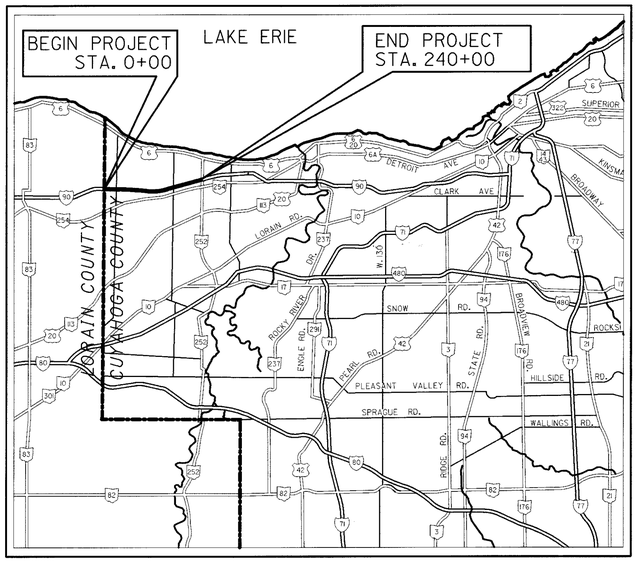

LOCATION MAP

LATITUDE: N41°25'00" LONGITUDE: W81°57'10"

PORTION TO BE IMPROVED

UNDIVIDED STATE & FEDERAL ROUTES

OTHER ROADS

DESIGN DESIGNATION (SEE SHEET 2)

DESIGN FUNCTIONAL CLASSIFICATION - FREEWAY

DESIGN EXCEPTIONS

NONE

ENGINEERS SEAL:

ROADWAY

STATE OF OHIO S. JOSEPH STODOLAK E-57830 REGISTERED PROFESSIONAL ENGINEER

SIGNED: S. Joseph Stodolak
DATE: 4-10-00

ENGINEERS SEAL:

BRIDGE

STATE OF OHIO DAVID WILLIAM LEAKE E-39017 REGISTERED PROFESSIONAL ENGINEER

SIGNED: David W Leake
DATE: 5-2-00

ENGINEERS SEAL:

BRIDGES CUY-90-0201 & CUY-90-0303

SIGNED: Thomas Daly P.E.
DATE: 3-9-00

UNDERGROUND UTILITIES
TWO WORKING DAYS
BEFORE YOU DIG
CALL 1-800-362-2764 (TOLL FREE)
OHIO UTILITIES PROTECTION SERVICE
NON-MEMBERS
MUST BE CALLED DIRECTLY

PLAN PREPARED BY:

BURGESS & NIPLE, LIMITED
100 WEST ERIE STREET
PAINESVILLE, OH 44077

STATE OF OHIO
DEPARTMENT OF TRANSPORTATION

CUY-90-0.00
PART 1

CITY OF WESTLAKE
CUYAHOGA COUNTY
FOR PART 2, SEE CUY-90-0.95

INDEX OF SHEETS:

TITLE SHEET	1
SCHEMATIC PLAN	2-4
TYPICAL SECTIONS	5-33
GENERAL NOTES	34-40
TRAFFIC MAINTENANCE	41-92
GENERAL SUMMARIES	93-99
COMPUTATIONS AND SUB-SUMMARIES	100-124
STORM WATER POLLUTION PREVENTION PLAN	125-127
PLAN & PROFILE SHEETS (MAINLINE)	128-182
PLAN SHEETS (RAMPS)	183-194
CROSS SECTION SUBSUMMARY	195
CROSS SECTIONS (MAINLINE)	196-333
CROSS SECTIONS (RAMPS)	334-336
PLAN & PROFILE (SIDE ROADS)	337-339
MISCELLANEOUS DETAILS	340-357, 354A, 354B
APPROACH SLAB DETAILS	358-360
TRAFFIC CONTROL PLANS	361-390
LIGHTING PLANS	391-408
STRUCTURES OVER 20' SPAN	
CUY-90-0045 L & R	409-447
CUY-90-0201	448-459
CUY-90-0249 L & R	460-497
CUY-90-0303	498-509
CUY-90-0356	510-514
CUY-90-0365	515-522
NOISE BARRIER PLANS	523-582

PROJECT DESCRIPTION

THIS PROJECT INVOLVES THE WIDENING AND UPGRADING OF I-90 FROM THE LORAIN COUNTY LINE EAST TO ONE MILE EAST OF COLUMBIA ROAD (SR252). MAJOR WORK ITEMS INCLUDE PAVEMENT WIDENING, DRAINAGE UPGRADING, REHABILITATION, NOISE BARRIER INSTALLATION, SIGNING AND PAVEMENT MARKINGS.

LIMITED ACCESS

THIS IMPROVEMENT IS ESPECIALLY DESIGNED FOR THROUGH TRAFFIC AND HAS BEEN DECLARED A LIMITED ACCESS HIGHWAY OR FREEWAY BY ACTION OF THE DIRECTOR IN ACCORDANCE WITH THE PROVISIONS OF SECTION 5511.02 OF THE OHIO REVISED CODE.

1997 SPECIFICATIONS

THE STANDARD SPECIFICATIONS OF THE STATE OF OHIO, DEPARTMENT OF TRANSPORTATION, INCLUDING CHANGES AND SUPPLEMENTAL SPECIFICATIONS LISTED IN THE PROPOSAL SHALL GOVERN THIS IMPROVEMENT.

I HEREBY APPROVE THESE PLANS AND DECLARE THAT THE MAKING OF THIS IMPROVEMENT WILL NOT REQUIRE THE CLOSING TO TRAFFIC OF I-90 AND THAT PROVISIONS FOR THE MAINTENANCE AND SAFETY OF TRAFFIC WILL BE AS SET FORTH ON THE PLANS AND ESTIMATES. THIS IMPROVEMENT WILL REQUIRE THE CLOSING OF CANTERBURY ROAD AND CAHOON ROAD STRUCTURES OVER I-90 AND DETOURS WILL BE PROVIDED AS INDICATED ON SHEETS .

UNDER AUTHORITY OF SECTION 4511.21, DIVISION (I) OF THE OHIO REVISED CODE, THE REVISED PRIMA FACIE SPEED LIMITS AS INDICATED HEREIN ARE DETERMINED TO BE REASONABLE AND SAFE, AND ARE HEREBY ESTABLISHED FOR THE DURATION OF THIS PROJECT. THE PRIMA FACIE SPEED LIMIT OR LIMITS HEREBY ESTABLISHED SHALL BECOME EFFECTIVE WHEN APPROPRIATE SIGNS GIVING NOTICE THEREOF ARE ERECTED.

APPROVED _____
DATE 11 AUG 2000 DISTRICT DEPUTY DIRECTOR

APPROVED _____
DATE 9-12-00 DIRECTOR, DEPARTMENT OF TRANSPORTATION

PART 1 & 2

STANDARD CONSTRUCTION DRAWINGS

BP-1.1M	10-28-94	GR-3.2M	10-21-97	DM-1.1M	6-30-95	HL-60.21M	3-31-95	MT-98.16M	6-24-93	TC-65.13M	11-03-93
BP-1.2M	10-28-94	GR-4.1M	11-30-94	DM-1.2M	6-30-95			MT-98.19M	3-01-96	TC-71.10M	9-01-93
BP-2.1M	4-8-97	GR-5.1M	4-21-95	DM-2.1M	6-30-95	TC-7.65M	2-01-94			TC-72.20M	9-01-93
BP-2.2M	10-21-97	GR-6.1M	1-3-96	DM-4.1M	6-30-95	TC-12.30M	2-01-94			TC-81.20M	11-24-93
		GR-6.2M	1-3-96	DM-4.2M	6-30-95	TC-21.10M	12-10-96	MT-101.20M	3-01-96	TC-82.10	1-19-99
BP-2.3	4-29-99			DM-4.3	4-29-99	TC-21.20M	12-10-96	MT-101.60M	4-25-94	TC-82.11	1-19-99
BP-2.5M	4-8-97	RM-1.1	4-29-99	DM-4.4	4-29-99	TC-21.40M	2-01-94	MT-102.10M	1-30-95	TC-85.20M	11-24-93
BP-3.1M	10-28-94	RM-3.1M	10-21-97			TC-22.20M	2-01-94	MT-105.10M	4-25-94		
BP-5.1M	10-28-94	RM-4.1M	6-30-98	HL-10.31M	3-31-95	TC-31.21M	3-31-94	MT-105.11M	4-25-94	A-1-69M	6-12-69
BP-7.1M	10-28-94	RM-4.3M	10-21-97	HL-20.11M	3-31-95	TC-32.10M	3-31-94			AS-1-81	10-25-94
BP-9.1	4-29-99	RM-4.4M	10-21-97	HL-20.13M	1-31-97			TC-41.10M	3-31-94	BS-1-93	12-19-94
		RM-9.5M	10-21-97	HL-20.21M	8-31-94	MT-35.10M	1-30-95	TC-41.20M	7-01-94	EXJ-4-87	2-14-97
F-1.1M	4-8-97	CB-2.1M	7-12-95	HL-30.11M	3-31-95	MT-35.11M	1-30-95	TC-42.10M	3-31-94	GSD-1-96	2-21-97
F-3.1M	4-21-95	CB-2.2M	7-12-95	HL-30.21M	5-01-95	MT-95.30M	4-25-94	TC-42.20M	3-31-94	PCB-91	3-20-95
F-3.3M	4-21-95	CB-2.3M	7-12-95	HL-30.22M	3-31-95	MT-95.31M	4-25-94	TC-51.11M	9-30-94	RB-1-55	10-25-94
F-3.4M	4-8-97	CB-3.1M	7-12-95	HL-30.31M	5-01-95	MT-95.32M	4-25-94	TC-51.12M	3-31-94	SBR-1-99	1-12-99
		HW-2.1M	7-12-95	HL-30.32M	8-14-96	MT-95.40M	10-01-92	TC-52.10M	7-29-94	TST-1-99	7-06-99
GR-1.1M	10-21-97	HW-2.2M	7-12-95	HL-30.33M	8-31-94	MT-97.10M	4-25-94	TC-52.20M	7-29-94	VPF-1-90M	3-20-95
GR-1.2M	1-3-96	I-2.1M	4-14-98	HL-50.11M	3-31-95	MT-97.11M	1-30-95	TC-61.10M	3-31-94		
GR-1.3M	11-30-94			HL-50.21M	8-31-94	MT-98.13M	6-24-93	TC-65.10M	11-03-95		
GR-2.1M	4-14-98	MH-1.1M	10-21-97	HL-60.11M	5-1-95	MT-98.14M	6-24-93	TC-65.11M	11-03-95		
GR-3.1M	10-21-97	MH-1.2M	9-6-95	HL-60.12M	3-31-95	MT-98.15M	6-24-93	TC-65.12M	11-03-95	SS816	4-21-97

SUPPLEMENTAL SPECIFICATIONS

SS806	9-09-97
SS814	6-02-98
SS815	5-30-96
SS828	7-28-98
SS830	10-21-98
SS842	1-06-99
SS844	1-6-99
SS846	9-9-97
SS855	6-30-98
SS863	9-09-97
SS870	8-16-99
SS877	4-13-99
SS899	10-21-98
SS905	4-01-98
SS906	5-05-98
SS907	10-21-98
SS908	1-06-99
SS910	7-28-98
SS932	10-2-96
SS954	9-9-97
SS880	6-15-99
SS1059	6-15-99

FEDERAL PROJECT NO. TE21-G000(105) TE21-G000(106)

PID NO. 11738

CONSTRUCTION PROJECT NO.

RAILROAD INVOLVEMENT NONE

CUYAHOGA COUNTY CUY-90-0.00

1 / 582

CUY - IR 90 - 0.00
000558
DIST 12

PID# 11738
12-13-00

02 MAR 2000
p:\PR22308\CADD\11738GT.DGN

DESIGN DESIGNATION	FROM LORAIN COUNTY LINE TO CROCKER RD. E. RAMPS	FROM CROCKER RD. E RAMPS TO COLUMBIA RD. E RAMPS	FROM COLUMBIA RD. EAST RAMPS
CURRENT ADT (1999)	55230	60950	79140
DESIGN YEAR ADT (2019)	67740	72070	94780
DESIGN HOURLY VOLUME (2017)	6774	7207	9478
DIRECTIONAL DISTRIBUTION	60%	60%	60%
TRUCKS (24 HOUR B&C)	8%	8%	8%
DESIGN SPEED	65 MPH		
LEGAL SPEED	60 MPH		

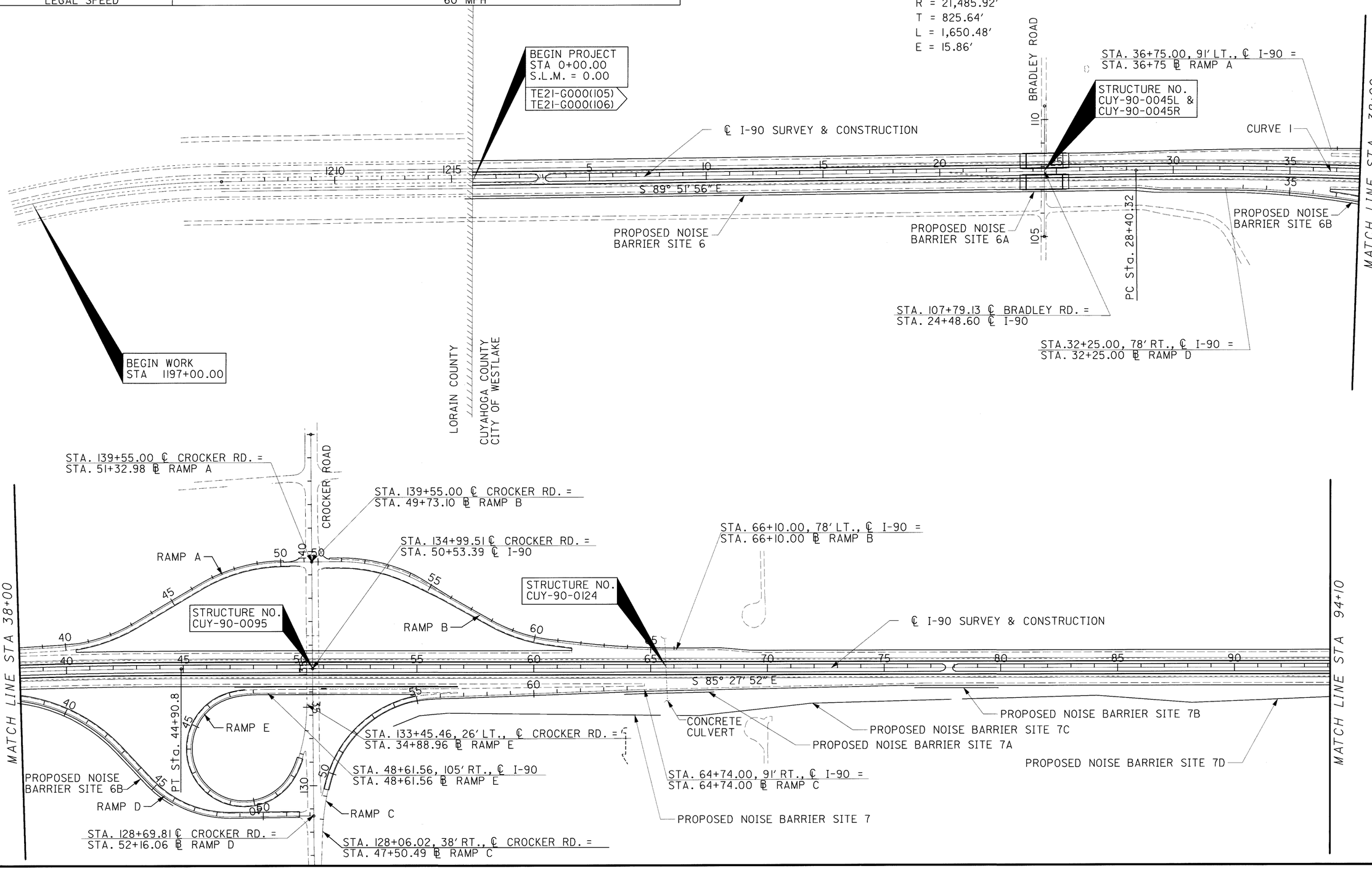

SCHEMATIC PLAN

CUY-90-0.00

02 MAR 2000
P:\PR22308\CADD\II738GBA.DGN

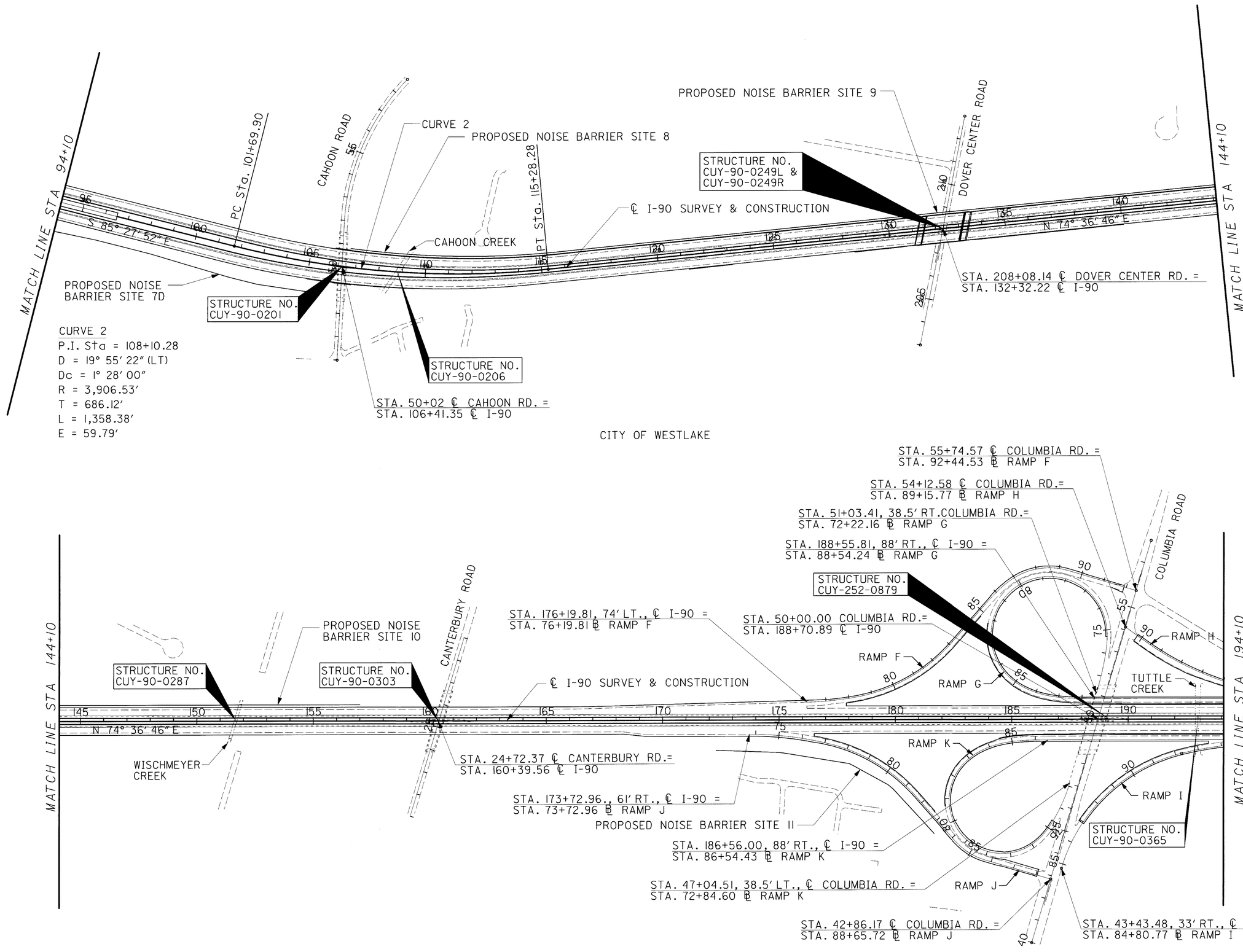
MATCH LINE STA 94+10
PC Sta. 101+69.90
CAHOON ROAD
CURVE 2
PROPOSED NOISE BARRIER SITE 8
PT Sta. 115+28.28
PROPOSED NOISE BARRIER SITE 9
DOVER CENTER ROAD
STRUCTURE NO. CUY-90-0249L & CUY-90-0249R
℄ I-90 SURVEY & CONSTRUCTION
CAHOON CREEK
S 85° 27' 52" E
N 74° 36' 46" E
MATCH LINE STA 144+10
PROPOSED NOISE BARRIER SITE 7D
STRUCTURE NO. CUY-90-0201
STRUCTURE NO. CUY-90-0206
STA. 208+08.14 ℄ DOVER CENTER RD. = STA. 132+32.22 ℄ I-90
STA. 50+02 ℄ CAHOON RD. = STA. 106+41.35 ℄ I-90
CURVE 2
P.I. Sta = 108+10.28
D = 19° 55' 22" (LT)
Dc = 1° 28' 00"
R = 3,906.53'
T = 686.12'
L = 1,358.38'
E = 59.79'
CITY OF WESTLAKE
STA. 55+74.57 ℄ COLUMBIA RD. = STA. 92+44.53 ℄ RAMP F
STA. 54+12.58 ℄ COLUMBIA RD.= STA. 89+15.77 ℄ RAMP H
STA. 51+03.41, 38.5' RT.COLUMBIA RD.= STA. 72+22.16 ℄ RAMP G
STA. 188+55.81, 88' RT., ℄ I-90 = STA. 88+54.24 ℄ RAMP G
COLUMBIA ROAD
STRUCTURE NO. CUY-252-0879
RAMP H
MATCH LINE STA 144+10
CANTERBURY ROAD
STA. 176+19.81, 74' LT., ℄ I-90 = STA. 76+19.81 ℄ RAMP F
STA. 50+00.00 COLUMBIA RD.= STA. 188+70.89 ℄ I-90
RAMP F
RAMP G
TUTTLE CREEK
PROPOSED NOISE BARRIER SITE 10
STRUCTURE NO. CUY-90-0287
STRUCTURE NO. CUY-90-0303
℄ I-90 SURVEY & CONSTRUCTION
N 74° 36' 46" E
RAMP K
RAMP I
MATCH LINE STA 194+10
WISCHMEYER CREEK
STA. 24+72.37 ℄ CANTERBURY RD.= STA. 160+39.56 ℄ I-90
STA. 173+72.96., 61' RT., ℄ I-90 = STA. 73+72.96 ℄ RAMP J
PROPOSED NOISE BARRIER SITE 11
STRUCTURE NO. CUY-90-0365
STA. 186+56.00, 88' RT., ℄ I-90 = STA. 86+54.43 ℄ RAMP K
STA. 47+04.51, 38.5' LT., ℄ COLUMBIA RD. = STA. 72+84.60 ℄ RAMP K
RAMP J
STA. 42+86.17 ℄ COLUMBIA RD. = STA. 88+65.72 ℄ RAMP J
STA. 43+43.48, 33' RT., ℄ COLUMBIA RD. = STA. 84+80.77 ℄ RAMP I
HORIZONTAL SCALE IN FEET
0 100 200 400
SCHEMATIC PLAN
CUY-90-0.00
3
582
02 MAR 2000
p:\PR22308\CADD\11738GBB.DGN

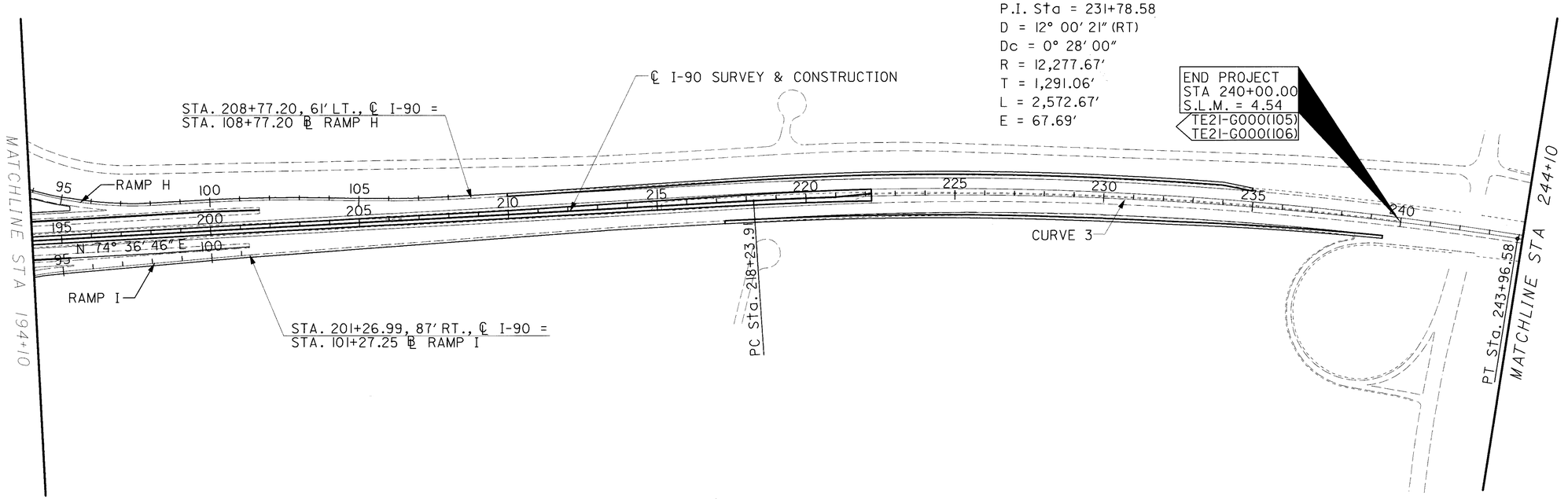

CITY OF WESTLAKE

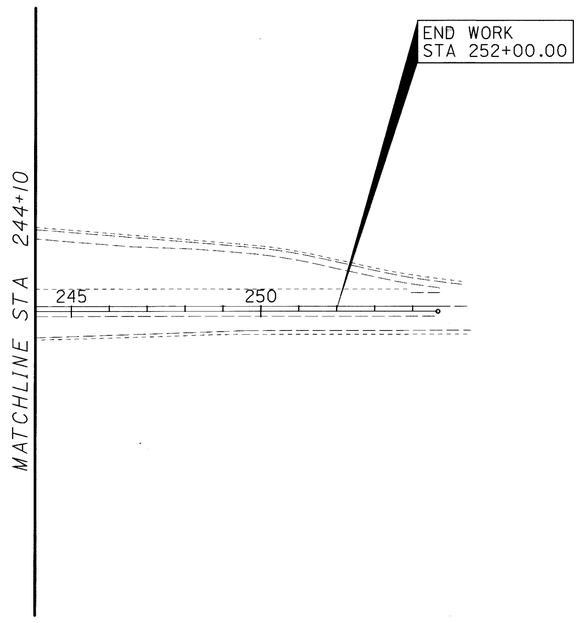

HORIZONTAL SCALE IN FEET
0 100 200 400

SCHEMATIC PLAN

CUY-90-0.00

4
582

02 MAR 2000
p:\PR22308\CADD\IF38GBC.DGN

PROPOSED LEGEND

(1)	ITEM - 203	EMBANKMENT, AS PER PLAN
(2)	ITEM - 203	EXCAVATION NOT INCLUDING EMBANKMENT CONSTRUCTION
(3)	ITEM - 203	SUBGRADE COMPACTION AND PROOF ROLLING
(4)	ITEM - 302	14" ASPHALT CONCRETE (7 YEAR WARRANTY)
(5)	ITEM - 304	6" AGGREGATE BASE, AS PER PLAN
(6)	ITEM - 407	TACK COAT FOR INTERMEDIATE COURSE
(7)	ITEM - 407	TACK COAT
(8)	ITEM - 446	1 1/2" ASPHALT CONCRETE SURFACE COURSE, TYPE 1H, A.P.P.
(9)	ITEM - 446	1 3/4" ASPHALT CONCRETE INTERMEDIATE COURSE, TYPE 2, PG 64-28
(10)	ITEM - 605	6" SHALLOW PIPE UNDERDRAIN OR 6" SHALLOW PIPE UNDERDRAIN A.P.P.
(11)	ITEM - 622	CONCRETE BARRIER, TYPE B-50
(12)	ITEM - 617	COMPACTED AGGREGATE, TYPE A, AS PER PLAN
(13)	ITEM - 855	4" ASPHALT TREATED FREE DRAINING BASE
(14)	ITEM - 606	GUARDRAIL, TYPE 5
(15)	ITEM - 870	SEEDING AND MULCHING
(16)	ITEM - 254	PAVEMENT PLANING BITUMINOUS
(17)	ITEM - 448	ASPHALT CONCRETE INTERMEDIATE COURSE, TYPE 1 UNDER GUARDRAIL, PG 64-22
(18)	ITEM - 830	CONCRETE MEDIAN
(19)	ITEM - 202	PAVEMENT REMOVED
(20)	ITEM - 611	REINFORCED CONCRETE APPROACH SLABS, (T=15")
(21)	STANDARD TYPE D LONGITUDINAL JOINT, AS PER PLAN	
(22)	ITEM - 611	REINFORCED CONCRETE APPROACH SLAB, (T=13")
(23)	ITEM - 622	CONCRETE BARRIER, TYPE C-50
(24)	ITEM - 622	CONCRETE BARRIER, TYPE C-50, AS PER PLAN
(25)*	ITEM - 446	3.5" AVERAGE ASPHALT CONCRETE INTERMEDIATE COURSE TYPE 2, PG64-28
(26)*	ITEM - 305	10" CONCRETE PAVEMENT
(27)	ITEM - 203	LINEAR GRADING
(28)	ITEM - 622	CONCRETE BARRIER, TYPE D
(29)	ITEM - 451	9" REINFORCED CONCRETE PAVEMENT
(30)	ITEM - 611	REINFORCED CONCRETE APPROACH SLAB, (T=12")
(31)	ITEM - 608	4" CONCRETE WALK
(32)	ITEM - 830	CURB, TYPE 2A AS PER PLAN
(33)	ITEM - 830	CURB, TYPE 2B AS PER PLAN
(34)	ITEM - 448	1 1/4" ASPHALT CONCRETE SURFACE COURSE, TYPE 1, PG 64-22
(35)	ITEM - 448	1 1/4" ASPHALT CONCRETE INTERMEDIATE COURSE, TYPE 1, PG 64-22
(36)	ITEM - 203	SUBGRADE COMPACTION
(37)	ITEM - 622	CONCRETE BARRIER, TYPE B-32
(38)	ITEM - 302	11 1/4" BITUMINOUS AGGREGATE BASE

EXISTING LEGEND

- (A) 9"± REINFORCED CONCRETE PAVEMENT
- (B) 10"± CONCRETE PAVEMENT (MAINLINE REINFORCED, RAMPS PLAIN)
- (C) BITUMINOUS AGGREGATE BASE
- (D) AGGREGATE BASE
- (E) SUBBASE
- (F) UNDERDRAIN
- (G) CONCRETE MEDIAN WITH GLARE SCREEN
- (H) CURB
- (I) 1-1/2"± ASPHALT CONCRETE SURFACE COURSE
- (J) 2"± ASPHALT CONCRETE INTERMEDIATE COURSE
- (K) 3"± ASPHALT CONCRETE
- (L) LONGITUDINAL JOINT
- (M) GUARDRAIL, TYPE 5
- (N) COMPACTED AGGREGATE
- (O) 10"± CONCRETE BASE
- (P) 24" LONG #5 DEFORMED BARS
- (Q) 9" AGGREGATE
- (R) 13" REINFORCED CONCRETE APPROACH SLAB
- (S) 4" CONCRETE WALK
- (T) 2 1/2" ASPHALT CONCRETE

SEE SHEETS 523-526 FOR NOISE BARRIER TYPICALS

NOTE: LIFT THICKNESSES AND STEP WIDTHS SHOWN IN THE PLANS ARE FOR QUANTITY ESTIMATION ONLY AND ARE NOT REQUIRED LIFT THICKNESSES FOR ACTUAL CONSTRUCTION

* (QUANTIFIED UNDER ITEM 615 TEMPORARY PAVEMENT, AS PER PLAN. SEE SHEET 46)

I-90 TYPICAL SECTION LEGEND

CUY-90-0.00

I:\PROJECTS\Pidll738\dgn\final plans\ll738GYA.DGN 20-JUL-2000 1:39PM jgrmovse

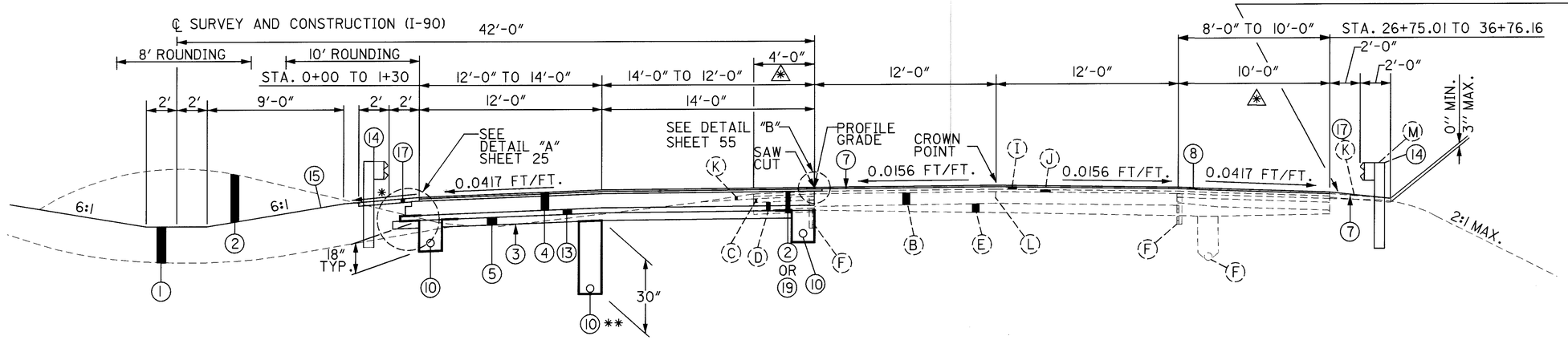

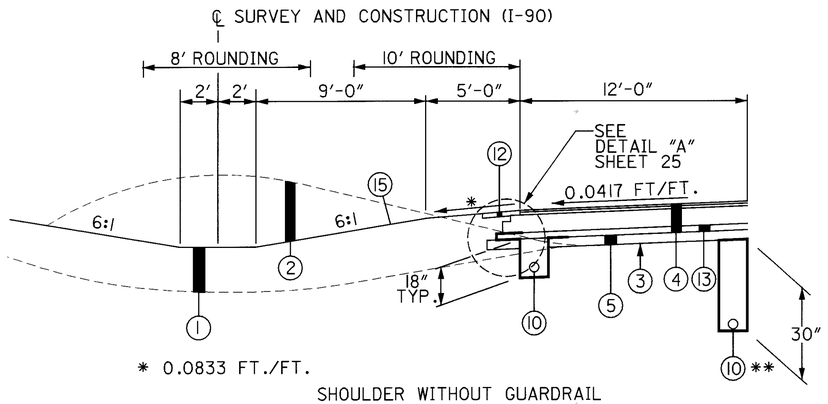

* 0.0833 FT./FT.

SHOULDER WITHOUT GUARDRAIL

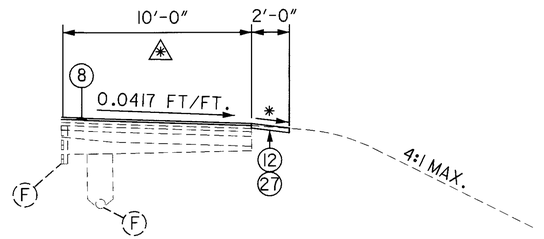

SHOULDER WITHOUT GUARDRAIL

* SLOPE TO MATCH EXISTING GRADE

3 LANE NORMAL SECTION (14' LANE)

** STA. 0+00 TO STA. 10+02
6" SHALLOW PIPE UNDERDRAIN
WITH FABRIC WRAP, A.P.P.

I-90 WESTBOUND

STA. 0+00.00	TO	STA. 23+45.62	=	2345.62 FT.
STA. 25+52.62	TO	STA. 47+60.00	=	2207.38 FT.
STA. 54+60.00	TO	STA. 96+50.00	=	4190.00 FT.
		TOTAL =		8743.00 FT.

I-90 EASTBOUND

STA. 0+00.00	TO	STA. 23+44.52	=	2344.52 FT.
STA. 25+51.52	TO	STA. 48+05.00	=	2253.48 FT.
STA. 54+05.00	TO	STA. 96+50.00	=	4245.00 FT.
		TOTAL =		8843.00 FT.

⚠ SEE EXISTING CONCRETE SHOULDER DETAIL SHEET 24

FOR BRIDGE & APPROACH SLAB LIMITS
SEE SHEET 19

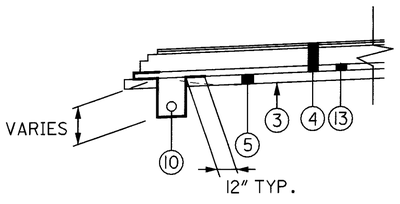

TYPICAL UNDERDRAIN INSTALLATION
WITH FABRIC WRAP

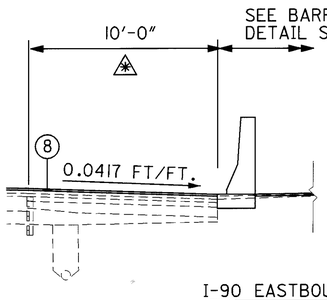

I-90 EASTBOUND

STA. 47+21.00 TO 48+05.00 SHOULDER

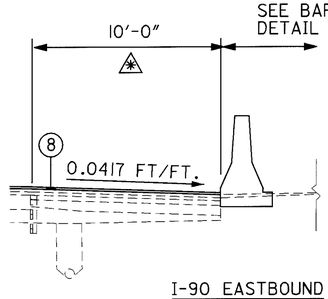

I-90 EASTBOUND

STA. 54+05.00 TO 56+74.00 SHOULDER

FOR LEGEND SEE SHEET 5

I-90 TYPICAL SECTIONS

CUY-90-0.00

I:\PROJECTS\Pid11738\dgn\final plans\11738GYA.DGN 20-JUL-2000 1:42PM jgrmovse

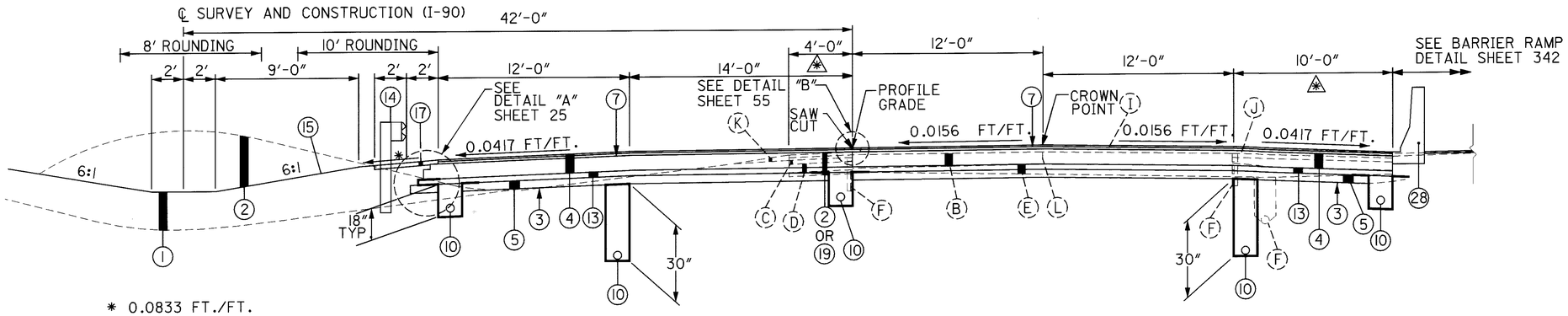

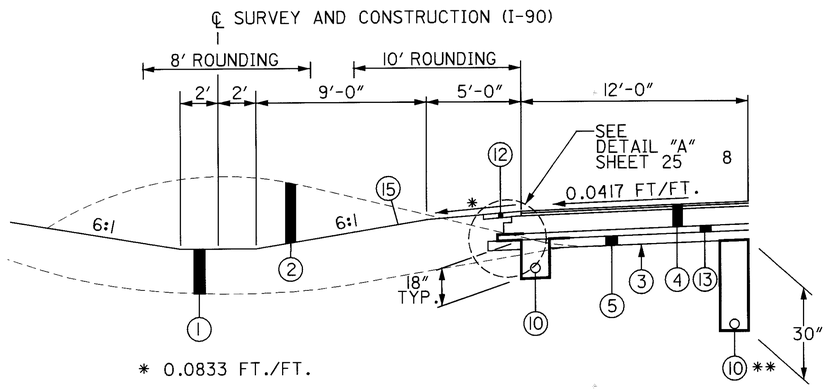

SHOULDER WITHOUT GUARDRAIL

SEE EXISTING CONCRETE SHOULDER DETAIL SHEET 24

3 LANE NORMAL SECTION (14' LANE)

I-90 WESTBOUND

STA. 47+60.00 TO STA. 50+55.00 = 295.00 FT.

I-90 EASTBOUND

STA. 48+05.00 TO STA. 51+00.00 = 295.00 FT.

FOR LEGEND SEE SHEET 5

I-90 TYPICAL SECTIONS

CUY-90-0.00

I:\PROJECTS\Pid11738\dgn\final plans\11738GYA.DGN 20-JUL-2000 1:43PM jgrmovse

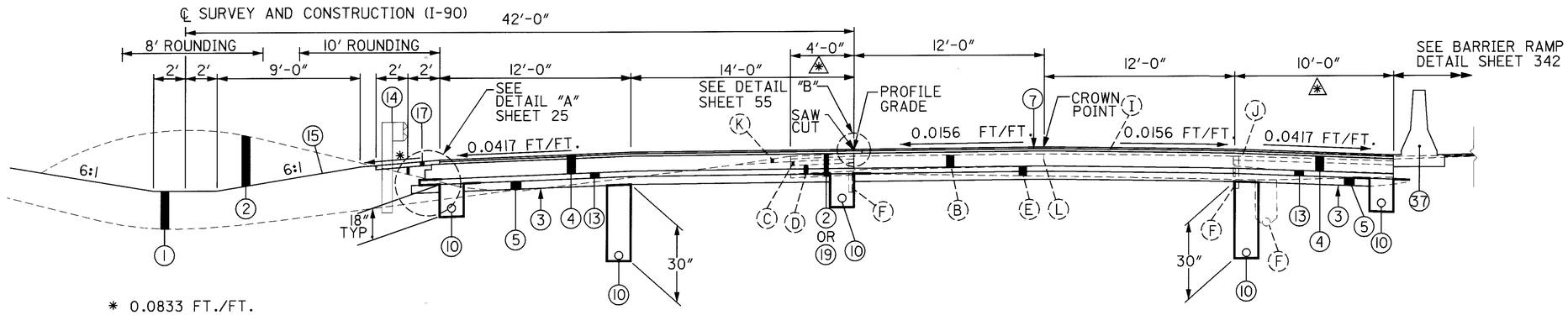

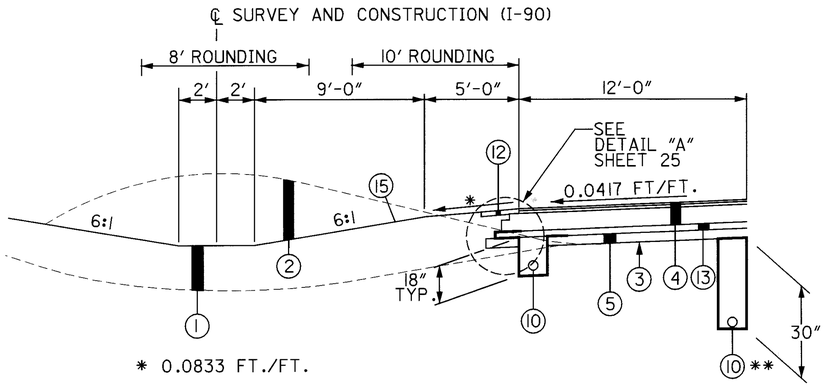

SHOULDER WITHOUT GUARDRAIL

3 LANE NORMAL SECTION (14' LANE)

I-90 WESTBOUND

STA. 50+55.00 TO STA. 54+60.00 = 405.00 FT.

I-90 EASTBOUND

STA. 51+00.00 TO STA. 54+05.00 = 305.00 FT.

FOR LEGEND SEE SHEET 5

I-90 TYPICAL SECTIONS

CUY-90-0.00

I:\PROJECTS\Pid11738\dgn\final plans\11738GYA.DGN 20-JUL-2000 1:43PM jgrmovse

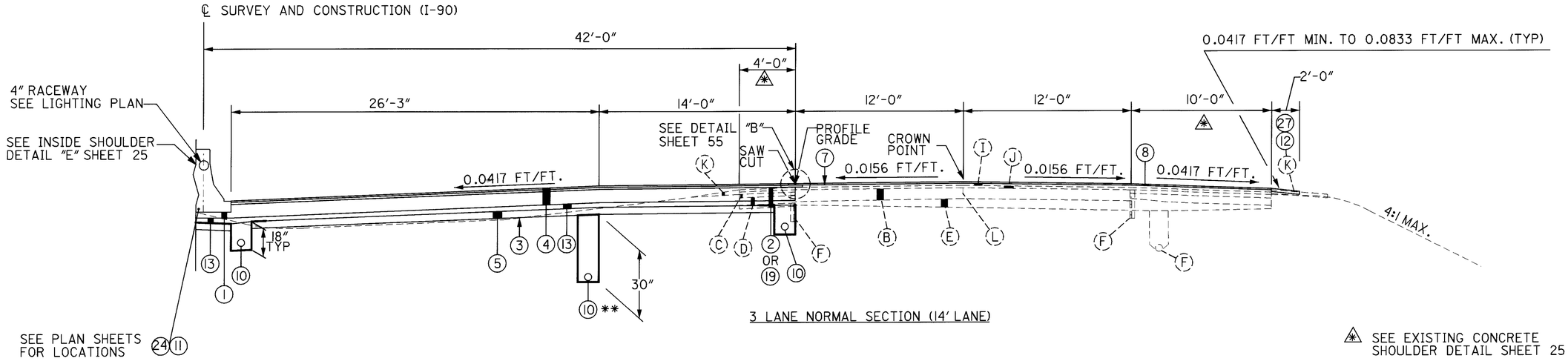

I-90 WESTBOUND

STA. 96+50.00 TO STA. 100+58.81 = 408.81 FT.

I-90 EASTBOUND

STA. 96+50.00 TO STA. 99+80.79 = 330.79 FT.

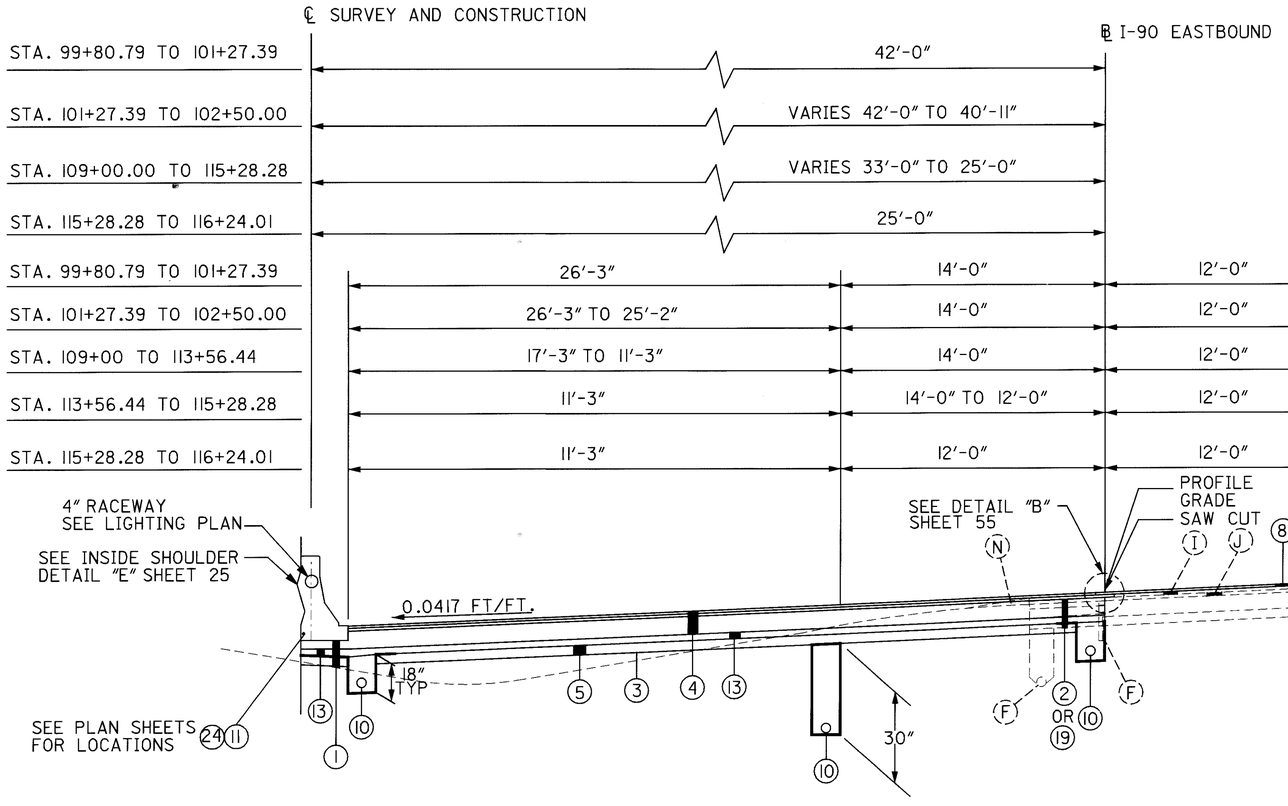

SEE EXISTING CONCRETE
SHOULDER DETAIL SHEET 24

I-90 EASTBOUND-SUPERELEVATION LEFT

STA. 99+80.79	TO	STA. 102+50.00	=	269.21 FT.
STA. 109+00.00	TO	STA. 116+24.01	=	724.01 FT.
		TOTAL	=	993.22 FT.

* SLOPE TO MATCH EXISTING GRADE

FOR LEGEND SEE SHEET 5

I-90 TYPICAL SECTIONS

I-90

CUY-90-0.00

I:\PROJECTS\Pid11738\dgn\finalplans\11738GYA.DGN 20-JUL-2000 1:44PM jgrmovse

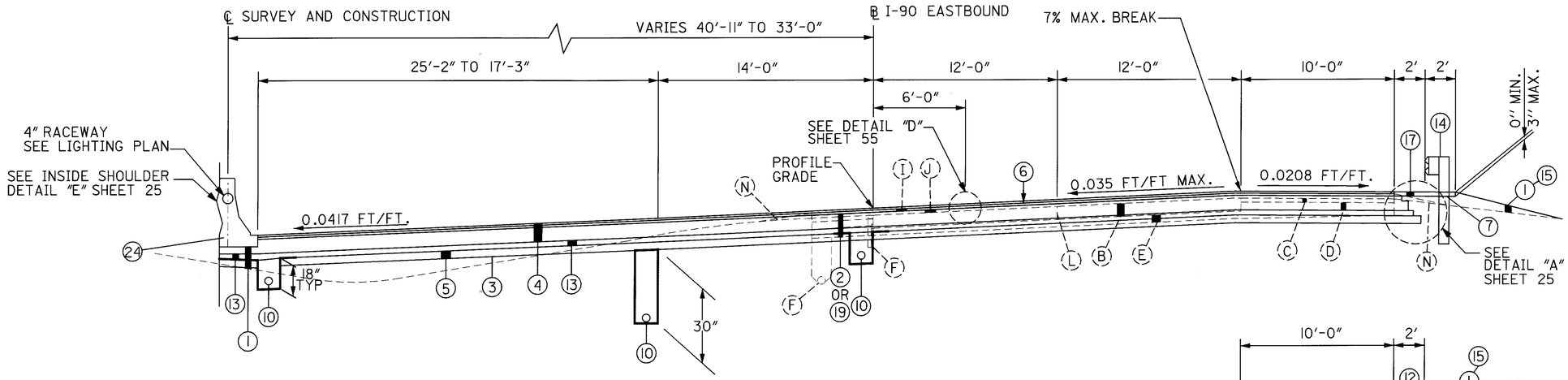

I-90 EASTBOUND-SUPERELEVATION LEFT

STA. 102+50.00 TO STA. 109+00.00 = 650.00 FT.

TOTAL = 650.00 FT.

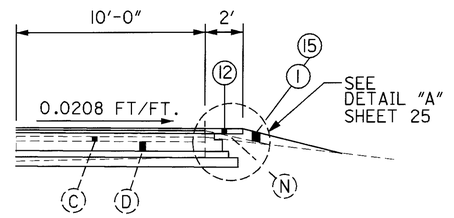

SHOULDER WITHOUT GUARDRAIL

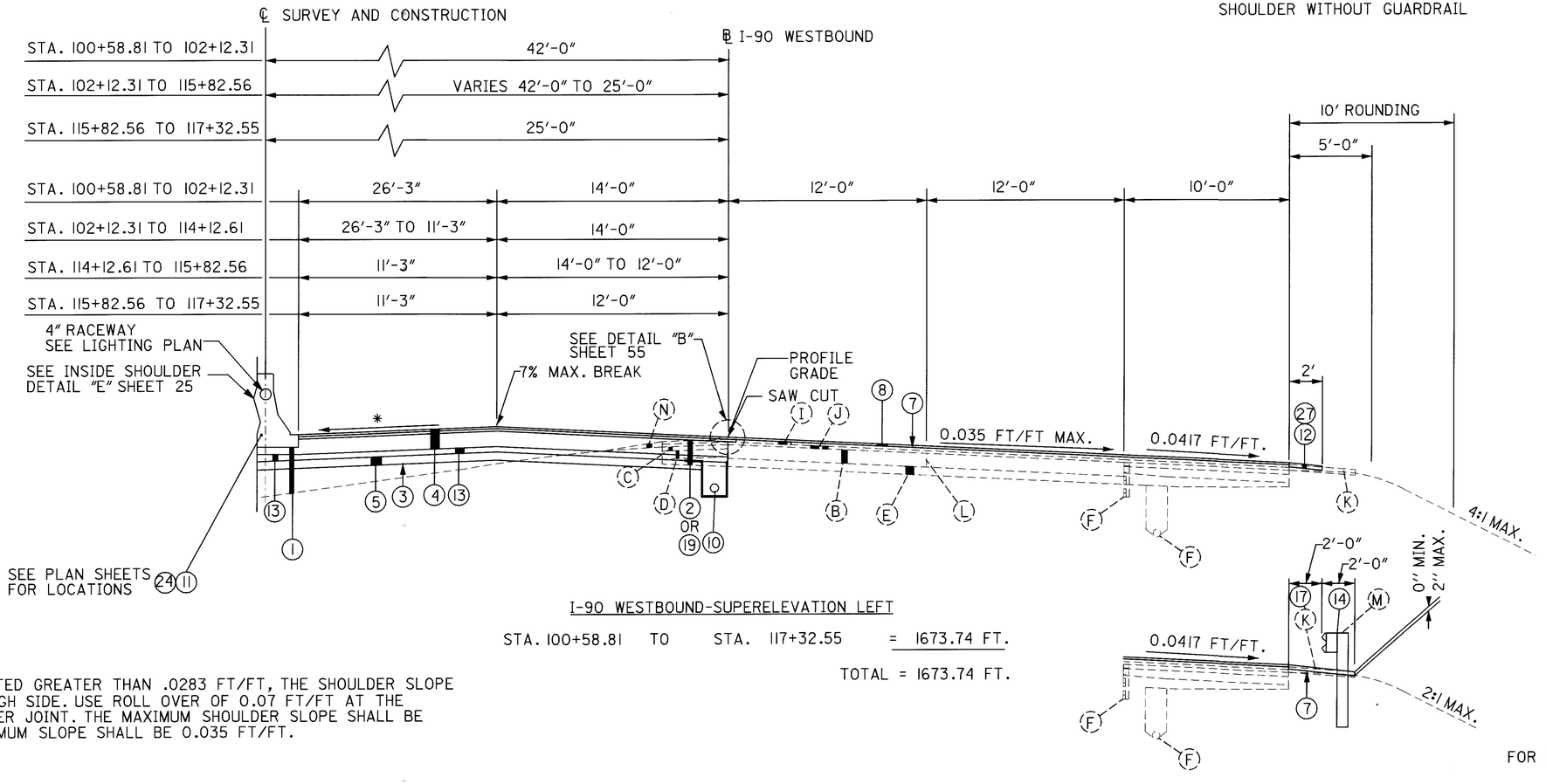

I-90 WESTBOUND-SUPERELEVATION LEFT

STA. 100+58.81 TO STA. 117+32.55 = 1673.74 FT.

TOTAL = 1673.74 FT.

* WHEN SUPERELEVATED GREATER THAN .0283 FT/FT, THE SHOULDER SLOPE VARIES ON THE HIGH SIDE. USE ROLL OVER OF 0.07 FT/FT AT THE PAVEMENT-SHOULDER JOINT. THE MAXIMUM SHOULDER SLOPE SHALL BE 0.417 FT/FT, MINIMUM SLOPE SHALL BE 0.035 FT/FT.

FOR LEGEND SEE SHEET 5

TYPICAL SECTIONS

CUY-90-0.00

I:\PROJECTS\Pid1738\dgn\finalplans\1738GYA.DGN 20-JUL-2000 1:44PM jgrmovse

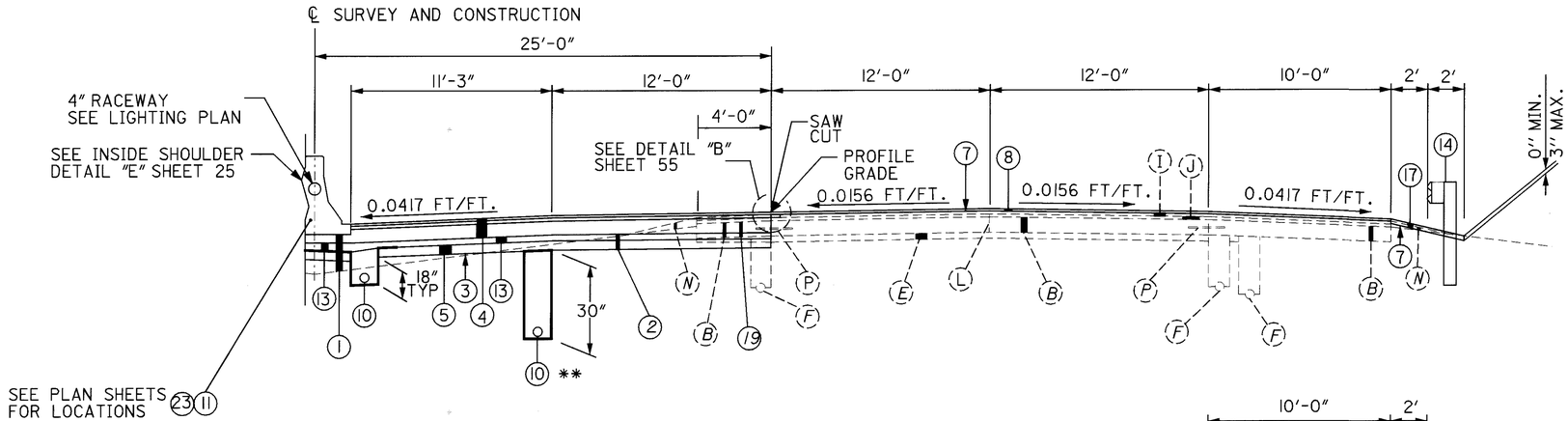

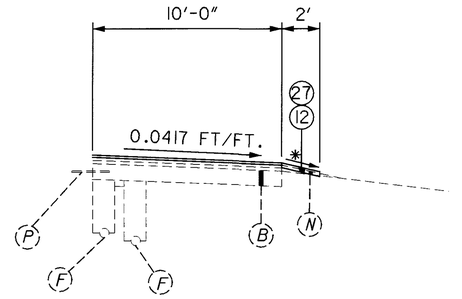

SHOULDER WITHOUT GUARDRAIL

* SLOPE TO MATCH EXISTING GRADE

** W.B. STA. 153+00 TO STA. 156+90
6" SHALLOW PIPE UNDERDRAIN
WITH FABRIC WRAP, A.P.P.

** W.B. STA. 163+90 TO STA. 168+00
6" SHALLOW PIPE UNDERDRAIN
WITH FABRIC WRAP, A.P.P.

** E.B. STA. 153+00 TO STA. 156+50
6" SHALLOW PIPE UNDERDRAIN
WITH FABRIC WRAP, A.P.P.

** E.B. STA. 162+60 TO STA. 168+00
6" SHALLOW PIPE UNDERDRAIN
WITH FABRIC WRAP, A.P.P.

3 LANE NORMAL HALF SECTION

I-90 WESTBOUND

STA. 117+32.55	TO	STA. 131+25.86	=	1393.31 FT.
STA. 133+38.56	TO	STA. 156+90.00	=	2351.44 FT.
STA. 163+90.00	TO	STA. 184+85.00	=	2095.00 FT.
			TOTAL =	5839.75 FT.

FOR BRIDGE AND APPROACH SLAB LIMITS
SEE SHEET 19.

I-90 EASTBOUND

STA. 116+24.01	TO	STA. 131+25.86	=	1501.85 FT.
STA. 133+38.56	TO	STA. 156+50.00	=	2311.44 FT.
STA. 162+60.00	TO	STA. 185+00.00	=	2240.00 FT.
			TOTAL =	6053.29 FT.

FOR BRIDGE AND APPROACH SLAB LIMITS
SEE SHEET 19

FOR LEGEND SEE SHEET 5

TYPICAL SECTIONS

CUY-90-0.00

I:\PROJECTS\Pid11738\dgn\finalplans\11738GYA.DGN 20-JUL-2000 1:45PM jgrmovse

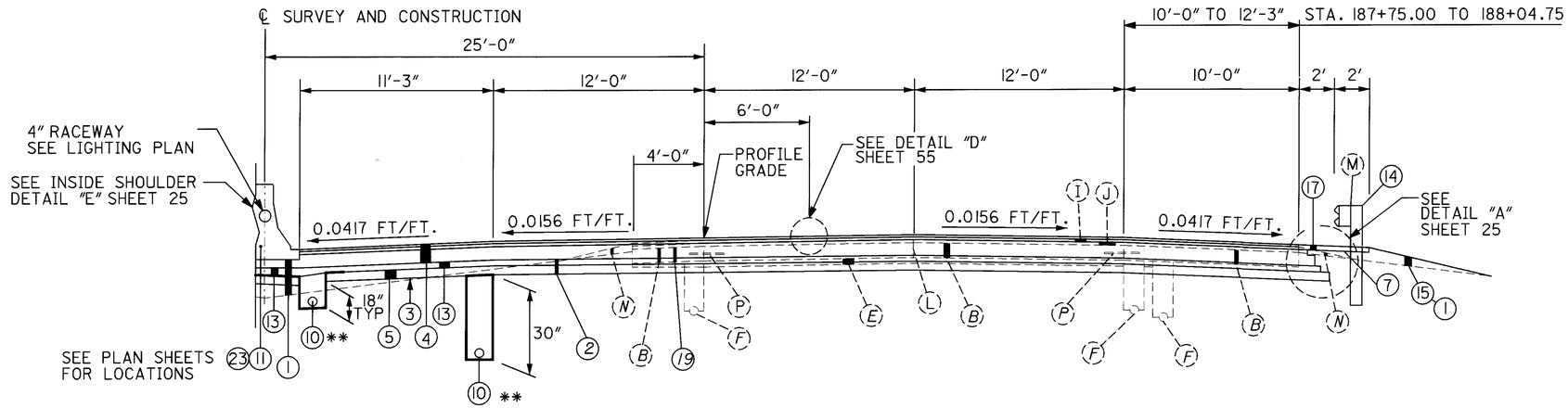

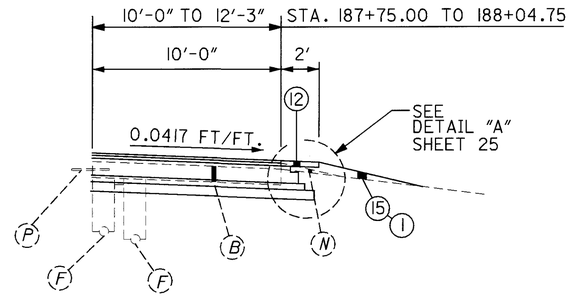

SHOULDER WITHOUT GUARDRAIL

** W.B. STA. 151+77 TO STA. 152+00
6" SHALLOW PIPE UNDERDRAIN
WITH FABRIC WRAP, A.P.P.

** W.B. STA. 156+90 TO STA. 163+90
6" SHALLOW PIPE UNDERDRAIN
WITH FABRIC WRAP, A.P.P.

** W.B. STA. 186+75 TO STA. 188+54.24
4" ROCK CUT UNDERDRAIN, A.P.P.

** E.B. STA. 151+71 TO STA. 153+00
6" SHALLOW PIPE UNDERDRAIN
WITH FABRIC WRAP, A.P.P.

** E.B. STA. 156+50 TO STA. 162+60
6" SHALLOW PIPE UNDERDRAIN
WITH FABRIC WRAP, A.P.P.

** E.B. STA. 186+75 TO STA. 186+54.53
4" ROCK CUT UNDERDRAIN, A.P.P.

3 LANE NORMAL HALF SECTION

I-90 WESTBOUND

STA. 156+90.00	TO	STA. 163+90.00	= 700.00	FT.
STA. 184+85.00	TO	STA. 188+54.24	= 369.24	FT.
		TOTAL =	1069.24	FT.

I-90 EASTBOUND

STA. 156+50.00	TO	STA. 162+60.00	= 610.00	FT.
STA. 185+00.00	TO	STA. 186+54.53	= 154.53	FT.
		TOTAL =	764.53	FT.

FOR LEGEND SEE SHEET 5

TYPICAL SECTIONS

CUY-90-0.00

I:\PROJECTS\Pid11738\dgn\finalplans\11738GYA.DGN 20-JUL-2000 1:45PM jgrmoyse

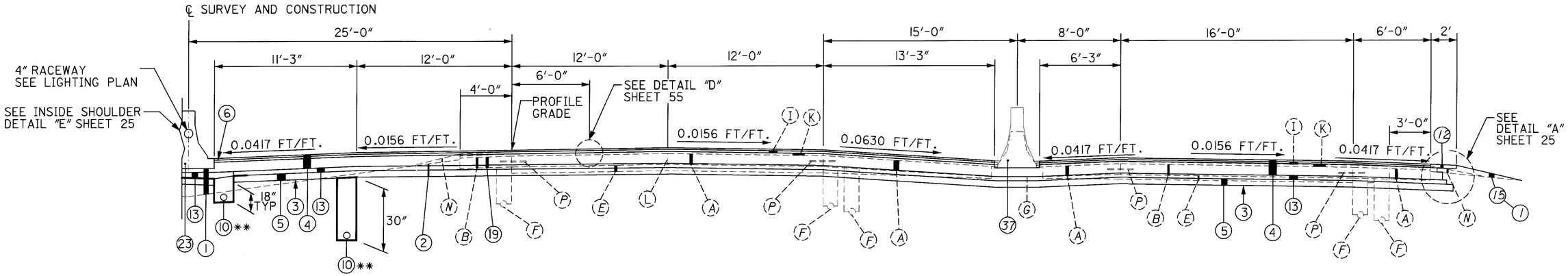

** W.B. STA. 188+54.24 TO STA. 189+78.00
4" ROCK CUT UNDERDRAIN, A.P.P.

3 LANE NORMAL HALF SECTION
WITH PARALLEL RAMP

** E.B. STA. 186+54.53 TO STA. 189+39.51
4" ROCK CUT UNDERDRAIN, A.P.P.

I-90 WESTBOUND

STA. 188+54.24	TO	STA. 189+78.00	=	123.76 FT.
		TOTAL	=	123.76 FT.

I-90 EASTBOUND

STA. 186+54.53	TO	STA. 189+39.51	=	284.98 FT.
		TOTAL	=	284.98 FT.

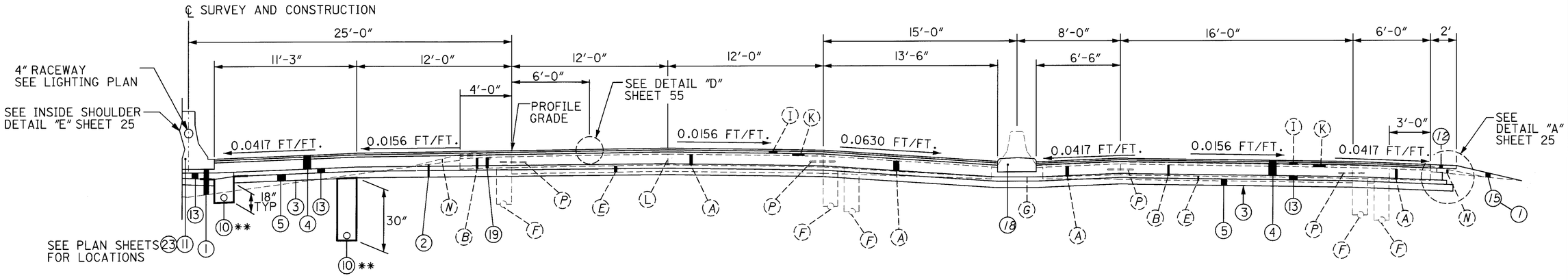

** W.B. STA. 189+78.00 TO STA. 192+70.32
4" ROCK CUT UNDERDRAIN, A.P.P.

3 LANE NORMAL HALF SECTION
WITH PARALLEL RAMP

** E.B. STA. 189+39.51 TO STA. 192+70.32
4" ROCK CUT UNDERDRAIN, A.P.P.

I-90 WESTBOUND

STA. 189+78.00	TO	STA. 192+70.32	=	292.32 FT.
STA. 193+32.82	TO	STA. 194+33.30	=	100.48 FT.
		TOTAL	=	392.80 FT.

I-90 EASTBOUND

STA. 189+39.51	TO	STA. 192+70.32	=	330.81 FT.
STA. 193+32.82	TO	STA. 194+44.70	=	111.88 FT.
		TOTAL	=	442.69 FT.

FOR BRIDGE & APPROACH SLAB LIMITS
SEE SHEET 19

FOR LEGEND SEE SHEET 5

I-90 TYPICAL SECTIONS

CUY-90-0.00

I:\PROJECTS\Pidll738\dgn\final plans\Ill738GYA.DGN 20-JUL-2000 1:46PM jgrmoyse

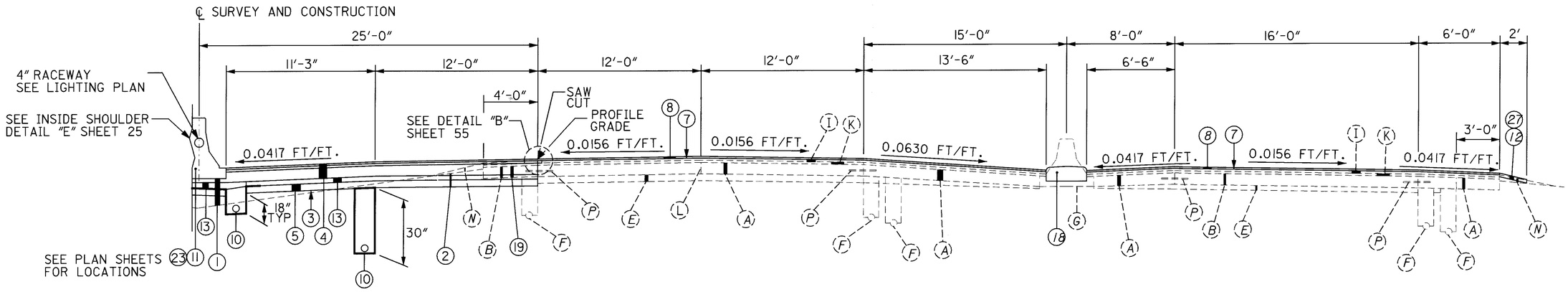

3 LANE NORMAL HALF SECTION
WITH PARALLEL RAMP

I-90 WESTBOUND

STA. 194+33.30 TO STA. 195+30.90 = 97.60 FT.
TOTAL = 97.60 FT.

I-90 EASTBOUND

STA. 194+44.70 TO STA. 195+26.95 = 82.25 FT.
TOTAL = 82.25 FT.

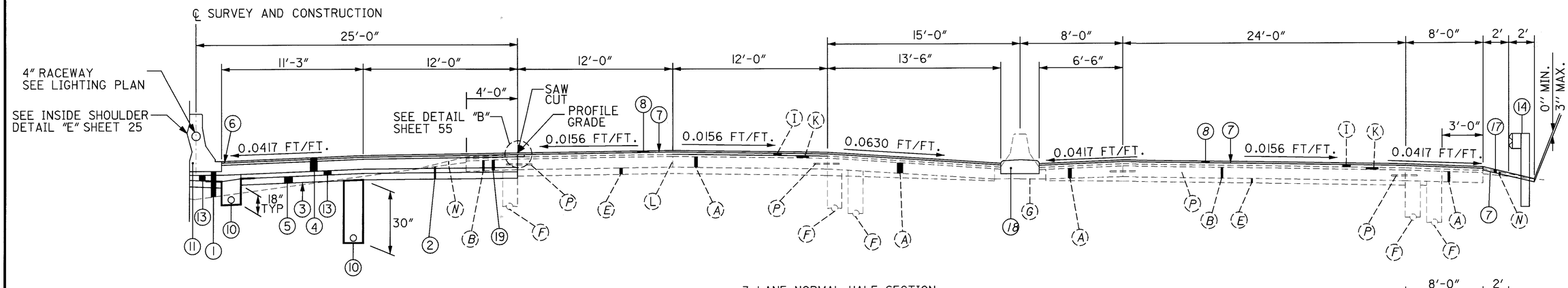

3 LANE NORMAL HALF SECTION
WITH PARALLEL RAMP

I-90 WESTBOUND

STA. 195+30.90 TO STA. 201+67.13 = 636.23 FT.
TOTAL = 636.23 FT.

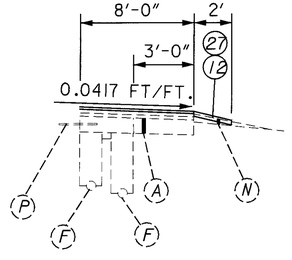

SHOULDER WITHOUT GUARDRAIL

FOR LEGEND SEE SHEET 5

I-90 TYPICAL SECTIONS

CUY-90-0.00

14
582

I:\PROJECTS\Pid11738\dgn\final plans\U1738GYA.DGN 20-JUL-2000 1:46PM jgrmovse

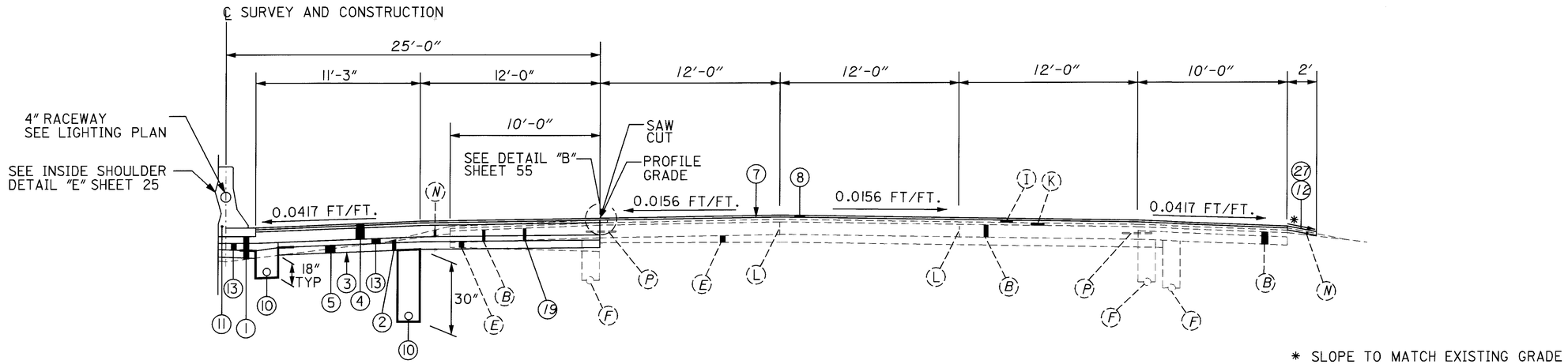

4 LANE NORMAL SECTION

I-90 WESTBOUND

STA. 201+67.13 TO STA. 210+00.00 = 832.87 FT.

TOTAL = 832.87 FT.

I-90 EASTBOUND

STA. 195+26.95 TO STA. 217+25.00 = 2198.05 FT.

TOTAL = 2198.05 FT.

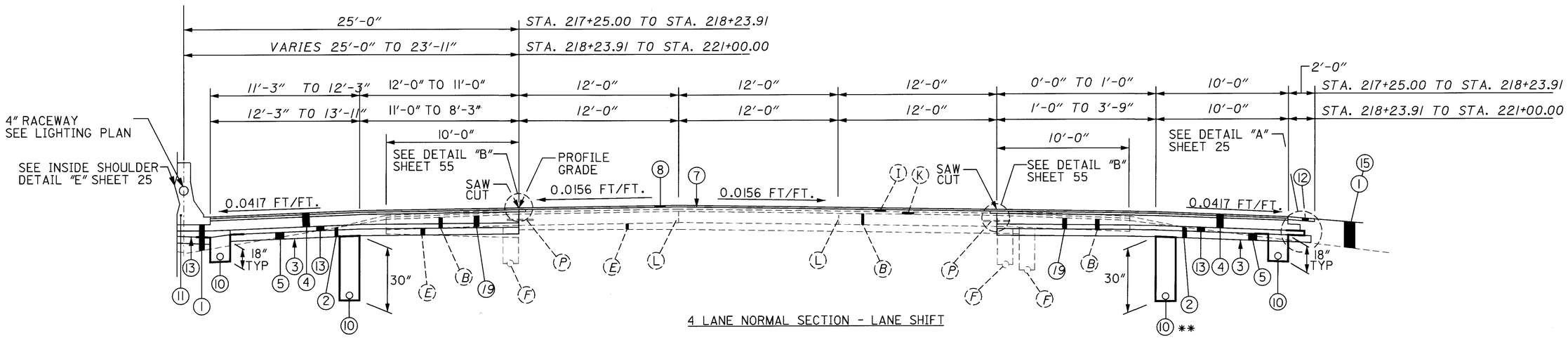

4 LANE NORMAL SECTION - LANE SHIFT

I-90 EASTBOUND

STA. 217+25.00 TO STA. 221+00.00 = 375.00 FT.

FOR LEGEND SEE SHEET 5

I-90 TYPICAL SECTIONS

CUY-90-0.00

I:\PROJECTS\Pidll738\dgn\final plans\ll738GYA.DGN 20-JUL-2000 1:46PM jgrmovse

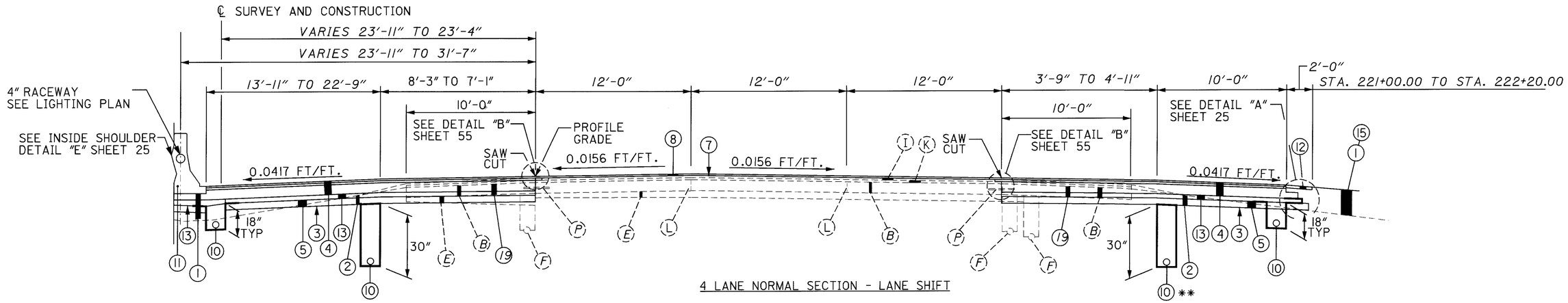

4 LANE NORMAL SECTION - LANE SHIFT

I-90 EASTBOUND

STA. 221+00.00 TO STA. 222+20.00 = 120.00 FT.

** E.B. STA. 221+00.00 TO STA. 222+20.00
6" SHALLOW PIPE UNDERDRAIN
WITH FABRIC WRAP, A.P.P.

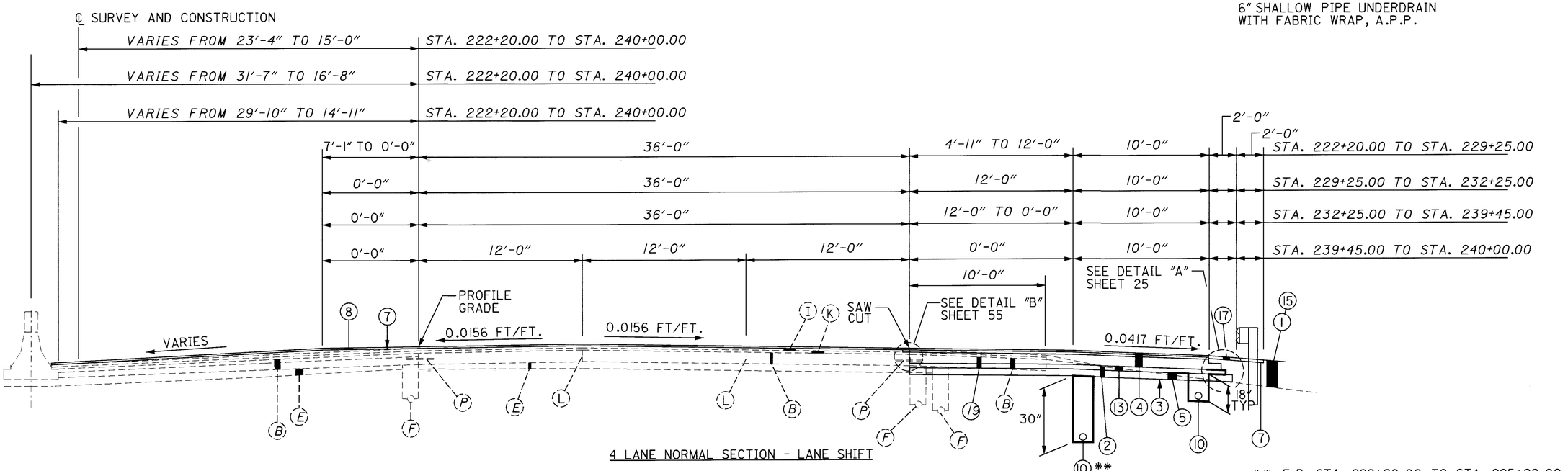

4 LANE NORMAL SECTION - LANE SHIFT

I-90 EASTBOUND

STA. 222+20.00 TO STA. 240+00.00 = 1780.00 FT.

MEET EXISTING
CONCRETE BARRIER
STA. 223+00

** E.B. STA. 222+20.00 TO STA. 225+98.00
6" SHALLOW PIPE UNDERDRAIN
WITH FABRIC WRAP, A.P.P.

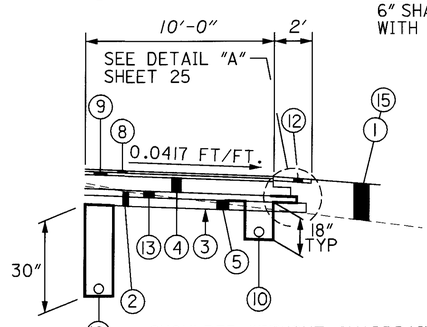

** SHOULDER WITHOUT GUARDRAIL

FOR LEGEND SEE SHEET 5

I-90 TYPICAL SECTIONS

I-90

CUY-90-0.00

16
582

I:\PROJECTS\Pidll738\dgn\finalplans\ll738GYA.DGN 20-JUL-2000 1:47PM jgrmovse

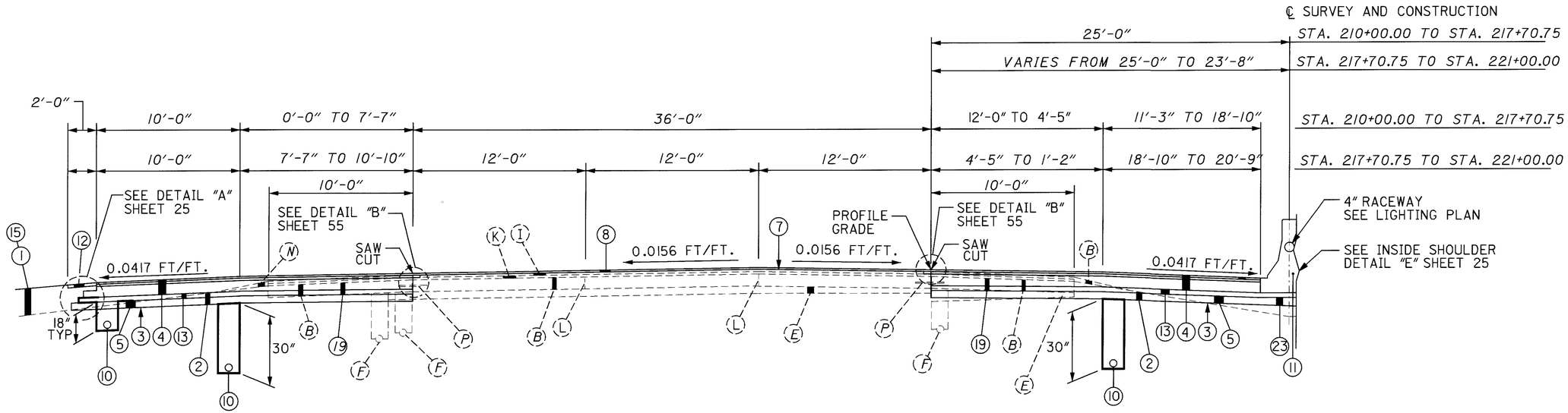

4 LANE NORMAL SECTION - LANE SHIFT

I-90 WESTBOUND

STA. 210+00.00 TO STA. 221+00.00 = 1100.00 FT.

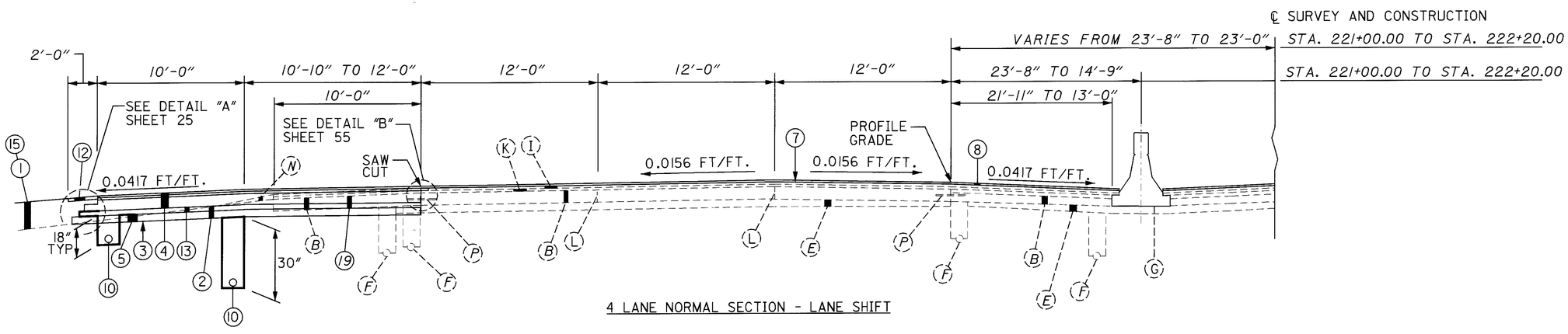

4 LANE NORMAL SECTION - LANE SHIFT

I-90 WESTBOUND

STA. 221+00.00 TO STA. 222+20.00 = 120.00 FT.

FOR LEGEND SEE SHEET 5

I-90 TYPICAL SECTIONS

CUY-90-0.00

17
582

I:\PROJECTS\Pid11738\dgn\final plans\11738GYA.DGN 20-JUL-2000 1:47PM jgrmovse

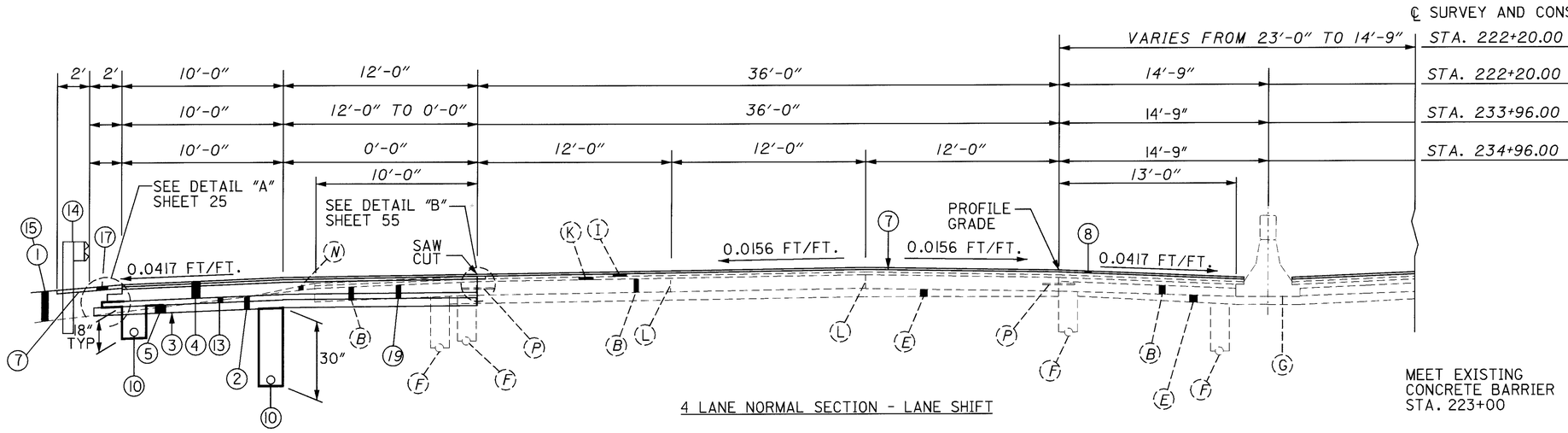

4 LANE NORMAL SECTION - LANE SHIFT

I-90 WESTBOUND

STA. 222+20.00 TO STA. 240+00.00 = 1780.00 FT.

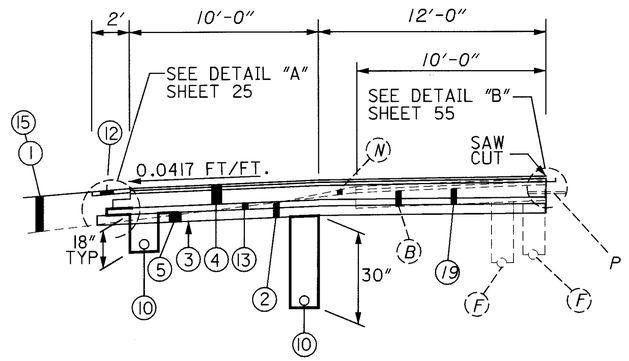

SHOULDER WITHOUT GUARDRAIL

FOR LEGEND SEE SHEET 5

I-90 TYPICAL SECTIONS

CUY-90-0.00

18
582

I:\PROJECTS\Pid#1738\dgn\final plans\1f738GYA.DGN 20-JUL-2000 1:48PM jgrmovse

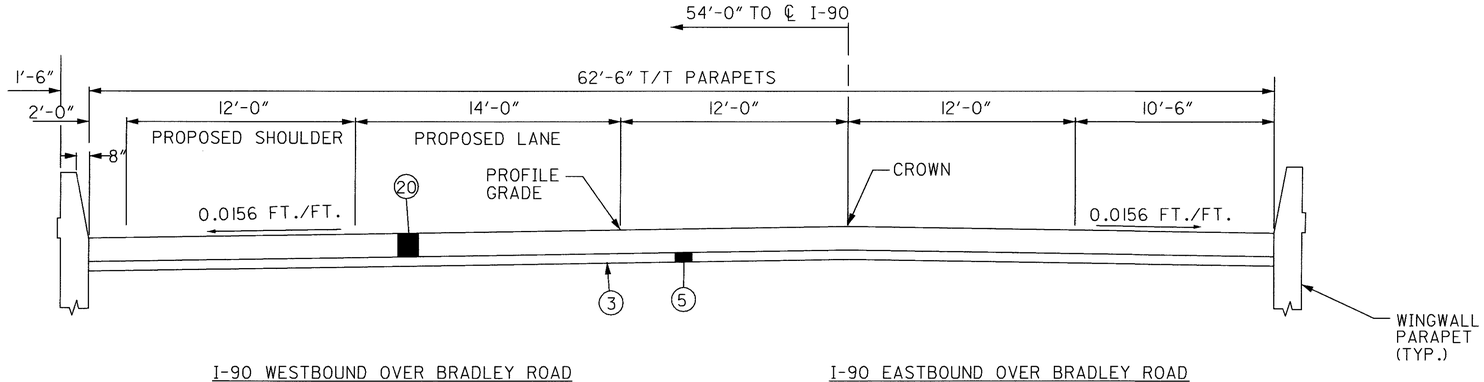

I-90 WESTBOUND OVER BRADLEY ROAD

STA.	23+45.62	TO	STA.	23+70.62	= 25.00 FT.
STA.	25+27.62	TO	STA.	25+52.62	= 25.00 FT.
				TOTAL	= 50.00 FT.

I-90 EASTBOUND OVER BRADLEY ROAD

STA.	23+44.52	TO	STA.	23+69.52	= 25.00 FT.
STA.	25+26.52	TO	STA.	25+51.52	= 25.00 FT.
				TOTAL	= 50.00 FT.

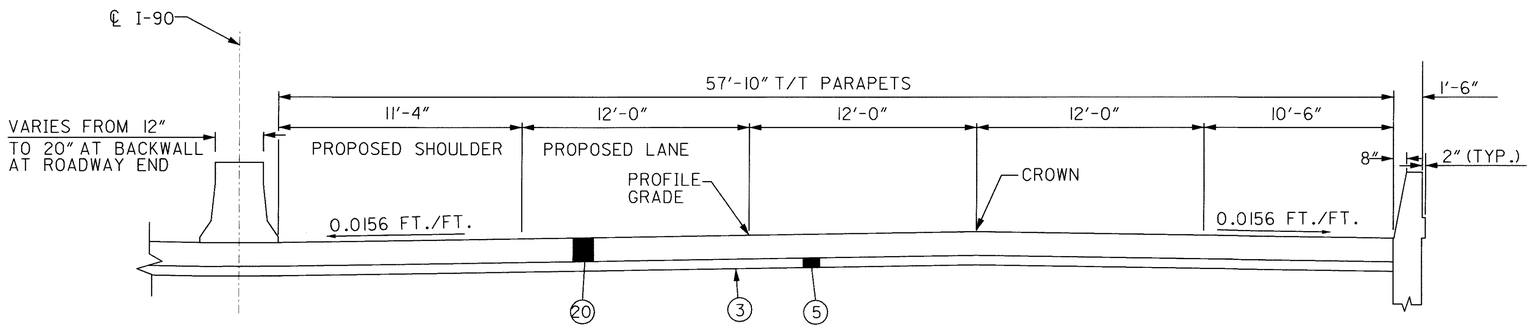

I-90 WESTBOUND OVER DOVER CENTER ROAD

STA.	131+25.86	TO	STA.	131+50.86	= 25.00 FT.
STA.	133+13.56	TO	STA.	133+38.56	= 25.00 FT.
				TOTAL	= 50.00 FT.

I-90 EASTBOUND OVER DOVER CENTER ROAD

STA.	131+25.86	TO	STA.	131+50.86	= 25.00 FT.
STA.	133+13.56	TO	STA.	133+38.56	= 25.00 FT.
				TOTAL	= 50.00 FT.

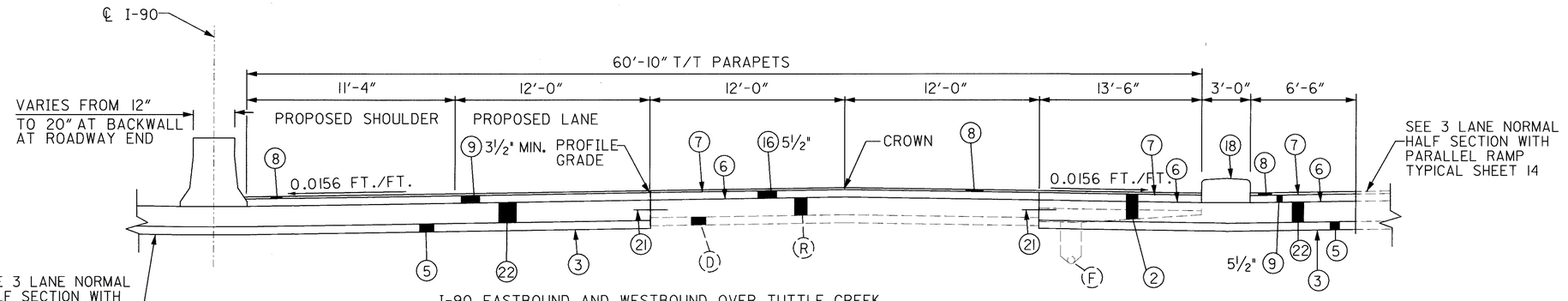

I-90 EASTBOUND AND WESTBOUND OVER TUTTLE CREEK

STA.	192+70.32	TO	STA.	192+90.32	= 20.00 FT.
STA.	193+12.82	TO	STA.	193+32.82	= 20.00 FT.
				TOTAL	= 40.00 FT.

** W.B. STA. 192+70.32 TO STA. 192+88
4" ROCK CUT UNDERDRAIN, A.P.P.

** E.B. STA. 192+70.32 TO STA. 192+88
4" ROCK CUT INDERDRAIN, A.P.P.

FOR LEGEND SEE SHEET 5

I-90 TYPICAL SECTIONS

CUY-90-0.00

02 MAR 2000
P:\PR22308\CADD\I738GYA.DGN

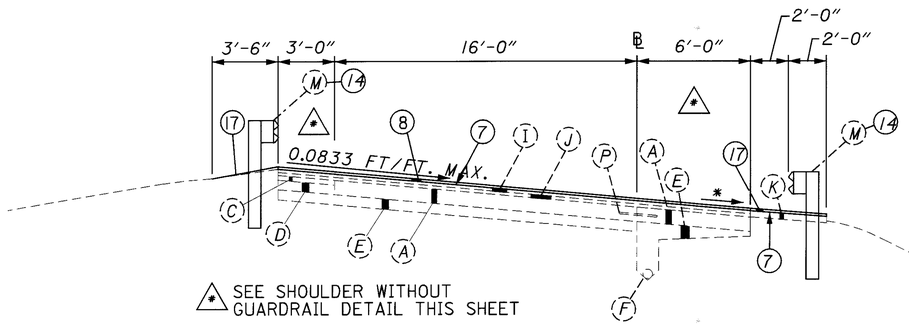

△* SEE SHOULDER WITHOUT GUARDRAIL DETAIL THIS SHEET

* 0.0417/FT. OR RATE OF SUPERELEVATION WHICHEVER IS GREATER

RAMP A	℄ STA.	40+14.02	TO	℄ STA.	44+75.00	= 460.98 FT.
RAMP B	℄ STA.	56+50.00	TO	℄ STA.	61+62.68	= 512.68 FT.
RAMP C	℄ STA.	49+27.50	TO	℄ STA.	54+92.71	= 565.21 FT.
RAMP D	℄ STA.	36+81.16	TO	℄ STA.	43+75.00	= 693.84 FT.
RAMP E	℄ STA.	37+18.84	TO	℄ STA.	47+22.20	= 1003.36 FT.
				TOTAL =		3236.07 FT.

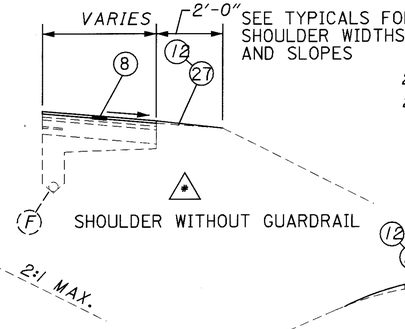

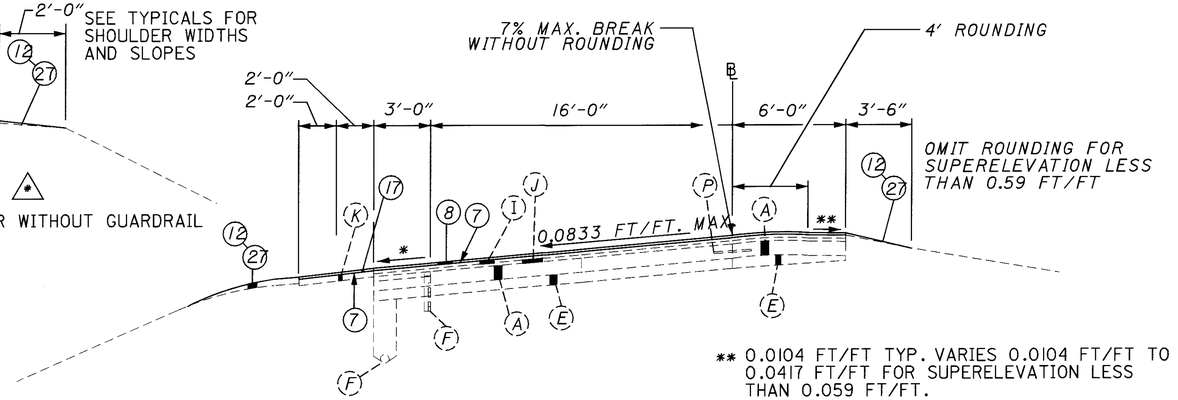

** 0.0104 FT/FT TYP. VARIES 0.0104 FT/FT TO 0.0417 FT/FT FOR SUPERELEVATION LESS THAN 0.059 FT/FT.

RAMP A	℄ STA.	44+75.00	TO	℄ STA.	50+11.42	= 536.42 FT.
RAMP B	℄ STA.	55+99.10	TO	℄ STA.	56+50.00	= 50.90 FT.
RAMP D	℄ STA.	43+75.00	TO	℄ STA.	51+55.06	= 780.06 FT.
					TOTAL =	1367.38 FT.

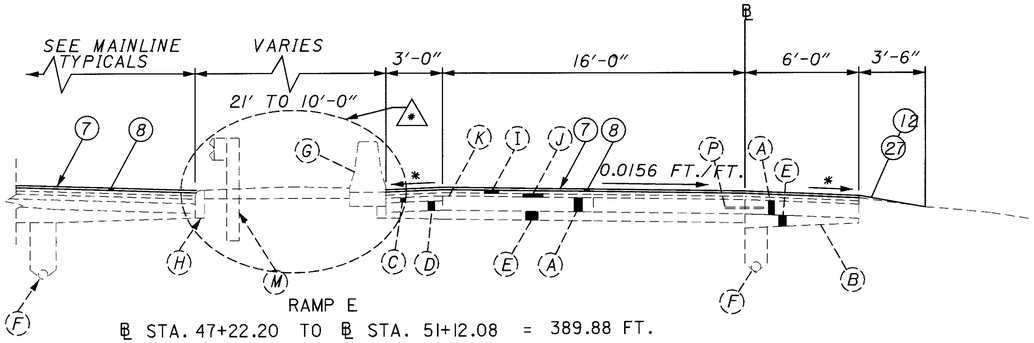

RAMP E

℄ STA. 47+22.20 TO ℄ STA. 51+12.08 = 389.88 FT.

△* SEE RAMP E CONCRETE MEDIAN DETAILS SHEET 342

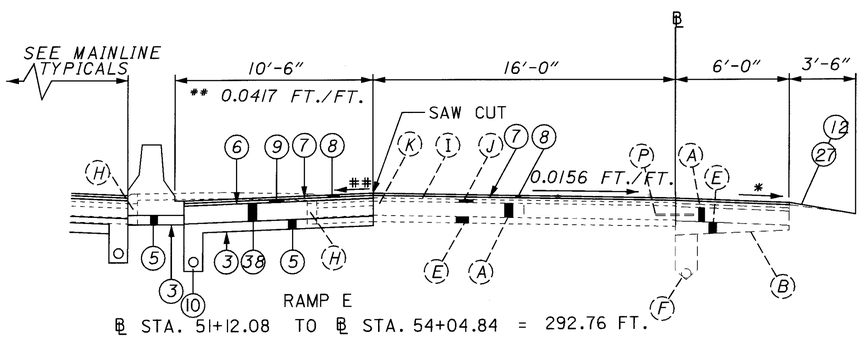

RAMP E

℄ STA. 51+12.08 TO ℄ STA. 54+04.84 = 292.76 FT.

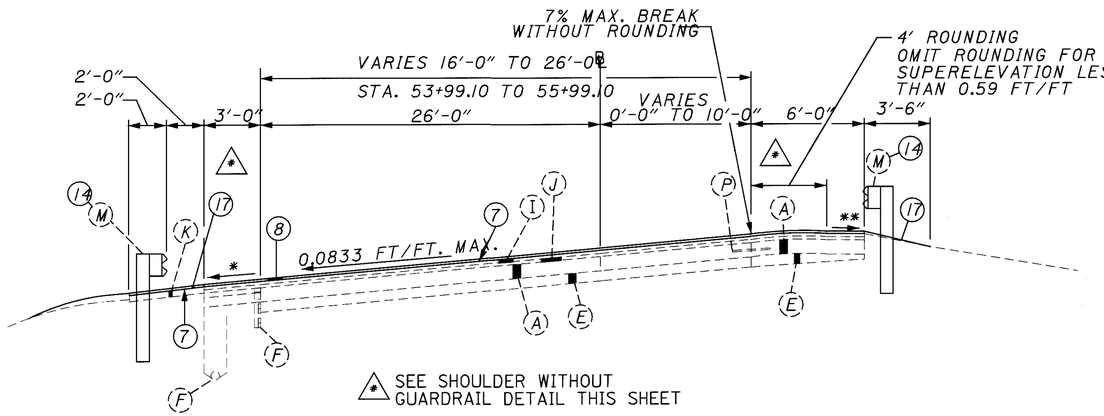

△* SEE SHOULDER WITHOUT GUARDRAIL DETAIL THIS SHEET

RAMP B	℄ STA.	50+50.00	TO	℄ STA.	53+99.10	= 349.10 FT.
RAMP B	℄ STA.	53+99.10	TO	℄ STA.	55+99.10	= 200.00 FT.
					TOTAL =	549.10 FT.

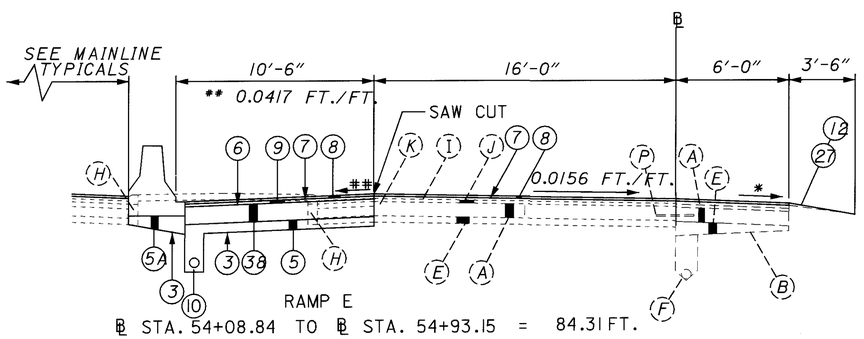

RAMP E

℄ STA. 54+08.84 TO ℄ STA. 54+93.15 = 84.31 FT.

(5A) ITEM 304 AGGREGATE BASE, AS PER PLAN DEPTH VARIES FROM 5.5" TO 11.5"

FOR LEGEND SEE SHEET 5

I-90 RAMP TYPICAL SECTIONS

CUY-90-0.00

I:\PROJECTS\Pid1738\dgn\finalplans\1738GYA.DGN 20-JUL-2000 1:48PM jgrmovse

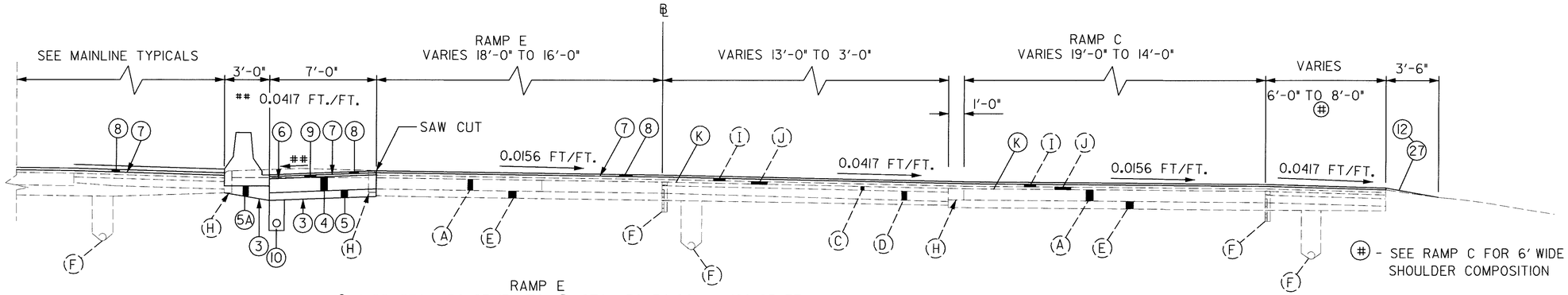

RAMP E

℄ I-90 STA. 54+93.15 TO ℄ STA. 56+74.00 = 180.85 FT.

(5A) 304 AGGREGATE BASE, AS PER PLAN DEPTH VARIES FROM 5.5" TO 11.5"

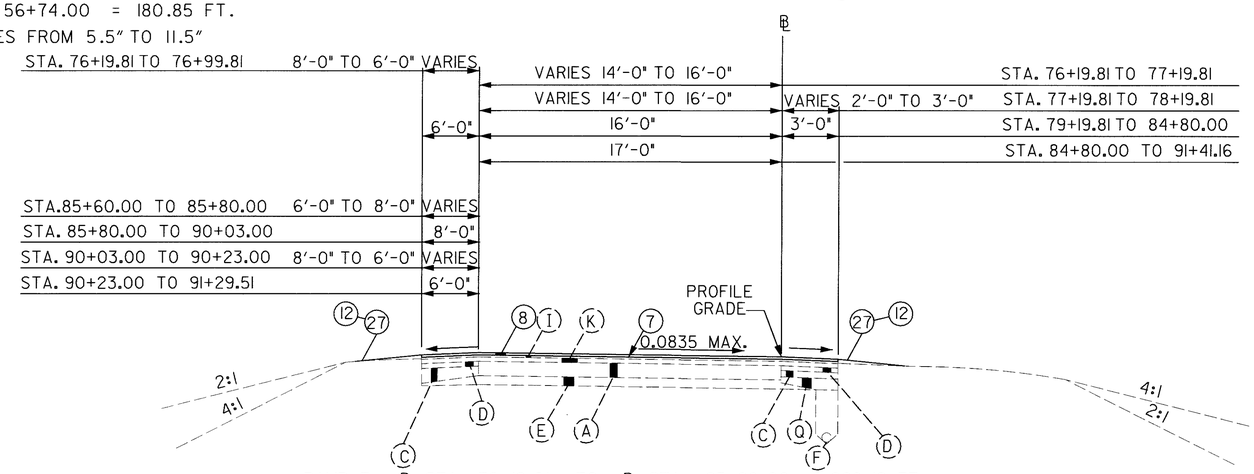

RAMP F ℄ STA. 76+19.81 TO ℄ STA. 85+80.00 = 960.19 FT.

RAMP F ℄ STA. 90+03.00 TO ℄ STA. 91+41.16 = 138.16 FT.

TOTAL = 1098.35 FT.

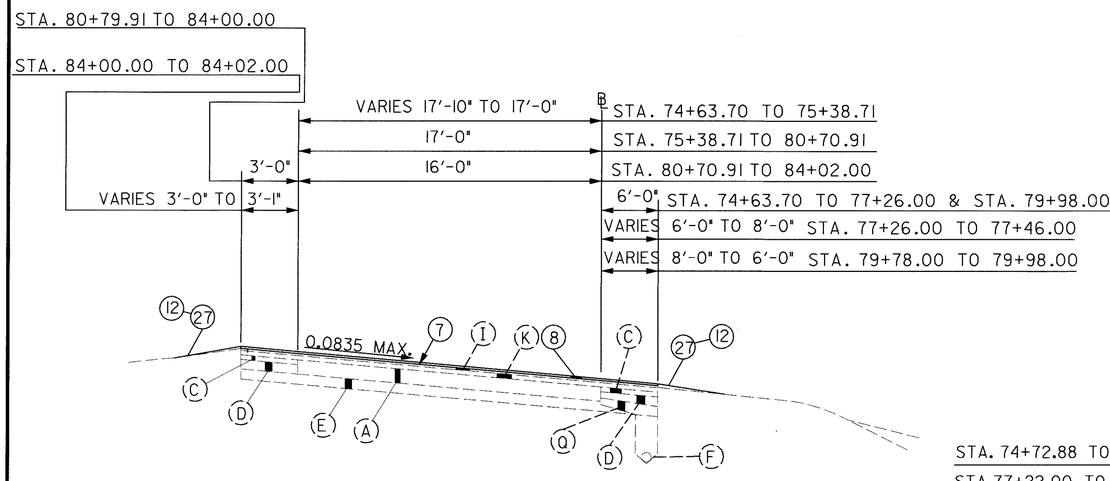

RAMP K ℄ STA. 74+63.70 TO ℄ STA. 77+46.00* = 282.30 FT.

RAMP K ℄ STA. 79+78.00 TO ℄ STA. 84+02.00* = 424.00 FT.

TOTAL = 706.30 FT.

* FOR CONTINUATION OF RAMP K SEE SHEET 23

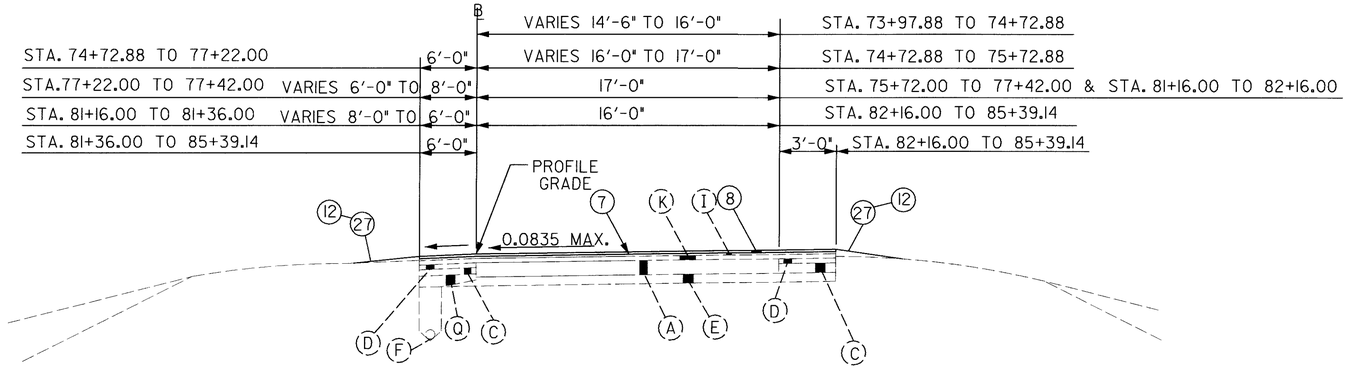

RAMP G ℄ STA. 73+97.88 TO ℄ STA. 77+42.00 = 344.12 FT.

RAMP G ℄ STA. 81+16.00 TO ℄ STA. 85+39.14 = 423.14 FT.

TOTAL = 767.26 FT.

FOR LEGEND SEE SHEET 5

I-90 RAMP TYPICAL SECTIONS

CUY-90-0.00

02 MAR 2000
p:\PR22308\CADD\11738GYA.DGN

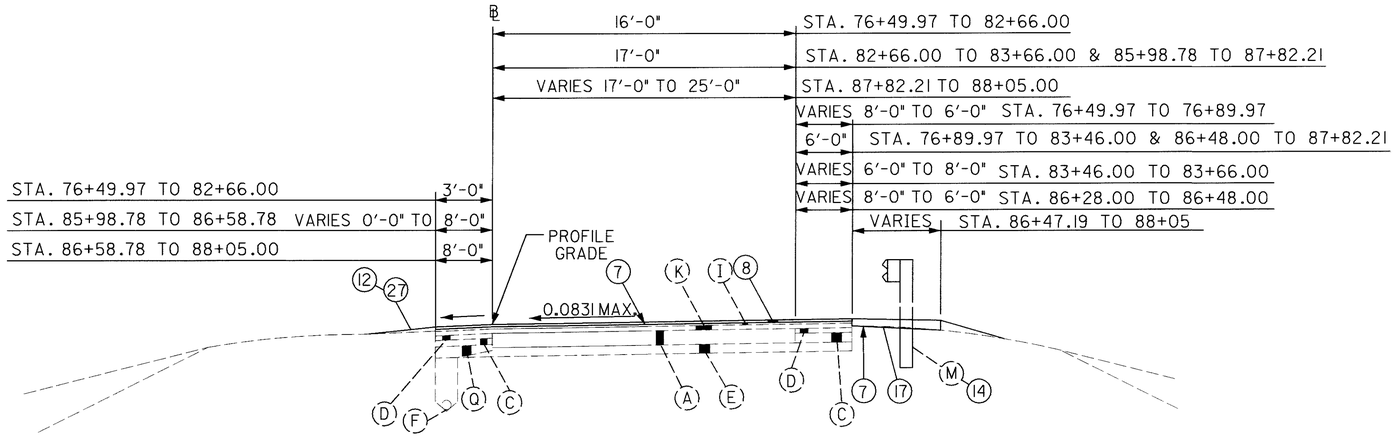

RAMP J ℄ STA. 76+49.97 TO ℄ STA. 83+66.00* = 716.03 FT.
RAMP J ℄ STA. 85+98.78 TO ℄ STA. 88+05.00 = 206.22 FT.
TOTAL = 922.25 FT.

* FOR STA. 83+66.00 TO 85+98.78
SEE SHEET 23

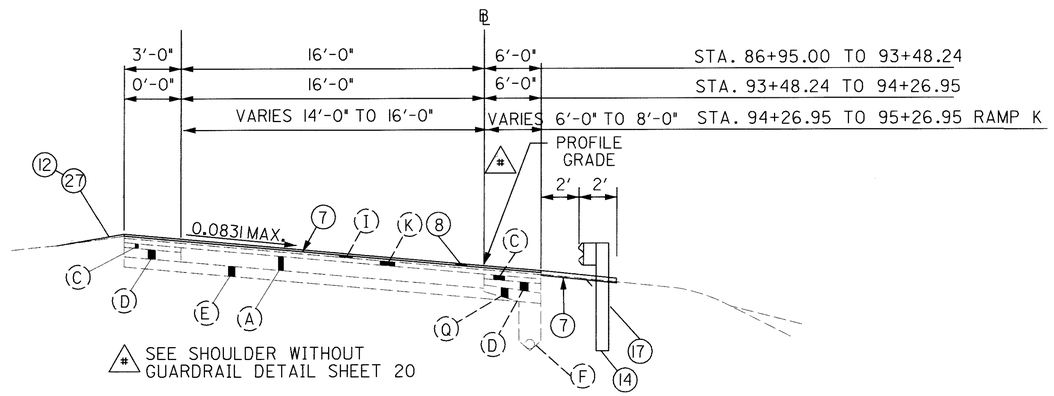

RAMP I ℄ STA. 86+95.00 TO ℄ STA. 95+26.95 = 831.95 FT.
TOTAL = 831.95 FT.

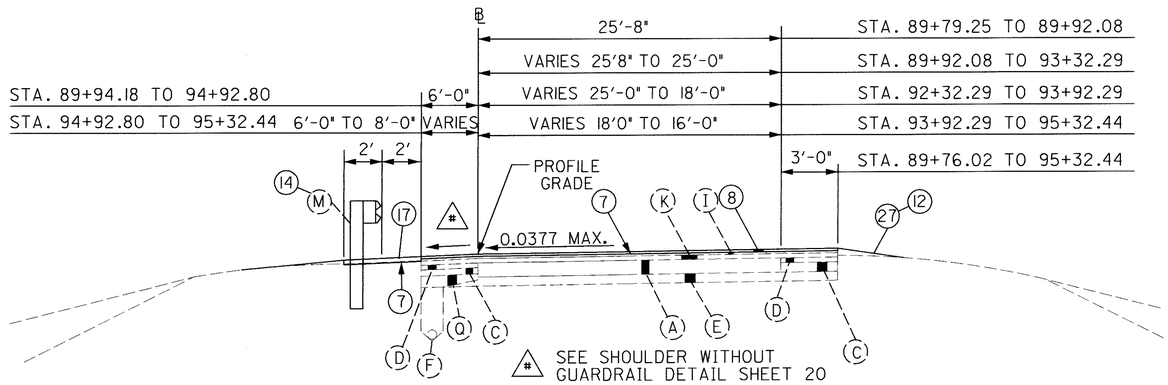

RAMP H ℄ STA. 89+79.25 TO ℄ STA. 95+32.44 = 553.55 FT.
TOTAL = 553.55 FT.

FOR LEGEND SEE SHEET 5

I-90 RAMP TYPICAL SECTIONS

CUY-90-0.00

02 MAR 2000
p:\PR22308\CADD\I738GYA.DGN

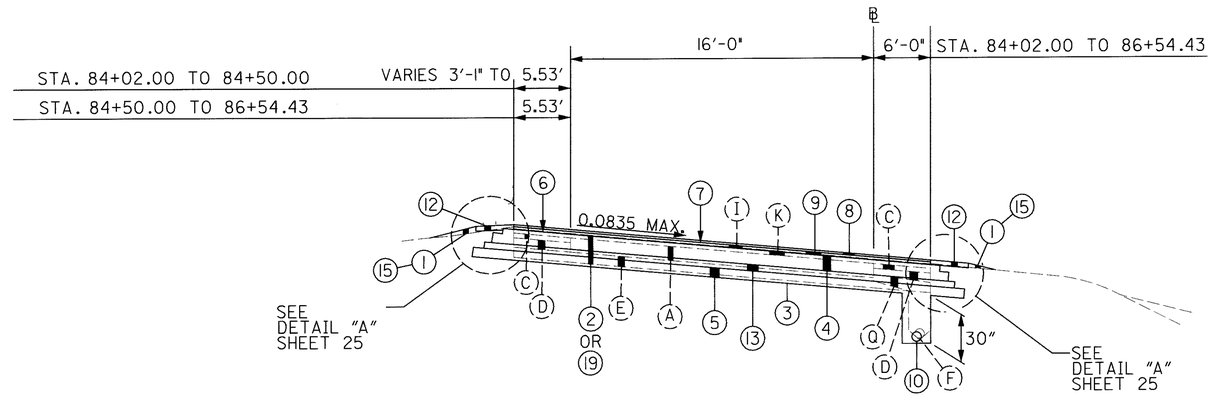

RAMP K ℄ STA. 84+02.00 TO ℄ STA. 86+54.43 = 252.43 FT.
TOTAL = 252.43 FT.

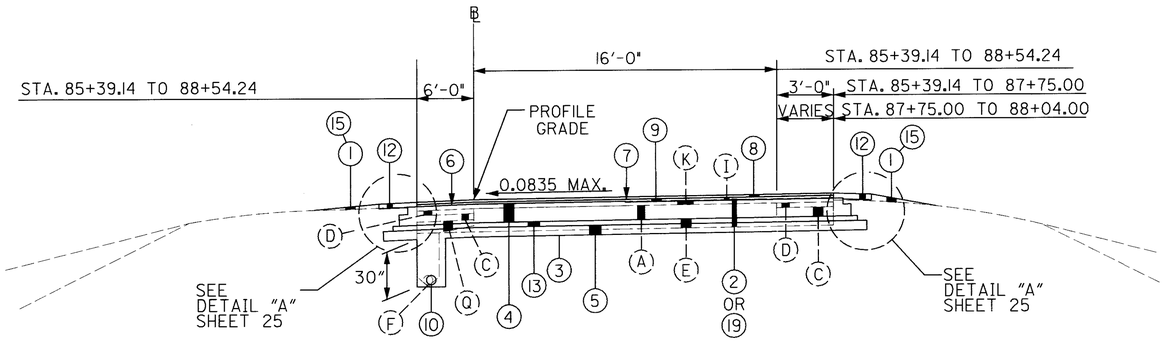

RAMP G ℄ STA. 85+39.14 TO ℄ STA. 88+54.24 = 315.10 FT.
TOTAL = 315.10 FT.

SUPERELEVATED TWO-WAY RAMP SECTION

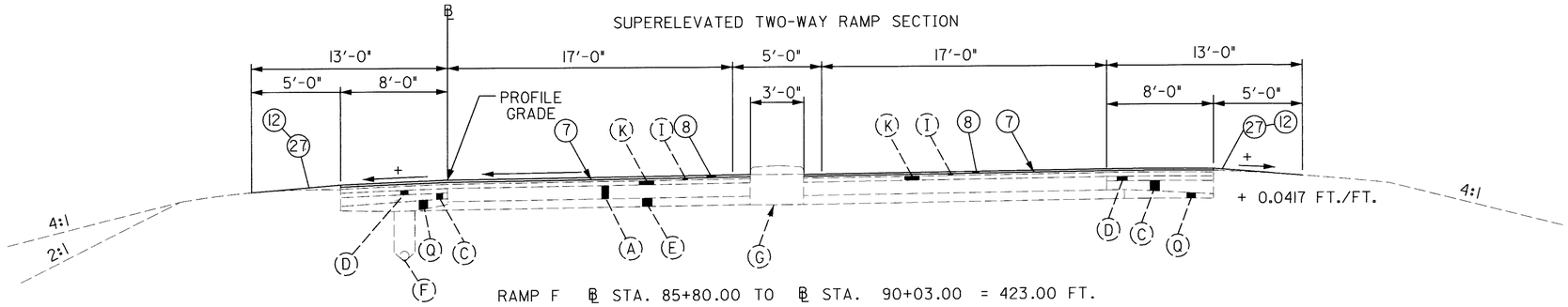

RAMP F ℄ STA. 85+80.00 TO ℄ STA. 90+03.00 = 423.00 FT.
RAMP G ℄ STA. 77+42.00 TO ℄ STA. 81+16.00 = 374.00 FT.
RAMP J ℄ STA. 83+66.00 TO ℄ STA. 85+98.78 = 232.78 FT.
RAMP K ℄ STA. 77+46.00 TO ℄ STA. 79+78.00 = 232.00 FT.
TOTAL = 1261.78 FT.

FOR LEGEND SEE SHEET 5

I-90 RAMP TYPICAL SECTIONS

CUY-90-0.00

02 MAR 2000
p:\PR22308\CADD\11738CYA.DGN

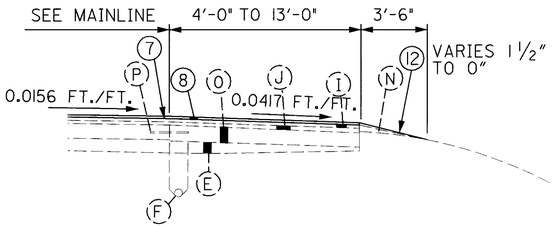

EXISTING CONCRETE SHOULDER

I-90 EASTBOUND	SIDE	WIDTH	DISTANCE
STA 21+24.00 TO 23+69.00	RT. (I.S.)	4′	= 245 FT.
STA 21+24.00 TO 23+69.00	RT. (O.S.)	10′	= 245 FT.
STA 25+26.00 TO 27+71.00	RT. (I.S.)	4′	= 245 FT.
STA 25+26.00 TO 27+71.00	RT. (O.S.)	10′	= 245 FT.
STA 128+91.00 TO 131+37.00	RT. (O.S.)	10′	= 246 FT.
STA 128+99.00 TO 131+44.00	RT. (I.S.)	4′	= 245 FT.
STA 133+06.00 TO 135+51.00	RT. (I.S.)	4′	= 245 FT.
STA 132+99.00 TO 135+44.00	RT. (I.S.)	10′	= 245 FT.
STA 146+00.00 TO 168+28.68	RT. (O.S.)	10′	= 2228.68 FT.
STA 148+00.00 TO 192+90.32	RT. (I.S.)	4′	= 4490.32 FT.
STA 168+28.68 TO 169+28.68	RT. (O.S.)	9′	= 100 FT FT..
STA 169+28.68 TO 176+51.32	RT. (O.S.)	8′	= 722.64 FT.
STA 176+51.32 TO 185+05.00	RT. (O.S.)	10′	= 853.68 FT.
STA 185+05.00 TO 192+90.32	RT. (O.S.)	VARIES	= 785.32 FT.
STA 192+90.32 TO 195+26.99	RT. (O.S.)	13′	= 236.37 FT.
STA 193+12.82 TO 198+26.99	RT. (I.S.)	4′	= 514.17 FT.
STA 195+26.99 TO 201+69.99	RT. (O.S.)	VARIES	= 600.00 FT.
STA 198+26.99 TO 201+69.99	RT. (I.S.)	VARIES 4′-10′	= 343.00 FT.
STA 201+26.99 TO 213+26.99	RT. (O.S.)	8′	= 1200.00 FT.
STA 201+26.99 TO 222+20.00	RT. (I.S.)	10′	= 2093.00 FT.
STA 213+26.99 TO 214+26.99	RT. (O.S.)	9′	= 100.00 FT.
STA 214+26.99 TO 238+48.00	RT. (O.S.)	10′	= 2421.01 FT.
STA 222+20.00 TO 240+00.00	RT. (I.S.)	11′	= 1780.00 FT.

I-90 WESTBOUND	SIDE	WIDTH	DISTANCE
STA 21+25.00 TO 23+70.00	LT. (O.S.)	10′	= 245 FT.
STA 21+25.00 TO 23+70.00	LT. (I.S.)	4′	= 245 FT.
STA 25+27.00 TO 27+72.00	LT. (O.S.)	10′	= 245 FT.
STA 25+27.00 TO 27+72.00	LT. (I.S.)	4′	= 245 FT.
STA 129+21.00 TO 131+66.00	LT. (O.S.)	10′	= 245 FT.
STA 129+14.00 TO 131+59.00	LT. (I.S.)	4′	= 245 FT.
STA 133+29.00 TO 135+74.00	LT. (O.S.)	10′	= 245 FT.
STA 133+21.00 TO 135+66.00	LT. (I.S.)	4′	= 245 FT.
STA 146+00.00 TO 166+19.81	LT. (O.S.)	10′	= 2019.81 FT.
STA 148+00.00 TO 192+88.75	LT. (I.S.)	4′	= 4488.75 FT.
STA 166+19.81 TO 166+99.81	LT. (O.S.)	9′	= 80 FT.
STA 166+99.81 TO 176+19.81	LT. (O.S.)	8′	= 920 FT.
STA 176+19.81 TO 177+88.26	LT. (O.S.)	VARIES	= 168.45 FT.
STA 177+88.26 TO 187+75.00	LT. (O.S.)	10′	= 986.74 FT.
STA 187+75.00 TO 188+04.75	LT. (O.S.)	VARIES	= 29.75 FT.
STA 188+04.75 TO 189+77.84	LT. (O.S.)	VARIES	= 173.09 FT.
STA 189+77.84 TO 199+82.25	LT. (O.S.)	13′	= 1004.41 FT.
STA 198+67.13 TO 201+67.13	LT. (I.S.)	VARIES 4′-10′	= 300 FT.
STA 199+82.25 TO 201+67.13	LT. (O.S.)	VARIES	= 184.88 FT
STA 201+67.13 TO 207+25.83	LT. (O.S.)	8′	= 558.70 FT.
STA 201+67.13 TO 222+20.00	LT. (I.S.)	10′	= 2052.87 FT.
STA 207+25.83 TO 208+77.20	LT. (O.S.)	9′	= 151.40 FT.
STA 208+77.20 TO 240+00.00	LT. (O.S.)	10′	= 3122.80 FT.

RAMP K

STA 84+00.00 TO 84+50.00	LT. (O.S.)	3′	= 50 FT.
STA 84+50.00 TO 89+39.51	LT. (O.S.)	VARIES	= 489.51 FT.
STA 89+39.51 TO 92+88.75	LT. (O.S.)	VARIES	= 349.24 FT.
STA 92+88.75 TO 93+11.25	LT. (O.S.)	6	= 22.50 FT.
STA 93+11.25 TO 95+26.95	LT. (O.S.)	6	= 238.20 FT.
STA 84+00.00 TO 92+88.75	RT. (I.S.)	6′	= 888.75 FT.
STA 92+88.75 TO 93+11.25	RT. (I.S.)	6′	= 22.50 FT.
STA 93+11.25 TO 93+68.00	RT. (I.S.)	8′	= 56.75 FT.
STA 93+68.00 TO 95+26.95	RT. (I.S.)	VARIES	= 158.95 FT.

RAMP G

STA 87+75.00 TO 88+04.75	LT. (O.S.)	VARIES	= 29.75 FT.
STA 88+04.75 TO 92+88.75	LT. (O.S.)	6′	= 484 FT.
STA 92+88.75 TO 93+11.25	LT. (O.S.)	6′	= 22.50 FT.
STA 93+11.25 TO 95+32.47	LT. (O.S.)	6′	= 221.22 FT.
STA 87+75.00 TO 92+88.75	RT. (I.S.)	6′	= 513.75 FT.
STA 92+88.75 TO 93+11.25	RT. (I.S.)	8′	= 22.50 FT.
STA 93+11.25 TO 95+32.47	RT. (I.S.)	6′	= 221.22 FT.

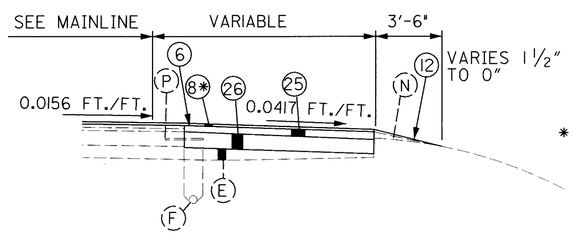

* TO BE CONSTRUCTED WITH MAINLINE OVERLAY

TEMPORARY SHOULDER REPLACEMENT TO BE LEFT IN PLACE

I-90 EASTBOUND

STA 19+05 TO 21+24 RT.
STA 27+71 TO 28+55 RT.
STA 98+69.9 TO 111+30 RT.
STA 128+10 TO 128+91 RT.
STA 135+44 TO 136+53 RT.

RAMP K

STA 83+35.13 TO 84+53 LT.
STA 83+90.67 TO 93+44.66 RT.

I-90 WESTBOUND

STA 19+05 TO 21+25 LT.
STA 27+72 TO 29+70 LT.
STA 128+10 TO 129+14 LT.
STA 135+74 TO 136+53 LT.

RAMP G

STA 84+29.14 TO 88+32.35 RT.
STA 84+96.36 TO 95+30.16 LT.

NOTE: THIS ITEM TO BE PAID FOR AS ITEM 615 TEMPORARY PAVEMENT, AS PER PLAN (INCLUDING ITEMS 407,451 & 448). SEE MAINTENANCE OF TRAFFIC PLANS SHEETS FOR LOCATIONS AND MAINTENANCE OF TRAFFIC SUBSUMMARY SHEETS FOR QUANTITIES.

FOR LEGEND SEE SHEET 5

I-90 TYPICAL SECTION DETAILS

CUY-90-0.00

02 MAR 2000
P:\PR22308\CADD\NI738GYA.DGN

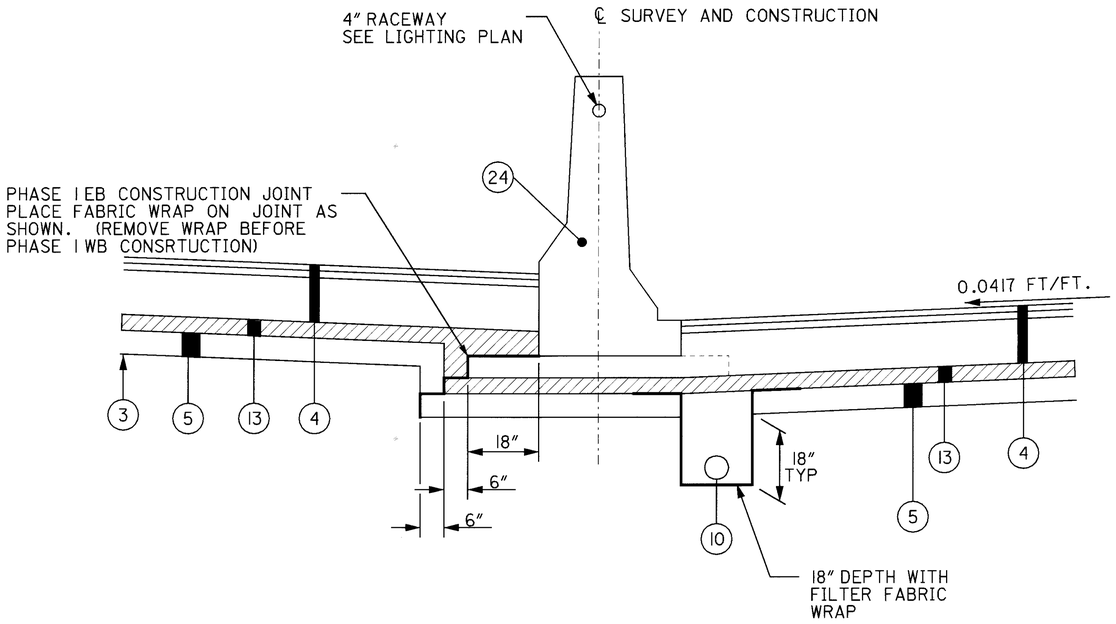

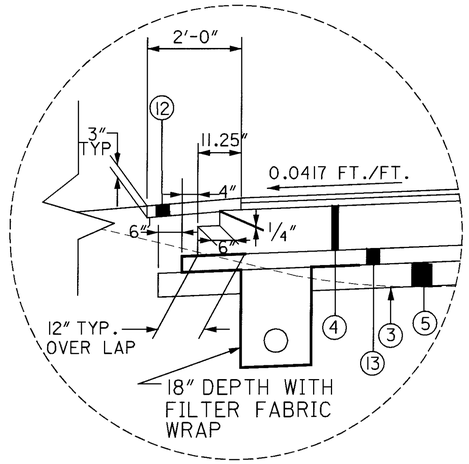

DETAIL "A"
OUTSIDE SHOULDER DETAIL

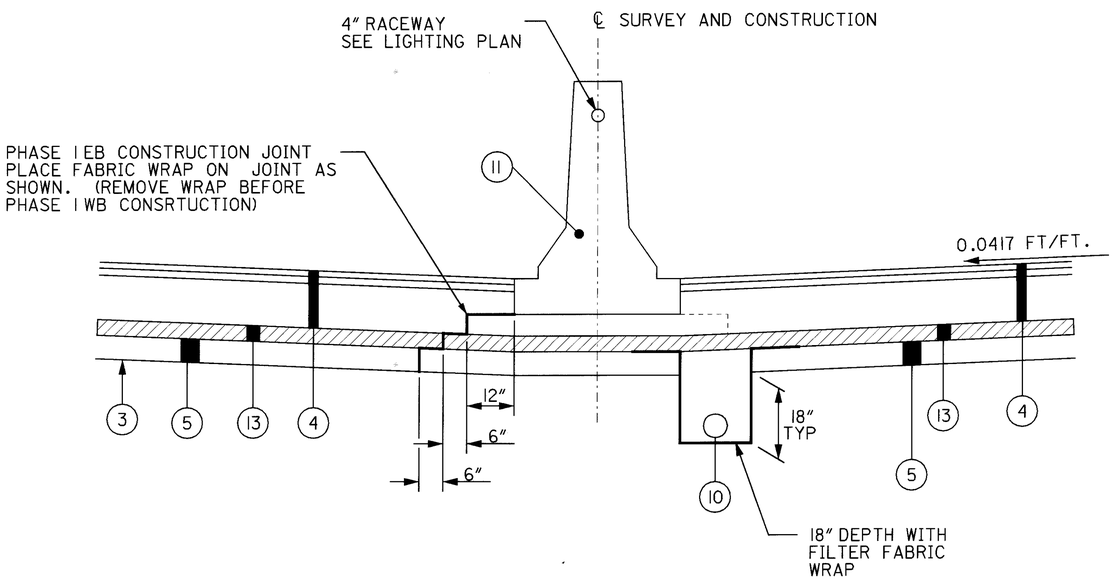

DETAIL "E"
INSIDE SHOULDER DETAIL

FOR LEGEND SEE SHEET 5

I-90 TYPICAL SECTION DETAILS

CUY-90-0.00

I:\PROJECTS\Pid1738\dgn\finalplans\1738GYA.DGN 20-JUL-2000 1:49PM jgrmovse

SUPERELEVATION TABLE EASTBOUND

PI STA= 108+56.02 | Dc= 1°28"

LEFT SIDE					PROFILE GRADE LINE		RIGHT SIDE									
EDGE ELEVATION	TRANSITION RATE	ELEVATION CORRECTION	CROSS SLOPE	WIDTH	STATION	PROFILE GRADE	WIDTH	CROSS SLOPE	ELEVATION CORRECTION	TRANSITION RATE	CROWN POINT	WIDTH	CROSS SLOPE	ELEVATION CORRECTION	TRANSITION RATE	REMARKS
666.74	**	-0.22	0.0156	14.00	99+80.79	666.96	12.00	0.0156	-0.19	**	667.15	12.00	-0.0156	0.19	**	N.C.
666.69		-0.22	0.0156	14.00	100+00	666.91	12.00	0.0156	-0.19		667.10	12.00	-0.0116	0.14		
666.65		-0.22	0.0156	14.00	100+25	666.87	12.00	0.0156	-0.19		667.06	12.00	-0.0064	0.08		
666.58		-0.22	0.0156	14.00	100+50	666.80	12.00	0.0156	-0.19		666.99	12.00	-0.0012	0.01		
666.57		-0.22	0.0156	14.00	100+55.79	666.79	12.00	0.0156	-0.19		666.98	12.00	0.0000	0.00		H.F.
666.53		-0.22	0.0156	14.00	100+75	666.75	12.00	0.0156	-0.19		666.94	12.00	0.0067	-0.08		
666.48		-0.22	0.0156	14.00	101+00	666.70	12.00	0.0156	-0.19		666.89	12.00	0.0153	-0.18		
666.48		-0.22	0.0156	14.00	101+00.79	666.70	12.00	0.0156	-0.19		666.89	12.00	0.0156	-0.19		R.C.
666.36		-0.28	0.0200	14.00	101+25	666.64	12.00	0.0200	-0.24		666.88	12.00	0.0200	-0.24		
666.24		-0.35	0.0247	14.00	101+50	666.59	12.00	0.0247	-0.30		666.89	12.00	0.0247	-0.30		
666.12		-0.41	0.0293	14.00	101+75	666.53	12.00	0.0293	-0.35		666.88	12.00	0.0293	-0.35		
666.00		-0.47	0.0339	14.00	102+00	666.47	12.00	0.0339	-0.41		666.88	12.00	0.0339	-0.41		
665.97		-0.49	0.0350	14.00	102+05.79	666.46	12.00	0.0350	-0.42		666.88	12.00	0.0350	-0.42		F.S.
665.92		-0.49	0.0350	14.00	102+25	666.41	12.00	0.0350	-0.42		666.83	12.00	0.0350	-0.42		
665.87		-0.49	0.0350	14.00	102+50	666.36	12.00	0.0350	-0.42		666.78	12.00	0.0350	-0.42		
665.78		-0.49	0.0350	14.00	102+75	666.27	12.00	0.0350	-0.42		666.69	12.00	0.0350	-0.42		
665.69		-0.49	0.0350	14.00	103+00	666.18	12.00	0.0350	-0.42		666.60	12.00	0.0350	-0.42		
665.58		-0.49	0.0350	14.00	103+25	666.07	12.00	0.0350	-0.42		666.49	12.00	0.0350	-0.42		
665.45		-0.49	0.0350	14.00	103+50	665.94	12.00	0.0350	-0.42		666.36	12.00	0.0350	-0.42		
665.30		-0.49	0.0350	14.00	103+75	665.79	12.00	0.0350	-0.42		666.21	12.00	0.0350	-0.42		
665.13		-0.49	0.0350	14.00	104+00	665.62	12.00	0.0350	-0.42		666.04	12.00	0.0350	-0.42		
664.94		-0.49	0.0350	14.00	104+25	665.43	12.00	0.0350	-0.42		665.85	12.00	0.0350	-0.42		
664.73		-0.49	0.0350	14.00	104+50	665.22	12.00	0.0350	-0.42		665.64	12.00	0.0350	-0.42		
664.52		-0.49	0.0350	14.00	104+75	665.01	12.00	0.0350	-0.42		665.43	12.00	0.0350	-0.42		
664.35		-0.49	0.0350	14.00	105+00	664.84	12.00	0.0350	-0.42		665.26	12.00	0.0350	-0.42		
664.22		-0.49	0.0350	14.00	105+25	664.71	12.00	0.0350	-0.42		665.13	12.00	0.0350	-0.42		
664.12		-0.49	0.0350	14.00	105+50	664.61	12.00	0.0350	-0.42		665.03	12.00	0.0350	-0.42		
664.05		-0.49	0.0350	14.00	105+75	664.54	12.00	0.0350	-0.42		664.96	12.00	0.0350	-0.42		
664.02		-0.49	0.0350	14.00	106+00	664.51	12.00	0.0350	-0.42		664.93	12.00	0.0350	-0.42		
664.02		-0.49	0.0350	14.00	106+25	664.51	12.00	0.0350	-0.42		664.93	12.00	0.0350	-0.42		
664.06		-0.49	0.0350	14.00	106+50	664.55	12.00	0.0350	-0.42		664.97	12.00	0.0350	-0.42		
664.13		-0.49	0.0350	14.00	106+75	665.62	12.00	0.0350	-0.42		665.04	12.00	0.0350	-0.42		
664.24		-0.49	0.0350	14.00	107+00	664.73	12.00	0.0350	-0.42		665.15	12.00	0.0350	-0.42		
664.38		-0.49	0.0350	14.00	107+25	664.87	12.00	0.0350	-0.42		665.29	12.00	0.0350	-0.42		
664.55		-0.49	0.0350	14.00	107+50	665.04	12.00	0.0350	-0.42		665.46	12.00	0.0350	-0.42		
664.73		-0.49	0.0350	14.00	107+75	665.22	12.00	0.0350	-0.42		665.64	12.00	0.0350	-0.42		
664.89		-0.49	0.0350	14.00	108+00	665.38	12.00	0.0350	-0.42		665.80	12.00	0.0350	-0.42		
665.03		-0.49	0.0350	14.00	108+25	665.52	12.00	0.0350	-0.42		665.94	12.00	0.0350	-0.42		
665.14		-0.49	0.0350	14.00	108+50	665.63	12.00	0.0350	-0.42		666.05	12.00	0.0350	-0.42		
665.24		-0.49	0.0350	14.00	108+75	665.73	12.00	0.0350	-0.42		666.15	12.00	0.0350	-0.42		
665.31		-0.49	0.0350	14.00	109+00	665.80	12.00	0.0350	-0.42		666.22	12.00	0.0350	-0.42		
665.33		-0.49	0.0350	14.00	109+25	665.82	12.00	0.0350	-0.42		666.24	12.00	0.0350	-0.42		
665.36		-0.49	0.0350	14.00	109+50	665.85	12.00	0.0350	-0.42		666.27	12.00	0.0350	-0.42		
665.41		-0.49	0.0350	14.00	109+75	665.90	12.00	0.0350	-0.42		666.32	12.00	0.0350	-0.42		
665.46		-0.49	0.0350	14.00	110+00	665.95	12.00	0.0350	-0.42		666.37	12.00	0.0350	-0.42		
665.52		-0.49	0.0350	14.00	110+25	666.01	12.00	0.0350	-0.42		666.43	12.00	0.0350	-0.42		
665.59		-0.49	0.0350	14.00	110+50	666.08	12.00	0.0350	-0.42		666.50	12.00	0.0350	-0.42		

** = MATCH EXISTING RATES

CALCULATED MH
CHECKED RAS

SUPERELEVATION TABLE

CUY-90-0.00

03 MAR 2000
P:\PR22308\CADD\11738GEA.DGN

SUPERELEVATION TABLE EASTBOUND

PI STA= 108+56.02 | Dc = 1°28"

LEFT SIDE					PROFILE GRADE LINE		RIGHT SIDE									
EDGE ELEVATION	TRANSITION RATE	ELEVATION CORRECTION	CROSS SLOPE	WIDTH	STATION	PROFILE GRADE	WIDTH	CROSS SLOPE	ELEVATION CORRECTION	TRANSITION RATE	CROWN POINT	WIDTH	CROSS SLOPE	ELEVATION CORRECTION	TRANSITION RATE	REMARKS
665.65	**	-0.49	0.0350	14.00	110+75	666.14	12.00	0.0350	-0.42	**	666.56	12.00	0.0350	-0.42	**	
665.71		-0.49	0.0350	14.00	111+00	666.20	12.00	0.0350	-0.42		666.62	12.00	0.0350	-0.42		
665.77		-0.49	0.0350	14.00	111+25	666.26	12.00	0.0350	-0.42		666.68	12.00	0.0350	-0.42		
665.84		-0.49	0.0350	14.00	111+50	666.33	12.00	0.0350	-0.42		666.75	12.00	0.0350	-0.42		
665.89		-0.49	0.0350	14.00	111+75	666.38	12.00	0.0350	-0.42		666.80	12.00	0.0350	-0.42		
665.92		-0.49	0.0350	14.00	112+00	666.41	12.00	0.0350	-0.42		666.83	12.00	0.0350	-0.42		
665.97		-0.49	0.0350	14.00	112+25	666.46	12.00	0.0350	-0.42		666.88	12.00	0.0350	-0.42		
666.04		-0.49	0.0350	14.00	112+50	666.53	12.00	0.0350	-0.42		666.95	12.00	0.0350	-0.42		
666.10		-0.49	0.0350	14.00	112+75	666.59	12.00	0.0350	-0.42		667.01	12.00	0.0350	-0.42		
666.16		-0.49	0.0350	14.00	113+00	666.65	12.00	0.0350	-0.42		667.07	12.00	0.0350	-0.42		
666.22		-0.49	0.0350	14.00	113+25	666.71	12.00	0.0350	-0.42		667.13	12.00	0.0350	-0.42		
666.27		-0.49	0.0350	14.00	113+50	666.76	12.00	0.0350	-0.42		667.18	12.00	0.0350	-0.42		
666.32		-0.48	0.0350	13.78	113+75	666.80	12.00	0.0350	-0.42		667.22	12.00	0.0350	-0.42		
666.35		-0.47	0.0350	13.49	114+00	666.82	12.00	0.0350	-0.42		667.24	12.00	0.0350	-0.42		
666.37		-0.47	0.0350	13.33	114+14.27	666.84	12.00	0.0350	-0.42		667.26	12.00	0.0350	-0.42		F.S.
666.43		-0.44	0.0330	13.20	114+25	666.86	12.00	0.0330	-0.40		667.26	12.00	0.0330	-0.40		
666.55		-0.37	0.0284	12.91	114+50	666.92	12.00	0.0284	-0.34		667.26	12.00	0.0284	-0.34		
666.65		-0.30	0.0238	12.62	114+75	666.95	12.00	0.0238	-0.29		667.24	12.00	0.0238	-0.29		
666.70		-0.24	0.0192	12.33	115+00	666.94	12.00	0.0192	-0.23		667.17	12.00	0.0192	-0.23		
666.75		-0.19	0.0156	12.10	115+19.27	666.94	12.00	0.0156	-0.19		667.13	12.00	0.0156	-0.19		R.C.
666.76		-0.19	0.0156	12.04	115+25	666.95	12.00	0.0156	-0.19		667.14	12.00	0.0136	-0.16		
666.79		-0.19	0.0156	12.00	115+50	666.98	12.00	0.0156	-0.19		667.17	12.00	0.0049	-0.06		
666.82		-0.19	0.0156	12.00	115+64.27	667.01	12.00	0.0156	-0.19		667.20	12.00	0.0000	0.00		H.F.
666.84		-0.19	0.0156	12.00	115+75	667.03	12.00	0.0156	-0.19		667.22	12.00	-0.0028	0.03		
666.87		-0.19	0.0156	12.00	116+00	667.06	12.00	0.0156	-0.19		667.25	12.00	-0.0093	0.11		
666.82	↓	-0.19	0.0156	12.00	116+24.01	667.01	12.00	0.0156	-0.19	↓	667.20	12.00	-0.0156	0.19	↓	N.C.

** = MATCH EXISTING RATES

CALCULATED MH
CHECKED RAS

SUPERELEVATION TABLE

CUY-90-0.00

02 MAR 2000
P:\PR22308\CADD\I738GEA.DGN

SUPERELEVATION TABLE WESTBOUND

PI STA= 108+56.02 | Dc = 1°28"

LEFT SIDE										PROFILE GRADE LINE		RIGHT SIDE					
EDGE ELEVATION	TRANSITION RATE	ELEVATION CORRECTION	CROSS SLOPE	WIDTH	CROWN POINT	TRANSITION RATE	ELEVATION CORRECTION	CROSS SLOPE	WIDTH	STATION	PROFILE GRADE	WIDTH	CROSS SLOPE	ELEVATION CORRECTION	TRANSITION RATE	EDGE ELEVATION	REMARKS
666.93	**	0.19	0.0156	12.00	667.12	**	-0.19	-0.0156	12.00	100+58.81	666.93	14.00	-0.0156	0.22	**	666.71	N.C.
666.83		0.19	0.0156	12.00	667.02		-0.15	-0.0122	12.00	100+75	666.87	14.00	-0.0122	0.17		666.70	
666.70		0.19	0.0156	12.00	666.88		-0.08	-0.0070	12.00	101+00	666.80	14.00	-0.0070	0.10		666.70	
666.57		0.19	0.0156	12.00	666.76		-0.02	-0.0018	12.00	101+25	666.74	14.00	-0.0018	0.03		666.71	
666.53		0.19	0.0156	12.00	666.72		0.00	0.0000	12.00	101+33.81	666.72	14.00	0.0000	0.00		666.72	H.F.
666.23		0.19	0.0156	12.00	666.42		0.27	0.0229	12.00	101+50	666.69	14.00	0.0229	-0.32		667.01	
665.82		0.19	0.0156	12.00	666.00		0.59	0.0489	12.00	101+75	666.59	14.00	0.0489	-0.68		667.27	
666.19		0.19	0.0156	12.00	666.37		0.19	0.0156	12.00	101+78.81	666.56	14.00	0.0156	-0.22		666.78	R.C.
665.92		0.23	0.0195	12.00	666.16		0.23	0.0195	12.00	102+00	666.39	14.00	0.0195	-0.27		666.66	
665.78		0.29	0.0241	12.00	666.07		0.29	0.0241	12.00	102+25	666.36	14.00	0.0241	-0.34		666.70	
665.66		0.35	0.0288	12.00	666.00		0.35	0.0288	12.00	102+50	666.35	14.00	0.0288	-0.40		666.75	
665.45		0.40	0.0333	12.00	665.85		0.40	0.0333	12.00	102+75	666.25	14.00	0.0333	-0.47		666.72	
665.37		0.42	0.0350	12.00	665.79		0.42	0.0350	12.00	102+83.81	666.21	14.00	0.0350	-0.49		666.70	F.S.
665.30		0.42	0.0350	12.00	665.72		0.42	0.0350	12.00	103+00	666.14	14.00	0.0350	-0.49		666.63	
665.23		0.42	0.0350	12.00	665.65		0.42	0.0350	12.00	103+25	666.07	14.00	0.0350	-0.49		666.56	
665.16		0.42	0.0350	12.00	665.58		0.42	0.0350	12.00	103+50	666.00	14.00	0.0350	-0.49		666.49	
665.15		0.42	0.0350	12.00	665.57		0.42	0.0350	12.00	103+75	665.99	14.00	0.0350	-0.49		666.48	
665.14		0.42	0.0350	12.00	665.56		0.42	0.0350	12.00	104+00	665.98	14.00	0.0350	-0.49		666.47	
665.09		0.42	0.0350	12.00	665.51		0.42	0.0350	12.00	104+25	665.93	14.00	0.0350	-0.49		666.42	
665.04		0.42	0.0350	12.00	665.46		0.42	0.0350	12.00	104+50	665.88	14.00	0.0350	-0.49		666.37	
664.97		0.42	0.0350	12.00	665.39		0.42	0.0350	12.00	104+75	665.81	14.00	0.0350	-0.49		666.30	
664.89		0.42	0.0350	12.00	665.31		0.42	0.0350	12.00	105+00	665.73	14.00	0.0350	-0.49		666.22	
664.82		0.42	0.0350	12.00	665.24		0.42	0.0350	12.00	105+25	665.66	14.00	0.0350	-0.49		666.15	
664.75		0.42	0.0350	12.00	665.17		0.42	0.0350	12.00	105+50	665.59	14.00	0.0350	-0.49		666.08	
664.76		0.42	0.0350	12.00	665.18		0.42	0.0350	12.00	105+75	665.60	14.00	0.0350	-0.49		666.09	
664.75		0.42	0.0350	12.00	665.17		0.42	0.0350	12.00	106+00	665.59	14.00	0.0350	-0.49		666.08	
664.67		0.42	0.0350	12.00	665.09		0.42	0.0350	12.00	106+25	665.51	14.00	0.0350	-0.49		666.00	
664.61		0.42	0.0350	12.00	665.03		0.42	0.0350	12.00	106+50	665.45	14.00	0.0350	-0.49		665.94	
664.67		0.42	0.0350	12.00	665.09		0.42	0.0350	12.00	106+75	665.51	14.00	0.0350	-0.49		666.00	
664.71		0.42	0.0350	12.00	665.13		0.42	0.0350	12.00	107+00	665.55	14.00	0.0350	-0.49		666.04	
664.72		0.42	0.0350	12.00	665.14		0.42	0.0350	12.00	107+25	665.56	14.00	0.0350	-0.49		666.05	
664.73		0.42	0.0350	12.00	665.15		0.42	0.0350	12.00	107+50	665.57	14.00	0.0350	-0.49		666.06	
664.76		0.42	0.0350	12.00	665.18		0.42	0.0350	12.00	107+75	665.60	14.00	0.0350	-0.49		666.09	
664.78		0.42	0.0350	12.00	665.20		0.42	0.0350	12.00	108+00	665.62	14.00	0.0350	-0.49		666.11	
664.79		0.42	0.0350	12.00	665.21		0.42	0.0350	12.00	108+25	665.63	14.00	0.0350	-0.49		666.12	
664.82		0.42	0.0350	12.00	665.24		0.42	0.0350	12.00	108+50	665.66	14.00	0.0350	-0.49		666.15	
664.89		0.42	0.0350	12.00	665.31		0.42	0.0350	12.00	108+75	665.73	14.00	0.0350	-0.49		666.22	
664.94		0.42	0.0350	12.00	665.36		0.42	0.0350	12.00	109+00	665.78	14.00	0.0350	-0.49		666.27	
664.98		0.42	0.0350	12.00	665.40		0.42	0.0350	12.00	109+25	665.82	14.00	0.0350	-0.49		666.31	
665.02		0.42	0.0350	12.00	665.44		0.42	0.0350	12.00	109+50	665.86	14.00	0.0350	-0.49		666.35	
665.05		0.42	0.0350	12.00	665.47		0.42	0.0350	12.00	109+75	665.89	14.00	0.0350	-0.49		666.38	
665.10		0.42	0.0350	12.00	665.52		0.42	0.0350	12.00	110+00	665.94	14.00	0.0350	-0.49		666.43	
665.23		0.42	0.0350	12.00	665.65		0.42	0.0350	12.00	110+25	666.07	14.00	0.0350	-0.49		666.56	
665.34		0.42	0.0350	12.00	665.76		0.42	0.0350	12.00	110+50	666.18	14.00	0.0350	-0.49		666.67	
665.41		0.42	0.0350	12.00	665.83		0.42	0.0350	12.00	110+75	666.25	14.00	0.0350	-0.49		666.74	
665.45		0.42	0.0350	12.00	665.87		0.42	0.0350	12.00	111+00	666.29	14.00	0.0350	-0.49		666.78	
665.46		0.42	0.0350	12.00	665.88		0.42	0.0350	12.00	111+25	666.30	14.00	0.0350	-0.49		666.79	
665.48	▼	0.42	0.0350	12.00	665.90	▼	0.42	0.0350	12.00	111+50	666.32	14.00	0.0350	-0.49	▼	666.81	

** = MATCH EXISTING RATES

CALCULATED MH
CHECKED RAS

SUPERELEVATION TABLE

CUY-90-0.00

02 MAR 2000
p:\PR22308\CADD\11738GEA.DGN

SUPERELEVATION TABLE WESTBOUND

PI STA= 108+56.02 | Dc = 1°28″

LEFT SIDE										PROFILE GRADE LINE		RIGHT SIDE					
EDGE ELEVATION	TRANSITION RATE	ELEVATION CORRECTION	CROSS SLOPE	WIDTH	CROWN POINT	TRANSITION RATE	ELEVATION CORRECTION	CROSS SLOPE	WIDTH	STATION	PROFILE GRADE	WIDTH	CROSS SLOPE	ELEVATION CORRECTION	TRANSITION RATE	EDGE ELEVATION	REMARKS
665.59	* *	0.42	0.0350	12.00	666.01	* *	0.42	0.0350	12.00	111+75	666.43	14.00	0.0350	-0.49	* *	666.92	
665.68		0.42	0.0350	12.00	666.10		0.42	0.0350	12.00	112+00	666.52	14.00	0.0350	-0.49		667.01	
665.73		0.42	0.0350	12.00	666.15		0.42	0.0350	12.00	112+25	666.57	14.00	0.0350	-0.49		667.06	
665.78		0.42	0.0350	12.00	666.20		0.42	0.0350	12.00	112+50	666.62	14.00	0.0350	-0.49		667.11	
665.86		0.42	0.0350	12.00	666.28		0.42	0.0350	12.00	112+75	666.70	14.00	0.0350	-0.49		667.19	
665.92		0.42	0.0350	12.00	666.34		0.42	0.0350	12.00	113+00	666.76	14.00	0.0350	-0.49		667.25	
665.97		0.42	0.0350	12.00	666.39		0.42	0.0350	12.00	113+25	666.81	14.00	0.0350	-0.49		667.30	
666.02		0.42	0.0350	12.00	666.44		0.42	0.0350	12.00	113+50	666.86	14.00	0.0350	-0.49		667.35	
666.09		0.42	0.0350	12.00	666.51		0.42	0.0350	12.00	113+75	666.93	14.00	0.0350	-0.49		667.42	
666.14		0.42	0.0350	12.00	666.56		0.42	0.0350	12.00	114+00	666.98	14.00	0.0350	-0.49		667.47	
666.17		0.42	0.0350	12.00	666.59		0.42	0.0350	12.00	114+25	667.01	13.82	0.0350	-0.48		667.49	
666.22		0.42	0.0350	12.00	666.64		0.42	0.0350	12.00	114+50	667.06	13.53	0.0350	-0.47		667.53	
666.28		0.42	0.0350	12.00	666.70		0.42	0.0350	12.00	114+75	667.12	13.24	0.0350	-0.46		667.58	
666.30		0.42	0.0350	12.00	666.72		0.42	0.0350	12.00	114+92.29	667.14	13.04	0.0350	-0.46		667.60	F.S.
666.32		0.40	0.0337	12.00	666.73		0.40	0.0337	12.00	115+00	667.13	12.96	0.0337	-0.44		667.57	
666.41		0.36	0.0296	12.00	666.76		0.36	0.0296	12.00	115+25	667.12	12.67	0.0296	-0.38		667.50	
666.52		0.30	0.0254	12.00	666.83		0.30	0.0254	12.00	115+50	667.13	12.38	0.0254	-0.31		667.44	
666.73		0.21	0.0172	12.00	666.93		0.21	0.0172	12.00	116+00	667.14	12.00	0.0172	-0.21		667.35	
666.76		0.19	0.0.156	12.00	666.94		0.19	0.0.156	12.00	116+09.55	667.13	12.00	0.0.156	-0.19		667.32	R.C.
666.81		0.19	0.0.156	12.00	667.00		0.12	0.0102	12.00	116+25	667.12	12.00	0.0102	-0.12		667.24	
666.88		0.19	0.0.156	12.00	667.07		0.02	0.0016	12.00	116+50	667.09	12.00	0.0016	-0.02		667.11	
666.89		0.19	0.0.156	12.00	667.08		0.00	0.0000	12.00	116+54.55	667.08	12.00	0.0000	0.00		667.08	H.F.
666.89		0.19	0.0.156	12.00	667.08		-0.05	-0.0041	12.00	116+75	667.03	12.00	-0.0041	0.06		666.98	
666.90		0.19	0.0.156	12.00	667.09		-0.11	-0.0091	12.00	117+00	666.98	12.00	-0.0091	0.13		666.87	
666.95		0.19	0.0.156	12.00	667.14		-0.17	-0.0141	12.00	117+25	666.97	12.00	-0.0141	0.20		666.80	
666.97	▼	0.19	0.0.156	12.00	667.16	▼	-0.19	-0.0156	12.00	117+32.55	666.97	12.00	-0.0156	0.22	▼	666.78	N.C.

** = MATCH EXISTING RATES

CALCULATED MH
CHECKED RAS

SUPERELEVATION TABLE

CUY-90-0.00

02 MAR 2000
D:\PR22308\CADD\I738GEA.DGN

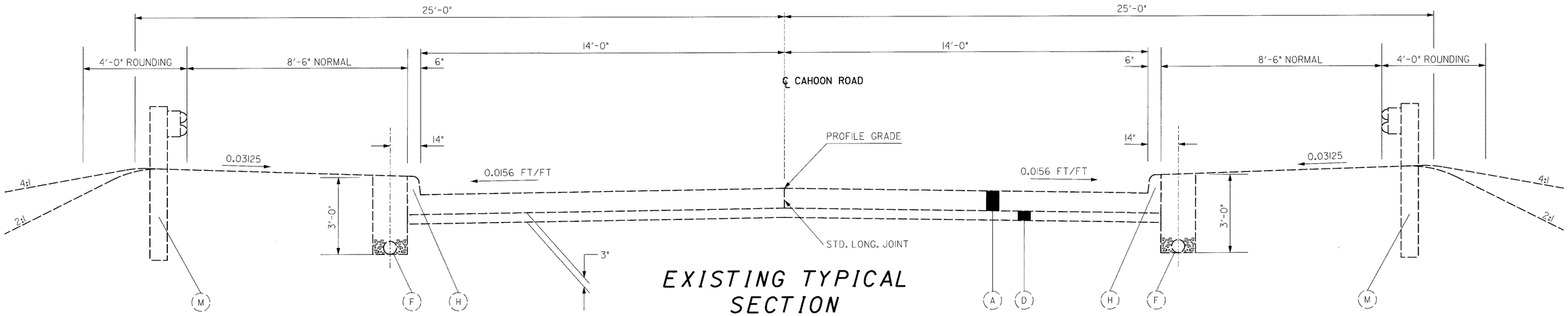

EXISTING TYPICAL SECTION

CAHOON ROAD

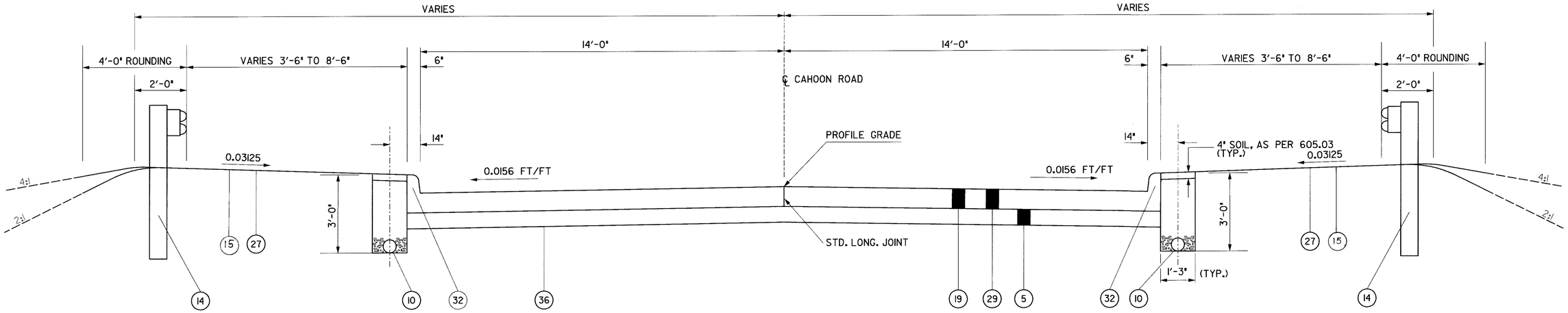

STATION LIMITS

CAHOON ROAD: STA 48+00.00 TO STA 48+54.22 = 54.22 LF
= 54.22 LF

PROPOSED NORMAL SECTION

CAHOON ROAD

FOR LEGEND SEE SHEET 5

TYPICAL SECTIONS - CAHOON ROAD

CUY-90-0.00

30
582

11738YB.DGN 02 FEBRUARY 2000

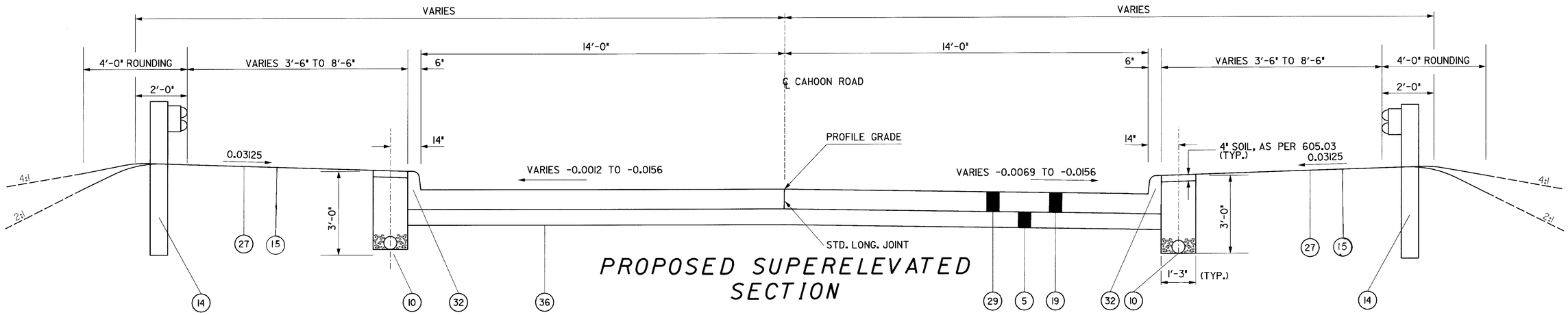

PROPOSED SUPERELEVATED SECTION

STATION LIMITS

CAHOON ROAD: STA 51+50.73 TO STA 52+00.00 = 49.27 LF
= 49.27 LF

SUPERELEVATION TABLE - CAHOON ROAD

E/P$_L$	X-SL$_L$	W$_L$	℄ STATION	P.G.	W$_R$	X-SL$_R$	E/P$_R$
685.41•	-0.0012	14'	52+00.00	685.43•	14'	-0.0069	685.33•
685.58	-0.0051	14'	51+86.62	685.65	14'	-0.0093	685.52
685.70	-0.0085	14'	51+75.00	685.81	14'	-0.0113	685.66
685.89	-0.0156	14'	51+50.73	686.11	14'	-0.0156	685.89

•EXISTING ELEVATION

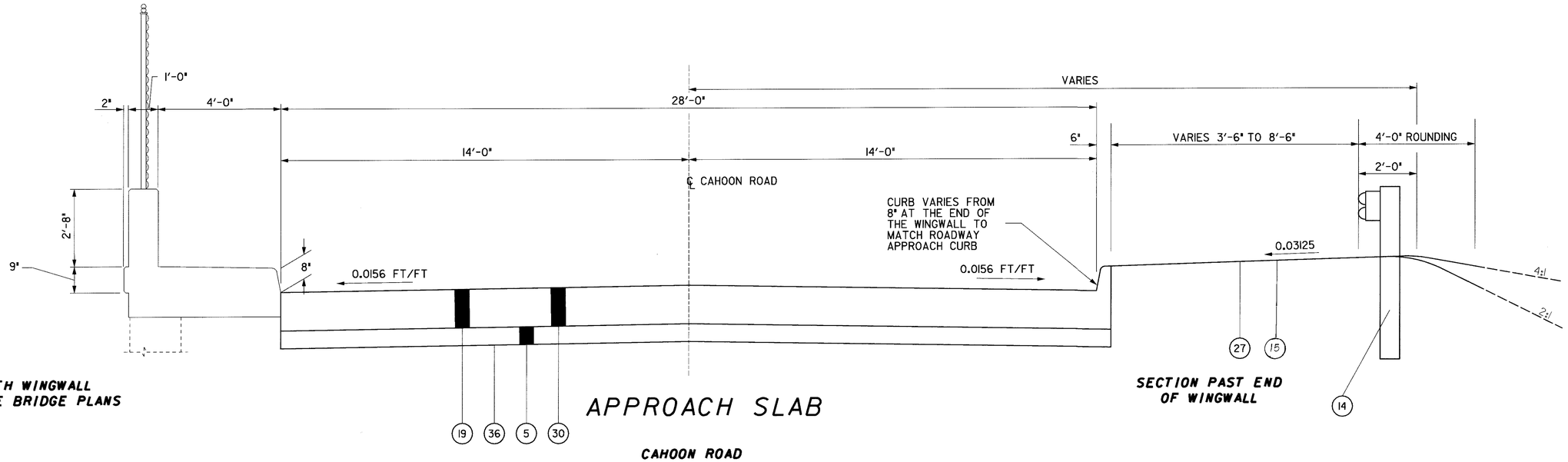

SECTION WITH WINGWALL
FOR DETAIL SEE BRIDGE PLANS

APPROACH SLAB

CAHOON ROAD

SECTION PAST END OF WINGWALL

STATION LIMITS

CAHOON ROAD: STA 48+54.22 TO STA 48+69.22 = 15.00 LF
STA 51+35.73 TO STA 51+50.73 = 15.00 LF
= 30.00 LF

FOR LEGEND SEE SHEET 5

TYPICAL SECTIONS - CAHOON ROAD

CUY-90-0.00

11738GYC.DGN 02 FEBRUARY 2000

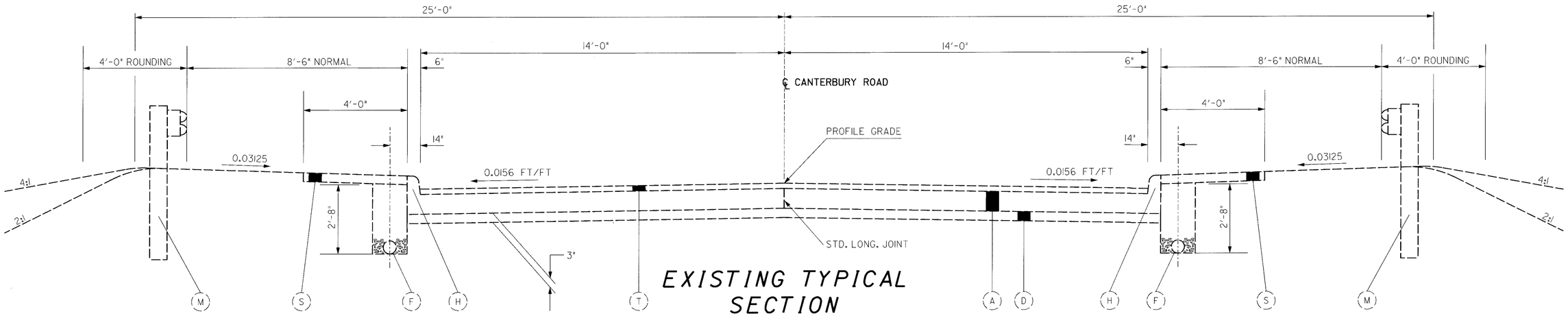

EXISTING TYPICAL SECTION

CANTERBURY ROAD

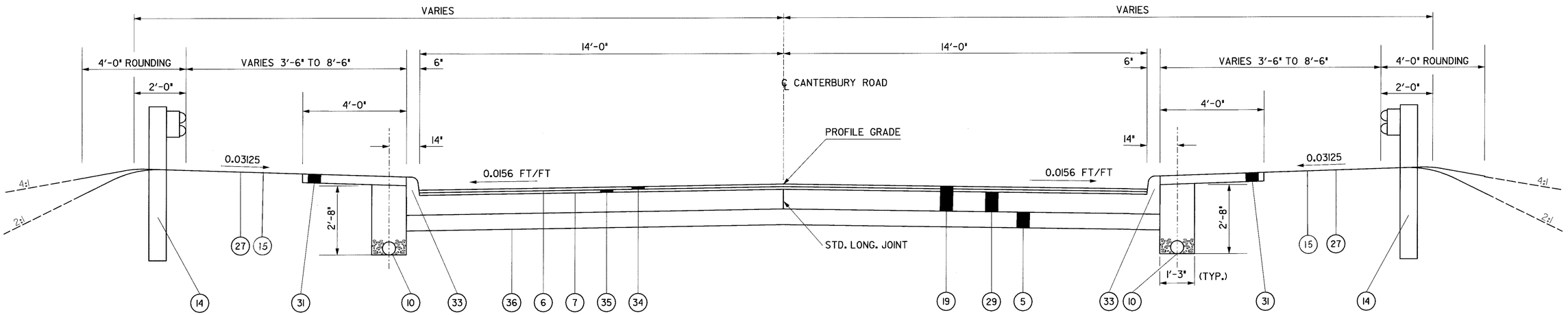

PROPOSED NORMAL SECTION

CANTERBURY ROAD

STATION LIMITS

CANTERBURY ROAD: STA 23+00.00 TO STA 23+33.52 = 33.52 LF
STA 26+11.22 TO STA 26+50.00 = 38.78 LF
= 72.30 LF

FOR LEGEND SEE SHEET 5

TYPICAL SECTIONS - CANTERBURY ROAD

CUY-90-0.00

1738CYD.DGN 02 FEBRUARY 2000

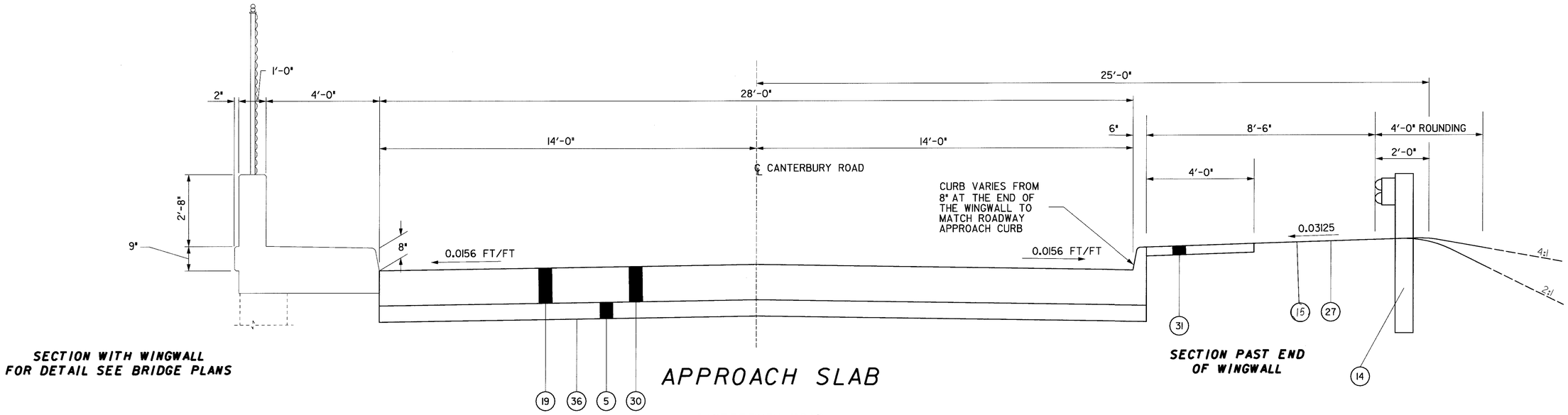

SECTION WITH WINGWALL
FOR DETAIL SEE BRIDGE PLANS

APPROACH SLAB

CANTERBURY ROAD

SECTION PAST END OF WINGWALL

STATION LIMITS

CANTERBURY ROAD:	STA 23+33.52 TO STA 23+48.52	= 15.00 LF
	STA 25+96.22 TO STA 26+11.22	= 15.00 LF
		= 30.00 LF

FOR LEGEND SEE SHEET 5

TYPICAL SECTIONS - CANTERBURY ROAD

CUY-90-0.00

11738GYE.DGN 02 FEBRUARY 2000

CONVERSION OF METRIC STANDARD DRAWINGS

THE METRIC STANDARD DRAWINGS REFERENCED IN THIS PLAN SHALL BE CONVERTED TO ENGLISH UNITS USING THE SI (METRIC) TO ENGLISH CONVERSION FACTORS PROVIDED IN SECTION 109.011 OF THE 1997 CONSTRUCITON AND MATERIALS SPECIFICATIONS. THE APPENDIX OF ASTM E 380 SHALL BE UTILIZED FOR ANY ADDITIONAL CONVERSION FACTORS REQUIRED. CONVERSIONS SHALL BE APPROPRIATELY PRECISE AND SHALL REFLECT INDUSTRY ENGLISH VALUES WHERE SUITABLE.

UNDERGROUND UTILITIES

THE LOCATIONS OF THE UNDERGROUND UTILITIES SHOWN ON THE PLANS ARE AS OBTAINED FROM THE OWNERS OF THE UTILITY AS REQUIRED BY SECTION 153.64 OF THE OHIO REVISED CODE.

UTILITY OWNERSHIP

THE FOLLOWING UTILITIES AND OWNERS ARE LOCATED WITHIN THE WORK LIMITS OF THIS PROJECT:

COLUMBIA GAS COMPANY
7080 FRY ROAD
MIDDLEBURG HTS., OHIO 44130
(216) 243-1000

AMERITECH
13630 LORAIN AVENUE
CLEVELAND, OHIO 44111
(216) 476-6142

THE ILLUMINATING COMPANY
4141 ROCKSIDE ROAD
SEVEN HILLS, OHIO 44131

CITY OF CLEVELAND
WATER DEPARTMENT
1201 LAKESIDE AVENUE
CLEVELAND, OHIO 44111

CALL OHIO UTILITIES PROTECTION SERVICE TWO (2) WORKING DAYS BEFORE YOU DIG. TOLL FREE TELEPHONE: 1-800-362-2764.

ANY AND ALL WORK REQUIRED FOR REMOVING, RELOCATING AND CONSTRUCTION OF NEW FACILITIES FOR PRIVATE OR PUBLIC UTILITIES WILL BE DONE BY AND AT THE EXPENSE OF THE RESPECTIVE OWNERS UNLESS OTHERWISE NOTED ON THE PLANS. THE CONTRACTOR SHALL COORDINATE HIS OPERATIONS WITH THE WORK OF THE UTILITY OWNERS OR OTHERS WHO MAY BE MAKING THE RELOCATIONS.

ROUNDING

THE ROUNDING AT SLOPE BREAKPOINTS SHOWN ON THE TYPICAL SECTIONS APPLY TO ALL CROSS-SECTIONS EVEN THOUGH OTHERWISE SHOWN.

TYPICAL SECTIONS

EXISTING TYPICAL SECTIONS AND UNDERDRAIN HAVE BEEN TAKEN FROM THE RECORD PLANS AND ARE BELIEVED TO REPRESENT THE EXISTING PAVEMENT, BUT THE STATE OF OHIO DOES NOT GUARANTEE THE ACCURACY OF THE SAME.

FOR FURTHER INFORMATION IN REGARD TO THE EXISTING TYPICAL SECTIONS AND UNDERDRAIN LOCATIONS THE CONTRACTOR SHALL REFER TO THE PREVIOUS CONSTRUCTION PLANS. THESE PLANS MAY BE REVIEWED AT THE OHIO DEPARTMENT OF TRANSPORTATION, DISTRICT TWELVE OFFICES, 5500 TRANSPORTATION BOULEVARD, GARFIELD HEIGHTS, OHIO 44125-8003.

COOPERATION BETWEEN CONTRACTORS

THE CONTRACTOR SHALL COOPERATE AND COORDINATE HIS OPERATIONS WITH THE CONTRACTOR'S OPERATIONS ON OTHER PROJECTS THAT MAY BE IN FORCE DURING THE LIFE OF THIS CONTRACT. NO WAIVER OF ANY PROVISIONS OF 105.07 OF THE CONSTRUCTION AND MATERIALS SPECIFICATIONS

CONTINGENCY QUANTITIES

THE CONTRACTOR SHALL NOT ORDER MATERIALS OR PERFORM WORK FOR ITEMS DESIGNATED BY PLAN NOTE TO BE USED "AS DIRECTED BY THE ENGINEER" UNLESS AUTHORIZED BY THE ENGINEER. THE ACTUAL WORK LOCATIONS AND QUANTITIES USED FOR SUCH ITEMS SHALL BE INCORPORATED INTO THE FINAL CHANGE ORDER GOVERNING COMPLETION OF THIS PROJECT.

WORK LIMITS

THE WORK LIMITS SHOWN ON THESE PLANS ARE FOR PHYSICAL CONSTRUCTION ONLY. THE INSTALLATION AND OPERATION OF ALL TEMPORARY TRAFFIC CONTROL AND TEMPORARY TRAFFIC CONTROL DEVICES REQUIRED BY THESE PLANS SHALL BE PROVIDED BY THE CONTRACTOR WHETHER INSIDE OR OUTSIDE THESE WORK LIMITS.

MATERIAL STORAGE OR BATCH PLANTS

THE CONTRACTOR MAY USE THE INFIELD OF LOOP RAMP E AT CROCKER RD. AND I-90 AND/OR THE INFIELD OF RAMP K AT COLUMBIA RD. AND I-90 FOR MATERIAL STORAGE OR FOR A TEMPORARY BATCH PLANT OR MATERIAL PROCESSING PLANT. ANY USAGE SHALL BE IN ACCORDANCE WIHT 614.30 AND 107.21. LOCATIONS FOR INGRESS AND EGRESS SHALL BE APPROVED BY THE ENGINEER.

ITEM 806 - FIELD OFFICE, TYPE C, AS PER PLAN

THREE (3) OUTSIDE TELEPHONE LINES SHALL BE PROVIDED AND ASSIGNED AS LISTED BELOW:

LINE 1 FACSIMILE MACHINE & ONE PHONE
LINE 2 COMPUTER MODEM
LINE 3 RECORDED ANSWERING DEVICE & PHONES (3)

IN ADDITION TO THE REQUIREMENTS STATED IN THE SPECIFICATIONS, THE FOLLOWING EQUIPMENT SHALL BE INCLUDED FOR PAYMENT UNDER THIS ITEM: A. THREE (3) CELLULAR PHONES (WITH SEPARATE LINE FOR EACH PHONE) FOR USE AS DIRECTED BY THE ENGINEER. PLEASE NOTE THAT THIS IS IN ADDITION TO THE REQUIREMENTS OF 806.02.

EQUIPMENT AND MATERIAL STORAGE

IN ORDER TO PROVIDE FOR THE SAFETY OF THE TRAVELING PUBLIC THE CONTRACTOR'S ATTENTION IS DIRECTED TO 614.03. IN ADDITION, THE FOLLOWING PROVISIONS SHALL APPLY:

1) ANY REMOVED ITEMS SHALL NOT BE STORED ON THE RIGHT OF WAY FOR MORE THAN THIRTY DAYS.

2) THE STORAGE OF EQUIPMENT, MATERIALS AND VEHICLES WITHIN THE HIGHWAY RIGHT OF WAY WILL BE PERMITTED. THE NUMBER OF AREAS AND EXACT LOCATIONS SHALL BE APPROVED BY THE ENGINEER.

3) ALL DISTRIBUTION AREAS SHALL BE RETURNED TO THEIR ORIGINAL CONDITION AT NO EXPENSE TO THE STATE.

RIGHT OF WAY

ALL WORK SHALL BE PERFORMED WITHIN THE EXISTING RIGHT OF WAY, TEMPORARY RIGHT OF WAY, OR EASEMENTS.

BENCHMARKS

THE BENCHMARKS SHOWN ON THE PLANS ARE FOR THE CONSTRUCTION OF THE BRIDGES AND NOISE BARRIER.

ALL DRAINAGE STRUCTURES ARE TO BE BUILT OFF A LOCAL REFERENCE SET BY THE CONTRACTOR WHICH SHALL BE ESTABLISHED RELATIVE TO THE CLOSEST EXISTING PLAN EDGE OF PAVEMENT ELEVATION.

ALL COST ASSOCIATED WITH SETTING LOCAL REFERENCES SHALL BE CONSIDERED INCIDENTAL TO THE PROJECT COST.

CONTRACTOR'S EQUIPMENT AND OPERATION

ALL VEHICLES AND EQUIPMENT MUST BE EQUIPPED WITH AT LEAST ONE FLASHING, ROTATING, OR OSCILLATING AMBER LIGHT THAT IS VISIBLE IN ALL DIRECTIONS OF TRAFFIC FOR AT LEAST ONE QUARTER MILE, DAY OR NIGHT. THIS INCLUDES TRUCKS HAULING ASPHALT. UNLESS BEHIND CONCRETE BARRIER, THE CONTRACTOR'S EQUIPMENT SHALL BE OPERATED IN THE DIRECTION OF TRAFFIC ONLY.

PROGRESS SCHEDULE (CRITICAL PATH METHOD)

THE PRE-CONSTRUCTION MEETING SHALL BE HELD NO LATER THAN 30 CALENDAR DAYS AFTER THE CONTRACT IS SIGNED. THE CONTRACTOR SHALL SUBMIT THEIR PROPOSED CPM SCHEDULE AT THE PRE-CONSTRUCTION MEETING FOR REVIEW BY THE CONSTRUCTION ENGINEER. WRITTEN COMMENTS REGARDING THE CPM SCHEDULE WILL BE FORWARDED TO THE CONTRACTOR BY THE CONSTRUCTION ENGINEER WITHIN 14 CALENDAR DAYS AFTER THE PRE-CONSTRUCTION MEETING. A FINAL CPM SCHEDULE SHALL BE SUBMITTED TO THE CONSTRUCTION ENGINEER WITHIN 30 CALENDAR DAYS FROM THE DATE OF THE PRE-CONSTRUCTION MEETING BUT AT LEAST SEVEN (7) CALENDAR DAYS PRIOR TO THE DATE DESIGNATED AS THE STARTING DATE IN THE CPM SCHEDULE. THE SCHEDULE SHALL BE SIGNED AND DATED BY THE PRIME CONTRACTOR AND NAMED SUBCONTRACTORS.

ADJUSTMENTS IN CONTRACT TIME

TIME EXTENSIONS WILL ONLY BE CONSIDERED WHEN CONTROLLING ITEMS OF WORK ON THE APPROVED CPM SCHEDULE ARE AFFECTED DUE TO NO FAULT OF THE CONTRACTOR

WHEN ADDITIONAL WORK IS REQUIRED, TIME EXTENSIONS WILL ONLY BE GRANTED FOR CONTROLLING ITEMS ON THE CPM SCHEDULE.

PROJECT PROGRESS MEETINGS

PROGRESS MEETING WILL BE HELD EVERY FOUR (4) WEEKS AT THE PROJECT OFFICE, OR OTHER LOCATION DESIGNATED BY THE CONSTRUCTION ENGINEER AND ATTENDED BY O.D.O.T. AND CONTRACTOR DECISION-MAKING PERSONNEL.

THE PURPOSE OF THESE MEETINGS WILL BE TO DISCUSS CRITICAL OPERATIONS AND POTENTIAL PROBLEMS. THE CONTRACTOR WILL CONFIRM THE NUMBER AND DURATION OF WORK SHIFTS, NUMBER OF WORK CREWS, AND SPECIFIC PORTION OF THE WORK TO BE PERFORMED DURING THE FOLLOWING WEEKS.

THESE MEETINGS CAN ONLY BE WAIVED BY THE CONSTRUCTION ENGINEER.

INDIANA BAT

THE PROJECT IS WITHIN THE RANGE OF THE FEDERALLY ENDANGERED INDIANA BAT (MYOTIS SODALIS). THE PROJECT MAY IMPACT SUMMER AND BROOD REARING HABITATS FOR THIS SPECIES (I.E., TREES OVER NINE INCHES DIAMETER BREAST HEIGHT WITH LOOSE OR PEELING BARK AND/OR CAVITIES GREATER THEN 3-4 INCHES IN SIZE). TO PREVENT HARM TO THESE BATS, THE REMOVAL OF ANY POTENTIAL ROOST TREES MUST BE COMPLETED BETWEEN SEPTEMBER 15 AND APRIL 15. THE TREES WITHIN THE PROJECT AREA SHOULD BE MARKED AND CUT THE WINTER BEFORE THE CONSTRUCTION ACTIVITIES START. ALL BAT TREE CUTTING MUST BE COMPLETED BEFORE THE APRIL 15 DEADLINE.

ELEVATION DATUM

ALL ELEVATIONS ARE BASED ON U.S.G.S. DATUM. THE CONTRACTOR SHALL USE THE BENCHMARK CLOSEST TO EACH BRIDGE TO CONSTRUCT ONLY THAT BRIDGE.

MORTARS FOR GROUT ANCHORING

ALL REFERENCE TO SUPPLEMENTAL SPECIFICATION 952 APPEARING ON STANDARD DRAWINGS OR THROUGHOUT THESE PLANS SHALL BE CONSIDERED TO READ 705.20

JOINT SEALER

ALL REFERENCES TO 705.01 OR 705.02, APPEARING ON STANDARD DRAWINGS OR ON THE PLANS SHALL BE CONSIDERED TO READ 705.04.

CALCULATED

CHECKED

GENERAL NOTES

CUY-90-0.00

22 MAR 2000
P:\PR22308\CADD\N1738GNA.dgn

CALCULATED MJB CHECKED RAS

GENERAL NOTES

ADDITIONAL SOIL INFORMATION

THE SOIL PROFILE AND/OR STRUCTURE FOUNDATION INVESTIGATIONS SHEETS CONTAIN ALL AVAILABLE SOIL AND BEDROCK INFORMATION WHICH CAN BE CONVENIENTLY SHOWN. ADDITIONAL SUBSURFACE INVESTIGATIONS MAY HAVE BEEN MADE TO STUDY SOME ASPECT OF THE PROJECT. MORE INFORMATION, IF ANY, MAY BE OBTAINED IN DISTRICT 12. THE OFFICE OF MATERIALS MANAGEMENT OR THE OFFICE OF STRUCTURAL ENGINEERING.

CONSTRUCTION NOISE

ACTIVITIES AND LAND USE ADJACENT TO THIS PROJECT MAY BE AFFECTED BY CONSTRUCTION NOISE. IN ORDER TO MINIMIZE ANY ADVERSE CONSTRUCTION NOISE IMPACTS; JACK HAMMERS, HOE RAMS, PILE DRIVERS, AND PAVEMENT BREAKERS SHALL NOT BE OPERATED BETWEEN THE HOURS OF 9:00PM AND 6:00 AM. IN ADDITION, ANY SUCH DEVICE SHALL NOT BE OPERATED AT ANY TIME IN SUCH A MANNER THAT THE NOISE CREATED SUBSTANTIALLY EXCEEDS THE NOISE CUSTOMARILY AND NECESSARILY ATTENDANT TO THE REASONABLE AND EFFICIENT PERFORMANCE OF SUCH EQUIPMENT.

ITEM 201 - CLEARING AND GRUBBING

ALTHOUGH THERE ARE NO TREES AND/OR STUMPS SPECIFICALLY MARKED FOR REMOVAL WITHIN THE LIMITS OF THIS PROJECT, A LUMP SUM QUANTITY HAS BEEN INCLUDED IN THE GENERAL SUMMARY FOR ITEM 201, CLEARING AND GRUBBING. TREES OR OTHER VEGETATION WHICH BLOCKS THE VIEW OF EXISTING OR PROPOSED SIGNS SHALL BE REMOVED AT THE BEGINNING OF CONTRACT WORK. ALL TREES AND/OR STUMPS INTERFERING WITH THE INSTALLATION OF THE REPLACEMENT FENCING SHALL BE REMOVED AND INCLUDED IN ITEM 201, CLEARING AND GRUBBING.

THIS LUMP SUM ITEM SHALL BE USED TO CLEAR BRUSH AND THE NEAT TRIMMING AND/OR REMOVAL OF TREES IN CONFLICT WITH THE PROPOSED NOISE BARRIER LOCATIONS. TREES SCHEDULED TO BE TRIMMED OR REMOVED SHALL BE MARKED AND APPROVED BY THE PROJECT ENGINEER PROIR TO THE WORK BEING PERFORMED.

THE CONTRACTOR SHALL MINIMIZE THE CLEARING OF BRUSH AND TRIMMING AND/OR REMOVAL OF TREES BY LIMITING CLEARING AND GRUBBING TO THE FOLLOWING DEFINED "WORK AREA":

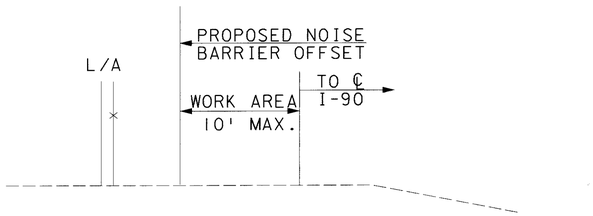

THE WORK AREA SHALL BE A MAXIMUM WIDTH OF TEN (10) FEET MEASURED FROM THE NOISE BARRIER TOWARD THE FREEWAY SIDE OF THE NOISE BARRIER IN CUT SECTIONS DEFINED BY THE TYPICAL SECTIONS. THIS WORK AREA SHALL BE USED BY THE CONTRACTOR'S EQUIPMENT TO PERFORM WORK NECESSARY TO INSTALL THE NOISE BARRIERS. ON THE RESIDENTIAL SIDE OF NOISE BARRIERS IN CUT SECTIONS, THE CONTRACTOR SHALL BE LIMITED ONLY TO TRIMMING OF BRANCHES AND LIMBS WHICH EXTEND OVER THE PROPOSED NOISE BARRIER ALIGNMENT AND WILL OTHERWISE DISABLE THE CONTRACTOR FROM CONSTRUCTING NOISE BARRIER POSTS AND PANELS AS DETERMINED BY THE PROJECT ENGINEER.

FOR CLARIFICATION, TRESS SHALL BE INTERPRETED AS ANY GROWTH WITH A TRUNK DIAMETER OF AT LEAST THREE (3) INCHES.

THE CONTRACTOR SHALL MARK ALL TREES WITHIN THE WORK AREA WHICH HE INTENDS TO REMOVE. TO MINIMIZE THE REMOVAL OF TREES THE ENGINEER MAY MODIFY THE WORK AREA WIDTH AND OFFSET. TO SAVE A LARGE TREE THE CONTRACTOR SHOULD EXPECT TO ACCESS THE SITE FROM BOTH DIRECTIONS.

IN THE AREA BETWEEN THE BACK OF THE NOISE BARRIER AND EXISTING FENCE, WHERE THE FENCE IS TO BE REMOVED, AND THE ADJOINING PROPERTY IS RESIDENTIAL, THE AREA SHALL BE RESTORED TO A STATE COMPARABLE TO THE ADJOINING PROPERTY.

ALL PROVISIONS SET FORTH IN THE SPECIFICATIONS UNDER THIS ITEMS SHALL BE INCLUDED IN THE LUMP SUM PRICE BID FOR ITEM 201 - CLEARING AND GRUBBING.

ITEM 203 - LINEAR GRADING

GRADED SHOULDERS AT LOCATIONS WHERE NEW GUARDRAIL IS TO BE ERECTED, WHERE THERE IS NO CURRENT GUARDRAIL MAINLINE OR RAMPS, SHALL BE RESHAPED AS DIRECTED BY THE ENGINEER TO INSURE A SMOOTH DRAINABLE SURFACE, FREE OF ALL IRREGULARITIES.

WHEN SPECIFIED ON THE TYPICALS, IN CONJUNCTION WITH COMPACTED AGGREGATE, THE LINEAR GRADING SHALL BE USED TO PREPARE ON AREA BEYOND THE SHOULDER FOR THE PLACEMENT OF THE COMPACTED AGGREGATE.

EXCESS EXCAVATION RESULTING FROM RESHAPING SHOULDERS SHALL BE DISPOSED OF AS DIRECTED BY THE ENGINEER. THIS ITEM OF WORK SHALL ALSO INCLUDE THE APPLICATION OF AGRICULTURAL LIMING, COMMERCIAL FERTILITZER, SEEDING AND MULCHING TO ALL AREAS DISTURBED BY CONSTRUCTION. APPLICATION RATES SHALL BE AS PER ITEM 659. PAYMENT FOR ALL WORK AND MATERIAL DESCRIBED ABOVE SHALL BE INCLUDED IN THE CONTRACT PRICE BID PER LINEAR FOOT FOR ITEM 203 LINEAR GRADING. THE LINEAR MEASUREMENT SHALL BE FOR ONE SIDE OF THE ROAD ONLY. THE FOLLOWING ESTIMATED QUANTITY SHALL BE CARRIED TO THE GENERAL SUMMARY:

ITEM 203	LINEAR GRADING	550 STATIONS

CONTRACTION AND/OR EXPANSION JOINTS

ALTHOUGH SPECIFIC LOACATIONS OF CERTAIN CONTRACTION AND EXPANSION JOINTS HAVE BEEN DETAILED ON THIS PLAN, NO WAIVER OF THE SPECIFICATIONS IS INTENDED. PROVISION OF EXPANSION JOINTS AT ALL MAJOR STRUCTURES AND THE MAXIMUM SPACING BETWEEN CONTRACTION JOINTS SHALL, IN ALL CASES, BE IN ACCORDANCE WITH STANDARD CONSTRUCTION DRAWING BP-2.2M AND THE SPECIFICATIONS.

CONTRACTION JOINTS IN CONCRETE PAVEMENT OR BASE WIDENING

WHERE NEW CONCRETE IS PLACED ADJACENT TO EXISTING CONCRETE, CONTRACTION JOINTS SHALL BE PROVIDED IN THE NEW CONCRETE SO AS TO FORM CONTINUOUS JOINTS WITH THOSE IN THE EXISTING CONCRETE.

THE MAXIMUM DISTANCE BETWEEN THE JOINTS IN THE NEW CONCRETE SHALL BE IN ACCORDANCE WITH ,STANDARD CONSTRUCTION DRAWING BP-2.2M, IF NECESSARY, ADDITIONAL JOINTS SHALL BE PROVIDED IN THE NEW CONCRETE AT APPROXIMATELY EQUAL INTERVALS BETWEEN EXISTING JOINTS THAT EXCEED MAXIMUM SPACING.

MEDIAN AND/OR CURBING ON APPROACH SLABS

THE SPACE OF THE MEDIAN AND/OR CURBING ON APPROACH SLABS SHALL BE TRANSITIONED, FROM THE STANDARD SECTION ON THE APPROACHES TO THE SECTION USED ON THE BRIDGE, WITHIN THE LIMITS OF THE APPROACH SLAB.

EXISTING FENCE REPAIR

WHERE SHOWN ON THE PLANS OR DESIGNATED BY THE ENGINEER, DEFECTIVE FENCE SHALL BE REMOVED AND REPLACED.

QUANTITIES FOR REMOVAL OF EXISTING FENCE AND PLACEMENT OF THE NEW FENCE ARE SHOWN ON THE PLANS AND CARRIED TO THE GENERAL SUMMARY. IN ADDITION, THE FOLLOWING CONTINGENCY QUANTITIES ARE PROVIDED FOR THE ABOVE WORK IN THE GENERAL SUMMARY:

ITEM 202 - FENCE REMOVED	500 LIN. FT.
ITEM 607 - FENCE, TYPE CLT	500 LIN. FT.

ITEM 202 - GUARDRAIL REMOVED

THIS ITEM SHALL INCLUDE BOTH STANDARD AND BARRIER TYPE RAILS INCLUDING ANCHOR ASSEMBLIES AND TERMINAL ASSEMBLIES.

PAVEMENT REMOVAL

REMOVAL OF RIGID CONCRETE PAVEMENT INCLUDES THE PAVEMENT AND ALL ASPHALT COURSES ON TOP OF IT. NO SEPARATE MEASUREMENT OR PAYMENT SHALL BE MADE FOR REMOVING THE ASPHALT COURSES ON TOP OF THE CONCRETE BASE.

SAW CUTS

THE REMOVAL OF ALL PAVEMENT ADJACENT TO A PORTION OF PAVEMENT TO PERMANENTLY REMAIN SHALL REQUIRE A FULL DEPTH SAW CUT. A FULL DEPTH DIAMOND SAW CUT IS REQUIRED FOR RIGID PAVEMENT. NO SEPARATE PAYMENT SHALL BE MADE FOR THIS WORK. PAYMENT IS INCLUDED UNDER THE APPROPRIATE 202 OR 203 PAY ITEM.

ITEM 203 - EMBANKMENT, AS PER PLAN

THE TOP 3 INCHES OF EMBANKMENT SHALL CONSIST OF LOOSE, FRIABLE, LOAMY SOIL WITHOUT THE ADMIXTURE OF REFUSE OR STONE GREATER THAN 1 INCH. THE SOIL SHALL BE CAPABLE OF SUPPORTING VEGETATION.

REMOVAL AND REPLACEMENT OF UNSUITABLE MATERIAL

WHERE SHOWN ON THE PLANS OR DESIGNATED BY THE ENGINEER, UNSUITABLE SUBGRADE MATERIAL SHALL BE REMOVED AND REPLACED AS DEFINED IN 203.13(c).

THE FOLLOWING CONTIGENCY QUANTITIES ARE PROVIDED FOR THE ABOVE WORK IN THE GENERAL SUMMARY.

ITEM 203 - EXCAVATION, NOT INCLUDING EMB. CONST.	4000 C.Y.
ITEM 203 - EMBANKMENT USING GRANULAR MATERIAL	4000 C.Y.

ITEM 202 - RAISED PAVEMENT MARKINGS REMOVED FOR STORAGE, AS PER PLAN

RAISED PAVEMENT MARKINGS SHALL BE REMOVED FROM THE ROADWAY IN A MANNER THAT PREVENTS DAMAGE TO THE CASTINGS. REMOVED MARKERS SHALL BE COLLECTED, STORED IN 55 GALLON DRUMS (WITH AMOUNT CLEARLY MARKED) AND THEN DELIVERED TO THE ODOT WARRENSVILLE YARD, 25609 EMERY RD.), WARRENSVILLE HTS., OHIO 44128 (SR 175 AT INTERSECTION OF I-271 AND EMERY RD.), BY THE CONTRACTOR AS DIRECTED BY THE ENGINEER. THE PROJECT ENGINEER SHALL GIVE THE WARRENSVILLE TRAFFIC DEPARTMENT (292-5301) 48 HOUR NOTICE PRIOR TO DELIVERIES. THE PROJECT ENGINEER SHALL BE RESPONSIBLE FOR FURNISHING ALL NECESSARY TRANSFER/RECEIVING DOCUMENTATION TO THE YARD. ALL COSTS ASSOCIATED WITH THE REMOVAL, STORAGE, AND DELIVERY OF THESE MARKERS SHALL BE INCLUDED IN THE UNIT BID PRICE FOR ITEM 202 - RAISED PAVEMENT MARKERS REMOVED FOR STORAGE, AS PER PLAN.

ITEM 202 - RAISED PAVEMENT MARKERS REMOVED FOR STORAGE, AS PER PLAN.....	1233 EA.

MONUMENTS

MONUMENTS SHALL BE CONSTRUCTED IN ACCORDANCE WITH DETAILS AND LOCATIONS SHOWN ON STANDARD CONSTRUCTION DRAWING RM-1.1 AND AT THE LOCATIONS SHOWN ON SHEET 357.

PAVING UNDER GUARDRAIL

THIS OPERATION SHALL INCLUDE PREPARATION OF THE GRADED SHOULDER USING 203, LINEAR GRADING, AND PAVING UNDER THE GUARDRAIL USING 448 ASPHALT CONCRETE INTERMEDIATE COURSE, TYPE 1, UNDER GUARDRAIL, PG 64-22. PAVING UNDER GUARDRAIL SHALL CONSIST OF PLACING ITEM 448 TO THE DEPTH SPECIFIED USING ONE OF THE FOLLOWING METHODS:

METHOD A:
1) SET GUARDRAIL POSTS
2) PLACE ITEM 448

METHOD B:
1) PLACE ITEM 448
2) BORE ASPHALT AT POST LOCATIONS (MAY BE OMITTED IF STEEL POSTS ARE USED)
3) SET GUARDRAIL POSTS
4) PATCH AROUND POSTS. THE MATERIALS USED FOR PATCHING SHALL BE A BITUMINOUS CONCRETE APPROVED BY THE ENGINEER. PATCHED AREAS SHALL BE COMPACTED USING EITHER HAND OR MECHANICAL METHODS. FINISHED SURFACES SHALL BE SMOOTH AND SLOPED TO DRAIN AWAY FROM THE POSTS

22 MAR 2000
D:\PR22308\CADD\11738GNA.dgn

GUARDRAIL PROTECTION

NO SIGN SUPPORTS SHALL BE ERECTED BEFORE THE NECESSARY GUARDRAIL PROTECTION IS IN PLACE. SIMILARLY, EXISTING GUARDRAIL WHICH PROTECTS AN OBSTRUCTION OR SLOPE WHICH IS TO BE UPGRADED TO ELIMINATE GUARDRAIL, SHALL NOT BE REMOVED UNTIL THAT WORK HAS BEEN COMPLETED. EXISTING GUARDRAIL WHICH IS SCHEDULED TO BE REPLACED WITH TYPE 5 GUARDRAIL, SHALL NOT BE REMOVED UNTIL THE NEW GUARDRAIL IS READY TO BE INSTALLED. UNDER NO CIRCUMSTANCES SHALL ANY HAZARD BE WITHOUT GUARDRAIL PROTECTION FOR MORE THAN 24 HOURS. (SEE PUBLIC SAFETY NOTE SHEET NO.43)

CONNECTIONS BETWEEN EXISTING AND PROPOSED GUARDRAIL

WHEN IT IS NECESSARY TO SPLICE PROPOSED GUARDRAIL TO EXISTING GUARDRAIL, ONLY THE EXISTING SHALL BE CUT, DRILLED, OR PUNCHED. THE CONNECTION SHALL BE MADE USING A "W-BEAM RAIL SPLICE" AS SHOWN IN AASHTO M180. PAYMENT SHALL BE INCLUDED IN THE UNIT PRICE BID FOR THE RESPECTIVE GUARDRAIL ITEMS.

LOCATION OF GUARDRAIL

THE LOCATIONS OF GUARDRAIL RUNS, AS SHOWN IN THESE PLANS, ARE SUBJECT TO ADJUSTMENT PRIOR TO FINAL ACCEPTANCE. THE ENGINEER SHALL BE SATISFIED THAT ALL INSTALLATIONS WILL AFFORD MAXIMUM PROTECTION FOR TRAFFIC.

TYPE 5 GUARDRAIL POST SPACING

WHEN THE OFFSET BETWEEN THE FACE OF THE GUARDRAIL AND BRIDGE PIERS, MAJOR SIGNS, SIGN SUPPORTS, OR OTHER FIXED OBSTACLES IS LESS THAN 5 FEET 6 INCHES THE GUARDRAIL SHALL BE STIFFENED BY PROVIDING 3 FEET 1.5 INCH POST SPACING FROM 12.5 FEET IN ADVANCE OF THE OBSTRUCTION TO ITS END, AS PER STANDARD DRAWING GR-2.1M. COST SHALL BE INCLUDED IN THE TYPE 5A UNIT PRICE BID.

ITEM 622 - CONCRETE BARRIER, TYPE B-50

ALL CONCRETE BARRIERS SHALL HAVE THE STATION NUMBERS IMPRESSED INTO THE NEW BARRIER BEFORE IT TAKES ITS FINAL SET. THE NUMERALS SHALL BE 3 TO 4 INCHES IN HEIGHT AND .25 INCH IN DEPTH. PAYMENT SHALL BE INCLUDED IN THE UNIT PRICE BID PER ITEM 622 - CONCRETE BARRIER, TYPE B-50.

ITEM 830 - 4" CONCRETE MEDIAN, AS PER PLAN

THIS ITEM SHALL FOLLOW SPECIFICATION 830 WITH THE ADDITION OF THE FOLLOWING:

1. ADDITIONAL MATERIAL NECESSARY TO FILL ANY VOID BENEATH THE CONCRETE MEDIAN LEFT BY THE REMOVAL OF THE CONCRETE BARRIER SHALL CONFORM TO ITEM 304 AGGREGATE BASE. COST FOR THE MATERIAL AND ALL LABOR TO CONSTRUCT IT SHALL BE INCLUDED IN THE UNIT COST FOR ITEM 830 - 4" CONCRETE MEDIAN, AS PER PLAN.

PROFILE GRADE

THE PROFILE GRADE FOR THIS PROJECT SHALL BE 1.5" ABOVE THE EXISTING ASPHALT OVERLAY OR ABOVE THE EXISTING 3½" ASPHALT OVERLAY AS APPLICABLE. THE ONLY EXCEPTIONS TO THIS OCCUR AT THE MAINLINE BRIDGES AND UNDERNEATH THE OVERHEAD BRIDGES. THE ADJUSTMENTS FOR THOSE ARE AS FOLLOWS:

MAINLINE BRIDGES:

THE APPROACH SLAB SHALL BE CONSTRUCTED TO A GRADE ESTABLISHED BY EXTENDING THE BRIDGE GRADE BACK ACROSS THE APPROACH SLAB, WITH NO CHANGE IN GRADE OCCURRING AT THE BRIDGE JOINT. THE PROFILE GRADE FROM THE END OF THE APPROACH SLAB TO A POINT 75 FEET AWAY SHALL BE SET BY USING A STRAIGHT GRADE. (THE POINT 75 FEET AWAY SHALL BE BASED UPON THE EXISTING PROFILE GRADE PLUS 1½" OR 1¾" AS APPROPRIATE)

OVERHEAD BRIDGES:

A REVISED PROFILE GRADE SHALL BE ESTABLISHED AT THE OVERHEAD BRIDGES WHERE NEEDED TO PROVIDE A 15'-6" MINIMUM VERTICAL CLEARANCE. THE LIMITS OF THESE REVISIONS ARE SHOWN ON THE PLAN AND PROFILE SHEETS. THE REVISED PROFILE HAS BEEN ESTABLISHED BY USING GRADE BREAKS AND VERTICAL CURVES IN THE PROFILE GRADE. THE PROFILE BREAKS AS SHOWN SHOULD BE USED TO ESTABLISH SUBGRADE AND THE SURFACE OF THE SUBBASE. ALL ASPHALTIC COURSES ABOVE SHOULD BE PAVED AT UNIFORM THICKNESS WITHOUT CONCERN FOR MEETING THESE GRADE BREAKS. THIS WILL RESULT IN A ROUNDING AT EACH GRADE BREAK INSTEAD OF A QUICK BREAK.

PHASED CONSTRUCTION - MAINLINE LONGITUDINAL JOINT

THE CONSTRUCTION JOINT BETWEEN PHASE 1 AND PHASE 2 IS DETAILED ON SHEET 55. THE JOINTS SHALL BE LAPPED AS PER THE DETAIL IN LIEU OF THE REQUIREMENTS OF BP-3.1M. IF TYPICAL EQUIPMENT CAN NOT COMPACT TO THE EDGE OF THE PART WIDTH JOINT, ADDITIONAL COMPACTION SHALL BE REQUIRED. THE TYPE AND METHOD SHALL BE AS APPROVED BY THE ENGINEER. AT THE PART WIDTH CONSTRUCTION JOINT THE CONTRACTOR SHALL VERTICALLY PROTECT THE ASPHALT TREATED FREE DRAINING BASE FROM CONTAMINATION FROM CLAY BENEATH THE EXISTING SUBBASE OR CLAY WITHIN THE EXISTING SUBBASE. (THIS IS MOST LIKELY AT ROADWAY LOWERING AREAS.) TO DO THIS THE CONTRACTOR SHALL INSTALL A GEOTEXTILE FABRIC AGAINST THE VERTICALFACE PRIOR TO PLACING THE ASPHALT TREATED FREE DRAINING BASE. WHEN USED THIS FABRIC SHALL BE REMOVED OR LAID FLAT PRIOR TO PHASE 2 CONSTRUCTION.

ALL COSTS FOR THIS WORK SHALL BE CONSIDERED INCIDENTAL TO THE ASPHALT TREATED FREE DRAINING BASE ITEM. ANY DAMAGE DONE DURING PHASE 2 CONSTRUCTION TO THE PART WIDTH CONSTRUCTION JOINT SHALL BE REPAIRED BY THE CONTRACTOR AT NO COST TO THE STATE. IF THE 304 BASE SLOUGHS IN ANY WAY IT SHALL BE RECOMPACTED UNDER THE PHASE 1 CONSTRUCTION AREA USING HAND TAMPING METHODS.

PHASED CONSTRUCTION - BUTT JOINTS

THE RESURFACING (INTERMEDIATE COURSE) FOR PHASE 1 CONSTRUCTION SHALL BE FEATHERED (THICKENED) TO MEET THE APPROACH SLABS OR PROJECT TERMINI. THIS SHALL BE DONE IN 100 FEET MAINLINE AND 25 FEET RAMP. WHEN PLACING THE SURFACE COURSE IN THESE AREAS THE INTERMEDIATE COURSE SHALL BE REMOVED TO PLACE A CONSTANT 1½" SURFACE COURSE. RAMP BUTT JOINTS SHALL BE MADE BY FIRST TAPERING THE PAVEMENT PLANING TO PROVIDE A SMOOTH TRANSITION AT THE WORK LIMIT. THE INTERMEDIATE COURSE SHALL BE FEATHERED TO MEET THE EXISTING RAMP. WHEN THE SURFACE COURSE IS TO BE PLACED, A BUTT JOINT SHALL BE CREATED IN THE PREVIOUSLY RAMPED ASPHALT. PAYMENT FOR THE REMOVAL SHALL BE MADE UNDER THE FOLLOWING ITEM

ITEM 254 - PAVEMENT PLANING, BITUMINOUS 3936 S.Y.

LONGITUDINAL JOINTS (INTERMEDIATE AND SURFACE COURSES)

LONGITUDINAL JOINTS BETWEEN A PAVEMENT LANE AND ADJOINING BERM OR SPEED CHANGE LANE, AND BETWEEN A SPEED CHANGE LANE AND THE ADJOING BERM SHALL BE MADE THE SAME DAY. ALL LONGITUDINAL JOINTS SHALL BE HOT WITH THE EXCEPTION OF ONE COLD JOINT PER ROADWAY.

LONGITUDINAL JOINT LOCATIONS SHALL BE AS APPROVED BY THE ENGINEER. EACH RAMP SHALL HAVE ONLY ONE LONGITUDINAL COLD JOINT LOCATED APPROXIMATELY HALFWAY ACROSS THE RAMP.

ITEM 304 - AGGREGATE BASE, AS PER PLAN

THIS ITEM CONSISTS OF A BASE COURSE COMPOSED OF CRUSHED AGGREGATES AS PER ITEM 304 OR USING CRUSHED CONCRETE MEETING THE REQUIREMENTS OF ITEM 304 AND THE SPECIFICATIONS BELOW:

AGGREGATES SHALL CONSIST OF CLEAN, SOUND, DURABLE PARTICLES OF CRUSHED CONCRETE AND SHALL BE FREE FROM COATINGS OF CLAY, SILT, VEGETABLE MATTER, AND OTHER OBJECTIONABLE MATERIALS AND SHALL CONTAIN NO CLAY BALLS. FINE AGGREGATE PASSING THE NO. 4 (4.75 MM) SIEVE SHALL CONSIST OF FINES FROM THE OPERATION OF CRUSHING THE COARSE AGGREGATE. IF NECESSARY, FINE AGGREGATE MAY BE ADDED TO PRODUCE THE CORRECT GRADATION. THE FINE AGGREGATE SHALL BE PRODUCED BY CRUSHING STONE, GRAVEL, OR CRUSHED CONCRETE THAT MEET THE REQUIREMENTS FOR WEAR AND ROUNDNESS SPECIFIED FOR COARSE AGGREGATE.

THE CRUSHED AGGREGATE PORTION WHICH IS RETAINED ON THE NO. 4 (4.75 MM) SIEVE SHALL CONTAIN NOT MORE THAN 15 PERCENT, BY WEIGHT, OF FLAT OR ELONGATED PIECES AS DEFINED IN ASTM D 693 AND SHALL HAVE AT LEAST 90 PERCENT BY WEIGHT OF PARTICLES WITHAT LEAST TWO FRACTURED FACES AND 100 PERCENT WITH AT LEAST ON FRACTURED FACE. THE AREA OF EACH FACE SHALL BE EQUAL TO AT LEAST 75 PERCENT OF THE SMALLEST MIDESCTIONAL AREA OF THE PIECE. WHEN TWO FRACTURED FACES ARE CONTIGUOUS, THE ANGLE BETWEEN THE PLANES OF FRACTURES SHALL BE AT LEAST 30 TO COUNT AS TWO FRACTURED FACES.

THE AGGREGATE SHALL BE UNIFORMLY BLENDED DURING CRUSHING OPERATIONS OR MIXED IN A PLANT. THE PLANT SHALL BLEND AND MIX THE MATERIALS TO MEET THE SPECIFICATIONS AND TO SECURE THE PROPER MOISTURE CONTENT FOR COMPACTION.

ITEM 407 - TACK COAT

THE RATE OF APPLICATION OF THE 407 TACK COAT SHALL BE SUBJECT TO ADJUSTMENT AS DIRECTED BY THE ENGINEER. PLAN QUANTITIES INDICATE AN AVERAGE APPLICATION RATE OF 0.10 GALLONS PER SQUARE YARD OF TACK COAT FOR ESTIMATING PURPOSES ONLY.

IN ADDITION TO THE QUANTITY CALCULATED IN THE PAVEMENT CALCULATIONS, THE FOLLOWING ESTIMATED QUANTITY HAS BEEN CARRIED TO THE GENERAL SUMMARY FOR USE ON EXISTING ASPHALT UNDER GUARDRAIL WHERE NEW GUARDRAIL AND ASPHALT UNDER GUARDRAIL ARE IN THE SAME LOCATION.

ITEM 407 - TACK COAT 730 GAL.

ITEM 407 - TACK COAT FOR INTERMEDIATE COURSE

THE RATE OF APPLICATION OF THE 407 TACK COAT FOR INTERMEDIATE COURSE SHALL BE SUBJECT TO ADJUSTMENT AS DIRECTED BY THE ENGINEER. PLAN QUANTITIES INDICATE AN AVERAGE APPLICATION RATE OF 0.05 GALLONS PER SQUARE YARD OF TACK COAT FOR INTERMEDIATE COURSE FOR ESTIMATING PURPOSES ONLY.

CALCULATED MJB CHECKED RAS

GENERAL NOTES

CUY-90-0.00

I:\PROJECTS\Pidll738\dgn\finalplans\ll738GNA.dgn 21-JUL-2000 3:01PM jgrmovse

ITEM 446 - ASPHALT CONCRETE SURFACE COURSE, TYPE 1H, AS PER PLAN WITH SUPPLEMENT 1059 WARRANTY

THE GRADATION FOR THIS ITEM SHALL BE AS PER 441.02, TABLE A, TYPE 1 SURFACE, MEDIUM. ALL OTHER SPECIFICATIONS SHALL BE AS PER TYPE 1H. COARSE AGGREGATE FOR THIS ITEM SHALL BE LIMITED TO SLAG OR LIMESTONE.

ITEM 611 - REINFORCED CONCRETE APPROACH SLAB (T=15") OR (T=13"), AS PER PLAN

THIS ITEM SHALL BE CONSTRUCTED WITH ITEM 611 AND THE DETAIL SHEET WITH THE FOLLOWING ADDITIONS:

1. CONCRETE BARRIER, DOWEL HOLES, & EPOXY GROUT WITHIN THE APPROACH SLAB LIMITS SHALL BE INCLUDED FOR PAYMENT IN THIS ITEM.

2. ALL MATERIALS, LABOR AND INSTALLATION SHALL BE INCLUDED FOR PAYMENT IN ITEM 611 - REINFORCED CONCRETE APPROACH SLAB (T=15") OR (T-13"), AS PER PLAN.

ITEM 830 CURB - TYPE 2A OR TYPE 2B, AS PER PLAN

ITEM 830 CURB, TYPE 2A OR TYPE 2B AS PER PLAN, SHALL MEET ALL REQUIREMENTS OF ODOT SS 830 EXCEPT THAT IT SHALL HAVE A FACE EXPOSURE OF SEVEN (7") INCHES TO MATCH THE EXISTING 6" x 7" INTEGRAL CURB.

ITEM 617 - COMPACTED AGGREGATE, TYPE A, AS PER PLAN

THIS ITEM SHALL BE USED ALONG ALL SHOULDERS WHEN SHOWN ON THE TYPICAL SECTIONS. MATERIAL FOR THIS ITEM SHALL BE LIMITED TO CRUSHED SLAG, CRUSHED LIMESTONE OR ASPHALT GRINDINGS. IF ASPHALT GRINDINGS ARE USED THE ONLY MATERIAL REQUIREMENT IS THAT 100% SHALL PASS A 1 INCH SIEVE. ALL COSTS OF EXCAVATION OR EMBANKMENT NECESSARY TO CONSTRUCT THIS ITEM AND PROVIDE POSITIVE DRAINAGE ARE INCLUDED IN THIS ITEM.

THIS ITEM SHALL BE PLACED PRIOR TO SHIFTING TRAFFIC NEXT TO THE EARTH SHOULDER, AND AGAIN AFTER THE FINAL RESURFACING HAS BEEN PLACED. (SEE DETAIL ON SHEET 55.)

ITEM 618 - RUMBLE STRIPS

THIS ITEM OF WORK SHALL NOT BE INSTALLED UNTIL AFTER ALL TRAFFIC SHIFTS UTILIZING THE SHOULDER HAVE BEEN COMPLETED. THE OFFSET FROM THE EDGE LINE SHALL BE 2 FEET IN LIEU OF THE OFFSETS SHOWN ON BP-9.1. THIS ITEM SHALL BE USED ON ASPHALT SHOULDERS ONLY, RUMBLE STRIPS SHALL NOT BE INSTALLED ON BRIDGE DECKS OR APPROACH SLABS.

ITEM 623 - CONSTRUCTION LAYOUT STAKES, AS PER PLAN

IN ADDITION TO THE REQUIREMENTS OF ITEM 623, THE CONTRACTOR SHALL PROVIDE FIELD SURVEY FOR ALL BRIDGE TRANSITIONS.

REVIEW OF DRAINAGE FACILITIES

BEFORE ANY WORK IS STARTED ON THE PROJECT, AND AGAIN BEFORE FINAL ACCEPTANCE BY THE STATE, REPRESENTATIVES OF THE STATE AND THE CONTRACTOR, ALONG WITH LOCAL REPRESENTATIVES SHALL MAKE A VISUAL INSPECTION OF THE EXISTING SEWERS WITHIN THE WORK LIMITS WHICH ARE TO REMAIN IN SERVICE AND WHICH MAY BE AFFECTED FROM FIELD OBSERVATIONS. RECORDS OF THE INSPECTIONS SHALL BE KEPT IN WRITING BY THE STATE.

ALL NEW CONDUITS, INLETS, CATCH BASINS, AND MANHOLES CONSTRUCTED AS A PART OF THE PROJECT SHALL BE FREE OF ALL FOREIGN MATTER AND IN A CLEAN CONDITION BEFORE THE PROJECT WILL BE ACCEPTED BY THE STATE.

ALL EXISTING SEWERS INSPECTED INITIALLY BY THE ABOVE MENTIONED PARTIES SHALL BE MAINTAINED AND LEFT IN A CONDITION REASONABLY COMPARABLE TO THAT DETERMINED BY THE ORIGINAL INSPECTION. ANY CHANGE IN THE CONDITION RESULTING FROM THE CONTRACTOR'S OPERATIONS SHALL BE CORRECTED BY THE CONTRACTOR TO THE SATISFACTION OF THE ENGINEER.

PAYMENT FOR ALL OPERATIONS DESCRIBED ABOVE SHALL BE INCLUDED IN THE UNIT PRICES BID FOR THE PERTINENT 603 CONDUIT ITEMS OF THE CONTRACT.

CROSSINGS AND CONNECTIONS TO EXISTING PIPES AND UTILITIES

WHERE PLANS PROVIDE FOR A PROPOSED CONDUIT TO BE CONNECTED TO, OR CROSS OVER OR UNDER AN EXISTING SEWER OR UNDERGROUND UTILITY, THE CONTRACTOR SHALL LOCATE THE EXISTING PIPES OR UTILITIES BOTH AS TO LINE AND GRADE BEFORE STARTING TO LAY THE PROPOSED CONDUIT.

IF IT IS DETERMINED THAT THE ELEVATION OF THE EXISTING CONDUIT, OR EXISTING APPURTENANCES TO BE CONNECTED, DIFFERS FROM THE PLAN ELEVATION OR RESULTS IN A CHANGE IN THE PLAN CONDUIT SLOPE, THE ENGINEER SHALL BE NOTIFIED BEFORE STARTING CONSTRUCTION OF ANY PORTION OF THE PROPOSED CONDUIT WHICH WILL BE AFFECTED BY THE VARIANCE IN THE EXISTING ELEVATIONS. IF IT IS DETERMINED THAT THE PROPOSED CONDUIT WILL INTERSECT AN EXISTING SEWER OR UNDERGROUND UTILITY IF CONSTRUCTED AS SHOWN ON THE PLAN, THE ENGINEER SHALL BE NOTIFIED BEFORE STARTING CONSTRUCTION OF ANY PORTION OF THE PROPOSED CONDUIT WHICH WOULD BE AFFECTED BY THE INTERFERENCE WITH AND EXISTING FACILITY.

PAYMENT FOR ALL OPERATIONS DESCRIBED ABOVE SHALL BE INCLUDED IN THE CONTRACT PRICE FOR THE PERTINENT 603 CONDUIT LINE.

REPLACEMENT INLETS AND CATCH BASINS

BEFORE ORDERING ANY REPLACEMENT INLETS OR CATCH BASINS THE CONTRACTOR SHALL SURVEY THE LOCATIONS AND FLOW LINES OF ALL EXISTING SEWER AND UNDERDRAINS ENTERING THE INLETS OR CATCH BASINS. ELEVATIONS SHOWN ON THE PLANS SHALL BE ADJUSTED TO REFLECT THE FIELD SURVEY DATA.

PAYMENT FOR ALL OF THE OPERATIONS DESCRIBED ABOVE SHALL BE INCLUDED IN THE PERTINENT ITEM 604, ITEM.

UNTREATED SEPTIC CONNECTIONS

THIS PLAN MAKES NO PROVISIONS FOR CONNECTING, NOR SHALL THE ENGINEER OR CONTRACTOR CONNECT, ANY UNTREATED SEPTIC DRAINAGE INTO THE HIGHWAY DRAINAGE SYSTEM. ANY PIPE CARRYING UNTREATED SEPTIC FLOW SHALL BE PLUGGED WITH CLASS C CONCRETE AT THE RIGHT OF WAY LINE. PAYMENT FOR PLUGGING SHALL BE INCLUDED IN THE CONTRACT PRICE FOR ITEM 203 - EXCAVATION NOT INCLUDING EMBANKMENT CONSTRUCTION.

ITEM 605 - 6" PIPE UNDERDRAIN

ALL EXISTING UNDERDRAIN ARE TO BE KEPT IN SERVICE AND SHALL BE OUTLETTED AS DIRECTED BY THE ENGINEER, INTO THE NEW DRAINAGE STRUCTURES OR NEW UNDERDRAIN OUTLETS. EXISTING CLOGGED OR NONFUNCTIONING UNDERDRAIN OUTLETS SHALL BE REMOVED AND REPLACED.

QUANTITIES FOR PLACEMENT OF NEW UNDERDRAINS ARE SHOWN ON THE PLANS AND CARRIED TO THE GENERAL SUMMARY. IN ADDITION, THE FOLLOWING CONTINGENCY QUANTITIES ARE PROVIDED FOR THE ABOVE WORK IN THE GENERAL SUMMARY AS DIRECTED BY THE ENGINEER:

ITEM 603 - 6" CONDUIT, TYPE F, 707.41 NON-PERFORATED ASTM 3034 SDR 35, 707.42 OR 707.33	80 L.F.
ITEM 605 - 4" ROCK CUT UNDERDRAIN, A.P.P.	190 L.F.
ITEM 605 - 6" SHALLOW PIPE UNDERDRAIN WITH FABRIC WRAP (18" DEEP)	3700 L.F.
ITEM 605 - 6" SHALLOW PIPE UNDERDRAIN WITH FABRIC WRAP (30 " DEEP), AS PER PLAN	6200 L.F.

UNDERDRAIN OUTLETS

ALL 18 INCH DEEP UNDERDRAINS SHALL BE CONNECTED TO THE OUTLETS FOR THE 30 INCH DEEP UNDERDRAINS WHEREVER THEY CROSS.

ALL PROPOSED UNDERDRAIN OUTLETS ARE SHOWN SEPARATELY FROM THE EXISTING UNDERDRAIN OUTLETS FOR CLARITY ONLY. ALL PROPOSED UNDERDRAIN OUTLETS SHALL REPLACE THE EXISTING UNDERDRAIN OUTLETS AND CONNECT TO BOTH THE PROPOSED AND EXISTING UNDERDRAIN RUNS.

MANHOLE, NO. 3 AS PER PLAN

FRAME AND COVER SHALL BE EAST JORDAN IRON WORKS #1710 WITH TYPE "M" FLAT GRATE, NEENAH R-2668 WITH TYPE C GRATE, OR APPROVED EQUAL.

ITEM SPECIAL - MISCELLANEOUS METAL

EXISTING CASTINGS MAY PROVE TO BE UNSUITABLE FOR REUSE, AS DETERMINED BY THE ENGINEER. IT SHALL BE THE CONTRACTOR'S RESPONSIBILITY TO PROVIDE THE CASTING OF THE REQUIRED TYPE, SIZE AND STRENGTH (HEAVY OR LIGHT DUTY) FOR THE PARTICULAR STRUCTURE IN QUESTION. ALL MATERIALS SHALL MEET ITEM 604 OF THE SPECIFICATIONS AND SHALL HAVE THE PRIOR APPROVAL OF THE ENGINEER.

THE FOLLOWING ESTIMATED QUANTITY HAS BEEN CARRIED OVER TO THE GENERAL SUMMARY FOR USE AS DIRECTED BY THE ENGINEER.

ITEM SPECIAL - MISCELLANEOUS METAL 5000 LBS.

THE CONTRACTOR IS CAUTIONED TO USE EXTREME CARE IN THE REMOVAL, STORAGE, AND REPLACEMENT OF ALL EXISTING CASTINGS. CASTINGS DAMAGED BY THE NEGLIGENCE OF THE CONTRACTOR, AS DETERMINED BY THE ENGINEER, SHALL BE REPLACED WITH THE PROPER NEW CASTING AT THE EXPENSE OF THE CONTRACTOR.

ITEM SPECIAL - FILL AND PLUG EXISTING CONDUIT

THIS ITEM SHALL CONSIST OF THE CONSTRUCTION OF BULKHEADS IN AN EXISTING CONDUIT AND FILLING THE AREA THUS SEALED OFF WITH LEAN GROUT, ITEM 613, SAND OR OTHER MATERIAL APPROVED BY THE ENGINEER.

BULKHEADS SHALL BE LOCATED AT THE LIMITS OF THE AREA TO BE FILLED AS INDICATED ON THE PLANS. THE BULKHEADS SHALL CONSIST OF BRICK OR CONCRETE MASONRY WITH A MINIMUM THICKNESS OF 12 IN. THE FILL MATERIAL SHALL BE PUMPED INTO PLACE OR PLACED BY OTHER MEANS APPROVED BY THE ENGINEER, SO THAT, AFTER SETTLEMENT, AT LEAST 90 PERCENT OF THE CROSS SECTIONAL AREA OF THE CONDUIT, FOR ITS ENTIRE LENGTH, SHALL BE FILLED. THE LENGTH OF FILLED AND PLUGGED CONDUIT TO BE PAID FOR SHALL BE THE ACTUAL NUMBER OF FEET (MEASURED ALONG THE CENTERLINE OF EACH CONDUIT FROM OUTER FACE TO OUTER FACE OF BULKHEADS) FILLED AND PLUGGED AS DESCRIBED ABOVE. IN LIEU OF FILLING AND PLUGGING THE EXISTING CONDUIT, THE PIPE MAY BE CRUSHED AND BACKFILLED IN ACCORDANCE WITH THE PROVISIONS OF 203, OR IT MAY BE REMOVED.

THE LENGTH, MEASURED AS PROVIDED ABOVE, SHALL BE PAID FOR AT THE CONTRACT PRICE PER FOOT FOR, ITEM SPECIAL, FILL AND PLUG EXISTING CONDUIT

ITEM 203 - PROOF ROLLING

AN ESTIMATED QUANTITY FOR THIS ITEM HAS BEEN PROVIDED IN THE GENERAL SUMMARY FOR USE AS DIRECTED BY THE ENGINEER.

ITEM 203 - PROOF ROLLING 57 HOURS

CALCULATED MJB
CHECKED RAS

GENERAL NOTES

CUY-90-0.00

i:\PROJECTS\Pid11738\dgn\finalplans\11738GNA.dgn 21-JUL-2000 3:01PM jgrmovse

ITEM 203 - ROADWAY, MISC.: TEMPORARY MEDIAN DRAINAGE

DURING ALL PHASES OF CONSTRUCTION, THROUGH THE WINTER SEASON, AND UNTIL THE COMPLETION OF THE PROJECT, IT IS THE CONTRACTOR'S RESPOSIBILITY TO PROVIDE POSITIVE MEDIAN DRAINAGE. NO PONDING OF WATER WILL BE PERMITTED ALONG THE PROPOSED CONCRETE BARRIER AND SPREAD OF WATER SHALL NOT ENCROACH ON THE WESTBOUND SHOULDER.

THE MEANS OF DRAINAGE SHALL BE THE RESPONSIBILTY OF AND PLACED BY THE CONTRACTOR WITH THE CONCURRENCE OF THE ENGINEER.

PAYMENT FOR ALL LABOR, EQUIPMENT AND MATERIALS SHALL BE INCLUDED IN THE LUMP SUM CONTRACT PRICE FOR 203 - ROADWAY, MISC.: TEMPORARY MEDIAN DRAINAGE.

TEMPORARY SOIL EROSION AND SEDIMENT CONTROL

THE FOLLOWING ESTIMATED QUANTITIES ARE TO BE PLACED BY THE CONTRACTOR WITH THE ENGINEER'S CONCURRENCE FOR TEMPORARY EROSION AND SEDIMENT CONTROL MEASURES:

877 - TEMPORARY SEEDING AND MULCHING	9005 SQ. YD.
877 - TEMPORARY PERIMETER FILTER FABRIC FENCE	2360 LIN. FT.
877 - TEMPORARY DITCH CHECK FILTER FABRIC FENCE	320 LIN. FT.
877 - TEMPORARY INLET PROTECTION FILTER FABRIC FENCE	690 LIN. FT.
877 - TEMPORARY DITCH PROTECTION	4050 SQ. YD.
877 - SEDIMENT REMOVAL	150 CU. YD
601 - ROCK CHANNEL PROTECTION, TYPE C (WITH FILTER)	108 CU. YD.
870 - MOWING	102 M. SQ. FT.
870 - COMMERCIAL FERTILIZER	2 TON
870 - REPAIR SEEDING AND MULCHING	2252 SQ. YD.
870 - WATER	3 M. GAL.
870 - SOIL ANALYSIS TEST	2 EACH
870 - PLACING TOPSOIL	2518 CU. YD.

ITEM 603, CONDUIT BORED AND JACKED

WHERE IT IS SPECIFIED THAT A CONDUIT BE INSTALLED BY THE METHOD OF BORING AND JACKING, NO TRENCH EXCAVATION SHALL BE CLOSER THAN 5 FEET TO THE EDGE OF PAVEMENT. TRENCHES SHALL BE ADEQUATELY SUPPORTED AND THE SPECIFICATION REQUIREMENTS FOR CLASS B BEDDING SHALL BE DISREGARDED. IF A CASING PIPE IS USED IN THE BORING AND JACKING OPERATION, THE VOID BETWEEN IT AND THE INTERIOR CARRIER PIPE SHALL BE COMPLETELY FILLED WITH ITEM 613, SAND, GROUT, OR OTHER MATERIAL APPROVED BY THE ENGINEER.

ITEM 870, SEEDING AND MULCHING

SEEDING AND MULCHING SHALL BE APPLIED TO ALL AREAS OF EXPOSED SOIL BETWEEN THE RIGHT-OF-WAY LINES, AND WITHIN THE CONSTRUCTION LIMITS FOR AREAS OUTSIDE THE RIGHT-OF-WAY LINES COVERED BY WORK AGREEMENT OR SLOPE EASEMENT. THE CONTRACTOR SHALL ESTABLISH A GOOD STRAND OF GRASS WITH UNIFORM COLOR AND DENSITY, TO THE SATISFACTION OF THE ENGINEER. QUANTITY CALCULATIONS FOR ITEM 870, SEEDING AND MULCHING,ARE BASED ON THESE LIMITS.

THE FOLLOWING ESTIMATED QUANTITY HAS BEEN CARRIED TO THE GENERAL SUMMARY FOR USE ON CAHOON AND CANTERBURY ROADS:

ITEM 870 SEEDING AND MULCHING 260 SQ. YD.

WATERING OF PERMANENT SEEDED AREAS

THE FOLLOWING ESTIMATED QUANTITY IS TO BE USED AS DIRECTED BY THE ENGINEER TO PROMOTE GROWTH AND TO CARE FOR PERMANENT SEEDED AREAS PER 659.09:

ITEM 870 - WATER 100 M GAL

ITEM 638 - VALVE BOX ADJUSTED TO GRADE

THE FOLLOWING CONTINGENCY QUANTITY TO BE USED AS DIRECTED BY THE ENGINEER HAS BEEN INCLUDED FOR THE WATER VALVE BOXES LOCATED @ STA 24+2.73, CANTERBURY ROAD 72.5' RT & @ STA 48+72, COLUMBIA ROAD 95' LT. THE VALVE BOXES WERE FIELD INVESTIGATED BUT NEITHER VALVE BOX COULD BE FOUND. RECORD PLANS SHOW A BOX AT EACH LOCATION.

PRIOR TO DOING ANY WORK NEAR THESE VALVE BOXES THE CONTRACTOR SHALL VERIFY THEIR LOCATION AND DEPTH.

ITEM 638 - VALVE BOX ADJUSTED TO GRADE, 2 EACH

ITEM 203 - DITCH CLEANOUT

THIS WORK SHALL CONSIST OF REESTABLISHING THE FLOW AND CROSS-SECTION OF AN EXISTING DITCH. SURPLUS OR UNSUITABLE MATERIAL, AS DETERMINED BY THE ENGINEER, SHALL BE DISPOSED OF AS PER 203.05. EMBANKMENT REQUIRED FOR ERODED CONDITIONS SHALL MEET THE REQUIREMENTS OF 203.07 EXCEPT THAT THE COMPACTION REQUIREMENTS ARE WAIVED.

MEASUREMENT OF THE DITCH CLEANOUT SHALL BE THE ACTUAL LINEAR FEET MEASURED ALONG THE CENTERLINE OF THE DITCH.

PAYMENT FOR ALL THE ABOUVE SHALL BE INCLUDED IN THE UNIT PRICE BID FOR ITEM 203, DITCH CLEANOUT.

THE FOLLOWING ESTIMATED QUANTITY HAS BEEN CARRIED OVER TO THE GENERAL SUMMARY FOR USE AS DIRECTED BY THE ENGINEER.

ITEM 203 - DITCH CLEANOUT 1000 LIN.FT.

ITEM SPECIAL - PIPE CLEANOUT

THIS WORK SHALL CONSIST OF REMOVING SEDIMENT AND DEBRIS FROM THE EXISTING DRAINAGE CONDUITS SPECIFIED IN THE PLANS. ALL MATERIAL REMOVED SHALL BE DISPOSED OF AS PER 203.05. ALL SEWERS SHALL BE CLEANED OUT TO THE SATISFACTION OF THE ENGINEER.

CLEANOUT OF THE PIPE SHALL BE PAID FOR AT THE UNIT PRICE BID FOR ITEM SPECIAL - PIPE CLEANOUT. THIS PRICE SHALL INCLUDE THE COST FOR MATERIAL, EQUIPMENT, LABOR, AND ALL INCIDENTALS REQUIRED TO COMPLETE THE CLEANOUT.

ITEM SPECIAL - PIPE CLEANOUT 1750 LIN.FT.

ITEM SPECIAL - ASBESTOS ABATEMENT

AN ASBESTOS SURVEY OF THE IR-90 MAINLINE BRIDGES OVER DOVER CENTER ROAD AND BRADLEY ROAD AND THE OVERPASS BRIDGES AT CAHOON ROAD, CROCKER ROAD, CANTERBURY ROAD AND COLUMBIA ROAD SCHEDULED FOR DECK REPLACEMENTS WAS COMPLETED IN MAY OF 2000 BY A CERTIFIED ASBESTOS HAZARD EVALUATION SPECIALIST. THE SURVEY IDENTIFIED THE ASBESTOS CONTAINING MATERIALS AT THE LOCATION LISTED IN THE CHART BELOW.

BRIDGE	LOCATION	ASBESTOS CONTAINING MATERIALS
CAHOON ROAD	PARAPET: WESTSIDE OF BRIDGE	SIX (6) 4-INCH FIBER DUCT PIPES TOTAL LENGTH 1590 FT.
CROCKER ROAD	BOTH PARAPETS	TWO (2) 2-INCH CONDUIT PIPES TOTAL LENGTH 520 FT.
CANTERBURY ROAD	PARAPET: EAST SIDE OF BRIDGE	SIX (6) 4-INCH FIBER DUCT PIPES TOTAL LENGTH 1482 FT.
COLUMBIA ROAD	PARAPET: EAST SIDE OF BRIDGE	NINE (9) 4-INCH FIBER DUCT PIPES TOTAL LENGTH 2475 FT.

THE REMOVAL AND DISPOSAL OF ANY ASBESTOS CONTAINING MATERIAL DISTURBED DURING THE REPLACEMENT OF THE BRIDGE DECKS MUST COMPLY WITH THE OHIO ADMINISTRATIVE CODE, THE OCCUPATIONAL SAFETY AND HEALTH ADMINNISTRATION (OSHA) REGULATIONS, AND THE NATIONAL EMISSION STANDARD FOR HAZARDOUS AIR POLLUTANTS (NESHAP) STANDARDS FOR ASBESTOS.

A COPY OF THE OHIO ENVIRONMENTAL PROTECTION AGENCY (OEPA) NOTIFICATION OF DEMOLITION AND RENOVATION FORM WITH SECTIONS I-VII AND XVI COMPLETED IS INCLUDED WITH THE BID PACKAGE. A COPY OF THIS FORM SIGNED BY THE BRIDGE OWNER WILL BE PROVIDED TO THE SUCCESSFUL BIDDER. THE CONTRACTOR WILL COMPLETE SECTIONS VIII-XIII OF THE SIGNED FORM AND SUBMIT THE COMPLETED FORM TO THE LOCAL AIR AUTHORITY AT LEAST TEN (10) DAYS PRIOR TO DEMOLITION OF THE BRIDGE. THE CONTRACTOR WILL PROVIDE A COPY OF THE COMPLETED FORM TO THE ENGINEER. THE LOCAL AIR AUTHORITY IS:

SHARON MCDUFFY
THE DEPARTMENT OF PUBLIC HEALTH
DIVISION OF ENVIRONMENT
1925 ST. CLAIR AVENUE
CLEVELAND, OH 44114
PHONE: (216) 664-2300

A COPY OF THE OHIO DEPARTMENT OF HEALTH NOTIFICATION FORM IS ALSO INCLUDED WITH THE BID PACKAGE. A COPY OF THIS FORM MUST BE COMPLETED AND SUBMITTED TO THE OHIO DEPARTMENT OF HEALTH AT LEAST TEN (10) DAYS PRIOR TO THE DEMOLITION OF THE BRIDGE. THE CONTRACTOR SHALL PROVIDE A COPY OF THE COMPLETED FORM TO THE ENGINEER.

THE CONTRACTOR SHALL PROVIDE AN INDIVIDUAL TRAINED IN THE PROVISIONS OF NESHAP THAT WILL BE ON-SITE DURING REMOVAL OF THE ASBESTOS CONTAINING MATERIALS. IN ADDITION TO THE ASBESTOS CONTAINING MATERIAL IDENTIFIED IN THE ASBESTOS SURVEY REPORT, ANY ADDITIONAL NON-VISIBLE ASBESTOS ENCOUNTERED WITHIN THE PROJECT WORK LIMITS SHALL ALSO BE MONITORED BY THIS INDIVIDUAL.

THE CONTRACTOR SHALL FURNISH ALL LABOR, EQUIPMENT, AND MATERIALS NECESSARY TO COMPLETE, SUBMIT, AND COMPLY WITH THE OEPA NOTIFICATION FORM AND TO REMOVE, TRANSPORT, AND DISPOSE OF THE MATERIALS CONTAINING ASBESTOS FROM WITHIN THE PROJECT WORK LIMITS. PAYMENT OF THIS WORK SHALL BE INCLUDED IN THE BID LUMP SUM PRICE ITEM SPECIAL - ASBESTOS ABATEMENT.

ITEM SPECIAL - ASBESTOS ABATEMENT LUMP SUM

ASBESTOS INFORMATION

ASBESTOS CONTAINING MATERIALS (ACM) WERE IDENTIFIED IN THE UTILITY PIPES AND DUCTS UNDER THE BRIDGE DECKING AT CAHOON ROAD, CANTERBURY ROAD AND COLUMBIA ROAD. THESE UTILITY FACILITIES ARE NOT TO BE IMPACTED DURING CONSTRUCTION PER ITEM 530 STRUCTURES, MISCELLANEOUS PROTECTION OF UTILITIES NOTE ON PAGE 450 OF THE PROJECT PLANS. IT IS IMPERATIVE THAT THE ACM UTILITY CONDUITS LOCATED UNDER THE BRIDGE ARE NOT CUT, MOVED OR DAMAGED DURING CONSTRUCTION. THE ASBESTOS SURVEY IDENTIFIED ACM AT THE FOLLOWING LOCATION:

BRIDGE	LOCATION	ASBESTOS CONTAINING MATERIALS
CAHOON ROAD	UNDER BRIDGE DECK	TWO (2) 5-INCH CONDUIT PIPES TOTAL LENGTH 530 FT.
CANTERBURY ROAD	UNDER BRIDGE DECK	NINE (9) 5-INCH TRANSITE DUCTS TOAL LENGTH 2223 FT,
COLUMBIA ROAD	UNDER BRIDGE DECK	SIX (6) 5-INCH TRANSITE DUCTS TOTAL LENGTH 1650 FT.

CALCULATED MJB CHECKED RAS

GENERAL NOTES

CUY-90-0.00

i:\PROJECTS\Pid1738\dgn\final plans\1738GNA.dgn 21-JUL-2000 3:02PM jgrmovse

CALCULATED | CHECKED

GENERAL NOTES

ITEM 606, ANCHOR ASSEMBLY, TYPE E-98:

THIS ITEM SHALL CONSIST OF FURNISHING AND INSTALLING EITHER OF THE FOLLOWING GUARDRAIL END TERMINALS.

1) THE ET-2000 (1997) MANUFACTURED BY SYRO, INC., 1170 N. STATE STREET, GIRARD, OHIO 44420 (TELEPHONE:330.545.4373).

THE LENGTH OF THE ET-2000 (1997) SYSTEM IS CONSIDERED TO BE 50 FT, INCLUSIVE OF TWO 25 FT LONG RAIL ELEMENTS. INSTALLATION SHALL BE AT THE LOCATIONS SPECIFIED IN THE PLANS, IN ACCORDANCE WITH THE MANUFACTURER'S SPECIFICATIONS AS DETAILED ON THE FOLLOWING PRE-APPROVED SHOP DRAWINGS:

DWG. #	DRAWING NAME	DWG./REV. DATE	ODOT APPROVAL DATE
SS265M	ET-2000 (1997) PLAN, ELEVATION & SECTIONS	6/20/97	3/6/98

2) THE SKT-350 MANUFACTURED BY ROAD SYSTEMS, INC., 7631 NEW CASTLE DRIVE, FRANKFORT, IL 60423 (TELEPHONE: 815.464.5917).

THE LENGTH OF THE SKT-350 SYSTEM IS CONSIDERED TO BE 50 FT, INCLUSIVE OF FOUR 12.5 FT LONG RAIL ELEMENTS. INSTALLATION SHALL BE AT THE LOCATIONS SPECIFIED IN THE PLANS, IN ACCORDANCE WITH THE MANUFACTURER'S SPECIFICATIONS AS DETAILED ON THE FOLLOWING PRE-APPROVED SHOP DRAWINGS:

DWG. #	DRAWING NAME	DWG./REV. DATE	ODOT APPROVAL DATE
SKT-4M	SEQUENTIAL KINKING TERMINAL (SKT-350) ASSEMBLY WITH 4 FOUNDATION TUBES	12/11/97	3/6/98

A TYPE C DELINEATOR SHALL BE INSTALLED AT THE HEAD OF ALL TYPE E-98 UNITS LOCATED ON THE RIGHT SIDE OF THE THROUGH ROADWAY. A TYPE D DELINEATOR SHALL BE INSTALLED AT THE HEAD OF ALL TYPE E-98 UNITS LOCATED ON THE LEFT SIDE OF THE THROUGH ROADWAY.

PAYMENT FOR THE ABOVE WORK SHALL BE MADE AT THE UNIT PRICE BID FOR ITEM 606, ANCHOR ASSEMBLY, TYPE E-98, EACH, AND SHALL INCLUDE ALL LABOR, TOOLS, EQUIPMENT AND MATERIALS NECESSARY TO CONSTRUCT A COMPLETE AND FUNCTIONAL ANCHOR ASSEMBLY SYSTEM, INCLUDING ALL RELATED TRANSITIONS, DELINEATORS, HARDWARE AND GRADING, NOT SEPARATELY SPECIFIED, AS REQUIRED BY THE MANUFACTURER.

THE FACE OF THE TYPE E-98 IMPACT HEAD SHALL BE COVERED WITH A SHEET OF TYPE G REFLECTIVE SHEETING, PER CMS 730.19, APPROXIMATELY 18"x18". DELINEATORS SHALL COMPLY WITH STANDARD TRAFFIC DRAWING TC-61.10.

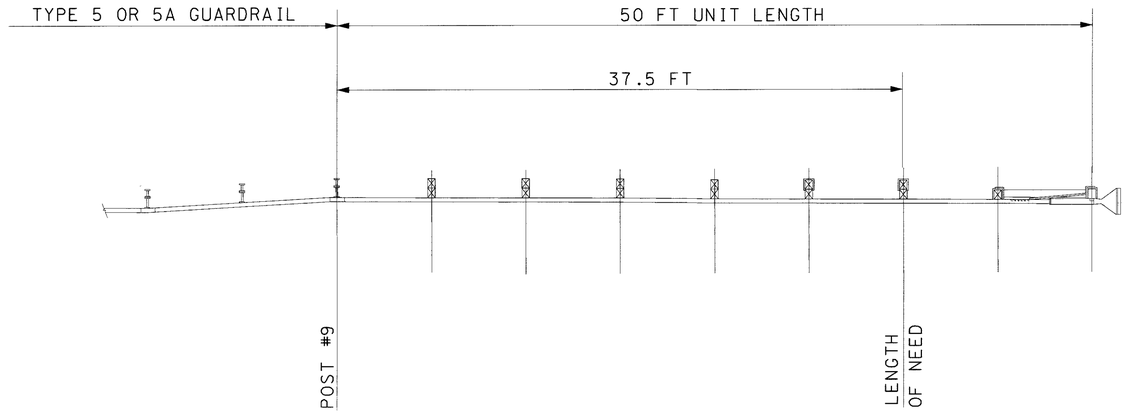

POST #9 IS INCLUDED FOR PAYMENT WITH STANDARD GUARDRAIL

LENGTH OF NEED @ POST #3

ET-2000

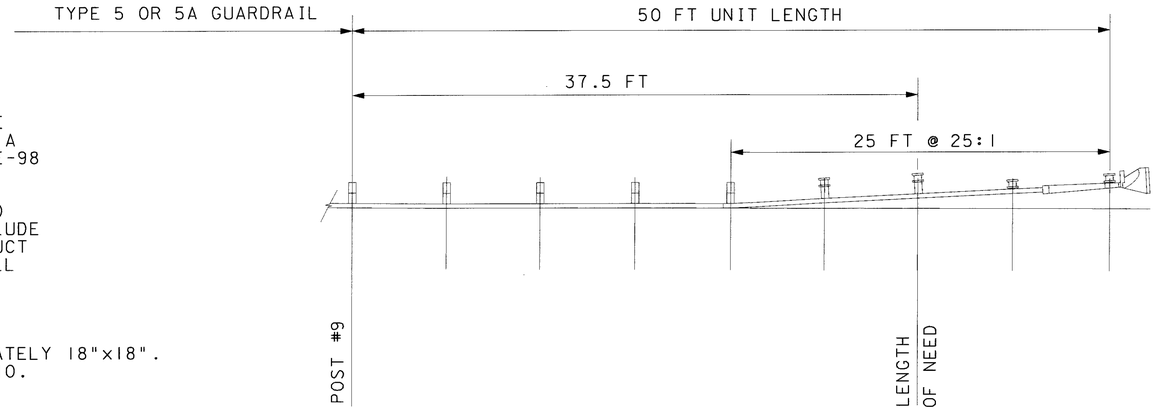

POST #9 IS INCLUDED FOR PAYMENT WITH STANDARD GUARDRAIL

LENGTH OF NEED @ POST #3

SKT-350

NCHRP REPORT 350 COMPLIANCE

CUY-90-0.00

03 MAR 2000
p:\PR22308\CADD\17386NA.dgn

ITEM 606 - IMPACT ATTENUATOR, TYPE 2-98 [(MODEL #QS3007Y), (UNIDIRECTIONAL OR BIDIRECTIONAL)]

THIS ITEM SHALL CONSIST OF FURNISHING AND INSTALLING A QUADGUARD IMPACT ATTENUATOR MANUFACTURED BY ENERGY ABSORPTION SYSTEMS, INC., ONE EAST WACKER DRIVE, CHICAGO, IL 60601 (TELEPHONE: 312-467-6750).

INSTALLATION SHALL BE AT THE LOCATIONS SPECIFIED IN THE PLANS, IN ACCORDANCE WITH THE MANUFACTURER5/32 S SPECIFICATIONS AS DETAILED ON THE FOLLOWING PRE-APPROVED SHOP DRAWINGS:

DWG. #	DRAWING NAME	DWG./REV. DATE	ODOT APPROVAL DATE
QSTSCVR-U	QUADGUARD SYSTEM WITH TENSION STRUT BACKUP	7/10/96 Rev. A	3/6/98
QSCBCVR-U	QUADGUARD SYSTEM WITH CONCRETE BACKUP	4/28/97 Rev. E	3/6/98
QFTSCVR-U	QUADGUARD SYSTEM W/ 69" & 90" TENSION STRUT BACKUPS	9/5/97 Rev. C	3/6/98
QFCBCVR-U	QUADGUARD SYSTEM W/ 69" & 90" CONCRETE BACKUPS	9/4/97 Rev. D	3/6/98
35-40-20	DEFLECTOR ASSEMBLY, CONCRETE BACKUP RETROFIT, QG	11/14/97 Rev. B	7/31/98
35-40-03	QUADGUARD SYSTEM BACKUP ASSEMBLY, TS, QG	3/19/99 Rev. F	8/27/99
35-40-08 2 SHEETS	QUADGUARD SYSTEM CONCRETE BACKUP, QG ON GRADE & ON EXISTING CONCRETE STRUCTURE	10/14/97 Rev. F 10/14/97 Rev. F	8/27/99 8/27/99
35-40-21 2 SHEETS	TRANSITION ASSEMBLY QUAD-BEAM TO W-BEAM	11/6/97 Rev. B 7/14/97 Rev. A	8/27/99 8/27/99
35-40-22 2 SHEETS	TRANSITION ASSEMBLY QUAD-BEAM TO THRIE-BEAM	7/15/97 Rev. A 7/11/97 Rev. A	8/27/99 8/27/99
35-40-15	QUADGUARD SYSTEM END SHOE ASSEMBLY, QG	9/11/98 Rev. F	8/27/99
3540211 2 SHEETS	QG TRANSITION ASSEMBLY QUAD-BEAM TO W-BEAM-WIDE	8/29/97 Rev. A 8/29/97 Rev. A	8/27/99 8/27/99
3540221 2 SHEETS	QG TRANSITION ASSEMBLY QUAD-BEAM TO THRIE-BEAM-WIDE	8/29/97 Rev. A 8/29/97 Rev. A	8/27/99 8/27/99
3540498	QG SYSTEM NOSE ASSEMBLY, QG, 24, 30, 36, W/ BELTING	12/30/98	8/27/99
3540150	QUADGUARD TRANSITION TO VERTICAL CONCRETE BARRIER	9/96	8/27/99

WHEN BI-DIRECTIONAL DESIGNS ARE SPECIFIED, THE CONTRACTOR SHALL SUPPLY APPROPRIATE TRANSITIONS.

PAYMENT FOR THE ABOVE WORK SHALL BE MADE AT THE UNIT PRICE BID FOR ITEM 606, IMPACT ATTENUATOR, TYPE 2-98 [(MODEL #), (UNIDIRECTIONAL OR BIDIRECTIONAL)], EACH, AND SHALL INCLUDE ALL LABOR, TOOLS, EQUIPMENT AND MATERIALS NECESSARY TO CONSTRUCT A COMPLETE AND FUNCTIONAL IMPACT ATTENUATOR SYSTEM, INCLUDING ALL RELATED BACKUPS, TRANSITIONS, HARDWARE AND GRADING, NOT SEPARATELY SPECIFIED, AS REQUIRED BY THE MANUFACTURER. SEE SHEET 347 FOR CONCRETE BACKUP DETAILS.

CALCULATED | CHECKED

GENERAL NOTES

CUY-90-0.00

03 MAR 2000
P:\PR22308\CADD\II738GNA.dgn

MAINTENANCE OF TRAFFIC

GENERAL

IT IS THE RESPONSIBILITY OF THE CONTRACTOR TO PROVIDE THRU VEHICULAR ACCESS IN BOTH DIRECTIONS AT ALL TIMES THROUGHOUT THE PROJECT AREA. THE PROJECT SHALL BE CONSTRUCTED IN FOUR MAJOR PHASES IN ORDER TO MINIMIZE TRAFFIC DISRUPTION AND INCONVENIENCE TO THE GENERAL PUBLIC. THE CONTRACTOR SHALL BE RESPONSIBLE FOR PROVIDING ALL EQUIPMENT, MATERIALS AND MANPOWER NEEDED TO ADEQUATELY MAINTAIN TRAFFIC AS PROVIDED FOR IN THE PLANS AND SPECIFICATIONS.

THE CONTRACTOR IS REMINDED THAT, IN THE CONDUCT OF THIS PROJECT, HIS SEQUENCE OF OPERATIONS SHALL BE PLANNED IN SUCH A WAY AS TO MINIMIZE THE NUMBER OF LANE REDUCTIONS AND/OR LANE WIDTH REDUCTIONS REQUIRED TO MAINTAIN TRAFFIC THROUGH THE PROJECT.

IT IS THE INTENT OF THIS PROJECT TO MAINTAIN A MINIMUM OF TWO LANES OF TRAFFIC, IN EACH DIRECTION ON THE MAINLINE PAVEMENT DURING ALL PHASES OF THE PROJECT, EXCEPT FOR CLOSURES AS PERMITTED BY THE "SCHEDULE OF THRU LANES TO BE MAINTAINED NOTE". NO LONG TERM CLOSURES WILL BE PERMITTED ON THE 2 LANE SECTION OF I-90.

THE CONTRACTOR SHALL HAVE ALL NORMAL LANES OF TRAFFIC OPENED BETWEEN NOVEMBER 15 AND MARCH 15. NO TRAFFIC THIS TIME. THE CONTRACTOR IS CAUTIONED TO SCHEDULE HIS WORK, ESPECIALLY ASPAHLT OVERLAYS, TO MEET THIS REQUIREMENT. SHORT TERM LANE CLOSURES MAY BE PERMITTED BETWEEN NOVEMBER 15 AND MARCH 15, AS APPROVED BY THE PROJECT ENGINEER AND ACCORDING TO THE "SCHEDULE OF THRU LANES TO BE MAINTAINED" DESCRIBED ON SHEET 48.

THE SCHEDULED DATE FOR COMPLETION OF ALL PHASES REQUIRING TRAFFIC SHIFTS SHALL BE NO LATER THAN OCTOBER 15. APPROVED TIME EXTENSION DUE TO WEATHER OR OTHER REASONS SHALL EXTEND THE OCTOBER 15TH DATE TO NO LATER THAN NOVEMBER 15TH IN THE YEAR WHICH THEY OCCUR.

THE TIME BETWEEN NOVEMBER 15 AND MARCH 15 IS CONSIDERED WINTER MONTHS AND NO EXTENSIONS WILL BE GRANTED FOR THIS TIME.

NOVEMBER 15TH SHALL BE CONSIDERED TO CONSTITUTE AN INTERIM COMPLETION DATE AND LIQUIDATED DAMAGES SHALL BE ASSESSED IN ACCORDANCE WITH 108.07 FOR EACH CALENDAR DAY THAT ALL LANES HAVE NOT BEEN RETURNED TO THEIR NORMAL POSITION.

NO EXTENSIONS OF TIME SHALL BE GRANTED FOR DELAYS IN MATERIAL DELIVERIES, UNLESS SUCH DELAYS ARE INDUSTRY-WIDE, OR FOR LABOR STRIKES, UNLESS SUCH STRIKES ARE AREA-WIDE.

SHOULD THE CONTRACTOR FAIL TO MEET THIS REQUIREMENT THE CONTRACTOR SHALL BE ASSESSED LIQUIDATED DAMAGES IN ACCORDANCE WITH 108.07 OF THE CONSTRUCTION AND MATERIAL SPECIFICATIONS.

OVERHEAD SIGNS AND SUPPORTS THAT ARE BEING MODIFIED SHALL NOT BE REMOVED UNTIL THE NEW FOUNDATION IS CONSTRUCTED AND ANY REQUIRED SUPPORT MODIFICATIONS ARE AT THE SITE.

SUSPENSION OF WORK

IF THE CONTRACTOR FAILS TO COMPLY WITH THE PROVISIONS FOR TRAFFIC CONTROL AS SET FORTH IN THESE PLANS OR WITH PROVISIONS OF THE OHIO MANUAL OF UNIFORM TRAFFIC CONTROL DEVICES (OMUTCD), THE ENGINEER SHALL SUSPEND WORK UNTIL THE CONTRACTOR COMPLIES WITH THE NECESSARY REQUIREMENTS.

MAJOR WORK ITEMS

THE FOLLOWING MAJOR WORK ITEMS WILL REQUIRE TRAFFIC MAINTENANCE PROCEDURES WHICH SHALL BE INCORPORATED INTO THE CONTRACTOR'S SEQUENCE OF OPERATIONS:

A. TEMPORARY PAVEMENT REPLACEMENT ON OUTSIDE SHOULDERS.
B. MEDIAN PAVEMENT LANE AND SHOULDER CONSTRUCTION AND MEDIAN REGRADING.
C. BRIDGE WIDENING, BRIDGE DECK REPLACEMENT, AND REPAIR.
D. INSTALLATION AND/OR REPAIR OF CONCRETE BARRIER AND GUARDRAIL
E. INSTALLATION AND/OR REPLACEMENT OF HIGHWAY TOWER LIGHT POLES
F. I-90 OUTSIDE PAVEMENT REPLACEMENT AND RAMP REPLACEMENT.
G. ASPHALT CONCRETE OVERLAYS
H. PAVEMENT MARKINGS
I. INSTALLATION OF NEW OVERHEAD SIGNS
J. INSTALLATION OF NOISE BARRIERS (SEE NOTE ON SHEET 45)

MAJOR CONSTRUCTION PHASES

PRELIMINARY PHASE 1 EASTBOUND

1. CONSTRUCT TEMPORARY SHOULDERS PRIOR TO IMPLEMENTING TRAFFIC SHIFTS
2. BEGIN BRIDGE PIER AND ABUTMENT WIDENING, ETC.

PHASE 1 EASTBOUND - CONSTRUCT INSIDE LANES

THE MAJOR WORK ITEMS DURING THIS PHASE INCLUDE THE FOLLOWING:

1. DRAINAGE - COMPLETE ALL NEW UNDERDRAINS, AND OUTLETS, ETC. (ITEM NOS. 603, 604 AND 605)
2. LIGHTING - INSTALL CONDUITS UNDER PAVEMENT.
3. SIGNING - COMPLETE ALL FOUNDATION WORK.
4. PAVEMENT - COMPLETE ALL PAVEMENT WORK NEEDED FOR NEW LANE, NEW MEDIAN SHOULDER AND LOWERINGS, INCLUDING GUARD RAILS OR MEDIAN BARRIER, EXCEPT SURFACE COURSE. (GUARDRAILS AT FUTURE TOWER LIGHT POLE LOCATIONS SHALL NOT BE INSTALLED UNTIL NEEDED).
5. BRIDGES - SEE STAGE 1 EASTBOUND CONSTRUCTION SEQUENCING NOTES, SHEETS 410, 461.

PRELIMINARY PHASE 2 EASTBOUND

1. CONSTRUCT TEMPORARY SHOULDERS PRIOR TO IMPLEMENTING TRAFFIC SHIFTS.

PHASE 2 EASTBOUND - OUTSIDE LANES

THE MAJOR WORK ITEMS DURING THIS PHASE INCLUDE THE FOLLOWING:

1. DRAINAGE - INSTALL UNDERDRAINS AND OUTLETS. INSTALL NON-MEDIAN DRAINAGE STRUCTURES.
2. LIGHTING - INSTALL CONDUITS UNDER PAVEMENT.
3. PAVEMENT - COMPLETE ALL PAVEMENT WORK FOR OUTSIDE LANES, CONSTRUCT LOWERINGS, GUARDRAIL AND BARRIERS, EXCEPT SURFACE COURSE.
4. SIGNING - COMPLETE ALL SIGNING WORK INCLUDING INSTALLATION OF OVERHEAD SIGNS
5. BRIDGES - SEE STAGE 2 EASTBOUND CONSTRUCTION SEQUENCING NOTES, SHEETS 410, 461.

AT THE END OF PHASE 2 EASTBOUND

PLACE SURFACE COURSE BEHIND PCB WHERE FEASIBLE. REPLACE PCB WITH DRUMS, PLACE SURFACE COURSE ON OUTSIDE LANES AND RAMPS. RETURN TRAFFIC TO OUTSIDE LANES, PLACE SURFACE COURSE ON INSIDE LANES. INSTALL PERMANENT PAVEMENT MARKINGS AND OPEN ALL LANES TO TRAFFIC.

PRELIMINARY PHASE 1 WESTBOUND

1. CONSTRUCT TEMPORARY SHOULDERS AND COMPLETE PAVEMENT SURFACE REPAIRS PRIOR TO IMPLEMENTING TRAFFIC SHIFTS
2. BEGIN BRIDGE PIER AND ABUTMENT WIDENING, ETC.

PHASE 1 WESTBOUND - CONSTRUCT INSIDE LANES

THE MAJOR WORK ITEMS DURING THIS PHASE INCLUDE THE FOLLOWING:

1. DRAINAGE - COMPLETE ALL NEW UNDERDRAINS, AND OUTLETS, ETC. (ITEM NOS. 603, 604 AND 605)
2. LIGHTING - INSTALL CONDUITS UNDER PAVEMENT. INSTALL GUARDRAIL TO PROTECT TOWERS ALONG EASTBOUND I-90. INSTALL TOWERS. LIGHTING MUST BE OPERATING PRIOR TO IMPLEMENTING PHASE 2 WESTBOUND.
3. SIGNING - COMPLETE ALL FOUNDATION WORK.
4. PAVEMENT - COMPLETE ALL PAVEMENT WORK NEEDED FOR NEW LANE, NEW MEDIAN SHOULDER AND LOWERINGS, INCLUDING GUARD RAILS OR MEDIAN BARRIER, EXCEPT SURFACE COUSE. COMPLETE MEDIAN GRADING, SEEDING AND MULCHING, ETC.
5. BRIDGES - SEE STAGE 1 WESTBOUND CONSTRUCTION SEQUENCING NOTES, SHEETS 410, 461.

PRELIMINARY PHASE 2 WESTBOUND

1. CONSTRUCT TEMPORARY SHOULDERS AND COMPLETE PAVEMENT SURFACE REPAIRS PRIOR TO IMPLEMENTING TRAFFIC SHIFTS.

PHASE 2 WESTBOUND - OUTSIDE LANES

THE MAJOR WORK ITEMS DURING THIS PHASE INCLUDE THE FOLLOWING:

1. DRAINAGE - INSTALL UNDERDRAINS AND OUTLETS. CONSTRUCT NON-MEDIAN DRAINAGE STRUCTURES.
2. LIGHTING - COMPLETE ANY REMAINING LIGHTING WORK.
3. PAVEMENT - COMPLETE ALL PAVEMENT WORK FOR OUTSIDE LANES, CONSTRUCT LOWERINGS, GUARDRAIL AND BARRIERS, EXCEPT SURFACE COURSE.
4. SIGNING - COMPLETE ALL SIGNING WORK INCLUDING INSTALLATION OF OVERHEAD SIGNS
5. BRIDGES - SEE STAGE 2 WESTBOUND CONSTRUCTION SEQUENCING NOTES, SHEETS 410, 461.

AT THE END OF PHASE 2 WESTBOUND

PLACE SURFACE COURSE BEHIND PCB WHERE FEASIBLE. REPLACE PCB WITH DRUMS, PLACE SURFACE COURSE ON OUTSIDE LANES AND RAMPS. RETURN TRAFFIC TO OUTSIDE LANES, PLACE SURFACE COURSE ON INSIDE LANES. INSTALL PERMANENT PAVEMENT MARKINGS AND OPEN ALL LANES TO TRAFFIC.

TRUCKS AND EQUIPMENT INGRESS AND EGRESS

OPENINGS IN THE PORTABLE CONCRETE BARRIER (PCB) MAY BE ALLOWED AT THE ENGINEERS DISCRETION. THESE OPENINGS OR BEGINNING SECTIONS THAT ARE CLOSER THAN 20 FEET TO THE TRAVELED WAY ON FREEWAY MAINLINES MUST BE PROTECTED BY A TEMPORARY IMPACT ATTENUATOR. THE TEMPORARY IMPACT ATTENUATOR MUST MEET THE REQUIREMENTS OF NCHRP (NATIONAL COOPERATIVE HIGHWAY RESEARCH PROGRAM) 350 FOR 65 MPH. WHEN USED THE TEMPORARY IMPACT ATTENUATOR SHALL NOT BE LOCATED ANY CLOSER TO THE TRAFFIC THAN THE NORMAL CONCRETE BARRIER OFFSET, AND PREFERABLY AT LEAST 2 FEET FARTHER AWAY. ALL COSTS FOR THE TEMPORARY IMPACT ATTENUATORS SHALL BE INCLUDED UNDER ITEM 614, MAINTAINING TRAFFIC.

03 MAR 2000
D:\PR22308\CADD\II738MNA.DGN

CONSTRUCTION VEHICLE ACCESS TO WORK AREAS

WARNING SIGNS SHALL BE POSTED WHEN TRUCKS ARE ENTERING OR EXITING THE ROADWAY. NO SIGNIFICANT NUMBER OF CONSTRUCTION VEHICLES SHALL ENTER OR EXIT THE WORK ZONE DURING PEAK-HOUR TRAFFIC FLOWS. (EASTBOUND 6:00 A.M. TO 9:00 A.M. AND WESTBOUND 3:00 P.M. TO 7:00 P.M.) FOR THE PURPOSE OF THIS NOTE, CONSTRUCTION VEHICLES SHALL BE DEFINED AS HEAVY VEHICLES SUACH AS DUMP TRUCKS, CONCRETE TRUCKS, TRACTOR TRAILERS, FLATBED TRUCKS, ETC. A SIGNIFICANT NUMBER OF CONSTRUCTION VEHICLES IS DEFINED AS 6 VEHICLES PER HOUR. WHENEVER A SIGNIFICANT NUMBER OF TRUCKS ARE ACCESSING THE WORK AREA THE CONTRACTOR SHALL IMPLEMENT ONE-LANE CLOSURES TO PROVIDE FOR THE SAFE INGRESS AND EGRESS OF HIS VEHICLES. THIS WORK SHALL ONLY BE SCHEDULED WHEN SAFE INGRESS AND EGRESS CONDITIONS CAN BE OBTAINED AND SHALL BE LIMITED TO THE TIMES ALLOWED UNDER THE SHORT TERM CLOSURE TABLE. LANE CLOSURES FOR TRUCKS EXITING THE HIGHWAY MAY BE WAIVED BY THE ENGINEER PROVIDING THAT A DECELERATION AREA LOCATED OUTSIDE THE THRU TRAFFIC LANES IS AVAILABLE FOR THE CONSTRUCTION VEHICLES. ALL COSTS OF SHORT TERM LANE CLOSURES AND/OR MODIFICATIONS TO THE PORTABLE CONCRETE BARRIER SHALL BE INCLUDED UNDER ITEM 614 - MAINTAINING TRAFFIC.

LANE CLOSURES FOR SAFE INGRESS AND EGRESS WILL NOT BE REQUIRED AT LOCATIONS WHERE THE CONTRACTOR CONSTRUCTS A TEMPORARY ACCEL AND / OR DECEL LANE OR COMBINATION DECELERATION AND ACCELERATION LANE AS DETAILED IN THESE PLANS. PAYMENT FOR THIS WORK IS INCLUDED UNDER ITEM 615- TEMPORARY ROAD, AS PER PLAN. (SEE SHEETS 49,50)

TEMPORARY MEDIAN CROSSOVERS

THE CONTRACTOR MAY CONSTRUCT ADDITIONAL MEDIAN CROSSOVERS FOR USE BY HIS FORCES AT LOCATIONS AS APPROVED BY THE ENGINEER. CROSSOVERS CONSTRUCTED FOR USE DURING PHASE I CONSTRUCTION SHALL REQUIRE A 300 FT LONG DECELERATION LANE WHICH WIDENS THE SHOULDER FROM 4' TO 12'. ANY ADDITIONAL MEDIAN CROSSOVER CONSTRUCTED SHALL INCLUDE A PAVED WEARING SURFACE. AT THE COMPLETION OF ALL CONSTRUCTION ALL TEMPORARY MEDIAN CROSSOVERS SHALL BE REMOVED AND THE AREA GRADED AS PER THE CROSS SECTIONS. COST FOR ALL WORK ASSOCIATED WITH TEMPORARY MEDIAN CROSSOVER SHALL BE INCLUDED IN THE LUMP SUM BID FOR ITEM 614, MAINTAINING TRAFFIC.

BRIDGE STAGE CONSTRUCTION

THE CONTRACTOR SHALL REFER TO THE TYPICAL CROSS SECTIONS AND TRANSVERSE SECTIONS IN THE STRUCTURE PLANS FOR DETAILS ON THE STAGE CONSTRUCTION OF EACH BRIDGE.

TRAFFIC CONTROL FOR ASPHALT CONCRETE OPERATIONS

ALL ASPHALT CONCRETE OPERATIONS SHALL BE CONDUCTED IN A MANNER THAT WILL ASSURE MINIMUM DANGER AND INCONVENIENCE TO THE HIGHWAY USERS. UNLESS WORKING BEHIND PCB, ASPHALT WORK SHALL BE PERFORMED DURING THE TIMES PERMITTED FOR LANE CLOSURES. (SEE NOTE). THE PROCEDURE FOR INSTALLATION OF ANY ASPHALT LAYER SHALL BE SUCH THAT NO DISCONTINUITY IN THE ELEVATION OF THE TRAVELED SURFACE SHALL EXIST AT ANY TIME OTHER THAN DURING THE PERMITTED WORKING HOURS AND THEN ONLY WHEN SUCH PROPER TRAFFIC CONTROL DEVICES ARE IN PLACE AS WILL PREVENT SUCH A DISCONTINUITY BEING A DANGER TO HIGHWAY USERS.

TRAFFIC MUST BE MAINTAINED AT ALL TIMES IN BOTH DIRECTIONS IN ACCORDANCE WITH THE "SCHEDULE OF THRU LANES TO BE MAINTAINED".

WHENEVER ANY PART OF THE TRAVELED SURFACE IS CLOSED, THE MOTORIST SHALL BE WARNED AND DIVERTED BY THE CONTRACTOR THROUGH THE USE OF A FLASHING ARROW, IN ADDITION TO THOSE PROVISIONS SET FORTH IN THE OHIO MANUAL OF UNIFORM TRAFFIC CONTROL DEVICES FOR STREETS, AND HIGHWAYS.

PRIOR TO OPENING THE ROADWAY TO NORMAL TRAFFIC DURING WINTER MONTHS, ALL ASPHALT WORK MUST BE COMPLETED AN EQUAL FULL-WIDTH DISTANCE.

TRAFFIC SHALL NOT BE PERMITTED TO CROSS ANY PART-WIDTH RESURFACING JOINTS EXCEPT AS IS NECESSARY DURING THE ACTUAL RESURFACING OPERATION. ANY PART-WIDTH RESURFACING JOINTS WHICH MUST BE EXPOSED TO TRAFFIC SHALL BE RAMPED USING ITEM 614 - BITUMINOUS CONCRETE FOR MAINTAINING TRAFFIC, AT A RATE NOT TO EXCEED 1 INCH IN 1 FOOT (LONGITUDINAL JOINTS).

TEMPORARY TRANSVERSE RESURFACING JOINTS WHICH MUST BE EXPOSED TO TRAFFIC SHALL BE RAMPED USING ITEM 614 - BITUMINOUS CONCRETE FOR MAINTAINING TRAFFIC, AT A RATE NOT TO EXCEED 1 INCH IN 4 FEET.

WHENEVER TRAFFIC IS SUBJECTED TO HALF-WIDTH OVERLAYS PRIOR TO COMPLETING THE ASPHALT COURSE, THE CONTRACTOR SHALL PROVIDE OW - 171-48 OR OW-P-171-24 SIGNS (DUAL SIGN INSTALLATION). PLACEMENT SHALL BE AS DIRECTED BY THE ENGINEER AND INCLUDED IN THE LUMP SUM BID FOR ITEM 614 - MAINTAINING TRAFFIC.

MAINTENANCE OF I-90 TRAFFIC ON HOLIDAYS AND SPECIAL EVENTS

NO SHORT TERM CLOSURES OR RAMP CLOSURES SHALL BE IMPLEMENTED ON ALL PUBLIC HOLIDAYS OR EVENTS SUCH AS NEW YEAR'S DAY, MARTIN LUTHER KING JR. DAY, GOOD FRIDAY, EASTER SUNDAY, MEMORIAL DAY, INDEPENDENCE DAY, LABOR DAY, COLUMBUS DAY, THANKSGIVING DAY, AND CHRISTMAS DAY.

THE PERIOD OF TIME THAT THE LANES ARE TO BE OPEN DEPENDS ON THE DAY OF THE WEEK ON WHICH THE HOLIDAY OR EVENT FALLS. THE FOLLOWING SCHEDULE SHALL BE USED TO DETERMINE THIS PERIOD.

DAYS OF THE WEEK	TIME ALL LANES MUST BE OPEN TO TRAFFIC
SUNDAY	12:00 NOON FRIDAY THROUGH 12:00 NOON MONDAY
MONDAY	12:00 NOON FRIDAY THROUGH 12:00 NOON TUESDAY
TUESDAY	12:00 NOON MONDAY THROUGH 12:00 NOON WEDNESDAY
WEDNESDAY	12:00 NOON TUESDAY THROUGH 12:00 NOON THURSDAY
THURSDAY	12:00 NOON WEDNESDAY THROUGH 12:00 NOON FRIDAY
FRIDAY	12:00 NOON THURSDAY THROUGH 12:00 NOON MONDAY
SATURDAY	12:00 NOON FRIDAY THROUGH 12:00 NOON MONDAY

SHOULD THE CONTRACTOR FAIL TO MEET THESE REQUIREMENTS THE CONTRACTOR SHALL BE ASSESSED LIQUIDATED DAMAGES IN ACCORDANCE WITH 108.07 OF THE CONSTRUCTION AND MATERIAL SPECIFICATIONS.

SHORT TERM ONE LANE CLOSURES ON BRADLEY ROAD, AND DOVER CENTER ROAD.

IN ORDER TO CONSTRUCT THE CONCRETE SLOPE PROTECTION, PAVED GUTTER AND CONCRETE WALK IN THE AREAS UNDER THE BRIDGES THE CONTRACTOR SHALL BE PERMITTED TO TEMPORARILY CLOSE ONE LANE OF THE PAVEMENT DURING THE TIME CONSTRUCTION IS BEING DONE IN THAT AREA. AT THE END OF EACH WORK DAY ALL LANES MUST BE OPEN TO TRAFFIC.

THE CONTRACTOR MAY ALSO IMPLEMENT A ONE LANE CLOSURE TO FACILITATE WIDENING, AND BRIDGE DECK REMOVAL PLACEMENT.

THESE CLOSURES SHALL ONLY BE IMPLEMENTED DURING NON-RUSH HOURS AS DETERMINED BY THE ENGINEER.

THE CONTRACTOR SHALL MAINTAIN TRAFFIC AT ALL TIMES IN ACCORDANCE WITH THE REQUIREMENTS OF ITEM 614. THE LENGTH OF TWO WAY ALTERNATING TRAFFIC ZONES USING ONE LANE SHALL BE KEPT TO A MINIMUM CONSISTENT WITH THE REQUIREMENTS OF THE WORK.

CAHOON AND CANTERBURY ROADS MAYBE CLOSED UP TO 65 DAYS EACH TO PERMIT BRIDGE DECK REMOVAL & REPLACEMENT. SEE DETOUR PLANS. CAHOON RD SHALL NOT BE CLOSED WHILE LONG TERM MAINTENANCE OF TRAFFIC CLOSURES ARE IN PLACE ON CROCKER ROAD.

ONE LANE OF TRAFFIC IN EACH DIRECTION WILL BE MAINTAINED ON CROCKER ROAD DURING BRIDGE DECK REPLACEMENT AND WIDENING. SEE PART 2 PLANS.

ALL LANES ON COLUMBIA ROAD WILL BE OPEN FROM 6:00 AM TO 9:00 AM AND 3:00 PM TO 7:00 PM MONDAY THROUGH FRIDAY. ONE LANE CLOSURES MAY BE IMPLEMENTED AT OTHER TIMES.

ALL SIGNS, DRUMS, BARRICADES AND FLAGGERS SHALL BE UTILIZED IN CONFORMANCE WITH THE OHIO MANUAL OF UNIFORM TRAFFIC CONTROL DEVICES FOR STREETS AND HIGHWAYS, CURRENT EDITION, LATEST REVISIONS AND PER STANDARD CONSTRUCTION DRAWINGS MT-95.31M, MT-95.32M, MT-97.10M.

REPLACEMENT DRUMS

DRUMS FURNISHED BY THE CONTRACTOR IN ACCORDANCE WITH THE REQUIREMENT OF THE PLANS, SPECIFICATIONS AND PROPOSAL WHICH BECOME DAMAGED BY TRAFFIC FOR REASONS BEYOND THE CONTROL OF THE CONTRACTOR SHALL BE REPLACED AS DIRECTED BY THE ENGINEER.

PAYMENT FOR THE REPLACEMENT DRUMS SHALL BE INCLUDED IN THE LUMP SUM BID PRICE FOR ITEM 614 , MAINTAINING TRAFFIC, AND SHALL INCLUDE THE COST OF REMOVING AND DISPOSING OF THE DAMAGED DRUM AND PROVIDING AND MAINTAINING THE REPLACEMENT DRUMS IN ACCORDANCE WITH THE CONTRACT REQUIREMENTS FOR THE ORIGINAL DRUM.

CURE WATER

THE CONTRACTOR IS RESPONSIBLE TO CONTROL ANY WATER THAT FLOWS ONTO THE ROADWAY. DURING TIMES WHEN THE WATER MAY FREEZE, IT IS THE CONTRACTORS RESPONSIBILITY TO MAKE SURE THE ROADWAY DOES NOT BECOME ICY.

NIGHT VESTS

ALL OF THE CONTRACTORS AND SUBCONTRACTORS PERSONNEL WORKING DURING THE HOURS OF DARKNESS SHALL WEAR A 100% SILVER REFLECTIVE SAFETY VEST. THE SAFETY VEST SHALL BE PROVIDED BY THE CONTRACTOR. THE VEST MAY HAVE SEVERAL LIME OR ORANGE STRIPES ON IT.

FLASHING LIGHTS

ALL WORK VEHICLES AND EQUIPMENT THAT ENTER THE WORK ZONE MORE THAN ONCE A DAY MUST BE EQUIPPED WITH AT LEAST ONE FLASHING, ROTATING, OR OSCILLATING AMBER LIGHT THAT IS VISIBLE IN ALL DIRECTIONS OF TRAFFIC FOR AT LEAST ONE QUARTER OF A MILE, DAY OR NIGHT.

GUARDRAIL REPLACEMENT

NO HAZARD SHALL BE LEFT UNPROTECTED EXCEPT FOR THE ACTUAL TIME NECESSARY TO REMOVE, GRADE, AND REINSTALL GUARDRAIL IN A CONTINUOUS OPERATION. THE REMOVAL OF ALL GUARDRAIL SHALL AT ALL TIMES BE AS DIRECTED BY THE ENGINEER. NO GUARDRAIL SHALL BE REMOVED UNTIL THE REPLACEMENT MATERIAL IS ON SITE AND READY FOR INSTALLATION. FAILURE TO COMPLY WITH THIS REQUIREMENT SHALL BE DEEMED SUFFICIENT CAUSE TO ORDER WORK SUSPENDED ON THIS PROJECT UNTIL SUCH TIME THAT THE ENGINEER IS ASSURED OF SAID COMPLIANCE.

PLACING PORTABLE CONCRETE BARRIER

WHEN PLACING OR REMOVING PORTABLE CONCRETE BARRIER THE ADJACENT LANE SHALL BE CLOSED WHEN POSSIBLE.

TEMPORARY CONCRETE BARRIER (PUBLIC SAFETY)

TEMPORARY CONCRETE BARRIER SECTIONS (10 FT. LONG) AS REQUIRED BY THE PUBLIC SAFETY NOTE SHALL BE SUPPLIED BY THE CONTRACTOR. THE CONTRACTOR SHALL BE RESPONSIBLE FOR ALL LOADING, UNLOADING AND TRANSPORTATION OF THE BARRIER.

THE BARRIER SECTIONS SHALL BE BOLTED TOGETHER WITH STEEL CONNECTIONS AS PER STANDARD CONSTRUCTION DRAWING RM-4.1M.

IT IS ANTICIPATED THAT THE SAME BARRIER WILL BE USED IN VARIOUS PHASES OF CONSTRUCTION. MOVEMENT OF THE CONCRETE BARRIER BETWEEN PHASES SHALL BE ACCOMPLISHED IN ONE WORKING DAY WHENEVER POSSIBLE.

ALL COSTS FOR FURNISHING, INSTALLING, REINSTALLING AND SUBSEQUENT REMOVING TEMPORARY CONCRETE BARRIER AS DESCRIBED WILL BE PAID FOR IN THE CONTRACT PRICE FOR ITEM 622, PORTABLE CONCRETE BARRIER.

CALCULATED CWP
CHECKED NJG/RAS

MAINTENANCE OF TRAFFIC GENERAL NOTES

CUY-90-0.00

03 MAR 2000
P:\PR22308\CADD\II738MNA.DGN

PROTECTIVE CLOSURE AT BRIDGES

DURING THE CONSTRUCTION OF THE BRIDGE DECKS AND THE APPROACH SLABS, TYPE III BARRICADES MUST BE ERECTED AT THE APPROACH ENDS OF THE PCB. DURING NON WORKING HOURS THE BARRICADES MUST EXTEND TOTALLY ACROSS THE ROADWAY AND BERM SO THAT A VEHICLE CAN NOT ENTER THE BRIDGE WORK AREA. THE PURPOSE OF THESE BARRICADES IS TO STOP MOTORIST FROM DRIVING BEHIND THE PCB AND INTO THE BRIDGE WORK AREA.

TRAFFIC CONTROL MATERIALS

A. SIGNS

SIGN DIMENSIONS AND SPECIFICATIONS, INCLUDING LETTER SIZES, SHALL BE AS PROVIDED IN THE OMUTCD, OR IN SIGN DESIGN DRAWINGS PROVIDED BY THE DEPARTMENT OF TRANSPORTATION. THE SIGNS SHALL BE SUBJECT TO APPROVAL OF THE ENGINEER PRIOR TO THE START OF THE PROJECT.

ALL SIGNS SHALL HAVE A REFLECTORIZED BACKGROUND OF REFLECTIVE MATERIALS AS DESCRIBED IN THE OMUTCD.

B. SIGN SUPPORTS

TEMPORARY SIGN SUPPORTS SHALL BE AS SHOWN ON MT-105.10M AND MT-105.11M.

C. DRUMS

DRUMS SHALL BE IN ACCORDANCE WITH PERTINENT SECTIONS OF THE OHIO MANUAL OF UNIFORM TRAFFIC CONTROL DEVICES. ALL PERMANENT LANE CLOSURES SHALL BE DELINEATED WITH DRUMS SPACED AT 50 FEET CENTER TO CENTER . ALL COSTS FOR INSTALLING, MAINTAINING AND SUBSEQUENT REMOVAL OF SAID DRUMS SHALL BE INCLUDED IN THE LUMP SUM BID PRICE FOR ITEM 614 - MAINTAINING TRAFFIC.

D. SMALL BARRICADES

TYPE II BARRICADES MAY BE USED INSTEAD OF DRUMS TO CLOSE LANES WHERE REQUIRED FOR RESURFACING. THESE SHALL BE AT LEAST 36" HIGH AND 12" WIDE. NEAR THE TOP OF THE BARRICADE THERE SHALL BE A PANEL WITH ALTERNATE ORANGE AND REFLECTORIZED WHITE 6" STRIPS. THIS PANEL SHALL BE AT LEAST 12" WIDE AND 24" HIGH. THE BARRICADE SHALL BE OF SUFFICIENT STABILITY SO THAT WIND OR TRAFFIC AIR TURBULENCE WILL NOT UPSET THEM. BARRICADES SHALL BE IN ACCORDANCE WITH PERTINENT SECTIONS OF THE OHIO MANUAL OF UNIFORM TRAFFIC CONTROL DEVICES. BARRICADES SHALL BE USED DURING NIGHT TIME HOURS ONLY.

E. LIGHTING DEVICES

FLASHERS SHALL BE 12 VOLT BATTERY OPERATED MODELS WITH 7 INCH DIAMETER YELLOW LENSES ILLUMINATED BY RAPID INTERMITTENT FLASHERS OF SHORT DURATION AND SHALL BE PLACED ON ALL SIGNS AT ALL TIMES.

CONTINUOUS BURN LIGHTS SHALL BE 12 VOLT BATTERY OPERATED MODELS WITH MINIMUM 7 INCH DIAMETER YELLOW LENSES.

F. FLASHING ARROW BARRICADE

WHENEVER ANY PART OF THE TRAVELED SURFACE IS CLOSED. THE MOTORIST SHALL BE WARNED AND DIVERTED BY THE CONTRACTOR THROUGH THE USE OF ONE FLASHING ARROW BARRICADE FOR EACH LANE CLOSED. THE CONTRACTOR SHALL REFER TO STANDARD CONSTRUCTION DRAWINGS, MT-35.10M, MT-35.11M AND THE PROVISION SET FORTH IN OHIO MANUAL OF UNIFORM TRAFFIC CONTROL DEVICES FOR STREETS AND HIGHWAYS FOR ALL INFORMATION REGARDING FURNISHING, MAINTAINING, AND USE OF FLASHING ARROW BARRICADES. IF THE FLASHING ARROW BARRICADE IS WITHIN 300 FEET OF A RESIDENCE OR ON A SURFACE STREET, A SOLAR POWERED FLASHING ARROW BARRICADE SHALL BE USED. PAYMENT FOR THE ABOVE SHALL BE INCLUDED IN THE LUMP SUM BID FOR ITEM 614, MAINTAINING TRAFFIC.

PUBLIC SAFETY

THE FOLLOWING PROVISIONS "A", "B", AND "C" SHALL APPLY WHEN THE LANE ADJACENT TO THE GUARDRAIL IS OPEN TO TRAFFIC:

THE PERIOD OF TIME THAT A HAZARD IS LEFT UNPROTECTED BY THE REMOVAL OF GUARDRAIL SHALL BE HELD TO AN ABSOLUTE MINIMUM AND IN NO CASE SHALL SUCH A PERIOD BE LONGER THAN ONE WORKING DAY. IF, AFTER ONE DAY, THE ENTIRE RUN OF GUARDRAIL CONSTRUCTION IS NOT COMPLETE THE FOLLOWING SHALL APPLY:

A. IN AREAS WHERE EXISTING GUARDRAIL HAS BEEN REMOVED OR THE GUARDRAIL IS IN A PARTIAL STAGE OF COMPLETION, THE CONTRACTOR SHALL PROVIDE AND MAINTAIN TYPE II BARRICADES WITH TYPE C (STEADY BURNING) WARNING LIGHTS WITHIN THE LIMITS OF THE UNPROTECTED AREA. THE BARRICADES SHALL BE PLACED AT 50' INTERVALS AND OFFSET AT LEAST TWO FEET FROM THE EDGE OF THE TRAVELED ROADWAY AND IN CLOSE PROXIMITY TO THE CONSTRUCTION. THE APPROACH END OF A PARTIALLY COMPLETED RUN OF GUARDRAIL SHALL BE FASTENED AT GROUND LEVEL TO A STEEL DRUM.

B. DURING THE REPAIR OF WINGWALL PARAPETS OR IF THE EXISTING GUARDRAIL IS FOR THE PROTECTION OF AN OBSTACLE (I.E. SIGN SUPPORT, BRIDGE PARAPET, ETC.) THE CONTRACTOR SHALL ERECT PORTABLE CONCRETE BARRIER, AS DETAILED ON THIS SHEET, IN THE DIRECTION OF TRAFFIC. THE REQUIREMENTS OF PARAGRAPH "A" SHALL APPLY TO THE REMAINING GUARDRAIL WITHIN THE RUN. TEMPORARY BARRIER SHALL BE FLARED AT A 17:1 (MINIMUM) TAPER RATE AND SHALL INCLUDE A TEMPORARY END TERMINAL AS PER RM-4.2M.

C. THE REQUIREMENTS STATED IN "A" SHALL APPLY FOR A PERIOD NOT TO EXCEED ONE WEEK. WHERE THE REBUILDING OR CONSTRUCTION OF ANY RUN OF GUARDRAIL CANNOT BE ACCOMPLISHED WITHIN ONE WEEK, THE CONTRACTOR SHALL PROVIDE AND MAINTAIN TEMPORARY CONCRETE BARRIER IN THE INTERIM TIME IT TAKES TO COMPLETE THE WORK (SEE DETAIL ON THIS SHEET). THE APPROACH END OF THE PORTABLE CONCRETE BARRIER SHALL BE FLARED TO THE OUTER EDGE OF THE PAVED SHOULDER AND SHALL INCLUDE A TEMPORARY END TERMINAL AS PER RM-4.2M. IN ADDITION, A TYPE II BARRICADE WITH TYPE B (HIGH INTENSITY FLASHER) WARNING LIGHT SHALL BE PLACED IN FRONT OF THIS INITIAL SECTION OF TEMPORARY BARRIERS TO PROVIDE FOREWARNING TO THE APPROACHING TRAFFIC.

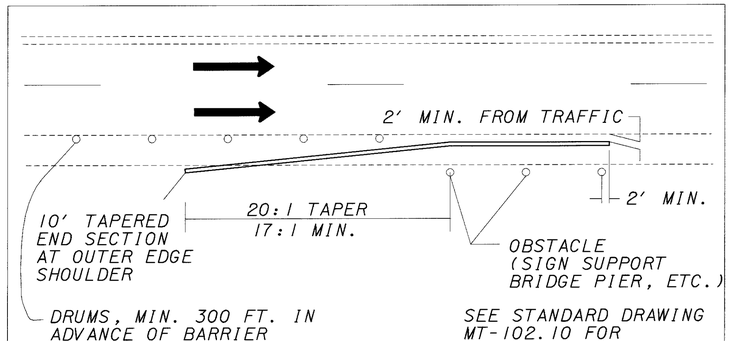

PORTABLE CONCRETE BARRIER AT HAZARDS

SEE PUBLIC SAFETY NOTE FOR REQUIRED USE

WHEN THE LANE ADJACENT TO THE GUARDRAIL IS CLOSED TO TRAFFIC THE PROVISIONS OF PARAGRAPH "A" ABOVE SHALL APPLY AFTER 1 DAY. THE PROVISIONS OF PARAGRAPH "B" ABOVE SHALL APPLY AFTER 10 DAYS AND THE PROVISIONS OF PARAGRAPH "C" ABOVE SHALL APPLY AFTER 15 DAYS.

THE TERM "GUARDRAIL" AS USED HEREIN SHALL BE UNDERSTOOD TO COVER ALL TYPES OF GUARDRAIL, EXISTING OR PROPOSED FOR THE PROJECT, INCLUDING BARRIER DESIGN GUARDRAIL, BRIDGE WINGWALL PARAPETS, AND CONCRETE BARRIER.

THE COST OF COMPLYING WITH THESE SAFETY PROCEDURES SHALL BE INCLUDED IN THE LUMP SUM BID PRICE FOR ITEM 614, MAINTAINING TRAFFIC.

RAMP CLOSURES FOR RESURFACING

THE CONTRACTOR MAY CLOSE ONE RAMP AT A TIME FOR PAVEMENT PLANING, PAVEMENT REPAIRS OR RESURFACING. THE CLOSURES SHALL BE AS PERMITTED BY THE "SCHEDULE OF THRU LANES TO BE MAINTAINED NOTE." THE MOTORING PUBLIC SHALL BE GIVEN ADVANCE WARNING OF RAMP CLOSURES AT LEAST 72 HOURS IN ADVANCE THROUGH THE USE OF EITHER A GROUND MOUNTED FLAT SHEET SIGN OR A PORTABLE CHANGEABLE MESSAGE SIGN (PCMS). A LOCAL ENFORCEMENT OFFICER (LEO) WITH PATROL CAR (PAID FOR BY THE CONTRACTOR) SHALL BE USED FOR EACH RAMP CLOSURE AND BE PRESENT FOR THE ENTIRE CLOSURE TIME.

FREEWAY ENTRANCE RAMPS SHALL BE CLOSED WITH A PCMS SUGGESTING A RECOMMENDED DETOUR.

FREEWAY EXIT RAMPS SHALL BE CLOSED WITH A PCMS ROUTING TRAFFIC TO THE NEXT EXIT AND A SECOND PCMS INDICATING A U-TURN AT THAT EXIT (UNLESS DIRECTED DIFFERENTLY BY THE ENGINEER).

FOR RAMP CLOSURES, ONE OR TWO ADDITIONAL PCMS UNITS WILL BE NEEDED AS DESCRIBED ABOVE. THESE WILL BE IN ADDITION TO THE PCMS UNITS SPECIFIED IN THE PLANS AND SHALL BE PAID FOR BY THE CONTRACTOR.

PROTECTION OF PUBLIC

WHENEVER ANY WORK IS BEING DONE DIRECTLY OVER A TRAVELED LANE OR SHOULDER, THE CONTRACTOR SHALL SUPPLY SUFFICIENT SAFETY EQUIPMENT AS APPROVED BY THE DIRECTOR TO PROTECT THE TRAVELING PUBLIC FROM ANY CONSTRUCTION DEBRIS. IF THE TRAVELED LANES UNDER THE STRUCTURES ARE TO BE CLOSED FOR REASONS OF SAFETY, METHOD AND TIME OF CLOSURE MUST BE APPROVED PRIOR TO IMPLEMENTATION. PERSONAL CARS SHALL NOT BE PARKED WITHIN THE L/A.

MAINTAINING VEHICULAR TRAFFIC

GENERAL PROVISIONS

1. TRAFFIC SHALL BE MAINTAINED IN ACCORDANCE WITH THE "SCHEDULE OF THRU LANES TO BE MAINTAINED" DESCRIBED ON SHEET NO. 48. THE CONTRACTOR SHALL SET UP AND OPERATE HIS EQUIPMENT IN SUCH A MANNER AS TO MINIMIZE ENCROACHMENT UPON THE TRAVELED WIDTH OF PAVEMENT.

2. THE CONTRACTOR SHALL NOTIFY THE ENGINEER, THE RESPONSIBLE LAW ENFORCEMENT AGENCY, AND THE OHIO DEPARTMENT OF TRANSPORTATION, DISTRICT 12 PUBLIC INFORMATION OFFICER 216-581-2333, EXT. 244, NOT LESS THAN FORTY-EIGHT (48) HOURS PRIOR TO A SCHEDULED DISRUPTION OF TRAFFIC.

3. DURING OVERHEAD CONSTRUCTION, THE CONTRACTOR SHALL PROVIDE, IF DEEMED NECESSARY BY THE ENGINEER, SAFETY NETS AND OR OTHER SAFETY DEVICES UNDER THE STRUCTURES TO PROTECT TRAFFIC IN THE AREA OF CONSTRUCTION.

4. DURING NON-WORKING PERIODS, OPEN EXCAVATIONS SHALL BE DELINEATED WITH WARNING FLASHERS AND/OR OTHER APPROVED DEVICES AS DEEMED APPROPRIATE BY THE ENGINEER.

5. EXISTING SIGNS LOCATED WITHIN THE ROAD WORK AREAS WHICH ARE NECESSARY FOR INTERIM OR PERMANENT TRAFFIC CONTROL SHALL BE REMOVED AND REERECTED IN LOCATIONS AS APPROVED BY THE ENGINEER.

6. THE CONTRACTOR SHALL FURNISH, ERECT, AND MAINTAIN ALL NEW WARNING AND INFORMATION SIGNS NECESSARY FOR MAINTAINING TRAFFIC. THE CONTRACTOR SHALL DETERMINE WHAT SIGNS ARE NEEDED AND ADVISE THE ENGINEER TWO (2) WEEKS IN ADVANCE OF HIS DETAILED PLANS. SEE THE TRAFFIC MAINTENANCE DETAILS FOR THE MINIMUM SIGNAGE REQUIRED.

7. TRAFFIC CONTROL DEVICES SHALL BE SET UP PRIOR TO THE START OF CONSTRUCTION, AND SHALL BE PROPERLY MAINTAINED DURING THE TIME SPECIAL CONDITIONS EXIST. THEY SHALL REMAIN IN PLACE ONLY AS LONG AS THEY ARE NEEDED AND SHALL BE IMMEDIATELY REMOVED THEREAFTER. WHERE OPERATIONS ARE PERFORMED IN STAGES, THERE SHALL BE IN PLACE ONLY THOSE DEVICES THAT APPLY TO THE CONDITION PRESENT DURING STAGE IN PROGRESS. ALL SIGNS WITH MESSAGES WHICH DO NOT APPLY DURING A CERTAIN PERIOD SHALL BE COVERED OR SET ASIDE OUT OF THE VIEW OF TRAFFIC.

CALCULATED CWP
CHECKED NJG/RAS

MAINTENANCE OF TRAFFIC GENERAL NOTES

CUY-90-0.00

03 MAR 2000
p:\PR22308\CADD\MT738MNA.DGN

8. PLACEMENT OF FINAL ROADWAY PAVEMENT MARKINGS AND RAISED PAVEMENT MARKINGS SHALL BE ACCOMPLISHED IN ACCORDANCE WITH THE "SCHEDULE OF THRU LANES TO BE MAINTAINED" DESCRIBED ON SHEET NO. 48.

THE CONTRACTOR SHALL PROVIDE TWO (2) TRAILING VEHICLES AS PER MT-99.20M FOLLOWING THE PAVEMENT MARKING EQUIPMENT. THE TWO (2) TRAILING VEHICLES SHALL TRAVEL 500 FEET APART WITH THE REMOTE VEHICLE TRAVELING ON THE SHOULDER (LEFT OR RIGHT AS APPLICABLE) WHERE USABLE SHOULDER IS AVAILABLE. THE FIRST TRAIL VEHICLE IN A TRAFFIC LANE SHALL BE EQUIPPED WITH A TRUCK MOUNTED ATTENUATOR MEETING NCHRP 350 REQUIREMENTS. THE INTERMEDIATE TRAILING VEHICLE SHALL TRAVEL IN THE CLOSED LANE 500 FEET BEHIND THE PAVEMENT MARKING EQUIPMENT. THE POLICE CRUISER SHALL TRAVEL 500 TO 1000 FEET BEHIND THE REMOTE TRAILING VEHICLE. EACH TRAILING VEHICLE SHALL HAVE A YELLOW FLASHING BEACON PLUS 48 INCH MINIMUM ORANGE AND BLACK CONSTRUCTION WARNING SIGNS MOUNTED ON THE BACK FACING TRAFFIC WITH STANDARD TYPE MESSAGES ADVISING MOTORISTS OF THE WORK AHEAD, ADVISORY WARNING SPEED AND WHICH LANE IS CLOSED.

9. ANY TIME TRAFFIC MUST BE COMPLETELY STOPPED ON A FREEWAY OR INTERSTATE IT SHALL BE DONE IN THE FOLLOWING MANNER (THIS INCLUDES THE ERECTION OF OVERHEAD SUPPORTS):

A.) THE COMPLETE TRAFFIC STOPPAGE ON ALL LANES OF ANY DIRECTIONAL ROADWAY SHALL BE NO MORE THAN 10 MINUTES IN ANY ONE CONSECUTIVE 30 MINUTE PERIOD OR UNTIL TRAFFIC CLEARS.

B.) A MINIMUM OF TWO (2) LAW ENFORCEMENT OFFICERS (L.E.O.) WITH PATROL VEHICLES SHALL BE USED TO PACE MOTORISTS TO A STOP. THERE SHALL BE ONE L.E.O. FOR EACH LANE ON THE FREEWAY.

C.) AFTER TRAFFIC HAS BEEN SLOWED, ONE (1) PATROL VEHICLE SHALL TRAVEL ALONG THE ROADWAY SHOULDER 500 FEET BEHIND THE BACK UP OF STOPPED VEHICLES. WHERE STOPPAGE OCCURS IN THE VICINITY OF FREEWAY ENTRANCES, THE CONTRACTOR SHALL PLACE FLAGMEN ON THE RAMPS TO STOP TRAFFIC. PATROL VEHICLES SHALL HAVE FLASHING BEACONS.

D.) TO PROVIDE ADEQUATE VISIBILITY TO APPROACHING MOTORISTS THE CONTRACTOR SHALL ERECT AND MAINTAIN "ROADWORK AHEAD", "PREPARE TO STOP", AND "STOP AHEAD" SIGNS WITH TWO FLASHING TWELVE-INCH (12") TRAFFIC SIGNAL HEADS IN ACCORDANCE WITH 632.05. THESE SIGNS SHALL BE ILLUMINATED DURING NIGHT OPERATIONS AND SHALL BE 48 INCH SIGNS. PATROL VEHICLES AND SIGNS SHALL BE LOCATED IN ACCORDANCE WITH THE SKETCH BELOW.

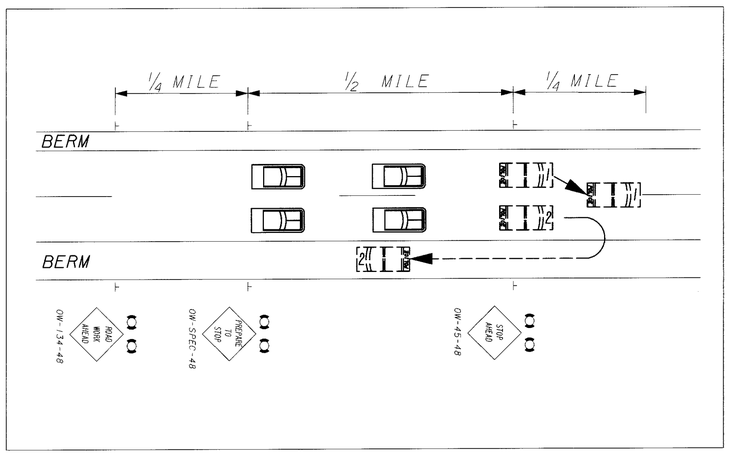

E.) STOPPING TRAFFIC SHALL BE DONE WHEN THE GREATEST NUMBER OF LANES AS PERMITTED TO BE CLOSED BY THE PLANS OR BY DISTRICT 12's PERMITTED LANE CLOSURES REFERENCE MAP. A PORTABLE CHANGEABLE MESSAGE SIGN, TO BE OF A TYPE SHOWN ON ODOTS PRE-APPROVED LISTS, SHALL BE PLACED 1.5 MILES TO 2 MILES IN ADVANCE OF THE CLOSURE OR AS DIRECTED BY THE ENGINEER.

10. A 50 MPH REGULATORY SPEED LIMIT ZONE WILL BE ESTABLISHED FOR THIS PROJECT AS INDICATED ON THE MAINTENANCE OF TRAFFIC SHEETS. THIS WILL REQUIRE NEW TEMPORARY R-10-48 SPEED LIMIT SIGNS TO BE FURNISHED, ERECTED, AND MAINTAINED BY THE CONTRACTOR, PER THE MAINTENANCE OF TRAFFIC PLANS. IN ADDITION, THE EXISTING SPEED LIMIT SIGNS ARE TO BE MODIFIED BY THE CONTRACTOR TO INCLUDE ALUMINUM SIGN OVERLAYS, AND RELOCATION ON TEMPORARY SIGN SUPPORTS.

11. CONTRACTOR SHALL BE REQUIRED TO PROVIDE SUFFICIENT CREWS TO IMPLEMENT ALL OR A SUB-PHASE OF THE TRAFFIC CONTROL IN THE MAINTENANCE OF TRAFFIC PLANS WITHIN THE SAME WORK DAY. THIS WILL PREVENT ANY CONFUSION BETWEEN THE CONSTRUCTION PHASE TRAFFIC PATTERN AND THE EXISTING TRAFFIC PATTERN. THE MAINTENANCE OF TRAFFIC PLANS CAN BE SUB-PHASED BY CONCENTRATING ON ONE DIRECTION OR A LENGTH WITHIN THAT DIRECTION. HOWEVER, IN EACH SUB-PHASE THE MAINTENANCE OF TRAFFIC PLANS SHALL BE COMPLETELY IMPLEMENTED WITHIN THE SAME WORK DAY.

12. FOR ANY OPERATION NOT SPECIFICALLY MENTIONED IN THESE PLANS, THE TRAFFIC SHALL BE MAINTAINED IN ACCORDANCE WITH THE "OHIO MANUAL OF UNIFORM TRAFFIC CONTROL DEVICES".

13. NO STOPPAGE OF TRAFFIC OR ESTABLISHMENT OF PERMANENT LANE SHIFTS SHALL OCCUR WITHOUT LAW ENFORCEMENT PERSONNEL AT EACH LOCATION TO DIRECT TRAFFIC.

14. ALL LABOR, MATERIALS, EQUIPMENT AND ANY INCIDENTALS REQUIRED TO COMPLETE THE WORK AS DESCRIBED ABOVE SHALL BE INCLUDED IN THE LUMP SUM BID FOR ITEM 614, MAINTAINING TRAFFIC.

ITEM 614 TEMPORARY MARKINGS (INITIAL SHIFTS, RESURFACING OR LANE SHIFTS REMOVALS)

TEMPORARY MARKINGS SHALL BE PLACED AT THE LOCATIONS SHOWN IN THE MAINTENANCE OF TRAFFIC PLANS.

AT THE COMPLETION OF PHASE 2 TEMPORARY MARKINGS SHALL BE PLACED AT THE LOCATIONS OF THE PERMANENT PAVEMENT MARKINGS.

ITEM 614, TEMPORARY PAVEMENT MARKINGS (TRAFFIC SHIFTS)

LANE SHIFTS OR LANE CLOSURES SHALL BE IMPLEMENTED USING 60:1 MAXIMUM TAPER RATES UNLESS OTHERWISE NOTED IN THE PLANS ON MAINLINE PAVEMENT AND DIRECTIONAL ROADWAYS AND 25:1 MAXIMUM TAPER RATES ON RAMPS.
(SEE TRAFFIC MAINTENANCE DETAIL SHEETS)

TYPICAL LOCATIONS INCLUDE:

A.) LANE CLOSURE
B.) LANE SHIFTS
C.) ENTRANCE/EXIT RAMP EXTENSIONS ACROSS CLOSED OUTSIDE LANES

ALL CONFLICTING PAVEMENT MARKINGS (INCLUDING THE LANE LINE ADJACENT TO THE LANE CLOSURE TAPER) SHALL BE REMOVED PRIOR TO PLACING THESE PAVEMENT MARKINGS.

ALL TEMPORARY PAVEMENT MARKINGS, WHICH ARE INSTALLED BEYOND THE PROPOSED RESURFACING LIMITS SHALL BE 740.06, TYPE 1. (THIS ALSO INCLUDES RECONSTRUCTED BRIDGE DECKS)

THE ESTIMATED QUANTITIES FOR THIS WORK ARE TABULATED ON SHEETS 56-58.

WORKSITE TRAFFIC SUPERVISOR

THE CONTRACTOR SHALL EMPLOY (OTHER THAN THE SUPERINTENDENT) AND SUBJECT TO THE APPROVAL OF THE ENGINEER, A CERTIFIED WORKSITE TRAFFIC SUPERVISOR (WTS). THE WTS MAY BE CERTIFIED FROM ONE OF THE FOLLOWING ORGANIZATIONS 1) AMERICAN TRAFFIC SAFETY SERVICES ASSOCIATION (A.T.S.S.A., PHONE NO. 1-800-272-8772) CERTIFIED WORKSITE TRAFFIC SUPERVISOR (WTS), 2) THE NATIONAL SAFETY COUNCIL, TRAFFIC CONTROL ZONES SUPERVISORS COURSE, PHONE NO. 1-800-441-5103, OR TAKE THE FOLLOWING COURSE BY THE NATIONAL HIGHWAY INSTITUTE, DESIGN AND OPERATION OF WORK ZONE TRAFFIC CONTROL PH. NO 1-(703) 235-0528. THE WTS POSITION IS ESTABLISHED FOR THE PURPOSE OF MONITORING AND CORRECTING ANY TRAFFIC CONTROL DEFICIENCIES IN THE WORK ZONE. THE WTS SHALL OVERSEE ALL OPERATIONS THAT AFFECT THE MOVEMENT OF VEHICULAR AND PEDESTRIAN TRAFFIC THROUGH THE WORK ZONE.

THE WTS SHALL BE PRESENT WHEN THE CONTRACTOR OR SUBCONTRACTOR INSTALLS A TRAFFIC RESTRICTION, LANE CLOSURE ETC. IN LIEU OF THE WTS BEING PRESENT WHEN A SUBCONTRACTOR HAS A TRAFFIC CONTROL ZONE IN PLACE, THE SUBCONTRACTOR MAY USE HIS OWN PERSONNEL THAT IS A CERTIFIED WTS. THE SUBCONTRACTOR MUST PRESENT A COPY OF HIS WTS CERTIFICATION TO THE PROJECT ENGINEER. A WTS MUST BE PRESENT WHEN THE WORK ZONE IS BEING SET UP. HE MUST APPROVE THE WORK ZONE BEFORE HE LEAVES OR PERFORMS OTHER DUTIES.

IF THE RESTRICTIONS ARE SHORT TERM, THE WTS SHALL MONITOR THE ZONE FOR COMPLIANCE. DURING THE LANE CLOSURE HE SHALL MAKE SURE ALL TRAFFIC CONTROL ITEMS ARE FUNCTIONING PROPERLY. TRAFFIC CONTROL WILL BE THE WTS MAIN DUTY DURING IMPLEMENTATION OF ZONES OR SHORT TERM ZONES. THE WTS SHALL HAVE THE AUTHORITY TO HAVE DEFICIENCIES CORRECTED AS SOON AS POSSIBLE. THE WTS SHALL PROVIDE THE PROJECT ENGINEER A SKETCH OF THE TRAFFIC CONTROL PLAN (TCP) EVERY DAY THERE IS TO BE A SHORT TERM TRAFFIC RESTRICTION, LANE CLOSURE ETC. THIS TCP SHALL SHOW HOW THE WORK ZONES ARE TO BE IMPLEMENTED.

DAILY, INCLUDING ONE DAY DURING THE WEEKEND AND HOLIDAYS, THE WTS SHALL SPEND A MINIMUM OF ONE HOUR REVIEWING AND MAINTAINING THE WORK ZONE. THESE HOURS MAY BE ADJUSTED BY THE ENGINEER. THE HOURS MAY BE REDUCED DURING THE WINTER CONSTRUCTION SEASON IF DIRECTED BY THE ENGINEER. THE WTS SHALL INSPECT THE WORK ZONE AT THE BEGINNING AND END OF EACH WORK DAY AND ONE TIME PER WEEK DURING THE HOURS OF DARKNESS AND ONCE DURING A WEEKEND.

A RECORD OF EACH DAY'S REVIEW SHALL BE GIVEN TO THE PROJECT ENGINEER THE FOLLOWING WORKDAY, IN WRITING, AND SHALL INCLUDE: TRAFFIC CONTROL DEVICE CONDITION, PLACEMENT, VISIBILITY, TRAFFIC FLOW CONDITIONS, INCIDENTS, CONGESTION POINTS, ADEQUACY OF ADVANCED WARNING SIGNS BEYOND THE PROJECT LIMITS, INTERACTION OF WORK VEHICLES WITH TRAFFIC, PROPER STORAGE OF MATERIALS AND EQUIPMENT, ACCIDENTS, RECORD OF DEFICINCIES, AND RESOLUTIONS OF THE DEFIENCIES, ETC.

THE WTS SHALL BE AVAILABLE ON A 24-HOUR BASIS TO REPAIR AND/OR REPLACE DAMAGED OR MISSING TRAFFIC CONTROL DEVICES. A 24-HOUR PHONE NUMBER SHALL BE MADE AVAILABLE TO THE PROJECT ENGINEER IN ORDER TO CONTACT THE WTS. THE WTS SHALL HAVE A PAGER AND THE PHONE NUMBER PROVIDED TO THE PROJECT ENGINEER.

FAILURE OF THE CONTRACTOR TO COMPLY WITH ANY OF THE ABOVE, SHALL CONSTITUTE CAUSE FOR THE PROJECT ENGINEER TO DEDUCT $500.00 PER DAY FROM MONEY DUE THE CONTRACTOR, NOT AS A PENALTY, BUT AS A LIQUIDATED DAMAGE.

PAYMENT FOR THE WTS SHALL BE INCLUDED UNDER THE LUMP SUM ITEM 614, MAINTAINING TRAFFIC.

CALCULATED CWP
CHECKED NJG/RAS

MAINTENANCE OF TRAFFIC GENERAL NOTES

CUY-90-0.00

03 MAR 2000
D:\PR22308\CADD\I738MNA.DGN

CALCULATED CWP
CHECKED NJG/RAS

MAINTENANCE OF TRAFFIC GENERAL NOTES

CLEAN WATER FALLING SIGN

WHENEVER CURE WATER MAY BE FALLING ONTO THE ROADWAY BELOW, THE CONTRACTOR SHALL ERECT OW-SPEC-48 SIGNS "CLEAN WATER FALLING" ON EACH SIDE OF THE ROADWAY AT APPROXIMATELY 500 FT. IN ADVANCE OF THE OVERHEAD STRUCTURE.

LIQUIDATED DAMAGES / INTERIM COMPLETION REQUIREMENTS

THE CONTRACTOR SHALL SCHEDULE HIS OPERATIONS AND INCREASE HIS WORK FORCE AS NECESSARY SO AS TO COMPLETE ALL WORK ITEMS LISTED FOR EACH PHASE FOR THE IDENTIFIED WORK ZONES (SEE "CONSTRUCTION PHASING" NOTES), WITHIN THE TIME LIMITS ALLOCATED IN THE "GENERAL" NOTE.

NON-RUSH HOUR CLOSURES, AS PERMITTED BY THE "SCHEDULE OF THRU LANES TO BE MAINTAINED" TABLE ON SHEET 48, ARE NOT CONSIDERED WITHIN TIME LIMITS ABOVE. (THOSE CLOSURES ARE DISCUSSED IN THE "LIQUIDATED DAMAGES/SHORT TERM LANE CLOSURES" NOTE).

THE COMPLETION OF A PHASE REQUIRES THAT ALL WORK FOR THAT PHASE IS COMPLETED AND TRAFFIC IS RETURNED TO NORMAL OR THE SUBSEQUENT PHASE IS IMPLEMENTED.

THE TIME LIMIT SHOWN SHALL BEGIN ON THE FIRST DAY THAT THE LANE SHIFTS ARE IMPLEMENTED AND SHALL CONTINUE COUNTING BASED UPON CALENDAR DAYS UNTIL COMPLETION AS DEFINED ABOVE.

LIQUIDATED DAMAGES AS DETERMINED FROM THE TABLE IN SECTION 108.07 OF THE SPECIFICATIONS SHALL BE ASSESSED FOR EACH DAY (OR PORTION THEREOF) FOR WHICH THESE TIME LIMITS, ARE NOT MET. IF MORE THAN ONE PHASE OF THIS WORK IS IN VIOLATION OF THE STATED TIME LIMITS THEN LIQUIDATED DAMAGES IN THE AMOUNT NOTED ABOVE SHALL BE ASSESSED FOR EACH PHASE AND WILL BE CUMULATIVE. LIQUIDATED DAMAGES SHALL ALSO BE ASSESSED WHEN A CLOSURE IS VIOLATED.

LIQUIDATED DAMAGES / SHORT TERM LANE CLOSURES

SHORT TERM LANE CLOSURES ARE THOSE WHICH ARE PERMITTED BY THE PLANS ON SHEET 48 . SHORT TERM CLOSURES CAN BE IMPLEMENTED DURING LONG TERM MAINTENANCE OF TRAFFIC PHASES FOR THE TIMES GIVEN.

THESE TIMES SHALL NOT BE REVISED WITHOUT PRIOR APPROVAL FROM THE DISTRICT 12 WORK ZONE TRAFFIC CONTROL ENGINEER.

IF SHORT TERM LANE CLOSURES ARE IN PLACE OUTSIDE THE SPECIFIED TIMES, LIQUIDATED DAMAGES IN THE AMOUNT OF $100.00 PER MINUTE SHALL BE ACCESSED THE CONTRACTOR FOR EACH MINUTE THE LANE REMAINS CLOSED.

SHORT TERM LANE CLOSURES SHALL ONLY BE IMPLEMENTED WHEN WORK IS BEING CONTINUOUSLY PERFORMED. THE CLOSURE SHALL BE REMOVED AS SOON AS POSSIBLE AFTER WORK HAS STOPPED.

SPEED LIMIT REDUCTION

A 50 MPH REGULATORY SPEED LIMIT ZONE WILL BE ESTABLISHED FOR THIS PROJECT. SEE "WORK ZONE SPEED LIMIT" NOTE ON SHEET47.

ADDITIONAL SIGNAGE

EXTRA ADVANCE WARNING SIGN GROUPS AS PER STANDARD DRAWINGS MT-95.30M, MT-93.10M, MT-97.10M, MT-98.12M, MT-98.15M, MT-98.16M, MT-98.17M, MT-98.18M AND MT-102.10M SHALL ALSO BE INSTALLED, PAYMENT FOR THESE SIGNS SHALL BE UNDER ITEM 614, MAINTAINING TRAFFIC.

"ALL TRUCKS USE LEFT LANES" SIGNS SHALL NOT BE INSTALLED INITIALLY. IF DETERMINED TO BE NEEDED BY THE ENGINEER THEY SHALL BE PAID FOR SEPARATELY AS "ADDITIONAL SIGNS".

NOISE BARRIER CONSTRUCTION

THE CONTRACTOR SHALL INSTALL THE NOISE BARRIER AS SOON AS POSSIBLE AND WITHOUT CAUSING UNNECESSARY LANE CLOSURES ON IR 90. THE RECOMMENDED SEQUENCE OF INSTALLATION SHALL BE AS FOLLOWS:

PRELIM. EB PHASE - INSTALL EB BARRIERS (AS MATERIAL AVAILABILITY ALLOWS)
PHASE I EB - INSTALL WB BARRIERS (AS MATERIAL AVAILABILITY ALLOWS)
PHASE 2 EB - COMPLETE INSTALLATION OF ALL EB BARRIERS
PHASE 2 WB - COMPLETE INSTALLATION OF ALL WB BARRIERS

ALL LANE RESTRICTIONS SHALL BE AS PER THE "SCHEDULE OF THRU LANES TO BE MAINTAINED" NOTE ON SHEET 48.

MAINTENANCE OF TRAFFIC CONTROL ZONES

THE CONTRACTOR SHALL BE RESPONSIBLE TO MAINTAIN THE SIGNS, DRUMS AND TEMPORARY PAVEMENT MARKINGS AT THE LOCATIONS DETAILED IN THE PLANS OR SPECIFIED IN THE STANDARD DRAWINGS. WHEN THE CONTRACTOR IS NOTIFIED OF DEFICIENCIES HE SHALL CORRECT THE DEFICIENCIES AS SOON AS POSSIBLE, PREFERABLY WITHIN 12 HOURS AND NO LATER THAN 24 HOURS. IF ANY NOTED DEFICIENCIES ARE NOT CORRECTED WITHIN 24 HOURS THE ENGINEER SHALL DEDUCT ONE DAY PAY FOR ITEM 614, MAINTAINING TRAFFIC, NOT AS A LUMP SUM ITEM PENALTY BUT AS LIQUIDATED DAMAGES. THE CONTRACTOR SHALL BE SUBJECT TO THESE LIQUIDATED DAMAGES FOR EACH AND EVERY DAY THAT THESE PROVISIONS ARE NOT MET. ALL COSTS FOR MAINTAINING THE WORK ZONES AS DESCRIBED ABOVE SHALL BE INCLUDED UNDER ITEM 614, MAINTAINING TRAFFIC.

ITEM 630, SIGNING MISC.: ADDITIONAL SIGNS, GROUND MOUNTED, AS DIRECTED BY THE ENGINEER

WHEN ADDITIONAL SIGNING IS NEEDED TO MAINTAIN TRAFFIC, THE CONTRACTOR SHALL FURNISH THE SIGN OR SIGNS AS DIRECTED BY THE ENGINEER. THESE SIGNS SHALL BE GROUND MOUNTED AND MEET ALL THE SPECIFICATIONS OF THE PLAN, PROPOSAL, AND CURRENT YEAR CMS.

PAYMENT FOR THIS ITEM SHALL INCLUDE BUT NOT BE LIMITED TO THE COST OF FURNISHING AND ERECTING THE SIGN, INCLUDING DRIVE POSTS OR OTHER APPROVED METHODS OF SUPPORT, MAINTAINING THE SIGN, AND REMOVING THE SIGN.

THE FOLLOWING QUANTITY SHALL BE CARRIED TO THE GENERAL SUMMARY:

ITEM 630, SIGNING MISC.: ADDITIONAL SIGNS, GROUND MOUNTED, AS DIRECTED BY THE ENGINEER 1000 SQ.FT.

COVERING OF SIGNS

WHERE DIRECTED BY THE ENGINEER OR WHERE THE PLANS CALL FOR AN OVERHEAD SIGN TO BE COVERED, THE CONTRACTOR SHALL DO SO IN SUCH A MANNER AS TO AVOID DAMAGING THE PERMANENT SIGN WHEN THE COVER IS REMOVED. THE COVER SHALL BE TOTALLY OPAQUE. THE USE OF ADHESIVE TAPE APPLIED DIRECTLY TO A SIGN FACE IS STRICTLY PROHIBITED.THE FOLLOWING CONTINGENCY QUANTITY TO BE USED AS DIRECTED BY THE ENGINEER HAS BEEN INCLUDED IN THE GENERAL SUMMARY:

ITEM 630	SIGN, TEMP. OVERLAY	400 S.F.
ITEM 630	REMOVAL OF OVERLAY SIGN	6 EACH.

THE REMOVAL OR COVERING OF GROUND MOUNTED SIGNS IS INCLUDED UNDER ITEM 614, MAINTAINING TRAFFIC

ITEM 614, BARRIER REFLECTOR, TYPE A
ITEM 614, BARRIER REFLECTOR, TYPE B
ITEM 614, OBJECT MARKER

BARRIER REFLECTORS, OBJECT MARKERS AND THEIR MOUNTINGS SHALL CONFORM TO ITEM 626 EXCEPT FOR SPACING. OBJECT MARKERS (ON 32" MEDIAN BARRIER OR 32 " PARAPETS ONLY) AND BARRIER REFLECTORS SHALL BE PLACED ON MEDIAN BARRIER, GUARDRAIL AND BRIDGE PARAPETS ADJACENT TO TRAFFIC LANES WHICH HAVE BEEN SHIFTED GREATER THAN 2 FEET FROM THE NORMAL DRIVING LANE. WHEN USED, THE SPACING OF THE REFLECTORS SHALL BE HALF THE DISTANCE SPECIFIED IN ITEM 626. BARRIER REFLECTORS AND OBJECT MARKERS SHALL ALSO BE PLACED ON ALL PORTABLE CONCRETE BARRIERS WHERE THEY SHALL BE SPACED AS PER MT-95.40. REFLECTOR COLOR SHALL MATCH THE COLOR OF THE EDGE LINE. THE QUANITIES AND LOCATIONS INDICATED ON THE MAINTENANCE OF TRAFFIC DETAIL SHEETS ARE FOR THE INSTALLATION ON PORTABLE CONCRETE BARRIERS. THE FOLLOWING ESTIMATED CONTINGENCY QUANTITIES HAVE BEEN INCLUDED IN THE GENERAL SUMMARY TO BE USED ON EXISTING BARRIER, PARAPETS AND GUARDRAIL AND ARE TO BE INSTALLED PRIOR TO SHIFTING TRAFFIC:

ITEM 614 - BARRIER REFLECTOR, TYPE A	100 EACH
ITEM 614 - BARRIER REFLECTOR, TYPE B	800 EACH
ITEM 614 - OBJECT MARKER	50 EACH

DUST CONTROL

THE CONTRACTOR SHALL FURNISH AND APPLY WATER AND CALCIUM CHLORIDE FOR DUST CONTROL AS DIRECTED BY THE ENGINEER. THE FOLLOWING CONTINGENCY QUANTITIES HAVE BEEN INCLUDED FOR DUST CONTROL PURPOSES:

ITEM 616 - WATER	363 M.GAL.
ITEM 616 - CALCIUM CHLORIDE	8 TONS

ITEM 642 - REMOVAL OF PAVEMENT MARKING
ITEM 644 - REMOVAL OF PAVEMENT MARKING

THIS ITEM SHALL BE USED TO REMOVE EXISTING PERMANENT PAVEMENT MARKINGS WHICH ARE IN CONFLICT WITH THE PROPOSED TEMPORARY MARKINGS. ALL CONFLICTING MARKINGS SHALL BE REMOVED EVEN THOUGH NOT SPECIFICALLY SHOWN ON THE PLANS. ITEM 642 QUANTITIES ARE INCLUDED FOR THE REMOVAL OF PAINT PAVEMENT MARKINGS. ITEM 644 QUANTITIES SHALL BE USED WHEN THE EXISTING MARKINGS ARE FOUND TO BE THERMOPLASTIC INSTEAD OF PAINT. IN THOSE AREAS THE 642 REMOVALS SHALL BE NON-PERFORMED. THIS ITEM SHALL ALSO BE USED TO REMOVE 642 MARKINGS PLACED DURING PHASE I WHICH ARE IN CONFLICT WITH PHASE 2 MARKINGS. THE FOLLOWING ESTIMATED QUANTITIES HAVE BEEN INCLUDED IN THE GENERAL SUMMARY TO BE USED AS OUTLINED ABOVE:

ITEM 642 - REMOVAL OF PAVEMENT MARKING	16,000 L.F.
ITEM 644 - REMOVAL OF PAVEMENT MARKING	125,000 L.F.

ITEM SPECIAL - REPLACEMENT SIGN

FLAT SHEET SIGNS FURNISHED BY THE CONTRACTOR IN ACCORDANCE WITH THE REQUIREMENT OF THE PLANS, SPECIFICATIONS AND PROPOSAL WHICH BECOME DAMAGED BY TRAFFIC FOR REASONS BEYOND THE CONTROL OF THE CONTRACTOR SHALL BE REPLACED IN KIND WHEN DIRECTED BY THE ENGINEER. REPLACEMENT SIGNS SHALL BE NEW. OTHER MATERIALS MAY BE USED BUT MUST BE IN GOOD CONDITION AND SUBJECT TO APPROVAL BY THE ENGINEER.

PAYMENT FOR THE NEW SIGNS SHALL BE MADE AT THE CONTRACT PRICE PER SQUARE FOOT FOR ITEM SPECIAL, REPLACEMENT SIGN, AND SHALL INCLUDE THE COST OF REMOVING AND DISPOSING OF THE DAMAGED SIGNS, HARDWARE AND SUPPORTS AND PROVIDING NECESSARY REPLACEMENT HARDWARE, SUPPORTS, ETC.

AN ESTIMATED QUANTITY OF ITEM SPECIAL - REPLACEMENT SIGN HAS BEEN CARRIED TO THE GENERAL SUMMARY:

ITEM SPECIAL REPLACEMENT SIGN 1500 SQ. FT.

CUY-90-0.00

03 MAR 2000
P:\PR22308\CADD\I738MNA.DGN

ITEM 614 - TEMPORARY IMPACT ATTENUATOR, (UNIDIRECTIONAL OR BIDIRECTIONAL)

THIS ITEM INCLUDES ALL LABOR AND MATERIALS REQUIRED TO FURNISH, INSTALL, REMOVE, MAINTAIN, REPAIR IF HIT, AND MOVE TO DIFFERENT LOCATIONS.

THIS ITEM SHALL CONSIST OF FURNISHING AND INSTALLING EITHER OF THE FOLLOWING IMPACT ATTENUATORS:

1) THE QUADGUARD CZ, (24" [610 MM] WIDE 6-BAY) TEMPORARY IMPACT ATTENUATORMANUFACTURED BY ENERGY ABSORPTION SYSTEMS, INC., ONE EAST WACKER DRIVE, CHICAGO, IL 60601 (TELEPHONE: 312.467.6750).

THE LENGTH OF THE 6-BAY QUADGUARD CZ IS 20'-9" [6.33 M]. INSTALLATION SHALL BE AT THE LOCATIONS SPECIFIED IN THE PLANS, IN ACCORDANCE WITH THE MANUFACTURER'S SPECIFICATIONS AS DETAILED ON THE FOLLOWING PRE-APPROVED SHOP DRAWINGS:

DWG. #	DRAWING NAME	DWG./REV. DATE	ODOT APPROVAL DATE
QSCZCVR-T4	QUADGUARD CZ SYSTEM FOR CONSTRUCTION ZONES	5/13/99 Rev. J	8/27/99
35-40-10	QUADGUARD SYSTEM CONCRETE PAD, CZ, QG	11/19/99 Rev. D	8/27/99
35-40-16	QUADGUARD SYSTEM BACKUP ASSEMBLY, CZ, QG	7/30/99 Rev. F	8/27/99
3540512	QUADGUARD CZ SYSTEM NOSE ASSEMBLY,CZ,QG,24,30,36	5/17/99	8/27/99
35-40-18	TRANSITION ASSEMBLY, 4 OFFSET, QG	6/25/99 Rev. F	8/27/99
3540260	QUADGUARD SYSTEM PCMB ANCHOR ASSEMBLY	11/19/97 Rev. C	8/27/99

2) THE TRACC (TRINITY ATTENUATING CRASH CUSHION) MANUFACTURED BY SYRO INC., 1170 N. STATE STREET, GIRARD, OHIO 44420 (TELEPHONE: 330.545.4373).

THE TRACC IS 21'-0" [6.4 M] LONG AND 2'-7" [0.8 M] WIDE. INSTALLATION SHALL BE AT THE LOCATIONS SPECIFIED IN THE PLANS, IN ACCORDANCE WITH THE MANUFACTURER'S SPECIFICATIONS AS DETAILED ON THE FOLLOWING PRE-APPROVED SHOP DRAWINGS:

DWG. #	DRAWING NAME	DWG./REV. DATE	ODOT APPROVAL DATE
SS450 SS450M	CRASH-CUSHION ATTENUATING TERMINAL PLAN, ELEVATION & SECTION	3/12/99 Rev.1 3/12/99 Rev.1	8/27/99 8/27/99
SS455	TRACC TRANSITION TO W-BEAM MEDIAN BARRIER PLAN, ELEVATION & SECTIONS	2/18/99	8/27/99
SS461	TRACC TRANSITION TO CONCRETE SAFETY SHAPE BARRIER PLAN, ELEVATION & SECTIONS	6/30/99 Rev. 1	8/27/99
SS462	TRACC TRANSITION TO CONCRETE BARRIER SINGLE SLOPE PLAN, ELEVATION & SECTIONS	6/30/99	8/27/99

THE CONTRACTOR SHALL PROVIDE A REPLACEMENT UNIT WHEN AN IMPACT IS SEVERE ENOUGH TO REQUIRE COMPLETE REPLACEMENT OF THE ATTENUATOR. THE CONTRACTOR SHALL HAVE SPARE PARTS PACKAGE AVAILABLE ON THE PROJECT SITE AT ALL TIMES WHEN AN ATTENUATOR IS IN PLACE. THE CONTRACTOR SHALL PROVIDE A MINIMUM OF ONE COMPLETE SPARE PARTS PACKAGE FOR EVERY 1 TO 6 UNITS INSTALLED ON THE PROJECT SITE. FOR EXAMPLE, 5 INSTALLED UNITS REQUIRE 1 SPARE PARTS PACKAGE AND 7 INSTALLED UNITS REQUIRE 2 SPARE PARTS PACKAGES.

WHEN BI-DIRECTIONAL DESIGNS ARE SPECIFIED, THE CONTRACTOR SHALL SUPPLY APPROPRIATE TRANSITIONS. PAYMENT FOR THE ABOVE WORK SHALL BE MADE AT THE UNIT PRICE BID FOR ITEM 614, TEMPORARY IMPACT ATTENUATOR, (UNIDIRECTIONAL OR BIDIRECTIONAL), EACH, AND SHALL INCLUDE ALL LABOR, TOOLS, EQUIPMENT AND MATERIALS NECESSARY TO CONSTRUCT, MAINTAIN, REPAIR, REPLACE OR RELOCATE A COMPLETE AND FUNCTIONAL IMPACT ATTENUATOR SYSTEM, INCLUDING ALL RELATED BACKUPS, TRANSITIONS, LEVELING PADS, HARDWARE AND GRADING, NOT SEPARATELY SPECIFIED, AS REQUIRED BY THE MANUFACTURER.

SEVERAL TEMPORARY IMPACT ATTENUATORS WILL BE REQUIRED SIMULTANEOUSLY IN THIS PROJECT. MOVEMENT OF THE UNITS TO ANOTHER LOCATION OR ANOTHER PHASE WILL BE INCLUDED IN THE UNIT BID PRICE FOR THIS ITEM. THESE UNITS ARE TO BE PLACED AT THE LOCATIONS SHOWN IN THE MAINTENANCE OF TRAFFIC DETAIL SHEETS. PAYMENT FOR THIS ITEM DOES NOT INCLUDE THOSE IMPACT ATTENUATORS REQUIRED BY THE "TRUCKS AND EQUIPMENT INGRESS AND EGRESS" NOTE. THE ANCHORING AND PLACEMENT REQUIREMENTS MUST BE AS PER THE MANUFACTURERS RECOMMENDATIONS.

THE FOLLOWING ESTIMATED QUANTITY HAS BEEN CARRIED TO THE GENERAL SUMMARY:

ITEM 614, TEMPORARY IMPACT ATTENUATOR, (UNIDIRECTIONAL OR BIDIRECTIONAL) 3 EACH

PORTABLE CONCRETE BARRIER, 32', BRIDGE MOUNTED

THIS ITEM HAS BEEN PROVIDED FOR USE DURING CONSTRUCTION OF THE I-90 BRIDGES OVER BRADLEY ROAD AND DOVER CENTER ROAD. THE CONTRACTOR MAY USE THE SAME BARRIER FOR PHASE I AND PHASE II CONSTRUCTION PROVIDING THE FOLLOWING CONDITIONS ARE MET DURING MOVEMENT.

THE ADJACENT PHASE I LANE IS CLOSED TO TRAFFIC
THE GAP IN THE BRIDGE DECK IS LESS THAN 3 FEET WIDE THE CLOSED LANE FROM PHASE I WILL NOT RE-OPEN TO TRAFFIC AND TRAFFIC WILL BE SHIFTED TO PHASE 2 (WITHIN THE ALLOWABLE TIMES)

IF THE ABOVE PROVISIONS CAN NOT BE MET, A SEPARATE CONCRETE BARRIER SHALL BE INSTALLED BEFORE REMOVING THE EXISTING BARRIER. FLAGGERS SHALL BE UTILIZED FOR PROTECTION OF VEHICULAR TRAFFIC UNTIL MOVEMENT OF THE BARRIER IS COMPLETE. THE BARRIER SECTIONS (10 FEET LONG) SHALL BE FURNISHED, INSTALLED, MAINTAINED, RELOCATED, AND REINSTALLED, AND SUBSEQUENTLY REMOVED BY THE CONTRACTOR AT LOCATIONS SHOWN ON THE PLANS. THE CONTRACTOR SHALL BE RESPONSIBLE FOR ALL LOADING, UNLOADING, AND TRANSPORTATION OF THE BARRIER. THE BARRIER SECTIONS SHALL BE AS PER PCB-91. THE BARRIER ANCHORS AND BLOCKING SHALL NOT PROTRUDE MORE THAN 1 INCH BEYOND THE TRAFFIC SIDE OF THE BARRIER. ALL COSTS INVOLVED IN REMOVING THE BARRIER AND ANCHORS AND REINSTALLING THE CONCRETE BARRIER BETWEEN PHASES ON THE BRIDGES AND REPAIR OF THE BRIDGE DECKS TO THE SATISFACTION OF THE ENGINEER WILL BE INCLUDED IN THE CONTRACT BID PRICE FOR ITEM 622 - PORTABLE CONCRETE BARRIER, 32", BRIDGE MOUNTED.

ITEM 615 - TEMPORARY PAVEMENT, AS PER PLAN

THIS ITEM SHALL BE CLASS A TEMPORARY PAVEMENT. WHEN USED IN AREAS WHICH ARE DESIGNATED TO REMAIN, THE TOP 3.5 INCHES SHALL BE CONSTRUCTED WITH ASPHALT AND THE BASE SHALL CONSIST OF 10" CONCRETE BASE. THE CONCRETE BASE SHALL BE CONNECTED TO THE EXISTING PAVEMENT WITH A TYPE D JOINT AS PER BP 2.1M. (SEE TYPICAL SECTION SHEET 24)

THE SUBBASE AS REQUIRED BY ITEM 615 MAY BE OMITTED WHEREVER AN EXISTING SUBBASE OF AT LEAST 4" EXISTS.

03 MAR 2000
D:\PR22308\CADD\1738MNA.DGN

ITEM 614 - PORTABLE CHANGEABLE MESSAGE SIGN, AS PER PLAN

THE CONTRACTOR SHALL FURNISH, INSTALL, MAINTAIN, AND REMOVE WHEN NO LONGER NEEDED, A PORTABLE CHANGEABLE MESSAGE SIGN(S). THE PCMS SHALL BE OF THE TYPE SHOWN ON THE LIST OF APPROVED PCMS MAINTAINED BY THE DIRECTOR. THE PCMS SHALL BE A CLASS I OR II TYPE UNIT.

THE PORTABLE CHANGEABLE MESSAGE SIGN SHALL BE MOUNTED ON A TRAILER. THE LOCATION OF THE PCMS SHALL BE AS DIRECTED BY THE ENGINEER. THE ENGINEER SHALL BE PROVIDED ACCESS TO EACH SIGN UNIT AND SHALL BE PROVIDED WITH APPROPRIATE TRAINING AND OPERATION INSTRUCTION.

THE PCMS SHALL CONTAIN A CELLULAR TELEPHONE LINK WHICH WILL ALLOW REMOTE SIGN ACTIVATION, DEACTIVATION, MESSAGE CHANGES, MESSAGE ADDITIONS AND REVISIONS TO TIME OF DAY PROGRAMS. THE SYSTEM SHALL ALSO PERMIT VERIFICATION OF CURRENT AND PROGRAMMED MESSAGES.

THE CONTRACTOR SHALL PROVIDE TO THE ENGINEER THE SOFTWARE NECESSARY TO CONTROL THE PCMS REMOTELY.

THE PCMS SHALL BE EQUIPPED WITH A MYRIAD SAFETY BEAM OR AN APPROVED EQUAL AS DETERMINED BY THE ENGINEER. THE MYRID SAFETY BEAM SENDS OUT A SIGNAL THAT ACTIVATES RADAR DETECTORS. THE BEAM IS APPROVED BY THE F.C.C. THE MYRIAD SAFETY BEAM SHALL USE THE SAME POWER SUPPLY AS THE PCMS. THE MYRIAD SAFETY BEAM SHALL BE ABLE TO BE ACTIVATED WITH THE PCMS RUNNING OR NOT. THE MYRIAD SAFETY BEAM IS DISTRIBUTED BY THE TRIPLEX GROUP, INC. P.O. BOX 428, NEW HOPE, PA 18938, PHONE (215) 862-5077.

AT THE DIRECTION OF THE ENGINEER THE PCMS MAY BE REMOVED FOR PERIODS WHEN NOT IN USE. NO PAYMENT WILL BE MADE FOR THESE TIMES (EX. WINTER MONTHS).

THERE SHALL BE 2 CLASS I OR II CHANGEABLE MESSAGE SIGNS AT 9 MONTHS EACH.

ITEM 614, PORTABLE CHANGEABLE MESSAGE SIGN, AS PER PLAN — 18 SIGN-MONTH

ITEM 614, BITUMINOUS CONCRETE FOR MAINTAINING TRAFFIC, AS PER PLAN

THIS ITEM SHALL BE USED TO REPAIR HOLES IN BRIDGES DECKS, ROADWAY SURFACE AND BERMS. IT SHALL BE THE CONTRACTORS RESPONSIBILITY TO MONITOR THE ROADWAY TO DETERMINE WHEN THE HOLES SHALL BE PATCHED. THE CONTRACTOR MUST NOTIFY THE ENGINEER FOR HIS APPROVAL

THE CONTRACTOR WILL BE RESPONSIBLE FOR DAMAGES TO MOTORIST VEHICLES IF THE HOLES ARE NOT FILLED IN A REASONABLE AMOUNT OF TIME.

THE CONTRACTOR IS RESPONSIBLE FOR MAINTAINING THE ROADWAY, BRIDGE DECKS AND BERMS (IN THE DIRECTION WORK IS BEING PERFORMED) THE FIRST DAY OF WORK UNTIL CONSTRUCTION IS COMPLETE. THIS INCLUDES PERIODS WHEN WORK IS SUSPENDED.

THE PROCEDURE FOR PATCHING A HOLE IS: REMOVE ALL LOOSE AND DISINTEGRATED ASPHALT OR CONCRETE TO AN EXTENT TO EXPOSE SOUND CONCRETE OR ASPHALT. THE PERIMETER OF ALL REMOVAL AREAS SHALL BE VERTICAL.

CARE SHALL BE TAKEN ON BRIDGE DECKS NOT TO PUNCTURE THE DECK OR DAMAGE THE REINFORCING STEEL. THE CONTRACTOR SHALL TAKE WHATEVER STEPS NECESSARY TO MAKE THE BRIDGE DECK PASSABLE.

THE SURFACE TO BE PATCHED MUST BE CLEANED AND DRIED.

THE ENTIRE SURFACE SHALL BE TACK COATED, INCLUDING THE VERTICAL FACES.

ASPHALT CONCRETE SHALL BE IN ACCORDANCE WITH ITEM 404 OR 402 AS DETERMINED BY THE ENGINEER. IT SHALL BE PLACED IN 2 INCH LIFTS AND COMPACTED TO THE LEVEL OF THE WEARING SURFACE.

COLD MIX MAY BE USED ONLY DURING THE WINTER MONTHS WHEN ASPHALT IS NOT AVAILABLE OR AT THE DIRECTION OF THE ENGINEER. COMPACTION EQUIPMENT MUST BE APPROVED BY THE ENGINEER.

ALL TRAFFIC CONTROL NEEDED FOR THIS WORK SHALL BE INCLUDED IN THIS ITEM OF WORK. THE FOLLOWING QUANTITY HAS BEEN CARRIED TO THE GENERAL SUMMARY TO BE USED AS DIRECTED BY THE ENGINEER.

ITEM 614, BITUMINOUS CONCRETE FOR MAINTAINING TRAFFIC, AS PER PLAN — 150 CU. YD.

ITEM 614 - LAW ENFORCEMENT OFFICER WITH PATROL CAR

IN ADDITION TO THE REQUIREMENTS OF 614 AND THE LATEST EDITION OF THE OHIO MANUAL OF UNIFORM TRAFFIC CONTROL DEVICES (OMUTCD), A UNIFORMED LAW ENFORCEMENT OFFICER (LEO) AND OFFICIAL PATROL CAR WITH WORKING TOP MOUNTED EMERGENCY FLASHING LIGHTS SHALL BE PROVIDED FOR CONTROLLING TRAFFIC FOR THE FOLLOWING TASKS:

A. FOR INITIAL SET-UP AND TEAR DOWN OF LANE SHIFTS, SUBSTANTIAL CHANGES TO A MAINTENANCE OF TRAFFIC SCHEME OR WHEN NEW LANE SHIFT ARRANGEMENTS ARE INITIATED.

B. DURING THE ENTIRE ADVANCE PREPARATION AND CLOSURE SEQUENCE WHERE COMPLETE BLOCKAGE OF TRAFFIC IS REQUIRED.

C. DURING A TRAFFIC SIGNAL INSTALLATION

D. WHEN DIRECTED BY THE ENGINEER

LEO'S SHOULD NOT BE USED WHERE THE OMUTCD INTENDS THAT FLAGGERS BE USED. THE LEO'S ARE CONSIDERED TO BE EMPLOYED BY THE CONTRACTOR AND THE CONTRACTOR SHALL BE RESPONSIBLE FOR THEIR ACTIONS. ALTHOUGH THEY ARE EMPLOYED BY THE CONTRACTOR, THE PROJECT ENGINEER SHALL HAVE CONTROL OVER THEIR PLACEMENT. THE OFFICIAL PATROL CAR SHALL BE A PUBLIC SAFETY VEHICLE AS REQUIRED BY THE OHIO REVISED CODE.

THE CONTRACTOR SHALL MAKE ARRANGEMENTS FOR THESE SERVICES WITH:

A. CITY OF WESTLAKE POLICE DEPARTMENT
27300 HILLIARD BOULEVARD
WESTLAKE, OHIO 44145
(440) 871-3311

B. STATE OF OHIO HIGHWAY PATROL CUYAHOGA COUNTY
CLEVELAND PATROL POST
12323 BROADWAY AVENUE
GARFIELD HEIGHTS, OH 44125
(216) 587-0208

THE HOURS PAID SHALL INCLUDE MINIMUM SHOW-UP TIME REQUIRED BY THE LAW ENFORCEMENT AGENCY INVOLVED.

IF THE CONTRACTOR WISHES TO UTILIZE LEO'S FOR FLAGGING AND TRAFFIC CONTROL OTHER THAN FOR THAT REQUIRED IN THESE PLANS, HE MAY DO SO AT HIS OWN EXPENSE.

LAW ENFORCEMENT OFFICERS WITH PATROL CAR REQUIRED BY THE TRAFFIC MAINTENANCE TASKS ABOVE SHALL BE PAID FOR ON A UNIT PRICE (HOURLY) BASIS UNDER ITEM SPECIAL, LAW ENFORCEMENT OFFICER WITH PATROL CAR. THESE HOURS SHALL ALSO BE USED FOR SPEED ENFORCEMENT. THE FOLLOWING ESTIMATED QUANTITIES HAVE BEEN CARRIED TO THE GENERAL SUMMARY:

ITEM 614, LAW ENFORCEMENT OFFICER WITH PATROL CAR — 2400 HOURS

ITEM 614, WORK ZONE SPEED LIMIT SIGN

THE CONTRACTOR SHALL FURNISH, INSTALL, MAINTAIN, COVER DURING SUSPENSION OF WORK, AND REMOVE WORK ZONE SPEED LIMIT SIGNS AND SUPPORTS (R-10-48) (50 MPH) WITHIN THE WORK LIMITS IN ACCORDANCE WITH THE FOLLOWING REQUIREMENTS.

THE CONTRACTOR SHALL COVER OR REMOVE ANY EXISTING SPEED LIMIT OR MINIMUM SPEED SIGNS WITHIN THE REDUCED SPEED ZONE. THESE SIGNS SHALL BE RESTORED DURING SUSPENSION OR TERMINATION OF THE REDUCED SPEED LIMIT. THE EXPENSE OF COVERING OR REMOVAL AND RESTORATION OF EXISTING SPEED LIMIT OR MINIMUM SPEED SIGNS IS INCIDENTAL TO THE PAY ITEM FOR THE WORK ZONE SPEED LIMIT SIGNS.

THE WORK ZONE SPEED LIMIT SIGNS MAY BE ERECTED AND COVERED PRIOR TO STARTING WORK OR MAY BE ERECTED AND UNCOVERED NO MORE THAN 4 HOURS BEFORE THE ACTUAL START OF WORK. THE SIGNS SHALL BE REMOVED OR COVERED NO LATER THAN 4 HOURS FOLLOWING RESTORATION OF ALL LANES TO TRAFFIC WITH NO RESTRICTIONS OR SOONER AS DIRECTED BY THE ENGINEER.

THE CONTRACTOR SHALL ERECT A WORK ZONE SPEED LIMIT SIGN IN ADVANCE OF ANY LANE RESTRICTION EXPECTED TO LAST AT LEAST 30 DAYS OR AS DIRECTED BY THE ENGINEER. THE SIGN SHALL BE MOUNTED ON BOTH SIDES OF DIVIDED HIGHWAYS, 500 FEET IN ADVANCE OF THE LANE REDUCTION TAPER. THE SIGN SHALL BE MOUNTED ON THE RIGHT SIDE, 250 FEET IN ADVANCE OF THE LANE REDUCTION TAPER ON UNDIVIDED HIGHWAYS. THE SIGN SHALL BE ON THE SIDE NEAREST TRAFFIC EVERY 1 MILE FOR 55 MPH ZONES AND EVERY 1/2 MILE FOR 50 MPH ZONES. THESE SIGNS SHALL ALSO BE ERECTED IMMEDIATELY AFTER EACH ENTRANCE RAMP WITHIN THE ZONE. A SIGN TO INDICATE THE RESUMPTION OF THE STATUTORY SPEED LIMIT SHALL BE ERECTED AT THE END OF ANY REDUCED SPEED ZONE. THIS SIGN SHALL BE AN R-8A.

THE CONTRACTOR MAY USE SIGNS AND SUPPORTS IN USED-BUT-GOOD CONDITION PROVIDED THE SIGNS MEET CURRENT ODOT SPECIFICATIONS. SIGN FACES SHALL BE REFLECTORIZED WITH TYPE G SHEETING COMPLYING WITH THE REQUIREMENTS OF 730.19 AND U.S. DEPARTMENT OF TRANSPORTATION SUPPLEMENTAL SPECIFICATION FOR TYPE III SHEETING, FP-85. WORK ZONE SPEED LIMIT SIGNS SHALL BE MOUNTED ON TWO (2) ITEM 630, GROUND MOUNTED SUPPORTS, NO 4 POST, IF PROTECTED, ELSE ITEM 630, GROUND MOUNTED SUPPORTS, NO. 3 POST.

WORK ZONE SPEED LIMIT SIGN AND SUPPORTS WILL BE MEASURED AS THE NUMBER OF SIGN INSTALLATIONS, INCLUDING THE SIGN AND NECESSARY SUPPORTS. IF A SIGN AND SUPPORT COMBINATION IS REMOVED AND REERECTED AT ANOTHER LOCATION WITHIN THE PROJECT DUE TO CHANGES IN THE SPEED ZONE DIRECTED BY THE ENGINEER, IT SHALL BE CONSIDERED ANOTHER UNIT.

PAYMENT FOR ACCEPTED QUANTITIES, COMPLETE AND IN PLACE WILL BE MADE AT THE CONTRACT UNIT PRICE. PAYMENT SHALL BE FULL COMPENSATION FOR ALL MATERIALS, LABOR, INCIDENTALS AND EQUIPMENT FOR FURNISHING, ERECTION, MAINTENANCE, COVERING DURING SUSPENSION OF WORK, AND REMOVAL OF THE SIGNS AND SUPPORTS.

THE FOLLOWING ESTIMATED QUANTITY HAS BEEN INCLUDED IN THE GENERAL SUMMARY TO BE USED AS OUTLINED ABOVE:

ITEM 614 - WORK ZONE SPEED LIMIT SIGN — 36 EACH

DOUBLE THE FINES SIGNS

THE CONTRACTOR SHALL FURNISH, INSTALL, MAINTAIN, COVER WHEN DIRECTED BY THE ENGINEER AND REMOVE R-180-48 SIGNS. THE SIGNS SHALL BE DUAL MOUNTED APPROXIMATELY 500 FEET AFTER THE ROAD WORK AHEAD SIGNS. THE SIGNS SHALL BE INSTALLED ON ALL FREEWAYS LEADING INTO THE PROJECT. SIGNS SHALL BE POSTED ON ALL ENTRANCE RAMPS ENTERING THE PROJECT ON THE RIGHT SIDE ONLY. THE SIGNS SHALL BE DUAL MOUNTED EVERY 2 MILES. THE SIGNS MAY HAVE TO BE ADJUSTED WHEN TRAFFIC IS SWITCHED EITHER EASTBOUND OR WESTBOUND. PAYMENT FOR THE ADJUSTMENT OF THE SIGNS WILL BE INCLUDED IN THE PAYMENT FOR EACH SIGN.

THE FOLLOWING QUANTITY HAS BEEN CARRIED TO THE GENERAL SUMMARY.

ITEM 614, DOUBLE FINES IN WORK ZONE SIGN, R-180-48 — 20 EACH

CALCULATED CWP
CHECKED WJG/RAS

MAINTENANCE OF TRAFFIC GENERAL NOTES

CUY-90-0.00

03 MAR 2000
D:\PR22308\CADD\1738MNA.DGN

CALCULATED CWP
CHECKED NJG/RAS

MAINTENANCE OF TRAFFIC GENERAL NOTES

CUY-90-0.00

TRAFFIC SHIFTS ONTO EXISTING SHOULDERS

MAINTENANCE OF TRAFFIC SHIFTS ONTO CONCRETE SHOULDERS ARE DESIGNED TO BE USED WITHOUT STRUCTURAL REPAIR. SHIFTS OF UP TO 2 FEET ONTO FLEXIBLE SHOULDERS ARE ALSO DESIGNED TO BE USED WITHOUT STRUCTURAL REPLACEMENT. WHEN THE TRAFFIC SHIFT EXCEEDS 2 FEET ONTO A FLEXIBLE SHOULDER THE PLANS PROVIDE FOR SHOULDER REPLACEMENT.

FOR BOTH FLEXIBLE AND RIGID SHOULDERS, AREAS WHERE SIGNIFICANT LONGITUDINAL DISTRESS EXISTS ALONG THE SHOULDER JOINT SHALL BE MILLED AND FILLED PRIOR TO SHIFTING TRAFFIC. THE LOCATIONS SHALL BE AS DIRECTED BY THE ENGINEER AND SHALL TYPICALLY CONSIST OF A STRIP 3 FOOT WIDE AND 1½ INCHES DEEP. THIS STRIP SHALL EXTEND 1 FOOT ONTO THE RIGHT LANE AND 2 FEET ONTO THE SHOULDER. THE FOLLOWING ESTIMATED QUANTITIES HAVE BEEN INCLUDED TO PERFORM THE WORK AS OUTLINED ABOVE:

ITEM 254	PAVEMENT PLANING, BITUMINOUS	6100 S.Y.
ITEM 407	TACK COAT	610 GAL
ITEM 446	ASPHALT CONCRETE, SURFACE COURSE TYPE 1, PG 64-22	275 C.Y.

TRAFFIC SHIFTS ONTO SHOULDER

THE FOLLOWING ESTIMATED QUANTITY IS PROVIDED FOR REPAIRING STRUCTURAL FAILURES IN THE SHOULDERS USED FOR MAINTAINING TRAFFIC. IT SHALL BE USED TO CONSTRUCT A SHOULDER FOR MAINTAINING TRAFFIC AS DIRECTED BY THE ENGINEER. PAYMENT FOR THIS ITEM SHALL INCLUDE ALL COSTS OF EXCAVATION AND TRAFFIC CONTROL. REPAIR LOCATIONS SHALL BE AS DIRECTED BY THE ENGINEER. WHEN USED FOR REPAIRS, THIS ITEM SHALL BE PLACED WITHIN 12 HOURS OF NOTIFICATION BY THE ENGINEER, AT TIMES DIRECTED BY THE ENGINEER.

ITEM 301 BITUMINOUS AGGREGATE BASE, PG 64-22 100 C.Y.

FLOODLIGHTING

FLOODLIGHTING OF THE WORK SITE FOR OPERATIONS CONDUCTED DURING NIGHT TIME PERIODS SHALL BE ACCOMPLISHED SO THAT THE LIGHTS DO NOT CAUSE GLARE TO THE DRIVERS ON THE ROADWAY. TO ENSURE THE ADEQUACY OF THE FLOODLIGHT PLACEMENT, THE CONTRACTOR AND THE ENGINEER SHALL DRIVE THROUGH THE WORK SITE EACH NIGHT WHEN THE LIGHTING IS IN PLACE AND OPERATIVE PRIOR TO COMMENCING ANY WORK. IF GLARE IS DETECTED THE LIGHT PLACEMENT AND SHEILDING SHALL BE ADJUSTED TO THE SATISFACTION OF THE ENGINEER BEFORE WORK PROCEEDS.

PAYMENT FOR ALL LABOR, EQUIPMENT AND MATERIALS SHALL BE INCLUDED IN THE LUMP SUM CONTRACT PRICE FOR MAINTAINING TRAFFIC.

ALTERNATE METHODS

IF THE CONTRACTOR SO ELECTS, HE MAY SUBMIT ALTERNATE METHODS FOR THE MAINTENANCE OF TRAFFIC, PROVIDED THE INTENT OF THE PROVISIONS IS FOLLOWED AND NO ADDITIONAL INCONVIENCE TO THE TRAVELING PUBLIC RESULTS THERE FROM. NO ALTERNATE PLAN SHALL BE PLACED INTO EFFECT UNTIL APPROVAL HAS BEEN GRANTED IN WRITING, BY THE DIRECTOR.

SCHEDULE OF THRU LANES TO BE MAINTAINED

- INDICATES ALLOWABLE 2 LANE REDUCTION TIMES

ROAD.	1 LANE REDUCTION			RAMP CLOSED		
	YEAR	SHORT TERM CLOSURE		YEAR	SHORT TERM CLOSURE ⊕	
		WEEKDAYS	WEEKENDS		WEEKDAYS	WEEKENDS
IR-90 EB (2 LANES) W. OF SR 252	CONSTRUCTION YEARS, 2000, 2001	10:00 AM-3:00 PM 6:00 PM-6:00 AM	10 PM FRI TO 10 AM SAT 10 PM SAT TO 11 AM SUN 10 PM SUN TO 6 AM MON			
IR-90 WB (2 LANES) W. OF SR 252	CONSTRUCTION YEARS 2000 - 2002	9:00 AM-3:00 PM 7:00 PM-7:00 AM	10 PM FRI TO 10 AM SAT 10 PM SAT TO 11 AM SUN 10 PM SUN TO 6 AM MON			
IR-90 EB (3 LANES) E. OF SR 252	CONSTRUCTION YEARS 2000 - 2002	9:00 AM-6:00 AM 9:00 PM-6:00 AM #	9 AM FRI TO 6 AM MON 12:01 AM SUN TO 11:59 PM SUN #			
IR-90 WB (3 LANES) E. OF SR 252	CONSTRUCTION YEARS 2000 - 2002	7:00 PM-3:00 PM 9:00 PM-6:00 AM #	7 PM FRI TO 3 PM MON 12:01 AM SUN TO 11:59 PM SUN #			
IR-90 EB (3 LANES) BUILT 2001	CONSTRUCTION YEAR 2002	9:00 AM-6:00 AM 9:00 PM-6:00 AM #	9 AM FRI TO 6 AM MON 12:01 AM SUN TO 11:59 PM SUN #			
CROCKER RD	SEE PART 2 PLANS FOR CUY-90-0.95 REQUIREMENTS					
COLUMBIA RD		9:00 AM-3:00 PM 7:00 PM-6:00 AM	9:00 AM-3:00 PM 7:00 PM-6:00 AM			
IR-90 EB RAMPS				C,D,E,I,J & K (2001)	10:00 PM- 5:30AM	2:00 AM TO 6:00 AM SAT&SUN
IR-90 WB RAMPS				A,B,F,G & H (2002)	10:00 PM- 5:30AM	2:00 AM TO 6:00 AM SAT&SUN

⊕ - PERFORM WORK USING FLAGMEN, SHIFTING TRAFFIC ONTO THE SHOULDERS EXCEPT WHEN CLOSING THE RAMP ENTIRELY. RAMPS MAY BE CLOSED A MAXIMUM OF 5 TIMES EACH PER YEAR. SEE "RAMP CLOSURES FOR RESURFACIMG" GENERAL NOTE,

CONSTRUCTION PHASING

PHASE NO.	IR-90 E.B. (2 LANES)	IR-90 W.B. (2 LANES)
PRELIM. EB	2000	
PHASE 1 EB	2001	
PHASE 2 EB		
PRELIM. WB		2002
PHASE 1 WB		
PHASE 2 WB		

03 MAR 2000
P:\PR22308\CADD\I738MNA.DGN

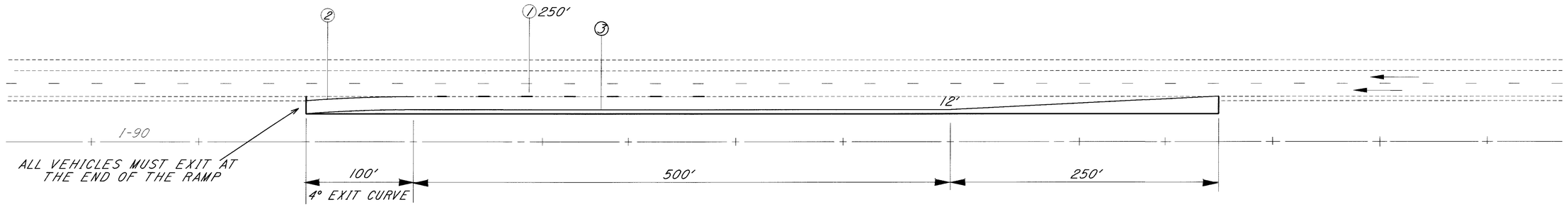

TEMPORARY DECELERATION LANE

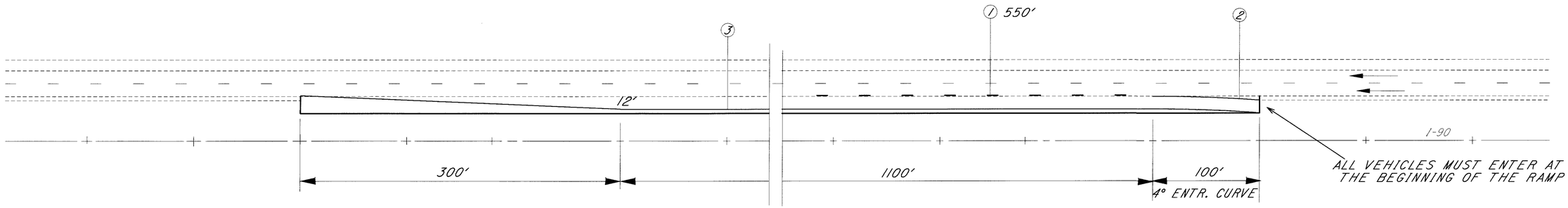

TEMPORARY ACCELERATION LANE

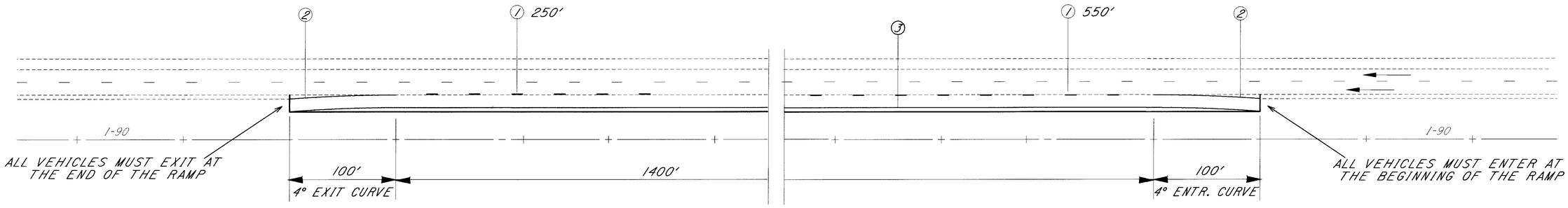

TEMPORARY COMBINED DECELERATION AND ACCELERATION LANE

WEST OF CAHOON ROAD

BOTH TEMPORARY ACCELERATION OR TEMPORARY DECELERATION LANES MAY BE USED AT ALL TIMES BY THE CONTRACTOR.

LEGEND:

(1) TEMPORARY LANE LINE, CLASS 1, 642 PAINT (WHITE)
(2) TEMPORARY EDGE LINE, CLASS 1, 642 PAINT (WHITE
(3) TEMPORARY EDGE LINE, CLASS 1, 642 PAINT (YELLOW)

03 MAR 2000
D:\PR22308\CADD\I738MDB.DGN

CALCULATED MJG
CHECKED

MAINTENANCE OF TRAFFIC GENERAL NOTES

CUY-90-0.00

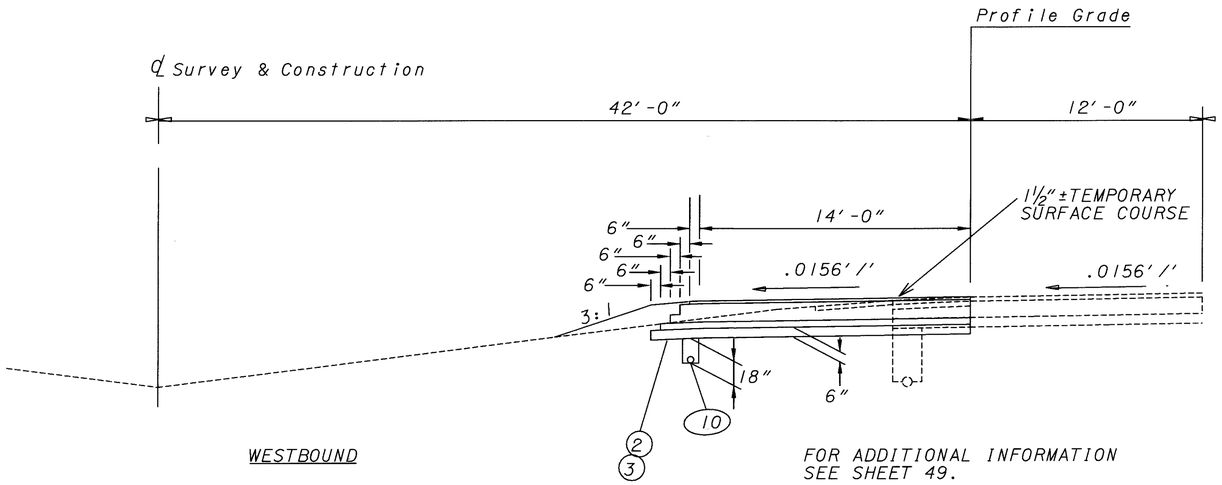

TEMPORARY ACCELERATION AND DECELERATION LANES

THE NUMBER AND LOCATIONS OF TEMPORARY LANES SHALL BE DETERMINED BY THE CONTRACTOR, WITH THE APPROVAL OF THE ENGINEER.

TEMPORARY ACCELERATION AND DECELERATION LANES SHALL BE CONSTRUCTED USING BOTH "BID PAY ITEMS" AND ITEM 615 - TEMPORARY ROAD, AS PER PLAN. BID ITEMS SHALL BE USED FOR ALL ITEMS UP TO AND INCLUDING THE 302 BASE MATERIAL. THE UNDERDRAIN OUTLET TO THE APPROPRIATE CATCH BASIN SHALL BE PAID FOR USING BID ITEMS IF IN THE FINAL LOCATION, OTHERWISE, THE OUTLET SHALL BE PAID FOR UNDER THE TEMPORARY ROAD, AS PER PLAN ITEM.

WHEN THE TEMPORARY LANE IS TO BE INCORPORATED INTO THE FINAL PAVING THE FOLLOWING SHALL APPLY: REMOVE THE TEMPORARY WEARING COURSE. ALONG THE EDGE OF THE PAVEMENT TO REMAIN, REMOVE 6" OF ALL PREVIOUS COURSES CREATING 6" STEPS FROM THE SUBBASE UP TO THE INTERMEDIATE COURSE.

IN ORDER TO CONSTRUCT THE ABOVE THE CONTRACTOR SHALL IMPLEMENT A TEMPORARY TRAFFIC CONTROL ZONE AS PER THE EASTBOUND DETAIL SHOWN ON SHEET49. ALL PAVEMENT MARKINGS SHALL BE TAPE. RAISED PAVEMENT MARKER REFLECTORS SHALL BE REMOVED. THE ZONE SHALL PROTECT THE OPEN EXCAVATION AND ALL WORK SHALL BE PERFORMED BEHIND THE BARRIER. THE REPAIR OF THE SURFACE OF THE RIGHT SHOULDER PRIOR TO IMPLEMENTING THE SHIFT SHALL BE PAID FOR USING BID ITEMS.

AFTER THE TEMPORARY LANE HAS BEEN CONSTRUCTED THE TEMPORARY LANE SHALL BE MARKED AS PER THE DETAILS, SEE SHEET 49, AND THE MAINLINE TRAFFIC SHIFTED BACK TO ITS NORMAL POSITION. PAVEMENT MARKINGS SHALL BE PAINT. RPM REFLECTORS SHALL BE REPLACED.

48" ORANGE CONSTRUCTION SIGNS WITH "TRUCKS ENTERING HIGHWAY" OR "TRUCKS EXITING HIGHWAY" SHALL BE PLACED AS APPROPRIATE.

ITEM 615 - TEMPORARY ROAD, AS PER PLAN

THE FOLLOWING WORK SHALL BE INCLUDED UNDER THIS LUMP SUM BID ITEM.

- ALL COSTS OF MAINTAINING TRAFFIC TO CONSTRUCT THE TEMPORARY LANES.
- TEMPORARY UNDERDRAIN OUTLETS.
- PORTABLE CONCRETE BARRIER, SIGNAGE AND PAVEMENT MARKINGS.
- PLACING AND REMOVING THE TEMPORARY WEARING COURSE.
- ALL COSTS OF MATERIALS AND LABOR TO REMOVE THE PREVIOUS COURSES TO CREATE 6" STEPS.
- ANY ADDITIONAL COSTS OF EXCAVATION, EMBANKMENT, SEEDING AND MULCHING.

ESTIMATED QUANTITIES: (FOR INFORMATION ONLY, PAYMENT INCLUDED IN 615)

TEMPORARY ACCELERATION LANE:	
- TEMPORARY EDGE LINE, CLASS 1, 740.06, TYPE 1(WHITE)	2530 L.F.
- TEMPORARY EDGE LINE, CLASS 1, 740.06, TYPE 1(YELLOW)	2530 L.F.
- TEMPORARY CHANNELIZING LINE, CLASS 1, 740.06, TYPE1(WHITE)	2530 L.F.
- TEMPORARY EDGE LINE, CLASS 1, 642 PAINT (WHITE)	100 L.F.
- TEMPORARY EDGE LINE, CLASS 1, 642 PAINT (YELLOW)	1500 L.F.
- TEMPORARY LANE LINE, CLASS 1, 642 PAINT (WHITE)	550 L.F.
- BARRIER REFLECTOR, TYPE B	70 EACH
- OBJECT MARKER	70 EACH
- PORTABLE CONCRETE BARRIER, 32"	1700 L.F.
TEMPORARY DECELERATION LANE:	
- TEMPORARY EDGE LINE, CLASS 1, 740.06, TYPE 1(WHITE)	1880 L.F.
- TEMPORARY EDGE LINE, CLASS 1, 740.06, TYPE1(YELLOW)	1880 L.F.
- TEMPORARY CHANNELIZING LINE, CLASS 1, 740.06, TYPE 1(WHITE)	1880 L.F.
- TEMPORARY EDGE LINE, CLASS1, 642 PAINT (WHITE)	100 L.F.
- TEMPORARY EDGE LINE, CLASS 1, 642 PAINT (YELLOW)	850 L.F.
- TEMPORARY LANE LINE, CLASS 1, 642 PAINT (WHITE)	250 L.F.
- BARRIER REFLECTOR, TYPE B	44 EACH
- OBJECT MARKER	44 EACH
- PORTABLE CONCRETE BARRIER, 32"	1050 L.F.
COMBINED TEMPORARY ACCELERATION/DECELERATION LANE:	
- TEMPORARY EDGE LINE, CLASS 1, 740.06, TYPE 1(WHITE)	2630 L.F.
- TEMPORARY EDGE LINE, CLASS 1, 740.06, TYPE 1(YELLOW)	2630 L.F.
- TEMPORARY CHANNELIZING LINE, CLASS 1, 740.06, TYPE 1(WHITE)	2630 L.F.
- TEMPORARY EDGE LINE, CLASS 1, 642 PAINT (WHITE)	200 L.F.
- TEMPORARY EDGE LINE, CLASS1, 642 PAINT (YELLOW)	1600 L.F.
- TEMPORARY LANE LINE, CLASS 1, 642 PAINT (WHITE)	800 L.F.
- BARRIER REFLECTOR, TYPE B	74 EACH
- OBJECT MARKER	74 EACH
- PORTABLE CONCRETE BARRIER, 32"	1800 L.F.

THE LUMP SUM PAYMENT FOR THIS ITEM SHALL INCLUDE ALL TEMPORARY LANES CONSTRUCTED.

CALCULATED MJG CHECKED

03 MAR 2000
p:\PR22308\CADD\II738MDB.DGN

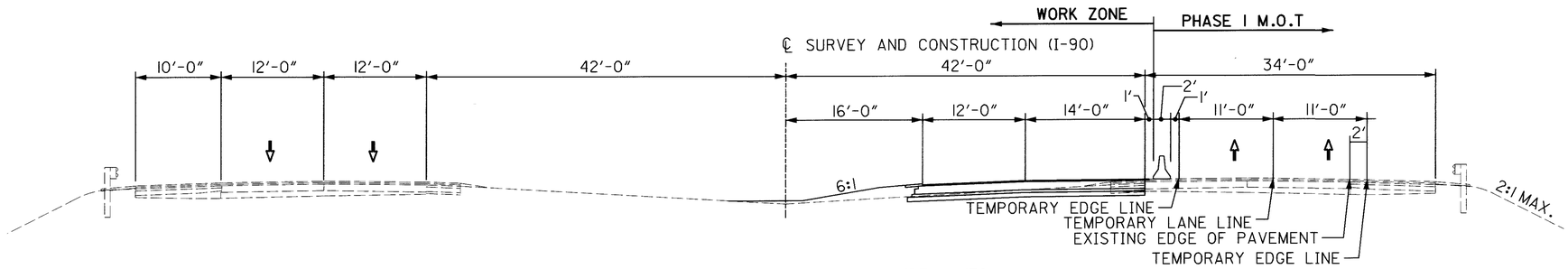

PHASE I - EASTBOUND - CONSTRUCT INSIDE LANES
(NORMAL OR LOWERED PROFILE - DO NOT PLACE SURFACE COURSE)

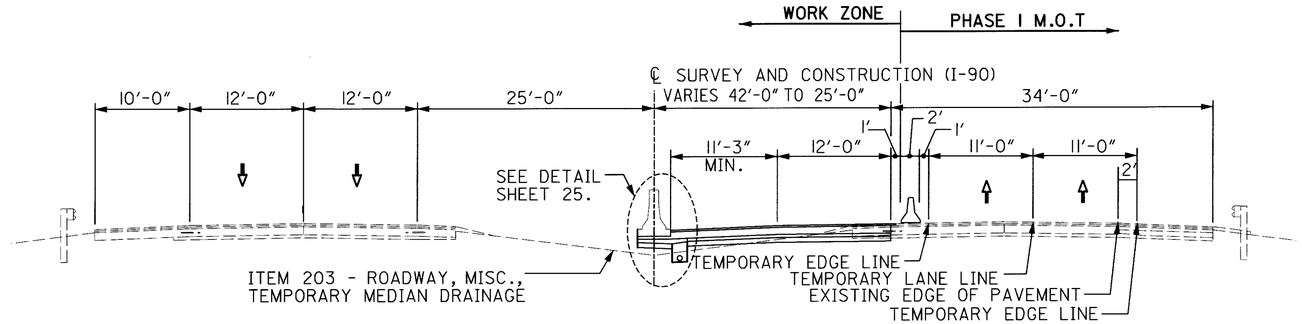

PHASE I - EASTBOUND - CONSTRUCT INSIDE LANES
(NORMAL AND LOWERED PROFILE WITH BARRIER - DO NOT PLACE SURFACE COURSE)
STA. 96+50 TO STA. 148+00

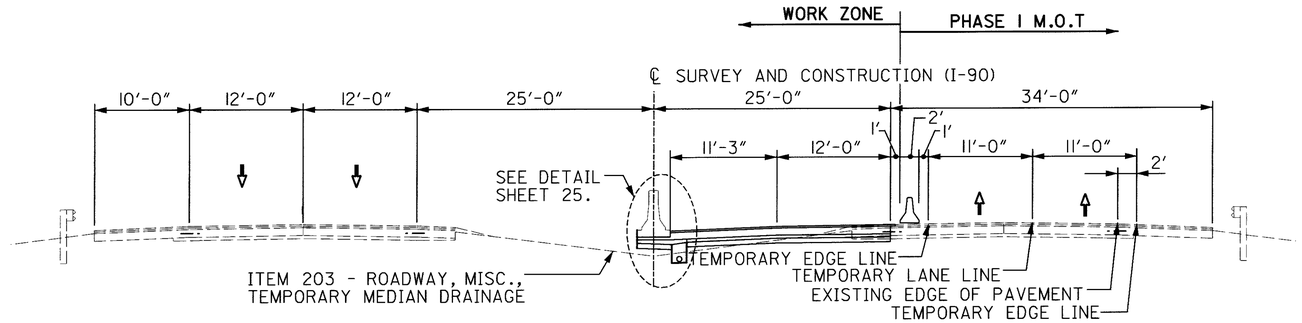

PHASE I - EASTBOUND - CONSTRUCT INSIDE LANES
(NORMAL PROFILE WITH BARRIER - DO NOT PLACE SURFACE COURSE)

IN 3 LANE SECTION, RIGHT EDGE LINE IS 2' ONTO OUTSIDE SHOULDER

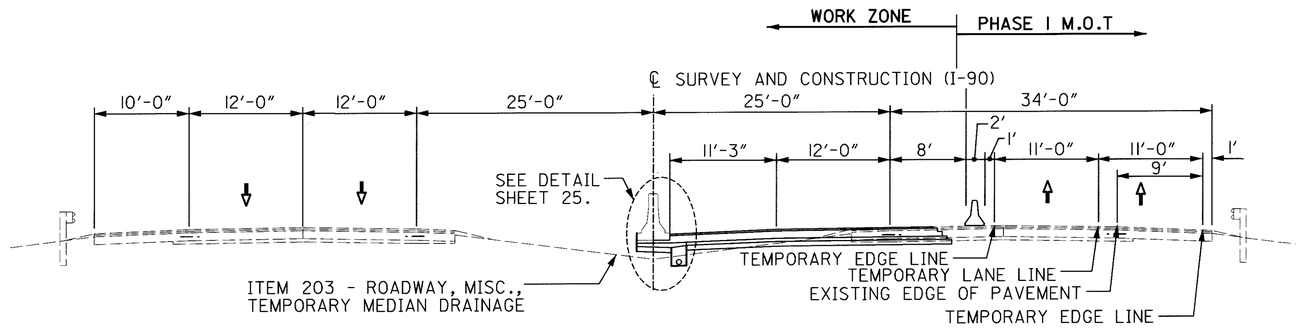

PHASE I - EASTBOUND - CONSTRUCT INSIDE LANES
(LOWERED PROFILE WITH BARRIER - DO NOT PLACE SURFACE COURSE)

PHASED CONSTRUCTION - PHASE 1 EASTBOUND

CUY-90-0.00

03 MAR 2000
p:\pr22308\cadd\11738mda.dgn

AT THE END OF PHASE 2
REMOVE PCB, RETURN TRAFFIC
TO OUTSIDE LANES AND
PLACE SURFACE COURSE ON
INSIDE LANES AND SHOULDER

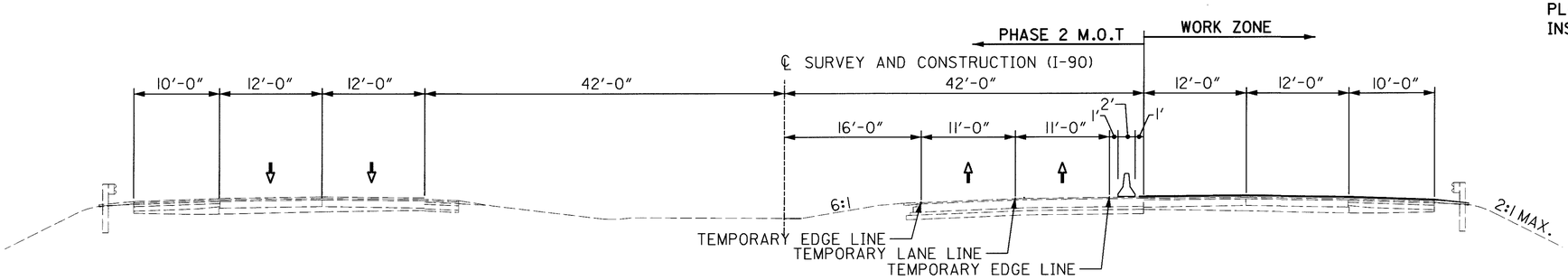

PHASE 2 - EASTBOUND - CONSTRUCT OUTSIDE LANES
(NORMAL & LOWERED PROFILE)
IF NORMAL PROFILE USE DRUMS IN PLACE OF PORTABLE CONCRETE BARRIER

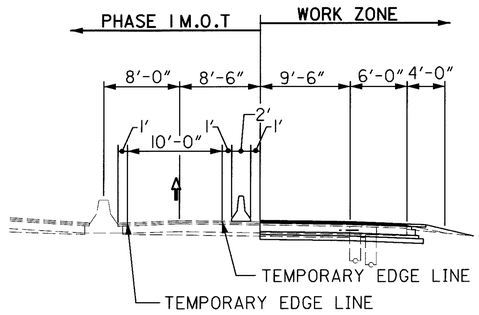

PHASE 1 - EASTBOUND RAMP K - CONSTRUCT OUTSIDE
(LOWERED PROFILE - BARRIER)

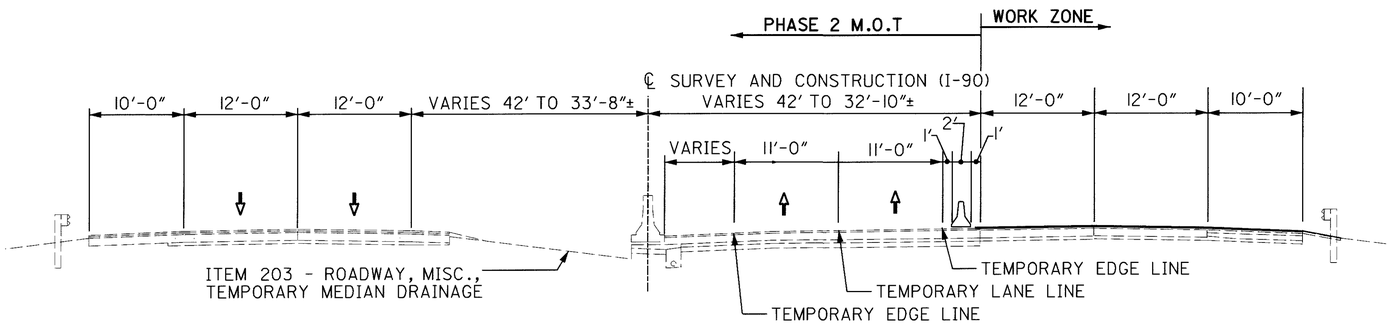

PHASE 2 - EASTBOUND - CONSTRUCT OUTSIDE LANES
(NORMAL & LOWERED PROFILE - BARRIER)
IF NORMAL PROFILE USE DRUMS IN PLACE OF PORTABLE CONCRETE BARRIER
STA. 96+50 TO STA. 109+00

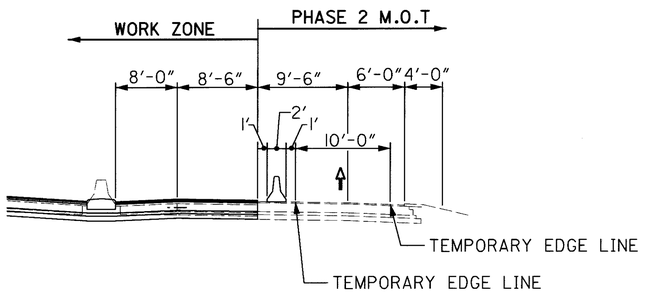

PHASE 2 - EASTBOUND RAMP K - CONSTRUCT INSIDE
(LOWERED PROFILE - BARRIER)

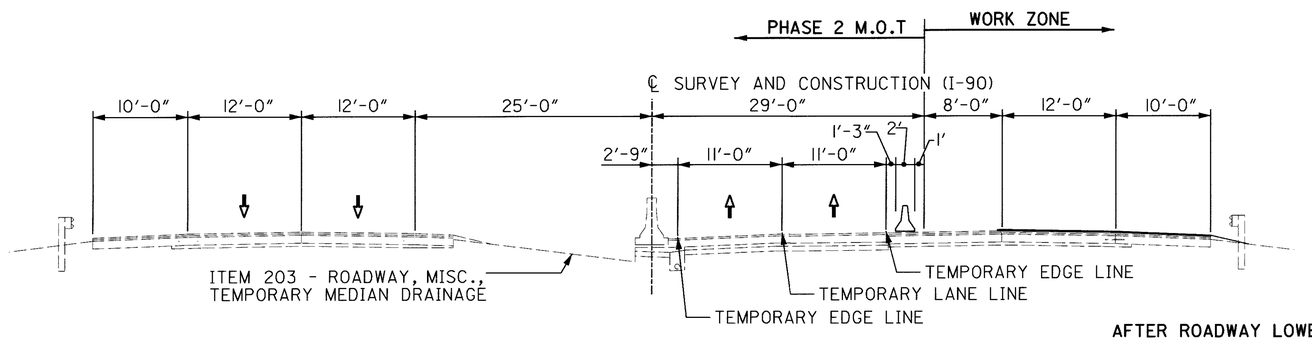

PHASE 2 - EASTBOUND - CONSTRUCT OUTSIDE LANES
(NORMAL & LOWERED PROFILE - BARRIER)
IF NORMAL PROFILE USE DRUMS IN PLACE OF PORTABLE CONCRETE BARRIER

AFTER ROADWAY LOWERING
IS COMPLETE, REMOVE PCB
AND PLACE SURFACE COURSE
ON MIDDLE LANE

PHASED CONSTRUCTION - PHASE 2 EASTBOUND & RAMP K

CUY-90-0.00

03 MAR 2000
d:\pr22308\cadd\l738mda.dgn

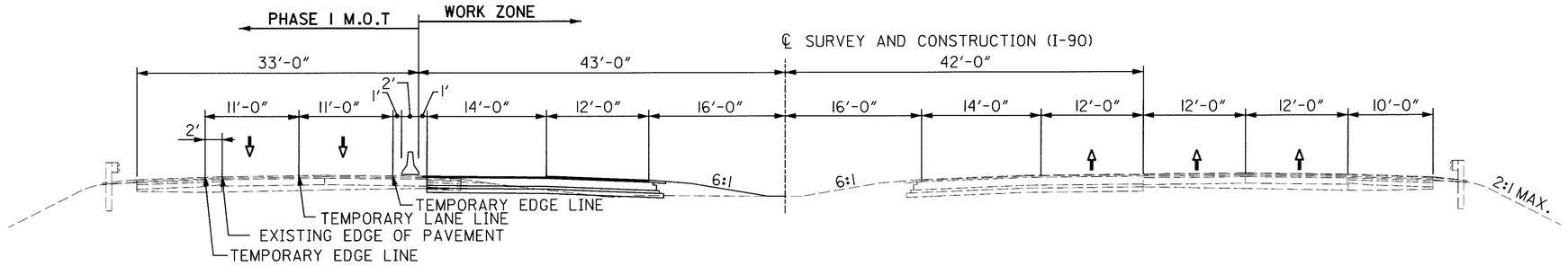

PHASE I - WESTBOUND - CONSTRUCT INSIDE LANES
(NORMAL PROFILE - DO NOT PLACE SURFACE COURSE)

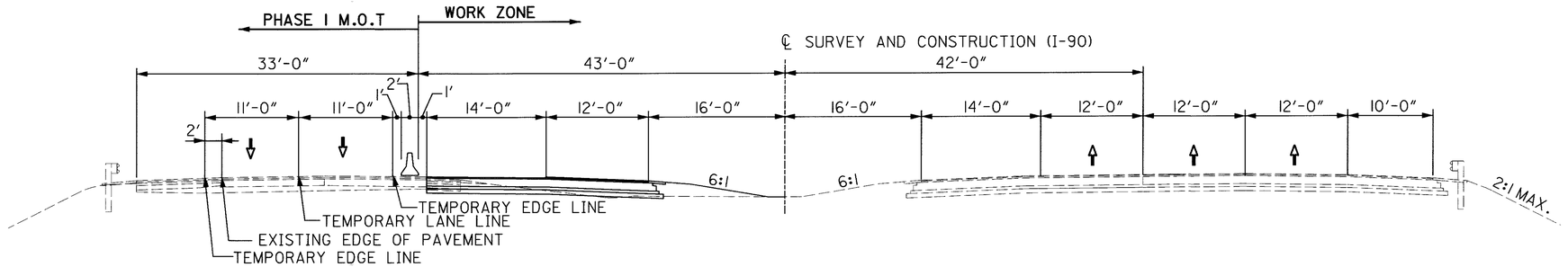

PHASE I - WESTBOUND - CONSTRUCT INSIDE LANES
(LOWERED PROFILE - DO NOT PLACE SURFACE COURSE)

IN 3 LANE SECTION, RIGHT EDGE LINE IS 2' ONTO OUTSIDE SHOULDER

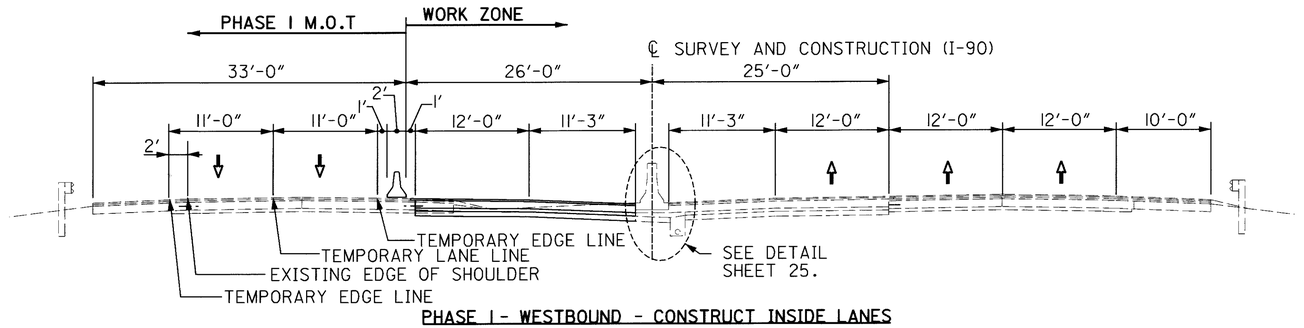

PHASE I - WESTBOUND - CONSTRUCT INSIDE LANES
(NORMAL PROFILE WITH BARRIER - DO NOT PLACE SURFACE COURSE)

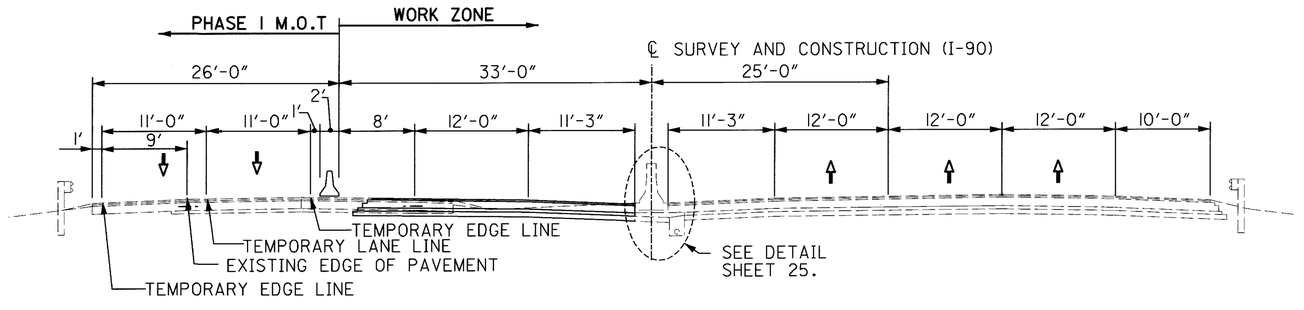

PHASE I - WESTBOUND - CONSTRUCT INSIDE LANES
(LOWERED PROFILE WITH BARRIER - DO NOT PLACE SURFACE COURSE)

PHASED CONSTRUCTION - PHASE 1 WESTBOUND

CUY-90-0.00

03 MAR 2000
p:\pr22308\cadd\ll738mda.dgn

AT THE END OF PHASE 2
REMOVE PCB, RETURN TRAFFIC
TO OUTSIDE LANES AND
PLACE SURFACE COURSE ON
INSIDE LANES AND SHOULDER

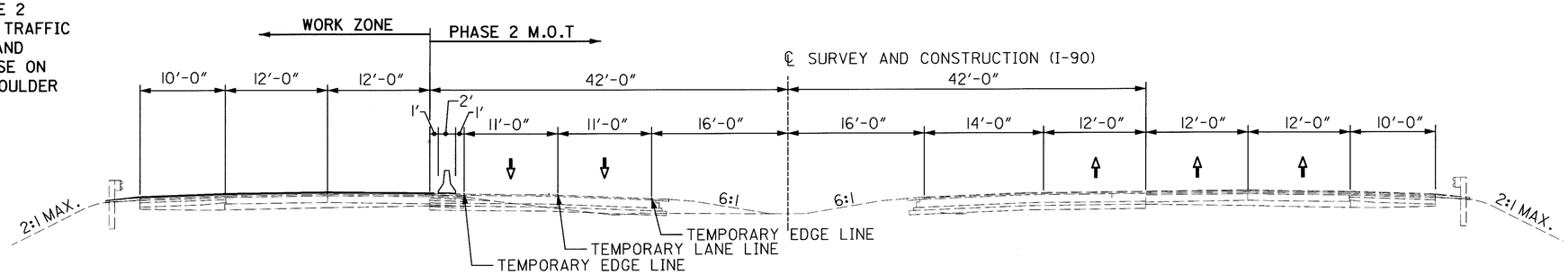

PHASE 2 - WESTBOUND - CONSTRUCT OUTSIDE LANES
(NORMAL & LOWERED PROFILE)
IF NORMAL PROFILE USE DRUMS IN PLACE OF PORTABLE CONCRETE BARRIER

AFTER ROADWAY LOWERING
IS COMPLETE, REMOVE PCB
AND PLACE SURFACE COURSE
ON MIDDLE LANE

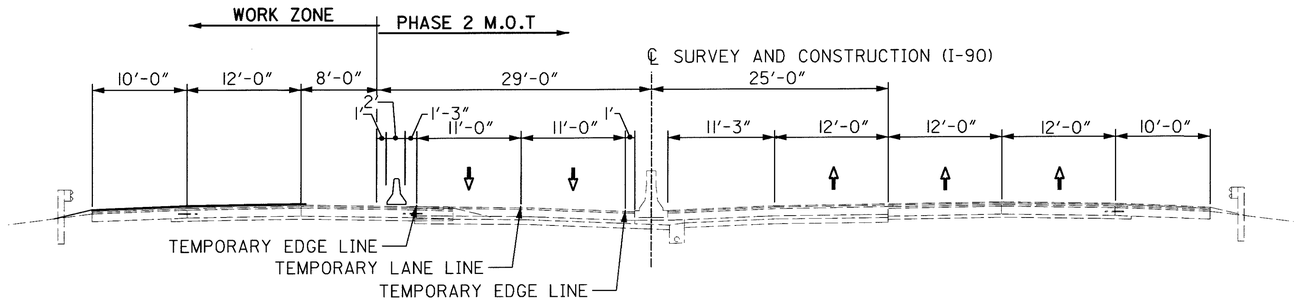

PHASE 2 - WESTBOUND - CONSTRUCT OUTSIDE LANES
(NORMAL & LOWERED PROFILE - BARRIER)
IF NORMAL PROFILE USE DRUMS IN PLACE OF PORTABLE CONCRETE BARRIER

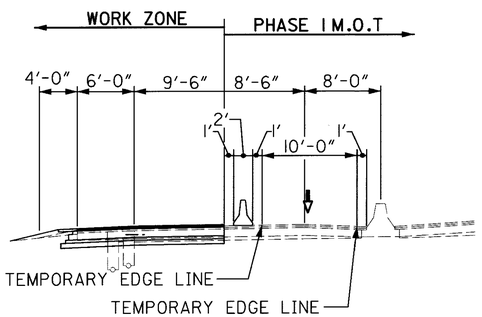

PHASE I - WESTBOUND RAMP G - CONSTRUCT OUTSIDE
(LOWERED PROFILE - BARRIER)

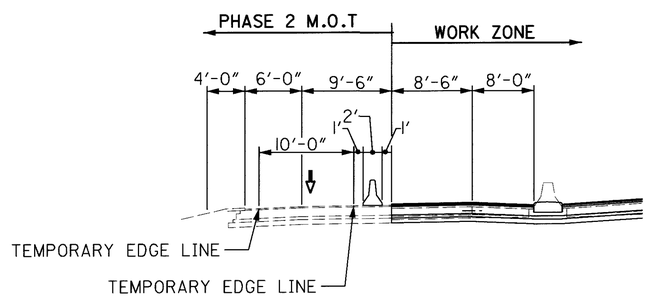

PHASE 2 - WESTBOUND RAMP G - CONSTRUCT INSIDE
(LOWERED PROFILE - BARRIER)

03 MAR 2000
P:\pr22308\cadd\ll738mda.dgn

PHASED CONSTRUCTION - PHASE 2 WESTBOUND & RAMP G

CUY-90-0.00

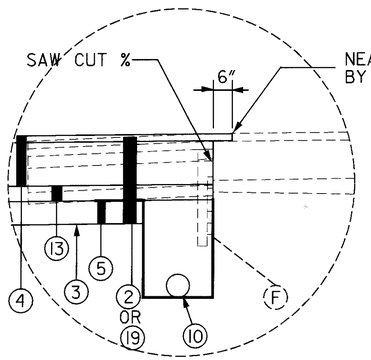

PHASE 1

DETAIL "B"

PART WIDTH CONSTRUCTION

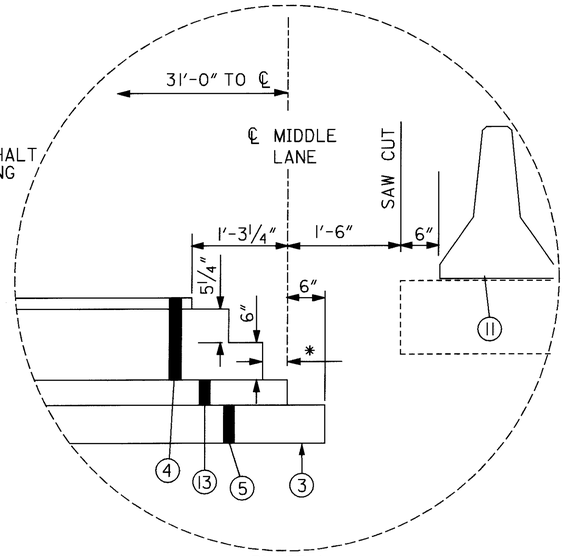

PHASE 1

* WIDTH OF PAVEMENT STEP = LAYER THICKNESS

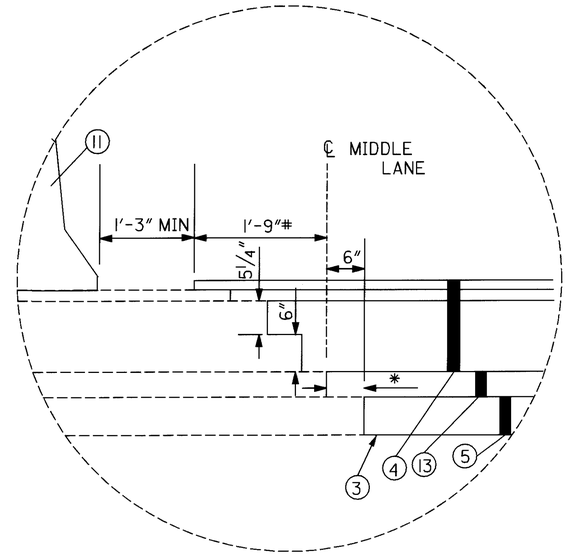

PHASE 2

* WIDTH OF PAVEMENT STEP = LAYER THICKNESS

#-SURFACE COURSE MAY BE PLACED AFTER PCB REMOVAL, LOCATE JOINTS AS PER BP-3.1

DETAIL "D"

PART WIDTH CONSTRUCTION

(@ CANTERBURY RD, AND COLUMBIA RD)

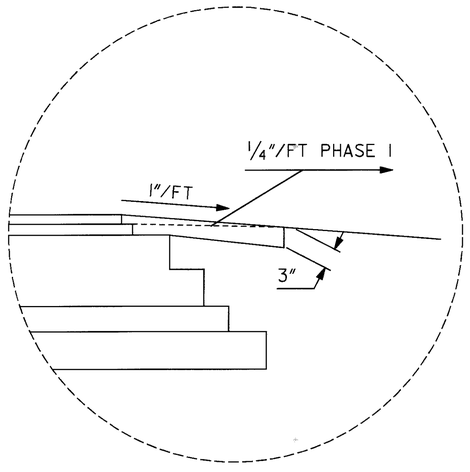

PHASED CONSTRUCTION OF COMPACTED AGGREGATE

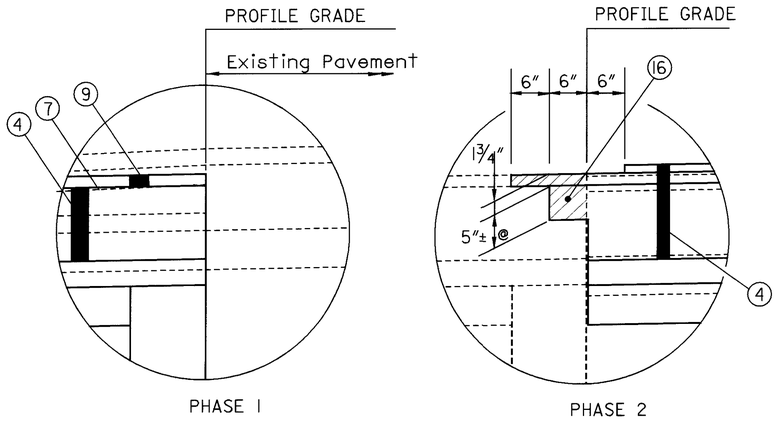

PHASE 1

PHASE 2

PART WIDTH CONSTRUCTION

REMOVE P.C.B. PRIOR TO PLACING PHASE 2 INTERMEDIATE COURSE

@ - MATCH THICKNESS OF TOP 302 COURSE

DETAIL "C"

PART WIDTH CONSTRUCTION

(@ CROCKER RD. AND CAHOON RD (EB))

SEE LEGEND SHEET 5

PHASED CONSTRUCTION

CUY-90-0.00

I:\PROJECTS\Pid1738\dgn\final plans\1738MDA.DGN 20-JUL-2000 2:44PM jgrmovse

ESTIMATED QUANTITIES

PHASE	LOCATION	STATION FROM	STATION TO	DIRECTION		TRAFFIC SHIFTS 614 TEMPORARY LANE LINE, CLASS 1, 642 PAINT LIN FT	TEMPORARY EDGE LINE, CLASS 1, 642 PAINT (WHITE) LIN FT	TEMPORARY EDGE LINE, CLASS 1, 642 PAINT (YELLOW) LIN FT	TEMPORARY CHANNELIZING LINE, CLASS 1, 642 PAINT LIN FT	TEMPORARY DOTTED LINE, CLASS 1, 642 PAINT LIN FT		TRAFFIC SHIFTS 614 TEMPORARY LANE LINE, CLASS 1, 740.06, TYPE 1 LIN FT	TEMPORARY EDGE LINE, CLASS 1, 740.06, TYPE 1 (WHITE) LIN FT	TEMPORARY EDGE LINE, CLASS 1, 740.06, TYPE 1 (YELLOW) LIN FT	TEMPORARY CHANNELIZING LINE, CLASS 1, 740.06, TYPE 1 LIN FT		
1	190	1207+50	1215+90	EB									840	840	840		
1	190	0+00	16+75	EB		1675	1675	1675									
1	190	16+75	28+94	EB			1219	1219	1219								
1	190	28+94	31+60	EB				266	266								
1	190	31+60	32+30	EB				70	70	70							
1	190	32+30	34+38	EB		208		208		208							
1	190	34+38	36+75	EB		237		237	237								
1	190	36+75	66+11	EB		2936	2936	2936									
1	190	66+11	75+78	EB		967		967									
1	190	75+78	124+30	EB		4852	4852	4852									
1	190	124+30	139+80	EB			1550	1550	1550								
1	190	139+80	147+80	EB		800	800	800									
1	190	147+80	169+20	EB			2140	2140	2140								
1	190	169+20	171+91	EB		271	271	271									
1	190	171+91	174+50	EB		259	259	259		259							
1	190	174+50	175+03	EB		53		53		53							
1	190	175+03	176+51	EB		148		148	148								
1	190	176+51	180+30	EB		379	379	379									
1	190	180+30	200+70	EB			2040	2040	2040								
1	190	200+70	207+26	EB		656	656	656									
1	190	207+26	213+26	EB								1200		600			
1	190	213+26	220+20	EB			694					1388		694			
1	190	220+20	228+50	EB									830	830	1660		
1	RAMP G	84+29	85+29					100					100				
1	RAMP G	85+29	95+50				1021	1021									
1	RAMP G	95+50	99+00					350							350		
1	RAMP H	95+00	99+00												400		
1	RAMP I	93+25	97+50						425								
1	RAMP K	83+05	84+55					150					150				
1	RAMP K	84+55	97+50				1295	1295									
TOTALS CARRIED TO GENERAL SUMMARY						13,441	21,787	23,642	8,095	590		2,588	1,920	2,964	3,250		
						2.54 MI	45,429 L.F. = 8.60 MI					0.49 MI	4,884 L.F. = 0.93 MI				

CALCULATED GJN CHECKED ENF

MAINTENANCE OF TRAFFIC SUBSUMMARY

CUY-90-0.00

03 MAR 2000
D:\PR22308\CADD\II738MSA.DGN

ESTIMATED QUANTITIES

PHASE	LOCATION	STATION FROM	STATION TO	DIRECTION		TRAFFIC SHIFTS 614 TEMPORARY LANE LINE, CLASS I, 642 PAINT LIN FT	TEMPORARY EDGE LINE, CLASS I, 642 PAINT (WHITE) LIN FT	TEMPORARY EDGE LINE, CLASS I, 642 PAINT (YELLOW) LIN FT	TEMPORARY CHANNELIZING LINE, CLASS I, 642 PAINT LIN FT	TEMPORARY DOTTED LINE, CLASS I, 642 PAINT LIN FT		614 TEMPORARY LANE LINE, CLASS I, 740.06, TYPE 1 LIN FT	TEMPORARY EDGE LINE, CLASS I, 740.06, TYPE 1 (WHITE) LIN FT	TEMPORARY EDGE LINE, CLASS I, 740.06, TYPE 1 (YELLOW) LIN FT	TEMPORARY CHANNELIZING LINE, CLASS I, 740.06, TYPE 1 LIN FT	TEMPORARY DOTTED LINE, CLASS I, 740.06, TYPE 1 LIN FT		
1	190	1211+90	1215+90	WB									400	400	400			
1	190	0+00	2+00	WB									200	200	200			
1	190	2+00	17+25	WB		1525	1525	1525										
1	190	17+25	28+66	WB			1141	1141	1141									
1	190	28+66	32+30	WB				364	364									
1	190	32+30	35+33	WB		303		303										
1	190	35+33	61+62	WB		2629	2629	2629										
1	190	61+62	63+78	WB		216		216	216									
1	190	63+78	66+06	WB		228		228		228								
1	190	66+06	69+10	WB		304		304										
1	190	69+10	124+80	WB		5570	5570	5570										
1	190	124+80	140+30	WB			1550	1550	1550									
1	190	140+30	150+80	WB		1050	1050	1050										
1	190	150+80	167+68	WB			1688	1688	1688									
1	190	167+68	170+70	WB				302	302									
1	190	170+70	174+46	WB		376		376										
1	190	174+46	178+80	WB		434	434	434										
1	190	178+80	201+20	WB			2240	2240	2240									
1	190	201+20	201+67	WB		47	47	47										
1	190	201+67	204+74	WB		307		307	307									
1	190	204+74	205+00	WB		52		26										
1	190	205+00	207+26	WB								452		226				
1	190	207+26	224+30	WB			1704					3408		1704				
1	190	224+30	230+20	WB									590	590	1180			
TOTALS CARRIED TO GENERAL SUMMARY						13,041	19,578	20,300	7,808	228		3,860	1,190	3,120	1,780			
						2.47 MI	39,878 L.F. = 7.55 MI					0.73 MI	4,310 L.F. = 0.82 MI					

CALCULATED GJN
CHECKED ENF

MAINTENANCE OF TRAFFIC SUBSUMMARY

CUY-90-0.00

03 MAR 2000
P:\PR22308\CADD\I738MSA.DGN

ESTIMATED QUANTITIES

PHASE	LOCATION	STATION FROM	STATION TO	DIRECTION		TRAFFIC SHIFTS 614 TEMPORARY LANE LINE, CLASS 1, 642 PAINT LIN FT	TEMPORARY EDGE LINE, CLASS 1, 642 PAINT (WHITE) LIN FT	TEMPORARY EDGE LINE, CLASS 1, 642 PAINT (YELLOW) LIN FT	TEMPORARY CHANNELIZING LINE, CLASS 1, 642 PAINT LIN FT	TEMPORARY DOTTED LINE, CLASS 1, 642 PAINT LIN FT		TRAFFIC SHIFTS 614 TEMPORARY LANE LINE, CLASS 1, 740.06, TYPE 1 LIN FT	TEMPORARY EDGE LINE, CLASS 1, 740.06, TYPE 1 (WHITE) LIN FT	TEMPORARY EDGE LINE, CLASS 1, 740.06, TYPE 1 (YELLOW) LIN FT	TEMPORARY CHANNELIZING LINE, CLASS 1, 740.06, TYPE 1 LIN FT	TEMPORARY DOTTED LINE, CLASS 1, 740.06, TYPE 1 LIN FT		
2	190	1197+50	1215+90	WB									1840	1840	1840			
2	190	0+00	2+00	WB									200	200	200			
2	190	2+00	33+70	WB		3170	3170	3170										
2	190	33+70	71+14	WB		3744	3744	3744										
2	190	71+14	171+73	WB		10059	10059	10059										
2	190	171+73	214+44	WB		4271	4271	4271										
2	190	214+44	215+94	WB			150	150	150									
2	190	215+94	223+57	WB			763	763	1526									
2	190	223+57	238+50	WB		2986	1493	1493										
2	190	238+50	249+20	WB									1070	1070	2140			
2	190	1197+00	1215+90	EB									1890	1890	1890			
2	190	0+00	1+40	EB									140	140	140			
2	190	1+40	30+50	EB		2910	2910	2910										
2	190	30+50	82+50	EB		5200	5200	5200										
2	190	82+50	109+00	EB		2650	2650	2650										
2	190	109+00	113+00	EB			400	400	400									
2	190	113+00	172+20	EB		5920	5920	5920										
2	190	172+20	215+00	EB		4280	4280	4280										
2	190	215+00	238+10	EB		4620	2310	2310										
2	190	238+10	244+00	EB									590	590	1180			
2	190	244+00	249+00	EB										500	1000	500		
2	190	249+00	252+00	EB									300	300	600			
2	RAMP A	33+70	40+35				665	665										
2	RAMP B	63+50	71+14				764	764										
2	RAMP C & E	76+74	82+50				576	576										
2	RAMP D	30+50	35+00				450	450										
2	RAMP F	71+73	77+00				527	527										
2	RAMP G	84+30	95+50				1120	1120										
2	RAMP G	95+50	97+00					150	150									
2	RAMP G & H	97+00	101+61				461	461	461									
2	RAMP G & H	105+00	108+77					377										
2	RAMP G & H	108+77	115+94				717	717										
2	RAMP H	95+00	97+00				200		200									
2	RAMP I	93+25	95+50						225									
2	RAMP J	72+20	75+25				305	305										
2	RAMP K	83+05	95+50				1245	1245										
2	RAMP K & I	95+50	101+28			578		578										
2	RAMP K & I	101+28	115+00				1372	1372										
2	CLAGUE RAMP	238+53	244+00										547		547			
2	CLAGUE RAMP	244+00	246+00										200					
TOTALS CARRIED TO GENERAL SUMMARY						50,388	55,722	56,627	3,112				6,777	6,530	9,537	500		
						9.54 MI	112,349 L.F. = 21.28 MI						13,307 L.F. = 2.52 MI					

CALCULATED GJN
CHECKED ENF

MAINTENANCE OF TRAFFIC SUBSUMMARY

CUY-90-0.00

03 MAR 2000
P:\PR22308\CADD\1738MSA.DGN

ESTIMATED QUANTITIES

PHASE	LOCATION	STATION FROM	STATION TO	DIRECTION	LENGTH	614 BARRIER REFLECTOR, TYPE B	614 OBJECT MARKER	622 PORTABLE CONCRETE BARRIER, 32"	622 PORTABLE CONCRETE BARRIER, 32", BRIDGE MOUNTED
						EACH	EACH	LIN FT	LIN FT
1	190	1211+90	1215+90	EB	400	16	16	400	
1	190	0+00	222+20	EB	22,220	889	889	21790	430
1	190	1215+80	1215+90	WB	10	1	1	10	
1	190	0+00	223+60	WB	22,360	895	895	21930	430
1	RAMP G	85+30	96+70		1140	46	46	1140	
1	RAMP I	93+25	96+00		275	6	6	280	
1	RAMP K	83+55	95+00		1145	46	46	1150	
2	190	22+45	32+90	WB	1045	42	42	840	210
2	190	46+60	59+60	WB	1300	52	52	1300	
2	190	130+30	138+60	WB	830	34	34	610	220
2	190	155+90	171+10	WB	1520	61	61	1520	
2	190	183+85	200+00	WB	1615	65	65	1620	
2	190	208+77	239+00	WB	3023	122	122	3030	
2	190	18+44	25+64	EB	720	29	29	510	210
2	190	43+05	55+05	EB	1200	48	48	1200	
2	190	97+50	110+00	EB	1250	50	50	1250	
2	190	126+00	134+30	EB	830	34	34	610	220
2	190	151+00	163+60	EB	1260	51	51	1260	
2	190	180+00	195+50	EB	1550	62	62	1550	
2	RAMP G	85+30	98+68		1338	54	54	1338	
2	RAMP K	83+75	95+50		1175	48	48	1180	
TOTALS CARRIED TO GENERAL SUMMARY						2,651	2,651	64,518	1,720

ESTIMATED QUANTITIES

PHASE	SIDE	STATION FROM	STATION TO	LENGTH	AVERAGE WIDTH	TRAFFIC SHIFTS 615 TEMPORARY PAVEMENT, AS PER PLAN
				FEET	FEET	SQ YDS
1	90WB LT	18+75	21+25	250	10	278
1	90WB LT	27+71	28+66	95	10	106
1	90WB LT	126+30	129+20	290	10	323
1	90WB LT	135+75	138+30	255	10	284
1	RAMP G RT	84+30	88+40	400	*	303*
1	90EB RT	18+75	21+25	250	10	278
1	90EB RT	27+74	28+94	120	10	134
1	90EB RT	126+30	128+91	261	10	290
1	90EB RT	135+45	138+30	285	10	317
1	RAMP K LT	83+35	84+55	120	*	70*
2	RAMP G LT	84+95	95+30	1035	*	280*
2	RAMP K RT	83+90	93+45	955	*	313*
TOTALS CARRIED TO GENERAL SUMMARY						2,976

* CADD GENERATED

CALCULATED GJN
CHECKED ENF

MAINTENANCE OF TRAFFIC SUBSUMMARY

CUY-90-0.00

03 MAR 2000
P:\PR22308\CADD\II738MSA.DGN

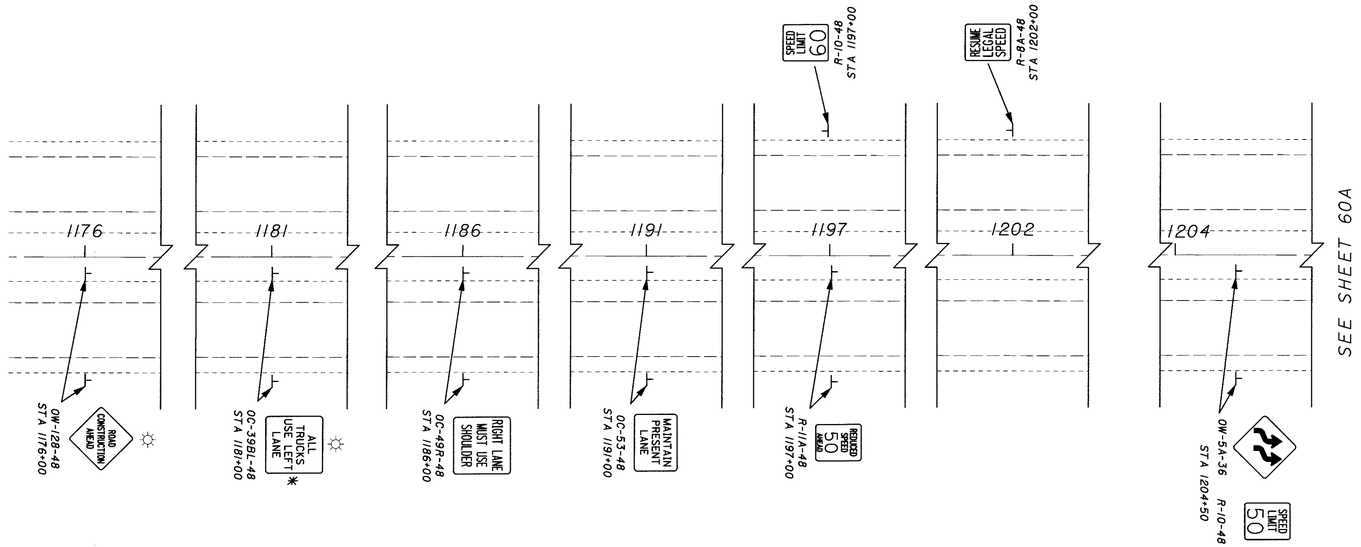

LEGEND

1. TEMPORARY LANE LINE, CLASS I, 642 PAINT (WHITE)
2. PORTABLE CONCRETE BARRIER, 32 INCH
3. TEMPORARY EDGE LINE, CLASS I, 642 PAINT (WHITE)
4. TEMPORARY EDGE LINE, CLASS I, 642 PAINT (YELLOW)
5. TEMPORARY CHANNELIZING LINE, CLASS I, 642 PAINT (WHITE)
6. TEMPORARY DOTTED LINE, CLASS I, 642 PAINT (WHITE)
7. TEMPORARY EDGE LINE, CLASS I, 740.06, TYPE I (WHITE)
8. TEMPORARY EDGE LINE, CLASS I, 740.06, TYPE I (YELLOW)
9. TEMPORARY CHANNELIZING LINE, CLASS I, 740.06, TYPEI (WHITE)
10. TEMPORARY LANE LINE, CLASS I, 740.06, TYPE I (WHITE)

← DIRECTION OF TRAVEL

• • • DRUMS

☼ TYPE A WARNING LIGHT

* IF DETERMINED TO BE NEEDED BY THE ENGINEER

03 MAR 2000
P:\PR22308\CADD\IT738MP7.DGN

CALCULATED NJG
CHECKED

0 25 50 100
HORIZONTAL SCALE IN FEET

MAINTENANCE OF TRAFFIC PHASE 1

CUY-90-0.00

60
582

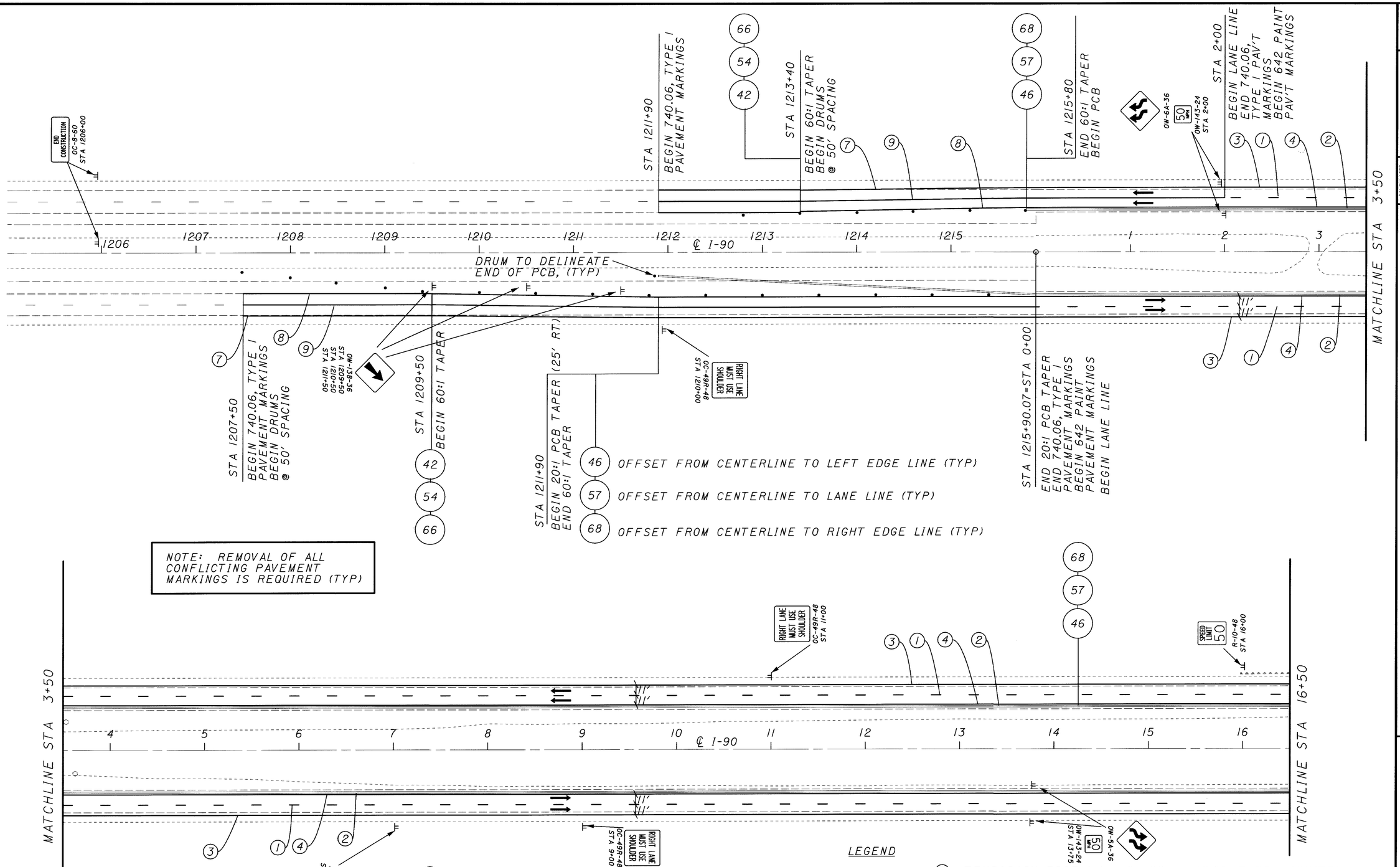

NOTE: OFFSET TO PCB ARE TO TOE OF BARRIER CLOSEST TO TRAFFIC.

NOTE: TOE OF BARRIER IS 1'-0" FROM TEMPORARY EDGE LINE, TYPICALLY.

LEGEND

1. TEMPORARY LANE LINE, CLASS I, 642 PAINT (WHITE)
2. PORTABLE CONCRETE BARRIER, 32 INCH
3. TEMPORARY EDGE LINE, CLASS I, 642 PAINT (WHITE)
4. TEMPORARY EDGE LINE, CLASS I, 642 PAINT (YELLOW)
5. TEMPORARY CHANNELIZING LINE, CLASS I, 642 PAINT (WHITE)
6. TEMPORARY DOTTED LINE, CLASS I, 642 PAINT (WHITE)
7. TEMPORARY EDGE LINE, CLASS I, 740.06, TYPE I (WHITE)
8. TEMPORARY EDGE LINE, CLASS I, 740.06, TYPE I (YELLOW)
9. TEMPORARY CHANNELIZING LINE, CLASS I, 740.06, TYPEI (WHITE)
10. TEMPORARY LANE LINE, CLASS I, 740.06, TYPE I (WHITE)

← DIRECTION OF TRAVEL

• • • DRUMS

HORIZONTAL SCALE IN FEET
0 25 50 100

CALCULATED NJG
CHECKED

MAINTENANCE OF TRAFFIC PHASE 1

CUY-90-0.00

60A
582

03 MAR 2000
p:\pr22308\cadd\11738mpc.dgn

MAINTENANCE OF TRAFFIC PHASE 1

CUY-90-0.00

HORIZONTAL SCALE IN FEET

CALCULATED NJG CHECKED

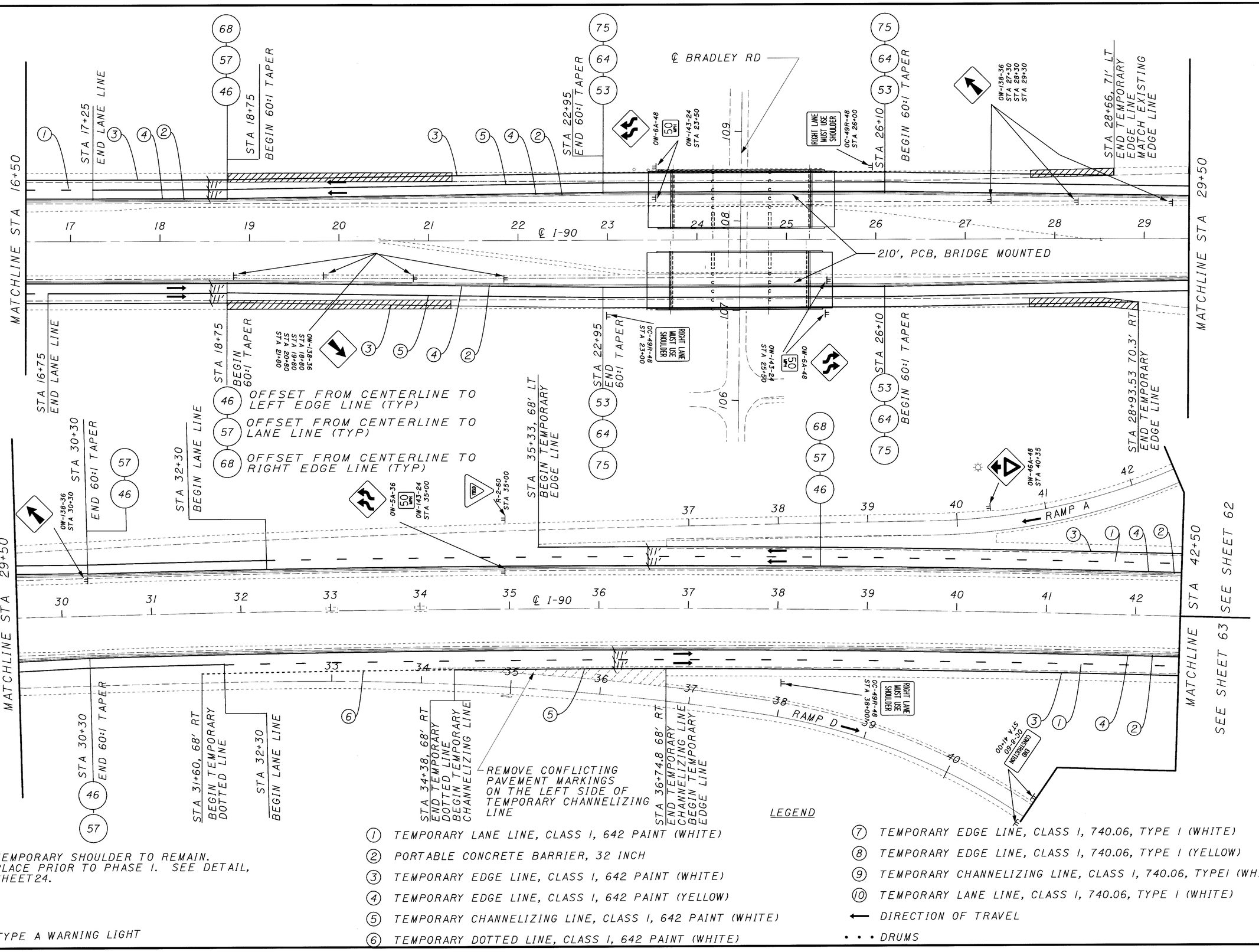

TEMPORARY SHOULDER TO REMAIN. PLACE PRIOR TO PHASE I. SEE DETAIL, SHEET 24.

☼ TYPE A WARNING LIGHT

LEGEND

1. TEMPORARY LANE LINE, CLASS I, 642 PAINT (WHITE)
2. PORTABLE CONCRETE BARRIER, 32 INCH
3. TEMPORARY EDGE LINE, CLASS I, 642 PAINT (WHITE)
4. TEMPORARY EDGE LINE, CLASS I, 642 PAINT (YELLOW)
5. TEMPORARY CHANNELIZING LINE, CLASS I, 642 PAINT (WHITE)
6. TEMPORARY DOTTED LINE, CLASS I, 642 PAINT (WHITE)
7. TEMPORARY EDGE LINE, CLASS I, 740.06, TYPE I (WHITE)
8. TEMPORARY EDGE LINE, CLASS I, 740.06, TYPE I (YELLOW)
9. TEMPORARY CHANNELIZING LINE, CLASS I, 740.06, TYPEI (WHITE)
10. TEMPORARY LANE LINE, CLASS I, 740.06, TYPE I (WHITE)

← DIRECTION OF TRAVEL

• • • DRUMS

03 MAR 2000
p:\pr22308\cadd\ll738mpb.dgn

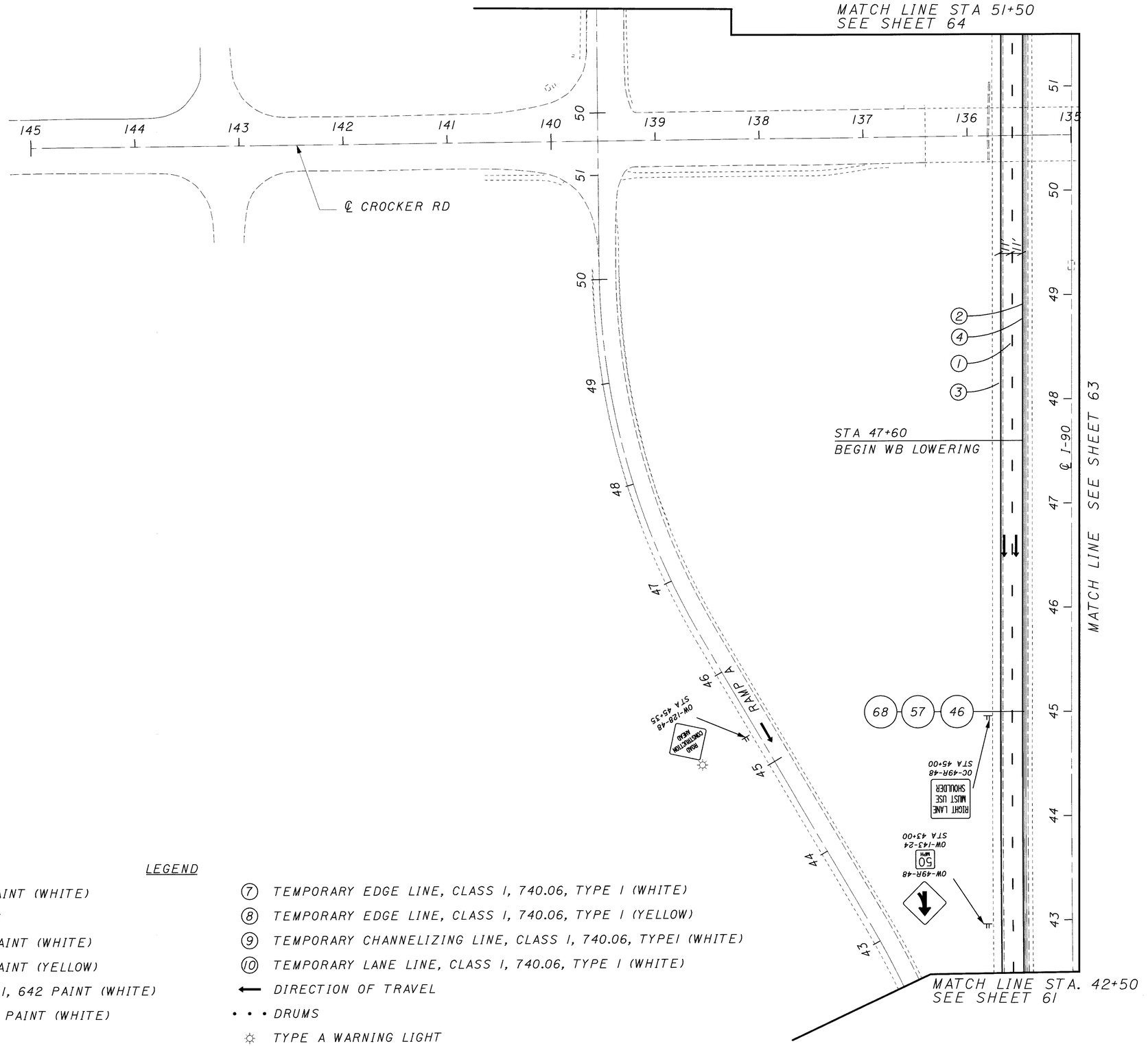

LEGEND

1. TEMPORARY LANE LINE, CLASS I, 642 PAINT (WHITE)
2. PORTABLE CONCRETE BARRIER, 32 INCH
3. TEMPORARY EDGE LINE, CLASS I, 642 PAINT (WHITE)
4. TEMPORARY EDGE LINE, CLASS I, 642 PAINT (YELLOW)
5. TEMPORARY CHANNELIZING LINE, CLASS I, 642 PAINT (WHITE)
6. TEMPORARY DOTTED LINE, CLASS I, 642 PAINT (WHITE)
7. TEMPORARY EDGE LINE, CLASS I, 740.06, TYPE I (WHITE)
8. TEMPORARY EDGE LINE, CLASS I, 740.06, TYPE I (YELLOW)
9. TEMPORARY CHANNELIZING LINE, CLASS I, 740.06, TYPEI (WHITE)
10. TEMPORARY LANE LINE, CLASS I, 740.06, TYPE I (WHITE)

← DIRECTION OF TRAVEL

• • • DRUMS

☼ TYPE A WARNING LIGHT

HORIZONTAL SCALE IN FEET
0 25 50 100

CALCULATED NJG
CHECKED

MAINTENANCE OF TRAFFIC PHASE 1

CUY-90--0.00

62
582

03 MAR 2000
p:\pr22308\cadd\lit38mpc.dgn

MATCH LINE STA. 51+50
SEE SHEET 64

RAMP C

℄ CROCKER RD

RAMP E

STA 48+05, ℄ I-90
BEGIN EB LOWERING

℄ I-90

RAMP D

MATCH LINE STA. 44+00

MATCH LINE STA. 41+00
SEE SHEET 61

MATCH LINE STA. 44+00

MATCH LINE SEE SHEET 62

RIGHT LANE MUST USE SHOULDER
OC-49R-48
STA 46+00

MATCH LINE STA. 42+50
SEE SHEET 61

LEGEND

1. TEMPORARY LANE LINE, CLASS I, 642 PAINT (WHITE)
2. PORTABLE CONCRETE BARRIER, 32 INCH
3. TEMPORARY EDGE LINE, CLASS I, 642 PAINT (WHITE)
4. TEMPORARY EDGE LINE, CLASS I, 642 PAINT (YELLOW)
5. TEMPORARY CHANNELIZING LINE, CLASS I, 642 PAINT (WHITE)
6. TEMPORARY DOTTED LINE, CLASS I, 642 PAINT (WHITE)
7. TEMPORARY EDGE LINE, CLASS I, 740.06, TYPE I (WHITE)
8. TEMPORARY EDGE LINE, CLASS I, 740.06, TYPE I (YELLOW)
9. TEMPORARY CHANNELIZING LINE, CLASS I, 740.06, TYPEI (WHITE)
10. TEMPORARY LANE LINE, CLASS I, 740.06, TYPE I (WHITE)

← DIRECTION OF TRAVEL

• • • DRUMS

HORIZONTAL SCALE IN FEET
0 25 50 100

CALCULATED NJG
CHECKED

MAINTENANCE OF TRAFFIC PHASE 1

CUY-90-0.00

63
582

06 MAR 2000
D:\PR22308\CADD\IT738MPD.DGN

MATCH LINE STA. 61+00
SEE SHEET 65

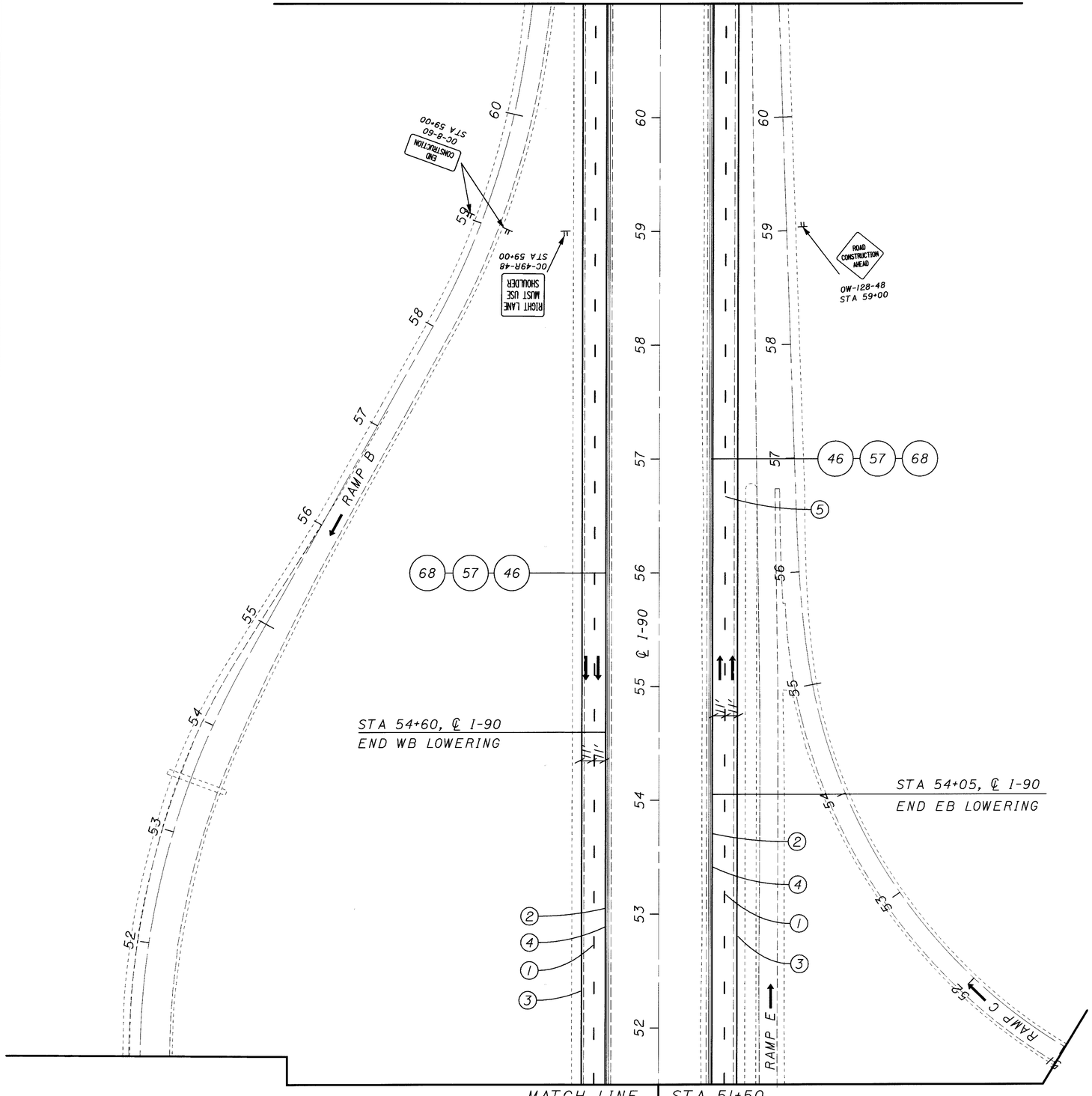

MATCH LINE
SEE SHEET 62

STA 51+50
SEE SHEET 63

LEGEND

1. TEMPORARY LANE LINE, CLASS I, 642 PAINT (WHITE)
2. PORTABLE CONCRETE BARRIER, 32 INCH
3. TEMPORARY EDGE LINE, CLASS I, 642 PAINT (WHITE)
4. TEMPORARY EDGE LINE, CLASS I, 642 PAINT (YELLOW)
5. TEMPORARY CHANNELIZING LINE, CLASS I, 642 PAINT (WHITE)
6. TEMPORARY DOTTED LINE, CLASS I, 642 PAINT (WHITE)
7. TEMPORARY EDGE LINE, CLASS I, 740.06, TYPE I (WHITE)
8. TEMPORARY EDGE LINE, CLASS I, 740.06, TYPE I (YELLOW)
9. TEMPORARY CHANNELIZING LINE, CLASS I, 740.06, TYPEI (WHITE)
10. TEMPORARY LANE LINE, CLASS I, 740.06, TYPE I (WHITE)

⟵ DIRECTION OF TRAVEL

• • • DRUMS

HORIZONTAL SCALE IN FEET
0 25 50 100

CALCULATED RAS
CHECKED

MAINTENANCE OF TRAFFIC PHASE 1

CUY-90-0.00

64
582

06 MAR 2000
p:\pr22308\caddl\l738mpe.dgn

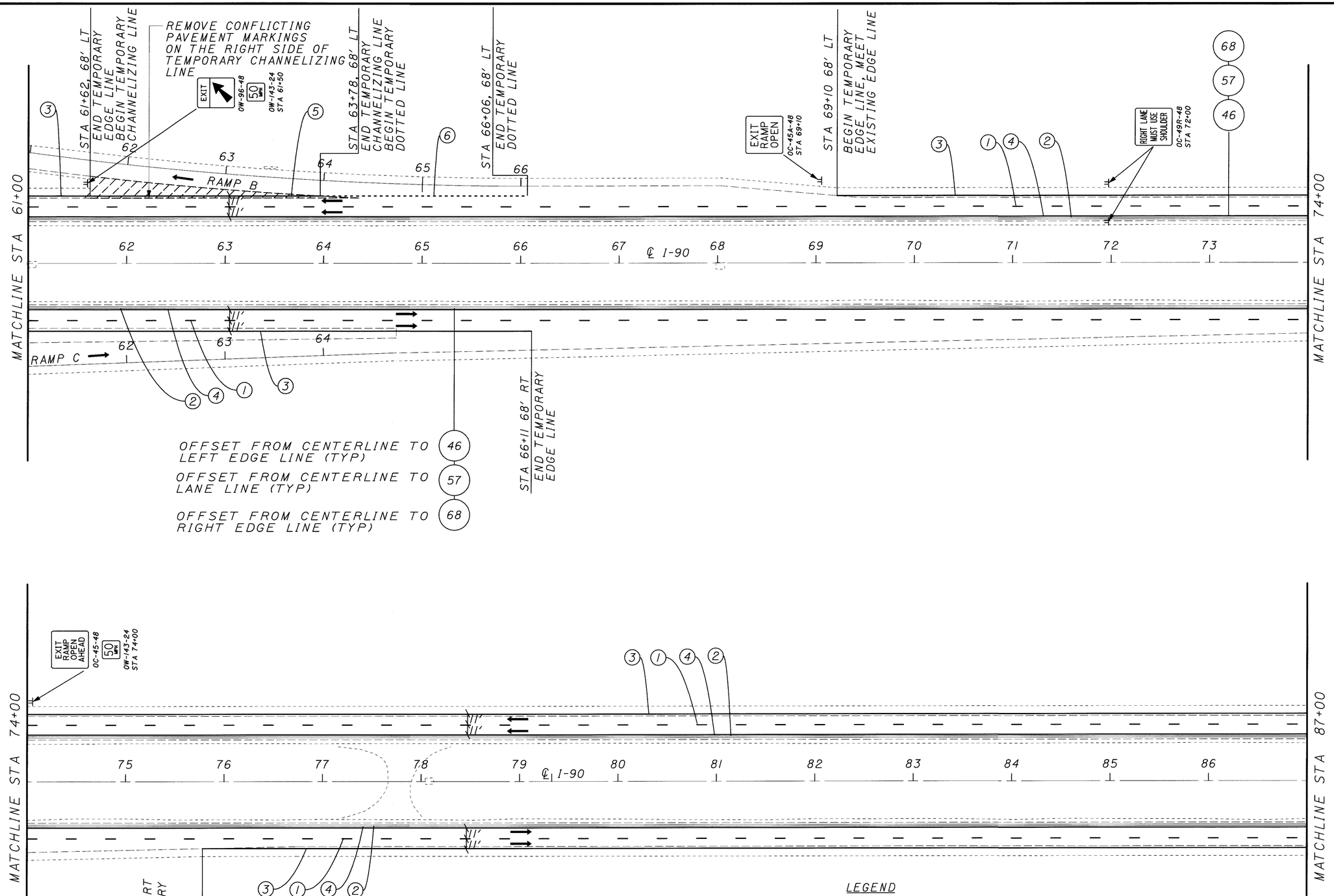

LEGEND

1. TEMPORARY LANE LINE, CLASS I, 642 PAINT (WHITE)
2. PORTABLE CONCRETE BARRIER, 32 INCH
3. TEMPORARY EDGE LINE, CLASS I, 642 PAINT (WHITE)
4. TEMPORARY EDGE LINE, CLASS I, 642 PAINT (YELLOW)
5. TEMPORARY CHANNELIZING LINE, CLASS I, 642 PAINT (WHITE)
6. TEMPORARY DOTTED LINE, CLASS I, 642 PAINT (WHITE)
7. TEMPORARY EDGE LINE, CLASS I, 740.06, TYPE I (WHITE)
8. TEMPORARY EDGE LINE, CLASS I, 740.06, TYPE I (YELLOW)
9. TEMPORARY CHANNELIZING LINE, CLASS I, 740.06, TYPEI (WHITE)
10. TEMPORARY LANE LINE, CLASS I, 740.06, TYPE I (WHITE)

← DIRECTION OF TRAFFIC

• • • DRUMS

HORIZONTAL SCALE IN FEET
0 25 50 100

CALCULATED NJG
CHECKED

MAINTENANCE OF TRAFFIC PHASE 1

CUY-90-0.00

65
582

03 MAR 2000
p:\pr-22308\cadd\l738mpf.dgn

MAINTENANCE OF TRAFFIC PHASE 1

CUY-90-0.00

HORIZONTAL SCALE IN FEET
0 25 50 100

CALCULATED NJG
CHECKED

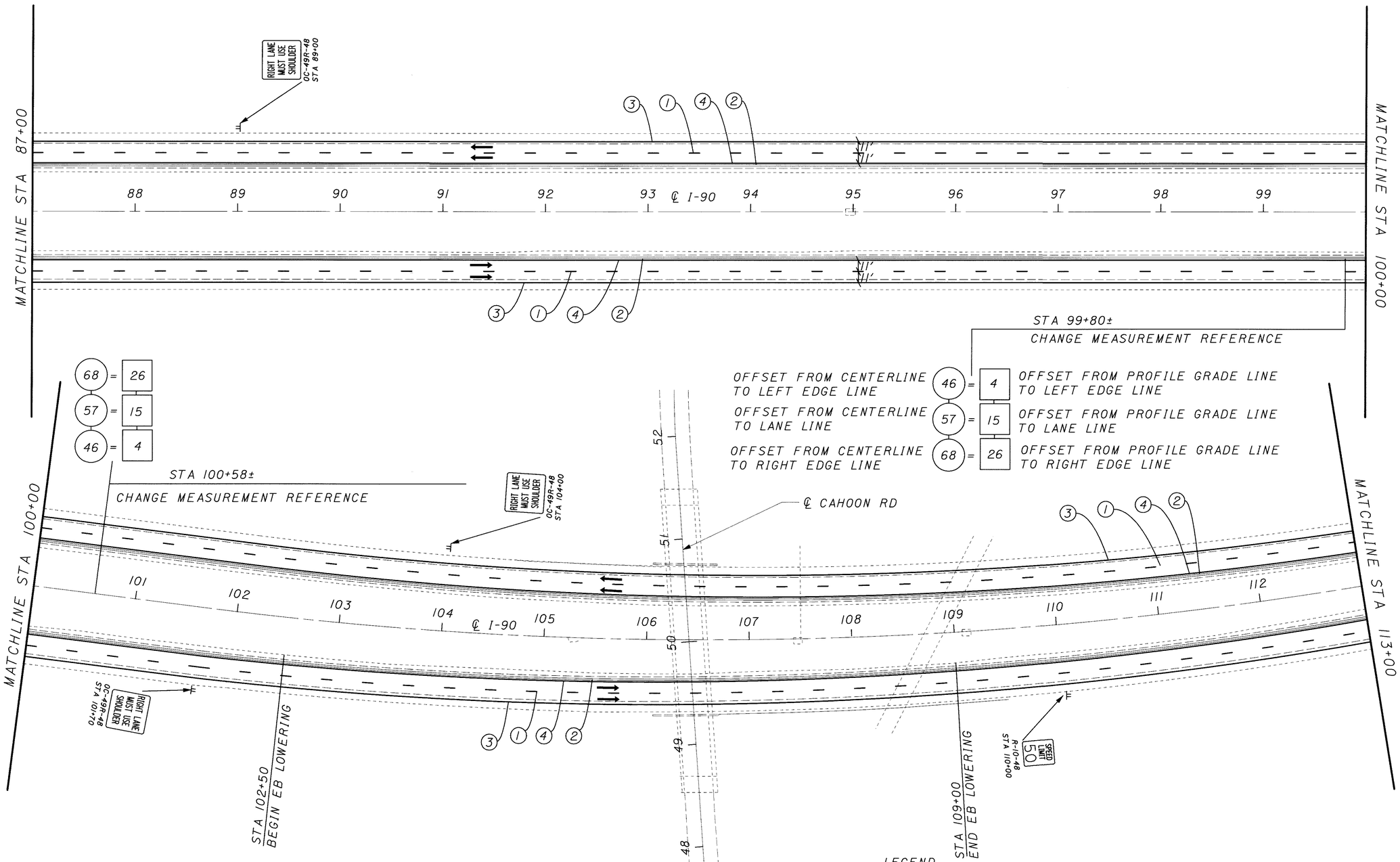

LEGEND

1. TEMPORARY LANE LINE, CLASS I, 642 PAINT (WHITE)
2. PORTABLE CONCRETE BARRIER, 32 INCH
3. TEMPORARY EDGE LINE, CLASS I, 642 PAINT (WHITE)
4. TEMPORARY EDGE LINE, CLASS I, 642 PAINT (YELLOW)
5. TEMPORARY CHANNELIZING LINE, CLASS I, 642 PAINT (WHITE)
6. TEMPORARY DOTTED LINE, CLASS I, 642 PAINT (WHITE)
7. TEMPORARY EDGE LINE, CLASS I, 740.06, TYPE I (WHITE)
8. TEMPORARY EDGE LINE, CLASS I, 740.06, TYPE I (YELLOW)
9. TEMPORARY CHANNELIZING LINE, CLASS I, 740.06, TYPEI (WHITE)
10. TEMPORARY LANE LINE, CLASS I, 740.06, TYPE I (WHITE)

⟵ DIRECTION OF TRAVEL

• • • DRUMS

06 MAR 2000
p:\pr22308\cadd\11738mpg.dgn

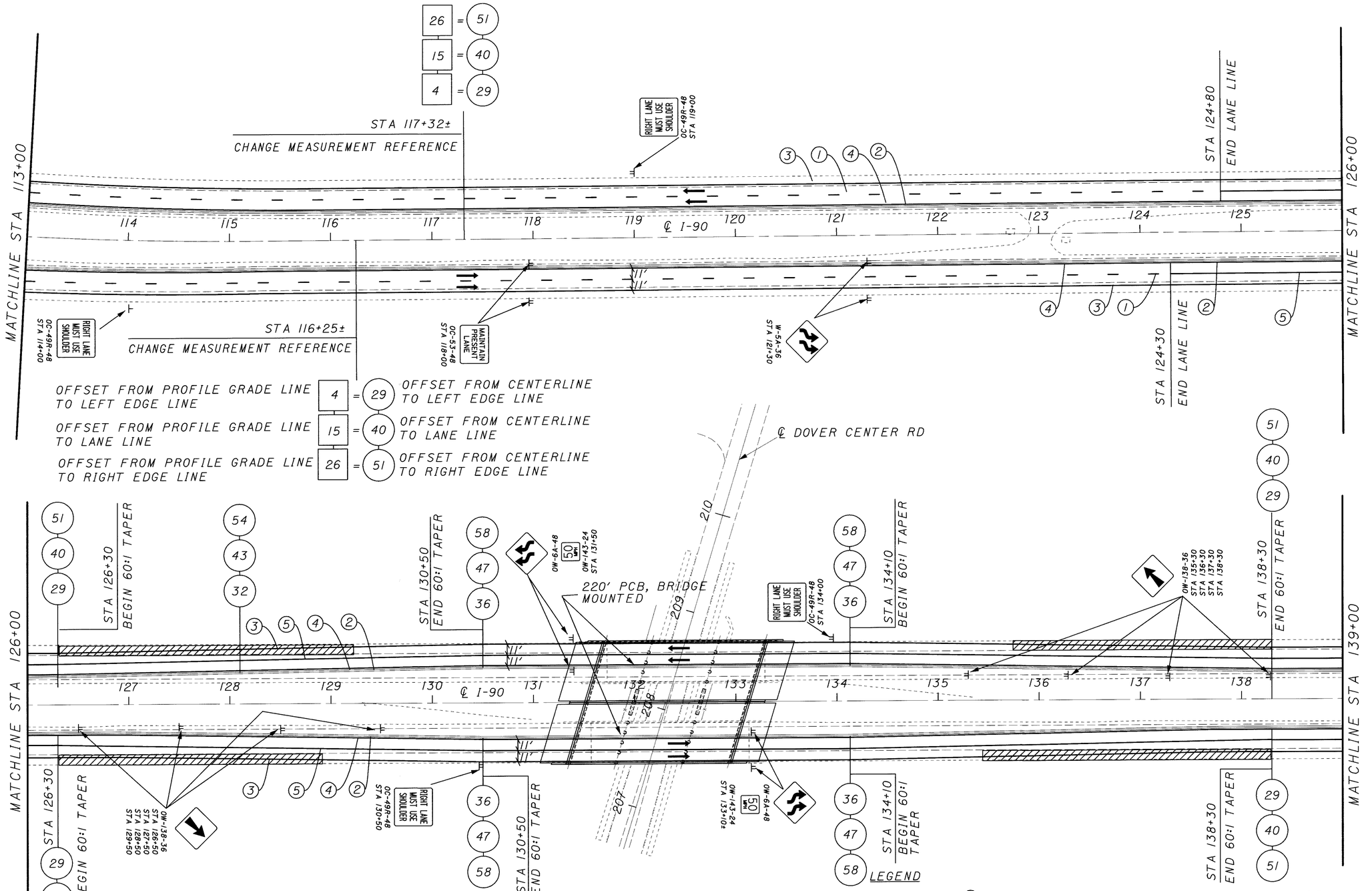

TEMPORARY SHOULDER TO REMAIN. PLACE PRIOR TO PHASE I. SEE DETAIL, SHEET 24.

① TEMPORARY LANE LINE, CLASS I, 642 PAINT (WHITE)
② PORTABLE CONCRETE BARRIER, 32 INCH
③ TEMPORARY EDGE LINE, CLASS I, 642 PAINT (WHITE)
④ TEMPORARY EDGE LINE, CLASS I, 642 PAINT (YELLOW)
⑤ TEMPORARY CHANNELIZING LINE, CLASS I, 642 PAINT (WHITE)
⑥ TEMPORARY DOTTED LINE, CLASS I, 642 PAINT (WHITE)
⑦ TEMPORARY EDGE LINE, CLASS I, 740.06, TYPE I (WHITE)
⑧ TEMPORARY EDGE LINE, CLASS I, 740.06, TYPE I (YELLOW)
⑨ TEMPORARY CHANNELIZING LINE, CLASS I, 740.06, TYPEI (WHITE)
⑩ TEMPORARY LANE LINE, CLASS I, 740.06, TYPE I (WHITE)
← DIRECTION OF TRAVEL
• • • DRUMS

HORIZONTAL SCALE IN FEET
0 25 50 100
CALCULATED NJG CHECKED

MAINTENANCE OF TRAFFIC PHASE 1

CUY-90-0.00

67
582

06 MAR 2000
D:\pr22308\caddd\I738mph.dgn

MAINTENANCE OF TRAFFIC PHASE 1

CUY-90-0.00

HORIZONTAL SCALE IN FEET
0 25 50 100

CALCULATED NJG
CHECKED

OFFSET FROM CENTERLINE TO OUTSIDE EDGE LINE (TYP) — 51
OFFSET FROM CENTERLINE TO LANE LINE (TYP) — 40
OFFSET FROM CENTERLINE TO INSIDE EDGE LINE (TYP) — 29

MATCHLINE STA 139+00
STA 140+30 BEGIN LANE LINE
STA 139+80 BEGIN LANE LINE
STA 147+80 END LANE LINE
STA 149+80 BEGIN 60:1 TAPER
STA 150+80 END LANE LINE
MATCHLINE STA 152+00

MAINTAIN PRESENT LANE OC-53-48 STA 140+00
RIGHT LANE MUST USE SHOULDER OC-49R-48 STA 139+00
MAINTAIN PRESENT LANE OC-53-48 STA 142+00
OW-5A-48 50 MPH OW-143-24 STA 143+50
OW-5A-48 STA 145+00
SPEED LIMIT 50 R-10-48 STA 150+00
OW-6B-48 STA 151+00

℄ I-90

MATCHLINE STA 152+00
STA 152+30 BEGIN 60:1 TAPER
RIGHT LANE MUST USE SHOULDER OC-49R-48 STA 154+50
STA 156+50 END 60:1 TAPER
STA 156+90 BEGIN WB LOWERING
OW-6A-48 50 MPH OW-143-24 STA 159+00
℄ CANTERBURY RD
STA 163+90 END WB LOWERING
RIGHT LANE MUST USE SHOULDER OC-49R-48 STA 164+50
STA 164+50 BEGIN 60:1 TAPER
MATCHLINE STA 165+00

OW-36-48 STA 152+00 STA 153+00
STA 154+00 END 60:1 TAPER
RIGHT LANE MUST USE SHOULDER OC-49R-48 STA 155+00
STA 156+50 BEGIN EB LOWERING
OW-6A-48 50 MPH OW-143-24 STA 159+50
STA 162+60 END EB LOWERING
OW-143-24 50 MPH OW-143-50 STA 163+50
EXIT RAMP OPEN AHEAD OC-49-48
STA 163+50 BEGIN 60:1 TAPER

℄ 1-90 stations: 140 141 142 143 144 145 146 147 148 149 150 151
℄ CANTERBURY RD stations: 153 154 155 156 157 158 159 160 161 162 163 164

24 ft, 25 ft, 26 ft

LEGEND

1. TEMPORARY LANE LINE, CLASS I, 642 PAINT (WHITE)
2. PORTABLE CONCRETE BARRIER, 32 INCH
3. TEMPORARY EDGE LINE, CLASS I, 642 PAINT (WHITE)
4. TEMPORARY EDGE LINE, CLASS I, 642 PAINT (YELLOW)
5. TEMPORARY CHANNELIZING LINE, CLASS I, 642 PAINT (WHITE)
6. TEMPORARY DOTTED LINE, CLASS I, 642 PAINT (WHITE)
7. TEMPORARY EDGE LINE, CLASS I, 740.06, TYPE I (WHITE)
8. TEMPORARY EDGE LINE, CLASS I, 740.06, TYPE I (YELLOW)
9. TEMPORARY CHANNELIZING LINE, CLASS I, 740.06, TYPEI (WHITE)
10. TEMPORARY LANE LINE, CLASS I, 740.06, TYPE I (WHITE)

← DIRECTION OF TRAVEL

• • • DRUMS

06 MAR 2000
p:\pr22308\cadd\11738mpi.dgn

03 MAR 2000
p:\pr22308\cadd\11738mpj.dgn

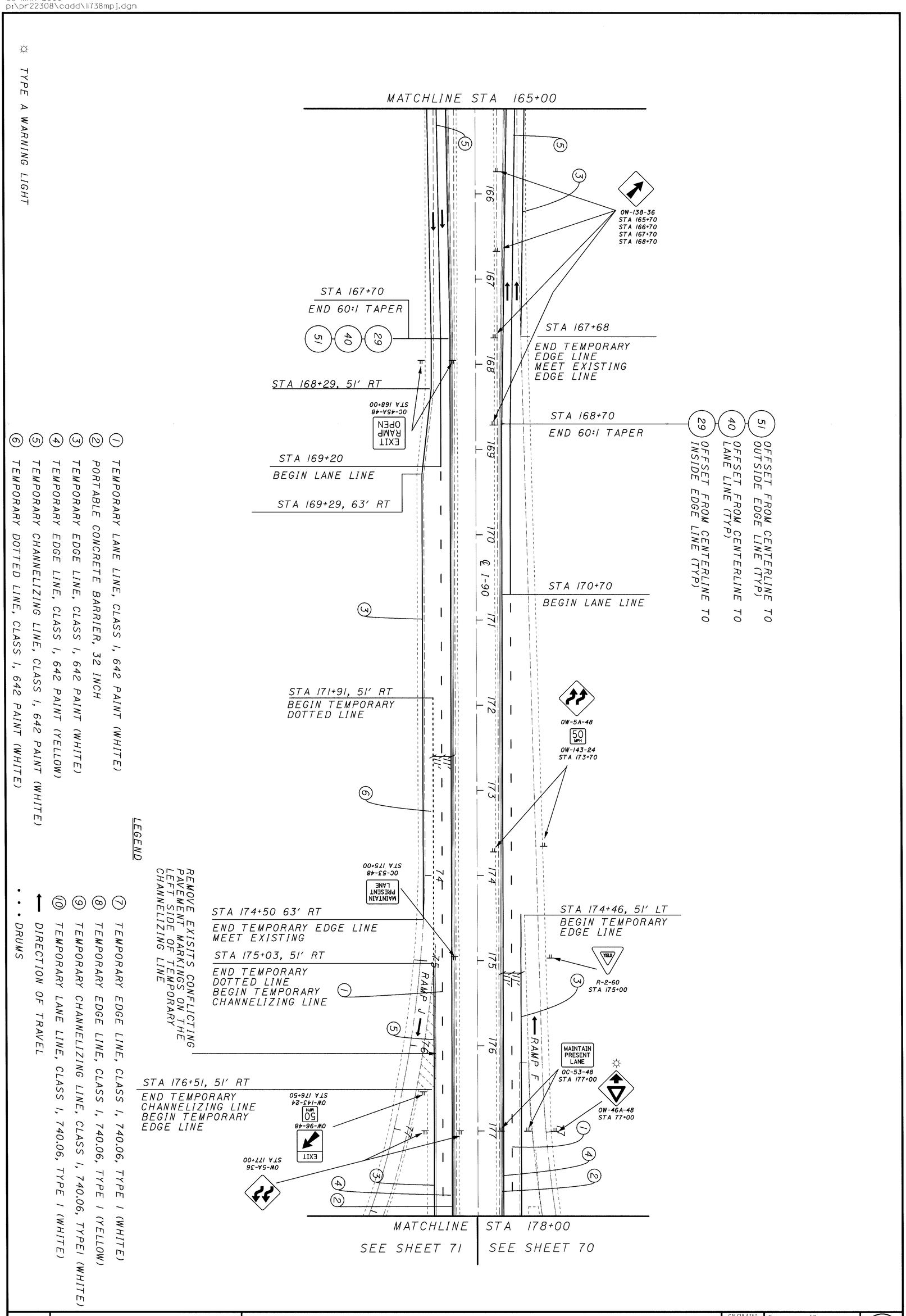

LEGEND

1. TEMPORARY LANE LINE, CLASS I, 642 PAINT (WHITE)
2. PORTABLE CONCRETE BARRIER, 32 INCH
3. TEMPORARY EDGE LINE, CLASS I, 642 PAINT (WHITE)
4. TEMPORARY EDGE LINE, CLASS I, 642 PAINT (YELLOW)
5. TEMPORARY CHANNELIZING LINE, CLASS I, 642 PAINT (WHITE)
6. TEMPORARY DOTTED LINE, CLASS I, 642 PAINT (WHITE)
7. TEMPORARY EDGE LINE, CLASS I, 740.06, TYPE I (WHITE)
8. TEMPORARY EDGE LINE, CLASS I, 740.06, TYPE I (YELLOW)
9. TEMPORARY CHANNELIZING LINE, CLASS I, 740.06, TYPEI (WHITE)
10. TEMPORARY LANE LINE, CLASS I, 740.06, TYPE I (WHITE)

☼ TYPE A WARNING LIGHT

• • • DRUMS

DIRECTION OF TRAVEL

69 / 582	CUY-90-0.00	MAINTENANCE OF TRAFFIC PHASE 1	CALCULATED NJG / CHECKED	0 25 50 100 HORIZONTAL SCALE IN FEET

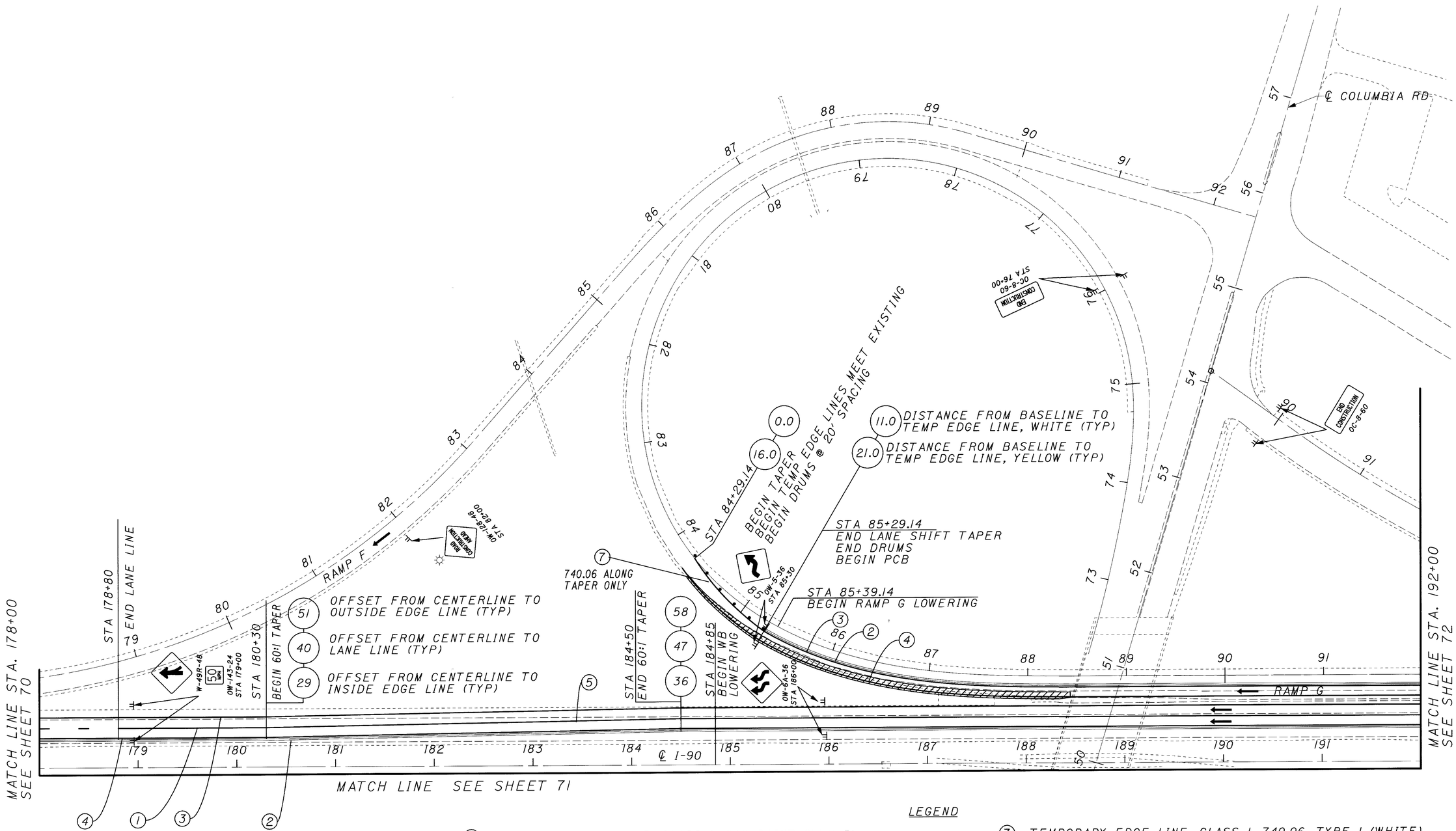

LEGEND

1. TEMPORARY LANE LINE, CLASS I, 642 PAINT (WHITE)
2. PORTABLE CONCRETE BARRIER, 32 INCH
3. TEMPORARY EDGE LINE, CLASS I, 642 PAINT (WHITE)
4. TEMPORARY EDGE LINE, CLASS I, 642 PAINT (YELLOW)
5. TEMPORARY CHANNELIZING LINE, CLASS I, 642 PAINT (WHITE)
6. TEMPORARY DOTTED LINE, CLASS I, 642 PAINT (WHITE)
7. TEMPORARY EDGE LINE, CLASS I, 740.06, TYPE I (WHITE)
8. TEMPORARY EDGE LINE, CLASS I, 740.06, TYPE I (YELLOW)
9. TEMPORARY CHANNELIZING LINE, CLASS I, 740.06, TYPEI (WHITE)
10. TEMPORARY LANE LINE, CLASS I, 740.06, TYPE I (WHITE)

← DIRECTION OF TRAVEL

• • • DRUMS

TEMPORARY SHOULDER. PLACE PRIOR TO PHASE I. SEE DETAIL, SHEET 24.

☼ TYPE A WARNING LIGHT

HORIZONTAL SCALE IN FEET 0 25 50 100

CALCULATED NJG CHECKED

MAINTENANCE OF TRAFFIC PHASE 1

CUY-90-0.00

03 MAR 2000
p:\pr22308\cadd\11738mpk.dgn

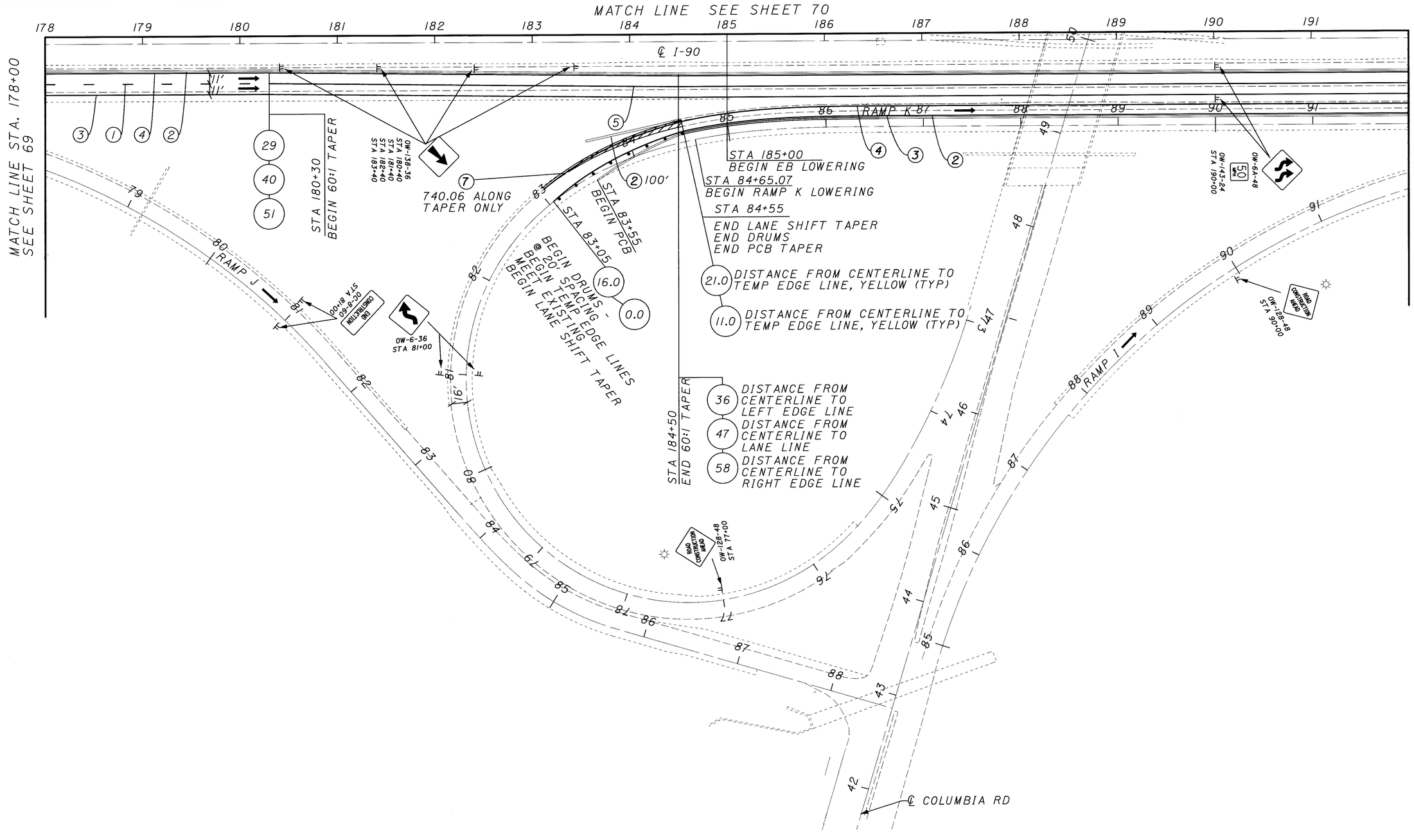

TEMPORARY SHOULDER TO REMAIN. PLACE PRIOR TO PHASE 1. SEE DETAIL, SHEET 24.

☼ TYPE A WARNING LIGHT

LEGEND

1. TEMPORARY LANE LINE, CLASS I, 642 PAINT (WHITE)
2. PORTABLE CONCRETE BARRIER, 32 INCH
3. TEMPORARY EDGE LINE, CLASS I, 642 PAINT (WHITE)
4. TEMPORARY EDGE LINE, CLASS I, 642 PAINT (YELLOW)
5. TEMPORARY CHANNELIZING LINE, CLASS I, 642 PAINT (WHITE)
6. TEMPORARY DOTTED LINE, CLASS I, 642 PAINT (WHITE)
7. TEMPORARY EDGE LINE, CLASS I, 740.06, TYPE I (WHITE)
8. TEMPORARY EDGE LINE, CLASS I, 740.06, TYPE I (YELLOW)
9. TEMPORARY CHANNELIZING LINE, CLASS I, 740.06, TYPEI (WHITE)
10. TEMPORARY LANE LINE, CLASS I, 740.06, TYPE I (WHITE)

← DIRECTION OF TRAVEL

• • • DRUMS

HORIZONTAL SCALE IN FEET
0 25 50 100

CALCULATED NJG CHECKED

MAINTENANCE OF TRAFFIC PHASE 1

CUY-90-0.00

71
582

06 MAR 2000
p:\pr22308\cadd\lf738mpl.dgn

03 MAR 2000
p:\pr22308\cadd\11738mpm.dgn

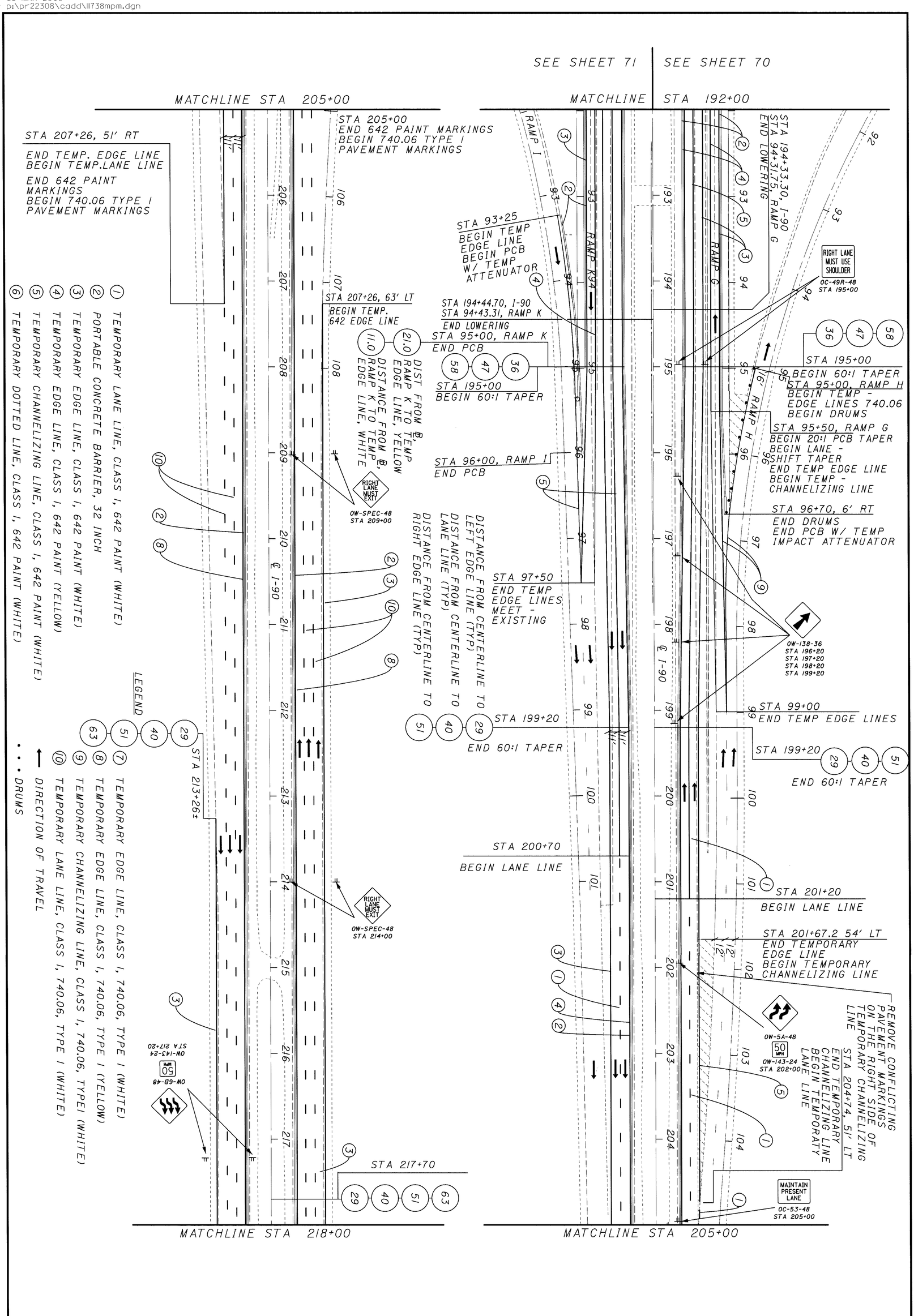

72 / 582	CUY-90-0.00	MAINTENANCE OF TRAFFIC PHASE 1	CALCULATED NJG / CHECKED / HORIZONTAL SCALE IN FEET

MAINTENANCE OF TRAFFIC PHASE 1

CUY-90-0.00

HORIZONTAL SCALE IN FEET

CALCULATED NJG

CHECKED

MATCHLINE STA 218+00

MATCHLINE STA 231+00

MATCHLINE STA 244+00

CONTINUE LEFT EDGE LINE AND LANE LINES IN 740.06 TYPE 1

DISTANCE FROM CENTERLINE TO OUTSIDE EDGE LINE 61

DISTANCE FROM CENTERLINE TO LANE LINE 49

DISTANCE FROM CENTERLINE TO LANE LINE 38

DISTANCE FROM CENTERLINE TO INSIDE EDGE LINE 27

STA 222+20

STA 223+00

60' PCB TAPER @ 20:1

STA. 224+30 END LANE LINES END 642 PAINT EDGE LINE

RIGHT LANE MUST USE SHOULDER OC-49R-48

QUADGUARD CZ SEE MT-95.81

STA. 225+80

240' - 60:1 MAX. TAPER

OW-138-36 STA 226+20 STA 227+20 STA 228+20

3-12' LANES

STA. 228+20

STA. 230+20

END 740.06, TYPE 1 PAV'T MARKINGS MEET EXISTING

219 220 221 222 223 224 ℄ I-90 225 226 227 228 229 230

CONTINUE LEFT EDGE LINE AND LANE LINES IN 740.06 TYPE 1

R-10-48 STA 220+00 SPEED LIMIT 50

STA 220+20

END LANE LINES END 642 PAINT RIGHT EDGE LINE BEGIN 740.06, TYPE 1 EDGE LINE

STA 222+20

END PCB BEGIN 60:1 TAPER

STA 227+00

END 60:1 TAPER MEET EX. PAV'T MARKINGS

STA 228+50

END 740.06, TYPE 1 PAV'T MARKINGS MEET EXISTING

CLAGUE ROAD

RAMP H

OW-58-48 50 MPH STA 233+80

OW-143-24

R-10-48 SPEED LIMIT 50 STA 238+00

232 233 234 235 236 237 ℄ I-90 238 239 240 241 242 243

RAMP G

LEGEND

1. TEMPORARY LANE LINE, CLASS I, 642 PAINT (WHITE)
2. PORTABLE CONCRETE BARRIER, 32 INCH
3. TEMPORARY EDGE LINE, CLASS I, 642 PAINT (WHITE)
4. TEMPORARY EDGE LINE, CLASS I, 642 PAINT (YELLOW)
5. TEMPORARY CHANNELIZING LINE, CLASS I, 642 PAINT (WHITE)
6. TEMPORARY DOTTED LINE, CLASS I, 642 PAINT (WHITE)
7. TEMPORARY EDGE LINE, CLASS I, 740.06, TYPE I (WHITE)
8. TEMPORARY EDGE LINE, CLASS I, 740.06, TYPE I (YELLOW)
9. TEMPORARY CHANNELIZING LINE, CLASS I, 740.06, TYPEI (WHITE)
10. TEMPORARY LANE LINE, CLASS I, 740.06, TYPE I (WHITE)

← DIRECTION OF TRAVEL

• • • DRUMS

03 MAR 2000
P:\pr-22308\cadd\ll738mpn.dgn

MAINTENANCE OF TRAFFIC PHASE 1

CUY-90-0.00

74
582

CALCULATED NJG
CHECKED

HORIZONTAL SCALE IN FEET
0 25 50 100

N

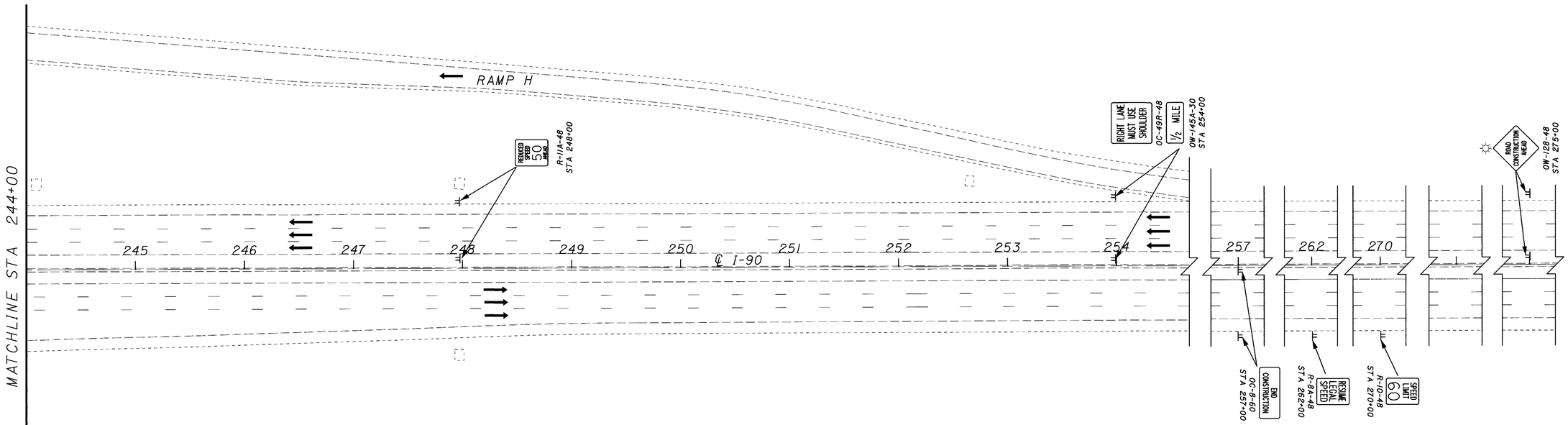

LEGEND

1. TEMPORARY LANE LINE, CLASS I, 642 PAINT (WHITE)
2. PORTABLE CONCRETE BARRIER, 32 INCH
3. TEMPORARY EDGE LINE, CLASS I, 642 PAINT (WHITE)
4. TEMPORARY EDGE LINE, CLASS I, 642 PAINT (YELLOW)
5. TEMPORARY CHANNELIZING LINE, CLASS I, 642 PAINT (WHITE)
6. TEMPORARY DOTTED LINE, CLASS I, 642 PAINT (WHITE)
7. TEMPORARY EDGE LINE, CLASS I, 740.06, TYPE I (WHITE)
8. TEMPORARY EDGE LINE, CLASS I, 740.06, TYPE I (YELLOW)
9. TEMPORARY CHANNELIZING LINE, CLASS I, 740.06, TYPEI (WHITE)
10. TEMPORARY LANE LINE, CLASS I, 740.06, TYPE I (WHITE)

← DIRECTION OF TRAVEL

• • • DRUMS

☼ TYPE A WARNING LIGHT

03 MAR 2000
pr\pr22308\caddd\11738mpo.dgn

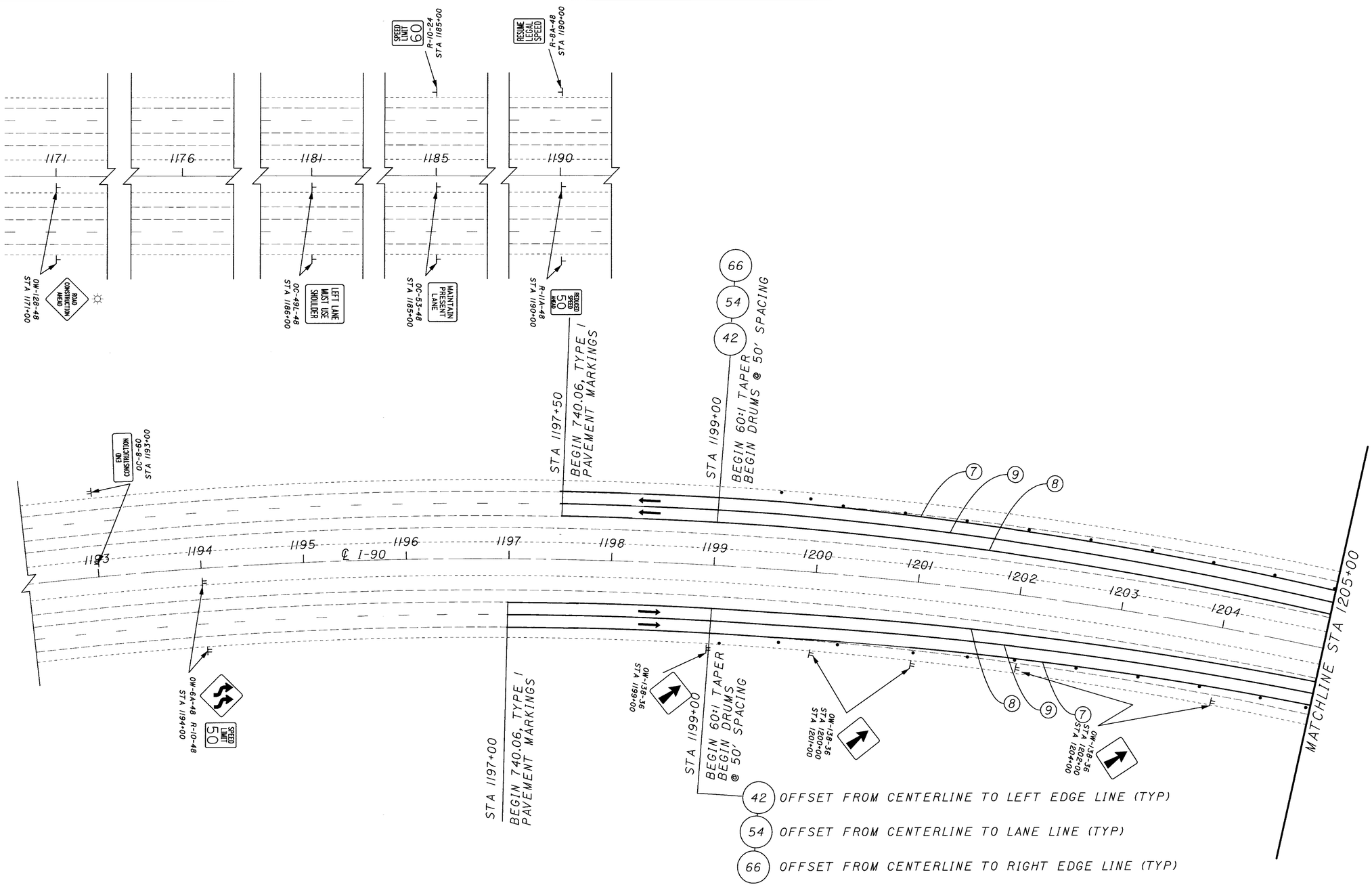

LEGEND

1. TEMPORARY LANE LINE, CLASS I, 642 PAINT (WHITE)
2. PORTABLE CONCRETE BARRIER, 32 INCH
3. TEMPORARY EDGE LINE, CLASS I, 642 PAINT (WHITE)
4. TEMPORARY EDGE LINE, CLASS I, 642 PAINT (YELLOW)
5. TEMPORARY CHANNELIZING LINE, CLASS I, 642 PAINT (WHITE)
6. TEMPORARY DOTTED LINE, CLASS I, 642 PAINT (WHITE)
7. TEMPORARY EDGE LINE, CLASS I, 740.06, TYPE I (WHITE)
8. TEMPORARY EDGE LINE, CLASS I, 740.06, TYPE I (YELLOW)
9. TEMPORARY CHANNELIZING LINE, CLASS I, 740.06, TYPEI (WHITE)
10. TEMPORARY LANE LINE, CLASS I, 740.06, TYPE I (WHITE)

← DIRECTION OF TRAVEL

• • • DRUMS

☼ TYPE A WARNING LIGHT

HORIZONTAL SCALE IN FEET
0 25 50 100

CALCULATED NJG
CHECKED

MAINTENANCE OF TRAFFIC PHASE 2

CUY-90-0.00

75
582

06 MAR 2000
D:\PR22308\CADD\MT38MP5.DGN

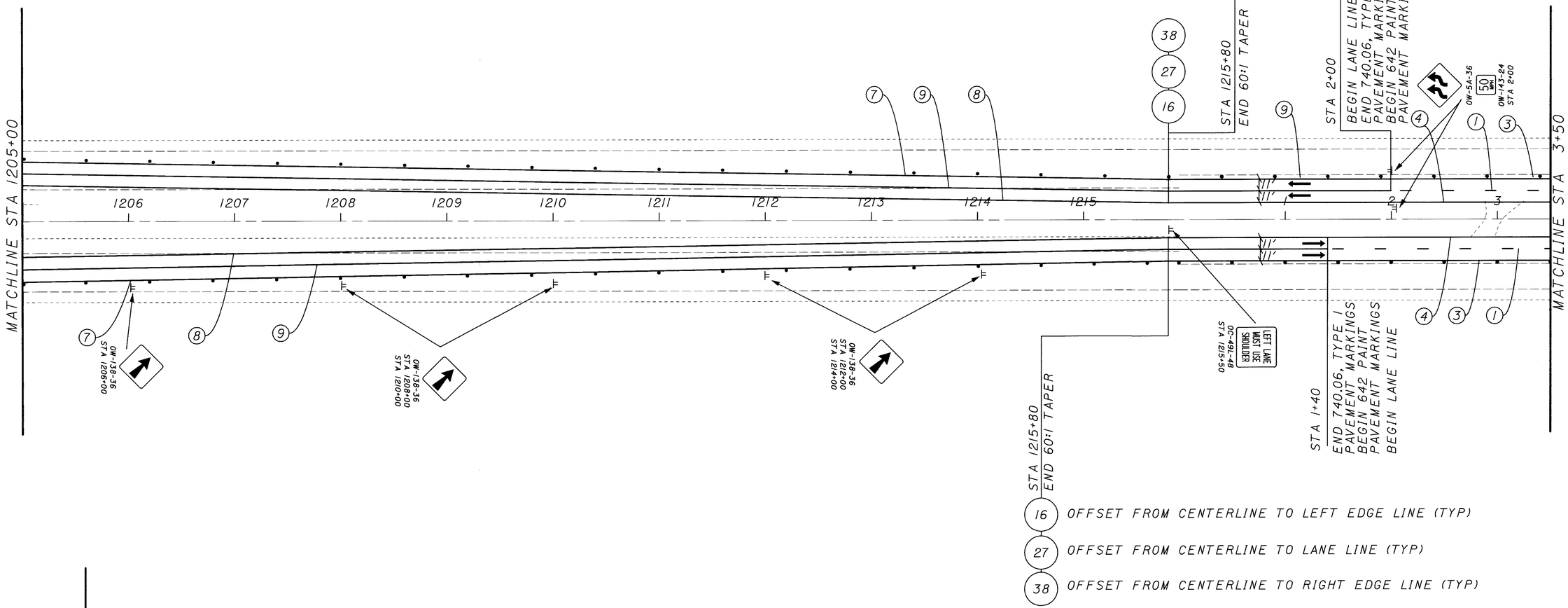

16 OFFSET FROM CENTERLINE TO LEFT EDGE LINE (TYP)

27 OFFSET FROM CENTERLINE TO LANE LINE (TYP)

38 OFFSET FROM CENTERLINE TO RIGHT EDGE LINE (TYP)

NOTE: OFFSET TO PCB ARE TO TOE OF BARRIER CLOSEST TO TRAFFIC

NOTE: TOE OF BARRIER IS 1'-0" FROM TEMPORARY EDGE LINE, TYPICALLY.

LEGEND

(1) TEMPORARY LANE LINE, CLASS I, 642 PAINT (WHITE)

(2) PORTABLE CONCRETE BARRIER, 32 INCH

(3) TEMPORARY EDGE LINE, CLASS I, 642 PAINT (WHITE)

(4) TEMPORARY EDGE LINE, CLASS I, 642 PAINT (YELLOW)

(5) TEMPORARY CHANNELIZING LINE, CLASS I, 642 PAINT (WHITE)

(6) TEMPORARY DOTTED LINE, CLASS I, 642 PAINT (WHITE)

(7) TEMPORARY EDGE LINE, CLASS I, 740.06, TYPE I (WHITE)

(8) TEMPORARY EDGE LINE, CLASS I, 740.06, TYPE I (YELLOW)

(9) TEMPORARY CHANNELIZING LINE, CLASS I, 740.06, TYPEI (WHITE)

(10) TEMPORARY LANE LINE, CLASS I, 740.06, TYPE I (WHITE)

← DIRECTION OF TRAVEL

• • • DRUMS

N

0 25 50 100 HORIZONTAL SCALE IN FEET

CALCULATED NJG CHECKED

MAINTENANCE OF TRAFFIC PHASE 2

CUY-90-0.00

76
582

03 MAR 2000
P:\pr22308\cadd\1738mpr.dgn

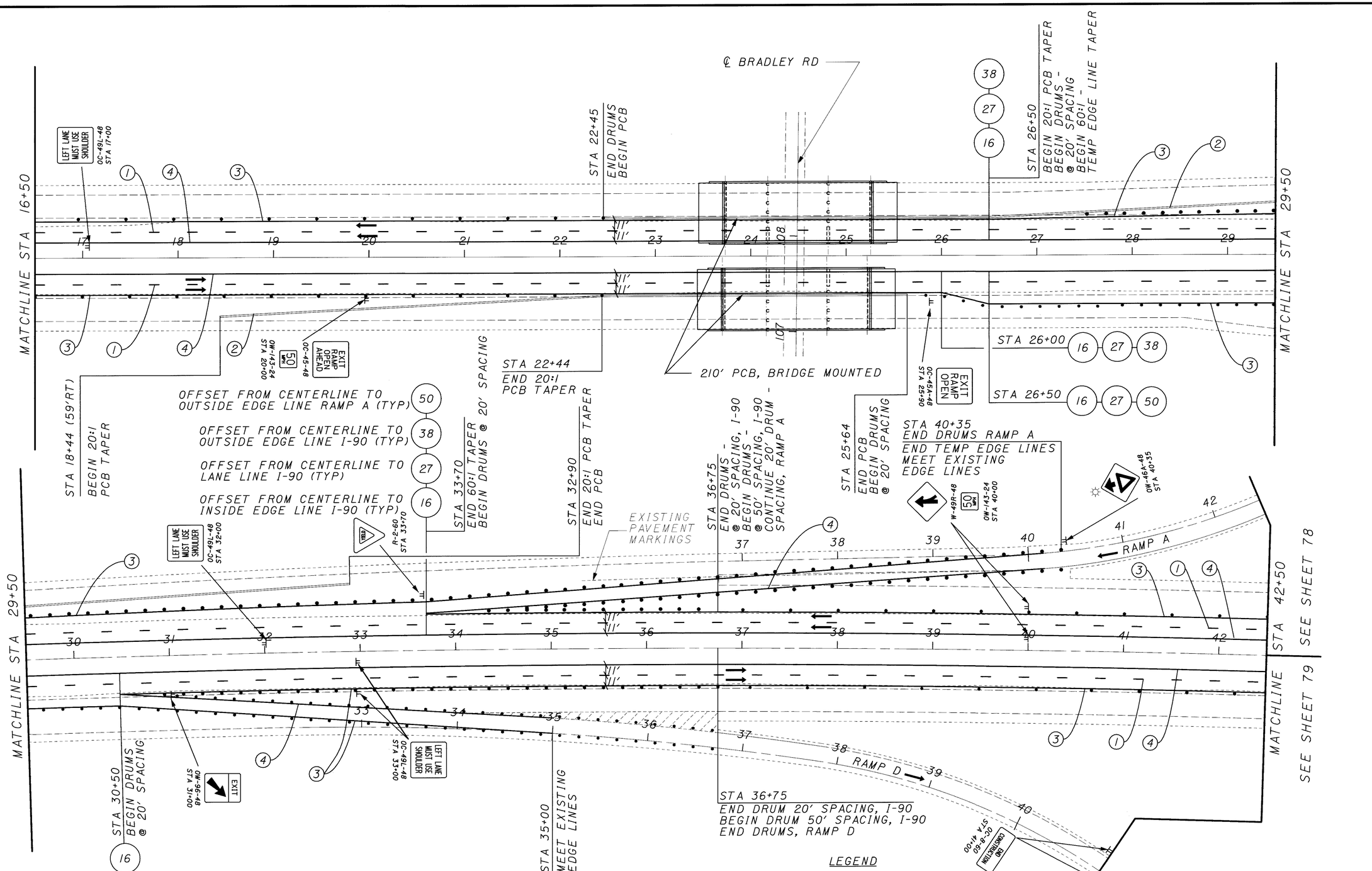

LEGEND

1. TEMPORARY LANE LINE, CLASS I, 642 PAINT (WHITE)
2. PORTABLE CONCRETE BARRIER, 32 INCH
3. TEMPORARY EDGE LINE, CLASS I, 642 PAINT (WHITE)
4. TEMPORARY EDGE LINE, CLASS I, 642 PAINT (YELLOW)
5. TEMPORARY CHANNELIZING LINE, CLASS I, 642 PAINT (WHITE)
6. TEMPORARY DOTTED LINE, CLASS I, 642 PAINT (WHITE)
7. TEMPORARY EDGE LINE, CLASS I, 740.06, TYPE I (WHITE)
8. TEMPORARY EDGE LINE, CLASS I, 740.06, TYPE I (YELLOW)
9. TEMPORARY CHANNELIZING LINE, CLASS I, 740.06, TYPEI (WHITE)
10. TEMPORARY LANE LINE, CLASS I, 740.06, TYPE I (WHITE)

← DIRECTION OF TRAVEL

• • • DRUMS

☼ TYPE A WARNING LIGHT

HORIZONTAL SCALE IN FEET 0 25 50 100

CALCULATED NJG

CHECKED

MAINTENANCE OF TRAFFIC PHASE 2

CUY-90-0.00

03 MAR 2000
p:\pr22308\cadd\11738mps.dgn

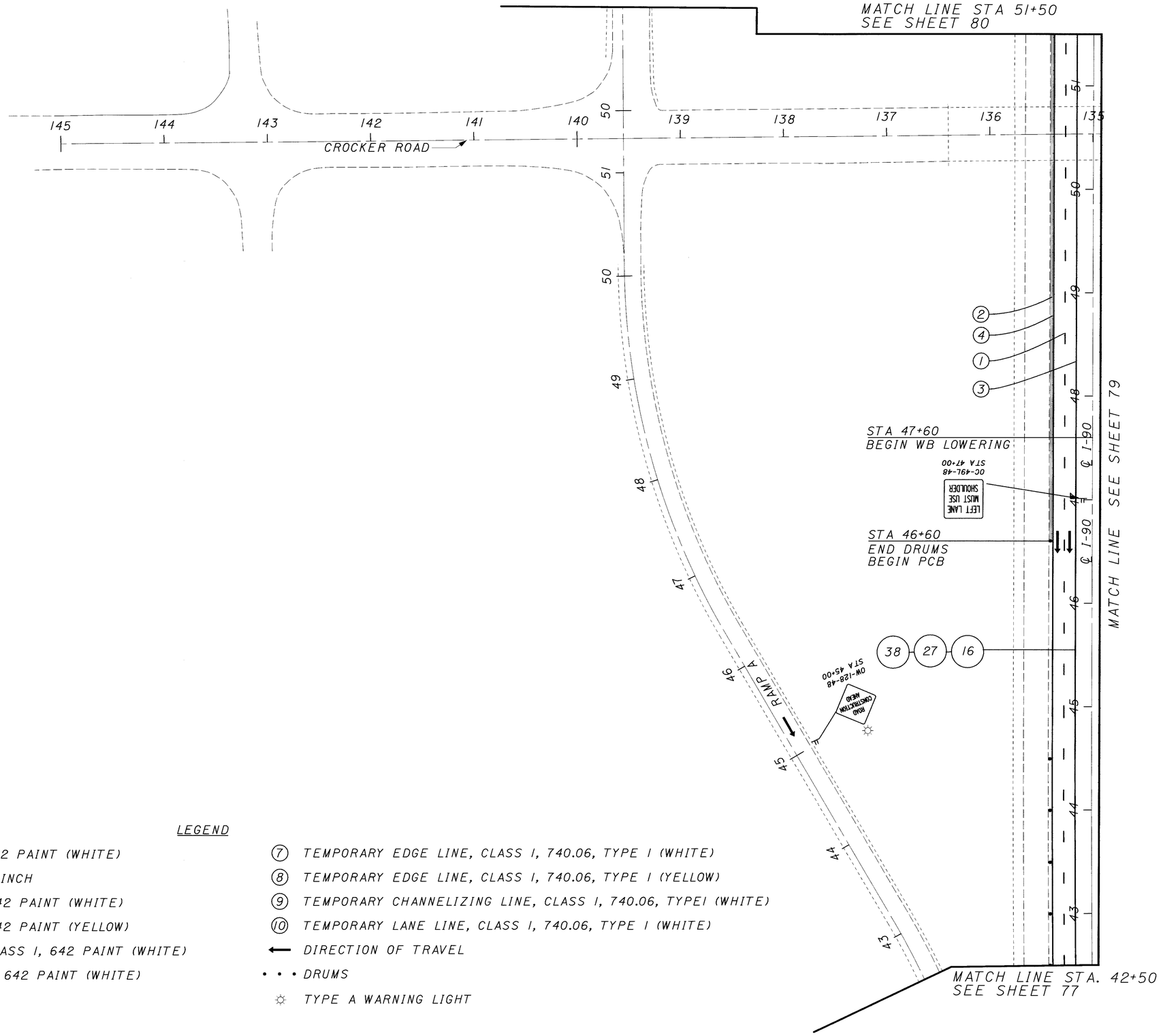

LEGEND

1. TEMPORARY LANE LINE, CLASS I, 642 PAINT (WHITE)
2. PORTABLE CONCRETE BARRIER, 32 INCH
3. TEMPORARY EDGE LINE, CLASS I, 642 PAINT (WHITE)
4. TEMPORARY EDGE LINE, CLASS I, 642 PAINT (YELLOW)
5. TEMPORARY CHANNELIZING LINE, CLASS I, 642 PAINT (WHITE)
6. TEMPORARY DOTTED LINE, CLASS I, 642 PAINT (WHITE)
7. TEMPORARY EDGE LINE, CLASS I, 740.06, TYPE I (WHITE)
8. TEMPORARY EDGE LINE, CLASS I, 740.06, TYPE I (YELLOW)
9. TEMPORARY CHANNELIZING LINE, CLASS I, 740.06, TYPEI (WHITE)
10. TEMPORARY LANE LINE, CLASS I, 740.06, TYPE I (WHITE)

← DIRECTION OF TRAVEL

• • • DRUMS

☼ TYPE A WARNING LIGHT

HORIZONTAL SCALE IN FEET
0 25 50 100

CALCULATED NJG
CHECKED

MAINTENANCE OF TRAFFIC PHASE 2

CUY-90-0.00

78
582

03 MAR 2000
p:\pr22308\cadd\ll738mpt.dgn

MATCH LINE STA. 51+50
SEE SHEET 80

RAMP C

STA 48+05, ℄ I-90
BEGIN EB LOWERING

℄ I-90

STA 47+05, ℄ I-90 (16) (27) (38)
END DRUMS
END 20:1 PCB TAPER

LEFT LANE MUST USE SHOULDER
OC-49L-48
STA 47+00

RAMP E

RAMP D

STA 43+05 (59'RT)
BEGIN 20:1 PCB TAPER

MATCH LINE STA. 42+50
SEE SHEET 77

MATCH LINE SEE SHEET 78

MATCH LINE STA. 44+00

MATCH LINE STA. 44+00

MATCH LINE STA. 41+00
SEE SHEET 77

LEGEND

(1) TEMPORARY LANE LINE, CLASS I, 642 PAINT (WHITE)
(2) PORTABLE CONCRETE BARRIER, 32 INCH
(3) TEMPORARY EDGE LINE, CLASS I, 642 PAINT (WHITE)
(4) TEMPORARY EDGE LINE, CLASS I, 642 PAINT (YELLOW)
(5) TEMPORARY CHANNELIZING LINE, CLASS I, 642 PAINT (WHITE)
(6) TEMPORARY DOTTED LINE, CLASS I, 642 PAINT (WHITE)
(7) TEMPORARY EDGE LINE, CLASS I, 740.06, TYPE I (WHITE)
(8) TEMPORARY EDGE LINE, CLASS I, 740.06, TYPE I (YELLOW)
(9) TEMPORARY CHANNELIZING LINE, CLASS I, 740.06, TYPEI (WHITE)
(10) TEMPORARY LANE LINE, CLASS I, 740.06, TYPE I (WHITE)
⟵ DIRECTION OF TRAVEL
• • • DRUMS

HORIZONTAL SCALE IN FEET
0 25 50 100

CALCULATED NJG
CHECKED

MAINTENANCE OF TRAFFIC PHASE 2

CUY-90-0.00

79
582

03 MAR 2000
p:\pr22308\cadd\11738mpu.dgn

MATCHLINE STA. 61+00
SEE SHEET 81

STA 59+60, ℄ I-90
END 20:1 PCB TAPER

END CONSTRUCTION OC-8-60 STA 59+00

ROAD CONSTRUCTION AHEAD
OW-128-48
STA 59+00

STA 56+80
BEGIN DRUMS @ 20' SPACING

STA 55+60, ℄ I-90
BEGIN DRUMS @ 50' SPACING
BEGIN 20:1 PCB TAPER

STA 55+05, ℄ I-90 (16) (27) (38)
END PCB
BEGIN DRUMS @ 50' SPACING

STA 54+60, ℄ I-90
END WB LOWERING

STA 54+05, ℄ I-90
END EB LOWERING

RAMP B

RAMP E

RAMP C

℄ I-90

MATCHLINE SEE SHEET 78

STA 51+50 SEE SHEET 79

LEGEND

(1) TEMPORARY LANE LINE, CLASS I, 642 PAINT (WHITE)
(2) PORTABLE CONCRETE BARRIER, 32 INCH
(3) TEMPORARY EDGE LINE, CLASS I, 642 PAINT (WHITE)
(4) TEMPORARY EDGE LINE, CLASS I, 642 PAINT (YELLOW)
(5) TEMPORARY CHANNELIZING LINE, CLASS I, 642 PAINT (WHITE)
(6) TEMPORARY DOTTED LINE, CLASS I, 642 PAINT (WHITE)
(7) TEMPORARY EDGE LINE, CLASS I, 740.06, TYPE I (WHITE)
(8) TEMPORARY EDGE LINE, CLASS I, 740.06, TYPE I (YELLOW)
(9) TEMPORARY CHANNELIZING LINE, CLASS I, 740.06, TYPEI (WHITE)
(10) TEMPORARY LANE LINE, CLASS I, 740.06, TYPE I (WHITE)
← DIRECTION OF TRAVEL
• • • DRUMS
☼ TYPE A WARNING LIGHT

HORIZONTAL SCALE IN FEET
0 25 50 100

CALCULATED NJG CHECKED

MAINTENANCE OF TRAFFIC PHASE 2

CUY-90-0.00

80
582

03 MAR 2000
P:\pr22308\caddNI738mpv.dgn

MAINENANCE OF TRAFFIC PHASE 2

CUY-90-0.00

HORIZONTAL SCALE IN FEET

CALCULATED NJG | CHECKED

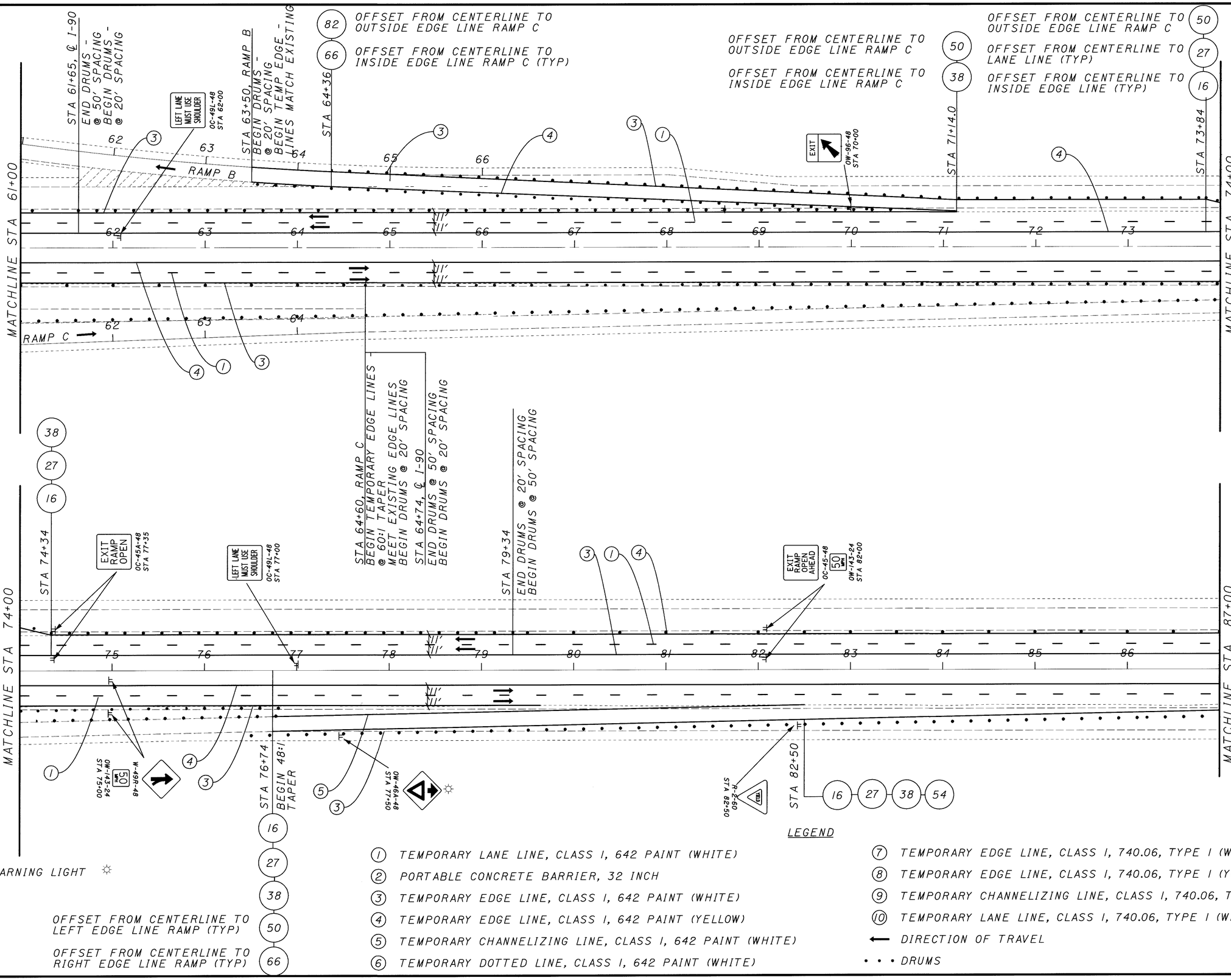

LEGEND

1. TEMPORARY LANE LINE, CLASS I, 642 PAINT (WHITE)
2. PORTABLE CONCRETE BARRIER, 32 INCH
3. TEMPORARY EDGE LINE, CLASS I, 642 PAINT (WHITE)
4. TEMPORARY EDGE LINE, CLASS I, 642 PAINT (YELLOW)
5. TEMPORARY CHANNELIZING LINE, CLASS I, 642 PAINT (WHITE)
6. TEMPORARY DOTTED LINE, CLASS I, 642 PAINT (WHITE)
7. TEMPORARY EDGE LINE, CLASS I, 740.06, TYPE I (WHITE)
8. TEMPORARY EDGE LINE, CLASS I, 740.06, TYPE I (YELLOW)
9. TEMPORARY CHANNELIZING LINE, CLASS I, 740.06, TYPEI (WHITE)
10. TEMPORARY LANE LINE, CLASS I, 740.06, TYPE I (WHITE)

← DIRECTION OF TRAVEL

• • • DRUMS

03 MAR 2000
p:\pr22308\cadd\ll38mpw.dgn

LEGEND

1. TEMPORARY LANE LINE, CLASS I, 642 PAINT (WHITE)
2. PORTABLE CONCRETE BARRIER, 32 INCH
3. TEMPORARY EDGE LINE, CLASS I, 642 PAINT (WHITE)
4. TEMPORARY EDGE LINE, CLASS I, 642 PAINT (YELLOW)
5. TEMPORARY CHANNELIZING LINE, CLASS I, 642 PAINT (WHITE)
6. TEMPORARY DOTTED LINE, CLASS I, 642 PAINT (WHITE)
7. TEMPORARY EDGE LINE, CLASS I, 740.06, TYPE I (WHITE)
8. TEMPORARY EDGE LINE, CLASS I, 740.06, TYPE I (YELLOW)
9. TEMPORARY CHANNELIZING LINE, CLASS I, 740.06, TYPEI (WHITE)
10. TEMPORARY LANE LINE, CLASS I, 740.06, TYPE I (WHITE)

← DIRECTION OF TRAVEL

• • • DRUMS

MATCHLINE STA 87+00

MATCHLINE STA 100+00

MATCHLINE STA 100+00

MATCHLINE STA 113+00

LEFT LANE MUST USE SHOULDER
OC-491-48
STA 92+00

LEFT LANE MUST USE SHOULDER
OC-491-48
STA 107+00

℄ I-90

℄ CAHOON RD

88 89 90 91 92 93 94 95 96 97 98 99 101 102 103 104 105 106 107 108 109 110 111 112

52 51 50 49

STA 90+18
END 48:1 TAPER -
BEGIN DRUMS @
50' SPACING

STA 97+50 (59'RT)
BEGIN PCB @ 20:1 TAPER

STA 99+80±
CHANGE MEASUREMENT REFERENCE

STA 100+58±
CHANGE MEASUREMENT REFERENCE

STA 101+50
END DRUMS
END PCB TAPER

STA 102+50
BEGIN ROADWAY
LOWERING

R-10-48
STA 104+50

50
SPEED LIMIT

STA 109+00, END
ROADWAY LOWERING
BEGIN 60:1 TAPER

STA 110+00
END PCB
BEGIN DRUMS
@ 50' SPACING

STA 110+75
BEGIN 120:1
TAPER

STA 111+25
END 60:1 TAPER

38	=	4
27	=	15
16	=	26

OFFSET FROM CENTERLINE TO LEFT EDGE LINE
OFFSET FROM CENTERLINE TO LANE LINE
OFFSET FROM CENTERLINE TO RIGHT EDGE LINE

OFFSET LEFT FROM PROFILE GRADE LINE TO LEFT EDGE LINE
OFFSET LEFT FROM PROFILE GRADE LINE TO LANE LINE
OFFSET LEFT FROM PROFILE GRADE LINE TO RIGHT EDGE LINE

26	OFFSET LEFT FROM PROFILE GRADE LINE TO LEFT EDGE LINE
15	OFFSET LEFT FROM PROFILE GRADE LINE TO LANE LINE
4	OFFSET LEFT FROM PROFILE GRADE LINE TO RIGHT EDGE LINE

4
15
26

26
15
4

22.25
11.25
0.25

HORIZONTAL SCALE IN FEET
0 25 50 100

CALCULATED NJG
CHECKED

MAINTENANCE OF TRAFFIC PHASE 2

CUY-90-0.00

82
582

03 MAR 2000
p:\pr22308\cadd\ll738mpx.dgn

03 MAR 2000
P:\pr22308\cadd\11738mpy.dgn

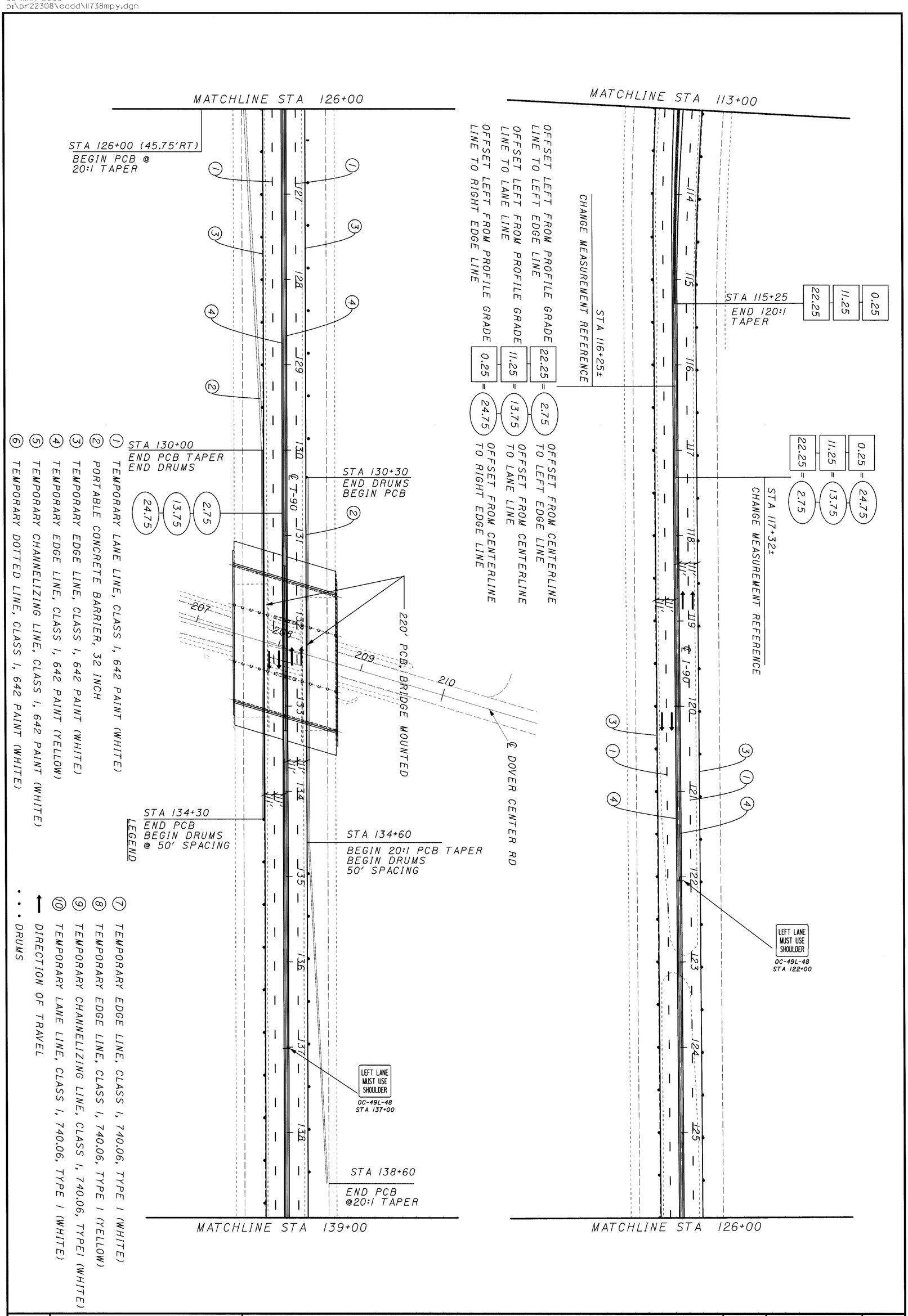

83 / 582	CUY-90-0.00	MAINTENANCE OF TRAFFIC PHASE 2	CALCULATED NJG / CHECKED	0 50 / 25 100 HORIZONTAL SCALE IN FEET	N

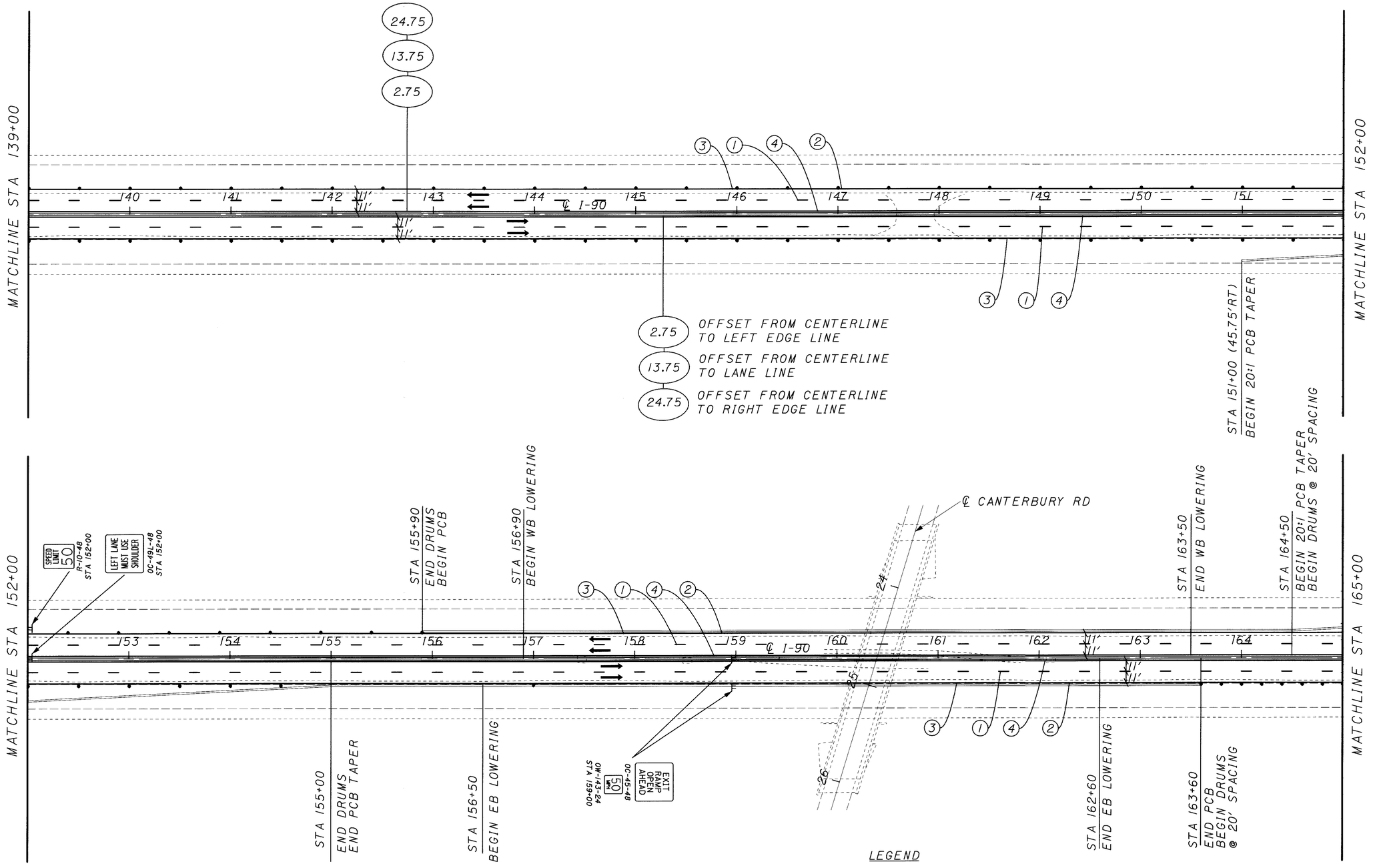

LEGEND

(1) TEMPORARY LANE LINE, CLASS I, 642 PAINT (WHITE)
(2) PORTABLE CONCRETE BARRIER, 32 INCH
(3) TEMPORARY EDGE LINE, CLASS I, 642 PAINT (WHITE)
(4) TEMPORARY EDGE LINE, CLASS I, 642 PAINT (YELLOW)
(5) TEMPORARY CHANNELIZING LINE, CLASS I, 642 PAINT (WHITE)
(6) TEMPORARY DOTTED LINE, CLASS I, 642 PAINT (WHITE)
(7) TEMPORARY EDGE LINE, CLASS I, 740.06, TYPE I (WHITE)
(8) TEMPORARY EDGE LINE, CLASS I, 740.06, TYPE I (YELLOW)
(9) TEMPORARY CHANNELIZING LINE, CLASS I, 740.06, TYPEI (WHITE)
(10) TEMPORARY LANE LINE, CLASS I, 740.06, TYPE I (WHITE)
← DIRECTION OF TRAVEL
• • • DRUMS

HORIZONTAL SCALE IN FEET
0 25 50 100

CALCULATED NJG
CHECKED

MAINTENANCE OF TRAFFIC PHASE 2

CUY-90-0.00

03 MAR 2000
p:\pr22308\caddNI38mpz.dgn

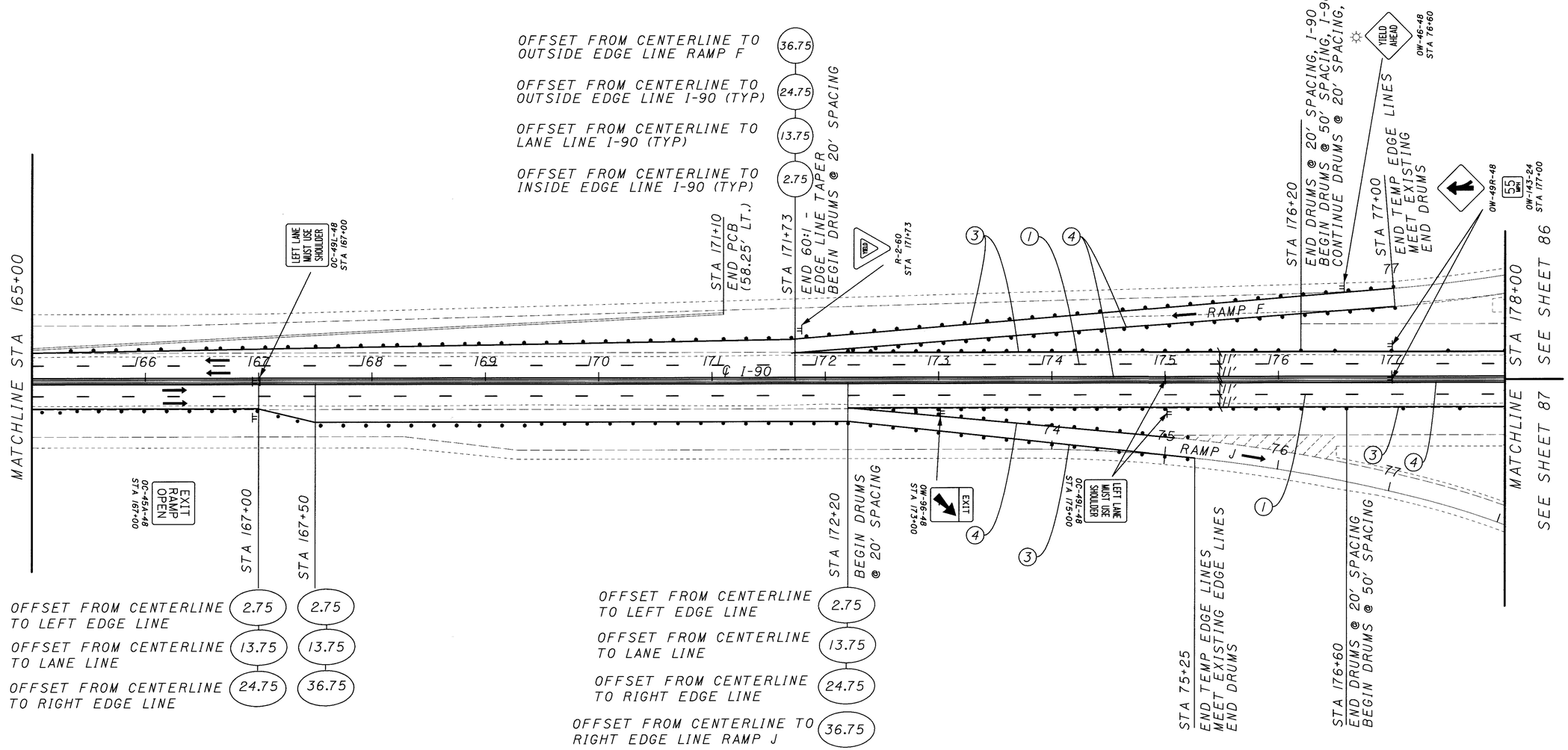

LEGEND

1. TEMPORARY LANE LINE, CLASS I, 642 PAINT (WHITE)
2. PORTABLE CONCRETE BARRIER, 32 INCH
3. TEMPORARY EDGE LINE, CLASS I, 642 PAINT (WHITE)
4. TEMPORARY EDGE LINE, CLASS I, 642 PAINT (YELLOW)
5. TEMPORARY CHANNELIZING LINE, CLASS I, 642 PAINT (WHITE)
6. TEMPORARY DOTTED LINE, CLASS I, 642 PAINT (WHITE)
7. TEMPORARY EDGE LINE, CLASS I, 740.06, TYPE I (WHITE)
8. TEMPORARY EDGE LINE, CLASS I, 740.06, TYPE I (YELLOW)
9. TEMPORARY CHANNELIZING LINE, CLASS I, 740.06, TYPEI (WHITE)
10. TEMPORARY LANE LINE, CLASS I, 740.06, TYPE I (WHITE)

← DIRECTION OF TRAVEL

• • • DRUMS

☼ TYPE A WARNING LIGHT

HORIZONTAL SCALE IN FEET
0 25 50 100

CALCULATED NJG
CHECKED

MAINTENANCE OF TRAFFIC PHASE 2

CUY-90-0.00

03 MAR 2000
P:\pr22308\cadd\il738mp0.dgn

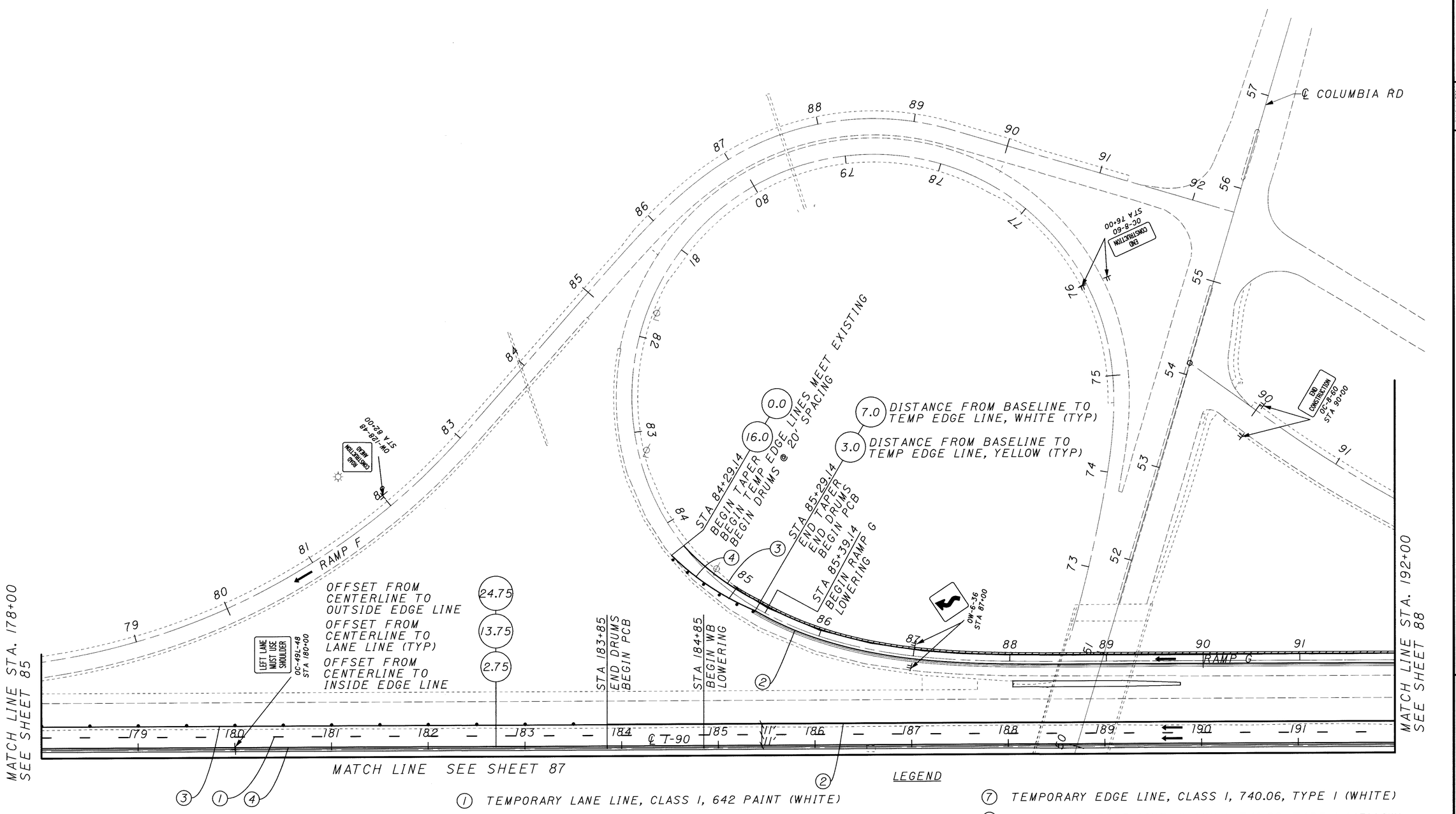

LEGEND

1. TEMPORARY LANE LINE, CLASS I, 642 PAINT (WHITE)
2. PORTABLE CONCRETE BARRIER, 32 INCH
3. TEMPORARY EDGE LINE, CLASS I, 642 PAINT (WHITE)
4. TEMPORARY EDGE LINE, CLASS I, 642 PAINT (YELLOW)
5. TEMPORARY CHANNELIZING LINE, CLASS I, 642 PAINT (WHITE)
6. TEMPORARY DOTTED LINE, CLASS I, 642 PAINT (WHITE)
7. TEMPORARY EDGE LINE, CLASS I, 740.06, TYPE I (WHITE)
8. TEMPORARY EDGE LINE, CLASS I, 740.06, TYPE I (YELLOW)
9. TEMPORARY CHANNELIZING LINE, CLASS I, 740.06, TYPEI (WHITE)
10. TEMPORARY LANE LINE, CLASS I, 740.06, TYPE I (WHITE)

← DIRECTION OF TRAVEL

• • • DRUMS

☼ TYPE A WARNING LIGHT

TEMPORARY SHOULDER TO REMAIN. PLACE PRIOR TO PHASE 2. SEE DETAIL, SHEET 24.

HORIZONTAL SCALE IN FEET 0 25 50 100

CALCULATED NJG CHECKED

MAINTENANCE OF TRAFFIC PHASE 2

CUY-90-0.00

06 MAR 2000
p:\pr22308\cadd\11738mpl.dgn

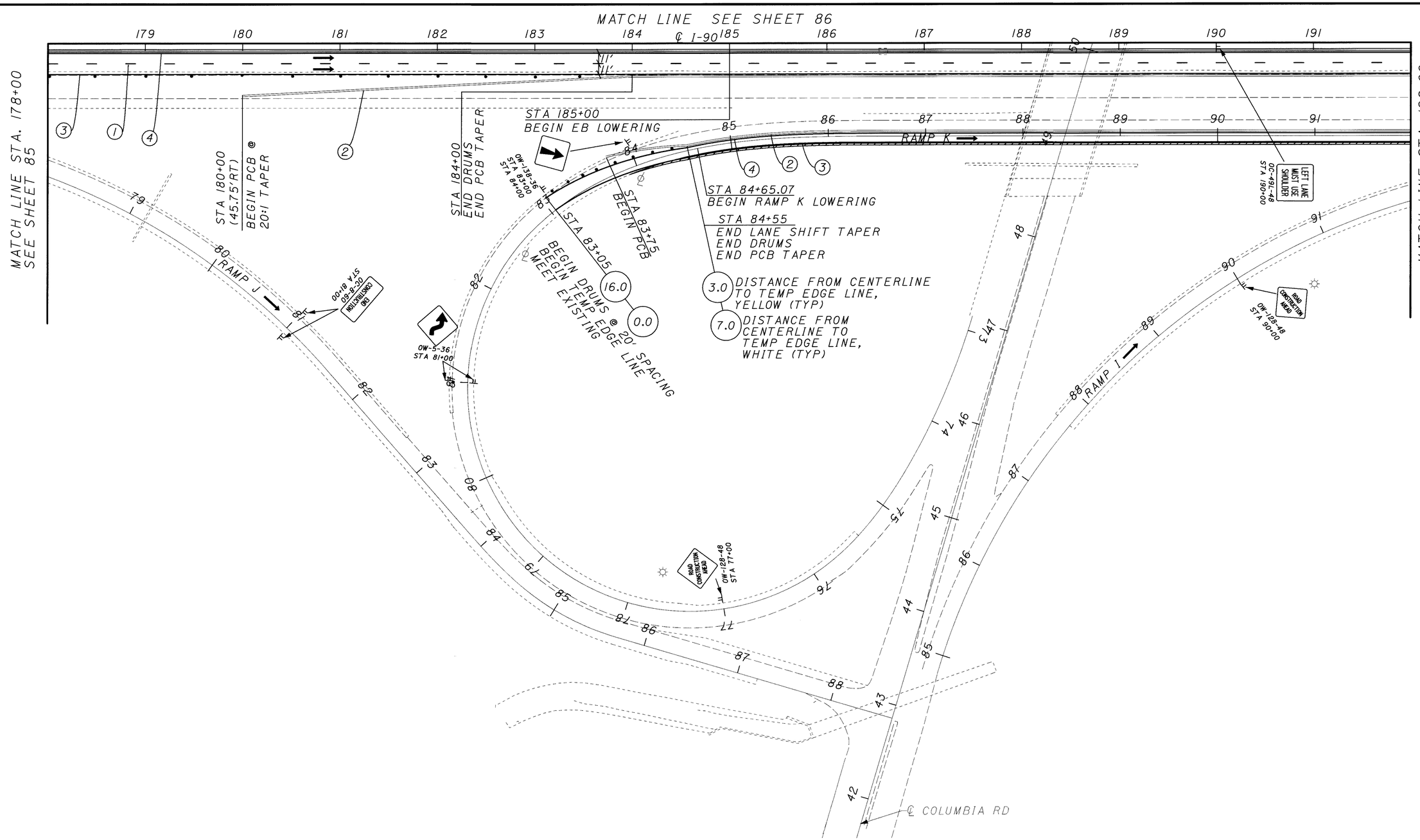

TEMPORARY SHOULDER . PLACE PRIOR TO PHASE 2. SEE DETAIL, SHEET 24.

LEGEND

1. TEMPORARY LANE LINE, CLASS I, 642 PAINT (WHITE)
2. PORTABLE CONCRETE BARRIER, 32 INCH
3. TEMPORARY EDGE LINE, CLASS I, 642 PAINT (WHITE)
4. TEMPORARY EDGE LINE, CLASS I, 642 PAINT (YELLOW)
5. TEMPORARY CHANNELIZING LINE, CLASS I, 642 PAINT (WHITE)
6. TEMPORARY DOTTED LINE, CLASS I, 642 PAINT (WHITE)
7. TEMPORARY EDGE LINE, CLASS I, 740.06, TYPE I (WHITE)
8. TEMPORARY EDGE LINE, CLASS I, 740.06, TYPE I (YELLOW)
9. TEMPORARY CHANNELIZING LINE, CLASS I, 740.06, TYPEI (WHITE)
10. TEMPORARY LANE LINE, CLASS I, 740.06, TYPE I (WHITE)

← DIRECTION OF TRAVEL

• • • DRUMS

☼ TYPE A WARNING LIGHT

HORIZONTAL SCALE IN FEET
0 25 50 100

CALCULATED NJG
CHECKED

MAINTENANCE OF TRAFFIC PHASE 2

CUY-90-0.00

87
582

03 MAR 2000
D:\pr22308\cadd\1738mp2.dgn

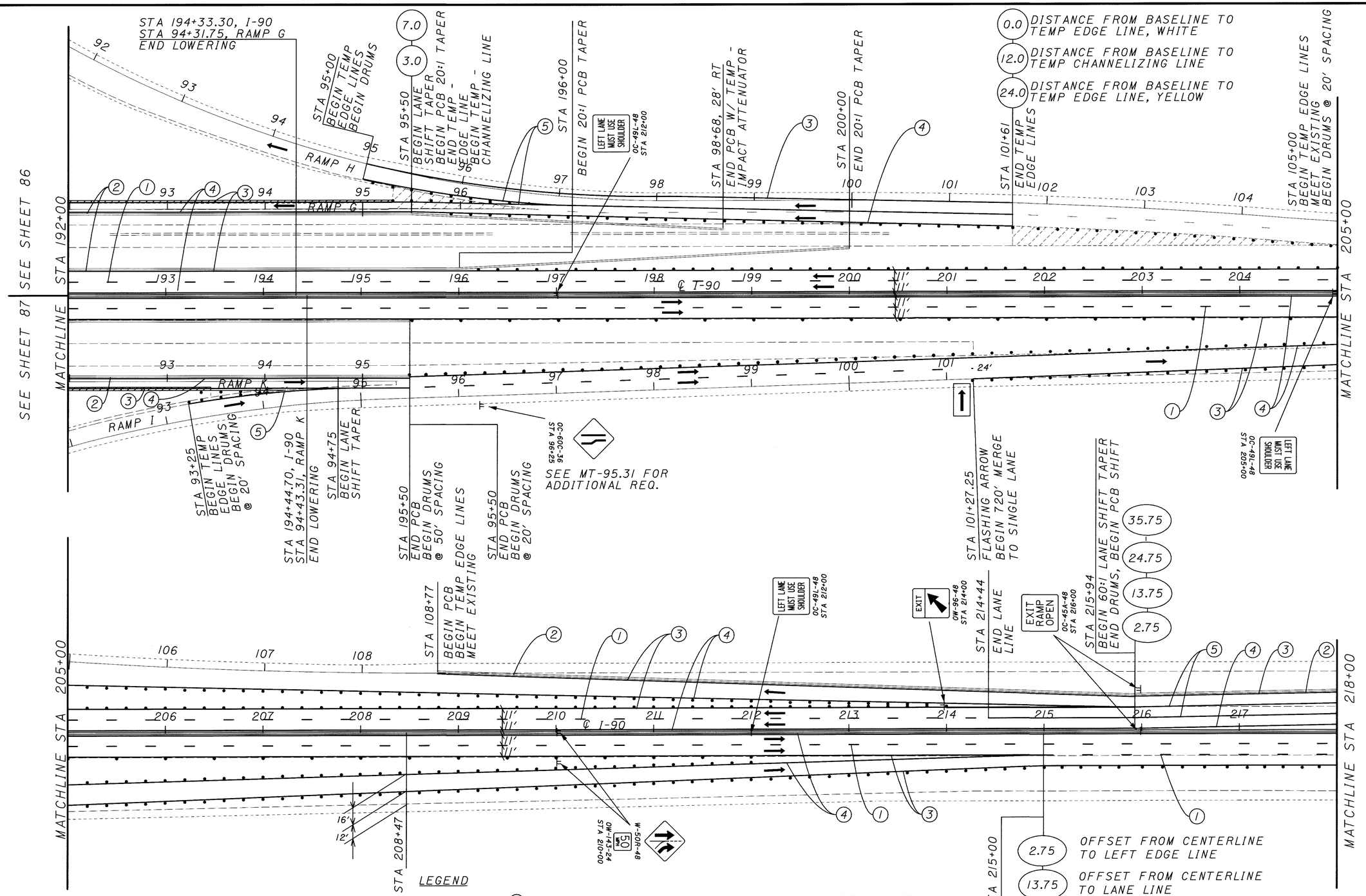

LEGEND

1. TEMPORARY LANE LINE, CLASS I, 642 PAINT (WHITE)
2. PORTABLE CONCRETE BARRIER, 32 INCH
3. TEMPORARY EDGE LINE, CLASS I, 642 PAINT (WHITE)
4. TEMPORARY EDGE LINE, CLASS I, 642 PAINT (YELLOW)
5. TEMPORARY CHANNELIZING LINE, CLASS I, 642 PAINT (WHITE)
6. TEMPORARY DOTTED LINE, CLASS I, 642 PAINT (WHITE)
7. TEMPORARY EDGE LINE, CLASS I, 740.06, TYPE I (WHITE)
8. TEMPORARY EDGE LINE, CLASS I, 740.06, TYPE I (YELLOW)
9. TEMPORARY CHANNELIZING LINE, CLASS I, 740.06, TYPEI (WHITE)
10. TEMPORARY LANE LINE, CLASS I, 740.06, TYPE I (WHITE)

← DIRECTION OF TRAVEL

• • • DRUMS

HORIZONTAL SCALE IN FEET
0 25 50 100

CALCULATED NJG
CHECKED

MAINTENANCE OF TRAFFIC PHASE 2

CUY-90-0.00

03 MAR 2000
p:\pr22308\cadd\ll738mp3.dgn

MAINTENANCE OF TRAFFIC PHASE 2

CUY-90-0.00

89
582

CALCULATED RAS
CHECKED

HORIZONTAL SCALE IN FEET
0 50 100 200

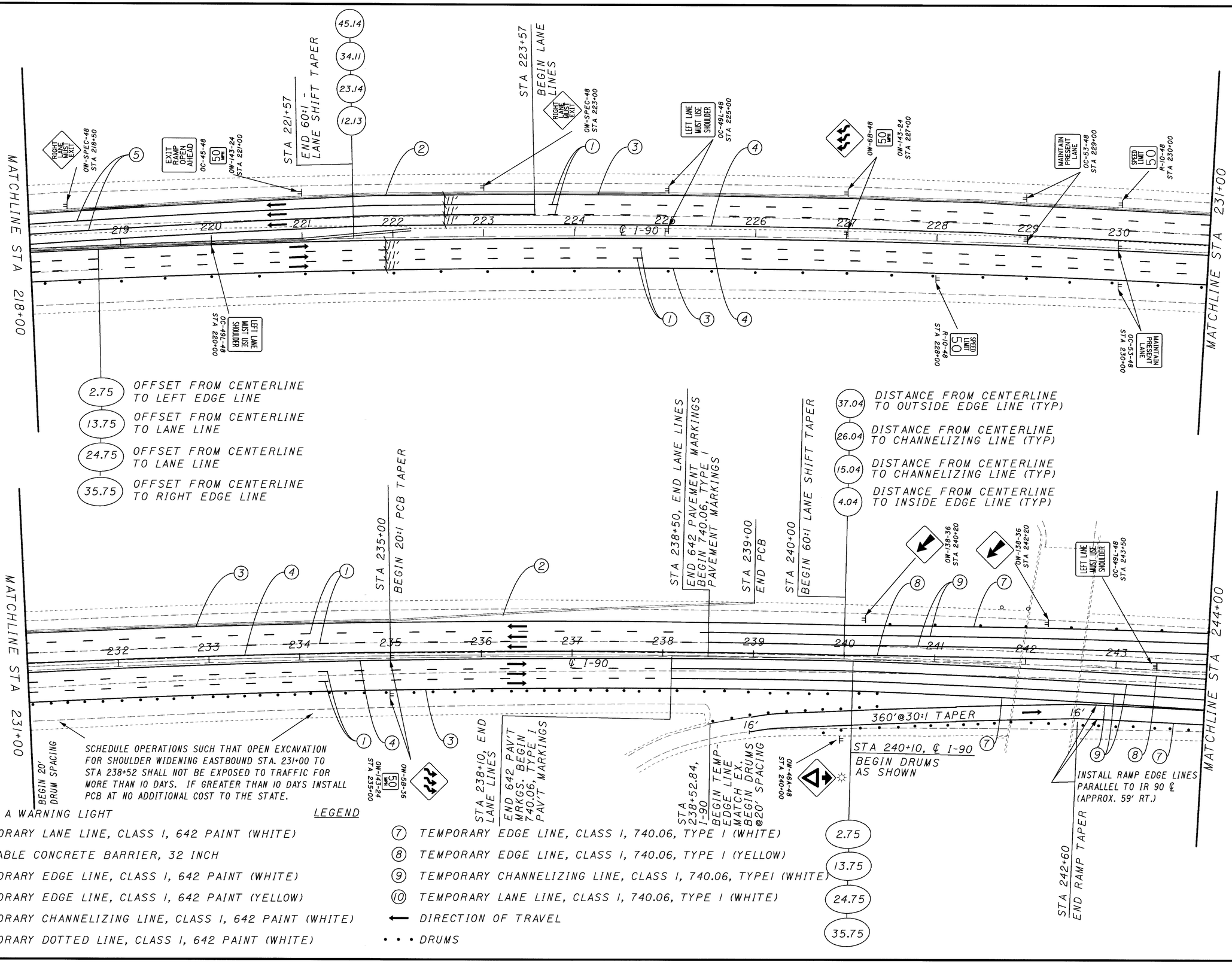

LEGEND

- ☼ TYPE A WARNING LIGHT
- (1) TEMPORARY LANE LINE, CLASS I, 642 PAINT (WHITE)
- (2) PORTABLE CONCRETE BARRIER, 32 INCH
- (3) TEMPORARY EDGE LINE, CLASS I, 642 PAINT (WHITE)
- (4) TEMPORARY EDGE LINE, CLASS I, 642 PAINT (YELLOW)
- (5) TEMPORARY CHANNELIZING LINE, CLASS I, 642 PAINT (WHITE)
- (6) TEMPORARY DOTTED LINE, CLASS I, 642 PAINT (WHITE)
- (7) TEMPORARY EDGE LINE, CLASS I, 740.06, TYPE I (WHITE)
- (8) TEMPORARY EDGE LINE, CLASS I, 740.06, TYPE I (YELLOW)
- (9) TEMPORARY CHANNELIZING LINE, CLASS I, 740.06, TYPEI (WHITE)
- (10) TEMPORARY LANE LINE, CLASS I, 740.06, TYPE I (WHITE)
- ⟵ DIRECTION OF TRAVEL
- • • • DRUMS

03 MAR 2000
p:\pr22308\cadd\lf738mp4.dgn

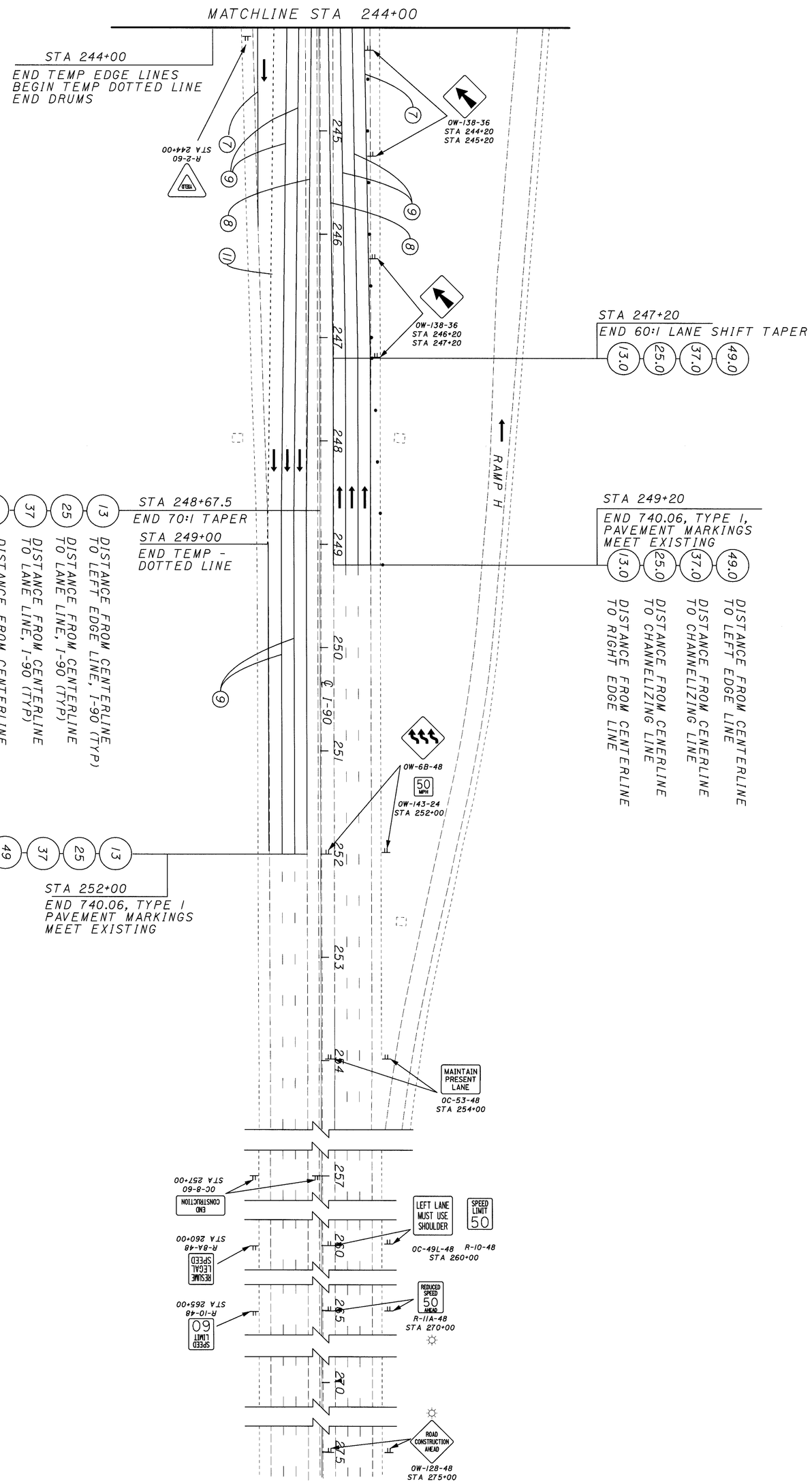

* IF DETERMINED TO BE NEEDED BY THE ENGINEER

LEGEND

① TEMPORARY LANE LINE, CLASS I, 642 PAINT (WHITE)
② PORTABLE CONCRETE BARRIER, 32 INCH
③ TEMPORARY EDGE LINE, CLASS I, 642 PAINT (WHITE)
④ TEMPORARY EDGE LINE, CLASS I, 642 PAINT (YELLOW)
⑤ TEMPORARY CHANNELIZING LINE, CLASS I, 642 PAINT (WHITE)
⑥ TEMPORARY DOTTED LINE, CLASS I, 642 PAINT (WHITE)
⑦ TEMPORARY EDGE LINE, CLASS I, 740.06, TYPE I (WHITE)
⑧ TEMPORARY EDGE LINE, CLASS I, 740.06, TYPE I (YELLOW)
⑨ TEMPORARY CHANNELIZING LINE, CLASS I, 740.06, TYPEI (WHITE)
⑩ TEMPORARY LANE LINE, CLASS I, 740.06, TYPE I (WHITE)
⑪ TEMPORARY DOTTED LINE, CLASS I, 740.06, TYPE I (WHITE)

DIRECTION OF TRAVEL
• • • DRUMS
☼ TYPE A WARNING LIGHT

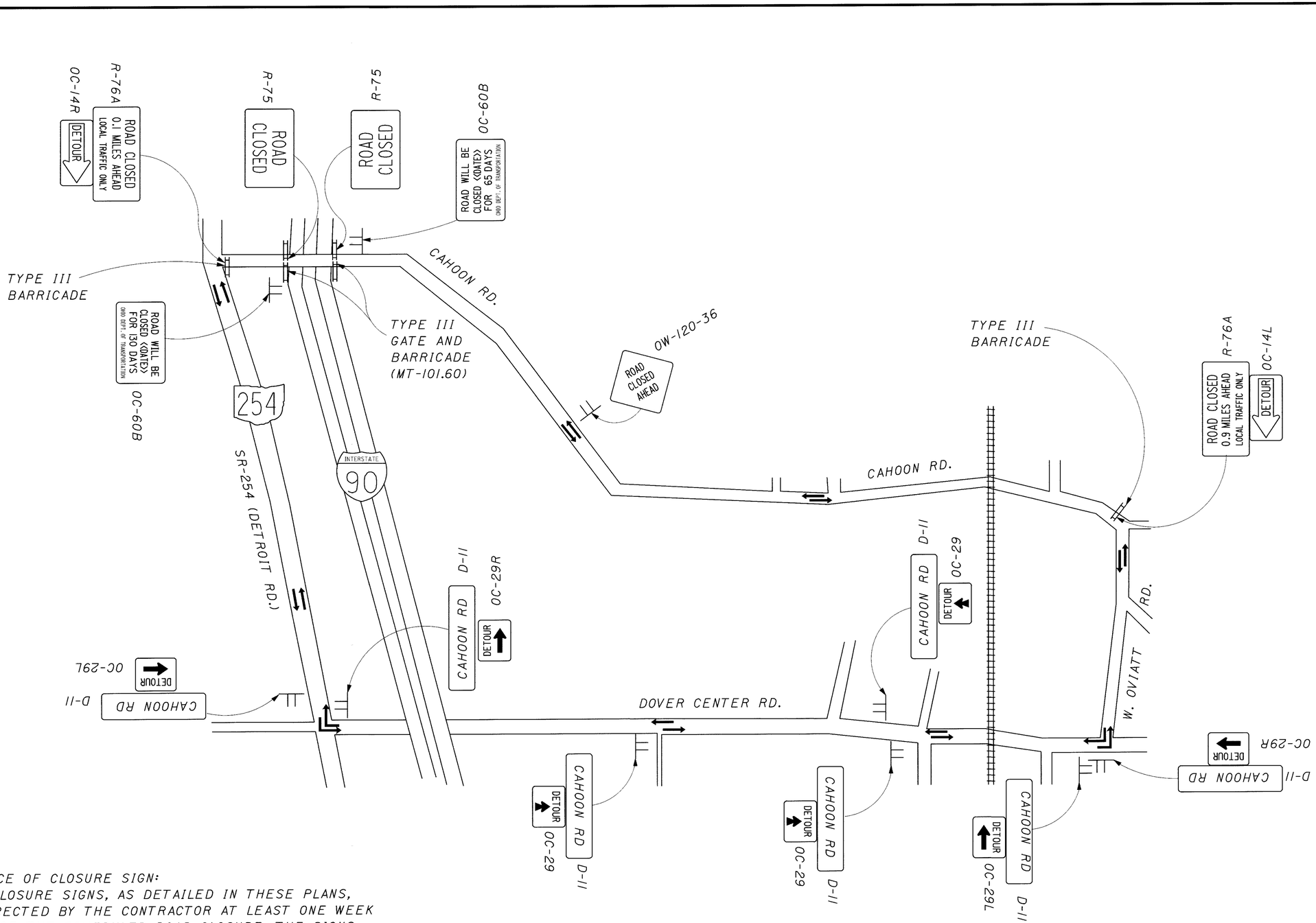

OC-60B NOTICE OF CLOSURE SIGN:
NOTICE OF CLOSURE SIGNS, AS DETAILED IN THESE PLANS, SHALL BE ERECTED BY THE CONTRACTOR AT LEAST ONE WEEK IN ADVANCE OF THE SCHEDULED ROAD CLOSURE. THE SIGNS SHALL BE ERECTED ON THE RIGHT HAND SIDE OF THE ROAD FACING TRAFFIC. THEY SHALL BE PLACED SO AS NOT TO INTERFERE WITH THE VISIBILITY OF ANY OTHER TRAFFIC CONTROL SIGNS. THEY SHALL BE ERECTED AT THE POINT OF CLOSURE. THE CONTRACTOR SHALL DETERMINE AND INCLUDE THE CLOSURE DATE. LENGTH OF CLOSURE SHALL NOT EXCEED 130 DAYS.

THE CONTRACTOR SHALL PROVIDE, ERECT AND MAINTAIN SIGNS, SIGN SUPPORTS AND BARRICADES, AS DETAILED IN THE OHIO MANUAL OF UNIFORM TRAFFIC CONTROL DEVICES AND IN THESE PLANS AND NOTES. ALL COSTS SHALL BE INCLUDED IN ITEM 614-MAINTAINING TRAFFIC.

FOR DETAILS NOT SHOWN SEE STD. DRAWING:
MT-101.60

NOT TO SCALE
HORIZONTAL SCALE IN FEET

CALCULATED
CHECKED

CAHOON RD DETOUR PLAN

CUY-90-0.00

03 MAR 2000
p:\pr-22308\cadd\11738mma.dgn

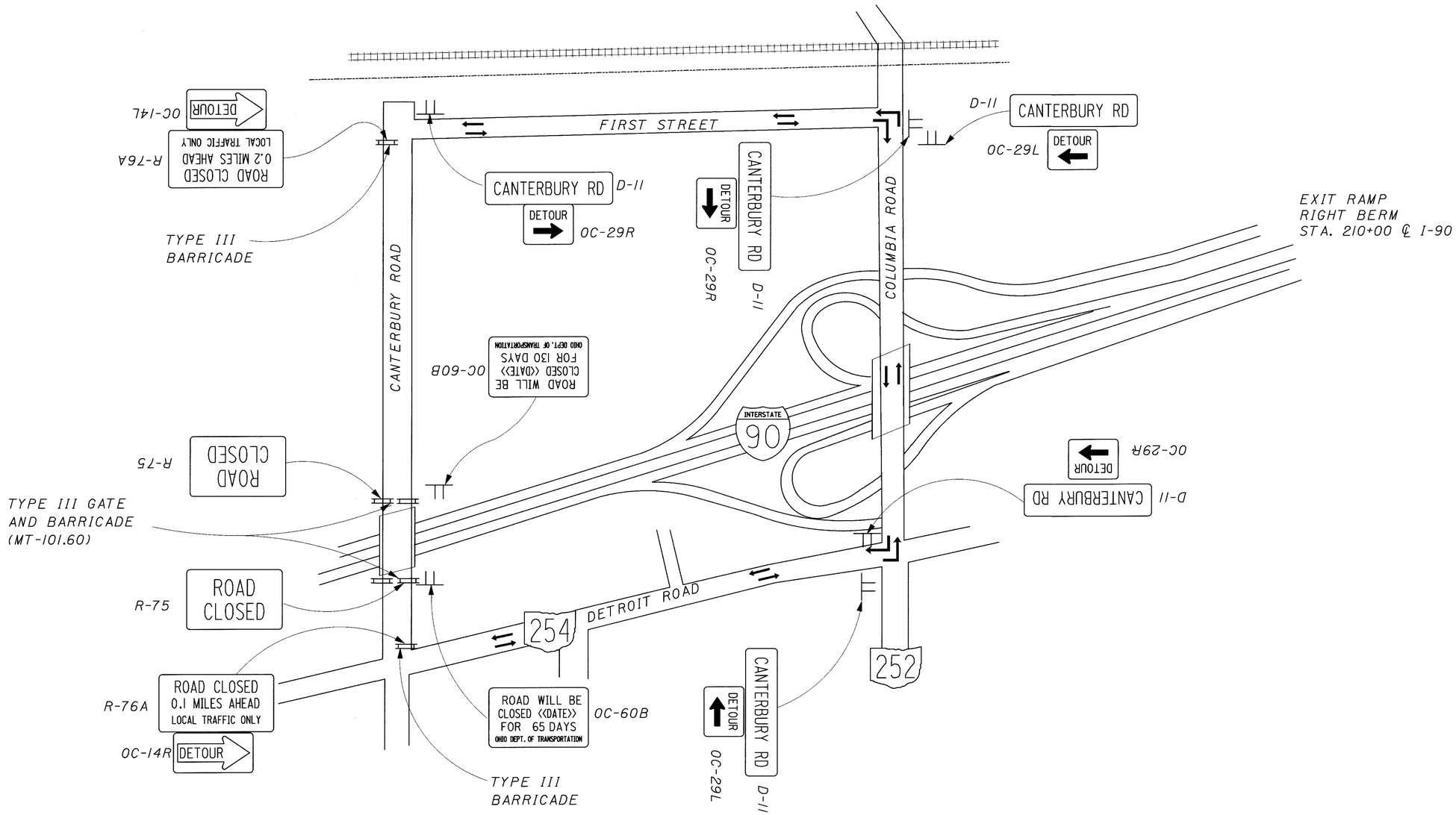

OC-60B NOTICE OF CLOSURE SIGN:
NOTICE OF CLOSURE SIGNS, AS DETAILED IN THESE PLANS, SHALL BE ERECTED BY THE CONTRACTOR AT LEAST ONE WEEK IN ADVANCE OF THE SCHEDULED ROAD CLOSURE. THE SIGNS SHALL BE ERECTED ON THE RIGHT HAND SIDE OF THE ROAD FACING TRAFFIC. THEY SHALL BE PLACED SO AS NOT TO INTERFERE WITH THE VISIBILITY OF ANY OTHER TRAFFIC CONTROL SIGNS. THEY SHALL BE ERECTED AT THE POINT OF CLOSURE. THE CONTRACTOR SHALL DETERMINE AND INCLUDE THE CLOSURE DATE. LENGTH OF CLOSURE SHALL NOT EXCEED 130 DAYS.

THE CONTRACTOR SHALL PROVIDE, ERECT AND MAINTAIN SIGNS, SIGN SUPPORTS AND BARRICADES, AS DETAILED IN THE OHIO MANUAL OF UNIFORM TRAFFIC CONTROL DEVICES AND IN THESE PLANS AND NOTES. ALL COSTS SHALL BE INCLUDED IN ITEM 614-MAINTAINING TRAFFIC.

FOR DETAILS NOT SHOWN SEE STD. DRAWING:
MT-101.60

NOT TO SCALE
HORIZONTAL SCALE IN FEET

CALCULATED
CHECKED

CANTERBURY RD DETOUR PLAN

CUY-90-0.00

03 MAR 2000
p:\pr22308\cadd\1738mmb.dgn

SHEET NUMBER								PARTICIPATION				ITEM	ITEM EXT.	GRAND TOTAL	UNIT	DESCRIPTION	SEE SHEET NO.
35	38	100	101	102	103	195	339	1	2	3	4						
																ROADWAY	
LUMP								LUMP	LUMP	LUMP		201	11000	LUMP		CLEARING AND GRUBBING	
			8					7	1			202	11004	8	EACH	STRUCTURE REMOVED	
				868					868			202	22900	868	SQ YD	APPROACH SLAB REMOVED	
		38744					753	10590	28154	753		202	23000	39497	SQ YD	PAVEMENT REMOVED	
							569			569		202	30000	569	SQ FT	WALK REMOVED	
				953					953			202	30600	953	LIN FT	CONCRETE MEDIAN REMOVED	
				2954				94	2860			202	30700	2954	LIN FT	CONCRETE BARRIER REMOVED	
				1537			350	1537		350		202	32000	1887	LIN FT	CURB REMOVED	
			1591					803	788			202	34900	1591	LIN FT	PIPE REMOVED	
					13541		412.5	1988	11553	412.5		202	38000	13953	LIN FT	GUARDRAIL REMOVED	
1233									1233			202	54101	1233	EACH	RAISED PAVEMENT MARKER REMOVED FOR STORAGE	35
																AS PER PLAN	
			4					3	1			202	58000	4	EACH	MANHOLE REMOVED	
			26					12	14			202	58100	26	EACH	CATCH BASIN REMOVED	
			4						4			202	58200	4	EACH	INLET REMOVED	
			2					2				202	58500	2	EACH	CATCH BASIN ABANDONED	
				35				35				202	60010	35	EACH	MONUMENT ASSEMBLY REMOVED	
500				6209				6209	500			202	75000	6709	LIN FT	FENCE REMOVED	
			849					653	196			SPECIAL	20270000	849	LIN FT	FILL AND PLUG EXISTING CONDUIT	38
	1750										1750	SPECIAL	20270100	1750	LIN FT	PIPE CLEANOUT	38
4000						72607		52293	20314			203	12000	72607	CU YD	EXCAVATION NOT INCLUDING EMBANKMENT CONSTRUCTION	
						19094		16778	2316			203	20001	19094	CU YD	EMBANKMENT, AS PER PLAN	35
4000								4000				203	21000	4000	CU YD	EMBANKMENT USING GRANULAR MATERIAL	
	57							43.5	13	0.5		203	45000	57	HOUR	PROOF ROLLING	
		170145					753	131777	38368	753		203	50000	170898	SQ YD	SUBGRADE COMPACTION	
	1000										1000	203	55000	1000	LIN FT	DITCH CLEANOUT	
550									542	8		203	60000	550	STATION	LINEAR GRADING	
	LUMP							LUMP				203	98500	LUMP		ROADWAY, MISC.: TEMPORARY MEDIAN DRAINAGE	38
				19				19				604	38500	19	EACH	MONUMENT ASSEMBLY	
				21				21				604	38501	21	EACH	MONUMENT ASSEMBLY, AS PER PLAN	357
							1			1		604	39500	1	EACH	MONUMENT BOX ADJUSTED TO GRADE	

PARTICIPATION 1 = MAJOR NEW, TE21-G000(105)
PARTICIPATION 2 = PAVEMENT, TE21-G000(106)
PARTICIPATION 3 = BRIDGE, TE21-G000(106)
PARTICIPATION 4 = 100 % STATE

CALCULATED RAS
CHECKED MGS

GENERAL SUMMARY

CUY-90-0.00

93
582

I:\PROJECTS\Pid11738\dgn\final plans\11738GG.dgn 14-SEP-2000 8:31AM jgrmovse

SHEET NUMBER								PARTICIPATION				ITEM	ITEM EXT.	GRAND TOTAL	UNIT	DESCRIPTION	SEE SHEET NO.
35	102	103					339	1	2	3	4						
																ROADWAY (CONTINUED)	
	5340							5340				SPECIAL	60610200	5340	SQ FT	NOISE BARRIER (REFLECTIVE), 10' HEIGHT AND UNDER	
	37266							37266				SPECIAL	60610210	37266	SQ FT	NOISE BARRIER (REFLECTIVE), OVER 10' TO 14' HEIGHT	
	212532							212532				SPECIAL	60610220	212532	SQ FT	NOISE BARRIER (REFLECTIVE), OVER 14' TO 20' HEIGHT	
	3312							3312				SPECIAL	60610920	3312	SQ FT	NOISE BARRIER, MISC.: BRIDGE MOUNTED	527
		21884.55					362.5	2745	19139.5	362.5		606	13000	22247	LIN FT	GUARDRAIL, TYPE 5	
		100							100			606	13050	100	LIN FT	GUARDRAIL, TYPE 5A	
		31						10	21			606	22010	31	EACH	ANCHOR ASSEMBLY, TYPE E-98	
							2			2		606	25000	2	EACH	ANCHOR ASSEMBLY, TYPE A	
		32						8	24			606	26500	32	EACH	ANCHOR ASSEMBLY, TYPE T	
		12					8	2	10	8		606	35000	20	EACH	BRIDGE TERMINAL ASSEMBLY, TYPE 1	
		5							5			606	35100	5	EACH	BRIDGE TERMINAL ASSEMBLY, TYPE 2	
		2							2			606	35124	2	EACH	BRIDGE TERMINAL ASSEMBLY, TYPE 3 (MODIFIED)	
		4							4			606	35141	4	EACH	BRIDGE TERMINAL ASSEMBLY, TYPE 4, AS PER PLAN	346
		1							1			606	60020	1	EACH	IMPACT ATTENUATOR, TYPE 2-98 (UNIDIRECTIONAL)	
		1						1				606	60024	1	EACH	IMPACT ATTENUATOR, TYPE 2-98 (BIDIRECTIONAL)	
500	324								324	500		607	23000	824	LIN FT	FENCE, TYPE CLT	
							569			569		608	10000	569	SQ FT	4" CONCRETE WALK	
	9625.5								8958.8	666.7		622	23404	9625.5	LIN FT	CONCRETE BARRIER, TYPE B1	
	574									574		622	23500	574	LIN FT	CONCRETE BARRIER, TYPE C	
	1718								1718			622	23504	1718	LIN FT	CONCRETE BARRIER, TYPE C1	
		104								104		622	24000	104	LIN FT	CONCRETE BARRIER, TYPE D	
	1680								1680			622	23505	1680	LIN FT	CONCRETE BARRIER, TYPE C1--, AS PER PLAN	347
	673									673		622	24001	673	LIN FT	CONCRETE BARRIER, TYPE D, AS PER PLAN	348,350
	98									98		622	25001	98	LIN FT	CONCRETE BARRIER, AS PER PLAN	349,351
							207			207		830	14001	207	LIN FT	CURB, TYPE 2-A, AS PER PLAN	37
							143			143		830	16001	143	LIN FT	CURB, TYPE 2-B, AS PER PLAN	37
	44									44		830	26000	44	LIN FT	CURB, TYPE 6	
	558									558		830	70001	558	SQ YD	4" CONCRETE MEDIAN, AS PER PLAN	36

PARTICIPATION 1 = MAJOR NEW, TE21-G000(105)
PARTICIPATION 2 = PAVEMENT, TE21-G000(106)
PARTICIPATION 3 = BRIDGE, TE21-G000(106)
PARTICIPATION 4 = 100 % STATE

CALCULATED RAS CHECKED MGS

GENERAL SUMMARY

CUY-90-0.00

I:\PROJECTS\Pidll738\dgn\Final plans\ll7386G.dgn 14-SEP-2000 8:31AM jgrmovse

SHEET NUMBER							PARTICIPATION				ITEM	ITEM EXT.	GRAND TOTAL	UNIT	DESCRIPTION	SEE SHEET NO.
	38	101	102	125	195	339	1	2	3	4						
															EROSION CONTROL	
		67					67				601	28000	67	CU YD	DUMPED ROCK FILL, TYPE D	
	108	270					283	95			601	32200	378	CU YD	ROCK CHANNEL PROTECTION, TYPE C WITH FILTER	
			210					210			601	39000	210	LIN FT	PAVED GUTTER, TYPE 4	
								162			660	20000	162	SQ YD	SODDING REINFORCED	
			1954				1954				670	40000	1954	SQ YD	DITCH EROSION PROTECTION	
			264				264				670	41000	264	SQ YD	SLOPE EROSION PROTECTION	
			14					14			838	20750	14	CU YD	GABIONS WITH ADDITIONAL COATING	
	2						2				870	00100	2	EACH	SOIL ANALYSIS TEST	
	2518						1659	859			870	00200	2518	CU YD	PLACING TOPSOIL	
	260				45024		29659	15365	260		870	10000	45284	SQ YD	SEEDING AND MULCHING	
	2252						1483	769			870	14000	2252	SQ YD	REPAIR SEEDING AND MULCHING	
	2						1.3	0.7			870	20000	2	TON	COMMERCIAL FERTILIZER	
	103						67	35	1		870	35000	103	M GAL	WATER	
	102						67	35			870	40000	102	M SQ FT	MOWING	
	9005						5932	3073			877	10000	9005	SQ YD	TEMPORARY SEEDING AND MULCHING	
	2360			4720				7080			877	30100	7080	LIN FT	TEMPORARY PERIMETER FILTER FABRIC FENCE	
	320			640			960				877	30200	960	LIN FT	TEMPORARY DITCH CHECK FILTER FABRIC FENCE	
	690			1380			1331	739			877	30300	2070	LIN FT	TEMPORARY INLET PROTECTION FILTER FABRIC FENCE	
	4050						4050				877	55500	4050	SQ YD	TEMPORARY DITCH PROTECTION	
	150						40	110			877	60000	150	CU YD	SEDIMENT REMOVAL	

PARTICIPATION 1 = MAJOR NEW, TE21-G000(105)
PARTICIPATION 2 = PAVEMENT, TE21-G000(106)
PARTICIPATION 3 = BRIDGE, TE21-G000(106)
PARTICIPATION 4 = 100 % STATE

CALCULATED RAS
CHECKED MGS

GENERAL SUMMARY

CUY-90-0.00

95
582

I:\PROJECTS\Pidll738\dgn\final plans\ll738GG.dgn 14-SEP-2000 8:32AM jgrmovse

SHEET NUMBER							PARTICIPATION				ITEM	ITEM EXT.	GRAND TOTAL	UNIT	DESCRIPTION	SEE SHEET NO.
37	38	101	103			339	1	2	3	4						
															DRAINAGE	
		4.2					3.6	0.6			602	20000	4.2	CU YD	CONCRETE MASONRY	
80			876				806	150			603	01500	956	LIN FT	6" CONDUIT, TYPE F	
		157					97	60			603	05900	157	LIN FT	15" CONDUIT, TYPE B	
		335					109	226			603	07400	335	LIN FT	18" CONDUIT, TYPE B	
		219					86	133			603	07600	219	LIN FT	18" CONDUIT, TYPE C	
		746.5					463	283.5			603	08900	746.5	LIN FT	21" CONDUIT, TYPE B	
		412.5					181	231.5			603	10400	412.5	LIN FT	24" CONDUIT, TYPE B	
		328.5					30	298.5			603	10600	328.5	LIN FT	24" CONDUIT, TYPE C	
		34					34				603	13400	34	LIN FT	30" CONDUIT, TYPE B	
		36						36			603	13600	36	LIN FT	30" CONDUIT, TYPE C	
		985					985				603	96600	985	LIN FT	CONDUIT, BORED OR JACKED, 18", TYPE B OR C, 706.02	
		84					84				603	96600	84	LIN FT	CONDUIT, BORED OR JACKED, 21", TYPE B OR C, 706.02	
		1056					1056				603	97001	1056	LIN FT	SLOTTED DRAIN, 15" DIAMETER, AS PER PLAN	354
		6						6			604	00400	6	EACH	CATCH BASIN, NO. 3	
		3						3			604	00800	3	EACH	CATCH BASIN, NO. 3A	
		6					3	3			604	01201	6	EACH	CATCH BASIN, NO. 4, AS PER PLAN	356
		2						2			604	01600	2	EACH	CATCH BASIN, NO. 5	
		1					1				604	02000	1	EACH	CATCH BASIN, NO. 6	
		1						1			604	09000	1	EACH	CATCH BASIN ADJUSTED TO GRADE	
		7					7				604	09500	7	EACH	CATCH BASIN RECONSTRUCTED TO GRADE	
		4					4				604	14501	4	EACH	INLET, NO. 3A, AS PER PLAN	353
		1						1			604	14600	1	EACH	INLET, NO. 3B	
		9					9				604	14602	9	EACH	INLET, NO. 3B50	
		10					8	2			604	14603	10	EACH	INLET, NO. 3B50, AS PER PLAN	355
		2						2			604	31500	2	EACH	MANHOLE, NO. 3	
		1						1			604	31501	1	EACH	MANHOLE, NO. 3, AS PER PLAN	37
	5000						2500	2500			SPECIAL	60450000	5000	POUND	MISCELLANEOUS METAL	38
190			1824				1824	190			605	05221	2014	LIN FT	4" ROCK CUT UNDERDRAIN, AS PER PLAN	355
						346.5			346.5		605	11100	346.5	LIN FT	6" SHALLOW PIPE UNDERDRAIN	
3700			40154				33927	9927			605	11110	43854	LIN FT	6" SHALLOW PIPE UNDERDRAIN WITH FABRIC WRAP	
6200			66700				61067	11833			605	11111	72900	LIN FT	6" SHALLOW PIPE UNDERDRAIN WITH FABRIC WRAP, AS PER PLAN	37
			268				268				605	13410	268	LIN FT	6" UNCLASSIFIED PIPE UNDERDRAIN WITH FABRIC WRAP	

PARTICIPATION 1 = MAJOR NEW, TE21-G000(105)
PARTICIPATION 2 = PAVEMENT, TE21-G000(106)
PARTICIPATION 3 = BRIDGE, TE21-G000(106)
PARTICIPATION 4 = 100 % STATE

CALCULATED RAS
CHECKED MGS

GENERAL SUMMARY

CUY-90-0.00

I:\PROJECTS\PIdll738\dgn\finalplans\ll738GG.dgn 09-AUG-2000 3:15PM jgrmovse

SHEET NUMBER							PARTICIPATION				ITEM	ITEM EXT.	GRAND TOTAL	UNIT	DESCRIPTION	SEE SHEET NO.
36	37	48		100	102	339	1	2	3	4						
															PAVEMENT	
3936		6100		2658			3414	9280			254	01000	12694	SQ YD	PAVEMENT PLANING, BITUMINOUS	
		100						100			301	46000	100	CU YD	BITUMINOUS AGGREGATE BASE, PG64-22	
				12203				12203			302	46000	12203	CU YD	BITUMINOUS AGGREGATE BASE, PG64-22	
						126			126		304	20000	126	CU YD	AGGREGATE BASE	
				28169			21850	6319			304	20001	28169	CU YD	AGGREGATE BASE, AS PER PLAN	36
	730	610		25384		17		26724	17		407	10000	26741	GALLON	TACK COAT	
				1870		9		1870	9		407	14000	1879	GALLON	TACK COAT FOR INTERMEDIATE COURSE	
				2040				2040			446	46040	2040	CU YD	ASPHALT CONCRETE INTERMEDIATE COURSE, TYPE 2, PG64-28	
		275						275			446	47010	275	CU YD	ASPHALT CONCRETE SURFACE COURSE, TYPE 1, PG64-28	
				11129				11129			446	50002	11129	CU YD	ASPHALT CONCRETE SURFACE COURSE, TYPE 1H, AS PER PLAN (WITH SUPPLEMENT 1059 WARRANTY)	37
						8			8		448	46020	8	CU YD	ASPHALT CONCRETE INTERMEDIATE COURSE, TYPE 1, PG64-22	
				912				91	821		448	46060	912	CU YD	ASPHALT CONCRETE INTEREMEDIATE COURSE, TYPE 1, PG64-22 (UNDER GUARDRAIL)	
						8			8		448	47020	8	CU YD	ASPHALT CONCRETE SURFACE COURSE, TYPE 1, PG64-22	
						116			116		SPECIAL	45130000	116	LIN FT	PRESSURE RELIEF JOINT, TYPE A	
						547			547		451	14000	547	SQ YD	9" REINFORCED CONCRETE PAVEMENT	
						187			187		611	10000	187	SQ YD	REINFORCED CONCRETE APPROACH SLAB (T=12")	
					427		222.5	204.5			611	15001	427	SQ YD	REINFORCED CONCRETE APPROACH SLAB (T=13"), AS PER PLAN	37
					1354.5		620	734.5			611	25001	1354.5	SQ YD	REINFORCED CONCRETE APPROACH SLAB (T=15"), AS PER PLAN	37
				1172			308	864			617	10101	1172	CU YD	COMPACTED AGGREGATE, TYPE A, AS PER PLAN	37
				18			9	9			618	40600	18	MILE	RUMBLE STRIPS, TYPE 2 (ASPHALT)	
				18429			14375	4054			855	10000	18429	SQ YD	4" ASPHALT TREATED FREE DRAINING BASE	
				50139			50139				880	15000	50139	CU YD	ASPHALT CONCRETE (7 YEAR WARRANTY)	

PARTICIPATION 1 = MAJOR NEW, TE21-G000(105)
PARTICIPATION 2 = PAVEMENT, TE21-G000(106)
PARTICIPATION 3 = BRIDGE, TE21-G000(106)
PARTICIPATION 4 = 100 % STATE

CALCULATED RAS
CHECKED MGS

GENERAL SUMMARY

CUY-90-0.00

E:\PROJECTS\Pidll738\dgn\final plans\II738GG.dgn 14-SEP-2000 8:32AM jgrmovse

SHEET NUMBER							PARTICIPATION				ITEM	ITEM EXT.	GRAND TOTAL	UNIT	DESCRIPTION	SEE SHEET NO.
	38						1	2	3	4						
															WATER WORK	
	2							2			638	10800	2	EACH	VALVE BOX ADJUSTED TO GRADE	
															LIGHTING SEE SHEET 393	
															TRAFFIC CONTROL SEE SHEET 365-366	
															STRUCTURES	
															CUY-90-0045 SEE SHEET 421	
															CUY-90-0201 SEE SHEET 451	
															CUY-90-0249 SEE SHEET 472	
															CUY-90-0303 SEE SHEET 501	
															CUY-90-0356 SEE SHEET 513	
															CUY-90-0365 SEE SHEET 518	

PARTICIPATION 1 = MAJOR NEW, TE21-G000(105)
PARTICIPATION 2 = PAVEMENT, TE21-G000(106)
PARTICIPATION 3 = BRIDGE, TE21-G000(106)
PARTICIPATION 4 = 100 % STATE

CALCULATED RAS
CHECKED MGS

GENERAL SUMMARY

CUY-90-0.00

22 MAR 2000
D:\PR22308\CADD\11738GG.dgn

SHEET NUMBER								PARTICIPATION				ITEM	ITEM EXT.	GRAND TOTAL	UNIT	DESCRIPTION	SEE SHEET NO.
45	46	47	50	56	57	58	59	1	2	3	4						
																MAINTENANCE OF TRAFFIC	
		2400						2400				614	11100	2400	HOUR	LAW ENFORCEMENT OFFICER WITH PATROL CAR	
	3							3				614	12340	3	EACH	TEMPORARY IMPACT ATTENUATOR, (UNIDIRECTIONAL OR BIDIRECTIONAL)	
		36						36				614	12470	36	EACH	WORK ZONE SPEED LIMIT SIGN	
		20						20				614	12480	20	EACH	DOUBLED FINES IN WORK ZONE SIGN	
1500								1500				SPECIAL	61412500	1500	SQ FT	REPLACEMENT SIGN	
		150						150				614	13001	150	CU YD	BITUMINOUS CONCRETE FOR MAINTAINING TRAFFIC, AS PER PLAN	47
100								100				614	13200	100	EACH	BARRIER REFLECTOR, TYPE A	
800							2651	3451				614	13300	3451	EACH	BARRIER REFLECTOR, TYPE B	
50							2651	2701				614	13350	2701	EACH	OBJECT MARKER	
		18						18				614	18601	18	SIGN MNTH	PORTABLE CHANGEABLE MESSAGE SIGN, AS PER PLAN	47
				2.54	2.47	9.54		14.55				614	20100	14.55	MILE	TEMPORARY LANE LINE, CLASS I, 642 PAINT	
				0.49	0.73			1.22				614	20200	1.22	MILE	TEMPORARY LANE LINE, CLASS I, 740.06, TYPE I	
				8.6	7.55	21.28		37.43				614	22100	37.43	MILE	TEMPORARY EDGE LINE, CLASS I, 642 PAINT	
				0.93	0.82	2.52		4.27				614	22200	4.27	MILE	TEMPORARY EDGE LINE, CLASS I, 740.06, TYPE I	
				8095	7808	3112		19015				614	23200	19015	LIN FT	TEMPORARY CHANNELIZING LINE, CLASS I, 642 PAINT	
				3250	1780	9537		14567				614	23400	14567	LIN FT	TEMPORARY CHANNELIZING LINE, CLASS I, 740.06, TYPE I	
				590	228			818				614	24200	818	LIN FT	TEMPORARY DOTTED LINE, CLASS I, 642 PAINT	
						500		500				614	24400	500	LIN FT	TEMPORARY DOTTED LINE, CLASS I, 740.06, TYPE I	
			LUMP					LUMP				615	10001	LUMP		TEMPORARY ROAD, AS PER PLAN	50
							2976	2976				615	35001	2976	SQ YD	TEMPORARY PAVEMENT, AS PER PLAN	46
363								363				616	10000	363	M GAL	WATER	
8								8				616	20000	8	TON	CALCIUM CHLORIDE	
400								400				630	80300	400	SQ FT	SIGN, TEMPORARY OVERLAY	
6								6				630	89900	6	EACH	REMOVAL OF OVERLAY SIGN	
1000								1000				630	97800	1000	SQ FT	SIGNING, MISC.: ADDITIONAL SIGNS, GROUND MOUNTED, AS DIRECTED BY THE ENGINEER	45
16000								16000				642	30000	16000	LIN FT	REMOVAL OF PAVEMENT MARKING	
125000								125000				644	30000	125000	LIN FT	REMOVAL OF PAVEMENT MARKING	
							64518	64518				622	40020	64518	LIN FT	PORTABLE CONCRETE BARRIER, 32"	
							1720	1720				622	40040	1720	LIN FT	PORTABLE CONCRETE BARRIER, 32", BRIDGE MOUNTED	
								LUMP				614	11000	LUMP		MAINTAINING TRAFFIC	
								LUMP				623	10001	LUMP		CONSTRUCTION LAYOUT STAKES, AS PER PLAN	37
								LUMP				624	10000	LUMP		MOBILIZATION	
								32				806	16021	32	MONTH	FIELD OFFICE, TYPE C, AS PER PLAN	34

PARTICIPATION 1 = MAJOR NEW, TE21-G000(105)
PARTICIPATION 2 = PAVEMENT, TE21-G000(106)
PARTICIPATION 3 = BRIDGE, TE21-G000(106)
PARTICIPATION 4 = 100 % STATE

CALCULATED RAS
CHECKED MGS

GENERAL SUMMARY

CUY-90-0.00

22 MAR 2000
D:\PR22308\CADD\17386G.dgn

SHEET NO.	202 PAVEMENT REMOVED SQ.YD.	203 SUBGRADE COMPACTION SQ.YD.	254 PAVEMENT PLANING BITUMINOUS SQ.YD.	302 BITUMINOUS AGGREGATE BASE CU.YD.	304 AGGREGATE BASE, AS PER PLAN CU.YD.	407 TACK COAT GAL.	407 TACK COAT FOR INTERMEDIATE COURSE GAL.	446 ASPHALT CONCRETE INTERMEDIATE COURSE, TYPE 2, PG 64-28 CU.YD.	446 ASPHALT CONCRETE SURFACE COURSE, TYPE IH, APP WITH SUPPLEMENT 1059 WARRANTY CU.YD.	448 ASPHALT CONCRETE INTERMEDIATE COURSE, TYPE I UNDER GUARDRAIL PG 64-22 CU.YD.	611 RUMBLE STRIPS, TYPE 2 (ASPHALT) MILE	617 COMPACTED AGGREGATE, TYPE A, AS PER PLAN CU.YD.	855 ASPHALT TREATED FREE DRAINING BASE CU.YD.	880 14" ASPHALT CONCRETE (7 YEAR WARRANTY) CU.YD.
104		19017		728	3118	2128	114	111	889				2041	6332
105		22810		789	3761	2875	123	120	1201				2478	7853
106		17731		741	2953	2351	116	239	982				1964	6161
107		11194		1950	1847	959	315	335	404				1219	1832
108		9571		689	1587	2444	184	179	1020				1053	2903
109		2125		622	347	760	95	93	363				226	
110		34314		850	5629	4064	133	129	1696				3687	12043
111		20206		850	3364	2315	133	129	967				2238	7012
112		9072		754	1513	1193	117	115	500				1008	2666
113		6269		965	1049	961	161	157	404				677	1191
114		10825		1716	1783	2529	265	257	1055				1238	2006
115		686		178	133	1753	9	73	793					
116		1032		297	167	868	46	45	539				108	
117		840		250	138	149	39	38	298				89	
118		2242		404	409	10	5	5	4				479	
119		887		183	155	10	6	5	5				146	
120		1112		181	186	1	1	1	1				126	
121			2658								18			140
122	38566													
123										912				
124												1172		
340	178	212		56	30	14	8	9	8				20	
TOTALS	38744	170145	2658	12203	28169	25384	1870	2040	11129	912	18	1172	18797	50139

++ 18797 CU.YD. = 18429 SQ. YD.

++ THE SQUARE YARD PAY QUANTITY FOR ITEM 855 IS AN AVERAGE CONVERSION OF THE ESTIMATED CUBIC YARD PLAN QUANTITY USING THE FOLLOWING FORMULA:

18797 CU. YD. X [1/.34 FT X 1 FT/3 YD] = 18429 SQ. YD.

PAYMENT SHALL BE MADE ON THE CONVERTED SQUARE YARD BASIS, BUT INSTALLED TO THE THICKNESS AND AREAS SHOWN ON THE TYPICAL SECTIONS AND ASSOCIATED DETAILS. NO ADJUSTMENTS SHALL BE MADE IN THE UNIT PRICE FOR THE AREAS OF VARIABLE THICKNESSES CALLED FOR IN THE PLANS.

CALCULATED RAS CHECKED RAS

PAVEMENT SUBSUMMARY

CUY-90-0.00

I:\PROJECTS\Pidl1738\dgn\final plans\1738GSB.dgn 20-JUL-2000 2:54PM Jgrmovse

DRAINAGE																		
	202						601		602	603								
SHEET NO.	PIPE REMOVED	CATCH BASIN REMOVED	CATCH BASIN ABANDONED	INLET REMOVED	MANHOLE REMOVED	STRUCTURE REMOVED	ROCK CHANNEL PTOTECTION, TYPE C WITH FILTER	DUMPED ROCK FILL, TYPE D	CONCRETE MASONRY	15" CONDUIT, TYPE B	18" CONDUIT, TYPE B	18" CONDUIT, TYPE C	21" CONDUIT, TYPE B	24" CONDUIT, TYPE B	24" CONDUIT, TYPE C	30" CONDUIT, TYPE B	30" CONDUIT, TYPE C	SLOTTED DRAIN, 15" DIAMETER, AS PER PLAN
	LIN FT	EACH	EACH	EACH	EACH	EACH	CU YD	CU YD	CU YD	LIN FT	LIN FT	LIN FT	LIN FT	LIN FT	LIN FT	LIN FT	LIN FT	LIN FT
129	59	1							0.40									
131																		
133							30		0.40									
136																		
139	820	11			1	1			0.60	125		133	87.5	231.5	298.5			
143								10										
146							30	40	0.40									
149								11										
151	171	1			1			6		8			125					261
154	68	1	1			1				8			100					25
156	62	2				1	30				48							
161		1	1				30		0.40									
164	130	2			2	2	30		0.40	8				181	30			90
171	229	5		4		1	30		0.40	8	287	86	434			34	36	680
175							30		0.40									
177	10	1				1	30		0.40									
179	42	1				1	30		0.40									
TOTALS	1591	26	2	4	4	8	270	67	4.20	157	335	219	746.5	412.5	328.5	34	36	1056

DRAINAGE																
	603		604													SPECIAL
SHEET NO.	CONDUIT, BORED OR JACKED, 18", TYPE B OR C, 706.02	CONDUIT, BORED OR JACKED, 21", TYPE B OR C, 706.02	CATCH BASIN NO. 3	CATCH BASIN NO. 3A	CATCH BASIN NO. 4, AS PER PLAN	CATCH BASIN RECONSTRUCTED TO GRADE	CATCH BASIN NO. 5	CATCH BASIN ADJUSTED TO GRADE	CACTH BASIN NO. 6	MANHOLE NO. 3	MANHOLE NO. 3, A.P.P.	INLET NO. 3B50	INLET NO. 3B50, AS PER PLAN	INLET NO. 3B	INLET NO. 3A, AS PER PLAN	FILL AND PLUG EXISTING CONDUIT
	LIN FT	LIN FT	EACH	EACH	EACH	EACH	EACH	EACH	EACH	EACH	EACH	EACH	EACH	EACH	EACH	LIN FT
129	104				1											
131						1										
133	127				1											
136						2										
139					3		2			2			2	1		
143						2		1								
146	119				1	1										
151	111					1			1			1				
154		84													2	81
156	98											2				92
161	91											2				
164												1	3			158
171			6	2							1		5			366
175	126			1								1				
177	110											1				92
179	99											1				60
TOTALS	985	84	6	3	6	7	2	1	1	2	1	9	10	1	4	849

CALCULATED MJB
CHECKED RAS

ROADWAY SUBSUMMARY

CUY-90-0.00

101
582

I:\PROJECTS\Pidll738\dgn\final plans\ll738GS.dgn 09-AUG-2000 3:16PM jgrmovse

ROADWAY															
SHEET NO.	202				611		622						830	
	APPROACH SLAB REMOVED	CURB REMOVED	MEDIAN REMOVED	CONCRETE BARRIER REMOVED	REINFORCED CONCRETE APPROACH SLAB (T=13"), A.P.P.	REINFORCED CONCRETE APPROACH SLAB (T=15"), A.P.P.	CONCRETE BARRIER, AS PER PLAN	CONCRETE BARRIER, TYPE B-50	CONCRETE BARRIER, TYPE C-50	CONCRETE BARRIER, TYPE C-50, A.P.P.	CONCRETE BARRIER, TYPE C-32	CONCRETE BARRIER, TYPE D, A.P.P.	CURB, TYPE 6	4" CONCRETE MEDIAN, AS PER PLAN
	SQ YD	LIN FT	SQ YD	LIN FT	SQ YD	SQ YD	LIN FT	LIN FT	LIN FT	LIN FT	LIN FT	LIN FT	LIN FT	SQ YD
134	434					695							20	
136				12										
140		1537	953	77			28				574	473		
144				14										
152				128			42	344		680		100		
154								250		1000				
157	217					337.5		1187.5					24	
159	217					322		1112						
162								1200	50					
165				128			28	560	690			100		
167								1250						
172				1650	427			952	898					293
175				837				1250						265
177								1250						
180				108				270	80					
TOTALS	868	1537	953	2954	427	1354.5	98	9625.5	1718	1680	574	673	44	558

NOISE BARRIER				
SHEET NO.	SPECIAL			
	NOISE BARRIER (REFLECTIVE) 10' AND UNDER	NOISE BARRIER (REFLECTIVE) OVER 10' TO 14'	NOISE BARRIER (REFLECTIVE) OVER 14' TO 20'	NOISE BARRIER (REFLECTIVE) BRIDGE MOUNTED
	SQ FT	SQ FT	SQ FT	SQ FT
129	120	144	12000	
131	1284	5152	11388	
133		2690	14848	1495
136			15796	
140	120	3816		
143	960	6936	13344	
146	228		26860	
149			20064	
152	108	11424	1994	
154			22790	
157		624	18232	406
159			18760	1411
162			22313	
165		288	15	
167	120	3123	5856	
189	480	528	8272	
194	1920	2541		
TOTALS	5340	37266	212532	3312

EROSION CONTROL					
SHEET NO.	601	660	670		838
	PAVED GUTTER, TYPE 4	SODDING REINFORCED	DITCH EROSION PROTECTION	SLOPE EROSION PROTECTION	GABIONS, WITH ADDITIONAL COATING
	SQ FT	SQ YD	SQ YD	SQ YD	CU YD
129			250		
131			451		
133		173	172	264	7
136			204		
140			250		
144			244		
147			257		
149			92		
152			34		
156		78			7
173	210				
TOTALS	210	251	1954	264	14

FENCE		
SHEET NO.	202	607
	FENCE REMOVED	FENCE, TYPE CL
	LIN FT	LIN FT
140	310	11
143	1229	193
146	1250	100
149	1250	
152	1100	6
167	650	4
194	420	10
TOTALS	6209	324

MONUMENTATION			
SHEET NO.	202	604	
	MONUMENT ASSEMBLY REMOVED	MONUMENT ASSEMBLY	MONUMENT ASSEMBLY, AS PER PLAN
	EACH	EACH	EACH
357	35	19	21
TOTALS	35	19	21

CALCULATED MJB
CHECKED RAS

ROADWAY SUBSUMMARY

CUY-90-0.00

102
582

I:\PROJECTS\Pid11738\dgn\final plans\11738SS.dgn 20-JUL-2000 3:31PM jgrmoyse

UNDERDRAINS

SHEET NO.	603	605				605 FOR INFORMATION ONLY			
	6" CONDUIT, TYPE F	6" SHALLOW PIPE UNDERDRAIN WITH FABRIC WRAP	6" SHALLOW PIPE UNDERDRAIN WITH FABRIC WRAP, A.P.P.	4" ROCK CUT UNDERDRAIN WITH FABRIC WRAP, A.P.P.	6" UNCLASSIFIED PIPE UNDERDRAIN WITH FABRIC WRAP	TEE	60° BEND	90° BEND	
	LIN FT	LIN FT	LIN FT	LIN FT	LIN FT	EACH	EACH	EACH	
129	50		4266			10		4	
131	20	1894	5671			4	2	1	
133		2177	4353						
136	44	2492	5128			10		3	
141	62	4379	6451		268	12		6	
143	30	2288	4019			10	2	4	
146	40	2490	5165			3	2	2	
149		2500	5000						
151	120	1788	3938			11	2	6	
154	40	1909	4069			4	3	2	
156	40	2397	1181			2			
159		2268	1135						
161	90	1384	2234				2	6	
164	70	306	3428			2	1	2	
167		2500	1250						
173	130	220	1545	1824		6	1	4	
175	20	1596	2156				1	2	
177	30	3685	2413			2		1	
179	80	3211	2652			3	2	6	
182	10	670	646			1		1	
TOTALS	876	40154	66700	1824	268	80	18	50	

GUARDRAIL

SHEET NO.	202	606		622	606							
	GUARDRAIL REMOVED	GUARDRAIL, TYPE 5	GUARDRAIL, TYPE 5A	CONCRETE BARRIER, TYPE D	ANCHOR ASSEMBLY, TYPE E-98	ANCHOR ASSEMBLY, TYPE T	BRIDGE TERMINAL ASSEMBLY. TYPE 1	BRIDGE TERMINAL ASSEMBLY, TYPE 2	BRIDGE TERMINAL ASSEMBLY, TYPE 3 (MODIFIED)	BRIDGE TERMINAL ASSEMBLY, TYPE 4, AS PER PLAN	IMPACT ATTENUATOR TYPE 2-98 [MODEL # Q53007Y QUADGUARD), (UNIDIRECTIONAL)]	IMPACT ATTENUATOR TYPE 2-98 [MODEL # Q53007Y QUADGUARD), (BIDIRECTIONAL)]
	LIN FT	LIN FT	LIN FT	LIN FT	EACH	EACH	EACH	EACH	EACH	EACH	EACH	EACH
129		917.34			1							
131	609	1553.88	37.5			1						
134	2166.50	2416.47			3		4	2				
136	150	950		52	2	2	1	1				
140	487.5	950			5	4	2					
143	700	1525		52	3	4	1	1				
146		687.5			2	2						
149		125			1	1						
152	194	50			1		2	1				1
154	832.50	1500				1						
157	1000	1476.86	37.5		1	1	1	1				
159	1550	1787.50				1	1	1				
162	325	1725			1	1						
165	675	645			3	1	2					
167		250				1						
172	1012.5	500				3			2		1	
175	675	537.5	25		2	1						
180	312.50	962.5			2	1						
182	525	500				1						
185	928	787.5			2	2				4		
187	673	700			1							
189	150	762.5				2						
192	312.5	312.5										
194	262.5	262.5			1	2						
TOTALS	13541	21884.55	100.0	104	31	32	14	7	2	4	1	1

CALCULATED MJB
CHECKED RAS

ROADWAY SUBSUMMARY

CUY-90-0.00

I:\PROJECTS\Pidll738\dgn\final plans\ll738GS.dgn 09-AUG-2000 3:05PM jgrmovse

STATION TO STATION	DIRECTION	DISTANCE D	AVERAGE WIDTH W	SURFACE AREA A A=DxW	AVERAGE WIDTH W	SURFACE AREA A A=DxW	CADD GENERATED AREAS	CADD GENERATED AREAS	203		302		304		407		407		446		446		855	
									SUBGRADE COMPACTION		11.25" BITUMINOUS AGGREGATE BASE		6" AGGREGATE BASE, AS PER PLAN		TACK COAT (0.10 GAL./SQ. YD.)		TACK COAT FOR INTERMEDIATE COURSE (0.05 GAL./SQ. YD.)		1.75" ASPHALT CONCRETE INTERMEDIATE COURSE, TYPE 2, PG 64-28		1.5" ASPHALT CONCRETE SURFACE COURSE, TYPE IH, APP		4" ASPHALT TREATED FREE DRAINING BASE	
190		FEET	** I FEET	** I SQ. FT.	** I FEET	** I SQ. FT.	** I SQ. FT.	** II SQ. FT.	** I SQ.YD.	** II SQ.YD.	** I CU.YD.	** II CU.YD.	** I CU.YD.	** II CU.YD.	** I GAL.	** II GAL.	** I GAL.	** II GAL.	** I CU.YD.	** II CU.YD.	** I CU.YD.	** II CU.YD.	** I CU.YD.	** II CU.YD.
0+0.00 TO 23+44.52	EB	2344.52	28.27	66279.58	0.00	0.00			7365															
0+0.00 TO 23+44.52	EB	2344.52	26.94	63161.37	0.00	0.00					2194													
0+0.00 TO 23+44.52	EB	2344.52	27.77	65107.32	0.00	0.00							1206											
0+0.00 TO 23+44.52	EB	2344.52	26.00	60957.52	34.00	79713.68										886				330		283	370	
0+0.00 TO 23+44.52	EB	2344.52	27.27	63935.06	0.00	0.00																		789
25+51.52 TO 28+55.00	EB	303.48	28.27	8579.38	0.00	0.00			954															
25+51.52 TO 28+55.00	EB	303.48	26.94	8175.75	0.00	0.00					284													
25+51.52 TO 28+55.00	EB	303.48	27.77	8427.64	0.00	0.00							157											
25+51.52 TO 28+55.00	EB	303.48	26.00	7890.48	34.00	10318.32										115				43		37	48	
25+51.52 TO 28+55.00	EB	303.48	27.27	8275.90	0.00	0.00																		103
28+55.00 TO 29+55.00	EB	100.00	28.27	2827.00	0.00	0.00			315															
28+55.00 TO 29+55.00	EB	100.00	26.94	2694.00	0.00	0.00					94													
28+55.00 TO 29+55.00	EB	100.00	27.77	2777.00	0.00	0.00							52											
28+55.00 TO 29+55.00	EB	100.00	26.00	2600.00	39.00	3900.00										44				15		13	19	
28+55.00 TO 29+55.00	EB	100.00	27.27	2727.00	0.00	0.00																		34
29+55.00 TO 36+75.87	EB	720.87	28.27	20378.99	0.00	0.00			2265															
29+55.00 TO 36+75.87	EB	720.87	26.94	19420.24	0.00	0.00					675													
29+55.00 TO 36+75.87	EB	720.87	27.77	20018.56	0.00	0.00							371											
29+55.00 TO 36+75.87	EB	720.87	26.00	18742.62	44.00	31718.28		3905.62								396				102		87	165	
29+55.00 TO 36+75.87	EB	720.87	27.27	19658.12	0.00	0.00																		243
36+75.87 TO 48+05	EB	1129.13	28.27	31920.51	0.00	0.00			3547															
36+75.87 TO 48+05	EB	1129.13	26.94	30418.76	0.00	0.00					1057													
36+75.87 TO 48+05	EB	1129.13	27.77	31355.94	0.00	0.00							581											
36+75.87 TO 48+05	EB	1129.13	26.00	29357.38	34.00	38390.42										427				159		136	178	
36+75.87 TO 48+05	EB	1129.13	27.27	30791.38	0.00	0.00																		380
48+05 TO 54+05	EB	600.00	28.27	16962.00	36.27	21762.00			1885	2418														
48+05 TO 54+05	EB	600.00	26.94	16164.00	34.94	20964.00					562	728												
48+05 TO 54+05	EB	600.00	27.77	16662.00	35.77	21462.00							309	398										
48+05 TO 54+05	EB	600.00	26.00	15600.00	34.00	20400.00										227		114	85	111	73	95		
48+05 TO 54+05	EB	600.00	27.27	16362.00	35.27	21162.00																	202	261
54+05 TO 54+90.27	EB	85.27	28.27	2410.58	0.00	0.00			268															
54+05 TO 54+90.27	EB	85.27	26.94	2297.17	0.00	0.00					80													
54+05 TO 54+90.27	EB	85.27	27.77	2367.95	0.00	0.00							44											
54+05 TO 54+90.27	EB	85.27	26.00	2217.02	34.00	2899.18										33				12		11	14	
54+05 TO 54+90.27	EB	85.27	27.27	2325.31	0.00	0.00																		29
SUBTOTALS (THIS SHEET)									16599	2418	*4946	728	2720	398		2128		114	*746	111	*640	889	1780	261
TOTALS (THIS SHEET)									19017		728		3118			2128		114	111		889		2041	
TOTALS CARRIED TO PAVEMENT SUBSUMMARY									19017		728		3118			2128		114	111		889		2041	

* THESE ITEMS ARE COMBINED FOR PARTICIPATION I AND CARRIED TO THE PAVEMENT SUB-SUMMARY SHEET UNDER ITEM 880 - 14" ASPHALT CONCRETE (7 YEAR WARRANTY): 6332 CU. YD.

**I = PARTICIPATION I - MAJOR NEW, TE21-G000(105)
**II = PARTICIPATION II - PAVEMENT, TE21-G000(106)

CALCULATED MGS
CHECKED RAS

PAVEMENT CALCULATIONS

CUY-90-0.00

I:\PROJECTS\Pidl738\dgn\finalplans\ll738PCA.DGN 20-JUL-2000 3:34PM jgrmovse

STATION TO STATION	DIRECTION	DISTANCE D	AVERAGE WIDTH W	SURFACE AREA A A=DxW	AVERAGE WIDTH W	SURFACE AREA A A=DxW	CADD GENERATED AREAS	CADD GENERATED AREAS	203 SUBGRADE COMPACTION		302 11.25" BITUMINOUS AGGREGATE BASE		304 6" AGGREGATE BASE, AS PER PLAN		407 TACK COAT (0.10 GAL./SQ. YD.)		407 TACK COAT FOR INTERMEDIATE COURSE (0.05 GAL./SQ. YD.)		446 1.75" ASPHALT CONCRETE INTERMEDIATE COURSE, TYPE 2, PG 64-28		446 1.5" ASPHALT CONCRETE SURFACE COURSE, TYPE 1H, APP		855 4" ASPHALT TREATED FREE DRAINING BASE	
190		FEET	** I FEET	** I SQ. FT.	** I FEET	** I SQ. FT.	** I SQ. FT.	** II SQ. FT.	** I SQ.YD.	** II SQ.YD.	** I CU.YD.	** II CU.YD.	** I CU.YD.	** II CU.YD.	** I GAL.	** II GAL.	** I GAL.	** II GAL.	** I CU.YD.	** II CU.YD.	** I CU.YD.	** II CU.YD.	** I CU.YD.	** II CU.YD.
54+90.27 TO 76+72.75	EB	2182.48	28.27	61698.71	0.00	0.00			6856															
54+90.27 TO 76+72.75	EB	2182.48	26.94	58796.01	0.00	0.00					2042													
54+90.27 TO 76+72.75	EB	2182.48	27.77	60607.47	0.00	0.00							1123											
54+90.27 TO 76+72.75	EB	2182.48	26.00	56744.48	24.00	52379.52		74988.86								1416			307		263	590		
54+90.27 TO 76+72.75	EB	2182.48	27.27	59516.23	0.00	0.00																	735	
76+72.75 TO 96+50.00	EB	1977.25	28.27	55896.86	0.00	0.00			6211															
76+72.75 TO 96+50.00	EB	1977.25	26.94	53267.12	0.00	0.00					1850	00												
76+72.75 TO 96+50.00	EB	1977.25	27.77	54908.23	0.00	0.00							1017											
76+72.75 TO 96+50.00	EB	1977.25	26.00	51408.50	34.00	67226.50										747			278		238	312		
76+72.75 TO 96+50.00	EB	1977.25	27.27	53919.61	0.00	0.00																	666	
96+50.00 TO 99+80.79	EB	330.79	40.25	13314.30	0.00	0.00			1480															
96+50.00 TO 99+80.79	EB	330.79	40.25	13314.30	0.00	0.00					463													
96+50.00 TO 99+80.79	EB	330.79	40.25	13314.30	0.00	0.00							247											
96+50.00 TO 99+80.79	EB	330.79	40.25	13314.30	34.00	11246.86										125			72		62	53		
96+50.00 TO 99+80.79	EB	330.79	40.25	13314.30	0.00	0.00																	165	
99+80.79 TO 101+27.39	EB	146.60	40.25	5900.65	0.00	0.00			656															
99+80.79 TO 101+27.39	EB	146.60	40.25	5900.65	0.00	0.00					205													
99+80.79 TO 101+27.39	EB	146.60	40.25	5900.65	0.00	0.00							110											
99+80.79 TO 101+27.39	EB	146.60	40.25	5900.65	34.00	4984.40										56			32		28	24		
99+80.79 TO 101+27.39	EB	146.60	40.25	5900.65	0.00	0.00																	73	
101+27.39 TO 102+50.00	EB	122.61	39.71	4868.84	0.00	0.00			541															
101+27.39 TO 102+50.00	EB	122.61	39.71	4868.84	0.00	0.00					170													
101+27.39 TO 102+50.00	EB	122.61	39.71	4868.84	0.00	0.00							91											
101+27.39 TO 102+50.00	EB	122.61	39.71	4868.84	34.00	4168.74										47			27		23	20		
101+27.39 TO 102+50.00	EB	122.61	39.71	4868.84	0.00	0.00																	61	
102+50.00 TO 109+00.00	EB	650.00	35.21	22886.50	36.27	23575.50			2543	2620														
102+50.00 TO 109+00.00	EB	650.00	35.21	22886.50	34.94	22711.00					795	789												
102+50.00 TO 109+00.00	EB	650.00	35.21	22886.50	35.77	23250.50							424	431										
102+50.00 TO 109+00.00	EB	650.00	35.21	22886.50	34.00	22100.00										246		123	124	120	106	103		
102+50.00 TO 109+00.00	EB	650.00	35.21	22886.50	35.27	22925.50																	283	283
109+00.00 TO 115+28.28	EB	628.28	27.25	17120.63	0.00	0.00			1903															
109+00.00 TO 115+28.28	EB	628.28	27.25	17120.63	0.00	0.00					595													
109+00.00 TO 115+28.28	EB	628.28	27.25	17120.63	0.00	0.00							318											
109+00.00 TO 115+28.28	EB	628.28	27.25	17120.63	34.00	21361.52										238			93		80	99		
109+00.00 TO 115+28.28	EB	628.28	27.25	17120.63	0.00	0.00																	212	
SUBTOTALS (THIS SHEET)									20190	2620	*6120	789	3330	431		2875		123	*933	120	*800	1201	2195	283
TOTALS (THIS SHEET)									22810		789		3761			2875		123	120		1201		2478	
TOTALS CARRIED TO PAVEMENT SUBSUMMARY									22810		789		3761			2875		123	120		1201		2478	

* THESE ITEMS ARE COMBINED FOR PARTICIPATION I AND CARRIED TO THE PAVEMENT SUB-SUMMARY SHEET UNDER ITEM 880 - 14" ASPHALT CONCRETE (7 YEAR WARRANTY): 7853 CU. YD.

**I = PARTICIPATION I - MAJOR NEW, TE21-G000(105)
**II = PARTICIPATION II - PAVEMENT, TE21-G000(106)

CALCULATED MGS
CHECKED RAS

PAVEMENT CALCULATIONS

CUY-90-0.00

t:\PROJECTS\Pidll738\dgn\final plans\ll738PCA.DGN 20-JUL-2000 3:34PM jgrmovse

STATION TO STATION	DIRECTION	DISTANCE D	AVERAGE WIDTH W	SURFACE AREA A A=DxW	AVERAGE WIDTH W	SURFACE AREA A A=DxW	CADD GENERATED AREAS	CADD GENERATED AREAS	203		302		304		407		407		446		446		855	
									SUBGRADE COMPACTION		11.25" BITUMINOUS AGGREGATE BASE		6" AGGREGATE BASE, AS PER PLAN		TACK COAT (0.10 GAL./SQ. YD.)		TACK COAT FOR INTERMEDIATE COURSE (0.05 GAL./SQ. YD.)		1.75" ASPHALT CONCRETE INTERMEDIATE COURSE, TYPE 2, PG 64-28		1.5" ASPHALT CONCRETE SURFACE COURSE, TYPE IH, APP		4" ASPHALT TREATED FREE DRAINING BASE	
190		FEET	** I FEET	** I SQ. FT.	** I FEET	** I SQ. FT.	** I SQ. FT.	** II SQ. FT.	** I SQ.YD.	** II SQ.YD.	** I CU.YD.	** II CU.YD.	** I CU.YD.	** II CU.YD.	** I GAL.	** II GAL.	** I GAL.	** II GAL.	** I CU.YD.	** II CU.YD.	** I CU.YD.	** II CU.YD.	** I CU.YD.	** II CU.YD.
115+28.28 TO 116+24.01	EB	95.73	23.25	2225.72	0.00	0.00			248															
115+28.28 TO 116+24.01	EB	95.73	23.25	2225.72	0.00	0.00					78													
115+28.28 TO 116+24.01	EB	95.73	23.25	2225.72	0.00	0.00							42											
115+28.28 TO 116+24.01	EB	95.73	23.25	2225.72	34.00	3254.82										37			13		11	16		
115+28.28 TO 116+24.01	EB	95.73	23.25	2225.72	0.00	0.00																	28	
116+24.01 TO 131+25.86	EB	1501.85	23.25	34918.01	0.00	0.00			3880															
116+24.01 TO 131+25.86	EB	1501.85	23.25	34918.01	0.00	0.00					1213													
116+24.01 TO 131+25.86	EB	1501.85	23.25	34918.01	0.00	0.00							647											
116+24.01 TO 131+25.86	EB	1501.85	23.25	34918.01	34.00	51062.90										568			189		162	237		
116+24.01 TO 131+25.86	EB	1501.85	23.25	34918.01	0.00	0.00																	431	
133+38.56 TO 156+50.00	EB	2311.44	23.25	53740.98	0.00	0.00			5972															
133+38.56 TO 156+50.00	EB	2311.44	23.25	53740.98	0.00	0.00					1867													
133+38.56 TO 156+50.00	EB	2311.44	23.25	53740.98	0.00	0.00							996											
133+38.56 TO 156+50.00	EB	2311.44	23.25	53740.98	34.00	78588.96										874			291		249	364		
133+38.56 TO 156+50.00	EB	2311.44	23.25	53740.98	0.00	0.00																	663	
156+50.00 TO 162+60.00	EB	610.00	23.25	14182.50	36.27	22124.70			1576	2459														
156+50.00 TO 162+60.00	EB	610.00	23.25	14182.50	34.94	21313.40					493	741												
156+50.00 TO 162+60.00	EB	610.00	23.25	14182.50	35.77	21819.70							263	405										
156+50.00 TO 162+60.00	EB	610.00	23.25	14182.50	34.00	20740.00										231		116	77	113	66	97		
156+50.00 TO 162+60.00	EB	610.00	23.25	14182.50	35.27	21514.70																	175	266
162+60.00 TO 168+28.68	EB	568.68	23.25	13221.81	0.00	0.00			1470															
162+60.00 TO 168+28.68	EB	568.68	23.25	13221.81	0.00	0.00					460													
162+60.00 TO 168+28.68	EB	568.68	23.25	13221.81	0.00	0.00							245											
162+60.00 TO 168+28.68	EB	568.68	23.25	13221.81	34.00	19335.12										215			72	105	62	90		
162+60.00 TO 168+28.68	EB	568.68	23.25	13221.81	0.00	0.00																	164	
168+28.68 TO 169+26.68	EB	98.00	23.25	2278.50	0.00	0.00			254															
168+28.68 TO 169+26.68	EB	98.00	23.25	2278.50	0.00	0.00					80													
168+28.68 TO 169+26.68	EB	98.00	23.25	2278.50	0.00	0.00							43											
168+28.68 TO 169+26.68	EB	98.00	23.25	2278.50	39.00	3822.00										43			13	21	11	18		
168+28.68 TO 169+26.68	EB	98.00	23.25	2278.50	0.00	0.00																	29	
169+26.68 TO 176+51.00	EB	724.32	23.25	16840.44	0.00	0.00			1872															
169+26.68 TO 176+51.00	EB	724.32	23.25	16840.44	0.00	0.00					585													
169+26.68 TO 176+51.00	EB	724.32	23.25	16840.44	0.00	0.00							312											
169+26.68 TO 176+51.00	EB	724.32	23.25	16840.44	44.00	31870.08		2520.65								383			91		78	160		
169+26.68 TO 176+51.00	EB	724.32	23.25	16840.44	0.00	0.00																	208	
SUBTOTALS (THIS SHEET)									15272	2459	*4776	741	2548	405		2351		116	*746	239	*639	982	1698	266
TOTALS (THIS SHEET)									17731		741		2953		2351		116		239		982		1964	
TOTALS CARRIED TO PAVEMENT SUBSUMMARY									17731		741		2953		2351		116		239		982		1964	

* THESE ITEMS ARE COMBINED FOR PARTICIPATION I AND CARRIED TO THE PAVEMENT SUB-SUMMARY SHEET UNDER ITEM 880 - 14" ASPHALT CONCRETE (7 YEAR WARRANTY): 6161 CU. YD.

**I = PARTICIPATION I - MAJOR NEW, TE21-G000(105)
**II = PARTICIPATION II - PAVEMENT, TE21-G000(106)

CALCULATED MGS CHECKED RAS

PAVEMENT CALCULATIONS

CUY-90-0.00

I:\PROJECTS\Pidll738\dgn\finalplans\ll738PCA.DGN 20-JUL-2000 3:35PM jgrmovse

STATION TO STATION	DIRECTION	DISTANCE D	AVERAGE WIDTH W	SURFACE AREA A A=DxW	AVERAGE WIDTH W	SURFACE AREA A A=DxW	CADD GENERATED AREAS	CADD GENERATED AREAS	203		302		304		407		407		446		446		855	
									SUBGRADE COMPACTION		11.25" BITUMINOUS AGGREGATE BASE		6" AGGREGATE BASE, AS PER PLAN		TACK COAT (0.10 GAL./SQ. YD.)		TACK COAT FOR INTERMEDIATE COURSE (0.05 GAL./SQ. YD.)		1.75" ASPHALT CONCRETE INTERMEDIATE COURSE, TYPE 2, PG 64-28		1.5" ASPHALT CONCRETE SURFACE COURSE, TYPE IH, APP		4" ASPHALT TREATED FREE DRAINING BASE	
190		FEET	** I FEET	** I SQ. FT.	** I FEET	** I SQ. FT.	** I SQ. FT.	** II SQ. FT.	** I SQ.YD.	** II SQ.YD.	** I CU.YD.	** II CU.YD.	** I CU.YD.	** II CU.YD.	** I GAL.	** II GAL.	** I GAL.	** II GAL.	** I CU.YD.	** II CU.YD.	** I CU.YD.	** II CU.YD.	** I CU.YD.	** II CU.YD.
176+51.00 TO 185+00	EB	859.00	23.25	19971.75	0.00	0.00			2220															
176+51.00 TO 185+00	EB	859.00	23.25	19971.75	0.00	0.00					694													
176+51.00 TO 185+00	EB	859.00	23.25	19971.75	0.00	0.00							370											
176+51.00 TO 185+00	EB	859.00	23.25	19971.75	34.00	29206.00										325			108		93	136		
176+51.00 TO 185+00	EB	859.00	23.25	19971.75	0.00	0.00																	247	
185+00.00 TO 186+54.53	EB	154.53	23.25	3592.82	34.00	5254.02		907.47	400	685														
185+00.00 TO 186+54.53	EB	154.53	23.25	3592.82	34.00	5254.02		907.47			125	183												
185+00.00 TO 186+54.53	EB	154.53	23.25	3592.82	34.00	5254.02		907.47					67	98										
185+00.00 TO 186+54.53	EB	154.53	23.25	3592.82	34.00	5254.02		907.47								69		30	20	29	17	29		
185+00.00 TO 186+54.53	EB	154.53	23.25	3592.82	34.00	5254.02		907.47															45	76
186+54.53 TO 189+39.51	EB	284.98	23.25	6625.79	71.27	20310.52			737	2257														
186+54.53 TO 189+39.51	EB	284.98	23.25	6625.79	69.40	19777.61					231	687												
186+54.53 TO 189+39.51	EB	284.98	23.25	6625.79	70.77	20168.03							123	374										
186+54.53 TO 189+39.51	EB	284.98	23.25	6625.79	66.00	18808.68										209		105	36	102	31	88		
186+54.53 TO 189+39.51	EB	284.98	23.25	6625.79	70.27	20025.54																	82	247
189+39.51 TO 192+70.32	EB	330.81	23.25	7691.33	71.27	23576.83			855	2620														
189+39.51 TO 192+70.32	EB	330.81	23.25	7691.33	69.40	22958.21					268	798												
189+39.51 TO 192+70.32	EB	330.81	23.25	7691.33	70.77	23411.42							143	434										
189+39.51 TO 192+70.32	EB	330.81	23.25	7691.33	66.00	21833.46										243		122	42	118	36	102		
189+39.51 TO 192+70.32	EB	330.81	23.25	7691.33	70.27	23246.02																	95	287
192+70.32 TO 192+90.32	EB	20.00	23.25	465.00	31.27	625.40			52	70														
192+70.32 TO 192+90.32	EB	20.00	0.00	0.00	6.94	138.80						5												
192+70.32 TO 192+90.32	EB	20.00	23.25	465.00	30.77	615.40							9	12		15		8	3	23	3	7		
192+70.32 TO 192+90.32	EB	20.00	23.25	465.00	66.00	1320.00																		5
192+70.32 TO 192+90.32	EB	20.00	0.00	0.00	17.25	345.00																		
193+12.82 TO 193+32.82	EB	20.00	23.25	465.00	31.27	625.40			52	70														
193+12.82 TO 193+32.82	EB	20.00	0.00	0.00	6.94	138.80						5												
193+12.82 TO 193+32.82	EB	20.00	23.25	465.00	30.77	615.40							9	12		15		8	3	23	3	7		
193+12.82 TO 193+32.82	EB	20.00	23.25	465.00	66.00	1320.00																		5
193+12.82 TO 193+32.82	EB	20.00	0.00	0.00	17.25	345.00																		
193+32.82 TO 194+44.70	EB	111.88	23.25	2601.21	71.27	7973.69			290	886														
193+32.82 TO 194+44.70	EB	111.88	23.25	2601.21	69.40	7824.89					91	272												
193+32.82 TO 194+44.70	EB	111.88	23.25	2601.21	70.77	7917.75							49	147										
193+32.82 TO 194+44.70	EB	111.88	23.25	2601.21	66.00	7384.08										83		42	15	40	13	35		
193+32.82 TO 194+44.70	EB	111.88	23.25	2601.21	70.27	7861.81																	33	97
SUBTOTALS (THIS SHEET)									4606	6588	*1409	1950	770	1077		959		315	*227	335	*196	404	502	717
TOTALS (THIS SHEET)									11194		1950		1847		959		315		562		404		1219	
TOTALS CARRIED TO PAVEMENT SUBSUMMARY									11194		1950		1847		959		315		562		404		1219	

* THESE ITEMS ARE COMBINED FOR PARTICIPATION I AND CARRIED TO THE PAVEMENT SUB-SUMMARY SHEET UNDER ITEM 880 - 14" ASPHALT CONCRETE (7 YEAR WARRANTY): 1832 CU. YD.

**I = PARTICIPATION I - MAJOR NEW, TE21-G000(105)
**II = PARTICIPATION II - PAVEMENT, TE21-G000(106)

CALCULATED MGS CHECKED RAS

PAVEMENT CALCULATIONS

CUY-90-0.00

I:\PROJECTS\Pidll738\dgn\final plans\ll738PCA.DGN 20-JUL-2000 3:35PM jgrmovse

PAVEMENT CALCULATIONS

CALCULATED MGS | CHECKED RAS

CUY-90-0.00

STATION TO STATION	DIRECTION	DISTANCE D	AVERAGE WIDTH W	SURFACE AREA A A=DxW	AVERAGE WIDTH W	SURFACE AREA A A=DxW	CADD GENERATED AREAS	CADD GENERATED AREAS	203 SUBGRADE COMPACTION		302 11.25" BITUMINOUS AGGREGATE BASE		304 6" AGGREGATE BASE, AS PER PLAN		407 TACK COAT (0.10 GAL./SQ. YD.)		407 TACK COAT FOR INTERMEDIATE COURSE (0.05 GAL./SQ. YD.)		446 1.75" ASPHALT CONCRETE INTERMEDIATE COURSE, TYPE 2, PG 64-28		446 1.5" ASPHALT CONCRETE SURFACE COURSE, TYPE 1H, APP		855 4" ASPHALT TREATED FREE DRAINING BASE	
190		FEET	** I FEET	** I SQ. FT.	** I FEET	** I SQ. FT.	** I SQ. FT.	** II SQ. FT.	** I SQ.YD.	** II SQ.YD.	** I CU.YD.	** II CU.YD.	** I CU.YD.	** II CU.YD.	** I GAL.	** II GAL.	** I GAL.	** II GAL.	** I CU.YD.	** II CU.YD.	** I CU.YD.	** II CU.YD.	** I CU.YD.	** II CU.YD.
194+44.70 TO 195+26.95	EB	82.25	23.25	1912.31	0.00	0.00			213															
194+44.70 TO 195+26.95	EB	82.25	23.25	1912.31	0.00	0.00					67													
194+44.70 TO 195+26.95	EB	82.25	23.25	1912.31	0.00	0.00							36											
194+44.70 TO 195+26.95	EB	82.25	23.25	1912.31	66.00	5428.50									61				11		9	26		
194+44.70 TO 195+26.95	EB	82.25	23.25	1912.31	0.00	0.00																	24	
195+26.95 TO 208+26.99	EB	1300.04	23.25	30225.93	0.00	0.00			3359															
195+26.95 TO 208+26.99	EB	1300.04	23.25	30225.93	0.00	0.00					1050													
195+26.95 TO 208+26.99	EB	1300.04	23.25	30225.93	0.00	0.00							560											
195+26.95 TO 208+26.99	EB	1300.04	23.25	30225.93	48.00	62401.92		29406.83							1021				164		140	426		
195+26.95 TO 208+26.99	EB	1300.04	23.25	30225.93	0.00	0.00																	373	
208+26.99 TO 217+25.00	EB	898.01	23.25	20878.73	0.00	0.00			2320															
208+26.99 TO 217+25.00	EB	898.01	23.25	20878.73	0.00	0.00					725													
208+26.99 TO 217+25.00	EB	898.01	23.25	20878.73	0.00	0.00							387											
208+26.99 TO 217+25.00	EB	898.01	23.25	20878.73	36.00	32328.36		11440.54							487				113		97	203		
208+26.99 TO 217+25.00	EB	898.01	23.25	20878.73	0.00	0.00																	258	
217+25.00 TO 218+23.91	EB	98.91	23.25	2299.66	12.77	1263.08			256	141														
217+25.00 TO 218+23.91	EB	98.91	23.25	2299.66	11.44	1131.53					80	40												
217+25.00 TO 218+23.91	EB	98.91	23.25	2299.66	12.27	1213.63							43	23										
217+25.00 TO 218+23.91	EB	98.91	23.25	2299.66	46.50	4599.32									52		26		13	25	11	22		
217+25.00 TO 218+23.91	EB	98.91	23.25	2299.66	11.77	1164.17																	29	15
218+23.91 TO 221+00.00	EB	276.09	22.71	6270.00	12.77	3525.67			697	392														
218+23.91 TO 221+00.00	EB	276.09	22.71	6270.00	11.44	3158.47					218	110												
218+23.91 TO 221+00.00	EB	276.09	22.71	6270.00	12.27	3387.62							117	63										
218+23.91 TO 221+00.00	EB	276.09	22.71	6270.00	46.50	13355.85									149		75		34	73	30	62		
218+23.91 TO 221+00.00	EB	276.09	22.71	6270.00	11.77	3249.58																	78	41
221+00.00 TO 222+20.00	EB	120.00	26.00	3120.00	16.60	1992.00			347	222														
221+00.00 TO 222+20.00	EB	120.00	26.00	3120.00	15.27	1832.40					109	64												
221+00.00 TO 222+20.00	EB	120.00	26.00	3120.00	16.10	1932.00							58	36										
221+00.00 TO 222+20.00	EB	120.00	26.00	3120.00	50.33	6039.60									68				17		15	28		
221+00.00 TO 222+20.00	EB	120.00	26.00	3120.00	14.33	1719.60											10			10				
221+00.00 TO 222+20.00	EB	120.00	26.00	3120.00	15.60	1872.00																	39	24
222+20.00 TO 229+25.00	EB	705.00	0.00	0.00	20.73	14614.65				1624														
222+20.00 TO 229+25.00	EB	705.00	0.00	0.00	19.40	13677.00						475												
222+20.00 TO 229+25.00	EB	705.00	0.00	0.00	20.23	14262.15								264										
222+20.00 TO 229+25.00	EB	705.00	0.00	0.00	77.34	54524.70									606							253		
222+20.00 TO 229+25.00	EB	705.00	0.00	0.00	18.46	13014.30											73			71				
222+20.00 TO 229+25.00	EB	705.00	0.00	0.00	19.73	13909.65																		172
* THESE ITEMS ARE COMBINED FOR PARTICIPATION I AND CARRIED TO THE PAVEMENT SUB-SUMMARY SHEET UNDER ITEM 880 - 14" ASPHALT CONCRETE (7 YEAR WARRANTY): 2903 CU. YD.																								
SUBTOTALS (THIS SHEET)									7192	2379	*2249	689	1201	386		2444		184	*352	179	*302	1020	801	252
TOTALS (THIS SHEET)									9571		689		1587		2444		184		179		1020		1053	
TOTALS CARRIED TO PAVEMENT SUBSUMMARY									9571		689		1587		2444		184		179		1020		1053	

**I = PARTICIPATION I - MAJOR NEW, TE21-G000(105)
**II = PARTICIPATION II - PAVEMENT, TE21-G000(106)

I:\PROJECTS\Pldl1738\dgn\finalplans\l1738PCA.DGN 20-JUL-2000 3:36PM jgrmovse

PAVEMENT CALCULATIONS

CALCULATED MGS CHECKED RAS

CUY-90-0.00

109
582

STATION TO STATION	DIRECTION	DISTANCE D	AVERAGE WIDTH W	SURFACE AREA A A=DxW	AVERAGE WIDTH W	SURFACE AREA A A=DxW	CADD GENERATED AREAS	CADD GENERATED AREAS	203 SUBGRADE COMPACTION		302 11.25" BITUMINOUS AGGREGATE BASE		304 6" AGGREGATE BASE, AS PER PLAN		407 TACK COAT (0.10 GAL./SQ. YD.)		407 TACK COAT FOR INTERMEDIATE COURSE (0.05 GAL./SQ. YD.)		446 1.75" ASPHALT CONCRETE INTERMEDIATE COURSE, TYPE 2, PG 64-28		446 1.5" ASPHALT CONCRETE SURFACE COURSE, TYPE 1H, APP		855 4" ASPHALT TREATED FREE DRAINING BASE	
190		FEET	** I FEET	** I SQ. FT.	** I FEET	** I SQ. FT.	** I SQ. FT.	** II SQ. FT.	** I SQ.YD.	** II SQ.YD.	** I CU.YD.	** II CU.YD.	** I CU.YD.	** II CU.YD.	** I GAL.	** II GAL.	** I GAL.	** II GAL.	** I CU.YD.	** II CU.YD.	** I CU.YD.	** II CU.YD.	** I CU.YD.	** II CU.YD.
229+25.00 TO 232+25.00	EB	300.00	0.00	0.00	24.27	7281.00				809														
229+25.00 TO 232+25.00	EB	300.00	0.00	0.00	22.94	6882.00						239												
229+25.00 TO 232+25.00	EB	300.00	0.00	0.00	23.77	7131.00								133										
229+25.00 TO 232+25.00	EB	300.00	0.00	0.00	80.67	24201.00										269						113		
229+25.00 TO 232+25.00	EB	300.00	0.00	0.00	22.00	6600.00												37		36				
229+25.00 TO 232+25.00	EB	300.00	0.00	0.00	23.27	6981.00																		87
232+25.00 TO 238+45.00	EB	620.00	0.00	0.00	19.10	11842.00				1316														
232+25.00 TO 238+45.00	EB	620.00	0.00	0.00	17.77	11017.40						383												
232+25.00 TO 238+45.00	EB	620.00	0.00	0.00	18.60	11532.00								214										
232+25.00 TO 238+45.00	EB	620.00	0.00	0.00	71.23	44162.60										491						205		
232+25.00 TO 238+45.00	EB	620.00	0.00	0.00	16.83	10436.46												58		57				
232+25.00 TO 238+45.00	EB	620.00	0.00	0.00	18.10	11222.00																		139
238+45.00 TO 240+00	EB	155.00	0.00	0.00	61.38	9513.90																45		
SUBTOTALS (THIS SHEET)										2125		622		347		760		95		93		363		226
TOTALS (THIS SHEET)									2125		622		347		760		95		93		363		226	
TOTALS CARRIED TO PAVEMENT SUBSUMMARY									2125		622		347		760		95		93		363		226	

**I = PARTICIPATION I - MAJOR NEW, TE21-G000(105)
**II = PARTICIPATION II - PAVEMENT, TE21-G000(106)

13 MAR 2000
P:\PR22308\CADD\IF738PCA.DGN

PAVEMENT CALCULATIONS

CALCULATED MGS CHECKED RAS

CUY-90-0.00

STATION TO STATION	DIRECTION	DISTANCE D	AVERAGE WIDTH W	SURFACE AREA A A=DxW	AVERAGE WIDTH W	SURFACE AREA A A=DxW	CADD GENERATED AREAS	CADD GENERATED AREAS	203 SUBGRADE COMPACTION		302 11.25" BITUMINOUS AGGREGATE BASE		304 6" AGGREGATE BASE, AS PER PLAN		407 TACK COAT (0.10 GAL./SQ. YD.)		407 TACK COAT FOR INTERMEDIATE COURSE (0.05 GAL./SQ. YD.)		446 1.75" ASPHALT CONCRETE INTERMEDIATE COURSE, TYPE 2, PG 64-28		446 1.5" ASPHALT CONCRETE SURFACE COURSE, TYPE 1H, APP		855 4" ASPHALT TREATED FREE DRAINING BASE	
190		FEET	** I FEET	** I SQ. FT.	** I FEET	** I SQ. FT.	** I SQ. FT.	** II SQ. FT.	** I SQ.YD.	** II SQ.YD.	** I CU.YD.	** II CU.YD.	** I CU.YD.	** II CU.YD.	** I GAL.	** II GAL.	** I GAL.	** II GAL.	** I CU.YD.	** II CU.YD.	** I CU.YD.	** II CU.YD.	** I CU.YD.	** II CU.YD.
0+00 TO 23+45.62	WB	2345.62	28.27	66310.68	0.00	0.00			7368															
0+00 TO 23+45.62	WB	2345.62	26.94	63191.00	0.00	0.00					2195													
0+00 TO 23+45.62	WB	2345.62	27.77	65137.87	0.00	0.00							1207											
0+00 TO 23+45.62	WB	2345.62	26.00	60986.12	34.00	79751.08										887			330		283	370		
0+00 TO 23+45.62	WB	2345.62	27.27	63965.06	0.00	0.00																	789	
25+52.62 TO 47+60.00	WB	2207.38	28.27	62402.63	0.00	0.00			6934															
25+52.62 TO 47+60.00	WB	2207.38	26.94	59466.82	0.00	0.00					2065													
25+52.62 TO 47+60.00	WB	2207.38	27.77	61298.94	0.00	0.00							1136											
25+52.62 TO 47+60.00	WB	2207.38	26.00	57391.88	34.00	75050.92		19569.79								1052			310		266	439		
25+52.62 TO 47+60.00	WB	2207.38	27.27	60195.25	0.00	0.00																	743	
47+60.00 TO 54+60.00	WB	700.00	28.27	19789.00	36.27	25389.00																		
47+60.00 TO 54+60.00	WB	700.00	26.94	18858.00	34.94	24458.00																		
47+60.00 TO 54+60.00	WB	700.00	27.77	19439.00	35.77	25039.00			2199	2821														
47+60.00 TO 54+60.00	WB	700.00	26.00	18200.00	34.00	23800.00					655	850												
47+60.00 TO 54+60.00	WB	700.00	27.27	19089.00	35.27	24689.00							360	464										
54+60.00 TO 61+62.77	WB	702.77	28.27	19867.31	0.00	0.00										265		133	99	129	85	111		
54+60.00 TO 61+62.77	WB	702.77	26.94	18932.62	0.00	0.00			2208														236	305
54+60.00 TO 61+62.77	WB	702.77	27.77	19515.92	0.00	0.00					658													
54+60.00 TO 61+62.77	WB	702.77	26.00	18272.02	34.00	23894.18							362											
54+60.00 TO 61+62.77	WB	702.77	27.27	19164.54	0.00	0.00										266			99		85	111		
61+62.77 TO 69+21.57	WB	758.80	28.27	21451.28	0.00	0.00																	237	
61+62.77 TO 69+21.57	WB	758.80	26.94	20442.07	0.00	0.00			2384															
61+62.77 TO 69+21.57	WB	758.80	27.77	21071.88	0.00	0.00					710													
61+62.77 TO 69+21.57	WB	758.80	26.00	19728.80	24.00	18211.20		18506.22					391											
61+62.77 TO 69+21.57	WB	758.80	27.27	20692.48	0.00	0.00										408			107		92	170		
69+21.57 TO 96+50.00	WB	2728.43	28.27	77132.72	0.00	0.00																	256	
69+21.57 TO 96+50.00	WB	2728.43	26.94	73503.90	0.00	0.00			8571															
69+21.57 TO 96+50.00	WB	2728.43	27.77	75768.50	0.00	0.00					2553													
69+21.57 TO 96+50.00	WB	2728.43	26.00	70939.18	34.00	92766.62							1404											
69+21.57 TO 96+50.00	WB	2728.43	27.27	74404.29	0.00	0.00										1031			384		329	430		
96+50.00 TO 100+58.81	WB	408.81	40.25	16454.60	0.00	0.00																	918	
96+50.00 TO 100+58.81	WB	408.81	40.25	16454.60	0.00	0.00			1829															
96+50.00 TO 100+58.81	WB	408.81	40.25	16454.60	0.00	0.00					572													
96+50.00 TO 100+58.81	WB	408.81	40.25	16454.60	34.00	13899.54							305											
96+50.00 TO 100+58.81	WB	408.81	40.25	16454.60	0.00	0.00										155			89		77	65		
																							203	
SUBTOTALS (THIS SHEET)									31493	2821	*9408	850	5165	464		4064		133	*1418	129	*1217	1696	3382	305
TOTALS (THIS SHEET)									34314		850		5629		4064		133		129		1696		3687	
TOTALS CARRIED TO PAVEMENT SUBSUMMARY									34314		850		5629		4064		133		129		1696		3687	

* THESE ITEMS ARE COMBINED FOR PARTICIPATION I AND CARRIED TO THE PAVEMENT SUB-SUMMARY SHEET UNDER 880 - 14" ASPHALT CONCRETE (7 YEAR WARRANTY): 12043 CU. YD.

**I = PARTICIPATION I - MAJOR NEW, TE21-G000(105)
**II = PARTICIPATION II - PAVEMENT, TE21-G000(106)

I:\PROJECTS\Pid1738\dgn\final plans\1738PCB.dgn 20-JUL-2000 3:54PM jgrmovse

CALCULATED MGS CHECKED RAS

PAVEMENT CALCULATIONS

CUY-90-0.00

STATION TO STATION	DIRECTION	DISTANCE D	AVERAGE WIDTH W	SURFACE AREA A A=DxW	AVERAGE WIDTH W	SURFACE AREA A A=DxW	CADD GENERATED AREAS	CADD GENERATED AREAS	203 SUBGRADE COMPACTION		302 11.25" BITUMINOUS AGGREGATE BASE		304 6" AGGREGATE BASE, AS PER PLAN		407 TACK COAT (0.10 GAL./SQ. YD.)		407 TACK COAT FOR INTERMEDIATE COURSE (0.05 GAL./SQ. YD.)		446 1.75" ASPHALT CONCRETE INTERMEDIATE COURSE, TYPE 2, PG 64-28		446 1.5" ASPHALT CONCRETE SURFACE COURSE, TYPE 1H, APP		855 4" ASPHALT TREATED FREE DRAINING BASE	
190		FEET	** I FEET	** I SQ. FT.	** I FEET	** I SQ. FT.	** I SQ. FT.	** II SQ. FT.	** I SQ.YD.	** II SQ.YD.	** I CU.YD.	** II CU.YD.	** I CU.YD.	** II CU.YD.	** I GAL.	** II GAL.	** I GAL.	** II GAL.	** I CU.YD.	** II CU.YD.	** I CU.YD.	** II CU.YD.	** I CU.YD.	** II CU.YD.
100+58.81 TO 102+12.31	WB	153.50	40.25	6178.38	0.00	0.00			687															
100+58.81 TO 102+12.31	WB	153.50	40.25	6178.38	0.00	0.00					215													
100+58.81 TO 102+12.31	WB	153.50	40.25	6178.38	0.00	0.00							115											
100+58.81 TO 102+12.31	WB	153.50	40.25	6178.38	34.00	5219.00										58			34		29	25		
100+58.81 TO 102+12.31	WB	153.50	40.25	6178.38	0.00	0.00																	77	
102+12.31 TO 114+12.61	WB	1200.30	32.75	39309.83	0.00	0.00			4368															
102+12.31 TO 114+12.61	WB	1200.30	32.75	39309.83	0.00	0.00					1365													
102+12.31 TO 114+12.61	WB	1200.30	32.75	39309.83	0.00	0.00							728											
102+12.31 TO 114+12.61	WB	1200.30	32.75	39309.83	34.00	40810.20										454			213		182	189		
102+12.31 TO 114+12.61	WB	1200.30	32.75	39309.83	0.00	0.00																	485	
114+12.61 TO 115+82.56	WB	169.95	24.25	4121.29	0.00	0.00			458															
114+12.61 TO 115+82.56	WB	169.95	24.25	4121.29	0.00	0.00					144													
114+12.61 TO 115+82.56	WB	169.95	24.25	4121.29	0.00	0.00							77											
114+12.61 TO 115+82.56	WB	169.95	24.25	4121.29	34.00	5778.30										65			23		20	27		
114+12.61 TO 115+82.56	WB	169.95	24.25	4121.29	0.00	0.00																	51	
115+82.56 TO 117+32.55	WB	149.99	23.25	3487.27	0.00	0.00			388															
115+82.56 TO 117+32.55	WB	149.99	23.25	3487.27	0.00	0.00					122													
115+82.56 TO 117+32.55	WB	149.99	23.25	3487.27	0.00	0.00							65											
115+82.56 TO 117+32.55	WB	149.99	23.25	3487.27	34.00	5099.66										57			19		17	24		
115+82.56 TO 117+32.55	WB	149.99	23.25	3487.27	0.00	0.00																	44	
117+32.55 TO 131+25.86	WB	1393.31	23.25	32394.46	0.00	0.00			3600															
117+32.55 TO 131+25.86	WB	1393.31	23.25	32394.46	0.00	0.00					1125													
117+32.55 TO 131+25.86	WB	1393.31	23.25	32394.46	0.00	0.00							600											
117+32.55 TO 131+25.86	WB	1393.31	23.25	32394.46	34.00	47372.54										527			175		150	220		
117+32.55 TO 131+25.86	WB	1393.31	23.25	32394.46	0.00	0.00																	400	
133+38.56 TO 156+90.00	WB	2351.44	23.25	54670.98	0.00	0.00			6075															
133+38.56 TO 156+90.00	WB	2351.44	23.25	54670.98	0.00	0.00					1899													
133+38.56 TO 156+90.00	WB	2351.44	23.25	54670.98	0.00	0.00							1013											
133+38.56 TO 156+90.00	WB	2351.44	23.25	54670.98	34.00	79948.96										889			296		254	371		
133+38.56 TO 156+90.00	WB	2351.44	23.25	54670.98	0.00	0.00																	675	
156+90.00 TO 163+90.00	WB	700.00	23.25	16275.00	36.27	25389.00			1809	2821														
156+90.00 TO 163+90.00	WB	700.00	23.25	16275.00	34.94	24458.00					566	850												
156+90.00 TO 163+90.00	WB	700.00	23.25	16275.00	35.77	25039.00							302	464										
156+90.00 TO 163+90.00	WB	700.00	23.25	16275.00	34.00	23800.00										265		133	88	129	76	111		
156+90.00 TO 163+90.00	WB	700.00	23.25	16275.00	35.27	24689.00																	201	305
SUBTOTALS (THIS SHEET)									17385	2821	*5436	850	2900	464		2315		133	*848	129	*728	967	1933	305
TOTALS (THIS SHEET)									20206		850		3364		2315		133		129		967		2238	
TOTALS CARRIED TO PAVEMENT SUBSUMMARY									20206		850		3364		2315		133		129		967		2238	

* THESE ITEMS ARE COMBINED FOR PARTICIPATION I AND CARRIED TO THE PAVEMENT SUB-SUMMARY SHEET UNDER 880 - 14" ASPHALT CONCRETE (7 YEAR WARRANTY): 7012 CU. YD.

**I = PARTICIPATION I - MAJOR NEW, TE21-G000(105)
**II = PARTICIPATION II - PAVEMENT, TE21-G000(106)

I:\PROJECTS\Pidll738\dgn\finalplans\ll738PCB.dgn 20-JUL-2000 3:54PM jgrmovse

STATION TO STATION	DIRECTION	DISTANCE D	AVERAGE WIDTH W	SURFACE AREA A A=DxW	AVERAGE WIDTH W	SURFACE AREA A A=DxW	CADD GENERATED AREAS	CADD GENERATED AREAS	203		302		304		407		407		446		446		855	
									SUBGRADE COMPACTION		11.25" BITUMINOUS AGGREGATE BASE		6" AGGREGATE BASE, AS PER PLAN		TACK COAT (0.10 GAL./SQ. YD.)		TACK COAT FOR INTERMEDIATE COURSE (0.05 GAL./SQ. YD.)		1.75" ASPHALT CONCRETE INTERMEDIATE COURSE, TYPE 2, PG 64-28		1.5" ASPHALT CONCRETE SURFACE COURSE, TYPE 1H, APP		4" ASPHALT TREATED FREE DRAINING BASE	
190		FEET	** I FEET	** I SQ. FT.	** I FEET	** I SQ. FT.	** I SQ. FT.	** II SQ. FT.	** I SQ.YD.	** II SQ.YD.	** I CU.YD.	** II CU.YD.	** I CU.YD.	** II CU.YD.	** I GAL.	** II GAL.	** I GAL.	** II GAL.	** I CU.YD.	** II CU.YD.	** I CU.YD.	** II CU.YD.	** I CU.YD.	** II CU.YD.
163+90.00 TO 166+19.81	WB	229.81	23.25	5343.08	0.00	0.00			594															
163+90.00 TO 166+19.81	WB	229.81	23.25	5343.08	0.00	0.00					186													
163+90.00 TO 166+19.81	WB	229.81	23.25	5343.08	0.00	0.00							99											
163+90.00 TO 166+19.81	WB	229.81	23.25	5343.08	34.00	7813.54										87			29		25	37		
163+90.00 TO 166+19.81	WB	229.81	23.25	5343.08	0.00	0.00																	66	
166+19.81 TO 177+89.15	WB	1169.34	23.25	27187.16	0.00	0.00			3021															
166+19.81 TO 177+89.15	WB	1169.34	23.25	27187.16	0.00	0.00					944													
166+19.81 TO 177+89.15	WB	1169.34	23.25	27187.16	0.00	0.00							504											
166+19.81 TO 177+89.15	WB	1169.34	23.25	27187.16	24.00	28064.16		27920.28								623			147		126	260		
166+19.81 TO 177+89.15	WB	1169.34	23.25	27187.16	0.00	0.00																	336	
177+89.15 TO 184+85.00	WB	660.85	23.25	15364.76	0.00	0.00			1708															
177+89.15 TO 184+85.00	WB	660.85	23.25	15364.76	0.00	0.00					534													
177+89.15 TO 184+85.00	WB	660.85	23.25	15364.76	0.00	0.00							285											
177+89.15 TO 184+85.00	WB	660.85	23.25	15364.76	34.00	22468.90										250			83		72	105		
177+89.15 TO 184+85.00	WB	660.85	23.25	15364.76	0.00	0.00																	190	
184+85.00 TO 187+75.00	WB	290.00	23.25	6742.50	36.27	10518.30			750	1169														
184+85.00 TO 187+75.00	WB	290.00	23.25	6742.50	34.94	10132.60					235	352												
184+85.00 TO 187+75.00	WB	290.00	23.25	6742.50	35.77	10373.30							125	193										
184+85.00 TO 187+75.00	WB	290.00	23.25	6742.50	34.00	9860.00										110		55	37	54	32	46		
184+85.00 TO 187+75.00	WB	290.00	23.25	6742.50	35.27	10228.30																	84	127
187+75.00 TO 188+04.75	WB	29.75	23.25	691.69	37.40	1112.65			77	124														
187+75.00 TO 188+04.75	WB	29.75	23.25	691.69	36.07	1073.08					25	38												
187+75.00 TO 188+04.75	WB	29.75	23.25	691.69	36.90	1097.78							13	21										
187+75.00 TO 188+04.75	WB	29.75	23.25	691.69	35.13	1045.12										12		6	4	6	4	5		
187+75.00 TO 188+04.75	WB	29.75	23.25	691.69	36.40	1082.90																	9	14
188+04.75 TO 188+54.24	WB	49.49	23.25	1150.64	36.25	1794.01			128	200														
188+04.75 TO 188+54.24	WB	49.49	23.25	1150.64	36.25	1794.01					40	63												
188+04.75 TO 188+54.24	WB	49.49	23.25	1150.64	36.25	1794.01							22	34										
188+04.75 TO 188+54.24	WB	49.49	23.25	1150.64	36.25	1794.01										20		10	7	10	6	9		
188+04.75 TO 188+54.24	WB	49.49	23.25	1150.64	36.25	1794.01																	15	23
188+54.24 TO 189+78.00	WB	123.76	23.25	2877.42	71.27	8820.38			320	981														
188+54.24 TO 189+78.00	WB	123.76	23.25	2877.42	69.94	8655.77					100	301												
188+54.24 TO 189+78.00	WB	123.76	23.25	2877.42	70.77	8758.50							54	163										
188+54.24 TO 189+78.00	WB	123.76	23.25	2877.42	66.00	8168.16										91		46	16	45	14	38		
188+54.24 TO 189+78.00	WB	123.76	23.25	2877.42	70.27	8696.62																	36	108
SUBTOTALS (THIS SHEET)									6598	2474	*2064	754	1102	411		1193		117	*323	115	*279	500	736	272
TOTALS (THIS SHEET)									9072		754		1513			1193		117	115		500		1008	
TOTALS CARRIED TO PAVEMENT SUBSUMMARY									9072		754		1513			1193		117	115		500		1008	

* THESE ITEMS ARE COMBINED FOR PARTICIPATION I AND CARRIED TO THE PAVEMENT SUB-SUMMARY SHEET UNDER 880 - 14" ASPHALT CONCRETE (7 YEAR WARRANTY): 2666 CU. YD.

**I = PARTICIPATION I - MAJOR NEW, TE21-G000(105)
**II = PARTICIPATION II - PAVEMENT, TE21-G000(106)

CALCULATED MGS
CHECKED RAS

PAVEMENT CALCULATIONS

CUY-90-0.00

I:\PROJECTS\Pldl1738\dgn\final plans\1l738PCB.dgn 20-JUL-2000 3:55PM jgrmovse

STATION TO STATION	DIRECTION	DISTANCE D	AVERAGE WIDTH W	SURFACE AREA A A=DxW	AVERAGE WIDTH W	SURFACE AREA A A=DxW	CADD GENERATED AREAS	CADD GENERATED AREAS	203		302		304		407		407		446		446		855	
									SUBGRADE COMPACTION		11.25" BITUMINOUS AGGREGATE BASE		6" AGGREGATE BASE, AS PER PLAN		TACK COAT (0.10 GAL./SQ. YD.)		TACK COAT FOR INTERMEDIATE COURSE (0.05 GAL./SQ. YD.)		1.75" ASPHALT CONCRETE INTERMEDIATE COURSE, TYPE 2, PG 64-28		1.5" ASPHALT CONCRETE SURFACE COURSE, TYPE 1H, APP		4" ASPHALT TREATED FREE DRAINING BASE	
190		FEET	** I FEET	** I SQ. FT.	** I FEET	** I SQ. FT.	** I SQ. FT.	** II SQ. FT.	** I SQ.YD.	** II SQ.YD.	** I CU.YD.	** II CU.YD.	** I CU.YD.	** II CU.YD.	** I GAL.	** II GAL.	** I GAL.	** II GAL.	** I CU.YD.	** II CU.YD.	** I CU.YD.	** II CU.YD.	** I CU.YD.	** II CU.YD.
189+78.00 TO 192+70.32	WB	292.32	23.25	6796.44	71.27	20833.65			756	2315														
189+78.00 TO 192+70.32	WB	292.32	23.25	6796.44	69.94	20444.86					236	710												
189+78.00 TO 192+70.32	WB	292.32	23.25	6796.44	70.77	20687.49							126	384										
189+78.00 TO 192+70.32	WB	292.32	23.25	6796.44	66.00	19293.12										215		108	37	105	32	90		
189+78.00 TO 192+70.32	WB	292.32	23.25	6796.44	70.27	20541.33																	84	254
192+70.32 TO 192+90.32	WB	20.00	23.25	465.00	31.27	625.40			52	70														
192+70.32 TO 192+90.32	WB	20.00	0.00	0.00	6.94	138.80						5												
192+70.32 TO 192+90.32	WB	20.00	23.25	465.00	36.77	735.40							9	14										
192+70.32 TO 192+90.32	WB	20.00	23.25	465.00	66.00	1320.00										15		8	3	8	3	7		
192+70.32 TO 192+90.32	WB	20.00	0.00	0.00	17.25	345.00																		5
193+12.82 TO 193+32.82	WB	20.00	23.25	465.00	31.27	625.40			52	70														
193+12.82 TO 193+32.82	WB	20.00	0.00	0.00	6.94	138.80						5												
193+12.82 TO 193+32.82	WB	20.00	23.25	465.00	36.77	735.40							9	14										
193+12.82 TO 193+32.82	WB	20.00	23.25	465.00	66.00	1320.00										15		8	3	8	3	7		
193+12.82 TO 193+32.82	WB	20.00	0.00	0.00	17.25	345.00																		5
193+32.82 TO 194+33.30	WB	100.48	23.25	2336.16	71.27	7161.21			260	796														
193+32.82 TO 194+33.30	WB	100.48	23.25	2336.16	69.94	7027.57					82	245												
193+32.82 TO 194+33.30	WB	100.48	23.25	2336.16	70.77	7110.97							44	132										
193+32.82 TO 194+33.30	WB	100.48	23.25	2336.16	66.00	6631.68										74		37	13	36	11	31		
193+32.82 TO 194+33.30	WB	100.48	23.25	2336.16	70.27	7060.73																	29	88
194+33.30 TO 195+32.48	WB	99.18	23.25	2305.94	0.00	0.00			257															
194+33.30 TO 195+32.48	WB	99.18	23.25	2305.94	0.00	0.00					81													
194+33.30 TO 195+32.48	WB	99.18	23.25	2305.94	0.00	0.00							43											
194+33.30 TO 195+32.48	WB	99.18	23.25	2305.94	66.00	6545.88										73			13		11	31		
194+33.30 TO 195+32.48	WB	99.18	23.25	2305.94	0.00	0.00																	29	
195+32.48 TO 198+14.30	WB	281.82	23.25	6552.32	0.00	0.00			729															
195+32.48 TO 198+14.30	WB	281.82	23.25	6552.32	0.00	0.00					228													
195+32.48 TO 198+14.30	WB	281.82	23.25	6552.32	0.00	0.00							122											
195+32.48 TO 198+14.30	WB	281.82	23.25	6552.32	37.50	10568.25		13761.56								271			36		31	113		
195+32.48 TO 198+14.30	WB	281.82	23.25	6552.32	0.00	0.00																	81	
198+14.30 TO 201+67.13	WB	352.83	23.25	8203.30	0.00	0.00			912															
198+14.30 TO 201+67.13	WB	352.83	23.25	8203.30	0.00	0.00					285													
198+14.30 TO 201+67.13	WB	352.83	23.25	8203.30	0.00	0.00							152											
198+14.30 TO 201+67.13	WB	352.83	23.25	8203.30	76.00	26815.08										298			45		38	125		
198+14.30 TO 201+67.13	WB	352.83	23.25	8203.30	0.00	0.00																	102	
SUBTOTALS (THIS SHEET)									3018	3251	*912	965	505	544		961		161	*150	157	*129	404	325	352
TOTALS (THIS SHEET)									6269		965		1049		961		161		157		404		677	
TOTALS CARRIED TO PAVEMENT SUBSUMMARY									6269		965		1049		961		161		157		404		677	

* THESE ITEMS ARE COMBINED FOR PARTICIPATION I AND CARRIED TO THE PAVEMENT SUB-SUMMARY SHEET UNDER 880 - 14" ASPHALT CONCRETE (7 YEAR WARRANTY): 1191 CU. YD.

**I = PARTICIPATION I - MAJOR NEW, TE21-G000(105)
**II = PARTICIPATION II - PAVEMENT, TE21-G000(106)

CALCULATED MGS
CHECKED RAS

PAVEMENT CALCULATIONS

CUY-90-0.00

I:\PROJECTS\Pidil738\dgn\final plans\il738PCB.dgn 20-JUL-2000 3:55PM jgrmovse

STATION TO STATION	DIRECTION	DISTANCE D	AVERAGE WIDTH W	SURFACE AREA A A=DxW	AVERAGE WIDTH W	SURFACE AREA A A=DxW	CADD GENERATED AREAS	CADD GENERATED AREAS	203		302		304		407		407		446		446		855	
									SUBGRADE COMPACTION		11.25" BITUMINOUS AGGREGATE BASE		6" AGGREGATE BASE, AS PER PLAN		TACK COAT (0.10 GAL./SQ. YD.)		TACK COAT FOR INTERMEDIATE COURSE (0.05 GAL./SQ. YD.)		1.75" ASPHALT CONCRETE INTERMEDIATE COURSE, TYPE 2, PG 64-28		1.5" ASPHALT CONCRETE SURFACE COURSE, TYPE 1H, APP		4" ASPHALT TREATED FREE DRAINING BASE	
190		FEET	** I FEET	** I SQ. FT.	** I FEET	** I SQ. FT.	** I SQ. FT.	** II SQ. FT.	** I SQ.YD.	** II SQ.YD.	** I CU.YD.	** II CU.YD.	** I CU.YD.	** II CU.YD.	** I GAL.	** II GAL.	** I GAL.	** II GAL.	** I CU.YD.	** II CU.YD.	** I CU.YD.	** II CU.YD.	** I CU.YD.	** II CU.YD.
201+67.13 TO 210+00.00	WB	832.87	23.25	19364.23	0.00	0.00			2152															
201+67.13 TO 210+00.00	WB	832.87	23.25	19364.23	0.00	0.00					673													
201+67.13 TO 210+00.00	WB	832.87	23.25	19364.23	0.00	0.00							359											
201+67.13 TO 210+00.00	WB	832.87	23.25	19364.23	36.00	29983.32		15301.19								504			105		90	210		
201+67.13 TO 210+00.00	WB	832.87	23.25	19364.23	0.00	0.00																	239	
210+00.00 TO 217+70.75	WB	770.75	23.25	17919.94	16.07	12385.95			1992	1377														
210+00.00 TO 217+70.75	WB	770.75	23.25	17919.94	14.74	11360.86					623	395												
210+00.00 TO 217+70.75	WB	770.75	23.25	17919.94	15.57	12000.58							332	223										
210+00.00 TO 217+70.75	WB	770.75	23.25	17919.94	49.80	38383.35										427			97		83	178		
210+00.00 TO 217+70.75	WB	770.75	23.25	17919.94	15.07	11615.20																	222	144
210+00.00 TO 217+70.75	WB	770.75	23.25	17919.94	13.80	10636.35												60		58				
217+70.75 TO 221+00.00	WB	329.25	22.59	7437.76	21.48	7072.29			827	786														
217+70.75 TO 221+00.00	WB	329.25	22.59	7437.76	20.15	6634.39					259	231												
217+70.75 TO 221+00.00	WB	329.25	22.59	7437.76	20.98	6907.67							138	128										
217+70.75 TO 221+00.00	WB	329.25	22.59	7437.76	55.21	18177.89										202			41		35	85		
217+70.75 TO 221+00.00	WB	329.25	22.59	7437.76	20.48	6743.04																	92	84
217+70.75 TO 221+00.00	WB	329.25	22.59	7437.76	19.21	6324.89												36		35				
221+00.00 TO 222+20.00	WB	120.00	0.00	0.00	23.69	2842.80				316														
221+00.00 TO 222+20.00	WB	120.00	0.00	0.00	22.36	2683.20						94												
221+00.00 TO 222+20.00	WB	120.00	0.00	0.00	23.19	2782.80								52										
221+00.00 TO 222+20.00	WB	120.00	0.00	0.00	21.42	2570.40										29						12		
221+00.00 TO 222+20.00	WB	120.00	0.00	0.00	65.32	7838.40																		97
221+00.00 TO 222+20.00	WB	120.00	0.00	0.00	22.69	2722.80												16		15				
222+20.00 TO 233+96.00	WB	1176.00	0.00	0.00	24.27	28541.52				3172														
222+20.00 TO 233+96.00	WB	1176.00	0.00	0.00	22.94	26977.44						937												
222+20.00 TO 233+96.00	WB	1176.00	0.00	0.00	23.77	27953.52								518										
222+20.00 TO 233+96.00	WB	1176.00	0.00	0.00	72.75	85554.00										951						397		
222+20.00 TO 233+96.00	WB	1176.00	0.00	0.00	23.27	27365.52																		338
222+20.00 TO 233+96.00	WB	1176.00	0.00	0.00	22.00	25872.00												144		140				
233+96.00 TO 234+96.00	WB	100.00	0.00	0.00	18.27	1827.00				203														
233+96.00 TO 234+96.00	WB	100.00	0.00	0.00	16.94	1694.00						59												
233+96.00 TO 234+96.00	WB	100.00	0.00	0.00	17.77	1777.00								33										
233+96.00 TO 234+96.00	WB	100.00	0.00	0.00	66.75	6675.00										75						31		
233+96.00 TO 234+96.00	WB	100.00	0.00	0.00	17.27	1727.00																		22
233+96.00 TO 234+96.00	WB	100.00	0.00	0.00	16.00	1600.00												9		9				
234+96.00 TO 240+00.00	WB	504.00	0.00	0.00	60.75	30618.00										341						142		
SUBTOTALS (THIS SHEET)									4971	5854	*1555	1716	829	954		2529		265	*243	257	*208	1055	553	685
TOTALS (THIS SHEET)									10825		1716		1783		2529		265		257		1055		1238	
TOTALS CARRIED TO PAVEMENT SUBSUMMARY									10825		1716		1783		2529		265		257		1055		1238	

* THESE ITEMS ARE COMBINED FOR PARTICIPATION I AND CARRIED TO THE PAVEMENT SUB-SUMMARY SHEET UNDER 880 - 14" ASPHALT CONCRETE (7 YEAR WARRANTY): 2006 CU. YD.

**I = PARTICIPATION I - MAJOR NEW, TE21-G000(105)
**II = PARTICIPATION II - PAVEMENT, TE21-G000(106)

CALCULATED MGS CHECKED RAS

PAVEMENT CALCULATIONS

CUY-90-0.00

I:\PROJECTS\Pldll738\dgn\finalplans\ll738PCB.dgn 20-JUL-2000 3:56PM jgrmovse

STATION TO STATION	RAMP	DISTANCE D	AVERAGE WIDTH W	SURFACE AREA A A=DxW	AVERAGE WIDTH W	SURFACE AREA A A=DxW	CADD GENERATED AREAS	CADD GENERATED AREAS	203 SUBGRADE COMPACTION		302 11.25" BITUMINOUS AGGREGATE BASE		304 6" AGGREGATE BASE, AS PER PLAN		407 TACK COAT (0.10 GAL./SQ. YD.)		407 TACK COAT FOR INTERMEDIATE COURSE (0.05 GAL./SQ. YD.)		446 1.75" ASPHALT CONCRETE INTERMEDIATE COURSE, TYPE 2, PG 64-28		446 1.5" ASPHALT CONCRETE SURFACE COURSE, TYPE IH, APP		855 4" ASPHALT TREATED FREE DRAINING BASE	
190		FEET	** I FEET	** I SQ. FT.	** II FEET	** II SQ. FT.	** I SQ. FT.	** II SQ. FT.	** I SQ.YD.	** II SQ.YD.	** I CU.YD.	** II CU.YD.	** I CU.YD.	** II CU.YD.	** I GAL.	** II GAL.	** I GAL.	** II GAL.	** I CU.YD.	** II CU.YD.	** I CU.YD.	** II CU.YD.	** I CU.YD.	** II CU.YD.
40+42.14 TO 44+75.00	RAMP A	432.86			25	10821.5										121						51		
44+75.00 TO 50+11.42	RAMP A	536.42			25	13410.5										150						63		
50+11.42 TO 50+82.70	RAMP A	71.28						1617.9								18						8		
50+82.70 TO 51+07.70	RAMP A	25						1184.9								14						6		
50+00.15 TO 50+25.15	RAMP B	25						1885.4								21						9		
50+25.15 TO 50+50.00	RAMP B	24.85						1035.7								12						5		
50+50.00 TO 53+99.10	RAMP B	349.1			45	15709.5										175						73		
53+99.10 TO 55+99.10	RAMP B	200			35	7000										78						33		
55+99.10 TO 56+50.00	RAMP B	50.9			25	1272.5										15						6		
56+50.00 TO 61+63.79	RAMP B	513.79			25	12844.75										143						60		
49+05.50 TO 49+27.50	RAMP C	25						515								6						3		
49+27.50 TO 54+95.51	RAMP C	568.01			22	12496.22										139						58		
36+75.87 TO 43+75.00	RAMP D	699.13			25	17478.25										195						81		
43+75.00 TO 51+55.06	RAMP D	780.06			25	19501.5										217						91		
51+55.06 TO 51+80.06	RAMP D	25						821.7								10						4		
36+93.84 TO 37+18.84	RAMP E	25						543.6								7						3		
37+18.84 TO 47+22.20	RAMP E	1003.36			25	25084										279						117		
47+22.20 TO 51+12.08	RAMP E	389.88			25	9747										109						46		
51+12.08 TO 54+04.84	RAMP E	292.76			13	3805.88				423														
51+12.08 TO 54+04.85	RAMP E	293.76			13	3818.88								71										
51+12.08 TO 54+04.87	RAMP E	295.76			10	2957.6						103												
51+12.08 TO 54+04.88	RAMP E	296.76			35	10386.6										13		7		57		49		
54+04.84 TO 54+93.15	RAMP E	84.13			13	1093.69				122														
54+04.84 TO 54+93.15	RAMP E	84.13			10	841.3								16										
54+04.84 TO 54+93.15	RAMP E	84.13			10	841.3						30												
54+04.84 TO 54+93.15	RAMP E	84.13			35	2944.55										4		2		16		14		
54+04.84 TO 54+93.15##	RAMP E	84.13			3	252.39								7										
54+93.15 TO 56+74.00	RAMP E	180.85			7	1265.95				141														
54+04.84 TO 54+93.15	RAMP E	180.85			7	1265.95								24										
54+04.84 TO 54+93.15	RAMP E	180.85			7	1265.95						45												
54+04.84 TO 54+93.15##	RAMP E	180.85			3	542.55								15										
47+25.01 TO 51+12.08#	RAMP E	387.07						2596								27						13		
SUBTOTALS (THIS SHEET)										686		178		133		1753		9		73		793		
TOTALS (THIS SHEET)									686		178		133		1753		9		73		793			
TOTALS CARRIED TO PAVEMENT SUBSUMMARY									686		178		133		1753		9		73		793			

AREA BETWEEN MAINLINE BARRIER AND RAMP E BARRIER.
AVERAGE DEPTH = 8.52"

**I = PARTICIPATION I - MAJOR NEW, TE21-G000(105)
**II = PARTICIPATION II - PAVEMENT, TE21-G000(106)

CALCULATED GJN
CHECKED RAS

PAVEMENT CALCULATIONS

CUY-90-0.00

03 MAR 2000
P:\pr22308\caddNI738pcc.dgn

PAVEMENT CALCULATIONS

CALCULATED GJN
CHECKED RAS

CUY-90-0.00

STATION TO STATION	RAMP	DISTANCE D	AVERAGE WIDTH W	SURFACE AREA A A=DxW	AVERAGE WIDTH W	SURFACE AREA A A=DxW	CADD GENERATED AREAS	CADD GENERATED AREAS	203 SUBGRADE COMPACTION		302 11.25" BITUMINOUS AGGREGATE BASE		304 6" AGGREGATE BASE, AS PER PLAN		407 TACK COAT (0.10 GAL./SQ. YD.)		407 TACK COAT FOR INTERMEDIATE COURSE (0.05 GAL./SQ. YD.)		446 1.75" ASPHALT CONCRETE INTERMEDIATE COURSE, TYPE 2, PG 64-28		446 1.5" ASPHALT CONCRETE SURFACE COURSE, TYPE IH, APP		855 4" ASPHALT TREATED FREE DRAINING BASE	
190		FEET	** I FEET	** I SQ. FT.	** II FEET	** II SQ. FT.	** I SQ. FT.	** II SQ. FT.	** I SQ.YD.	** II SQ.YD.	** I CU.YD.	** II CU.YD.	** I CU.YD.	** II CU.YD.	** I GAL.	** II GAL.	** I GAL.	** II GAL.	** I CU.YD.	** II CU.YD.	** I CU.YD.	** II CU.YD.	** I CU.YD.	** II CU.YD.
77+85.48 TO 85+80.00	RAMP F	794.52			25	19863										221						92		
85+80.00 TO 90+03.00	RAMP F	423			26	10998										123						51		
90+03.00 TO 90+23.90	RAMP F	20.9			24	501.6										6						3		
90+23.90 TO 91+29.51	RAMP F	105.61			23	2429.03										27						12		
91+29.51 TO 91+41.16	RAMP F	11.65			23	267.95										3						2		
91+41.16 TO 91+89.51	RAMP F	48.35			27	1305.45										15						7		
91+89.51 TO 92+14.51	RAMP F	25						1598.7								18						8		
73+72.88 TO 73+97.88	RAMP G	25						428.7								5						2		
73+97.88 TO 74+72.88	RAMP G	75			15	1125										13						6		
74+72.88 TO 75+72.88	RAMP G	100			22.5	2250										25						11		
75+72.88 TO 77+22.00	RAMP G	149.12			23	3429.76										39						16		
77+22.00 TO 77+42.00	RAMP G	20			24	480										6						3		
77+42.00 TO 81+16.00	RAMP G	374			26	9724										109						46		
81+16.00 TO 81+36.00	RAMP G	20			24	480										6						3		
81+36.00 TO 82+16.00	RAMP G	80			23	1840										21						9		
82+16.00 TO 85+39.14	RAMP G	323.14			25	8078.5										90						38		
85+39.14 TO 87+75.00	RAMP G	235.86			29.54	6967.30				775														
85+39.14 TO 87+75.00	RAMP G	235.86			26.88	6339.92						221												
85+39.14 TO 87+75.00	RAMP G	235.86			28.54	6731.44								125										
85+39.14 TO 87+75.00	RAMP G	235.86			25	5896.5										66		33		32		28		
85+39.14 TO 87+75.00	RAMP G	235.86			27.54	6495.58																		80
87+75.00 TO 88+04.00	RAMP G	29			30.54	885.66				99														
87+75.00 TO 88+04.00	RAMP G	29			27.88	808.52						29												
87+75.00 TO 88+04.00	RAMP G	29			29.54	856.66								16										
87+75.00 TO 88+04.00	RAMP G	29			26	754										9		5		5		4		
87+75.00 TO 88+04.00	RAMP G	29			28.54	827.66																		11
88+04.00 TO 88+54.24	RAMP G	50.24			28.27	1420.28				158														
88+04.00 TO 88+54.24	RAMP G	50.24			26.94	1353.47						47												
88+04.00 TO 88+54.24	RAMP G	50.24			27.77	1395.16								26										
88+04.00 TO 88+54.24	RAMP G	50.24			26	1306.24										15		8		8		7		
88+04.00 TO 88+54.24	RAMP G	50.24			27.27	1370.04																		17
89+54.25 TO 89+79.25	RAMP H	25						854.40								1						4		
89+79.25 TO 89+92.08	RAMP H	12.83			35	449.05										1						3		
89+92.08 TO 89+94.18	RAMP H	2.1			35	73.5										1						1		
89+94.18 TO 93+32.29	RAMP H	338.11			34.33	11607.32										13						54		
93+32.29 TO 93+92.29	RAMP H	60			30.5	1830										3						9		
93+92.29 TO 94+92.80	RAMP H	100.51			27	2713.77										4						13		
94+92.80 TO 95+31.97	RAMP H	39.17			27	1057.59										2						5		
86+70.00 TO 86+95.00	RAMP I	25						480.30								1						3		
86+95.00 TO 93+48.24	RAMP I	653.24			25	16331										19						76		
93+48.24 TO 95+26.95	RAMP I	178.71						4772.5								6						23		
SUBTOTALS (THIS SHEET)										1032		297		167		868		46		45		539		108
TOTALS (THIS SHEET)										1032		297		167		868		46		45		539		108
TOTALS CARRIED TO PAVEMENT SUBSUMMARY										1032		297		167		868		46		45		539		108

**I = PARTICIPATION I - MAJOR NEW, TE21-G000(105)
**II = PARTICIPATION II - PAVEMENT, TE21-G000(106)

03 MAR 2000
p:\pr22308\cadd\1738pcc.dgn

PAVEMENT CALCULATIONS

CALCULATED GJN
CHECKED RAS

STATION TO STATION	RAMP	DISTANCE D	AVERAGE WIDTH W	SURFACE AREA A A=DxW	AVERAGE WIDTH W	SURFACE AREA A A=DxW	CADD GENERATED AREAS	CADD GENERATED AREAS	203 SUBGRADE COMPACTION		302 11.25" BITUMINOUS AGGREGATE BASE		304 6" AGGREGATE BASE, AS PER PLAN		407 TACK COAT (0.10 GAL./SQ. YD.)		407 TACK COAT FOR INTERMEDIATE COURSE (0.05 GAL./SQ. YD.)		446 1.75" ASPHALT CONCRETE INTERMEDIATE COURSE, TYPE 2, PG 64-28		446 1.5" ASPHALT CONCRETE SURFACE COURSE, TYPE IH, APP		855 4" ASPHALT TREATED FREE DRAINING BASE	
190		FEET	** I FEET	** I SQ. FT.	** II FEET	** II SQ. FT.	** I SQ. FT.	** II SQ. FT.	** I SQ.YD.	** II SQ.YD.	** I CU.YD.	** II CU.YD.	** I CU.YD.	** II CU.YD.	** I GAL.	** II GAL.	** I GAL.	** II GAL.	** I CU.YD.	** II CU.YD.	** I CU.YD.	** II CU.YD.	** I CU.YD.	** II CU.YD.
76+52.98 TO 76+89.97	RAMP J	36.99			26	961.74										2						5		
76+89.97 TO 82+66.00	RAMP J	576.03			25	14400.75										17						67		
82+66.00 TO 83+46.00	RAMP J	80			23	1840										3						9		
83+46.00 TO 83+66.00	RAMP J	20			24	480										1						3		
83+66.00 TO 85+98.78	RAMP J	232.78			26	6052.28										7						29		
85+98.78 TO 86+28.00	RAMP J	29.22			29	847.38										1						4		
86+28.00 TO 86+48.00	RAMP J	20			29	580										1						3		
86+48.00 TO 86+58.78	RAMP J	10.78			30	323.4										1						2		
86+58.78 TO 87+82.21	RAMP J	123.43			31	3826.33										5						18		
87+82.21 TO 88+05.00	RAMP J	22.79			31	706.49										1						4		
88+05.00 TO 88+30.00	RAMP J	25						1266.30								2						6		
74+38.70 TO 74+63.70	RAMP K	25						674.40								1						4		
74+63.70 TO 75+38.71	RAMP K	75.01			23.42	1756.51										2						9		
75+38.71 TO 77+26.00	RAMP K	187.29			23	4307.67										5						20		
77+26.00 TO 77+46.00	RAMP K	20			24	480										1						3		
77+46.00 TO 79+78.00	RAMP K	232			26	6032										7						28		
79+78.00 TO 79+98.00	RAMP K	20			24	480										1						3		
79+98.00 TO 80+70.91	RAMP K	72.91			23	1676.93										2						8		
80+70.91 TO 80+79.91	RAMP K	9			23	207										1						1		
80+79.91 TO 84+00.00	RAMP K	320.09			25	8002.25										9						38		
84+00.00 TO 84+02.00	RAMP K	2			25	50										1						1		
84+02.00 TO 84+50.00	RAMP K	48			30.53	1465.44				163														17
84+02.00 TO 84+50.00	RAMP K	48			28.14	1350.72						47												
84+02.00 TO 84+50.00	RAMP K	48			29.8	1430.4								27										
84+02.00 TO 84+50.00	RAMP K	48			26.26	1260.48										15		7		7		6		
84+02.00 TO 84+50.00	RAMP K	48			28.8	1382.4																		
84+50.00 TO 86+54.43	RAMP K	204.43			29.8	6092.01				677														
84+50.00 TO 86+54.43	RAMP K	204.43			28.47	5820.12						203												
84+50.00 TO 86+54.43	RAMP K	204.43			29.3	5989.80								111										
84+50.00 TO 86+54.43	RAMP K	204.43			27.53	5627.96										63		32		31		27		
84+50.00 TO 86+54.43	RAMP K	204.43			28.8	5887.58																		72
SUBTOTALS (THIS SHEET)										840		250		138		149		39		38		298		89
TOTALS (THIS SHEET)									840		250		138		149		39		38		298		89	
TOTALS CARRIED TO PAVEMENT SUBSUMMARY									840		250		138		149		39		38		298		89	

**I = PARTICIPATION I - MAJOR NEW, TE21-G000(105)
**II = PARTICIPATION II - PAVEMENT, TE21-G000(106)

CUY-90-0.00

03 MAR 2000
P:\pr22308\cadd\1738pcc.dgn

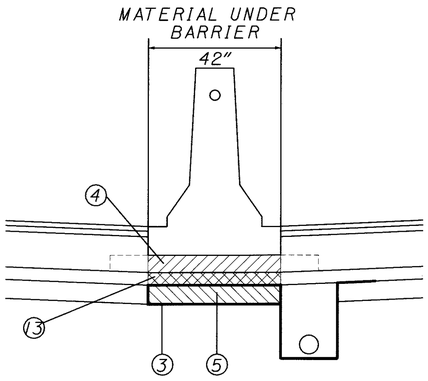

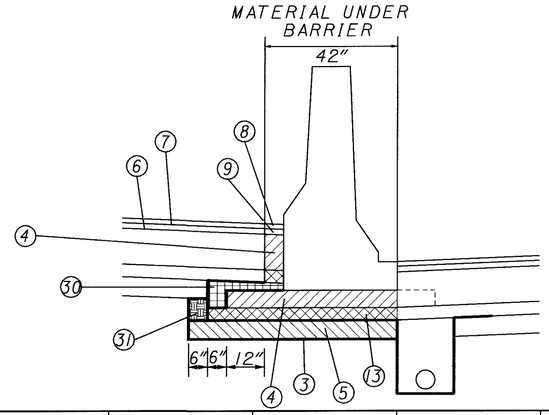

PAVEMENT CALCULATIONS

CALCULATED MGS
CHECKED RAS

CUY-90-0.00

118
582

REFERENCE #	STATION TO STATION	DISTANCE D	AVERAGE WIDTH W	SURFACE AREA A A=DxW	AVERAGE WIDTH W	SURFACE AREA A A=DxW	CADD GENERATED AREAS	CADD GENERATED AREAS	203 SUBGRADE COMPACTION		302 5.75" BITUMINOUS AGGREGATE BASE		304 6" AGGREGATE BASE, AS PER PLAN		407 TACK COAT (0.10 GAL./SQ. YD.)		407 TACK COAT FOR INTERMEDIATE COURSE (0.05 GAL./SQ. YD.)		446 1.75" ASPHALT CONCRETE INTERMEDIATE COURSE, TYPE 2, PG 64-28		446 1.5" ASPHALT CONCRETE SURFACE COURSE, TYPE 1H, APP		855 4" ASPHALT TREATED FREE DRAINING BASE	
	190	FEET	** I FEET	** I SQ. FT.	** I FEET	** I SQ. FT.	** I SQ. FT.	** II SQ. FT.	** I SQ.YD.	** II SQ.YD.	** I CU.YD.	** II CU.YD.	** I CU.YD.	** II CU.YD.	** I GAL.	** II GAL.	** I GAL.	** II GAL.	** I CU.YD.	** II CU.YD.	** I CU.YD.	** II CU.YD.	** I CU.YD.	** II CU.YD.
(3)	96+76.50 TO 100+20.00	343.50	3.5	1202.25					134															
(4)	96+76.50 TO 100+20.00	343.50	3.5	1202.25							22													
(5)	96+76.50 TO 100+20.00	343.50	3.5	1202.25									23											
(13)	96+76.50 TO 100+20.00	343.50	3.5	1202.25																			15	
(3)	100+20.00 TO 117+00.00	1680.00	3.5	5880.00					654															
(4)	100+20.00 TO 117+00.00	1680.00	5.00	8400.00							149													
(5)	100+20.00 TO 117+00.00	1680.00	3.50	5800.00									109											
(31)	100+20.00 TO 117+00.00	1680.00	0.54	907.20									34											
(6)(7)(8)(9)	100+20.00 TO 117+00.00	1680.00	0.50	840.00											10		5		5		4			
(13)	100+20.00 TO 117+00.00	1680.00	5.50	9240.00																			115	
(30)	100+20.00 TO 117+00.00	1680.00	3.0	5040																			187	
(3)	117+00.00 TO 131+25.86	1425.86	3.5	4990.51					555															
(4)	117+00.00 TO 131+25.86	1425.86	3.5	4990.51							89													
(5)	117+00.00 TO 131+25.86	1425.86	3.5	4990.51									93											
(13)	117+00.00 TO 131+25.86	1425.86	3.5	4990.51																			62	
(3)	133+38.56 TO 156.50.00	2311.44	3.5	8090.04					899															
(4)	133+38.56 TO 156.50.00	2311.44	3.5	8090.04							144													
(5)	133+38.56 TO 156.50.00	2311.44	3.5	8090.04									150											
(13)	133+38.56 TO 156.50.00	2311.44	3.5	8090.04																			100	
	SUBTOTALS (THIS SHEET)								2242		404		409		10		5		5		4		479	
	TOTALS (THIS SHEET)								2242		404		409		10		5		5		4		479	
	TOTALS CARRIED TO PAVEMENT SUBSUMMARY								2242		404		409		10		5		5		4		479	

**I = PARTICIPATION I - MAJOR NEW, TE21-G000(105)
**II = PARTICIPATION II - PAVEMENT, TE21-G000(106)

03 MAR 2000
p:\pr22308\cadd\1738pcd.dgn

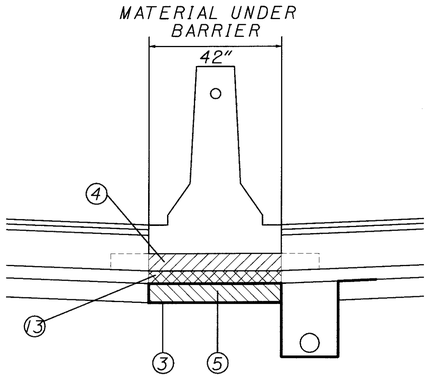

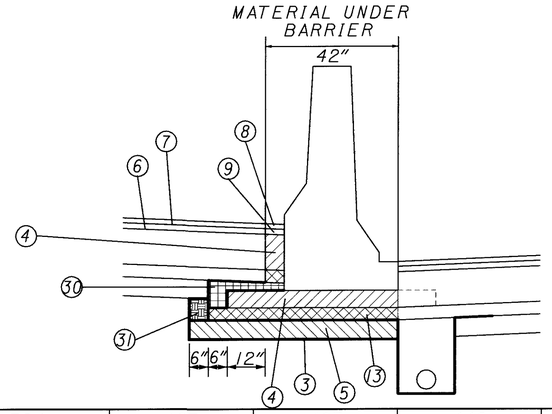

REFERENCE #	STATION TO STATION	DISTANCE D	AVERAGE WIDTH W	SURFACE AREA A A=DxW	AVERAGE WIDTH W	SURFACE AREA A A=DxW	CADD GENERATED AREAS	CADD GENERATED AREAS	203 SUBGRADE COMPACTION		302 11.25" BITUMINOUS AGGREGATE BASE		304 6" AGGREGATE BASE, AS PER PLAN		407 TACK COAT (0.10 GAL./SQ. YD.)		407 TACK COAT FOR INTERMEDIATE COURSE (0.05 GAL./SQ. YD.)		446 1.75" ASPHALT CONCRETE INTERMEDIATE COURSE, TYPE 2, PG 64-28		446 1.5" ASPHALT CONCRETE SURFACE COURSE, TYPE IH, APP		855 4" ASPHALT TREATED FREE DRAINING BASE	
	190	FEET	** I FEET	** I SQ. FT.	** I FEET	** I SQ. FT.	** I SQ. FT.	** II SQ. FT.	** I SQ.YD.	** II SQ.YD.	** I CU.YD.	** II CU.YD.	** I CU.YD.	** II CU.YD.	** I GAL.	** II GAL.	** I GAL.	** II GAL.	** I CU.YD.	** II CU.YD.	** I CU.YD.	** II CU.YD.	** I CU.YD.	** II CU.YD.
③	156+50.00 TO 163+90.00	740.00	3.5	2590.00					288															
④	156+50.00 TO 163+90.00	740.00	5.0	2590.00							66													
⑤	156+50.00 TO 163+90.00	740.00	3.5	2590.00									48											
㉛	156+50.00 TO 163+90.00	740.00	.19	140.6									6											
⑥⑦⑧⑨	156+50.00 TO 163+90.00	740.00	0.5	2590.00											5		3		2		2			
⑬	156+50.00 TO 163+90.00	740.00	5.5	2590.00																			51	
㉚	156+50.00 TO 163+90.00	740.00	0.26	192.4																			8	
③	163+90.00 TO 185+50.00	740.00	3.5	2590.00					288															
④	163+90.00 TO 185+50.00	740.00	3.5	2590.00							46													
⑤	163+90.00 TO 185+50.00	740.00	3.5	2590.00									48											
⑬	163+90.00 TO 185+50.00	740.00	3.5	2590.00																			32	
③	185+50.00 TO 192+70.32	685.32	3.5	2398.62					267															
④	185+50.00 TO 192+70.32	685.32	5.0	3426.60							61													
⑤	185+50.00 TO 192+70.32	685.32	3.5	2398.62									45											
⑥⑦⑧⑨	185+50.00 TO 192+70.32	685.32	0.5	342.66											4		2		2		2			
⑬	185+50.00 TO 192+70.32	685.32	5.5	3769.26																			47	
③	193+32.82 TO 194+44.70	111.88	3.5	391.58					44															
④	193+32.82 TO 194+44.70	111.88	5.0	559.40							10													
⑤	193+32.82 TO 194+44.70	111.88	3.5	391.58									8											
⑥⑦⑧⑨	193+32.82 TO 194+44.70	111.88	0.5	55.94											1		1		1		1			
⑬	193+32.82 TO 194+44.70	111.88	5.5	615.34																			8	
	SUBTOTALS (THIS SHEET)								887		183		155		10		6		5		5		146	
	TOTALS (THIS SHEET)								887		183		155		10		6		5		5		146	
	TOTALS CARRIED TO PAVEMENT SUBSUMMARY								887		183		155		10		6		5		5		146	

**I = PARTICIPATION I - MAJOR NEW, TE21-G000(105)
**II = PARTICIPATION II - PAVEMENT, TE21-G000(106)

CALCULATED MGS
CHECKED RAS

PAVEMENT CALCULATIONS

CUY-90-0.00

119
582

03 MAR 2000
P:\pr22308\cadd\11738pcd.dgn

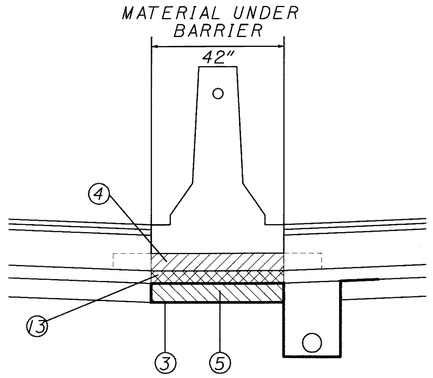

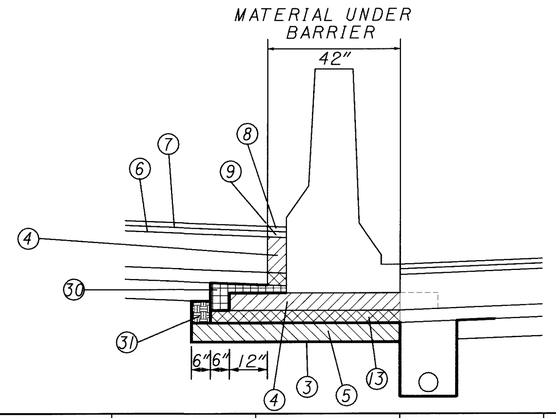

REFERENCE #	STATION TO STATION	DISTANCE D	AVERAGE WIDTH W	SURFACE AREA A A=DxW	AVERAGE WIDTH W	SURFACE AREA A A=DxW	CADD GENERATED AREAS	CADD GENERATED AREAS	203 SUBGRADE COMPACTION		302 11.25" BITUMINOUS AGGREGATE BASE		304 6" AGGREGATE BASE, AS PER PLAN		407 TACK COAT (0.10 GAL./SQ. YD.)		407 TACK COAT FOR INTERMEDIATE COURSE (0.05 GAL./SQ. YD.)		446 1.75" ASPHALT CONCRETE INTERMEDIATE COURSE, TYPE 2, PG 64-28		446 1.5" ASPHALT CONCRETE SURFACE COURSE, TYPE 1H, APP		855 4" ASPHALT TREATED FREE DRAINING BASE	
	190	FEET	** I FEET	** I SQ. FT.	** I FEET	** I SQ. FT.	** I SQ. FT.	** II SQ. FT.	** I SQ.YD.	** II SQ.YD.	** I CU.YD.	** II CU.YD.	** I CU.YD.	** II CU.YD.	** I GAL.	** II GAL.	** I GAL.	** II GAL.	** I CU.YD.	** II CU.YD.	** I CU.YD.	** II CU.YD.	** I CU.YD.	** II CU.YD.
(3)	194+44.70 TO 222+20.00	2775.30	3.5	9713.55					1080															
(4)	194+44.70 TO 222+20.00	2775.30	3.5	9713.55							173													
(5)	194+44.70 TO 222+20.00	2775.30	3.5	9713.55									180											
(13)	194+44.70 TO 222+20.00	2775.30	3.5	9713.55																			120	
(3)	222+20.00 TO 223+00.00	80.00	3.5	280.00					32															
(4)	222+20.00 TO 223+00.00	80.00	5.0	400.00							8													
(5)	222+20.00 TO 223+00.00	80.00	3.5	280.00									6											
(6)(7)(8)(9)	222+20.00 TO 223+00.00	80.00	0.5	40.00											1		1		1		1			
(13)	222+20.00 TO 223+00.00	80.00	5.5	440.00																			6	
SUBTOTALS (THIS SHEET)									1112		181		186		1		1		1		1		126	
TOTALS (THIS SHEET)									1112		181		186		1		1		1		1		126	
TOTALS CARRIED TO PAVEMENT SUBSUMMARY									1112		181		186		1		1		1		1		126	

**I = PARTICIPATION I - MAJOR NEW, TE21-G000(105)
**II = PARTICIPATION II - PAVEMENT, TE21-G000(106)

CALCULATED MGS
CHECKED RAS

PAVEMENT CALCULATIONS

CUY-90-0.00

03 MAR 2000
p:\pr-22308\cadd\1738pcd.dgn

ESTIMATED QUANTITIES FOR PLANING AND OVERLAPPING OF TYPICAL SECTIONS

TE21-G000 (105)

DETAIL SEE SHEET 55	STATION TO STATION	DIRECTION	LENGTH	AVERAGE WIDTH	254 PAVEMENT PLANING, BITUMINOUS; PHASE 1	254 PAVEMENT PLANING, BITUMINOUS; PHASE 2	302 5" BITUMINOUS AGGREGATE BASE	446 1¾" ASPHALT CONCRETE INTERMEDIATE COURSE, TYPE 2, PG 64-28	
				FEET	SQ YDS	SQ YDS	CY	CY	
	LOWERED PROFILE - CROCKER RD.								
C	47+60 TO 54+60	WB	700	1.0/0.5		117	5.40	3.78	
C	48+05 TO 54+05	EB	600	1.0/0.5		100	4.63	3.24	
	LOWERED PROFILE - CAHOON RD.								
C	102+50 TO 109+00	EB	650	1.0/0.5		108	5.02	3.51	
	NORMAL PROFILES								
B	0+00 TO 23+46	WB	2346	0.5	130			6.33	
B	25+53 TO 47+60	WB	2207	0.5	123			5.96	
B	54+60 TO 131+40	WB	7680	0.5	427			20.74	
B	133+60 TO 156+90	WB	2330	0.5	129			6.29	
B	163+90 TO 184+85	WB	2095	0.5	116			5.66	
B	194+33 TO 240+00	WB	4567	0.5	254			12.33	
B	0+00 TO 23+46	EB	2346	0.5	130			6.33	
B	25+53 TO 48+05	EB	2252	0.5	125			6.08	
B	54+05 TO 102+50	EB	4845	0.5	269			13.08	
B	109+00 TO 131+10	EB	2210	0.5	123			5.97	
B	133+30 TO 156+50	EB	2320	0.5	129			6.26	
B	162+60 TO 185+00	EB	2240	0.5	124			6.05	
B	194+45 TO 240+00	EB	4555	0.5	253			12.30	
	TOTALS CARRIED TO PAVEMENT SUBSUMMARY				2,333	325	*16	*124	
					2,658 SQ YDS				

STATION TO STATION	DIRECTION	SIDE	DISTANCE D	618 RUMBLE STRIPS, TYPE 2 (ASPHALT)
I-90			FEET	MILE
0+00 TO 23+44.52	EB	RT	2344.52	0.45
25+51.52 TO 131+25.86	EB	RT	10574.34	2.01
133+38.56 TO 192+70.32	EB	RT	5931.76	1.13
193+32.82 TO 240+00	EB	RT	4667.18	0.89
0+00 TO 23+44.52	EB	LT	2344.52	0.45
25+51.52 TO 131+25.86	EB	LT	10574.34	2.01
133+38.56 TO 192+70.32	EB	LT	5931.76	1.13
193+32.82 TO 240+00	EB	LT	4667.18	0.89
0+00 TO 23+45.62	WB	RT	2345.62	0.45
25+52.62 TO 131+25.86	WB	RT	10573.24	2.01
133+38.56 TO 192+70.32	WB	RT	5931.76	1.13
193+32.82 TO 240+00	WB	RT	4667.18	0.89
0+00 TO 23+45.62	WB	LT	2345.62	0.45
25+52.62 TO 131+25.86	WB	LT	10573.24	2.01
133+38.56 TO 192+70.32	WB	LT	5931.76	1.13
193+32.82 TO 240+00	WB	LT	4667.18	0.89
TOTALS (THIS SHEET)				17.92
TOTALS CARRIED TO PAVEMENT SUBSUMMARY				18

* THESE ITEMS ARE BASED ON THE ASSUMED LIFT THICKNESSES AND STEP WIDTHS SHOWN IN THE PLANS. THESE ESTIMATED QUANTITIES ARE TAKEN TO THE PAVEMENT SUMMARY SHEET AND ADDED TO THE QUANTITIES FOR ITEM 880 - 14" ASPHALT CONCRETE (7 YEAR WARRANTY), ALTHOUGH THE TOTAL THICKNESS IS 6¾" ON THIS SHEET.

CALCULATED GJN/CWP CHECKED ENF/RAS

PAVEMENT CALCULATIONS

CUY-90-0.00

I:\PROJECTS\Pidll738\dgn\finalplans\ll738PCE.dgn 21-JUL-2000 7:47AM jgrmovse

STATION TO STATION	RAMP OR DIRECTION	SIDE (SEE NOTE 1)	DISTANCE D	AVERAGE WIDTH W	SURFACE AREA A=DxW	202 PAVEMENT REMOVED		STATION TO STATION	RAMP OR DIRECTION	SIDE (SEE NOTE 1)	DISTANCE D	AVERAGE WIDTH W	SURFACE AREA A=DxW	202 PAVEMENT REMOVED	
I-90			FEET	FEET	SQ. FT.	SQ. YD.		I-90			FEET	FEET	SQ. FT.	SQ. YD.	
						**I	**II							**I	**II
21+24 TO 23+69	EB	RT(I.S.)	245	4	980	108.9		187+75 TO 189+77.84	WB	LT(O.S.)	202.84	VARIES	#2413.28		268.2
25+26 TO 27+71	EB	RT(I.S.)	245	4	980	108.9		189+77.84 TO 192+90.32	WB	LT(O.S.)	312.48	13	4062.24		451.4
48+05 TO 54+05	EB	EX. LANE	600	24	14400		1600	193+12.82 TO 194+33.30	WB	LT(I.S.)	120.48	4	481.92	53.6	
102+50 TO 109+00	EB	EX. LANE	650	24	15600		1733.4	193+12.82 TO 194+33.30	WB	LT(O.S.)	120.48	13	1566.24		174.1
128+99 TO 131+44	EB	RT(I.S.)	245	4	980	108.9		193+32.82 TO 194+33.30	WB	EX. LANE	100.48	24	2411.52		268
133+06 TO 135+51	EB	RT(I.S.)	245	4	980	108.9		194+33.30 TO 198+67.13	WB	LT(I.S.)	433.83	4	1735.32	192.9	
148+00 TO 156+50	EB	RT(I.S.)	850	4	3400	377.8		198+67.13 TO 201+67.13	WB	LT(I.S.)	300	4-10	2100	233.4	
156+50 TO 162+60	EB	RT(I.S.)	610	4	2440	271.1		201+67.13 TO 222+20	WB	LT(I.S.)	2052.87	10	20528.7	2281	
156+50 TO 162+60	EB	EX. LANE	610	24	14640		1626.7	210+00 TO 234+96	WB	LT(O.S.)	2496	10	24960		2773.4
156+50 TO 162+60	EB	RT(O.S.)	610	10	16100		677.8								
162+60 TO 185+00	EB	RT(I.S.)	2240	4	8960	995.6		RAMPS							
185+00 TO 185+05	EB	RT(I.S.)	5	4	20	2.2		85+39.14 TO 92+68.75	G	EX. LANE	729.61	16	11673.76		1297.1
185+00 TO 185+05	EB	EX. LANE	5	24	120		13.4	87+75.00 TO 88+04.75	G	LT	29.75	3-6	133.88		14.9
185+00 TO 185+05	EB	RT(O.S.)	5	10	50		5.6	88+04.75 TO 92+88.75	G	LT	484	6	2904		322.7
185+05 TO 192+90.32	EB	RT(I.S.)	785.32	4	3141.28	349.1		93+11.25 TO 94+31.75	G	LT	120.5	6	723		80.3
185+05 TO 192+70.32	EB	EX. LANE	965.32	24	18367.68		2040.9	87+75.00 TO 92+88.75	G	LT	513.75	6	3082.5		342.5
185+05 TO 192+90.32	EB	RT(O.S.)	785.32	VARIES	#12706.5		1411.9	93+11.25 TO 94+31.75	G	LT	120.5	8	964		107.2
193+12.82 TO 193+32.82	EB	RT(I.S.)	20	4	80	8.9		93+21.25 TO 94+31.75	G	EX. LANE	110.5	16	1768		196.5
193+12.82 TO 193+32.82	EB	RT(O.S.)	20	13	260		28.9	84+02 TO 89+39.51	K	LT	537.51	VARIES	#2486.42		276.3
193+32.82 TO 194+44.70	EB	RT(I.S.)	111.88	4	447.52	49.6		89+39.51 TO 92+88.75	K	LT	349.24	6	2095.44		232.9
193+32.82 TO 194+44.70	EB	EX. LANE	111.88	24	2685.12		298.4	93+11.25 TO 94+43.13	K	LT	131.88	6	791.28		88.0
193+32.82 TO 194+44.70	EB	RT(O.S.)	111.88	13	1454.44		161.7	84+02 TO 92+88.75	K	RT	886.75	6	5320.5		591.2
194+44.70 TO 198+26.99	EB	RT(I.S.)	382.29	4	1529.16	170		93+11.25 TO 93+44.70	K	RT	33.45	8	276.6		29.7
198+26.99 TO 201+26.99	EB	RT(I.S.)	300	4-10 (7)	2100	233.4		84+02 TO 92+68.75	K	EX. LANE	866.75	16	13868		1540.9
201+26.99 TO 217+25	EB	RT(I.S.)	1598.01	10	15980.1	1775.6		93+21.25 TO 94+43.13	K	EX. LANE	121.88	16	1950.08		216.7
217+25 TO 222+20	EB	RT(I.S.)	495	10	4950	550									
217+25 TO 222+20	EB	RT(O.S.)	495	10	4950		550								
222+20 TO 238+45	EB	RT(O.S.)	1625	10	16250		1805.6								
21+25 TO 23+70	WB	LT(I.S.)	245	4	980	108.9									
25+27 TO 27+72	WB	LT(I.S.)	245	4	980	108.9									
47+60 TO 54+60	WB	EX. LANE	700	24	16800		1866.7								
129+14 TO 131+59	WB	LT(I.S.)	245	4	980	108.9									
133+21 TO 135+66	WB	LT(I.S.)	245	4	980	108.9									
148+00 TO 156+90	WB	LT(I.S.)	890	4	3560	395.6									
156+90 TO 163+90	WB	LT(I.S.)	700	4	2800	311.2									
156+90 TO 163+90	WB	EX. LANE	700	24	16800		1866.7								
156+90 TO 163+90	WB	LT(O.S.)	700	10	7000		777.8								
163+90 TO 184+85	WB	LT(I.S.)	2095	4	8380	931.2									
184+85 TO 192+90.32	WB	LT(I.S.)	805.32	4	3221.28	357.92									
184+85 TO 192+70.32	WB	EX. LANE	785.32	24	18847.68		2094.2								
184+85 TO 187+75	WB	LT(O.S.)	290	10	2900		322.3								
SUBTOTAL						7650.42									
# CADD GENERATED															

* NOTE 1 : I.S.= INSIDE SIDE
O.S.= OUTSIDE SIDE

** NOTE 2 : PARTICIPATION I - MAJOR NEW, TE21-G000(105)
PARTICIPATION II - PAVEMENT, TE21-G000(106)

SUBTOTAL	2760.9	9272.0
SUBTOTAL FROM PREVIOUS COLUMN	7650.42	18882.0
TOTALS	10411.32	28154.0
TOTALS CARRIED TO PAVEMENT SUBSUMMARY	38566	

CALCULATED RAS
CHECKED TKH

PAVEMENT CALCULATIONS

CUY-90-0.00

STATION TO STATION	RAMP OR DIRECTION	SIDE (SEE NOTE 1)	DISTANCE D	AVERAGE WIDTH W	SURFACE AREA A=DxW	448 ASPHALT CONCRETE INTERMEDIATE COURSE, TYPE I UNDER GUARDRAIL, PG 64-22		STATION TO STATION	RAMP OR DIRECTION	SIDE (SEE NOTE 1)	DISTANCE D	AVERAGE WIDTH W	SURFACE AREA A=DxW	448 ASPHALT CONCRETE INTERMEDIATE COURSE, TYPE I UNDER GUARDRAIL, PG 64-22	
I-90			FEET	FEET	SQ. FT.	CU. YD.		I-90			FEET	FEET	SQ. FT.	CU. YD.	
						**I	**II							**I	**II
1213+69.73 TO 1214+32.73	EB	RT(O.S.)	63	5	315		2.92	42+15 TO 42+78	WB	LT(I.S.)	63	5	315	2.92	
1214+32.73 TO 23+57.62	EB	RT(O.S.)	2514.96	4	10059.84		93.15	50+12.78 TO 53+02.78	WB	LT(I.S.)	290	4	1160	10.75	
20+67.12 TO 21+30.12	EB	RT(I.S.)	63	5	315	2.92		53+02.78 TO 53+65.78	WB	LT(I.S.)	63	5	315	2.92	
21+30.12 TO 23+57.62	EB	RT(I.S.)	227.5	4	910	8.43		51+23.90 TO 51+63.90	WB	LT(O.S.)	40	4	160		1.49
25+37.27 TO 46+30.17 (RAMP D)	EB	RT(O.S.)	2092.9	4	8371.6		77.52	51+63.90 TO 52+26.90	WB	LT(O.S.)	63	5	315		2.92
32+42 TO 33+05	EB	RT(I.S.)	63	5	315	2.92		64+87.5 TO 66+15	WB	LT(I.S.)	127.5	4	510	4.73	
33+05 TO 34+32.50	EB	RT(I.S.)	127.5	4	510	4.73		66+15 TO 66+78	WB	LT(I.S.)	63	5	315	2.92	
45+70 TO 46+33	EB	RT(O.S.)	63	5	315		2.92	89+87.5 TO 91+15	WB	LT(O.S.)	127.5	4	510		4.73
46+33 TO 47+23	EB	RT(O.S.)	90	4	360		3.34	91+15 TO 91+78	WB	LT(O.S.)	63	5	315		2.92
47+51.28 TO 48+14.28	EB	RT(I.S.)	63	5	315	2.92		106+68.14 TO 131+39.6	WB	LT(O.S.)	2471.46	4	9885.84		91.54
48+14.28 TO 51+04.28	EB	RT(I.S.)	290	4	1160	10.75		133+44.08 TO 160+07	WB	LT(O.S.)	2662.92	4	10651.68		98.63
56+27 TO 56+90	EB	RT(I.S.)	63	5	315	2.92		160+93.40 TO 161+58.4	WB	LT(O.S.)	65	4	260		2.41
56+90 TO 58+17.50	EB	RT(I.S.)	127.5	4	510	4.73		161+58.4 TO 162+21.40	WB	LT(O.S.)	63	5	315		2.92
58+00.4 TO 58+63.4	EB	RT(O.S.)	63	5	315		2.92	204+77.50 TO 206+30	WB	LT(O.S.)	152.5	4	610		5.65
58+63.4 TO 67+90.9	EB	RT(O.S.)	927.5	4	3710		34.36	206+30 TO 206+93	WB	LT(O.S.)	63	5	315		2.92
70+22 TO 70+85	EB	RT(I.S.)	63	5	315	2.92		223+77.50 TO 225+17.5	WB	LT(O.S.)	140	4	560		5.19
70+85 TO 72+12.5	EB	RT(I.S.)	127.5	4	510	4.73		225+17.5 TO 225+80.50	WB	LT(O.S.)	63	5	315		2.92
73+93 TO 74+56	EB	RT(O.S.)	63	5	315		2.92								
74+56 TO 80+21	EB	RT(O.S.)	565	4	2260		20.93	RAMPS							
104+98.85 TO 105+61.85	EB	RT(O.S.)	63	5	315		2.92	50+33.18 TO 53+44.36	B	RT	311.18	4	1244.72		11.53
105+61.85 TO 106+12.22	EB	RT(O.S.)	50.37	4	201.48		1.87	50+26.30 TO 53+44.13	B	LT	317.83	4	1271.32		11.78
106+85 TO 109+54.96	EB	RT(O.S.)	269.96	4	1079.84		10.00	53+56.85 TO 54+88.13	B	RT	131.28	4	525.12		4.86
121+27 TO 121+90	EB	RT(O.S.)	63	5	315		2.92	54+88.13 TO 55+51.13	B	RT	63	5	315		2.92
121+90 TO 123+17.5	EB	RT(O.S.)	127.5	4	510		4.73	53+57.45 TO 54+88.73	B	LT	131.28	4	525.12		4.87
128+42.66 TO 129+05.66	EB	RT(O.S.)	63	5	315		2.92	54+88.73 TO 55+51.73	B	LT	63	5	315		2.92
129+05.66 TO 131+20.66	EB	RT(O.S.)	215	4	860		7.97	59+50 TO 64+10	B	RT	460	4	1840		17.04
133+07.70 TO 140+07.70	EB	RT(O.S.)	700	4	2800		25.93	64+10 TO 64+73	B	RT	63	5	315		2.92
148+31 TO 148+94	EB	RT(O.S.)	63	5	315		2.92	50+02.36 TO 50+65.36	C	LT	63	5	315		2.92
148+94 TO 151+59	EB	RT(O.S.)	265	4	1060		9.82	50+65.36 TO 53+70	C	LT	304.64	4	1218.56		11.29
158+68.60 TO 159+31.60	EB	RT(O.S.)	63	5	315		2.92	49+27.50 TO 53+50	C	RT	422.5	4	1690		15.65
159+31.60 TO 159+84.10	EB	RT(O.S.)	52.5	4	210		1.95	37+41.58 TO 38+96.04	E	RT	154.46	4	617.84		5.73
166+47 TO 167+10	EB	RT(O.S.)	63	5	315		2.92	92+06.29 TO 98+00	H	RT	593.71	4	2374.84		21.99
167+10 TO 172+12.50	EB	RT(O.S.)	502.5	4	2010		18.62	98+00 TO 98+63	H	RT	63	5	315		2.92
223+22 TO 223+85	EB	RT(O.S.)	63	5	315		2.92	86+88.50 TO 92+82.50	I	RT	594	4	2376		22.00
223+85 TO 237+12.5	EB	RT(O.S.)	1327.5	4	5310		49.17	93+13.79 TO 93+51.29	I	RT	37.5	4	150		1.39
15+96.12 TO 23+58.62	WB	LT(I.S.)	762.5	4	3050		28.25	85+62.85 TO 86+25.85	J	RT	63	5	315		2.92
25+39.52 TO 28+29.52	WB	LT(I.S.)	290	4	1160	10.75		86+25.85 TO 87+90.59	J	RT	164.74	4	658.96		6.11
28+29.52 TO 28+92.52	WB	LT(I.S.)	63	5	315	2.92		74+64.53 TO 75+75.50	K	RT	110.97	4	443.88		4.11
25+39.52 TO 30+42.02	WB	LT(I.S.)	502.5	4	2010		18.62								
30+42.02 TO 31+05.02	WB	LT(O.S.)	63	5	315		2.92								
40+87.5 TO 42+15	WB	LT(I.S.)	127.5	4	510	4.73									
SUBTOTAL						66.37	441.27								
														24.24	380.11
								SUBTOTAL FROM PREVIOUS COLUMN						66.37	441.27
								TOTALS						90.61	821.38
								TOTALS CARRIED TO PAVEMENT SUBSUMMARY						912	

* NOTE 1 : I.S.= INSIDE SIDE
O.S.= OUTSIDE SIDE

** NOTE 2 : PARTICIPATION I - MAJOR NEW, TE21-G000(105)
PARTICIPATION II - PAVEMENT, TE21-G000(106)

CALCULATED RAS
CHECKED TKH

PAVEMENT CALCULATIONS

CUY-90-0.00

STATION TO STATION	RAMP OR DIRECTION	SIDE (SEE NOTE 1)	DISTANCE D	AVERAGE WIDTH W	SURFACE AREA A=DxW	617 COMPACTED AGREGATE, TYPE A, AS PER PLAN	
I-90			FEET	FEET	SQ. FT.	CU. YD.	
						**I	**II
0+00 TO 20+67.12	EB	RT(I.S.)	2067.12	2	4134.24	38.3	
25+51.52 TO 32+42	EB	RT(I.S.)	690.48	2	1380.96	12.8	
34+32.5 TO 47+51.28	EB	RT(I.S.)	1318.78	2	2637.56	24.5	
51+04.28 TO 56+27	EB	RT(I.S.)	522.72	2	1045.44	9.7	
58+17.50 TO 70+22	EB	RT(I.S.)	1204.5	2	2409	22.4	
72+12.5 TO 96+50.06	EB	RT(I.S.)	2437.56	2	4875.12	45.2	
36+75 TO 45+70	EB	RT(O.S.)	895	2	1790		16.6
55+00 TO 58+00.4	EB	RT(O.S.)	300.4	2	600.8		5.6
67+90.9 TO 73+93	EB	RT(O.S.)	602.1	2	1204.2		11.2
80+21 TO 104+98.85	EB	RT(O.S.)	2477.85	2	4955.7		45.9
109+54.96 TO 121+27	EB	RT(O.S.)	1172.04	2	2344.08		21.8
123+17.5 TO 128+42.66	EB	RT(O.S.)	525.16	2	1050.32		9.8
140+07.70 TO 148+31	EB	RT(O.S.)	823.3	2	1646.6		15.3
151+59 TO 158+68.60	EB	RT(O.S.)	709.6	2	1419.2		13.2
160+46 TO 166+47	EB	RT(O.S.)	601	2	1202		11.2
172+12.5 TO 176+51	EB	RT(O.S.)	438.5	2	877		8.2
176+51 TO 185+05	EB	RT(O.S.)	854	2	1708		15.9
193+51.29 TO 223+22	EB	RT(O.S.)	2970.71	2	5941.42		55.1
237+12.5 TO 238+45	EB	RT(O.S.)	132.5	2	265		2.5
0+00 TO 23+58.62	WB	LT(I.S.)	2358.62	2	4717.24	43.7	
28+92.52 TO 40+87.5	WB	LT(I.S.)	1194.98	2	2389.96	22.2	
42+78 TO 50+12.78	WB	LT(I.S.)	734.78	2	1469.56	13.7	
53+65.78 TO 64+87.5	WB	LT(I.S.)	1121.72	2	2243.44	20.8	
66+78 TO 96+50.06	WB	LT(I.S.)	2972.06	2	5944.12	55.1	
0+00 TO 15+96.12	WB	LT(O.S.)	1596.12	2	3192.24		29.6
31+05.02 TO 40+42.73	WB	LT(O.S.)	937.71	2	1875.42		17.4
40+42.73 TO 50+24.50	WB	LT(O.S.)	981.77	2	1963.54		18.2
52+26.9 TO 61+62.68	WB	LT(O.S.)	935.78	2	1871.56		17.4
64+73 TO 89+87.5	WB	LT(O.S.)	2514.5	2	5029		46.6
91+78 TO 106+05.09	WB	LT(O.S.)	1427.09	2	2854.18		26.5
158+35 TO 160+31.50	WB	LT(O.S.)	196.5	2	393		3.7
162+21.4 TO 177+88.95	WB	LT(O.S.)	1567.55	2	3135.1		29.1
177+88.95 TO 188+04.75	WB	LT(O.S.)	1015.8	2	2031.6		18.9
198+63 TO 204+77.50	WB	LT(O.S.)	614.5	2	1229		11.4
206+93 TO 223+77.5	WB	LT(O.S.)	1684.5	2	3369		31.2
225+80.5 TO 240+00	WB	LT(O.S.)	1419.5	2	2839		26.3
RAMPS							
40+42.18 TO 50+38.42	A	LT	996.24	2	1992.48		18.5
40+45.63 TO 50+11.42	A	RT	965.79	2	1931.58		17.9
55+51.73 TO 61+63.79	B	RT	612.06	2	1224.12		11.4
SUBTOTAL						308.4	556.4

STATION TO STATION	RAMP OR DIRECTION	SIDE (SEE NOTE 1)	DISTANCE D	AVERAGE WIDTH W	SURFACE AREA A=DxW	617 COMPACTED AGREGATE, TYPE A, AS PER PLAN	
I-90			FEET	FEET	SQ. FT.	CU. YD.	
						**I	**II
55+51.73 TO 59+50	B	LT	398.27	2	796.54		7.4
49+27.51 TO 50+02.36	C	LT	74.85	2	149.7		1.4
53+70 TO 54+95.50	C	LT	125.5	2	251		2.4
53+50 TO 55+00	C	RT	150	2	300		2.8
36+71.91 TO 51+55.06	D	LT	1483.15	2	2966.3		27.5
46+33 TO 51+55.06	D	RT	522.06	2	1044.12		9.7
38+96.04 TO 54+93.16	E	LT	1597.12	2	3194.24		29.6
37+18.50 TO 47+33.09	E	RT	1014.59	2	2029.18		18.8
77+85.48 TO 85+80	F	RT	794.52	2	1589.04		14.8
90+03 TO 91+41.16	F	RT	138.16	2	276.32		2.6
77+88.95 TO 91+41.16	F	LT	1352.21	2	2704.42		25.1
75+22.88 TO 95+30.17	G	LT	2007.29	2	4014.58		37.2
73+97.88 TO 77+42	G	RT	344.12	2	688.24		6.4
81+16.00 TO 88+03.5	G	RT	687.5	2	1375		12.8
89+79.25 TO 95+31	H	LT	551.75	2	1103.5		10.3
89+79.25 TO 92+06.24	H	RT	226.99	2	453.98		4.3
86+79.25 TO 93+48.25	I	LT	669	2	1338		12.4
76+49.40 TO 83+66	J	LT	716.6	2	1433.2		13.3
85+98.78 TO 88+05	J	LT	206.22	2	412.44		3.9
76+51 TO 85+62.85	J	RT	911.85	2	1823.7		16.9
75+75.50 TO 93+44.66	K	RT	1769.16	2	3538.32		32.8
74+63.70 TO 77+46	K	LT	282.3	2	564.6		5.3
79+78 TO 84+49.81	K	LT	471.81	2	943.62		8.8
SUBTOTAL						0	306.5
SUBTOTAL FROM PREVIOUS COLUMN						308.4	556.4
TOTALS						308.4	862.9
TOTALS CARRIED TO PAVEMENT SUBSUMMARY						1172	

* NOTE 1 : I.S.= INSIDE SIDE
O.S.= OUTSIDE SIDE

** NOTE 2 : PARTICIPATION I - MAJOR NEW, TE21-G000(105)
PARTICIPATION II - PAVEMENT, TE21-G000(106)

CALCULATED RAS
CHECKED TKH

PAVEMENT CALCULATIONS

CUY-90-0.00

PROJECT DESCRIPTION

THE 4.54 MILE LENGTH WILL INCLUDE PAVEMENT WIDENING AND RESURFACING OF INTERSTATE 90 FROM THE LORAIN COUNTY LINE TO CLAGUE ROAD.

PROJECT DATA

TOTAL AREA (RIGHT-OF-WAY)	84.23 ha
AREA TO UNDERGO EXCAVATION, FILLING OR GRADING	20.15 ha
RUNOFF CODFFICIENT, PRE-CONSTRUCTION	0.78-0.90
RUNOFF COEFFICIENT, POST CONSTRUCTION	0.90
SOIL DATA - SEE GENERAL NOTES	
IMMEDIATE RECEIVING WATERS	TUTTLE CREEK
SUBSEQUENT RECEIVING WATERS	LAKE ERIE

U.S.G.S. QUADRANT = N 41225 - W8152.5/7.5
NORTH OLMSTED, OHIO
LONGITUDE: 81 55' 32"
LATITUDE: 41 28' 30"

PROJECT DATA

ITEM 877, TEMPORARY INLET PROTECTION FILTER FABRIC FENCE - 1380 FT
ITEM 877, TEMPORARY DITCH CHECK FILTER FABRIC FENCE - 640 FT
ITEM 877, TEMPORARY PERIMETER FILTER FABRIC FENCE - 4720 FT

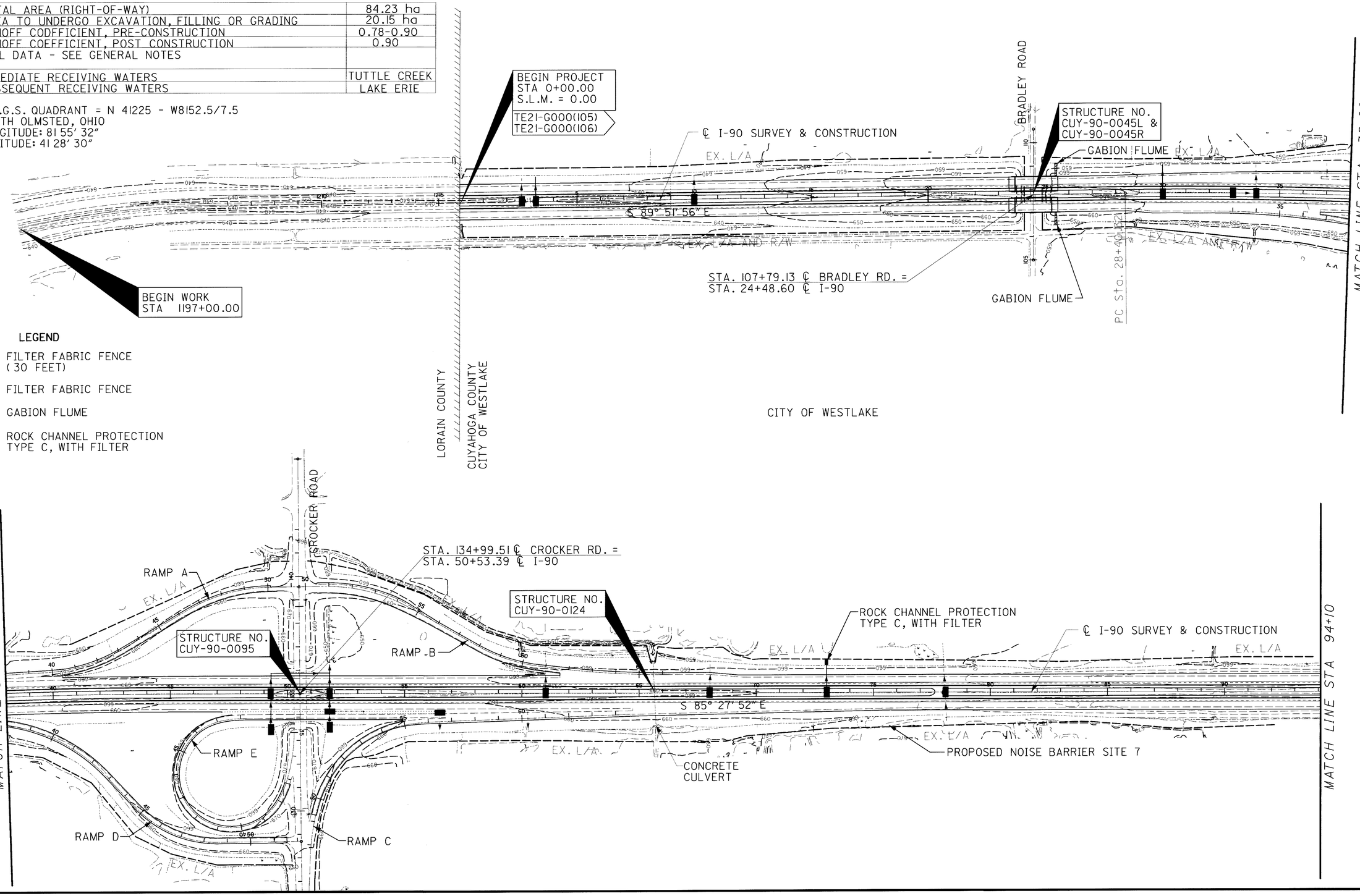

LEGEND

- FILTER FABRIC FENCE (30 FEET)
- —FF— FILTER FABRIC FENCE
- GABION FLUME
- ROCK CHANNEL PROTECTION TYPE C, WITH FILTER

HORIZONTAL SCALE IN FEET
0 100 200 400

STORM WATER POLLUTION PREVENTION PLAN

CUY-90-0.00

125
582

22 MAR 2000
c:\PR22308\CADD\1738DE0.DGN

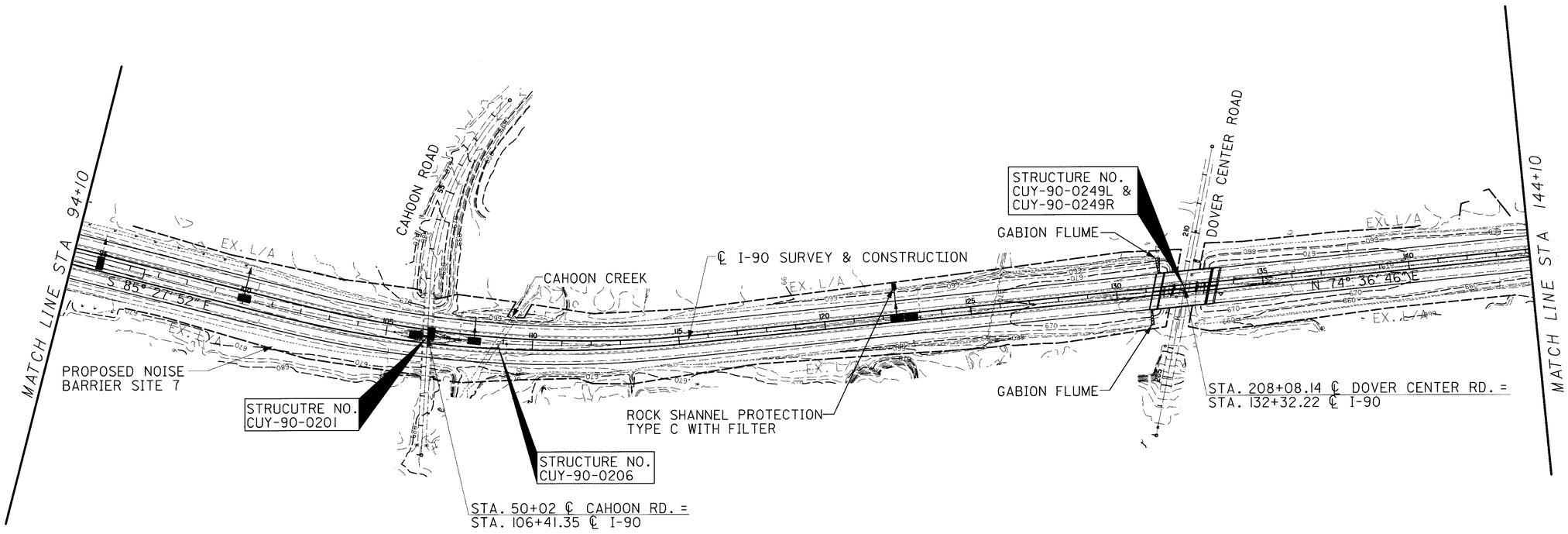

CITY OF WESTLAKE

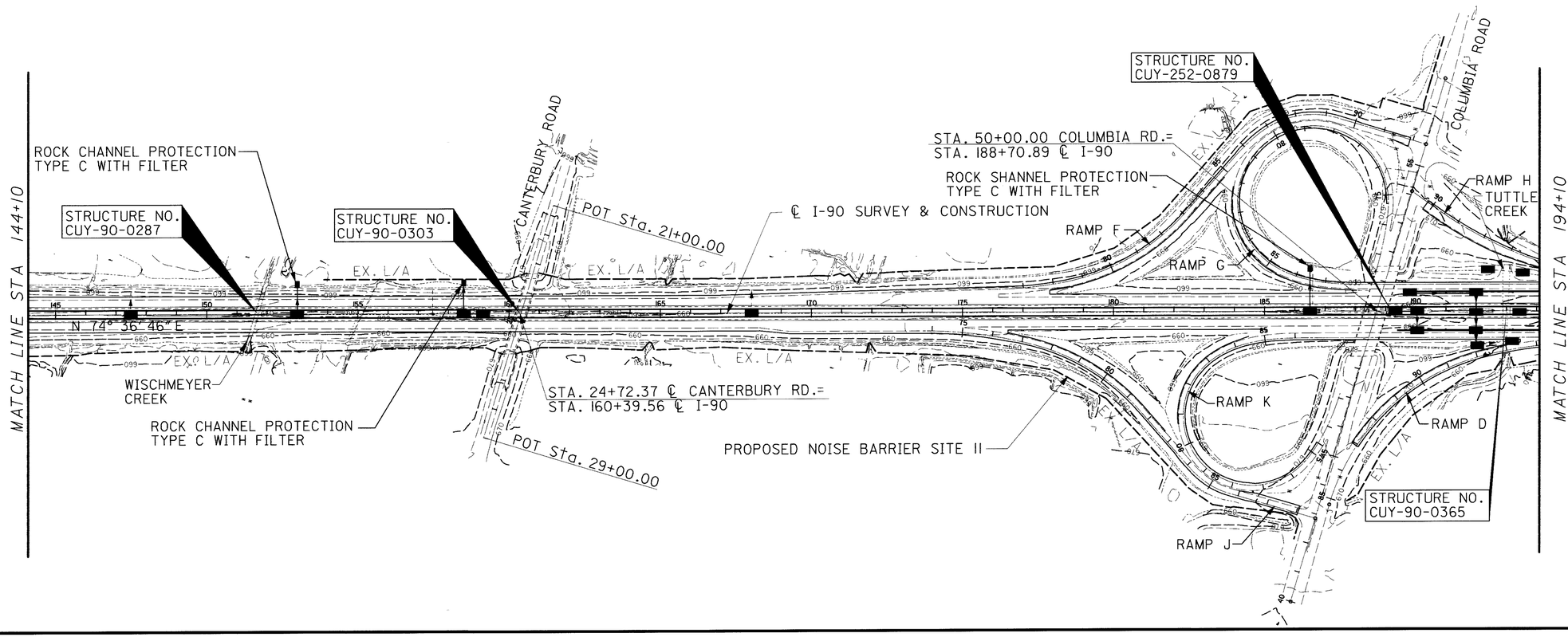

HORIZONTAL SCALE IN FEET
0 100 200 400

STORM WATER POLLUTION PREVENTION PLAN

CUY-90-0.00

126
582

03 MAR 2000
p:\pr22308\cadd\11738del.dgn

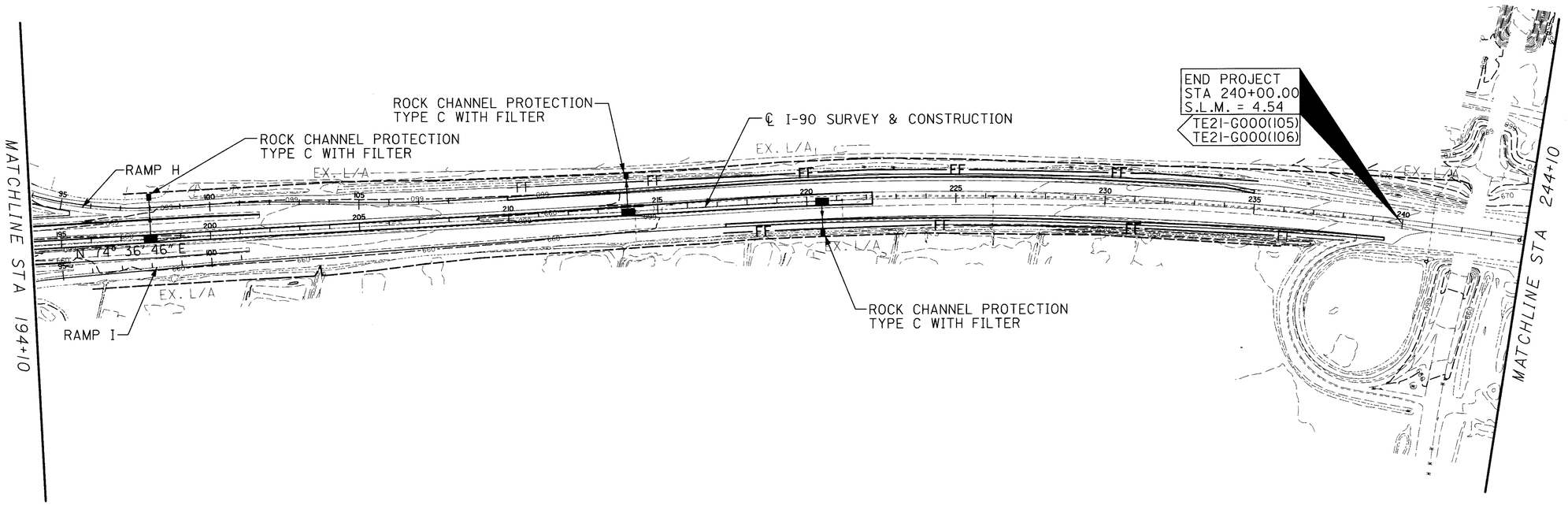

CITY OF WESTLAKE

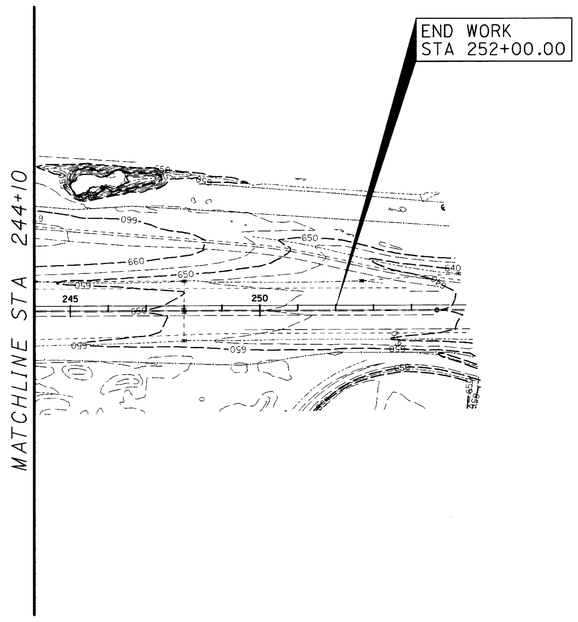

HORIZONTAL SCALE IN FEET

STORM WATER POLLUTION PREVENTION PLAN

CUY-90-0.00

127
582

03 MAR 2000
p:\pr22308\cadd\ll738de2.dgn

BENCH MARK: DISK IN HEADWALL STA 1215+90± RT
STAMPED LOR 1-1923.03 1996
ELEV = 636.41

SEE SHEETS 547 TO 581 FOR NOISE BARRIER PROFILES

FOR MEDIAN CROSS OVER DETAILS SEE SHEET 340

BEGIN PROJECT
STA. 0+00.00
S.L.M. 0.00
TE21-G000(105)
TE21-G000(106)

EX. L/A

℄ I-90 W.B.

℄ I-90 SURVEY & CONSTRUCTION

14' LANE (TYP.)

12' SHOULDER (TYP.)

15"S

18"S

U10 U11 U12 U22 D2 U18 U16 U17

1211 1212 1213 1214 1215

REMOVE 15"S

MATCHLINE STA 7+00

GR1 L.O.N. 162.5'

SITE 6
BEGIN NOISE BARRIER
N.B. STA 10+00 =
℄ I-90
STA 1215+56.25, 86.0' RT.

E1 U13 U14 U15 U24 D1 U23 U19 E2 U20 U21

℄ I-90 E.B.

NOISE BARRIER SITE 6

NW1

EQUATION:
Sta 1215+90.07 BK =
Sta 0+00.00 AH

EX. L/A AND R/W

= BUTT JOINT

100' TRANSITION BUTT JOINT

PROFILE GRADE 1-1/2" ABOVE EXISTING PROFILE

MATCH EXISTING ELEV.

CB-4, A.P.P.
STA. 3+24.90, ℄
GRATE EL 635.08
18" INV. N EL 632.08

PROFILE GRADE

EXISITNG GROUND @ 42' LT. & RT. OF ℄

0.24 % +2.00± % W.B.

0.24 % +2.00± % E.B.

REMOVE 15"S

EXISTING GROUND @ ℄

EX. CB-4
STA. 2+65, ℄
GRATE EL 635.46
15" INV. N,E 632.68

REMOVE CB-4
STA. 3+24.90, ℄
GRATE EL 635.46
15" INV. W 632.88

STA 0+00
EX 83"X53" PIPE

EXISITNG GROUND @ 42' LEFT OF ℄ (TYP.)
EXISTING GROUND @ ℄ (TYP.)
EXISITNG GROUND @ 42' RIGHT OF ℄ (TYP.)

650 645 640 635 630 625 620

638.42 636.02 638.41 638.22 635.99 638.27 638.12 635.94 638.07 638.00 635.80 638.03 637.93 635.69 637.93 637.80 636.48 637.83 637.73 635.68 637.79 637.62 635.77 637.82 637.67 636.05 637.99 638.05 636.25 638.28 638.34 636.53 638.45 638.70 636.75 638.77 639.08 637.16 639.22 639.49 637.54 639.65

0 1 2 3 4 5 6 7

HORIZONTAL SCALE IN FEET
0 25 50 100

CALCULATED | CHECKED

PLAN AND PROFILE
STA 0+00 TO STA 7+00

CUY-90-0.00

07 APR 2000
P:\PR22308\cadd\I738GPLD.DGN

DRAINAGE

REF NO.	STATION FROM	STATION TO	SIDE	202 CATCH BASIN REMOVED EACH	202 PIPE REMOVED LIN FT	602 CONCRETE MASONRY CU YD	603 CONDUIT, BORED OR JACKED, 18", TYPE B OR C, 706.02 LIN FT	604 CATCH BASIN NO. 4, AS PER PLAN EACH	
D1	2+65	3+24.90	℄		59				
D2	3+24.90		℄	1		0.31	104	1	
TOTALS				1	59	0.31	104	1	
TOTALS CARRIED TO ROADWAY SUBSUMMARY				1	59	0.40	104	1	

UNDERDRAIN

REF NO.	STATION FROM	STATION TO	SIDE	603 6" CONDUIT, TYPE F LIN FT	605 6" SHALLOW PIPE UNDERDRAIN WITH FABRIC WRAP, A.P.P. LIN FT	FITTINGS FOR INFORMATION ONLY TEE EACH	FITTINGS FOR INFORMATION ONLY 90° BEND EACH	
U10	0+10	3+20	LT	10	343		1	
U11	0+10	3+20	LT		310	1		
U12	0+10	3+20	LT		310	1		
U13	0+10	3+20	RT		310	1		
U14	0+10	3+20	RT		310	1		
U15	0+10	3+20	RT	10	343		1	
U16	3+28	7+00	LT	10	406		1	
U17	3+28	7+00	LT		372	1		
U18	3+28	7+00	LT		372	1		
U19	3+28	7+00	RT		372	1		
U20	3+28	7+00	RT		372	1		
U21	3+28	7+00	RT	10	406		1	
U22	3+20	3+24.90	℄	5		1		
U23	3+24.90	3+28	℄	5		1		
U24	2+80	3+20	℄		40			
TOTALS CARRIED TO ROADWAY SUBSUMMARY				50	4266	10	4	

NOISE BARRIER

REF NO.	STATION FROM	STATION TO	SIDE	SPECIAL NOISE BARRIER (REFLECTIVE) 10' AND UNDER SQ FT	SPECIAL NOISE BARRIER (REFLECTIVE) OVER 10' TO 14' SQ FT	SPECIAL NOISE BARRIER (REFLECTIVE) OVER 14' TO 20' SQ FT
NW1	1215+56.25	7+00	RT	120	144	12000
	*(10+00)	*(17+33.82)				
TOTALS CARRIED TO ROADWAY SUBSUMMARY				120	144	12000

* STATIONING ALONG NOISE BARRIER

GUARDRAIL

REF NO.	STATION FROM	STATION TO	SIDE	606 GUARDRAIL, TYPE 5 LIN FT	606 ANCHOR ASSEMBLY, TYPE E-98 EACH	
GR1	1213+72.73	7+00	RT	917.34	1	
TOTALS CARRIED TO ROADWAY SUBSUMMARY				917.34	1	

EROSION CONTROL

REF NO.	STATION FROM	STATION TO	SIDE	670 DITCH EROSION PROTECTION SQ YD	
E1	1+07	2+57	℄	125	
E2	3+31	4+81	℄	125	
TOTALS CARRIED TO ROADWAY SUBSUMMARY				250	

CALCULATED MJB/JAA
CHECKED RAS/ENF

PLAN AND PROFILE SUBSUMMARY
STA 0+00 TO STA 7+00

CUY-90-0.00

I:\PROJECTS\Pidll738\dgn\final plans\ll738GPULDGN 21-JUL-2000 7:49AM jgrmovse

BENCHMARK: CHISELED "□" ON THE SOUTHEAST CORNER OF HEADWALL STA. 10+00± 111'± LT. ELEV.= 637.13

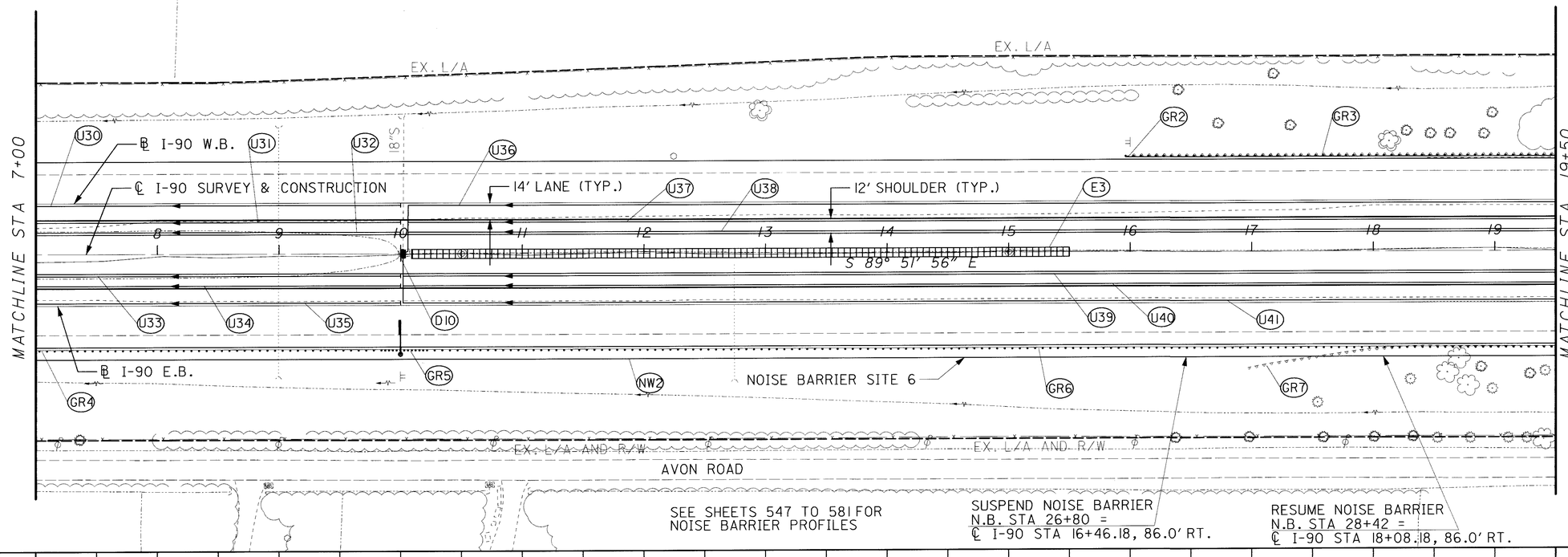

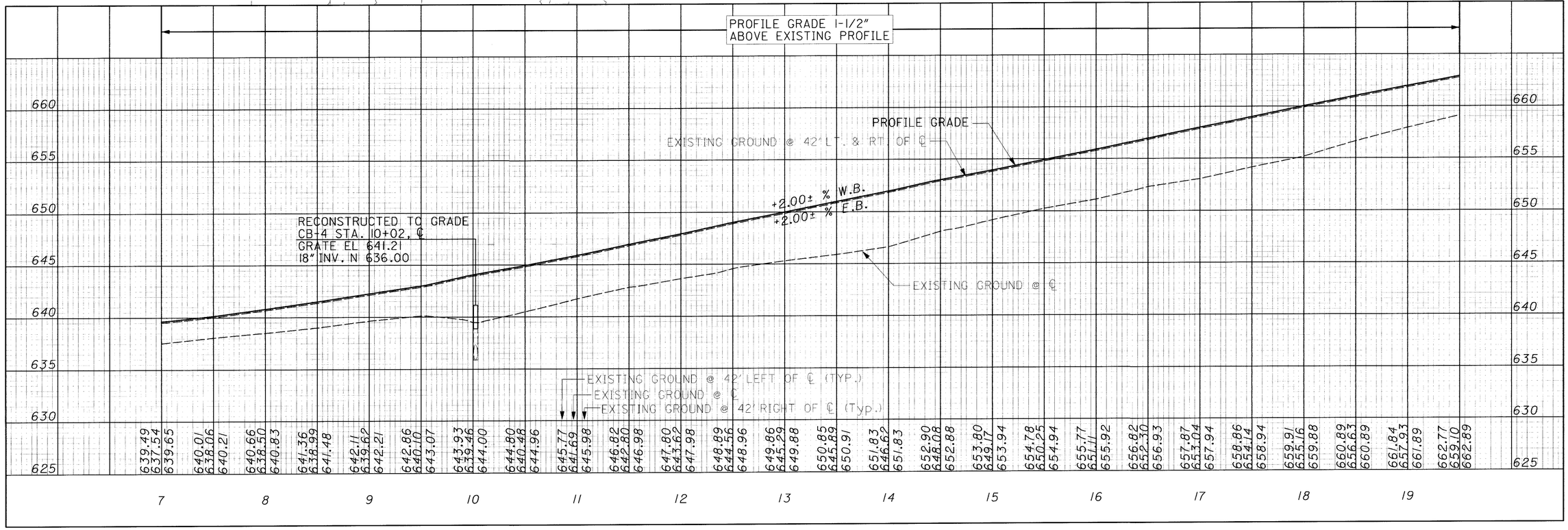

HORIZONTAL SCALE IN FEET
0 25 50 100
CALCULATED
CHECKED

PLAN AND PROFILE STA 7+00 TO STA 19+50

CUY-90-0.00

130
582

$ DATE $
$ FILE $

GUARDRAIL

REF NO.	STATION FROM	STATION TO	SIDE	202 GUARDRAIL REMOVED LIN FT	606 GUARDRAIL, TYPE 5 LIN FT	606 GUARDRAIL, TYPE 5A LIN FT	606 ANCHOR ASSEMBLY, TYPE T EACH
GR2	15+96.12	19+50	LT		341.38		1
GR3	15+96.12	19+50	LT	353.88			
GR4	7+00	9+82.62	RT		282.62		
GR5	9+82.62	10+20.12	RT			37.5	
GR6	10+20.12	19+50	RT		929.88		
GR7	16+95.12	19+50	RT	254.88			
TOTALS CARRIED TO ROADWAY SUBSUMMARY				609	1554	37.5	1

NOISE BARRIER

REF NO.	STATION FROM	STATION TO	SIDE	SPECIAL NOISE BARRIER (REFLECTIVE) 10' AND UNDER SQ FT	SPECIAL NOISE BARRIER (REFLECTIVE) OVER 10' TO 14' SQ FT	SPECIAL NOISE BARRIER (REFLECTIVE) OVER 14' TO 20' SQ FT
NW2	7+00	19+50	RT	1284	5152	11388
	*(17+33.82)	*(29+83.82)				
TOTALS CARRIED TO ROADWAY SUBSUMMARY				1284	5152	11388

* STATIONING ALONG NOISE BARRIER

DRAINAGE

REF NO.	STATION FROM	STATION TO	SIDE	604 CATCH BASIN NO. 4 RECONSTRUCTED TO GRADE EACH	
D10	10+02		℄	1	
TOTALS CARRIED TO ROADWAY SUBSUMMARY				1	

UNDERDRAIN

REF NO.	STATION FROM	STATION TO	SIDE	603 6" CONDUIT, TYPE F LIN FT	605 6" SHALLOW PIPE UNDERDRAIN WITH FABRIC WRAP LIN FT	605 6" SHALLOW PIPE UNDERDRAIN WITH FABRIC WRAP, A.P.P. LIN FT	FITTINGS FOR INFORMATION ONLY TEE EACH	90° BEND EACH	60° BEND EACH	
U30	7+00	10+00	LT			300				
U31	7+00	10+00	LT			300				
U32	7+00	10+00	LT			300				
U33	7+00	10+00	RT			300				
U34	7+00	10+00	RT			300				
U35	7+00	10+00	RT			300				
U36	10+02	19+50	LT	10		989		1	1	
U37	10+04	19+50	LT		946		1			
U38	10+04	19+50	LT			946	1			
U39	10+02	19+50	RT			948	1			
U40	10+02	19+50	RT		948		1			
U41	10+02	19+50	RT	10		988		1		
TOTALS CARRIED TO ROADWAY SUBSUMMARY				20	1894	5671	4	2	1	

EROSION CONTROL

REF NO.	STATION FROM	STATION TO	SIDE	670 DITCH EROSION PROTECTION SQ YD	
E3	10+09	15+50	℄	450.83	
TOTALS				450.83	
TOTALS CARRIED TO ROADWAY SUBSUMMARY				451	

CALCULATED MJB/JAA
CHECKED RAS/ENF

PLAN AND PROFILE SUBSUMMARY
STA 7+00 TO STA 19+50

CUY-90-0.00

131
582

I:\PROJECTS\Pid1738\dgn\final plans\1738GPA.DGN 21-JUL-2000 7:52AM jgrmovse

Curve 1 Data:
P.I. Sta = 36+65.96
Delta = 4°24'04.58" (RT)
Degree = 0°16'00.00"
T = 825.64
L = 1,650.48
R = 21,485.92
E = 15.86
LC = 1,650.07
PC Sta = 28+40.32
PT Sta = 44+90.80

BENCHMARK #1: 1" IRON PIN IN MONUMENT
BOX ELEV.= 644.05

BENCHMARK #2: 1" IRON PIN IN MONUMENT
BOX ELEV.= 647.15

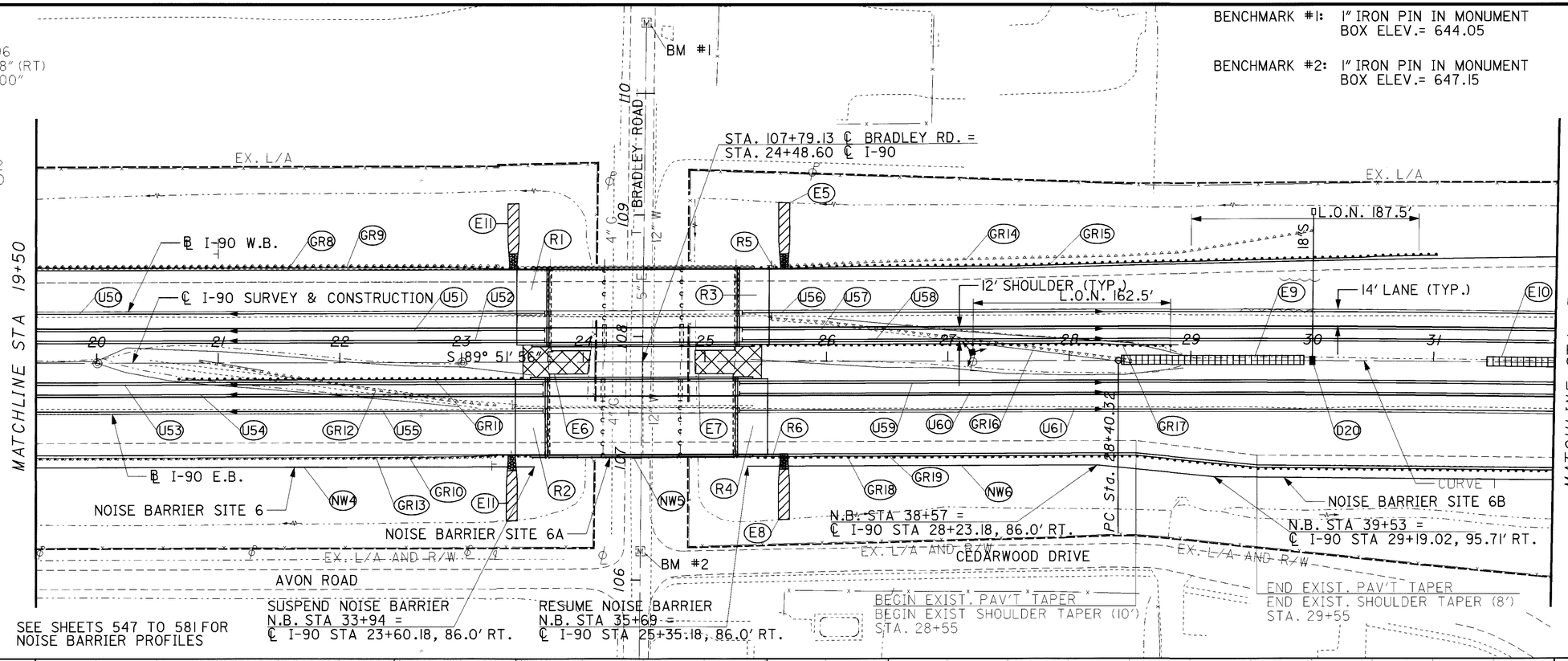

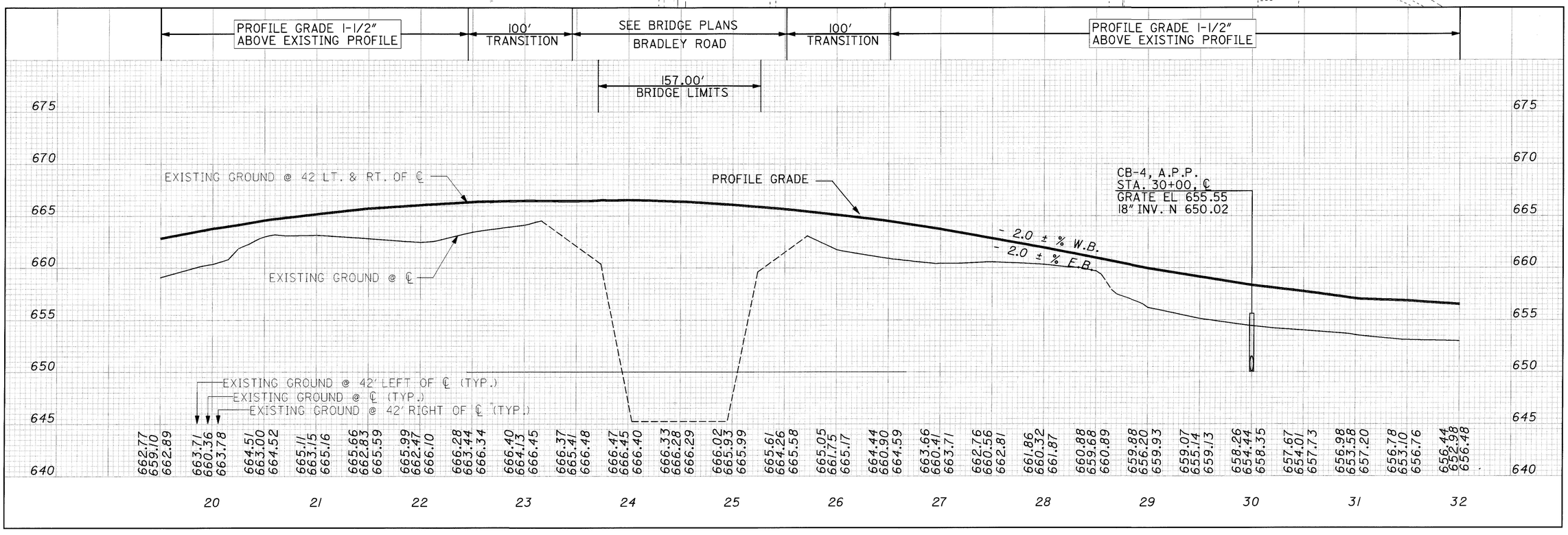

PLAN AND PROFILE
STA 19+50 TO STA 32+00

CUY-90-0.00

132
582

I:\PROJECTS\Pid1738\dgn\finalplans\1738GPB.DGN 21-JUL-2000 7:54AM jgrmovse

DRAINAGE

REF NO.	STATION FROM	STATION TO	SIDE	601 ROCK CHANNEL PROTECTION, TYPE C WITH FILTER (CU YD)	602 CONCRETE MASONRY (CU YD)	603 CONDUIT, BORED OR JACKED, 18" TYPE B OR C, 706.02 (LIN FT)	604 CATCH BASIN NO. 4, AS PER PLAN (EACH)
D20	30+00		℄	30	0.31	127	1
TOTALS				30	0.31	127	1
TOTALS CARRIED TO ROADWAY SUBSUMMARY				30	0.40	127	1

NOISE BARRIER

REF NO.	STATION FROM	STATION TO	SIDE	SPECIAL: NOISE BARRIER (REFLECTIVE) 10' AND UNDER (SQ FT)	SPECIAL: NOISE BARRIER (REFLECTIVE) OVER 10' TO 14' (SQ FT)	SPECIAL: NOISE BARRIER (REFLECTIVE) OVER 14' TO 20' (SQ FT)	SPECIAL: NOISE BARRIER, MISC.: BRIDGE MOUNTED (SQ FT)
NW4	19+50	23+60.18	RT		2690	2784	
	*(29+83.82)	*(33+94)					
NW5	CUY-90-0045R		RT				1495
NW6	25+35.18	32+00	RT			12064	
	*(35+69)	*(42+33.98)					
TOTALS CARRIED TO ROADWAY SUBSUMMARY					2690	14848	1495

* STATIONING ALONG NOISE BARRIER

UNDERDRAIN

REF NO.	STATION FROM	STATION TO	SIDE	605 6" SHALLOW PIPE UNDERDRAIN WITH FABRIC WRAP (LIN FT)	605 6" SHALLOW PIPE UNDERDRAIN WITH FABRIC WRAP, A.P.P. (LIN FT)
U50	19+50	23+68.5	LT		418.5
U51	19+50	23+68.5	LT	418.5	
U52	19+50	23+68.5	LT		418.5
U53	19+50	23+67	RT		417
U54	19+50	23+67	RT	417	
U55	19+50	23+67	RT		417
U56	25+30	32+00	LT		670
U57	25+30	32+00	LT	670	
U58	25+30	32+00	LT		670
U59	25+29	32+00	RT		671
U60	25+29	32+00	RT	671	
U61	25+29	32+00	RT		671
TOTALS CARRIED TO ROADWAY SUBSUMMARY				2177	4353

EROSION CONTROL

REF NO.	STATION FROM	STATION TO	SIDE	660 SODDING REINFORCED (SQ YD)	670 SLOPE EROSION PROTECTION (SQ YD)	670 DITCH EROSION PROTECTION (SQ YD)	838 GABIONS, WITH ADDITIONAL COATING (CU YD)
E5	25+62	25+68	LT	41.9			3.33
E6	23+50.77	24+06.16	℄		131.55		
E7	24+91.76	25+46.37	℄		132.22		
E8	25+62	25+68	RT	41.19			3.33
E9	28+43	29+93	℄			125	
E10	31+44	32+00	℄			46.66	
E11	23+30	23+30	LT/RT	90			
TOTALS				173.09	263.77	171.66	6.66
TOTALS CARRIED TO ROADWAY SUBSUMMARY				173	264	172	7

CALCULATED MJB/JAA
CHECKED RAS/ENF

PLAN AND PROFILE SUBSUMMARY
STA 19+50 TO STA 32+00

CUY-90-0.00

133
582

I:\PROJECTS\Pidl738\dgn\final plans\il738GPB.DGN 21-JUL-2000 7:54AM jgrmovse

GUARDRAIL									
				202	606				
REF NO.	STATION		SIDE	GUARDRAIL REMOVED	GUARDRAIL, TYPE 5	ANCHOR ASSEMBLY, TYPE E-98	ANCHOR ASSEMBLY, TYPE T	BRIDGE TERMINAL ASSEMBLY, TYPE 1	BRIDGE TERMINAL ASSEMBLY, TYPE 2
	FROM	TO		LIN FT	LIN FT	EACH	EACH	EACH	EACH
GR8	19+50	23+58.62	LT	408.62					
GR9	19+50	23+58.62	LT		396.12				1
GR10	19+50	23+57.62	RT		382.62			1	
GR11	20+70.12	23+57.62	RT		212.5	1		1	
GR12	20+44.90	23+56.80	RT	312.5					
GR13	19+50	23+57.62	RT	407.62					
GR14	25+39.52	30+01.07	LT	462.5					
GR15	25+39.52	31+02.02	LT		487.5	1		1	
GR16	25+39.80	28+51.70	LT	312.5					
GR17	25+39.52	28+89.52	LT		275	1		1	
GR18	25+38.52	28+01.02	RT	262.5					
GR19	25+37.27	32+00	RT		662.73				1
TOTALS CARRIED TO ROADWAY SUBSUMMARY				2166.50	2416	3		4	2

ROADWAY						
				202	611	830
REF NO.	STATION		SIDE	APPROACH SLAB REMOVED	REINFORCED CONCRETE APPROACH SLAB (T=15"), A.P.P.	CURB, TYPE 6
	FROM	TO		SQ YD	SQ YD	LIN FT
R1	23+45.62	23+70.62	LT	108.33	173.61	
R2	23+44.52	23+69.52	RT	108.33	173.61	
R3	25+27.62	25+52.62	LT	108.33	173.61	
R4	25+26.52	25+51.52	RT	108.33	173.61	
R5	25+52	25+62	LT			10
R6	25+52	25+62	RT			10
TOTALS				433.32	694.44	20
TOTALS CARRIED TO ROADWAY SUBSUMMARY				434	695	20

CALCULATED MJB
CHECKED RAS

PLAN AND PROFILE SUBSUMMARY
STA 19+50 TO STA 32+00

CUY-90-0.00

I:\PROJECTS\Pid11738\dgn\final plans\11738GPB.DGN 21-JUL-2000 7:55AM jgrmovse

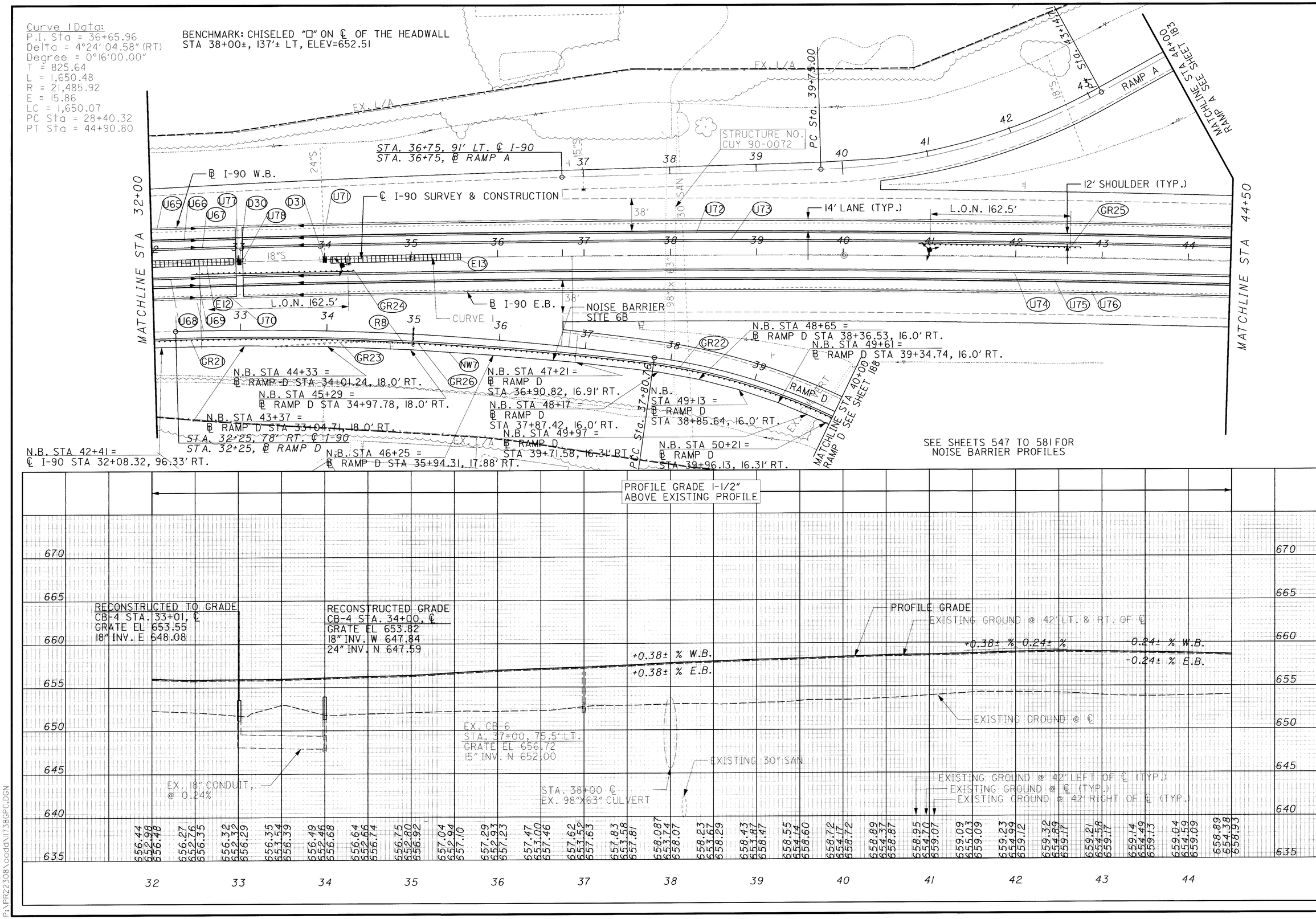

HORIZONTAL SCALE IN FEET

CALCULATED

CHECKED

PLAN AND PROFILE
STA 32+00 TO STA 44+50

CUY-90-0.00

07 APR 2000
P:\PR22308\cadd\1738GPC.DGN

GUARDRAIL

REF NO.	STATION FROM	STATION TO	SIDE	202 GUARDRAIL REMOVED	606 GUARDRAIL, TYPE 5	606 BRIDGE TERMINAL ASSEMBLY, TYPE 1	606 BRIDGE TERMINAL ASSEMBLY, TYPE 2	606 ANCHOR ASSEMBLY, TYPE E-98	606 ANCHOR ASSEMBLY, TYPE T	622 CONCRETE BARRIER, TYPE D
				LIN FT	LIN FT	EA	EA	EACH	EACH	LIN FT
GR21	32+00	34+37.93	RT		238.93	1				
GR22	35+38.93	40+00	RT		461.07		1			
GR23	33+40	34+90	RT	150						
GR24	32+45	34+32.50	RT		125			1	1	
GR25	40+87.50	42+75	LT		125			1	1	
GR26	34+62.93	35+14.93	RT							52
TOTALS CARRIED TO ROADWAY SUBSUMMARY				150	950	1	1	2	2	52

DRAINAGE

REF NO.	STATION FROM	STATION TO	SIDE	604 CATCH BASIN NO. 4 RECONSTRUCTED TO GRADE	
				EACH	
D30	33+01		℄	1	
D31	34+00		℄	1	
TOTALS CARRIED TO ROADWAY SUBSUMMARY				2	

EROSION CONTROL

REF NO.	STATION FROM	STATION TO	SIDE	670 DITCH EROSION PROTECTION	
				SQ YD	
E12	32+00	32+94	℄	78.33	
E13	34+07	35+57	℄	125	
TOTALS					
TOTALS CARRIED TO ROADWAY SUBSUMMARY				204	

UNDERDRAIN

REF NO.	STATION FROM	STATION TO	SIDE	603 6" CONDUIT, TYPE F	605 6" SHALLOW PIPE UNDERDRAIN WITH FABRIC WRAP	605 6" SHALLOW PIPE UNDERDRAIN WITH FABRIC WRAP, A.P.P.	FITTINGS FOR INFORMATION ONLY TEE	FITTINGS FOR INFORMATION ONLY 90° BEND	FITTINGS FOR INFORMATION ONLY
				LIN FT	LIN FT	LIN FT	EACH	EACH	
U65	32+00	33+01	LT	10		135		1	
U66	32+00	32+99	LT		99		1		
U67	32+00	32+99	LT			99	1		
U68	32+00	32+99	RT			99	1		
U69	32+00	32+99	RT		99		1		
U70	32+00	33+01	RT	10		135		1	
U71	33+01	44+50	LT	10		1183		1	
U72	33+03	44+50	LT		1147		1		
U73	33+03	44+50	LT			1147	1		
U74	33+03	44+50	RT			1147	1		
U75	33+03	44+50	RT		1147		1		
U76	33+03	44+50	RT	10		1183			
U77	29+99	33+01	℄	2			1		
U78	33+01	33+03	℄	2			1		
TOTALS CARRIED TO ROADWAY SUBSUMMARY				44	2492	5128	10	3	

ROADWAY

REF NO.	STATION FROM	STATION TO	SIDE	202 CONCRETE BARRIER REMOVED
				LIN FT
R8	34+90	35+02	RT	12
TOTALS CARRIED TO ROADWAY SUBSUMMARY				12

NOISE BARRIER

REF NO.	STATION FROM	STATION TO	SIDE	SPECIAL NOISE BARRIER (REFLECTIVE) 10' AND UNDER	SPECIAL NOISE BARRIER (REFLECTIVE) OVER 10' TO 14'	SPECIAL NOISE BARRIER (REFLECTIVE) OVER 14' TO 20'
				SQ FT	SQ FT	SQ FT
NW7	32+00	40+00	RT			15796
	*(42+33.98)	*(50+24.87)				
TOTALS CARRIED TO ROADWAY SUBSUMMARY						15796

* STATIONING ALONG NOISE BARRIER

CALCULATED MJB/JAA
CHECKED RAS/ENF

PLAN AND PROFILE SUBSUMMARY
STA 32+00 TO STA 44+50

CUY-90-0.00

136
582

I:\PROJECTS\Pidl738\dgn\finalplans\il738GPC.DGN 09-AUG-2000 3:07PM jgrmovse

SEE MEDIAN GRADING DETAIL SHEET 341

BENCHMARK: CHISELED "□" ON ℄ OF HEADWALL
STA 54+87± RAMP C, 62'± RT, ELEV=653.79

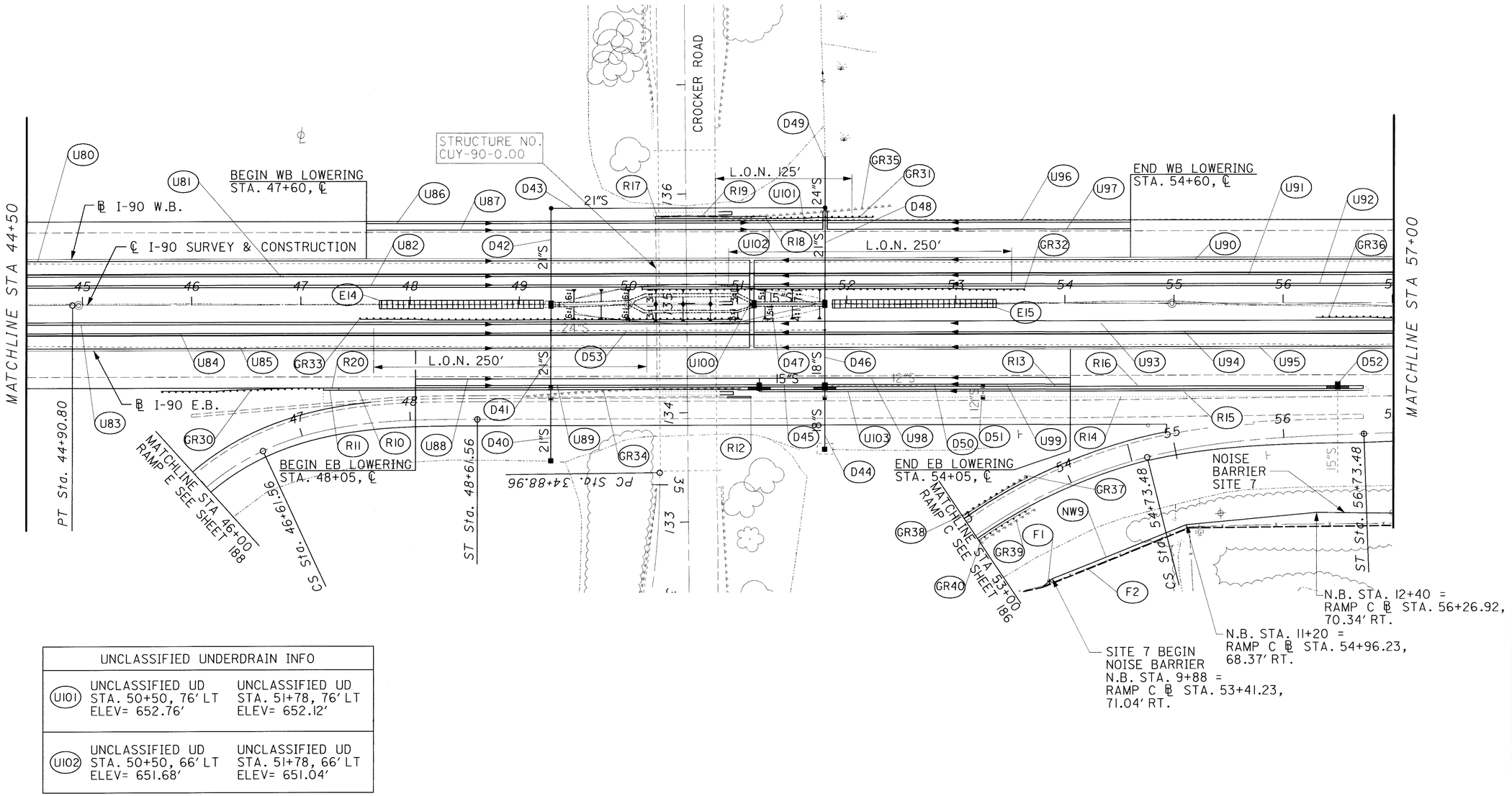

UNCLASSIFIED UNDERDRAIN INFO		
(UI01)	UNCLASSIFIED UD STA. 50+50, 76' LT ELEV= 652.76'	UNCLASSIFIED UD STA. 51+78, 76' LT ELEV= 652.12'
(UI02)	UNCLASSIFIED UD STA. 50+50, 66' LT ELEV= 651.68'	UNCLASSIFIED UD STA. 51+78, 66' LT ELEV= 651.04'

SEE SHEETS 547 TO 581 FOR NOISE BARRIER PROFILES

HORIZONTAL SCALE IN FEET
0 25 50 100
CALCULATED
CHECKED

PLAN
STA 44+50 TO STA 57+00

CUY-90-0.00

137
582

07 APR 2000
P:\PR22308\cadd\II738GPD.DGN

| | | |

DRAINAGE																		
REF NO.	STATION		SIDE	202				602	603					604				
				PIPE REMOVED	MANHOLE REMOVED	CATCH BASIN REMOVED	STRUCTURE REMOVED	CONCRETE MASONRY	15" CONDUIT, TYPE B	18" CONDUIT, TYPE C	21" CONDUIT, TYPE B	24" CONDUIT, TYPE B	24" CONDUIT, TYPE C	CATCH BASIN NO.4, AS PER PLAN	CATCH BASIN NO. 5	MANHOLE NO. 3	INLET NO. 3B	INLET NO. 3B, A.P.P.
	FROM	TO		LIN FT	EACH	EACH	EACH	CU YD	LIN FT	LIN FT	LIN FT	LIN FT	LIN FT	EACH	EACH	EACH	EACH	EACH
D40	49+29		RT	69		3						69			1			
D41	49+29		RT	75	1	1						75		1				
D42	49+29		LT									87.5				1		
D43	49+29	51+80	LT										251					
D44	51+80		RT	58		3				58					1			1
D45	51+20	51+80	RT						60									1
D46	51+80		RT	75		1				75				1				
D47	51+15	51+80	℄						65					1				
D48	51+80		LT	87.5							87.5					1		
D49	51+80		LT	47.5			1	0.56					47.5					
D50	51+80	53+25	RT	145														
D51	53+25		RT	12		2												
D52	56+50		RT			1											1	
D53	49+29	51+80	℄	251														
TOTALS				820	1	11	1	0.56	125	133	87.5	231.5	298.5	3	2	2	1	2
TOTALS CARRIED TO ROADWAY SUBSUMMARY				820	1	11	1	0.60	125	133	87.5	231.5	298.5	3	2	2	1	2

CALCULATED MJB
CHECKED RAS

PLAN AND PROFILE SUBSUMMARY
STA 44+50 TO STA 57+00

CUY-90-0.00

08 MAR 2000
p:\pr22308\cadd\1738gpd.dgn

GUARDRAIL

REF NO.	STATION FROM	STATION TO	SIDE	202 GUARDRAIL REMOVED	606 GUARDRAIL, TYPE 5	606 ANCHOR ASSEMBLY, TYPE E-98	606 ANCHOR ASSEMBLY, TYPE T	606 BRIDGE TERMINAL ASSEMBLY. TYPE 1
				LIN FT	LIN FT	EACH	EACH	EACH
GR30	45+73	47+23	RT		125	1		1
GR31	51+23.90	52+23.90	LT		100	1		1
GR32	50+12.78	53+62.78	LT		287.5	1	1	
GR33	47+54.28	51+04.28	RT		287.5	1	1	
GR34	49+03	51+05	RT	212.5				
GR35	51+00.90	52+39	LT	137.5				
GR36	56+30	57+00	RT		20	1		
GR37	53+00	53+66.76	LT	66.8				
GR38	53+00	53+66.58	LT		70		1	
GR39	53+00	53+61.55	RT	61.55				
GR40	53+00	53+56.70	RT		56.3		1	
TOTALS				478.4	946.3	5	4	2
TOTALS CARRIED TO ROADWAY SUBSUMMARY				487.5	950	5	4	2

NOISE BARRIER

REF NO.	STATION FROM	STATION TO	SIDE	SPECIAL NOISE BARRIER (REFLECTIVE) 10' AND UNDER	SPECIAL NOISE BARRIER (REFLECTIVE) OVER 10' TO 14'	SPECIAL NOISE BARRIER (REFLECTIVE) OVER 14' TO 20'
				SQ FT	SQ FT	SQ FT
NW9	53+41.23	57+00	RT	120	3816	
	*(9+88)	*(13+13.08)				
TOTALS CARRIED TO ROADWAY SUBSUMMARY				120	3816	

* STATIONING ALONG NOISE BARRIER

FENCE

REF NO.	STATION FROM	STATION TO	SIDE	202 FENCE REMOVED	607 FENCE, TYPE CL
				LIN FT	LIN FT
F1	53+40		RT		11
F2	53+30	57+00	RT	310	
TOTALS CARRIED TO ROADWAY SUBSUMMARY				310	11

ROADWAY

REF NO.	STATION FROM	STATION TO	SIDE	202 CURB REMOVED	202 CONCRETE MEDIAN REMOVED	202 CONCRETE BARRIER REMOVED	622 CONCRETE BARRIER, A.P.P.		622 CONCRETE BARRIER, TYPE C-32	622 CONCRETE BARRIER, TYPE D, A.P.P.	
				LIN FT	SQ YD	LIN FT	LIN FT		LIN FT	LIN FT	
R10	47+21	51+00	RT							379	
R11	47+21	56+74	RT	953							
R12	50+90	51+10	RT							20	
R13	51+00	54+05	RT						305		
R14	50+90	56+74	RT	584							
R15	47+21	56+74	RT		953						
R16	54+05	56+74	RT						269		
R17	50+24.50	51+12	LT							87.5	
R18	51+12	51+26	LT				14				
R19	50+27.48	51+03.62	LT			76.14					
R20	47+21	47+35	RT				14				
TOTALS				1537	953	76.14	28		574	472.5	
TOTALS CARRIED TO ROADWAY SUBSUMMARY				1537	953	77	28		574	473	

EROSION CONTROL

REF NO.	STATION FROM	STATION TO	SIDE	670 DITCH EROSION CONTROL	
				SQ YD	
E14	47+72	49+22	℄	125	
E15	51+87	53+37	℄	125	
TOTALS CARRIED TO ROADWAY SUBSUMMARY				250	

CALCULATED MJB/JAA
CHECKED RAS/ENF

PLAN AND PROFILE SUBSUMMARY
STA 44+50 TO STA 57+00

CUY-90-0.00

i:\PROJECTS\Pidll738\dgn\final plans\ll738gpd.dgn 21-JUL-2000 10:08AM jgrmovse

UNDERDRAIN										
REF NO.	STATION		SIDE	603	605			FITTINGS		
								FOR INFORMATION ONLY		
				6" CONDUIT, TYPE F	6" UNCLASSIFIED PIPE UNDERDRAIN WITH FABRIC WRAP	6" SHALLOW PIPE UNDERDRAIN WITH FABRIC WRAP	6" SHALLOW PIPE UNDERDRAIN WITH FABRIC WRAP, A.P.P.	TEE	90° BEND	
	FROM	TO		LIN FT	LIN FT	LIN FT	LIN FT	EACH	EACH	
U80	44+50	51+15	LT	10			705		1	
U81	4+50	51+13	LT.			663		1		
U82	44+50	51+13	LT				663	1		
U83	44+50	51+13	RT				663	1		
U84	44+50	51+13	RT			663		1		
U85	44+50	51+15	RT	10			705		1	
U86	47+60	51+80	LT				417	1		
U87	47+60	51+80	LT	10		429			1	
U88	48+05	51+20	RT			321		1		
U89	48+05	51+20	RT				315			
U90	51+15	57+00	LT	10			625		1	
U91	51+15	57+00	LT			585				
U92	51+15	57+00	LT				585			
U93	51+15	57+00	RT				585	1		
U94	51+15	57+00	RT			585		1		
U95	51+15	57+00	RT	10			625	1		
U96	51+80	54+60	LT				278		1	
U97	51+80	54+60	LT	10		288			1	
U98	51+20	54+05	RT			291		1		
U99	51+20	54+05	RT				285			
U100	51+13	51+15	℄	2				1		
U101	50+50	51+78	LT		128					
U102	50+50	51+80	LT		140					
U103	51+20	56+74	RT			554		1		
TOTALS CARRIED TO ROADWAY SUBSUMMARY				62	268	4379	6451	12	6	

CALCULATED MJB
CHECKED RAS

PLAN AND PROFILE SUBSUMMARY
STA 44+50 TO STA 57+00

CUY-90-0.00

141
582

08 MAR 2000
p:\pr-22308\cadd\1738gpd.dgn

BENCHMARK: CHISELED "□" ON ℄ OF HEADWALL STA. 65+76± 130'± RT. ELEV.= 656.90

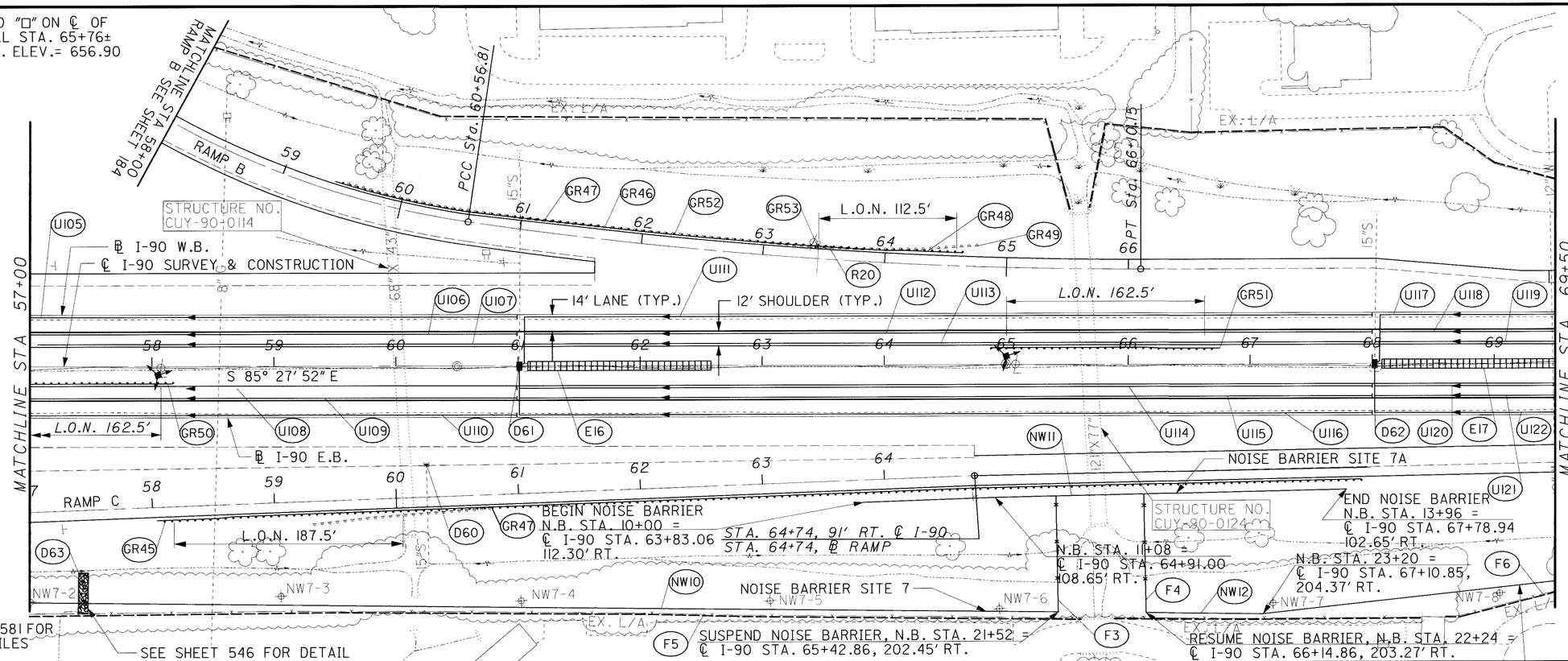

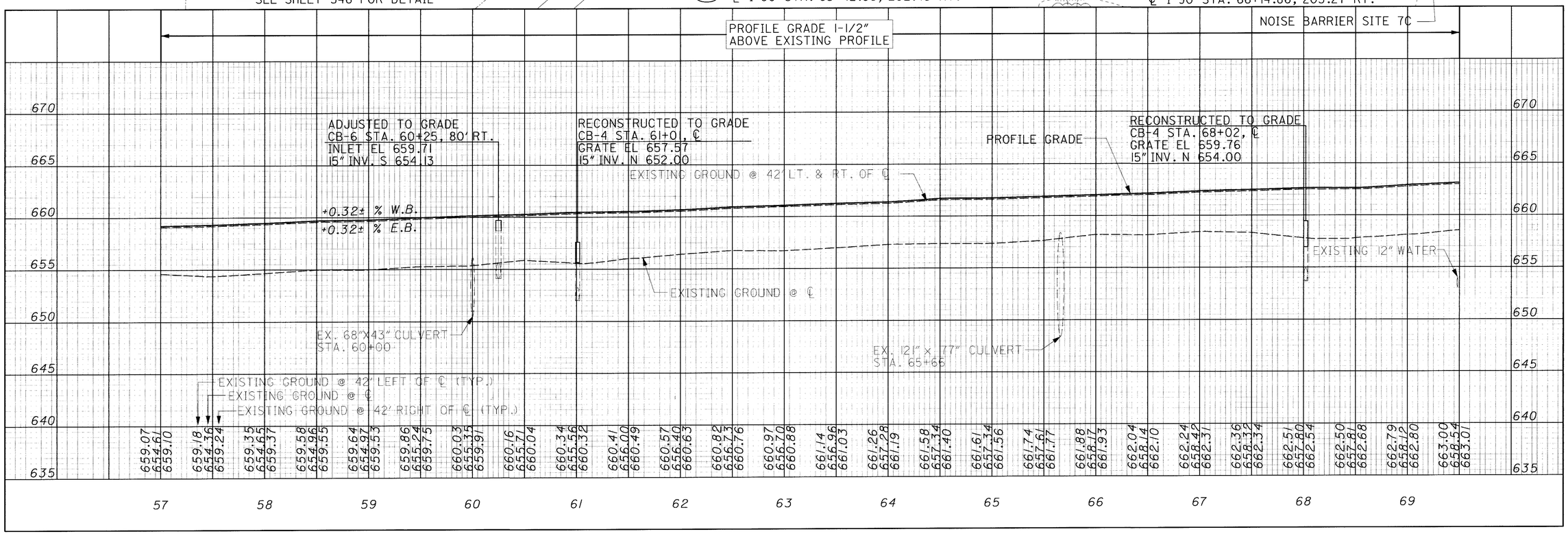

HORIZONTAL SCALE IN FEET

CALCULATED

CHECKED

PLAN AND PROFILE
STA 57+00 TO STA 69+50

CUY-90-0.00

142
582

07 APR 2000
P:\PR22309\Cadd\11738PE.DGN

DRAINAGE

REF NO.	STATION FROM	STATION TO	SIDE	601 DUMPED ROCK FILL, TYPE D	604 CATCH BASIN NO. 4 RECONSTRUCTED TO GRADE	604 CATCH BASIN NO. 6 ADJUSTED TO GRADE
				CU YD	EACH	EACH
D60	60+30		RT			1
D61	61+01		℄		1	
D62	68+02		℄		1	
D63	57+44		RT	10		
TOTALS CARRIED TO ROADWAY SUBSUMMARY				10	2	1

NOISE BARRIER

REF NO.	STATION FROM	STATION TO	SIDE	SPECIAL NOISE BARRIER (REFLECTIVE) 10' AND UNDER	SPECIAL NOISE BARRIER (REFLECTIVE) OVER 10' TO 14'	SPECIAL NOISE BARRIER (REFLECTIVE) OVER 14' TO 20'
				SQ FT	SQ FT	SQ FT
NW10	57+00	65+42.86	RT		3276	8304
	*(13+13.08)	*(21+52)				
NW11	63+83.06	67+78.94	RT			5040
	*(10+00)	*(13+96)				
NW12	66+14.86	69+50	RT	960	3660	
	*(22+24)	*(25+60)				
TOTALS CARRIED TO ROADWAY SUBSUMMARY				960	6936	13344

* STATIONING ALONG NOISE BARRIER

FENCE

REF NO.	STATION FROM	STATION TO	SIDE	202 FENCE REMOVED	607 FENCE, TYPE CL
				LIN FT	LIN FT
F3	65+42		RT		95
F4	66+14		RT		98
F5	57+00	65+62	RT	864	
F6	65+89	69+50	RT	365	
TOTALS CARRIED TO ROADWAY SUBSUMMARY				1229	193

GUARDRAIL

REF NO.	STATION FROM	STATION TO	SIDE	202 GUARDRAIL REMOVED	606 GUARDRAIL, TYPE 5	606 BRIDGE TERMINAL ASSEMBLY, TYPE 1	606 BRIDGE TERMINAL ASSEMBLY, TYPE 2	606 ANCHOR ASSEMBLY, TYPE E-98	606 ANCHOR ASSEMBLY, TYPE T	622 CONCRETE BARRIER, TYPE D
				LIN FT	LIN FT	EA	EA	EACH	EACH	LIN FT
GR45	58+03.40	67+90.9	RT		925			1	1	
GR46	59+50	63+45	LT	400						
GR47	59+43.02	63+07.50	LT		350		1		1	
GR48	64+07.50	64+70	LT		12.5	1		1		
GR49	63+54.90	65+04.90	LT	150						
GR50	57+00	58+17.50	RT		105				1	
GR51	64+87.50	66+75	LT		125			1	1	
GR52	58+80	60+30	RT	150						
GR53	63+31.50	63+83.50	LT							52
TOTALS				700	1517.5	1	1	3	4	52
TOTALS CARRIED TO ROADWAY SUBSUMMARY				700	1525	1	1	3	4	52

UNDERDRAIN

REF NO.	STATION FROM	STATION TO	SIDE	603 6" CONDUIT, TYPE F	605 6" SHALLOW PIPE UNDERDRAIN WITH FABRIC WRAP	605 6" SHALLOW PIPE UNDERDRAIN WITH FABRIC WRAP, A.P.P.	FITTINGS FOR INFORMATION ONLY TEE	FITTINGS FOR INFORMATION ONLY 90° BEND	FITTINGS FOR INFORMATION ONLY 60° BEND	
				LIN FT	LIN FT	LIN FT	EACH	EACH	EACH	
U105	57+00	59+99	LT			299				
U106	57+00	59+99	LT		299					
U107	57+00	59+99	LT			299				
U108	57+00	59+99	RT			299				
U109	57+00	59+99	RT		299					
U110	57+00	59+99	RT			299				
U111	61+01	68+00	LT	10			1	1	1	
U112	61+03	68+00	LT			733	1			
U113	61+03	68+00	LT		697		1			
U114	61+01	68+00	RT			699	1			
U115	61+01	68+00	RT		699		1			
U116	61+01	68+00	RT			733	1			
U117	68+02	69+50	LT	10		182		1		
U118	68+04	69+50	LT		146			1	1	
U119	68+04	69+50	LT			146	1			
U120	68+02	69+50	RT			148	1			
U121	68+02	69+50	RT		148		1			
U122	68+02	69+50	RT	10		182	1			
								1		
TOTALS CARRIED TO ROADWAY SUBSUMMARY				30	2288	4019	10	4	2	

CALCULATED MJB/JAA
CHECKED RAS/ENF

PLAN AND PROFILE SUBSUMMARY
STA 57+00 TO STA 69+50

CUY-90-0.00

143
582

I:\PROJECTS\Pidil738\dgn\final plans\U1738GPE.dgn 09-AUG-2000 3:08PM jgrmovse

EROSION CONTROL					
				670	
REF NO.	STATION		SIDE	DITCH EROSION PROTECTION	
	FROM	TO		SQ YD	
E16	61+08	62+58	℄	125	
E17	68+08	69+50	℄	118.33	
TOTALS				243.33	
TOTALS CARRIED TO ROADWAY SUBSUMMARY				244	

ROADWAY					
				202	
REF NO.	STATION		SIDE	CONCRETE BARRIER REMOVED	
	FROM	TO		LIN FT	
R20	63+42	63+56	LT	14	
TOTALS CARRIED TO ROADWAY SUBSUMMARY				14	

CALCULATED MJB
CHECKED RAS

PLAN AND PROFILE SUBSUMMARY
STA 57+00 TO STA 69+50

CUY-90-0.00

144
582

08 MAR 2000
p:\pr2230\cadd\ll738gpe.dgn

BENCHMARK: SPIKE SET IN WEST SIDE OF 16" TREE STA. 77+75± 125'± RT. ELEV.= 666.81

FOR MEDIAN CROSSOVER DETAIL, SEE SHEET 340.

SEE SHEETS 547 TO 581 FOR NOISE BARRIER PROFILES

MATCHLINE STA 69+50

MATCHLINE STA 82+00

BASSETT ROAD

15" SAN

18"S

30"S

EX. L/A

℄ I-90 W.B.

℄ I-90 SURVEY & CONSTRUCTION

℄ I-90 E.B.

14' LANE (TYP.)

12' SHOULDER (TYP.)

L.O.N. 162.5'

NOISE BARRIER SITE 7C

NOISE BARRIER SITE 7B

NOISE BARRIER SITE 7

NOISE BARRIER SITE 7D

N.B. STA. 28+00 = ℄ I-90 STA. 71+87.94, 151.61' RT.

BEGIN NOISE BARRIER N.B. STA. 10+00 = ℄ I-90 STA. 76+00.47, 86.00' RT.

END NOISE BARRIER N.B. STA. 14+08 = ℄ I-90 STA. 80+08.47, 86.00' RT.

SUSPEND NOISE BARRIER N.B. STA. 34+00 = ℄ I-90 STA. 77+87.74, 136.14' RT.

RESUME NOISE BARRIER N.B. STA. 34+48 = ℄ I-90 STA. 78+35.73, 134.90' RT.

SEE SHEET 546 FOR DETAILS

NW7-9 NW7-10 NW7-11 NW7-12 NW7-13 NW7-14 NW13 NW15

E18 E19 E20 F7 F8 F9 D70 D71 D72 D73 GR55 GR56 U125 U126 U127 U128 U129 U130 U131 U132 U133 U134 U135 U136 U137 U138 U139 U140 U141 U142 NW14

PROFILE GRADE 1-1/2" ABOVE EXISTING PROFILE

RECONSTRUCTED TO GRADE CB-4 STA. 78+08, ℄ GRATE EL 663.25 30" INV. N,S 657.20

CB-4, A.P.P. STA. 73+00, ℄ GRATE EL 661.37 18" INV. N 655.81

PROPOSED PROFILE

EXISTING GROUND @ 42' LT. & RT. OF ℄

+0.32± % W.B.

+0.32± % E.B.

EXISTING GROUND @ ℄

EX. CB-B STA. 78+12, 108' RT. GRATE EL 661.25 30" INV. N 657.75

EXISTING 15" SAN

EXISTING GROUND @ 42' LEFT OF ℄ (TYP.)

EXISTING GROUND @ ℄

EXISTING GROUND @ 42' LEFT OF ℄ (TYP.)

675 670 665 660 655 650 645 640

663.00 658.55 663.01 663.19 659.00 663.12 663.54 659.20 663.29 663.53 659.08 663.46 663.72 659.62 663.59 663.88 659.60 663.97 664.02 659.48 664.00 664.12 659.82 664.15 664.32 660.05 664.35 664.51 660.19 664.41 664.61 659.98 664.66 664.66 660.15 664.76 664.86 660.67 664.98 665.00 660.86 665.07 665.14 661.43 665.21 665.34 661.63 665.42 665.45 662.49 665.57 665.65 662.61 665.80 665.80 661.89 665.91 666.03 661.81 666.06 666.11 662.04 666.35 666.33 662.38 666.35 666.53 662.40 666.54 666.71 662.52 666.84 666.90 663.03 666.82 666.44 663.00 666.94

70 71 72 73 74 75 76 77 78 79 80 81 82

07 APR 2000
P:\PR22308\cadd\I738GPF.DGN

PLAN AND PROFILE
STA 69+50 TO STA 82+00

CUY-90-0.00

145
582

NOISE BARRIER

REF NO.	STATION FROM	STATION TO	SIDE	SPECIAL: NOISE BARRIER (REFLECTIVE) 10' AND UNDER	SPECIAL: NOISE BARRIER (REFLECTIVE) OVER 10' TO 14'	SPECIAL: NOISE BARRIER (REFLECTIVE) OVER 14' TO 20'
				SQ FT	SQ FT	SQ FT
NW13	69+50	77+87.74	RT			13320
	*(25+60)	*(34+00)				
NW14	76+00.47	80+08.47	RT	228		7212
	*(10+00)	*(14+08)				
NW15	78+35.73	82+00	RT			6328
	*(34+98)	*(38+12.39)				
TOTALS CARRIED TO ROADWAY SUBSUMMARY				228		26860

* STATIONING ALONG NOISE BARRIER

DRAINAGE

REF NO.	STATION FROM	STATION TO	SIDE	601: ROCK CHANNEL PROTECTION, TYPE C WITH FILTER	601: DUMPED ROCK FILL, TYPE D	602: CONCRETE MASONRY	603: CONDUIT, BORED OR JACKED, 18" TYPE B OR C, 706.02	604: CATCH BASIN NO.4, AS PER PLAN	604: CATCH BASIN NO. 4 RECONSTRUCTED TO GRADE
				CU YD	CU YD	CU YD	LIN FT	EACH	EACH
D70	73+00		℄	30		0.31	119	1	
D71	78+08		℄						1
D72	72+44		RT		8.5				
D73	72+80		RT		31.3				
TOTALS				30	39.8	0.31	119	1	1
TOTALS CARRIED TO ROADWAY SUBSUMMARY				30	40	0.40	119	1	1

GUARDRAIL

REF NO.	STATION FROM	STATION TO	SIDE	606: GUARDRAIL, TYPE 5	606: ANCHOR ASSEMBLY, TYPE E-98	606: ANCHOR ASSEMBLY, TYPE T
				LIN FT	EACH	EACH
GR55	70+25	72+12.50	RT	125	1	1
GR56	73+96	80+21	RT	562.5	1	1
TOTALS CARRIED TO ROADWAY SUBSUMMARY				687.5	2	2

FENCE

REF NO.	STATION FROM	STATION TO	SIDE	202: FENCE REMOVED	607: FENCE, TYPE CL
				LIN FT	LIN FT
F7	77+88		RT		51
F8	78+36		RT		49
F9	69+50	82+00	RT	1250	
TOTALS CARRIED TO ROADWAY SUBSUMMARY				1250	100

UNDERDRAIN

REF NO.	STATION FROM	STATION TO	SIDE	603: 6" CONDUIT, TYPE F	605: 6" SHALLOW PIPE UNDERDRAIN WITH FABRIC WRAP	605: 6" SHALLOW PIPE UNDERDRAIN WITH FABRIC WRAP, A.P.P.	FITTINGS FOR INFORMATION ONLY: TEE	FITTINGS FOR INFORMATION ONLY: 90° BEND	FITTINGS FOR INFORMATION ONLY: 60° BEND
				LIN FT	LIN FT	LIN FT	EACH	EACH	EACH
U125	69+50	72+98	LT			348			
U126	69+50	72+98	LT		348				
U127	69+50	72+98	LT			348			
U128	69+50	72+98	RT			348			
U129	69+50	72+98	RT		348				
U130	69+50	72+98	RT			348			
U131	73+00	78+08	LT	10		540		1	1
U132	73+02	78+08	LT		506		1		
U133	73+02	78+08	LT			506	1		
U134	73+00	78+08	RT			508	1		
U135	73+00	78+08	RT		508			1	1
U136	73+00	78+08	RT	10		542			
U137	78+08	82+00	LT	10		426			
U138	78+10	82+00	LT		390				
U139	78+10	82+00	LT			390			
U140	78+10	82+00	RT			390			
U141	78+10	82+00	RT		390				
U142	78+08	82+00	RT	10		426			
U143	77+63	78+08	℄			45			
TOTALS CARRIED TO ROADWAY SUBSUMMARY				40	2490	5165	3	2	2

CALCULATED MJB/JAA
CHECKED RAS/ENF

PROFILE SUBSUMMARY
PLAN AND PROFILE
STA 69+50 TO STA 82+00

CUY-90-0.00

146
582

i:\PROJECTS\Pidll738\dgn\final plans\ll738GPF.DGN 21-JUL-2000 10:51AM jgrmovse

EROSION CONTROL					
				670	
REF NO.	STATION		SIDE	DITCH EROSION PROTECTION	
	FROM	TO		SQ YD	
E18	69+50	69+58	℄	6.66	
E19	73+08	74+58	℄	125	
E20	78+15	79+65	℄	125	
TOTALS				256.66	
TOTALS CARRIED TO ROADWAY SUBSUMMARY				257	

CALCULATED MJB
CHECKED RAS

PLAN AND PROFILE SUBSUMMARY
STA 69+50 TO STA 82+00

CUY-90-0.00

147
582

08 MAR 2000
p:\pf22308\cadd\l738gpf.dgn

BENCHMARK: CHISELED "□" ON ℄ OF HEADWALL
STA. 89+54± 103'± RT.
ELEV.= 664.40

SEE SHEETS 547 TO 581 FOR
NOISE BARRIER PROFILES

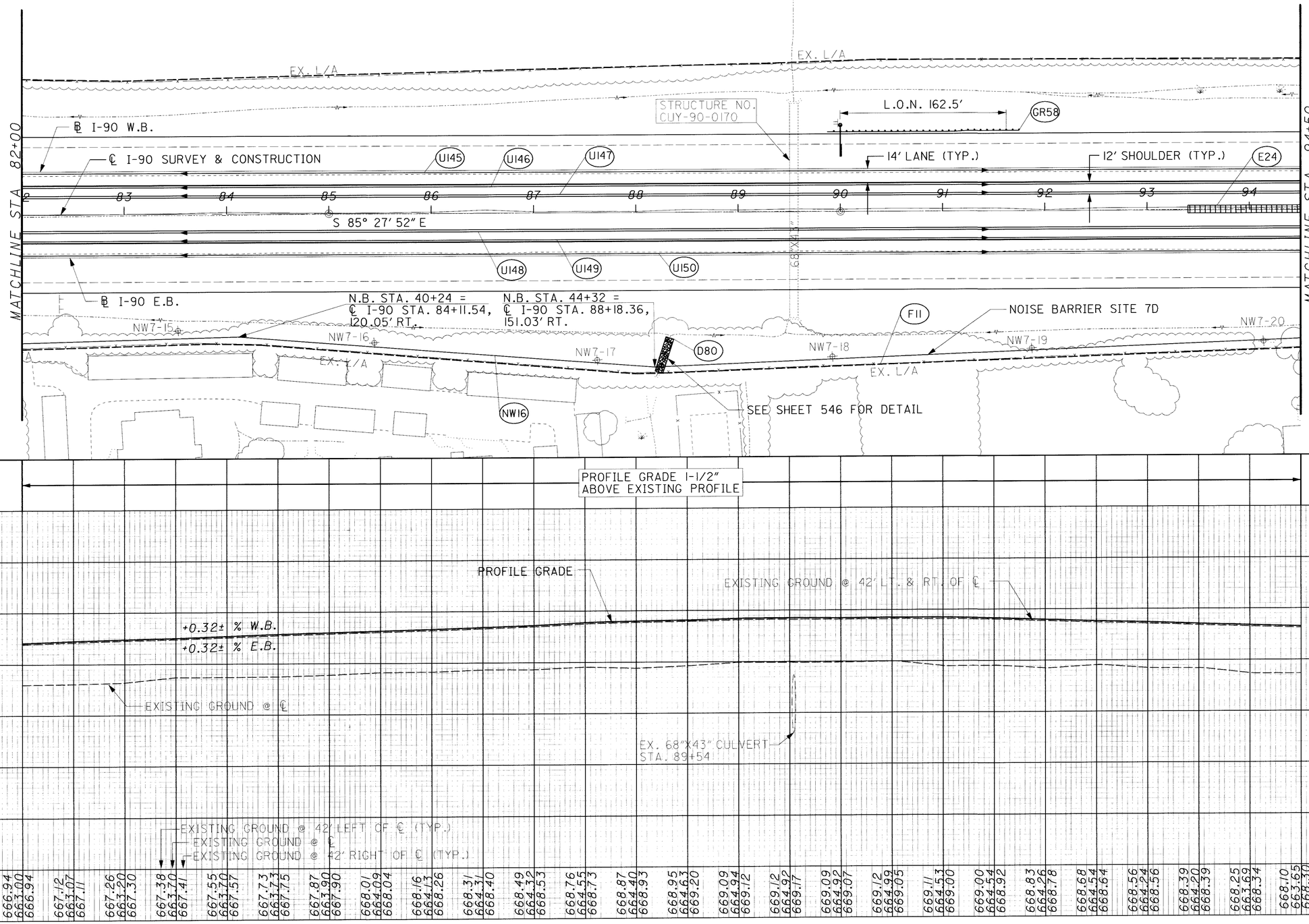

HORIZONTAL SCALE IN FEET
0 25 50 100

CALCULATED | CHECKED

PLAN AND PROFILE
STA 82+00 TO STA 94+50

CUY-90-0.00

148
582

$DATE$
$FILE$

GUARDRAIL

REF NO.	STATION FROM	STATION TO	SIDE	606 GUARDRAIL, TYPE 5 LIN FT	606 ANCHOR ASSEMBLY, TYPE E-98 EACH	606 ANCHOR ASSEMBLY, TYPET EACH	
GR58	89+87.5	91+75	LT	125	1	1	
TOTALS CARRIED TO ROADWAY SUBSUMMARY				125	1	1	

NOISE BARRIER

REF NO.	STATION FROM	STATION TO	SIDE	SPECIAL NOISE BARRIER (REFLECTIVE) 10' AND UNDER SQ FT	SPECIAL NOISE BARRIER (REFLECTIVE) OVER 10' TO 14' SQ FT	SPECIAL NOISE BARRIER (REFLECTIVE) OVER 14' TO 20' SQ FT
NW16	82+00	94+50	RT			20064
	*(38+12.39)	*(50+64.16)				
TOTALS CARRIED TO ROADWAY SUBSUMMARY						20064

* STATIONING ALONG NOISE BARRIER

UNDERDRAIN

REF NO.	STATION FROM	STATION TO	SIDE	603 6" SHALLOW PIPE UNDERDRAIN WITH FABRIC WRAP EACH	603 6" SHALLOW PIPE UNDERDRAIN WITH FABRIC WRAP, A.P.P. EACH	
U145	82+00	94+50	LT		1250	
U146	82+00	94+50	LT	1250		
U147	82+00	94+50	LT		1250	
U148	82+00	94+50	RT		1250	
U149	82+00	94+50	RT	1250		
U150	82+00	94+50	RT		1250	
TOTALS CARRIED TO ROADWAY SUBSUMMARY				2500	5000	

FENCE

REF NO.	STATION FROM	STATION TO	SIDE	202 FENCE REMOVED LIN FT	607 FENCE, TYPE CL LIN FT
F11	82+00	94+50	RT	1250	
TOTALS CARRIED TO ROADWAY SUBSUMMARY				1250	

DRAINAGE

REF NO.	STATION FROM	STATION TO	SIDE	601 DUMPED ROCK FILL, TYPE D CU YD	
D80	88+24		RT	10.4	
TOTALS CARRIED TO ROADWAY SUBSUMMARY				11	

EROSION CONTROL

REF NO.	STATION FROM	STATION TO	SIDE	670 DITCH EROSION PROTECTION SQ YD	
E24	93+40	94+50	℄	91.66	
TOTALS				91.66	
TOTALS CARRIED TO ROADWAY SUBSUMMARY				92	

CALCULATED MJB/JAA
CHECKED RAS/ENF

PLAN AND PROFILE SUBSUMMARY STA 82+00 TO STA 94+50

CUY-90-0.00

i:\PROJECTS\Pid1738\dgn\finalplans\1I7386PG.DGN 21-JUL-2000 10:57AM jgrmovse

Curve 2 Data:
P.I. Sta = 108+56.02
Delta = 19°55' 22.33" (LT)
Degree = 1°28'00.00"
T = 686.12
L = 1,358.38
R = 3,906.53
E = 59.79
LC = 1,351.54
PC Sta = 101+69.90
PT Sta = 115+28.28

FOR MEDIAN GRADING DETAIL, SEE SHEET 341.

SEE SHEETS 547 TO 581 FOR NOISE BARRIER PROFILES

BENCHMARK: IRON PIN IN MONUMENT BOX
STA. 51+56± ℄ CAHOON RD.
ELEV.= 684.92

BENCHMARK: IRON PIN IN MONUMENT BOX
STA. 47+00± ℄ CAHOON RD.
ELEV.= 678.12

SITE 8
BEGIN NOISE BARRIER
N.B. STA 10+00 =
℄ I-90
STA 106+70, 80.70' LT.

STRUCTURE NO.
CUY-90-0124

MATCHLINE STA 94+50

MATCHLINE STA 107+00

℄ I-90 W.B.

℄ I-90 SURVEY & CONSTRUCTION

14' LANE (TYP.)

℄ I-90 E.B.

S 65° 27' 52" E

PC Sta. 101+69.90

BEGIN EB LOWERING
STA. 102+50, ℄

CURVE 2

REMOVE 15"S

SEE SHEET 546 FOR DETAIL

N.B. STA. 54+40 =
℄ I-90 STA. 98+25.73,
119.99' RT.

END NOISE BARRIER STA. 61+48 =
℄ I-90 STA. 105+21.28, 128.15' RT.

1:0 N 112.50'

N.B. STA. 52+00 =
℄ I-90 STA. 95+85.73,
120.02' RT.

NOISE BARRIER
SITE 7D

N.B. STA. 58+00 =
℄ I-90 STA. 101+84.92,
134.55' RT.

N.B. STA. 59+20 =
℄ I-90 STA. 103+00.88,
136.66' RT.

EX. L/A

NW7-21 NW7-22 NW7-23 NW7-24 NW7-25 NW7-26

U155 U156 U157 E25 U158 U159 U160 U161 U162 U163 U164 U165 U166 U167 U168 U169 U170 U171 U172 U173 U174 U175 U176

D90 R22 R20 R21 D91 D92 D93 D94 D95 D96 D97 D98 D99 D100 D101 R24 R25 R26 R27 R28 R29

NW17 NW18 GR60 GR61 GR62 GR63 GR64 GR65 F12 F13

PROFILE GRADE 1-1/2"
ABOVE EXISTING PROFILE

W.B.
E.B.

RECONSTRUCT TO GRADE
CB-4 STA. 94+97, ℄
GRATE EL 665.34
15" INV. N 660.61

PROFILE GRADE

EXISTING GROUND @ 42' LT. & RT. OF ℄

-0.24± % W.B.
-0.24± % E.B.

EXISTING GROUND @ ℄

I-3B50 STA. 100+00, ℄
GRATE EL 665.63
18" INV. N 661.49

W.B. STA. 106+22, 37.06' LT.
UNDER CLEARANCE
EXISTING MIN. CLEARANCE 16.79'
MIN. CLEARANCE 16.79'

E.B. STA. 106+61.50, 59.17' RT.
UNDER CLEARANCE
EXISTING MIN. CLEARANCE 15.10'
MIN. CLEARNACE 15.79'

EXISITNG GROUND @ 42' LEFT OF ℄ (TYP.)
EXISTING GROUND @ ℄ (TYP.)
EXISTING @ 42' RIGHT OF ℄ (TYP.)

STA. 101+24.16 EB ℄ BEGIN EX. GROUND SHIFT FROM 42' LT TO 25' LT

STA. 102+15.64 WB ℄ BEGIN EX. GROUND SHIFT FROM 42' LT TO 25' LT

E.B. V.P.I. Sta. 103+50.00
Elev. = 666.10, 200' V.C.
SSD = 1138'

I-3A A.P.P.
STA. 105+75, 3.67' RT.
GRATE EL 663.14
15' INV. N 659.10

CB-6 STA. 106+50, 5.92' LT.
GRATE EL 665.20
21" INV. W,E 658.27

I-3A A.P.P.
STA. 105+75, 3.67' LT.
GRATE EL 665.24
21" INV. E 658.54
15' INV. S 659.04

-0.24 % -0.88 % E.B.

-0.88 % +0.71 % E.B.

15" INV. 661.02

50'-15" SLOTTED DRAIN, @ 0.5%

40'-15" SLOTTER DRAIN @0.5%
STA. 105+35 EB
15" INV. 661.55

15" INV. 661.32

REMOVE CB-4
STA. 105+29, ℄
GRATE EL 660.81
15" INV. 658.09

125'-15" SLOTTED DRAIN, @ 0.5%

15" INV. 663.22

15" INV. 663.39

20'-15" SLOTTED DRAIN @ 0.5%
STA. 106+30 WB
15" INV. 663.50

REMOVE 15"S
REMOVE MH
STA. 106+40, 12' LT.
INV 15" 657.20

150'-21" CONDUIT, TYPE B, @ 0.40%

75'-21" CONDUIT, TYPE B, @ 0.36%

EXISTING 24" RCP

E.B. V.P.I. Sta. 106+00.00
Elev. = 663.89, 300' V.C.
SSD = N/A

EXISTING 24" RCP

675 670 665 660 655 650 645 640

95 96 97 98 99 100 101 102 103 104 105 106 107

PLAN AND PROFILE
STA 94+50 TO STA 107+00

CUY-90-0.00

150
582

I:\PROJECTS\Pldl1738\dgn\finalplans\1738GPH.DGN 09-AUG-2000 3:18PM jgrmovse

DRAINAGE

REF NO.	STATION FROM	STATION TO	SIDE	202 PIPE REMOVED LIN FT	202 MANHOLE REMOVED EACH	202 CATCH BASIN REMOVED EACH	601 DUMPED ROCK FILL, TYPE D CU YD	603 15" CONDUIT, TYPE B, LIN FT	603 21" CONDUIT, TYPE B, LIN FT	603 CONDUIT, BORED OR JACKED, 18", TYPE B OR C, 706.02 LIN FT	603 SLOTTED DRAIN, 15" DIAMETER, AS PER PLAN LIN FT	604 CATCH BASIN NO.4 RECONSTRUCTED TO GRADE EACH	604 CATCH BASIN NO. 6 EACH	604 INLET NO. 3B50 EACH	604 INLET NO. 3A A.P.P. EACH
D90	94+97		℄									1			
D91	100+00		℄							111				1	
D92	105+75	106+50	LT						75						
D93	106+40	107+00	LT	60									1		
D94	105+29	106+40	LT	111	1	1									
D95	105+35	105+75	RT								40				
D96	105+75	107+00	RT								40				
D97	106+30	106+50	LT								129				
D98	106+50	107+00	LT								52				
D99	95+72		RT				5.2								
D100	105+75		℄					8							2
D101	106+50	107+00	LT						50						
TOTALS CARRIED TO ROADWAY SUBSUMMARY				171	1	1	6	8	125	111	261	1	1	1	2

UNDERDRAIN

REF NO.	STATION FROM	STATION TO	SIDE	603 6" CONDUIT, TYPE F LIN FT	605 6" SHALLOW PIPE UNDERDRAIN WITH FABRIC WRAP LIN FT	605 6" SHALLOW PIPE UNDERDRAIN WITH FABRIC WRAP, A.P.P. LIN FT	FITTINGS FOR INFORMATION ONLY TEE EACH	90° BEND EACH	60° BEND EACH	
U155	94+50	94+97	LT	10		81		1	1	
U156	94+50	94+95	LT		45		1			
U157	94+50	94+95	LT			45	1			
U158	94+50	94+97	RT			47	1			
U159	94+50	94+97	RT		47		1			
U160	94+50	94+97	RT	10		81		1		
U161	94+99	99+98	LT	10		530		1	1	
U162	94+99	99+98	LT		499		1			
U163	96+76.5	100+00	RT			323.5	1			
U164	94+99	100+00	RT		501		1			
U165	94+99	100+00	RT	10		535		1		
U166	100+02	107+00	LT			698				
U167	100+02	105+74	RT	10		564	1			
U168	100+02	105+74	RT		572		1			
U169	100+02	105+74	RT	10		601		1		
U170	106+50		LT	10		22	1			
U171	105+76	107+00	RT	10		116				
U172	105+76	107+00	RT		124		1			
U173	105+76	107+00	RT	10		153		1		
U174	105+35	107+00	LT	10		12				
U175	105+55	107+00	LT	10		87				
U176	106+50	107+00	LT	10		42				
TOTALS CARRIED TO ROADWAY SUBSUMMARY				120	1788	3938	11	6	2	

CALCULATED MJB
CHECKED RAS

PLAN AND PROFILE SUBSUMMARY
STA 94+50 TO STA 107+00

CUY-90-0.00

151
582

I:\PROJECTS\Pidll738\dgn\final plans\II738GPH.DGN 09-AUG-2000 3:19PM jgrmovse

GUARDRAIL

REF NO.	STATION FROM	STATION TO	SIDE	202 GUARDRAIL REMOVED	606 GUARDRAIL, TYPE 5	606 BRIDGE TERMINAL ASSEMBLY, TYPE 1	606 BRIDGE TERMINAL ASSEMBLY, TYPE 2	606 ANCHOR ASSEMBLY, TYPE E-98	
				LIN FT	LIN FT	EACH	EACH	EACH	
GR60	104+64.96	106+13.67	RT	137.5					
GR61	105+01.85	106+12.22	RT		37.5	1		1	
GR62	106+69.60	107+00	LT	27.1					
GR63	106+68.14	107+00	LT		6.25	1			
GR64	106+73	107+00	RT	29.4					
GR65	106+85	107+00	RT		2.5		1		
TOTALS				194	46.25	2	1	1	
TOTALS CARRIED TO ROADWAY SUBSUMMARY				194	50	2	1	1	

ROADWAY

REF NO.	STATION FROM	STATION TO	SIDE	202 CONCRETE BARRIER REMOVED	606 IMPACT ATTENUATOR TYPE 2-98 (MODEL # QS3007Y QUADGUARD), (BIDIRECTIONAL)]	622 CONCRETE BARRIER, A.P.P.	622 CONCRETE BARRIER, TYPE B-50	622 CONCRETE BARRIER, TYPE C-50, A.P.P.	622 CONCRETE BARRIER, TYPE D, A.P.P.
				LIN FT	EACH	LIN FT	LIN FT	LIN FT	LIN FT
R20	96+76.50	100+20	℄				343.5		
R21	100+20	107+00	℄					680	
R22	96+50	96+76.50	℄		1				
R23	106+07.40	106+70.42	RT	64					
R24	106+10.16	106+24.75	RT			14			
R25	106+24.75	106+73	RT						50
R26	106+05.09	106+68.77	LT	64					
R27	106+05	106+56	LT						50
R28	106+56	106+70.28	LT			14			
R29	106+73	106+87	RT			14			
TOTALS				128	1	42	343.5	680	100
TOTALS CARRIED TO ROADWAY SUBSUMMARY				128	1	42	344	680	100

FENCE

REF NO.	STATION FROM	STATION TO	SIDE	202 FENCE REMOVED	607 FENCE, TYPE CL	
				LIN FT	LIN FT	
F12	105+22		RT		6	
F13	94+50	105+22	RT	1100		
TOTALS CARRIED TO ROADWAY SUBSUMMARY				1100	6	

NOISE BARRIER

REF NO.	STATION FROM	STATION TO	SIDE	SPECIAL NOISE BARRIER (REFLECTIVE) 10' AND UNDER	SPECIAL NOISE BARRIER (REFLECTIVE) OVER 10' TO 14'	SPECIAL NOISE BARRIER (REFLECTIVE) OVER 14' TO 20'	
				SQ FT	SQ FT	SQ FT	
NW17	94+50	105+21.28	RT	108	11136	1904	
	*(50+64.16)	*(61+48)					
NW18	106+70	107+00	LT		288	90	
	*(10+00)	*(10+30)					
TOTALS CARRIED TO ROADWAY SUBSUMMARY				108	11424	1994	

* STATIONING ALONG NOISE BARRIER

EROSION CONTROL

REF NO.	STATION FROM	STATION TO	SIDE	670 DITCH EROSION PROTECTION	
				SQ YD	
E25	94+50	94+90	℄	33.33	
TOTALS				33.33	
TOTALS CARRIED TO ROADWAY SUBSUMMARY				34	

CALCULATED MJB/JAA
CHECKED RAS/ENF

PLAN AND PROFILE SUBSUMMARY
STA 94+50 TO STA 107+00

CUY-90-0.00

i:\PROJECTS\Pid1738\dgn\final plans\li738GPH.DGN 21-JUL-2000 11:00AM jgrmovse

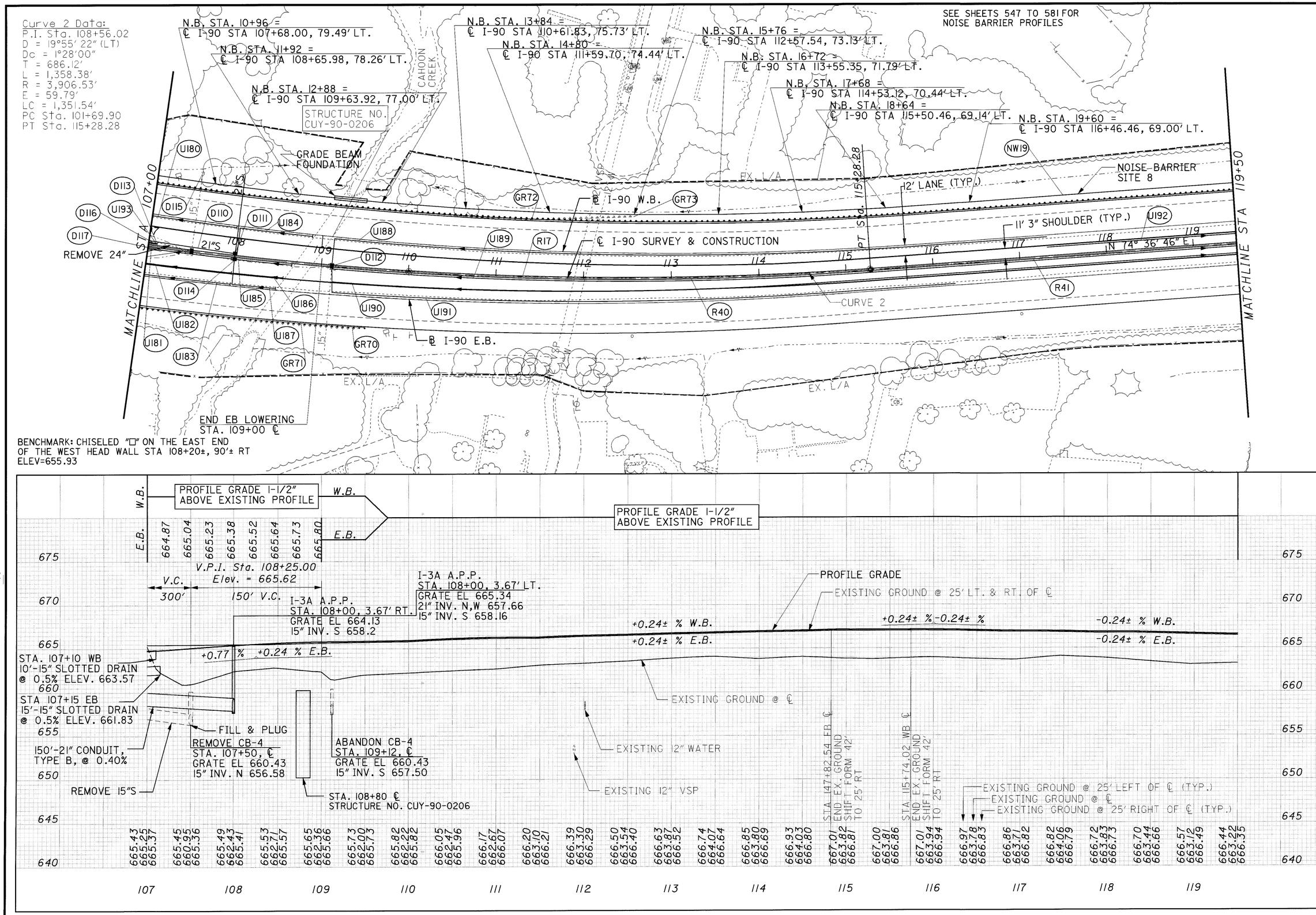

PLAN AND PROFILE
STA 107+00 TO STA 119+50

CUY-90-0.00

I:\PROJECTS\Pid11738\dgn\final plans\11738GP1.DGN 09-AUG-2000 3:21PM jgrmovse

GUARDRAIL

REF NO.	STATION FROM	STATION TO	SIDE	202 GUARDRAIL REMOVED LIN FT	606 GUARDRAIL, TYPE 5 LIN FT	606 ANCHOR ASSEMBLY, TYPE T EACH	
GR70	107+00	109+48.5	RT	275			
GR71	107+00	109+54.96	RT		247.5	1	
GR72	107+00	119+50	LT		1250		
GR73	107+00	112+56.91	LT	557.1			
TOTALS				832.1	1497.5	1	
TOTALS CARRIED TO ROADWAY SUBSUMMARY				832.5	1500	1	

ROADWAY

REF NO.	STATION FROM	STATION TO	SIDE	622 CONCRETE BARRIER, TYPE B-50 LIN FT	622 CONCRETE BARRIER, TYPE C-50, A.P.P. LIN FT	
R40	107+00	117+00	℄		1000	
R41	117+00	119+50	℄	250		
TOTALS CARRIED TO ROADWAY SUBSUMMARY				250	1000	

NOISE BARRIER

REF NO.	STATION FROM	STATION TO	SIDE	SPECIAL NOISE BARRIER (REFLECTIVE) 10' AND UNDER SQ FT	SPECIAL NOISE BARRIER (REFLECTIVE) OVER 10' TO 14' SQ FT	SPECIAL NOISE BARRIER (REFLECTIVE) OVER 14' TO 20' SQ FT
NW19	107+00	119+50	LT			22790
	*(10+30)	*(22+63.54)				
TOTALS CARRIED TO ROADWAY SUBSUMMARY						22790

* STATIONING ALONG NOISE BARRIER

UNDERDRAIN

REF NO.	STATION FROM	STATION TO	SIDE	603 6" CONDUIT, TYPE F LIN FT	605 6" SHALLOW PIPE UNDERDRAIN WITH FABRIC WRAP LIN FT	605 6" SHALLOW PIPE UNDERDRAIN WITH FABRIC WRAP, A.P.P. LIN FT	FITTINGS FOR INFORMATION ONLY TEE EACH	FITTINGS FOR INFORMATION ONLY 90° BEND EACH	FITTINGS FOR INFORMATION ONLY 60° BEND EACH	
U180	107+00	179+98	LT			298				
U181	107+00	179+98	RT			298				
U182	107+00	179+98	RT		298					
U183	107+00	179+98	RT			298				
U184	108+00	108+87	LT	10		112		1	1	
U185	108+00	108+66	RT			66	1			
U186	108+00	108+58	RT		58		1			
U187	108+00	108+50	RT	10		78		1		
U188	109+12	117+32	LT	10		840			1	
U189	109+12	119+50	RT			1333			1	
U190	109+12	119+50	RT		1335		1			
U191	108+76	116+24	RT	10		736	1			
U192	117+32	119+50	LT		218					
U193	107+00	107+10	LT			10				
TOTALS CARRIED TO ROADWAY SUBSUMMARY				40	1909	4069	4	2	3	

DRAINAGE

REF NO.	STATION FROM	STATION TO	SIDE	202 PIPE REMOVED LIN FT	202 CATCH BASIN REMOVED EACH	202 CATCH BASIN ABANDON EACH	202 STRUCTURE REMOVED EACH	603 SLOTTED DRAIN, 15" DIAMETER, AS PER PLAN LIN FT	603 15" CONDUIT, TYPE B LIN FT	603 21" CONDUIT, TYPE B LIN FT	603 CONDUIT, BORED OR JACKED, 21" TYPE B OR C, 706.02 LIN FT	604 INLET NO. 3A A.P.P. EACH	SPECIAL FILL AND PLUG EXISTING CONDUIT LIN FT
D110	107+00	108+00	LT							100		1	
D111	108+00		LT								84		
D112	109+12		℄			1							
D113	107+00	107+50	℄	58	1								
D114	108+00		℄						8			1	
D115	107+50		RT	10			1						81
D116	107+00	107+10	LT					10					
D117	107+00	107+15	RT					15					
TOTALS CARRIED TO ROADWAY SUBSUMMARY				68	1	1	1	25	8	100	84	2	81

CALCULATED MJB/JAA
CHECKED RAS/ENF

PLAN AND PROFILE SUBSUMMARY
STA 107+00 TO STA 119+50

CUY-90-0.00

I:\PROJECTS\Pid11738\dgn\final plans\11738GPLDGN 09-AUG-2000 3:10PM jgrmovse

BENCHMARK: CHISELED "□" ON TOP OF RCP
STA. 125+45±, 100'± RT., ELEV.= 658.74

SEE SHEETS 547 TO 581 FOR
NOISE BARRIER PROFILES

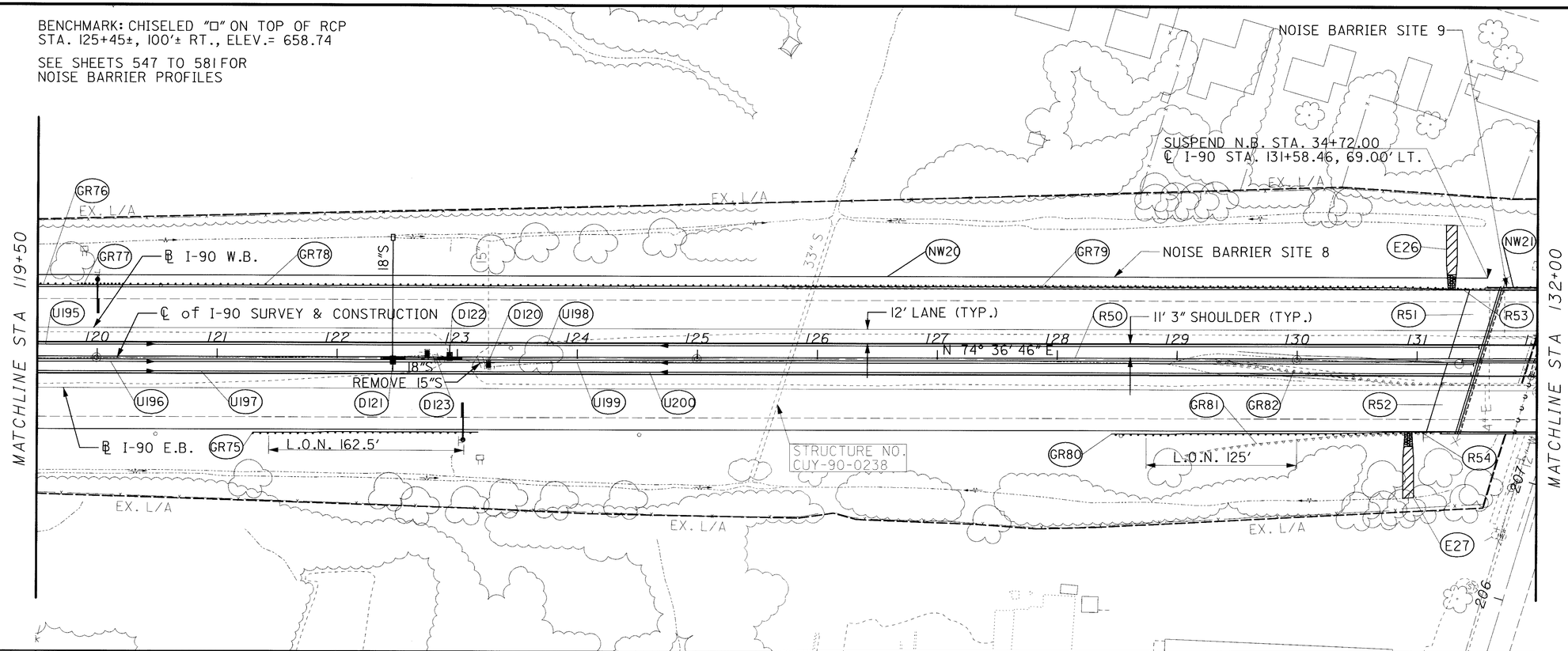

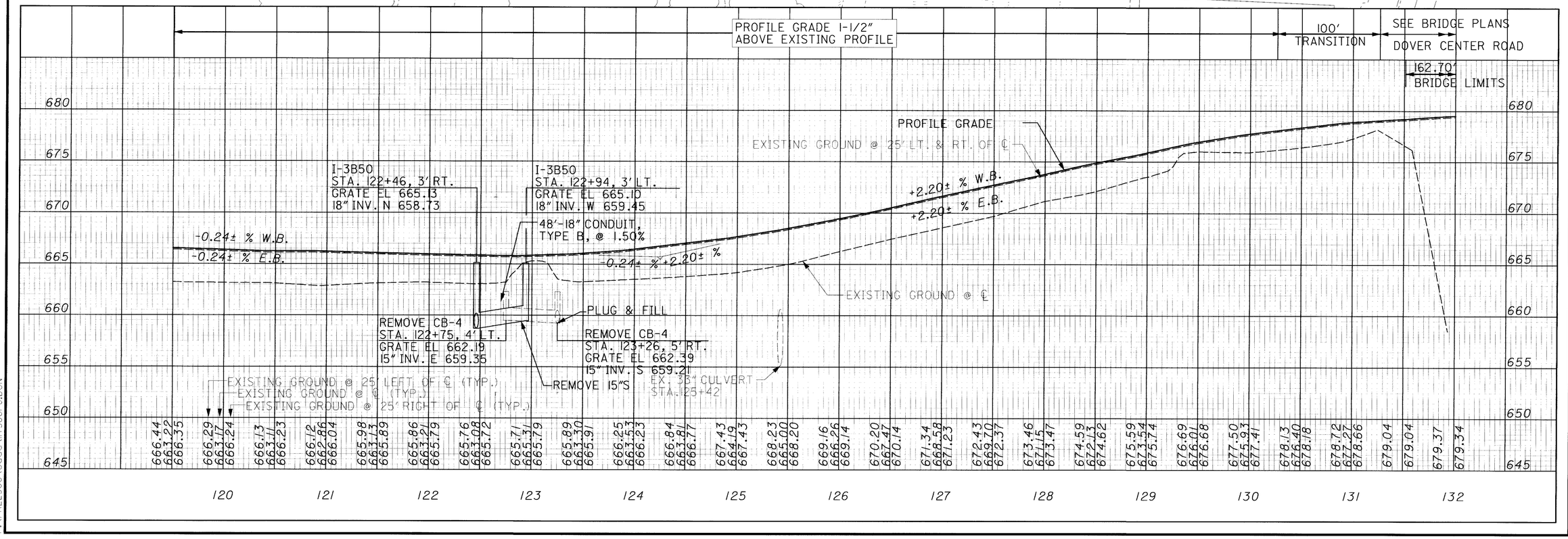

PLAN AND PROFILE
STA 119+50 TO STA 132+00

CUY-90-0.00

155
582

07 APR 2000
P:\PR22308\caddv\738GPJDGN

DRAINAGE

REF NO.	STATION FROM	STATION TO	SIDE	202 PIPE REMOVED	202 CATCH BASIN REMOVED	202 STRUCTURE REMOVED	601 ROCK CHANNEL PROTECTION, TYPE C WITH FILTER	603 18" CONDUIT, TYPE B	603 CONDUIT, BORED OR JACKED, 18", TYPE B OR C, 706.02	604 INLET NO. 3B50	SPECIAL FILL AND PLUG EXISTING CONDUIT
				LIN FT	EACH	EACH	CU YD	LIN FT	LIN FT	EACH	LIN FT
D120	123+26		LT	10	1	1					92
D121	122+46		℄				30		98	1	
D122	122+46	122+94	℄					48		1	
D123	122+75	123+26	℄	52	1						
TOTALS CARRIED TO ROADWAY SUBSUMMARY				62	2	1	30	48	98	2	92

EROSION CONTROL

REF NO.	STATION FROM	STATION TO	SIDE	660 SODDING REINFORCED	838 GABIONS, WITH ADDITIONAL COATING	
				SQ YD	CU YD	
E26	131+25.5	131+31.5	LT	39.22	3.33	
E27	130+90	130+96	RT	38.31	3.33	
TOTALS				77.53	6.66	
				78	7	

UNDERDRAIN

REF NO.	STATION FROM	STATION TO	SIDE	603 6" CONDUIT, TYPE F	605 6" SHALLOW PIPE UNDERDRAIN WITH FABRIC WRAP	605 6" SHALLOW PIPE UNDERDRAIN WITH FABRIC WRAP, A.P.P.	FITTINGS FOR INFORMATION ONLY TEE		
				LIN FT	LIN FT	LIN FT	EACH		
U195	119+50	122+94	LT	10	344				
U196	119+50	122+46	RT	10		288	1		
U197	119+50	122+46	RT	10	296				
U198	122+94	131+52	LT		858		1		
U199	122+46	131+47	RT	10		893			
U200	122+46	131+45	RT		899				
TOTALS CARRIED TO ROADWAY SUBSUMMARY				40	2397	1181	2		

CALCULATED MJB
CHECKED RAS

PLAN AND PROFILE SUBSUMMARY
STA 119+50 TO STA 132+00

CUY-90-0.00

08 MAR 2000
p:\pr22308\cadd\11738gpj.dgn

GUARDRAIL

REF NO.	STATION FROM	STATION TO	SIDE	202 GUARDRAIL REMOVED	606 GUARDRAIL, TYPE 5	606 GUARDRAIL, TYPE 5A	606 ANCHOR ASSEMBLY, TYPE E-98	606 ANCHOR ASSEMBLY, TYPE T	606 BRIDGE TERMINAL ASSEMBLY, TYPE 1	606 BRIDGE TERMINAL ASSEMBLY, TYPE 2
				LIN FT	LIN FT	LIN FT	EACH	EACH	EACH	EACH
GR75	121+30	123+17.5	RT		125		1	1		
GR76	119+50	119+82.10	LT		32.1					
GR77	119+82.10	120+19.60	LT			37.5				
GR78	120+19.60	131+39.36	LT		1119.76					1
GR79	125+69.40	131+56.90	LT	587.5						
GR80	128+45.66	131+20.66	RT		200				1	
GR81	129+07.9	131+19.80	RT	212.5						
GR82	129+33.5	131+32.9	RT	200						
TOTALS CARRIED TO ROADWAY SUBSUMMARY				1000	1477	37.5	1	1	1	1

NOISE BARRIER

REF NO.	STATION FROM	STATION TO	SIDE	SPECIAL NOISE BARRIER (REFLECTIVE) 10' AND UNDER	SPECIAL NOISE BARRIER (REFLECTIVE) OVER 10' TO 14'	SPECIAL NOISE BARRIER (REFLECTIVE) OVER 14' TO 20'	SPECIAL NOISE BARRIER, MISC.: BRIDGE MOUNTED
				SQ FT	SQ FT	SQ FT	SQ FT
NW20	119+50	131+58.46	LT		624	18232	
	*(22+63.54)	*(34+72)					
NW21	CUY-90-0249L	132+00	LT				406
TOTALS CARRIED TO ROADWAY SUBSUMMARY					624	18232	406

ROADWAY

REF NO.	STATION FROM	STATION TO	SIDE	202 APPROACH SLAB REMOVED	611 REINFORCED CONCRETE APPROACH SLAB (T=15"), A.P.P.	622 CONCRETE BARRIER, TYPE B50	830 CURB, TYPE 6
				CU YD	SQ YD	LIN FT	LIN FT
R50	119+50	131+25.86	℄			1175.86	
R51	131+25.86	131+50.86	LT	108.33	167.76		
R52	131+25.86	131+50.86	RT	108.33	167.12		
R53	131+31.50	131+43.50	LT				12
R54	130+96	131+08	RT				12
TOTALS				216.67	334.88	1175.86	24
TOTALS CARRIED TO ROADWAY SUBSUMMARY				217	337.5	1187.5	24

CALCULATED MJB/JAA
CHECKED RAS/ENF

PLAN AND PROFILE
STA 119+50 TO STA 132+00

CUY-90-0.00

i:\PROJECTS\Pid1738\dgn\finalplans\1738GFJ.DGN 21-JUL-2000 11:17AM jgrmovse

SEE SHEETS 547 TO 581 FOR NOISE BARRIER PROFILES

BENCHMARK: SPIKE SET IN WEST SIDE OF 36" TREE STA. 209+77± DOVER CENTER ROAD 38'± RT. ELEV.= 658.08

NOISE BARRIER SITE 9

RESUME N.B. STA. 36+50.50 = ℄ I-90 STA.133+36.96, 69.00' LT.

DOVER CENTER ROAD

NOISE BARRIER SITE 10

EX. L/A

STA. 208+08.14 ℄ DOVER CENTER RD. = STA. 132+32.22 ℄ I-90

℄ I-90 W.B.

NW22 NW23 GR87 GR88

STRUCTURE NO. CUY 90-0249 L&R

MATCHLINE STA 132+00

MATCHLINE STA 144+50

R60 GR89 U205 R61 U206 U207 R62

℄ I-90 SURVEY & CONSTRUCTION

12' LANE (TYP.)

11' 3" SHOULDER (TYP.)

133 134 135 136 137 138 139 140 141 142 143 144

N 74° 36' 46" E

℄ I-90 E.B.

GR85 GR86

EX. L/A

EX. L/A

SEE BRIDGE PLANS
DOVER CENTER ROAD

100' TRANSITION

PROFILE GRADE 1-1/2" ABOVE EXISTING PROFILE

+2.20± %

-2.20± %

162.70' BRIDGE LIMITS

680 675 670 665 660 655 650 645

PROFILE GRADE

EXISTING GROUND @ 25' LT. & RT. OF ℄

EXISTING GROUND @ ℄

EXISTING GROUND @ 25' LEFT OF ℄ (TYP.)

EXISTING GROUND @ ℄

EXISTING GROUND @ 25' RIGHT OF ℄ (TYP.)

679.37 679.34 679.51 679.34 679.57 679.68 679.68 679.64 679.51 677.90 679.50 679.23 678.08 679.18 678.82 677.90 678.71 678.16 676.12 678.13 677.46 674.23 677.43 676.56 673.73 676.70 675.63 672.80 675.78 674.60 672.25 674.59 673.50 671.65 673.51 672.41 669.50 672.60 671.31 668.49 671.30 670.20 667.44 670.17 669.09 666.34 669.08 667.99 665.40 668.04 666.94 664.53 666.98 666.04 663.51 666.04 665.24 662.81 665.23 664.53 661.67 664.56 664.02 661.28 664.10 663.60 660.88 663.62 663.31 660.52 663.33 663.21 660.37 663.10

132 133 134 135 136 137 138 139 140 141 142 143 144

HORIZONTAL SCALE IN FEET 0 25 50 100

CALCULATED CHECKED

PLAN AND PROFILE

STA 132+00 TO STA 144+50

CUY-90-0.00

158
582

07 APR 2000
P:\PR22308\cadd\I738GPK.DGN

ROADWAY

REF NO.	STATION FROM	STATION TO	SIDE	202 APPROACH SLAB REMOVED (SQ YD)	611 REINFORCED CONCRETE APPROACH SLAB (T=15"), A.P.P. (SQ YD)	622 CONCRETE BARRIER, TYPE B-50 (LIN FT)	
R60	133+13.56	133+38.56	LT	108.33	160.65		
R61	133+13.56	133+38.56	RT	108.33	160.65		
R62	133+38.56	144+50	℄			1111.44	
TOTALS				216.67	321.3	1111.44	
TOTALS CARRIED TO ROADWAY SUBSUMMARY				217	322	1112	

GUARDRAIL

REF NO.	STATION FROM	STATION TO	SIDE	202 GUARDRAIL REMOVED (LIN FT)	606 GUARDRAIL, TYPE 5 (LIN FT)	606 BRIDGE TERMINAL ASSEMBLY, TYPE 1 (EACH)	606 BRIDGE TERMINAL ASSEMBLY, TYPE 2 (EACH)	606 ANCHOR ASSEMBLY, TYPE T (EACH)	
GR85	133+07.70	140+07.70	RT	700					
GR86	133+07.70	140+07.70	RT		675		1	1	
GR87	133+44.80	140+06.70	LT	662.5					
GR88	133+44.80	144+50	LT		1105.2	1			
GR89	133+43.01	135+28.12	LT	186.5					
TOTALS				1549	1780.2	1	1	1	
TOTALS CARRIED TO ROADWAY SUBSUMMARY				1550	1787.5	1	1	1	

UNDERDRAIN

REF NO.	STATION FROM	STATION TO	SIDE	605 6" SHALLOW PIPE UNDERDRAIN WITH FABRIC WRAP (LIN FT)	605 6" SHALLOW PIPE UNDERDRAIN WITH FABRIC WRAP, A.P.P. (LIN FT)	
U205	133+19.44	144+50	LT	1130.56		
U206	133+15	144+50	LT		1135	
U207	133+12.84	144+50	LT	1137.16		
TOTALS				2267.72	1135	
TOTALS CARRIED TO ROADWAY SUBSUMMARY				2268	1135	

NOISE BARRIER

REF NO.	STATION FROM	STATION TO	SIDE	SPECIAL: NOISE BARRIER (REFLECTIVE) 10' AND UNDER (SQ FT)	SPECIAL: NOISE BARRIER (REFLECTIVE) OVER 10' TO 14' (SQ FT)	SPECIAL: NOISE BARRIER (REFLECTIVE) OVER 14' TO 20' (SQ FT)	SPECIAL: NOISE BARRIER, MISC.: BRIDGE MOUNTED (SQ FT)
NW22	132+00	CUY-90-0249L	LT				1411
NW23	133+36.96	144+50	LT			18760	
	*(36+50.50)	*(47+63.54)					
TOTALS CARRIED TO ROADWAY SUBSUMMARY						18760	1411

* STATIONING ALONG NOISE BARRIER

CALCULATED MJB/JAA
CHECKED RAS/ENF

PLAN AND PROFILE SUBSUMMARY
STA 132+00 TO STA 144+50

CUY-90-0.00

159
582

I:\PROJECTS\Pid1738\dgn\finalplans\1738GPK.DGN 21-JUL-2000 11:18AM jgrmovse

BENCHMARK: CHISELED "□" ON ℄ OF HEADWALL STA. 145+52± 86'± RT. ELEV.= 658.99

BENCHMARK: CHISELED "□" ON EAST SIDE OF HEADWALL STA. 154+77± 90'± RT. ELEV.= 654.55

SEE SHEETS 547 TO 581 FOR NOISE BARRIER PROFILES

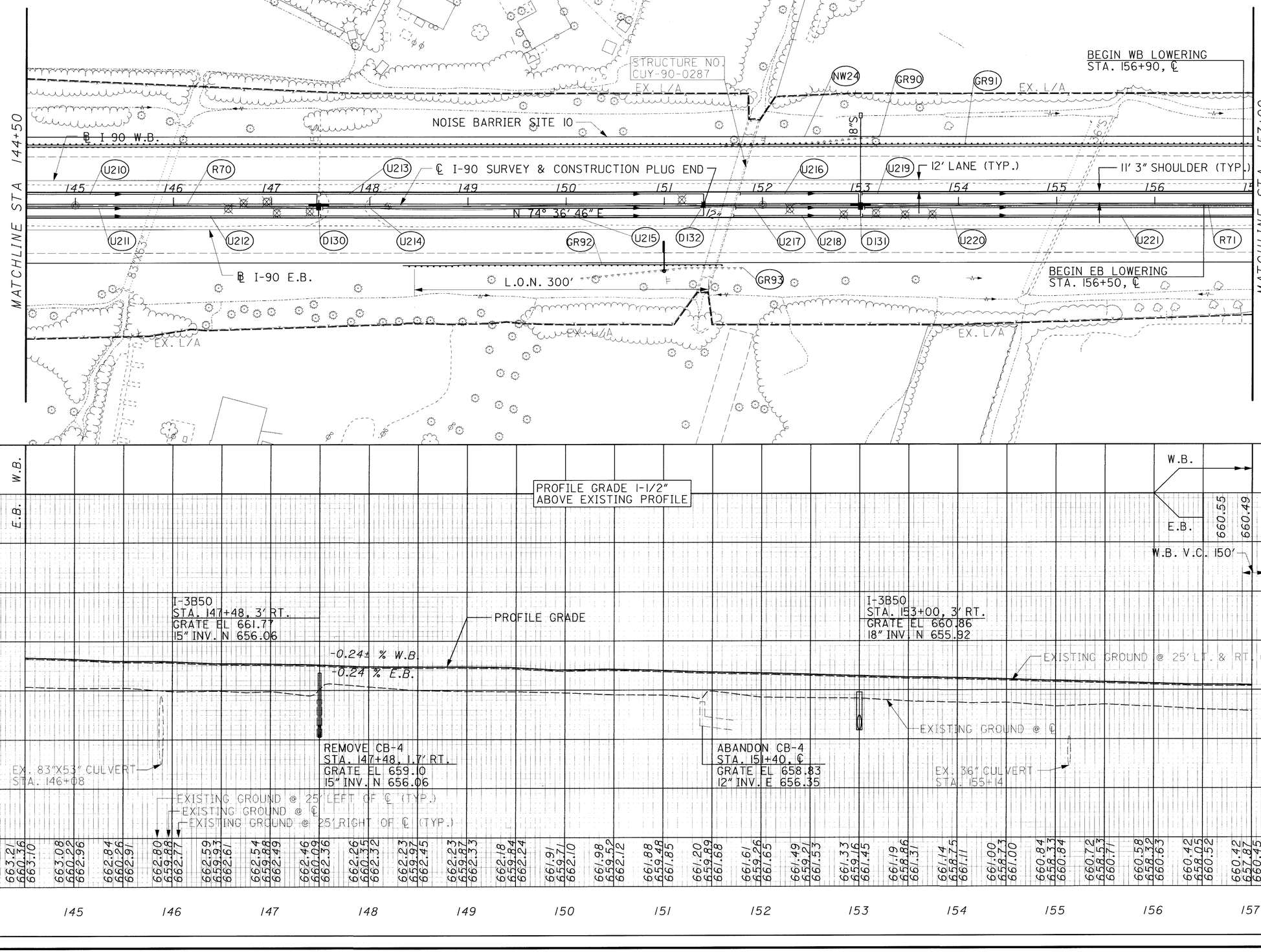

07 APR 2000
S:\PR2308\cadd\NI738GPL.DGN

PLAN AND PROFILE
STA 144+50 TO STA 157+00

CUY-90-0.00

160
582

DRAINAGE

REF NO.	STATION FROM	STATION TO	SIDE	202 CATCH BASIN REMOVED (EACH)	202 CATCH BASIN ABANDONED (EACH)	601 ROCK CHANNEL PROTECTION, TYPE C WITH FILTER (CU YD)	602 CONCRETE MASONRY (CU YD)	603 CONDUIT, BORED OR JACKED, 18", TYPE B OR C, 706.02 (LIN FT)	604 INLET NO. 3B50 (EACH)	
D130	147+48		℄	1					1	
D131	153+00		℄			30	0.31	91	1	
D132	151+40		℄		1					
TOTALS				1	1	30	0.31	91	2	
TOTALS CARRIED TO ROADWAY SUBSUMMARY				1	1	30	0.40	91	2	

UNDERDRAIN

REF NO.	STATION FROM	STATION TO	SIDE	603 6" CONDUIT, TYPE F (LIN FT)	605 6" SHALLOW PIPE UNDERDRAIN WITH FABRIC WRAP (LIN FT)	605 6" SHALLOW PIPE UNDERDRAIN WITH FABRIC WRAP, A.P.P. (LIN FT)	FITTINGS FOR INFORMATION ONLY TEE (EACH)	90° BEND (EACH)	60° BEND (EACH)	
U210	144+50	147+48	LT	10	300			1		
U211	144+50	147+48	RT	10		290				
U212	144+50	147+48	RT	10	298			1		
U213	147+50	151+40	LT	10	393			1		
U214	147+52	151+40	RT	10		380			1	
U215	147+50	151+40	RT	10	393			1		
U216	151+77	153+00	LT	10		126		1	1	
U217	151+73	153+00	RT	10		119				
U218	151+71	153+00	RT	10		127		1		
U219	153+02	157+00	LT			398				
U220	153+04	157+00	RT			396				
U221	153+02	157+00	RT			398				
TOTALS CARRIED TO ROADWAY SUBSUMMARY				90	1384	2234		6	2	

CALCULATED MJB
CHECKED RAS

PLAN AND PROFILE SUBSUMMARY
STA 144+50 TO STA 157+00

CUY-90-0.00

161
582

08 MAR 2000
p:\pr22308\cadd\l738gpl.dgn

GUARDRAIL

REF NO.	STATION FROM	STATION TO	SIDE	202 GUARDRAIL REMOVED	606 GUARDRAIL, TYPE 5	606 ANCHOR ASSEMBLY, TYPE E-98	606 ANCHOR ASSEMBLY, TYPE T	
				LIN FT	LIN FT	LIN FT	LIN FT	
GR90	151+54.50	153+17	LT	162.5				
GR91	144+50	157+00	LT		1250			
GR92	148+34	151+59	RT		262.5	1	1	
GR93	150+13	151+75	RT	162.5				
TOTALS CARRIED TO ROADWAY SUBSUMMARY				325	1725	1	1	

ROADWAY

REF NO.	STATION FROM	STATION TO	SIDE	622 CONCRETE BARRIER, TYPE B-50	622 CONCRETE BARRIER, TYPE C-50
				LIN FT	LIN FT
R70	144+50	156+50	RT	1200	
R71	156+50	157+00			50
TOTALS CARRIED TO ROADWAY SUBSUMMARY				1200	50

NOISE BARRIER

REF NO.	STATION FROM	STATION TO	SIDE	SPECIAL NOISE BARRIER (REFLECTIVE) 10' AND UNDER	SPECIAL NOISE BARRIER (REFLECTIVE) OVER 10' TO 14'	SPECIAL NOISE BARRIER (REFLECTIVE) OVER 14' TO 20'
				SQ FT	SQ FT	SQ FT
NW24	144+50	157+00	LT			22313
	*(47+63.54)	*(60+13.54)				
TOTALS CARRIED TO ROADWAY SUBSUMMARY						22313

CALCULATED MJB/JAA
CHECKED RAS/ENF

PLAN AND PROFILE SUBSUMMARY
STA 144+50 TO STA 157+00

CUY-90-0.00

I:\PROJECTS\Pidll738\dgn\finalplans\ll738GPL.DGN 21-JUL-2000 11:20AM jgrmovse

BENCHMARK: IRON PIN IN MONUMENT BOX STA. 23+00± ℄ CANTERBURY ROAD ELEV.= 675.76

NOISE BARRIER SITE 10

END NOISE BARRIER
N.B. STA. 60+38.50 =
℄ I-90 STA. 157+24.96, 69.0' LT.

SEE SHEETS 547 TO 581 FOR NOISE BARRIER PROFILES

FOR MEDIAN BARRIER DETAILS UNDER BRIDGE, SEE SHEET 347.

STRUCTURE NO. CUY-90-0303

NO. 7 VALVE BOX, 1' BELOW SURFACE STA. 24+2.73, 72.5' RT ℄ CANTERBURY RD.

STA. 24+72.37 ℄ CANTERBURY RD. = STA. 160+39.56 ℄ I-90

END WB LOWERING
STA. 163+90, ℄

BEGIN EXIST. 40:1 PAV'T TAPER
BEGIN EXIST. SHOULDER TAPER (10')
STA. 166+19.81

END EXIST. SHOULDER TAPER (8')
STA. 166+99.81

MATCHLINE STA 157+00

MATCHLINE STA 169+50

℄ I-90 W.B.

℄ I-90 E.B.

℄ I-90 SURVEY & CONSTRUCTION

12' LANE (TYP.)

11' 3" SHOULDER (TYP.)

40:1 TAPER

L.O.N. 125'

L.O.N. 162.5'

REMOVE 12"S
N 74° 36' 46" E

END EB LOWERING
STA. 162+60 ℄

BEGIN EXIST. PAV'T TAPER
BEGIN EXIST. SHOULDER TAPER (10')
STA. 168+28.68

END EXIST. PAV'T TAPER
END EXIST. SHOULDER TAPER (8')
STA. 169+26.68

BENCHMARK: IRON PIN IN MONUMENT BOX STA. 28+86± ℄ CANTERBURY ROAD ELEV.= 679.58

SEE SHEETS 354A FOR SLOTTED DRAIN DETAILS.

W.B. V.P.I. Sta. 157+65.00
Elev. = 660.36, 150' V.C.
SSD = 1129'

I-3B50, APP
STA. 158+50, 3' LT.
GRATE EL 658.91
24" INV. E 654.02
24" INV. N 654.02

22'-24" CONDUIT, TYPE B,@ 0.23%

I-3B50, APP
STA. 159+50, 3' RT.
GRATE EL 659.22
24" INV. W,E 654.32

I-3B50, APP
STA. 159+72, 3' LT.
GRATE EL 658.41
24" INV. W 654.37

E.B. V.P.I. Sta. 161+85.00
Elev. = 661.24, 150' V.C.
SSD =1431.

W.B. V.P.I. Sta. 162+65.00
Elev. = 661.34, 250' V.C.

I-3B50
STA. 168+02, 3'RT.
GRATE EL 662.06
15" INV. N 655.84

PROFILE GRADE

EXISTING GROUND @ 25' LT. & RT. OF ℄

PROFILE GRADE 1-1/2" ABOVE EXISTING PROFILE

-0.24± % -0.87± %W.B.

-0.24± % E.B.

-0.87 % +1.06 % W.B.

-0.24 % +0.85 % E.B.

+1.06 % +0.24 % W.B.

+0.73 % +0.24 % E.B.

+0.24± % W.B.

+0.24± % E.B.

EXISTING 12" WATER

EXISTING GROUND @ ℄

PLUG & FILL
REMOVE CB-4
STA. 157+48, ℄
GRATE EL 656.98
15" INV. N 653.70
12" INV. E 654.20

REMOVE 12"S

100'-24" CONDUIT, TYPE B,@ 0.30%

REMOVE CB-4
STA. 158+50, ℄
GRATE EL 657.20
12" INV. W 654.46

E.B. V.P.I. Sta. 160+10.00
Elev. = 659.75, 200' V.C.
SSD = N/A

W.B. V.P.I. Sta. 159+90.00
Elev. = 658.41, 300' V.C.
SSD = 2719'

PLUG & FILL

EXISTING 18" RCP

REMOVE CB-4
STA. 162+11, ℄
GRATE EL 657.81
15" INV. N 654.17

W.B. STA. 160+37.50, 49' LT.
UNDER CLEARANCE
EXISTING MIN. CLEARANCE 14.43'
MIN. CLEARANCE 16.00'

EX. 48"X76" CULVERT
STA. 164+96

E.B. STA. 160+45, 37' RT.
UNDER CLEARANCE
EXISTING MIN. CLEARANCE 15.51'
MIN. CLEARANCE 16.05'

REMOVE CB-4
STA. 168+02, ℄
GRATE EL 659.35
15" INV. N 655.84

EXISTING GROUND @ 25' LEFT OF ℄ (TYP.)
EXISTING GROUND @ ℄
EXISTING GROUND @ 25' RIGHT OF ℄ (TYP.)

	W.B.	E.B.
157	660.43	660.43
	660.32	660.37
	660.18	660.31
	660.02	660.25
158	659.83	660.19
	659.62	660.13
	659.44	660.07
	659.30	660.01
159	659.20	659.96
	659.14	659.94
	659.12	659.95
	659.14	660.00
160	659.20	660.08
	659.30	660.19
	659.44	660.34
	659.62	660.52
161	659.84	660.73
	660.10	660.91
	660.35	661.07
	660.57	661.20
162	660.78	661.31
	660.96	661.40
	661.13	
163	661.27	
	661.40	
	661.52	
	661.59	
164	661.52	660.42
	659.19	657.87
	661.68	660.45
165	661.68	660.28
	659.34	657.63
	661.81	660.57
166	661.77	660.29
	659.52	658.89
	661.78	660.45
167	662.02	660.37
	659.57	657.37
	661.99	660.47
168	662.15	660.46
	659.59	659.95
	662.12	660.57
169	662.25	660.59
	659.74	660.04
	662.24	660.70
	662.38	660.79
	659.86	660.10
	662.38	660.89
	662.46	660.74
	660.13	660.24
	662.48	660.78
	662.62	660.89
	660.06	660.40
	662.64	
	662.74	660.97
	660.14	660.59
	662.70	661.09
	662.74	661.06
	660.41	658.24
	662.91	661.18
	662.91	661.18
	660.56	658.57
	662.96	661.28
		661.27
		658.91
		661.33
		661.46
		659.35
		661.53

PLAN AND PROFILE
STA 157+00 TO STA 169+50

CUY-90-0.00

163
582

I:\PROJECTS\Pid11738\dgn\final plans\11738GPM.DGN 09-AUG-2000 3:33PM jgrmovse

DRAINAGE																
				202				601	602	603				604		SPECIAL
REF NO.	STATION		SIDE	PIPE REMOVED	MANHOLE REMOVED	CATCH BASIN REMOVED	STRUCTURE REMOVED	ROCK CHANNEL PROTECTION, TYPE C WITH FILTER	CONCRETE MASONRY	15" CONDUIT, TYPE B	24" CONDUIT, TYPE B	24" CONDUIT, TYPE C	SLOTTED DRAIN, 15" DIAMETER, AS PER PLAN	INLET NO. 3B50, AS PER PLAN	INLET NO. 3B50	FILL AND PLUG EXISTING CONDUIT
	FROM	TO		LIN FT	EACH	EACH	EACH	CU YD	CU YD	LIN FT	LIN FT	LIN FT	LIN FT	EACH	EACH	LIN FT
D140	157+48	158+50	℄	102		1										
D141	158+50		℄		1			30	0.31		59	30		1		
D142	158+50	159+50	℄								100			1		
D143	159+50	159+72	℄								22			1		
D144	162+11		℄	10		1	1									80
D145	161+65	168+02	℄	8	1					8					1	
D146	159+20	159+50	RT										30			
D147	159+72	160+02	LT										30			
D148	157+48		LT	10			1									78
D221	159+50	159+65	RT										15			
D222	159+57	159+72	LT										15			
TOTALS				130	2	2	2	30	0.31	8	181	30	90	3	1	158
TOTALS CARRIED TO ROADWAY SUBSUMMARY				130	2	2	2	30	0.40	8	181	30	90	3	1	158

UNDERDRAIN									
				603	605		FITTINGS			
							FOR INFORMATION ONLY			
REF NO.	STATION		SIDE	6" CONDUIT, TYPE F	6" SHALLOW PIPE UNDERDRAIN WITH FABRIC WRAP	6" SHALLOW PIPE UNDERDRAINWITH FABRIC WRAP A.P.P.	TEE	90° BEND	60° BEND	
	FROM	TO		LIN FT	LIN FT	LIN FT	EACH	EACH	EACH	
U225	157+00	159+84	LT	10		289	1			
U226	157+00	159+50	RT	10		242				
U227	157+00	159+50	RT	10		255	1			
U228	159+84	167+98	LT			814				
U229	159+50	167+98	RT	10		840				
U230	159+50	167+98	RT			848				
U231	168+02	169+50	LT	10	153			1	1	
U232	168+02	169+50	RT	10		140				
U233	168+02	169+50	RT	10	153			1		
TOTALS CARRIED TO ROADWAY SUBSUMMARY				70	306	3428	2	2	1	

CALCULATED MJB
CHECKED RAS

PLAN AND PROFILE SUBSUMMARY
STA 157+00 TO STA 169+50

CUY-90-0.00

I:\PROJECTS\Pldi1738\dgn\finalplans\I1738GPM.DGN 09-AUG-2000 3:27PM jgrmovse

GUARDRAIL

REF NO.	STATION FROM	STATION TO	SIDE	202 GUARDRAIL REMOVED	606 GUARDRAIL, TYPE 5	606 ANCHOR ASSEMBLY, TYPE E-98	606 ANCHOR ASSEMBLY, TYPE T	606 BRIDGE TERMINAL ASSEMBLY, TYPE 1
				LIN FT	LIN FT	EACH	EACH	EACH
GR95	158+33.80	159+86.27	RT	150				
GR96	158+71.60	159+84.10	RT		50	1		1
GR97	158+97.50	160+85	RT	187.5				
GR98	159+93.50	161+81	LT	187.5				
GR99	157+00	160+07	LT		295		1	
GR100	160+92.25	162+43.40	LT	150				
GR101	160+93.40	162+18.40	LT		50	1		1
GR102	166+50	169+50	RT		250	1		
TOTALS CARRIED TO ROADWAY SUBSUMMARY				675	645	3	1	2

NOISE BARRIER

REF NO.	STATION FROM	STATION TO	SIDE	SPECIAL NOISE BARRIER (REFLECTIVE) 10' AND UNDER	SPECIAL NOISE BARRIER (REFLECTIVE) OVER 10' TO 14'	SPECIAL NOISE BARRIER (REFLECTIVE) OVER 14' TO 20'
				SQ FT	SQ FT	SQ FT
NW25	157+00	157+24.96	LT		288	15
	*(60+13+.54)	*(60+38.50)				
TOTALS CARRIED TO ROADWAY SUBSUMMARY					288	15

* STATIONING ALONG NOISE BARRIER

ROADWAY

REF NO.	STATION FROM	STATION TO	SIDE	202 CONCRETE BARIER REMOVED	622 CONCRETE BARRIER, A.P.P.	622 CONCRETE BARRIER, TYPE B-50	622 CONCRETE BARRIER, TYPE D, A.P.P.	622 CONCRETE BARRIER, TYPE C-50
				LIN FT	LIN FT	LIN FT	LIN FT	LIN FT
R80	157+00	163+90	℄					690
R81	160+30.20	160+94.2	LT	64				
R82	160+31.50	160+81.50	LT				50	
R83	160+81.50	160+95.50	LT		14			
R84	159+84	160+48	RT	64				
R85	159+82	159+96	RT		14			
R86	159+96	160+46	RT				50	
R87	163+90	169+50	℄			560		
TOTALS CARRIED TO ROADWAY SUBSUMMARY				128	28	560	100	690

CALCULATED MJB/JAA
CHECKED RAS/ENF

PLAN AND PROFILE SUBSUMMARY STA 157+00 TO STA 169+50

CUY-90-0.00

165
582

i:\PROJECTS\Pid11738\dgn\final plans\11738GPM.DGN 21-JUL-2000 11:22AM jgrmovse

BENCHMARK: CHISELED SQUARE "□", NORTH WESTERLY CORNER OF HEADWALL, STA 171+80±, 100'± RT., ELEV=655.68

SEE SHEETS 547 TO 581 FOR NOISE BARRIER PROFILES

END EXIST. 40:1 PAV'T TAPER
STA. 176+19.81, 74' LT. ℄ I-90
PC STA. 76+19.81, ℄ RAMP F

PC Sta. 76+19.81

PCC Sta. 78+19.81

MATCHLINE STA 169+50

MATCHLINE STA 182+00

MATCHLINE STA 8+00 RAMP F SEE SHEET 190

MATCHLINE STA 79+00 RAMP J SEE SHEET 193

℄ I-90 W.B.

℄ I-90 E.B.

℄ I-90 SURVEY & CONSTRUCTION

40:1 TAPER

54" CULVERT

EX. L/A

U240

U241

U242

R90

GR105

F14

F15

NW11-1

NW11-2

NW11-3

NW11-4

NW26

36'

12' LANE (TYP.)

11' 3" SHOULDER (TYP.)

48'

N 74° 36' 46" E

RAMP F

RAMP J

N.B. STA. 9+88 =
℄ I-90 STA. 172+18, 128.90' RT.

BEGIN NOISE BARRIER

STA. 173+72.96, 61' RT. ℄ I-90
PC STA. 73+72.96, ℄ RAMP J

N.B. STA. 12+64 =
℄ I-90 STA. 174+93.83, 138.73' RT. =
℄ RAMP J STA. 75+00.43, 72.35' RT.

N.B. STA. 12+88 =
℄ RAMP J STA. 75+25.71, 72.52' RT.

N.B. STA. 15+76 =
℄ RAMP J STA. 78+31.72, 54.33' RT.

N.B. 16+00 =
℄ RAMP J STA. 78+57.67, 55.79' RT.

NOISE WALL SITE 11

PROFILE GRADE 1-1/2" ABOVE EXISTING PROFILE

PROFILE GRADE

EXISTING GROUND @ 25' LT. & RT. OF ℄

EXISTING GROUND @ ℄

EXISTING GROUND @ 25' LEFT OF ℄ (TYP.)

EXISTING GROUND @ ℄

EXISTING GROUND @ 25' RIGHT OF ℄ (TYP.)

EX. 54" CULVERT
STA. 171+72

675 670 665 660 655 650 645 640

170 171 172 173 174 175 176 177 178 179 180 181 182

662.91 660.56 662.96 662.98 660.34 663.08 663.03 660.44 663.14 663.18 660.52 663.24 663.36 660.88 663.34 663.42 661.15 663.42 663.58 661.18 663.62 663.71 661.35 663.06 663.83 661.44 661.79 663.87 661.60 663.93 664.01 661.72 664.08 664.18 661.91 664.19 664.26 661.99 663.06 664.31 661.84 664.30 664.30 662.14 664.37 664.19 662.12 664.37 664.24 662.10 664.25 664.15 661.93 664.13 663.98 661.82 663.98 663.72 661.64 663.76 663.54 661.43 663.59 663.39 661.31 663.45 663.24 661.22 663.39 663.09 660.89 663.15 662.89 660.44 662.95 662.67 660.42 662.73

07 APR 2000
P:\PR22308\cadd\1738GPN.DGN

PLAN AND PROFILE
STA 169+50 TO STA 182+00

CUY-90-0.00

166
582

GUARDRAIL

REF NO.	STATION FROM	STATION TO	SIDE	606 GUARDRAIL, TYPE 5 LIN FT	606 ANCHOR ASSEMBLY, TYPE T EACH	
GR105	169+50	172+12.50	RT	250	1	
TOTALS CARRIED TO ROADWAY SUBSUMMARY				250	1	

UNDERDRAIN

REF NO.	STATION FROM	STATION TO	SIDE	605 6" SHALLOW PIPE UNDERDRAIN WITH FABRIC WRAP LIN FT	605 6" SHALLOW PIPE UNDERDRAIN WITH FABRIC WRAP, A.P.P. LIN FT	
U240	169+50	182+00	LT	1250		
U241	169+50	182+00	RT		1250	
U242	169+50	182+00	RT	1250		
TOTALS CARRIED TO ROADWAY SUBSUMMARY				2500	1250	

ROADWAY

REF NO.	STATION FROM	STATION TO	SIDE	622 CONCRETE BARIER, TYPE B-50 LIN FT	
R90	169+50	182+00	℄	1250	
TOTALS CARRIED TO ROADWAY SUBSUMMARY				1250	

FENCE

REF NO.	STATION FROM	STATION TO	SIDE	202 FENCE REMOVED LIN FT	607 FENCE, TYPE CL LIN FT	
F14	172+25		RT		4	
F15	172+20	79+00	RT	650		
TOTALS CARRIED TO ROADWAY SUBSUMMARY				650	4	

NOISE BARRIER

REF NO.	STATION FROM	STATION TO	SIDE	SPECIAL NOISE BARRIER (REFLECTIVE) 10' AND UNDER SQ FT	SPECIAL NOISE BARRIER (REFLECTIVE) OVER 10' TO 14' SQ FT	SPECIAL NOISE BARRIER (REFLECTIVE) OVER 14' TO 20' SQ FT
NW26	172+18	79+00	RT	120	3123	5856
	*(9+88)	*(16+42.33)				
TOTALS CARRIED TO ROADWAY SUBSUMMARY				120	3123	5856

* STATIONING ALONG NOISE BARRIER

CALCULATED MJB/JAA
CHECKED RAS/ENF

PLAN AND PROFILE SUBSUMMARY
STA 169+50 TO STA 182+00

CUY-90-0.00

i:\PROJECTS\Pid1738\dgn\final plans\il738GPN.DGN 21-JUL-2000 11:24AM jgrmovse

FOR MEDIAN BARRIER DETAIL
UNDER BRIDGE SEE SHEET 347

SEE SHEET 354B FOR
SLOTTED DRAIN DETAILS.

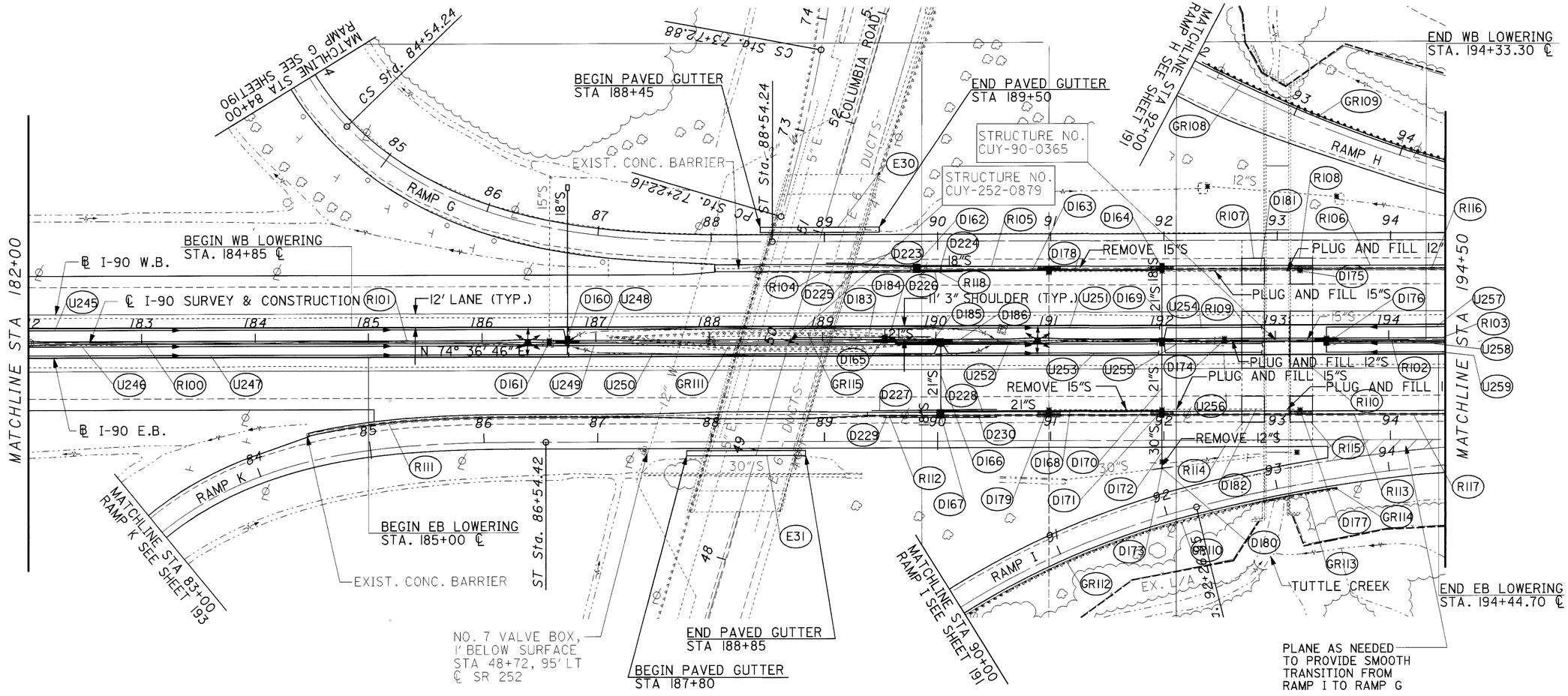

HORIZONTAL SCALE IN FEET
0 25 50 100

CALCULATED | CHECKED

PLAN AND PROFILE
STA 182+00 TO STA 194+50

CUY-90-0.00

168
582

I:\PROJECTS\Pidll738\dgn\final plans\ll738GP0.DGN 09-AUG-2000 3:35PM jgrmovse

W.B. 661.68 661.57 661.44 661.29 661.12 660.93 660.73 660.50 660.25 659.99 659.71 659.45 659.22 659.05 658.91 658.81 658.75 658.74 658.76 658.53 658.86 658.51 658.95 659.04 659.14 659.23 659.32 659.41 659.61 659.81 *

E.B. 661.71 661.60 661.47 661.32 661.15 660.97 660.76 660.54 660.31 660.05 659.76 659.53 659.30 659.10 658.92 658.78 658.67 658.59 658.53 658.51 658.55 658.61 658.70 658.88 659.06 659.25 659.43 659.61 659.83 *

* PROFILE GRADE 1-1/2" ABOVE EXISTING PROFILE

W.B. V.P.I. Sta. 186+10.00
Elev. = 661.29, 250' V.C.
SSD = 988'

E.B. V.P.I. Sta. 186+25.00
Elev. = 661.37, 250' V.C.
SSD = 1088'

CB-3 STA. 190+04, 65.5' RT.
GRATE EL 657.49
18" INV. N 653.38

CB-3 STA. 190+04, 62.5' RT.
GRATE EL 657.49
21" INV. N,E 653.12
18" INV. S 653.37

I-3B50, A.P.P.
STA. 190+04, 3' RT.
GRATE EL 657.79
21" INV. S,E 653.29

CB-3 STA. 189+83, 62.5' LT.
GRATE EL 657.79
18" INV. N 653.61
18" INV. W 653.61

CB-3 STA. 189+83, 65.5' LT.
GRATE EL 657.80
18" INV. S 653.62

CB-3A STA. 192+00, 65.5' RT.
GRATE EL 658.05
30" INV. N,S 651.42

CB-3A STA. 192+00, 62.5' RT.
GRATE EL 658.05
21" INV. N,W 652.18
30" INV. S 651.43

MH STA. 192+00, 115.15' RT.
GRATE EL 656.39
30" INV. N 651.27
30" INV. W,E 651.27

CB-3A STA. 192+00, 62.5' LT.
GRATE EL 658.21
18" INV. N,W 652.87
21" INV. S 652.62

I-3B50, A.P.P.
STA. 192+00, 3' RT.
GRATE EL 658.39
21" INV. N,S 652.40

CB-3A STA. 192+00, 65.5' LT.
GRATE EL 658.21
18" INV. S 652.62

W.B. V.P.I. Sta. 194+33.3Elev. = 659.94
W.B. V.P.I. Sta. 193+02.7Elev. = 659.42
E.B. V.P.I. Sta. 193+44.7Elev. = 659.59
E.B. V.P.I. Sta. 194+44.7Elev. = 660.02

REMOVE 8'-30"S AND REP. WITH 8-30" CONDUIT, TYPE C, @ 0.85%

REMOVE 8'-15"S AND REP. WITH 8'-15" CONDUIT, TYPE B, @ 0.57%

I-3B50, A.P.P.
STA. 186+75, 3' LT.
GRATE EL 659.75
18" INV. N 655.00

I-3B50, A.P.P.
STA. 189+55, 3' LT.
GRATE EL 658.05
21" INV. E 653.43

217'-18" CONDUIT, TYPE B, @ 0.34%

196'-21" CONDUIT, TYPE B, @ 0.48%

I-3B50, A.P.P.
STA. 193+45, 3' RT.
GRATE EL 658.90
15" INV. W 653.20

675 670 665 660 655 650 645 640 635 630 625

EXISTING GROUND @ 25' LT. & RT. OF ℄

PROFILE GRADE

-0.36± % W.B.
-0.36± % E.B.

-0.36 % -1.13 % W.B.
-0.36 % -1.05 % E.B.

-1.13 % +0.19 % W.B.
-1.05 % +0.36% E.B.

+0.19 % +0.40% W.B.
+0.36 % +0.43 % E.B.

+0.24 % W.B.
+0.24 % E.B.

EXISTING GROUND @ ℄

49'-21" CONDUIT TYPE B, @ 0.28%

REMOVE 15"S

PLUG & FILL EX. 30"S

PLUG & FILL

PLUG & FILL

PLUG & FILL

PLUG & FILL

PLUG & FILL

REMOVE CB-4
STA. 186+59, ℄
GRATE EL 657.86
15" INV. N 654.06

EXISTING 12" WATER

REMOVE I-3B
STA. 191+00, 64' LT. & RT.
GUTTER EL 657.84
15" INV. E 653.80

REMOVE CB 2-2B
STA. 192+00, 107' RT.
GRATE EL 655.12
12" INV. S 652.5

REMOVE I-3B
STA.192+05, 64' LT. & RT.
GRATE EL 657.72
15" INV. W,E 653.30

EX. CB-5
STA. 192+40, 135.25 LT.
GRATE EL 652.85
15" INV. E 650.20

EX. CB-5
STA. 193+54, 126' LT.
GRATE EL 653.00
12" INV. E 651.00

REMOVE CB-4
STA. 193+45, ℄
GRATE EL 656.44
15" INV. W 653.20

REMOVE I-3B
STA. 193+21.75, 64' LT. & RT.
GRATE EL 657.86
12" INV. W,E 653.60

ABANDON CB-4
STA. 192+55, ℄
GRATE EL 655.49
12" INV. E 653.30

W.B. STA. 188+44.50, 37' LT.
UNDER CLEARANCE
EX. MIN. CLEARANCE 14.50'
MIN. CLEARANCE 15.88

E.B. STA. 188+19, 37' RT.
UNDER CLEARANCE
EX. MIN. CLEARANCE 14.69'
MIN. CLEARANCE 15.89'

E.B. V.P.I. Sta. 189+35.00
Elev. = 658.10, 300, V.C.
SSD = N/A

W.B. V.P.I. Sta. 188+50.00
Elev. = 658.58, 200' V.C.
SSD = N/A

EXISTING GROUND @ 25' LEFT OF ℄ (TYP.)
EXISTING GROUND @ ℄
EXISTING GROUND @ 25' RIGHT OF ℄ (TYP.)

662.67 660.42 662.73 | 662.49 660.17 662.50 | 662.40 659.92 662.37 | 662.21 659.64 662.28 | 661.23 659.65 662.09 | 661.74 659.42 661.91 | 661.55 659.17 661.69 | 661.38 659.03 661.53 | 661.27 658.70 661.32 | 661.06 658.36 661.17 | 660.75 659.92 660.99 | 660.63 660.70 660.73 | 660.59 660.34 660.63 | 660.44 659.88 660.51 | 660.22 659.60 660.20 | 660.00 659.79 660.08 | 659.79 659.44 659.82 | 659.65 657.85 659.62 | 659.65 657.27 659.54 | 659.52 657.00 659.51 | 659.45 656.73 659.44 | 659.39 656.57 659.35 | 659.28 658.66 659.30 | 659.52 657.01 659.49 | 659.74 657.60 659.68 | 659.85 658.27 659.91

182 183 184 185 186 187 188 189 190 191 192 193 194

HORIZONTAL SCALE IN FEET
0 25 50 100

CALCULATED
CHECKED

PLAN AND PROFILE
STA 182+00 TO STA 194+50

CUY-90-0.00

169
582

I:\PROJECTS\Pldll738\dgn\final plans\ll738GP0.DGN 09-AUG-2000 3:36PM jgrmovse

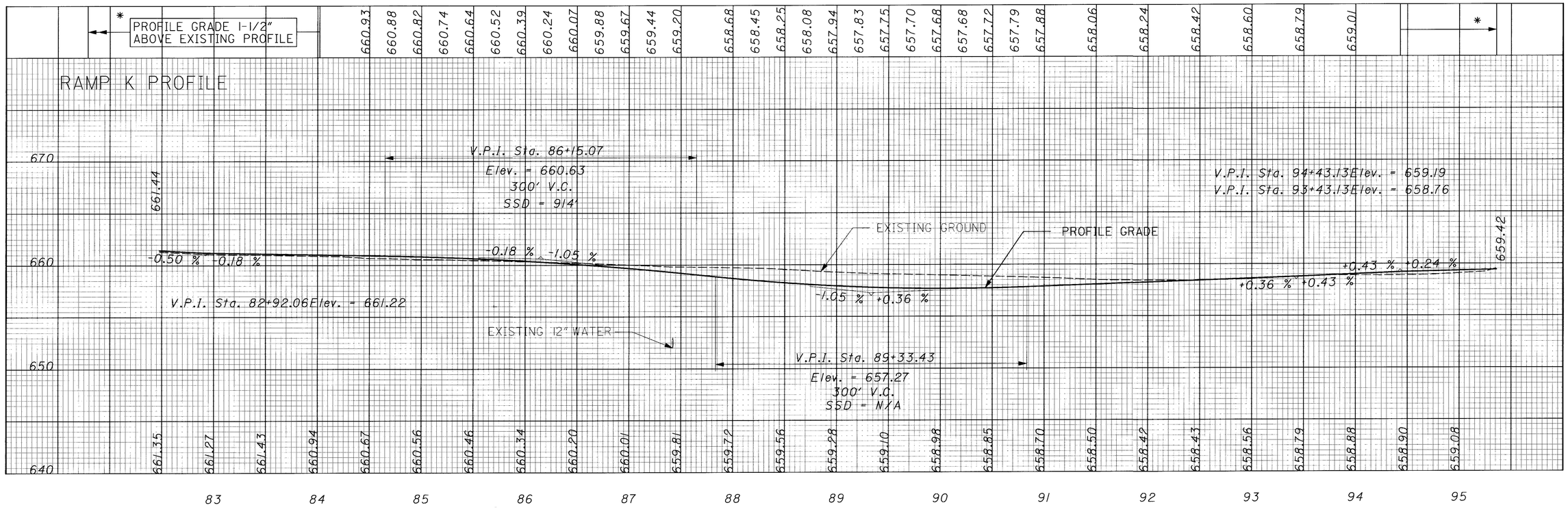
RAMP K PROFILE
PROFILE GRADE 1-1/2" ABOVE EXISTING PROFILE
660.93 660.88 660.82 660.74 660.64 660.52 660.39 660.24 660.07 659.88 659.67 659.44 659.20 658.68 658.45 658.25 658.08 657.94 657.83 657.75 657.70 657.68 657.68 657.72 657.79 657.88 658.06 658.24 658.42 658.60 658.79 659.01
670
660
650
640
661.44
V.P.I. Sta. 86+15.07
Elev. = 660.63
300' V.C.
SSD = 914'
V.P.I. Sta. 94+43.13Elev. = 659.19
V.P.I. Sta. 93+43.13Elev. = 658.76
EXISTING GROUND
PROFILE GRADE
659.42
-0.50 % -0.18 %
-0.18 % -1.05 %
+0.43 % +0.24 %
+0.36 % +0.43 %
-1.05 % +0.36 %
V.P.I. Sta. 82+92.06Elev. = 661.22
EXISTING 12" WATER
V.P.I. Sta. 89+33.43
Elev. = 657.27
300' V.C.
SSD = N/A
661.35 661.27 661.43 660.94 660.67 660.56 660.46 660.34 660.20 660.01 659.81 659.72 659.56 659.28 659.10 658.98 658.85 658.70 658.50 658.42 658.43 658.56 658.79 658.88 658.90 659.08
83 84 85 86 87 88 89 90 91 92 93 94 95
RAMP G PROFILE
PROFILE GRADE 1-1/2" ABOVE EXISTING PROFILE
660.26 660.08 659.95 659.80 659.61 659.39 659.14 658.86 658.60 658.38 658.21 658.07 657.98 657.92 657.91 657.94 658.03 658.12 658.22 658.31 658.40 658.50 658.59 658.78 658.98
670
660
650
640
660.14
V.P.I. Sta. 86+62.82
Elev. = 659.85
150' V.C.
SSD = 949'
V.P.I. Sta. 94+31.75Elev. = 659.11
V.P.I. Sta. 93+01.13Elev. = 658.59
EXISTING GROUND
PROFILE GRADE
659.36
+0.00 % -0.37 %
-0.37 % -1.13 %
+0.40 % +0.24 %
+0.19 % +0.40 %
-1.13 % +0.19 %
V.P.I. Sta. 85+04.35Elev. = 660.44
EXISTING 12" WATER
V.P.I. Sta. 88+48.43
Elev. = 657.75
200' V.C.
SSD = N/A
660.04 660.22 660.35 660.35 660.22 660.09 659.97 659.77 659.74 659.59 659.47 659.32 659.17 658.93 658.80 658.71 658.65 658.60 658.55 658.55 658.64 658.79 658.95 659.15
84 85 86 87 88 89 90 91 92 93 94 95
HORIZONTAL SCALE IN FEET
50 25 0 50 100
CHECKED
PROFILE
RAMP G & RAMP K
CUY-90-0.00
170
582
08 MAR 2000
p:\pr22308\caddv\738gpo.dgn

DRAINAGE																										
				202				601	602	603							604				SPECIAL					
REF NO.	STATION		SIDE	PIPE REMOVED	CATCH BASIN REMOVED	INLET REMOVED	STRUCTURE REMOVED	ROCK CHANNEL PROTECTION, TYPE C WITH FILTER	CONCRETE MASONRY	15" CONDUIT, TYPE B	18" CONDUIT, TYPE B	18" CONDUIT, TYPE C	21" CONDUIT, TYPE B	30" CONDUIT, TYPE B	30" CONDUIT, TYPE C	SLOTTED DRAIN, 15" DIAMETER, AS PER PLAN	CATCH BASIN NO. 3	CATCH BASIN NO. 3A	MANHOLE NO. 3, A.P.P.	INLET NO. 3B50, A.P.P.	FILL AND PLUG EXISTING CONDUIT					
	FROM	TO		LIN FT	EACH	EACH	EACH	CU YD	CU YD	LIN FT	LIN FT	LIN FT	LIN FT	LIN FT	LIN FT	LIN FT	EACH	EACH	EACH	EACH	LIN FT					
D160	186+75		℄					30	0.31		61	86								1						
D161	186+59		℄	10	1		1														137					
D162	189+83		LT								3							2								
D163	189+83	192+00	LT								217															
D164	192+00		LT								3						2									
D165	189+55	190+04	℄										49							2						
D166	190+04		℄										63													
D167	190+04		RT														2									
D168	190+04	192+00	RT								3		196													
D169	192+00		℄										63							1						
D170	192+00		℄										63													
D171	192+00		RT											3			2									
D172	192+00		RT											31	20											
D173	191+92	192+08	RT												16				1							
D174	192+55	192+90	℄		1																35					
D175	193+10	193+21.75	LT		1																11.75					
D176	193+37	193+45	℄							8										1						
D177	193+10	193+21.75	RT		1																11.75					
D178	191+00	192+05	LT	105		2																				
D179	191+00	192+05	RT	105		2																				
D180	192+00		RT	9	1																					
D181	192+05	192+90	LT																		85					
D182	192+05	192+90	RT																		85					
D183	189+35	189+55	LT													80										
D184	189+55	189+75	LT													40										
D185	189+84	190+04	RT													40										
D186	190+04	190+24	RT													70										
D223	189+03	189+83	LT													80										
D224	189+83	190+23	LT													40										
D225	189+03	189+83	RT													80										
D226	189+83	190+23	RT													40										
D227	189+44	190+04	LT													60										
D228	190+04	190+54	LT													50										
D229	189+64	190+04	RT													50										
D230	190+04	190+54	RT													50										
	TOTALS			229	5	4	1	30	0.31	8	287	86	434	34	36	680	6	2	1	5	365.5					
TOTALS	CARRIED TO ROADWAAY SUBSUMMARY			229	5	4	1	30	0.40	8	287	86	434	34	36	680	6	2	1	5	366					

CALCULATED MJB
CHECKED RAS

PLAN AND PROFILE SUBSUMMARY
STA 182+00 TO STA 194+50

CUY-90-0.00

171
582

I:\PROJECTS\Pid#1738\dgn\finalplans\1738GP0.DGN 09-AUG-2000 3:38PM jgrmovse

GUARDRAIL

REF NO.	STATION FROM	STATION TO	SIDE	202 GUARDRAIL REMOVED	606 GUARDRAIL, TYPE 5	606 ANCHOR ASSEMBLY, TYPE T	606 BRIDGE TERMINAL ASSEMNLY, TYPE 3 (MODIFIED)	
				LIN FT	LIN FT	EACH	EACH	
GRI08	92+31.70	94+42.32	LT	210.62				
GRI09	92+06.29	94+42.32	LT		236.03	1		
GRI10	90+00	92+82.53	RT		257.53	1	1	
GRI11	187+07	189+32	RT	225				
GRI12	90+00	93+13.79	RT	313.79				
GRI13	93+13.79	93+51.29	RT	37.5				
GRI14	93+13.79	93+51.29	RT			1	1	
GRI15	187+99	190+24	LT	225				
TOTALS				1011.91	493.56	3	2	
TOTALS CARRIED TO ROADWAY SUBSUMMARY				1012.5	500	3	2	

ROADWAY

REF NO.	STATION FROM	STATION TO	SIDE	202 CONCRETE BARRIER REMOVED	202 APPROACH SLAB REMOVED	606 IMPACT ATTENUATOR, TYPE 2-98 [(MODEL #QS3007Y QUADGUARD (UNIDIRECTIONAL)]	611 REINFORCED CONCRETE APPROACH SLAB (T=13"), A.P.P.	622 CONCRETE BARIER, TYPE B-50	622 CONCRETE BARRIER, TYPE C-50	830 4" CONCRETE MEDIAN, A.P.P.	
				LIN FT	SQ YD	EACH	SQ YD	LIN FT	LIN FT	SQ YD	
R100	182+00	184+85	℄					285			
R101	184+85	192+70.32	℄						785.32		
R102	193+32.82	194+44.70	℄						111.88		
R103	194+44.70	194+50	℄					.30			
R104	188+04.75	189+78	LT					173.25			
R105	189+78	192+70.32	LT							104.11	
R106	193+32.82	194+50	LT							39.06	
R107	192+70.32	192+90.32	LT				51.11				
R108	193+12.82	193+32.82	LT				51.11				
R109	192+70.32	192+90.32	℄				111.11				
R110	193+12.82	193+32.82	℄				111.11				
R111	184+47	189+39.51	RT					492.51			
R112	189+39.51	192+70.32	RT							110.27	
R113	193+32.82	194+50	RT							39.06	
R114	192+70.32	192+90.32	RT				51.11				
R115	193+12.82	193+32.82	RT				51.11				
R116	188+04.75	194+50	LT	645.25							
R117	184+47	194+50	RT	1003							
R118	189+78	190+04.50	LT			1					
TOTALS				1648.25		1	426.66	951.06	897.2	292.5	
TOTALS CARRIED TO ROADWAY SUBSUMMARY				1650		1	427	952	898	293	

CALCULATED MJB
CHECKED RAS

PLAN AND PROFILE SUBSUMMARY
STA 182+00 TO STA 194+50

CUY-90-0.00

08 MAR 2000
P:\pr22308\cadd\II738gpo.dgn

UNDERDRAIN

REF NO.	STATION FROM	STATION TO	SIDE	603 6" CONDUIT, TYPE F LIN FT	605 4" ROCK CUT UNDERDRAIN, A.P.P. LIN FT	605 6" SHALLOW PIPE UNDERDRAIN WITH FABRIC WRAP LIN FT	605 6" SHALLOW PIPE UNDERDRAINWITH FABRIC WRAP, A.P.P. LIN FT	FITTINGS FOR INFORMATION ONLY TEE EACH	90° BEND EACH	60° BEND EACH	
U245	182+00	186+75	LT	10			480		1	1	
U246	182+00	186+75	RT				475				
U247	182+00	186+75	RT	10			480		1		
U248	186+77	189+55	LT	10	283			1			
U249	186+77	190+04	RT	10	319						
U250	186+77	190+04	RT	10	332			1			
U251	189+55	191+98	LT		243						
U252	190+04	191+96	RT	10	184						
U253	190+04	191+98	RT	10	197						
U254	192+00	192+88	LT	10	93			1	1		
U255	192+00	192+88	RT	10	80						
U256	192+00	192+88	RT	10	93			1	1		
U257	193+45	194+50	LT	10		110					
U258	193+45	194+50	RT	10			110	1			
U259	193+45	194+50	RT	10		110					
								1			
TOTALS CARRIED TO ROADWAY SUBSUMMARY				130	1824	220	1545	6	4	1	

EROSION CONTROL

REF NO.	STATION FROM	STATION TO	SIDE	601 PAVED GUTTER, TYPE 4 LIN FT	
E30	188+45	189+50	LT	105	
E31	187+80	188+85	RT	105	
TOTALS CARRIED TO ROADWAY SUBSUMMARY				210	

CALCULATED MJB
CHECKED RAS

PLAN AND PROFILE SUBSUMMARY
STA 182+00 TO STA 194+50

CUY-90-0.00

08 MAR 2000
P:\pr22308\cadd\il738gpo.dgn

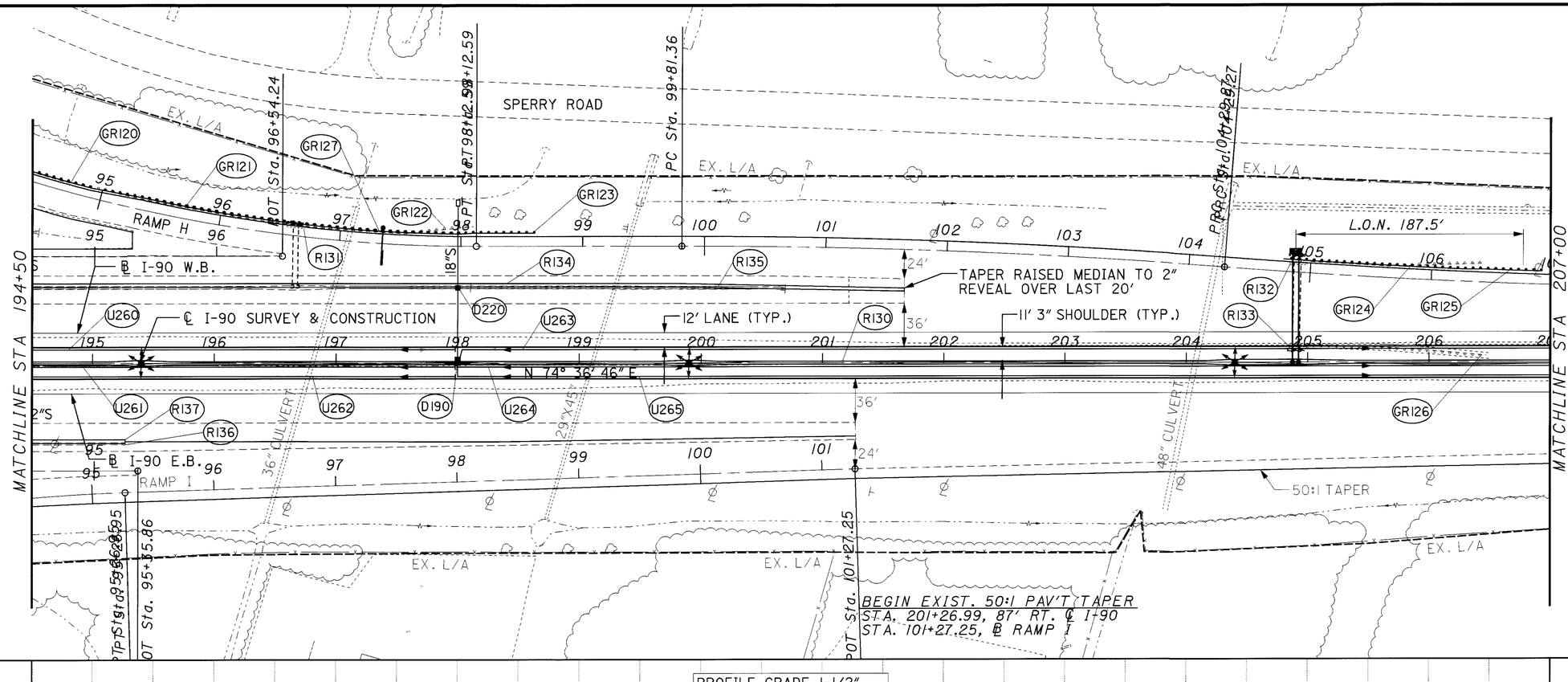

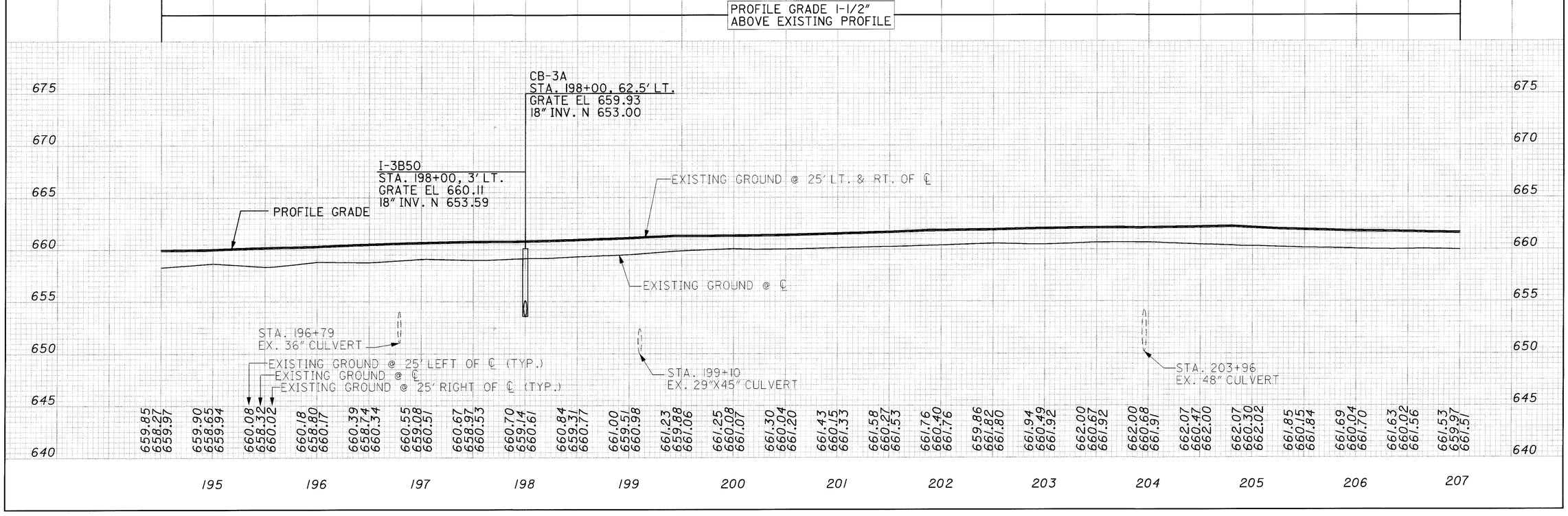

PLAN AND PROFILE
STA 194+50 TO STA 207+00

CUY-90-0.00

174
582

HORIZONTAL SCALE IN FEET
0 25 50 100

CALCULATED
CHECKED

I:\PROJECTS\Pjdl738\dgn\final plans\ll738GPP.DGN 09-AUG-2000 3:40PM jgrmovse

UNDERDRAIN

REF NO.	STATION FROM	STATION TO	SIDE	603 6" CONDUIT, TYPE F (LIN FT)	605 6" SHALLOW PIPE UNDERDRAIN WITH FABRIC WRAP (LIN FT)	605 6" SHALLOW PIPE UNDERDRAIN WITH FABRIC WRAP, A.P.P. (LIN FT)	FITTINGS FOR INFORMATION ONLY 90° BEND (EACH)	FITTINGS FOR INFORMATION ONLY 60° BEND (EACH)	
U260	194+50	197+98	LT		348				
U261	194+50	197+96	RT			346			
U262	194+50	197+98	RT		348				
U263	198+00	207+00	LT	10		905	1	1	
U264	198+00	207+00	RT		900				
U265	198+00	207+00	RT	10		905	1		
TOTALS CARRIED TO ROADWAY SUBSUMMARY				20	1596	2156	2	1	

ROADWAY

REF NO.	STATION FROM	STATION TO	SIDE	202 CONCRETE BARRIER REMOVED (LIN FT)	622 CONCRETE BARRIER TYPE B-50 (LIN FT)	830 4" CONCRETE MEDIAN AS PER PLAN (SQ YD)	
R130	194+50	207+00	LT		1250		
R131	96+55.80	96+69.64	LT	14			
R132	204+88	205+02	LT	14			
R133	204+88	205+02	LT	14			
R134	194+50	201+67.13	LT	717.13			
R135	194+50	201+67.13	LT			239.04	
R136	194+50	195+26.95	RT	76.95			
R137	194+50	195+26.95	RT			25.65	
TOTALS				836.08	1250	264.69	
TOTALS CARRIED TO ROADWAY SUBSUMMARY				837	1250	265	

GUARDRAIL

REF NO.	STATION FROM	STATION TO	SIDE	202 GUARDRAIL REMOVED (LIN FT)	606 GUARDRAIL, TYPE 5 (LIN FT)	606 GUARDRAIL, TYPE 5A (LIN FT)	606 ANCHOR ASSEMBLY, TYPE E-98 (EACH)	606 ANCHOR ASSEMBLY, TYPE T (EACH)		
GRI20	94+42.32	96+55.80	LT	215.48						
GRI21	94+42.32	97+22.50	LT		280.18					
GRI22	96+69.64	98+16.50	LT	148.96						
GRI23	97+47.50	98+60	LT		100		1			
GRI24	204+99.02	206+49.90	LT	150						
GRI25	204+77.50	206+90	LT		150		1	1		
GRI26	204+99.02	206+49.90	LT	150						
GRI27	97+22.50	97+47.50	LT			25				
TOTALS				664.44	530.18	25	2	1		
TOTALS CARRIED TO ROADWAY SUBSUMMARY				675	537.5	25	2	1		

DRAINAGE

REF NO.	STATION FROM	STATION TO	SIDE	601 ROCK CHANNEL PROTECTION, TYPE C WITH FILTER (CU YD)	602 CONCRETE MASONRY (CU YD)	603 CONDUIT, BORED OR JACKED, 18", TYPE B OR C, 706.02 (LIN FT)	604 INLET NO. 3B50 (EACH)	604 CATCH BASIN NO. 3A (EACH)
D190	198+00		℄	30	0.31	126	1	
D220	198+00		LT					1
TOTALS				30	0.31	126	1	1
TOTALS CARRIED TO ROADWAY SUBSUMMARY				30	0.40	126	1	1

CALCULATED MJB
CHECKED RAS

PROFILE SUBSUMMARY
PLAN AND PROFILE
STA 194+50 TO STA 207+00

CUY-90-0.00

I:\PROJECTS\Pidll738\dgn\finalplans\ll738GPP.DGN 09-AUG-2000 3:41PM jgrmovse

Curve 3 Data:
P.I. Sta = 231+14.98
Delta = 12°00' 20.89" (RT)
Degree = 0°28'00.00"
T = 1,291.06
L = 2,572.67
R = 12,277.67
E = 67.69
LC = 2,567.97
PC Sta = 218+23.91
PT Sta = 243+96.59

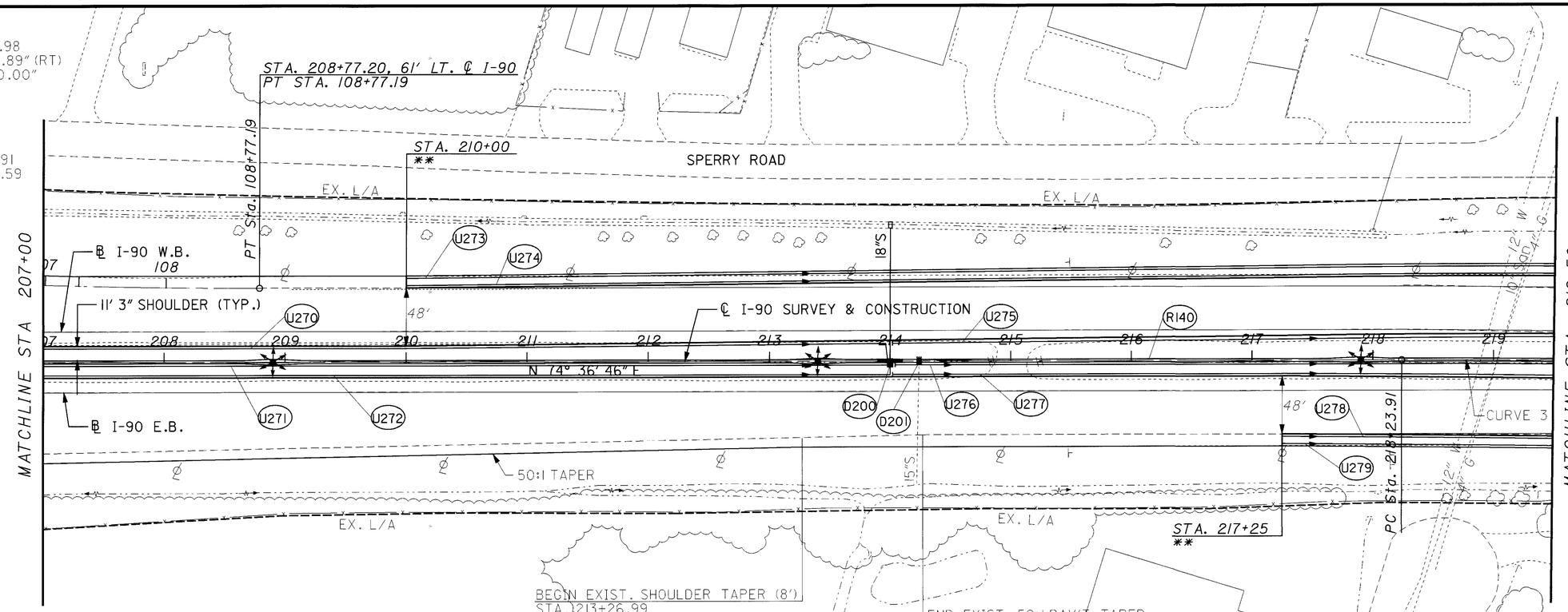

** SEE TYPICALS FOR PAVEMENT & SHOULDER WIDTHS & WIDENINGS

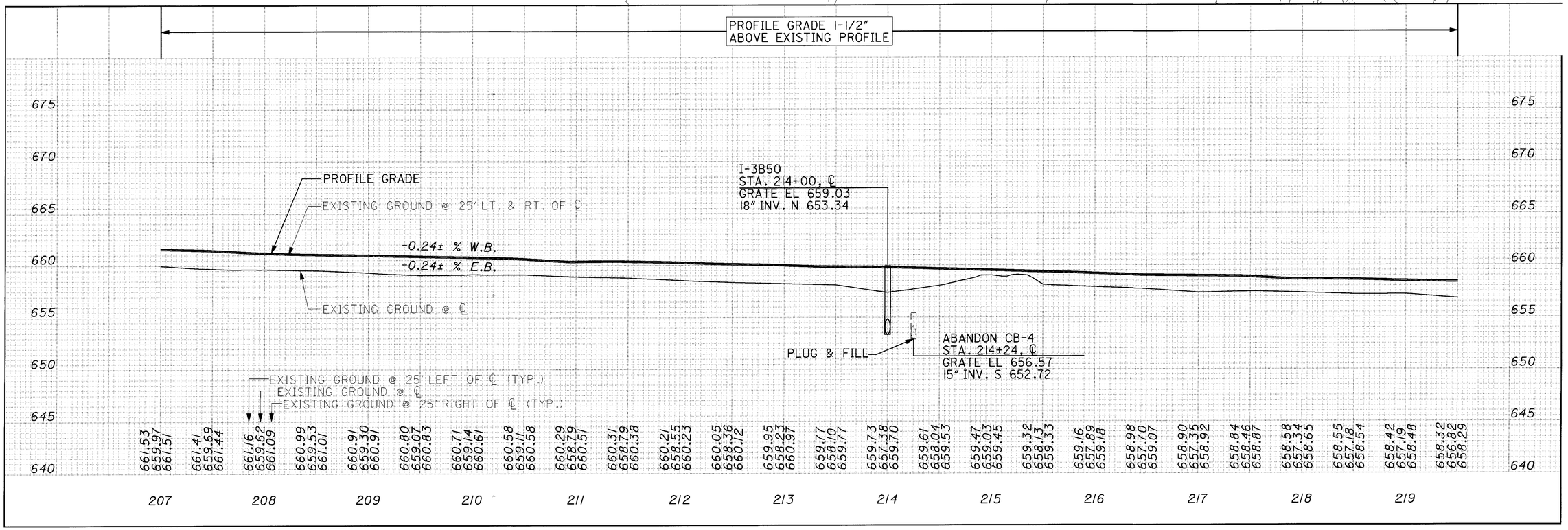

I:\PROJECTS\Pidll738\dgn\final plans\ll738GP0.DGN 09-AUG-2000 3:43PM jgrmovse

HORIZONTAL SCALE IN FEET
0 25 50 100
CALCULATED
CHECKED

PLAN AND PROFILE
STA 207+00 TO STA 219+50

CUY-90-0.00

ROADWAY

REF NO.	STATION FROM	STATION TO	SIDE	622 CONCRETE BARRIER TYPE B-50	
				LIN FT	
R140	207+00	219+50	℄	1250	
TOTALS CARRIED TO ROADWAY SUBSUMMARY				1250	

DRAINAGE

REF NO.	STATION FROM	STATION TO	SIDE	202 PIPE REMOVED	202 CATCH BASIN REMOVED	202 STRUCTURE REMOVED	601 ROCK CHANNEL PROTECTION, TYPE C WITH FILTER	602 CONCRETE MASONRY	603 CONDUIT, BORED OR JACKED, 18", TYPE B OR C, 706.02	604 INLET NO. 3B50	SPECIAL FILL AND PLUG EXISTING CONDUIT
				LIN FT	EACH	EACH	CU YD	CU YD	LIN FT	EACH	LIN FT
D200	214+00		RT				30	0.31	110	1	
D201	214+24		LT	10	1	1					92
TOTALS					1	1	30	0.31	110	1	92
TOTALS CARRIED TO ROADWAY SUBSUMMARY				10	1	1	30	0.40	110	1	92

UNDERDRAIN

REF NO.	STATION FROM	STATION TO	SIDE	603 6"CONDUIT, TYPE F	605 6" SHALLOW PIPE UNDERDRAIN WITH FABRIC WRAP	605 6" SHALLOW PIPE UNDERDRAIN WITH FABRIC WRAP, A.P.P.	FITTINGS FOR INFORMATION ONLY TEE	90° BEND	
				LIN FT	LIN FT	LIN FT	EACH	EACH	
U270	207+00	214+00	LT	10	707		1	1	
U271	207+00	214+00	LT	10		692			
U272	207+00	214+00	LT	10	707		1		
U273	210+00	219+50	RT			950			
U274	210+00	219+50	RT		950				
U275	214+02	219+50	RT		548				
U276	214+04	219+50	LT			546			
U277	214+02	219+50	LT		548				
U278	217+25	219+50	RT		225				
U279	217+25	219+50	RT			225			
TOTALS CARRIED TO ROADWAY SUBSUMMARY				30	3685	2413	2	1	

CALCULATED MJB
CHECKED RAS

PLAN AND PROFILE SUBSUMMARY
STA 207+00 TO STA 219+50

CUY-90-0.00

08 MAR 2000
P:\pr22308\cadd\11738gpq.dgn

Curve 3 Data:
P.I. Sta = 231+14.98
Delta = 12°00' 20.89" (RT)
Degree = 0°28'00.00"
T = 1,291.06
L = 2,572.67
R = 12,277.67
E = 67.69
LC = 2,567.97
PC Sta = 218+23.91
PT Sta = 243+96.59

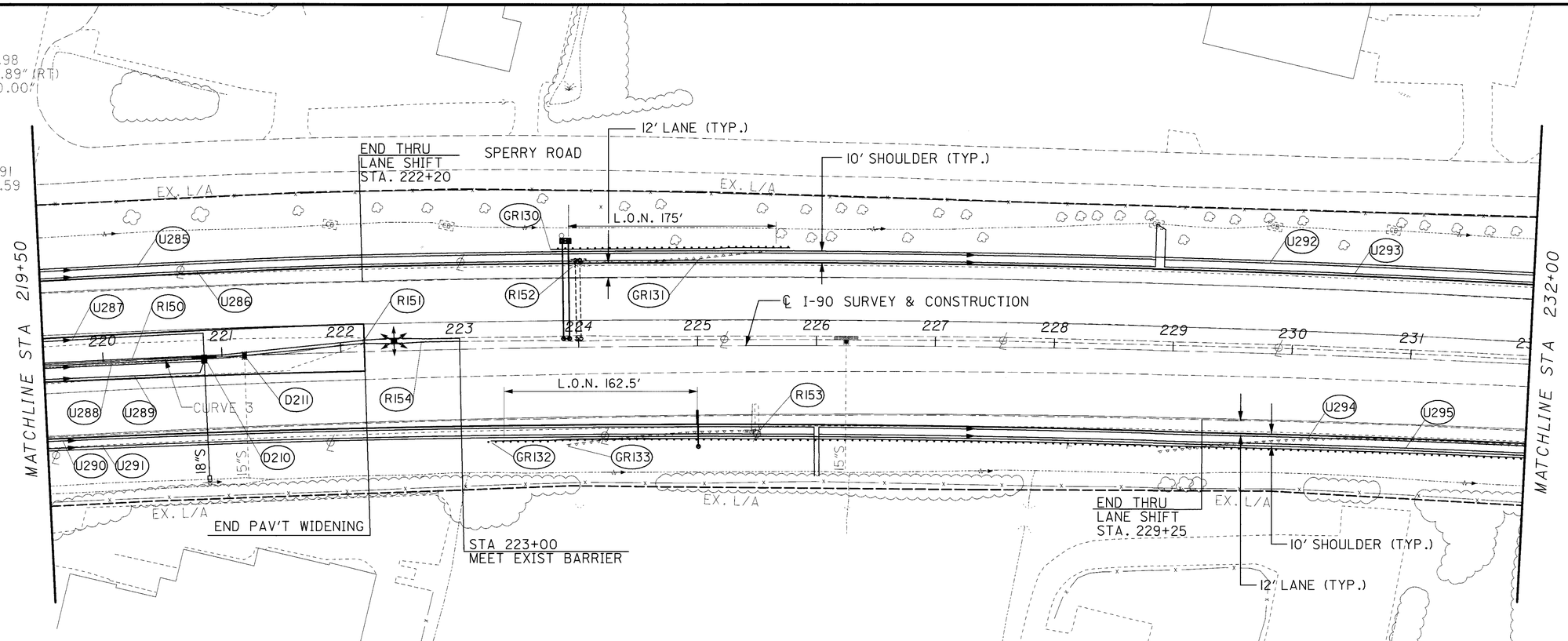

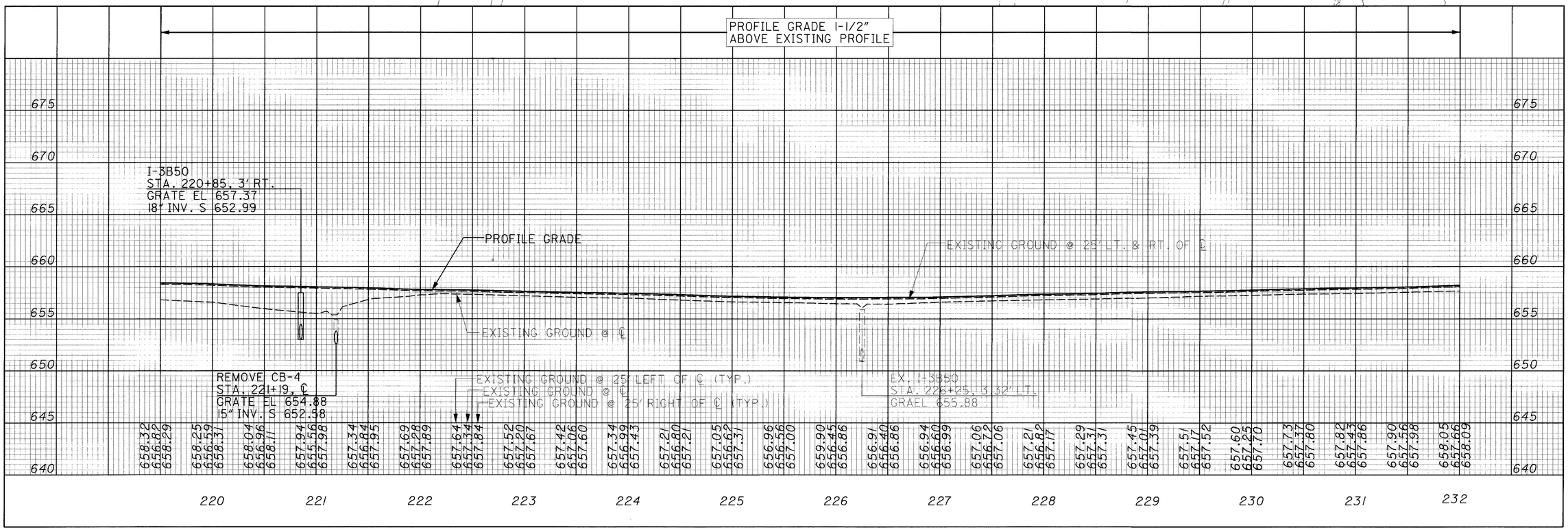

HORIZONTAL SCALE IN FEET
0 25 50 100
CALCULATED
CHECKED

PLAN AND PROFILE
STA 219+50 to STA 232+00

CUY-90-0.00

178
582

15 MAR 2000
P:\pr22308\cadd\1738gpr.dgn

DRAINAGE												
REF NO.	STATION		SIDE	202			601	602	603	604	SPECIAL
				PIPE REMOVED	CATCH BASIN REMOVED	STRUCTURE REMOVED	ROCK CHANNEL PROTECTION, TYPE C WITH FILTER	CONCRETE MASONRY	CONDUIT, BORED OR JACKED, 18", TYPE B OR C, 706.02	INLET NO. 3B50	FILL AND PLUG EXISTING CONDUIT
	FROM	TO		LIN FT	EACH	EACH	CU YD	CU YD	LIN FT	EACH	LIN FT
D210	220+85		℄				30	0.31	99	1	
D211	221+19		℄	42	1	1					60
TOTALS				42	1	1	30	0.31	99	1	60
TOTALS CARRIED TO ROADWAY SUBSUMMARY				42	1	1	30	0.40	99	1	60

UNDERDRAIN										
REF NO.	STATION		SIDE	603	605		FITTINGS FOR INFORMATION ONLY			
				6" CONDUIT. TYPE F	6" SHALLOW PIPE UNDERDRAIN WITH FABRIC WRAP	6" SHALLOW PIPE UNDERDRAIN WITH FABRIC WRAP, A.P.P.	TEE	90° BEND	60° BEND	
	FROM	TO		LIN FT	LIN FT	LIN FT	EACH	EACH	EACH	
U285	219+50	228+84	LT		934		1			
U286	219+50	228+84	LT	10		962		1		
U287	219+50	220+85	LT	10	146			1		
U288	219+50	220+85	RT			135				
U289	219+50	220+85	RT	10	136			1	1	
U290	219+50	225+98	RT	10	681			1		
U291	219+50	225+98	RT			648	1			
U292	228+91	232+00	LT	10	342			1		
U293	228+91	232+00	LT	10		309	1			
U294	226+02	232+00	RT	10	630			1	1	
U295	226+02	232+00	RT	10		598				
TOTALS CARRIED TO ROADWAY SUBSUMMARY				80	3211	2652	3	6	2	

CALCULATED MJB
CHECKED RAS

PLAN AND PROFILE SUBSUMMARY
STA 219+50 to STA 232+00

CUY-90-0.00

08 MAR 2000
D:\pr22308\cadd\ll738gpr.dgn

GUARDRAIL

REF NO.	STATION FROM	STATION TO	SIDE	202 GUARDRAIL REMOVED	606 GUARDRAIL, TYPE 5	606 ANCHOR ASSEMBLY, TYPE E-98	606 ANCHOR ASSEMBLY, TYPE T	
				LIN FT	LIN FT	EACH	EACH	
GRI30	223+77.50	225+77.50			137.5	1	1	
GRI31	224+07.7	225+59		150				
GRI32	223+25	232+00			825	1		
GRI33	223+89	225+40		162.5				
TOTALS CARRIED TO ROADWAY SUBSUMMARY				312.5	962.5	2	1	

ROADWAY

REF NO.	STATION FROM	STATION TO	SIDE	202 CONCRETE BARRIER REMOVED	622 CONCRETE BARRIER TYPE B-50	622 CONCRETE BARRIER TYPE C-50	
				LIN FT	LIN FT	LIN FT	
R150	219+50	222+20			270		
R151	222+20	223+00				80	
R152	223+98	224+12		14			
R153	225+38.75	225+52.75		14			
R154	222+20	223+00		80			
TOTALS CARRIED TO ROADWAY SUBSUMMARY				108	270	80	

CALCULATED M/B
CHECKED RAS

PLAN AND PROFILE SUBSUMMARY
STA 219+50 to STA 232+00

CUY-90-0.00

08 MAR 2000
p:\pr2308\cadd\l738gprr.dgn

Curve 3 Data:
P.I. Sta = 231+14.98
Delta = 12°00' 20.89" (RT)
Degree = 0°28'00.00"
T = 1,291.06
L = 2,572.67
R = 12,277.67
E = 67.69
LC = 2,567.97
PC Sta = 218+23.91
PT Sta = 243+96.59

10' SHOULDER (TYP.)
12' LANE (TYP.)
BEGIN PAV'T TAPER
STA. 233+96
SPERRY ROAD
EX. L/A
END PAV'T TAPER
STA. 234+96
12" S.
END PROJECT
STA 240+00
CLAGUE ROAD
60" S
MATCHLINE STA 232+00
MATCHLINE STA 244+50
U300
U301
48'
36'
℄ I-90 SURVEY & CONSTRUCTION
233 234 235 236 237 238 239 240 241 242 243 244
CURVE 3
U302
U303
60:1 TAPER
GR140
GR141
16" W
PT Sta. 243+96.58
BEGIN 60:1 PAV'T TAPER
STA. 232+25
END 60:1 PAV'T TAPER
STA. 239+45
END PAV'T REPLACEMENT
STA. 238+45, 53.5' RT.

= BUTT JOINT

PROFILE GRADE 1-1/2"
ABOVE EXISTING PROFILE
100'
TRANSITION
BUTT JOINT

675 670 665 660 655 650 645 640

PROFILE GRADE
EXISTING GROUND @ 25' LT. & RT. OF ℄
+0.24± % W.B.
+0.24± % E.B.
+0.24± %, -0.76± %
-0.76± % W.B.
-0.76± % E.B.
MATCH EX. ELEV.
EXISTING GROUND @ ℄
EXISTING GROUND @ 25' LEFT OF ℄ (TYP.)
EXISTING GROUND @ ℄
EXISTING GROUND @ 25' RIGHT OF ℄ (TYP.)

658.05 658.09 658.21 658.37 658.43 658.55 658.66 658.76 658.77 658.62 658.46 658.26 658.03 657.69 657.25 656.86 656.50 656.09
657.66 657.77 657.92 658.05 658.17 658.25 658.29 658.35 658.22 658.04 657.74 657.47 657.18 656.82 656.41 656.04 655.59
658.21 658.40 658.59 658.58 658.66 658.73 658.71 658.60 658.41 658.16 657.91 657.55 657.15 656.70 656.39 656.00

232 233 234 235 236 237 238 239 240 241 242 243 244

= 0 25 50 100 HORIZONTAL SCALE IN FEET

CALCULATED | CHECKED

PLAN AND PROFILE
STA 232+00 TO STA 244+50

CUY-90-0.00

181
582

08 MAR 2000
P:\pr2308\cadd\1738gps.dgn

UNDERDRAIN									
				603	605		FITTINGS		
							FOR INFORMATION ONLY		
REF NO.	STATION		SIDE	6" CONDUIT, TYPE F	6" SHALLOW PIPE UNDERDRAIN WITH FABRIC WRAP	6" SHALLOW PIPE UNDERDRAIN WITH FABRIC WRAP, A.P.P.	TEE	90° BEND	
	FROM	TO		LIN FT	LIN FT	LIN FT	EACH	EACH	
U300	232+00	234+96	LT			296			
U301	232+00	234+96	LT		296				
U302	232+00	235+50	RT	10	374			1	
U303	232+00	235+50	RT			350	1		
TOTALS CARRIED TO ROADWAY SUBSUMMARY				10	670	646	1	1	

GUARDRAIL							
				202	606		
REF NO.	STATION		SIDE	GUARDRAIL REMOVED	GUARDRAIL, TYPE 5	ANCHOR ASSEMBLY, TYPE T	
	FROM	TO		LIN FT	LIN FT	EACH	
GR140	232+00	237+25		525			
GR141	232+00	237+12.50			500	1	
TOTALS CARRIED TO ROADWAY SUBSUMMARY				525	500	1	

CALCULATED MJB
CHECKED RAS

PLAN AND PROFILE SUBSUMMARY
STA 232+00 TO STA 244+50

CUY-90-0.00

08 MAR 2000
D:\pr22308\caddV11738gps.dgn

08 MAR 2000
p:\pr22308\cadd\ll738gpv.dgn

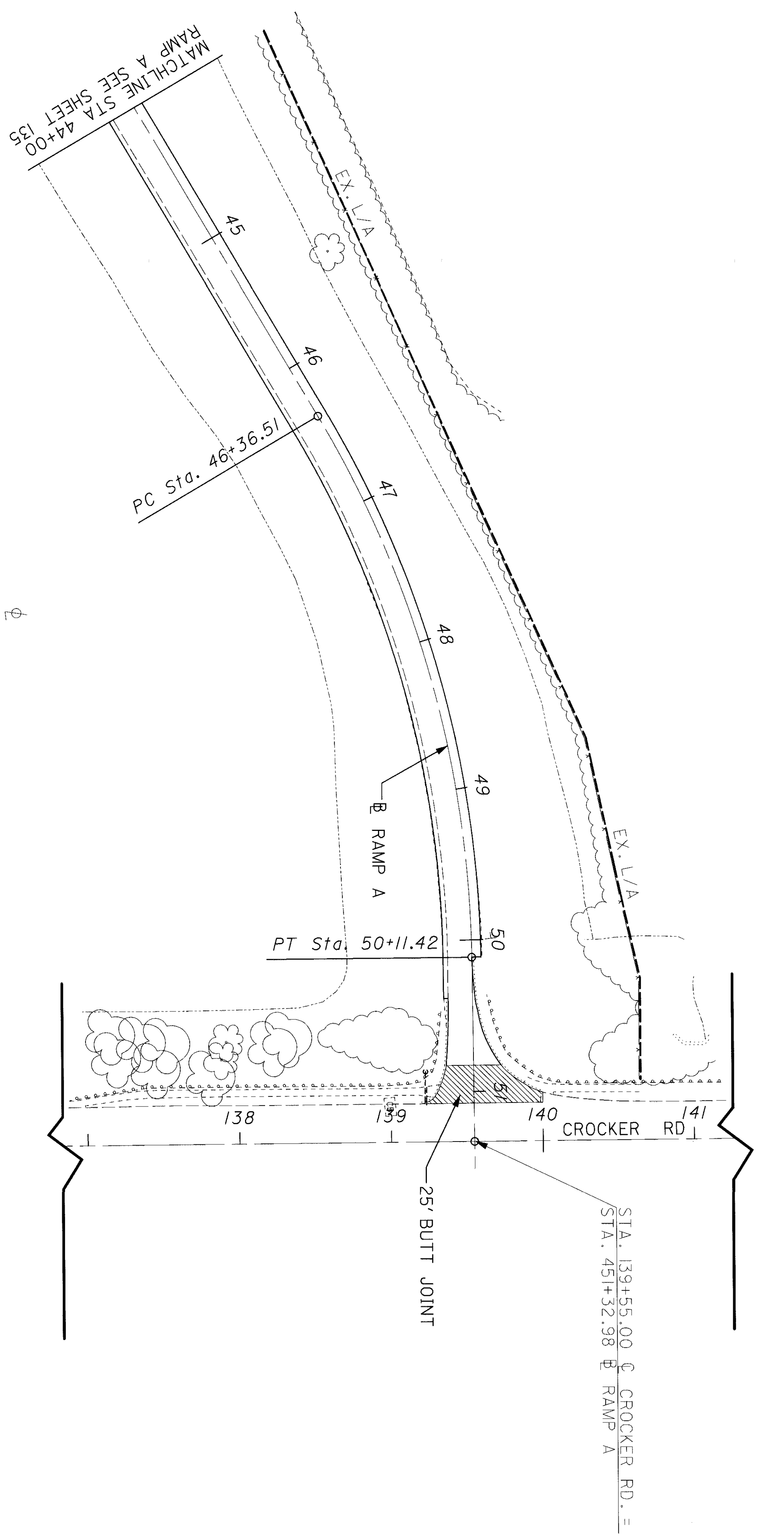

183 582	CUY-90-0.00	RAMP A PLAN SHEET	HORIZONTAL SCALE IN FEET (0, 25, 50, 100)

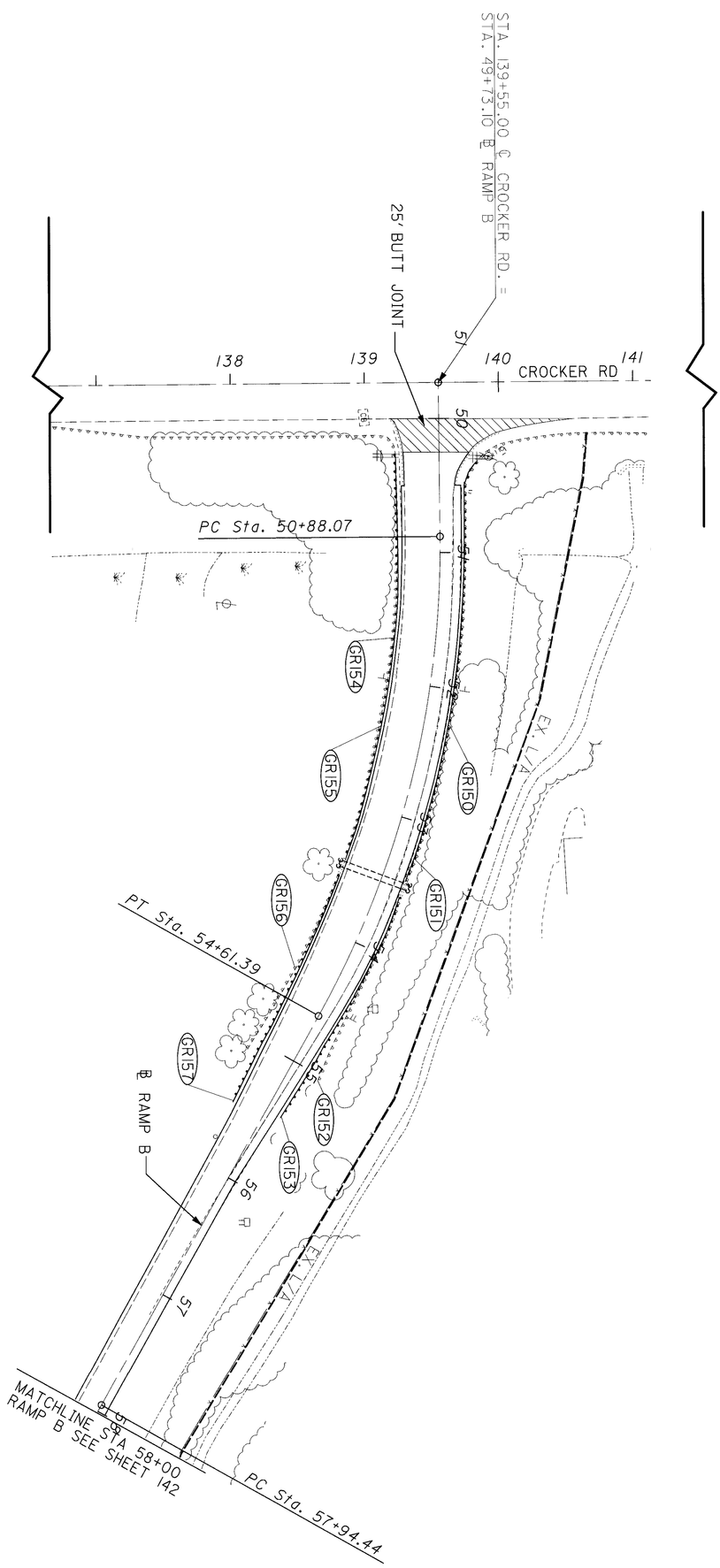
STA. 139+55.00 ℄ CROCKER RD. =
STA. 49+73.10 ℄ RAMP B
25' BUTT JOINT
138
139
140
CROCKER RD
141
PC Sta. 50+88.07
GR154
GR155
GR156
GR157
GR153
GR152
GR151
GR150
PT Sta. 54+61.39
℄ RAMP B
EXIT A
MATCHLINE STA 58+00
RAMP B SEE SHEET 142
PC Sta. 57+94.44

GUARDRAIL								
				202	606			
REF NO.	STATION		SIDE	GUARDRAIL REMOVED	GUARDRAIL, TYPE 5	ANCHOR ASSEMBLY, TYPE E-98	ANCHOR ASSEMBLY, TYPE T	BRIDGE TERMINAL ASSEMBLY. TYPE 4, A.P.P.
	FROM	TO		LIN FT	LIN FT	EACH	EACH	EACH
GR150	50+33.18	53+44.36	RT	320				
GR151	50+33.18	53+44.36	RT		282.5		1	1
GR152	53+56.85	55+03.85	RT	150				
GR153	53+56.85	55+48.13	RT		112.5	1		1
GR154	50+26.30	53+44.13	LT	308				
GR155	50+26.30	53+44.13	LT		270.5		1	1
GR156	53+57.45	55+13.43	LT	150				
GR157	53+57.45	55+48.73	LT		112.5	1		1
TOTALS				928	778	2	2	4
TOTALS CARRIED TO ROADWAY SUBSUMMARY				928	787.5	2	2	4

CALCULATED MJB
CHECKED RAS

PLAN AND PROFILE SUBSUMMARY
RAMP B

CUY-90-0.00

185
582

08 MAR 2000
p:\pr22308\cadd\11738gpx.dgn

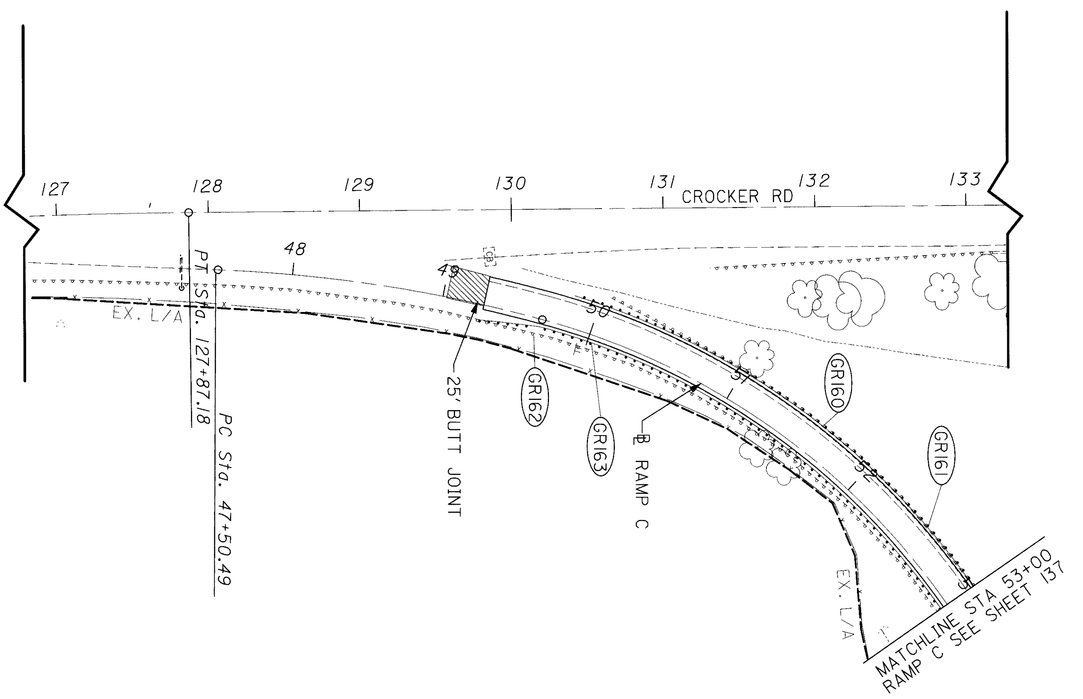
127
128
129
130
131
132
133
CROCKER RD
48
49
50
51
52
53
EX. L/A
PT Sta. 127+87.18
PC Sta. 47+50.49
25' BUTT JOINT
GR162
GR163
℄ RAMP C
GR160
GR161
EX. L/A
MATCHLINE STA 53+00
RAMP C SEE SHEET 137

GUARDRAIL							
REF NO.	STATION			202	606		
				GUARDRAIL REMOVED	GUARDRAIL, TYPE 5	ANCHOR ASSEMBLY, TYPE E-98	
	FROM	FROM	SIDE	LIN FT	LIN FT	EACH	
GR160	49+83.35	53+00	LT	308			
GR161	50+05.36	53+00	LT		330.7	1	
GR162	49+27.50	53+00	RT	365			
GR163	49+27.50	53+00	RT		368.8		
TOTALS				673	699.5	1	
TOTALS CARRIED TO ROADWAY SUBSUMMARY				673	700	1	

CALCULATED MJB
CHECKED RAS

PLAN AND PROFILE SUBSUMMARY
RAMP C

CUY-90-0.00

187
582

08 MAR 2000
P:\pr22308\caddd\ll738gpy.dgn

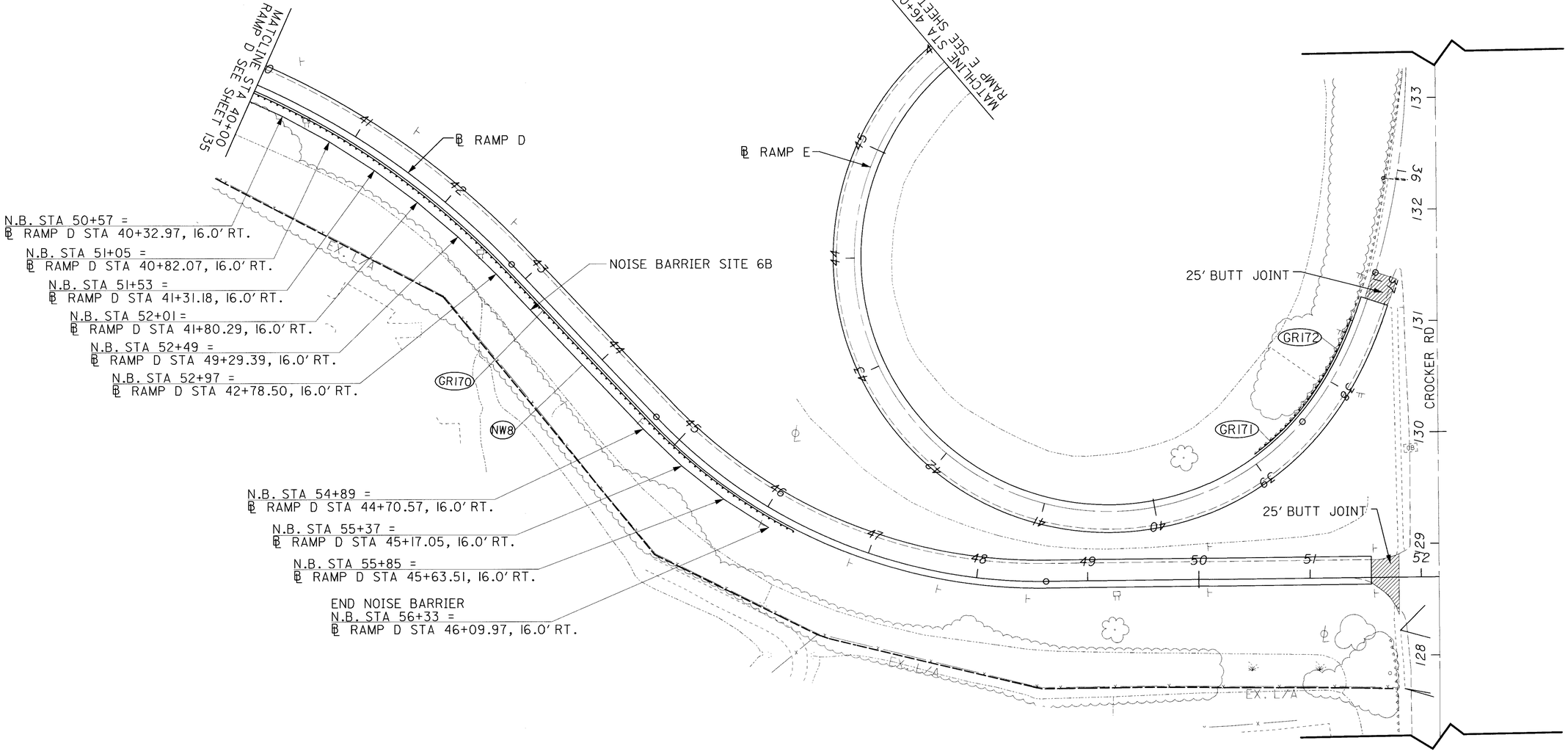

SEE SHEETS 547 TO 581 FOR
NOISE BARRIER PROFILES

HORIZONTAL SCALE IN FEET

RAMPS D & E PLAN SHEET

CUY-90-0.00

188
582

07 APR 2000
P:\PR223108\cadd\11738GPW.DGN

NOISE BARRIER						
REF NO.	STATION		SIDE	SPECIAL		
				NOISE BARRIER (REFLECTIVE) 10' AND UNDER	NOISE BARRIER (REFLECTIVE) OVER 10' TO 14'	NOISE BARRIER (REFLECTIVE) OVER 14' TO 20'
	FROM	TO		SQ FT	SQ FT	SQ FT
NW8	40+00	46+09.97	RT	480	528	8272
	*(50+24.87)	*(56+33)				
TOTALS CARRIED TO ROADWAY SUBSUMMARY				480	528	8272

* STATIONING ALONG NOISE BARRIER

GUARDRAIL						
REF NO.	STATION		SIDE	202	606	
				GUARDRAIL REMOVED	GUARDAIL, TYPE 5	ANCHOR ASSEMBLY, TYPE T
	FROM	TO		LIN FT	LIN FT	EACH
GRI70	40+00	46+30.17	RT		613.93	1
GRI71	37+41.58	38+96.04	RT		137.5	1
GRI72	37+41.58	38+95.46	RT	150		
TOTALS				150	751.43	2
TOTALS CARRIED TO ROADWAY SUBSUMMARY				150	762.5	2

CALCULATED MJB/JAA
CHECKED RAS/ENF

PLAN AND PROFILE SUBSUMMARY
RAMPS D & E

CUY-90-0.00

189
582

i:\PROJECTS\Pidll738\dgn\final plans\II738GPW.DGN 21-JUL-2000 11:27AM jgrmovse

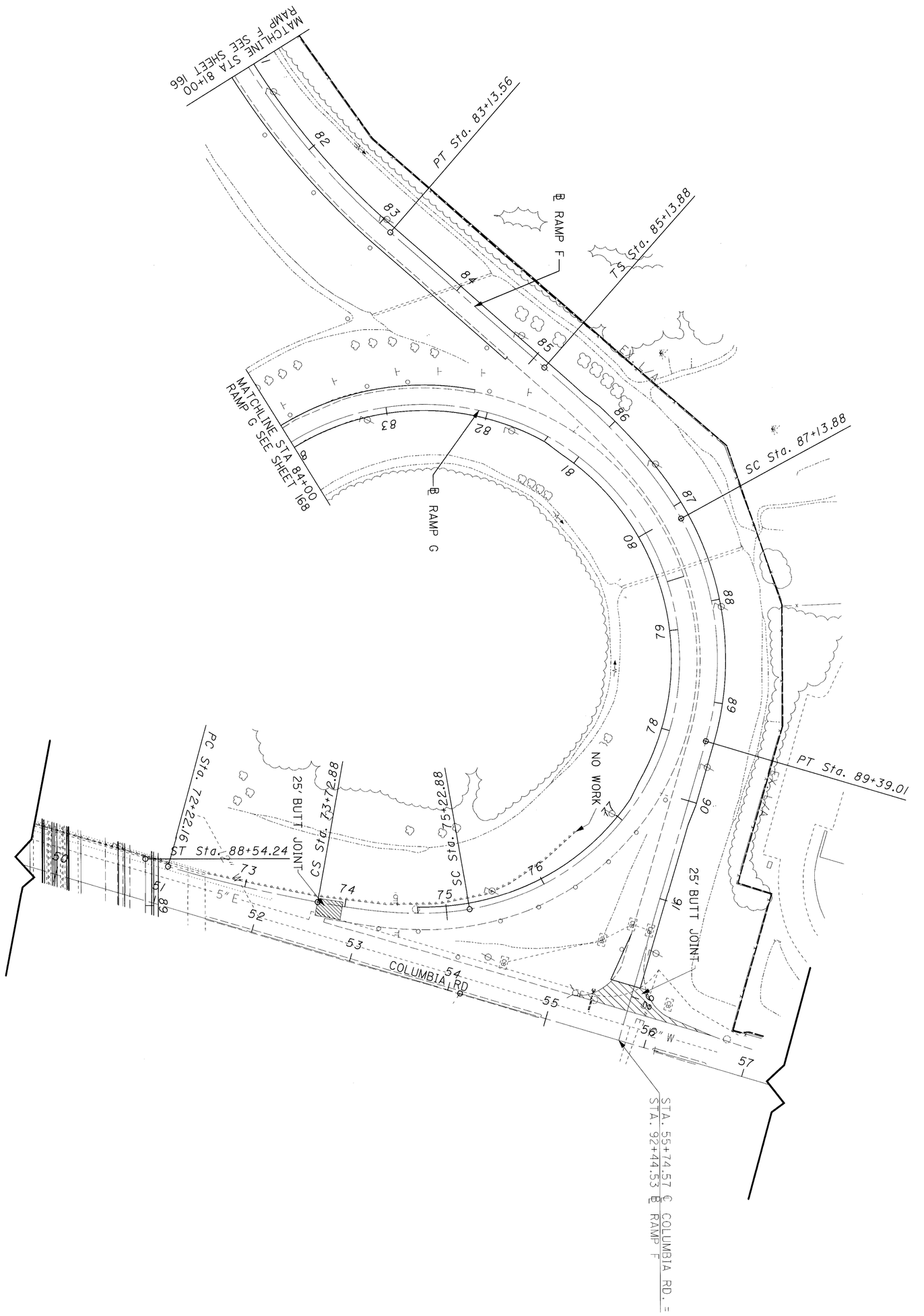

190 / 582	CUY-90-0.00	RAMPS F & G PLAN SHEET	HORIZONTAL SCALE IN FEET

08 MAR 2000
p:\pr22308\cadd\ll738gpl.dgn

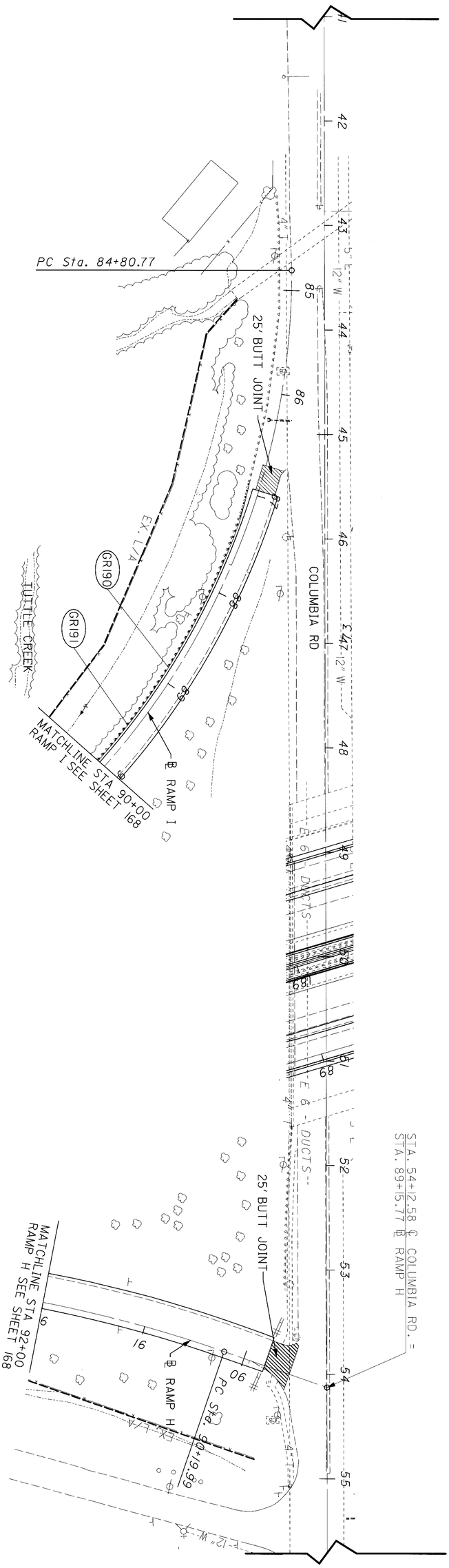

191 / 582	CUY 90-0.00	RAMPS H & I PLAN SHEET	0 50 25 100 HORIZONTAL SCALE IN FEET	N

REF NO.	STATION		SIDE	202 GUARDRAIL REMOVED	606 GUARDRAIL, TYPE 5	
	FROM	TO		LIN FT	LIN FT	
GRI90	86+88.50	90+00	RT	308		
GRI91	86+88.50	90+00	RT		308	
TOTALS				312.5	308	
TOTALS CARRIED TO ROADWAY SUBSUMMARY				312.5	312.5	

CALCULATED MJB
CHECKED RAS

PLAN AND PROFILE SUBSUMMARY
RAMPS H & I

CUY-90-0.00

192
582

08 MAR 2000
p:\pr22308\cadd\11738gpl.dgn

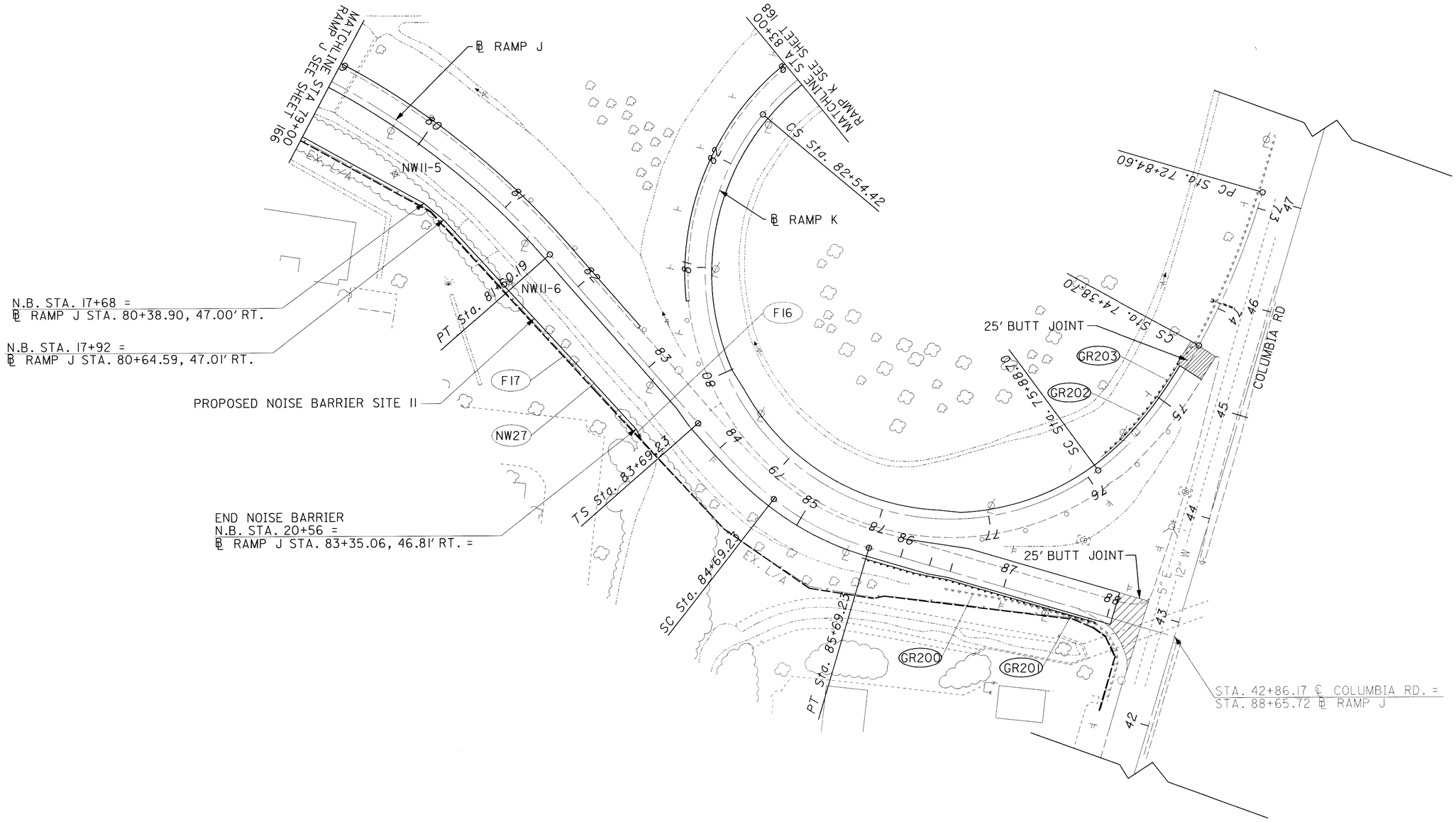

SEE SHEETS 547 TO 581 FOR NOISE BARRIER PROFILES

07 APR 2000
P:\PR22308\cadd\11738GP01.DGN

RAMPS J & K PLAN SHEET

CUY-90-0.00

193
582

NOISE BARRIER

REF NO.	STATION FROM	STATION TO	SIDE	SPECIAL: NOISE BARRIER (REFLECTIVE) 10' AND UNDER	SPECIAL: NOISE BARRIER (REFLECTIVE) OVER 10' TO 14'	SPECIAL: NOISE BARRIER (REFLECTIVE) OVER 14' TO 20'
	FROM	TO		SQ FT	SQ FT	SQ FT
NW27	79+00	83+35.06	RT	1920	2541	
	*(16+42.33)	*(20+56)				
TOTALS CARRIED TO ROADWAY SUBSUMMARY				1920	2541	

* STATIONING ALONG NOISE BARRIER

FENCE

REF NO.	STATION FROM	STATION TO	SIDE	202 FENCE REMOVED	607 FENCE, TYPE CL
	FROM	TO		LIN FT	LIN FT
F16	83+40		RT		10
F17	79+00	83+45	RT	420	
TOTALS CARRIED TO ROADWAY SUBSUMMARY				420	10

GUARDRAIL

REF NO.	STATION FROM	STATION FROM	SIDE	202 GUARDRAIL REMOVED	606 GUARDRAIL, TYPE 5	606 ANCHOR ASSEMBLY, TYPE E-98	606 ANCHOR ASSEMBLY, TYPE T
	FROM	FROM	SIDE	LIN FT	LIN FT	EACH	EACH
GR200	86+47.19	87+90.59	RT	150			
GR201	85+65.85	87+90.59	RT		162.5	1	1
GR202	74+64.53	75+75.50	RT	112.5			
GR203	74+64.53	75+79.29	RT		100		1
TOTALS				262.5	262.5	1	2
TOTALS CARRIED TO ROADWAY SUBSUMMARY				262.5	262.5	1	2

CALCULATED MJB/JAA
CHECKED RAS/ENF

PLAN AND PROFILE SUBSUMMARY
RAMPS J & K

CUY-90-0.00

194
582

i:\PROJECTS\Pid1738\dgn\finalplans\1738GP0.DGN 21-JUL-2000 12:09PM jgrmoyse

SHEET NO.	203		870
	EXCAVATION, NOT INCLUDING EMBANKMENT CONSTRUCTION	EMBANKMENT, AS PER PLAN	SEEDING AND MULCHING
	CU. YD.	CU. YD.	SQ. YD.
196	581	25	468
197	409	16	390
198	606	22	390
199	714	53	624
200	680	74	624
201	448	126	468
202	350	286	468
203	446	421	624
204	319	377	468
205	331	338	468
206	413	459	624
207	478	299	624
208	498	181	624
209	504	99	444
210	506	247	624
211	373	169	468
212	352	223	468
213	484	282	624
214	335	214	468
215	422	373	624
216	326	286	468
217	390	434	624
218	414	401	624
219	399	431	624
220	408	416	624
221	512	411	652
222	891	212	718
223	1719	21	714
224	1625	158	989
225	971	314	642
226	514	375	659
227	279	332	468
228	357	485	624
229	273	350	468
230	382	411	624
231	407	371	624
232	323	257	624
233	312	274	468
234	288	354	468
235	296	318	468
236	306	291	468
237	307	299	468
238	295	325	468
239	441	323	624
240	341	218	426
241	414	364	624
242	414	364	624
SUBTOTAL 1	22840	13071	26519

SHEET NO.	203		870
	EXCAVATION, NOT INCLUDING EMBANKMENT CONSTRUCTION	EMBANKMENT, AS PER PLAN	SEEDING AND MULCHING
	CU. YD.	CU. YD.	SQ. YD.
243	443	343	624
244	449	331	624
245	429	364	624
246	303	305	468
247	384	452	624
248	395	445	624
249	283	335	624
250	384	251	236
251	301	92	0
252	335	57	0
253	545	80	56
254	711	88	227
255	1063	71	390
256	1271	33	353
257	606	69	181
258	350	105	0
259	277	59	0
260	368	58	0
261	308	52	0
262	347	18	0
263	327	33	0
264	261	24	0
265	222	8	0
266	270	4	0
267	269	11	0
268	370	5	0
269	339	0	0
270	602	0	0
271	555	0	0
272	362	16	0
273	386	6	0
274	393	0	0
275	388	2	0
276	287	2	0
277	291	2	0
278	290	2	0
279	296	0	0
280	289	0	0
281	212	0	0
282	302	0	0
283	403	0	0
284	372	7	42
285	794	22	257
286	1271	2	344
287	1703	5	529
288	899	22	316
289	447	3	32
SUBTOTAL 2	22145	3777	7270

SHEET NO.	203		870
	EXCAVATION, NOT INCLUDING EMBANKMENT CONSTRUCTION	EMBANKMENT, AS PER PLAN	SEEDING AND MULCHING
	CU. YD.	CU. YD.	SQ. YD.
290	281	0	0
291	262	0	0
292	270	0	0
293	273	0	0
294	390	0	0
295	400	0	0
296	433	0	0
297	463	0	0
298	454	0	0
299	310	0	0
300	389	0	30
301	741	11	227
302	1614	0	273
303	2487	0	304
304	1222	0	237
305	826	0	282
306	1196	0	517
307	1206	32	478
308	497	4	110
309	524	2	43
310	392	0	0
311	392	0	0
312	581	0	0
313	593	0	0
314	578	0	0
315	669	0	0
316	550	0	0
317	721	22	156
318	744	46	264
319	358	29	142
320	834	72	301
321	929	116	526
322	781	86	409
323	743	150	621
324	696	261	849
325	501	203	665
326	376	138	642
327	491	211	644
328	484	224	644
329	373	263	679
330	420	195	726
331	216	68	277
332	122	14	115
334	205	25	303
335	417	0	470
336	198	59	455
SUBTOTAL 3	27479	2678	11336

	203		870
	EXCAVATION, NOT INCLUDING EMBANKMENT CONSTRUCTION	EMBANKMENT, AS PER PLAN	SEEDING AND MULCHING
	CU. YD.	CU. YD.	SQ. YD.
SUBTOTAL 1	22853	13079	26460
SUBTOTAL 2	22152	3784	7175
SUBTOTAL 3	27602	2231	11389
TOTAL CARRIED TO GENERAL SUMMARY	72607	19094	45024

CALCULATED MN
CHECKED RAS

EARTHWORK SUB-SUMMARY

CUY-90-0.00

195
582

$DATE&
D:\PR22309\CADD\1738gxb.dgn

06 MAR 2000
p:\PR22308\CADD\11738GX.DGN

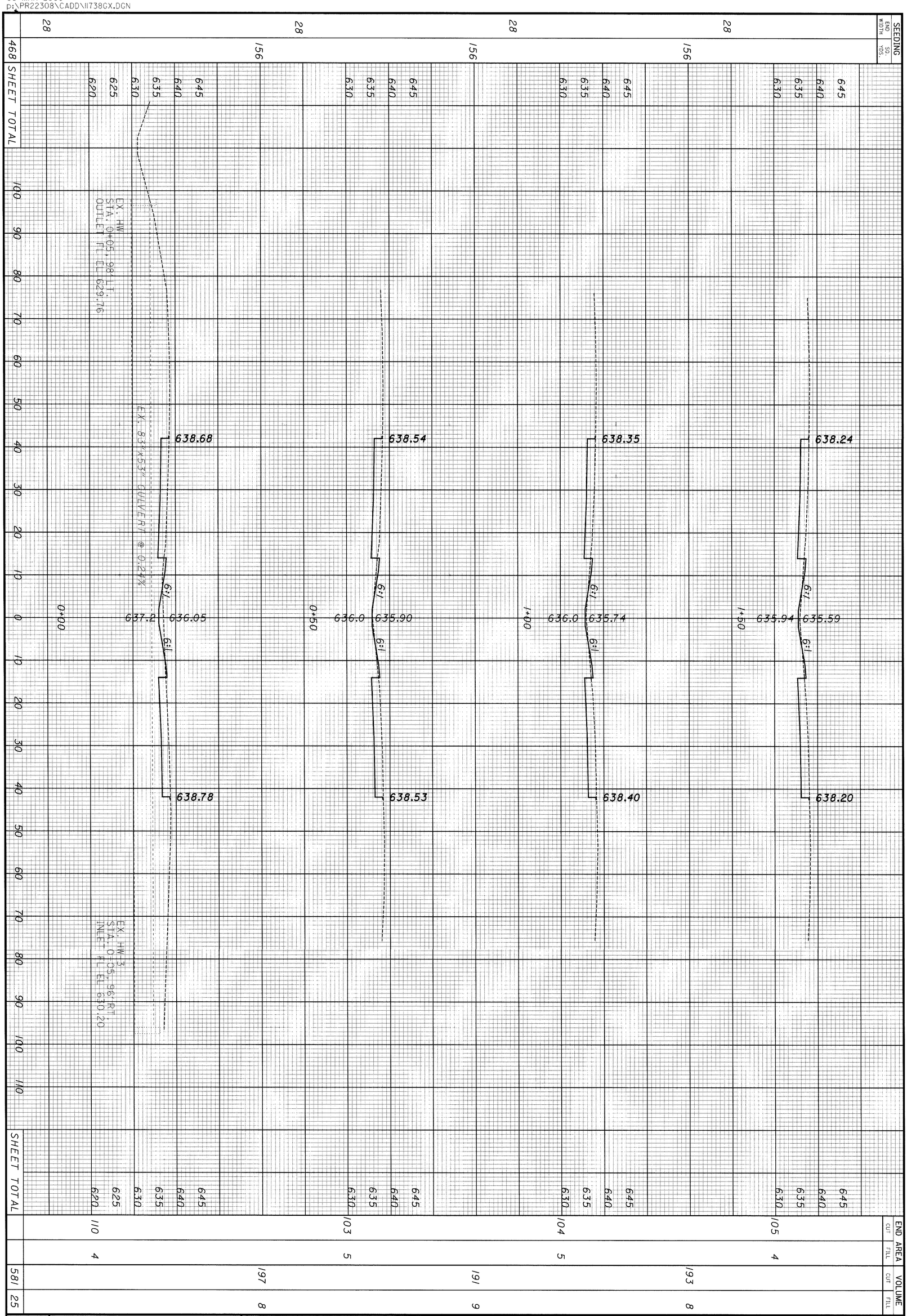

196 / 582	CUY-90-0.00	CROSS SECTIONS STA 0+00 TO STA 1+50	CALCULATED MH CHECKED RAS

SEEDING	
END WIDTH	SQ. YDS.
0	
	78
28	
	156
28	
	156
	390

637.93
634.84
637.95
636.50
REMOVE 15" CONDUIT
STA. 3+00, ℄
15" INV. W,E 632.51
3+00

638.06
7.3:1
7.3:1
638.05
EX. 15"@ 0.90%
635.70
-W
STA. 2+65, 104' LT.
15" INV. 631.73
EX. CB-4
STA. 2+65, C
GRATE EL 635.46
15" INV. N,E 632.68
2+50

638.12
6:1
635.51
6:1
638.16
635.22
2+00

SHEET TOTAL

END AREA		VOLUME	
CUT	FILL	CUT	FILL
142	0		
		223	6
99	6		
		186	10
102	5		
		191	8
		409	16

SHEET TOTAL

CALCULATED MH
CHECKED RAS

CROSS SECTIONS
STA 2+00 TO STA 3+00

CUY-90-0.00

197
582

06 MAR 2000
P:\PR22308\CADD\11738GX.DGN

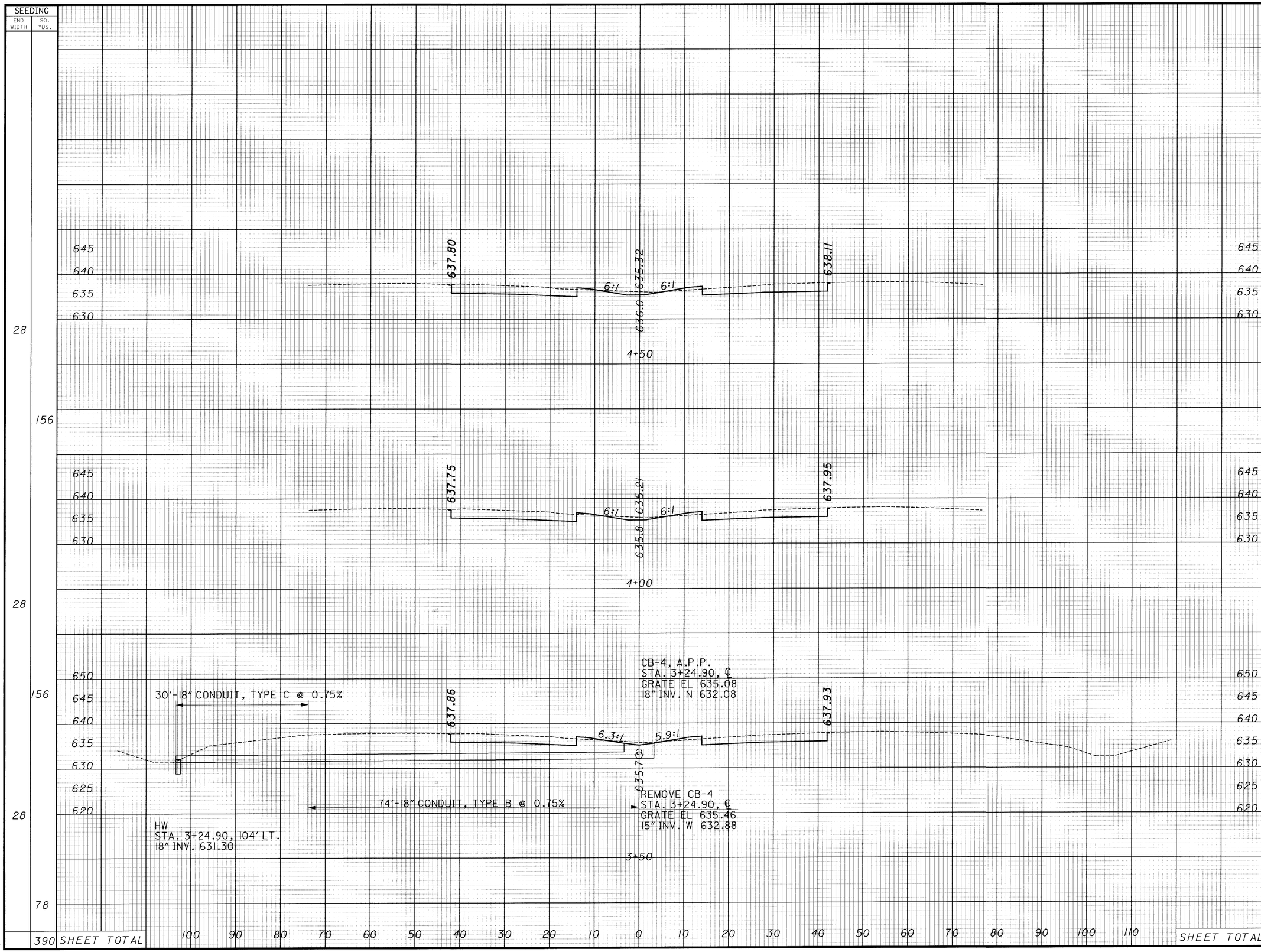

CALCULATED MH
CHECKED RAS

CROSS SECTIONS
STA 3+50 TO STA 4+50

CUY-90-0.00

06 MAR 2000
p:\PR22308\CADD\11738GX.DGN

06 MAR 2000
P:\PR22308\CADD\11738GX.DGN

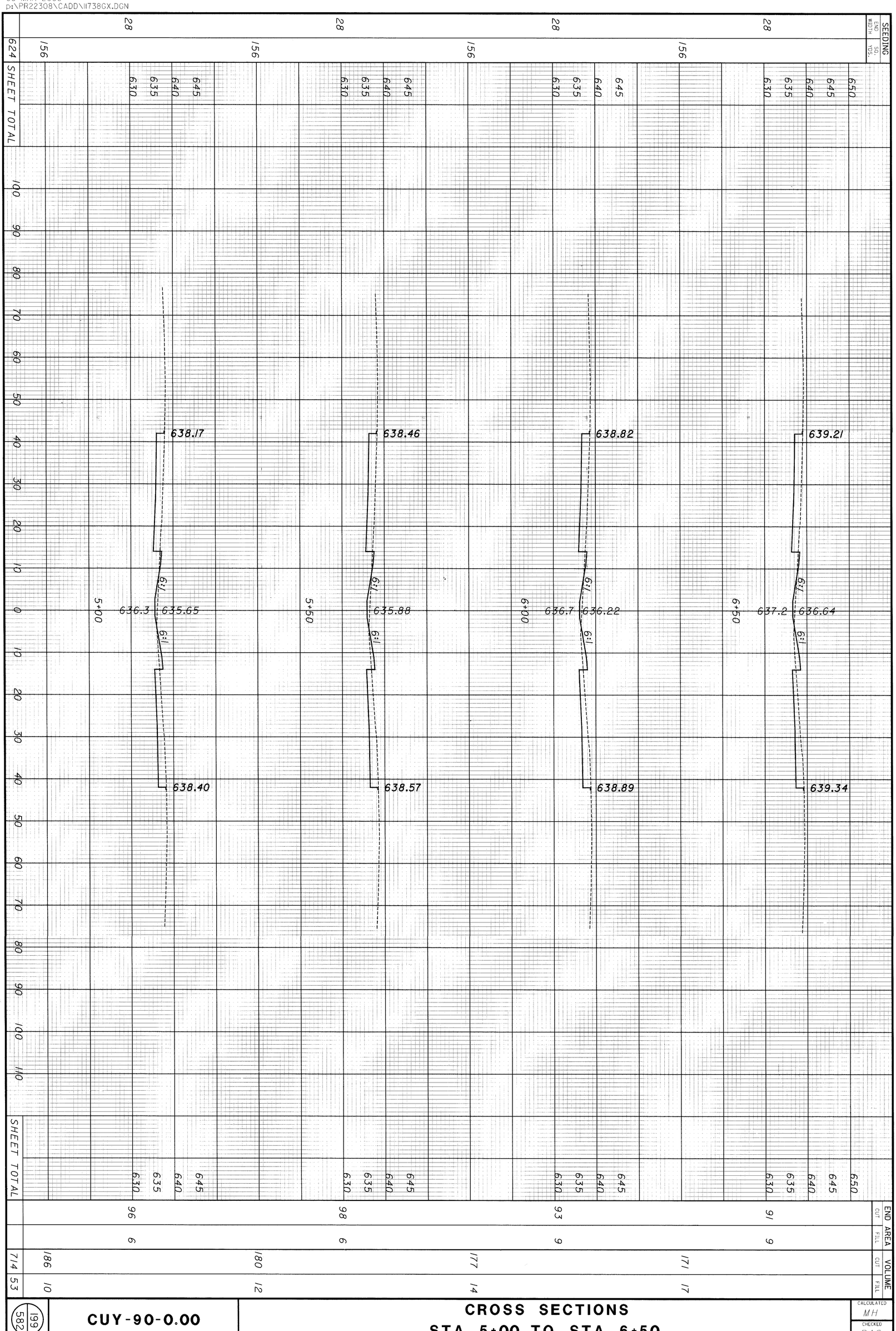

199
582

CUY-90-0.00

CROSS SECTIONS
STA 5+00 TO STA 6+50

CALCULATED MH
CHECKED RAS

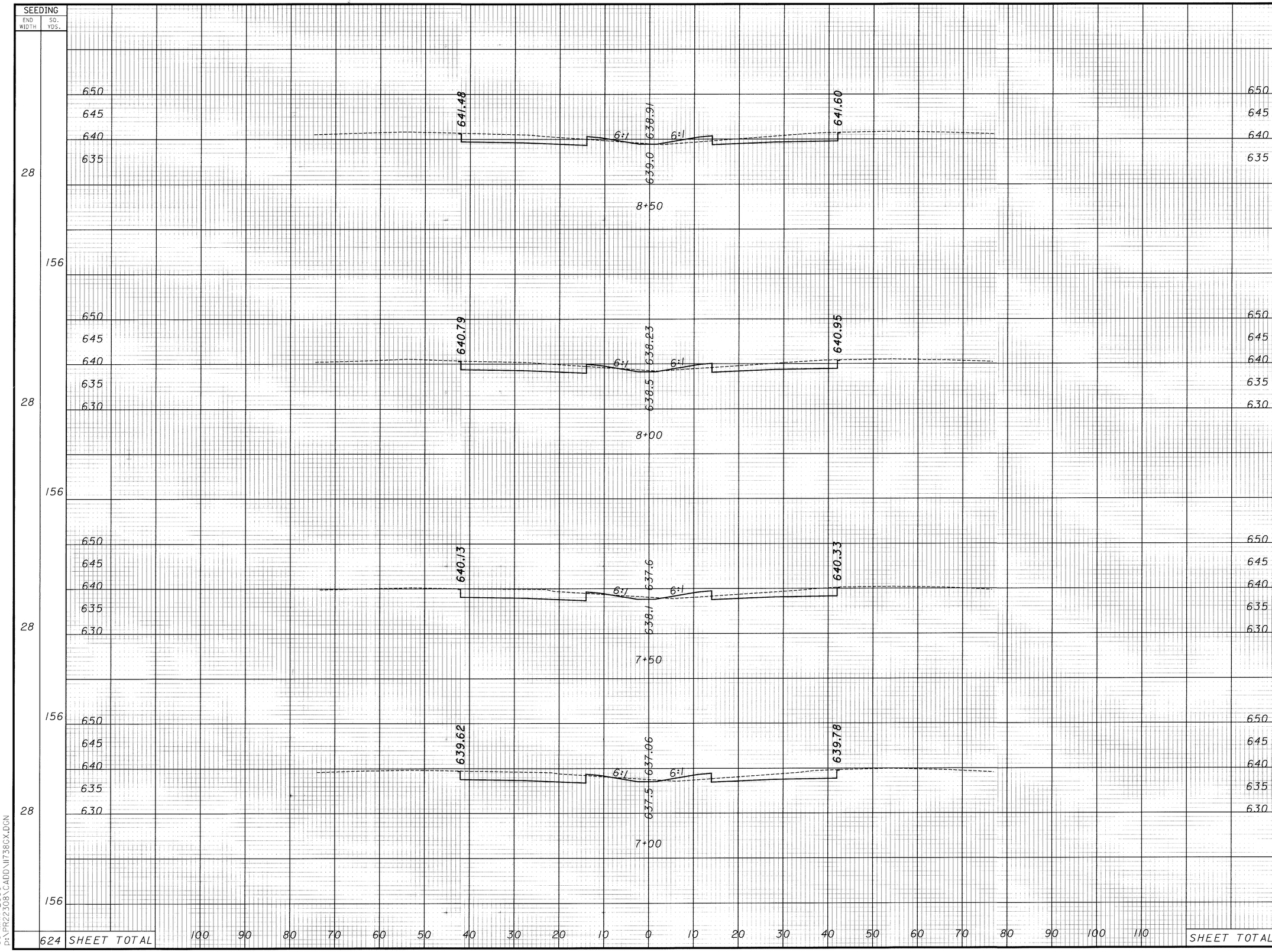

END AREA CUT	END AREA FILL	VOLUME CUT	VOLUME FILL
87	13		
		166	20
92	8		
		172	17
93	10		
		172	19
92	10		
		170	18
SHEET TOTAL		680	74

CALCULATED MH
CHECKED RAS

CROSS SECTIONS
STA 7+00 TO STA 8+50

CUY-90-0.00

06 MAR 2000
p:\PR22308\CADD\11738GX.DGN

SEEDING END WIDTH	SEEDING SQ. YDS.	END AREA CUT	END AREA FILL	VOLUME CUT	VOLUME FILL
28	156	63	54	134	70
28	156	82	21	155	32
28	156	85	14	159	24
	468 SHEET TOTAL			448	126

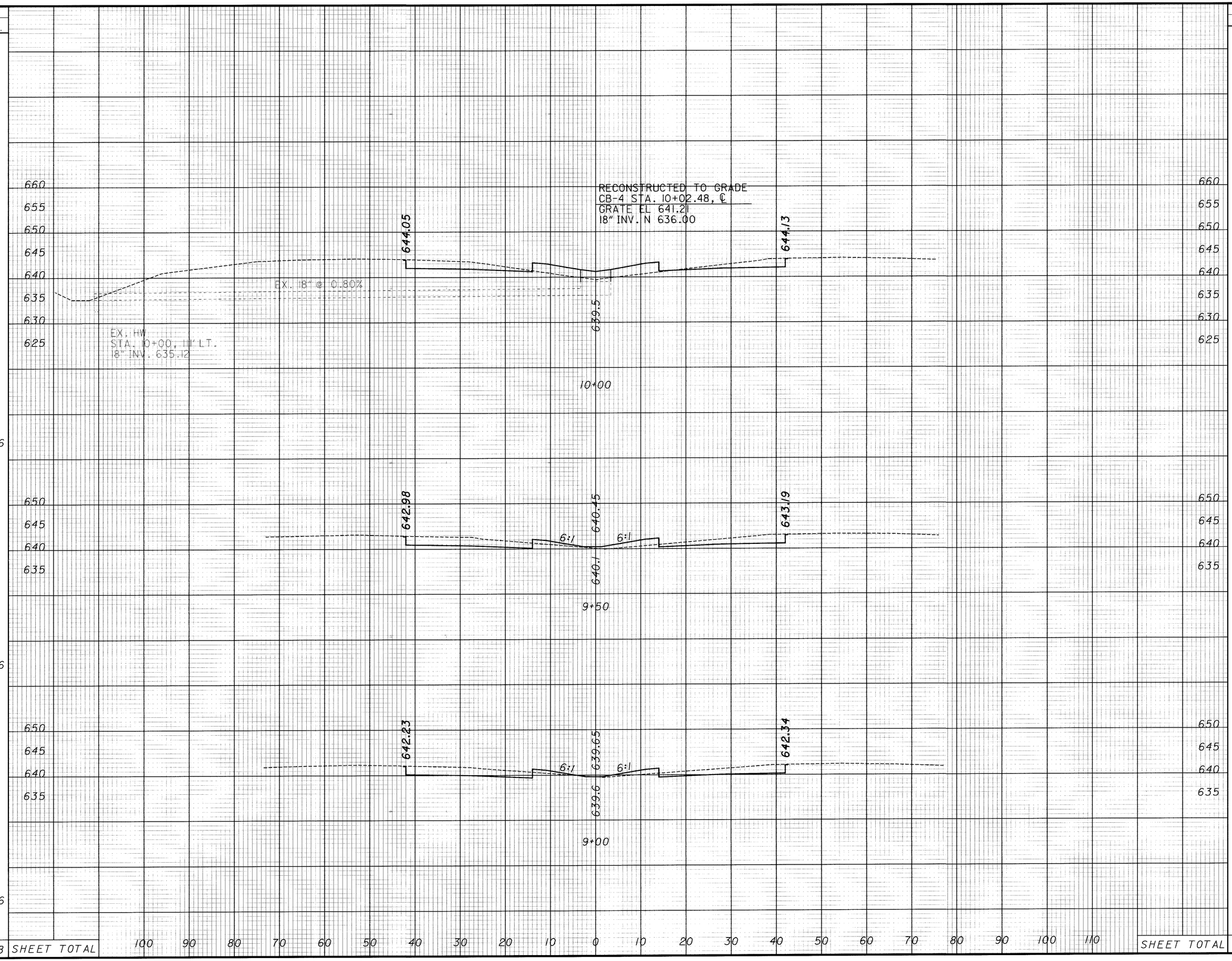

CALCULATED MH
CHECKED RAS

CROSS SECTIONS
STA 9+00 TO STA 10+00

CUY-90-0.00

201
582

06 MAR 2000
P:\PR22309\CADD\II738CX.DGN

SEEDING	
END WIDTH	SQ. YDS.
28	156
28	156
28	156
	468

END AREA		VOLUME	
CUT	FILL	CUT	FILL
65	47		
		118	91
63	51		
		116	96
62	53		
		116	99
SHEET TOTAL		350	286

CALCULATED MH
CHECKED RAS

CROSS SECTIONS
STA 10+50 TO STA 11+50

CUY-90-0.00

202
582

06 MAR 2000
P:\PR22308\CADD\11738GX.DGN

SEEDING END WIDTH	SEEDING SQ. YDS.
28	156
28	156
28	156
28	156
	624

END AREA CUT	END AREA FILL	VOLUME CUT	VOLUME FILL
57	70		
		107	121
58	61		
		109	107
60	55		
		113	100
62	54		
		117	93
SHEET TOTAL		446	421

CALCULATED MH
CHECKED RAS

CROSS SECTIONS
STA 12+00 TO STA 13+50

CUY-90-0.00

203
582

06 MAR 2000
D:\PR22308\CADD\11738GX.DGN

SEEDING	
END WIDTH	SQ. YDS.
28	156
28	156
28	156
	468

END AREA		VOLUME	
CUT	FILL	CUT	FILL
			118
58	63		
			127
57	64		
			132
57	73		
SHEET TOTAL		319	377

CALCULATED M H
CHECKED R A S

CROSS SECTIONS
STA 14+00 TO STA 15+00

CUY-90-0.00

204
582

06 MAR 2000
D:\PR22308\CADD\U7386X.DGN

SEEDING	
END WIDTH	SQ. YDS.
28	
	156
28	
	156
28	
	156
	468

END AREA		VOLUME	
CUT	FILL	CUT	FILL
59	58		
		109	112
59	63		
		111	113
61	59		
		111	113
SHEET TOTAL		331	338

CALCULATED MH
CHECKED RAS

CROSS SECTIONS
STA 15+50 TO STA 16+50

CUY-90-0.00

205
582

06 MAR 2000
P:\PR22306\CADD\11738GX.DGN

SEEDING			END AREA		VOLUME	
END WIDTH	SQ. YDS.		CUT	FILL	CUT	FILL
28	156	18+50	58	55	106	110
28	156	18+00	57	65	105	117
28	156	17+50	56	62	100	118
28	156	17+00	51	66	102	114
	624	SHEET TOTAL			413	459

CALCULATED M H
CHECKED R A S

CROSS SECTIONS
STA 17+00 TO STA 18+50

CUY-90-0.00

206
582

06 MAR 2000
p:\PR22308\CADD\11738GX.DGN

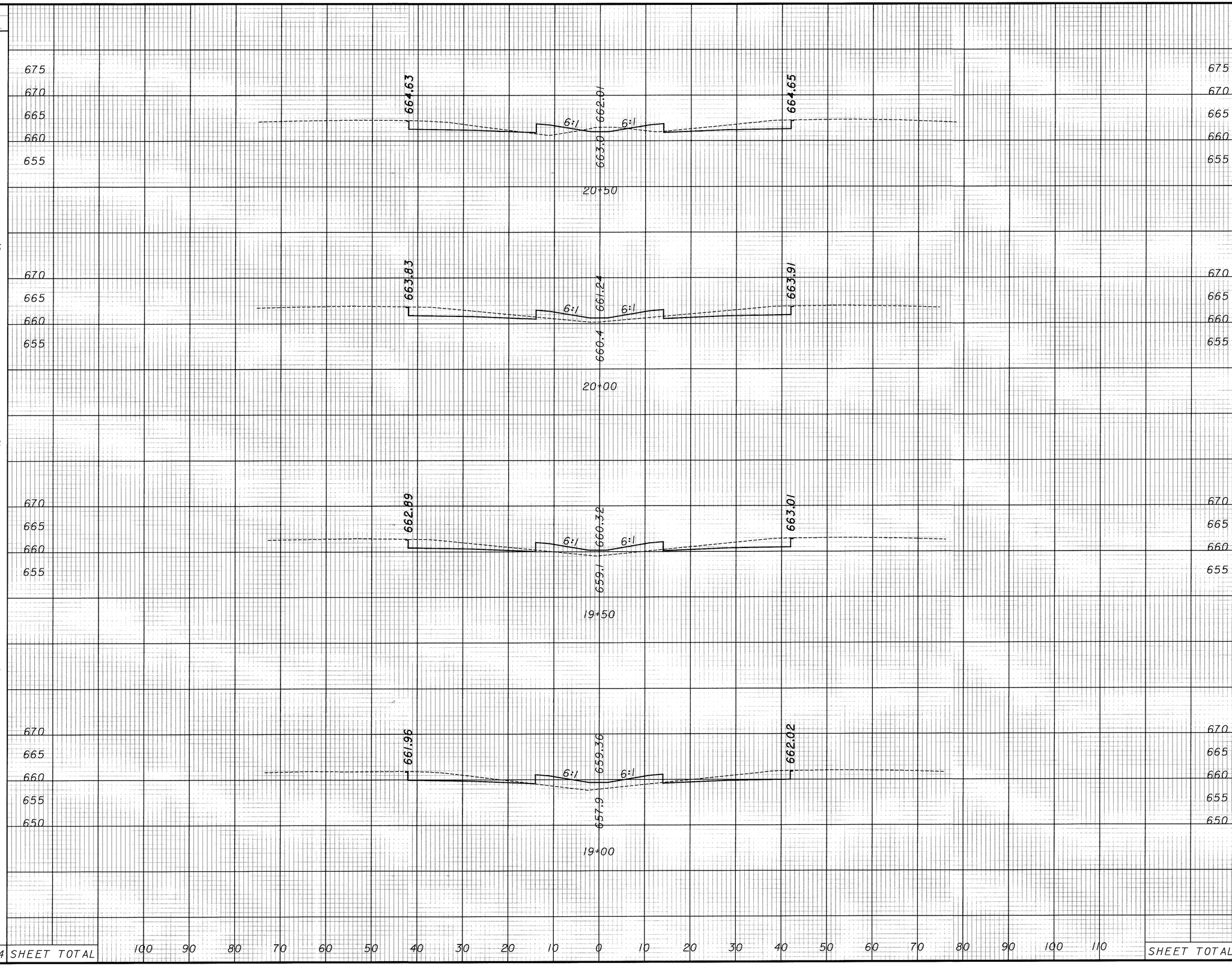

SEEDING END WIDTH	SEEDING SQ. YDS.	END AREA CUT	END AREA FILL	VOLUME CUT	VOLUME FILL
28		67	24		
	156			126	53
28		70	33		
	156			126	68
28		66	40		
	156			117	82
28		60	49		
	156			109	96
	624 SHEET TOTAL		SHEET TOTAL	478	299

CALCULATED MH
CHECKED RAS

CROSS SECTIONS
STA 19+00 TO STA 20+50

CUY-90-0.00

21 MAR 2000
p:\PR22308\CADD\11738GX.DGN

SEEDING	
END WIDTH	SQ. YDS.
80	136
28	156
28	156
28	156
	624

SHEET TOTAL	

END AREA	
CUT	FILL
80	22
67	32
64	23
65	20

VOLUME	
CUT	FILL
136	50
121	51
119	40
122	40
498	181

CALCULATED MH
CHECKED RAS

CROSS SECTIONS
STA 21+00 TO STA 22+50

CUY-90-0.00

208
582

21 MAR 2000
D:\PR22308\CADD\11738GX.DGN

SEEDING END WIDTH	SEEDING SQ. YDS.
28	
	148
28	
28	
	140
28	
	156
	444

END AREA CUT	END AREA FILL	VOLUME CUT	VOLUME FILL
675			
670			
665			
660			
655	72	34	
		162	31
25+52.49	112	1	
		26	26
23+44.82	118	1	
		166	11
675			
670			
665			
660	82	12	
		150	31
SHEET TOTAL		504	99

CALCULATED MH
CHECKED RAS

CROSS SECTIONS STA 23+00 TO STA 26+00

CUY-90-0.00

209
582

06 MAR 2000
P:\PR22308\CADD\11738GX.DGN

SEEDING END WIDTH	SEEDING SQ. YDS.	END AREA CUT	END AREA FILL	VOLUME CUT	VOLUME FILL
28	156	72	18	133	40
28	156	72	25	127	57
28	156	65	37	120	76
28	156	65	46	126	74
	624 SHEET TOTAL			506	247

CALCULATED M/H

CHECKED RAS

CROSS SECTIONS STA 26+50 TO STA 28+00

CUY-90-0.00

06 MAR 2000
P:\PR22308\CADD\1738GX.DGN

SEEDING	
END WIDTH	SQ. YDS.
28	156
28	156
28	156
	468 SHEET TOTAL

END AREA		VOLUME	
CUT	FILL	CUT	FILL
59	46	113	81
63	42	126	55
73	17	134	33
		373	169

SHEET TOTAL

CALCULATED M H
CHECKED R A S

CROSS SECTIONS
STA 28+50 TO STA 29+50

CUY-90-0.00

06 MAR 2000
P:\PR22308\CADD\11738GX.DGN

SEEDING		END AREA		VOLUME		CALCULATED MH	CHECKED RAS
END WIDTH	SQ. YDS.	CUT	FILL	CUT	FILL		
28	156	71	34	126	67		
28	156	65	39	116	75		
28	156	60	42	110	81		
	468 SHEET TOTAL			352	223		

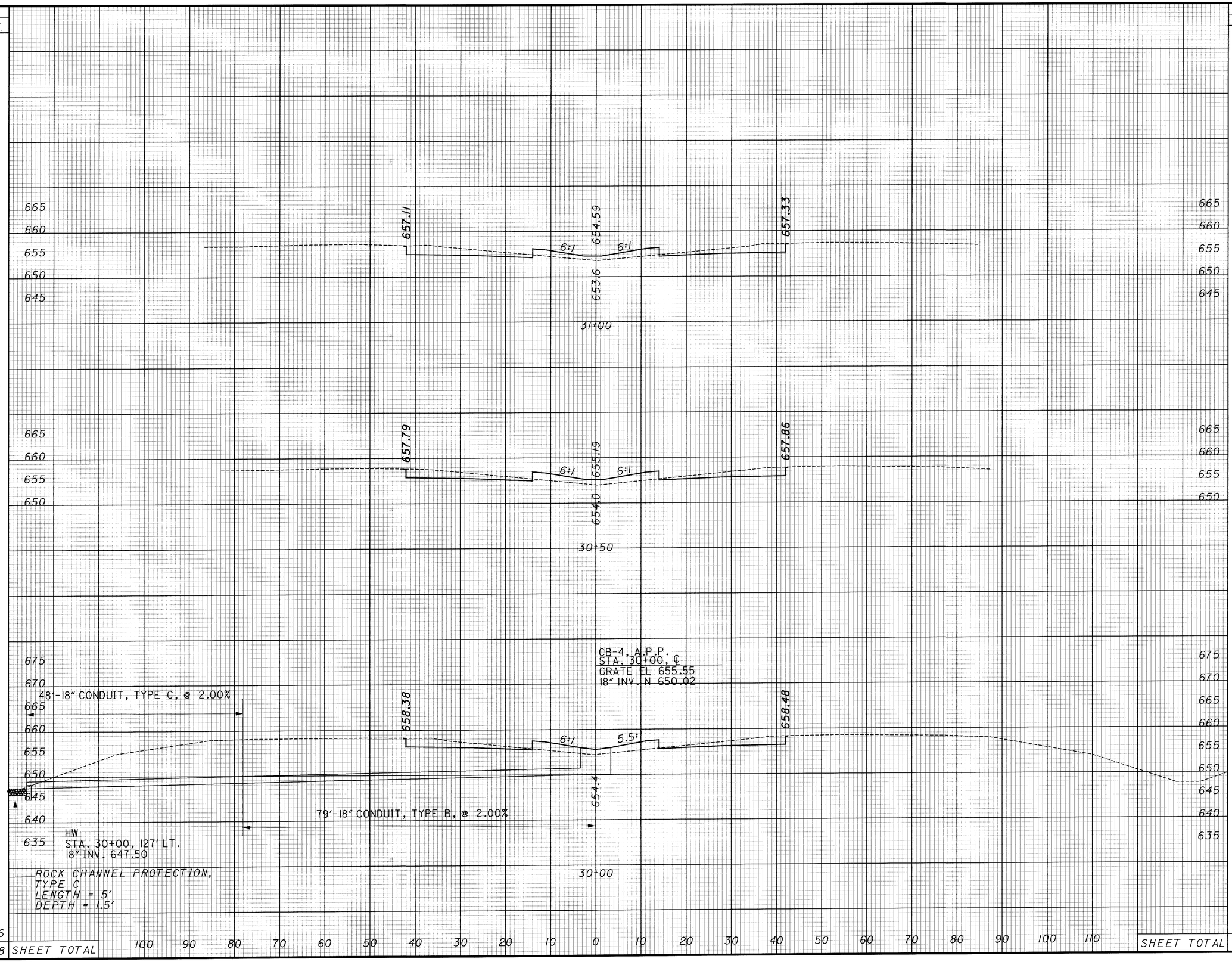

CROSS SECTIONS
STA 30+00 TO STA 31+00

CUY-90-0.00

06 MAR 2000
p:\PR22308\CADD\1738CX.DGN

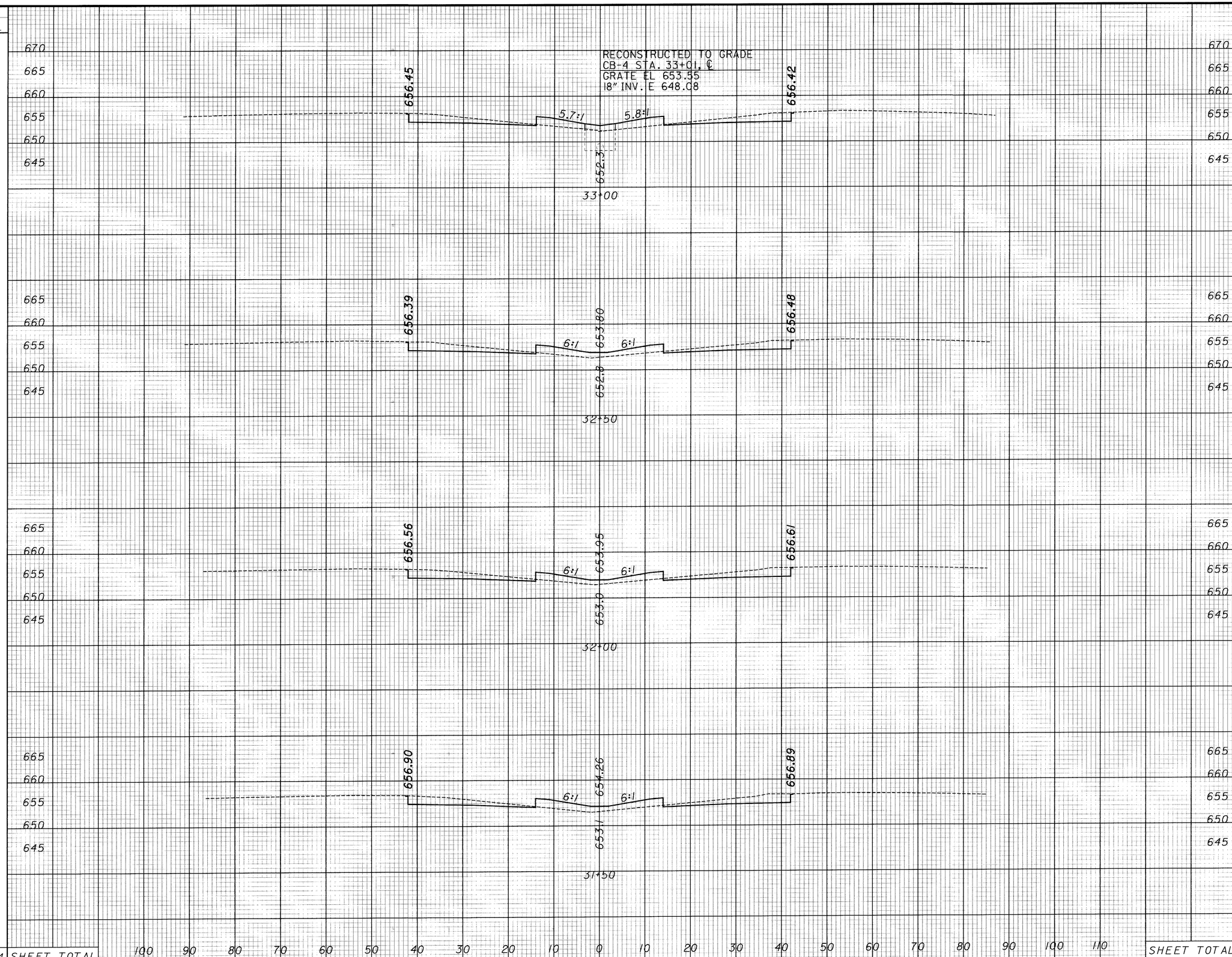

SEEDING END WIDTH	SEEDING SQ. YDS.	END AREA CUT	END AREA FILL	VOLUME CUT	VOLUME FILL
28		60	42		
	156			116	75
28		64	38		
	156			122	68
28		67	35		
	156			121	70
28		64	41		
	156			125	69
	624 SHEET TOTAL			484	282

CALCULATED MH
CHECKED RAS

CROSS SECTIONS
STA 31+50 TO STA 33+00

CUY-90-0.00

06 MAR 2000
p:\PR22308\CADD\11738GX.DGN

SEEDING END WIDTH	SEEDING SQ. YDS.
28	156
28	156
28	156
28	156
	468

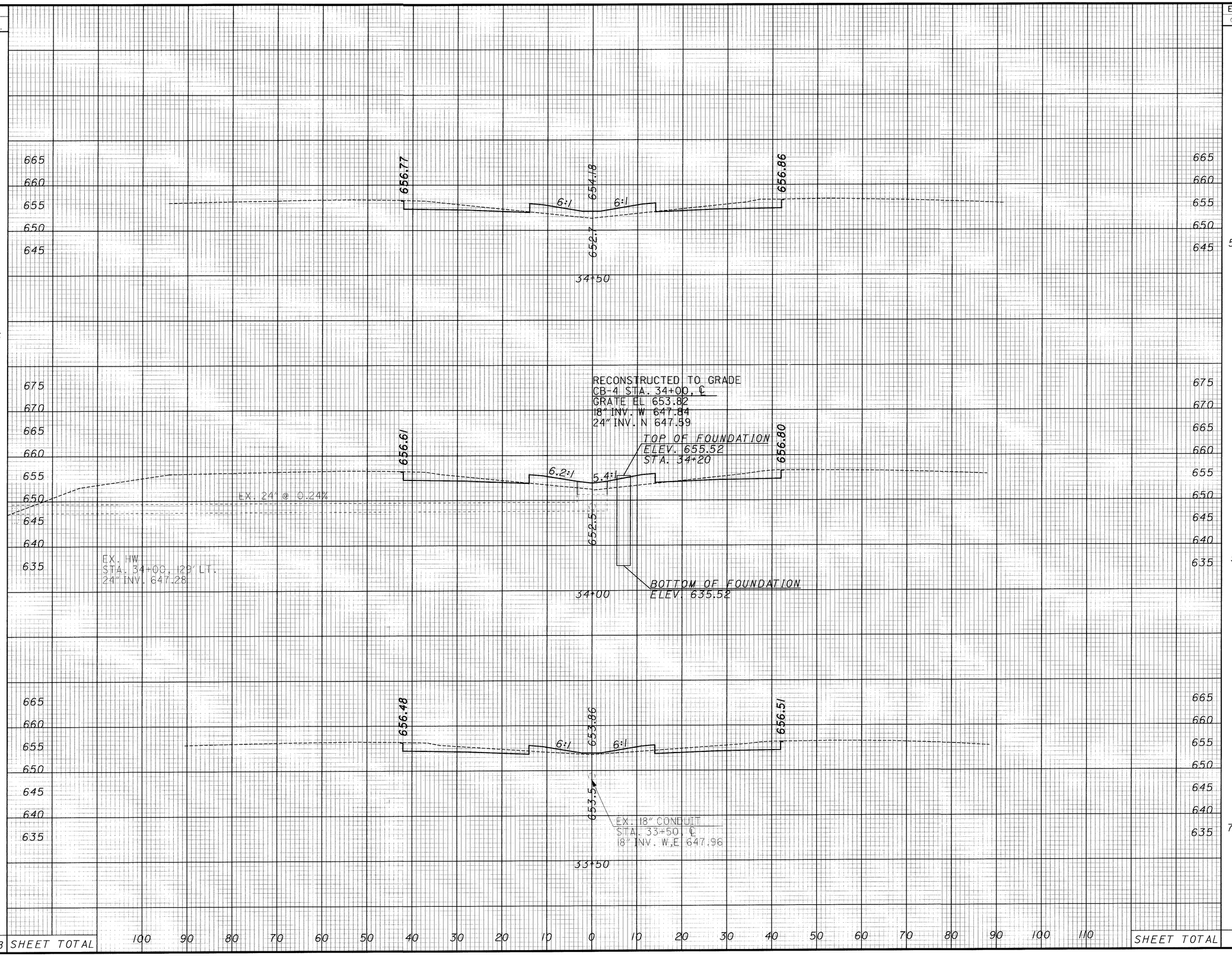

END AREA CUT	END AREA FILL	VOLUME CUT	VOLUME FILL
59	46		
		102	90
51	50		
		112	66
70	21		
		121	58
SHEET TOTAL		335	214

CALCULATED M H
CHECKED R A S

CROSS SECTIONS
STA 33+50 TO STA 34+50

CUY-90-0.00

06 MAR 2000
P:\PR22308\CADD\11738CX.DGN

SEEDING	
END WIDTH	SQ. YDS.
28	
	156
28	
	156
28	
	156
28	
	156
	624

END AREA		VOLUME	
CUT	FILL	CUT	FILL
54	57		
		100	102
54	54		
		102	96
56	50		
		109	89
61	47		
		111	86
SHEET TOTAL		422	373

CALCULATED MH
CHECKED RAS

CROSS SECTIONS STA 35+00 TO STA 36+50

CUY-90-0.00

215
582

06 MAR 2000
p:\PR22308\CADD\11738GX.DGN

SEEDING	
END WIDTH	SQ. YDS.
28	156
28	156
28	156
	468

END AREA	
CUT	FILL
58	52
59	51
61	49

VOLUME	
CUT	FILL
109	96
111	92
106	98
326	286

CALCULATED MH
CHECKED RAS

CROSS SECTIONS
STA 37+00 TO STA 38+00

CUY-90-0.00

216
582

06 MAR 2000
P:\PR22308\CADD\1738GX.DGN

SEEDING END WIDTH	SEEDING SQ. YDS.	END AREA CUT	END AREA FILL	VOLUME CUT	VOLUME FILL
28	156	53	59	97	109
28	156	52	58	94	111
28	156	50	61	96	111
28	156	53	59	103	103
624	SHEET TOTAL			390	434

CALCULATED M H
CHECKED R A S

CROSS SECTIONS
STA 38+50 TO STA 40+00

CUY-90-0.00

217
582

06 MAR 2000
P:\PR22308\CADD\11738GX.DGN

SEEDING END WIDTH	SEEDING SQ. YDS.
28	156
28	156
28	156
28	156
	624 SHEET TOTAL

END AREA CUT	END AREA FILL	VOLUME CUT	VOLUME FILL
60	51		
		111	93
60	49		
		105	96
53	55		
		99	104
54	57		
		99	108
		414	401 SHEET TOTAL

CALCULATED WH
CHECKED RAS

CROSS SECTIONS STA 40+50 TO STA 42+00

CUY-90-0.00

218
582

06 MAR 2000
P:\PR22308\CADD\11738GX.DGN

SEEDING END WIDTH	SEEDING SQ. YDS.
28	156
28	156
28	156
28	156
	624

SHEET TOTAL

END AREA CUT	END AREA FILL	VOLUME CUT	VOLUME FILL
52	59		
		97	112
53	62		
		97	114
52	62		
		99	107
55	54		
		106	98
		399	431

SHEET TOTAL

CALCULATED MH
CHECKED RAS

CROSS SECTIONS
STA 42+50 TO STA 44+00

CUY-90-0.00

219
582

06 MAR 2000
p:\PR22308\CADD\11738GX.DGN

SEEDING END WIDTH	SEEDING SQ. YDS.	END AREA CUT	END AREA FILL	VOLUME CUT	VOLUME FILL
28		55	57		
	156			102	102
28		55	53		
	156			103	101
28		56	56		
	156			103	105
28		56	58		
	156			100	108
	624 SHEET TOTAL			408	416

CALCULATED MH
CHECKED RAS

CROSS SECTIONS
STA 44+50 TO STA 46+00

CUY-90-0.00

220
582

06 MAR 2000
P:\PR22308\CADD\II738GX.DGN

SEEDING END WIDTH	SEEDING SQ. YDS.		END AREA CUT	END AREA FILL	VOLUME CUT	VOLUME FILL
32		48+05 AHEAD	130	51		
32		48+05 BACK	98	51		
	18				19	11
32			98	51		
	134				146	76
28		47+60 AHEAD	98	51		
28		47+60 BACK	57	53		
	32				22	20
28			57	53		
	156				102	103
28			53	58		
	156				111	101
28			66	51		
	156				112	100
	652	SHEET TOTAL			512	411

CALCULATED MH
CHECKED RAS

CROSS SECTIONS
STA 46+50 TO STA 48+00

CUY-90-0.00

221
582

2 MAR 2000
p:\PR22308\CADD\1738GX.DGN

SEEDING		END AREA		VOLUME	
END WIDTH	SQ. YDS.	CUT	FILL	CUT	FILL
40	229	211	18	355	54
42	270	171	40	300	78
55	219	152	44	236	80
SHEET TOTAL	718			891	212

CALCULATED MH
CHECKED RAS

CROSS SECTIONS
STA 48+50 TO STA 49+50

CUY-90-0.00

222
582

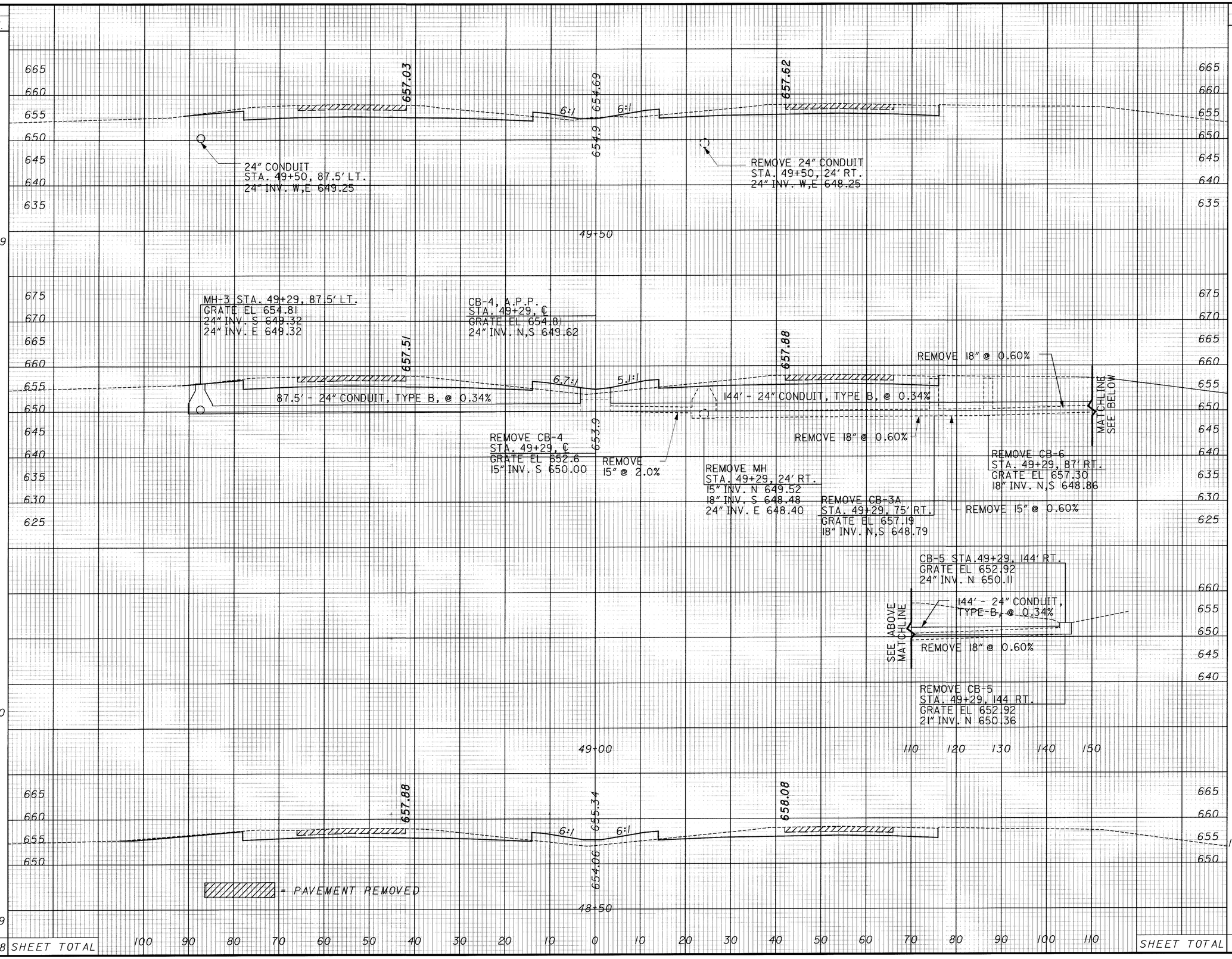

21 MAR 2000
D:\PR22308\CADD\II738GX.DGN

SEEDING	
END WIDTH	SQ. YDS.
45	239
41	239
45	236
	714

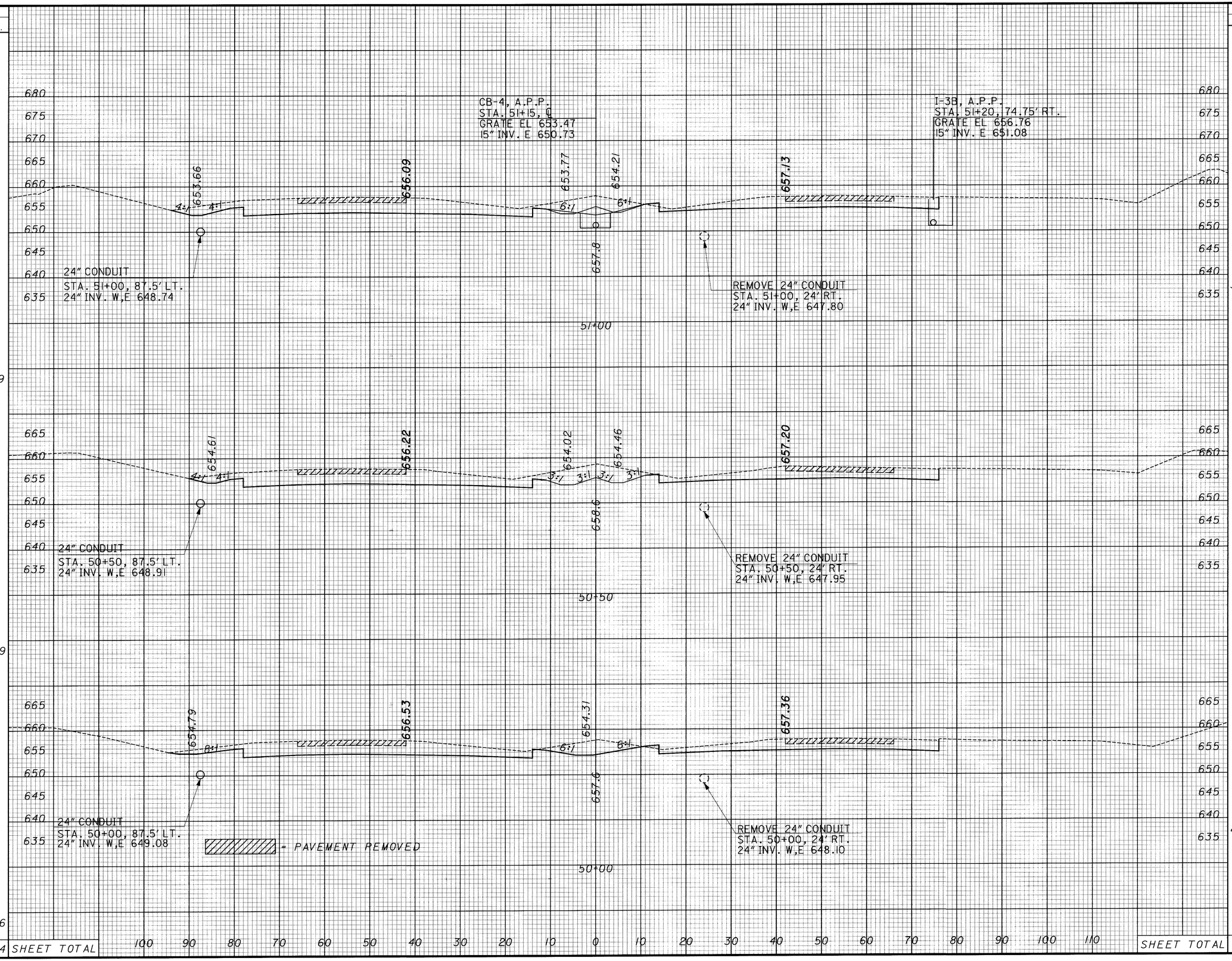

END AREA		VOLUME	
CUT	FILL	CUT	FILL
346	1		
		645	1
351	0		
		602	2
299	2		
		472	18
		1719	21

SHEET TOTAL

CALCULATED MH
CHECKED RAS

CROSS SECTIONS
STA 50+00 TO STA 51+00

CUY-90-0.00

223
582

06 MAR 2000
D:\PR22308\CADD\II738GX.DGN

SEEDING	
END WIDTH	SQ. YDS.
68	270
78	
81	
	368
	351
	898 SHEET TOTAL

END AREA		VOLUME	
CUT	FILL	CUT	FILL
219	44	450	78
267	40	551	58
327	22	624	22
		1625	158

CALCULATED MH
CHECKED RAS

CROSS SECTIONS
51+50 TO STA 52+50

CUY-90-0.00

224
582

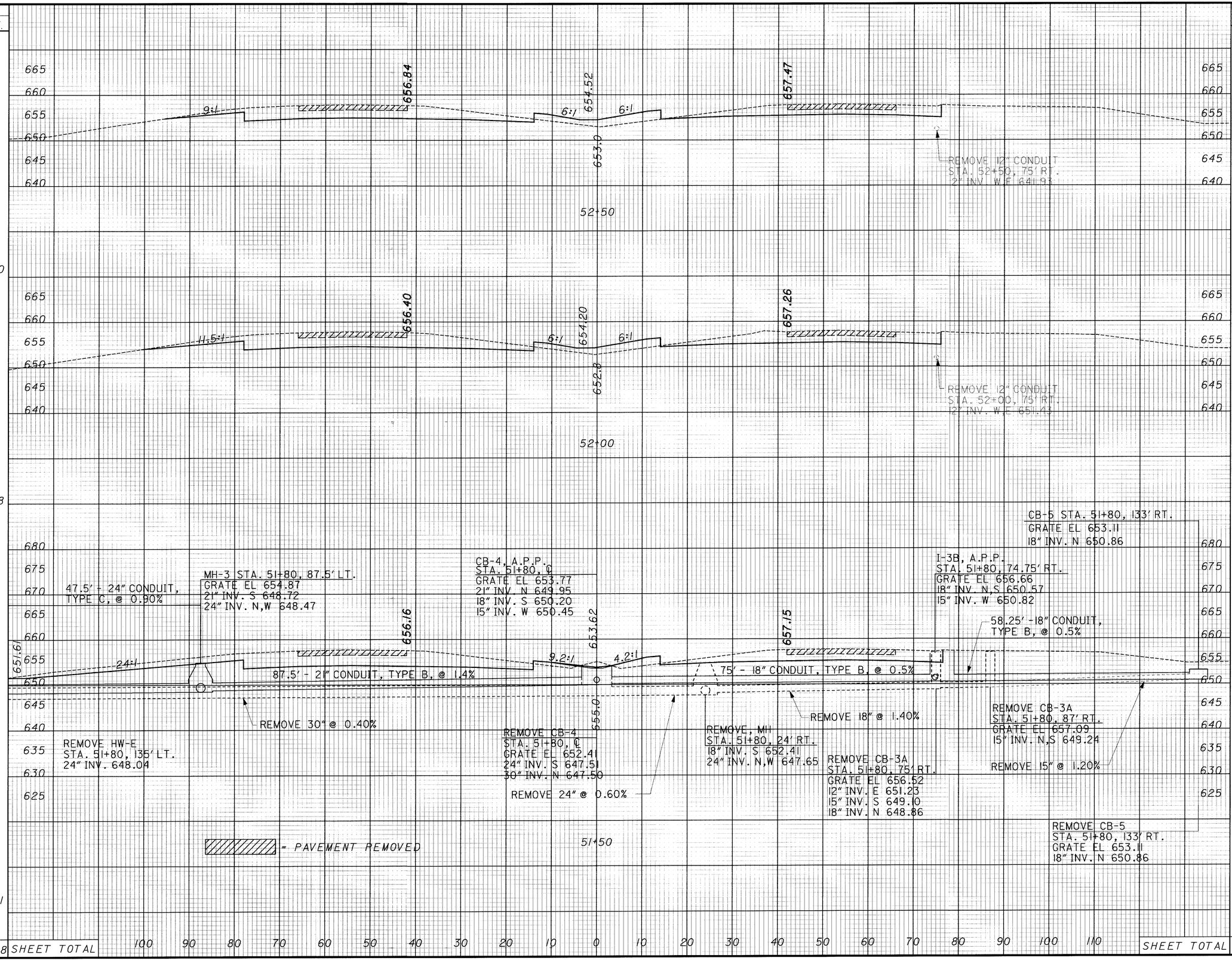

21 MAR 2000
D:\PR22308\CADD\11738GX.DGN

SEEDING END WIDTH	SEEDING SQ. YDS.
37	
40	
	23
40	
	206
34	
	190
34	
	223
	642

54+05 AHEAD
54+05 BACK

PAVEMENT LOWERING ENDS AT STA 54+05 EASTBOUND

665
660
655
650
645

6:1 6:1 6:1

658.13 655.49 658.11

54+00

657.80 655.23 657.93

53+50

12.1:1 6:1 6:1

657.37 654.91 657.72

53+00

REMOVE CB-3A
STA. 53+25. 75' RT.
GRATE EL. 656.60
12" S.E. 652.68

REMOVE 12" @ 1.00%

REMOVE CB-3A
STA. 53+25. 87' RT.
GRATE EL. 656.60
12" INV. N 652.80

= PAVEMENT REMOVED

100 90 80 70 60 50 40 30 20 10 0 10 20 30 40 50 60 70 80 90 100 110

SHEET TOTAL

END AREA CUT	END AREA FILL	VOLUME CUT	VOLUME FILL
97	61		
137	63		
		27	13
137	63		
		270	111
153	56		
		306	101
177	52		
		368	89
		971	314

SHEET TOTAL

CALCULATED MH
CHECKED RAS

CROSS SECTIONS
STA 53+000 STA 54+00

CUY-90-0.00

225
582

21 MAR 2000
P:\PR22308\CADD\11738GX.DGN

SEEDING END WIDTH	SEEDING SQ. YDS.	END AREA CUT	END AREA FILL	VOLUME CUT	VOLUME FILL
28	156	55	49	101	89
28	156	55	48	101	91
28	125	55	51	113	75
28		56	51		
28		97	56		
37	185	97	56	162	98
	659 SHEET TOTAL		SHEET TOTAL	514	375

CALCULATED MH
CHECKED RAS

CROSS SECTIONS
STA 54+50 TO STA 56+00

CUY-90-0.00

226
582

21MAR 2000
D:\PR22308\CADD\11738GX.DGN

SEEDING END WIDTH	SEEDING SQ. YDS.
28	156
28	156
28	156
28	156
	468

END AREA CUT	END AREA FILL	VOLUME CUT	VOLUME FILL
48	68		
49	65		
51	56		
		89	123
		92	112
		98	97
		279	332
SHEET TOTAL			

CALCULATED MH
CHECKED RAS

CROSS SECTIONS
STA 56+50 TO STA 57+50

CUY-90-0.00

06 MAR 2000
P:\PR22308\CADD\U738GSX.DGN

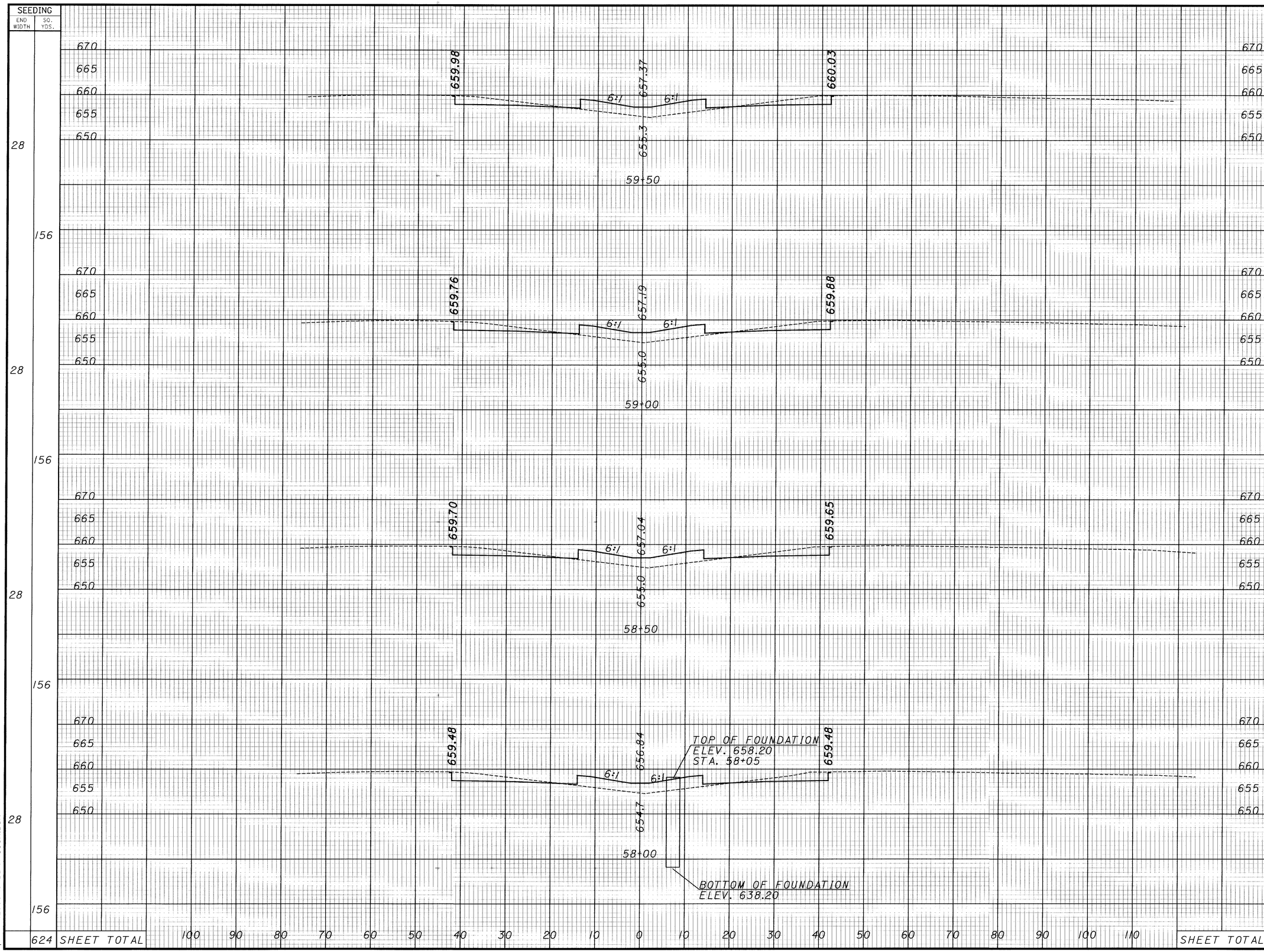

CALCULATED MH
CHECKED RAS

CROSS SECTIONS
STA 58+00 TO STA 59+50

CUY-90-0.00

06 MAR 2000
p:\PR22308\CADD\11738GX.DGN

SEEDING END WIDTH	SEEDING SQ. YDS.
28	156
28	156
28	156
468	SHEET TOTAL

END AREA CUT	END AREA FILL	VOLUME CUT	VOLUME FILL
46	65	90	114
51	58	93	115
49	66	90	121
		273	350
		SHEET TOTAL	

CALCULATED MH
CHECKED RAS

CROSS SECTIONS
STA 60+00 TO STA 61+00

CUY-90-0.00

229
582

RECONSTRUCTED TO GRADE
CB-4 STA. 61+01, ℄
GRATE EL 657.57
15" INV. N 652.00

660.47 660.44 5.7:1 5.7:1 655.6 61+00

EX. 15" @ 0.60%

660.29 660.28 6:1 6:1 657.65 655.9

EX. 15" @ 30%

EX. CB-6
STA. 60+25, 80 RT.
INLET EL 658.70
15" INV. S 654.13

60+50

660.15 660.16 6:1 6:1 657.52 655.3

EX. 68" X 43" CULVERT @ 0.40%

EX. HW
STA. 59+92.26, 157.28 LT.
INV. EL 649.52

EX. 68" X 43" CULVERT
STA. 60+00

EX. HW
STA. 60+11.5, 139.06 RT.
INV EL 650.59

60+00

670 665 660 655 650 645 640

100 90 80 70 60 50 40 30 20 10 0 10 20 30 40 50 60 70 80 90 100 110

07 MAR 2000
p:\PR22308\CADD\11738GX.DGN

06 MAR 2000
p:\PR22308\CADD\11738GX.DGN

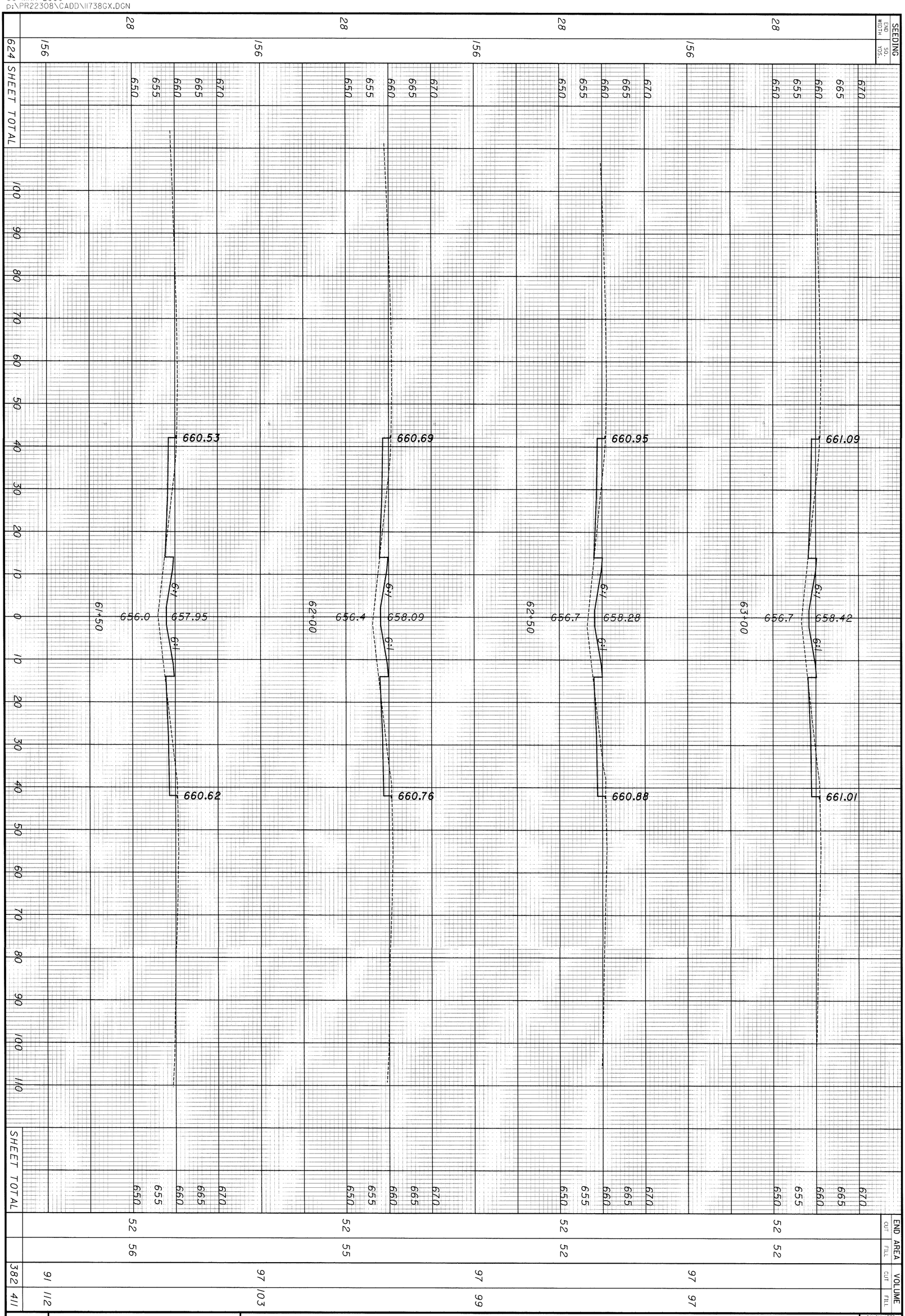

230 / 582	CUY-90-0.00	CROSS SECTIONS STA 61+50 TO STA 63+00	CALCULATED MH CHECKED RAS

SEEDING END WIDTH	SEEDING SQ. YDS.	END AREA CUT	END AREA FILL	VOLUME CUT	VOLUME FILL
28	156	54	51	99	96
28	156	53	52	104	91
28	156	59	46	105	89
28	156	54	50	99	95
	624 SHEET TOTAL			407	371

CALCULATED MH
CHECKED RAS

CROSS SECTIONS
STA 63+50 TO STA 65+00

CUY-90-0.00

231
582

06 MAR 2000
P:\PR22308\CADD\II738CX.DGN

SEEDING END WIDTH	SEEDING SQ. YDS.	END AREA CUT	END AREA FILL	VOLUME CUT	VOLUME FILL
28	156	60	44	111	80
28	156	60	43	109	85
28	156	57	49	103	92
	624 SHEET TOTAL			323	257

CALCULATED MH
CHECKED RAS

CROSS SECTIONS
STA 65+50 TO STA 66+50

CUY-90-0.00

232
582

06 MAR 2000
p:\PR22308\CADD\I738GX.DGN

SEEDING	
END WIDTH	SQ. YDS.
28	156
28	156
28	156
	468

RECONSTRUCTED TO GRADE
CB-4 STA. 68+02, ℄
GRATE EL 659.76
15" INV. N 654.00

EX. 15" @ 0.80%

EX. HW
STA. 68+02, 125' LT.
15" INV. 653.00

662.63 — 5.8:1 — 657.8 — 5.7:1 — 662.66

68+00

662.48 — 6:1 — 659.84 — 6:1 — 662.47

67+50

662.37 — 6:1 — 659.77 — 6:1 — 662.44

67+00

100 90 80 70 60 50 40 30 20 10 0 10 20 30 40 50 60 70 80 90 100 110

SHEET TOTAL

END AREA		VOLUME	
CUT	FILL	CUT	FILL
47	69		
57	48	97	108
57	44	106	85
		109	81
		312	274

SHEET TOTAL

CALCULATED MH
CHECKED RAS

CROSS SECTIONS
STA 67+00 TO STA 68+00

CUY-90-0.00

233
582

06 MAR 2000
P:\PR22308\CADD\I738GX.DGN

SEEDING END WIDTH	SEEDING SQ. YDS.
28	156
28	156
28	156
	468

SHEET TOTAL

END AREA CUT	END AREA FILL	VOLUME CUT	VOLUME FILL
54	60	98	113
52	62	97	117
53	64	93	124
		288	354

SHEET TOTAL

CALCULATED M H
CHECKED R A S

CROSS SECTIONS STA 68+50 TO STA 69+50

CUY-90-0.00

234
582

06 MAR 2000
D:\PR22308\CADD\11738GX.DGN

SEEDING	
END WIDTH	SQ. YDS.
28	156
28	156
28	156
	468

SHEET TOTAL

100 90 80 70 60 50 40 30 20 10 0 10 20 30 40 50 60 70 80 90 100 110

END AREA	
CUT	FILL
54	55
52	58
54	56

VOLUME	
CUT	FILL
98	105
98	106
100	107
296	318

CALCULATED MH
CHECKED RAS

CROSS SECTIONS
STA 70+00 TO STA 71+00

CUY-90-0.00

235
582

06 MAR 2000
P:\PR22308\CADD\1738GX.DGN

SEEDING	
END WIDTH	SQ. YDS.
28	156
28	156
28	156
	468

END AREA		VOLUME	
CUT	FILL	CUT	FILL
52	59		
53	54	97	104
60	46	104	93
		105	94
		306	291

SHEET TOTAL

CALCULATED MH
CHECKED RAS

CROSS SECTIONS
STA 71+50 TO STA 72+50

CUY-90-0.00

236
582

06 MAR 2000
P:\PR22308\CADD\11738CX.DGN

SEEDING	
END WIDTH	SQ. YDS.
28	
	156
28	
	156
28	
	156
	468

675
670
665
660
655

664.64
6:1
661.95
6:1
664.53

74+00

675
670
665
660
655

664.44
6:1
661.82
6:1
664.48

660.1

73+50

675
670
665
660
655
650
645

43'-18" CONDUIT, TYPE C, @ 1.00%

CB-4, A.P.P.
STA. 73+00, ℄
GRATE EL 661.37
18" INV. N 655.81

664.24
5.8:1
659.0
5.7:1
664.27

HW-4B
STA. 73+00, 119' LT.
18" INV. 654.80

76'-18" CONDUIT, TYPE B, @ 1.00%

73+00

ROCK CHANNEL
PROTECTION, TYPE C
LENGTH = 5'
DEPTH = 1.5'

100 90 80 70 60 50 40 30 20 10 0 10 20 30 40 50 60 70 80 90 100 110

SHEET TOTAL

END AREA	
CUT	FILL
54	56
56	53
57	52

VOLUME	
CUT	FILL
102	100
104	97
101	102
307	299

SHEET TOTAL

CALCULATED MH
CHECKED RAS

CROSS SECTIONS
STA 73+00 TO STA 74+00

CUY-90-0.00

237
582

06 MAR 2000
P:\PR22308\CADD\II738GX.DGN

SEEDING	
END WIDTH	SQ. YDS.
28	
	156
28	
	156
28	
	156
	468

SHEET TOTAL

END AREA		VOLUME	
CUT	FILL	CUT	FILL
57	51		
		103	102
54	59		
		96	113
50	62		
		96	110
		295	325

SHEET TOTAL

CALCULATED M H
CHECKED R A S

CROSS SECTIONS
74+50 TO STA 75+50

CUY-90-0.00

238
582

06 MAR 2000
p:\PR22308\CADD\1738CX.DGN

06 MAR 2000
p:\PR22308\CADD\11738GX.DGN

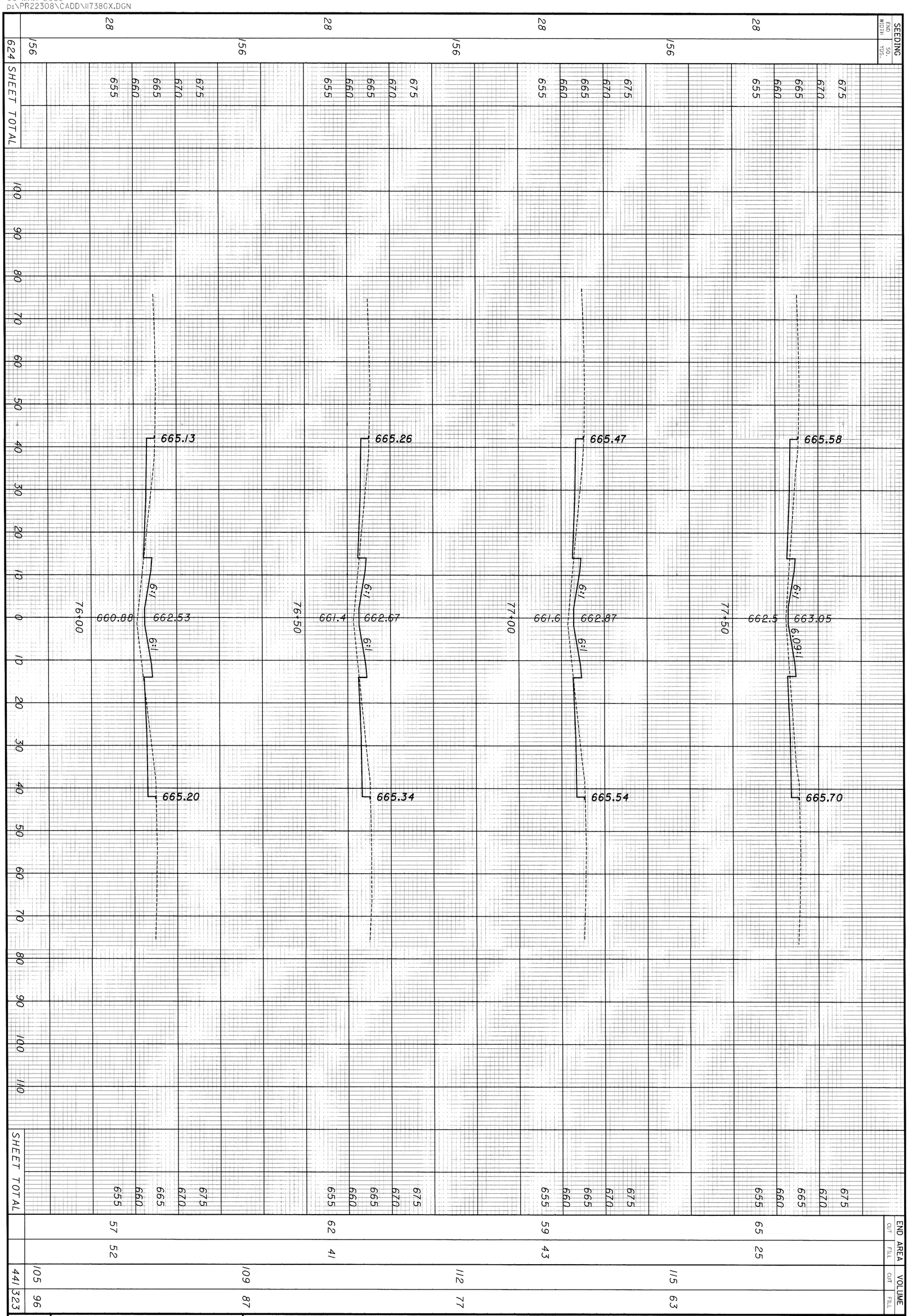

239 / 582	CUY-90-0.00	CROSS SECTIONS STA 76+00 TO STA 77+50	CALCULATED MH CHECKED RAS

SEEDING END WIDTH	SEEDING SQ. YDS.	END AREA CUT	END AREA FILL	VOLUME CUT	VOLUME FILL
28	156	55	55	103	97
28	147	56	50	115	72
25	123	68	28	123	49
	426 SHEET TOTAL			341	218

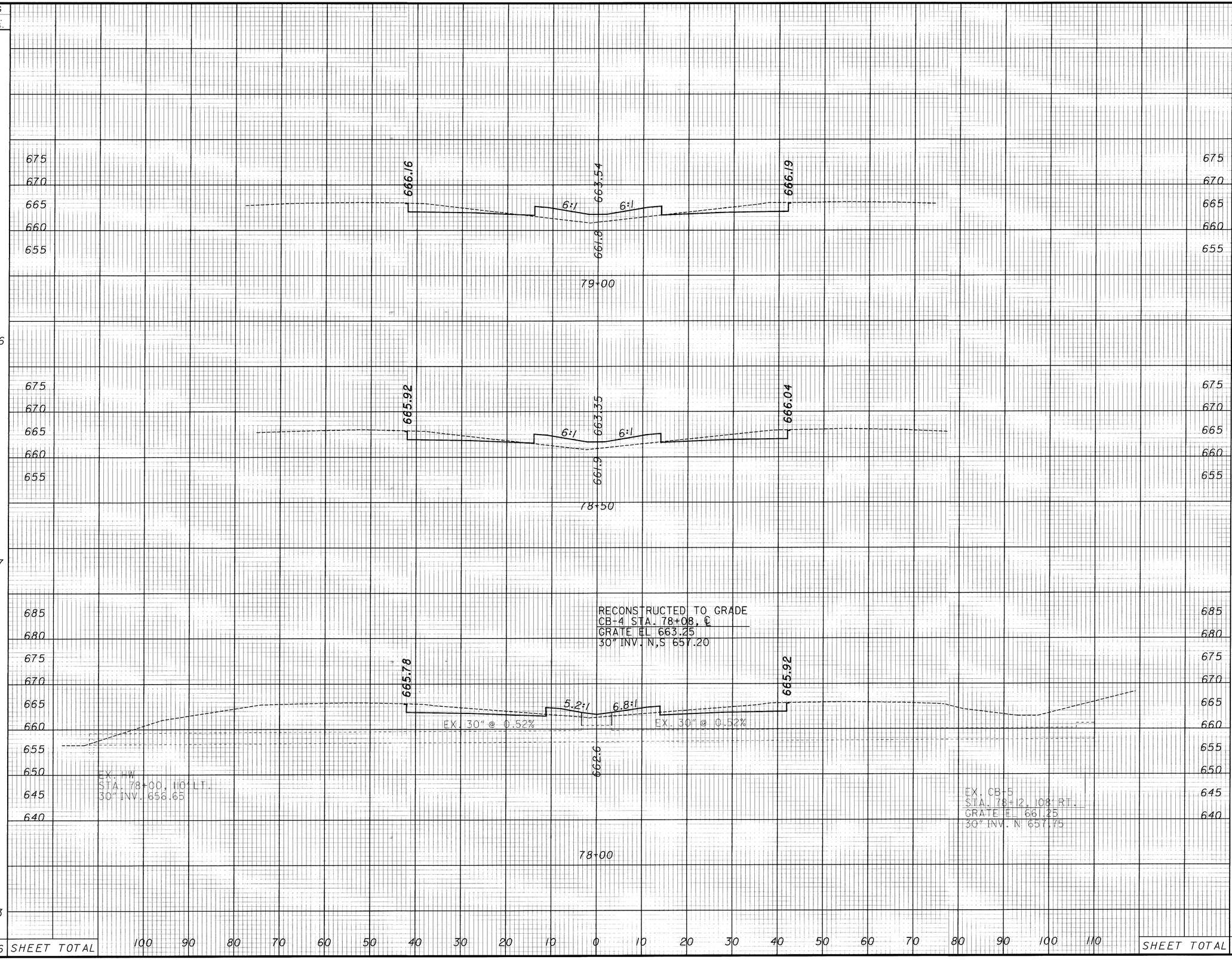

CALCULATED

CHECKED

CROSS SECTIONS STA 78+00 TO STA 79+00

CUY-90-0.00

240
582

06 MAR 2000
p:\PR22308\CADD\1738GX.DGN

SEEDING		END AREA		VOLUME	
END WIDTH	SQ. YDS.	CUT	FILL	CUT	FILL
28	156	53	52	103	92
28	156	59	48	107	86
28	156	57	45	103	89
28	156	54	50	101	97
	624 SHEET TOTAL			414	364

CALCULATED MH
CHECKED RAS

CROSS SECTIONS
STA 79+50 TO STA 81+00

CUY-90-0.00

241
582

21 MAR 2000
P:\PR22308\CADD\11738GX.DGN

SEEDING END WIDTH	SEEDING SQ. YDS.	END AREA CUT	END AREA FILL	VOLUME CUT	VOLUME FILL
28	156	59	47	110	87
28	156	59	47	111	85
28	156	61	45	115	82
28	156	63	44	107	89
	624 SHEET TOTAL			414	364

CALCULATED MH
CHECKED RAS

CROSS SECTIONS

STA 81+50 TO STA 83+00

CUY-90-0.00

242
582

21 MAR 2000
D:\PR22308\CADD\IT38CX.DGN

SEEDING END WIDTH	SEEDING SQ. YDS.	END AREA CUT	END AREA FILL	VOLUME CUT	VOLUME FILL
28		58	47		
	156			108	87
28		58	48		
	156			110	86
28		60	45		
	156			116	78
28		65	39		
	156			115	80
	624 SHEET TOTAL		SHEET TOTAL	443	343

667.99 665.37 668.02 663.9 6:1 6:1 85+00

667.85 665.23 667.88 663.7 6:1 6:1 84+50

667.68 665.05 667.70 663.7 6:1 6:1 84+00

667.50 664.88 667.53 663.7 6:1 6:1 83+50

675 670 665 660

100 90 80 70 60 50 40 30 20 10 0 10 20 30 40 50 60 70 80 90 100 110

CALCULATED MH CHECKED RAS

CROSS SECTIONS STA 83+50 TO STA 85+00

CUY-90-0.00

243 582

06 MAR 2000
P:\PR22308\CADD\1738GX.DGN

SEEDING END WIDTH	SEEDING SQ. YDS.	END AREA CUT	END AREA FILL	VOLUME CUT	VOLUME FILL
28		57	52		
	156			104	97
28		55	53		
	156			105	95
28		58	49		
	156			110	87
28		61	45		
	156			110	85
	624 SHEET TOTAL			449	331

675
670
665
660

668.61 | 666.00 | 668.66
6:1 6:1
664.3
87+00

668.44 | 665.84 | 668.52
6:1 6:1
664.3
86+50

668.28 | 665.70 | 668.39
6:1 6:1
664.13
86+00

668.14 | 665.52 | 668.17
6:1 6:1
664.09
85+50

100 90 80 70 60 50 40 30 20 10 0 10 20 30 40 50 60 70 80 90 100 110

CALCULATED MH
CHECKED RAS

CROSS SECTIONS
STA 85+50 TO STA 87+00

CUY-90-0.00

244
582

06 MAR 2000
p:\PR22308\CADD\11738GX.DGN

SEEDING			END AREA		VOLUME	
END WIDTH	SQ. YDS.		CUT	FILL	CUT	FILL
28	156	89+00	53	54	93	109
28	156	88+50	47	64	92	114
28	156	88+00	52	60	99	104
28	156	87+50	55	53	104	97
	624	SHEET TOTAL			429	364

CALCULATED MH
CHECKED RAS

CROSS SECTIONS
STA 87+50 TO STA 89+00

CUY-90-0.00

245
582

06 MAR 2000
p:\PR22308\CADD\II738GX.DGN

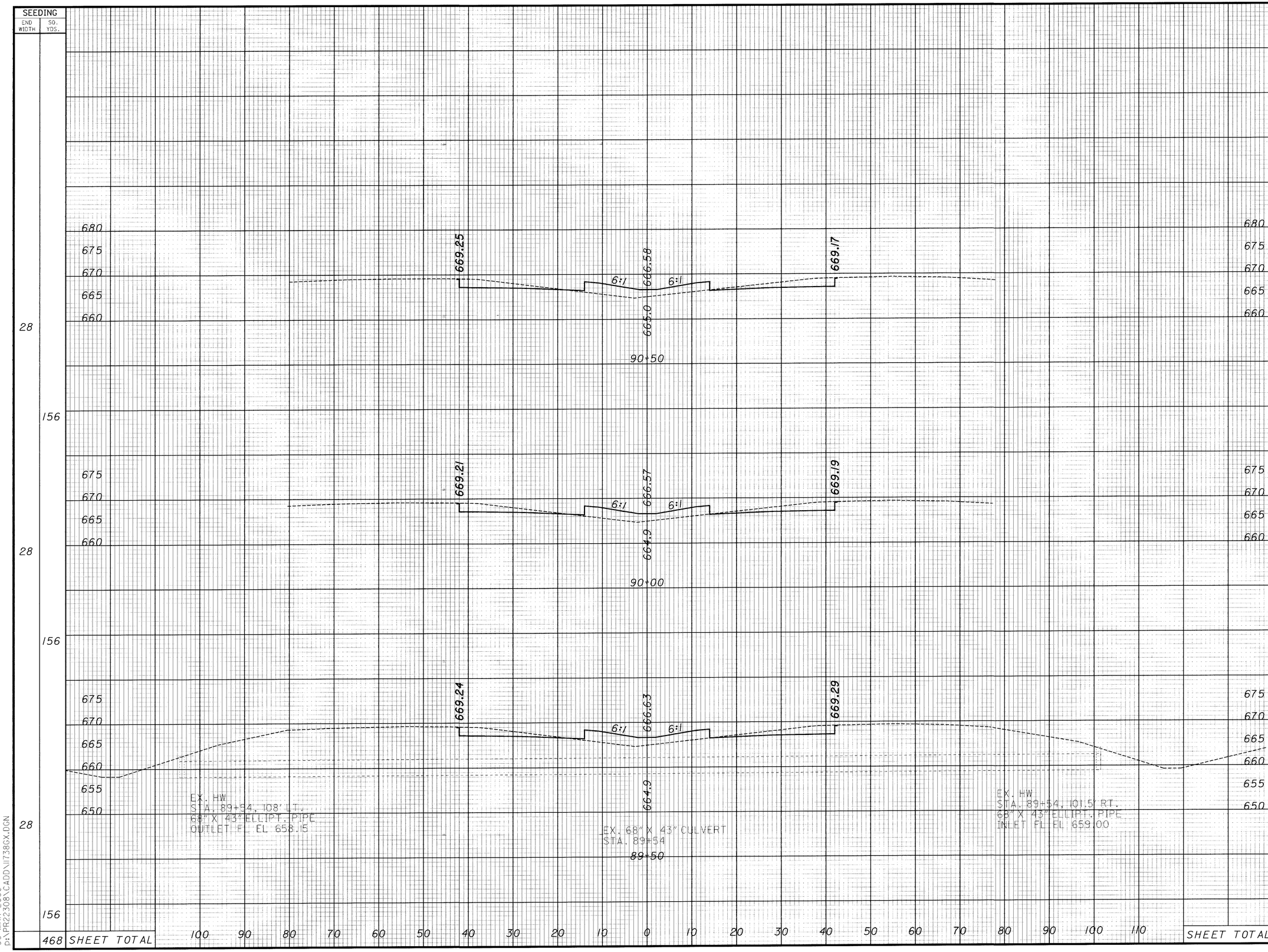

END AREA CUT	END AREA FILL	VOLUME CUT	VOLUME FILL
55	54		
		102	100
55	54		
		101	103
55	57		
		100	102
SHEET TOTAL		303	305

CALCULATED MH
CHECKED RAS

CROSS SECTIONS
STA 89+50 TO STA 90+50

CUY-90-0.00

06 MAR 2000
p:\PR22308\CADD\11738GX.DGN

SEEDING END WIDTH	SEEDING SQ. YDS.
28	156
28	156
28	156
28	156
	624

SHEET TOTAL

END AREA CUT	END AREA FILL	VOLUME CUT	VOLUME FILL
58	53		
		102	106
52	61		
		94	115
49	64		
		90	120
48	66		
		96	111
		384	452

SHEET TOTAL

CALCULATED MH
CHECKED RAS

CROSS SECTIONS STA 91+00 TO STA 92+50

CUY-90-0.00

247
582

06 MAR 2000
D:\PR22308\CADD\U738GX.DGN

SEEDING END WIDTH	SEEDING SQ. YDS.
28	156
28	156
28	156
28	156
	624 SHEET TOTAL

END AREA CUT	END AREA FILL	VOLUME CUT	VOLUME FILL
50	65	93	121
50	66	97	113
55	56	101	107
54	59	104	104
		395	445

CALCULATED MH
CHECKED RAS

CROSS SECTIONS
STA 93+00 TO STA 94+50

CUY-90-0.00

248
582

06 MAR 2000
P:\PR22308\CADD\11738GX.DGN

SEEDING END WIDTH	SEEDING SQ. YDS.
28	156
28	156
28	156
28	156
	624 SHEET TOTAL

END AREA CUT	END AREA FILL	VOLUME CUT	VOLUME FILL
49	65	95	112
54	55	96	107
50	60	92	116
		283	335
SHEET TOTAL			

CALCULATED

CHECKED

CROSS SECTIONS STA 95+00 TO STA 96+00

CUY-90-0.00

06 MAR 2000
D:\PR22308\CADD\I738GX.DGN

SEEDING	
END WIDTH	SQ. YDS.
0	0
0	0
0	80
28	156
	236

END AREA		VOLUME	
CUT	FILL	CUT	FILL
51	20		
		94	41
50	24		
		94	48
51	28		
		99	47
56	22		
		97	115
SHEET TOTAL		384	251

CALCULATED MH
CHECKED RAS

CROSS SECTIONS
STA 96+50 TO STA 98+00

CUY-90-0.00

250
582

06 MAR 2000
P:\PR22308\CADD\1738GX.DGN

SEEDING END WIDTH	SEEDING SQ. YDS.
0	
	0
	0
0	
	0
	0
0	
	0
	0
SHEET TOTAL	0

END AREA CUT	END AREA FILL	VOLUME CUT	VOLUME FILL
57	14		
		103	29
54	17		
		100	30
54	15		
		98	33
SHEET TOTAL		301	92

CALCULATED M H
CHECKED R A S

CROSS SECTIONS
STA 98+50 TO STA 99+50

CUY-90-0.00

251
582

06 MAR 2000
P:\PR22308\CADD\11738CX.DGN

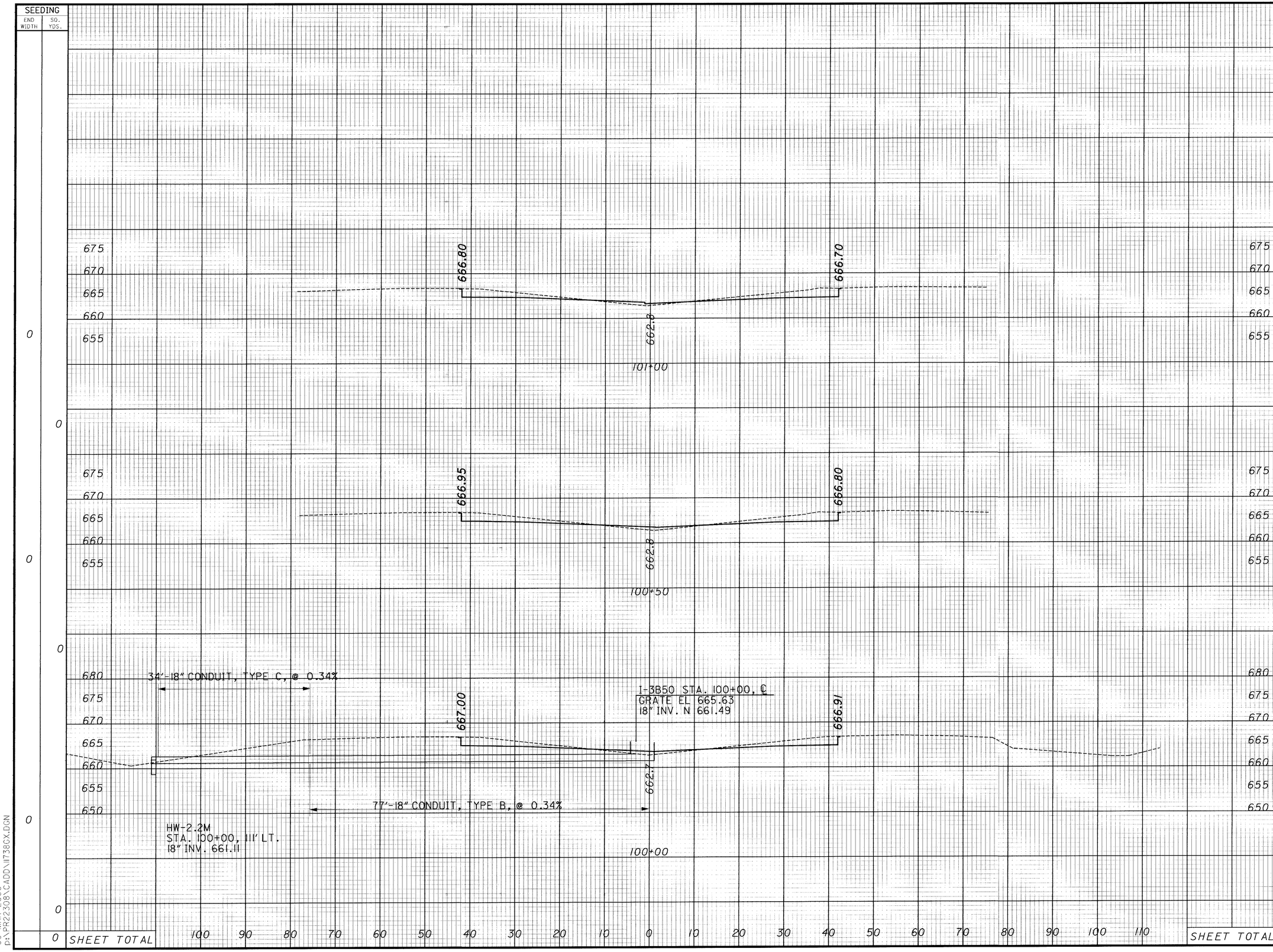

END AREA CUT	END AREA FILL	VOLUME CUT	VOLUME FILL
62	7		
		115	15
62	9		
		112	19
59	11		
		108	23
		335	57

CALCULATED MH
CHECKED RAS

CROSS SECTIONS
STA 100+00 TO STA 101+00

CUY-90-0.00

06 MAR 2000
p:\PR22308\CADD\11738GX.DGN

SEEDING END WIDTH	SEEDING SQ. YDS.	
11		
	56	
9		STA 102+50 AHEAD
9		STA 102+50 BACK
	0	
0		
	0	
0		
	0	
	56	SHEET TOTAL

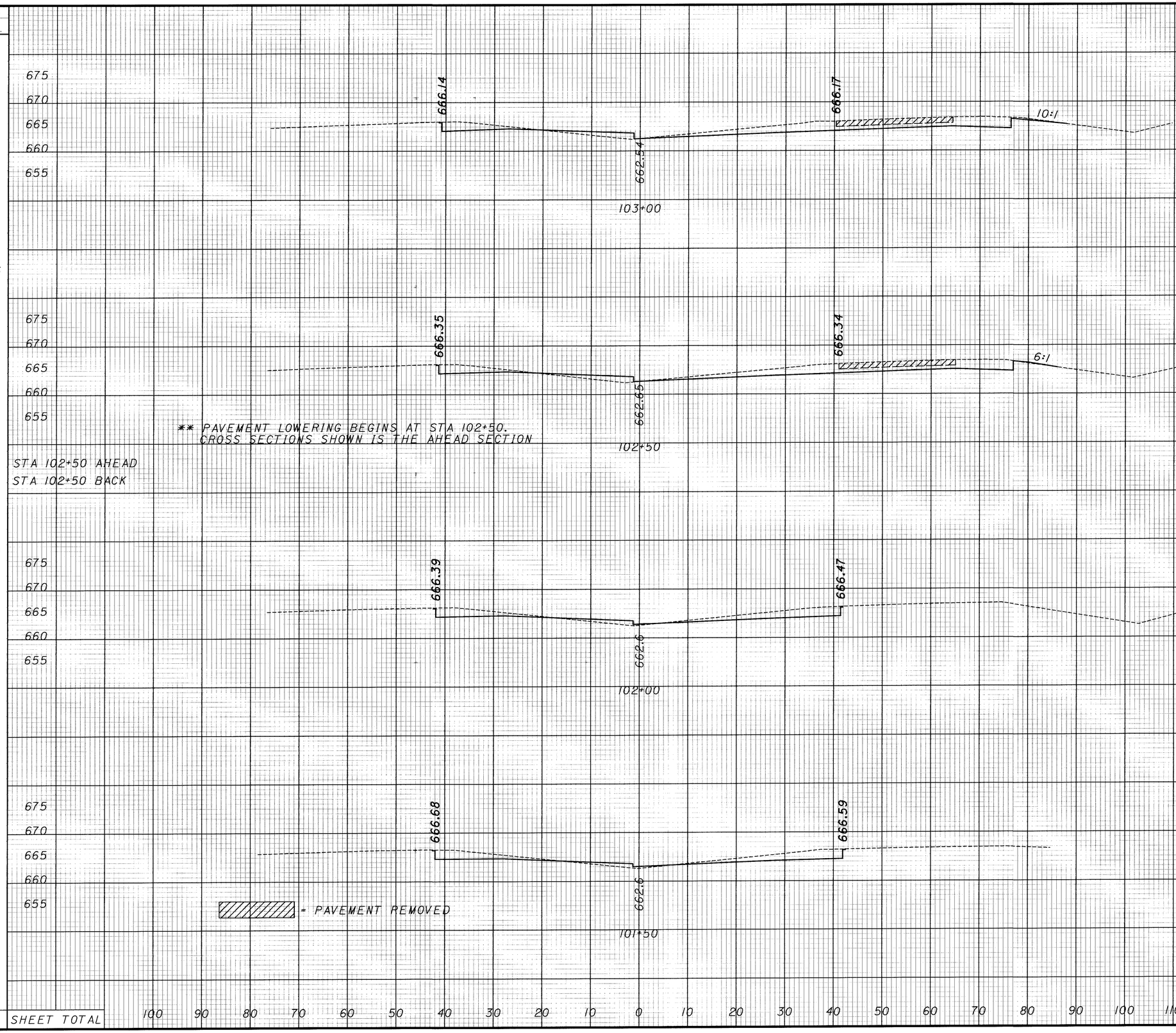

	END AREA CUT	END AREA FILL	VOLUME CUT	VOLUME FILL
	109	13		
			198	26
		15		
STA 102+50 AHEAD	104	0		
STA 102+50 BACK	60	14		
			115	22
	64	9		
			117	17
	62	9		
			115	15
SHEET TOTAL			545	80

CALCULATED WH
CHECKED RAS

CROSS SECTIONS STA 101+50 TO STA 103+00

CUY-90-0.00

253
582

06 MAR 2000
P:\PR22308\CADD\II738GX.DGN

SEEDING	
END WIDTH	SQ. YDS.
20	109
19	70
6	48
	227

SHEET TOTAL

END AREA		VOLUME	
CUT	FILL	CUT	FILL
159	21	276	32
137	13	231	28
111	17	204	28
		711	88

SHEET TOTAL

CALCULATED MH
CHECKED RAS

CROSS SECTIONS
STA 103+50 TO STA 104+50

CUY-90-0.00

254
582

21 MAR 2000
P:\PR22308\CADD\11738GX.DGN

SEEDING	
END WIDTH	SQ. YDS.
28	131
19	128
27	131
	390

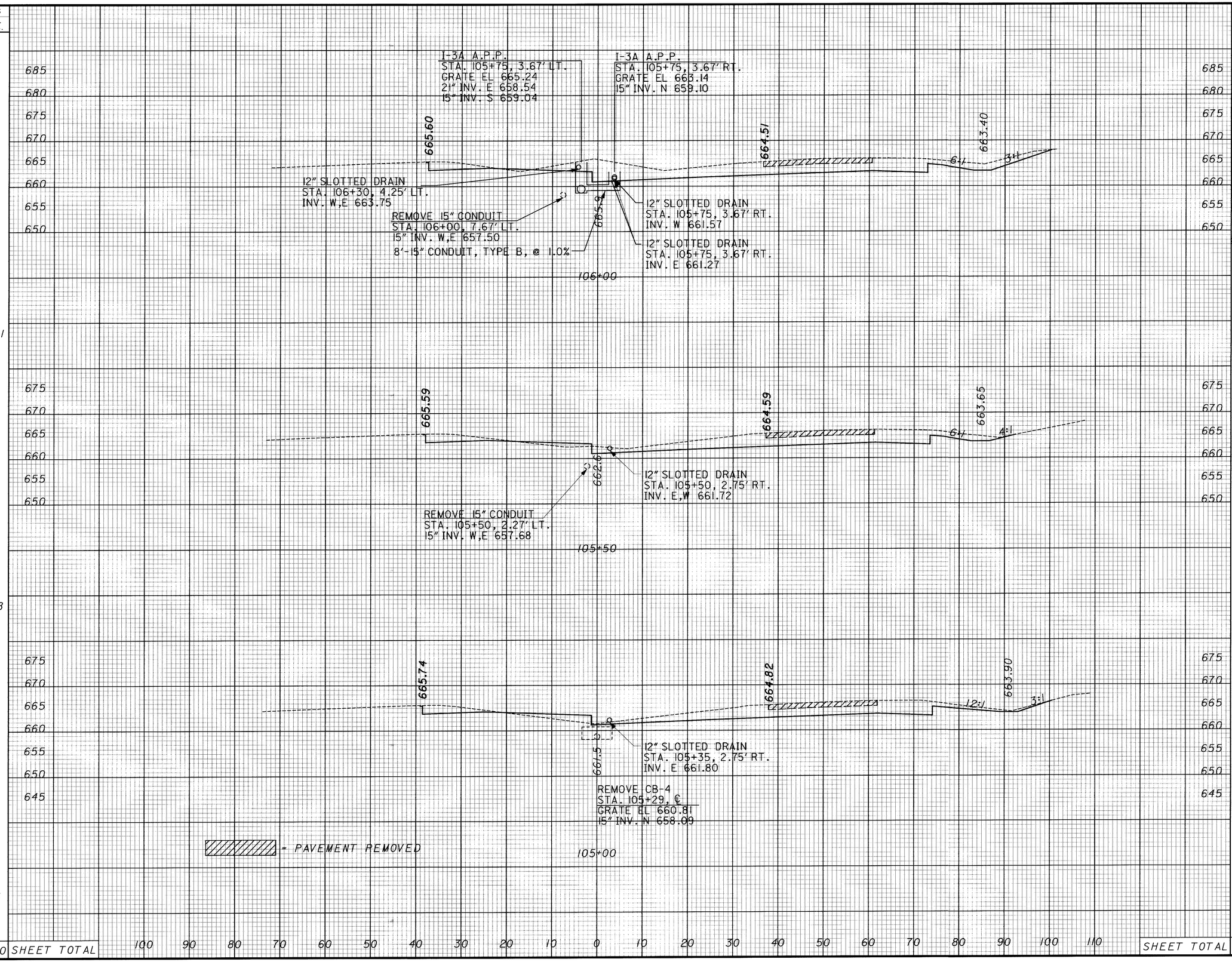

END AREA		VOLUME	
CUT	FILL	CUT	FILL
259	2		
		417	10
189	9		
		337	25
172	18		
		309	36
SHEET TOTAL		1063	71

CALCULATED MH
CHECKED RAS

CROSS SECTIONS
105+00 TO STA 106+00

CUY-90-0.00

255
582

08 MAR 2000
D:\PR22308\CADD\I738GX.DGN

SEEDING		END AREA		VOLUME		CALCULATED MH	CHECKED RAS
END WIDTH	SQ. YDS.	CUT	FILL	CUT	FILL		
7	64	108	25	285	27		
16	128	198	4	464	4		
30	161	300	0	522	2		
353	SHEET TOTAL			1271	33		

675 670 665 660 655 650 645 640

665.57

665.09

4:1

FILL AND PLUG 81'-15" CONDUIT

PLUG END

21" CONDUIT
STA. 107+50, 3' LT.
21" INV. W,E 657.87

667.0

PLUG END

REMOVE 10'-15" CONDUIT

REMOVE CB-4
STA. 107+50, ℄
GRATE EL 660.43
15" INV. N 656.58

REMOVE HW-E
STA. 107+48, 9' LT.
15" INV. 655.41

107+50

675 670 665 660 655 650 645

665.55

664.75

662.90

4:1

4:1

12" SLOTTED DRAIN
STA. 107+10, 2.75' LT.
INV. W 663.82

665.3

12" SLOTTED DRAIN
STA. 107+15, 2.75' RT.
INV. W 662.08

REMOVE 15" CONDUIT
STA. 107+00, 5.45' LT.
15" INV. W,E 657.50

21" CONDUIT
STA. 107+00, 3' LT.
21" INV. W,E 658.07

107+00

685 680 675 670 665 660 655 650 645

CB-6 STA. 106+50, 5.92' LT.
GRATE EL 665.21
21" INV. W,E 658.27

665.46

664.56

663.15

4:1

2.3:1

12" SLOTTED DRAIN
STA. 106+50, 4.25' RT.
INV. W,E 661.71

EX. 24" RCP @ 2.49%,
STA. 106+91.24

666.6

EX. 24" RCP @ 1.85%,
STA. 106+91.24

REMOVE MH
STA. 106+40, 12' LT.
ELEV. COVER 664.50
15" INV. 657.20

= PAVEMENT REMOVED

12" SLOTTED DRAIN
STA. 106+50, 5.42' LT.
INV. W 663.64

12" SLOTTED DRAIN
STA. 106+50, 5.42' LT.
INV. E 663.47

106+50

100 90 80 70 60 50 40 30 20 10 0 10 20 30 40 50 60 70 80 90 100 110

SHEET TOTAL

CROSS SECTIONS
STA 106+50 TO STA 107+50

CUY-90-0.00

256
582

06 MAR 2000
P:\PR22308\CADD\U738GX.DGN

SEEDING END WIDTH	SEEDING SQ. YDS.
0	
0	
	33
12	
	81
17	
	67
181	SHEET TOTAL

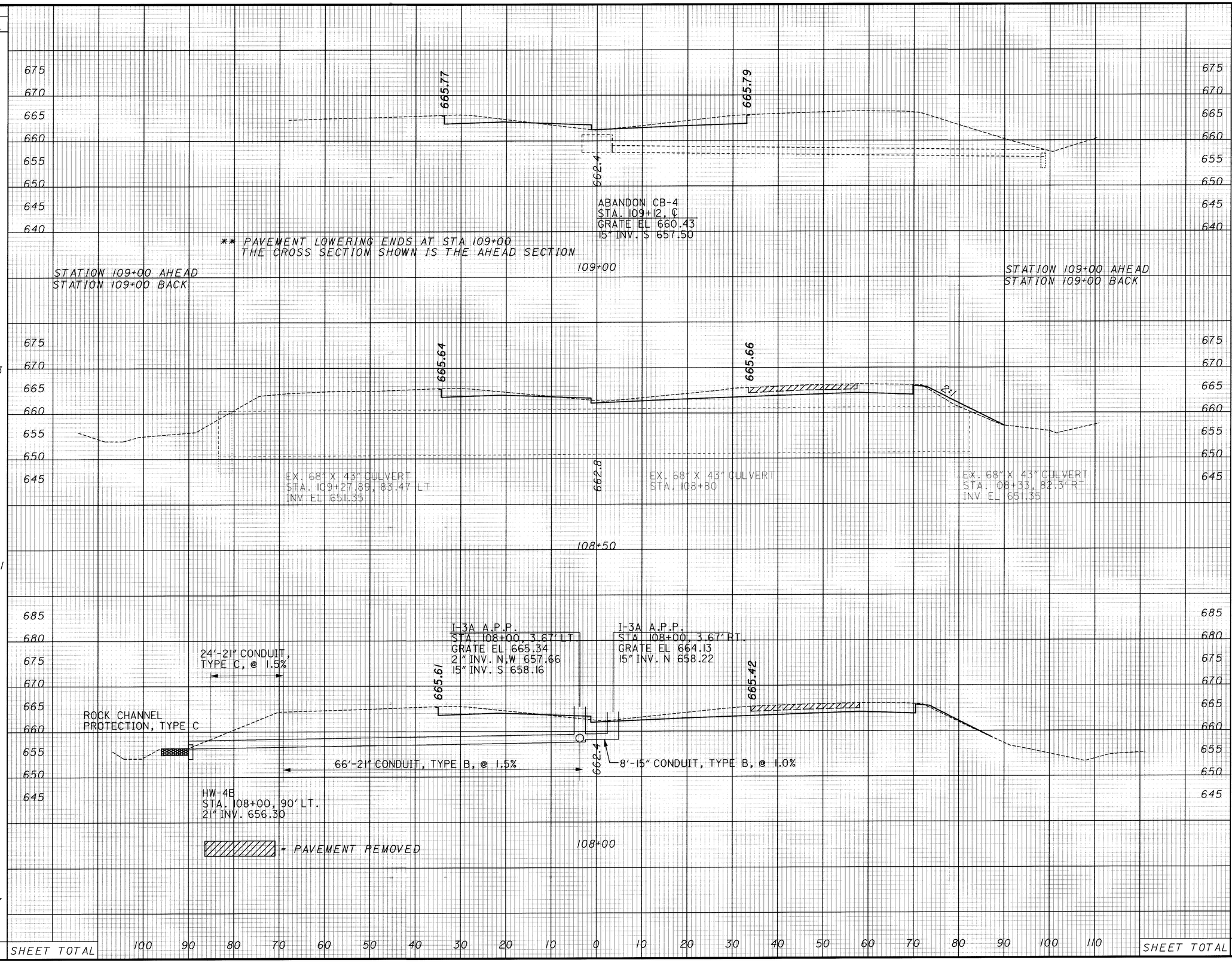

END AREA CUT	END AREA FILL	VOLUME CUT	VOLUME FILL
51	7		
109	7		
		202	19
109	12		
		203	19
108	8		
		201	31
	SHEET TOTAL	606	69

CALCULATED MH
CHECKED RAS

CROSS SECTIONS
STA 108+00 TO STA 109+00

CUY-90-0.00

257
582

21MAR 2000
D:\PR22308\CADD\II738GX.DGN

SEEDING END WIDTH	SEEDING SQ. YDS.	END AREA CUT	END AREA FILL	VOLUME CUT	VOLUME FILL
0	0	46	14	86	29
0	0	46	17	87	29
0	0	48	14	87	27
0	0	46	15	90	20
SHEET TOTAL	0			350	105

111+00: 666.29, 662.7, 666.21

110+50: 666.15, 662.5, 666.10

110+00: 665.92, 662.2, 665.96

109+50: 665.84, 662.0, 665.86

675 / 670 / 665 / 660 / 655

100 90 80 70 60 50 40 30 20 10 0 10 20 30 40 50 60 70 80 90 100 110

CALCULATED M H

CHECKED R A S

CROSS SECTIONS

STA 109+50 TO STA 111+00

CUY-90-0.00

258
582

06 MAR 2000
D:\PR22308\CADD\11738GX.DGN

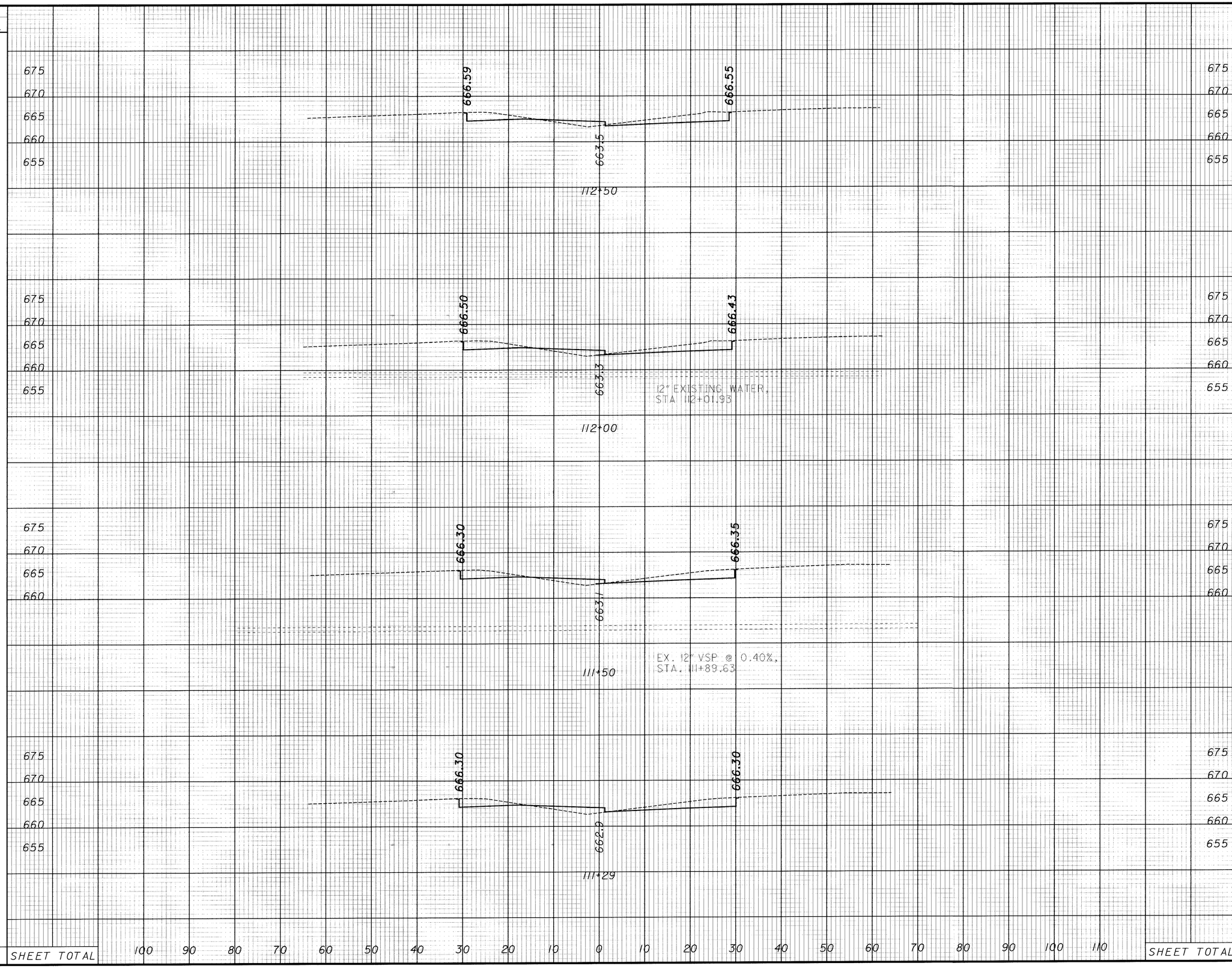

SEEDING END WIDTH	SEEDING SQ. YDS.	END AREA CUT	END AREA FILL	VOLUME CUT	VOLUME FILL
0		52	8		
	0			95	17
0		50	10		
	0			93	19
0		50	11		
	0			38	9
0		48	12		
	0			51	14
0	SHEET TOTAL			277	59

CALCULATED MH
CHECKED RAS

CROSS SECTIONS
STA 111+29 TO STA 112+50

CUY-90-0.00

06 MAR 2000
p:\PR22308\CADD\11738GX.DGN

SEEDING	
END WIDTH	SQ. YDS.
0	0
0	0
0	0

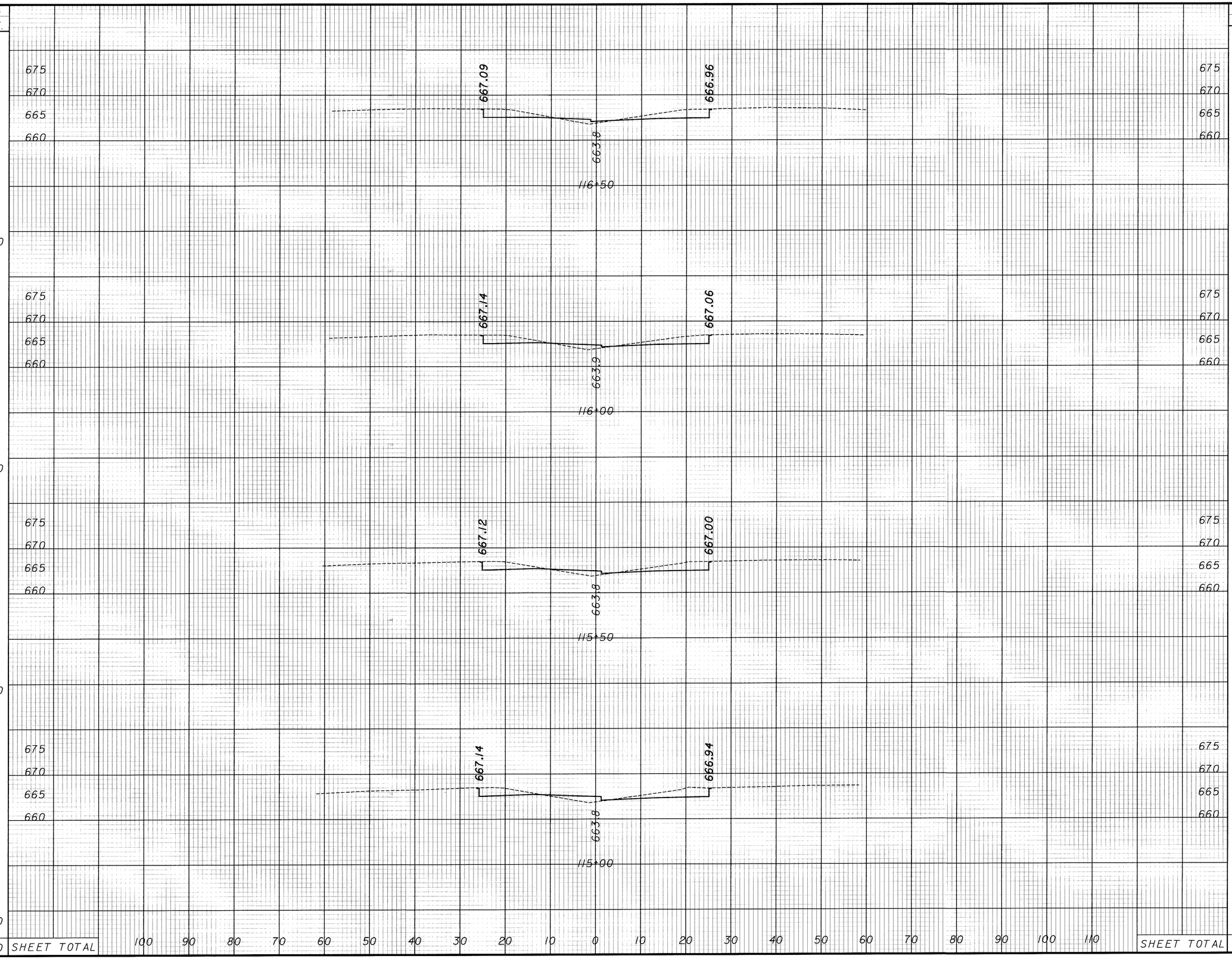

SEEDING END WIDTH	SEEDING SQ. YDS.	END AREA CUT	END AREA FILL	VOLUME CUT	VOLUME FILL
0		44	6		
	0			78	11
0		40	6		
	0			74	12
0		40	7		
	0			75	14
0		42	9		
	0			81	15
0	SHEET TOTAL			308	52

CALCULATED MH
CHECKED RAS

CROSS SECTIONS
STA 115+00 TO STA 116+50

CUY-90-0.00

06 MAR 2000
p:\PR22308\CADD\11738GX.DGN

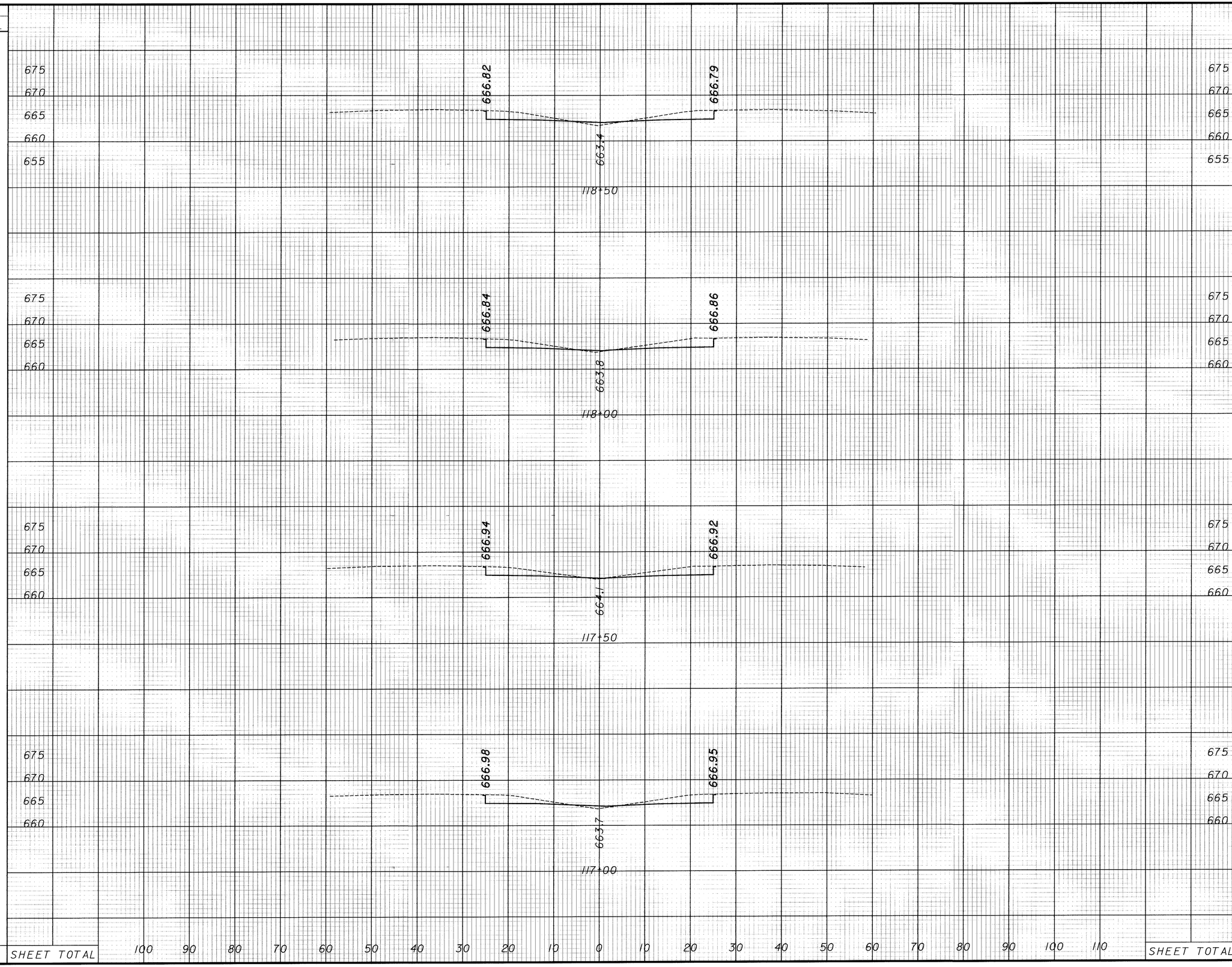

SEEDING END WIDTH	SEEDING SQ. YDS.	END AREA CUT	END AREA FILL	VOLUME CUT	VOLUME FILL
0		45	4		
	0			86	5
0		48	1		
	0			91	2
0		50	0		
	0			88	3
0		45	3		
	0			82	8
0	SHEET TOTAL			347	18

CALCULATED MH
CHECKED RAS

CROSS SECTIONS
STA 117+00 TO STA 118+50

CUY-90-0.00

06 MAR 2000
p:\PR22308\CADD\11738GX.DGN

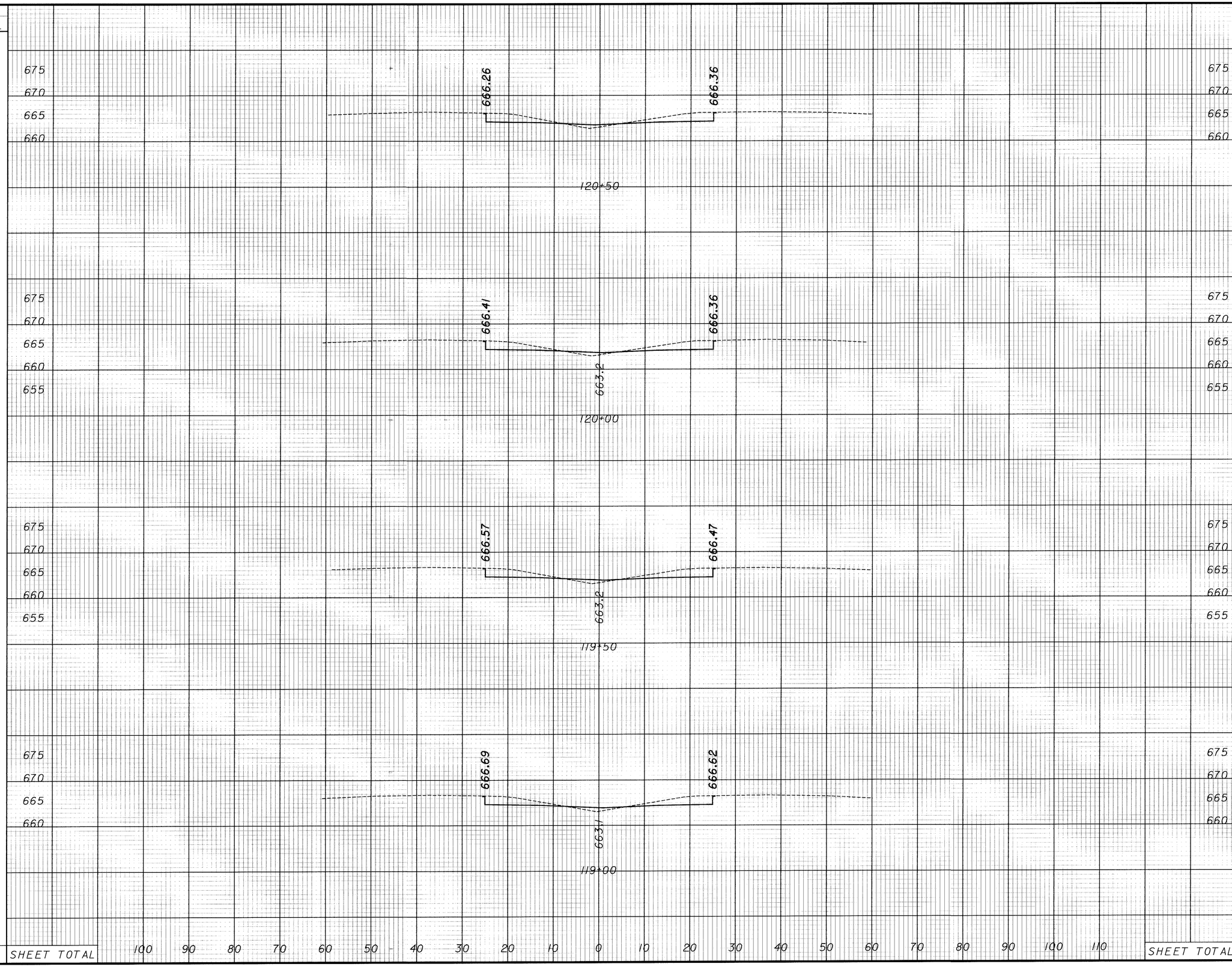

SEEDING END WIDTH	SEEDING SQ. YDS.	END AREA CUT	END AREA FILL	VOLUME CUT	VOLUME FILL
0		44	5		
	0			81	8
0		44	4		
	0			82	8
0		45	5		
	0			82	9
0		43	5		
	0			82	8
	0 SHEET TOTAL			327	33

CALCULATED MH
CHECKED RAS

CROSS SECTIONS
STA 119+00 TO STA 120+50

CUY-90-0.00

06 MAR 2000
p:\PR22308\CADD\11738GX.DGN

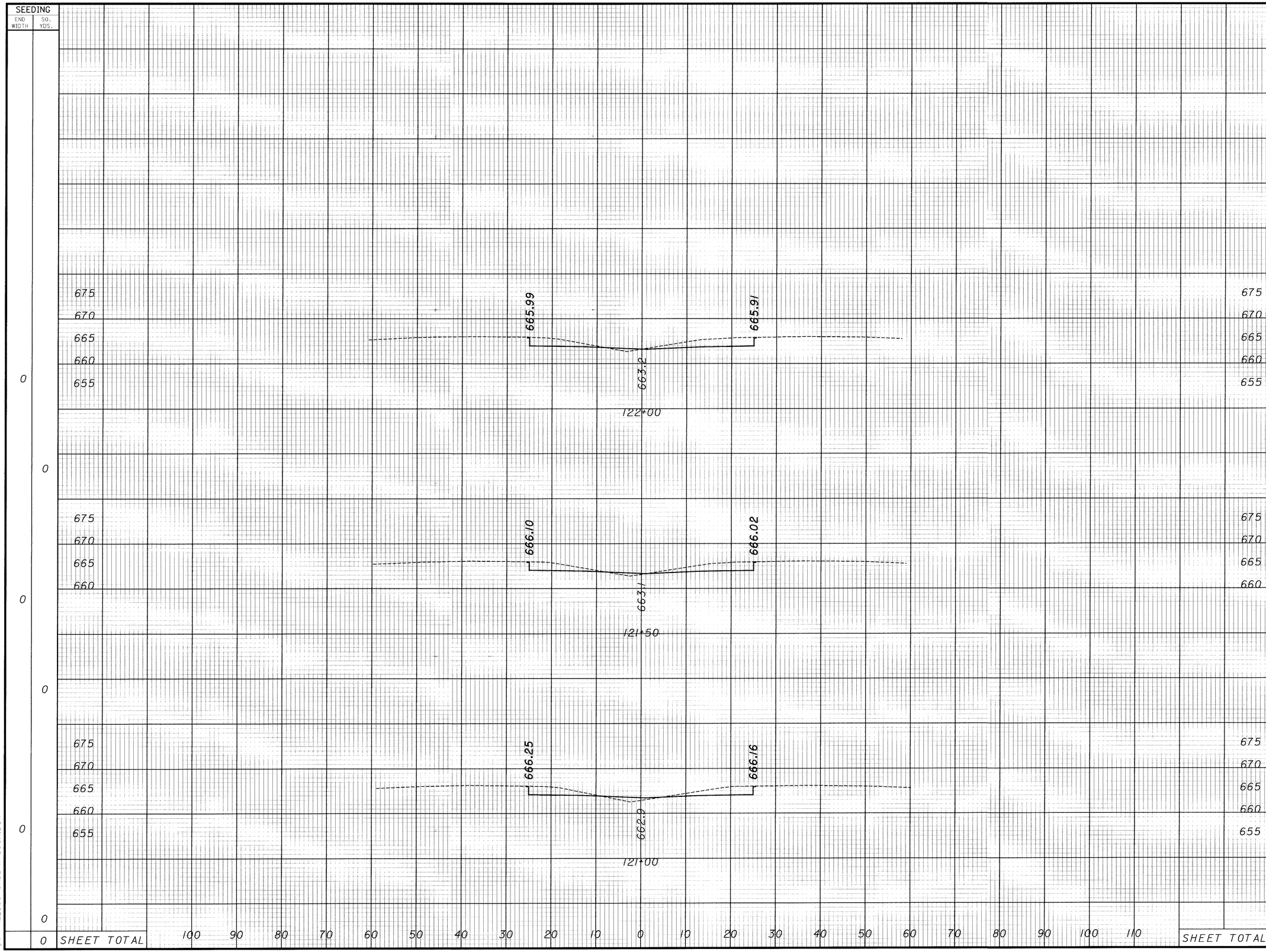

END AREA CUT	END AREA FILL	VOLUME CUT	VOLUME FILL
53	3		
		94	5
49	3		
		86	9
44	6		
		81	10
SHEET TOTAL		261	24

CALCULATED MH
CHECKED RAS

CROSS SECTIONS
STA 121+00 TO STA 122+00

CUY-90-0.00

06 MAR 2000
p:\PR22308\CADD\11738GX.DGN

SEEDING		END AREA		VOLUME		CALCULATED MH	CHECKED RAS
END WIDTH	SQ. YDS.	CUT	FILL	CUT	FILL		
0	0	96	0	123	3		
	0	55	3	8	0		
	0	54	3	91	5		
	0	SHEET TOTAL		222	8		

690 685 680 675 670 665 660 655 650

I-3B50
STA. 122+94, 3' LT.
GRATE EL 665.10
18" INV. W 659.45

665.82 665.90

665.22

REMOVE 18" CONDUIT
STA, 22+94, 0.65' LT.
18" INV. W,E 659.30

122+94

675 670 665 660 655 650 645

665.88 665.84

663.10

18" CONDUIT
STA, 122+50, ℄
18" INV. W,E 658.79

REMOVE CB-4
STA. 122+75, 4' LT.
GRATE EL 662.19
15" INV. E 659.35

122+50

690 685 680 675 670 665 660 655 650 645 640

I-3B50
STA. 122+46, 3' RT.
GRATE EL 665.13
18" INV. N,E 658.73

39'-18" CONDUIT, TYPE C, @ 2.5%

665.89 665.84

663.10

HW-4B
STA. 122+46, 98' LT.
18" INV. 656.28

59'-18" CONDUIT, TYPE B, @ 2.5%

ROCK CHANNEL
PROTECTION, TYPE C
LENGTH = 5'
DEPTH = 1.5'

122+46

100 90 80 70 60 50 40 30 20 10 0 10 20 30 40 50 60 70 80 90 100 110

CROSS SECTIONS
STA 122+46 TO STA 122+94

CUY-90-0.00

265
582

06 MAR 2000
p:\PR22308\CADD\IJ738GX.DGN

SEEDING	
END WIDTH	SQ. YDS.
0	0
0	0
0	0
0	0
0	0
0	SHEET TOTAL

675 670 665 660 655

666.38 666.35 663.60

124+00

675 670 665 660 655 650 645 640

666.02 666.04 663.3

123+50

675 670 665 660 655 650 645 640

665.83 665.91 665.5

FILL AND PLUG 92'-15" CONDUIT

PLUG END

PLUG END

REMOVE 10'-15" CONDUIT

REMOVE HW-E
STA. 123+26, 102' LT.
15" INV. 655.55

REMOVE CB-4
STA. 123+26, 5' RT.
GRATE EL 662.39
15" INV. S 659.21

123+00

100 90 80 70 60 50 40 30 20 10 0 10 20 30 40 50 60 70 80 90 100 110

END AREA		VOLUME	
CUT	FILL	CUT	FILL
57	0		
		105	2
56	2		
		143	2
98	0		
		22	0
		270	4

SHEET TOTAL

CALCULATED MH
CHECKED RAS

CROSS SECTIONS
STA 123+00 TO STA 124+00

CUY-90-0.00

266
582

06 MAR 2000
P:\PR22308\CADD\II736X.DGN

SEEDING	
END WIDTH	SQ. YDS.
0	
	0
0	
0	
	0
0	
	0

675
670
665
660
655
650
645

EX. HW
STA. 125+42.40, 112.5' LT.
33" INV. 653.32

EX. 33" @ 0.84%

668.36
668.33
665.0

125+50

EX. HW
STA. 125+42.40, 103' RT.
33" INV. 655.13

667.55
667.56
664.19

125+00

666.97
666.89
663.8

124+50

100 90 80 70 60 50 40 30 20 10 0 10 20 30 40 50 60 70 80 90 100 110

SHEET TOTAL

END AREA	
CUT	FILL
43	3
45	3
51	1
SHEET TOTAL	

VOLUME	
CUT	FILL
82	6
88	4
99	1
269	11

CALCULATED MH
CHECKED RAS

CROSS SECTIONS
STA 124+50 TO STA 125+50

CUY-90-0.00

267
582

06 MAR 2000
D:\PR22308\CADD\11738GX.DGN

06 MAR 2000
P:\PR22308\CADD\11738GX.DGN

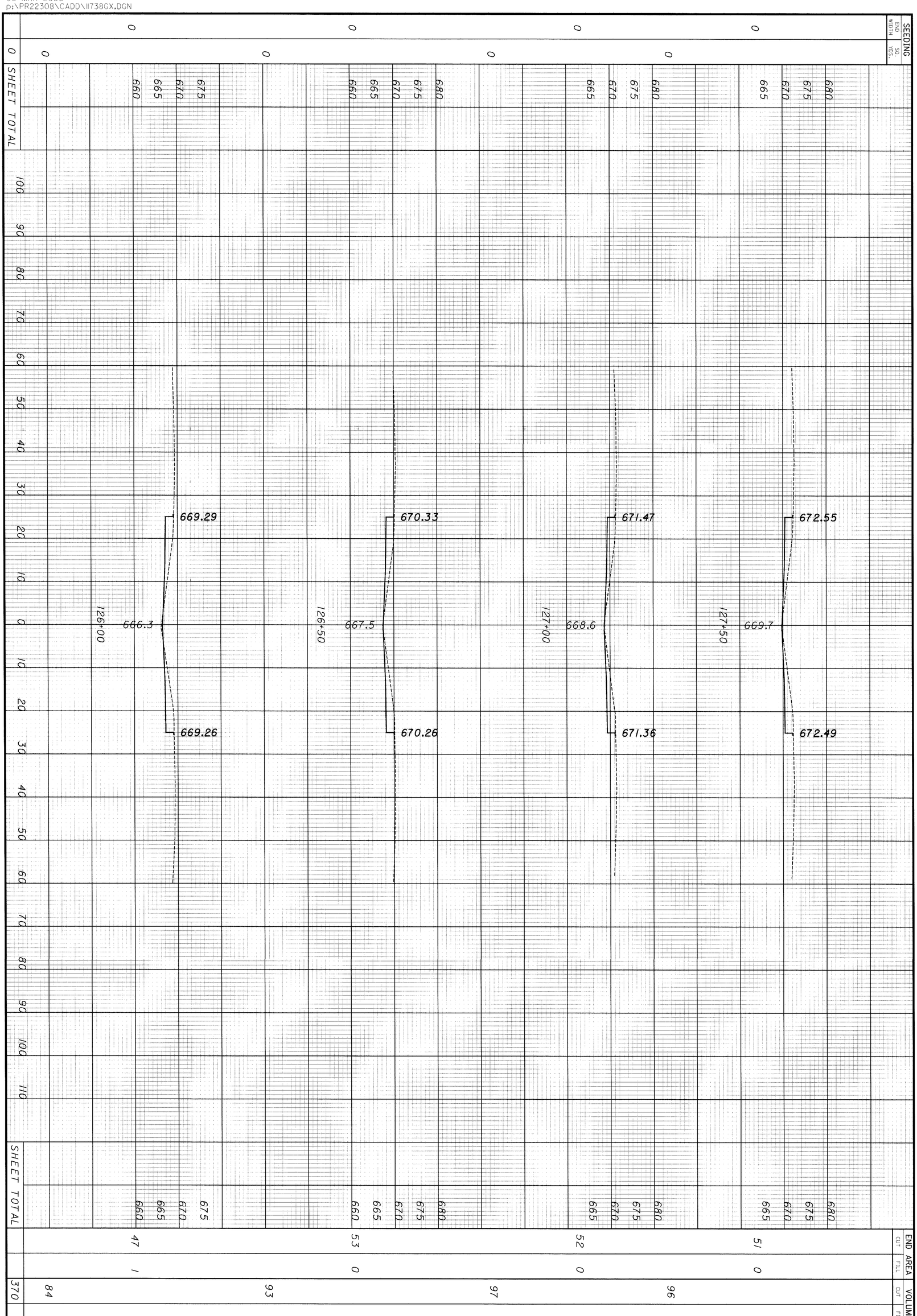

268
582

CUY-90-0.00

CROSS SECTIONS
STA 126+00 TO STA 127+50

CALCULATED MH
CHECKED RAS

SEEDING	
END WIDTH	SQ. YDS.
0	0
0	0
0	0
0	0
0	0
0	0
0	0
SHEET TOTAL	0

END AREA		VOLUME	
CUT	FILL	CUT	FILL
73	0		
		125	0
62	0		
		110	0
56	0		
		104	0
57	0		
		100	0
SHEET TOTAL		339	0

CALCULATED MH
CHECKED RAS

CROSS SECTIONS
STA 128+00 TO STA 129+50

CUY-90-0.00

269
582

06 MAR 2000
p:\PR22308\CADD\1738GX.DGN

SEEDING END WIDTH	SEEDING SQ. YDS.	END AREA CUT	END AREA FILL	VOLUME CUT	VOLUME FILL
0	0	88	0	32	0
0		88	0	97	
0		78	0		
0	0			70	0
0		78	0		
0	0			137	0
0		71	0		
0	0			132	0
0		72	0		
0	0			134	0
0	SHEET TOTAL			602	0

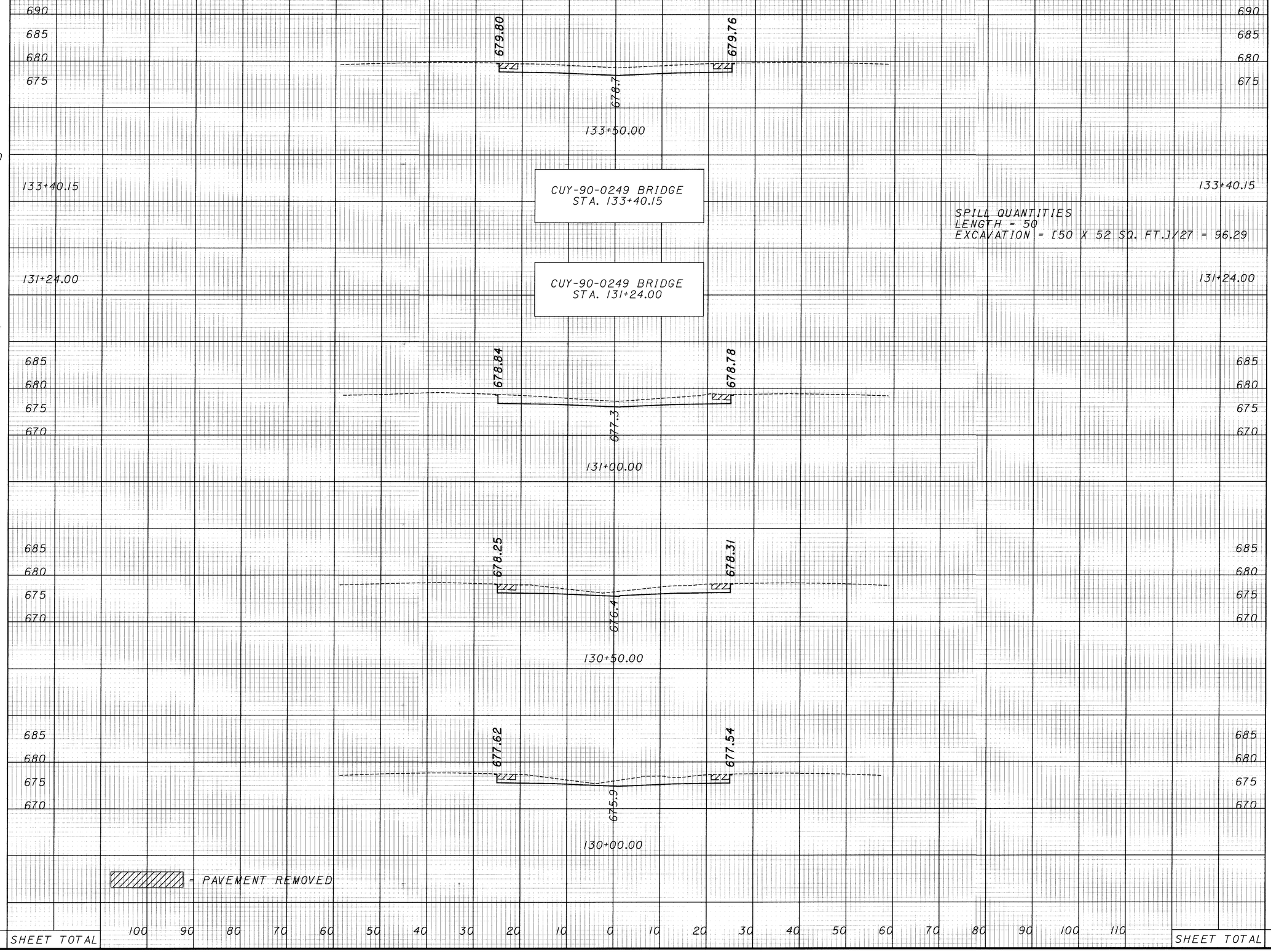

CALCULATED M H
CHECKED R A S

CROSS SECTIONS
STA 130+00 TO STA 133+50

CUY-90-0.00

270
582

06 MAR 2000
p:\PR22308\CADD\I738GX.DGN

SEEDING END WIDTH	SEEDING SQ. YDS.	END AREA CUT	END AREA FILL	VOLUME CUT	VOLUME FILL
0	0	59	0	122	0
0	0	73	0	139	0
0	0	77	0	142	0
0	0	77	0	152	0
	0			555	0

CALCULATED MH
CHECKED RAS

CROSS SECTIONS
STA 134+00 TO STA 135+50

CUY-90-0.00

271
582

06 MAR 2000
p:\PR22308\CADD\1738GX.DGN

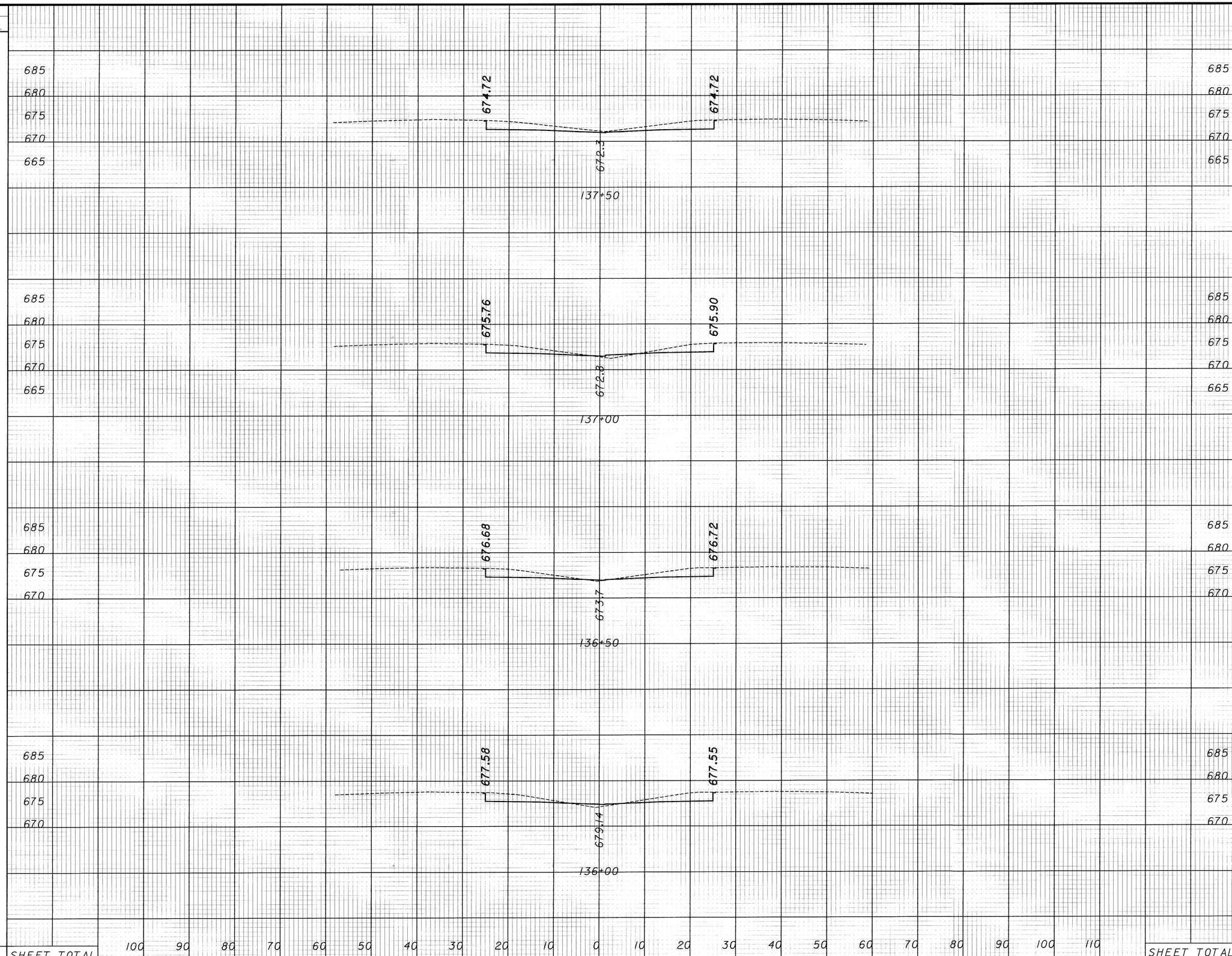

SEEDING END WIDTH	SEEDING SQ. YDS.	END AREA CUT	END AREA FILL	VOLUME CUT	VOLUME FILL
0		56	0		
	0			93	4
0		44	4		
	0			86	4
0		49	1		
	0			87	4
0		44	4		
	0			96	4
0	SHEET TOTAL			362	16

CALCULATED MH
CHECKED RAS

CROSS SECTIONS
STA 136+00 TO STA 137+50

CUY-90-0.00

06 MAR 2000
p:\PR22308\CADD\11738GX.DGN

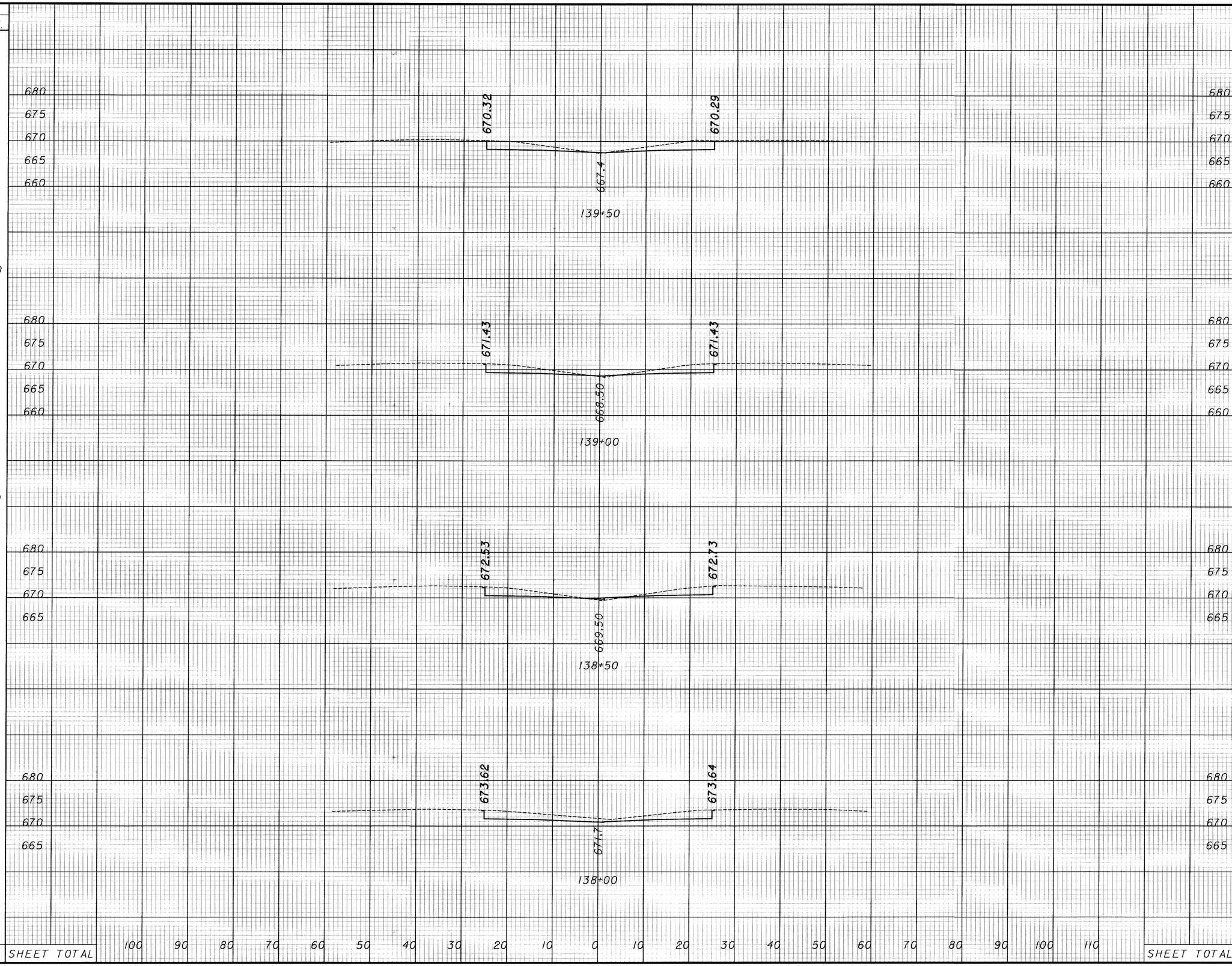

SEEDING END WIDTH	SEEDING SQ. YDS.	END AREA CUT	END AREA FILL	VOLUME CUT	VOLUME FILL
0		53	0		
	0			93	1
0		48	1		
	0			85	3
0		43	2		
	0			98	2
0		63	0		
	0			110	0
0	SHEET TOTAL		SHEET TOTAL	386	6

CALCULATED MH
CHECKED RAS

CROSS SECTIONS
STA 138+00 TO STA 139+50

CUY-90-0.00

06 MAR 2000
p:\PR22308\CADD\11738GX.DGN

SEEDING END WIDTH	SEEDING SQ. YDS.
	0
	0
	0
	0
	0
	0
SHEET TOTAL	0

675 / 670 / 665 / 660 / 655

666.16 — 663.5 — 666.16

141+50

675 / 670 / 665 / 660

667.07 — 664.5 — 667.10

141+00

675 / 670 / 665 / 660

668.11 — 665.4 — 668.16

140+50

675 / 670 / 665 / 660

669.21 — 666.3 — 669.20

140+00

100 90 80 70 60 50 40 30 20 10 0 10 20 30 40 50 60 70 80 90 100 110

END AREA CUT	END AREA FILL	VOLUME CUT	VOLUME FILL
54	0		
		100	0
54	0		
		100	0
54	0		
		97	0
51	0		
		96	0
SHEET TOTAL		393	0

CALCULATED M H
CHECKED R A S

CROSS SECTIONS
STA 140+00 TO STA 141+50

CUY-90-0.00

274
582

06 MAR 2000
P:\PR22308\CADD\11738GX.DGN

SEEDING		END AREA		VOLUME	
END WIDTH	SQ. YDS.	CUT	FILL	CUT	FILL
0	0	52	0	96	0
0	0	52	0	94	1
0	0	49	1	97	1
0	0	55	0	101	0
	0			388	2

SHEET TOTAL

CALCULATED MH
CHECKED RAS

CROSS SECTIONS
STA 142+00 TO STA 143+50

CUY-90-0.00

275
582

06 MAR 2000
p:\PR22308\CADD\1738CSX.DGN

SEEDING		END AREA		VOLUME	
END WIDTH	SQ. YDS.	CUT	FILL	CUT	FILL
0		53	0		
	0			97	0
0		52	0		
	0			95	1
0		51	0		
	0			95	1
0	0	SHEET TOTAL		287	2

CALCULATED M H
CHECKED RAS

CROSS SECTIONS
STA 144+00 TO STA 145+00

CUY-90-0.00

06 MAR 2000
p:\PR22308\CADD\VI738GX.DGN

SEEDING	
END WIDTH	SQ. YDS.
0	0
0	0
0	0
0	0
0	0
SHEET TOTAL	0

END AREA		VOLUME	
CUT	FILL	CUT	FILL
53	0		
		95	1
50	1		
		97	1
54	0		
		99	0
		291	2
SHEET TOTAL			

CALCULATED MH
CHECKED RAS

CROSS SECTIONS
STA 145+50 TO STA 146+50

CUY-90-0.00

277
582

06 MAR 2000
p:\PR22308\CADD\II738GX.DGN

SEEDING	
END WIDTH	SQ. YDS.
0	0
0	0
0	0
0	0
0	0
0	SHEET TOTAL

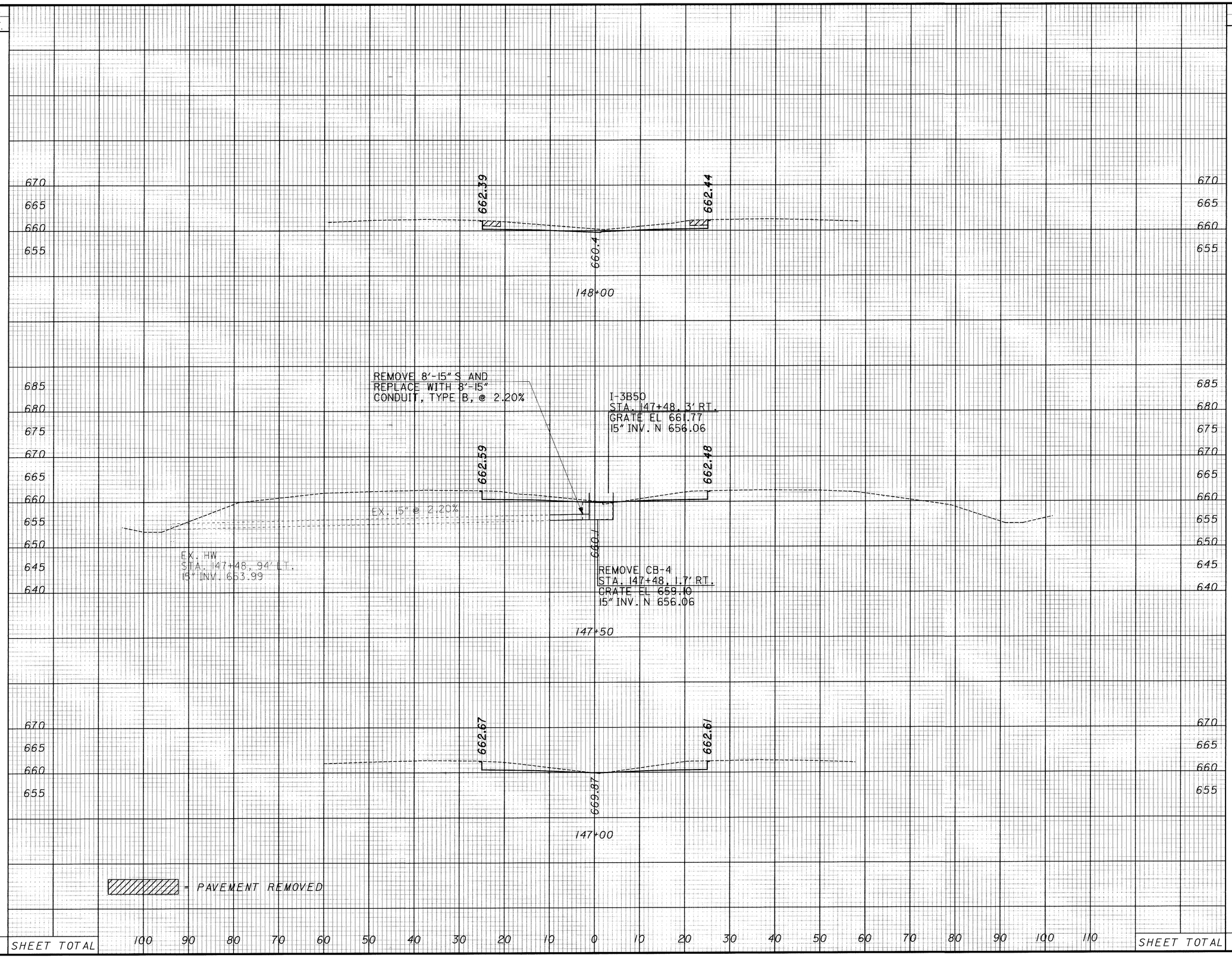

END AREA		VOLUME	
CUT	FILL	CUT	FILL
59	0		
		101	1
49	1		
		93	1
51	0		
		96	0
SHEET TOTAL		290	2

CALCULATED MH
CHECKED RAS

CROSS SECTIONS
147+00 TO STA 148+00

CUY-90-0.00

278
582

06 MAR 2000
P:\PR22308\CADD\VI738GX.DGN

SEEDING	
END WIDTH	SQ. YDS.
0	0
0	0
0	0
0	0
0	0
SHEET TOTAL	0

END AREA		VOLUME	
CUT	FILL	CUT	FILL
53	0		
		96	0
51	0		
		96	0
53	0		
		104	0
	SHEET TOTAL	296	0

CALCULATED MH
CHECKED RAS

CROSS SECTIONS
STA 148+50 TO STA 149+50

CUY-90-0.00

279
582

06 MAR 2000
p:\PR22308\CADD\VI738GX.DGN

SEEDING	
END WIDTH	SQ. YDS.
0	0
0	0
0	0
0	0
0	0
SHEET TOTAL	0

END AREA		VOLUME	
CUT	FILL	CUT	FILL
50	0	91	0
48	0	97	0
57	0	101	0
SHEET TOTAL		289	0

CALCULATED WH
CHECKED RAS

CROSS SECTIONS
STA 150+00 TO STA 151+00

CUY-90-0.00

280
582

06 MAR 2000
P:\PR22308\CADD\U738GX.DGN

SEEDING	
END WIDTH	SQ. YDS.
0	0
0	0
0	0
0	0
0	0
0	0
SHEET TOTAL	0

END AREA		VOLUME	
CUT	FILL	CUT	FILL
56	0		
		111	0
64	0		
		22	0
56	0		
		79	0
SHEET TOTAL		212	0

CALCULATED MH
CHECKED RAS

CROSS SECTIONS
STA 151+40 TO STA 152+00

CUY-90-0.00

281
582

06 MAR 2000
P:\PR22308\CADD\17386X.DGN

SEEDING END WIDTH	SEEDING SQ. YDS.	END AREA CUT	END AREA FILL	VOLUME CUT	VOLUME FILL
0	0	54	0	101	0
0	0	55	0	100	0
0	0	54	0	101	0
0	0				
SHEET TOTAL				302	0

CALCULATED M H
CHECKED R A S

CROSS SECTIONS
STA 152+50 TO STA 153+50

CUY-90-0.00

282
582

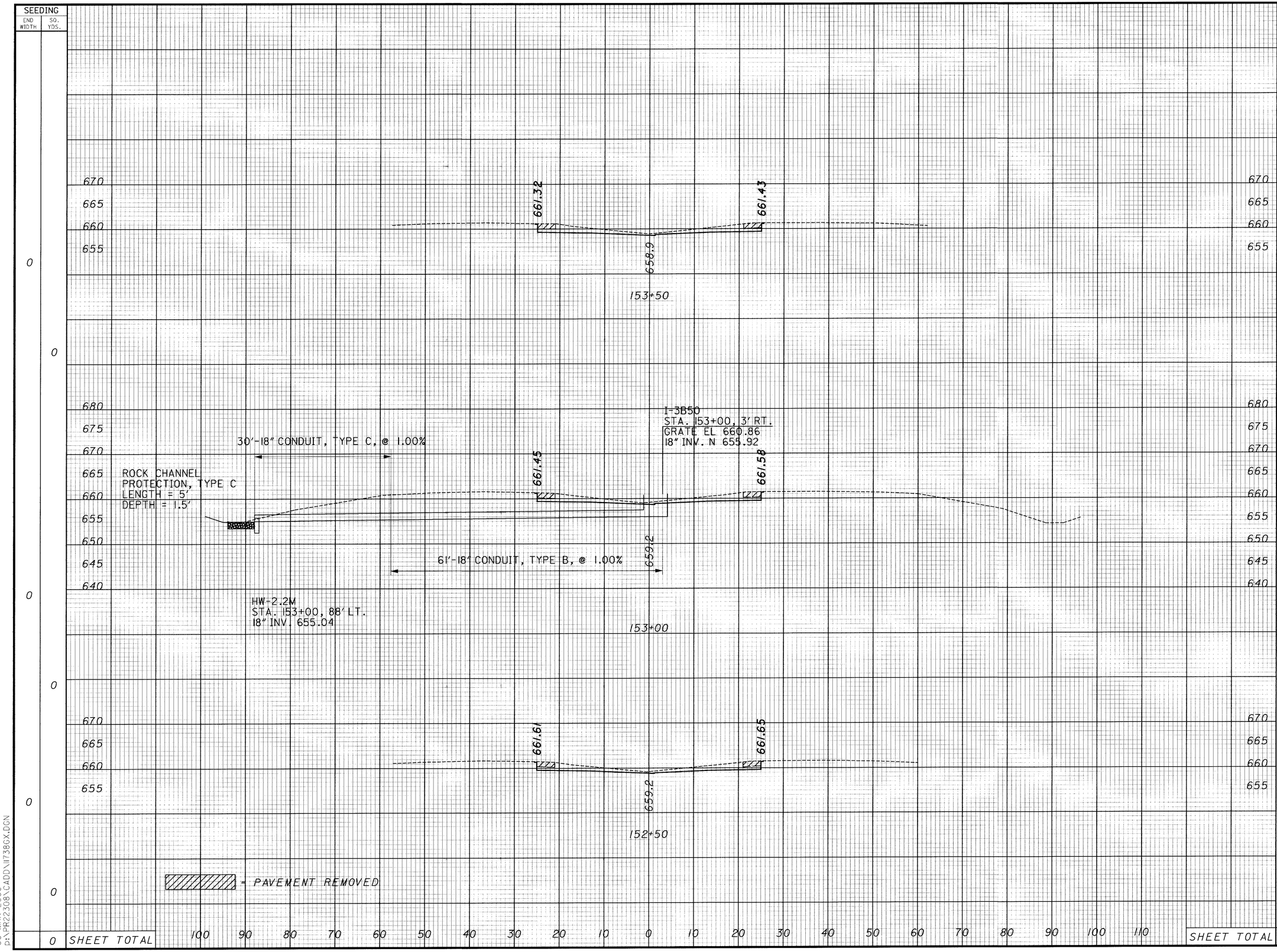

06 MAR 2000
p:\PR22308\CADD\U738GX.DGN

SEEDING	
END WIDTH	SQ. YDS.
0	0
0	0
0	0
0	0
0	0
0	0
0	0
0	SHEET TOTAL

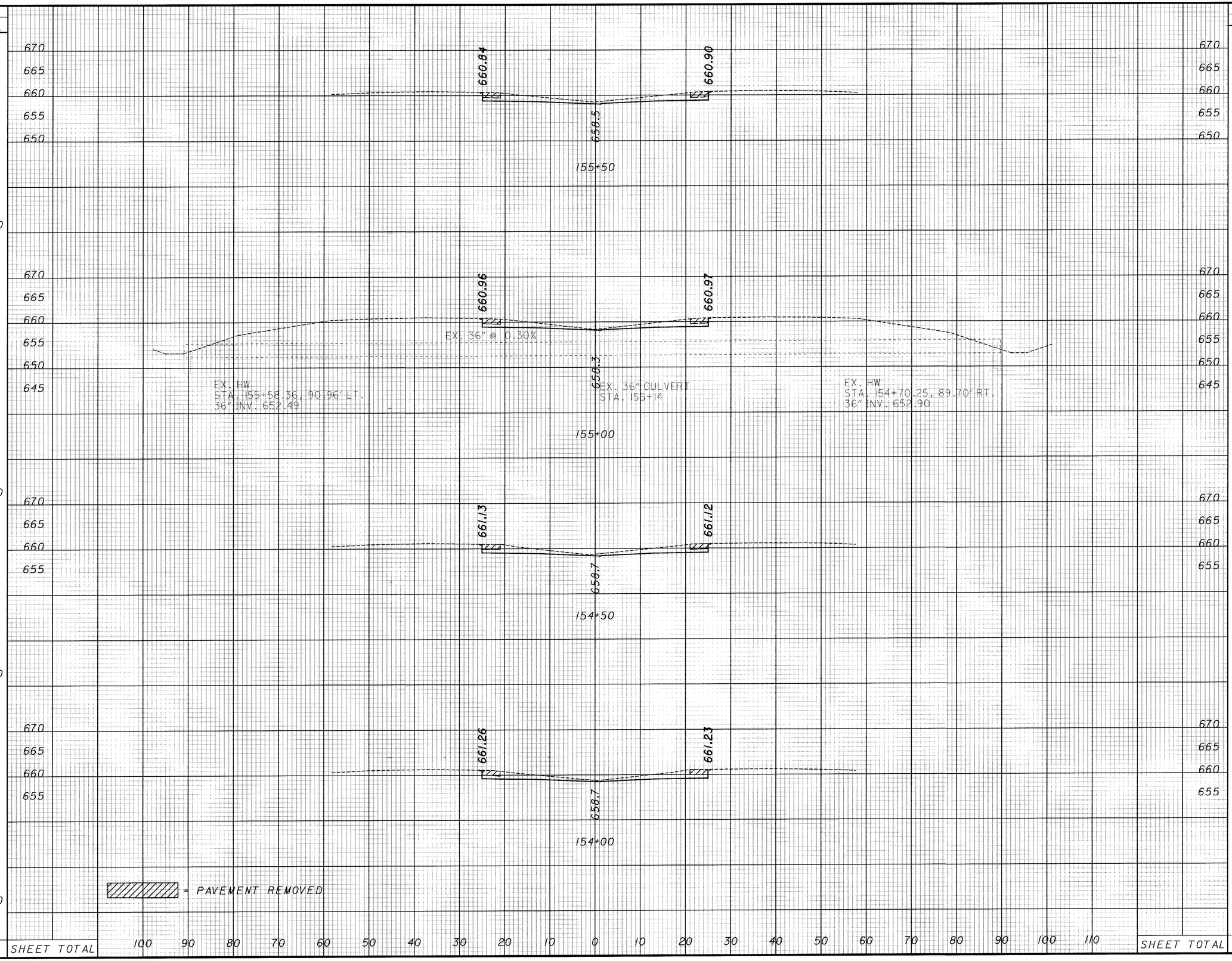

END AREA		VOLUME	
CUT	FILL	CUT	FILL
57	0		
		102	0
53	0		
		100	0
55	0		
		101	0
53	0		
		100	0
SHEET TOTAL		403	0

CALCULATED MH
CHECKED RAS

CROSS SECTIONS
STA 154+00 TO STA 155+50

CUY-90-0.00

283
582

06 MAR 2000
P:\PR22308\CADD\1738GX.DGN

SEEDING END WIDTH	SEEDING SQ. YDS.	END AREA CUT	END AREA FILL	VOLUME CUT	VOLUME FILL
22		111	6		
	24			41	2
22		111	6		
4		83			
	18			123	5
4		83	1		
0		56	0		
	0			103	0
0		56	0		
	0			105	0
	42	SHEET TOTAL		372	7

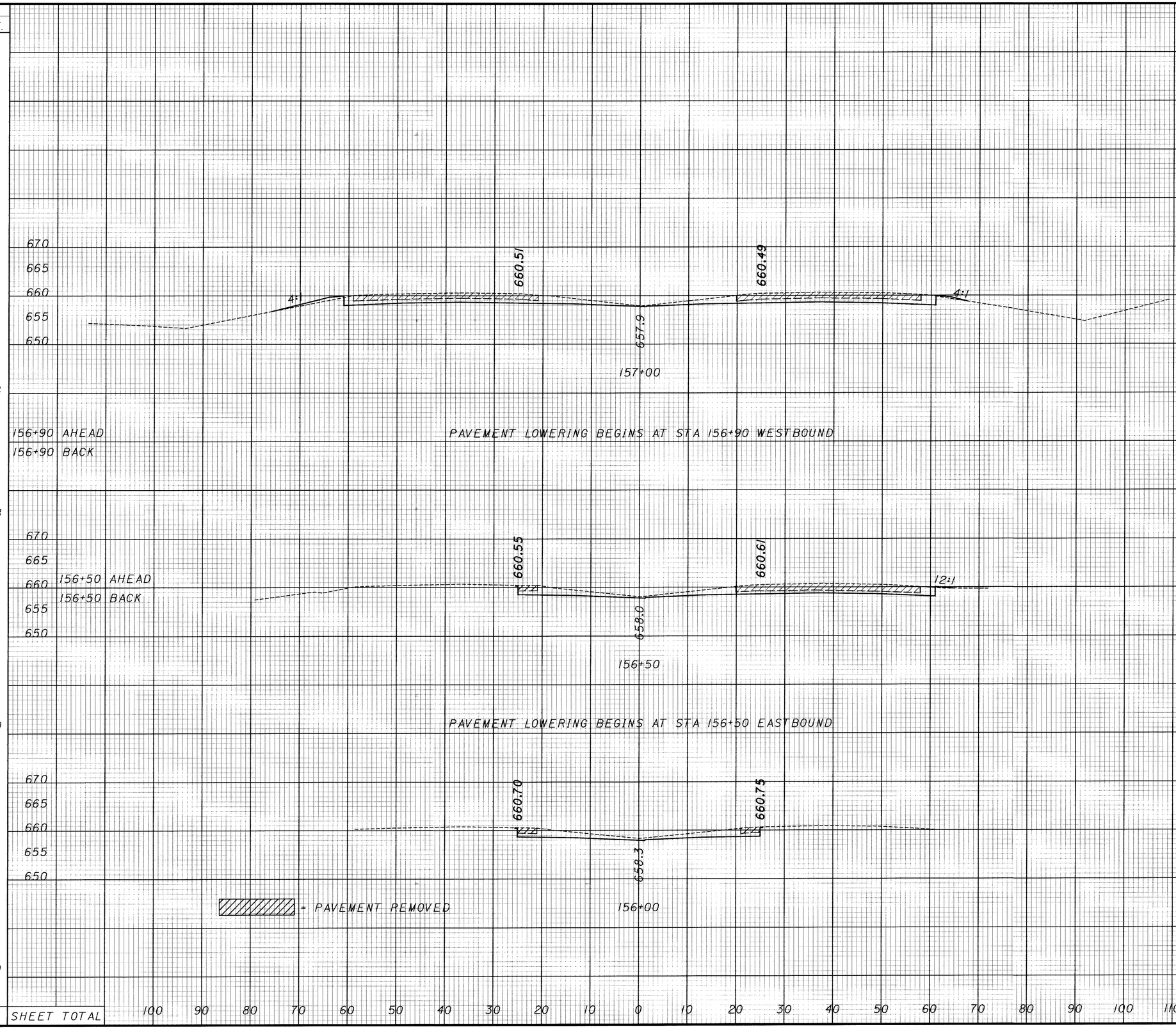

CALCULATED MH
CHECKED RAS

CROSS SECTIONS
STA 156+00 TO STA 157+00

CUY-90-0.00

284
582

06 MAR 2000
p:\PR22308\CADD\11738GX.DGN

SEEDING	
END WIDTH	SQ. YDS.
10	64
13	84
17	109
	257

END AREA		VOLUME	
CUT	FILL	CUT	FILL
177	2	318	4
165	2	263	7
118	5	213	11
		794	22

CALCULATED MH
CHECKED RAS

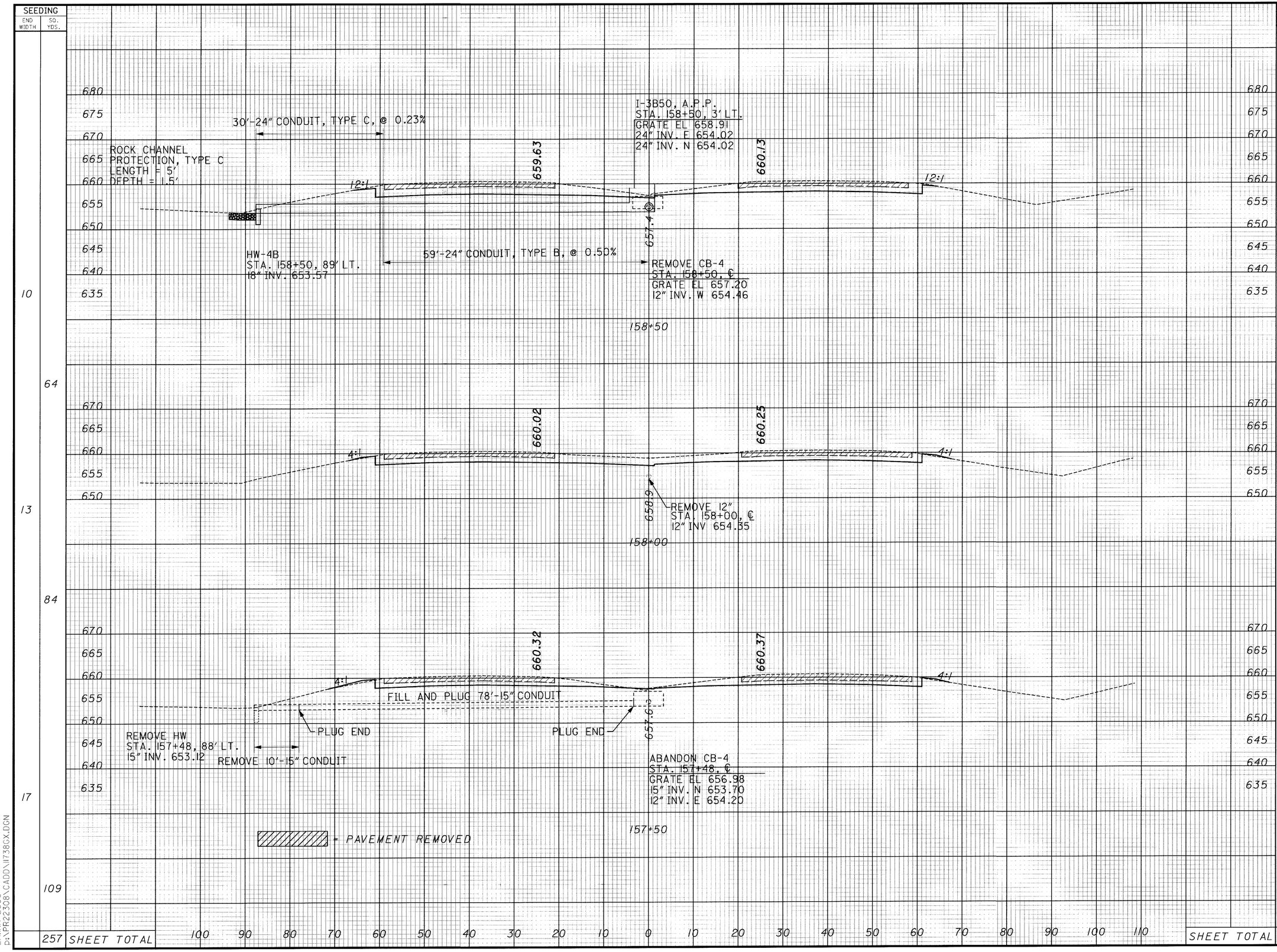

CROSS SECTIONS
STA 157+50 TO STA 158+50

CUY-90-0.00

285
582

21 MAR 2000
P:\PR22308\CADD\1738GX.DGN

SEEDING	
END WIDTH	SQ. YDS.
34	121
30	139
20	84
	344

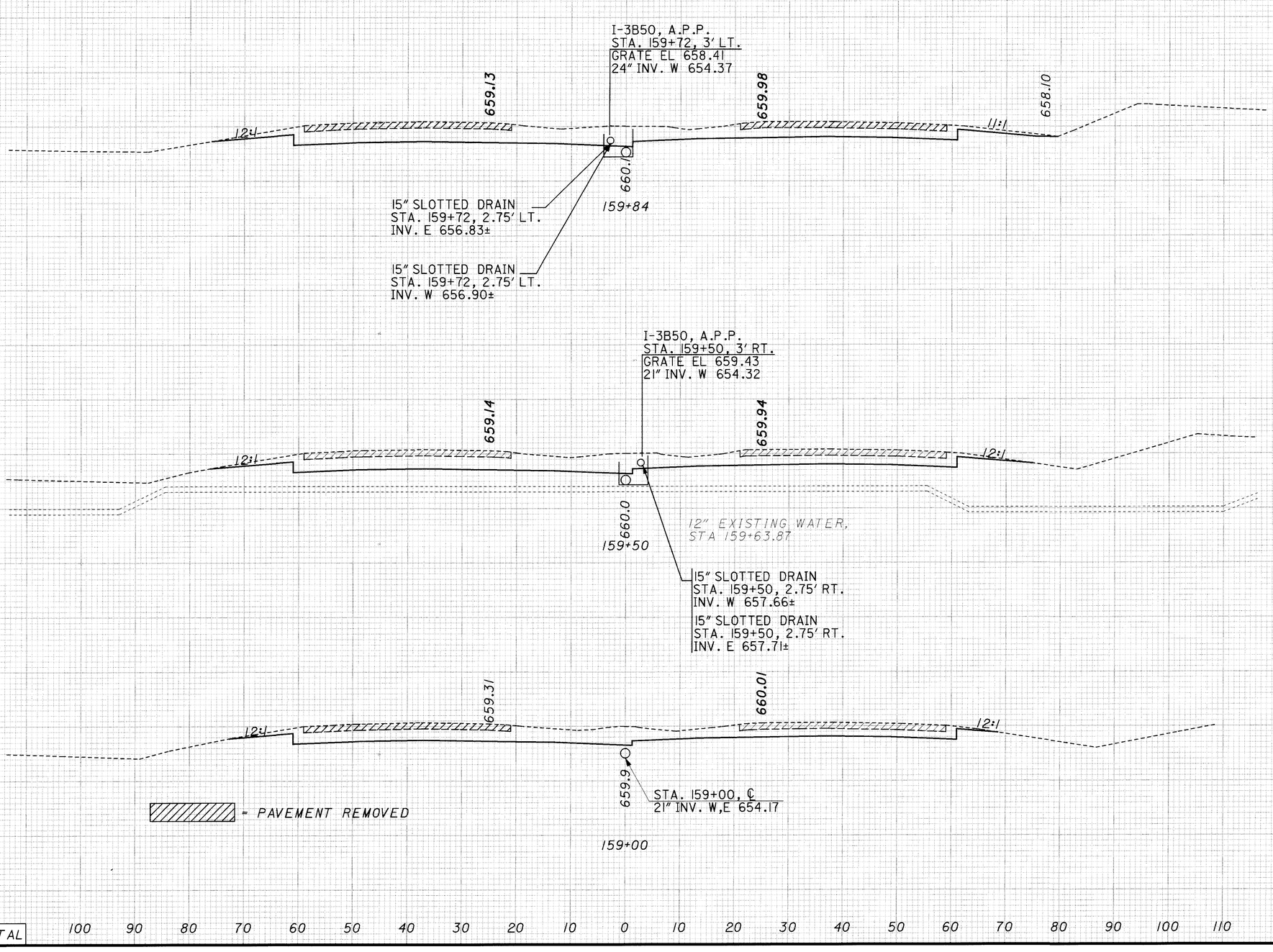

END AREA		VOLUME	
CUT	FILL	CUT	FILL
306	0		
		375	0
288	0		
		500	0
			0
250	0		
SHEET TOTAL		396	21
		1271	2

CALCULATED MH
CHECKED RAS

CROSS SECTIONS STA 159+00 TO STA 159+84

CUY-90-0.00

286
582

I:\PROJECTS\Pidll738\dgn\final plans\ll738GX.DGN 09-AUG-2000 3:48PM jgrmovse

SEEDING	
END WIDTH	SQ. YDS.
21	
	139
29	
	158
28	
	172
34	
	60
	529

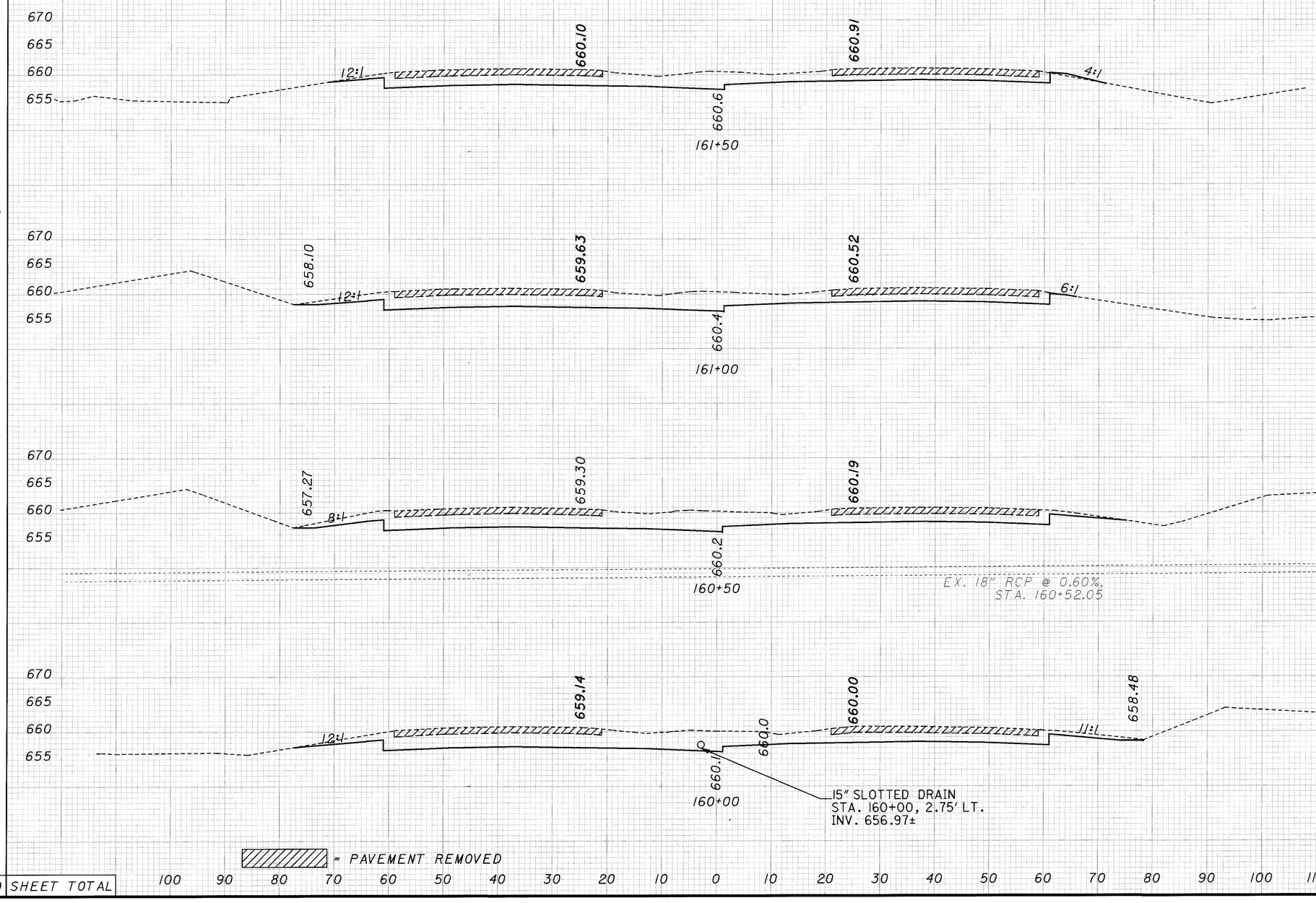

END AREA		VOLUME	
CUT	FILL	CUT	FILL
211	3		
		438	4
262	1		
		519	1
298	0		
		563	0
310	0		
		183	0
		1703	5

SHEET TOTAL

CALCULATED MH
CHECKED RAS

CROSS SECTIONS
STA 160+00 TO STA 161+50

CUY-90-0.00

287
582

I:\PROJECTS\Pidl1738\dgn\finalplans\1738GX.DGN 09-AUG-2000 3:52PM jgrmovse

SEEDING END WIDTH	SEEDING SQ. YDS.
14	75
13	63
15	
15	
	17
15	
	72
11	
	89
	316

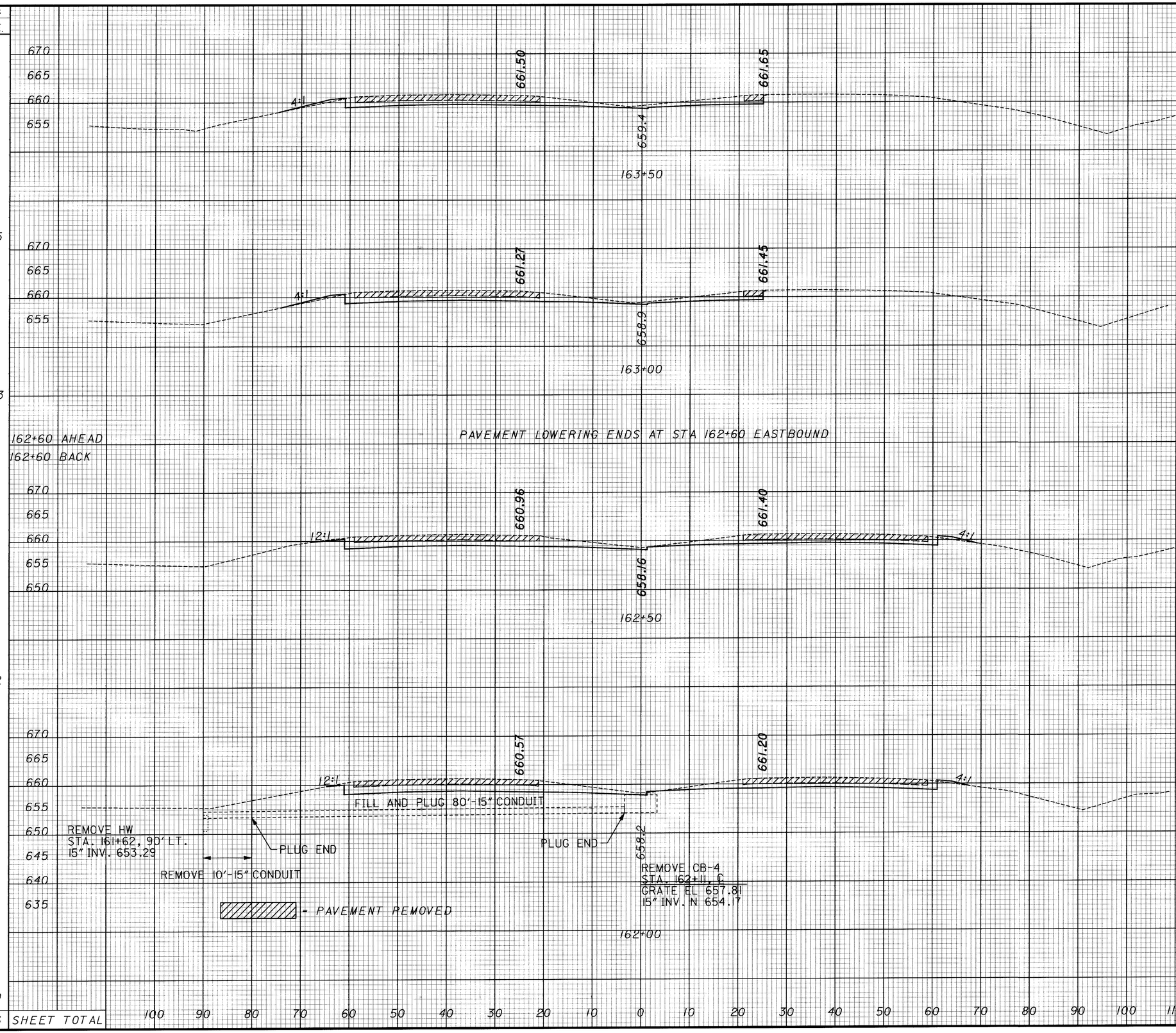

END AREA CUT	END AREA FILL	VOLUME CUT	VOLUME FILL
88	3		
		162	6
87	3		
		129	5
87	3		
121	3		
		45	1
121	3		
		240	5
138	3		
		323	5
SHEET TOTAL		899	22

CALCULATED MH
CHECKED RAS

CROSS SECTIONS STA 162+00 TO STA 163+50

CUY-90-0.00

288
582

06 MAR 2000
p:\PR22308\CADD\I738GX.DGN

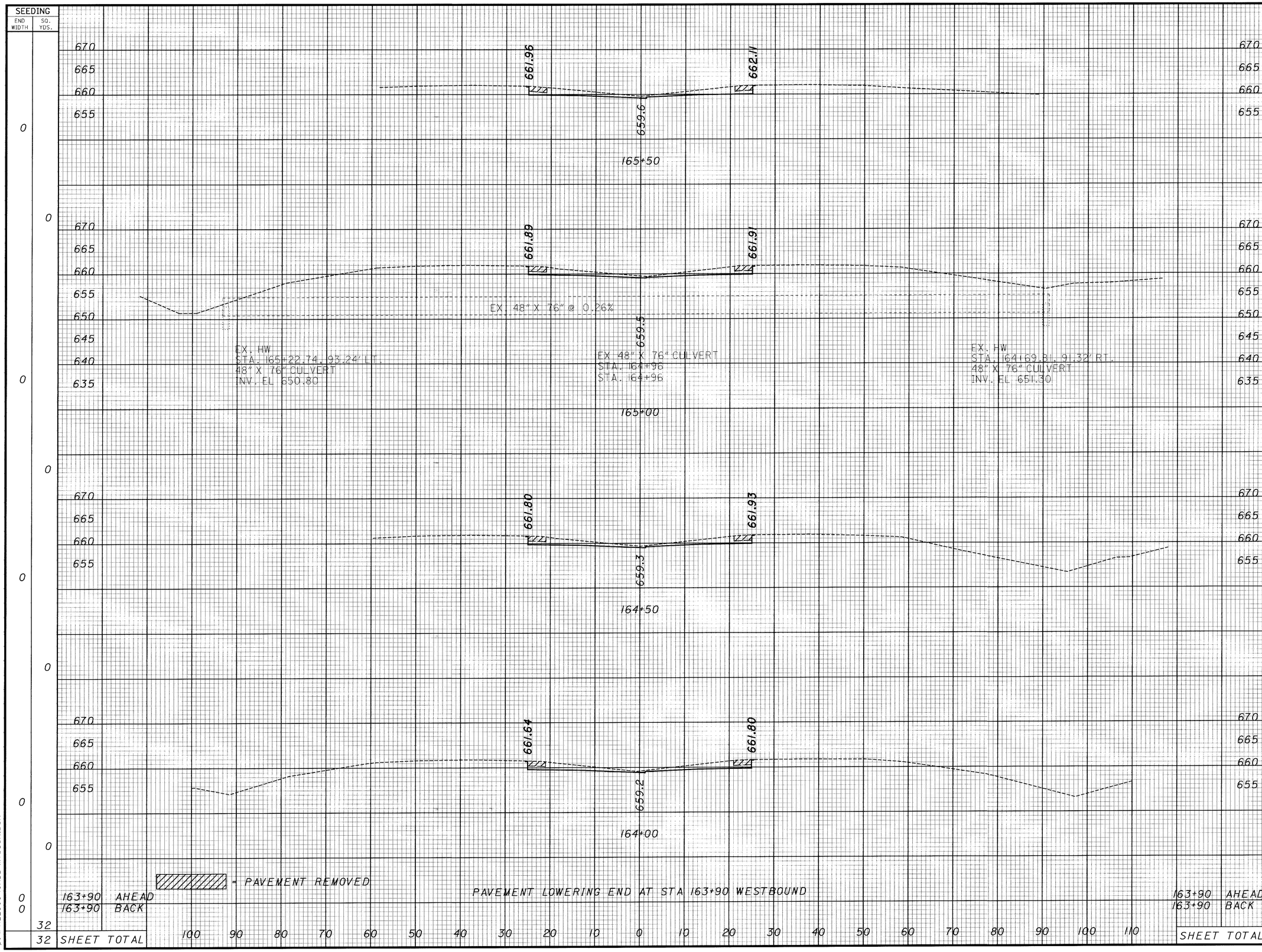

CALCULATED MH
CHECKED RAS

CROSS SECTIONS
STA 164+00 TO STA 165+50

CUY-90-0.00

06 MAR 2000
p:\PR22308\CADD\11738GX.DGN

SEEDING	
END WIDTH	SQ. YDS.
0	0
0	0
0	0
0	0
0	0
SHEET TOTAL	0

END AREA		VOLUME	
CUT	FILL	CUT	FILL
49	0	91	0
50	0	93	0
50	0	97	0
SHEET TOTAL		281	0

CALCULATED M H
CHECKED R A S

CROSS SECTIONS
STA 166+00 TO STA 167+00

CUY-90-0.00

290
582

06 MAR 2000
P:\PR22308\CADD\11738GX.DGN

SEEDING	
END WIDTH	SQ. YDS.
0	0
	0
	0
	0
	0
	0
	0
SHEET TOTAL	0

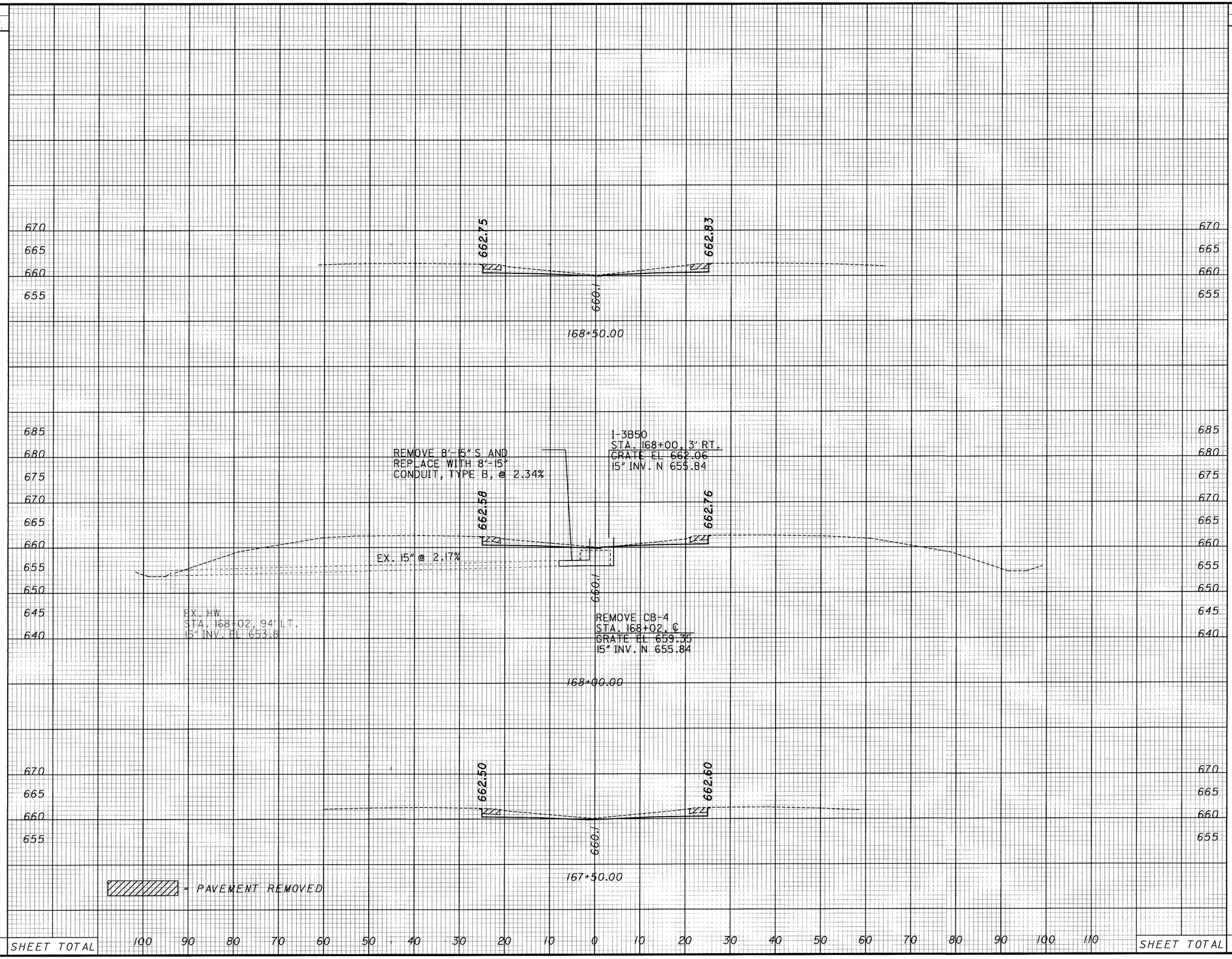

END AREA		VOLUME	
CUT	FILL	CUT	FILL
48	0		
		83	0
42	0		
		86	0
51	0		
		93	0
		262	0
SHEET TOTAL			

CALCULATED MH
CHECKED RAS

CROSS SECTIONS
STA 167+50 TO STA 168+50

CUY-90-0.00

06 MAR 2000
P:\PR22308\CADD\11738GX.DGN

SEEDING	
END WIDTH	SQ. YDS.
0	0
0	0
0	0
0	0
0	0
SHEET TOTAL	0

END AREA		VOLUME	
CUT	FILL	CUT	FILL
46	0	89	0
51	0	92	0
48	0	89	0
SHEET TOTAL		270	0

CALCULATED MH
CHECKED RAS

CROSS SECTIONS
STA 169+00 TO STA 170+00

CUY-90-0.00

292
582

06 MAR 2000
P:\PR22308\CADD\11738GX.DGN

SEEDING	
END WIDTH	SQ. YDS.
0	0
0	0
0	0
0	0
0	0
SHEET TOTAL	0

END AREA		VOLUME	
CUT	FILL	CUT	FILL
50	0	93	0
50	0	92	0
49	0	88	0
SHEET TOTAL		273	0

CALCULATED MH
CHECKED RAS

CROSS SECTIONS
STA 170+50 TO STA 171+50

CUY-90-0.00

293
582

06 MAR 2000
P:\PR22308\CADD\1738GX.DGN

SEEDING END WIDTH	SEEDING SQ. YDS.	END AREA CUT	END AREA FILL	VOLUME CUT	VOLUME FILL
0	0	53	0	99	0
0	0	53	0	97	0
0	0	51	0	97	0
0	0	54	0	97	0
SHEET TOTAL	0			390	0

CALCULATED WH
CHECKED RAS

CROSS SECTIONS
STA 172+00 TO STA 173+50

CUY-90-0.00

294
582

06 MAR 2000
P:\PR22308\CADD\U1738GX.DGN

21 MAR 2000
P:\PR22308\CADD\II738GX.DGN

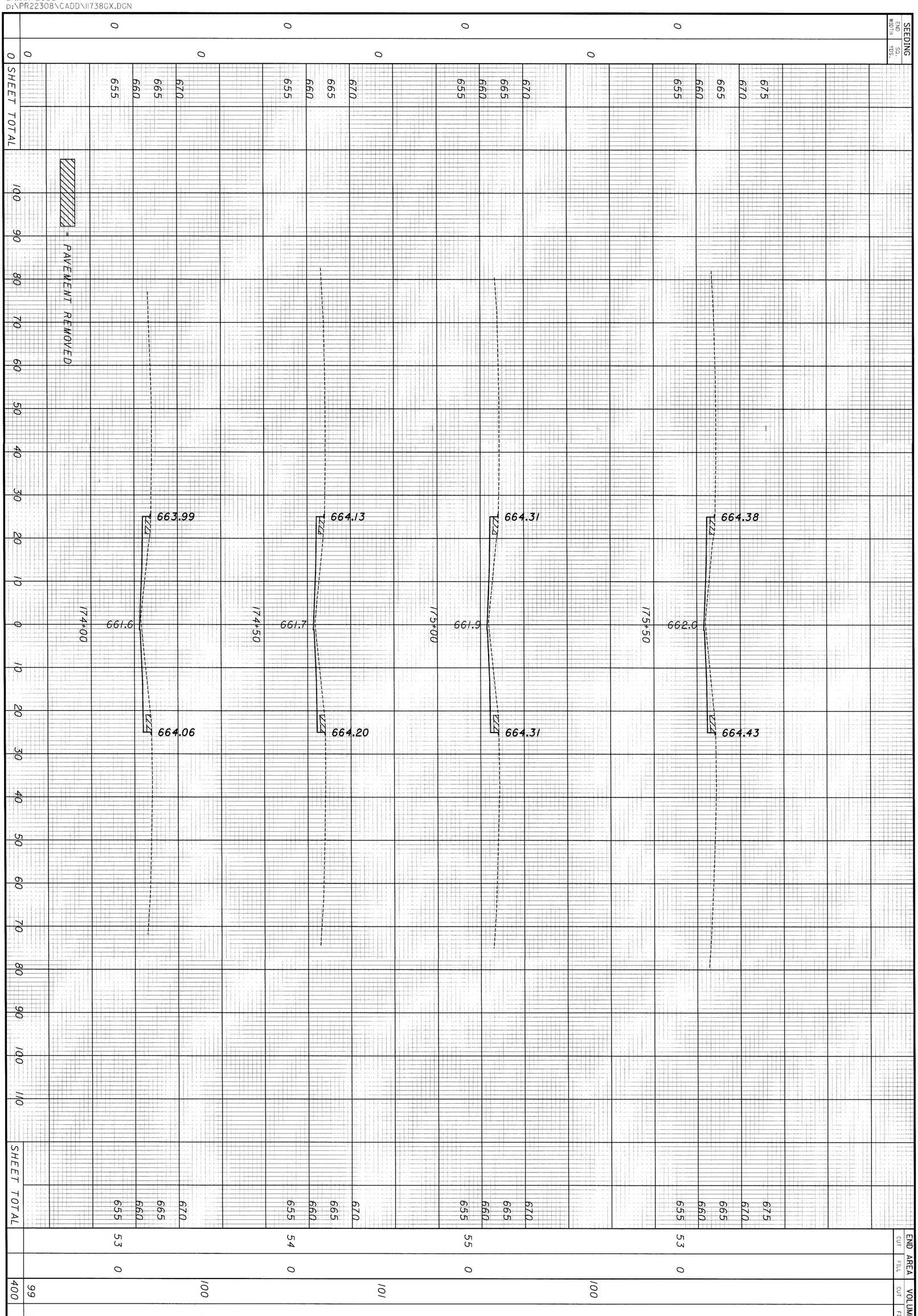

295
582

CUY-90-0.00

CROSS SECTIONS
STA 174+00 TO STA 175+50

CALCULATED MH
CHECKED RAS

SEEDING		END AREA		VOLUME		CALCULATED	CHECKED
END WIDTH	SQ. YDS.	CUT	FILL	CUT	FILL	M H	R A S
0	0	62	0	116	0		
0	0	63	0	117	0		
0	0	63	0	105	0		
0	0	50	0	95	0		
	0			433	0		

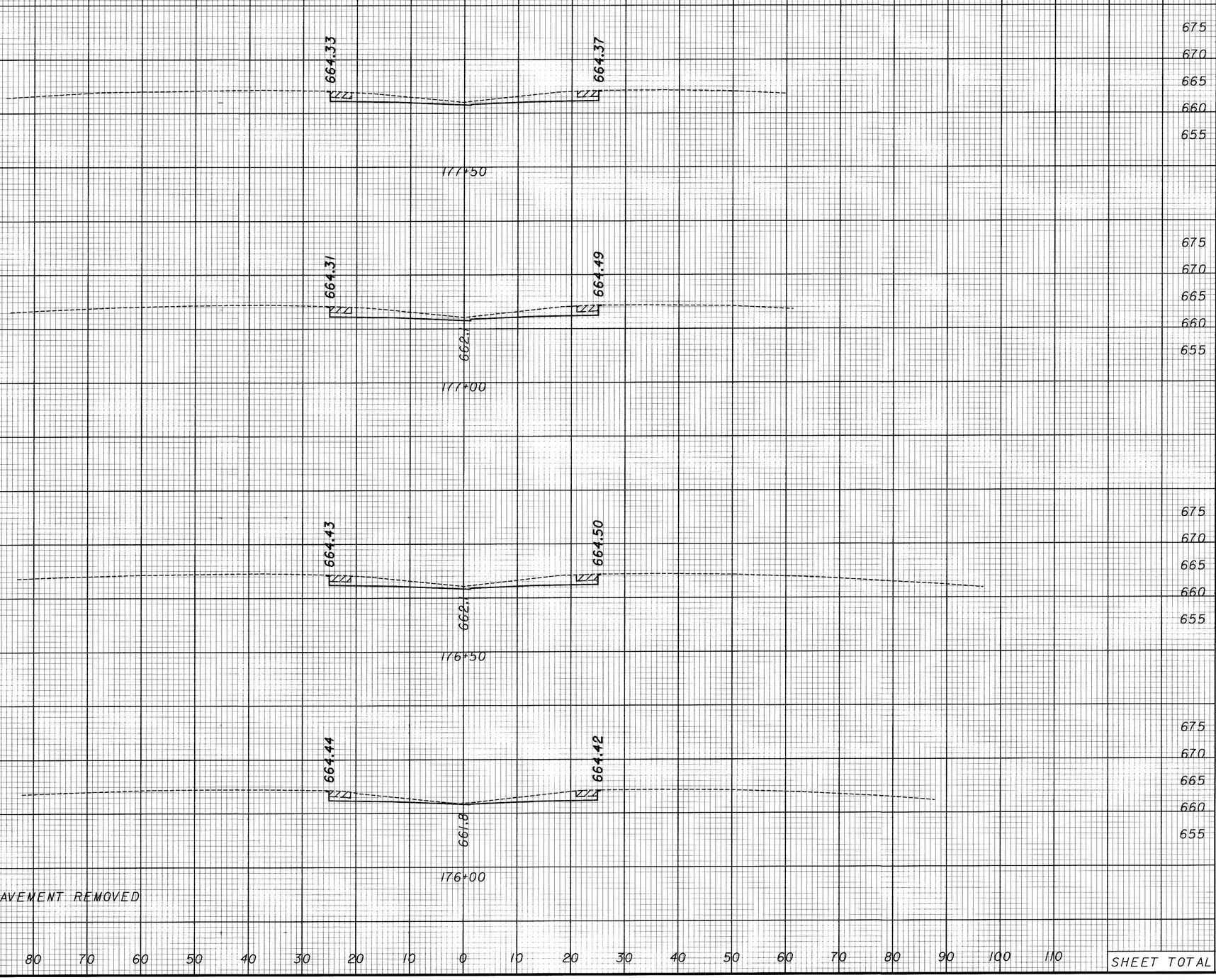

CROSS SECTIONS
STA 176+00 TO STA 177+50

CUY-90-0.00

296
582

06 MAR 2000
P:\PR22308\CADD\11738GX.DGN

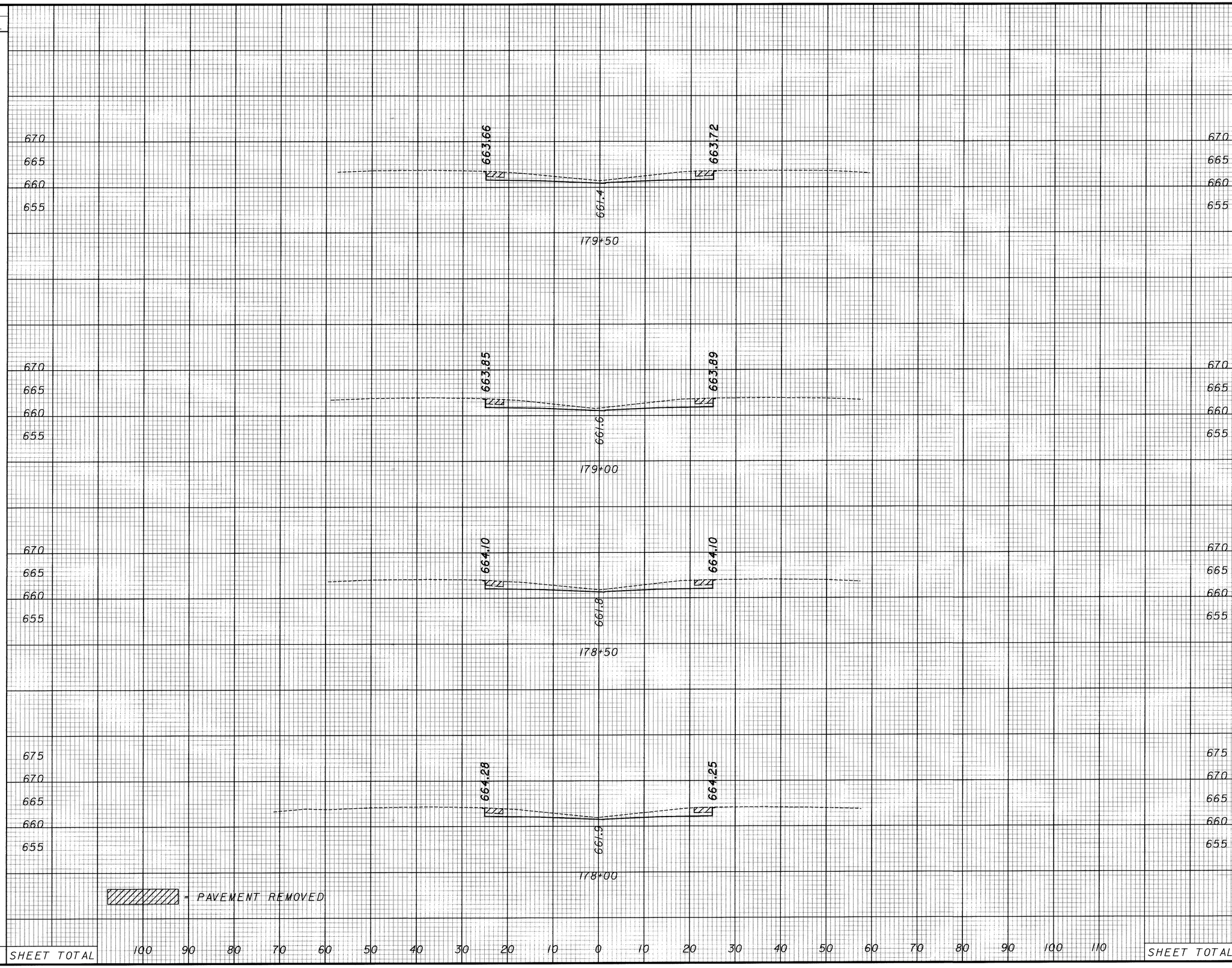

END AREA CUT	END AREA FILL	VOLUME CUT	VOLUME FILL
64	0		
		118	0
63	0		
		117	0
63	0		
		114	0
61	0		
		114	0
SHEET TOTAL		463	0

CALCULATED MH
CHECKED RAS

CROSS SECTIONS
STA 178+00 TO STA 179+50

CUY-90-0.00

06 MAR 2000
p:\PR22308\CADD\11738GX.DGN

SEEDING		END AREA		VOLUME	
END WIDTH	SQ. YDS.	CUT	FILL	CUT	FILL
0	0	57	0	108	0
0	0	61	0	113	0
0	0	61	0	115	0
0	0	63	0	118	0
0	0	SHEET TOTAL		454	0

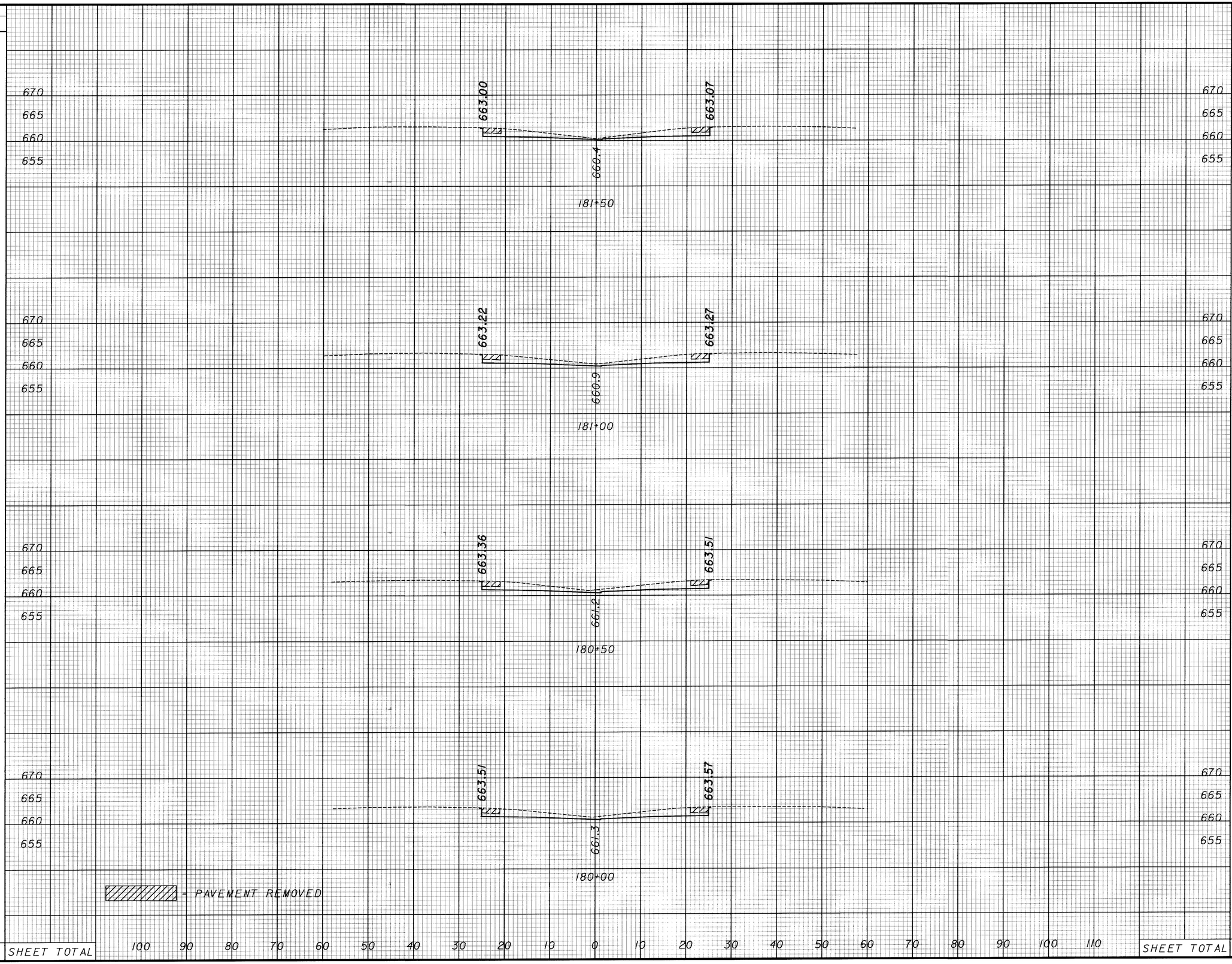

CALCULATED MH
CHECKED RAS

CROSS SECTIONS STA 180+00 TO STA 181+50

CUY-90-0.00

298
582

06 MAR 2000
D:\PR22308\CADD\1738GX.DGN

SEEDING		END AREA		VOLUME	
END WIDTH	SQ. YDS.	CUT	FILL	CUT	FILL
0	0	51	0	97	0
0	0	53	0	105	0
0	0	60	0	108	0
0	0	SHEET TOTAL		310	0

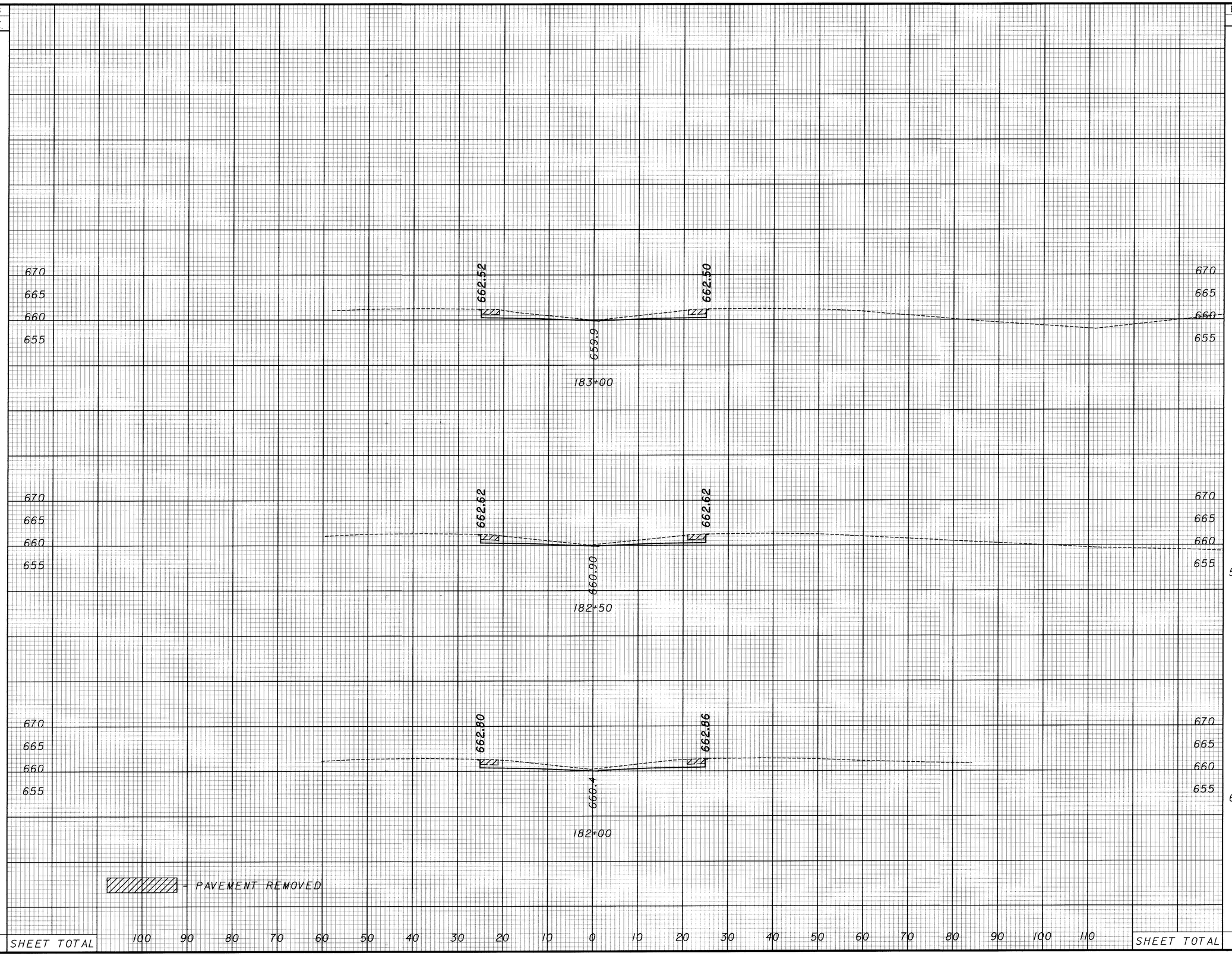

CALCULATED MH
CHECKED RAS

CROSS SECTIONS
182+00 TO STA 183+00

CUY-90-0.00

299
582

06 MAR 2000
P:\PR22308\CADD\11738GX.DGN

SEEDING END WIDTH	SEEDING SQ. YDS.		END AREA CUT	END AREA FILL	VOLUME CUT	VOLUME FILL
24		185+00 AHEAD	117	3		
18		185+00 BACK	81	0		
	30				46	0
18		184+85 AHEAD	31	0		
0		184+85 BACK	50	0		
	0				65	0
0		184+50	50	0		
	0				94	0
0		184+00	51	0		
	0				92	0
0		183+50	48	0		
	0				92	0
	30	SHEET TOTAL			389	0

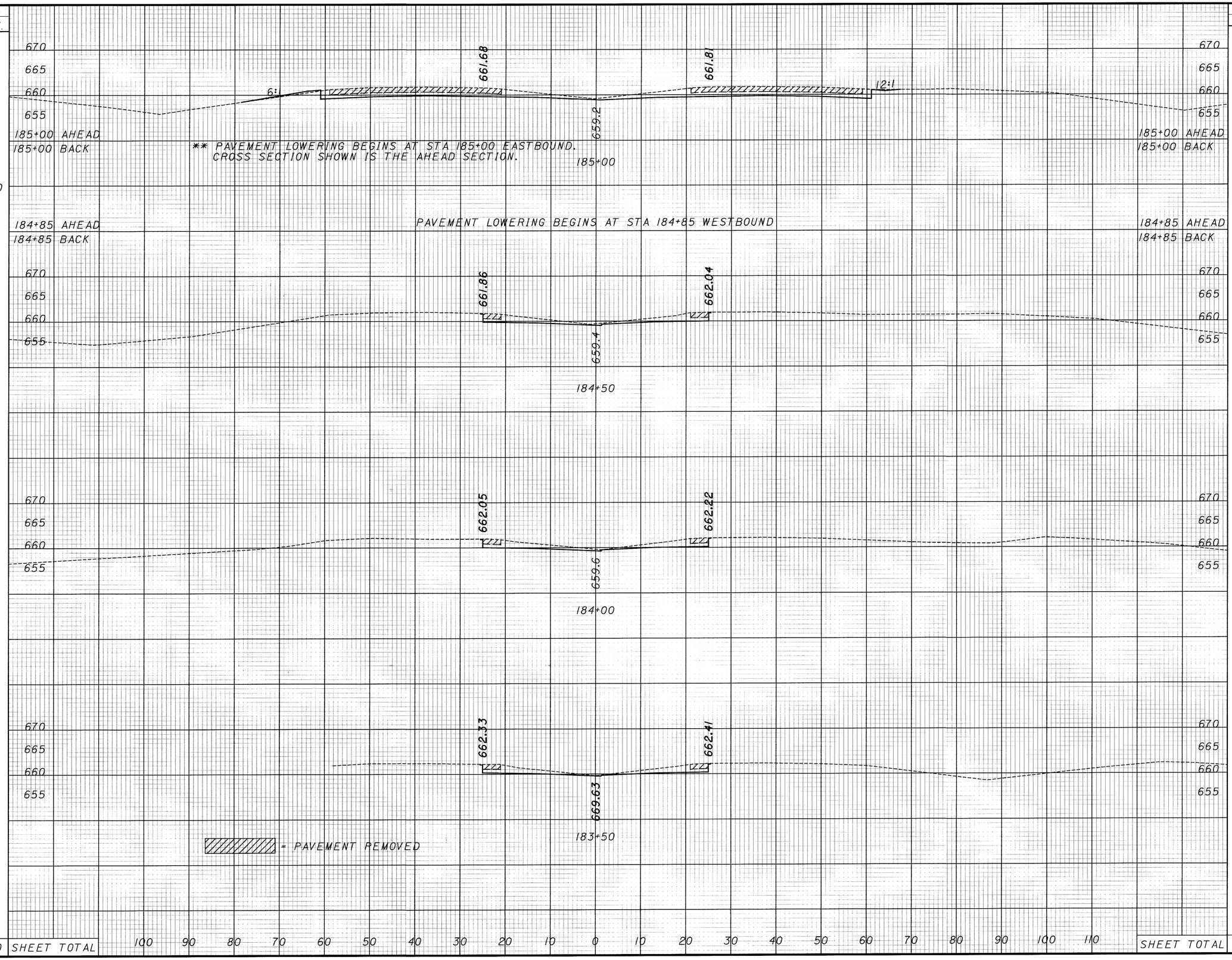

CALCULATED MH
CHECKED RAS

CROSS SECTIONS
STA 183+50 TO STA 185+00

CUY-90-0.00

300
582

21 MAR 2000
P:\PR22308\CADD\11738GX.DGN

SEEDING	
END WIDTH	SQ. YDS.
17	
	61
5	
	56
15	
	108
	225

I-3B50, A.P.P.
STA. 186+75, 3' LT.
GRATE EL 659.75
18" INV. N 655.00

86'-18" CONDUIT, TYPE C, @ 0.65%

61'-18" CONDUIT, TYPE B, @ 0.65%

SEE RAMP G STA 86+50

SEE RAMP K STA 86+00

SEE RAMP K STA 85+50

4:1

6:1

12:1

660.73

660.97

658.4

186+50

661.32

658.7

186+00

661.44

661.60

659.0

185+50

= PAVEMENT REMOVED

690 685 680 675 670 665 660 655 650 645

670 665 660 655 650

670 665 660 655 650

100 90 80 70 60 50 40 30 20 10 0 10 20 30 40 50 60 70 80 90 100 110

END AREA		VOLUME	
CUT	FILL	CUT	FILL
203	0		
		305	0
126	0		
		222	5
114	2		
		214	6
SHEET TOTAL		741	11

CALCULATED MH
CHECKED RAS

CROSS SECTIONS
STA 185+50 TO STA 186+50

CUY-90-0.00

301
582

06 MAR 2000
D:\PR22308\CADD\11738CX.DGN

SEEDING	
END WIDTH	SQ. YDS.
7	81
	22
	103
	15
	89
	273

END AREA		VOLUME	
CUT	FILL	CUT	FILL
377	0		
		651	0
325	0		
		578	0
255	0		
		425	0
		1613	0

CALCULATED MH
CHECKED RAS

CROSS SECTIONS
STA 187+00 TO STA 188+00

CUY-90-0.00

302
582

SEE RAMP G STA 88+00
659.23
659.53
660.3
188+00
EX. 30" PIPE
STA 188+00, 115.80' RT.
30" INV. W.E 654.80

SEE RAMP G STA 87+50
658.88
659.71
660.05
658.12
4:1
12:1
660.7
187+50
12" EXISTING WATER,
STA 187+71.52
EX. 30" PIPE
STA 187+42, 115.24' RT.
30" INV. E 655.15

SEE RAMP G STA 87+00
658.77
660.25
660.54
4:1
FILL AND PLUG 70'-15" CONDUIT
PLUG END
659.6
REMOVE CB-4
STA. 186+59, ℄
GRATE EL 657.86
15" INV. N 654.06
187+00

= PAVEMENT REMOVED

670
665
660
655
650
645
640
635

100 90 80 70 60 50 40 30 20 10 0 10 20 30 40 50 60 70 80 90 100 110

SHEET TOTAL

21 MAR 2000
P:\PR22308\CADD\11738GX.DGN

SEEDING	
END WIDTH	SQ. YDS.
21	
103	
35	
139	
15	
62	
304	SHEET TOTAL

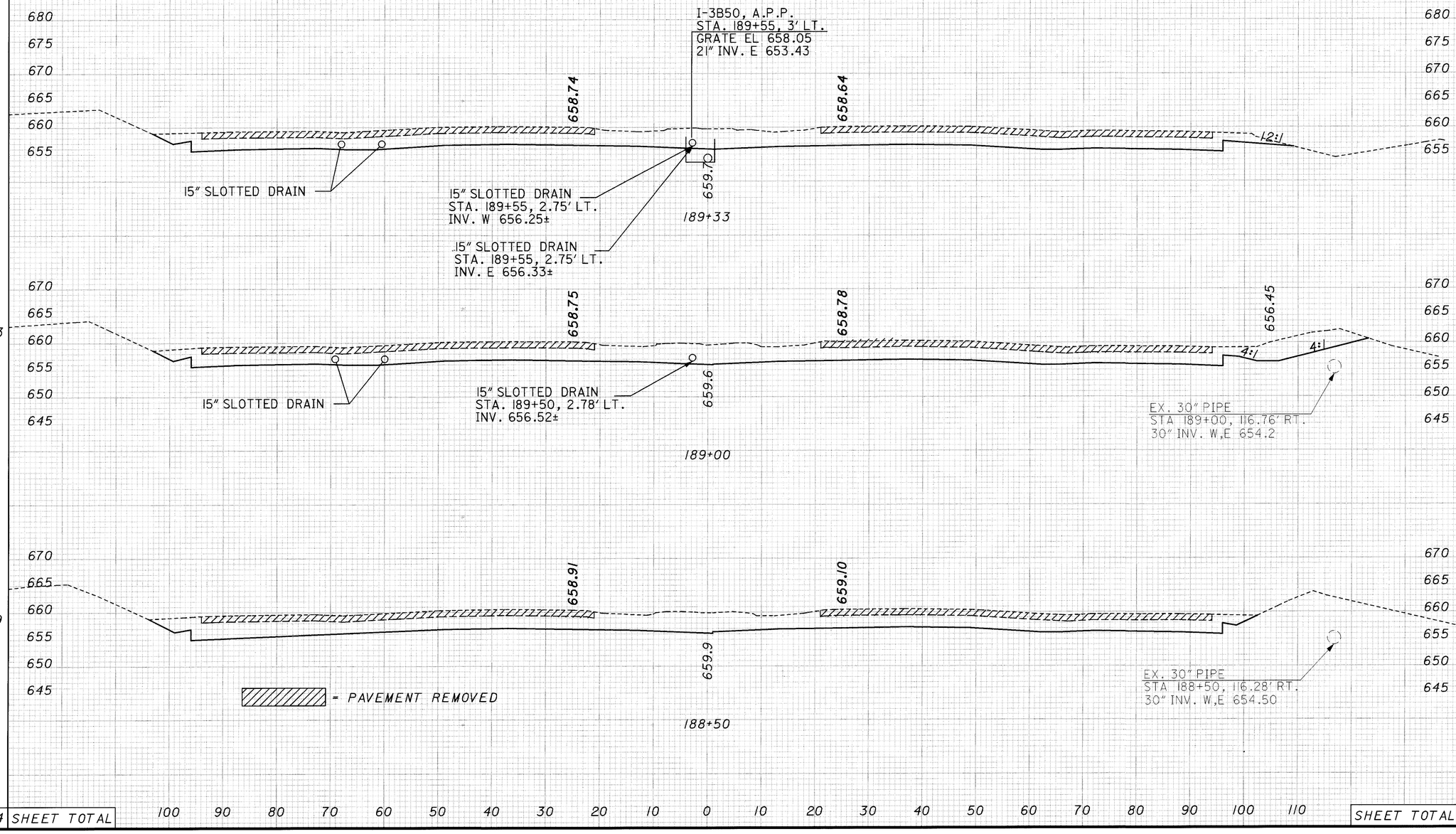

END AREA		VOLUME	
CUT	FILL	CUT	FILL
502	0		
		655	0
569	0		
		1005	0
515	0		
		827	0
		2483	0

100 90 80 70 60 50 40 30 20 10 0 10 20 30 40 50 60 70 80 90 100 110

SHEET TOTAL

CALCULATED MH
CHECKED RAS

CROSS SECTIONS
STA 188+50 TO STA 189+33

CUY-90-0.00

303
582

I:\PROJECTS\Pjdll738\dgn\final plans\ll738GX.DGN 09-AUG-2000 3:55PM jgrmovse

SEEDING	
END WIDTH	SQ. YDS.
50	237
21	
40	
SHEET TOTAL	

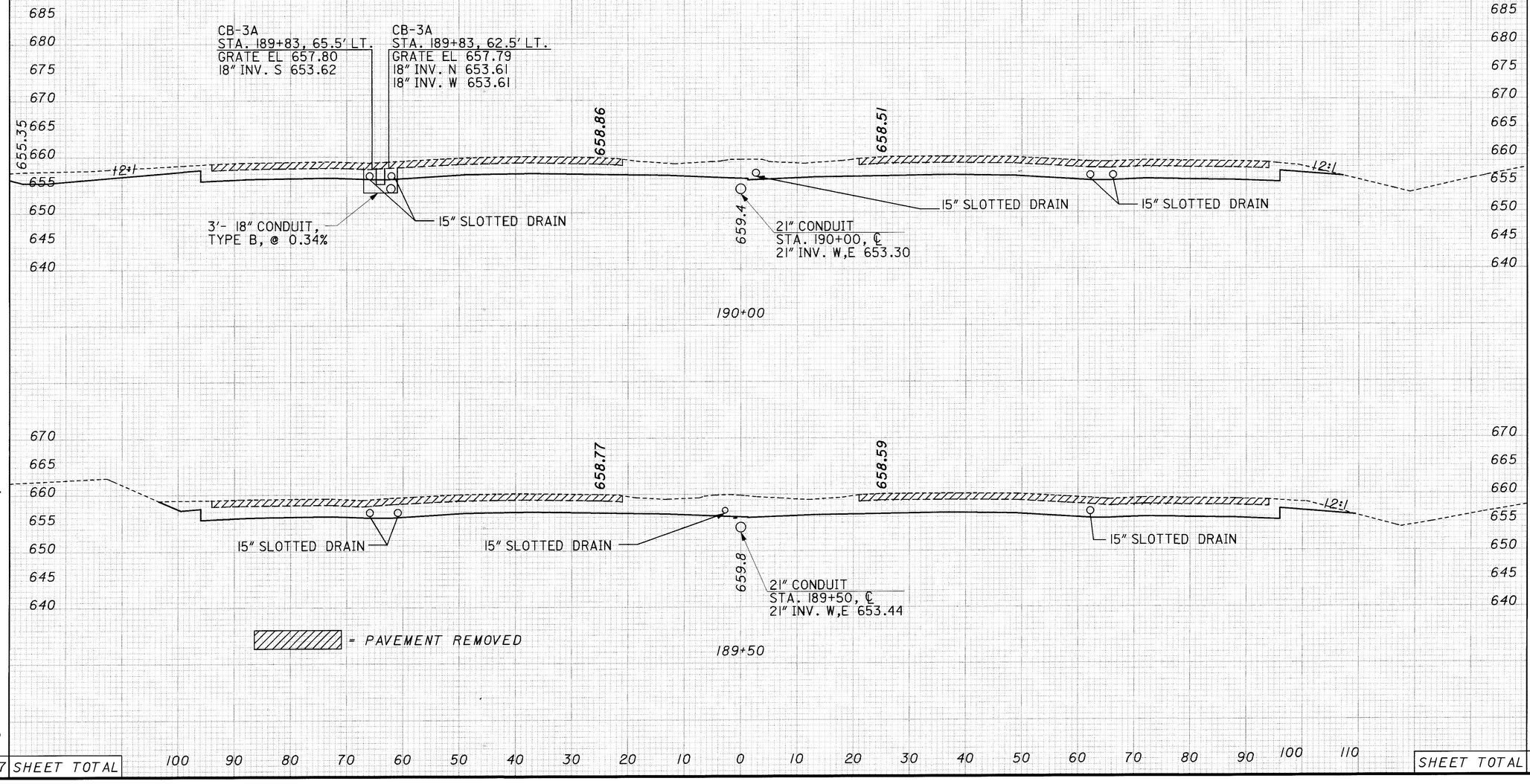

END AREA		VOLUME	
CUT	FILL	CUT	FILL
489	0		
		909	0
493	0		
		313	0
		1222	0
SHEET TOTAL			

CALCULATED MH
CHECKED RAS

CROSS SECTIONS
STA 189+50 TO STA 190+00

CUY-90-0.00

304
582

I:\PROJECTS\Pidl\738\dgn\final plans\II738GX.DGN 09-AUG-2000 3:56PM jgrmovse

SEEDING	
END WIDTH	SQ. YDS.
48	
259	
53	
23	
282	SHEET TOTAL

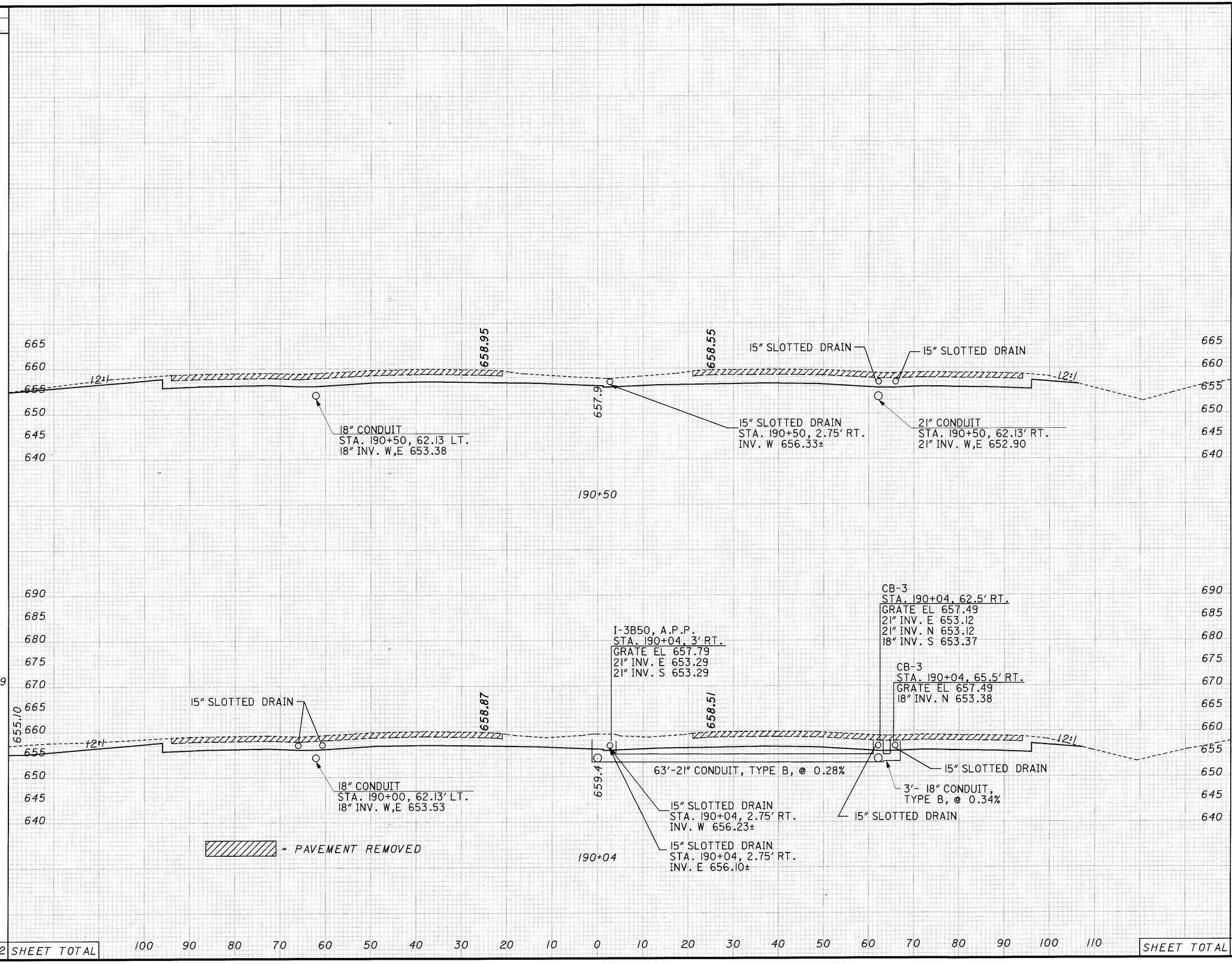

END AREA		VOLUME	
CUT	FILL	CUT	FILL
392	0		
		753	0
491	0		
		73	0
SHEET TOTAL		826	0

CALCULATED MH
CHECKED RAS

CROSS SECTIONS
STA 190+04 TO STA 190+50

CUY-90-0.00

305
582

$DATE$
$FILE$

SEEDING	
END WIDTH	SQ. YDS.
36	517
51	275
SHEET TOTAL	

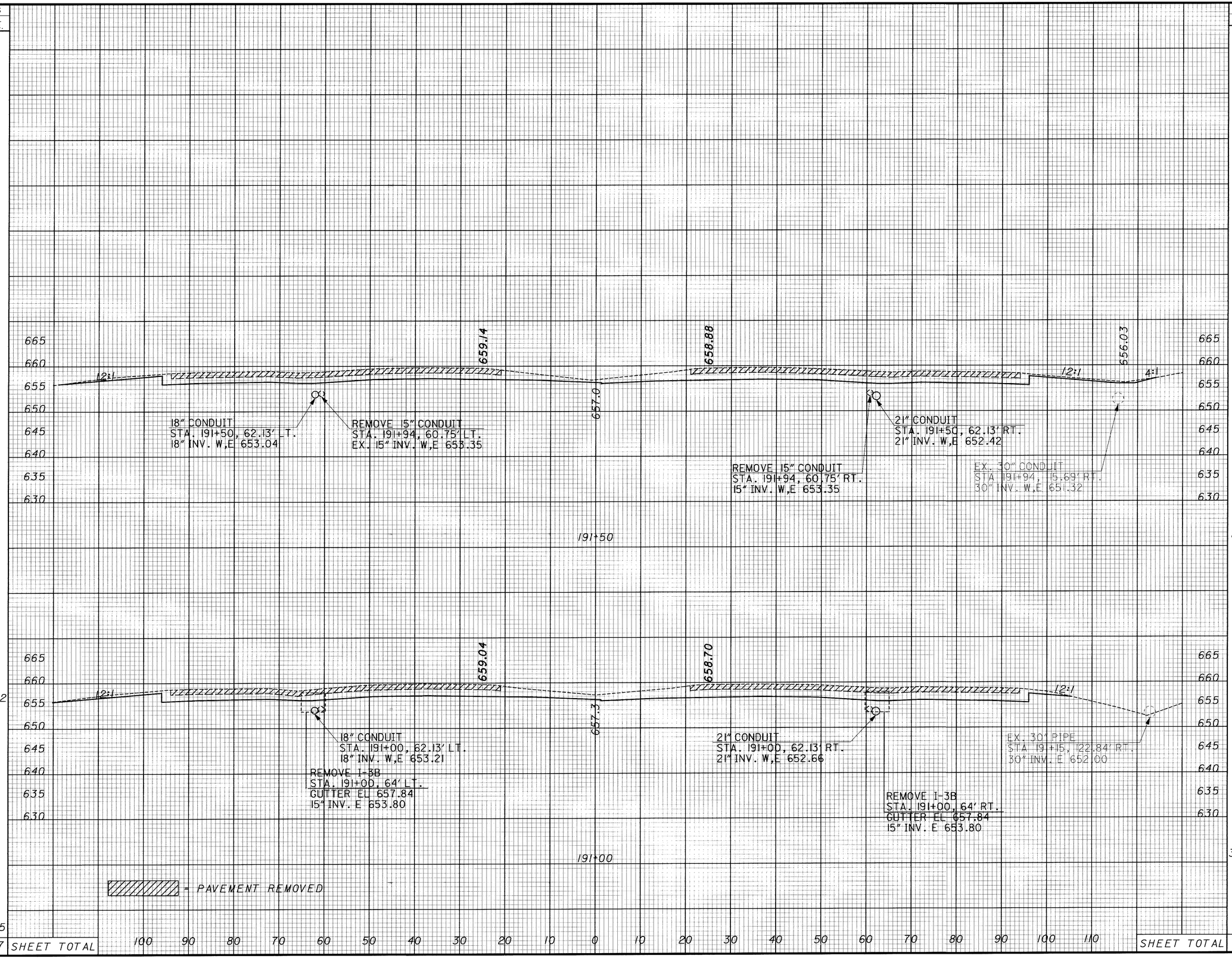

END AREA		VOLUME	
CUT	FILL	CUT	FILL
281	0		
		547	0
309	0		
		649	0
SHEET TOTAL		1196	0

CALCULATED

CHECKED

CROSS SECTIONS
STA 191+00 TO STA 191+50

CUY-90-0.00

306
582

06 MAR 2000
P:\PR22308\CADD\I738GX.DGN

SEEDING END WIDTH	SEEDING SQ. YDS.
24	
	55
24	
	195
46	
	228
478	SHEET TOTAL

CUY-90-0365 BRIDGE
STA. 192+70.32

SPILL QUANTITIES
LEGHT = 50' AREA = 50' X 1.0'
EXCAVATION = 150' X 50'1/27 = 93

192+70.32

192+50.00

192+00.00

659.32

659.25

657.58

656.63

659.23

659.06

656.7

12:1

6:1

4:1

PLUG & FILL 15" CONDUIT
STA. 192+55, 60.75' LT.
15" INV. W,E 653.01
OUTLETS THRU BRIDGE WALL @
STA. 192+90, 60.75' LT. EL 652.80

ABANDON CB-4
STA. 192+55, ℄
GRATE EL 655.49
PLUG & FILL 12" INV. E 653.30
OUTLETS THRU BRIDGE WALL @
STA. 192+90, ℄ EL 653.00

EX. 30" CONDUIT
STA. 192+55, 110.17' RT.
30" INV. W,E 650.80
OUTLETS THRU BRIDGE WAL @
STA. 192+90, 107' RT. EL 650.50

PLUG & FILL 15" CONDUIT
STA. 192+55, 60.75' RT.
15" INV. W,E 653.01
OUTLETS THRU BRIDGE WALL @
STA. 192+90, 60.75' RT. EL 652.80

CB-3A
STA. 192+00, 65.5' LT.
GRATE EL 658.21
18" INV. S 652.88

CB-3A
STA. 192+00, 62.5' LT.
GRATE EL 658.21
18" INV. N 652.87
18" INV. W 652.87
21" INV. S 652.62

I-3B50, A.P.P.
STA. 192+00, 3' RT.
GRATE EL 658.39
21" INV. N,S 652.40

CB-3
STA. 192+00, 62.5' RT.
GRATE EL 658.05
21" INV. W 652.18
21" INV. N 652.18
30" INV. S 651.43

CB-3
STA. 192+00, 65.5' RT.
GRATE EL 658.05
30" INV. N,S 651.42

MH-1
STA. 192+00, 115.15' RT.
GRATE EL 656.39
30" INV. N 651.27
30" INV. W,E 651.27

20'-30" CONDUIT,
TYPE C, @ 0.30%

63'-21" CONDUIT, TYPE B, @ 0.35%

63'-21" CONDUIT, TYPE B, @ 0.35%

3'-18" CONDUIT,
TYPE B, @ 0.34%

3'-30" CONDUIT,
TYPE B, @ 0.30%

31'-30" CONDUIT,
TYPE B, @ 0.30%

REMOVE 12" CONDUIT

REMOVE I-3B
STA. 192+00, 64' LT.
GUTTER EL 657.72
15" INV. W,E 653.30

REMOVE I-3B
STA. 192+05, 64' RT.
GUTTER EL 657.72
15" INV. W,E 653.30

REMOVE CB 2-2B
STA. 192+00, 107' RT.
GRATE EL 655.12
12" INV. S 652.5

= PAVEMENT REMOVED

END AREA CUT	END AREA FILL	VOLUME CUT	VOLUME FILL
203	0		
		153	0
203	0		
		406	16
236	17		
		479	16
	SHEET TOTAL	1038	32

CALCULATED MH
CHECKED RAS

CROSS SECTIONS
STA 192+00 TO STA 192+50

CUY-90-0.00

307
582

08 MAR 2000
P:\PR22308\CADD\11738GX.DGN

SEEDING END WIDTH	SEEDING SQ. YDS.
12	75
15	35
21	0
	110

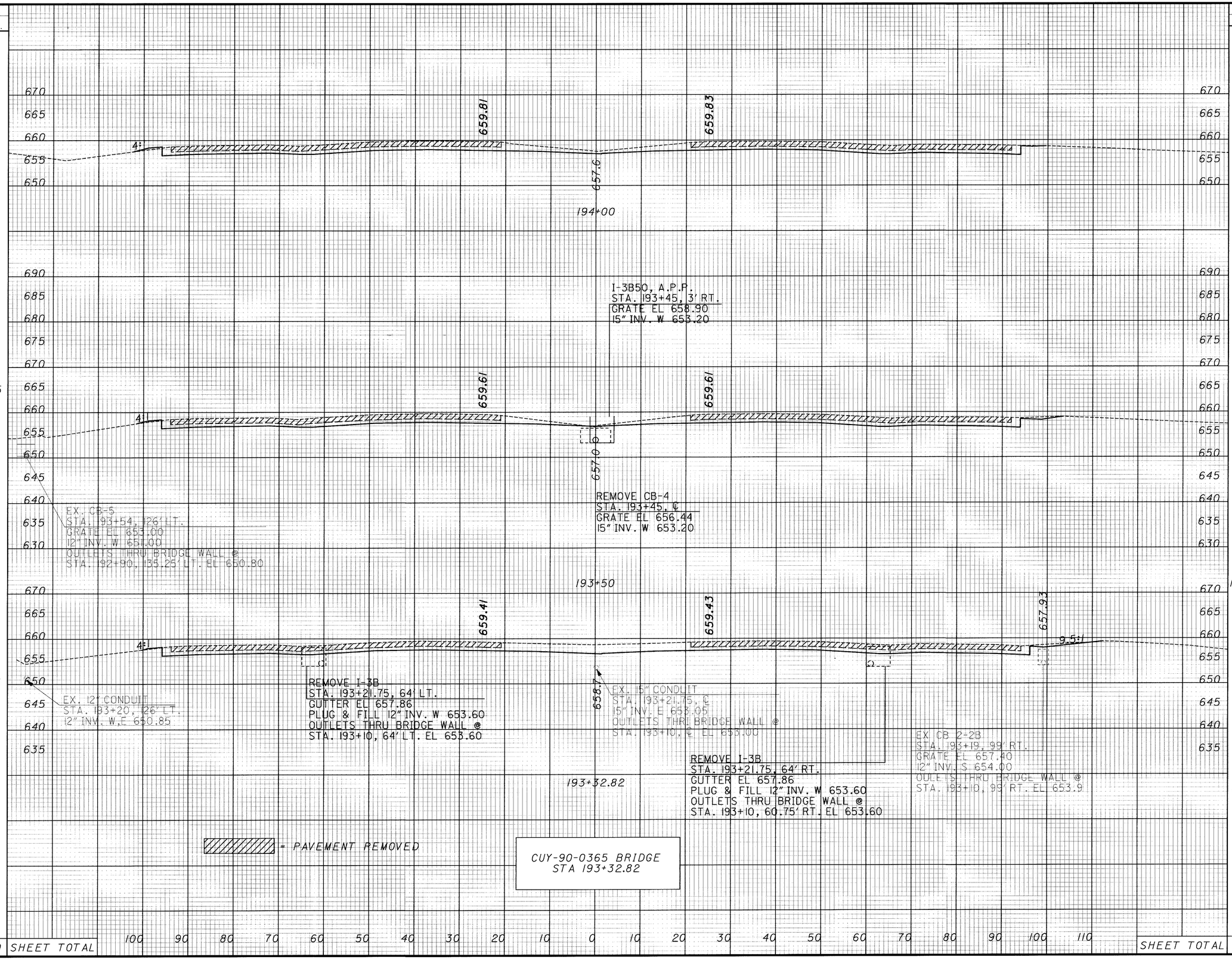

END AREA CUT	END AREA FILL	VOLUME CUT	VOLUME FILL
161	2		
		297	3
158	1		
		107	1
175	0		
		93	0
SHEET TOTAL		497	4

CALCULATED MH
CHECKED RAS

CROSS SECTIONS
STA 193+32.82 TO STA 194+00

CUY-90-0.00

308
582

21 MAR 2000
p:\PR22308\CADD\11738GX.DGN

SEEDING END WIDTH	SEEDING SQ. YDS.	STA	END AREA CUT	END AREA FILL	VOLUME CUT	VOLUME FILL
0	0	196+00.00	73	0		
					130	0
0	0	195+50.00	67	0		
					133	0
0	0	195+00.00	76	0		
					14	0
0	0	194+50.00	67	0		
		STA 194+44.70 AHEAD	67	0		
4	6	STA 194+44.70 BACK	121	0	48	0
		STA 194+33.30 AHEAD	105	0		
4	8	STA 194+33.30 BACK	161	0		
					199	2
37	43	SHEET TOTAL			524	2

STA 194+44.70 AHEAD — PAVEMENT LOWERING ENDS AT STA 194+44.70 EASTBOUND — STA 194+44.70 AHEAD

STA 194+44.70 BACK — STA 194+44.70 BACK

▨ - PAVEMENT REMOVED

STA 194+33.30 AHEAD — PAVEMENT LOWERING ENDS AT STA 194+33.30 WESTBOUND — STA 194+33.30 AHEAD

STA 194+33.30 BACK — STA 194+33.30 BACK

CALCULATED M/H

CHECKED RAS

CROSS SECTIONS STA 194+50 TO STA 196+00

CUY-90-0.00

309
582

21 MAR 2000
p:\PR22308\CADD\U1738GX.DGN

SEEDING	
END WIDTH	SQ. YDS.
0	
0	
0	
0	
0	
0	SHEET TOTAL

END AREA	
CUT	FILL
69	0
72	0
68	0

VOLUME	
CUT	FILL
131	0
130	0
131	0
392	0

CALCULATED MH
CHECKED RAS

CROSS SECTIONS
STA 196+50 TO STA 197+50

670
665
660
655

660.79
660.65
659.0
197+50

670
665
660
655

660.67
660.63
659.
197+00

670
665
660
655
650
645
640

660.51
660.48
658.7
196+50

EX. 36" @ 0.33%

EX. 36" CULVERT
STA. 196+79

EX. HW
STA 196+87. 129.48' RT.
36" INV. 652.50

EX. HW
STA 197+16.29 30.06' LT.
36" INV. 651.60

= PAVEMENT REMOVED

100 90 80 70 60 50 40 30 20 10 0 10 20 30 40 50 60 70 80 90 100 110

CUY-90-0.00

310
582

06 MAR 2000
P:\PR22308\CADD\I738GX.DGN

SEEDING END WIDTH	SEEDING SQ. YDS.	END AREA CUT	END AREA FILL	VOLUME CUT	VOLUME FILL
0		71	0		
	0			131	0
0		70	0		
0		71	0		
	0			130	0
	0	SHEET TOTAL		392	0

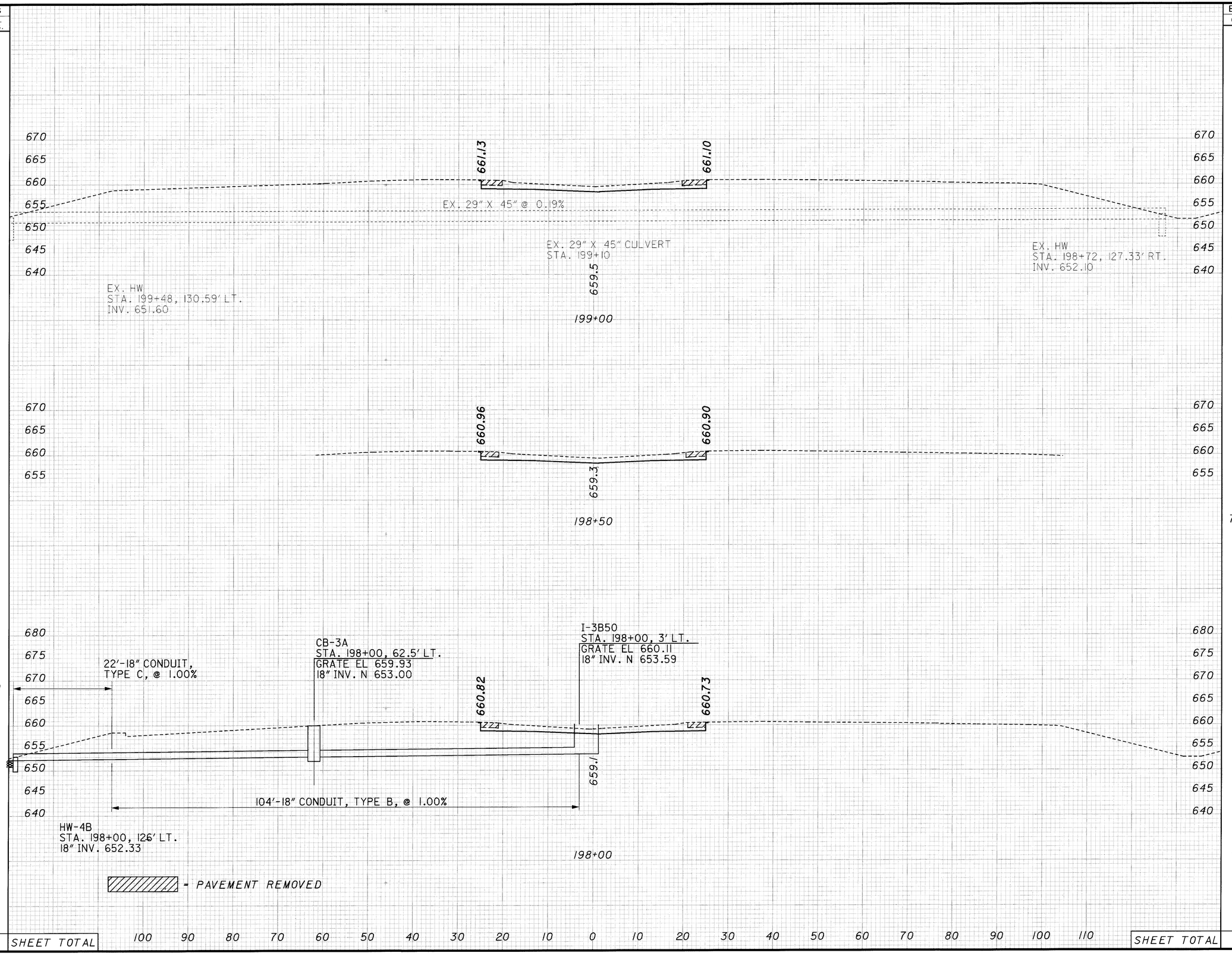

CALCULATED M H
CHECKED R A S

CROSS SECTIONS
STA 198+00 TO STA 199+00

CUY-90-0.00

311
582

$DATE$
$FILE$

SEEDING		END AREA		VOLUME		CALCULATED	CHECKED
END WIDTH	SQ. YDS.	CUT	FILL	CUT	FILL	MH	RAS

0		80	0			
0	0			147	0	
0		79	0			
0	0			150	0	
0		83	0			
0	0			148	0	
0		76	0			
0				136	0	
0	SHEET TOTAL			581	0	SHEET TOTAL

CROSS SECTIONS
STA 199+50 TO STA 201+00

CUY-90-0.00

06 MAR 2000
P:\PR22308\CADD\1738GX.DGN

SEEDING	
END WIDTH	SQ. YDS.
0	0
0	0
0	0
0	0
0	0
0	0
0	0
0	0
SHEET TOTAL	0

END AREA		VOLUME	
CUT	FILL	CUT	FILL
78	0		
		148	0
82	0		
		149	0
79	0		
		148	0
80	0		
		148	0
SHEET TOTAL		593	0

CALCULATED MH
CHECKED RAS

CROSS SECTIONS
201+50 TO STA 203+00

CUY-90-0.00

313
582

06 MAR 2000
D:\PR22308\CADD\11738GX.DGN

SEEDING END WIDTH	SEEDING SQ. YDS.
0	
	0
0	
	0
0	
	0

SEEDING END WIDTH	SEEDING SQ. YDS.
0	
	0
0	
	0
0	
	0
0	
	0
SHEET TOTAL	0

END AREA CUT	END AREA FILL	VOLUME CUT	VOLUME FILL
71	0		
		134	0
74	0		
		136	0
73	0		
		135	0
72	0		
		133	0
71	0		
		131	0
		669	0

CALCULATED MH
CHECKED RAS

CROSS SECTIONS
205+50 TO STA 207+50

CUY-90-0.00

315
582

06 MAR 2000
D:\PR22308\CADD\11738GX.DGN

SEEDING	
END WIDTH	SQ. YDS.
0	
	0
0	
	0
0	
	0
0	
	0
SHEET TOTAL	0

670
665
660
655

660.92 660.96 659.1

209+50

670
665
660
655

661.03 661.03 659.3

209+00

670
665
660
655

661.12 661.14 659.5

208+50

670
665
660
655

661.28 661.22 659.6

208+00

670
665
660
655

- PAVEMENT REMOVED

100 90 80 70 60 50 40 30 20 10 0 10 20 30 40 50 60 70 80 90 100 110

END AREA		VOLUME	
CUT	FILL	CUT	FILL
71	0		
		135	0
75	0		
		140	0
76	0		
		140	0
75	0		
		135	0
SHEET TOTAL		550	0

CALCULATED MH
CHECKED RAS

CROSS SECTIONS
STA 208+00 TO STA 209+50

CUY-90-0.00

316
582

06 MAR 2000
P:\PR22308\CADD\11738GX.DGN

SEEDING END WIDTH	SEEDING SQ. YDS.
10	56
10	50
8	36
5	14
	156

END AREA CUT	END AREA FILL	VOLUME CUT	VOLUME FILL
102	4		
		189	9
102	5		
		186	8
99	3		
		186	4
101	1		
		160	1
		721	22
SHEET TOTAL			

CALCULATED M H

CHECKED R A S

CROSS SECTIONS
STA 210+00 TO STA 211+50

CUY-90-0.00

317
582

06 MAR 2000
P:\PR22308\CADD\1738GX.DGN

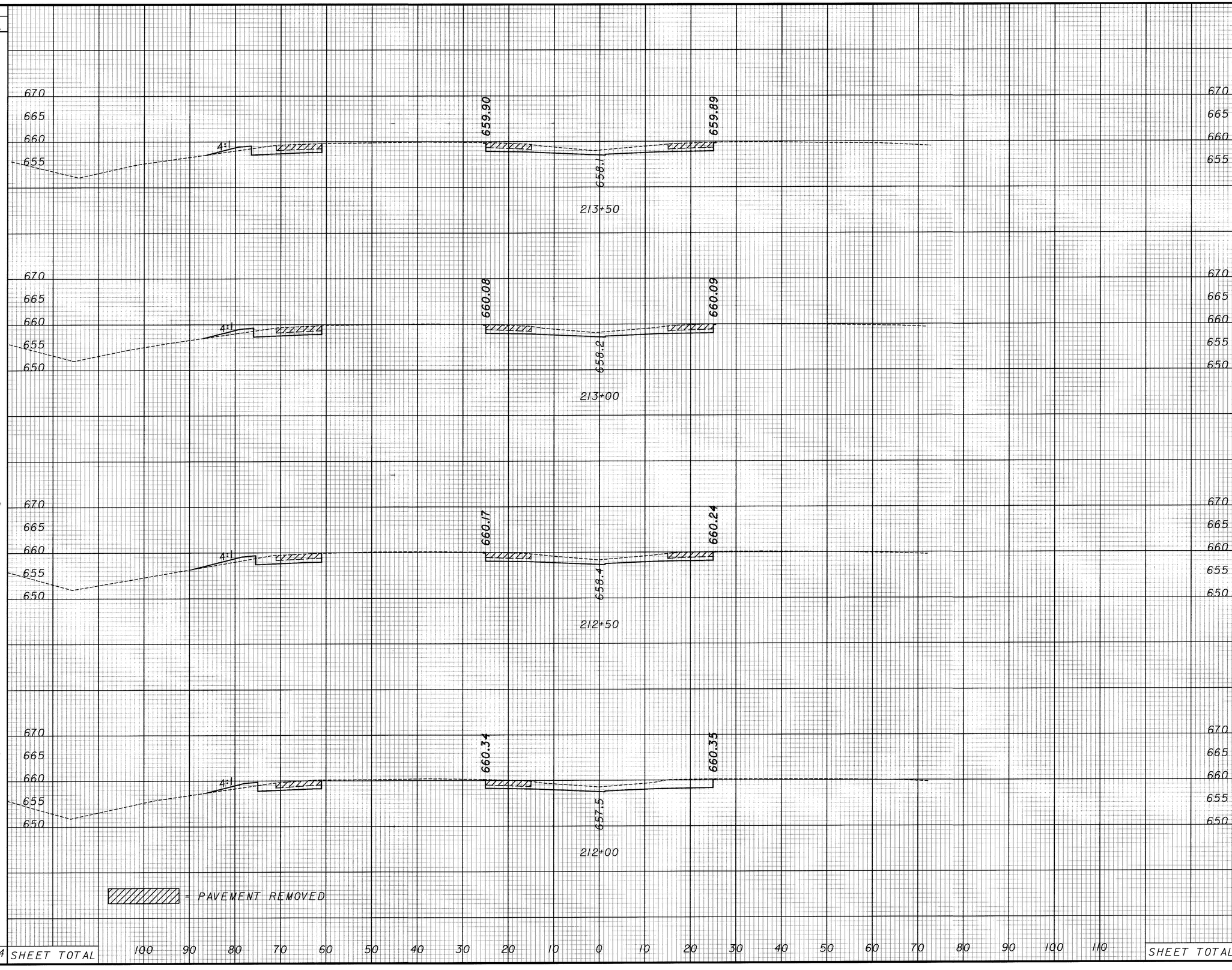

SEEDING END WIDTH	SEEDING SQ. YDS.	END AREA CUT	END AREA FILL	VOLUME CUT	VOLUME FILL
10		102	5		
	59			186	10
11		99	6		
	70			186	12
14		101	7		
	73			186	13
12		99	7		
	62			186	11
	264 SHEET TOTAL		SHEET TOTAL	744	46

CALCULATED MH
CHECKED RAS

CROSS SECTIONS
STA 212+00 TO STA 213+50

CUY-90-0.00

06 MAR 2000
p:\PR22308\CADD\11738GX.DGN

SEEDING		END AREA		VOLUME		CALCULATED MH	CHECKED RAS
END WIDTH	SQ. YDS.	CUT	FILL	CUT	FILL		
15	42	107	9	93	9		
15	38	93	9	86	8		
12	62	91	7	179	12		
	142			358	29		

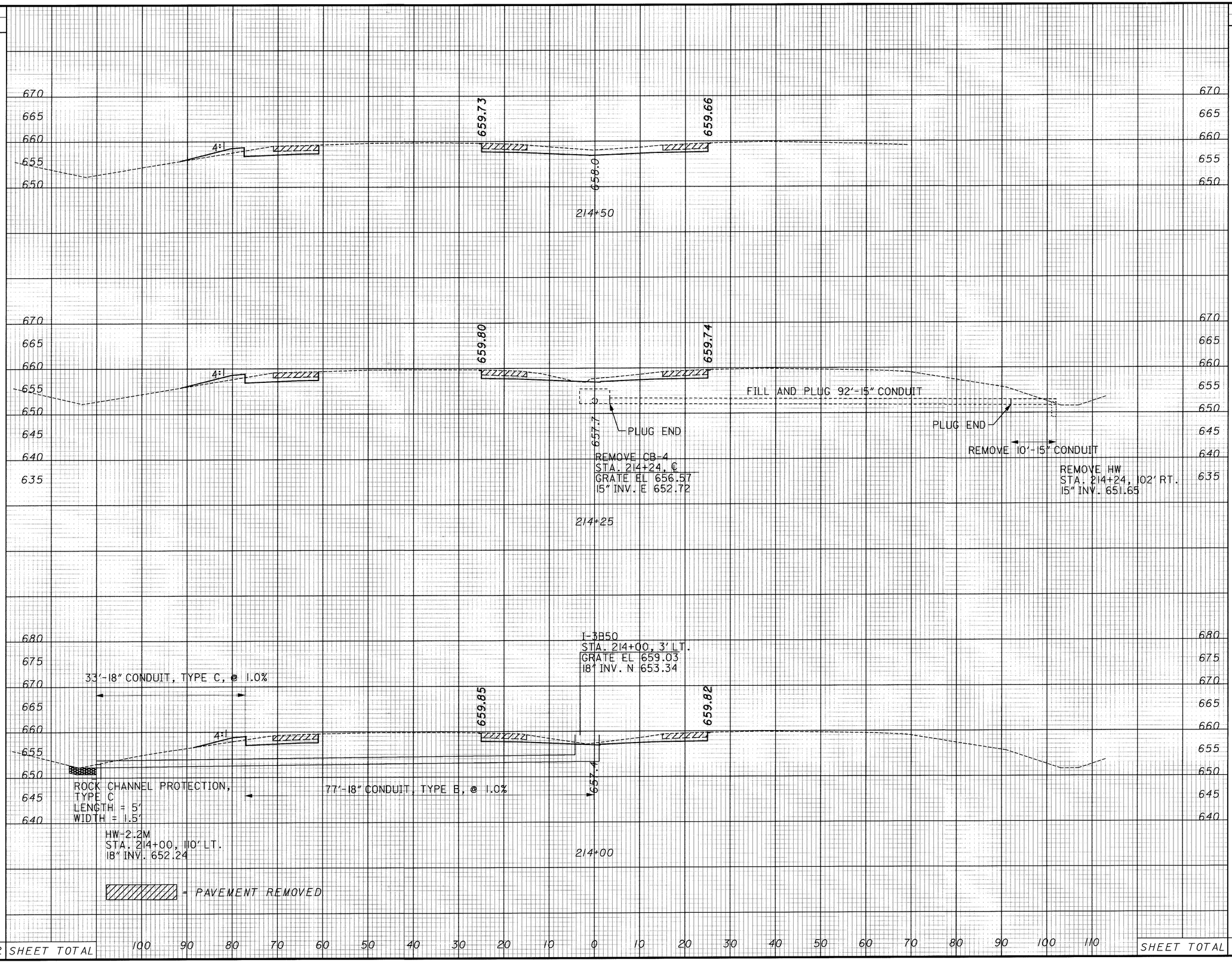

CROSS SECTIONS STA 214+00 TO STA 214+50

CUY-90-0.00

319
582

2:MAR 2000
D:\PR22308\CADD\I738CX.DGN

SEEDING		END AREA		VOLUME	
END WIDTH	SQ. YDS.	CUT	FILL	CUT	FILL
13					
	75	109	9		
14					
		108	11		
	75			201	19
13					
		110	9		
	75			202	19
13					
		124	9		
	73			217	17
13					
	78			214	17
	301	SHEET TOTAL		834	72

CALCULATED M/H
CHECKED RAS

CROSS SECTIONS
STA 215+00 TO STA 216+50

CUY-90-0.00

320
582

06 MAR 2000
P:\PR22308\CADD\11738CX.DGN

SEEDING	
END WIDTH	SQ. YDS.
24	150
30	159
27	128
19	89
	526

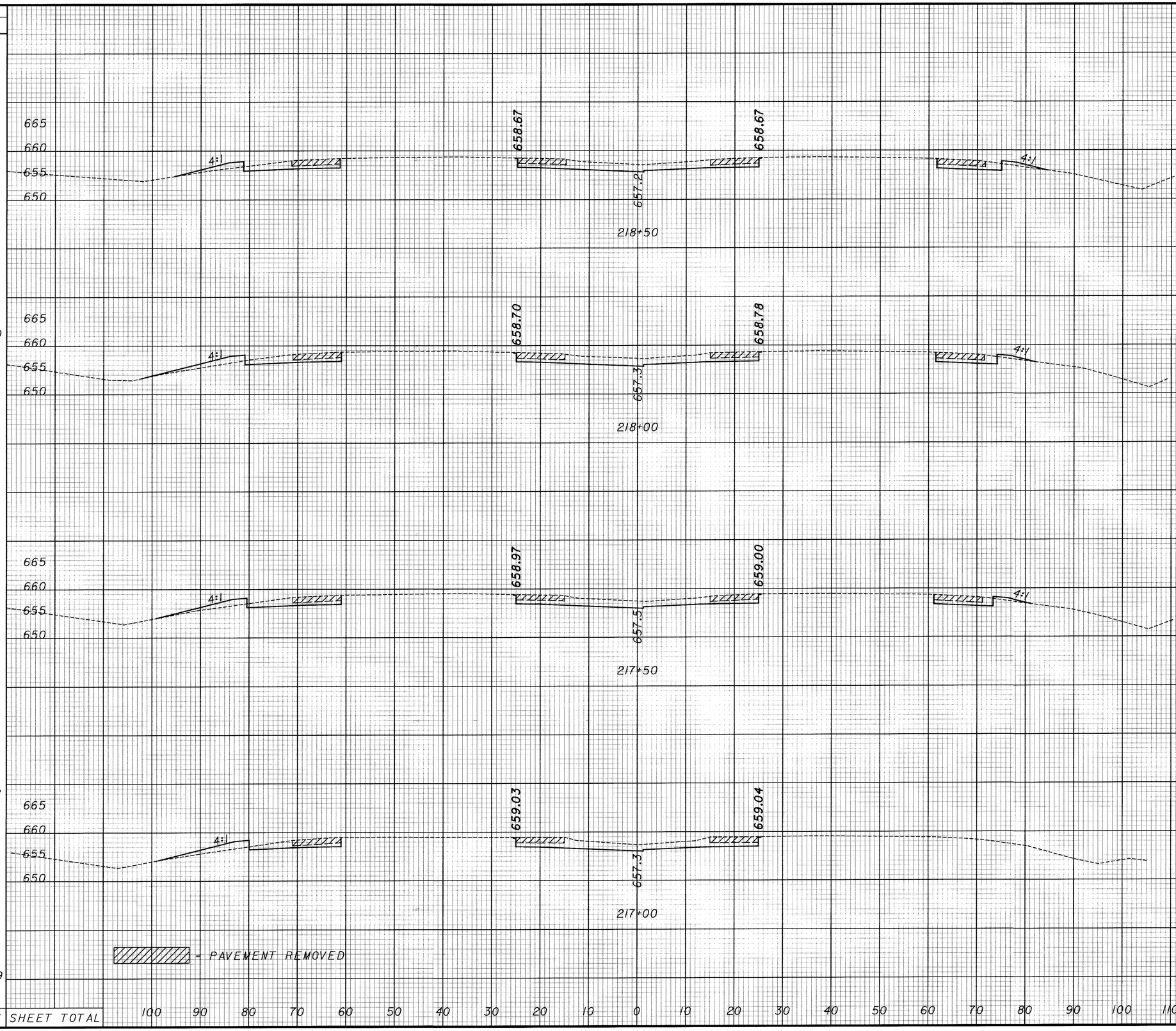

END AREA		VOLUME	
CUT	FILL	CUT	FILL
136	14		
137	18	253	30
131	16	249	32
110	16	224	30
		203	24
SHEET TOTAL		929	116

CALCULATED M H
CHECKED RAS

CROSS SECTIONS
STA 217+00 TO STA 218+50

CUY-90-0.00

321
582

06 MAR 2000
P:\PR22308\CADD\11738GX.DGN

SEEDING	
END WIDTH	SQ. YDS.
33	
	159
24	
	125
21	
	125
	409

665
660
655
650
4:1
658.38
656.6
658.44
220+00
665
660
655
650
4:1

665
660
655
650
4:1
658.44
656.8
658.42
219+50
665
660
655
650
4:1

665
660
655
650
4:1
658.54
657.2
658.60
219+00
665
660
655
650
4:1

= PAVEMENT REMOVED

100 90 80 70 60 50 40 30 20 10 0 10 20 30 40 50 60 70 80 90 100 110

SHEET TOTAL

END AREA		VOLUME	
CUT	FILL	CUT	FILL
136	22		
		259	36
143	16		
		264	26
142	12		
		258	24
		781	86

SHEET TOTAL

CALCULATED MH
CHECKED RAS

CROSS SECTIONS
STA 219+00 TO STA 220+00

CUY-90-0.00

322
582

06 MAR 2000
p:\PR22308\CADD\U738GX.DGN

SEEDING	
END WIDTH	SQ. YDS.
40	223
40	209
35	189
	621

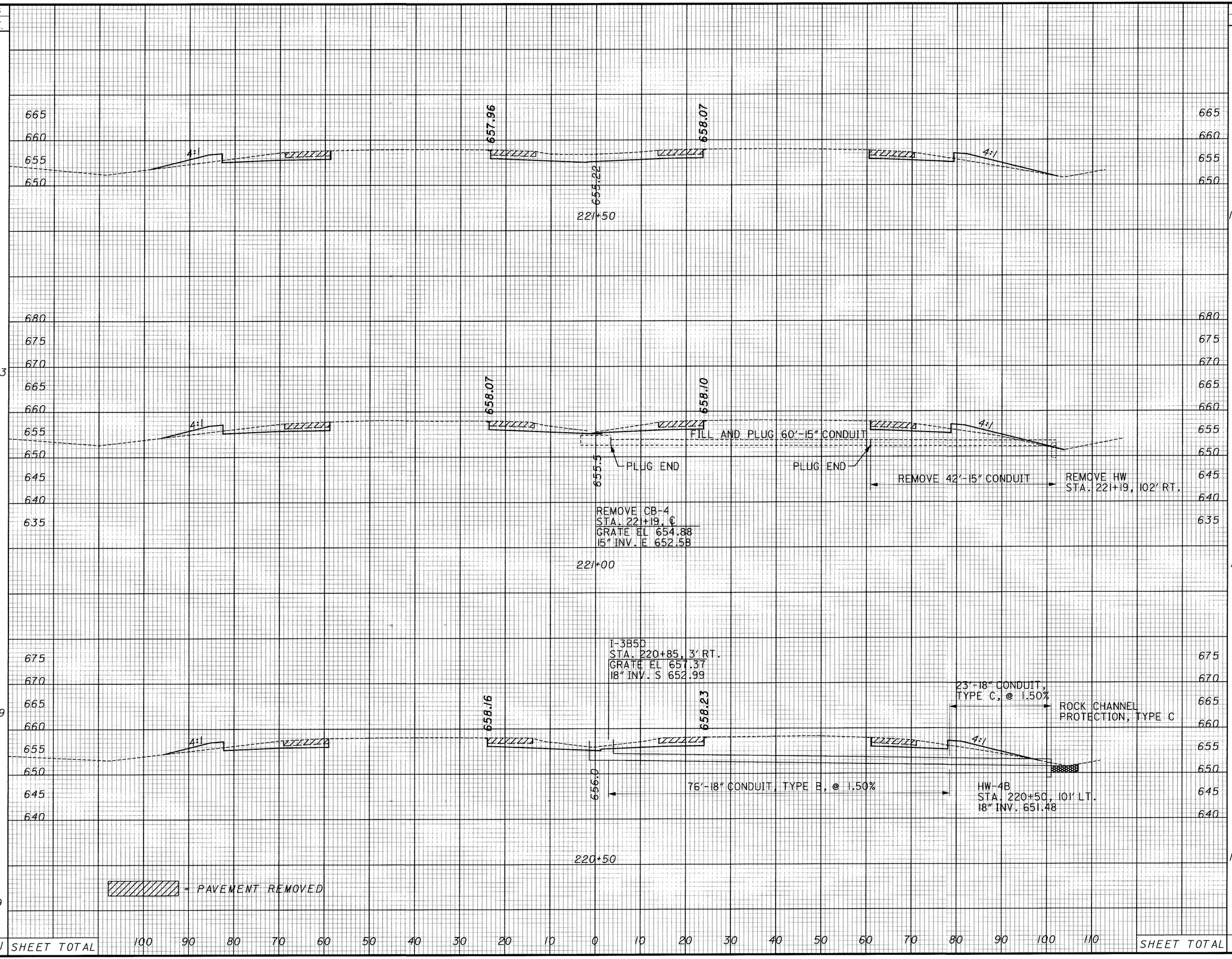

END AREA		VOLUME	
CUT	FILL	CUT	FILL
145	34		
		253	57
128	27		
		241	49
132	25		
		249	44
SHEET TOTAL		743	150

CALCULATED MH
CHECKED RAS

CROSS SECTIONS
STA 220+50 TO STA 221+50

CUY-90-0.00

323
582

06 MAR 2000
D:\PR22308\CADD\1738GX.DGN

06 MAR 2000
p:\PR22308\CADD\11738GX.DGN

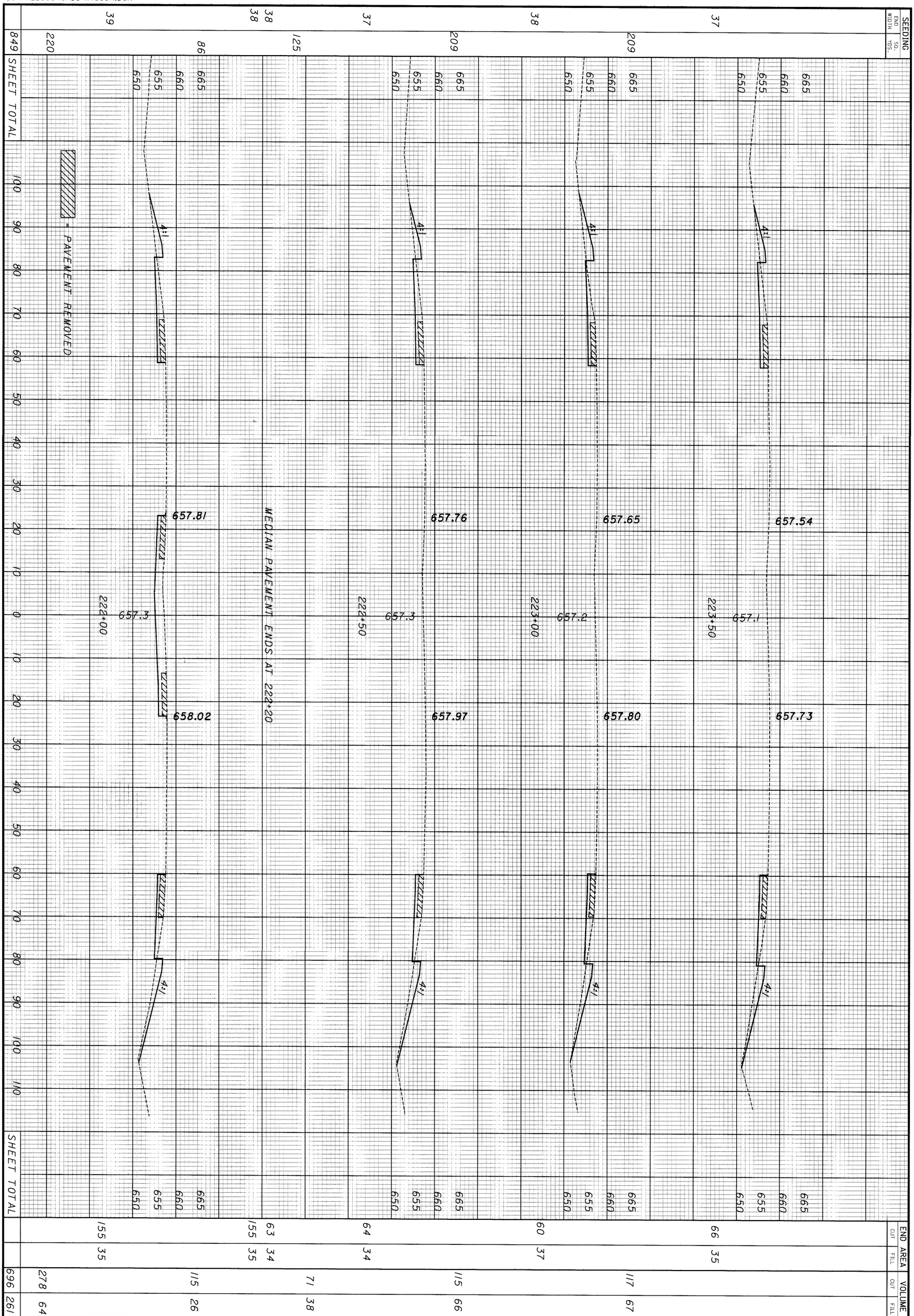

324 / 582	CUY-90-0.00	CROSS SECTIONS STA 222+00 TO STA 223+50	CALCULATED MH CHECKED RAS

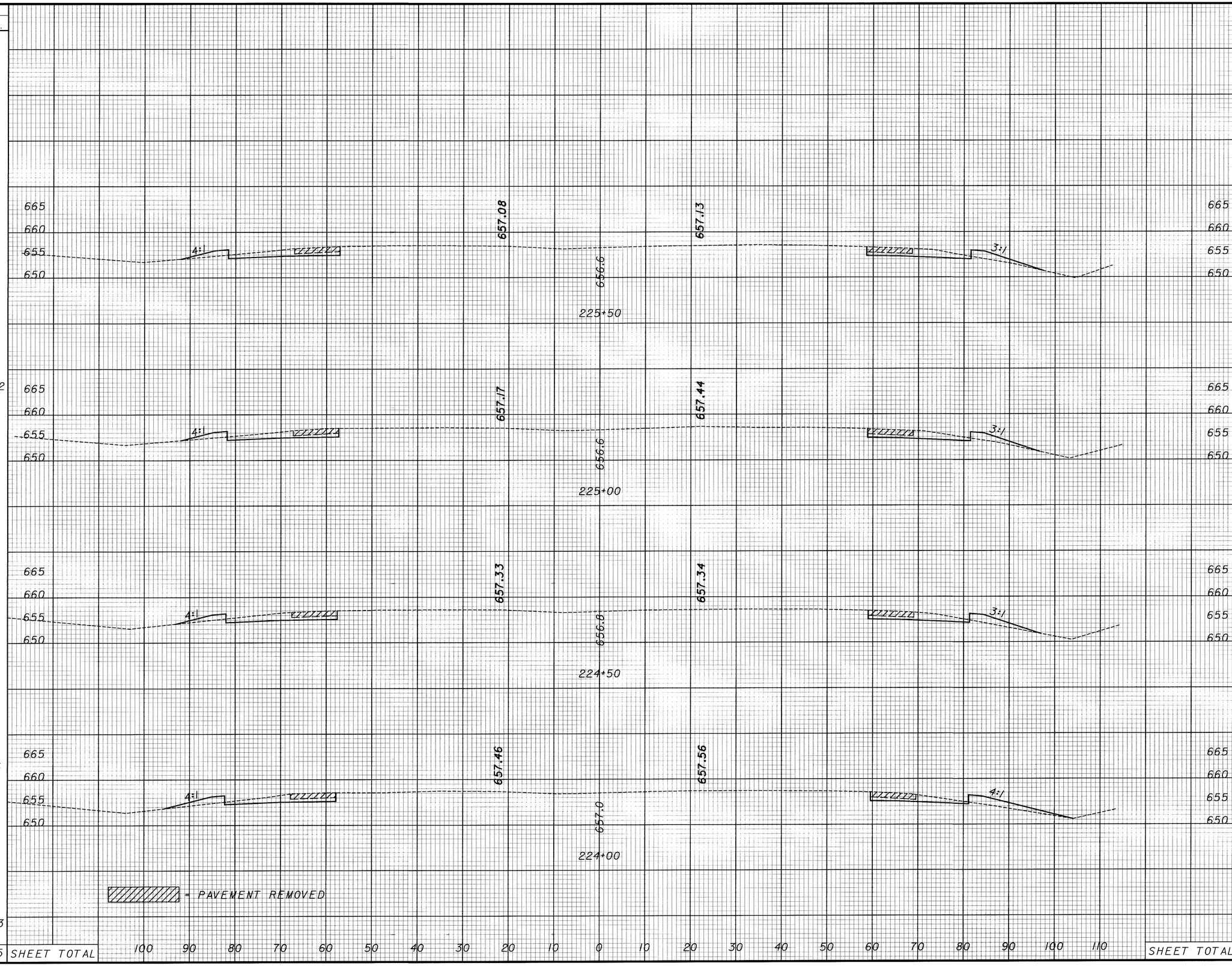

SEEDING END WIDTH	SEEDING SQ. YDS.	END AREA CUT	END AREA FILL	VOLUME CUT	VOLUME FILL
26		68	37		
	142			128	41
25		68	21		
	145			129	42
27		71	37		
	175			124	55
36		68	37		
	203			120	65
	665 SHEET TOTAL		SHEET TOTAL	501	203

CALCULATED MH
CHECKED RAS

CROSS SECTIONS
STA 224+00 TO STA 225+50

CUY-90-0.00

06 MAR 2000
p:\PR22308\CADD\11738GX.DGN

SEEDING END WIDTH	SEEDING SQ. YDS.
30	172
32	167
28	156
28	147
	642

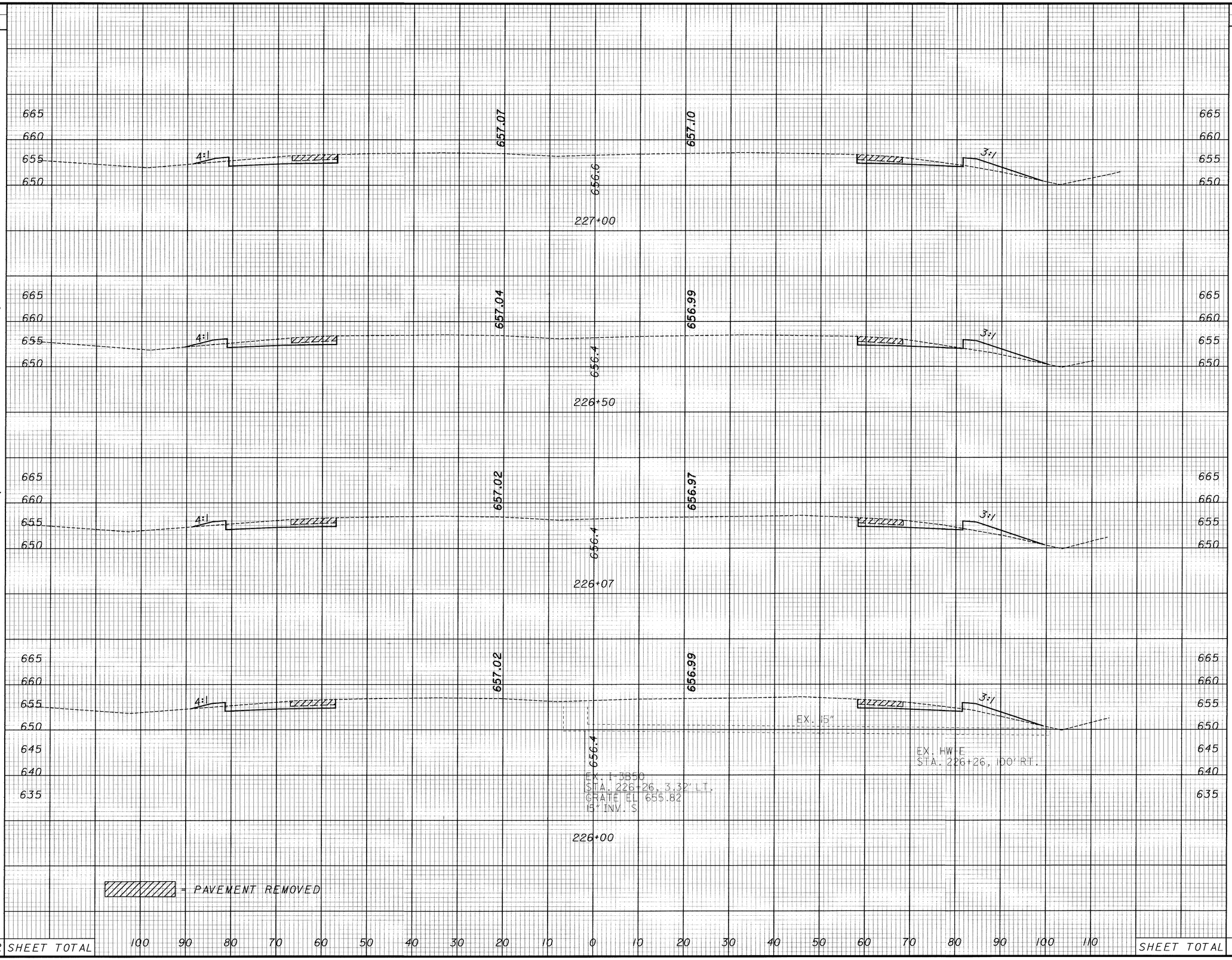

END AREA CUT	END AREA FILL	VOLUME CUT	VOLUME FILL
65	64		
		119	116
63	62		
		119	105
66	51		
		123	88
67	44		
		125	76
SHEET TOTAL		376	138

CALCULATED M/H
CHECKED RAS

CROSS SECTIONS
STA 226+00 TO STA 227+00

CUY-90-0.00

06 MAR 2000
p:\PR22308\CADD\1738GX.DGN

SEEDING	
END WIDTH	SQ. YDS.
25	
	148
28	
	127
25	
20	
25	
	142
	644

END AREA		VOLUME	
CUT	FILL	CUT	FILL
68	23		
		122	49
63	29		
69	23		
		106	42
70	21		
		18	6
		130	41
SHEET TOTAL		491	211

CALCULATED MH
CHECKED RAS

CROSS SECTIONS
STA 227+50 TO STA 229+00

CUY-90-0.00

327
582

06 MAR 2000
p:\PR22308\CADD\U738GX.DGN

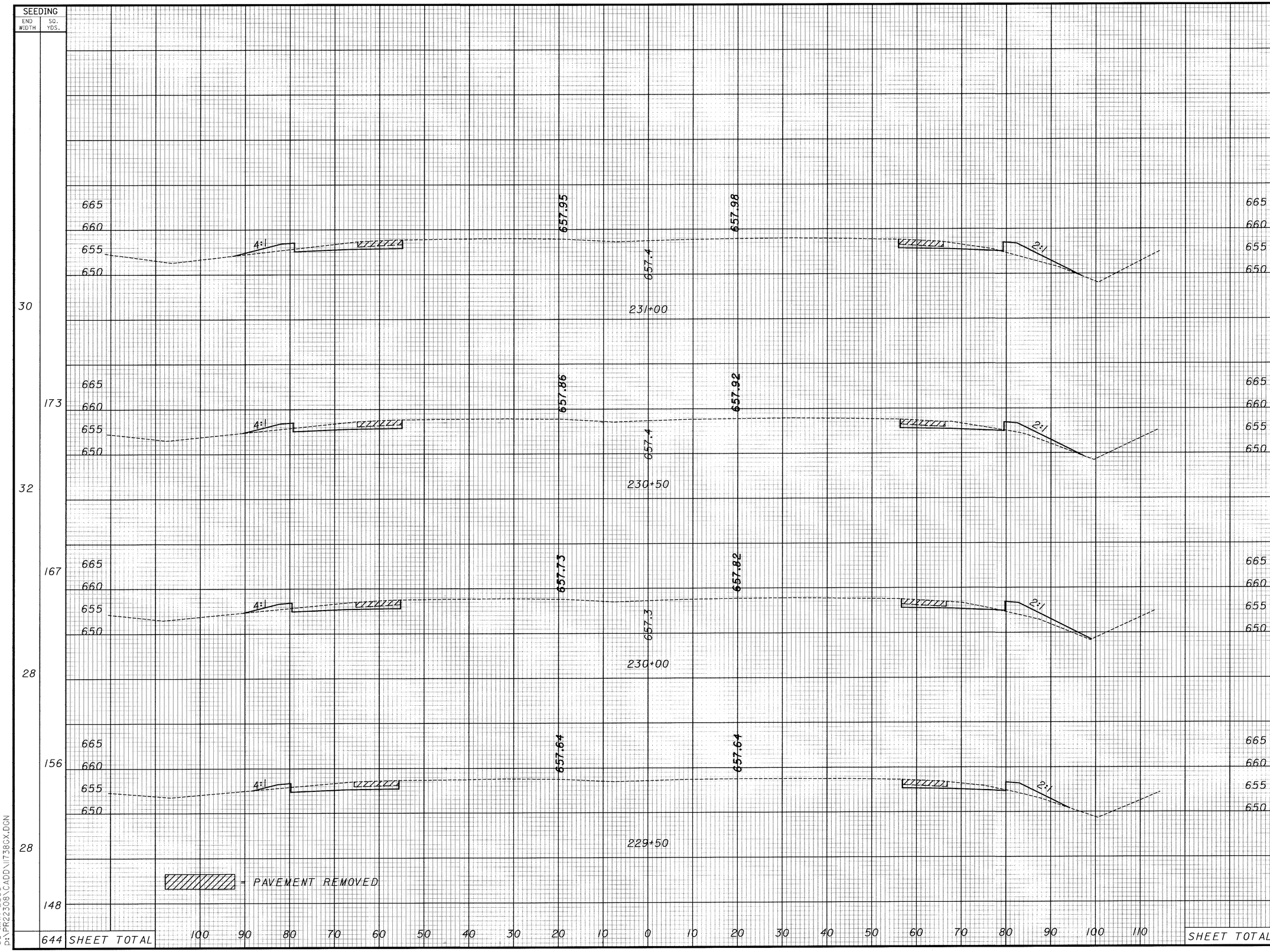

CALCULATED MH
CHECKED RAS

CROSS SECTIONS
STA 229+50 TO STA 231+00

CUY-90-0.00

06 MAR 2000
p:\PR22308\CADD\11738GX.DGN

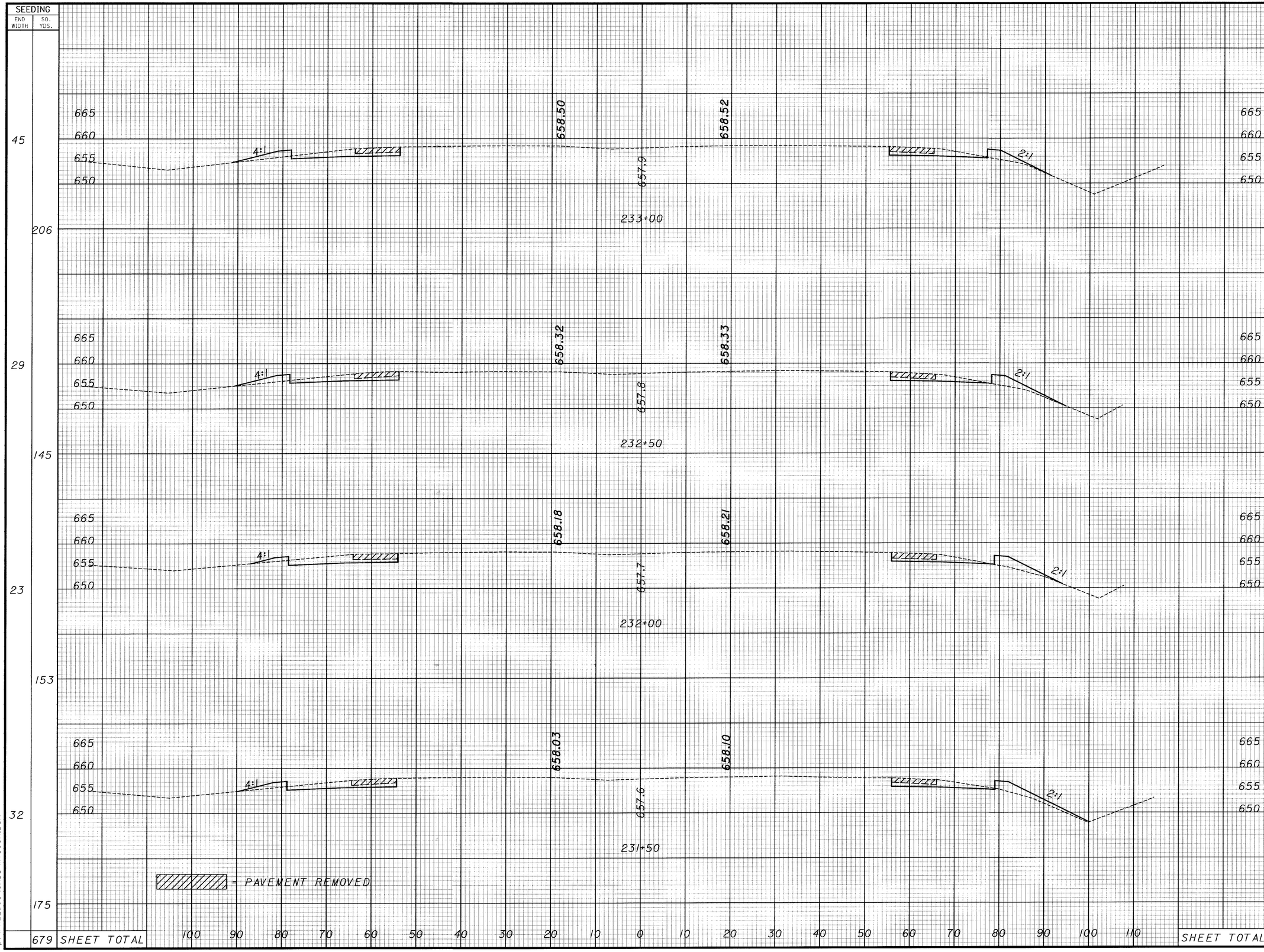

END AREA CUT	END AREA FILL	VOLUME CUT	VOLUME FILL
64	25		
		116	49
61	28		
		122	49
70	24		
		126	102
66	31		
		119	63
		373	263

CALCULATED MH
CHECKED RAS

CROSS SECTIONS
STA 231+50 TO STA 233+00

CUY-90-0.00

06 MAR 2000
p:\PR22308\CADD\11738GX.DGN

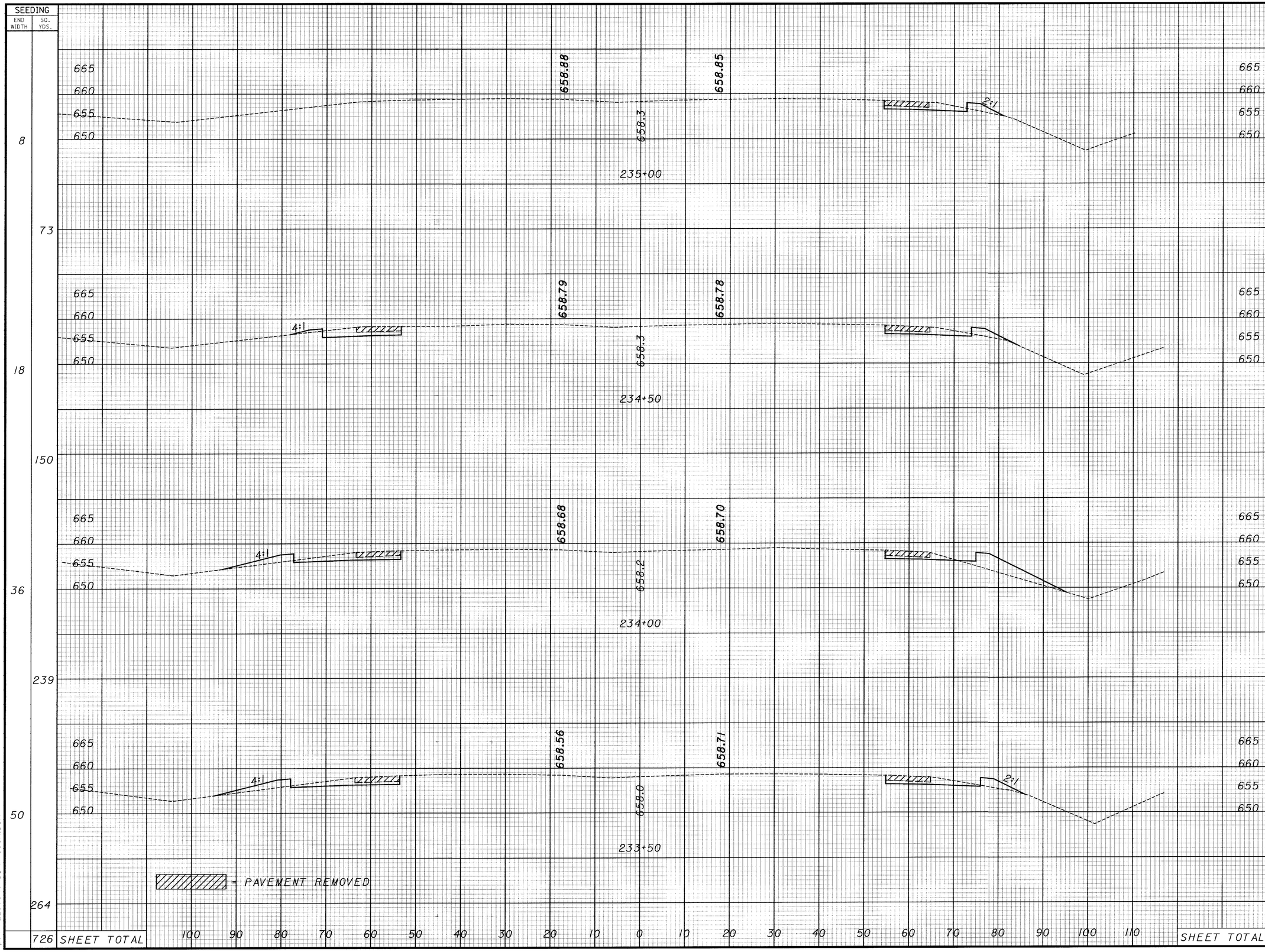

CALCULATED MH
CHECKED RAS

CROSS SECTIONS
STA 233+50 TO STA 235+00

CUY-90-0.00

06 MAR 2000
p:\PR22308\CADD\11738GX.DGN

SEEDING	
END WIDTH	SQ. YDS.
17	
	81
12	
13	
	70
12	
	56
	277

END AREA		VOLUME	
CUT	FILL	CUT	FILL
29	7		
		54	12
29	6		
		54	16
29	11		
		54	21
29	11		
		54	19
		216	68

CALCULATED MH
CHECKED RAS

CROSS SECTIONS
STA 235+50 TO STA 237+00

CUY-90-0.00

331
582

237+00
658.37
658.30
657.7
2.9:1

236+50
658.58
658.55
658.0
3.5:1

236+00
658.74
658.74
658.2
3.0:1

235+50
658.89
658.84
658.3
2.5:1

▨ - PAVEMENT REMOVED

665
660
655
650

100 90 80 70 60 50 40 30 20 10 0 10 20 30 40 50 60 70 80 90 100 110

SHEET TOTAL

06 MAR 2000
P:\PR22308\CADD\17386X.DGN

SEEDING	
END WIDTH	SQ. YDS.
0	
14	
5	
34	
7	
67	
115	SHEET TOTAL

END AREA		VOLUME	
CUT	FILL	CUT	FILL
0	0		
		20	1
27	1		
		50	3
27	3		
		52	10
		122	14
SHEET TOTAL			

CALCULATED MH
CHECKED RAS

CROSS SECTIONS
STA 237+50 TO STA 239+00

CUY-90-0.00

332
582

665
660
655
650

656.96
656.85
656.4
239+00

657.34
657.32
656.8
238+50

657.79
657.70
657.2
238+00

4:1

658.13
658.05
657.5
237+50

4:1

= PAVEMENT REMOVED

100 90 80 70 60 50 40 30 20 10 0 10 20 30 40 50 60 70 80 90 100 110

06 MAR 2000
P:\PR22308\CADD\II738GX.DGN

SEEDING	
END WIDTH	SQ. YDS.

END AREA		VOLUME	
CUT	FILL	CUT	FILL

CALCULATED MH
CHECKED RAS

CROSS SECTIONS

STA 239+50 TO STA 240+00

CUY-90-0.00

665
660
655
650

656.20
656.15
655.6
240+00.00

665
660
655
650

656.59
656.54
655.9
239+50.00

SHEET TOTAL 100 90 80 70 60 50 40 30 20 10 0 10 20 30 40 50 60 70 80 90 100 110 SHEET TOTAL

06 MAR 2000
P:\PR22308\CADD\11738GX.DGN

SEEDING	
END WIDTH	SQ. YDS.
15	75
12	89
20	114
21	25
21	0
	303

END AREA		VOLUME	
CUT	FILL	CUT	FILL
47	0	76	3
35	3	61	8
31	6	56	12
29	7	12	2
29	7		
0	0		
SHEET TOTAL		205	25

CALCULATED MH
CHECKED RAS

CROSS SECTIONS RAMP G
STA 85+50 TO STA 87+00

CUY-90-0.00

334
582

08 MAR 2000
D:\PR22308\CADD\11738gxc.dgn

SEEDING	
END WIDTH	SQ. YDS.
48	281
53	189
	470

END AREA		VOLUME	
CUT	FILL	CUT	FILL
165	0		
		263	0
119	0		
		154	0
SHEET TOTAL		417	0

CALCULATED MH
CHECKED RAS

CROSS SECTIONS RAMP G
STA 87+50 TO STA 88+00

CUY-90-0.00

335
582

08 MAR 2000
p:\PR22308\CADD\1738gxc.dgn

SEEDING END WIDTH	SEEDING SQ. YDS.	END AREA CUT	END AREA FILL	VOLUME CUT	VOLUME FILL
25	144	27	12	50	23
27	136	27	13	50	19
22	100	27	7	50	10
14	75	27	4	48	7
14		27	4		
0		0	0		
	455 SHEET TOTAL			198	59

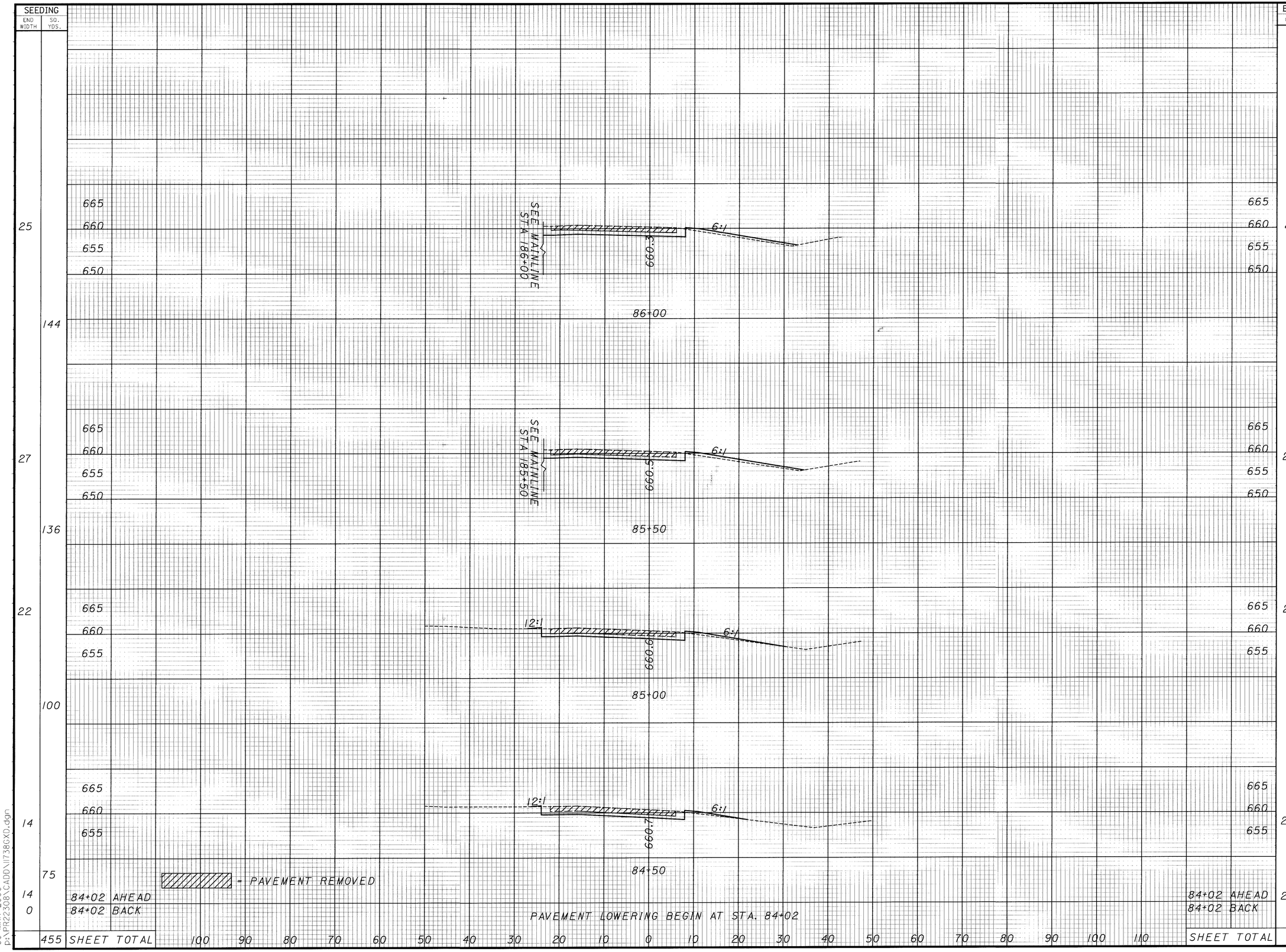

CALCULATED MH
CHECKED RAS

CROSS SECTIONS RAMP K
STA 84+50 TO STA 86+00

CUY-90-0.00

336
582

08 MAR 2000
P:\PR22308\CADD\1738CXD.dgn

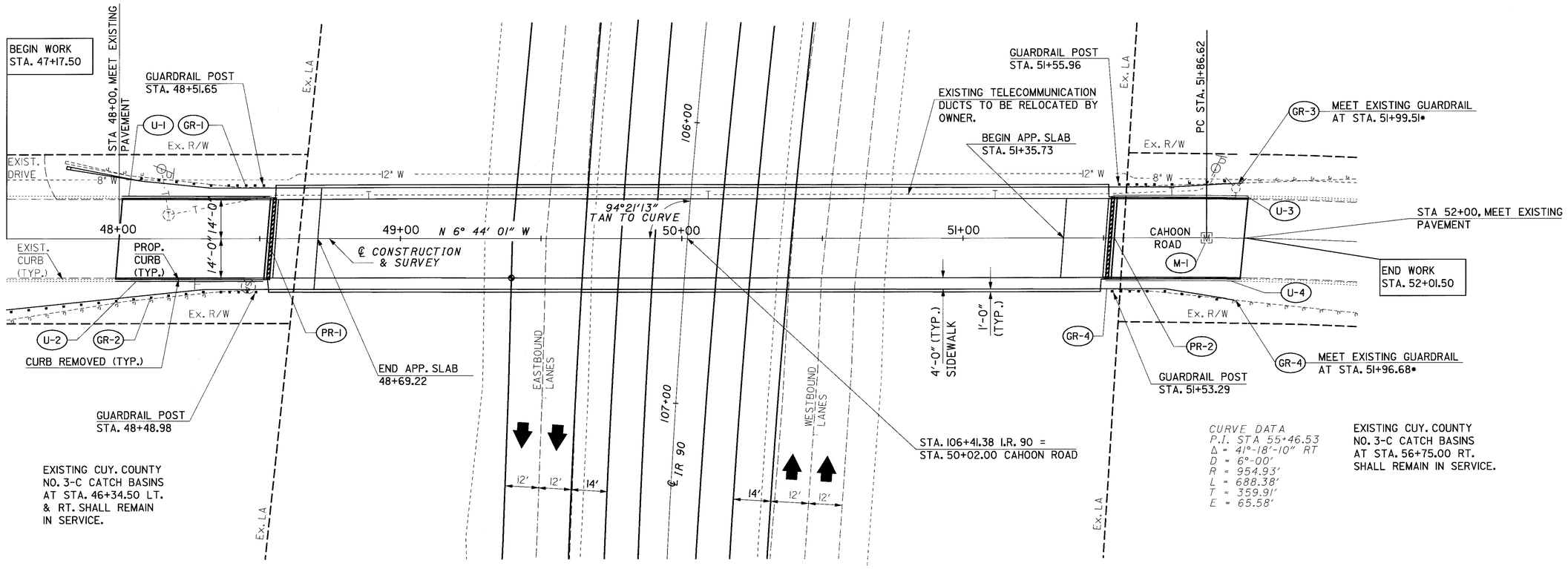

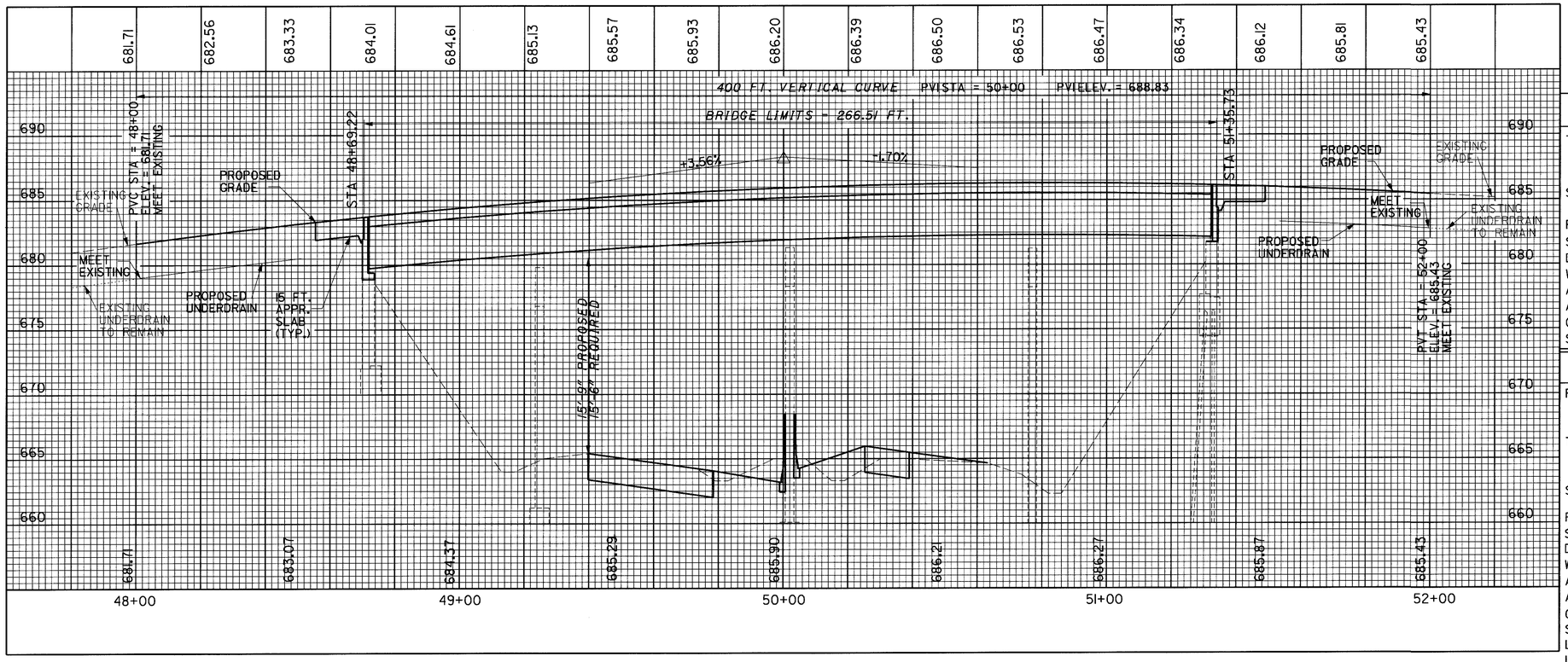

• SEE GENERAL NOTE, SHT. 31

FOR QUANTITIES SEE SHEET 248.

EXISTING STRUCTURE

TYPE:	CONTINUOUS STEEL BEAM BRIDGE (ASTM 36) WITH REINFORCED CONCRETE DECK AND SUBSTRUCTURE. BUILT IN 1968.
SPANS:	54'-0", 77'-0", 77'-0", 54'-0", c/c OF BEARINGS
ROADWAY:	28'-0" f/f OF SIDEWALK
SKEW:	4°-15' L.F.
DESIGN LOADING:	CF 130 (57)
WEARING SURFACE:	1" MONOLITHIC CONCRETE
APPROACH SLABS:	AS-1-67 (25' LONG)
ALIGNMENT:	TANGENT
CROWN:	3/16" PER FOOT
SIDEWALK:	4'-0" WITH FENCE

PROPOSED STRUCTURE

PROPOSED WORK:	NEW COMPOSITE REINFORCED CONCRETE DECK, SIDEWALKS, RAILINGS AND APPROACH SLABS.
TYPE:	SURFACES. CONTINUOUS STEEL BEAM BRIDGE (ASTM 36) WITH REINFORCED CONCRETE DECK AND SUBSTRUCTURE.
SPANS:	54'-0", 77'-0", 77'-0", 54'-0", c/c OF BEARINGS
ROADWAY:	28'-0" f/f OF SIDEWALK
SKEW:	4°-15' L.F.
DESIGN LOADING:	HS20-44 AND ALTERNATE MILITARY LOADING
WEARING SURFACE:	MONOLITHIC CONCRETE
APPROACH SLABS:	15'-0" (12" THICK)
ALIGNMENT:	TANGENT
CROWN:	3/16" PER FOOT
SIDEWALK:	4'-0" WITH FENCE
LONGITUDE:	W 81° 55' 51"
LATITUDE:	N 41° 28' 00"

N

0 10 20 40 HORIZONTAL SCALE IN FEET

CALCULATED SDL CHECKED RJZ

PLAN AND PROFILE
STA. 47+00 TO STA. 52+00
CAHOON ROAD
CUY-90-0.00

337
582

BEGIN WORK
STA. 22+98.80

POT = STA. 23+00
MEET EXISTING
PAVEMENT

GR-5 MEET EXISTING GUARDRAIL
AT STA. 23+03.28*

GUARDRAIL POST
STA. 23+22.03

EXIST.
SIDEWALK
(TYP.)

U-5

1'-0"
(TYP.)

18" SAN

N 01° 20' 22" E

EXIST. MONUMENT BOX
TO REMAIN

U-6 PROP
CURB
(TYP.)

12" W

EXIST.
CURB
(TYP.)

PROP. SIDEWALK (TYP.)

SIDEWALK REMOVED (TYP.)

CURB REMOVED (TYP.)

MEET EXISTING GUARDRAIL
AT STA. 23+14.75* GR-6

Ex. R/W

GUARDRAIL POST
STA. 23+33.50

END APPROACH SLAB
STA. 23+48.52

EXISTING CUY. COUNTY
NO. 3-C CATCH BASINS
AT STA. 21+00 LT. & RT.
SHALL REMAIN IN SERVICE.

STA. 160+39.56 I.R. 90 =
STA. 24+72.37 CANTERBURY ROAD

Ex. LA

PR-3

14'-0"
14'-0"

4'-0" (TYP.)
SIDEWALK

24+00

161+00

160+00

73°-16'-24"

12' 12' 12'
12' 12' 12'

℄ WESTBOUND LANES

N 74° 36' 46" E

℄ EASTBOUND LANES

25+00

℄ CONSTRUCTION
& SURVEY

MEET EXISTING GUARDRAIL
AT STA. 26+27.91* GR-7

GUARDRAIL POST
STA. 26+09.16

TELECOMMUNICATION
DUCTS TO BE RELOCATED
BY OWNER

Ex. LA

26+00

PR-4

STA. 26+50, MEET
EXISTING PAVEMENT

U-7

END WORK
STA. 26+51.20

EXIST.
MONUMENT BOX
TO REMAIN

8" SAN

℄ CANTERBURY
ROAD (C.R. 84)

N 01° 20' 22" E

12" W

POT = STA. 26+86.671

U-8

GR-8 MEET EXISTING GUARDRAIL
AT STA. 26+39.55*

GUARDRAIL POST
STA. 26+20.80

BEGIN APPROACH SLAB
STA. 25+96.22

Ex. R/W

Ex. LA

* SEE GENERAL NOTE, SHT. 31

EXISTING CUY. COUNTY
NO. 3-C CATCH BASINS
AT STA. 28+25 LT. & RT.
SHALL REMAIN IN SERVICE.

FOR QUANTITIES SEE SHEET 248.

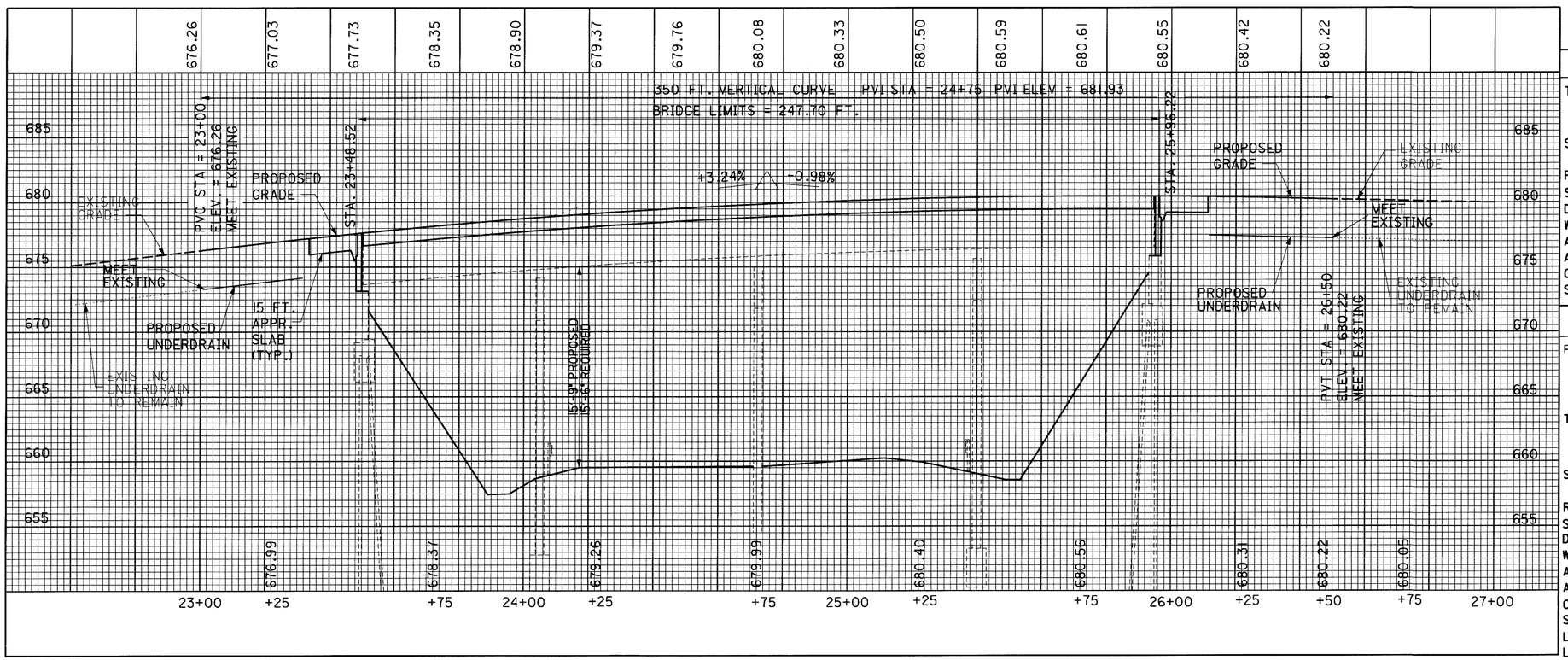

EXISTING STRUCTURE

TYPE:	CONTINUOUS STEEL BEAM BRIDGE (ASTM A36) WITH REINFORCED CONCRETE DECK AND SUBSTRUCTURE. BUILT IN 1969.
SPANS:	54'-0", 67'-6", 67'-6", 54'-0", c/c OF BEARINGS
ROADWAY:	**28'-0" f/f OF SIDEWALK**
SKEW:	16°-42'-55" R.F.
DESIGN LOADING:	CF 400 (57)
WEARING SURFACE:	1 1/2" ASPHALT CONCRETE
APPROACH SLABS:	AS-I-67 (25' LONG)
ALIGNMENT:	TANGENT
CROWN:	3/16" PER FOOT
SIDEWALK:	**4'-0" WITH FENCE**

PROPOSED STRUCTURE

PROPOSED WORK:	NEW COMPOSITE REINFORCED CONCRETE DECK, SIDEWALKS, RAILINGS AND APPROACH SLABS.
TYPE:	CONTINUOUS COMPOSITE STEEL BEAM BRIDGE (ASTM A36) WITH REINFORCED CONCRETE DECK AND SUBSTRUCTURE.
SPANS:	54'-0", 67'-6", 67'-6", 54'-0", **c/c OF BEARINGS**
ROADWAY:	28'-0" f/f OF SIDEWALK
SKEW:	16°-42'-55" R.F.
DESIGN LOADING:	HS20-44 AND ALTERNATE MILITARY LOADING
WEARING SURFACE:	MONOLITHIC CONCRETE
APPROACH SLABS:	15'-0" (12" THICK)
ALIGNMENT:	**TANGENT**
CROWN:	3/16" PER FOOT
SIDEWALK:	**4'-0" WITH FENCE**
LONGITUDE:	W 81° 54' 45"
LATITUDE:	N 41° 28' 15"

HORIZONTAL SCALE IN FEET
0 10 20 40

CALCULATED SDL CHECKED RJZ

CANTERBURY - PLAN AND PROFILE STA. 23+00 TO 26+50

CUY-90-0.00

338
582

REF NO.	SHEET NO.	ROAD	STATION FROM	STATION TO	SIDE	202 GUARDRAIL REMOVED	604 MONUMENT BOX ADJUSTED TO GRADE	605 6" SHALLOW PIPE UNDERDRAIN	606 GUARDRAIL TYPE 5	606 GUARDRAIL, END ASSEMBLY TYPE A	606 BRIDGE TERMINAL ASSEMBLY TYPE I	SPECIAL PRESSURE RELIEF JOINT, TYPE A
						LIN. FT.	EACH	LIN. FT.	LIN. FT.	EACH	EACH	LIN. FT.
GR-1		CAHOON	47+82.91	48+57.90	LT.	75.0			25.0	1	1	
GR-2		CAHOON	47+18.72	48+55.23	RT.	137.5			112.5	1	1	
GR-3		CAHOON	51+49.71	51+99.51	LT.	50.0			50.0		1	
GR-4		CAHOON	51+47.04	51+96.68	RT.	50.0			50.0		1	
GR-5		CANTERBURY	23+03.28	23+28.28	LT.	25.0			25.0		1	
GR-6		CANTERBURY	23+14.75	23+39.75	RT.	25.0			25.0		1	
GR-7		CANTERBURY	26+02.91	26+27.91	LT.	25.0			25.0		1	
GR-8		CANTERBURY	26+14.55	26+39.55	RT.	25.0			25.0		1	
M-1		CAHOON	51+86.62		:		1					
PR-1		CAHOON	48+54.22									29.0
PR-2		CAHOON	51+50.73									29.0
PR-3		CANTERBURY	23+33.52									29.0
PR-4		CANTERBURY	26+11.22									29.0
U-1		CAHOON	48+01.20	48+52.20	LT.			51.0				
U-2		CAHOON	47+98.75	48+46.75	RT.			48.0				
U-3		CAHOON	51+53.50	52+01.50	LT.			48.0				
U-4		CAHOON	51+50.75	51+98.75	RT.			48.0				
U-5		CANTERBURY	22+98.80	23+24.80	LT.			26.0				
U-6		CANTERBURY	23+00.90	23+34.90	RT.			34.0				
U-7		CANTERBURY	26+08.00	26+49.00	LT.			41.0				
U-8		CANTERBURY	26+17.20	26+51.20	RT.			50.5				
TOTALS CARRIED TO GENERAL SUMMARY						412.5	1	346.5	362.5	2	8	116.0

ITEM 451 - CONCRETE PAVEMENT

CAHOON ROAD

STA. 51+50.73 TO STA. 52+00.00
(49.27) (28) (1/9) = _____153.28 SQ. YD.

STA. 48+00.00 TO STA. 48+54.22
(54.22) (28) (1/9) = _____168.68 SQ. YD.

CANTERBURY ROAD

STA. 23+00.00 TO STA. 23+33.52
(33.52) (28) (1/9) = _____104.28 SQ. YD.

STA. 26+11.22 TO STA. 26+50.00
(38.78) (28) (1/9) = _____120.65 SQ. YD.

TOTAL ITEM 451 = 546.89 SQ. YD.
USE: 547 SQ. YD.

ITEM 304 - 6" AGGREGATE BASE

CAHOON ROAD

STA. 51+50.73 TO STA. 52+00.00
(49.27) (29) (6/12) (1/27) = _____26.46 CU. YD.

STA. 48+00.00 TO STA. 48+54.22
(54.22) (29) (6/12) (1/27) = _____29.12 CU. YD.

STA. 48+54.22 TO STA. 48+69.22
(15.00) (28) (6/12) (1/27) = _____7.78 CU. YD.

STA. 51+35.73 TO STA. 51+50.73
(15.00) (28) (6/12) (1/27) = _____7.78 CU. YD.

CANTERBURY ROAD

STA. 23+00.00 TO STA. 23+33.52
(33.52) (29) (6/12) (1/27) = _____18.00 CU. YD.

STA. 26+11.22 TO STA. 26+50.00
(38.78) (29) (6/12) (1/27) = _____20.83 CU. YD.

STA. 23+33.52 TO STA. 23+48.52
(15.00) (28) (6/12) (1/27) = _____7.78 CU. YD.

STA. 25+96.22 TO STA. 26+11.22
(15.00) (28) (6/12) (1/27) = _____7.78 CU. YD.

TOTAL ITEM 304 = 125.53 CU. YD.
USE: 126 CU. YD.

ITEM 608 - 4" CONCRETE WALK

CANTERBURY ROAD

STA. 22+98.80 TO STA. 23+26.18 LT.
(27.38) (4) = _____109.52 SQ. FT.

STA. 23+01.20 TO STA. 23+37.65 RT.
(38.78) (4) = _____145.80 SQ. FT.

STA. 26+05.01 TO STA. 26+48.80 LT.
(38.78) (4) = _____175.16 SQ. FT.

STA. 26+16.65 TO STA. 26+51.20 RT.
(38.78) (4) = _____138.20 SQ. FT.

TOTAL ITEM 608 = 568.68 SQ. FT.
USE: 569 SQ. FT.

ITEM ~~608~~ 830 - CURB, TYPE 2A, A.P.P.

CAHOON ROAD

STA. 48+01.20 TO STA. 48+55.29 LT.
(54.09) = _____54.09 L.F.

STA. 47+98.80 TO STA. 48+53.13 LT.
(54.33) = _____54.33 L.F.

STA. 51+51.81 TO STA. 52+01.20 LT.
(49.39) = _____49.39 L.F.

STA. 51+49.66 TO STA. 51+98.80 RT.
(49.14) = _____49.14 L.F.

TOTAL ITEM 609 = 206.95 L.F.
USE: 207 L.F.

ITEM ~~608~~ 830 - CURB, TYPE 2B, A.P.P.

CANTERBURY ROAD

STA. 22+98.80 TO STA. 23+29.31 LT.
(30.51) = _____30.51 L.F.

STA. 23+01.20 TO STA. 23+37.65 RT.
(36.45) = _____36.45 L.F.

STA. 26+07.01 TO STA. 26+48.80 LT.
(41.79) = _____41.79 L.F.

STA. 26+16.65 TO STA. 26+51.20 RT.
(34.55) = _____34.55 L.F.

TOTAL ITEM 609 = 143.30 L.F. USE: 143 L.F.

ITEM 448 - ASPHALT CONCRETE, SURFACE COURSE

CANTERBURY ROAD

STA. 23+00.00 TO STA. 23+33.52
(33.52) (28) (5/4) (1/12) (1/27) = _____3.62 CU. YD.

STA. 26+11.22 TO STA. 26+50.00
(38.78) (28) (5/4) (1/12) (1/27) = _____4.19 CU. YD.

TOTAL ITEM 448 = 7.81 CU. YD.
USE: 8 CU. YD.

ITEM 448 - ASPHALT CONCRETE, INTERMEDIATE COURSE

CANTERBURY ROAD

STA. 23+00.00 TO STA. 23+33.52
(33.52) (28) (5/4) (1/12) (1/27) = _____3.62 CU. YD.

STA. 26+11.22 TO STA. 26+50.00
(38.78) (28) (5/4) (1/12) (1/27) = _____4.19 CU. YD.

TOTAL ITEM 448 = 7.81 CU. YD.
USE: 8 CU. YD.

ITEM 407 - TACK COAT

CANTERBURY ROAD

STA. 23+00.00 TO STA. 23+33.52
(33.52) (28) (1/9) (0.075) = _____7.82 GAL.

STA. 26+11.22 TO STA. 26+50.00
(38.78) (28) (1/9) (0.075) = _____9.05 GAL.

TOTAL ITEM 407 = 16.87 GAL.
USE: 17 GAL.

ITEM 407 - TACK COAT FOR INTERMEDIATE COURSE

CANTERBURY ROAD

STA. 23+00.00 TO STA. 23+33.52
(33.52) (28) (1/9) (0.075/2) = _____3.91 GAL.

STA. 26+11.22 TO STA. 26+50.00
(38.78) (28) (1/9) (0.075/2) = _____4.53 GAL.

TOTAL ITEM 407 = 8.43 GAL.
USE: 9 GAL.

ITEM 611 - CONCRETE APPROACH SLAB (T = 12")

CAHOON ROAD

STA. 48+54.22 TO STA. 48+69.22
(15.00) (28) (1/9) = _____46.67 SQ. YD.

STA. 51+35.73 TO STA. 51+50.73
(15.00) (28) (1/9) = _____46.67 SQ. YD.

CANTERBURY ROAD

STA. 23+33.52 TO STA. 23+48.52
(15.00) (28) (1/9) = _____46.67 SQ. YD.

STA. 25+96.22 TO STA. 26+11.22
(15.00) (28) (1/9) = _____46.67 SQ. YD.

TOTAL ITEM 611 = 186.67 SQ. YD.
USE: 187 SQ. YD.

ITEM 203 - SUBGRADE COMPACTION

CAHOON ROAD

STA. 51+50.73 TO STA. 52+00.00
(49.27) (29) (1/9) = _____158.76 SQ. YD.

STA. 48+00.00 TO STA. 48+54.22
(54.22) (29) (1/9) = _____174.71 SQ. YD.

STA. 48+54.22 TO STA. 48+69.22
(15.00) (28) (1/9) = _____46.67 SQ. YD.

STA. 51+35.73 TO STA. 51+50.73
(15.00) (28) (1/9) = _____46.67 SQ. YD.

CANTERBURY ROAD

STA. 23+00.00 TO STA. 23+33.52
(33.52) (29) (1/9) = _____108.01 SQ. YD.

STA. 26+11.22 TO STA. 26+50.00
(38.78) (29) (1/9) = _____124.96 SQ. YD.

STA. 23+33.52 TO STA. 23+48.52
(15.00) (28) (1/9) = _____46.67 SQ. YD.

STA. 25+96.22 TO STA. 26+11.22
(15.00) (28) (1/9) = _____46.67 SQ. YD.

TOTAL ITEM 203 = 753.12 SQ. YD.
USE: 753 SQ. YD.

ITEM 202 - PAVEMENT REMOVED

SAME AS ABOVE: ITEM 203 - SUBGRADE COMPACTION

TOTAL ITEM 202 = 753.12 SQ. YD.
USE: 753 SQ. YD.

ITEM 202 - WALK REMOVED

SAME AS ITEM 608 - 4" CONCRETE WALK

TOTAL ITEM 202 = 568.68 SQ. FT.
USE: 569 SQ. FT.

ITEM 202 - CURB REMOVED

SAME AS ITEM 609 - CURB, TYPE A&B, A.P.P.

TOTAL ITEM 202 = 350.25 L.F.
USE: 350 L.F.

CALCULATED SDL CHECKED RJZ

ESTIMATED QUANTITIES

CUY-90-0.00

339
582

II738GSA.DGN 02 FEBRUARY 2000

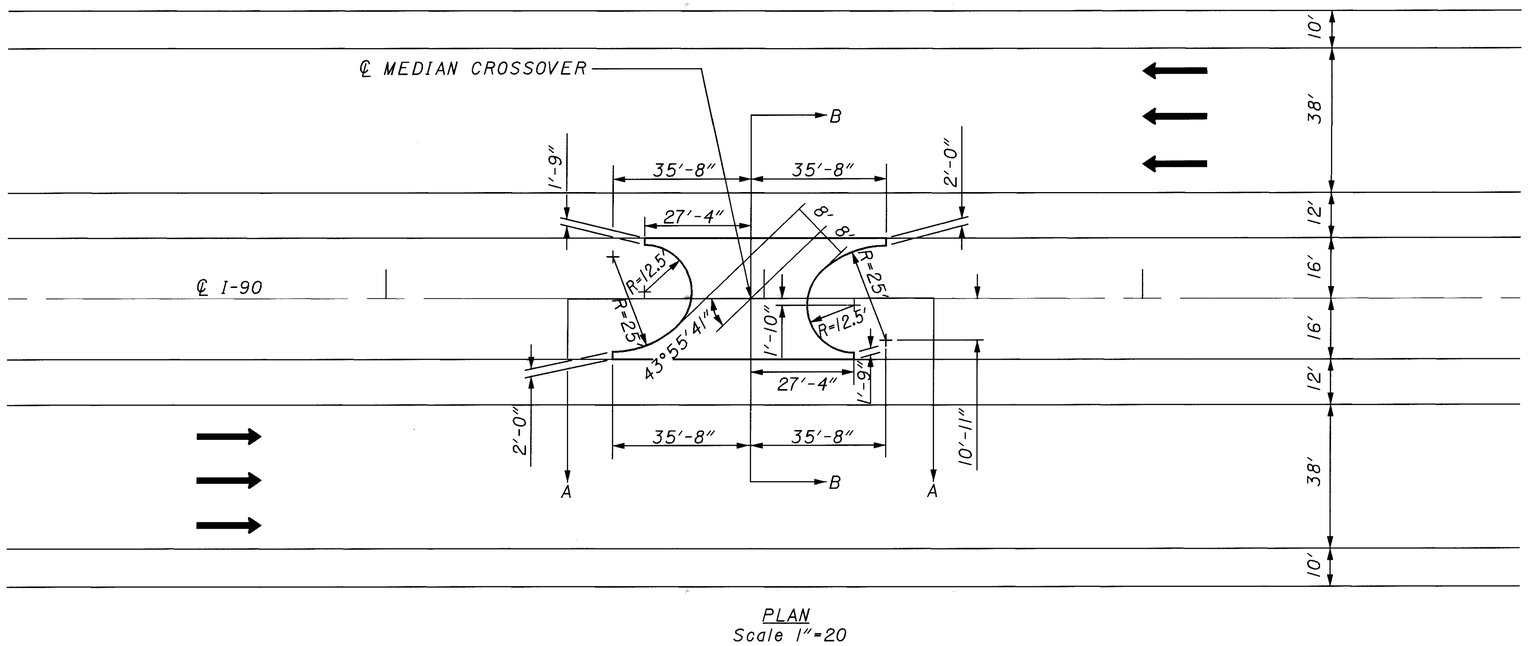

PLAN
Scale 1"=20

EXTRA QUANTITIES

	202	203	302	304	407	407	446	446	855
MEDIAN CROSSOVER STATION	PAVEMENT REMOVED	SUBGRADE COMPACTION	11 1/4" BITUMINOUS AGGREGATE BASE	6" AGGREGATE BASE, AS PER PLAN	TACK COAT FOR INTERMEDIATE COURSE	TACK COAT	1 1/2" ASPHALT CONCRETE SURFACE COURSE, TYPE IH, AS PER PLAN	1 3/4" ASPHALT CONCRETE INTERMEDIATE COURSE, TYPE 2, PG 64-28	4" ASPHALT TREATED FREE DRAINING BASE
	SY	SY	CY	SY	GAL	GAL	CY	CY	SY
2+96.5	88.6	106	27.76	14.76	3.54	6.64	3.84	4.44	9.74
77+78.45	89.0	106	27.84	14.80	3.54	6.64	3.86	4.44	9.78
SHEET TOTAL	177.6	212	55.60	29.56	7.08	13.28	7.70	8.88	19.52
TOTALS CARRIED TO PAVEMENT SUBSUMMARY	178	212	56	30	8	14	8	9	20

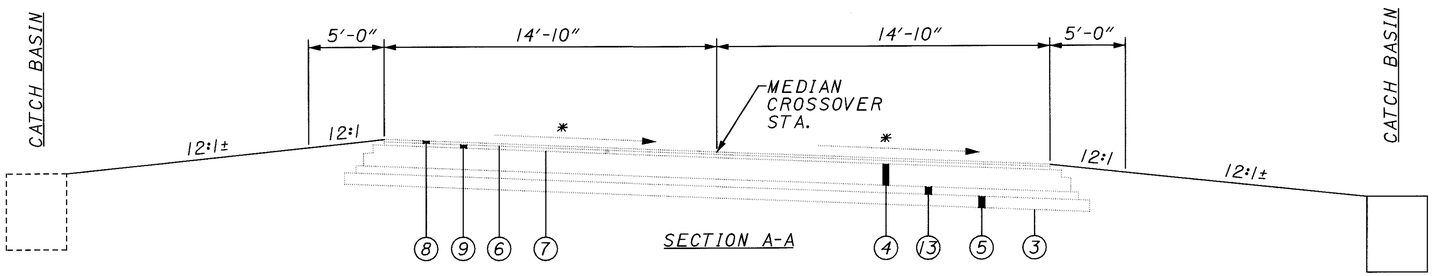

SECTION A-A

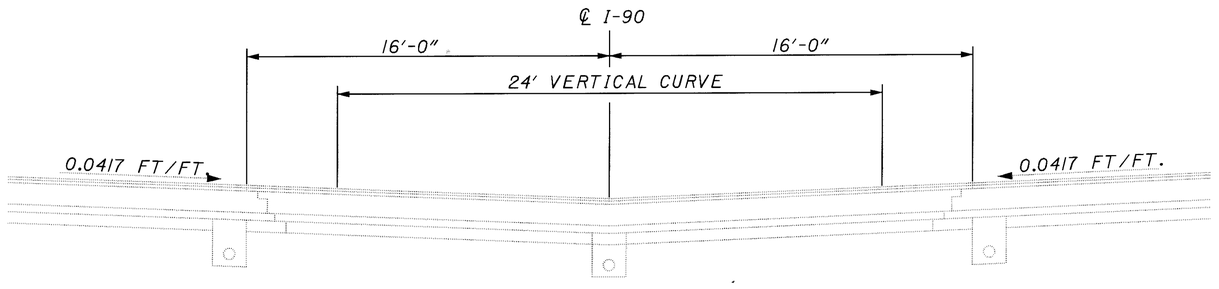

TYPICAL MEDIAN CROSSOVER
SECTION B-B

PROPOSED

(3) ITEM 203 - SUBGRADE COMPACTION AND PROOF ROLLING
(4) ITEM 302 - 11 1/4" BITUMINOUS AGGREGATE BASE
(5) ITEM 304 - 6" AGGREGATE BASE
(6) ITEM 407 - TACK COAT FOR INTERMEDIATE COURSE
(7) ITEM 407 - TACK COAT
(8) ITEM 446 - 1 1/2" ASPHALT CONCRETE SURFACE COURSE, TYPE IH, AS PER PLAN
(9) ITEM 446 - 1 3/4" ASPHALT CONCRETE INTERMEDIATE COURSE, TYPE 2, PG 64-28
(13) ITEM 855 - 4" ASPHALT TREATED FREE DRAINING BASE

* THE CROSS SLOPE ON THE MEDIAN CROSSOVER IS THE SAME AS THE LONGITUDINAL SLOPE OF I-90.

CALCULATED NJG
CHECKED RAS

MEDIAN CROSSOVER DETAIL

CUY-90-0.00

340
582

I:\PROJECTS\Pid11738\dgn\final plans\11738GMA.DGN 21-JUL-2000 12:10PM jgrmovse

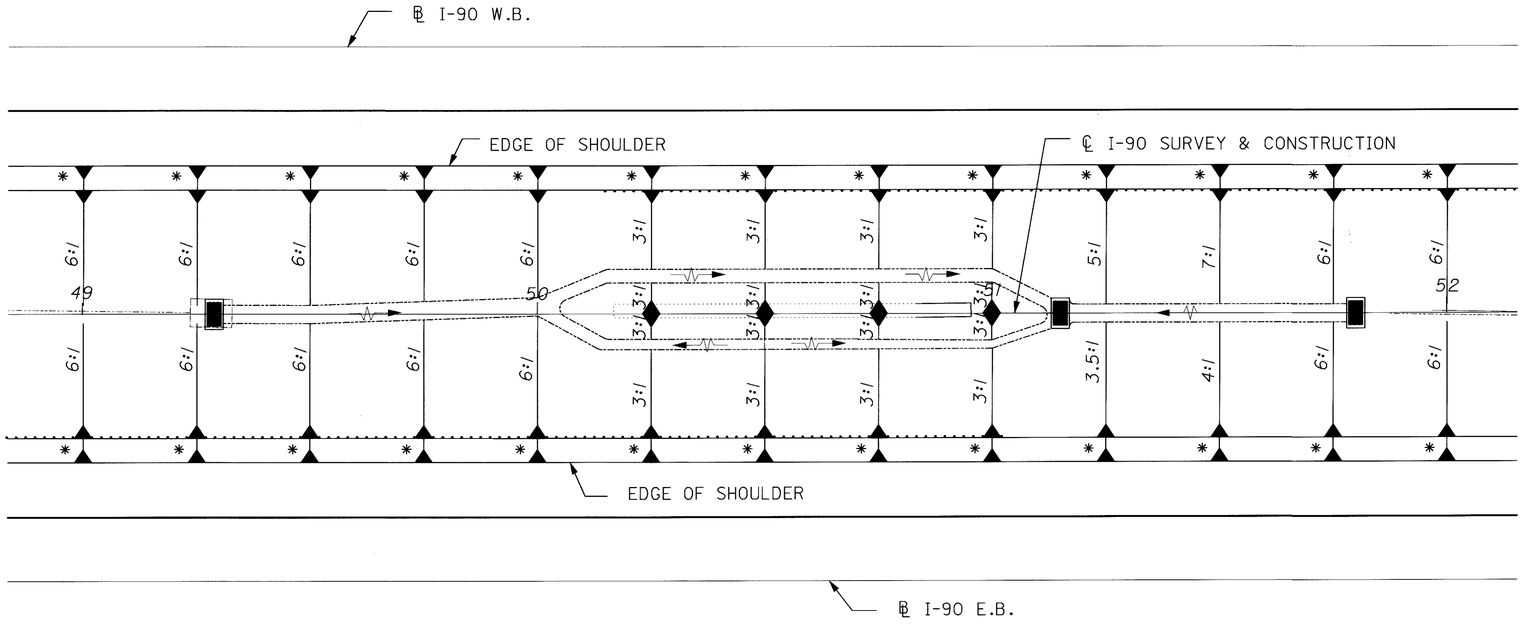

* 12:1 SLOPE

STA 49+29 TO STA 51+80

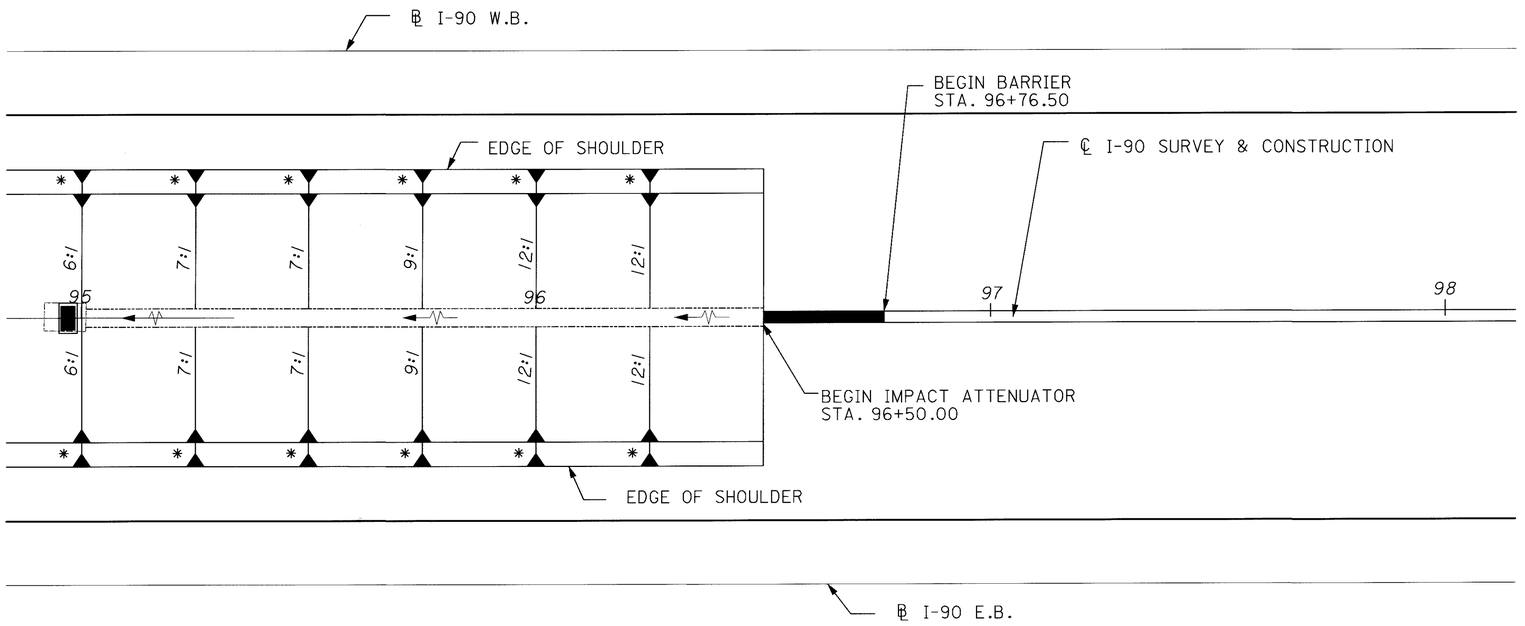

* 12:1 SLOPE

STA 95+00 TO STA 96+50

HORIZONTAL SCALE IN FEET
0 25 50 100

CALCULATED

CHECKED

MEDIAN GRADING DETAIL

CUY-90-0.00

08 MAR 2000
P:\pr22308\cadd\11738gpd.dgn

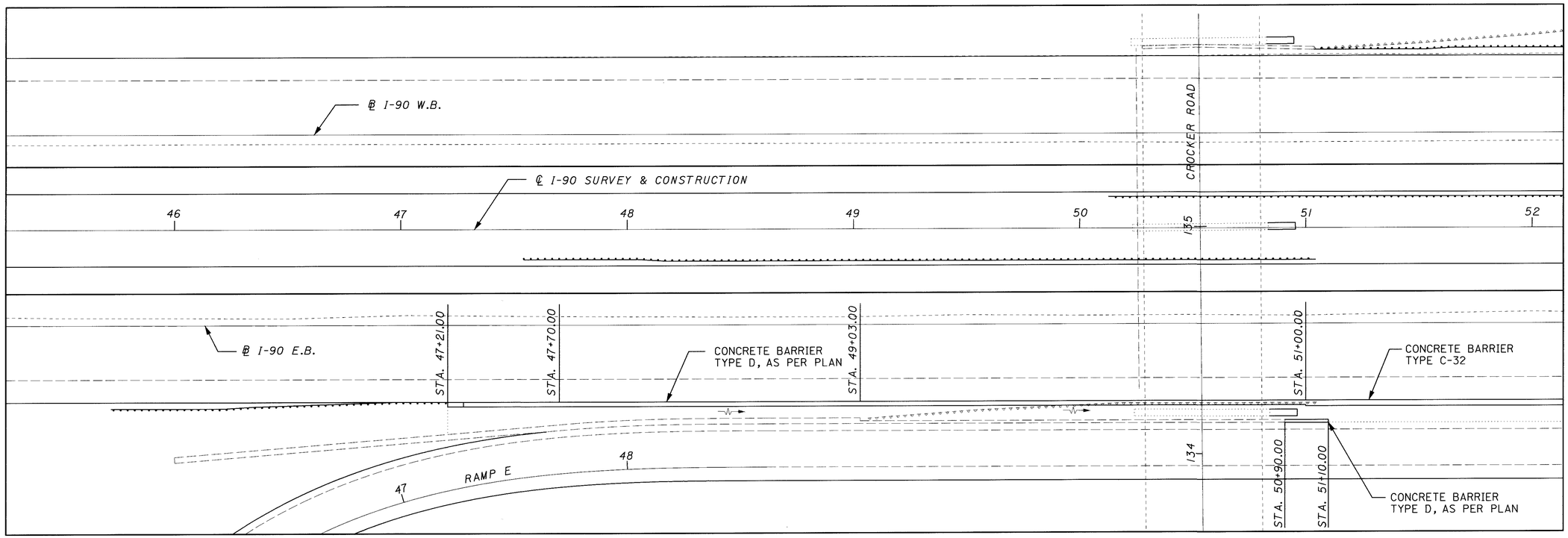

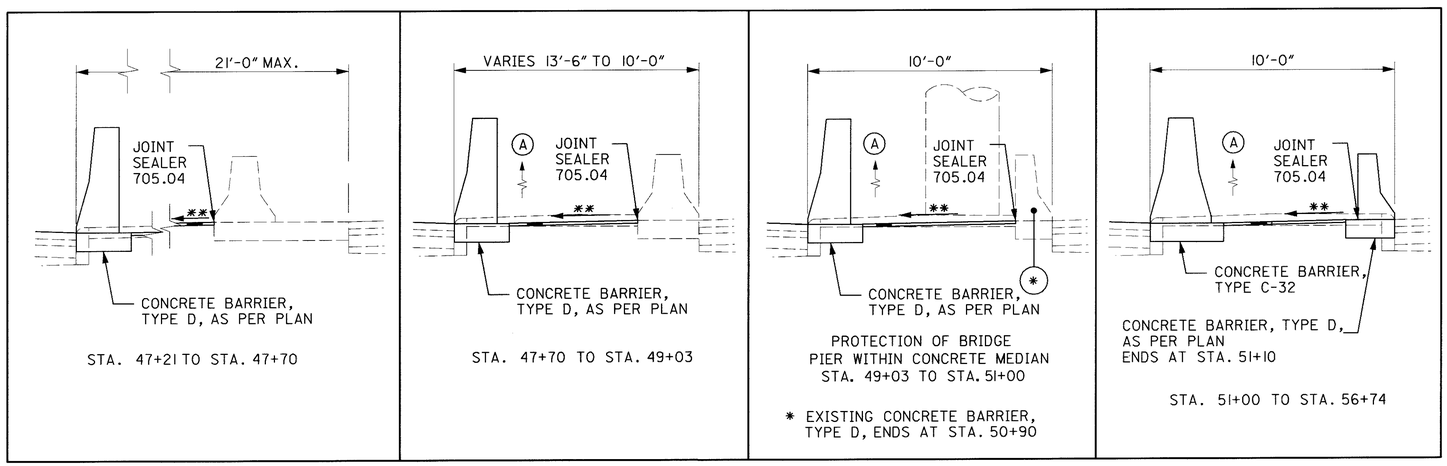

(A) SLOPE TO PROVIDE POSITIVE DRAINAGE TOWARD CATCH BASIN @ STA 51+20

** SLOPE 1-1/4" ASPHALT TO PROVIDE POSITIVE DRAINAGE TOWARD MAINLINE

08 MAR 2000
p:\pr2308\cadd\l738gpd.dgn

BARRIER RAMP DETAIL

CUY-90-0.00

342
582

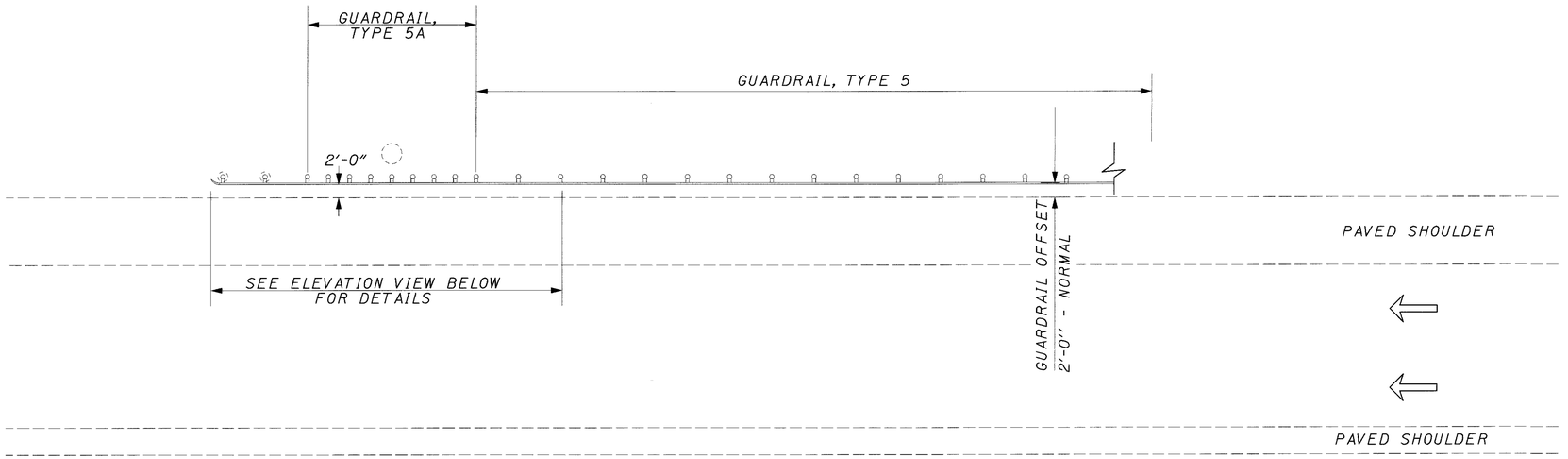

TYPE 5A GUARDRAIL PROTECTION FOR OVERHEAD SIGN SUPPORTS

REQUIRED WHEN FACE OF HAZARD IS BETWEEN 5'-6" AND 3'-6" OF FACE OF GUARDRAIL

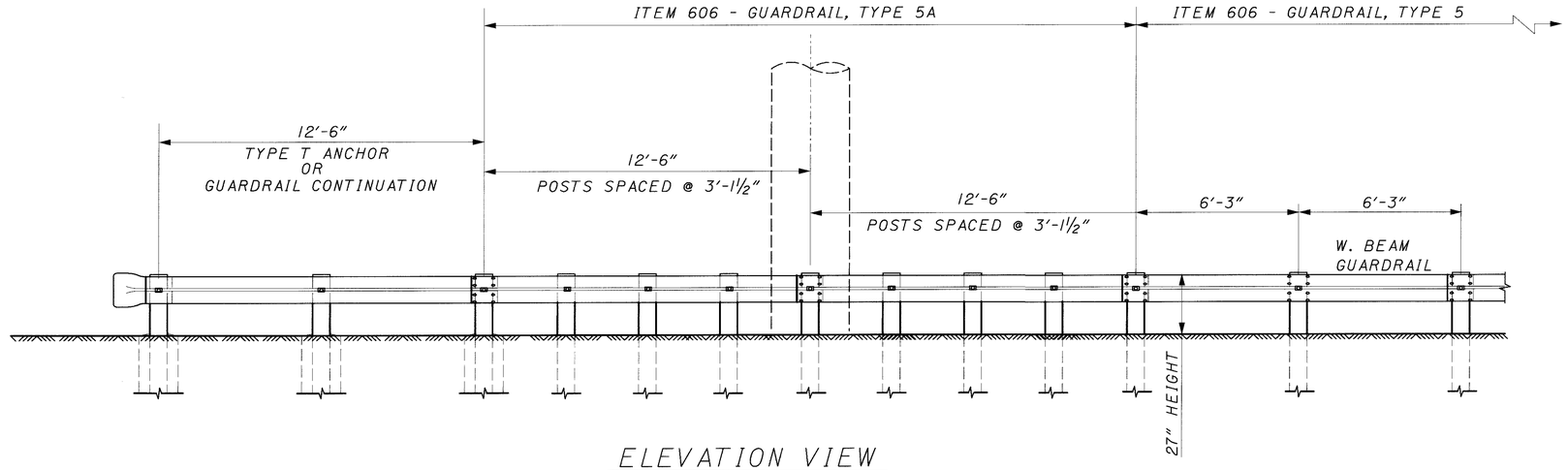

ELEVATION VIEW

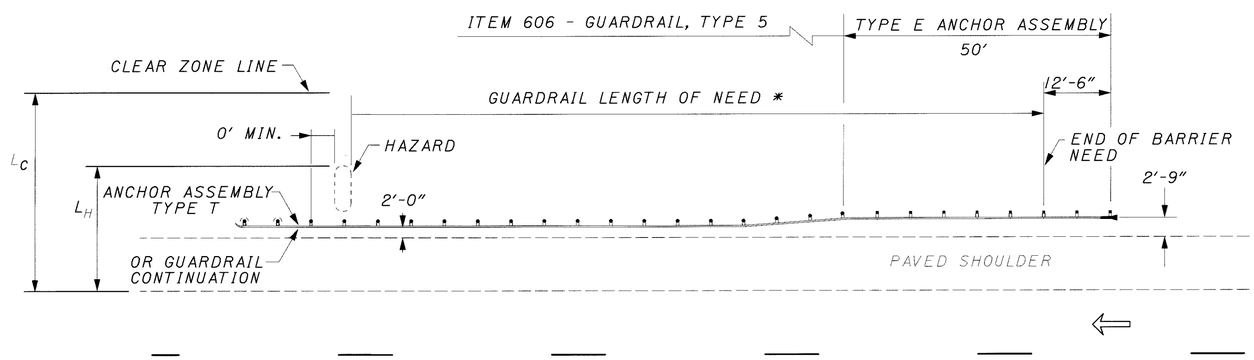

TYPICAL GUARDRAIL PROTECTION OF HAZARDS

CALCULATED
CHECKED

GUARDRAIL DETAILS - TYPE 5A PROTECTION

CUY-90-0.00

09 MAR 2000
p:\pr22308\cadd\11738grb.dgn

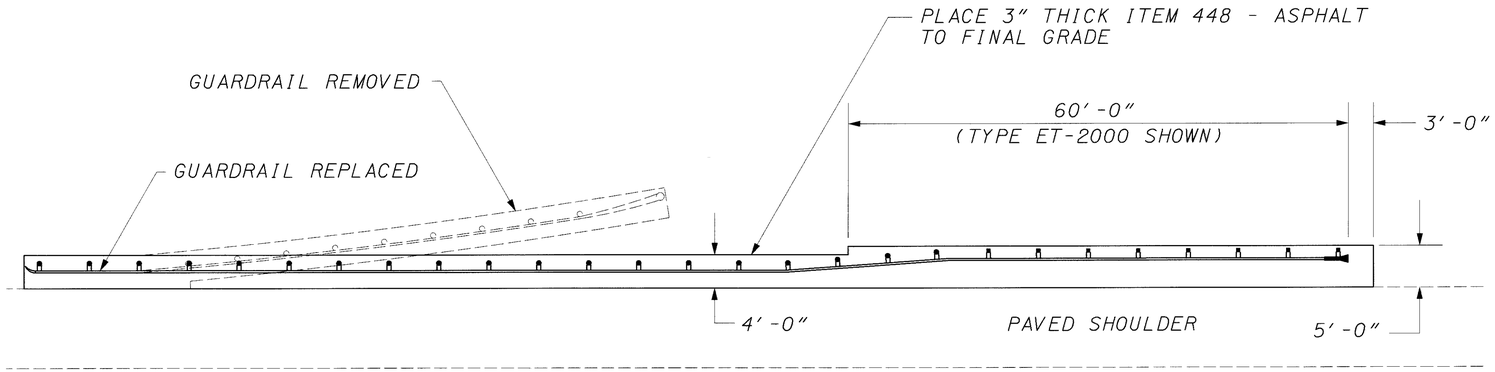

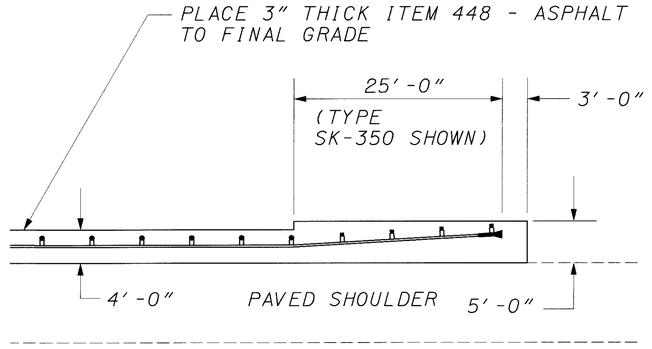

ITEM 448 FOR EROSION CONTROL WITH TYPE E-98 ANCHOR ASSEMBLY

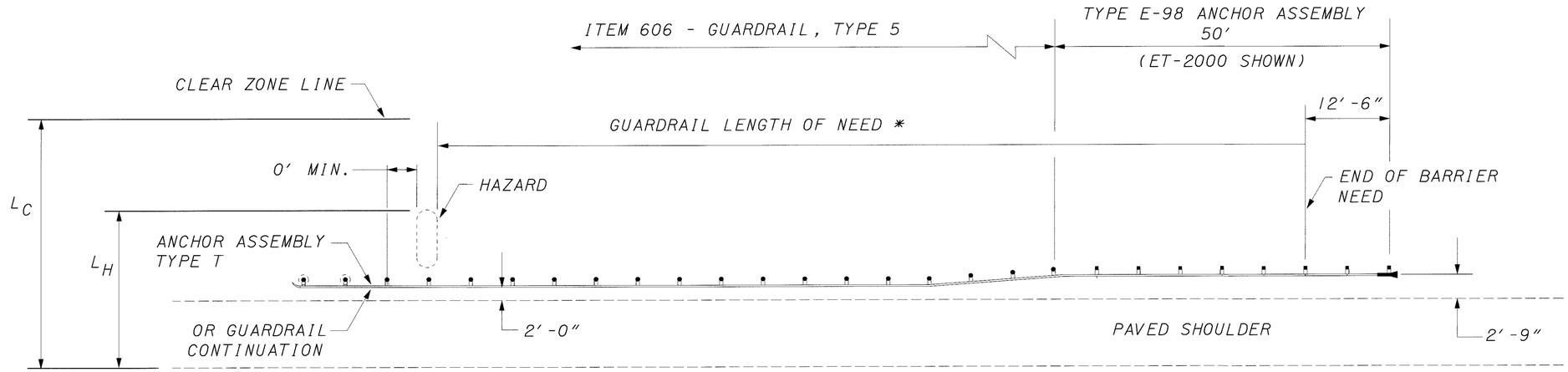

TYPICAL GUARDRAIL PROTECTION OF HAZARDS

CALCULATED

CHECKED

GUARDRAIL PROTECTION OF HAZARDS

CUY-90-0.00

344
582

09 MAR 2000
D:\Apr22308\cadd\ll738grc.dgn

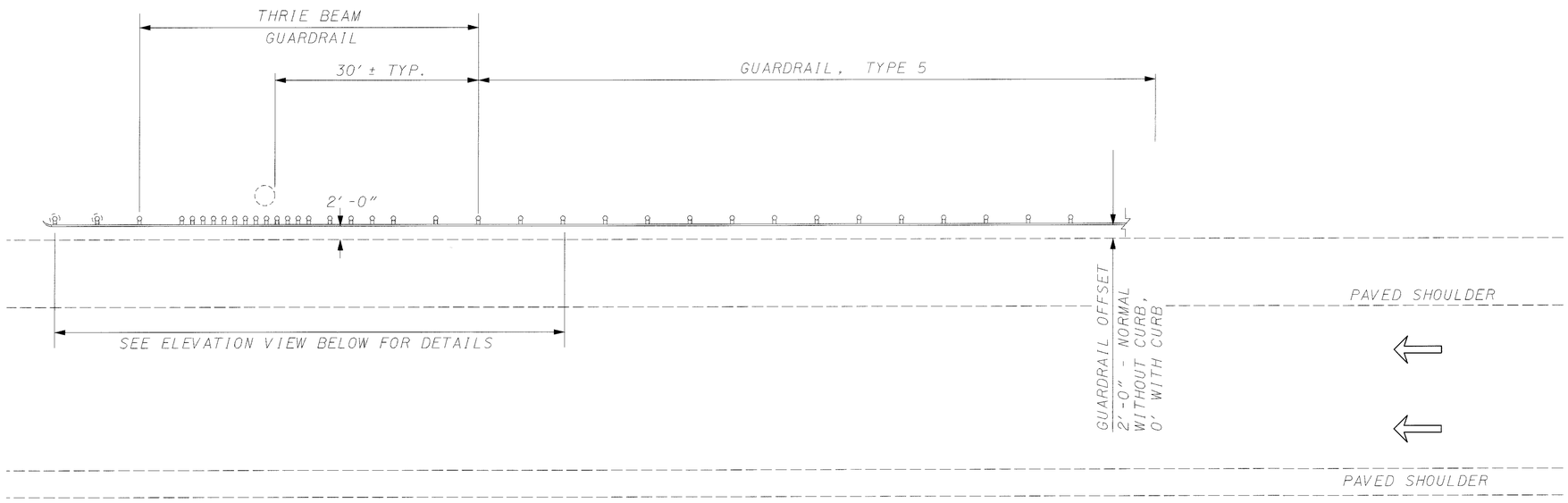

THRIE BEAM GUARDRAIL PROTECTION FOR OVERHEAD SIGN SUPPORTS OR PIERS

REQUIRED WHEN FACE OF HAZARD IS BETWEEN 3'-6" AND 2'-9" OF NORMAL GUARDRAIL OFFSET

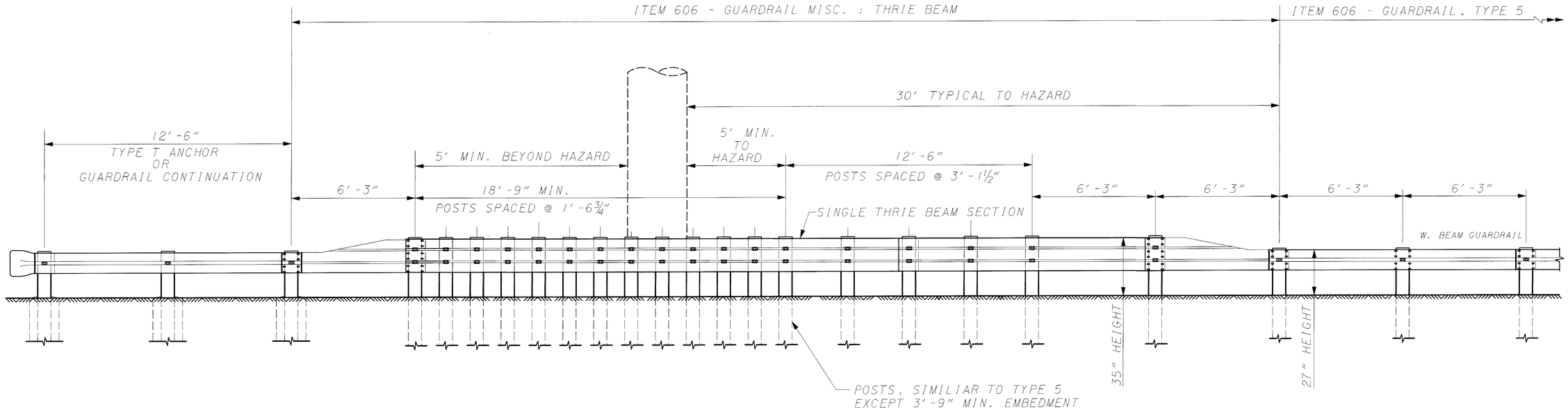

ELEVATION VIEW

CALCULATED | CHECKED

THRIE BEAM GUARDRAIL PROTECTION FOR OVERHEAD SIGN SUPPORTS OR PIERS

CUY-90-0.00

345
582

09 MAR 2000
P:\pr22308\cadd\ll738gre.dgn

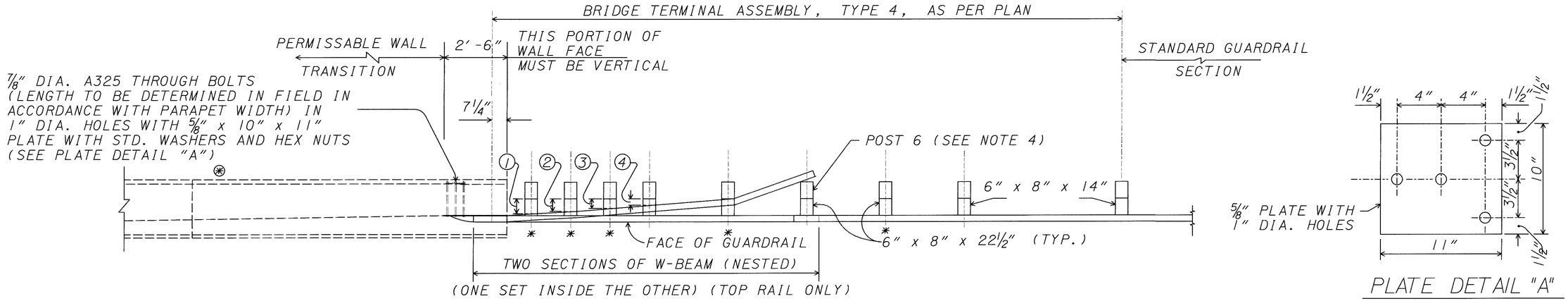

PLAN

PLATE DETAIL "A"

⊛ FOR ATTACHMENT TO ABUTMENT WALLS, THIS ITEM REAUIRES THE USE OF PIOLYESTER RESIN ANCHORS WITH FEMALE THREADED INSERTS (10" LONG) (PLATE DETAIL NOT REQUIRED)

* GUARDRAIL NOT ATTACHED TO POSTS. BLOCKOUT FASTENED TO POST WITH STD. POST BOLT.

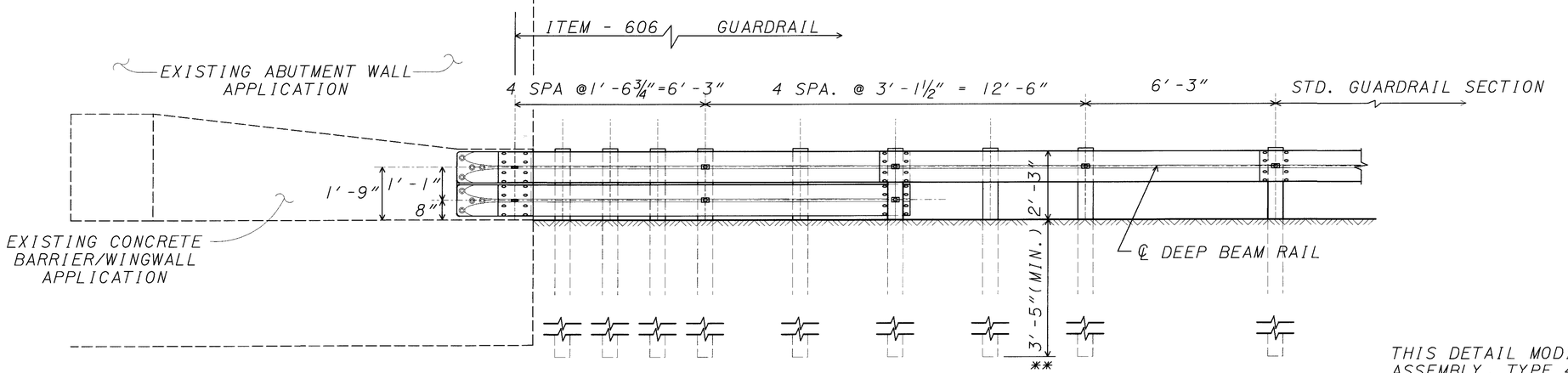

ELEVATION

GENERAL NOTES

1. THIS GUARDRAIL TRANSITION IS APPROPRIATE FOR CONNECTION TO VERTICAL CONCRETE SHAPE AND SHOULD NOT BE CONNECTED DIRECTLY TO A CONCRETE SAFETY SHAPE. CONCRETE SAFETY SHAPE BARRIERS SHOULD BE TRANSITIONED TO A VERTICAL SHAPE AT THE GUARDRAIL CONNECTION.
2. THE RUBRAIL MAY BE SHOP BENT IN THE LAST 3 FEET TO FACILITATE INSTALLATION.
3. BOTTOM WOOD BLOCKS, LOCATED ON POSTS 1,2,3, AND 4 ARE CENTER DRILLED AND SECURED WITH 5/8" CARRIAGE BOLTS.
4. POSTS 1,2,3,4, AND 6 REQUIRE AN ADDITIONAL HOLE TO ATTACH LOWER BLOCKS AND/OR LOWER BEAM.
5. SEE STANDARD CONSTRUCTION DRAWINGS GR-1.2M AND G3-3.4M FOR ADDITIONAL DETAILS.

** SEE STD. CONSTRUCTION DRAWING GR-1.2 FOR ADDITIONAL POST EMBEDMENT DETAILS.

BLOCKOUT CHART BOTTOM BEAM WOOD BLOCKS 1'-2"X6"	
POST	THICKNESS
1	7"
2	6"
3	4.5"
4	3"

THIS DETAIL MODIFIES A BRIDGE TERMINAL ASSEMBLY, TYPE 4 FOR CONNECTION TO A VERTICAL WALL.
ALL DIMENSIONS AND DETAILS SHOWN ARE IN AGREEMENT WITH THE APPROVED CRASHWORTHY GUARDRAIL TRANSITION FOUND IN "FHWA TECHNICAL ADVISORY T 5040.26" AND THE "ROADSIDE DESIGN GUIDE"

CALCULATED | CHECKED

BRIDGE TERMINAL ASSEMBLY, TYPE 4, AS PER PLAN

CUY-90-0.00

09 MAR 2000
p:\br22308\cadd\l738grg.dgn

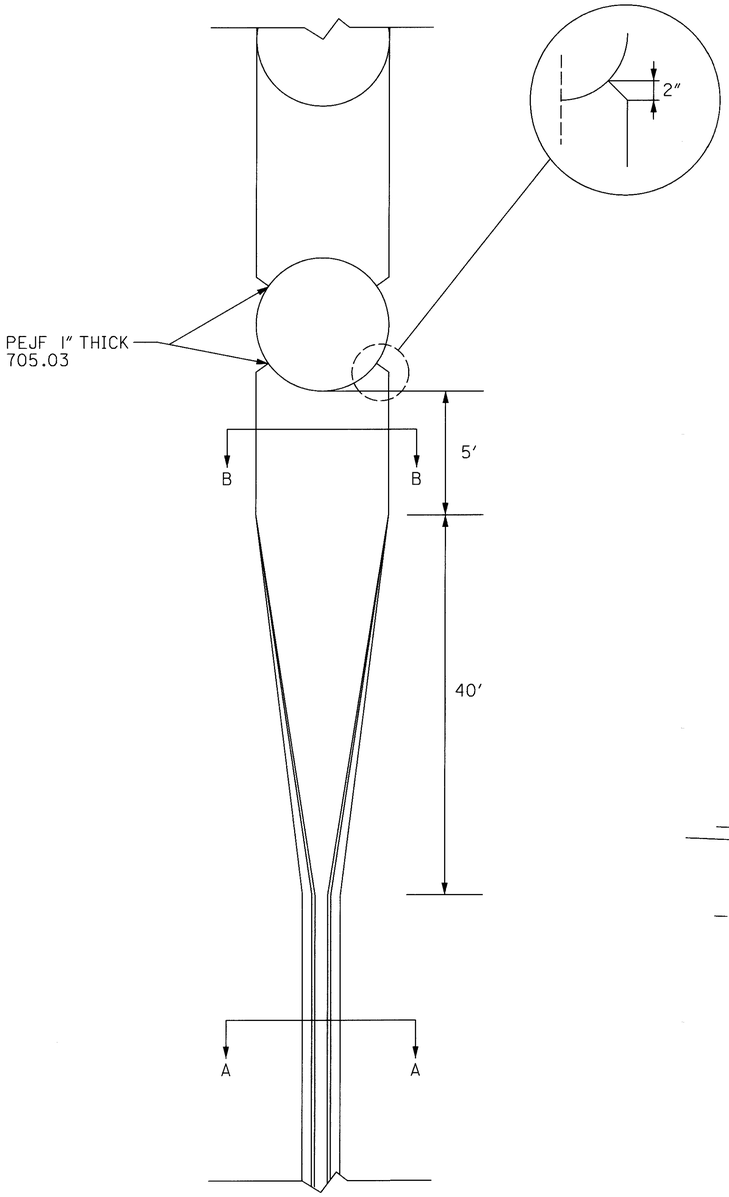

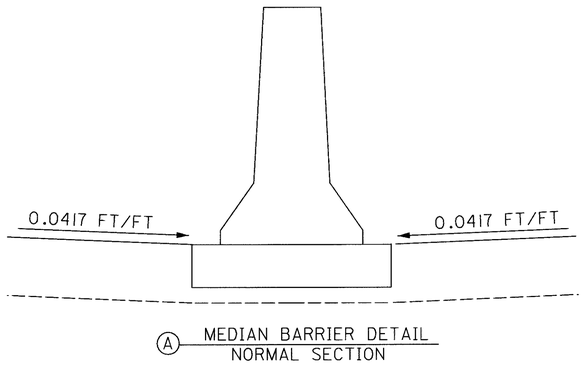

Ⓐ MEDIAN BARRIER DETAIL
NORMAL SECTION

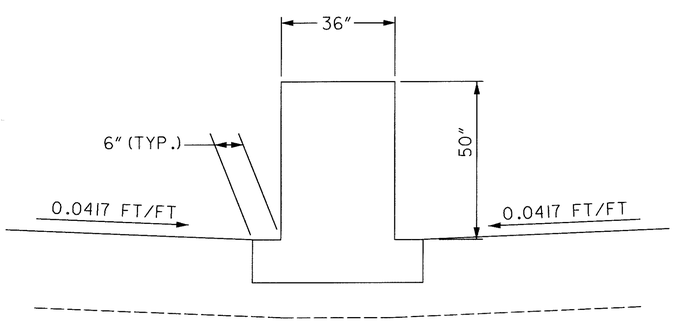

Ⓑ MEDIAN BARRIER PIER DETAIL
SECTION UNDER BRIDGE

CONCRETE BARRIER, TYPE B-50
MEDIAN BARRIER DETAIL UNDER BRIDGES

CUY-90-0303 AND CUY-90-0879

NOT TO SCALE

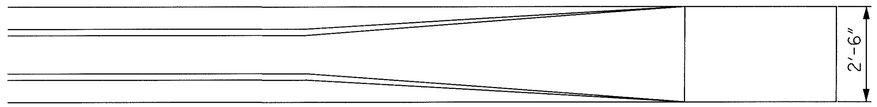

PLAN VIEW

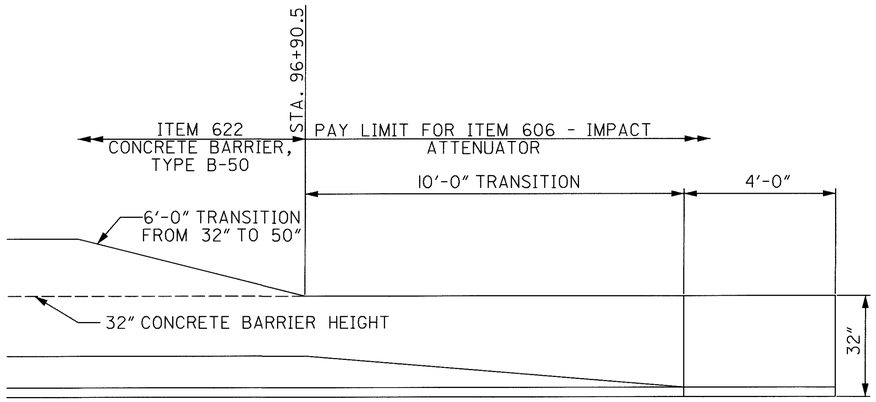

ELEVATION VIEW

NOTE: SEE MANUFACTURER'S DRAWING 35-40-08 FOR BARRIER END DETAILS

CONCRETE BARRIER, TYPE B-50
CONCRETE BACKUP DETAILS

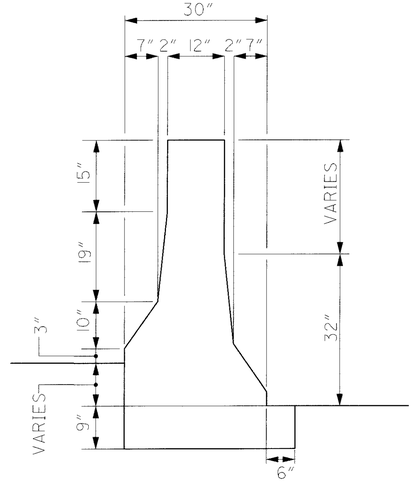

CONCRETE BARRIER, TYPE C-50, AS PER PLAN

BARRIER DETAILS

CUY-90-0.00

09 MAR 2000
P:\pr22308\caddd\1738grd.dgn

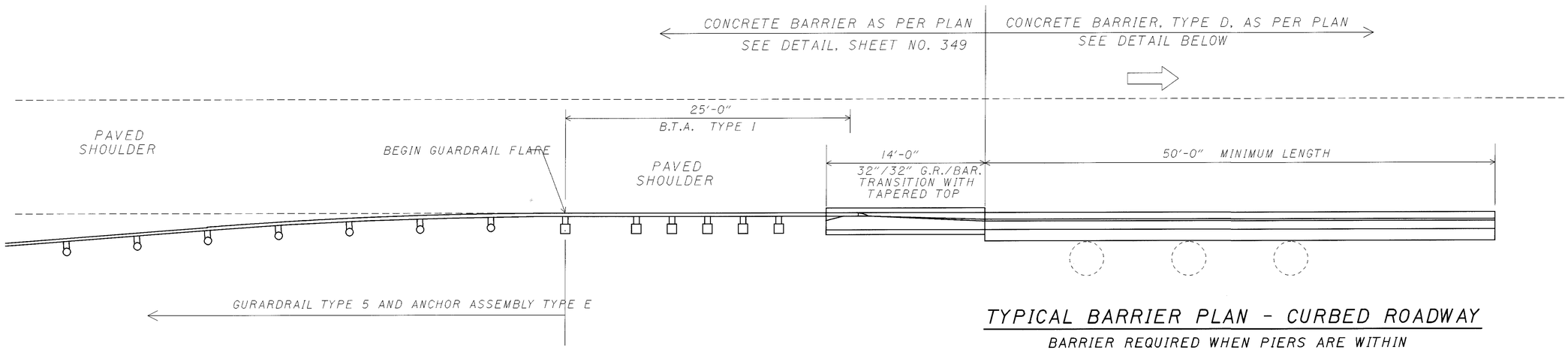

TYPICAL BARRIER PLAN - CURBED ROADWAY

BARRIER REQUIRED WHEN PIERS ARE WITHIN
2'-9" OF NORMAL GUARDRAIL OFFSET

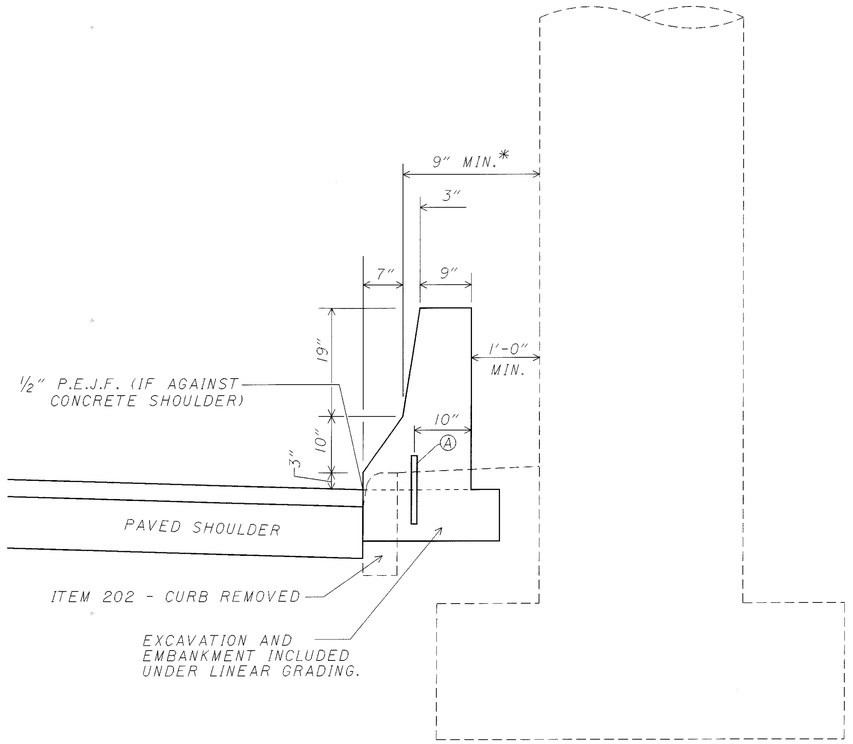

* - IF PIER IS CLOSER THAN 12 1/2 INCHES TO NORMAL GUARDRAIL OFFSET THEN REDUCE BARRIER TOP WIDTH AT PIER ONLY AND PLACE 1/2 " P.E.J.F. (705.03) BETWEEN PIER AND BARRIER. TREAT CONCRETE BASE SIMILARLY.

Ⓐ - No. 8 DEFORMED STEEL BARS, 12" LONG, SPACED ON 2" CENTERS

TYPICAL BARRIER SECTION - CURBED ROADWAY

ITEM 622 - CONCRETE BARRIER, TYPE D, AS PER PLAN
(DETAIL FOR BARRIER UNDER CROCKER ROAD BRIDGE EASTBOUND)

CALCULATED | CHECKED

BARRIER PROTECTION OF PIERS

CUY-90-0.00

348
582

i:\PROJECTS\Pidll738\dgn\finalplans\ll738GRL.dgn 21-JUL-2000 12:12PM jgrmovse

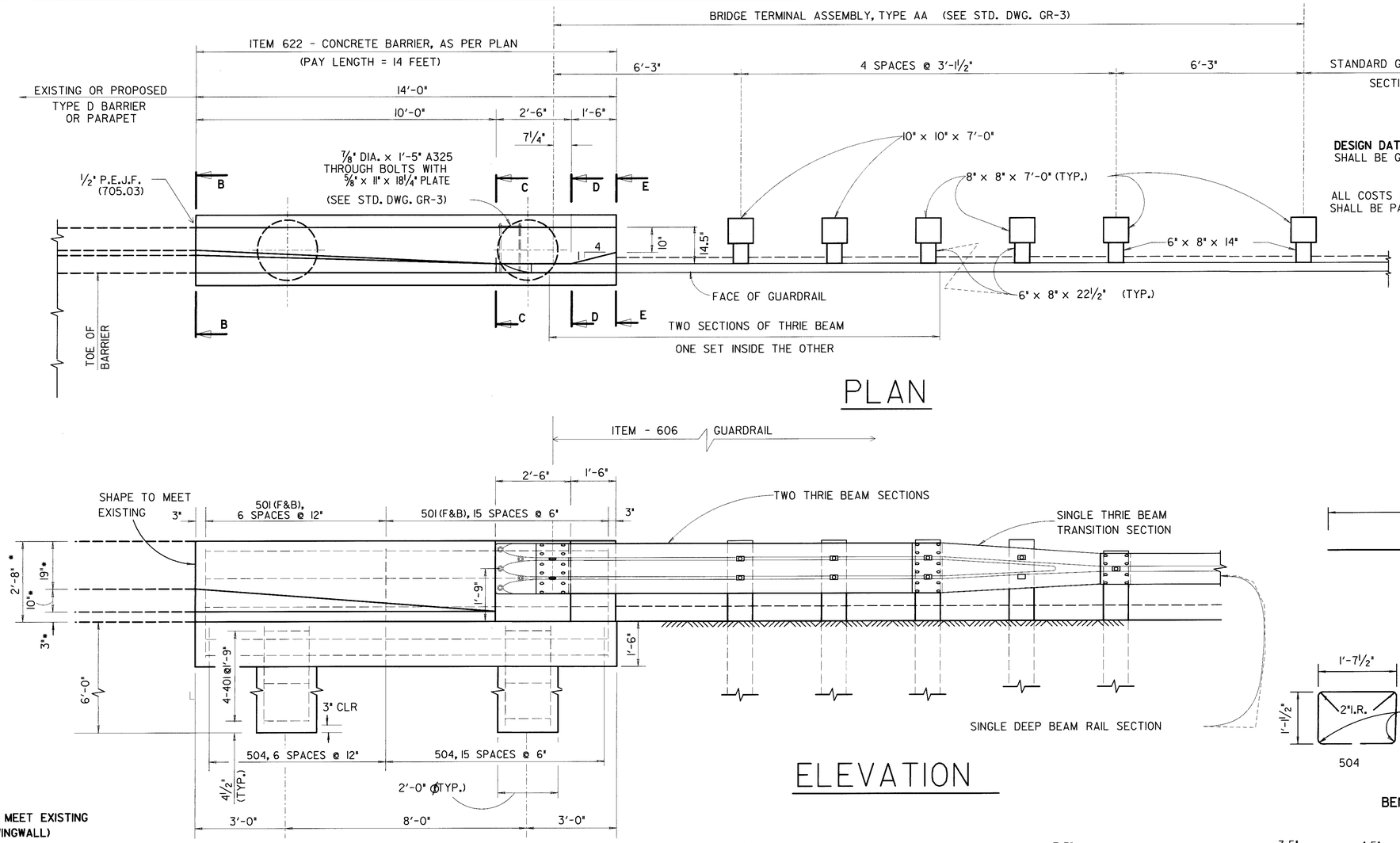

PLAN

ELEVATION

* VARY TO MEET EXISTING PARAPET (WINGWALL)

GENERAL NOTES

DESIGN DATA: CONCRETE SHALL BE CLASS C, REINFORCING STEEL SHALL BE GRADE 60

ALL COSTS FOR EXCAVATION AND EMBANKMENT SHALL BE PAID FOR SEPARATELY UNDER LINEAR GRADING.

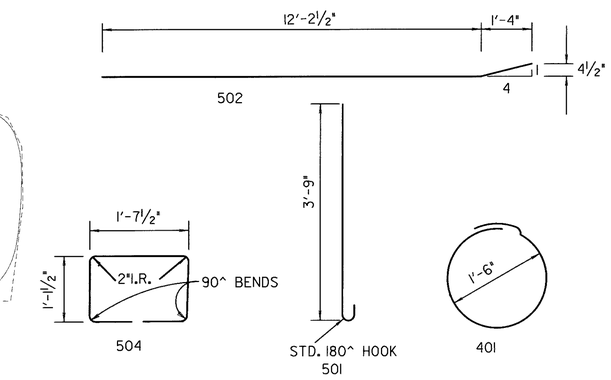

BENDING DIAGRAMS

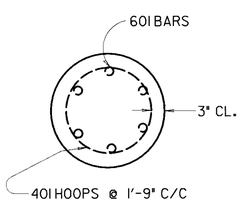

SECTION F-F

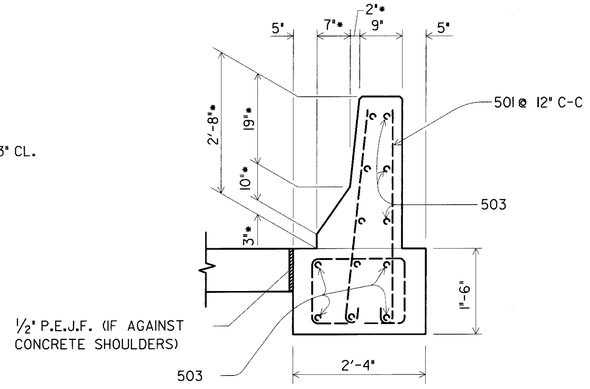

SECTION B - B

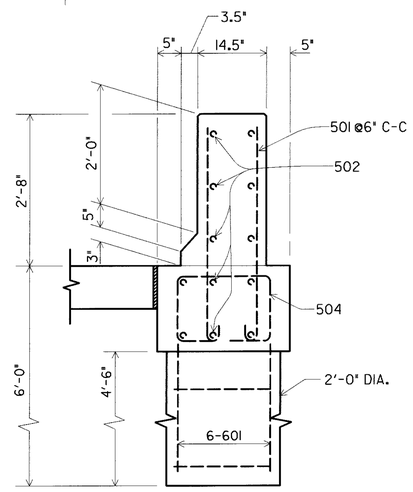

SECTION C - C

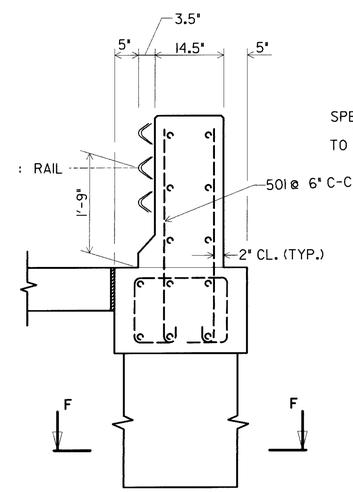

SECTION D - D

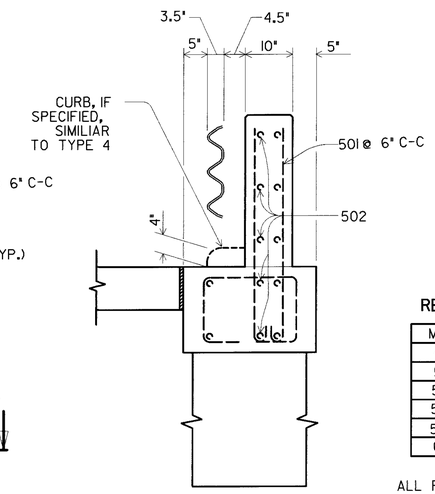

SECTION E - E

REINFORCING BAR LIST

MARK	NO.	LENGTH	TYPE
401	8	6'-0"	BT.
501	44	4'-4"	BT.
502	5	13'-7"	BT.
503	7	13'-7"	STR.
504	22	5'-0½"	BT.
601	12	5'-6"	STR.

ALL REINFORCING BARS SHALL BE EPOXY COATED

CALCULATED
CHECKED

32"/32" GUARDRAIL TRANSITION WITH TAPERED TOP (WITH OR WITHOUT CURBS)

CUY-90-0.00

09 MAR 2000
p:\pr22308\cadd\11738grh.dgn

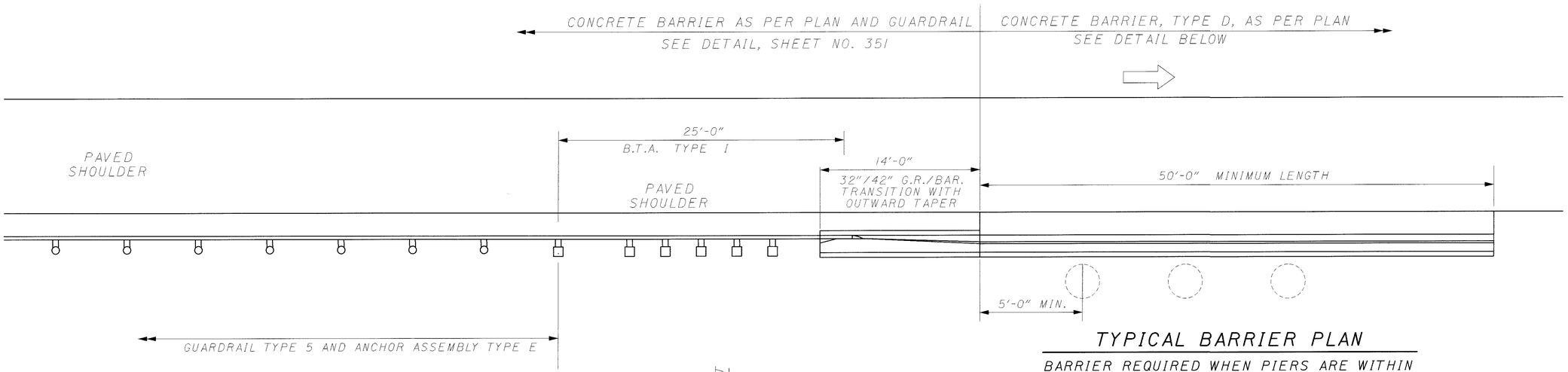

TYPICAL BARRIER PLAN

BARRIER REQUIRED WHEN PIERS ARE WITHIN 2'-9" OF NORMAL GUARDRAIL OFFSET

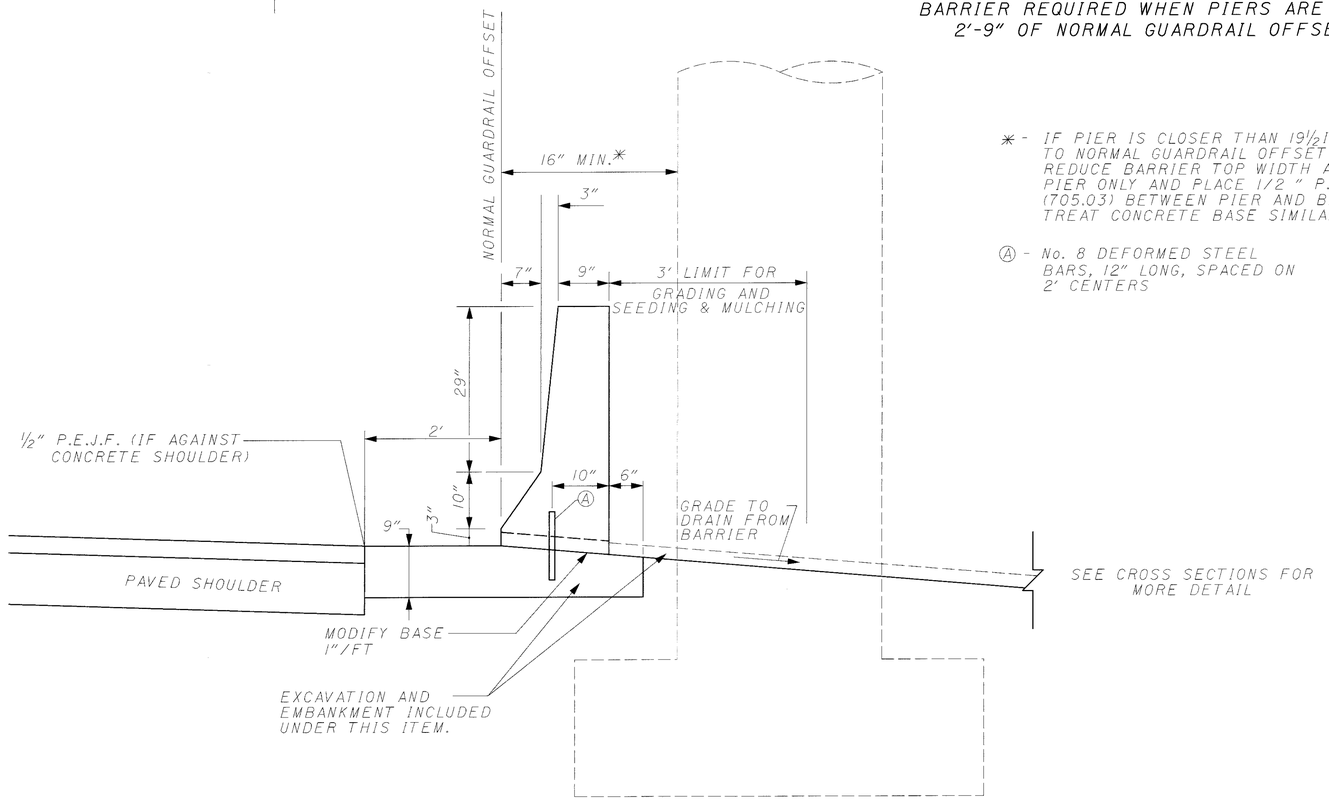

* - IF PIER IS CLOSER THAN 19½ INCHES TO NORMAL GUARDRAIL OFFSET THEN REDUCE BARRIER TOP WIDTH AT PIER ONLY AND PLACE 1/2 " P.E.J.F. (705.03) BETWEEN PIER AND BARRIER. TREAT CONCRETE BASE SIMILARLY.

Ⓐ - No. 8 DEFORMED STEEL BARS, 12" LONG, SPACED ON 2' CENTERS

TYPICAL BARRIER SECTION

ITEM 622 - CONCRETE BARRIER, TYPE D, AS PER PLAN
(DETAIL FOR BARRIER IN SAG VERTICAL CURVES)

NOTE: PROVIDE 2"X18" DRAINAGE SLOTS 5' CENTER TO CENTER IN SAGS

SPACE DRAINAGE SLOTS SO AS TO ENSURE THAT A DRAINAGE SLOT WILL BE AT THE LOW POINT

CALCULATED
CHECKED

BARRIER PROTECTION OF PIERS

CUY-90-0.00

09 MAR 2000
p:\pr22308\cadd\11738gra.dgn

32"/42" GUARDRAIL TRANSITION WITH TAPERED TOP (WITH OR WITHOUT CURBS)

CALCULATED | CHECKED

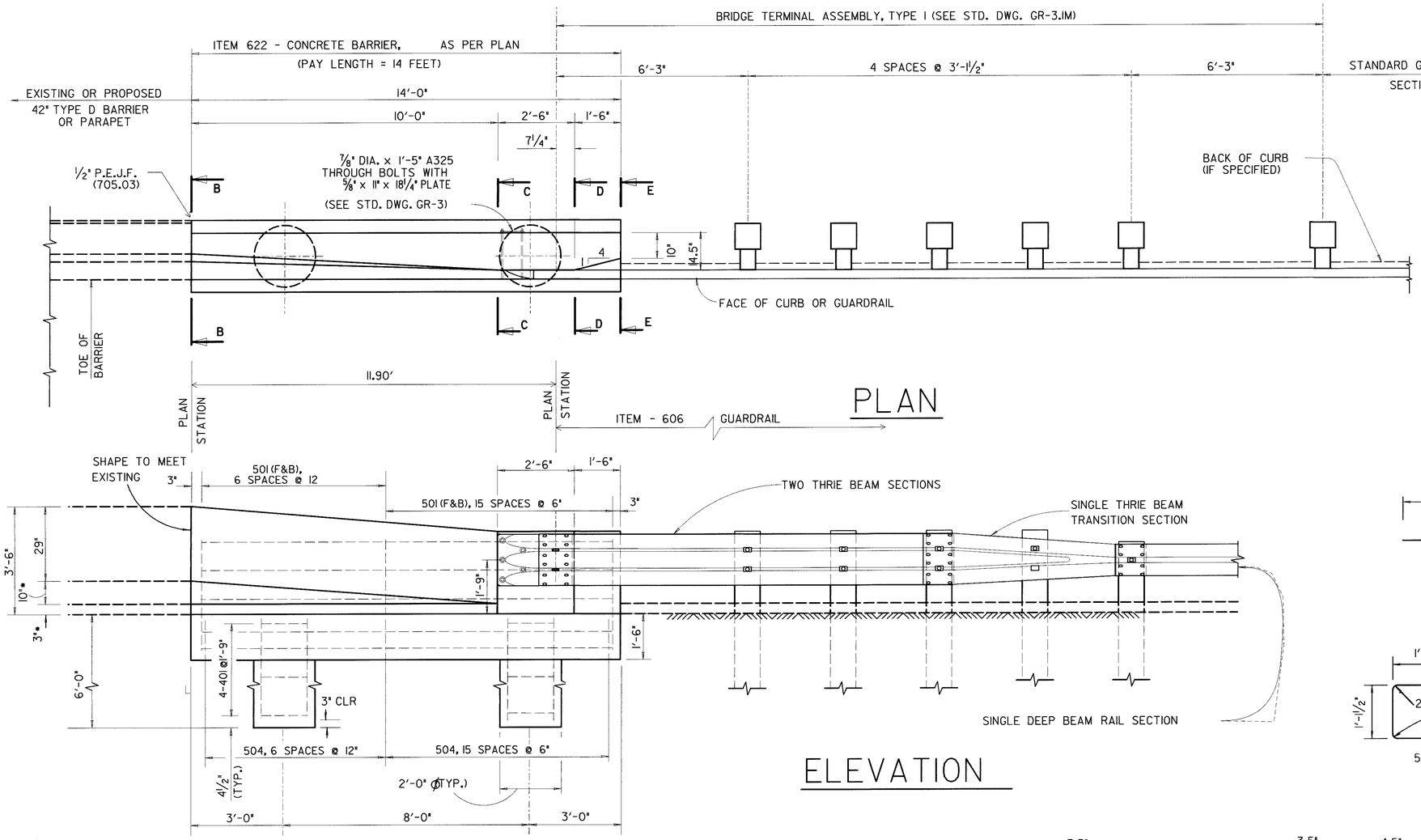

GENERAL NOTES

DESIGN DATA: CONCRETE SHALL BE CLASS C, REINFORCING STEEL SHALL BE GRADE 60

ALL COSTS FOR EXCAVATION AND EMBANKMENT SHALL BE PAID FOR SEPARATELY UNDER THIS ITEM.

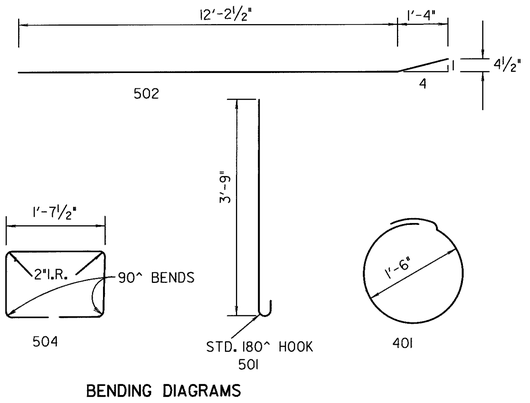

BENDING DIAGRAMS

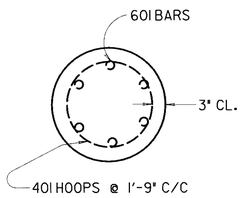

SECTION F-F

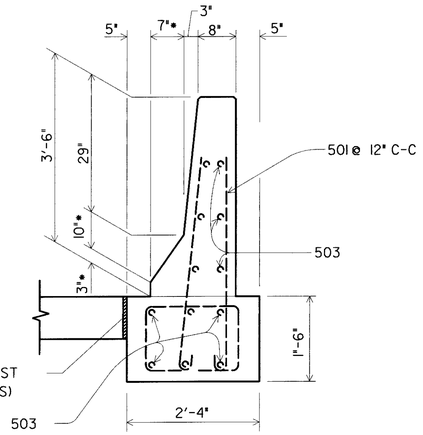

SECTION B - B

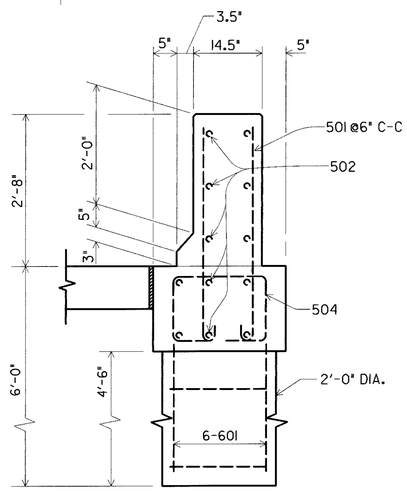

SECTION C - C

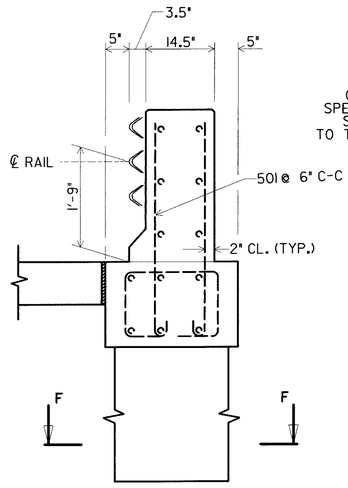

SECTION D - D

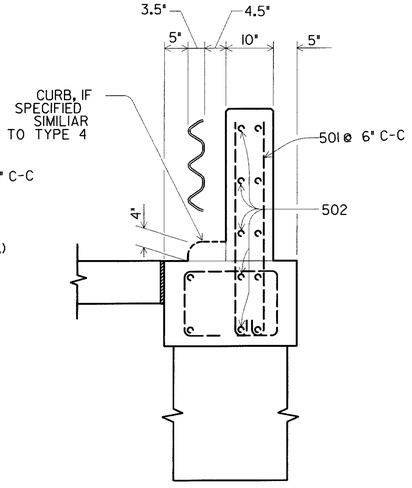

SECTION E - E

REINFORCING BAR LIST

MARK	NO.	LENGTH	TYPE
401	8	6'-0"	BT.
501	44	4'-4"	BT.
502	5	13'-7"	BT.
503	7	13'-7"	STR.
504	22	5'-0½"	BT.
601	12	5'-6"	STR.

ALL REINFORCING BARS SHALL BE EPOXY COATED

CUY-90-0.00

09 MAR 2000
p:\pr-22308\cadd\1738gr-f.dgn

PLOT SUBMITTED: $$$$$SYTIME$$$$$$
GABION.DGN
PLOTTED BY: $$USERNAME$$
PLOTTED FROM: $$$$$$$$$$$$$$$$$$$$DGNSPEC$$$$$$$$$$$$$$$$$$$$

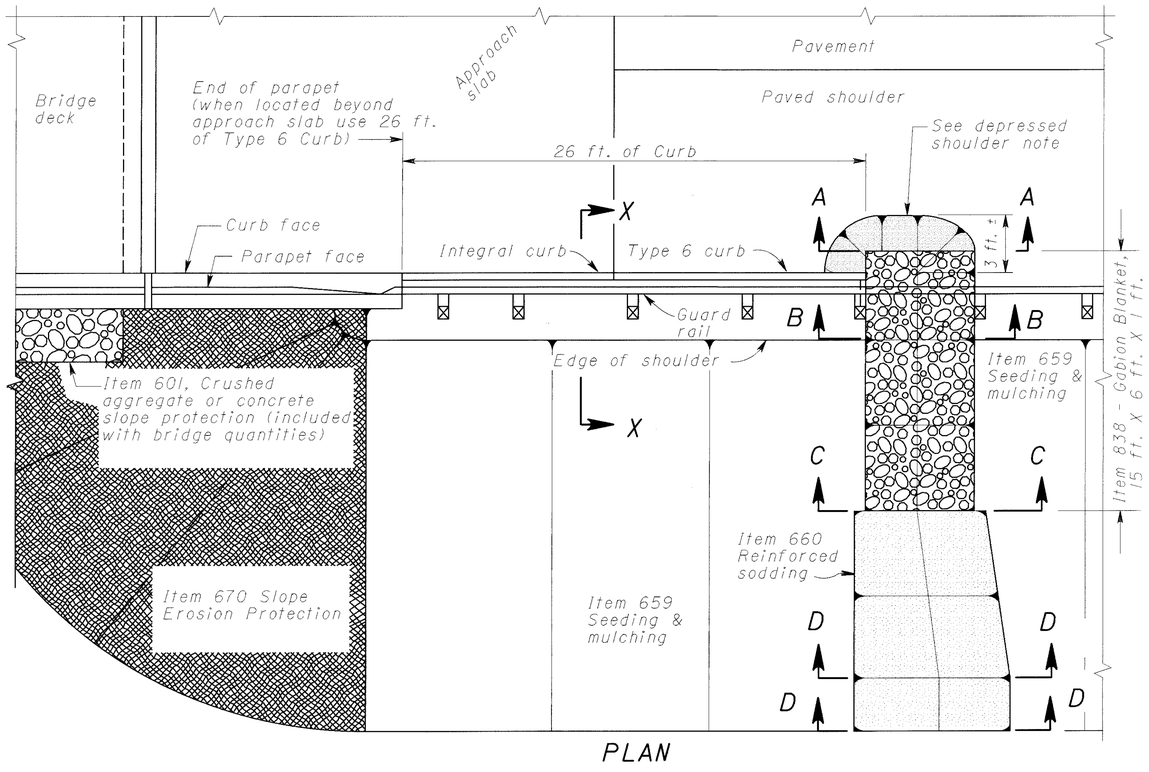

PLAN

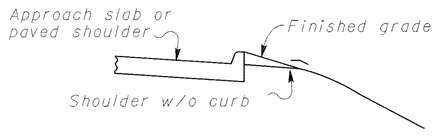

SECTION X-X

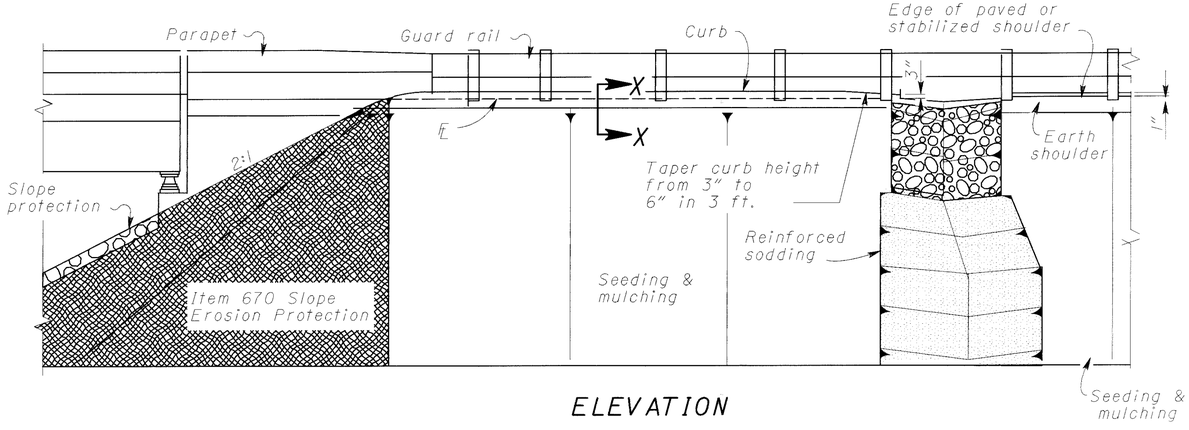

ELEVATION

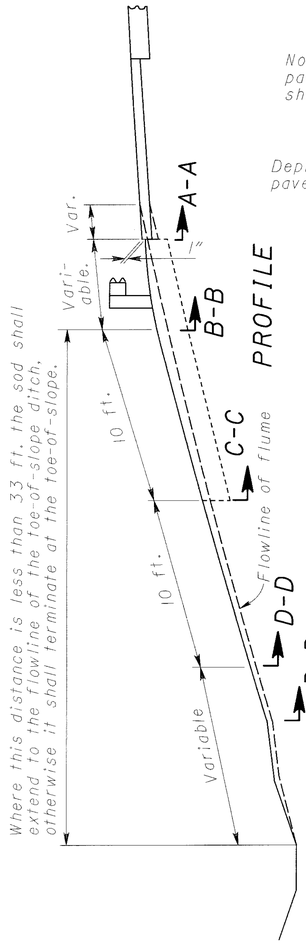

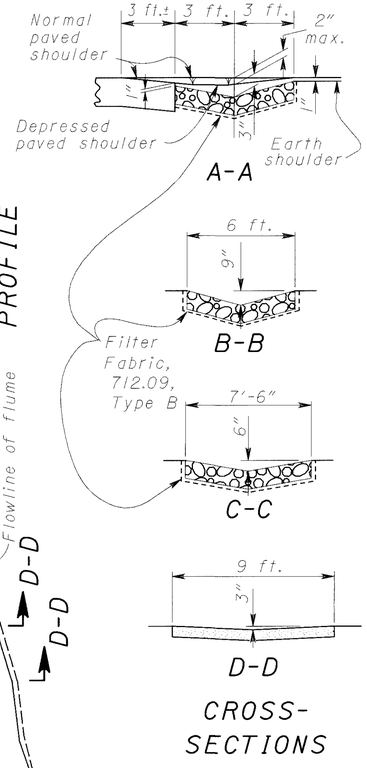

CROSS-SECTIONS

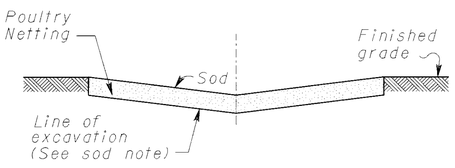

SOD INSTALLALLATION DETAIL

NOTES

DEPRESSED SHOULDER: This portion of the shoulder shall be depressed to ensure positive drainage into the gabion flume. It is especially important in the shoulder area to excavate and shape the subgrade according to the cross-sections.

PLACING REINFORCED SODDING: Prior to placing the sod, galvanized poultry netting shall be placed on the finished subgrade. The netting shall be 4 foot wide, poultry netting or equivalent, with 2 inch mesh and No. 20 gage minimum wire. Each strand shall be staked securely to the subgrade by using 1"x 1" x 8" wood stakes or T-shaped pins of the size stated in CMS 660.06. The stakes or pins shall be placed at 4 foot intervals on the top and bottom and in rows 4 feet apart. The poultry netting shall be fastened to the wood stakes with metal staples. Where the sodding is from 8 feet to 9 feet wide, two strands of netting for a total width of 8 feet is permitted.

SOD: Sod shall be laid in accordance with CMS 660. Special care shall be taken to excavate the sod bed to a proper depth so that the sod is flush with the surrounding grade.

PAYMENT: Payment for all the above shall be included in the unit price bid for Item 660, Square Meter, Reinforced Sodding.

GABION BLANKET

Item 838 - Gabions, with additional coating shall be installed in accordance with this detail and the specifications.

PLACING FILTER FABRIC

Filter Fabric, 712.09 Type B shall be placed in accordance with the second paragraph of 601.08. In addition, securing pins as provided in 601.08 shall be placed to coincide with the gabion blanket wire basket in such a manner so as to prevent downward migration of the wire basket lower surface.

All costs of furnishing and installing filter fabric shall be included in Item 838 - Gabions, with additional coating.

DISTRIC 12 PRODUCTION

EROSION CONTROL AT BRIDGES (GABION FLUME)

CUY-90-0.00

REV. 8-27-98

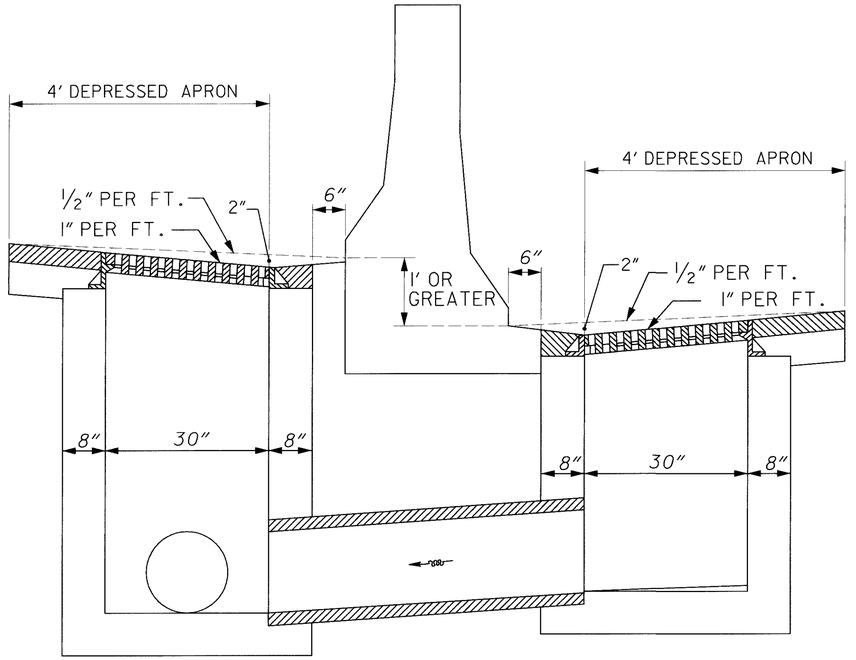

INLET 3A, AS PER PLAN

(PAID PER EACH BASIN)

FOR ALL DETAILS NOT SHOWN, REFER TO SCD I-2.IM

CALCULATED

CHECKED

BARRIER MEDIAN INLET 3A, AS PER PLAN

CUY-90-0.00

353
582

09 MAR 2000
P:\pr22308\cadd\ll738gmb.dgn

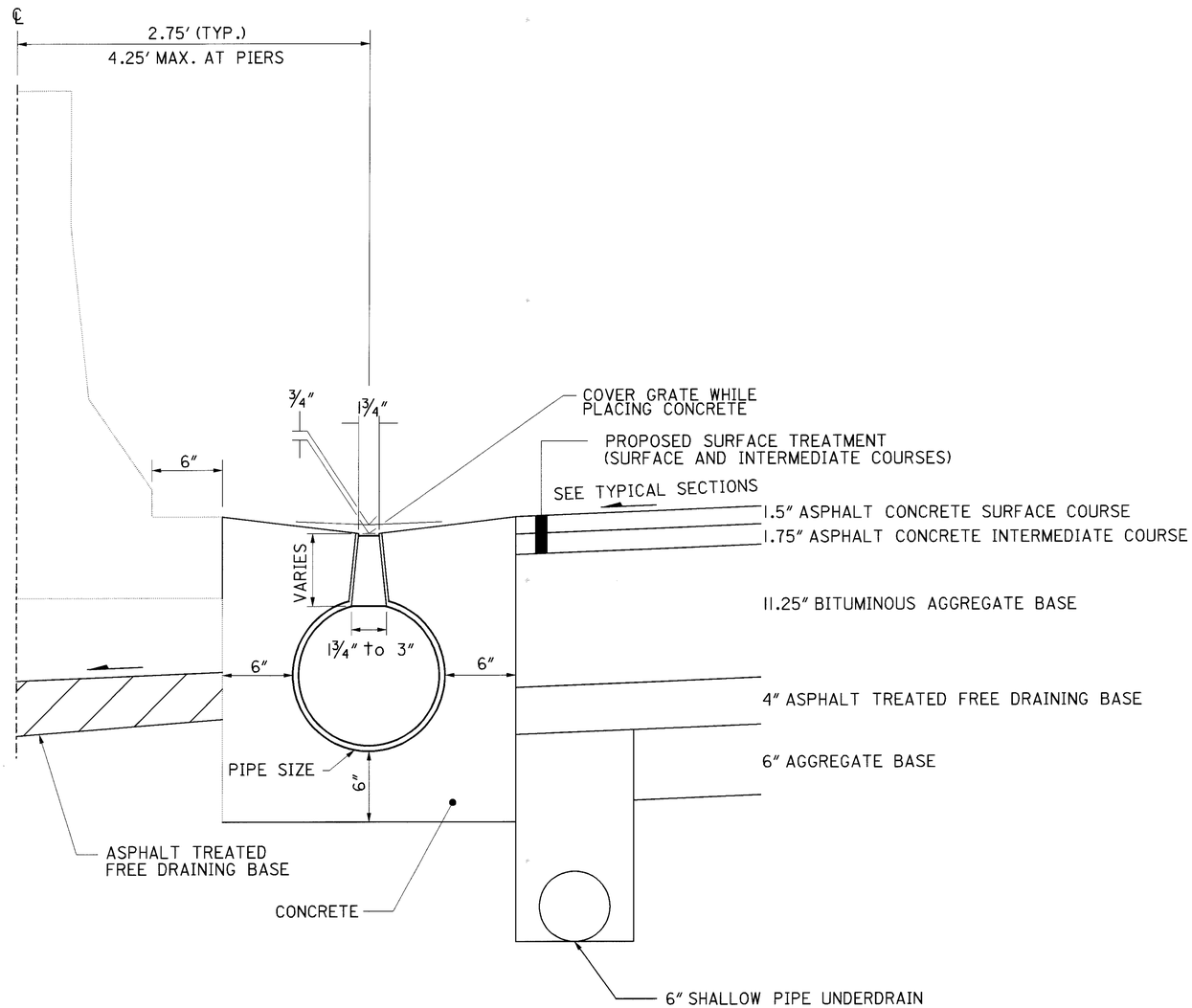

ITEM 603 - SLOTTED DRAIN, 15" DIAMETER, AS PER PLAN

THIS ITEM SHALL CONSIST OF 15" DIAMETER SLOTTED DRAIN BITUMINOUS-COATED STEEL CONDUIT 707.05 (14 GAGE) WITH A VARIABLE HEIGHT BY 3/16" GALVANIZED SOLID BAR GRATE AS APPROVED BY THE ENGINEER.

THE SLOTTED DRAIN ℄'S SHOWN IN THE PLAN ARE APPROXIMATE AND SHALL BE ADJUSTED BY THE CONTRACTOR BASED ON THE VARIABLE GRATE HEIGHTS RECOMMENDED BY THE MANUFACTURER. THE MINIMUM PIPE SLOPE FOR THE 15" SLOTTED DRAINS SHALL BE 0.5%. THE DOWNSTREAM ℄ FOR THE SLOTTED DRAIN SHALL BE ADJUSTED TO ENTER THE CB AT AN ACCEPTABLE ELEVATION. THE DRAIN SHALL BE FURNISHED AND INSTALLED WITH THE SPECIAL BENDS AND CONNECTIONS REQUIRED TO CONNECT THE SLOTTED DRAIN TO THE HIGHWAY DRAINAGE SYSTEM AS PART OF THIS PAY ITEM.

SECTIONS SHALL BE FURNISHED WITH A MODIFIED HUGGER BAND TO BOLT THROUGH THE SLOTTED OPENING.

THE GRATE SHALL BE FILLET WELDED AT EVERY OTHER CORRUGATION ON THE TANGENT.

BEDDING AND BACKFILL SHALL BE ITEM 499 CONCRETE (ANY CLASS).

THE CONCRETE SHALL BE FINISHED AND CURED AS PER 451.09 AND 451.10. CONTRACTION JOINTS SHALL BE TOOLED AT THE SPACING OF THE ADJACENT PAVEMENT OR 10' WHERE THE EXISTING SPACING IS NOT OBVIOUS.

AT THE CONTRACTOR'S REQUEST, THE DEPARTMENT WILL CONSIDER ALTERNATE PROPOSALS AS APPROVED BY THE DISTRICT PRODUCTION ADMINISTRATOR. ALTERNATE PROPOSALS SHALL BE STRUCTURALLY AND HYDRAULICALLY EQUIVALENT.

ALL LABOR, MATERIALS, AND EQUIPMENT NECESSARY TO PERFORM THE ABOVE NOTED WORK SHALL BE INCLUDED IN THE UNIT PRICE BID FOR ITEM 603- SLOTTED DRAIN, 15" DIAMETER, AS PER PLAN.

CALCULATED

CHECKED

SLOTTED DRAIN DETAIL

CUY-90-0.00

I:\PROJECTS\Pidll738\dgn\finalplans\ll738GMB.DGN 10-AUG-2000 12:18PM jgrmovse

NOTES: 1. SEE SHEET 163-165 FOR PLAN, PROFILE, AND QUANTITIES.
2. SEE SHEET 354 FOR SLOTTED DRAIN DETAILS.

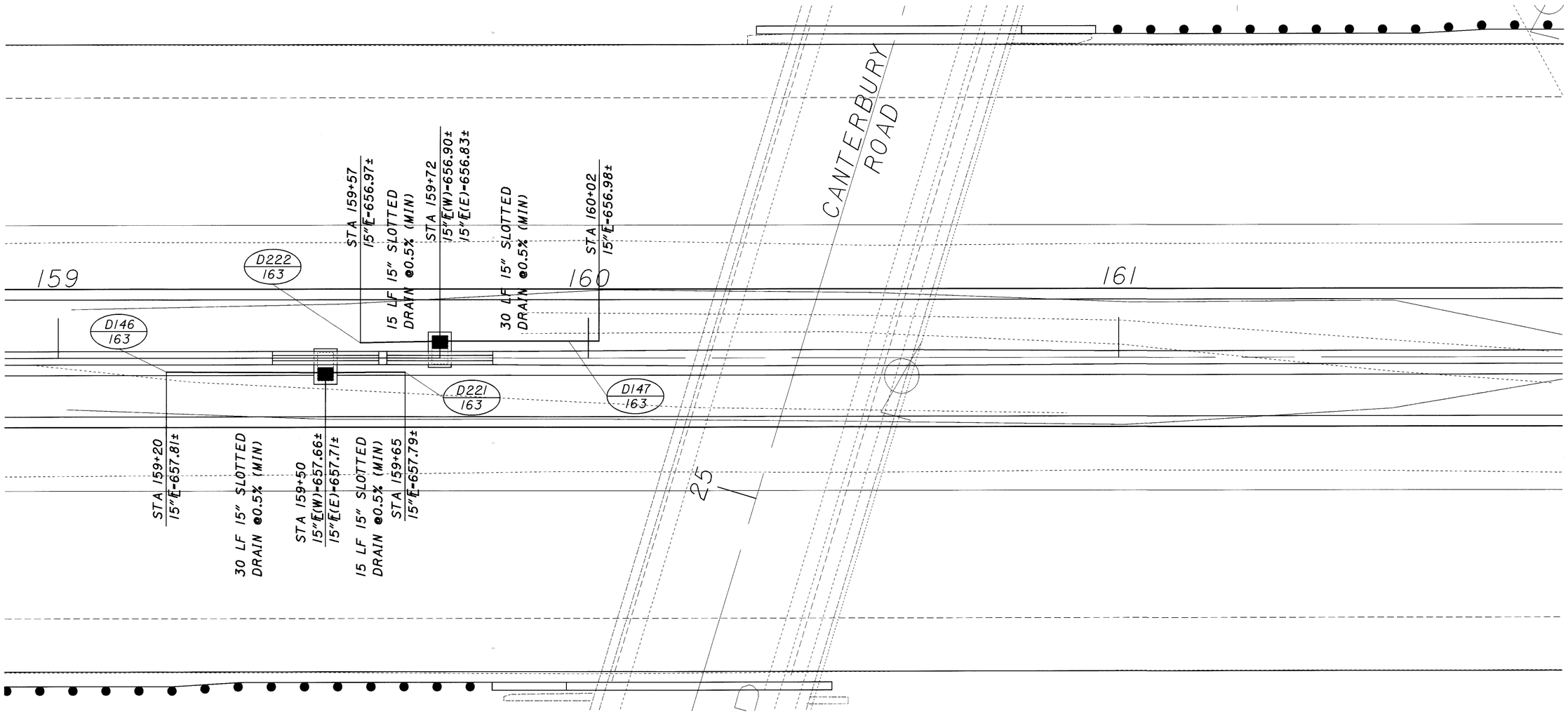

HORIZONTAL SCALE IN FEET
0 5 10 20

CALCULATED DRL
CHECKED

SLOTTED DRAIN DETAIL - CANTERBURY RD

CUY-90-0.00

354A
582

I:\PROJECTS\Pldll738\dgn\finalplans\ll738DDA.dgn 10-AUG-2000 12:19PM jgrmovse

NOTES: 1. SEE SHEET 168-173 FOR PLAN, PROFILE, AND QUANTITIES.
2. SEE SHEET 354 FOR SLOTTED DRAIN DETAILS.

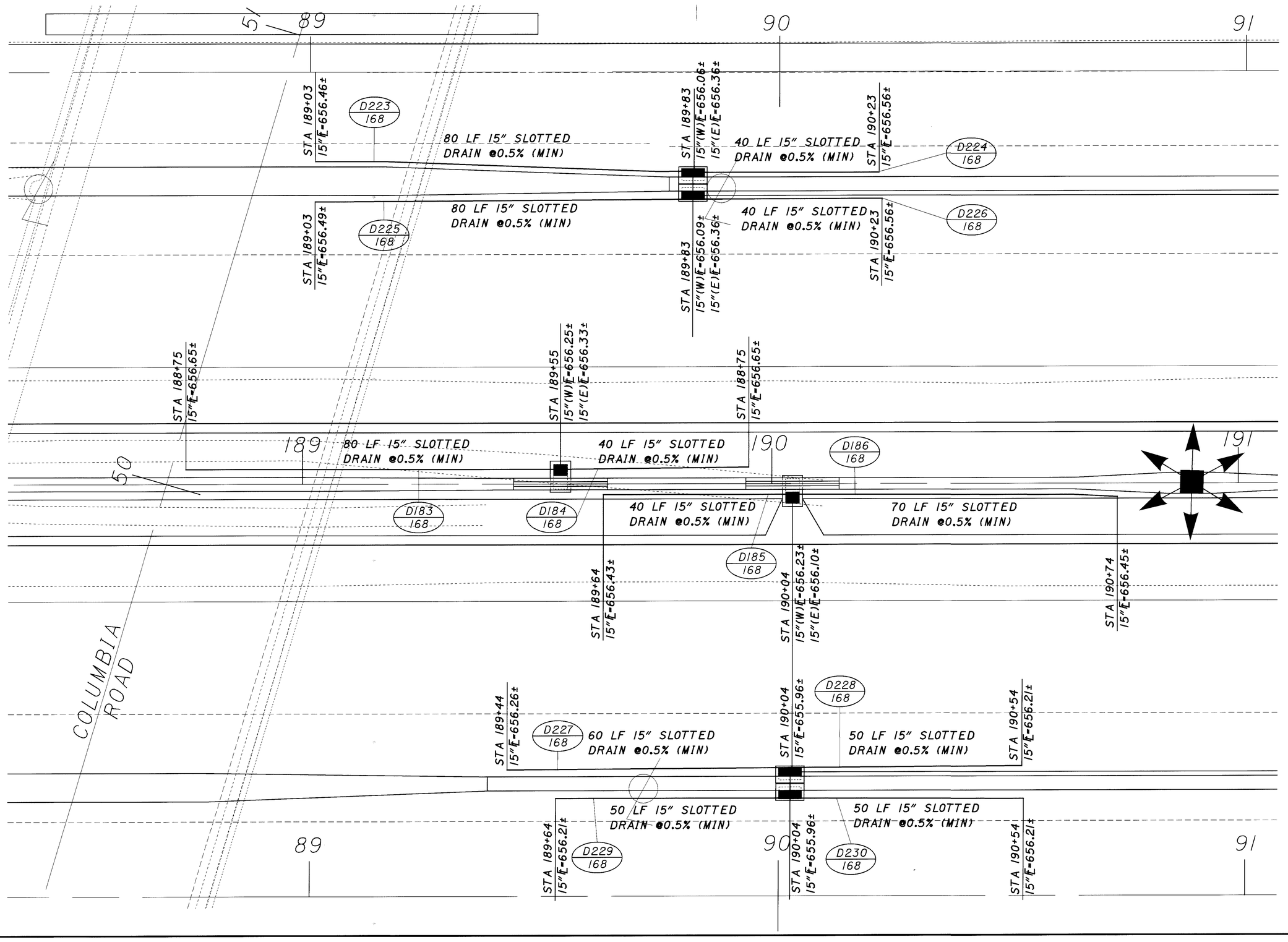

HORIZONTAL SCALE IN FEET
0 5 10 20

CALCULATED DRL
CHECKED

SLOTTED DRAIN DETAIL - COLUMBIA ROAD

CUY-90-0.00

354B
582

I:\PROJECTS\PIdll738\dgn\final plans\ll738DDA.dgn 10-AUG-2000 12:21PM jgrmovse

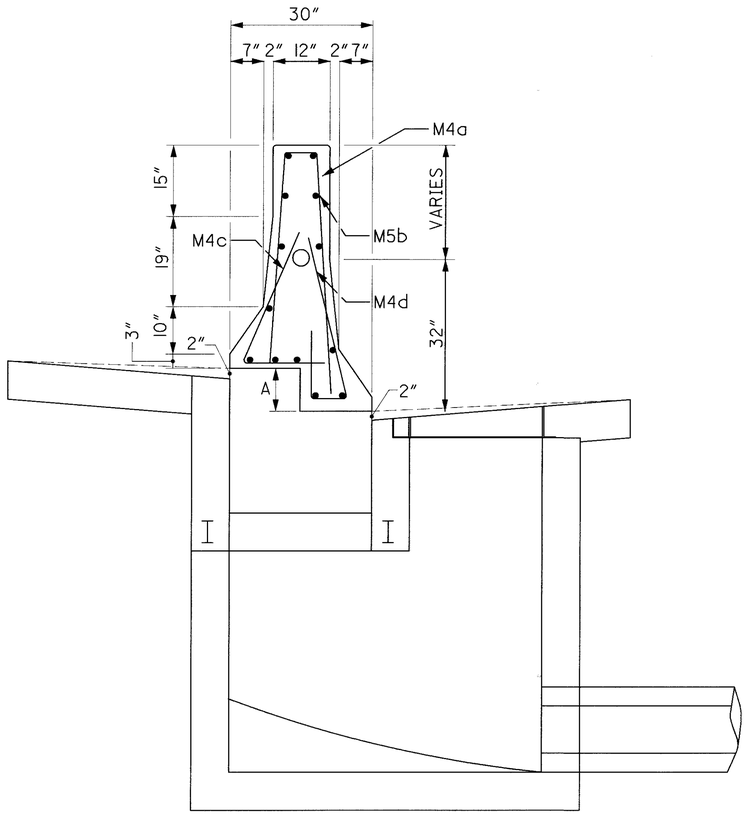

I-3B50 INLET, AS PER PLAN

NOT TO SCALE

REF NO.	SHEET NO.	STATION	GRATE SIDE (HIGH OR LOW)	A (FT.)
D44	137	51+20	LOW	0.69'
D45	137	51+80	LOW	0.68'
D141	163	158+50	LOW	0.50'
D142	163	159+50	HIGH	0.80'
D143	163	159+72	LOW	0.83'
D160	168	186+75	LOW	0.27'
D165	168	189+55	HIGH	0.20'
D165	168	190+04	LOW	0.36'
D169	168	192+00	LOW	0.34'
D176	168	193+45	HIGH	0.01'

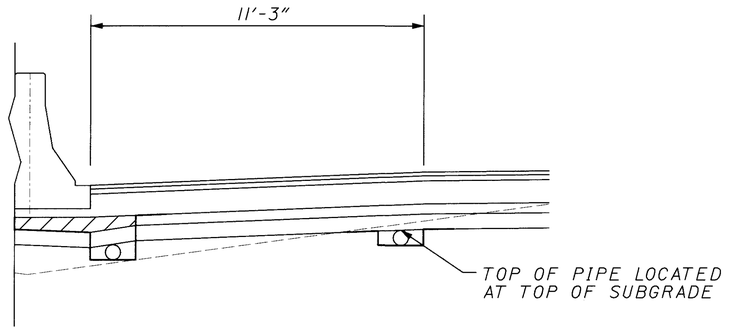

ITEM 605 4" ROCK CUT UNDERDRAIN WITH FABRIC WRAP, A.P.P.

COMMON NOTES

1. STANDARD CONSTRUCTION DRAWINGS I-3A & B AND I-3C & D SHALL APPLY EXCEPT AS MODIFIED HEREIN AND ON THE GENERAL NOTES

2. THE CONTRACOR SHALL RECALCULATE THE "A" VALUE BASED UPON FIELD SURVEY AFTER THE LEVELING COURSE HAS BEEN PLACED.

3. THE ACTUAL CONSTRUCTION SHALL BE BASED UPON THE FIELD CALCULATED "A" VALUE.

4. VARIATIONS OF ±1/2 INCH IN THE AS BUILT "A" DIMENSION FROM THE CALCULATED ARE PERMITTED. ANY VARIATIONS SHALL BE ADJUSTED IN THE "NON-MAJOR FLOW" (NON-DOOR OR NON-GRATE SIDE) APRON SLOPES.

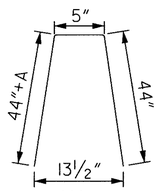

M4a
10 REQ'D
L=4'-10"+A

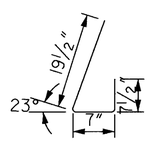

M4d
10 REQ'D
L=2'-8"

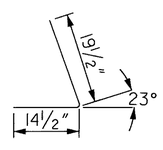

M4c
10 REQ'D
L=2'-9"

MISCELLANEOUS DETAILS

CUY-90-0.00

22 MAR 2000
P:\PR22308\CADD\II738GMB.DGN

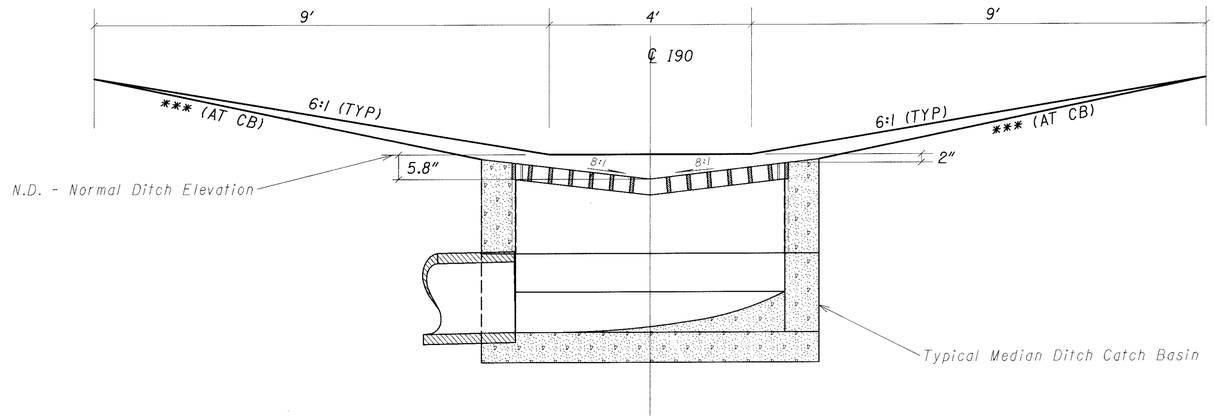

*** = See Cross Sections For Slope At Catch Basin

Note: This detail shall be used for No. 4, No.5 and No. 8 Catch Basins, as per plan. For details not shown see Std. Dwg. CB-4, CB-5, & CB-8.

BAR LOCATION DETAIL
CATCH BASIN NO. 4, 5, & 8, AS PER PLAN

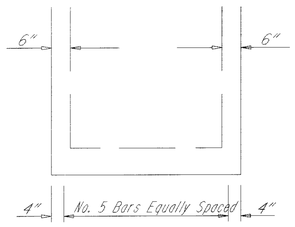

The number of bars needed along each side of a No. 4 Catch Basin with a concrete apron is 7. For a No. 5 & 8 Catch Basin the number of bars needed along each side with a concrete apron is 4.

CATCH BASIN NO.	TOTAL # OF BARS FOR A STD. APRON	TOTAL # OF BARS FOR A SAG APRON
4	7	14
5	4	8
8	4	8

The furnishing and placing of steel for the 5/8" x 12" dowel bars shall be per 509 reinforcing steel. The dowel bars shall be epoxy coated per 509.10. The dowel bars shall be installed per 510 or cast into the basin. Bolt or inserts may be used. The catch basin shall be precast or cast-in-place concrete, brick or concrete block will not be permitted. The 6" concrete apron shall be reinforced per 601.04(3).

For details not shown for concrete apron, see standard drawing for appropriate C.B.

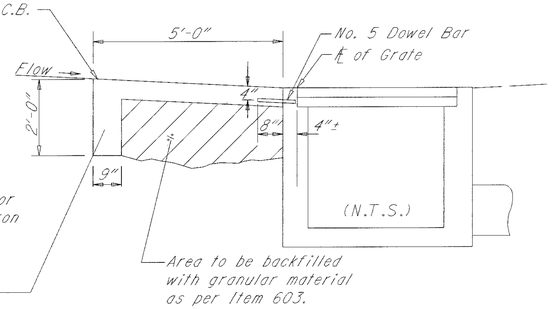

The requirements of Item 604 shall govern the replacement of the existing Catch Basin. The work shall include the removal and disposal of the existing Catch Basin and its subsequent replacement. The concrete apron shall be replaced and backfilled as shown here and in the pertinent standard drawing.

The unit price for each catch basin shall include the replacement of any connecting sewer pipes damaged during the removal or installation of the basin. The new pipe shall match the material type of the existing pipe and shall meet the requirements of Item 603.

Payment for the above work shall be included in the unit bid price for Item 604 Catch Basin, No. 4, 5, or 8, as per plan, and shall constitute full compensation for furnishing all material, labor, tools, and equipment incidental to complete this item of work.

CATCH BASIN NO. 4, AS PER PLAN

CALCULATED | CHECKED

MISCELLANEOUS DETAILS

CUY-90-0.00

09 MAR 2000
p:\pr-22308\caddd\1738gme.dgn

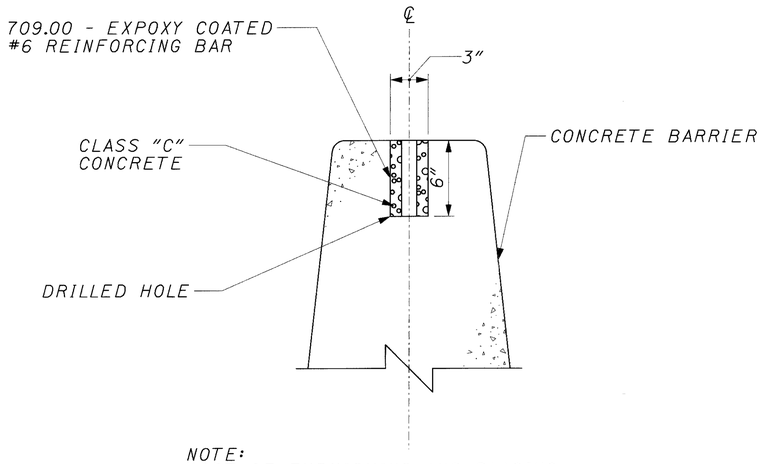

NOTE:
COST OF FURNISHING AND PLACING 709.00 - EPOXY COATED #6 REINFORCING BAR, AND CLASS "C" CONCRETE SHALL BE INCLUDED IN THE PRICE BID FOR ITEM 604 - MONUMENT ASSEMBLY, AS PER PLAN

ITEM 604 - MONUMENT ASSEMBLY, AS PER PLAN

STATION		LOCATION	202	604	
			MONUMENT ASSEMBLY REMOVED	MONUMENT ASSEMBLY	MONUMENT ASSEMBLY, AS PER PLAN
			EACH	EACH	EACH
10+50.69		℄ CONSTRUCTION	1	1	
15+00.69		0.037' LT OF ℄ CONSTRUCTION	1	1	
20+00.64		℄ CONSTRUCTION	1	1	
23+00.76		0.010' RT OF ℄ CONSTRUCTION	1	1	
28+40.32	PC	℄ CONSTRUCTION		1	
35+01.17		0.067' LT OF ℄ CONSTRUCTION	1	1	
40+01.17		℄ CONSTRUCTION	1	1	
44+90.80	PT	0.059' LT OF ℄ CONSTRUCTION		1	
44+96.47		℄ CONSTRUCTION	1	1	
49+99.84		0.012' RT OF ℄ CONSTRUCTION	1	1	
54+98.14		0.261' RT OF ℄ CONSTRUCTION	1	1	
60+49.95		0.031' RT OF ℄ CONSTRUCTION	1	1	
64+99.74		0.584' LT OF ℄ CONSTRUCTION	1	1	
69+87.05		0.096' RT OF ℄ CONSTRUCTION	1	1	
74+99.99		0.070' LT OF ℄ CONSTRUCTION	1	1	
80+00.10		0.059' LT OF ℄ CONSTRUCTION	1	1	
85+00.15		℄ CONSTRUCTION	1	1	
90+00.16		℄ CONSTRUCTION	1	1	
95+50.20		0.103' LT OF ℄ CONSTRUCTION	1	1	
101+69.90	PC	℄ CONSTRUCTION			1
101+70.19		℄ CONSTRUCTION	1		1
105+00.57		0.018' LT OF ℄ CONSTRUCTION	1		1
110+00.57		0.017' RT OF ℄ CONSTRUCTION	1		1
115+27.72		0.119' LT OF ℄ CONSTRUCTION	1		1
115+28.28	PT	℄ CONSTRUCTION			1
119+99.43		0.118' LT OF ℄ CONSTRUCTION	1		1
124+99.51		℄ CONSTRUCTION	1		1
129+99.77		0.064' LT OF ℄ CONSTRUCTION	1		1
134+99.98		0.010' RT OF ℄ CONSTRUCTION	1		1
140+00.06		0.089' RT OF ℄ CONSTRUCTION	1		1
145+00.09		0.146' RT OF ℄ CONSTRUCTION	1		1
152+00.38		0.152' RT OF ℄ CONSTRUCTION	1		1
158+00.46		0.256' LT OF ℄ CONSTRUCTION	1		1
164+00.55		℄ CONSTRUCTION	1		1
170+00.69		0.028' LT OF ℄ CONSTRUCTION	1		1
176+00.84		0.095' LT OF ℄ CONSTRUCTION	1		1
182+00.91		0.091' LT OF ℄ CONSTRUCTION	1		1
188+01.15		0.183' LT OF ℄ CONSTRUCTION	1		1
218+23.91	PC	℄ CONSTRUCTION			1
237+50.53		72.969' RT OF ℄ CONSTRUCTION	1		1
TOTALS CARRIED TO ROADWAY SUBSUMMARY			35	19	21

CALCULATED RAS
CHECKED RAS

MONUMENTATION

CUY-90-0.00

09 MAR 2000
P:\pr22308\cadd\II738gmc.dgn

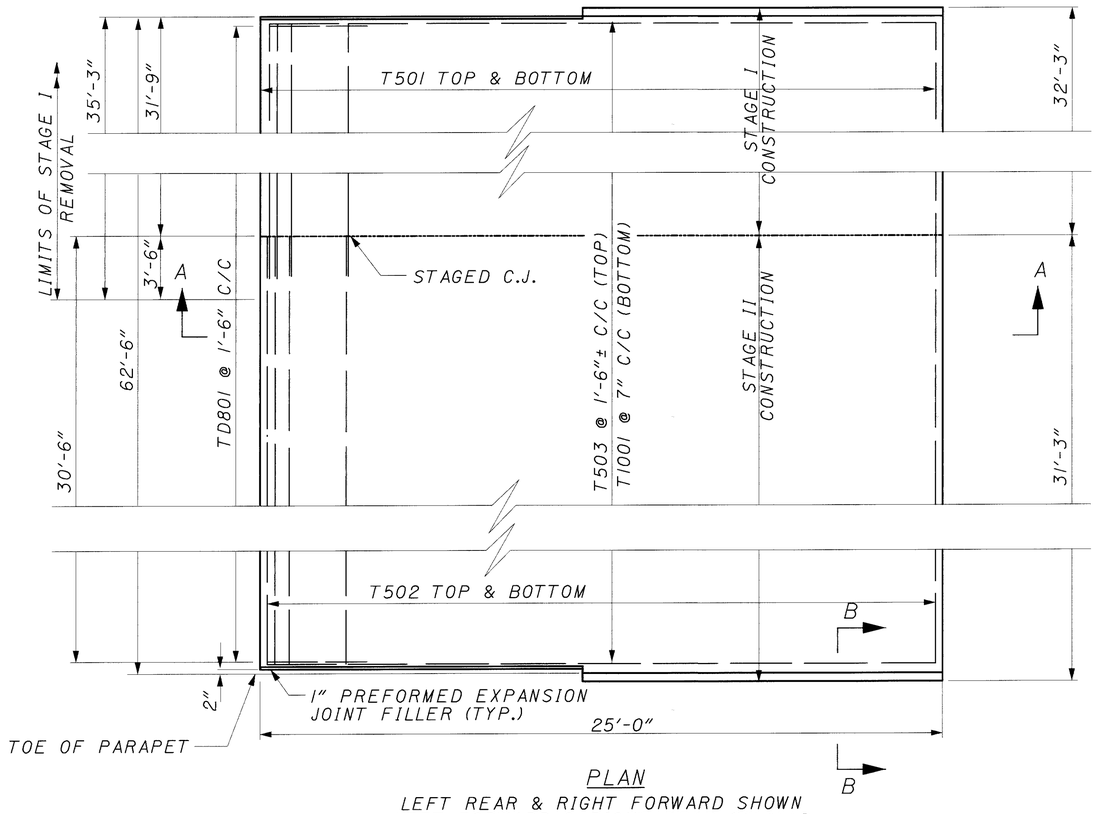

PLAN

LEFT REAR & RIGHT FORWARD SHOWN
LEFT FORWARD & RIGHT REAR SIMILAR

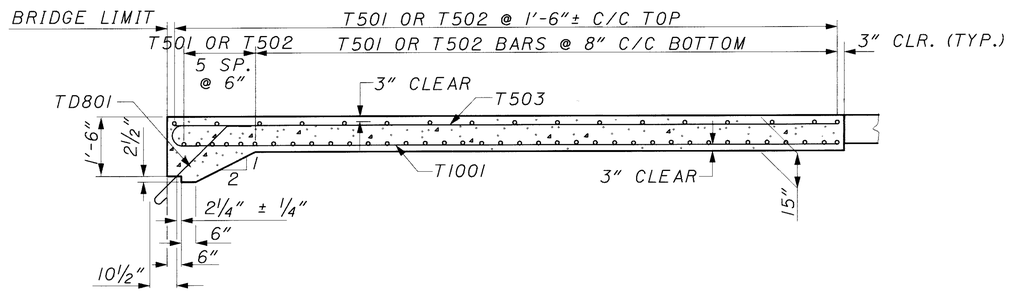

SECTION A-A

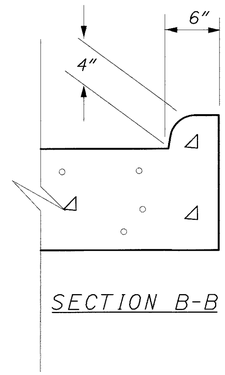

SECTION B-B

REINFORCING STEEL LIST			
MARK	LENGTH	SHAPE	NO.*
T501	34'-6"	S	228
T502	30'-2"	S	228
T503	24'-6"	S	172
T1001	25'-11"	B	432
TD801	5'-4"	B	172

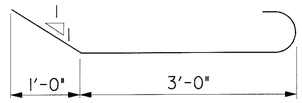

TD801

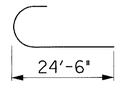

T1001

NOTES:

1. REINFORCING STEEL TO BE INCLUDED WITH APPROACH SLAB FOR PAYMENT
2. ALL BARS SHALL BE EPOXY COATED

* -COUNT INCLUDES FOUR APPROACH SLABS

SEE STD. AS-1-81 FOR ADDITIONAL DETAILS.

LAP NO. 5 BARS 1'-8" MIN.

LEGEND:

PEJF = PREFORMED EXPANSION JOINT FILLER
BOT = BOTTOM
C/C = CENTER TO CENTER
C.J. = CONSTRUCTION JOINT

DESIGNED JAA
CHECKED SCT

APPROACH SLAB DETAILS
BRIDGE NO. CUY-90-0045 OVER BRADLEY RD.

CUY-90-0.00

358
582

R:\PR22308\CADD\TAPPSLB.DGN

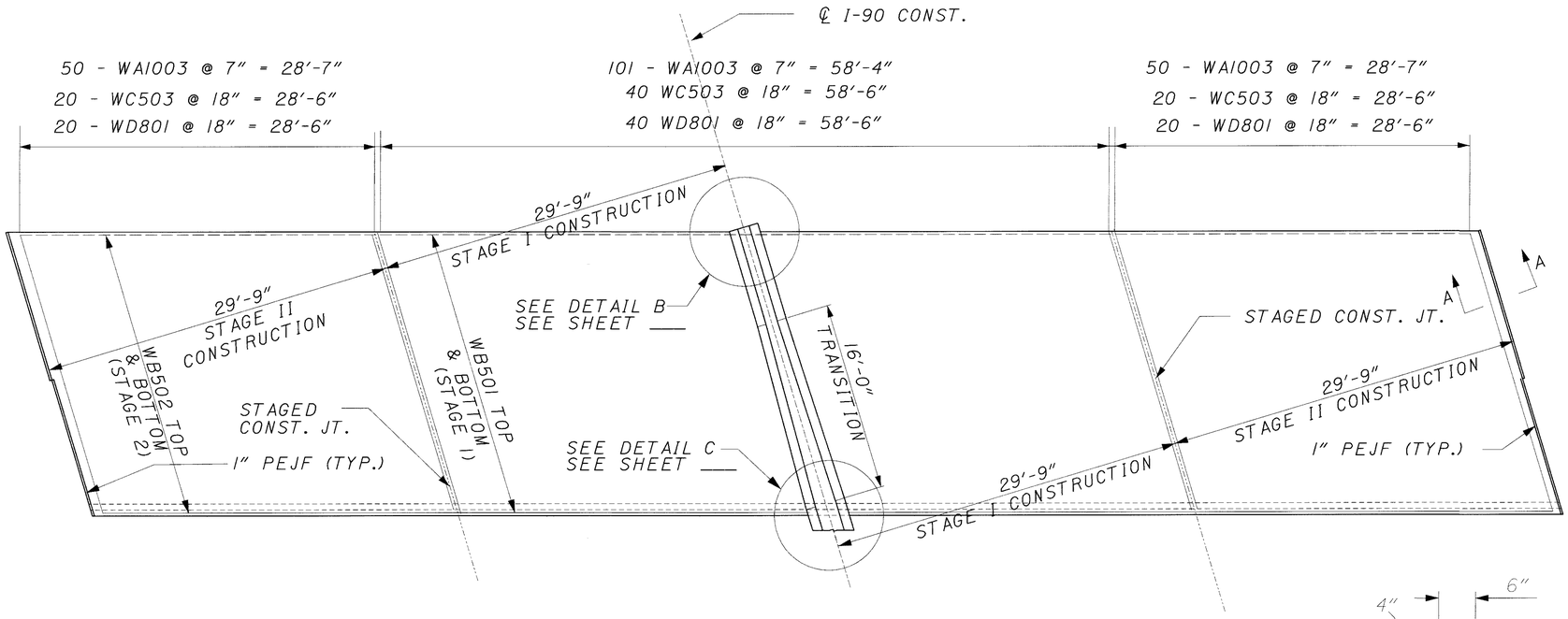

PLAN

FORWARD APPROACH SLAB SHOWN, REAR SIMILAR

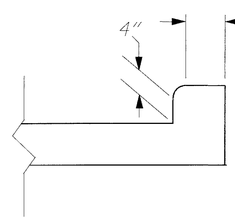

SECTION A-A

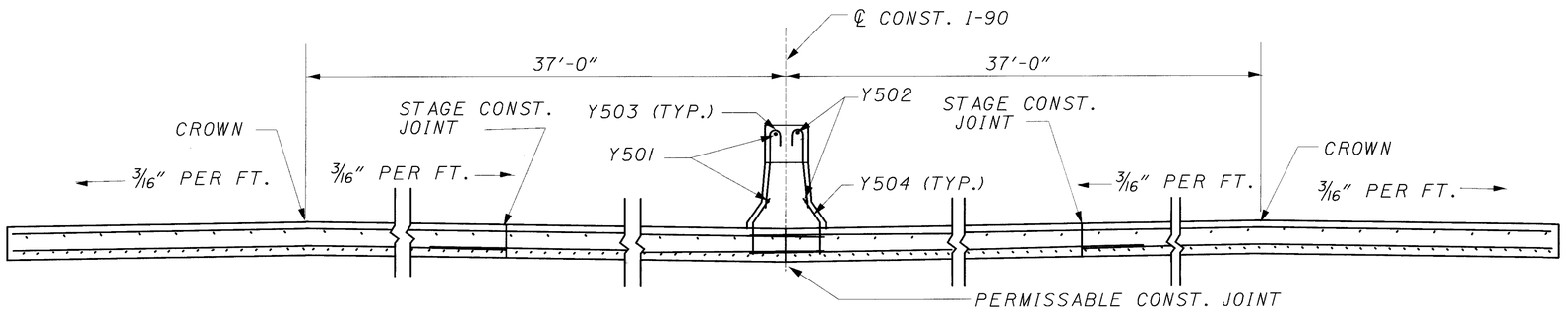

TRANSVERSE SECTION

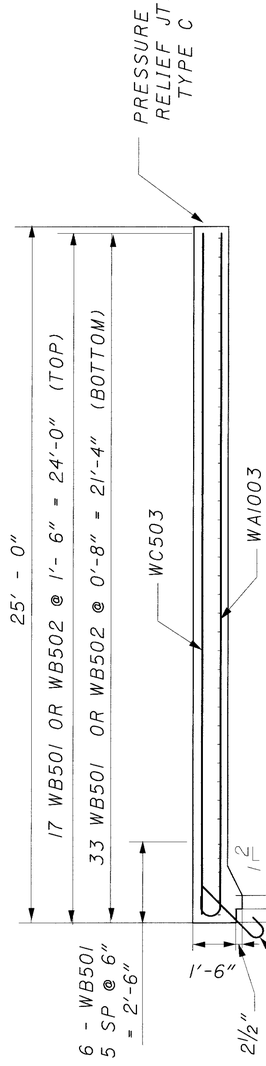

LONGITUDINAL SECTION

NOTE:

FOR DETAILS NOT SHOWN SEE STD. DRAWINGS AS-1-81, MC-9.3, AND SHEET 2/2.

DESIGNED JAA
CHECKED SCT

APPROACH SLAB DETAILS
BRIDGE NO. CUY-90-0249 OVER DOVER CENTER RD.
CUY-90-0.00

359
582

R:\PR22308\CADD\WAPSLAB1.DGN

CUY-90-0249
DOVER CENTER ROAD
APPROACH SLAB REBAR SCHEDULE

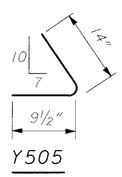

Y505

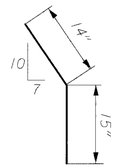

Y504

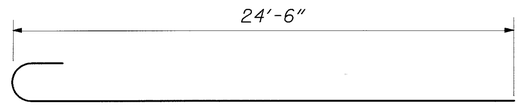

WA1003

MARK	SHAPE	LENGTH	NUMBER
WA1003	B	25'-11"	402
WC503	S	24'- 6"	160
WD801	B	5'- 8"	160
WB501	S	34'- 8"	200
WB502	S	30'- 9"	200
WY501	S	25'-11"	4
WY502	S	26'-11"	4
WY503	B	3'-11"	76
WY504	B	2'- 5"	64
WY505	B	2'- 5"	12

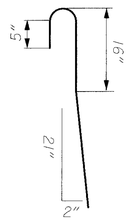

Y503

NOTE: AMOUNTS LISTED ARE FOR BOTH FORWARD AND REAR APPROACH SLABS.

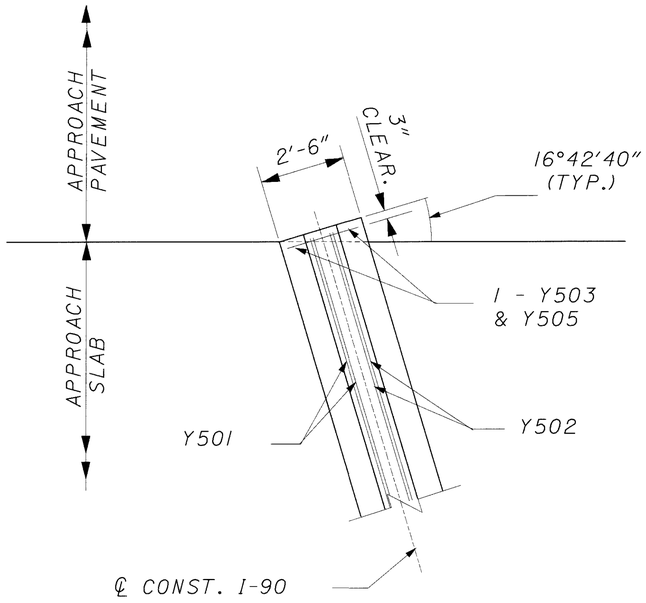

DETAIL B

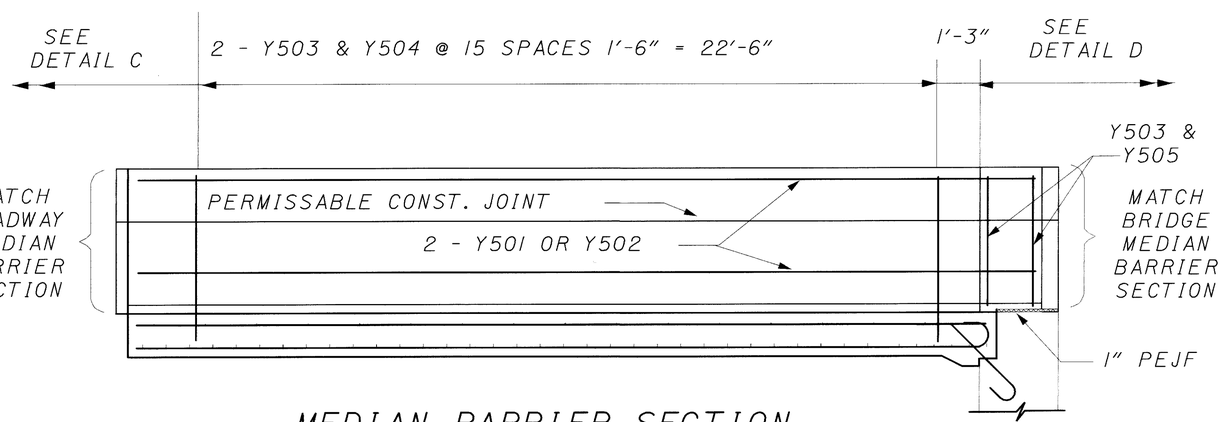

MEDIAN BARRIER SECTION

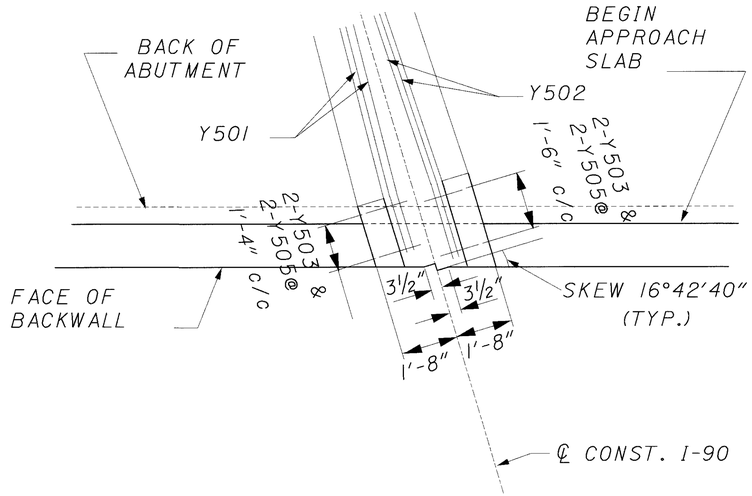

DETAIL C

DESIGNED JAA
CHECKED SCT

APPROACH SLAB DETAILS
BRIDGE NO. CUY-90-0249 OVER DOVER CENTER RD.
CUY-90-0.00

360
582

R:\PR22308\CADD\WAPSLABLDGN

CALCULATED CWP
CHECKED RAS

TRAFFIC CONTROL NOTES

CUY-90-0.00

TRAFFIC CONTROL STANDARD CONSTRUCTION DRAWINGS

REFERENCES TO SUPPLEMENTAL SPECIFICATIONS 857, 858, 861, 957, 958, AND 961 ON THE TRAFFIC CONTROL STANDARD CONSTRUCTION DRAWINGS IN THESE PLANS SHALL BE CONSIDERED TO READ AS RESPECTIVE REFERENCES TO ITEMS 630, 633, 730, 731, AND 733.

LAYOUT OF PAVEMENT MARKINGS

THE CONTRACTOR SHALL BE RESPONSIBLE FOR ALL OF THE LAYOUT AND LOCATIONS OF THE VARIOUS PAVEMENT MARKINGS.

REMOVAL OF EXISTING ITEMS

ALL 630 REMOVAL ITEMS NOT SPECIFICALLY INCLUDING STORAGE OR REERECTION SHALL BECOME THE RESPONSIBILITY OF THE CONTRACTOR. REMOVAL AND DISPOSAL SHALL BECOME THE RESPONSIBILITY OF THE CONTRACTOR.

ITEM 630 - SIGN LOCATIONS

SIGN LOCATIONS OF EXISTING AND PROPOSED SIGNS ON THE PLANS ARE APPROXIMATE. THE CONTRACTOR PRIOR TO THE ERECTION OF ALL SIGN SUPPORTS (POSTS, BEAMS AND OVERHEADS) SHALL STAKE THE PROPOSED LOCATIONS, INCLUDING OFFSETS OVERHEAD SUPPORT LOCATIONS SHALL ALSO INCLUDE FOUNDATION ELEVATIONS. THE ENGINEER SHALL APPROVE ALL SUPPORT LOCATIONS AND MAY ADJUST THE LOCATION TO CORRECT SLOPE AND SUB-SURFACE DIFFICULTIES, SIGN SIGH DISTANCE OBSTRUCTIONS, IMPROVE SAFETY AND ELIMINATE OVERHEAD OBSTACLES.

PAYMENT FOR STAKING SHALL BE INCIDENTAL TO THE VARIOUS SIGN SUPPORT ITEMS.

RETROREFLECTOR REPLACEMENT

THE FOLLOWING ESTIMATED QUANTITY HAS BEEN INCLUDED IN THE TRAFFIC CONTROL GENERAL SUMMARY TO BE USED AS DIRECTED BY THE ENGINEER TO REPLACE THE RETROREFLECTORS WHICH WERE REMOVED IN THE LANE CLOSURE AREAS WHICH WERE BEYOND THE RESURFACING LIMITS.

ITEM 621 - PRISMATIC RETROREFLECTOR 115 EACH

ITEM 620 - DELINEATORS

THE FOLLOWING ESTIMATED QUANTITIES HAVE BEEN INCLUDED IN THE TRAFFIC CONTROL GENERAL SUMMARY TO BE USED AS DIRECTED BY THE ENGINEER FOR THE INSTALLATION OR REPLACEMENT OF DELINEATORS. LOCATIONS OF DELINEATORS SHALL BE AS PER O.D.O.T. STANDARD CONSTRUCTION DRAWING TC-61.10.

ITEM 620 - DELINEATOR, TYPE C, POST MOUNTED	40 EACH
ITEM 620 - DELINEATOR, TYPE C, BRACKET MOUNTED	5 EACH
ITEM 620 - DELINEATOR, TYPE D, POST MOUNTED	38 EACH
ITEM 620 - DELINEATOR REMOVED FOR DISPOSAL	30 EACH

ITEM 621 - RAISED PAVEMENT MARKER, INSTALLATION ONLY, AS PER PLAN

LOADING OF MATERIALS SUPPLIED BY THE DEPARTMENT AT THE RECYCLER'S WAREHOUSE

TRUCKS SHALL HAVE A LOADING HEIGHT OF 48 INCHES AND BE ABLE TO BACK UP FLUSH TO THE LOADING DOCK.

TRUCKS SHALL NOT HAVE ANY OBSTRUCTIONS OR PROTRUSIONS THAT PREVENT THE LOADING BY A STANDARD FORKLIFT OR LIFT TRUCK.

SEMITRUCKS OR 20 FOOT COMMERCIAL TRUCKS ARE THE MOST APPROPRIATE TRUCKS FOR LOADS IN EXCESS OF 4 PALLETS (ONE PALLET = 21 BOXES = 2100 LBS).

STAKE BODY TRUCKS ARE APPROPRIATE TO LOAD LESS THAN 4 PALLETS, PROVIDED THE TRUCK IS RATED FOR THE LOAD AND THE LOAD CAN BE SAFELY SECURED FOR TRANSPORT BY CHAINING OR STRAPPING DOWN AS NEEDED.

PICKUP TRUCKS ARE APPROPRIATE FOR LOADS OF APPROXIMATELY ONE PALLET, PROVIDED THE PICKUP TRUCK IS RATED FOR THE LOAD AND THE LOAD CAN BE SAFELY SECURED FOR TRANSPORT.

DUMP TRUCKS, TILT BED TRUCKS, AND NON COMMERCIAL MOVING VANS WILL NOT BE LOADED BY THE RECYCLER'S WAREHOUSE.

THE WAREHOUSE SUPERVISOR WILL REFUSE TO LOAD ANY TRUCK THAT IS UNSAFE TO LOAD OR UNSUITABLE FOR THE LOAD BEING PLACED ON THE TRUCK.

RAISED PAVEMENT MARKERS

MATERIALS SUPPLIED BY THE DEPARTMENT

FOR THIS PROJECT, THE RPM CASTINGS SUPPLIED BY O.D.O.T. WILL COME WITH REFLECTORS ATTACHED.

ALL MATERIALS ARE TO BE CONTRACTOR FURNISHED, EXCEPT THAT THE DEPARTMENT SHALL SUPPLY RPM MATERIALS IN THE QUANTITIES SHOWN HEREIN TO THE CONTRACTOR. PAY ITEMS FOR THE DEPARTMENT SUPPLIED MATERIALS SHALL BE INDICATED AS "INSTALLATION ONLY". THE TYPE OF DEPARTMENT SUPPLIED MATERIAL SHALL BE RAISED PAVEMENT MARKER CASTINGS.

THE CONTRACTOR SHALL PICK UP THE DEPARTMENT SUPPLIED RPM MATERIALS AT THE OPI WAREHOUSE IN COLUMBUS, OHIO.

THE CONTRACTOR SHALL PICK UP DEPARTMENT SUPPLIED RPM MATERIALS AT THE SPECIFIED LOCATION(S) FOR TRANSPORT TO THE WORK SITE OR TO THE CONTRACTOR'S STORAGE FACILITY. THE RECYCLED RAISED PAVEMENT MARKER (RPM) AUTHORIZATION FORM IS TO BE SIGNED BY THE DISTRICT CONSTRUCTION ENGINEER PRIOR TO PICKUP OF THE RPMS. THE CONTRACTOR SHALL NOTIFY THE DISTRICT AND/OR THE PARTIES LISTED ON THE AUTHORIZATION FORM IN WRITING AT LEAST FIVE (5) CALENDAR DAYS PRIOR TO PICK UP OF THE DEPARTMENT SUPPLIED MATERIALS. THE CONTRACTOR SHALL STORE THE RPMS WITHOUT DAMAGE OR CONTAMINATION WITH FOREIGN MATTER. A DEDUCTION IN THE AMOUNT OF ACTUAL COST TO THE DEPARTMENT SHALL BE MADE FOR MATERIALS DAMAGED BY THE CONTRACTOR OR FOR CASTINGS RECEIVED BY THE CONTRACTOR WHICH WERE NOT INSTALLED AND WERE NOT RETURNED TO THE DEPARTMENT.

RETURN NON-PERFORMED RAISED PAVEMENT MARKER MATERIALS SUPPLIED BY THE DEPARTMENT

RAISED PAVEMENT MARKER MATERIALS SUPPLIED BY THE DEPARTMENT, THAT ARE NON-PERFORMED SHALL BE CAREFULLY REPACKED OR PACKED IN THE BOXES IN THE SAME STYLE AND QUANTITY AS ORIGINALLY RECEIVED FROM THE DEPARTMENT. CASTING STYLES SHALL NOT BE MIXED WITHIN ANY ONE CONTAINER. THE CONTRACTOR SHALL CLEARLY MARK ON THE OUTSIDE OF THE EACH CONTAINER THE STYLE OF CASTING. BOXES SHALL BE PLACED ON SKIDS OR PALLETS IN THE SAME STYLE (LOW PROFILE OR CONVENTIONAL, REFLECTORISED OR NON REFLECTORISED) AND NO MORE THAN 420 RPMS (OR 21 BOXES) ON ONE SKID.

ONLY USE BOXES SUPPLIED BY THE RAISED PAVEMENT MARKER RECYCLER. BOXES MUST BE MARKED WITH THE RECYCLER'S PART OR CATALOG NUMBER AND THE PROJECT NUMBER. THE RECYCLER'S CATALOG OR PART NUMBER'S MAY BE OBTAINED FROM THE OFFICE OF TRAFFIC ENGINEERING IN COLUMBUS, OHIO OR FROM THE RECYCLER. BOXES NOT MARKED WITH THE PROPER RECYCLER'S CATALOG OR PART NUMBERS, AND THE DEPARTMENT'S PROJECT NUMBER WILL NOT BE ACCEPTED AT THE RECYCLER'S WAREHOUSE. NON PERFORMED MATERIALS WILL BE RETURNED TO THE LOCATION AS SPECIFIED BY THE DISTRICT CONSTRUCTION ENGINEER WITHIN 30 DAYS OF COMPLETION OF THE PROJECT.

THE ABOVE WORK INCLUDING ALL LABOR, EQUIPMENT AND MATERIAL NEEDED TO PERFORM THE WORK, SHALL BE CONSIDERED INCIDENTAL TO THE RESPECTIVE PAY ITEM.

IF THE DEPARTMENT HAS TO REPACKAGE THE RPMS CORRECTLY, THE CONTRACTOR WILL BE ASSESSED THE ACTUAL COST FOR REPACKAGING THE MATERIALS BY THE DEPARTMENT'S FORCES.

RAISED PAVEMENT MARKERS SHALL BE INSTALLED IN ACCORDANCE WITH STANDARD DRAWINGS TC-65.10M, TC-65.11M, AND TC-65.12M.

THE FOLLOWING ESTIMATED QUANTITIES HAVE BEEN CARRIED TO THE TRAFFIC CONTROL GENERAL SUMMARY. THE CONTRACTOR SHALL INSTALL RECYCLED RAISED PAVEMENT MARKERS WITH PRISMATIC REFLECTORS: SEE SHEET 321.

ITEM 626 - BARRIER REFLECTORS

THE FOLLOWING ESTIMATED QUANTITY HAS BEEN INCLUDED IN THE TRAFFIC CONTROL GENERAL SUMMARY FOR THE INSTALLATION OF BARRIER REFLECTORS. LAYOUT OF BARRIER REFLECTORS SHALL BE AS INDICATED IN 626.03

BARRIER REFLECTOR, TYPE A	345 EACH
BARRIER REFLECTOR, TYPE B	337 EACH

ITEM 631 - REMOVAL OF DISCONNECT SWITCH ENCLOSURE AND DISPOSAL

INCIDENTAL TO THE REMOVAL OF DISCONNECT SWITCH ENCLOSURE, THE DISCONNECT SWITCH SHALL BE REMOVED AND DISPOSED OF BY THE CONTRACTOR.

ITEM 631 - REMOVAL OF LUMINAIRE AND DISPOSAL

INCIDENTAL TO THE REMOVAL OF THE LUMINAIRE, THE BALLAST, AND THE MOUNTING BRACKET ASSEMBLY SHALL BE REMOVED AND DISPOSED OF BY THE CONTRACTOR.

ITEM 631 - BALLAST, BY TYPE, INTEGRAL

BALLAST FOR MERCURY VAPOR LUMINAIRES SHALL BE MOUNTED WITHIN THE LUMINARIE HOUSING (INTEGRAL) OR MOUNTED IN A WEATHERPROOF HOUSING ATTATCHED TO OR BESIDE THE LUMINAIRE (CONTIGUOUS). BALLAST HOUSING SHALL BE OF CORROSION RESISTANT MATERIALS.

INTEGRAL BALLASTS SHALL BE USED TO LIGHT ALL NON-STRUCTURALLY MOUNTED OVERHEAD SIGNS AS SHOWN IN THE PLANS.

ITEM 631 - ENCLOSURE PADLOCKS

DISCONNECT SWITCH ENCLOSURES FURNISHED IN ACCORDANCE WITH SPECIFICATION 631.08 SHALL INCLUDE A PADLOCK EQUAL TO MASTER NO. 48KA OR WILSONBOHANNON 660, WITH LOCK BODY OF BRONZE OR BRASS, AND KEYING IN ACCORDANCE WITH THE FOREGOING SPECIFICATION. PROTECTIVE COATING OF OVERHEAD SIGN STURCTURES

ITEM 632 - DETECTOR LOOP

AN ESTIMATED QUANTITY OF ITEM 632 - DETECTOR LOOP HAS BEEN PROVIDED AS A CONTIGENCY WHEN WIRE IS CUT, BROKEN, OR DESTROYED DUE TO PAVEMENT REPAIR OR BUTT JOINT OPERATIONS.

NEW LOOP DETECTORS SHALL BE PLACED AT THE SAME LOCATIONS AND SAME SIZE AS THE EXISTING. THE LOOP DETECTOR WIRE SHALL BE REPLACED TO THE PULL BOX OR POLE, WHICHEVER IS APPLICABLE, UNDER ITEM 632 AND TC-82.10, TC-82.11.

THE FOLLOWING ESTIMATED QUANTITIES HAVE BEEN CARRIED TO THE TRAFFIC CONTROL GENERAL SUMMARY:

ITEM 632 - DETECTOR LOOP 2 EACH

FOR ESTIMATION PURPOSES ONLY: APPROXIMATELY 150 FT. OF SAW CUT AND 300 FT. OF DETECTOR WIRE.

I:\PROJECTS\Pid11738\dgn\final plans\11738TNA.DGN 21-JUL-2000 12:16PM jgrmovse

CALCULATED CWP
CHECKED RAS

TRAFFIC CONTROL NOTES

PROTECTIVE COATING OF OVERHEAD SIGN STURCTURES

GENERAL

OVERHEAD SIGN SUPPORTS CAN BE SEPARATED INTO MAJOR SECTIONS SUCH AS END FRAMES, TRUSSES, VERTICAL POLES AND CANTILEVER ARMS. DURING THE IMPLEMENTATION OF THIS WORK ITEM IT WILL BE BENEFICIAL TO REFER TO THE MAJOR SECTIONS OF THE OVERHEAD SIGN SUPPORTS RATHER THAN THE WHOLE SUPPORT. MORE SPECIFIC INSTRUCTIONS AND FLEXIBILITY CAN BE GIVEN BASED UPON THE UNIT OF MEASURE AND PAYMENT PER MAJOR SUPPORT SECTION.

THE PROTECTIVE COATING OF OVERHEAD SIGN SUPPORT SECTIONS SHALL BE A FOUR PART PROCESS TO INCLUDE SURFACE PREPARATION FOLLOWED BY A THREE STEP COATING SYSTEM. THIS THREE STEP COATING SYSTEM SHALL CONSIST OF AN EPOXY PRIME COAT, AN EPOXY INTERMEDIATE COAT, AND A URETHANE TOP COAT, WITH EACH COAT A DIFFERENT COLOR. FOR AN EXPLANATION OF THE MATERIALS TO BE USED SEE NOTE ENTITLED "COATING SYSTEM." THE PURPOSE OF THIS COATING IS TO PROVIDE PROTECTION FOR NEW (UNWEATHERED) AND OLDER (WEATHERED) GALVANIZED STEEL SUPPORT SECTIONS FROM CORROSIVE ELEMENTS IN THE ATMOSPHERE. COATING AND SURFACE PREPARATION OF THE NEW GALVANIZED SUPPORT SECTIONS SHOULD BE DONE BY THE MANUFACTURER.

THE CONTRACTOR SHALL TAKE ALL NECESSARY PRECAUTIONS TO COMPLY WITH POLLUTION LAWS, RULES OR REGULATIONS OF FEDERAL, STATE, LOCAL AGENCIES. THE COATING MATERIALS SPECIFIED FOR THE WORK CAN BE HAZARDOUS TO THE HEALTH OF THE APPLICATOR IF NOT APPLIED AS PER THE MANUFACTURER'S INSTRUCTIONS. THE CONTRACTOR SHALL FOLLOW THE DATA SHEET AND THE LABEL ON THE PAINT CONTAINERS. THESE PRECAUTIONS SHALL INCLUDE THE USE OF RESPIRATORS AND EYE AND SKIN PROTECTION AS SPECIFIED. THE CONTRACTOR SHALL ALSO INSURE THAT HIS PAINTING OPERATIONS AND LOCATION WILL NOT ENDANGER OR ADVERSELY AFFECT THE PUBLIC IN GENERAL.

THE PROPOSED CLEANING AND COATING OPERATIONS SHALL BE PERFORMED ONLY WHEN THE AMBIENT TEMPERATURE IS 50 DEGREES F OR ABOVE FOR A PERIOD OF 24 CONTINUOUS HOURS. PAINT SHALL NOT BE APPLIED DURING RAIN, FOG, OR MIST, OR WHEN THE STEEL SURFACE TEMPERATURE IS LESS THAN 5 DEGREES F ABOVE THE DEW POINT. PAINT SHALL NOT BE APPLIED TO WET OR DAMP SURFACES OR ON FROSTED OR ICE COATED SURFACES. PAINT SHALL NOT BE APPLIED WHEN THE RELATIVE HUMIDITY IS GREATER THAN 85%. ALL STEEL SURFACES OF TRUSS AND END FRAMES INCLUDING THE WELDED AREAS, BALLAST ENCLOSURE MOUNTING BRACKET AND THE BASE PLATES ARE TO BE CLEANED AND COATED. BEFORE EACH COATING IS APPLIED, IT SHALL BE MIXED WITH AN APPROVED POWER MECHANICAL MIXER TO A UNIFORM CONSISTENCY WHICH SHALL BE MAINTAINED DURING ITS APPLICATION. EACH COAT SHALL BE APPLIED IN A WORKMANLIKE MANNER AS A CONTINUOUS FILM OF UNIFORM THICKNESS WHICH IS FREE OF HOLIDAYS, PORES, RUNS, OR SAGS. ALL COATS SHALL BE APPLIED BY BRUSH. THINNING OF PAINT IS STRICTLY PROHIBITED. PAINT NOT CAPABLE OF BEING APPLIED AS SPECIFIED SHALL NOT BE USED. THE COATING SHALL PENETRATE ALL JOINTS AND CONNECTIONS. THE ENGINEER SHALL BE NOTIFIED 24 HOURS PRIOR TO ANY CLEANING OR COATING OPERATIONS SO THAT INSPECTION SERVICES CAN BE PROVIDED.

TO PROVIDE ASSURANCE THAT NO THINNING OF THE PROTECTIVE COATING MATERIAL IS BEING DONE, PERIODIC CHECKS BY A STATE INSPECTOR WILL BE MADE OF THE MATERIAL. THESE CHECKS WILL BE MADE UTILIZING A VISCOSITY TEST CUP PROCEDURE AS PROVIDED BY THE MANUFACTURER OF THE MATERIAL. THE FREQUENCY OF THESE CHECKS WILL BE DETERMINED BY THE ENGINEER BASED UPON FIELD EVALUATION AND JOB PERFORMANCE.

IF THE VISCOSITY CHECK REVEALS THAT THE MATERIAL HAS BEEN THINNED, IMMEDIATE REJECTION OF THE MATERIAL SHALL BE MADE. THIS REJECTION SHALL REQUIRE THE CONTRACTOR TO IMMEDIATELY STOP USING THE MATERIAL AND PROVIDE NEW MATERIAL OF THE PROPER SPECIFICATION PER PLAN. IN ADDITION, THE COATING OF THE SIGN SUPPORT WITH THE NON-APPROVED MATERIAL BE CONSIDERED UNACCEPTABLE. THEREFORE THE SUPPORT SHALL BE STRIPPED AND RE-COATED WITH THE APPROVED MATERIAL (UNTHINNED MATERIAL). 3 TO 4 VISCOSITY CHECKS INDICATING A PERPETUAL QUALITY CONTROL PROBLEM (THINNED MATERIAL) SHALL BE CONSIDERED SUFFICIENT JUSTIFICATION TO TERMINATE THE CONTRACT.

THE COST OF THE VISCOSITY TEXT KIT SHALL BE BORN BY THE CONTRACTOR AND CONSIDERED INCIDENTAL TO THE ITEM SPECIALS PER COAT. THE TEST KIT SHALL CONTAIN ITEMS SUCH AS INSTRUCTIONS, VISCOSITY CUP, STANDARD COMPARISON RATS, CARRYING CASE, CLEANING EQUIPMENT, STOPWATCH, ETC. THE KIT SHALL BE GIVEN TO THE STATE INSPECTOR FOR USE DURING THE PERFORMANCE OF THE WORK. AFTER THE PROJECT IS COMPLETE, THE TEST KIT SHALL REVERT TO THE STATE AS STATE PROPERTY.

COATING SYSTEM

THE COATING SYSTEM SHALL CONSIST OF A POLYAMIDE-CURED EPOXY PRIME COAT, A POLYAMIDE-CURED EPOXY INTERMEDIATE COAT AND AN ALIPHATIC POLYURETHANE TOP COAT. THE COATING MATERIALS USED SHALL BE THOSE AS LISTED FROM ONE OF THE FOLLOWING MANUFACTURERS OR AN APPROVED EQUAL:

1. AMERON
   210 NORTH BEARRY STREET
   BREA, CALIFORNIA 92622
   LOCAL TELEPHONE CONTACT: (419) 885-5336
   PRIME COAT: AMERCOAT 385
   INTERMEDIATE COAT: AMERLOCK 400
   TOP COAT: AMERCOAT 450 HS

2. ICI/DEVOE COATINGS
   5480 CLOVERLEAF PKWY.
   VALLEY VIEW, OHIO 44125
   LOCAL TELEPHONE CONTACT: (216) 328 - 1581
   PRIME COAT: DEVRAN 4170 CORROSION RESISTANT EPOXY
   INTERMEDIATE COAT: DEVRAN 4170 CORROSION RESISTANT EPOXY
   TOP COAT: DEVTHANTE 4708 ALIPHATIC URETHANE ENAMEL

3. PORTERE PAINT CO.
   400 SOUTH 13TH STREET
   LOUISVILLE, KY 40201
   LOCAL TELEPHONE CONTACT: (419) 666-0026
   PRIME COAT: PROTER PAINTS MCR 4300
   INTERMEDIATE COAT: PORTER PAINTS MCR 4300
   TOP COAT: PORTER PAINTS HYTHANE

4. POLYCARB
   33095 BAINBRIDGE ROAD
   P.O. BOX 39278
   SOLON, OHIO 44139
   LOCAL TELEPHONE CONTACT: (440) 248-1223
   PRIME COAT: MARK-60 (ULTRAPOX)
   INTERMEDIATE COAT: MARK-60 (ULTRAPOX)
   TOP COAT: MARK-73 (ULTRA-KOTE)

5. SHERWIN-WILLIAMS COMPANY
   671 BETA DRIVE
   MAYFIELD VILLAGE, OHIO 44143
   LOCAL TELEPHONE CONTACT: (440) 461-3310
   PRIME COAT: TILE-CLAD ii HI-BILD PRIMER
   INTERMEDIATE COAT: HI-SOLIDS CATALYZED EPOXY
   TOP COAT: HI-BILD ALIPHATIC POLYURETHANE ENAMEL

ALL THREE COATS OF THE SYSTEM SHALL BE MANUFACTURED BY THE SAME COMPANY TO INSURE COMPATIBILITY AMONG COATS.

SURFACE PREPARATIONS, NEW SUPPORT SECTIONS

NEW UNWEATHERED GALVANIZED SUPPORT SECTIONS SHALL HAVE THEIR SURFACE PREPARATION AS WELL AS THEIR PROTECTIVE COATING DONE AT THE MANUFACTURER OF THE SUPPORT SECTIONS.

THE SUPPORT SECTIONS SHALL BE PREPARED FOR COATING BY SSPC - SPI FOLLOWED BY SSPC - SP7 (SOLVENT CLEANING) FOLLOWED BY A BRUSH OFF BLAST. BLASTING ABRASIVES CONTAINING MORE THAN 1% FREE SILICA SHALL NOT BE ALLOWED. BEFORE THE PREPARED SURFACE DEGRADES FROM THE PRESCRIBED STANDARDS, THE PRIME COAT SHALL BE APPLIED. IN EVERY CASE, THE SURFACES SHALL BE COATED WITH THE EPOXY PRIME COAT ON THE SAME DAY OF SURFACE PREPARATION. CAREFUL HANDLING AND STORAGE WILL BE REQUIRED TO PREVENT SCRAPING, MARRING, OR OTHER SURFACE DAMAGE TO THE PREPARED SURFACE.

PAYMENT SHALL INCLUDE ALL LABOR, EQUIPMENT, HANDLING, TRANSPORTATION COSTS AND MATERIALS NECESSARY TO ACCOMPLISH THIS ITEM OF WORK PER MAJOR SUPPORT SECTION.

BASIS OF PAYMENT WILL BE AS FOLLOWS:

CONTRACT BID PRICE PER EACH MAJOR SUPPORT SECTION.

SURFACE PREPARATION, EXISTING SUPPORT SECTIONS

EXISTING, WEATHERED GALVANIZED SUPPORT SECTIONS SHALL HAVE THEIR SURFACE PREPARATION AS WELL AS THEIR PROTECTIVE COATING UNDER CONDITIONS OF TEMPERATURE AND HUMIDITY WITHIN THE SAME RANGE AS SPECIFIED BY THE MANUFACTURED OF THE EPOXY - PRIME COAT MATERIAL SPECIFIED BY THE MANUFACTURER OF THE EPOXY - PRIME COAT MATERIAL TO BE USED IMMEDIATELY AFTER THIS CLEANING OPERATION. THE SUPPORT SECTIONS SHALL BE PREPARED FOR COATING BY SSPC - SPI FOLLOWED BY SSPC - SPA (SOLVENT) CLEANING FOLLOWED BY A COMMERCIAL BLAST CLEANING). BEFORE THE PREPARED SURFACE DEGRADES FROM THE PRESCRIBED STANDARDS, THE PRIME COAT SHALL BE APPLIED. IN EVERY CASE, THE SURFACE SHALL BE COATED WITH THE EPOXY PRIME COAT ON THE SAME DAY AS THE SURFACE PREPARATION. CAREFUL HANDLING AND STORAGE WILL BE REQUIRED TO PREVENT ANY SCRAPING, MARRING, OR OTHER SURFACE DAMAGE TO THE PREPARED SURFACE.

PAYMENT SHALL INCLUDE ALL LABOR, EQUIPMENT, HANDLING, TRANSPORTATION COSTS, AND MATERIALS NECESSARY TO ACCOMPLISH THIS ITEM OF WORK PER MAJOR SUPPORT SECTION.

BASIS OF PAYMENT WILL BE AS FOLLOWS:
ITEM 630 - SURFACE PREPARATION, EXISTING SUPPORT SECTIONS AT THE CONTRACT BID PRICE PER EACH MAJOR SUPPORT SECTION.

COATING, EPOXY PRIME COAT, SUPPORT SECTIONS

THIS ITEM SHALL CONSIST OF ONE (1) COAT OF AN EPOXY PRIMER TO SUPPORT SECTIONS. THE TOTAL DRY FILM THICKNESS OF THIS COAT SHALL BE BETWEEN 1.5 AND 2.0 MILS. IF MORE THAN ONE PASS IS NECESSARY TO OBTAIN THE REQUIRED THICKNESS, THAT COAT SHALL BE BORNE BY THE CONTRACTOR.

THIS COAT SHALL IN ALL CASES BE APPLIED BY BRUSH OVER SURFACES THAT WERE PREPARED EARLIER THAT SAME DAY. THE THINNING OF THE EPOXY MATERIAL IS STRICTLY PROHIBITED. MATERIAL NOT CAPABLE OF BEING APPLIED AS SPECIFIED SHALL NOT BE USED.

WHEN THE AVERAGE DRY FILM THICKNESS OF THIS COAT OVER THE ENTIRE SUPPORT SECTION IS LESS THAN THE SPECIFIED 1.5 BUT IS AT LEAST 1.25 MILS, THE CONTRACTOR BID PRICE FOR THIS ITEM SHALL BE REDUCED IN DIRECT PROPORTION TO THE DEFICIENCY OF COATING UP TO 16-2/3%. IF THE DEFICIENCY OF COATING IS MORE THAN 16-2/3% (I.E. THE AVERAGE DRY FILM THICKNESS IS LESS THAN 1.25 MILS) THE WORK FOR THIS ITEM SHALL BE CONSIDERED UNSATISFACTORY AND SHALL BE RECOATED AT THE FULL EXPENSE OF THE CONTRACTOR, INCLUDING ALL LABOR, EQUIPMENT AND MATERIAL.

THE EPOXY PRIME COAT CHOSEN BY THE CONTRACTOR SHALL BE ONE OF THE FOLLOWING TWO-COMPONENT COMPOSITIONS CONFORMING TO ITS LISTED PROPERTIES:

CUY-90-0.00

10 MAR 2000
p:\pr22308\caddd\1738tna.dgn

AMERICOAT 385
% SOLIDS BY VOLUME: 47% +/- 3%
POT LIFE: 8 HRS. @ 77 DEGREES F (25 DEGREES C)
DRYING TIME: 4 HRS. @77 DEGREES F

DEVRAN 4170 CORROSION RESISTANT EPOXY PRIMER 5465 SERIES
% SOLIDS BY VOLUME: 54% +/- 1%
% SOLIDS BY WEIGHT: 71% +/- 1%
POT LIFE: 4 HRS. @ 77 DEGREES F
DRYING TIME: TOUCH 1-2 HRS., RECOAT 7 HOURS
VISCOSITY: 95-100 KU

MCR-4301 EPOXY PRIMER
% SOLIDS BY VOLUME: 48.0% +/- 2%
POT LIFE: 30 HRS. @ 50-60 DEGREES F
16 HRS. @ 80-100 DEGREES F
DRYING TIME: 4-6 HRS. @ 50-60 DEGREES F

MRAK-60 ULTRAPOX
%SOLIDS BY WEIGHT: 70-75% +/- 2%
POT LIFE: 6 HRS. @ 75 DEGREES F
DRYING TIME: 2-3 HRS. INITIAL SET @ 75 DEGREES F
VISCOSITY: 300-500 CPS @ 75 DEGREES F

TILE-CLAD II HI-BILD PRIMER
% SOLIDS BY VOLUME: 48% +/- 2%
% SOLIDS BY WEIGHT: 63% +/- 2%
POT LIFE: 8 HRS @ 77 DEGREES F
DRYING TIME: 1 HR. TO TOUCH, 6 HRS. TO RECOAT

FOR NEW SUPPORT SECTIONS THIS PRIME COAT SHALL BE DONE AT THE MANUFACTURER OF THE SUPPORT SECTIONS. VERIFICATION BY THE MANUFACTURER OF THE COATING MATERIAL FOR THE PRIME COAT PROCEDURES WILL BE REQUIRED. CAREFUL HANDLING AND STORAGE WILL BE REQUIRED TO PREVENT ANY SCRAPING, MARRING OR OTHER SURFACE DAMAGE TO THE PRIME COAT.

THE PAYMENT SHALL INCLUDE ALL LABOR, EQUIPMENT, HANDLING COSTS AND MATERIALS NECESSARY TO ACCOMPLISH THIS ITEM OF WORK. THIS PRIME COAT SHALL BE MANUFACTURED BY THE SAME COMPANY SUPPLYING THE INTERMEDIATE AND TOP COATS. A PROPERLY CALIBRATED DRY FILM THICKNESS INSTRUMENT WILL BE USED TO CHECK THE COATING.

BASIS OF PAYMENT WILL BE AS FOLLOWS:
ITEM 630-COATING, EPOXY PRIME COAT, SUPPORT SECTIONS, AT THE CONTRACT BID PRICE PER EACH MAJOR SUPPORT SECTION.

COATING EPOXY INTERMEDIATE COAT, SUPPORT SECTIONS

THIS SHALL CONSIST OF THE APPLICATION OF ONE (1) COAT OF EPOXY TO SUPPORT SECTIONS. THE TOTAL DRY FILM THICKNESS OF THIS COAT SHALL NOT BE LESS THAN SIX (6.0) MILS. IF MORE THAN ONE PASS IS NECESSARY TO OBTAIN THE REQUIRED THICKNESS, THAT COAT SHALL BE BORNE BY THE CONTRACTOR. THIS COAT SHALL BE APPLIED BY BRUSH. THINNING OF THE EPOXY MATERIAL IS STRICTLY PROHIBITED. MATERIAL NOT CAPABLE OF BEING APPLIED AS SPECIFIED SHALL NOT BE USED.

WHEN THE AVERAGE DRY FILM THICKNESS OF THIS COAT OVER THE ENTIRE SUPPORT SECTION IS LESS THAN THE SPECIFIED SIX (6.0) MILS, THE CONTRACT PRICE FOR THIS ITEM SHALL BE REDUCED IN DIRECT PROPORTION TO THE PERCENT DEFICIENCY OF COATING UP TO 16-2/3%. IF THE DEFICIENCY OF COATING IS MORE THAN 16-2/3%, (I.E. THE AVERAGE FILM THICKNESS IS LESS THAN 5.0 MILS), THE WORK FOR THIS ITEM SHALL BE CONSIDERED UNSATISFACTORY AND SHALL BE RECOATED AT THE FULL EXPENSE OF THE CONTRACTOR, INCLUDING ALL LABOR, EQUIPMENT, AND MATERIAL. THE EPOXY INTERMEDIATE COAT CHOSEN BY THE CONTRACTOR SHALL BE ONE OF THE FOLLOWING TWO-COMPONENT COMPOSITIONS CONFORMING TO ITS LISTED PROPERTIES:

AMERLOCK 400
% SOLIDS BY VOLUME: 83% +/- 2%
POT LIFE: 2-1/2 HRS. @ 70 DEGREES F
DRYING TIME: 20 HRS. @ 70 DEGREES F

DEVRAN 4 170 CORROSION RESISTANT EPOXY PRIMER 5465 SERIES
% SOLIDS BY WEIGHT: 54% +/- 1%
% VOLUME BY WEIGHT: 71% +/- 1%
POT LIFE: 4 HRS. @ 77 DEGREES F
DRYING TIME: TOUCH 1-2 HRS., RECOAT 7 HRS.
VISCOSITY: 95-100 KU 70 DEGREES F, 50% R.H.

MCR-4301 EPOXY PRIMER
% SOLIDS BY VOLUME: 48.0% +/- 2%
POT LIFE: 30 HRS. @50-60 DEGREES F
16 HRS. @ 80 DEGREES F
DRYING TIME: 1-2 HRS. @ 60-80 DEGREES F

MARK-60 ULTRAPOX
% SOLIDS BY WEIGHT: 70-75% +/- 2%
POT LIFE : 6 HRS. @ 75 DEGREES F
DRYING TIME: 2-3 HRS. INITIAL SET @ 75 DEGREES F

HI-SOLIDS CATALYZED EPOXY
% SOLIDS BY VOLUME: 61% +/- 2% (SLATE GREY)
% SOLIDS BY WEIGHT: 77% +/- 2%
POT LIFE: 5 HRS. @ 77 DEGREES F
DRYING TIME: 1 HR. TO TOUCH, 4 HRS. TACK FREE, 6 HRS. TO RECOAT @ 77 DEGREES F, 50% R.H.

AT LEAST 24 HOURS BUT NO MORE THAN THREE (3) DAYS SHALL ELAPSE AFTER THE APPLICATION OF THE EPOXY PRIME COAT AND BEFORE THE APPLICATION OF THE EPOXY INTERMEDIATE COAT. SURFACES SHALL IN ALL CASES BE CLEAN BEFORE THE INTERMEDIATE COAT IS APPLIED.

FOR NEW SUPPORT SECTIONS, THE INTERMEDIATE COAT SHALL BE DONE AT THE MANUFACTURER OF THE SUPPORT SECTIONS. VERIFICATION BY THE MANUFACTURER FOR THE INTERMEDIATE COAT PROCEDURE WILL BE REQUIRED. CAREFUL HANDLING AND STORAGE WILL BE REQUIRED TO PREVENT ANY SCRAPING, MARRING OR OTHER SURFACE DAMAGE TO THE INTERMEDIATE COAT.

THE PAYMENT SHALL INCLUDE ALL LABOR, EQUIPMENT, HANDLING COSTS AND MATERIALS NECESSARY TO ACCOMPLISH THIS ITEM OF WORK. THIS INTERMEDIATE COAT SHALL BE MANUFACTURED BY THE SAME COMPANY SUPPLYING THE PRIME AND TOP COATS. A PROPERLY CALIBRATED DRY FILM THICKNESS INSTRUMENT WILL BE USED TO CHECK THE COATING.

BASIS OF PAYMENT WILL BE AS FOLLOWS:
ITEMS 630 - COATING, EPOXY, INTERMEDIATE COAT, SUPPORT SECTIONS AT THE CONTRACT BID PRICE PER EACH MAJOR SUPPORT SECTION.

COATING, URETHANE TOP COAT, SUPPORT SECTIONS

THIS ITEM SHALL CONSIST OF THE APPLICATION OF ONE (1) COAT OF URETHANE TO SUPPORT SECTIONS. THE TOTAL DRY FILM THICKNESS OF THIS COAT SHALL NOT BE LESS THAN ONE AND ONE-HALF (1.5) MILS. IF MORE THAN ONE PASS IS NECESSARY TO OBTAIN THE REQUIRED THICKNESS, THAT COAT SHALL BE BORNE BY THE CONTRACTOR. THIS COAT SHALL BE APPLIED BY BRUSH. THINNING OF THE URETHANE MATERIAL IS STRICTLY PROHIBITED. MATERIAL NOT CAPABLE OF BEING APPLIED AS SPECIFIED SHALL NOT BE USED.

WHEN THE AVERAGE DRY FILM THICKNESS OF THIS COAT OVER THE ENTIRE SUPPORT SECTION IS LESS THAN THE SPECIFIED ONE AND ONE HALF (1.5) MILS BUT IS AT LEAST ONE (1.0) MIL, THE CONTRACT PRICE FOR THIS ITEM SHALL BE REDUCED IN DIRECT PROPORTION TO THE PERCENT DEFICIENCY OF COATING UP TO 33 1/3%. IF THE DEFICIENCY OF THE COATING IS MORE THAN 33 1/3%, (I.E. THE AVERAGE DRY FILM THICKNESS IS LESS THAN 1.0 MIL), THE WORK FOR THIS ITEM SHALL BE CONSIDERED UNSATISFACTORY AND SHALL BE RECOATED AT THE FULL EXPENSE OF THE CONTRACTOR, INCLUDING ALL LABOR, EQUIPMENT AND MATERIAL.

THE URETHANE TOP COAT CHOSEN BY THE CONTRACTOR SHALL BE ONE OF THE FOLLOWING MATERIALS CONFORMING TO ITS LISTED PROPERTIES:

AMERCOAT 450 HS
% SOLIDS BY VOLUME: 45% +/- 2%
POT LIFE: 20 HRS. @ 77 DEGREES F
DRYING TIME: 8 HRS. @ 77 DEGREES F DRY THROUGH

DEVTHANE 4708 ALIPHATIC URETHANE ENAMEL (6200/6252)
% SOLIDS BY VOLUME: 48% +/- 1%
% SOLIDS BY WEIGHT: 59% +/- 1%
POT LIFE: 6 HRS. @ 70 DEGREES F
DRYING TIME: 4 HRS. @ 77 DEGREES F RECOAT

HEATHEN
% SOLIDS BY VOLUME: 42% +/- 2%
POT LIFE: 16 HRS. @ 50 DEGREES F
12 HRS. @ 75 DEGREES F

MARK-73 (ULTRA-COTE)
% SOLIDS BY VOLUME: 52.5% +/- 2%
% SOLIDS BY WEIGHT: 55% +/- 2%
POT LIFE: 8 HRS. @ 75 DEGREES F
DRYING TIME: 4-5 HRS. @ 75 DEGREES F TACK FREE
VISCOSITY: 70-75 KU @ 75 DEGREES F

HI-BILD ALIPHATIC POLYURETHANE ENAMEL
% SOLIDS BY VOLUME: 40% +/- 2% (CATALYZED)
% SOLIDS BY WEIGHT: 48% +/- 2%
POT LIFE: 6 HRS. @ 77 DEGREES F
DRYING TIME: 30 MIN. TO TOUCH, 4 HRS. TACK FREE, 18 HRS.

72 HRS MAX TO RECOAT

AT LEAST 24 HOURS BUT NO MORE THAN THREE (3) DAYS SHALL ELAPSE AFTER THE APPLICATION OF THE EPOXY INTERMEDIATE COAT AND BEFORE THE APPLICATION OF THE URETHANE TOP COAT. SURFACES SHALL IN ALL CASES BE CLEAN BEFORE THE TOP COAT IS APPLIED.

FOR NEW SUPPORT SECTIONS, THIS TOP COAT SHALL BE DONE AT THE MANUFACTURER OF THE SUPPORT SECTIONS. VERIFICATION BY THE MANUFACTURER FOR THE TOP COAT PROCEDURE WILL BE REQUIRED. CAREFUL HANDLING AND STORAGE WILL BE REQUIRED TO PREVENT ANY SCRAPING, MARRING OR OTHER SURFACE DAMAGE TO THE TOP COAT.

THE PAYMENT SHALL INCLUDE ALL LABOR, EQUIPMENT, HANDLING COSTS AND MATERIALS NECESSARY TO ACCOMPLISH THIS ITEM OF WORK. THIS TOP COAT SHALL BE MANUFACTURED BY THE SAME COMPANY SUPPLYING THE PRIME AND INTERMEDIATE COATS. A PROPERLY CALIBRATED DRY FILM INSTRUMENT WILL BE USED TO CHECK THE COATING.

BASIS OF PAYMENT WILL BE AS FOLLOWS:
ITEM 630 - COATING, URETHANE TOP COAT, SUPPORT SECTIONS AT THE CONTRACT BID PRICE PER EACH MAJOR SUPPORT SECTION.

CALCULATED CWP
CHECKED RAS

TRAFFIC CONTROL NOTES

CUY-90-0.00

10 MAR 2000
p:\pr22308\caddd\738tna.dgn

PREQUALIFICATION

PRIOR TO USE, THE CONTRACTOR SHALL SUBMIT TO THE DIRECTOR COPIES OF THE MANUFACTURER'S CERTIFIED TEST DATA SHOWING THAT THE MATERIAL COMPLIES WITH THE REQUIREMENTS OF THIS SPECIFICATION. THE TEST DATA SHALL INCLUDE THE BRAND NAME OF THE PAINT, NAME OF THE MANUFACTURER, NUMBER OF THE LOT TESTED AND DATE OF THE MANUFACTURE. WHEN THE PAINT HAS BEEN APPROVED BY THE DIRECTOR, FURTHER PERFORMANCE TESTING BY THE MANUFACTURER WILL NOT BE REQUIRED UNLESS THE FORMULATION OR MANUFACTURING PROCESS HAS BEEN CHANGED, IN WHICH CASE NEW CERTIFIED TEST RESULTS WILL BE REQUIRED.

ACCEPTANCE

THE MANUFACTURER SHALL SUBMIT CERTIFIED TEST DATA IN ACCORDANCE WITH THE REQUIREMENTS OF THIS SPECIFICATION. THE STATE RESERVES THE RIGHT TO SAMPLE AND TEST DELIVERED LOTS FOR COMPLIANCE.

LOCATIONS

THE FOLLOWING SUMMARY OF MAJOR SUPPORT SECTIONS TO HAVE PROTECTIVE COATING APPLIED IS NOTED BELOW:

SUPPORT NO.	MAJOR SECTIONS
2	1 POLE, 1 ARM
7	1 POLE, 1 ARM
10	1 POLE, 1 ARM
13	1 POLE, 1 ARM
20	2 END FRAMES
22	2 END FRAMES
24	1 POLE, 1 ARM
28	1 POLE, 1 ARM
29	1 POLE, 1 ARM

THE FOLLOWING QUANTITIES HAVE BEEN CARRIED TO THE TRAFFIC CONTROL GENERAL SUMMARY:

ITEM 630 - SURFACE PREPARATION, NEW SUPPORT SECTION	20 EACH
ITEM 630 - COATING, EPOXY PRIME COAT, SUPPORT SECTION	20 EACH
ITEM 630 - COATING, EPOXY INTERMEDIATE COAT, SUPPORT SECTION	20 EACH
ITEM 630 - COATING, URETHANE TOP COAT, SUPPORT SECTION	20 EACH

MATERIAL FURNISHED BY THE DEPARTMENT
(INSTALLATION ONLY)

	ONE-WAY WHITE		ONE-WAY YELLOW		TWO-WAY WHITE		TWO-WAY YELLOW		TWO-WAY WHITE-RED		TWO-WAY YELLOW-RED	
DESCRIPTION	COLS.	DIST.	COLS.	DIST.	COLS.	DIST.	COLS.	DIST.	COLS.	DIST.	COLS.	DIST.
RAISED PAVEMENT MARKER	865								153		215	
TOTAL BY COLOR	865								153		215	

	TOTAL	NUMBER OF CONVENTIONAL HIGH PROFILE	NUMBER OF TAPERED LOW PROFILE	DISTRICT STORED	COLUMBUS STORED
ITEM 621 - RAISED PAVEMENT MARKER, INSTALLATION ONLY	1233	----	----	----	1233
ITEM 621 - RAISED PAVEMENT MARKER CASTING, INSTALLATION ONLY	----	----	----	----	----
ITEM 621 - PRISMATIC RETRO-REFLECTORS, INSTALLATION ONLY	----	----	----	----	----
ITEM 621 - RAISED PAVEMENT MARKER MISC., REPLACEMENT OF RAISED PAVEMENT MARKER	----	----	----	----	----

CALCULATED CWP
CHECKED RAS

TRAFFIC CONTROL NOTES

CUY-90-0.00

10 MAR 2000
p:\pr22308\cadd\ll738tng.dgn

SHEET NUMBER							PARTICIPATION				ITEM	ITEM EXT.	GRAND TOTAL	UNIT	DESCRIPTION	SEE SHEET NO.
361	364		367	368			1	2	3	4						
															TRAFFIC CONTROL	
40								40			620	10300	40	EACH	DELINEATOR, TYPE C, POST MOUNTED	
5								5			620	11000	5	EACH	DELINEATOR, TYPE C, BRACKET MOUNTED	
38								38			620	15300	38	EACH	DELINEATOR, TYPE D, POST MOUNTED	
30								30			620	31200	30	EACH	DELINEATOR REMOVED FOR DISPOSAL	
			8					8			620	40300	8	EACH	REFLECTOR, TYPE D	
	1233							1233			621	00200	1233	EACH	RAISED PAVEMENT MARKINGS, INSTALLATION ONLY	
115								115			621	00300	115	EACH	PRISMATIC RETROREFLECTORS	
				12			12				625	32000	12	EACH	GROUND ROD	
345							43	302			626	00100	345	EACH	BARRIER REFLECTOR, TYPE A	
337							266	71			626	00200	337	EACH	BARRIER REFLECTOR, TYPE B	
			66.0					66.0			630	02100	66.0	LIN FT	GROUND MOUNTED SUPPORT, NO. 2 POST	
			29.5					29.5			630	03100	29.5	LIN FT	GROUND MOUNTED SUPPORT, NO. 3 POST	
			134.0					134.0			630	04100	134.0	LIN FT	GROUND MOUNTED SUPPORT, NO. 4 POST	
			38.5					38.5			630	06400	38.5	LIN FT	GROUND MOUNTED SUPPORT, S4X7.7 BEAM	
			38.5					38.5			630	07600	38.5	LIN FT	GROUND MOUNTED SUPPORT, W10X12 BEAM	
			2					2			630	09000	2	EACH	BREAKAWAY BEAM CONNECTION	
	20						20				630	09102	20	EACH	SURFACE PREPARATION, NEW SECTION	
	20						20				630	09104	20	EACH	COATING, EPOXY PRIME COAT, SUPPORT SECTION	
	20						20				630	09106	20	EACH	COATING, EPOXY INTERMEDIATE COAT, SUPPORT SECTION	
	20						20				630	09108	20	EACH	COATING, URETHANE TOP COAT, SUPPORT SECTION	
				7			7				630	21000	7	EACH	OVERHEAD SIGN SUPPORT, TYPE TC-12.30, DESIGN 10	
				1			1				630	21200	1	EACH	OVERHEAD SIGN SUPPORT, TYPE TC-12.30, DESIGN 12	
				2			2				630	45500	2	EACH	OVERHEAD SIGN SUPPORT, TYPE TC-7.65, DESIGN 8	
			2					2			630	79501	2	EACH	SIGN SUPPORT ASSEMBLY, POLE MOUNTED, AS PER PLAN	390
			124.0					124.0			630	80102	124.0	SQ FT	SIGN FLAT SHEET, TYPE G	
			88.0	2319.0			2319.0	88.0			630	80204	2407.0	SQ FT	SIGN EXTRUSHEET, TYPE G	
			2	9			9	2			630	82000	11	EACH	SIGN BACKING ASSEMBLY	
			2					2			630	84500	2	EACH	GROUND MOUNTED BEAM SUPPORT FOUNDATION	
				12			12				630	84510	12	EACH	RIGID OVERHEAD SIGN SUPPORT FOUNDATION	
			28					28			630	84900	28	EACH	REMOVAL OF GROUND MOUNTED SIGN AND DISPOSAL	
			2				2				630	85100	2	EACH	REMOVAL OF GROUND MOUNTED SIGN AND REERECTION	
				5			5				630	85400	5	EACH	REMOVAL OF GROUND MOUNTED MAJOR SIGN AND DISPOSAL	
			24					24			630	86002	24	EACH	REMOVAL OF GROUND MOUNTED POST SUPPORT AND DISPOSAL	
			2	10			10	2			630	86102	12	EACH	REMOVAL OF GROUND MOUNTED BEAM SUPPORT AND DISPOSAL	
				6			6				630	87400	6	EACH	REMOVAL OF OVERHEAD MOUNTED SIGN AND DISPOSAL	
			3					3			630	87500	3	EACH	REMOVAL OF POLE MOUNTED SIGN AND DISPOSAL	
				1			1				630	89706	1	EACH	REMOVAL OF OVERHEAD SIGN SUPPORT AND DISPOSAL, TYPE TC-12.30	
				3			3				630	89802	3	EACH	REMOVAL OF OVERHEAD SIGN SUPPORT AND DISPOSAL, TYPE TC-7.65	
				10			10				631	84000	10	EACH	SIGN SERVICE	
				12			12				631	84300	12	EACH	SIGN WIRED	
				10			10				631	85100	10	EACH	DISCONNECT SWITCH WITH ENCLOSURE, TYPE X	
				29			29				631	87202	29	EACH	BALLAST, TYPE CMRI-175-480, INTEGRAL	
				29			29				631	88200	29	EACH	MERCURY VAPOR LUMINAIRE, TYPE TC-31.20 WITH 175 WATT LAMP	

PARTICIPATION 1 - MAJOR NEW, TE21-G0001 (105)
PARTICIPATION 2 - PAVEMENT, TE21-G0001 (106)
PARTICIPATION 3 - BRIDGE, TE21-G0001 (106)
PARTICIPATION 4 - 100% STATE

CALCULATED CWP
CHECKED RAS

TRAFFIC CONTROL GENERAL SUMMARY

CUY-90-0.00

I:\PROJECTS\Pidll738\dgn\final plans\ll738tga.dgn 14-SEP-2000 8:38AM jgrmovse

SHEET NUMBER							PARTICIPATION				ITEM	ITEM EXT.	GRAND TOTAL	UNIT	DESCRIPTION	SEE SHEET NO.
361				367	369		1	2	3	4						
															TRAFFIC CONTROL	
				12			12				631	94200	12	EACH	REMOVAL OF LUMINAIRE AND DISPOSAL	
				4			4				631	94304	4	EACH	REMOVAL OF DISCONNECT SWITCH AND DISPOSAL	
				12			12				631	94404	12	EACH	REMOVAL OF BALLAST AND DISPOSAL	
				6			6				631	94408	6	EACH	REMOVAL OF SIGN WIRING AND DISPOSAL	
				4			4				631	94412	4	EACH	REMOVAL OF SIGN SERVICE AND DISPOSAL	
2								2			632	26500	2	EACH	DETECTOR LOOP	
					.15				.15		642	00300	.15	MILES	CENTERLINE, TYPE 1	
					27.17			27.17			828	10000	27.17	MILE	EDGE LINE	
					22.49			22.49			828	10100	22.49	MILE	LANE LINE	
					3839			3839			828	10300	3839	LIN FT	CHANNELIZING LINE	
					116			116			828	10400	116	LIN FT	STOP LINE	
					171			171			828	10500	171	LIN FT	CROSSWALK LINE	
					1587			1587			828	10600	1587	LIN FT	TRANSVERSE LINE	
					11			11			828	20300	11	EACH	LANE ARROW	
					6			6			828	20400	6	EACH	WORD ON PAVEMENT, 72"	

PARTICIPATION 1 - MAJOR NEW, TE21-G0001 (105)
PARTICIPATION 2 - PAVEMENT, TE21-G0001 (106)
PARTICIPATION 3 - BRIDGE, TE21-G0001 (106)
PARTICIPATION 4 - 100% STATE

CALCULATED CWP
CHECKED RAS

TRAFFIC CONTROL GENERAL SUMMARY

CUY-90-0.00

10 MAR 2000
p:\pr2230\cadd\11738tga.dgn

SHEET NO.	REFERENCE NO.	LOCATION	STATION	SIDE	CODE	SIZE (INCHES)	630																620
							SIGN, FLAT SHEET, TYPE G	SIGN, EXTRUSHEET, TYPE G	GROUND MOUNTED SUPPORT, No. 2 POST	GROUND MOUNTED SUPPORT, No. 3 POST	GROUND MOUNTED SUPPORT, No. 4 POST	GROUND MOUNTED SUPPORT, S4x7.7 BEAM	GROUND MOUNTED SUPPORT, W10X12 BEAM	SIGN SUPPORT ASSEMBLY, POLE MOUNTED, AS PER PLAN	SIGN BACKING ASSEMBLY	GROUND MOUNTED BEAM SUPPORT FOUNDATION	REMOVAL OF GROUND MOUNTED SIGN AND DISPOSAL	REMOVAL OF GROUND MOUNTED SIGN AND REERECTION	REMOVAL OF GROUND MOUNTED POST SUPPORT AND DISPOSAL	REMOVAL OF GROUND MOUNTED BEAM SUPPORT AND DISPOSAL	REMOVAL OF POLE MOUNTED SIGN AND DISPOSAL	BREAKAWAY BEAM CONNECTION	REFLECTOR, TYPE D
							SQ. FT.	SQ. FT.	LIN. FT.	LIN. FT.	LIN. FT.	LIN. FT.	LIN. FT.	EACH	EACH	EACH	EACH	EACH	EACH	EACH	EACH	EACH	EACH
371	1	EASTBOUND	2+80	LT.	R-123-36	36" x 36"	9.0				18.0						1		1				1
					R-19-24	24" x 30"	5.0										1						
372	3	EASTBOUND	23+50	RT.	X-6R-12	12" x 36"	3.0		11.0								1		1				
372	4	EASTBOUND	23+50	LT.	X-6L-12	12" x 36"	3.0		11.0								1		1				
376	5	EASTBOUND	77+65	LT.	R-123-36	36" x 36"	9.0				18.0						1		1				1
					R-19-24	24" x 30"	5.0										1						
378	6	EASTBOUND	122+80	LT.	R-123-36	36" x 36"											1		1				
					R-19-24	24" x 30"											1						1
378	8	EASTBOUND	131+15	RT.	X-6R-12	12" x 36"	3.0		11.0								1		1				
378	9	EASTBOUND	131+30	RT.	X-6L-12	12" x 36"	3.0							1			1		1				
383	12	EASTBOUND	215+20	LT.	R-123-36	36" x 36"											1		1				1
					R-19-24	24" x 30"											1						
384/389	14	EASTBOUND	228+12	RT.	R-7B-48	48" x 96"		32.0				19/19.5				2	1		2			2	
384	15	EASTBOUND	236+86	RT.	W-49R-48	48" x 48"	16.0				15/15.5						1		2				
383	21	WESTBOUND	214+80	LT.	R-123-36	36" x 36"											1		1				1
					R-19-24	24" x 30"											1						
383	23	WESTBOUND	198+10	RT.	M-5-36-2	36" x 36"															1		
					M-2-36-2	36" x 36"															1		
					M-40-36	36" x 18"															1		
378	25	WESTBOUND	133+35	LT.	X-6L-12	12" x 36"	3.0							1			1		1				
378	26	WESTBOUND	133+50	RT.	X-6R-12	12" x 36"	3.0		11.0								1		1				
378	27	WESTBOUND	123+20	LT.	R-123-36	36" x 36"											1		1				1
					R-19-24	24" x 30"											1						
377	28A	WESTBOUND	107+00	RT.													2			2			
377/389	28B	WESTBOUND	105+00	RT.	GEP-96	96" X 24"		16.0					18.8/19.7		1	2							
					GSH-1	120" X 48"		40.0															
376	30	WESTBOUND	77+95	LT.	R-123-36	36" x 36"	9.0				18.0						1		1				1
					R-19-24	24" x 30"	5.0										1						
372	31	WESTBOUND	25+50	LT.	X-6L-12	12" x 36"	3.0		11.0								1		1				
372	32	WESTBOUND	25+50	RT.	X-6R-12	12" x 36"	3.0		11.0								1		1				
371	33	WESTBOUND	3+20	LT.	R-123-36	36" x 36"	9.0				18.0						1		1				1
					R-19-24	24" x 30"	5.0										1						
374	34	RAMP D	45+55	RT.	W-33-36	36" x 48"	12.0			15/14.5								1	2				
374	35	RAMP D	46+00	RT.	W-45-48	48" x 48"	16.0				15.5/16							1	2				
TOTALS							124.0	88.0	66.0	29.5	134.0	38.5	38.5	2	1	4	28	2	24	2	3	2	8
TOTALS CARRIED TO TRAFFIC CONTROL GENERAL SUMMARY							124.0	88.0	66.0	29.5	134.0	38.5	38.5	2	1	4	28	2	24	2	3	2	8

CALCULATED CWP
CHECKED RAS

SIGNING SUBSUMMARY

CUY-90-0.00

10 MAR 2000
p:\pr22308\cadd\1738tsa.dgn

SIGNING SUBSUMMARY

CALCULATED CWP | CHECKED RAS

SHEET NO.	REFERENCE NO.	LOCATION	STATION	SIDE	CODE	SIZE (FEET)	630 SIGN, EXTRUSHEET, TYPE G	630 RIGID OVERHEAD SIGN SUPPORT FOUNDATION	630 SIGN BACKING ASSMEBLY	630 OVERHEAD SIGN SUPPORT, TYPE TC-12.30 DESIGN 10 27.5' ARM	630 OVERHEAD SIGN SUPPORT TYPE TC-12.30 DESIGN 10 30' ARM	630 OVERHEAD SIGN SUPPORT, TYPE TC-12.30 DESIGN 12 34' ARM	630 OVERHEAD SIGN SUPPORT TYPE TC-7.65, DESIGN 8, 82' SPAN	630 OVERHEAD SIGN SUPPORT, TYPE TC-7.65, DESIGN 8, 91' SPAN	630 REMOVAL OF OVERHEAD SIGN SUPPORT AND DISPOSAL, TYPE TC-7.65	630 REMOVAL OF OVERHEAD SIGN SUPPORT AND DISPOSAL, TYPE TC-12.30	630 REMOVAL OF OVERHEAD MOUNTED SIGN AND DISPOSAL	630 REMOVAL OF GROUND MOUNTED MAJOR SIGN AND DISPOSAL	630 REMOVAL OF GROUND MOUNTED BEAM SUPPORT AND DISPOSAL	631 SIGN SERVICE	631 SIGN WIRED	631 DISCONNECT SWITCH WITH ENCLOSURE, TYPE X	631 BALLAST (INTEGRAL), TYPE CMRI-175(480)	631 MERCURY VAPOR LUMINAIR, TYPE TC-31.21 WITH 175-WATT LAMP	631 REMOVAL OF SIGN SERVICE AND DISPOSAL	631 REMOVAL OF SIGNS WIRED AND DISPOSAL	631 REMOVAL OF DISCONNECT SWITCH AND DISPOSAL	631 REMOVAL OF BALLAST AND DISPOSAL	631 REMOVAL OF LUMINAIRE AND DISPOSAL	625 GROUND ROD
							SQ. FT.	EACH	EACH	EACH	EACH	EACH	EACH	EACH	EACH	EACH	EACH	EACH	EACH	EACH	EACH	EACH	EACH	EACH	EACH	EACH	EACH	EACH	EACH	EACH
371/386	2	EASTBOUND	10+00	RT.	GB	15 x 9'	135.0	1		1									1	2	1	1	1	2	2					1
					GEP-96	8' x 2'	16.0		1																					
378/386	7	EASTBOUND	123+05	RT.	GB	20' x 10'	200.0	1			1								1	2	1	1	1	3	3					1
					GEP-96	8' x 2'	16.0		1																					
379/386	10	EASTBOUND	151+00	RT.	GB	17' x 10'	170.0	1			1										1	1	1	2	2					1
					GEP-96	8' x 2'	16.0		1																					
380/386	11	EASTBOUND	168+25	RT.	GE	17' x 10'	170.0	1			1								1	2	1	1	1	2	2					1
					GEP-96	8' x 2'	16.0		1																					
384/386	13	EASTBOUND	225+00	RT.	GB	20' x 10'	200.0	1			1						1	1			1	1	1	3	3	1	1	1	2	2	1
					GEP-96	8' x 2'	16.0		1																					
384/387	20	WESTBOUND	223+90	RT.	GG	25' x 10'	250.0	2					1		1		1				1	1	1	3	3	1	1	1	2	2	2
					GE	17' x 10'	170.0										1					1		2	2		1		2	2	
					GEP-96	8' x 2'	16.0		1																					
383/388	22	WESTBOUND	204+90	RT.	GG	25' x 10'	250.0	2						1	1		1				1	1	1	3	3	1	1	1	2	2	2
					GE	20' x 10'	200.0										1					1		3	3		1		2	2	
					GEP-96	8' x 2'	16.0		1																					
383/386	24	RAMP H	97+35	RT.	GE	16' x 10'	160.0	1				1			1		1				1	1	1	2	2	1	1	1	2	2	1
378/386	28	WESTBOUND	120+00	RT.	GB	15 x 9'	135.0	1		1									1	2	1	1	1	2	2					1
					GEP-96	8' x 2'	16.0		1																					
377/386	29	WESTBOUND	90+00	RT.	GB	15 x 9'	135.0	1			1								1	2	1	1	1	2	2					1
					GEP-96	8' x 2'	16.0		1																					
			TOTALS				2319.0	12	9	2	5	1	1	1	3	1	6	5	10	10	12	10	29	29	4	6	4	12	12	12
		TOTALS CARRIED TO TRAFFIC CONTROL GENERAL SUMMARY					2319.0	12	9	2	5	1	1	1	3	1	6	5	10	10	12	10	29	29	4	6	4	12	12	12

CUY-90-0.00

15 MAR 2000
D:\PR22308\CADD\M738TSA.DGN

4" EDGE LINE, (WHITE)

STATION FROM	STATION TO	SIDE	LENGTH FT
1197+50	1215+90.07	WB	1840.07
0+00	33+20.8	WB	3320.80
35+35	61+62.5	WB	2627.50
64+35.8	174+46	WB	11010.20
174+46	201+67	WB	2721.00
205+10	249+20	WB	4410.00
1197+00	1215+90.07	EB	1890.07
0+00	33+97	EB	3397.00
36+76	66+12.5	EB	2936.50
66+12.5	174+80	EB	10867.50
176+50	205+18.5	EB	2868.50
205+18.5	241+90	EB	3671.50
241+90	252+00	EB	1010.00
		SUBTOTAL	52570.64 FT

STATION FROM	STATION TO	RAMP	LENGTH FT
33+20.8	51+07.68	A	1786.88
50+00	56+00	B	600.00
56+00	64+35.8	B	835.80
49+02.5	55+76	C	673.50
55+76	66+12.5	C & E	1036.50
33+97	51+80.06	D	1783.06
36+93.84	55+76	E	1882.16
74+46	92+14.51	F	1768.51
73+72.88	95+31	G	2158.12
96+70.5	105+10	G & H	839.50
89+54.25	96+70.5	H	716.25
86+70	95+27	I	857.00
74+80	88+32.63	J	1352.63
74+38.70	95+27	K	2088.30
95+27	105+18.5	K & I	991.50
238+50	241+90	CLAGUE	340.00
		SUBTOTAL	19709.71 FT

4" EDGE LINE, (YELLOW)

STATION FROM	STATION TO	SIDE	LENGTH FT
1197+50	1215+90.07	WB	1840.07
0+00	249+20	WB	24920.00
1197+00	1215+90.07	EB	1890.07
0+00	252+00	EB	25200.00
		SUBTOTAL	53850.14 FT

STATION FROM	STATION TO	RAMP	LENGTH FT
36+82	51+07.68	A	1425.68
50+00	61+63.5	B	1163.50
49+02.5	54+94.78	C	592.28
55+76	64+74	C & E	898.00
36+72	51+80.06	D	1508.06
36+93.84	55+76	E	1882.16
75+58.50	92+14.51	F	1656.01
73+72.88	96+70.5	G	2297.62
96+70.5	101+65	G & H	494.50
89+54.25	95+31	H	576.75
86+70	94+20.5	I	750.50
76+60	88+32.63	J	1172.63
74+38.70	95+27	K	2088.30
95+27	101+27	K & I	600.00
238+50	240+35.5	CLAGUE	185.50
		SUBTOTAL	17291.49 FT

ITEM 828 - EDGE LINE

TOTAL 27.17 MILES

4" LANE LINE, (WHITE)

STATION FROM	STATION TO	SIDE	LENGTH FT
1197+50	1215+90.07	WB	1840.07
1197+50	1215+90.07	WB	1840.07
0+00	249+20	WB	24920.00
0+00	249+20	WB	24920.00
33+20.8	35+35	WB	214.20
64+35.8	66+00	WB	164.20
172+21	174+46	WB	225.00
205+10	233+96	WB	2886.00
1197+00	1215+90.07	EB	1890.07
1197+00	1215+90.07	EB	1890.07
0+00	252+00	EB	25200.00
0+00	252+00	EB	25200.00
31+60	33+97	EB	237.00
66+12.5	69+00	EB	287.50
171+91.5	174+80	EB	288.50
205+18.5	208+18.5	EB	300.00
205+18.5	232+16	EB	2697.50
241+90	244+29.3	EB	239.30
		SUBTOTAL	115237.98 FT

STATION FROM	STATION TO	RAMP	LENGTH FT
51+20	54+00	B	280.00
51+20	55+16	B	396.00
55+76	59+22	C & E	346.00
96+70.5	105+10	G & H	839.50
89+76	92+91	H	315.00
95+27	108+18.5	K & I	1291.50
		SUBTOTAL	3468.00 FT

ITEM 828 - LANE LINE

TOTAL 22.49 MILES

STOP LINE, EPOXY SS828

STATION FROM	STATION TO	RAMP	LENGTH FT
51+75		D	42.00
89+76		H	28.82
88+20		J	44.19
		SUBTOTAL	115.01 FT

ITEM 828 - STOP LINE

TOTAL 116 FT

CROSSWALK LINE

STATION FROM	STATION TO	RAMP	LENGTH FT
51+79		D	48.11
51+85		D	59.32
89+65		H	29.89
89+71		H	33.27
		SUBTOTAL	170.59 FT

ITEM 828 - CROSSWALK LINE

TOTAL 171 FT

CENTERLINE, TYPE I

STATION FROM	STATION TO		MILES
48+00	52+00	CAHOON ROAD	0.08
23+00	26+50	CANTERBURY ROAD	0.07

ITEM 642 - CENTERLINE, TYPE I

TOTAL .15 MILES

4" CHANNELIZING LINE

STATION FROM	STATION TO	RAMP	LENGTH FT
61+62.5	64+35.8	WB	273.30
201+67	205+10	WB	343.00
33+97	36+76	EB	279.00
174+80	176+50	EB	170.00
35+35	36+82	A	147.00
50+50	51+20	B	70.00
50+50	51+20	B	70.00
61+63.5	64+35.8	B	272.30
54+94.78	55+76	C	81.22
64+74	66+12.5	C & E	138.50
33+97	36+72	D	275.00
74+46	75+58.50	F	112.50
95+31	96+70.5	G	139.50
101+65	105+10	G & H	345.00
95+31	96+70.5	H	139.50
94+20.5	95+27	I	106.50
74+80	76+60	J	180.00
86+70	88+20	J	150.00
101+27	105+18.5	K & I	391.50
240+35.5	241+90	CLAGUE	154.50
		SUBTOTAL	3838.32 FT

ITEM 828 - CHANNELIZING LINE

TOTAL 3839 FT

4" TRANSVERSE LINE (WHITE), 12' CENTER SPACING

STATION FROM	STATION TO	RAMP	LENGTH FT
61+63.5	64+35.8	B	358.75
33+97	36+72	D	364.26
95+31	96+70.5	G & H	191.91
101+65	105+10	G & H	404.17
74+80	76+60	J	240.26
		SUBTOTAL	1586.35 FT

ITEM 828 - TRANSVERSE LINE

TOTAL 1587 FT

WORD "ONLY" ON PAVEMENT, 72"

STATION FROM	RAMP	QUANTITY EACH
50+80	B	2
91+24	H	2
87+32	J	2

ITEM 828 - WORD ON PAVEMENT, 72"

TOTAL 6 EA.

LANE ARROW, 100"

STATION FROM	RAMP	QUANTITY EACH
51+10	B	3
90+70	H	2
91+91	H	2
86+70	J	2
87+85	J	2

ITEM 828 - LANE ARROW

TOTAL 11 EA.

CALCULATED CWP
CHECKED RAS

PAVEMENT MARKING CALCULATIONS

CUY-90-0.00

10 MAR 2000
p:\pr22308\cadd\11738tsb.dgn

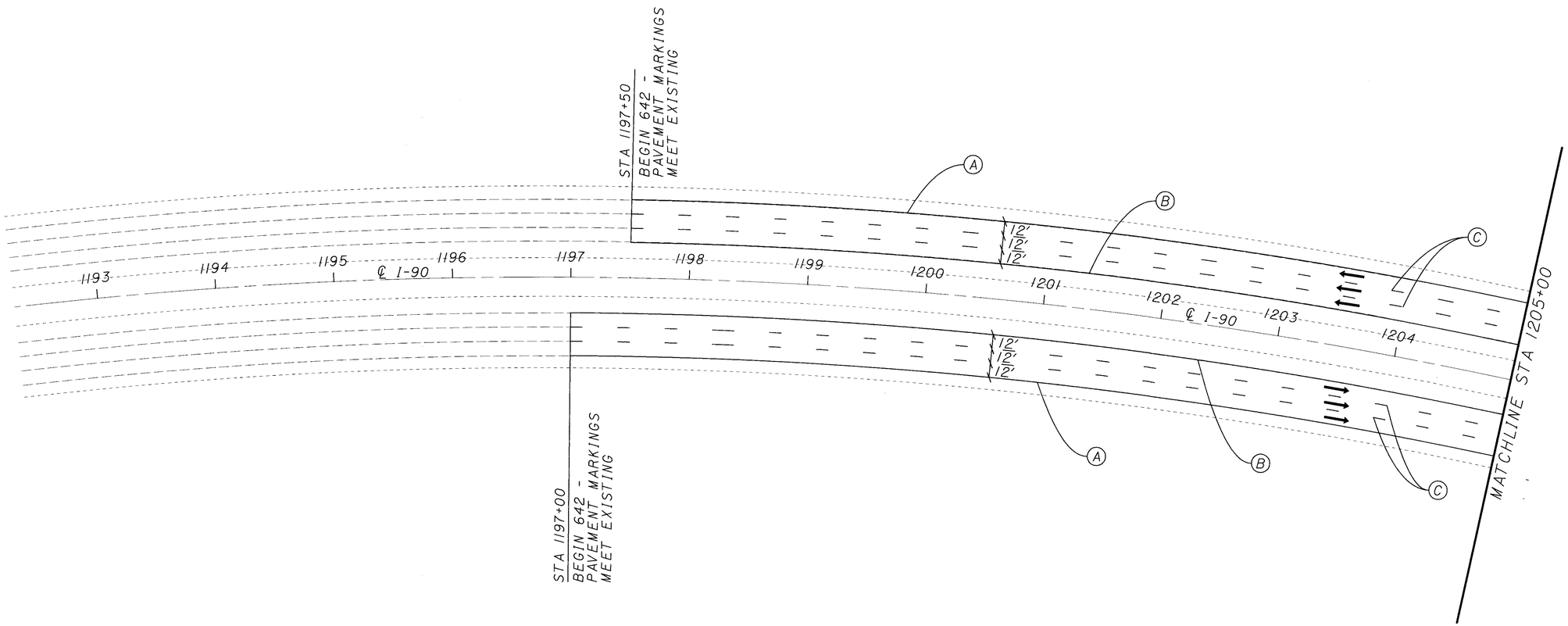

PAVEMENT MARKING LEGEND

- (A) EDGE LINE (WHITE)
- (B) EDGE LINE (YELLOW)
- (C) LANE LINE (WHITE)
- (D) CHANNELIZING LINE (WHITE)
- (E) TRANSVERSE LINE (WHITE), 12' CENTER SPACING
- (F) STOP LINE
- ← DIRECTION OF TRAVEL

SIGN LEGEND

- OVERHEAD TRUSS SIGN STRUCTURE
- CANTILEVER SIGN SUPPORT
- GROUND MOUNTED SIGN SUPPORT
- EXISTING SIGN, TO REMAIN
- EXISTING SIGN, TO BE REMOVED
- PROPOSED SIGN

13 MAR 2000
D:\PR22308\CADD\I738TPA.DGN

N

0 25 50 100
HORIZONTAL SCALE IN FEET

CALCULATED NJG
CHECKED RAS

SIGNING AND PAVEMENT MARKING PLAN

CUY-90-0.00

370
582

FOR MEDIAN CROSSOVER SIGNING DETAIL, SEE SHEET 390.

MATCHLINE STA 1205+00

1206 1207 1208 1209 ℄ I-90 1210 1211 1212 1213 1214 1215

NOISE BARRIER

Sta 1215+90.07 BK = Sta 0+00.00 AH

ENTERING Lorain County CORP LIMIT STA. 0+00

ENTERING Cuyahoga County Westlake CORP LIMIT STA. 0+00

EMERGENCY AND AUTHORIZED VEHICLES ONLY R-19-24

R-123-36 STA. 3+20 (33)

R-123-36 STA. 2+80 (1)

MATCHLINE STA 3+50

12′ 12′ 12′

MILE 1 5 6 STA. 4+00

EX. L/A

SPEED LIMIT 60 55 MPH VEHICLES OVER 4 TONS EMPTY NON COM BUSES STA. 16+00

MATCHLINE STA 3+50

MATCHLINE STA 16+50

4 5 6 7 8 9 ℄ I-90 10 11 12 13 14 15 16

EX. L/A AND R/W

MILE 1 5 6 STA. 4+10

SPEED LIMIT 60 55 MPH VEHICLES OVER 4 TONS EMPTY NON COM BUSES STA. 7+00

EXIT 156 Crocker Rd Bassett Rd 1/2 MILE STA. 10+00

EXIT 156 Crocker Rd Bassett Rd 1/2 MILE (2)

STA. 10+00 GB - 15' X 8.5' LEVEL 1

GEP-96 8' X 2'

NOISE BARRIER

SPEED LIMIT 60 55 MPH VEHICLES OVER 4 TONS EMPTY NON COM BUSES STA. 16+00

EX. L/A AND R/W

EX. L/A AND R/W

PAVEMENT MARKING LEGEND

- (A) EDGE LINE (WHITE)
- (B) EDGE LINE (YELLOW)
- (C) LANE LINE (WHITE)
- (D) CHANNELIZING LINE (WHITE)
- (E) TRANSVERSE LINE (WHITE), 12′ CENTER SPACING
- (F) STOP LINE
- ← DIRECTION OF TRAVEL

SIGN LEGEND

- OVERHEAD TRUSS SIGN STRUCTURE
- CANTILEVER SIGN SUPPORT
- GROUND MOUNTED SIGN SUPPORT
- EXISTING SIGN, TO REMAIN
- EXISTING SIGN, TO BE REMOVED
- PROPOSED SIGN

10 MAR 2000
p:\pr-22308\cadd\ll738tpb.dgn

HORIZONTAL SCALE IN FEET
0 25 50 100

CALCULATED NJG
CHECKED RAS

SIGNING AND PAVEMENT MARKING PLAN

CUY-90-0.00

371
582

10 MAR 2000
p:\pr22308\cadd\11738tpc.dgn

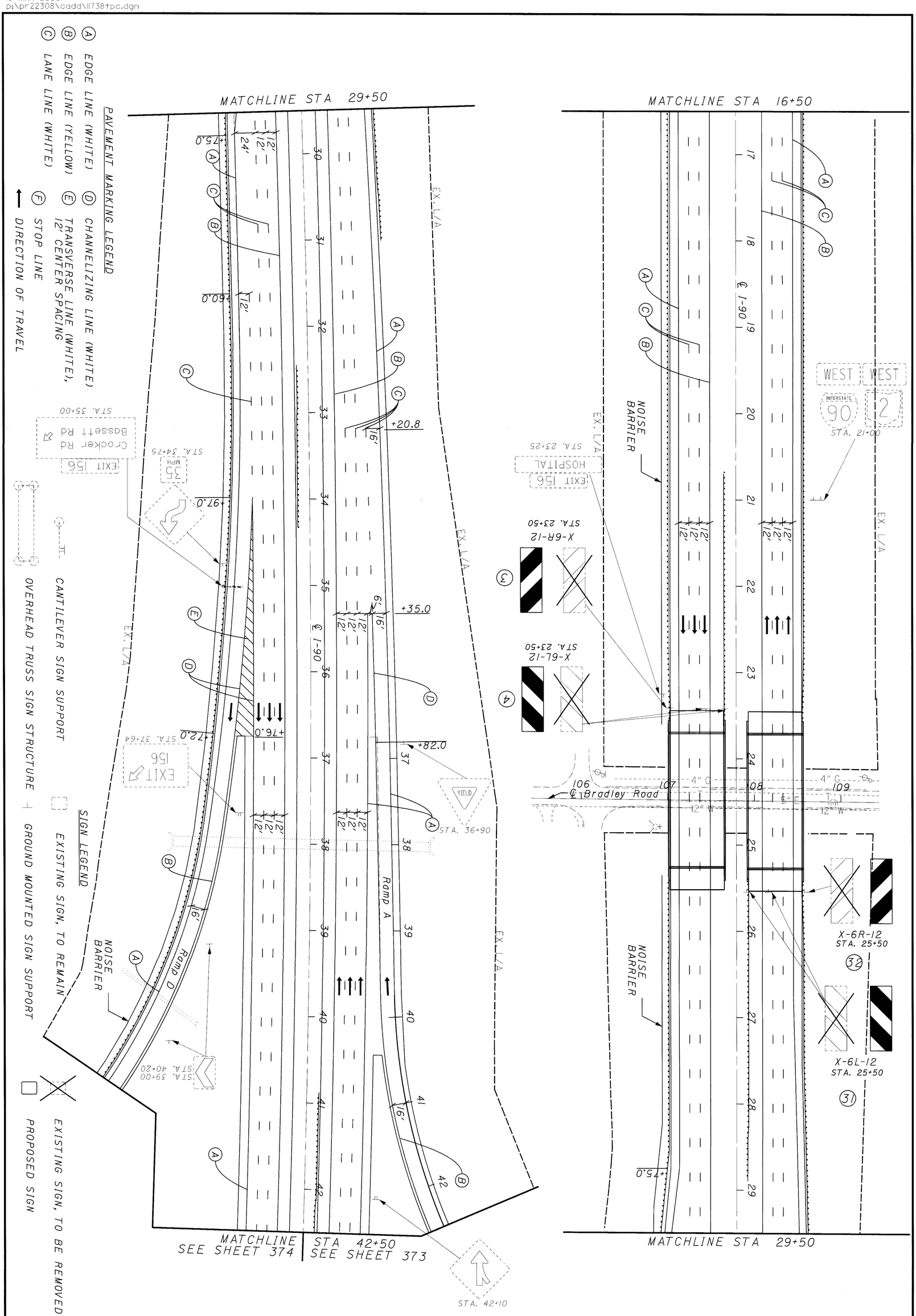

372/582	CUY-90-0.00	SIGNING AND PAVEMENT MARKING PLAN	CALCULATED NJG / CHECKED RAS	0 50 / 25 100 HORIZONTAL SCALE IN FEET	N

10 MAR 2000
p:\pr22308\cadd\ll738tpd.dgn

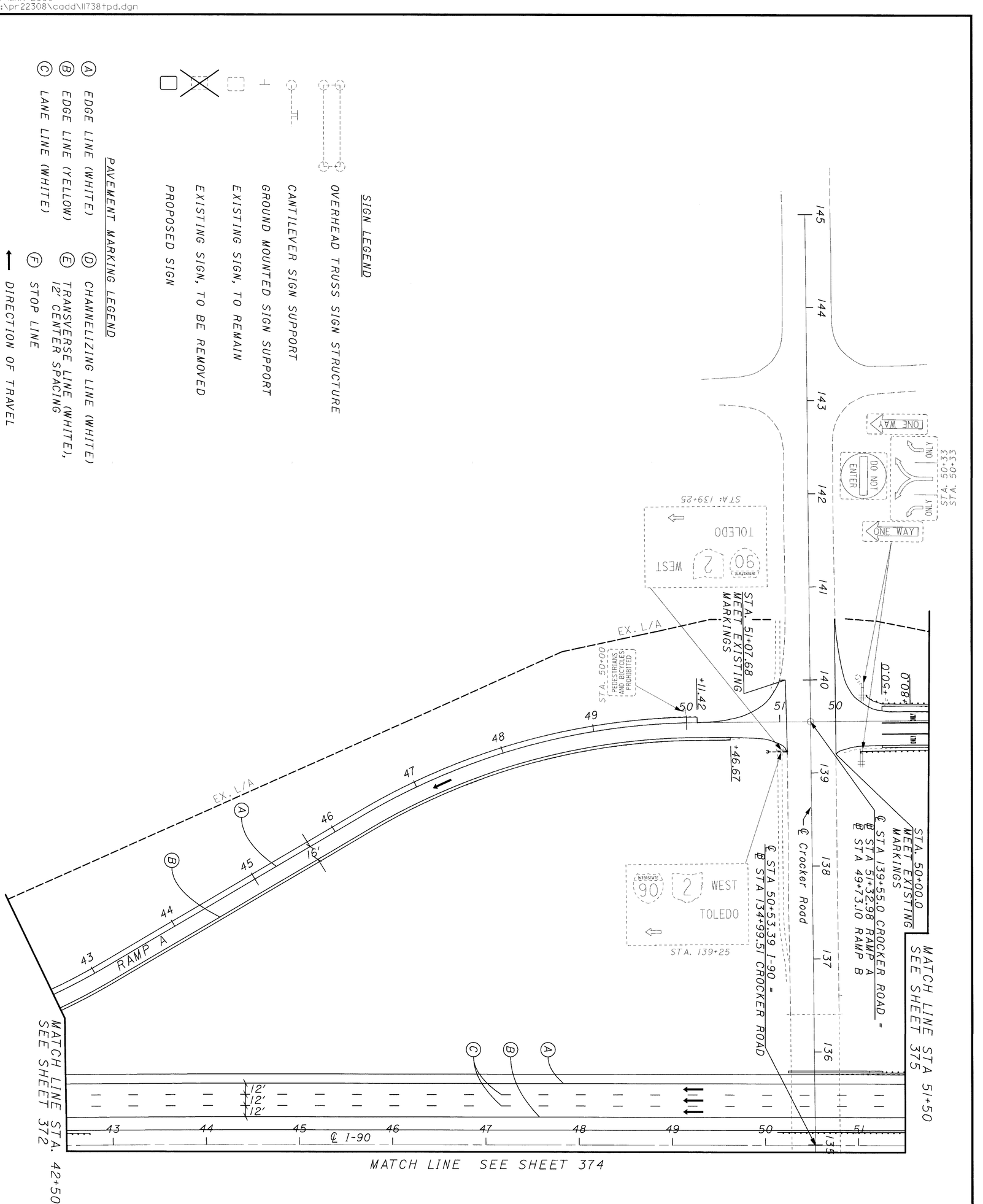

373/582	CUY-90-0.00	SIGNING AND PAVEMENT MARKING PLAN	CALCULATED NJG / CHECKED RAS	HORIZONTAL SCALE IN FEET

10 MAR 2000
p:\pr22308\cadd\11738tpe.dgn

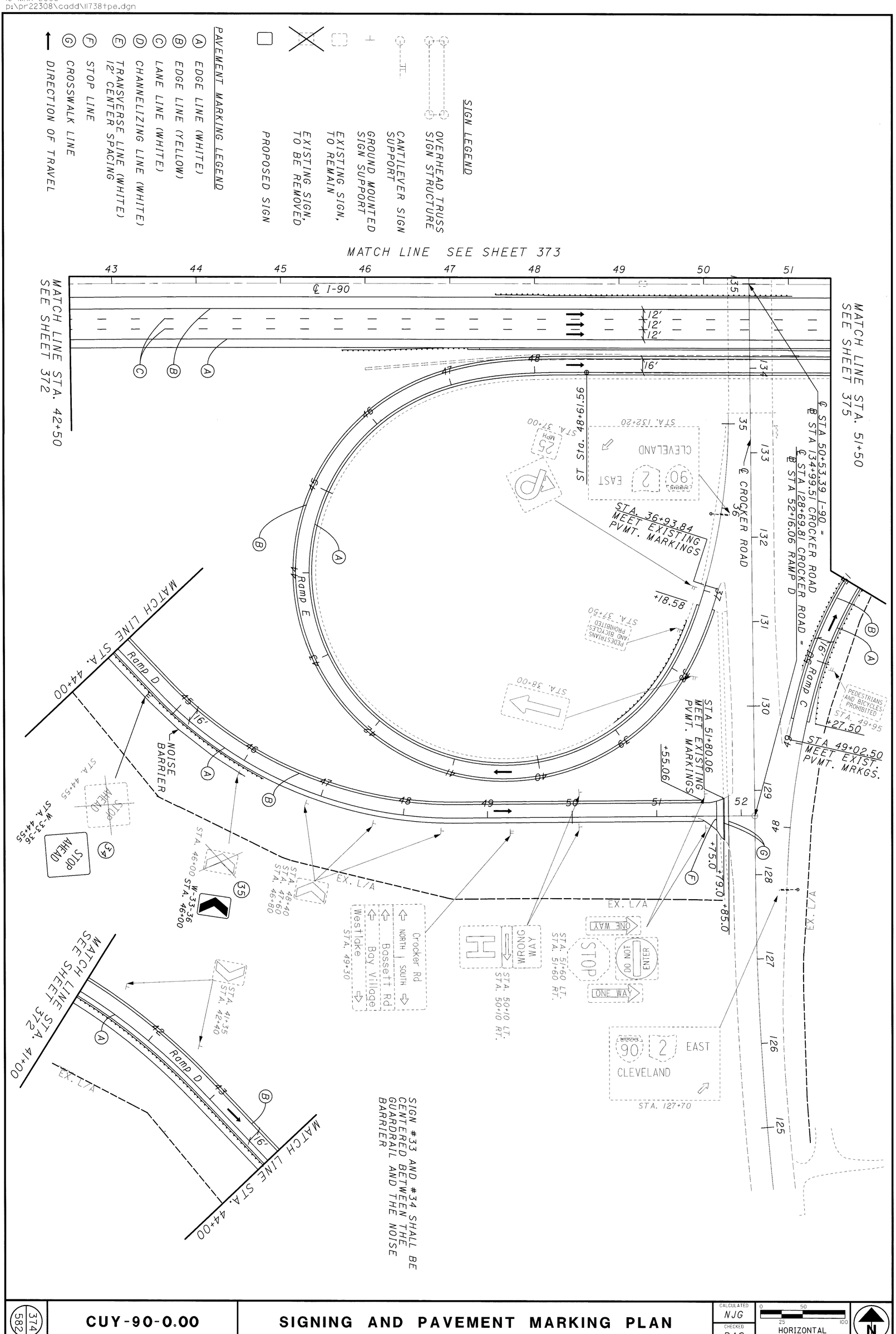

374 / 582	CUY-90-0.00	SIGNING AND PAVEMENT MARKING PLAN	CALCULATED NJG / CHECKED RAS	HORIZONTAL SCALE IN FEET

SIGN LEGEND

- OVERHEAD TRUSS SIGN STRUCTURE
- CANTILEVER SIGN SUPPORT
- GROUND MOUNTED SIGN SUPPORT
- EXISTING SIGN, TO REMAIN
- EXISTING SIGN, TO BE REMOVED
- PROPOSED SIGN

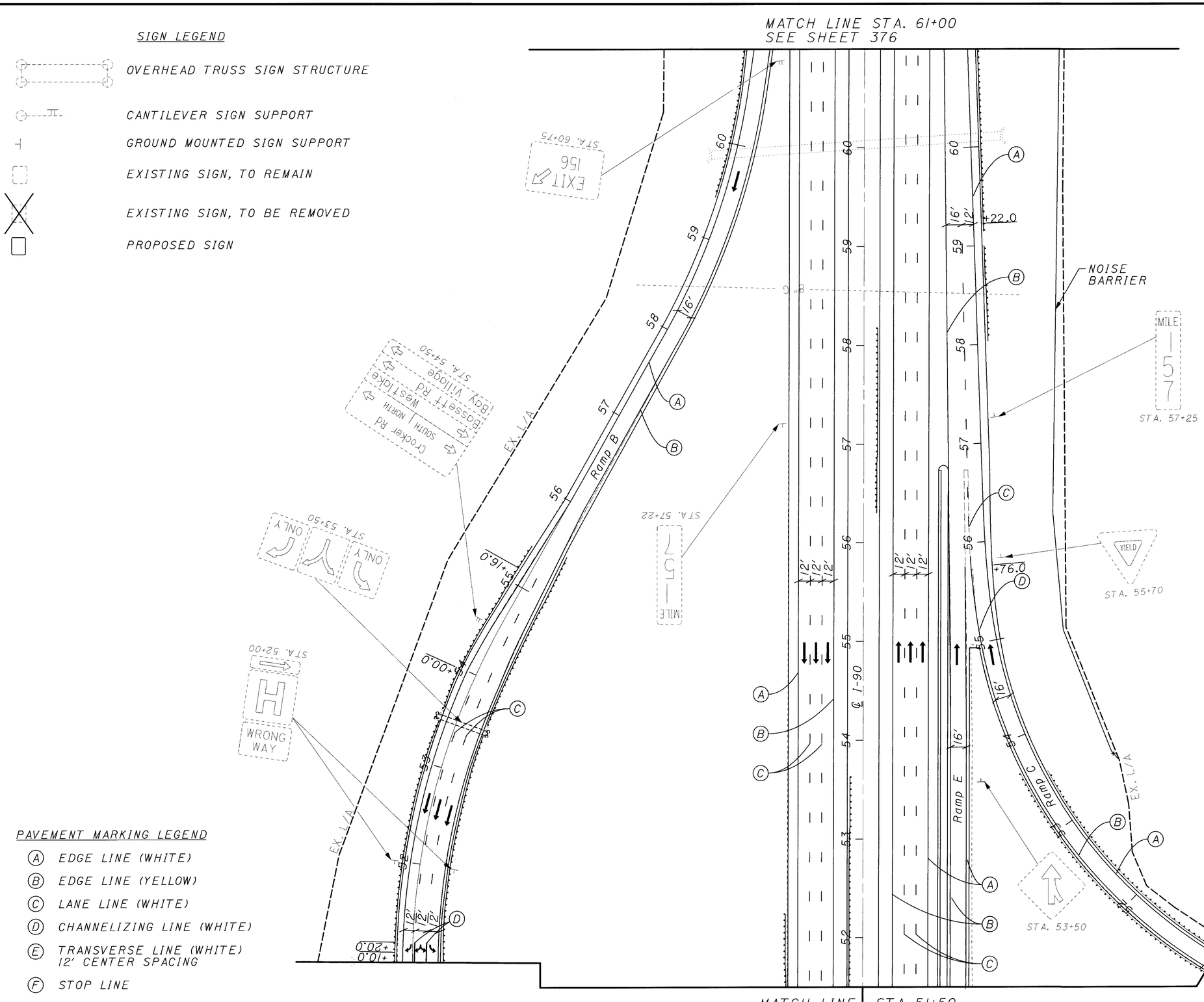

PAVEMENT MARKING LEGEND

- (A) EDGE LINE (WHITE)
- (B) EDGE LINE (YELLOW)
- (C) LANE LINE (WHITE)
- (D) CHANNELIZING LINE (WHITE)
- (E) TRANSVERSE LINE (WHITE) 12' CENTER SPACING
- (F) STOP LINE
- ← DIRECTION OF TRAVEL

MATCH LINE SEE SHEET 373 | STA 51+50 SEE SHEET 374

HORIZONTAL SCALE IN FEET
0 25 50 100

CALCULATED N.J.G.
CHECKED R.A.S.

SIGNING AND PAVEMENT MARKING PLAN

CUY-90-0.00

375
582

10 MAR 2000
p:\pr22308\cadd\ll738tpf.dgn

SIGNING AND PAVEMENT MARKING PLAN

CUY-90-0.00

CALCULATED N.J.G. CHECKED R.A.S.

HORIZONTAL SCALE IN FEET 0 25 50 100

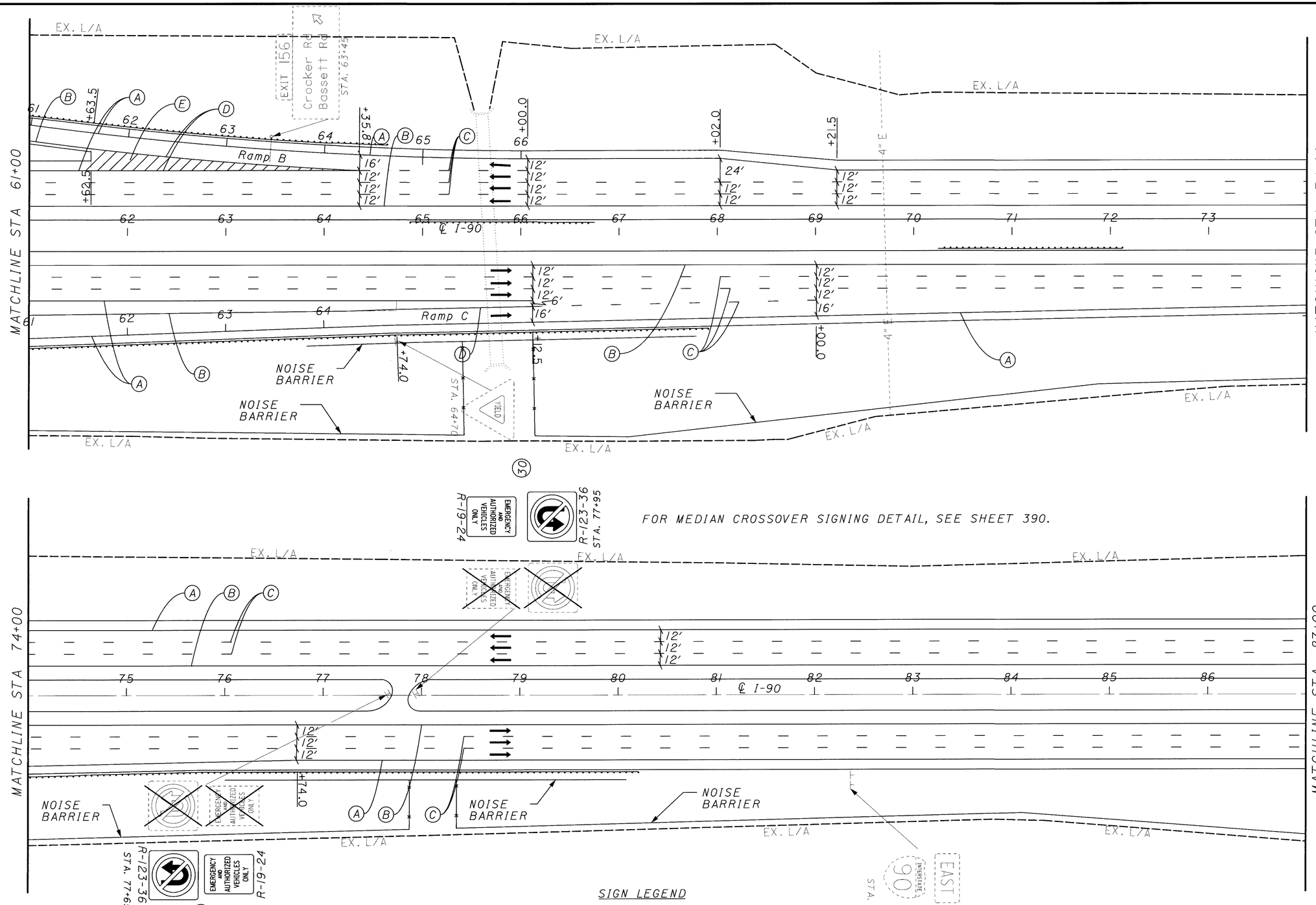

PAVEMENT MARKING LEGEND (5)

- (A) EDGE LINE (WHITE)
- (B) EDGE LINE (YELLOW)
- (C) LANE LINE (WHITE)
- (D) CHANNELIZING LINE (WHITE)
- (E) TRANSVERSE LINE (WHITE), 12' CENTER SPACING
- (F) STOP LINE
- DIRECTION OF TRAVEL

SIGN LEGEND

- OVERHEAD TRUSS SIGN STRUCTURE
- CANTILEVER SIGN SUPPORT
- GROUND MOUNTED SIGN SUPPORT
- EXISTING SIGN, TO REMAIN
- EXISTING SIGN, TO BE REMOVED
- PROPOSED SIGN

10 MAR 2000
p:\pr22308\cadd\ll7381pg.dgn

10 MAR 2000
p:\pr22308\cadd\11738tph.dgn

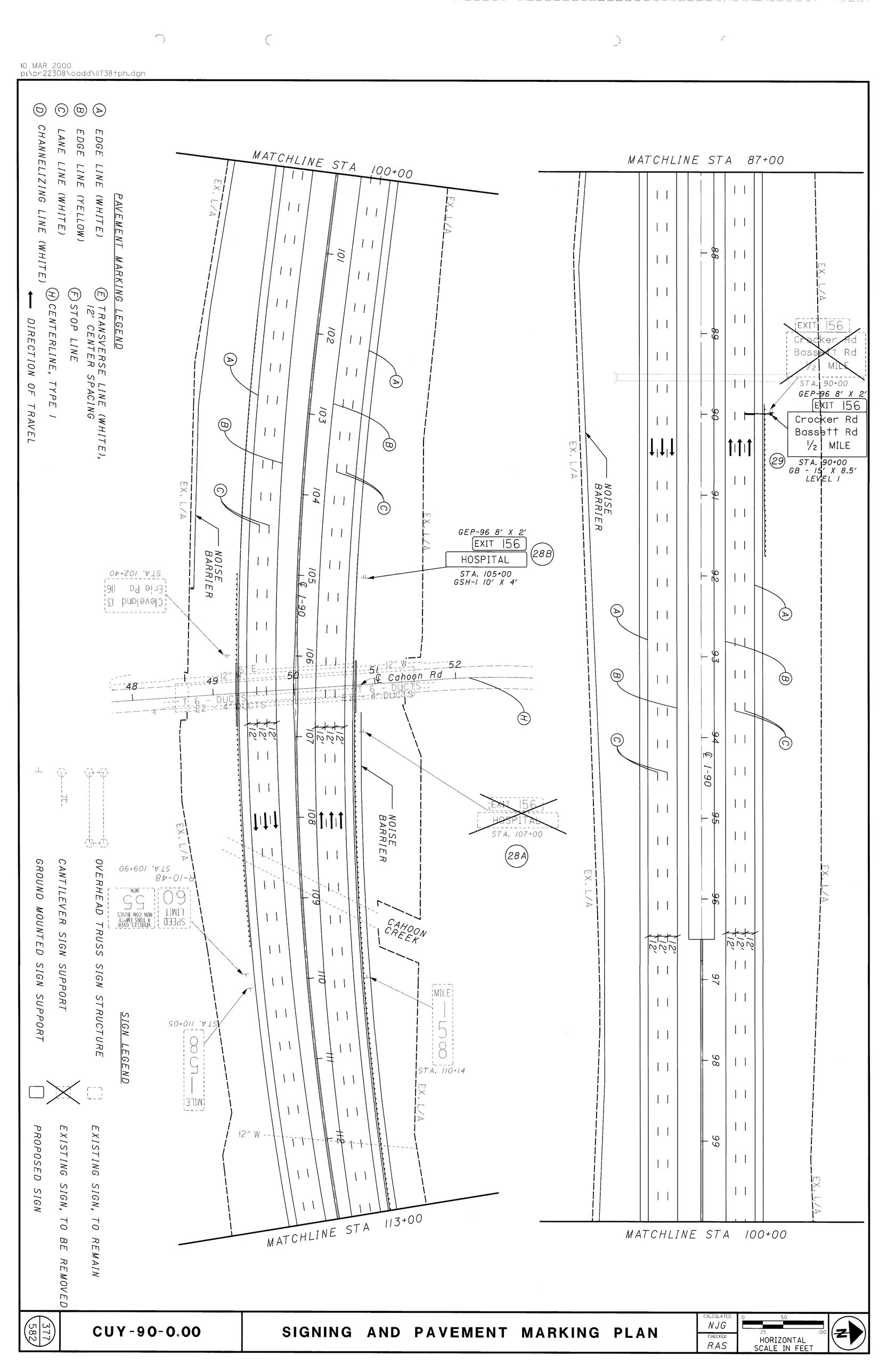

377 / 582	CUY-90-0.00	SIGNING AND PAVEMENT MARKING PLAN	CALCULATED NJG / CHECKED RAS	0 50 25 100 HORIZONTAL SCALE IN FEET

10 MAR 2000
p:\pr22308\cadd\11738tpi.dgn

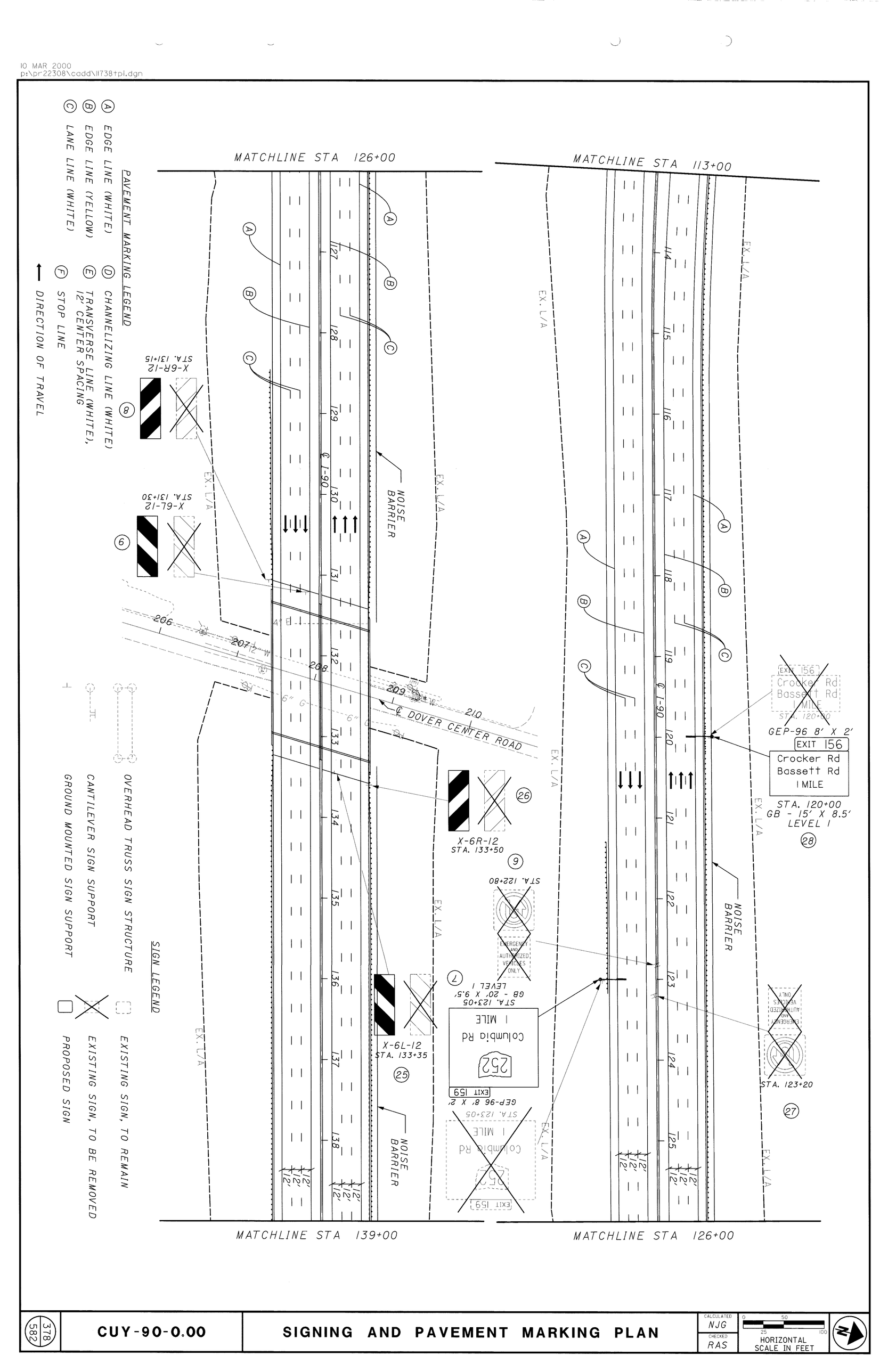

378 / 582	CUY-90-0.00	SIGNING AND PAVEMENT MARKING PLAN	CALCULATED NJG / CHECKED RAS	0 50 / 25 100 HORIZONTAL SCALE IN FEET	N

10 MAR 2000
p:\pr22308\cadd\11738tpj.dgn

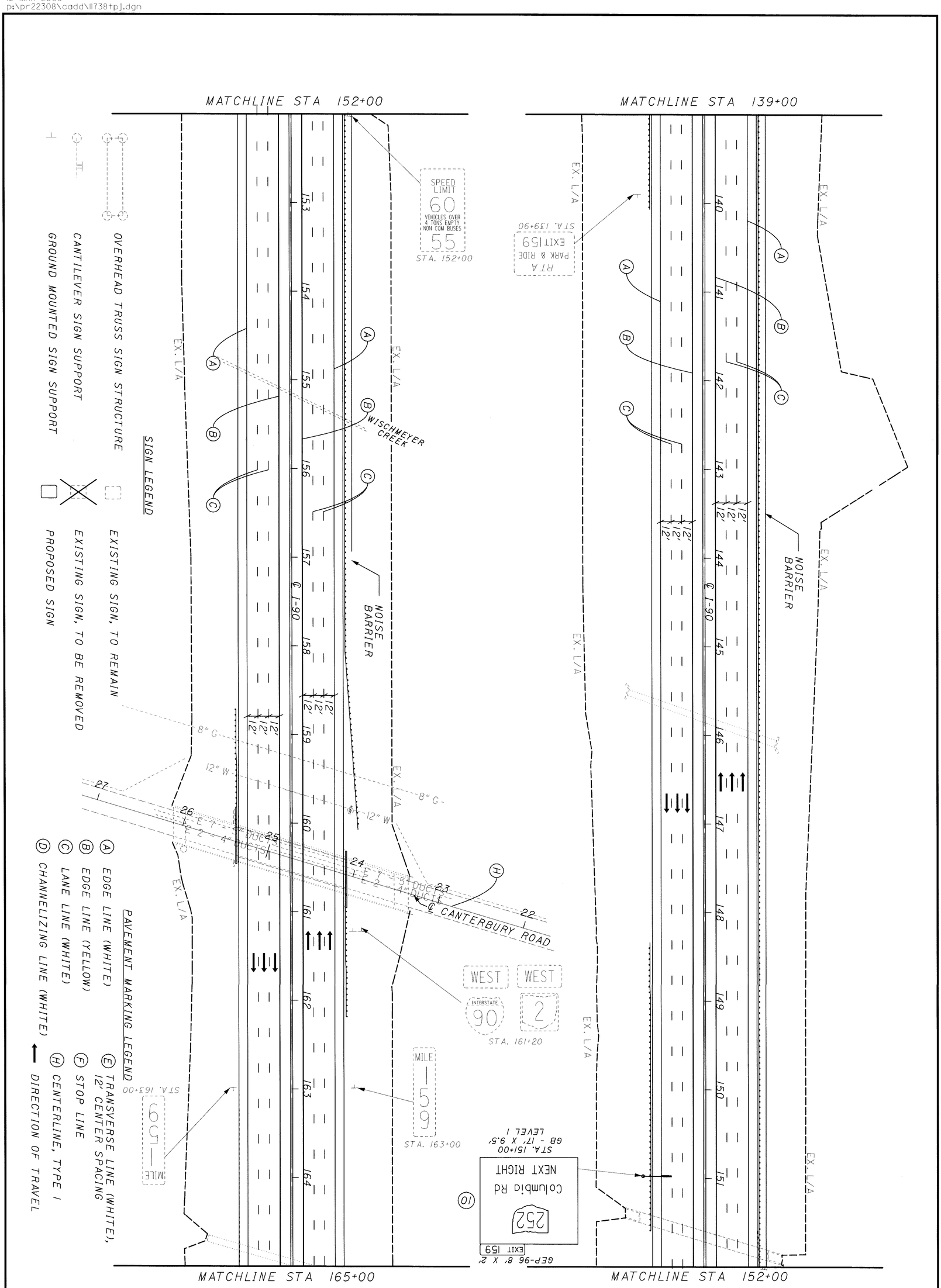

379 / 582	CUY-90-0.00	SIGNING AND PAVEMENT MARKING PLAN	CALCULATED NJG / CHECKED RAS	0 25 50 100 HORIZONTAL SCALE IN FEET

10 MAR 2000
p:\pr22308\cadd\11738tpk.dgn

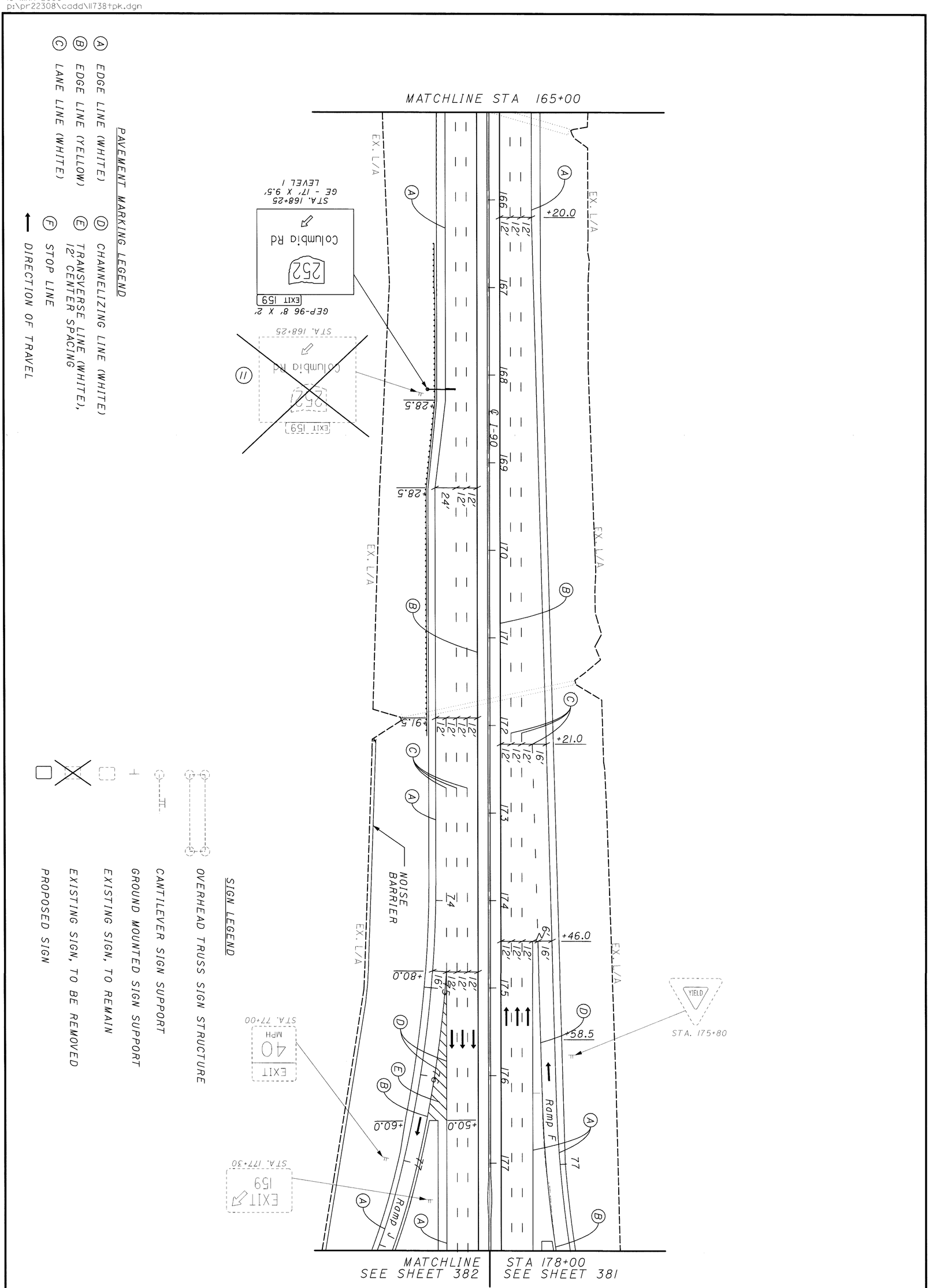

PAVEMENT MARKING LEGEND

- (A) EDGE LINE (WHITE)
- (B) EDGE LINE (YELLOW)
- (C) LANE LINE (WHITE)
- (D) CHANNELIZING LINE (WHITE)
- (E) TRANSVERSE LINE (WHITE), 12' CENTER SPACING
- (F) STOP LINE
- DIRECTION OF TRAVEL

SIGN LEGEND

- OVERHEAD TRUSS SIGN STRUCTURE
- CANTILEVER SIGN SUPPORT
- GROUND MOUNTED SIGN SUPPORT
- EXISTING SIGN, TO REMAIN
- EXISTING SIGN, TO BE REMOVED
- PROPOSED SIGN

380/582	CUY-90-0.00	SIGNING AND PAVEMENT MARKING PLAN	CALCULATED NJG / CHECKED RAS	0 50 / 25 100 HORIZONTAL SCALE IN FEET

PAVEMENT MARKING LEGEND

- (A) EDGE LINE (WHITE)
- (B) EDGE LINE (YELLOW)
- (C) LANE LINE (WHITE)
- (D) CHANNELIZING LINE (WHITE)
- (E) TRANSVERSE LINE (WHITE), 12' CENTER SPACING
- (F) STOP LINE
- (G) CROSSWALK LINE
- ← DIRECTION OF TRAVEL

SIGN LEGEND

- OVERHEAD TRUSS SIGN STRUCTURE
- CANTILEVER SIGN SUPPORT
- GROUND MOUNTED SIGN SUPPORT
- EXISTING SIGN, TO REMAIN
- EXISTING SIGN, TO BE REMOVED
- PROPOSED SIGN

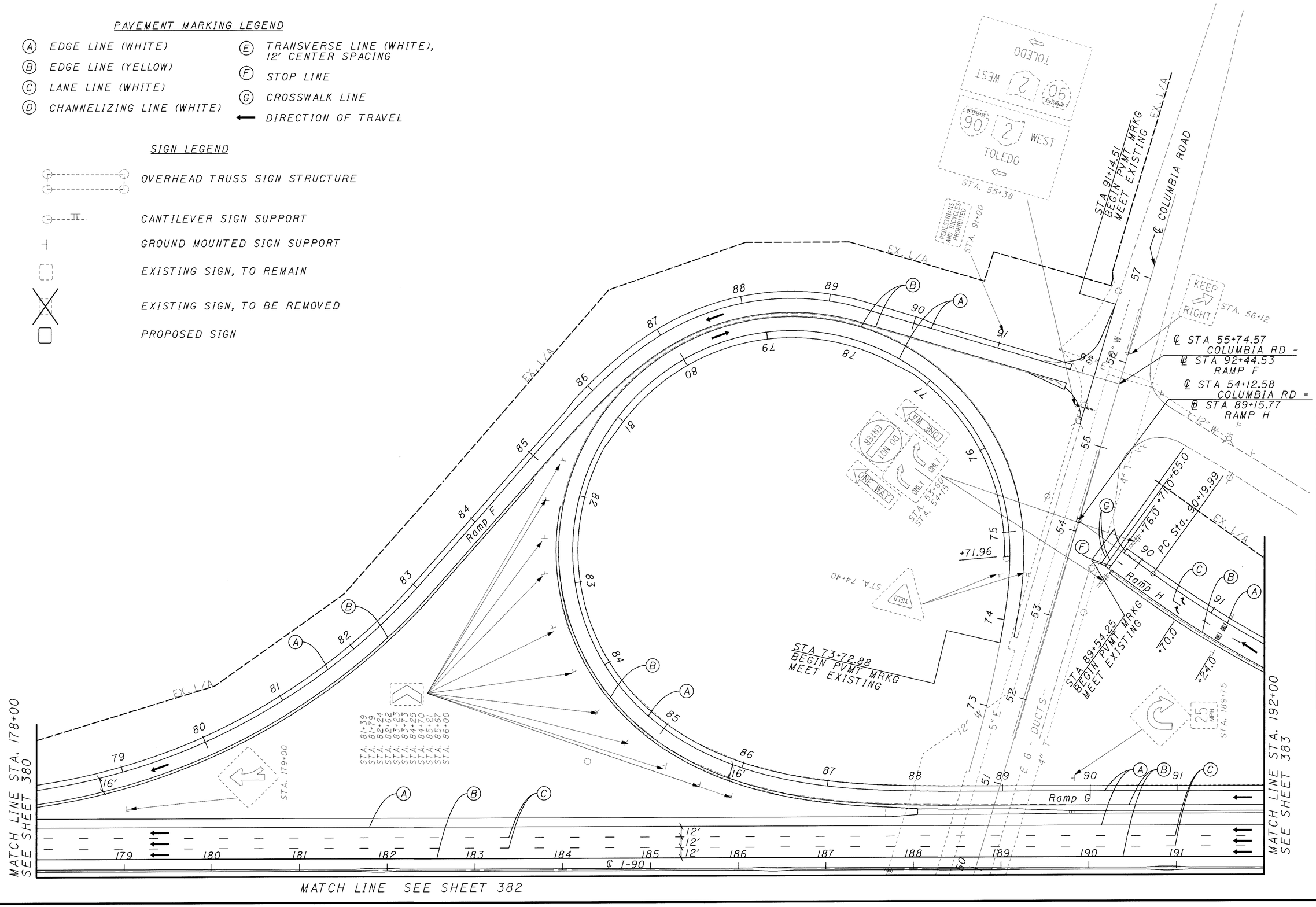

HORIZONTAL SCALE IN FEET
0 25 50 100

CALCULATED NJG
CHECKED RAS

SIGNING AND PAVEMENT MARKING PLAN

CUY-90-0.00

381
582

10 MAR 2000
p:\pr22308\cadd\I738tpl.dgn

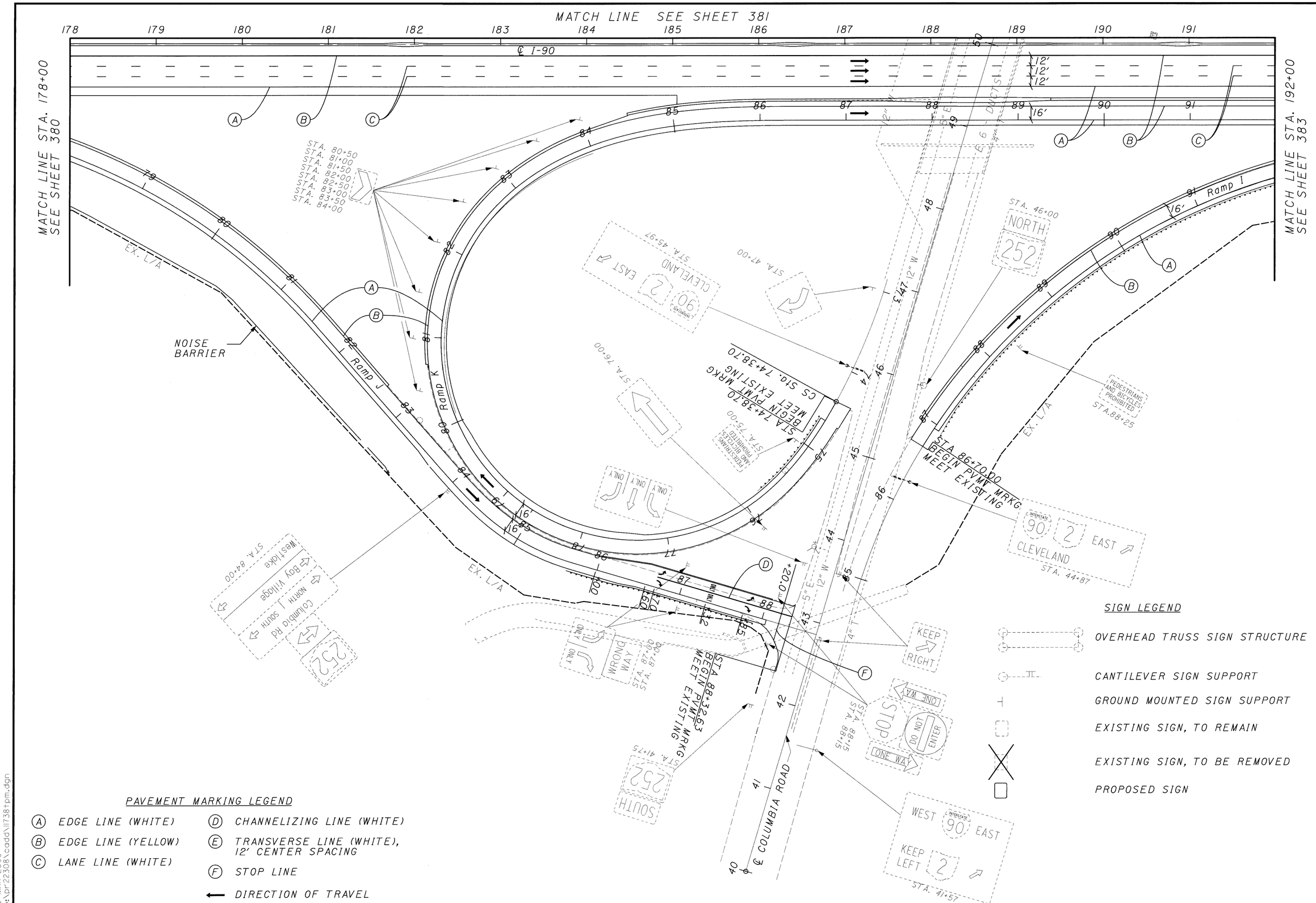

HORIZONTAL SCALE IN FEET

CALCULATED NJG
CHECKED RAS

SIGNING AND PAVEMENT MARKING PLAN

CUY-90-0.00

10 MAR 2000
p:\pr22308\cadd\11738tpm.dgn

10 MAR 2000
p:\pr22308\cadd\11738tpn.dgn

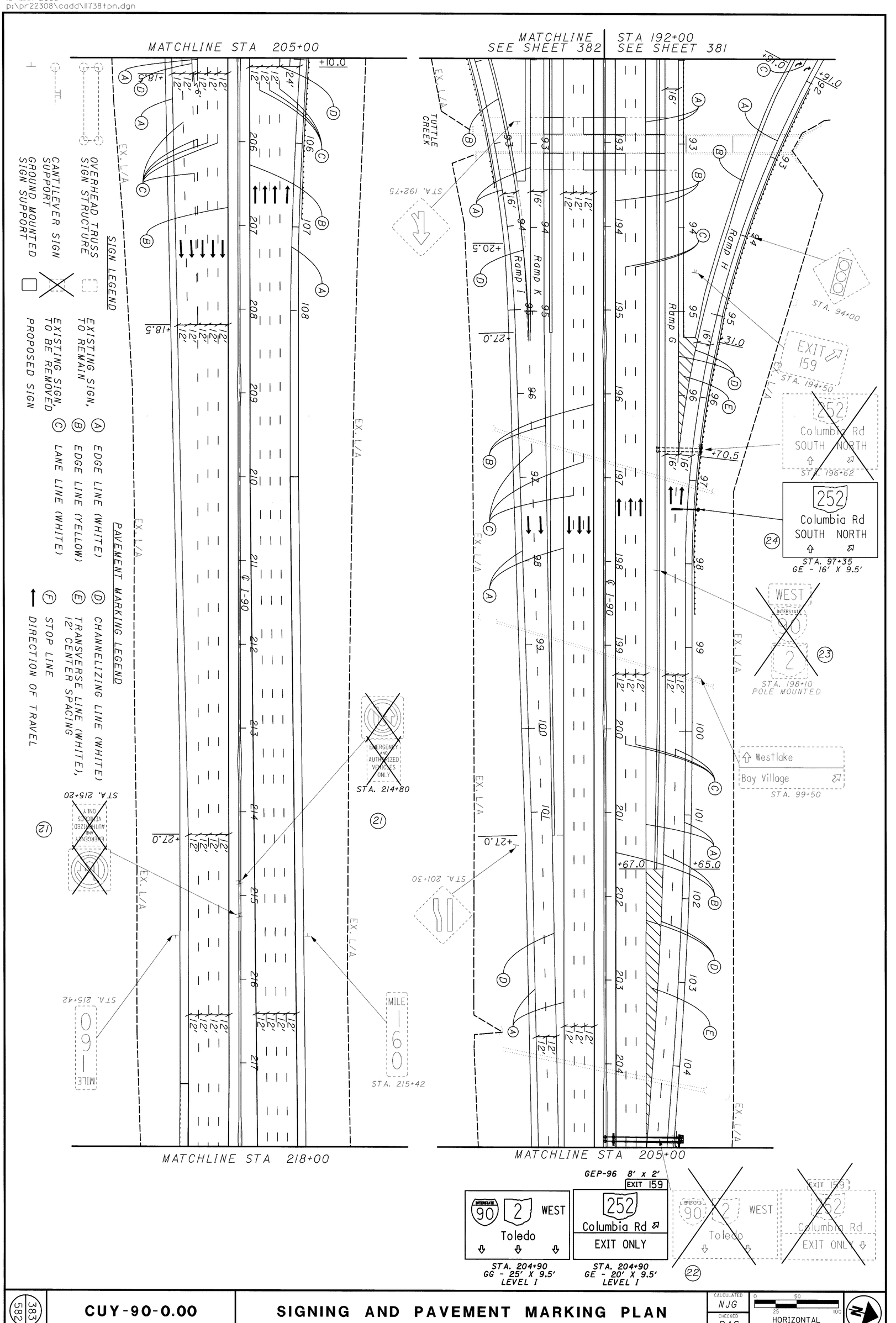

383 582	CUY-90-0.00	SIGNING AND PAVEMENT MARKING PLAN	CALCULATED NJG / CHECKED RAS	0 50 25 100 HORIZONTAL SCALE IN FEET

10 MAR 2000
p:\pr22308\cadd\ll738tpo.dgn

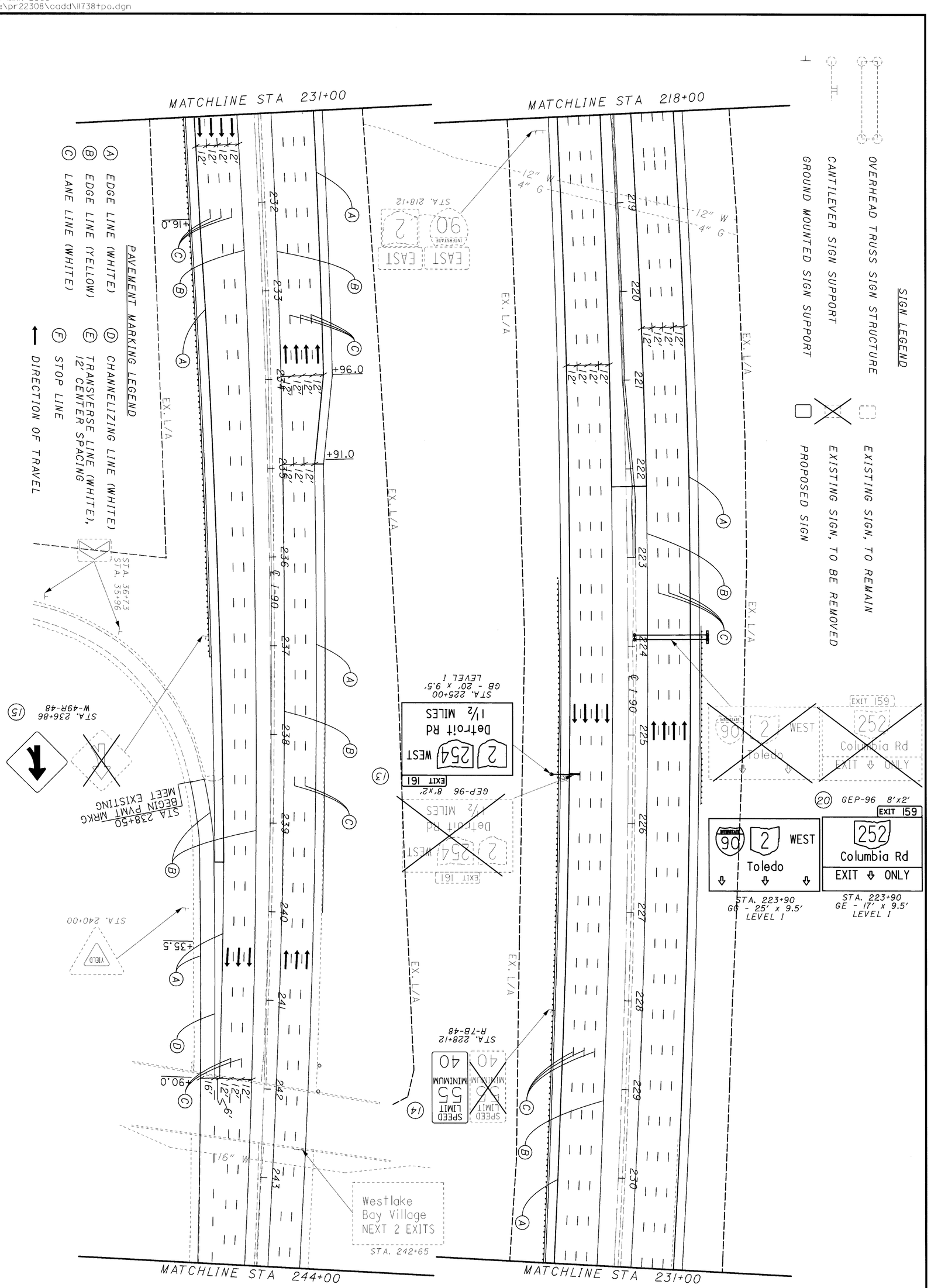

384/582	CUY-90-0.00	SIGNING AND PAVEMENT MARKING PLAN	CALCULATED NJG / CHECKED RAS	0 25 50 100 HORIZONTAL SCALE IN FEET	N

10 MAR 2000
p:\pr22308\cadd\ll738tpp.dgn

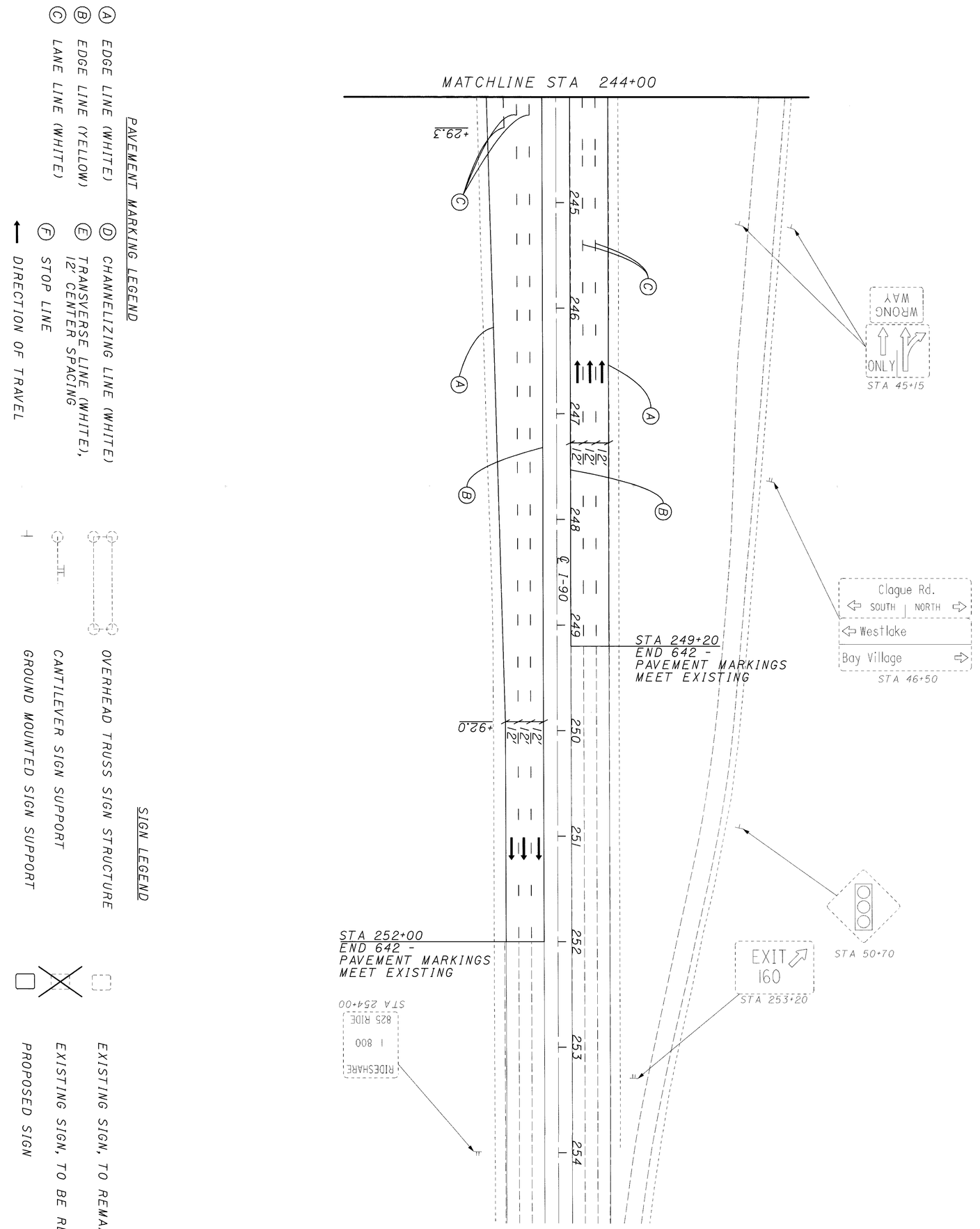

385/582	CUY-90-0.00	SIGNING AND PAVEMENT MARKING PLAN	CALCULATED NJG / CHECKED RAS	0 50 / 25 100 HORIZONTAL SCALE IN FEET	N

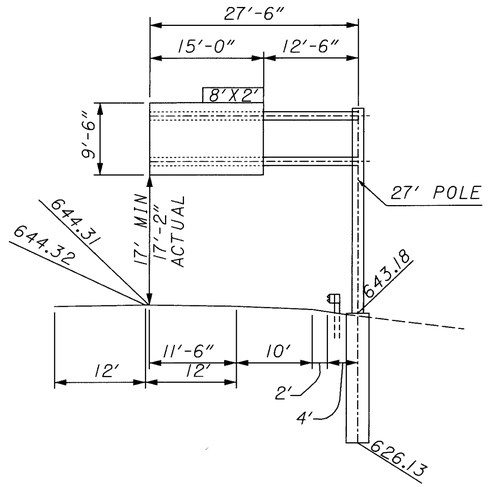

CANTILEVER SIGN NO. 2
STA 10+00, E.B. I-90
TYPE TC-12.30, DESIGN NO. 10
27.5' ARM

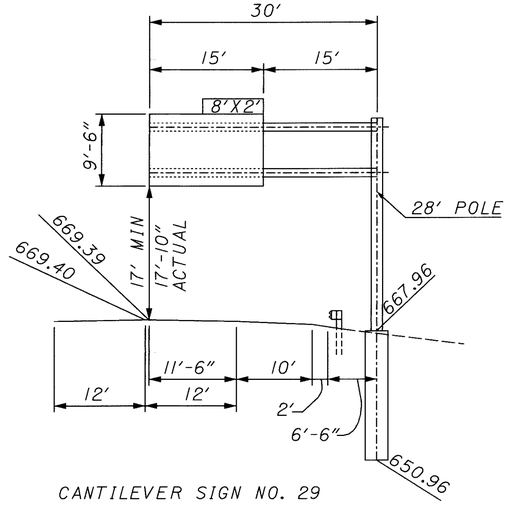

CANTILEVER SIGN NO. 29
STA 90+00, W.B. I-90
TYPE TC-12.30, DESIGN NO. 10
30' ARM

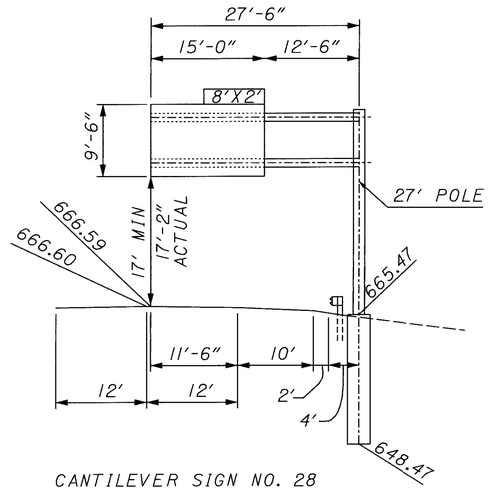

CANTILEVER SIGN NO. 28
STA 120+00, W.B. I-90
TYPE TC-12.30, DESIGN NO. 10
27.5' ARM

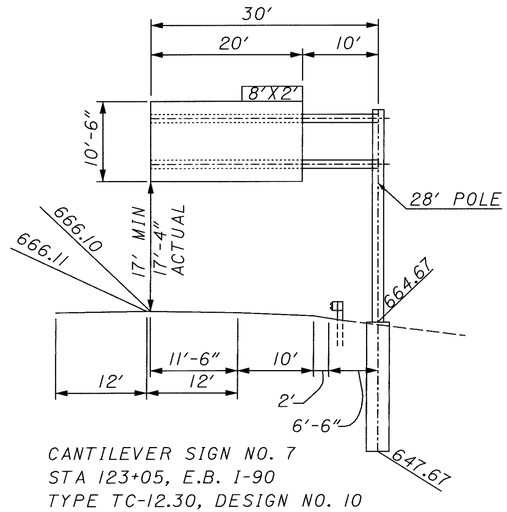

CANTILEVER SIGN NO. 7
STA 123+05, E.B. I-90
TYPE TC-12.30, DESIGN NO. 10
30' ARM

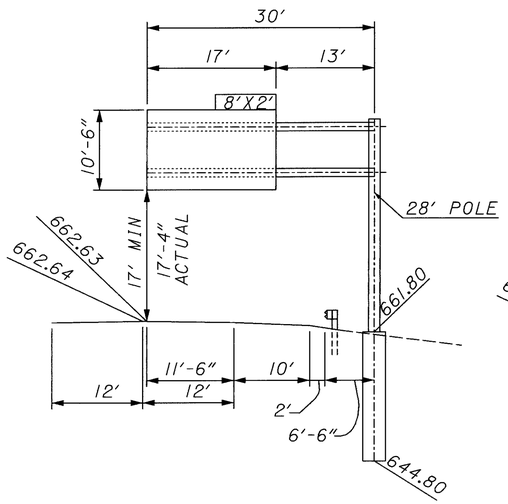

CANTILEVER SIGN NO. 10
STA 151+00, E.B. I-90
TYPE TC-12.30, DESIGN NO. 10
30' ARM

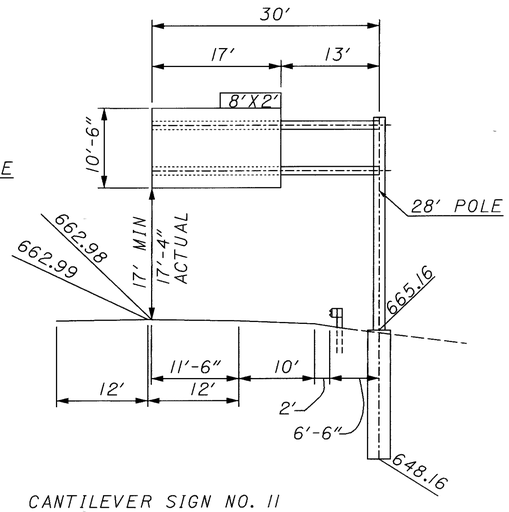

CANTILEVER SIGN NO. 11
STA 168+25, E.B. I-90
TYPE TC-12.30, DESIGN NO. 10
30' ARM

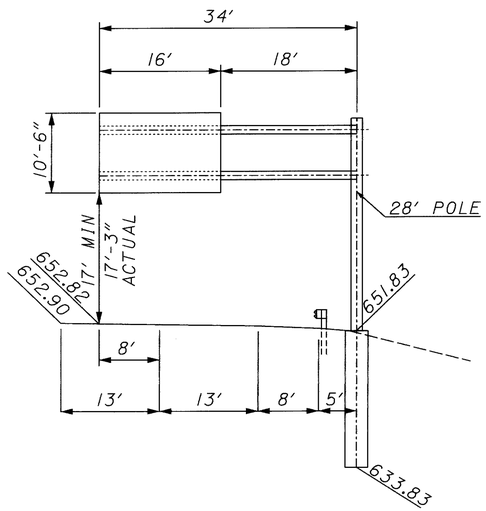

CANTILEVER SIGN NO. 24
STA 97+35, RAMP H, W.B. I-90
TYPE TC-12.30, DESIGN NO. 12
34' ARM

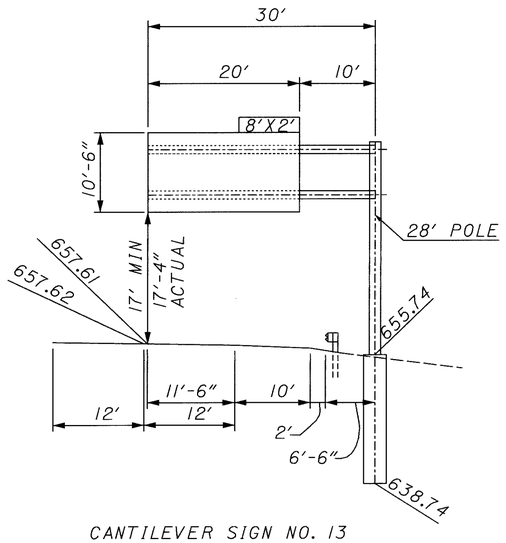

CANTILEVER SIGN NO. 13
STA 225+00, E.B. I-90
TYPE TC-12.30, DESIGN NO. 10
30' ARM

SCALE IN FEET
0 5 10 20

CALCULATED CWP
CHECKED RAS

SIGNING
ELEVATION VIEWS

CUY-90-0.00

386
582

10 MAR 2000
p:\pr22308\cadd\ll738tea.dgn

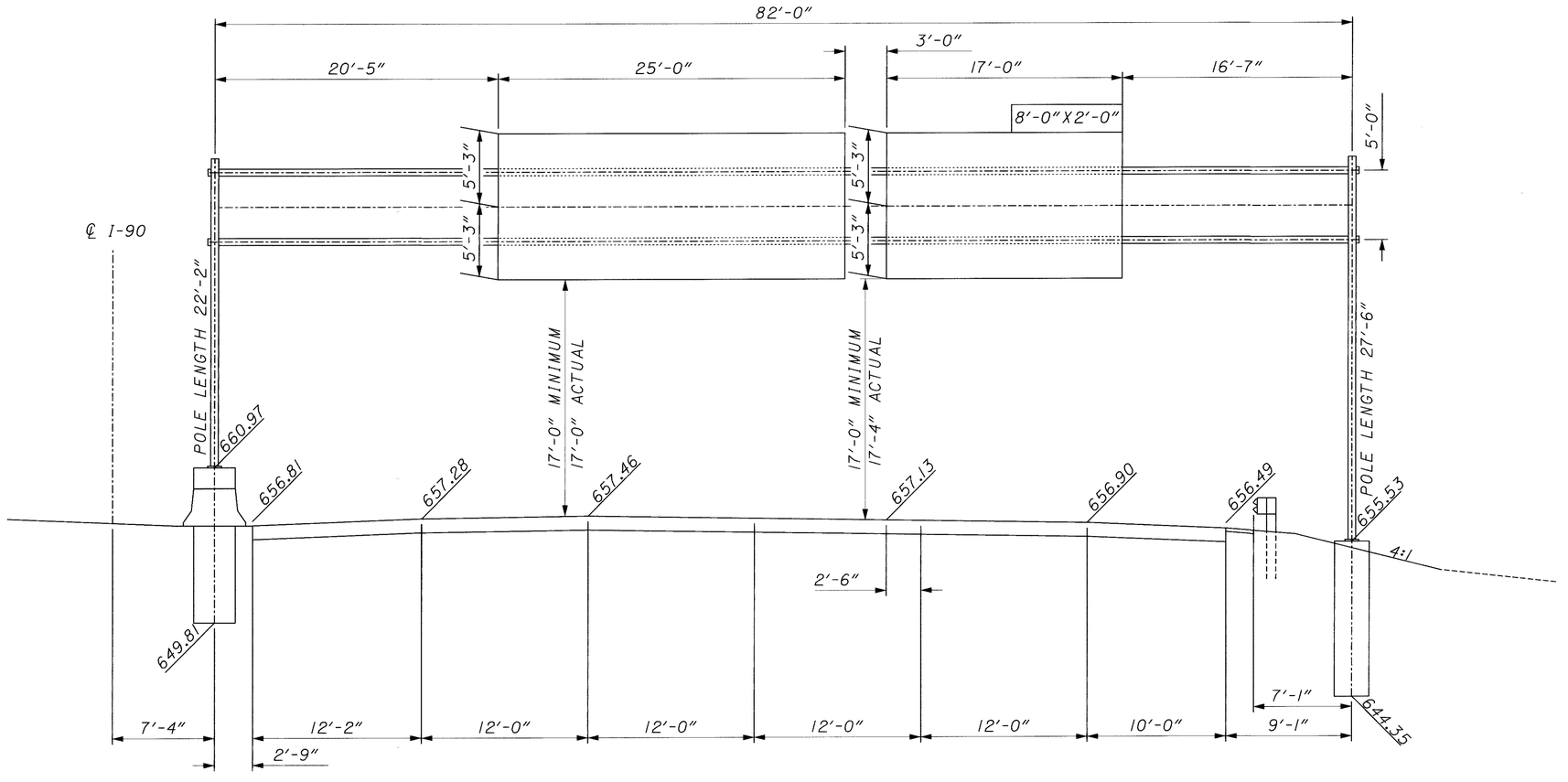

OVERHEAD SIGN NO. 20
STA 223+90 W.B.L. I-90
TYPE TC-7.65, DESIGN 8, 5 FOOT BOX
82'-0.0" ARM

SIGNING
ELEVATION VIEWS

CALCULATED NJG
CHECKED RAS

0 2.5 5 10
SCALE IN FEET

CUY-90-0.00

10 MAR 2000
p:\pr22308\cadd\ll738feb.dgn

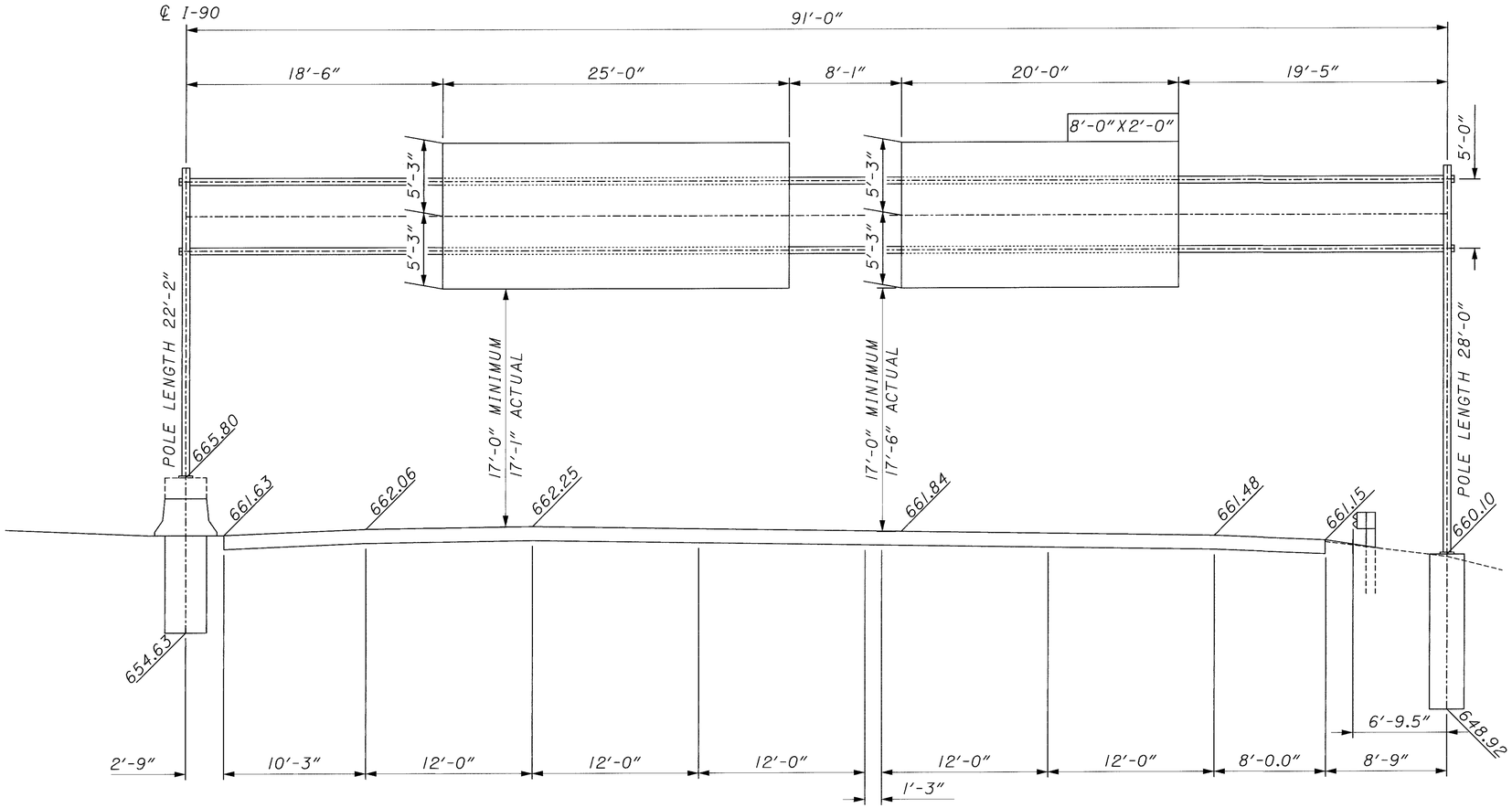

OVERHEAD SIGN NO. 22
STA 204+90 W.B.L. I-90
TYPE TC-7.65, DESIGN 8, 5 FOOT BOX
91'-0.0" ARM

SCALE IN FEET

CALCULATED NJG
CHECKED RAS

SIGNING
ELEVATION VIEWS

CUY-90-0.00

388
582

10 MAR 2000
p:\pr2230\caddd\1738teb.dgn

SIGN NO. 28B
STA 105+00, W.B. I-90
W10X12 BEAM SUPPORT

SIGN NO. 14
STA 228+12, E.B. I-90
S4x7.7 BEAM SUPPORT

SCALE IN FEET
0 2.5 5 10

CALCULATED CWP
CHECKED RAS

SIGNING
ELEVATION VIEWS

CUY-90-0.00

389
582

10 MAR 2000
p:\pr22308\cadd\ll738tec.dgn

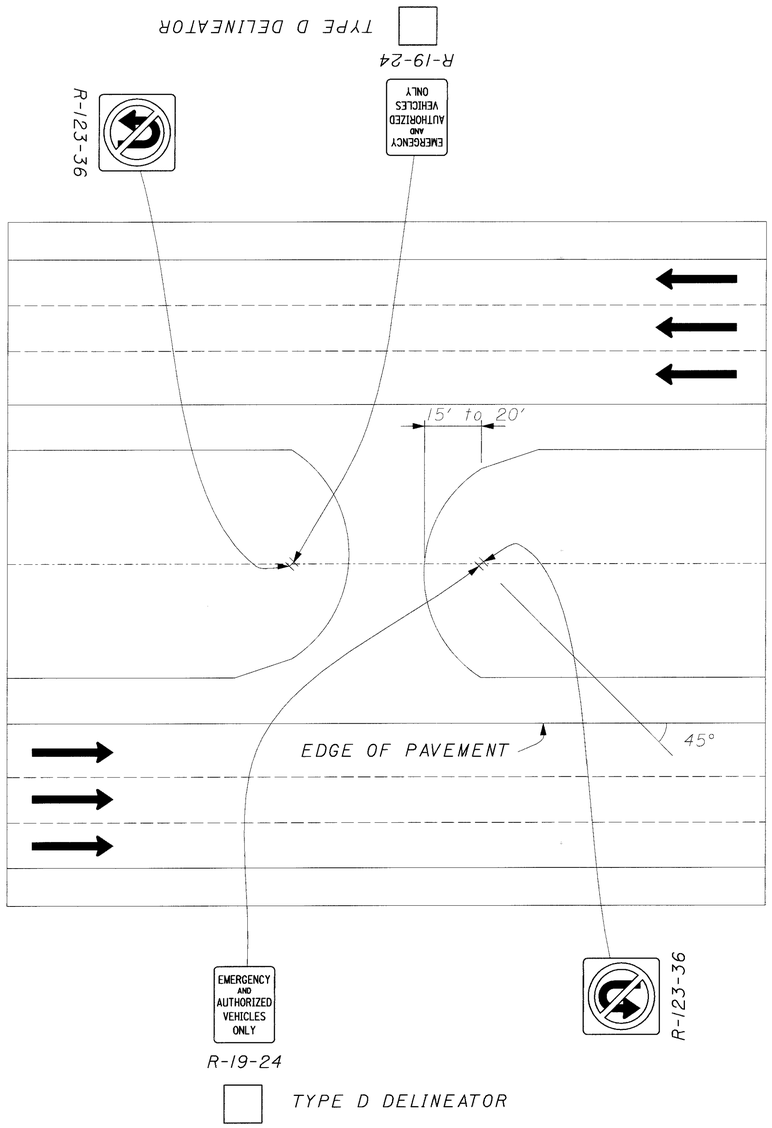

NOTES:

1. THE R-19 & R-123 SIGNS SHALL BE ERECTED BACK-TO-BACK AT APPROXIMATELY THE MIDPOINT OF THE MEDIAN WIDTH AT A 45 DEGREE ANGLE TO THE TRAFFIC FLOW.

MEDIAN CROSSOVER SIGNING DETAIL

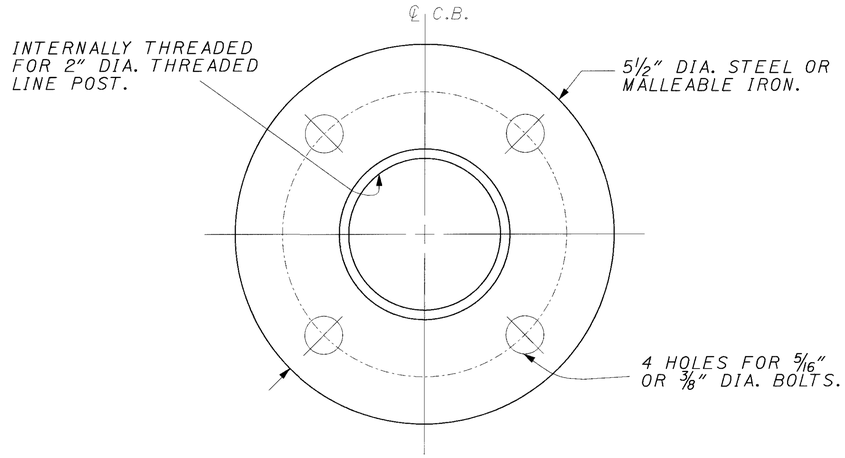

STANDARD FLOOR FLANGE

(FOR 2" DIA. THREADED LINE POST.)

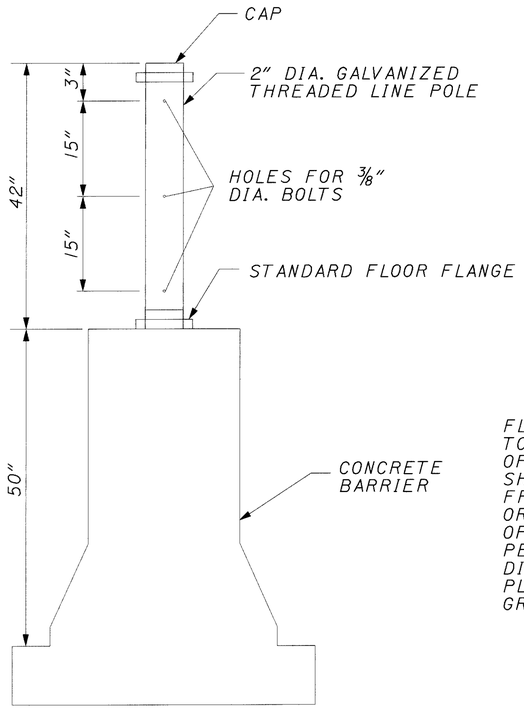

GALVANIZING: ALL METAL PARTS AND FITTINGS NOT COATED WITH ALUMINUM OR VINYL SHALL BE GALVANIZED AFTER FABRICATION IN ACCORDANCE WITH ASTM A-123 OR A-153, WHICHEVER MAY APPLY.

FLOOR FLANGES SHALL BE ANCHORED TO THE CONCRETE BARRIER WITH BOLTS OF REQUIRED DIAMETER AND EXPANSION SHIELD ANCHORS PER 712.01, OR MEETING FF-S-325 GROUP II, TYPE 4, CLASS 1 OR 2, OR GROUP VIII, TYPE 1 WITH CERTIFICATION OF PROOF LOAD PER 712.01. ALSO PERMITTED ARE BOLTS OF REQUIRED DIAMETER AND 4" MINIMUM EMBEDMENT, PLACED IN THE FRESH CONCRETE OR GROUTED IN DRILLED HOLES.

ITEM 630 - SUPPORT ASSEMBLY, POLE MOUNTED, AS PER PLAN

THIS ITEM SHALL INCLUDE ALL MATERIALS, EQUIPMENT AND LABOR NECESSARY TO PROVIDE AND INSTALL THE MEDIAN MOUNTED SIGN POST AS DETAILED ABOVE.

CALCULATED CWP
CHECKED RAS

SIGNING DETAILS

CUY-90-0.00

390
582

10 MAR 2000
p:\pr22308\cadd\11738tda.dgn

ITEM SPECIAL - MAINTAIN EXISTING LIGHTING

EXISTING ROADWAYS WHICH ARE TO REMAIN OPEN TO TRAFFIC DURING CONSTRUCTION OF THIS PROJECT AND WHICH ARE LIGHTED SHALL HAVE THE LIGHTING MAINTAINED AS DESCRIBED HEREIN.

BEFORE ANY WORK IS STARTED IN THE IMMEDIATE VICINITY OF ANY EXISTING LIGHTING CIRCUITS, REPRESENTATIVES OF THE STATE, THE MAINTAINING AGENCY, AND THE CONTRACTOR SHALL MAKE A VISUAL INSPECTION OF THE EXISTING ROADWAY LIGHTING CIRCUITS TO BE MAINTAINED. DURING THIS INSPECTION, A WRITTEN RECORD OF THE CONDITION OF THE EXISTING LIGHTING SHALL BE MADE BY THE STATE REPRESENTATIVE. THIS WRITTEN REPORT SHALL NOTE INDIVIDUAL LUMINAIRES WHICH ARE NOT IN WORKING ORDER, INDIVIDUAL POLES WHICH ARE NOT STANDING, AND INDIVIDUAL CIRCUITS WHICH ARE NOT IN WORKING ORDER. THE COMPLETED REPORT SHALL BE SIGNED BY THE REPRESENTATIVES OF THE STATE, THE MAINTAINING AGENCY, AND THE CONTRACTOR.

IF, AS A RESULT OF THIS INSPECTION, IT IS DETERMINED THAT THE CONDITION OF THE EXISTING SYSTEM IS BELOW THAT REQUIRED FOR THE SAFETY OF THE TRAVELING PUBLIC, THEN THE MAINTAINING AGENCY SHALL MAKE REPAIRS NECESSARY TO RETURN THE SYSTEM TO AN ACCEPTABLE CONDITION. FOLLOWING THESE REPAIRS, THE SYSTEM SHALL AGAIN BE INSPECTED AND A REPORT MADE AND SIGNED AS OUTLINED HEREIN.

WHEN THE EXISTING SYSTEM IS IN AN ACCEPTABLE CONDITION, IT SHALL BE TURNED OVER TO THE CONTRACTOR WHO SHALL THEN BE REQUIRED TO MAINTAIN THE EXISTING LIGHTING TO THE CONDITION OUTLINED IN THIS REPORT WITH THE EXCEPTION OF KNOCKDOWNS DUE TO TRAFFIC ACCIDENTS.

REPLACEMENT OF KNOCKED DOWN UNITS SHALL BE DONE ONLY WHEN THE ENGINEER HAS DETERMINED THAT THE REPLACEMENT OF THE KNOCKED DOWN UNIT IS NECESSARY AND SHALL BE PAID SEPARATELY ON A UNIT BASIS.

SHOULD THE CONTRACTOR DESIRE THE REMOVAL OF THE EXISTING LIGHTING BEFORE THE NEW LIGHTING IS OPERATIONAL, THE CONTRACTOR SHALL THEN BE RESPONSIBLE FOR ADEQUATE TEMPORARY LIGHTING OF THAT PORTION OF THE EXISTING ROADWAY AFFECTED BY THE REMOVAL OF THE EXISTING LIGHTING. ****TEMPORARY LIGHTING TO MAINTAIN THE EXISTING LIGHTING IS NOT REQUIRED PROVIDED THAT SERVICE IS ONLY INTERRUPTED FOR A TOTAL OF 60 DAYS OR LESS.*****

PRIOR TO INSTALLING SUCH LIGHTING, THE CONTRACTOR SHALL PREPARE AND SUBMIT FOUR SETS OF THE TEMPORARY LIGHTING PLAN TO THE DIRECTOR FOR REVIEW AND APPROVAL.

THIS PLAN SHALL SHOW LOCATION OF POLES, LENGTH OF BRACKET ARMS, STYLE OF LUMINAIRES, MOUNTING HEIGHT, WIRING METHODS, AND OTHER PERTINENT INFORMATION. THE TEMPORARY LIGHTING SHALL PROVIDE AN AVERAGE INITIAL INTENSITY OF 1.0 FOOTCANDLES WITH AN AVERAGE TO MINIMUM UNIFORMITY NOT TO EXCEED 4:1. MOUNTING HEIGHT FOR TEMPORARY LUMINAIRES SHALL NOT BE LESS THAN 27 FEET AND MINIMUM OVERHEAD CONDUCTOR CLEARANCE SHALL BE 20 FEET. TEMPORARY OVERHEAD CONSTRUCTION SHALL NOT BE LESS THAN GRADE "B" FOR STRENGTH REQUIREMENTS AS DEFINED BY THE NATIONAL ELECTRIC SAFETY CODE. WOOD POLES WITH OVERHEAD WIRING MAY BE USED. HOWEVER, TEMPORARY LIGHTING SHALL MEET FEDERAL AND STATE SAFETY CRITERIA. IF BREAKAWAY POLES ARE USED TO MEET THESE CRITERIA, THEN UNDERGROUND WIRING SHALL BE USED. RECONDITIONED OR USED MATERIALS MAY BE FURNISHED FOR TEMPORARY LIGHTING.

ALL MATERIALS NECESSARY TO COMPLETE THE TEMPORARY LIGHTING SHALL BE FURNISHED AND INSTALLED BY THE CONTRACTOR. WHEN NO LONGER NEEDED, THE TEMPORARY LIGHTING INSTALLATION SHALL BE REMOVED AND PROPERLY DISPOSED OF BY THE CONTRACTOR.

SEQUENCE OF OPERATIONS

THE EXISTING LIGHTS LOCATED ON STRUCTURES SHALL REMAIN OPERATIVE UNTIL THE DECK IS REMOVED. OTHER EXISTING LIGHTS SHALL REMAIN OPERATIVE UNTIL ALL OF THE PROPOSED TOWERS ARE IN PLACE AND AS MUCH OF THE PROPOSED CIRCUITS AS POSSIBLE HAVE BEEN INSTALLED. THE CONTRACTOR SHALL ESTABLISH A FUNCTIONING NEW LIGHTING SYSTEM PRIOR TO DISCONNECTING THE EXISTING SYSTEM. ALL COSTS FOR SEQUENCING THIS WORK AND PROVIDING A TEMPORARY CIRCUIT CONNECTION SHALL BE CONSIDERED AS INCIDENTAL TO THE LIGHTING PAY ITEMS.

GENERAL

THE POWER SUPPLYING AGENCY FOR THIS PROJECT IS:

CLEVELAND ELECTRIC ILLUMINATING COMPANY
55 PUBLIC SQUARE
CLEVELAND, OHIO 44101

SUPPLIED POWER IS CONTROLLED 480 VOLTS, 2 WIRE, ONE SIDE GROUNDED.

PORTABLE POWER UNIT

THE CONTRACTOR SHALL SUPPLY A PORTABLE UNIT AS SPECIFIED IN THE ODOT CONSTRUCTION AND MATERIAL SPECIFICATIONS. A QUANTITY OF "1 EACH" OF "ITEM 625 - PORTABLE POWER UNIT" IS INCLUDED IN THE GENERAL SUMMARY FOR THIS PURPOSE.

HIGH VOLTAGE DIRECT CURRENT TEST

A HIGH VOLTAGE DIRECT CURRENT TEST, AS DESCRIBED IN THE SPECIFICATIONS SHALL BE PERFORMED ON ALL DISTRIBUTION CABLE AND DUCT CABLE SYSTEMS TO BE INSTALLED ON THIS PROJECT. THE TEST SHALL NOT BE PERFORMED UNTIL AFTER ALL NEW CONSTRUCTION, SUCH AS GUARD RAIL,FENCE, DELINEATOR POSTS, SIGN SUPPORTS, ETC., IN THE IMMEDIATE LOCATION OF THE CABLE RUN BEING TESTED, HAS BEEN COMPLETED. A LUMP SUM PAYMENT FOR THIS TEST HAS BEEN INCLUDED IN THE LIGHTING GENERAL SUMMARY.

ELECTRICAL SERVICE FOR ILLUMINATED SIGNS

THE PAY ITEMS IN THE LIGHTING GENERAL SUMMARY INCLUDE THE PULL BOX ADJACENT TO EACH LIGHTED SIGN AND THE ELECTRICAL SERVICE CONNECTIONS LEADING INTO THE BOX, INCLUDING SPLICE KITS IN THE PULL BOX. QUANTITIES FOR ELECTRICAL SERVICE FROM THE CONNECTION IN THE PULL BOX TO THE SIGN ARE INCLUDED IN THE TRAFFIC CONTROL SUMMARY.

SOIL INFORMATION

SUBSURFACE INVESTIGATIONS WERE MADE FOR THE ORIGINAL CONSTRUCTION OF I.R. 90. COPIES OF THIS DATA MAY BE INSPECTED AT THE DISTRICT 12 DESIGN OFFICE, 5500 TRANSPORTATION BLVD., GARFIELD HTS. OHIO.

HIGH MAST LUMINARIES

THE LUMINAIRE ARRAYS AND ASSOCIATED ILLUMINATION TEST AREAS SPECIFIED IN SECTION 713.21 OF THE CONSTRUCTION AND MATERIAL SPECIFICATIONS ARE HEREBY WAIVED FOR THIS PROJECT. INSTEAD, THE LUMINARIES FOR TOWER LIGHTING SHALL MEET THE FOLLOWING REQUIREMENTS.

ASYMMETRIC, TYPE I OR II, LUMINARIES FOR TOWER LIGHTING SHALL BE HOLOPHANE "HMSC" TEST #43191, GE 7365(II), OR APPROVED EQUAL.

IN ADDITION, OTHER CUT OFF STYLE LUMINARIES WILL BE CONSIDERED IF THE DESIGNED INTENSITY AND UNIFORMITY ARE PROVIDED USING THE DESIGNED POLE LOCATIONS AND THE DESIGNED NUMBER AND TYPE OF FIXTURES PER POLE.

HIGH MAST LIGHT TOWERS

THE MANUFACTURER SHALL SUBMIT A REPORT FROM AN INDEPENDENT TESTING LABORATORY TO SHOW THAT THE LUMINAIRES DO NOT RECEIVE MORE THAN THESPECIFIED ACCELERATION LOAD. THE TESTING LABORATORY'S REPORT SHALL SPECIFY IN DETAIL THE MOUNTING LOCATIONS OF THE ACCELEROMETERS AND THE TEST PROCEDURES USED. IN ADDITION TO THIS REPORT ODOT RESERVES THE RIGHTTO CONDUCT FIELD MEASUREMENTS OF THOSE ACCELERATION LOADS AND TO ACCEPT ONLY THOSE DESIGNS IN WHICH THE TESTED INSTALLATIONS MEET THE SPECIFICATIONS.THE TERMINAL BLOCK SHOWN ON THE STANDARD CONSTRUCTION DRAWINGS SHALL BE INCLUDED IN THE PRICE OF THE LIGHT TOWER.

LAMPS-HIGH PRESSURE SODIUM (HPS)

HIGH PRESSURE SODIUM LAMPS SHALL BE GENERAL ELECTRIC "LUCALOX" CROUSE-HINDS "CERAMALUX", SYLVANIA "LUMALUX", OR EQUAL APPROVED BY THE ENGINEER.

CONDUIT ON STRUCTURE

EXPANSION FITTINGS FOR CONDUIT ON STRUCTURES SHALL BE OZ TYPE AX-4, CROUSE-HINDS TYPE XJ-4, APPLETON TYPE XJ-4, OR EQUAL APPROVED BY THEENGINEER FOR ALL BRIDGES. EACH EXPANSION FITTING SHALL HAVE A COPPER EXTERNAL BONDING JUMPER.

LIGHTING ABANDONED OR REMOVED

THE REMOVAL OR ABANDONMENT OF ANY ITEMS WHICH ARE NOT ITEMIZED SEPARATELY SHALL BE CONSIDERED INCIDENTAL TO THE ADJACENT WORK ITEM.

EXISTING DUCT CABLE AND CONDUIT

THE LOCATIONS OF EXISTING CONDUIT AND DUCT CABLE SHOWN ON THE PLANS HAVE BEEN OBTAINED BY SEARCHES OF AVAILABLE RECORDS AND FIELD CHECKS. IT IS BELIEVED THAT THEY ARE ESSENTIALLY CORRECT, HOWEVER, THE STATE OF OHIO DOES NOT GUARANTEE THEIR ACCURACY OR COMPLETENESS. (EXISTING PLANS ARE CUY-90-2.80, CONSTRUCTION PROJECT NO. 774-73 AND CUY-90-0.00, CONSTRUCTION PROJECT NO. 304-91)

UNDERDRAINS FOR PULL BOXES

REFERENCE IS MADE TO STANDARD DRAWING HL-30.11 FOR DETAILS OF DRAINING PULL BOXES. UNDERDRAINS FOR PULL BOXES SHALL BE USED AS DIRECTED BY THE ENGINEER AND SHALL BE PROVIDED WHERE THE LENGTH REQUIRED FOR A SATISFACTORY OUTLET DOES NOT EXCEED APPROXIMATELY 20 FEET. AN ESTIMATED QUANTITY OF "ITEM 603 - 4" CONDUIT, TYPE E" IS INCLUDED IN THE LIGHTING GENERAL SUMMARY FOR THIS PURPOSE. THIS ITEM SHALL ALSO INCLUDE THE COST OF RESTORING PAVED SHOULDER AREAS WHEN NECESSARY TO DRAIN THE PULL BOX INTO EXISTING DRAINS.

ITEM 603 - 4" CONDUIT, TYPE E 580 LIN. FT.

ITEM 202 - DISCONNECT EXISTING CIRCUIT

THIS ITEM OF WORK SHALL CONSIST OF THE DISCONNECTION OF AN EXISTING LIGHT CIRCUIT AT A PULL BOX OR A LIGHT POLE.

DISCONNECTION AT A PULL BOX SHALL INVOLVE CUTTING THE EXISTING CIRCUIT AND REMOVING ALL SPLICE KITS. ANY CABLE THAT IS TO BE ABANDONED SHALL BE TERMINATED IN A MANNER SUCH THAT NO CABLE IS LEFT REMAINING IN THE PULL BOX.

DISCONNECTION AT A LIGHT SHALL INVOLVE THE REMOVAL OF THE PART OF CABLE TO BE ABANDONED FROM THE POLE. THOSE ENDS OF THE CONNECTOR KITS FROM WHICH THE ABANDONED CABLE IS REMOVED SHALL BE PLUGGED AND TAPED.

ANY CABLE THAT IS TO BE REUSED IN A PULL BOX OR LIGHT POLE SHALL BE CUT IN SUCH A MANNER SO THAT THERE IS SUFFICIENT LENGTH OF CABLE LEFT FOR RECONNECTION. CABLE SPLICE KITS AND CONNECTOR KITS WILL BE PAID FOR RESPECTIVELY UNDER ITEM 625.

PAYMENT WILL BE MADE AT THE UNIT BID PRICE FOR EACH ITEM SPECIAL "DISCONNECT EXISTING CIRCUIT" AND SHALL BE FULL COMPENSATION FOR ALL LABOR, MATERIALS AND INCIDENTALS REQUIRED TO COMPLETE THE WORK.

ITEM 202 - LIGHT POLE REMOVED, AS PER PLAN

THIS ITEM OF WORK SHALL BE IN ACCORDANCE WITH ITEM 202 AND SHALL CONSIST OF REMOVING EITHER A GROUND MOUNTED OR BRIDGE MOUNTED LIGHT POLE FROM ITS FOUNDATION OR BRIDGE PILASTER AND PROPERLY DISPOSING OF IT OFF THE PROJECT SITE.

ALL POLES THAT ARE 32' OR LESS SHALL BE STORED ON SITE FOR ODOT PICKUP

ALL LIGHT POLES BASES SHALL BE STORED ON SITE FOR ODOT PICKUP.

PAYMENT SHALL BE MADE PER EACH LIGHT POLE REMOVED AND SHALL NOT BE DIFFERENTIATED BY GROUND MOUNTED OR BRIDGE MOUNTED TYPE.

ITEM 202 - LIGHT POLE FOUNDATION REMOVED, AS PER PLAN

THIS ITEM OF WORK SHALL BE IN ACCORDANCE WITH ITEM 202 AND SHALL CONSIST OF REMOVING EXISTING LIGHT POLE FOUNDATIONS TO A MINIMUM OF TWO (2) FEET BELOW FINISHED GRADE AND BACKFILLING THE RESULTANT DEPRESSION WITH COMPACTED SOIL AND RESTORING THE DISTURBED AREA.

PAYMENT SHALL BE MADE PER EACH LIGHT POLE FOUNDATION REMOVED TO A MINIMUM OF TWO (2) FEET BELOW GRADE. WHEREVER THE LIGHTING PLANS INDICATE "LIGHT POLE TO BE REMOVED" OR "LIGHT POLE FOUNDATION TO BE REMOVED", THE FOUNDATIONS SHALL BE REMOVED TO A MINIMUM OF TWO (2) FEET BELOW FINISHED GRADE.

CALCULATED NJG
CHECKED ENF

LIGHTING NOTES

CUY-90-0.00

391
582

27 MAR 2000
D:\PR22308\CADD\I738LNA.DGN

ITEM 202 - LIGHT TOWER FOUNDATION REMOVED, AS PER PLAN

THIS ITEM OF WORK SHALL BE IN ACCORDANCE WITH ITEM 202 AND SHALL CONSIST OF REMOVING THE EXISTING LIGHT TOWER FOUNDATION TO A MINIMUM OF TWO (2) FEET BELOW FINISHED GRADE AND BACKFILLING THE RESULTANT DEPRESSION WITH COMPACTED SOIL AND RESTORING THE DISTURBED AREA.

ITEM 625 - LIGHT TOWER FOUNDATIONS, AS PER PLAN

LIGHT TOWER FOUNDATIONS NOT LOCATED ON A CONCRETE BARRIER SHALL CONFORM TO THE DESIGN SHOWN ON STANDARD CONSTRUCTION DRAWING HL-20.21 EXCEPT THEY SHALL PROJECT ABOVE GRADE 18" IN OR ADJACENT TO DITCHES AND 6" ELSEWHERE. THE BOLT PATTERN SHALL MATCH THAT OF THE EXISTING TOWER TO BE REUSED.

LIGHT TOWER FOUNDATIONS LOCATED ON A BARRIER MEDIAN SHALL CONFORM TO THE DESIGN SHOWN ON SHEET 407. THE CONTRACTOR SHALL ACCURATELY LOCATE UNDERGROUND CONDUITS PRIOR TO DRILLING FOR FOUNDATIONS. FOUNDATION LOCATIONS SHALL BE SHIFTED, AS DIRECTED BY THE ENGINEER, TO AVOID ANY UNDERGROUND UTILITIES OR CONDUITS BY AT LEAST 10 FEET. ALL FOUNDATION RELOCATIONS SHALL BE APPROVED BY THE ENGINEER PRIOR TO DRILLING. ALL COSTS OF REMOVAL OF EXCAVATED MATERIAL, GRADING, AND RESTORATION OF ALL DISTURBED AREAS IN ACCORDANCE WITH ITEM 659 SHALL BE CONSIDERED AS INCIDENTAL TO THE LIGHT TOWER FOUNDATION ITEM.

STRUCTURE CONDUIT MATERIALS

CONDUITS ON STRUCTURE SHALL BE 713.04 (STEEL). ALL COSTS FOR CONDUITS, FITTINGS, ETC., UP TO THE FIRST PULLBOX OFF THE STRUCTURE ARE INCLUDED WITH THE STRUCTURE CONCRETE FOR PAYMENT.

LIGHTING, MISC.: REMOVE & RE-ERECT EXISTING LIGHT TOWER

THIS ITEM OF WORK SHALL BE IN ACCORDANCE WITH ITEMS 202 AND 625 AND SHALL CONSIST OF THE REMOVAL OF THE EXISTING LIGHT TOWER, INCLUDING LUMINAIRES, CABLES, ETC., AND DIRECTLY RE-ERECTING ON NEW RELOCATED LIGHT TOWER FOUNDATION. PULLEY AND CHAINS ON THE LOWERING MECHANISM SHALL BE LUBRICATED ACCORDING TO MANUFACTURERS RECOMMENDATIONS. THIS ITEM OF WORK SHALL NOT OCCUR UNTIL THE NEW RELOCATED LIGHT TOWER FOUNDATIONS ARE COMPLETE.

PAYMENT WILL BE MADE AT THE UNIT BID PRICE FOR EACH ITEM 625 "LIGHTING, MISC.: REMOVE & RE-ERECT EXISTING LIGHT TOWER" AND SHALL BE FULL COMPENSATION FOR ALL LABOR, MATERIALS AND INCIDENTALS REQUIRED TO COMPLETE THE WORK.

STRUCTURE GROUNDING SYSTEM, AS PER PLAN

THIS ITEM OF WORK SHALL CONSIST OF THE GROUNDING OF THE PROPOSED STRUCTURE ALONG WITH THE ATTACHED STRUCTURE FENCE.

PAYMENT WILL BE AT THE UNIT BID PRICE FOR EACH STRUCTURE GROUNDED AND SHALL BE FULL COMPENSATION FOR ALL LABOR, MATERIALS, AND INCIDENTALS REQUIRED TO COMPLETE THE WORK.

ITEM 625.07 - 713.13 UNDERPASS LUMINARIES

THIS ITEM SHALL BE 1) HOLOPHANE "UNDERPASS WALL PACK", OR 2) GENERAL ELECTRIC UNDERPAS UNIT, OR 3) CCOPER WALL LIGHT, OR 4) AMERICA ELECTRIC SIDELIGHT SERIES, OR EQUAL APPROVED BY THE ENGINEER, AND SHALL BE FURNISHED WITH AN INTEGRAL FUSE HOLDER AND 10 AMPERE FUSE. THE INTEGRAL HIGH PRESSURE SODIUM BALLAST SHALL BE OF A REGULATOR TYPE RATED FOR 480 VOLTS AS REQUIRED, 150 WATTS. THE LUMINAIRES SHALL BE MOUNTED IN THE SAME LOCATION AS THE REMOVED UNDERPASS LUMINAIRE. THE LUMINAIRES SHALL BE SUPPLIED WITH A VANDAL SHIELD.

ITEM 625 - SERVICE TO UNDERPASS LIGHTING, AS PER PLAN

THIS ITEM SHALL CONSIST OF PROVIDING COMPLETE ELECTRICAL SERVICE, EXCEPT FOR LUMINAIRES FOR THE UNDERPASS LIGHTING SYSTEM. THE INSTALLATION WORK SHALL INCLUDECONDUITS, MOUNTINGS, FITTINGS, JUNCTION BOXES, SERVICE SWITCHES, CONDUCTORS (MATCH TYPE AND SIZE OF EXISTING CIRCUIT), AND ALL INCIDENTALS NECESSARY TO COMPLETE THE SERVICE. THE LUMP SUM PRICE FOR ITEM 625 - SERVICE TO UNDERPASS LIGHTING, AS PER PLAN SHALL INCLUDE PAYMENT FOR ALL EQUIPMENT, LABOR, AND MATERIALS NECESSARY TO COMPLETE THE WORK AS SPECIFIED. COMPONENT PARTS NOT SPECIFICALLY MENTIONED REQUIRED FOR SATISFACTORY OPERATION OF THIS ITEM SHALL BE FURNISHED AND CONSIDERED PAID FOR AS PART OF THE ITEM. THE CONDUIT SHALL BE AT LEAST 1" AND SHALL BE BOLTED WITH TWO BOLTS PER CLAMP. ALL LUMINAIRES SHALL BE WIRED BACK TO THE EXISTING CONTROL CENTERS. THE CONTRACTOR SHALL MAKE ALL CONNECTIONS.

THE SERVICE WILL BE FOR CIRCUITS A AND D AT COLUMBIA ROAD. LUMINAIRES A-31, A-32, A-33, A-34, A-35 ARE ON CIRCUIT A AT CONTROL CENTER A & B AT COLUMBIA ROAD. LUMINAIRES D-14, D-15, D-16, D-17, D-18 ARE ON CIRCUIT D AT CONTROL CENTER C & D AT COLUMBIA ROAD.

ITEM 625 - LIGHTING, MISC.: LABEL EXISTING LIGHT POLES AND LIGHT TOWERS

THIS ITEM SHALL CONSIST OF PROVIDING AND PLACING NEW LABELS FOR EXISTING LIGHT POLES AND LIGHT TOWERS THAT WILL REMAIN. ALL EXISTING LPOLES AND LIGHT TOWERS ON CIRCUITS A, B, C, E, D, F, W, 1CR, 2CR, AND 3CR SHALL RECEIVE NEW LABELS. LABELS SHALL MATCH THE NEW IDENTIFICATION, SOME LIGHT POLES AND TOWERS MAY HAVE CHANGED NAMES. REFER TO THE PROPOSED CIRCUIT MAPS FOR THE NEW IDENTIFICATIONS. LABEL THE EXISTING POLES AND TOWERS IN ACCORDANCE WITH STANDARD DRAWINGS AND CMS 625.23, WITH THE EXCEPTION THAT PAYMENT WILL BE UNDER ITEM 625 - LIGHTING, MISC.: LABEL EXISTING LIGHT POLES AND LIGHT TOWERS. THE LUMP SUM PRICE SHALL INCLUDE PAYMENT FOR ALL EQUIPMENT, LABOR, AND MATERIALS NECESSARY TO COMPLETE THE WORK AS SPECIFIED.

NEW LIGHT POLES WILL BE LABELED AS PER CMS 625.23

CALCULATED | CHECKED

LIGHTING NOTES

CUY-90-0.00

I:\PROJECTS\Pidll738\dgn\finalplans\ll738LNA.DGN 21-JUL-2000 12:18PM jgrmovse

SHEET NUMBER							PARTICIPATION				ITEM	ITEM EXT.	GRAND TOTAL	UNIT	DESCRIPTION	SEE SHEET NO.
	391	392	394	395			1	2	3	4						
															LIGHTING	
			3					3			202	75300	3	EACH	PULL BOX REMOVED	
			48					47	1		202	75401	48	EACH	LIGHT POLE REMOVED, AS PER PLAN	391
			47					47			202	75501	47	EACH	LIGHT POLE FOUNDATION REMOVED, AS PER PLAN	391
			56					56			202	75506	56	EACH	LUMINAIRE REMOVED	
			1						1		202	75508	1	EACH	LUMINAIRE REMOVED FOR REUSE	
			6				6				202	75541	6	EACH	LIGHT TOWER FOUNDATION REMOVED, AS PER PLAN	392
			10					9	1		202	75800	10	EACH	DISCONNECT EXISTING CIRCUIT	
	580						220	360			603	00400	580	LIN FT	4" CONDUIT, TYPE E	
			1	2			1	2			625	00500	3	EACH	CONNECTOR KIT, TYPE II	
			1	2			1	2			625	00600	3	EACH	CONNECTOR KIT, TYPE III	
				22				22			625	01000	22	EACH	CONNECTOR KIT, TYPE VII A	
				4				4			625	01004	4	EACH	CONNECTOR KIT, TYPE VII B	
				2				2			625	01100	2	EACH	CONNECTOR KIT, TYPE VII C	
			2	68			25	41	4		625	01500	70	EACH	CABLE SPLICING KIT	
				1					1		625	02918	1	EACH	LIGHT POLE, DESIGN A12B30	
				4					4		625	10614	4	EACH	LIGHT POLE ANCHOR BOLTS ON STRUCTURE	
				11				11			625	13300	11	EACH	LIGHT TOWER, BBBBBB80	
				6			6				625	15101	6	EACH	LIGHT TOWER FOUNDATION, 36" X 20' DEEP, AS PER PLAN	392
				11				11			625	15700	11	EACH	LIGHT TOWER FOUNDATION, MISC.: MEDIAN MOUNTED 36"X20' DEEP	407
	1						1				625	20000	1	EACH	PORTABLE POWER UNIT	
				18128			1252	16270	606		625	23200	18128	LIN FT	NO. 4 AWG 5000 VOLT DISTRIBUTION CABLE	
				90					90		625	23400	90	LIN FT	NO. 10 AWG POLE AND BRACKET CABLE	
				10231			4460	5771			625	24100	10231	LIN FT	1-1/2" DUCT CABLE WITH TWO NO. 4 AWG 5000 VOLT CABLES	
				729			94	635			625	25500	729	LIN FT	CONDUIT, 3", 713.04	
				395			53	342			625	25900	395	LIN FT	CONDUIT, JACKED OR DRILLED, 3"	
				66				66			625	26260	66	EACH	LUMINAIRE, HIGH MAST, ASYMMETRIC 400W HIGH PRESSURE SODIUM, 713.21, 480V	
				10						10	625	27500	10	EACH	UNDERPASS LUMINAIRES	
				10518			4454	6064			625	29002	10518	LIN FT	TRENCH, 24" DEEP	
				1					1		625	29920	1	EACH	STRUCTURE JUNCTION BOX	
				29			11	18			625	30700	29	EACH	PULL BOX, 713.08, 18"	
				1				1			625	30706	1	EACH	PULL BOX, 713.08, 24"	
				26				26			625	31501	26	EACH	MEDIAN PULL BOX, AS PER PLAN	407
				34			12	22			625	32000	34	EACH	GROUND ROD	
				6			3	3			625	33001	6	EACH	STRUCTURE GROUNDING SYSTEM, AS PER PLAN	392
		LUMP								LUMP	625	37001	LUMP	LUMP	SERVICE TO UNDERPASS LIGHTING, AS PER PLAN	
	LUMP						LUMP	LUMP			SPECIAL	62540000	LUMP		MAINTAIN EXISTING LIGHTING	391
				6			6				625	98000	6	EACH	LIGHTING, MISC.: REMOVE AND REERECT EXISTING LIGHT TOWER	392
		LUMP								LUMP	625	98200	LUMP	LUMP	LIGHTING, MISC.: LABEL EXISTING LIGHT POLES AND LIGHT TOWERS	

PARTICIPATION 1 - MAJOR NEW, TE21-G0001 (105)
PARTICIPATION 2 - PAVEMENT, TE21-G0001 (106)
PARTICIPATION 3 - BRIDGE, TE21-G0001 (106)
PARTICIPATION 4 - 100% STATE

CALCULATED RAS
CHECKED NJG

LIGHTING GENERAL SUMMARY

CUY-90-0.00

I:\PROJECTS\Pidll738\dgn\final plans\ll738LGA.DGN 14-SEP-2000 8:39AM jgrmovse

STATION		202												625		
LOCATION	REFERENCE	PULL BOX REMOVED	LIGHT POLE REMOVED, AS PER PLAN	LIGHT POLE FOUNDATION REMOVED, AS PER PLAN	LUMINAIRE REMOVED	LIGHT TOWER FOUNDATION REMOVED, AS PER PLAN	DISCONNECT EXISTING CIRCUIT	STATION	REFERENCE	PULL BOX REMOVED	LIGHT POLE REMOVED, AS PER PLAN	LIGHT POLE FOUNDATION REMOVED, AS PER PLAN	LUMINAIRE REMOVED	LUMINAIRE REMOVED FOR REUSE	LIGHT TOWER FOUNDATION REMOVED, AS PER PLAN	DISCONNECT EXISTING CIRCUIT	CONNECTOR KIT, TYPE II	CONNECTOR KIT, TYPE III	CABLE SPLICE KIT
		EACH	EACH	EACH	EACH	EACH	EACH			EACH	EACH	EACH	EACH	EACH	EACH	EACH	EA.	EA.	EACH
INTERSTATE 90								INTERSTATE 90 (CONT.)											
27+20						1		218+03		2						2			
34+20						1		218+34	SPC-E-1		1	1	1						
41+00						1		219+56	SPC-F-1		1	1	1						
58+05						1		220+67	SPC-E-2		1	1	1						
65+00						1	1	221+88	SPC-F-2		1	1	1						
72+00						1		223+01	SPC-E-3		1	1	1						
177+85	SPC-A-13		1	1	1			224+20	SPC-F-3		1	1	1						
177+95	SPC-C-29		1	1	1														
180+00	SPC-A-14 & SPC-C-18		2	2	2			RAMP J											
181+95	SPC-A-15		1	1	1			86+25	SPC-C-27		1	1	1						
182+10	SPC-C-19		1	1	1														
183+90	SPC-A-16		1	1	1			CANTERBURY ROAD											
184+20	SPC-C-20		1	1	1			24+70	W-1		1			1		1			
185+80	SPC-A-21		1	1	1														
186+40	SPC-C-21		1	1	1			RAMP J											
187+30	SPC-A-22		1	1	1			78+12	CIRCUIT A							1	1	1	
187+90	SPC-C-28		1	1	1														
189+72	SPC-B-11		1	1	2			RAMP K											
189+90	SPC-D-13		1	1	2			84+00	CIRCUIT A							1			
191+80	SPC-D-12		1	1	2														
192+22	SPC-B-10		1	1	2			RAMP F											
193+70	SPC-D-11		1	1	2			77+95	CIRCUIT C							1			2
194+72	SPC-B-9		1	1	2														
195+90	SPC-D-10		1	1	2			RAMP G											
196+50		1						84+70	CIRCUIT C							1			
196+60	SPC-B-12		1	1	1														
198+10	SPC-D-8		1	1	2			RAMP I											
198+30	SPC-B-13		1	1	1			94+72	CIRCUIT B							1			
200+10	SPC-B-14		1	1	1														
200+30	SPC-D-9		1	1	2			RAMP H											
201+90	SPC-E-9		1	1	1			78+12	CIRCUIT D							1			
202+00	SPC-B-15		1	1	1														
203+45	SPC-E-17		1	1	1														
203+95	SPC-B-16		1	1	1														
205+00	SPC-E-16		1	1	1														
206+00	SPC-F-13		1	1	1														
206+90	SPC-E-15		1	1	1														
208+10	SPC-F-12		1	1	1														
209+00	SPC-E-14		1	1	1														
210+30	SPC-F-11		1	1	1														
211+35	SPC-E-13		1	1	1														
212+60	SPC-F-10		1	1	1														
213+68	SPC-E-12		1	1	1														
214+92	SPC-F-9		1	1	1														
216+01	SPC-E-11		1	1	1														
217+24	SPC-F-8		1	1	1														
SUBTOTAL		1	40	40	49	6	1	SUBTOTAL		2	8	7	7	1		9	1	1	2
								SUBTOTAL FROM PREVIOUS COLUMN		1	40	40	49		6	1			
								TOTALS CARRIED TO LIGHTING GENERAL SUMMARY		3	48	47	56	1	6	10	1	1	2

CALCULATED NJG
CHECKED ENF

LIGHTING SUBSUMMARY

CUY-90-0.00

23 MAR 2000
P:\pr-22308\caddd\l738lsa.dgn

REF.	SIDE	STATION FROM	STATION TO	625 CONNECTOR KIT, TYPE II	CONNECTOR KIT, TYPE III	CONNECTOR KIT, TYPE VIIA	CONNECTOR KIT, TYPE VIIB	CONNECTOR KIT, TYPE VIIC	CABLE SPLICING KIT	LIGHT POLE, DESIGN A12B30	LIGHT POLE ANCHOR BOLTS ON STRUCTURE	LIGHT TOWER BBBBBB80	LIGHT TOWER FOUNDATION 36" x 20' DEEP, AS PER PLAN	LIGHT TOWER FOUNDATION, MISC.: MEDIAN MOUNTED, 36" x 20' DEEP	NO. 4 AWG 5000 VOLT DISTRIBUTION CABLE	NO. 10 AWG POLE AND BRACKET CABLE	1-1/2" DUCT CABLE WITH TWO NO. 4 AWG 5000 VOLT CABLES	CONDUIT, 3", 713.04	CONDUIT, JACKED OR DRILLED UNDER PAVEMENT, 3"	LUMINAIRE, HIGH MAST ASYMMETRIC 400W HIGH PRESSURE SODIUM, 713.21, 480V	TRENCH, 24" DEEP	STRUCTURE JUNCTION BOX	LUMINAIRE, UNDERPASS	PULL BOX, 713.08, 18"	PULL BOX, 713.08, 24"	MEDIAN PULL BOX, AS PER PLAN	GROUND ROD	STRUCTURE GROUNDING SYSTEM, AS PER PLAN	LIGHTING, MISC.: REMOVE & RE-ERECT EXISTING LIGHT TOWER
				EA.	EA.	EA.	EA.	EA.	EA.	EA.	EACH	EACH	EACH	EACH	LIN FT	LIN FT	LIN FT	LIN FT	LIN FT	EACH	LIN FT	EACH	EACH	EACH	EACH	EACH	EACH	EACH	EACH
		INTERSTATE 90																											
398	RT	10+10							2						171.0			23.0	52.5		23.0			1					
	MED	10+10	23+45						8								1365				1335			4					
	MED	23+45	25+50.5												450.0														
		CUY-90-0045L																										1	
		CUY-90-0045R																										1	
	MED	25+50.5	27+20						2								196.0				186.0			1					
	MED	27+20											1														2		1
	MED	27+20	34+20														726.0				716.0								
398/399	MED	34+20	41+00						2				1				700.0				680.0			1			2		1
399	RT	41+00							4				1		171.0		26.0	24.0			40.0			2			2		1
		CUY-90-0095																										1	
	LT/RT	58+05							2				1		260.0			26.0			26.0			1			2		1
	MED	58+05	65+00										1				721.0				711.0						2		1
	LT	65+00							2						200.0			21.0			21.0								
400	MED	65+00	72+00						2								726.0				716.0			1					
	MED	72+00											1														2		1
	MED	72+00	89+90						2								1800.0				1790.0			1					
	LT	89+90							2						207.0			42.0	51.5		42.0			1					
	MED	89+90	97+50			2			2						270.0		645.0	125.0			635.0			1		1			
400/401	MED	97+50	119+90			8	2								4580.0											5			
401	LT	119+90							2						152.0			23.5	42.5		23.5			1					
	MED	119+90	122+95			2									630.0											1			
	RT	122+95							2						152.0			23.5	42.5		23.5			1					
	MED	131+29																								1			
		CUY-90-0249L																										1	
		CUY-90-0249R																										1	
	MED	133+45																								1			
	RT	151+10	169+00	1	1				8								1830.0				1790.0			4					
		CUY-90-0303																										1	
402	MED	177+40	181+90									1		1	920.0					6						1	2		
	MED	181+90	186+40									1		1	920.0					6						1	2		
	MED	186+40	190+90			4	2					1		1	1000.0			120.0		6	120.0					4	2		
	MED	190+50	51+72(COLUMBIA)						4						228.0		114.0	15.0	89.0		119.0			2					
	MED	190+90										1		1						6						1	2		
	RT	192+19.20				2			4						360.0			160.2	116.2		44.0			2		1			
	MED	192+19.20	195+40												661.6														
	MED	195+40	199+90									1		1	920.0					6						1	2		
402/403	MED	199+90	204+40									1		1	920.0					6						1	2		
403	MED	204+40										1		1						6						1	2		
	MED	205+00	208+90			2									800.0											1			
	MED	208+90	213+40									1		1	920.0					6						1	2		
	MED	213+40	217+90									1		1	920.0					6						1	2		
	MED	217+90	222+40			2		2				1		1	940.0					6						2	2		
	MED	218+03							2						194.0			51.0			51.0			1					
	MED	218+03							4						376.0			48.0			48.0				1				
	MED	218+03	223+75						2								582.0				572.0			1					
	MED	218+03	225+22.5						2								730.0				720.0			1					
	MED	222+40										1		1						6						1	2		
	MED	225+25.5													199.0			26.0			26.0								
		CANTERBURY ROAD																											
401	MED	23+34±	26+17±	1	1				4	1	4				606.0	90.0						1							
		A31-A35/D14-D18																					5/5						
		RAMP H																											
402	LT	96+55	97+25						4								70.0				60.0			2					
SUBTOTAL				2	2	22	4	2	68	1	4	11	6	11	18127.6	90.0	10231.0	728.2	394.2	66	10518.0	1	10	29	1	26	34	6	6
TOTALS CARRIED TO LIGHTING GENERAL SUMMARY				2	2	22	4	2	68	1	4	11	6	11	18128.0	90.0	10231.0	729.0	395.0	66	10518.0	1	10	29	1	26	34	6	6

CALCULATED NJG
CHECKED ENF

LIGHTING SUBSUMMARY

CUY-90-0.00

i:\PROJECTS\Pidl1738\dgn\finalplans\il738LSB.dgn 21-JUL-2000 12:20PM jgrmovse

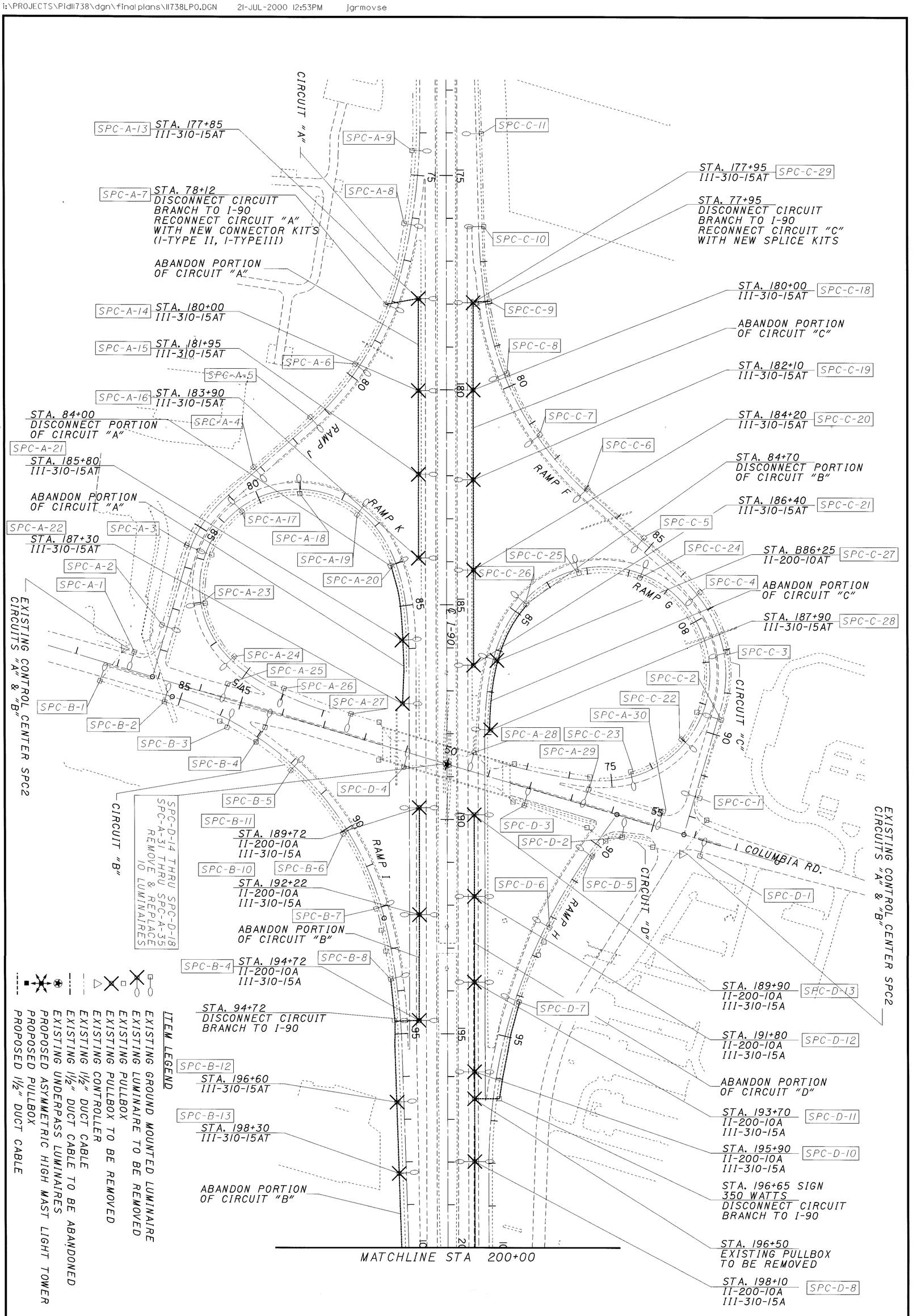

396
582

CUY-90-0.00

LIGHTING REMOVAL PLAN

0 50 100 200
HORIZONTAL SCALE IN FEET

N

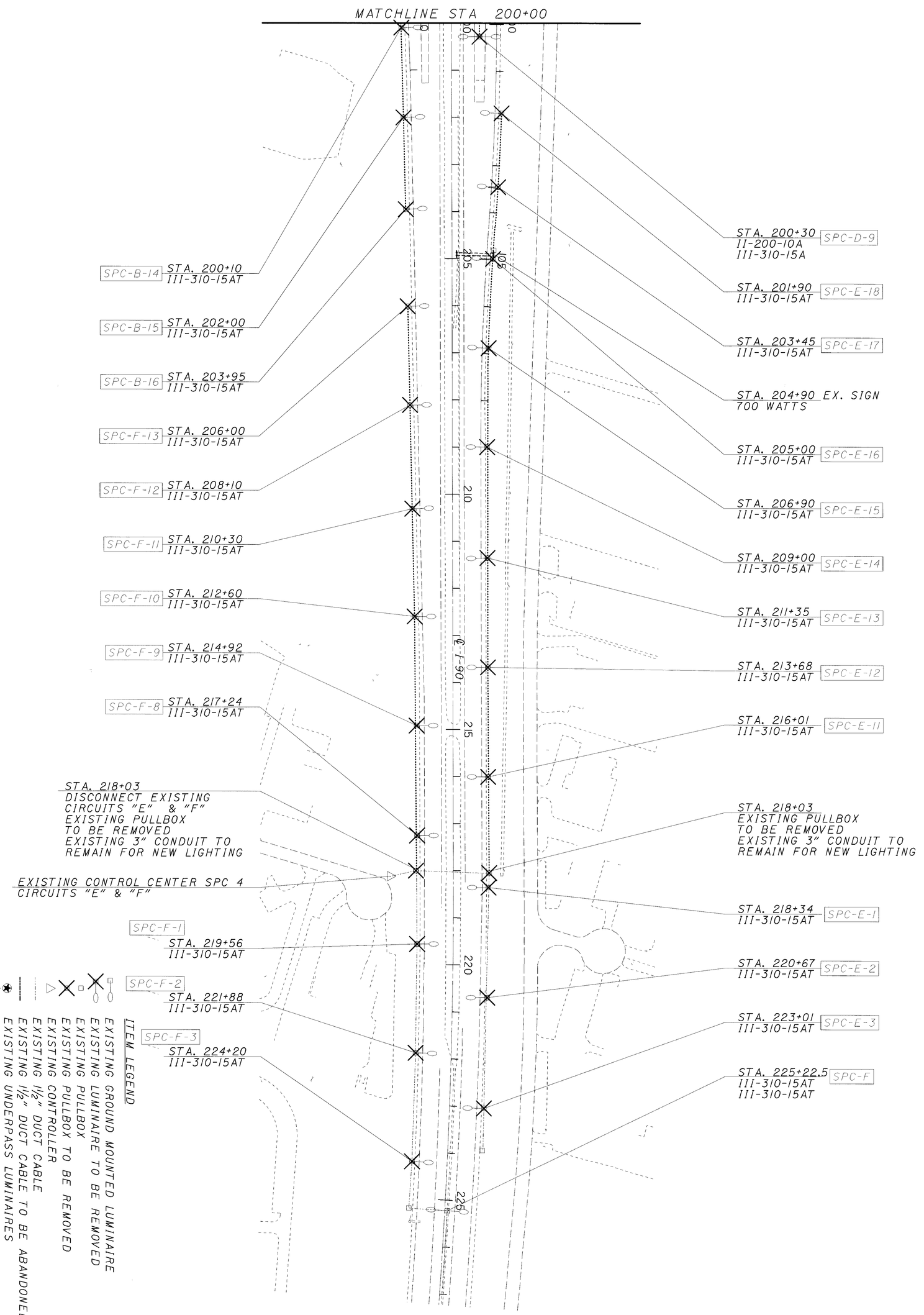
MATCHLINE STA 200+00
SPC-B-14 STA. 200+10 III-310-15AT
SPC-B-15 STA. 202+00 III-310-15AT
SPC-B-16 STA. 203+95 III-310-15AT
SPC-F-13 STA. 206+00 III-310-15AT
SPC-F-12 STA. 208+10 III-310-15AT
SPC-F-11 STA. 210+30 III-310-15AT
SPC-F-10 STA. 212+60 III-310-15AT
SPC-F-9 STA. 214+92 III-310-15AT
SPC-F-8 STA. 217+24 III-310-15AT
STA. 218+03 DISCONNECT EXISTING CIRCUITS "E" & "F" EXISTING PULLBOX TO BE REMOVED EXISTING 3" CONDUIT TO REMAIN FOR NEW LIGHTING
EXISTING CONTROL CENTER SPC 4 CIRCUITS "E" & "F"
SPC-F-1 STA. 219+56 III-310-15AT
SPC-F-2 STA. 221+88 III-310-15AT
SPC-F-3 STA. 224+20 III-310-15AT
STA. 200+30 II-200-10A III-310-15A SPC-D-9
STA. 201+90 III-310-15AT SPC-E-18
STA. 203+45 III-310-15AT SPC-E-17
STA. 204+90 EX. SIGN 700 WATTS
STA. 205+00 III-310-15AT SPC-E-16
STA. 206+90 III-310-15AT SPC-E-15
STA. 209+00 III-310-15AT SPC-E-14
STA. 211+35 III-310-15AT SPC-E-13
STA. 213+68 III-310-15AT SPC-E-12
STA. 216+01 III-310-15AT SPC-E-11
STA. 218+03 EXISTING PULLBOX TO BE REMOVED EXISTING 3" CONDUIT TO REMAIN FOR NEW LIGHTING
STA. 218+34 III-310-15AT SPC-E-1
STA. 220+67 III-310-15AT SPC-E-2
STA. 223+01 III-310-15AT SPC-E-3
STA. 225+22.5 III-310-15AT III-310-15AT SPC-F
ITEM LEGEND
EXISTING GROUND MOUNTED LUMINAIRE
EXISTING LUMINAIRE TO BE REMOVED
EXISTING PULLBOX
EXISTING PULLBOX TO BE REMOVED
EXISTING CONTROLLER
EXISTING 1½" DUCT CABLE
EXISTING 1½" DUCT CABLE TO BE ABANDONED
EXISTING UNDERPASS LUMINAIRES
PROPOSED ASYMMETRIC HIGH MAST LIGHT TOWER
PROPOSED PULLBOX
PROPOSED 1½" DUCT CABLE

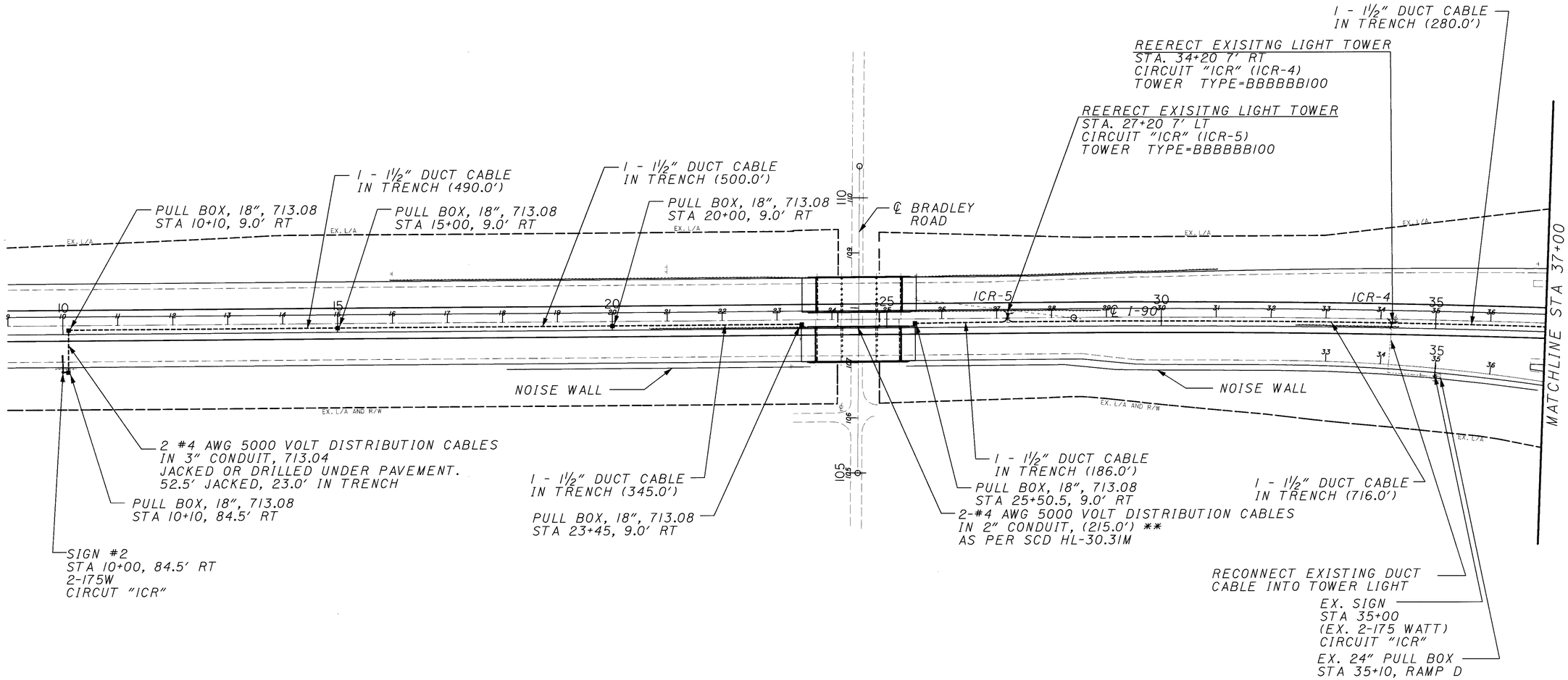

NOTES:

** CONDUIT PAID FOR IN ITEM STRUCTURE CONCRETE

(xxx) ALL DISTANCES SHOWN ARE CENTER TO CENTER

ITEM LEGEND

- EXISTING GROUND MOUNTED LUMINAIRE
- EXISTING LUMINAIRE TO BE REMOVED
- EXISTING PULLBOX
- EXISTING CONTROLLER
- EXISTING 1½" DUCT CABLE
- EXISTING 1½" DUCT CABLE TO BE ABANDONED
- EXISTING UNDERPASS LUMINAIRES
- PROPOSED ASYMMETRIC HIGH MAST LIGHT TOWER, TYPE V, 6-400W HPS, 713.21, 480V
- PROPOSED PULLBOX
- PROPOSED 1½" DUCT CABLE
- REERECTED HIGH MAST TOWER

HORIZONTAL SCALE IN FEET
0 50 100 200

CALCULATED | CHECKED

LIGHTING PLAN

CUY-90-0.00

398
592

23 MAR 2000
P:\pr-22309\cadd\l738lpa.dgn

℄ CROCKER ROAD

EX. PULLBOX
STA 65+00
DISCONNECT AND RECONNECT
EXISTING CIRCUIT

2-#4 5000 VOLT DISTRIBUTION CABLES (90.0')
IN EXISTING 3" JACKED CONDUIT (69.0')
IN NEW 3" CONDUIT, 713.04 (21.0')
EXTEND TO LIGHT TOWER
STA 65+00, 7.0' RT.

EXISTING OVERHEAD SIGN
(EX. 2-175 WATT)
CIRCUIT "3CR"

EX. 24" PULL BOX
STA 63+30

1 - 1½" DUCT CABLE
IN TRENCH (50.0')

PULL BOX, 18", 713.08
STA. 37+50, 9' RT

1 - 1½" DUCT CABLE
IN TRENCH (350.0')

EX. SIGN
STA. 139+25
(EX. 2-100 WATT)
CIRCUIT "2CR"

REERECT EXISITNG LIGHT TOWER
STA. 41+00 7' LT.
CIRCUIT "ICR" (ICR-3)
TOWER TYPE=BBBBBBI00

2CR-2
1 - 1½" DUCT CABLE (711')
IN TRENCH

2CR-3

REERECT EXISITNG LIGHT TOWER
STA. 58+05 7' RT.
CIRCUIT "3CR" (3CR-1)
TOWER TYPE=BBBBBBI00

1 - 1½" DUCT CABLE
IN TRENCH (16.0')

RAMP A
RAMP B
RAMP C
RAMP D
RAMP E

℄ I-90

ICR-3
3CR-1
3CR-2
ICR-2
ICR-1
2CR-1

2 #4 AWG

PULL BOX, 18", 713.08
STA. 41+00 9' RT

EX. SIGN
STA. 132+20
(EX. 1-100 WATT)
CIRCUIT "2CR"

EXTEND EXISTING
3" CONDUIT, 713.04
TO PULL BOX (24')
STA. 41+00, 9' RT

2 - #4 AWG 5000 VOLT
DISTRIBUTION CABLES (123.5')

REERECT EXISITNG LIGHT TOWER
STA. 65+00 7' LT.
CIRCUIT "3CR" (3CR-2)
TOWER TYPE=BBBBBBI00

EXTEND EXISTING
3" CONDUIT, 713.04
TO LIGHT TOWER (26')

PULL BOX, 18", 713.08
STA 58+05 130.5' RT

NOISE WALL

NOISE WALL

PULL BOX, 18", 713.08
STA. 41+00 84.5' RT
DISCONNECT AND
RECONNECT EXISTING CIRCUIT

CIRCUIT TO BE RELOCATED.
(SEE PART II PLANS)

EXISTING DUCT CABLE

EXISTING PULLBOX

EX. SIGN
STA. 127+70
(EX. 1-100 WATT)
CIRCUIT "2CR"

EXISTING DUCT CABLE

EXISTING POWER SERVICE "CR"

EXISTING PULLBOX

MATCHLINE STA 37+00

MATCHLINE STA 65+00

EX. L/A

EX. CULVERT

50 140 50

40 45 50 55 60

35

45 55 60

45 50

40 130 40

ITEM LEGEND

- EXISTING GROUND MOUNTED LUMINAIRE
- EXISTING LUMINAIRE TO BE REMOVED
- EXISTING PULLBOX
- EXISTING CONTROLLER
- EXISTING 1½" DUCT CABLE
- EXISTING 1½" DUCT CABLE TO BE ABANDONED
- EXISTING UNDERPASS LUMINAIRES
- PROPOSED ASYMMETRIC HIGH MAST LIGHT TOWER, TYPE V, 6-400W HPS, 713.21, 480 V
- PROPOSED PULLBOX
- PROPOSED 1½" DUCT CABLE
- REERECTED HIGH MAST TOWER
- EXISTING TOWER

NOTE:

(xxx) ALL DISTANCES SHOWN ARE CENTER TO CENTER

N

HORIZONTAL SCALE IN FEET
0 50 100 200

CALCULATED | CHECKED

LIGHTING PLAN

CUY-90-0.00

399
582

23 MAR 2000
R:\pr22308\cadd\II738lpb.dgn

REERECT EXISTING LIGHT TOWER
STA. 72+00 7' RT
CIRCUIT "3CR" (3CR-3)
TOWER TYPE=BBBBBB100

PULL BOX, 18", 713.08
STA 89+90, 84.5' LT

SIGN #29
STA 90+00, 84.5' LT
2-175W
CIRCUIT "3CR"

2 #4 AWG (93.5')
IN 3" CONDUIT, 713.04,
JACKED OR DRILLED UNDER PAVEMENT,
51.5' JACKED,
42' IN TRENCH.

1 - 1½" DUCT CABLE
IN TRENCH (716')

1- 1½" DUCT CABLE
IN TRENCH (1790.0')

PULL BOX, 18", 713.08
STA 89+90, 9.0' RT

MATCHLINE STA 65+00

MATCHLINE STA 92+00

1- 1½" DUCT CABLE
IN TRENCH (210.0')

3CR-3

℄ I-90

EX. L/A

1 - 1½" DUCT CABLE
IN TRENCH (425.0')

2 - #4 AWG 5000 VOLT DISTRIBUTION CABLES
IN 3" CONDUIT, 713.04
IN TRENCH (125.0')

PULL BOX, 18", 713.08
STA 96+25, 9.0' RT

MEDIAN PULL BOX, AS PER PLAN
STA 102+00, ℄ I-90

MEDIAN PULL BOX, AS PER PLAN
STA 97+50, ℄ I-90

2-#4 AWG 5000 VOLT DISTRIBUTION CABLES
IN BARRIER (450.0')

2-#4 AWG 5000 VOLT DISTRIBUTION CABLES
IN BARRIER (500.0')

℄ CAHOON
ROAD

2-#4 AWG 5000 VOLT DISTRIBUTION CABLES
IN BARRIER (400.0')

MEDIAN PULL BOX, AS PER PLAN
STA 111+00, ℄ I-90

2-#4 AWG 5000 VOLT DISTRIBUTION CABLES
IN BARRIER (400.0')

2-#4 AWG 5000 VOLT DISTRIBUTION CABLES
IN BARRIER (400.0')

MEDIAN PULL BOX, AS PER PLAN
STA 115+00, ℄ I-90

MATCHLINE STA 119+00

MEDIAN PULL BOX, AS PER PLAN
STA 107+00, ℄ I-90

ITEM LEGEND

- EXISTING GROUND MOUNTED LUMINAIRE
- EXISTING LUMINAIRE TO BE REMOVED
- EXISTING PULLBOX
- EXISTING CONTROLLER
- EXISTING 1½" DUCT CABLE
- EXISTING 1½" DUCT CABLE TO BE ABANDONED
- EXISTING UNDERPASS LUMINAIRES
- PROPOSED ASYMMETRIC HIGH MAST LIGHT TOWER, TYPE V, 6-400W HPS, 713.21, 480V
- PROPOSED PULLBOX
- PROPOSED 1½" DUCT CABLE
- REERECTED HIGH MAST TOWER

NOTE:

(xxx) ALL DISTANCES SHOWN ARE CENTER TO CENTER

HORIZONTAL SCALE IN FEET
0 50 100 200

CALCULATED

CHECKED

LIGHTING PLAN

CUY-90-0.00

400
582

23 MAR 2000
R:\pr22308\cadd\li738lpc.dgn

2-#4 AWG 5000 VOLT DISTRIBUTION CABLES IN BARRIER (90.0')

PULL BOX, 18", 713.08 STA 119+90, 66.0' LT

MEDIAN PULL BOX, AS PER PLAN STA 131+29, ℄ I-90 (FOR FUTURE USE)

℄ DOVER CENTER ROAD

SIGN #28 STA 120+00, 67.5' LT 2 - 175W CIRCUIT "3CR"

2 #4 AWG (66.0') IN 3" CONDUIT, 713.04 JACKED OR DRILLED UNDER PAVEMENT. 42.5' JACKED, 23.5' IN TRENCH

MEDIAN PULL BOX, AS PER PLAN STA 133+45, ℄ I-90 (FOR FUTURE USE)

MEDIAN PULL BOX, AS PER PLAN STA 119+90, ℄ I-90

MATCHLINE STA 119+00

120 125 ℄ I-90 130 135 140 145

MATCHLINE STA 146+00

EX. L/A

MEDIAN PULL BOX, AS PER PLAN STA 122+95, ℄ I-90

2 #4 AWG (66.0') IN 3" CONDUIT, 713.04 JACKED OR DRILLED UNDER PAVEMENT. 42.5' JACKED, 23.5' IN TRENCH

SIGN #7 STA 123+05, 67.5' RT 3 - 175W CIRCUIT "3CR"

210

205

PULL BOX, 18", 713.08 STA 122+95, 66.0' RT

2-#4 AWG 5000 VOLT DISTRIBUTION CABLES IN BARRIER (305.0')

℄ CANTERBURY ROAD

2-#4 AWG 5000 VOLT DISTRIBUTION CABLES IN PARAPET (147.0')

1 - 1½" DUCT CABLE IN TRENCH (635.0')

MATCHLINE STA 146+00

150 155 ℄ I-90 160 165 170

MATCHLINE STA 174+00

PULL BOX, 18", 713.08 STA 156+00, 66.0' RT

1 - 1½" DUCT CABLE IN TRENCH (490.0')

1 - 1½" DUCT CABLE IN TRENCH (600.0')

PULL BOX, 18", 713.08 STA 162+00, 66.0' RT

SIGN #11 STA 168+25, 67.5' RT 2-175W CIRCUIT "A"

PULL BOX, 18", 713.08 STA 168+35, 66.0' RT

TIE INTO EXISTING CIRCUIT STA 169+00

1 - 1½" DUCT CABLE IN TRENCH (65.0')

SIGN #10 STA 151+00, 67.5' RT 2-175W CIRCUIT "A"

PULL BOX, 18", 713.08 STA 151+10, 66.0' RT

BRIDGE MOUNTED LIGHT POLE W/ ANCHOR BASE STA 24+70, 19.66' LT. REUSE 200 W HPS 12' BRACKET ARM CIRCUIT "W"

2-#4 AWG 5000 VOLT DISTRIBUTION CABLES IN PARAPET (136.0')

NOTE:

(xxx) ALL DISTANCES SHOWN ARE CENTER TO CENTER

ITEM LEGEND

- EXISTING GROUND MOUNTED LUMINAIRE
- EXISTING LUMINAIRE TO BE REMOVED
- EXISTING PULLBOX
- EXISTING CONTROLLER
- EXISTING 1½" DUCT CABLE
- EXISTING 1½" DUCT CABLE TO BE ABANDONED
- EXISTING UNDERPASS LUMINAIRES
- PROPOSED ASYMMETRIC HIGH MAST LIGHT TOWER, TYPE V, 6-400W HPS, 713.21, 480V
- PROPOSED PULLBOX
- PROPOSED 1½" DUCT CABLE
- REERECTED HIGH MAST TOWER

N

HORIZONTAL SCALE IN FEET 0 50 100 200

CALCULATED

CHECKED

LIGHTING PLAN

CUY-90-0.00

401
582

23 MAR 2000
p:\pr22308\cadd\li738lpe.dgn

SEE SHEET 396 FOR REMOVAL PLAN

MEDIAN PULL BOX, AS PER PLAN
STA 189+20, ℄ I-90

2 #4 AWG 5000 VOLT DISTRIBUTION CABLES
IN 3" CONDUIT (120.0'), 713.04
TRENCH OFFSET TO BE
5.0' LEFT OF I-90 CENTERLINE.

MEDIAN PULL BOX, AS PER PLAN
STA 188+10, ℄ I-90

2 - #4 AWG 5000 VOLT DISTRIBUTION CABLES
IN BARRIER (170.0')

STA. 186+40, ℄ I-90
CIRCUIT "D" (D21)
TOWER TYPE = BBBBBB80
WITH MEDIAN PULL BOX,
AS PER PLAN

2 - #4 AWG 5000 VOLT DISTRIBUTION CABLES
IN BARRIER (450.0')

STA. 181+90, ℄ I-90
CIRCUIT "D" (D20)
TOWER TYPE = BBBBBB80
WITH MEDIAN PULL BOX,
AS PER PLAN

2 - #4 AWG 5000 VOLT DISTRIBUTION CABLES
IN BARRIER (450.0')

STA. 177+40, ℄ I-90
CIRCUIT "D" (D19)
TOWER TYPE = BBBBBB80
WITH MEDIAN PULL BOX,
AS PER PLAN

PULL BOX, 18", 713.08
STA 92+24, 25.7' LT

1 - 1½" DUCT CABLE
IN TRENCH (104.0')

PULL BOX, 18", 713.08
STA 51+72, 41.0' RT
(COLUMBIA ROAD)

2 - #4 AWG 5000 VOLT,
DISTRIBUTION CABLES
IN BARRIER (170.0')

EX. SIGN #8

2 #4 AWG 5000 VOLT DISTRIBUTION CABLES
IN 3" CONDUIT (104.0'), 713.04
JACKED OR DRILLED UNDER PAVEMENT.
89' JACKED, 15' IN TRENCH

MEDIAN PULL BOX, AS PER PLAN
STA 190+50, ℄ I-90

STA. 190+90, ℄ I-90
CIRCUIT "D" (D22)
TOWER TYPE = BBBBBB80
WITH MEDIAN PULL BOX,
AS PER PLAN

MEDIAN PULL BOX, AS PER PLAN
STA 192+19.20, ℄ I-90

2 #4 AWG 5000 VOLT DISTRIBUTION CABLES
IN 3" CONDUIT (123.0'), 713.04
JACKED OR DRILLED UNDER PAVEMENT.
79' JACKED, 44' IN TRENCH

PULL BOX, 18", 713.08
STA 92+24, 25.7' LT

PULL BOX, 18", 713.08
STA 96+55, 13.0' LT

1 - 1½" DUCT CABLE
IN TRENCH (60.0')

PULL BOX, 18", 713.08
STA 97+25, 13.0' LT

SIGN #24
STA 97+35, 13.0' LT
2 - 175W
CIRCUIT "D"

MATCHLINE STA 174+00

MATCHLINE STA 200+00

RAMP G

RAMP H

RAMP I

RAMP J

COLUMBIA ROAD

D19 D20 D21 D22 B17 B18

1½" DUCT CABLE
IN TRENCH (41.2')

EX. SIGN #26

2 - #4 AWG 5000V
DISTRIBUTION CABLES
IN BARRIER (321.0')
PULL BOX, 18", 713.08
STA 92+24, 11.50' RT

STA. 195+40, ℄ I-90
CIRCUIT "B" (B17)
TOWER TYPE = BBBBBB80
WITH MEDIAN PULL BOX,
AS PER PLAN

2 - #4 AWG 5000 VOLT
DISTRIBUTION CABLES
IN 3" CONDUIT (37.0'), 713.04
JACKED OR DRILLED UNDER
PAVEMENT

EX. SIGN #6
1 - 100W

2 - #4 AWG 5000 VOLT,
DISTRIBUTION CABLES
IN BARRIER (450.0')

STA. 199+90, ℄ I-90
CIRCUIT "B" (B18)
TOWER TYPE = BBBBBB80
WITH MEDIAN PULL BOX,
AS PER PLAN

2 - #4 AWG 5000 VOLT,
DISTRIBUTION CABLES
IN BARRIER (10.0')

EX. SIGN #5
1- 100W

ITEM LEGEND

- EXISTING GROUND MOUNTED LUMINAIRE
- EXISTING LUMINAIRE TO BE REMOVED
- EXISTING PULLBOX
- EXISTING CONTROLLER
- EXISTING 1½" DUCT CABLE
- EXISTING 1½" DUCT CABLE TO BE ABANDONED
- EXISTING UNDERPASS LUMINAIRES
- PROPOSED ASYMMETRIC HIGH MAST LIGHT TOWER, TYPE V, 6-400W HPS, 713.21, 480V
- PROPOSED PULLBOX
- PROPOSED 1½" DUCT CABLE
- REERECTED HIGH MAST TOWER

NOTE:

(xxx) ALL DISTANCES SHOWN ARE CENTER TO CENTER

HORIZONTAL SCALE IN FEET
0 50 100 200

LIGHTING PLAN

CUY-90-0.00

402
582

$DATE$
D:\pr-22308\cadd\lf738lpg.dgn

SEE SHEET ___ FOR REMOVAL PLAN

STA. 217+90, ℄ I-90
CIRCUIT "E" (E-3)
TOWER TYPE = BBBBBB80
WITH MEDIAN PULL BOX,
AS PER PLAN

2 - #4 AWG 5000 VOLT DISTRIBUTION CABLES
IN BARRIER (450.0')

STA. 213+40, ℄ I-90
CIRCUIT "E" (E-2)
TOWER TYPE = BBBBBB80
WITH MEDIAN PULL BOX,
AS PER PLAN

2 - #4 AWG 5000 VOLT DISTRIBUTION CABLES
IN BARRIER (450.0')

STA. 208+90, ℄ I-90
CIRCUIT "E" (E-1)
TOWER TYPE = BBBBBB80
WITH MEDIAN PULL BOX,
AS PER PLAN

2 - #4 AWG 5000 VOLT DISTRIBUTION CABLES
IN BARRIER (390.0')

SIGN #22
STA 204+90, ℄ I-90
6 - 175W
CIRCUIT "E"

STA. 204+40, ℄ I-90
CIRCUIT "B" (B19)
TOWER TYPE = BBBBBB80
WITH MEDIAN PULL BOX,
AS PER PLAN

2 - #4 AWG 5000 VOLT,
DISTRIBUTION CABLES
IN BARRIER (440.0')

MEDIAN PULL BOX,
AS PER PLAN
STA 218+03, ℄ I-90

2 - #4 AWG 5000 VOLT
DISTRIBUTION CABLES (87.0')
IN EXISTING 3" CONDUIT (36.0')
ADD 51.0' - 3" CONDUIT, 713.04,
IN TRENCH

PULL BOX, 18", 713.08
STA 218+03, 87.0' LT

2 - #4 AWG 5000 VOLT,
DISTRIBUTION CABLES
IN BARRIER (450.0')

STA. 222+40, 8.22' LT
CIRCUIT "E" (E-4)
TOWER TYPE = BBBBBB80
WITH MEDIAN PULL BOX,
AS PER PLAN

1 - 1½" DUCT CABLE
IN TRENCH (572.0')

PULL BOX, 18", 713.08
STA 223+75, 87.0' LT

SIGN #20
STA 223+90, 89.0' LT
5 - 175W
CIRCUIT "F"

RECONNECT EXISTING
CIRCUIT
STA. 225+22.5

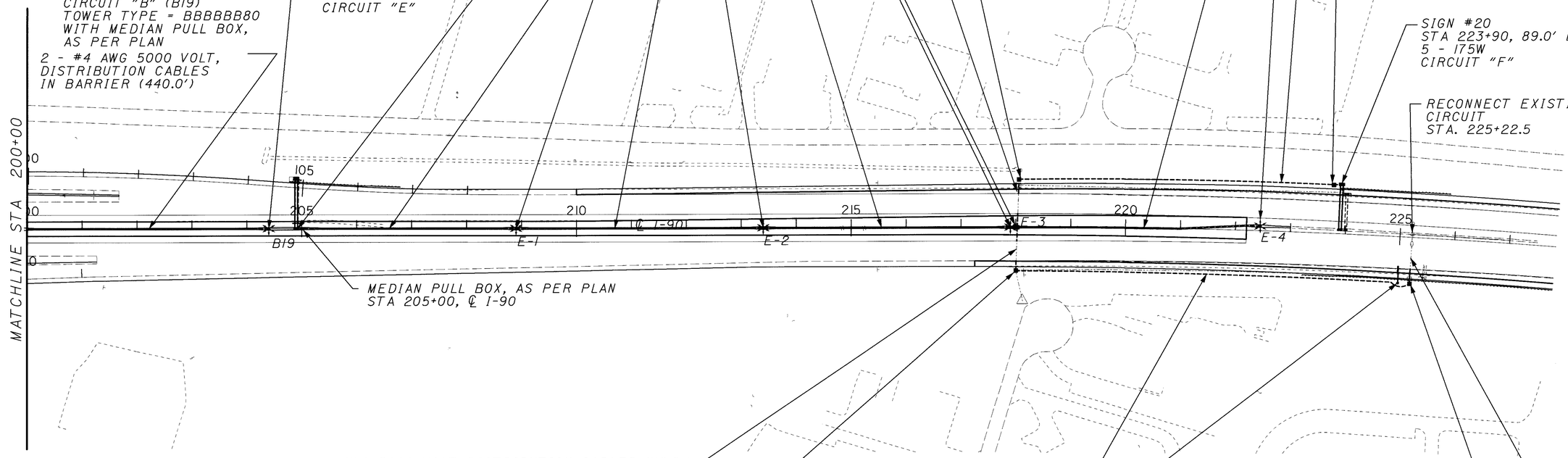

MEDIAN PULL BOX, AS PER PLAN
STA 205+00, ℄ I-90

4 - #4 AWG 5000 VOLT DISTRIBUTION CABLES (78.0')
IN EXISTING 3" CONDUIT (36.0')
ADD 42.0' - 3" CONDUIT, 713.04, IN TRENCH

PULL BOX, 24", 713.08
STA 218+03, 84.0' RT

1 - 1½" DUCT CABLE
IN TRENCH (720.0')

SIGN #13
STA 225+00, 84.0' RT
3 - 175W
CIRCUIT "F"

PULL BOX, 18", 713.08
STA 225+22.5, 89.5' RT

2 - #4 AWG 5000 VOLT DISTRIBUTION CABLES (89.5')
IN EXISTING 3" CONDUIT (63.5')
ADD 26.0' - 3" CONDUIT, 713.04, IN TRENCH

ITEM LEGEND

- EXISTING GROUND MOUNTED LUMINAIRE
- EXISTING LUMINAIRE TO BE REMOVED
- EXISTING PULLBOX
- EXISTING CONTROLLER
- EXISTING 1½" DUCT CABLE
- EXISTING 1½" DUCT CABLE TO BE ABANDONED
- EXISTING UNDERPASS LUMINAIRES
- PROPOSED ASYMMETRIC HIGH MAST LIGHT TOWER, TYPE V, 6-400W HPS, 713.21, 480V
- PROPOSED PULLBOX
- PROPOSED 1½" DUCT CABLE
- REERECTED HIGH MAST TOWER

NOTE:
(xxx) ALL DISTANCES SHOWN ARE CENTER TO CENTER

HORIZONTAL SCALE IN FEET
0 50 100 200

LIGHTING PLAN

CUY-90-0.00

403
582

$DATE$
p:\pr22308\cadd\li738ph.dgn

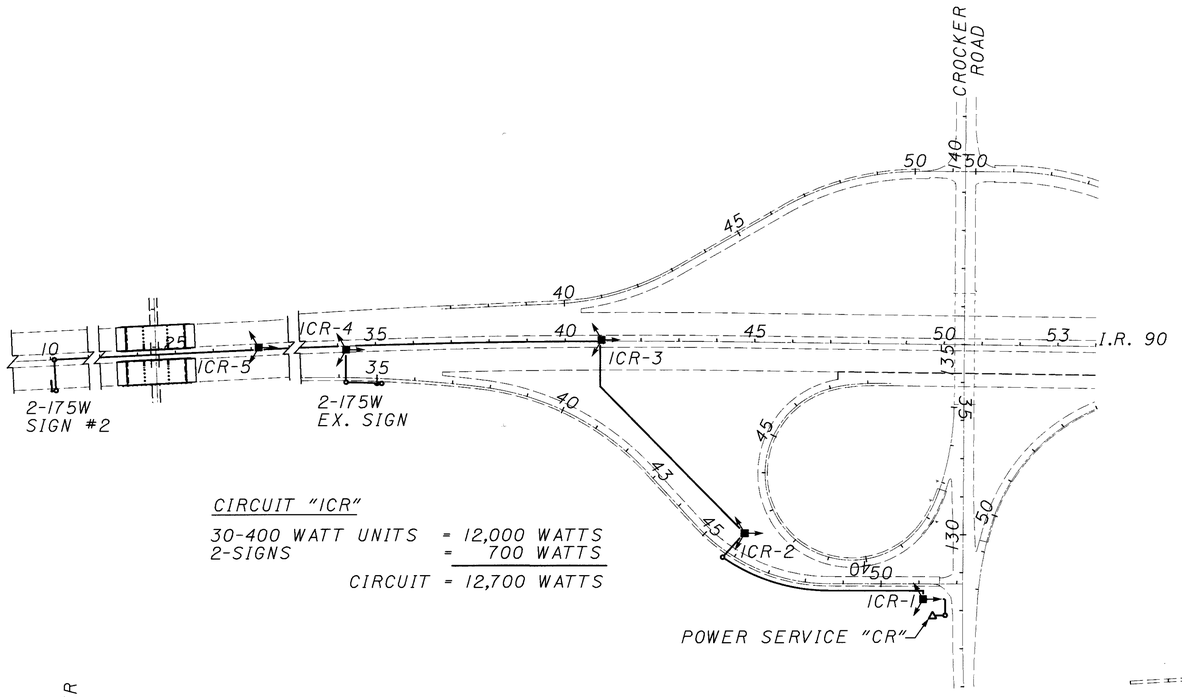

CIRCUIT "ICR"

30-400 WATT UNITS = 12,000 WATTS
2-SIGNS = 700 WATTS
CIRCUIT = 12,700 WATTS

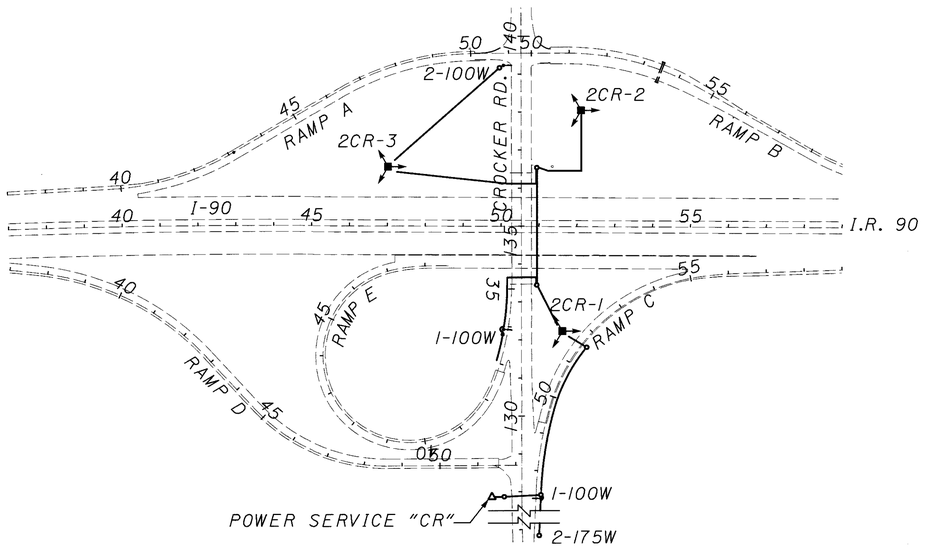

CIRCUIT "2CR"

18-400 WATT UNITS = 7,200 WATTS
5-SIGNS = 750 WATTS
CIRCUIT = 7,950 WATTS

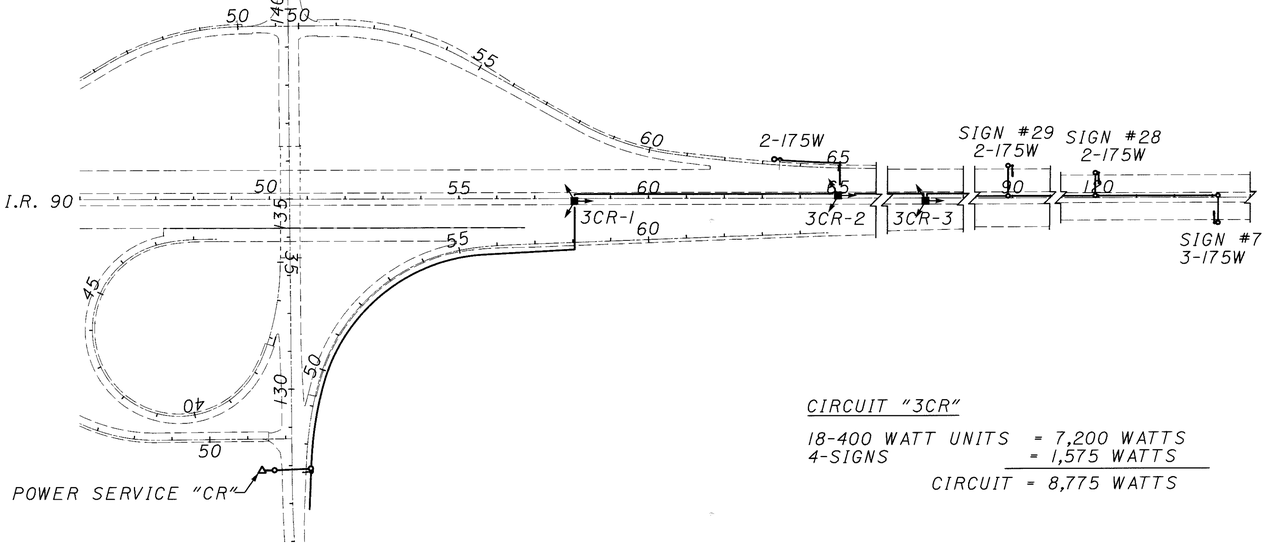

CIRCUIT "3CR"

18-400 WATT UNITS = 7,200 WATTS
4-SIGNS = 1,575 WATTS
CIRCUIT = 8,775 WATTS

HORIZONTAL SCALE IN FEET

CALCULATED

CHECKED

LIGHTING CIRCUIT MAPS

CUY-90-0.00

23 MAR 2000
P:\pr22308\cadd\ll738lca.dgn

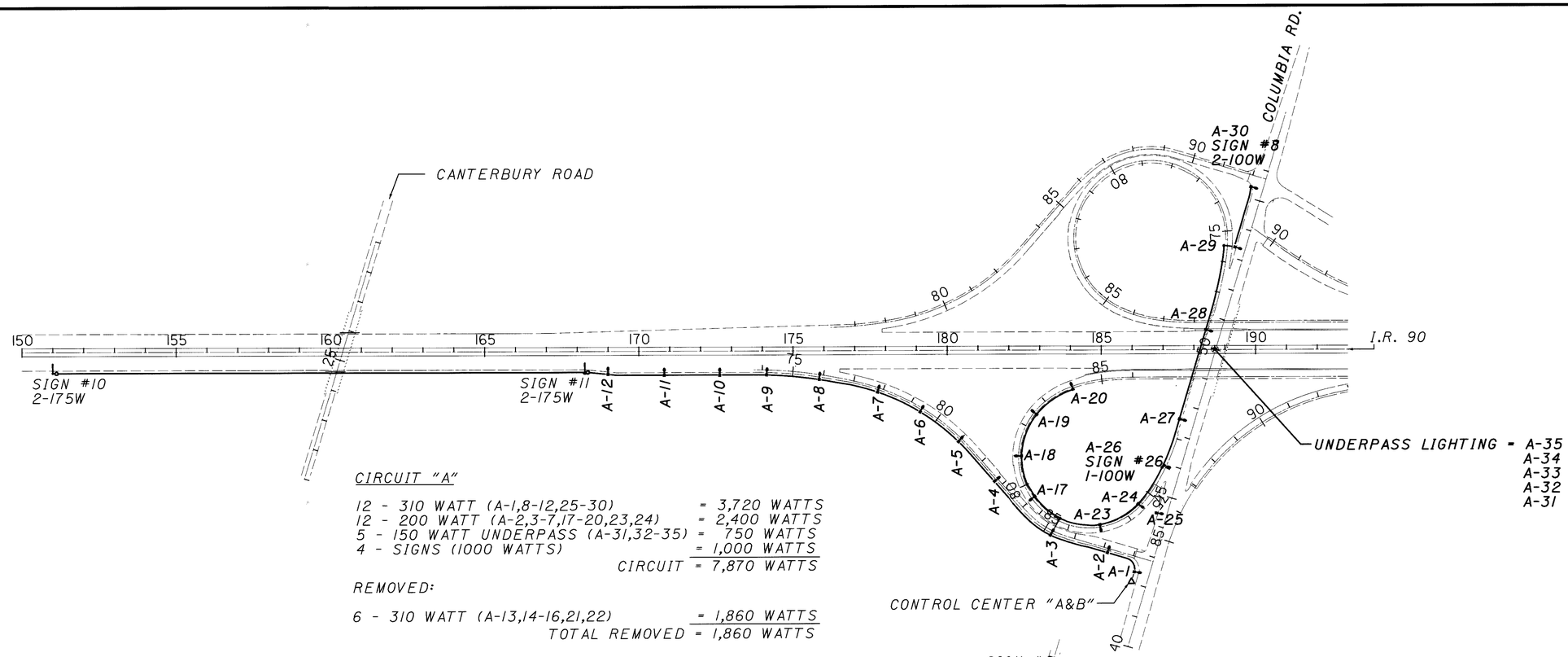

CIRCUIT "A"

12 - 310 WATT (A-1,8-12,25-30) = 3,720 WATTS
12 - 200 WATT (A-2,3-7,17-20,23,24) = 2,400 WATTS
5 - 150 WATT UNDERPASS (A-31,32-35) = 750 WATTS
4 - SIGNS (1000 WATTS) = 1,000 WATTS
CIRCUIT = 7,870 WATTS

REMOVED:

6 - 310 WATT (A-13,14-16,21,22) = 1,860 WATTS
TOTAL REMOVED = 1,860 WATTS

CIRCUIT "C"

22 - 200 WATTS (C-1,2-17,22-26) = 4,400 WATTS
1 - SIGN (100 WATTS) = 100 WATTS
CIRCUIT = 4,500 WATTS

REMOVED:

6 - 310 WATT (C-18,19-21,28,29) = 1,860 WATTS
1 - 200 WATT (C-27) = 200 WATTS
TOTAL REMOVED = 2,060 WATTS

CIRCUIT "W"

1-200 WATT = 200 WATTS
CIRCUIT = 200 WATTS

HORIZONTAL SCALE IN FEET

CALCULATED

CHECKED

LIGHTING CIRCUIT MAPS

CUY-90-0.00

405
582

23 MAR 2000
p:\pr2308\cadd\lt38icb.dgn

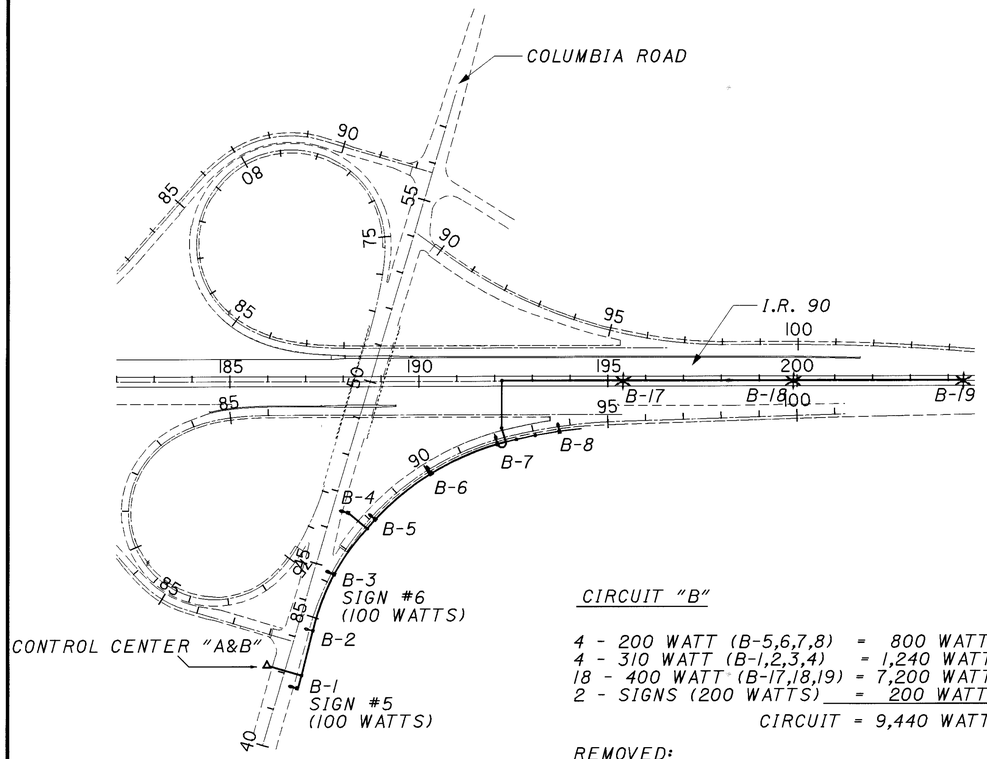

CIRCUIT "B"

4 - 200 WATT (B-5,6,7,8) = 800 WATTS
4 - 310 WATT (B-1,2,3,4) = 1,240 WATTS
18 - 400 WATT (B-17,18,19) = 7,200 WATTS
2 - SIGNS (200 WATTS) = 200 WATTS

CIRCUIT = 9,440 WATTS

REMOVED:
3 - 200 WATT (B-9,10,11) = 600 WATTS
8 - 310 WATT (B-9,10-16) = 2,480 WATTS

TOTAL REMOVED = 3,080 WATTS

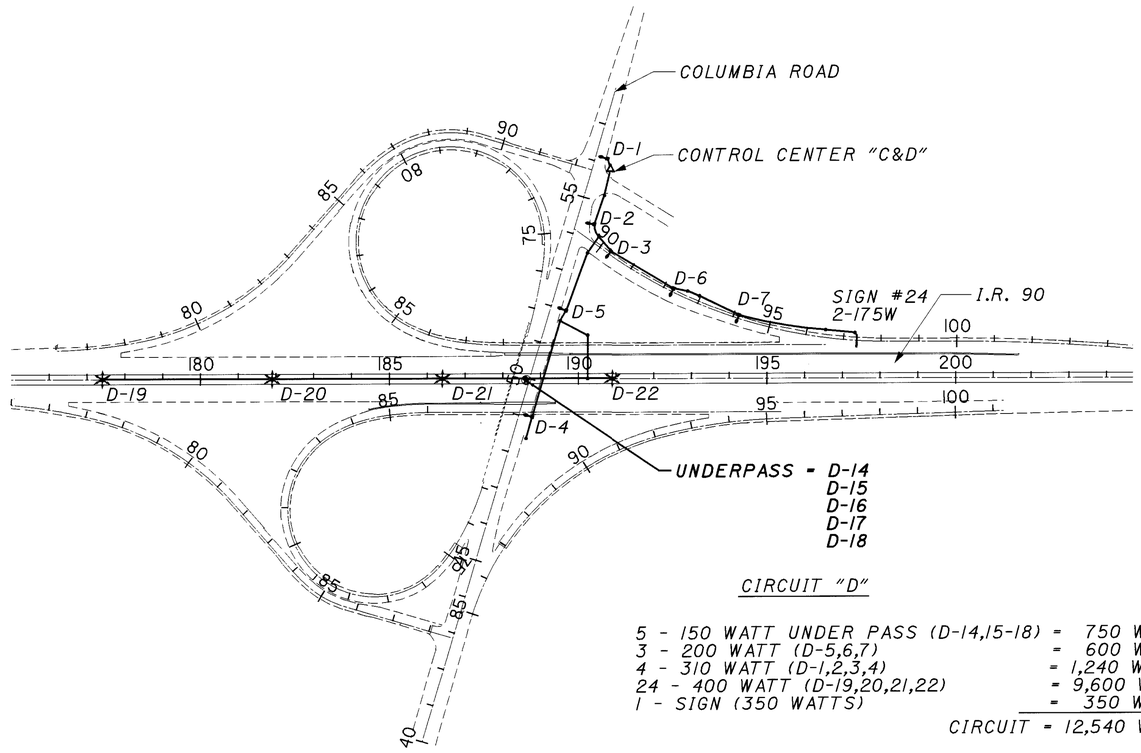

CIRCUIT "D"

5 - 150 WATT UNDER PASS (D-14,15-18) = 750 WATTS
3 - 200 WATT (D-5,6,7) = 600 WATTS
4 - 310 WATT (D-1,2,3,4) = 1,240 WATTS
24 - 400 WATT (D-19,20,21,22) = 9,600 WATTS
1 - SIGN (350 WATTS) = 350 WATTS

CIRCUIT = 12,540 WATTS

REMOVED:
6 - 200 WATT (D-8,9-13) = 1,200 WATTS
6 - 310 WATT (D-8,9-13) = 1,860 WATTS

TOTAL REMOVED = 3,060 WATTS

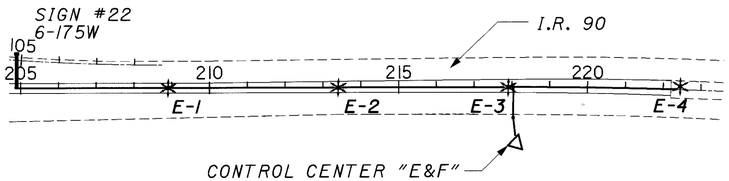

CIRCUIT "E"

24 - 400 WATT (E-1,2,3,4) = 9,600 WATTS
1 - SIGN (1050 WATTS) = 1,050 WATTS

CIRCUIT = 10,650 WATTS

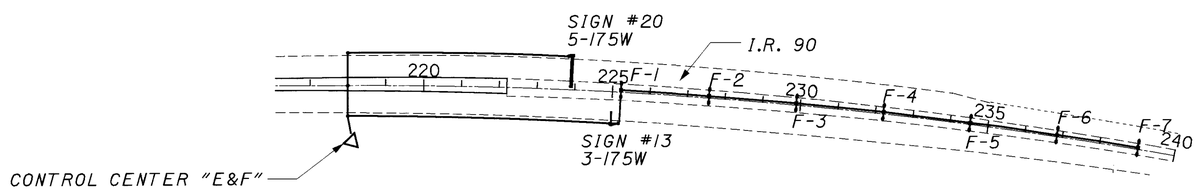

CIRCUIT "F"

14 - 310 WATT (F-1,2,3,4,5,6,7) = 4,340 WATTS
3 - SIGNS (1400 WATTS) = 1,400 WATTS

CIRCUIT = 5,740 WATTS

HORIZONTAL SCALE IN FEET

CALCULATED

CHECKED

LIGHTING CIRCUIT MAPS

CUY-90-0.00

406
582

i:\PROJECTS\Pid1738\dgn\final plans\lf738lcc.dgn 21-JUL-2000 2:22PM jgrmovse

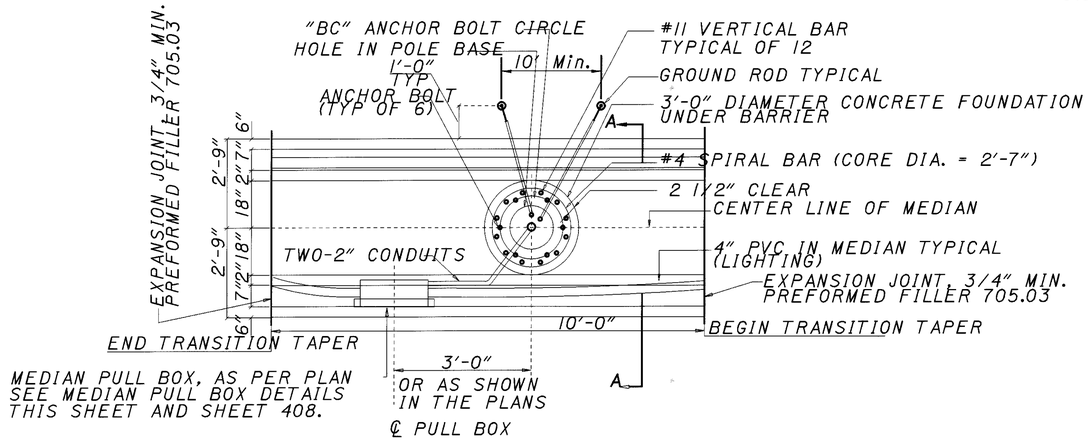

PLAN OF LIGHT TOWER FOUNDATION MISC: MEDIAN MOUNTED, 36" x 20' DEEP

NOT TO SCALE

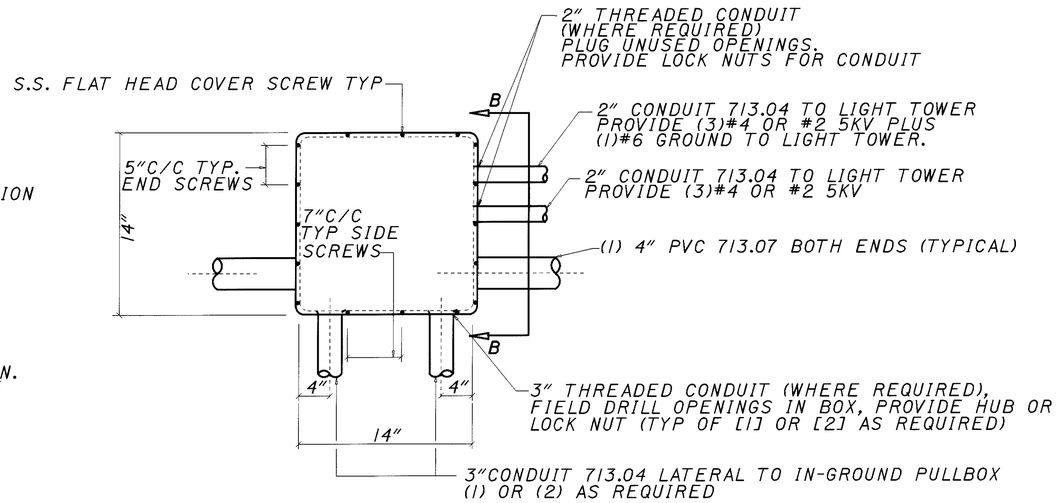

MEDIAN PULL BOX, AS PER PLAN

NOT TO SCALE

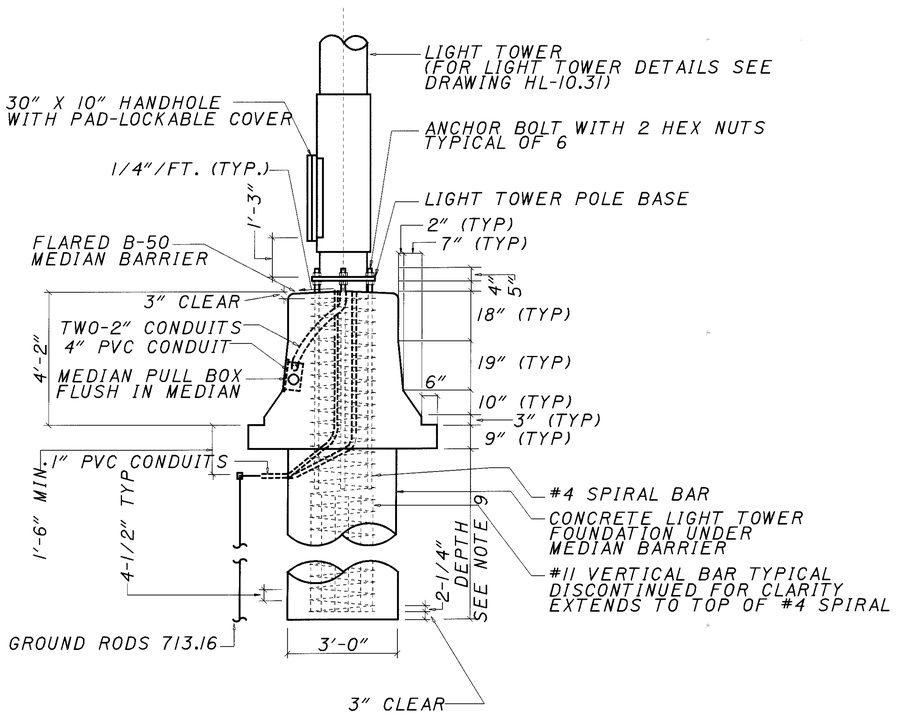

SECTION A-A

NOT TO SCALE

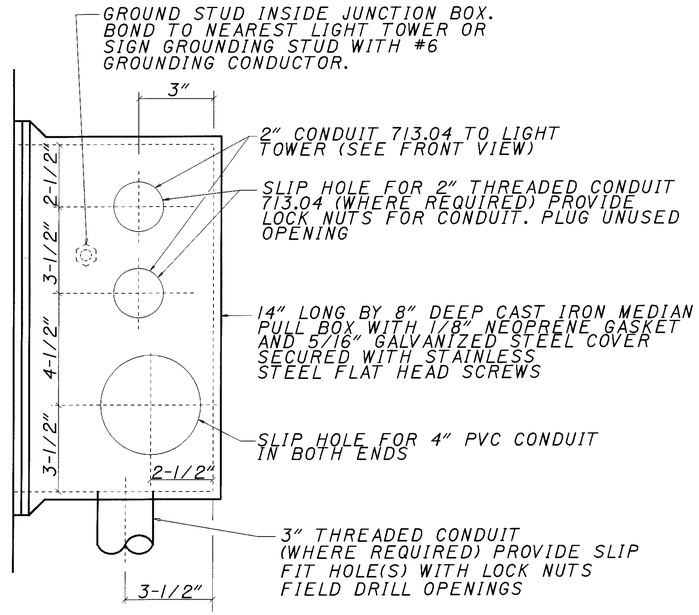

SECTION B

NOT TO SCALE

NOTES

1. FOUNDATION TO BE CAST-IN-PLACE CLASS "C" CONCRETE AS PER SS899.
2. REINFORCING TO COMPLY WITH AND BE PLACED IN ACCORDANCE WITH 509.
3. LIGHT POLE ANCHOR BOLT SIZE AND SPACING TO FIT MOUNTING PLATE SUPPLIED WITH TOWER. HOWEVER, BOLT CIRCLE SHALL BE EQUAL TO OR LESS THAN 26". THE MINIMUM LENGTH ANCHOR BOLT SHALL BE 70" AND THE BOLTS SHALL HAVE EITHER A 6" "L" BEND OR A 5" X 5" PLATE ON THE EMBEDDED END.
4. CONSTRUCTION SHALL CONFORM TO THE REQUIREMENTS OF 622, 625, AND SS842, 830, 865, 899..
5. GROUND RODS WILL BE PAID SEPARATELY.
6. SEE LIGHTING PLANS TO DETERMINE NUMBER AND SIZES OF CONDUITS ENTERING MEDIAN PULL BOXES AT EACH TOWER LIGHT FOUNDATION LOCATION AND AT EACH CONDUIT CROSSOVER AND SIGN SERVICE LOCATION.
7. THE UNIT PRICE BID FOR EACH ITEM 625 - LIGHT TOWER FOUNDATION, MISC: MEDIAN MOUNTED, 36" x 20' DEEP, AS PER PLAN, SHALL BE FULL COMPENSATION FOR FURNISHING AND PLACING ANCHOR BOLTS, CONCRETE FOUNDATION, CONDUIT RACEWAYS, REINFORCING, MEDIAN PULL BOX, EMT. THE 10' SECTION OF CONCRETE BARRIER, AND ALL LABOR, MATERIAL, EQUIPMENT, AND INCIDENTALS NECESSARY TO COMPLETE THE WORK AS SPECIFIED.
8. DEDUCT 10 LINEAR FEET FROM ITEM 622 - CONCRETE BARRIER, TYPE B-50, AS PER PLAN FOR EACH MEDIAN MOUNTED LIGHT TOWER FOUNDATION.
9. EXTEND REINFORCING STEEL AND CONCRETE 5 FEET DEEPER FOR 25' DEEP FOUNDATION.
10. PROVIDE TWO-2" CONDUITS FROM PULL BOX TO EACH LIGHT TOWER BASE.
11. ALL WIRING SHALL BE FED THROUGH THE PULL BOX DIRECTLY INTO THE BASE OF THE LIGHT TOWER WHERE ALL CONNECTIONS SHALL BE MADE. NO CONNECTIONS OR SPLICES SHALL BE MADE IN THE PULL BOX.

CALCULATED | CHECKED

LIGHTING DETAILS

CUY-90-0.00

I:\PROJECTS\Pidl1738\dgn\final plans\il738LDA.DGN 21-JUL-2000 12:56PM jgrmovse

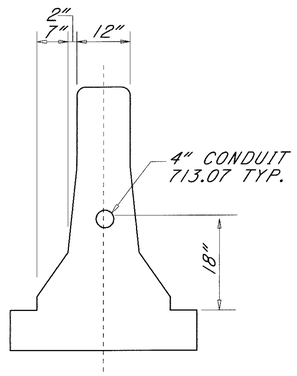

50" BARRIER VERTICAL TOP

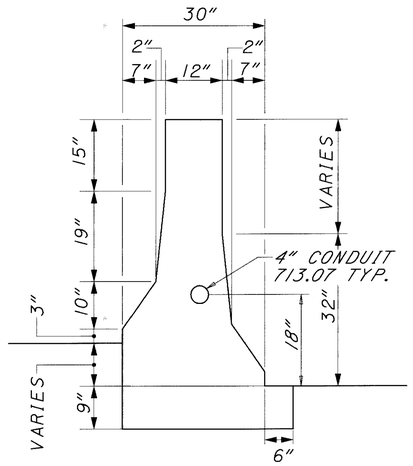

CONCRETE BARRIER, TYPE C-50, AS PER PLAN

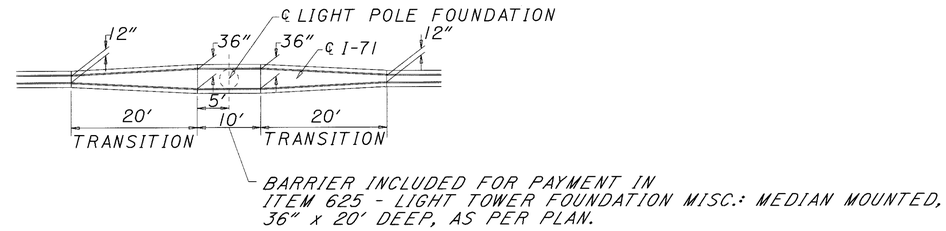

BARRIER TRANSITION AT LIGHT POLE FOUNDATION

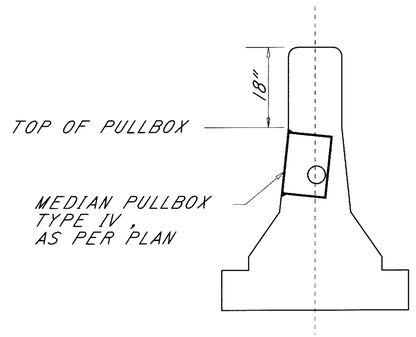

LIGHTING PULLBOX LOCATION

(NOTE: 4" CONDUIT LOCATION IN PULLBOX VARIES FROM HL-20.13)

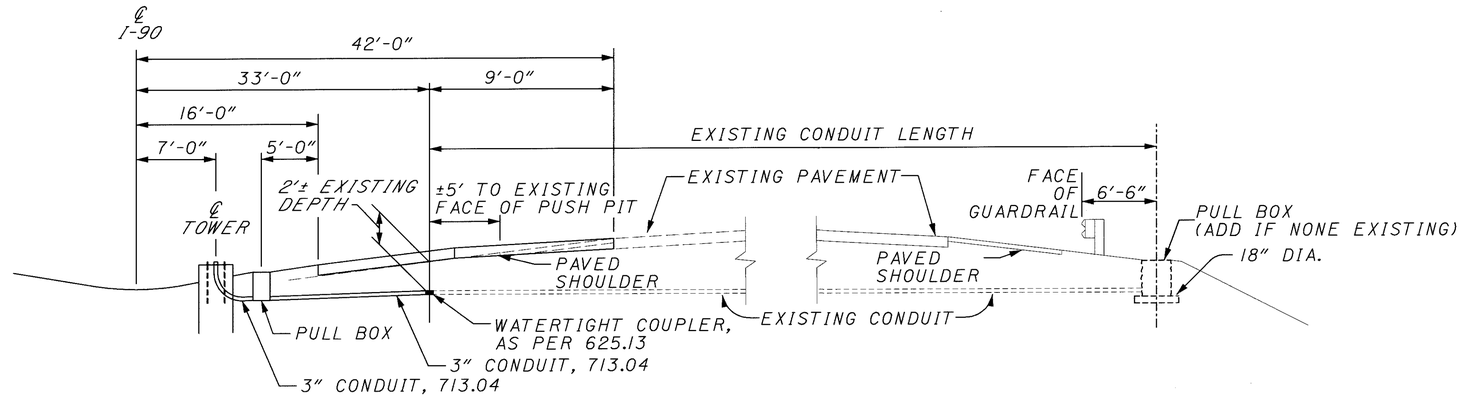

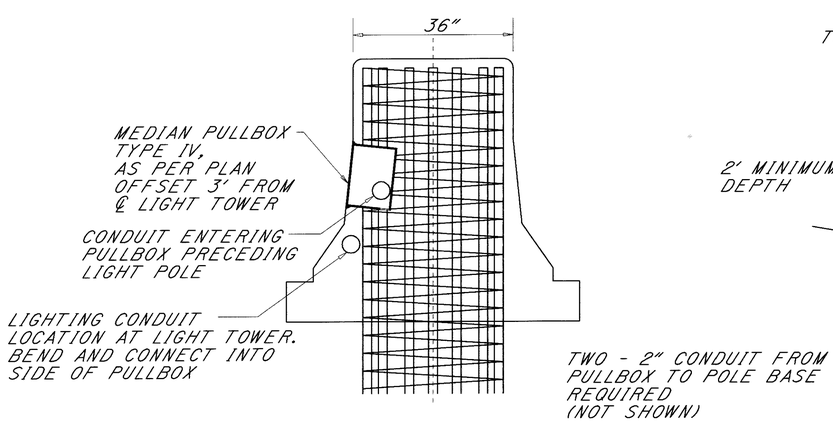

LIGHT TOWER FOUNDATION

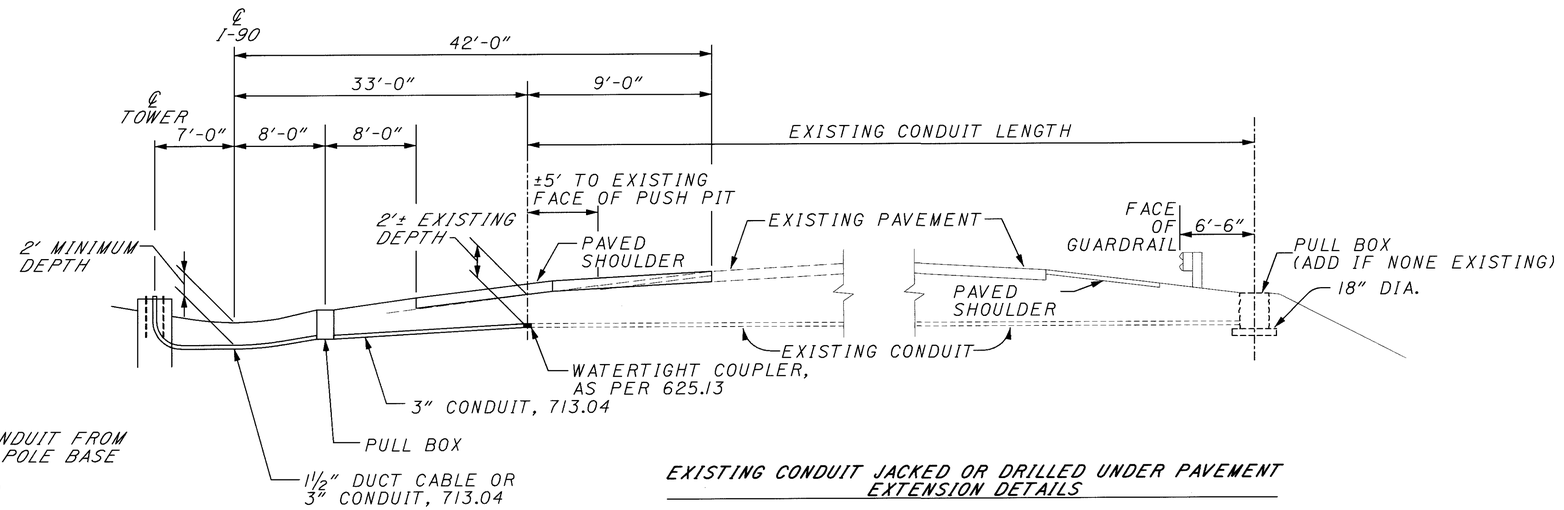

EXISTING CONDUIT JACKED OR DRILLED UNDER PAVEMENT EXTENSION DETAILS

CALCULATED
CHECKED

LIGHTING DETAILS

CUY-90-0.00

23 MAR 2000
p:\pr22308\cadd\11738lda.dgn

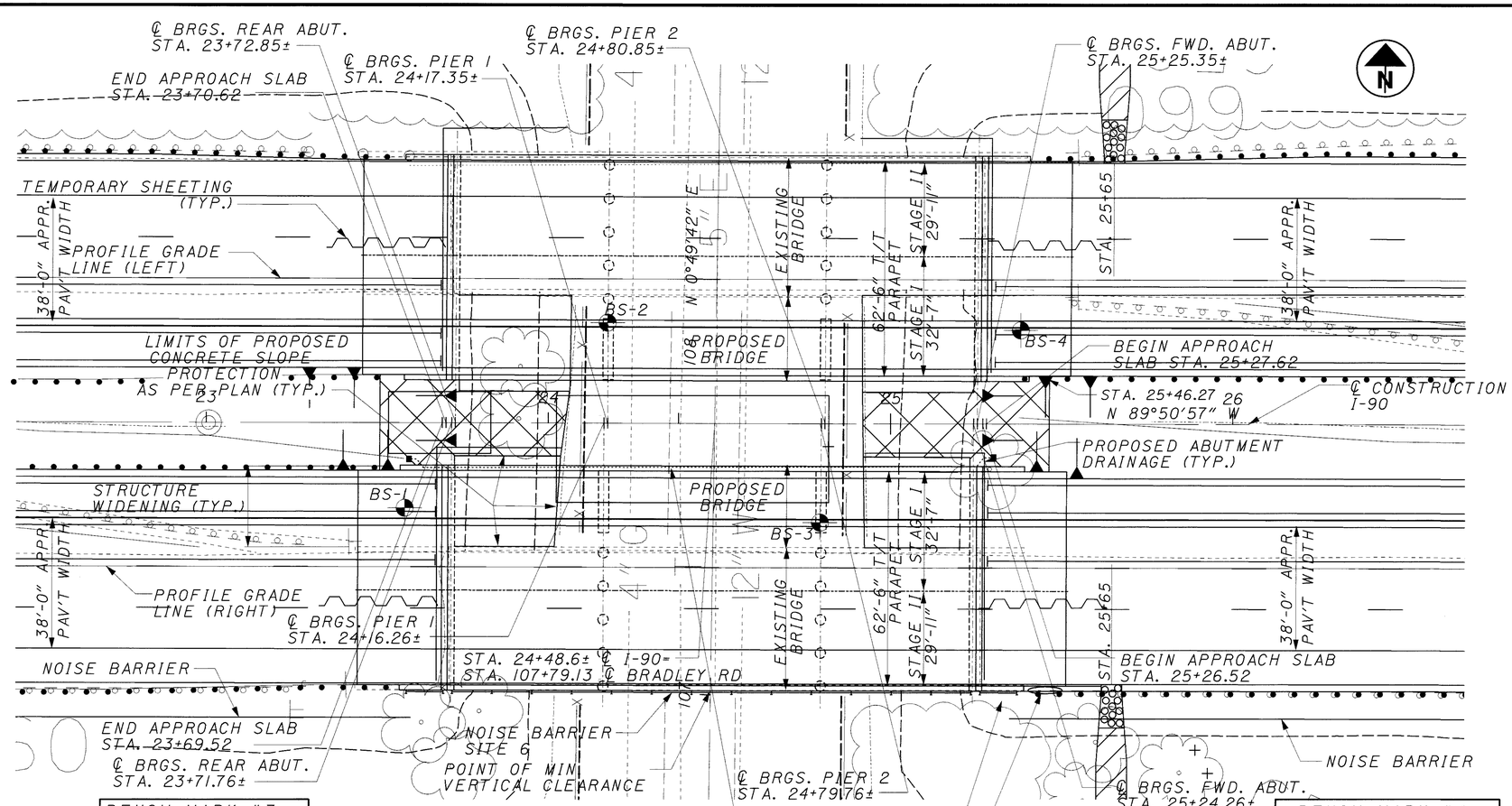

PLAN

BENCH MARK #3
IPMF #1283 STA. 24+58, 2270' LT ELEV. 644.052

BENCH MARK #4
IPF ℄ CEDARWOOD DR. STA. 24+55, 2165' RT. ELEV. 648.057

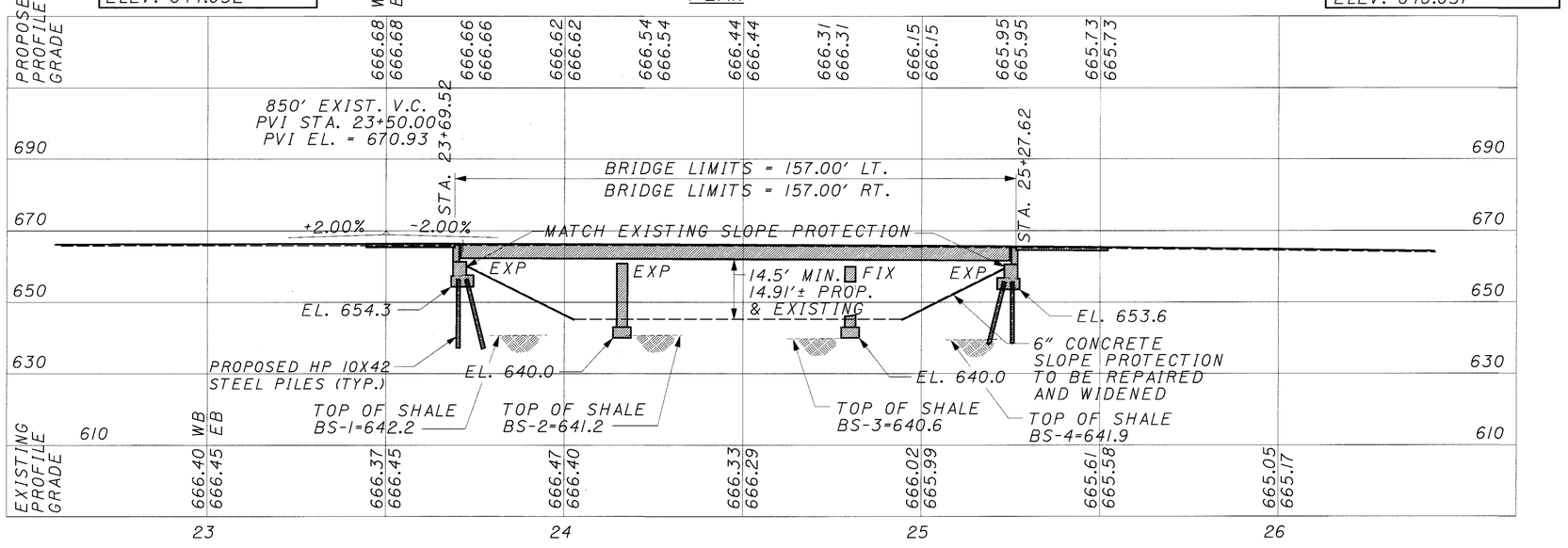

PROFILE ALONG GRADE LINE

LEGEND:
ABUT. = ABUTMENT
ACT. = ACTUAL
BRGS. = BEARINGS
EXIST. = EXISTING
FWD. = FORWARD
MIN. = MINIMUM
TYP. = TYPICAL

NOTE:
EARTHWORK LIMITS SHOWN ARE APPROXIMATE. ACTUAL SLOPES SHALL CONFORM TO PLAN CROSS SECTIONS.

STATION OF FIRST GUARDRAIL POST ADJACENT TO BRIDGE		
ABUTMENT	LEFT	RIGHT
RIGHT REAR	23+54.62	23+54.62
LEFT REAR	23+55.72	23+55.72
RIGHT FORWARD	25+41.42	25+41.42
LEFT FORWARD	25+42.52	25+42.52

FOUNDATION DATA

ESTIMATED PILE PAY LENGTH:
REAR ABUTMENT: 20 FEET
FORWARD ABUTMENT: 20 FEET

TRAFFIC DATA

CURRENT ADT (1999) 55230
DESIGN YEAR ADT (2019) 67740
DESIGN YEAR ADTT (2019) 6774

EXISTING STRUCTURE

SFN: 1807692 & 1807706

TYPE: THREE SPAN CONTINUOUS A36 STEEL BEAM WITH REINFORCED CONCRETE DECK AND SUBSTRUCTURE

SPANS: 44'-6"±; 63'-6"±; 44'-6"± c/c BRGS.

ROADWAY: 39'-0" t/t PARAPETS

LOADING: CF 2000 (57)

WEARING SURFACE: 1¼" LMC

ALIGNMENT: TANGENT CROWN: 0.0156

APPROACH SLABS: 25' LONG (AS-1-81)

SKEW: NONE DATE BUILT: 1971

PROPOSED STRUCTURE

TYPE: WIDENED THREE SPAN CONTINUOUS STEEL COMPOSITE BEAM WITH REINFORCED CONCRETE DECK AND SUBSTRUCTURE

SPANS: 44'-6"; 63'-6"; 44'-6" c/c BRGS

ROADWAY: 62'-6" t/t PARAPETS

LOADING: HS-20-44 CASE I AND ALTERNATE MILITARY LOADING

WEARING SURFACE: 1" MONOLITHIC CONCRETE

ALIGNMENT: TANGENT CROWN: 0.0156

APPROACH SLABS: 25' LONG (AS-1-81)

SKEW: NONE

SUPERELEVATION: NONE

LATITUDE: N 41°28'00" LONGITUDE: W 81°57'45"

BURGESS & NIPLE

DATE REVIEWED MAR 12-15-99
STRUCTURE FILE NUMBER 1807692, 1807706
DRAWN KK
REVISED
DESIGNED KK
CHECKED SCT

CUYAHOGA COUNTY
STA. 23+69.52
STA. 25+27.62

SITE PLAN
BRIDGE NO. CUY-90-0045
OVER BRADLEY ROAD

CUY-90-0.00

1 / 39

409
582

P:\PR22308\CADD\TSITEPLN.DGN

PROPOSAL NOTES:

ITEM SPECIAL - SEALING OF CONCRETE SURFACES

STANDARD DRAWINGS:

REFERENCE SHALL BE MADE TO THE FOLLOWING STANDARD DRAWINGS:

AS-1-81	DATED 10-25-94
BS-1-93	DATED 12-19-94
EXJ-4-87	DATED 2-14-97
GSD-1-96	DATED 2-12-97
PCB-91	DATED 3-20-95
RB-1-55	DATED 2-2-59
SBR-1-99	DATED 1-12-99

AND SUPPLEMENTAL SPECIFICATIONS:

815	DATED 5-30-96
842	DATED 1-6-99
844	DATED 1-6-99
846	DATED 9-9-97
863	DATED 9-9-97
899	DATED 10-21-98
910	DATED 4-21-97
945	DATED 6-14-95

DESIGN SPECIFICATIONS:

THIS STRUCTURE CONFORMS TO "STANDARD SPECIFICATIONS FOR HIGHWAY BRIDGES" ADOPTED BY THE AMERICAN ASSOCIATION OF STATE HIGHWAY AND TRANSPORTATION OFFICIALS (AASHTO), 1996, INCLUDING THE 1997 AND 1998 INTERIM SPECIFICATIONS, AND THE ODOT BRIDGE DESIGN MANUAL.

DECK PROTECTION METHOD:

EPOXY COATED REINFORCING STEEL, 2½" CONCRETE COVER AND SEALING OF CONCRETE SURFACES.

MONOLITHIC WEARING SURFACE:

WEARING SURFACE IS ASSUMED, FOR DESIGN PURPOSES, TO BE 1 INCH THICK.

MAINTENANCE OF TRAFFIC:

TWO LANES OF TRAFFIC IN EACH DIRECTION WITH A MINIMUM HORIZONTAL WIDTH OF 11 FEET PER LANE SHALL BE MAINTAINED ON I-90 AT ALL TIMES. REFER TO THE ROADWAY PLANS FOR OTHER TRAFFIC REQUIREMENTS AND PAYMENT PROVISIONS.

FOR MAINTENANCE OF TRAFFIC DETAILS, SEE SHEETS 10,11/31 AND ROADWAY PLANS.

DESIGN DATA:

DESIGN LOADING: HS20-44, CASE I, AND ALTERNATE MILITARY LOADING

HIGH PERFORMANCE CONCRETE - COMPRESSIVE STRENGTH = 4500 PSI (SUPERSTRUCTURE)

HIGH PERFORMANCE CONCRETE - COMPRESSIVE STRENGTH = 4500 PSI (SUBSTRUCTURE)

REINFORCING STEEL: ASTM A615, A616, OR A617, GRADE 60
MINIMUM YIELD STRENGTH 60,000 PSI

STRUCTURAL STEEL: ASTM A709, GRADE 36
MINIMUM YIELD STRENGTH 36,000 PSI

PROPOSED WORK:

IN GENERAL, THE PROPOSED WORK CONSISTS OF REMOVAL OF THE EXISTING BRIDGE DECKS, ABUTMENT BACKWALLS, APPROACH SLABS, ABUTMENT DRAINAGE, WINGWALLS, AND FAILED AREAS OF SLOPE PROTECTION AT THE ABUTMENTS. THE EXISTING SUBSTRUCTURE UNITS SHALL BE WIDENED TO ACCOMMODATE THE PROPOSED TYPICAL SECTION. CONSTRUCTION SHALL INCLUDE THE INSTALLATION OF NEW WINGWALLS, ABUTMENT DRAINAGE, BACKWALLS, STRIP SEAL EXPANSION JOINTS, NEW END FRAMES, CONCRETE SLOPE PROTECTION, APPROACH SLABS, ADDITIONAL BEAMS, AND WIDENED BRIDGE DECK. IN ADDITION, CONCRETE SUBSTRUCTURE UNITS SHALL BE SEALED WITH EPOXY-URETHANE, SEAL NEW CONCRETE WITH EPOXY-URETHANE, REPAIR EXISTING CONCRETE SLOPE PROTECTION AND COMPLETE INCIDENTAL ITEMS OF WORK. TRAFFIC ON THE BRIDGE, AS WELL AS ON THE ROAD UNDER THE BRIDGE, MUST BE MAINTAINED THROUGHOUT CONSTRUCTION NECESSITATING THE WORK BE COMPLETED IN STAGES. THE MAJOR ITEMS OF WORK REQUIRING STAGED CONSTRUCTION ARE DESCRIBED BELOW FOR INFORMATION. SOME OF THE PROJECT ITEMS OF WORK MAY BE PERFORMED AT THE CONTRACTOR'S OWN SCHEDULE WITHIN THE TIME FRAME. HOWEVER, ALL WORK MUST BE COORDINATED WITHIN MAINTENANCE OF TRAFFIC PLANS AND SAFETY REQUIREMENTS.

STAGE I EASTBOUND CONSTRUCTION SEQUENCE:

1. DIVERT TRAFFIC TO THE OUTSIDE LANE AND SHOULDER OF THE RIGHT BRIDGE AND INSTALL PORTABLE CONCRETE BARRIER.
2. SAWCUTAND REMOVE INSIDE PORTIONS OF THE RIGHT APPROACH SLABS AND BRIDGE DECKS, INCLUDING PARAPETS AND SCUPPERS. REMOVE ENOUGH MEDIAN RAILING FROM THE LEFT BRIDGE TO ALLOW ABUTMENT CONSTRUCTION.
3. INSTALL TEMPORARY SHEETING ON THE APPROCHES AS REQUIRED.
4. REMOVE INSIDE PORTIONS OF THE RIGHT ABUTMENTS, END CROSS-FRAMES AND EXPANSION JOINTS. REMOVE ENOUGH OF THE ABUTMENT TO ALLOW CONSTRUCTION OF THE WIDENING.
5. CONSTRUCT ABUTMENT EXTENSIONS AND PIERS.
6. ERECT ADDITIONAL BEAMS FOR WIDENING.
7. CONSTRUCT INSIDE PORTIONS OF THE RIGHT BRIDGE DECK, BACKWALLS, DRAINAGE, AND APPROACH SLAB.
8. RELOCATE PORTABLE CONCRETE BARRIERS ON TO THE NEW BRIDGE DECK AND APPROACH SLABS.

STAGE II EASTBOUND CONSTRUCTION SEQUENCE:

1. DIVERT TRAFFIC TO INSIDE PORTION OF THE RIGHT BRIDGE DECK.
2. REMOVE OUTSIDE PORTIONS OF RIGHT APPROACH SLABS AND BRIDGE DECKS, INCLUDING PARAPETS AND SCUPPERS.
3. INSTALL TEMPORARY SHEETING ON APPROCHES AS REQUIRED.
4. REMOVE OUTSIDE PORTIONS OF RIGHT ABUTMENT BACKWALLS AND WINGWALLS.
5. CONSTRUCT OUTSIDE WINGWALLS AND INSTALL REMAINDER OF NEW ABUTMENT DRAINAGE SYSTEM.
6. CONSTRUCT OUTSIDE PORTIONS OF THE RIGHT BRIDGE DECK AND APROACH SLAB.
7. REMOVE PORTABLE CONCRETE BARRIER AND RESUME NORMAL TRAFFIC.

STAGE I WESTBOUND CONSTRUCTION SEQUENCE:

1. DIVERT TRAFFIC TO THE OUTSIDE LANE AND SHOULDER OF THE LEFT BRIDGE AND INSTALL PORTABLE CONCRETE BARRIER.
2. SAWCUT AND REMOVE INSIDE PORTIONS OF THE LEFT APPROACH SLABS AND BRIDGE DECK, INCLUDING PARAPETS AND SCUPPERS.
3. INSTALL TEMPORARY SHEETING ON THE APPROACHES AS REQUIRED.
4. REMOVE INSIDE PORTIONS OF THE LEFT ABUTMENTS, END CROSS-FRAMES AND EXPANSION JOINTS. REMOVE ENOUGH OF THE ABUTMENT TO ALLOW CONSTRUCTION OF THE WIDENING.
5. CONSTRUCT ABUTMENT EXTENSIONS AND PIERS.
6. ERECT ADDITIONAL BEAMS FOR WIDENING.
7. CONSTRUCT INSIDE PORTIONS OF BRIDGE DECK, BACKWALLS, DRAINAGE, AND APPROACH SLABS.
8. RELOCATE PORTABLE CONCRETE BARRIERS ON TO THE NEW BRIDGE DECK.

STAGE II WESTBOUND CONSTRUCTION SEQUENCE:

1. DIVERT TRAFFIC TO INSIDE PORTION OF THE LEFT BRIDGE DECK.
2. REMOVE OUTSIDE PORTIONS OF THE LEFT APPROACH SLAB AND BRIDGE DECK, INCLUDING PARAPETS AND SCUPPERS.
3. INSTALL TEMPORARY SHEETING ON APPROACHES AS REQUIRED.
4. REMOVE OUTSIDE PORTIONS OF THE LEFT ABUTMENT BACKWALLS AND WINGWALLS.
5. CONSTRUCT OUTSIDE WINGWALLS AND INSTALL REMAINDER OF NEW ABUTMENT DRAINAGE SYSTEM.
6. CONSTRUCT OUTSIDE PORTIONS OF THE LEFT BRIDGE DECK, BACKWALLS, BACKFILL, AND APPROACH SLABS.
7. REMOVE PORTABLE CONCRETE BARRIER AND RESUME NORMAL TRAFFIC.

EXISTING STRUCTURE VERIFICATION:

DETAILS AND DIMENSIONS SHOWN ON THESE PLANS PERTAINING TO THE EXISTING STRUCTURE HAVE BEEN OBTAINED FROM PLANS OF THE EXISTING STRUCTURE AND/OR FROM FIELD OBSERVATIONS AND MEASUREMENTS. CONSEQUENTLY, THEY ARE INDICATIVE OF THE EXISTING STRUCTURE AND THE PROPOSED WORK, BUT THEY SHALL BE CONSIDERED TENTATIVE AND APPROXIMATE. THE CONTRACTOR IS REFERRED TO CMS SECTIONS 102.05, 105.02, AND 863.07.

CONTRACT BID PRICES SHALL BE BASED UPON A RECOGNITION OF THE UNCERTAINTIES DESCRIBED ABOVE AND UPON A PREBID EXAMINATION OF THE EXISTING STRUCTURE BY THE CONTRACTOR. HOWEVER, ALL PROJECT WORK SHALL BY BASED UPON ACTUAL DETAILS AND DIMENSIONS WHICH HAVE BEEN VERIFIED BY THE CONTRACTOR IN THE FIELD.

EXISTING STRUCTURE PLANS:

THE ORIGINAL DESIGN AND UPGRADING PLANS MAY BE EXAMINED BY PROSPECTIVE BIDDERS AT THE DEPARTMENT OF TRANSPORTATION, DISTRICT 12 OFFICE, 5500 TRANSPORTATION BOULEVARD, GARFIELD HEIGHTS, OHIO. THE CONTRACTOR SHALL BECOME FAMILIAR WITH THE DRAWINGS.

ITEM 202 - PORTIONS OF STRUCTURE REMOVED, AS PER PLAN:

DESCRIPTION: THIS WORK SHALL CONSIST OF THE REMOVAL OF CONCRETE DECKS INCLUDING PARAPETS, DECK JOINTS, SCUPPERS AND OTHER APPURTENCES FROM STEEL SUPPORTING SYSTEMS (BEAMS, GIRDERS, CROSS FRAMES, ETC.) THIS ITEM SHALL ALSO INCLUDE THE ELEMENTS INDICATED IN THE PLANS AND GENERAL NOTES AND THAT ARE NOT SEPARATELY LISTED FOR PAYMENT. ITEMS TO BE REMOVED INCLUDE ALL EXISTING MATERIALS BEING REPLACED BY NEW CONSTRUCTION AND MISCELLANEOUS ITEMS THAT ARE NOT SHOWN TO BE INCORPORATED INTO THE FINAL CONSTRUCTION AND ARE DIRECTED TO BE REMOVED BY THE ENGINEER. CARE SHALL BE TAKEN DURING DECK REMOVALS TO PROTECT PORTIONS OF SUCH SYSTEMS THAT ARE TO BE SALVAGED AND INCORPORATED INTO THE PROPOSED STRUCTURE. IN THIS RESPECT, THE USE OF EXPLOSIVES, HEADACHE BALLS AND/OR HOE RAMS WILL NOT BE PERMITTED. THE METHOD OF REMOVAL AND THE WEIGHT OF HAMMER SHALL BE APPROVED BY THE ENGINEER. ALL WORK SHALL BE DONE IN A MANNER THAT WILL NOT CUT, ELONGATE OR DAMAGE THE EXISTING REINFORCING STEEL TO BE PRESERVED. CHIPPING HAMMERS SHALL NOT BE HEAVIER THAN THE NOMINAL 90-POUND CLASS. PNEUMATIC HAMMERS SHALL NOT BE PLACED IN DIRECT CONTACT WITH REINFORCING STEEL THAT IS TO BE RETAINED IN THE REBUILT STRUCTURE.

P:\VPR22308\CADD\TNOTES1.DGN

BURGESS & NIPLE

DESIGNED SCT/JAA | DRAWN SCT/JAA | REVIEWED MAR | DATE 12-22-99
CHECKED JAA/SCT | REVISED | STRUCTURE FILE NUMBER 1807692,1807706

STRUCTURE NOTES 1 OF 11
BRIDGE NO. CUY-90-0045 L&R
OVER BRADLEY ROAD

CUY-90-0.00

2 / 39

410
582

PROTECTION OF TRAFFIC: PRIOR TO DEMOLITION OF ANY PORTIONS FOR THE EXISTING SUPERSTRUCTURE OR SUBSTRUCTURE, THE CONTRACTOR SHALL SUBMIT HIS PLANS FOR THE PROTECTION OF TRAFFIC (VEHICULAR, PEDESTRIAN) ON AND/OR UNDER THE STRUCTURE TO THE DIRECTOR FOR APPROVAL. THESE PLANS SHALL INCLUDE PROVISIONS FOR ANY DEVICES AND STRUCTURES NECESSARY TO ENSURE SUCH PROTECTION. THE CONTRACTOR SHALL DETERMINE THEIR ADEQUACY AND NOTE SUCH ON THE PLANS OR IN THE PROPOSAL SHALL BE MAINTAINED AT ALL TIMES EXCEPT AS OTHERWISE APPROVED BY THE DIRECTOR.

PROTECTION OF STEEL SUPPORT SYSTEMS: BEFORE DECK SLAB CUTTING IS PERMITTED, THE OUTLINE OF EXISTING STEEL MEMBERS IN CONTACT WITH THE BOTTOM OF THE DECK SHALL BE DRAWN ON THE SURFACE OF DECK, SMALL DIAMETER PILOT HOLES SHALL BY DRILLED 2 INCHES OUTSIDE THESE LINES TO CONFIRM THE LOCATION OF FLANGE EDGES. DECK CUTS OVER OR WITHIN 2 INCHES OF FLANGE EDGES SHALL NOT EXTEND LOWER THAN THE BOTTOM LAYER OF DECK SLAB REINFORCING STEEL. CUTS MADE OUTSIDE 2 INCHES OF FLANGE EDGES MAY EXTEND THE FULL DEPTH OF THE DECK. DURING CUTTING OF THE DECK SLAB, CARE SHALL BE TAKEN NOT TO DAMAGE STEEL MEMEBERS THAT ARE TO BE INCORPORATED INTO THE PROPOSED STRUCTURE.

DECK REMOVALS: DUE TO THE POSSIBLE PRESENCE OF WELDED ATTACHMENTS TO EXISTING STRUCTURAL STEEL (FINISHING MACHINE, SCUPPER, AND FORM SUPPORTS, ETC.), CARE SHALL BE TAKEN DURING DECK REMOVAL TO AVOID DAMAGING STRINGERS WHICH ARE TO REMAIN. STRINGERS DAMAGED BY THE CONTRACTOR'S REMOVAL OPERATIONS SHALL, AT NO COST TO THE PROJECT, BE REPLACED OR REPAIRED. PROPOSED REPAIRS, DEVELOPED BY A REGISTERED PROFESSIONAL ENGINEER, SHALL BE SUBMITTED IN WRITING FOR REVIEW AND APPROVAL BY THE DIRECTOR.

REMOVAL METHODS: CONCRETE MAY BE REMOVED BY CUTTING AND BY MEANS OF HAND OPERATED PNEMATIC HAMMERS EMPLOYING POINTED OR BLUNTED CHISEL TYPE TOOLS. FOR REMOVALS ABOVE STEEL MEMBERS, A HAMMER HEAVIER THAN 35 POUNDS BUT NOT TO EXCEED 90 POUNDS MAY BE USED AT THE APPROVAL OF THE ENGINEER, TO ENSURE ADEQUATE DEPTH CONTROL AND TO PREVENT NICKING OR GOUGING THE PRIMARY STEEL MEMBERS.

EXTRANEOUS MEMBERS: EXISTING EXTRANEOUS MEMBERS (I.E., FINISHING MACHINE AND FORM SUPPORTS, ETC., AND THE SUPPPORT FOR SCUPPERS AND BULB ANGLES WHICH ARE TO BE REMOVED) ATTACHED BY WELDED CONNECTIONS TO PORTIONS OF THE TOP FLANGES DESIGNATED "TENSION" SHALL BE REMOVED AND THE FLANGE SURFACES GROUND SMOOTH. GRINDING SHALL BE CAREFULLY DONE AND PARALLEL TO THE FLANGES.

LOADING LIMITATIONS: NO PART OF THE STRUCTURE SHALL BE SUBJECTED TO UNIT STRESSES THAT EXCEED BY MORE THAN 136.5% OF THE ALLOWABLE UNIT STRESSES GIVEN IN THE AMERICAN ASSOCIATION OF STATE HIGHWAY AND TRANSPORTATION OFFICIALS (AASHTO) STANDARD SPECIFICATION FOR HIGHWAY BRIDGES DUE EITHER TO DEMOLITION, ERECTION OR CONSTRUCTION METHODS, OR TO THE USE OR MOVEMENT OF DEMOLITION OR ERECTION EQUIPMENT ON OR ACROSS THE STRUCTURE. STRUCTURAL ANALYSIS COMPUTATIONS, BY AN ENGINEER REGISTERED BY THE STATE OF OHIO, SHOWING THE ALLOWABLE STRESSES AND THE MAXIMUM STRESSES PRODUCED BY THE CONTRACTOR'S METHODS OR EQUIPMENT SHALL BE SUBMITTED TO THE DIRECTOR FOR REVIEW AND APPROVAL AT LEAST 2 WEEKS PRIOR TO THE START OF THE WORK.

CUT LINE CONSTRUCTION JOINT PREPARATION: SAW CUT BOUNDARIES OF PROPOSED CONCRETE REMOVALS 1" DEEP. REMOVE CONCRETE TO A ROUGH SURFACE. INSTALL DOWEL BARS AS SPECIFIED. PRIOR TO CONCRETE PLACEMENT, ABRASIVELY CLEAN JOINT SURFACE AND EXPOSED REINFORCEMENT TO REMOVE LOOSE AND DISINTEGRATED CONCRETE AND LOOSE RUST. THEN, THE JOINT SURFACE AND EXPOSED REINFORCEMENT SHALL BE THOROUGHLY CLEANED OF ALL DIRT, DUST AND OTHER FORIEGN MATERIAL BY THE USE OF WATER, AIR UNDER PRESSURE, OR OTHER METHODS WHICH PRODUCE SATISFACTORY RESULTS. CONCRETE BONDING SURFACES SHALL BE WET WITHOUT FREE WATER AS CONCRETE IS PLACED.

SUBSTRUCTURE CONCRETE REMOVAL: SHALL BE BY MEANS OF APPROVED PNEUMATIC HAMMERS EMPLOYING POINTED AND BLUNT CHISEL TOOLS. HYDRAULIC HOE-RAM TYPE HAMMERS WILL NOT BE PERMITTED. THE WEIGHT OF THE HAMMER SHALL NOT BE MORE THAN 35 POUNDS FOR REMOVAL WITHIN 18 INCHES OF PORTIONS TO BE PRESERVED. OUTSIDE THE 18 INCH LIMIT, A HAMMER HEAVIER THAN 35 POUNDS, BUT NOT TO EXCEED 90 POUNDS, MAY BE USED AT THE APPROVAL OF THE ENGINEER. PNEUMATIC HAMMERS SHALL NOT BE PLACED IN DIRECT CONTACT WITH REINFORCING STEEL THAT IS TO BE RETAINED IN THE REBUILT STRUCTURE.

PAYMENT: THIS WORK SHALL BE PAID FOR AT THE CONTRACT LUMP SUM PRICE BID, WHICH PRICE AND PAYMENT SHALL BE FULL COMPENSATION FOR ALL LABOR, EQUIPMENT, MATERIALS, AND INCIDENTALS NECESSARY TO COMPLETE THE WORK IN CONFORMANCE WITH THESE REQUIREMENTS, WITH PERTINENT PROVISIONS OF 202, AND TO THE SATISFACTION OF THE ENGINEER.

INSPECTION OF STRUCTURAL STEEL:

THE ENGINEER SHALL BE GIVEN THE OPPORTUNITY TO VISUALLY INSPECT ALL EXISTING BUTT-WELDED TOP FLANGE SPLICES TO ENSURE THAT THEY ARE FREE OF DEFECTS. THE DECK SLAB HAUNCH FORMS IMMEDIATELY ADJACENT TO SUCH WELDS SHALL NOT BE ERECTED UNTIL AFTER THE ENGINEER HAS COMPLETED THIS INSPECTION. THIS INSPECTION SHALL NOT TAKE PLACE UNTIL AFTER THE TOP FLANGES ARE CLEANED AS SPECIFIED IN SS 842.08, BUT IT SHALL BE DONE BEFORE THE DECK SLAB REINFORCEMENT IS INSTALLED. THE COST ASSOCIATED WITH THIS INSPECTION SHALL BE INCLUDED WITH SUPERSTRUCTURE CONCRETE, FOR PAYMENT.

PILES DRIVEN TO BEDROCK:

PILES SHALL BE DRIVEN TO REFUSAL ON BEDROCK. REFUSAL SHALL BE CONSIDERED AS OBTAINED BY PENETRATING SOFT BEDROCK FOR SEVERAL INCHES WITH A MINIMUM RESISTANCE OF 20 BLOWS PER INCH OR REFUSAL SHALL BY CONSIDERED AS OBTAINED AFTER THE PILE HAS CONTACTED HARD BEDROCK AND THE PILE HAS THEN RECEIVED AT LEAST 20 BLOWS.

THE ULTIMATE BEARING VALUE IS 41 TONS PER PILE FOR THE HP10x42 ABUTMENT PILES.

ABUTMENT PILES:
20 PILES 20 FEET LONG, ESTIMATED LENGTH
20 PILES OF ORDER LENGTH 20 FEET LONG
10 SPLICES

FOUNDATION BEARING PRESSURE:

PIER FOOTINGS, AS DESIGNED, PRODUCE A MAXIMUM BEARING PRESSURE OF 4.67 TONS PER SQUARE FOOT. THE ALLOWABLE BEARING PRESSURE IS 5 TONS PER SQUARE FOOT.

FOOTINGS SHALL EXTEND A MINIMUM OF 3 INCHES INTO BEDROCK OR TO THE ELEVATION SHOWN, WHICHEVER IS LOWER.

REPLACEMENT OF EXISTING REINFORCING STEEL:

ANY EXISTING REINFORCING BARS WHICH ARE TO BE INCORPORATED INTO THE NEW WORK AND ARE MADE UNUSABLE BY THE CONTRACTOR'S CONCRETE REMOVAL OPERATIONS SHALL BE REPLACED WITH NEW STEEL AT HIS COST. ANY EXISTING REINFORCING BARS DEEMED BY THE ENGINEER TO BE UNUSABLE BECAUSE OF CORROSION SHALL BE REPLACED WITH NEW EPOXY COATED REINFORCING STEEL AS DIRECTED BY THE ENGINEER. THIS SHALL BE INCLUDED UNDER ITEM 842 - CONCRETE, MISC.: REPLACEMENT OF DAMAGED REINFORCING STEEL FOR PAYMENT. ANY DRILLING AND GROUTING OF DOWEL HOLES REQUIRED FOR REPLACEMENT OF CORRODED REINFORCING STEEL SHALL BE INCLUDED UNDER ITEM 842 - CONCRETE, MISC.: DRILLING AND GROUTING DOWEL HOLES FOR PAYMENT.

ITEM 519 - PATCHING CONCRETE STRUCTURES, AS PER PLAN:

ALL SURFACES TO BE PATCHED AND THE EXPOSED REINFORCING STEEL WITHIN, SHALL BE THOROUGHLY CLEANED BY ABRASIVE BLASTING PRIOR TO THE CLEANING SPECIFIED BY 519.04 AND 520.05. CLEANING SHALL PRECEDE APPLICATION OF THE PATCHING MATERIAL OR ERECTION OF THE FORMS BY NOT MORE THAN 24 HOURS. WELDED WIRE MESH SHALL CONFORM TO 711.02 AND BE INCLUDED WITH ITEM 519, PATCHING CONCRETE STRUCTURES, AS PER PLAN FOR PAYMENT.

THIS ITEM SHALL INCLUDE PATCHING OF CONCRETE STRUCTURES IN ACCORDANCE WITH ITEM 519 OF THE CMS AND SHALL ALSO INCLUDE ALL WORK NECESSARY TO EXCAVATE AND SUBSEQUENTLY BACKFILL EMBANKMENT AREAS ADJACENT TO STRUCTURES WITH APPARENT CONCRETE DETERIORATION AT THE GROUND SURFACE. (SEE PLANS FOR LIMITS.)

ITEM SPECIAL, SEALING OF CONCRETE SURFACES (EPOXY-URETHANE):

THE COLOR OF THE URETHANE TOP COAT SHALL BE FEDERAL COLOR STANDARD NO. 595-20219, COCOA.

REINFORCING BAR SPLICES:

REINFORCING BAR SPLICE LENGTHS SHALL CONFORM TO THE MINIMUM LENGTHS SPECIFIED BY 509.08 OF THE CMS UNLESS OTHERWISE NOTED ON THE PLANS.

MECHANICAL CONNECTORS FOR REINFORCING STEEL:

AN APPROVED TYPE OF MECHANICAL CONNECTOR FOR REINFORCING BARS SHALL BE PROVIDED WHERE REQUIRED. INSTALLATION OF CONNECTORS SHALL CONFORM WITH MANUFACTURER'S RECOMMENDED PROCEDURES. IF A DOWEL BAR SPLICE TYPE OF CONNECTOR IS FURNISHED, THE MINIMUM DOWEL BAR LENGTH TO BE FURNISHED WITH THE CONNECTOR SHALL BE AS SHOWN ON THE PLAN.

CONNECTORS AND DOWEL BARS SHALL BE EPOXY COATED. COATING FOR BOTH THE CONNECTORS AND BARS SHALL CONFORM TO THE SAME SPECIFICATIONS. COATINGS WHICH HAVE BEEN DAMAGED OR WHICH OTHERWISE DO NOT MEET SPECIFICATIONS WITH RESPECT TO COLOR, CONTINUITY, AND UNIFORMITY, MAY BE REPAIRED AS DIRECTED BY THE ENGINEER OR THEY SHALL BE REPLACED WITH MATERIAL WHICH MEETS THE SPECIFICATIONS.

CONNECTOR AND DOWEL BAR EXTENSIONS SHALL CONFORM WITH ITEM 509. THE COST OF FURNISHING THE CONNECTORS AND EXTENSIONS SHALL BE INCLUDED WITH THE APPROPRIATE CONCRETE ITEM FOR PAYMENT.

BURGESS & NIPLE

DESIGNED SCT/JAA
DRAWN SCT/JAA
CHECKED JAA/SCT
REVIEWED MAR
DATE 12-27-99
REVISED
STRUCTURE FILE NUMBER 1807692/807706

STRUCTURE NOTES 2 OF 11
BRIDGE NO. CUY-90-0045 L&R
OVER BRADLEY ROAD

CUY-90-0.00

3 / 39

411
582

P:\PR22308\CADD\TNOTES2.DGN

ITEM 518 - POROUS BACKFILL WITH FILTER FABRIC

GEOTEXTILE FABRIC SHALL BE PLACED BETWEEN THE POROUS BACKFILL AND THE APPROACH FILL. IT SHALL TURN UNDER THE BOTTOM OF THE POROUS BACKFILL AND RETURN UP 6 INCHES AGAINST THE BACK FACE OF THE ABUTMENT. THE FABRIC SHALL CONFORM TO 712.09 TYPE A AND BE INCLUDED WITH POROUS BACKFILL FOR PAYMENT.

SLOPE PROTECTION, MISC.:REPLACEMENT OF EXISTING SLOPE PROTECTION:

AREAS OF EXISTING CONCRETE PROTECTION REQUIRING REPLACEMENT AT THE TIME OF CONSTRUCTION SHALL BE REPLACED AS DIRECTED BY THE ENGINEER. REMOVAL OF EXISTING CONCRETE SLOPE PROTECTION SHALL BE INCLUDED WITH ITEM 202 FOR PAYMENT.

SECTIONS OF SLOPE PROTECTION TO BE REPLACED SHALL BE SAW CUT IN ORDER TO PROVIDE A STRAIGHT EDGE AT THE REMAINING PORTIONS OF SLOPE PROTECTION. THE BASE SHALL BE FILLED IN ORDER TO PROVIDE A UNIFORM THICKNESS OF CLASS C CONCRETE.

ITEM 503 - COFFERDAMS, CRIBS AND SHEETING, AS PER PLAN:

TEMPORARY SHEETING SHALL BE USED WHERE NECESSARY TO ACCOMPLISH THE PROPOSED CONSTRUCTION IN STAGES. THE DESIGN OF THE TEMPORARY SHEETING SHALL BE THE RESPONSIBILITY OF THE CONTRACTOR, BE DESIGNED BY A REGISTERED PROFESSIONAL ENGINEER, AND CONFORM WITH 501.05. FOR APPROVAL, FIVE COPIES OF THE DRAWINGS SHALL BE SUBMITTED TO THE DIRECTOR. CONSTRUCTION OF THE SHEETING SHALL NOT BEGIN UNTIL AFTER WRITTEN APPROVAL HAS BEEN RECEIVED FROM THE DIRECTOR. PORTIONS OF THE TEMPORARY SHEETING COMPOSED OF STEEL OR CONCRETE MAY BE LEFT IN PLACE AT THE DISCRETION OF THE ENGINEER. PORTIONS COMPOSED OF OTHER MATERIALS SHALL BE REMOVED PRIOR TO COMPLETION OF THE WORK.

PRECOMPRESSED BITUMEN IMPREGNATED FOAM JOINT SEAL:

DESCRIPTION: THIS WORK SHALL CONSIST OF SEALING JOINTS USING BITUMEN IMPREGNATED FOAM IN ACCORDANCE WITH THESE SPECIFICATIONS, IN REASONABLY CLOSE CONFORMITY WITH THE PLANS AND MANUFACTURER'S SPECIFICATIONS AND RECOMMENDATIONS AND AS DIRECTED BY THE ENGINEER.

MATERIAL: THE MATERIAL SHALL BE A PRECOMPRESSED BITUMEN IMPREGNATED FOAM JOINT SEALANT SUCH AS EMSEAL PCSA, PERMABAND ROYSTON UNIBAND 8100 OR AN APPROVED EQUAL. EMSEAL U.S.A., IS LOCATED AT 344 MILL ROAD IN STAMFORD, CT. 06903 AND HAS A TELEPHONE NUMBER OF (203) 322-3828. PERMABAND IS AVAILABLE FROM PERMAQUIK (CANADA) LTD. WHICH IS LOCATED AT 3043 UNIVERSAL DRIVE IN MISSISSAUGA, ONTARIO L4X2E2; TELEPHONE (416) 625-9444, ROYSTON IS LOCATED AT 128 FIRST ST. PITTSBURGH, PA. 15238; TELEPHONE (412) 828-1500. ALL MATERIAL SHALL BE STORED AND INCORPORATED IN THE WORK AS RECOMMENDED BY THE MANUFACTURER.

SURFACE PREPARATION: THE FACES TO WHICH THE SEAL MUST ADHERE SHALL BE BLASTED CLEAN AND BE FREE OF FOREIGN MATERIAL SUCH AS DIRT, DUST, GREASE, FORM OIL, RELEASE AGENTS AND ANY OTHER MATERIAL DETRIMENTAL TO ADHESION OF THE SEALANT. RESTRICTIONS: BLASTING ABRASIVE CONTAINING MORE THAN 1% FREE SILICA SHALL NOT BE ALLOWED.

APPLICATION: JOINT SEALS SHALL BE INSTALLED ONLY WHEN THE SURFACES ARE DRY AND THE SURFACE TEMPERATURE IS ABOVE 50 DEGREES FAHRENHEIT. BOTH CONCRETE SURFACES ADJACENT TO THE JOINT SEAL SHALL BE PRIMED AS RECOMMENDED BY THE MANUFACTURER. THE FOAM SEAL SHALL BE REMOVED FROM THE PACKAGING AND ITS NARROW EDGE INSERTED INTO THE JOINT OPENING. THE DEPTH FACE WITH THE SELF-ADHESIVE BACKING SHALL BE ACCELERATED PRESSED AGAINST ONE SIDE OF THE JOINT SO THAT FOAM IS HELD IN PLACE WHILE IT RECOVERS. AT TEMPERATURES ABOVE 68 DEGREES FAHRENHEIT THE MATERIAL WILL RECOVER IN A FEW HOURS. AT TEMPERATURES BELOW 68 DEGREES FAHRENHEIT THE RECOVERY SHALL BE ACCELERATED BY HEATING THE MATERIAL WITH AN OPEN FLAME, GAS BURNER, INFRA-RED LAMP OR HOT AIR BLOWER. A CONTINUOUS LENGTH OF JOINT SEAL SHALL BE ACHIEVED BY JOINING INDIVIDUAL ENDS. ENDS MUST BE PUSHED WELL PAST ONE ANOTHER. THE SEAL SHALL NOT BE PULLED OR STRECHED SO THAT GAPS BETWEEN SUCCESSIVE LENGTHS ARE PREVENTED.

PAYMENT FOR THIS MATERIAL SHALL BE INCLUDED UNDER ITEM 611, APPROACH SLAB, AS PER PLAN.

POURED POLYURETHANE JOINT SEAL:

DESCRIPTION: THIS WORK SHALL CONSIST OF SEALING JOINTS AT THE WINGWALL AND APPROACH SLAB INTERFACE WITH POURED POLYURETHANE JOINT SEAL IN ACCORDANCE WITH THESE SPECIFICATIONS, IN REASONABLE CLOSE CONFORMITY WITH THE PLANS AND MANUFACTURER'S SPECIFICATIONS AND RECOMMENDATIONS AND AS DIRECTED BY THE ENGINEER

MATERIAL: THE MATERIAL FOR THIS ITEM IS A TWO-PART, COLD APPLIED CHEMICALLY CURING SELF-LEVELING, ELASTOMERIC, POLYURETHANE JOINT SEALANT MEETING THE REQUIREMENTS OF FEDERAL SPECIFICATION TT-S-00227E AND ASTM C-920. ALL MATERIAL SHALL BE STORED AND INCORPORATED IN THE WORK AS SPECIFIED BY THE MANUFACTURER.

APPLICATION: POLYURETHANE JOINT SEAL SHALL BE POURED OVER THE FULL LENGTH OF THE PRECOMPRESSED BITUMEN IMPREGNATED FOAM PREVIOUSLY INSTALLED IN THE JOINT AS DETAILED IN THE PLANS AND SHALL BE APPLIED ONLY WHEN THE CONCRETE IS DRY AND ITS TEMPERATURE IS ABOVE 50 DEGREES FAHRENHEIT. THE INSTALLED AND CURED MATERIAL SHALL BE THE DEPTH AS SHOWN IN THE PLANS AND SHALL BE BONDED TO THE CONCRETE SIDES OF THE JOINT. ANY UNBONDED SECTION SHALL BE REMOVED AND REPLACED AT THE CONTRACTOR'S EXPENSE. DAMS AS REQUIRED TO CONTAIN THE SEALER SHALL BE INCIDENTAL TO THIS WORK.

PAYMENT FOR THIS MATERIAL SHALL BE INCLUDED UNER ITEM 611, APPROACH SLAB, AS PER PLAN.

ITEM 503, UNCLASSIFIED EXCAVATION, AS PER PLAN

UNCLASSIFIED EXCAVATION SHALL BE IN ACCORDANCE WITH ITEM 503 EXCEPT TAHT THE BACKFILL MATERIAL BEHIND THE ABUTMENTS SHALL BE C.M.S. 304 MATERIAL PACKED IN 6 INCH LIFTS.

ITEM 514, FIELD PAINTING MISC.: REPAIRING DAMAGED PAINT

THIS ITEM SHALL CONSIST OF PREPARING AND COATING THE FOLLOWING AREAS OF EXISTING STEEL:

1) ANY AREA WHERE DRILLING, GRINDING, OR WELDING OCCURED.
2) AREAS THAT WERE ABRASIVE BLASTED.
3) ANY AREAS DAMAGED BY THE CONTRACTOR'S OPERATIONS.

SURFACE PREPARATION SHALL CONSIST OF ABRASIVE BLASTING THE AREA TO BE COATED TO AN SA 2½ NEAR-WHITE CONDITION. BLASTING ABRASIVES CONTAINING MORE THAN 1% FREE SILICA SHALL NOT BE ALLOWED. THESE AREAS SHALL BE COATED THE SAME DAY THAT THEY ARE BLASTED.

THE PREPARED AREAS SHALL BE COATED WITH ONE COAT OF A HIGH SOLIDS EPOXY AT LEAST 5 MILS THICK. THE HIGH SOLIDS EPOXY SHALL BE APPLIED BY BRUSH. THE COLOR OF THE HIGH SOLIDS EPOXY SHALL CLOSELY MATCH THE COLOR OF THE EXISTING COATING.

THE HIGH SOLIDS EPOXY SHALL BE ONE OF THE FOLLOWING PRODUCTS:

1) AMERON AMERLOCK 400
2) VALSPAR HIGH SOLIDS EPOXY 76 SERIES
3) TNEMEC CHEMBUILD SERIES 135
4) SHERWIN WILLIAMS - EPOXY-MASTIC COATING

COST FOR FURNISHING ALL MATERIALS, LABOR, AND EQUIPMENT NECESSARY TO COMPLETE THIS ITEM SHALL BE INCLUDED IN THE LUMP SUM BID PRICE FOR THIS ITEM:

ITEM	UNIT	DESCRIPTION
514	LUMP SUM	FIELD PAINTING MISC.: REPAIRING DAMAGED PAINT AREAS

P:\PR22308\CADD\TNOTES3.DGN

BURGESS & NIPLE

DESIGNED	DRAWN	REVIEWED	DATE
SCT/JAA	SCT/JAA	MAR	12-22-99
CHECKED	REVISED	STRUCTURE FILE NUMBER	
JAA/SCT		1807692/807706	

STRUCTURE NOTES 3 OF 11
BRIDGE NO. CUY-90-0045 L&R
OVER BRADLEY ROAD

CUY-90-0.00

ITEM 844 HIGH PERFORMANCE CONCRETE, SUPERSTRUCTURE, (DECK) AS PER PLAN

ITEM 844 HIGH PERFORMANCE CONCRETE, SUPERSTRUCTURE, (PARAPET) AS PER PLAN

ITEM 844 HIGH PERFORMANCE CONCRETE, SUBSTRUCTURE, AS PER PLAN

THE PROVISIONS OF 844 SHALL APPLY EXCEPT AS NOTED BELOW.

SLIPFORMING:
THE CONTRACTOR IS ALLOWED THE OPTION OF SLIPFORMING BRIDGE PARAPETS OVER NON TRAVELED WAYS. A MINIMUM OF 3 DAYS AFTER PLACING THE TEST SECTION THE CONTRACTOR SHALL CORE THE TEST SECTION (A MINIMUM OF 3 CORES) AT LOCATIONS AS DIRECTED BY THE ENGINEER. APPROVAL TO SLIPFORM SHALL NOT BE GRANTED UNTIL AFTER THE CORING AND AFTER A SUCCESSFUL SLIPFORMING RESULT IS OBTAINED. IN ADDITION TO THE REQUIREMENTS OF THE LAST PARAGRAPH OF 844.031 THE ENGINEER WILL INSPECT THE SLIPFORMED SURFACE FOR HORIZONTAL CRACKING 6 MONTHS AFTER COMPLETION OF THE SLIPFORMING OPERATION. ANY ADDITIONAL CRACKS FOUND SHALL BE REPAIRED AS PER THE SPECIFICATIONS AT NO ADDITIONAL COST TO THE STATE. IN ADDITION, ALL ANCHOR BOLTS FOR FENCE POSTS SHALL BE CAST IN PLACE.

SLIPFORMING SHALL NOT BE PERFORMED DIRECTLY OVER AREAS WHERE THERE IS OR WILL BE VEHICULAR OR PEDESTRIAN TRAFFIC. AT THESE LOCATIONS, THE PARAPETS SHALL BE FORMED AND THE FOLLOWING REQUIREMENTS FOLLOWED.

THE MINIMUM CONCRETE SLUMP DURING PLACEMENT OF ALL CONCRETE PARAPETS SHALL BE 6 INCHES. THE MAXIMUM SLUMP ALLOWED DURING PLACEMENT IS 8 INCHES.

FORMS SHALL NOT BE REMOVED UNTIL AT LEAST 2 HOURS AFTER THE FINAL SET. DETERMINATION OF THE FINAL SET SHALL BE AS PER ASTM C266 (GILLMORE NEEDLE). TESTING SHALL BE PERFORMED BY THE CONTRACTOR AT NO COST TO THE STATE.

ANCHOR BOLTS FOR FENCE POSTS SHALL BE CAST IN PLACE.

THIS ITEM SHALL INCLUDE THE DRILLING OF HOLES PER CMS 510 INTO CONCRETE OR MASONRY AND THE FURNISHING AND PLACING OF GROUT INTO HOLES. NON-SHRINKING EPOXY GROUT SHALL BE USED IN ACCORDANCE WITH CMS 705.20. ANCHORING SHALL CONFORM TO CMS 705.20. PAYMENT SHALL BE INCLUDED WITH THIS ITEM. THE FURNISHING AND PLACEMENT OF STEEL FOR DOWELS IS ALSO INCLUDED WITH THIS ITEM

THE CONTRACTOR SHALL CONSTRUCT 1½ INCHES DEEP AND ¼ INCH WIDE CONTROL JOINTS SPACED AT A MINIMUM OF 6 FEET AND A MAXIMUM OF 8 FEET ON CENTER. THE CONTROL JOINTS SHALL BE MADE IN THE COMPLETE CIRCUMFERENCE OF THE PARAPET, STARTING AND ENDING AT THE ELEVATION OF THE TOP OF THE CONCRETE DECK (SEE DETAILS BELOW). THE CONTRACTOR MAY EITHER FORM THE CONTROL JOINTS IN WITH FORM LINERS, OR, WITHIN 24 HOURS OF PLACEMENT, SAW CUT THE CONTROL JOINTS IN WITH THE USE OF AN EDGE GUIDE, FENCE, OR JIG WHICH IS REQUIRED TO ENSURE THAT THE CUT JOINT IS STRAIGHT, TRUE, AND ALIGNED ON ALL FACES OF THE PARAPET. THE ENTIRE LENGTH OF EACH CONTROL JOINT SHALL BE SEALED TO A MINIMUM DEPTH OF 1½ INCHES WITH A CAULKING MATERIAL CONFORMING TO FEDERAL SPECIFICATION, TT-S-00227E.

MIX OPTIONS:
ALL DECK CONCRETE AND PARAPET CONCRETE SHALL BE MIX 4, AS PER PLAN. ALL OTHER CONCRETE SHALL BE MIX 4, AS PER PLAN, OR MIX 2 CONCRETE. THE FOLLOWING PROPORTIONS WILL USED AS A STARTING MIX DESIGN.

CONCRETE TABLE:
QUANTITIES PER CUBIC YARD
AGGREGATES (SSD)

MIX 4, AS PER PLAN (GGBF SLAG + MICROSILICA)

	GRAVEL	LIMESTONE	SLAG
FINE AGGREGATE (LB)	1245	1245	1246
#8 COARSE AGGREGATE (LB)	360	360	315
#57 COARSE AGGREGATE (LB)	1315	1335	1155
TOTAL (LB)	2920	2940	2716
CEMENT CONTENT (LB)	400	400	400
GGBF SLAG (LB)	170	170	170
MICROSILICA (LB)	30	30	30
WATER TO CEMENTITIOUS RATIO MAX.	0.42	0.42	0.42
AIR CONTENT, +/-2%	7%	7%	7%

THE WEIGHTS SPECIFIED IN THE CONCRETE TABLE WERE CALCULATED FOR MATERIALS OF THE FOLLOWING BULK SPECIFIC GRAVITIES (SSD): NATURAL SAND AND GRAVEL 2.62, LIMESTONE SAND 2.68, LIMESTONE 2.65, SLAG 2.30, FLY ASH 2.65, GGBF SLAG 2.90, MICROSILICA SOLID 2.20, AND PORTLAND CEMENT 3.15. FOR AGGREGATES OF SPECIFIC GRAVITIES DIFFERING MORE THAN PLUS OR MINUS 0.02 FROM THESE, THE WEIGHTS IN THE TABLE WILL BE CORRECTED.

DECK TEXTURING:
IN LIEU OF THE REQUIREMENTS OF SS 842 OR SS 844, CONCRETE DECK SLABS SHALL BE FINISHED IN ACCORDANCE WITH 451.09 AND 451.12 EXCEPT THAT CONSTRUCTION JOINTS SHALL NOT BE EDGED, AND A STRIP OF SURFACE 9 TO 12 INCHES WIDE ADJACENT TO CURBS AND BARRIERS SHALL NOT BE GROOVED. IF THE TEXTURE AS REQUIRED IS NOT MET, THE CONTRACTOR WILL SAW TEXTURE THE DECK AT NO COST TO THE STATE.

BASIS OF PAYMENT:
ALL COSTS OF MATERIAL AND LABOR TO PROVIDE LIGHTING CONDUITS IF SHOWN IN THE BRIDGE PLANS SHALL BE INCLUDED FOR PAYMENT UNDER THIS ITEM. PAYMENT FOR THE ABOVE COMPLETED AND ACCEPTED QUANTITIES WILL BE MADE AT THE CONTRACT BID PRICE FOR:

ITEM	UNITS	DESCRIPTION
844E48001	CUBIC YARD	HIGH PERFORMANCE CONCRETE SUPERSTRUCTURE (DECK), AS PER PLAN
844E48021	CUBIC YARD	HIGH PERFORMANCE CONCRETE SUPERSTRUCTURE (PARAPET), AS PER PLAN
844E48041	CUBIC YARD	HIGH PERFORMANCE CONCRETE SUBSTRUCTURE, AS PER PLAN
844E49000	LUMP SUM	HIGH PERFORMANCE CONCRETE TRIAL MIX
844E49010	LUMP SUM	HIGH PERFORMANCE CONCRETE TESTING

P:\PR22308\CADD\TNOTES4.DGN

BURGESS & NIPLE

DESIGNED SCT/JAA | DRAWN SCT/JAA | REVIEWED MAR 02-08-00 | DATE
CHECKED JAA/SCT | REVISED | STRUCTURE FILE NUMBER 1807692,1807706

STRUCTURE NOTES 4 OF 11
BRIDGE NO. CUY-90-0249 L&R
OVER DOVER CENTER ROAD

CUY-90-0.00

ITEM SPECIAL - FIELD PAINTING, MISC.:SHOP PAINTING AND FIELD TOUCH-UP OF STRUCTURAL STEEL

DESCRIPTION

This specification covers shop cleaning and shop application of a 3 coat paint system on Item 863 - structural steel and the field cleaning and repair of surfaces damaged in shipping, handling, and erecting the structural steel and any other damages during construction.

This specification shall also include the galvanizing as per 711.02 of all nuts, washers, bolts, anchor bolts, and all other structural members designated in the plans.

MATERIAL

A. A three coat paint system consisting of an

Organic Zinc Prime Coat
Epoxy Intermediate Coat
Urethane Finish Coat

and meeting the requirements of Supplemental Specification 910 entitled "OZEU Structural Steel Paint"

B. Inorganic Zinc Silicate primer paint, for the bolted faying surfaces, meeting the requirements of C & MS 708.17.

C. A tie coat. Consisting of an Epoxy Intermediate Coat, meeting the requirements of Supplemental Specification 910, "Epoxy Intermediate Coat" and thinned 50%, by volume, with a thineer as recommended by the paint manufacturer.

Approved paint, items A and C, shall be from one manufacturer, regardless of shop or field application.

Approved paint, Item B, may be from a different manufacturer than Items A and C. Item B paint used shall be from the same manufacturer for both shop application and field touch-up.

PRE-PAINT CONFERENCE

If designated on the plan a pre-paint conference shall be held separately from the preconstruction meeting. Attendees to this meeting shall include the General Contractor, Paint Contractor, Structural Steel erector, Fabricator, Quality Control Specialist, Engineer, Structural Steel Engineer, and others if required in the plan.

The meeting shall take place before the steel is fabricated or painted.

QUALITY CONTROL SPECIALISTS

This person will not be a Foreman or member of the Contractor's or Fabricator's production staff (ie. he will not abrasive blast, paint, recover spent abrasives, etc.).He will not be involved in any other miscellaneous task (ie. mixing paint, running errands, running or working on equipment, etc. Documentation that personnel performing quality control related functions are qualified shall be submitted to the Engineer prior to allowing the Quality Control Specialist (QCS) to begin work. Documentation/verification shall be provided to the Engineer that the QCS has received formal training from one of the following: KTA tator, S.G. Pinney, or Corrosion Control Consultants. He shall be equipped with material safety data sheets, tools and equipment to provide quality control on all facets of the work and shall have a thorough understanding of the plans and specifications pertaining to this project. He shall be responsible for inspecting the equipment at the specified intervals, the abrasives, and the work, at all quality control points. He shall also be responsible for verifying that all work is done within the specified work limitation. He shall cooperate with the Inspector and compare and document quality control readings. He shall have the authority to stop work and the responsibility to inform the Contractor's or Fabricator's Foreman of nonconforming work.

Quality control specialists will be required in the shop and in the field. Before fabrication the fabricator shall designate one individual for each shop as a Quality Control Specialist.

At the preconstruction or pre-paint meeting, the Contractor shall also designate one individual on each project as a Quality Control Specialist (only one person per project will be necessary unless the Contractor is working at more than three (3) sites simultaneously). It will then be necessary to provide an additional Quality Control Specialist and a set of testing equipment as described in the equipment section for each additional three sites being painted simultaneously.

Quality Control Points

Quality control points (QCP) are points in time when one phase of the work is complete and ready for inspection by the Contractor or Fabricator and the Structural Steel Engineer or the Engineer prior to continuing with the next operational step. At these points: The Contractor or Fabricator shall afford access to inspect all affected surfaces. If inspection indicates a deficiency, that phase of the work shall be corrected in accordance with these specifications prior to beginning the next phase of work. Discovery of defective work or material after a Quality Control Point is past or failure of the final product before final acceptance, shall not in any way prevent rejection or obligate the State of Ohio to final acceptance.

Quality Control Points (QCP)	(PURPOSE)
1.) Washing	Remove water soluble oil, grease, salt, dirt, etc.
2.) Solvent Cleaning	Remove asphaltic cement, oil, grease, salt, dirt, etc., not removed during washing
3.) Grinding Edges	Grind edges required.
4.) Abrasive Blasting	Blast surface to receive paint
5.) Prime Coat Application	Check surface cleanlyness, apply prime coat check coating thickness
6.) Intermediate Coat Application	Check surface cleanliness, apply intermediate coat, check coating thickness
7.) Finish Coat Application	Check surface cleanliness, apply finish coat, check coating thickness
8.) Visual Inspection	Visually inspect paint before shipment of steel and check of total system thickness.
9.) Repair of Damage Areas	Check for damage areas after completion of structure and repeat QCP 1 - 7 for damage areas.
10.) Final Review	Wash structure as per QCP#1. Visually inspect system for acceptance and check total system thickness.

SURFACE PREPARATION

This item shall consist of washing, solvent cleaning, and abrasive cleaning of structural steel members.

DESIGN AGENCY
O.D.O.T.
DISTRICT TWELVE
L&D DEPARTMENT

DESIGNED	DRAWN	REVIEWED	DATE	STRUCTURE FILE NUMBER
BGW	JMB	MJM	08/20/98	1807692/807706
CHECKED	REVISED			
GWM				

STRUCTURE NOTES 5 OF 11
BRIDGE NO. CUY-90-0045 L&R
OVER BRADLEY ROAD

CUY-90-0.00

P:\PR22308\CADD\TNOTES5.DGN

Washing (QCP #1)

Prior to abrasive blasting, all surfaces to be painted shall be washed with potable water having a nozzle pressure of at least 1,000 PSI and a delivery rate of not less than 4 gallons per minute. (QCP #1) The contractor or fabricator, shall provide equipment specifications to verify the above. The equipment shall also be equipped with gauges to verify the pressure. The water shall contain tri-sodium phosphate detergent at a rate of 2 ounces (by weight) per gallon of technical grade, hydrated water (minimum) to remove water soluble oil, grease, salt and dirt. Before the surfaces dry, the bridge or structural steel member shall be rinsed to remove all remaining detergent. The nozzle shall be held at a maximum of twelve (12) inches from the surface being washed or rinsed. Surfaces shall not be considered as clean until clear rinse water runs off the structure. After the surface is rinsed and allowed to dry, it shall be checked for remaining visible dirt. Surfaces shall be rewashed and rinsed as necessary to remove all remaining dirt. The finish coat shall be applied within three (3) months of washing the structure or structural steel member.

Solvent Cleaning (QCP #2)

After washing, all traces of asphaltic cement, oil, grease, diesel fuel deposits, and other soluble contaminants which remain, shall be removed by solvent cleaning (QCP #2) (see SSPC-SP 1 Solvent Cleaning for recommended practices). Under no circumstances shall any abrasive blasting be done to areas with asphaltic cement, oil, grease, or diesel fuel deposits. All solvent cleaned areas shall be rewashed as previously noted.

Grinding Edges (QCP #3)

The edges of all steel shall be rounded in accordance with AWS D1.5 Section 3.2.9 before abrasive blasting.

Abrasive Blasting (QCP #4)

All steel to be painted shall be blast cleaned according to SSPC-SP10 (near-white blast) as shown in SSPC-Vis 1-89 (pictorial surface preparation standards for painting steel surfaces). Steel shall be maintained in a blast cleaned condition until it has received a prime coat of paint.

During Shop application and field touchup galvanized steel (including corrugated steel bridge flooring), adjacent concrete, existing painted surface and other surfaces not intended to be painted, shall be masked to prevent damage from abrasive blasting and painting operations.

The abrasive shall be a recyclable steel grit. After each use and prior to reuse, the steel grit shall be cleaned of paint chips, rust, mill scale and other foreign material by equipment specifically designed for such cleaning.

The surface profile shall be a minimum of one (1) mils and a maximum of three and one half (3.5) mils. Abrasives of a size suitable to develop the required surface profile shall be used. Any abrasive blasting which is done when the steel temperature is less than 5 degrees above the dew point shall be reblasted when the steel temperature is five (5) degrees above the dew point. Dew point shall be defined as the temperature at which moisture condenses on the steel surfaces.

All fins, tears, slivers, and burred or sharp edges that are present on any steel member after blasting shall be removed by grinding and the area reblasted.

All abrasives and residue shall be removed from surfaces to be painted with a vacuum system equipped with a brush-type cleaning tool. All steel blast cleaned in any one day shall be kept dust free and prime coated the same day. Failure to prime coat the same day will require reblasting before prime coating. No dust or abrasives from adjacent work shall be left on the finish coat.

The Quality Control Specialist shall perform the following test (and the Inspector will verify) to ensure that the air is not contaminated: blow air from the nozzle for thirty (30) seconds onto a white cloth or blotter held in a rigid frame. If any oil or other contaminants are present on the cloth or blotter, abrasive blasting shall be suspended until the problem is corrected and verified by another test. This test shall be done at the start of each shift and at four (4) hour intervals.

Abrasive blasting and painting may take place simultaneously on any one bridge as long as abrasive blasting debris and/or dust created by be the blowing operation does not come in contact with freshly painted surfaces.

The Contractor shall remove all blasting residues from the roadway, pedestrian walkways, gutters and other drainage facilities at the end of each day's work. Care shall be taken to keep all blasting residues out of drains or catch basins. Nearby drains and catch basins shall be covered during blasting operations. Blasting residue shall not be permitted on surfaces which are being used by vehicles or pedestrians. The blasting residues shall be disposed of outside the highway right of way.

TESTING EQUIPMENT

Both the Contractor for the field application and the Fabricator for shop application, shall provide and assign to the Engineer the following testing equipment in good working order, for the duration of the project,one set of testing equipment for each quantity control specialist. These shall be separate sets from those contractor or fabricator provide for Quality Control Specialist.

Each Quality Control Specialist shall have his own testing equipment. When no test equipment is available, no work shall be performed.

1. *One (1) Spring micrometer and 1 roll of coarse and 3 (unless otherwise specified on plans) rolls of extra-coarse replica tape.*
2. *One (1) Positector 2000-6000, Quanix 2200, or Elcometer (A345FBII) and the calibration plates as per the NBS calibration standards in accordance with ASTM D-1186.*
3. *One (1) Sling Psychrometer including Psychometric tables Used to calculate relative humidity and dew point temperature.*
4. *Two (2) steel surface thermometers accurate within 2 degrees.*
5. *Flashlight 2-D cell*
6. *SSPC Visual Standard for Abrasive Blast Cleaned Steel SSPC-Vis 1-89*
7. *One (1) Recorder Thermometer capable of recording the date, time, and temperature over a period of at least 12 hours.*

HANDLING

All paint and thinner shall be delivered to the project site or Fabricator's shop in original, unopened containers with labels intact. Minor damage to containers is acceptable provided the container has not been punctured. Thinner containers shall be a maximum of five (5) gallons.

Paint shall be stored at the temperature recommended by the manufacturer to prevent paint deterioration.

Each container of paint and thinner shall be clearly marked or labeled to show paint identification, component, color, lot number, stock number, date of manufacture, and information and warnings as may be required by Federal and State laws.

All containers of paint and thinner shall remain unopened until required for use. The label information shall be legible and shall be checked at the time of use.

Solvent used for cleaning equipment is exempt from the above requirements.

Paint which has livered, gelled or otherwise deteriorated during storage shall not be used. However, thixotropic materials which can be stirred to attain normal consistency may be used.

DESIGN AGENCY: O.D.O.T. DISTRICT TWELVE L&D DEPARTMENT
REVIEWED: MJM 08/20/98 DATE
STRUCTURE FILE NUMBER: 1807692,1807706
DRAWN: JMB REVISED
DESIGNED: BGW CHECKED: GWM

STRUCTURE NOTES 6 OF 11
BRIDGE NO. CUY-90-0045 L&R OVER BRADLEY ROAD

CUY-90-0.00

P:\PR22308\CADD\TNOTES5.DGN

The oldest paint of each kind shall be used first. No paint shall be used which has surpassed its shelf life.

Paint may be considered as eligible for payment for material on hand as specified in 109.07. However, only paint which the contractor can prove to the Engineer will be used during the construction season shall be eligible for payment. The Contractor shall provide the Engineer calculations indicating the total square feet of steel to be painted during the construction season. He shall also provide calculations showing the total number of gallons required. The Contractor shall be responsible to store the paint on the project in such manner to prevent theft and adverse temperatures. He shall provide thermometers capable of monitoring the maximum high and low temperatures within the storage facility. The Contractor is responsible for properly disposing of all unused paint and paint containers.

The Contractor shall furnish shipping invoices for all materials used on the project to the Engineer, prior to use.

MIXING AND THINNING

All ingredients in any container of paint shall be thoroughly mixed immediately before use and shall be agitated often enough during application to maintain a uniform composition; however, the primer shall be continuously mixed by an automated agitation system (Hand held mixers not allowed). Paint shall be carefully examined after mixing for uniformity and to verify that no unmixed pigment remains on the bottom of the container. The paint shall be mixed with a high shear mixer (such as a Jiffy Mixer). Paddle mixers or paint shakers are not allowed. Paint shall not be mixed or kept in suspension by means of an air stream bubbling under the paint surface.

All paint shall be strained after mixing. Strainers shall be of a type to remove only skins and undesirable matter, but not the pigment.

No thinner shall be added to the paint without the Engineer's approval, and only if necessary for proper application as recommended by the manufacturer. When the use of thinner is permissible, thinner shall be added slowly to the paint during the mixing process. All thinning shall be done under supervision of the Engineer. In no case shall more thinner be added than that recommended by the manufacturer's printed instructions. Only thinners recommended and supplied by the paint manufacturer may be added to the paint. No other additives shall be added to the paint.

Catalysts, curing agents, or hardeners which are in separate packages shall be added to the base paint only after the base paint has been thoroughly mixed. The proper volume of the catalyst shall then be slowly poured into the required volume of base with constant agitation. Liquid which has separated from the pigment shall not be poured off prior to the mixing. The mixture shall be used within the pot life specified by the manufacturer. Therefore only enough paint shall be catalyzed for prompt use. Most mixed, catalyzed paints cannot be stored, and unused portions of these shall be discarded at the end of each working day.

COATING APPLICATION

General

All structural steel, scuppers, bulb angles, expansion joints, steel railing, exposed steel piling, drain troughs, galvanized surfaces and other areas indicated on the plans shall be painted unless otherwise noted in the plans.

Galvanized surfaces to be embedded in concrete and surfaces in contact with seals, shall be masked and receive no paint.

All areas where field welding is required shall be masked prior to shop coating and receive no paint.

The top of flanges shall receive the prime coat only.

Areas to receive studs shall not be masked but paint shall be removed before studs are applied.

Treatment of Faying Surfaces

Surfaces indicated below shall be treated according to Method A or Method B as described in this specification:

1. Faying surfaces of main beam or girder bolted field splices.

2. All internal contact surfaces of filler and splice plates.

3. Other surfaces indicated in the plans.

Bolted crossframes on straight beams or girders do not need to meet the requirements of Method A or Method B unless indicated otherwise in the plans.

Method A

The faying surfaces shall be coated with inorganic zinc primer.

The coating of these faying surfaces with the inorganic zinc-rich primer shall be done by using a double masking technique. First, the areas adjacent to the faying surfaces shall be tightly masked and the inorganic zinc primer applied. After this primer has dried sufficiently enough to avoid damage, the faying surfaces shall be masked and the remainder of the girder shall be coated with the organic zinc-rich primer and subsequent coats.

All bolted shop connections and bolted cross frames shall be removed and disassembled prior to the blasting and coating of the girders or beams. The parts shall be blasted separately and primed, then reassembled and the bolts fully tightened using the turn of the nut method.

Method B

The faying surfaces shall be coated with organic zinc primer only per this specification. In order to use Method B, the primer shall be tested in accordance with the methods described in "Allowable Stress Design Specification for Structural Joints Using ASTM A325 or A490 Bolts". Testing shall include slip tests and tension creep tests. A minimum slip coefficient of 0.33 shall be attained.

Testing shall be performed by an accredited laboratory at the Contractor's expense. Certified test results shall be furnished to the Engineer. Documentation shall also include certification that the essential variables (defined in section 1.2, Appendix A, of the Structural Joints Specification) used in the testing are the same as those used in the paint provided for the structure.

All galvanized components, including galvanized nuts, bolts, and washers, shall be solvent cleaned after installation. The epoxy tiecoat, epoxy coat and the urethane protective coat shall then be applied.

Temporary erection marks added by the fabricator to highlight or enhance the required steel stamped erection marks shall be made without damaging the paint system. Temporary erection marks shall be applied only after the finish coat is cured and shall be removed at the end of the project.

Unless otherwise specified, all coats shall be applied by spray.

The Contractor for field application and the Fabricator for shop application, shall supply the Engineer with the product data sheets before any coating is done. The product data sheets shall indicate the mixing and thinning directions, the recommended spray nozzles and pressures and the minimum drying time for shop applied coats.

DESIGN AGENCY
O.D.O.T.
DISTRICT TWELVE
L&D DEPARTMENT

DATE REVIEWED 08/20/98
STRUCTURE FILE NUMBER 807692,807706

DRAWN JMB REVISED
DESIGNED BGW CHECKED GWM

STRUCTURE NOTES 7 OF 11
BRIDGE NO. CUY-90-0045 L&R
OVER BRADLEY ROAD

CUY-90-0.00

These product data sheets shall be followed except when they conflict with these specifications, in which case the specifications shall govern.

If the surface is degraded or contaminated after surface preparation and before painting, the surface shall be restored before painting application. In order to prevent degradation or contamination of cleaned surface, the prime coat of paint shall be applied within twenty four (24) hours after blast cleaning with method A, and within eight (8) hours after blast cleaning with method B, as required in surface preparation above.

Cleaning and painting shall be scheduled so that dust or other contaminants do not fall on wet, newly-painted surfaces. Surfaces not intended to be painted shall be suitably protected from the effects of cleaning and painting operations. Overspray shall be removed with a stiff bristle brush, wire screen, or a water wash with sufficient pressure to remove overspray without damaging the paint. The overspray must be removed before applying the next coat. All abrasives and residue shall be removed from painted surfaces before recoating, with a vacuum system equipped with a brush type cleaning tool.

No visible abrasives from adjacent work shall be left on any coat. Abrasives shall be removed.

Spray application for the intermediate coat (epoxy) shall not be used where traffic (including railroad, highway and river traffic, public and private property) is affected unless the operation is totally contained to prevent overspray. If brushed more than one coat may be necessary to produce the required millage.

Spray Application (General)

All spray application of paint shall be in accordance with the following:

Primer ingredients shall be kept uniformly mixed in the Spray equipment shall be kept clean so that dirt, dried paint and other foreign materials are not deposited in the paint film. Any solvent left in the equipment shall be completely removed before using.

Paint shall be applied in a uniform layer with overlapping at the edges of the spray pattern. The border of the spray pattern shall be painted first; with the painting of the interior of the spray pattern to follow, before moving to the next spray pattern area. A spray pattern area is such that the gun shall be held perpendicular to the surface and at a distance which will ensure that a wet layer of paint is deposited on the surface. The trigger of the gun should be released at the end of each stroke. All bolts and rivet heads shall be sprayed from at least two (2) directions or brushed to insure coverage.

Each spray operator shall demonstrate to the Engineer his ability to apply the paint as specified. Any operator who does not demonstrate this ability shall not spray.

If mud cracking occurs, the affected area shall be cleaned to bare metal in accordance with surface preparation above and repainted.

All spray equipment used shall be suitable for use with the specified paint. Paint manufacturer's equipment recommendations shall be consulted in the event of paint application problems.

If air spray is used, traps or separators shall be provided to remove oil and condensed water from the air. The traps or separators must be of adequate size and must be drained periodically during operations. The following test shall be done by the Contractor and verified by the Engineer to insure that the traps or separators are working properly. Blow air from the spray gun for thirty (30) seconds onto a white cloth or blotter held in a rigid frame. If any oil, water or other contaminants are present on the cloth or blotter: painting shall be suspended until the problem is corrected and verified by another test. This test shall be done at the start of each shift and at four (4) hour intervals. This is not required for an airless sprayer.

Application Approval

The beginning of the application of each of the three different coats shall be subject to inspection and approval. The purpose of this inspection is to detect any defects which might result from the Contractor's method of application. If any defects are discovered, the Contractor shall make all necessary adjustments to his method of application to eliminate these defects before proceeding with application.

Temperature

Paint shall not be applied when the temperature of the air, steel, or paint is below 50 degrees F. Paint shall not be applied when the steel surface temperature is expected to drop below 50 degrees F before the paint has cured for the minimum times specified below:

	50 F	60 F	70 F
Primer	4 hrs.	3 hrs.	2 hrs.
Intermediate	6 hrs.	5 hrs.	4 hrs.
Finish	8 hrs.	6 hrs.	4 hrs.

The above temperatures and times shall be monitored with the recording thermometer.

Moisture

Paint shall not be applied when the steel surface temperature is less than 5 degrees F above the dew point. Paint shall not be applied to wet or damp surfaces or on frosted or ice-coated surfaces. Paint shall not be applied when the relative humidity is greater than 85%. Paint shall not be applied during rain, fog or mist unless the above moisture criteria is met.

Continuity

Each coat of paint shall be applied as a continuous film of uniform thickness free of all defects such as holidays, runs, sags, etc. All thin spots or areas missed shall be repainted and permitted to dry before the next coat of paint is applied.

Dry Film Thickness

Prime thickness, cumulative prime and intermediate thickness and cumulative prime, intermediate and finish thickness shall be determined by use of type 2 magnetic gage in accordance with the following:

Five (5) separate spot measurement spaced evenly over each 100 square feet of area to be measured. For field measurements these measurements shall be taken on flanges, webs, cross bracing, stiffeners, etc. Three (3) gage readings shall be made for each spot measurement of either the substrate or the paint. Move the probe a distance of one to three inches for each new gage reading. Discard any unusually high or low gage reading that cannot be repeated consistently. Take the average (mean) of the three gage readings as the spot measurement. The average of five spot measurements for each such 100 square foot area shall not be less that the specified thickness. No single spot measurement in any 100 square foot area shall be less than 80% of the specified thickness. Any one of three readings which are average to produce each spot measurement, may under- run by a greater amount. The five spot measurements shall be made for each 100 square feet of area as follows:

1. For structures or batch of structural steel not exceeding 300 square feet in area, each 100 square foot area shall be measured.

2. For structures or batch of structural steel not exceeding 1,000 square feet in area, three 100 square foot areas shall be randomly selected and measured.

3. For structures or batch of structural steel exceeding 1,000 square feet in area, the first 1,000 square feet shall be measured as stated in section 2 and for each additional 1,000 square feet, or increment thereof, one 100 square

DESIGN AGENCY O.D.O.T. DISTRICT TWELVE L&D DEPARTMENT
DESIGNED BGW DRAWN JMB CHECKED GWM REVISED
REVIEWED MJM DATE 08/20/98 STRUCTURE FILE NUMBER 1807692,1807706

STRUCTURE NOTES 8 OF 11
BRIDGE NO. CUY-90-0045 L&R OVER BRADLEY ROAD

CUY-90-0.00

P:\PR22308\CADD\TNOTES5.DGN

foot area shall be randomly selected and measured.

4. If the dry film thickness for any 100 square foot area (sections 2 & 3 is not in compliance with the requirements of paragraph 1 of this section, then each 100 square foot area shall be measured.

5. Other size areas or number of spot measurements may be specified in the contract plans as appropriate for the size and shape of the structure to be measured.

Each coat of paint shall have the following mil thickness measured above the peaks:

	Min. Spec Thickness	Max. Spec. Spot	Min. Spot	Max
Prime	3.0	5.0	2.5	7.5
Intermediate	5.0	7.0	4.0	10.5
Sub Total	8.0	12.0	6.4	18.0
Finish	2.0	4.0	1.6	6.0
Total	10.0	16.0	8.0	24.0

Film thicknesses greater than the maximum specified thicknesses that do no exhibit defects (such as runs, sags, bubbles, mudcracking, etc.) and for which the Contractor has received a written statement from the coating manufacturer stating that this excessive thickness is not detrimental, may remain in place at the discretion of the Director.

For any spot or maximum average thickness over 24 mils, it will be necessary for the Contractor to prove to the Department that the excess thickness will not be detrimental to the coating system. This shall be accomplished by providing the Director, for approval, certified test data proving that the excessive thickness will adequately bond to the steel when subjected to thermal expansion and contraction. This thermal expansion and contraction and expansion cycles have taken place, the tested system shall be subjected to pull off tests and the results compared to the results of pull off tests which have been performed on a paint system with the proper thicknesses. In addition to the certified test results, it will also be necessary for the Contractor to provide the Director a written statement from the paint manufacturer stating that this excessive thickness is not detrimental.

If the Director does not approve the excessive coating thicknesses or the Contractor elects not to provide the required written statement from the plant manufacturer and the certified test results when required, the Contractor, at his own expense, shall remove and replace the coating. The removal and replacement of the coating shall be done as specified in the section of this specification titled Repair Procedures.

Prime, Intermediate And Finish Coat Application (QCP #5, #6 & #7

Each coat of paint shall be in a proper state of cure or dryness before the application of the succeeding coat. Paint shall be considered ready for recoating when an additional coat can be applied without the development of any detrimental film irregularities, such as lifting, wrinkling or loss of adhesion of the undercoat. The time interval between coating applications shall be in compliance with manufacture's written instructions and no more than thirty (30) days between the prime and intermediate coats and thirteen (13) days between the intermediate and finish coats. These maximum recoat times include weather related days.

No additional time for weather delays will be allowed. Any coat which has cured more than the above allotted time without recoating shall be removed and the steel reblasted to SSPC-SP10.

The completion date (month and year) of the finish coat and the letters OZEU shall be stenciled on the steel in 4" letters with a black urethane paint. This date shall be applied at four locations near the end of each outside beam on the outside web visible from the road or as directed by the Engineer.

HANDLING AND SHIPPING

Extreme care shall be exercised in handling the steel in the shop, during shipping, during erection, and during subsequent construction of the bridge. Painted steel shall not be moved or handled until sufficient cure time has elapsed and approval has been obtained from the inspector. The steel shall be insulated from the binding chains by softeners approved by the Engineer. Hooks and slings used to hoist steel shall be padded. Diaphragms and similar pieces shall be spaced in such a way that no rubbing will occur during shipment that may damage the coatings. The steel shall be stored on pallets at the job site, or by other means approved by the Engineer, so that it does not rest on the ground or so that components do not fall or rest on each other. All shipping and job site storage details shall be presented to the Engineer prior to fabrication in writing and be approved prior to shipping the steel. Approval of the above does not relieve the contractor of responsibility of shipping or storage damage.

REPAIR OF DAMAGED AREAS (QCP #9)

Damaged areas of paint and areas which do not comply with the requirements of this specification, shall have the paint removed and all defects corrected. The steel shall then be retextured to a near white condition to produce a profile of between 1 to 3 1/2 mils. This profile shall be measured immediately prior to the application of the prime coat to insure that the profile is not destroyed during the feathering procedure.

The existing paint shall be feathered to expose a minimum of 1/2 inch of each coat.

During the reapplication of the paint, care shall be used to insure that each coat of paint is only applied within the following areas. The prime coat shall only be applied to the surface of the bare steel and the existing prime coat, which has been exposed by feathering. The prime coat shall not be applied to the adjacent intermediate coat. The intermediate coat shall only be applied to the new prime coat and the existing feathered intermediate coat. The intermediate coat and the existing finish coat which has been feathered or lightly sanded. The finish coat shall not extend beyond the areas which has been feathered or lightly sanded.

The first two coats shall be applied by brush. The finish coat shall be applied by either brush or spray.

It may be necessary to make several applications in order to achieve the proper thickness for each coat.

During the application of the prime coat, the paint should be continuously mixed.

All abrasive blasting and painting shall still be done in accordance with the specifications.

All repairs should be made in a manner to blend the patched are with the adjacent coating. The finished surface of the patched area shall have a smooth even profile with the adjacent surface.

The first repair area shall be used as a test section and no more repairs made until the methods are approved by the Engineer.

The Contractor or fabricator shall submit his method of correcting runs in writing to the Director for approval.

Damaged paint which will be inaccessible for coating after erection shall be repaired and recoated prior to erection.

In order to minimize damage to the painted steel, concrete splatter and form leakage shall be washed from the surface of the

DESIGN AGENCY O.D.O.T. DISTRICT TWELVE L&D DEPARTMENT
DATE REVIEWED MJM 08/20/98 STRUCTURE FILE NUMBER 1807692,1807706
DRAWN JMB REVISED
DESIGNED BGW CHECKED GWM
STRUCTURE NOTES 9 OF 11
BRIDGE NO. CUY-90-0045 L&R
OVER BRADLEY ROAD
CUY-90-0.00
10/39
418/582

P:\PR22308\CADD\TNOTES5.DGN

steel shortly after the concrete is placed and before it is dry. If concrete dries it shall be removed and paint repaired.

Temporary attachments, supports for scaffolding and,finishing machine or forms shall not damage the coating system.(In particular, on the fascias where bracing is used, sufficient size support pads shall be used.)

After the erection work has been completed, including all connections and the approved repair of any damaged beams, girders or other steel members, and the deck has been placed, the Contractor and Engineer shall inspect the structure for damaged paint. (QCP #10). Damaged areas shall be repaired by repeating QCP #1 to #8. The contractor shall wash the structure as per QCP#1 after all work to the structure is completed.

SAFETY REQUIREMENTS AND PRECAUTIONS

The contractor shall meet the safety requirements of the Ohio Industrial Commission and the Occupational Safety and Health Administration (OSHA), in addition to the scaffolding requirements below.

The Contractor is required to meet the applicable safety requirements of the Ohio Industrial Commission in addition to the scaffolding requirements specified below.

The Material Safety Data Sheets (MSDS) shall be provided at the preconstruction meeting for all paint, thinners and abrasives used on this project. No work shall start until the MSDS has been submitted.

The fabricator shall also provide MSDS for all abrasives to be used on this project to the shop inspector. No work shall start until MSDS have been submitted.

SCAFFOLDING

Rubber rollers, or other protective devices meeting the approval of the Engineer, shall be used on scaffold fastenings. Metal rollers or clamps and other types of fastenings which will mar or damage coated surfaces shall not be used.

INSPECTION ACCESS FOR FIELD TOUCHUP

In addition to the requirement of 105.11, the contractor shall furnish, erect, and move scaffolding and other appropriate equipment, to permit the Inspector the opportunity to inspect (closely observe), all affected surfaces. This opportunity shall be provided to the Inspector during all phases of the work and continue for a period of at least ten (10) working days after the touch-up work has been completed. When scaffolding is used, it shall be provided in accordance with the following requirements.

When scaffolding, or the hangers attached to the scaffolding are supported by horizontal wire ropes, or when scaffolding is placed directly under the surface to be painted, the following requirements shall be complied with:

When scaffolding is suspended forty three inches or more below the surface to be painted, two rows of guardrail shall be placed on all sides of the scaffolding. One row of guardrail shall be placed at forty two inches above the scaffolding and the other row at twenty inches above the scaffolding.

When the scaffolding is suspended at least twenty one inches, but less than forty three inches below the surface to be painted, a row of guardrail shall be placed on all sides of the scaffolding at twenty inches above the scaffolding.

Two rows of guardrail shall be placed on all sides of scaffolding not previously mentioned. The rows of guardrail shall be placed at forty two and twenty inches above scaffolding, as previously mentioned.

All scaffolding must be at least twenty four inches wide when guardrail is used and twenty eight inches wide when the scaffolding is suspended less than twenty one inches below the surface to be painted and guardrail is not used. If two or more scaffolding are laid parallel to achieve the proper width, they must be rigidly attached to each other to preclude any differential movement.

All guardrail shall be constructed as a substantial barrier which is securely fastened in place and is free from protruding objects such as nails, screws and bolts. There shall be an opening in the guardrail, properly located, to allow the Inspector access onto the scaffolding.

The rails and uprights shall be either metal or wood. If pipe railing is used, the railing shall have a nominal diameter of no less than one and one half inches. If structural steel railing is use, the rails shall be 2 X 2 X 3/8 inch steel angles or other metal shapes of equal or greater strength. If wood railing is used, the railing shall be 2 X 4 inch (nominal) stock. All uprights shall be spaced at no more than 8 feet on center. If wood uprights are used, the uprights shall be 2 X 4 inches (nominal) stock.

When the surface to be inspected is more than fifteen feet above the ground or water, and the scaffolding is supported from the structure being painted, the Contractor shall provide the Inspector with a safety belt and lifeline. The lifeline shall not allow a fall greater than six feet. The Contractor shall provide a method of attaching the lifeline to the structure independent of the scaffolding, cables, or brackets supporting the scaffolding.

When scaffolding is more than two and one half feet above the ground, the Contractor shall provide a ladder for access onto the scaffolding. The ladder and any equipment used to attach the ladder to the structure shall be capable of supporting 250 pounds with a safety factor of at least four (4). All rungs, steps, cleats, or treads shall have uniform spacing and shall not exceed twelve inches on center. At least one side rail shall extend at least thirty six inches above the landing near the top of the ladder.

An additional landing shall be required when the distance from the ladder to the point where the scaffolding may be accessed, exceeds twelve inches. The landing shall be a minimum of at least twenty four inches wide and twenty four inches long. It shall also be of adequate size and shape so that the distance from the landing to the point where the scaffolding is accessed does not exceed twelve inches. The landing shall be rigid and firmly attached to the ladder; however, it shall not be supported by the ladder. The scaffolding shall be capable of supporting a minimum of one thousand pounds.

In addition to the aforementioned requirements, the Contractor is still responsible to observe and comply with all Federal, State and local laws, ordinances, regulations, orders and decrees.

The Contractor shall furnish all necessary traffic control to permit inspection during and after all phases of the project.

PROTECTION OF PERSONS AND PROPERTY

The Contractor shall collect, remove and dispose of all buckets, rags or other discarded materials and shall leave the job site in a clean condition.

The Contractor shall protect all portions of the structure which are not to be painted, against damage or disfigurement by splashes, spatters, and smirches of paint.

The Contractor shall install and maintain suitable shields or enclosures to prevent damage to adjacent buildings, parked cars, trucks, boats, or vehicles traveling on, over, or under structures being painted. They shall be suitably anchored and reinforced to prevent interfering with normal traffic operations in the open lanes. Payment for the shields shall be included as incidental to the applicable field coating operation. Work shall be suspended when damage to adjacent buildings, motor vehicles, boats, or other property is occurring.

When or where any direct or indirect damage or injury is done to public or private property, the Contractor shall restore, at his own expense, such property, to a condition similar or equal to

DESIGN AGENCY
O.D.O.T.
DISTRICT TWELVE
L&D DEPARTMENT

DESIGNED	DRAWN	REVIEWED	DATE
BGW	JMB	MJM	08/20/98
CHECKED	REVISED	STRUCTURE FILE NUMBER	
GWM		1807692,1807706	

STRUCTURE NOTES 10 OF 11
BRIDGE NO. CUY-90-0045 L&R
OVER BRADLEY ROAD

CUY-90-0.00

that existing before such damage or injury was done.

POLLUTION CONTROL

The Contractor shall take all necessary precautions to comply with pollution control laws, rules or regulations of Federal, State or local agencies.

WORK LIMITATIONS

Abrasive blasting and painting done in the field shall be performed between April 15 and October 15. Even though the Contractor is permitted to work prior to May 1, April is considered a winter month and no extension due to adverse weather conditions will be granted for this period. Additional work limitations on specific bridges/projects may be required by plan note.

METHOD OF MEASUREMENT

The method of measurements shall be according to the pertinent of 513, 514 and 516 of the current Constructions and Materials Specifications.

COLOR OF FINISH COAT

Finish coat shall be gray matching FEDERAL COLOR STANDARD NO. FS-595A-16440.

METHOD OF PAYMENT

The area of the top of the top flange which shall receive the prime coat only shall not be included in the measurement for the pay item.

The cost of the above including labor, material, equipment and incidentals shall be included in the unit price bid for each item as listed below.

Payment for this item shall include all labor, surface preparation, materials, inspection and equipment to shop apply a prime, intermediate and finish paint coat at the item 863 structural steel fabricator's shop facilities. Also included in this item is all required field site surface preparation, cleaning, painting and/or repair of damaged shop paint caused during shipping, erection or construction procedures.

The cost of the surface preparation and prime coat to the top of the top flange shall be included as an incidental for payment under Shop Painting and Field Touch-Up of Structural Steel.

Shop painting per 513.222 shall not be included with the price bid for structural steel but shall be included with Item Special, Shop Painting and Field Touch-Up of Structural Steel for payment.

ITEM	UNIT	DESCRIPTION
Special	Lb.	Field painting, Misc.: Shop Painting and Field Touch-Up of Structural Steel

P:\PR22308\CADD\TNOTES5.DGN

DESIGN AGENCY
O.D.O.T.
DISTRICT TWELVE
L&D DEPARTMENT

DESIGNED	DRAWN	REVIEWED	DATE
BGW	JMB	MJM	08/20/98
CHECKED	REVISED	STRUCTURE FILE NUMBER	
GWM		1807692,1807706	

STRUCTURE NOTES 11 OF 11
BRIDGE NO. CUY-90-0045 L&R
OVER BRADLEY ROAD

CUY-90-0.00

12/39

420
582

ESTIMATED QUANTITIES

ITEM	ITEM EXT.	TOTAL	UNIT	DESCRIPTION	LEFT BRIDGE				RIGHT BRIDGE				PARTICIPATION	
					SUPER	ABUT	PIERS	GEN'L	SUPER	ABUT	PIERS	GEN'L	1	2
202	11201	LUMP		PORTIONS OF STRUCTURE REMOVED, AS PER PLAN				LUMP				LUMP	LUMP	LUMP
503	11101	LUMP		COFFERDAMS, CRIBS AND SHEETING, AS PER PLAN				LUMP				LUMP	LUMP	LUMP
503	21101	480	CU. YD.	UNCLASSIFIED EXCAVATION, AS PER PLAN		166	74			166	74		480	
505	11100	LUMP		PILE DRIVING EQUIPMENT AND MOBILIZATION		LUMP				LUMP			LUMP	LUMP
507	00100	400	L.F.	STEEL PILES HP 10X42, FURNISHED		200				200			400	
507	00150	400	L.F.	STEEL PILES HP 10X42, DRIVEN		200				200			400	
507	50500	10	EACH	STEEL PILE SPLICES		5				5			10	
SPECIAL	51267510	1708	SQ. YD.	SEALING CONCRETE SURFACES (EPOXY-URETHANE)*	357	177	320		357	177	320		783	925
514	27704	LUMP		FIELD PAINTING MISC.: REPAIRING DAMAGED PAINT AREAS	LUMP				LUMP				LUMP	LUMP
SPECIAL	51426030	145326	POUND	FIELD PAINTING MISC.: SHOP PAINTING AND FIELD TOUCH-UP OF STRUCTURAL STEEL	72663				72663				145326	
516	11210	260	L.F.	STRUCTURAL EXPANSION JOINT INCLUDING ELASTOMERIC STRIP SEAL	130				130				96	164
516	46000	6	EACH	BEARING DEVICE, BOLSTER			3				3		6	
516	46200	18	EACH	BEARING DEVICE, ROCKER		6	3			6	3		18	
518	21200	138	CU. YD.	POROUS BACKFILL WITH FILTER FABRIC		69				69			47	91
518	40000	288	L.F.	6 INCH PERFORATED CORRUGATED PLASTIC PIPE		144				144			97	191
518	40010	184	L.F.	6 INCH NON-PERFORATED CORRUGATED PLASTIC PIPE INCLUDING SPECIALS		92				92				184
519	11101	75	SQ. FT.	PATCHING CONCRETE STRUCTURES, AS PER PLAN		3				3	69			75
601	21001	422	SQ. YD.	CONCRETE SLOPE PROTECTION, AS PER PLAN		211				211			422	
601	21100	20	SQ. YD.	SLOPE PROTECTION, MISC.: REPLACEMENT OF EXISTING SLOPE PROTECTION				10**				10**		20
842	81300	6	EACH	CONCRETE, MISC.: DRILLING AND GROUTING DOWEL HOLES				3				3		6
842	81400	40	POUND	CONCRETE, MISC.: REPLACEMENT OF DAMAGED REINFORCING STEEL				20				20		40
844	48001	584	CU. YD.	HIGH PERFORMANCE CONCRETE, SUPERSTRUCTURE (DECK), AS PER PLAN	292				292				216	368
844	48021	98	CU. YD.	HIGH PERFORMANCE CONCRETE, SUPERSTRUCTURE (PARAPET), AS PER PLAN	49				49				49	49
844	48041	386	CU. YD.	HIGH PERFORMANCE CONCRETE, SUBSTRUCTURE, AS PER PLAN		146	47			146	47		202	184
844	49000	LUMP		HIGH PERFORMANCE CONCRETE, TRIAL MIX				LUMP				LUMP	LUMP	LUMP
844	49010	LUMP		HIGH PERFORMANCE CONCRETE, TESTING				LUMP				LUMP	LUMP	LUMP
863	10260	145326	POUND	STRUCTURAL STEEL MEMBERS, LEVEL THREE (3) FABRICATION, A709 GRADE 36	72663				72663				145326	
863	20000	4532	EACH	WELDED STUD SHEAR CONNECTORS	2266				2266				1244	3288

* SEE PROPOSAL NOTE

** CONTINGENCY QUANTITY TO BE USED AS DIRECTED BY THE ENGINEER

I:\PROJECTS\Pid11738\dgn\finalplans\TESTQUAN.DGN 14-SEP-2000 8:53AM jgrmovse

BURGESS & NIPLE

DATE 01-17-00
REVIEWED MAR
STRUCTURE FILE NUMBER 1807692,1807706
DRAWN JAA
REVISED
DESIGNED CDC
CHECKED SCT

ESTIMATED QUANTITIES
BRIDGE NO. CUY-90-0045 L&R
OVER BRADLEY ROAD

CUY-90-0.00

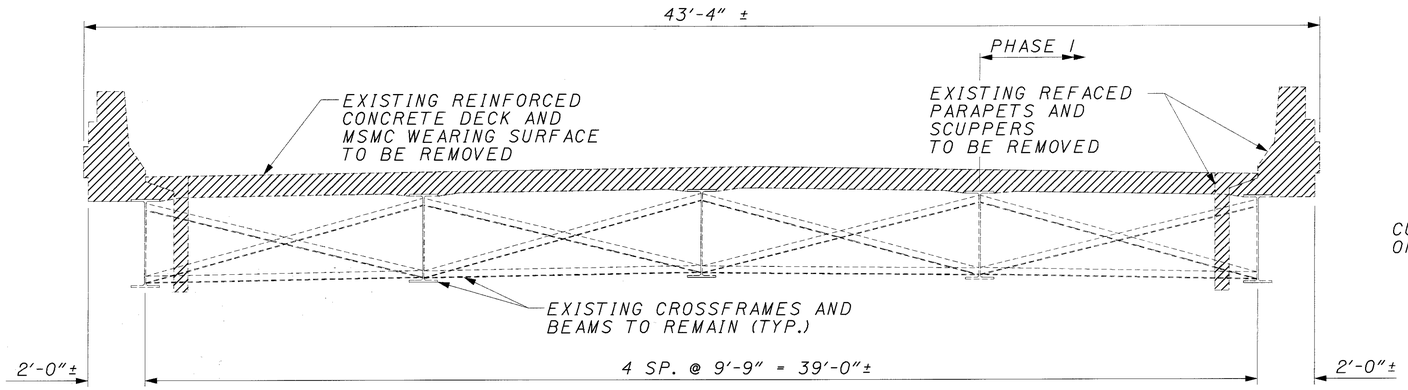

EXISTING TRANSVERSE SECTION

LEFT BRIDGE LOOKING AHEAD
RIGHT BRIDGE LOOKING BACK

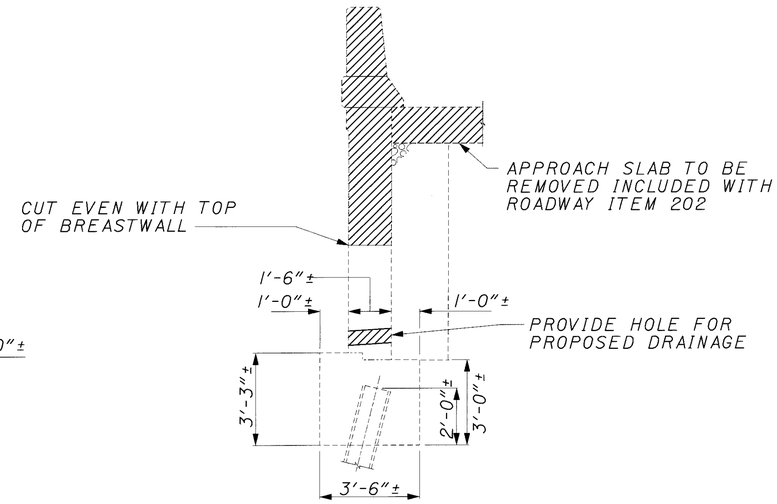

EXISTING WINGWALL REMOVAL DETAIL

INDICATES AREA TO BE REMOVED PER ITEM 202 - PORTIONS OF STRUCTURE REMOVED, AS PER PLAN.

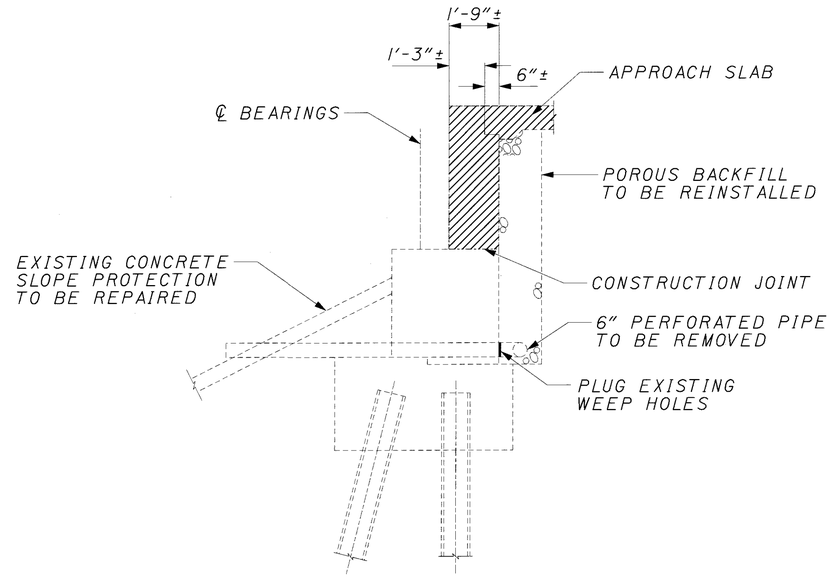

EXISTING ABUTMENT REMOVAL DETAIL

BURGESS & NIPLE

DESIGNED	DRAWN	REVIEWED	DATE
JAA	JAA	MAR	12-15-99
CHECKED	REVISED	STRUCTURE FILE NUMBER	
SCT		1807692, 1807706	

REMOVAL DETAILS
BRIDGE NO. CUY-90-0045 L & R
OVER BRADLEY ROAD

CUY-90-0.00

P:\PR22308\CADD\TREMOVAL.DGN

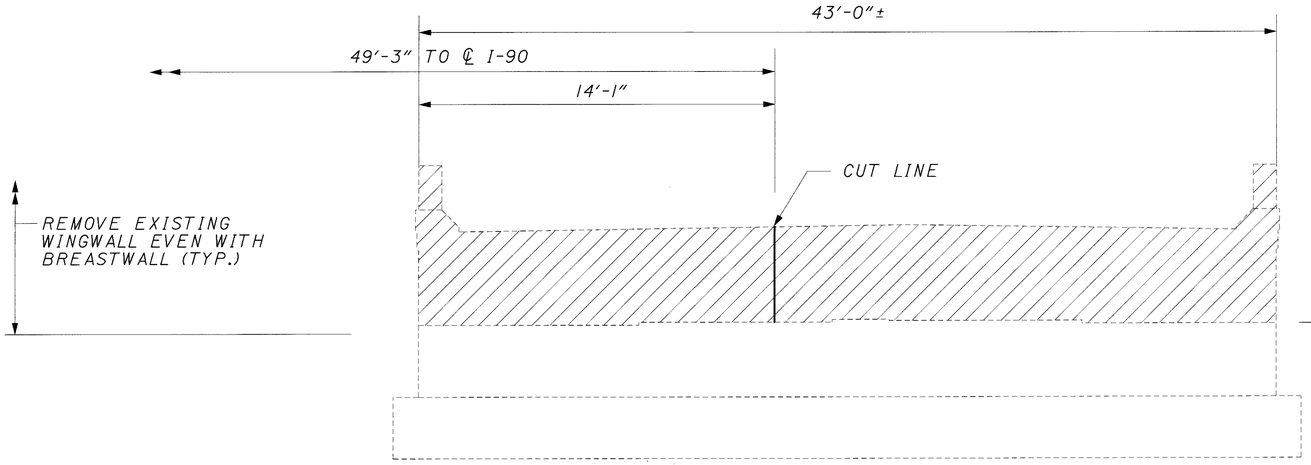

REAR ABUTMENT ELEVATION
(PILES NOT SHOWN)

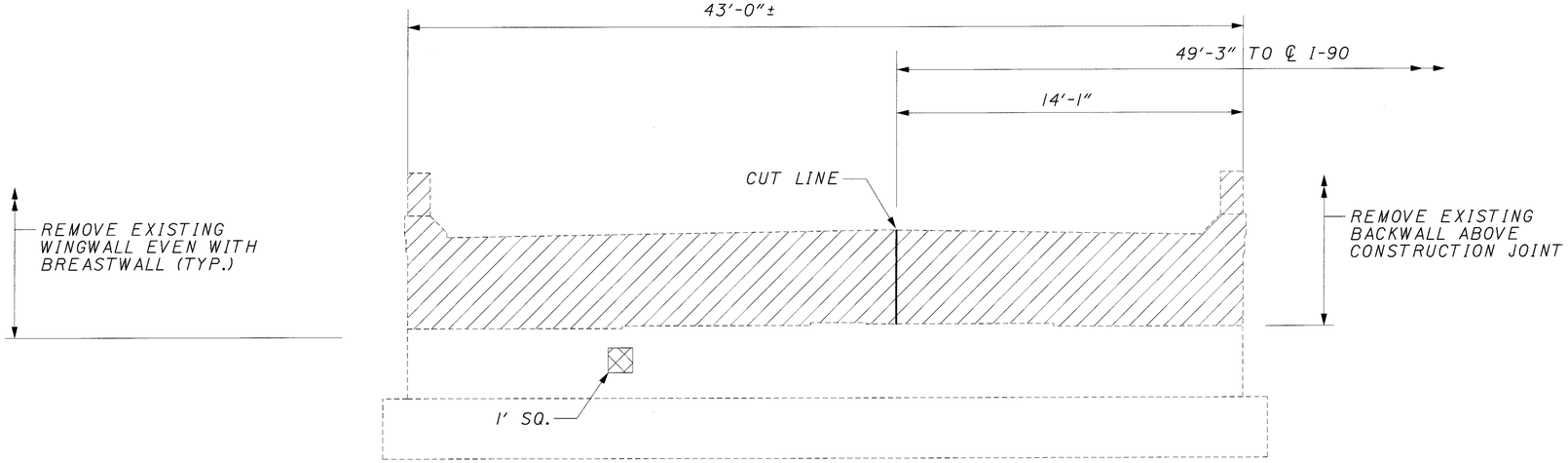

FORWARD ABUTMENT ELEVATION
(PILES NOT SHOWN)

INDICATES AREA TO BE REMOVED PER ITEM 202 - PORTIONS OF STRUCTURE REMOVED, AS PER PLAN

INDICATES AREA TO BE PATCHED PER ITEM 519 - PATCHING CONCRETE STRUCTURES, AS PER PLAN

PHYSICAL INVENTORY OF MEASURED QUANTITIES OF DETERIORATION WAS PERFORMED IN JULY, 1999.

SUMMARY OF PATCHING QUANTITIES▲	
ABUTMENT	ESTIMATED QUANTITY
REAR	0 FT²
FORWARD	3.0 FT²
TOTAL = 3.0 FT²	

▲ ESTIMATED QUANTITY HAS BEEN INCREASED BY 200% OVER FIELD MARKED QUANTITY TO ALLOW FOR ADDITIONAL DETERIORATION.

CONCRETE SHALL BE SOUNDED AND PATCHED PRIOR TO RESETTING BEARINGS.

BURGESS & NIPLE

REVIEWED MAR DATE 12-15-99
STRUCTURE FILE NUMBER 1807692,1807706
DRAWN RAR REVISED
DESIGNED JAA CHECKED SCT

ABUTMENT REMOVAL AND REPAIR DETAILS, LE
BRIDGE NO. CUY-90-0045 L & R
OVER BRADLEY ROAD

CUY-90-0.00

15/39

423/582

P:\PR22308\CADD\TABREM.DGN

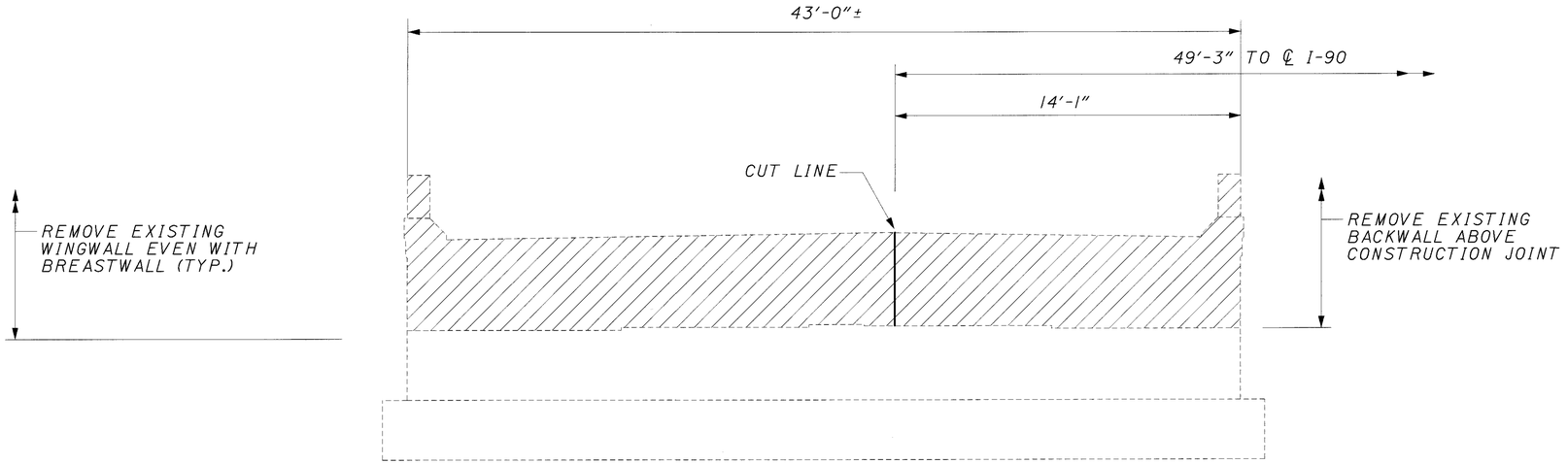

REAR ABUTMENT ELEVATION
(PILES NOT SHOWN)

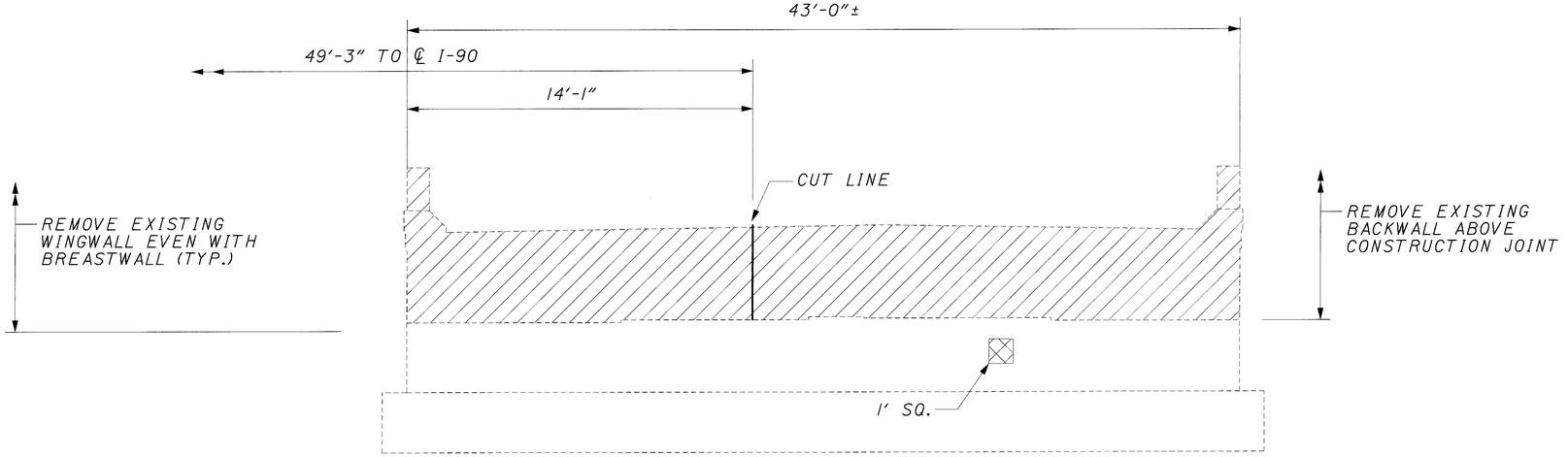

FORWARD ABUTMENT ELEVATION
(PILES NOT SHOWN)

INDICATES AREA TO BE REMOVED PER ITEM 202 - PORTIONS OF STRUCTURE REMOVED, AS PER PLAN

INDICATES AREA TO BE PATCHED PER ITEM 519 - PATCHING CONCRETE STRUCTURES, AS PER PLAN

PHYSICAL INVENTORY OF MEASURED QUANTITIES OF DETERIORATION WAS PERFORMED IN JULY, 1999.

SUMMARY OF PATCHING QUANTITIES▲	
ABUTMENT	ESTIMATED QUANTITY
REAR	0 FT²
FORWARD	3.0 FT²
TOTAL = 3.0 FT²	

▲ ESTIMATED QUANTITY HAS BEEN INCREASED BY 200% OVER FIELD MARKED QUANTITY TO ALLOW FOR ADDITIONAL DETERIORATION.

CONCRETE SHALL BE SOUNDED AND PATCHED PRIOR TO RESETTING BEARINGS.

BURGESS & NIPLE

DESIGNED JAA | DRAWN RAR | REVIEWED MAR | DATE 12-15-99
CHECKED SCT | REVISED | STRUCTURE FILE NUMBER 1807692,1807706

ABUTMENT REMOVAL AND REPAIR DETAILS, RIGHT BRIDGE
BRIDGE NO. CUY-90-0045 L & R
OVER BRADLEY ROAD

CUY-90-0.00

16/39

424
582

P:\PR22308\CADD\TABREM.DGN

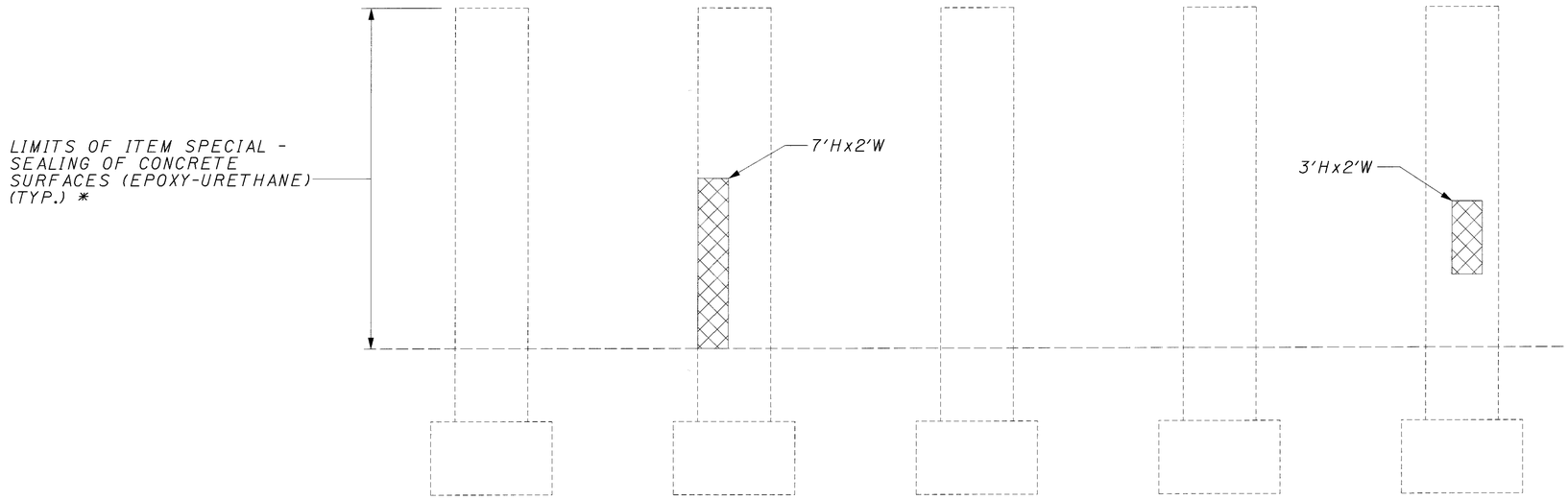

PIER 1 ELEVATION

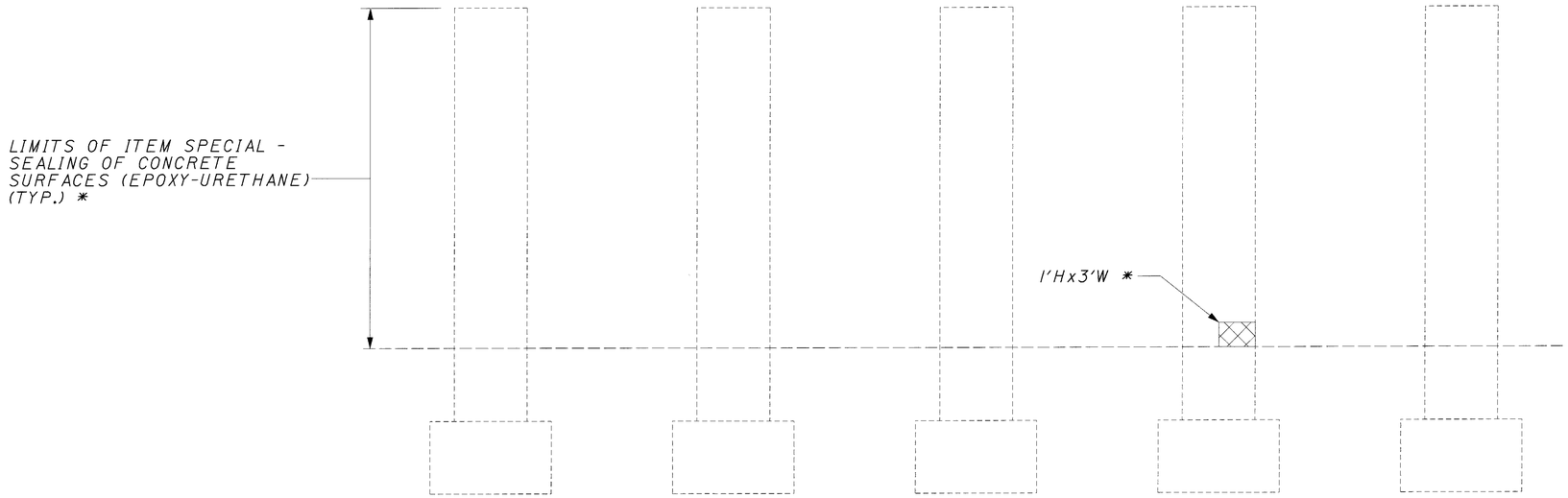

PIER 2 ELEVATION

INDICATES AREA TO BE REMOVED PER ITEM 202 - PORTIONS OF STRUCTURE REMOVED, AS PER PLAN

INDICATES AREA TO BE PATCHED PER ITEM 519 - PATCHING CONCRETE STRUCTURES, AS PER PLAN

PHYSICAL INVENTORY OF MEASURED QUANTITIES OF DETERIORATION WAS PERFORMED IN JULY, 1999.

SUMMARY OF PATCHING QUANTITIES▲	
PIER	ESTIMATED QUANTITY
REAR	60.0 FT^2
FORWARD	9.0 FT^2
TOTAL = 69.0 FT^2	

▲ ESTIMATED QUANTITY HAS BEEN INCREASED BY 200% OVER FIELD MARKED QUANTITY TO ALLOW FOR ADDITIONAL DETERIORATION.

CONCRETE SHALL BE SOUNDED AND PATCHED PRIOR TO RESETTING BEARINGS.

NOTES:

THE PIERS FOR THE LEFT BRIDGE OVER BRADLEY ROAD HAVE NO AREAS IN NEED OF REPAIR AT THE TIME OF INSPECTION.

* - INVESTIGATE FOR DETERIORATION BELOW GRADE WHEN CONCRETE DETERIORATION AT GROUND SURFACE IS APPARENT. SEE EXCAVATION DETAIL THIS SHEET.

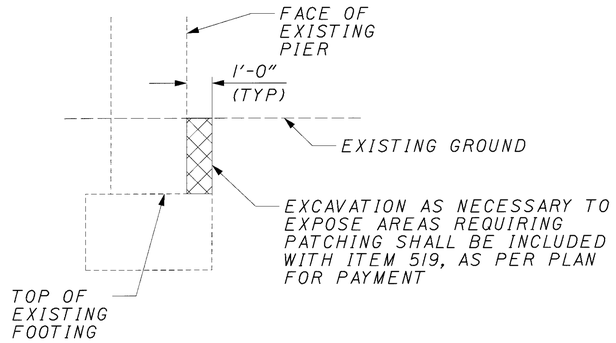

EXCAVATION LIMITS FOR REPAIR AREAS

BURGESS & NIPLE

DESIGNED	DRAWN	REVIEWED	DATE
JAA	RAR	MAR	12-15-99
CHECKED	REVISED	STRUCTURE FILE NUMBER	
SCT		1807692,1807706	

PIER REPAIR DETAILS, RIGHT BRIDGE
BRIDGE NO. CUY-90-0045 L & R
OVER BRADLEY ROAD

CUY-90-0.00

17 / 39

425
582

P:\PR22308\CADD\TABREM.DGN

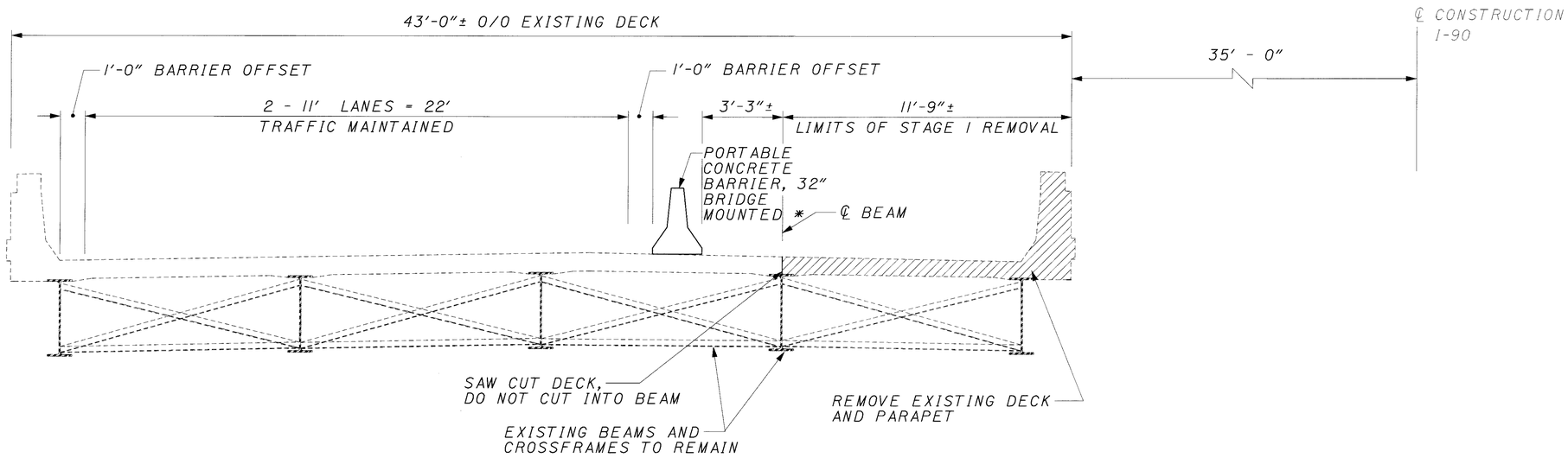

STAGE ONE REMOVAL

LEFT BRIDGE LOOKING AHEAD
RIGHT BRIDGE LOOKING BACK

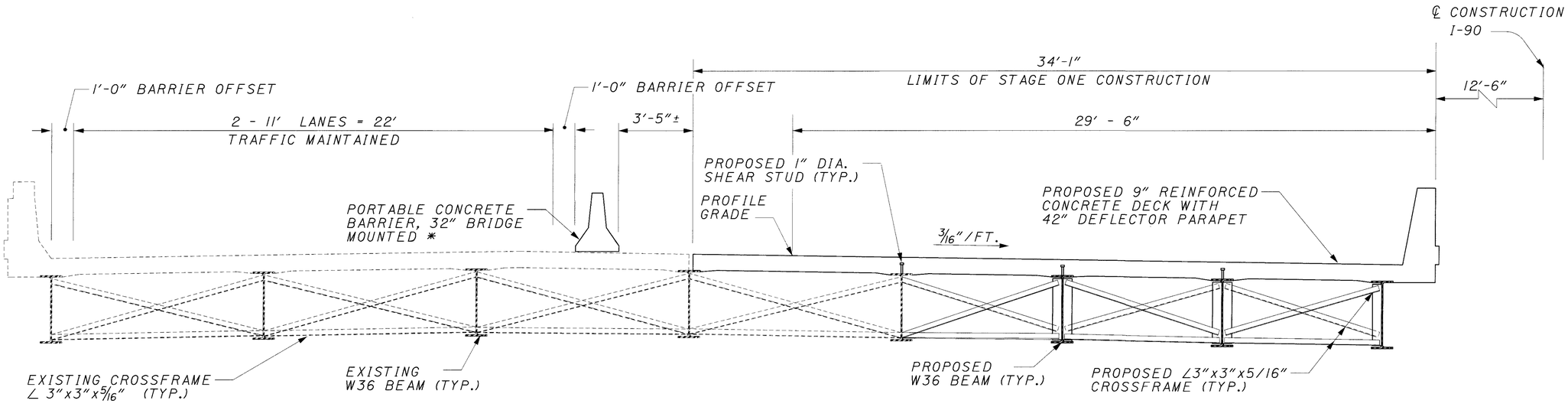

STAGE ONE CONSTRUCTION

LEFT BRIDGE LOOKING AHEAD
RIGHT BRIDGE LOOKING BACK

* PORTABLE CONCRETE BARRIER SHALL BE ANCHORED AT TWO LOCATIONS PER SEGMENT AND CONFORM TO STANDARD DRAWING PCB-91.
SEE ROADWAY PLAN DETAILS. PAY FOR UNDER ITEM 622.

LEGEND:

O/O = OUT TO OUT
T/T = TOE TO TOE
TYP. = TYPICAL
DIA. = DIAMETER

BURGESS & NIPLE

DESIGNED	DRAWN	REVIEWED	DATE
DCF	DCF	MAR	02-08-00
CHECKED	REVISED	STRUCTURE FILE NUMBER	
SCT		1807692, 1807706	

STAGED CONSTRUCTION DETAILS I
BRIDGE NO. CUY-90-0045 L & R
OVER BRADLEY ROAD

CUY-90-0.00

18/39

426/582

P:\pr22308\cadd\tstage1.dgn

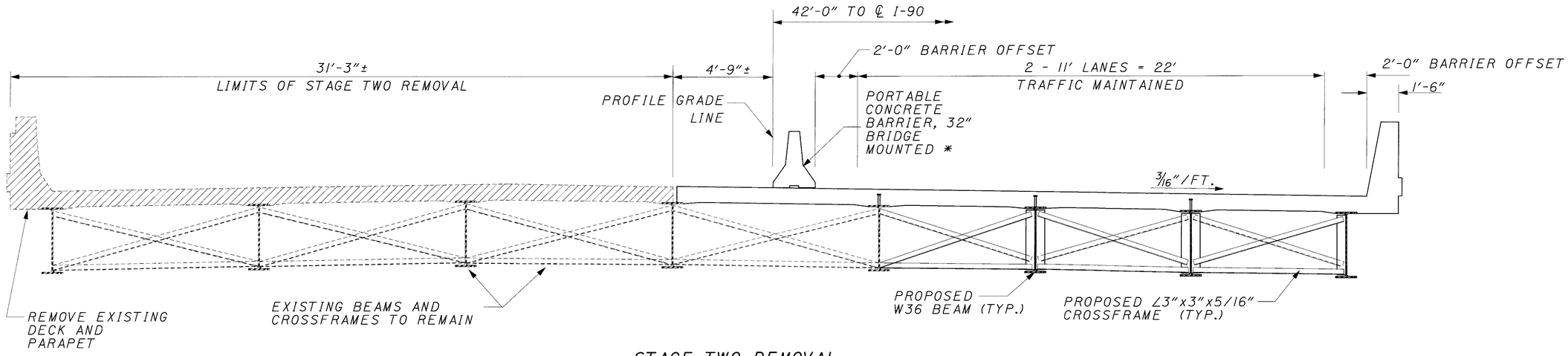

STAGE TWO REMOVAL

LEFT BRIDGE LOOKING AHEAD
RIGHT BRIDGE LOOKING BACK

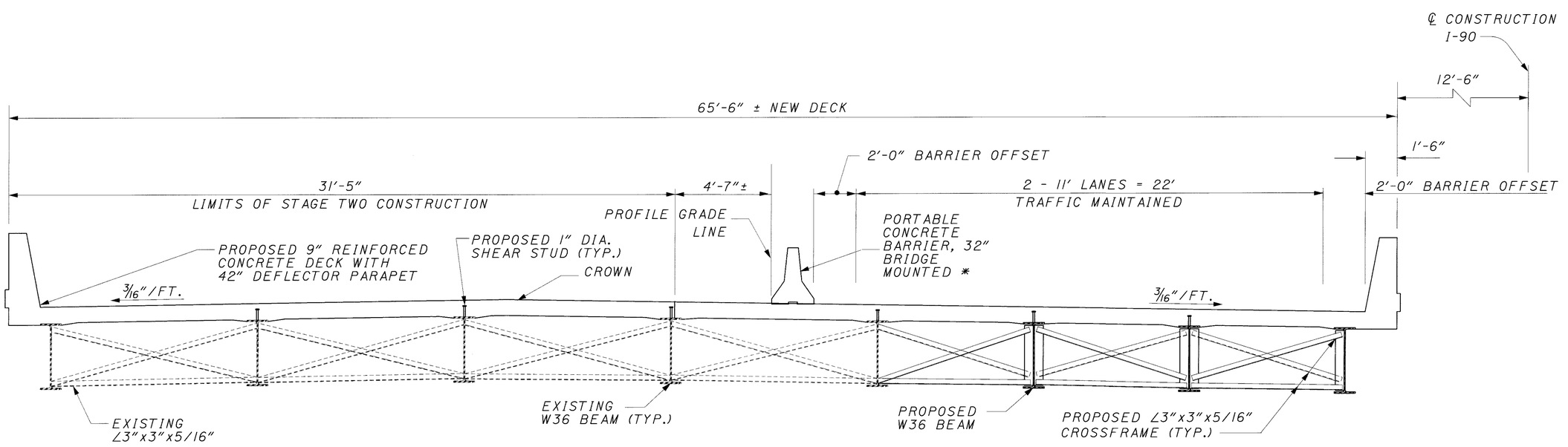

STAGE TWO CONSTRUCTION

LEFT BRIDGE LOOKING AHEAD
RIGHT BRIDGE LOOKING BACK

* PORTABLE CONCRETE BARRIER SHALL BE ANCHORED AT TWO LOCATIONS PER SEGMENT AND CONFORM TO STANDARD DRAWING PCB-91.
SEE ROADWAY PLAN DETAILS. PAY FOR UNDER ITEM 622.

LEGEND:
O/O = OUT TO OUT
T/T = TOE TO TOE
TYP. = TYPICAL
DIA. = DIAMETER

BURGESS & NIPLE

DESIGNED	DRAWN	REVIEWED	DATE
DCF	DCF	MAR	02-08-00
CHECKED	REVISED	STRUCTURE FILE NUMBER	
SCT		1807692, 1807706	

STAGED CONSTRUCTION DETAILS II
BRIDGE NO. CUY-90-0045 L & R
OVER BRADLEY ROAD

CUY-90-0.00

19/39

427/582

p:\pr22308\cadd\tstage2.dgn

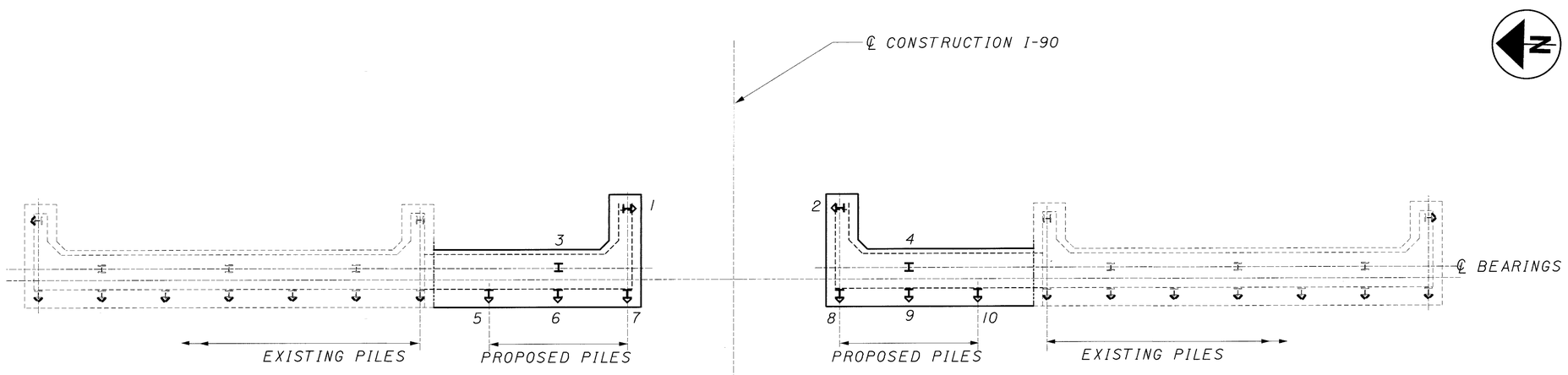

NO PILES BEING PLACED
IN PIER FOUNDATIONS

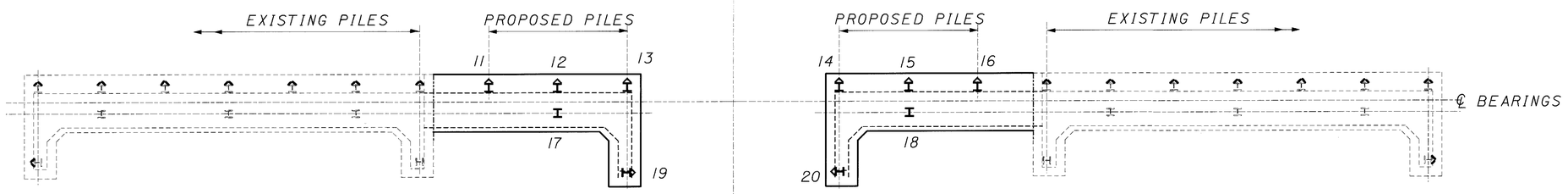

NOTE:
FOR ADDITIONAL FOUNDATION INFORMATION SEE FOUNDATION PLAN, SHEET 13731 .

- EXISTING HP10x42 BATTERED PILE
- EXISTING HP10x42 VERTICAL PILE
- PROPOSED HP10x42 BATTERED PILE
- PROPOSED HP10x42 VERTICAL PILE

TPILEPLN.DGN

BURGESS & NIPLE

DESIGN AGENCY

REVIEWED MAR DATE 12-15-99
STRUCTURE FILE NUMBER 1807692, 1807706

DRAWN DCF REVISED
DESIGNED DCF CHECKED SCT

PILE LAYOUT PLAN
BRIDGE NO. CUY-90-0045L & R
OVER BRADLEY ROAD

CUY-90-0.00

20/39

428
582

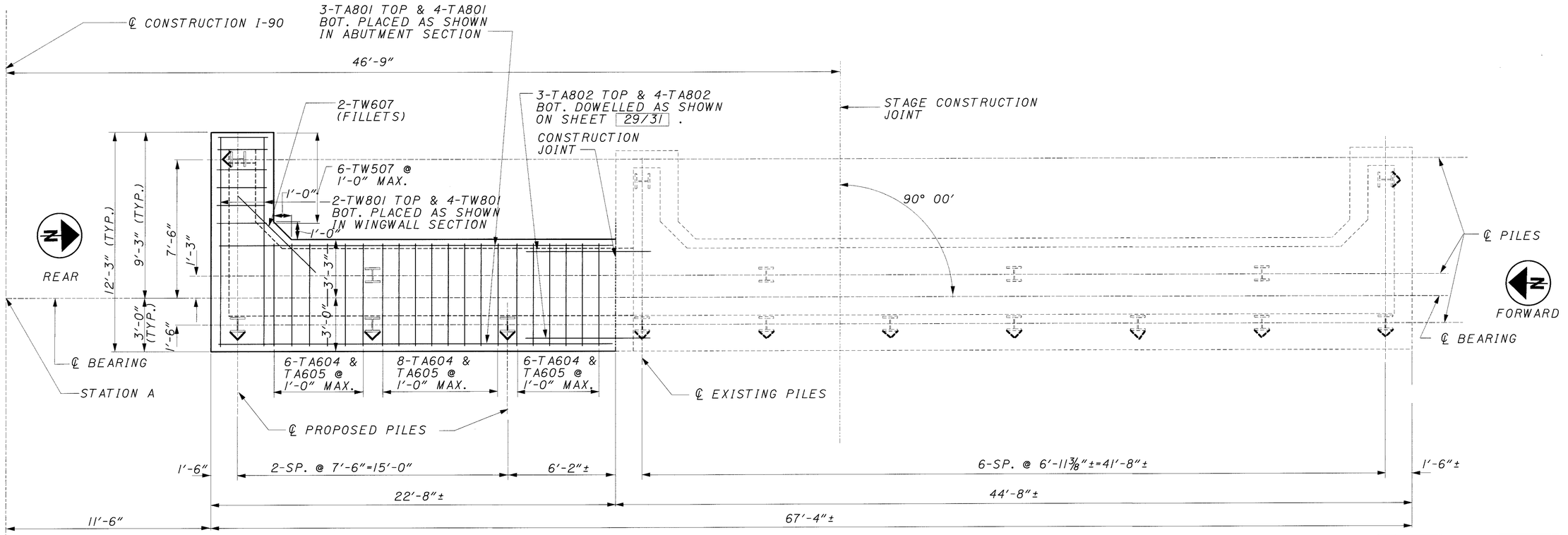

ABUTMENT FOUNDATION PLAN

LEFT BRIDGE, R.A. & RIGHT BRIDGE, F.A. SHOWN
LEFT BRIDGE, F.A. & RIGHT BRIDGE, R.A. OPPOSITE HAND

		STATIONS
	LOCATION	A
LEFT	R.A.	23+72.85±
	F.A.	25+25.35±
	PIER 1	24+17.35±
	PIER 2	24+80.85±
RIGHT	R.A.	23+71.76±
	F.A.	25+24.26±
	PIER 1	24+16.26±
	PIER 2	24+79.76±

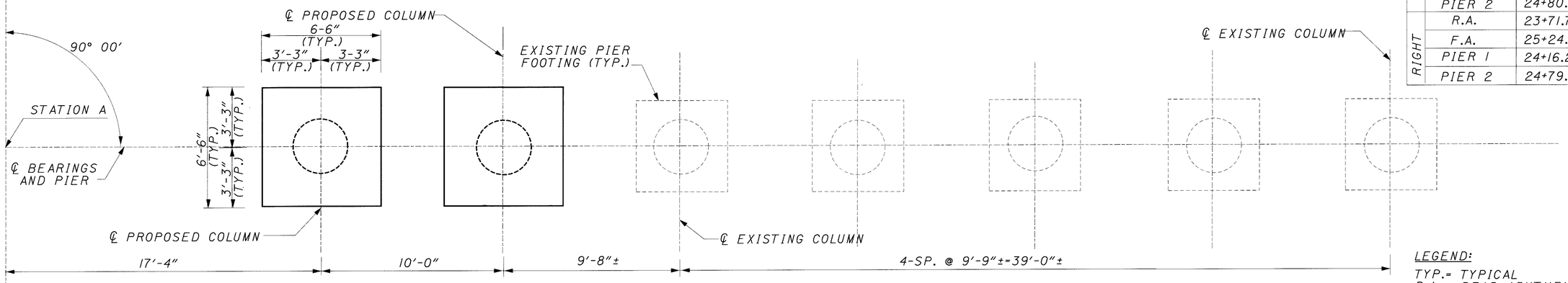

PIER FOUNDATION PLAN

RIGHT BRIDGE PIERS SHOWN,
LEFT BRIDGE PIERS OPPOSITE HAND

LEGEND:
TYP.= TYPICAL
R.A. = REAR ABUTMENT
F.A. = FORWARD ABUTMENT
MAX.= MAXIMUM
SP. = SPACES
V = BATTERED PILES

NOTES:

FOR PIER FOOTING REINFORCEMENT SEE PIER DETAILS SHEET 19/31 .

WORK THIS SHEET WITH SHEETS 12/31 & 18/31 .

* 5'-0" MIN. LAP FOR NO. 8 BARS

BURGESS & NIPLE

DESIGNED SCT | DRAWN SCT | CHECKED JAA | REVIEWED MAR | DATE 12-15-99 | REVISED | STRUCTURE FILE NUMBER 1807692,807706

FOUNDATION PLAN
BRIDGE NO. CUY-90-0045 L & R
OVER BRADLEY ROAD

CUY-90-0.00

21/39

429
582

P:\PR22308\CADD\TFOUND.DGN

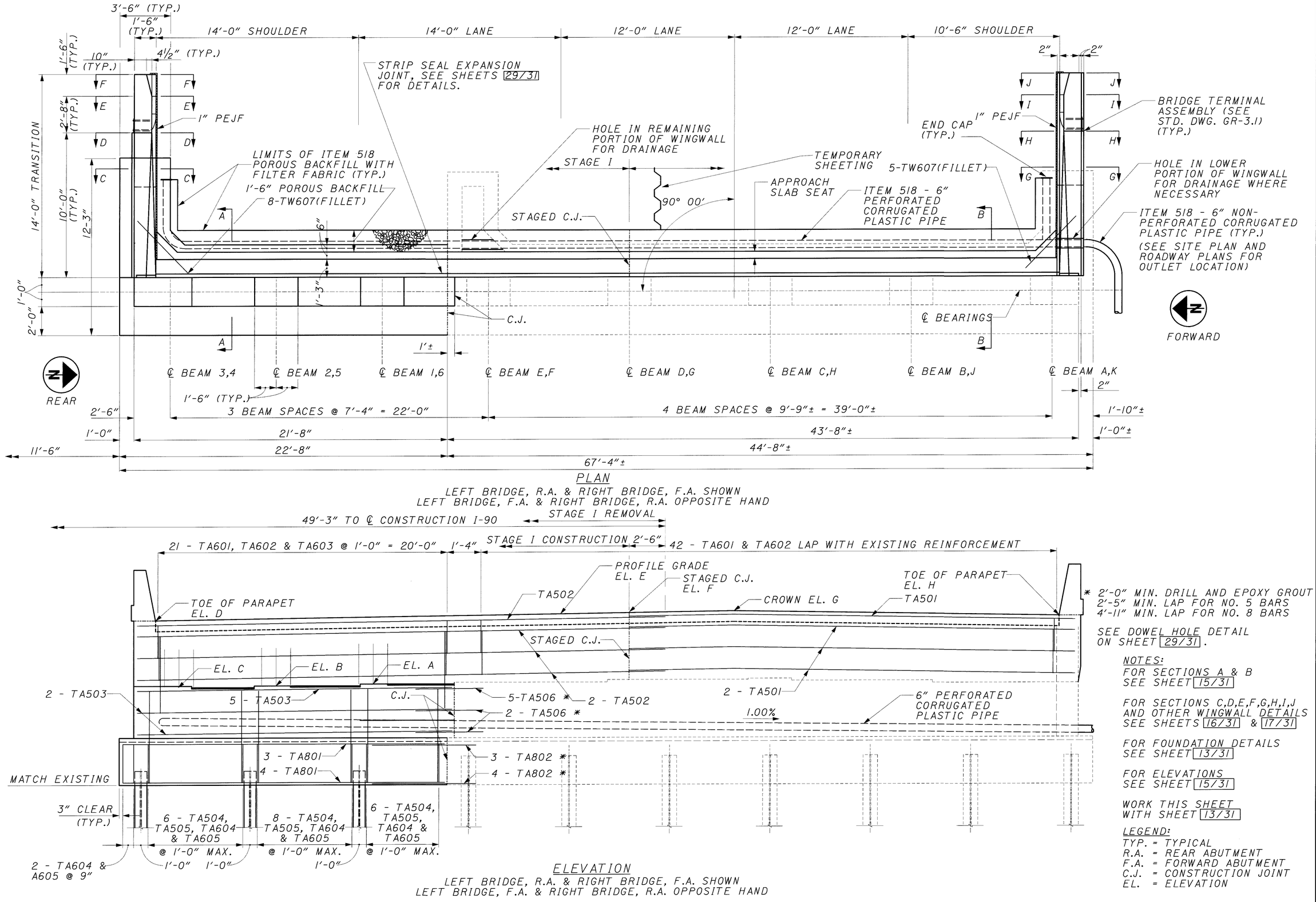

PLAN

LEFT BRIDGE, R.A. & RIGHT BRIDGE, F.A. SHOWN
LEFT BRIDGE, F.A. & RIGHT BRIDGE, R.A. OPPOSITE HAND

ELEVATION

LEFT BRIDGE, R.A. & RIGHT BRIDGE, F.A. SHOWN
LEFT BRIDGE, F.A. & RIGHT BRIDGE, R.A. OPPOSITE HAND

* 2'-0" MIN. DRILL AND EPOXY GROUT
2'-5" MIN. LAP FOR NO. 5 BARS
4'-11" MIN. LAP FOR NO. 8 BARS

SEE DOWEL HOLE DETAIL ON SHEET 29/31 .

NOTES:
FOR SECTIONS A & B SEE SHEET 15/31

FOR SECTIONS C,D,E,F,G,H,I,J AND OTHER WINGWALL DETAILS SEE SHEETS 16/31 & 17/31

FOR FOUNDATION DETAILS SEE SHEET 13/31

FOR ELEVATIONS SEE SHEET 15/31

WORK THIS SHEET WITH SHEET 13/31

LEGEND:
TYP. = TYPICAL
R.A. = REAR ABUTMENT
F.A. = FORWARD ABUTMENT
C.J. = CONSTRUCTION JOINT
EL. = ELEVATION

P:\PR22308\CADD\TABUT2.DGN

BURGESS & NIPLE

DESIGNED	DRAWN	REVIEWED	DATE
JAA	JAA	MAR	01-03-00
CHECKED	REVISED	STRUCTURE FILE NUMBER	
SCT		807692,807706	

ABUTMENT DETAILS I
BRIDGE NO. CUY-90-0045 L & R
OVER BRADLEY ROAD

CUY-90-0.00

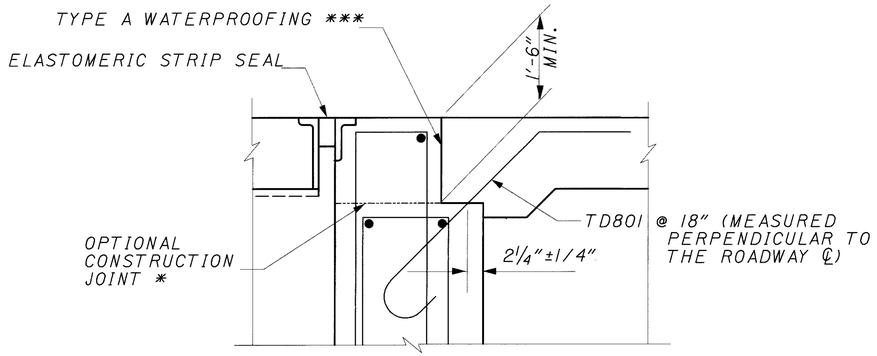

DETAIL T

APPLIES TO BOTH SECTIONS A-A & B-B

ELEVATIONS								
LOCATION	ELEVATION							
	"A"	"B"	"C"	"D"	"E"	"F"	"G"	"H"
L. R.	661.53	661.42	661.30	666.23	666.66	666.74	666.85	666.50
L. F.	660.88	660.76	660.65	665.51	665.95	666.03	666.14	665.79
R. R.	661.54	661.43	661.31	666.23	666.66	666.74	666.85	666.50
R. F.	660.89	660.77	660.66	665.52	665.96	666.03	666.15	665.80

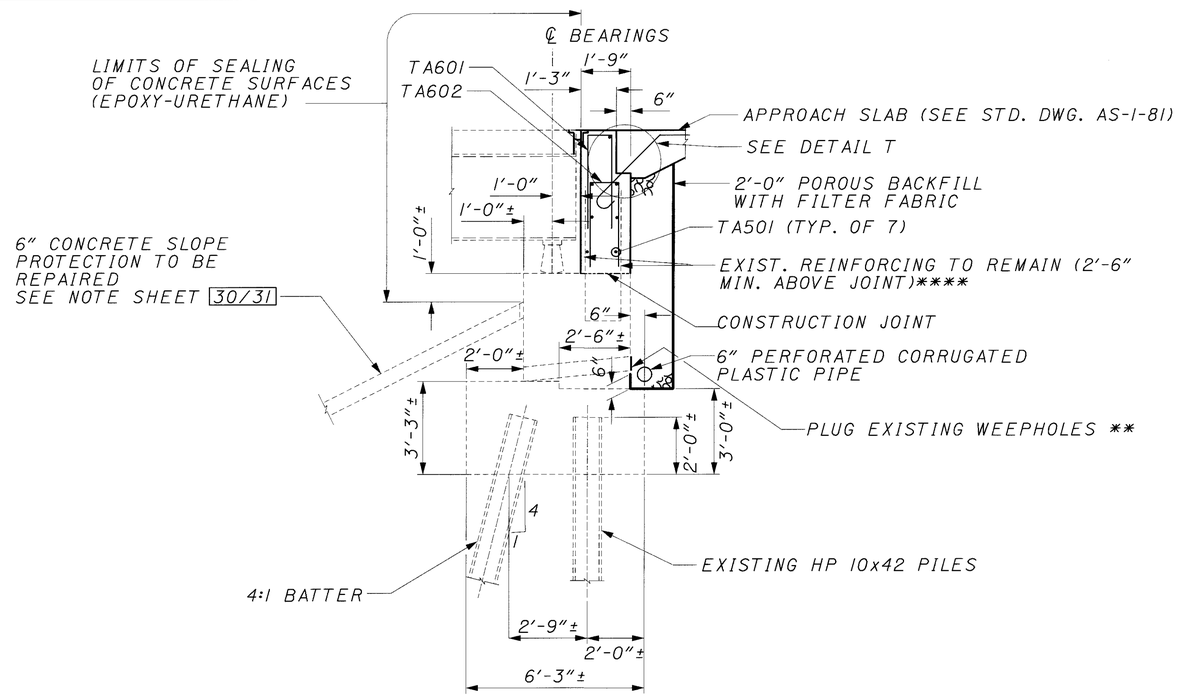

SECTION B-B

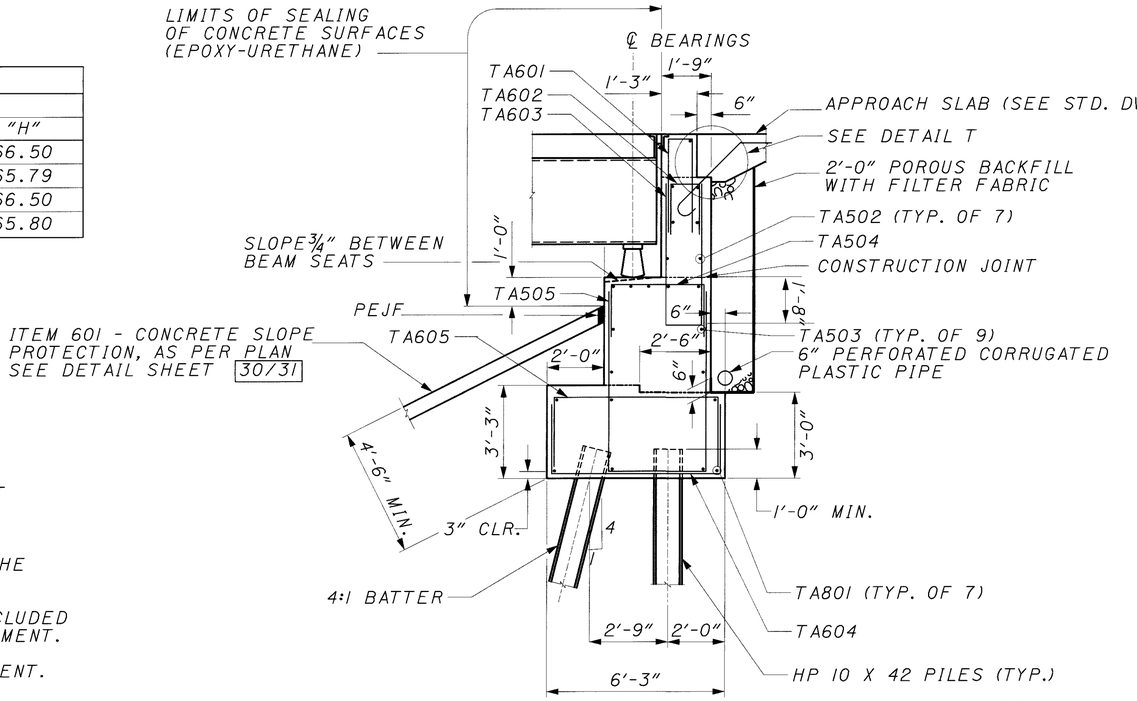

SECTION A-A

NOTES:

POUROUS BACKFILL WITH FILTER FABRIC, 2 FEET THICK SHALL EXTEND UP TO THE PLANE OF THE SUBGRADE, TO ONE FOOT BELOW THE EMBANKMENT SURFACE, AND LATERALLY TO THE ENDS OF THE WINGWALLS.

* BACKWALL CONCRETE ABOVE THIS OPTIONAL CONSTRUCTION JOINT SHALL NOT BE PLACED UNTIL AFTER THE DECK CONCRETE IN THE SPAN ADJACENT TO THE ABUTMENT HAS BEEN PLACED.

** EXISTING 4" WEEPHOLES TO BE PLUGGED IN ACCORDANCE WITH 202.09 & INCLUDED WITH ITEM 202 - PORTIONS OF STRUCTURE REMOVED, AS PER PLAN FOR PAYMENT.

*** INCLUDE WITH ITEM 611 - REINFORCED CONCRETE APPROACH SLAB FOR PAYMENT.

**** PRESERVE EXISTING REINFORCING STEEL (CONTRACTOR MAY REPLACE IN KIND WITH EPOXY COATED DOWELS AT NO ADDITIONAL COST TO THE STATE).

PROVIDE 3" CLEAR COVER FOR ABUTMENTS

LEGNED

STD. DWG. = STANDARD DRAWING
TYP. = TYPICAL
C.J. = CONSTRUCTION JOINT
MIN. = MINIMUM

BURGESS & NIPLE

DESIGNED KK | DRAWN KK | REVIEWED MAR | DATE 12-15-99
CHECKED SCT | REVISED | STRUCTURE FILE NUMBER 18076921807706

ABUTMENT DETAILS II
BRIDGE NO. CUY-90-0045 L & R
OVER BRADLEY ROAD

CUY-90-0.00

P:\PR22308\CADD\TABUT1.DGN

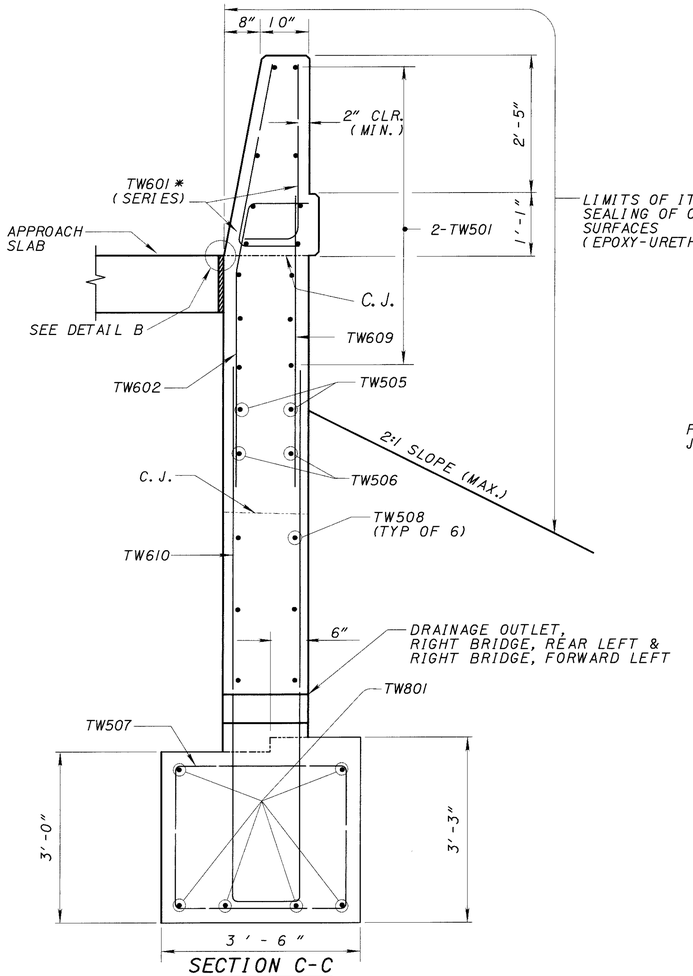

LIMITS OF ITEM SPECIAL SEALING OF CONCRETE SURFACES (EPOXY-URETHANE)

ELEVATIONS				
LOCATION	ELEVATION			
	"C"	"D"	"M"	"L"
L.R. RIGHT	661.30	666.23	665.23	——
L.F. RIGHT	660.65	665.51	665.38	——
R.R. LEFT	661.31	666.23	665.23	657.55
R.F. LEFT	660.66	665.52	665.39	656.85

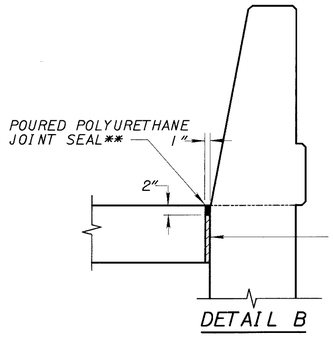

DETAIL B

**FOAM AND JOINT SEAL INCLUDED WITH ITEM 611 - APPROACH SLAB, AS PER PLAN FOR PAYMENT. (SEE GENERAL NOTES)

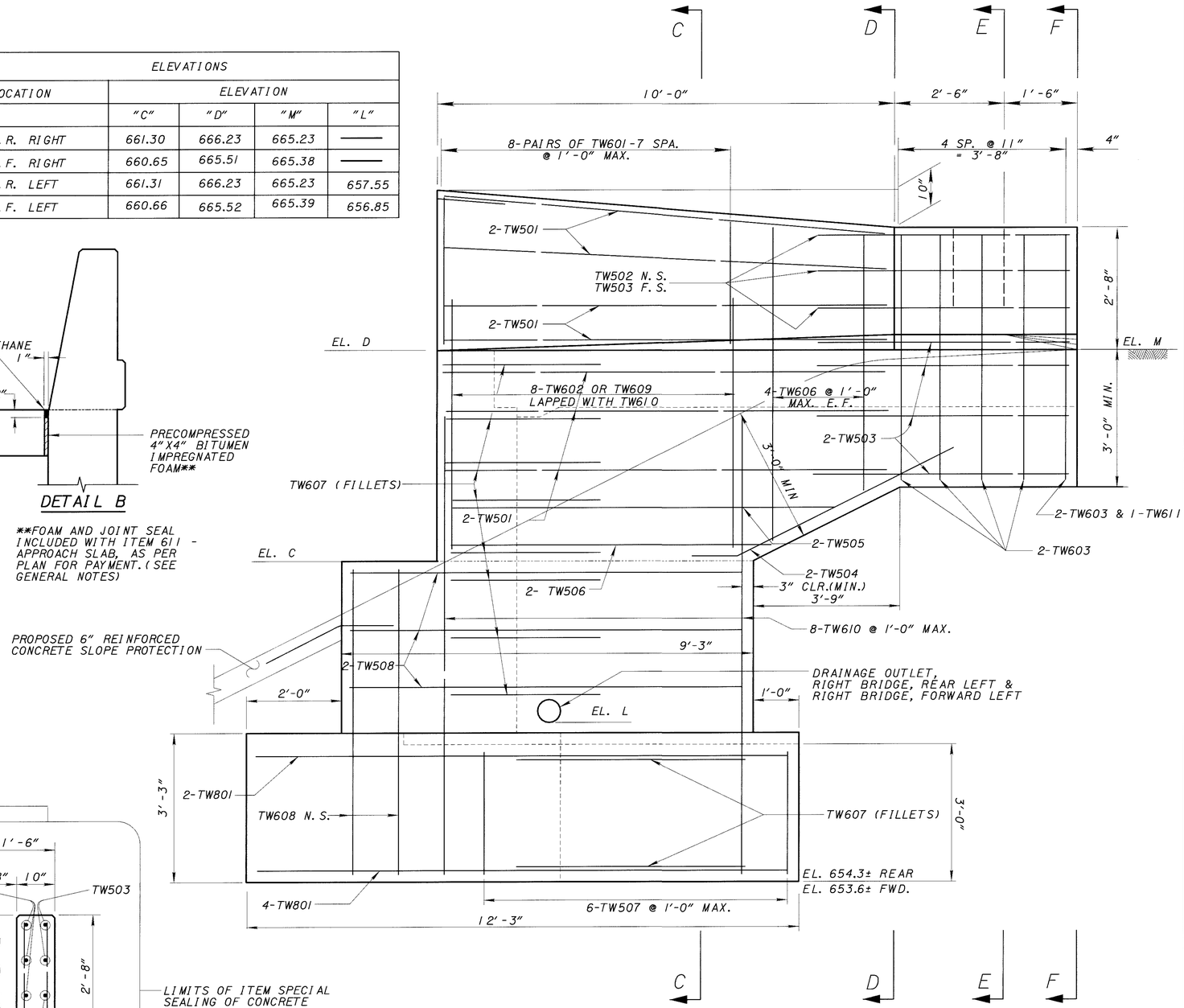

MEDIAN WINGWALL ELEVATION

PILES NOT SHOWN

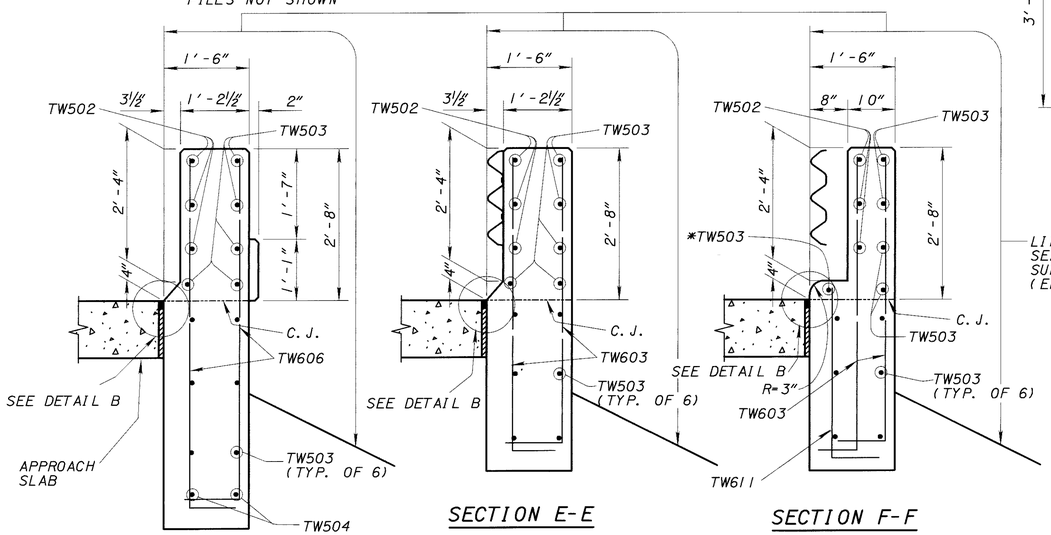

LIMITS OF ITEM SPECIAL SEALING OF CONCRETE SURFACES (EPOXY-URETHANE)

NOTES:

FOR BRIDGE TERMINAL ASSEMBLY SEE STANDARD CONSTRUCTION DRAWING GR-3.1 AND GR-3.2.

* FIELD BEND IF NECESSARY

2'-5" MINIMUM LAP FOR NO. 5 BARS

LEGEND:

N.S.	=	NEAR SIDE
F.S.	=	FAR SIDE
SPA.	=	SPACES
C.J.	=	CONSTRUCTION JOINT
TYP.	=	TYPICAL
MAX.	=	MAXIMUM
L.R.	=	LEFT REAR
L.F.	=	LEFT FORWARD
R.R.	=	RIGHT REAR
R.F.	=	RIGHT FORWARD
EL.	=	ELEVATION
E.F.	=	EACH FACE
CLR.	=	CLEARANCE

BURGESS & NIPLE

DESIGNED CDC | DRAWN CDC | CHECKED SCT | REVIEWED MAR | DATE 12-15-99 | REVISED | STRUCTURE FILE NUMBER 1807692, 1807706

WINGWALL DETAILS I

BRIDGE NO. CUY-90-0045 L & R OVER BRADLEY ROAD

CUY-90-0.00

P:\PR22308\CADD\TWINGB.DGN

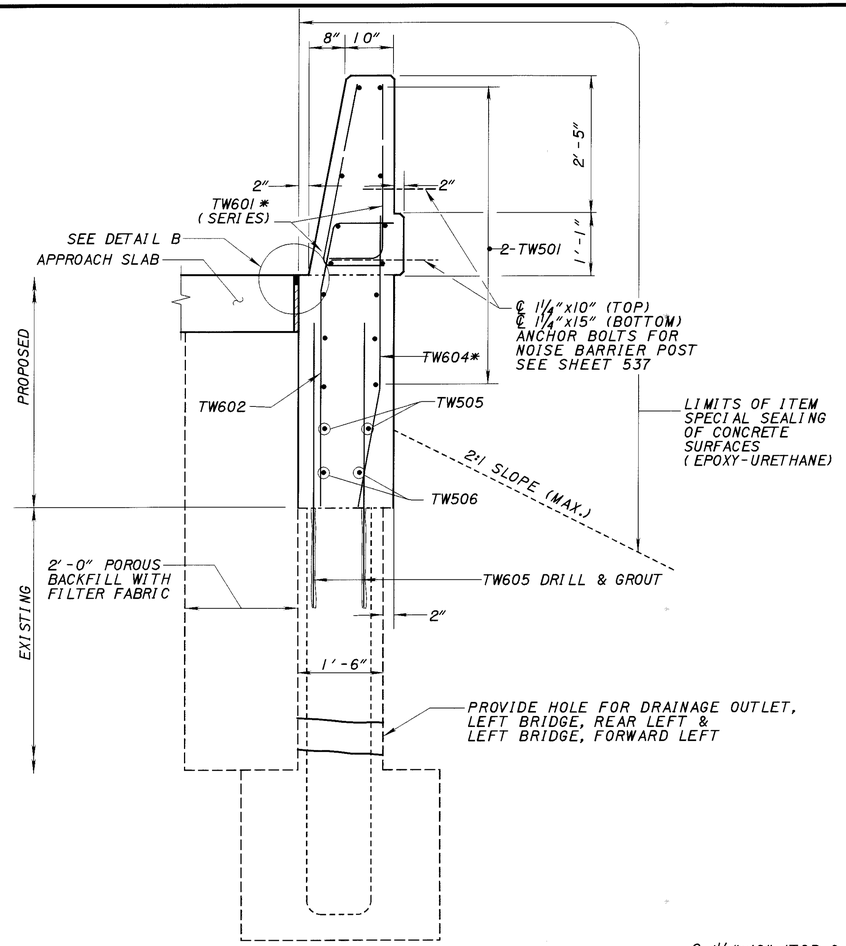

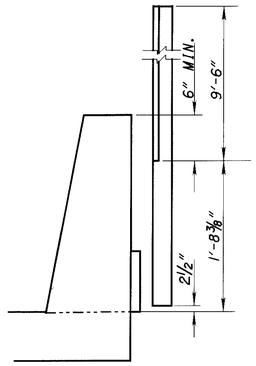

NOISE BARRIER POST DETAIL

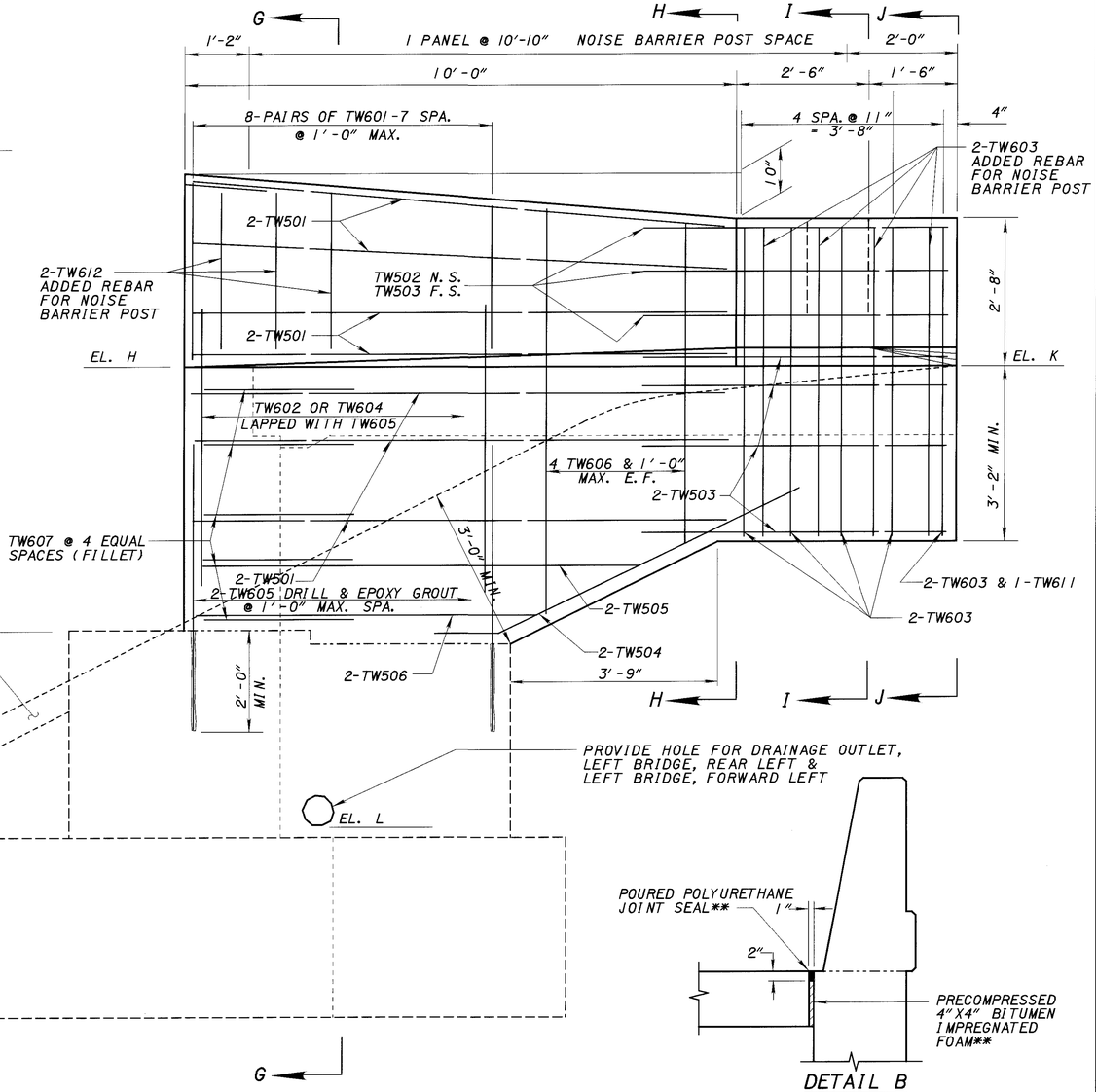

DETAIL B

**FOAM AND JOINT SEAL INCLUDED WITH APPROACH SLAB, AS PER PLAN FOR PAYMENT. (SEE GENERAL NOTES)

SECTION G-G

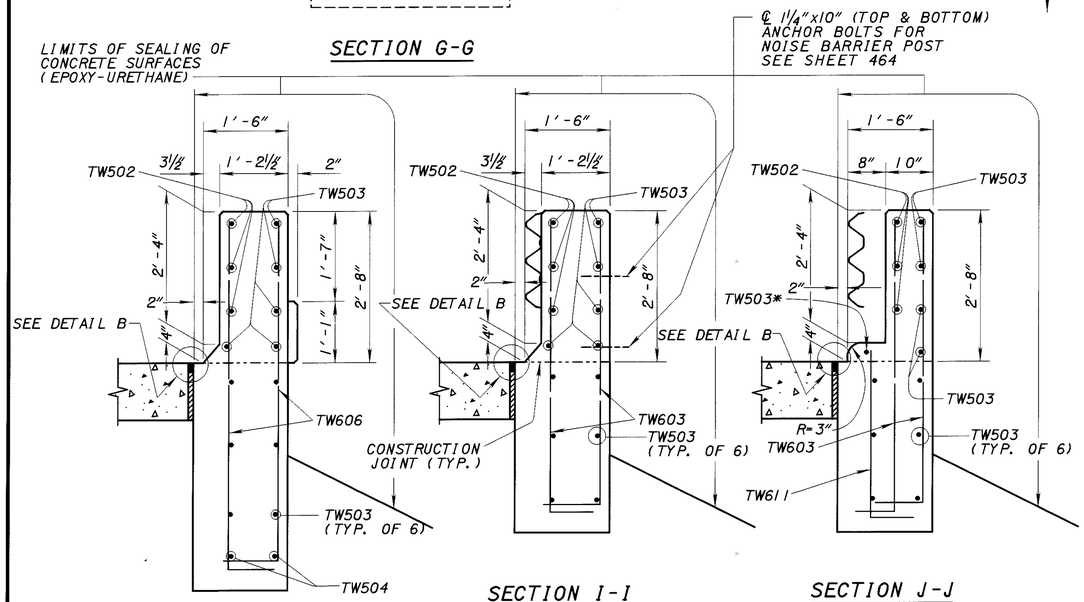

SECTION H-H

SECTION I-I

SECTION J-J

OUTSIDE WINGWALL ELEVATION

ELEVATIONS				
LOCATION	ELEVATION			
	"J"	"H"	"K"	"L"
L.R. LEFT	661.34	666.50	666.51	657.55
L.F. LEFT	660.64	665.79	665.66	656.85
R.R. RIGHT	661.42	666.50	666.51	——
R.F. RIGHT	660.72	665.80	665.67	——

LEGEND:
N.S. = NEAR SIDE
E.F. = EACH FACE
F.S. = FAR SIDE
L.R. = LEFT REAR
L.F. = LEFT FORWARD
R.R. = RIGHT REAR
R.F. = RIGHT FORWARD
SPA. = SPACES
TYP. = TYPICAL
MAX. = MAXIMUM
MIN. = MINIMUM

NOTES:

FOR BRIDGE TERMINAL ASSEMBLY SEE STANDARD CONSTRUCTION DRAWING GR-3.1 AND GR-3.2.

* FIELD BEND IF NECESSARY

2'-5" MINIMUM LAP FOR NO. 5 BARS

FOR NOISE BARRIER POST AND PARAPET DETAILS SEE NOISE BARRIER DETAILS, SHEETS 179 TO 979.

BURGESS & NIPLE

DATE 12-15-99
REVIEWED MAR
STRUCTURE FILE NUMBER 1807692,1807706
DRAWN CDC
REVISED
DESIGNED CDC
CHECKED SCT

WINGWALL DETAILS II
BRIDGE NO. CUY-90-0045 L & R
OVER BRADLEY ROAD

CUY-90-0.00

25/39
433/582

i:\PROJECTS\Pidll738\dgn\finalplans\TWING.DGN 21-JUL-2000 12:58PM jgrmovse

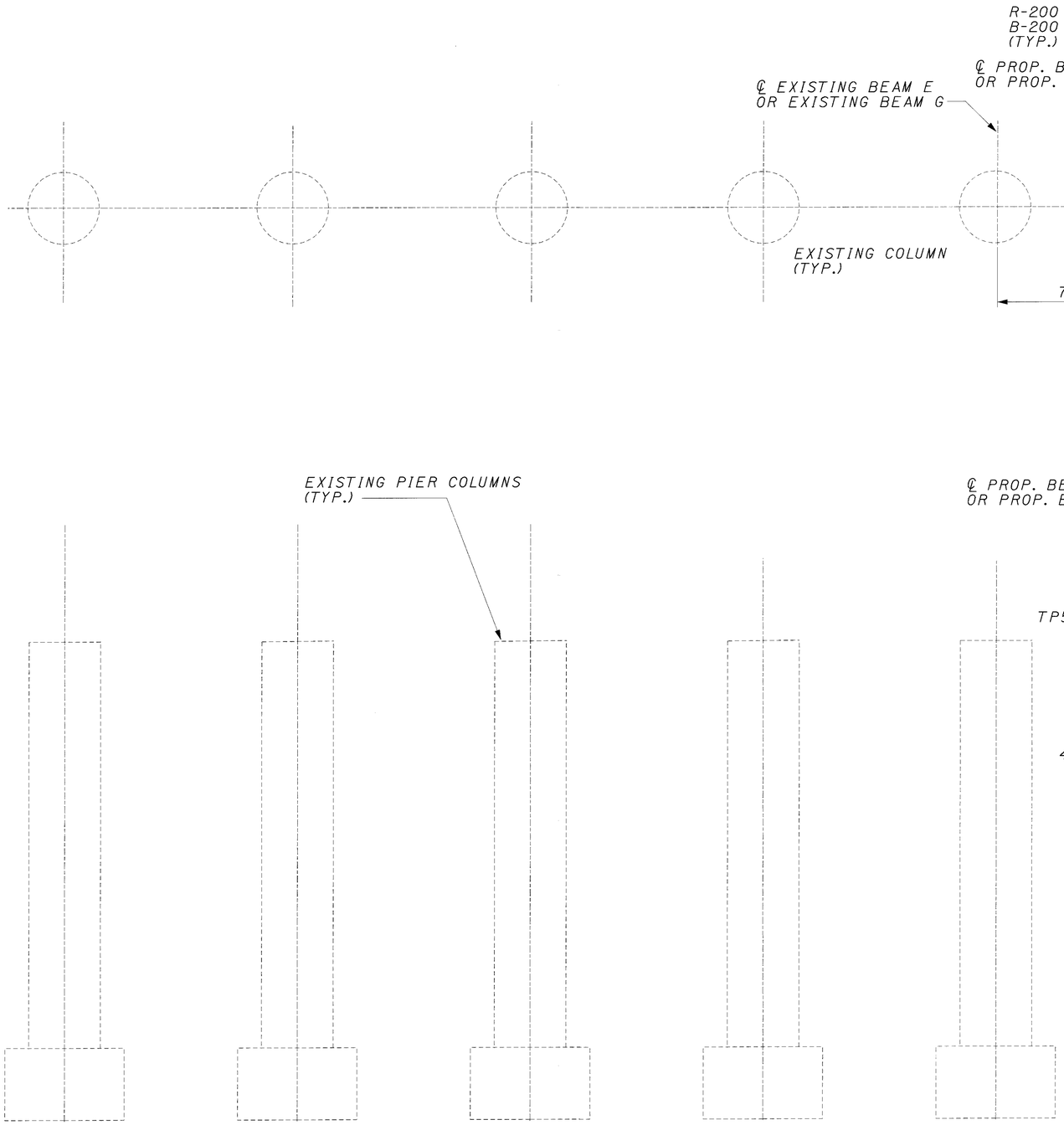

PIER ELEVATION

LEFT BRIDGE LOOKING AHEAD
RIGHT BRIDGE LOOKING BACK
(4 PIERS TOTAL)

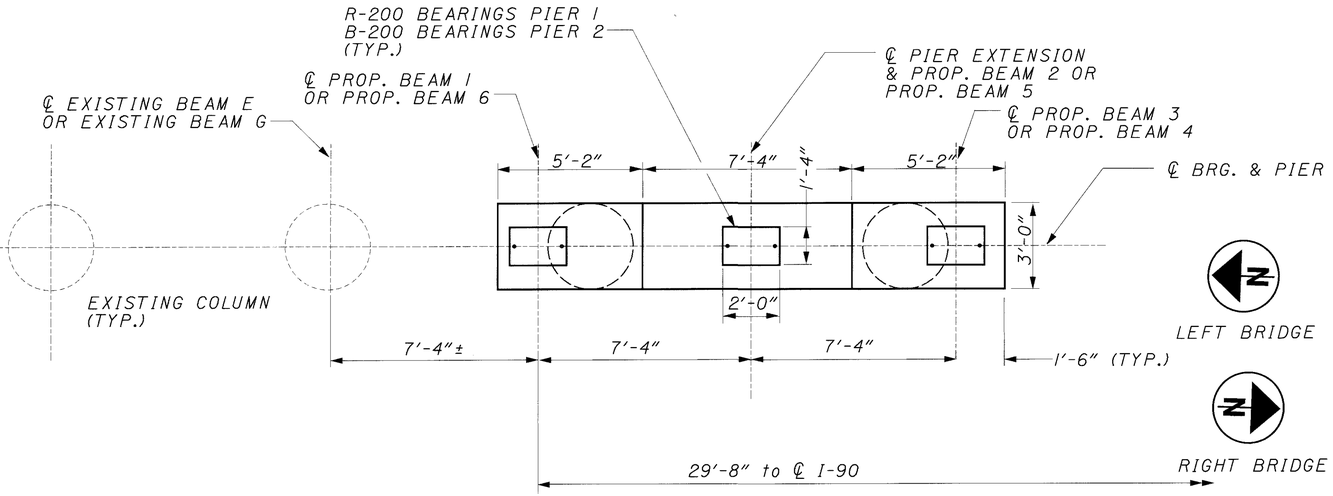

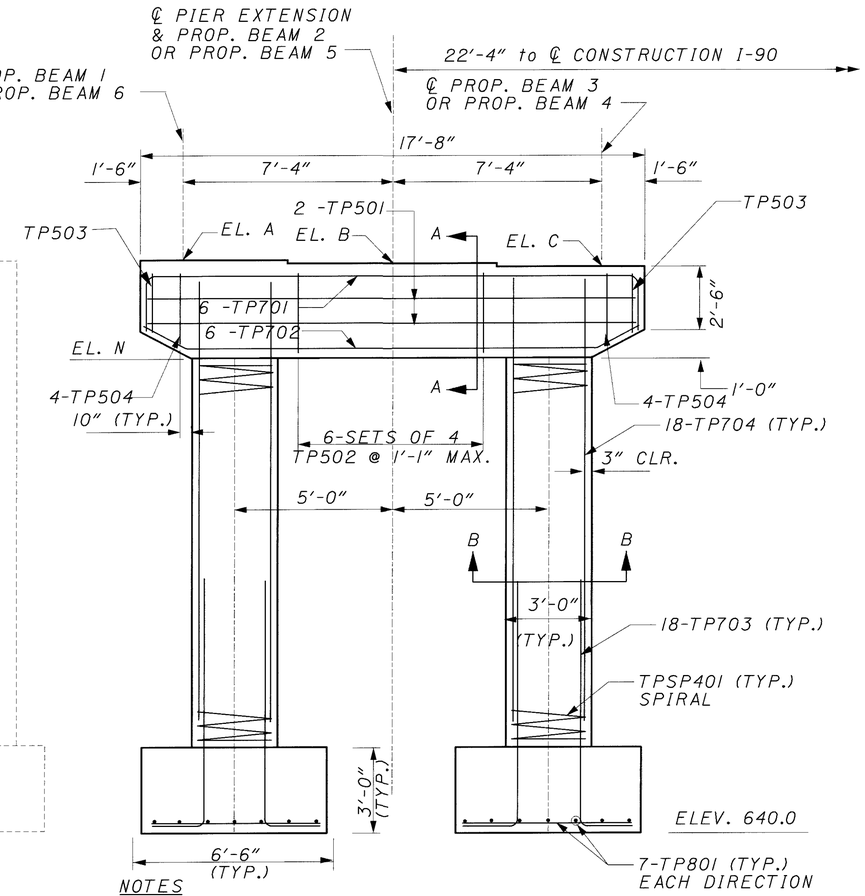

NOTES

SEAL ENTIRE EXPOSED SURFACE AREA OF PROPOSED AND EXISTING PIER COLUMNS AND CAPS EXCEPT FOR THE TOP HORIZONTAL SURFACE.

FOR SEAT ELEVATIONS SEE SHEET 19/31 .

FOR SECTION A-A AND B-B SEE SHEET 19/31 .

LEGEND

c/c	= CENTER TO CENTER
TYP.	= TYPICAL
BRG.	= BEARING
PROP.	= PROPOSED
CLR.	= CLEARANCE
TYP.	= TYPICAL

BURGESS & NIPLE

DESIGNED DCF/SCT
DRAWN DCF/JAA
CHECKED SCT/JAA
REVIEWED MAR
DATE 12-15-99
REVISED
STRUCTURE FILE NUMBER 1807692, 1807706

PIER DETAILS I
BRIDGE NO. CUY-90-0045 L & R
OVER BRADLEY ROAD

CUY-90-0.00

26/39

434/582

p:\pr22308\cadd\tpler1.dgn

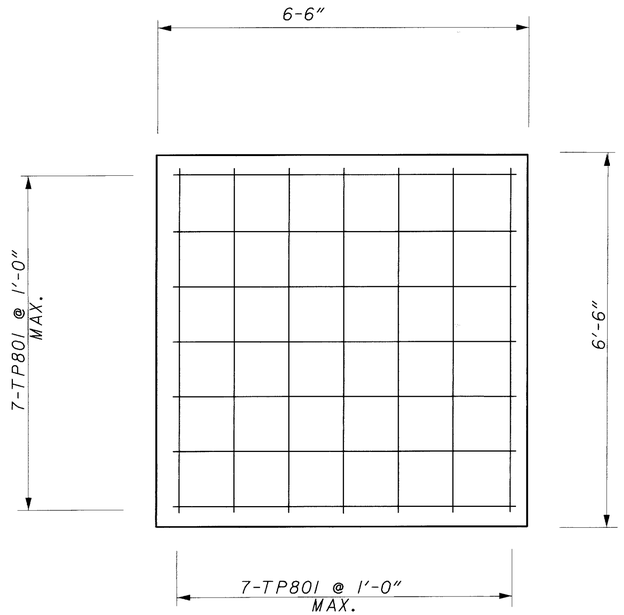

PIER FOOTING PLAN

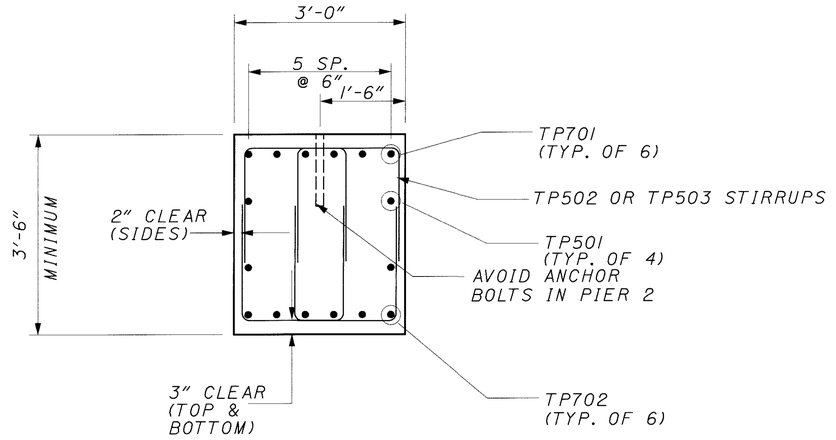

SECTION A-A

	PIER 1 RIGHT	PIER 2 RIGHT	PIER 1 LEFT	PIER 2 LEFT
EL. "A"	660.92	660.65	660.94	660.65
EL. "B"	660.80	660.53	660.82	660.54
EL. "C"	660.69	660.42	660.71	660.42
EL. "N"	657.19	656.92	657.21	656.92

TABLE OF ELEVATIONS

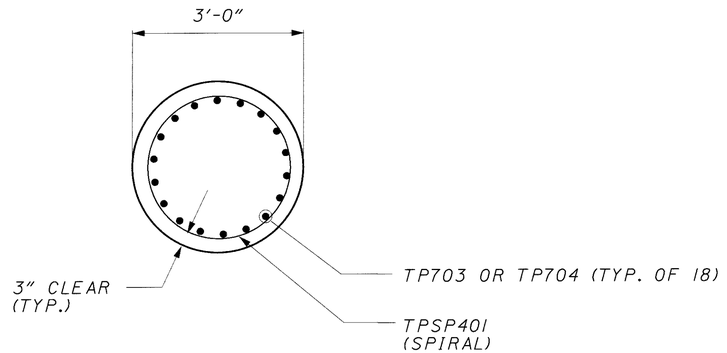

SECTION B-B

LEGEND

TYP. = TYPICAL

MAX. = MAXIMUM

p:\pr22308\cadd\tpier2.dgn

BURGESS & NIPLE

DESIGNED	DRAWN	REVIEWED	DATE
SCT/JAA	JAA/SCT	MAR	12-15-99
CHECKED	REVISED	STRUCTURE FILE NUMBER	
JAA/SCT		1807692, 1807706	

PIER DETAILS II

BRIDGE NO. CUY-90-0045 L & R
OVER BRADLEY ROAD

CUY-90-0.00

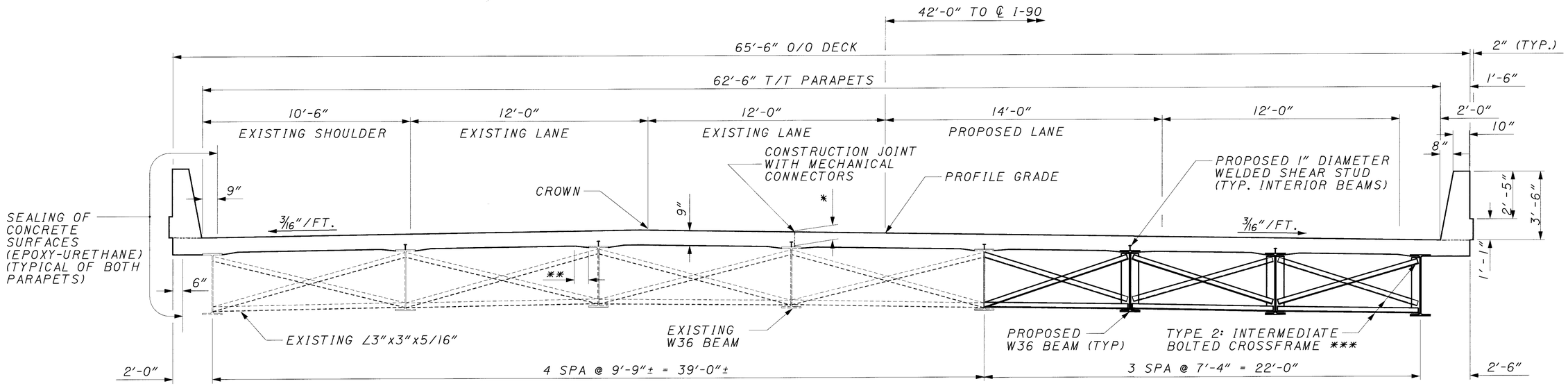

TRANSVERSE SECTION

LEFT BRIDGE LOOKING AHEAD
RIGHT BRIDGE LOOKING BACK

* SEE ANTICIPATED DECK SLAB DEPTH TABLE, SHEET 27/31. THESE ARE NOMINAL DIMENSIONS. THE QUANTITY OF DECK CONCRETE TO BE PAID FOR SHALL BE BASED ON THESE DIMENSIONS, EVEN THOUGH DEVIATION FROM THEM MAY BE NECESSARY BECAUSE THE TOP FLANGE OF THE BEAM MAY NOT HAVE THE EXACT CAMBER OR CONFORMATION REQUIRED TO PLACE IT PARALLEL TO THE FINISHED GRADE. DEDUCTION SHALL BE MADE FOR THE VOLUME OF ENCASED STEEL PLATES AS PER 842.18 OF THE CMS.

** A TYPICAL HAUNCH WIDTH OF 9" SHALL BE USED FOR COMPUTING QUANTITY OF CONCRETE. HOWEVER, THE HAUNCH WIDTH MAY VARY BETWEEN 6" AND 12" PROVIDED THAT THE SLOPE SHALL BE NOT MORE THAN 1:4 FOR A HAUNCH LESS THAN 9" IN WIDTH.

*** CROSSFRAMES SHALL BE INSTALLED PRIOR TO THE DECK POUR WITH THE EXCEPTION OF THE CROSSFRAMES BETWEEN THE FIRST PROPOSED BEAM AND EXISTING FASCIA BEAM. AT THESE LOCATIONS, THE CROSSFRAMES SHALL NOT BE WELDED AT ONE SIDE, OR IF BOLTED, BOLTS SHALL ONLY BE HAND TIGHTENED. AFTER THE POUR DIRECTLY OVER THIS BAY, COMPLETE THE CROSSFRAME INSTALLATION. CROSSFRAMES BETWEEN PROPOSED BEAMS SHALL BE INSTALLED PRIOR TO DECK PLACEMENT.

SEE STANDARD DRAWING SBR-1-96 FOR PARAPET DETAILS.

SEE STANDARD DRAWING GSD-1-96 FOR STRUCTURAL STEEL DETAILS.

LEGEND:
O/O = OUT TO OUT
SPA = SPACES
T/T = TOE TO TOE
TYP. = TYPICAL

BURGESS & NIPLE

DESIGNED	DRAWN	REVIEWED	DATE
KK	KK	MAR	12-15-99
CHECKED	REVISED	STRUCTURE FILE NUMBER	
SCT		1807692, 1807706	

TRANSVERSE SECTION
BRIDGE NO. CUY-90-0045 L & R
OVER BRADLEY ROAD

CUY-90-0.00

28/39

436
582

P:\pr22308\cadd\tsuper1.dgn

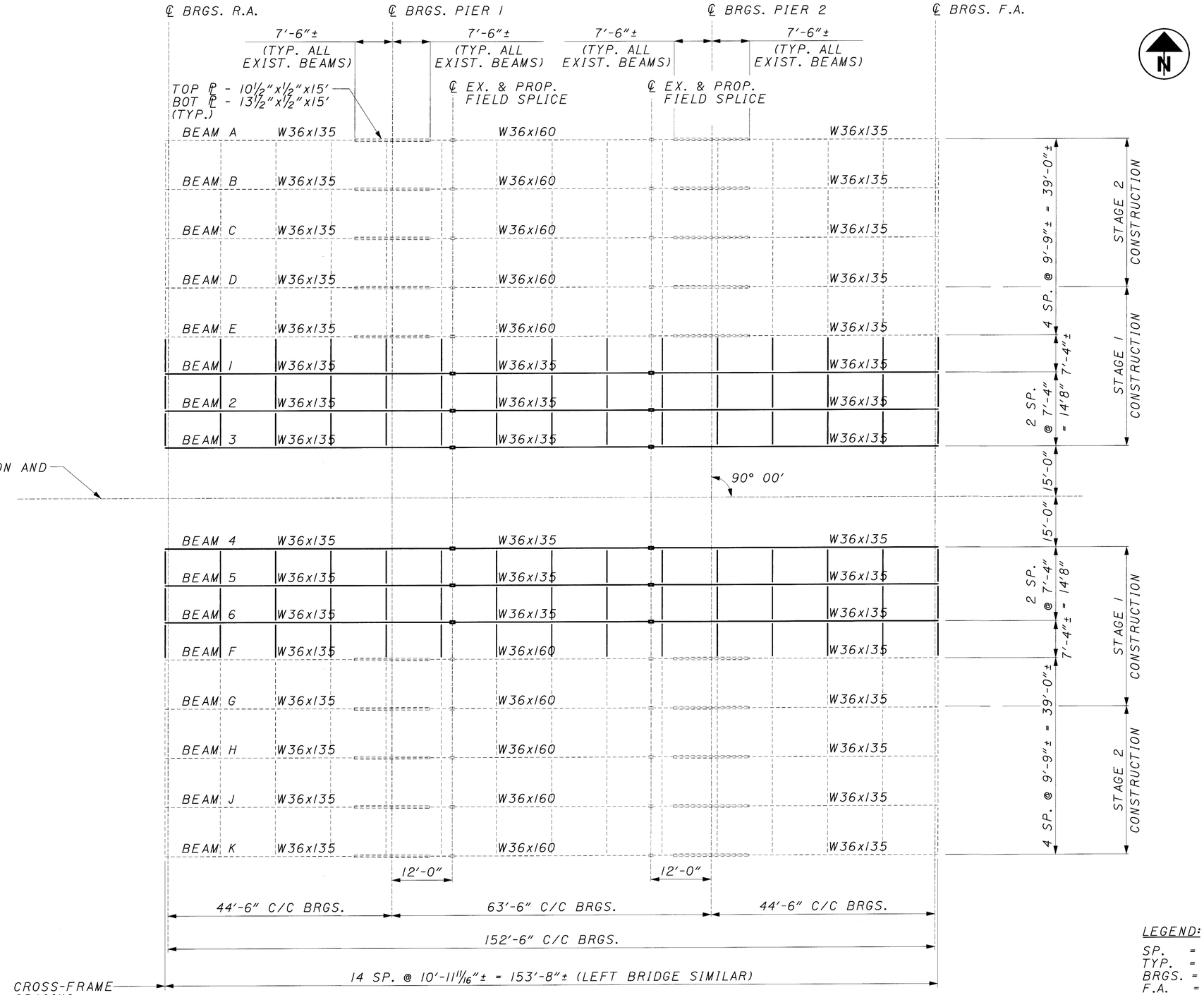

FRAMING PLAN

LEGEND:

SP. = SPACES
TYP. = TYPICAL
BRGS. = BEARINGS
F.A. = FORWARD ABUTMENT
R.A. = REAR ABUTMENT

BURGESS & NIPLE

DESIGNED	DRAWN	REVIEWED	DATE
JAA	JAA	MAR	12-15-99
CHECKED	REVISED	STRUCTURE FILE NUMBER	
SCT		1807692, 1807706	

FRAMING PLAN
BRIDGE NO. CUY-90-0045 L & R
OVER BRADLEY ROAD

CUY-90-0.00

p:\pr22308\cadd\frmpln.dgn

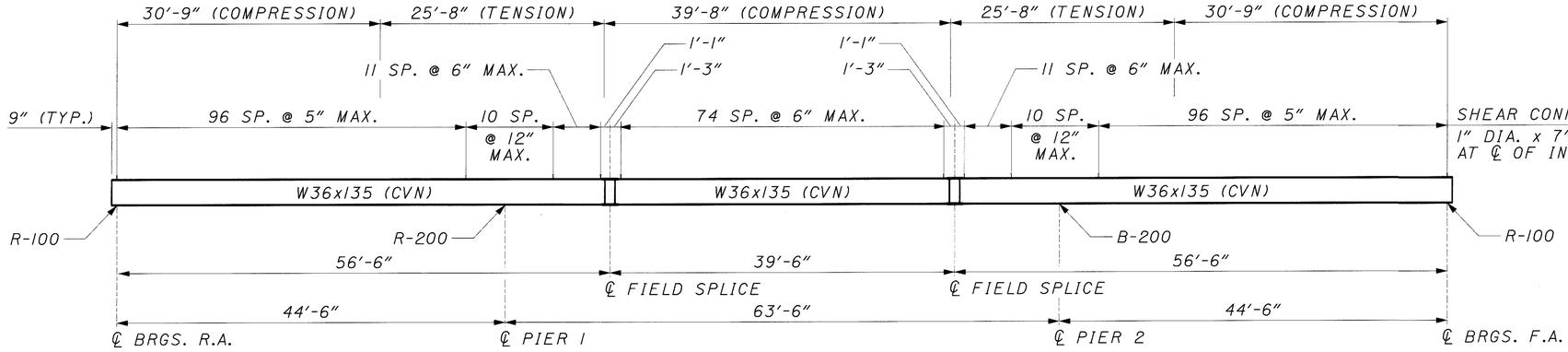

PROPOSED BEAM ELEVATION

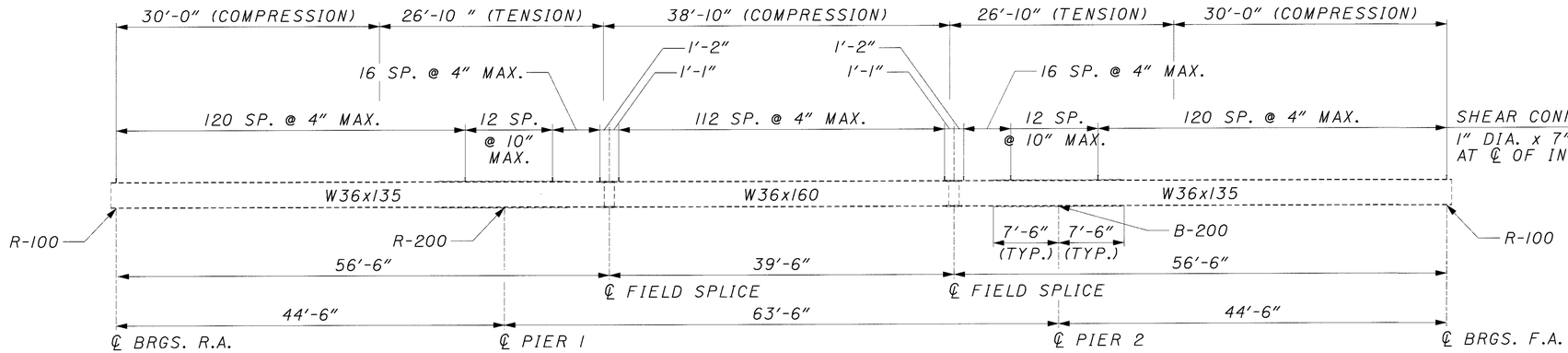

EXISTING BEAM ELEVATION

NOTES:

1. FOR BEAM SPLICE DETAIL SEE STANDARD DRAWING BS-1-93, PAGE 2/3 (FOR 36 KSI STEEL) AND REFER TO THE DETAIL FOR A W36x135 BEAM.
2. WELDED ATTACHMENT OF SUPPORTS FOR CONCRETE DECK FINISHING MACHINE MAY BE MADE TO AREAS OF THE FASCIA BEAM FLANGES DESIGNATED "COMPRESSION". ATTACHMENTS SHALL NOT BE MADE TO AREAS DESIGNATED TENSION. FILLET WELDS TO COMPRESSION FLANGES SHALL NOT BE CLOSER THAN 1 INCH FROM EDGE OF FLANGE, NOT BE MORE THAN 2 INCHES LONG, AND NOT BE SMALLER THAN THE MINIMUM SIZE REQUIRED BY AASHTO/AWS.
3. WHERE A SHAPE OR PLATE IS DESIGNATED (CVN) THE MATERIAL SHALL MEET SPECIFIED MINIMUM NOTCH TOUGHNESS REQUIREMENTS AS SPECIFIED IN 711.01 OF CMS.
4. ALL BOLTS SHALL BE GALVANIZED 1" DIAMETER ASTM A325 HIGH STRENGTH BOLTS.
5. FOR BEARING DETAILS SEE STD. DWG. RB-1-55.
6. WELDED SHEAR CONNECTORS SHALL ONLY BE INSTALLED ON INTERIOR BEAMS.

BURGESS & NIPLE

DESIGNED	DRAWN	REVIEWED	DATE
JAA	JAA	MAR	12-15-99
CHECKED	REVISED	STRUCTURE FILE NUMBER	
SCT		1807692, 1807706	

BEAM DETAILS
BRIDGE NO. CUY-90-0045 L & R
OVER BRADLEY ROAD

CUY-90-0.00

p:\br22308\cadd\tbeamelv.dgn

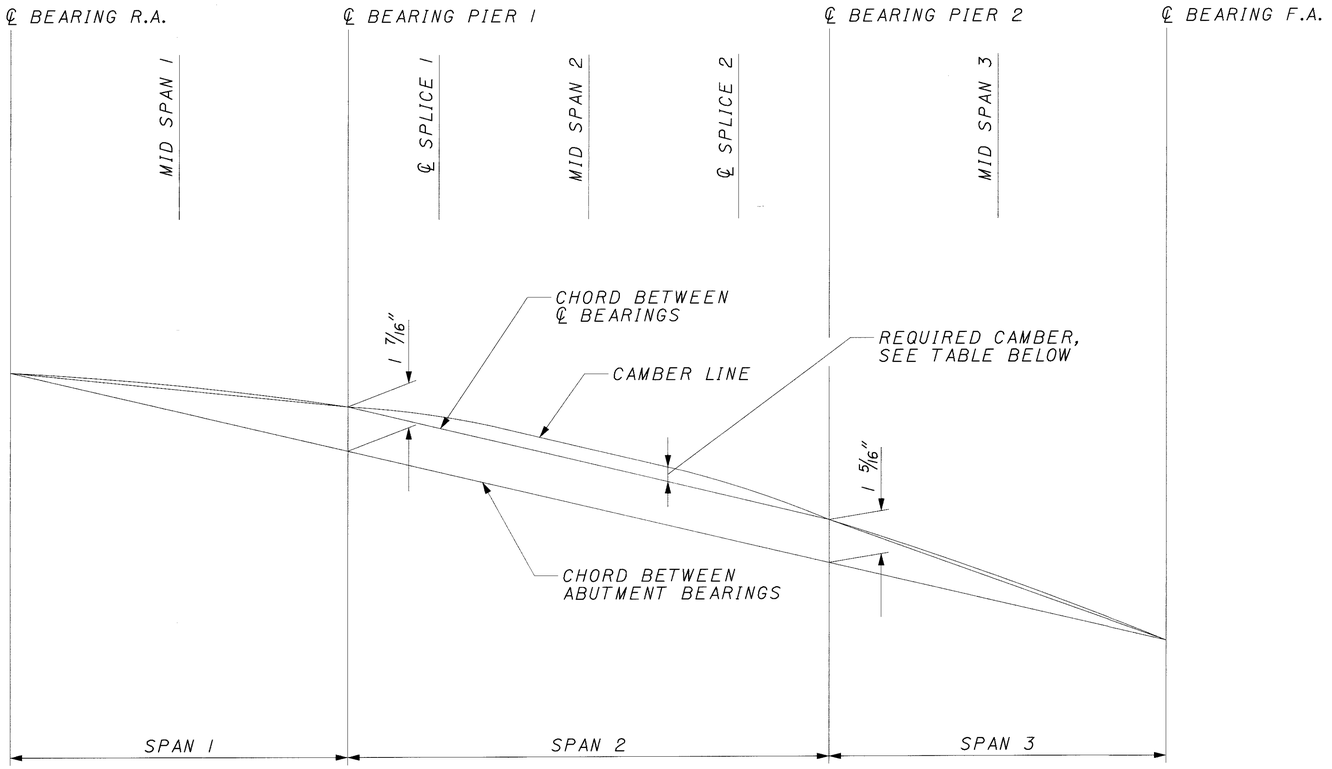

CAMBER AND BLOCKING DIAGRAM

CAMBER TABLE (INCHES) (FROM LINE BETWEEN ℄ BEARINGS)					
	SPAN 1	SPAN 2			SPAN 3
	MID SPAN	℄ SPLICE 1	MID SPAN	℄ SPLICE 2	MID SPAN
DEFLECTION DUE TO STEEL WEIGHT	0	0	1/16	0	0
DEFLECTION DUE TO SLAB & PARAPET WEIGHT	1/8	3/16	3/8	3/16	1/8
VERTICAL CURVE ADJUSTMENT	1/8	1/8	1/4	1/8	1/8
REQUIRED CAMBER	1/4	5/16	11/16	5/16	1/4

BURGESS & NIPLE

DESIGNED	DRAWN	REVIEWED	DATE
JAA	JAA	MAR	12-15-99
CHECKED	REVISED	STRUCTURE FILE NUMBER	
SCT		1807692, 1807706	

CAMBER AND BLOCKING DIAGRAM
BRIDGE NO. CUY-90-0045 L & R
OVER BRADLEY ROAD

CUY-90-0.00

P:\pr22308\cadd\tcamber.dgn

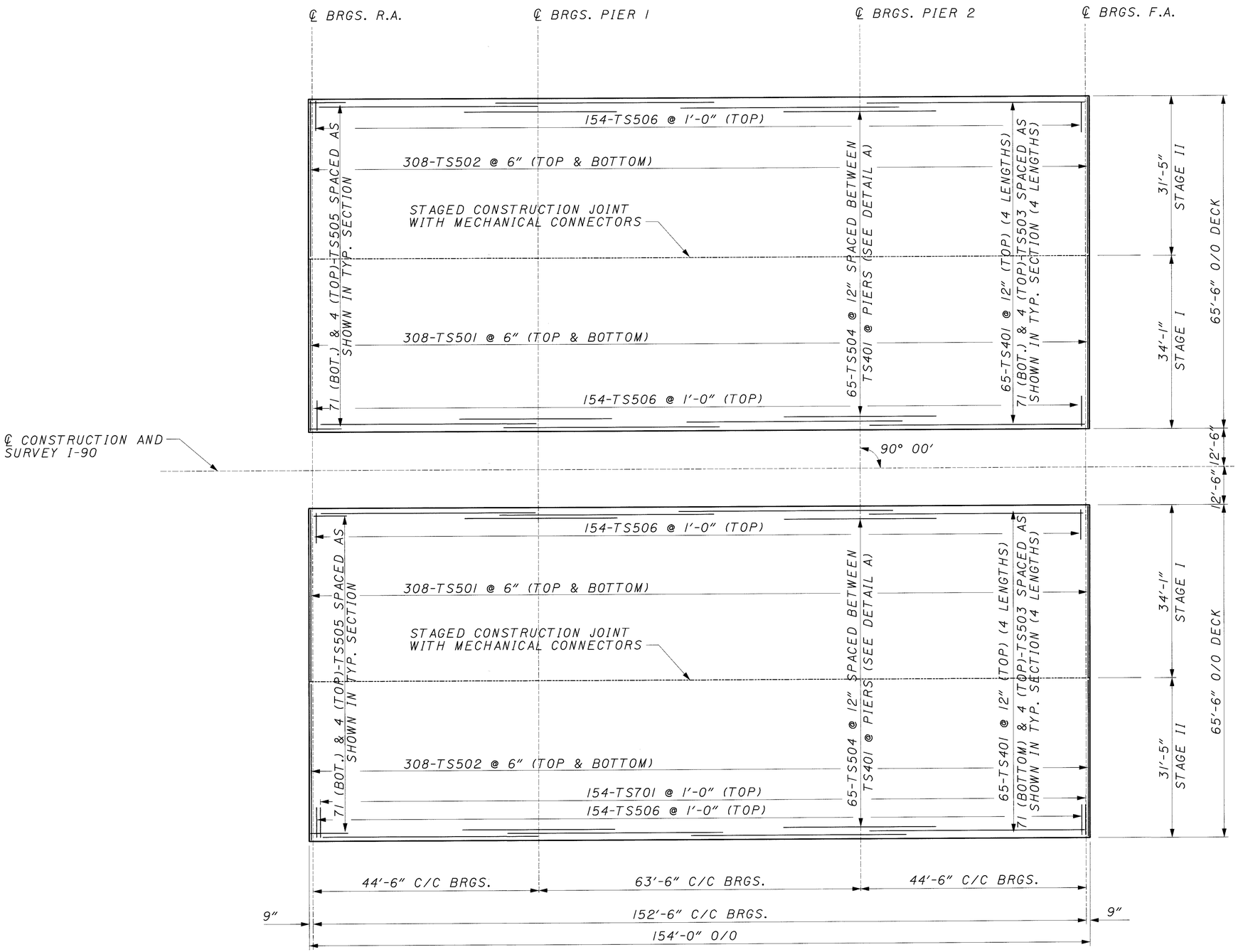

DECK SLAB PLAN

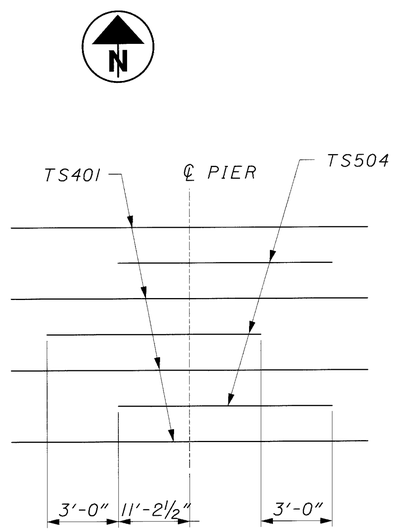

DETAIL A

LONGITUDINAL BARS LAP REQUIREMENTS

No. 4 = 2'-0"
No. 5 = 2'-5"

LEGEND:

BRGS. = BEARINGS
C/C = CENTER TO CENTER
O/O = OUT TO OUT
BOT. = BOTTOM
TYP. = TYPICAL

BURGESS & NIPLE

DESIGNED KK | DRAWN KK | REVIEWED MAR | DATE 12-15-99
CHECKED SCT | REVISED | STRUCTURE FILE NUMBER 807692, 1807706

DECK SLAB PLAN
BRIDGE NO. CUY-90-0045 L & R
OVER BRADLEY ROAD

CUY-90-0.00

32/39

440
582

p:\pr22308\cadd\tdeck1.dgn

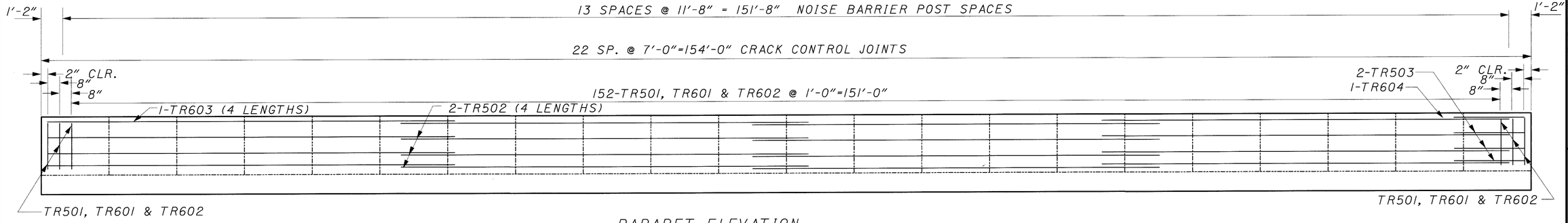

PARAPET ELEVATION

ALL LOCATIONS

NOISE BARRIER PANELS ARE TO BE PLACED ONLY ON THE SOUTH PARAPET OF THE RIGHT BRIDGE

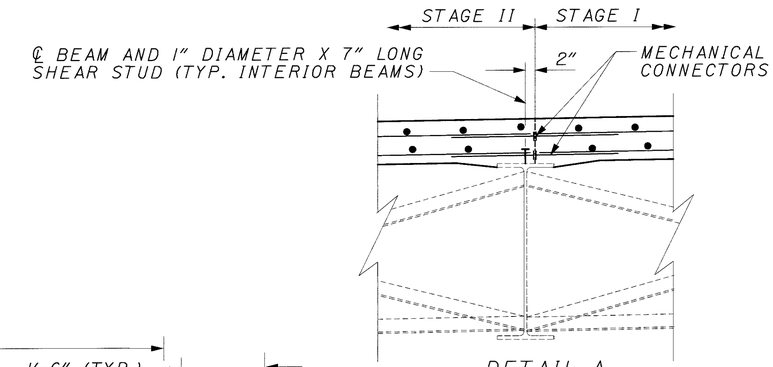

DETAIL A

MECHANICAL CONNECTORS TRANSVERSE BARS SHALL HAVE A MIN. LAP OF 2'-9"

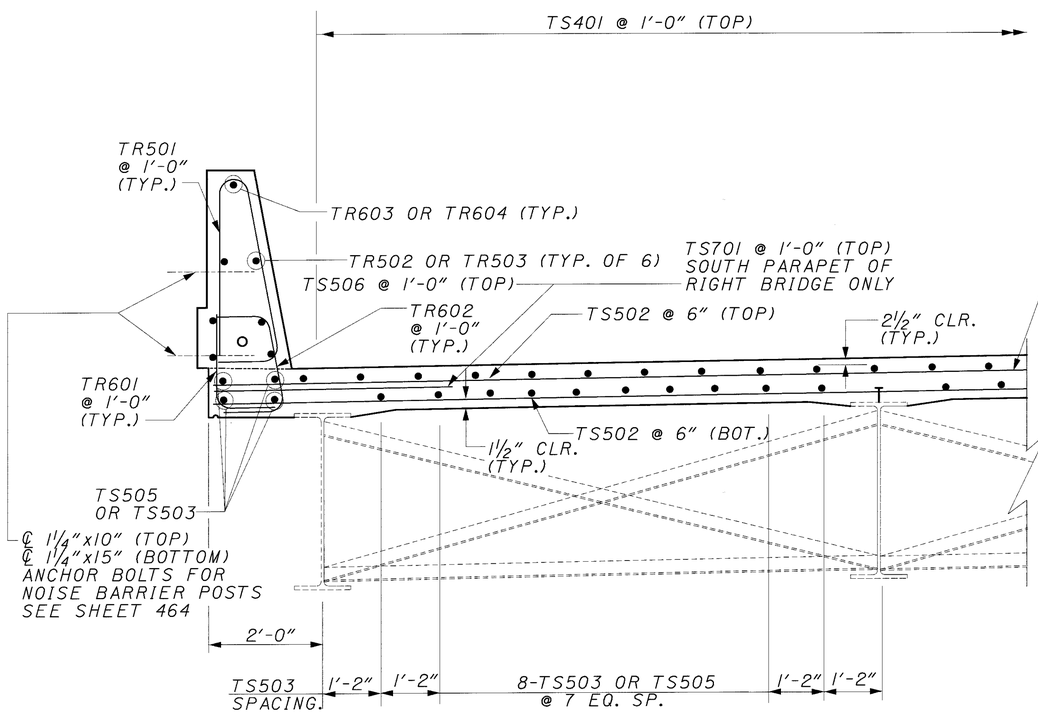

TYPICAL DECK SECTION

AT 9'-9" BAY
LEFT BRIDGE LOOKING AHEAD
RIGHT BRIDGE LOOKING BACK

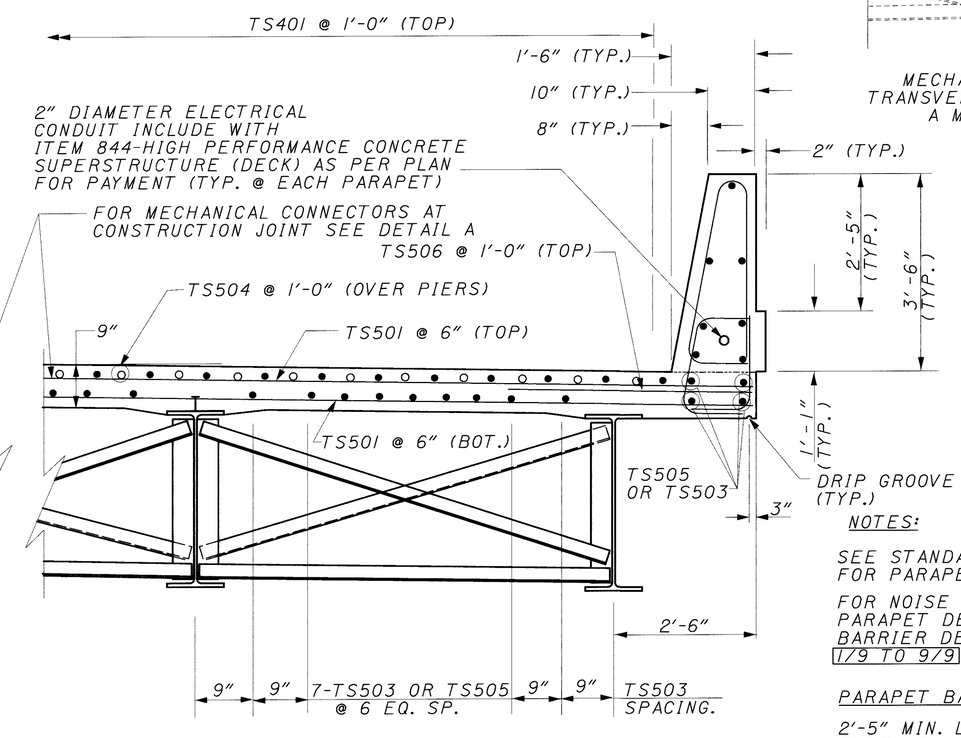

TYPICAL DECK SECTION OVER PIERS

AT 7'-4" BAY
LEFT BRIDGE LOOKING AHEAD
RIGHT BRIDGE LOOKING BACK

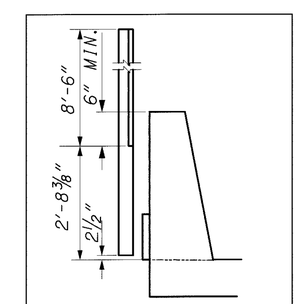

NOISE BARRIER POST DETAIL

NOTES:

SEE STANDARD DRAWING SBR-1-96 FOR PARAPET DETAILS.

FOR NOISE BARRIER POST AND PARAPET DETAILS SEE NOISE BARRIER DETAILS, SHEETS 1/9 TO 9/9.

PARAPET BARS LAP REQUIREMENTS

2'-5" MIN. LAP FOR #5 BARS &
2'-11" MIN. LAP FOR #6 BARS.

LEGEND:

EQ. = EQUAL
SP. = SPACES
O/O = OUT TO OUT
TYP. = TYPICAL
BOT. = BOTTOM
MIN. = MINIMUM

BURGESS & NIPLE

DESIGNED	DRAWN	REVIEWED	DATE
JAA/SCT	SCT	MAR	02-08-00
CHECKED	REVISED	STRUCTURE FILE NUMBER	
SCT/JAA		1807692, 1807706	

DECK AND PARAPET DETAILS
BRIDGE NO. CUY-90-0045 L & R
OVER BRADLEY ROAD

CUY-90-0.00

p:\pr22308\cadd\tdecksec.dgn

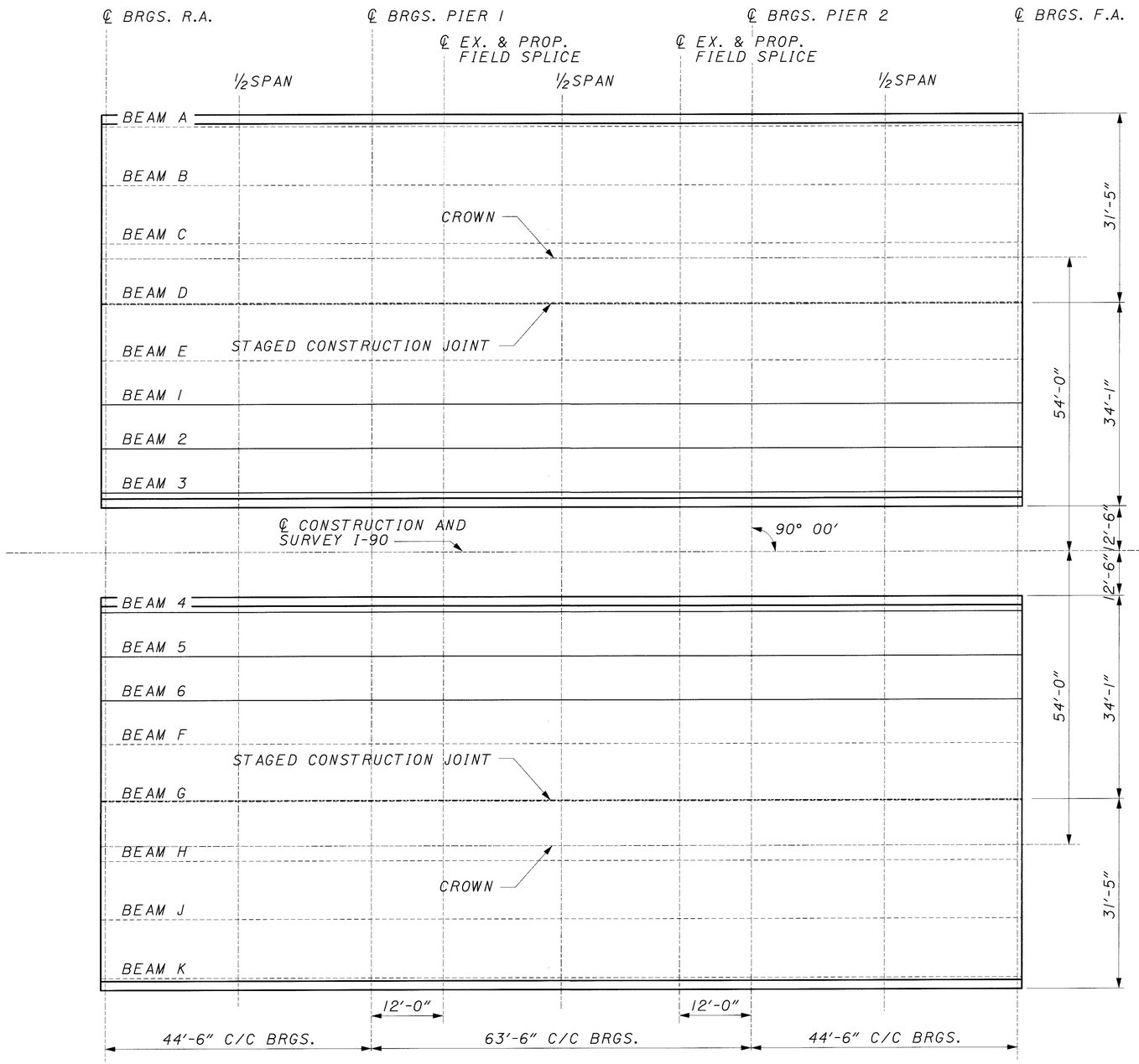

SCREED ELEVATION PLAN

SCREED ELEVATIONS:

FIELD PROCEDURES DURING STAGED CONSTRUCTION OF DECKS WITHOUT CLOSURE POURS

1. SURVEY ELEVATIONS OF EXISTING BEAMS IN STAGE I AT THE LOCATIONS SHOWN IN THE TABLE PRIOR TO STAGE I DECK REMOVAL AND AFTER STAGE I DECK REMOVAL.
2. COMPUTE THE AMOUNT OF SURVEYED REBOUND FOR THESE BEAMS BY SUBTRACTING THE ELEVATIONS AFTER REMOVAL FROM THE ELEVATIONS BEFORE REMOVAL.
3. COMPUTE THE ADJUSTED REBOUND FOR THESE BEAMS BY MULTIPLYING THE SURVEYED REBOUND BY THE RATIO OF THE PROPOSED DEAD LOAD TO EXISTING DEAD LOAD.
4. ADD THE AMOUNT OF ADJUSTED REBOUND TO THE FINAL TOP OF DECK ELEVATIONS TO OBTAIN THE DECK SCREED ELEVATIONS. USE REBOUND OF CLOSEST BEAM TO DETERMINE GUTTER DECK SCREED ELEVATION.
5. AFTER STAGE I DECK PLACEMENT, REPEAT STEPS I THRU 4 FOR REMAINING BEAMS PRIOR TO AND AFTER STAGE 2 DECK REMOVAL.

NOTES:

1. DECK SLAB DEPTH: THE QUANTITY OF DECK SLAB CONCRETE TO BE PAID FOR SHALL BE BASED ON THE MINIMUM REQUIRED DECK SLAB THICKNESS OF 9 INCHES. THE QUANTITY OF CONCRETE REQUIRED FOR THE HAUNCH SHALL BE BASED ON THE DESIGN HAUNCH OF 4 INCHES EVEN THOUGH DEVIATION FROM THAT DEPTH MAY BE NECESSARY BECAUSE THE TOP FLANGE OF THE BEAM MAY NOT BE PARALLEL TO THE FINISHED GRADE. ACTUAL HAUNCH DEPTHS MAY VARY FROM A 3 INCH MINIMUM TO A 4½ INCH MAXIMUM.
2. A HAUNCH WIDTH OF 9 INCHES SHALL BE USED FOR COMPUTING QUANTITY OF CONCRETE. HOWEVER, THE HAUNCH WIDTH MAY VARY BETWEEN 6 AND 12 INCHES.
3. THE COST OF SURVEYING IS CONSIDERED INCINDENTAL TO DECK CONSTRUCTION AND SHALL BE INCLUDED WITH ITEM 844 - HIGH PERFORMANCE CONCRETE, SUPER-STRUCTURE (DECK) FOR PAYMENT.
4. FOR STAGED CONSTRUCTION DETAILS, SEE SHEETS 10 & 11 OF 31.

$$\frac{\text{PROPOSED DEAD LOAD}}{\text{EXISTING DEAD LOAD}} = 0.88$$

LEGEND:

BRGS. = BEARINGS
C/C = CENTER TO CENTER
O/O = OUT TO OUT

BURGESS & NIPLE

DESIGNED	DRAWN	REVIEWED	DATE
KK	KK	MAR	12-15-99
CHECKED	REVISED	STRUCTURE FILE NUMBER	
JAA		1807692, 1807706	

SCREED ELEVATION PLAN & NOTES
BRIDGE NO. CUY-90-0045 L & R
OVER BRADLEY ROAD

CUY-90-0.00

p:\pr22308\cadd\tscreed1.dgn

DECK SCREED ELEVATION TABLE, LEFT BRIDGE

		SPAN 1			SPAN 2			SPAN 3		
		℄ BEARING REAR ABUT.	½SPAN	℄ BEARING PIER 1	℄ FIELD SPLICE	½SPAN	℄ FIELD SPLICE	℄ BEARING PIER 2	½SPAN	℄ BEARING FWD. ABUT.
TOE OF OUTSIDE PARAPET	FINAL TOP OF DECK ELEV.	666.50	666.46	666.40	666.36	666.28	666.18	666.11	665.96	665.79
	DECK SCREED ELEV.	666.50		666.40				666.11		665.79
BEAM A	* ELEV. AFTER DECK REMOVAL									
	* ELEV. BEFORE DECK REMOVAL									
	** SURVEYED REBOUND									
	*** ADJUSTED REBOUND									
	FINAL TOP OF DECK ELEV.	666.51	666.47	666.41	666.37	666.29	666.19	666.12	665.97	665.80
	**** DECK SCREED ELEV.	666.51		666.41				666.12		665.80
BEAM B	* ELEV. AFTER DECK REMOVAL									
	* ELEV. BEFORE DECK REMOVAL									
	** SURVEYED REBOUND									
	*** ADJUSTED REBOUND									
	FINAL TOP OF DECK ELEV.	666.66	666.62	666.56	666.52	666.44	666.34	666.27	666.12	665.95
	**** DECK SCREED ELEV.	666.66		666.56				666.27		665.95
BEAM C	* ELEV. AFTER DECK REMOVAL									
	* ELEV. BEFORE DECK REMOVAL									
	** SURVEYED REBOUND									
	*** ADJUSTED REBOUND									
	FINAL TOP OF DECK ELEV.	666.81	666.78	666.72	666.68	666.59	666.49	666.42	666.27	666.10
	**** DECK SCREED ELEV.	666.81		666.72				666.42		666.10
CROWN	FINAL TOP OF DECK ELEV.	666.85	666.81	666.76	666.71	666.63	666.53	666.46	666.31	666.14
	DECK SCREED ELEV.	666.85		666.76				666.46		666.14
BEAM D	* ELEV. AFTER DECK REMOVAL									
	* ELEV. BEFORE DECK REMOVAL									
	** SURVEYED REBOUND									
	*** ADJUSTED REBOUND									
	FINAL TOP OF DECK ELEV.	666.74	666.70	666.64	666.60	666.52	666.42	666.35	666.20	666.03
	**** DECK SCREED ELEV.	666.74		666.64				666.35		666.03
C.J.	FINAL TOP OF DECK ELEV.	666.74	666.70	666.64	666.60	666.52	666.42	666.35	666.20	666.03
	DECK SCREED ELEV.	666.74		666.64				666.35		666.03
BEAM E	* ELEV. AFTER DECK REMOVAL									
	* ELEV. BEFORE DECK REMOVAL									
	** SURVEYED REBOUND									
	*** ADJUSTED REBOUND									
	FINAL TOP OF DECK ELEV.	666.58	666.55	666.49	666.45	666.37	666.26	666.19	666.05	665.87
	**** DECK SCREED ELEV.	666.58	666.56	666.49	666.47	666.40	666.28	666.19	666.06	665.87
BEAM 1	FINAL TOP OF DECK ELEV.	666.47	666.43	666.38	666.33	666.25	666.15	666.08	665.93	665.76
	DECK SCREED ELEV.	666.47	666.44	666.38	666.35	666.28	666.17	666.08	665.94	665.76
BEAM 2	FINAL TOP OF DECK ELEV.	666.36	666.32	666.26	666.22	666.14	666.04	665.97	665.82	665.64
	DECK SCREED ELEV.	666.36	666.33	666.26	666.24	666.17	666.06	665.97	665.83	665.64
BEAM 3	FINAL TOP OF DECK ELEV.	666.24	666.21	666.15	666.11	666.02	665.92	665.85	665.70	665.53
	DECK SCREED ELEV.	666.24	666.22	666.15	666.13	666.05	665.94	665.85	665.71	665.53
TOE OF INSIDE PARAPET	FINAL TOP OF DECK ELEV.	666.23	666.19	666.13	666.09	666.01	665.91	665.84	665.69	665.51
	DECK SCREED ELEV.	666.23	666.20	666.13	666.11	666.04	665.93	665.84	665.70	665.51

ANTICIPATED DECK SLAB DEPTHS, LEFT BRIDGE

LOCATION	SPAN 1			SPAN 2			SPAN 3		
	℄ BEARING REAR ABUT.	½SPAN	℄ BEARING PIER 1	℄ FIELD SPLICE	½SPAN	℄ FIELD SPLICE	℄ BEARING PIER 2	½SPAN	℄ BEARING FWD. ABUT.
BEAM A	1.07	1.10	1.13	1.13	1.12	1.11	1.11	1.07	1.02
BEAM B	1.06	1.10	1.13	1.13	1.12	1.11	1.11	1.07	1.02
BEAM C	1.05	1.09	1.13	1.13	1.12	1.12	1.12	1.08	1.02
BEAM D	1.07	1.10	1.12	1.12	1.12	1.11	1.11	1.07	1.02
BEAM E	1.08	1.10	1.11	1.11	1.11	1.10	1.10	1.06	1.02
BEAM 1	1.08	1.10	1.11	1.11	1.11	1.10	1.10	1.06	1.02
BEAM 2	1.08	1.10	1.11	1.11	1.11	1.10	1.10	1.06	1.02
BEAM 3	1.08	1.10	1.11	1.11	1.11	1.10	1.10	1.06	1.02

DEPTHS ARE SHOWN FROM TOP OF DECK TO TOP OF BEAM FLANGE
ANTICIPATED DRY RUN DISTANCES CAN BE OBTAINED BY ADDING THE ADJUSTED REBOUND TO THE ANTICIPATED DECK SLAB DEPTHS

* - BEAM ELEVATION SURVEYED DURING CONSTRUCTION
** - SURVEYED REBOUND = BEAM ELEVATION BEFORE DECK REMOVAL MINUS BEAM ELEVATION AFTER DECK REMOVAL.
*** - ADJUSTED REBOUND = RATIO OF PROPOSED DEAD LOAD TO EXISTING DEAD LOAD (PROVIDED BY THE DESIGNER) MULTIPLIED TIMES THE SURVEYED REBOUND
**** - DECK SCREED ELEV. = ADJUSTED REBOUND ADDED TO THE FINAL TOP OF DECK ELEVATION

BURGESS & NIPLE

REVIEWED MAR DATE 12-15-99
STRUCTURE FILE NUMBER 1807692, 1807706
DRAWN KK REVISED
DESIGNED KK CHECKED JAA

DECK SCREED ELEVATIONS, LEFT BRIDGE
BRIDGE NO. CUY-90-0045 L & R
OVER BRADLEY ROAD

CUY-90-0.00

p:\pr-2308\cadd\tscreedl.dgn

DECK SCREED ELEVATION TABLE, RIGHT BRIDGE

		SPAN 1			SPAN 2			SPAN 3		
		℄ BEARING REAR ABUT.	½SPAN	℄ BEARING PIER 1	℄ FIELD SPLICE	½SPAN	℄ FIELD SPLICE	℄ BEARING PIER 2	½SPAN	℄ BEARING FWD. ABUT.
TOE OF INSIDE PARAPET	FINAL TOP OF DECK ELEV.	666.23	666.19	666.13	666.09	666.01	665.91	665.84	665.69	665.52
	DECK SCREED ELEV.	666.23	666.20	666.13	666.11	666.04	665.93	665.84	665.70	665.52
BEAM 4	FINAL TOP OF DECK ELEV.	666.24	666.21	666.15	666.11	666.03	665.92	665.86	665.71	665.54
	DECK SCREED ELEV.	666.24	666.22	666.15	666.13	666.06	665.94	665.86	665.72	665.54
BEAM 5	FINAL TOP OF DECK ELEV.	666.36	666.32	666.26	666.22	666.14	666.04	665.97	665.82	665.65
	DECK SCREED ELEV.	666.36	666.33	666.26	666.24	666.17	666.06	665.97	665.83	665.65
BEAM 6	FINAL TOP OF DECK ELEV.	666.47	666.44	666.38	666.33	666.26	666.15	666.09	665.94	665.77
	DECK SCREED ELEV.	666.47	666.45	666.38	666.35	666.29	666.17	666.09	665.95	665.77
BEAM F	* ELEV. AFTER DECK REMOVAL									
	* ELEV. BEFORE DECK REMOVAL									
	** SURVEYED REBOUND									
	*** ADJUSTED REBOUND									
	FINAL TOP OF DECK ELEV.	666.59	666.55	666.49	666.45	666.37	666.26	666.20	666.05	665.88
	**** DECK SCREED ELEV.	666.59		666.49				666.20		665.88
C.J.	FINAL TOP OF DECK ELEV.	666.74	666.70	666.65	666.60	666.52	666.42	666.35	666.21	666.03
	DECK SCREED ELEV.	666.74		666.65				666.35		666.03
BEAM G	* ELEV. AFTER DECK REMOVAL									
	* ELEV. BEFORE DECK REMOVAL									
	** SURVEYED REBOUND									
	*** ADJUSTED REBOUND									
	FINAL TOP OF DECK ELEV.	666.74	666.70	666.65	666.60	666.52	666.42	666.35	666.21	666.03
	**** DECK SCREED ELEV.	666.74		666.65				666.35		666.03
CROWN	FINAL TOP OF DECK ELEV.	666.85	666.82	666.76	666.71	666.64	666.53	666.47	666.32	666.15
	DECK SCREED ELEV.	666.85		666.76				666.47		666.15
BEAM H	* ELEV. AFTER DECK REMOVAL									
	* ELEV. BEFORE DECK REMOVAL									
	** SURVEYED REBOUND									
	*** ADJUSTED REBOUND									
	FINAL TOP OF DECK ELEV.	666.81	666.78	666.72	666.68	666.60	666.49	666.43	666.28	666.11
	**** DECK SCREED ELEV.	666.81		666.72				666.43		666.11
BEAM J	* ELEV. AFTER DECK REMOVAL									
	* ELEV. BEFORE DECK REMOVAL									
	** SURVEYED REBOUND									
	*** ADJUSTED REBOUND									
	FINAL TOP OF DECK ELEV.	666.66	666.63	666.57	666.52	666.45	666.34	666.27	666.13	665.96
	**** DECK SCREED ELEV.	666.66		666.57				666.27		665.96
BEAM K	* ELEV. AFTER DECK REMOVAL									
	* ELEV. BEFORE DECK REMOVAL									
	** SURVEYED REBOUND									
	*** ADJUSTED REBOUND									
	FINAL TOP OF DECK ELEV.	666.51	666.47	666.42	666.37	666.29	666.19	666.12	665.98	665.80
	**** DECK SCREED ELEV.	666.51		666.42				666.12		665.80
TOE OF OUTSIDE PARAPET	FINAL TOP OF DECK ELEV.	666.50	666.47	666.41	666.36	666.29	666.18	666.12	665.97	665.80
	DECK SCREED ELEV.	666.50		666.41				666.12		665.80

ANTICIPATED DECK SLAB DEPTHS, RIGHT BRIDGE

LOCATION	SPAN 1			SPAN 2			SPAN 3		
	℄ BEARING REAR ABUT.	½SPAN	℄ BEARING PIER 1	℄ FIELD SPLICE	½SPAN	℄ FIELD SPLICE	℄ BEARING PIER 2	½SPAN	℄ BEARING FWD. ABUT.
BEAM 4	1.07	1.10	1.13	1.13	1.11	1.11	1.11	1.07	1.02
BEAM 5	1.07	1.10	1.13	1.13	1.11	1.11	1.11	1.07	1.02
BEAM 6	1.07	1.10	1.13	1.13	1.11	1.11	1.11	1.07	1.02
BEAM F	1.07	1.10	1.13	1.13	1.11	1.11	1.11	1.07	1.02
BEAM G	1.06	1.09	1.12	1.12	1.09	1.10	1.10	1.06	1.02
BEAM H	1.05	1.09	1.11	1.11	1.07	1.10	1.10	1.06	1.02
BEAM J	1.06	1.09	1.12	1.12	1.10	1.11	1.11	1.06	1.03
BEAM K	1.06	1.10	1.13	1.13	1.12	1.11	1.11	1.08	1.04

DEPTHS ARE SHOWN FROM TOP OF DECK TO TOP OF BEAM FLANGE
ANTICIPATED DRY RUN DISTANCES CAN BE OBTAINED BY ADDING THE ADJUSTED REBOUND TO THE ANTICIPATED DECK SLAB DEPTHS

* - BEAM ELEVATION SURVEYED DURING CONSTRUCTION
** - SURVEYED REBOUND = BEAM ELEVATION BEFORE DECK REMOVAL MINUS BEAM ELEVATION AFTER DECK REMOVAL.
*** - ADJUSTED REBOUND = RATIO OF PROPOSED DEAD LOAD TO EXISTING DEAD LOAD (PROVIDED BY THE DESIGNER) MULTIPLIED TIMES THE SURVEYED REBOUND
**** - DECK SCREED ELEV. = ADJUSTED REBOUND ADDED TO THE FINAL TOP OF DECK ELEVATION

BURGESS & NIPLE

DESIGNED KK | DRAWN KK | CHECKED JAA | REVIEWED MAR | DATE 12-15-99 | REVISED | STRUCTURE FILE NUMBER 1807692, 1807706

DECK SCREED ELEVATIONS, RIGHT BRIDGE
BRIDGE NO. CUY-90-0045 L & R
OVER BRADLEY ROAD

CUY-90-0.00

e:\pr22308\cadd\tscreedl.dgn

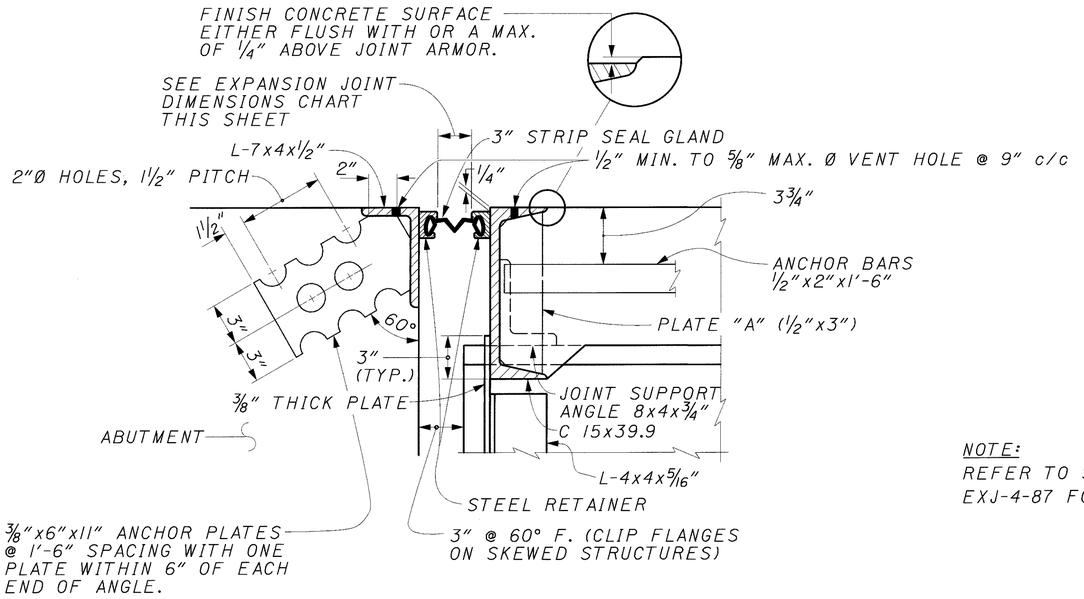

NOTE:
REFER TO STANDARD DRAWING EXJ-4-87 FOR DETAILS.

TYPICAL SECTION THRU EXPANSION JOINT

SEE STD. DWGS. GSD-1-96 AND EXJ-4-87.

EXPANSION JOINT DIMENSIONS							
LOCATION	TEMPERATURE						
	40° F	50° F	60° F	70° F	80° F	90° F	100° F
REAR ABUT	1 13/16"	1 11/16"	1 5/8"	1 9/16"	1 7/16"	1 3/8"	1 5/16"
FORWARD ABUT	1 3/4"	1 3/4"	1 11/16"	1 11/16"	1 5/8"	1 9/16"	1 9/16"

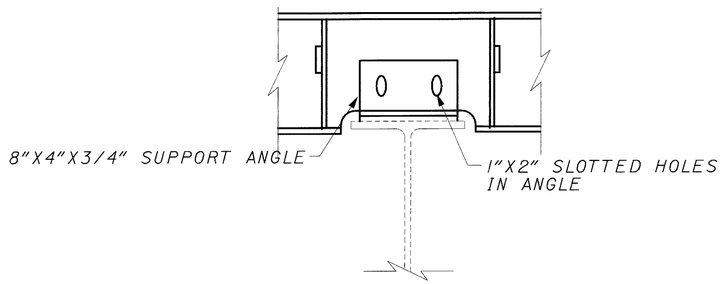

EXPANSION JOINT SUPPORT DETAIL

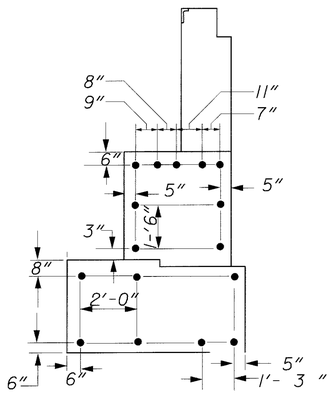

DOWEL HOLE DETAIL

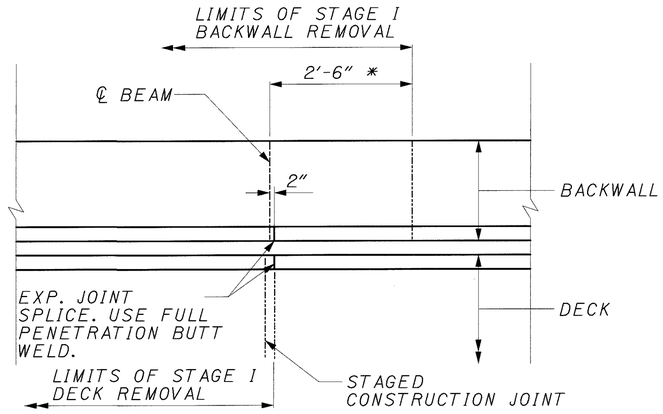

EXPANSION JOINT SPLICE DETAIL

FORWARD ABUTMENT RIGHT BRIDGE SHOWN, OTHERS SIMILAIR

* REBAR LAP SPLICES WILL BE USED IN BACKWALL

LEGEND

TYP. = TYPICAL
STD. DWG. = STANDARD DRAWING
ABUT. = ABUTMENT

P:\PR22308\CADD\TMISC.DGN

BURGESS & NIPLE

DESIGNED SCT | DRAWN SCT | CHECKED JAA | REVISED | REVIEWED MAR | DATE 12-15-99 | STRUCTURE FILE NUMBER 1807692,1807706

MISCELLANEOUS DETAILS
BRIDGE NO. CUY-90-0045 L & R
OVER BRADLEY ROAD

CUY-90-0.00

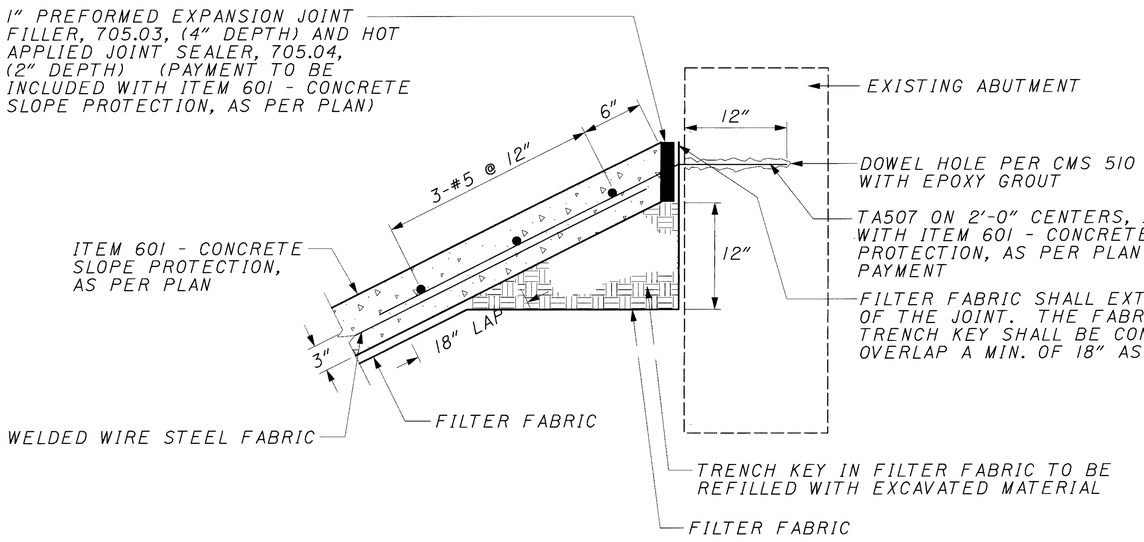

CONCRETE SLOPE PROTECTION ANCHORING DETAIL

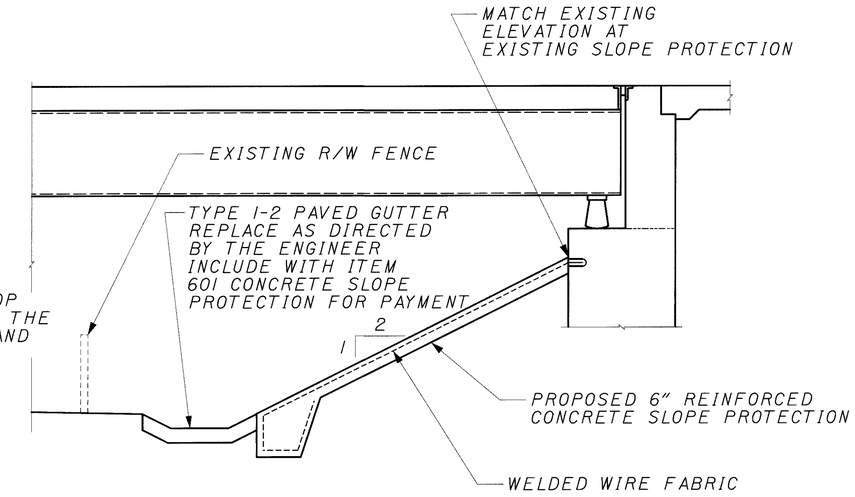

CONCRETE SLOPE PROTECTION EXTENSION

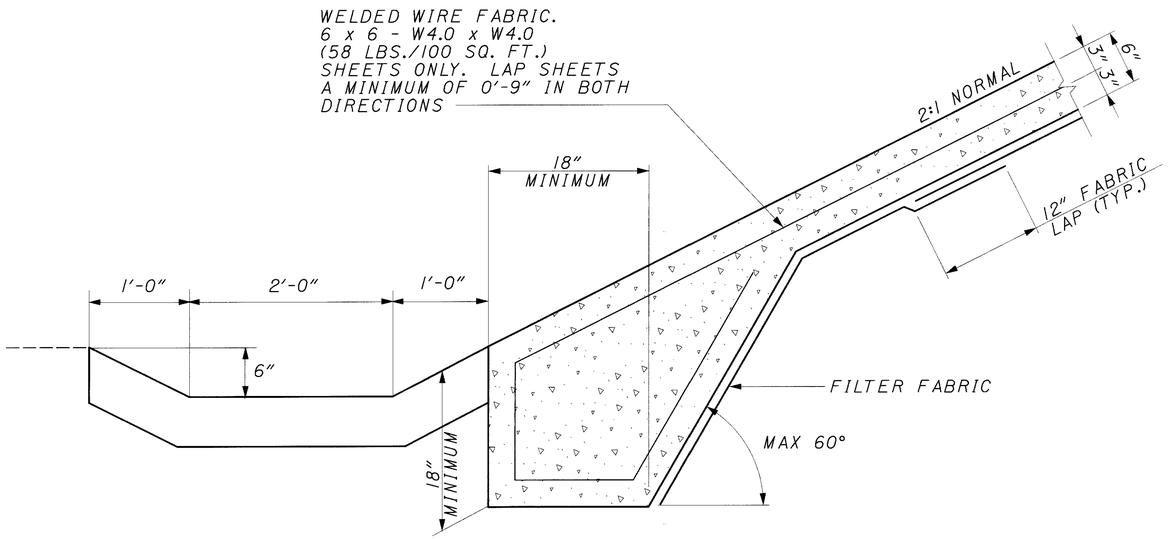

AT TOE OF SLOPE

ITEM 601 - CONCRETE SLOPE PROTECTION, AS PER PLAN

THIS WORK SHALL INCLUDE THE FOLLOWING:

A. EXCAVATION OF EXISTING SLOPE TO A DEPTH NECESSARY TO ESTABLISH A PROPER SUBGRADE DEPTH WHICH WILL ACCEPT THE PROPOSED SIX INCH THICK CONCRETE SLOPE PROTECTION. THE CONTRACTOR SHALL GRADE THE SLOPE TO PROVIDE A UNIFORM PLANE FOR THE SUBGRADE.

B. PROPOSED SLOPE PROTECTION: THE INSTALLATION OF THE NEW WELDED STEEL WIRE FABRIC REINFORCED SLOPE PROTECTION AS SHOWN ON THIS SHEET INCLUDING REINFORCING STEEL, WELDED STEEL FABRIC, 709.14, DOWEL HOLES AND GROUT, GEOTEXTILE FILTER, PREFORMED EXPANSION JOINT FILLER AND CONCRETE. THE FABRIC SHALL MEET REQUIREMENTS OF 712.09, TYPE B (NONWOVEN). FIELD SPLICES SHALL CONSIST OF TWELVE INCHES OVERLAP SECURED IN ANY MANNER SUITABLE TO THE ENGINEER THAT WILL ASSURE THAT THE OVERLAP IS MAINTAINED. OVERLAP CLOSURE AT THE TOP OF THE TRENCH SHALL BE 18 INCHES, SECURED AS ABOVE.

ALL COSTS OF CONSTRUCTING THE NEW SLOPE PROTECTION, INCLUDING ALL NECESSARY EMBANKMENT, EXCAVATION, REBARS, DOWELS, WELDED STEEL WIRE FABRIC, FILTER FABRIC, PREFORMED EXPANSION JOINT FILLER, JOINT SEALER, AND CONCRETE SHALL BE INCLUDED UNDER ITEM 601 - CONCRETE SLOPE PROTECTION, AS PER PLAN.

BURGESS & NIPLE

DESIGNED	DRAWN	REVIEWED	DATE
KK	KK	MAR	12-15-99
CHECKED	REVISED	STRUCTURE FILE NUMBER	
SCT		1807692,1807706	

SLOPE PROTECTION DETAILS
BRIDGE NO. CUY-90-0045 L & R
OVER BRADLEY ROAD

CUY-90-0.00

38/39

446
582

P:\PR22308\CADD\TMISC.DGN

MARK	NUMBER LEFT BRIDGE	NUMBER RIGHT BRIDGE	TOTAL NO.	LENGTH	TYPE	DIM. A	DIM. B	DIM. C	INCR.
ABUTMENT									
TA501	14	14	28	31'-0"	STR				
TA502	14	14	28	36'-4"	STR				
TA503	18	18	36	22'-2"	STR				
TA504	40	40	80	7'-7"	4	3'-3"	2'-4"		
TA505	40	40	80	15'-4"	4	3'-3"	6'-2"		
TA506	18	18	36	4'-7"	STR				
TA507	30	30	60	5'-2"	2	1'-2"	3'-7"	1'-9"	
TA601	126	126	252	7'-3"	4	9"	3'-5"		
TA602	126	126	252	6'-11"	4	1'-3"	3'-0"		
TA603	42	42	84	9'-0"	4	1'-3"	4'-0"		
TA604	44	44	88	10'-5"	4	5'-9"	2'-6"		
TA605	44	44	88	9'-5"	4	5'-9"	2'-0"		
TA801	14	14	28	22'-3"	STR				
TA802	14	14	28	7'-2"	STR				
WINGWALL									
TW501	56	56	112	9'-9"	STR				
TW502	12	12	24	6'-6"	2	4'-11"	1'-6"	5"	
TW503	44	44	88	6'-6"	STR				
TW504	8	8	16	6'-0"	2	5'-0"	11"	5"	
TW505	8	8	16	8'-10"	STR				
TW506	8	8	16	7'-8"	STR				
TW507	12	12	24	11'-3"	9	2'-6"	3'-0"		
TW508	12	12	24	8'-9"	STR				
TW601	64	64	128	3'-7"	1	1'-1"	2'-8"		1"
				TO			TO		
				4'-2"			3'-3"		
TW602	32	32	64	6'-7"	7	4'-9"	0'-11"	1'-1"	
TW603	40	48	88	5'-11"	1	0'-8½"	5'-4"		
TW604	16	16	32	6'-1"	2	5'-1"	1'-0"	0'-3"	
TW605	32	32	64	6'-0"	STR				
TW606	32	32	64	6'-5"	1	0'-10"	5'-9"		3"
				TO			TO		
				7'-2"			6'-6"		
TW607	30	30	60	6'-4"	STR				
TW608	4	4	8	7'-5"	1	1'-0"	6'-6"		
TW609	16	16	32	6'-1"	STR				
TW610	16	16	32	20'-9"	4	1'-0"	10'-0"		
TW611	4	4	8	3'-7"	1	0'-9"	3'-0"		
TW612		6	6	3'-7"	1	1'-0"	2'-9"		
TW801	12	12	24	11'-9"	STR				
PIER									
TPSP401	4	4	8	14'-3"	8				
TP501	8	8	16	17'-2"	STR				
TP502	48	48	96	7'-7"	4	1'-10"	3'-0"		
TP503	4	4	8	10'-7"	9	2'-3"	2'-7"		
TP504	16	16	32	6'-7"	4	1'-10"	2'-6"		
TP701	12	12	24	20'-10"	4	17'-2"	2'-0"		
TP702	12	12	24	17'-7"	3	13'-0"	2'-1"	1'-0"	
TP703	72	72	144	8'-8"	1	1'-2"	7'-8"		
TP704	72	72	144	17'-0"	STR				
TP801	56	56	112	6'-0"	STR				

ALL REINFORCING SHALL BE EPOXY COATED

THE BAR SIZE NUMBER IS SPECIFIED IN THE BAR MARK COLUMN. THE FIRST DIGIT INDICATES THE BAR SIZE NUMBER. FOR EXAMPLE TP601 IS A NO. 6 BAR. DIMENSIONS SHOWN ARE OUT TO OUT UNLESS OTHERWISE INDICATED. R INDICATES INSIDE RADIUS UNLESS OTHERWISE NOTED.

MARK	NUMBER LEFT BRIDGE	NUMBER RIGHT BRIDGE	TOTAL NO.	LENGTH	TYPE	DIM. A	DIM. B	DIM. C	INCR.
DECK									
TS401	260	260	520	40'-0"	STR				
TS501	616	616	1232	33'-7"	STR				
TS502	616	616	1232	30'-11"	STR				
TS503	300	300	600	40'-0"	STR				
TS504	130	130	260	25'-5"	STR				
TS505	75	75	150	3'-6"	STR				
TS506	308	308	616	5'-0"	STR				
TS701		154	154	5'-0"	STR				
RAIL									
TR501	312	366	678	7'-5"	5				
TR502	48	48	96	40'-0"	STR				
TR503	12	12	24	3'-6"	STR				
TR601	312	366	678	2'-9"	1	1'-2"	1'-9"		
TR602	312	366	678	3'-4"	6	1'-7"	1'-1"		
TR603	8	8	16	40'-0"	STR				
TR604	2	2	4	5'-6"	STR				

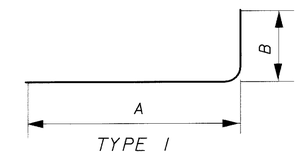

TYPE 1

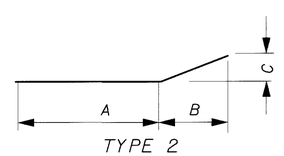

TYPE 2

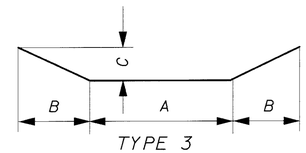

TYPE 3

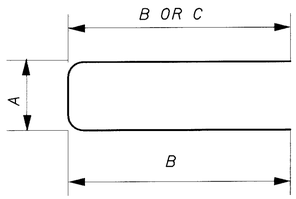

TYPE 4

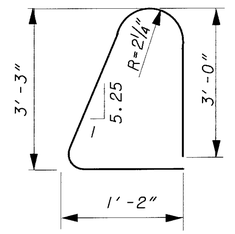

TYPE 5

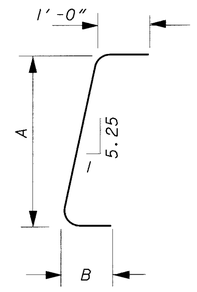

TYPE 6

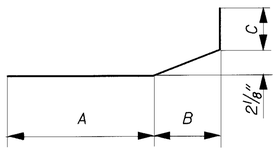

TYPE 7

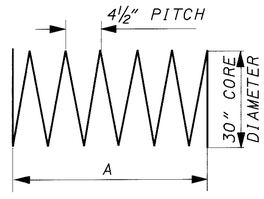

TYPE 8

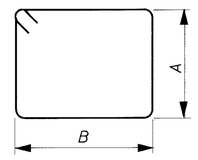

TYPE 9

SPACERS

CONCRETE SPACERS OR OTHER APPROVED NONCORROSIVE SPACING DEVICES SHALL BE USED AT SUFFICIENT INTERVALS (NEAR THE BOTTOM AND AT INTERVALS NOT EXCEEDING 10 FEET) TO INSURE CONCENTRIC SPACING FOR THE ENTIRE CAGE LENGTH. SPACERS SHALL BE CONSTRUCTED OF APPROVED MATERIAL EQUAL IN QUALITY AND DURABILITY TO THE CONCRETE SPECIFIED FOR THE SHAFT. THE SPACERS SHALL HAVE ADEQUATE DIMENSIONS TO ENSURE A MINIMUM 3 INCH CLEAR SPACE BETWEEN THE OUTSIDE OF THE REINFORCING CAGE AND THE DESIGN DIMENSION OF THE DRILLED SHAFT OR COLUMN. CYLINDRICAL CONCRETE FEET (BOTTOM SUPPORT) SHALL BE PROVIDED TO ENSURE THAT THE BOTTOM OF THE CAGE IS MAINTAINED AT THE PROPER DISTANCE ABOVE THE BASE.

BURGESS & NIPLE

DESIGNED DCF | DRAWN DCF | CHECKED SCT | REVISED | REVIEWED MAR | DATE 12-15-99 | STRUCTURE FILE NUMBER 1807692, 1807706

REINFORCING SCHEDULE

BRIDGE NO. CUY-90-0045L&R
OVER BRADLEY ROAD

CUY-90-0.00

P:\PR22308\CADD\TREBAR1.DGN

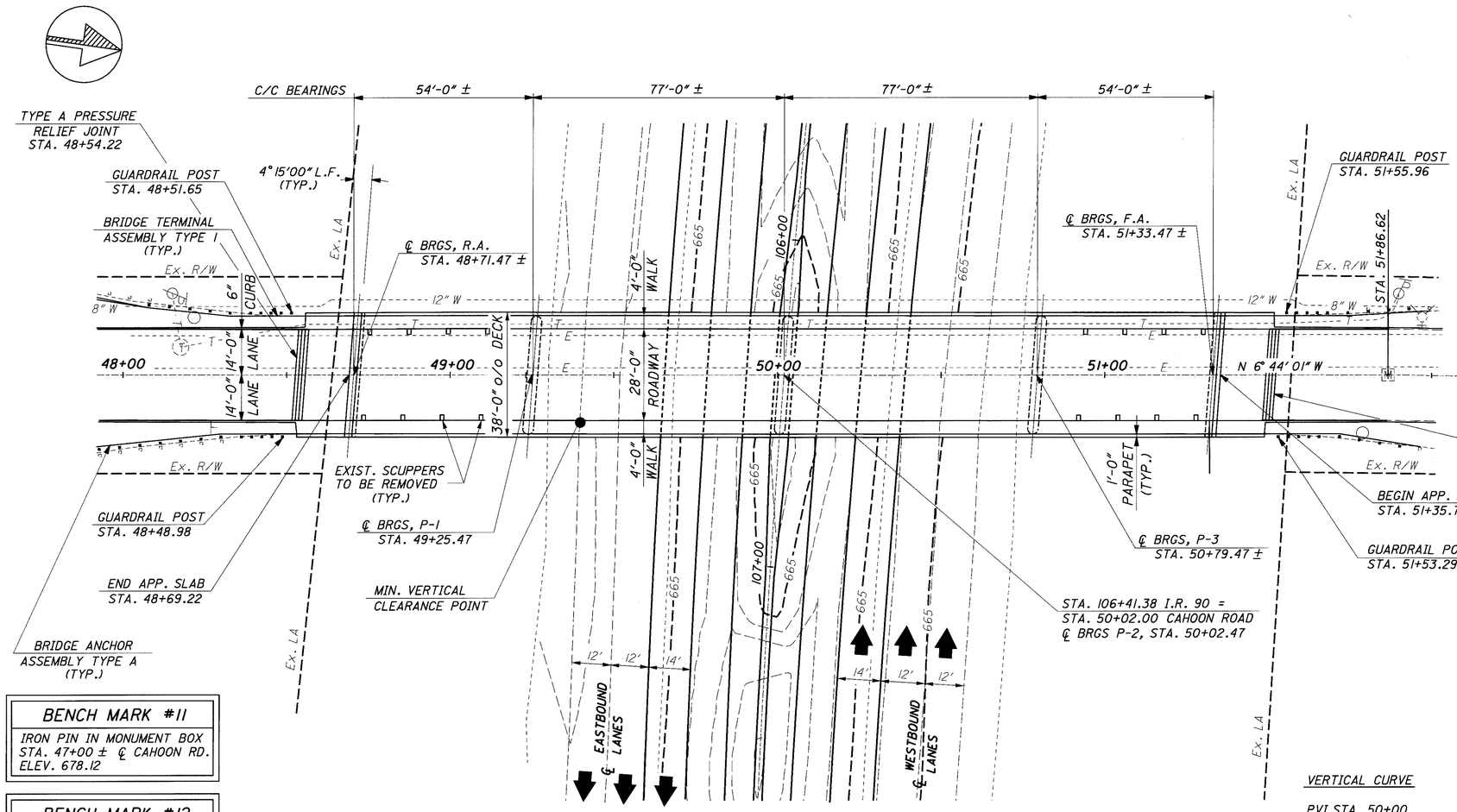

PLAN

PROPOSED WORK:

1. REMOVE EXISTING DECK, SCUPPERS, END CROSSFRAMES, EXPANSION JOINTS, SIDEWALKS, RAILING, BACKWALLS AND APPROACH SLABS, AND OTHER ITEMS NOTED ON THE PLANS.
2. PLACE NEW ABUTMENT BACKWALLS, SIDEWALKS, DECK, END CROSSFRAMES, EXPANSION JOINTS, RAILING, APPROACH SLABS AND VANDAL PROTECTION FENCE.
3. REPAIR DAMAGED CONCRETE ABUTMENT SEATS.
4. RESET ROCKER BEARINGS.
5. SEAL CONCRETE SURFACES.

TRAFFIC DATA	
CURRENT ADT: 1999	5600
DESIGN YEAR ADT: 2019	7600
ADTT: 2019	152

LEGEND:

T = 6-4" TELECOMMUNICATION DUCTS (TO BE RELOCATED FROM SIDEWALK AT OWNERS EXPENSE.)

E = FIRST ENERGY ILLUMINATING CO. DUCTS. (TO BE PROTECTED.)

O/O = OUT TO OUT
F/F = FACE TO FACE
TYP. = TYPICAL
C/C = CENTER TO CENTER
EX. OR EXIST. = EXISTING
BRGS = BEARINGS
MIN. = MINIMUM
F.A. = FORWARD ABUTMENT
℄ = CENTERLINE
R.A. = REAR ABUTMENT
L.F. = LEFT FORWARD
Ⓜ = MONUMENT BOX

BENCH MARK #11
IRON PIN IN MONUMENT BOX STA. 47+00 ± ℄ CAHOON RD. ELEV. 678.12

BENCH MARK #12
IRON PIN IN MONUMENT BOX STA. 51+56 ± ℄ CAHOON RD. ELEV. 684.92

VERTICAL CURVE

PVI STA. 50+00
PVI EL. 688.830
G1 = 3.56%
G2 = -1.70%
L = 400'

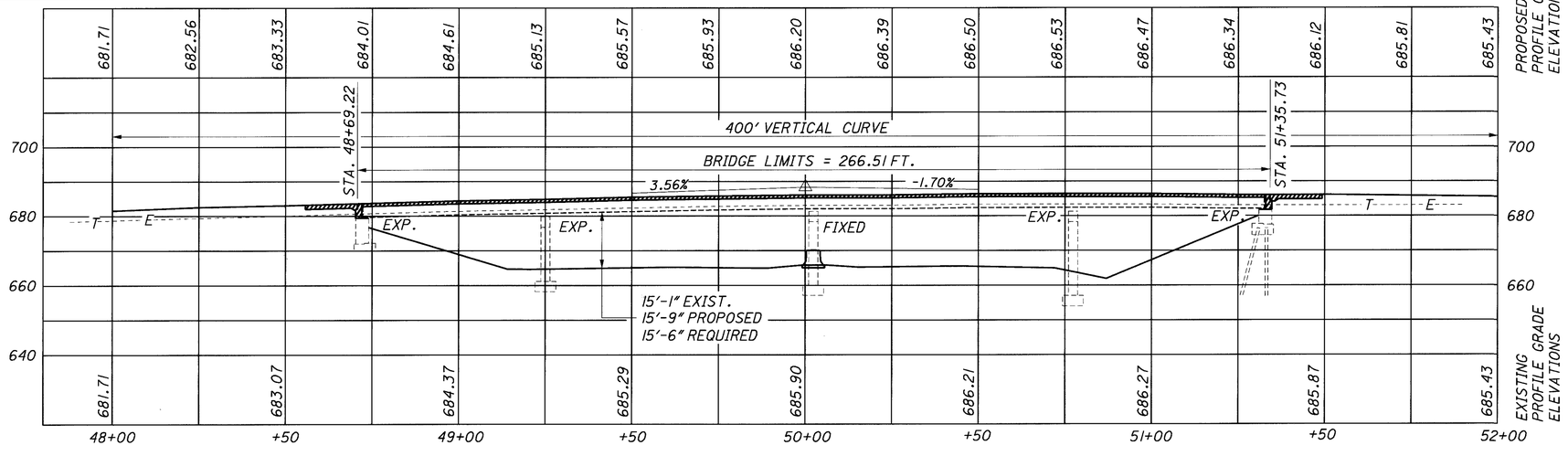

PROFILE ALONG ℄ CONSTRUCTION

EXISTING STRUCTURE

TYPE:	CONTINUOUS NON-COMPOSITE STEEL BEAM BRIDGE (ASTM A36) WITH REINFORCED CONC. DECK AND SUBSTRUCTURE.
SPANS:	54'-0", 77'-0", 77'-0", 54'-0", c/c OF BEARINGS
ROADWAY:	28'-0" f/f OF SIDEWALK
SKEW:	4°-15'-00" L.F.
DESIGN LOADING:	CF 130 (57)
WEARING SURFACE:	1" MONOLITHIC CONCRETE
APPROACH SLABS:	AS-1-67 (25' LONG)
ALIGNMENT:	TANGENT
CROWN:	3/16" PER FOOT
SIDEWALK:	4'-0" WITH FENCE
YEAR BUILT:	1969
S.F.N.	1807978

PROPOSED STRUCTURE

PROPOSED WORK:	NEW COMPOSITE REINFORCED CONCRETE DECK, SIDEWALKS, RAILINGS AND APPROACH SLABS.
TYPE:	CONTINUOUS STEEL BEAM BRIDGE (ASTM 36) WITH REINFORCED CONCRETE DECK AND SUBSTRUCTURE.
SPANS:	54'-0", 77'-0", 77'-0", 54'-0", c/c OF BEARINGS
ROADWAY:	28'-0" f/f OF SIDEWALK
SKEW:	4°-15'-00" L.F.
DESIGN LOADING:	HS20-44 CASE II & ALT. MILITARY LOADING
WEARING SURFACE:	MONOLITHIC CONCRETE
APPROACH SLABS:	15'-0" LONG (AS-1-81) (12" THICK)
ALIGNMENT:	TANGENT
CROWN:	3/16" PER FOOT
SIDEWALK:	4'-0" WITH FENCE
LONGITUDE:	W 81°-55'-51"
LATITUDE:	N 41°-28'-00"

DESIGN AGENCY: THOMAS FOK & ASSOC., LTD. 3896 MAHONING AVE., YOUNGSTOWN, OHIO
DATE: 2-4-00
REVIEWED: TF
STRUCTURE FILE NUMBER: 1807978
DRAWN: KRM
REVISED:
DESIGNED: JDV
CHECKED: HJS
CUYAHOGA COUNTY STA. 48+69.22 TO STA. 51+35.73

SITE PLAN
BRIDGE NO. CUY-90-0201
UNDER CAHOON ROAD

CUY-90-0.00

PROPOSAL NOTES:

SEALING OF CONCRETE SURFACES
CONCRETE REPAIR BY EPOXY INJECTION

REFERENCE SHALL BE MADE TO:

STANDARD DRAWINGS:

AS-1-81	DATED	10-25-94
EXJ-4-87	DATED	2-14-97
GSD-1-96	DATED	2-21-97
VPF-1-90M	DATED	3-20-95

AND TO SUPPLEMENTAL SPECIFICATIONS:

842	DATED	1-6-99
844	DATED	1-6-99
863	DATED	9-9-97
899	DATED	10-21-98

DESIGN SPECIFICATIONS: THIS STRUCTURE CONFORMS TO "STANDARD SPECIFICATIONS FOR HIGHWAY BRIDGES" ADOPTED BY THE AMERICAN ASSOCIATION OF STATE HIGHWAY AND TRANSPORTATION OFFICALS, 1996, INCLUDING THE 1997 AND 1998 INTERIM SPECIFICATIONS, AND THE ODOT BRIDGE DESIGN MANUAL.

DESIGN LOADING: HS20-44, CASE II, AND THE ALTERNATE MILITARY LOADING.

DESIGN DATA:

HIGH PERFORMANCE CONCRETE-COMPRESSIVE STRENGTH 4500 P.S.I. (SUPERSTRUCTURE)

HIGH PERFORMANCE CONCRETE-COMPRESSIVE STRENGTH 4500 P.S.I. (SUBSTRUCTURE)

REINFORCING STEEL-ASTM A615, A616 OR A617, GRADE 60,
MINIMUM YIELD STRENGTH 60,000 P.S.I.

DECK PROTECTION METHOD:
EPOXY COATED REINFORCING STEEL
2 1/2 INCH CONCRETE COVER

MONOLITHIC WEARING SURFACE IS ASSUMED, FOR DESIGN PURPOSES, TO BE 1 INCH THICK.

PORTIONS OF STRUCTURE REMOVED, OVER 20 FOOT SPAN, AS PER PLAN

DESCRIPTION: THIS WORK SHALL CONSIST OF THE REMOVAL, WHOLLY OR IN PART, AND SATISFACTORY DISPOSAL OF PORTIONS OF THE EXISTING STRUCTURE AS PER 202 OF THE CONSTRUCTION AND MATERIAL SPECIFICATIONS AND AS DIRECTED ON THE PLANS. THIS WORK SHALL ALSO INCLUDE ANY DEVICES OR STRUCTURES NECESSARY FOR THE PROTECTION OF TRAFFIC, PREPARATION OF PLANS FOR SUCH STRUCTURES, AND ANY OTHER WORK ASSOCIATED WITH REMOVAL OF PORTIONS OF THE EXISTING STRUCTURE AS DESCRIBED BELOW. CARE SHALL BE TAKEN TO PROTECT PORTIONS OF THE STRUCTURE THAT ARE TO REMAIN AND BE INCORPORATED INTO THE PROPOSED STRUCTURE. IN THIS RESPECT, THE USE OF EXPLOSIVES, HEADACHE BALLS AND/OR HOE RAM TYPE OF EQUIPMENT IS PROHIBITED.

PROTECTION OF TRAFFIC: PRIOR TO DEMOLITION OF ANY PORTIONS OF THE EXISTING SUPERSTRUCTURE, THE CONTRACTOR SHALL SUBMIT HIS PLANS FOR THE PROTECTION OF TRAFFIC (VEHICULAR, PEDESTRIAN, ETC.) ADJACENT TO AND/OR UNDER THE STRUCTURE TO THE DIRECTOR FOR APPROVAL. THESE PLANS SHALL INCLUDE PROVISIONS FOR ANY DEVICES AND STRUCTURES THAT MAY BE NECESSARY TO ENSURE SUCH PROTECTION. TEMPORARY VERTICAL CLEARANCES SPECIFIED ON THE PLANS OR IN THE PROPOSAL SHALL BE MAINTAINED AT ALL TIMES EXCEPT AS OTHERWISE APPROVED BY THE DIRECTOR.

PROTECTION OF STEEL SUPPORT SYSTEMS: BEFORE DECK SLAB CUTTING IS PERMITTED, THE OUTLINE OF PRIMARY STEEL MEMBERS IN CONTACT WITH THE BOTTOM OF THE DECK SHALL BE DRAWN ON THE SURFACE OF THE DECK. SMALL DIAMETER PILOT HOLES SHALL BE DRILLED 2 INCHES OUTSIDE THESE LINES TO CONFIRM THE LOCATION OF FLANGE EDGES. DECK CUTS OVER OR WITHIN 2 INCHES OF FLANGE EDGES SHALL NOT EXTEND LOWER THAN THE BOTTOM LAYER OF DECK SLAB REINFORCING STEEL. CUTS MADE OUTSIDE 2 INCHES OF FLANGE EDGES MAY EXTEND THE FULL DEPTH OF THE DECK. DURING CUTTING OF THE DECK SLAB, CARE SHALL BE TAKEN NOT TO DAMAGE STEEL MEMBERS THAT ARE TO BE INCORPORATED INTO THE PROPOSED STRUCTURE.

REMOVAL METHODS: CONCRETE MAY BE REMOVED BY CUTTING AND BY MEANS OF HAND OPERATED PNEUMATIC HAMMERS EMPLOYING POINTED OR BLUNTED CHISEL TYPE TOOLS. FOR REMOVALS ABOVE STEEL MEMBERS, A HAMMER HEAVIER THAN 35 POUNDS BUT NOT TO EXCEED 90 POUNDS MAY BE USED AT THE APPROVAL OF THE ENGINEER, TO ENSURE ADEQUATE DEPTH CONTROL AND TO PREVENT NICKING OR GAUGING THE PRIMARY STEEL MEMBERS. PRIOR TO PROCEEDING WITH ANY REMOVAL, THE CONTRACTOR SHALL SUBMIT THE REMOVAL PROCEDURE TO THE ENGINEER FOR REVIEW AND APPROVAL.

DECK REMOVALS: DUE TO THE POSSIBLE PRESENSE OF WELDED ATTACHMENTS TO EXISTING STRUCTURAL STEEL (FINISHING MACHINE, SCUPPER AND FORM SUPPORTS, ETC.), CARE SHALL BE TAKEN DURING DECK REMOVAL TO AVOID DAMAGING STRINGERS WHICH ARE TO REMAIN. WHEN REMOVING THE EXISTING SCUPPERS, AND OTHER WELDED ATTACHMENTS, GRIND ALL WELDS SMOOTH. STRINGERS DAMAGED BY THE CONTRACTOR'S REMOVAL OPERATION SHALL, AT NO COST TO THE STATE, BE REPLACED OR REPAIRED. PROPOSED REPAIRS, DEVELOPED BY A REGISTERED PROFESSIONAL ENGINEER, SHALL BE SUBMITTED IN WRITING FOR REVIEW AND APPROVAL BY THE DIRECTOR.

EXTRANEOUS MEMBERS: EXISTING EXTRANEOUS MEMBERS (I.E., FINISHING MACHINE AND FORM SUPPORTS, ETC., AND THE SUPPORT FOR SCUPPERS AND BULB ANGLES WHICH ARE TO BE REMOVED) ATTACHED BY WELDED CONNECTIONS TO PORTIONS OF THE TOP FLANGES DESIGNATED "TENSION" SHALL BE REMOVED AND THE FLANGE SURFACES GROUND SMOOTH. GRINDING SHALL BE CAREFULLY DONE AND PARALLEL TO THE FLANGES.

LOADING LIMITATIONS: NO PART OF THE STRUCTURE SHALL BE SUJECTED TO UNIT STRESSES THAT EXCEED 136.5% OF THE ALLOWABLE UNIT STRESSES GIVEN IN THE AASHTO STANDARD SPECIFICATIONS FOR HIGHWAY BRIDGES DUE EITHER TO DEMOLITION, ERECTION OR CONSTRUCTION METHODS, OR TO THE USE OR MOVEMENT OF DEMOLITION OR ERECTION EQUIPMENT ON OR ACROSS THE STRUCTURE. STRUCTURAL ANALYSIS COMPUTATIONS, BY A REGISTERED PROFESSIONAL ENGINEER, SHOWING THE ALLOWABLE STRESSES AND THE MAXIMUM STRESSES PRODUCED BY THE CONTRACTOR'S METHODS OR EQUIPMENT SHALL BE SUBMITTED TO THE DIRECTOR FOR REVIEW AND APPROVAL AT LEAST TWO WEEKS PRIOR TO THE START OF THE WORK.

PAYMENT: THIS WORK WILL BE PAID FOR AT THE CONTRACT LUMP SUM PRICE BID, WHICH PRICE AND PAYMENT SHALL BE FULL COMPENSATION FOR ALL LABOR, EQUIPMENT, MATERIALS AND INCIDENTIALS NECESSARY TO COMPLETE THE WORK IN CONFORMANCE WITH THESE REQUIREMENTS, WITH PERTINENT PROVISIONS OF 202, AND TO THE SATISFACTION OF THE ENGINEER.

CUT LINE CONSTRUCTION JOINT PREPARATION: SAW CUT BOUNDARIES OF PROPOSED CONCRETE REMOVALS 1 INCH DEEP. REMOVE CONCRETE TO A ROUGH SURFACE. WHERE PRACTICABLE, THE EXISTING REINFORCING STEEL WHERE REQUIRED IN THE PLANS SHALL BE LEFT IN PLACE. INSTALL DOWEL BARS IF SPECIFIED. PRIOR TO CONCRETE PLACEMENT ABRASIVELY CLEAN JOINT SURFACE AND EXPOSED REINFORCEMENT TO REMOVE LOOSE AND DISINTEGRATED CONCRETE AND LOOSE RUST. THE JOINT SURFACE AND EXPOSED REINFORCEMENT SHALL BE THOROUGHLY CLEANED OF ALL DIRT, DUST, OR OTHER FOREIGN MATERIAL BY THE USE OF WATER, AIR UNDER PRESSURE, OR OTHER METHODS THAT PRODUCE SATISFACTORY RESULTS. CONCRETE BONDING SURFACES SHALL BE WET WITHOUT FREE WATER AS CONCRETE IS PLACED.

SUBSTRUCTURE CONCRETE REMOVAL SHALL BE BY MEANS OF APPROVED PNEUMATIC HAMMERS EMPLOYING POINTED AND BLUNT CHISEL TOOLS. HYDRAULIC HOE-RAM TYPE HAMMERS WILL NOT BE PERMITTED. THE WEIGHT OF THE HAMMER SHALL NOT BE MORE THAN 35 POUNDS FOR REMOVAL WITHIN 18 INCHES OF PORTIONS TO BE PRESERVED. OUTSIDE THE 18 INCH LIMIT, A HAMMER HEAVIER THAN 35 POUNDS, BUT NOT TO EXCEED 90 POUNDS, MAY BE USED AT THE APPROVAL OF THE ENGINEER. PNEUMATIC HAMMERS SHALL NOT BE PLACED IN DIRECT CONTACT WITH REINFORCING STEEL THAT IS TO BE RETAINED IN THE REBUILT STRUCTURE.

EXISTING STRUCTURE VERIFICATION: DETAILS AND DIMENSIONS SHOWN ON THESE PLANS PERTAINING TO THE EXISTING STRUCTURE HAVE BEEN OBTAINED FROM PLANS OF THE EXISTING STRUCTURE AND FROM FIELD OBSERVATIONS AND MEASUREMENTS. CONSEQUENTLY, THEY ARE INDICATIVE OF THE EXISTING STRUCTURE AND THE PROPOSED WORK BUT THEY SHALL BE CONSIDERED TENTATIVE AND APPROXIMATE. THE CONTRACTOR IS REFERRED TO CMS SECTIONS 102.05, 105.02 AND 863.07.

CONTRACT BID PRICES SHALL BE BASED UPON A RECOGNITION OF THE UNCERTAINTIES DESCRIBED ABOVE AND UPON A PRE-BID EXAMINATION OF THE EXISTING STRUCTURE BY THE CONTRACTOR. HOWEVER, ALL PROJECT WORK SHALL BE BASED UPON ACTUAL DETAILS AND DIMENSIONS WHICH HAVE VERIFIED BY THE CONTRACTOR IN THE FIELD.

REPLACEMENT OF EXISTING REINFORCING STEEL: ANY EXISTING REINFORCING BARS WHICH ARE TO BE INCORPORATED INTO THE NEW WORK AND WHICH ARE MADE UNUSABLE BY CONCRETE REMOVAL OPERATIONS SHALL BE REPLACED WITH NEW STEEL AT THE CONTRACTOR'S COST. ANY EXISTING REINFORCING BARS DEEMED BY THE ENGINEER TO BE UNUSABLE BECAUSE OF CORROSION SHALL BE REPLACED WITH NEW STEEL. PAYMENT SHALL BE INCLUDED WITH ITEM 842, CONCRETE, MISC.: REPLACEMENT OF DAMAGED REINFORCING STEEL. ANY GROUTING OF DOWEL HOLES REQUIRED FOR REPLACEMENT OF CORRODED REINFORCING STEEL SHALL BE INCLUDED UNDER ITEM 842 - CONCRETE MISC.: DRILLING AND GROUTING DOWEL HOLES FOR PAYMENT.

EXISTING BRIDGE PLANS: THE ORIGINAL CONSTRUCTION PLANS OF THE EXISTING BRIDGE ARE AVAILABLE UPON REQUEST AT THE DISTRICT 12 OFFICE OF THE OHIO DEPARTMENT OF TRANSPORTATION, GARFIELD HEIGHTS, OHIO.

ITEM 503-UNCLASSIFIED EXCAVATION, AS PER PLAN: UNCLASSIFIED EXCAVATION SHALL BE IN ACCORDANCE WITH ITEM 503, EXCEPT THAT BACKFILL BEHIND THE ABUTMENTS SHALL BE C.M.S. 304 MATERIAL PLACED IN 6 IN. LIFTS.

INSPECTION OF STRUCTURAL STEEL: THE ENGINEER SHALL VISUALLY INSPECT ALL EXISTING BUTT-WELDED SPLICES AND/OR FLANGE COVER PLATE FILLET WELDS TO ENSURE THAT THEY ARE FREE OF DEFECTS AND CRACKS. THE DECK SLAB HAUNCH FORMS IMMEDIATELY ADJACENT TO SUCH WELDS SHALL NOT BE ERECTED UNTIL AFTER THE ENGINEER HAS COMPLETED THIS INSPECTION. THIS INSPECTION SHALL NOT TAKE PLACE UNTIL AFTER THE TOP FLANGES ARE CLEANED AS SPECIFIED IN 511.08, BUT IT SHALL BE DONE BEFORE THE DECK SLAB REINFORCEMENT IS INSTALLED. THE COST ASSOCIATED WITH THIS INSPECTION SHALL BE INCLUDED WITH ITEM 842, SUPERSTRUCTURE CONCRETE FOR PAYMENT. ANY CRACKS FOUND SHOULD BE REPORTED TO THE OFFICE OF STRUCTURAL ENGINEERING, BRIDGE CONSTRUCTION SPECIALIST, ALONG WITH SPECIFIC INFORMATION ON LOCATION OF THE CRACKS LENGTH, AND DEPTH SO AN EVALUATION AND REPAIR OR REPLACEMENT RECOMMENDATION CAN BE MADE.

ITEM 863 STRUCTURAL STEEL MEMBERS, MISCELLANEOUS LEVEL FABRICATION, AS PER PLAN: STEEL MEMBERS TO BE FABRICATED UNDER THIS ITEM WILL NOT REQUIRE SHOP DRAWINGS PRIOR TO FABRICATION. THE CONTRACTOR SHALL MAKE NECESSARY MEASUREMENTS AND PREPARE SKETCHES, DRAWINGS, TABLES, ETC. THE ENGINEER SHALL HAVE AUTHORITY AND RESPONSIBILTY FOR ENSURING THAT THE FABRICATED STEEL IS ACCEPTABLE. TECHNICAL ASSISTANCE WILL BE PROVIDED ON REQUEST BY THE OFFICE OF STRUCTURAL ENGINEERING. MILL TEST REPORTS AND SHIPPING DOCUMENTS SHALL BE SUBMITTED TO THE ENGINEER FOR REVIEW AND APPROVAL PRIOR TO INCORPORATING STEEL ITEMS INTO THE WORK, AS REQUIRED BY 501.07. AFTER FABRICATION, THE CONTRACTOR SHALL SUBMIT SHOP DRAWINGS TO THE ENGINEER FOR REVIEW AND APPROVAL TO ENSURE THAT THE DRAWINGS DEPICT THE STEEL AS ACTUALLY INCORPORATED INTO THE WORK. THE ENGINEER WILL THEN SEND ONE APPROVED SET TO THE OFFICE OF STRUCTURAL ENGINEERING FOR INFORMATION. PAY WEIGHTS SHALL BE COMPUTED IN COMPLIANCE WITH SS 863 AND SUBMITTED TO THE ENGINEER FOR HIS REVIEW AND APPROVAL. THE FABRICATOR SHALL FURNISH A 35 MILLIMETER MICROFILM COPY OF EACH SHOP DRAWING, WHICH SHALL BE MOUNTED ON AN APERTURE CARD AS SPECIFIED IN 501.05.

STEEL MEMBERS INCLUDED IN THIS ITEM INCLUDE ALL END CROSS FRAMES.

BACKWALL CONCRETE: IN ADDITION TO CMS 844, BACKWALL CONCRETE ABOVE THE OPTIONAL CONSTRUCTION JOINT AT THE APPROACH SLAB SEAT SHALL NOT BE PLACED UNTIL AFTER THE DECK CONCRETE IN THE SPAN ADJACENT TO THE ABUTMENT HAS BEEN PLACED.

INSTALLATION OF SEAL: DURING INSTALLATION OF THE SUPPORT/ARMOR FOR THE SUPERSTRUCTURE SIDE OF THE EXPANSION JOINT SEAL, THE SEATING OF BEAMS ON BEARINGS SHALL BE CAREFULLY OBSERVED TO ASSURE THAT POSITIVE BEARING IS MAINTAINED. PROPER ELEVATION OF THE SUPPORT/ARMOR SHALL BE ACHIEVED BY ADJUSTING THE CONNECTION ANGLES AND BOLTS BETWEEN BEAM AND EXPANSION JOINT.

REINFORCING STEEL: NEW REINFORCING STEEL MAY REQUIRE FIELD CUTTING OR BENDING TO BE PROPERLY FITTED. PAYMENT SHALL BE INCLUDED IN ITEM 844.

DOWEL HOLES, REINFORCING STEEL AND EPOXY MORTAR PER CMS 510 ARE TO BE INCLUDED WITH THE APPROPRIATE ITEM 842 FOR PAYMENT.

NOTE

1. FOR ADDITIONAL STRUCTURE GENERAL NOTES, SEE SHEETS 3 & 4 OF 12.

DESIGN AGENCY
THOMAS FOK & ASSOC., LTD.
3896 MAHONING AVE., YOUNGSTOWN, OHIO

DESIGNED JDV | DRAWN KRM | REVIEWED TF | DATE 2-4-00
CHECKED HJS | REVISED | STRUCTURE FILE NUMBER 1807978

STRUCTURE NOTES 1 OF 2
BRIDGE NO. CUY-90-0201
UNDER CAHOON ROAD

CUY-90-0.00

2 / 12

449
582

ITEM 516 - REFURBISH BEARING DEVICE, AS PER PLAN:

THIS ITEM SHALL INCLUDE ALL WORK NECESSARY TO PROPERLY ALIGN BRIDGE BEARINGS AS WELL AS THEIR CLEANING AND PAINTING AND SHALL BE PERFORMED WHEN THE DECK IS OFF.

INCLUDED SHALL BE JACKING, DISASSEMBLY OF THE BEARINGS, HAND TOOL CLEANING (GRINDING IF NECESSARY), PAINTING AS REQUIRED BY SYSTEM OZEU, REPLACEMENT OF ANY DAMAGED SHEET LEAD WITH PREFORMED BEARING PADS (711.21), INSTALLATION OF ANY NECESSARY STEEL SHIMS OF THE SAME SIZE AS THE BEARINGS TO PROVIDE A SNUG FIT, REALIGNMENT OF THE MASONRY PLATE, SO THAT THE BEARINGS ARE VERTICALLY ALIGNED AT 60 DEGREES F, AND RE-ASSEMBLY OF THE BEARINGS.

THE CONTRACTOR SHALL BE RESPONSIBLE FOR THE DESIGN, INSTALLATION AND OPERATION OF AN ADEQUATE JACKING SYSTEM, INCLUDING ANY TEMPORARY OR PERMANENT SUPPORTS NECESSARY TO REFURBISH THE DESIGNATED BEARING DEVICES.

JACKS SHALL HAVE A SWIVEL LOAD CAP, A DOMED PISTON HEAD OR SOME OTHER DEVICE TO PROTECT AGAINST THE EFFECTS OF SIDE LOAD ON THE JACK.

THE HEIGHT OF THE LIFT SHALL NOT EXCEED ¼ INCH. MAXIMUM DIFFERENTIAL JACKING HEIGHT BETWEEN ANY ADJACENT ABUTMENTS OR PIERS SHALL BE 1" OR LESS. IF, DURING THE JACKING OPERATIONS, DAMAGE TO THE STRUCTURE IS VISUALLY OBSERVED, THE JACKING OPERATION SHALL IMMEDIATELY CEASE AND APPROVED SUPPORTS SHALL BE INSTALLED. THE CONTRACTOR SHALL THEN ANALYZE THE DAMAGE AND SUBMIT A METHOD OF CORRECTION TO THE ENGINEER FOR APPROVAL. COST OF THE REQUIRED REPAIRS SHALL BE BORNE BY THE CONTRACTOR.

THE CONTRACTOR SHALL ASSURE ALL BEARINGS ARE SHIMMED ADEQUATELY AND THAT NO BEAMS AND/OR BEARING DEVICES ARE "FLOATING", AND SHALL DEMONSTRATE TO THE ENGINEER THAT THE BRIDGE BEARINGS ARE FULLY SEATED BETWEEN ALL CONTACT AREAS. IF FULL SEATING IS NOT ATTAINED, SUITABLE MEANS OF REPAIR, SUBJECT TO THE APPROVAL OF THE ENGINEER, WILL BE REQUIRED AT THE CONTRACTORS EXPENSE. AT THE OPTION OF THE CONTRACTOR AND AT NO ADDITIONAL COST TO THE STATE, NEW BEARINGS OF THE SAME TYPE AS THE EXISTING MAY BE INSTALLED IN PLACE OF REFURBISHING THE BEARINGS. ALL WORK SHALL BE TO THE SATISFACTION OF THE ENGINEER.

PAYMENT FOR ALL THE ABOVE DESCRIBED LABOR AND MATERIALS WILL BE MADE AT THE CONTRACT PRICE BID FOR ITEM 516 - REFURBISH BEARING DEVICE, AS PER PLAN.

ITEM 530 - STRUCTURE, MISC.: PROTECTION OF UTILITIES

THIS ITEM SHALL CONSIST OF FURNISHING ALL NECESSARY LABOR, MATERIALS, AND EQUIPMENT TO PROTECT EXISTING UTILITIES LOCATED ON THE BRIDGE SUPERSTRUCTURE DURING CONSTRUCTION.

THE CONTRACTOR IS REMINDED THAT ALL EXISTING COMPONENTS AND SYSTEMS TO REMAIN IN USE DURING AND AFTER THIS PROJECT REQUIRE PROTECTION. THESE ITEMS INCLUDE, BUT ARE NOT LIMITED TO:

1. FIRST ENERGY TRANSITE DUCT BANKS BETWEEN THE BEAMS

IT IS THE CONTRACTOR'S RESPONSIBILITY TO PROTECT THESE SYSTEMS AND COMPONENTS FOR THE DURATION OF THE CONTRACT. THE CONTRACTOR IS DIRECTED TO SECTION 107 AND PARTICULARLY TO SECTION 107.12 OF THE CONSTRUCTION AND MATERIAL SPECIFICATIONS.

PAYMENT SHALL BE MADE AT THE LUMP SUM PRICE BID FOR ITEM 530 - SPECIAL - STRUCTURE, MISC.: PROTECTION OF UTILITIES. THIS SHALL INCLUDE ALL NECESSARY TOOLS, LABOR, EQUIPMENT AND MATERIALS NECESSARY TO SUCCESSFULLY PERFORM THIS ITEM OF WORK.

ITEM 844 HIGH PERFORMANCE CONCRETE, SUPERSTRUCTURE, (DECK) AS PER PLAN

ITEM 844 HIGH PERFORMANCE CONCRETE, SUPERSTRUCTURE, (PARAPET) AS PER PLAN

ITEM 844 HIGH PERFORMANCE CONCRETE, SUBSTRUCTURE, AS PER PLAN

THE PROVISIONS OF 844 SHALL APPLY EXCEPT AS NOTED BELOW.

SLIPFORMING:
THE CONTRACTOR IS ALLOWED THE OPTION OF SLIPFORMING BRIDGE PARAPETS OVER NON TRAVELED WAYS. A MINIMUM OF 3 DAYS AFTER PLACING THE TEST SECTION THE CONTRACTOR SHALL CORE THE TEST SECTION (A MINIMUM OF 3 CORES) AT LOCATIONS AS DIRECTED BY THE ENGINEER. APPROVAL TO SLIPFORM SHALL NOT BE GRANTED UNTIL AFTER THE CORING AND AFTER A SUCCESSFUL SLIPFORMING RESULT IS OBTAINED. IN ADDITION TO THE REQUIREMENTS OF THE LAST PARAGRAPH OF 844.031 THE ENGINEER WILL INSPECT THE SLIPFORMED SURFACE FOR HORIZONTAL CRACKING 6 MONTHS AFTER COMPLETION OF THE SLIPFORMING OPERATION. ANY ADDITIONAL CRACKS FOUND SHALL BE REPAIRED AS PER THE SPECIFICATIONS AT NO ADDITIONAL COST TO THE STATE. IN ADDITION, ALL ANCHOR BOLTS FOR FENCE POSTS SHALL BE CAST IN PLACE.

SLIPFORMING SHALL NOT BE PERFORMED DIRECTLY OVER AREAS WHERE THERE IS OR WILL BE VEHICULAR OR PEDESTRIAN TRAFFIC. AT THESE LOCATIONS, THE PARAPETS SHALL BE FORMED AND THE FOLLOWING REQUIREMENTS FOLLOWED.

THE MINIMUM CONCRETE SLUMP DURING PLACEMENT OF ALL CONCRETE PARAPETS SHALL BE 6 INCHES. THE MAXIMUM SLUMP ALLOWED DURING PLACEMENT IS 8 INCHES.

FORMS SHALL NOT BE REMOVED UNTIL AT LEAST 2 HOURS AFTER THE FINAL SET. DETERMINATION OF THE FINAL SET SHALL BE AS PER ASTM C266 (GILLMORE NEEDLE). TESTING SHALL BE PERFORMED BY THE CONTRACTOR AT NO COST TO THE STATE.

ANCHOR BOLTS FOR FENCE POSTS SHALL BE CAST IN PLACE.

THIS ITEM SHALL INCLUDE THE DRILLING OF HOLES PER CMS 510 INTO CONCRETE OR MASONRY AND THE FURNISHING AND PLACING OF GROUT INTO HOLES. NON-SHRINKING EPOXY GROUT SHALL BE USED IN ACCORDANCE WITH CMS 705.20. ANCHORING SHALL CONFORM TO CMS 705.20. PAYMENT SHALL BE INCLUDED WITH THIS ITEM. THE FURNISHING AND PLACEMENT OF STEEL FOR DOWELS IS ALSO INCLUDED WITH THIS ITEM

THE CONTRACTOR SHALL CONSTRUCT 1½ INCHES DEEP AND ¼ INCH WIDE CONTROL JOINTS SPACED AT A MINIMUM OF 6 FEET AND A MAXIMUM OF 8 FEET ON CENTER. THE CONTROL JOINTS SHALL BE MADE IN THE COMPLETE CIRCUMFERENCE OF THE PARAPET, STARTING AND ENDING AT THE ELEVATION OF THE TOP OF THE CONCRETE DECK (SEE DETAILS BELOW). THE CONTRACTOR MAY EITHER FORM THE CONTROL JOINTS IN WITH FORM LINERS, OR, WITHIN 24 HOURS OF PLACEMENT, SAW CUT THE CONTROL JOINTS IN WITH THE USE OF AN EDGE GUIDE, FENCE, OR JIG WHICH IS REQUIRED TO ENSURE THAT THE CUT JOINT IS STRAIGHT, TRUE, AND ALIGNED ON ALL FACES OF THE PARAPET. THE ENTIRE LENGTH OF EACH CONTROL JOINT SHALL BE SEALED TO A MINIMUM DEPTH OF 1½ INCHES WITH A CAULKING MATERIAL CONFORMING TO FEDERAL SPECIFICATION, TT-S-00227E.

MIX OPTIONS:
ALL DECK CONCRETE AND PARAPET CONCRETE SHALL BE MIX 4, AS PER PLAN. ALL OTHER CONCRETE SHALL BE MIX 4, AS PER PLAN, OR MIX 2 CONCRETE. THE FOLLOWING PROPORTIONS WILL USED AS A STARTING MIX DESIGN.

CONCRETE TABLE:
QUANTITIES PER CUBIC YARD
AGGREGATES (SSD)

MIX 4, AS PER PLAN (GGBF SLAG + MICROSILICA)

	GRAVEL	LIMESTONE	SLAG
FINE AGGREGATE (LB)	1245	1245	1246
#8 COARSE AGGREGATE (LB)	360	360	315
#57 COARSE AGGREGATE (LB)	1315	1335	1155
TOTAL (LB)	2920	2940	2716
CEMENT CONTENT (LB)	400	400	400
GGBF SLAG (LB)	170	170	170
MICROSILICA (LB)	30	30	30
WATER TO CEMENTITIOUS RATIO MAX.	0.42	0.42	0.42
AIR CONTENT, +/-2%	7%	7%	7%

THE WEIGHTS SPECIFIED IN THE CONCRETE TABLE WERE CALCULATED FOR MATERIALS OF THE FOLLOWING BULK SPECIFIC GRAVITIES (SSD): NATURAL SAND AND GRAVEL 2.62, LIMESTONE SAND 2.68, LIMESTONE 2.65, SLAG 2.30, FLY ASH 2.65, GGBF SLAG 2.90, MICROSILICA SOLID 2.20, AND PORTLAND CEMENT 3.15. FOR AGGREGATES OF SPECIFIC GRAVITIES DIFFERING MORE THAN PLUS OR MINUS 0.02 FROM THESE, THE WEIGHTS IN THE TABLE WILL BE CORRECTED.

DECK TEXTURING:
IN LIEU OF THE REQUIREMENTS OF SS 842 OR SS 844, CONCRETE DECK SLABS SHALL BE FINISHED IN ACCORDANCE WITH 451.09 AND 451.12 EXCEPT THAT CONSTRUCTION JOINTS SHALL NOT BE EDGED, AND A STRIP OF SURFACE 9 TO 12 INCHES WIDE ADJACENT TO CURBS AND BARRIERS SHALL NOT BE GROOVED. IF THE TEXTURE AS REQUIRED IS NOT MET, THE CONTRACTOR WILL SAW TEXTURE THE DECK AT NO COST TO THE STATE.

BASIS OF PAYMENT:
ALL COSTS OF MATERIAL AND LABOR TO PROVIDE LIGHTING CONDUITS IF SHOWN IN THE BRIDGE PLANS SHALL BE INCLUDED FOR PAYMENT UNDER THIS ITEM. PAYMENT FOR THE ABOVE COMPLETED AND ACCEPTED QUANTITIES WILL BE MADE AT THE CONTRACT BID PRICE FOR:

ITEM	UNITS	DESCRIPTION
844E48001	CUBIC YARD	HIGH PERFORMANCE CONCRETE SUPERSTRUCTURE (DECK), AS PER PLAN
844E48021	CUBIC YARD	HIGH PERFORMANCE CONCRETE SUPERSTRUCTURE (PARAPET), AS PER PLAN
844E48041	CUBIC YARD	HIGH PERFORMANCE CONCRETE SUBSTRUCTURE, AS PER PLAN
844E49000	LUMP SUM	HIGH PERFORMANCE CONCRETE TRIAL MIX
844E49010	LUMP SUM	HIGH PERFORMANCE CONCRETE TESTING

DESIGN AGENCY
THOMAS FOK & ASSOC., LTD.
3896 MAHONING AVE., YOUNGSTOWN, OHIO

DESIGNED JDV | DRAWN KRM | REVIEWED TF | DATE 2-4-00
CHECKED HJS | REVISED | STRUCTURE FILE NUMBER 1807978

STRUCTURE NOTES 2 OF 2
BRIDGE NO. CUY-90-0201
UNDER CAHOON ROAD

CUY-90-0.00

3 / 12

450
582

									AS PER PLAN
ITEM	ITEM EXT.	TOTAL	UNIT	DESCRIPTION	SUPER.	ABUT.	PIERS	GEN'L	SHEET NO.
202	11203	LUMP		PORTIONS OF STRUCTURE REMOVED, OVER 20 FOOT SPAN, AS PER PLAN				LUMP	2/12
503	21101	19	CU. YARD	UNCLASSIFIED EXCAVATION, AS PER PLAN		19			2/12
SPECIAL	51267504	350	SQ. YARD	SEALING OF CONCRETE SURFACES (NON-EPOXY) *	317	33			
SPECIAL	51267510	673	SQ. YARD	SEALING OF CONCRETE SURFACES (EPOXY URETHANE) *	522	140	11		
SPECIAL	51271500	251	SQ. YARD	URETHANE TOP COAT SEALER			251		
516	11210	72	LIN. FEET	STRUCTURAL EXPANSION JOINT INCLUDING ELASTOMERIC STRIP SEAL				72	
516	45305	10	EACH	REFURBISH BEARING DEVICE, AS PER PLAN		10			2/12
518	21220	LUMP		POROUS BACKFILL		LUMP			
519	11100	159	SQ. FOOT	PATCHING CONCRETE STRUCTURES		63	96		
519	12600	19	LIN. FEET	CONCRETE REPAIR BY EPOXY INJECTION *		19			
SPECIAL	53000200	LUMP		STRUCTURE, MISC.: PROTECTION OF UTILITIES	LUMP				3/12
SPECIAL	60739900	588	LIN. FEET	VANDAL PROTECTION FENCE, 6' STRAIGHT, COATED FABRIC	527	61			
816	00610	1655	POUND	FIELD PAINTING OF NEW STEEL, INTERMEDIATE AND FINISH COAT, SYSTEM IZEU	1655				
842	81300	3	EACH	CONCRETE, MISC.: DRILLING AND GROUTING DOWEL HOLES				3	
842	81400	20	POUND	CONCRETE, MISC.: REPLACEMENT OF DAMAGED REINFORCING STEEL				20	
844	48001	384	CU. YARD	HIGH PERFORMANCE CONCRETE SUPERSTRUCTURE (DECK), AS PER PLAN	384				3/12
844	48021	59	CU. YARD	HIGH PERFORMANCE CONCRETE SUPERSTRUCTURE (PARAPET), AS PER PLAN	52	7			3/12
844	48041	23	CU. YARD	HIGH PERFORMANCE CONCRETE SUBSTRUCTURE, AS PER PLAN		23			3/12
863	10201	1655	POUND	STRUCTURAL STEEL MEMBERS, MISC., LEVEL FABRICATION, AS PER PLAN	1655				2/12
863	20000	1512	EACH	WELDED STUD SHEAR CONNECTOR	1512				

* SEE PROPOSAL NOTE

CALCULATED BY JDV DATE 5-99
CHECKED BY KRM DATE 12-99

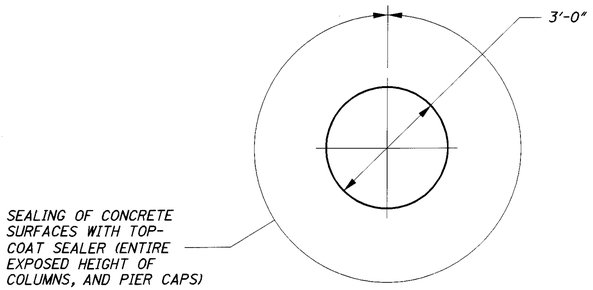

SEALING OF CONCRETE SURFACES-PIERS

ITEM SPECIAL-URETHANE TOP COAT SEALER: THIS ITEM SHALL CONSIST OF THE APPLICATION OF A URETHANE TOP COAT SEALER OVER CONCRETE AREAS PREVIOUSLY COATED WITH EPOXY SEALER. THE COLOR SHALL BE FEDERAL COLOR STANDARD NO. 595-20219 COCOA AND THE MATERIAL SHALL CONFORM TO PROPOSAL NOTE "SEALING OF CONCRETE SURFACES"

SURFACES TO WHICH THE URETHANE TOP COAT IS TO BE APPLIED SHALL BE DRY AND FREE FROM DUST, DIRT, OIL, WAX, CURING COMPOUNDS, EFFLORESCENCE, LAITANCE AND OTHER FOREIGN MATERIALS WITH THE EXCEPTION OF THE EXISTING EPOXY SEALER.

THE REQUIRED CLEANING SHALL BEGIN WITH HIGH PRESSURE WATER BLASTING (1000 PSI OR GREATER). MILDEW SHALL BE TREATED WITH A HYPOCHLORITE SOLUTION TO KILL SPORES. A LIGHT SWEEP ABRASIVE BLAST SHALL FOLLOW TO REMOVE ANY FOREIGN SUBSTANCES AND TO ROUGHEN ALL THE SURFACES OF THE EXISTING SEALER WITHOUT REMOVING THE EXISTING SEALER. THE ABRASIVE BLAST SHALL BE FOLLOWED BY POWER SWEEPING OR AIR BROOMING. BLASTING ABRASIVES CONTAINING MORE THAN 1% FREE SILICA SHALL NOT BE ALLOWED.

THE URETHANE TOP COAT SHALL BE APPLIED ACCORDING TO PN "SEALING OF CONCRETE SURFACES." THE URETHANE TOP COAT SHALL BE APPLIED WITHIN 48 HOURS AFTER SURFACE PREPARATION. APPLICATION SHALL BE BY BRUSH OR ROLLER AS DIRECTED BY THE ENGINEER.

THE COST OF ALL LABOR, EQUIPMENT AND MATERIAL NECESSARY TO ACCOMPLISH THIS ITEM OF WORK SHALL BE PAID FOR UNDER:

ITEM	UNIT	DESCRIPTION
SPECIAL	SQ. YD.	URETHANE TOP COAT SEALER

REVISED BY B&N 5-12-00

DESIGN AGENCY
THOMAS FOK & ASSOC., LTD.
3896 MAHONING AVE., YOUNGSTOWN, OHIO

DATE 2-4-00
REVIEWED TF
STRUCTURE FILE NUMBER 1807978

DRAWN KRM
REVISED

DESIGNED JDV
CHECKED HJS

ESTIMATED QUANTITIES & STRUCTURE NOTES
BRIDGE NO. CUY-90-0201
UNDER CAHOON ROAD

CUY-90-0.00

4 / 12

451
582

I:\PROJECTS\Pid1738\dgn\finalplans\estquan.dgn 14-SEP-2000 8:54AM jgrmovse

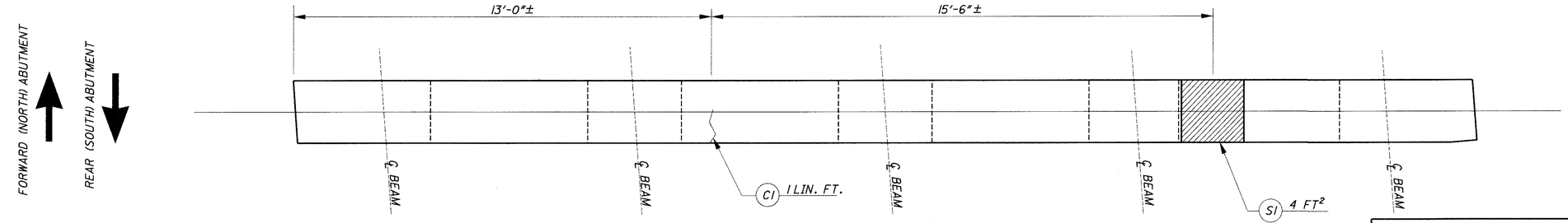

REAR ABUTMENT BEAM SEAT PLAN

SUMMARY OF REPAIR QUANTITIES		
LOCATION	ITEM 519-PATCHING CONCRETE SURFACES	
	MEASURED QTY. (S.F.)	ESTIMATED QTY. (S.F.)
REAR ABUTMENT	12	18
FORWARD ABUTMENT	30	45
		TOTAL = 63

QUANTITIES ARE CARRIED TO THE ESTIMATED QUANTITY SHEET ON 4 OF 12.

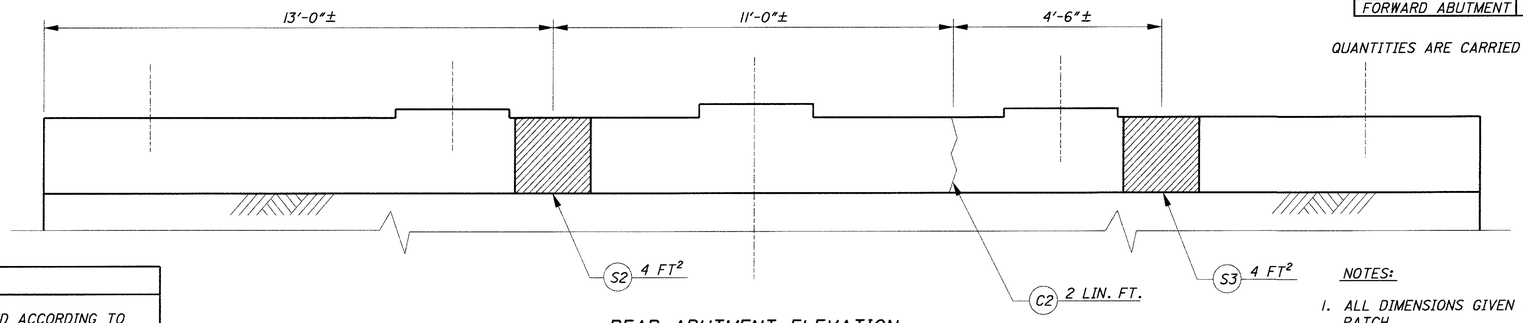

REAR ABUTMENT ELEVATION
(BACKWALL NOT SHOWN)

LEGEND

- ~ = CRACK TO BE EPOXY-INJECTED ACCORDING TO ITEM 519, (MEASURED NOVEMBER, 1999)
- (C_) LIN. FT. = APPROXIMATE LIN. FT. TO BE EPOXY-INJECTED
- ▨ = AREAS TO BE PATCHED ACCORDING TO ITEM 519. (MEASURED NOVEMBER, 1999)
- (S_) FT² = APPROXIMATE AREA TO BE PATCHED

NOTES:

1. ALL DIMENSIONS GIVEN ARE MEASURED TO THE CENTERLINE OF THE PATCH.
2. ESTIMATED QUANTITIES HAVE BEEN INCREASED BY 50% OVER MEASURED QUANTITIES TO ALLOW FOR ADDITIONAL DETERIORATION.
3. EXACT DIMENSIONS AND LOCATIONS OF PATCHES AND CRACKS SHALL BE DETERMINED BY THE ENGINEER IN THE FIELD FOR FINAL PAY QUANTITY.

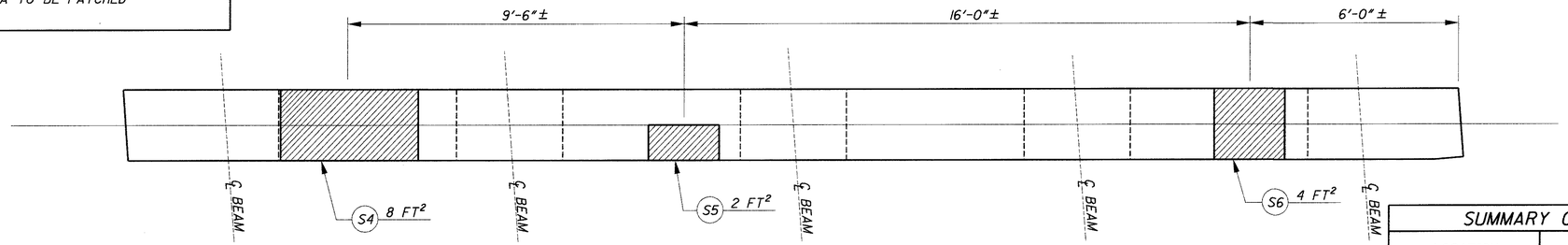

FORWARD ABUTMENT BEAM SEAT PLAN

SUMMARY OF REPAIR QUANTITIES		
LOCATION	CRACK REPAIR BY EPOXY INJECTION	
	MEASURED QTY. (L.F.)	ESTIMATED QTY. (L.F.)
REAR ABUTMENT	3	5
FORWARD ABUTMENT	4	6
LEFT FWD. WINGWALL	5	8
		TOTAL = 19

QUANTITIES ARE CARRIED TO THE ESTIMATED QUANTITY SHEET ON 4 OF 12.

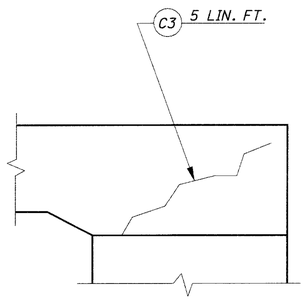

LEFT FORWARD WINGWALL ELEVATION

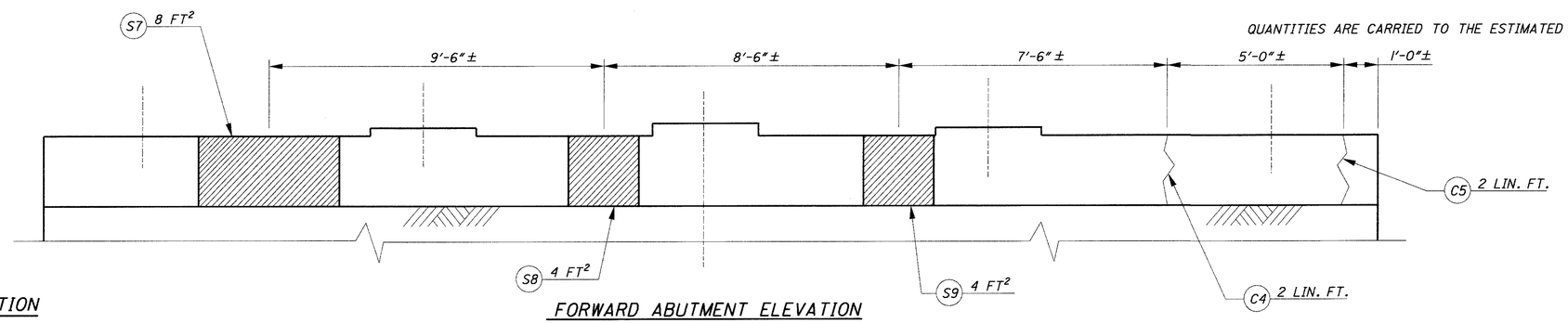

FORWARD ABUTMENT ELEVATION
(BACKWALL NOT SHOWN)

DESIGN AGENCY
THOMAS FOK & ASSOC., LTD.
3896 MAHONING AVE., YOUNGSTOWN, OHIO

DATE 2-4-00
REVIEWED TF
STRUCTURE FILE NUMBER 1807978
DRAWN KRM
REVISED
DESIGNED JDV
CHECKED HJS

ABUTMENT REPAIR DETAILS
BRIDGE NO. CUY-90-0201
UNDER CAHOON ROAD

CUY-90-0.00

5 / 12

452
582

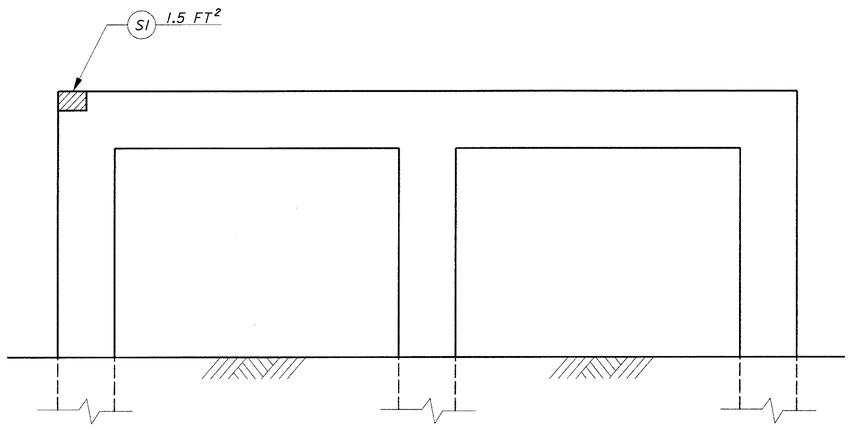

PIER NO. 1
(LOOKING NORTH)

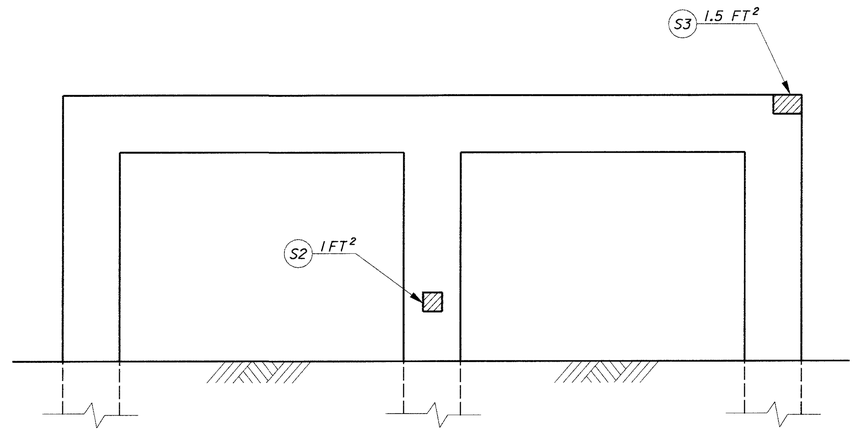

PIER NO. 1
(LOOKING SOUTH)

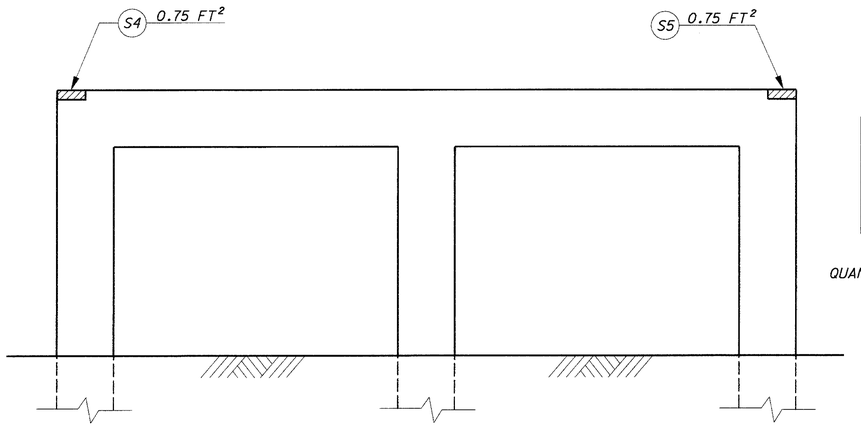

PIER NO. 2
(LOOKING NORTH)

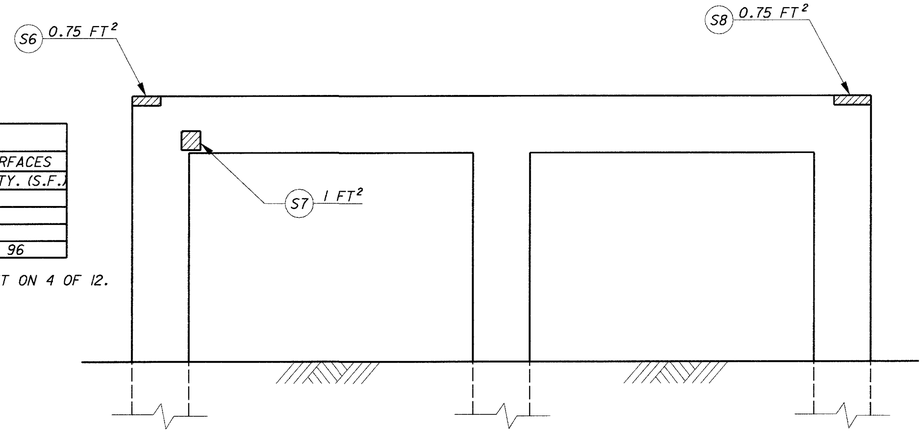

PIER NO. 2
(LOOKING SOUTH)

SUMMARY OF REPAIR QUANTITIES

LOCATION	ITEM 519-PATCHING CONCRETE SURFACES	
	MEASURED QTY. (S.F.)	ESTIMATED QTY. (S.F.)
PIER NO. 1	4	6
PIER NO. 2	4	6
PIER NO. 3	56	84
		TOTAL = 96

QUANTITIES ARE CARRIED TO THE ESTIMATED QUANTITY SHEET ON 4 OF 12.

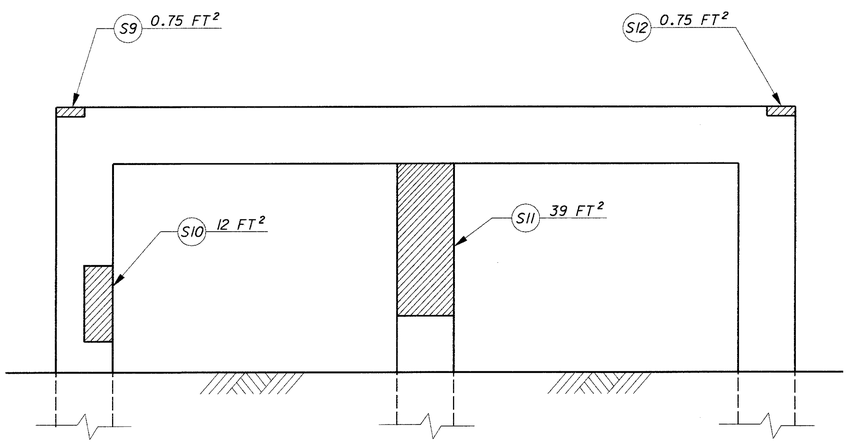

PIER NO.3
(LOOKING NORTH)

LEGEND

= AREAS TO BE PATCHED ACCORDING TO ITEM 519. (MEASURED NOVEMBER, 1999)

S_ FT² = APPROXIMATE AREA TO BE PATCHED

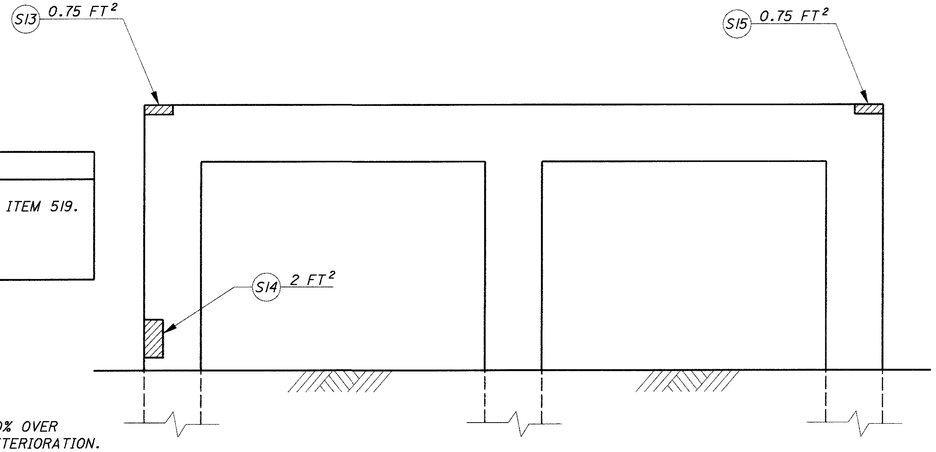

PIER NO.3
(LOOKING SOUTH)

NOTES:

1. ESTIMATED QUANTITIES HAVE BEEN INCREASED BY 50% OVER MEASURED QUANTITIES TO ALLOW FOR ADDITIONAL DETERIORATION.
2. EXACT DIMENSIONS AND LOCATIONS OF PATCHES SHALL BE DETERMINED BY THE ENGINEER IN THE FIELD FOR FINAL PAY QUANTITY.

DESIGN AGENCY
THOMAS FOK & ASSOC., LTD.
3896 MAHONING AVE., YOUNGSTOWN, OHIO

DESIGNED	DRAWN	REVIEWED	DATE
JDV	KRM	TF	2-4-00
CHECKED	REVISED	STRUCTURE FILE NUMBER	
HJS		1807978	

PIER REPAIR DETAILS
BRIDGE NO. CUY-90-0201
UNDER CAHOON ROAD

CUY-90-0.00

6 / 12

453
582

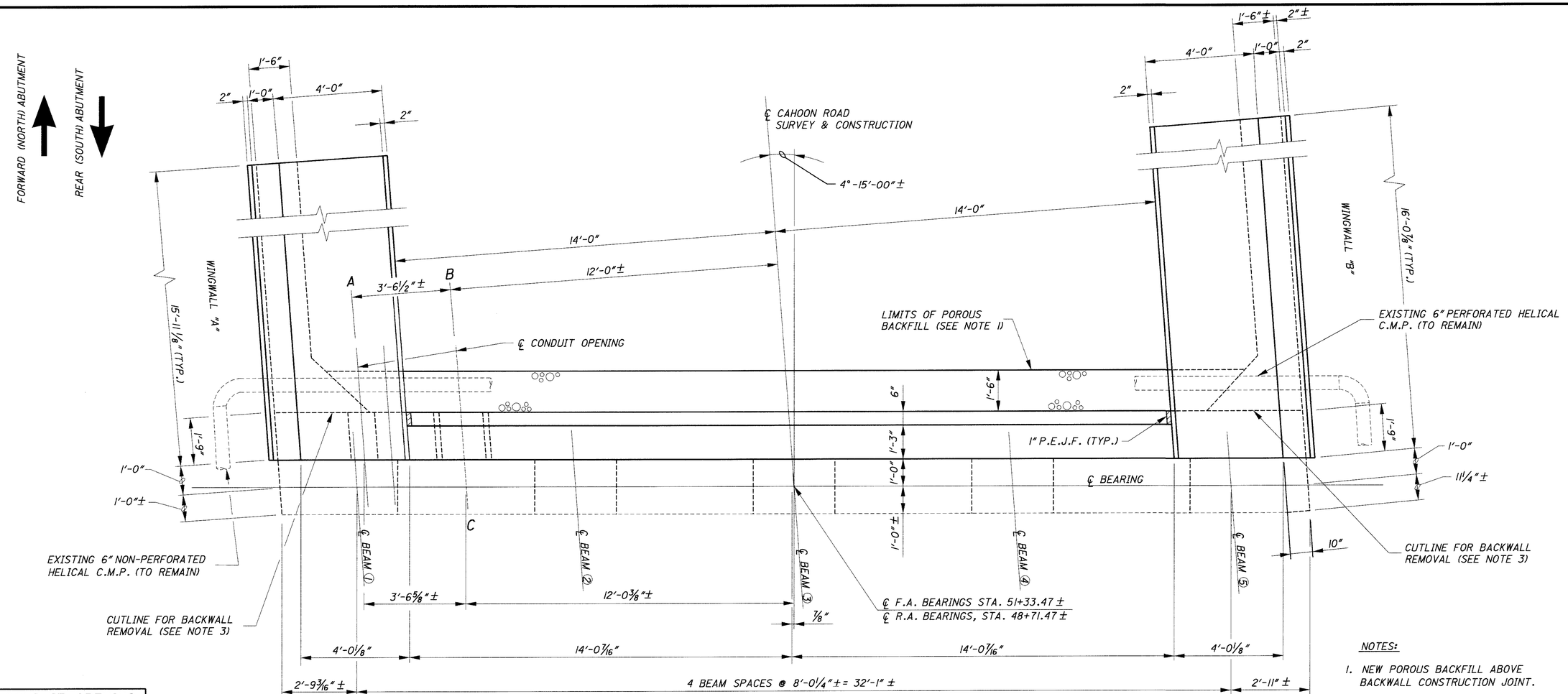

CONDUIT OPENING DIMENSIONS		
OPENING	HEIGHT	WIDTH
A	2'-0"	11"
B	10"	1'-4"
C	1'-0"	2'-0"

(SEE NOTE 4)

NOTES:

1. NEW POROUS BACKFILL ABOVE BACKWALL CONSTRUCTION JOINT.
2. FOR SECTION A-A, SECTION B-B, & WINGWALL "A" & "B", SEE SHEET 8 OF 12.
3. REMOVE BACKWALL TO EXISTING C.J. AT BEAM SEAT (SEE SECTION A-A, SHEET 8 OF 12.
4. THE OPENING DIMENSIONS AND LOCATIONS ARE TO BE VERIFIED BY THE CONTRACTOR.

** BEAM NUMBERS, OPENINGS AND REBARS (EXCEPT EA501) FOR REAR ABUTMENT ARE OPPOSITE HAND ABOUT ℄ CAHOON RD.

DESIGN AGENCY
THOMAS FOK & ASSOC., LTD.
3896 MAHONING AVE., YOUNGSTOWN, OHIO

DESIGNED JDV | DRAWN KRM | REVIEWED TF | DATE 2-4-00
CHECKED HJS | REVISED | STRUCTURE FILE NUMBER 1807978

ABUTMENT DETAILS I OF 2

BRIDGE NO. CUY-90-0201
UNDER CAHOON ROAD

CUY-90-0.00

7 / 12

454
582

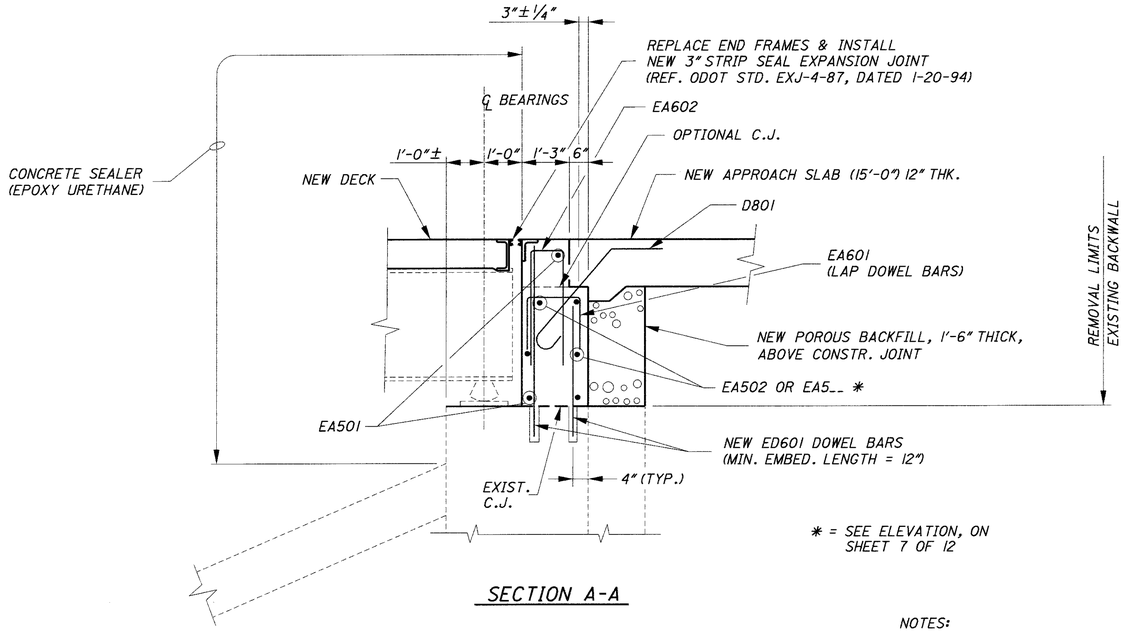

SECTION A-A

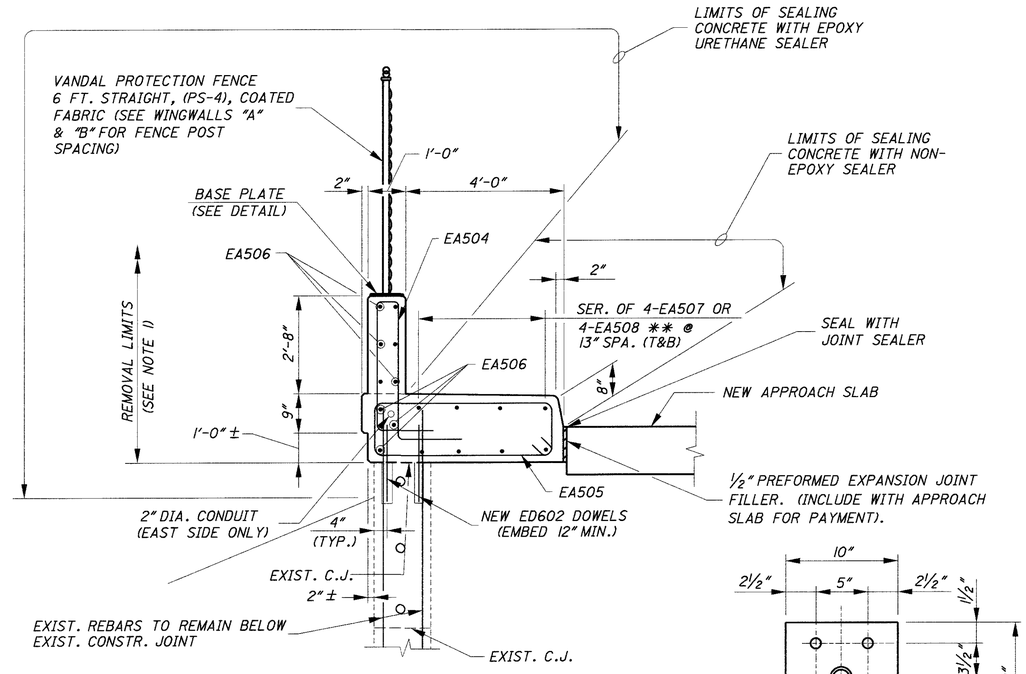

WINGWALL SECTION B-B

** = SEE WINGWALL "A" OR "B"

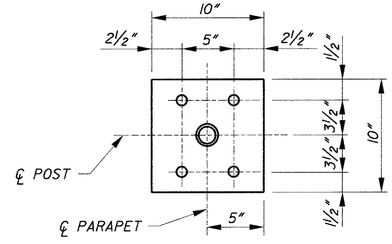

BASE PLATE DETAIL

NOTES:

1. REMOVE EXISTING SIDEWALK, PARAPET AND FENCE TO EXISTING CONSTRUCTION JOINT AND RECONSTRUCT AS SHOWN.

LEGEND:

C.J. = CONSTRUCTION JOINT

B

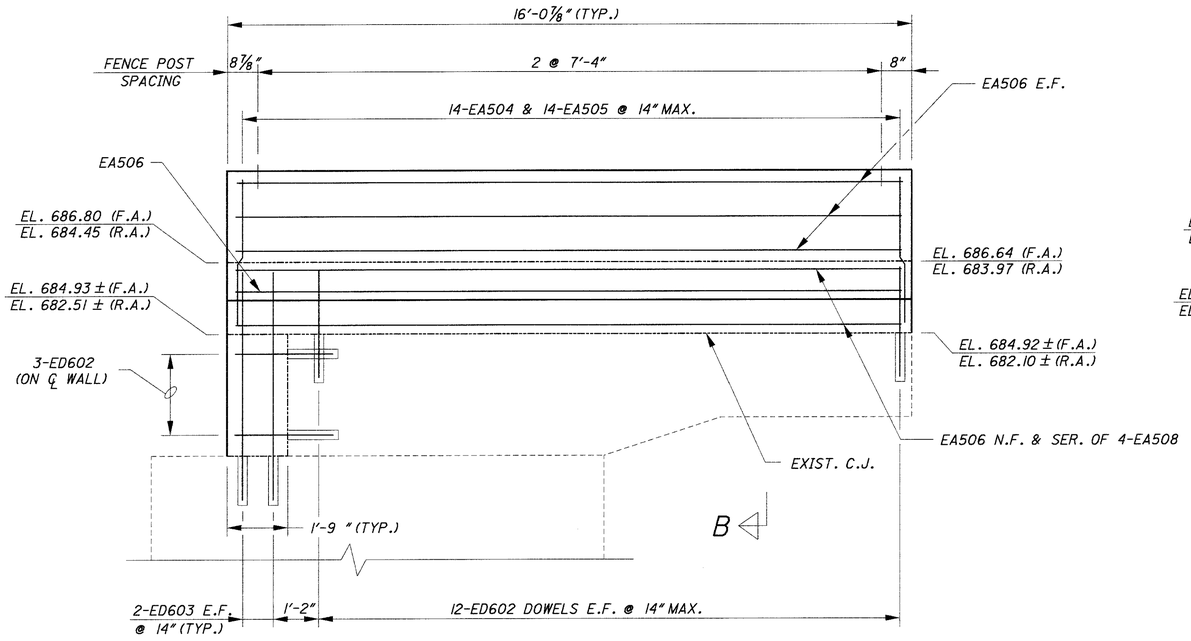

WINGWALL "B"

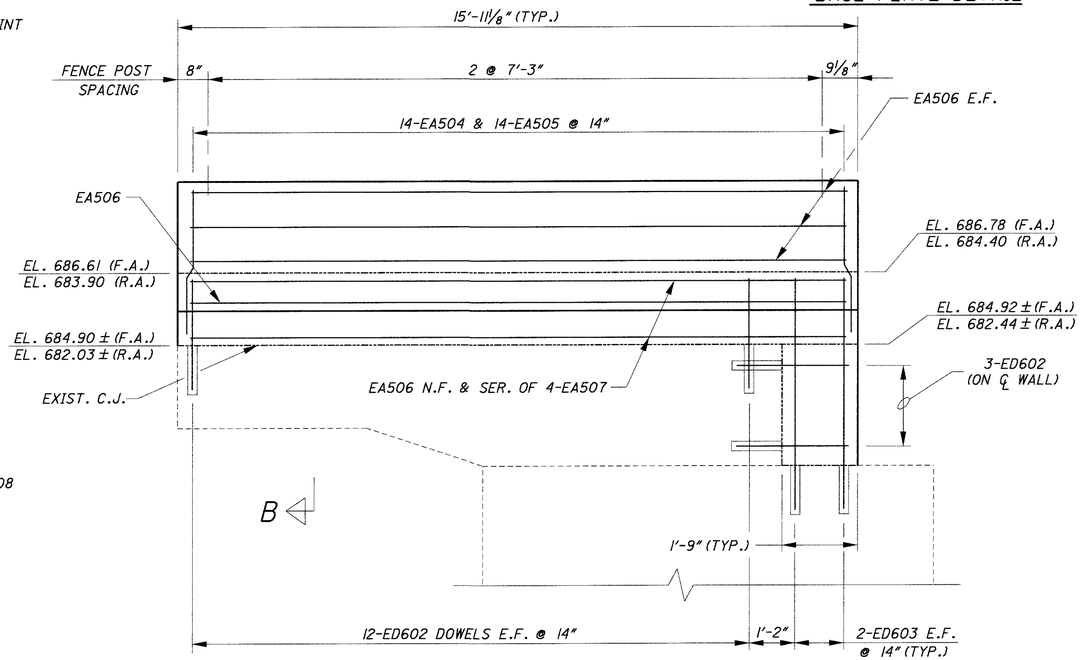

WINGWALL "A"

DESIGN AGENCY
THOMAS FOK & ASSOC., LTD.
3896 MAHONING AVE., YOUNGSTOWN, OHIO

DESIGNED	DRAWN	REVIEWED	DATE
JDV	KRM	TF	2-4-00
CHECKED	REVISED	STRUCTURE FILE NUMBER	
HJS		1807978	

ABUTMENT DETAILS 2 OF 2
BRIDGE NO. CUY-90-0201
UNDER CAHOON ROAD

CUY-90-0.00

8 / 12

455
582

DECK SCREED ELEVATIONS (SEE NOTE 1)

	LOCATION	SPAN 1 ℄ BRG. R.A.	SPAN 1 1/4 SPAN	SPAN 1 1/2 SPAN	SPAN 1 3/4 SPAN	SPAN 2 ℄ BRG. PIER P-1	SPAN 2 SPLICE	SPAN 2 1/2 SPAN	SPAN 2 3/4 SPAN	SPAN 3 ℄ BRG. PIER P-2	SPAN 3 SPLICE	SPAN 3 1/2 SPAN	SPAN 3 SPLICE	SPAN 4 ℄ BRG. PIER P-3	SPAN 4 1/4 SPAN	SPAN 4 1/2 SPAN	SPAN 4 3/4 SPAN	SPAN 4 ℄ BRG. F.A.
BEAMS	1	683.70	684.06	684.38	684.66	684.91	685.19	685.61	685.82	685.98	686.13	686.29	686.31	686.27	686.25	686.22	686.14	686.01
	2	683.81	684.17	684.49	684.77	685.03	685.31	685.72	685.94	686.10	686.25	686.41	686.43	686.40	686.38	686.34	686.27	686.14
	3	683.92	684.28	684.60	684.88	685.14	685.42	685.84	686.06	686.22	686.37	686.53	686.55	686.52	686.51	686.47	686.39	686.27
	4	683.78	684.15	684.47	684.75	685.01	685.29	685.71	685.93	686.09	686.24	686.40	686.43	686.40	686.38	686.35	686.27	686.15
	5	683.64	684.01	684.33	684.61	684.87	685.15	685.57	685.79	685.96	686.12	686.28	686.30	686.28	686.26	686.23	686.15	686.03
PTS. *	A	683.73	684.09	684.41	684.69	684.94	685.22	685.64	685.85	686.01	686.16	686.32	686.34	686.30	686.29	686.25	686.17	686.04
	B	683.67	684.04	684.36	684.64	684.90	685.19	685.61	685.83	686.00	686.15	686.31	686.34	686.31	686.29	686.26	686.18	686.06

* A=TOE/CURB LEFT
B=TOE/CURB RIGHT

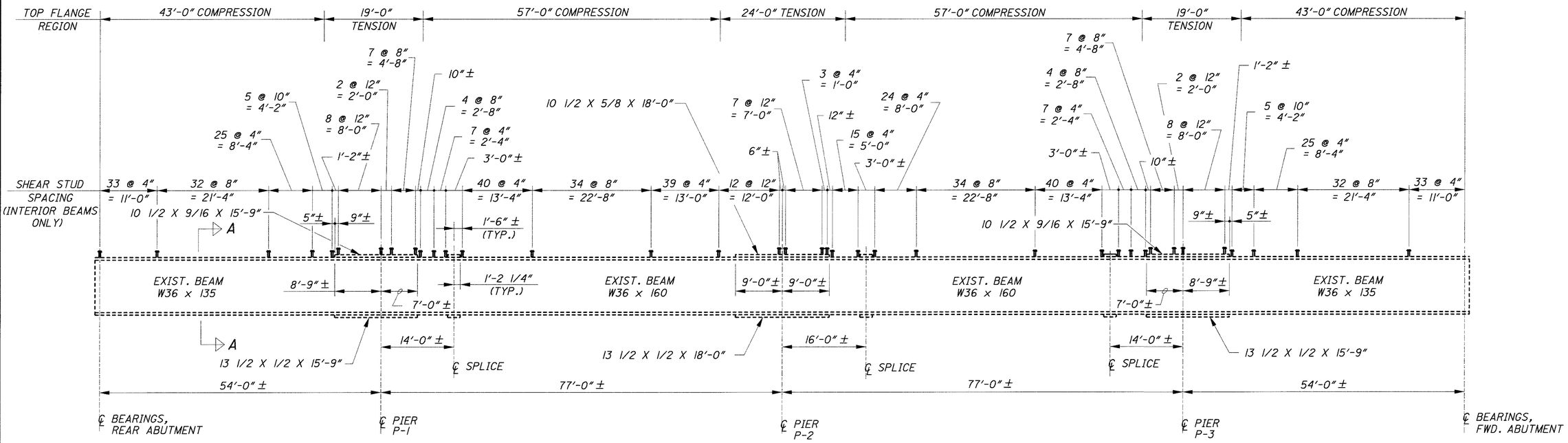

TYPICAL BEAM ELEVATION

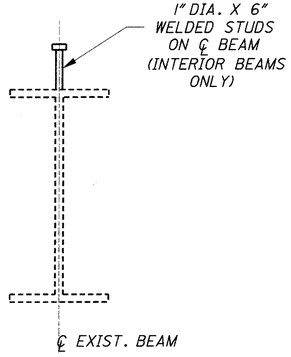

SECTION A-A
(INTERIOR BEAMS ONLY)

NOTES:

1. SCREED ELEVATIONS SHOWN ARE FOR THE DECK SLAB SURFACE PRIOR TO CONCRETE PLACEMENT. ALLOWANCE HAS BEEN MADE FOR ANTICIPATED CALCULATED DEAD LOAD DEFLECTIONS.
2. WELDED ATTACHMENT OF SUPPORTS FOR CONCRETE DECK FINISHING MACHINE MAY BE MADE TO AREAS OF THE FASCIA STRINGER FLANGES DESIGNATED "COMPRESSION". ATTACHMENTS SHALL NOT BE MADE TO AREAS DESIGNATED "TENSION". FILLET WELDS TO COMPRESSION FLANGES SHALL BE NOT CLOSER THAN 1 INCH FROM EDGE OF FLANGE, BE NOT MORE THAN 2 INCHES LONG, AND BE NOT SMALLER THAN THE MINIMUM SIZE REQUIRED BY AASHTO.
3. WELDED SHEAR CONNECTOR SHALL ONLY BE INSTALLED ON INTERIOR BEAMS.

DESIGN AGENCY
THOMAS FOK & ASSOC., LTD.
3896 MAHONING AVE., YOUNGSTOWN, OHIO

DATE 2-4-00
REVIEWED TF
STRUCTURE FILE NUMBER 1807978

DRAWN KRM
REVISED

DESIGNED HJS
CHECKED JDV

SCREED AND BEAM ELEVATION DETAILS
BRIDGE NO. CUY-90-0201
UNDER CAHOON ROAD

CUY-90-0.00

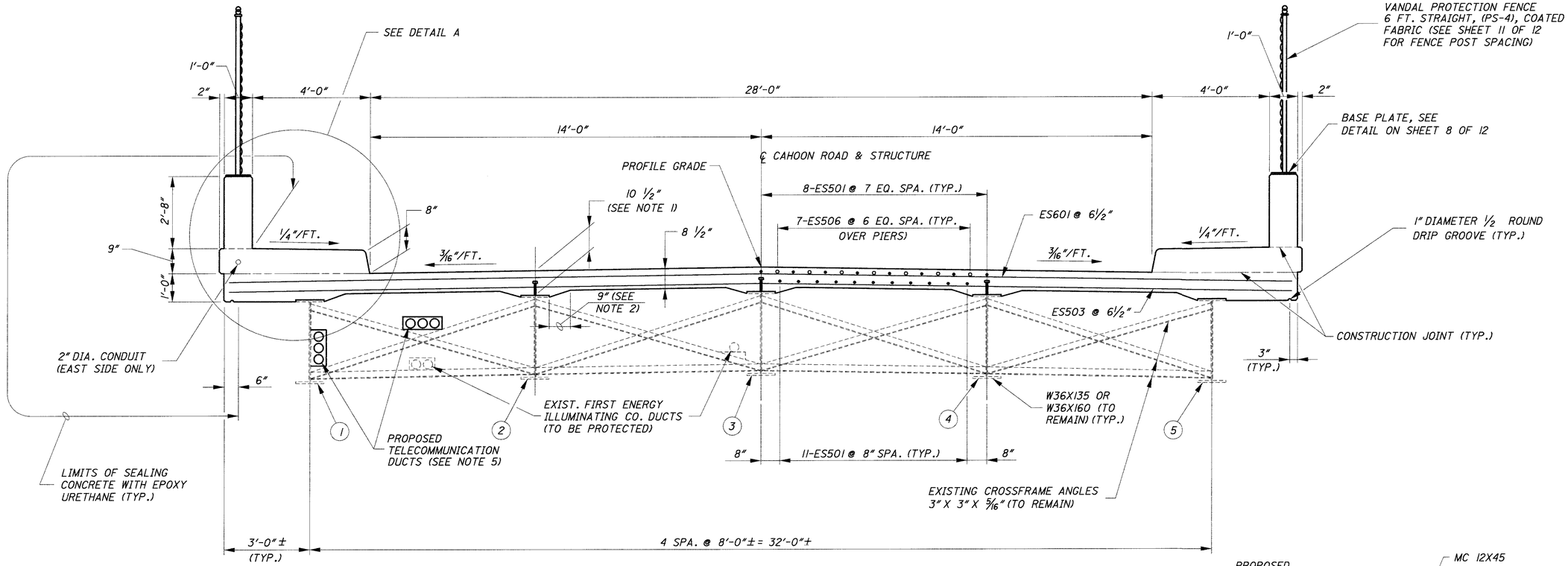

TRANSVERSE SECTION

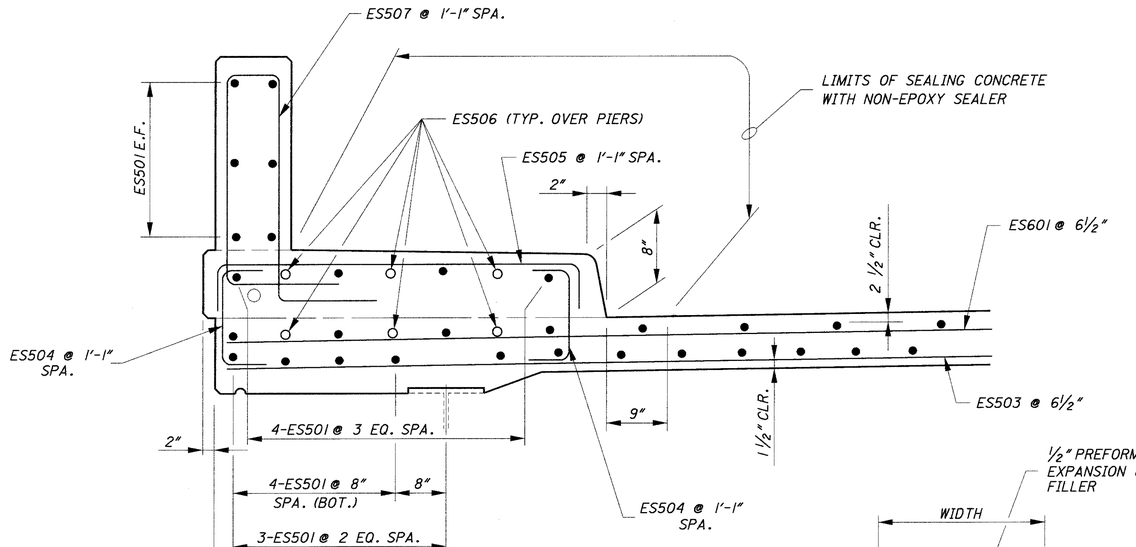

DETAIL A

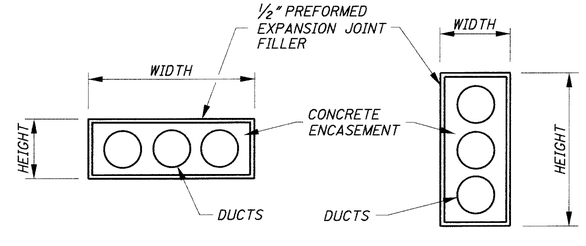

DETAIL OF DUCT OPENINGS THRU ABUTMENT

(REFER TO ELEVATION & TABLE, SHEET 7 OF 12)

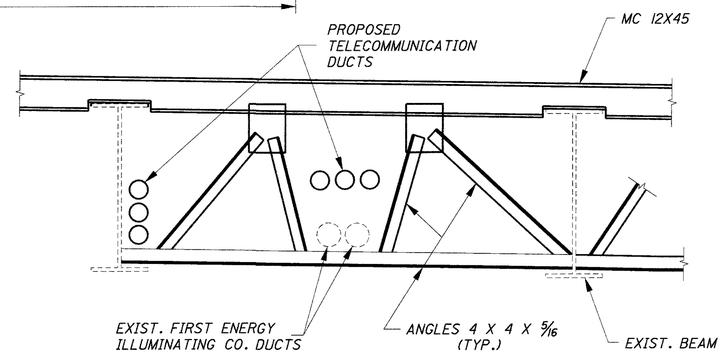

NEW END CROSSFRAME MODIFIED TO CLEAR EXIST.& PROPOSED DUCTS

(SEE NOTE 6)

NOTES:

1. DECK SLAB DEPTH: THE DISTANCE SHOWN FROM THE TOP OF THE STEEL BEAM IS THE THEORETICAL DESIGN DIMENSION, INCLUDING THE DESIGN HAUNCH THICKNESS OF 2 INCHES. THE QUANTITY OF DECK CONCRETE TO BE PAID FOR SHALL BE BASED ON THIS DIMENSION MINUS THE DESIGN HAUNCH THICKNESS, EVEN THOUGH DEVIATION FROM IT MAY BE NECESSARY BECAUSE THE TOP FLANGE OF THE BEAM MAY NOT HAVE THE EXACT CAMBER OR CONFORMATION REQUIRED TO PLACE IT PARALLEL TO THE FINISHED GRADE.
2. A HAUNCH WIDTH OF 9 INCHES SHALL BE USED FOR COMPUTING THE QUANTITY OF CONCRETE. HOWEVER THE HAUNCH WIDTH MAY VARY BETWEEN 6 INCHES AND 12 INCHES.
3. FOR DECK SLAB PLAN, SEE SHEET 11 OF 12.
4. FOR VANDAL PROTECTION FENCE DETAILS, REFER TO ODOT STANDARD VPF-1-90M. EXCEPT REFER TO SHEET 8 OF 12 FOR BASE PLATE DETAIL.
5. SUPPORT DETAILS TO BE FURNISHED BY THE OWNER. ALL COSTS TO RELOCATE THESE DUCTS ARE TO BE AT THE OWNER'S EXPENSE.
6. FOR END CROSSFRAMES TO THE RIGHT OF THE ℄ OF CAHOON ROAD, AND FOR ADDITIONAL DETAILS, SEE STANDARD DRAWING EXJ-4-87 AND GSD-1-96.

DESIGN AGENCY
THOMAS FOK & ASSOC., LTD.
3896 MAHONING AVE., YOUNGSTOWN, OHIO

DESIGNED JDV | DRAWN KRM | CHECKED HJS | REVISED | REVIEWED TF | DATE 2-4-00 | STRUCTURE FILE NUMBER 1807978

TRANSVERSE SECTION
BRIDGE NO. CUY-90-0201
UNDER CAHOON ROAD

CUY-90-0.00

10 / 12

457
582

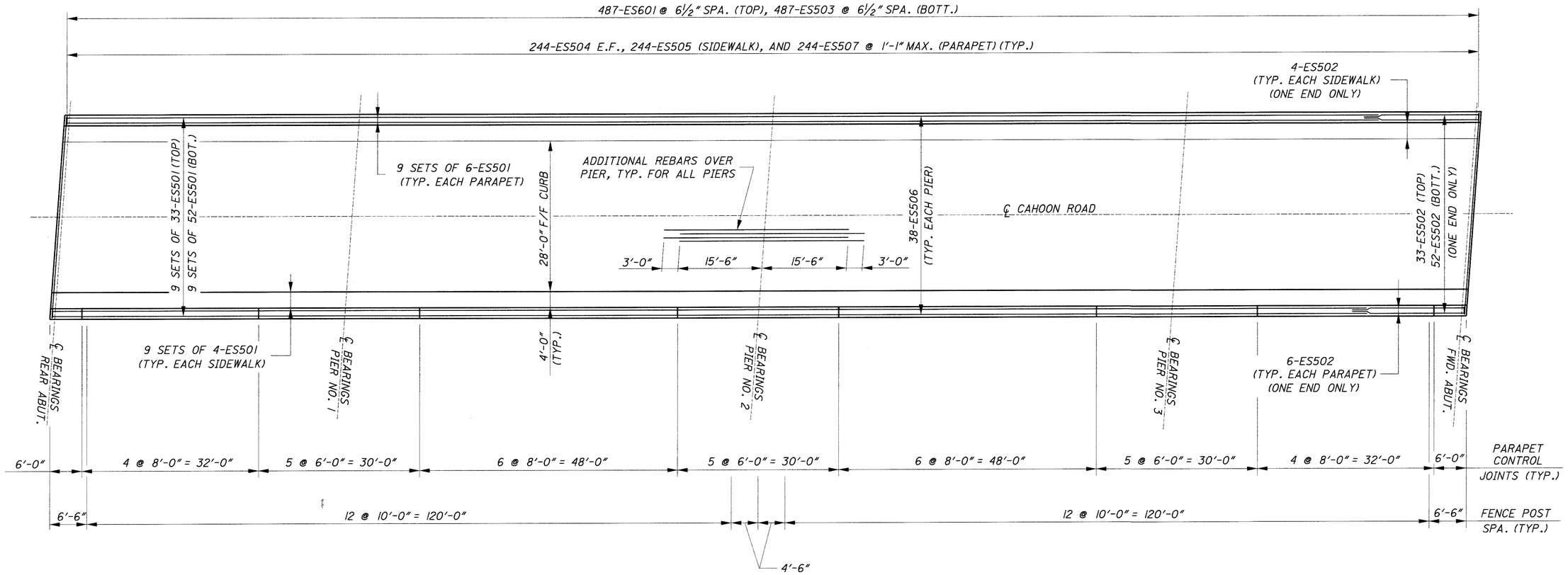

DECK PLAN

DIMENSION A		
TEMP. **	REAR ABUT.	FWD. ABUT.
30	1 15/16"	1 15/16"
40	1 13/16"	1 13/16"
50	1 11/16"	1 11/16"
60	1 5/8"	1 5/8"
70	1 1/2"	1 1/2"
80	1 7/16"	1 7/16"
90	1 3/16"	1 3/16"

** AMBIENT AIR TEMPERATURE (F°) AT TIME OF JOINT INSTALLATION

REFER TO STD. DWG. EXJ-4-87, SHEET 2 OF 5 FOR DIMENSION A LOCATION

NOTE-3" STRIP SEAL REQUIRED

MIN. REBAR LAP
#5 = 2'-5"

NOTES

1. FOR REINFORCEMENT SCHEDULE, SEE SHEET 12 OF 12.
2. FOR TRANSVERSE SECTION, SEE SHEET 10 OF 12.

LEGEND

BOTT. = BOTTOM
TYP. = TYPICAL

DESIGN AGENCY
THOMAS FOK & ASSOC., LTD.
3896 MAHONING AVE., YOUNGSTOWN, OHIO

DESIGNED JDV | DRAWN KRM | REVIEWED TF | DATE 2-4-00
CHECKED HJS | REVISED | STRUCTURE FILE NUMBER 1807978

DECK PLAN
BRIDGE NO. CUY-90-0201
UNDER CAHOON ROAD

CUY-90-0.00

11 / 12

458
582

ABUTMENTS

MARK	NO. REQD.	LENGTH	TYPE	DIMENSIONS A	B	C	D	INCR.	WEIGHT LBS.	NO. REQD. R.A.	F.A.
EA501	6	35'-4"	STR						221	3	3
EA502	8	29'-5"	STR						246	4	4
EA503	16	2'-5"	STR						40	8	8
EA504	56	10'-1"	14	3'-2"	3'-9"				589	28	28
EA505	56	12'-0 1/2"	9	1'-3"	4'-6"				703	28	28
EA506	36	15'-7"	STR						585	18	18
EA507	4 SERIES	15'-11"	STR					1"	264	2 SERIES	2 SERIES
	OF 4	TO 15'-8"								OF 4	OF 4
EA508	4 SERIES	15'-7"	STR					1"	258	2 SERIES	2 SERIES
	OF 4	TO 15'-4"								OF 4	OF 4
EA509	8	7'-3"	2	2'-6"	2'-6"	2'-6"			60	4	4
EA510	8	8'-9"	2	3'-0"	3'-0"	3'-0"			73	4	4
EA601	56	5'-6"	2	2'-3"	1'-4"	2'-3"			463	28	28
EA602	56	5'-0"	2	2'-3"	10"	2'-3"			421	28	28
ED601	112	4'-6"	STR						757	56	56
ED602	108	2'-6"	STR						406	54	54
ED603	44	6'-2"	STR						408	22	22
D801	38	4'-7"	12		2'-3"				465	19	19
								TOTAL = 5959			

SUPERSTRUCTURE

MARK	NO. REQD.	LENGTH	TYPE	DIMENSIONS A	B	C	D	INCR.	WEIGHT LBS.
ES501	945	30'-0"	STR						29,569
ES502	105	16'-0"	STR						1752
ES503	487	37'-8"	STR						19,132
ES504	976	2'-5 1/2"	2	10"	1'-0 1/2"	10"			2503
ES505	488	5'-0"	2	4 1/2"	4'-6"	4 1/2"			2545
ES506	114	34'-0"	STR						4043
ES507	488	9'-2"	14	2'-11"	3'-1"				4666
ES601	487	37'-8"	STR						27,552
								TOTAL = 91,762	

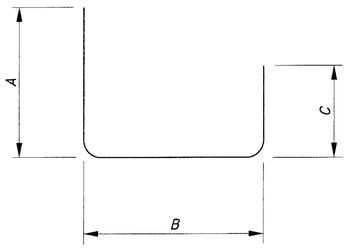

TYPE 2

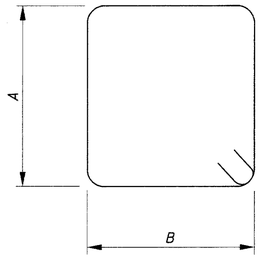

TYPE 9

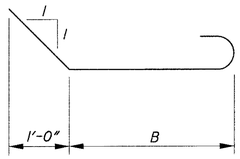

TYPE 12

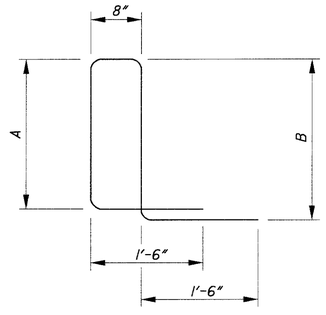

TYPE 14

NOTES:

BAR SIZE: THE BAR SIZE IS INDICATED IN THE BAR MARK. THE FIRST LETTER INDICATES THAT THE BAR IS EPOXY COATED. THE SECOND LETTER IDENTIFIES THE BAR LOCATION; NEXT DIGIT INDICATES THE BAR SIZE DESIGNATION AND THE REMAINING DIGITS ITS SEQUENCE NUMBER.

EXAMPLE: ES501

A) S = LOCATION OF BAR IN THE SUPERSTRUCTURE
B) 5 = BAR SIZE DESIGNATION
C) 01 = SEQUENCE NUMBER

BAR DIMENSIONS SHOWN ARE OUT TO OUT UNLESS OTHERWISE INDICATED.

STR = STRAIGHT

REINFORCING STEEL SHALL BE INCLUDED FOR PAYMENT IN THE CONTRACT UNIT PRICE BID FOR ITEM 844-HIGH PERFORMANCE CONCRETE AS PER PLAN. REINFORCING STEEL LENGTHS AND WEIGHTS GIVEN ARE FOR ESTIMATE PURPOSES ONLY.

DESIGN AGENCY
THOMAS FOK & ASSOC., LTD.
3896 MAHONING AVE., YOUNGSTOWN, OHIO

DESIGNED JDV | DRAWN KRM | REVIEWED TF | DATE 2-4-00
CHECKED HJS | REVISED | STRUCTURE FILE NUMBER 1807978

REINFORCING STEEL LIST
BRIDGE NO. CUY-90-0201
UNDER CAHOON ROAD

CUY-90-0.00

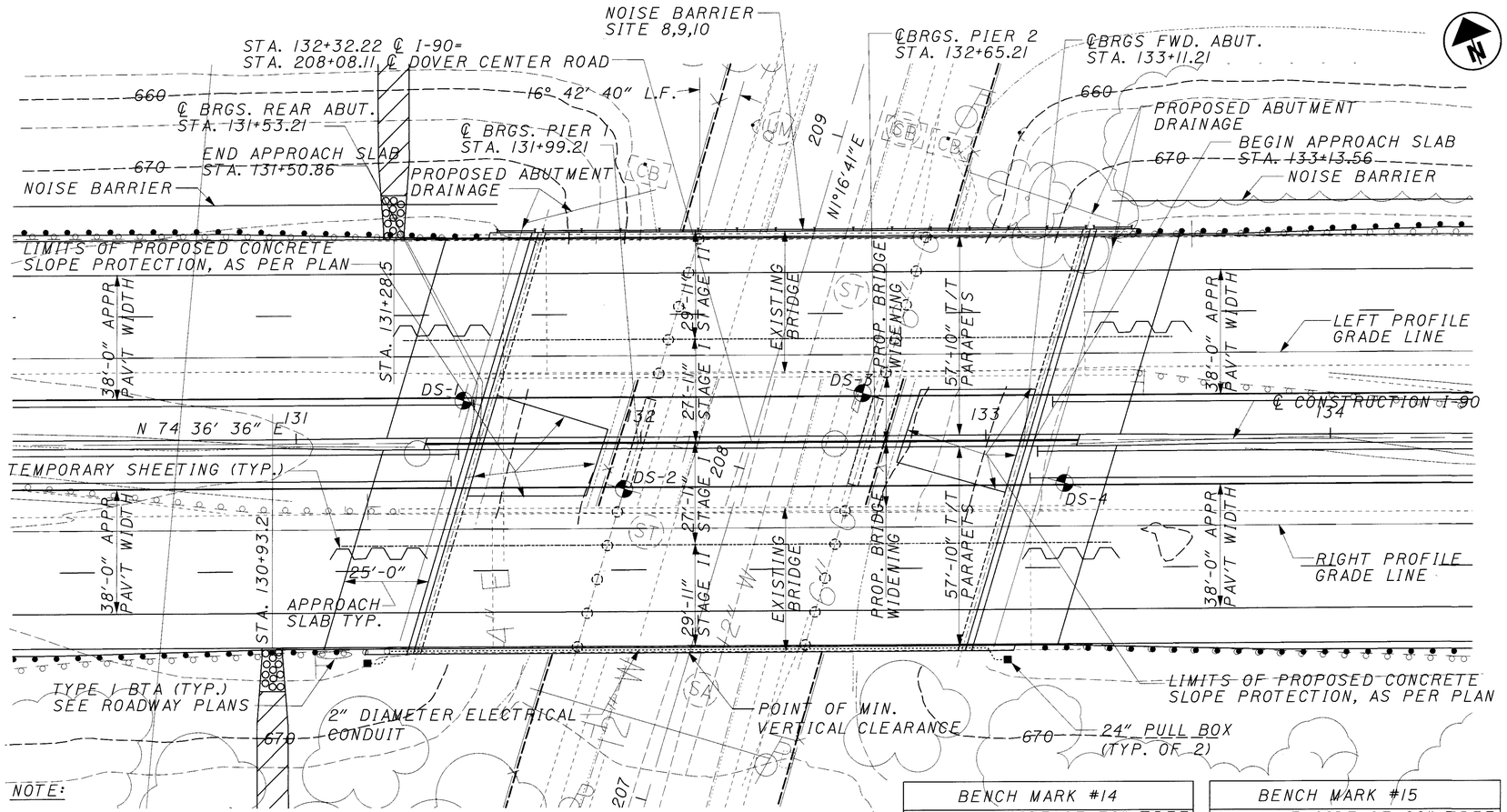

NOTE:

EARTHWORK LIMITS SHOWN ARE APPROXIMATE. ACTUAL SLOPES SHALL CONFORM TO PLAN CROSS SECTIONS.

PLAN

BENCH MARK #14	BENCH MARK #15
SS IN W SIDE OF 36" TREE STA. 133+12, 269' LT. ELEV. 658.075	SS IN E SIDE OF 22" TREE STA. 131+35, 2200' RT. ELEV. 670.675

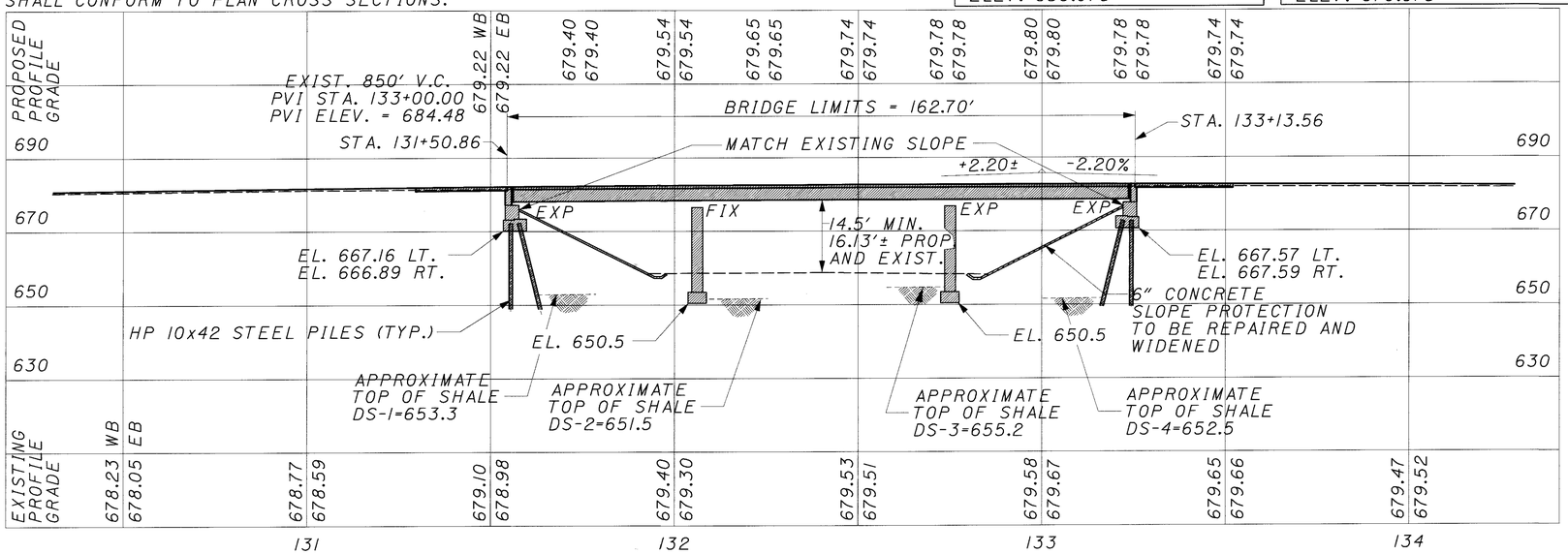

PROFILE ALONG GRADE LINE

LEGEND:
ABUT. = ABUTMENT
ACT. = ACTUAL
BRGS. = BEARINGS
EXIST. = EXISTING
FWD. = FORWARD
MIN. = MINIMUM
TYP. = TYPICAL

STATION OF FIRST GUARDRAIL POST ADJACENT TO BRIDGE		
ABUTMENT	LEFT	RIGHT
REAR	131+49.82	131+13.21
FORWARD	133+51.11	133+10.34

FOUNDATION DATA

ESTIMATED PILE PAY LENGTH:

REAR ABUTMENT	(HP10x42)	25 FEET
FORWARD ABUTMENT	(HP10x42)	25 FEET

TRAFFIC DATA

CURRENT ADT (1999).....60950
DESIGN YEAR ADT (2019).....72070
DESIGN YEAR ADTT (2019) 7207

EXISTING STRUCTURE

SFN: 1808087 & 1808095

TYPE: THREE SPAN CONTINUOUS STEEL COMPOSITE BEAM WITH REINFORCED CONCRETE DECK AND SUBSTRUCTURE

SPANS: 46-0"±; 66'-0"±; 46'-0"± c/c BRGS.

ROADWAY: 39'-0"± t/t PARAPETS

LOADING: CF 2000 (57)

WEARING SURFACE: 1¼" LMC

ALIGNMENT: TANGENT CROWN: 0.0156

APPROACH SLABS: 25' LONG (AS-1-81)

SKEW: 16° 42' 40"± L.F. DATE BUILT: 1971

PROPOSED STRUCTURE

TYPE: WIDENED THREE SPAN CONTINUOUS STEEL BEAM WITH COMPOSITE REINFORCED CONCRETE DECK AND SUBSTRUCTURE

SPANS: 46'-0"±; 66'-0"±; 46'-0"± c/c BRGS

ROADWAY: 57'-10" t/t PARAPETS

LOADING: HS-20-44, CASE I AND ALTERNATE MILITARY LOADING

WEARING SURFACE: 1" MONOLITHIC CONCRETE

ALIGNMENT: TANGENT CROWN: 0.0156

APPROACH SLABS: 25' LONG (AS-1-81)

SKEW: 16° 42' 40"± L.F.

SUPERELEVATION: NONE

LATITUDE: N 41°28'00" LONGITUDE: W 81°55'15"

BURGESS & NIPLE

DATE 12-29-99
REVIEWED MAR
STRUCTURE FILE NUMBER 1808087,1808095
DRAWN KK
REVISED
DESIGNED KK
CHECKED SCT

CUYAHOGA COUNTY
STA. 131+50.86 TO
STA. 133+13.56

SITE PLAN

BRIDGE NO. CUY-90-0249 L&R
OVER DOVER CENTER ROAD

CUY-90-0.00

17 MAR 2000
P:\PR22308\CADD\WSITEPLN.DGN

PROPOSAL NOTES

ITEM SPECIAL - SEALING OF CONCRETE SURFACES

STANDARD DRAWINGS:

REFERENCE SHALL BE MADE TO THE FOLLOWING STANDARD DRAWINGS:

AS-1-81	DATED 10-25-94
PCB-91	DATED 3-20-95
BR-1	DATED 12-15-94
EXJ-4-87	DATED 2-14-97
GSD-1-96	DATED 2-12-97
RB-1-55	DATED 2-2-59
SBR-1-99	DATED 01-12-99

AND SUPPLEMENTAL SPECIFICATIONS:

815	DATED 5-30-96
842	DATED 1-6-99
844	DATED 1-6-99
863	DATED 9-9-97
899	DATED 10-21-98
910	DATED 4-21-97

DESIGN SPECIFICATIONS:

THIS STRUCTURE CONFORMS TO "STANDARD SPECIFICATIONS FOR HIGHWAY BRIDGES" ADOPTED BY THE AMERICAN ASSOCIATION OF STATE HIGHWAY AND TRANSPORTATION OFFICIALS (AASHTO), 1996, INCLUDING THE 1997 AND 1998 INTERIM SPECIFICATIONS, AND THE ODOT BRIDGE DESIGN MANUAL.

DECK PROTECTION METHOD:

EPOXY COATED REINFORCING STEEL, 2½" CONCRETE COVER AND SEALING OF CONCRETE SURFACES.

MONOLITHIC WEARING SURFACE:

WEARING SURFACE IS ASSUMED, FOR DESIGN PURPOSES, TO BE 1 INCH THICK.

MAINTENANCE OF TRAFFIC:

TWO LANES OF TRAFFIC IN EACH DIRECTION WITH A MINIMUM HORIZONTAL WIDTH OF 11 FEET PER LANE SHALL BE MAINTAINED ON I-90 AT ALL TIMES. REFER TO THE ROADWAY PLANS FOR OTHER TRAFFIC REQUIREMENTS AND PAYMENT PROVISIONS.

FOR MAINTENANCE OF TRAFFIC DETAILS, SEE SHEET 9/30, 10/30, AND ROADWAY PLANS.

DESIGN DATA:

DESIGN LOADING: HS20-44, CASE I, AND ALTERNATE MILITARY LOADING
HIGH PERFORMANCE CONCRETE - COMPRESSIVE STRENGTH = 4500 PSI (SUPERSTRUCTURE)
HIGH PERFORMANCE CONCRETE - COMPRESSIVE STRENGTH = 4500 PSI (SUBSTRUCTURE)

REINFORCING STEEL: ASTM A615, A616, OR A617, GRADE 60
MINIMUM YIELD STRENGTH 60 000 PSI
STRUCTURAL STEEL: ASTM A709, GRADE 36

PROPOSED WORK:

IN GENERAL, THE PROPOSED WORK CONSISTS OF REMOVAL OF THE EXISTING BRIDGE DECKS, ABUTMENT BACKWALLS, APPROACH SLABS, ABUTMENT DRAINAGE, WINGWALLS, AND FAILED AREAS OF SLOPE PROTECTION AT THE ABUTMENTS. THE EXISTING SUBSTRUCTURE UNITS SHALL BE WIDENED TO ACCOMMODATE THE PROPOSED TYPICAL SECTION. CONSTRUCTION SHALL CONCLUDE WITH THE INSTALLATION OF NEW WINGWALLS, ABUTMENT DRAINAGE, BACKWALLS, STRIP SEAL EXPANSION JOINT, NEW END FRAMES, CONCRETE SLOPE PROTECTION, APPROACH SLABS, ADDITIONAL BEAMS, AND WIDENED BRIDGE DECK. IN ADDITION, SEAL CONCRETE SUBSTRUCTURE UNITS WITH EPOXY-URETHANE, SEAL NEW CONCRETE WITH EPOXY-URETHANE, REPAIR EXISTING CONCRETE SLOPE PROTECTION AND COMPLETE INCIDENTAL ITEMS OF WORK. TRAFFIC ON THE BRIDGE, AS WELL AS ON THE ROAD UNDER THE BRIDGE, MUST BE MAINTAINED THROUGHOUT CONSTRUCTION. NECESSITATING THE WORK BE COMPLETED IN STAGES. THE MAJOR ITEMS OF WORK REQUIRING STAGED CONSTRUCTION ARE DESCRIBED BELOW FOR INFORMATION. SOME OF THE PROJECT ITEMS OF WORK MAY BE PERFORMED AT THE CONTRACTOR'S OWN SCHEDULE WITHIN THE TIME FRAME. HOWEVER, ALL WORK MUST BE COORDINATED WITHIN MAINTENANCE OF TRAFFIC PLANS AND SAFETY REQUIREMENTS.

STAGE I EASTBOUND CONSTRUCTION SEQUENCE:

1. DIVERT TRAFFIC TO THE OUTSIDE LANE AND SHOULDER OF THE RIGHT BRIDGE AND INSTALL PORTABLE CONCRETE BARRIER.
2. SAWCUTAND REMOVE INSIDE PORTIONS OF THE RIGHT APPROACH SLABS AND BRIDGE DECKS, INCLUDING PARAPETS AND SCUPPERS. REMOVE ENOUGH MEDIAN RAILING FROM THE LEFT BRIDGE TO ALLOW ABUTMENT CONSTRUCTION.
3. INSTALL TEMPORARY SHEETING ON THE APPROCHES AS REQUIRED.
4. REMOVE INSIDE PORTIONS OF THE RIGHT ABUTMENTS, END CROSS-FRAMES AND EXPANSION JOINTS. REMOVE ENOUGH OF THE LEFT ABUTMENT TO ALLOW CONSTRUCTION OF THE WIDENING.
5. CONSTRUCT ABUTMENT AND PIER EXTENSIONS.
6. ERECT ADDITIONAL BEAMS FOR WIDENING.
7. CONSTRUCT INSIDE PORTIONS OF THE RIGHT BRIDGE DECK, BACKWALLS, ABUTMENTS, DRAINAGE, AND APPROACH SLAB.
8. RELOCATE PORTABLE CONCRETE BARRIERS ON TO THE NEW BRIDGE DECK AND APPROACH SLABS.

STAGE II EASTBOUND CONSTRUCTION SEQUENCE:

1. DIVERT TRAFFIC TO INSIDE PORTION OF THE RIGHT BRIDGE DECK.
2. REMOVE OUTSIDE PORTIONS OF RIGHT APPROACH SLABS AND BRIDGE DECKS, INCLUDING PARAPETS AND SCUPPERS.
3. INSTALL TEMPORARY SHEETING ON APPROCHES AS REQUIRED.
4. REMOVE OUTSIDE PORTIONS OF RIGHT ABUTMENT BACKWALLS AND WINGWALLS.
5. CONSTRUCT OUTSIDE WINGWALLS AND INSTALL REMAINDER OF NEW ABUTMENT DRAINAGE SYSTEM.
6. CONSTRUCT OUTSIDE PORTIONS OF THE RIGHT BRIDGE DECK AND APROACH SLAB.
7. REMOVE PORTABLE CONCRETE BARRIER AND RESUME NORMAL TRAFFIC.

STAGE I WESTBOUND CONSTRUCTION SEQUENCE:

1. DIVERT TRAFFIC TO THE OUTSIDE LANE AND SHOULDER OF THE LEFT BRIDGE AND INSTALL PORTABLE CONCRETE BARRIER.
2. SAWCUT AND REMOVE INSIDE PORTIONS OF THE LEFT APPROACH SLABS AND BRIDGE DECK, INCLUDING PARAPETS AND SCUPPERS.
3. INSTALL TEMPORARY SHEETING ON THE APPROACHES AS REQUIRED.
4. REMOVE INSIDE PORTIONS OF THE LEFT ABUTMENTS, END CROSS-FRAMES AND EXPANSION JOINTS.
5. CONSTRUCT ABUTMENT AND PIER EXTENSION
6. ERECT ADDITIONAL BEAMS FOR WIDENING
7. CONSTRUCT INSIDE PORTIONS OF BRIDGE DECK, BACKWALLS, DRAINAGE, AND APPROACH SLABS.
8. RELOCATE PORTABLE CONCRETE BARRIERS ON TO THE NEW BRIDGE DECK.

STAGE II WESTBOUND CONSTRUCTION SEQUENCE:

1. DIVERT TRAFFIC TO INSIDE PORTION OF THE LEFT BRIDGE DECK.
2. REMOVE OUTSIDE PORTIONS OF THE LEFT APPROACH SLAB AND BRIDGE DECK, INCLUDING PARAPETS AND SCUPPERS.
3. INSTALL TEMPORARY SHEETING ON APPROACHES AS REQUIRED.
4. REMOVE OUTSIDE PORTIONS OF THE LEFT ABUTMENT BACKWALLS AND WINGWALLS.
5. CONSTRUCT OUTSIDE WINGWALLS AND INSTALL REMAINDER OF NEW ABUTMENT DRAINAGE SYSTEM.
6. CONSTRUCT OUTSIDE PORTIONS OF THE LEFT BRIDGE DECK, BACKWALLS, BACKFILL, AND APPROACH SLABS.
7. REMOVE PORTABLE CONCRETE BARRIER AND RESUME NORMAL TRAFFIC.

EXISTING STRUCTURE VERIFICATION:

DETAILS AND DIMENSIONS SHOWN ON THESE PLANS PERTAINING TO THE EXISTING STRUCTURE HAVE BEEN OBTAINED FROM PLANS OF THE EXISTING STRUCTURE AND/OR FROM FIELD OBSERVATIONS AND MEASUREMENTS. CONSEQUENTLY, THEY ARE INDICATIVE OF THE EXISTING STRUCTURE AND THE PROPOSED WORK, BUT THEY SHALL BE CONSIDERED TENTATIVE AND APPROXIMATE. THE CONTRACTOR IS REFERRED TO CMS SECTIONS 102.05, 105.02, AND 863.07.

CONTRACT BID PRICES SHALL BE BASED UPON A RECOGNITION OF THE UNCERTAINTIES DESCRIBED ABOVE AND UPON A PREBID EXAMINATION OF THE EXISTING STRUCTURE BY THE CONTRACTOR. HOWEVER, ALL PROJECT WORK SHALL BY BASED UPON ACTUAL DETAILS AND DIMENSIONS WHICH HAVE BEEN VERIFIED BY THE CONTRACTOR IN THE FIELD.

EXISTING STRUCTURE PLANS:

THE ORIGINAL DESIGN AND UPGRADING PLANS MAY BE EXAMINED BY PROSPECTIVE BIDDERS AT THE DEPARTMENT OF TRANSPORTATION, DISTRICT 12 OFFICE, 5500 TRANSPORTATION BOULEVARD, GARFIELD HEIGHTS, OHIO. THE CONTRACTOR SHALL BE FAMILIAR WITH THE DRAWINGS.

ITEM 202 - PORTIONS OF STRUCTURE REMOVED, AS PER PLAN:

DESCRIPTION: THIS WORK SHALL CONSIST OF THE REMOVAL OF CONCRETE DECKS INCLUDING PARAPETS, DECK JOINTS, SCUPPERS AND OTHER APPURTENCES FROM STEEL SUPPORTING SYSTEMS (BEAMS, GIRDERS, CROSS FRAMES, ETC.) THIS ITEM SHALL ALSO INCLUDE THE ELEMENTS INDICATED IN THE PLANS AND GENERAL NOTES AND THAT ARE NOT SEPARATELY LISTED FOR PAYMENT. ITEMS TO BE REMOVED INCLUDE ALL EXISTING MATERIALS BEING REPLACED BY NEW CONSTRUCTION AND MISCELLANEOUS ITEMS THAT ARE NOT SHOWN TO BE INCORPORATED INTO THE FINAL CONSTRUCTION AND ARE DIRECTED TO BE REMOVED BY THE ENGINEER. CARE SHALL BE TAKEN DURING DECK REMOVALS TO PROTECT PORTIONS OF SUCH SYSTEMS THAT ARE TO BE SALVAGED AND INCORPORATED INTO THE PROPOSED STRUCTURE. IN THIS RESPECT, THE USE OF EXPLOSIVES, HEADACHE BALLS AND/OR HOE-RAMS WILL NOT BE PERMITTED. THE METHOD OF REMOVAL AND THE WEIGHT OF HAMMER SHALL BE APPROVED BY THE ENGINEER. ALL WORK SHALL BE DONE IN A MANNER THAT WILL NOT CUT, ELONGATE OR DAMAGE THE EXISTING REINFORCING STEEL TO BE PRESERVED. CHIPPING HAMMERS SHALL NOT BE HEAVIER THAN THE NOMINAL 90-POUND CLASS. PNEUMATIC HAMMERS SHALL NOT BE PLACED IN DIRECT CONTACT WITH REINFORCING STEEL THAT IS TO BE RETAINED IN THE REBUILT STRUCTURE.

17 MAR 2000
p:\pr-22308\cadd\wnotes1.dgn

PROTECTION OF TRAFFIC: PRIOR TO DEMOLITION OF ANY PORTIONS FOR THE EXISTING SUPERSTRUCTURE OR SUBSTRUCTURE, THE CONTRACTOR SHALL SUBMIT HIS PLANS FOR THE PROTECTION OF TRAFFIC (VEHICULAR, PEDESTRIAN) ON AND/OR UNDER THE STRUCTURE TO THE DIRECTOR FOR APPROVAL. THESE PLANS SHALL INCLUDE PROVISIONS FOR ANY DEVICES AND STRUCTURES NECESSARY TO ENSURE SUCH PROTECTION. THE CONTRACTOR SHALL DETERMINE THEIR ADEQUACY AND NOTE SUCH ON THE PLANS OR IN THE PROPOSAL SHALL BE MAINTAINED AT ALL TIMES EXCEPT AS OTHERWISE APPROVED BY THE DIRECTOR.

PROTECTION OF STEEL SUPPORT SYSTEMS: BEFORE DECK SLAB CUTTING IS PERMITTED, THE OUTLINE OF EXISTING STEEL MEMBERS IN CONTACT WITH THE BOTTOM OF THE DECK SHALL BE DRAWN ON THE SURFACE OF DECK, SMALL DIAMETER PILOT HOLES SHALL BY DRILLED 2 INCHES OUTSIDE THESE LINES TO CONFIRM THE LOCATION OF FLANGE EDGES. DECK CUTS OVER OR WITHIN 2 INCHES OF FLANGE EDGES SHALL NOT EXTEND LOWER THAN THE BOTTOM LAYER OF DECK SLAB REINFORCING STEEL. CUTS MADE OUTSIDE 2 INCHES OF FLANGE EDGES MAY EXTEND THE FULL DEPTH OF THE DECK. DURING CUTTING OF THE DECK SLAB, CARE SHALL BE TAKEN NOT TO DAMAGE STEEL MEMEBERS THAT ARE TO BE INCORPORATED INTO THE PROPOSED STRUCTURE.

DECK REMOVALS: DUE TO THE POSSIBLE PRESENCE OF WELDED ATTACHMENTS TO EXISTING STRUCTURAL STEEL (FINISHING MACHINE, SCUPPER, AND FORM SUPPORTS, ETC.), CARE SHALL BE TAKEN DURING DECK REMOVAL TO AVOID DAMAGING STRINGERS WHICH ARE TO REMAIN. STRINGERS DAMAGED BY THE CONTRACTOR'S REMOVAL OPERATIONS SHALL, AT NO COST TO THE PROJECT, BE REPLACED OR REPAIRED. PROPOSED REPAIRS, DEVELOPED BY A REGISTERED PROFESSIONAL ENGINEER, SHALL BE SUBMITTED IN WRITING FOR REVIEW AND APPROVAL BY THE DIRECTOR.

REMOVAL METHODS: CONCRETE MAY BE REMOVED BY CUTTING AND BY MEANS OF HAND OPERATED PNEMATIC HAMMERS EMPLOYING POINTED OR BLUNTED CHISEL TYPE TOOLS. FOR REMOVALS ABOVE STEEL MEMBERS, A HAMMER HEAVIER THAN 35 POUNDS BUT NOT TO EXCEED 90 POUNDS MAY BE USED AT THE APPROVAL OF THE ENGINEER, TO ENSURE ADEQUATE DEPTH CONTROL AND TO PREVENT NICKING OR GOUGING THE PRIMARY STEEL MEMBERS.

EXTRANEOUS MEMBERS: EXISTING EXTRANEOUS MEMBERS (I.E., FINISHING MACHINE AND FORM SUPPORTS, ETC., AND THE SUPPPORT FOR SCUPPERS AND BULB ANGLES WHICH ARE TO BE REMOVED) ATTACHED BY WELDED CONNECTIONS TO PORTIONS OF THE TOP FLANGES DESIGNATED "TENSION" SHALL BE REMOVED AND THE FLANGE SURFACES GROUND SMOOTH. GRINDING SHALL BE CAREFULLY DONE AND PARALLEL TO THE FLANGES.

LOADING LIMITATIONS: NO PART OF THE STRUCTURE SHALL BE SUBJECTED TO UNIT STRESSES THAT EXCEED BY MORE THAN 136.5% OF THE ALLOWABLE UNIT STRESSES GIVEN IN THE AMERICAN ASSOCIATION OF STATE HIGHWAY AND TRANSPORTATION OFFICIALS (AASHTO) STANDARD SPECIFICATION FOR HIGHWAY BRIDGES DUE EITHER TO DEMOLITION, ERECTION OR CONSTRUCTION METHODS, OR TO THE USE OR MOVEMENT OF DEMOLITION OR ERECTION EQUIPMENT ON OR ACROSS THE STRUCTURE. STRUCTURAL ANALYSIS COMPUTATIONS, BY AN ENGINEER REGISTERED BY THE STATE OF OHIO, SHOWING THE ALLOWABLE STRESSES AND THE MAXIMUM STRESSES PRODUCED BY THE CONTRACTOR'S METHODS OR EQUIPMENT SHALL BE SUBMITTED TO THE DIRECTOR FOR REVIEW AND APPROVAL AT LEAST 2 WEEKS PRIOR TO THE START OF THE WORK.

SUBSTRUCTURE CONCRETE REMOVAL: SHALL BE BY MEANS OF APPROVED PNEUMATIC HAMMERS EMPLOYING POINTED AND BLUNT CHISEL TOOLS. HYDRAULIC HOE-RAM TYPE HAMMERS WILL NOT BE PERMITTED. THE WEIGHT OF THE HAMMER SHALL NOT BE MORE THAN 35 POUNDS FOR REMOVAL WITHIN 18 INCHES OF PORTIONS TO BE PRESERVED. OUTSIDE THE 18 INCH LIMIT, A HAMMER HEAVIER THAN 35 POUNDS, BUT NOT TO EXCEED 90 POUNDS, MAY BE USED AT THE APPROVAL OF THE ENGINEER. PNEUMATIC HAMMERS SHALL NOT BE PLACED IN DIRECT CONTACT WITH REINFORCING STEEL THAT IS TO BE RETAINED IN THE REBUILT STRUCTURE.

PAYMENT: THIS WORK SHALL BE PAID FOR AT THE CONTRACT LUMP SUM PRICE BID, WHICH PRICE AND PAYMENT SHALL BE FULL COMPENSATION FOR ALL LABOR, EQUIPMENT, MATERIALS, AND INCIDENTALS NECESSARY TO COMPLETE THE WORK IN CONFORMANCE WITH THESE REQUIREMENTS, WITH PERTINENT PROVISIONS OF 202, AND TO THE SATISFACTION OF THE ENGINEER.

INSPECTION OF STRUCTURAL STEEL:

THE ENGINEER SHALL BE GIVEN THE OPPORTUNITY TO VISUALLY INSPECT ALL EXISTING BUTT-WELDED TOP FLANGE SPLICES TO ENSURE THAT THEY ARE FREE OF DEFECTS. THE DECK SLAB HAUNCH FORMS IMMEDIATELY ADJACENT TO SUCH WELDS SHALL NOT BE ERECTED UNTIL AFTER THE ENGINEER HAS COMPLETED THIS INSPECTION. THIS INSPECTION SHALL NOT TAKE PLACE UNTIL AFTER THE TOP FLANGES ARE CLEANED AS SPECIFIED IN SS 842.08, BUT IT SHALL BE DONE BEFORE THE DECK SLAB REINFORCEMENT IS INSTALLED. THE COST ASSOCIATED WITH THIS INSPECTION SHALL BE INCLUDED WITH SUPERSTRUCTURE CONCRETE, FOR PAYMENT.

PILES DRIVEN TO BEDROCK:

PILES SHALL BE DRIVEN TO REFUSAL ON BEDROCK. REFUSAL SHALL BE CONSIDERED AS OBTAINED BY PENETRATING SOFT BEDROCK FOR SEVERAL INCHES WITH A MINIMUM RESISTANCE OF 20 BLOWS PER INCH OR REFUSAL SHALL BY CONSIDERED AS OBTAINED AFTER THE PILE HAS CONTACTED HARD BEDROCK AND THE PILE HAS THEN RECEIVED AT LEAST 20 BLOWS.

THE ULTIMATE BEARING VALUE IS 81 KIPS PER PILE FOR THE HP10x42 ABUTMENT PILES.

ABUTMENT PILES:
16 PILES 25 FEET LONG, ESTIMATED LENGTH
16 PILES OF ORDER LENGTH 25 FEET LONG
8 SPLICES

FOUNDATION BEARING PRESSURE:

PIER FOOTINGS, AS DESIGNED, PRODUCE A MAXIMUM BEARING PRESSURE OF 4.67 TONS PER SQUARE FOOT. THE ALLOWABLE BEARING PRESSURE IS 5 TONS PER SQUARE FOOT.

FOOTINGS SHALL EXTEND A MINIMUM OF 3 INCHES INTO BEDROCK OR TO THE ELEVATION SHOWN, WHICHEVER IS LOWER.

REPLACEMENT OF EXISTING REINFORCING STEEL:

ANY EXISTING REINFORCING BARS WHICH ARE TO BE INCORPORATED INTO THE NEW WORK AND ARE MADE UNUSABLE BY THE CONTRACTOR'S CONCRETE REMOVAL OPERATIONS SHALL BE REPLACED WITH NEW STEEL AT HIS COST. ANY EXISTING REINFORCING BARS DEEMED BY THE ENGINEER TO BE UNUSABLE BECAUSE OF CORROSION SHALL BE REPLACED WITH NEW EPOXY COATED REINFORCING STEEL AS DIRECTED BY THE ENGINEER. THIS SHALL BE INCLUDED UNDER ITEM 842 - CONCRETE, MISC.: REPLACEMENT OF DAMAGED REINFORCING STEEL FOR PAYMENT. ANY DRILLING AND GROUTING OF DOWEL HOLES REQUIRED FOR REPLACEMENT OF CORRODED REINFORCING STEEL SHALL BE INCLUDED UNDER ITEM 842 - CONCRETE, MISC.: DRILLING AND GROUTING DOWEL HOLES FOR PAYMENT.

ITEM 519 - PATCHING CONCRETE STRUCTURES, AS PER PLAN:

ALL SURFACES TO BE PATCHED AND THE EXPOSED REINFORCING STEEL WITHIN, SHALL BE THOROUGHLY CLEANED BY ABRASIVE BLASTING PRIOR TO THE CLEANING SPECIFIED BY 519.04 AND 520.05. CLEANING SHALL PRECEDE APPLICATION OF THE PATCHING MATERIAL OR ERECTION OF THE FORMS BY NOT MORE THAN 24 HOURS. WELDED WIRE MESH SHALL CONFORM TO 711.02 AND BE INCLUDED WITH ITEM 519, PATCHING CONCRETE STRUCTURES, AS PER PLAN FOR PAYMENT.

THIS ITEM SHALL INCLUDE PATCHING OF CONCRETE STRUCTURES IN ACCORDANCE WITH ITEM 519 OF THE CMS AND SHALL ALSO INCLUDE ALL WORK NECESSARY TO EXCAVATE AND SUBSEQUENTLY BACKFILL EMBANKMENT AREAS ADJACENT TO STRUCTURES WITH APPARENT CONCRETE DETERIORATION AT THE GROUND SURFACE. (SEE PLANS FOR LIMITS.)

ITEM SPECIAL, SEALING OF CONCRETE SURFACES (EPOXY-URETHANE):

THE COLOR OF THE URETHANE TOP COAT SHALL BE FEDERAL COLOR STANDARD NO. 595-20219, COCOA.

REINFORCING BAR SPLICES:

REINFORCING BAR SPLICE LENGTHS SHALL CONFORM TO THE MINIMUM LENGTHS SPECIFIED BY 509.08 OF THE CMS UNLESS OTHERWISE NOTED ON THE PLANS.

MECHANICAL CONNECTORS FOR REINFORCING STEEL:

AN APPROVED TYPE OF MECHANICAL CONNECTOR FOR REINFORCING BARS SHALL BE PROVIDED WHERE REQUIRED. INSTALLATION OF CONNECTORS SHALL CONFORM WITH MANUFACTURER'S RECOMMENDED PROCEDURES. IF A DOWEL BAR SPLICE TYPE OF CONNECTOR IS FURNISHED, THE MINIMUM DOWEL BAR LENGTH TO BE FURNISHED WITH THE CONNECTOR SHALL BE AS SHOWN ON THE PLAN.

CONNECTORS AND DOWEL BARS SHALL BE EPOXY COATED. COATING FOR BOTH THE CONNECTORS AND BARS SHALL CONFORM TO THE SAME SPECIFICATIONS. COATINGS WHICH HAVE BEEN DAMAGED OR WHICH OTHERWISE DO NOT MEET SPECIFICATIONS WITH RESPECT TO COLOR, CONTINUITY, AND UNIFORMITY, MAY BE REPAIRED AS DIRECTED BY THE ENGINEER OR THEY SHALL BE REPLACED WITH MATERIAL WHICH MEETS THE SPECIFICATIONS.

CONNECTOR AND DOWEL BAR EXTENSIONS SHALL CONFORM WITH ITEM 509. THE COST OF FURNISHING THE CONNECTORS AND EXTENSIONS SHALL BE INCLUDED WITH THE APPROPRIATE CONCRETE ITEM FOR PAYMENT.

17 MAR 2000
pw:\pr22308\cadd\wnotes2.dgn

BURGESS & NIPLE

DESIGNED	DRAWN	REVIEWED	DATE
SCT/JAA	SCT/JAA	MAR	12-27-99
CHECKED	REVISED	STRUCTURE FILE NUMBER	
JAA/SCT		1808087,1808095	

STRUCTURE NOTES 2 OF 11
BRIDGE NO. CUY-90-0249 L&R
OVER DOVER CENTER ROAD

CUY-90-0.00

ITEM 518 - POROUS BACKFILL WITH FILTER FABRIC

GEOTEXTILE FABRIC SHALL BE PLACED BETWEEN THE POROUS BACKFILL AND THE APPROACH FILL. IT SHALL TURN UNDER THE BOTTOM OF THE POROUS BACKFILL AND RETURN UP 6 INCHES AGAINST THE BACK FACE OF THE ABUTMENT. THE FABRIC SHALL CONFORM TO 712.09 TYPE A AND BE INCLUDED WITH POROUS BACKFILL FOR PAYMENT.

SLOPE PROTECTION, MISC.:REPLACEMENT OF EXISTING SLOPE PROTECTION

AREAS OF EXISTING CONCRETE PROTECTION REQUIRING REPLACEMENT AT THE TIME OF CONSTRUCTION SHALL BE REPLACED AS DIRECTED BY THE ENGINEER. REMOVAL OF EXISITING CONCRETE SLOPE PROTECTION SHALL BE INCLUDED WITH ITEM 202 FOR PAYMENT.

SECTIONS OF SLOPE PROTECTION TO BE REPLACED SHALL BE SAWCUT AT THE JOINTS IN ORDER TO PROVIDE A STRAIGHT EDGE AT THE REMAINING PORTIONS OF SLOPE PROTECTION. THE BASE SHALL BE FILLED IN ORDER TO PROVIDE A 6" UNIFORM THICKNESS OF CLASS C CONCRETE.

ITEM 503 - COFFERDAMS, CRIBS AND SHEETING, AS PER PLAN:

TEMPORARY SHEETING SHALL BE USED WHERE NECESSARY TO ACCOMPLISH THE PROPOSED CONSTRUCTION IN STAGES. THE DESIGN OF THE TEMPORARY SHEETING SHALL BE THE RESPONSIBILITY OF THE CONTRACTOR, BE DESIGNED BY A REGISTERED PROFESSIONAL ENGINEER, AND CONFORM WITH 501.05. FOR APPROVAL, FIVE COPIES OF THE DRAWINGS SHALL BE SUBMITTED TO THE DIRECTOR. CONSTRUCTION OF THE SHEETING SHALL NOT BEGIN UNTIL AFTER WRITTEN APPROVAL HAS BEEN RECEIVED FROM THE DIRECTOR. PORTIONS OF THE TEMPORARY SHEETING COMPOSED OF STEEL OR CONCRETE MAY BE LEFT IN PLACE AT THE DISCRETION OF THE ENGINEER. PORTIONS COMPOSED OF OTHER MATERIALS SHALL BE REMOVED PRIOR TO COMPLETION OF THE WORK.

PRECOMPRESSED BITUMEN IMPREGNATED FOAM JOINT SEAL:

DESCRIPTION: THIS WORK SHALL CONSIST OF SEALING JOINTS USING BITUMEN IMPREGNATED FOAM IN ACCORDANCE WITH THESE SPECIFICATIONS, IN REASONABLY CLOSE CONFORMITY WITH THE PLANS AND MANUFACTURER'S SPECIFICATIONS AND RECOMMENDATIONS AND AS DIRECTED BY THE ENGINEER.

MATERIAL: THE MATERIAL SHALL BE A PRECOMPRESSED BITUMEN IMPREGNATED FOAM JOINT SEALANT SUCH AS EMSEAL PCSA, PERMABAND ROYSTON UNIBAND 8100 OR AN APPROVED EQUAL. EMSEAL U.S.A., IS LOCATED AT 344 MILL ROAD IN STAMFORD, CT. 06903 AND HAS A TELEPHONE NUMBER OF (203) 322-3828. PERMABAND IS AVAILABLE FROM PERMAQUIK (CANADA) LTD. WHICH IS LOCATED AT 3043 UNIVERSAL DRIVE IN MISSISSAUGA, ONTARIO L4X2E2; TELEPHONE (416) 625-9444, ROYSTON IS LOCATED AT 128 FIRST ST. PITTSBURGH, PA. 15238; TELEPHONE (412) 828-1500. ALL MATERIAL SHALL BE STORED AND INCORPORATED IN THE WORK AS RECOMMENDED BY THE MANUFACTURER.

SURFACE PREPERATION: THE FACES TO WHICH THE SEAL MUST ADHERE SHALL BE BLASTED CLEAN AND BE FREE OF FOREIGN MATERIAL SUCH AS DIRT, DUST, GREASE, FORM OIL, RELEASE AGENTS AND ANY OTHER MATERIAL DETRIMENTAL TO ADHESION OF THE SEALANT. RESTRICTIONS: BLASTING ABRASIVE CONTAINING MORE THAN 1% FREE SILICA SHALL NOT BE ALLOWED.

APPLICATION: JOINT SEALS SHALL BE INSTALLED ONLY WHEN THE SURFACES ARE DRY AND THE SURFACE TEMPERATURE IS ABOVE 50 DEGREES FAHRENHEIT. BOTH CONCRETE SURFACES ADJACENT TO THE JOINT SEAL SHALL BE PRIMED AS RECOMMENDED BY THE MANUFACTURER. THE FOAM SEAL SHALL BE REMOVED FROM THE PACKAGING AND ITS NARROW EDGE INSERTED INTO THE JOINT OPENING. THE DEPTH FACE WITH THE SELF-ADHESIVE BACKING SHALL BE ACCELERATED PRESSED AGAINST ONE SIDE OF THE JOINT SO THAT FOAM IS HELD IN PLACE WHILE IT RECOVERS. AT TEMPERATURES ABOVE 68 DEGREES FAHRENHEIT THE MATERIAL WILL RECOVER IN A FEW HOURS. AT TEMPERATURES BELOW 68 DEGREES FAHRENHEIT THE RECOVERY SHALL BE ACCELERATED BY HEATING THE MATERIAL WITH AN OPEN FLAME, GAS BURNER, INFRA-RED LAMP OR HOT AIR BLOWER. A CONTINUOUS LENGTH OF JOINT SEAL SHALL BE ACHIEVED BY JOINING INDIVIDUAL ENDS. ENDS MUST BE PUSHED WELL PAST ONE ANOTHER. THE SEAL SHALL NOT BE PULLED OR STRECHED SO THAT GAPS BETWEEN SUCCESSIVE LENGTHS ARE PREVENTED.

PAYMENT FOR THIS MATERIAL SHALL BE INCLUDED UNDER ITEM 611, APPROACH SLAB, AS PER PLAN.

POURED POLYURETHANE JOINT SEAL:

DESCRIPTION: THIS WORK SHALL CONSIST OF SEALING JOINTS AT THE WINGWALL AND APPROACH SLAB INTERFACE WITH POURED POLYURETHANE JOINT SEAL IN ACCORDANCE WITH THESE SPECIFICATIONS, IN REASONABLE CLOSE CONFORMITY WITH THE PLANS AND MANUFACTURER'S SPECIFICATIONS AND RECOMMENDATIONS AND AS DIRECTED BY THE ENGINEER

MATERIAL: THE MATERIAL FOR THIS ITEM IS A TWO-PART, COLD APPLIED CHEMICALLY CURING SELF-LEVELING, ELASTOMERIC, POLYURETHANE JOINT SEALANT MEETING THE REQUIREMENTS OF FEDERAL SPECIFICATION TT-S-00227E AND ASTM C-920. ALL MATERIAL SHALL BE STORED AND INCORPORATED IN THE WORK AS SPECIFIED BY THE MANUFACTURER.

APPLICATION: POLYURETHANE JOINT SEAL SHALL BE POURED OVER THE FULL LENGTH OF THE PRECOMPRESSED BITUMEN IMPREGNATED FOAM PREVIOUSLY INSTALLED IN THE JOINT AS DETAILED IN THE PLANS AND SHALL BE APPLIED ONLY WHEN THE CONCRETE IS DRY AND ITS TEMPERATURE IS ABOVE 50 DEGREES FAHRENHEIT. THE INSTALLED AND CURED MATERIAL SHALL BE THE DEPTH AS SHOWN IN THE PLANS AND SHALL BE BONDED TO THE CONCRETE SIDES OF THE JOINT. ANY UNBONDED SECTION SHALL BE REMOVED AND REPLACED AT THE CONTRACTOR'S EXPENSE. DAMS AS REQUIRED TO CONTAIN THE SEALER SHALL BE INCIDENTAL TO THIS WORK.

PAYMENT FOR THIS MATERIAL SHALL BE INCLUDED UNER ITEM 611, APPROACH SLAB, AS PER PLAN.

ITEM 503, UNCLASSIFIED EXCAVATION, AS PER PLAN

UNCLASSIFIED EXCAVATION SHALL BE IN ACCORDANCE WITH ITEM 503 EXCEPT TAHT THE BACKFILL MATERIAL BEHIND THE ABUTMENTS SHALL BE C.M.S. 304 MATERIAL PACKED IN 6 INCH LIFTS.

ITEM 514, FIELD PAINTING MISC.: REPAIRING DAMAGED PAINT

THIS ITEM SHALL CONSIST OF PREPARING AND COATING THE FOLLOWING AREAS OF EXISTING STEEL:

1) ANY AREA WHERE DRILLING, GRINDING, OR WELDING OCCURED.
2) AREAS THAT WERE ABRASIVE BLASTED.
3) ANY AREAS DAMAGED BY THE CONTRACTOR'S OPERATIONS.

SURFACE PREPARATION SHALL CONSIST OF ABRASIVE BLASTING THE AREA TO BE COATED TO AN SA 2½ NEAR-WHITE CONDITION. BLASTING ABRASIVES CONTAINING MORE THAN 1% FREE SILICA SHALL NOT BE ALLOWED. THESE AREAS SHALL BE COATED THE SAME DAY THAT THEY ARE BLASTED.

THE PREPARED AREAS SHALL BE COATED WITH ONE COAT OF A HIGH SOLIDS EPOXY AT LEAST 5 MILS THICK. THE HIGH SOLIDS EPOXY SHALL BE APPLIED BY BRUSH. THE COLOR OF THE HIGH SOLIDS EPOXY SHALL CLOSELY MATCH THE COLOR OF THE EXISTING COATING.

THE HIGH SOLIDS EPOXY SHALL BE ONE OF THE FOLLOWING PRODUCTS:

1) AMERON AMERLOCK 400
2) VALSPAR HIGH SOLIDS EPOXY 76 SERIES
3) TNEMEC CHEMBUILD SERIES 135
4) SHERWIN WILLIAMS - EPOXY-MASTIC COATING

COST FOR FURNISHING ALL MATERIALS, LABOR, AND EQUIPMENT NECESSARY TO COMPLETE THIS ITEM SHALL BE INCLUDED IN THE LUMP SUM BID PRICE FOR THIS ITEM:

ITEM	UNIT	DESCRIPTION
514	LUMP SUM	FIELD PAINTING MISC.: REPAIRING DAMAGED PAINT AREAS

17 MAR 2000
p:\br-2230R\cadd\wnotes3.dgn

BURGESS & NIPLE

DESIGNED	DRAWN	REVIEWED	DATE
SCT/JAA	SCT/JAA	MAR	12-22-99
CHECKED	REVISED	STRUCTURE FILE NUMBER	
JAA/SCT		1808087,1808095	

STRUCTURE NOTES 3 OF 11
BRIDGE NO. CUY-90-0249 L&R
OVER DOVER CENTER ROAD

CUY-90-0.00

ITEM 844 HIGH PERFORMANCE CONCRETE, SUPERSTRUCTURE, (DECK) AS PER PLAN

ITEM 844 HIGH PERFORMANCE CONCRETE, SUPERSTRUCTURE, (PARAPET) AS PER PLAN

ITEM 844 HIGH PERFORMANCE CONCRETE, SUBSTRUCTURE, AS PER PLAN

THE PROVISIONS OF 844 SHALL APPLY EXCEPT AS NOTED BELOW.

SLIPFORMING:
THE CONTRACTOR IS ALLOWED THE OPTION OF SLIPFORMING BRIDGE PARAPETS OVER NON TRAVELED WAYS. A MINIMUM OF 3 DAYS AFTER PLACING THE TEST SECTION THE CONTRACTOR SHALL CORE THE TEST SECTION (A MINIMUM OF 3 CORES) AT LOCATIONS AS DIRECTED BY THE ENGINEER. APPROVAL TO SLIPFORM SHALL NOT BE GRANTED UNTIL AFTER THE CORING AND AFTER A SUCCESSFUL SLIPFORMING RESULT IS OBTAINED. IN ADDITION TO THE REQUIREMENTS OF THE LAST PARAGRAPH OF 844.031 THE ENGINEER WILL INSPECT THE SLIPFORMED SURFACE FOR HORIZONTAL CRACKING 6 MONTHS AFTER COMPLETION OF THE SLIPFORMING OPERATION. ANY ADDITIONAL CRACKS FOUND SHALL BE REPAIRED AS PER THE SPECIFICATIONS AT NO ADDITIONAL COST TO THE STATE. IN ADDITION, ALL ANCHOR BOLTS FOR FENCE POSTS SHALL BE CAST IN PLACE.

SLIPFORMING SHALL NOT BE PERFORMED DIRECTLY OVER AREAS WHERE THERE IS OR WILL BE VEHICULAR OR PEDESTRIAN TRAFFIC. AT THESE LOCATIONS, THE PARAPETS SHALL BE FORMED AND THE FOLLOWING REQUIREMENTS FOLLOWED.

THE MINIMUM CONCRETE SLUMP DURING PLACEMENT OF ALL CONCRETE PARAPETS SHALL BE 6 INCHES. THE MAXIMUM SLUMP ALLOWED DURING PLACEMENT IS 8 INCHES.

FORMS SHALL NOT BE REMOVED UNTIL AT LEAST 2 HOURS AFTER THE FINAL SET. DETERMINATION OF THE FINAL SET SHALL BE AS PER ASTM C266 (GILLMORE NEEDLE). TESTING SHALL BE PERFORMED BY THE CONTRACTOR AT NO COST TO THE STATE.

ANCHOR BOLTS FOR FENCE POSTS SHALL BE CAST IN PLACE.

THIS ITEM SHALL INCLUDE THE DRILLING OF HOLES PER CMS 510 INTO CONCRETE OR MASONRY AND THE FURNISHING AND PLACING OF GROUT INTO HOLES. NON-SHRINKING EPOXY GROUT SHALL BE USED IN ACCORDANCE WITH CMS 705.20. ANCHORING SHALL CONFORM TO CMS 705.20. PAYMENT SHALL BE INCLUDED WITH THIS ITEM. THE FURNISHING AND PLACEMENT OF STEEL FOR DOWELS IS ALSO INCLUDED WITH THIS ITEM

THE CONTRACTOR SHALL CONSTRUCT 1½ INCHES DEEP AND ¼ INCH WIDE CONTROL JOINTS SPACED AT A MINIMUM OF 6 FEET AND A MAXIMUM OF 8 FEET ON CENTER. THE CONTROL JOINTS SHALL BE MADE IN THE COMPLETE CIRCUMFERENCE OF THE PARAPET, STARTING AND ENDING AT THE ELEVATION OF THE TOP OF THE CONCRETE DECK (SEE DETAILS BELOW). THE CONTRACTOR MAY EITHER FORM THE CONTROL JOINTS IN WITH FORM LINERS, OR, WITHIN 24 HOURS OF PLACEMENT, SAW CUT THE CONTROL JOINTS IN WITH THE USE OF AN EDGE GUIDE, FENCE, OR JIG WHICH IS REQUIRED TO ENSURE THAT THE CUT JOINT IS STRAIGHT, TRUE, AND ALIGNED ON ALL FACES OF THE PARAPET. THE ENTIRE LENGTH OF EACH CONTROL JOINT SHALL BE SEALED TO A MINIMUM DEPTH OF 1½ INCHES WITH A CAULKING MATERIAL CONFORMING TO FEDERAL SPECIFICATION, TT-S-00227E.

MIX OPTIONS:
ALL DECK CONCRETE AND PARAPET CONCRETE SHALL BE MIX 4, AS PER PLAN. ALL OTHER CONCRETE SHALL BE MIX 4, AS PER PLAN, OR MIX 2 CONCRETE. THE FOLLOWING PROPORTIONS WILL USED AS A STARTING MIX DESIGN.

CONCRETE TABLE:
QUANTITIES PER CUBIC YARD
AGGREGATES (SSD)

MIX 4, AS PER PLAN (GGBF SLAG + MICROSILICA)

	GRAVEL	LIMESTONE	SLAG
FINE AGGREGATE (LB)	1245	1245	1246
#8 COARSE AGGREGATE (LB)	360	360	315
#57 COARSE AGGREGATE (LB)	1315	1335	1155
TOTAL (LB)	2920	2940	2716
CEMENT CONTENT (LB)	400	400	400
GGBF SLAG (LB)	170	170	170
MICROSILICA (LB)	30	30	30
WATER TO CEMENTITIOUS RATIO MAX.	0.42	0.42	0.42
AIR CONTENT, +/-2%	7%	7%	7%

THE WEIGHTS SPECIFIED IN THE CONCRETE TABLE WERE CALCULATED FOR MATERIALS OF THE FOLLOWING BULK SPECIFIC GRAVITIES (SSD): NATURAL SAND AND GRAVEL 2.62, LIMESTONE SAND 2.68, LIMESTONE 2.65, SLAG 2.30, FLY ASH 2.65, GGBF SLAG 2.90, MICROSILICA SOLID 2.20, AND PORTLAND CEMENT 3.15. FOR AGGREGATES OF SPECIFIC GRAVITIES DIFFERING MORE THAN PLUS OR MINUS 0.02 FROM THESE, THE WEIGHTS IN THE TABLE WILL BE CORRECTED.

DECK TEXTURING:
IN LIEU OF THE REQUIREMENTS OF SS 842 OR SS 844, CONCRETE DECK SLABS SHALL BE FINISHED IN ACCORDANCE WITH 451.09 AND 451.12 EXCEPT THAT CONSTRUCTION JOINTS SHALL NOT BE EDGED, AND A STRIP OF SURFACE 9 TO 12 INCHES WIDE ADJACENT TO CURBS AND BARRIERS SHALL NOT BE GROOVED. IF THE TEXTURE AS REQUIRED IS NOT MET, THE CONTRACTOR WILL SAW TEXTURE THE DECK AT NO COST TO THE STATE.

BASIS OF PAYMENT:
ALL COSTS OF MATERIAL AND LABOR TO PROVIDE LIGHTING CONDUITS IF SHOWN IN THE BRIDGE PLANS SHALL BE INCLUDED FOR PAYMENT UNDER THIS ITEM. PAYMENT FOR THE ABOVE COMPLETED AND ACCEPTED QUANTITIES WILL BE MADE AT THE CONTRACT BID PRICE FOR:

ITEM	UNITS	DESCRIPTION
844E48001	CUBIC YARD	HIGH PERFORMANCE CONCRETE SUPERSTRUCTURE (DECK), AS PER PLAN
844E48021	CUBIC YARD	HIGH PERFORMANCE CONCRETE SUPERSTRUCTURE (PARAPET), AS PER PLAN
844E48041	CUBIC YARD	HIGH PERFORMANCE CONCRETE SUBSTRUCTURE, AS PER PLAN
844E49000	LUMP SUM	HIGH PERFORMANCE CONCRETE TRIAL MIX
844E49010	LUMP SUM	HIGH PERFORMANCE CONCRETE TESTING

BURGESS & NIPLE

DESIGNED SCT/JAA | DRAWN SCT/JAA | REVIEWED MAR | DATE 02-07-00
CHECKED JAA/SCT | REVISED | STRUCTURE FILE NUMBER 1808087,1808095

STRUCTURE NOTES 4 OF 11
BRIDGE NO. CUY-90-0249 L&R
OVER DOVER CENTER ROAD

CUY-90-0.00

17 MAR 2000
p:\pr22308\cadd\wnotes4.dgn

ITEM SPECIAL - FIELD PAINTING, MISC.:SHOP PAINTING AND FIELD TOUCH-UP OF STRUCTURAL STEEL

DESCRIPTION

This specification covers shop cleaning and shop application of a 3 coat paint system on Item 863 - structural steel and the field cleaning and repair of surfaces damaged in shipping, handling, and erecting the structural steel and any other damages during construction.

This specification shall also include the galvanizing as per 711.02 of all nuts, washers, bolts, anchor bolts, and all other structural members designated in the plans.

MATERIAL

A. A three coat paint system consisting of an

Organic Zinc Prime Coat
Epoxy Intermediate Coat
Urethane Finish Coat

and meeting the requirements of Supplemental Specification 910 entitled "OZEU Structural Steel Paint"

B. Inorganic Zinc Silicate primer paint, for the bolted faying surfaces, meeting the requirements of C & MS 708.17.

C. A tie coat. Consisting of an Epoxy Intermediate Coat, meeting the requirements of Supplemental Specification 910, "Epoxy Intermediate Coat" and thinned 50%, by volume, with a thineer as recommended by the paint manufacturer.

Approved paint, items A and C, shall be from one manufacturer, regardless of shop or field application.

Approved paint, Item B, may be from a different manufacturer than Items A and C. Item B paint used shall be from the same manufacturer for both shop application and field touch-up.

PRE-PAINT CONFERENCE

If designated on the plan a pre-paint conference shall be held separately from the preconstruction meeting. Attendees to this meeting shall include the General Contractor, Paint Contractor, Structural Steel erector, Fabricator, Quality Control Specialist, Engineer, Structural Steel Engineer, and others if required in the plan.

The meeting shall take place before the steel is fabricated or painted.

QUALITY CONTROL SPECIALISTS

This person will not be a Foreman or member of the Contractor's or Fabricator's production staff (ie. he will not abrasive blast, paint, recover spent abrasives, etc.).He will not be involved in any other miscellaneous task (ie. mixing paint, running errands, running or working on equipment, etc. Documentation that personnel performing quality control related functions are qualified shall be submitted to the Engineer prior to allowing the Quality Control Specialist (QCS) to begin work. Documentation/verification shall be provided to the Engineer that the QCS has received formal training from one of the following: KTA tator, S.G. Pinney, or Corrosion Control Consultants. He shall be equipped with material safety data sheets, tools and equipment to provide quality control on all facets of the work and shall have a thorough understanding of the plans and specifications pertaining to this project. He shall be responsible for inspecting the equipment at the specified intervals, the abrasives, and the work, at all quality control points. He shall also be responsible for verifying that all work is done within the specified work limitation. He shall cooperate with the Inspector and compare and document quality control readings. He shall have the authority to stop work and the responsibility to inform the Contractor's or Fabricator's Foreman of nonconforming work.

Quality control specialists will be required in the shop and in the field. Before fabrication the fabricator shall designate one individual for each shop as a Quality Control Specialist.

At the preconstruction or pre-paint meeting, the Contractor shall also designate one individual on each project as a Quality Control Specialist (only one person per project will be necessary unless the Contractor is working at more than three (3) sites simultaneously). It will then be necessary to provide an additional Quality Control Specialist and a set of testing equipment as described in the equipment section for each additional three sites being painted simultaneously.

Quality Control Points

Quality control points (QCP) are points in time when one phase of the work is complete and ready for inspection by the Contractor or Fabricator and the Structural Steel Engineer or the Engineer prior to continuing with the next operational step. At these points: The Contractor or Fabricator shall afford access to inspect all affected surfaces. If inspection indicates a deficiency, that phase of the work shall be corrected in accordance with these specifications prior to beginning the next phase of work. Discovery of defective work or material after a Quality Control Point is past or failure of the final product before final acceptance, shall not in any way prevent rejection or obligate the State of Ohio to final acceptance.

Quality Control Points (QCP)	(PURPOSE)
1.) Washing	Remove water soluble oil, grease, salt, dirt, etc.
2.) Solvent Cleaning	Remove asphaltic cement, oil, grease, salt, dirt, etc., not removed during washing
3.) Grinding Edges	Grind edges required.
4.) Abrasive Blasting	Blast surface to receive paint
5.) Prime Coat Application	Check surface cleanlyness, apply prime coat check coating thickness
6.) Intermediate Coat Application	Check surface cleanliness, apply intermediate coat, check coating thickness
7.) Finish Coat Application	Check surface cleanliness, apply finish coat, check coating thickness
8.) Visual Inspection	Visually inspect paint before shipment of steel and check of total system thickness.
9.) Repair of Damage Areas	Check for damage areas after completion of structure and repeat QCP 1 - 7 for damage areas.
10.) Final Review	Wash structure as per QCP#1. Visually inspect system for acceptance and check total system thickness.

SURFACE PREPARATION

This item shall consist of washing, solvent cleaning, and abrasive cleaning of structural steel members.

DESIGN AGENCY
O.D.O.T.
DISTRICT TWELVE
L&D DEPARTMENT

REVIEWED MJM 08/20/98 DATE
STRUCTURE FILE NUMBER 1808087,808095
DRAWN JMB REVISED
DESIGNED BGW CHECKED GWM

STRUCTURE NOTES 5 OF 11
BRIDGE NO. CUY-90-0249 L&R
OVER DOVER CENTER ROAD

CUY-90-0.00

17 MAR 2000
p:\pr-2230\cadd\wnotes5.dgn

Washing (QCP #1)

Prior to abrasive blasting, all surfaces to be painted shall be washed with potable water having a nozzle pressure of at least 1,000 PSI and a delivery rate of not less than 4 gallons per minute. (QCP #1) The contractor or fabricator, shall provide equipment specifications to verify the above. The equipment shall also be equipped with gauges to verify the pressure. The water shall contain tri-sodium phosphate detergent at a rate of 2 ounces (by weight) per gallon of technical grade, hydrated water (minimum) to remove water soluble oil, grease, salt and dirt. Before the surfaces dry, the bridge or structural steel member shall be rinsed to remove all remaining detergent. The nozzle shall be held at a maximum of twelve (12) inches from the surface being washed or rinsed. Surfaces shall not be considered as clean until clear rinse water runs off the structure. After the surface is rinsed and allowed to dry, it shall be checked for remaining visible dirt. Surfaces shall be rewashed and rinsed as necessary to remove all remaining dirt. The finish coat shall be applied within three (3) months of washing the structure or structural steel member.

Solvent Cleaning (QCP #2)

After washing, all traces of asphaltic cement, oil, grease, diesel fuel deposits, and other soluble contaminants which remain, shall be removed by solvent cleaning (QCP #2) (see SSPC-SP 1 Solvent Cleaning for recommended practices). Under no circumstances shall any abrasive blasting be done to areas with asphaltic cement, oil, grease, or diesel fuel deposits. All solvent cleaned areas shall be rewashed as previously noted.

Grinding Edges (QCP #3)

The edges of all steel shall be rounded in accordance with AWS D1.5 Section 3.2.9 before abrasive blasting.

Abrasive Blasting (QCP #4)

All steel to be painted shall be blast cleaned according to SSPC-SP10 (near-white blast) as shown in SSPC-Vis 1-89 (pictorial surface preparation standards for painting steel surfaces). Steel shall be maintained in a blast cleaned condition until it has received a prime coat of paint.

During Shop application and field touchup galvanized steel (including corrugated steel bridge flooring), adjacent concrete, existing painted surface and other surfaces not intended to be painted, shall be masked to prevent damage from abrasive blasting and painting operations.

The abrasive shall be a recyclable steel grit. After each use and prior to reuse, the steel grit shall be cleaned of paint chips, rust, mill scale and other foreign material by equipment specifically designed for such cleaning.

The surface profile shall be a minimum of one (1) mils and a maximum of three and one half (3.5) mils. Abrasives of a size suitable to develop the required surface profile shall be used. Any abrasive blasting which is done when the steel temperature is less than 5 degrees above the dew point shall be reblasted when the steel temperature is five (5) degrees above the dew point. Dew point shall be defined as the temperature at which moisture condenses on the steel surfaces.

All fins, tears, slivers, and burred or sharp edges that are present on any steel member after blasting shall be removed by grinding and the area reblasted.

All abrasives and residue shall be removed from surfaces to be painted with a vacuum system equipped with a brush-type cleaning tool. All steel blast cleaned in any one day shall be kept dust free and prime coated the same day. Failure to prime coat the same day will require reblasting before prime coating. No dust or abrasives from adjacent work shall be left on the finish coat.

The Quality Control Specialist shall perform the following test (and the Inspector will verify) to ensure that the air is not contaminated: blow air from the nozzle for thirty (30) seconds onto a white cloth or blotter held in a rigid frame. If any oil or other contaminants are present on the cloth or blotter, abrasive blasting shall be suspended until the problem is corrected and verified by another test. This test shall be done at the start of each shift and at four (4) hour intervals.

Abrasive blasting and painting may take place simultaneously on any one bridge as long as abrasive blasting debris and/or dust created by be the blowing operation does not come in contact with freshly painted surfaces.

The Contractor shall remove all blasting residues from the roadway, pedestrian walkways, gutters and other drainage facilities at the end of each day's work. Care shall be taken to keep all blasting residues out of drains or catch basins. Nearby drains and catch basins shall be covered during blasting operations. Blasting residue shall not be permitted on surfaces which are being used by vehicles or pedestrians. The blasting residues shall be disposed of outside the highway right of way.

TESTING EQUIPMENT

Both the Contractor for the field application and the Fabricator for shop application, shall provide and assign to the Engineer the following testing equipment in good working order, for the duration of the project,one set of testing equipment for each quantity control specialist. These shall be separate sets from those contractor or fabricator provide for Quality Control Specialist.

Each Quality Control Specialist shall have his own testing equipment. When no test equipment is available, no work shall be performed.

1. One (1) Spring micrometer and 1 roll of coarse and 3 (unless otherwise specified on plans) rolls of extra-coarse replica tape.

2. One (1) Positector 2000-6000, Quanix 2200, or Elcometer (A345FBI1) and the calibration plates as per the NBS calibration standards in accordance with ASTM D-1186.

3. One (1) Sling Psychrometer including Psychometric tables Used to calculate relative humidity and dew point temperature.

4. Two (2) steel surface thermometers accurate within 2 degrees.

5. Flashlight 2-D cell

6. SSPC Visual Standard for Abrasive Blast Cleaned Steel SSPC-Vis 1-89

7. One (1) Recorder Thermometer capable of recording the date, time, and temperature over a period of at least 12 hours.

HANDLING

All paint and thinner shall be delivered to the project site or Fabricator's shop in original, unopened containers with labels intact. Minor damage to containers is acceptable provided the container has not been punctured. Thinner containers shall be a maximum of five (5) gallons.

Paint shall be stored at the temperature recommended by the manufacturer to prevent paint deterioration.

Each container of paint and thinner shall be clearly marked or labeled to show paint identification, component, color, lot number, stock number, date of manufacture, and information and warnings as may be required by Federal and State laws.

All containers of paint and thinner shall remain unopened until required for use. The label information shall be legible and shall be checked at the time of use.

Solvent used for cleaning equipment is exempt from the above requirements.

Paint which has livered, gelled or otherwise deteriorated during storage shall not be used. However, thixotropic materials which can be stirred to attain normal consistency may be used.

17 MAR 2000
D:\pr22308\cadd\wnotes5.dgn

DESIGN AGENCY
O.D.O.T.
DISTRICT TWELVE
L&D DEPARTMENT

REVIEWED MJM 08/20/98
DATE
STRUCTURE FILE NUMBER 1808087,1808095

DRAWN JMB
REVISED

DESIGNED BGW
CHECKED GWM

The oldest paint of each kind shall be used first. No paint shall be used which has surpassed its shelf life.

Paint may be considered as eligible for payment for material on hand as specified in 109.07. However, only paint which the contractor can prove to the Engineer will be used during the construction season shall be eligible for payment. The Contractor shall provide the Engineer calculations indicating the total square feet of steel to be painted during the construction season. He shall also provide calculations showing the total number of gallons required. The Contractor shall be responsible to store the paint on the project in such manner to prevent theft and adverse temperatures. He shall provide thermometers capable of monitoring the maximum high and low temperatures within the storage facility. The Contractor is responsible for properly disposing of all unused paint and paint containers.

The Contractor shall furnish shipping invoices for all materials used on the project to the Engineer, prior to use.

MIXING AND THINNING

All ingredients in any container of paint shall be thoroughly mixed immediately before use and shall be agitated often enough during application to maintain a uniform composition; however, the primer shall be continuously mixed by an automated agitation system (Hand held mixers not allowed). Paint shall be carefully examined after mixing for uniformity and to verify that no unmixed pigment remains on the bottom of the container. The paint shall be mixed with a high shear mixer (such as a Jiffy Mixer). Paddle mixers or paint shakers are not allowed. Paint shall not be mixed or kept in suspension by means of an air stream bubbling under the paint surface.

All paint shall be strained after mixing. Strainers shall be of a type to remove only skins and undesirable matter, but not the pigment.

No thinner shall be added to the paint without the Engineer's approval, and only if necessary for proper application as recommended by the manufacturer. When the use of thinner is permissible, thinner shall be added slowly to the paint during the mixing process. All thinning shall be done under supervision of the Engineer. In no case shall more thinner be added than that recommended by the manufacturer's printed instructions. Only thinners recommended and supplied by the paint manufacturer may be added to the paint. No other additives shall be added to the paint.

Catalysts, curing agents, or hardeners which are in separate packages shall be added to the base paint only after the base paint has been thoroughly mixed. The proper volume of the catalyst shall then be slowly poured into the required volume of base with constant agitation. Liquid which has separated from the pigment shall not be poured off prior to the mixing. The mixture shall be used within the pot life specified by the manufacturer. Therefore only enough paint shall be catalyzed for prompt use. Most mixed, catalyzed paints cannot be stored, and unused portions of these shall be discarded at the end of each working day.

COATING APPLICATION

General

All structural steel, scuppers, bulb angles, expansion joints, steel railing, exposed steel piling, drain troughs, galvanized surfaces and other areas indicated on the plans shall be painted unless otherwise noted in the plans.

Galvanized surfaces to be embedded in concrete and surfaces in contact with seals, shall be masked and receive no paint.

All areas where field welding is required shall be masked prior to shop coating and receive no paint.

The top of flanges shall receive the prime coat only.

Areas to receive studs shall not be masked but paint shall be removed before studs are applied.

Treatment of Faying Surfaces

Surfaces indicated below shall be treated according to Method A or Method B as described in this specification:

1. Faying surfaces of main beam or girder bolted field splices.

2. All internal contact surfaces of filler and splice plates.

3. Other surfaces indicated in the plans.

Bolted crossframes on straight beams or girders do not need to meet the requirements of Method A or Method B unless indicated otherwise in the plans.

Method A

The faying surfaces shall be coated with inorganic zinc primer.

The coating of these faying surfaces with the inorganic zinc-rich primer shall be done by using a double masking technique. First, the areas adjacent to the faying surfaces shall be tightly masked and the inorganic zinc primer applied. After this primer has dried sufficiently enough to avoid damage, the faying surfaces shall be masked and the remainder of the girder shall be coated with the organic zinc-rich primer and subsequent coats.

All bolted shop connections and bolted cross frames shall be removed and disassembled prior to the blasting and coating of the girders or beams. The parts shall be blasted separately and primed, then reassembled and the bolts fully tightened using the turn of the nut method.

Method B

The faying surfaces shall be coated with organic zinc primer only per this specification. In order to use Method B, the primer shall be tested in accordance with the methods described in "Allowable Stress Design Specification for Structural Joints Using ASTM A325 or A490 Bolts". Testing shall include slip tests and tension creep tests. A minimum slip coefficient of 0.33 shall be attained.

Testing shall be performed by an accredited laboratory at the Contractor's expense. Certified test results shall be furnished to the Engineer. Documentation shall also include certification that the essential variables (defined in section 1.2, Appendix A, of the Structural Joints Specification) used in the testing are the same as those used in the paint provided for the structure.

All galvanized components, including galvanized nuts, bolts, and washers, shall be solvent cleaned after installation. The epoxy tiecoat, epoxy coat and the urethane protective coat shall then be applied.

Temporary erection marks added by the fabricator to highlight or enhance the required steel stamped erection marks shall be made without damaging the paint system. Temporary erection marks shall be applied only after the finish coat is cured and shall be removed at the end of the project.

Unless otherwise specified, all coats shall be applied by spray.

The Contractor for field application and the Fabricator for shop application, shall supply the Engineer with the product data sheets before any coating is done. The product data sheets shall indicate the mixing and thinning directions, the recommended spray nozzles and pressures and the minimum drying time for shop applied coats.

These product data sheets shall be followed except when they conflict with these specifications, in which case the specifications shall govern.

If the surface is degraded or contaminated after surface preparation and before painting, the surface shall be restored before painting application. In order to prevent degradation or contamination of cleaned surface, the prime coat of paint shall be applied within twenty four (24) hours after blast cleaning with method A, and within eight (8) hours after blast cleaning with method B, as required in surface preparation above.

Cleaning and painting shall be scheduled so that dust or other contaminants do not fall on wet, newly-painted surfaces. Surfaces not intended to be painted shall be suitably protected from the effects of cleaning and painting operations. Overspray shall be removed with a stiff bristle brush, wire screen, or a water wash with sufficient pressure to remove overspray without damaging the paint. The overspray must be removed before applying the next coat. All abrasives and residue shall be removed from painted surfaces before recoating, with a vacuum system equipped with a brush type cleaning tool.

No visible abrasives from adjacent work shall be left on any coat. Abrasives shall be removed.

Spray application for the intermediate coat (epoxy) shall not be used where traffic (including railroad, highway and river traffic, public and private property) is affected unless the operation is totally contained to prevent overspray. If brushed more than one coat may be necessary to produce the required millage.

Spray Application (General)

All spray application of paint shall be in accordance with the following:

Primer ingredients shall be kept uniformly mixed in the Spray equipment shall be kept clean so that dirt, dried paint and other foreign materials are not deposited in the paint film. Any solvent left in the equipment shall be completely removed before using.

Paint shall be applied in a uniform layer with overlapping at the edges of the spray pattern. The border of the spray pattern shall be painted first; with the painting of the interior of the spray pattern to follow, before moving to the next spray pattern area. A spray pattern area is such that the gun shall be held perpendicular to the surface and at a distance which will ensure that a wet layer of paint is deposited on the surface. The trigger of the gun should be released at the end of each stroke. All bolts and rivet heads shall be sprayed from at least two (2) directions or brushed to insure coverage.

Each spray operator shall demonstrate to the Engineer his ability to apply the paint as specified. Any operator who does not demonstrate this ability shall not spray.

If mud cracking occurs, the affected area shall be cleaned to bare metal in accordance with surface preparation above and repainted.

All spray equipment used shall be suitable for use with the specified paint. Paint manufacturer's equipment recommendations shall be consulted in the event of paint application problems.

If air spray is used, traps or separators shall be provided to remove oil and condensed water from the air. The traps or separators must be of adequate size and must be drained periodically during operations. The following test shall be done by the Contractor and verified by the Engineer to insure that the traps or separators are working properly. Blow air from the spray gun for thirty (30) seconds onto a white cloth or blotter held in a rigid frame. If any oil, water or other contaminants are present on the cloth or blotter: painting shall be suspended until the problem is corrected and verified by another test. This test shall be done at the start of each shift and at four (4) hour intervals. This is not required for an airless sprayer.

Application Approval

The beginning of the application of each of the three different coats shall be subject to inspection and approval. The purpose of this inspection is to detect any defects which might result from the Contractor's method of application. If any defects are discovered, the Contractor shall make all necessary adjustments to his method of application to eliminate these defects before proceeding with application.

Temperature

Paint shall not be applied when the temperature of the air, steel, or paint is below 50 degrees F. Paint shall not be applied when the steel surface temperature is expected to drop below 50 degrees F before the paint has cured for the minimum times specified below:

	50 F	60 F	70 F
Primer	4 hrs.	3 hrs.	2 hrs.
Intermediate	6 hrs.	5 hrs.	4 hrs.
Finish	8 hrs.	6 hrs.	4 hrs.

The above temperatures and times shall be monitored with the recording thermometer.

Moisture

Paint shall not be applied when the steel surface temperature is less than 5 degrees F above the dew point. Paint shall not be applied to wet or damp surfaces or on frosted or ice-coated surfaces. Paint shall not be applied when the relative humidity is greater than 85%. Paint shall not be applied during rain, fog or mist unless the above moisture criteria is met.

Continuity

Each coat of paint shall be applied as a continuous film of uniform thickness free of all defects such as holidays, runs, sags, etc. All thin spots or areas missed shall be repainted and permitted to dry before the next coat of paint is applied.

Dry Film Thickness

Prime thickness, cumulative prime and intermediate thickness and cumulative prime, intermediate and finish thickness shall be determined by use of type 2 magnetic gage in accordance with the following:

Five (5) separate spot measurement spaced evenly over each 100 square feet of area to be measured. For field measurements these measurements shall be taken on flanges, webs, cross bracing, stiffeners, etc. Three (3) gage readings shall be made for each spot measurement of either the substrate or the paint. Move the probe a distance of one to three inches for each new gage reading. Discard any unusually high or low gage reading that cannot be repeated consistently. Take the average (mean) of the three gage readings as the spot measurement. The average of five spot measurements for each such 100 square foot area shall not be less that the specified thickness. No single spot measurement in any 100 square foot area shall be less than 80% of the specified thickness. Any one of three readings which are average to produce each spot measurement, may under- run by a greater amount. The five spot measurements shall be made for each 100 square feet of area as follows:

1. For structures or batch of structural steel not exceeding 300 square feet in area, each 100 square foot area shall be measured.
2. For structures or batch of structural steel not exceeding 1,000 square feet in area, three 100 square foot areas shall be randomly selected and measured.
3. For structures or batch of structural steel exceeding 1,000 square feet in area, the first 1,000 square feet shall be measured as stated in section 2 and for each additional 1,000 square feet, or increment thereof, one 100 square

foot area shall be randomly selected and measured.

4. If the dry film thickness for any 100 square foot area (sections 2 & 3 is not in compliance with the requirements of paragraph 1 of this section, then each 100 square foot area shall be measured.

5. Other size areas or number of spot measurements may be specified in the contract plans as appropriate for the size and shape of the structure to be measured.

Each coat of paint shall have the following mil thickness measured above the peaks:

	Min. Spec Thickness	Max. Spec. Spot	Min. Spot	Max
Prime	3.0	5.0	2.5	7.5
Intermediate	5.0	7.0	4.0	10.5
Sub Total	8.0	12.0	6.4	18.0
Finish	2.0	4.0	1.6	6.0
Total	10.0	16.0	8.0	24.0

Film thicknesses greater than the maximum specified thicknesses that do no exhibit defects (such as runs, sags, bubbles, mudcracking, etc.) and for which the Contractor has received a written statement from the coating manufacturer stating that this excessive thickness is not detrimental, may remain in place at the discretion of the Director.

For any spot or maximum average thickness over 24 mils, it will be necessary for the Contractor to prove to the Department that the excess thickness will not be detrimental to the coating system. This shall be accomplished by providing the Director, for approval, certified test data proving that the excessive thickness will adequately bond to the steel when subjected to thermal expansion and contraction. This thermal expansion and contraction and expansion cycles have taken place, the tested system shall be subjected to pull off tests and the results compared to the results of pull off tests which have been performed on a paint system with the proper thicknesses. In addition to the certified test results, it will also be necessary for the Contractor to provide the Director a written statement from the paint manufacturer stating that this excessive thickness is not detrimental.

If the Director does not approve the excessive coating thicknesses or the Contractor elects not to provide the required written statement from the plant manufacturer and the certified test results when required, the Contractor, at his own expense, shall remove and replace the coating. The removal and replacement of the coating shall be done as specified in the section of this specification titled Repair Procedures.

Prime, Intermediate And Finish Coat Application (QCP #5, #6 & #7

Each coat of paint shall be in a proper state of cure or dryness before the application of the succeeding coat. Paint shall be considered ready for recoating when an additional coat can be applied without the development of any detrimental film irregularities, such as lifting, wrinkling or loss of adhesion of the undercoat. The time interval between coating applications shall be in compliance with manufacture's written instructions and no more than thirty (30) days between the prime and intermediate coats and thirteen (13) days between the intermediate and finish coats. These maximum recoat times include weather related days.

No additional time for weather delays will be allowed. Any coat which has cured more than the above allotted time without recoating shall be removed and the steel reblasted to SSPC-SP10.

The completion date (month and year) of the finish coat and the letters OZEU shall be stenciled on the steel in 4" letters with a black urethane paint. This date shall be applied at four locations near the end of each outside beam on the outside web visible from the road or as directed by the Engineer.

HANDLING AND SHIPPING

Extreme care shall be exercised in handling the steel in the shop, during shipping, during erection, and during subsequent construction of the bridge. Painted steel shall not be moved or handled until sufficient cure time has elapsed and approval has been obtained from the inspector. The steel shall be insulated from the binding chains by softeners approved by the Engineer. Hooks and slings used to hoist steel shall be padded. Diaphragms and similar pieces shall be spaced in such a way that no rubbing will occur during shipment that may damage the coatings. The steel shall be stored on pallets at the job site, or by other means approved by the Engineer, so that it does not rest on the ground or so that components do not fall or rest on each other. All shipping and job site storage details shall be presented to the Engineer prior to fabrication in writing and be approved prior to shipping the steel. Approval of the above does not relieve the contractor of responsibility of shipping or storage damage.

REPAIR OF DAMAGED AREAS (QCP #9)

Damaged areas of paint and areas which do not comply with the requirements of this specification, shall have the paint removed and all defects corrected. The steel shall then be retextured to a near white condition to produce a profile of between 1 to 3 1/2 mils. This profile shall be measured immediately prior to the application of the prime coat to insure that the profile is not destroyed during the feathering procedure.

The existing paint shall be feathered to expose a minimum of 1/2 inch of each coat.

During the reapplication of the paint, care shall be used to insure that each coat of paint is only applied within the following areas. The prime coat shall only be applied to the surface of the bare steel and the existing prime coat, which has been exposed by feathering. The prime coat shall not be applied to the adjacent intermediate coat. The intermediate coat shall only be applied to the new prime coat and the existing feathered intermediate coat. The intermediate coat and the existing finish coat which has been feathered or lightly sanded. The finish coat shall not extend beyond the areas which has been feathered or lightly sanded.

The first two coats shall be applied by brush. The finish coat shall be applied by either brush or spray.

It may be necessary to make several applications in order to achieve the proper thickness for each coat.

During the application of the prime coat, the paint should be continuously mixed.

All abrasive blasting and painting shall still be done in accordance with the specifications.

All repairs should be made in a manner to blend the patched are with the adjacent coating. The finished surface of the patched area shall have a smooth even profile with the adjacent surface.

The first repair area shall be used as a test section and no more repairs made until the methods are approved by the Engineer.

The Contractor or fabricator shall submit his method of correcting runs in writing to the Director for approval.

Damaged paint which will be inaccessible for coating after erection shall be repaired and recoated prior to erection.

In order to minimize damage to the painted steel, concrete splatter and form leakage shall be washed from the surface of the

steel shortly after the concrete is placed and before it is dry. If concrete dries it shall be removed and paint repaired.

Temporary attachments, supports for scaffolding and,finishing machine or forms shall not damage the coating system.(In particular, on the fascias where bracing is used, sufficient size support pads shall be used.)

After the erection work has been completed, including all connections and the approved repair of any damaged beams, girders or other steel members, and the deck has been placed, the Contractor and Engineer shall inspect the structure for damaged paint. (QCP #10). Damaged areas shall be repaired by repeating QCP #1 to #8. The contractor shall wash the structure as per QCP#1 after all work to the structure is completed.

SAFETY REQUIREMENTS AND PRECAUTIONS

The contractor shall meet the safety requirements of the Ohio Industrial Commission and the Occupational Safety and Health Administration (OSHA), in addition to the scaffolding requirements below.

The Contractor is required to meet the applicable safety requirements of the Ohio Industrial Commission in addition to the scaffolding requirements specified below.

The Material Safety Data Sheets (MSDS) shall be provided at the preconstruction meeting for all paint, thinners and abrasives used on this project. No work shall start until the MSDS has been submitted.

The fabricator shall also provide MSDS for all abrasives to be used on this project to the shop inspector. No work shall start until MSDS have been submitted.

SCAFFOLDING

Rubber rollers, or other protective devices meeting the approval of the Engineer, shall be used on scaffold fastenings. Metal rollers or clamps and other types of fastenings which will mar or damage coated surfaces shall not be used.

INSPECTION ACCESS FOR FIELD TOUCHUP

In addition to the requirement of 105.11, the contractor shall furnish, erect, and move scaffolding and other appropriate equipment, to permit the Inspector the opportunity to inspect (closely observe), all affected surfaces. This opportunity shall be provided to the Inspector during all phases of the work and continue for a period of at least ten (10) working days after the touch-up work has been completed. When scaffolding is used, it shall be provided in accordance with the following requirements.

When scaffolding, or the hangers attached to the scaffolding are supported by horizontal wire ropes, or when scaffolding is placed directly under the surface to be painted, the following requirements shall be complied with:

When scaffolding is suspended forty three inches or more below the surface to be painted, two rows of guardrail shall be placed on all sides of the scaffolding. One row of guardrail shall be placed at forty two inches above the scaffolding and the other row at twenty inches above the scaffolding.

When the scaffolding is suspended at least twenty one inches, but less than forty three inches below the surface to be painted, a row of guardrail shall be placed on all sides of the scaffolding at twenty inches above the scaffolding.

Two rows of guardrail shall be placed on all sides of scaffolding not previously mentioned. The rows of guardrail shall be placed at forty two and twenty inches above scaffolding, as previously mentioned.

All scaffolding must be at least twenty four inches wide when guardrail is used and twenty eight inches wide when the scaffolding is suspended less than twenty one inches below the surface to be painted and guardrail is not used. If two or more scaffolding are laid parallel to achieve the proper width, they must be rigidly attached to each other to preclude any differential movement.

All guardrail shall be constructed as a substantial barrier which is securely fastened in place and is free from protruding objects such as nails, screws and bolts. There shall be an opening in the guardrail, properly located, to allow the Inspector access onto the scaffolding.

The rails and uprights shall be either metal or wood. If pipe railing is used, the railing shall have a nominal diameter of no less than one and one half inches. If structural steel railing is use, the rails shall be 2 X 2 X 3/8 inch steel angles or other metal shapes of equal or greater strength. If wood railing is used, the railing shall be 2 X 4 inch (nominal) stock. All uprights shall be spaced at no more than 8 feet on center. If wood uprights are used, the uprights shall be 2 X 4 inches (nominal) stock.

When the surface to be inspected is more than fifteen feet above the ground or water, and the scaffolding is supported from the structure being painted, the Contractor shall provide the Inspector with a safety belt and lifeline. The lifeline shall not allow a fall greater than six feet. The Contractor shall provide a method of attaching the lifeline to the structure independent of the scaffolding, cables, or brackets supporting the scaffolding.

When scaffolding is more than two and one half feet above the ground, the Contractor shall provide a ladder for access onto the scaffolding. The ladder and any equipment used to attach the ladder to the structure shall be capable of supporting 250 pounds with a safety factor of at least four (4). All rungs, steps, cleats, or treads shall have uniform spacing and shall not exceed twelve inches on center. At least one side rail shall extend at least thirty six inches above the landing near the top of the ladder.

An additional landing shall be required when the distance from the ladder to the point where the scaffolding may be accessed, exceeds twelve inches. The landing shall be a minimum of at least twenty four inches wide and twenty four inches long. It shall also be of adequate size and shape so that the distance from the landing to the point where the scaffolding is accessed does not exceed twelve inches. The landing shall be rigid and firmly attached to the ladder; however, it shall not be supported by the ladder. The scaffolding shall be capable of supporting a minimum of one thousand pounds.

In addition to the aforementioned requirements, the Contractor is still responsible to observe and comply with all Federal, State and local laws, ordinances, regulations, orders and decrees.

The Contractor shall furnish all necessary traffic control to permit inspection during and after all phases of the project.

PROTECTION OF PERSONS AND PROPERTY

The Contractor shall collect, remove and dispose of all buckets, rags or other discarded materials and shall leave the job site in a clean condition.

The Contractor shall protect all portions of the structure which are not to be painted, against damage or disfigurement by splashes, spatters, and smirches of paint.

The Contractor shall install and maintain suitable shields or enclosures to prevent damage to adjacent buildings, parked cars, trucks, boats, or vehicles traveling on, over, or under structures being painted. They shall be suitably anchored and reinforced to prevent interfering with normal traffic operations in the open lanes. Payment for the shields shall be included as incidental to the applicable field coating operation. Work shall be suspended when damage to adjacent buildings, motor vehicles, boats, or other property is occurring.

When or where any direct or indirect damage or injury is done to public or private property, the Contractor shall restore, at his own expense, such property, to a condition similar or equal to

DESIGN AGENCY: O.D.O.T. DISTRICT TWELVE L&D DEPARTMENT
DESIGNED BGW | DRAWN JMB | CHECKED GWM | REVISED
REVIEWED MJM 08/20/98 | DATE | STRUCTURE FILE NUMBER 1808087,1808095

STRUCTURE NOTES 10 OF 11
BRIDGE NO. CUY-90-0249 L&R
OVER DOVER CENTER ROAD

CUY-90-0.00

that existing before such damage or injury was done.

POLLUTION CONTROL

The Contractor shall take all necessary precautions to comply with pollution control laws, rules or regulations of Federal, State or local agencies.

WORK LIMITATIONS

Abrasive blasting and painting done in the field shall be performed between April 15 and October 15. Even though the Contractor is permitted to work prior to May 1, April is considered a winter month and no extension due to adverse weather conditions will be granted for this period. Additional work limitations on specific bridges/projects may be required by plan note.

METHOD OF MEASUREMENT

The method of measurements shall be according to the pertinent of 513, 514 and 516 of the current Constructions and Materials Specifications.

COLOR OF FINISH COAT

Finish coat shall be gray matching FEDERAL COLOR STANDARD NO. FS-595A-16440.

METHOD OF PAYMENT

The area of the top of the top flange which shall receive the prime coat only shall not be included in the measurement for the pay item.

The cost of the above including labor, material, equipment and incidentals shall be included in the unit price bid for each item as listed below.

Payment for this item shall include all labor, surface preparation, materials, inspection and equipment to shop apply a prime, intermediate and finish paint coat at the item 863 structural steel fabricator's shop facilities. Also included in this item is all required field site surface preparation, cleaning, painting and/or repair of damaged shop paint caused during shipping, erection or construction procedures.

The cost of the surface preparation and prime coat to the top of the top flange shall be included as an incidental for payment under Shop Painting and Field Touch-Up of Structural Steel.

Shop painting per 513.222 shall not be included with the price bid for structural steel but shall be included with Item Special, Shop Painting and Field Touch-Up of Structural Steel for payment.

ITEM	UNIT	DESCRIPTION
Special	Lb.	Field painting, Misc.: Shop Painting and Field Touch-Up of Structural Steel

17 MAR 2000
p:\pr22308\cadd\wnotes5.dgn

DESIGN AGENCY
O.D.O.T.
DISTRICT TWELVE
L&D DEPARTMENT

DESIGNED	DRAWN	REVIEWED	DATE
BGW	JMB	MJM	08/20/98
CHECKED	REVISED	STRUCTURE FILE NUMBER	
GWM		1808087,1808095	

STRUCTURE NOTES II OF II
BRIDGE NO. CUY-90-0249 L&R
OVER DOVER CENTER ROAD

CUY-90-0.00

ESTIMATED QUANTITIES

ITEM	ITEM EXT.	TOTAL	UNIT	DESCRIPTION	LEFT BRIDGE				RIGHT BRIDGE				PARTICIPATION	
					SUPER	ABUT	PIERS	GEN'L	SUPER	ABUT	PIERS	GEN'L	1	2
202	11203	LUMP		PORTIONS OF STRUCTURE REMOVED, OVER 20 FOOT SPAN, AS PER PLAN				LUMP				LUMP	LUMP	LUMP
503	11101	LUMP		COFFERDAMS, CRIBS AND SHEETING, AS PER PLAN				LUMP				LUMP	LUMP	LUMP
503	21101	248	CU. YD.	UNCLASSIFIED EXCAVATION, AS PER PLAN		75	47			79	47		248	
505	11100	LUMP		PILE DRIVING EQUIPMENT AND MOBILIZATION		LUMP				LUMP			LUMP	LUMP
507	00101	400	L.F.	STEEL PILES HP 10X42, FURNISHED, AS PER PLAN		200				200			400	
507	00151	400	L.F.	STEEL PILES HP 10X42, DRIVEN, AS PER PLAN		200				200			400	
507	50500	8	EACH	STEEL PILE SPLICES		4				4			8	
SPECIAL	51267510	1308	SQ. YD.	SEALING CONCRETE SURFACES (EPOXY-URETHANE) *	288	138	228		288	138	228		386	922
514	27704	LUMP		FIELD PAINTING MISC.: FIELD REPAIRING DAMAGED PAINT AREAS	LUMP				LUMP				LUMP	LUMP
SPECIAL	51426030	109282	POUND	FIELD PAINTING MISC.: SHOP PAINTING AND FIELD TOUCH-UP OF STRUCTURAL STEEL	54641				54641				109282	
516	11210	252	L.F.	STRUCTURAL EXPANSION JOINT INCLUDING ELASTOMERIC STRIP SEAL	126				126				72	180
516	46000	4	EACH	BEARING DEVICE, BOLSTER			2				2		4	
516	46200	12	EACH	BEARING DEVICE, ROCKER		4	2			4	2		12	
518	21200	106	CU. YD.	POROUS BACKFILL WITH FILTER FABRIC		53				53			28	78
518	40000	274	L.F.	6 INCH PERFORATED CORRUGATED PLASTIC PIPE		137				137			73	201
518	40010	116	L.F.	6 INCH NON-PERFORATED CORRUGATED PLASTIC PIPE INCLUDING SPECIALS		58				58				116
519	11101	30	SQ. FT.	PATCHING CONCRETE STRUCTURE, AS PER PLAN						27	3			30
601	21001	334	SQ. YD.	CONCRETE SLOPE PROTECTION, AS PER PLAN		167				167			334	
601	21100	20	SQ. YD.	SLOPE PROTECTION, MISC.: REPLACEMENT OF EXISTING SLOPE PROTECTION				10 **				10 **		20
842	81300	6	EACH	CONCRETE, MISC.: DRILLING AND GROUTING DOWEL HOLES				3				3		6
842	81400	40	POUND	CONCRETE, MISC.: REPLACEMENT OF DAMAGED REINFORCING STEEL				20				20		40
844	48001	568	CU. YD.	HIGH PERFORMANCE CONCRETE, SUPERSTRUCTURE (DECK), AS PER PLAN	284				284				164	404
844	48021	98	CU. YD.	HIGH PERFORMANCE CONCRETE, SUPERSTRUCTURE (PARAPET), AS PER PLAN	49				49				48	50
844	48041	260	CU. YD.	HIGH PERFORMANCE CONCRETE, SUBSTRUCTURE, AS PER PLAN		98	32			98	32		176	84
844	49000	LUMP		HIGH PERFORMANCE CONCRETE, TRIAL MIX				LUMP				LUMP	LUMP	LUMP
844	49010	LUMP		HIGH PERFORMANCE CONCRETE, TESTING				LUMP				LUMP	LUMP	LUMP
863	10260	109282	POUND	STRUCTURAL STEEL MEMBERS, LEVEL THREE (3) FABRICATION, A709 GRADE 36	54641				54641				109282	
863	20000	4096	EACH	WELDED STUD SHEAR CONNECTORS	2048				2048				816	3280

* SEE PROPOSAL NOTE.
** CONTINGENT QUANTITY TO BE USED AS DIRECTED BY THE ENGINEER.

BURGESS & NIPLE

DATE 01-17-00
REVIEWED MAR
STRUCTURE/TEE NUMBER 1808087,1808095
DRAWN JAA
REVISED
DESIGNED JAA
CHECKED SCT

ESTIMATED QUANTITIES
BRIDGE NO. CUY-90-0249 L&R
OVER DOVER CENTER ROAD

CUY-90-0.00

13/38

472
582

H:\PROJECTS\Pidl1738\dgn\finalplans\WESTQUAN.DGN 14-SEP-2000 8:56AM jgrmovse

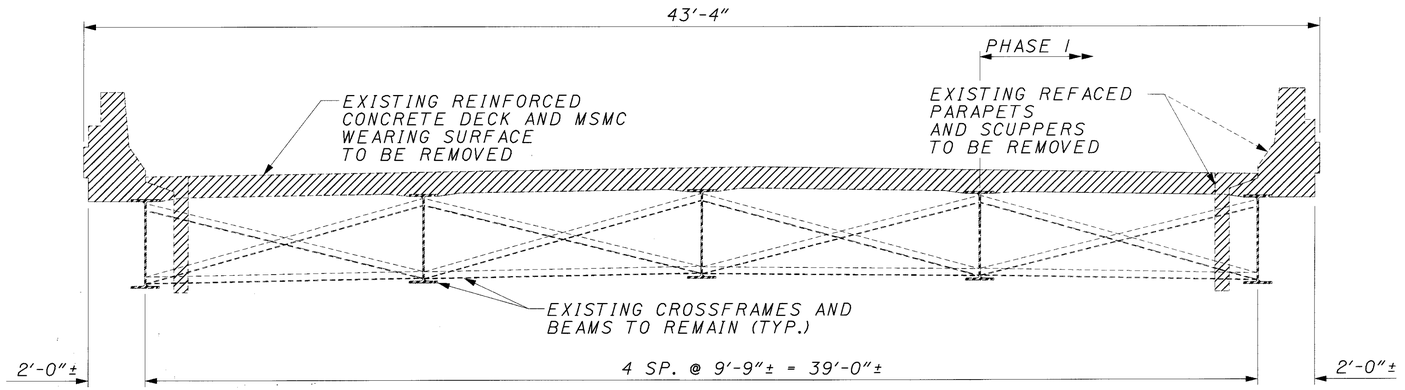

EXISTING TRANSVERSE SECTION

LEFT BRIDGE LOOKING AHEAD
RIGHT BRIDGE LOOKING BACK

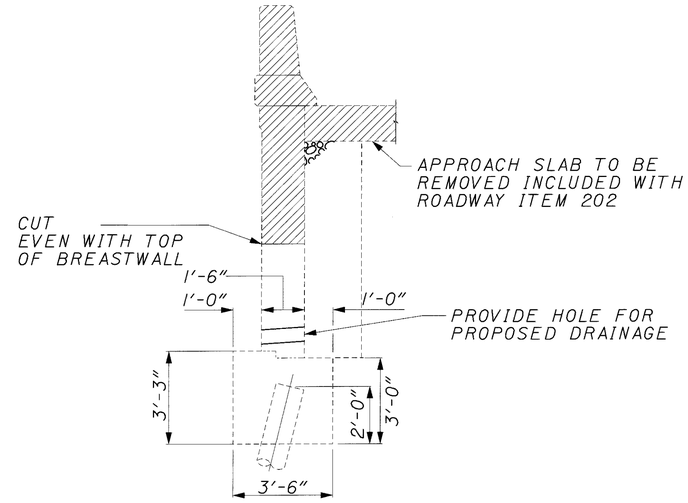

EXISTING WINGWALL REMOVAL DETAIL

CUT LINE CONSTRUCTION JOINT PREPARATION:

SAW CUT BOUNDARIES OF PROPOSED CONCRETE REMOVALS 1" DEEP. REMOVE CONCRETE TO A ROUGH SURFACE. INSTALL DOWEL BARS AS SPECIFIED. PRIOR TO CONCRETE PLACEMENT, ABRASIVELY CLEAN JOINT SURFACE AND EXPOSED REINFORCEMENT TO REMOVE LOOSE AND DISINTEGRATED CONCRETE AND LOOSE RUST. THEN, THE JOINT SURFACE AND EXPOSED REINFORCEMENT SHALL BE THOROUGHLY CLEANED OF ALL DIRT, DUST AND OTHER FORIEGN MATERIAL BY THE USE OF WATER, AIR UNDER PRESSURE, OR OTHER METHODS WHICH PRODUCE SATISFACTORY RESULTS. CONCRETE BONDING SURFACES SHALL BE WET WITHOUT FREE WATER AS CONCRETE IS PLACED.
SEE SHEET 3/30 FOR EXISTING REINFORCING STEEL DISPOSITION.

LEGEND

INDICATES AREA TO BE REMOVED PER ITEM 202 - PORTIONS OF STRUCTURE REMOVED, OVER 20 FOOT SPAN, AS PER PLAN

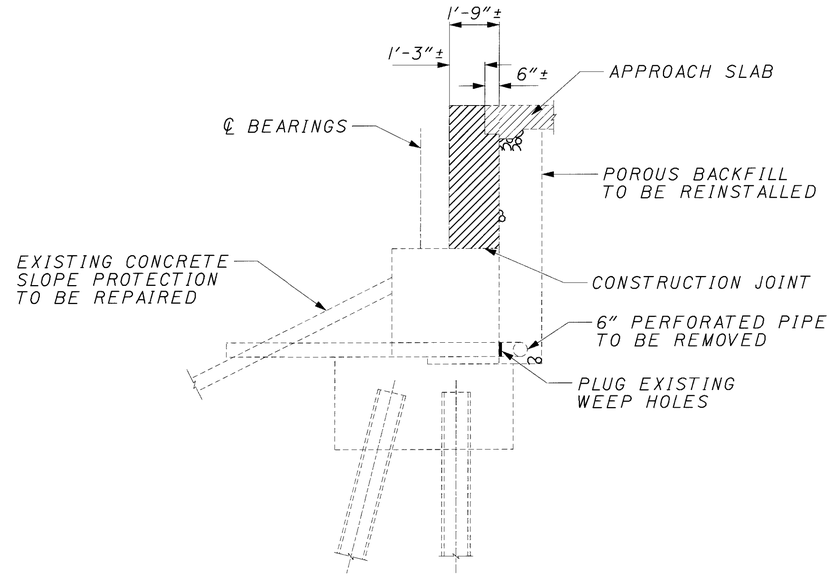

EXISTING ABUTMENT REMOVAL DETAIL

17 MAR 2000
p:\pr-22308\cadd\wremoval.dgn

BURGESS & NIPLE

REVIEWED	DATE	STRUCTURE FILE NUMBER
MAR	12-15-99	1808087, 1808095
DRAWN	REVISED	
JAA		
DESIGNED	CHECKED	
JAA	SCT	

REMOVAL DETAILS
BRIDGE NO. CUY-90-0249 L & R
OVER DOVER CENTER ROAD

CUY-90-0.00

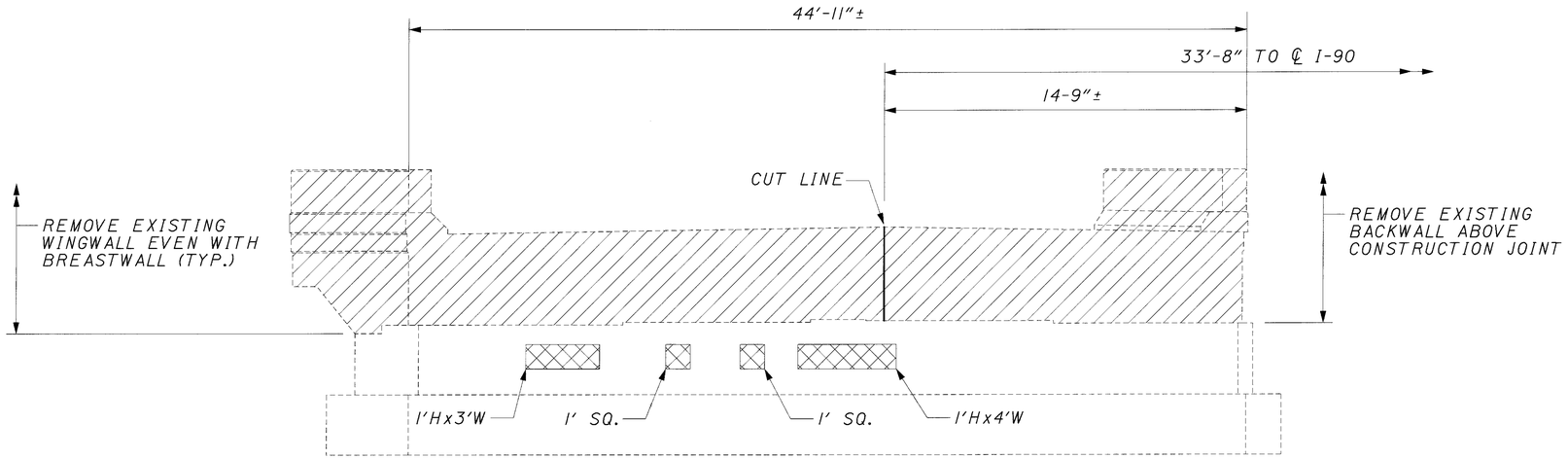

REAR ABUTMENT ELEVATION
(PILES NOT SHOWN)

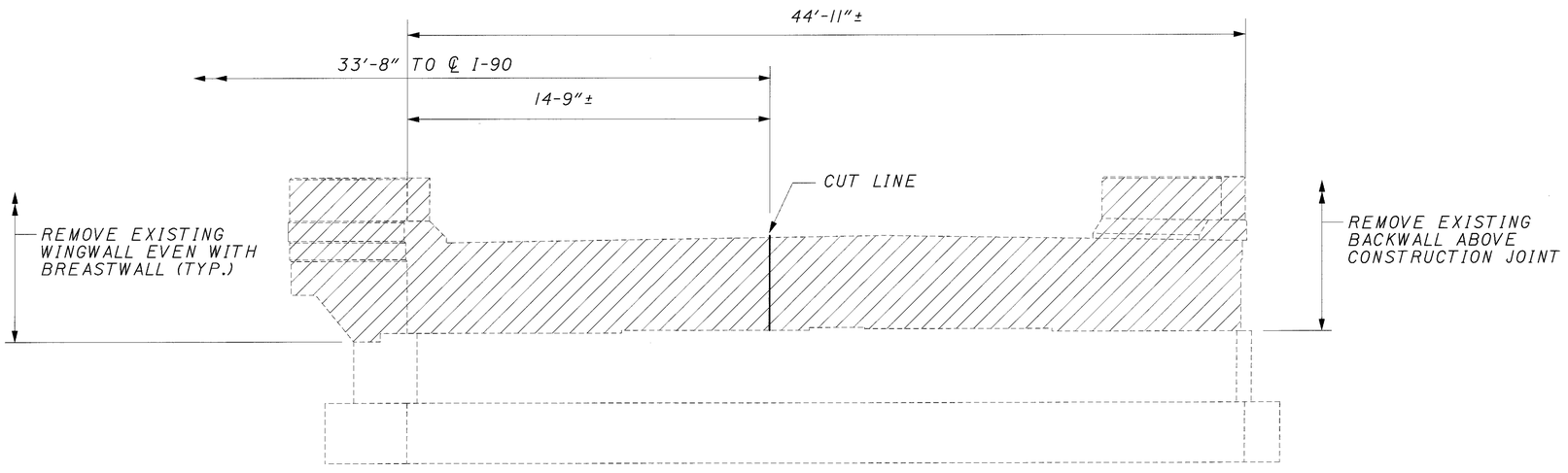

FORWARD ABUTMENT ELEVATION
(PILES NOT SHOWN)

RIGHT BRIDGE ABUTMENTS SHOWN
LEFT BRIDGE ABUTMENT REMOVAL LIMITS SIMILAR

LEGEND

INDICATES AREA TO BE REMOVED PER ITEM 202 - PORTION OF STRUCTURE REMOVED

INDICATES AREA TO BE PATCHED PER ITEM 519 - PATCHING OF CONCRETE STRUCTURES

PHYSICAL INVENTORY OF MEASURED QUANTITIES OF DETERIORATION WAS PERFORMED IN JULY, 1999.

SUMMARY OF PATCHING QUANTITIES▲	
ABUTMENT	ESTIMATED QUANTITY
REAR	27.0 FT²
FORWARD	0 FT²
TOTAL = 27.0 FT²	

▲ ESTIMATED QUANTITY HAS BEEN INCREASED BY 200% OVER FIELD MARKED QUANTITY TO ALLOW FOR ADDITIONAL DETERIORATION.

NOTES:

CUT LINE CONSTRUCTION JOINT PREPARATION:

SAW CUT BOUNDARIES OF PROPOSED CONCRETE REMOVAL I INCH DEEP. REMOVE CONCRETE TO A ROUGH SURFACE. WHERE PRACTICABLE, THE EXISTING REINFORCING STEEL WHERE REQUIRED IN THE PLANS SHALL BE LEFT IN PLACE. INSTALL DOWEL BARS IF SPECIFIED. PRIOR TO CONCRETE PLACEMENT ABRASIVELY CLEAN JOINT RUST. THE JOINT SURFACE AND EXPOSED REINFORCEMENT SHALL BE THOROUGHLY CLEANED OF ALL DIRT, DUST AND OTHER FOREIGN MATERIAL BY THE USE OF WATER, AIR UNDER PRESSURE, OR OTHER METHODS THAT PRODUCE SATISFACTORY RESULTS. CONCRETE BONDING SURFACES SHALL BE WET WITHOUT FREE WATER AS CONCRETE IS PLACED.

SUBSTRUCTURE CONCRETE REMOVAL:

SHALL BE BY MEANS OF APPROVED PNEUMATIC HAMMERS EMPLOYING POINTED AND BLUNT CHISEL TOOLS. HYDRAULIC HOE-RAM TYPE HAMMERS WILL NOT BE PERMITTED. THE WEIGHT OF THE HAMMER SHALL NOT BE MORE THAN 35 POUNDS FOR REMOVAL WITHIN 18 INCHES OF PORTIONS OF CONCRETE TO BE PRESERVED. OUTSIDE THE 18 INCH LIMIT, A HAMMER HEAVIER THAN 35 POUNDS, BUT NOT TO EXCEED 90 POUNDS MAY BE USED AT THE APPROVAL OF THE ENGINEER. PNEUMATIC HAMMERS SHALL NOT BE PLACED IN DIRECT CONTACT WITH REINFORCING STEEL WHICH IS TO BE RETAINED IN THE REBUILT STRUCTURE.

CONCRETE SHALL BE SOUNDED AND PATCHED PRIOR TO RESETTING BEARINGS.

LEFT BRIDGE QUANTITIES

THE ABUTMENTS FOR THE LEFT BRIDGE OVER DOVER CENTER ROAD HAVE NO AREAS IN NEED OF REPAIR AT THE TIME OF INSPECTION.

BURGESS & NIPLE

DESIGNED JAA | DRAWN RAR | CHECKED SCT | REVIEWED MAR | DATE 12-15-99 | REVISED | STRUCTURE FILE NUMBER 1808087,1808095

ABUTMENT REMOVAL AND REPAIR DETAILS, RIGHT BRIDGE
BRIDGE NO. CUY-90-0249 L & R OVER DOVER CENTER ROAD

CUY-90-0.00

15/38

474/582

17 MAR 2000
P:\pr22308\cadd\wabrem.dgn

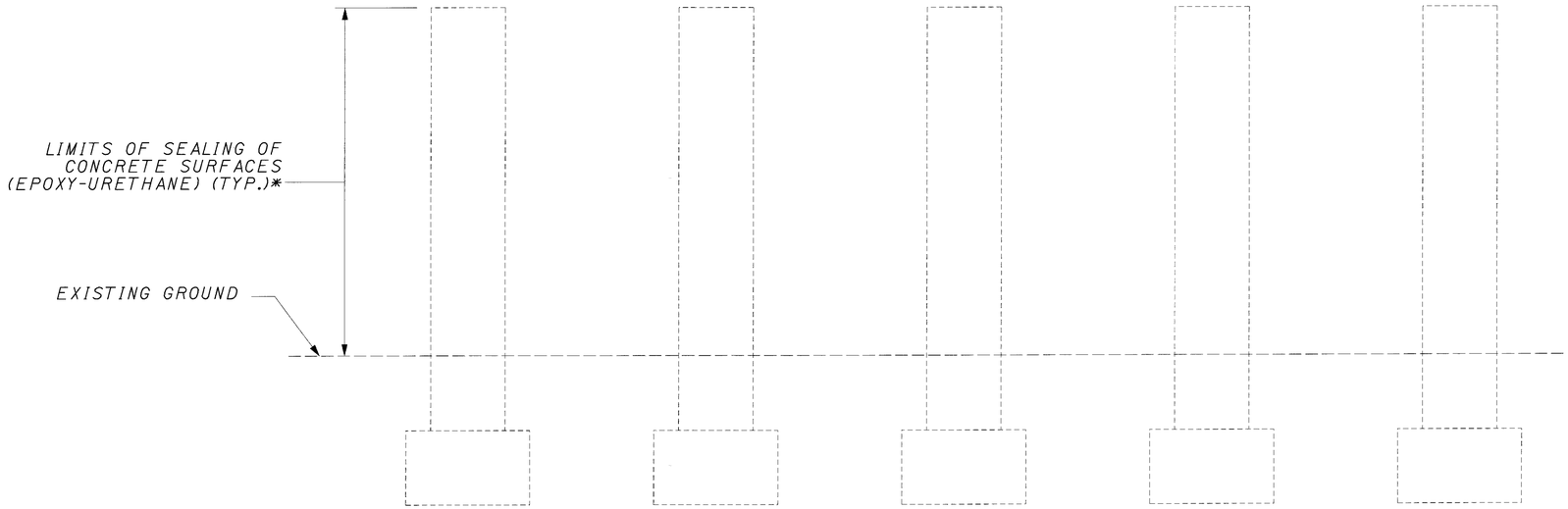

PIER 1 ELEVATION

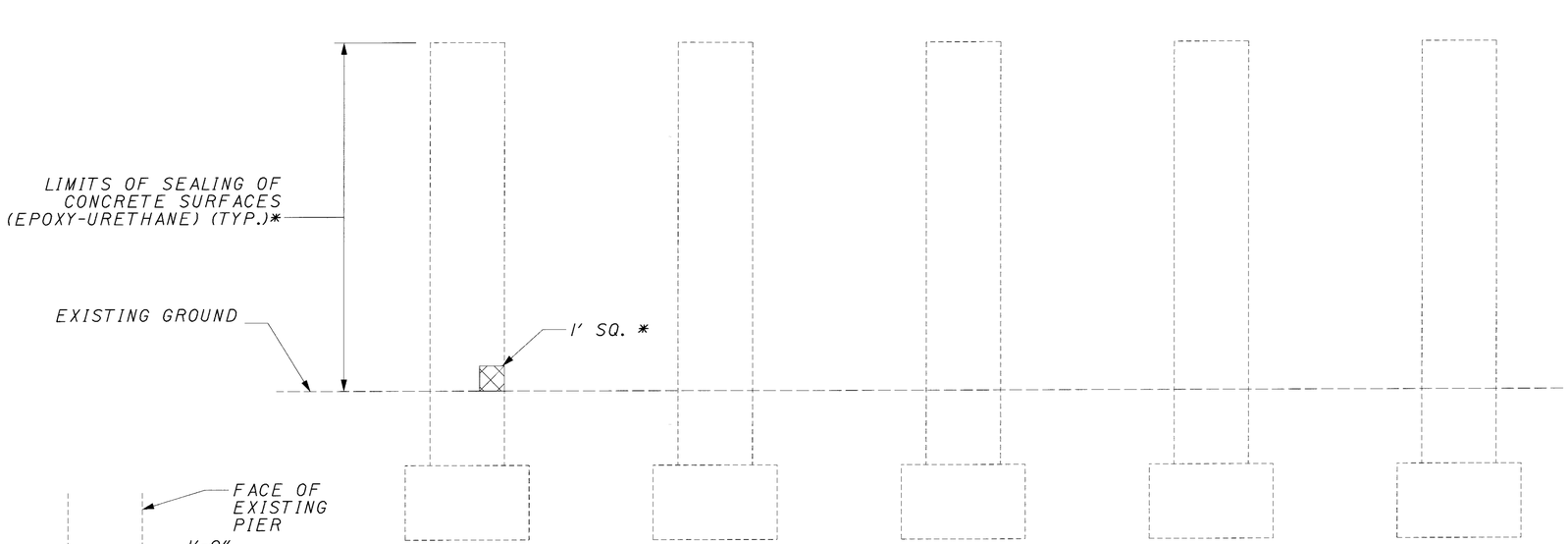

PIER 2 ELEVATION

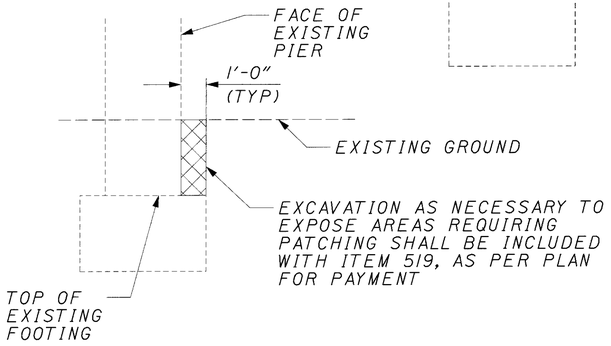

EXCAVATION LIMITS FOR REPAIR AREAS

LEGEND

INDICATES AREA TO BE REMOVED PER ITEM 202 - PORTION OF STRUCTURE REMOVED

INDICATES AREA TO BE PATCHED PER ITEM 519 - PATCHING OF CONCRETE STRUCTURES

PHYSICAL INVENTORY OF MEASURED QUANTITIES OF DETERIORATION WAS PERFORMED IN JULY, 1999.

SUMMARY OF PATCHING QUANTITIES▲	
ABUTMENT	ESTIMATED QUANTITY
REAR	0 FT²
FORWARD	3.0 FT²
TOTAL = 3.0 FT²	

▲ ESTIMATED QUANTITY HAS BEEN INCREASED BY 200% OVER FIELD MARKED QUANTITY TO ALLOW FOR ADDITIONAL DETERIORATION.

NOTES:

CUT LINE CONSTRUCTION JOINT PREPARATION:

SAW CUT BOUNDARIES OF PROPOSED CONCRETE REMOVAL 1 INCH DEEP. REMOVE CONCRETE TO A ROUGH SURFACE. WHERE PRACTICABLE, THE EXISTING REINFORCING STEEL WHERE REQUIRED IN THE PLANS SHALL BE LEFT IN PLACE. INSTALL DOWEL BARS IF SPECIFIED. PRIOR TO CONCRETE PLACEMENT ABRASIVELY CLEAN JOINT RUST. THE JOINT SURFACE AND EXPOSED REINFORCEMENT SHALL BE THOROUGHLY CLEANED OF ALL DIRT, DUST AND OTHER FOREIGN MATERIAL BY THE USE OF WATER, AIR UNDER PRESSURE, OR OTHER METHODS THAT PRODUCE SATISFACTORY RESULTS. CONCRETE BONDING SURFACES SHALL BE WET WITHOUT FREE WATER AS CONCRETE IS PLACED.

SUBSTRUCTURE CONCRETE REMOVAL:

SHALL BE BY MEANS OF APPROVED PNEUMATIC HAMMERS EMPLOYING POINTED AND BLUNT CHISEL TOOLS. HYDRAULIC HOE-RAM TYPE HAMMERS WILL NOT BE PERMITTED. THE WEIGHT OF THE HAMMER SHALL NOT BE MORE THAN 35 POUNDS FOR REMOVAL WITHIN 18 INCHES OF PORTIONS OF CONCRETE TO BE PRESERVED OUTSIDE THE 18 INCH LIMIT, A HAMMER HEAVIER THAN 35 POUNDS, BUT NOT TO EXCEED 90 POUNDS MAY BE USED AT THE APPROVAL OF THE ENGINEER. PNEUMATIC HAMMERS SHALL NOT BE PLACED IN DIRECT CONTACT WITH REINFORCING STEEL WHICH IS TO BE RETAINED IN THE REBUILT STRUCTURE.

CONCRETE SHALL BE SOUNDED AND PATCHED PRIOR TO RESETTING BEARINGS.

LEFT BRIDGE QUANTITIES:

THE PIERS FOR THE LEFT BRIDGE OVER DOVER CENTER ROAD HAVE NO AREAS IN NEED OF REPAIR AT TIME OF INSPECTION.

* - INVESTIGATE FOR DETERIORATION BELOW GRADE WHEN CONCRETE DETERIORATION AT GROUND SURFACE IS APPARENT. SEE EXCAVATION DETAIL THIS SHEET.

BURGESS & NIPLE

DESIGNED JAA | DRAWN RAR | CHECKED SCT | REVISED

REVIEWED MAR | DATE 12-15-99

STRUCTURE FILE NUMBER 1808087,1808095

PIER REPAIR DETAILS, RIGHT BRIDGE

BRIDGE NO. CUY-90-0249 L & R OVER DOVER CENTER ROAD

CUY-90-0.00

16 / 38

475 / 582

17 MAR 2000
p:\pr22308\cadd\wabrem.dgn

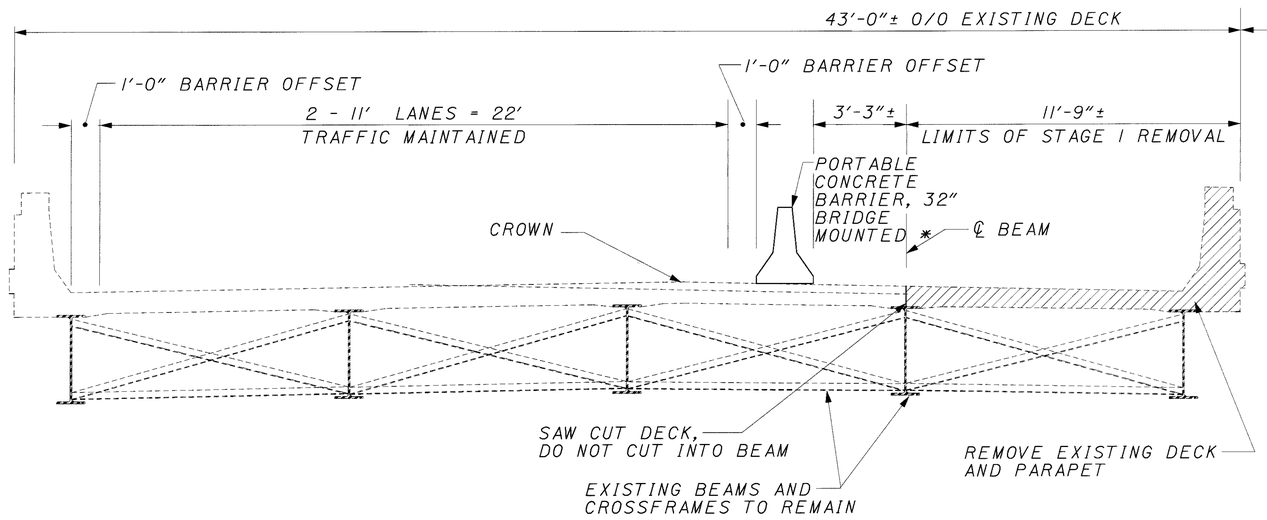

STAGE ONE REMOVAL

LEFT BRIDGE LOOKING AHEAD
RIGHT BRIDGE LOOKING BACK

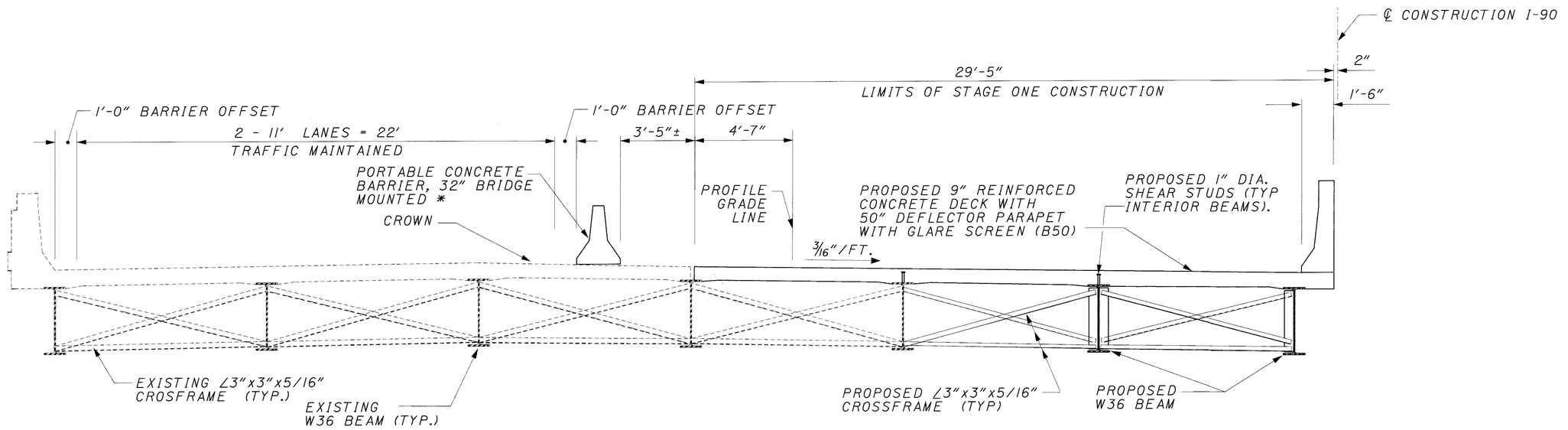

STAGE ONE CONSTRUCTION

LEFT BRIDGE LOOKING AHEAD
RIGHT BRIDGE LOOKING BACK

* PORTABLE CONCRETE BARRIER SHALL BE ANCHORED AT TWO LOCATIONS PER SEGMENT AND CONFORM TO STANDARD DRAWING PCB-91.
SEE ROADWAY PLAN DETAILS. PAY FOR UNDER ITEM 622.

LEGEND:

O/O = OUT TO OUT
T/T = TOE TO TOE
TYP. = TYPICAL
DIA. = DIAMETER

17 MAR 2000
p:\pr22308\cadd\wstgel.dgn

BURGESS & NIPLE

DESIGNED	DRAWN	REVIEWED	DATE
DCF	DCF	MAR	02-08-00
CHECKED	REVISED	STRUCTURE FILE NUMBER	
SCT		1808087, 1808095	

STAGED CONSTRUCTION DETAILS I
BRIDGE NO. CUY-90-0249 L & R
OVER DOVER CENTER ROAD

CUY-90-0.00

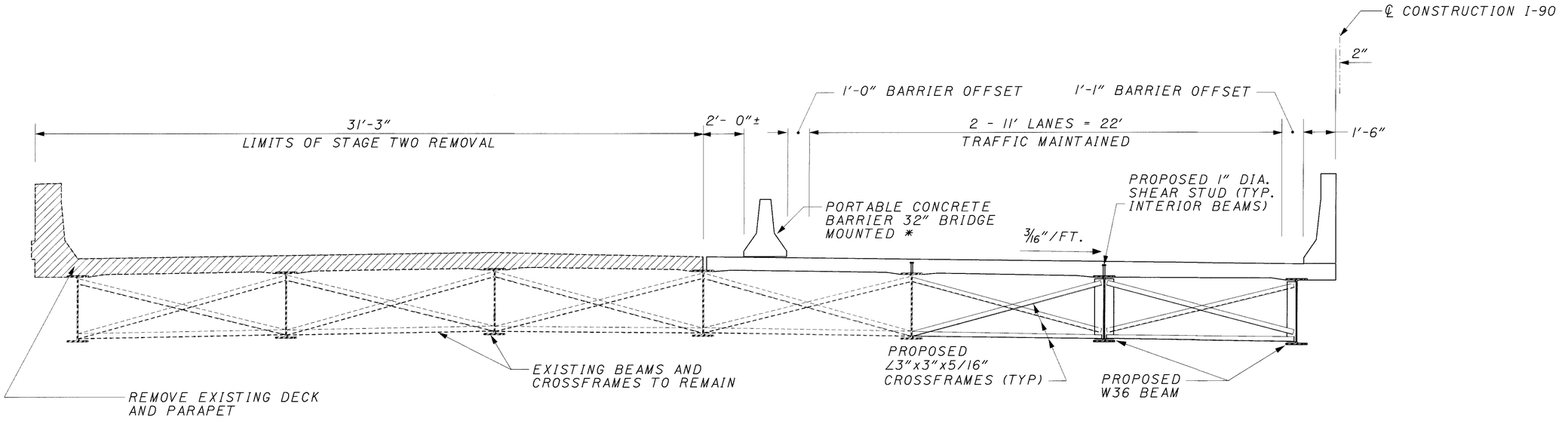

STAGE TWO REMOVAL

LEFT BRIDGE LOOKING AHEAD
RIGHT BRIDGE LOOKING BACK

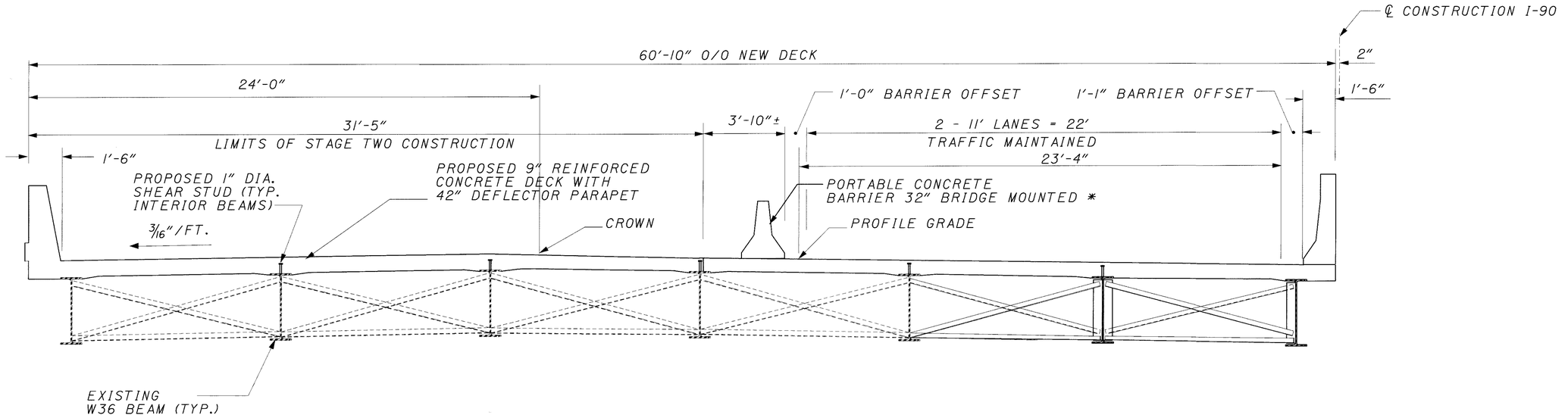

STAGE TWO CONSTRUCTION

LEFT BRIDGE LOOKING AHEAD
RIGHT BRIDGE LOOKING BACK

* PORTABLE CONCRETE BARRIER SHALL BE ANCHORED AT TWO LOCATIONS PER SEGMENT AND CONFORM TO STANDARD DRAWING PCB-91.
SEE ROADWAY PLAN DETAILS. PAY FOR UNDER ITEM 622

LEGEND:

O/O = OUT TO OUT
T/T = TOE TO TOE
TYP. = TYPICAL
DIA. = DIAMETER

BURGESS & NIPLE

REVIEWED MAR 02-08-00
STRUCTURE FILE NUMBER 1808087, 1808095
DRAWN DCF
REVISED
DESIGNED DCF
CHECKED SCT

STAGED CONSTRUCTION DETAILS II
BRIDGE NO. CUY-90-0249 L & R
OVER DOVER CENTER ROAD

CUY-90-0.00

18 / 38

477
582

17 MAR 2000
p:\pr22308\cadd\wstage2.dgn

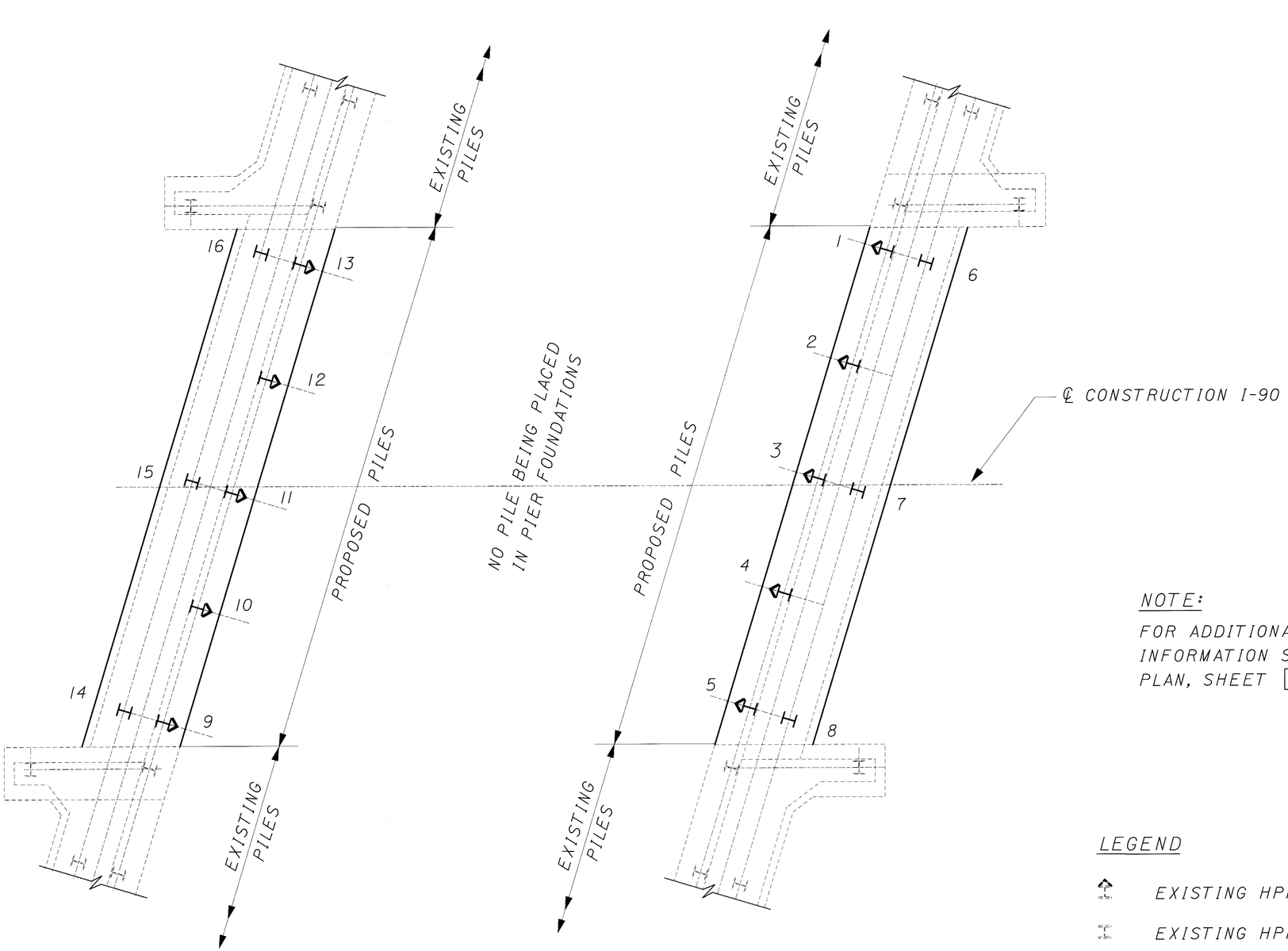

REAR ABUTMENT

FORWARD ABUTMENT

NOTE:

FOR ADDITIONAL FOUNDATION INFORMATION SEE FOUNDATION PLAN, SHEET 12/30

LEGEND

- EXISTING HP10x42 BATTERED PILE
- EXISTING HP10x42 VERTICAL PILE
- PROPOSED HP10x42 BATTERED PILE
- PROPOSED HP10x42 VERTICAL PILE

PILE LAYOUT PLAN
BRIDGE NO. CUY-90-0249L & R
OVER DOVER CENTER ROAD

DESIGN AGENCY: BURGESS & NIPLE

DESIGNED	DRAWN	REVIEWED	DATE
DCF	DCF	MAR	12-15-99
CHECKED	REVISED	STRUCTURE FILE NUMBER	
SCT		1808087, 1808095	

CUY-90-0.00

19/38

478/582

17 MAR 2000
p:\pr22308\cadd\wpilepln.dgn

** INTERSECTION ℄ I-90 & ℄ BEARING
STA 131+53.21 REAR ABUT.
STA 133+11.21 FWD. ABUT.

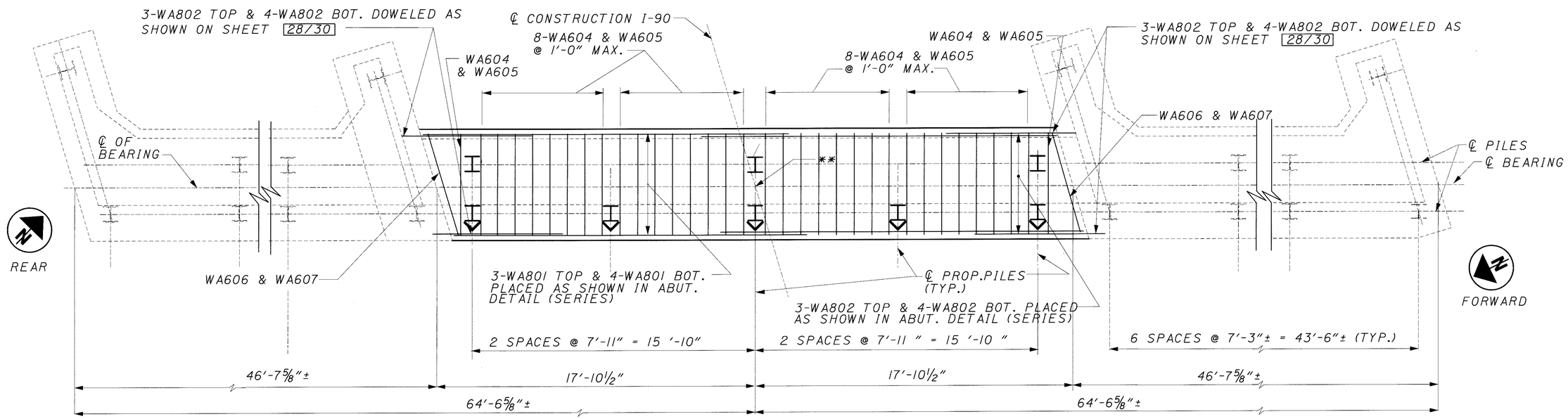

ABUTMENT FOUNDATION PLAN

FORWARD ABUTMENT SHOWN
REAR ABUTMENT SIMILAR

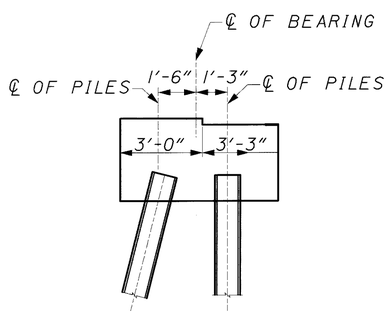

PILE DETAIL

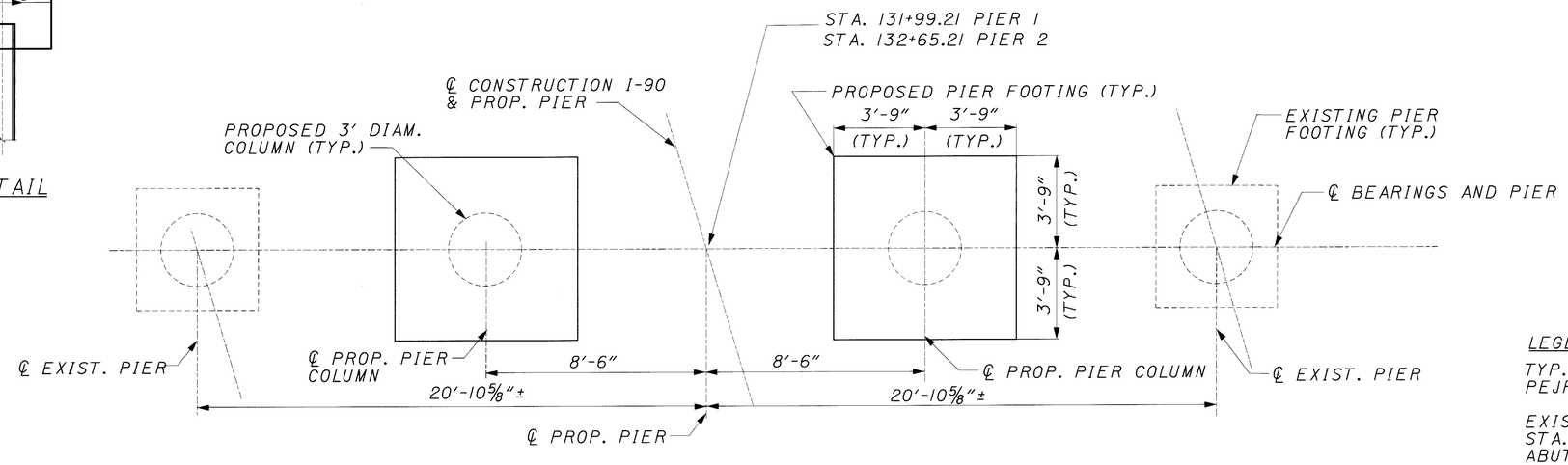

PIER FOUNDATION PLAN

TYPICAL OF ALL PIERS

LEGEND

TYP.	=	TYPICAL
PEJF	=	PREFORMED EXPANSION JOINT FILLER
EXIST.	=	EXISTING
STA.	=	STATION
ABUT.	=	ABUTMENT
MAX.	=	MAXIMUM
BOT.	=	BOTTOM
PROP.	=	PROPOSED
F.A.	=	REAR ABUTMENT
R.A.	=	FORWARD ABUTMENT
◡	=	BATTERED PILE

BURGESS & NIPLE

DESIGNED DCF | DRAWN DCF | CHECKED SCT | REVIEWED MAR | DATE 12-15-99 | REVISED | STRUCTURE FILE NUMBER 1808087 1808095

FOUNDATION PLAN
BRIDGE NO. CUY-90-0249 L & R
OVER DOVER CENTER ROAD

CUY-90-0.00

20/38

479/582

17 MAR 2000
p:\pr22308\cadd\w_found.dgn

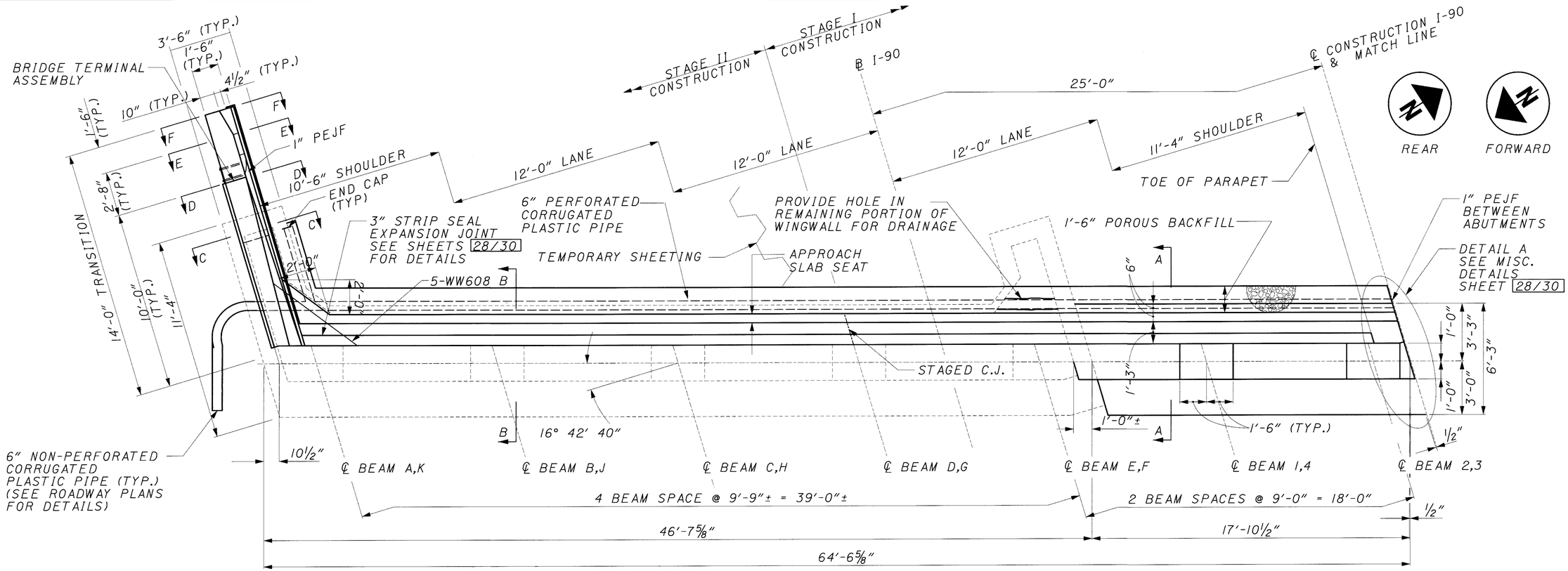

ABUTMENT PLAN

LEFT BRIDGE, F.A SHOWN
RIGHT BRIDGE, R.A. SIMILAR

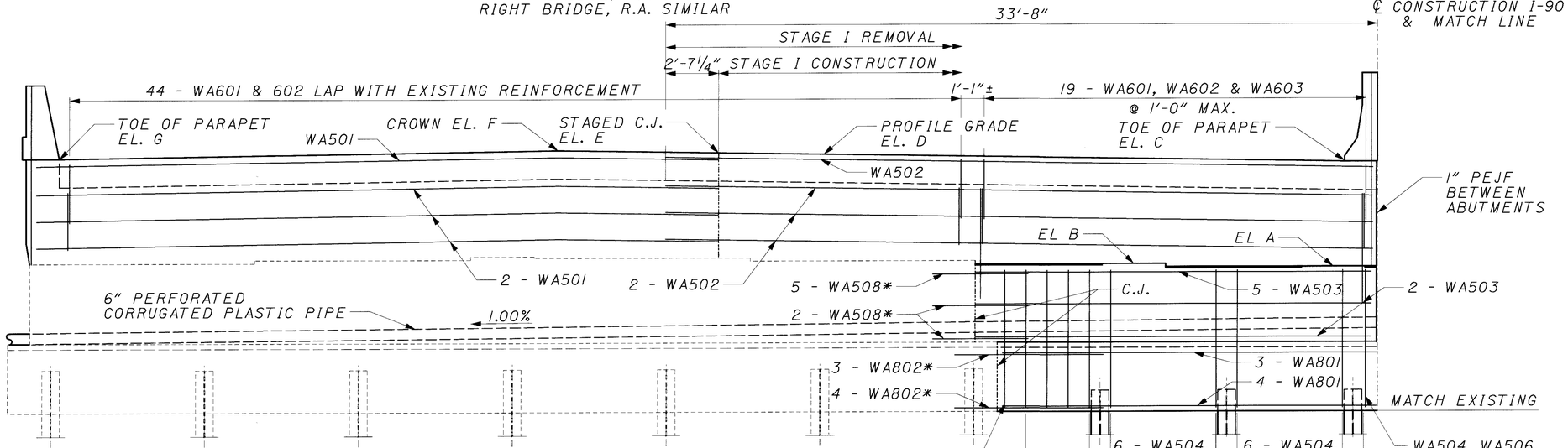

ELEVATION

LEFT BRIDGE, F.A SHOWN
RIGHT BRIDGE, R.A. SIMILAR

* 2'-0" MIN. DRILL AND GROUT
SEE DOWEL HOLE DETAIL
SHEET 28/30
2'-5" MIN. LAP FOR NO. 5 BARS
4'-11" MIN. LAP FOR NO. 8 BARS

NOTES:
FOR SECTIONS A, B,
SEE SHEET 15/30

FOR SECTIONS C,D,E,F
AND OTHER WINGWALL DETAILS
SEE SHEET 16/30

FOR FOUNDATION DETAILS
SEE SHEET 12/30

FOR ELEVATIONS
SEE SHEET 15/30

WORK THIS SHEET
WITH SHEETS 12/30 & 14/30

LEGEND:
TYP. = TYPICAL
MISC.= MISCELLANEOUS
R.A. = REAR ABUTMENT
F.A. = FORWARD ABUTMENT
C.J. = CONSTRUCTION JOINT
EL. = ELEVATION
MAX. = MAXIMUM
PEJF= PREFORMED EXPANSION JOINT FILLER

17 MAR 2000
p:\pr22308\caddv\wabut2.dgn

BURGESS & NIPLE

DESIGNED	DRAWN	REVIEWED	DATE
JAA	JAA	MAR	01-03-00
CHECKED	REVISED	STRUCTURE FILE NUMBER	
SCT		1808087,1808095	

ABUTMENT DETAILS I OF III
BRIDGE NO. CUY-90-0249 L & R
OVER DOVER CENTER ROAD

CUY-90-0.00

21/38

480
582

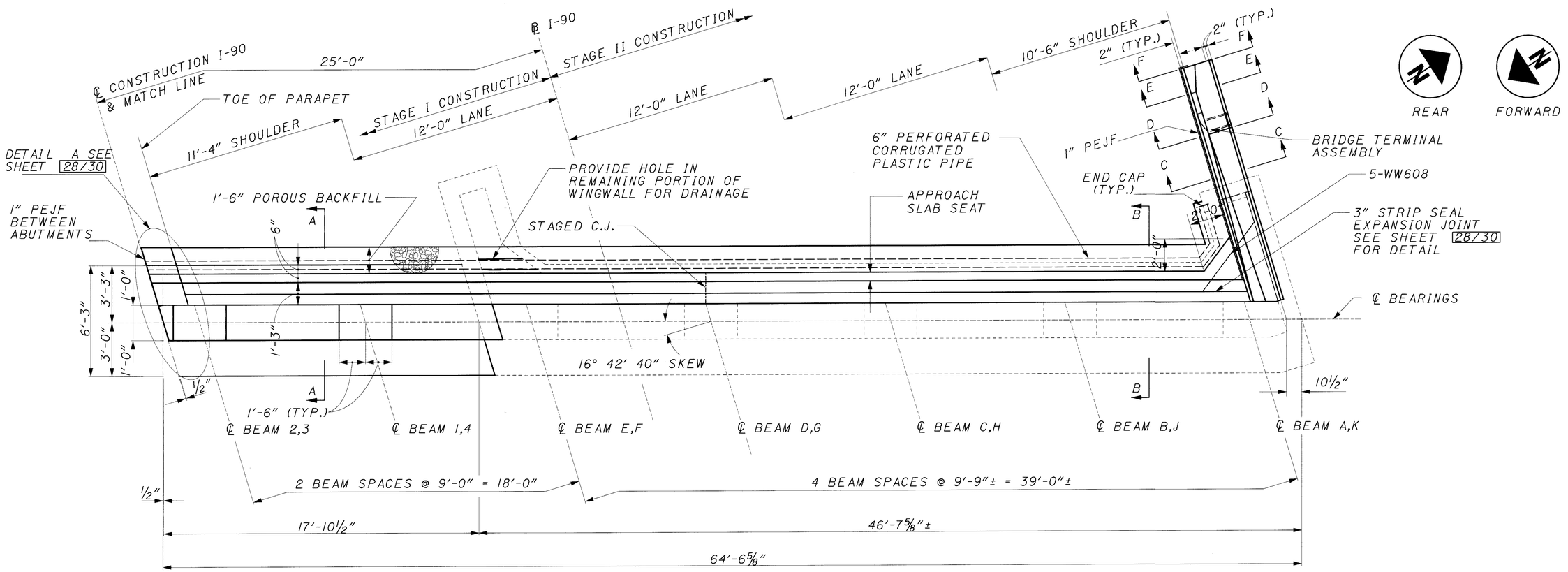

ABUTMENT PLAN

RIGHT BRIDGE, F.A SHOWN
LEFT BRIDGE, R.A. SIMILAR

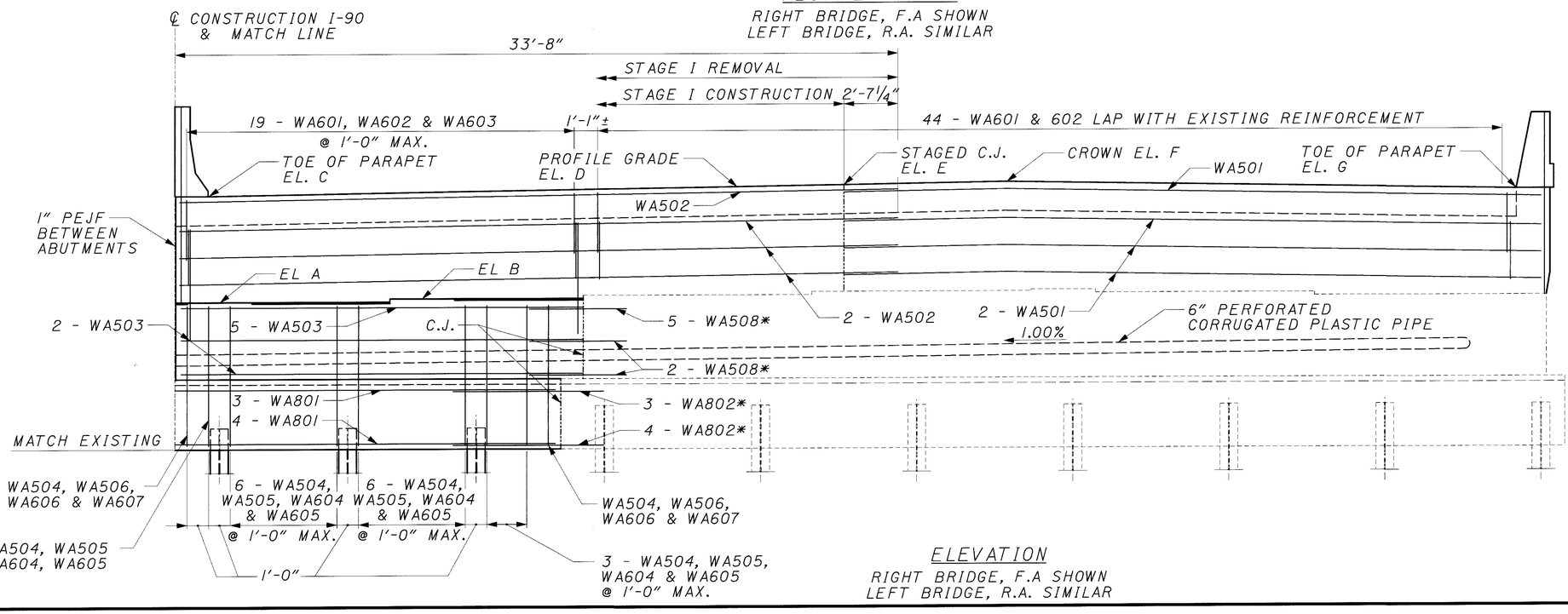

ELEVATION

RIGHT BRIDGE, F.A SHOWN
LEFT BRIDGE, R.A. SIMILAR

* 2'-0" MIN. DRILL AND GROUT SEE DOWEL HOLE DETAIL SHEET 28/30
2'-5" MIN. LAP FOR NO. 5 BARS
4'-11" MIN. LAP FOR NO. 8 BARS

NOTES:

FOR SECTIONS A, B, SEE SHEET 15/30

FOR SECTIONS C,D,E,F AND OTHER WINGWALL DETAILS SEE SHEET 16/30

FOR FOUNDATION DETAILS SEE SHEET 12/30

FOR ELEVATIONS SEE SHEET 15/30

WORK THIS SHEET WITH SHEETS 12/30 & 13/30

LEGEND:

TYP. = TYPICAL
R.A. = REAR ABUTMENT
F.A. = FORWARD ABUTMENT
C.J. = CONSTRUCTION JOINT
EL. = ELEVATION
MAX. = MAXIMUM
PEJF = PREFORMED EXPANSION JOINT FILLER

17 MAR 2000
P:\pr22308\cadd\wabut2.dgn

BURGESS & NIPLE

DESIGNED	DRAWN	CHECKED	REVISED	REVIEWED	DATE
JAA	JAA	SCT		MAR	01-03-00

STRUCTURE FILE NUMBER 1808087,1808095

ABUTMENT DETAILS II OF III
BRIDGE NO. CUY-90-0249 L & R
OVER DOVER CENTER ROAD

CUY-90-0.00

22/38

481
582

LOCATION	LEFT BRIDGE		RIGHT BRIDGE	
	R.A.	F.A.	R.A.	F.A.
A	674.01	674.51	674.01	674.55
B	674.17	674.65	674.13	674.69
C	678.87	679.43	678.87	679.43
D	679.29	679.79	679.18	679.80
E	679.37	679.86	679.24	679.87
F	679.50	679.97	679.33	679.99
G	679.20	679.61	678.93	679.64

TABLE OF ELEVATIONS

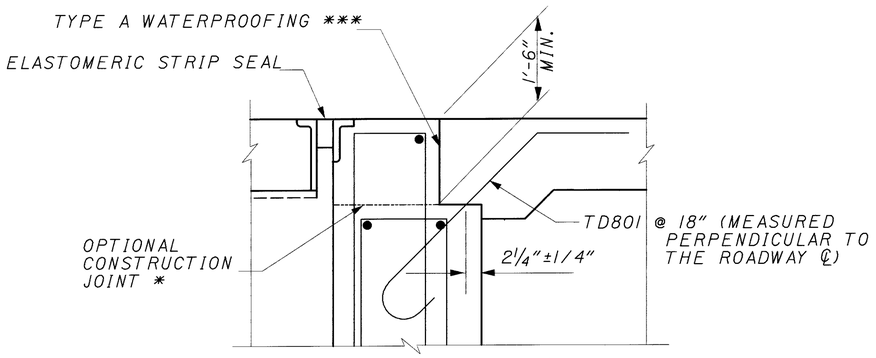

DETAIL T

APPLIES TO BOTH SECTIONS A-A & B-B

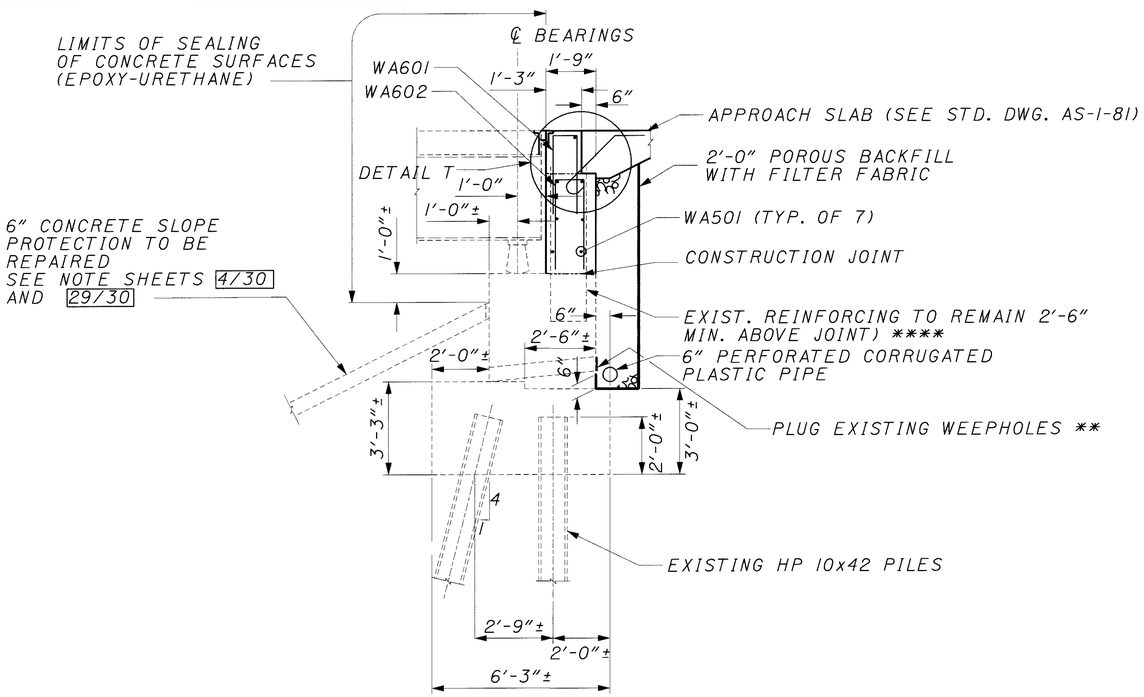

SECTION B-B

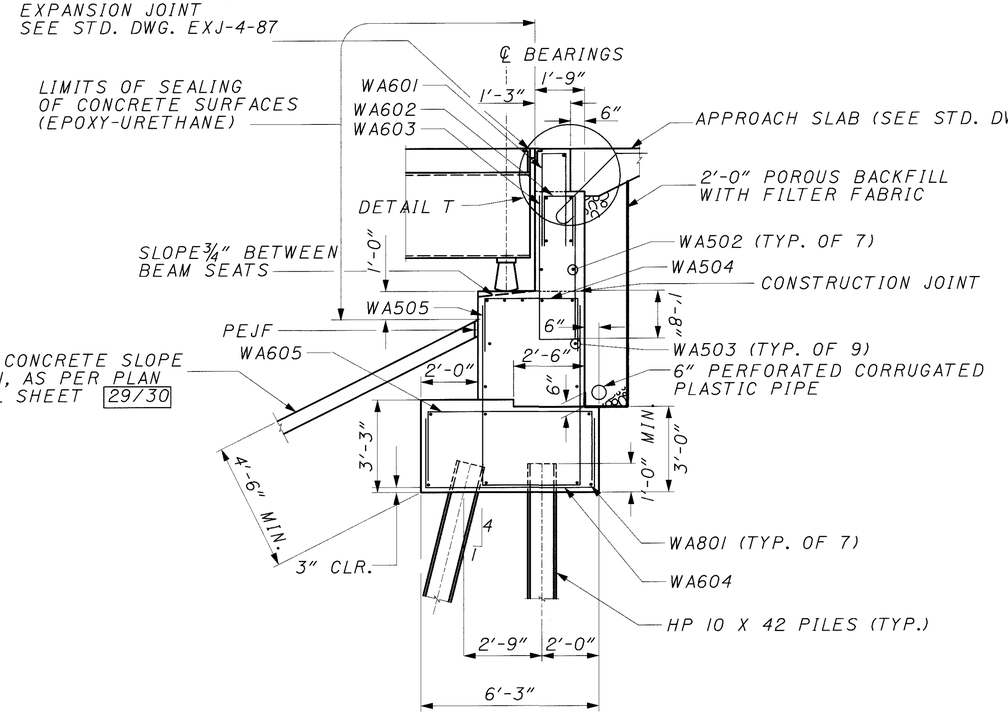

SECTION A-A

NOTES:

POUROUS BACKFILL WITH FILTER FABRIC, 2 FEET THICK SHALL EXTEND UP TO THE PLANE OF THE SUBGRADE, TO ONE FOOT BELOW THE EMBANKMENT SURFACE, AND LATERALLY TO THE ENDS OF THE WINGWALLS.

* BACKWALL CONCRETE ABOVE THIS OPTIONAL CONSTRUCTION JOINT SHALL NOT BE PLACED UNTIL AFTER THE DECK CONCRETE IN THE SPAN ADJACENT TO THE ABUTMENT HAS BEEN PLACED.

** EXISTING 4" WEEPHOLES TO BE PLUGGED IN ACCORD WITH 202.09 & INCLUDED WITH ITEM 202 - PORTIONS OF STRUCTURE REMOVED, AS PER PLAN FOR PAYMENT.

*** INCLUDE WITH ITEM 611 - REINFORCED CONCRETE APPROACH SLAB FOR PAYMENT.

**** OR REPLACE IN KIND WITH EPOXY GROUTED DOWELS AT NO ADDITIONAL COST TO THE STATE.

3" MINIMUM CLEAR COVER FOR ABUTMENTS

LEGEND

TYP. = TYPICAL
STD. DWG. = STANDARD DRAWING
MIN. = MINIMUM

17 MAR 2000
P:\pr22308\cadd\wabut1.dgn

BURGESS & NIPLE

REVIEWED MAR 01-03-00
DATE
STRUCTURE FILE NUMBER 1808087,1808095
DRAWN KK
REVISED
DESIGNED KK
CHECKED SCT

ABUTMENT DETAILS III OF III
BRIDGE NO. CUY-90-0249 L & R
OVER DOVER CENTER ROAD

CUY-90-0.00

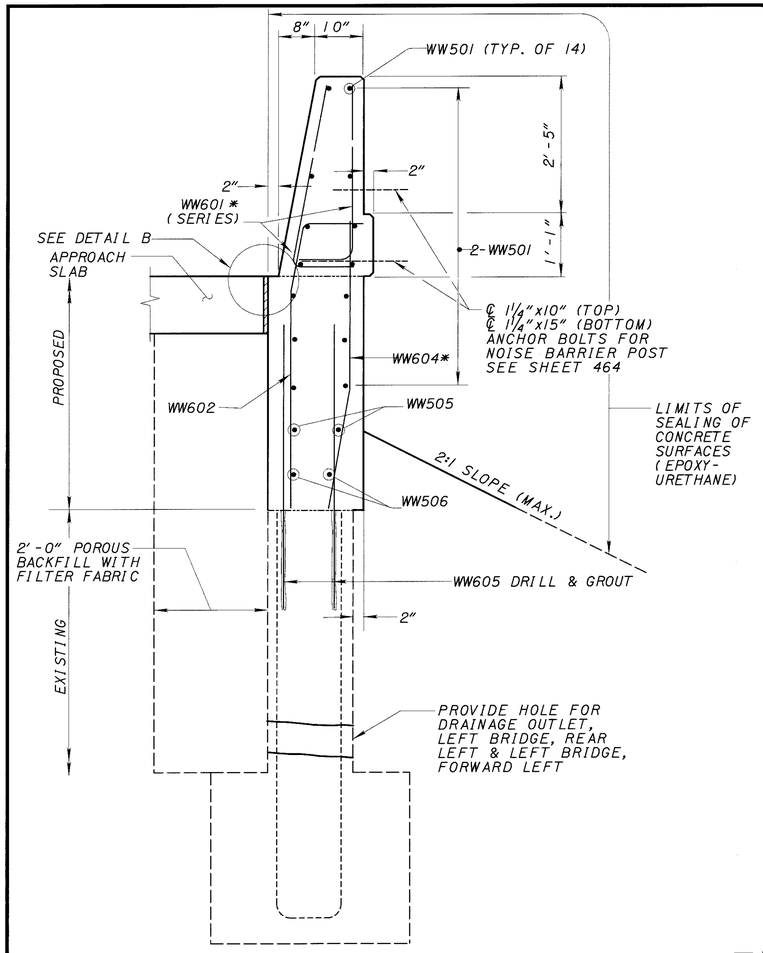

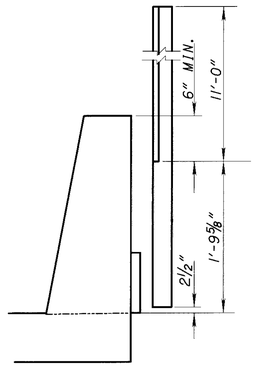

NOISE BARRIER POST DETAIL

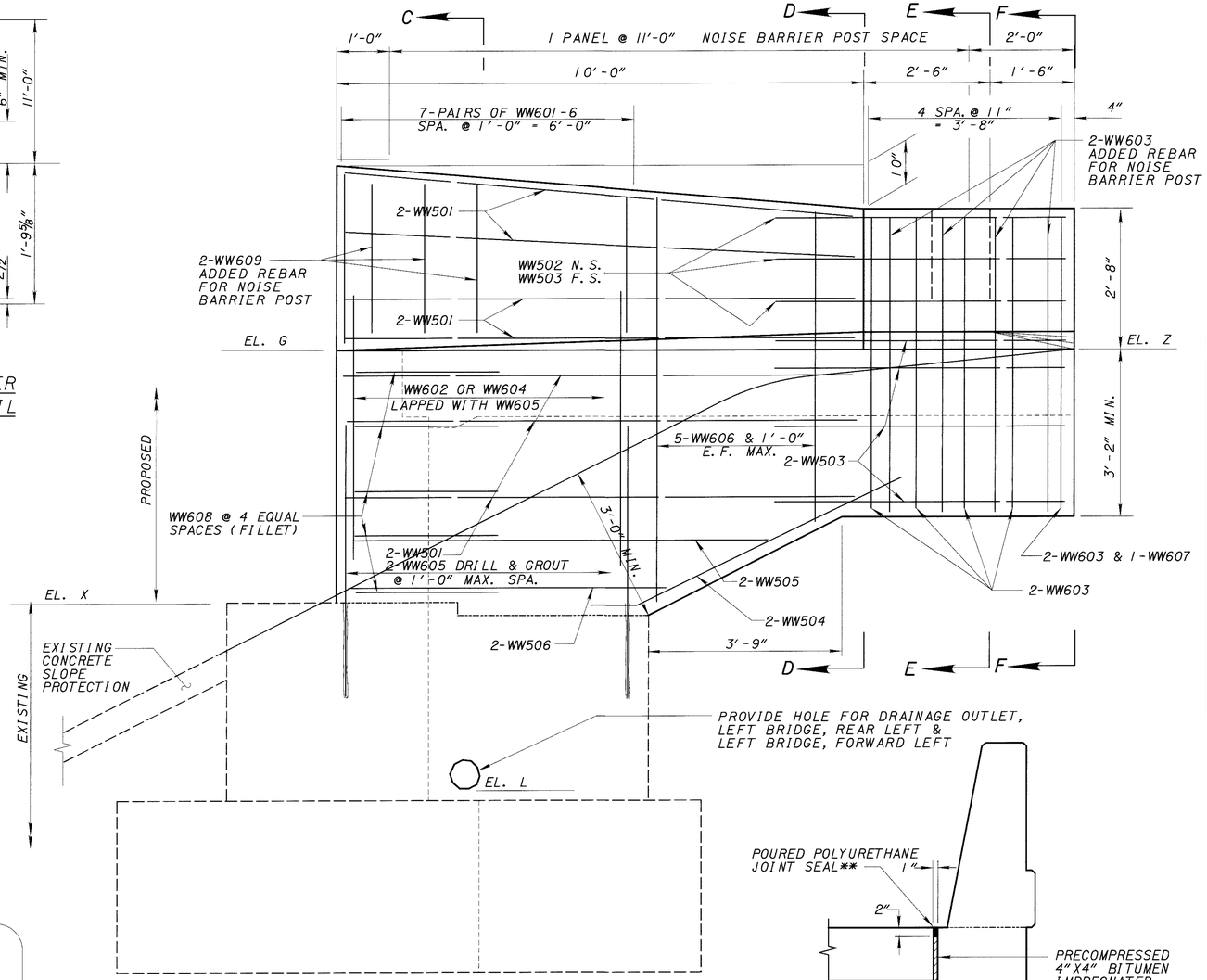

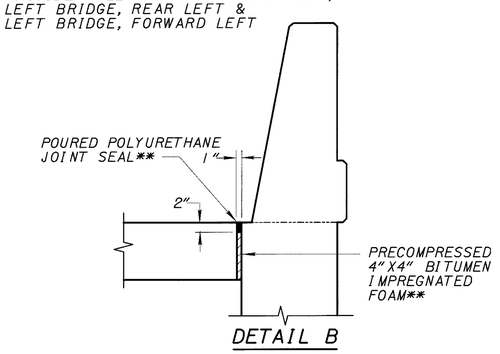

DETAIL B

C

WINGWALL ELEVATION

NOISE BARRIER PANELS ARE TO BE PLACED ONLY ON THE NORTH PARAPET OF THE LEFT BRIDGE

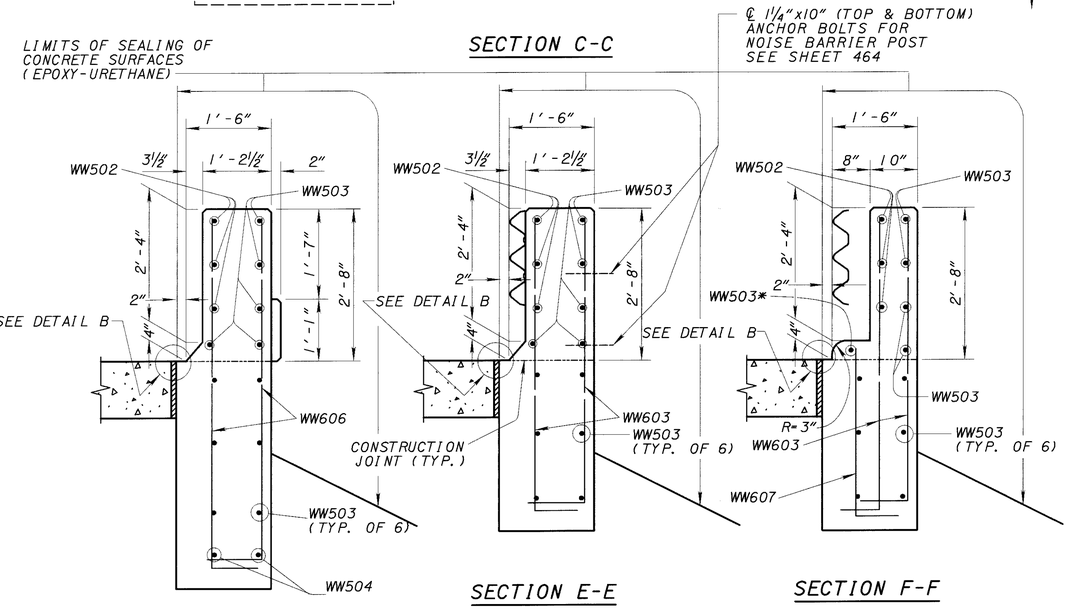

SECTION D-D

SECTION E-E

SECTION F-F

ELEVATIONS				
LOCATION	ELEVATION			
	"X"	"G"	"Z"	"L"
L. R. LEFT	674.19±	679.20	679.11	670.41
L. F. LEFT	674.60±	679.61	679.59	670.82
R. R. RIGHT	673.92±	678.93	678.81	——
R. F. RIGHT	674.62±	679.64	679.63	——

LEGEND:
- N. S. = NEAR SIDE
- E. F. = EACH FACE
- F. S. = FAR SIDE
- L. R. = LEFT REAR
- L. F. = LEFT FORWARD
- R. R. = RIGHT REAR
- R. F. = RIGHT FORWARD
- SPA. = SPACES
- TYP. = TYPICAL
- MAX. = MAXIMUM

**FOAM AND JOINT SEAL INCLUDED WITH APPROACH SLAB, AS PER PLAN FOR PAYMENT. (SEE GENERAL NOTES)

NOTES:

FOR BRIDGE TERMINAL ASSEMBLY SEE STANDARD CONSTRUCTION DRAWING GR-3.1 AND GR-3.2.

* FIELD BEND IF NECESSARY

2'-5" MINIMUM LAP FOR NO. 5 BARS

FOR NOISE BARRIER POST AND PARAPET DETAILS SEE NOISE BARRIER DETAILS, SHEETS 179 TO 979.

BURGESS & NIPLE

DATE 01-03-00
REVIEWED MAR
STRUCTURE FILE NUMBERS 180807, 180895
DRAWN SCT
REVISED
DESIGNED SCT
CHECKED JAA

WINGWALL DETAILS
BRIDGE NO. CUY-90-0249 L&R
OVER DOVER CENTER ROAD

CUY-90-0.00

24 / 38

483
582

17 MAR 2000
p:\pr22308\cadd\wwing.dgn

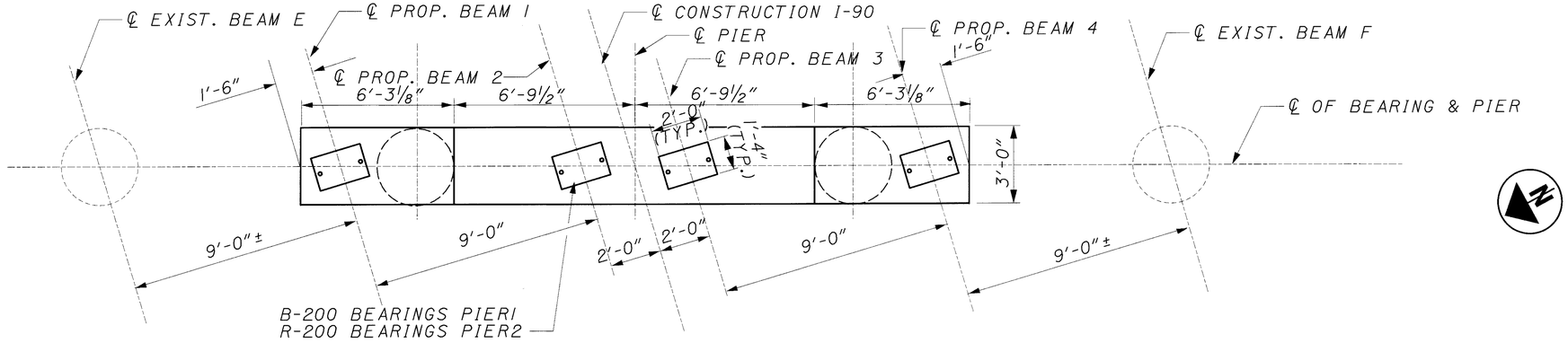

PIER PLAN

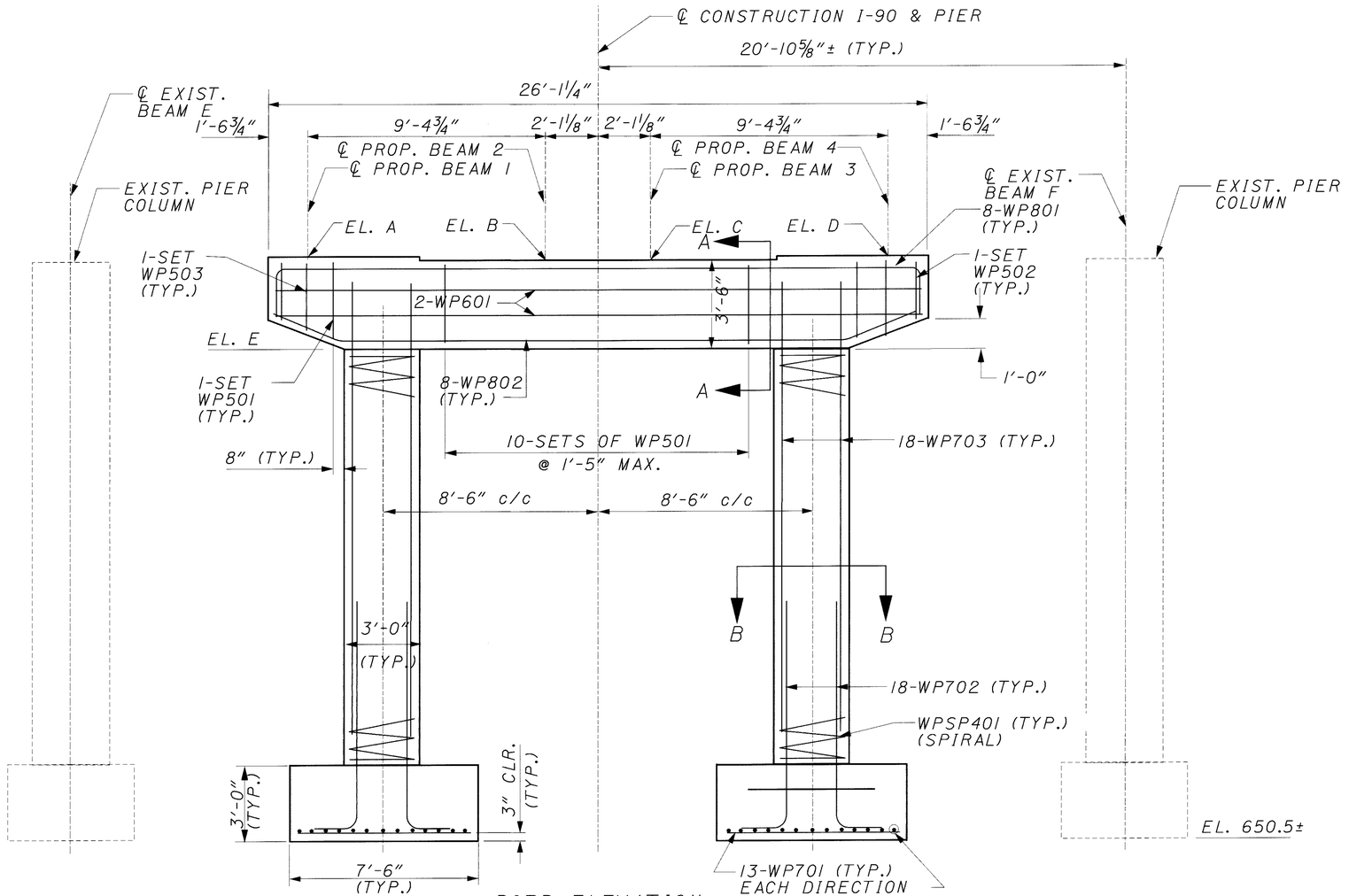

PIER ELEVATION
(2 PIERS TOTAL)

NOTES

SEAL ENTIRE EXPOSED SURFACE AREA OF PROPOSED AND EXISTING PIER COLUMNS AND CAP EXCEPT FOR THE TOP HORIZONTAL SURFACE.

FOR ELEVATIONS SEE SHEET 18/30.

FOR SECTIONS A-A AND B-B SEE SHEET 18/30.

LEGEND

c/c	=	CENTER TO CENTER
TYP.	=	TYPICAL
FWD.	=	FORWARD
EXIST.	=	EXISTING
CLR.	=	CLEARANCE
MAX.	=	MAXIMUM
PROP.	=	PROPOSED
EL.	=	ELEVATION

BURGESS & NIPLE

REVIEWED MAR DATE 01-03-00
DRAWN DCF REVISED
DESIGNED DCF CHECKED SCT
STRUCTURE FILE NUMBER 1808087, 1808095

PIER DETAILS I
BRIDGE NO. CUY-90-0249 L & R
OVER DOVER CENTER ROAD

CUY-90-0.00

25/38

484/582

17 MAR 2000
p:\pr22308\cadd\wpier2.dgn

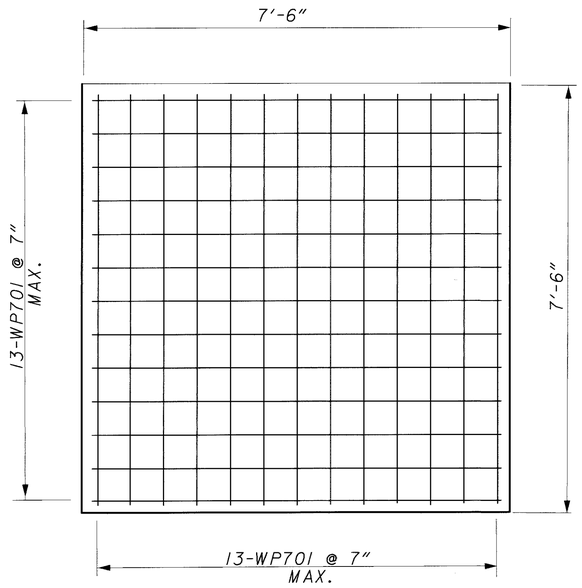

PIER FOUNDATION PLAN

	PIER 1	PIER 2
EL. "A"	673.91	674.10
EL. "B"	673.75	673.95
EL. "C"	673.73	673.95
EL. "D"	673.85	674.08
EL. "E"	670.23	670.45

TABLE OF ELEVATIONS

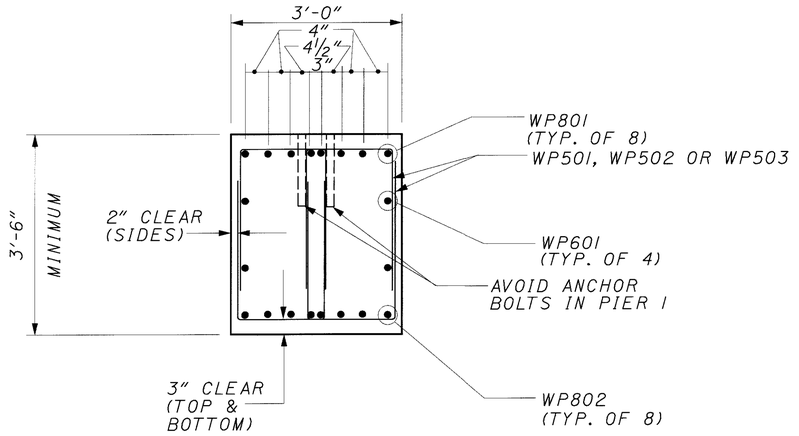

SECTION A-A
PIER 1

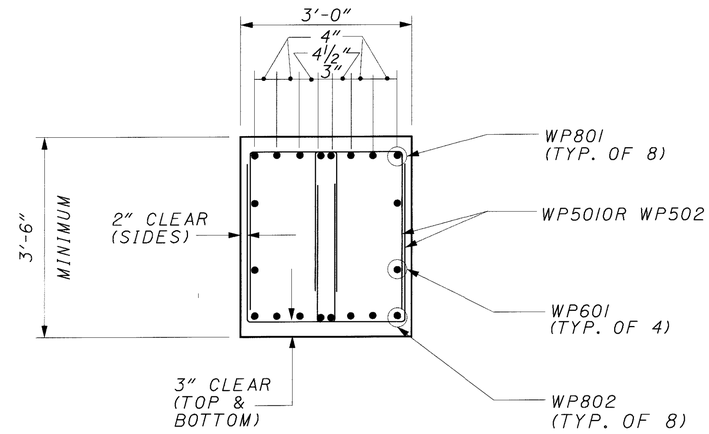

SECTION A-A
PIER 2

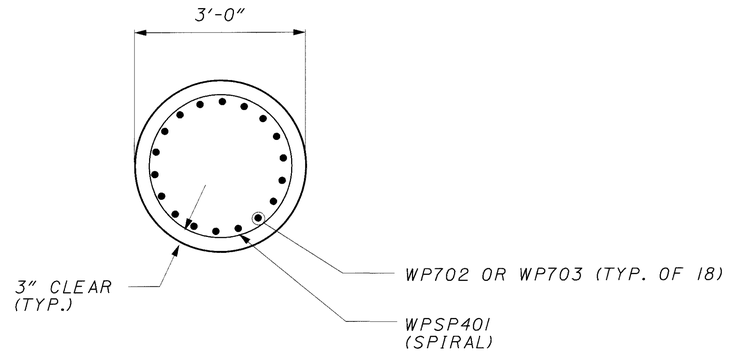

SECTION B-B

LEGEND
TYP. = TYPICAL
MAX. = MAXIMUM

17 MAR 2000
p:\pr22308\cadd\wpier1.dgn

BURGESS & NIPLE

DESIGNED	DRAWN	REVIEWED	DATE
SCT/JAA	JAA/SCT	MAR	01-03-00
CHECKED	REVISED	STRUCTURE FILE NUMBER	
JAA/SCT		1808087, 1808095	

PIER DETAILS II
BRIDGE NO. CUY-90-0249 L & R
OVER DOVER CENTER ROAD

CUY-90-0.00

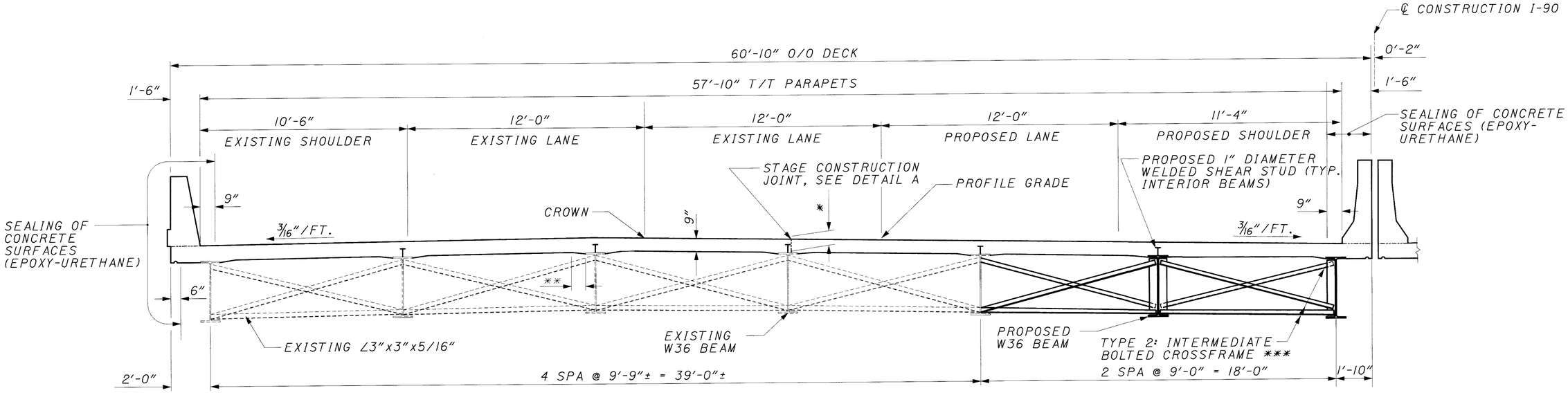

TRANSVERSE SECTION

LEFT BRIDGE LOOKING AHEAD
RIGHT BRIDGE LOOKING BACK

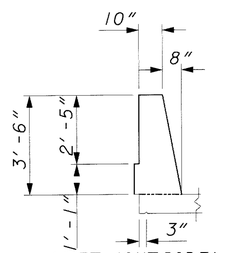

LEFT (OUTSIDE) PARAPET DETAIL

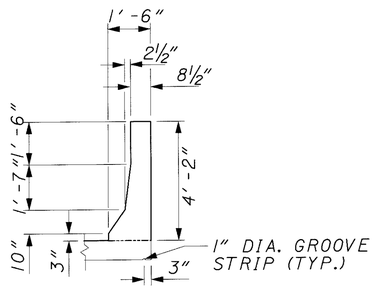

RIGHT (MEDIAN) BARRIER DETAIL

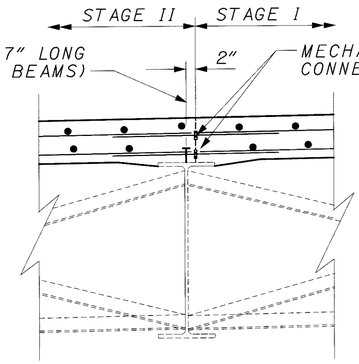

DETAIL A

MECHANICAL CONNECTORS TRANSVERSE BARS SHALL HAVE A MIN. LAP OF 2'-9"

* SEE ANTICIPATED DECK SLAB DEPTH TABLE, SHEETS 26/30 & 27/30. THESE ARE NOMINAL DIMENSIONS. THE QUANTITY OF DECK CONCRETE TO BE PAID FOR SHALL BE BASED ON THESE DIMENSIONS, EVEN THOUGH DEVIATION FROM THEM MAY BE NECESSARY BECAUSE THE TOP FLANGE OF THE BEAM MAY NOT HAVE THE EXACT CAMBER OR CONFIGURATION REQUIRED TO PLACE IT PARALLEL TO THE FINISHED GRADE. DEDUCTION SHALL BE MADE FOR THE VOLUME OF ENCASED STEEL PLATES AS PER 842.18 OF THE CMS.

** A TYPICAL HAUNCH WIDTH OF 9" SHALL BE USED FOR COMPUTING QUANTITY OF CONCRETE. HOWEVER, THE HAUNCH WIDTH MAY VARY BETWEEN 6" AND 12" PROVIDED THAT THE SLOPE SHALL BE NOT MORE THAN 1:4 FOR A HAUNCH LESS THAN 9" IN WIDTH.

*** CROSSFRAMES SHALL BE INSTALLED PRIOR TO THE DECK POUR WITH THE EXCEPTION OF THE CROSSFRAMES BETWEEN THE FIRST PROPOSED BEAM AND EXISTING FASCIA BEAM. AT THESE LOCATIONS, THE CROSSFRAMES SHALL NOT BE WELDED AT ONE SIDE, OR IF BOLTED, BOLTS SHALL ONLY BE HAND TIGHTENED. AFTER THE POUR DIRECTLY OVER THIS BAY, COMPLETE THE CROSSFRAME INSTALLATION. CROSSFRAMES BETWEEN PROPOSED BEAMS SHALL BE INSTALLED PRIOR TO DECK PLACEMENT.

FOR DETAILS NOT SHOWN
SEE STANDARD DRAWINGS:
BR-1-96, SBR-1-96, GSD-1-96,
& EXJ-4-87

LEGEND:
O/O = OUT TO OUT
SPA = SPACES
T/T = TOE TO TOE
TYP. = TYPICAL

BURGESS & NIPLE

DESIGNED	DRAWN	REVIEWED	DATE
KK/DCF	KK/DCF	MAR	01-10-00
CHECKED	REVISED	STRUCTURE FILE NUMBER	
SCT		1808087, 1808095	

TRANSVERSE SECTION
BRIDGE NO. CUY-90-0249 L&R
OVER DOVER CENTER ROAD

CUY-90-0.00

27/38

486
582

17 MAR 2000
p:\pr22308\cadd\w_tsect1.dgn

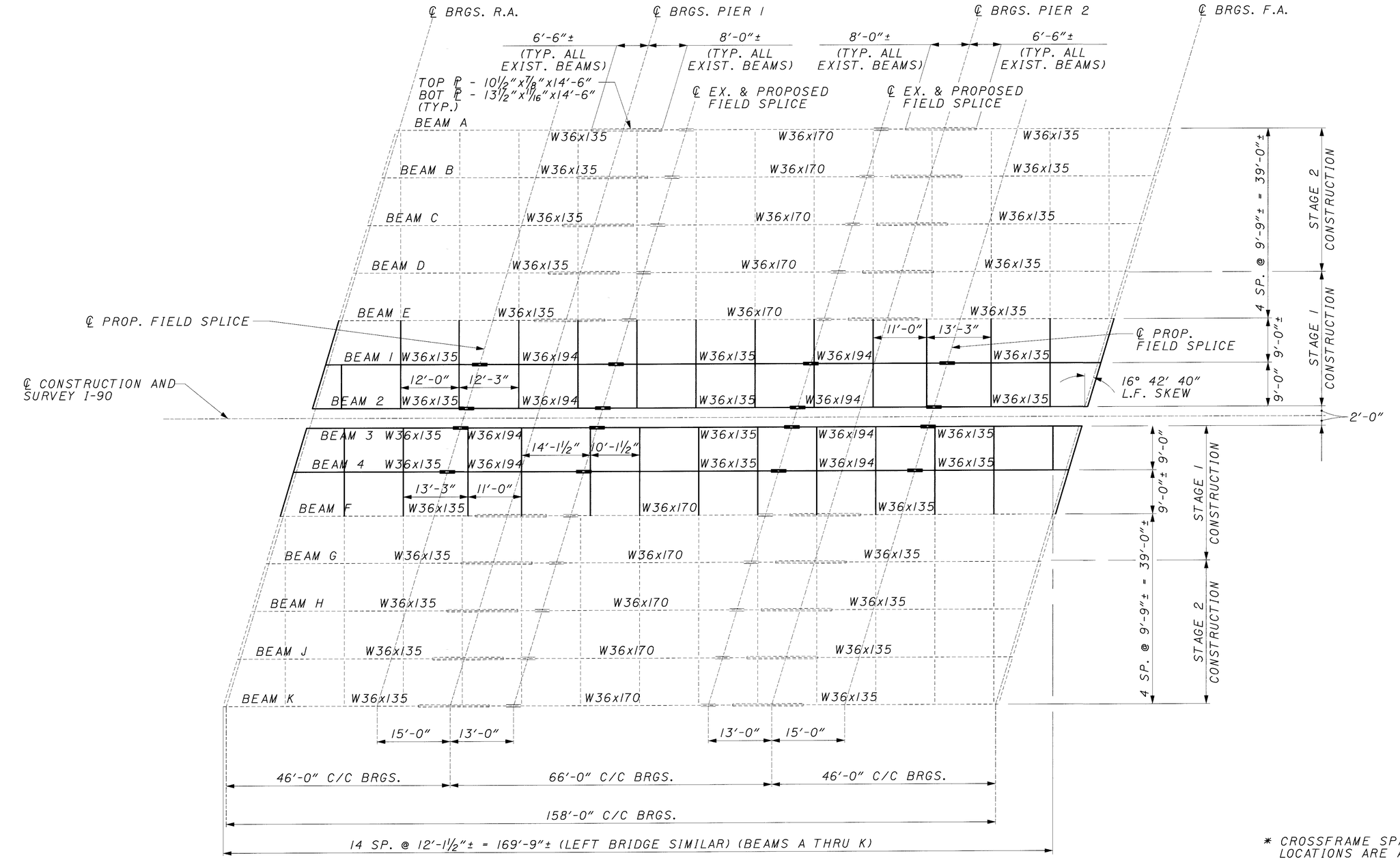

FRAMING PLAN

* CROSSFRAME SPACING IN THESE LOCATIONS ARE ADJUSTED TO AVOID CONFLICTS WITH BEAM SPLICE PLATES.

LEGEND:

SP. = SPACES
TYP. = TYPICAL
BRGS. = BEARINGS
F.A. = FORWARD ABUTMENT
R.A. = REAR ABUTMENT
L.F. = LEFT FORWARD
EX. = EXISTING
PROP. = PROPOSED

17 MAR 2000
p:\pr2308\cadd\wfrmpln.dgn

BURGESS & NIPLE

DESIGNED	DRAWN	REVIEWED	DATE
JAA	JAA	MAR	12-15-99
CHECKED	REVISED	STRUCTURE FILE NUMBER	
SCT		1808087,1808095	

FRAMING PLAN
BRIDGE NO. CUY-90-0249 L & R
OVER DOVER CENTER ROAD

CUY-90-0.00

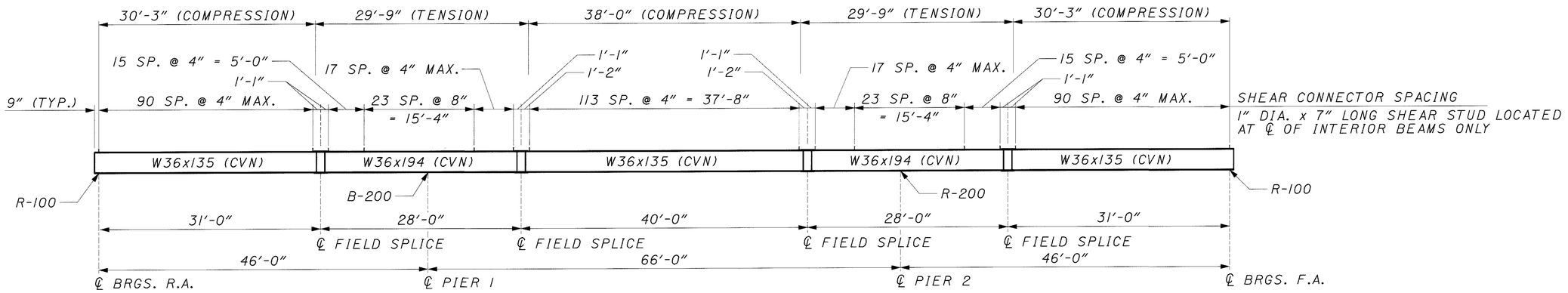

PROPOSED BEAM ELEVATION

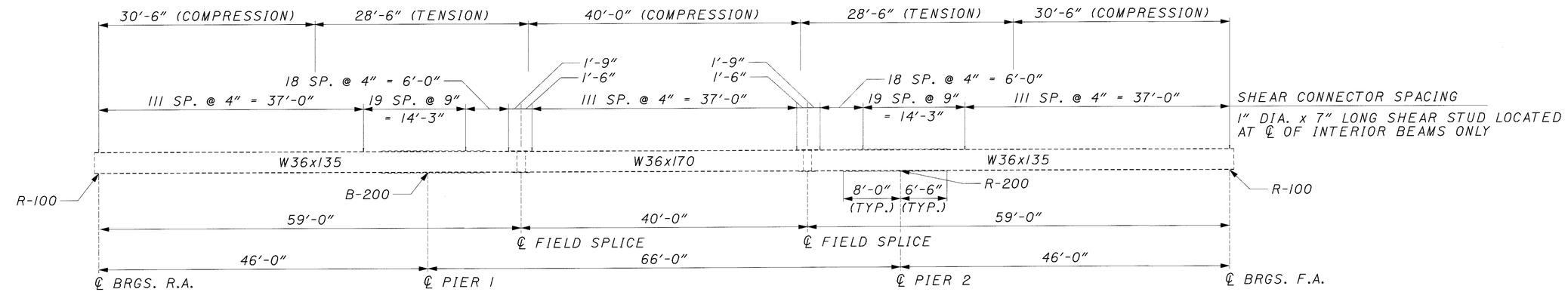

EXISTING BEAM ELEVATION

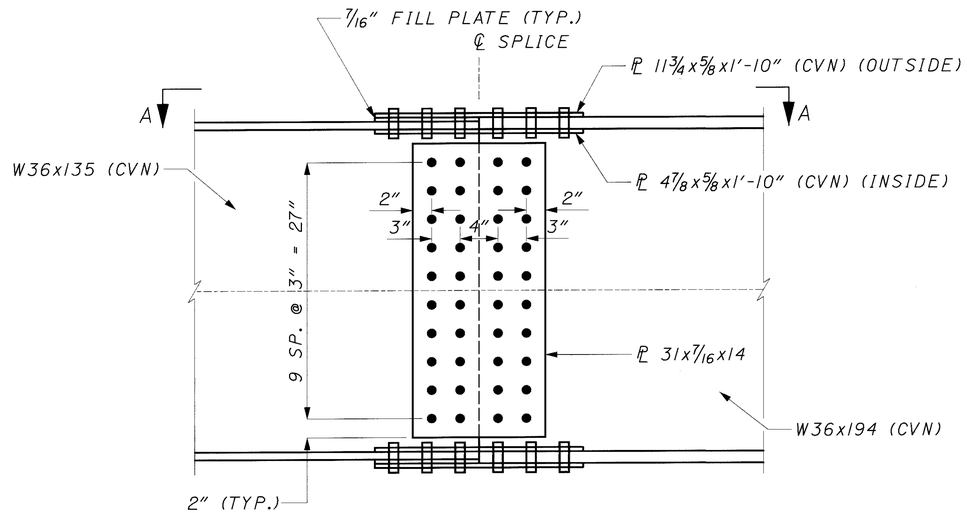

SPLICE ELEVATION

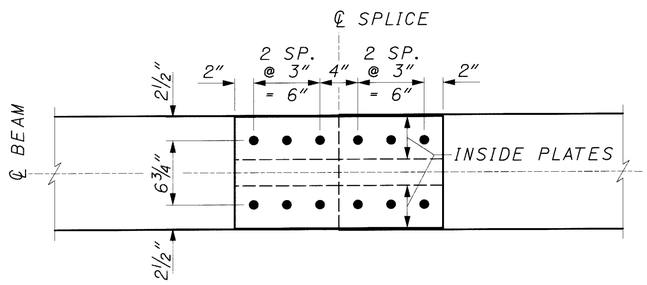

VIEW A-A

NOTES:

1. FOR BEAM SPLICE DETAIL SEE STANDARD DRAWING BS-1-93, PAGE 2/3 (FOR 36 KSI STEEL) AND REFER TO THE DETAIL FOR A W36x135 BEAM.
2. WELDED ATTACHMENT OF SUPPORTS FOR CONCRETE DECK FINISHING MACHINE MAY BE MADE TO AREAS OF THE FASCIA BEAM FLANGES DESIGNATED "COMPRESSION". ATTACHMENTS SHALL NOT BE MADE TO AREAS DESIGNATED TENSION. FILLET WELDS TO COMPRESSION FLANGES SHALL NOT BE CLOSER THAN 1 INCH FROM EDGE OF FLANGE, NOT BE MORE THAN 2 INCHES LONG, AND NOT BE SMALLER THAN THE MINIMUM SIZE REQUIRED BY AASHTO/AWS.
3. WHERE A SHAPE OR PLATE IS DESIGNATED (CVN) THE MATERIAL SHALL MEET SPECIFIED MINIMUM NOTCH TOUGHNESS REQUIREMENTS AS SPECIFIED IN 711.01 OF CMS.
4. ALL BOLTS SHALL BE GALVANIZED 1" DIAMETER ASTM A325 HIGH STRENGTH BOLTS.
5. FOR BEARING DETAILS SEE STD. DWG. RB-1-55.
6. WELDED SHEAR CONNECTORS SHALL ONLY BE INSTALLED ON INTERIOR BEAMS.

BURGESS & NIPLE

DESIGNED	DRAWN	REVIEWED	DATE
JAA	JAA	MAR	12-15-99
CHECKED	REVISED	STRUCTURE FILE NUMBER	
SCT		1808087,1808095	

BEAM DETAILS
BRIDGE NO. CUY-90-0249 L & R
OVER DOVER CENTER ROAD

CUY-90-0.00

17 MAR 2000
p:\pr22308\cadd\wbeamelv.dgn

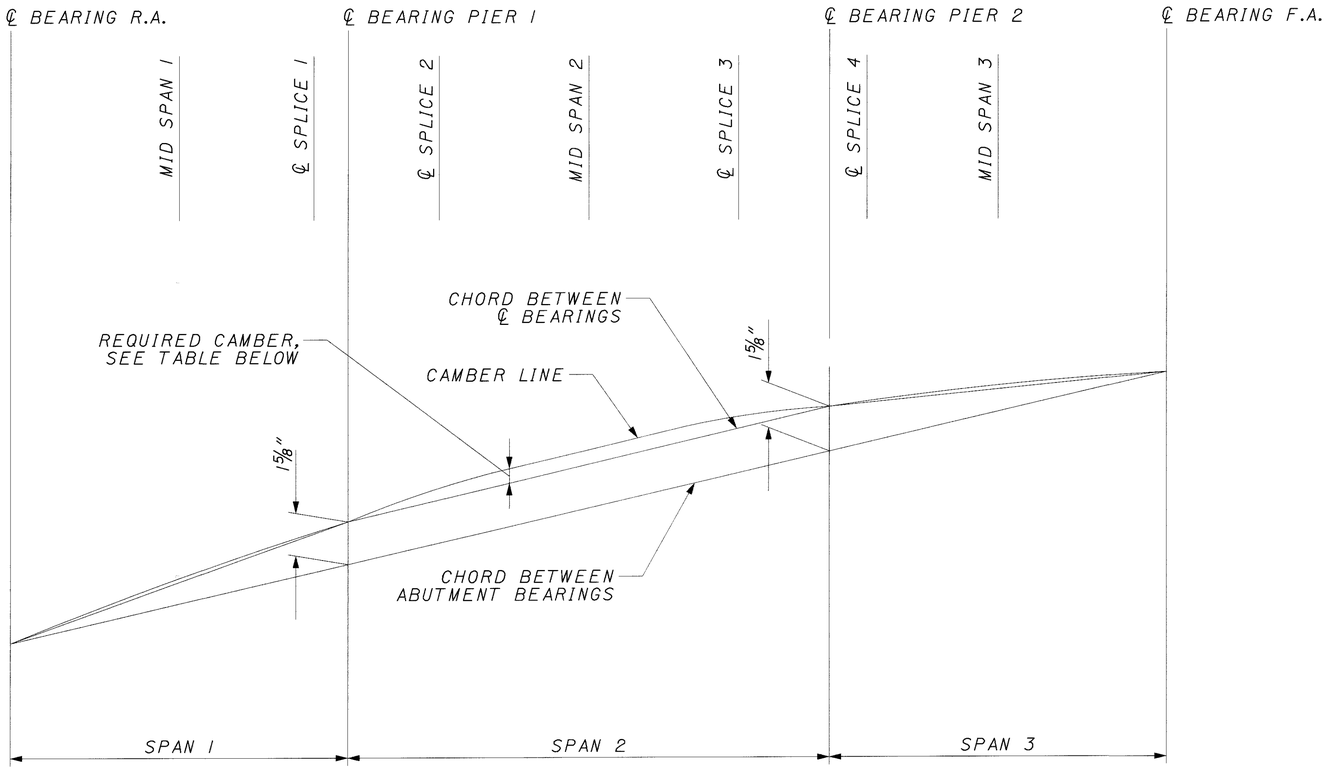

CAMBER AND BLOCKING DIAGRAM

CAMBER TABLE (INCHES) (FROM LINE BETWEEN ℄ BEARINGS)							
	SPAN 1		SPAN 2			SPAN 3	
	MID SPAN	℄ SPLICE 1	℄ SPLICE 2	MID SPAN	℄ SPLICE 3	℄ SPLICE 4	MID SPAN
DEFLECTION DUE TO STEEL WEIGHT	0	0	0	1/16	0	0	0
DEFLECTION DUE TO SLAB & PARAPET WEIGHT	1/8	3/16	3/16	3/8	3/16	3/16	1/8
VERTICAL CURVE ADJUSTMENT	3/16	1/16	3/16	1/4	3/16	1/16	1/8
REQUIRED CAMBER	5/16	3/8	3/8	11/16	3/8	3/8	1/4

BURGESS & NIPLE

DESIGNED	DRAWN	REVIEWED	DATE
KK	KK	MAR	12-15-99
CHECKED	REVISED	STRUCTURE FILE NUMBER	
SCT		1808087,1808095	

CAMBER AND BLOCKING DIAGRAM
BRIDGE NO. CUY-90-0249 L & R
OVER DOVER CENTER ROAD

CUY-90-0.00

17 MAR 2000
P:\pr2308\cadd\wcamber.dgn

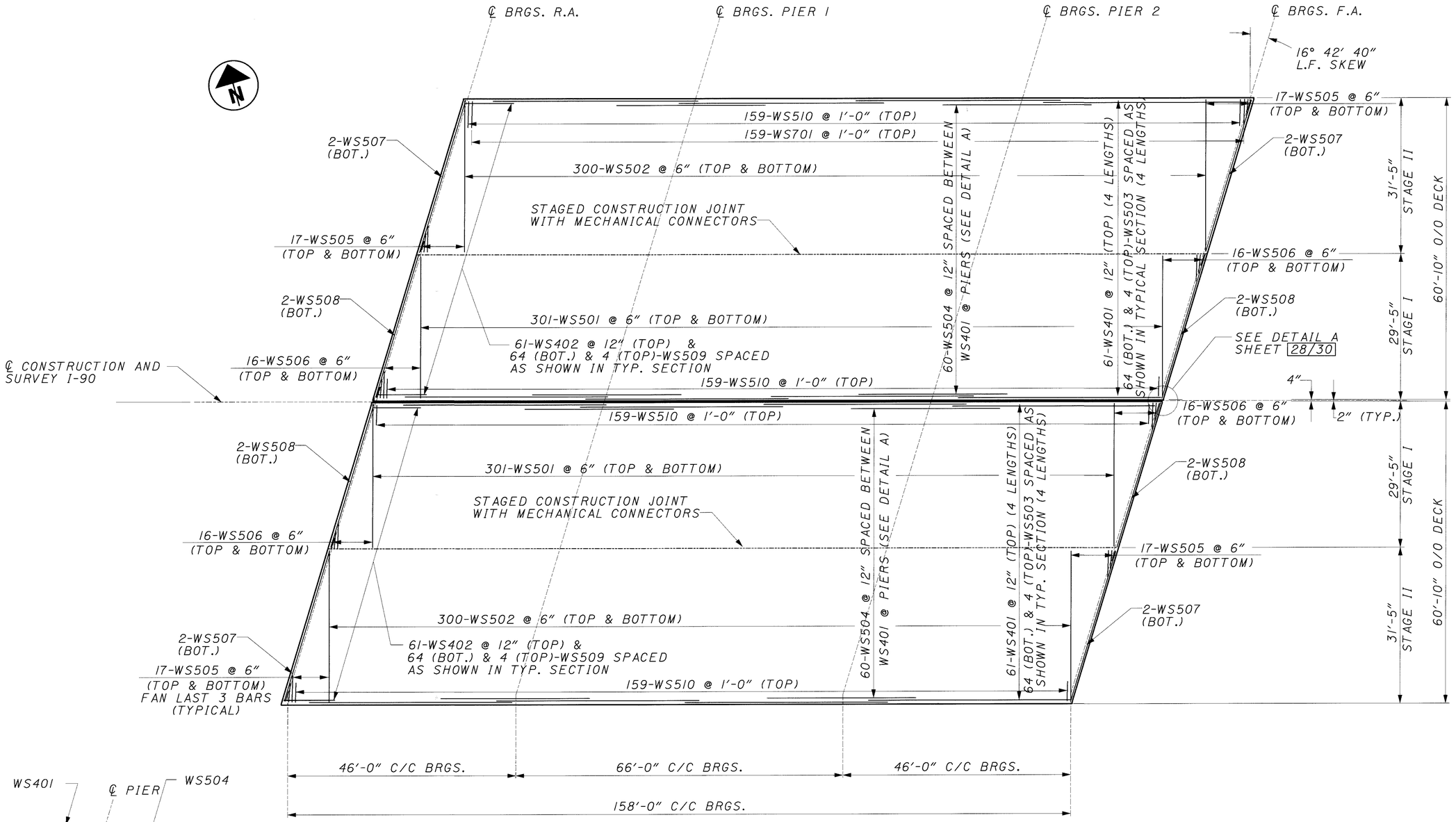

DECK SLAB PLAN

WS401 ℄ PIER WS504

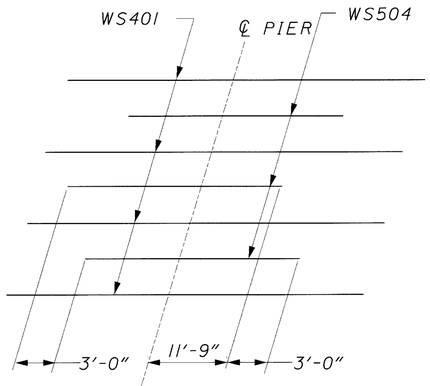

DETAIL A

LAP REQUIREMENTS

No. 4 = 2'-0"
No. 5 = 2'-5"

LEGEND:

BRGS. = BEARINGS
BOT. = BOTTOM
C/C = CENTER TO CENTER
O/O = OUT TO OUT

17 MAR 2000
P:\pr22308\cadd\wdeck1.dgn

BURGESS & NIPLE

DESIGNED	DRAWN	REVIEWED	DATE
KK	KK	MAR	01-10-00
CHECKED	REVISED	STRUCTURE FILE NUMBER	
SCT		1807692, 1807706	

DECK SLAB PLAN
BRIDGE NO. CUY-90-0249 L & R
OVER DOVER CENTER ROAD

CUY-90-0.00

31/38

490
582

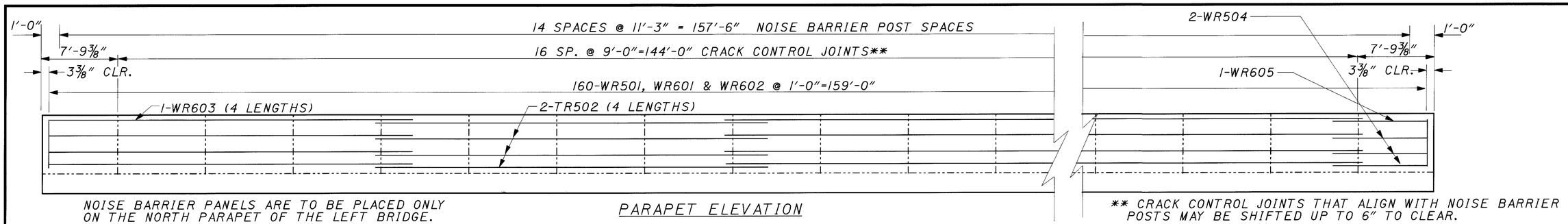

NOISE BARRIER PANELS ARE TO BE PLACED ONLY ON THE NORTH PARAPET OF THE LEFT BRIDGE.

PARAPET ELEVATION

** CRACK CONTROL JOINTS THAT ALIGN WITH NOISE BARRIER POSTS MAY BE SHIFTED UP TO 6" TO CLEAR.

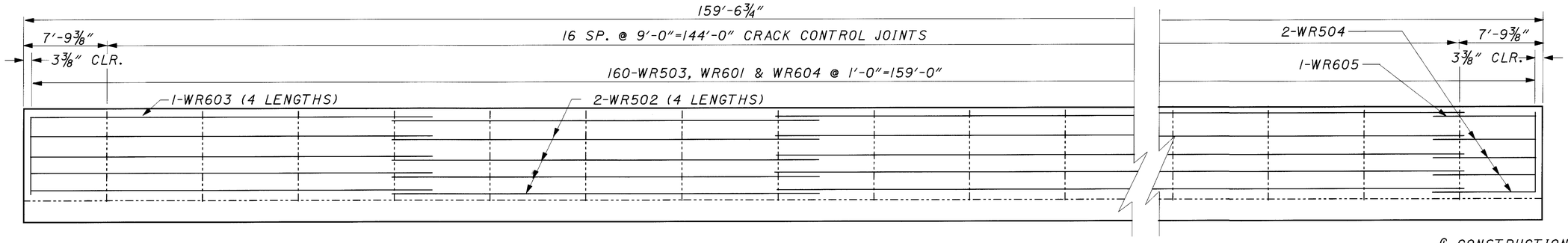

BARRIER ELEVATION

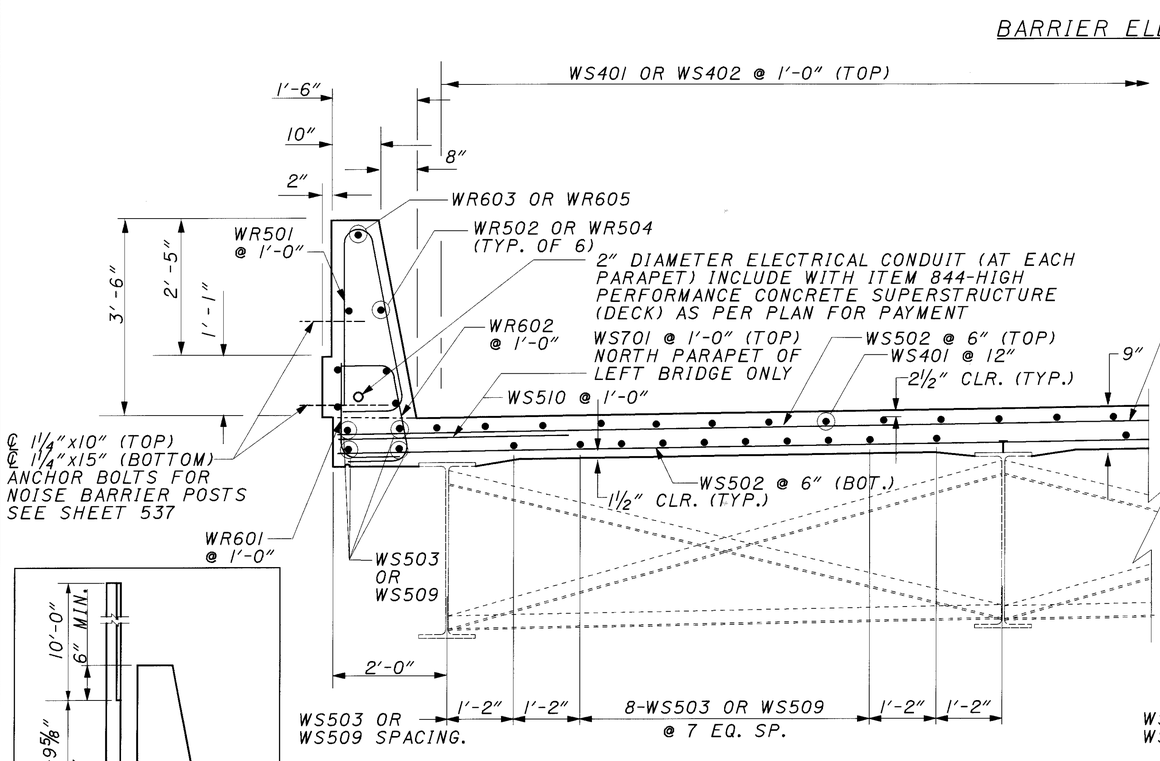

TYPICAL DECK SECTION
AT 9'-9" BAY

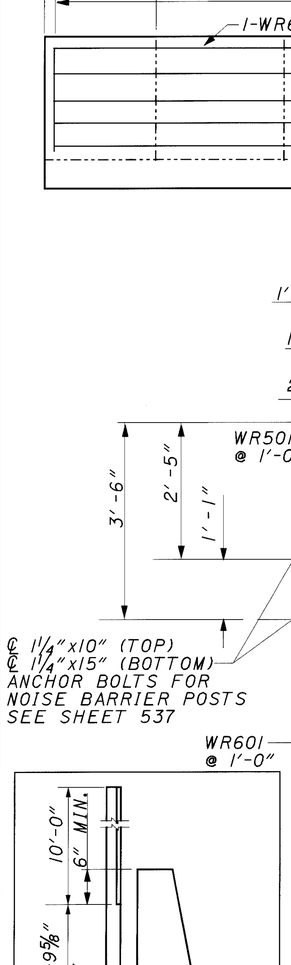

NOISE BARRIER POST DETAIL

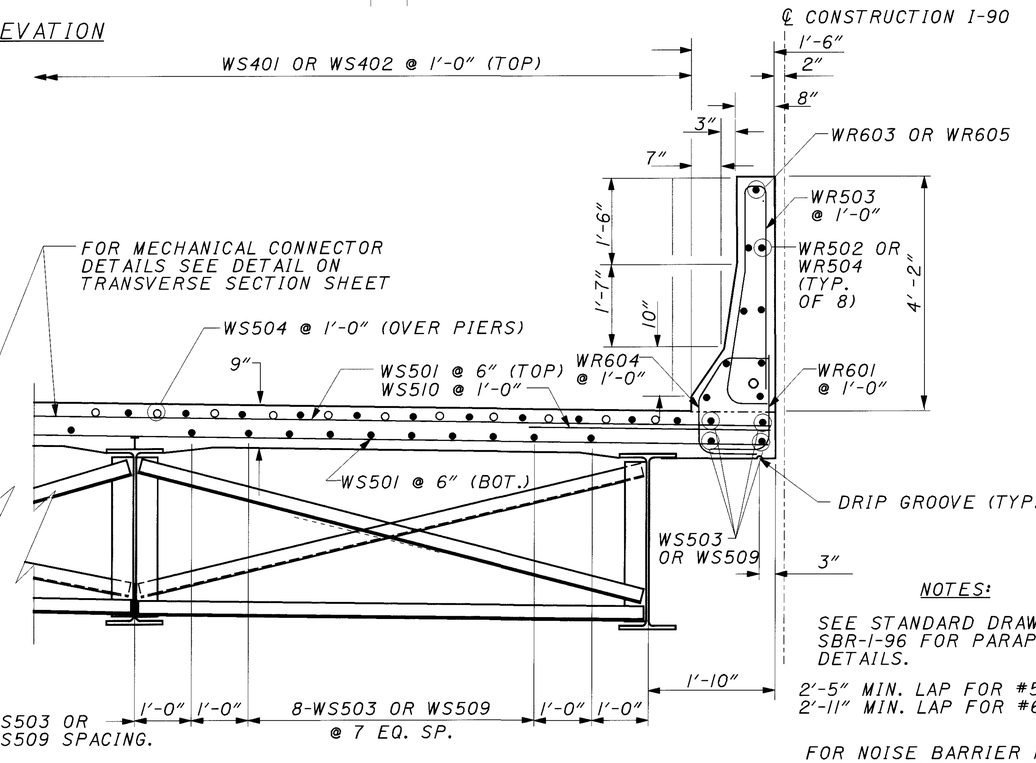

TYPICAL DECK SECTION OVER PIERS
AT 9'-0" BAY

NOTES:

SEE STANDARD DRAWING SBR-1-96 FOR PARAPET DETAILS.

2'-5" MIN. LAP FOR #5 BARS & 2'-11" MIN. LAP FOR #6 BARS.

FOR NOISE BARRIER POST AND PARAPET DETAILS SEE NOISE BARRIER DETAILS, SHEETS 1/9 TO 9/9.

EQ. = EQUAL
SP. = SPACES
O/O = OUT TO OUT
TYP.= TYPICAL
BOT = BOTTOM

LEFT BRIDGE LOOKING AHEAD
RIGHT BRIDGE LOOKING BACK

BURGESS & NIPLE

DATE 02-08-00
REVIEWED MAR
STRUCTURE FILE NUMBER 1808087, 1808095
DRAWN SCT
REVISED
DESIGNED JAA/SCT
CHECKED SCT/JAA

DECK AND PARAPET DETAILS
BRIDGE NO. CUY-90-0249 L & R
OVER DOVER CENTER ROAD

CUY-90-0.00

32/38

491/582

I:\PROJECTS\Pidl1738\dgn\finalplans\WDECKSEC.DGN 21-JUL-2000 2:28PM jgrmovse

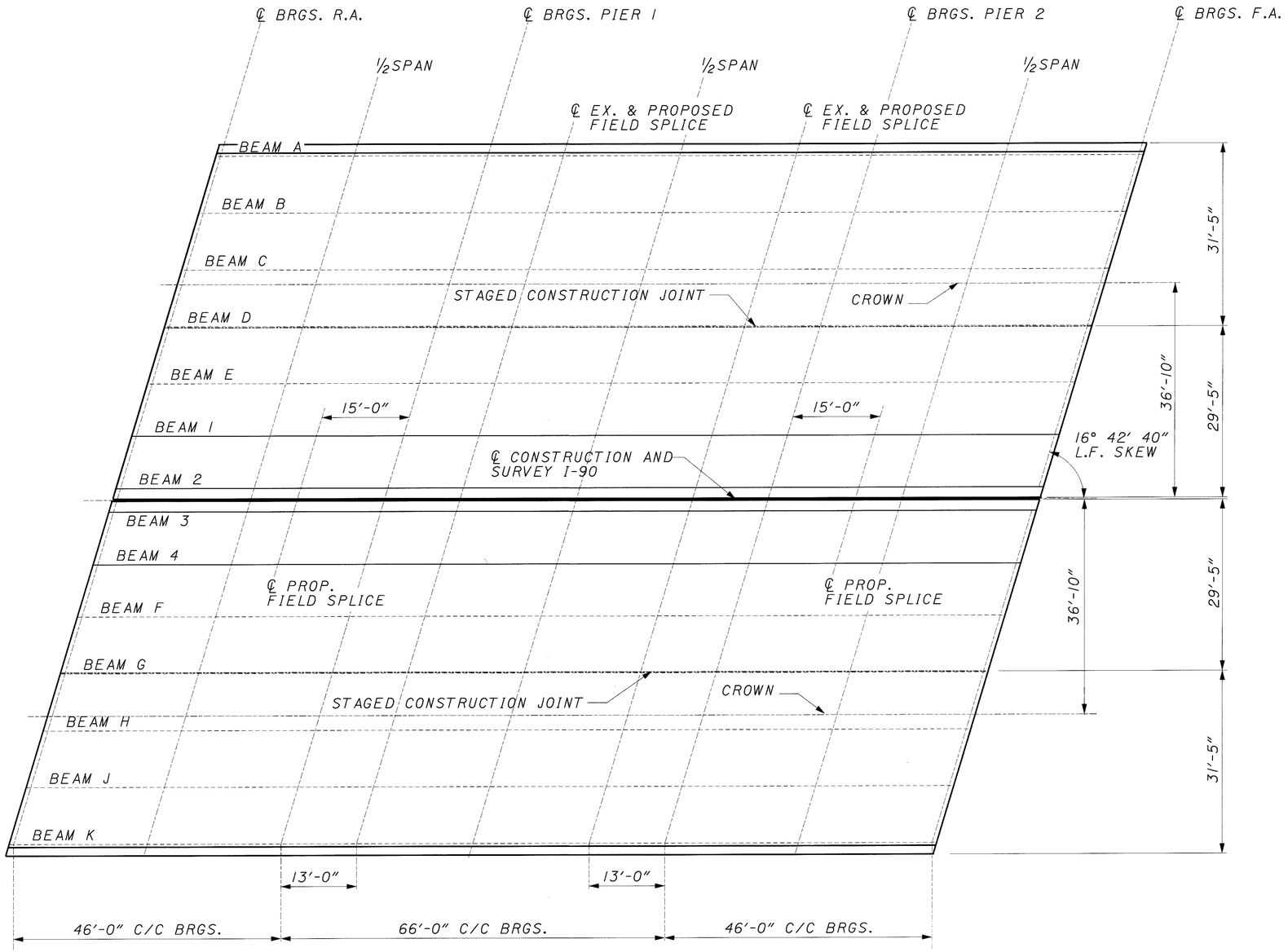

SCREED ELEVATION PLAN

SCREED ELEVATIONS:

FIELD PROCEDURES DURING STAGED CONSTRUCTION OF DECKS WITHOUT CLOSURE POURS

1. SURVEY ELEVATIONS OF EXISTING BEAMS IN STAGE I AT THE LOCATIONS SHOWN IN THE TABLE PRIOR TO STAGE I DECK REMOVAL AND AFTER STAGE I DECK REMOVAL.
2. COMPUTE THE AMOUNT OF SURVEYED REBOUND FOR THESE BEAMS BY SUBTRACTING THE ELEVATIONS AFTER REMOVAL FROM THE ELEVATIONS BEFORE REMOVAL.
3. COMPUTE THE ADJUSTED REBOUND FOR THESE BEAMS BY MULTIPLYING THE SURVEYED REBOUND BY THE RATIO OF THE PROPOSED DEAD LOAD TO EXISTING DEAD LOAD.
4. ADD THE AMOUNT OF ADJUSTED REBOUND TO THE FINAL TOP OF DECK ELEVATIONS TO OBTAIN THE DECK SCREED ELEVATIONS. USE REBOUND OF CLOSEST BEAM TO DETERMINE GUTTER DECK SCREED ELEVATION.
5. AFTER STAGE I DECK PLACEMENT, REPEAT STEPS I THRU 4 FOR REMAINING BEAMS PRIOR TO AND AFTER STAGE 2 DECK REMOVAL.

NOTES:

1. DECK SLAB DEPTH: THE QUANTITY OF DECK SLAB CONCRETE TO BE PAID FOR SHALL BE BASED ON THE MINIMUM REQUIRED DECK SLAB THICKNESS OF 9 INCHES. THE QUANTITY OF CONCRETE REQUIRED FOR THE HAUNCH SHALL BE BASED ON THE DESIGN HAUNCH OF 4 INCHES EVEN THOUGH DEVIATION FROM THAT DEPTH MAY BE NECESSARY BECAUSE THE TOP FLANGE OF THE BEAM MAY NOT BE PARALLEL TO THE FINISHED GRADE. ACTUAL HAUNCH DEPTHS MAY VARY FROM A 3 INCH MINIMUM TO A 4⅛ INCH MAXIMUM.
2. A HAUNCH WIDTH OF 9 INCHES SHALL BE USED FOR COMPUTING QUANTITY OF CONCRETE. HOWEVER, THE HAUNCH WIDTH MAY VARY BETWEEN 6 AND 12 INCHES.
3. THE COST OF SURVEYING IS CONSIDERED INCINDENTAL TO DECK CONSTRUCTION AND SHALL BE INCLUDED WITH ITEM 844 - HIGH PERFORMANCE CONCRETE, SUPER-STRUCTURE (DECK) FOR PAYMENT.
4. FOR STAGED CONSTRUCTION DETAILS, SEE SHEETS 9 & 10 OF 30.

$$\frac{\text{PROPOSED DEAD LOAD}}{\text{EXISTING DEAD LOAD}} = 0.88$$

LEGEND:

BRGS. = BEARINGS
C/C = CENTER TO CENTER
O/O = OUT TO OUT

BURGESS & NIPLE

DESIGNED	DRAWN	REVIEWED	DATE
KK	KK	MAR	12-15-99
CHECKED	REVISED	STRUCTURE FILE NUMBER	
JAA		1808087,1808095	

SCREED ELEVATION PLAN
BRIDGE NO. CUY-90-0249 L & R
OVER DOVER CENTER ROAD

CUY-90-0.00

33/38

492
582

17 MAR 2000
p:\pr22308\cadd\wscreedl.dgn

DECK SCREED ELEVATION TABLE, LEFT BRIDGE

		SPAN 1			SPAN 2			SPAN 3		
		℄ BEARING REAR ABUT.	½SPAN	℄ BEARING PIER 1	℄ FIELD SPLICE	½SPAN	℄ FIELD SPLICE	℄ BEARING PIER 2	½SPAN	℄ BEARING FWD. ABUT.
TOE OF OUTSIDE PARAPET	FINAL TOP OF DECK ELEV.	679.21	679.35	679.46	679.51	679.57	679.61	679.63	679.64	679.61
	DECK SCREED ELEV.	679.21		679.46				679.63		679.61
BEAM A	* ELEV. AFTER DECK REMOVAL									
	* ELEV. BEFORE DECK REMOVAL									
	** SURVEYED REBOUND									
	*** ADJUSTED REBOUND									
	FINAL TOP OF DECK ELEV.	679.21	679.35	679.47	679.52	679.58	679.62	679.64	679.64	679.62
	**** DECK SCREED ELEV.	679.21		679.47				679.64		679.62
BEAM B	* ELEV. AFTER DECK REMOVAL									
	* ELEV. BEFORE DECK REMOVAL									
	** SURVEYED REBOUND									
	*** ADJUSTED REBOUND									
	FINAL TOP OF DECK ELEV.	679.35	679.49	679.60	679.66	679.72	679.77	679.79	679.80	679.78
	**** DECK SCREED ELEV.	679.35		679.60				679.79		679.78
BEAM C	* ELEV. AFTER DECK REMOVAL									
	* ELEV. BEFORE DECK REMOVAL									
	** SURVEYED REBOUND									
	*** ADJUSTED REBOUND									
	FINAL TOP OF DECK ELEV.	679.48	679.62	679.74	679.80	679.87	679.91	679.93	679.95	679.93
	**** DECK SCREED ELEV.	679.48		679.74				679.93		679.93
CROWN	FINAL TOP OF DECK ELEV.	679.51	679.66	679.78	679.84	679.90	679.95	679.97	679.99	679.97
	DECK SCREED ELEV.	679.51		679.78				679.97		679.97
BEAM D	* ELEV. AFTER DECK REMOVAL									
	* ELEV. BEFORE DECK REMOVAL									
	** SURVEYED REBOUND									
	*** ADJUSTED REBOUND									
	FINAL TOP OF DECK ELEV.	679.38	679.53	679.66	679.71	679.78	679.84	679.86	679.87	679.86
	**** DECK SCREED ELEV.	679.38		679.66				679.86		679.86
C.J.	FINAL TOP OF DECK ELEV.	679.38	679.53	679.66	679.71	679.78	679.84	679.86	679.87	679.86
	DECK SCREED ELEV.	679.38		679.66				679.86		679.86
BEAM E	* ELEV. AFTER DECK REMOVAL									
	* ELEV. BEFORE DECK REMOVAL									
	** SURVEYED REBOUND									
	*** ADJUSTED REBOUND									
	FINAL TOP OF DECK ELEV.	679.21	679.36	679.49	679.55	679.62	679.68	679.70	679.72	679.71
	**** DECK SCREED ELEV.	679.21		679.49				679.70		679.71
BEAM 1	FINAL TOP OF DECK ELEV.	679.05	679.21	679.34	679.40	679.47	679.53	679.56	679.58	679.58
	DECK SCREED ELEV.	679.05	679.22	679.34	679.42	679.51	679.55	679.56	679.59	679.58
BEAM 2	FINAL TOP OF DECK ELEV.	678.89	679.05	679.18	679.24	679.32	679.38	679.41	679.44	679.44
	DECK SCREED ELEV.	678.89	679.06	679.18	679.26	679.36	679.40	679.41	679.45	679.44
TOE OF INSIDE PARAPET	FINAL TOP OF DECK ELEV.	678.88	679.04	679.18	679.24	679.32	679.38	679.41	679.43	679.43
	DECK SCREED ELEV.	678.88	679.05	679.18	679.26	679.36	679.40	679.41	679.44	679.43

ANTICIPATED DECK SLAB DEPTHS, LEFT BRIDGE (FT.)

LOCATION	SPAN 1			SPAN 2			SPAN 3		
	℄ BEARING REAR ABUT.	½SPAN	℄ BEARING PIER 1	℄ FIELD SPLICE	½SPAN	℄ FIELD SPLICE	℄ BEARING PIER 2	½SPAN	℄ BEARING FWD. ABUT.
BEAM A	1.02	1.06	1.10	1.10	1.07	1.11	1.11	1.09	1.07
BEAM B	1.02	1.06	1.09	1.09	1.07	1.11	1.11	1.09	1.07
BEAM C	1.03	1.06	1.09	1.09	1.07	1.12	1.12	1.10	1.08
BEAM D	1.02	1.06	1.09	1.09	1.07	1.12	1.12	1.10	1.07
BEAM E	1.02	1.06	1.09	1.09	1.07	1.12	1.12	1.10	1.07
BEAM 1	1.02	1.06	1.01	1.09	1.12	1.12	1.04	1.10	1.07
BEAM 2	1.02	1.06	1.01	1.09	1.12	1.12	1.04	1.10	1.07

DEPTHS ARE SHOWN FROM TOP OF DECK TO TOP OF BEAM FLANGE
ANTICIPATED DRY RUN DISTANCES CAN BE OBTAINED BY ADDING THE ADJUSTED REBOUND TO THE ANTICIPATED DECK SLAB DEPTHS

* - BEAM ELEVATION SURVEYED DURING CONSTRUCTION
** - SURVEYED REBOUND = BEAM ELEVATION BEFORE DECK REMOVAL MINUS BEAM ELEVATION AFTER DECK REMOVAL.
*** - ADJUSTED REBOUND = RATIO OF PROPOSED DEAD LOAD TO EXISTING DEAD LOAD (PROVIDED BY THE DESIGNER) MULTIPLIED TIMES THE SURVEYED REBOUND
**** - DECK SCREED ELEV. = ADJUSTED REBOUND ADDED TO THE FINAL TOP OF DECK ELEVATION

BURGESS & NIPLE

DESIGNED KK | DRAWN KK | CHECKED JAA | REVIEWED MAR | DATE 12-15-99 | REVISED | STRUCTURE FILE NUMBER 1808087, 1808095

DECK SCREED ELEVATIONS, LEFT BRIDGE
BRIDGE NO. CUY-90-0249 L & R
OVER DOVER CENTER ROAD

CUY-90-0.00

34/38

493
582

17 MAR 2000
D:\pr22308\cadd\wscreed1.dgn

DECK SCREED ELEVATION TABLE, RIGHT BRIDGE

		SPAN 1			SPAN 2			SPAN 3		
		℄ BEARING REAR ABUT.	½SPAN	℄ BEARING PIER 1	℄ FIELD SPLICE	½SPAN	℄ FIELD SPLICE	℄ BEARING PIER 2	½SPAN	℄ BEARING FWD. ABUT.
TOE OF INSIDE PARAPET	FINAL TOP OF DECK ELEV.	678.87	679.04	679.17	679.24	679.32	679.38	679.40	679.43	679.43
	DECK SCREED ELEV.	678.87	679.05	679.17	679.26	679.36	679.40	679.40	679.44	679.43
BEAM 3	FINAL TOP OF DECK ELEV.	678.88	679.04	679.18	679.24	679.32	679.38	679.41	679.44	679.44
	DECK SCREED ELEV.	678.88	679.05	679.18	679.26	679.36	679.40	679.41	679.45	679.44
BEAM 4	FINAL TOP OF DECK ELEV.	679.00	679.16	679.30	679.40	679.45	679.53	679.54	679.58	679.58
	DECK SCREED ELEV.	679.00	679.17	679.30	679.42	679.49	679.55	679.54	679.59	679.58
BEAM F	* ELEV. AFTER DECK REMOVAL									
	* ELEV. BEFORE DECK REMOVAL									
	** SURVEYED REBOUND									
	*** ADJUSTED REBOUND									
	FINAL TOP OF DECK ELEV.	679.12	679.29	679.43	679.55	679.58	679.68	679.68	679.71	679.72
	**** DECK SCREED ELEV.	679.12		679.43				679.68		679.72
C.J.	FINAL TOP OF DECK ELEV.	679.25	679.42	679.56	679.71	679.72	679.84	679.82	679.86	679.87
	DECK SCREED ELEV.	679.25		679.56				679.82		679.87
BEAM G	* ELEV. AFTER DECK REMOVAL									
	* ELEV. BEFORE DECK REMOVAL									
	** SURVEYED REBOUND									
	*** ADJUSTED REBOUND									
	FINAL TOP OF DECK ELEV.	679.25	679.42	679.56	679.71	679.72	679.84	679.82	679.86	679.87
	**** DECK SCREED ELEV.	679.25		679.56				679.82		679.87
CROWN	FINAL TOP OF DECK ELEV.	679.34	679.52	679.66	679.84	679.83	679.95	679.93	679.97	679.99
	DECK SCREED ELEV.	679.34		679.66				679.93		679.99
BEAM H	* ELEV. AFTER DECK REMOVAL									
	* ELEV. BEFORE DECK REMOVAL									
	** SURVEYED REBOUND									
	*** ADJUSTED REBOUND									
	FINAL TOP OF DECK ELEV.	679.30	679.47	679.62	679.80	679.78	679.91	679.89	679.93	679.95
	**** DECK SCREED ELEV.	679.30		679.62				679.89		679.95
BEAM J	* ELEV. AFTER DECK REMOVAL									
	* ELEV. BEFORE DECK REMOVAL									
	** SURVEYED REBOUND									
	*** ADJUSTED REBOUND									
	FINAL TOP OF DECK ELEV.	679.12	679.30	679.45	679.66	679.62	679.77	679.73	679.78	679.80
	**** DECK SCREED ELEV.	679.12		679.45				679.73		679.80
BEAM K	* ELEV. AFTER DECK REMOVAL									
	* ELEV. BEFORE DECK REMOVAL									
	** SURVEYED REBOUND									
	*** ADJUSTED REBOUND									
	FINAL TOP OF DECK ELEV.	678.94	679.13	679.28	679.52	679.45	679.62	679.57	679.62	679.64
	**** DECK SCREED ELEV.	678.94		679.28				679.57		679.64
TOE OF OUTSIDE PARAPET	FINAL TOP OF DECK ELEV.	679.93	679.12	679.27	679.51	679.45	679.61	679.56	679.61	679.64
	DECK SCREED ELEV.	679.93		679.27				679.56		679.64

ANTICIPATED DECK SLAB DEPTHS, RIGHT BRIDGE (FT.)

LOCATION	SPAN 1			SPAN 2			SPAN 3		
	℄ BEARING REAR ABUT.	½SPAN	℄ BEARING PIER 1	℄ FIELD SPLICE	½SPAN	℄ FIELD SPLICE	℄ BEARING PIER 2	½SPAN	℄ BEARING FWD. ABUT.
BEAM 3	1.01	1.06	1.03	1.11	1.13	1.12	1.04	1.07	1.03
BEAM 4	1.01	1.06	1.03	1.11	1.13	1.12	1.04	1.07	1.03
BEAM F	1.01	1.06	1.11	1.11	1.08	1.12	1.12	1.07	1.03
BEAM G	1.01	1.06	1.11	1.11	1.07	1.12	1.12	1.07	1.03
BEAM H	1.01	1.06	1.12	1.12	1.06	1.13	1.13	1.08	1.03
BEAM J	1.01	1.06	1.12	1.12	1.07	1.13	1.13	1.08	1.03
BEAM K	1.01	1.06	1.12	1.12	1.09	1.13	1.13	1.08	1.04

DEPTHS ARE SHOWN FROM TOP OF DECK TO TOP OF BEAM FLANGE
ANTICIPATED DRY RUN DISTANCES CAN BE OBTAINED BY ADDING THE ADJUSTED REBOUND TO THE ANTICIPATED DECK SLAB DEPTHS

* - BEAM ELEVATION SURVEYED DURING CONSTRUCTION
** - SURVEYED REBOUND = BEAM ELEVATION BEFORE DECK REMOVAL MINUS BEAM ELEVATION AFTER DECK REMOVAL.
*** - ADJUSTED REBOUND = RATIO OF PROPOSED DEAD LOAD TO EXISTING DEAD LOAD (PROVIDED BY THE DESIGNER) MULTIPLIED TIMES THE SURVEYED REBOUND
**** - DECK SCREED ELEV. = ADJUSTED REBOUND ADDED TO THE FINAL TOP OF DECK ELEVATION

BURGESS & NIPLE

DESIGNED KK | DRAWN KK | CHECKED JAA | REVIEWED MAR | DATE 12-15-99 | REVISED | STRUCTURE FILE NUMBER 1808087,1808095

DECK SCREED ELEVATIONS, RIGHT BRIDGE
BRIDGE NO. CUY-90-0249 L & R
OVER DOVER CENTER ROAD

CUY-90-0.00

35/38

494/582

17 MAR 2000
p:\pr22308\cadd\wscreed1.dgn

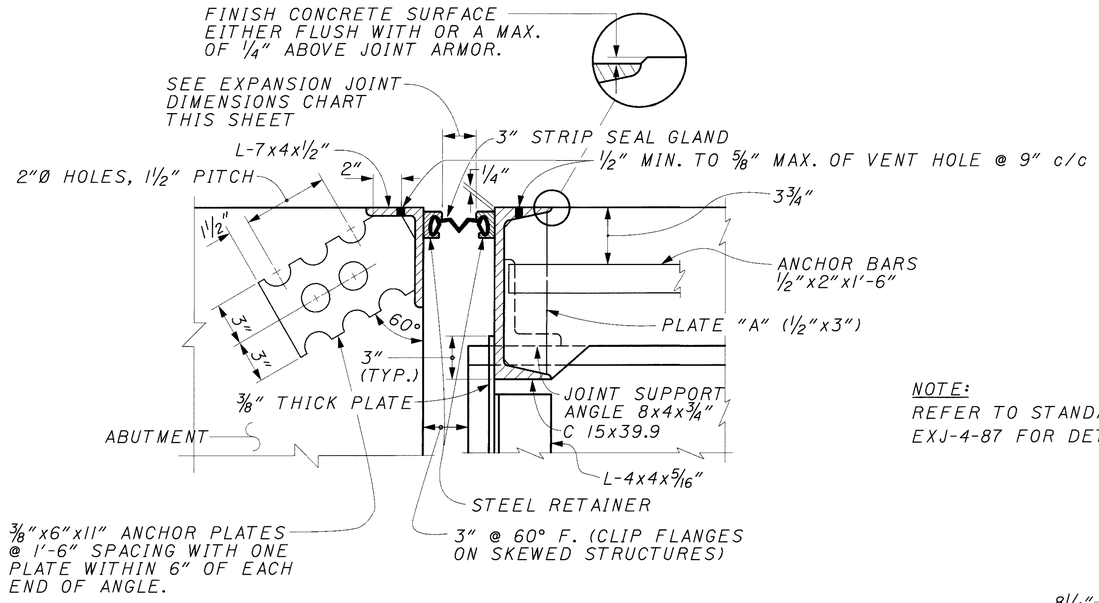

TYPICAL SECTION THRU EXPANSION JOINT

NOTE:
REFER TO STANDARD DRAWING
EXJ-4-87 FOR DETAILS.

EXPANSION JOINT DIMENSIONS							
LOCATION	TEMPERATURE						
	40° F	50° F	60° F	70° F	80° F	90° F	100° F
REAR ABUT	1 13/16"	1 11/16"	1 5/8"	1 9/16"	1 7/16"	1 3/8"	1 5/16"
FORWARD ABUT	1 3/4"	1 3/4"	1 11/16"	1 11/16"	1 5/8"	1 9/16"	1 9/16"

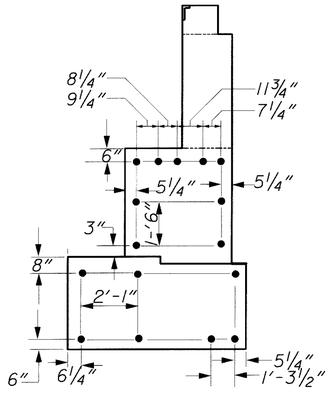

DOWEL HOLE DETAIL

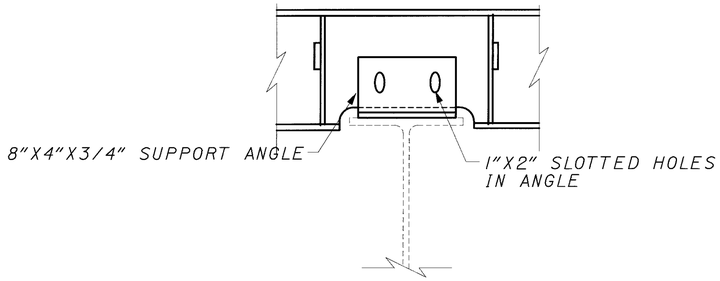

EXPANSION JOINT SUPPORT DETAIL

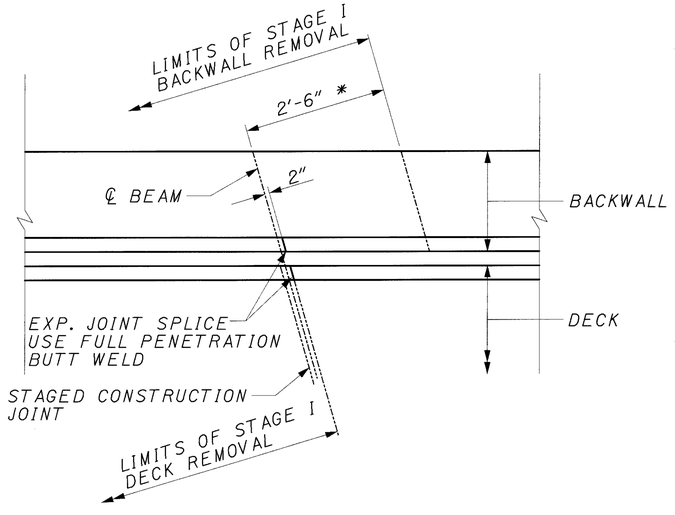

EXPANSION JOINT SPLICE DETAIL

FORWARD ABUTMENT RIGHT BRIDGE SHOWN,
OTHERS SIMILAIR

* REBAR LAP SPLICES WILL BE USED IN BACKWALL

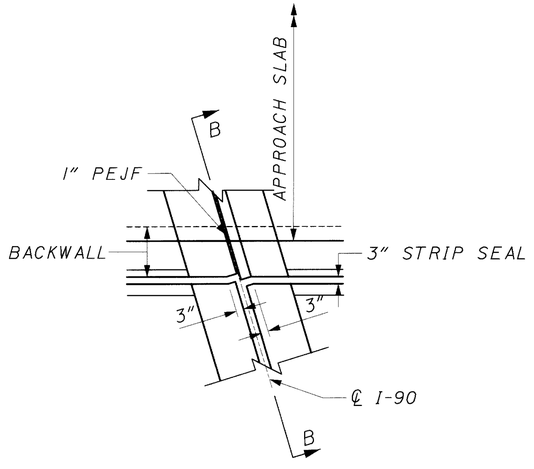

DETAIL A

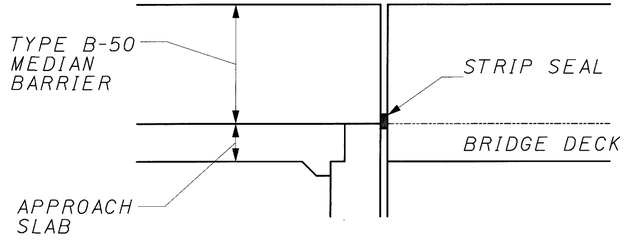

SECTION B-B

LEGNED

TYP. = TYPICAL
STD. DWG. = STANDARD DRAWING
ABUT = ABUTMENT

17 MAR 2000
P:\pr22308\cadd\wmisc.dgn

BURGESS & NIPLE

DESIGNED	DRAWN	REVIEWED	DATE
SCT	SCT	MAR	01-03-00
CHECKED	REVISED	STRUCTURE FILE NUMBER	
JAA		1808087,1808095	

MISCELLANEOUS DETAILS
BRIDGE NO. CUY-90-0249 L & R
OVER DOVER CENTER ROAD

CUY-90-0.00

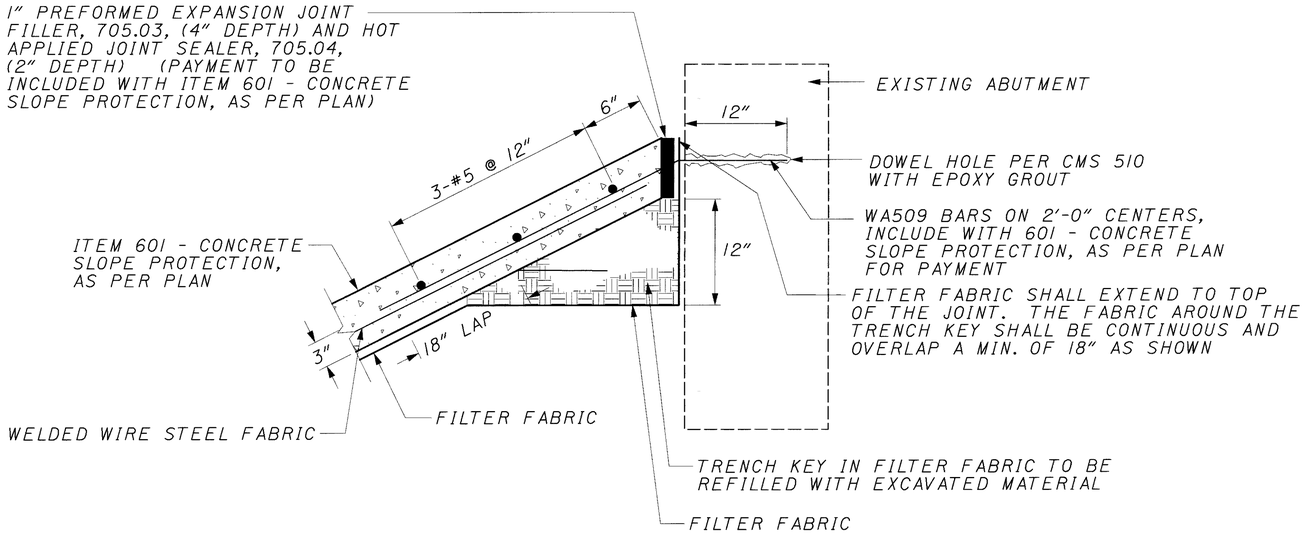

CONCRETE SLOPE PROTECTION ANCHORING DETAIL

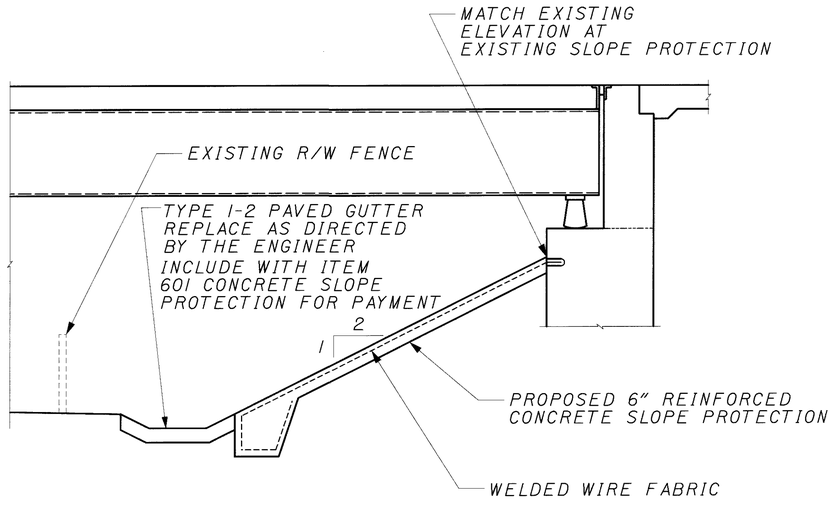

CONCRETE SLOPE PROTECTION EXTENSION

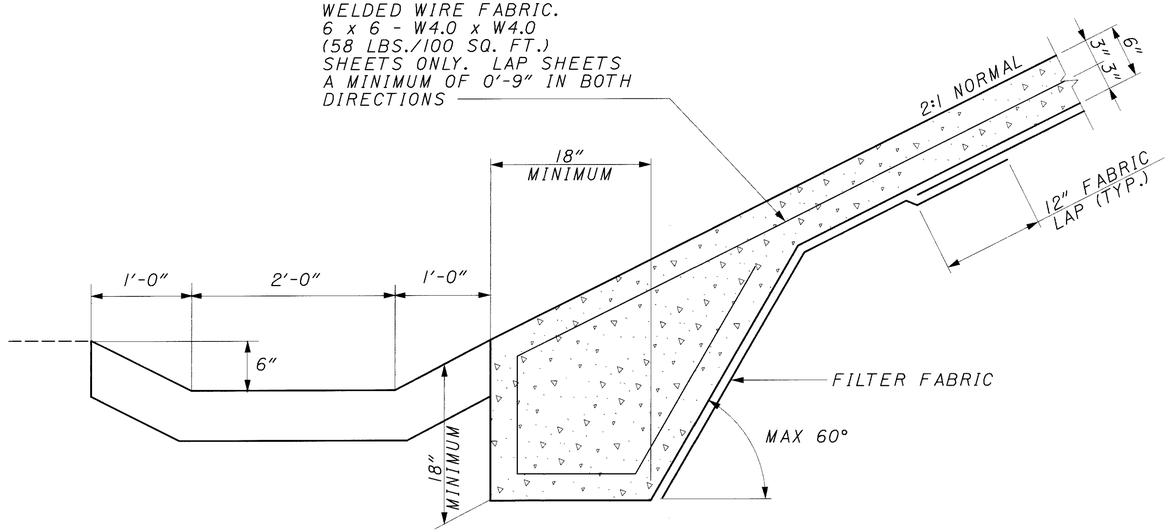

AT TOE OF SLOPE

ITEM 601 - CONCRETE SLOPE PROTECTION, AS PER PLAN

THIS WORK SHALL INCLUDE THE FOLLOWING:

A. EXCAVATION OF EXISTING SLOPE TO A DEPTH NECESSARY TO ESTABLISH A PROPER DEPTH WHICH WILL ACCEPT THE PROPOSED SIX INCH THICK CONCRETE SLOPE PROTECTION. THE EXISTING SLOPE NEED NOT BE REMOVED IN ITS ENTIRETY: THE CONTRACTOR SHALL GRADE THE REMAINING SLOPE TO PROVIDE A UNIFORM PLANE FOR THE SUBGRADE.

B. PROPOSED SLOPE PROTECTION: THE INSTALLATION OF THE NEW WELDED STEEL WIRE FABRIC REINFORCED SLOPE PROTECTION AS SHOWN ON THIS SHEET INCLUDING REINFORCING STEEL, WELDED STEEL FABRIC, 709.14, DOWEL HOLES AND GROUT, GEOTEXTILE FILTER, PREFORMED EXPANSION JOINT FILLER AND CONCRETE. THE FABRIC SHALL MEET REQUIREMENTS OF 712.09, TYPE B (NONWOVEN). FIELD SPLICES SHALL CONSIST OF TWELVE INCHES OVERLAP SECURED IN ANY MANNER SUITABLE TO THE ENGINEER THAT WILL ASSURE THAT THE OVERLAP IS MAINTAINED. OVERLAP CLOSURE AT THE TOP OF THE TRENCH SHALL BE 18 INCHES, SECURED AS ABOVE.

ALL COSTS OF CONSTRUCTING THE NEW SLOPE PROTECTION, INCLUDING ALL NECESSARY EMBANKMENT, EXCAVATION, REBARS, DOWELS, WELDED STEEL WIRE FABRIC, FILTER FABRIC, PREFORMED EXPANSION JOINT FILLER, JOINT SEALER, AND CONCRETE SHALL BE INCLUDED UNDER ITEM 601 - CONCRETE SLOPE PROTECTION, AS PER PLAN.

BURGESS & NIPLE

DESIGNED	DRAWN	REVIEWED	DATE
KK	KK	MAR	01-03-00
CHECKED	REVISED	STRUCTURE FILE NUMBER	
SCT		1808087,1808095	

SLOPE PROTECTION DETAILS
BRIDGE NO. CUY-90-0249 L & R
OVER DOVER CENTER ROAD

CUY-90-0.00

37/38

496/582

17 MAR 2000
p:\pr-22308\cadd\wmisc.dgn

MARK	NUMBER LEFT BRIDGE	NUMBER RIGHT BRIDGE	TOTAL	LENGTH	TYPE	DIM. A	DIM. B	DIM. C	INCR.
ABUTMENT									
WA501	14	14	28	32′-0″	STR				
WA502	14	14	28	33′-4″	STR				
WA503	18	18	36	18′-5″	STR				
WA504	36	36	72	6′-10″	4	3′-3″	1′-11″		
WA505	32	32	64	15′-5″	4	3′-3″	6′-4″		
WA506	4	4	8	7′-4″	1	6′-4″	1′-0″		
WA508	18	18	36	4′-7″	STR				
WA509	30	30	60	5′-2″	2	1′-2″	3′-7″	1′-9″	
WA601	126	126	252	7′-5″	4	0′-9″	3′-5″		
WA602	126	126	252	7′-0″	4	1′-3″	3′-0½″		
WA603	38	38	76	9′-0″	4	1′-3″	4′-0″		
WA604	32	32	64	10′-5″	4	5′-9″	2′-6″		
WA605	32	32	64	9′-5″	4	5′-9″	2′-0″		
WA606	4	4	8	10′-8 ″	4	6′-0″	2′-6″		
WA607	4	4	8	9′-8 ″	4	6′-0″	2′-0″		
WA801	14	14	28	17′-4 ″	STR				
WA802	14	14	28	7′-2″	STR				
WINGWALL									
WW501	28	28	56	9′-9″	STR				
WW502	6	6	12	6′-6″	2	4′-11″	1′-6″	0′-5″	
WW503	22	22	44	6′-6″	STR				
WW504	4	4	8	6′-0″	2	5′-0″	0′-11″	0′-5″	
WW505	4	4	8	8′-0″	STR				
WW506	4	4	8	6′-5″	STR				
WW601	28	28	56	3′-8″	1	1′-1″	2′-9″		6 @ 1″
				TO			TO		
				4′-2″			3′-3″		
WW602	14	14	28	6′-8″	7	4′-9″	0′-11″	1′-1″	
WW603	20	28	48	5′-11″	1	0′-8½″	5′-4″		
WW604	14	14	28	6′-1″	2	5′-1″	1′-0″	0′-3″	
WW605	28	28	56	6′-0″	STR				
WW606	20	20	40	6′-9″	1	0′-10″	5′-9″		4 @ 3″
				TO			TO		
				7′-9″			6′-9″		
WW607	2	2	4	3′-10″	1	1′-0″	3′-0″		
WW608	10	10	20	6′-4″	STR				
WW609	6		6	3′-5″	1	1′-0″	2′-9″		
PIER									
WPSP401	2	2	4	17′-0″	8	17′-0″			
WP501	48	48	96	6′-9″	4	1′-5½″	2′-9″		
WP502	8	8	16	5′-3″	4	1′-5½″	2′-0″		
WP503	8	8	16	6′-3″	4	1′-5½″	2′-6″		
WP601	4	4	8	25′-7″	STR				
WP701	52	52	104	7′-0″	STR				
WP702	36	36	72	8′-10″	1	7′-8″	1′-2″		
WP703	36	36	72	19′-6″	STR				
WP801	8	8	16	29′-2″	4	25′-7″	2′-0″		
WP802	8	8	16	25′-10″	3	20′-0″	2′-9⅝″	1′-0″	

ALL REINFORCING SHALL BE EPOXY COATED

MARK	NUMBER LEFT BRIDGE	NUMBER RIGHT BRIDGE	TOTAL NO.	LENGTH	TYPE	DIM. A	DIM. B	DIM. C	INCR.
DECK									
WS401	244	244	488	40′-0″	STR				
WS402	61	61	122	7′-3″	STR				
WS501	602	602	1204	29′-0″	STR				
WS502	600	600	1200	31′-0″	STR				
WS503	272	272	544	40′-0″	STR				
WS504	120	120	240	26′-6″	STR				
WS505	2 SETS	2 SETS	68	2′-8″	STR				1′-8″
	OF 17	OF 17		TO					
				29′-4″					
WS506	2 SETS	2 SETS	72	2′-4″	STR				1′-8″
	OF 16	OF 16		TO					
				27′-4″					
WS507	4	4	8	32′-4″	STR				
WS508	4	4	8	30′-3″	STR				
WS509	64	64	128	9′-3″	STR				
WS510	318	318	636	4′-3″	STR				
WS701	159		159	4′-3″	STR				
RAIL									
WR501	218	160	378	7′-5″	5				
WR502	56	56	112	40′-0″	STR				
WR503	160	160	320	8′-3″	10				
WR504	14	14	28	9′-3″	STR				
WR601	378	320	698	2′-9″	1	1′-2″	1′-10″		
WR602	218	160	378	3′-4″	6	1′-7″	1′-1″		
WR603	8	8	16	40′-0″	STR				
WR604	160	160	320	3′-0″	9				
WR605	2	2	4	11′-0″	STR				

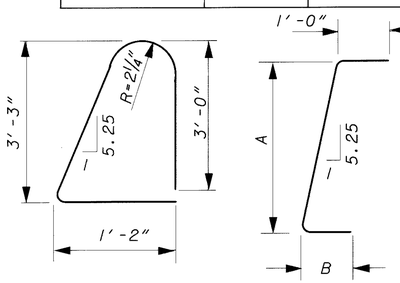

TYPE 5

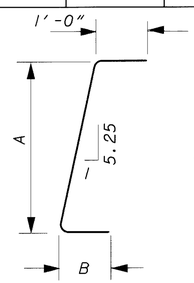

TYPE 6

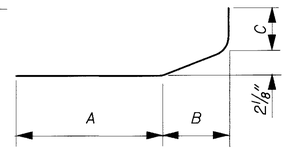

TYPE 7

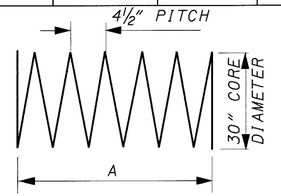

TYPE 8

THE BAR SIZE NUMBER IS SPECIFIED IN THE BAR MARK COLUMN AS THE FIRST DIGIT . FOR EXAMPLE WP601 IS A NO.6 BAR. DIMENSIONS SHOWN ARE OUT TO OUT UNLESS OTHERWISE INDICATED. R INDICATES INSIDE RADIUS UNLESS OTHERWISE NOTED.

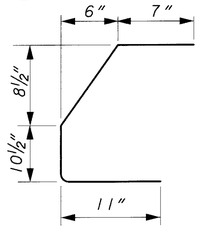

TYPE 9

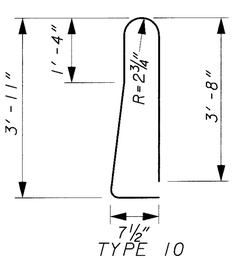

TYPE 10

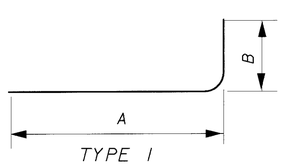

TYPE 1

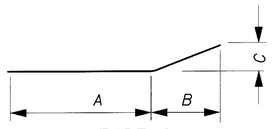

TYPE 2

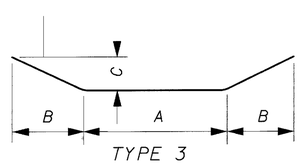

TYPE 3

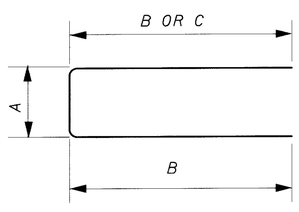

TYPE 4

SPACERS

CONCRETE SPACERS OR OTHER APPROVED NONCORROSIVE SPACING DEVICES SHALL BE USED AT SUFFICIENT INTERVALS (NEAR THE BOTTOM AND AT INTERVALS NOT EXCEEDING 10 FEET) TO INSURE CONCENTRIC SPACING FOR THE ENTIRE CAGE LENGTH. SPACERS SHALL BE CONSTRUCTED OF APPROVED MATERIAL EQUAL IN QUALITY AND DURABILITY TO THE CONCRETE SPECIFIED FOR THE SHAFT. THE SPACERS SHALL HAVE ADEQUATE DIMENSIONS TO ENSURE A MINIMUM 3 INCH CLEAR SPACE BETWEEN THE OUTSIDE OF THE REINFORCING CAGE AND THE DESIGN DIMENSION OF THE DRILLED SHAFT OR COLUMN. CYLINDRICAL CONCRETE FEET (BOTTOM SUPPORT) SHALL BE PROVIDED TO ENSURE THAT THE BOTTOM OF THE CAGE IS MAINTAINED AT THE PROPER DISTANCE ABOVE THE BASE.

17 MAR 2000
p:\pr-22308\cadd\wrebar1.dgn

BURGESS & NIPLE

DESIGNED DCF | DRAWN DCF | REVIEWED MAR | DATE 12-15-99 | STRUCTURE FILE NUMBER 1808087, 1808095 | CHECKED SCT | REVISED

REINFORCING SCHEDULE
BRIDGE NO. CUY-90-0249L&R
OVER DOVER CENTER ROAD

CUY-90-0.00

38 / 38

497
582

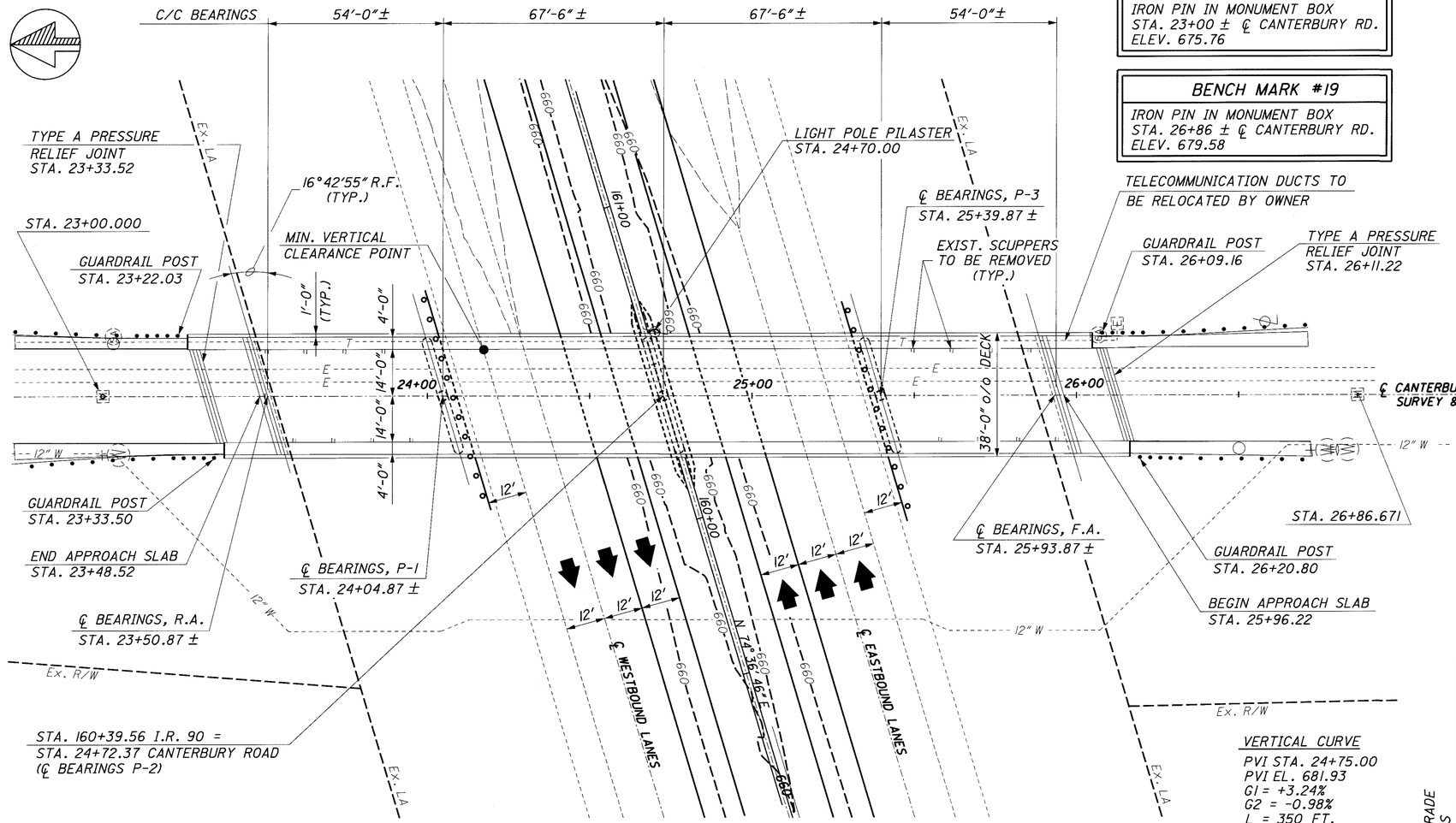

PLAN

BENCH MARK #18

IRON PIN IN MONUMENT BOX
STA. 23+00 ± ℄ CANTERBURY RD.
ELEV. 675.76

BENCH MARK #19

IRON PIN IN MONUMENT BOX
STA. 26+86 ± ℄ CANTERBURY RD.
ELEV. 679.58

VERTICAL CURVE

PVI STA. 24+75.00
PVI EL. 681.93
G1 = +3.24%
G2 = -0.98%
L = 350 FT.

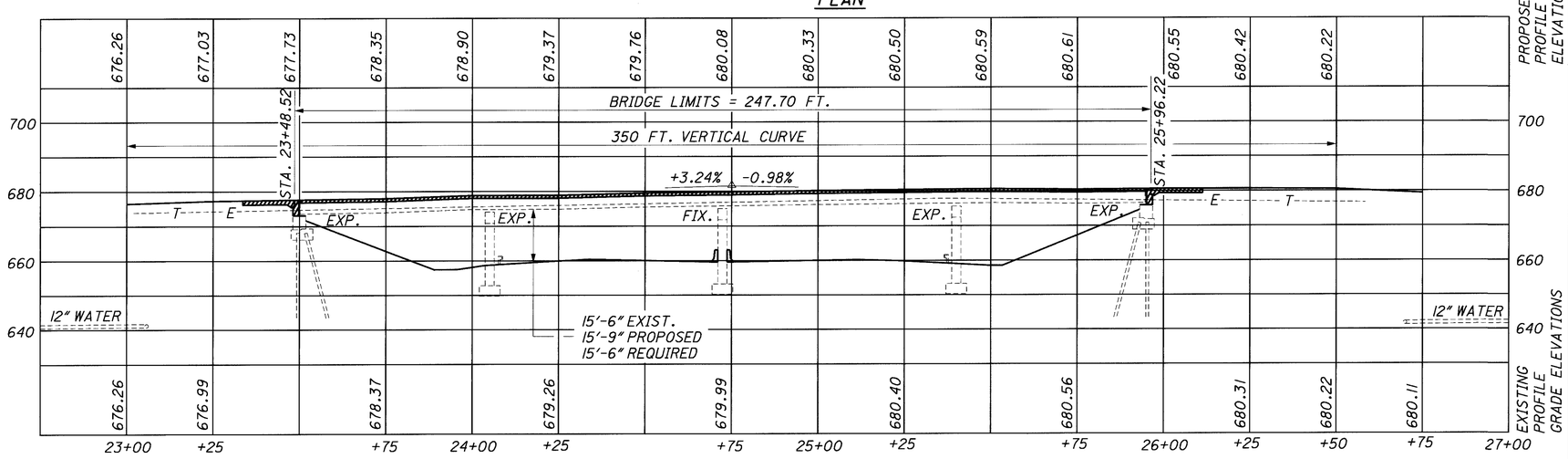

PROFILE ALONG ℄ CONSTRUCTION

PROPOSED WORK:

1. REMOVE EXISTING DECK, END CROSSFRAMES, EXPANSION JOINTS, SIDEWALKS, RAILING, BACKWALLS AND APPROACH SLABS, AND OTHER ITEMS NOTED ON THE PLANS.
2. PLACE NEW ABUTMENT BACKWALLS, SIDEWALKS, DECK, END CROSSFRAMES, EXPANSION JOINTS, RAILING, APPROACH SLABS AND VANDAL PROTECTION FENCE.
3. REPAIR DAMAGED CONCRETE ABUTMENT SEATS.
4. REPAIR CONCRETE SLOPE PROTECTION.
5. RESET ROCKER BEARINGS.
6. SEAL CONCRETE SURFACES.
7. REPAIR EXISTING PRESSURE RELIEF JOINTS.

TRAFFIC DATA

CURRENT ADT:(1999)	5600
DESIGN YEAR ADT:(2019)	7600
ADTT:	152

LEGEND:

T = 6-4" TELECOMMUNICATION DUCTS (TO BE RELOCATED FROM SIDEWALK AT OWNERS EXPENSE.)

E = FIRST ENERGY ILLUMINATING CO. DUCTS. (TO BE PROTECTED)

o/o = OUT TO OUT
TYP = TYPICAL
EX. OR EXIST. = EXISTING
MIN. = MINIMUM
℄ = CENTERLINE
R.F. = RIGHT FORWARD
M = MONUMENT BOX
F/F = FACE TO FACE
C/C = CENTER TO CENTER
F.A. = FORWARD ABUTMENT
R.A. = REAR ABUTMENT

EXISTING STRUCTURE

TYPE:	CONTINUOUS NON-COMPOSITE STEEL BEAM BRIDGE (ASTM A36) WITH REINFORCED CONC. DECK AND SUBSTRUCTURE.
SPANS:	54'-0", 67'-6", 67'-6", 54'-0", c/c OF BEARINGS
ROADWAY:	28'-0" f/f OF SIDEWALK
SKEW:	16°-42'-55" R.F. ±
DESIGN LOADING:	CF 400 (57)
WEARING SURFACE:	1 1/2" ASPHALT CONCRETE
APPROACH SLABS:	AS-1-67 (25' LONG)
ALIGNMENT:	TANGENT
CROWN:	3/16" PER FOOT
SIDEWALK:	4'-0" WITH FENCE
YEAR BUILT:	1969
S.F.N.	1807676

PROPOSED STRUCTURE

PROPOSED WORK:	NEW COMPOSITE REINFORCED CONCRETE DECK, SIDEWALKS, RAILINGS AND APPROACH SLABS.
TYPE:	CONTINUOUS COMPOSITE STEEL BEAM BRIDGE (ASTM A36) WITH REINFORCED CONCRETE DECK AND SUBSTRUCTURE.
SPANS:	54'-0", 67'-6", 67'-6", 54'-0", c/c OF BEARINGS
ROADWAY:	28'-0" f/f OF SIDEWALK
SKEW:	16°-42'-55" R.F. ±
DESIGN LOADING:	HS20-44 CASE II AND ALTERNATE MILITARY LOADING
WEARING SURFACE:	MONOLITHIC CONCRETE
APPROACH SLABS:	15'-0" LONG (AS-1-81) (12" THICK)
ALIGNMENT:	TANGENT
CROWN:	3/16" PER FOOT
SIDEWALK:	4'-0" WITH FENCE
LONGITUDE:	W 81°-54'-45"
LATITUDE:	N 41°-28'-15"

DESIGN AGENCY
THOMAS FOK & ASSOC., LTD.
3896 MAHONING AVE., YOUNGSTOWN, OHIO

DATE REVIEWED: 2-4-00 TF
STRUCTURE FILE NUMBER: 1807676
DRAWN: KRM
REVISED:
DESIGNED: JDV
CHECKED: HJS

CUYAHOGA COUNTY
STA. 23+48.52
TO
STA. 25+96.22

SITE PLAN
BRIDGE NO. CUY-90-0303
UNDER CANTERBURY ROAD

CUY-90-0.00

1 / 12

498
582

PROPOSAL NOTES:

SEALING OF CONCRETE SURFACES
CONCRETE REPAIR BY EPOXY INJECTION

REFERENCE SHALL BE MADE TO:

STANDARD DRAWINGS:

AS-1-81	DATED	10-25-94
EXJ-4-87	DATED	2-14-97
GSD-1-96	DATED	2-21-97
VPF-1-90M	DATED	3-20-95

AND TO SUPPLEMENTAL SPECIFICATIONS:

842	DATED	1-6-99
844	DATED	1-6-99
863	DATED	9-9-97
899	DATED	10-21-98

DESIGN SPECIFICATIONS: THIS STRUCTURE CONFORMS TO "STANDARD SPECIFICATIONS FOR HIGHWAY BRIDGES" ADOPTED BY THE AMERICAN ASSOCIATION OF STATE HIGHWAY AND TRANSPORTATION OFFICALS, 1996, INCLUDING THE 1997 AND 1998 INTERIM SPECIFICATIONS, AND THE ODOT BRIDGE DESIGN MANUAL.

DESIGN LOADING: HS20-44, CASE II, AND THE ALTERNATE MILITARY LOADING.

DESIGN DATA:

HIGH PERFORMANCE CONCRETE-COMPRESSIVE STRENGTH 4500 P.S.I. (SUPERSTRUCTURE)

HIGH PERFORMANCE CONCRETE-COMPRESSIVE STRENGTH 4500 P.S.I. (SUBSTRUCTURE)

REINFORCING STEEL-ASTM A615, A616 OR A617, GRADE 60,
MINIMUM YIELD STRENGTH 60,000 P.S.I.

DECK PROTECTION METHOD:
EPOXY COATED REINFORCING STEEL
2 1/2 INCH CONCRETE COVER

MONOLITHIC WEARING SURFACE IS ASSUMED, FOR DESIGN PURPOSES, TO BE 1 INCH THICK.

PORTIONS OF STRUCTURE REMOVED, OVER 20 FOOT SPAN, AS PER PLAN

DESCRIPTION: THIS WORK SHALL CONSIST OF THE REMOVAL, WHOLLY OR IN PART, AND SATISFACTORY DISPOSAL OF PORTIONS OF THE EXISTING STRUCTURE AS PER 202 OF THE CONSTRUCTION AND MATERIAL SPECIFICATIONS AND AS DIRECTED ON THE PLANS. THIS WORK SHALL ALSO INCLUDE ANY DEVICES OR STRUCTURES NECESSARY FOR THE PROTECTION OF TRAFFIC, PREPARATION OF PLANS FOR SUCH STRUCTURES, AND ANY OTHER WORK ASSOCIATED WITH REMOVAL OF PORTIONS OF THE EXISTING STRUCTURE AS DESCRIBED BELOW. CARE SHALL BE TAKEN TO PROTECT PORTIONS OF THE STRUCTURE THAT ARE TO REMAIN AND BE INCORPORATED INTO THE PROPOSED STRUCTURE. IN THIS RESPECT, THE USE OF EXPLOSIVES, HEADACHE BALLS AND/OR HOE RAM TYPE OF EQUIPMENT IS PROHIBITED.

PROTECTION OF TRAFFIC: PRIOR TO DEMOLITION OF ANY PORTIONS OF THE EXISTING SUPERSTRUCTURE, THE CONTRACTOR SHALL SUBMIT HIS PLANS FOR THE PROTECTION OF TRAFFIC (VEHICULAR, PEDESTRIAN, ETC.) ADJACENT TO AND/OR UNDER THE STRUCTURE TO THE DIRECTOR FOR APPROVAL. THESE PLANS SHALL INCLUDE PROVISIONS FOR ANY DEVICES AND STRUCTURES THAT MAY BE NECESSARY TO ENSURE SUCH PROTECTION. TEMPORARY VERTICAL CLEARANCES SPECIFIED ON THE PLANS OR IN THE PROPOSAL SHALL BE MAINTAINED AT ALL TIMES EXCEPT AS OTHERWISE APPROVED BY THE DIRECTOR.

PROTECTION OF STEEL SUPPORT SYSTEMS: BEFORE DECK SLAB CUTTING IS PERMITTED, THE OUTLINE OF PRIMARY STEEL MEMBERS IN CONTACT WITH THE BOTTOM OF THE DECK SHALL BE DRAWN ON THE SURFACE OF THE DECK. SMALL DIAMETER PILOT HOLES SHALL BE DRILLED 2 INCHES OUTSIDE THESE LINES TO CONFIRM THE LOCATION OF FLANGE EDGES. DECK CUTS OVER OR WITHIN 2 INCHES OF FLANGE EDGES SHALL NOT EXTEND LOWER THAN THE BOTTOM LAYER OF DECK SLAB REINFORCING STEEL. CUTS MADE OUTSIDE 2 INCHES OF FLANGE EDGES MAY EXTEND THE FULL DEPTH OF THE DECK. DURING CUTTING OF THE DECK SLAB, CARE SHALL BE TAKEN NOT TO DAMAGE STEEL MEMBERS THAT ARE TO BE INCORPORATED INTO THE PROPOSED STRUCTURE.

REMOVAL METHODS: CONCRETE MAY BE REMOVED BY CUTTING AND BY MEANS OF HAND OPERATED PNEUMATIC HAMMERS EMPLOYING POINTED OR BLUNTED CHISEL TYPE TOOLS. FOR REMOVALS ABOVE STEEL MEMBERS, A HAMMER HEAVIER THAN 35 POUNDS BUT NOT TO EXCEED 90 POUNDS MAY BE USED AT THE APPROVAL OF THE ENGINEER, TO ENSURE ADEQUATE DEPTH CONTROL AND TO PREVENT NICKING OR GAUGING THE PRIMARY STEEL MEMBERS. PRIOR TO PROCEEDING WITH ANY REMOVAL, THE CONTRACTOR SHALL SUBMIT THE REMOVAL PROCEDURE TO THE ENGINEER FOR REVIEW AND APPROVAL.

DECK REMOVALS: DUE TO THE POSSIBLE PRESENSE OF WELDED ATTACHMENTS TO EXISTING STRUCTURAL STEEL (FINISHING MACHINE, SCUPPER AND FORM SUPPORTS, ETC.), CARE SHALL BE TAKEN DURING DECK REMOVAL TO AVOID DAMAGING STRINGERS WHICH ARE TO REMAIN. WHEN REMOVING THE EXISTING SCUPPERS, AND OTHER WELDED ATTACHMENTS, GRIND ALL WELDS SMOOTH. STRINGERS DAMAGED BY THE CONTRACTOR'S REMOVAL OPERATION SHALL, AT NO COST TO THE STATE, BE REPLACED OR REPAIRED. PROPOSED REPAIRS, DEVELOPED BY A REGISTERED PROFESSIONAL ENGINEER, SHALL BE SUBMITTED IN WRITING FOR REVIEW AND APPROVAL BY THE DIRECTOR.

EXTRANEOUS MEMBERS: EXISTING EXTRANEOUS MEMBERS (I.E., FINISHING MACHINE AND FORM SUPPORTS, ETC., AND THE SUPPORT FOR SCUPPERS AND BULB ANGLES WHICH ARE TO BE REMOVED) ATTACHED BY WELDED CONNECTIONS TO PORTIONS OF THE TOP FLANGES DESIGNATED "TENSION" SHALL BE REMOVED AND THE FLANGE SURFACES GROUND SMOOTH. GRINDING SHALL BE CAREFULLY DONE AND PARALLEL TO THE FLANGES.

LOADING LIMITATIONS: NO PART OF THE STRUCTURE SHALL BE SUJECTED TO UNIT STRESSES THAT EXCEED 136.5% OF THE ALLOWABLE UNIT STRESSES GIVEN IN THE AASHTO STANDARD SPECIFICATIONS FOR HIGHWAY BRIDGES DUE EITHER TO DEMOLITION, ERECTION OR CONSTRUCTION METHODS, OR TO THE USE OR MOVEMENT OF DEMOLITION OR ERECTION EQUIPMENT ON OR ACROSS THE STRUCTURE. STRUCTURAL ANALYSIS COMPUTATIONS, BY A REGISTERED PROFESSIONAL ENGINEER, SHOWING THE ALLOWABLE STRESSES AND THE MAXIMUM STRESSES PRODUCED BY THE CONTRACTOR'S METHODS OR EQUIPMENT SHALL BE SUBMITTED TO THE DIRECTOR FOR REVIEW AND APPROVAL AT LEAST TWO WEEKS PRIOR TO THE START OF THE WORK.

PAYMENT: THIS WORK WILL BE PAID FOR AT THE CONTRACT LUMP SUM PRICE BID, WHICH PRICE AND PAYMENT SHALL BE FULL COMPENSATION FOR ALL LABOR, EQUIPMENT, MATERIALS AND INCIDENTIALS NECESSARY TO COMPLETE THE WORK IN CONFORMANCE WITH THESE REQUIREMENTS, WITH PERTINENT PROVISIONS OF 202, AND TO THE SATISFACTION OF THE ENGINEER.

CUT LINE CONSTRUCTION JOINT PREPARATION: SAW CUT BOUNDARIES OF PROPOSED CONCRETE REMOVALS 1 INCH DEEP. REMOVE CONCRETE TO A ROUGH SURFACE. WHERE PRACTICABLE, THE EXISTING REINFORCING STEEL WHERE REQUIRED IN THE PLANS SHALL BE LEFT IN PLACE. INSTALL DOWEL BARS IF SPECIFIED. PRIOR TO CONCRETE PLACEMENT ABRASIVELY CLEAN JOINT SURFACE AND EXPOSED REINFORCEMENT TO REMOVE LOOSE AND DISINTEGRATED CONCRETE AND LOOSE RUST. THE JOINT SURFACE AND EXPOSED REINFORCEMENT SHALL BE THOROUGHLY CLEANED OF ALL DIRT, DUST, OR OTHER FOREIGN MATERIAL BY THE USE OF WATER, AIR UNDER PRESSURE, OR OTHER METHODS THAT PRODUCE SATISFACTORY RESULTS. CONCRETE BONDING SURFACES SHALL BE WET WITHOUT FREE WATER AS CONCRETE IS PLACED.

SUBSTRUCTURE CONCRETE REMOVAL SHALL BE BY MEANS OF APPROVED PNEUMATIC HAMMERS EMPLOYING POINTED AND BLUNT CHISEL TOOLS. HYDRAULIC HOE-RAM TYPE HAMMERS WILL NOT BE PERMITTED. THE WEIGHT OF THE HAMMER SHALL NOT BE MORE THAN 35 POUNDS FOR REMOVAL WITHIN 18 INCHES OF PORTIONS TO BE PRESERVED. OUTSIDE THE 18 INCH LIMIT, A HAMMER HEAVIER THAN 35 POUNDS, BUT NOT TO EXCEED 90 POUNDS, MAY BE USED AT THE APPROVAL OF THE ENGINEER. PNEUMATIC HAMMERS SHALL NOT BE PLACED IN DIRECT CONTACT WITH REINFORCING STEEL THAT IS TO BE RETAINED IN THE REBUILT STRUCTURE.

EXISTING STRUCTURE VERIFICATION: DETAILS AND DIMENSIONS SHOWN ON THESE PLANS PERTAINING TO THE EXISTING STRUCTURE HAVE BEEN OBTAINED FROM PLANS OF THE EXISTING STRUCTURE AND FROM FIELD OBSERVATIONS AND MEASUREMENTS. CONSEQUENTLY, THEY ARE INDICATIVE OF THE EXISTING STRUCTURE AND THE PROPOSED WORK BUT THEY SHALL BE CONSIDERED TENTATIVE AND APPROXIMATE. THE CONTRACTOR IS REFERRED TO CMS SECTIONS 102.05, 105.02 AND 863.07.

CONTRACT BID PRICES SHALL BE BASED UPON A RECOGNITION OF THE UNCERTAINTIES DESCRIBED ABOVE AND UPON A PRE-BID EXAMINATION OF THE EXISTING STRUCTURE BY THE CONTRACTOR. HOWEVER, ALL PROJECT WORK SHALL BE BASED UPON ACTUAL DETAILS AND DIMENSIONS WHICH HAVE VERIFIED BY THE CONTRACTOR IN THE FIELD.

REPLACEMENT OF EXISTING REINFORCING STEEL: ANY EXISTING REINFORCING BARS WHICH ARE TO BE INCORPORATED INTO THE NEW WORK AND WHICH ARE MADE UNUSABLE BY CONCRETE REMOVAL OPERATIONS SHALL BE REPLACED WITH NEW STEEL AT THE CONTRACTOR'S COST. ANY EXISTING REINFORCING BARS DEEMED BY THE ENGINEER TO BE UNUSABLE BECAUSE OF CORROSION SHALL BE REPLACED WITH NEW STEEL. PAYMENT SHALL BE INCLUDED WITH ITEM 842, CONCRETE, MISC.: REPLACEMENT OF DAMAGED REINFORCING STEEL. ANY GROUTING OF DOWEL HOLES REQUIRED FOR REPLACEMENT OF CORRODED REINFORCING STEEL SHALL BE INCLUDED UNDER ITEM 842 - CONCRETE MISC.: DRILLING AND GROUTING DOWEL HOLES FOR PAYMENT.

EXISTING BRIDGE PLANS: THE ORIGINAL CONSTRUCTION PLANS OF THE EXISTING BRIDGE ARE AVAILABLE UPON REQUEST AT THE DISTRICT 12 OFFICE OF THE OHIO DEPARTMENT OF TRANSPORTATION, GARFIELD HEIGHTS, OHIO.

ITEM 503-UNCLASSIFIED EXCAVATION, AS PER PLAN: UNCLASSIFIED EXCAVATION SHALL BE IN ACCORDANCE WITH ITEM 503, EXCEPT THAT BACKFILL BEHIND THE ABUTMENTS SHALL BE C.M.S. 304 MATERIAL PLACED IN 6 IN. LIFTS.

INSPECTION OF STRUCTURAL STEEL: THE ENGINEER SHALL VISUALLY INSPECT ALL EXISTING BUTT-WELDED SPLICES AND/OR FLANGE COVER PLATE FILLET WELDS TO ENSURE THAT THEY ARE FREE OF DEFECTS AND CRACKS. THE DECK SLAB HAUNCH FORMS IMMEDIATELY ADJACENT TO SUCH WELDS SHALL NOT BE ERECTED UNTIL AFTER THE ENGINEER HAS COMPLETED THIS INSPECTION. THIS INSPECTION SHALL NOT TAKE PLACE UNTIL AFTER THE TOP FLANGES ARE CLEANED AS SPECIFIED IN 511.08, BUT IT SHALL BE DONE BEFORE THE DECK SLAB REINFORCEMENT IS INSTALLED. THE COST ASSOCIATED WITH THIS INSPECTION SHALL BE INCLUDED WITH ITEM 842, SUPERSTRUCTURE CONCRETE FOR PAYMENT. ANY CRACKS FOUND SHOULD BE REPORTED TO THE OFFICE OF STRUCTURAL ENGINEERING, BRIDGE CONSTRUCTION SPECIALIST, ALONG WITH SPECIFIC INFORMATION ON LOCATION OF THE CRACKS LENGTH, AND DEPTH SO AN EVALUATION AND REPAIR OR REPLACEMENT RECOMMENDATION CAN BE MADE.

ITEM 863 STRUCTURAL STEEL MEMBERS, MISCELLANEOUS LEVEL FABRICATION, AS PER PLAN: STEEL MEMBERS TO BE FABRICATED UNDER THIS ITEM WILL NOT REQUIRE SHOP DRAWINGS PRIOR TO FABRICATION. THE CONTRACTOR SHALL MAKE NECESSARY MEASUREMENTS AND PREPARE SKETCHES, DRAWINGS, TABLES, ETC. THE ENGINEER SHALL HAVE AUTHORITY AND RESPONSIBILTY FOR ENSURING THAT THE FABRICATED STEEL IS ACCEPTABLE. TECHNICAL ASSISTANCE WILL BE PROVIDED ON REQUEST BY THE OFFICE OF STRUCTURAL ENGINEERING. MILL TEST REPORTS AND SHIPPING DOCUMENTS SHALL BE SUBMITTED TO THE ENGINEER FOR REVIEW AND APPROVAL PRIOR TO INCORPORATING STEEL ITEMS INTO THE WORK, AS REQUIRED BY 501.07. AFTER FABRICATION, THE CONTRACTOR SHALL SUBMIT SHOP DRAWINGS TO THE ENGINEER FOR REVIEW AND APPROVAL TO ENSURE THAT THE DRAWINGS DEPICT THE STEEL AS ACTUALLY INCORPORATED INTO THE WORK. THE ENGINEER WILL THEN SEND ONE APPROVED SET TO THE OFFICE OF STRUCTURAL ENGINEERING FOR INFORMATION. PAY WEIGHTS SHALL BE COMPUTED IN COMPLIANCE WITH SS 863 AND SUBMITTED TO THE ENGINEER FOR HIS REVIEW AND APPROVAL. THE FABRICATOR SHALL FURNISH A 35 MILLIMETER MICROFILM COPY OF EACH SHOP DRAWING, WHICH SHALL BE MOUNTED ON AN APERTURE CARD AS SPECIFIED IN 501.05.

STEEL MEMBERS INCLUDED IN THIS ITEM INCLUDE ALL END CROSS FRAMES.

BACKWALL CONCRETE: IN ADDITION TO CMS 844, BACKWALL CONCRETE ABOVE THE OPTIONAL CONSTRUCTION JOINT AT THE APPROACH SLAB SEAT SHALL NOT BE PLACED UNTIL AFTER THE DECK CONCRETE IN THE SPAN ADJACENT TO THE ABUTMENT HAS BEEN PLACED.

INSTALLATION OF SEAL: DURING INSTALLATION OF THE SUPPORT/ARMOR FOR THE SUPERSTRUCTURE SIDE OF THE EXPANSION JOINT SEAL, THE SEATING OF BEAMS ON BEARINGS SHALL BE CAREFULLY OBSERVED TO ASSURE THAT POSITIVE BEARING IS MAINTAINED. PROPER ELEVATION OF THE SUPPORT/ARMOR SHALL BE ACHIEVED BY ADJUSTING THE CONNECTION ANGLES AND BOLTS BETWEEN BEAM AND EXPANSION JOINT.

REINFORCING STEEL: NEW REINFORCING STEEL MAY REQUIRE FIELD CUTTING OR BENDING TO BE PROPERLY FITTED. PAYMENT SHALL BE INCLUDED IN ITEM 844.

DOWEL HOLES, REINFORCING STEEL AND EPOXY MORTAR PER CMS 510 ARE TO BE INCLUDED WITH THE APPROPRIATE ITEM 842 FOR PAYMENT.

NOTE

1. FOR ADDITIONAL STRUCTURE GENERAL NOTES, SEE SHEETS 3 & 4 OF 12.

DESIGN AGENCY
THOMAS FOK & ASSOC., LTD.
3896 MAHONING AVE., YOUNGSTOWN, OHIO

DESIGNED JDV | DRAWN KRM | CHECKED HJS | REVISED

REVIEWED TFF | DATE 2-4-00 | STRUCTURE FILE NUMBER 1807676

STRUCTURE NOTES 1 OF 2
BRIDGE NO. CUY-90-0303
UNDER CANTERBURY ROAD

CUY-90-0.00

499
582

ITEM 516 - REFURBISH BEARING DEVICE, AS PER PLAN:

THIS ITEM SHALL INCLUDE ALL WORK NECESSARY TO PROPERLY ALIGN BRIDGE BEARINGS AS WELL AS THEIR CLEANING AND PAINTING AND SHALL BE PERFORMED WHEN THE DECK IS OFF.

INCLUDED SHALL BE JACKING, DISASSEMBLY OF THE BEARINGS, HAND TOOL CLEANING (GRINDING IF NECESSARY), PAINTING AS REQUIRED BY SYSTEM OZEU, REPLACEMENT OF ANY DAMAGED SHEET LEAD WITH PREFORMED BEARING PADS (711.21), INSTALLATION OF ANY NECESSARY STEEL SHIMS OF THE SAME SIZE AS THE BEARINGS TO PROVIDE A SNUG FIT, REALIGNMENT OF THE MASONRY PLATE, SO THAT THE BEARINGS ARE VERTICALLY ALIGNED AT 60 DEGREES F, AND RE-ASSEMBLY OF THE BEARINGS.

THE CONTRACTOR SHALL BE RESPONSIBLE FOR THE DESIGN, INSTALLATION AND OPERATION OF AN ADEQUATE JACKING SYSTEM, INCLUDING ANY TEMPORARY OR PERMANENT SUPPORTS NECESSARY TO REFURBISH THE DESIGNATED BEARING DEVICES.

JACKS SHALL HAVE A SWIVEL LOAD CAP, A DOMED PISTON HEAD OR SOME OTHER DEVICE TO PROTECT AGAINST THE EFFECTS OF SIDE LOAD ON THE JACK.

THE HEIGHT OF THE LIFT SHALL NOT EXCEED ¼ INCH. MAXIMUM DIFFERENTIAL JACKING HEIGHT BETWEEN ANY ADJACENT ABUTMENTS OR PIERS SHALL BE 1" OR LESS. IF, DURING THE JACKING OPERATIONS, DAMAGE TO THE STRUCTURE IS VISUALLY OBSERVED, THE JACKING OPERATION SHALL IMMEDIATELY CEASE AND APPROVED SUPPORTS SHALL BE INSTALLED. THE CONTRACTOR SHALL THEN ANALYZE THE DAMAGE AND SUBMIT A METHOD OF CORRECTION TO THE ENGINEER FOR APPROVAL. COST OF THE REQUIRED REPAIRS SHALL BE BORNE BY THE CONTRACTOR.

THE CONTRACTOR SHALL ASSURE ALL BEARINGS ARE SHIMMED ADEQUATELY AND THAT NO BEAMS AND/OR BEARING DEVICES ARE "FLOATING", AND SHALL DEMONSTRATE TO THE ENGINEER THAT THE BRIDGE BEARINGS ARE FULLY SEATED BETWEEN ALL CONTACT AREAS. IF FULL SEATING IS NOT ATTAINED, SUITABLE MEANS OF REPAIR, SUBJECT TO THE APPROVAL OF THE ENGINEER, WILL BE REQUIRED AT THE CONTRACTORS EXPENSE. AT THE OPTION OF THE CONTRACTOR AND AT NO ADDITIONAL COST TO THE STATE, NEW BEARINGS OF THE SAME TYPE AS THE EXISTING MAY BE INSTALLED IN PLACE OF REFURBISHING THE BEARINGS. ALL WORK SHALL BE TO THE SATISFACTION OF THE ENGINEER.

PAYMENT FOR ALL THE ABOVE DESCRIBED LABOR AND MATERIALS WILL BE MADE AT THE CONTRACT PRICE BID FOR ITEM 516 - REFURBISH BEARING DEVICE, AS PER PLAN.

ITEM 530 - STRUCTURE, MISC.: PROTECTION OF UTILITIES

THIS ITEM SHALL CONSIST OF FURNISHING ALL NECESSARY LABOR, MATERIALS, AND EQUIPMENT TO PROTECT EXISTING UTILITIES LOCATED ON THE BRIDGE SUPERSTRUCTURE DURING CONSTRUCTION.

THE CONTRACTOR IS REMINDED THAT ALL EXISTING COMPONENTS AND SYSTEMS TO REMAIN IN USE DURING AND AFTER THIS PROJECT REQUIRE PROTECTION. THESE ITEMS INCLUDE, BUT ARE NOT LIMITED TO:

1. FIRST ENERGY TRANSITE DUCT BANKS BETWEEN THE BEAMS

IT IS THE CONTRACTOR'S RESPONSIBILITY TO PROTECT THESE SYSTEMS AND COMPONENTS FOR THE DURATION OF THE CONTRACT. THE CONTRACTOR IS DIRECTED TO SECTION 107 AND PARTICULARLY TO SECTION 107.12 OF THE CONSTRUCTION AND MATERIAL SPECIFICATIONS.

PAYMENT SHALL BE MADE AT THE LUMP SUM PRICE BID FOR ITEM 530 - SPECIAL - STRUCTURE, MISC.: PROTECTION OF UTILITIES. THIS SHALL INCLUDE ALL NECESSARY TOOLS, LABOR, EQUIPMENT AND MATERIALS NECESSARY TO SUCCESSFULLY PERFORM THIS ITEM OF WORK.

ITEM 844 HIGH PERFORMANCE CONCRETE, SUPERSTRUCTURE, (DECK) AS PER PLAN

ITEM 844 HIGH PERFORMANCE CONCRETE, SUPERSTRUCTURE, (PARAPET) AS PER PLAN

ITEM 844 HIGH PERFORMANCE CONCRETE, SUBSTRUCTURE, AS PER PLAN

THE PROVISIONS OF 844 SHALL APPLY EXCEPT AS NOTED BELOW.

SLIPFORMING:
THE CONTRACTOR IS ALLOWED THE OPTION OF SLIPFORMING BRIDGE PARAPETS OVER NON TRAVELED WAYS. A MINIMUM OF 3 DAYS AFTER PLACING THE TEST SECTION THE CONTRACTOR SHALL CORE THE TEST SECTION (A MINIMUM OF 3 CORES) AT LOCATIONS AS DIRECTED BY THE ENGINEER. APPROVAL TO SLIPFORM SHALL NOT BE GRANTED UNTIL AFTER THE CORING AND AFTER A SUCCESSFUL SLIPFORMING RESULT IS OBTAINED. IN ADDITION TO THE REQUIREMENTS OF THE LAST PARAGRAPH OF 844.031 THE ENGINEER WILL INSPECT THE SLIPFORMED SURFACE FOR HORIZONTAL CRACKING 6 MONTHS AFTER COMPLETION OF THE SLIPFORMING OPERATION. ANY ADDITIONAL CRACKS FOUND SHALL BE REPAIRED AS PER THE SPECIFICATIONS AT NO ADDITIONAL COST TO THE STATE. IN ADDITION, ALL ANCHOR BOLTS FOR FENCE POSTS SHALL BE CAST IN PLACE.

SLIPFORMING SHALL NOT BE PERFORMED DIRECTLY OVER AREAS WHERE THERE IS OR WILL BE VEHICULAR OR PEDESTRIAN TRAFFIC. AT THESE LOCATIONS, THE PARAPETS SHALL BE FORMED AND THE FOLLOWING REQUIREMENTS FOLLOWED.

THE MINIMUM CONCRETE SLUMP DURING PLACEMENT OF ALL CONCRETE PARAPETS SHALL BE 6 INCHES. THE MAXIMUM SLUMP ALLOWED DURING PLACEMENT IS 8 INCHES.

FORMS SHALL NOT BE REMOVED UNTIL AT LEAST 2 HOURS AFTER THE FINAL SET. DETERMINATION OF THE FINAL SET SHALL BE AS PER ASTM C266 (GILLMORE NEEDLE). TESTING SHALL BE PERFORMED BY THE CONTRACTOR AT NO COST TO THE STATE.

ANCHOR BOLTS FOR FENCE POSTS SHALL BE CAST IN PLACE.

THIS ITEM SHALL INCLUDE THE DRILLING OF HOLES PER CMS 510 INTO CONCRETE OR MASONRY AND THE FURNISHING AND PLACING OF GROUT INTO HOLES. NON-SHRINKING EPOXY GROUT SHALL BE USED IN ACCORDANCE WITH CMS 705.20. ANCHORING SHALL CONFORM TO CMS 705.20. PAYMENT SHALL BE INCLUDED WITH THIS ITEM. THE FURNISHING AND PLACEMENT OF STEEL FOR DOWELS IS ALSO INCLUDED WITH THIS ITEM

THE CONTRACTOR SHALL CONSTRUCT 1½ INCHES DEEP AND ¼ INCH WIDE CONTROL JOINTS SPACED AT A MINIMUM OF 6 FEET AND A MAXIMUM OF 8 FEET ON CENTER. THE CONTROL JOINTS SHALL BE MADE IN THE COMPLETE CIRCUMFERENCE OF THE PARAPET, STARTING AND ENDING AT THE ELEVATION OF THE TOP OF THE CONCRETE DECK (SEE DETAILS BELOW). THE CONTRACTOR MAY EITHER FORM THE CONTROL JOINTS IN WITH FORM LINERS, OR, WITHIN 24 HOURS OF PLACEMENT, SAW CUT THE CONTROL JOINTS IN WITH THE USE OF AN EDGE GUIDE, FENCE, OR JIG WHICH IS REQUIRED TO ENSURE THAT THE CUT JOINT IS STRAIGHT, TRUE, AND ALIGNED ON ALL FACES OF THE PARAPET. THE ENTIRE LENGTH OF EACH CONTROL JOINT SHALL BE SEALED TO A MINIMUM DEPTH OF 1½ INCHES WITH A CAULKING MATERIAL CONFORMING TO FEDERAL SPECIFICATION, TT-S-00227E.

MIX OPTIONS:
ALL DECK CONCRETE AND PARAPET CONCRETE SHALL BE MIX 4, AS PER PLAN. ALL OTHER CONCRETE SHALL BE MIX 4, AS PER PLAN, OR MIX 2 CONCRETE. THE FOLLOWING PROPORTIONS WILL USED AS A STARTING MIX DESIGN.

CONCRETE TABLE:
QUANTITIES PER CUBIC YARD
AGGREGATES (SSD)

MIX 4, AS PER PLAN (GGBF SLAG + MICROSILICA)

	GRAVEL	LIMESTONE	SLAG
FINE AGGREGATE (LB)	1245	1245	1246
#8 COARSE AGGREGATE (LB)	360	360	315
#57 COARSE AGGREGATE (LB)	1315	1335	1155
TOTAL (LB)	2920	2940	2716
CEMENT CONTENT (LB)	400	400	400
GGBF SLAG (LB)	170	170	170
MICROSILICA (LB)	30	30	30
WATER TO CEMENTITIOUS RATIO MAX.	0.42	0.42	0.42
AIR CONTENT, +/-2%	7%	7%	7%

THE WEIGHTS SPECIFIED IN THE CONCRETE TABLE WERE CALCULATED FOR MATERIALS OF THE FOLLOWING BULK SPECIFIC GRAVITIES (SSD): NATURAL SAND AND GRAVEL 2.62, LIMESTONE SAND 2.68, LIMESTONE 2.65, SLAG 2.30, FLY ASH 2.65, GGBF SLAG 2.90, MICROSILICA SOLID 2.20, AND PORTLAND CEMENT 3.15. FOR AGGREGATES OF SPECIFIC GRAVITIES DIFFERING MORE THAN PLUS OR MINUS 0.02 FROM THESE, THE WEIGHTS IN THE TABLE WILL BE CORRECTED.

DECK TEXTURING:
IN LIEU OF THE REQUIREMENTS OF SS 842 OR SS 844, CONCRETE DECK SLABS SHALL BE FINISHED IN ACCORDANCE WITH 451.09 AND 451.12 EXCEPT THAT CONSTRUCTION JOINTS SHALL NOT BE EDGED, AND A STRIP OF SURFACE 9 TO 12 INCHES WIDE ADJACENT TO CURBS AND BARRIERS SHALL NOT BE GROOVED. IF THE TEXTURE AS REQUIRED IS NOT MET, THE CONTRACTOR WILL SAW TEXTURE THE DECK AT NO COST TO THE STATE.

BASIS OF PAYMENT:
ALL COSTS OF MATERIAL AND LABOR TO PROVIDE LIGHTING CONDUITS IF SHOWN IN THE BRIDGE PLANS SHALL BE INCLUDED FOR PAYMENT UNDER THIS ITEM. PAYMENT FOR THE ABOVE COMPLETED AND ACCEPTED QUANTITIES WILL BE MADE AT THE CONTRACT BID PRICE FOR:

ITEM	UNITS	DESCRIPTION
844E48001	CUBIC YARD	HIGH PERFORMANCE CONCRETE SUPERSTRUCTURE (DECK), AS PER PLAN
844E48021	CUBIC YARD	HIGH PERFORMANCE CONCRETE SUPERSTRUCTURE (PARAPET), AS PER PLAN
844E48041	CUBIC YARD	HIGH PERFORMANCE CONCRETE SUBSTRUCTURE, AS PER PLAN
844E49000	LUMP SUM	HIGH PERFORMANCE CONCRETE TRIAL MIX
844E49010	LUMP SUM	HIGH PERFORMANCE CONCRETE TESTING

DESIGN AGENCY
THOMAS FOK & ASSOC., LTD.
3896 MAHONING AVE., YOUNGSTOWN, OHIO

DESIGNED JDV | DRAWN KRM | REVIEWED TF | DATE 2-4-00
CHECKED HJS | REVISED | STRUCTURE FILE NUMBER 1807676

STRUCTURE NOTES 2 OF 2
BRIDGE NO. CUY-90-0303
UNDER CANTERBURY ROAD

CUY-90-0.00

									AS PER PLAN
ITEM	ITEM EXT.	TOTAL	UNIT	DESCRIPTION	SUPER.	ABUT.	PIERS	GEN'L	SHEET NO.
202	11203	LUMP		PORTIONS OF STRUCTURE REMOVED, OVER 20 FOOT SPAN, AS PER PLAN				LUMP	2/12
503	21101	17	CU. YARD	UNCLASSIFIED EXCAVATION, AS PER PLAN		17			2/12
SPECIAL	51267504	329	SQ. YARD	SEALING OF CONCRETE SURFACES (NON-EPOXY) *	294	35			
SPECIAL	51267510	623	SQ. YARD	SEALING OF CONCRETE SURFACES (EPOXY URETHANE) *	484	135	4		
SPECIAL	51271500	288	SQ. YARD	URETHANE TOP COAT SEALER			288		
516	11210	75	LIN. FEET	STRUCTURAL EXPANSION JOINT INCLUDING ELASTOMERIC STRIP SEAL				75	
516	45305	10	EACH	REFURBISH BEARING DEVICE, AS PER PLAN		10			2/12
518	21220	LUMP		POROUS BACKFILL		LUMP			
519	11100	33	SQ. FOOT	PATCHING CONCRETE STRUCTURES			33		
519	12600	30	LIN. FEET	CONCRETE REPAIR BY EPOXY INJECTION *		30			
SPECIAL	53000200	LUMP		STRUCTURE, MISC.: PROTECTION OF UTILITIES	LUMP				
601	21001	2	SQ. YARD	CONCRETE SLOPE PROTECTION, AS PER PLAN				2	8/12
SPECIAL	60739900	554	LIN. FEET	VANDAL PROTECTION FENCE, 6' STRAIGHT, COATED FABRIC	489	65			
816	00610	1745	POUND	FIELD PAINTING OF NEW STEEL, INTERMEDIATE AND FINISH COAT, SYSTEM IZEU	1745				
842	81300	3	EACH	CONCRETE, MISC.: DRILLING AND GROUTING DOWEL HOLES				3	
842	81400	20	POUND	CONCRETE, MISC.: REPLACEMENT OF DAMAGED REINFORCING STEEL				20	
844	48001	359	CU. YARD	HIGH PERFORMANCE CONCRETE SUPERSTRUCTURE (DECK), AS PER PLAN	337	22			3/12
844	48021	55	CU. YARD	HIGH PERFORMANCE CONCRETE SUPERSTRUCTURE (PARAPET), AS PER PLAN	48	7			3/12
844	48041	22	CU. YARD	HIGH PERFORMANCE CONCRETE SUBSTRUCTURE, AS PER PLAN		22			3/12
863	10201	1745	POUND	STRUCTURAL STEEL MEMBERS, MISC., LEVEL FABRICATION, AS PER PLAN	1745				2/12
863	20000	1491	EACH	WELDED STUD SHEAR CONNECTOR	1491				

* SEE PROPOSAL NOTE

CALCULATED BY JDV DATE 5-99
CHECKED BY HJS DATE 12-99

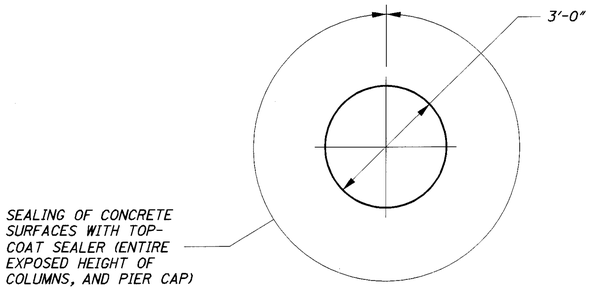

SEALING OF CONCRETE SURFACES-PIERS

ITEM SPECIAL-URETHANE TOP COAT SEALER: THIS ITEM SHALL CONSIST OF THE APPLICATION OF A URETHANE TOP COAT SEALER OVER CONCRETE AREAS PREVIOUSLY COATED WITH EPOXY SEALER. THE COLOR SHALL BE FEDERAL COLOR STANDARD NO. 595-20219 COCOA AND THE MATERIAL SHALL CONFORM TO PROPOSAL NOTE "SEALING OF CONCRETE SURFACES"

SURFACES TO WHICH THE URETHANE TOP COAT IS TO BE APPLIED SHALL BE DRY AND FREE FROM DUST, DIRT, OIL, WAX, CURING COMPOUNDS, EFFLORESCENCE, LAITANCE AND OTHER FOREIGN MATERIALS WITH THE EXCEPTION OF THE EXISTING EPOXY SEALER.

THE REQUIRED CLEANING SHALL BEGIN WITH HIGH PRESSURE WATER BLASTING (1000 PSI OR GREATER). MILDEW SHALL BE TREATED WITH A HYPOCHLORITE SOLUTION TO KILL SPORES. A LIGHT SWEEP ABRASIVE BLAST SHALL FOLLOW TO REMOVE ANY FOREIGN SUBSTANCES AND TO ROUGHEN ALL THE SURFACES OF THE EXISTING SEALER WITHOUT REMOVING THE EXISTING SEALER. THE ABRASIVE BLAST SHALL BE FOLLOWED BY POWER SWEEPING OR AIR BROOMING. BLASTING ABRASIVES CONTAINING MORE THAN 1% FREE SILICA SHALL NOT BE ALLOWED.

THE URETHANE TOP COAT SHALL BE APPLIED ACCORDING TO PN "SEALING OF CONCRETE SURFACES." THE URETHANE TOP COAT SHALL BE APPLIED WITHIN 48 HOURS AFTER SURFACE PREPARATION. APPLICATION SHALL BE BY BRUSH OR ROLLER AS DIRECTED BY THE ENGINEER.

THE COST OF ALL LABOR, EQUIPMENT AND MATERIAL NECESSARY TO ACCOMPLISH THIS ITEM OF WORK SHALL BE PAID FOR UNDER:

ITEM	UNIT	DESCRIPTION
SPECIAL	SQ. YD.	URETHANE TOP COAT SEALER

REVISED BY B&N 5-12-00

DESIGN AGENCY
THOMAS FOK & ASSOC., LTD.
3896 MAHONING AVE., YOUNGSTOWN, OHIO

DATE 2-4-00
REVIEWED TF
STRUCTURE FILE NUMBER 1807676
DRAWN KRM
REVISED
DESIGNED JDV
CHECKED HJS

ESTIMATED QUANTITIES & STRUCTURE NOTES
BRIDGE NO. CUY-90-0303
UNDER CANTERBURY ROAD

CUY-90-0.00

4 / 12

501
582

I:\PROJECTS\P1dl738\dgn\final plans\bes+quan.dgn 14-SEP-2000 8:58AM jgrmovse

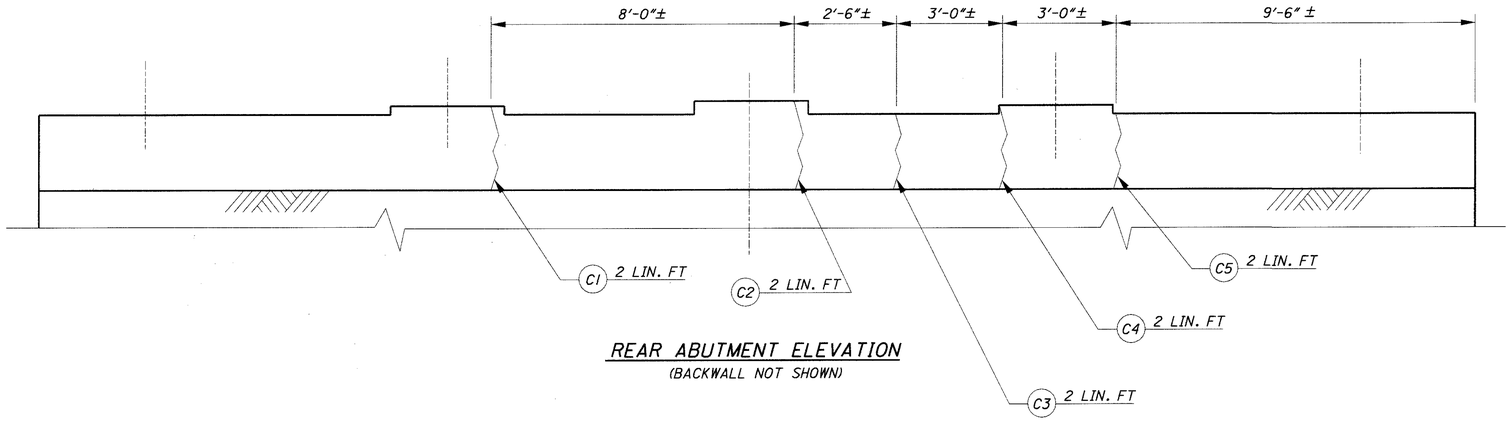

REAR ABUTMENT ELEVATION
(BACKWALL NOT SHOWN)

LEGEND	
~	= CRACK TO BE EPOXY-INJECTED ACCORDING TO ITEM 519, (MEASURED NOVEMBER, 1999)
(C_) LIN. FT.	= APPROXIMATE LIN. FT. TO BE EPOXY-INJECTED

SUMMARY OF REPAIR QUANTITIES		
LOCATION	CRACK REPAIR BY EPOXY INJECTION	
	MEASURED QTY. (L.F.)	ESTIMATED QTY. (L.F.)
REAR ABUTMENT	10	15
FORWARD ABUTMENT	10	15
		TOTAL = 30

QUANTITIES ARE CARRIED TO THE ESTIMATED QUANTITY SHEET ON 4 OF 12.

NOTES:

1. ALL DIMENSIONS GIVEN ARE MEASURED TO THE CENTERLINE OF THE CRACK.
2. ESTIMATED QUANTITES HAVE BEEN INCREASED BY 50% OVER MEASURED QUANTITES TO ALLOW FOR ADDITIONAL DETERIORATION.
3. EXACT DIMENSIONS AND LOCATIONS OF CRACKS SHALL BE DETERMINED BY THE ENGINEER IN THE FIELD FOR FINAL PAY QUANTITY.

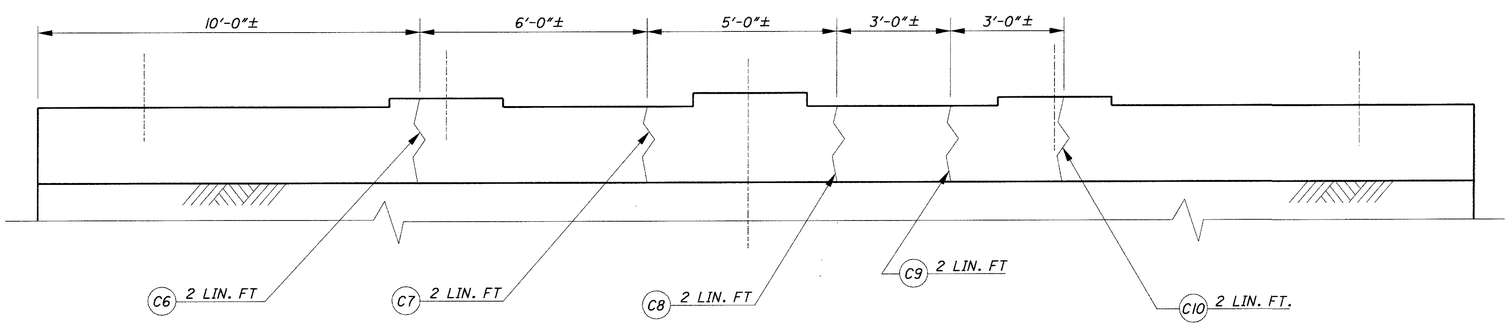

FORWARD ABUTMENT ELEVATION
(BACKWALL NOT SHOWN)

DESIGN AGENCY
THOMAS FOK & ASSOC., LTD.
3896 MAHONING AVE., YOUNGSTOWN, OHIO

DESIGNED JDV | DRAWN KRM | REVIEWED TF | DATE 2-4-00
CHECKED HJS | REVISED | STRUCTURE FILE NUMBER 1807676

ABUTMENT REPAIR DETAILS
BRIDGE NO. CUY-90-0303
UNDER CANTERBURY ROAD

CUY-90-0.00

5 / 12

502
582

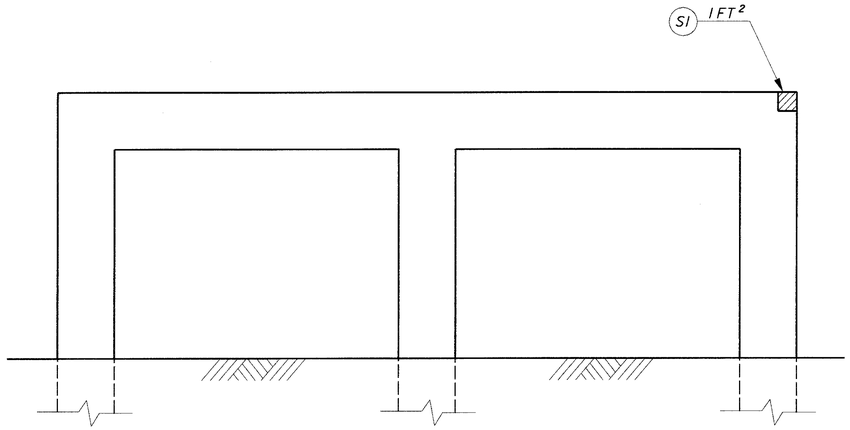

PIER NO. 1
(LOOKING NORTH)

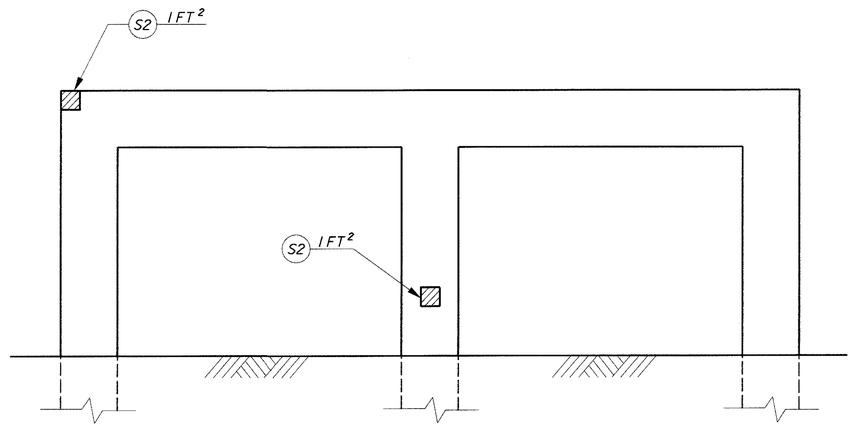

PIER NO. 1
(LOOKING SOUTH)

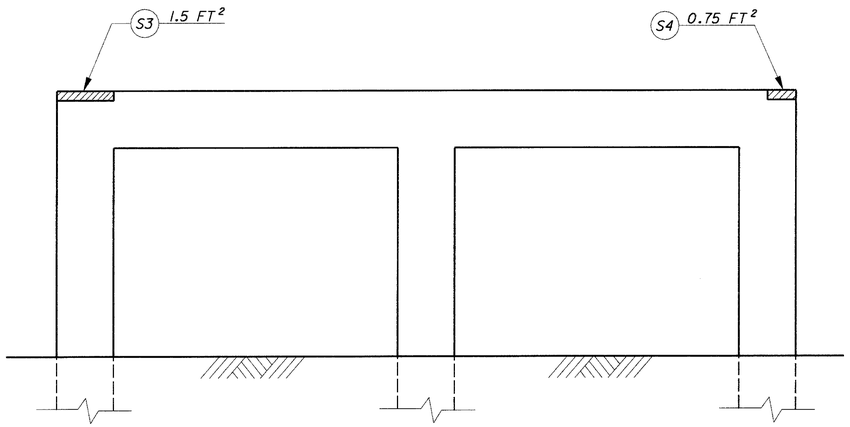

PIER NO. 2
(LOOKING NORTH)

LEGEND

= AREAS TO BE PATCHED ACCORDING TO ITEM 519. (MEASURED NOVEMBER, 1999)

(S_) FT² = APPROXIMATE AREA TO BE PATCHED

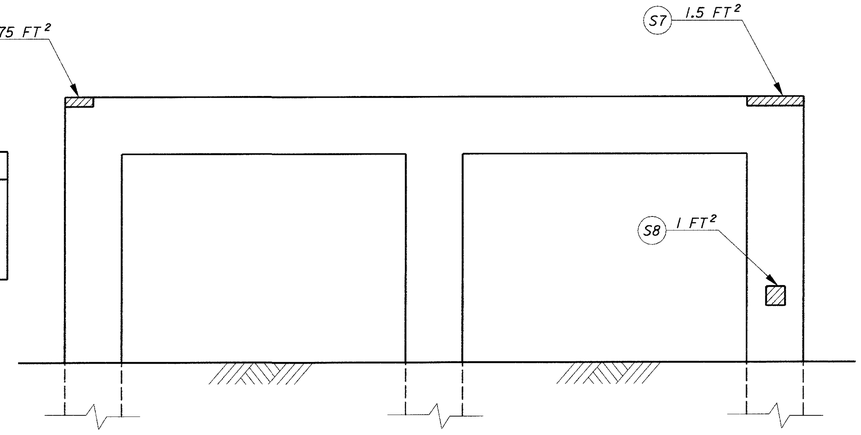

PIER NO. 2
(LOOKING SOUTH)

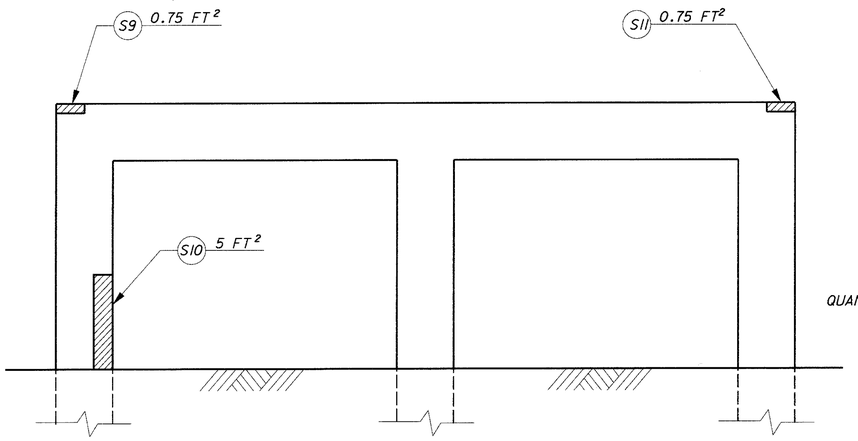

PIER NO.3
(LOOKING NORTH)

SUMMARY OF REPAIR QUANTITIES

LOCATION	ITEM 519-PATCHING CONCRETE SURFACES	
	MEASURED QTY. (S.F.)	ESTIMATED QTY. (S.F.)
PIER NO. 1	3	5
PIER NO. 2	5.5	8
PIER NO. 3	13	20
		TOTAL = 33

QUANTITIES ARE CARRIED TO THE ESTIMATED QUANTITY SHEET ON 4 OF 12.

NOTES:

1. ESTIMATED QUANTITES HAVE BEEN INCREASED BY 50% OVER MEASURED QUANTITES TO ALLOW FOR ADDITIONAL DETERIORATION.
2. EXACT DIMENSIONS AND LOCATIONS OF PATCHES SHALL BE DETERMINED BY THE ENGINEER IN THE FIELD FOR FINAL PAY QUANTITY.

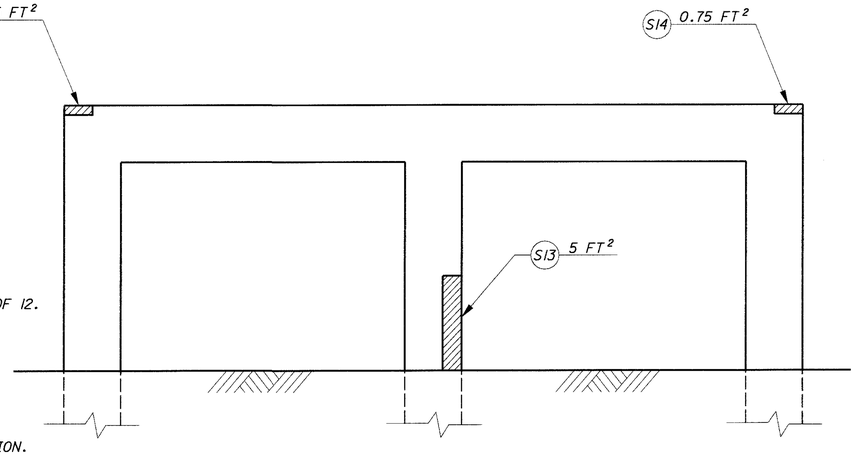

PIER NO.3
(LOOKING SOUTH)

DESIGN AGENCY
THOMAS FOK & ASSOC., LTD.
3896 MAHONING AVE., YOUNGSTOWN, OHIO

DESIGNED JDV | DRAWN KRM | CHECKED HJS | REVIEWED TF | DATE 2-4-00 | REVISED

STRUCTURE FILE NUMBER 1807676

PIER REPAIR DETAILS
BRIDGE NO. CUY-90-0303
UNDER CANTERBURY ROAD

CUY-90-0.00

6 / 12

503
582

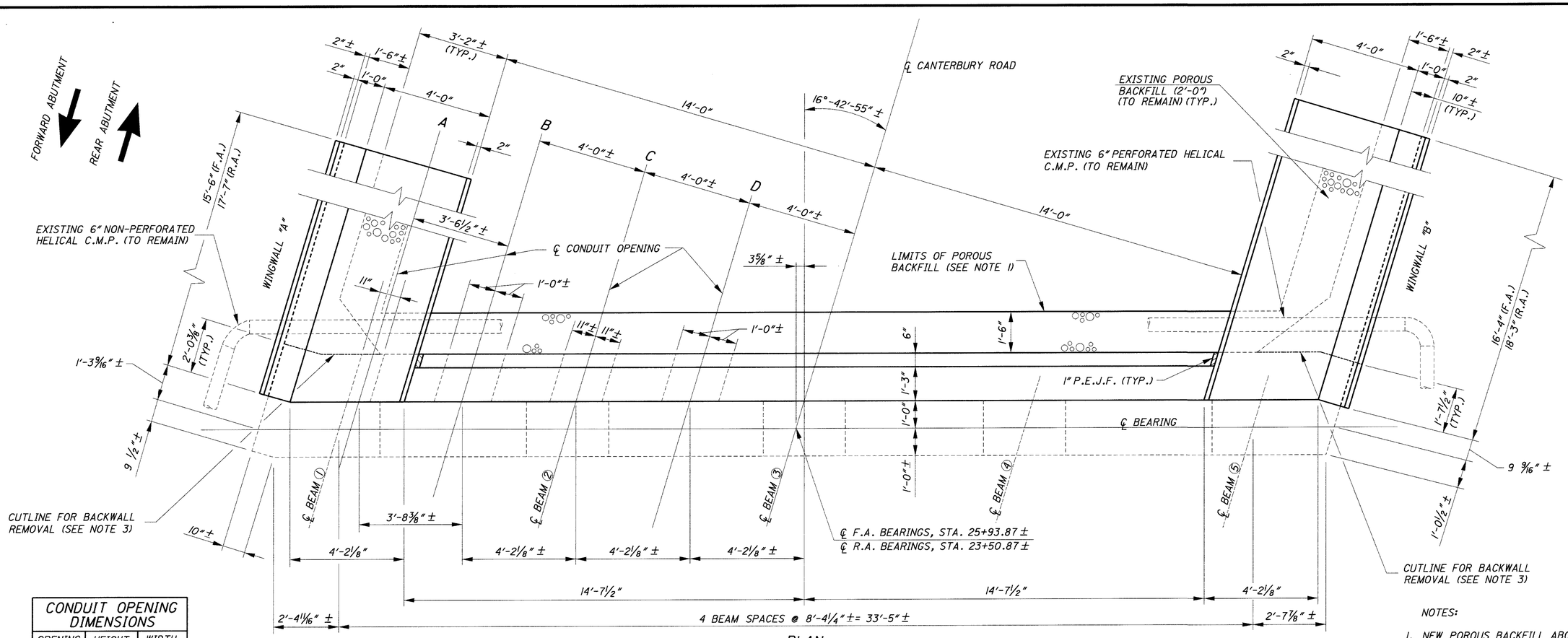

PLAN

FORWARD ABUTMENT SHOWN
REAR ABUTMENT AS NOTED **

CONDUIT OPENING DIMENSIONS		
OPENING	HEIGHT	WIDTH
A	2'-0"	11"
B	1'-0"	2'-0"
C	2'-0"	1'-10"
D	1'-0"	2'-0"

(SEE NOTE 4)

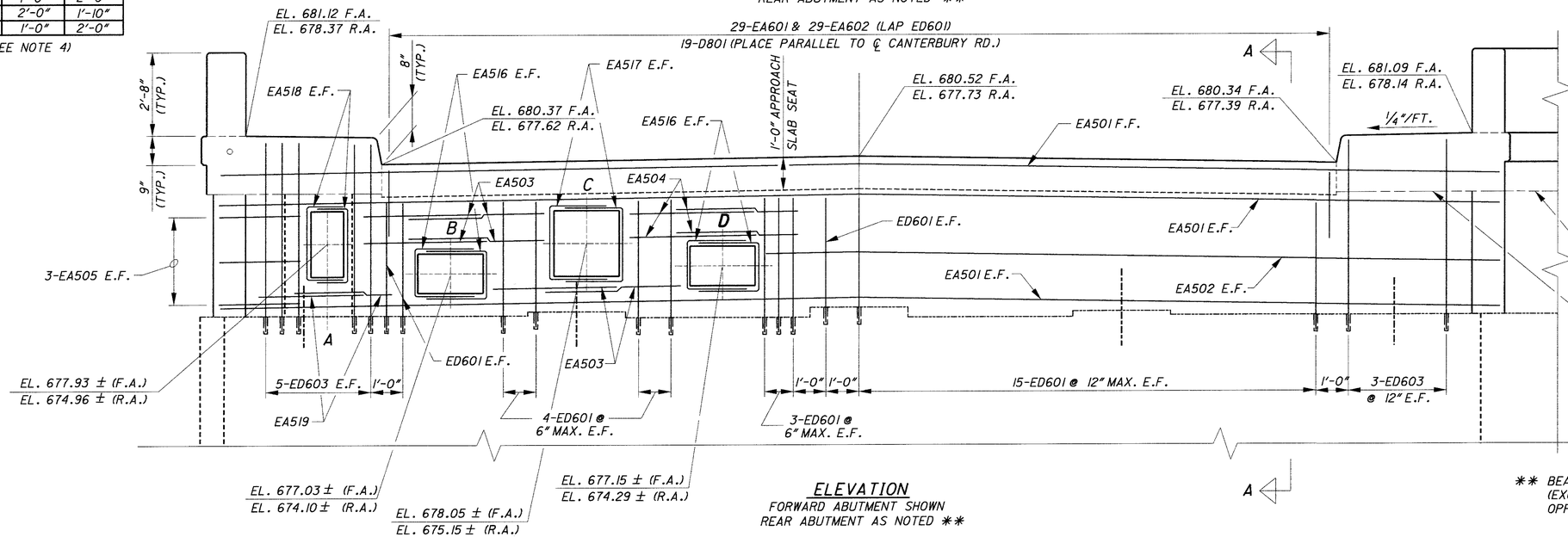

ELEVATION

FORWARD ABUTMENT SHOWN
REAR ABUTMENT AS NOTED **

NOTES:

1. NEW POROUS BACKFILL ABOVE BACKWALL CONSTRUCTION JOINT.
2. FOR SECTION A-A, SECTION B-B, & WINGWALL "A" & "B", SEE SHEET 8 OF 12.
3. REMOVE BACKWALL TO EXISTING C.J. AT BEAM SEAT (SEE SECTION A-A, SHEET 8 OF 12.
4. THE OPENING DIMENSIONS AND LOCATIONS ARE TO BE VERIFIED BY THE CONTRACTOR.

** BEAM NUMBERS, OPENINGS AND REBARS (EXCEPT EA501) FOR REAR ABUTMENT ARE OPPOSITE HAND ABOUT ℄ CANTERBURY RD.

DESIGN AGENCY
THOMAS FOK & ASSOC., LTD.
3896 MAHONING AVE., YOUNGSTOWN, OHIO

DESIGNED JDV | DRAWN KRM | REVIEWED TF | DATE 2-4-00
CHECKED HJS | REVISED | STRUCTURE FILE NUMBER 1807676

ABUTMENT DETAILS 1 OF 2

BRIDGE NO. CUY-90-0303
UNDER CANTERBURY ROAD

CUY-90-0.00

7 / 12

504
582

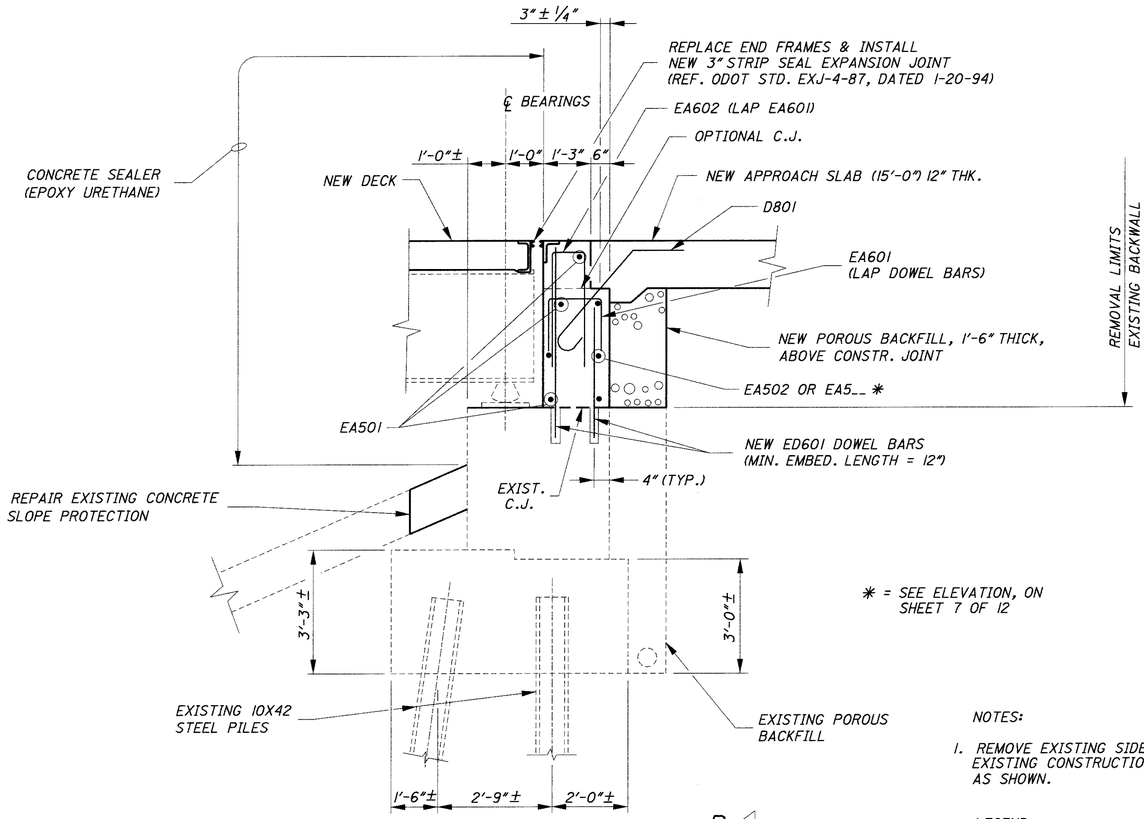

SECTION A-A

B

NOTES:

1. REMOVE EXISTING SIDEWALK, PARAPET AND FENCE TO EXISTING CONSTRUCTION JOINT AND RECONSTRUCT AS SHOWN.

LEGEND:

C.J. = CONSTRUCTION JOINT

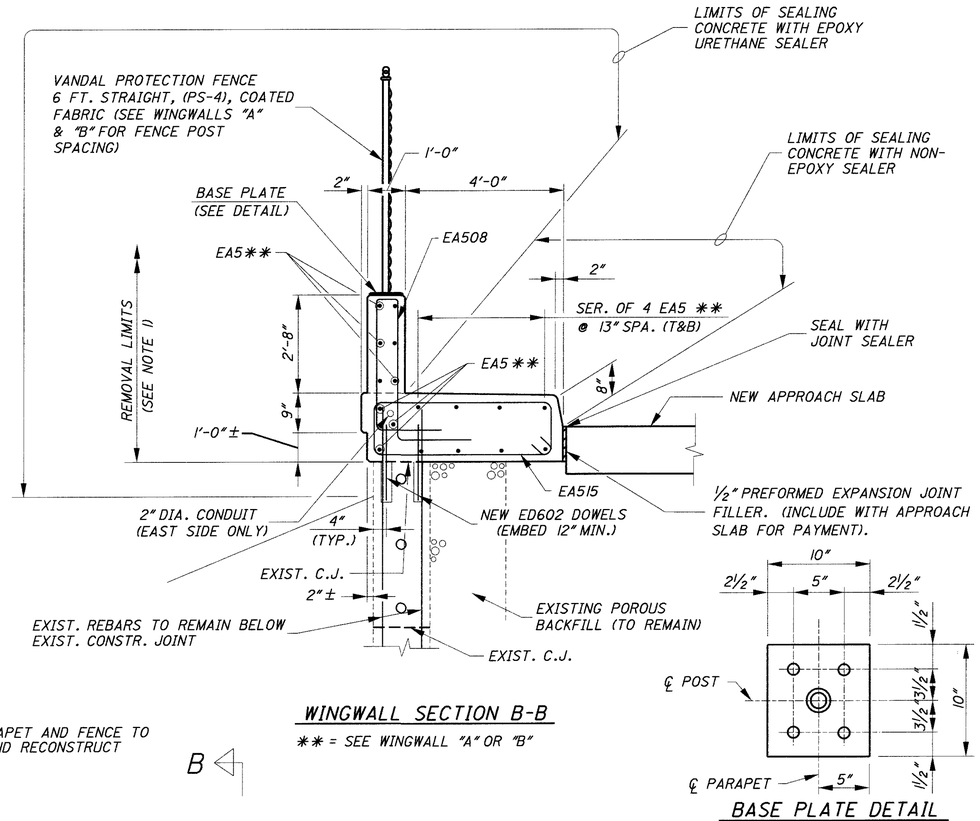

WINGWALL SECTION B-B

** = SEE WINGWALL "A" OR "B"

B

BASE PLATE DETAIL

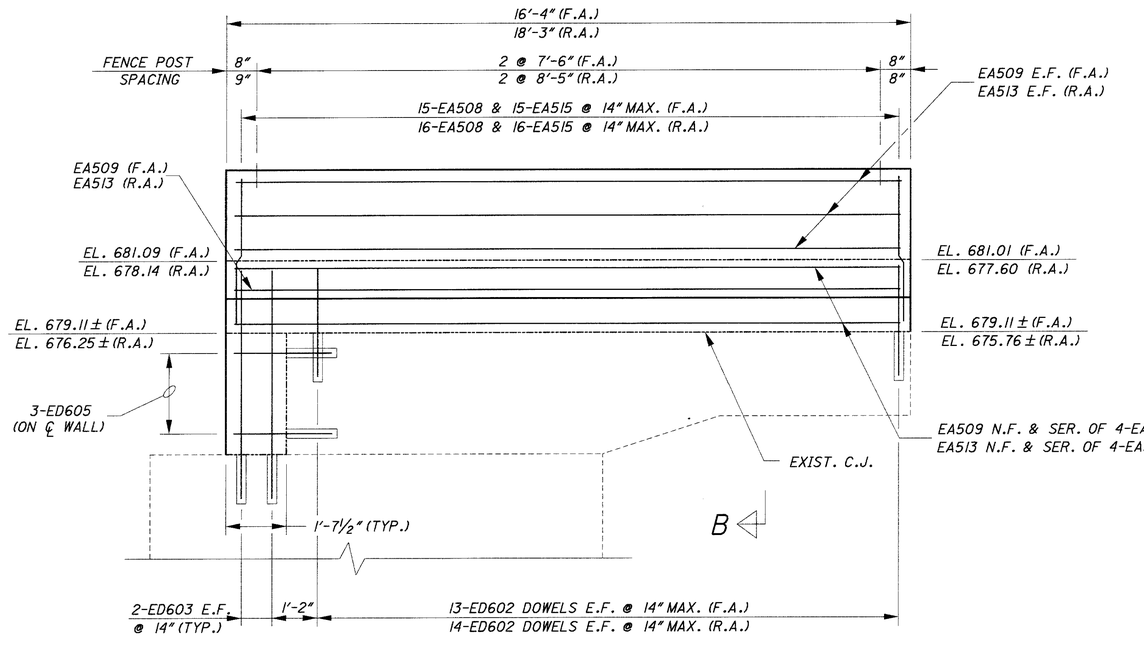

WINGWALL "B"

B

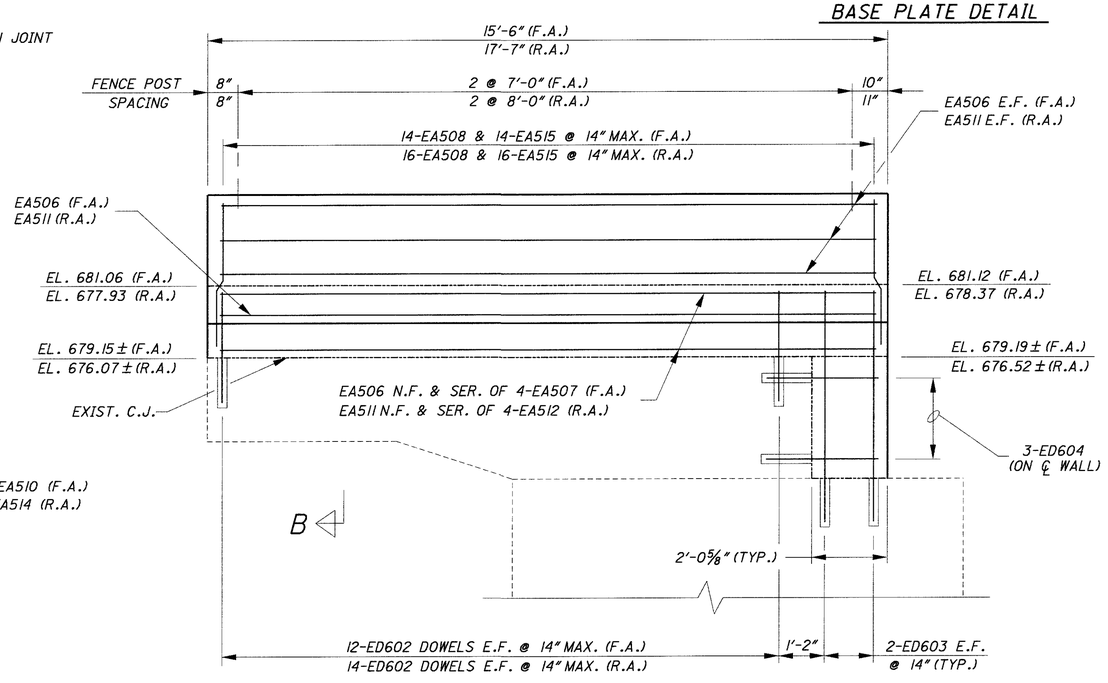

WINGWALL "A"

B

DESIGN AGENCY
THOMAS FOK & ASSOC., LTD.
3896 MAHONING AVE., YOUNGSTOWN, OHIO

DESIGNED JDV | DRAWN KRM | CHECKED HJS | REVIEWED TF | DATE 2-4-00 | REVISED | STRUCTURE FILE NUMBER 1807676

ABUTMENT DETAILS 2 OF 2
BRIDGE NO. CUY-90-0303
UNDER CANTERBURY ROAD

CUY-90-0.00

8 / 12

505
582

DECK SCREED ELEVATIONS (SEE NOTE 1)

LOCATION		SPAN 1				SPAN 2				SPAN 3				SPAN 4				
		℄ BRG. R.A.	1/4 SPAN	1/2 SPAN	3/4 SPAN	℄ BRG. PIER P-1	SPLICE	1/2 SPAN	SPLICE	℄ BRG. PIER P-2	1/4 SPAN	1/2 SPAN	SPLICE	℄ BRG. PIER P-3	1/4 SPAN	1/2 SPAN	3/4 SPAN	℄ BRG. F.A.
BEAMS	1	677.37	677.75	678.09	678.38	678.65	678.93	679.30	679.57	679.75	679.95	680.12	680.24	680.30	680.35	680.39	680.39	680.34
	2	677.56	677.94	678.27	678.55	678.82	679.10	679.46	679.73	679.90	680.10	680.27	680.38	680.43	680.48	680.52	680.51	680.46
	3	677.75	678.12	678.45	678.73	679.00	679.27	679.63	679.89	680.05	680.25	680.41	680.52	680.56	680.61	680.64	680.63	680.58
	4	677.69	678.06	678.38	678.66	678.92	679.19	679.54	679.79	679.96	680.15	680.30	680.40	680.45	680.49	680.52	680.50	680.44
	5	677.63	677.99	678.31	678.58	678.84	679.11	679.45	679.70	679.86	680.05	680.20	680.29	680.33	680.37	680.39	680.37	680.31
PTS. *	A	677.42	677.80	678.13	678.42	678.69	678.98	679.34	679.61	679.79	679.99	680.16	680.28	680.33	680.39	680.42	680.42	680.37
	B	677.64	678.01	678.33	678.60	678.86	679.13	679.47	679.72	679.88	680.07	680.22	680.32	680.36	680.40	680.43	680.41	680.34

* A=TOE/CURB LEFT
B=TOE/CURB RIGHT

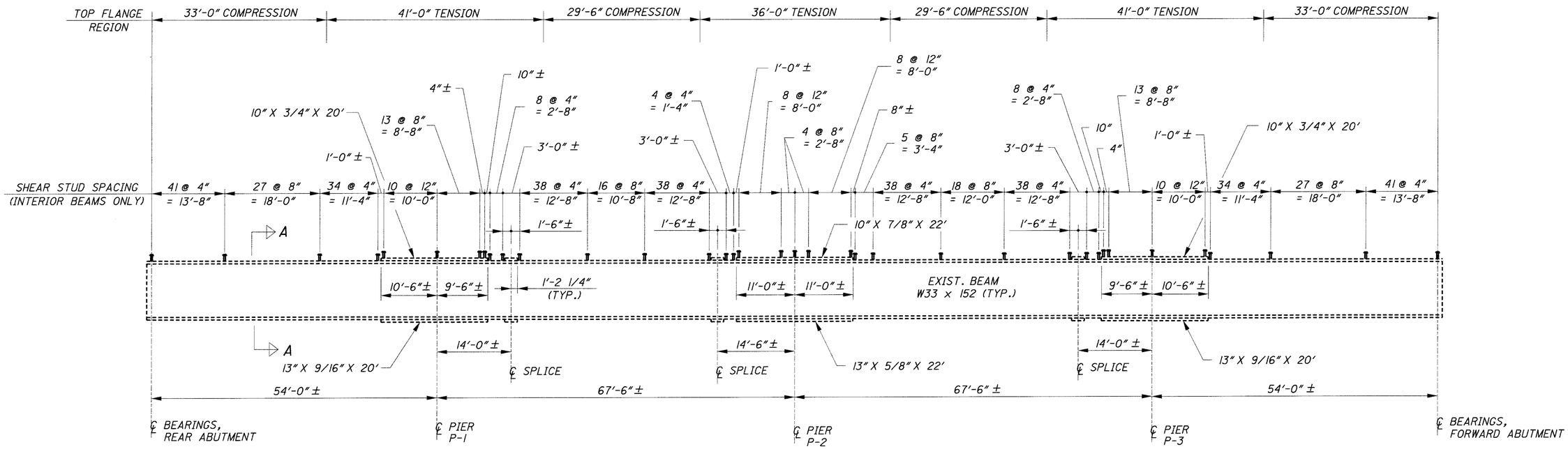

TYPICAL BEAM ELEVATION

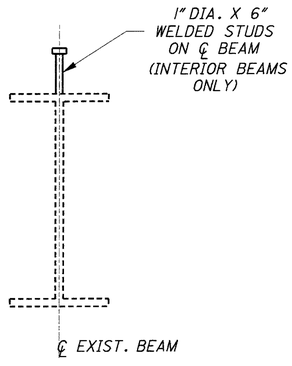

SECTION A-A
(INTERIOR BEAMS ONLY)

NOTES:

1. SCREED ELEVATIONS SHOWN ARE FOR THE DECK SLAB SURFACE PRIOR TO CONCRETE PLACEMENT. ALLOWANCE HAS BEEN MADE FOR ANTICIPATED CALCULATED DEAD LOAD DEFLECTIONS.

2. WELDED ATTACHMENT OF SUPPORTS FOR CONCRETE DECK FINISHING MACHINE MAY BE MADE TO AREAS OF THE FASCIA STRINGER FLANGES DESIGNATED "COMPRESSION". ATTACHMENTS SHALL NOT BE MADE TO AREAS DESIGNATED "TENSION". FILLET WELDS TO COMPRESSION FLANGES SHALL BE NOT CLOSER THAN 1 INCH FROM EDGE OF FLANGE, BE NOT MORE THAN 2 INCHES LONG, AND BE NOT SMALLER THAN THE MINIMUM SIZE REQUIRED BY AASHTO.

3. WELDED SHEAR CONNECTOR SHALL ONLY BE INSTALLED ON INTERIOR BEAMS.

DESIGN AGENCY
THOMAS FOK & ASSOC., LTD.
3896 MAHONING AVE., YOUNGSTOWN, OHIO

DESIGNED HJS | DRAWN KRM | REVIEWED TF | DATE 2-4-00
CHECKED JDV | REVISED | STRUCTURE FILE NUMBER 1807676

SCREED AND BEAM ELEVATION DETAILS
BRIDGE NO. CUY-90-0303
UNDER CANTERBURY ROAD

CUY-90-0.00

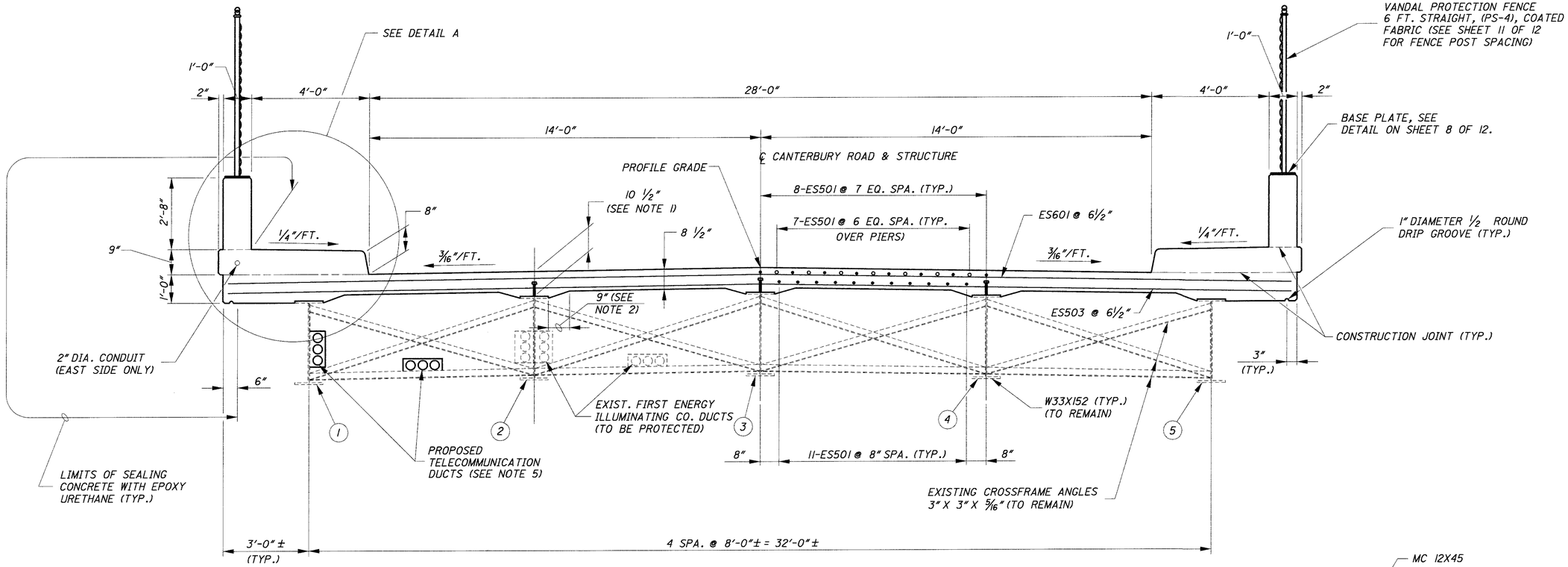

TRANSVERSE SECTION

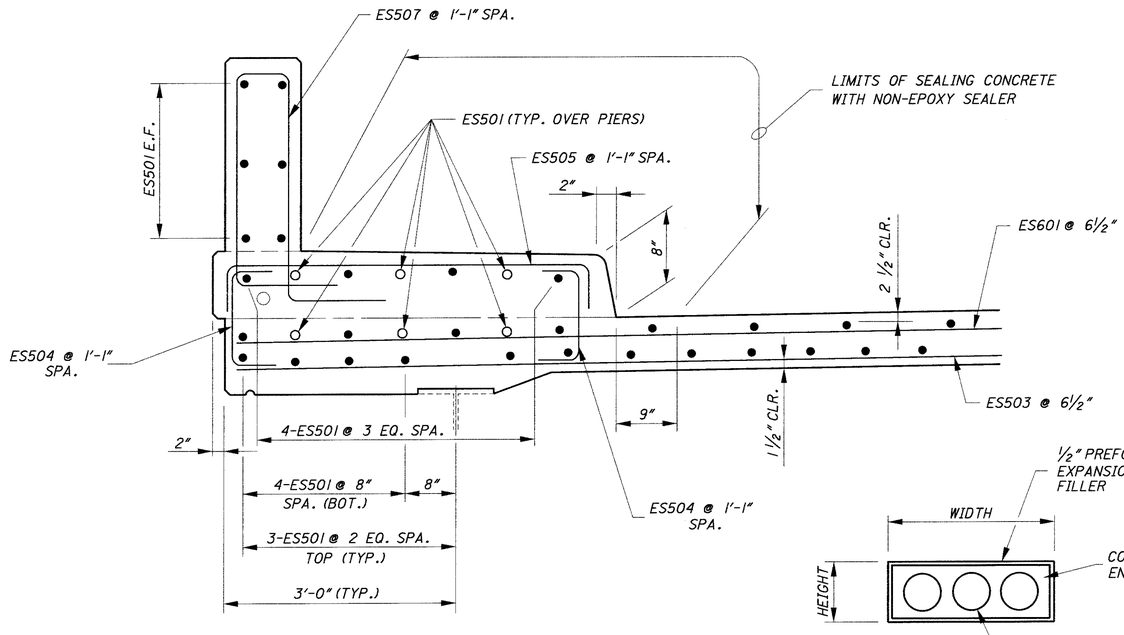

DETAIL A

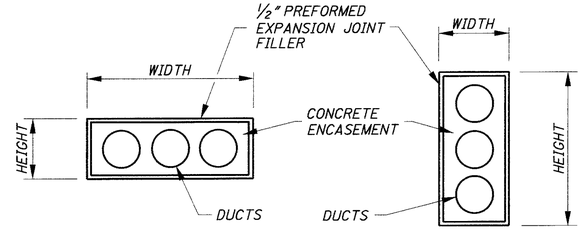

DETAIL OF DUCT OPENINGS THRU ABUTMENT

(REFER TO ELEVATION & TABLE, SHEET 7 OF 12)

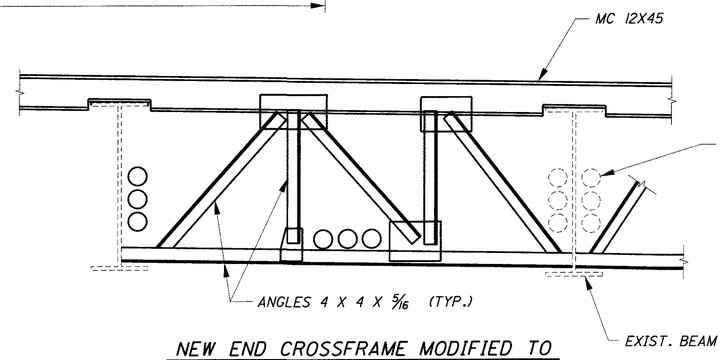

NEW END CROSSFRAME MODIFIED TO CLEAR EXIST. & PROPOSED DUCTS

(SEE NOTE 6)

NOTES:

1. DECK SLAB DEPTH: THE DISTANCE SHOWN FROM THE TOP OF THE STEEL BEAM IS THE THEORETICAL DESIGN DIMENSION, INCLUDING THE DESIGN HAUNCH THICKNESS OF 2 INCHES. THE QUANTITY OF DECK CONCRETE TO BE PAID FOR SHALL BE BASED ON THIS DIMENSION MINUS THE DESIGN HAUNCH THICKNESS, EVEN THOUGH DEVIATION FROM IT MAY BE NECESSARY BECAUSE THE TOP FLANGE OF THE BEAM MAY NOT HAVE THE EXACT CAMBER OR CONFORMATION REQUIRED TO PLACE IT PARALLEL TO THE FINISHED GRADE.
2. A HAUNCH WIDTH OF 9 INCHES SHALL BE USED FOR COMPUTING THE QUANTITY OF CONCRETE. HOWEVER THE HAUNCH WIDTH MAY VARY BETWEEN 6 INCHES AND 12 INCHES.
3. FOR DECK SLAB PLAN, SEE SHEET 11 OF 12.
4. FOR VANDAL PROTECTION FENCE DETAILS, REFER TO ODOT STANDARD VPF-1-90M. EXCEPT SEE SHEET 8 OF 12 FOR BASE PLATE DETAIL.
5. SUPPORT DETAILS TO BE FURNISHED BY THE OWNER. ALL COSTS TO RELOCATE THESE DUCTS ARE TO BE AT THE OWNER'S EXPENSE.
6. FOR END CROSSFRAMES TO THE RIGHT OF THE ℄ OF CANTERBURY ROAD, AND FOR ADDITIONAL DETAILS, SEE STANDARD DRAWINGS EXJ-4-87 AND GSD-1-96.

DESIGN AGENCY
THOMAS FOK & ASSOC., LTD.
3896 MAHONING AVE., YOUNGSTOWN, OHIO

DESIGNED JDV | DRAWN KRM | CHECKED HJS | REVIEWED TF | DATE 2-4-00 | REVISED | STRUCTURE FILE NUMBER 1807676

TRANSVERSE SECTION
BRIDGE NO. CUY-90-0303
UNDER CANTERBURY ROAD

CUY-90-0.00

10 / 12

507
582

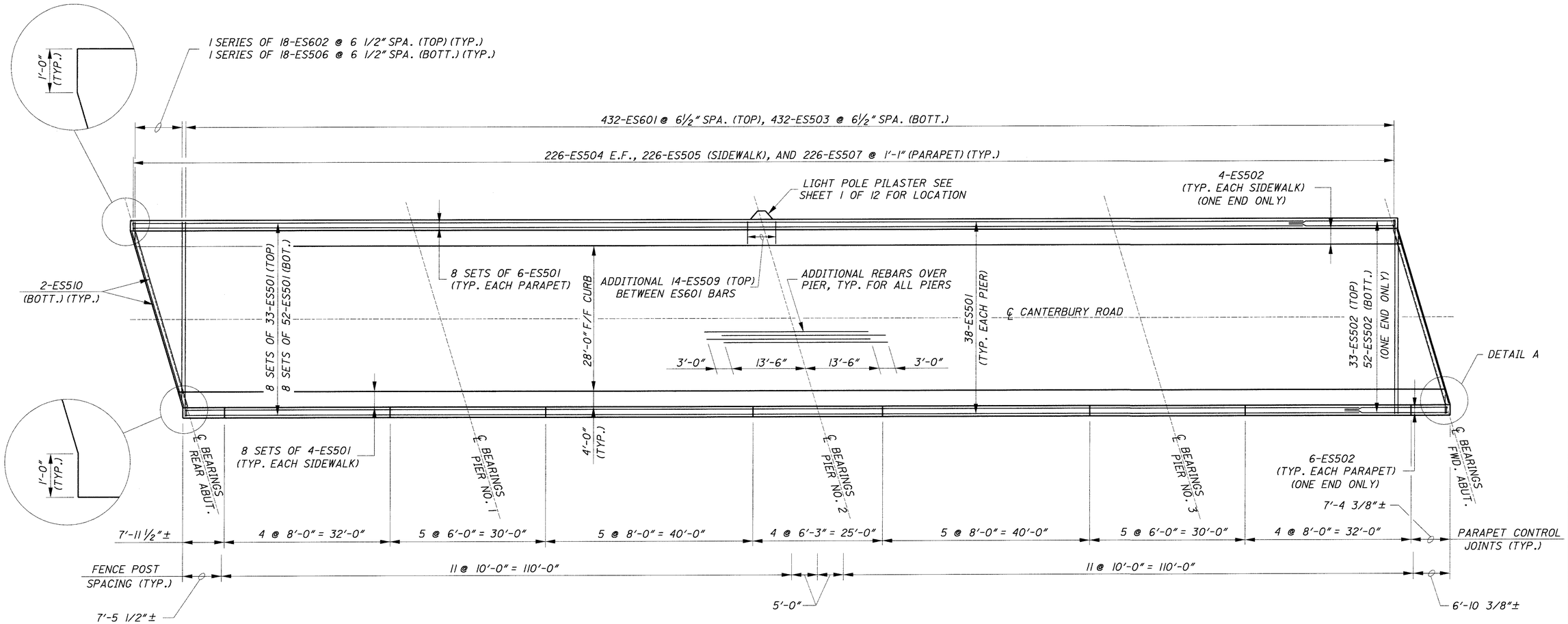

DECK PLAN

DIMENSION A		
TEMP. **	REAR ABUT.	FWD. ABUT.
30	1 7/8"	1 7/8"
40	1 13/16"	1 13/16"
50	1 11/16"	1 11/16"
60	1 5/8"	1 5/8"
70	1 1/2"	1 1/2"
80	1 7/16"	1 7/16"
90	1 5/16"	1 5/16"

** AMBIENT AIR TEMPERATURE (°F) AT TIME OF JOINT INSTALLATION

REFER TO STD. DWG. EXJ-4-87, SHEET 2 OF 5 FOR DIMENSION A LOCATION

NOTE-3" STRIP SEAL REQUIRED

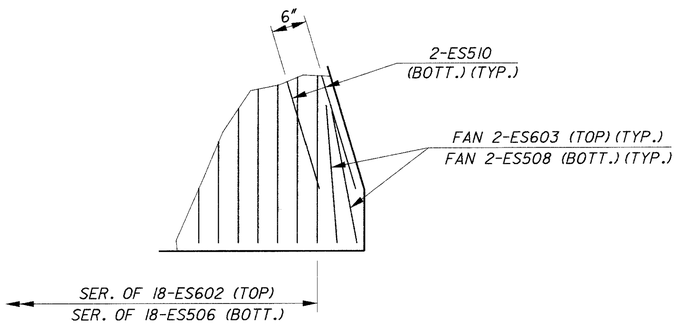

DETAIL A

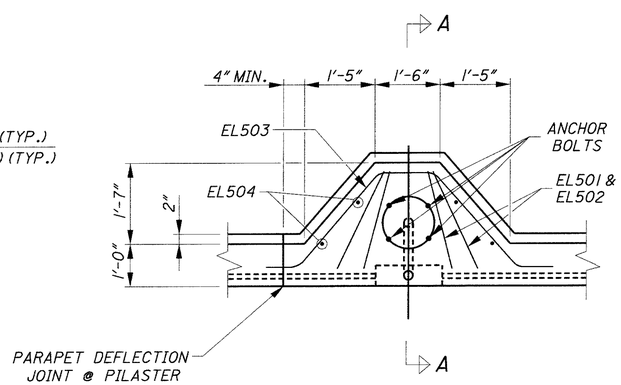

LIGHT POLE PILASTER PLAN

FOR ADDITIONAL STRUCTURE LIGHTING DETAILS, SEE ODOT STANDARD CONSTRUCTION DRAWINGS HL-20.14

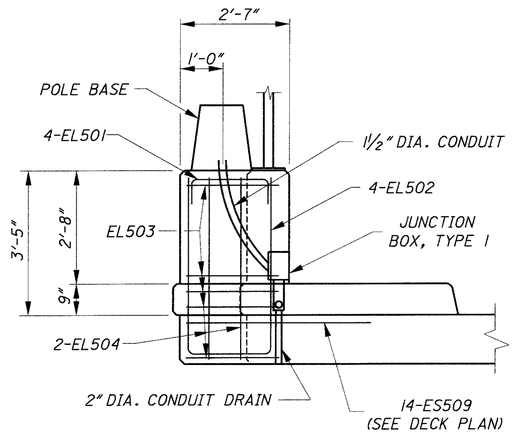

SECTION A-A

MIN. REBAR LAP
#5 = 2'-5"

NOTES

1. FOR REINFORCEMENT SCHEDULE, SEE SHEET 12 OF 12.
2. FOR TRANSVERSE SECTION, SEE SHEET 10 OF 12.

LEGEND

BOTT. = BOTTOM
TYP. = TYPICAL

DESIGN AGENCY
THOMAS FOK & ASSOC., LTD.
3896 MAHONING AVE., YOUNGSTOWN, OHIO

DESIGNED JDV | DRAWN KRM | REVIEWED TF | DATE 2-4-00
CHECKED HJS | REVISED | STRUCTURE FILE NUMBER 1807676

DECK PLAN
BRIDGE NO. CUY-90-0303
UNDER CANTERBURY ROAD

CUY-90-0.00

11 / 12

508
582

ABUTMENTS

MARK	NO. REQD.	LENGTH	TYPE	DIMENSIONS A	B	C	D	INCR.	WEIGHT LBS.	NO. REQD. R.A.	F.A.
EA501	10	37'-10"	STR						395	5	5
EA502	4	21'-3"	STR						89	2	2
EA503	12	9'-7"	2	4'-3"	1'-4"	4'-3"			120	6	6
EA504	8	9'-1"	2	4'-0"	1'-4"	4'-0"			76	4	4
EA505	12	2'-5"	4	1'-3"	1'-2"	3 1/2"			30	6	6
EA506	9	15'-2"	STR						142		9
EA507	2 SERIES	15'-0 1/4"	STR					3 3/4"	121		2 SERIES
	OF 4	TO 14'-1"									OF 4
EA508	61	10'-1"	14	3'-2"	3'-9"				642	32	29
EA509	9	16'-0"	STR						150		9
EA510	2 SERIES	17'-0 1/4"	STR					3 3/4"	138		2 SERIES
	OF 4	TO 16'-1"									OF 4
EA511	9	17'-3"	STR						162	9	
EA512	2 SERIES	17'-1 1/4"	STR					3 3/4"	139	2 SERIES	
	OF 4	TO 16'-2"								OF 4	
EA513	9	17'-11"	STR						168	9	
EA514	2 SERIES	18'-11 1/4"	STR					3 3/4"	154	2 SERIES	
	OF 4	TO 18'-0"								OF 4	
EA515	61	12'-0 1/2"	9	1'-3"	4'-6"				766	32	29
EA516	16	6'-3"	2	2'-6"	1'-6"	2'-6"			104	8	8
EA517	8	6'-11"	2	2'-4"	2'-6"	2'-4"			58	4	4
EA518	8	5'-3"	2	1'-6"	2'-6"	1'-6"			44	4	4
EA519	4	8'-7"	2	3'-9"	1'-4"	3'-9"			36	2	2
EA601	58	5'-0"	2	2'-0"	1'-4"	2'-0"			436	29	29
EA602	58	5'-0"	2	2'-3"	10"	2'-3"			436	29	29
ED601	116	4'-3"	STR						740	58	58
ED602	53	2'-6"	STR						199	28	25
ED603	48	5'-8"	STR						409	24	24
ED604	6	2'-10"	STR						26	3	3
ED605	6	2'-5"	STR						23	3	3
D801	38	4'-7"	12		2'-3"				465	19	19
								TOTAL = 6268			

SUPERSTRUCTURE

MARK	NO. REQD.	LENGTH	TYPE	DIMENSIONS A	B	C	D	INCR.	WEIGHT LBS.
ES501	954	30'-0"	STR						29,851
ES502	105	25'-0"	STR						2738
ES503	432	37'-7"	STR						16,934
ES504	904	2'-7"	2	10"	1'-2"	10"			2436
ES505	452	5'-0"	2	4 1/2"	4'-6"	4 1/2"			2357
ES506	2 SERIES	35'-9"	STR					1'-9 5/8"	767
	OF 18	TO 5'-1"							
ES507	452	9'-2"	14	2'-11"	3'-1"				4322
ES508	4	3'-0"	STR						13
ES509	14	4'-6"	STR						66
ES510	4	39'-3"	STR						164
ES601	432	37'-7"	STR						24,387
ES602	2 SERIES	35'-9"	STR					1'-9 5/8"	1104
	OF 18	TO 5'-1"							
ES603	4	3'-0"	STR						18
ES603	4	3'-0"	STR						
EL501	4	3'-0"	2	7"	2'-1"	7"			13
EL502	4	9'-10"	2	4'-0"	2'-1"	4'-0"			41
EL503	6	8'-2"	5						51
EL504	4	4'-0"	STR						17
								TOTAL = 85,279	

NOTES:

BAR SIZE: THE BAR SIZE IS INDICATED IN THE BAR MARK. THE FIRST LETTER INDICATES THAT THE BAR IS EPOXY COATED. THE SECOND LETTER IDENTIFIES THE BAR LOCATION; NEXT DIGIT INDICATES THE BAR SIZE DESIGNATION AND THE REMAINING DIGITS ITS SEQUENCE NUMBER.

EXAMPLE: ES501

A) S = LOCATION OF BAR IN THE SUPERSTRUCTURE
B) 5 = BAR SIZE DESIGNATION
C) 01 = SEQUENCE NUMBER

BAR DIMENSIONS SHOWN ARE OUT TO OUT UNLESS OTHERWISE INDICATED.

STR = STRAIGHT

REINFORCING STEEL SHALL BE INCLUDED FOR PAYMENT IN THE CONTRACT UNIT PRICE BID FOR ITEM 844-HIGH PERFORMANCE CONCRETE, AS PER PLAN. REINFORCING STEEL LENGTHS AND WEIGHTS GIVEN ARE FOR ESTIMATE PURPOSES ONLY.

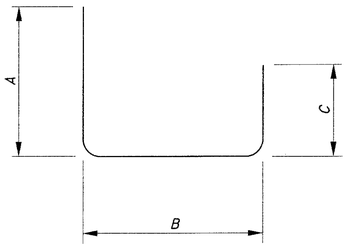

TYPE 2

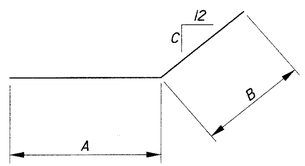

TYPE 4

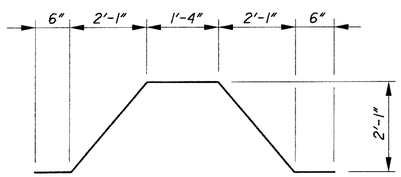

TYPE 5

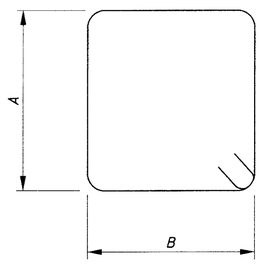

TYPE 9

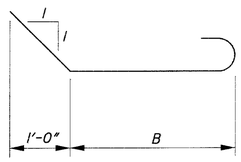

TYPE 12

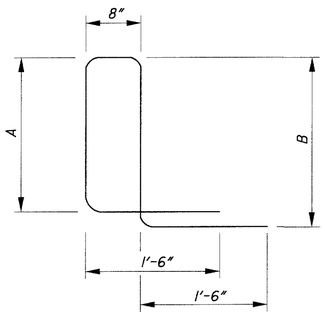

TYPE 14

DESIGN AGENCY
THOMAS FOK & ASSOC., LTD.
3896 MAHONING AVE., YOUNGSTOWN, OHIO

DATE 2-4-00
REVIEWED TF
STRUCTURE FILE NUMBER 1807676

DRAWN KRM
REVISED

DESIGNED JDV
CHECKED HJS

REINFORCING STEEL LIST
BRIDGE NO. CUY-90-0303
UNDER CANTERBURY ROAD

CUY-90-0.00

12 / 12

509
582

BRIDGE LIMITS = 274.69'±

67' 6"± | 67' 6"± | 67' 6"± | 67' 6"±

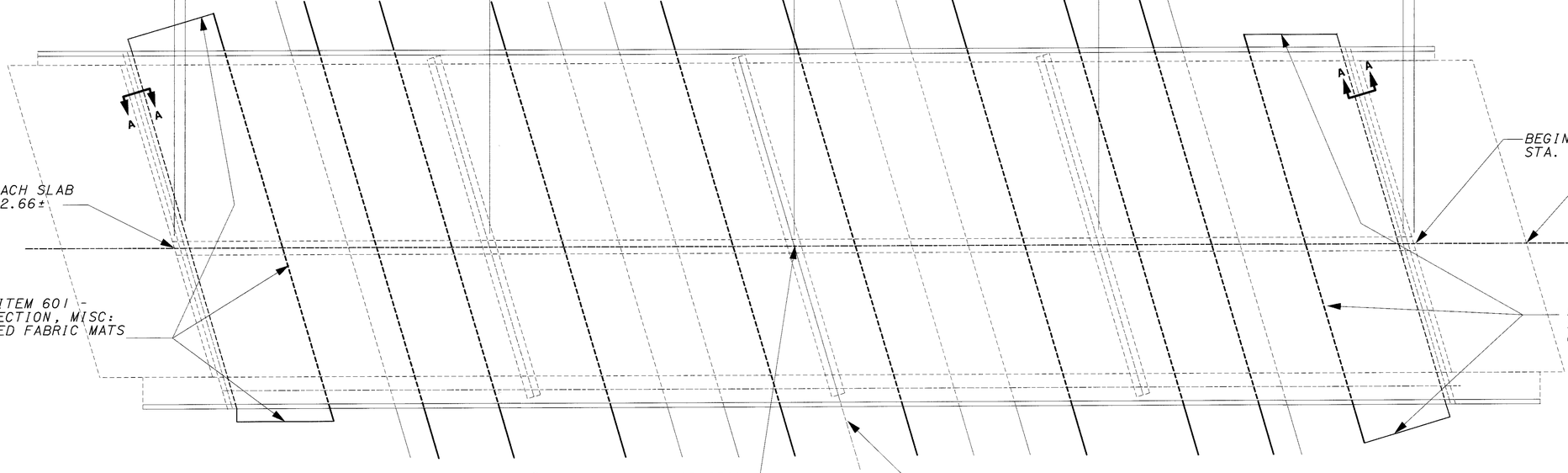

END APPROACH SLAB
STA. 48+62.66±

BEGIN APPROACH SLAB
STA. 51+37.35±

℄ COLUMBIA RD. (SR-252) & ITEM 516 - STRUCTURAL JOINT OR JOINT SEALER, MISC: 2 INCH CONTINUOUS PRESSURIZED SEAL

LIMITS OF ITEM 601 - SLOPE PROTECTION, MISC: GROUT FILLED FABRIC MATS

LIMITS OF ITEM 601 - SLOPE PROTECTION, MISC: GROUT FILLED FABRIC MATS

STA. 50+00± ℄ COLUMBIA RD. (SR-252) = STA. 188+69.32± ℄ I-90

℄ CONSTRUCTION I-90
℄ PIER 2

PLAN

ITEM 601 - SLOPE PROTECTION, MISC: GROUT FILLED FABRIC MATS
&
ITEM 202 - CONCRETE SLOPE PROTECTION REMOVED

ITEM 601 - SLOPE PROTECTION, MISC: GROUT FILLED FABRIC MATS
&
ITEM 202 - CONCRETE SLOPE PROTECTION REMOVED

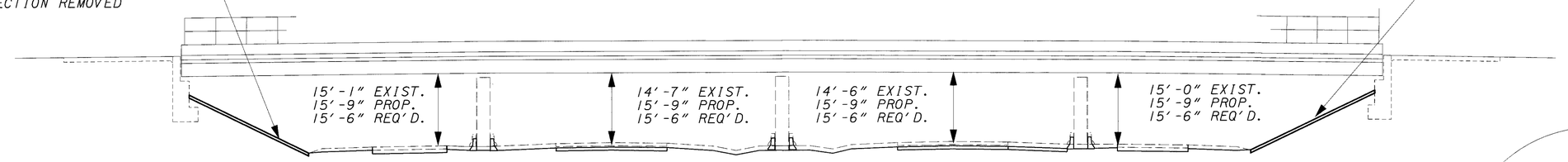

PROFILE

LIMITS OF ITEM SPECIAL URETHANE TOP COAT SEALER

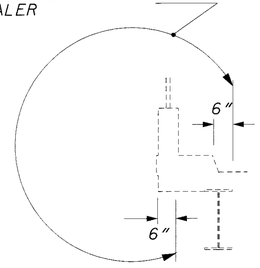

LEFT PARAPET

MEDIAN JOINT TO BE SEALED WITH ITEM 516 - STRUCTURAL JOINT OR JOINT SEALER, MISC: 2 INCH CONTINUOUS PRESSURIZED SEAL

LIMITS OF ITEM SPECIAL - URETHANE TOP COAT SEALER

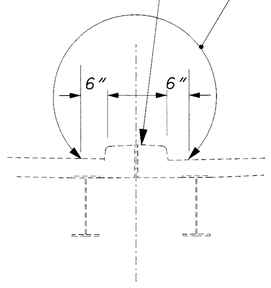

MEDIAN

ITEM SPECIAL - SEALING OF CONCRETE SURFACES (NON EPOXY)

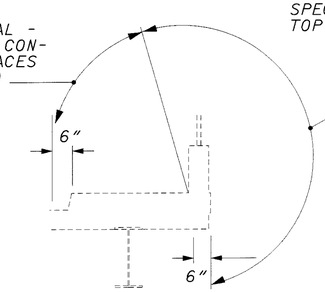

RIGHT PARAPET

LIMITS OF ITEM SPECIAL - URETHANE TOP COAT SEALER

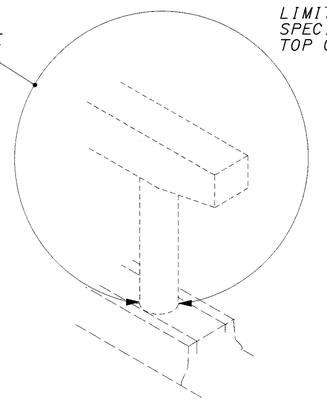

PIERS

LIMITS OF ITEM SPECIAL - URETHANE TOP COAT SEALER

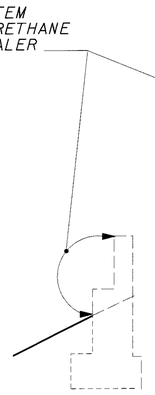

SECTION A-A

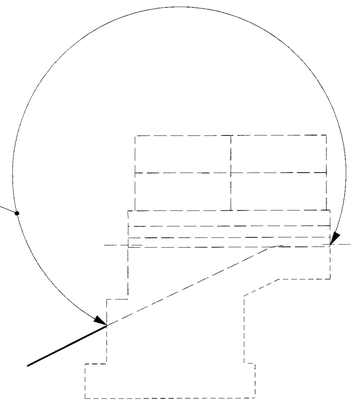

WING WALL

FOR DETAIL OF MEDIAN JOINT SEAL (2 INCH CONTINUOUS PRESSURIZED JOINT SEAL) SEE SHEET 575

17 MAR 2000
D:\PR22308\CADD\YGENPLN.DGN

BURGESS & NIPLE

DESIGNED	DRAWN	REVIEWED	DATE
DCF	DCF	DWL	8-5-99
CHECKED	REVISED	STRUCTURE FILE NUMBER	
SCT		1810421	

BRIDGE PLAN AND PROFILE
BRIDGE NO. CUY-90-0356
UNDER COLUMBIA ROAD (SR-252)

CUY-90-0.00

1 / 5

510
582

PROPOSAL NOTES

516 - SEALING OF CONCRETE SURFACES

GENERAL NOTES

REFERENCE SHALL BE MADE TO THE FOLLOWING SUPPLEMENTAL SPECIFICATIONS:
SS842 1/6/99 CONCRETE FOR STRUCTURES
SS899 1/6/99 CONCRETE - GENERAL

PROPOSED WORK:

THE PROPOSED WORK CONSISTS OF SEALING THE SUBSTRUCTURE CONCRETE WITH URETHANE TOPCOAT, REPLACING THE EXISTING CONCRETE SLOPE PROTECTION WITH GROUT FILLED FABRIC BAGS AND SEALING THE LONGITUDINAL MEDIAN JOINT.

EXISTING STRUCTURE VERIFICATION:

DETAILS AND DIMENSIONS SHOWN ON THESE PLANS PERTAINING TO THE EXISTING STRUCTURE HAVE BEEN OBTAINED FROM PLANS OF THE EXISTING STRUCTURE AND/OR FROM FIELD OBSERVATIONS AND MEASUREMENTS. CONSEQUENTLY, THEY ARE INDICATIVE OF THE EXISTING STRUCTURE AND THE PROPOSED WORK, BUT THEY SHALL BE CONSIDERED TENTATIVE AND APPROXIMATE. THE CONTRACTOR IS REFERRED TO CMS SECTIONS 102.05 AND 105.02.

CONTRACT BID PRICES SHALL BE BASED UPON A RECOGNITION OF THE UNCERTAINTIES DESCRIBED ABOVE AND UPON A PREBID EXAMINATION OF THE EXISTING STRUCTURE BY THE CONTRACTOR. HOWEVER, ALL PROJECT WORK SHALL BY BASED UPON ACTUAL DETAILS AND DIMENSIONS WHICH HAVE BEEN VERIFIED BY THE CONTRACTOR IN THE FIELD.

EXISTING STRUCTURE PLANS:

THE ORIGINAL DESIGN PLANS MAY BE EXAMINED BY PROSPECTIVE BIDDERS AT THE DEPARTMENT OF TRANSPORTATION, DISTRICT 12 OFFICE, 5500 TRANSPORTATION BOULEVARD, GARFIELD HEIGHTS, OHIO. THE CONTRACTOR SHALL BECOME FAMILIAR WITH THE DRAWINGS.

ITEM 519 - PATCHING CONCRETE STRUCTURES, AS PER PLAN:

ALL SURFACES TO BE PATCHED AND THE EXPOSED REINFORCING STEEL WITHIN, SHALL BE THOROUGHLY CLEANED BY ABRASIVE BLASTING PRIOR TO THE CLEANING SPECIFIED BY 519.04 AND 520.05. CLEANING SHALL PRECEDE APPLICATION OF THE PATCHING MATERIAL OR ERECTION OF THE FORMS BY NOT MORE THAN 24 HOURS. WELDED WIRE MESH SHALL CONFORM TO 711.02 AND BE INCLUDED WITH ITEM 519, PATCHING CONCRETE STRUCTURES, AS PER PLAN FOR PAYMENT.

THIS ITEM SHALL INCLUDE PATCHING OF CONCRETE STRUCTURES IN ACCORDANCE WITH ITEM 519 OF THE CMS AND SHALL ALSO INCLUDE ALL WORK NECESSARY TO EXCAVATE AND SUBSEQUENTLY BACKFILL EMBANKMENT AREAS ADJACENT TO STRUCTURES WITH APPARENT CONCRETE DETERIORATION AT THE GROUND SURFACE. (SEE PLANS FOR LIMITS.)

ITEM SPECIAL - URETHANE TOP COAT SEALER

THIS ITEM SHALL CONSIST OF THE APPLICATION OF A URETHANE TOP COAT SEALER OVER CONCRETE AREAS PREVIOUSLY COATED WITH EPOXY SEALER. THE COLOR SHALL BE FEDERAL COLOR STANDARD NO. 595A-16187 AND THE MATERIAL SHALL CONFORM TO PROPOSAL NOTE 516.

SURFACES TO WHICH THE URETHANE TOP COAT IS TO BE APPLIED SHALL BE DRY AND FREE FROM DUST, DIRT, OIL, WAX, CURING COMPOUNDS, EFFLORESCENCE, LAITANCE AND OTHER FOREIGN MATERIALS WITH THE EXCEPTION OF THE EXISTING EPOXY SEALER.

THE REQUIRED CLEANING SHALL BEGIN WITH HIGH PRESSURE WATER BLASTING (1000 PSI OR GREATER). MILDEW SHALL BE TREATED WITH A HYPOCHLORITE SOLUTION TO KILL SPORES. A LIGHT SWEEP ABRASIVE BLAST SHALL FOLLOW TO REMOVE FOREIGN SUBSTANCES AND TO ROUGHEN ALL THE SURFACES OF THE EXISTING SEALER WITHOUT REMOVING THE EXISTING SEALER. THE ABRASIVE BLAST SHALL BE FOLLOWED BY POWER SWEEPING OR AIR BROOMING. BLASTING ABRASIVES CONTAINING MORE THAN 1% FREE SILICA SHALL NOT BE ALLOWED.

THE URETHANE TOPCOAT SHALL BE APPLIED ACCORDING TO PROPOSAL NOTE 516. THE URETHANE TOP COAT SHALL BE APPLIED WITHIN FORTY-EIGHT (48) HOURS AFTER SURFACE PREPARATION. APPLICATION SHALL BE BRUSH OR ROLLER, AS DIRECTED BY THE ENGINEER,

THE COST OF ALL LABOR, EQUIPMENT AND MATERIAL NECESSARY TO ACCOMPLISH THIS ITEM OF WORK SHALL BE PAID FOR UNDER:

ITEM	UNIT	DESCRIPTION
SPECIAL	SQ. YD.	URETHANE TOP COAT SEALER

ITEM SPECIAL, SEALING OF CONCRETE SURFACES (EPOXY-URETHANE):

THE COLOR OF THE URETHANE TOP COAT SHALL BE FEDERAL COLOR STANDARD NO. 595 - 20219 COCOA.

ITEM 601 - SLOPE PROTECTION MISC.: GROUT FILLED FABRIC MATS

EMBANKMENT SLOPE PROTECTION EXTENDING FROM THE FACE OF THE ABUTMENT DOWN TO THE TOE OF SLOPE SHALL BE AS SPECIFIED IN ITEM 601.05 OF THE CONSTRUCTION AND MATERIAL SPECIFICATION EXCEPT AS MODIFIED HEREIN. THE FOLLOWING SHALL BE CONSIDERED AS SUPPLEMENTAL TO THE PROVISIONS SET FORTH THEREIN.

MATERIAL
THE MATERIAL USED FOR EMBANKMENT SLOPE PROTECTION SHALL CONSIST OF SPECIALLY-WOVEN MULTIPLE PANELS OF DOUBLE LAYER, OPEN SELVAGE NYLON FABRIC, JOINED IN A MAT CONFIGURATION SIMILAR TO "FABRIFORM 8", FILTER POINT OR APPROVED ALTERNATE. THIS MAT SHALL BE FILLED WITH A GROUT CONSISTING OF A MIXTURE OF PORTLAND CEMENT, FINE AGGREGATE AND WATER SO PROPORTIONED AND MIXED AS TO PROVIDE A PUMPABLE SLURRY. POZZOLAN AND GROUT FLUIDIFIER MAY BE USED AT THE OPTION OF THE CONTRACTOR. THE MIX SHALL EXHIBIT A COMPRESSIVE STRENGTH OF 2,000 P.S.I. AT TWENTY-EIGHT DAYS WHEN MADE AND TESTED IN ACCORDANCE WITH A.S.T.M. C-31 AND C-39.

INSTALLATION
THE GROUT FILLED FABRIC MATS SHALL BE INSTALLED ON THE PREPARED SLOPE IN STRICT ACCORDANCE WITH MANUFACTURER'S RECOMMENDATIONS. THE SIDES AND BOTTOM OF THE GROUT FILLED FABRIC MATS SHALL TERMINATE IN ANCHOR TRENCHES. THE TOP OF THE GROUT FILLED FABRIC MATS SHALL BE TRENCHED AND TERMINATE AT THE ABUTMENTS AGAINST 2" PREFORMED EXPANSION JOINT FILLER. (SEE DETAIL SHEET BELOW)

MEASUREMENT FOR PAYMENT
GROUT FILLED FABRIC MATS, AS PER PLAN WILL BE MEASURED BY THE SQUARE YARD OF FINISHED SURFACE COMPLETE IN PLACE.

BASIS OF PAYMENT

THE PRICE SHALL BE FULL COMPENSATION FOR ALL MATERIALS, LABOR, EQUIPMENT AND INCIDENTALS NECESSARY TO COMPLETE THIS ITEM AS SPECIFIED.

PAYMENT FOR ACCEPTED QUANTITIES, COMPLETE IN PLACE WILL BE MADE AT THE CONTRACT UNIT PRICE BID FOR:

ITEM	EXT.	UNIT	DESCRIPTION
601	21100	SQ. YD.	SLOPE PROTECTION MISC.: GROUT FILLED FABRIC MATS

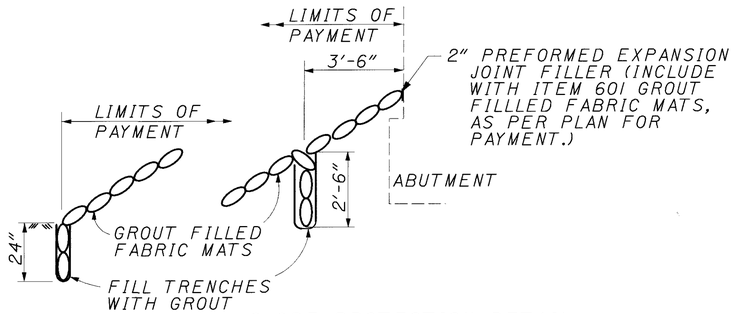

SLOPE PROTECTION DETAIL

17 MAR 2000
D:\pr-22308\cadd\ynotes1.dgn

BURGESS & NIPLE

REVIEWED	DATE
DWL	12-29-99
DESIGNED	DRAWN
DCF	DCF
CHECKED	REVISED
SCT	

STRUCTURE FILE NUMBER 181042

STRUCTURE NOTES 1 OF 2
BRIDGE NO. CUY-90-0356
UNDER COLUMBIA ROAD (SR-252)

CUY-90-0.00

2/5

511
582

2 INCH CONTINUOUS PRESSURIZED SEAL

DESCRIPTION

THIS WORK SHALL CONSIST OF FURNISHING AND INSTALLING A CONTINUOUS ELASTOMER SEAL IN ACCORDANCE WITH THE PLANS AND SPECIFICATIONS.

REQUIREMENTS

THE SEAL OF THE SIZE AND SHAPE SHOWN ON THE PLANS SHALL BE AS SUPPLIED BY JEENE TECHNOLOGY OF MICHIGAN, 1900 CHICAGO DRIVE, GRAND RAPIDS, MICHIGAN, PHONE: 1-800-552-3028. THE SEAL SHALL BE EXTRUDED POLYCHLOROPRENE MEETING THE FOLLOWING REQUIREMENTS:

PROPERTY	ASTM	REQUIREMENTS
HARDNESS, TYPE A DUROMETER	D-2240 (MODIFIED)	55+5 POINTS
ELONGATION @ BREAK MIN	D-412	250%
TENSILE STRENGTH, MIN.	D-412	2000 PSI
OVEN AGING, 70 HR. @ 212F	D-573	
HARDNESS, TYPE-A DUROMETER (POINTS CHANGE)		0 To +10
ELONGATION, LOSS MAX.		20%
TENSILE STRENGTH LOSS, MAX.		20%
COMPRESSION SET, 70 HR. @ 212 F. MAX.	D-395 METHOD B (MODIFIED)	40%
OZONE RESISTANCE 20% STRAIN, 300 PPHM, IN AIR @ 104 F (WIPED WITH TOLUENE TO REMOVE CONTAMINATION)	D-1149	NO CRACKS
OIL SWELL, 70 HR. @ 212 F WEIGHT CHANGE, MAX.	ASTM OIL 3	45%
HIGH TEMPERATURE RECOVERY, DEFLECTION, MIN.	D-2628-81	85%
LOW TEMPERATURE RECOVERY, 70 HR. @ 212 F 50% DEFLECTION, MIN.	D-2628-81	83%
LOW TEMPERATURE RECOVERY, 72 HR. @ 14 F 50% DEFLECTION, MIN.	D-2628-81	88%

THE ADHESIVE (ADE-52) SHALL HAVE THE FOLLOWING PROPERTIES:

EPOXY BASE, DOUBLE COMPONENT, THIXOTROPIC PASTE. RESISTS DILUTE ACIDS, ALKALIS, SOLVENTS, GREASES, OILS, MOISTURE, SUNLIGHT AND WEATHERING. TEMPERATURES UP TO 200 F DO NOT WEAKEN BOND INTERFACES. AT ROOM TEMPERATURES (68 F), A STRONG BOND WILL DEVELOP WITHIN 24 HOURS.

POT LIFE	40 MINUTES @ 68 F
TENSILE STRENGTH: MIN.	4140 PSI
SOLIDS HARDNESS	5 MOHS
FLASH POINT	>200 F
AXIAL COMPRESSION	8760 PSI
COMPLETE CURE	7 DAYS @ 68 F

AT HIGH AMBIENT TEMPERATURES THE CURE WILL BE ACCELERATED.

ADHESIVE ADE-52 APPLICATION CHART

PROFILE	WIDTH	FEET P/POUND	FEET P/KIT
2540W	1"	6	108
3550W	1½"	5	90
5070W	2"	4	72
6080W	2½"	3½"	63
8097W	3"	3	54

CERTIFICATION

CERTIFIED COPIES OF THE QUALIFICATION TEST RESULTS INDICATING THAT THE TESTED MATERIALS COMPLY WITH THE PROVISIONS OF THE ABOVE ITEM SHALL BE SUBMITTED TO THE ENGINEER FOR APPROVAL.

RESTRICTIONS

1. THE ELASTOMERIC JOINT NOSING SHALL BE IN PLACE AND CURED BEFORE THE ELASTOMERIC SEAL IS INSTALLED.
2. ALL INSTALLATIONS MUST BE PERFORMED UNDER THE SUPERVISION AND RESPONSIBILITY OF A TECHNICIAN PROVIDED DIRECTLY BY THE MANUFACTURER, AUTHORIZED CONTRACTOR, OR OWNER AUTHORIZED-TRAINED CREW.
3. THE ADHESIVE ADE-52 DOES NOT BOND ON DAMP OR HUMID SURFACES. NO INSTALLATION MAY BE PERFORMED IN RAINY WEATHER, OR WHEN RAIN IS EXPECTED FOR ONE HOUR AFTER INSTALLATION.
4. ALL SURFACES MUST BE COMPLETELY DRY PRIOR TO APPLYING ADHESIVE.
5. THE GAP WALL SURFACES MUST BE THOROUGHLY CLEANED AND FREE OF DUST, OIL. GREASE, WAX, AND MOISTURE BEFORE THE ADHESIVE IS APPLIED.
6. AMBIENT TEMPERATURES SHALL NOT BE LOWER THAN 55 F DURING INSTALLATION.

INSTALLATION

1. PREPARATION OF SEAL

A. THE PREFORMED SEAL MUST BE CUT TO THE CORRECT LENGTH FOR INSTALLATION. CARE SHOULD BE TAKEN TO EXTEND THE SEAL TO ITS FULL LENGTH BUT NOT TO EXERT EXCESS TENSION. IT SHOULD BE REMEMBERED THAT THE MATERIAL IS ELASTIC AND IMPROPER STRETCHING DURING LENGTH MEASUREMENT COULD CAUSE THE SEAL TO BE EITHER LONGER OR SHORTER THAN THE GAP LENGTH.

B. AFTER SEAL LENGTH IS DETERMINED, BOTH ENDS MUST BE PLUGGED (AIR TIGHT) AND AIR VALVE INSTALLED.

C. BEFORE MIXING THE ADHESIVE ADE-52, AIR MUST BE PUMPED INTO THE SEAL TO ASSURE THAT THERE ARE NO LEAKS PRIOR TO MIXING AND APPLICATION OF THE ADE-52.

2. ADHESIVE ADE-52

A. ADE-52 IS A VERY POWERFUL BONDING AGENT, WITH A FAST-SETTING FACTOR, (POT LIFE OF 30 MINUTES).

B. THE PROPORTIONS OF THE ADHESIVE TO BE MIXED MUST BE ONE PART COMPONENT C TO ONE PART R OR ACCORDING TO SPECIFIC MANUFACTURERS INSTRUCTIONS.

C. THE ADHESIVE MUST BE MIXED "ONLY" AFTER ALL PREPARATIONS OF GAP AND SEAL ARE TOTALLY FINISHED (CHECKED AND CONFIRMED).

D. TOTAL TIME AVAILABLE FOR WORKING WITH ADE-52 FROM TIME OF MIXING IS AN AVERAGE OF 30 MINUTES AT TEMPERATURES FROM 62 F TO 75 F. AT LOWER TEMPERATURES THE CURE OR SET-UP TIME WILL BE SOMEWHAT EXTENDED AND AT HIGHER TEMPERATURES THE TIME WILL BE SOMEWHAT DIMINISHED.

3. JOINT INSTALLATION IN THE GAP

A. APPLY ADHESIVE TO THE INNER WALLS OF THE CONCRETE AND STEEL AS EVENLY AS POSSIBLE, WITHOUT LEAVING BLANK SPOTS. IN THE SAME MANNER, APPLY THE ADHESIVE TO THE OUTSIDE WALLS OF THE SEAL.

B. AS THE ADHESIVE IS APPLIED TO THE SEAL WALLS (ON BOTH SIDES) THE SEAL SHOULD BE GRADUALLY INSERTED INTO THE GAP, IN ORDER NOT TO LEAVE SECTIONS OF GLUED SEAL OUTSIDE THE JOINT AND SUSCEPTIBLE TO INTRUSION OF FOREIGN MATTER.

4. PRESSURIZATION

A. THE PRESSURIZATION OF THE SEAL IS DONE THROUGH A VALVE THAT CONVEYS COMPRESSED AIR INTO THE PRE-FORMED SEAL WHOSE ENDS WERE PREVIOUSLY CLOSED, CAUSING THE SEAL TO EXPAND AGAINST THE JOINT'S CONCRETE WALLS. AFTER THE ADHESIVE HAS CURED 24 HOURS, THE VALVE CLAMP IS REMOVED, ALLOWING THE COMPRESSED AIR TO BLEED OFF, THEREBY RE-ESTABLISHING THE ISOBARIC BALANCE.

MEASUREMENT AND PAYMENT

PAYMENT FOR ACCEPTED QUANTITIES SHALL BE BASED ON THE LENGTH OF JOINT MEASURED ALONG THE CENTERLINE OF THE SEAL COMPLETE IN PLACE AND ACCEPTED. THIS PAYMENT SHALL INCLUDE THE COST OF FURNISHING AND PLACING SEALS, ADHESIVE AND ALL OTHER INCIDENTALS NECESSARY TO COMPLETE THIS WORK ACCORDING TO THE PLANS AND THIS SPECIFICATION.

PAYMENT WILL BE MADE AT THE CONTRACT UNIT PRICE BID PER LINEAR FOOT.

ITEM	UNIT	DESCRIPTION
516	LIN. FT.	STRUCTURAL JOINT OR JOINT SEALER, MISC: 2 INCH CONTINUOUS PRESSURIZED SEAL

17 MAR 2000
p:\pr22308\cadd\synotes1.dgn

BURGESS & NIPLE

REVIEWED DWL DATE 12-29-99
STRUCTURE FILE NUMBER 181021
DRAWN DCF REVISED
DESIGNED DCF CHECKED SCT

STRUCTURE NOTES 2 OF 2
BRIDGE NO. CUY-90-0356
UNDER COLUMBIA ROAD (SR-252)

CUY-90-0.00

ESTIMATED QUANTITIES

ITEM	ITEM EXT.	TOTAL	UNIT	DESCRIPTION	SUPERSTRUCTURE	SUBSTRUCTURE	GENERAL	PARTICIPATION 1	PARTICIPATION 2
202	98000	LUMP		REMOVAL MISC.: CONCRETE SLOPE PROTECTION REMOVED			LUMP	LUMP	LUMP
SPECIAL	512 67510	4	SQ. YD.	SEALING OF CONCRETE SURFACES (EPOXY-URETHANE)		4			4
SPECIAL	512 67504	253	SQ. YD.	SEALING OF CONCRETE SURFACES (NON-EPOXY)		253			253
SPECIAL	512 71500	1488	SQ. YD.	URETHANE TOP COAT SEALER		1488			1488
516	14600	275	L.F.	STRUCTURAL JOINT OR JOINT SEALER, MISC: 2" CONTINUOUS PRESSURIZED SEAL	275				275
519	11101	33	SQ. FT.	PATCHING CONCRETE STRUCTURE, AS PER PLAN		33			33
601	21100	696	SQ. YD.	SLOPE PROTECTION, MISC: GROUT FILLED FABRIC MATS			696		696

I:\PROJECTS\Pid1738\dgn\finalplans\YESTQUAN.DGN 14-SEP-2000 9:04AM jgrmovse

BURGESS & NIPLE

DESIGNED DCF | DRAWN DCF | REVIEWED DWL | DATE 01-17-00 | CHECKED SCT | REVISED | STRUCTURE FILE NUMBER 1810421

ESTIMATED QUANTITIES
BRIDGE NO. CUY-90-0.0356
UNDER COLUMBIA ROAD (SR-252)

CUY-90-0.00

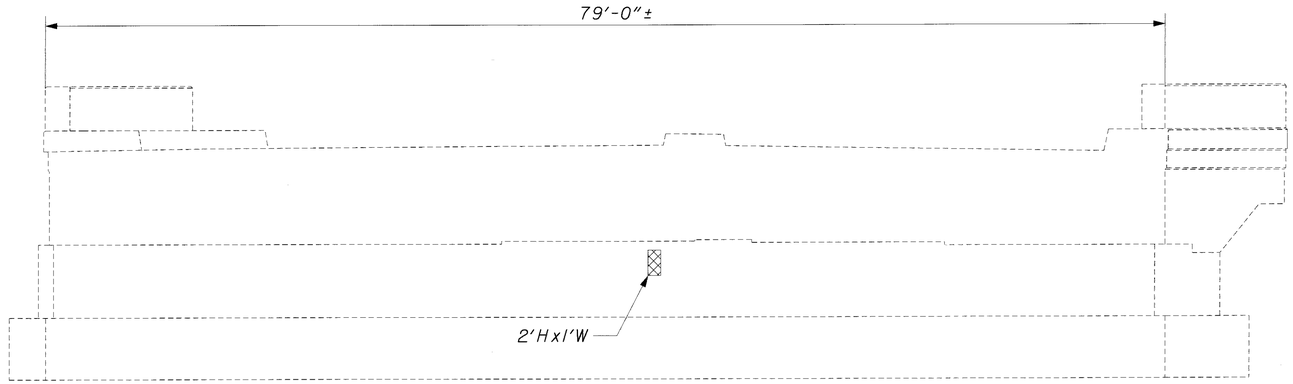

REAR ABUTMENT ELEVATION
(PILES NOT SHOWN)

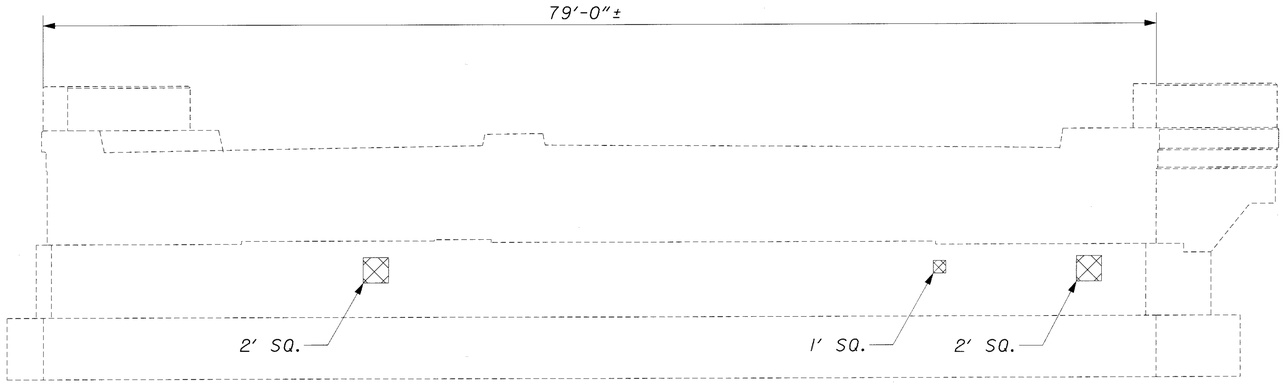

FORWARD ABUTMENT ELEVATION
(PILES NOT SHOWN)

INDICATES AREA TO BE PATCHED PER ITEM 519 - PATCHING OF CONCRETE STRUCTURES

PHYSICAL INVENTORY OF MEASURED QUANTITIES OF DETERIORATION WAS PERFORMED IN JULY, 1999.

SUMMARY OF PATCHING QUANTITIES▲	
ABUTMENT	ESTIMATED QUANTITY
REAR	6.0 FT²
FORWARD	27.0 FT²
TOTAL = 33.0 FT²	

▲ ESTIMATED QUANTITY HAS BEEN INCREASED BY 200% OVER FIELD MARKED QUANTITY TO ALLOW FOR ADDITIONAL DETERIORATION.

NOTES:

THE PIERS HAD NO AREAS IN NEED OF REPAIR AT THE TIME OF INSPECTION.

PATCHED AREAS SHALL BE SEALED WITH ITEM SPECIAL - SEALING OF CONCRETE SURFACES (EPOXY-URETHANE).

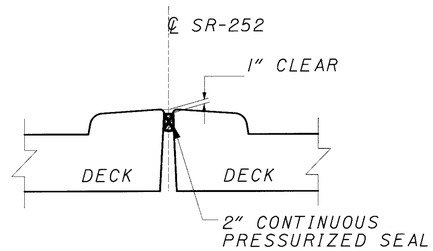

MEDIAN JOINT SEAL

BURGESS & NIPLE

DESIGNED	DRAWN	REVIEWED	DATE
JAA	RAR	DWL	8/5/99
CHECKED	REVISED	STRUCTURE FILE NUMBER	
SCT		181042I	

ABUTMENT REPAIR DETAILS
BRIDGE NO. CUY-90-0356
UNDER COLUMBIA ROAD (SR-252)

CUY-90-0.00

5 / 5

514
582

17 MAR 2000
p:\pr22308\cadd\ydbrem.dgn

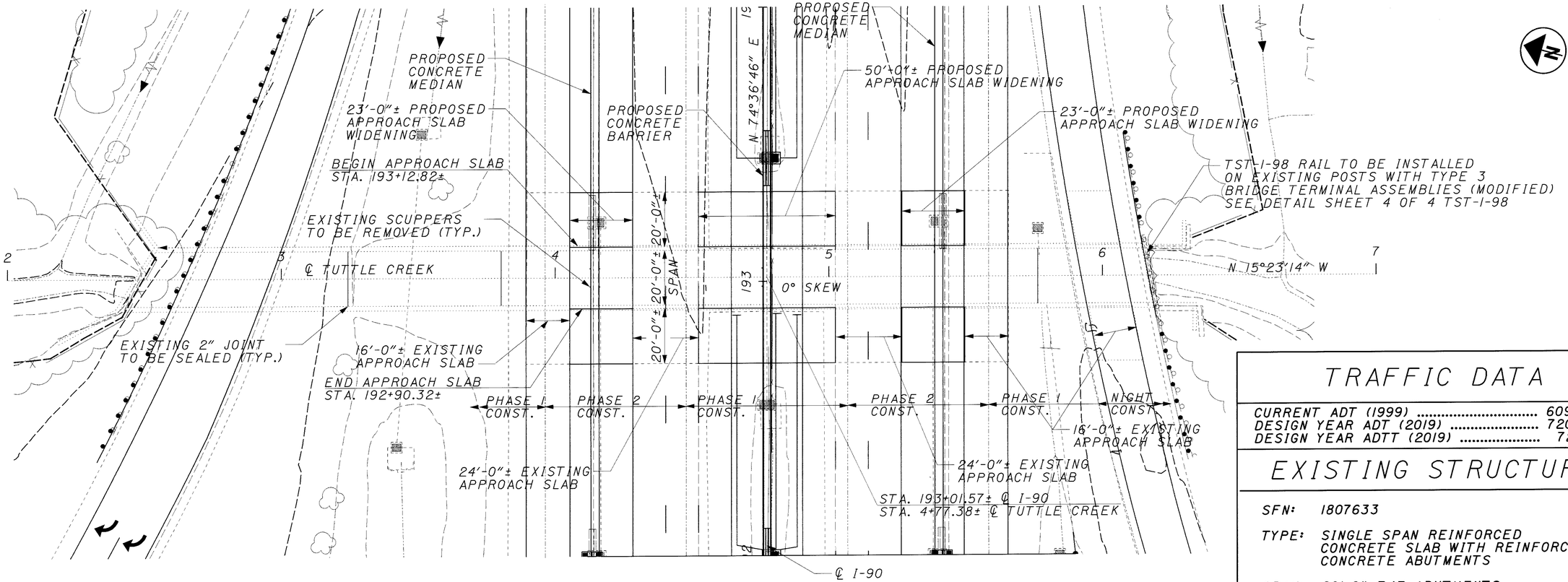

STATION OF FIRST GUARDRAIL POST ADJACENT TO BRIDGE		
ABUTMENT	LEFT	RIGHT
REAR	**	92+82.53±*
FORWARD	**	93+13.79±*

*USE EXIST. BRIDGE RAIL POSTS
**NO BRIDGE RAIL ON LEFT SIDE

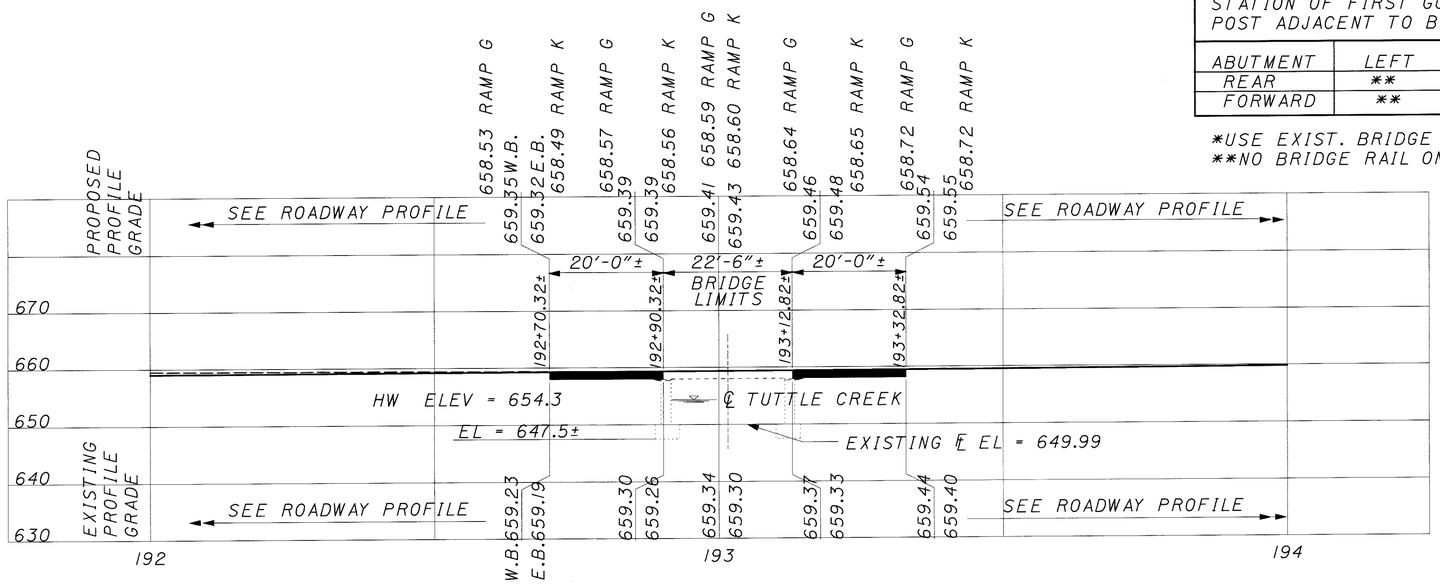

FOR DETAILS OF ROADWAY PROFILES SEE SHEETS 169/582 AND 170/582

TRAFFIC DATA

CURRENT ADT (1999) 60950
DESIGN YEAR ADT (2019) 72070
DESIGN YEAR ADTT (2019) 7207

EXISTING STRUCTURE

SFN: 1807633

TYPE: SINGLE SPAN REINFORCED CONCRETE SLAB WITH REINFORCED CONCRETE ABUTMENTS

SPAN: 20'-0" F/F ABUTMENTS

ROADWAY: VARIES (SHOULDER WIDTH)

LOADING: CF 2000 (57)

WEARING SURFACE: 5½"± ASPHALT CONCRETE

ALIGNMENT: TANGENT

APPROACH SLABS: 20' LONG (AS-1-81)

SKEW: NONE DATE BUILT: 1975

PROPOSED STRUCTURE

TYPE: SINGLE SPAN REINFORCED CONCRETE SLAB WITH REINFORCED CONCRETE ABUTMENTS

SPAN: 20'-0" F/F ABUTMENTS

ROADWAY: VARIES (SHOULDER WIDTH)

LOADING: HS-20-44 AND ALTERNATE MILITARY LOADING

WEARING SURFACE: 3¼" ASPHALT CONCRETE ON 3½" MSMC OVERLAY

ALIGNMENT: TANGENT

APPROACH SLABS: 20' LONG (AS-1-81)

SKEW: NONE

SUPERELEVATION: NONE

LATITUDE N 41°28.35' LONGITUDE W 81°54.00'

BURGESS & NIPLE

DESIGNED	DRAWN	REVIEWED	DATE
JAA	JAA	MAR	12-22-99
CHECKED	REVISED	STRUCTURE FILE NUMBER	
SCT		1807633	

CUYAHOGA COUNTY
STA. 192+90.32
STA. 193+12.82

SITE PLAN
BRIDGE NO. CUY-90-0365
OVER TUTTLE CREEK

CUY-90-0.00

1 / 8

515
582

20 MAR 2000
p:\PR22308\CADD\ZSITEPLN.DGN

PROPOSAL NOTES

516 ITEM SPECIAL - SEALING OF CONCRETE SURFACES

DESIGN SPECIFICATIONS:

THIS STRUCTURE CONFORMS TO "STANDARD SPECIFICATIONS FOR HIGHWAY BRIDGES" ADOPTED BY THE AMERICAN ASSOCIATION OF STATE HIGHWAY AND TRANSPORTATION OFFICIALS (AASHTO), 1996, INCLUDING THE 1997 AND 1998 INTERIM SPECIFICATIONS, AND THE ODOTBRIDGE DESIGN MANUAL.

STANDARD DRAWINGS:

REFERENCE SHALL BE MADE TO THE FOLLOWING STANDARD DRAWINGS:

AS-1-81	9-15-94
TST-1-99	7-06-99

AND SUPPLEMENTAL SPECIFICATIONS:

830	DATED	10-21-98	842	DATED	1-06-99
848	DATED	6-30-98	844	DATED	1-06-99
899	DATED	1-06-99			

PROPOSED WORK:

THE PROPOSED WORK CONSISTS OF REMOVAL OF THE EXISTING WEARING SURFACE AND BRIDGE RAIL. NEW INSTALLATIONS INCLUDE APPROACH SLAB WIDENINGS, WEARING SURFACE, BRIDGE RAIL AND CONCRETE BARRIER MEDIANS. IN ADDITION, THE CONCRETE DECK EDGE SHALL BE SEALED WITH EPOXY-URETHANE, DRAINAGE JOINTS SHALL BE SEALED AND SCUPPERS PLUGGED. TRAFFIC ON THE BRIDGE MUST BE MAINTAINED THROUGHOUT CONSTRUCTION, NECESSITATING THE WORK BE COMPLETED IN STAGES. THE MAJOR ITEMS OF WORK REQUIRING STAGED CONSTRUCTION ARE DESCRIBED BELOW FOR INFORMATION. SOME OF THE PROJECT ITEMS OF WORK MAY BE PERFORMED AT THE CONTRACTOR'S OWN SCHEDULE WITHIN THE TIME FRAME. HOWEVER, ALL WORK MUST BE COORDINATED WITHIN MAINTENANCE OF TRAFFIC PLANS AND SAFETY REQUIREMENTS.

SEQUENCE OF OPERATIONS

PHASE I

1. REMOVE EXISTING WEARING SURFACE
2. INSTALL APPROACH SLAB WIDENINGS AND CONCRETE BARRIER
3. INSTALL JOINT SEALS
4. INSTALL WEARING SURFACE

PHASE II

1. REMOVE EXISTING WEARING SURFACE AND CONCRETE BARRIERS
2. PLUG EXISTING SCUPPERS
3. INSTALL APPROACH SLAB WIDENINGS AND CONCRETE MEDIANS
4. INSTALL JOINT SEALS
5. INSTALL WEARING SURFACE
6. SEAL CONCRETE SURFACES

EXISTING STRUCTURE VERIFICATION:

DETAILS AND DIMENSIONS SHOWN ON THESE PLANS PERTAINING TO THE EXISTING STRUCTURE HAVE BEEN OBTAINED FROM PLANS OF THE EXISTING STRUCTURE AND/OR FROM FIELD OBSERVATIONS AND MEASUREMENTS. CONSEQUENTLY, THEY ARE INDICATIVE OF THE EXISTING STRUCTURE AND THE PROPOSED WORK, BUT THEY SHALL BE CONSIDERED TENTATIVE AND APPROXIMATE. THE CONTRACTOR IS REFERRED TO CMS SECTIONS 102.05 AND 105.02.

CONTRACT BID PRICES SHALL BE BASED UPON A RECOGNITION OF THE UNCERTAINTIES DESCRIBED ABOVE AND UPON A PREBID EXAMINATION OF THE EXISTING STRUCTURE BY THE CONTRACTOR. HOWEVER, ALL PROJECT WORK SHALL BY BASED UPON ACTUAL DETAILS AND DIMENSIONS WHICH HAVE BEEN VERIFIED BY THE CONTRACTOR IN THE FIELD.

EXISTING STRUCTURE PLANS:

THE ORIGINAL DESIGN PLANS MAY BE EXAMINED BY PROSPECTIVE BIDDERS AT THE DEPARTMENT OF TRANSPORTATION, DISTRICT 12 OFFICE, 5500 TRANSPORTATION BOULEVARD, GARFIELD HEIGHTS, OHIO. THE CONTRACTOR SHALL BECOME FAMILIAR WITH THE DRAWINGS.

ITEM 202 - PORTIONS OF STRUCTURES REMOVED, AS PER PLAN

DESCRIPTION
THIS WORK SHALL INCLUDE THE REMOVAL OF ELEMENTS INDICATED IN THE PLANS AND GENERAL NOTES THAT ARE NOT SEPARATELY LISTED FOR PAYMENT. ITEMS TO BE REMOVED INCLUDE ALL EXISTING MATERIALS BEING REPLACED BY NEW CONSTRUCTION AND MISCELLANEOUS ITEMS THAT ARE NOT SHOWN TO BE INCORPORATED INTO THE FINAL CONSTRUCTION AND ARE DIRECTED TO BE REMOVED BY THE ENGINEER. THE USE OF EXPLOSIVES, HEADACHE BALLS AND/OR HOE-RAMS WILL NOT BE PERMITTED. THE METHOD OF REMOVAL AND THE WEIGHT OF HAMMER SHALL BE APPROVED BY THE ENGINEER. ALL WORK SHALL BE DONE IN A MANNER THAT WILL NOT CUT, ELONGATE OR DAMAGE THE EXISTING REINFORCING STEEL TO BE PRESERVED. CHIPPING HAMMERS SHALL NOT BE HEAVIER THAT THE NOMINAL 90-POUND CLASS. PNEUMATIC HAMMERS SHALL NOT BE PLACED IN DIRECT CONTACT WITH REINFORCING STEEL THAT IS TO BE RETAINED IN THE REBUILT STRUCTURE.

PAYMENT
THIS WORK WILL BE PAID FOR AT THE CONTRACT LUMP SUM PRICE BID, WHICH PRICE AND PAYMENT SHALL BE FULL COMPENSATION FOR ALL LABOR, EQUIPMENT, MATERIALS AND INCIDENTALS NECESSARY TO COMPLETE THE WORK IN CONFORMANCE WITH THESE REQUIREMENTS, WITH PERTINENT PROVISIONS OF 202, AND TO THE SATISFACTION OF THE ENGINEER.

ITEM	UNIT	DESCRIPTION
202	LUMP	PORTIONS OF STRUCTURES REMOVED, AS PER PLAN

ITEM 518 SCUPPER MODIFICATION, AS PER PLAN, PLUGGING EXISTING SCUPPERS

THIS WORK SHALL CONSIST OF PLUGGING THE EXISTING SCUPPERS WITH CONCRETE. THE CONCRETE SHALL BE A MINIMUM OF FOUR (4) INCHES DEEP. THE TOP OF THE CONCRETE PLUG SHALL BE LEVEL WITH THE TOP SURFACE OF THE BRIDGE DECK.

PRICE AND PAYMENT FOR ONE SCUPPER MODIFIED AS PER PLAN SHALL INCLUDE THE COST OF ALL LABOR, EQUIPMENT, MATERIALS AND INCIDENTALS NECESSARY TO ACCOMPLISH THIS ITEM OF WORK TO THE SATISFACTION OF THE ENGINEER.

PAYMENT WILL BE MADE AT THE UNIT PRICE BID FOR ONE SCUPPER MODIFIED, AS PER PLAN.

ITEM	UNIT	DESCRIPTION
518	EACH	SCUPPER MODIFICATION, AS PER PLAN, PLUGGING SCUPPERS

ITEM SPECIAL, SEALING OF CONCRETE SURFACES (EPOXY-URETHANE)

THE COLOR OF THE URETHANE TOP COAT SHALL BE FEDERAL COLOR STANDARD NO. 595-20219 COCOA.

PRECOMPRESSED BITUMEN IMPREGNATED FOAM JOINT SEAL

DESCRIPTION:
THIS WORK SHALL CONSIST OF SEALING JOINTS USING BITUMEN IMPREGNATED FOAM IN ACCORDANCE WITH THESE SPECIFICATIONS IN REASONABLY CLOSE CONFORMITY WITH THE PLANS AND MANUFACTURER'S SPECIFICATIONS AND RECOMMENDATIONS AND AS DIRECTED BY THE ENGINEER

MATERIAL:
THE MATERIAL SHALL BE A PRECOMPRESSED BITUMEN IMPREGNATED FOAM JOINT SEALANT SUCH AS EMSEAL PCSA, PERMABAND, ROYSTON UNIBAND 8100 OR AN APPROVED EQUAL. EMSEAL U.S.A., IS LOCATED AT 344 MILL ROAD IN STAMFORD, CT 05903 AND HAS A TELEPHONE NUMBER OF (203) 322 3828. PERMABAND IS AVAILABLE FROM PERMAQUIK (CANADA) LTD WHICH IS LOCATED AT 3043 UNIVERSAL DRIVE IN MISSISSAUGA ONTARIO L4X2E2; TELEPHONE (416) 625-9444, ROYSTON IS LOCATED AT 128 FIRST ST. PITTSBURGH PA 15238 TELEPHONE (412) 828-1500. ALL MATERIAL SHALL BE STORED AND INCORPORATED IN THE WORK AS RECOMMENDED BY THE MANUFACTURER.

SURFACE PREPARATION:
THE FACES TO WHICH THE SEAL MUST ADHERE SHALL BE BLASTED CLEAN AND BE FREE OF FOREIGN MATERIAL SUCH AS DIRT, DUST, GREASE, FORM RELEASE AGENTS AND ANY OTHER MATERIAL DETRIMENTAL TO ADHESSION OF THE SEALANT.

RESTRICTIONS:
BLASTING ABRASIVE CONTAINING MORE THAN 1% FREE SILICA SHALL NOT BE ALLOWED.

APPLICATION:
JOINT SEALS SHALL BE INSTALLED ONLY WHEN THE SURFACES ARE DRY AND THE SURFACE TEMPERATURE IS ABOVE 50 DEGREES FAHRENHEIT. BOTH CONCRETE SURFACES ADJACENT TO THE JOINT SEAL SHALL BE PRIMED AS RECOMMENDED BY THE MANUFACTURER. THE FOAM SEAL SHALL BE REMOVED FROM THE PACKAGING AND ITS NARROW EDGE INSERTED INTO THE JOINT OPENING. THE DEPTH FACE WITH THE SELF-ADHESIVE BACKING SHALL BE PRESSED AGAINST ONE SIDE OF THE JOINT SO THAT FOAM IS HELD IN PLACE WHILE IT RECOVERS, AT TEMPERATURES ABOVE 68 DEGREES FAHRENHEIT THE MATERIAL WILL RECOVER IN A FEW HOURS. AT TEMPERATURES BELOW 68 DEGREES FAHRENHEIT THE RECOVERY SHALL BE ACCELERATED BY HEATING THE MATERIAL WITH AN OPEN FLAME, GAS BURNER, INFRA-RED LAMP OR HOT AIR BLOWER. A CONTINUOUS LENGTH OF JOINT SEAL SHALL BE ACHIEVED BY JOINING INDIVIDUAL STRIPS ONLY BY MEANS OF SCARFED JOINTS CUT AT 45 DEGREES OR LESS RELATIVE TO THE SIDES OF THE JOINT. THE SCARFED ENDS MUST BE PUSHED WELL PAST ONE ANOTHER. THE SEAL SHALL NOT BE PULLED OR STRETCHED SO THAT GAPS BETWEEN SUCCESSIVE LENGTHS ARE PREVENTED.

PAYMENT FOR THIS MATERIAL SHALL BE INCLUDED UNDER ITEM 516 - STRUCTURAL JOINT OR JOINT SEALER, MISC: 5"x5" PRECOMPRESSED BITUMEN IMPREGNATED FOAM JOINT SEAL.

POURED POLYURETHANE JOINT SEAL:

DESCRIPTION:
THIS MATERIAL SHALL BE USED TO SEAL THE JOINTS IN THE BRIDGE DECK AND BARRIER MEDIAN WITH POURED POLYURETHANE JOINT SEAL IN ACCORDANCE WITH THESE SPECIFICATIONS, IN REASONABLE CLOSE CONFORMITY WITH THE PLANS AND MANUFACTURER'S SPECIFICATIONS AND RECOMMENDATIONS, AND AS DIRECTED BY THE ENGINEER

MATERIAL: THE MATERIAL FOR THIS ITEM IS A TWO-PART, COLD APPLIED CHEMICALLY CURING SELF-LEVELING ELASTOMERIC, POLYURETHANE JOINT SEALANT MEETING THE REQUIREMENTS OF FEDERAL SPECIFICATION TT-S-00227E AND ASTM C-920. ALL MATERIAL SHALL BE STORED AND INCORPORATED IN THE WORK AS SPECIFIED BY THE MANUFACTURER.

APPLICATION:
POLYURETHANE JOINT SEAL SHALL BE POURED OVER THE FULL LENGTH OF THE PRECOMPRESSED BITUMEN IMPREGNATED FOAM PREVIOUSLY INSTALLED IN THE JOINT AS DETAILED IN THE PLANS AND SHALL BE APPLIED ONLY WHEN THE CONCRETE IS DRY AND ITS TEMPERATURE IS ABOVE 50 DEGREES FAHRENHEIT. THE INSTALLED AND CURED MATERIAL SHALL BE THE DEPTH AS SHOWN IN THE PLANS AND SHALL BE BONDED TO THE CONCRETE SIDES OF THE JOINT. ANY UNBONDED SECTION SHALL BE REMOVED AND REPLACED AT THE CONTRACTOR'S EXPENSE. DAMS AS REQUIRED TO CONTAIN THE SEALER SHALL BE INCIDENTAL TO THIS WORK.

PAYMENT FOR THIS MATERIAL SHALL BE INCLUDED UNDER ITEM 516 - STRUCTURAL JOINT OR JOINT SEALER, MISC: POURED POLYURETHANE JOINT SEAL.

BURGESS & NIPLE

DESIGNED DCF | DRAWN DCF | CHECKED SCT | REVISED | REVIEWED DWL | DATE 12-22-99 | STRUCTURE FILE NUMBER 1807633

STRUCTURE NOTES 1 OF 2
BRIDGE NO. CUY-90-0365
OVER TUTTLE CREEK

CUY-90-0.00

2 / 8

516
582

17 MAR 2000
P:\Pr-2230R\caddz\znotes1.dgn

ITEM 844 HIGH PERFORMANCE CONCRETE, SUPERSTRUCTURE, (DECK) AS PER PLAN

ITEM 844 HIGH PERFORMANCE CONCRETE, SUPERSTRUCTURE, (PARAPET) AS PER PLAN

ITEM 844 HIGH PERFORMANCE CONCRETE, SUBSTRUCTURE, AS PER PLAN

THE PROVISIONS OF 844 SHALL APPLY EXCEPT AS NOTED BELOW.

SLIPFORMING:
THE CONTRACTOR IS ALLOWED THE OPTION OF SLIPFORMING BRIDGE PARAPETS OVER NON TRAVELED WAYS. A MINIMUM OF 3 DAYS AFTER PLACING THE TEST SECTION THE CONTRACTOR SHALL CORE THE TEST SECTION (A MINIMUM OF 3 CORES) AT LOCATIONS AS DIRECTED BY THE ENGINEER. APPROVAL TO SLIPFORM SHALL NOT BE GRANTED UNTIL AFTER THE CORING AND AFTER A SUCCESSFUL SLIPFORMING RESULT IS OBTAINED. IN ADDITION TO THE REQUIREMENTS OF THE LAST PARAGRAPH OF 844.031 THE ENGINEER WILL INSPECT THE SLIPFORMED SURFACE FOR HORIZONTAL CRACKING 6 MONTHS AFTER COMPLETION OF THE SLIPFORMING OPERATION. ANY ADDITIONAL CRACKS FOUND SHALL BE REPAIRED AS PER THE SPECIFICATIONS AT NO ADDITIONAL COST TO THE STATE. IN ADDITION, ALL ANCHOR BOLTS FOR FENCE POSTS SHALL BE CAST IN PLACE.

SLIPFORMING SHALL NOT BE PERFORMED DIRECTLY OVER AREAS WHERE THERE IS OR WILL BE VEHICULAR OR PEDESTRIAN TRAFFIC. AT THESE LOCATIONS, THE PARAPETS SHALL BE FORMED AND THE FOLLOWING REQUIREMENTS FOLLOWED.

THE MINIMUM CONCRETE SLUMP DURING PLACEMENT OF ALL CONCRETE PARAPETS SHALL BE 6 INCHES. THE MAXIMUM SLUMP ALLOWED DURING PLACEMENT IS 8 INCHES.

FORMS SHALL NOT BE REMOVED UNTIL AT LEAST 2 HOURS AFTER THE FINAL SET. DETERMINATION OF THE FINAL SET SHALL BE AS PER ASTM C266 (GILLMORE NEEDLE). TESTING SHALL BE PERFORMED BY THE CONTRACTOR AT NO COST TO THE STATE.

ANCHOR BOLTS FOR FENCE POSTS SHALL BE CAST IN PLACE.

THIS ITEM SHALL INCLUDE THE DRILLING OF HOLES PER CMS 510 INTO CONCRETE OR MASONRY AND THE FURNISHING AND PLACING OF GROUT INTO HOLES. NON-SHRINKING EPOXY GROUT SHALL BE USED IN ACCORDANCE WITH CMS 705.20. ANCHORING SHALL CONFORM TO CMS 705.20. PAYMENT SHALL BE INCLUDED WITH THIS ITEM. THE FURNISHING AND PLACEMENT OF STEEL FOR DOWELS IS ALSO INCLUDED WITH THIS ITEM

THE CONTRACTOR SHALL CONSTRUCT 1½ INCHES DEEP AND ¼ INCH WIDE CONTROL JOINTS SPACED AT A MINIMUM OF 6 FEET AND A MAXIMUM OF 8 FEET ON CENTER. THE CONTROL JOINTS SHALL BE MADE IN THE COMPLETE CIRCUMFERENCE OF THE PARAPET, STARTING AND ENDING AT THE ELEVATION OF THE TOP OF THE CONCRETE DECK (SEE DETAILS BELOW). THE CONTRACTOR MAY EITHER FORM THE CONTROL JOINTS IN WITH FORM LINERS, OR, WITHIN 24 HOURS OF PLACEMENT, SAW CUT THE CONTROL JOINTS IN WITH THE USE OF AN EDGE GUIDE, FENCE, OR JIG WHICH IS REQUIRED TO ENSURE THAT THE CUT JOINT IS STRAIGHT, TRUE, AND ALIGNED ON ALL FACES OF THE PARAPET. THE ENTIRE LENGTH OF EACH CONTROL JOINT SHALL BE SEALED TO A MINIMUM DEPTH OF 1½ INCHES WITH A CAULKING MATERIAL CONFORMING TO FEDERAL SPECIFICATION, TT-S-00227E.

MIX OPTIONS:
ALL DECK CONCRETE AND PARAPET CONCRETE SHALL BE MIX 4, AS PER PLAN. ALL OTHER CONCRETE SHALL BE MIX 4, AS PER PLAN, OR MIX 2 CONCRETE. THE FOLLOWING PROPORTIONS WILL USED AS A STARTING MIX DESIGN.

CONCRETE TABLE:
QUANTITIES PER CUBIC YARD
AGGREGATES (SSD)

MIX 4, AS PER PLAN (GGBF SLAG + MICROSILICA)

	GRAVEL	LIMESTONE	SLAG
FINE AGGREGATE (LB)	1245	1245	1246
#8 COARSE AGGREGATE (LB)	360	360	315
#57 COARSE AGGREGATE (LB)	1315	1335	1155
TOTAL (LB)	2920	2940	2716
CEMENT CONTENT (LB)	400	400	400
GGBF SLAG (LB)	170	170	170
MICROSILICA (LB)	30	30	30
WATER TO CEMENTITIOUS RATIO MAX.	0.42	0.42	0.42
AIR CONTENT, +/-2%	7%	7%	7%

THE WEIGHTS SPECIFIED IN THE CONCRETE TABLE WERE CALCULATED FOR MATERIALS OF THE FOLLOWING BULK SPECIFIC GRAVITIES (SSD): NATURAL SAND AND GRAVEL 2.62, LIMESTONE SAND 2.68, LIMESTONE 2.65, SLAG 2.30, FLY ASH 2.65, GGBF SLAG 2.90, MICROSILICA SOLID 2.20, AND PORTLAND CEMENT 3.15. FOR AGGREGATES OF SPECIFIC GRAVITIES DIFFERING MORE THAN PLUS OR MINUS 0.02 FROM THESE, THE WEIGHTS IN THE TABLE WILL BE CORRECTED.

DECK TEXTURING:
IN LIEU OF THE REQUIREMENTS OF SS 842 OR SS 844, CONCRETE DECK SLABS SHALL BE FINISHED IN ACCORDANCE WITH 451.09 AND 451.12 EXCEPT THAT CONSTRUCTION JOINTS SHALL NOT BE EDGED, AND A STRIP OF SURFACE 9 TO 12 INCHES WIDE ADJACENT TO CURBS AND BARRIERS SHALL NOT BE GROOVED. IF THE TEXTURE AS REQUIRED IS NOT MET, THE CONTRACTOR WILL SAW TEXTURE THE DECK AT NO COST TO THE STATE.

BASIS OF PAYMENT:
ALL COSTS OF MATERIAL AND LABOR TO PROVIDE LIGHTING CONDUITS IF SHOWN IN THE BRIDGE PLANS SHALL BE INCLUDED FOR PAYMENT UNDER THIS ITEM. PAYMENT FOR THE ABOVE COMPLETED AND ACCEPTED QUANTITIES WILL BE MADE AT THE CONTRACT BID PRICE FOR:

ITEM	UNITS	DESCRIPTION
844E48001	CUBIC YARD	HIGH PERFORMANCE CONCRETE SUPERSTRUCTURE (DECK), AS PER PLAN
844E48021	CUBIC YARD	HIGH PERFORMANCE CONCRETE SUPERSTRUCTURE (PARAPET), AS PER PLAN
844E48041	CUBIC YARD	HIGH PERFORMANCE CONCRETE SUBSTRUCTURE, AS PER PLAN
844E49000	LUMP SUM	HIGH PERFORMANCE CONCRETE TRIAL MIX
844E49010	LUMP SUM	HIGH PERFORMANCE CONCRETE TESTING

17 MAR 2000
p:\pr-22308\caddz\znotes2.dgn

BURGESS & NIPLE

REVIEWED DWL DATE 02-08-00
STRUCTURE FILE NUMBER 1807633
DRAWN SCT/JAA REVISED
DESIGNED SCT/JAA CHECKED JAA/SCT

STRUCTURE NOTES 2 OF 2
BRIDGE NO. CUY-90-0365
OVER TUTTLE CREEK

CUY-90-0.00

ESTIMATED QUANTITIES

ITEM	ITEM EXT.	TOTAL	UNIT	DESCRIPTION	SUPERSTR.	SUBSTR.	GENERAL	PARTICIPATION 1	PARTICIPATION 2
202	11201	LUMP		PORTIONS OF STRUCTURES REMOVED, AS PER PLAN			LUMP	LUMP	LUMP
446	46040	36	CU. YD.	ASPHALT CONCRETE INTERMEDIATE COURSE, TYPE 2, PG 64-28	36			14	22
448	50000	31	CU. YD.	ASPHALT CONCRETE SURFACE COURSE, TYPE 1H	31			12	19
512	33011	868	SQ. YD.	TYPE 3 WATERPROOFING, AS PER PLAN	868			348	520
SPECIAL	512 67510	50	SQ. YD.	SEALING OF CONCRETE SURFACES (EPOXY-URETHANE)	50			45	5
516	14600	94	L.F.	STRUCTURAL JOINT OR JOINT SEALER, MISC: 5"x5" PRECOMPRESSED BITUMEN IMPREGNATED FOAM JOINT SEAL	94			47	47
516	14600	94	L.F.	STRUCTURAL JOINT OR JOINT SEALER, MISC: POURED POLYURETHANE JOINT SEAL	94			47	47
517	76300	28	L.F.	RAILING, MISC: TWIN STEEL TUBE			28		28
518	12801	4	EACH	SCUPPER MODIFICATION, AS PER PLAN, PLUGGING EXISTING SCUPPER	4				4
844	49500	7	CU. YD.	HIGH PERFORMANCE CONCRETE, MISC: CONCRETE BARRIER	7			7	
844	49500	5	CU. YD.	HIGH PERFORMANCE CONCRETE, MISC: CONCRETE MEDIAN	5			5	
848	10000	740	SQ. YD.	MICRO SILICA MODIFIED CONCRETE OVERLAY USING HYDRODEMOLITION - 3½ INCH THICK	740			296	444
848	30000	24	CU. YD.	MICRO SILICA MODIFIED CONCRETE OVERLAY (VARIABLE THICKNESS), MATERIAL ONLY	24			9	15
848	50300	1159	SQ. YD.	WEARING COURSE REMOVED, ASPHALT (5½"±)	1159			232	927
848	50100	LUMP		TEST SLAB	LUMP			LUMP	LUMP

BURGESS & NIPLE

REVIEWED DWL 12-22-99
STRUCTURE FILE NUMBER 1807633
DRAWN DCF
REVISED
DESIGNED DCF
CHECKED SCT

ESTIMATED QUANTITIES
BRIDGE NO. CUY-90-0365
OVER TUTTLE CREEK

CUY-90-0.00

17 MAR 2000
p:\pr22308\cadd\zestquan.dgn

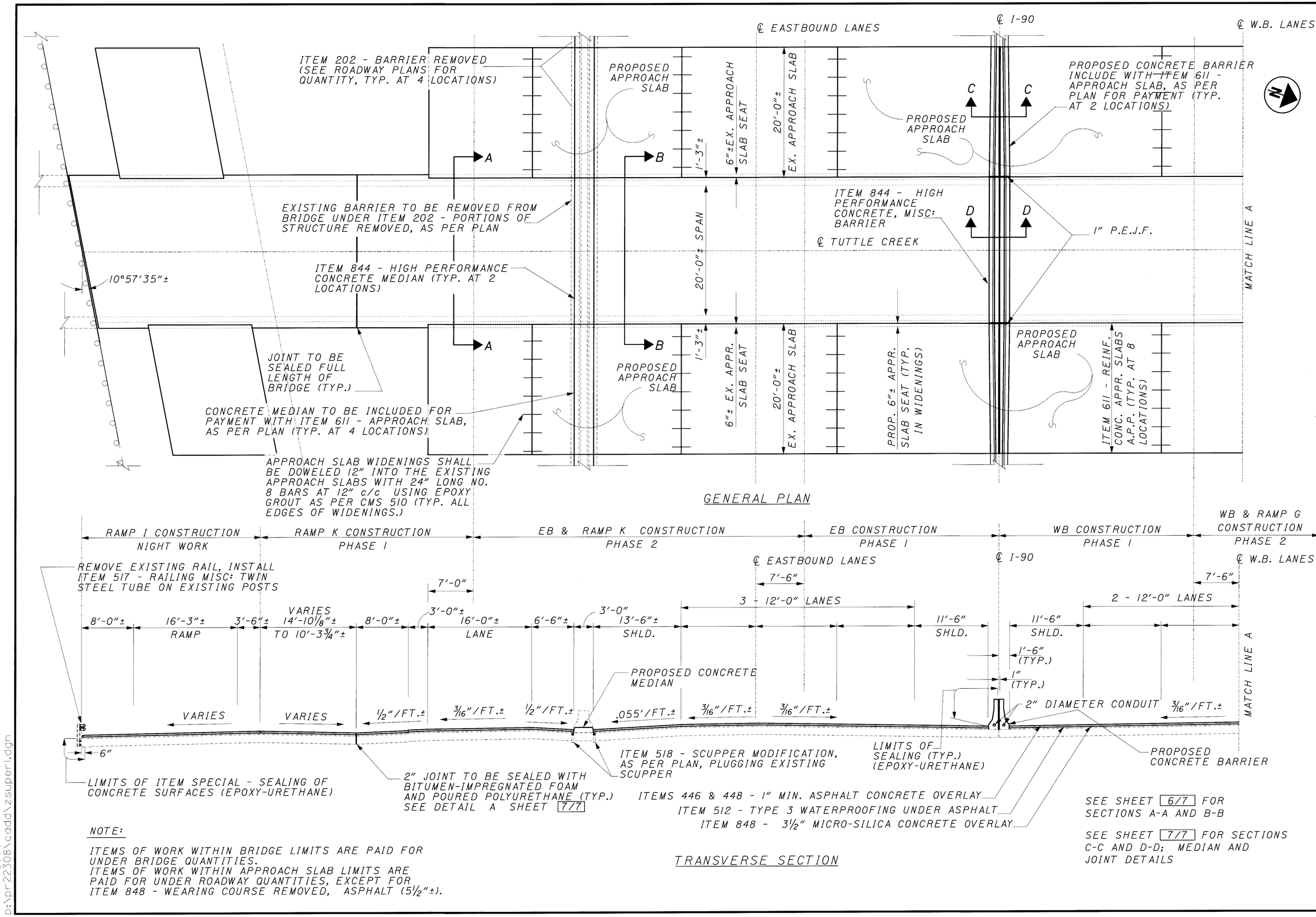

NOTE:

ITEMS OF WORK WITHIN BRIDGE LIMITS ARE PAID FOR UNDER BRIDGE QUANTITIES.
ITEMS OF WORK WITHIN APPROACH SLAB LIMITS ARE PAID FOR UNDER ROADWAY QUANTITIES, EXCEPT FOR ITEM 848 - WEARING COURSE REMOVED, ASPHALT (5 1/2"±).

BURGESS & NIPLE

DESIGNED	DRAWN	REVIEWED	DATE
JAA	JAA	DWL	1-18-00
CHECKED	REVISED	STRUCTURE FILE NUMBER	
SCT		1807633	

PLAN AND TRANSVERSE SECTION (1 OF 2)

BRIDGE NO. CUY-90-0365
OVER TUTTLE CREEK

CUY-90-0.00

17 MAR 2000
D:\pr22308\cadd\zsuper1.dgn

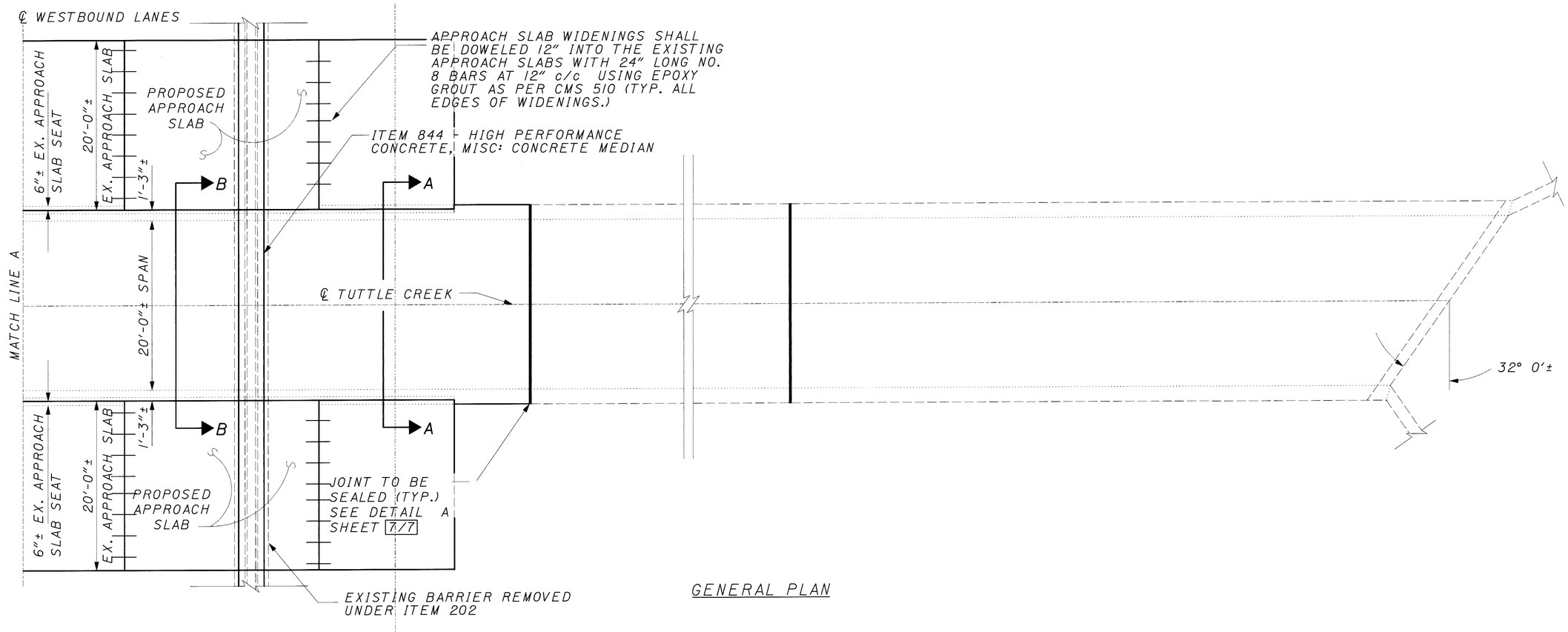

GENERAL PLAN

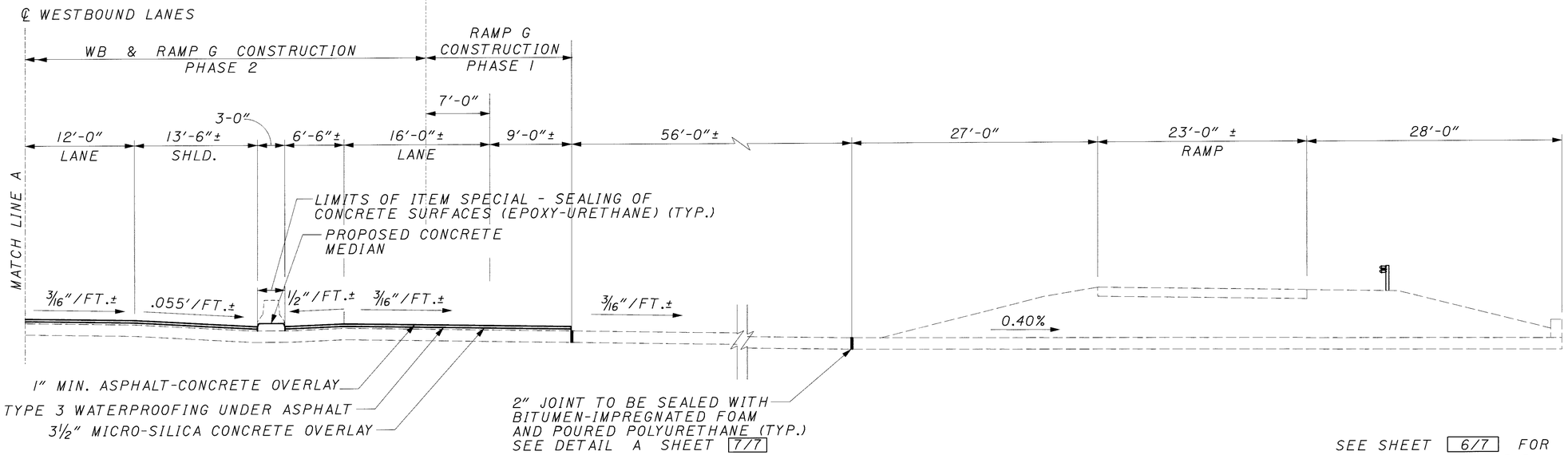

TRANSVERSE SECTION

NOTE:

ITEMS OF WORK WITHIN BRIDGE LIMITS ARE PAID FOR UNDER BRIDGE QUANTITIES.
ITEMS OF WORK WITHIN APPROACH SLAB LIMITS ARE PAID FOR UNDER ROADWAY QUANTITIES, EXCEPT FOR ITEM 848 - WEARING COURSE REMOVED, ASPHALT (5½"±).

SEE SHEET 6/7 FOR SECTIONS A-A AND B-B

SEE SHEET 7/7 FOR MEDIAN AND JOINT DETAILS

BURGESS & NIPLE

DESIGNED	DRAWN	REVIEWED	DATE
JAA	JAA	DWL	1-18-00
CHECKED	REVISED	STRUCTURE FILE NUMBER	
SCT		1807633	

PLAN AND TRANSVERSE SECTION (2 OF 2)
BRIDGE NO. CUY-90-0365
OVER TUTTLE CREEK

CUY-90-0.00

6/8

520
582

17 MAR 2000
p:\pr22308\cadd\zsuper2.dgn

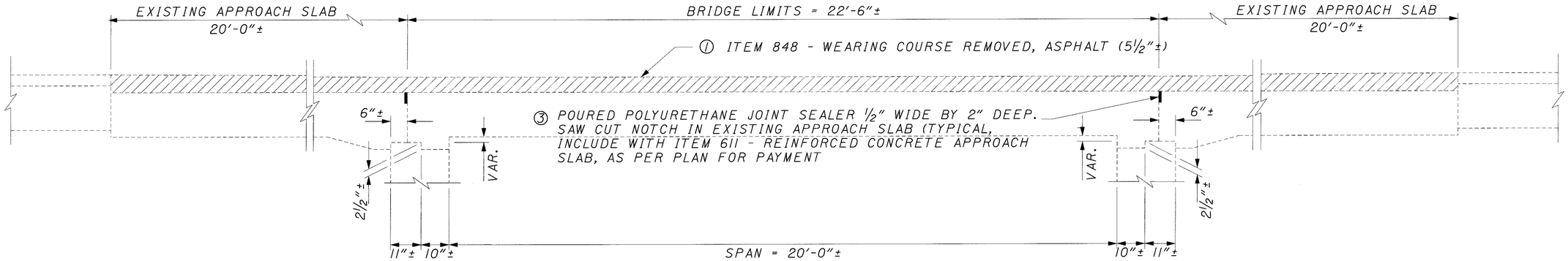

EXISTING SECTION A-A

(EXISTING MAINLINE SHOWN
SEE SECTION B-B FOR PROPOSED WIDENING)

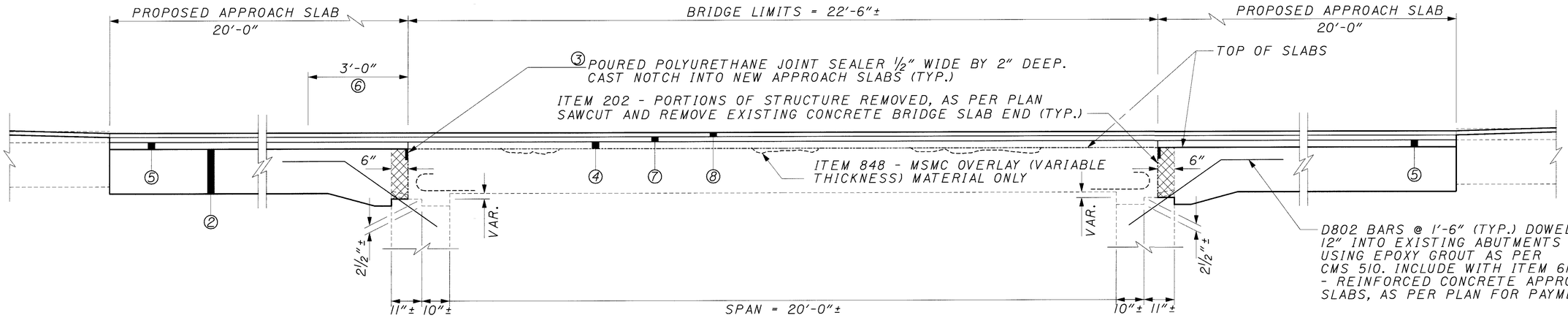

PROPOSED SECTION B-B

(PROPOSED APPROACH SLAB WIDENING SHOWN
OVERLAYS ON EXISTING SLABS SIMILAR)

CONSTRUCTION SEQUENCE:

① REMOVE 5½"± ASPHALT OVERLAY FROM BRIDGE AND APPROACH SLABS
② EXCAVATE AND PLACE SUBBASE AND APPROACH SLAB WIDENINGS
③ PREPARE AND SEAL APPROACH/BRIDGE SLAB JOINTS
④ PREPARE AND OVERLAY BRIDGE WITH 3½" MSMC
⑤ PLACE 2½" ASPHALT CONCRETE ON APPROACH SLABS
⑥ INSTALL TYPE 3 MEMBRANE WATERPROOFING ON MSMC BRIDGE OVERLAY AND 3 FEET ONTO ASPHALT OVERLAYS ON APPROACH SLABS
⑦ PLACE 1" MINIMUM ASPHALT INTERMEDIATE COURSE ON BRIDGE AND APPROACH SLABS
⑧ PLACE 1½" ASPHALT SURFACE COURSE ON BRIDGE AND APPROACH SLABS WITH MAINLINE PAVING OPERATION

SEE SHEETS 4 & 5/7 FOR LOCATIONS OF SECTIONS A-A & B-B

SEE SHEET 7/7 FOR DETAILS NOT SHOWN

17 MAR 2000
D:\pr22308\cadd\zsuper3.dgn

BURGESS & NIPLE

DESIGNED	DRAWN	REVIEWED	DATE
JAA	JAA	DWL	1-18-00
CHECKED	REVISED	STRUCTURE FILE NUMBER	
SCT		1807633	

REPAIR DETAILS
BRIDGE NO. CUY-90-0365
OVER TUTTLE CREEK

CUY-90-0.00

FOR DETAILS NOT SHOWN
SEE STD. DRAW. RM-3.1M

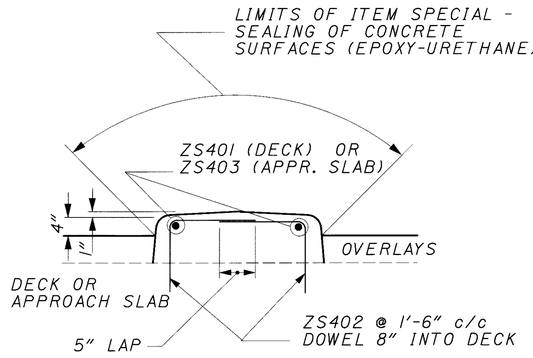

MEDIAN DETAIL
(TYPICAL OF DECK AND APPROACH SLAB)

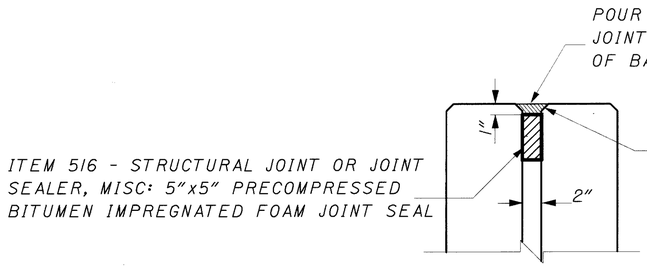

DETAIL B
JOINT SEAL

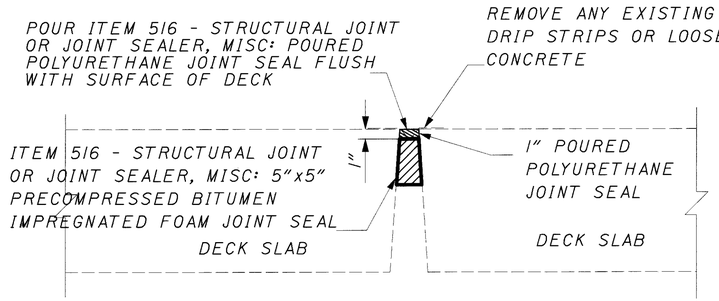

DETAIL A
JOINT SEAL

SEE SHEETS 4 & 5/7 FOR
LOCATIONS OF DETAIL A

REINFORCING SCHEDULE

MARK	NUMBER DECK	NUMBER APPR. SLAB	TOTAL NO.	LENGTH	TYPE
ZS401	4		4	22'-0"	STR
ZS402	64	112	176	2'-8"	1
ZS403		8	8	19'-6"	STR
ZS501	6		6	22'-0"	STR
ZS502	32		32	9'-0"	3
ZS503	32	56	88	3'-3"	2
ZS504		8	8	19'-6"	STR
ZS505		56	56	5'-0"	4
D802		132	132	3'-6"	5

ALL REINFORCING SHALL BE EPOXY COATED

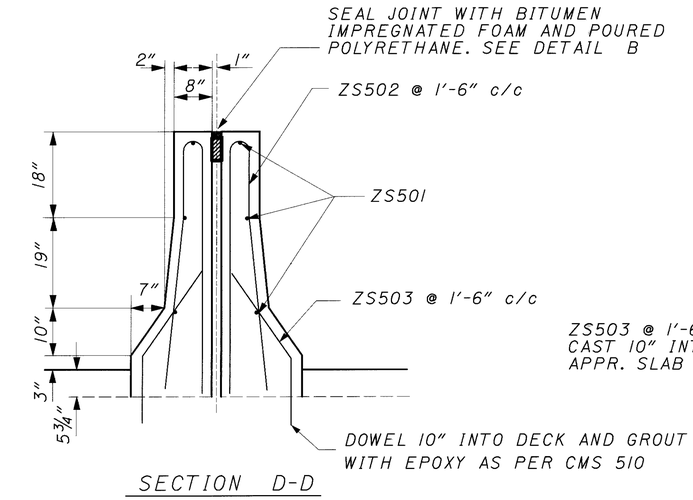

SECTION D-D

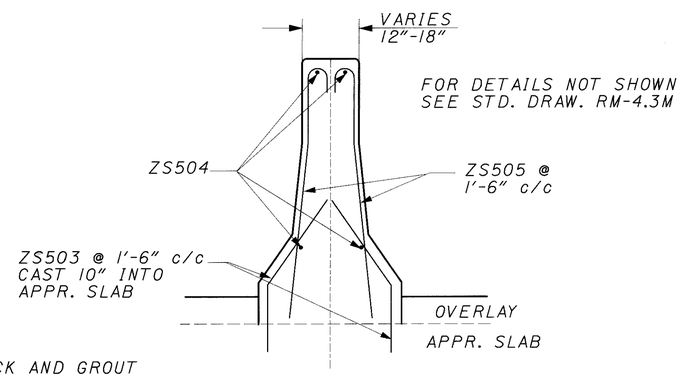

SECTION C-C

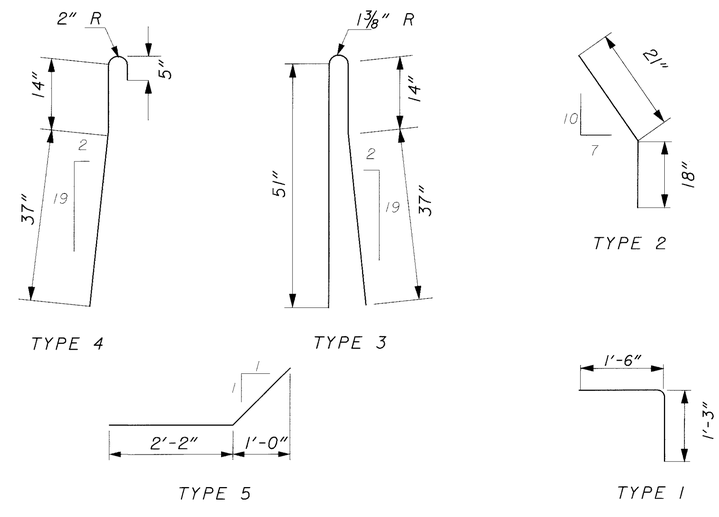

BURGESS & NIPLE

REVIEWED DWL 12-22-99 DATE
STRUCTURE FILE NUMBER 1807633
DRAWN DCF REVISED
DESIGNED DCF CHECKED SCT

MISCELLANEOUS DETAILS
BRIDGE NO. CUY-90-0365
OVER TUTTLE CREEK

CUY-90-0.00

8 / 8

522
582

17 MAR 2000
p:\pr-2230\cadd\zdetail.dgn

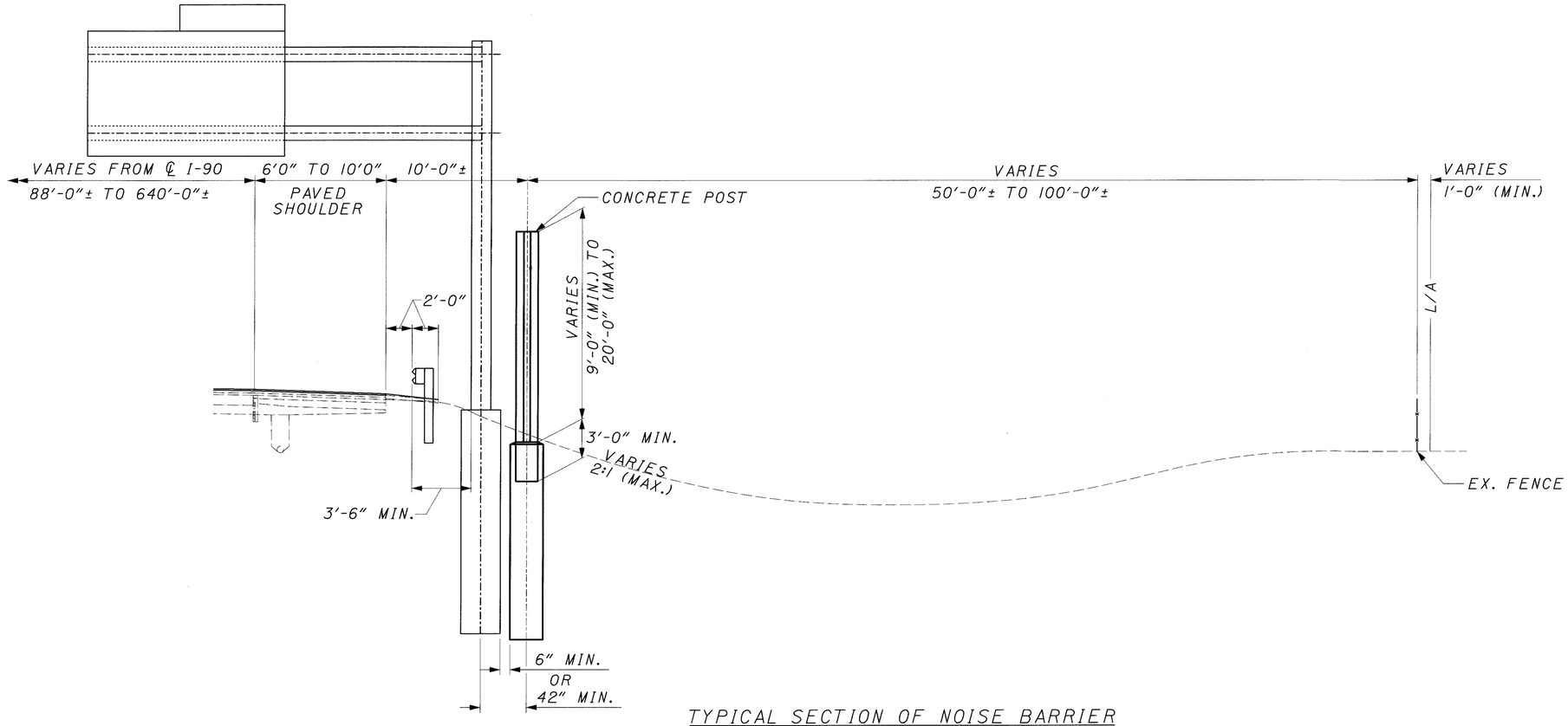

SIGN SUPPORT DETAIL

TYPICAL SECTION OF NOISE BARRIER

I-90 E.B. IN FILL SECTION

SITE 6: STA. 1215+56.25 TO STA. 16+46.18
STA. 18+08.18 TO STA. 23+60.18
STA. 25+35.18 ℄ I-90 TO STA. 46+09.97 ℄ RAMP D

NOTE: STATIONS OF THE NOISE BARRIER POSTS AND THE SIGN POSTS SHALL BE AT LEAST 4 FEET APART TO AVOID INTERFERENCE BETWEEN THE FOUNDATIONS.

SEE SHEETS 5/582 TO 33/582 FOR ROADWAY TYPICAL SECTIONS

NOISE BARRIER TYPICAL SECTION - SITE 6

CUY-90-0.00

20 MAR 2000
D:\PR22308\CADD\NWDET.DGN

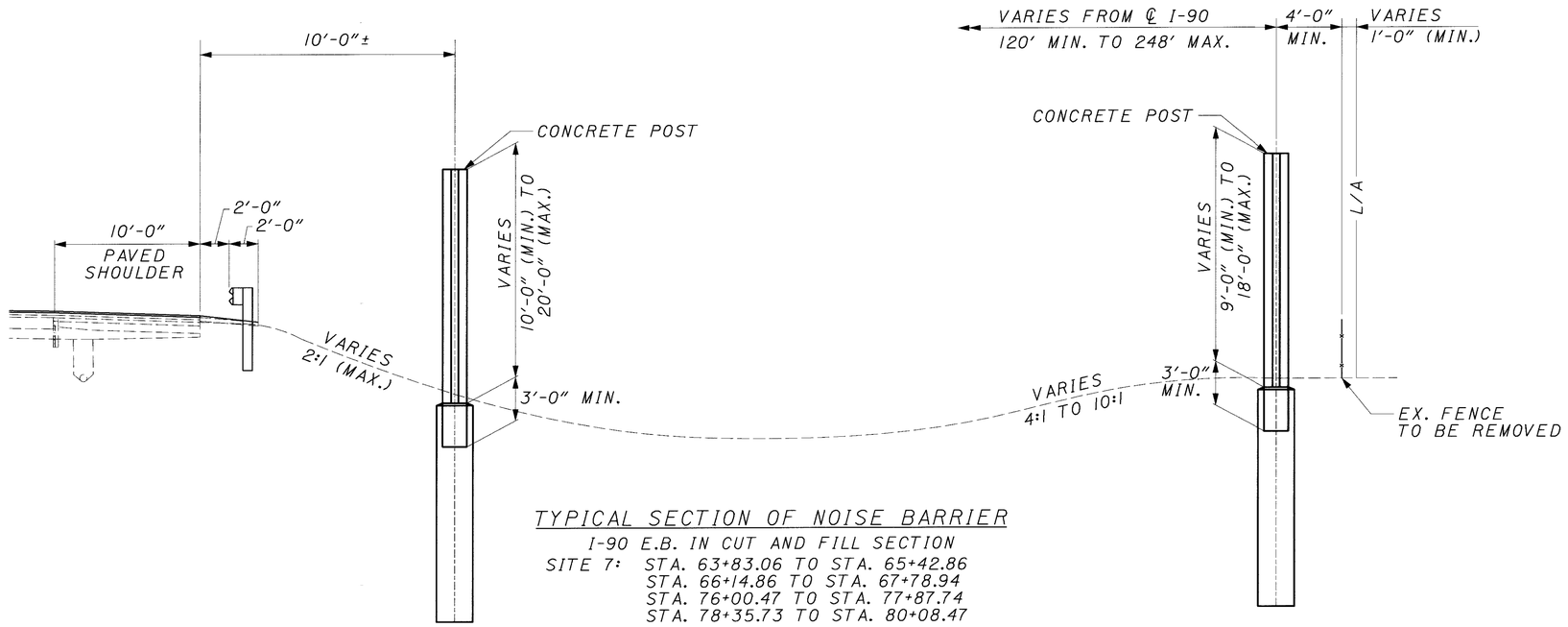

TYPICAL SECTION OF NOISE BARRIER

I-90 E.B. IN CUT AND FILL SECTION

SITE 7: STA. 63+83.06 TO STA. 65+42.86
STA. 66+14.86 TO STA. 67+78.94
STA. 76+00.47 TO STA. 77+87.74
STA. 78+35.73 TO STA. 80+08.47

SITE 7A: STA. 63+83.06 TO STA. 67+78.94

SITE 7B: STA. 76+00.47 TO STA. 80+08.47

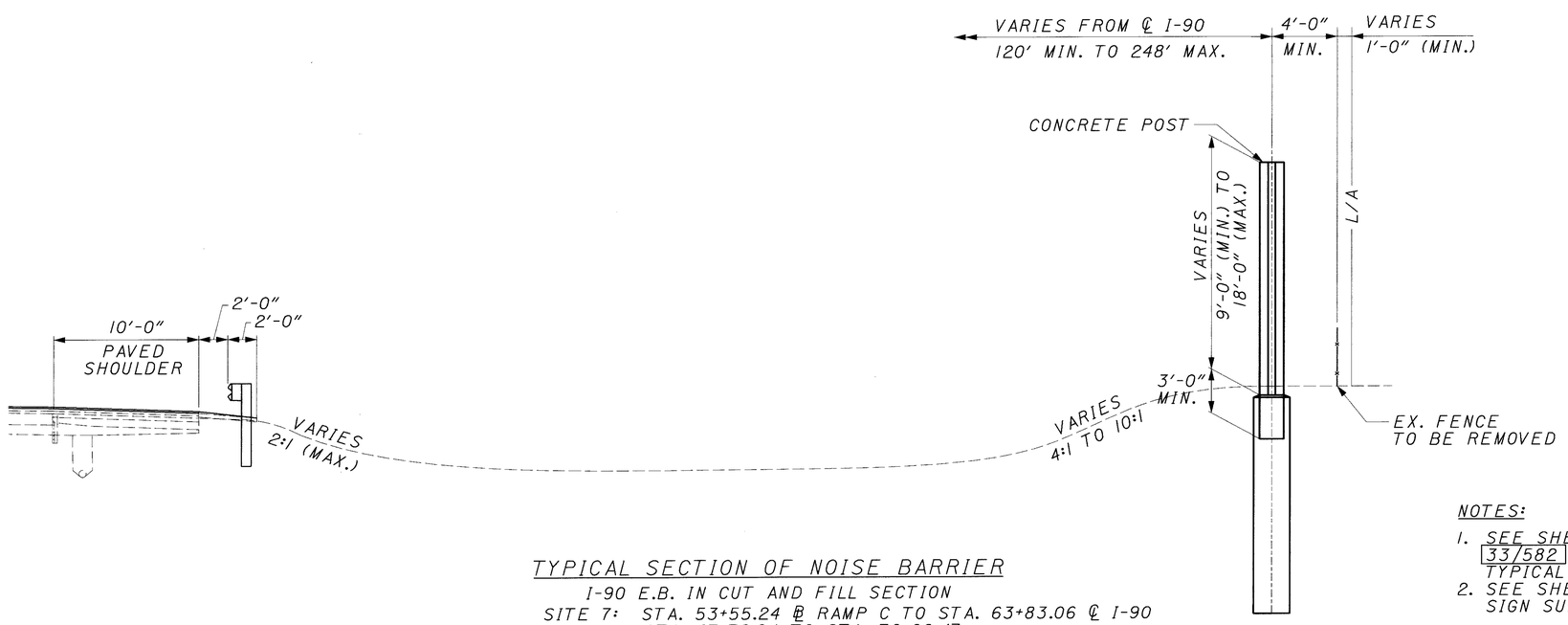

TYPICAL SECTION OF NOISE BARRIER

I-90 E.B. IN CUT AND FILL SECTION

SITE 7: STA. 53+55.24 ℄ RAMP C TO STA. 63+83.06 ℄ I-90
STA. 67+78.94 TO STA. 76+00.47
STA. 80+08.47 TO STA. 105+21.28℄ I-09

NOTES:

1. SEE SHEETS 5/582 TO 33/582 FOR ROADWAY TYPICAL SECTIONS.
2. SEE SHEET 523/582 FOR SIGN SUPPORT DETAILS.

NOISE BARRIER TYPICAL SECTIONS - SITES 7, 7A, 7B

CUY-90-0.00

524
582

20 MAR 2000
D:\PR22308\CADD\NWDET.DGN

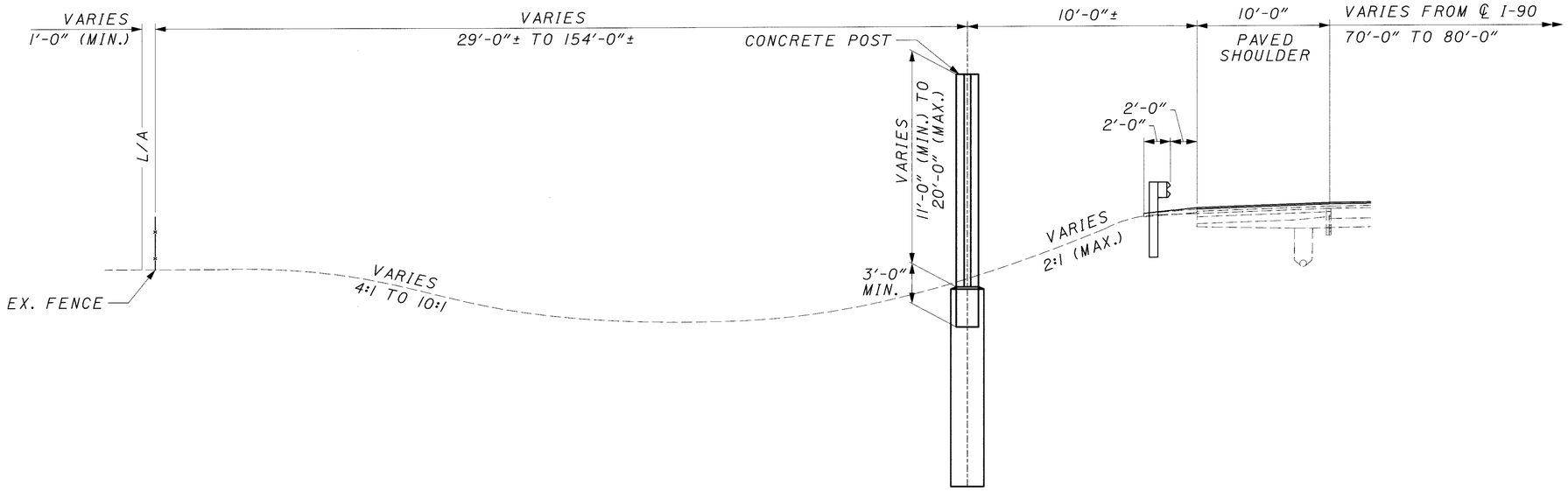

TYPICAL SECTION OF NOISE BARRIER

I-90 W.B. IN CUT AND FILL SECTIONS
SITES 8 AND 10: STA. 106+70.00 TO STA. 131+58.46
STA. 133+36.96 TO STA. 157+24.96

NOTES:

1. SEE SHEETS 5/582 TO 33/582 FOR ROADWAY TYPICAL SECTIONS.
2. SEE SHEET 523/582 FOR SIGN SUPPORT DETAILS.

NOISE BARRIER TYPICAL SECTION - SITES 8 AND 10

CUY-90-0.00

525
582

20 MAR 2000
p:\PR22308\CADD\NWDET.DGN

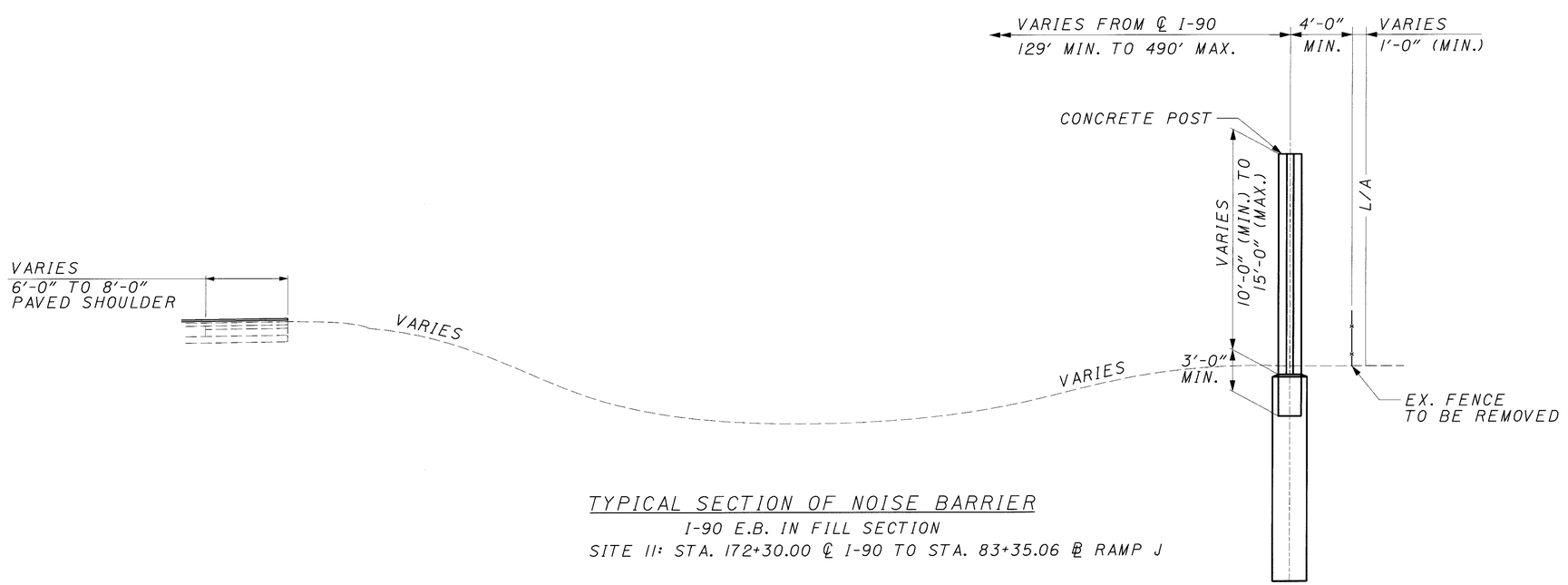

TYPICAL SECTION OF NOISE BARRIER

I-90 E.B. IN FILL SECTION

SITE 11: STA. 172+30.00 ℄ I-90 TO STA. 83+35.06 ℄ RAMP J

NOTES:

1. SEE SHEETS 5/582 TO 33/582 FOR ROADWAY TYPICAL SECTIONS.
2. SEE SHEET 523/582 FOR SIGN SUPPORT DETAILS.

NOISE BARRIER TYPICAL SECTION - SITE 11

CUY-90-0.00

526
582

20 MAR 2000
P:\PR22308\CADD\NWDET.DGN

CALCULATED DWL
CHECKED ENF

COST PARTICIPATION

THE QUANTITIES WHICH APPEAR IN THE GENERAL SUMMARIES HAVE BEEN PLACED IN THE FOLLOWING PARTICIPATION AREAS:

COST PARTICIPATION I - MAJOR NEW, TE21-G000(105)

PROTECTION OF EXISTING SEWERS AND CULVERTS

THE LOCATIONS AND DEPTHS OF EXISTING CULVERTS, STORM AND SANITARY SEWERS AS SHOWN IN THE PLANS WERE TAKEN FROM THE RECORD CONSTRUCTION PLANS CUY-90-0.00 AND CUY-90-2.80 AND ARE ASSUMED TO BE APPROXIMATE. BEFORE AUGERING POST HOLES OR EXCAVATING FOR SPREAD FOOTERS. THE CONTRACTOR SHALL FIELD LOCATE ALL EXISTING SEWERS AND CULVERTS.

SHOULD A SEWER OR CULVERT BE DAMAGED BY THE CONTRACTORS NEGLIGENCE IN THE ABOVE MENTIONED WORK, THE DAMAGED SECTIONS OF THE SEWER OR CULVERT SHALL BE REPLACED BY THE CONTRACTOR AT NO ADDITIONAL COST TO THE STATE.

SEQUENCE OF OPERATIONS FOR NOISE BARRIER WORK ITEMS

1. REMOVE EXISTING SIGNS AND GUARDRAILS
2. INSTALL GUARDRAIL
3. INSTALL SIGNS
4. REMOVE EXISTING FENCE AND INSTALL TEMPORARY FENCE
5. INSTALL NOISE BARRIERS

ITEM 201 - CLEARING AND GRUBBING

THIS LUMP SUM ITEM SHALL BE USED TO CLEAR BRUSH AND THE NEAT TRIMMING AND/OR REMOVAL OF TREES IN CONFLICT WITH THE PROPOSED NOISE BARRIER LOCATIONS. TREES SCHEDULED TO BE TRIMMED OR REMOVED SHALL BE MARKED AND APPROVED BY THE PROJECT ENGINEER PRIOR TO TO THE WORK BEING PERFORMED. CLEARING OF TREES SHALL BE KEPT TO A MINIMUM. FOR CLARIFICATION, TREES SHALL BE INTERPRETED AS ANY GROWTH WITH A TRUNK DIAMETER OF AT LEAST THREE (3) INCHES.

IN THE AREA BETWEEN THE BACK OF THE NOISE BARRIER AND EXISTING FENCE, WHERE THE FENCE IS TO BE REMOVED AND THE ADJOINING PROPERTY IS GRASSED RESIDENTIAL, THAT AREA SHALL BE FINISHED TO A STATE COMPARABLE TO THE ADJOINING PROPERTY.

RESTORATION OF WORK AREA

THIS NOTE SHALL SUPERSEDE THE REQUIREMENTS OF THE NOTE FOUND ON THE OHIO DEPARTMENT OF TRANSPORTATION'S NOISE BARRIER DETAILS SECTION IV, NOTE F, SHEET 2/9. THIS NOTE APPLIES TO AREAS LOCATED ON THE FREEWAY SIDE OF THE NOISE BARRIERS. AREAS ON THE RESIDENTIAL SIDE OF THE NOISE BARRIERS SHALL BE RESTORED AS PER THE ITEM 201 - CLEARING AND GRUBBING NOTE. UPON COMPLETION OF NOISE BARRIER INSTALLATION, THE CONTRACTOR SHALL RESTORE ALL DISTURBED AREAS TO THEIR ORIGINAL CONDITION. RESTORATION SHALL INCLUDE SEEDING AND MULCHING AS DEFINED IN CONSTRUCTION AND MATERIAL SPECIFICATIONS SECTION 659 USING A CROWN VETCH TYPE SEED MIXTURE AS DEFINED IN SECTION 659.09. THE RESTRICTION FROM SOWING CROWN VETCH DURING THE MONTHS OF SEPTEMBER AND OCTOBER ARE WAIVED, BUT ALL OTHER RESTRICTIONS ARE REQUIREMENTS OF 659.09 AND 659 SHALL APPLY.

PAYMENT FOR ALL EQUIPMENT, LABOR, AND MATERIALS, INCLUDING COMMERCIAL FERTILIZER, AGRICULTURAL LIMING, SEEDING AND MULCHING, AND WATER, NECESSARY TO COMPLETE THE RESTORATION OF ALL DISTURBED AREAS SHALL BE INCLUDED IN THE UNIT PRICE BID PER SQUARE FOOT FOR ITEM SPECIAL - NOISE BARRIER.

ITEM 607 - FENCE MISC.: TEMPORARY FENCE

THIS ITEM SHALL BE USED WHEN THE TIME BETWEEN THE REMOVAL OF THE EXISTING FENCE AND THE INSTALLATION OF THE PROPOSED FENCE OR NOISE BARRIER EXCEEDS ONE DAY. THIS FENCE SHALL BE INSTALLED IMMEDIATELY AFTER THE EXISTING FENCE IS REMOVED. THE TEMPORARY FENCE SHALL BE THE WOOD SNOW FENCE, PLASTIC NYLON CONSTRUCTION FENCE OR EXISTING FENCE FABRIC VARIETY MOUNTED ON DRIVEN POSTS. FOR EACH NOISE WALL SECTION, THE EXISTING FENCE SHALL NOT BE REMOVED EARLIER THAN 3 MONTHS PRIOR TO THE COMPLETED INSTALLATION OF THE NOISE WALL PANELS. ALL COSTS ASSOCIATED WITH PROVIDING, INSTALLING, MAINTAINING AND REMOVING THE TEMPORARY FENCE SHALL BE INCLUDED UNDER THIS ITEM.

THE FOLLOWING ESTIMATED QUANTITY IS CARRIED TO THE GENERAL SUMMARY:

ITEM 607 - FENCE MISC.:TEMPORARY FENCE.. 7000 L.F.

ITEM 623 - CONSTRUCTION LAYOUT STAKES, AS PER PLAN

THE CONTRACTOR SHALL LAYOUT AND STAKE EACH NOISE BARRIER SITE IN THE FIELD AND VERIFY DIMENSIONS OF THE POST AND THE PANELS PRIOR TO ORDERING FABRICATION. COST FOR THIS WORK TO BE INCLUDED IN THE LUMP SUM PRICE BID FOR ITEM 623 - CONSTRUCTION LAYOUT STAKES, AS PER PLAN.

ITEM SPECIAL - NOISE BARRIER, MISC.: BRIDGE MOUNTED

THIS WORK CONSISTS OF INSTALLING NOISE BARRIERS ON THE BRIDGES AS SHOWN IN THESE PLANS AND NOTES. THE NOISE BARRIERS SHALL BE THE CARSONITE SOUND BARRIER SYSTEM AS MANUFACTURED BY CARSONITE INTERNATIONAL, 10 BOB GIFFORD BLVD., P.O. BOX 98, EARLY BRANCH, SOUTH CAROLINA 29916, TELEPHONE NUMBER (800) 648-7916. THE COLOR SHALL BE FEDERAL STANDARD COLOR NUMBER 595-20219 (COCOA).

THE NOISE BARRIERS ARE TO BE INSTALLED ON THE SOUTH PARAPET OF CUY-90-0045R, IR-90 OVER BRADLEY RD. AND ON THE NORTH PARAPET OF CUY-90-0249L, IR-90 OVER DOVER CENTER RD. FOR FURTHER DETAILS SEE THE NOISE BARRIER DETAILS SHEETS 1/9 THRU 9/9 AND DECK AND PARAPET DETAILS, SHEET 441 AND 491, AND WINGWALL DETAILS, SHEET 433 AND 483. THE CONTRACTOR IS TO COORDINATE THIS WORK WITH THE ROADWAY NOISE BARRIER INSTALLATION.

THE NOISE BARRIER POSTS ARE TO BE INSTALLED VERTICALLY. THE POST ANCHORS ARE TO BE CAST INTEGRALY WITH THE PARAPETS.

THIS ITEM SHALL BE PAID FOR AT THE CONTRACT UNIT PRICE BID FOR ITEM SPECIAL - NOISE BARRIER, MISC.: BRIDGE MOUNTED. THIS PRICE AND PAYMENT SHALL BE FULL COMPENSATION FOR ALL LABOR, EQUIPMENT, MATERIALS AND INCIDENTALS NECESSARY TO COMPLETE THE WORK IN CONFORMITY WITH THESE PLANS AND NOTES AND TO THE SATISFACTION OF THE ENGINEER.

NOISE BARRIER NOTES

CUY-90-0.00

22 MAR 2000
P:\PR22308\CADD\NWNOTES.dgn

CALCULATED DWL
CHECKED ENF

NOISE BARRIER NOTES

ITEM SPECIAL - NOISE BARRIER

THIS NOTE APPLIES TO ALL NOISE BARRIERS EXCEPT BRIDGE MOUNTED.

THE FOLLOWING NOTES SUPPLEMENT AND/OR SUPERCEDE THE REQUIREMENTS OF THE "STANDARD" NOISE BARRIER DETAIL SHEETS NUMBERED SHEET 1/9 THRU 9/9. SIMILARLY, ANY PLAN NOTES OR PLAN DETAILS SHOWN IN THESE PLANS SHALL TAKE PRECEDENCE OVER SAID "STANDARD" DETAIL SHEETS NUMBERED 1/9 THRU 9/9.

WALL MATERIAL, POST MATERIAL AND COLOR: ALL BARRIERS SHALL BE PRECAST CONCRETE PANELS WITH AN ASHLAR CUT STONE FACADE AT LEAST ONE INCH DEEP FACING THE RESIDENTS' SIDE. THE FINISH PATTERN ON THE FREEWAY SIDE SHALL ALSO BE AN ASHLAR CUT STONE FINISH WITH A RELIEF NOT LESS THAN ONE-HALF THE DEPTH OF THAT FACING THE RESIDENTIAL SIDE OR IT SHALL BE A RANDOM BLOCK PATTERN IMPRESSED DESIGN WITH A RELIEF OF AT LEAST ½". THE RELIEF SHALL BE MEASURED FROM THE DEPTH AT THE CENTER OF THE JOINT TO THE OUTSIDE EDGE OF THE IMPRESSED JOINT. THE WIDTH TO DEPTH RATIO OF THE IMPRESSED JOINT SHALL BE 2:1 (E.G. IF THE DEPTH IS ½", THE WIDTH SHALL NOT EXCEED A NOMINAL 1" PLUS ⅛"). ALL PANELS WHICH FAIL TO MEET THE REQUIRED RELIEF SHALL BE REJECTED.

ANY LEACHING OR EFFLOURESCENCE, WHICH OCCURS PRIOR TO THE FINALIZATION OF THE ENTIRE PROJECT, SHALL BE REMOVED AND THE AREA RESEALED AT THE CONTRACTORS EXPENSE. THIS SHALL ALSO APPLY IN AREAS WHERE A PARTIAL ACCEPTANCE OF THE COMPLETED WALLS MAY HAVE BEEN RECEIVED.

PANEL TOLERANCES: THE MAXIMUM HORIZONTAL VARIATION FROM A STRAIGHT CHORD MEASURED ALONG THE KEYWAY SHALL BE +/- ¼". VARIATIONS IN EXCESS OF ¼" SHALL BE CAUSE FOR REJECTION OF THE PANEL.

THE CONTRACTOR'S BID SHALL BE BASED UPON ANY OF THE CONCRETE NOISE WALLS FOUND IN THE "NOISE BARRIER DETAILS" ON SHEET 3B/9 OF THE PLANS. THE CONTRACTOR MUST MAINTAIN UNIFORMITY OF WALL TYPE, TEXTURE, AND COLOR. THE COLOR OF THE NOISE WALL PANELS, POSTS, AND CAPS SHALL BE FEDERAL COLOR STD NO. 595-20219 (COCOA). THE POSTS SHALL BE CONCRETE AND COMPLY WITH ALL THE REQUIREMENTS FOUND IN THE "NOISE BARRIER DETAILS" OF THESE PLANS.

THE CONTRACTOR SHALL BE RESPONSIBLE FOR DEVELOPING DETAILED PLANS INCORPORATING THE NOISE BARRIER MATERIALS HE PROPOSES TO USE.

A TRENCH OR FAN NOISE BARRIER WILL NOT BE ACCEPTABLE FOR THIS PROJECT AT ANY OF THE LOCATIONS.

TYPICAL SECTIONS ARE SHOWN FOR NOISE BARRIERS MOUNTED WITHIN THE RECESSES OF THE CONCRETE POSTS.

PLAN QUANTITIES AND DETAILS HAVE BEEN DEVELOPED FOR 24 FOOT PANEL LENGTHS. OTHER PANEL LENGTHS ARE ACCEPTABLE ONLY WHEN REQUIRED TO AVOID UNDERGROUND FEATURES, TO MEET THE OVERALL WALL LENGTHS BETWEEN BENDS OR WHEN SPECIFIED IN THE PLANS. PANEL SPACING ON A LONGITUDINAL 2:1 SLOPE SHALL BE A MAXIMUM 12 FEET. WHEN 12" X 20" POSTS ARE REQUIRED THE FOUNDATION DIAMETER SHALL BE INCREASED TO 36" DIAMETER AND THE FOUNDATION DEPTH MAY BE DECREASED BY 1 FOOT. THE FOUNDATION DEPTHS SHOWN IN THE PLANS DO NOT INDICATE THIS REDUCTION.

CONCRETE PEDESTALS SHALL BE USED FOR ALL POST AND PANEL TYPE WALLS TO SUPPORT THE BOTTOM WALL PANELS. A NEOPRENE PAD IS REQUIRED AT EACH BOTTOM PANEL BEARING LOCATION. ADDITIONAL THICKNESS OF NEOPRENE BEARING PADS MAY BE USED TO MAINTAIN A LEVEL WALL. THE MANUFACTURER OR DESIGNER MUST SUPPLY THE CALCULATIONS TO SHOW THAT THE PEDESTAL WIDTH IS SUFFICIENT SUCH THAT THE NOISE WALL PANEL WILL NOT FAIL. THE FOUNDATIONS SHALL NOT BE CONSTRUCTED UNTIL THIS HAS BEEN PROVIDED. IF ADDITIONAL BEARING AREA IS NEEDED, THEN THE TOP OF THE FOUNDATION SHALL BE WIDENED TO PROVIDE THE NEEDED BEARING AREA.

HORIZONTAL LINES BETWEEN PANELS SHALL MATCH, EXCEPT AT 90 DEGREE ANGLE BREAKS. MISMATCH OF LINES IS ACCEPTABLE IN THE TOP PANEL WHERE THERE IS AN ELEVATION CHANGE. MISMATCH OF LINES IS ACCEPTABLE AT LONGITUDINAL DISTANCES OF 500 FEET IN ORDER TO MINIMIZE EXCESS WALL AREA.

FOR SHARP ANGLES CREATED AT INFLECTION POINTS ALONG A SINGLE NOISE BARRIER WHERE ADJACENT PANELS CANNOT BOTH FIT BETWEEN THE RECESSES OF THE STANDARD POST, THE CONTRACTOR SHALL PROVIDE A MODIFIED POST AS DETAILED ON SHEET 543. NOISE BARRIER INFLECTION POINTS ARE IDENTIFIED BY STATION AND OFFSET ON THE PLAN & PROFILE SHEETS.

IT IS CRITICAL THAT THE INTERFACE BEARING OF THE PANELS WITH EACH OTHER IS ON THE TOP OF THE KEYWAY AND NOT ON THE EDGES OF THE PANEL. BEARING ALONG THE EDGES MAY RESULT IN A SPALLED PANEL FACE. TO ENSURE THE PANEL TO PANEL BEARING IS ON THE TONGUE AND GROOVE AND NOT ON THE EDGE, A 1/16" VERTICAL GAP SHALL EXIST BETWEEN PANEL EDGES. A 1/16" (MIN.) NEOPRENE PAD PLACED ON TOP OF THE TONGUE MAY BE USED TO ACCOMPLISH THIS. WHEN A PANEL IS PLACED AND LACKS THE 1/16" VERTICAL GAP, IT SHALL IMMEDIATELY BE LIFTED AND A NEOPRENE PAD INSTALLED.

WHEN INSTALLING THE CONCRETE PANELS, EXTREME CARE SHALL BE TAKEN NOT TO CAUSE SPALLING OF THE PANELS (E.G. AT THE CORNERS OR ALONG THE FACES) DUE TO MISHANDLING OR OVERLOADING ONE AREA OF THE PANEL. IF, DURING THE INSTALLATION OF THE WALLS, ANY PLACED PANELS HAVE SPALLED AREAS, THE PANEL SHALL BE REMOVED AND DISPOSED OF, AND A NEW PANEL INSTALLED AT NO ADDITIONAL COST TO THE STATE.

LIFTING DEVICES THAT CHIP OR SPALL THE CONCRETE FACES WILL NOT BE ALLOWED. POSTS, CAPS, AND PANELS WITH VISIBLE SPALLS SHALL BE REJECTED.

QUANTITIES FOR THE NOISE BARRIERS ARE SHOWN ON THE SUB-SUMMARY SHEETS CORRESPONDING TO EACH PLAN AND PROFILE SHEET.

ANY ADDITIONAL SQUARE FOOTAGE SHALL BE AT THE CONTRACTOR'S EXPENSE EXCEPT WHEN THE EXISTING GROUND LINE ALONG THE WALL, AS FIELD MEASURED, IS LOWER THAN WHAT IS SHOWN IN THE PLANS BY AN AMOUNT REQUIRING ADDITIONAL HEIGHT TO ATTAIN A TOP OF WALL ELEVATION REQUIRED BY THE PLANS AS SHOWN ON THE NOISE BARRIER PROFILE SHEETS.

THE CALCULATED NOISE WALL AREA SHOWN IN THE PLANS IS BASED UPON TWELVE (12) INCH INCREMENTAL PANEL HEIGHTS. IF THE PANELS SUPPLIED HAVE GREATER MINIMUM INCREMENTS AND THEREFORE EXTEND ABOVE THE TOP OF WALL ELEVATION OR BELOW THE BOTTOM OF WALL ELEVATION, ASSHOWN IN THE PLANS, THE ADDITIONAL WALL AREA WILL NOT BE INCLUDED IN THE MEASURED AREA FOR PAYMENT.

IN ORDER TO ASSURE POSITIVE DRAINAGE UNDER THE NOISE BARRIER, A NOMINAL SIX (6) INCH LAYER OF #8, #9 OR #57 STONE SHALL BE PLACED CONTINUOUSLY UNDER THE NOISE WALL PANELS. THE WIDTH OF THE LAYER SHALL BE AT LEAST ONE (1) FOOT. AT THE LOW END OF EACH PANEL A TRANSVERSE AGGREGATE DRAIN OR 4" PIPE IN ACCORDANCE WITH ITEM 605 SHALL BE INSTALLED TO OUTLET TO THE EXISTING SLOPE, DITCH OR DRAINAGE STRUCTURE. REFER TO SECTION C-C ON SHEET 546 FOR THIS DETAIL.

ALL PANELS, POSTS AND CAPS SHALL BE COATED WITH A SEALER/STAIN AND DESCRIBED ELSEWHERE IN THE NOTES.

SEE SHEET 2/9 OF THE STANDARD NOISE BARRIER DETAIL SHEETS FOR METHOD OF MEASUREMENT AND BASIS OF PAYMENT.

i:\PROJECTS\Pidll738\dgn\finalplans\NWNOTES.dgn 21-JUL-2000 2:32PM jgrmovse

ITEM SPECIAL - NOISE BARRIER MISC.: NOISE WALL POST AND FOUNDATION

IF, AFTER THE SHOP DRAWINGS HAVE BEEN APPROVED, AND THE AVOIDANCE OF UTILITIES REQUIRES THAT A CLOSER POST SPACING BE USED, PAYMENT WILL BE MADE FOR THE ADDITIONAL POSTS AND FOUNDATIONS REQUIRED, ON A PER EACH BASIS. IF PANEL WIDTHS, WITHIN THESE CLOSURE POST SPACINGS ARE NOT A STANDARD WIDTH, AND A PANEL IS TO BE MADE BY CUTTING A STANDARD PANEL TO SIZE, PAYMENT FOR THIS ADDITIONAL WORK SHALL INCLUDE THE COST FOR THE ADDITIONAL POST, CUTTING THE PANELS TO SIZE, AND FOUNDATION. THE FOLLOWING ESTIMATED QUANTITY IS INCLUDED IN THE GENERAL SUMMARY TO PERFORM THIS WORK:

ITEM SPECIAL - NOISE BARRIER MISC.:
NOISE WALL POST AND FOUNDATION.. 4 EACH

NOISE BARRIER FOUNDATION IN BEDROCK

IN AREAS WHERE BEDROCK IS UNEXPECTEDLY ENCOUNTERED, THE CONTRACTOR MAY CHOOSE TO SHORTEN THE DRILLED SHAFT AND EMBED THE SHAFT THE REQUIRED MINIMUM SIX (6) FEET INTO THE BEDROCK. HE MAY FIELD CUT THE REINFORCING CAGE TO FIT THE SHORTENED DRILLED SHAFT THIS SHALL BE DONE AT NO EXTRA COST TO THE STATE.

NOISE BARRIER FOUNDATIONS IN WEAK SOIL

IN AREAS WHERE POOR SOIL CONDITIONS EXIST THAT WERE NOT SHOWN AS SUCH IN THE BORINGS, AN EXTRA THREE (3) FEET OF FOUNDATION DEPTH SHALL BE ADDED.

A POOR SOIL CONDITION SHALL BE CONSIDERED TO EXIST WHEN OVER ONE-THIRD (1/3) OF THE EXCAVATED DEPTH SHOWS AN UNEXPECTED WEAK SOIL TYPE. THIS SHALL BE DETERMINED BY THE PROJECT ENGINEER.

THE REINFORCEMENT FOR THE THREE (3) FEET OF EXTENDED FOUNDATION SHALL BE DEVELOPED BY USING A MINIMUM TWENTY-FOUR (24) INCH LAP SPLICE WITHIN THE CAGE TO ATTACH THE EIGHT (8) EXTRA BARS. NO EXTRA SPIRAL TIES WILL BE NECESSARY. PAYMENT FOR THE EXTRA REINFORCING STEEL, CONCRETE, AND ALL LABOR NECESSARY TO PERFORM THIS WORK SHALL BE INCLUDED IN THE UNIT PRICE BID FOR EACH ITEM SPECIAL - NOISE BARRIER MISC.: FOUNDATION EXTENSION. THE FOLLOWING ESTIMATED QUANTITY HAS BEEN CARRIED TO THE GENERAL SUMMARY TO BE USED AS DIRECTED BY THE ENGINEER.

ITEM SPECIAL - NOISE BARRIER MISC.:
FOUNDATION EXTENSION... 10 EACH

SOIL INFORMATION

SOIL BORINGS WERE TAKEN AT THE PROPOSED NOISE WALL LOCATIONS. THE INFORMATION CAN BE FOUND IN THE SOIL BORING LOGS AND LOCATION SHEETS INCLUDED IN THESE PLANS.

DRILLED SHAFT FOUNDATIONS

THE CONTRACTOR'S ATTENTION IS DIRECTED TO SECTION 524 OF THE 1997 CONSTRUCTION AND MATERIALS SPECIFICATIONS. THE CONTRACTOR SHALL STRICTLY ADHERE TO THE REQUIREMENTS OF 524.09 FOR THE REINFORCING STEEL FOR DRILLED SHAFTS.

CALCULATED DWL
CHECKED ENF

NOISE BARRIER NOTES

CUY-90-0.00

20 MAR 2000
p:\pr22308\cadd\nwnotes.dgn

CALCULATED DWL
CHECKED ENF

NOISE BARRIER CONCRETE SEALER/STAIN

DESCRIPTION

A SEALER/STAIN SHALL BE APPLIED TO ALL CONCRETE SURFACE AREAS OF THE NOISE BARRIER PANELS, POSTS, AND CAPS. THIS SHALL BE APPLIED PRIOR TO DELIVERY TO THE SITE.

THE COLOR OF THE APPLIED SEALER/STAIN SHALL MEET FEDERAL COLOR STANDARD IDENTIFICATION NUMBER SHOWN IN THE NOISE WALL PLANS.

MATERIALS

THE SEALER/STAIN SHALL BE A ONE COAT APPLICATION MEETING THE FOLLOWING PERFORMANCE REQUIREMENTS:

1. FREEZE-THAW TEST. THE APPLIED FINISH COATING SHALL BE SUBJECTED TO FREEZE-THAW CYCLE TESTS AS FOLLOWS:

   A. THREE CONCRETE SPECIMENS, NOT LESS THAN 4" X 6" BY 6", MINIMUM 5000 PSI @ 28 DAYS, SHALL BE CAST AND CURED. FOURTEEN DAYS MOIST CURING WITH A DRYING PERIOD AT ROOM TEMPERATURE, 60° TO 80° F, FOR 24 HOURS WILL BE REQUIRED BEFORE THE SPECIMENS ARE COATED WITH THE APPLIED FINISH. CAUTION SHALL BE TAKEN THAT THERE BE NO EXCESSIVE OIL ON SPECIMEN FORMS. THE FINISH COATING SHALL BE APPLIED TO THE SIDES OF SPECIMENS AT A SPREADING RATE OF 50 +/- 10 SQUARE FEET PER GALLON (1.2 +/- 0.2 SQ. METERS PER M/L). BRUSH APPLICATION WILL BE PERMITTED. CEMENTITIOUS COATING SHALL BE CURED AT ROOM TEMPERATURE AND 50 PERCENT RELATIVE HUMIDITY FOR 24 HOURS, AT ROOM TEMPERATURE AND 90 PERCENT RELATIVE HUMIDITY FOR 48 HOURS, AT ROOM TEMPERATURE AND 50 PERCENT RELATIVE HUMIDITY FOR FOUR DAYS FOR A TOTAL CURING TIME OF SEVEN DAYS. OTHER COATINGS SHALL BE CURED AT ROOM TEMPERATURE FOR 48 HOURS AFTER COMPLETION OF CURING.

   B. THE SPECIMENS SHALL BE IMMERSED IN WATER AT ROOM TEMPERATURE FOR THREE HOURS, THEN REMOVED.

   C. THE SPECIMENS SHALL BE PLACED IN COLD STORAGE AT -15° F (-26°C) FOR ONE HOUR, THEN REMOVED.

   D. THE SPECIMENS SHALL BE THAWED AT ROOM TEMPERATURE FOR ONE HOUR.

   E. STEPS C AND D ABOVE SHALL BE REPEATED FOR A TOTAL OF 300 CYCLES. AT THE END OF 300 CYCLES THE SPECIMENS SHALL SHOW NO VISIBLE DEFECTS.

2. ACCELERATED WEATHERING. THE APPLIED COATING SHALL BE SUBJECTED TO A 5,000 HOUR EXPOSURE TEST IN A TWIN-CARBON-ARC-WEATHEROMETER, ASTM G 23, TYPE D, AT AN OPERATING TEMPERATURE OF 145°F. THE TEST SHALL BE MADE AT 20-MINUTE CYCLES CONSISTING OF 17 MINUTES OF LIGHT AND 3 MINUTES OF WATER SPRAY PLUS LIGHT. AT THE END OF THE EXPOSURE TEST, THE EXPOSED SAMPLES SHALL SHOW NO CHIPPING, FLAKING, OR PEELING. THE PANELS FOR THIS TEST SHALL BE PREPARED BY APPLYING THE COATING AT A SPREADING RATE OF 50+/- 10 SQ. FEET PER GALLON TO BOTH SIDES AND EDGES OF PANELS CUT FROM ASBESTOS CEMENT SHINGLES IN ACCORDANCE WITH FEDERAL SPECIFICATIONS SS-S-346, TYPE I.

   CURING TIME SHALL BE IN ACCORDANCE WITH (1).

3. FUNGUS GROWTH RESISTANCE. THE APPLIED FINISH COATING SHALL PASS THE FUNGUS RESISTANCE TEST IN ACCORDANCE WITH FEDERAL SPECIFICATION TT-P-29G. FUNGUS GROWTH SHALL NOT BE INDICATED AFTER A MINIMUM INCUBATION PERIOD OF 21 DAYS.

4. IMPACT RESISTANCE. THE COATING SHALL BE APPLIED TO A CONCRETE PANEL PREPARED ACCORDING TO FEDERAL TEST METHOD STANDARD 141S, METHOD 2051, AT A SPREADING RATE OF 50 +/- 10 SQUARE FEET PER GALLON (1.2 +/- 0.2 SQUARE METERS PER LITER), AND ALLOWED TO CURE FOR 21 DAYS AT ROOM TEMPERATURE. THE TEST SHALL THEN BE RUN USING THE GARDNER MANDREL IMPACT TESTER IN ACCORDANCE WITH ASTM D 2794 USING A ½ OF AN INCH INDENTER WITH AN IMPACT LOAD OF 6 INCH-POUNDS. THE COATING SHALL SHOW NO CHIPPING UNDER THIS IMPACT LOAD.

5. SALT-SPRAY RESISTANCE TEST. A CONCRETE SPECIMEN SHALL BE COATED AT THE RATE OF 50 +/- 10 SQUARE FEET PER GALLON (1.2 +/- 0.2 SQUARE METERS PER LITER) AND CURED FOR 21 DAYS AT ROOM TEMPERATURE. THE COATED SPECIMEN SHALL BE EXPOSED TO A 5% SALT SOLUTION IN ACCORDANCE WITH ASTM B117 FOR 2000 HOURS WHERE THE ATMOSPHERIC TEMPERATURE IS MAINTAINED AT 90° +/- 2°F. AT THE END OF 2000 HOURS OF EXPOSURE, THE COATING SHALL SHOW NO ILL EFFECTS, LOSS OF ADHESION, OR DETERIORATION.

6. FLEXIBILITY TEST. A SHEET METAL SPECIMEN SHALL BE CAST WITH THE APPLIED FINISH COATING AT A RATE OF 50 +/- 10 SQUARE FEET PER GALLON (1.2 +/- 0.2 SQUARE METERS PER LITER) AND ALLOWED TO CURE FOR 48 HOURS AT ROOM TEMPERATURE. THE COATED SPECIMEN SHALL BE BENT 180 DEGREES OVER A ONE (1) INCH ROUND MANDREL.

   AFTER BENDING, THE COATING SHALL SHOW NO BREAKING.

7. NOTHING

8. ABSORPTION - THE ABSORPTION O TREATED CONCRETE UNDER TOTAL IMMERSION SHALL NOT EXCEED 1.0% AFTER 48 HOURS OR 2.0% AFTER 50 DAYS (ASTM C642, NON-AIR ENTRAINED CONCRETE). CONCRETE SHOULD BE PROPORTIONED AND MIXED IN ACCORDANCE WITH ASTM C672.

9. SCALING RESISTANCE -TREATED CONCRETE SHALL PASS ASTM C672, SCALING RESISTANCE TEST WITH A RATING OF "NO SCALING" AFTER 50 CYCLES (NON-AIR ENTRAINED CONCRETE) AS COMPARED TO "SEVERE SCALING" ON UNTREATED CONCRETE.

10. NCHRP 244, SERIES II - CUBE TEST
    - 3.1 WEIGHT GAIN - NOT TO EXCEED 25% OF UNTREATED CUBE
    - 3.2 ABSORBED CHLORIDE - NOT TO EXCEED 25% OF UNTREATED CUBE

11. NCHRP 24, SERIES IV - SOUTHERN EXPOSURE
    - 4.1 ABSORBED CHLORIDE - NOT TO EXCEED 10% OF UNTREATED CONCRETE

MATERIALS APPROVAL - THE CONTRACTOR SHALL FURNISH THE ENGINEER WITH TEST DATA TO VERIFY THE PRODUCT TO BE APPLIED MEETING THE MATERIAL REQUIREMENTS LISTED ABOVE.

PRE-APPROVED PRODUCTS

TEX-COTE XL-70 BRIDGE COAT W/SILANE
FT. LAUDERDALE, FLORIDA 33312

APPLICATION DRY FILM THICKNESS 15 MILS (380 UM)
SMOOTH SURFACE - RATE OF 50 SQ.FT/GAL
TEXTURED SURFACE (ASHLAR STONE) - RATE OF 40 SQ.FT/GAL
TEXTURED SURFACE (3/4 FLUTED) - 25 SQ.FT/GAL

CONTRACTOR TESTING EQUIPMENT - THE CONTRACTOR SHALL HAVE ON SITE AND IN GOOD WORKING ORDER THE FOLLOWING TESTING EQUIPMENT:

1. ONE SLING PSYCHROMETER INCLUDING PSYCHOMETRIC TABLES - USED TO RELATIVE HUMIDITY AND DEW POINT TEMPERATURE.

2. TWO STEEL SURFACE THERMOMETERS ACCURATE WITHIN 1°C (2°F) OR ONE PORTABLE INFRARED THERMOMETER AVAILABLE FROM:
   MODEL: RAYNGER ST SERIES (-18°C TO 400°C)
   MANUFACTURER: RAYTEK, INC.
   SANTA CRUZ, CA.
   (800) 227-8074
   OR APPROVED EQUAL TO THE PORTABLE INFRARED THERMOMETER

NOISE BARRIER NOTES

CUY-90-0.00

20 MAR 2000
P:\pr22308\cadd\nwnotes.dgn

3. SSPC VISUAL STANDARD FOR ABRASIVE BLAST CLEANED STEEL SSPC-VIS 1-89

4. ONE RECORDED THERMOMETER CAPABLE OF RECORDING THE DATE, TIME, AND TEMPERATURE OVER A PERIOD OF AT LEAST 12 HOURS.

SURFACE PREPARATION: ALL CONCRETE SURFACES SHALL BE THOROUGHLY CLEANED TO REMOVE DUST, DIRT, OIL, WAX, CURING COMPONENTS, EFFLORESCENCE, LAITANCE, COATINGS AND OTHER FOREIGN NATURALS. THE USE OF CHEMICALS AND OTHER CLEANING COMPONENTS TO FACILITATE THE REMOVAL OF THESE FOREIGN MATERIALS SHALL BE APPROVED BY THE SEALER MANUFACTURER OR ITS REPRESENTATIVE BEFORE USE. THE SEALER/STAIN SHALL BE APPLIED WITHIN 48 HOURS FOLLOWING SURFACE PREPARATION.

CLEANING EQUIPMENT SHALL BE FITTED WITH SUITABLE TRAPS, FILTERS, DRIP PANS AND OTHER DEVICES TO PREVENT OIL AND OTHER FOREIGN MATERIAL FROM BEING DEPOSITED ON THE SURFACE.

REQUIRED CLEANING METHODS FOR THE FOLLOWING CATEGORIES ARE:

NEW EXPOSED CONCRETE SUFACES WHICH ARE WATER CURED.

A WATER BLAST AT 48 MPA(7,000 P.S.I.) MINIMUM

NEW EXPOSED CONCRETE SURFACES WHERE CURING COMPOUNDS HAVE BEEN USED.

A WATER BLAST AT 48 MPS (7,000 P.S.I.) MINIMUM
OR
A SANDBLAST FOLLOWED BY AIR BROOMING OR POWER SWEEPING TO REMOVE DUST AND SAND FROM THE SURFACES AND OPEN PORES.

THE SEALER/STAIN SHALL BE APPLIED ONLY AFTER NEW CONCRETE HAS AIR DRIED FOR AT LEAST FIVE (5) DAYS AFTER COMPLETION OF REQUIRED CURING. CAVITIES WHICH REQUIRE GROUT FILLING SHALL HAVE BEEN FILLED, CURED AND AIR-DRIED FOR FIVE DAYS.

PRECAST CONCRETE THAT HAS RECEIVED AN ACCELERATED CURE MAY HAVE THE SEALER/STAIN APPLIED AFTER THE CONCRETE HAS ATTAINED THE REQUIRED 28 DAY STRENGTH AND AFTER CAVITIES WHICH REQUIRE GROUT FILLING HAVE BEEN FILLED, CURED AND AIR-DRIED FOR FIVE DAYS.

EQUIPMENT. APPLICATION EQUIPMENT SHALL BE THAT WHICH IS RECOMMENDED BY THE SEALER/STAIN/STAIN MANUFACTURER. THE SPRAY EQUIPMENT, TANKS, HOSES, BROOMS, ROLLERS, COATERS, SQUEEGEES, ETC., SHALL BE THOROUGHLY CLEAN, FREE OF FOREIGN MATTER, OIL RESIDUE AND WATER PRIOR TO APPLYING THE CONCRETE SEALER/STAIN.

APPLICATION TEMPERATURES

MINIMUM AMBIENT TEMPERATURE: 40°F (5°C)
MAXIMUM AMBIENT TEMPERATURE 100°F (38°C)

DO NOT APPLY SEALER/STAIN IF THE EXPECTED AMBIENT TEMPERATURE IS EXPECTED TO BE BELOW OR ABOVE THE ABOVE TEMPERATURE RANGE FOR UP TO 12 HOURS AFTER APPLICATION. DO NOT APPLY THE SEALER/STAIN IF RAIN IS ANTICIPATED WITHIN 4 HOURS AFTER APPLICATION.

IF THE MANUFACTURER'S RECOMMENDED TEMPERATURES AND TIMES ARE MORE RESTRICTIVE THAN SPECIFIED ABOVE, THE MANUFACTURER'S RECOMMENDATIONS SHALL BE FOLLOWED.

IF THE APPLICATOR IS UNABLE TO COMPLETE THE ENTIRE APPLICATION CONTINUOUSLY, THE LOCATION WHERE THE APPLICATION WAS STOPPED SHALL BE NOTED OR CLEARLY MARKED.

MIXING: MIXING SHALL BE ACCORDING TO THE MANUFACTURER'S RECOMMENDED WRITTEN PROCEDURES. MATERIAL SHALL BE MIXED TO A UNIFORM CONSISTENCY AND SHALL BE MAINTAINED DURING APPLICATION.

TEST APPLICATION: PRIOR TO FINAL APPLICATION, THE CONTRACTOR SHALL APPLY THE SEALER/STAIN TO A MEASURED TEST COVERAGE AREA OF DIFFERENT NOISE WALL COMPONENTS FOR THE PURPOSE OF DEMONSTRATING THE DESIRED PHYSICAL AND VISUAL EFFECT OF THE SEALER/STAIN.

APPEARANCE: THE SEALER/STAIN SHALL RESULT IN A UNIFORM APPEARANCE.

STORAGE: SEALER/STAIN COMPONENTS SHALL BE STORED IN TIGHTLY SEALED CONTAINERS IN A DRY LOCATION AND AS RECOMMENDED BY THE MANUFACTURER. WRITTEN DOCUMENTATION AS TO THE STORAGE AND REQUIRED TEMPERATURE SHALL BE SUPPLIED THE ENGINEER.

PRECAUTIONS: PRECAUTIONS SHALL BE FOLLOWED AS INDICATED ON THE MANUFACTURER'S MSDS.

BASIS OF PAYMENT: PAYMENT FOR MATERIALS, LABOR AND APPLICATION OF SEALER/STAIN SHALL BE INCIDENTAL TO THE SQUARE FOOT COST OF THE NOISE WALL.

CALCULATED DWL
CHECKED ENF

NOISE BARRIER NOTES

CUY-90-0.00

20 MAR 2000
D:\pr22308\cadd\nwnotes.dgn

GENERAL NOTES
Noise Barrier

I. Description
II. Posts
III. Barrier Materials
IV. Construction Methods
V. Acceptance Criteria
VI. Method of measurement
VII. Basis of Payment

GENERAL REQUIREMENTS - NOISE BARRIER
(See general note titled "Item Special - Noise Barrier" on sheet 455 for specific requirements for this project.

I. Description

This work shall consist of furnishing and installing noise barriers including all material, labor and equipment required in accordance with these provisions and applicable standards and in conformity with the dimensions, lines and grades shown on the plans.

No mixing of barrier material types or colors at any one noise barrier will be allowed, except where a run of noise barrier includes placement on a bridge.

Noise barriers placed on bridges shall not weigh more than 225 lbs. per linear foot.

Barrier material type supplied for reflective noise barrier projects shall be any listed on sheets 3A, 3B of 9 unless otherwise specified. Barrier material type supplied for absorptive noise barrier projects shall be any listed on sheet 3C of 9 unless otherwise specified .

Individual barrier fabrication and erection details, except for posts and foundations, shall be as per approved Manufacturer's drawings listed on sheets 3A, 3B, 3C of 9. Posts and foundations shall be as detailed in these plans. Project plan post and foundation details govern over manufacturer's drawings.

Post spacing shown in the noise barrier material Manufacturer's approved drawings may be used in lieu of the post spacing shown in the plans. Any interference with utilities or other post spacing adjustments required to meet design plan alignment, connections to structures, or other conditions created due to changing of post spacings shall be at the Contractor's expense.

Copies of the Manufacturer's drawings listed on sheets 3A, 3B, 3C of 9 shall be furnished the Engineer before any work is initiated. All project specific details not covered by the plans or the Manufacturer's drawings shall be approved by the Engineer before work is initiated.

The barrier and the associated work shall conform to SS 899 and section 501 of the CMS as appropriate.

II. Posts

A. SAWN TIMBER POSTS (to be used with wooden noise barriers only)

Sawn timber posts shall be select structure grade southern pine, surfaced four sides, with an allowable stress of 1,500 PSI. The material shall be dried to 19% maximum moisture content prior to preservative treatment. Color shall be similar to the barrier material furnished.

B. GLULAM POSTS (to be used with wooden noise barriers only)

Glulam posts (stress symbol 20F, wet use condition) shall be southern pine with an allowable stress of 2,000 PSI for the finished laminated post. AITC Standard 117, latest version, and ANSI/AITC A190.1-92, shall govern the material requirements and laminating procedures. The adhesive used in glulam production shall comply with "wet condition" use as set forth in ANSI/AITC A190.1-92. The appearance grade of the posts shall be Industrial per Section 2 of AITC Standard 110.

Color shall be similar to the barrier material furnished.

C. STEEL POSTS

Steel posts shall be ASTM A-588 and manufactured in accordance with SS 860 of the CMS unless otherwise specified. Exposed portions of the posts shall be painted to match the noise panel's color or receive a flashing matching the noise panel's color unless otherwise specified.

The portion of any posts in contact with soil and an additional 6 inches above and below the soil contact line on the post shall be coated with coal tar epoxy paint. The paint shall conform to Structural Steel Painting Council (SSPC) Paint Specification 16; be black in color; be applied as per the paint manufacturer's recommendations; and have a minimum dry film thickness of 16 mils. All surfaces that receive paint on the steel posts, whether coal tar epoxy or paint to match the noise panel color, shall be blast cleaned to conform to SSPC - SP10, near white metal.

The Contractor, in lieu of applying coal tar epoxy paint to post surfaces in contact with soil, may choose to supply galvanized posts. The post shall be ASTM A572, grade 50, steel, galvanized in accordance with ASTM A123.

Parapet mounted posts shall be ASTM A572, grade 50, steel, galvanized in accordance with ASTM A123.

The use of galvanized posts does not eliminate the Contractor from the requirement to paint or flash any exposed portion of the posts to match the noise panel's color.

D. CONCRETE POSTS, PEDESTALS, SPREAD FOOTINGS, and DRILLED SHAFTS

Reinforcing steel shall be ASTM A615, Grade 60.

Concrete shall be Class C concrete, SS 842, except for drill shaft concrete which shall conform to section G. Concrete for Drilled Shafts.

Post concrete shall be colored to match the noise panel material by the application of concrete sealer/stain, See note sheet 530 of 582.

E. PRESTRESSED CONCRETE POSTS

Item 515 of the CMS shall apply except as modified below.
Prestressed Concrete;
- compressive strength - 5,000 PSI,
- compressive strength at transfer of prestress - 4,000 PSI
- prestressing strand - ASTM A416.
- Ultimate strength F's = 270,000 PSI.
- Initial stress = 0.70 F's.

Prestressing strand shall be ½" diameter with an area of 0.153 sq. in. An initial tensile force of 28900 lbs. shall be applied to each strand. Exposed strand ends shall be painted with approved epoxy. See section C. above for specifications and application rates.

Post concrete shall be colored to match the noise panel material by the application of concrete sealer/stain. See note sheet 530 of 582.

F. REINFORCED MASONRY POSTS

Reinforcing steel shall be as per section II.D. above. Concrete pea gravel for posts shall conform to ASTM C 476. Portland Cement, Type I, II or III, shall be used in the grout mix.

Posts shall be faced either with brick or concrete block. Color and texture shall be similar to barrier material furnished.

For additional masonry notes, see masonry wall plans.

G. CONCRETE FOR DRILLED SHAFTS

Concrete for all drilled shafts shall be Class S Concrete and shall be in accordance with SS 842 except as modified and supplemented herein. The required slump is 7 inches plus or minus ½ inch. The maximum water to cement ratio shall be 0.50 for concrete placed under water. The requirements of adding 10 percent more cement to the concrete mix shall be waived. The top 10 feet of concrete in the drilled shafts are required to be vibrated. Only a minimal vibratory effort is necessary. SPECIAL CARE shall be taken NOT to OVER-VIBRATE the drilled shaft concrete.

NOTE: If the casing is removed using a vibratory hammer, no other vibratory effort is needed. The concrete for the drilled shaft shall be placed as per SS 842 except as modified by the plans. The concrete placement operation shall be continuous from the start to finish. The concrete for the drilled shaft shall be placed promptly after the final inspection of the shaft. If practicable, the concrete shall be placed in a clean, dry excavation. Care shall be taken to ensure that concrete is not being placed in moving water. The concrete can be placed in a dry drilled shaft excavation by the free fall method provided the concrete falls to its final position through air without striking the sides of the hole, the reinforcing steel cage or any other obstruction. The free fall method allows the concrete to be dropped from the top through a centering chute to the concrete's final position.

If the engineer determines that dewatering is not practicable, the contractor may be given permission to place the concrete under water. The drilled shaft excavation shall be filled with water to such a depth that all water motion has ceased. The concrete shall then be placed by means of a concrete pump. The concrete pump pipe shall have a diameter that is not less than 4 inches. The concrete pump equipment shall be so arranged that no vibrations result which might damage fresh concrete. Pipes carrying concrete from the pump to the shaft should be arranged with a minimum number of bends. The pipe used to convey the concrete to the bottom of the drilled shaft excavation shall be anchored to the steel casing to prevent the pipe from undulating during the initial placement of the concrete.

The pumping equipment shall be suitable in kind and adequate in capacity for the work required. The use of aluminum pipe as a conveyance for the concrete will not be permitted. An adequate quantity of grout, mortar, or concrete with coarse aggregate omitted shall be pumped through the equipment ahead of the specification concrete to provide lubrication to the pumping system. The concrete used for lubrication shall not be placed in the shaft. The lubrication process will not be repeated as long as the pumping operations are continuous. The operation of the pump shall be such that a continuous stream of concrete without air pockets is produced. In order to prevent the contamination of the concrete placed initially at the bottom of the shaft, the outlet end of the pumping pipe shall be sealed with a diaphragm or plug that is flushed out when the hydrostatic pressure from the column of concrete exceeds that of the water in the shaft. The initial rate of concrete placement must be carefully controlled so as not to lift or displace the cage of reinforcing steel. The conveying system shall be water tight and the outlet end shall always remain well below the top of the freshly placed concrete. The preferred concrete placement procedure is to maintain the outlet end of the pumping system at approximately 10 feet below the top of the fresh concrete. When the concrete reaches the top of the drilled shaft column, all laitance shall be removed.

Revised 12/99 B&N

22 MAR 2000
pr\PR22308\CADD\nrbd.dgn

III. Barrier Materials

Acceptable Noise panel designs are listed on sheets 3A, 3B, 3C of 9. For reflective barrier see sheet 3A and 3B of 9 and for absortive barrier see sheet 3C of 9. Materials shall either meet the manufacturer's requirements listed on their approved drawings or CMS requirements if not listed on manufacturer's approved drawings.

A. Noise barriers, Fanwall by Reinforcing Earth Co. and Hoover (propriety products) are acceptable unless otherwise stated in these plans, where the wider berm required for installation can be constructed.

B. Noise barriers made of Bongossi Wood (Lophira Alata/ L-Procera) shall require no preservative treatment.

C. Concrete Noise barrier panels, whether precast, prestressed, or cast in place.

IV. Construction Methods

A. Noise barriers shall be installed in accordance with the plans. Joints and connections shall be secured in such a manner as to be structurally sound with no visible openings for sound transmission. Noise panel attachments to posts and installation methods shall be structurally sound, give adequate support to the noise panels, and be secured to the post or adequately blocked between the post's flanges to eliminate movement at the support and eliminate any possible vibration.

Exclusive of the Contractor's choice of noise barrier panel, the top of installed noise barriers shall match the top of wall design elevations, with no variation between posts, unless the design plans require an elevation change.

The plan detailed elevations for the top of the noise barrier shall be maintained. If any additional panel height and square feet of noise panel are required to meet the plan elevations due to the Contractor's choice of post spacings and noise panels, the additional square feet shall not be included for payment.

B. Marred, chipped, scratched, spalled, or any other damage deemed detrimental to the noise barriers by the Engineer shall be repaired or replaced in accordance with the manufacturer's recommendations, as approved by the Engineer, at the Contractor's expense.

C. Preservative treatment of all wood materials used in the noise barrier shall be in accordance with section 712.06 of the CMS and the requirements of one of the following optional materials:

TYPE	RETENTION RATE (pcf)	
	Above Ground	In Ground Contact
CCA-Type C	0.4	0.6
Penta/LPG	0.4	0.6

Penta/LPG shall be penta-chlorophenol in AWPA P9 Section 2 solvent.

Laminated components shall be in conformance with AWPA Standard C28 for Glulam. Sawn lumber shall be in conformance with AWPA Standard C2.

Additional requirements for CCA-Type C are:

1. All lumber materials shall be dried to 19 percent moisture content or less prior to treatment. The treatment shall be in accordance with the AWPA Standards.

2. The same preservative shall be used to treat bolt holes, saw cuts, etc. (if any), and for additional dressing deemed necessary by the Engineer.

3. All wood members, except posts, shall be kiln-dried to a moisture content of 15 percent or less after preservative treatment.

4. After completion of the preservative treatment, all lumber materials shall be protected from increases in moisture content until they are incorporated into the wall.

5. CCA-Type C shall meet AWPA P-5.

Payment for all the above shall be included in the unit price bid for Item Special, Noise Barrier.

D. Trench backfill shall be with Class S concrete modified as per II.G. above. The method of placement shall not allow voids or excessive segregation and shall be performed to the satisfaction of the Engineer.

E. All excess excavation shall be disposed of in a manner satisfactory to the Engineer.

F. After erection of the noise barrier, the disturbed area shall be left in a finished condition at the direction of the Engineer and a growth of grass established, at the Contractor's expense, in accordance with CMS Item 659.

G. Tolerances

1. Posts (measured at top)
   a. Vertical alignment shall be within 0.05 inch/ft. of height.
   b. Posts shall be set within +/- ½ inch of their specified location.

2. Noise barriers
   a. Vertical alignment shall be within 0.05 inch/ft. of height.

H. For noise barriers that are built on top of earth berms, the berms shall be constructed of earthwork fill material in accordance with Item 203 of the CMS.

I. Inlet No. 3E shall be constructed per details and notes shown on sheet 9 of 9 of these Noise Barrier Details.

J. Concrete Epoxy Sealer where Noise Barriers are constructed adjacent to bridge parapet or type D concrete barriers and the Noise Barrier is not constructed to the ground line, the exposed concrete surface shall be coated with a concrete epoxy sealer of a color matching that of the noise barrier. The sealer shall be applied in accordance with the manufacturer's recommendation. A urethane top coat sealer shall also be applied over the concrete areas coated with epoxy sealer. The urethane coating shall be applied in accordance with the manufacturer's recommendation.

V. Acceptance Requirements

In addition to conforming with the structural requirements as shown in the plans, it is also necessary to comply with the following aesthetic requirements.

The Contractor shall deliver to the job site one full size noise panel, one full size post, and one full size post and barrier cap representative of the product the contractor is going to supply. The Engineer will evaluate whether both the noise panel and post meet all plan specified federal color standard, texture, trim, and/or coating requirements. To facilitate this comparison, the contractor shall supply the Engineer with a copy of "Federal Standard 595B Color Used in Government Procurement". If either the noise panel or post do not meet the plan requirements the Contractor shall have another noise panel or post manufactured and delivered to the job site for approval by the Engineer. If the plans do not specify a color, texture, trim, or coating requirement, it will still be necessary to deliver the sample post and panel to the job site. Prior to the production of any additional noise barriers or posts the sample post and panel must be delivered to the job site and approved if required.

The sample post, panel and caps will become the control post, panel, and caps with which all subsequent posts, panels and caps will be compared. This control post and panel shall be delivered to, and if necessary, moved to different locations to facilitate comparisons with the remaining posts, panels and caps.

Any delivered and/or erected posts, panels and caps which do not match the control post and panel or do not conform with the structural requirements as shown in the plans shall be removed and replaced at no additional costs.

VI. Method of Measurement

Noise barrier plan quantities are measured in square feet of acceptable barrier using a height from bottom of wall to top of wall and a length from post to post as detailed in the plans. Where a noise barrier is constructed behind a concrete parapet the bottom of the wall shall be defined as the top of the parapet for measurement purposes.

Final plan quantities of noise barrier in square feet shall not include any addition for noise barrier heights greater than plan requirements. The additional heights of noise barrier required to accommodate the contractor's selected manufactured barrier materials or post spacing either greater or less than plan post spacing shall not be included for payment. Square feet of noise barrier constructed below the ground line shall also not be included for payment.

The completed and accepted inlets, whether new, reconstructed, or adjusted to grade will be measured by the unit for each type of structure and class of work itemized.

VII. Basis of Payment

Noise barriers, completed and in place, as described in method of measurement, will be paid for at the contract unit price per square foot. This payment shall be full compensation for all materials, labor and equipment necessary to construct the noise barrier. All excavation, backfill with suitable material and any adjustment in earthwork quantities required due to the contractor's selected noise panel, sealing concrete with epoxy, urethane and sealer/stain, aggregate drains, compaction, disposal of surplus or unsuitable materials, seeding, fertilizing and mulching of disturbed areas, and any additional items shown on the noise barrier plans and not specifically paid for, shall also be included for payment.

ITEM	DESCRIPTION	UNIT
	REFLECTIVE TYPE	
Special	Noise Barrier (Reflective) 10 ft. ht. and under	Sq.ft.
Special	Noise Barrier (Reflective), over 10 to 14 ft. ht.	Sq.ft.
Special	Noise Barrier (Reflective), over 14 to 20 ft. ht.	Sq.ft.
	ABSORPTIVE TYPE	
Special	Noise Barrier (Absorptive), 10 ft. ht. and under	Sq.ft.
Special	Noise Barrier (Absorptive), over 10 to 14 ft. ht.	Sq.ft.
Special	Noise Barrier (Absorptive), over 14 to 20 ft. ht.	Sq.ft.
Item 604	Inlet, No.3E	Each

ABBREVIATIONS

AITC	American Institute of Timber Construction
ASTM	American Society for Testing and Materials
AWPA	American Wood Preservers' Association
BIA	Brick Institute of America
CCA	Cromated Copper Arsenate
CMS	Construction and Materials Specifications of ODOT
ILI	Indiana Limestone Institute
LPG	Volatile Petroleum Solvent (liquid propane gas)
SSPC	Structural Steel Painting Council
VPS	Voluntary Product Standard

DESIGN AGENCY: OFFICE OF STRUCTURAL ENGINEERING

DATE REVIEWED	STRUCTURE FILE NUMBER
11-21-97	
DRAWN	REVISED
	11/18/98
DESIGNED	CHECKED
REVISED	

NOISE BARRIER DETAILS

CUY-90-0.00

2 / 9

533
582

i:\PROJECTS\Pidll738\dgn\finalplans\nbd.dgn 21-JUL-2000 2:49PM jgrmovse

APPROVED REFLECTIVE BARRIER SUPPLIERS

	SUPPLIERS	DRAWINGS & NOTES	VARIABLES COLOR TEXTURE PATTERN BRICK STYLE	
STEEL				STEEL
FIBERGLASS WOOD PANEL				FIBERGLASS WOOD PANEL
VINYL				VINYL

NOTE: ADDITIONAL REFLECTIVE SUPPLIERS-SEE ATTACHED SHEET 3B

DESIGN AGENCY
OFFICE OF STRUCTURAL ENGINEERING

DESIGNED	DRAWN	REVIEWED	DATE
			11-21-97

CHECKED	REVISED	STRUCTURE FILE NUMBER
11/18/98		

REVISED

NOISE BARRIER DETAILS

CUY-90-0.00

22 MAR 2000
p:\PR22308\CADD\nbd.dgn

APPROVED REFLECTIVE BARRIER SUPPLIERS

	SUPPLIERS	DRAWINGS & NOTES	VARIABLES (COLOR TEXTURE PATTERN BRICK STYLE)	
CONCRETE	Faddis Concrete Products 3515 Kings Hwy. Downingtown, PA 19335 Telephone: (800) 777-7973 Fax: 1-215-873-8431	USODOT-1 Sheets 1-6 Nov. 1993 Note: up to 3283 N per meter on structures Note: Panels per Evercrete Limited D-7700297 - Sheets 1 & 2 Feb. 18,1997		CONCRETE
	The Reinforced Earth Company Midwest Region 760 Pasquinelli Drive Suite 344 Westmount,Ill. 60559 Telephone:(708) 655-0044 Fax:(708) 655-0064	FW-1 & FW-2 of 3 (5/17/83) Fanwall/Durisol Technical Handbook (10/1/89) with ODOT posts		
	Concrete Tech. Inc. 95 Mound Park Drive Springboro,Ohio 45066 Telephone:(513) 224-1867	Sheet #1 & P-3 (10/22/83)		
	Baxter Concrete Products, Inc. 3370 Port Union Road Hamilton, Ohio 45014 Telephone: (513) 860-3593	#92202-Sheets 1-17 (10-5-92)		
	Soundcore 4043 Maple Road, Suite 106 Amherst, NY 14226 Telephone: (716) 833-7651	Soundcore - Standard Hollowcore Precast Noise Barriers Drawing No. DET-1 (2-12-97)		
	Concrete Products, Inc. P.O. Box 2799 Redmond, Washington 98073 Telephone: (206) 881-7910	Precast Noise Abatement Wall System 1 January 13, 1994 Precast Noise Abatement Wall System 2 January 13, 1994 Precast Noise Abatement Wall System 3 January 13, 1994		
	Prestress Engineering Corp. P.O. Box 609 Algonquin, Illinois 60102-0609 Telephone: (708) 658-4545	Precast Noise Abatement Wall January, 1994		
	Sidley Precast Div. P.O. Box 70 Thompson, Ohio 44086 Telephone: (216) 298-3232	Noise Barrier March 04, 1994		
BRICK OR BLOCK MASONRY				BRICK OR BLOCK MASONRY
RECYCLED RUBBER	Carsonite International 10 Bob Gifford P.O. Box 98 Early Branch, South Carolina 29916 Telephone:(803) 943-1172	#9106121-02-2 (3/5/92) Product Binder #30-02180-92 #SBSA1001, SHEETS 1 THRU 8, (10/22/97) #SBSA1002, SHEET 1, (10/22/97)		RECYCLED RUBBER

NOTE: ADDITIONAL REFLECTIVE SUPPLIERS-SEE SHEET 3A

DESIGN AGENCY: OFFICE OF STRUCTURAL ENGINEERING

REVIEWED DATE: 11-21-97 — STRUCTURE FILE NUMBER

DRAWN — REVISED

DESIGNED — CHECKED: 11/18/98

REVISED

NOISE BARRIER DETAILS

CUY-90-0.00

22 MAR 2000
D:\PR22308\CADD\nbd.dgn

APPROVED ABSORBTIVE BARRIER SUPPLIERS

	SUPPLIERS	DRAWINGS & NOTES	VARIABLES COLOR TEXTURE PATTERN BRICK STYLE	
STEEL				STEEL
CONCRETE	Soundcore 4043 Maple Road, Suite 106 Amherst, NY 14226 Telephone: (716) 833-7651	Soundcore - Absorptive Noise Barrier Panel Drawing No. DET-1 (2-14-97)		CONCRETE

DESIGN AGENCY
OFFICE OF STRUCTURAL ENGINEERING

REVIEWED DATE 11-21-97 | STRUCTURE FILE NUMBER

DRAWN | REVISED

DESIGNED | CHECKED 11/18/98

REVISED

NOISE BARRIER DETAILS

CUY-90-0.00

30 / 9

536
582

22 MAR 2000
P:\PR22308\CADD\nbd.dgn

✳ See sheets 375, 383, 414 and 421 for dimension.

t= Additional rebars at post location (4-R501, 4-R601 AND 4-R602 as per deck transverse section sheets placed symmetrically about post location @ 12" max and spaced alternately between curb and parapet rebars. For information about additional rebars in the wingwall at post locations see wingwall detail sheets).

For curb and parapet rebars in concrete slab bridges, see Std. Dwg. SBR-1-99 (shown) and BR1.

For post connection to bikeway bridge, see sheet 6 of 9.

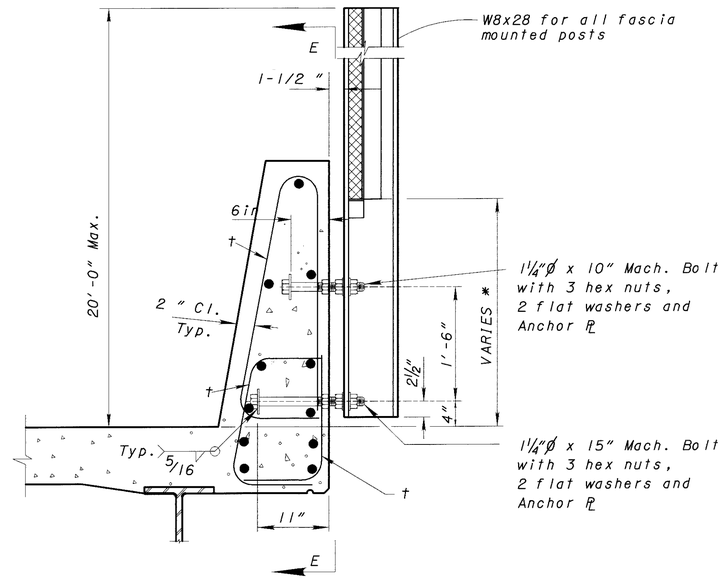

FASCIA MOUNTED POST

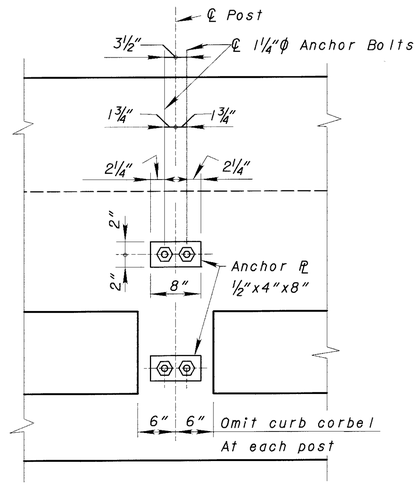

VIEW E-E

POST SPACING: For all bridge mounted posts, including the first post off the bridge, the maximum post spacing shall be 12'-0".

MATERIAL: All machine bolts, nuts, washers and plates shall be galvanized per CMS 711.02 & conform to the physical properties of ASTM A325M except that the minimum elongation shall be 10%. The chemical properties are waived.

Revised 12/99 B&N

DESIGN AGENCY: OFFICE OF STRUCTURAL ENGINEERING

REVIEWED: DATE 11-21-97 — STRUCTURE FILE NUMBER

DRAWN — REVISED 11/18/98

DESIGNED — CHECKED

REVISED

NOISE BARRIER DETAILS

CUY-90-0.00

4 / 9

537 / 582

22 MAR 2000
D:\PR22308\CADD\nbd.dgn

TABLE - DETAILS FOR SPREAD FOOTINGS*

PANEL GROUP	LENGTH L	WIDTH W	A BARS	B BARS
I	7'-6"	3'-6"	4-#5x7'-2" Top 4-#6x7'-2" Bot.	6-#5x3'-2" Top & Bottom
II	9'-0"	5'-6"	6-#5x8'-8" Top 6-#6x8'-8" Bot.	7-#5x5'-2" Top & Bottom
III	10'-6"	7'-6"	7-#5x10'-2" Top 7-#6x10'-2" Bot.	7-#5x7'-2" Top & Bottom
IV	12'-0"	9'-6"	9-#5x11'-8" Top 9-#6x11'-8" Bot.	9-#5x9'-2" Top & Bottom

Note: Soil should be able to handle a minimum allowable bearing pressure = 1.25 tons per sq. ft.

* All post and panel noise barriers shall utilize drilled shaft foundations unless otherwise indicated on the plans or directed by the Engineer.

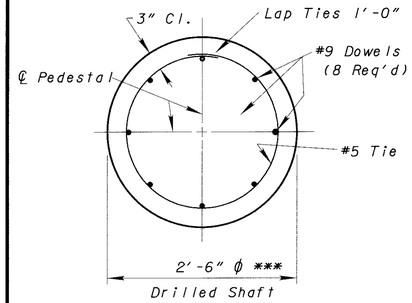

SECTION C-C

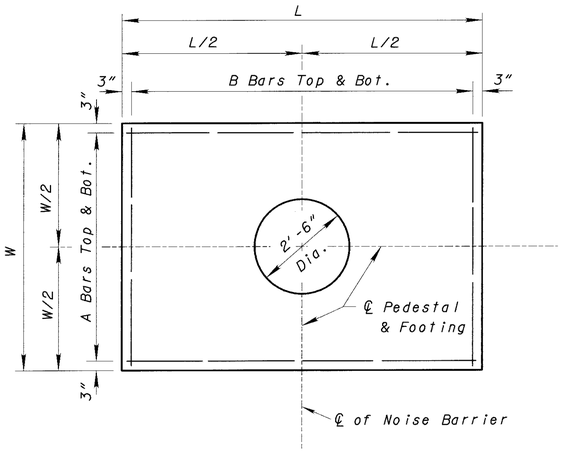

PLAN

*** See general note regarding 3'-0" ϕ drilled shafts for 12"X20" embeded posts.

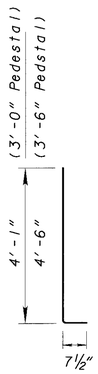

#9 DOWEL

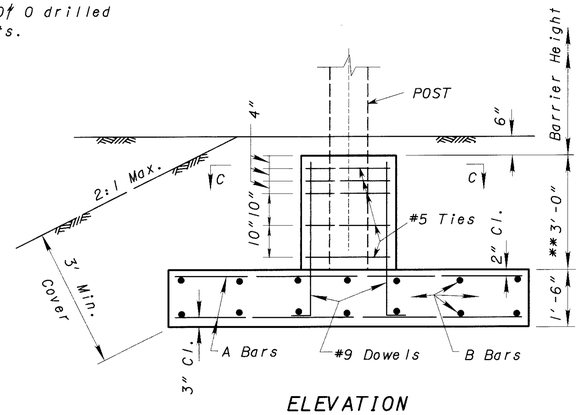

ELEVATION

SPREAD FOOTING FOUNDATION

** 3'-6" Pedestal for all embedded posts except concrete.

TABLE - OPTIONAL POST MOUNTING DETAILS
BOLTED CONNECTION

Steel Post	Base Plate	Dim. A	Dim. B	Min. Weld Size	Anchor Bolts	Proj.	Threaded Length	Base ℄ Hole Dim. H
W 8x13	12"x14"x5/8"	4"	5"	1/4"	4 - 5/8"ϕ x 12"	2"	4"	7/8"
W 8x18	12"x14"x1"	4"	5"	1/4"	4 - 7/8"ϕ x 14"	2½"	4½"	1¼"
W 8x28	14"x14"x1⅜"	5"	5"	5/16"	4- 1¼"ϕ x 17"	3¼"	5¼"	1¾"
W 14x38	14"x20"x1½"	5"	8"	5/16"	4- 1⅜"ϕ x 18"	3½"	5½"	1⅞"

Note: All anchor bolts, nuts, plain washers and lock washers shall be galvanized and conform to the physical properties of ASTM A325 except that the minimum elongation shall be 10%. The chemical properties are waived.

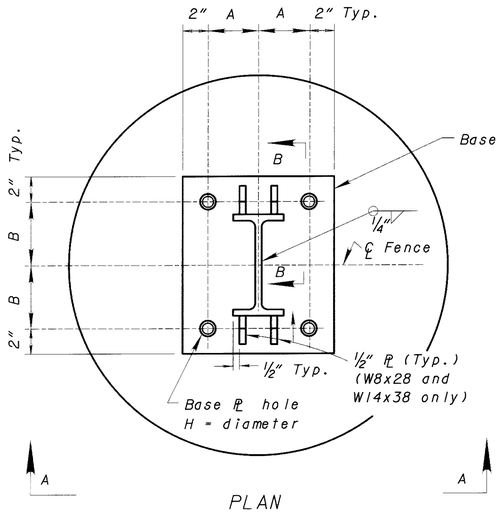

PLAN

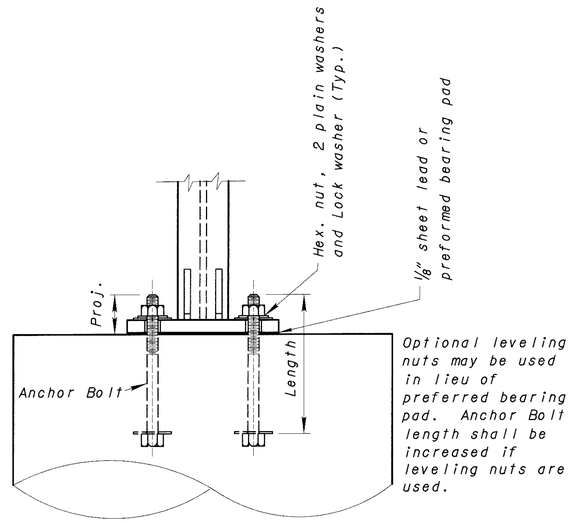

Optional leveling nuts may be used in lieu of preferred bearing pad. Anchor Bolt length shall be increased if leveling nuts are used.

PARTIAL ELEVATION A-A

OPTIONAL POST ATTACHMENT

8-#6 (Full depth post)
or
8-#9 (Partial depth post &
Posts bolted to foundation)

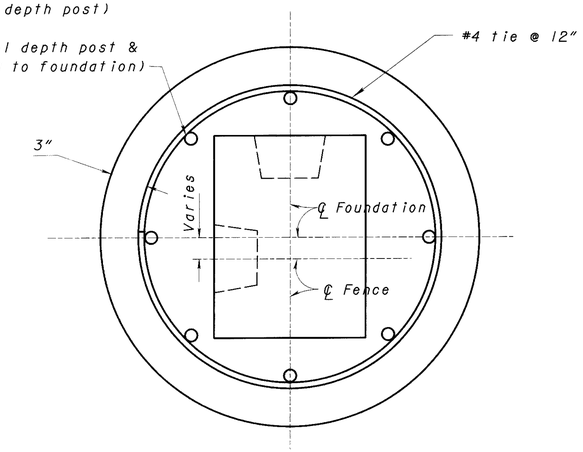

TYPICAL DRILLED SHAFT CROSS-SECTION

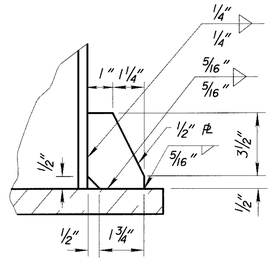

SECTION B-B

DESIGN AGENCY
BUREAU OF BRIDGES
AND
STRUCTURAL DESIGN

REVIEWED	DATE
	- -

STRUCTURE FILE NUMBER

DRAWN	REVISED
	11/18/98

DESIGNED	CHECKED

NOISE BARRIER DETAILS

CUY-90-0.00

5 / 9

538
582

22 MAR 2000
p:\PR22308\CADD\nbd.dgn

POST CONNECTION TO BIKEWAY STRUCTURE DETAIL

POST SPACING ON BRIDGES: For all bridge mounted posts, including the first post off the bridge, the maximum post spacing shall be 12 feet.

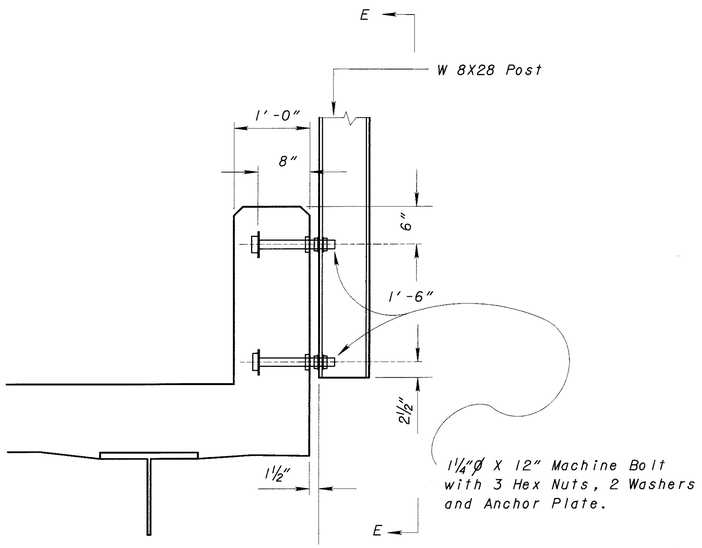

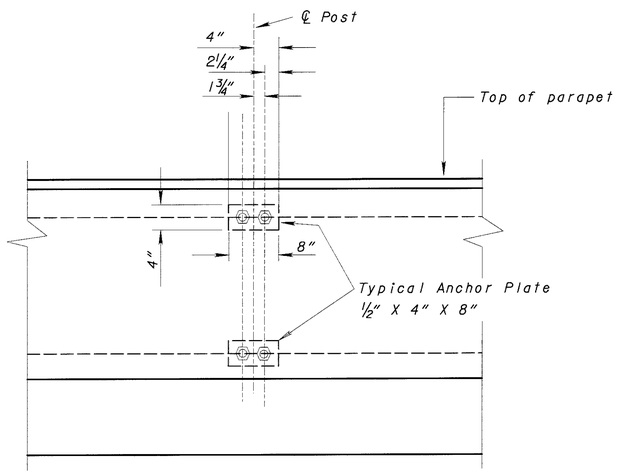

View E-E

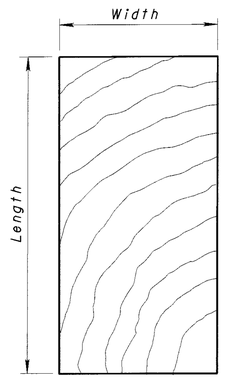

SAWN WOOD

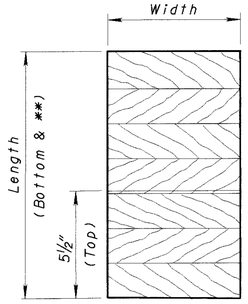

GLULAM

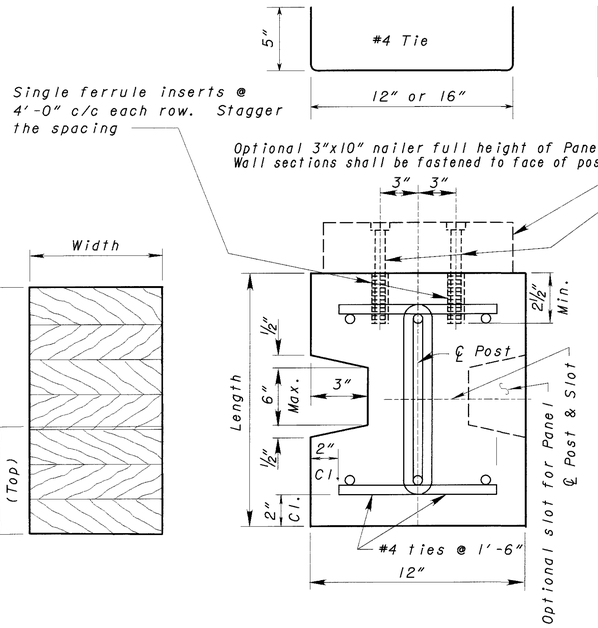

REINFORCED CONCRETE
(Precast)

PRESTRESSED CONCRETE
(4-½"ϕ strands)

L I N E P O S T D E T A I L S

NOTE: For post sizes and concrete post reinforcement, see Noise Barrier Table on Sheet 8 and 9.

Optional 3"x8" nailer full height of Panel. Wall sections shall be fastened to face of post.

½"ϕ x 3½" hex hd bolts w/2" O.D. washer @ 4'-0" c/c each row. Counter-sink heads flush w/nailer. Stagger the spacing.

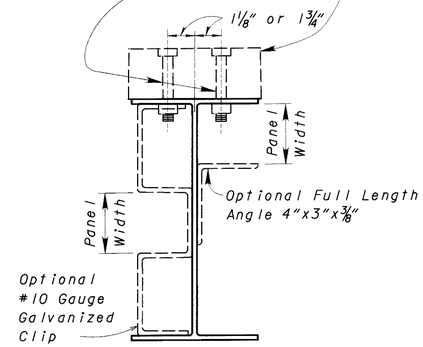

STEEL

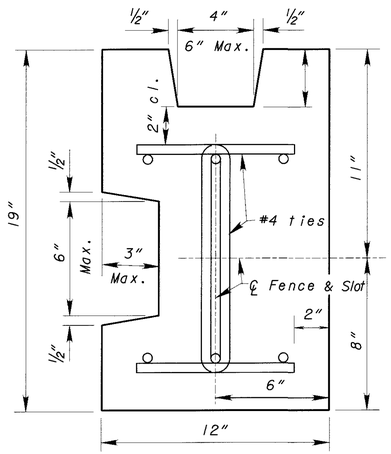

REINFORCED CONCRETE
CORNER POST

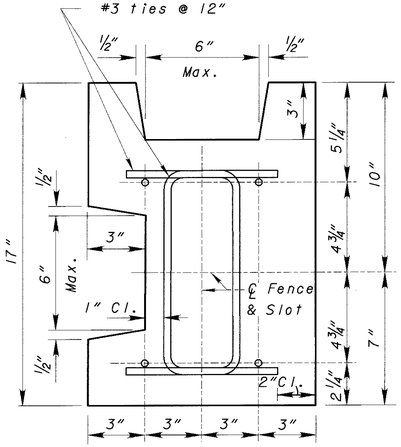

PRESTRESSED CONCRETE
CORNER POST

See sheet 543/582 for post details at major bends.

Revised 12/99 B&N

DESIGN AGENCY
BUREAU OF BRIDGES AND STRUCTURAL DESIGN

REVIEWED	DATE	STRUCTURE FILE NUMBER
	- -	
DRAWN	REVISED	
	11/18/98	
DESIGNED	CHECKED	

NOISE BARRIER DETAILS

CUY-90-0.00

6 / 9

539
582

22 MAR 2000
p:\PR22308\CADD\npd.dgn

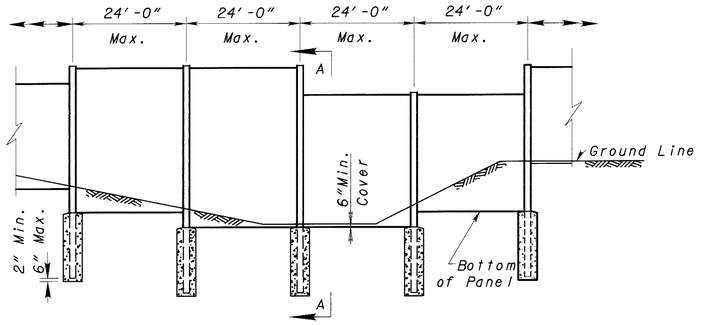

FRONT ELEVATION
(Post and Panel Noise Barrier)

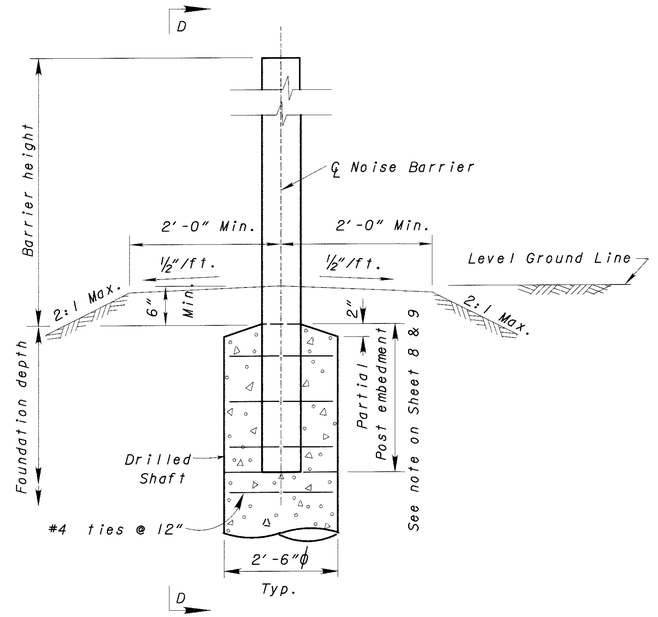

SECTION A-A

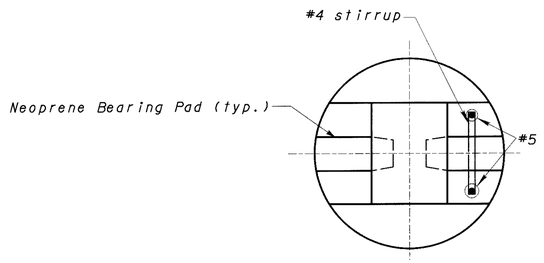

SECTION E-E

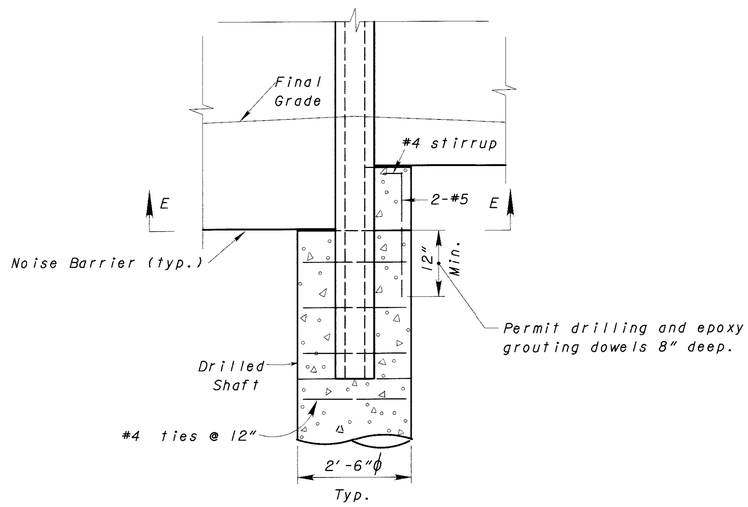

SECTION D-D

Revised 12/99 B&N

22 MAR 2000
P:\PR22308\CADD\nbd.dgn

DESIGN AGENCY
OFFICE OF STRUCTURAL ENGINEERING

REVISED	DESIGNED	DRAWN	REVIEWED	DATE
		REVISED 11/18/98	STRUCTURE FILE NUMBER	11-21-97
	CHECKED			

NOISE BARRIER DETAILS

CUY-90-0.00

7 / 9

540
582

NOISE BARRIER TABLE (POST AND PANEL CONSTRUCTION)

BARRIER HEIGHT (METERS)	POST SPACING (FEET) 8 & Under	Over 8 Thru 12	Over 12 Thru 16	Over 16 Thru 24	PANEL GROUP	POST SIZE
	12 and Less	10 and Less	8 and Less	6 and Less	I	Steel W8x13
						Sawn Timber 8"x10" (Nom.)
						Glulam $5\frac{1}{8}$" x $12\frac{3}{8}$" (**) to $5\frac{1}{8}$"x $5\frac{1}{2}$" (top)
						Reinforced Concrete 12"x16" W/6 #4
						Prestressed Concrete 12"x14" W/4 strands
						Masonry △ $8\frac{3}{4}$"x$12\frac{3}{4}$" W/4-#6
	Greater Than 12 Thru 16	Greater Than 10 Thru 14	Greater Than 8 Thru 12	Greater Than 6 Thru 10	II	Steel W8x18
						Sawn Timber 8"x14"(Nom.)
						Glulam $5\frac{1}{8}$"x $16\frac{1}{2}$"(**) to $5\frac{1}{8}$"x $5\frac{1}{2}$"(top)
						Reinforced Concrete 12"x16" W/6 #6
						Prestressed Concrete 12"x14" W/4 strands
						Masonry △ $8\frac{3}{4}$"x$12\frac{3}{4}$" W/4-#7
	Greater Than 16 Thru 20	Greater Than 14 Thru 20	Greater Than 12 Thru 16	Greater Than 10 Thru 14	III	Steel W8x28
						Sawn Timber 10"x16"(Nom.)
						Glulam $6\frac{3}{4}$" x$19\frac{1}{4}$"(**) to $6\frac{3}{4}$" x $5\frac{1}{2}$" (top)
						Reinforced Concrete 12"x16" W/6 #9
						Prestressed Concrete 12"x14" W/4 strands
						Masonry △ $8\frac{3}{4}$"x$16\frac{3}{4}$" W/4-#9
			Greater Than 16 Thru 20	Greater Than 14 Thru 20	IV	Steel W14x38
						Sawn Timber 12"x20"(Nom.)
						Glulam $10\frac{3}{4}$"x $20\frac{5}{8}$"(**) to $10\frac{3}{4}$"x $5\frac{1}{2}$"(top)
						Reinforced Concrete 12"x20" W/6 #9
						Prestressed Concrete 12"x20" w/4 strands
						Masonry △ $8\frac{3}{4}$"x$16\frac{3}{4}$" W/4 #11

FOUNDATION DEPTH (FEET) — GRANULAR SOIL — TRANSVERSE GROUND SLOPE (1)

SOIL TYPE	N (2) / ϕ (3)	2-4 / 25-32	4-10 / 27-35	10-20 / 30-38	20-30 / 32-40	30-50 / 34-43	50-60 / 36-44
	LEVEL	8.0	8.0	6.5	6.0	5.5	5.0
	5:1	8.0	8.0	7.0	6.5	6.0	5.5
	4:1	8.5	8.5	7.0	7.0	6.0	6.0
	3:1	9.0	8.5	7.5	7.0	6.5	6.5
	2:1	10.0	9.5	8.0	7.5	7.0	6.5
	LEVEL	9.5	9.5	8.0	7.5	7.5	6.5
	5:1	10.5	10.0	8.5	8.0	8.0	7.0
	4:1	11.0	10.5	9.0	8.5	8.0	7.5
	3:1	11.5	11.0	9.5	9.0	8.5	7.5
	2:1	12.5	12.0	10.0	9.5	9.0	8.0
	LEVEL	11.5	11.0	9.5	9.0	8.0	8.0
	5:1	12.5	11.5	10.0	10.0	8.5	8.5
	4:1	13.0	12.0	10.5	10.5	9.0	8.5
	3:1	13.5	13.0	11.0	10.5	9.5	9.0
	2:1	14.5	14.5	12.0	11.5	10.0	9.5
	LEVEL	15.5	14.0	12.0	11.0	10.5	10.5
	5:1	19.0	16.0	13.5	12.5	11.0	11.0
	4:1	20.5	17.5	14.0	13.0	12.0	11.5
	3:1	24.0	19.5	15.0	14.0	12.5	12.0
	2:1	*	30.0	19.0	16.0	14.0	13.0

(1) Transverse grade slope will be as designated in the plans.

(2) N = summation SP Test Values at 12 inches and 18 inches.

(3) Estimated Friction Angle based on N value

NOTES:

The depth of soil to bedrock varies from 2.7 feet to 20 feet throughout the length of this project based upon a review of the soil borings. Two types of foundations are given based upon the likelihood of encountering rock within the length of excavations. The normal maximum depth to bedrock at each site plus 6 feet of embedment into the rock can be used to set the length of the rock foundations at each site. The minimum lengths of soil foundations have been deriven from the adjacent charts.

Noise barrier height is the distance from the top of drilled shaft to the top of the higher barrier wall at that post, rounded to the nearest foot.

All posts and panel noise barriers shall utilize drilled shaft foundations unless otherwise indicated on the plans or directed by the Engineer.

If within the required length of the foundation, bedrock is encountered, the drilled shaft foundation may be terminated after 6 feet of penetration into the bedrock.

Embedment of posts into the drilled shafts shall not be less than 3'-6", except for concrete posts which shall be embedded not less than 3'-0".

POST SPACING ON BRIDGES: For all bridge mounted posts, including the first post off the bridge, the maximum post spacing shall be 12 feet.

* - not an acceptable design - select or install at a lower spacing to meet the height requirements of the wall.

NOISE BARRIER TABLE (POST AND PANEL CONSTRUCTION)

BARRIER HEIGHT (METERS)	POST SPACING (FEET) 8 & Under	Over 8 Thru 12	Over 12 Thru 16	Over 16 Thru 24	PANEL GROUP	POST SIZE
	12 and Less	10 and Less	8 and Less	6 and Less	I	Steel W8x13
						Sawn Timber 8"x10" (Nom.)
						Glulam $5\frac{1}{8}$" x $12\frac{3}{8}$" (**) to $5\frac{1}{8}$"x $5\frac{1}{2}$" (top)
						Reinforced Concrete 12"x16" W/6 #4
						Prestressed Concrete 12"x14" W/4 strands
						Masonry △ $8\frac{3}{4}$"x$12\frac{3}{4}$" W/4-#6
	Greater Than 12 Thru 16	Greater Than 10 Thru 14	Greater Than 8 Thru 12	Greater Than 6 Thru 10	II	Steel W8x18
						Sawn Timber 8"x14"(Nom.)
						Glulam $5\frac{1}{8}$"x $16\frac{1}{2}$"(**) to $5\frac{1}{8}$"x $5\frac{1}{2}$"(top)
						Reinforced Concrete 12"x16" W/6 #6
						Prestressed Concrete 12"x14" W/4 strands
						Masonry △ $8\frac{3}{4}$"x$12\frac{3}{4}$" W/4-#7
	Greater Than 16 Thru 20	Greater Than 14 Thru 20	Greater Than 12 Thru 16	Greater Than 10 Thru 14	III	Steel W8x28
						Sawn Timber 10"x16"(Nom.)
						Glulam $6\frac{3}{4}$" x$19\frac{1}{4}$"(**) to $6\frac{3}{4}$" x $5\frac{1}{2}$" (top)
						Reinforced Concrete 12"x16" W/6 #9
						Prestressed Concrete 12"x14" W/4 strands
						Masonry △ $8\frac{3}{4}$"x$16\frac{3}{4}$" W/4-#9
			Greater Than 16 Thru 20	Greater Than 14 Thru 20	IV	Steel W14x38
						Sawn Timber 12"x20"(Nom.)
						Glulam $10\frac{3}{4}$"x $20\frac{5}{8}$"(**) to $10\frac{3}{4}$"x $5\frac{1}{2}$"(top)
						Reinforced Concrete 12"x20" W/6 #9
						Prestressed Concrete 12"x20" w/4 strands
						Masonry △ $8\frac{3}{4}$"x$16\frac{3}{4}$" W/4 #11

FOUNDATION DEPTH (FEET) — COHESIVE SOIL — TRANSVERSE GROUND SLOPE (1)

SOIL TYPE	N (2)	0-2	2-4	4-8	8-16	16-32
	LEVEL	12.5	12.5	7.0	5.0	4.0
	5:1	13.5	13.5	7.5	5.0	4.0
	4:1	13.5	13.5	7.5	5.0	4.0
	3:1	14.0	14.0	8.0	5.0	4.0
	2:1	14.5	15.0	8.0	5.5	4.0
	LEVEL	17.0	17.0	9.5	7.5	5.0
	5:1	18.5	18.5	10.0	8.0	5.0
	4:1	19.0	18.5	10.5	8.0	5.0
	3:1	19.5	19.0	10.5	8.0	5.0
	2:1	20.0	20.0	11.0	8.5	5.5
	LEVEL	21.5	21.0	13.5	9.5	6.5
	5:1	23.0	23.0	14.5	10.0	7.0
	4:1	23.5	23.0	14.5	10.0	7.0
	3:1	25.0	24.0	15.0	10.5	7.0
	2:1	25.5	24.5	16.0	11.0	7.0
	LEVEL	*	*	19.0	13.0	9.0
	5:1	*	*	20.5	14.0	9.0
	4:1	*	*	21.0	14.5	9.0
	3:1	*	*	22.0	15.0	9.5
	2:1	*	*	24.0	15.0	10.0

LEGEND: △ Core dimensions only

(**)= Top of foundation.

Revised 12/99 B&N

22 MAR 2000
p:\PR22308\CADD\nbd.dgn

DESIGN AGENCY: OFFICE OF STRUCTURAL ENGINEERING
DATE REVIEWED: 11-21-97
STRUCTURE FILE NUMBER:
DRAWN:
REVISED: 11/18/98
DESIGNED:
CHECKED:
REVISED:

NOISE BARRIER DETAILS

CUY-90-0.00

8 / 9

541
582

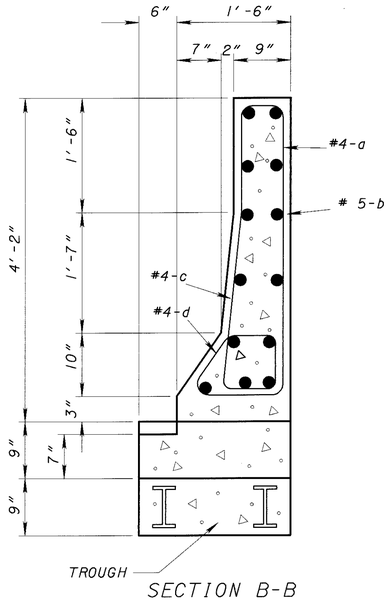

SECTION B-B

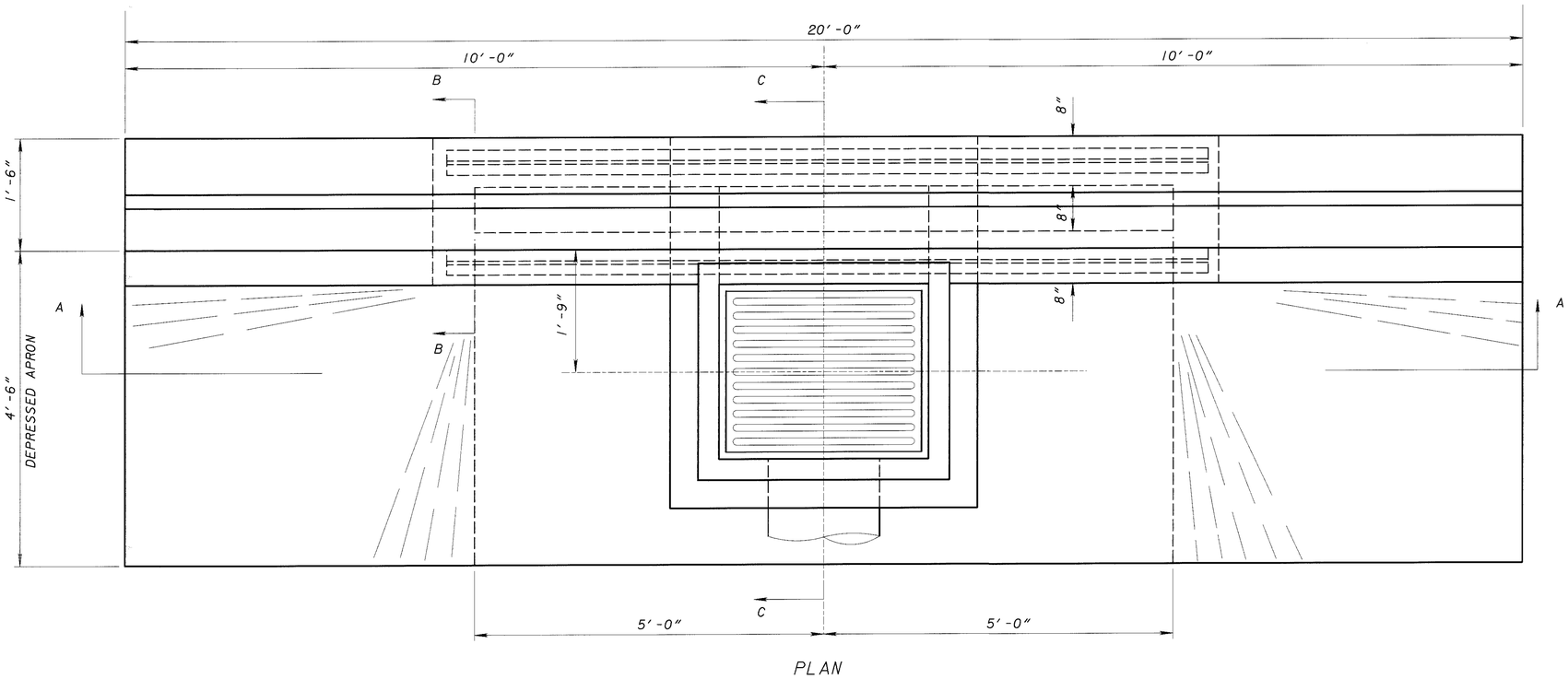

PLAN

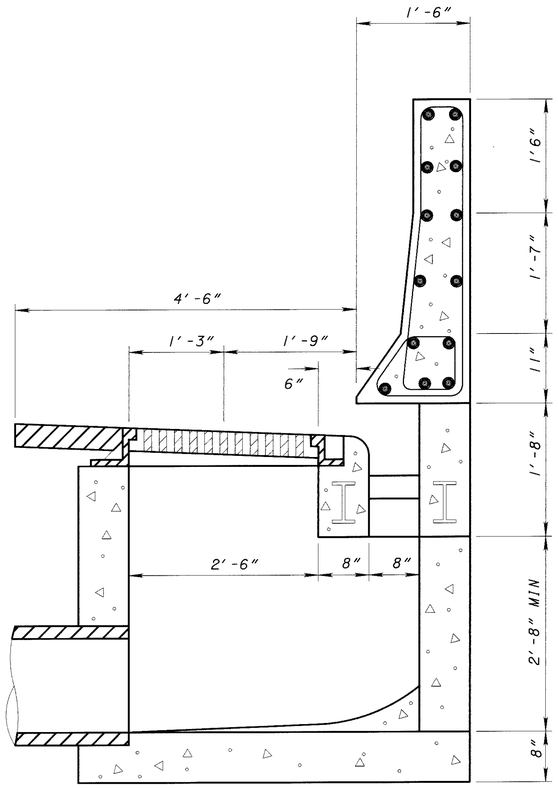

SECTION C-C

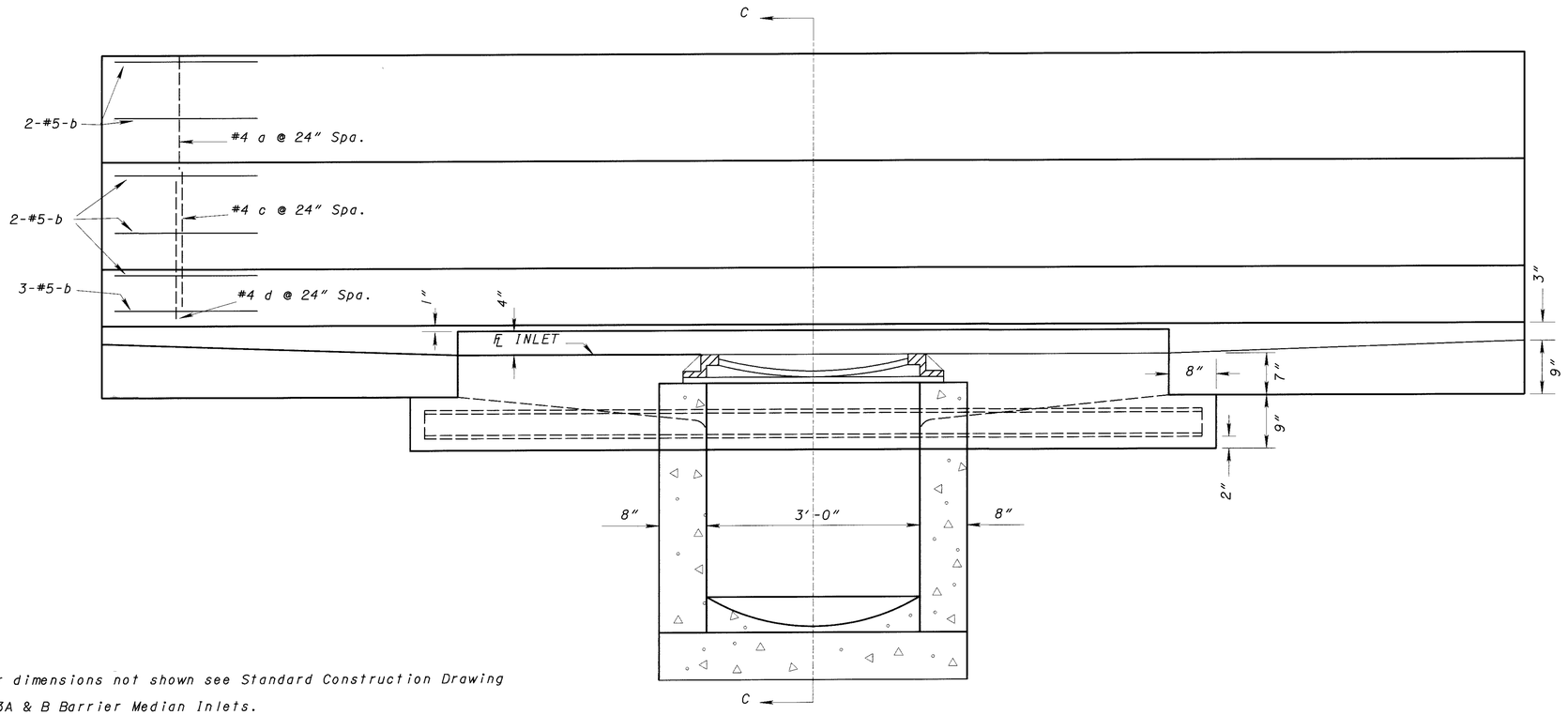

ELEVATION A-A

For dimensions not shown see Standard Construction Drawing I-3A & B Barrier Median Inlets.

22 MAR 2000
D:\PR22308\CADD\nbd.dgn

DESIGN AGENCY
BUREAU OF BRIDGES AND STRUCTURAL DESIGN

DESIGNED	DRAWN	REVIEWED	DATE
CHECKED	REVISED 11/18/98	STRUCTURE FILE NUMBER	- -

NOISE BARRIER DETAILS

CUY-90-0.00

9 / 9

542
582

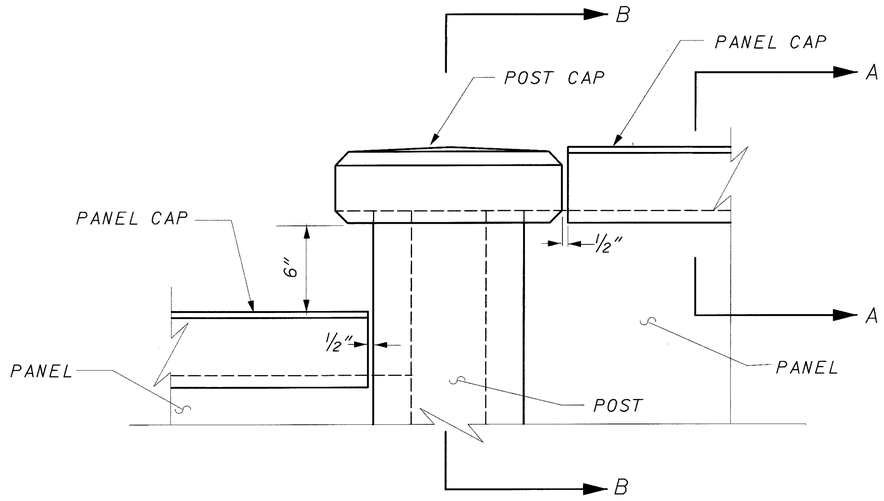

PARTIAL ELEVATION

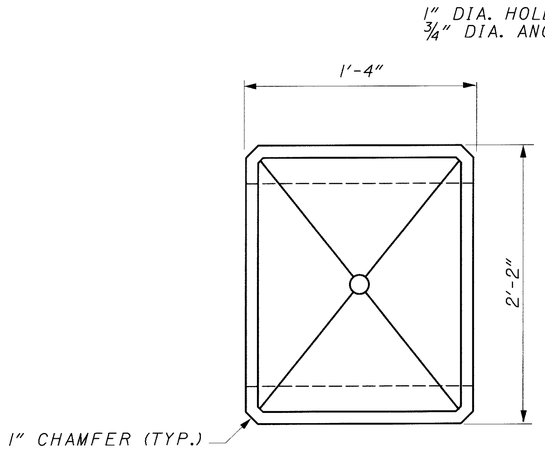

POST CAP PLAN

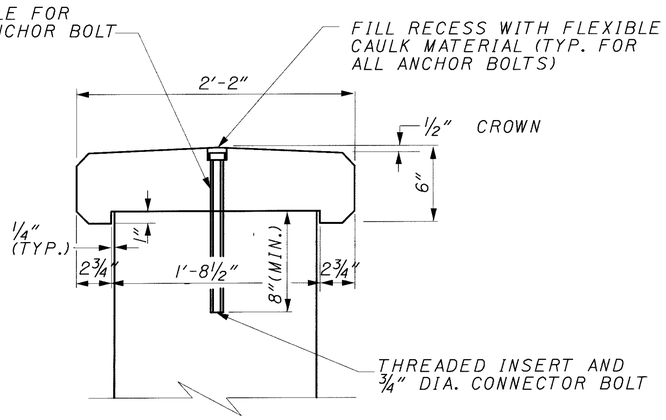

SECTION B-B

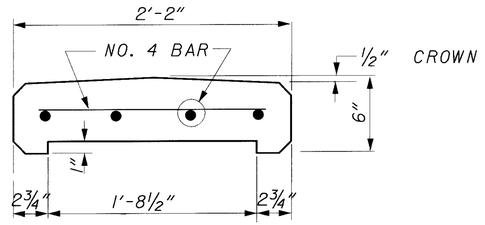

POST CAP DETAIL

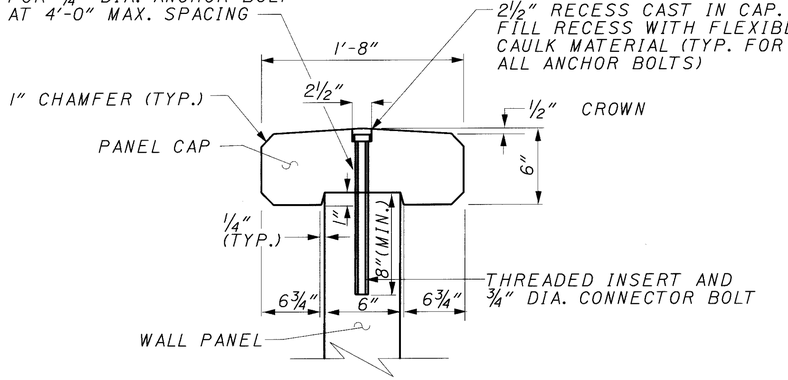

SECTION A-A

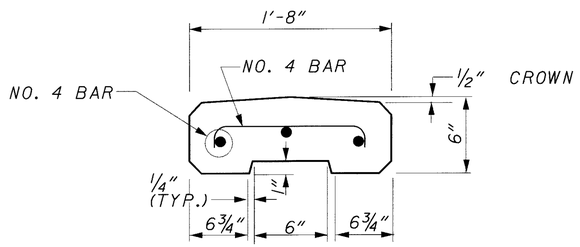

PANEL CAP DETAIL

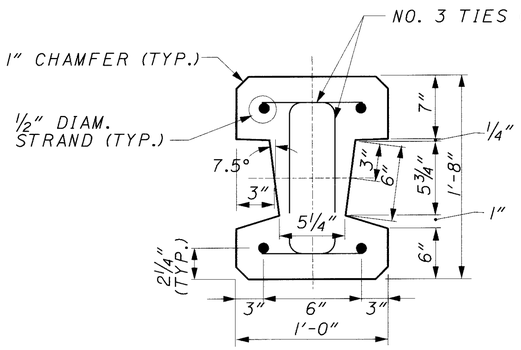

PRESTRESSED CONCRETE POST MAJOR BEND
ALL DIMENSIONS TYPICAL

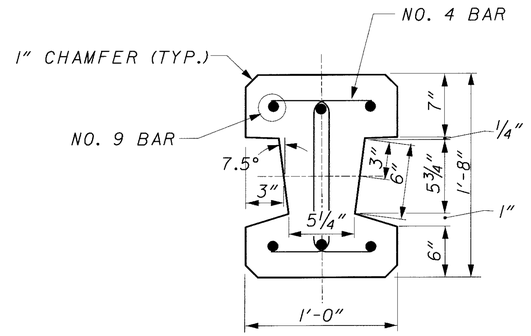

REINFORCED CONCRETE POST MAJOR BEND
ALL DIMENSIONS TYPICAL

LEGEND

MAX. =MAXIMUM
MIN. =MINIMUM
TYP. =TYPICAL

NOTES

PANEL CAP ENDS AT BEND LOCATIONS MUST BE AT A 7.5° ANGLE TO AVOID POST.

SEE SHEET 6/9 IN STANDARD NOISE BARRIER DETAILS FOR OTHER POST DETAILS

NOISE BARRIER CAP AND POST DETAILS

CUY-90-0.00

543
582

20 MAR 2000
p:\pr22308\caddv\nwdet2.dgn

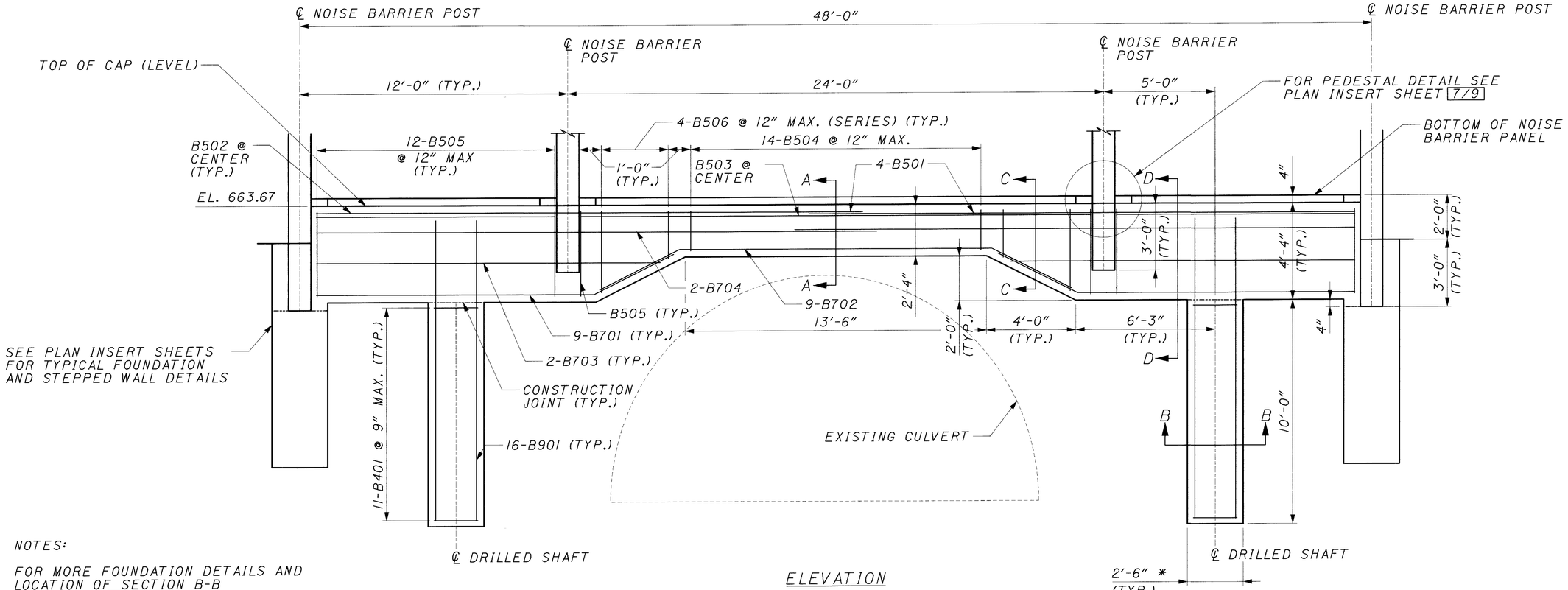

ELEVATION

NOTES:

FOR MORE FOUNDATION DETAILS AND LOCATION OF SECTION B-B SEE SHEET 545/582 .

* - IF 36" DRILLED SHAFT IS USED KEEP REINFORCING STEEL AS DETAILED BY HAVING AN EXTRA 3 INCHES OF COVER.

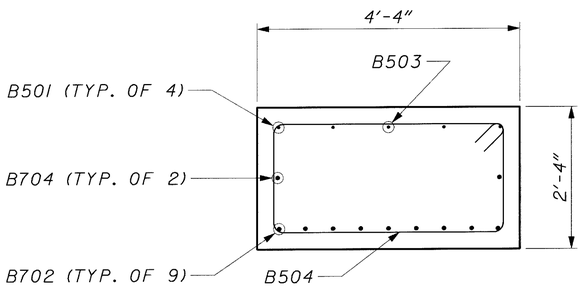

SECTION A-A

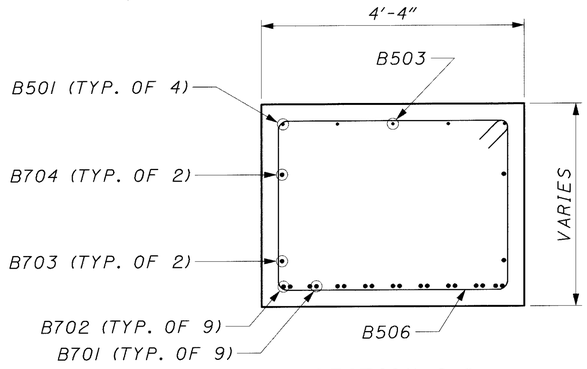

SECTION C-C

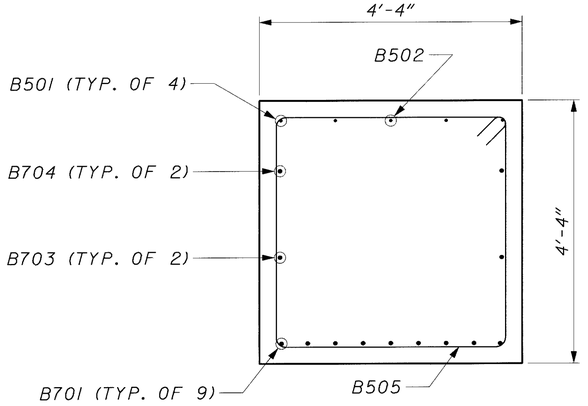

SECTION D-D

SITE 8,9,10 NOISE BARRIER FOUNDATION DETAIL (1 OF 2)
AT CULVERT CUY-90-0206 STA. 108+80

CUY-90-0.00

544
582

20 MAR 2000
P:\pr22308\caddv\nwdetf3.dgn

MARK	TOTAL	LENGTH	TYPE	DIM. A	DIM. B	DIM. C	INCR.
B401	22	7'-2"	4	1'-11½"			
B501	8	24'-6"	STR				
B502	2	10'-8"	STR				
B503	1	23'-10"	STR				
B504	14	11'-10"	3	1'-10"	3'-10"		
B505	26	15'-10"	3	3'-10"	3'-10"		
		12'-7"		2'-2½"	3'-10"		12"
B506	8	TO	3	TO			
		15'-7"		3'-8½"			
B701	18	16'-5"	1	12'-5"	3'-7"	1'-9½"	
B702	9	21'-9"	2	13'-9"	3'-7"	1'-9½"	
B703	4	15'-5"	STR				
B704	4	25'-1"	STR				
B901	32	13'-5"	STR				

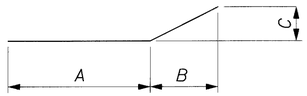

TYPE 1

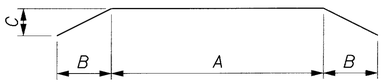

TYPE 2

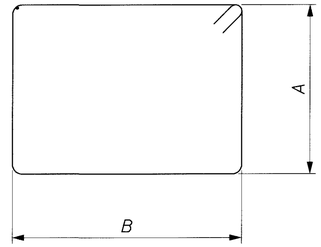

TYPE 3

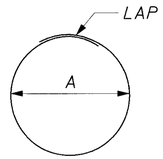

TYPE 4

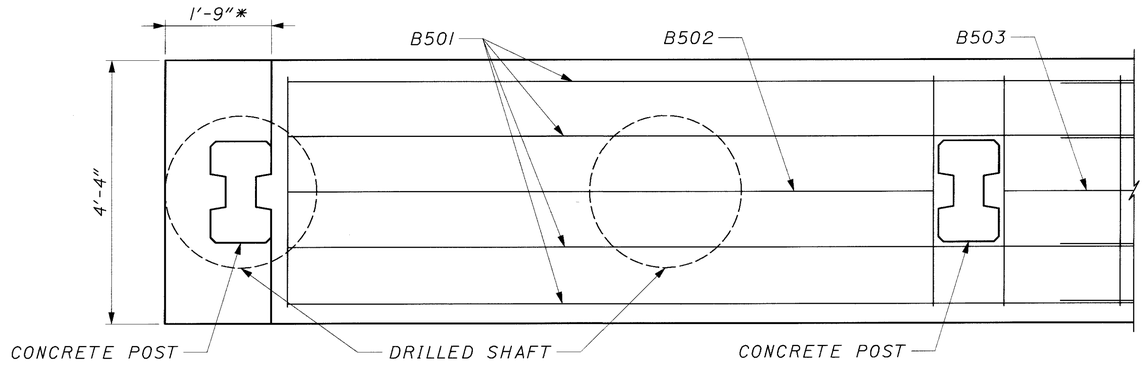

PARTIAL PLAN

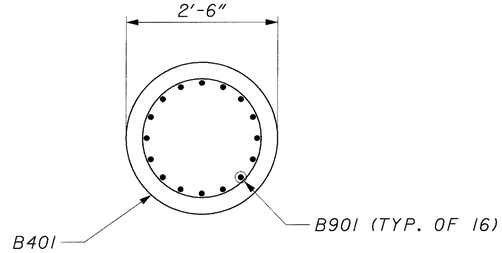

SECTION B-B

NOTES:

FOR MORE FOUNDATION DETAILS AND LOCATION OF SECTION B-B SEE SHEET 544/582.

* - IF 36" DRILLED SHAFTS ARE USED THIS DIMENSION WILL BE 2'-0".

SITE 8,9,10 NOISE BARRIER FOUNDATION DETAIL (2 OF 2)
AT CULVERT CUY-90-0206 STA. 108+80

CUY-90-0.00

545
582

20 MAR 2000
ps\pr22308\caddvnwdet3.dgn

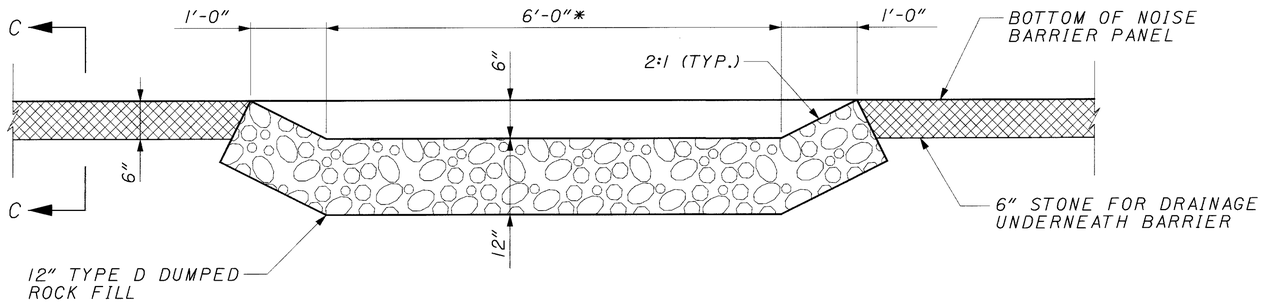

SECTION A-A

WHERE EXISTING GROUND LINE IS NEAR THE BOTTOM OF THE NOISE BARRIER

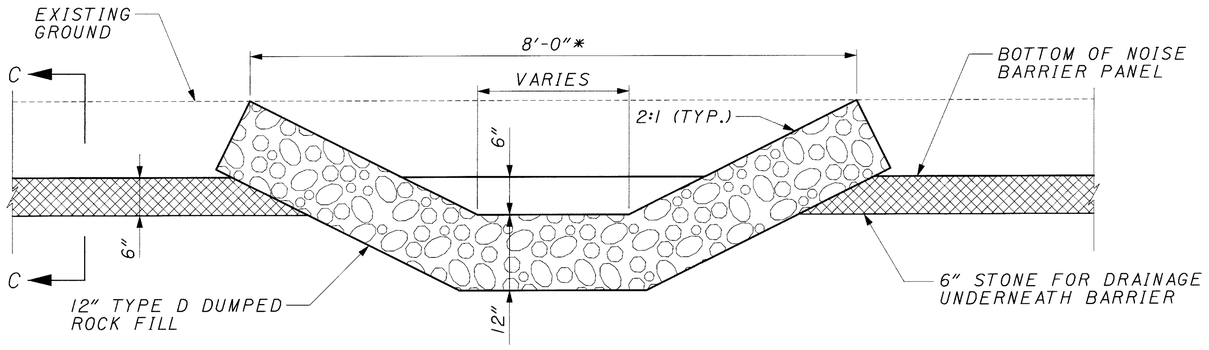

SECTION A-A

WHERE EXISTING GROUND LINE IS ABOVE THE BOTTOM OF THE NOISE BARRIER

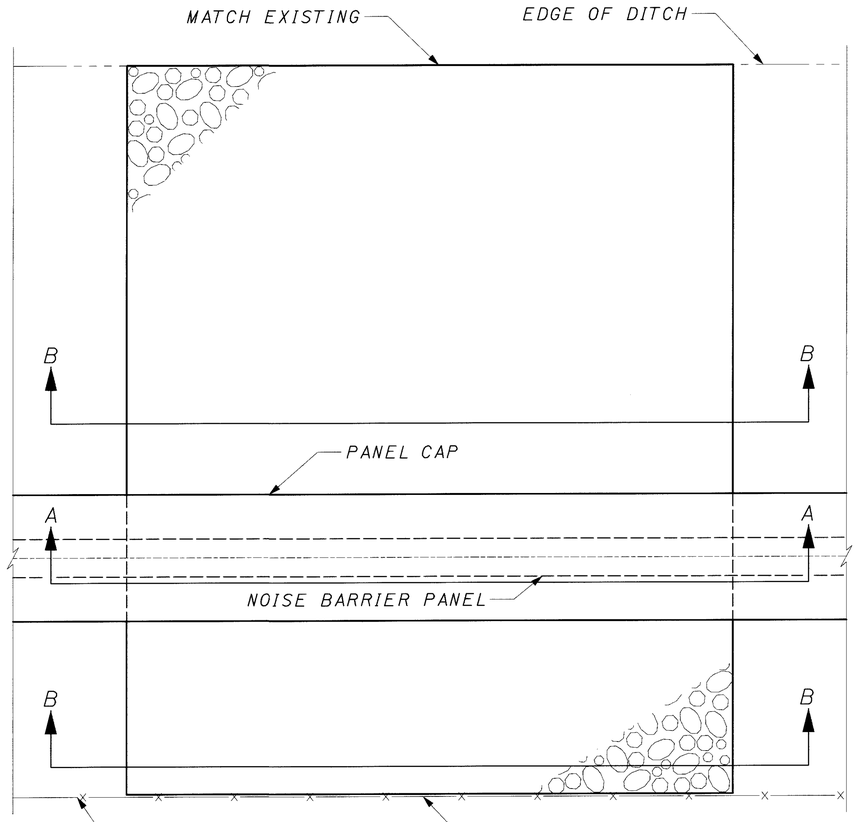

PLAN

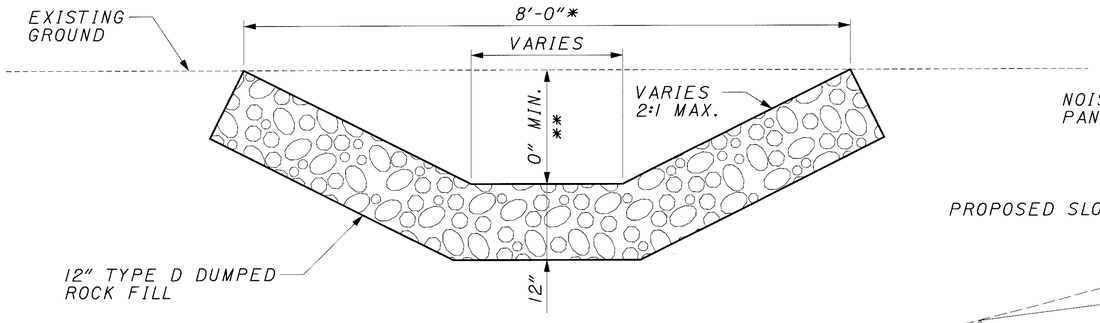

SECTION B-B

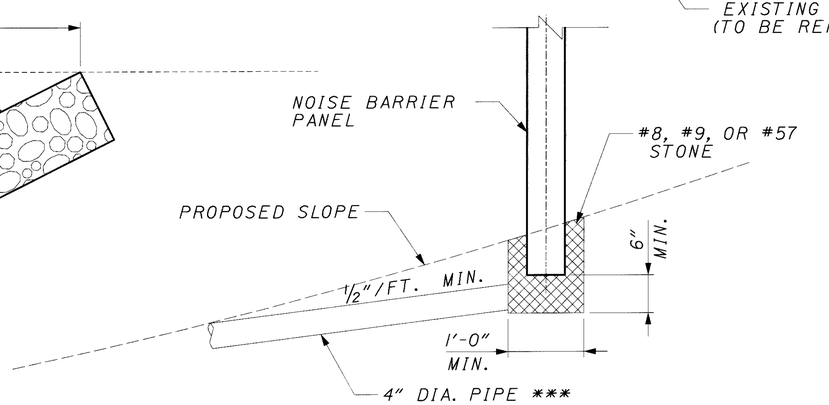

SECTION C-C

DRAINAGE UNDERNEATH BARRIER

NOTES:

1. SEE PLAN SHEETS AND NOISE BARRIER PROFILE SHEETS FOR LOCATIONS OF GUTTERS
2. SEE NOISE BARRIER NOTES FOR FURTHER DRAINAGE INFORMATION

* - UNLESS OTHERWISE INDICATED ON THE NOISE BARRIER PROFILE SHEETS

** - DEPTH AS REQUIRED TO MATCH ANY EXISTING DITCH

*** -PIPE IS TO BE SPACED AT 48' MAX. #8, #9 OR #57 STONE MAY BE SUBSTITUTED FOR OUTLET PIPE

NOISE BARRIER DRAINAGE DETAIL

CUY-90-0.00

20 MAR 2000
P:\pr22308\cadd\nwdet4.dgn

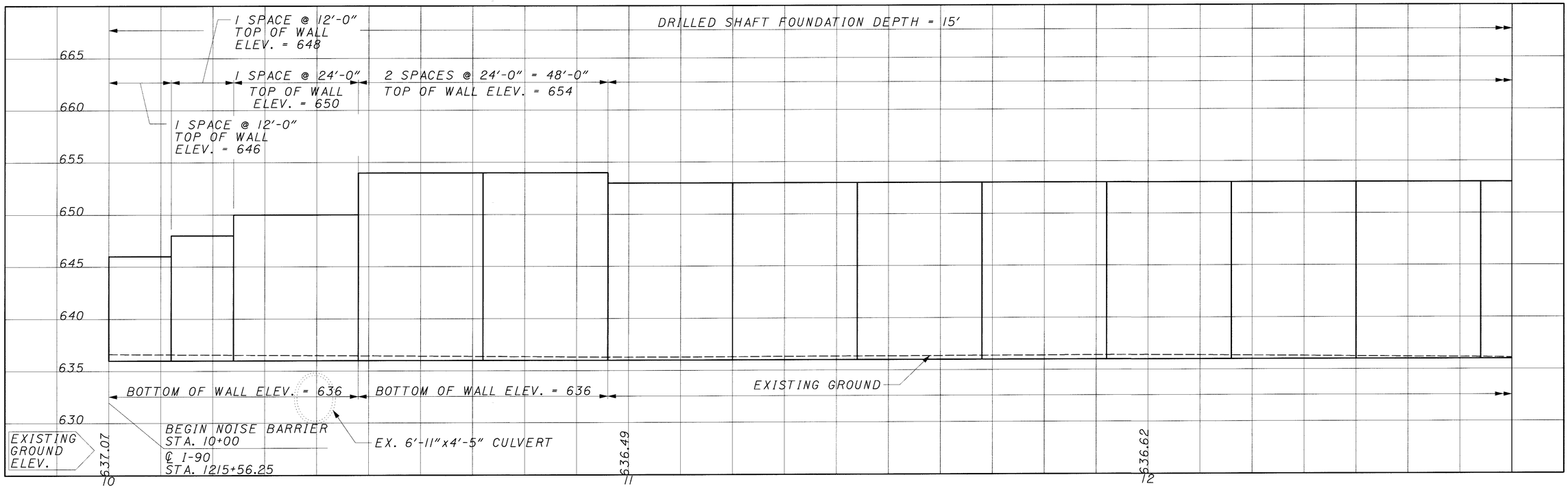

NOTES:

1. BOTTOM ELEVATIONS SHOWN ON PROFILE ARE FOR THE BOTTOM OF THE PANEL, NOT THE FINISHED GRADE LINE.
2. TOP ELEVATIONS SHOWN ARE THE MINIMUM TOP ELEVATIONS.
3. POST SPACING SHOWN IS 24'-0". OTHER POST SPACING WILL BE REQUIRED TO AVOID HITTING DRAINAGE STRUCTURES AND UTILITIES.
4. SEE SHEETS 128/582 TO 194/582 FOR NOISE BARRIER PLANS

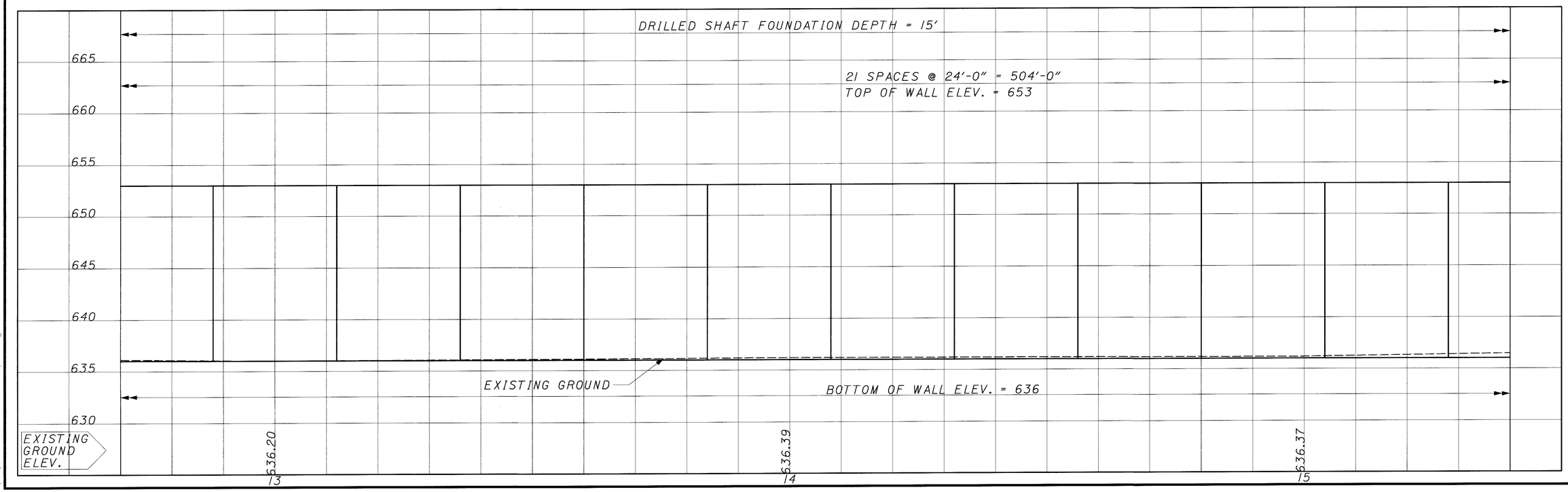

CALCULATED JAA
CHECKED SM

SITE 6 NOISE BARRIER PROFILE SHEET
STA. 10+00 TO 15+40

CUY-90-0.00

547
582

20 MAR 2000
p:\pr22308\cadd\sit6prq.dgn

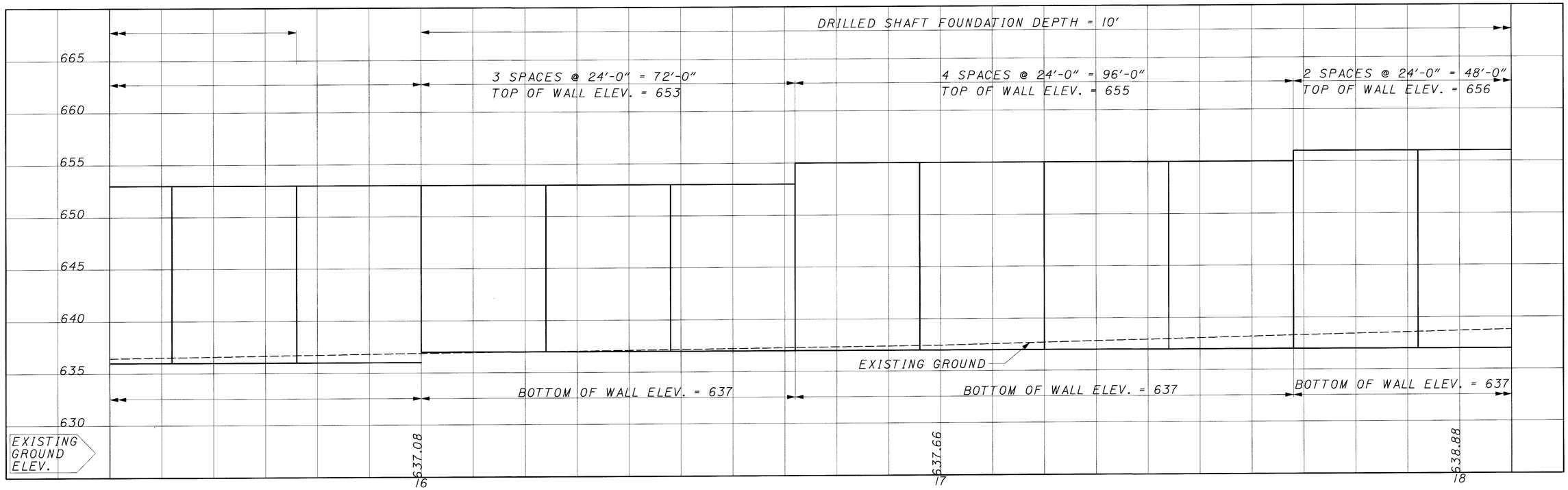

NOTES:

1. BOTTOM ELEVATIONS SHOWN ON PROFILE ARE FOR THE BOTTOM OF THE PANEL, NOT THE FINISHED GRADE LINE.
2. TOP ELEVATIONS SHOWN ARE THE MINIMUM TOP ELEVATIONS.
3. POST SPACING SHOWN IS 24'-0". OTHER POST SPACING WILL BE REQUIRED TO AVOID HITTING DRAINAGE STRUCTURES AND UTILITIES.
4. SEE SHEETS 128/582 TO 194/582 FOR NOISE BARRIER PLANS

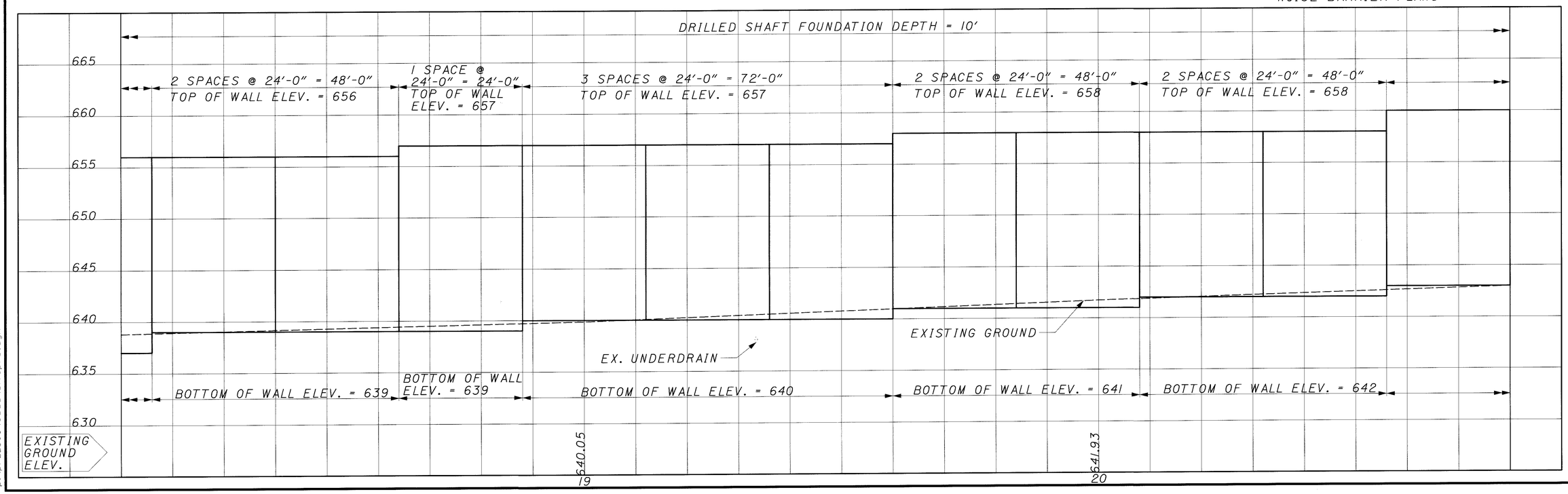

CALCULATED JAA
CHECKED SM

SITE 6 NOISE BARRIER PROFILE SHEET
STA. 15+40 TO 20+80

CUY-90-0.00

548
582

20 MAR 2000
p:\pr22308\cadd\sit6prb.dgn

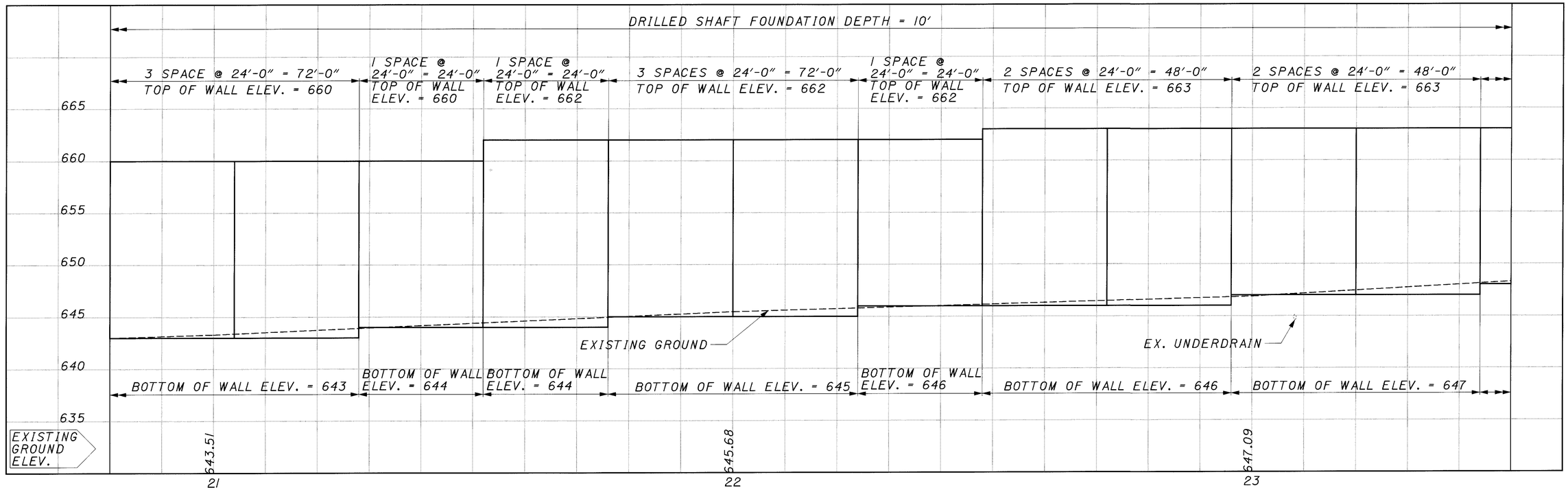

NOTES:

1. BOTTOM ELEVATIONS SHOWN ON PROFILE ARE FOR THE BOTTOM OF THE PANEL, NOT THE FINISHED GRADE LINE.
2. TOP ELEVATIONS SHOWN ARE THE MINIMUM TOP ELEVATIONS.
3. POST SPACING SHOWN IS 24'-0". OTHER POST SPACING WILL BE REQUIRED TO AVOID HITTING DRAINAGE STRUCTURES AND UTILITIES.
4. SEE SHEETS 128/582 TO 194/582 FOR NOISE BARRIER PLANS

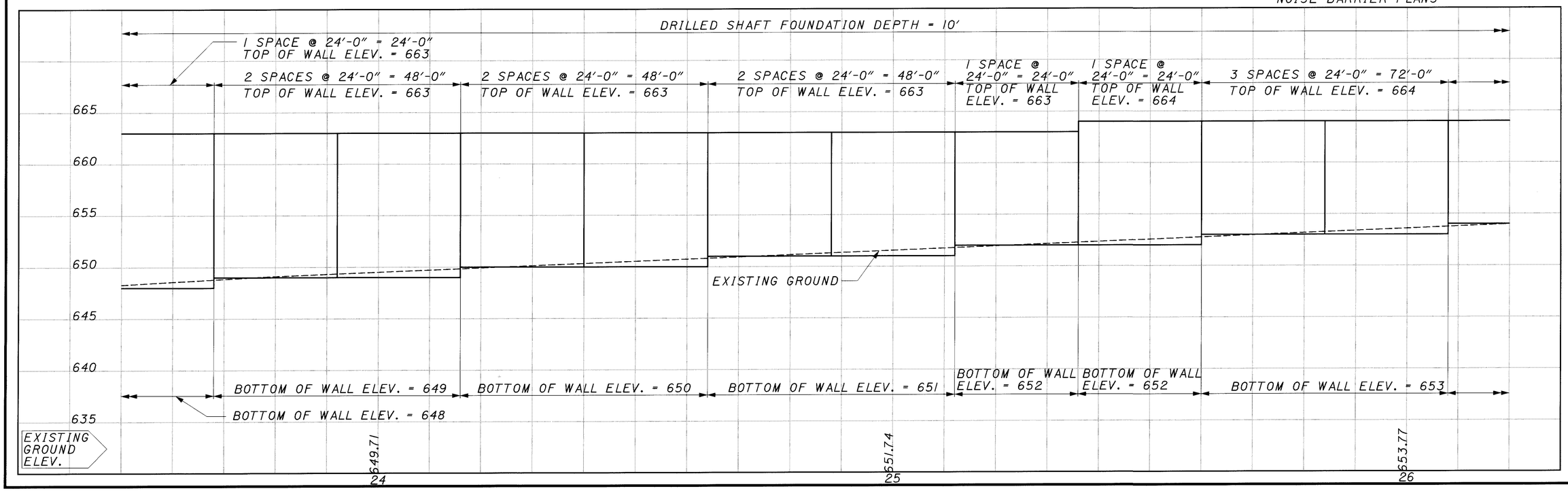

SITE 6 NOISE BARRIER PROFILE SHEET
STA. 20+80 TO 26+20

CALCULATED JAA
CHECKED SM

CUY-90-0.00

549
582

i:\PROJECTS\Pidll738\dgn\finalplans\sit6prc.dgn 21-JUL-2000 2:50PM jgrmovse

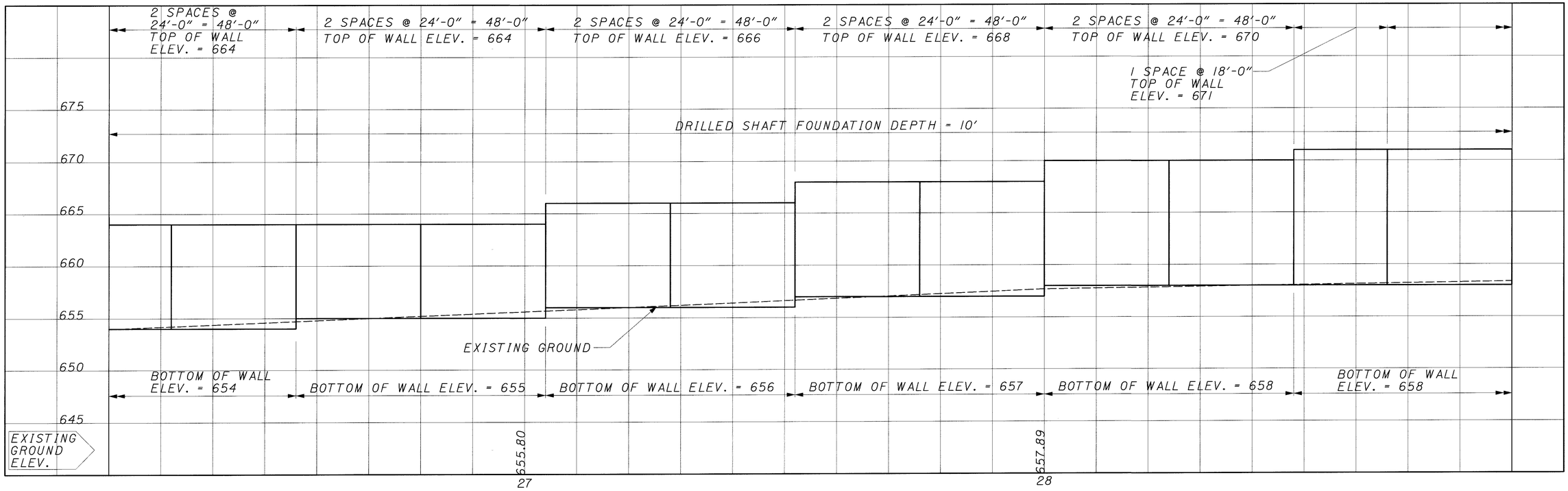

NOTES:

1. BOTTOM ELEVATIONS SHOWN ON PROFILE ARE FOR THE BOTTOM OF THE PANEL, NOT THE FINISHED GRADE LINE.
2. TOP ELEVATIONS SHOWN ARE THE MINIMUM TOP ELEVATIONS.
3. POST SPACING SHOWN IS 24'-0". OTHER POST SPACING WILL BE REQUIRED TO AVOID HITTING DRAINAGE STRUCTURES AND UTILITIES.
4. SEE SHEETS 128/582 TO 194/582 FOR NOISE BARRIER PLANS

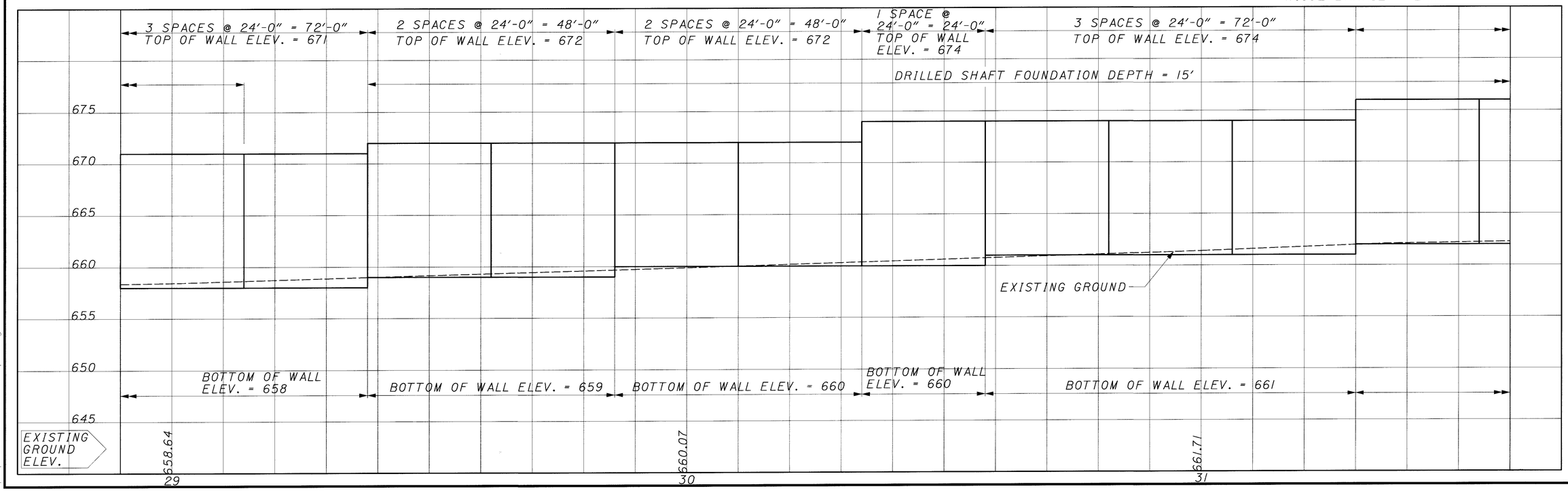

CALCULATED JAA
CHECKED SM

SITE 6 NOISE BARRIER PROFILE SHEET STA. 26+20 TO 31+60

CUY-90-0.00

550
582

20 MAR 2000
p:\pr22308\cadd\sit6prd.dgn

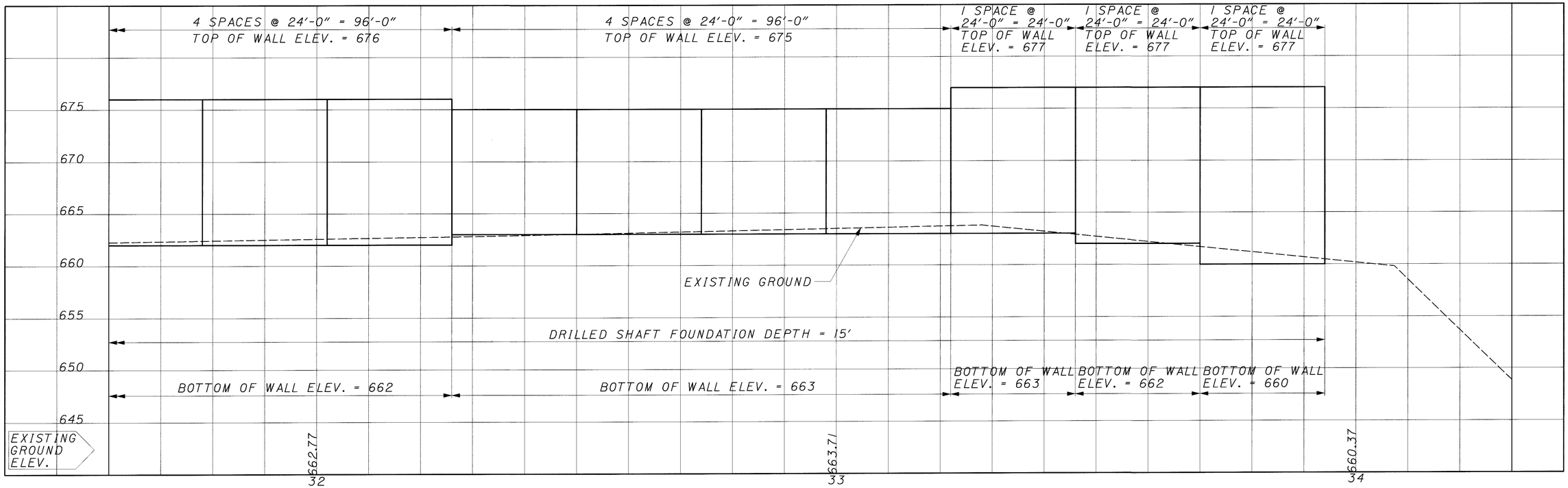

NOTES:

1. BOTTOM ELEVATIONS SHOWN ON PROFILE ARE FOR THE BOTTOM OF THE PANEL, NOT THE FINISHED GRADE LINE.
2. TOP ELEVATIONS SHOWN ARE THE MINIMUM TOP ELEVATIONS.
3. POST SPACING SHOWN IS 24'-0". OTHER POST SPACING WILL BE REQUIRED TO AVOID HITTING DRAINAGE STRUCTURES AND UTILITIES.
4. SEE SHEETS 128/582 TO 194/582 FOR NOISE BARRIER PLANS

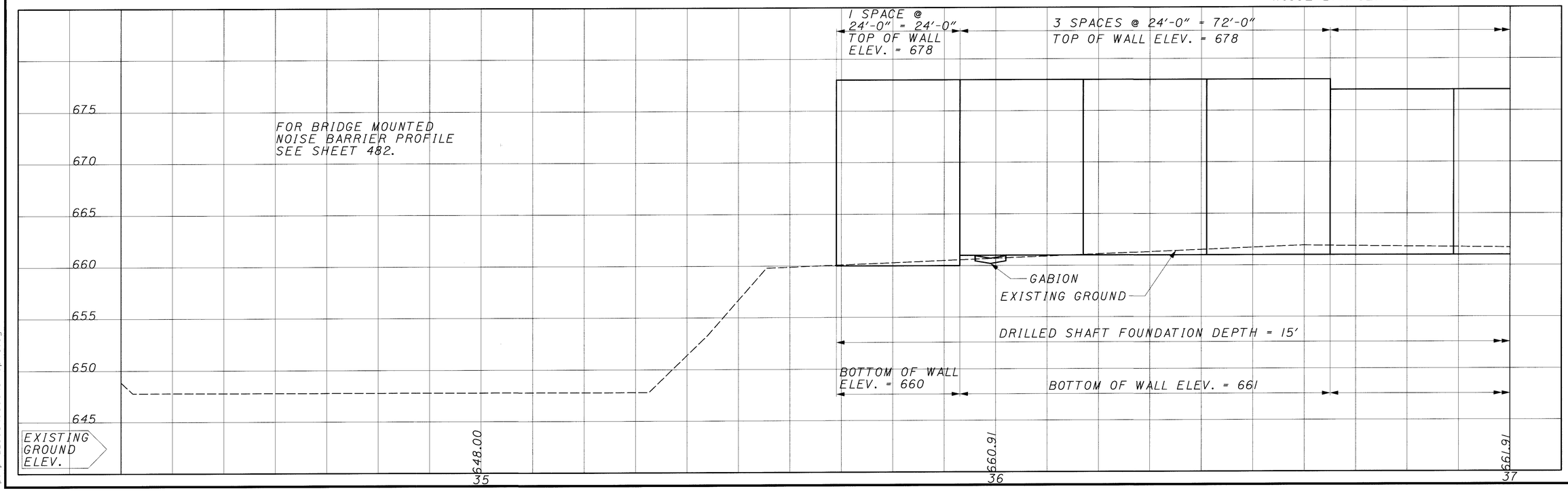

SITES 6 AND 6B NOISE BARRIER PROFILE SHEET
STA. 31+60 TO 33+94 AND 35+69 TO 37+00

CALCULATED JAA
CHECKED SM

CUY-90-0.00

551
582

20 MAR 2000
c:\pr22308\cadd\sit6pre.dgn

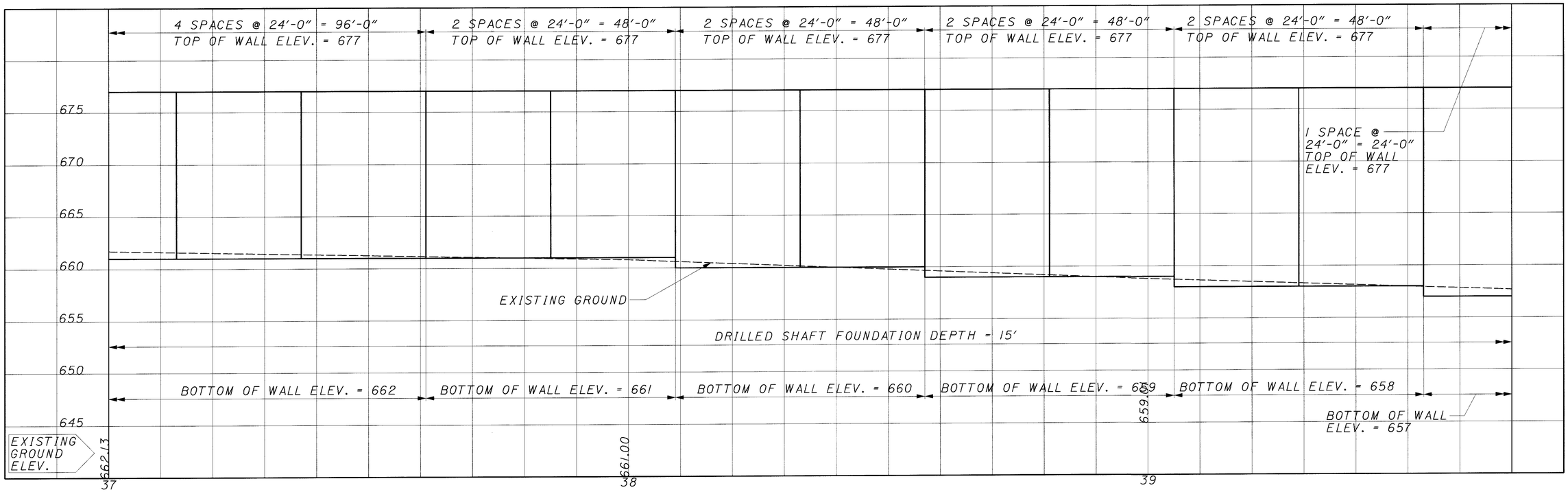

NOTES:

1. BOTTOM ELEVATIONS SHOWN ON PROFILE ARE FOR THE BOTTOM OF THE PANEL, NOT THE FINISHED GRADE LINE.
2. TOP ELEVATIONS SHOWN ARE THE MINIMUM TOP ELEVATIONS.
3. POST SPACING SHOWN IS 24'-0". OTHER POST SPACING WILL BE REQUIRED TO AVOID HITTING DRAINAGE STRUCTURES AND UTILITIES.
4. SEE SHEETS 128/582 TO 194/582 FOR NOISE BARRIER PLANS

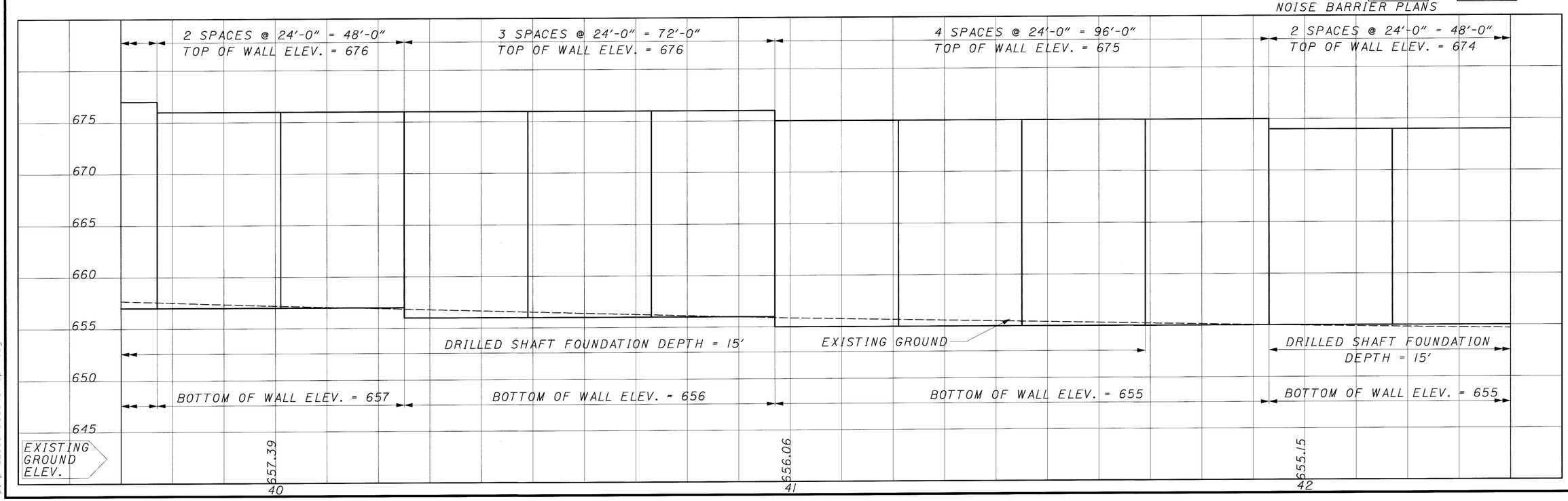

20 MAR 2000
P:\pr22308\cadd\sit6prf.dgn

CALCULATED JAA
CHECKED SM

SITE 6B NOISE BARRIER PROFILE SHEET
STA. 37+00 TO 42+40

CUY-90-0.00

552
582

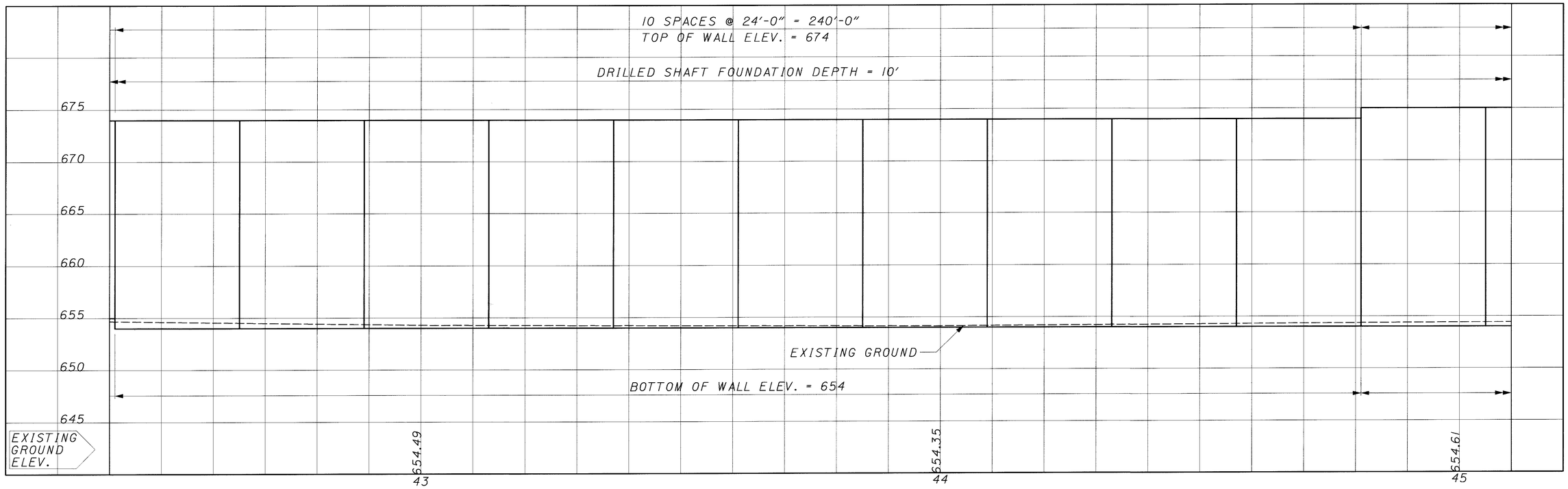

NOTES:

1. BOTTOM ELEVATIONS SHOWN ON PROFILE ARE FOR THE BOTTOM OF THE PANEL, NOT THE FINISHED GRADE LINE.
2. TOP ELEVATIONS SHOWN ARE THE MINIMUM TOP ELEVATIONS.
3. POST SPACING SHOWN IS 24'-0". OTHER POST SPACING WILL BE REQUIRED TO AVOID HITTING DRAINAGE STRUCTURES AND UTILITIES.
4. SEE SHEETS 128/582 TO 194/582 FOR NOISE BARRIER PLANS

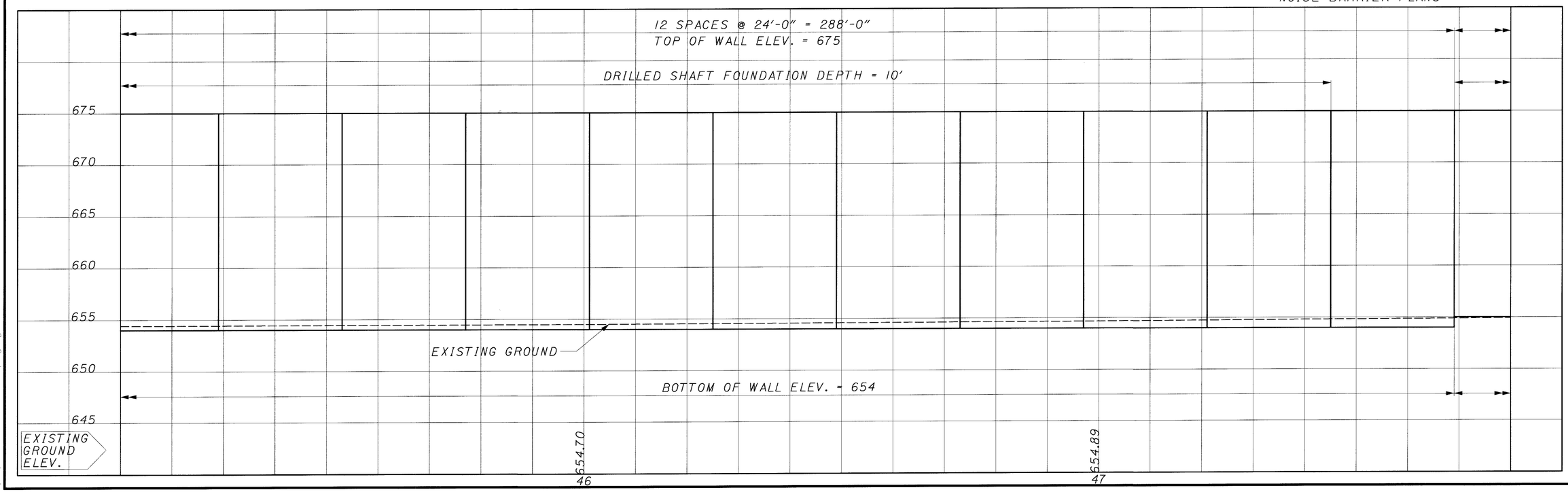

CALCULATED JAA
CHECKED SM

SITE 6B NOISE BARRIER PROFILE SHEET STA. 42+40 TO 47+80

CUY-90-0.00

553
582

20 MAR 2000
P:\pr22308\Cadd\sit6prg.dgn

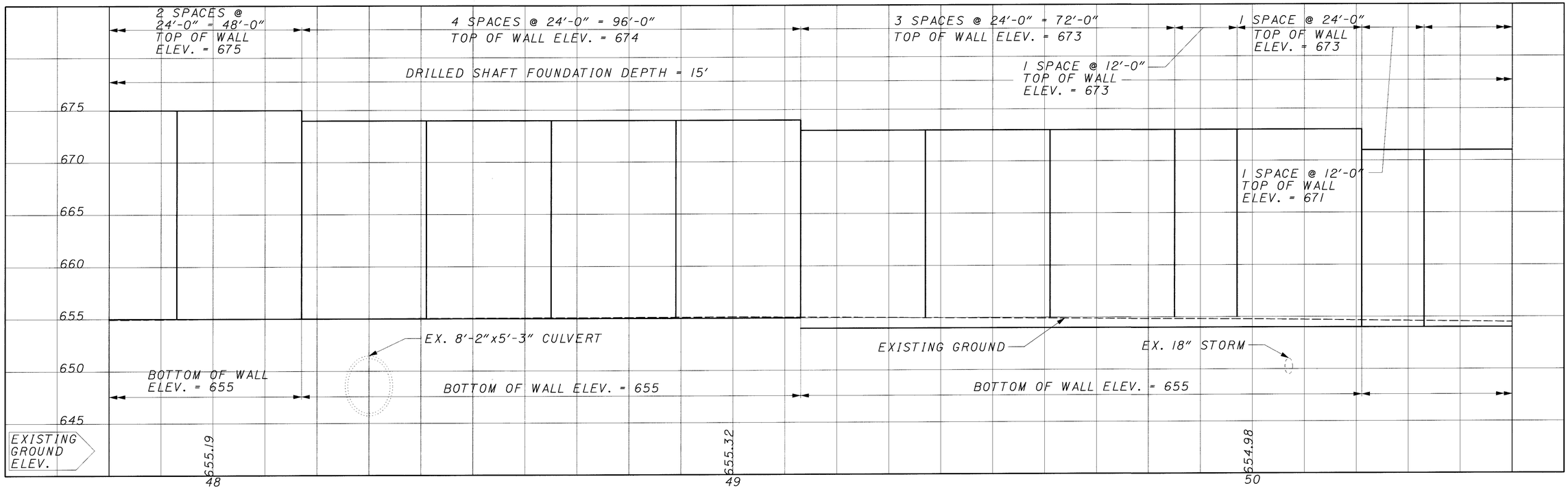

NOTES:

1. BOTTOM ELEVATIONS SHOWN ON PROFILE ARE FOR THE BOTTOM OF THE PANEL, NOT THE FINISHED GRADE LINE.
2. TOP ELEVATIONS SHOWN ARE THE MINIMUM TOP ELEVATIONS.
3. POST SPACING SHOWN IS 24'-0". OTHER POST SPACING WILL BE REQUIRED TO AVOID HITTING DRAINAGE STRUCTURES AND UTILITIES.
4. SEE SHEETS 128/582 TO 194/582 FOR NOISE BARRIER PLANS

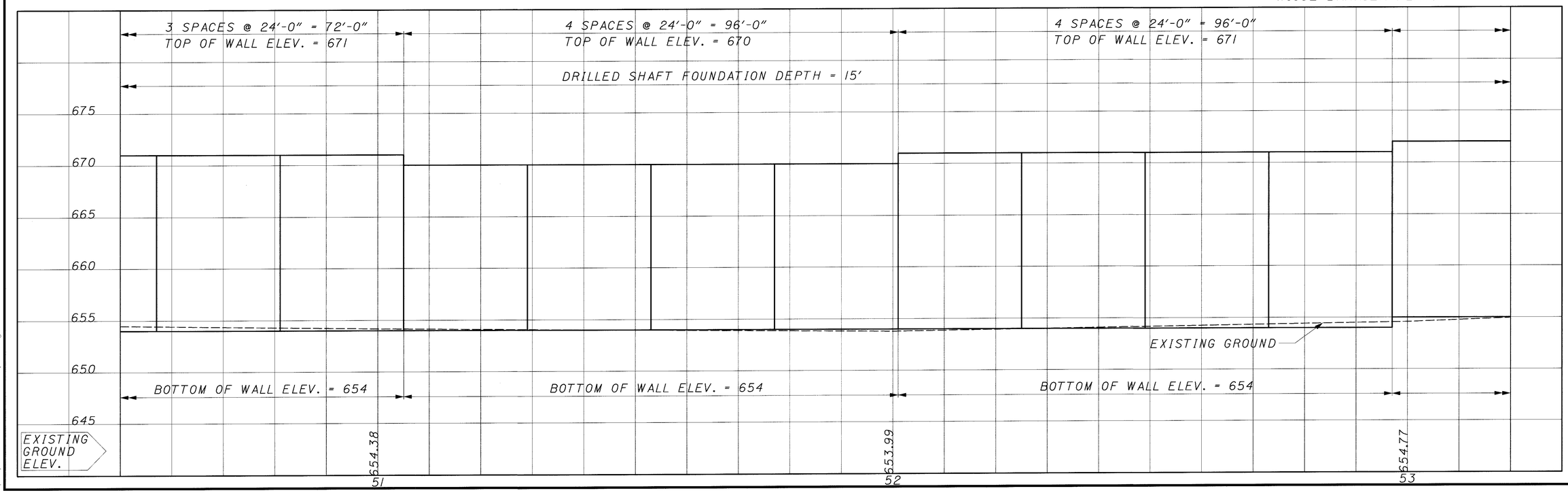

CALCULATED JAA
CHECKED SM

SITE 6B NOISE BARRIER PROFILE SHEET
STA. 47+80 TO 53+20

CUY-90-0.00

554
582

20 MAR 2000
P:\pr22308\caddd\sit6prh.dgn

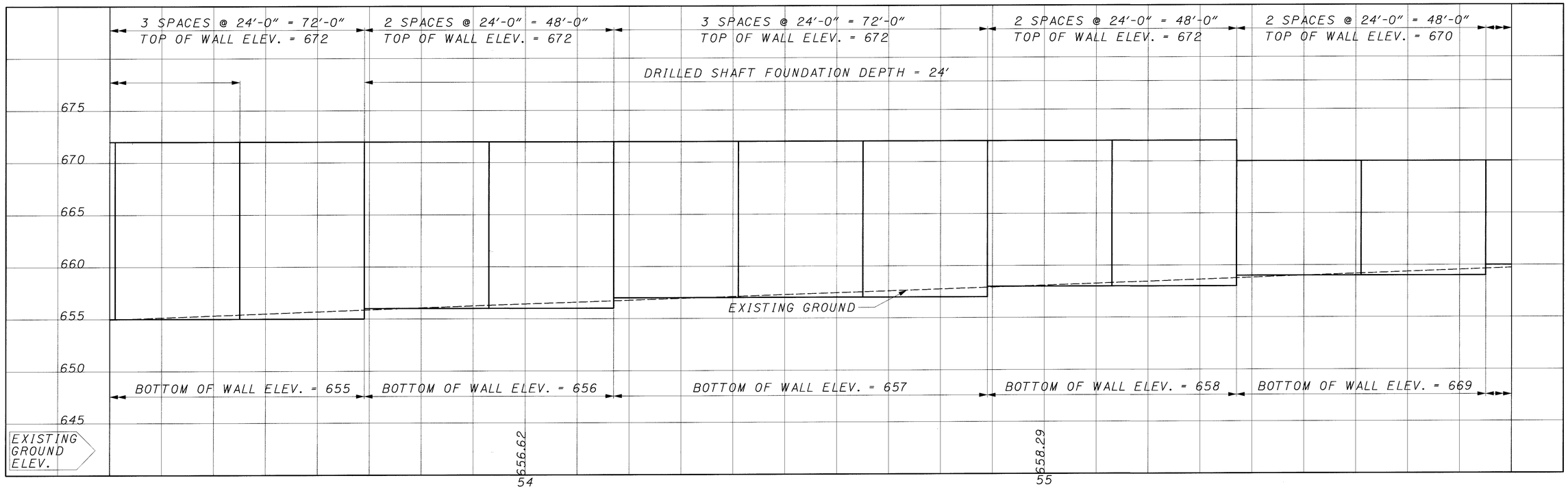

NOTES:

1. BOTTOM ELEVATIONS SHOWN ON PROFILE ARE FOR THE BOTTOM OF THE PANEL, NOT THE FINISHED GRADE LINE.
2. TOP ELEVATIONS SHOWN ARE THE MINIMUM TOP ELEVATIONS.
3. POST SPACING SHOWN IS 24'-0". OTHER POST SPACING WILL BE REQUIRED TO AVOID HITTING DRAINAGE STRUCTURES AND UTILITIES.
4. SEE SHEETS 128/582 TO 194/582 FOR NOISE BARRIER PLANS

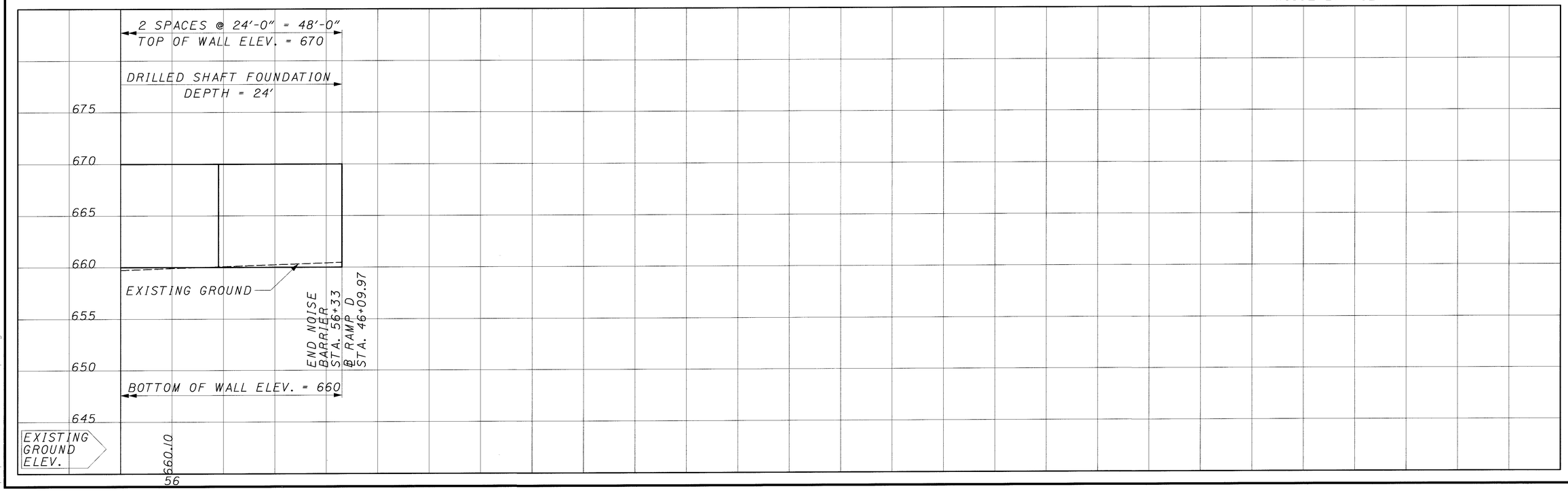

SITE 6B NOISE BARRIER PROFILE SHEET STA. 53+20 TO 56+33

CALCULATED JAA
CHECKED SM

CUY-90-0.00

555
582

20 MAR 2000
P:\pr2230\Cadd\sit6pri.dgn

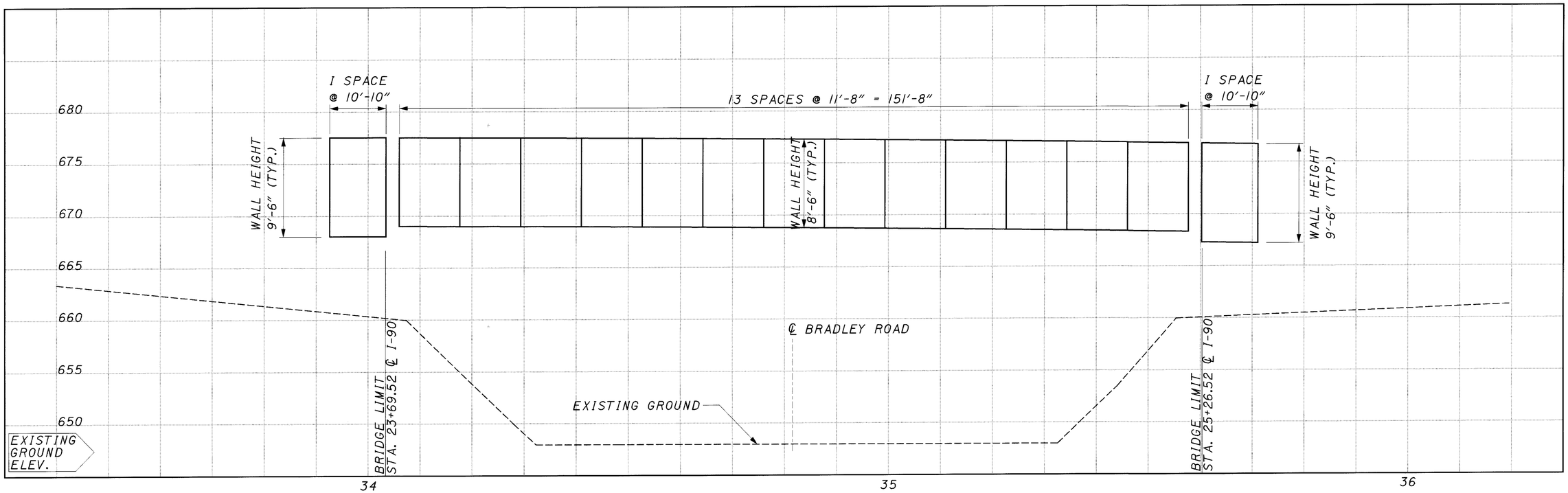

NOTES:

1. TOP ELEVATIONS SHOWN ARE THE MINIMUM TOP ELEVATIONS.
2. BRIDGE MOUNTED POSTS & "CARSONITE SOUND BARRIER" PANELS TOP OF WALL ELEVATIONS VARIES, SEE DECK AND PARAPET DETAILS, SHEET 441.
3. SEE BRADLEY ROAD BRIDGE PLAN SHEETS 409 & 441 FOR POST LOCATIONS.
4. SEE SHEET 4 / 9 FOR BRIDGE NOISE BARRIER DETAILS
5. SEE SHEETS 128/582 TO 194/582 FOR NOISE BARRIER PLANS

CALCULATED JAA
CHECKED SM

SITE 6A NOISE BARRIER PROFILE SHEET
FOR BRADLEY ROAD BRIDGE CUY-90-0095R

CUY-90-0.00

556
582

i:\PROJECTS\Pid1738\dgn\finalplans\sht6NSE.dgn 21-JUL-2000 2:52PM jgrmovse

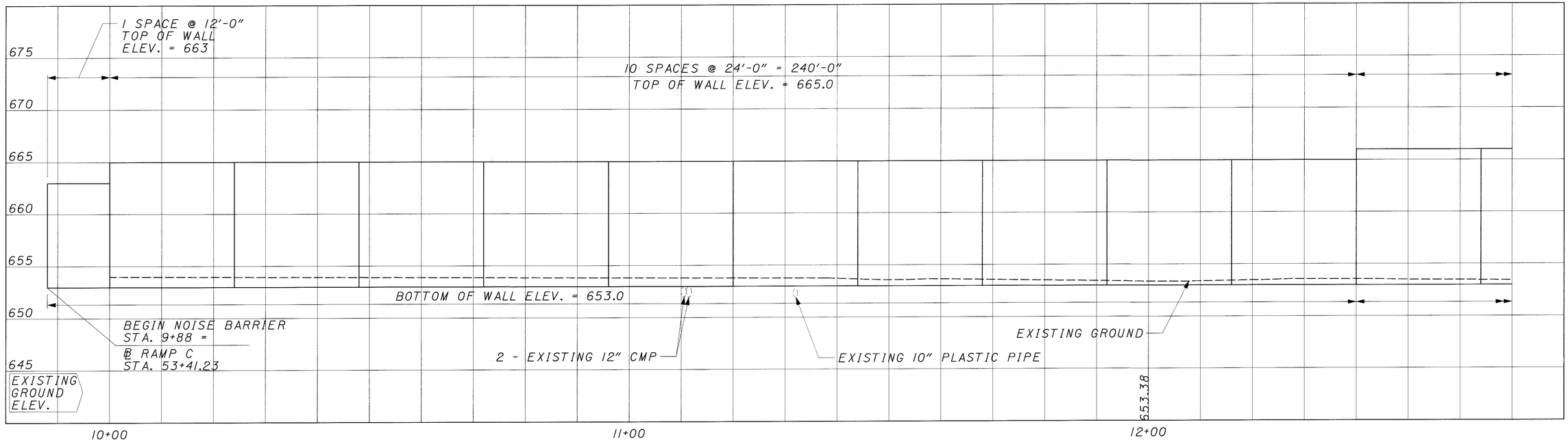

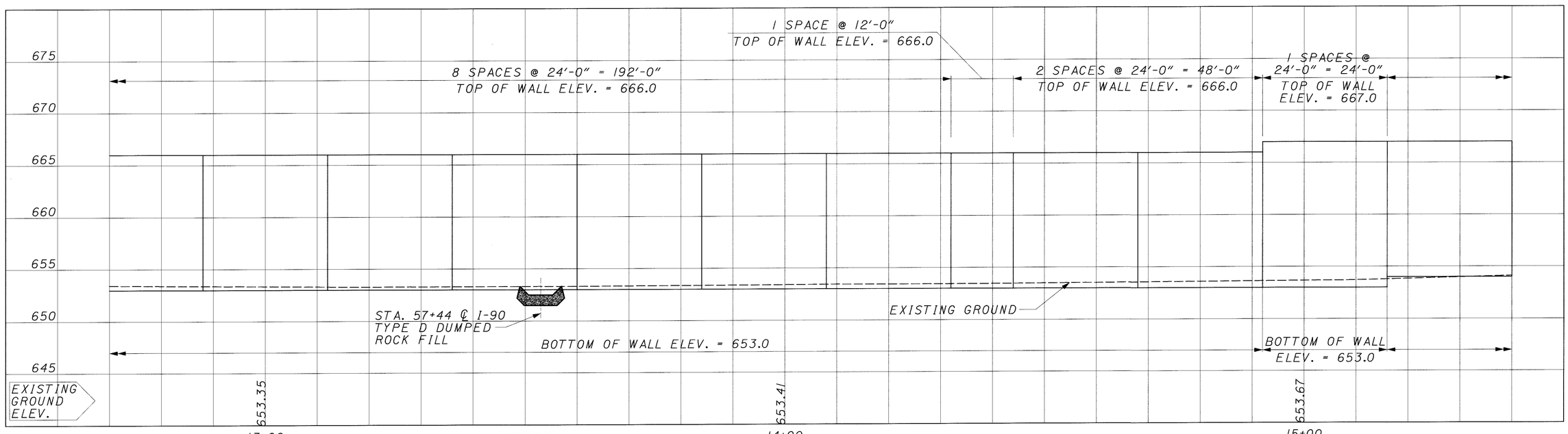

NOTES:

1. BOTTOM ELEVATIONS SHOWN ON PROFILE ARE FOR THE BOTTOM OF THE PANEL, NOT THE FINISHED GRADE LINE.
2. TOP ELEVATIONS SHOWN ARE THE MINIMUM TOP ELEVATIONS.
3. POST SPACING SHOWN IS 24'-0". OTHER POST SPACING WILL BE REQUIRED TO AVOID HITTING DRAINAGE STRUCTURES AND UTILITIES.
4. ALL DRILLED SHAFT FOUNDATION DEPTHS SHALL BE 6' INTO BEDROCK.
5. SEE SHEETS 128/582 TO 194/582 FOR NOISE BARRIER PLANS

CALCULATED JAA
CHECKED SM

SITE 7 NOISE BARRIER PROFILE SHEET
STA 9+88 TO STA 15+40

CUY-90-0.00

557
582

20 MAR 2000
P:\pr\2308\cadd\rwpr fla.dgn

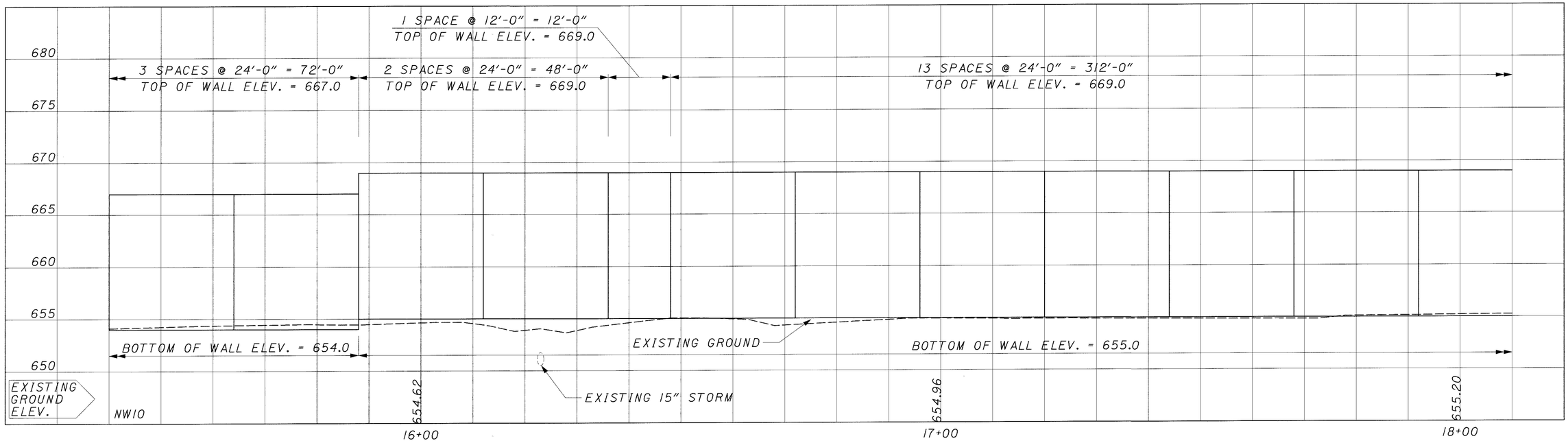

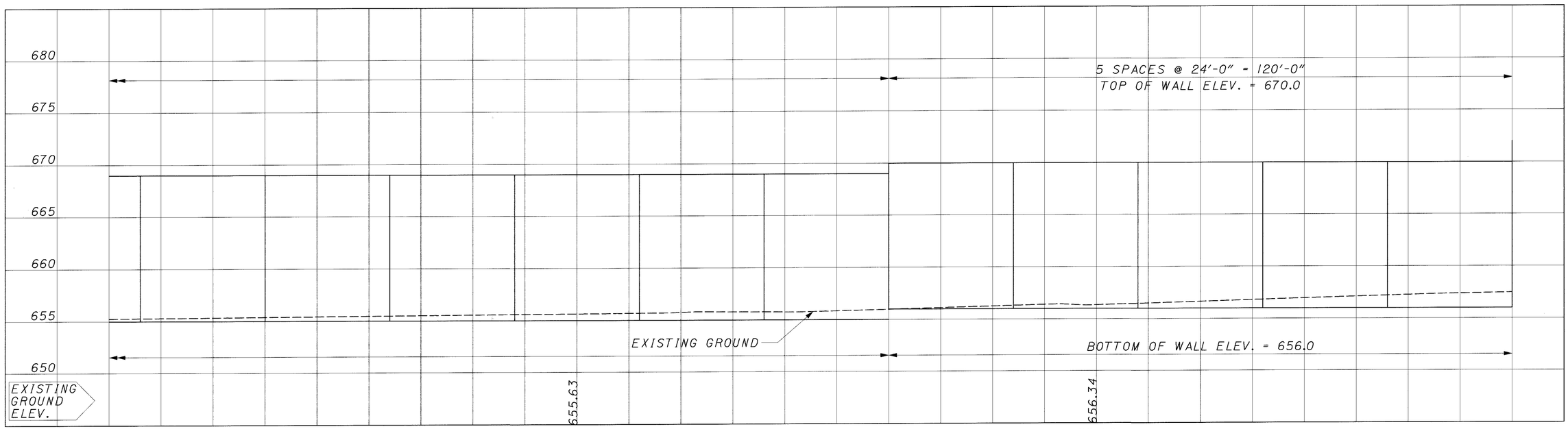

NOTES:

1. BOTTOM ELEVATIONS SHOWN ON PROFILE ARE FOR THE BOTTOM OF THE PANEL, NOT THE FINISHED GRADE LINE.
2. TOP ELEVATIONS SHOWN ARE THE MINIMUM TOP ELEVATIONS.
3. POST SPACING SHOWN IS 24'-0". OTHER POST SPACING WILL BE REQUIRED TO AVOID HITTING DRAINAGE STRUCTURES AND UTILITIES.
4. ALL DRILLED SHAFT FOUNDATION DEPTHS SHALL BE 6' INTO BEDROCK.
5. SEE SHEETS 128/582 TO 194/582 FOR NOISE BARRIER PLANS

CALCULATED JAA
CHECKED SM

SITE 7 NOISE BARRIER PROFILE SHEET STA 15+40 TO STA 20+80

CUY-90-0.00

20 MAR 2000
p:\pr22308\cadd\nwpr\f2a.dgn

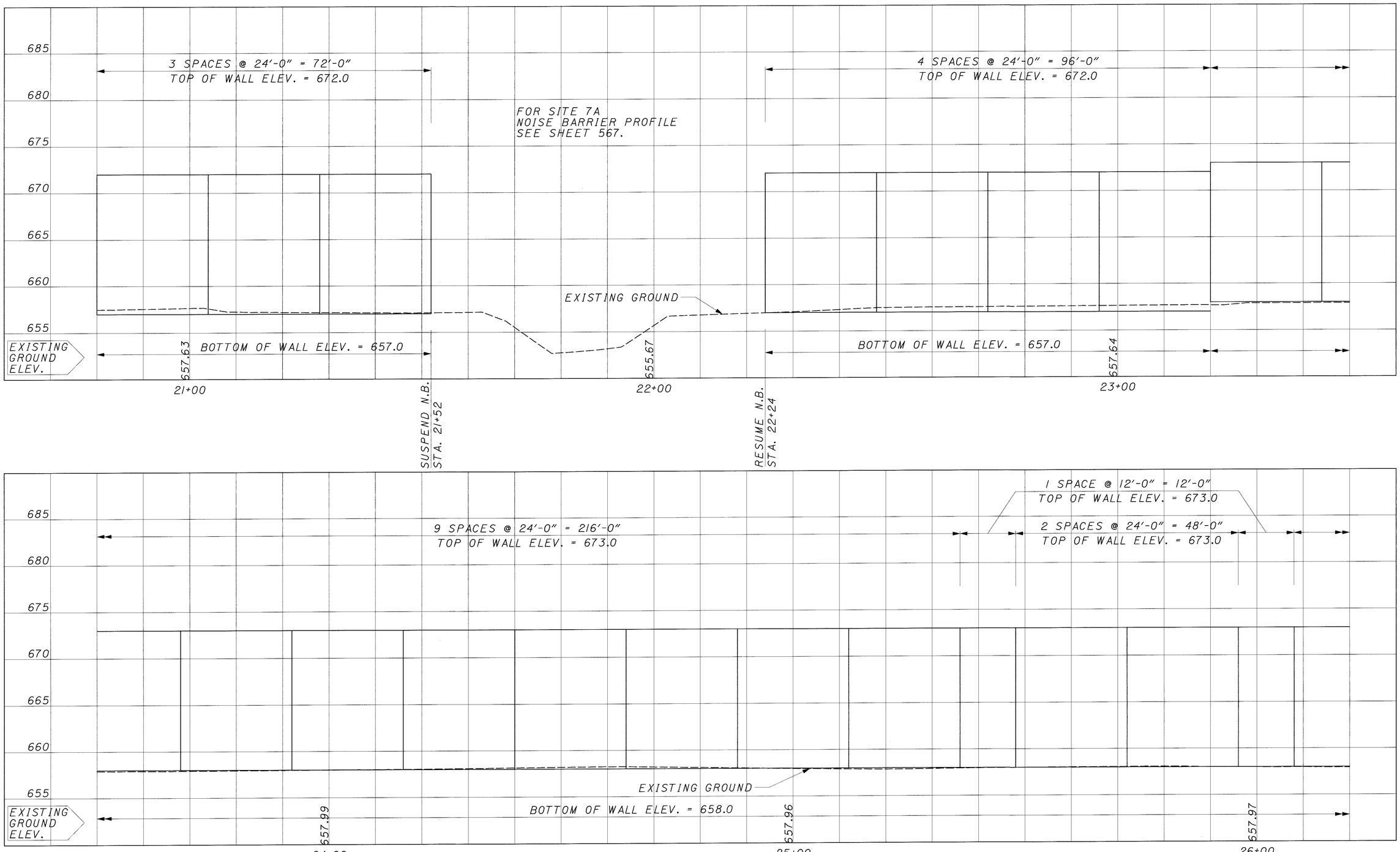

NOTES:

1. BOTTOM ELEVATIONS SHOWN ON PROFILE ARE FOR THE BOTTOM OF THE PANEL, NOT THE FINISHED GRADE LINE.
2. TOP ELEVATIONS SHOWN ARE THE MINIMUM TOP ELEVATIONS.
3. POST SPACING SHOWN IS 24'-0". OTHER POST SPACING WILL BE REQUIRED TO AVOID HITTING DRAINAGE STRUCTURES AND UTILITIES.
4. ALL DRILLED SHAFT FOUNDATION DEPTHS SHALL BE 6' INTO BEDROCK.
5. SEE SHEETS 128/582 TO 194/582 FOR NOISE BARRIER PLANS

CALCULATED JAA
CHECKED SM

SITES 7 AND 7C NOISE BARRIER PROFILE SHEET
STA 20+80 TO STA. 21+52 AND STA. 22+24 TO STA 26+20

CUY-90-0.00

559
582

20 MAR 2000
p:\pr22308\cadd\nwprf3a.dgn

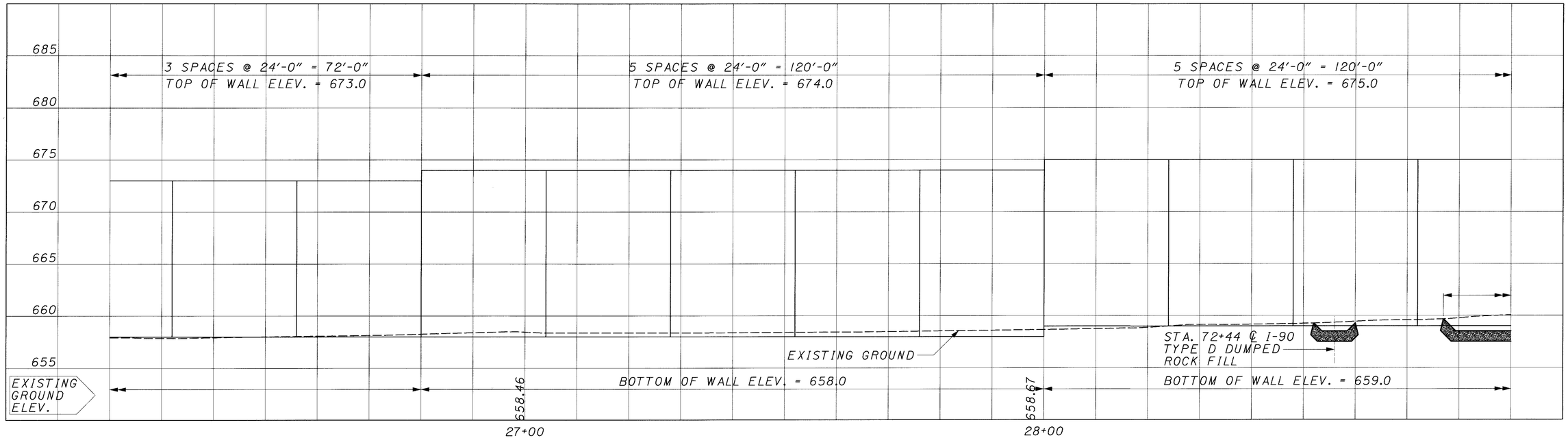

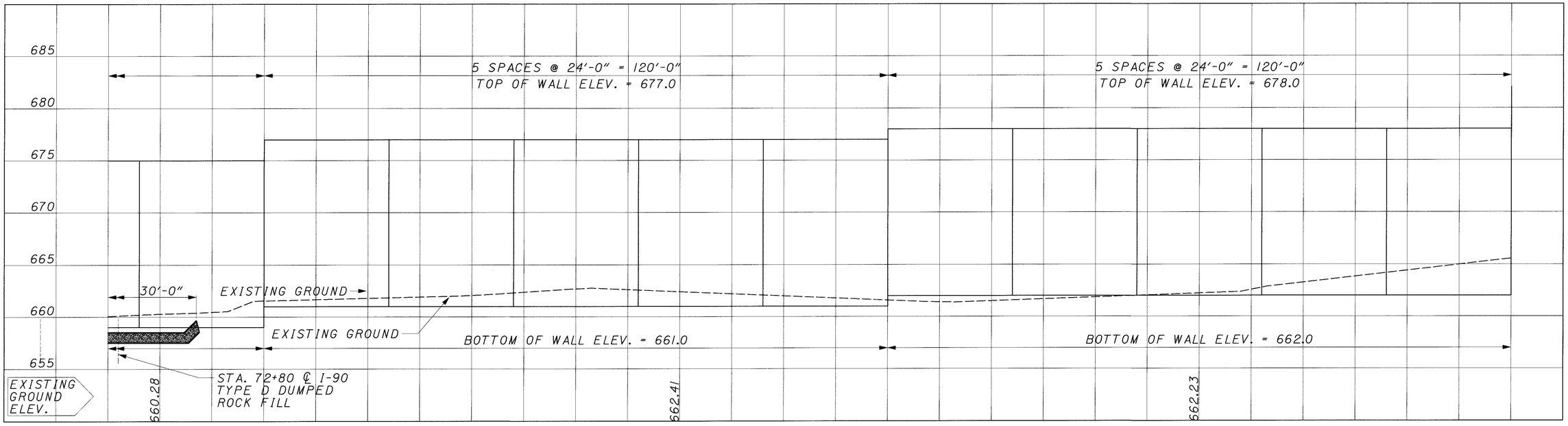

NOTES:

1. BOTTOM ELEVATIONS SHOWN ON PROFILE ARE FOR THE BOTTOM OF THE PANEL, NOT THE FINISHED GRADE LINE.
2. TOP ELEVATIONS SHOWN ARE THE MINIMUM TOP ELEVATIONS.
3. POST SPACING SHOWN IS 24'-0". OTHER POST SPACING WILL BE REQUIRED TO AVOID HITTING DRAINAGE STRUCTURES AND UTILITIES.
4. ALL DRILLED SHAFT FOUNDATION DEPTHS SHALL BE 6' INTO BEDROCK.
5. SEE SHEETS 128/582 TO 194/582 FOR NOISE BARRIER PLANS

CALCULATED JAA
CHECKED SM

SITE 7C NOISE BARRIER PROFILE SHEET
STA 26+20 TO STA 31+60

CUY-90-0.00

560
582

20 MAR 2000
P:\pr22308\cadd\nwpr14a.dgn

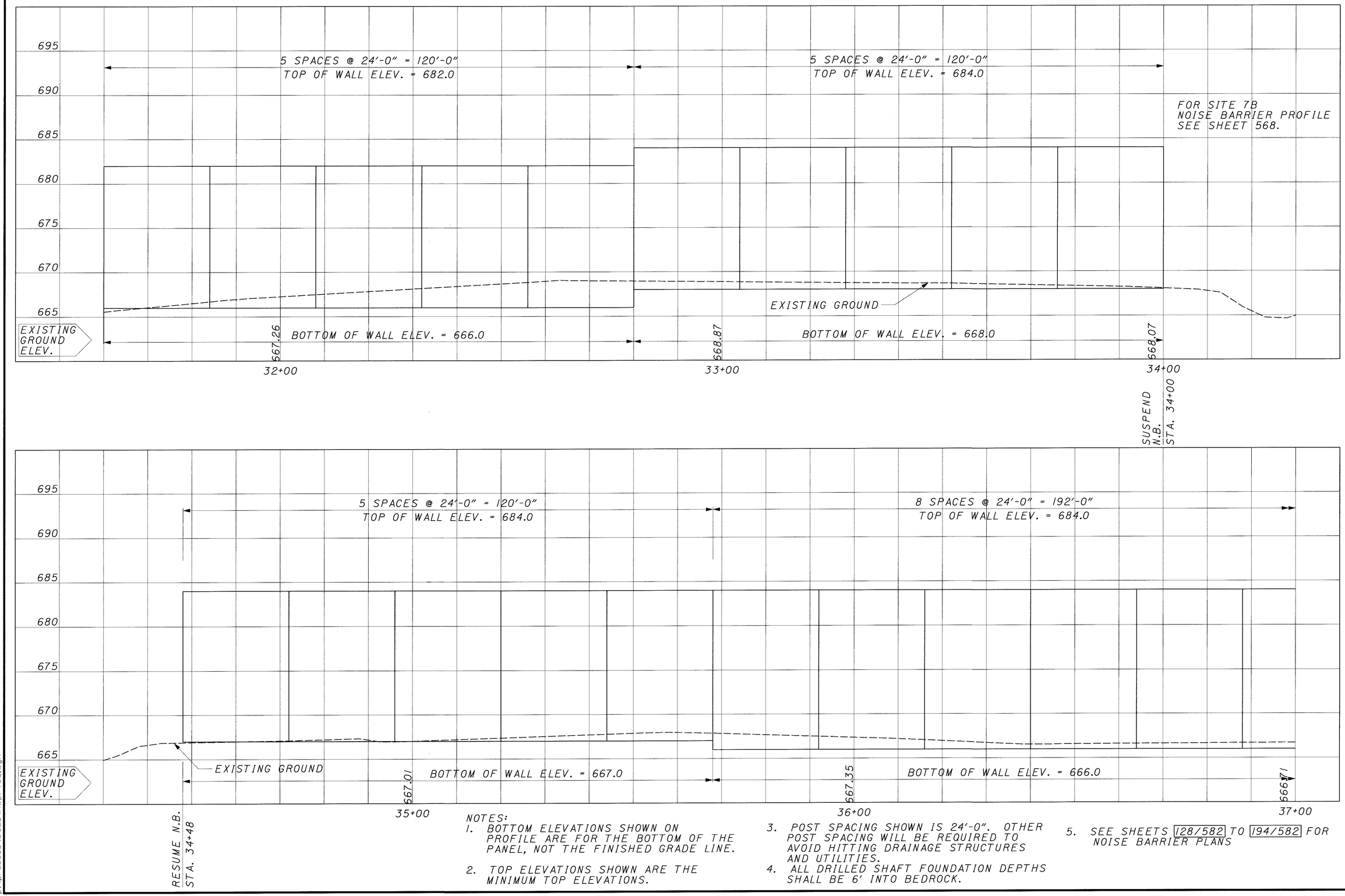

NOTES:

1. BOTTOM ELEVATIONS SHOWN ON PROFILE ARE FOR THE BOTTOM OF THE PANEL, NOT THE FINISHED GRADE LINE.
2. TOP ELEVATIONS SHOWN ARE THE MINIMUM TOP ELEVATIONS.
3. POST SPACING SHOWN IS 24'-0". OTHER POST SPACING WILL BE REQUIRED TO AVOID HITTING DRAINAGE STRUCTURES AND UTILITIES.
4. ALL DRILLED SHAFT FOUNDATION DEPTHS SHALL BE 6' INTO BEDROCK.
5. SEE SHEETS 128/582 TO 194/582 FOR NOISE BARRIER PLANS

CALCULATED JAA
CHECKED SM

7D NOISE BARRIER PROFILE SHEET
SITES 7C AND 7D STA 31+60 TO STA 37+00

CUY-90-0.00

561
582

20 MAR 2000
R:\pr22308\cadd\rwprfsa.dgn

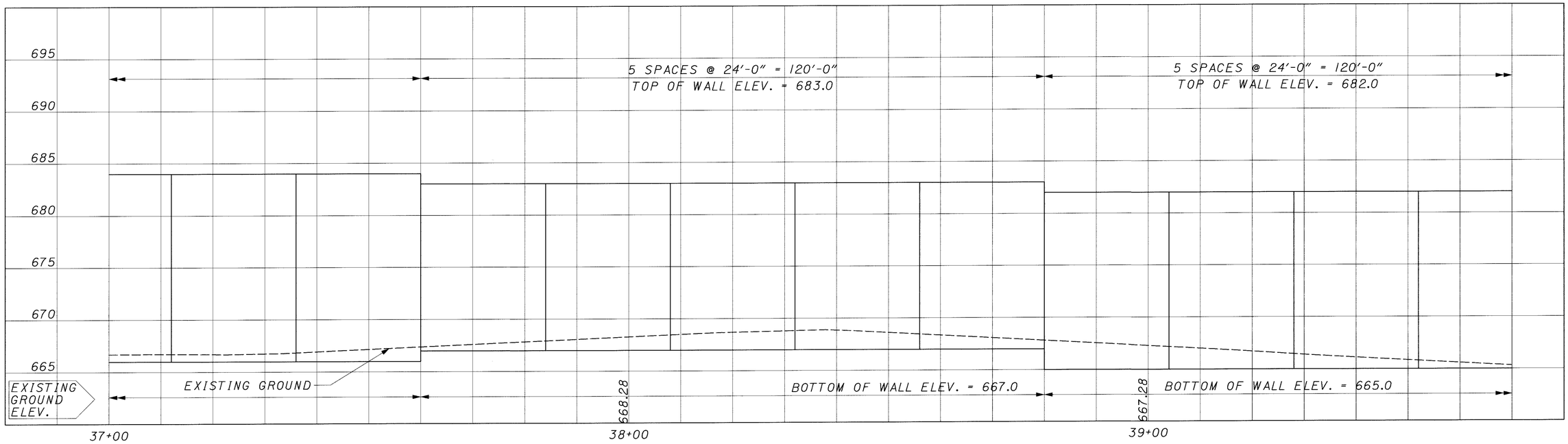

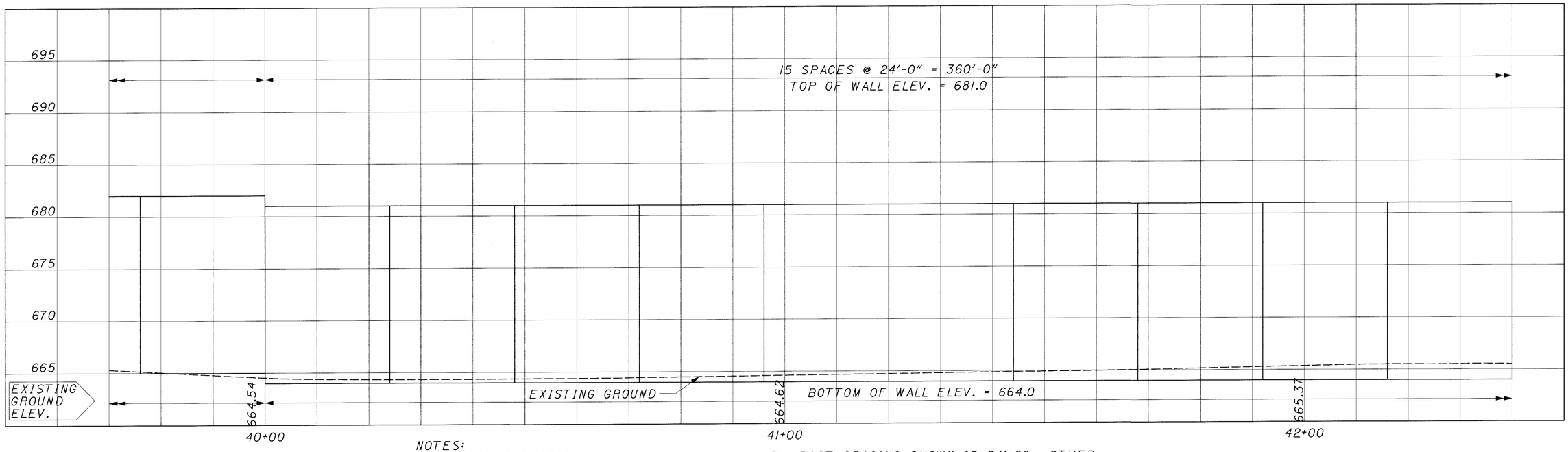

NOTES:

1. BOTTOM ELEVATIONS SHOWN ON PROFILE ARE FOR THE BOTTOM OF THE PANEL, NOT THE FINISHED GRADE LINE.
2. TOP ELEVATIONS SHOWN ARE THE MINIMUM TOP ELEVATIONS.
3. POST SPACING SHOWN IS 24'-0". OTHER POST SPACING WILL BE REQUIRED TO AVOID HITTING DRAINAGE STRUCTURES AND UTILITIES.
4. ALL DRILLED SHAFT FOUNDATION DEPTHS SHALL BE 6' INTO BEDROCK.
5. SEE SHEETS 128/582 TO 194/582 FOR NOISE BARRIER PLANS

CALCULATED JAA
CHECKED SM

SITE 7D NOISE BARRIER PROFILE SHEET STA 37+00 TO STA 42+40

CUY-90-0.00

562
582

20 MAR 2000
D:\pr22308\cadd\rwprf6a.dgn

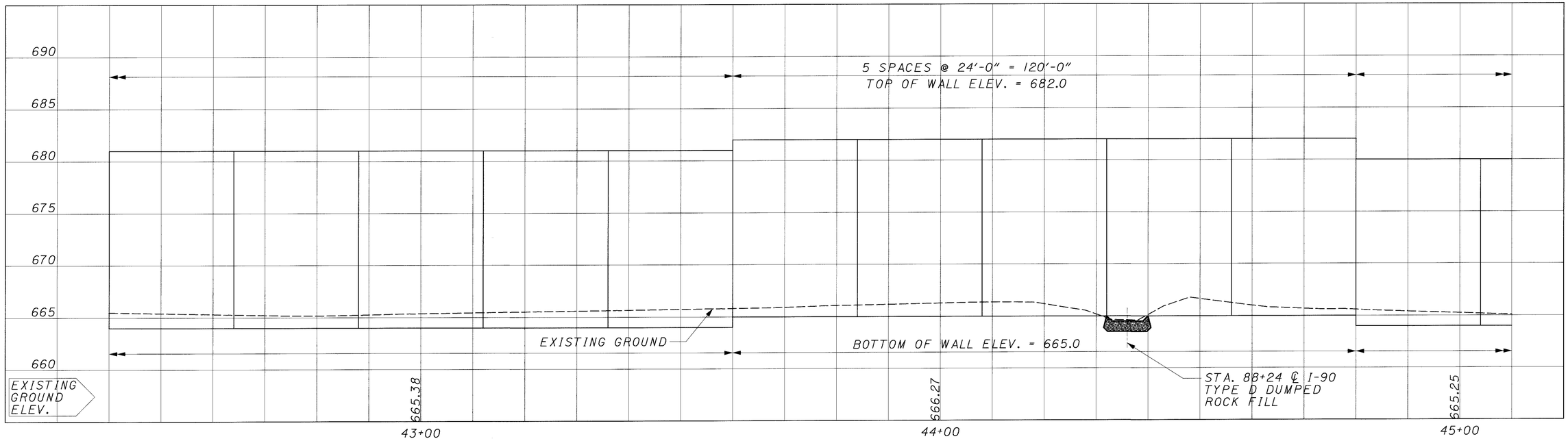

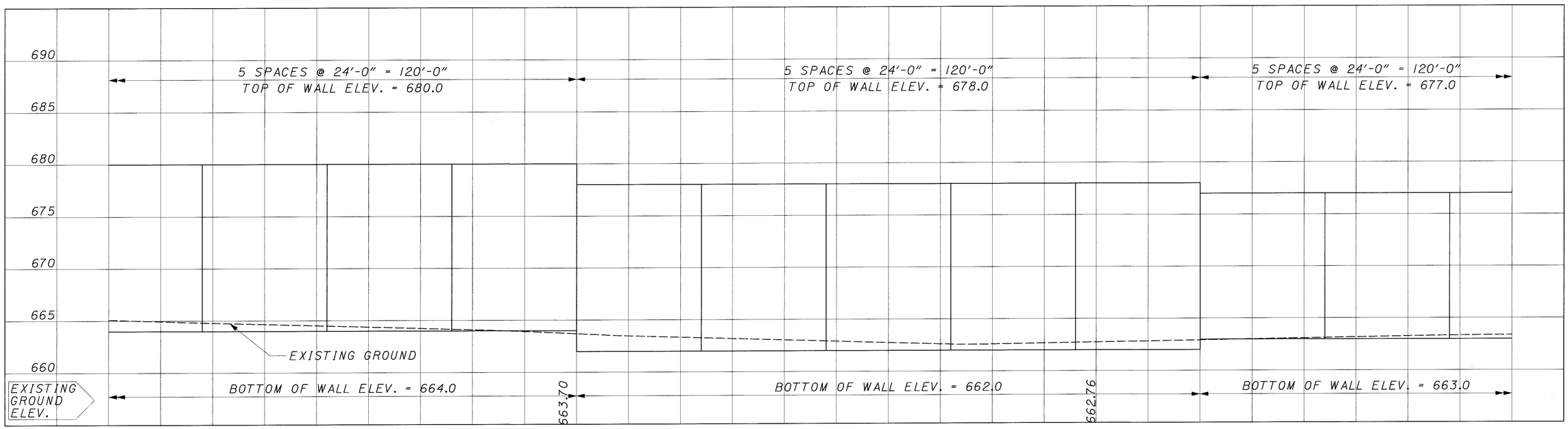

NOTES:
1. BOTTOM ELEVATIONS SHOWN ON PROFILE ARE FOR THE BOTTOM OF THE PANEL, NOT THE FINISHED GRADE LINE.
2. TOP ELEVATIONS SHOWN ARE THE MINIMUM TOP ELEVATIONS.
3. POST SPACING SHOWN IS 24'-0". OTHER POST SPACING WILL BE REQUIRED TO AVOID HITTING DRAINAGE STRUCTURES AND UTILITIES.
4. ALL DRILLED SHAFT FOUNDATION DEPTHS SHALL BE 6' INTO BEDROCK.
5. SEE SHEETS 128/582 TO 194/582 FOR NOISE BARRIER PLANS

CALCULATED JAA
CHECKED SM

SITE 7D NOISE BARRIER PROFILE SHEET
STA 42+40 TO STA 47+80

CUY-90-0.00

563
582

20 MAR 2000
p:\pr22308\cadd\nwprf7a.dgn

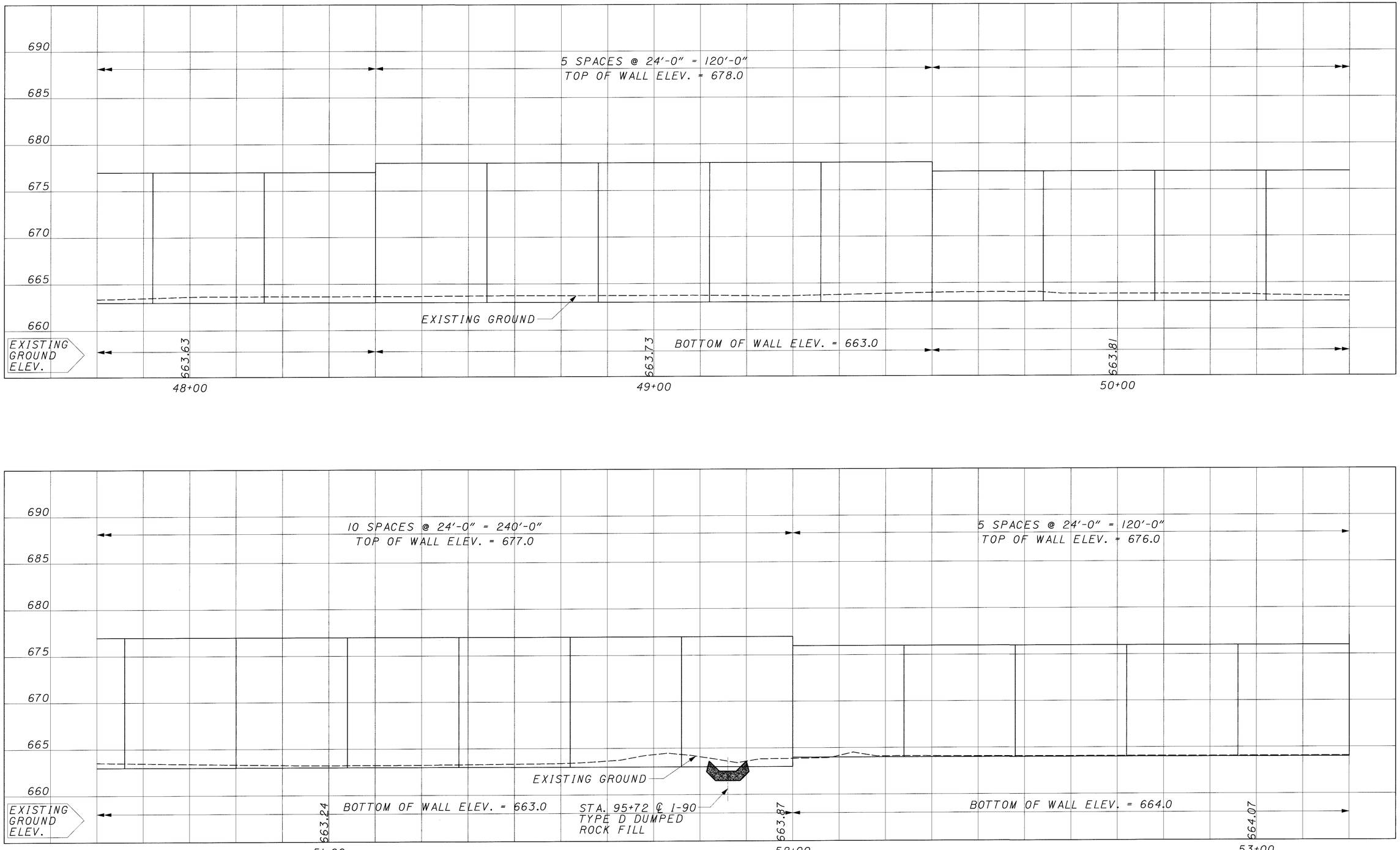

NOTES:

1. BOTTOM ELEVATIONS SHOWN ON PROFILE ARE FOR THE BOTTOM OF THE PANEL, NOT THE FINISHED GRADE LINE.
2. TOP ELEVATIONS SHOWN ARE THE MINIMUM TOP ELEVATIONS.
3. POST SPACING SHOWN IS 24'-0". OTHER POST SPACING WILL BE REQUIRED TO AVOID HITTING DRAINAGE STRUCTURES AND UTILITIES.
4. ALL DRILLED SHAFT FOUNDATION DEPTHS SHALL BE 6' INTO BEDROCK.
5. SEE SHEETS 128/582 TO 194/582 FOR NOISE BARRIER PLANS

CALCULATED JAA
CHECKED SM

SITE 7D NOISE BARRIER PROFILE SHEET STA 47+80 TO STA 53+20

CUY-90-0.00

564
582

20 MAR 2000
p:\pr22308\cadd\nwpr18a.dgn

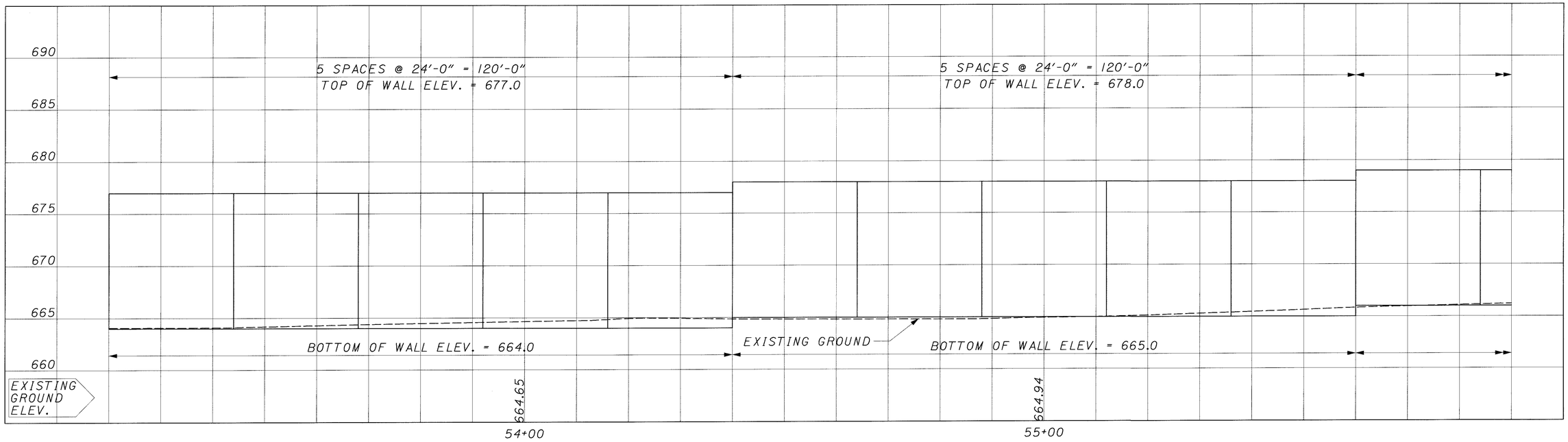

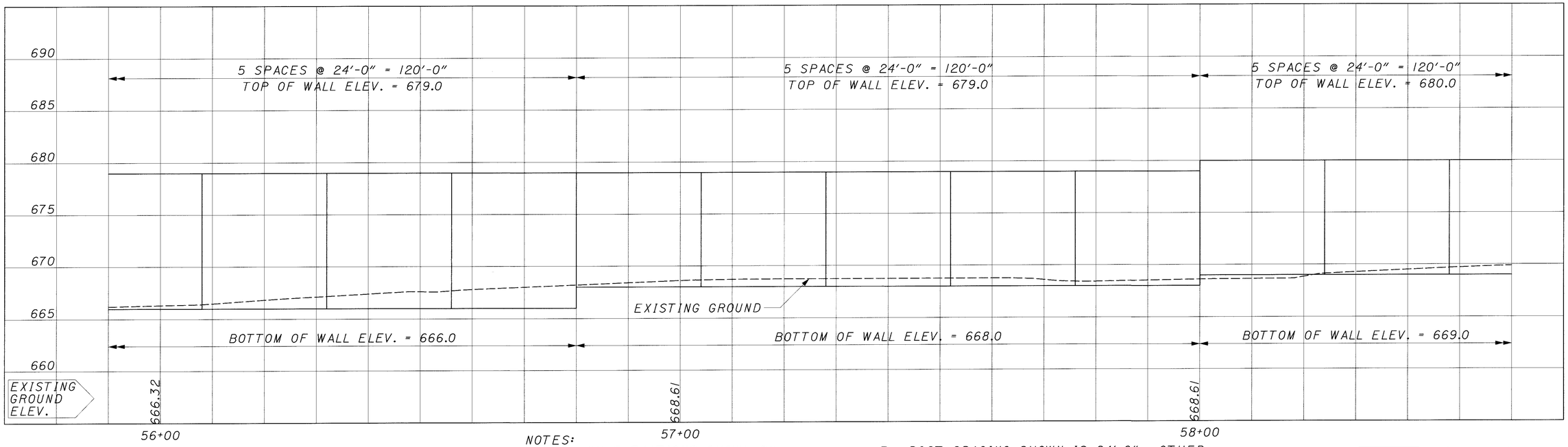

NOTES:

1. BOTTOM ELEVATIONS SHOWN ON PROFILE ARE FOR THE BOTTOM OF THE PANEL, NOT THE FINISHED GRADE LINE.
2. TOP ELEVATIONS SHOWN ARE THE MINIMUM TOP ELEVATIONS.
3. POST SPACING SHOWN IS 24'-0". OTHER POST SPACING WILL BE REQUIRED TO AVOID HITTING DRAINAGE STRUCTURES AND UTILITIES.
4. ALL DRILLED SHAFT FOUNDATION DEPTHS SHALL BE 6' INTO BEDROCK.
5. SEE SHEETS 128/582 TO 194/582 FOR NOISE BARRIER PLANS

CALCULATED JAA
CHECKED SM

SITE 7D NOISE BARRIER PROFILE SHEET
STA 53+20 TO STA 58+60

CUY-90-0.00

565
582

20 MAR 2000
R:\pr22308\cadd\nwpr-f9a.dgn

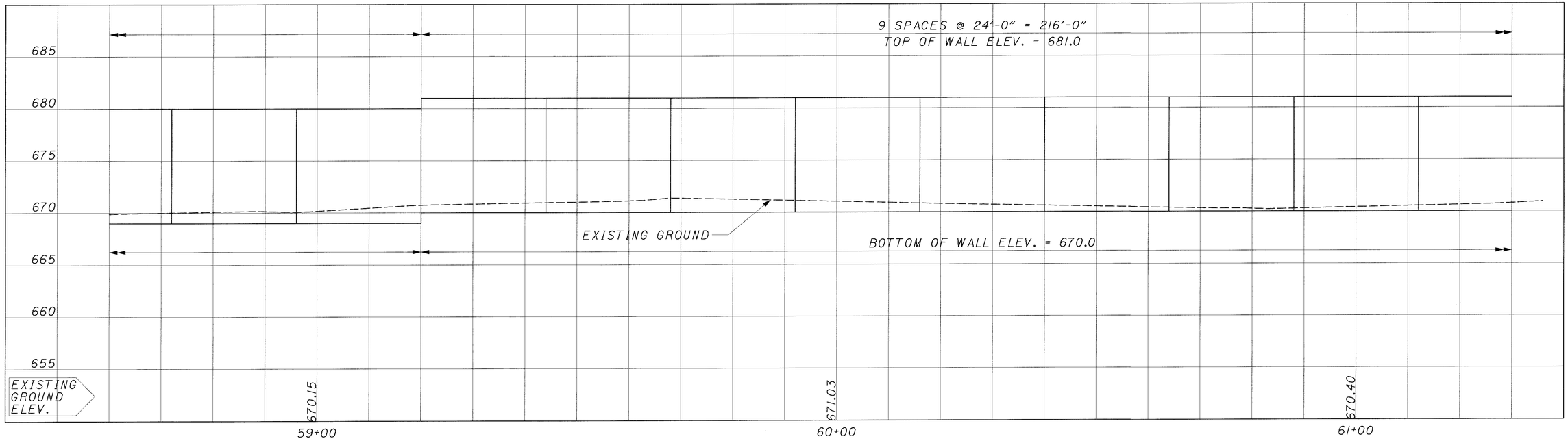

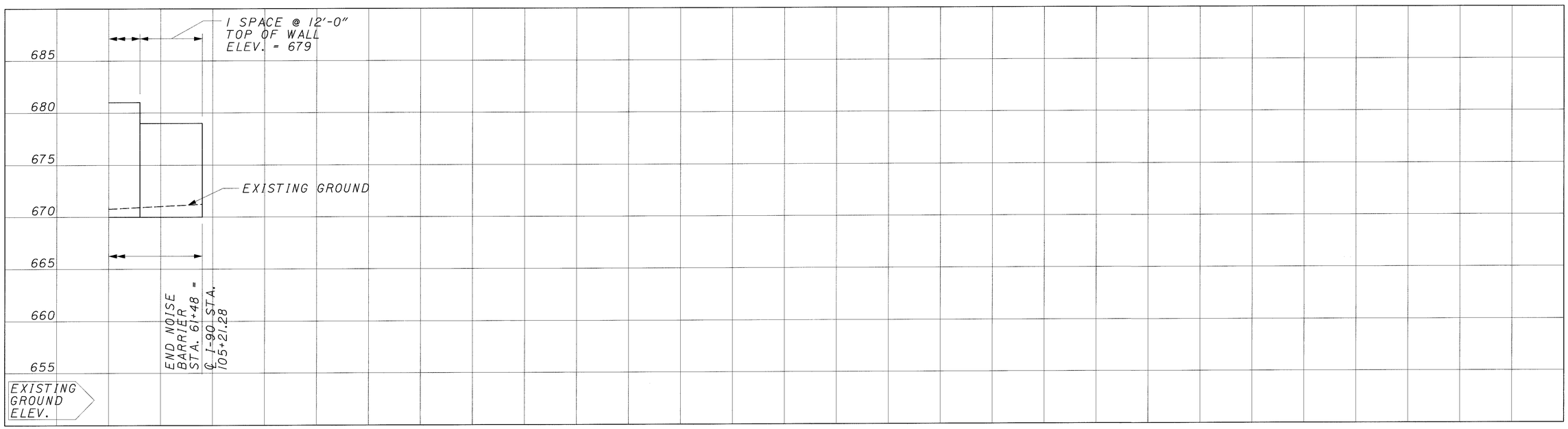

NOTES:

1. BOTTOM ELEVATIONS SHOWN ON PROFILE ARE FOR THE BOTTOM OF THE PANEL, NOT THE FINISHED GRADE LINE.
2. TOP ELEVATIONS SHOWN ARE THE MINIMUM TOP ELEVATIONS.
3. POST SPACING SHOWN IS 24'-0". OTHER POST SPACING WILL BE REQUIRED TO AVOID HITTING DRAINAGE STRUCTURES AND UTILITIES.
4. ALL DRILLED SHAFT FOUNDATION DEPTHS SHALL BE 6' INTO BEDROCK.
5. SEE SHEETS 128/582 TO 194/582 FOR NOISE BARRIER PLANS

CALCULATED JAA
CHECKED SM

SITE 7D NOISE BARRIER PROFILE SHEET
STA 58+60 TO STA 61+48

CUY-90-0.00

20 MAR 2000
R:\pr22308\cadd\wpr-f10a.dgn

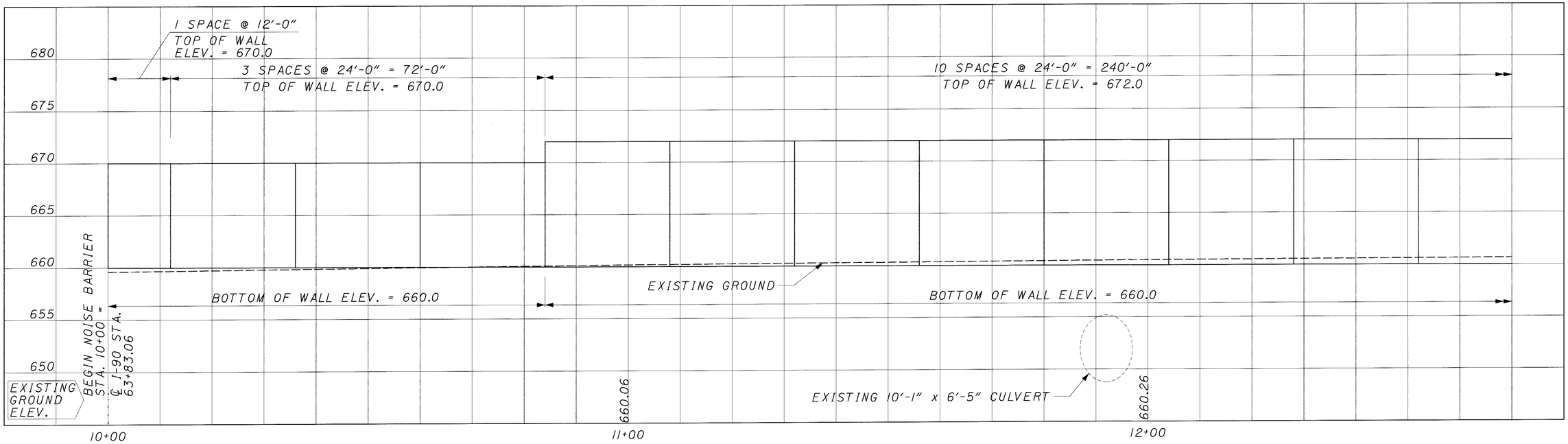

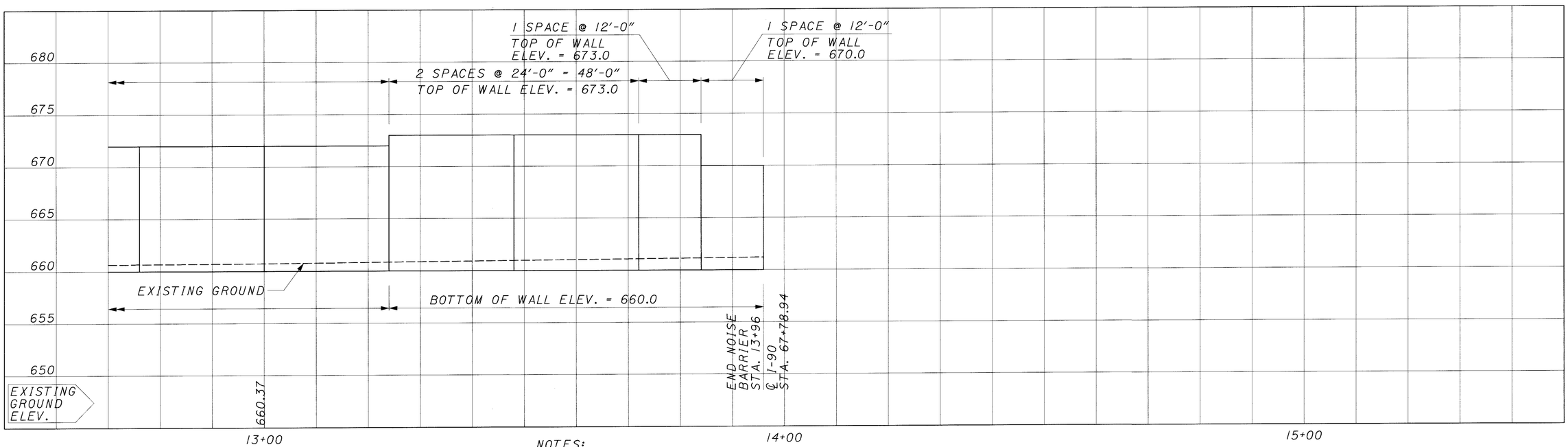

NOTES:

1. BOTTOM ELEVATIONS SHOWN ON PROFILE ARE FOR THE BOTTOM OF THE PANEL, NOT THE FINISHED GRADE LINE.
2. TOP ELEVATIONS SHOWN ARE THE MINIMUM TOP ELEVATIONS.
3. POST SPACING SHOWN IS 24'-0". OTHER POST SPACING WILL BE REQUIRED TO AVOID HITTING DRAINAGE STRUCTURES AND UTILITIES.
4. ALL DRILLED SHAFT FOUNDATION DEPTHS SHALL BE 6' INTO BEDROCK.
5. SEE SHEETS 128/582 TO 194/582 FOR NOISE BARRIER PLANS

CALCULATED JAA
CHECKED SM

SITE 7A NOISE BARRIER PROFILE SHEET STA 10+00 TO STA 13+84

CUY-90-0.00

20 MAR 2000
p:\pr-22308\cadd\nwpr-fila.dgn

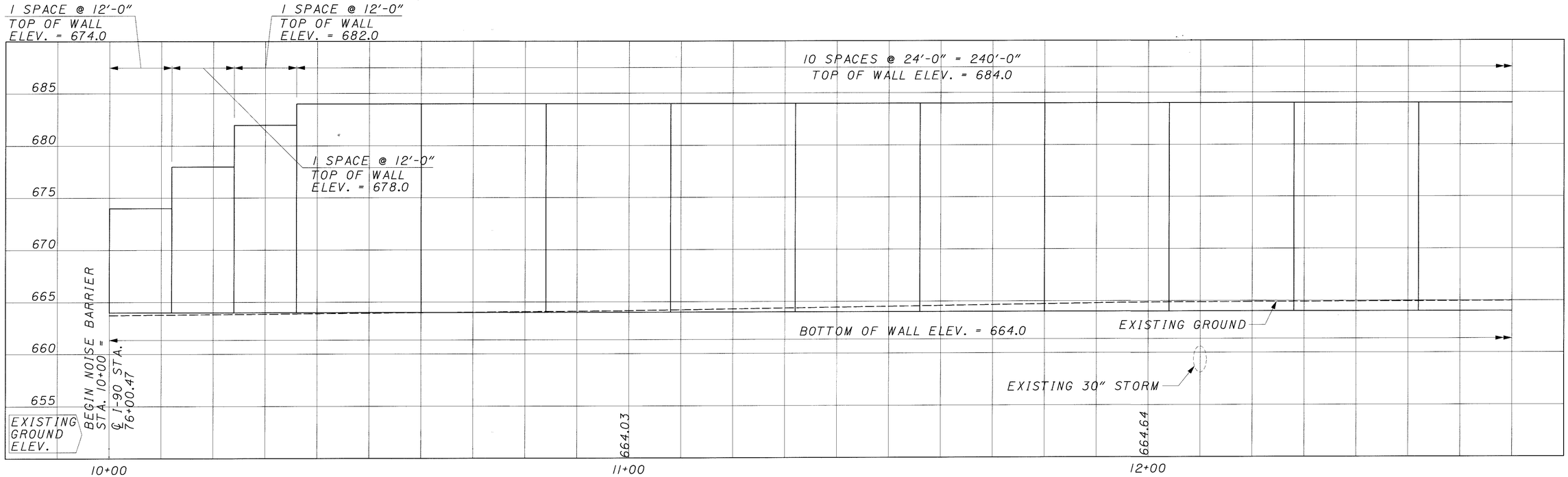

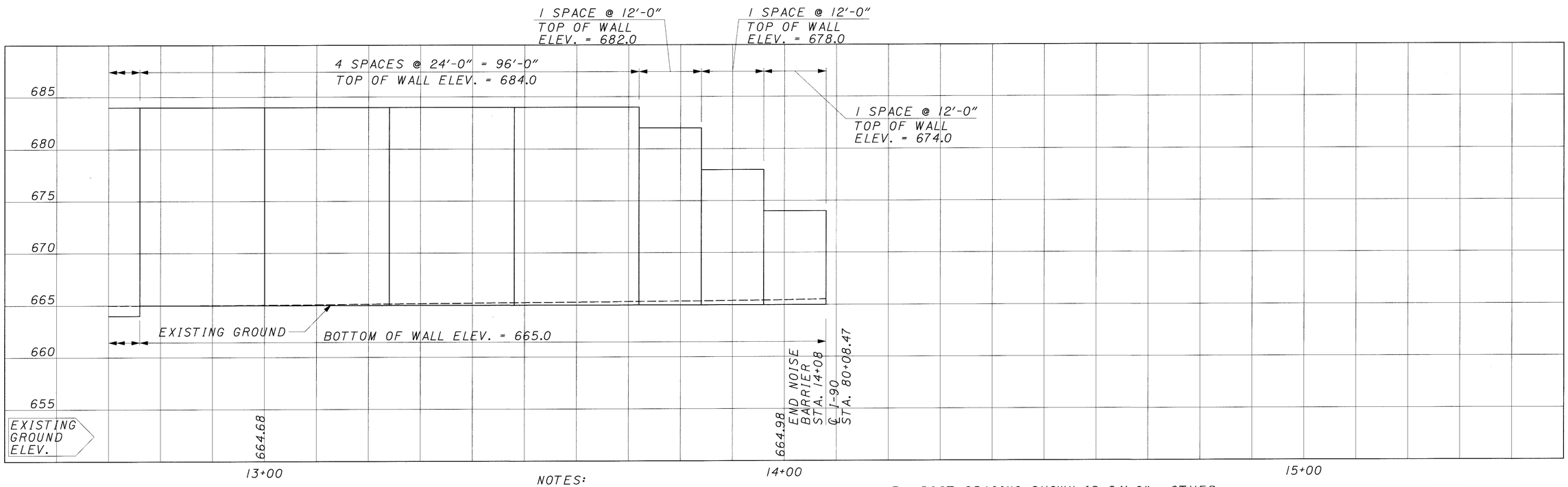

NOTES:

1. BOTTOM ELEVATIONS SHOWN ON PROFILE ARE FOR THE BOTTOM OF THE PANEL, NOT THE FINISHED GRADE LINE.
2. TOP ELEVATIONS SHOWN ARE THE MINIMUM TOP ELEVATIONS.
3. POST SPACING SHOWN IS 24'-0". OTHER POST SPACING WILL BE REQUIRED TO AVOID HITTING DRAINAGE STRUCTURES AND UTILITIES.
4. ALL DRILLED SHAFT FOUNDATION DEPTHS SHALL BE 6' INTO BEDROCK.
5. SEE SHEETS 128/582 TO 194/582 FOR NOISE BARRIER PLANS

CALCULATED JAA
CHECKED SM

SITE 7B NOISE BARRIER PROFILE SHEET
STA 10+00 TO STA 13+60

CUY-90-0.00

568
582

20 MAR 2000
B:\pr22308\cadd\nwpr-fl2a.dgn

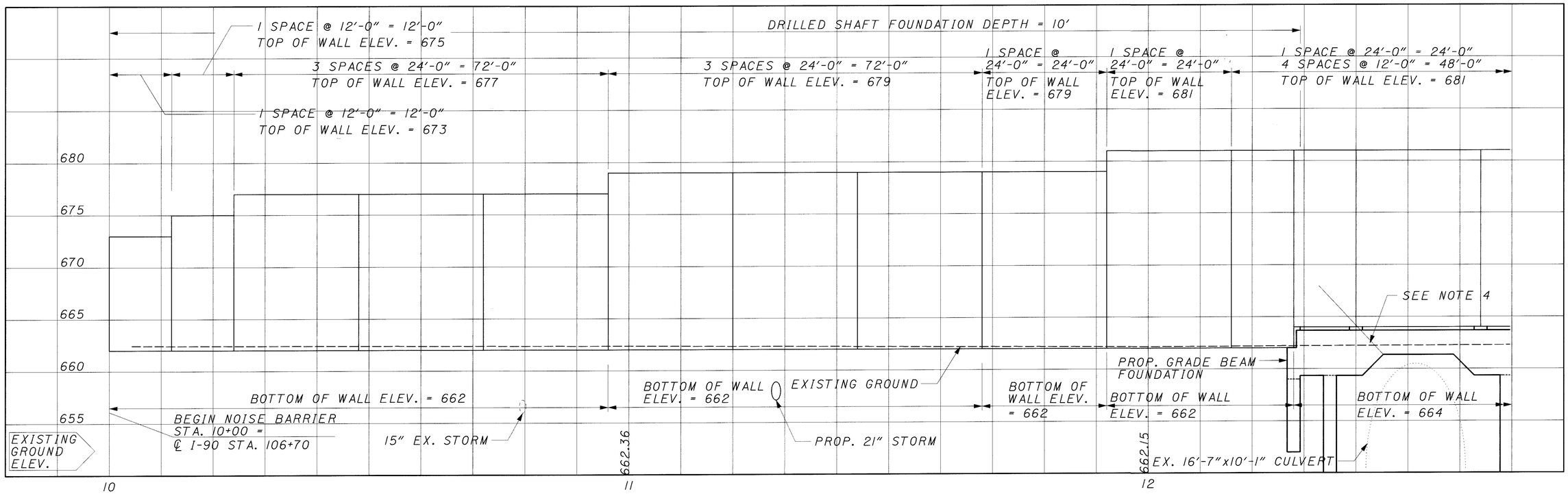

NOTES:

1. BOTTOM ELEVATIONS SHOWN ON PROFILE ARE FOR THE BOTTOM OF THE PANEL, NOT THE FINISHED GRADE LINE.
2. TOP ELEVATIONS SHOWN ARE THE MINIMUM TOP ELEVATIONS.
3. POST SPACING SHOWN IS 24'-0". OTHER POST SPACING WILL BE REQUIRED TO AVOID HITTING DRAINAGE STRUCTURES AND UTILITIES.
4. FOR PROPOSED GRADE BEAM FOUNDATION DETAILS SEE SHEETS 544 & 545.
5. SEE SHEETS 128/194 TO 194/582 FOR NOISE BARRIER PLANS

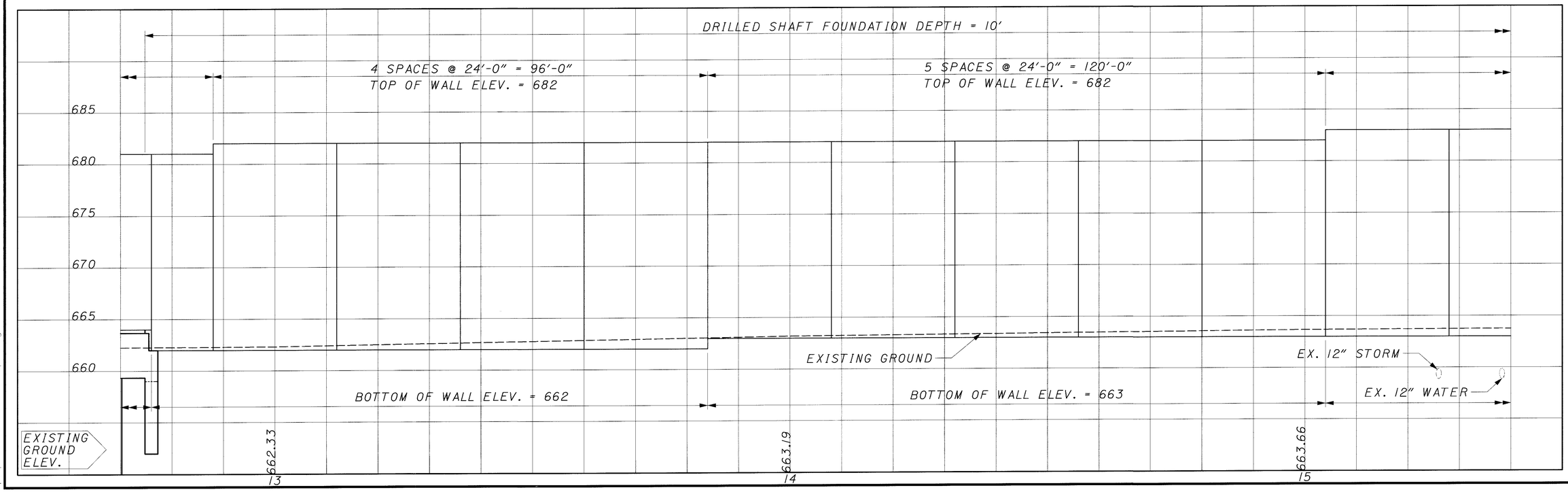

SITE 8 NOISE BARRIER PROFILE SHEET
STA. 10+00 TO 15+40

CALCULATED JAA
CHECKED SM

CUY-90-0.00

569
582

20 MAR 2000
P:\pr22308\cadd\sit8prg.dgn

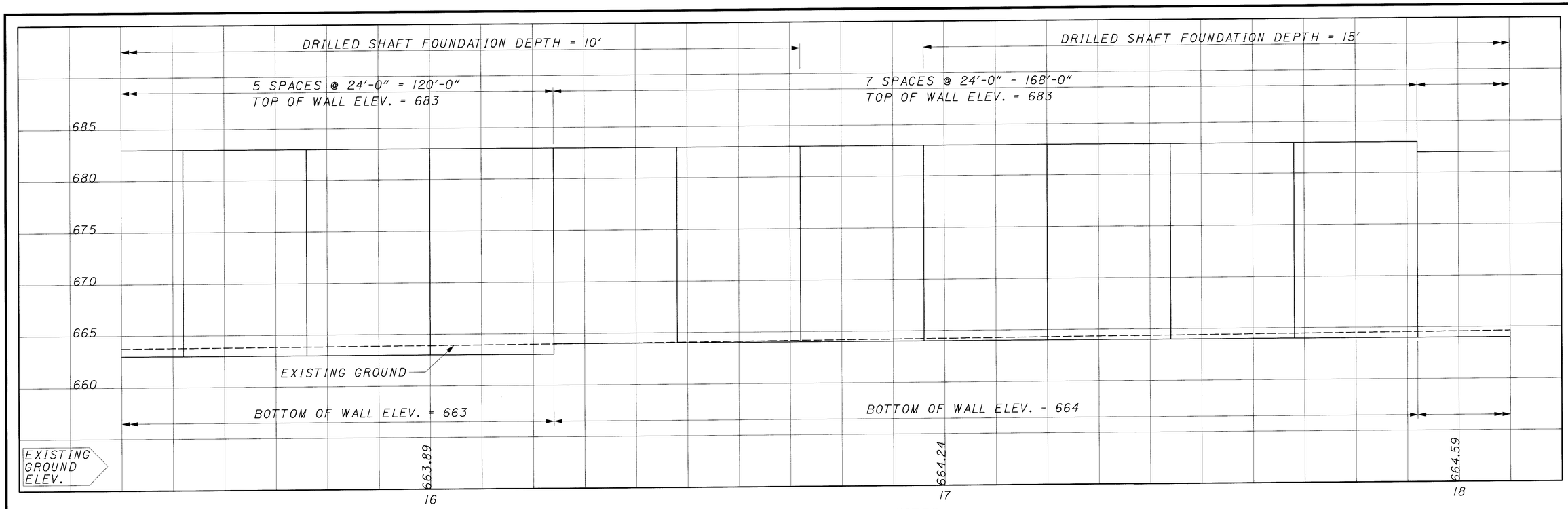

NOTES:

1. BOTTOM ELEVATIONS SHOWN ON PROFILE ARE FOR THE BOTTOM OF THE PANEL, NOT THE FINISHED GRADE LINE.
2. TOP ELEVATIONS SHOWN ARE THE MINIMUM TOP ELEVATIONS.
3. POST SPACING SHOWN IS 24'-0". OTHER POST SPACING WILL BE REQUIRED TO AVOID HITTING DRAINAGE STRUCTURES AND UTILITIES.
4. SEE SHEETS 128/194 TO 194/582 FOR NOISE BARRIER PLANS

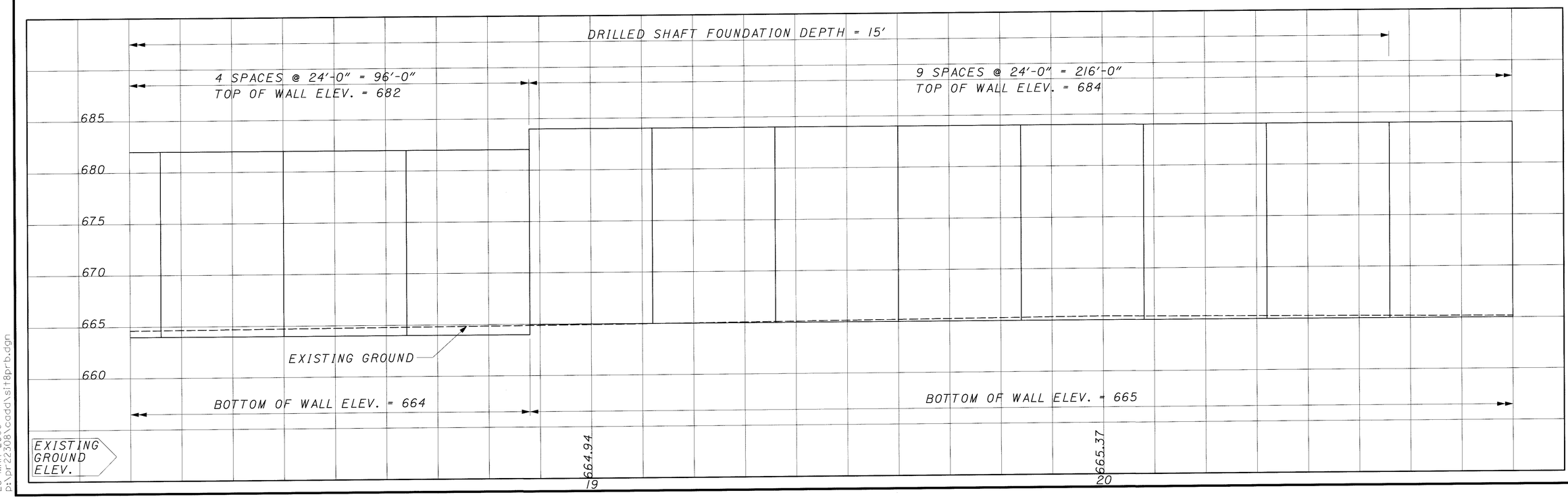

CALCULATED JAA
CHECKED SM

SITE 8 NOISE BARRIER PROFILE SHEET
STA. 15+40 TO 20+80

CUY-90-0.00

570
582

20 MAR 2000
D:\pr22308\cadd\sit8prb.dgn

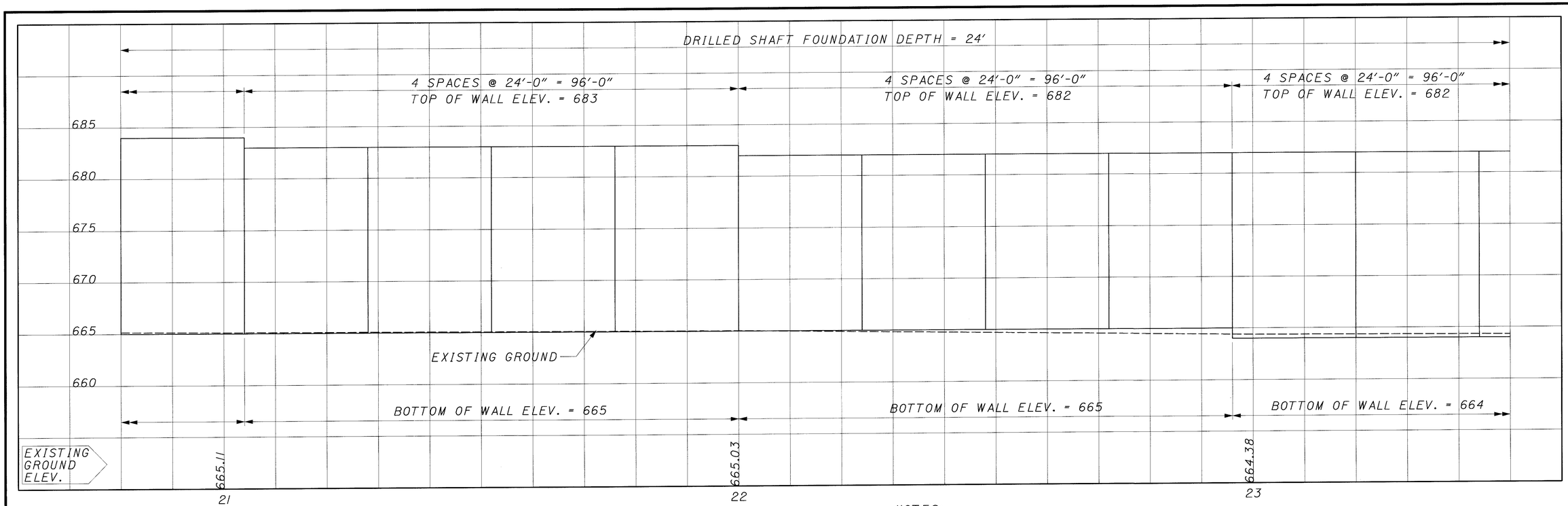

NOTES:

1. BOTTOM ELEVATIONS SHOWN ON PROFILE ARE FOR THE BOTTOM OF THE PANEL, NOT THE FINISHED GRADE LINE.
2. TOP ELEVATIONS SHOWN ARE THE MINIMUM TOP ELEVATIONS.
3. POST SPACING SHOWN IS 24'-0". OTHER POST SPACING WILL BE REQUIRED TO AVOID HITTING DRAINAGE STRUCTURES AND UTILITIES.
4. SEE SHEETS 128/194 TO 194/582 FOR NOISE BARRIER PLANS

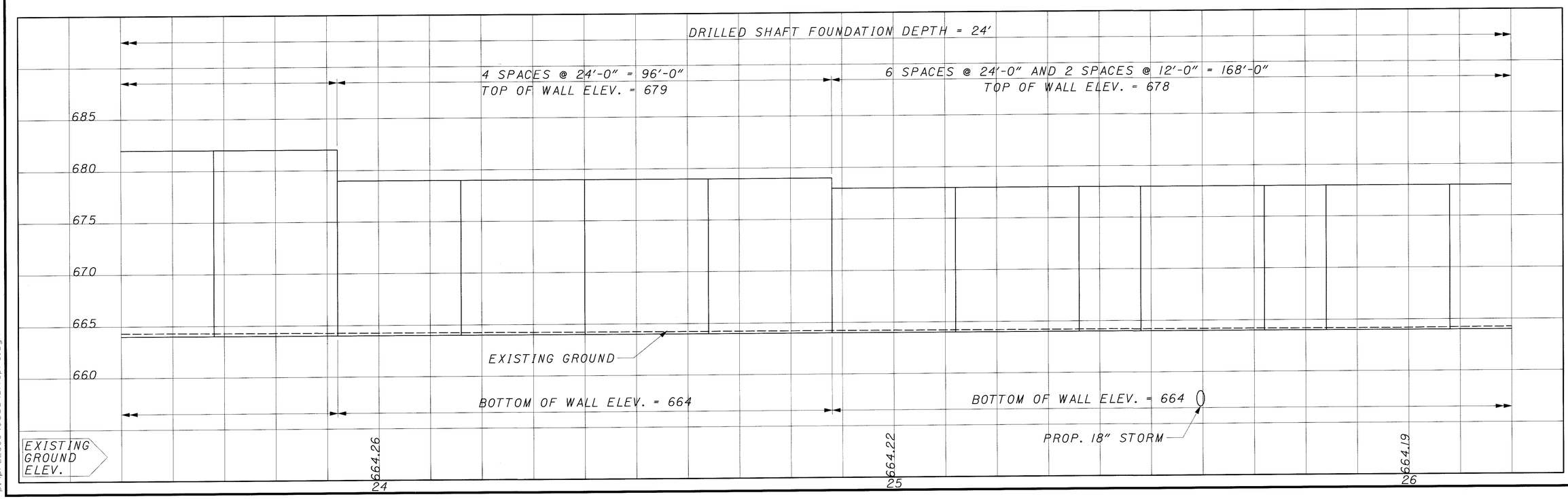

CALCULATED JAA
CHECKED SM

SITE 8 NOISE BARRIER PROFILE SHEET
STA. 20+80 TO 26+20

CUY-90-0.00

571
582

20 MAR 2000
p:\pr2308\cadd\sit8prc.dgn

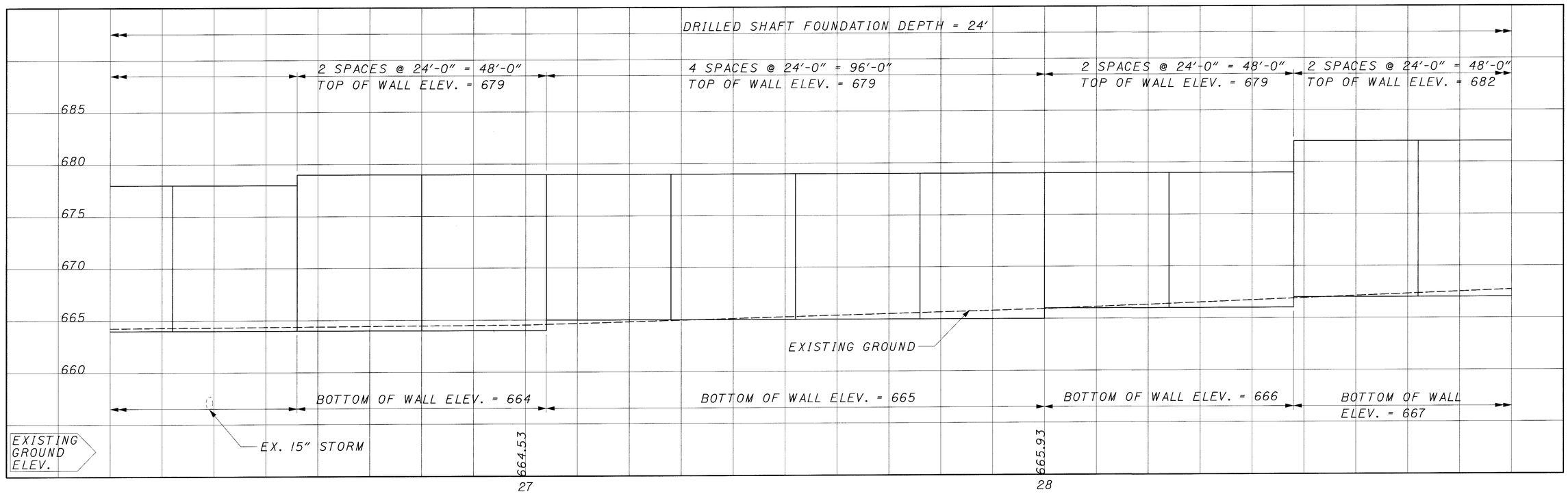

NOTES:

1. BOTTOM ELEVATIONS SHOWN ON PROFILE ARE FOR THE BOTTOM OF THE PANEL, NOT THE FINISHED GRADE LINE.
2. TOP ELEVATIONS SHOWN ARE THE MINIMUM TOP ELEVATIONS.
3. POST SPACING SHOWN IS 24'-0". OTHER POST SPACING WILL BE REQUIRED TO AVOID HITTING DRAINAGE STRUCTURES AND UTILITIES.
4. SEE SHEETS 128/194 TO 194/582 FOR NOISE BARRIER PLANS

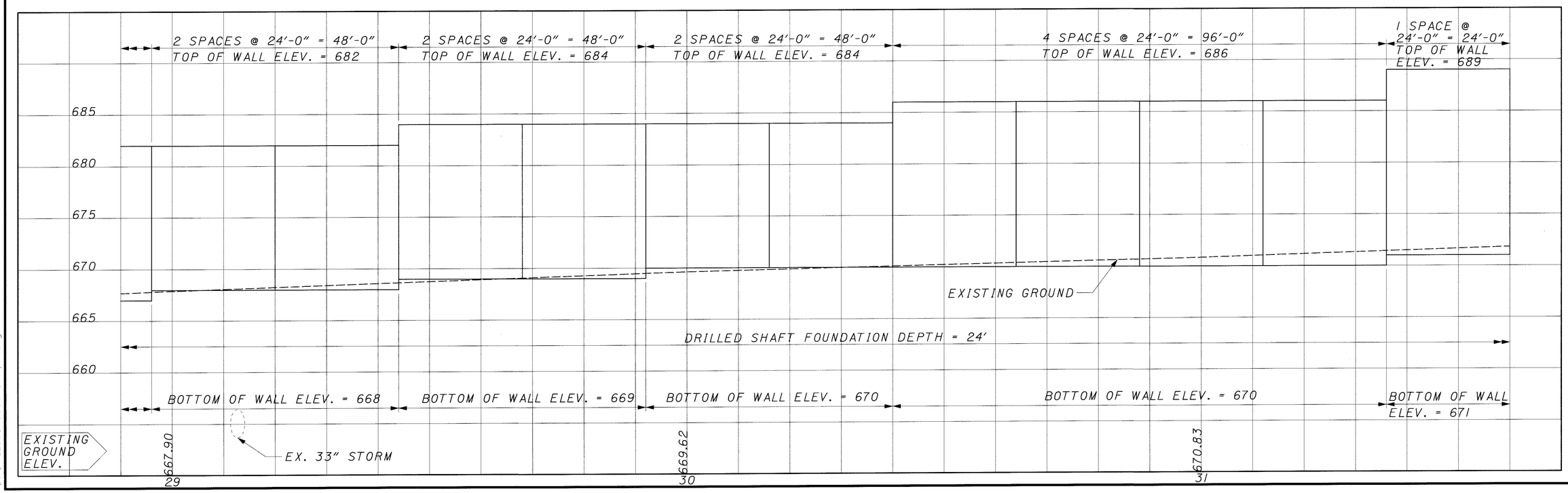

SITE 8 NOISE BARRIER PROFILE SHEET
STA 26+20 TO 31+60

CALCULATED JAA
CHECKED SM

CUY-90-0.00

572
582

20 MAR 2000
p:\pr-22308\cadd\sit8prd.dgn

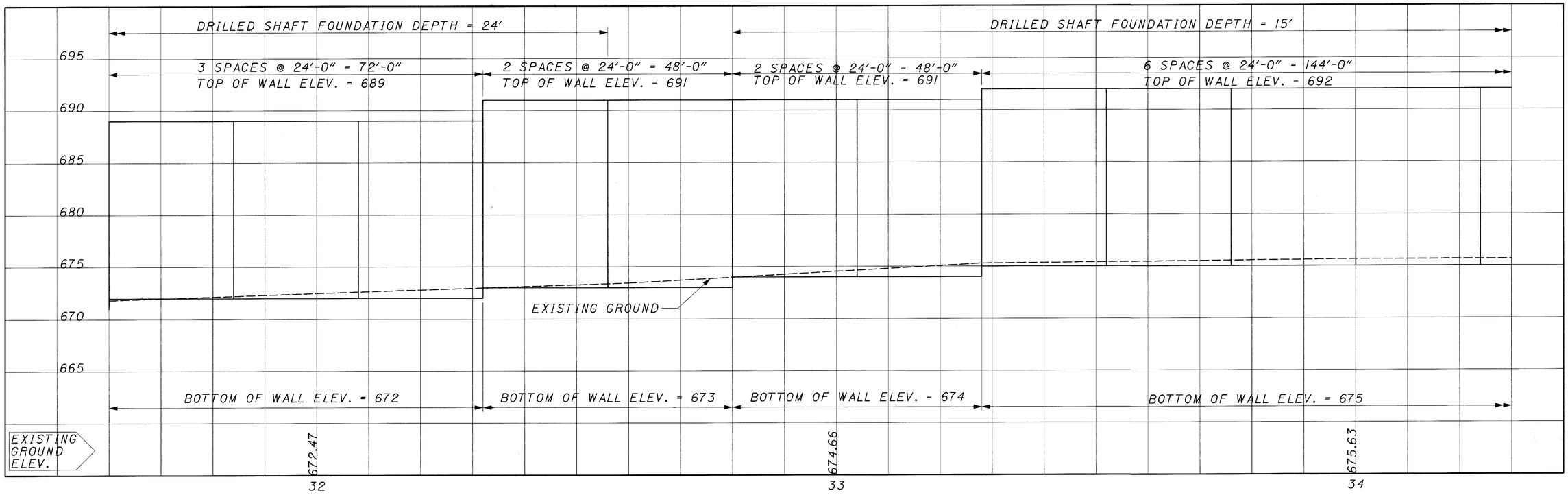

NOTES:

1. BOTTOM ELEVATIONS SHOWN ON PROFILE ARE FOR THE BOTTOM OF THE PANEL, NOT THE FINISHED GRADE LINE.
2. TOP ELEVATIONS SHOWN ARE THE MINIMUM TOP ELEVATIONS.
3. POST SPACING SHOWN IS 24'-0". OTHER POST SPACING WILL BE REQUIRED TO AVOID HITTING DRAINAGE STRUCTURES AND UTILITIES.
4. SEE SHEETS 128/194 TO 194/582 FOR NOISE BARRIER PLANS

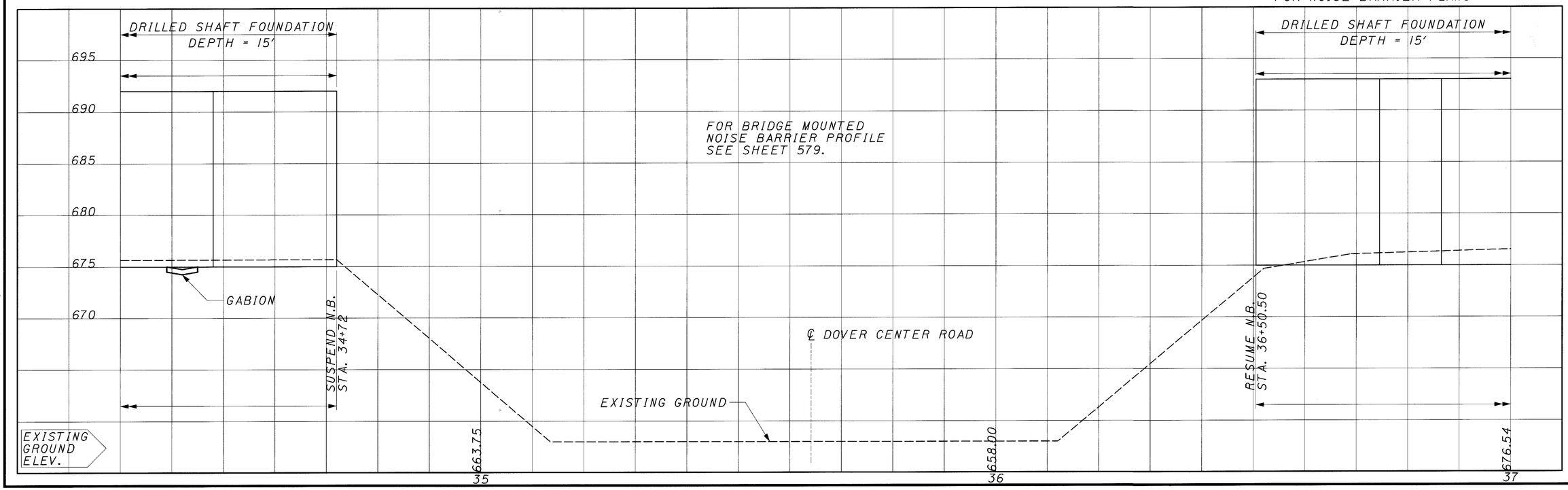

CALCULATED JAA
CHECKED SM

SITES 8 AND 10 NOISE BARRIER PROFILE SHEET
STA. 31+60 TO 34+72 AND 36+50.50 TO 37+00

CUY-90-0.00

573
582

24 MAR 2000
p:\pr22308\cadd\sit8pre.dgn

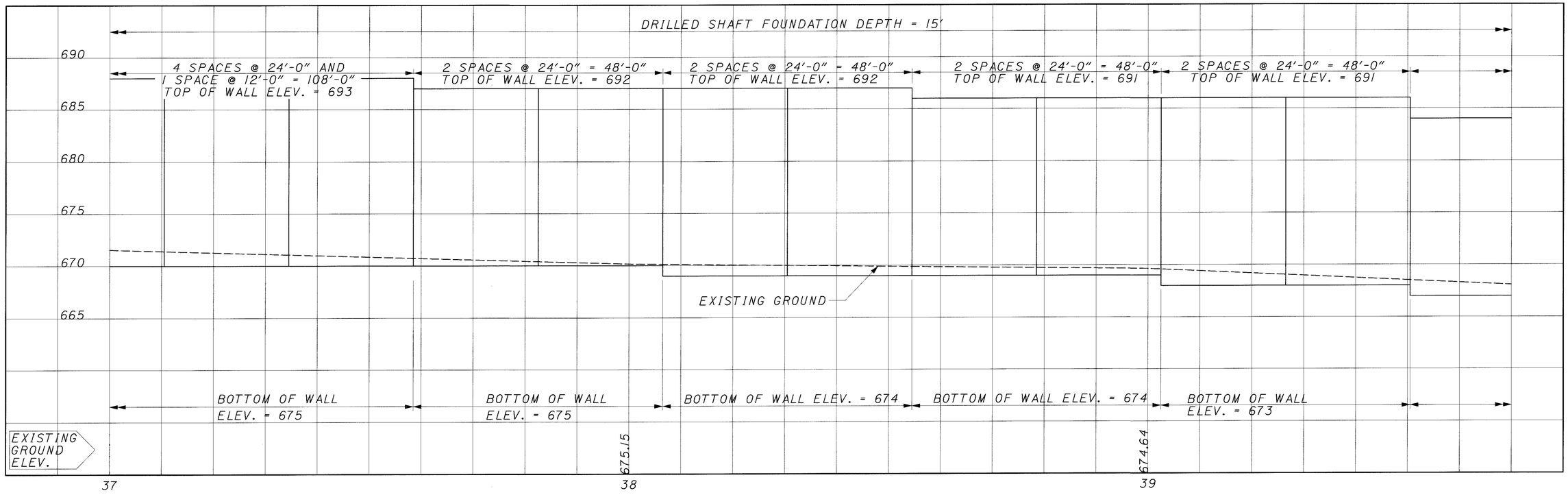

NOTES:

1. BOTTOM ELEVATIONS SHOWN ON PROFILE ARE FOR THE BOTTOM OF THE PANEL, NOT THE FINISHED GRADE LINE.
2. TOP ELEVATIONS SHOWN ARE THE MINIMUM TOP ELEVATIONS.
3. POST SPACING SHOWN IS 24'-0". OTHER POST SPACING WILL BE REQUIRED TO AVOID HITTING DRAINAGE STRUCTURES AND UTILITIES.
4. SEE SHEETS 128/194 TO 194/582 FOR NOISE BARRIER PLANS

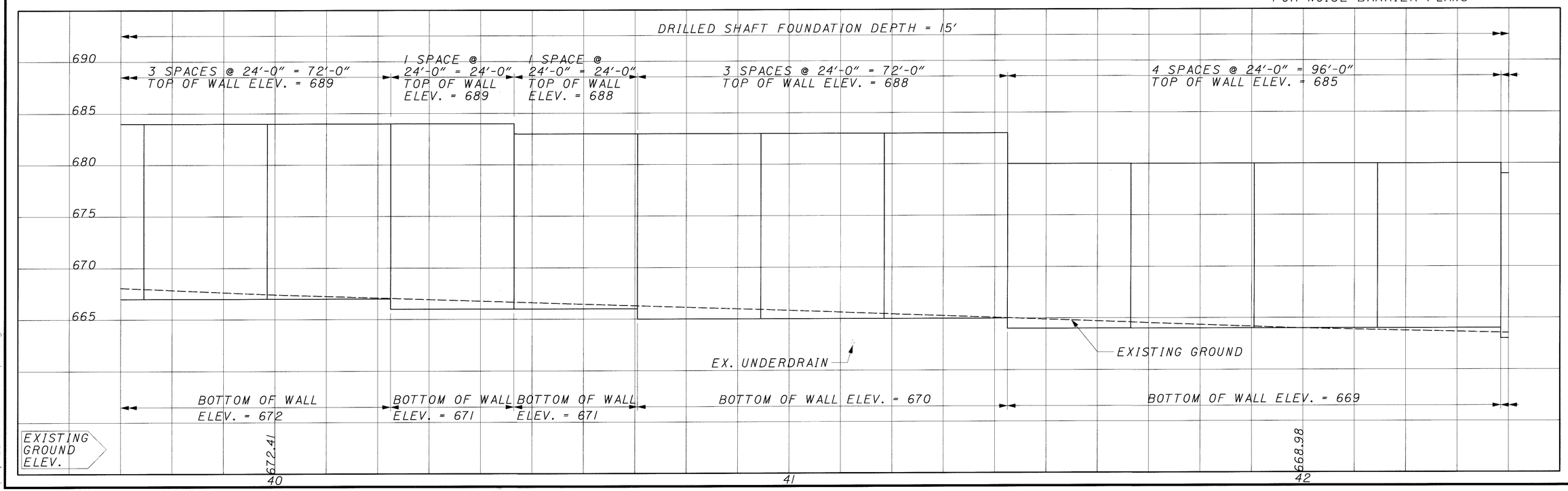

SITE 10 NOISE BARRIER PROFILE SHEET
STA. 37+00 TO 42+40

CALCULATED JAA
CHECKED SM

CUY-90-0.00

574
582

20 MAR 2000
P:\pr22308\cadd\sit8prf.dgn

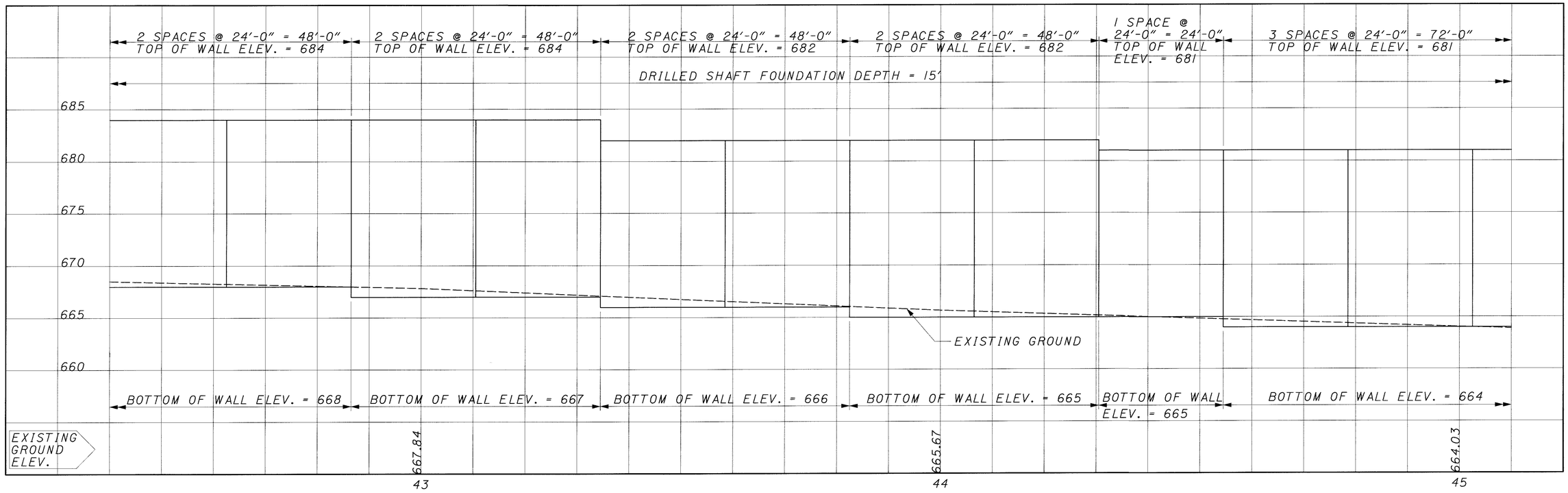

NOTES:

1. BOTTOM ELEVATIONS SHOWN ON PROFILE ARE FOR THE BOTTOM OF THE PANEL, NOT THE FINISHED GRADE LINE.
2. TOP ELEVATIONS SHOWN ARE THE MINIMUM TOP ELEVATIONS.
3. POST SPACING SHOWN IS 24'-0". OTHER POST SPACING WILL BE REQUIRED TO AVOID HITTING DRAINAGE STRUCTURES AND UTILITIES.
4. SEE SHEETS 128/194 TO 194/582 FOR NOISE BARRIER PLANS

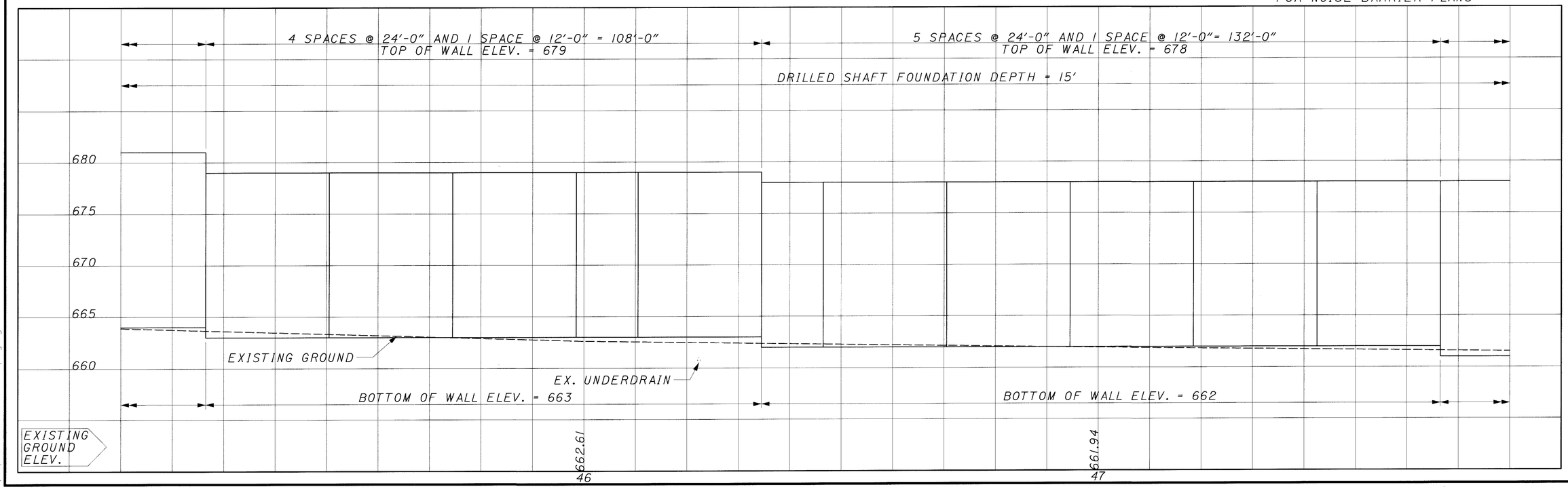

SITE 10 NOISE BARRIER PROFILE SHEET
STA. 42+40 TO 47+80

CALCULATED JAA
CHECKED SM

CUY-90-0.00

575
582

20 MAR 2000
ps\pr2230\caddv\sit8prg.dgn

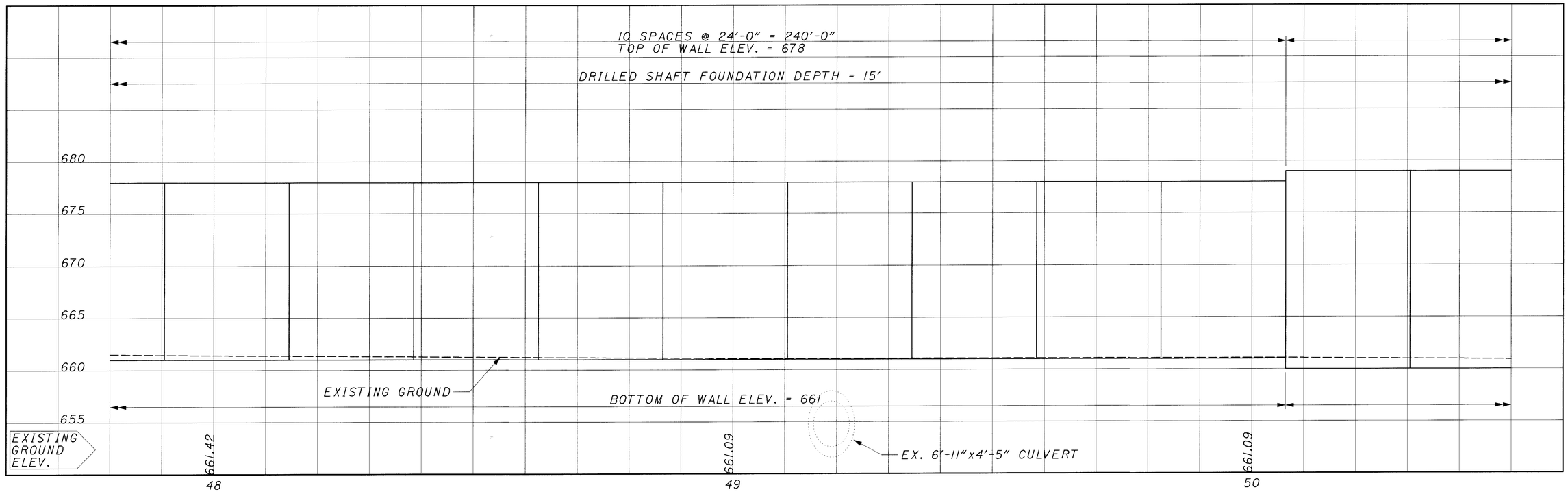

NOTES:

1. BOTTOM ELEVATIONS SHOWN ON PROFILE ARE FOR THE BOTTOM OF THE PANEL, NOT THE FINISHED GRADE LINE.
2. TOP ELEVATIONS SHOWN ARE THE MINIMUM TOP ELEVATIONS.
3. POST SPACING SHOWN IS 24'-0". OTHER POST SPACING WILL BE REQUIRED TO AVOID HITTING DRAINAGE STRUCTURES AND UTILITIES.
4. SEE SHEETS 128/194 TO 194/582 FOR NOISE BARRIER PLANS

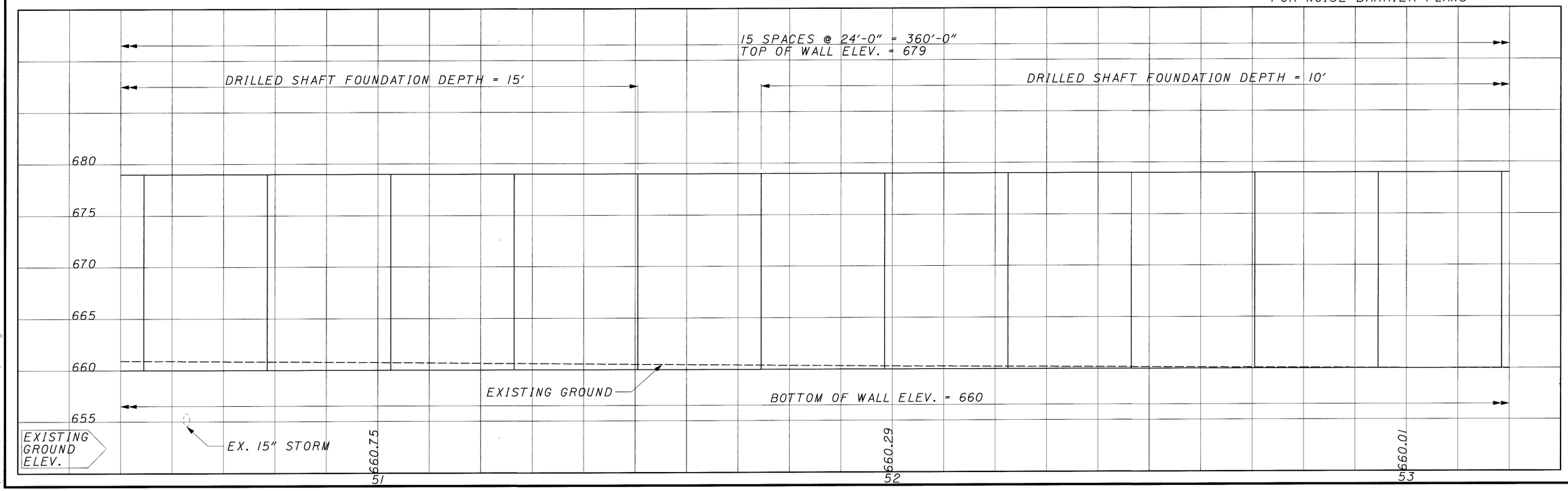

CALCULATED JAA
CHECKED SM

SITE 10 NOISE BARRIER PROFILE SHEET
STA. 47+80 TO 53+20

CUY-90-0.00

576
582

27 MAR 2000
p:\PR22308\CADD\sit8prh.dgn

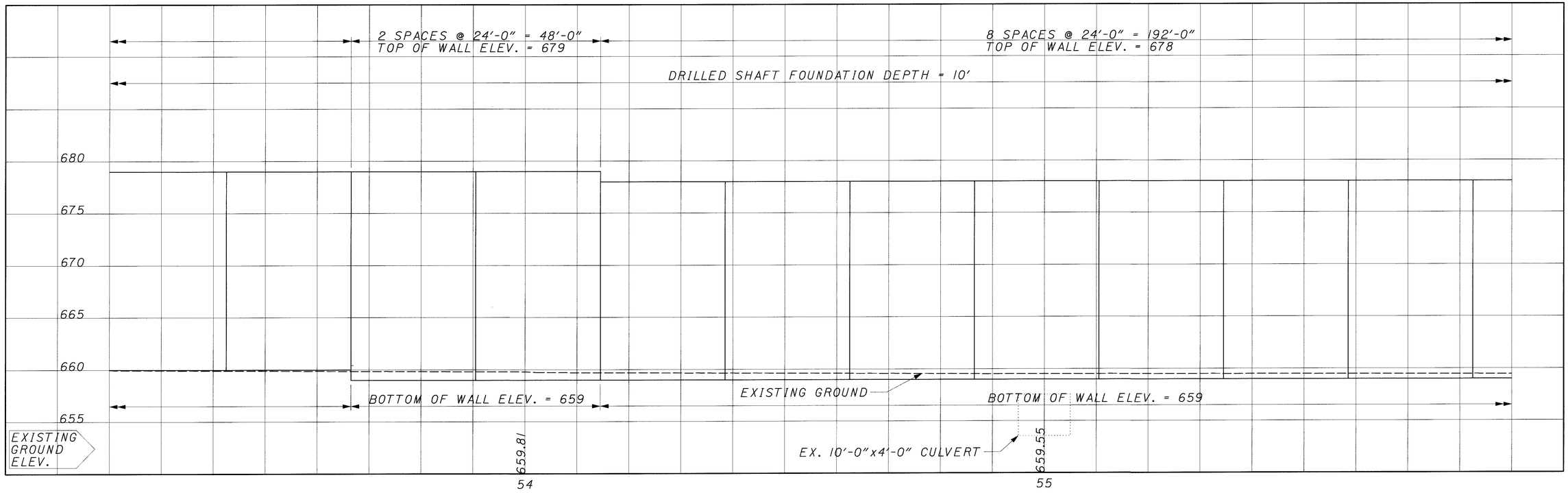

NOTES:

1. BOTTOM ELEVATIONS SHOWN ON PROFILE ARE FOR THE BOTTOM OF THE PANEL, NOT THE FINISHED GRADE LINE.
2. TOP ELEVATIONS SHOWN ARE THE MINIMUM TOP ELEVATIONS.
3. POST SPACING SHOWN IS 24'-0". OTHER POST SPACING WILL BE REQUIRED TO AVOID HITTING DRAINAGE STRUCTURES AND UTILITIES.
4. SEE SHEETS 128/194 TO 194/582 FOR NOISE BARRIER PLANS

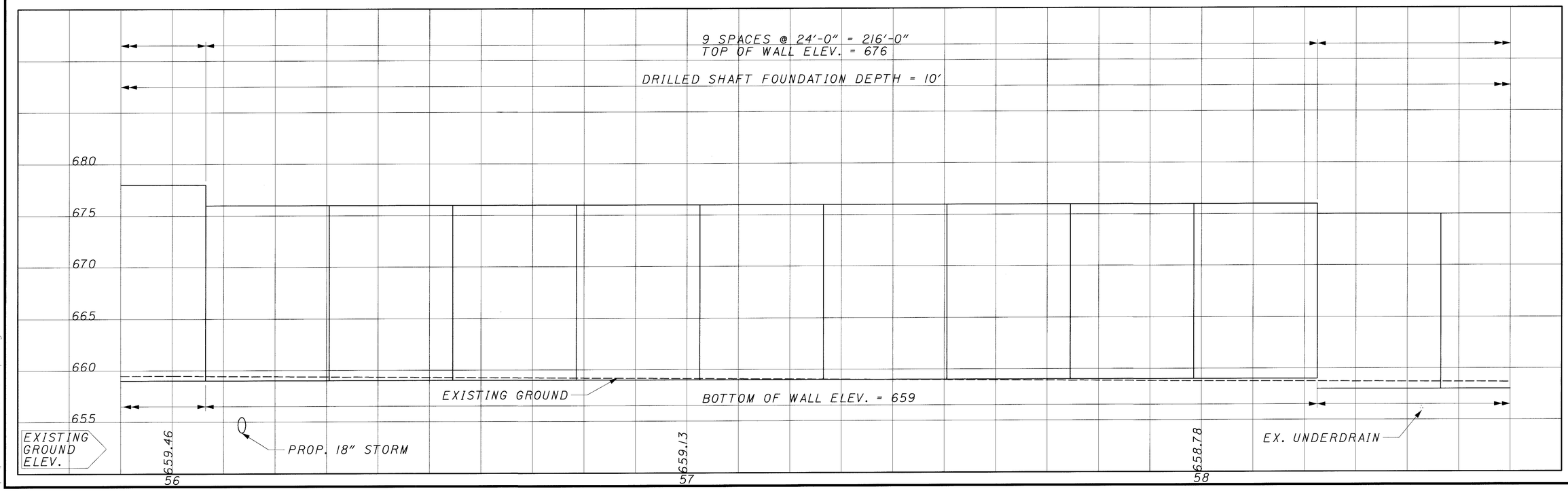

CALCULATED JAA
CHECKED SM

SITE 10 NOISE BARRIER PROFILE SHEET
STA. 53+20 TO 58+60

CUY-90-0.00

577
582

20 MAR 2000
D:\pr22308\cadd\sit8pr1.dgn

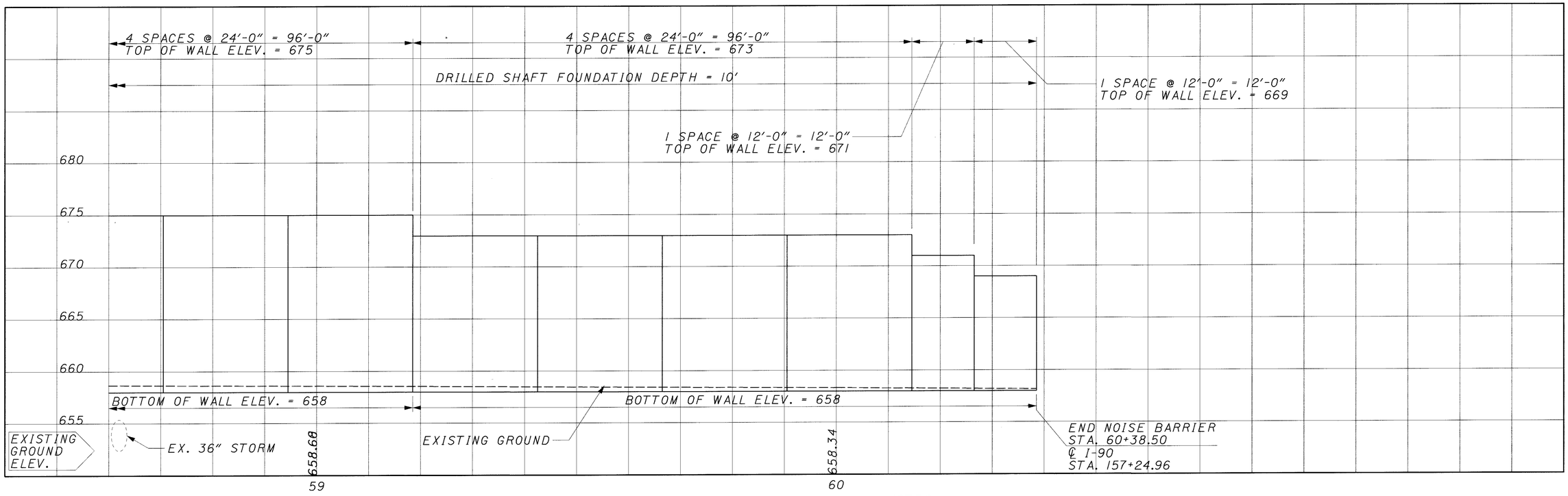

NOTES:

1. BOTTOM ELEVATIONS SHOWN ON PROFILE ARE FOR THE BOTTOM OF THE PANEL, NOT THE FINISHED GRADE LINE.
2. TOP ELEVATIONS SHOWN ARE THE MINIMUM TOP ELEVATIONS.
3. POST SPACING SHOWN IS 24'-0". OTHER POST SPACING WILL BE REQUIRED TO AVOID HITTING DRAINAGE STRUCTURES AND UTILITIES.
4. SEE SHEETS 128/194 TO 194/582 FOR NOISE BARRIER PLANS

CALCULATED JAA
CHECKED SM

SITE 10 NOISE BARRIER PROFILE SHEET STA. 58+60 TO 60+38.50

CUY-90-0.00

578
582

20 MAR 2000
p:\pr22308\cadd\sit8pri.dgn

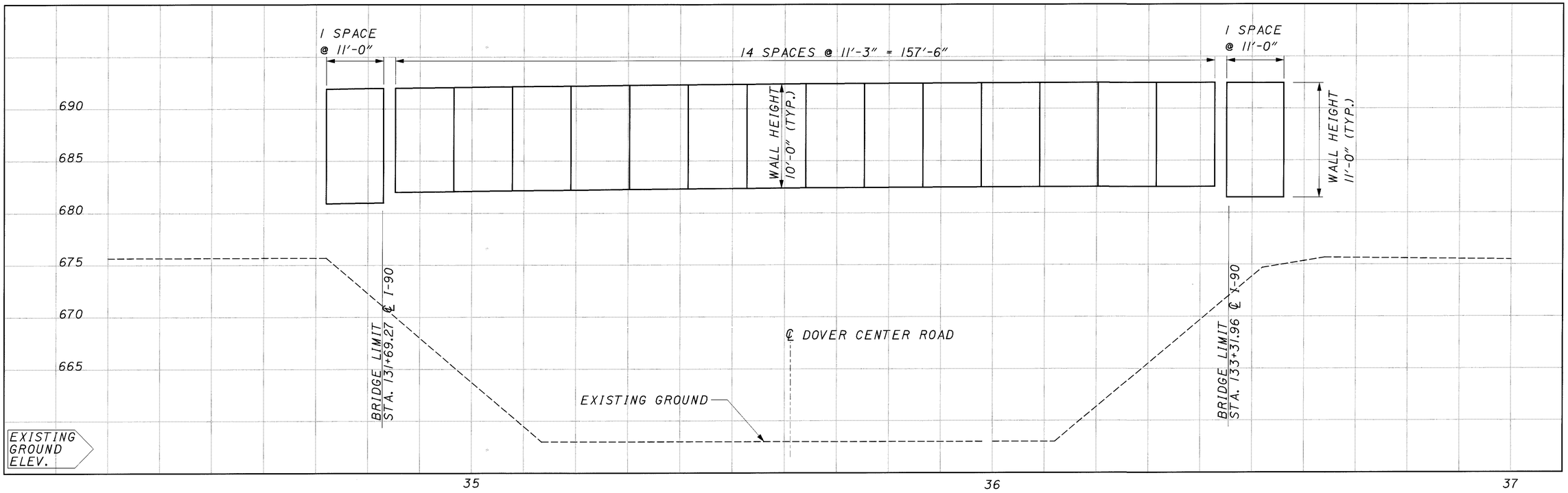

NOTES:

1. TOP ELEVATIONS SHOWN ARE THE MINIMUM TOP ELEVATIONS.
2. BRIDGE MOUNTED POSTS & "CARSONITE SOUND BARRIER" PANELS TOP OF WALL ELEVATIONS VARIES, SEE DECK AND PARAPET DETAILS, SHEET 491.
3. SEE DOVER CENTER ROAD BRIDGE PLAN SHEETS 460 & 491 FOR POST LOCATIONS.
4. SEE SHEET 4 / 9 FOR BRIDGE NOISE BARRIER DETAILS
5. SEE SHEETS 128/194 TO 194/582 FOR NOISE BARRIER PLANS

CALCULATED JAA CHECKED SM

SITE 9 NOISE BARRIER PROFILE SHEET
FOR DOVER CENTER ROAD BRIDGE CUY-90-0249L

CUY-90-0.00

579
582

i:\PROJECTS\Pid1738\dgn\finalplans\sit8nse.dgn 21-JUL-2000 2:53PM jgrmovse

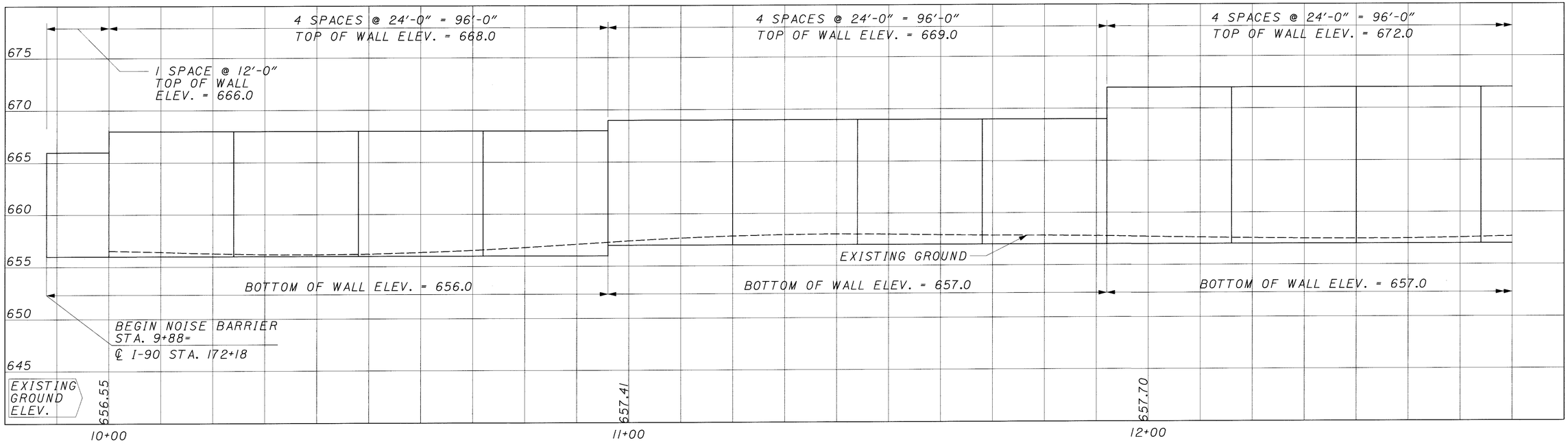

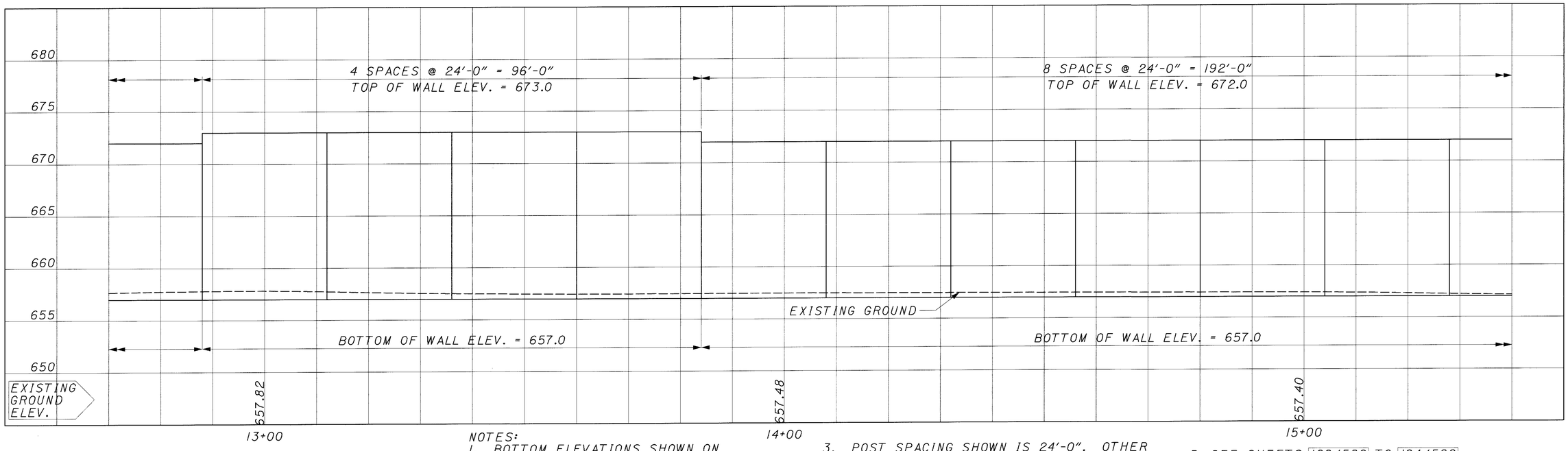

NOTES:

1. BOTTOM ELEVATIONS SHOWN ON PROFILE ARE FOR THE BOTTOM OF THE PANEL, NOT THE FINISHED GRADE LINE.
2. TOP ELEVATIONS SHOWN ARE THE MINIMUM TOP ELEVATIONS.
3. POST SPACING SHOWN IS 24'-0". OTHER POST SPACING WILL BE REQUIRED TO AVOID HITTING DRAINAGE STRUCTURES AND UTILITIES.
4. ALL DRILLED SHAFT FOUNDATION DEPTHS SHALL BE 6' INTO BEDROCK.
5. SEE SHEETS 128/582 TO 194/582 FOR NOISE BARRIER PLANS

CALCULATED JAA
CHECKED SM

SITE 11 NOISE BARRIER PROFILE SHEET STA 10+00 TO STA 15+40

CUY-90-0.00

580
582

20 MAR 2000
p:\pr22308\coddn\nwprfl.dgn

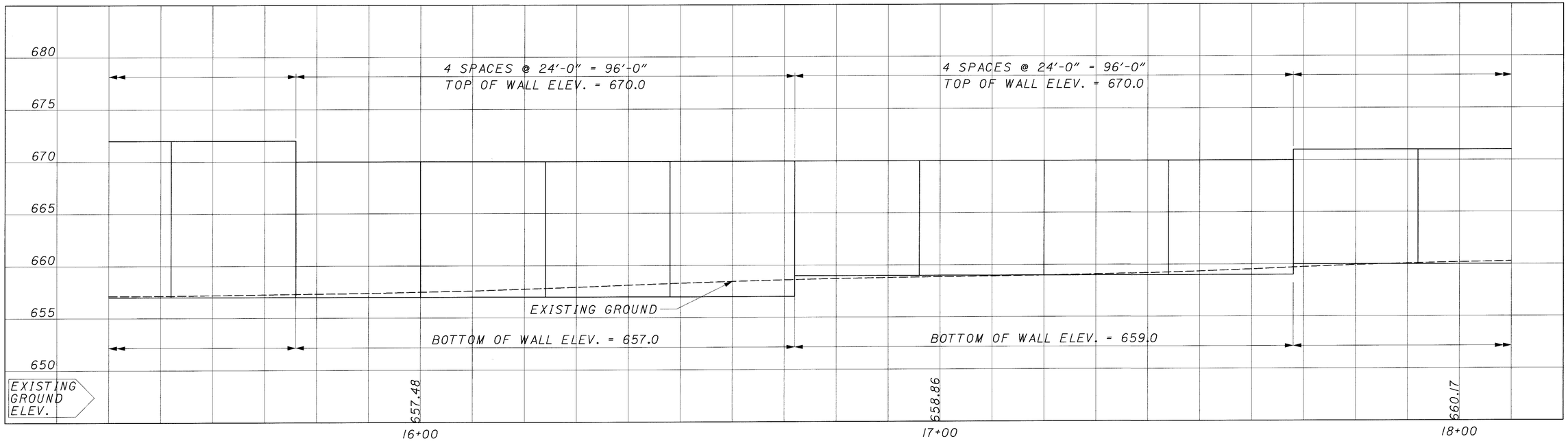

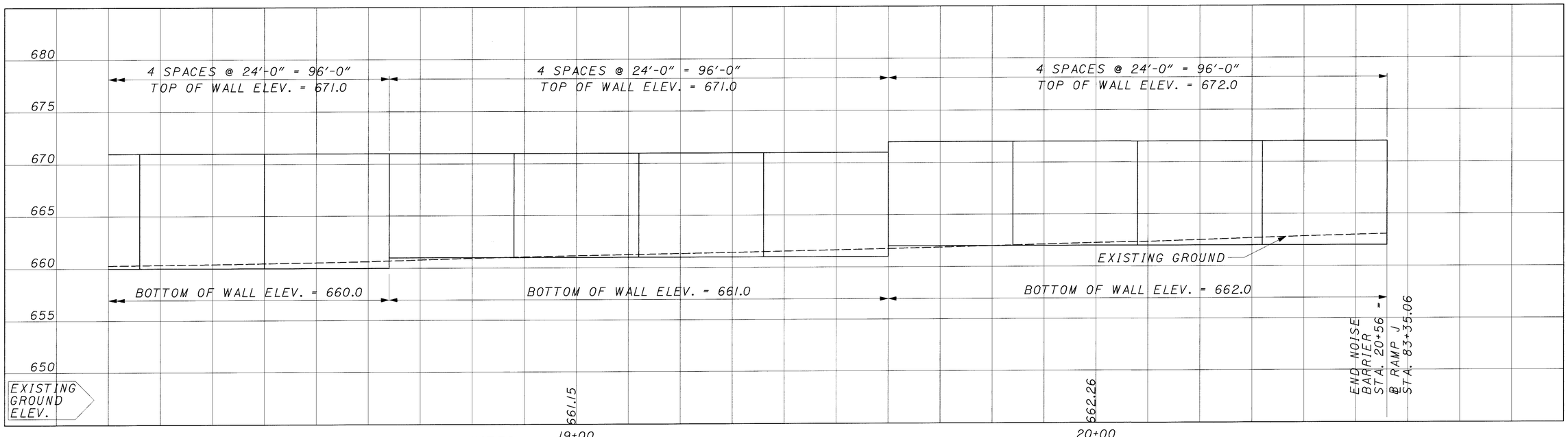

NOTES:

1. BOTTOM ELEVATIONS SHOWN ON PROFILE ARE FOR THE BOTTOM OF THE PANEL, NOT THE FINISHED GRADE LINE.
2. TOP ELEVATIONS SHOWN ARE THE MINIMUM TOP ELEVATIONS.
3. POST SPACING SHOWN IS 24'-0". OTHER POST SPACING WILL BE REQUIRED TO AVOID HITTING DRAINAGE STRUCTURES AND UTILITIES.
4. ALL DRILLED SHAFT FOUNDATION DEPTHS SHALL BE 6' INTO BEDROCK.
5. SEE SHEETS 128/582 TO 194/582 FOR NOISE BARRIER PLANS

CALCULATED JAA
CHECKED SM

SITE 11 NOISE BARRIER PROFILE SHEET STA 15+40 TO STA 20+56

CUY-90-0.00

581
582

20 MAR 2000
p:\pr22308\cadd\nwprf2.dgn

SOIL BORING LOCATIONS - SITE 6

BORING NO.	STATION	OFFSET	ELEVATION
NW6-1	1215+39.07	81.89' RT.	637.51
NW6-2	1+54.02	85.75' RT.	636.70
NW6-3	3+46.88	84.82' RT.	636.55
NW6-4	5+48.68	84.24' RT.	637.31
NW6-5	7+47.95	84.69' RT.	638.85
NW6-6	9+52.26	83.33' RT.	642.12
NW6-7	11+48.01	83.72' RT.	645.80
NW6-8	13+48.19	86.55' RT.	649.29
NW6-9	15+46.08	86.07' RT.	653.47
NW6-10	16+99.48	87.84' RT.	656.27
NW6-11	19+00.24	73.47' RT.	661.68
NW6-12	20+97.75	72.71' RT.	664.90
NW6-13	22+97.67	72.99' RT.	666.20
NW6-14	25+47.88	72.56' RT.	665.40
NW6-15	27+44.09	73.97' RT.	662.74
NW6-16	29+43.62	93.25' RT.	658.04
NW6-17	31+42.28	98.93' RT.	654.94
NW6-18	33+40.06	25.04' RT.	653.19
NW6-19	35+51.79	17.40' RT.	654.90
NW6-20	37+37.73	21.33' RT.	654.38
NW6-21	39+45.00	16.31' RT.	655.06
NW6-22	41+45.98	17.05' RT.	653.65
NW6-23	43+43.18	16.19' RT.	655.84
NW6-24	45+43.14	15.93' RT.	659.49
NW6-25	47+31.86	12.74' RT.	663.03
NW6-26	49+36.14	10.69' RT.	666.32

SOIL BORING LOCATIONS - SITE 7

BORING NO.	STATION	OFFSET	ELEVATION
NW7-1	55+42.88	192.57' RT.	653.31
NW7-2	57+00.62	192.29' RT.	653.29
NW7-3	59+06.12	187.93' RT.	653.64
NW7-4	61+02.76	192.05' RT.	654.80
NW7-5	63+06.69	192.58' RT.	655.48
NW7-6	64+94.63	199.69' RT.	657.61
NW7-7	67+18.83	195.41' RT.	649.71
NW7-8	69+04.71	187.78' RT.	650.06
NW7-9	70+88.33	159.16' RT.	650.43
NW7-10	73+07.56	139.76' RT.	660.10
NW7-11	75+03.13	135.62' RT.	662.10
NW7-12	77+52.24	130.51' RT.	668.58
NW7-13	79+63.12	126.99' RT.	667.49
NW7-14	81+46.49	117.08' RT.	667.46
NW7-15	83+52.58	113.71' RT.	664.61
NW7-16	85+44.22	126.01' RT.	664.64
NW7-17	87+62.22	143.87' RT.	665.88
NW7-18	89+92.15	141.57' RT.	663.50
NW7-19	91+87.21	134.16' RT.	663.49
NW7-20	94+13.72	127.99' RT.	663.88
NW7-21	96+17.93	121.86' RT.	664.34
NW7-22	98+06.44	121.14' RT.	664.99
NW7-23	100+29.00	125.97' RT.	667.36
NW7-24	102+11.20	131.33' RT.	668.94
NW7-25	104+53.40	125.77' RT.	669.72
NW7-26	105+85.97	123.54' RT.	672.88

SOIL BORING LOCATIONS - SITES 7A & 7B

BORING NO.	STATION	OFFSET	ELEVATION
NW7A-1	58+33.00	132.25' RT.	657.37
NW7A-2	60+42.85	127.03' RT.	657.71
NW7A-3	62+41.67	119.18' RT.	658.88
NW7B-1	76+17.49	86.75' RT.	663.74
NW7B-2	78+04.80	86.02' RT.	664.67
NW7B-3	80+18.79	85.23' RT.	665.26

SOIL BORING LOCATIONS - SITES 8,9, 10

BORING NO.	STATION	OFFSET	ELEVATION
NW8-1	106+89.68	68.47' LT.	664.31
NW8-2	109+55.02	65.00' LT.	664.82
NW8-3	111+54.23	79.88' LT.	662.91
NW8-4	113+57.79	72.05' LT.	664.07
NW8-5	115+59.02	68.49' LT.	664.87
NW8-6	117+56.00	68.64' LT.	665.32
NW8-7	119+59.06	70.11' LT.	664.60
NW8-8	121+58.71	69.67' LT.	664.25
NW9-1	123+58.14	68.94' LT.	664.36
NW9-2	125+56.50	68.10' LT.	667.36
NW9-3	127+55.71	56.68' LT.	672.31
NW9-4	129+53.70	56.15' LT.	676.45
NW9-5	131+52.10	55.52' LT.	678.86
NW9-6	133+51.76	54.85' LT.	679.23
NW9-7	134+58.71	55.86' LT.	678.76
NW9-8	136+53.86	56.96' LT.	676.11
NW9-9	138+53.07	56.85' LT.	671.92
NW9-10	140+51.26	70.57' LT.	666.41
NW9-11	142+50.75	69.94' LT.	663.05
NW10-1	144+48.56	66.44' LT.	661.86
NW10-2	146+48.99	68.60' LT.	661.07
NW10-3	148+49.12	68.01' LT.	660.61
NW10-4	150+46.77	69.50' LT.	659.90
NW10-5	152+46.52	71.54' LT.	659.15
NW10-6	154+82.50	68.03' LT.	658.90
NW10-7	156+82.18	68.36' LT.	658.45
NW10-8	158+78.03	68.45' LT.	658.56
NW10-9	162+01.37	60.49' LT.	660.32

SOIL BORING LOCATIONS - SITE 11

BORING NO.	STATION	OFFSET	ELEVATION
NW11-1	171+46.95	121.94' RT.	655.74
NW11-2	173+49.59	117.86' RT.	657.61
NW11-3	175+69.58	137.70' RT.	657.13
NW11-4	177+66.05	162.61' RT.	657.48
NW11-5	179+43.49	252.15' RT.	659.06
NW11-6	180+50.03	352.65' RT.	660.95

NOTES:

STATION AND OFFSET ARE BASED OFF OF ℄ I-90 EXCEPT FOR SITE 6, BORINGS NW6-16 TO NW6-26, WHICH IS BASED OFF OF ℄ RAMP D.

BURGESS & NIPLE

DESIGNED JAA | DRAWN JAA | REVIEWED DWL | DATE 12-20-99
CHECKED — | REVISED | STRUCTURE FILE NUMBER

NOISE BARRIER SOIL BORING LOCATIONS

CUY-90-0.00

582
582

20 MAR 2000
p:\pr22308\cadd\nwsbtbl.dgn

STATE OF OHIO
DEPARTMENT OF TRANSPORTATION
CUY — 90 — 0.95
PART 2
CITY OF WESTLAKE
CUYAHOGA COUNTY
FOR PART 1 SEE CUY—90—0.00

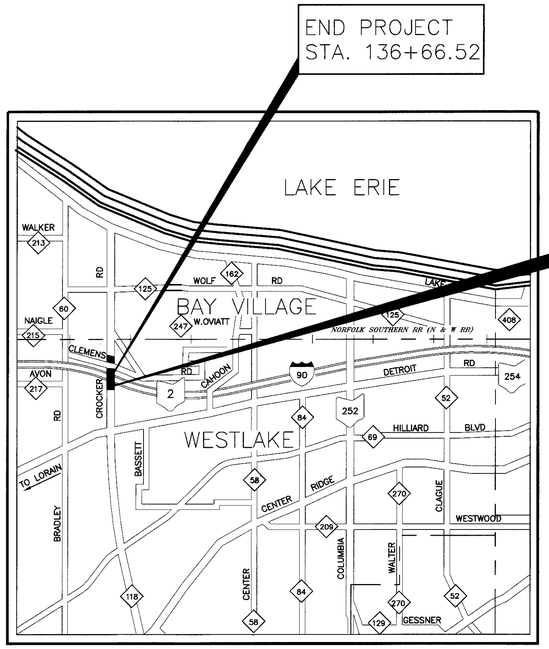

LOCATION MAP

0 4,000' 8,000'

LATITUDE: N41°25'00" LONGITUDE: W81°57'10"

Portion to be improved

State, U.S., & Interstate 252 20 90

County Roads 58

Other Roads

City Limits

DESIGN DESIGNATION

Current A.D.T. (1995)	= 26,400
Design Year A.D.T. (2015)	= 29,300
D.H.V. (2015)	= 9%
Directional Distribution	= 60%
Trucks (24 hour B & C)	= 5%
Design Speed	= 40 M.P.H.
Legal Speed	= 35 M.P.H.
Functional Classification	Principal Arterial — Urban
Design Exceptions	Vertical Clearance

INDEX OF SHEETS

Title Sheet	1
Schematic Plan	2
Typical Sections	3–5
General Notes	6–7
Maintenance of Traffic	8–19
General Summary	20–21
Calculations	22–23
Plan and Profile	24–31
Cross Sections	32–39
Intersection Detail	40
Miscellaneous Details	41
Lighting Plans	41A, 41B
Traffic Control Plans	42–50
Structure, Over 20' Span	51–76
Soil Profiles	77–80

SCALES

Plan 0 20' 40'

Profile Horiz. 0 20' 40' Vertical 0 5' 10'

Cross Section: Horiz. 0 5' 10' Vertical 0 5' 10'

PROJECT DESCRIPTION

This Project shall consist of bridge work, widening and reconstruction of Crocker Rd. The Project length along Crocker Rd. is 0.36 Miles.

1997 SPECIFICATIONS

The Standard Specifications of the State of Ohio Department of Transportation, including changes and supplemental specifications listed in the proposal shall govern this improvement.

I hereby approve these plans and declare that the making of this improvement will not require the closing to traffic of the highway and that provisions for the maintenance and safety of traffic will be as set forth on the plans and estimates.

Approved _____
Date 21 SEP 2000 District Deputy Director

Approved _____
Date 9-12-00 Director, Department of Transportation

UNDERGROUND UTILITIES
TWO(2) WORK DAYS
BEFORE YOU DIG
CALL...800-362-2764 (Toll Free) OHIO UTILITIES PROTECTION SERVICE
NON-MEMBERS MUST BE CALLED DIRECTLY

PLAN PREPARED BY:
R.E. WARNER & ASSOCIATES
24600 CENTER RIDGE ROAD
WESTLAKE, OHIO 44145
440-835-9400

STATE OF OHIO EDMUND DZIUBEK 42533 REGISTERED PROFESSIONAL ENGINEER

PLAN UPDATED 1-6-00 BY:
BURGESS & NIPLE
100 W. ERIE ST.
PAINESVILLE, OHIO 44077
440-354-9700

STATE OF OHIO DAVID W. LEAKE 39017 REGISTERED PROFESSIONAL ENGINEER

STANDARD CONSTRUCTION DRAWINGS	SUPPLEMENTAL SPECIFICATIONS
SEE PART 1	SEE PART 1

DEPARTMENT OF TRANSPORTATION
FEDERAL HIGHWAY ADMINISTRATION

APPROVED

_____ _____
DIVISION ADMINISTRATOR DATE

FEDERAL PROJECT NO.

PID NO.

CONSTRUCTION PROJECT NO.

RAILROAD INVOLVEMENT NONE

CUY—90—0.95

1/80

CURVE DATA RAMP "D"
P.I. STA. D-35+03.56
Δ = 9°43'33"
D = 1°45'00"
R = 3,274.04'
T = 278.56'
L = 555.76'
E = 11.83'

P.I. STA. D-40+42.12
Δ = 40°05'45"
D = 8°00'00"
R = 716.20'
T = 261.36'
L = 501.20'
E = 46.19'

P.I. STA. D-46+78.50
Δ = 47°00'00"
D = 12°00'00"
R = 477.47'
T = 207.61'
L = 391.67'
E = 43.18'

CURVE DATA RAMP "E"
P.I. STA. E-35+92.11
Δ = 16°23'25"
D = 8°00'00"
R = 716.20'
T = 103.15'
L = 204.88'
E = 7.39'

P.I. STA. E-37+82.96
Δ1+ Δ 2 = 24°45'00"
Ls = 150.00'
ST = 63.25'
LT = 89.12'
Δ = 204°25'45"
D = 25°00'00"
R = 229.18'
L = 817.72'

P.I. STA. E-47+29.46
Qs = 25°00'00"
Ls = 200.00'
Lt = 134.69'
ST = 67.90'
P = 7.22'
K = 99.37'

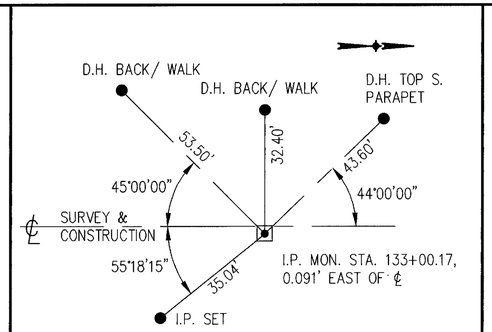

STA. 133+00.17

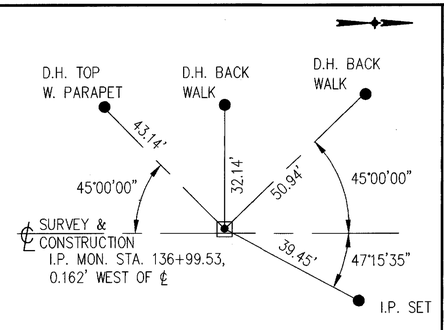

STA. 136+99.53

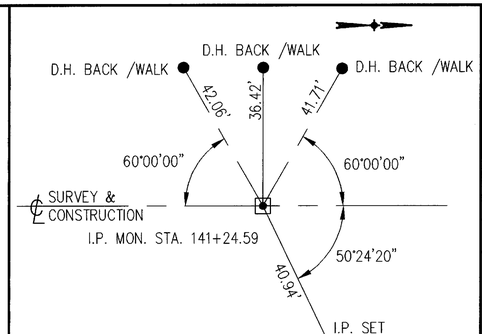

STA. 141+24.59

CURVE DATA RAMP "A"
P.I. STA. A-41+48.12
Δ = 27°10'37"
D = 8°00'00"
R = 716.20'
T = 173.12'
L = 339.72'
E = 20.62'

P.I. STA. A-48+28.37
Δ = 29°59'32"
D = 8°00'00"
R = 716.20'
T = 191.85'
L = 374.90'
E = 25.25'

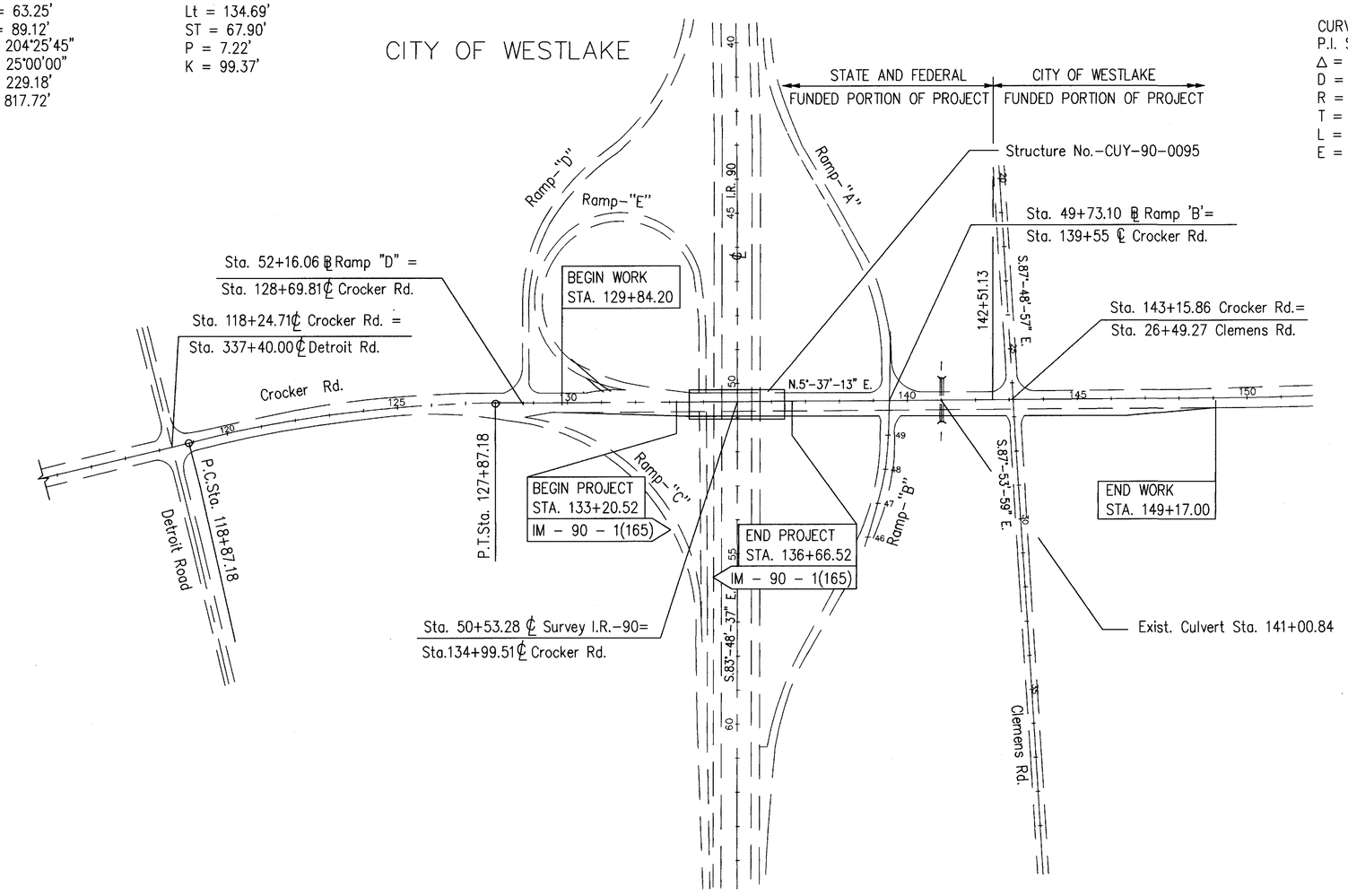

CURVE DATA RAMP "C"
P.I. STA. C-48+59.31
Δ = 13°00'50"
D = 6°00'00"
R = 954.93'
T = 108.92'
L = 216.90'
E = 6.19'

P.I. STA. C-55+40.43
Qs = 12°00'00"
Ls = 200.00'
Lt = 133.64'
ST = 66.95'
P = 3.49'
K = 99.85'

P.I. STA. C-52+47.03
Δ = 60°43'53"
D = 12°00'00"
R = 477.46'
T = 279.74'
L = 506.09'
E = 75.91'

CURVE DATA RAMP "B"
P.I. STA. B-52+79.07
Δ = 29°51'56"
D = 8°00'00"
R = 716.20'
T = 191.00'
L = 373.31'
E = 25.03'

P.I. STA. B-59+27.17
Δ = 21°00'00"
D = 8°00'00"
R = 716.20'
T = 132.74'
L = 262.50'
E = 12.20'

P.I. STA. B-63+33.95
Δ = 8°17'46"
D = 1°30'00"
R = 3,819.72'
T = 277.02'
L = 553.07'
E = 10.03'

N

0 200' 400'
HORIZONTAL SCALE IN FEET

SCHEMATIC PLAN

CUY-90-0.95

TYPE 611

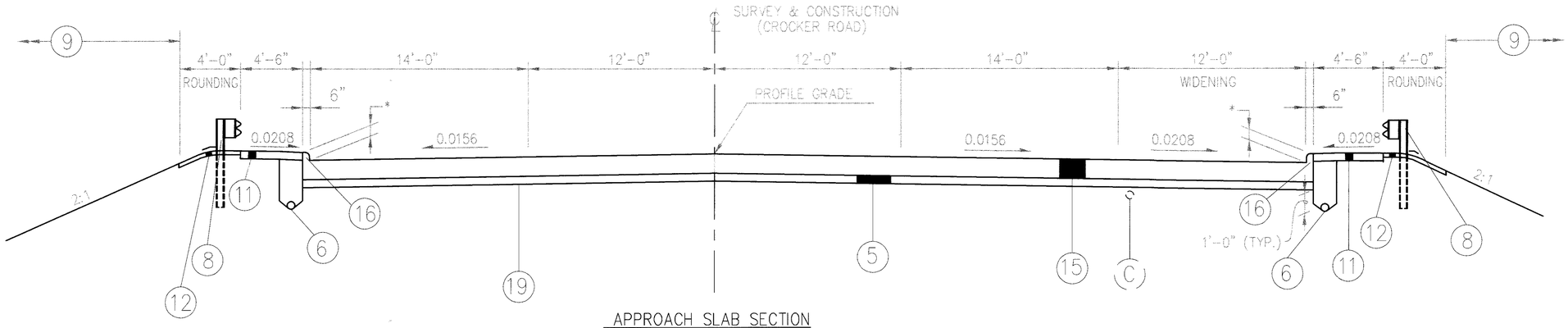

APPROACH SLAB SECTION

STA. 133 + 20.52 TO STA. 133 + 45.52 = 25.00 LIN. FT.
STA. 136 + 41.52 TO STA. 136 + 66.52 = 25.00 LIN. FT.
TOTAL = 50.00 LIN. FT.

* HEIGHT VARIES 6" TO 10" AT BRIDGE.

LEGEND

(1) ITEM 451 – 9" REINFORCED CONCRETE PAVEMENT
(2) ITEM 448 – 1 1/2" ASPHALT CONCRETE SURFACE COURSE, TYPE 1H
(3) ITEM 448 – 1 1/2" ASPHALT CONCRETE INTERMEDIATE COURSE, TYPE 2
(4) ITEM 407 – TACK COAT
(5) ITEM 304 – 6" AGGREGATE BASE (SEE PROPOSAL NOTE)
(6) ITEM 605 – 6" SHALLOW PIPE UNDERDRAIN WITH FABRIC WRAP
(7) ITEM 830 – CURB, TYPE 6
(8) ITEM 606 – GUARDRAIL, TYPE 5
(9) ITEM 659 – SEEDING AND MULCHING (SEE GENERAL NOTE)
(10) ITEM 254 – PAVEMENT PLANING, PORTLAND CEMENT CONCRETE (AVE. THICKNESS 1 1/2")
(11) ITEM 608 – 4 1/2" CONCRETE WALK, AS PER PLAN
(12) ITEM 448 – 3" ASPHALT CONCRETE SURFACE COURSE, TYPE 1, UNDER GUARDRAIL, AS PER PLAN
(13) ITEM 830 – CURB, TYPE 2-B
(14) TYPE D (DRILLED TIED LONGITUDINAL) JOINT AS PER. STD. DWG. BP-2.1M
(15) ITEM 611 – REINFORCED CONCRETE APPROACH SLAB (T=15")
(16) ITEM 830 – CURB, TYPE 2-A
(17) ITEM 202 – CURB REMOVED
(18) ITEM 605 – 4" SHALLOW PIPE UNDERDRAIN WITH FABRIC WRAP
(19) ITEM 203 – SUBGRADE COMPACTION
(20) ITEM 407 – TACK COAT FOR INTERMEDIATE COURSE

LEGEND (EXISTING)

(A) 9" REINFORCED CONCRETE PAVEMENT
(B) 3" SUBBASE
(C) SHALLOW PIPE UNDERDRAIN
(D) 6" INTEGRAL CONCRETE CURB
(E) GUARDRAIL, TYPE 5
(F) 4" CONCRETE WALK
(LJ) LONGITUDINAL JOINT

Revised by B&N 1-6-00

CALCULATED CLH
CHECKED WAN

1' 6" 0 1' 2'
SCALE:1/4"=1'

TYPICAL SECTIONS

CUY-90-0.95

3
80

TYPE 448

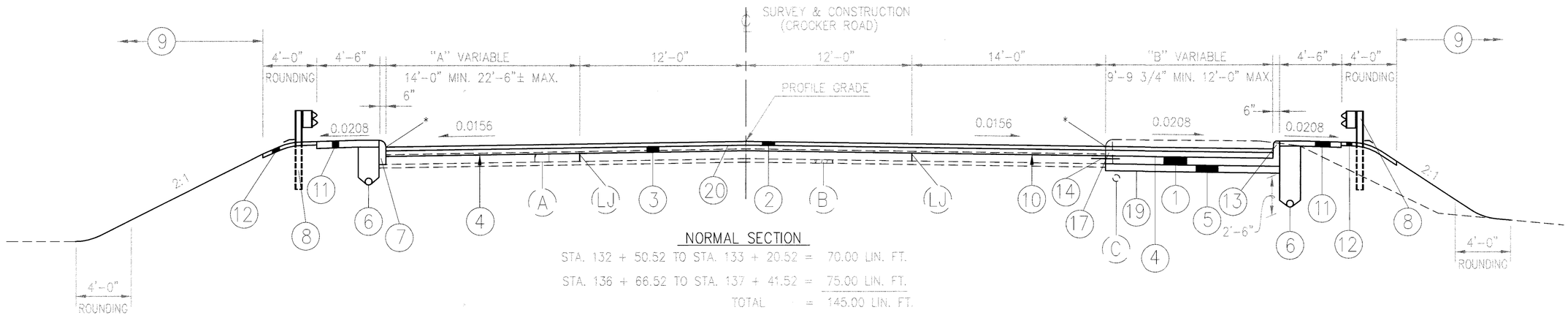

NORMAL SECTION

STA. 132 + 50.52 TO STA. 133 + 20.52 = 70.00 LIN. FT.

STA. 136 + 66.52 TO STA. 137 + 41.52 = 75.00 LIN. FT.

TOTAL = 145.00 LIN. FT.

"A" VARIES FROM 22'- 6"± @ STA. 132+50.52 TO 14'- 0" @ STA. 133+20.52

"A" = 14'- 0" @ STA. 136+66.52 TO STA. 137+41.52

"B" VARIES FROM 9'- 9 3/4" @ STA. 132+50.52 TO 12'- 0" @ STA. 133+20.52

"B" = 12'- 0" @ STA. 136+66.52 TO STA. 137+41.52

* – SAW CUT EXISTING PAVEMENT USING DIAMOND SAW BLADE

NOTE:

1. FOR LEGEND SEE SHT. 3.

TYPE 451 ON 304

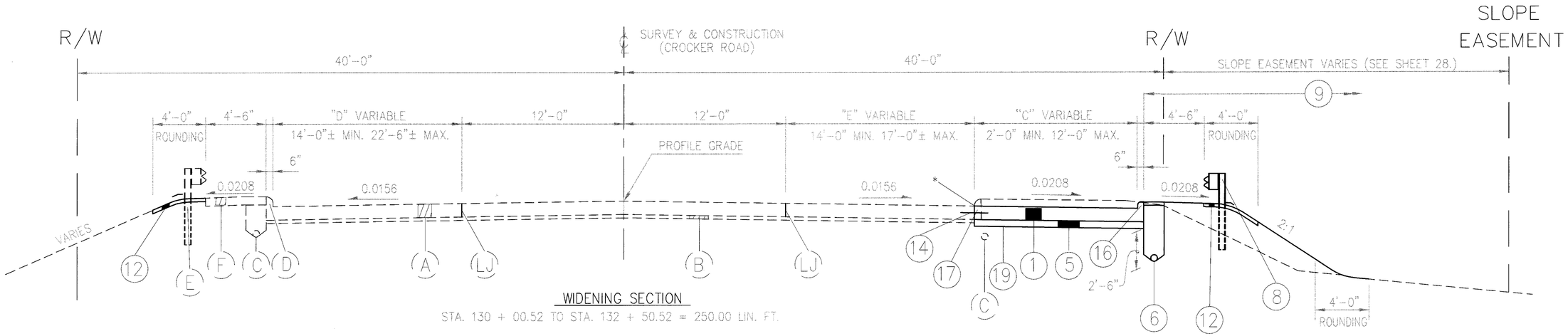

WIDENING SECTION

STA. 130 + 00.52 TO STA. 132 + 50.52 = 250.00 LIN. FT.

STA. 137 + 41.52 TO STA. 139 + 25.07 = 183.55 LIN. FT.

STA. 139 + 75.29 TO STA. 142 + 15.13 = 239.84 LIN. FT.

TOTAL = 673.39 LIN. FT.

"C" VARIES FROM 2'-0" @ STA. 130+00.52 TO 9'-9 3/4" @ STA. 132+50.52

"C" = 12'-0" @ STA. 137+41.52 TO STA. 139+25.07

"D" VARIES FROM 14'-0"± @ STA. 130+00.52 TO 22'-6"± @ STA. 132+50.52

"E" VARIES FROM 17'-0"± @ STA. 130+00.52 TO 14'-0" @ STA 131+09.14

"C" VARIES FROM 2'-0" @ STA. 139+75.29 TO 12'-0" @ STA. 140+42.00

"C" = 12'-0" @ STA. 140+42.00 TO STA. 142+15.13

Revised by B&N 1-6-00

CALCULATED CLH
CHECKED WAN

SCALE: 1/4"=1'
1' 6" 0 1' 2'

TYPICAL SECTIONS

CUY-90-0.95

4
80

TYPE 451 ON 304

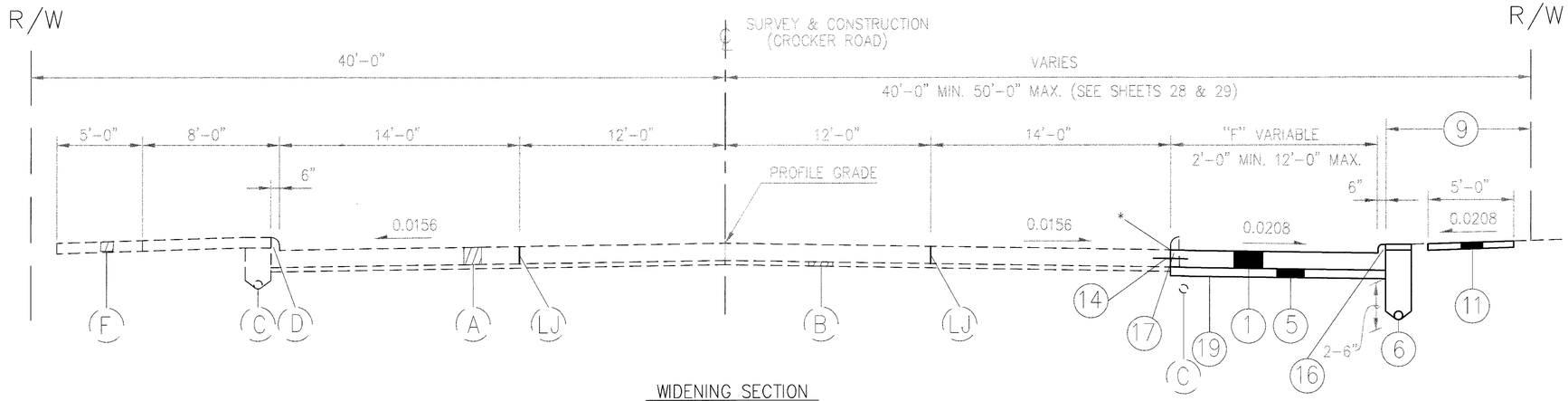

WIDENING SECTION

STA. 143 + 37.31 TO STA. 149 + 17.00 = 579.69 LIN. FT.

TOTAL = 579.69 LIN. FT.

NOTE:

FOR LEGEND SEE SHT. 3.

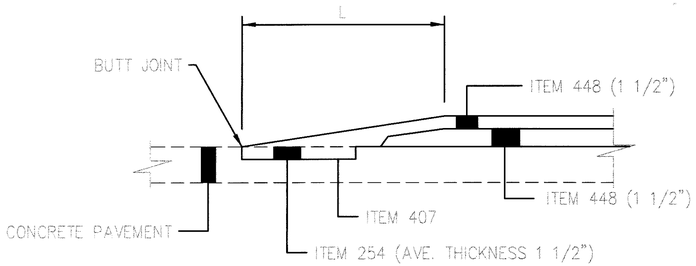

PAVEMENT PLANING, PORTLAND CEMENT CONCRETE

STA. 132+50.52 TO STA. 133+20.52 = 70.00 LIN. FT. = L

STA. 136+66.52 TO STA. 137+41.52 = 75.00 LIN. FT. = L

TOTAL = 145.00 LIN. FT.

"F" VARIES FROM 2'-0" @ STA. 143+37.31 TO 12'-0" @ STA. 144+25.14

"F" = 12'-0" @ STA. 144+25.14 TO STA. 145+97.00

"F" VARIES FROM 12'-0" @ STA. 145+97.00 TO 2'-0" @ STA. 149+17.00

* - SAW CUT EXISTING PAVEMENT USING DIAMOND SAW BLADE

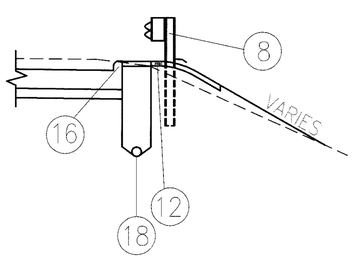

GUARDRAIL SECTION

STA. 140+13.00 (RT.) TO STA. 142+30.00 (RT.) = 192.00 LIN. FT.

(SEE SHEET 26 & 28)

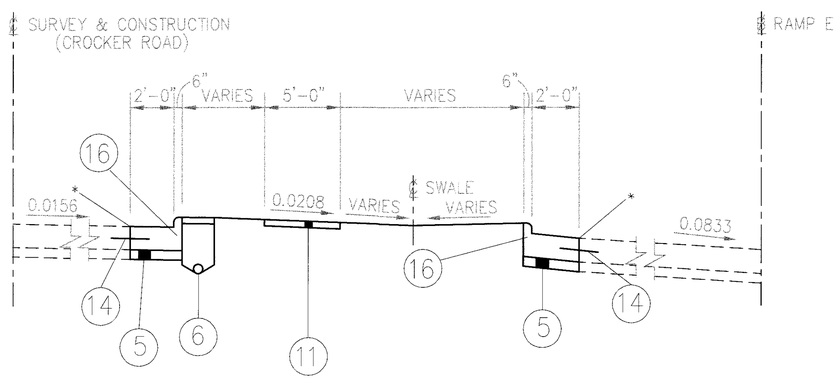

SECTION A-A

SHEET 24/80

RAMP E : STA. 137+15.80 TO STA. 138+03.75 (CURB & GUTTER, LEFT)

CROCKER ROAD : STA. 130+80.90 TO STA. 131+15.20 (CURB & GUTTER, AND CONCRETE WALK, LEFT)

Revised by B&N 1-6-00

CALCULATED CLH

CHECKED WAN

1' 6" 0 1' 2'

SCALE: 1/4"=1'

TYPICAL SECTIONS

CUY-90-0.95

5
80

CALCULATED CLH CHECKED WAN

GENERAL NOTES

ROUNDING:

THE ROUNDING AT SLOPE BREAKPOINTS SHOWN ON THE TYPICAL SECTIONS APPLY TO ALL CROSS-SECTIONS EVEN THOUGH OTHERWISE SHOWN.

UTILITIES:

LISTED BELOW ARE ALL UTILITIES LOCATED WITHIN THE PROJECT CONSTRUCTION LIMITS TOGETHER WITH THEIR RESPECTIVE OWNERS:

ELECTRIC: CLEVELAND ELECTRIC ILLUMINATING CO.
55 PUBLIC SQUARE P.O. BOX 5000
CLEVELAND, OHIO 44101
(216) 479-3452

GAS: COLUMBIA GAS OF OHIO, INC.
7080 FRY ROAD
MIDDLEBURG HEIGHTS, OHIO 44130
(216) 243-1000

LIGHTING: OHIO DEPARTMENT OF TRANSPORTATION
5500 TRANSPORTATION BLVD.
GARFIELD HEIGHTS, OH 44125
(216) 581-2100

THE LOCATION OF THE UNDERGROUND UTILITIES SHOWN ON THE PLANS ARE AS OBTAINED FROM THE OWNERS AS REQUIRED BY SECTION 153.64 O.R.C.

CONTINGENCY QUANTITIES:

THE CONTRACTOR SHALL NOT ORDER MATERIALS OR PERFORM WORK FOR ITEMS DESIGNATED BY PLAN NOTE TO BE USED "AS DIRECTED BY THE ENGINEER" UNLESS AUTHORIZED BY THE ENGINEER. THE ACTUAL WORK LOCATIONS AND QUANTITIES USED FOR SUCH ITEMS SHALL BE INCORPORATED INTO THE FINAL CHANGE ORDER GOVERNING COMPLETION OF THIS PROJECT.

FIELD OFFICE:

THE FIELD OFFICE PAID FOR UNDER PART 1 SHALL BE USED FOR THIS PROJECT

ELEVATION DATUM:

ALL ELEVATIONS ARE BASED ON U.S.G.S. DATUM.

WORK LIMITS:

THE WORK LIMITS SHOWN ON THESE PLANS ARE FOR PHYSICAL CONSTRUCTION ONLY. THE INSTALLATION AND OPERATION OF ALL TEMPORARY TRAFFIC CONTROL AND TEMPORARY TRAFFIC CONTROL DEVICES REQUIRED BY THESE PLANS SHALL BE PROVIDED BY THE CONTRACTOR WHETHER INSIDE OR OUTSIDE THESE WORK LIMITS.

ROADWAY:

REMOVAL OF TREES OR STUMPS:

ALL TREES AND STUMPS SPECIFICALLY MARKED FOR REMOVAL WITHIN THE CONSTRUCTION LIMITS SHALL BE REMOVED UNDER THE LUMP SUM BID FOR ITEM 201, CLEARING AND GRUBBING. THE FOLLOWING IS AN APPROXIMATE ESTIMATE OF THE NUMBER OF TREES AND STUMPS TO BE REMOVED:

SIZES	NO.TREES	NO.STUMPS	TOTAL
18"	0	0	0
30"	0	0	0
48"	0	0	0
60"	0	0	0

BENCHING OF FOUNDATION SLOPES:

ALTHOUGH CROSS-SECTIONS INDICATE SPECIFIC DIMENSIONS FOR PROPOSED BENCHING OF THE EMBANKMENT FOUNDATION IN CERTAIN AREAS, NO WAIVER OF THE SPECIFICATIONS IS INTENDED. ALL OTHER SLOPED EMBANKMENT AREAS SHALL BE BENCHED AS SET FORTH IN 203.09. NO ADDITIONAL PAYMENT WILL BE MADE FOR BENCHING REQUIRED BY THE PROVISIONS OF 203.09.

CONNECTION BETWEEN EXISTING AND PROPOSED GUARDRAIL:

WHEN IT IS NECESSARY TO SPLICE PROPOSED GUARDRAIL TO EXISTING GUARDRAIL, ONLY THE EXISTING GUARDRAIL SHALL BE CUT, DRILLED OR PUNCHED. THE CONNECTION SHALL BE MADE USING A "W-BEAM RAIL SPLICE" AS SHOWN ON THE STANDARD CONSTRUCTION DRAWING GR 1.1M. PAYMENT SHALL BE INCLUDED IN THE CONTRACT PRICE FOR THE RESPECTIVE GUARDRAIL ITEMS.

ITEM 448, ASPHALT CONCRETE SURFACE COURSE, TYPE 1 (UNDER GUARDRAIL) AS PER PLAN:

THIS OPERATION SHALL INCLUDE PREPARATION OF THE GRADED SHOULDER USING 203, LINEAR GRADING, AND PAVING UNDER THE GUARDRAIL USING 448, ASPHALT CONCRETE SURFACE COURSE, TYPE 1 (UNDER GUARDRAIL), AS PER PLAN.

ITEM 203, LINEAR GRADING, SHALL CONSIST OF EXCAVATING TOPSOIL, PLACING GRANULAR MATERIAL AND APPLYING HERBICIDE AS SPECIFIED IN THE PLANS AND IN ACCORDANCE WITH THE FOLLOWING:

ALL COLLECTED DEBRIS AND TOPSOIL, INCLUDING RHIZOMES, ROOTS AND OTHER VEGETATIVE PLANT MATERIAL SHALL BE REMOVED AND DISPOSED OF AS SPECIFIED IN 203.05.

THE REMOVED MATERIAL SHALL BE REPLACED WITH COMPACTABLE GRANULAR MATERIAL CONFORMING TO 203.02 PLACED TO GRADE AS DETAILED ON THE TYPICAL SECTION OR AS APPROVED BY THE ENGINEER.

HERBICIDE SHALL BE TREFLAN E.C., SPIKE OR AN APPROVED EQUAL AND SHALL BE APPLIED TO THE PREPARED AREA AFTER FINAL LEVELING AND GRADING HAS BEEN COMPLETED. THE APPLICATION SHALL BE JUST PRIOR TO PAVING AND SHALL STRICTLY ADHERE TO THE MANUFACTURER'S INSTRUCTIONS.

ONLY PROPERLY LICENSED PERSONNEL SHALL APPLY HERBICIDES AS REQUIRED BY THE OHIO REVISED CODE.

ALL EQUIPMENT, MATERIALS AND LABOR REQUIRED TO PERFORM THE WORK OUTLINED ABOVE SHALL BE INCLUDED FOR PAYMENT UNDER ITEM 203, LINEAR GRADING.

PAVING UNDER GUARDRAIL SHALL CONSIST OF PLACING ITEM 448 TO THE DEPTH SPECIFIED USING ONE OF THE FOLLOWING METHODS:

METHOD A:
1) SET GUARDRAIL POSTS
2) PLACE ITEM 448

METHOD B:
1) PLACE ITEM 448
2) BORE ASPHALT AT POST LOCATIONS
3) SET GUARDRAIL POSTS
4) PATCH AROUND POSTS. THE MATERIAL USED FOR PATCHING SHALL BE A BITUMINOUS CONCRETE APPROVED BY THE ENGINEER. PATCHED AREAS SHALL BE COMPACTED USING EITHER HAND OR MECHANICAL METHODS. FINISHED SURFACES SHALL BE SMOOTH AND SLOPED TO DRAIN AWAY FROM THE POSTS.

ALL EQUIPMENT, MATERIALS AND LABOR REQUIRED TO PERFORM THE WORK OUTLINED ABOVE, WITH THE EXCEPTION OF SETTING GUARDRAIL POSTS, SHALL BE INCLUDED FOR PAYMENT UNDER ITEM 448, ASPHALT CONCRETE SURFACE COURSE, TYPE 1 (UNDER GUARDRAIL), AS PER PLAN.

EROSION CONTROL:

ITEM 659, SEEDING & MULCHING:

SEEDING AND MULCHING SHALL BE APPLIED TO ALL AREAS OF EXPOSED SOIL BETWEEN THE RIGHT-OF-WAY LINES, AND WITHIN THE CONSTRUCTION LIMITS FOR AREAS OUTSIDE THE RIGHT-OF-WAY LINES COVERED BY WORK AGREEMENT OR SLOPE EASEMENT. QUANTITY CALCULATIONS FOR ITEM 659, SEEDING AND MULCHING, ARE BASED ON THESE LIMITS.

TEMPORARY SOIL EROSION AND SEDIMENT CONTROL:

THE FOLLOWING ESTIMATED QUANTITIES ARE TO BE PLACED BY THE CONTRACTOR WITH THE ENGINEER'S CONCURRENCE FOR TEMPORARY EROSION AND SEDIMENT CONTROL MEASURES:

ODOT		
877, TEMPORARY SEEDING AND MULCHING	750	SQ.YD.
877, TEMPORARY SLOPE DRAINS	50	LIN. FT.
877, TEMPORARY PERIMETER, DITCH CHECK OR INLET PROTECTION FILTER FABRIC FENCE	325	LIN. FT.
659, MOWING	9	M SQ. FT.
659, COMMERCIAL FERTILIZER	.04	TON
659, REPAIR SEEDING AND MULCHING	190	SQ.YD.
659, WATER	2	M GAL.
CITY OF WESTLAKE		
877, TEMPORARY SEEDING AND MULCHING	85	SQ.YD.
877, TEMPORARY PERIMETER, DITCH CHECK OR INLET PROTECTION FILTER FABRIC FENCE	325	LIN. FT.
659, MOWING	1	M SQ. FT.
659, COMMERCIAL FERTILIZER	0.01	TON
659, REPAIR SEEDING AND MULCHING	25	SQ.YD.
659, WATER	1	M GAL.

WATERING PERMANENT SEEDED AREAS:

THE FOLLOWING ESTIMATED QUANTITY IS TO BE USED AS DIRECTED BY THE ENGINEER TO PROMOTE GROWTH OF THE PERMANENT SEEDED AREAS AS PER 659.09.

ODOT		
ITEM 659	WATER	8 M-GAL.
CITY OF WESTLAKE		
ITEM 659	WATER	1 M-GAL.

EROSION CONTROL:

ITEM 601 AND 668 ARE PROVIDED IN THE PLANS FOR EROSION CONTROL. ROCK OF A STABLE NATURE SHALL NOT BE REMOVED IN ORDER TO PLACE ANY OF THESE ITEMS AND TURF OF A STABLE NATURE SHALL NOT BE REMOVED IN ORDER TO PLACE ITEM 668. THE ENGINEER SHALL CHECK AND NON-PERFORM QUANTITIES OR ADJUST LOCATIONS AND QUANTITIES OF THESE ITEMS WHERE INDICATED BY FIELD CONDITIONS DURING CONSTRUCTION. IN ADDITION, THESE ITEMS SHALL MEET THE REQUIREMENT OF 108.04.

DRAINAGE:

CROSSINGS AND CONNECTIONS TO EXISTING PIPE AND UTILITIES:

WHERE THE PLANS PROVIDE FOR PROPOSED CONDUIT TO BE CONNECTED TO, OR CROSS OVER OR UNDER AN EXISTING SEWER OR UNDERGROUND UTILITY, THE CONTRACTOR SHALL LOCATE THE EXISTING PIPES OR UTILITIES BOTH AS TO LINE AND GRADE BEFORE STARTING TO LAY THE PROPOSED CONDUIT.

IF IT IS DETERMINED THAT THE ELEVATION OF THE EXISTING CONDUIT, OR EXISTING APPURTENANCE TO BE CONNECTED, DIFFERS FROM THE PLAN ELEVATION OR RESULTS IN A CHANGE IN THE PLAN CONDUIT SLOPE, THE ENGINEER SHALL BE NOTIFIED BEFORE STARTING CONSTRUCTION OF ANY PORTION OF THE PROPOSED CONDUIT WHICH WILL BE AFFECTED BY THE VARIANCE IN THE EXISTING ELEVATIONS.

IF IT IS DETERMINED THAT THE PROPOSED CONDUIT WILL INTERSECT AN EXISTING SEWER OR UNDERGROUND UTILITY IF CONSTRUCTED AS SHOWN ON THE PLAN, THE ENGINEER SHALL BE NOTIFIED BEFORE STARTING CONSTRUCTION OF ANY PORTION OF THE PROPOSED CONDUIT WHICH WOULD BE AFFECTED BY THE INTERFERENCE WITH AN EXISTING FACILITY.

PAYMENT FOR ALL THE OPERATIONS DESCRIBED ABOVE SHALL BE INCLUDED IN THE CONTRACT PRICE FOR THE PERTINENT 603 CONDUIT ITEM.

REVIEW OF DRAINAGE FACILITIES:

BEFORE ANY WORK IS STARTED ON THE PROJECT AND AGAIN BEFORE FINAL ACCEPTANCE BY THE STATE, REPRESENTATIVES OF THE STATE AND THE CONTRACTOR, ALONG WITH LOCAL REPRESENTATIVES, SHALL MAKE AN INSPECTION OF ALL EXISTING SEWERS WHICH ARE TO REMAIN IN SERVICE AND WHICH MAY BE AFFECTED BY THE WORK. THE CONDITION OF THE EXISTING CONDUITS AND THEIR APPURTENANCES SHALL BE DETERMINED FROM FIELD OBSERVATIONS. RECORDS OF THE INSPECTION SHALL BE KEPT IN WRITING BY THE STATE.

ALL NEW CONDUITS, INLETS, CATCH BASINS, AND MANHOLES CONSTRUCTED AS A PART OF THE PROJECT SHALL BE FREE OF FOREIGN MATTER AND IN A CLEAN CONDITION BEFORE THE PROJECT WILL BE ACCEPTED BY THE STATE.

ALL EXISTING SEWERS INSPECTED INITIALLY BY THE ABOVE MENTIONED PARTIES SHALL BE MAINTAINED AND LEFT IN A CONDITION REASONABLY COMPARABLE TO THAT DETERMINED BY THE ORIGINAL INSPECTION. ANY CHANGE IN THE CONDITION RESULTING FROM THE CONTRACTOR'S OPERATIONS SHALL BE CORRECTED BY THE CONTRACTOR TO THE SATISFACTION OF THE ENGINEER.

PAYMENT FOR ALL OPERATIONS DESCRIBED ABOVE SHALL BE INCLUDED IN THE CONTRACT PRICE FOR THE PERTINENT 603 CONDUIT ITEMS.

MANHOLES, CATCH BASINS AND INLETS REMOVED OR ABANDONED

ALL CASTINGS SHALL BE CAREFULLY REMOVED AND STORED WITHIN THE RIGHT-OF-WAY FOR SALVAGE BY CITY FORCES.

PAYMENT FOR ALL OF THE ABOVE SHALL BE INCLUDED IN THE CONTRACT PRICE FOR THE PERTINENT 202 ITEM.

CUY-90-0.95

Revised by B&N 1-6-00

CALCULATED CLH CHECKED WAN

GENERAL NOTES

PAVEMENT:

CONTRACTION JOINTS IN CONCRETE PAVEMENT OR BASE WIDENING:

WHERE NEW CONCRETE IS PLACED ADJACENT TO EXISTING CONCRETE, CONTRACTION JOINTS SHALL BE PROVIDED IN THE NEW CONCRETE SO AS TO FORM CONTINUOUS JOINTS WITH THOSE IN THE EXISTING CONCRETE.

THE MAXIMUM DISTANCE BETWEEN THE JOINTS IN THE NEW CONCRETE SHALL BE IN ACCORDANCE WITH STANDARD CONSTRUCTION DRAWING BP-2.2M. IF NECESSARY, ADDITIONAL JOINTS SHALL BE PROVIDED IN THE NEW CONCRETE AT APPROXIMATELY EQUAL INTERVALS BETWEEN EXISTING JOINTS THAT EXCEED MAXIMUM SPACING.

ITEM 407, TACK COAT:

THE RATE OF APPLICATION OF THE 407 TACK COAT SHALL BE SUBJECT TO ADJUSTMENT AS DIRECTED BY THE ENGINEER. PLAN QUANTITIES INDICATE AN AVERAGE APPLICATION RATE OF 0.10 GALLONS PER SQUARE YARD OF TACK COAT FOR ESTIMATING PURPOSES ONLY.

ITEM 608, 4 1/2" CONCRETE WALK, AS PER PLAN:

ALL CONCRETE WALK SHALL BE A MINIMUM OF 4 1/2" THICK AND HAVE A 2" COMPACTED SCREENINGS BED WHICH MEETS THE REQUIREMENTS OF 703.10 EXCEPT THAT THE MINIMUM TOTAL PERCENT PASSING THE NO. 100 SIEVE SHALL BE FIVE (5) PERCENT. THE COST FOR FURNISHING AND PLACING THE 2" COMPACTED SCREENINGS BED AND FOR THE THICKENING AT FLEXIBLE DRIVES SHALL BE INCLUDED IN THE CONTRACT PRICE BID FOR ITEM 608 – 4 1/2" CONCRETE WALK, AS PER PLAN.

TRANSVERSE EXPANSION JOINTS SHALL CONSIST OF 1/2" WIDE, 705.03 PREFORMED FILLER. EXPANSION JOINTS SHALL BE CONSTRUCTED AT INTERVALS OF NOT MORE THAN 25 FEET UNLESS OTHERWISE DIRECTED BY THE ENGINEER. THEY SHALL BE PLACED AT THE GROOVED DIVISION LINES AND SHALL BE TRULY NORMAL TO THE GRADE. THE COST OF THE MATERIAL AND LABOR ASSOCIATED WITH THIS WORK IS INCLUDED IN THE CONTRACT UNIT PRICE BID FOR ITEM 608 – 4 1/2" CONCRETE WALK, AS PER PLAN.

ITEM 255, FULL DEPTH RIGID PAVEMENT REMOVAL AND RIGID REPLACEMENT, HIGH EARLY STRENGTH, CLASS C, AS PER PLAN:

THIS NOTE ONLY APPLIES TO THE CITY OF WESTLAKE FUNDED PORTION OF PROJECT.

ALL APPLICABLE PROVISIONS OF ITEM 255, AS SET FORTH IN THE CONSTRUCTION AND MATERIAL SPECIFICATIONS, SHALL APPLY EXCEPT AS MODIFIED HEREIN AND AS OTHERWISE DETAILED OR SPECIFIED ON WESTLAKE CONSTRUCTION DRAWING BP 2.5C.

255.04 CORRECTION OF DISTURBED SUBBASE AND SUBGRADE
SUITABLE SUBBASE DISTURBED IN AREAS WHERE CONCRETE PAVEMENT IS REMOVED SHALL BE SHAPED AND RECOMPACTED TO THE DEPTH OF ADJACENT SUBBASE. UNSUITABLE SUBBASE, AS DETERMINED BY THE ENGINEER SHALL BE REMOVED AND REPLACED UP TO 9 INCHES IN DEPTH WITH "ITEM 304 AGGREGATE BASE. AS PER PLAN" ON A COMPACTED SUBGRADE AT NO ADDITIONAL COST TO THE CITY. PLACING OF "ITEM 304 AGGREGATE BASE" SHALL CONFORM TO "304.03 PLACING" EXCEPT THAT VIBRATORY COMPACTION EQUIPMENT SHALL BE USED AND THE MAXIMUM COMPACTED THICKNESS OF ANY ONE LAYER SHALL NOT EXCEED 4 INCHES (LOOSE DEPTH).

THE CONTRACTOR SHALL INCLUDE THE REMOVAL AND REPLACEMENT OF SUBBASE OR SUBGRADE MATERIAL UP TO 9 INCHES IN DEPTH IN THE UNIT PRICE BID FOR ITEM 255 FULL DEPTH RIGID PAVEMENT REMOVAL AND RIGID REPLACEMENT, HIGH EARLY STRENGTH, CLASS C, AS PER PLAN.

255.08 OPENING TO TRAFFIC
SHALL CONFORM TO 255.08 EXCEPT AS MODIFIED HEREIN. IT IS NECESSARY TO OPEN THE COMPLETED PAVEMENT SECTIONS IN LESS THAN 5 DAYS. HIGH EARLY STRENGTH CONCRETE IN ACCORDANCE WITH 499.03 SHALL BE USED. THE PORTION OF PAVEMENT MAY BE OPENED TO TRAFFIC AFTER 3 DAYS PROVIDED TEST BEAMS ATTAIN A MODULES OF RUPTURE OF 500 POUNDS PER SQUARE INCH.

NO CEMENT REDUCTION SHALL BE PERMITTED IN CONCRETE MIXES DESIGNED OR INTENDED TO OBTAIN HIGH EARLY STRENGTH.

255.09 METHOD OF MEASUREMENT
THE QUANTITY OF FULL DEPTH PAVEMENT REMOVAL AND RIGID REPLACEMENT TO BE PAID FOR SHALL THE NUMBER OF SQUARE YARDS OF FULL DEPTH PAVEMENT REMOVED TO THE LIMITS ESTABLISHED BY THE ENGINEER. ACCEPTED QUANTITIES WILL BE PAID FOR AT THE CONTRACT UNIT PRICE PER SQUARE YARD, WHICH PRICE AND PAYMENT SHALL BE FULL COMPENSATION FOR ALL PAINT, PAVEMENT REMOVAL, SUBBASE REMOVAL FOR UNDERCUT REPLACEMENT, SUBBASE AND SUBGRADE CORRECTION, RIGID REPLACEMENT, CURING AND SEALING MATERIALS, FURNISHING AND PLACING DOWELS, BASKET ASSEMBLIES, REINFORCING STEEL, HOOK BOLTS, TIEBARS AND MESH, NON-SHRINK GROUT, JOINT SEALER, PREFORMED FILLER, BOND-BREAKER MATERIAL AND RESTORATION NOT COVERED UNDER OTHER ITEMS OF WORK.

THE FOLLOWING ESTIMATED QUANTITIES ARE INCLUDED IN THE GENERAL SUMMARY FOR USE AS DIRECTED BY THE ENGINEER, FOR THE CITY OF WESTLAKE FUNDED PORTION OF THE PROJECT:

ITEM 255 – FULL DEPTH PAVEMENT REMOVAL AND RIGID REPLACEMENT, HIGH EARLY STRENGTH, CLASS C, AS PER PLAN 150 SQ.YD.

ITEM 255 – FULL DEPTH PAVEMENT SAWING, AS PER PLAN 1800 LIN.FT.

ITEM 253 PAVEMENT REPAIR, JOINT AND CRACK SEALING, AS PER PLAN:

THIS NOTE ONLY APPLIES TO THE CITY OF WESTLAKE FUNDED PORTION OF THE PROJECT.

THE FOLLOWING METHOD OF CLEANING AND SEALING SHALL BE DONE IF DIRECTED BY THE ENGINEER:

JOINTS AND CRACKS SHALL BE THOROUGHLY CLEANED OF ALL FOREIGN MATERIAL BY APPROVED EQUIPMENT/METHODS SUCH AS SAND BLASTING, WATER UNDER PRESSURE, COMPRESSED AIR, ETC.; AND THE CONTACT SURFACES SHALL BE CLEAN AND DRY WHEN THE SEAL IS APPLIED.

WHERE LONGITUDINAL, TRANSVERSE OR OTHER RANDOM CRACKS OCCUR, AND WHERE SUCH CRACKS, IN THE OPINION OF THE ENGINEER, ARE NOT STRUCTURALLY DAMAGING TO THE RIGID PAVEMENT. THE CONTRACTOR SHALL CLEAN AND SEAL THE CRACK OPENING AS FOLLOWS:

A. WHERE THE CRACK EXTENDS DEEP INTO THE RIGID PAVEMENT AND THE SURFACE OPENING IS GREATER THAN 3/4", IT SHALL BE CLEANED THEN SEALED AS FOLLOWS: THE LOWER PORTION OF THE CRACK SHALL BE FILLED WITH HOT APPLIED 705.04 JOINT SEALER. THE UPPER PORTION OF THE CRACK SHALL BE FILLED FLUSH TO THE SURFACE WITH SAND ASPHALT. THE SAND SHALL CONFORM TO 703.02, EXCEPT THAT 100% MUST PASS THE NUMBER 4 SIEVE. THE BITUMEN CONTENT SHALL BE AS DIRECTED BY THE LABORATORY WITHIN THE FOLLOWING LIMITS:

   BITUMEN (PERCENT OF TOTAL MIX) 5.0 TO 10.0

B. CRACKS WITH SURFACE OPENINGS LESS THAN 3/4" SHALL BE CLEANED AND FILLED WITH A 705.04 JOINT SEALER FLUSH TO THE SURFACE WITHOUT EXCESS.

EXISTING LONGITUDINAL AND TRANSVERSE PAVEMENT JOINTS SHALL BE CLEANED AND RESEALED WITH 705.04 BITUMINOUS JOINT SEALER. FOR JOINT OPENINGS WIDER THAN 3/4", AN APPROVED BOND-BREAKING BACKER ROD MATERIAL SHALL BE INSTALLED SUCH THAT ONLY THE UPPER 1" OF THE JOINT WILL SUBSEQUENTLY BE SEALED WITH 705.04. EXISTING JOINT SEALER SHALL BE REMOVED BY METHODS APPROVED BY THE ENGINEER. TRANSVERSE JOINTS SHALL BE FILLED TO APPROXIMATELY 1/8" TO 1/4" BELOW THE PAVEMENT SURFACE.

LONGITUDINAL JOINTS SHALL BE FILLED FLUSH TO THE SURFACE WITHOUT EXCESS. WHERE, IN THE OPINION OF THE ENGINEER, EXISTING TRANSVERSE JOINTS ARE SOUNDLY SEALED FOR THE ENTIRE PAVEMENT WIDTH, SAID JOINTS SHALL BE LEFT UNDISTURBED.

THE METHOD OF MEASUREMENT SHALL BE THE ACTUAL NUMBER OF LIN.FT. ACCEPTED BY THE ENGINEER.

THE FOLLOWING ESTIMATED QUANTITY IS INCLUDED IN THE GENERAL SUMMARY FOR USE AS DIRECTED BY THE ENGINEER, FOR THE CITY OF WESTLAKE FUNDED PORTION OF THE PROJECT.

ITEM 253 – PAVEMENT REPAIR, JOINT AND CRACK SEALING 200 LIN.FT.

CONVERSION OF STANDARD CONSTRUCTION DRAWINGS

THE METRIC STANDARD DRAWINGS REFERENCED IN THIS PLAN SHALL BE CONVERTED TO ENGLISH UNITS USING THE SI (METRIC) TO ENGLISH CONVERSION FACTORS PROVIDED IN SECTION 109.011 OF THE 1997 CONSTRUCTION AND MATERIALS SPECIFICATIONS. THE APPENDIX OF ASTM E 380 SHALL BE UTILIZED FOR ANY ADDITIONAL CONVERSION FACTORS REQUIRED. CONVERSIONS SHALL BE APPROPRIATELY PRECISE AND SHALL REFLECT STANDARD INDUSTRY ENGLISH VALUES WHERE SUITABLE.

CUY-90-0.95

Revised by B&N 1-6-00

MAINTENANCE OF TRAFFIC NOTES

CALCULATED CLH | CHECKED WAN

NOTIFICATION

THE CONTRACTOR SHALL CONDUCT HIS OPERATION AS TO MAKE THE PROPOSED DECK REHABILITATION WITH A MINIMUM OF HAZARD, DELAY AND INCONVENIENCE TO THE MOTORISTS USING THE HIGHWAY AFFECTED BY THE WORK BEING DONE UNDER THIS CONTRACT. THROUGH TRAFFIC LANES OF 11 FEET MINIMUM EFFECTIVE WIDTH SHALL BE MAINTAINED AT ALL TIMES ON ALL ROADWAYS EXCEPT IR-90 WHERE 12-FOOT MINIMUM LANES MUST BE MAINTAINED.

THE PROJECT ENGINEER AND THE CITY OF WESTLAKE POLICE, FIRE AND PUBLIC WORKS DEPARTMENTS SHALL BE NOTIFIED IN WRITING AT LEAST THREE (3) WORKING DAYS PRIOR TO THE ACTUAL START OF CONSTRUCTION BY THE CONTRACTOR AND PRIOR TO CHANGING THE CONSTRUCTION STAGES.

CITY OF WESTLAKE:
POLICE DEPARTMENT 835-6430

WINTER TRAFFIC LIMITATIONS

ALL EXISTING LANES SHALL BE OPEN TO TRAFFIC BETWEEN NOVEMBER 15 AND APRIL 15. NOVEMBER 15 SHALL BE CONSIDERED TO CONSTITUTE AN INTERIM COMPLETION DATE AND LIQUIDATED DAMAGES SHALL BE ASSESSED IN ACCORDANCE WITH SECTION 108.07 OF THE CONSTRUCTION AND MATERIALS SPECIFICATIONS FOR EACH CALENDAR DAY THAT ALL LANES ARE NOT OPEN AND AVAILABLE TO TRAFFIC.

SYSTEM FOR MAINTAINING TRAFFIC

WHENEVER ANY TRAVELLED SURFACE IS BEING WORKED ON OR OTHERWISE NOT SUITABLE FOR SAFE AND CONVENIENT USE BY VEHICLES, TRAFFIC CONTROL DEVICES SUFFICIENT TO PROTECT SUCH AREAS AND TO ENSURE THE SAFE TRAFFIC CONTROL DEVICES AND THE MANNER IN WHICH THEY ARE USED SHALL BE INSTALLED AND MAINTAINED. SUCH TRAFFIC CONTROL DEVICES AND THE MANNER IN WHICH THEY ARE USED SHALL BE CONSISTENT WITH THESE PLANS AND THE OHIO MANUAL OF UNIFORM TRAFFIC CONTROL DEVICES FOR STREETS AND HIGHWAYS. THE TRAFFIC CONTROL DEVICE SYSTEM CONTAINED HEREIN SHALL CONSTITUTE THE MINIMUM PROVISIONS FOR TRAFFIC CONTROL FOR EACH PARTICULAR STATION. WHENEVER THE ENGINEER DEEMS IT NECESSARY, HE MAY DIRECT THAT ADDITIONAL OR ALTERNATIVE DEVICES BE USED. ALSO , THE CONTRACTOR SHALL PROVIDE SUFFICIENT ADDITIONAL BARRICADES, ETC. TO PROTECT THE FRESH CONCRETE DURING THE CURING PERIOD FROM ANY VEHICLES WHICH DRIVE AROUND OR THROUGH THE TRAFFIC CONTROL.

TRAFFIC CONTROL DEVICES SHALL BE SET UP PRIOR TO THE START OF CONSTRUCTION AND SHALL BE PROPERLY MAINTAINED DURING THE TIME SUCH SPECIAL CONDITIONS EXIST. THEY SHALL REMAIN IN PLACE ONLY AS LONG AS THEY ARE NEEDED AND SHALL BE IMMEDIATELY REMOVED THEREAFTER. WHERE OPERATIONS ARE PERFORMED IN STAGES, THERE SHALL BE IN PLACE ONLY THOSE DEVICES THAT APPLY TO THE CONDITION PRESENT DURING THE STAGE IN PROGRESS. ALL SIGNS WITH MESSAGES WHICH DO NOT APPLY DURING A CERTAIN PERIOD SHALL BE COVERED OR SET ASIDE OUT OF THE VIEW OF TRAFFIC.

ADVANCE WARNING SIGNS

ALL ADVANCE WARNING SIGNS FOR ANY CONDITION WHICH RESTRICTS TRAFFIC SHALL BE ERECTED BEFORE ANY SUCH RESTRICTION IS PUT INTO EFFECT. ALL SUCH SIGNS SHALL BE COVERED OR REMOVED FROM THE VIEW OF TRAFFIC WHENEVER THEY ARE NOT APPLICABLE.

RESTRICTIONS

NO TRAFFIC LANE CLOSURES EXCEPT AS SHOWN ON MAINTENANCE OF TRAFFIC PLANS OR AS INDICATED HEREIN SHALL BE ALLOWED. THE CONTRACTOR MUST NOTIFY ODOT AT LEAST (3) WORKING DAYS IN ADVANCE OF IMPLEMENTATION OF ANY LANE CLOSURE.

THE CONTRACTORS SHALL NOT ROUTE OR DIRECT TRAFFIC ON BOTH SIDES OF A LANE CLOSURE.

THE CONTRACTORS SHALL FURNISH, ERECT, MAINTAIN AND REMOVE ALL SIGNS AND ROADWAY MARKINGS REQUIRED FOR MAINTENANCE OF TRAFFIC DURING CONSTRUCTION AS SHOWN ON THESE PLANS.

NO STOPPAGE OF TRAFFIC OR ESTABLISHMENT OF LANE RESTRICTIONS SHALL OCCUR WITHOUT LAW ENFORCEMENT PERSONNEL AT EACH LOCATION TO DIRECT TRAFFIC.

HOLIDAYS AND SPECIAL EVENTS (APPLIES TO I-90 ONLY)

NO WORK SHALL BE PERFORMED AND ALL EXISTING LANES SHALL BE OPEN TO TRAFFIC DURING THE FOLLOWING DESIGNATED HOLIDAYS OR EVENTS:

FOURTH OF JULY
MEMORIAL DAY
LABOR DAY

THE PERIOD OF TIME THAT THE LANES ARE TO OPEN DEPENDS ON THE DAY OF THE WEEK ON WHICH THE HOLIDAY OR EVENT FALLS. THE FOLLOWING SCHEDULE SHALL BE USED TO DETERMINE THIS PERIOD:

DAY OF THE WEEK	TIME ALL LANES MUST BE OPEN TO TRAFFIC
SUNDAY	12:00N FRIDAY THROUGH 12:00N MONDAY
MONDAY	12:00N FRIDAY THROUGH 12:00N TUESDAY
TUESDAY	12:00N MONDAY THROUGH 12:00N WEDNESDAY
WEDNESDAY	12:00N TUESDAY THROUGH 12:00N THURSDAY
THURSDAY	12:00N WEDNESDAY THROUGH 12:00N MONDAY
FRIDAY	12:00N THURSDAY THROUGH 12:00N MONDAY

THERE SHALL NOT BE ANY EXTENSIONS DUE TO WEATHER OR MATERIAL DELAYS WHATSOEVER.

SHOULD THE CONTRACTOR FAIL TO MEET ANY OF THESE REQUIREMENTS, THE CONTRACTOR SHALL BE ASSESSED LIQUIDATED DAMAGES IN ACCORDANCE WITH 108.07 OF THE CONSTRUCTION AND MATERIALS SPECIFICATIONS.

I-90

WHENEVER ANY WORK IS BEING PERFORMED DIRECTLY OVER A TRAVELLED LANE OR SHOULDER AND THE TRAVELLED LANE SHOULD BE CLOSED FOR REASONS OF SAFETY, SHORT TERM LANE CLOSURES SHALL BE USED. SHORT TERM LANE CLOSURES SHALL BE PERMITTED DURING THE FOLLOWING TIMES:

WEEKDAYS

EASTBOUND: ONE LANE CLOSURE PERMITTED 10:00 A.M. TO 3:00 P.M. AND 6:00 P.M. TO 6:00 A.M.

WESTBOUND: ONE LANE CLOSURE PERMITTED 9:00 A.M. TO 3:00 P.M. AND 7:00 P.M. TO 7:00 A.M.

WEEKENDS

EASTBOUND: ONE LANE CLOSURE 10:00 P.M. FRIDAY TO 10:00 A.M. SATURDAY. 10:00 P.M. SATURDAY TO 11:00 A.M. SUNDAY OR 10:00 P.M. SUNDAY TO 6:00 A.M. MONDAY

WESTBOUND: ONE LANE CLOSURE 10:00 P.M. FRIDAY TO 10:00 A.M. SATURDAY. 10:00 P.M. SATURDAY TO 11:00 A.M. SUNDAY OR 10:00 P.M. SUNDAY TO 6:00 A.M. MONDAY

SHOULD THE CONTRACTOR FAIL TO MEET ANY OF THESE REQUIREMENTS, THE CONTRACTOR SHALL BE ASSESSED LIQUIDATED DAMAGES IN ACCORDANCE WITH 108.07 OF THE CONSTRUCTION AND MATERIALS SPECIFICATIONS.

CONDITIONS

DURING ALL PARTS OF THIS PROJECT, SIGNING, TEMPORARY PAVEMENT MARKINGS, ETC., SHALL BE LOCATED AS INDICATED ON SHEETS. THE NUMBER OF LANES AND THE MINIMUM LANE WIDTHS MAINTAINED SHALL BE AS INDICATED ON THE MAINTENANCE OF TRAFFIC SHEETS.

ITEM 614 MAINTAINING TRAFFIC

THE CONTRACTOR SHALL MAINTAIN TRAFFIC AT ALL TIMES IN ACCORDANCE WITH THE REQUIREMENTS OF ITEM 614 MAINTAINING TRAFFIC. TWO-WAY TRAFFIC SHALL BE MAINTAINED AT ALL TIMES BY USE OF THE EXISTING PAVEMENT, TEMPORARY PAVEMENT AND THE COMPLETED PAVEMENT. IN ADDITION TO THE REQUIREMENTS OF ITEM 614, THE FOLLOWING SPECIFIC PROVISIONS SHALL APPLY:

1. ALL SIGNS, LIGHTS, DRUMS, TRAFFIC CONTROL DEVICES AND TEMPORARY PAVEMENT MARKINGS SHALL BE FURNISHED, ERECTED, MAINTAINED AND REMOVED BY THE CONTRACTOR IN ACCORDANCE WITH THE "OHIO MANUAL OF UNIFORM TRAFFIC CONTROL DEVICES FOR STREETS AND HIGHWAYS (OMUTCD), MAINTAINING TRAFFIC STANDARD CONSTRUCTION DRAWINGS, THE MAINTENANCE TRAFFIC PLANS, AND ITEM 614.

2. TO ASSURE MAINTENANCE OF ADEQUATE TRAFFIC CONTROL AT ALL TIMES, NO SIGNS ARE TO BE INSTALLED OF REMOVED WITHOUT THE APPROVAL OF THE ENGINEER.

3. FAILURE TO COMPLY

   IF THE CONTRACTOR FAILS TO COMPLY WITH THE PROVISIONS OF TRAFFIC CONTROL AS SET FORTH IN THESE PLANS AND PROVISIONS OF THE OMUTCD AND THE FAILURE RESULTS IN A CONDITION AT THE WORK SITE WHICH IS UNSAFE FOR TRAFFIC, THE ENGINEER SHALL SUSPEND WORK UNTIL THE CONTRACTOR COMPLIES WITH THE NECESSARY REQUIREMENTS.

4. TEMPORARY LANE CLOSURES OR LANE WIDTH REDUCTION

   A MINIMUM OF TWO 11-FOOT LANES (1 LANE IN EACH DIRECTION) SHALL BE OPEN TO TRAFFIC STAGE WORK. THE CONTRACTOR SHALL ONLY INSTITUTE SUCH STAGE WORK CLOSURE OR WIDTH REDUCTION FROM 7 P.M. TO 5 A.M. AS APPROVED BY THE ENGINEER.

5. TEMPORARY TRAFFIC MARKINGS

   TEMPORARY PAVEMENT MARKINGS, TEMPORARY BARRIER REFLECTORS AND OBJECT MARKERS SHALL BE PROVIDED FOR EACH STAGE OF CONSTRUCTION, WITHIN THE LIMITS SHOWN ON THE PLANS.

   THE LOCATION, COLOR, AND TYPE OF BARRIER REFLECTORS AND OBJECT MARKERS SHALL BE IN ACCORDANCE WITH THE PROPOSAL NOTE.

   THE FOLLOWING ESTIMATED QUANTITY HAS BEEN PROVIDED IN THE GENERAL SUMMARY FOR BARRIER REFLECTORS:

   ITEM 614 BARRIER REFLECTOR, TYPE B

   PHASE I: STA. 132+00 TO 137+25 = 525 LINEAL FT. 53 REFLECTORS
   PHASE II: STA. 132+00 TO 137+80 = 580 LINEAL FT. 58 REFLECTORS

   PHASE I: 54 OBJECT MARKERS
   PHASE II: 59 OBJECT MARKERS

6. FLASHING ARROW REQUIREMENT

   WHENEVER ANY PART OF THE HIGHWAY SURFACE IS CLOSED, MOTORISTS SHALL BE WARNED AND DIRECTED BY THE CONTRACTOR THROUGH THE USE OF ONE FLASHING ARROW PANEL FOR EACH LANE CLOSED. THE FLASHING ARROW PANELS SHALL BE TYPE A AND SHALL CONFORM TO THOSE PROVISIONS SET FORTH IN THE OMUTCD AND STANDARD DRAWING MT-35.10M.

7. SIGNS

   SIGN DIMENSION AND SPECIFICATIONS, INCLUDING LETTER SIZES SHALL BE AS PROVIDED IN THE MANUAL, OR IN SIGN DESIGN DRAWINGS PROVIDED BY THE DEPARTMENT OF TRANSPORTATION. THE SIGNS SHALL BE SUBJECT TO APPROVAL BY THE ENGINEER PRIOR TO THE START OF THE PROJECT.

8. SIGN SUPPORTS

   SIGN SUPPORTS SHALL BE OF SUFFICIENT SIZES AND HEIGHT TO SUPPORT THE SIGNS AT THE HEIGHT INDICATED IN THE MANUAL. SUPPORTS SHALL ALSO BE ADEQUATE IN MASS AND STABILITY TO PREVENT SIGNS FROM BEING BLOWN OVER BY WIND OR VEHICULAR GENERATED AIR TURBULENCE. SEE STANDARD CONSTRUCTION DRAWINGS MT-105.10M AND MT-105.11M.

9. DRUMS

   DRUMS SHALL BE LOCATED AS SHOWN ON THE MAINTENANCE OF TRAFFIC PLANS.

10. WORK ZONE PAVEMENT MARKINGS

    PAVEMENT MARKINGS SHALL BE OF THE TYPE AND LOCATION AS SHOWN ON THE MAINTENANCE OF TRAFFIC PLANS, AND SHALL BE IN ACCORDANCE WITH STANDARD DRAWING MT-99.10M

    QUANTITIES FOR WORK ZONE PAVEMENT MARKINGS ARE SHOWN IN A TABLE ON SHEET 12&13. METHOD OF MEASUREMENT AND BASIS OF PAYMENT FOR THESE ITEMS ARE GIVEN IN STANDARD CONSTRUCTION DRAWING MT-99.10M.

11. ALL WORK AND COSTS FOR INSTALLING, MAINTAINING, AND SUBSEQUENT REMOVAL OF ITEMS REQUIRED FOR THE ABOVE MENTIONED MAINTENANCE OF TRAFFIC WORK, UNLESS PAID FOR SEPARATELY, INCLUDING DRUMS, SIGNS, SIGN SUPPORTS, ETC., SHALL BE INCLUDED IN THE CONTRACT LUMP SUM PRICE FOR ITEM 614 MAINTAINING TRAFFIC:

    ITEM 614 MAINTAINING TRAFFIC LUMP SUM

DUST CONTROL

THE FOLLOWING ESTIMATED QUANTITIES HAVE BEEN INCLUDED IN THE GENERAL SUMMARY TO BE USED AS DIRECTED BY THE ENGINEER FOR THE APPLICATION FOR PREVENTION OR ALLEVIATION OF DUST:

ITEM 616 WATER 50 M. GAL.

ITEM 616 CALCIUM CHLORIDE 5 TONS

COVERING OF SIGNS

WHERE THE PLANS CALL FOR A PERMANENT SIGN TO BE COVERED, THE CONTRACTOR SHALL DO SO IN SUCH A MANNER AS TO AVOID DAMAGING THE PERMANENT SIGN WHEN THE COVER IS REMOVED. THE COVER SHALL BE TOTALLY OPAQUE. THE USE OF ADHESIVE TAPE APPLIED DIRECTLY TO A SIGN IS STRICTLY PROHIBITED.

INTERIM COMPLETION DATE

CROCKER ROAD TRAFFIC SHALL BE RESTRICTED TO TWO LANES (ONE IN EACH DIRECTION) FOR A TOTAL OF NOT MORE THAN 140 DAYS. SHOULD THE CONTRACTOR FAIL TO MEET THIS REQUIREMENT, LIQUIDATED DAMAGES IN ACCORDANCE WITH 108.07 SHALL BE ASSESSED. THE CONTRACTOR SHALL SCHEDULE ALL WORK WHICH REQUIRES LONG TERM LANE RESTRICTIONS ON CROCKER ROAD TO BEGIN NO EARLIER THAN APRIL 15 AND BE COMPLETED NO LATER THAN OCTOBER 1.

SHORT TERM LANE CLOSURES WILL BE PERMITTED ON CROCKER ROAD AT OTHER TIMES (NON RUSH HOUR) AS APPROVED BY THE ENGINEER.

CLEAN WATER FALLING SIGN

WHENEVER CURE WATER MAY BE FALLING ONTO THE ROADWAY BELOW, THE CONTRACTOR SHALL ERECT OW-SPEC-48 SIGNS "CLEAN WATER FALLING" ON EACH SIDE OF THE ROADWAY AT APPROXIMATELY 500 FT. IN ADVANCE OF OVERHEAD STRUCTURE.

Revised by B&N 1-6-00

MAINTENANCE OF TRAFFIC GENERAL NOTES

CUY-90-0.95

8
80

MAINTENANCE OF TRAFFIC NOTES

ITEM 614, LAW ENFORCEMENT OFFICER WITH PATROL CAR

IN ADDITION TO THE REQUIREMENTS OF 614 AND THE LATEST EDITION OF THE OHIO MANUAL OF UNIFORM TRAFFIC CONTROL DEVICES (OMUTCD), A UNIFORMED LAW ENFORCEMENT OFFICER AND OFFICIAL PATROL CAR WITH WORKING TOP MOUNTED EMERGENCY FLASHING LIGHTS SHALL BE PROVIDED FOR CONTROLLING TRAFFIC FOR THE FOLLOWING TASKS:

1. CLOSING LANES ON I.R. 90 FOR STEEL ERECTION.

2. CONTROLLING TRAFFIC WHENEVER A CHANGE IN A TRAFFIC PATTERN TAKES PLACE (SETTING-UP OR SHIFTING MAINTENANCE OF TRAFFIC PHASES).

3. DIRECTING TRAFFIC AT A SIGNALIZED INTERSECTION DURING SIGNAL SHUTDOWN.

LAW ENFORCEMENT OFFICERS (L.E.O'S) SHOULD NOT BE USED WHERE THE OMUTCD INTENDS THAT FLAGGERS BE USED. THE LEO'S ARE CONSIDERED TO BE EMPLOYED BY THE CONTRACTOR AND THE CONTRACTOR SHALL BE RESPONSIBLE FOR THEIR ACTIONS. ALTHOUGH THEY ARE EMPLOYED BY THE CONTRACTOR, THE PROJECT ENGINEER SHALL HAVE CONTROL OVER THEIR PLACEMENT. THE OFFICIAL PATROL CAR SHALL BE A PUBLIC SAFETY VEHICLE AS REQUIRED BY THE OHIO REVISED CODE.

THE CONTRACTOR SHALL MAKE ARRANGEMENTS FOR THESE SERVICES WITH:
WESTLAKE POLICE DEPARTMENT
27300 HILLIARD BLVD.
835-6430

LAW ENFORCEMENT OFFICERS WITH PATROL CARS REQUIRED BY THE TRAFFIC MAINTENANCE TASKS ABOVE SHALL BE PAID FOR ON A UNIT PRICE (HOURLY) BASIS UNDER ITEM SPECIAL, LAW ENFORCEMENT OFFICER WITH PATROL CAR. THE FOLLOWING ESIMATED QUANTITY HAS BEEN CARRIED TO THE GENERAL SUMMARY:

ITEM 614, LAW ENFORCEMENT OFFICER WITH PATROL CAR 50 HOURS

THE HOURS PAID SHALL INCLUDE MINIMUM SHOW-UP TIME REQUIRED BY THE LAW ENFORCEMENT AGENCY INVOLVED.

IF THE CONTRACTOR WISHES TO UTILIZE LEO'S FOR FLAGGING AND TRAFFIC CONTROL OTHER THAN FOR THAT REQUIRED IN THESE PLANS, HE MAY DO SO AT HIS OWN EXPENSE. PAYMENT FOR THE EXCESS ABOVE THE CONTRACT REQUIREMENTS WILL BE INCLUDED UNDER ITEM 614, MAINTAINING TRAFFIC.

WORK TO BE COMPLETED PRIOR TO PHASE I M.O.T.

THIS SEQUENCE OF WORK SHALL BE COMPLETED PRIOR TO THE BEGINNING OF PHASE I. THE CONTRACTOR SHALL PERFORM ALL WORK OF THIS SEQUENCE WITH ALL LANES OF IR 90 OPEN TO TRAFFIC. SHOULD THE CONTRACTOR NEED TO TEMPORARILY CLOSE A LANE TO PERFORM THIS WORK, HE MAY DO SO BETWEEN THE HOURS OF 8:30AM - 4:00PM AS DIRECTED BY THE ENGINEER. THE CONTRACTOR SHALL FOLLOW STANDARD DRAWING MT.-95.31M AND MT.-95.32M WHEN CLOSING A LANE OF TRAFFIC. THE CONTRACTOR SHALL SCHEDULE HIS WORK IN SUCH A WAY SO AS TO HAVE ALL LANES OPEN TO TRAFFIC AT THE END OF EACH WORK DAY. THIS WORK SHALL INCLUDE, BUT IS NOT LIMITED TO, THE FOLLOWING:

1. CONSTRUCTION OF PIER FOOTERS
2. CONSTRUCTION OF PIER COLUMNS EXCLUDING PIER CAPS
3. ALL GRADING ADJACENT TO THE EXISTING STRUCTURE
4. DRAINAGE STRUCTURES WHERE PERMISSIBLE

THE CONTRACTOR SHALL ALSO PERFORM ALL OTHER WORK CAPABLE OF BEING DONE WITHOUT ANY PERMANENT LANE CLOSURES IN ADDITION TO THE AFOREMENTIONED WORK, AS DETERMINED BY THE ENGINEER.

SEQUENCE OF OPERATIONS

THE DEMOLITION AND RECONSTRUCTION OF STRUCTURE CUY-90-0095 SHALL BE PERFORMED IN TWO(2) PHASES. DURING PHASE I, THE EASTERN PORTION OF THE STRUCTURE SHALL BE DEMOLISHED AND RECONSTRUCTED. THE SAW CUT SHALL BE MADE AT THE EXISTING CENTERLINE (SEE PHASED CONSTRUCTION DETAILS IN STRUCTURE PLANS). THE EXISTING 12' & 14' LANES, 4' SIDEWALK AND 1' PARAPET WALL SHALL BE DEMOLISHED. THE PROPOSED DECK IS TO BE WIDENED TO INCLUDE 3 LANES OF WIDTH 12', 12' AND 14', A 5' SIDEWALK AND A 1' PARAPET WALL. DURING THIS FIRST CONSTRUCTION PHASE, TRAFFIC ON THE STRUCTURE SHALL BE MAINTAINED ON THE EXISTING WESTERN PORTION OF THE STRUCTURE, USING TWO 12' LANES, ONE IN EACH DIRECTION. WHEN POURING THE CONCRETE FOR PHASE I, A 5'-0" OPENING FOR A LAP SPLICE SHALL BE ALLOWED AS SHOWN ON THE STAGE CONSTRUCTION DETAILS.

PHASE II CONSTRUCTION SHALL CONSIST OF DEMOLITION AND RECONSTRUCTION OF THE REMAINDER OF THE EXISTING DECK (WESTERN PORTION). THE EXISTING 12' & 14' LANES, 4' SIDEWALK AND 1' PARAPET WALL SHALL BE DEMOLISHED. DURING THE SECOND PHASE OF CONSTRUCTION TRAFFIC ON THE STRUCTURE SHALL BE MAINTAINED ON THE EXISTING EASTERN PORTION OF THE STRUCTURE, USING TWO 12' LANES, ONE IN EACH DIRECTION.

SEE SHEETS 13,14 AND 18 FOR TRAFFIC SIGNAL TIMING AND SIGNAL HEAD ORIENTATION DURING PHASE 1 & PHASE II MAINTENANCE OF TRAFFIC.

MOT - SAMPLE CALCULATIONS:

TEMPORARY PAVEMENT (RAMP 'E') - WIDTH =20'
LENGTH = 100'
AREA = 222.22 SQ. YDS.

REWORKING OF RAMP 'E'

THE TEMPORARY RAMP 'E' WILL BEGIN 264' TO THE SOUTH AND 26' TO THE EAST OF ITS EXISTING LOCATION. THE EXISTING RADIUS OF 229.18' ON THE RAMP SHALL BE USED TO BEGIN TO DIRECT TRAFFIC ONTO THE RAMP, THEN A TANGENT WILL BE USED TO MATCH THE NEW RAMP TO THE EXISTING.

ERECTION OF STEEL OVER ACTIVE LANES

ERECTION OF STEEL OVER I.R. 90 WILL REQUIRE THE FREEWAY TO BE CLOSED FOR A SHORT DURATION SUBJECT TO THE FOLLOWING CONTROLS:

A. WORK IS LIMITED TO THE HOURS OF 11 PM TO 6 AM MONDAY THROUGH FRIDAY OR 8 AM TO 7 PM SUNDAY WITH THE APPROVAL OF THE ENGINEER.

B. DURATION OF CLOSURES SHALL NOT EXCEED TEN(10) MINUTE INTERVALS DURING ANY 30 MINUTE PERIOD.

C. LANE CLOSURES WILL BE IN ACCORDANCE WITH THE DETAIL BELOW. ONE PATROL VEHICLE IS REQUIRED FOR EACH LANE OF STOPPED TRAFFIC. AFTER TRAFFIC HAS BEEN SLOWED, ONE (1) PATROL VEHICLE SHALL TRAVEL ALONG THE ROADWAY SHOULDER 500 FT BEHIND THE BACK-UP OF STOPPED VEHICLES. PATROL VEHICLES SHALL HAVE HIGH-RISE FLASHING BEACONS TO PROVIDE ADEQUATE VISIBILITY TO APPROACHING MOTORISTS. THE CONTRACTOR SHALL ERECT AND MAINTAIN THE "ROAD WORK AHEAD", "PREPARE TO STOP" AND "STOP AHEAD" SIGNS WITH FLASHING TWELVE (12) INCH TRAFFIC SIGNAL HEADS IN ACCORDANCE WITH THE FOLLOWING SKETCH.

D. ACCESS TO THE INTERCHANGE EXIT RAMPS SHALL BE MAINTAINED DURING THE FREEWAY CLOSURE.

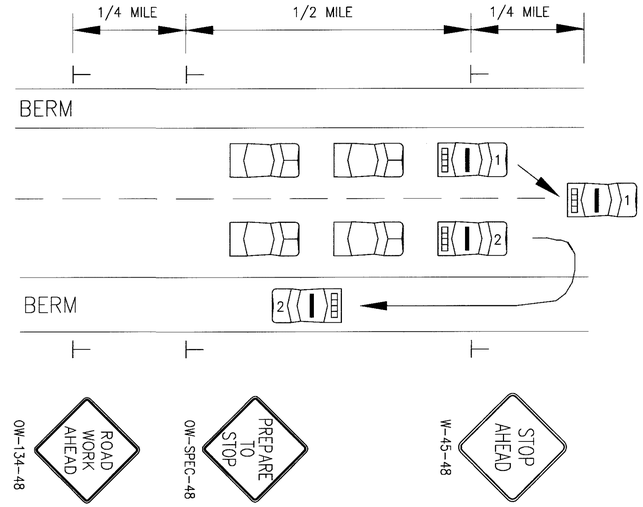

Revised by B&N 1-6-00

CALCULATED CLH CHECKED WAN

MAINTENANCE OF TRAFFIC GENERAL NOTES

CUY-90-0.95

9
80

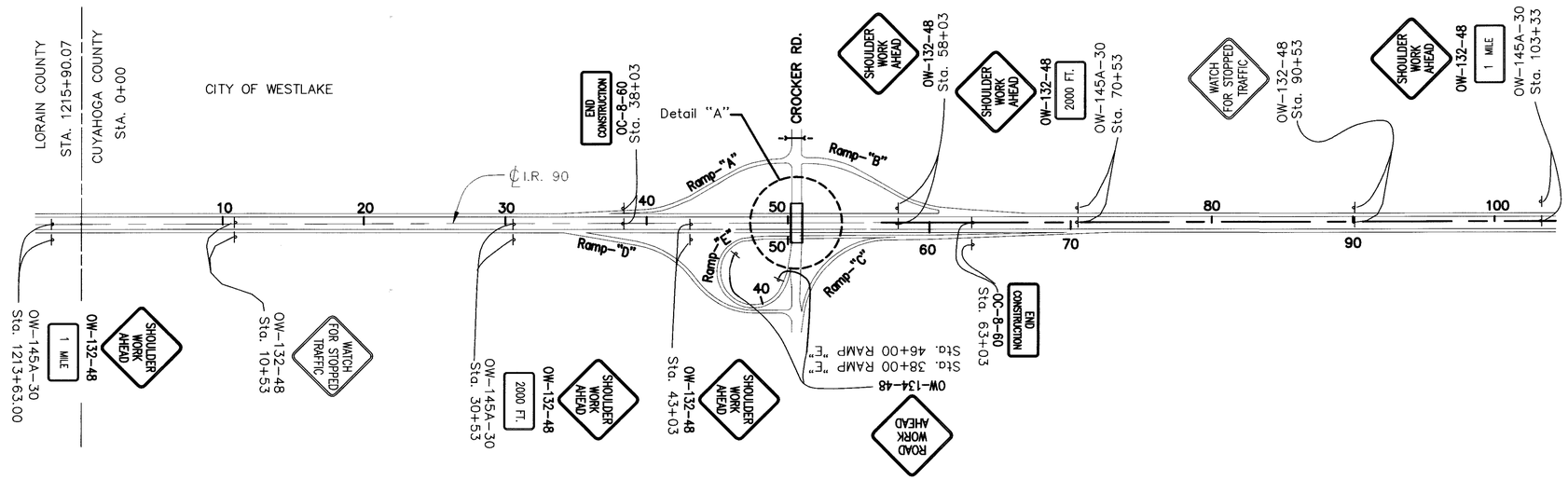

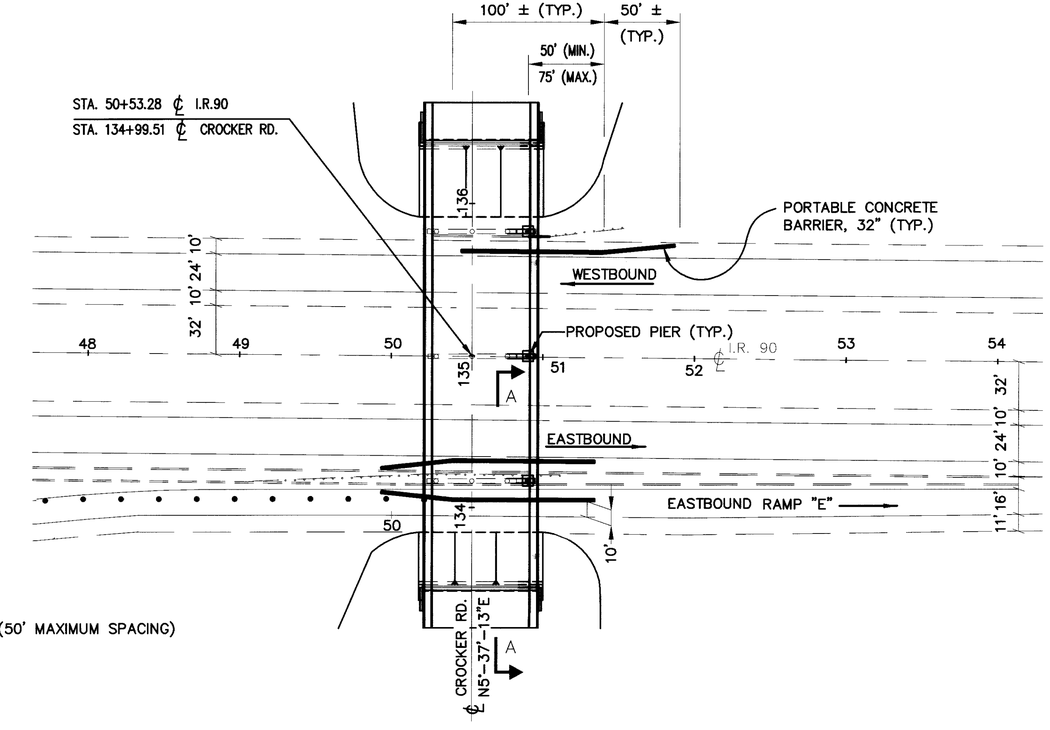

NOTE:

• – DRUMS (50' MAXIMUM SPACING)

DETAIL "A"
Scale: 1"=50'

ESTIMATED QUANTITIES:

ITEM 202 – GUARDRAIL REMOVED FOR REUSE	40 L.F.
ITEM 301 – 3" BITUMINOUS AGGREGATE BASE	4 C.Y.
ITEM 304 – 6" AGGREGATE BASE (SEE PROPOSAL NOTE)	7 C.Y.
ITEM 606 – GUARDRAIL REBUILT, TYPE 5	40 L.F.
ITEM 830 – CURB, TYPE 6	35 L.F.
ITEM 830 – 4" CONCRETE MEDIAN	20 S.Y.

QUANTITIES CARRIED TO GENERAL SUMMARY SHEET 20 & 21.

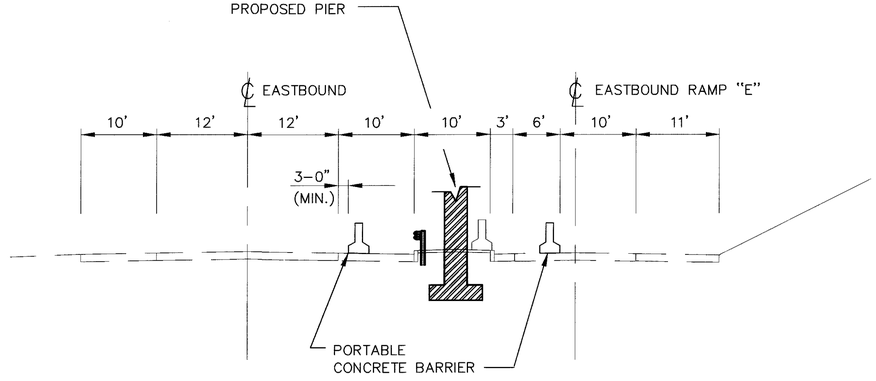

SECTION A–A
Scale: 1"=10'

Revised by B&N 1-6-00

HORIZONTAL SCALE IN FEET
0 500' 1000'

MAINTENANCE OF TRAFFIC I.R. 90

CUY-90-0.95

10
80

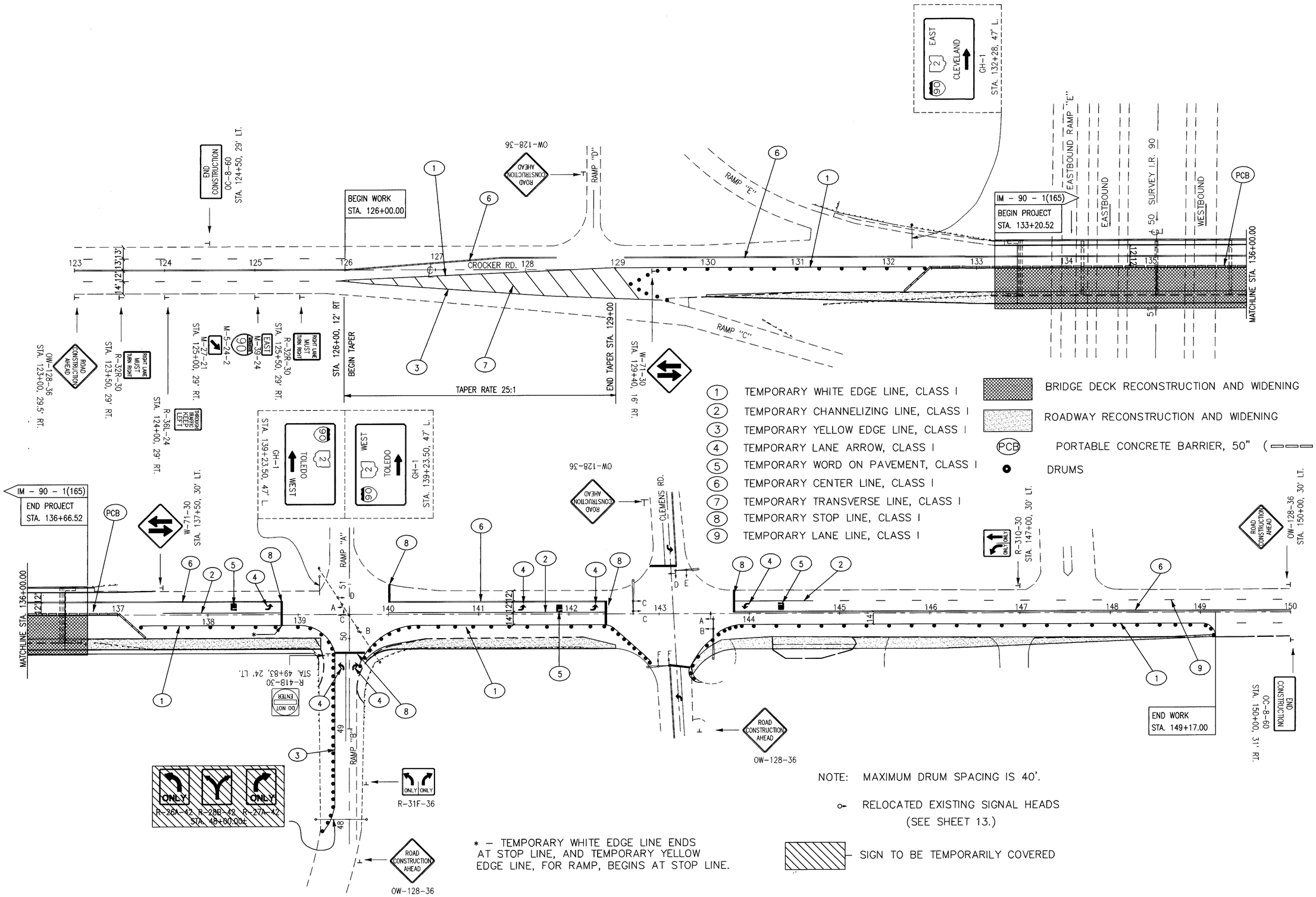

1. TEMPORARY WHITE EDGE LINE, CLASS I
2. TEMPORARY CHANNELIZING LINE, CLASS I
3. TEMPORARY YELLOW EDGE LINE, CLASS I
4. TEMPORARY LANE ARROW, CLASS I
5. TEMPORARY WORD ON PAVEMENT, CLASS I
6. TEMPORARY CENTER LINE, CLASS I
7. TEMPORARY TRANSVERSE LINE, CLASS I
8. TEMPORARY STOP LINE, CLASS I
9. TEMPORARY LANE LINE, CLASS I

BRIDGE DECK RECONSTRUCTION AND WIDENING

ROADWAY RECONSTRUCTION AND WIDENING

PCB PORTABLE CONCRETE BARRIER, 50" ( )

DRUMS

NOTE: MAXIMUM DRUM SPACING IS 40'.

RELOCATED EXISTING SIGNAL HEADS (SEE SHEET 13.)

SIGN TO BE TEMPORARILY COVERED

* – TEMPORARY WHITE EDGE LINE ENDS AT STOP LINE, AND TEMPORARY YELLOW EDGE LINE, FOR RAMP, BEGINS AT STOP LINE.

N

HORIZONTAL SCALE IN FEET
0 50' 100'

CALCULATED CLH
CHECKED WAW

MAINTENANCE OF TRAFFIC PHASE 1
STA. 123+00 TO 150+00

CUY-90-0.95

MAINTENANCE OF TRAFFIC QUANTITIES

SHEET NO.	DESCRIPTION	STATION FROM	STATION TO	CALCULATION	ITEM 614 TEMPORARY TRANSVERSE LINE, CLASS I	TEMPORARY CHANNEL. LINE, CLASS I	TEMPORARY STOP LINE, CLASS I	TEMPORARY CENTER LINE, CLASS I	TEMPORARY EDGE LINE, CLASS I W	TEMPORARY EDGE LINE, CLASS I Y	TEMPORARY LANE LINE, CLASS I	TEMPORARY LANE ARROW, CLASS I	TEMPORARY WORD ON PAVEMENT 72", CLASS I	ITEM 622 PORTABLE CONCRETE BARRIER, 50"
					LIN. FT.	LIN. FT.	LIN. FT.	LIN. FT.	LIN. FT.	LIN. FT.	LIN. FT.	EACH	EACH	LIN. FT.
ODOT														
11	PHASE 1 CROCKER ROAD	126+00	142+40.79	1640.79				1641						
		137+50	138+82.50	132.50		133								
		140+00	142+40.79	240.79		241								
		126+00	129+25	325	325									
		126+00	132+50	650					650					
		137+25	138+82.50	157.50					158					
		139+66.79	142+51.13	335.25					336					
		138+82.50		26			26							
		140+00		19.45			20							
		142+40.79		26.19			27							
		138+32.50		1									1	
		141+90.79		1									1	
		138+72.50		1								1		
		141+50.79		1								1		
		142+30.79		1								1		
		132+00	137+25	525										525
	RAMP "B"													
		49+84		33.10			34							
		50+11.49	47+85.95	273.4						274				
		49+74		2								2		
				SUB–TOTAL	325	374	107	1641 0.31 MI.	1144	274 0.27 MI.		5	2	525
100% CITY OF WESTLAKE														
11	PHASE 1 CROCKER ROAD	143+81.92	149+17.00	535.08				536						
		143+81.92	144+70.46	88.54		89								
		142+51.13	142+91.37	54.86					55					
		143+33.41	149+17.00	583.59					584					
		143+81.92		24			24							
		144+70.46	149+17.00	446.54							447			
		143+91.92		1								1		
		144+31.92		1									1	
				SUB–TOTAL		89	24	536 0.10 MI.	639	0.12 MI.	447 0.09 MI.	1	1	

NOTE: SUBTOTAL CARRIED TO GENERAL SUMMARY SHEET No.21

CALCULATED CLH CHECKED WAW

MAINTENANCE OF TRAFFIC SUB-SUMMARY

CUY-90-0.95

PHASING DIAGRAM

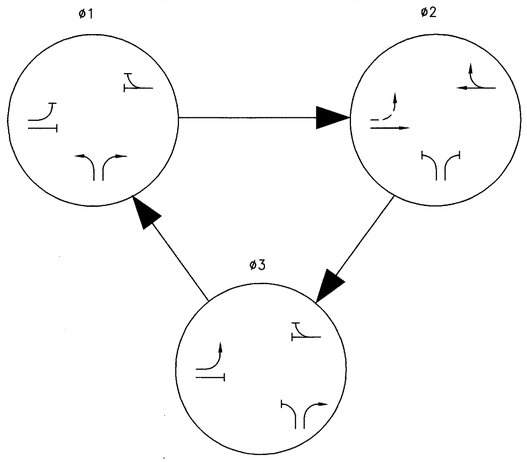

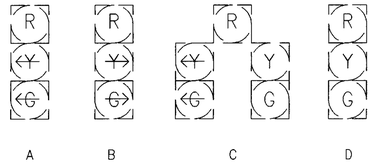

EX. 12" SIGNAL HEADS
RELOCATED, AS PER PLAN

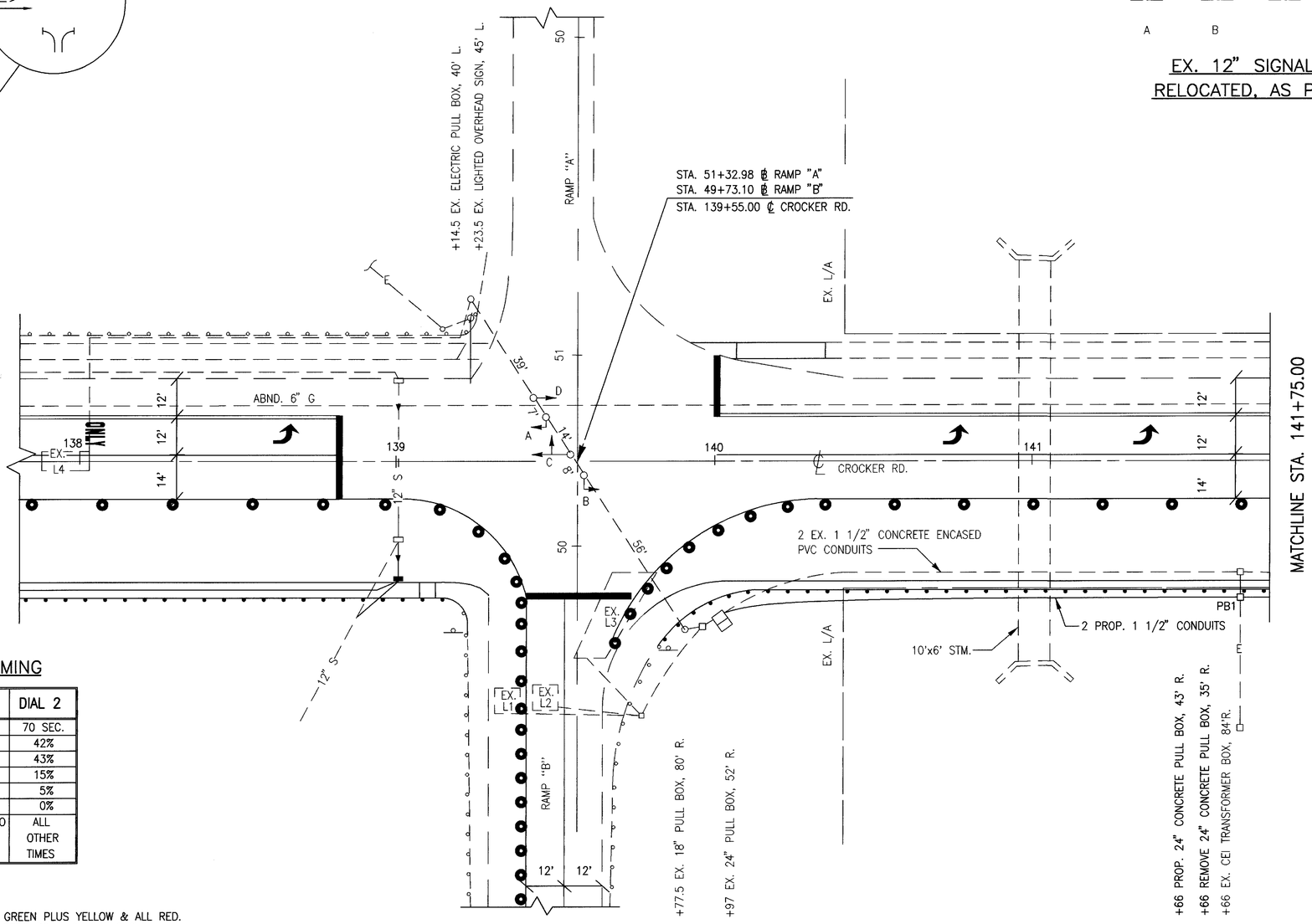

COORDINATION TIMING

INTERVAL	DIAL 1	DIAL 2
CYCLE LENGTH	70 SEC.	70 SEC.
PHASE 1 SPLIT	26%	42%
PHASE 2 SPLIT	59%	43%
PHASE 3 SPLIT	15%	15%
PERMISSIVE	5%	5%
OFFSET	0%	0%
TIME OF DAY SCHEDULE	6:30 AM TO 9:30 AM MON.–SAT.	ALL OTHER TIMES

NOTES:

1. PHASE SPLITS SHALL INCLUDE ALL GREEN PLUS YELLOW & ALL RED.
2. PERMISSIVES SHALL START AT THE ZERO POINT OF THE CYCLE.
3. OFFSETS SHALL BE REFERENCED TO THE BEGINNING OF PHASE 2 YELLOW.

SIGNAL TIMING CHART

INTERVAL	1	2	3
MINIMUM GREEN	13	36	5
MAXIMUM GREEN I	20	54	8
YELLOW CLEARANCE	3.6	3.6	3.6
ALL RED CLEARANCE	1.6	1.6	1.6

(6:30 AM TO 9:30 AM)

SIGNAL TIMING CHART

INTERVAL	1	2	3
MINIMUM GREEN	24	25	5
MAXIMUM GREEN I	36	38	8
YELLOW CLEARANCE	3.6	3.6	3.6
ALL RED CLEARANCE	1.6	1.6	1.6

(ALL OTHER TIMES)

SIGNAL SEQUENCE CHART

SIGNAL HEAD	ø1			ø2			ø3			FLASH
	R/W	CLEAR		R/W	CLEAR		R/W	CLEAR		
A	~~G~~	~~Y~~	R	R	R	R	R	R	R	R
B	~~G~~	~~Y~~	R	R	R	R	~~G~~	~~Y~~	R	R
C	R	R	R	G	Y	R	~~G~~/R	~~Y~~/R	R	Y
D	R	R	R	G	Y	R	R	R	R	Y

LEGEND:

● – DRUMS

NOTES:

1. DISCONNECT EXISTING LOOP DETECTORS L1, L2, L3 AND L4.
2. SEE SHEET 14 FOR TIME SPACE DIAGRAMS.

N

20' HORIZONTAL SCALE IN FEET (0, 20', 40')

CALCULATED CLH
CHECKED WAN

SIGNALIZATION PLAN PHASE 1
CROCKER ROAD - RAMP "A" & "B" INTERSECTION

CUY-90-0.95

```
(TS.DIAGM)
                                PASSER II-90
DECEMBER 93        MULTIPHASE ARTERIAL PROGRESSION PROGRAM        VERSION 2.0

RUN NO  3  DISTRICT 12  CROCKER RD (AM PHASE I)   05/24/95  CYCLE =  70 SECONDS
        HORIZONTAL SCALE 1 INCH =   30 SECS   (1 inch = 10 characters)
        VERTICAL   SCALE 1 INCH =  100 FEET   (1 inch = 6 lines)
INT  2  I                          |
CLEMENS I ////XXXXXXXXX            |////XXXXXXXXX          ////XXXXXXXXX
  4.4S  I .   .       .            |
        I                          |
        I .   .      ..            |
        I                          |
        I .   .      ..            |
        I                          |
        I .   .      . .           |
        I                          |
        I.    .      . .           |
        I                          |
        I.     .     . .           |
        I                          |
        I.     .     . .           |
        I                          |
        I      .     .  .          |
        I                          |
        I      .     .  .          |
        I                          |
INT  1  I      .     .  .          |
I-90 RA I///XXXXXXXXXXXXXX         |//XXXXXXXXXXXXXX       ///XXXXXXXXXXXXXX      /
  0.0S
            /A/                                          \B\
           35 MPH                                       35 MPH
        38 SECOND BAND                               28 SECOND BAND

      === DUAL LEFTS  (1+5)                        XXX DUAL THRUS  (2+6)
      /// LT 5 LEADS  (2+5)                        \\\ LT 1 LEADS  (1+6)
```

PHASE I CONSTRUCTION, AM

```
(TS.DIAGM)
                                PASSER II-90
DECEMBER 93        MULTIPHASE ARTERIAL PROGRESSION PROGRAM        VERSION 2.0

RUN NO  4  DISTRICT 12  CROCKER RD (PM PHASE I)   05/24/95  CYCLE =  70 SECONDS
        HORIZONTAL SCALE 1 INCH =   30 SECS   (1 inch = 10 characters)
        VERTICAL   SCALE 1 INCH =  100 FEET   (1 inch = 6 lines)
INT  2  I                          |
CLEMENS I//XXXXXXXXX            //|/XXXXXXXXX          ////XXXXXXXXX          ///
 63.4S  I                          |.        .
        I                          |
        I                          |.        ..
        I                          |
        I                          |.        ..
        I                          |
        I                          |..      . .
        I                          |
        I                          |.       . .
        I                          |
        I                          |.       . .
        I                          |
        I                          |.       . .
        I                          |
        I                          |.       . .
        I                          |
        I                          |.       . .
        I                          |
        I                          |.       . .
        I                          |
        I                          |.       . .
        I                          |
        I                          |.       . .
        I                          |
INT  1  I                          |.       . .
I-90 RA I///XXXXXXXXXX             |//XXXXXXXXXX          ///XXXXXXXXXX          /
  0.0S
            /A/                                          \B\
           35 MPH                                       35 MPH
        27 SECOND BAND                               28 SECOND BAND

      === DUAL LEFTS  (1+5)                        XXX DUAL THRUS  (2+6)
      /// LT 5 LEADS  (2+5)                        \\\ LT 1 LEADS  (1+6)
```

PHASE I CONSTRUCTION, PM

DESIGN AGENCY
R.E. WARNER & ASSOCIATES
CONSULTING ENGINEERS
WESTLAKE, OHIO 44145

CALCULATED CLH
CHECKED WAN

TIME SPACE DIAGRAMS FOR PHASE I
CROCKER ROAD - RAMP 'A' & 'B' INTERSECTION

CUY-90-0.95

[O:\81892\TSDG] CMM
3-15-96 9:05AM

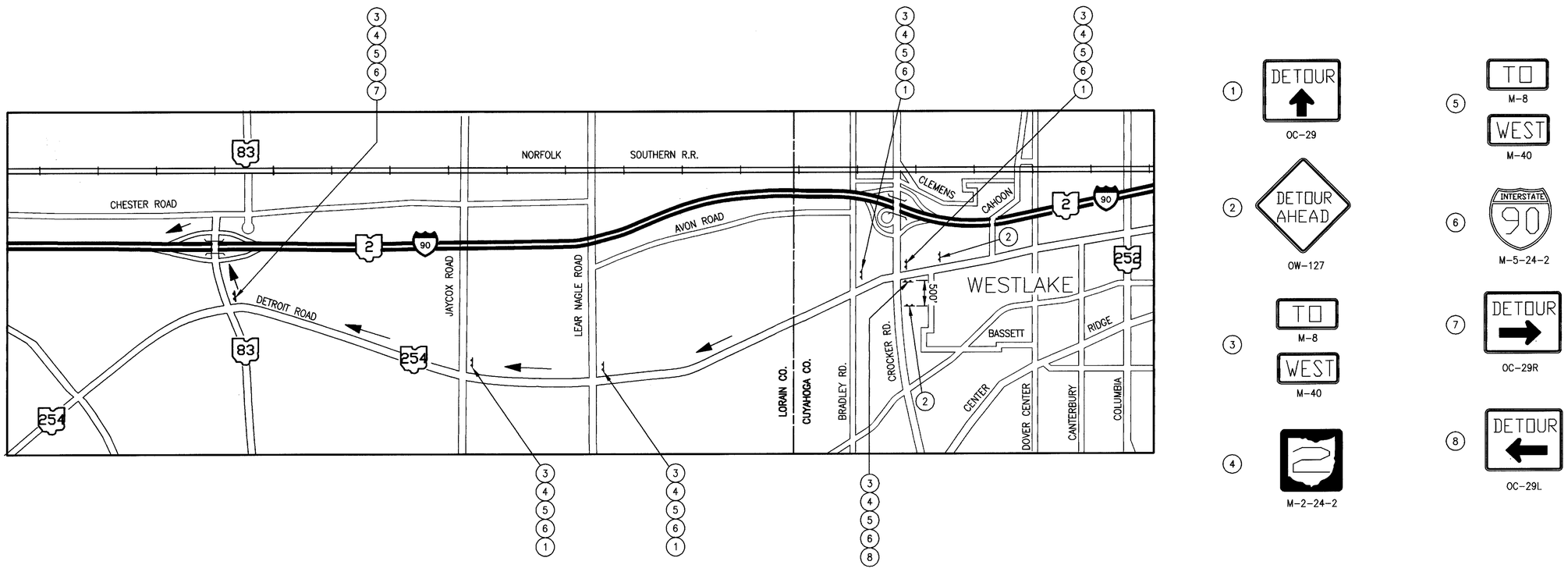

NOTE:

THE CONTRACTOR SHALL ERECT, MAINTAIN AND REMOVE THE DETOUR. PAYMENT FOR ALL MATERIAL, LABOR AND EQUIPMENT TO PERFORM THIS WORK SHALL BE INCLUDED IN THE LUMP SUM BID FOR ITEM 614 MAINTAINING TRAFFIC.

CALCULATED CLH
CHECKED WAN

MAINTENANCE OF TRAFFIC PHASE 2
DETOUR FOR I.R. 90 & ROUTE 2

CUY-90-0.95

MAINTENANCE OF TRAFFIC PHASE 2
STA. 123+00 TO 150+00

NOTE:
THE GORE SHALL BE REPLACED TO ORIGINAL CONDITION UPON COMPLETION OF PHASE 2. RECONSTRUCTION OF GORE SHALL BE PAID FOR UNDER ITEM 614 MAINTAINING TRAFFIC.
SEE MT-98.13 FOR LANE CLOSURE BEFORE EXIT GORE.

1. TEMPORARY WHITE EDGE LINE, CLASS I
2. TEMPORARY CHANNELIZING LINE, CLASS I
3. TEMPORARY YELLOW EDGE LINE, CLASS I
4. TEMPORARY LANE ARROW, CLASS I
5. TEMPORARY WORD ON PAVEMENT, CLASS I
6. TEMPORARY CENTER LINE, CLASS I
7. TEMPORARY TRANSVERSE LINE, CLASS I
8. TEMPORARY STOP LINE, CLASS I
9. TEMPORARY LANE LINE, CLASS I

BRIDGE DECK RECONSTRUCTION AND WIDENING

TEMPORARY PAVEMENT, CLASS A

PCB PORTABLE CONCRETE BARRIER, 50"

DRUMS

NOTE: MAXIMUM DRUM SPACING IS 40'.

RELOCATED EXISTING SIGNAL HEADS (SEE SHEET 18.)

* – ARROW PANNEL TYPE A

– SIGN TO BE TEMPORARILY COVERED

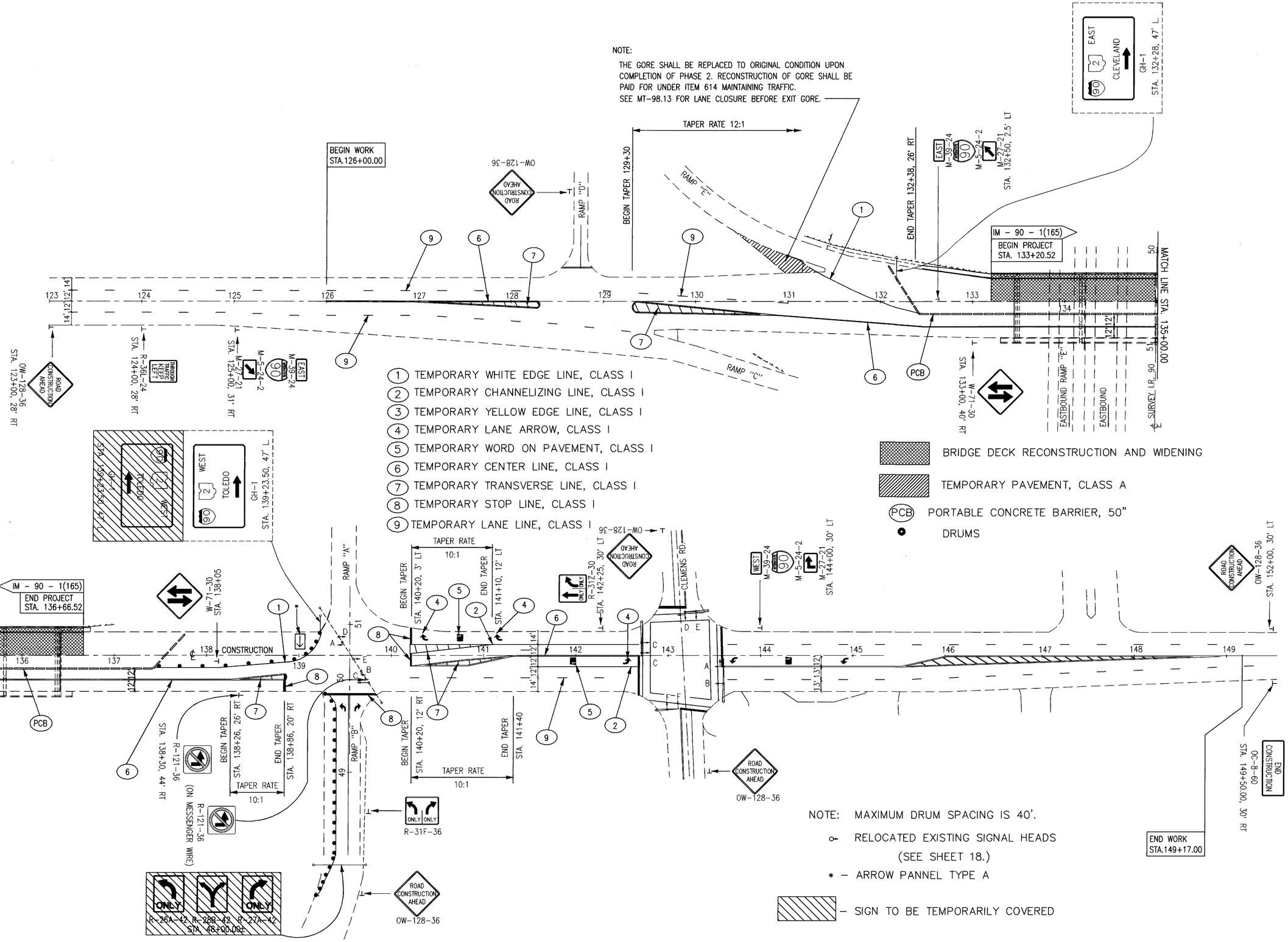

CALCULATED CLH CHECKED WHM

0 50' 100' HORIZONTAL SCALE IN FEET

CUY-90-0.95

MAINTENANCE OF TRAFFIC QUANTITIES

SHEET NO.	DESCRIPTION	STATION FROM	STATION TO	CALCULATION	ITEM 614 TEMPORARY TRANSVERSE LINE, CLASS I	ITEM 614 TEMPORARY CHANNEL. LINE, CLASS I	ITEM 614 TEMPORARY STOP LINE, CLASS I	ITEM 614 TEMPORARY CENTER LINE, CLASS I	ITEM 614 TEMPORARY EDGE LINE, CLASS I W	ITEM 614 TEMPORARY EDGE LINE, CLASS I Y	ITEM 614 TEMPORARY LANE LINE, CLASS I	ITEM 614 TEMPORARY LANE ARROW, CLASS I	ITEM 614 TEMPORARY WORD ON PAVEMENT 72", CLASS I	ITEM 615 TEMPORARY PAVEMENT CLASS A	ITEM 622 PORTABLE CONCRETE BARRIER, 50"
		FROM	TO		LIN. FT.	LIN. FT.	LIN. FT.	LIN. FT.	LIN. FT.	LIN. FT.	LIN. FT.	EACH	EACH	SQ. YD.	LIN. FT.
ODOT															
16	PHASE 2 CROCKER ROAD	126+00	129+30	330							330				
		126+00	131+00	500							500				
		140+20	142+70	250							250				
		126+00	138+86	1286				1286							
		140+20	142+70	250				250							
		126+90	128+30	140	140										
		129+30	130+70	140	140										
		138+26	138+86	60	60										
		140+20	141+10	90	90										
		140+20	141+40	120	120										
		138+86		12			12								
		140+20		32			32								
		140+20	142+70	250		250									
		141+50	142+70	120		120									
		131+15.31	132+38	122.69					123						
		137+44	139+24.40	194.28					195						
		132+00	137+80	580											580
		130+37.70	131+31.37	222.22										223	
		140+30		1								1			
		140+70		1									1		
		141+10		1								1			
		142+00		1											
		142+60		1									1		
	RAMP "B"	49+84		60			60					1			
				SUB–TOTAL	550	370	104	1536	318		1080	3	2	223	580
								0.29 MI.	0.06 MI.		0.21 MI.				

NOTE: SUBTOTAL CARRIED TO GENERAL SUMMARY SHEET No.21

CALCULATED CLH CHECKED WAV

MAINTENANCE OF TRAFFIC SUB-SUMMARY

CUY-90-0.95

PHASING DIAGRAM

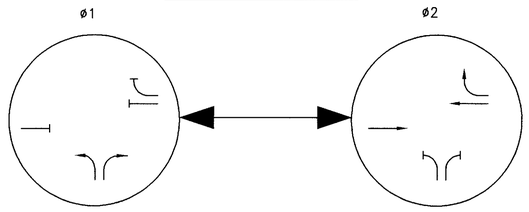

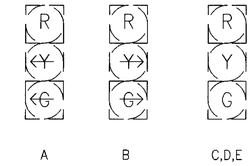

EX. 12" SIGNAL HEADS
RELOCATED, AS PER PLAN

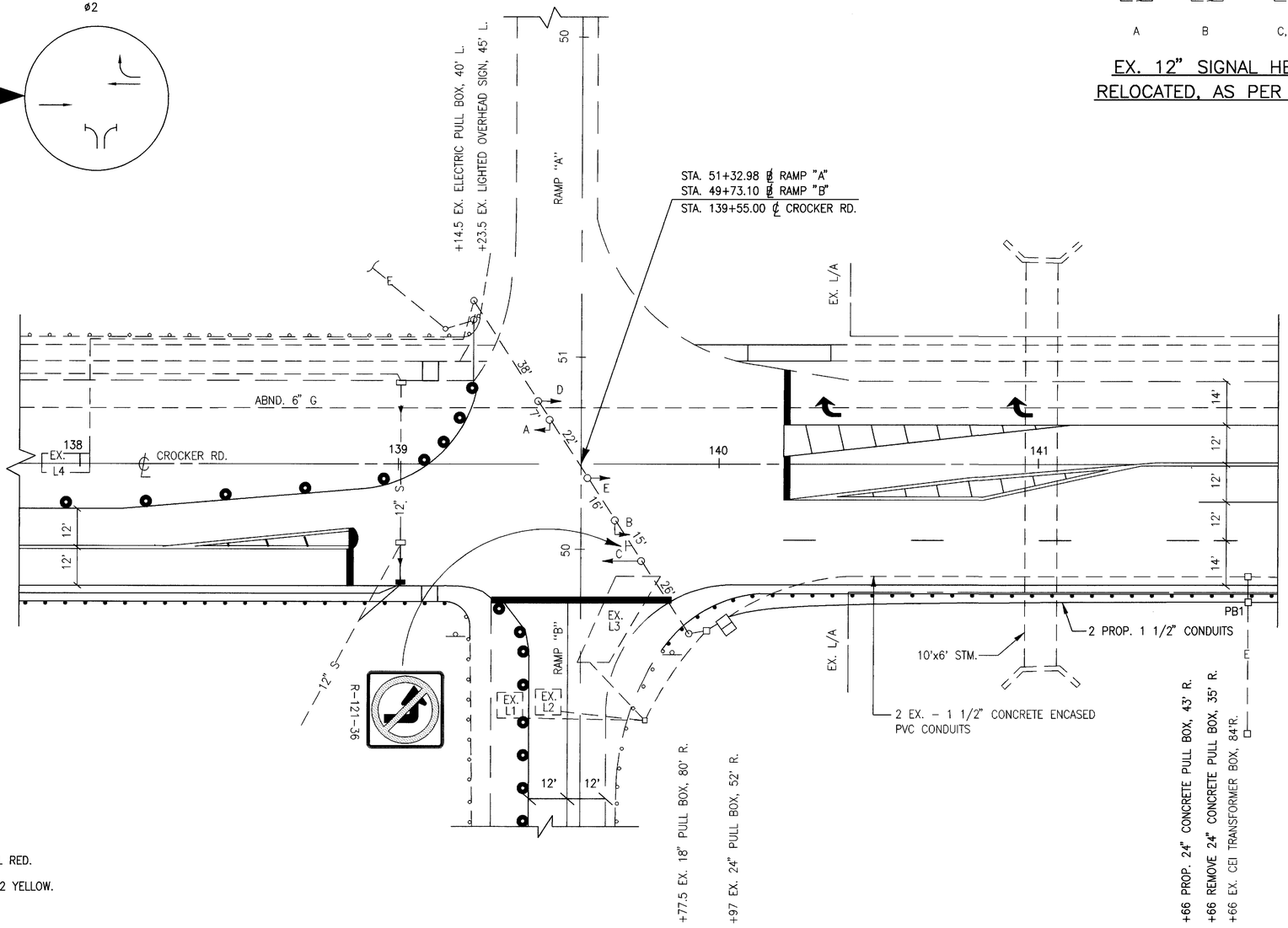

COORDINATION TIMING

INTERVAL	DIAL 1
CYCLE LENGTH	70 SEC.
PHASE 1 SPLIT	46%
PHASE 2 SPLIT	54%
PERMISSIVE	5%
OFFSET	0%
TIME OF DAY SCHEDULE	ALL TIMES

NOTES:
1. PHASE SPLITS SHALL INCLUDE ALL GREEN PLUS YELLOW & ALL RED.
2. PERMISSIVE SHALL START AT THE ZERO POINT OF THE CYCLE.
3. OFFSET SHALL BE REFERENCED TO THE BEGINNING OF PHASE 2 YELLOW.

SIGNAL TIMING CHART

INTERVAL	1	2
MINIMUM GREEN	27	32
MAXIMUM GREEN I	41	48
YELLOW CLEARANCE	3.6	3.6
ALL RED CLEARANCE	1.6	1.6

SIGNAL SEQUENCE CHART

SIGNAL HEAD	ø1			ø2			FLASH
	R/W	CLEAR		R/W	CLEAR		
A	~~G~~	~~Y~~	R	R	R	R	R
B	~~G~~	~~Y~~	R	R	R	R	R
C	R	R	R	G	Y	R	Y
D	R	R	R	G	Y	R	Y
E	R	R	R	G	Y	R	Y

LEGEND:

● – DRUMS

NOTE:

1. SEE SHEET 19 FOR TIME SPACE DIAGRAMS.

N

0 20' 40'
HORIZONTAL SCALE IN FEET

CALCULATED CLH
CHECKED WAM

SIGNALIZATION PLAN PHASE TWO
CROCKER ROAD - RAMP "A" & "B" INTERSECTION

CUY-90-0.95

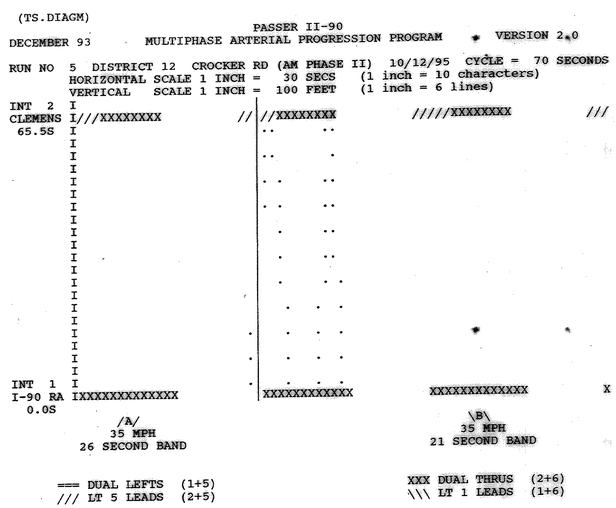

PHASE II CONSTRUCTION, AM

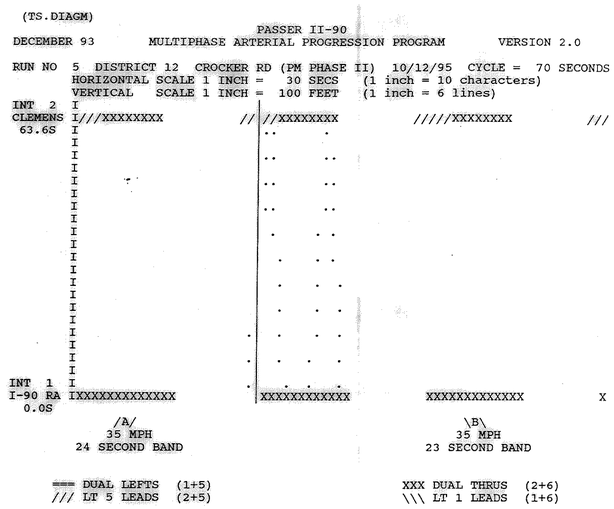

PHASE II CONSTRUCTION, PM

DESIGN AGENCY
R.E. WARNER & ASSOCIATES
CONSULTING ENGINEERS
WESTLAKE, OHIO 44145

CALCULATED CLH
CHECKED WAW

TIME SPACE DIAGRAMS FOR PHASE II
CROCKER ROAD - RAMP 'A' & 'B' INTERSECTION

CUY-90-0.95

[O:\81892\TSDG] CMM
3-15-96 9:05AM

ODOT SHEET NUMBER										100% CITY OF WESTLAKE SHEET NUMBER										ITEM	ITEM EXT	GRAND TOTAL	UNIT	DESCRIPTION	AS PER PLAN SHEET NUMBER
6	10	22	23	24	25	26	36		SUBTOTAL	6	7	22	28	29	39	41			SUBTOTAL						
																								ROADWAY	
									LUMP											201	11000	LUMP		CLEARING AND GRUBBING	
			289						289											202	22900	289	SQ. YD.	APPROACH SLAB REMOVED	
				1055	345	84			1484				66	148					214	202	23000	214	SQ. YD.	PAVEMENT REMOVED	
				391	341	278			1010				544						544	202	30000	2028	SQ. FT.	WALK REMOVED	
													247	442					689	202	32000	1699	LIN. FT.	CURB REMOVED	
				590	309	218			1117				242	291					533	202	35100	1650	LIN. FT.	PIPE REMOVED, 24" AND UNDER	
				387	354	250			991											202	38000	991	LIN. FT.	GUARDRAIL REMOVED	
	40								40											202	38200	40	LIN. FT.	GUARDRAIL REMOVED FOR REUSE	
														3					3	202	58000	3	EACH	MANHOLE REMOVED	
						1			1					2					2	202	58100	3	EACH	CATCH BASIN REMOVED	
							492		492						279				279	203	12000	771	CU. YD.	EXCAVATION NOT INCLUDING EMBANKMENT CONSTRUCTION	
							1183		1183						4				4	203	20000	1187	CU. YD.	EMBANKMENT	
		1211							1211			536							536	203	50000	1747	SQ. YD.	SUBGRADE COMPACTION	
			10						10											203	60000	10	STATION	LINEAR GRADING	
													14.5						14.5	518	21100	14.5	CU. YD.	POROUS BACKFILL	
				400	350	225			975											606	13000	975	LIN. FT.	GUARDRAIL, TYPE 5	
	40								40											606	16500	40	LIN. FT.	GUARDRAIL REBUILT, TYPE 5	
				1		1			2											606	25000	2	EACH	ANCHOR ASSEMBLY, TYPE A	
				1	1				2											606	35000	2	EACH	BRIDGE TERMINAL ASSEMBLY, TYPE 1	
				1	1				2											606	35100	2	EACH	BRIDGE TERMINAL ASSEMBLY, TYPE 2	
				1055	1790	267			3112				629	1673					2302	608	11001	5414	SQ. FT.	4-1/2" CONCRETE WALK, AS PER PLAN	7
				2	1	2			5				5	3					8	608	51000	13	EACH	CURB RAMP, TYPE 2	
					28				28											622	24000	28	LIN. FT.	CONCRETE BARRIER, TYPE D	
													18						18	842	46201	18	CU. YD.	CLASS C CONCRETE, AS PER PLAN	41
																								EROSION CONTROL	
							3814		3814						285				285	870	10000	4099	SQ. YD.	SEEDING AND MULCHING	
190									190	25									25	870	14000	215	SQ. YD.	REPAIR SEEDING AND MULCHING	
0.04									0.04	0.01									0.01	870	20000	0.05	TON	COMMERCIAL FERTILIZER	
10									10	2									2	870	35000	12	M-GAL	WATER	
9									9	1									1	870	40000	10	M-SQ.FT.	MOWING	
				373	830	177			1380											668	10000	1380	SQ. YD.	SEEDING AND EXCELSIOR MATTING	
750									750	85									85	877	10000	835	SQ. YD.	TEMPORARY SEEDING AND MULCHING	
325									325	325									325	877	30000	650	LIN. FT.	TEMPORARY PERIMETER, DITCH CHECK OR INLET PROTECTION FILTER FABRIC FENCE	
50									50											877	40000	50	LIN. FT.	TEMPORARY SLOPE DRAINS	
																								DRAINAGE	
				10	283				293					20					20	603	01500	313	LIN. FT.	6" CONDUIT, TYPE F NON-PERFORATED, ASTM D3034 SDR 35, SS931 OR SS944	
						18			18					97					97	603	04400	115	LIN. FT.	12" CONDUIT, TYPE B	
						18			18											603	04600	18	LIN. FT.	12" CONDUIT, TYPE C	
														18					18	603	05900	18	LIN. FT.	15" CONDUIT, TYPE B	
						1			1					2					2	604	00800	3	EACH	CATCH BASIN, NO. 3A	
														3					3	604	31500	3	EACH	MANHOLE, NO. 3	
														1					1	604	34500	1	EACH	MANHOLE ADJUSTED TO GRADE	
					8				8											604	36600	8	EACH	PRECAST REINFORCED CONCRETE OUTLET	
													37	33					70	SPECIAL	60460000	70	LIN. FT.	TRENCH DRAIN	
						238			238											605	05110	238	LIN. FT.	4" SHALLOW PIPE UNDERDRAIN WITH FABRIC WRAP	
				554	506				1060				331	293					624	605	11110	1684	LIN. FT.	6" SHALLOW PIPE UNDERDRAIN WITH FABRIC WRAP	
																								PAVEMENT	
										200									200	253	90200	200	LIN. FT.	PAVEMENT REPAIR, MISC: JOINT AND CRACK SEALING, AS PER PLAN	7
		370							370											254	01010	370	SQ. YD.	PAVEMENT PLANING, PORTLAND CEMENT CONCRETE	
			78						78											255	10000	78	SQ. YD.	FULL DEPTH PAVEMENT REMOVAL AND RIGID REPLACEMENT, CLASS C	
										150									150	255	10200	150	SQ. YD.	FULL DEPTH PAVEMENT REMOVAL AND RIGID REPLACEMENT, MISC: HIGH EARLY STRENGTH, CLASS C, A.P.P.	7
				129		104			233											255	20000	233	LIN. FT.	FULL DEPTH PAVEMENT SAWING	
										1800									1800	255	20001	1800	LIN. FT.	FULL DEPTH PAVEMENT SAWING, AS PER PLAN	7
	4								4											301	46000	4	CU. YD.	BITUMINOUS AGGREGATE BASE, PG64-22	
	7	220							227			102				11			113	304	20000	340	CU. YD.	AGGREGATE BASE (SEE PROPOSAL NOTE)	
		106							106											407	10000	106	GAL.	TACK COAT	
		43							43											407	14000	43	GAL.	TACK COAT FOR INTERMEDIATE COURSE	
		20							20											408	10000	20	GAL.	BITUMINOUS PRIME COAT	
		29							29											448	46040	29	CU. YD.	ASPHALT CONCRETE INTERMEDIATE COURSE, TYPE 2, PG64-28	
		44							44			2							2	448	50000	46	CU. YD.	ASPHALT CONCRETE SURFACE COURSE, TYPE 1H	
		40							40											448	47081	40	CU. YD.	ASPHALT CONCRETE SURFACE COURSE, UNDER GUARDRAIL, TYPE 1, PG64-22, AS PER PLAN	6

Revised by B&N 1-6-00

CALCULATED C.L.H. CHECKED WAN

GENERAL SUMMARY

CUY-90-0.95

20/80

ODOT SHEET NUMBER											100% CITY OF WESTLAKE SHEET NUMBER					ITEM	ITEM EXT	GRAND TOTAL	UNIT	DESCRIPTION	AS PER PLAN SHEET NUMBER
8	9	10	12	17	22	23	25	41A	41B	SUBTOTAL	12	22	23	41	SUBTOTAL						
																				PAVEMENT (CONT'D.)	
														83	83	451	11000	83	SQ. YD.	7" REINFORCED CONCRETE PAVEMENT	
														49	49	451	13000	49	SQ. YD.	8" REINFORCED CONCRETE PAVEMENT	
					957					957		601			601	451	14000	1558	SQ. YD.	9" REINFORCED CONCRETE PAVEMENT	
							130			130						SPECIAL	45130000	130	LIN. FT.	PRESSURE RELIEF JOINT, TYPE A	
						362				362						611	15000	362	SQ. YD.	REINFORCED CONCRETE APPROACH SLAB (T=13")	
						901				901			593		593	830	14000	1494	LIN. FT.	CURB, TYPE 2-A	
						138				138						830	16000	138	LIN. FT.	CURB, TYPE 2-B	
		35				139				174			90		90	830	26000	264	LIN. FT.	CURB, TYPE 6	
		20								20						830	72000	20	SQ. YD.	CONCRETE MEDIAN	
																				LIGHTING	
								4		4						202	75300	4	EACH	PULL BOX REMOVED	
								120		120						603	00400	120	LIN. FT.	4" CONDUIT, TYPE E	
									8	8						625	01500	8	EACH	CABLE SPLICING KIT	41A
									752	752						625	23000	752	LIN. FT.	NO. 4 AWG 600 VOLT DISTRIBUTION CABLE	
									850	850						625	24000	850	LIN. FT.	1-1 1/2" DUCT CABLE WITH TWO NO. 4 AWG 600 VOLT CABLES	
									810	810						625	29002	810	LIN. FT.	TRENCH, 24" DEEP	
									6	6						625	30700	6	EACH	PULLBOX, 713.08, 18"	
								LUMP		LUMP						SPECIAL	62540000	LUMP		MAINTAINING EXISTING LIGHTING	
																				FOR TRAFFIC CONTROL GENERAL SUMMARY, SEE SHEET 48	
																				FOR STRUCTURES, 20' SPAN AND OVER, SEE SHEET 51	
																				MAINTENANCE OF TRAFFIC	
	50									50						614	11100	50	HOUR	LAW ENFORCEMENT OFFICER WITH PATROL CAR	
111										111						614	13300	111	EACH	BARRIER REFLECTOR, TYPE B	
113										113						614	13350	113	EACH	OBJECT MARKER (SEE PROPOSAL NOTE)	
				0.21						0.21	0.09				0.09	614	20000	0.30	MILE	TEMPORARY LANE LINE, CLASS I	
			0.31	0.29						0.60	0.10				0.10	614	21000	0.70	MILE	TEMPORARY CENTER LINE, CLASS I	
			0.27	0.06						0.33	0.12				0.12	614	22000	0.45	MILE	TEMPORARY EDGE LINE, CLASS I	
			374	370						744	89				89	614	23000	833	LIN. FT.	TEMPORARY CHANNELIZING LINE, CLASS I	
			325	550						875						614	25000	875	LIN. FT.	TEMPORARY TRANSVERSE LINE, CLASS I	
			107	104						211	24				24	614	26000	235	LIN. FT.	TEMPORARY STOP LINE, CLASS I	
			5	3						8	1				1	614	30000	9	EACH	TEMPORARY LANE ARROW, CLASS I	
			2	2						4	1				1	614	31000	5	EACH	TEMPORARY WORD ON PAVEMENT, 72", CLASS I	
				223						223						615	20000	223	SQ. YD.	TEMPORARY PAVEMENT, CLASS A	
50										50						616	10000	50	M-GAL	WATER	
5										5						616	20000	5	TON	CALCIUM CHLORIDE	
			525	580						1105						622	40030	1105	LIN. FT.	PORTABLE CONCRETE BARRIER, 50"	
																614	11000	LUMP		MAINTAINING TRAFFIC	
																623	10000	LUMP		CONSTRUCTION LAYOUT STAKES	
																624	10000	LUMP		MOBILIZATION	

Revised by B&N 1-6-00

CALCULATED CLH CHECKED WAN

GENERAL SUMMARY

CUY-90-0.95

CALCULATED CLH CHECKED WAN

CALCULATIONS

ITEM 203 – SUBGRADE COMPACTION:

–ODOT–

STA. 131+12.52 TO STA. 133+20.52 = 208 L.F.
208 L.F. x (6 + 12.5)L.F./2 = 1924.00 S.F.

STA. 133+20.52 TO STA. 133+45.52 = (APPR. SLAB) 25 L.F.
25 L.F. x 65 L.F. = 1625.00 S.F.

STA. 136+41.52 TO STA. 136+66.52 = (APPR. SLAB) 25 L.F.
25 L.F. x 65 L.F. = 1625.00 S.F.

STA. 136+66.52 TO STA. 139+25.07 = 258.55 L.F.
258.55 L.F. x 12.5 L.F. = 3231.88 S.F.

STA. 140+07.30 TO STA. 140+42.00 = 34.70 L.F.
34.70 L.F. x (6 + 12.5)L.F./2 = 320.98 S.F.

STA. 140+42.00 TO STA. 142+15.13 = 173.13 L.F.
173.13 L.F. x 12.5 L.F. = 2164.13 S.F.

10,890.99 S.F.

AREA = 10,890.99 S.F. ÷ 9 S.F./S.Y. = 1,210.11 S.Y.
USE 1,211 S.Y.

–CITY OF WESTLAKE–

STA. 143+44.60 TO STA. 144+25.14 = 80.54 L.F.
80.54 L.F. x (6 + 12.5)L.F./2 = 745.00 S.F.

STA. 144+25.14 TO STA. 145+97.00 = 171.86 L.F.
171.86 L.F. x 12.5 L.F. = 2148.25 S.F.

STA. 145+97.00 TO STA. 148+05.00 = 208 L.F.
208 L.F. x (6 + 12.5)L.F./2 = 1924.00 S.F.

4817.25 S.F.

AREA = 4,817.25 S.F. ÷ 9 S.F./S.Y. = 535.25 S.Y.
USE 536 S.Y.

ITEM 254 – PAVEMENT PLANING, PORTLAND CEMENT CONCRETE:

–ODOT–

STA. 132+50.52 TO STA. 132+75.52 = 25 L.F.
(25 L.F. x (70.31 + 68.09)/2 L.F.) ÷ 9 S.F./S.Y. = 192.22 S.Y.

STA. 137+16.52 TO STA. 137+41.52 = 25 L.F.
(25 L.F. x 64 L.F.) ÷ 9 S.F./S.Y. = 177.78 S.Y.

370.00 S.Y.
USE 370 S.Y.

ITEM 451 – 9" REINFORCED CONCRETE PAVEMENT:

–ODOT–

STA. 130+80.89 TO STA. 131+15.21 = 34.32 L.F.
2.5 L.F. x 34.32 L.F. = 85.80 S.F.

STA. 37+16.00 TO STA. 38+06.25 90.25 L.F.
2.5 L.F. x 90.25 L.F. = 225.63 S.F.

STA. 130+00.52 TO STA. 133+20.52 = 320.00 L.F.
((2.5 + 12.5)÷ 2)L.F. x 320.00 L.F. = 2400.00 S.F.

STA. 136+66.52 TO STA. 139+25.07 258.55 L.F.
12.5 L.F. x 258.55 L.F. = 3231.88 S.F.

STA. 139+75.29 TO STA. 140+42.00 = 66.71 L.F.
((12.5 + 2.5)÷ 2)L.F. x 66.71 L.F. = 500.33 S.F.

STA. 140+42.00 TO STA. 142+15.13 = 173.13 L.F.
12.5 L.F. x 173.13 L.F. = 2164.13 S.F.

8,607.77 S.F.

AREA = 8,607.77 S.F. ÷ 9 S.F./S.Y. = 956.42 S.Y.
USE 957 S.Y.

–CITY OF WESTLAKE–

STA. 143+35.50 TO STA. 144+25.14 = 857.46 S.F.

STA. 144+25.14 TO STA. 145+97.00 = 171.86 L.F.
12.5 L.F. x 171.86 L.F. = 2148.25 S.F.

STA. 145+97.00 TO STA. 149+17.00 = 320.00 L.F.
((12.5 + 2.5)÷ 2)FT. x 320.00 L.F. = 2400.00 S.F.

5,405.71 S.F.

AREA = 5,405.71 S.F. ÷ 9 S.F./S.Y. = 600.63 S.Y.
USE 601 S.Y.

ITEM 304 – 6" AGGREGATE BASE:

–ODOT–

STA. 133+20.52 TO STA. 133+45.52 = 25 L.F.
65 L.F. x 25 L.F. ÷ 9 S.F./S.Y. = 180.56 S.Y.

STA. 136+41.52 TO STA. 136+66.52 = 25 L.F.
65 L.F. x 25 L.F. ÷ 9 S.F./S.Y. = 180.56 S.Y.

AREA FROM ITEM 451 = 957.00 S.Y.

1,318.12 S.Y.

VOLUME = 1,318.12 S.Y. x 0.5 FT. ÷ 3 FT./YD. = 219.69 C.Y.
USE 220 C.Y.

–CITY OF WESTLAKE–

AREA FROM ITEM 451 = 611.00 S.Y.
VOLUME = 611.00 S.Y. x 0.5 FT. ÷ 3 FT./YD. = 101.83 C.Y.
USE 102 C.Y.

ITEM 448 – ASPHALT CONCRETE INTERMEDIATE COURSE, TYPE 2:

–ODOT–

STA. 132+75.52 TO STA. 133+20.52 = 45 L.F.
(68.09 +64)L.F./2 x 45 L.F. ÷ 9 S.F./S.Y. = 330.23 S.Y.

STA. 136+66.52 TO STA. 137+16.52 = 50 L.F.
64 L.F. x 50.00 L.F. ÷ 9 S.F./S.Y. = 355.56 S.Y.

685.79 S.Y.

VOLUME = 685.79 S.Y. x 0.125 FT ÷ 3 FT./YD. = 28.57 C.Y.
USE 29 C.Y.

ITEM 448 – ASPHALT CONCRETE SURFACE COURSE, TYPE 1H:

–ODOT–

STA. 132+50.52 TO STA. 133+20.52 = 70 L.F.
(38 + ((22.5 + 14)÷ 2))L.F. + ((9.8125 + 12)÷ 2)L.F. x 70 L.F. = 4700.94 S.F.
4700.94 S.F. ÷ 9 S.F./S.Y. = 522.33 S.Y.

STA. 136+66.52 TO STA. 137+41.52 = 75 L.F.
(38 + 14 + 12)L.F. x 75 L.F. = 4800.00 S.F.
4800.00 S.F. ÷ 9 S.F./S.Y. = 533.33 S.Y.

1055.66 S.Y.

VOLUME = 1055.66 S.Y. x 0.125 FT ÷ 3 FT./YD.= 43.99
USE 44 C.Y.

–CITY OF WESTLAKE–
–AT SHELL GAS STATION

STA. 144+24.25 TO STA. 144+39.75 = 15.5 L.F.
2 L.F. x 15.5 L.F. = 31 S.F.
31 S.F. ÷ 9 S.F./S.Y. = 3.44 S.Y.

STA. 144+87.55 TO STA. 145+49.55 = 62 L.F.
(6 L.F. + 7.5 L.F.)/2 x 62 L.F. = 418.50 S.F.
418.50 S.F. ÷ 9 S.F./S.Y. = 46.50 S.Y.

49.94 S.Y.

VOLUME = 49.94 S.Y. x 0.125 FT ÷ 3 FT./YD.= 2.08 C.Y.
USE 2 C.Y.

ITEM 407 – TACK COAT:

–ODOT–

AREA FROM ITEM 448 = 1,055.66 S.Y.
1055.66 S.Y. x 0.10 GAL/S.Y. = 105.57 GAL.
USE 106 GAL.

ITEM 407 – TACK COAT FOR INTERMEDIATE COURSE:

–ODOT–

AREA FROM ITEM 448 = 1055.66 S.Y.
1055.66 S.Y. x 0.04 GAL/S.Y. = 42.23 GAL.
USE 43 GAL.

ITEM 408 – BITUMINOUS PRIME COAT:

–CITY OF WESTLAKE–

AREA FROM ITEM 448 = 49.94 S.Y.
49.94 S.Y. x 0.40 GAL/S.Y. = 19.98 GAL.
USE 20 GAL.

Revised by B&N 1-6-00

CUY-90-0.95

CALCULATED CLH CHECKED WAN

ITEM 830 – CURB, TYPE 2–A:

–ODOT–

STA. 130+80.89 (29.95' LT.) TO STA. 131+15.21 (31.50' LT.) =	34.35 L.F.
STA. 37+16.00 TO STA. 38+06.25 =	90.58 L.F.
STA. 130+00.52 (31' RT.) TO STA. 132+50.52 (35.8' RT.) =	250.05 L.F.
STA. 133+20.52 TO STA. 133+45.52 (LT.) =	25.00 L.F.
STA. 133+20.52 TO STA. 133+45.52 (RT.) =	25.00 L.F.
STA. 136+41.52 TO STA. 136+66.52 (LT.) =	25.00 L.F.
STA. 136+41.52 TO STA. 136+66.52 (RT.) =	25.00 L.F.
STA. 137+41.52 TO STA. 139+25.07 (RT.) =	183.55 L.F.
STA. 139+75.29 (50.75' RT.) TO STA. 142+15.13 (38' RT.) =	241.95 L.F.
	900.48 L.F.

USE 901 L.F.

–CITY OF WESTLAKE–

STA. 143+35.50 (66.75' RT.) TO STA. 149+17.00 (26' RT.) =	592.92 L.F.

USE 593 L.F.

ITEM 830 – CURB, TYPE 2–B:

–ODOT–

STA. 132+50.52 (9.8125' RT.) TO STA. 133+16.52 (12' RT.) =	66.05 L.F.
STA. 136+70.52 TO STA. 137+41.52 (RT) =	71.00 L.F.
	137.05 L.F.

USE 138 L.F.

ITEM 830 – CURB, TYPE 6:

–ODOT–

STA. 132+50.52 (34.50' LT.) TO STA. 133+16.52 (26' LT.) =	68.00 L.F.
STA. 136+70.52 TO STA. 137+41.52 (LT) =	71.00 L.F.
	139.00 L.F.

USE 139 L.F.

–CITY OF WESTLAKE–

STA. 144+25.22 TO STA. 145+14.50 =	89.28 L.F.

USE 90 L.F.

ITEM 202 – APPROACH SLAB REMOVED:

–ODOT–

STA. 133+20.52 TO STA. 133+45.52 =	25 L.F.	
52 L.F. x 25.00 L.F. ÷ 9 S.F./S.Y. =		144.44 S.Y.
STA. 136+41.52 TO STA. 136+66.52 =	25 L.F.	
52 L.F. x 25.00 L.F. ÷ 9 S.F./S.Y. =		144.44 S.Y.
		288.88 S.Y.

USE 289 S.Y.

ITEM 611 – REINFORCED CONCRETE APPROACH SLAB (T=15"):

–ODOT–

STA. 133+20.52 TO STA. 133+45.52 =	25 L.F.	
65 L.F. x 25.00 L.F. ÷ 9 S.F./S.Y. =		180.56 S.Y.
STA. 136+41.52 TO STA. 136+66.52 =	25 L.F.	
65 L.F. x 25.00 L.F. ÷ 9 S.F./S.Y. =		180.56 S.Y.
		361.12 S.Y.

USE 362 S.Y.

ITEM 255 – FULL DEPTH PAVEMENT REMOVAL AND RIGID REPLACEMENT, CLASS C:

–ODOT–

STA. 132+26.00 TO STA. 132+32.00 =	6 L.F.	
6 L.F. x (65 + 64)/2 L.F. ÷ 9 S.F./S.Y. =		43 S.Y.
STA. 137+24.00 TO STA. 137+30.00 =	6 L.F.	
6 L.F. x 52 L.F. ÷ 9 S.F./S.Y. =		34.67 S.Y.
		77.67 S.Y.

USE 78 S.Y.

ITEM 203 – LINEAR GRADING:

–ODOT–

STA. 131+00.92 TO STA. 133+22.52 =	225 L.F.
STA. 131+22.62 TO STA. 133+22.62 =	200 L.F.
STA. 136+64.42 TO STA. 137+35.00 =	75 L.F.
STA. 136+66.52 TO STA. 139+22.62 =	275 L.F.
STA. 139+82.26 TO STA. 142+30.00 =	250 L.F.
	1025 L.F.

LENGTH = 10 STA.

USE 10 STA.

ITEM 448 – ASPHALT CONCRETE SURFACE COURSE, TYPE 1 (UNDER GUARDRAIL), AS PER PLAN:

–ODOT–

LENGTH OF LINEAR GRADING =	1025.00 L.F.		
AREA = 1025 L.F. x 4 L.F. ÷ 9 S.F./S.Y. =		455.56 S.Y.	
VOLUME = (455.56 S.Y. x 0.25 L.F.) ÷ 3 FT./YD. =			37.96 C.Y.

USE 40 C.Y.

Revised by B&N 1-6-00

CALCULATIONS

CUY–90–0.95

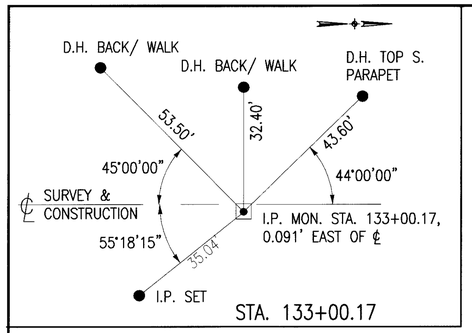

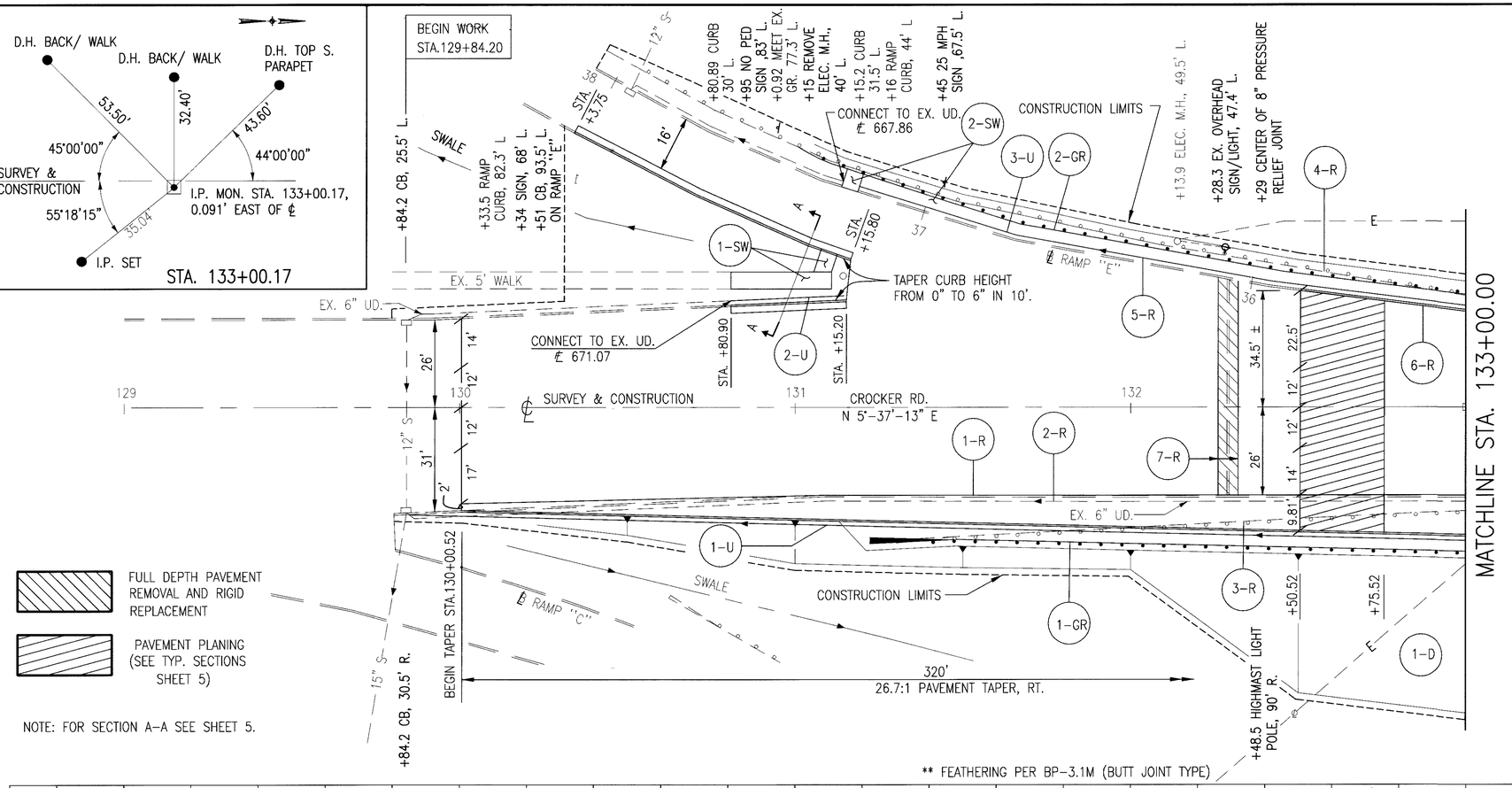

FULL DEPTH PAVEMENT REMOVAL AND RIGID REPLACEMENT

PAVEMENT PLANING (SEE TYP. SECTIONS SHEET 5)

NOTE: FOR SECTION A-A SEE SHEET 5.

** FEATHERING PER BP-3.1M (BUTT JOINT TYPE)

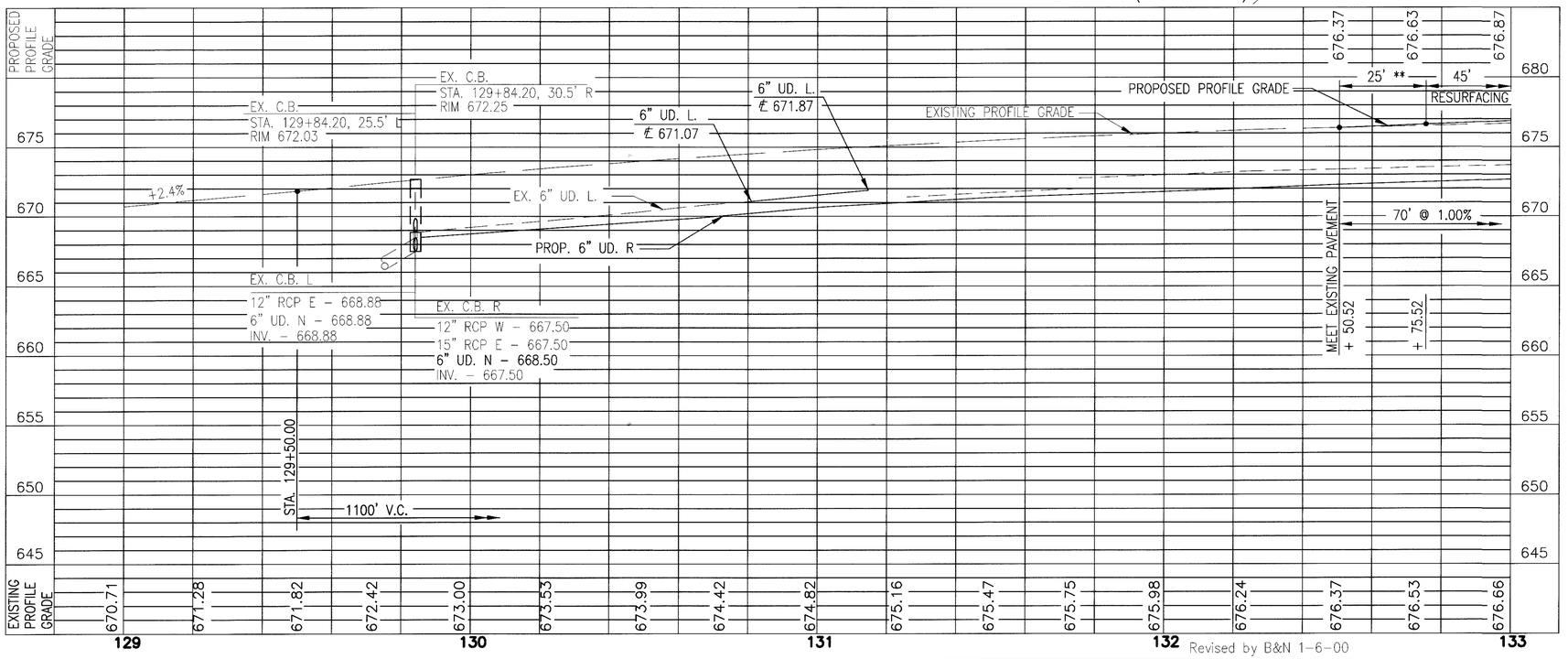

Revised by B&N 1-6-00

* NON-PERFORATED, ASTM D3034 SDR 35, SS931 OR SS944.

Benchmark:
Top of S.W. Anchor Bolt for I-90 E. Bound Ramp Sign, East Side of Crocker Rd., North of Detroit Rd.
Elev. - 669.61

D.H. = DRILL HOLE
I.P. = IRON PIN
E = ODOT LIGHTING CIRCUIT

N

0 20' 40'
HORIZONTAL SCALE IN FEET

CALCULATED C.L.H.
CHECKED WAN

ESTIMATED QUANTITIES

REF. NO.	STATION TO STATION	SIDE	202 PIPE REMOVED 24" AND UNDER L.F.	202 CURB REMOVED L.F.	202 WALK REMOVED S.F.	202 GUARDRAIL REMOVED L.F.	255 FULL DEPTH PAVEMENT SAWING L.F.	603 6" CONDUIT, TYPE F * L.F.	605 6" SHALLOW PIPE UNDERDRAIN WITH FABRIC WRAP L.F.	606 GUARDRAIL, TYPE 5 L.F.	606 ANCHOR ASSEMBLY TYPE A EA.	606 BRIDGE TERMINAL ASSEMBLY TYPE 1 EA.	606 BRIDGE TERMINAL ASSEMBLY TYPE 2 EA.	608 4 1/2" CONCRETE WALK, AS PER PLAN S.F.	608 CURB RAMP TYPE 2 EA.	668 SEEDING AND EXCELSIOR MATTING S.Y.	SEE SHT. NO.
1-GR	131+22.62 TO 133+22.62	R.															
2-GR	131+00.92 (77') TO 133+22.52 (31')	L.															7
1-R	130+00.52 (41') TO 133+20.52 (26')	R.		320						175	1	1	1		1		7
2-R	129+84.20 TO 133+44.52	R.	360							225				150	1		
3-R	131+30.00 TO 133+22.00	R.				192								905	1		
4-R	131+00.92 (77') TO 133+32.00 (30')	L.				195											
5-R	131+14.20 TO 133+44.52	L.	230														
6-R	132+50.52 (64') TO 133+20.52 (26')	L.		71													
7-R	132+26.00 TO 136+32.00	L-R					129										
1-SW	130+80.90 TO 131+10.80	L.			150												
2-SW	131+14.60 TO 133+20.52	L.			905												
1-U	129+84.20 TO 133+13.77	R.							320								
2-U	130+80.90 TO 131+14.45	L.						10	34								
3-U	131+14.60 TO 133+13.77	L.							200								
1-D	132+00.00 TO 133+00.00	R.															
TOTALS TO GENERAL SUMMARY			590	391	1055	387	129	10	554	400	1	1	1	1055	2	373	

PLAN AND PROFILE - CROCKER ROAD
STA. 129+00.00 TO 133+00.00

CUY-90-0.95

24
80

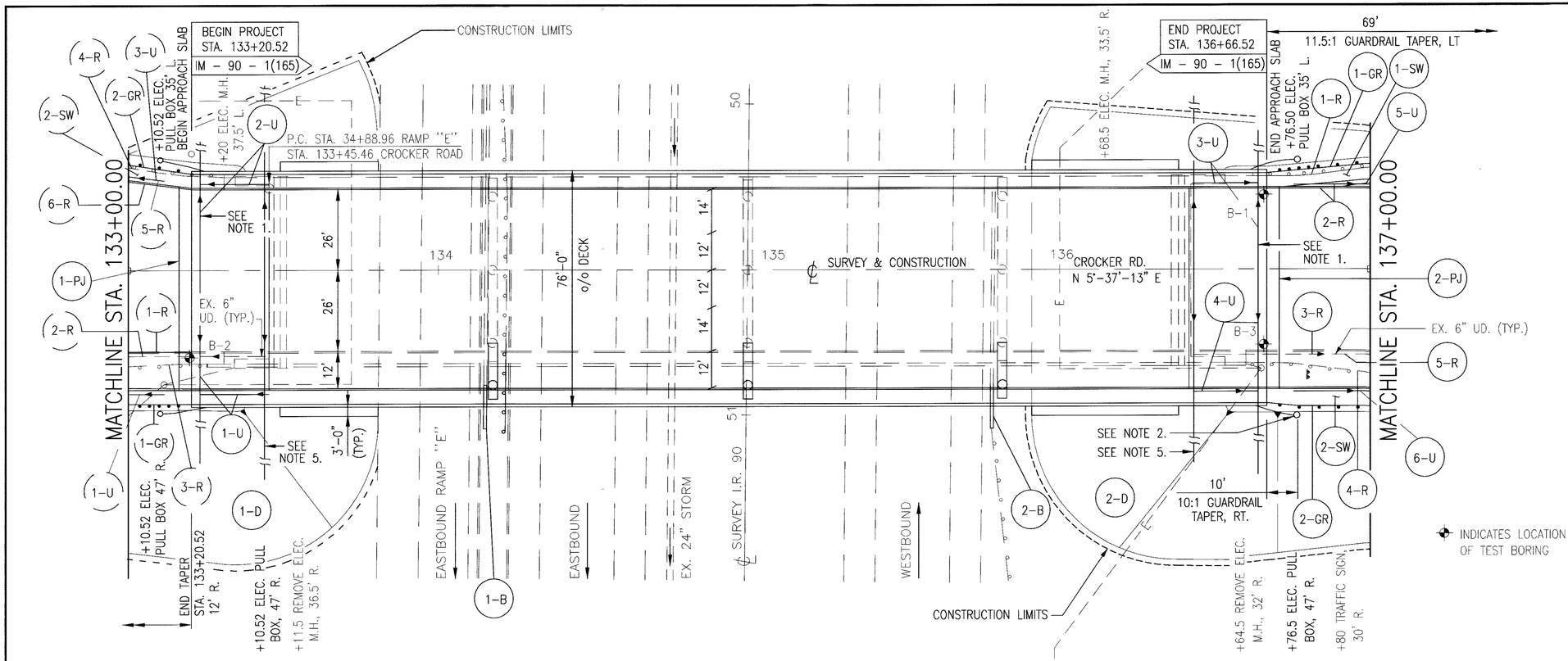

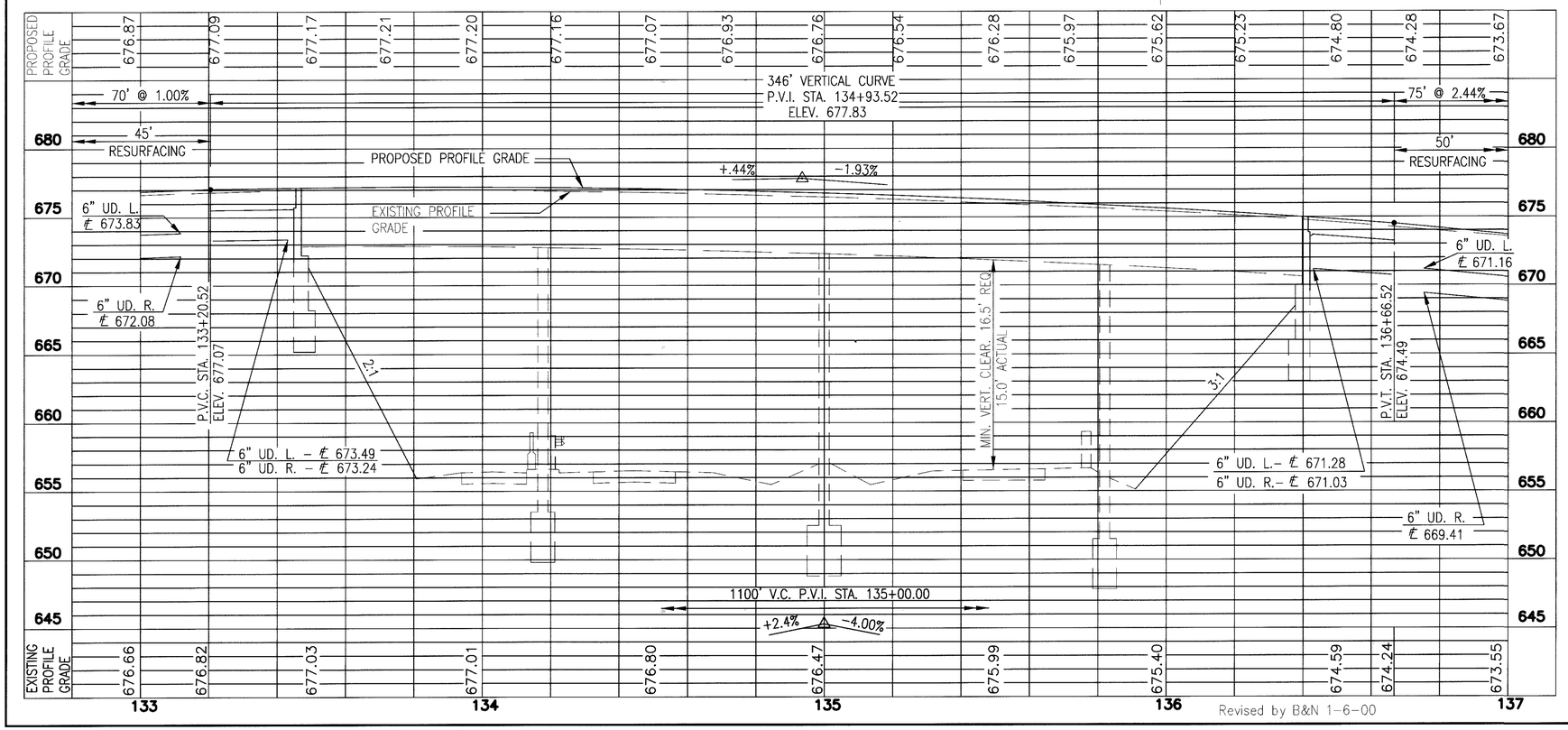

Revised by B&N 1-6-00

EXISTING STRUCTURE DATA
Structure File No. 1807722

TYPE: 4 Span Continuous Steel Beam with Reinf. Conc. Deck and Substructure
SPAN: 70'; 2 at 82';57.5' c/c Bearings
ROADWAY: 52'–0"± f/f of 4' Sidewalks
SUPERSTRUCTURE: Reinforced Concrete Slab
WEARING COURSE: 1" Monolithic Concrete
ALIGNMENT: Tangent
SKEW: None
CONDITION: Fair
DATE BUILT: 1970

PROPOSED STRUCTURE

TYPE: 4 Span Composite Steel Beam Reinf. Conc. Deck and Substructure
SPAN: 70; 2 at 82'; 57.5' c/c Bearings
ROADWAY: 64'–0" f/f of 5' Sidewalks
SKEW: None
LOADING: HS–20–44 and Alternate Military Loading (Case II)
WEARING SURFACE: 1" Monolithic Concrete
APPROACH SLAB: (AS–1–81) 25'–0"
ALIGNMENT: Tangent
CROWN: 3/16"/ft.
LAT.&LONG.: 41° 25' 00", 81° 57' 10"

Benchmark:
Top of S.W. Anchor Bolt for I–90 E. Bound Ramp Sign, East Side of Crocker Rd., North of Detroit Rd.
Elev. – 669.61

E = ODOT LIGHTING CIRCUIT

NOTES:
1. PROPOSED 6" UNDERDRAIN UNDER PAVEMENT FOR PRESSURE RELIEF JOINT, TYPE A. USE CONDUIT TYPE F, ASTM D3034 SDR35, SS931 OR SS944 PERFORATED PER 707.31. PROVIDE PRECAST REINFORCED CONCRETE OUTLET. (REFER TO CROSS SECTIONS FOR LIMITS OF INSTALLATION).
2. THE RELOCATION OF ANY NON–ODOT ELECTRIC LINES FROM THE EXISITNG PARAPET TO CONDUIT IN PROPOSED SIDEWALK, WILL BE THE RESPONSIBILTY OF THE UTILITY OWNER. SEE SHEET 30 FOR CONDUIT DETAIL.
3. FOR ESTIMATED QUANTITIES SEE SHEET 27.
4. FOR ◯ ESTIMATED QUANTITIES SEE SHEET 24.
5. PROPOSED 6" UNDERDRAIN FOR ABUTMENT DRAINAGE. PROVIDE PRECAST REINFORCED CONCRETE OUTLET AT TOE OF SLOPE. UNDERDRAIN LENGTH IN BRIDGE QUANTITIES.
6. FOR LIGHTING CIRCUIT RELOCATION SEE SHEETS 41A AND 41B.

N

HORIZONTAL SCALE IN FEET
0 20' 40'

CALCULATED CLH
CHECKED WAN

PLAN AND PROFILE – CROCKER ROAD
STA. 133+00.00 TO 137+00.00

CUY–90–0.95

25
80

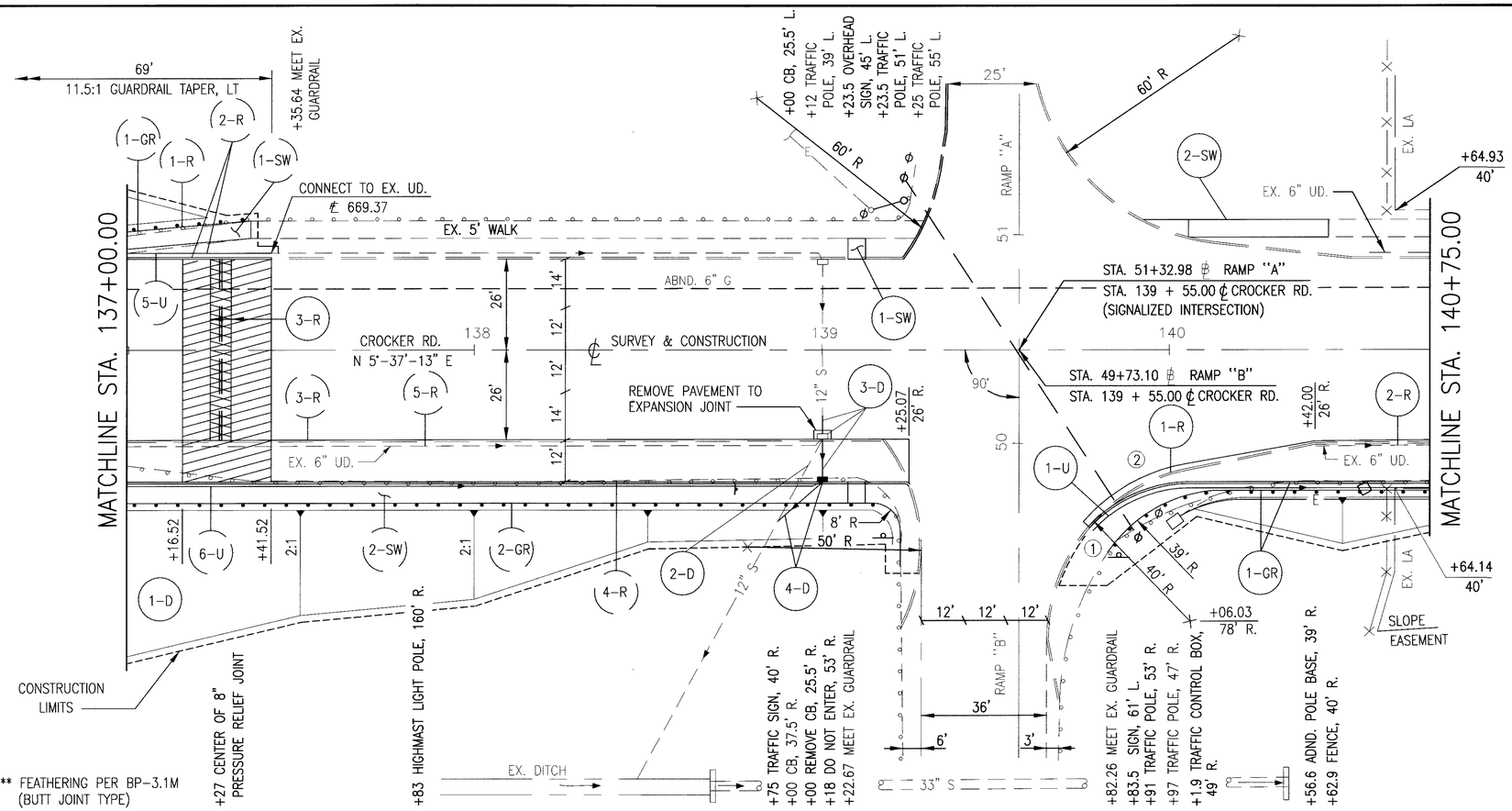

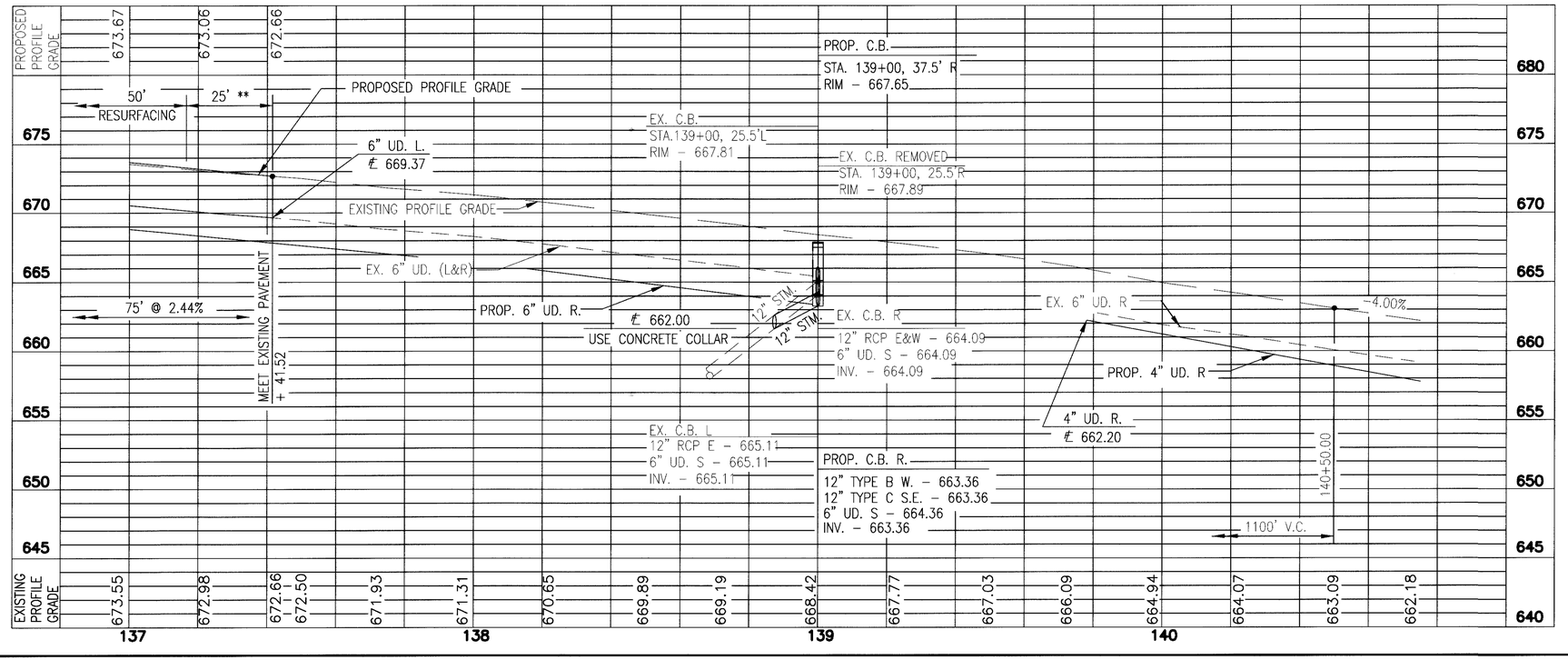

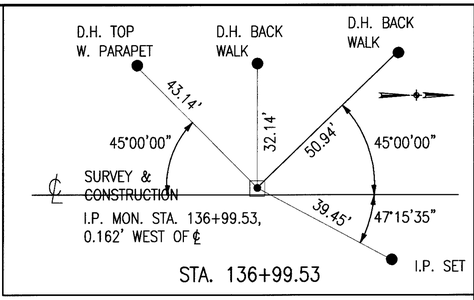

D.H. = DRILL HOLE
I.P. = IRON PIN

FULL DEPTH PAVEMENT REMOVAL AND RIGID REPLACEMENT

PAVEMENT PLANING (SEE TYP. SECTIONS SHEET 5)

NOTES:

1. FOR ESTIMATED QUANTITIES SEE SHEET 27.
2. FOR ( ) ESTIMATED QUANTITIES SEE SHEET 25.

① – CURVE DATA:
R = 40.00', △ = 46° 02' 57"
L = 32.15', CH = 31.29'
P.C. STA. 139+76.75 (50.75' R.)
P.T. STA. 140+05.32 (38.01' R.)

② – CURVE DATA:
R = 50.00', △ = 39° 00' 41"
L = 34.04', CH = 33.39'
P.C. STA. 139+75.29 (49.39' R.)
P.T. STA. 140+04.34 (32.93' R.)

Benchmark:
Top of S.W. Anchor Bolt for I-90 E. Bound Ramp Sign, East Side of Crocker Rd., North of Detroit Rd.
Elev. – 669.61

E = ODOT LIGHTING CIRCUIT

N

20' HORIZONTAL SCALE IN FEET (0, 20', 40')

CALCULATED CLH
CHECKED WAN

PLAN AND PROFILE – CROCKER ROAD
STA. 137+00.00 TO 140+75.00

CUY-90-0.95

26
80

Revised by B&N 1-6-00

ESTIMATED QUANTITIES FOR SHEET 25

REF. NO.	STATION TO STATION	SIDE	202 WALK REMOVED S.F.	202 CURB REMOVED L.F.	202 PIPE REMOVED 24" AND UNDER L.F.	202 GUARDRAIL REMOVED L.F.	451 PRESSURE RELIEF JOINT, TYPE A L.F.	603 6" CONDUIT, TYPE F * L.F.	605 6" SHALLOW PIPE UNDERDRAIN WITH FABRIC WRAP L.F.	606 BRIDGE TERMINAL ASSEMBLY TYPE 1 EA.	606 BRIDGE TERMINAL ASSEMBLY TYPE 2 EA.	606 GUARDRAIL TYPE 5 L.F.	608 4 1/2" CONCRETE WALK, AS PER PLAN S.F.	608 CURB RAMP TYPE 2 EA.	622 CONCRETE BARRIER TYPE D L.F.	668 SEEDING AND EXCELSIOR MATTING S.Y.	SEE SHT. NO.
1-B	50+90.36 TO 51+04.36	R.													14		25
2-B	50+90.36 TO 51+04.36	L.													14		25
1-GR	136+64.42 TO 137+35.64	L.								1		75					25
2-GR	136+64.52 TO 139+22.62	R.									1	275					25
1-SW	136+66.52 TO 137+35.52	L.	345										345				7,25
2-SW	136+66.52 TO 139+12.50	R.											1445	1			7,25
1-U	133+23.27 TO 133+44.77	R.						59	61								25
2-U	133+23.27 TO 133+44.77	L.						82	49								25
3-U	136+42.27 TO 136+63.77	L.						74	49								25
4-U	136+42.27 TO 136+63.77	R.						58	61								25
5-U	136+73.27 TO 137+41.52	L.							69								25
6-U	136+73.27 TO 139+00.00	R.						10	217								25
1-PJ	133+16.52 TO 133+20.52	L.-R.					65										25
2-PJ	136+66.52 TO 136+70.52	L.-R.					65										25
1-R	136+64.00 TO 137+35.64	L.				72											25
2-R	136+66.52 TO 137+41.52	L.		75	75												25
3-R	136+66.52 TO 139+25.07	R.		266													25
4-R	136+66.52 (30') TO 139+22.67 (61')	R.				282											25
5-R	136+66.52 TO 139+00.00	R.			234												25
1-D	133+00.00 TO 133+81.00	R.														371	25
2-D	135+91.00 TO 137+00.00	R.														459	25
TOTALS TO GENERAL SUMMARY			345	341	309	354	130	283	506	1	1	350	1790	1	28	830	

* NON-PERFORATED, ASTM D3034 SDR 35, SS931 OR SS944.

ESTIMATED QUANTITIES FOR SHEET 26

REF. NO.	STATION TO STATION	SIDE	202 WALK REMOVED S.F.	202 CURB REMOVED EA.	202 PIPE REMOVED 24" AND UNDER L.F.	202 GUARDRAIL REMOVED L.F.	202 CATCH BASIN REMOVED EA.	255 FULL DEPTH PAVEMENT SAWING EA.	603 12" CONDUIT, TYPE B L.F.	603 12" CONDUIT, TYPE C L.F.	604 CATCH BASIN, NO. 3A EA.	605 4" SHALLOW PIPE UNDERDRAIN WITH FABRIC WRAP L.F.	606 GUARDRAIL, TYPE 5 L.F	606 ANCHOR ASSEMBLY, TYPE A EA.	608 4 1/2" CONCRETE WALK, AS PER PLAN S.F.	608 CURB RAMP TYPE 2 EA.	668 SEEDING AND EXCELSIOR MATTING S.Y.	SEE SHT. NO.
1-D	137+00.00 TO 137+50.00	R.															177	26
2-D	138+87.00 TO 139+00.00	R.			27													26
3-D	139+00.00	R.			6		1		18									26
4-D	138+87.00 TO 139+00.00	R.								18	1							26
1-GR	139+82.26 (58') TO 142+30.00 (40.5')	R.				250							225	1				26
1-R	139+75.29 (50.75') TO 142+51.13 (38')	R.		278														26
2-R	140+42.00 TO 142+15.13	R.			185													26
3-R	137+24.00 TO 137+30.00	L-R						104										26
1-SW	139+10.00	L.														1		7,26
2-SW	139+92.35 TO 140+45.75	L.	84												267	1		7,26
1-U	139+75.00 TO 142+15.13	R.										238						26
TOTALS TO GENERAL SUMMARY			84	278	218	250	1	104	18	18	1	238	225	1	267	2	177	

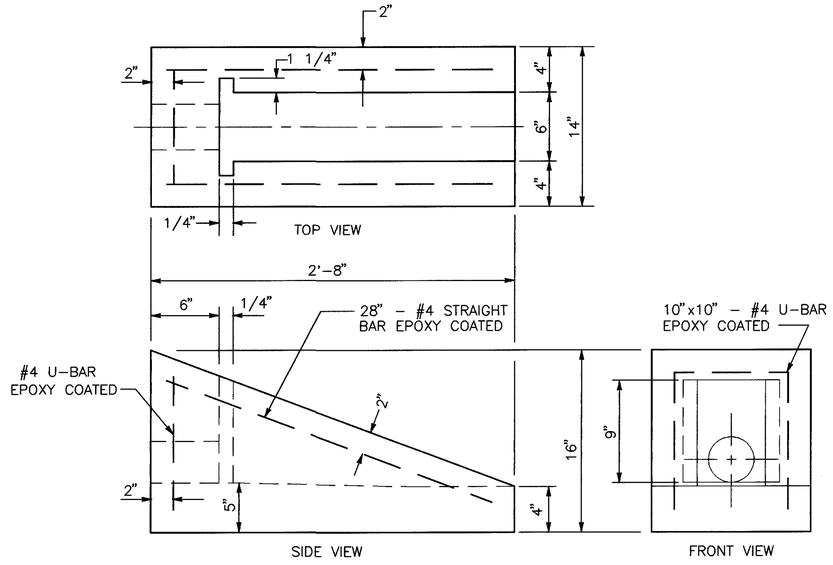

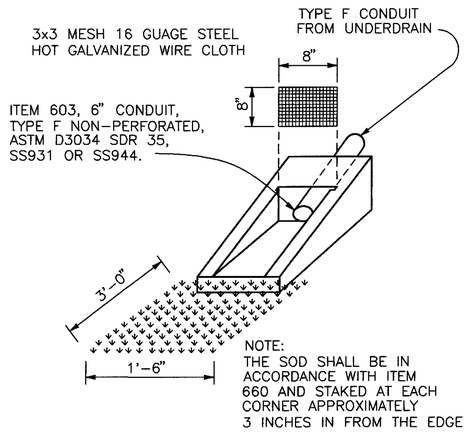

NOTE:
THE SOD SHALL BE IN ACCORDANCE WITH ITEM 660 AND STAKED AT EACH CORNER APPROXIMATELY 3 INCHES IN FROM THE EDGE

PRECAST REINFORCED CONCRETE OUTLET

THE CONCRETE OUTLET SHALL MEET THE REQUIREMENTS OF ITEM 604 IN THE CONSTRUCTION & MATERIALS SPECIFICATIONS. PAYMENT SHALL BE MADE ON AN EACH BASIS. PAYMENT SHALL INCLUDE THE COST OF THE SOD & WIRE CLOTH.

CALCULATED CLH CHECKED WAW

ROADWAY ESTIMATED QUANTITIES

CUY-90-0.95

27
80

[O:\81892\GP] RJE
01-11-96 1:27PM

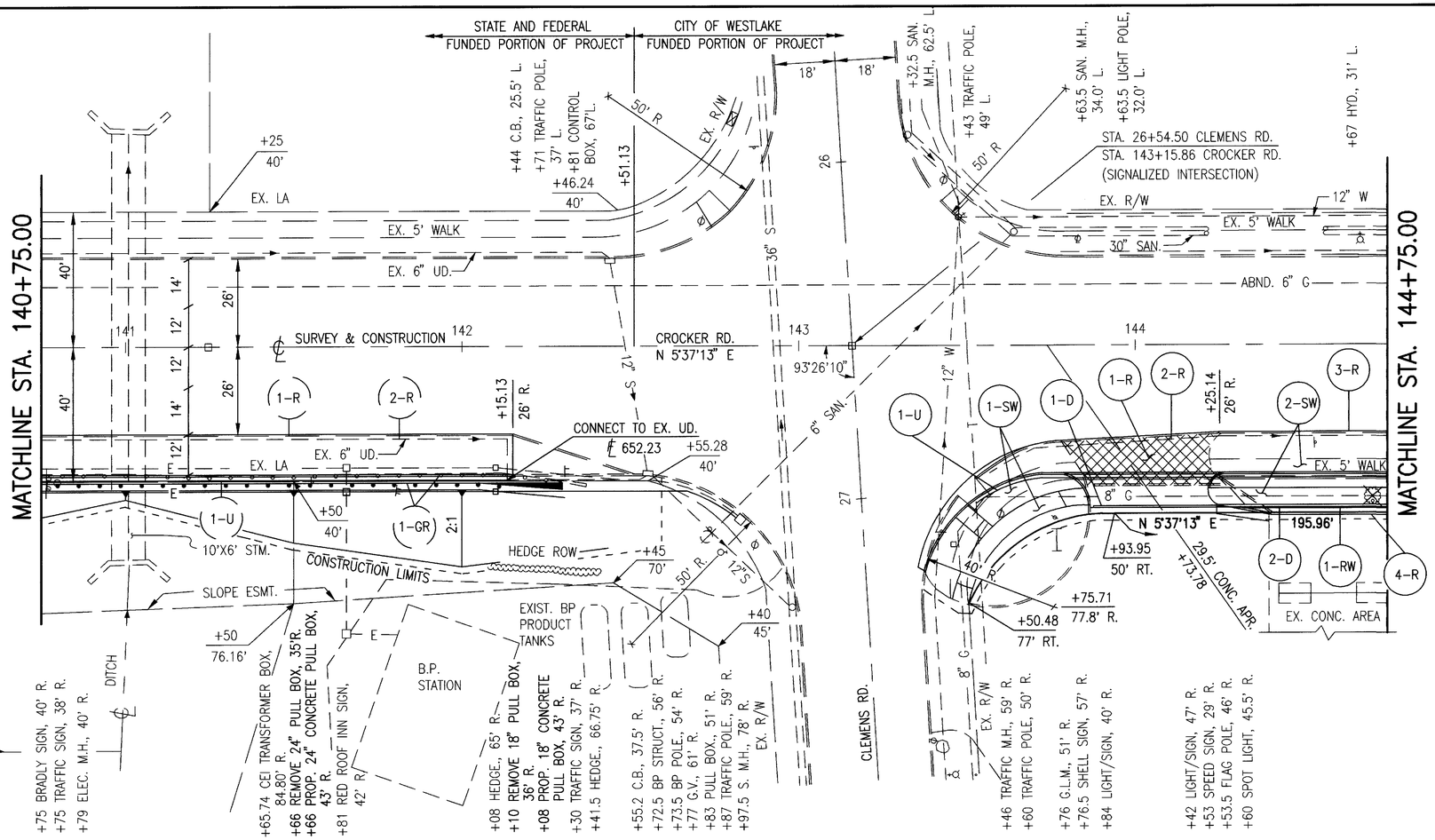

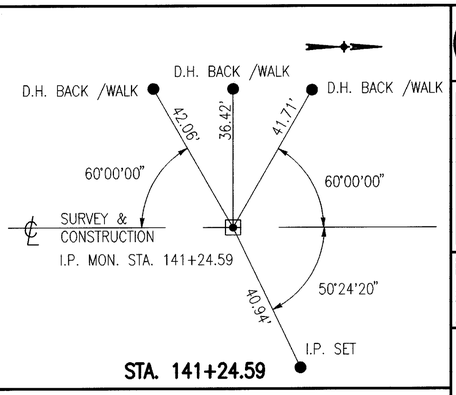

D.H. = DRILL HOLE

I.P. = IRON PIN

Benchmark:
Chiseled "X" on top Easterly Corner of Conc. Base for Traffic light Control Box, S.W. Corner of Crocker Rd. & Clemens Rd. – EL. 654.73

– PAVEMENT REMOVED

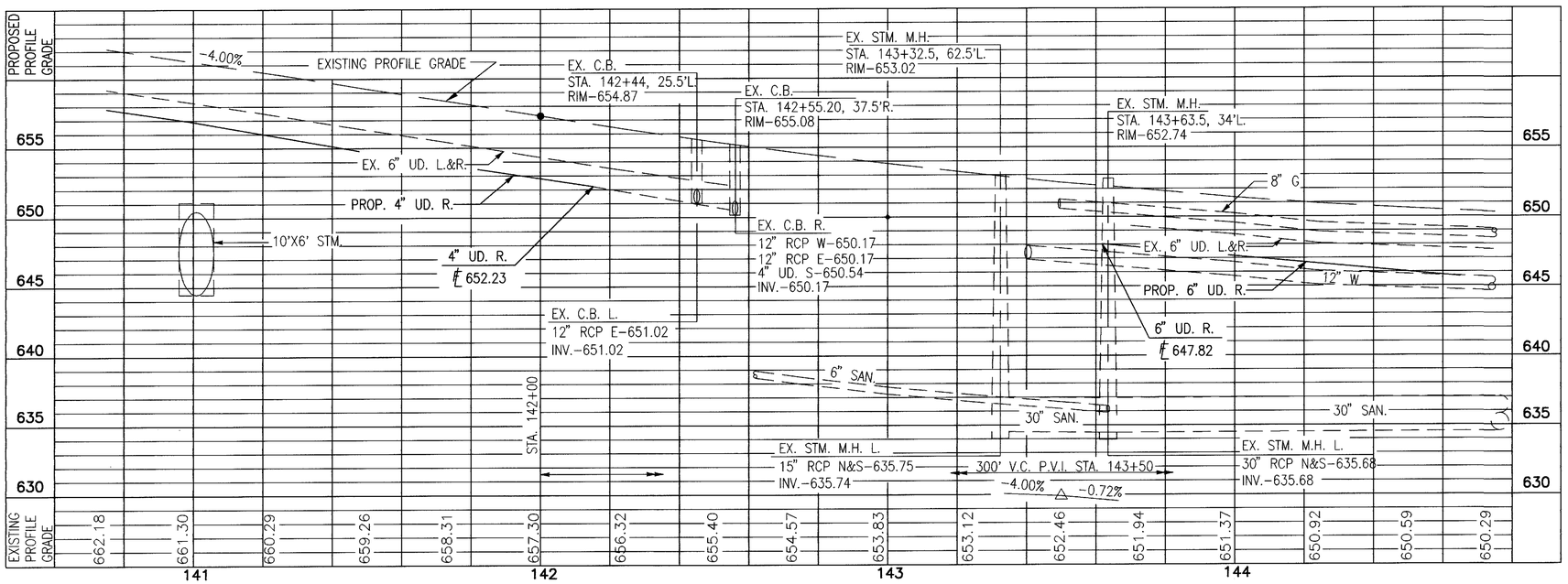

NOTES:
1. FOR INTERSECTION DETAIL SEE SHEET 40.
2. 8" GAS LINE TO BE RELOCATED BY OTHERS.
3. FOR ESTIMATED QUANTITIES SEE SHEET 30.
4. FOR RETAINING WALL DETAILS SEE SHEET 41.
5. FOR DRIVE DETAIL SEE SHEET 41.
6. FOR ( ) ESTIMATED QUANTITIES SEE SHEET 26.

N

HORIZONTAL SCALE IN FEET
0 20' 40'

CALCULATED CLH
CHECKED WAW

PLAN AND PROFILE - CROCKER RD.
STA. 140+75.00 TO 144+75.00

CUY-90-0.95

28
80

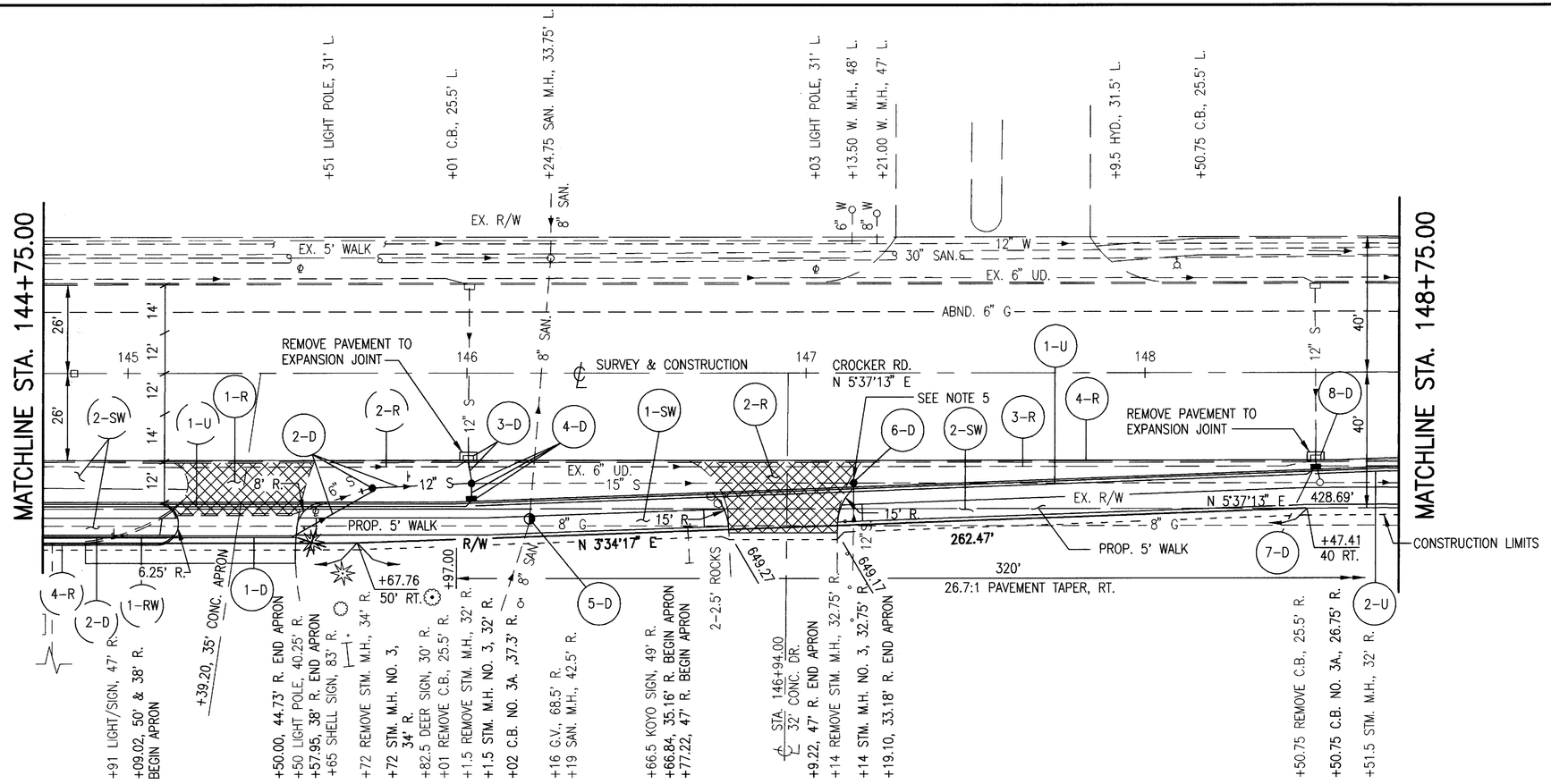

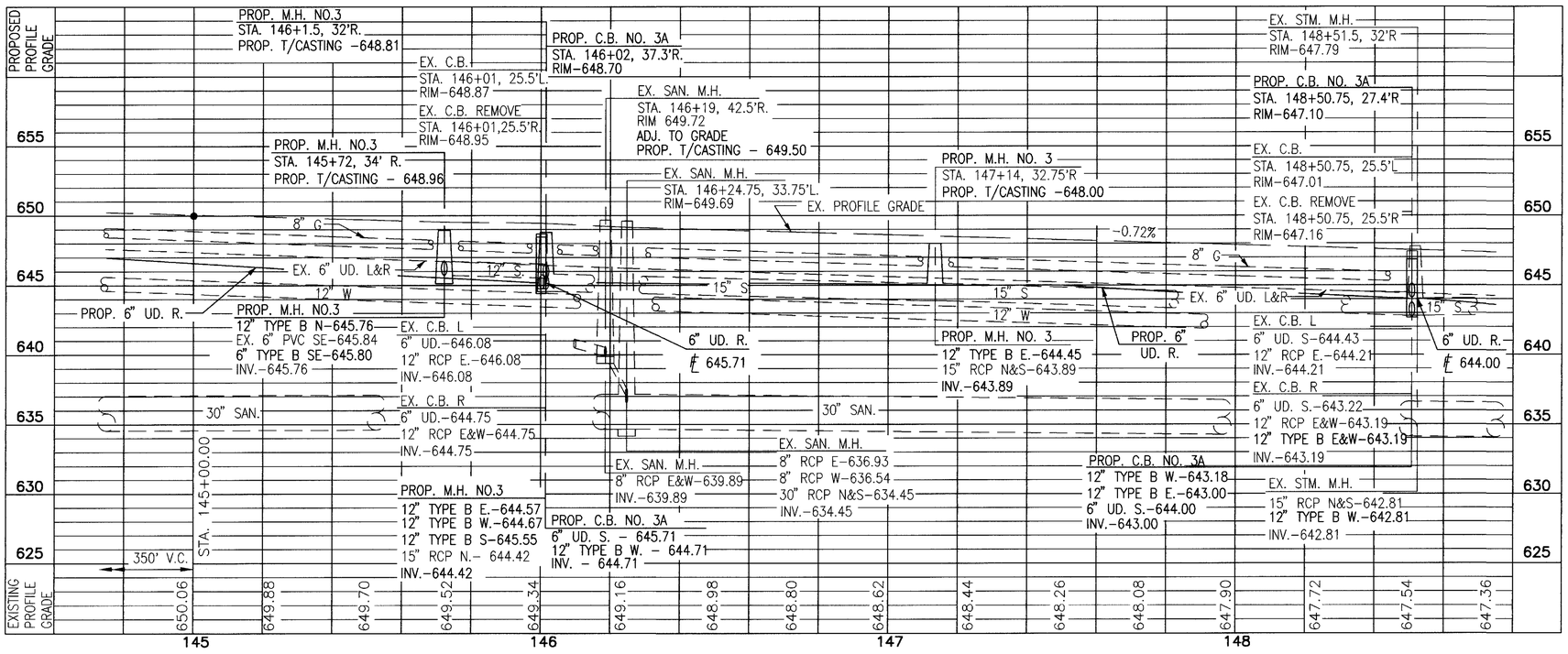

NOTES:

1. 8" GAS LINE TO BE RELOCATED BY OTHERS.
2. FOR CENTERLINE REFERENCES SEE SHEET 28.
3. FOR DRIVE DETAILS AND RETAINING WALL DETAILS SEE SHEET 41.
4. FOR INTERSECTION DETAIL SEE SHEET 40.
5. PLACE CONE OF MANHOLE AWAY FROM CURB.
6. FOR ESTIMATED QUANTITIES SEE SHEET 30.
7. FOR ( ) ESTIMATED QUANTITIES SEE SHEET 28.

N

20' 0 40' HORIZONTAL SCALE IN FEET

CALCULATED CLH CHECKED WAH

PLAN AND PROFILE - CROCKER RD.
STA. 144+75.00 TO 148+75.00

CUY-90-0.95

ESTIMATED QUANTITIES FOR SHEET 28 (100% CITY OF WESTLAKE)															
REF. NO.	STATION TO STATION	SIDE	202				842	518	604	605	608		SEE SHT. NO.
			PAVEMENT REMOVED	WALK REMOVED	CURB REMOVED	PIPE REMOVED 24" AND UNDER	CLASS C CONCRETE, AS PER PLAN	POROUS BACKFILL	TRENCH DRAIN	6" SHALLOW PIPE UNDERDRAIN WITH FABRIC WRAP	4 1/2" CONCRETE WALK, AS PER PLAN	CURB RAMP TYPE 2	
			S.Y.	S.F.	L.F.	L.F.	C.Y.	C.Y.	L.F.	L.F.	S.F.	EA.	
1-R	144+03.00	R.	66										28
2-R	143+59.00 TO 146+01.00	R.				242							28
3-R	143+35.50 (66.75') TO 144+75.00 (26')	R.			157								28
4-R	144+25.22 TO 145+14.50	R.			90								28
1-RW	144+25.22 TO 145+14.50	R.					18	14.5					28,41
1-SW	143+45.80 (75') TO 143+86.62 (42.5')	R.		280							365	3	7,28
2-SW	144+22.00 TO 143+75.00	R.		264							264	2	7,28
1-D	143+87.64 TO 144+24.22	R.							37				28
2-D	144+24.22 TO 145+15.50	R.								92			28
1-U	143+52.75 TO 146+02.00	R.								239			28
TOTALS TO GENERAL SUMMARY			66	544	247	242	18	14.5	37	331	629	5	

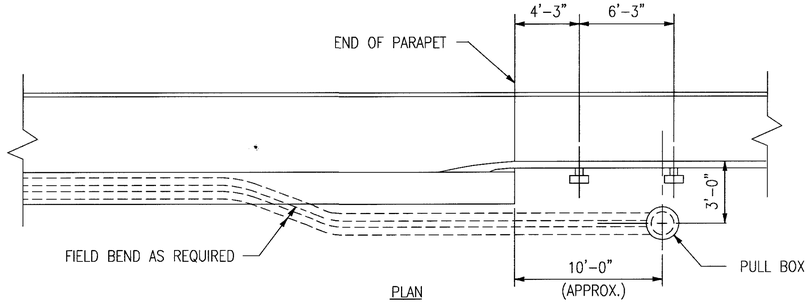

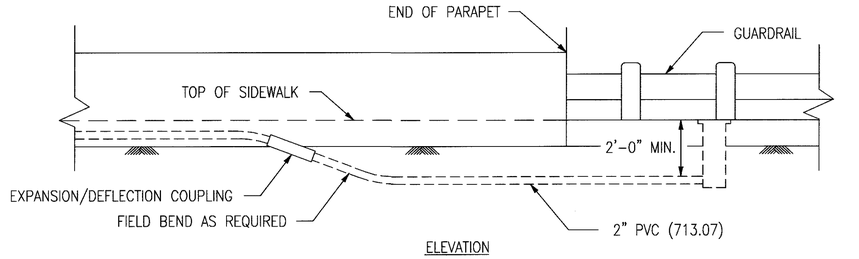

CONDUIT DETAIL

N.T.S.

DETAIL FOR RIGHT SIDE OF BRIDGE AS SHOWN
LEFT SIDE OF BRIDGE REQUIRES ONLY ONE 2" CONDUIT

* NON-PERFORATED, ASTM D3034 SDR 35, SS931 OR SS944.

ESTIMATED QUANTITIES FOR SHEET 29 (100% CITY OF WESTLAKE)																		
REF. NO.	STATION TO STATION	SIDE	202					603			604				605	608		SEE SHT. NO.
			PAVEMENT REMOVED	CURB REMOVED	PIPE REMOVED, 24" AND UNDER	MANHOLE REMOVED	CATCH BASIN REMOVED	6" CONDUIT, TYPE F *	12" CONDUIT, TYPE B	15" CONDUIT, TYPE B	CATCH BASIN NO. 3A	MANHOLE NO. 3	MANHOLE ADJUSTED TO GRADE	TRENCH DRAIN	6" SHALLOW PIPE UNDERDRAIN WITH FABRIC WRAP	4 1/2" CONCRETE WALK, AS PER PLAN	CURB RAMP TYPE 2	
			S.Y.	L.F.	L.F.	EA.	EA.	L.F.	L.F.	L.F.	EA.	EA.	EA.	L.F.	L.F.	S.F.	EA.	
1-D	145+15.50 TO 145+48.70	R.												33				29
2-D	145+48.70 TO 145+72.00	R.			30	1			58			1						29
3-D	146+01.00	R.			6		1		14									29
4-D	146+02.00	R.				1			5	6	1	1						29
5-D	146+19.00	R.											1					29
6-D	147+14.00	R.				1			6	12		1						29
7-D	148+50.75	R.							6		1							29
8-D	148+50.75	R.			6		1		8									29
1-R	145+39.20	R.	63															29
2-R	146+94.00	R.	85															29
3-R	146+01.00 TO 148+50.00	R.			249													29
4-R	144+75.00 TO 149+17.00	R.		442														29
1-SW	145+50.10 TO 146+77.10	R.														635	2	7,29
2-SW	147+09.50 TO 149+17.00	R.														1038	1	7,29
1-U	146+03.00 TO 148+50.75	R.						10							238			29
2-U	148+52.00 TO 149+17.00	R.						10							55			29
TOTALS TO GENERAL SUMMARY			148	442	291	3	2	20	97	18	2	3	1	33	293	1673	3	

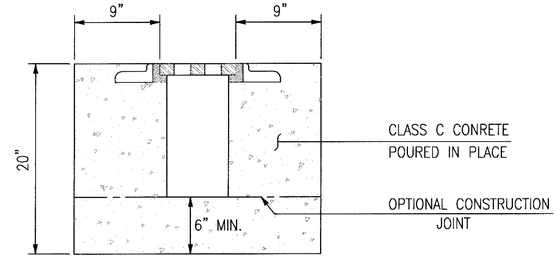

THE BASE SHALL BE SLOPED TO DRAIN WITH A MINIMUM LONGITUDINAL SLOPE OF 1/4" PER LINEAR FOOT. THE FRAME AND GRATE SHALL BE NEENAH R-4990-AX TYPE A, EAST JORDAN IRON WORKS 6951 TYPE M2 OR APPROVED EQUIVALENT.

A PRECAST OPTION MAY BE PROVIDED AT THE OPTION OF THE CONTRACTOR. IT SHALL BE INSTALLED PER THE MANUFACTURERS SPECIFICATIONS AND RECOMMENDATIONS UTILIZING A FRAME AND GRATE SUITABLE FOR HIGHWAY TRAFFIC. THE PRECAST DRAIN SHALL BE POLYDRAIN AS MANUFACTURED BY ATB, INC., POLYCAST SERIES 900 AS MANUFACTURED BY QUAZITE, ACO DRAIN NW100 AS MANUFACTURED BY ACO DRAIN, INC. OR APPROVED EQUIVALENT.

TRENCH DRAIN DETAIL

N.T.S.

Revised by B&N 1-6-00

CALCULATED C.L.H
CHECKED WAN

ROADWAY ESTIMATED QUANTITIES

CUY-90-0.95

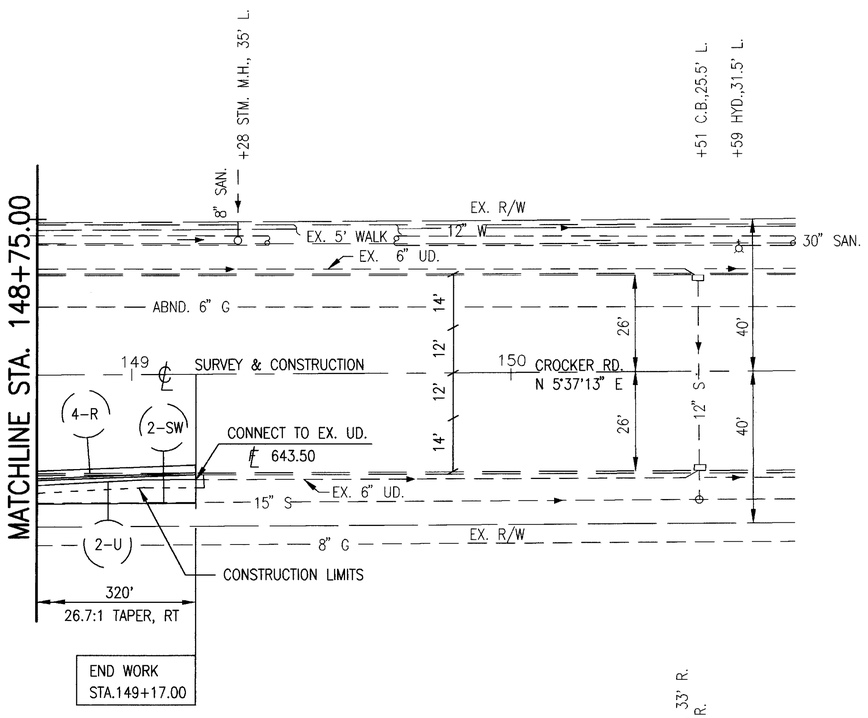

D.H. = DRILL HOLE

I.P. = IRON PIN

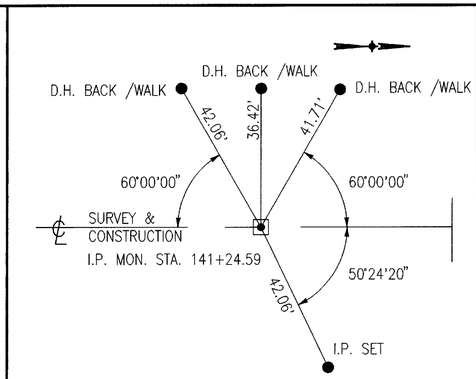

Benchmark:
Chiseled "X" on top Easterly Corner of Conc. Base for Traffic light Control Box, S.W. Corner of Crocker Rd. & Clemens Rd. – EL. 654.73

NOTE:

1. FOR ( ) ESTIMATED QUANTITIES SEE SHEET 29.

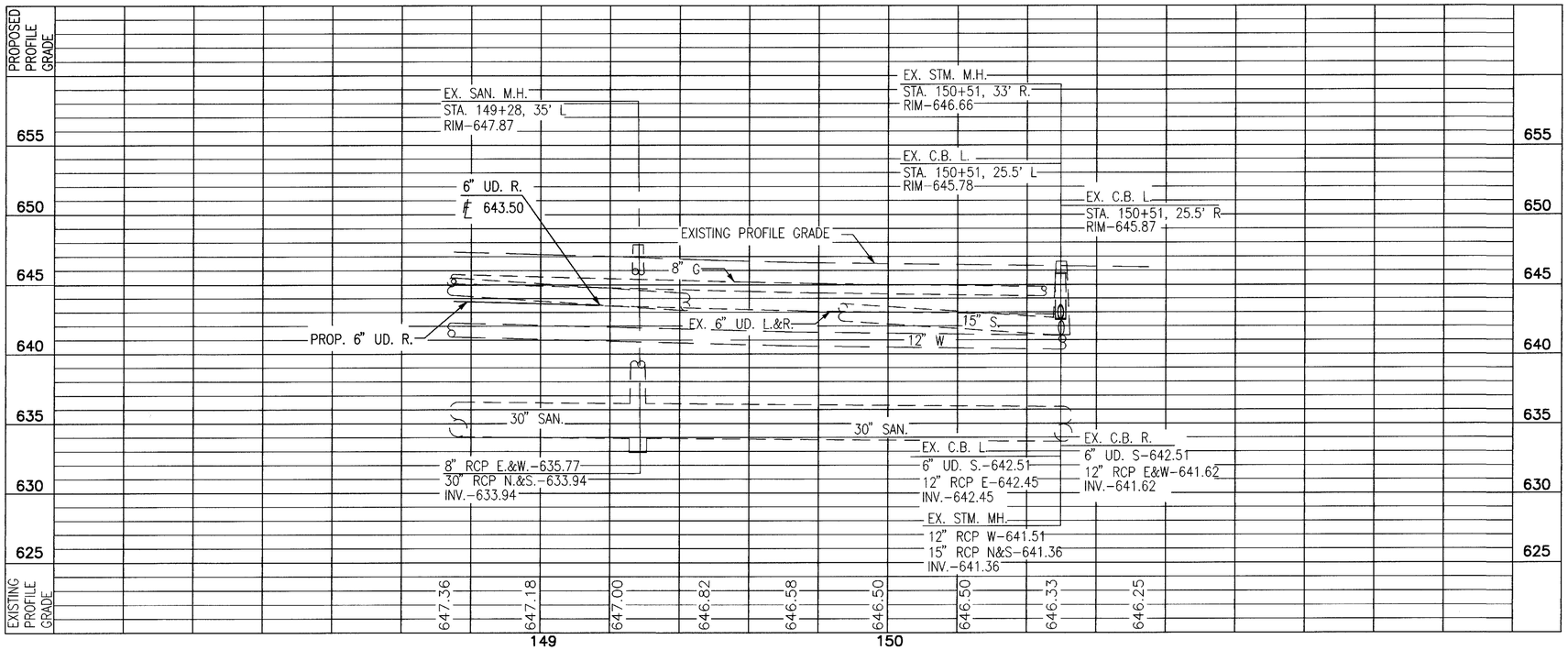

PLAN AND PROFILE - CROCKER RD.
STA. 148+75.00 TO 150+75.00

CALCULATED GLH
CHECKED WAH

HORIZONTAL SCALE IN FEET
0 20' 40'

CUY-90-0.95

SEEDING END WIDTH	SEEDING SQ. YDS.
30	161
23	109
26	100
12	21
12	

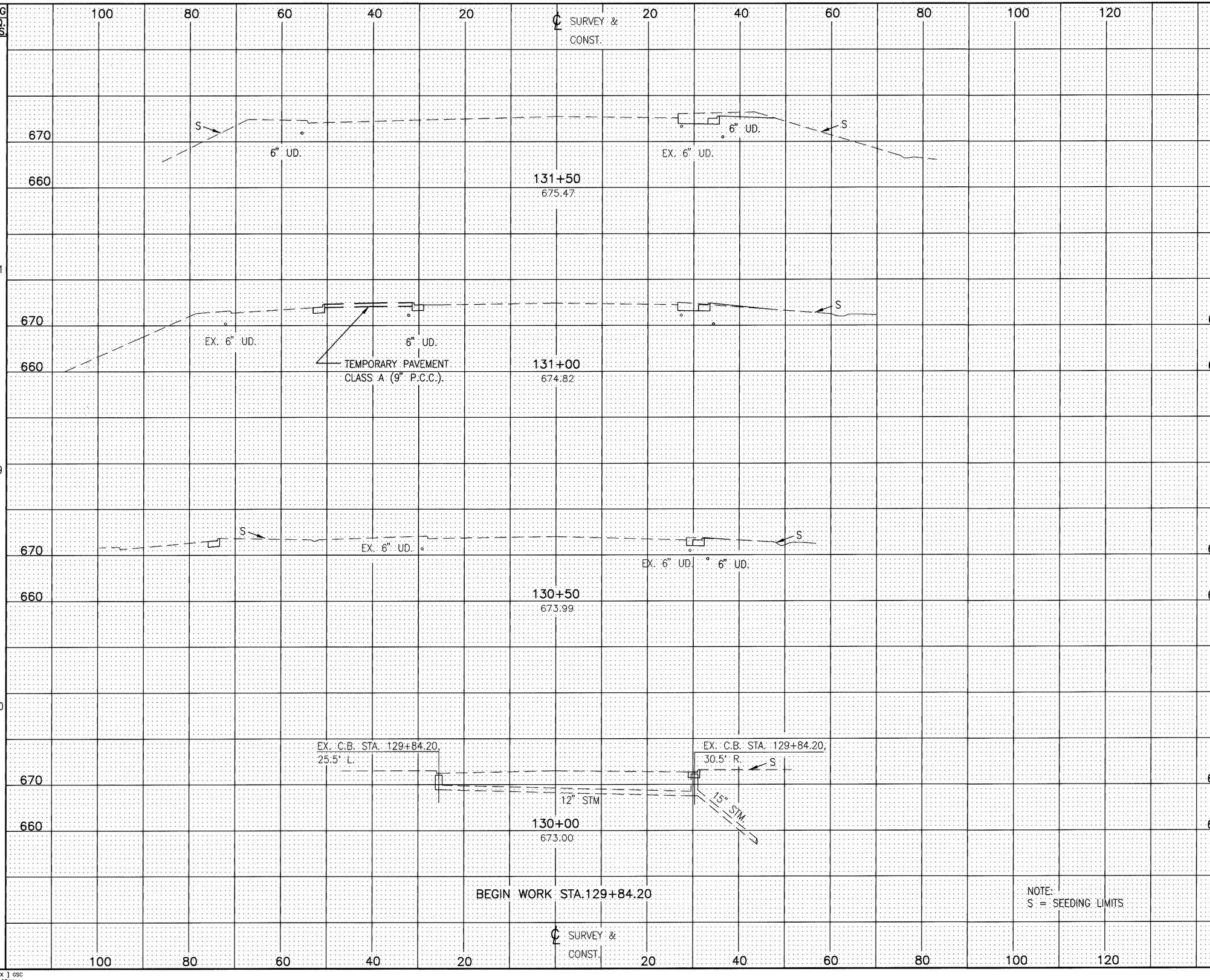

END AREA CUT	END AREA FILL	VOLUME CUT	VOLUME FILL
25	0		
		31	2
8	2		
		11	3
3	1		
		3	1
0	0		
		0	0
0	0		

CALCULATED CLH
CHECKED WAH

CROSS SECTIONS - CROCKER ROAD

STA. 130+00 TO 131+50

CUY-90-0.95

32
80

[O:\81892\GX] GSC
09-22-94 9:33AM

SEEDING END WIDTH	SEEDING SQ. YDS.
90	205
90	228
73	403
72	287
31	170
30	

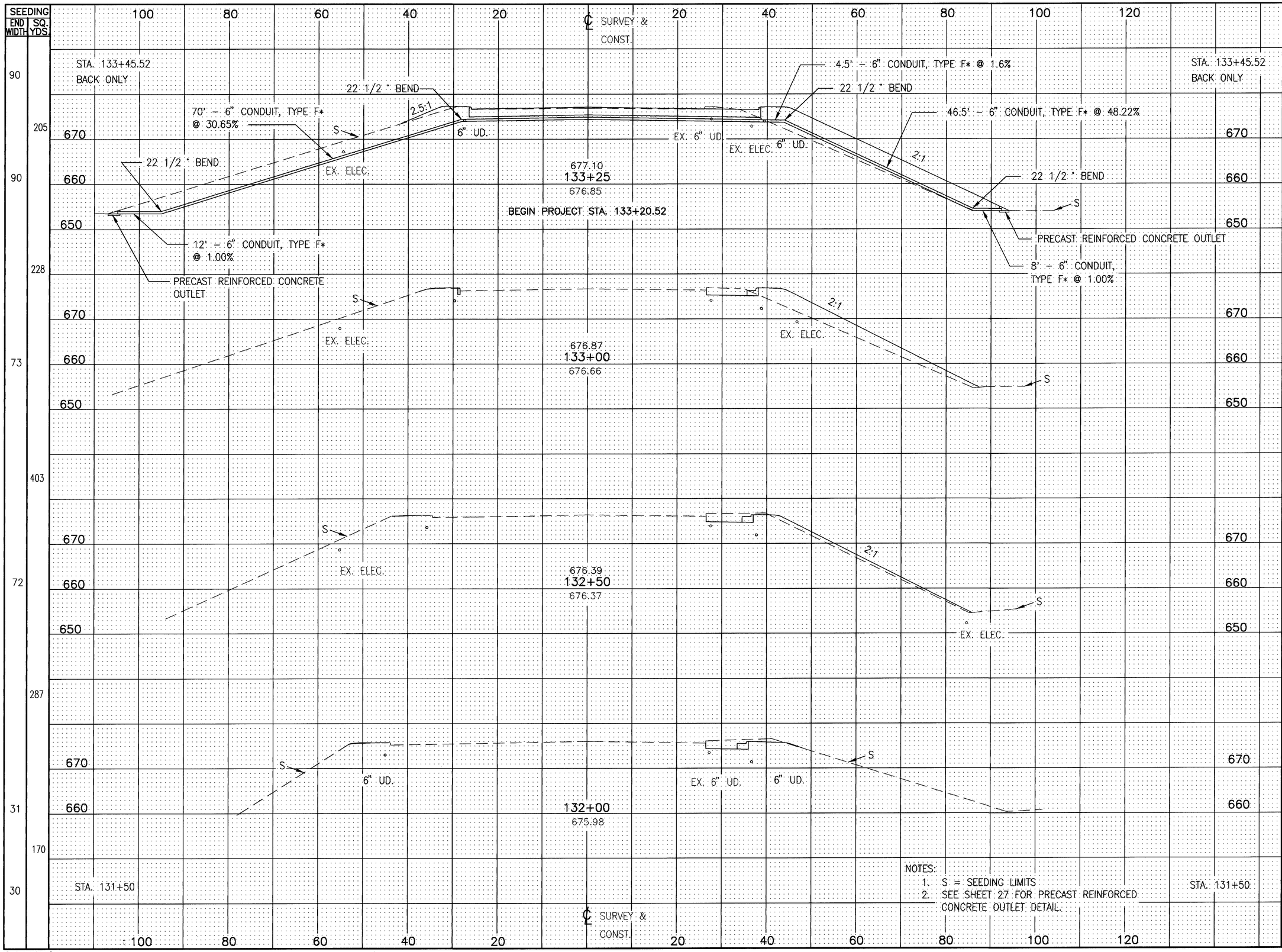

END AREA CUT	END AREA FILL	VOLUME CUT	VOLUME FILL
0	209		
		0	159
0	209		
		7	148
14	111		
		30	123
17	20		
		34	20
19	1		
		41	1
25	0		

CALCULATED CLH
CHECKED WHW

CROSS SECTIONS - CROCKER ROAD

STA. 132+00 TO 133+25

CUY-90-0.95

33
80

[O:\81892\GX] GSC
09-22-94 9:33AM

SEEDING END WIDTH	SEEDING SQ. YDS.
31	
	170
30	
	300
78	
	473
92	
	87
92	

END AREA CUT	END AREA FILL	VOLUME CUT	VOLUME FILL
17	28	35	49
21	25	35	113
16	97	15	321
0	250	0	79
0	250		

CALCULATED CLH

CHECKED WAV

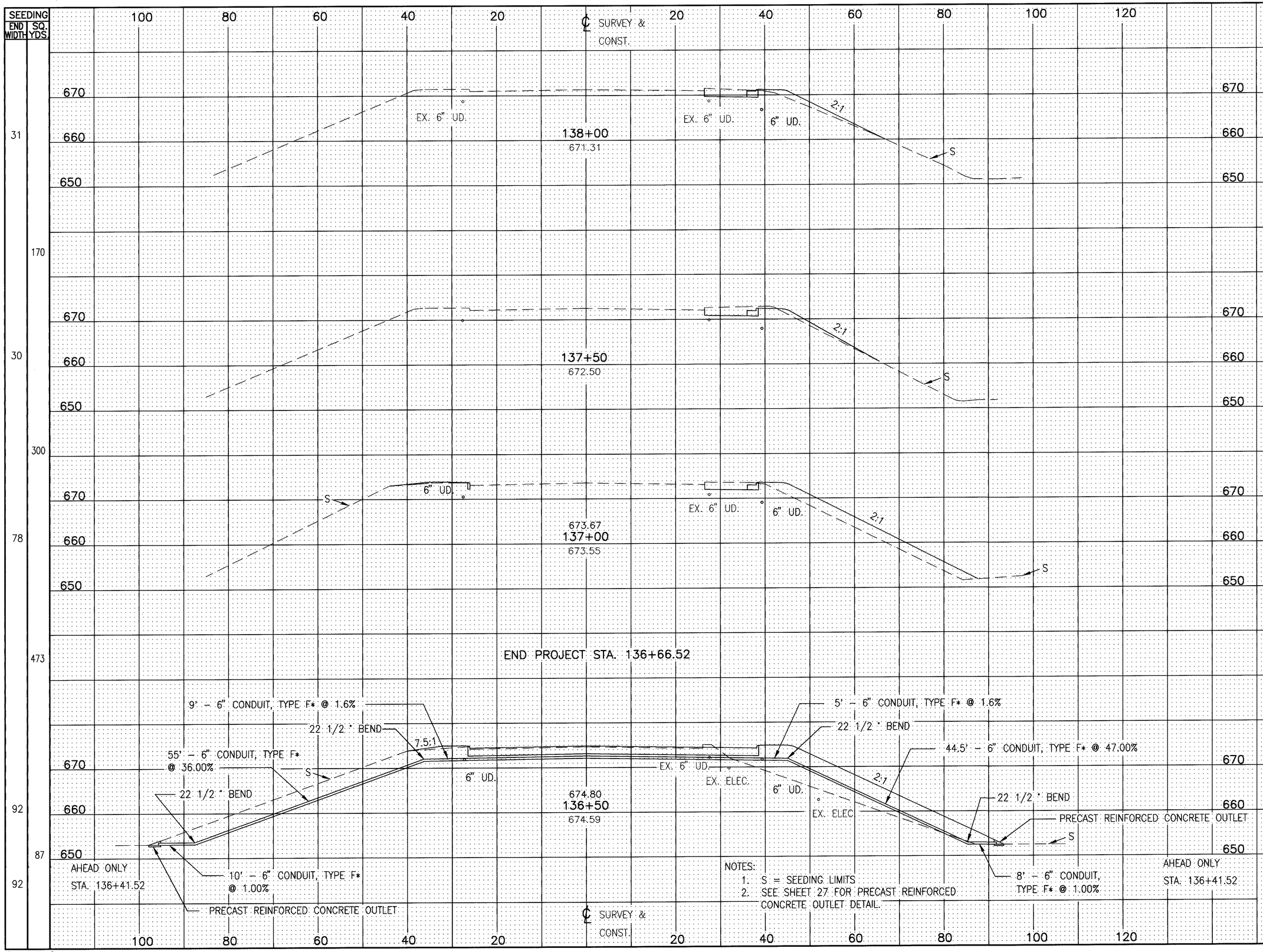

CROSS SECTIONS - CROCKER ROAD

STA. 136+50 TO 138+00

CUY-90-0.95

[G:\81892\GX] GSC
09-22-94 9:33AM

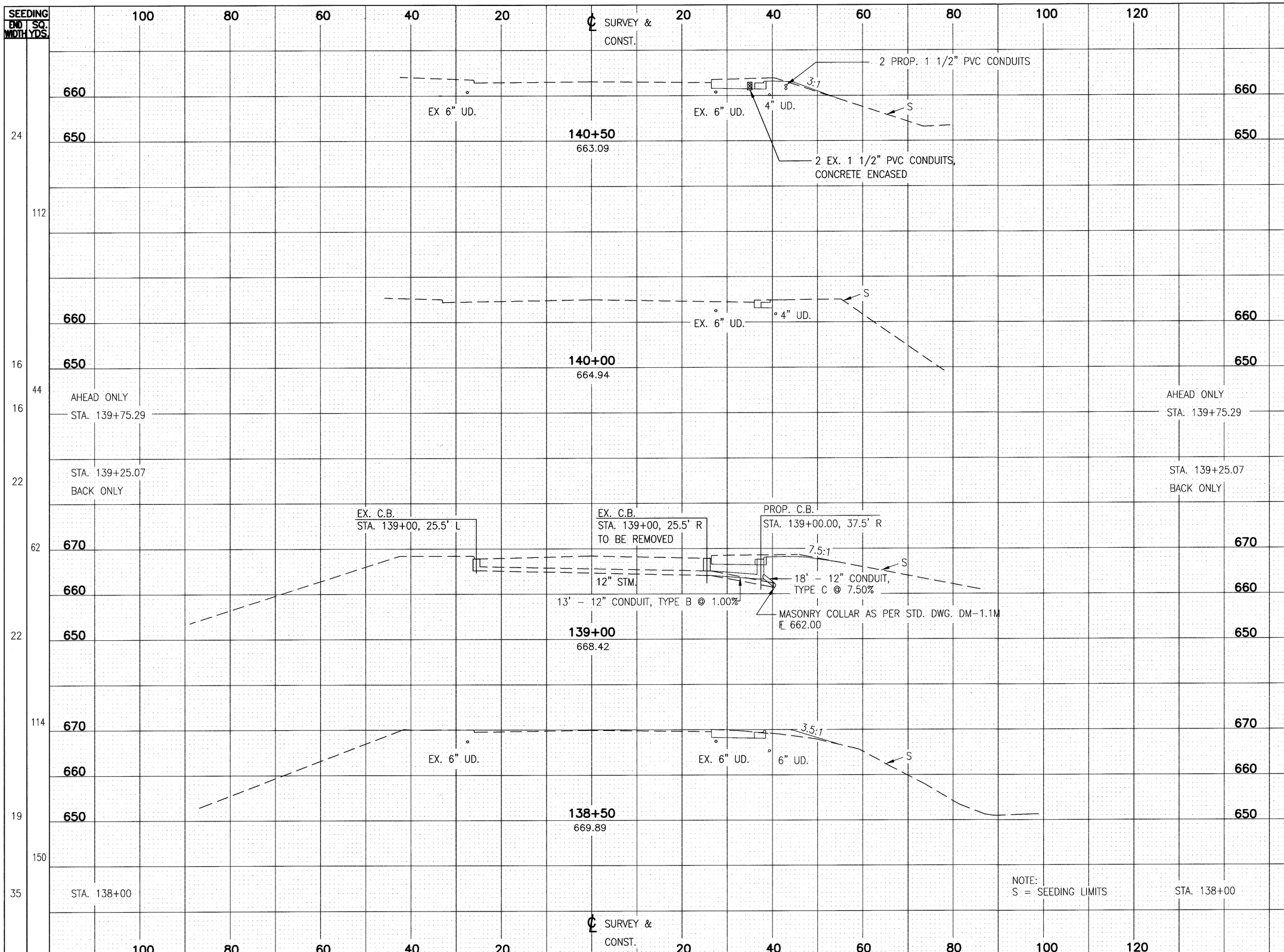

END AREA CUT	END AREA FILL	VOLUME CUT	VOLUME FILL
23	2		
		24	2
3	0		
		2	0
1	0		
30	0		
		28	0
30	0		
		43	12
16	12		
		31	37
17	28		

CALCULATED CLH
CHECKED WAN

CROSS SECTIONS - CROCKER ROAD
STA. 138+50 TO 140+50

CUY-90-0.95

35
80

Revised by B&N 1-6-00

SEEDING END WIDTH	SEEDING SQ. YDS.
	3731
10	
10	
	80
31	
31	
	52
31	
	164
28	
	125
17	
24	114

100 80 60 40 20 ℄ SURVEY & CONST. 20 40 60 80 100 120

TOTAL FOR ODOT FUNDED PORTION OF PROJECT, CARRIED TO SHEET 20.

R/W
EX. C.B.
STA. 142+44, 25.5' L.

R/W
EX. C.B.
STA. 142+55.20, 37.5' R.

TOTAL FOR ODOT FUNDED PORTION OF PROJECT, CARRIED TO SHEET 20.

STA. 142+51.13
BACK ONLY

650

640

S

12" STM.

12" STM.

142+50
655.40

STA. 142+51.13
BACK ONLY

650

640

AHEAD ONLY
STA. 142+15.13
BACK ONLY

EX. 6" UD.

EX. 6" UD.

PROP. 18" CONCRETE TRAFFIC PULLBOX

2:1

4" UD.

S

650

640

142+00
657.30

EX. 18" CONCRETE TRAFFIC PULLBOX

AHEAD ONLY
STA. 142+15.13
BACK ONLY

650

640

660

650

PROP. 24" CONCRETE TRAFFIC PULLBOX

2:1

141+50
659.26

S

EX. 24" CONCRETE TRAFFIC PULLBOX

EX. ELEC.

660

650

R/W

R/W

2 PROP. 1 1/2" PVC CONDUITS

EX. 6" UD.

EX. 6" UD.

4" UD.

S

6'x10' CULVERT

2 EX. 1 1/2" PVC CONDUITS, CONCRETE ENCASED

660

650

141+00
661.30

NOTE:
S = SEEDING LIMITS

STA. 140+50

STA. 140+50

℄ SURVEY & CONST.

100 80 60 40 20 20 40 60 80 100 120

END AREA CUT	END AREA FILL	VOLUME CUT	VOLUME FILL
		492	1183
0	0		
		0	0
0	0		
		0	23
0	35		
19	35		
		11	20
19	35		
		36	49
19	18		
		36	18
19	1		
23	2	39	3

CALCULATED CLH
CHECKED WAW

CROSS SECTIONS - CROCKER ROAD

STA. 141+00 TO 142+50

CUY-90-0.95

36
80

[O:\81892\GX] GSC
09-22-94 9:33AM

SEEDING END WIDTH	SEEDING SQ. YDS.
11	
4	7
4	
4	23
4	12
0	
0	0
0	

100 80 60 40 20 ℄ SURVEY & CONST. 20 40 60 80 100 120

R/W R/W

R/W

650

640

8% 6%

EX. 8" G

EX. 6" UD.

6" UD.

EX. 6" UD.

EX. 12" W

PROP. M.H. NO. 3
STA. 145+72, 34' R.

AHEAD ONLY

EX. 30" SAN.

145+50
649.70

145+14.50
BACK ONLY

650

640

6" UD.

145+00
650.06

650

640

6" UD.

EX. 6" DRAIN

144+50
650.59

AHEAD ONLY
145+25
BACK ONLY

R/W R/W R/W

650

640

6.35%

EX. 6" UD.

EX. 8" G

6" UD.

EX. 6" UD.

EX. 12" W

EX. 30" SAN.

144+00
651.37

NOTE: 1. 8" GAS LINE TO BE RELOCATED BY OTHERS.

2. S = SEEDING LIMITS

STA. 143+35.50

100 80 60 40 20 ℄ SURVEY & CONST. 20 40 60 80 100 120

END AREA CUT	END AREA FILL	VOLUME CUT	VOLUME FILL
21	0	45	0
27	0	53	0
30	0	41	0
14	0	13	0
0	0		

CALCULATED CJH

CHECKED WAH

CROSS SECTIONS - CROCKER ROAD

STA. 144+00 TO 145+50

CUY-90-0.95

37
80

[O:\81892\GX] GSC
09-22-94 9:33AM

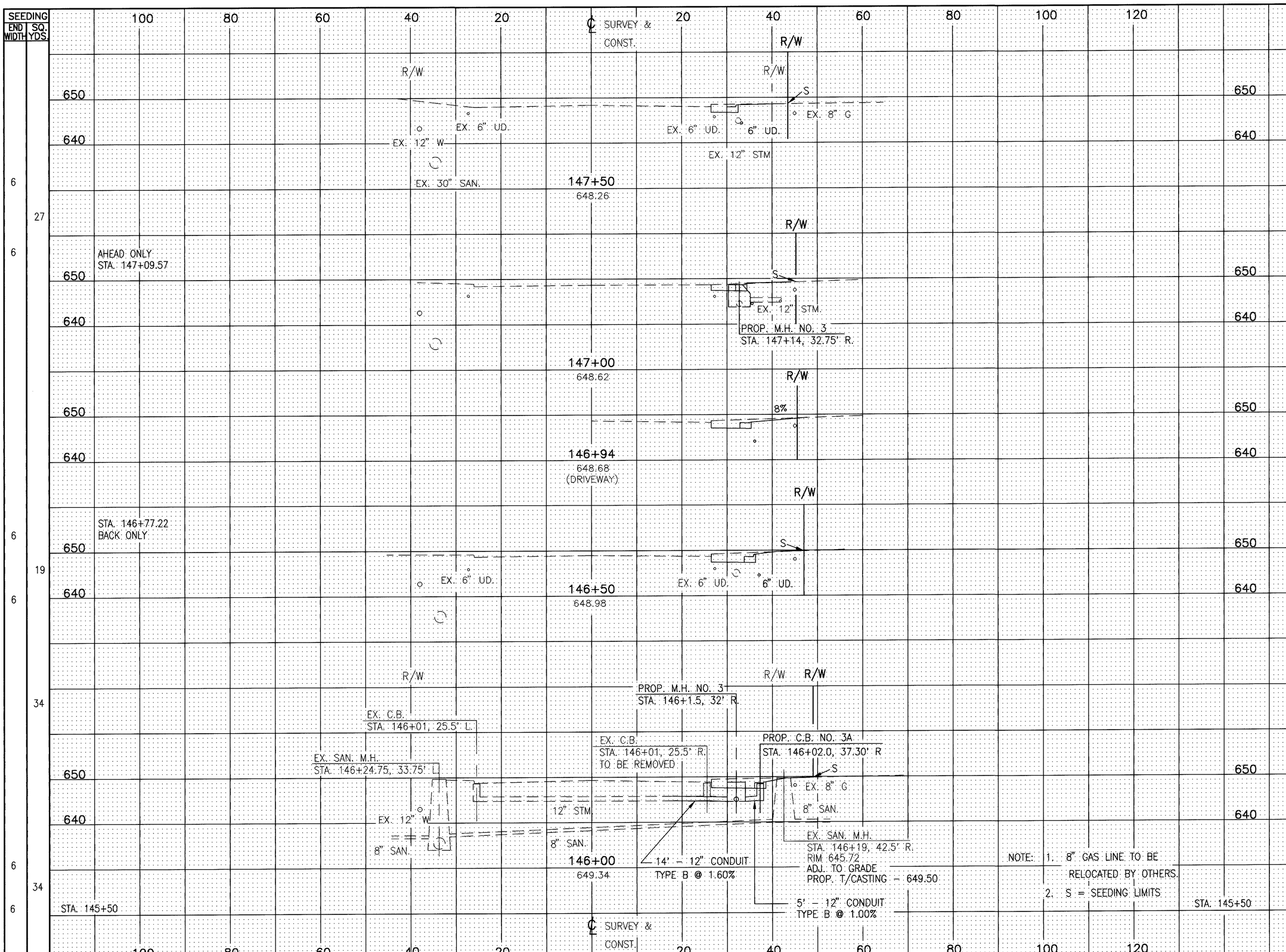

NOTE: 1. 8" GAS LINE TO BE RELOCATED BY OTHERS.
2. S = SEEDING LIMITS

END AREA CUT	END AREA FILL	VOLUME CUT	VOLUME FILL
5	0		
		12	1
8	1		
		3	1
15	0		
		26	0
16	0		
		37	0
24	0		
		42	0
21	0		

CALCULATED CLH
CHECKED WAN

CROSS SECTIONS - CROCKER ROAD
STA. 146+50 TO 147+50

CUY-90-0.95

38
80

[O:\81892\GX] GSC
09-22-94 9:33AM

SEEDING END WIDTH	SEEDING SQ. YDS.
5	285
9	14
	39
5	37
8	39
6	

100 80 60 40 20 ℄ SURVEY & CONST. 20 40 60 80 100 120

TOTAL FOR CITY OF WESTLAKE FUNDED PORTION OF PROJECT, CARRIED TO SHEET 20.

TOTAL FOR CITY OF WESTLAKE FUNDED PORTION OF PROJECT, CARRIED TO SHEET 20.

STA. 149+17.00

END WORK STA. 149+17.00

STA. 149+17.00

650

640

R/W

S

EX. 12" W

EX. 6" UD

EX. 30" SAN.

149+00

647.18

6" UD.

EX. 15" STM.

EX. 8" G

EX. C.B.
STA. 148+50.75 25.5' R.
TO BE REMOVED

EX. C.B.
STA. 158+50.75, 25.5' L

EX. 12" STM.

8' – 12" CONDUIT
TYPE B @ 1.00%

148+50

647.54

PROP. C.B.
STA. 148+50.75, 27.40' R

EX. STM. M.H.
STA. 148+51.5, 32' R.

6' – 12" CONDUIT, TYPE B @ 2.00%

EX. 6" UD.

148+00

647.90

NOTE: 1. 8" GAS LINE TO BE RELOCATED BY OTHERS.

2. S = SEEDING LIMITS

STA. 147+50

END AREA CUT	END AREA FILL	VOLUME CUT	VOLUME FILL
0	0	279	4
1	0	1	0
1	0	1	0
0	0	1	0
0	1	0	1
0	1	5	1
0	0		

CALCULATED CLH
CHECKED WAH

CROSS SECTIONS - CROCKER ROAD

STA. 148+00 TO 149+00

CUY-90-0.95

39
80

[O:\81892\GX] GSC
09-22-94 9:33AM

③ P.C. STA. 143+35.55, 65.8' R.
P.T. STA. 143+77.89, 28.4' R.
R = 45.81', △ =76°10'47"
L = 60.91, CH. = 56.52

④ P.C. STA. 143+37.31, 66.8' R.
P.T. STA. 143+72.40, 37.9' R.
R = 40', △ =69°12'36"
L = 48.32', CH. = 45.43'

⑤ PROP. R/W CURVE
P.C. STA. 143+50.48, 77' RT.
P.T. STA. 143+93.95, 50' RT.
R = 45.00', △ =69°19'25"
L = 60.49, CH. = 51.19

⑥ EXIST. R/W CURVE
P.C. STA. 143+50.48, 77' R.
P.T. STA. 143+83.75, 40' RT.
R = 35', △ =88°25'25"
L = 54.01, CH. = 48.81

N

HORIZONTAL SCALE IN FEET
0 10' 20'

CALCULATED CLH
CHECKED WAN

CLEMENS RD. AND CROCKER RD. INTERSECTION DETAIL

CUY-90-0.95

40
80

26
EX. R/W
EX. 5' WALK
STA. 26+54.50 CLEMENS RD.
STA. 143+15.86 CROCKER RD.
(SIGNALIZED INTERSECTION)
653.34
143
CROCKER RD.
N 5°37'13" E
144
145
93°26'10"
26'
14'
12'
12'
26'
14'
12'
143+83.75
40' RT.
651.35
651.80
652.20
652.46
652.58
652.56
652.54
27
CLEMENS RD.
EX. R/W
5' WALK
PROP.
41' R.
+85.47
75.05' R.
143+50.48
77' RT.
PROP. CONC. APRON
650.26
EX. 5' WALK
10' R.
5' R.
INV.
649.78
651.72
TRENCH DRAIN
INV.
649.25
652.27
ASPHALT
SEE ODOT STD. DWG. BP 3.1
FOR BUTT JOINT DETAIL
8" RETAINING
WALL
651.80
EX. CONC. AREA
143+93.95
50' RT.
649.34
PROP. CONC. APRON
8' R.
648.98
EX. R/W
PROP. 5' WALK
6.25' R.
INV.
647.44
R/W
651.60
650.30
INV.
647.97
TRENCH
DRAIN
650.00
651.00
650.75
650.60
ASPHALT
SEE ODOT STD. DWG. BP 3.1M
FOR BUTT JOINT DETAIL
+24.25 ASPHALT
48.25' TO 50.25' R.
+39.75 ASPHALT
50' TO 52' R.
+87.56 ASPHALT
50' TO 56' R.
+49.55 ASPHALT
48.5' TO 56' R.

Revised by B&N 1-6-00

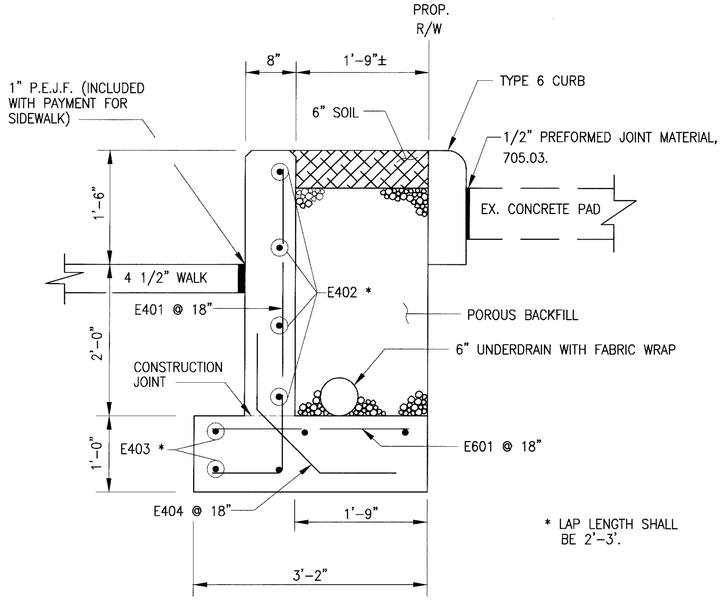

* LAP LENGTH SHALL BE 2'-3'.

RETAINING WALL
SEE SHEET 28 & 29
(SCALE 1"-1')

STATION	OFFSET	TOP OF RETAINING WALL ELEVATION
144+25.22	47.59' R.	652.77
144+50.00	47.59' R.	652.40
144+75.00	47.59' R.	652.30
145+00.00	47.59' R.	652.10
145+14.50	47.59' R.	651.80

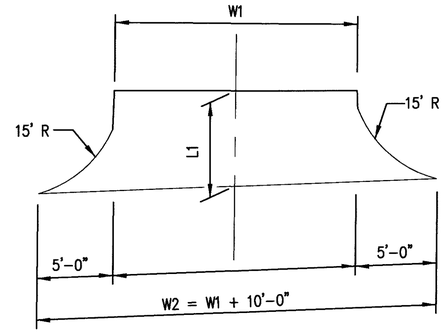

KOYO DRIVE APRON DETAIL

NOTE:

1. USE CLASS C CONCRETE, 4000 P.S.I.
2. EXPOSED CONCRETE EDGES SHALL BE CHAMFERED 1" BY 1".
3. PAYMENT FOR REINFORCING STEEL SHALL BE INCLUDED IN THE BID PRICE FOR ITEM 842, CLASS C CONCRETE, AS PER PLAN.

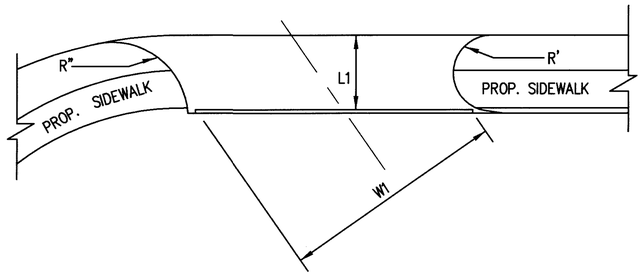

TYPICAL SERVICE STATION DRIVE APRON DETAIL

REINFORCING SCHEDULE

MARK	NUMBER	LENGTH	TYPE	A	B	C	D		TOTAL
E401	60	4'-10"	1	0'-11"	4'-0"				194
E402	12	31'-2"	STR.						250
E403	15	31'-2"	STR.						313
E404	60	3'-2"	2	1'-0"	0'-10"	0'-10"	1'-0"		127
E601	60	2'-9"	STR.						248
RETAINING WALL TOTAL = 1,132 LBS.									

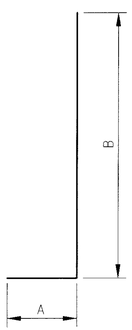

TYPE 1

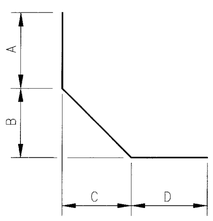

TYPE 2

DRIVE APRON QUANTITIES

CITY OF WESTLAKE

SHEET	STATION	SIDE	EXISTING CONSTRUCTION	TYPE	SKEW	WIDTH	L1	W1	W2	R"	R'	304 3" AGGREGATE BASE	451 7" REINFORCED CONCRETE PAVEMENT	451 8" REINFORCED CONCRETE PAVEMENT
												C.Y.	S.Y.	S.Y.
28	143+73.78	R.	CONC.	COM.	55°07'	29.5'	9.5'	29.5'		10'	5'	3.5	41.9	
29	145+39.20	R.	CONC.	COM.	98°32'	35'	9.5'	35'		6'	8'	3.4	40.6	
29	146+94.00	R.	CONC.	IND.	90°25'	32'	12.5'	32'	42'			4.1		48.8
TOTALS TO GENERAL SUMMARY												11.0	82.5	48.8

(SEE CITY OF WESTLAKE STD. CONST. DWG. #22 FOR DRIVE APRON DETAILS)

CALCULATED CLH
CHECKED WAN

MISCELLANEOUS DETAILS

CUY-90-0.95

41
80

Revised by B&N 1-6-00

D:\81892\GN 05C
07-27-95 11:35AM

CALCULATED ENF CHECKED

ITEM SPECIAL - MAINTAIN EXISTING LIGHTING

LIGHTING CIRCUIT 2CR AT CROCKER ROAD SHALL BE MAINTAINED AS DESCRIBED HEREIN.

BEFORE ANY WORK IS STARTED IN THE IMMEDIATE VICINITY OF CROCKER ROAD, REPRESENTATIVES OF THE STATE AND THE CONTRACTOR SHALL MAKE A VISUAL INSPECTION OF THE EXISTING CIRCUIT 2CR LIGHTING ITEMS. DURING THIS INSPECTION, A WRITTEN RECORD OF THE CONDITION OF THE EXISTING LIGHTING SHALL BE MADE BY THE STATE REPRESENTATIVE. THIS WRITTEN REPORT SHALL NOTE INDIVIDUAL LUMINAIRES WHICH ARE NOT IN WORKING ORDER, AND INDIVIDUAL CIRCUITS WHICH ARE NOT IN WORKING ORDER. THE COMPLETED REPORT SHALL BE SIGNED BY THE REPRESENTATIVES OF THE STATE, THE MAINTAINING AGENCY, AND THE CONTRACTOR.

IF, AS A RESULT OF THIS INSPECTION, IT IS DETERMINED THAT THE CONDITION OF THE EXISTING SYSTEM IS BELOW THAT REQUIRED FOR THE SAFETY OF THE TRAVELING PUBLIC, THEN THE MAINTAINING AGENCY SHALL MAKE REPAIRS NECESSARY TO RETURN THE SYSTEM TO AN ACCEPTABLE CONDITION. FOLLOWING THESE REPAIRS, THE SYSTEM SHALL AGAIN BE INSPECTED AND A REPORT MADE AND SIGNED AS OUTLINED HEREIN.

WHEN THE EXISTING SYSTEM IS IN AN ACCEPTABLE CONDITION, IT SHALL BE TURNED OVER TO THE CONTRACTOR WHO SHALL THEN BE REQUIRED TO MAINTAIN THE EXISTING LIGHTING TO THE CONDITION OUTLINED IN THIS REPORT.

THE CONTRACTOR SHALL THEN BE RESPONSIBLE FOR PROVIDING ADEQUATE TEMPORARY CIRCUITRY TO CONNECT THAT PORTION OF THE EXISTING CIRCUIT AFFECTED BY THE CONSTRUCTION OF THE CROCKER ROAD BRIDGE WIDENING.

RECONDITIONED OR USED MATERIALS MAY BE FURNISHED FOR THE TEMPORARY LIGHTING CIRCUITRY.

ALL MATERIALS NECESSARY TO COMPLETE THE TEMPORARY LIGHTING SHALL BE FURNISHED AND INSTALLED BY THE CONTRACTOR. WHEN NO LONGER NEEDED, THE TEMPORARY LIGHTING CIRCUITY SHALL BE REMOVED AND PROPERLY DISPOSED OF BY THE CONTRACTOR.

ALL COSTS FOR THE ABOVE WORK SHALL BE INCLUDED IN THE LUMP SUM BID FOR ITEM SPECIAL - MAINTAIN EXISTING LIGHTING.

STRUCTURE CONDUIT MATERIAL

CONDUIT ON STRUCTURES MAY BE 713.04 (STEEL) OR 713.07 (PVC) EXCEPT THAT ALL CONDUITS NOT ENCASED IN CONCRETE SHALL BE 713.04 (STEEL). ALL COSTS FOR CONDUITS, FITTINGS, ETC., UP TO THE FIRST PULLBOX OFF THE STRUCTURE ARE INCLUDED WITH THE STRUCTURE CONCRETE FOR PAYENT.

CONDUIT ON STRUCTURE

EXPANSION FITTINGS FOR CONDUIT ON STRUCTURES SHALL BE OZ TYPE AX-4, CROUSE-HINDS TYPE XJ-4, APPLETON TYPE XJ-4, OR EQUAL APPROVED BY THE ENGINEER FOR ALL BRIDGES. EACH EXPANSION FITTING SHALL HAVE A COPPER EXTERNAL BONDING JUMPER.

LIGHTING ABANDONED OR REMOVED

THE REMOVAL OR ABANDONMENT OF ANY ITEMS WHICH ARE NOT ITEMIZED SEPARATELY SHALL BE CONSIDERED INCIDENTAL TO THE ADJACENT WORK ITEM.

UNDERDRAINS FOR PULL BOXES

REFERENCE IS MADE TO STANDARD DRAWING HL-30.11M FOR DETAILS OF DRAINING PULL BOXES. UNDERDRAINS FOR PULL BOXES SHALL BE USED AS DIRECTED BY THE ENGINEER AND SHALL BE PROVIDED WHERE THE LENGTH REQUIRED FOR A SATISFACTORY OUTLET DOES NOT EXCEED APPROXIMATELY 20 FEET. AN ESTIMATED QUANTITY OF "ITEM 603 - 4" CONDUIT, TYPE E" IS INCLUDED IN THE LIGHTING GENERAL SUMMARY FOR THIS PURPOSE. THIS ITEM SHALL ALSO INCLUDE THE COST OF RESTORING PAVED SHOULDER AREAS WHEN NECESSARY TO DRAIN THE PULL BOX INTO EXISTING DRAINS.

ITEM 603 - 4" CONDUIT, TYPE E — 120 LIN. FT.

EXISTING DUCT CABLE AND CONDUIT

THE LOCATIONS OF EXISTING CONDUIT AND DUCT CABLE SHOWN ON THE PLANS HAVE BEEN OBTAINED BY SEARCHES OF AVAILABLE RECORDS AND FIELD CHECKS. IT IS BELIEVED THAT THEY ARE ESSENTIALLY CORRECT, HOWEVER, THE STATE OF OHIO DOES NOT GUARANTEE THEIR ACCURACY OR COMPLETENESS.

REMOVAL OF EXISTING PULLBOXES

EXISTING PULLBOXES AT THE END OF THE CROCKER ROAD BRIDGE SHALL NOT BE REMOVED UNTIL NO LONGER NEEDED FOR THE MAINTENANCE OF THE EXISTING CIRCUIT(S).

THE FOLLOWING ESTIMATED QUANTITY HAS BEEN INCLUDED IN THE GENERAL SUMMARY TO PERFORM THIS WORK.

ITEM 202 - PULLBOX REMOVED ..... 4 EACH

SHEET ADDED BY B&N JAN. 13, 2000

LIGHTING NOTES

CUY-90-0.95

41A
80

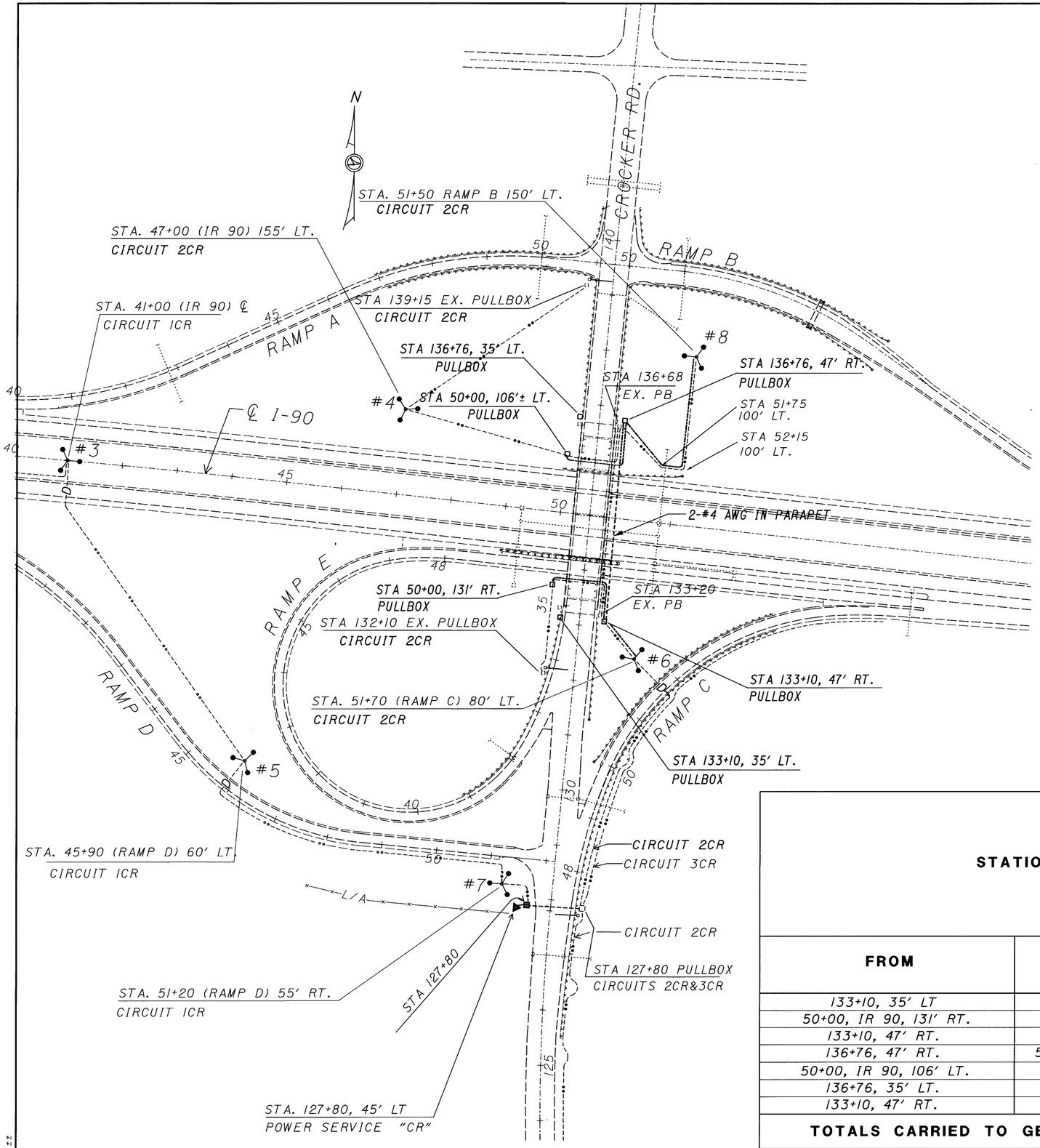

LEGEND

- □ PULLBOX, 18" CONCRETE, 713.08
- ——— 1½" DUCT CABLE WITH 2#4 AWG 600 VOLT CABLES
- - - - - - 2" DIAM. CONDUIT ON STRUCTURE

SHEET ADDED BY B&N JAN. 13, 2000

STATION		625					
FROM	TO	CABLE SPLICING KIT	PULLBOX, CONCRETE 713.08, 18"	TRENCH, 24" DEEP	1-1½" DUCT CABLE WITH TWO NO. 4 AWG 600 VOLT CABLES	NO. 4 AWG 600 VOLT DISTRIBUTION CABLE	
		EACH	EACH	LIN FT	LIN FT	LIN FT	
133+10, 35' LT			1				
50+00, IR 90, 131' RT.	133+10, 47' RT.	2	1	180	190		
133+10, 47' RT.	136+76, 47' RT.	2	1			752	
136+76, 47' RT.	51+50, RAMP B, 150' LT.	2	1	350	360		
50+00, IR 90, 106' LT.	136+76, 47' RT.	2	1	190	200		
136+76, 35' LT.			1				
133+10, 47' RT.	51+70, RAMP C, 80' LT.			90	100		
TOTALS CARRIED TO GENERAL SUMMARY		8	6	810	850	752	

CALCULATED ENF CHECKED

LIGHTING DETAILS

CUY-90-0.95

41B
80

CALCULATED CLH | CHECKED WAN

ITEM 632 – VEHICULAR SIGNAL HEADS, 3 OR 5 SECTION, 12" LENS, 1–WAY, AS PER PLAN:

SECTION 732.01 OF THE SPECIFICATIONS IS MODIFIED FOR THIS PROJECT AS FOLLOWS:

A) SIGNAL HEADS AND VISORS SHALL BE CONSTRUCTED OF INJECTION MOLDED, UV STABILIZED POLYCARBONATE PLASTIC AND MEET I.T.E. SPECIFICATIONS.
B) PLASTIC LENSES SHALL BE USED.
C) PIPE, SPACERS, AND FITTINGS CONSTRUCTED OF POLYCARBONATE PLASTIC MAY BE USED IN LIEU OF GALVANIZED STEEL OR ALUMINUM.
D) PROPER EXTERIOR COLORS SHALL BE OBTAINED BY USE OF COLORED PLASTIC MATERIAL RATHER THAN PAINTING.

ITEM 625 POWER SUPPLY FOR TRAFFIC SIGNALS

ELECTRIC POWER SHALL BE OBTAINED FROM THE CLEVELAND ELECTRIC ILLUMINATING COMPANY AT THE LOCATION INDICATED ON THE PLANS. POWER SUPPLIED SHALL BE 120 VOLTS.

ITEM 632 – LOOP DETECTOR UNITS, BY TYPE, AS PER PLAN

IN ADDITION TO THE REQUIREMENTS OF 632 AND 732.07 OR 732.08, LOOP DETECTOR UNITS SHALL HAVE THE FOLLOWING REQUIREMENTS OR FEATURES:

THE OUTPUT DEVICE SHALL BE A RELAY, AND ALL CONTACTS SHALL BE INCLUDED IN THE WIRING HARNESS.

THE UNIT SHALL BE SELF TUNING.

THE UNIT'S ELECTRICAL CONNECTION PLUGS OR WIRING HARNESS SHALL ALLOW READY REPLACEMENT WITH A SINGLE CHANNEL AMPLIFIER AS DESCRIBED IN THE FINAL PARAGRAPH OF 732.07.

ITEM 632 – REMOVAL OF TRAFFIC SIGNAL INSTALLATION

THE REMOVAL SHALL CONSIST OF VEHICULAR SIGNAL HEADS, CONTROLLER WITH CABINET, STRAIN POLES AND PEDESTALS, MESSENGER WIRE, CABLE, CONDUIT RISER, AND ALL OTHER PORTIONS OF THE TRAFFIC SIGNAL INSTALLATION.
CONTRACTOR SHALL STORE REMOVED EQUIPMENT AND MATERIALS ON THE SITE FOR PICKUP BY THE CITY OF WESTLAKE. IF THE EQUIPMENT AND MATERIALS HAVE NOT BEEN PICKED UP BY THE CITY AT THE END OF CONSTRUCTION, THE EQUIPMENT AND MATERIAL SHALL BECOME THE PROPERTY OF THE CONTRACTOR. THE CONTRACTOR SHALL MAKE ARRANGEMENTS WITH THE CITY OF WESTLAKE TO DISCONNECT EXISTING POWER SERVICE BEFORE THE EXISTING SIGNAL INSTALLATION IS REMOVED.

UNDERDRAINS FOR PULL BOXES

UNDERDRAINS FOR PULL BOXES SHALL BE USED AS DIRECTED BY THE ENGINEER, AND SHALL BE PROVIDED WHEN THE LENGTH REQUIRED FOR A SATISFACTORY OUTLET DOES NOT EXCEED APPROXIMATELY 40 FEET. AN ESTIMATED QUANTITY OF 100 LINEAR FEET OF ITEM 603, 4" CONDUIT TYPE E, IS INCLUDED IN THE TRAFFIC SIGNAL GENERAL SUMMARY FOR THIS PURPOSE.

LOOP DETECTOR INSTALLATION:

PRIOR TO LOOP DETECTOR PAVEMENT CUTTING, THE CONTRACTOR SHALL SPOT PAINT ALL LOOP DETECTOR LOCATIONS.
THE CONTRACTOR SHALL ALSO NOTIFY THE CITY OF WESTLAKE TRAFFIC ENGINEER 48 HRS. IN ADVANCE OF ANY LOOP DETECTOR PAVEMENT CUTTING SUCH THAT HE MAY INSPECT FINAL LOOP DETECTOR LOCATIONS.
THE CITY OF WESTLAKE TRAFFIC ENGINEER: 871–3300

TEMPORARY MAINTENANCE OF EXISTING SIGNALS:

INCIDENTAL TO THE REQUIREMENTS FOR MAINTAINING TRAFFIC IN ACCORDANCE WITH 614.03, EXISTING TRAFFIC SIGNALS AT THE INTERSECTION OF CROCKER ROAD AND I–90 WESTBOUND RAMPS SHALL BE TEMPORARILY MAINTAINED UNTIL THE NEW TRAFFIC SIGNAL INSTALLATION IS IN OPERATION, SEE SHEETS 6 & 8. ANY COSTS FOR THE TEMPORARY MAINTENANCE OF EXISTING SIGNALS SHALL BE INCLUDED IN THE LUMP SUM FOR 614 MAINTAINING TRAFFIC.

ITEM 633 – CONTROLLER, ACTUATED, 3 PHASE, SOLID STATE DIGITAL MICROPROCESSOR, AS PER PLAN:

THE CONTRACTOR SHALL FURNISH AND INSTALL AN ACTUATED 3 PHASE DIGITAL MICROPROCESSOR CONTROLLER AND BASE MOUNTED CABINET AND ALL OTHER ACCESSORIES THAT ARE NECESSARY TO MAKE THE CONTROLLER FUNCTIONAL AND OPERATIONAL AS SHOWN IN THE PLANS.

THE CONTROLLER SHALL MEET OR EXCEED ALL REQUIREMENTS OF THE CURRENT EDITION OF NEMA STANDARD TS–1, AND SHALL BE DELIVERED PREWIRED.

OVERLAP PROGRAMMING:

THE CONTROLLER SHALL BE EQUIPPED WITH AN INTERCHANGEABLE PLUG–IN PRINTED CIRCUIT BOARD OVERLAP PROGRAMMING ASSEMBLY, AS DESCRIBED IN TS–1, PART 14.

CONFLICT MONITOR:

A CONFLICT MONITOR SHALL BE PROVIDED WITH THE CONTROLLER. THE CONFLICT MONITOR SHALL HAVE EXTENDED MONITORING IN ACCORDANCE WITH 733.04, PART 3B.

PRIOR TO ACCEPTANCE, THE CONTRACTOR SHALL CERTIFY IN WRITING, THAT THE CONTROLLER HAS BEEN TESTED BY AN AUTOMATIC CONFLICT MONITOR TESTER, AND THAT NO CONFLICTS EXIST IN THE PROPER OPERATION OF THE CONTROLLER.

CONTROLLER CABINET:

THE CONTROLLER CABINET SHALL HAVE THE FOLLOWING FEATURES:

1) THE FOLLOWING SWITCHES SHALL BE MOUNTED ON THE SWITCH PANEL IN THE CABINET:
   A) RUN / STOP TIME
   B) CONTROLLER SHUTDOWN
   C) DETECTOR TEST
2) CORBIN LOCKS
3) LIGHTNING PROTECTION
4) A POLICE DOOR PANEL, EQUIPPED WITH THE FOLLOWING SWITCHES:
   A) SIGNAL SHUTDOWN
   B) FLASH CONTROL
   C) AUTOMATIC / MANUAL TRANSFER

PAYMENT:

PAYMENT FOR "ITEM 633 CONTROLLER, ACTUATED, 3 PHASE, SOLID STATE DIGITAL MICROPROCESSOR, AS PER PLAN" SHALL BE MADE AT THE CONTRACT UNIT PRICE BID. PAYMENT SHALL BE FULL COMPENSATION FOR ALL LABOR, MATERIALS, TOOLS, EQUIPMENT, TESTING, CERTIFICATIONS, AND OTHER INCIDENTALS NECESSARY TO FURNISH THE CONTROLLER, COMPLETE IN PLACE, INCLUDING ALL CONNECTIONS MADE AND WIRING COMPLETE, TESTED, AND ACCEPTED.

ITEM 632 – PEDESTRIAN SIGNAL HEADS, TYPE D2, AS PER PLAN

SECTION 732.05 OF THE SPECIFICATIONS IS MODIFIED FOR THIS PROJECT AS FOLLOWS:

A.) SIGNAL HEADS AND VISORS SHALL BE CONSTRUCTED OF POLYCARBONATE PLASTIC AND MEET ITE SPECIFICATIONS.
B.) PLASTIC LENSES SHALL BE USED.
C.) PIPE, SPACERS AND FITTINGS CONSTRUCTED OF POLYCARBONATE PLASTIC MAY BE USED IN LIEU OF GALVANIZED STEEL OR ALUMINUM.
D.) PROPER EXTERIOR COLORS SHALL BE OBTAINED BY USE OF COLORED PLASTIC MATERIAL RATHER THAN PAINTING.
E.) SIGNALS SHALL DISPLAY THE UPRAISED PALM AND WALKING PERSON SYMBOLS, IN LIEU OF WORD MESSAGES.

MAINTENANCE OF TRAFFIC SIGNAL INSTALLATIONS:

THE CONTRACTOR SHALL BE RESPONSIBLE FOR MAINTAINING TRAFFIC SIGNAL INSTALLATIONS WITHIN THE PROJECT UNDER THE FOLLOWING CONDITIONS:

A.) EXISTING SIGNAL INSTALLATIONS WHICH THE PLANS REQUIRE THE CONTRACTOR TO ADJUST, MODIFY, ADD ONTO OR REMOVE, OR WHICH THE CONTRACTOR ACTUALLY ADJUSTS, MODIFIES OR OTHERWISE DISTURBS. THE CONTRACTOR SHALL BE RESPONSIBLE FOR THE ENTIRE INSTALLATION (AT AN INTERSECTION) FROM THE TIME HIS OPERATIONS FIRST DISTURB THE INSTALLATION UNTIL THE INSTALLATION HAS BEEN SUBSEQUENTLY REMOVED OR MODIFIED AND THE WORK IS ACCEPTED.
B.) NEW OR REUSED SIGNAL INSTALLATIONS OR DEVICES, INSTALLED BY THE CONTRACTOR. THE CONTRACTOR SHALL BE RESPONSIBLE FOR MAINTENANCE OF THESE FROM THE TIME OF INSTALLATION UNTIL THE WORK IS ACCEPTED.

THE CONTRACTOR SHALL CORRECT AS QUICKLY AS POSSIBLE ALL OUTAGES OR MALFUNCTIONS. HE SHALL PROVIDE THE CITY AND THE ENGINEER SUCH ADDRESSES AND PHONE NUMBERS WHERE HIS MAINTENANCE FORCES CAN BE CONTACTED. THE CONTRACTOR SHALL PROVIDE ONE OR MORE TO RECEIVE ALL CALLS AND DISPATCH THE NECESSARY MAINTENANCE FORCES TO CORRECT OUTAGES OR MALFUNCTIONS. SUCH A PERSON OR PERSONS MAY BE USED TO PERFORM OTHER DUTIES AS LONG AS PROMPT ATTENTION IS GIVEN TO THESE CALLS AND A PERSON IS READILY AVAILABLE CONTINUOUSLY 24 HOURS A DAY, 7 DAYS A WEEK. ALL LAMP OUTAGES, CABLE OUTAGES, ELECTRICAL FAILURES, EQUIPMENT MALFUNCTIONS AND MISALIGNED SIGNAL HEADS SHALL BE CORRECTED TO THE SATISFACTION OF THE ENGINEER, WITH THE SIGNAL BACK IN SERVICE WITHIN FOUR HOURS AFTER THE CONTRACTOR HAS BEEN NOTIFIED OF THE OUTAGE OR MALFUNCTION.
IN THE EVENT NEW SIGNALS ARE DAMAGED PRIOR TO ACCEPTANCE, ALL DAMAGED EQUIPMENT, EXCEPT POLES AND CONTROL EQUIPMENT, SHALL BE REPLACED BY THE CONTRACTOR TO THE SATISFACTION OF THE ENGINEER WITH THE SIGNAL BACK IN SERVICE WITHIN EIGHT HOURS AFTER THE CONTRACTOR HAS BEEN NOTIFIED OF THE DAMAGE.
IF POLES AND/OR CONTROL EQUIPMENT ARE DAMAGED AND MUST BE REPLACED, THE CONTRACTOR MAKE TEMPORARY REPAIRS AS NECESSARY TO BRING THE SIGNAL BACK INTO FULL OPERATION WITHIN THE ALLOWED EIGHT HOUR PERIOD, AND SHALL MAKE PERMANENT REPAIRS OR REPLACEMENT AS SOON THEREAFTER AS POSSIBLE.
NONE OF THE ABOVE SHALL BE CONSTRUED AS COLLECTIVE OR CONSECUTIVE OUTAGE TIME PERIODS AT ANY ONE LOCATION. THAT IS, WHERE MORE THAN ONE OUTAGE OR MALFUNCTION OCCURS CONCURRENTLY AT ANY ONE LOCATION, THEN THE ALLOTTED TIME LIMIT SHALL BE FOR THE WORST SINGLE OUTAGE OR MALFUNCTION.
WHERE OUTAGES ARE THE DIRECT RESULT OF A VEHICLE ACCIDENT, THE RESPONSE OF THE CONTRACTOR SHALL BE AS OUTLINED ABOVE. THE CONTRACTOR SHALL BE RESPONSIBLE FOR COLLECTION OF ANY COMPENSATION FOR THIS WORK FROM THOSE PARTIES RESPONSIBLE FOR THE DAMAGE.
WHERE THE CONTRACTOR HAS FAILED TO OR CANNOT RESPOND TO AN OUTAGE OR SIGNAL EQUIPMENT MALFUNCTION, AT THESE LOCATIONS WITHIN HIS RESPONSIBILITY, WITHIN PERIOD AS SPECIFIED ABOVE, THE ENGINEER MAY INVOKE THE PROVISIONS OF SECTION 105.15 AND ANY SUBSEQUENT BILLINGS TO THE STATE OR THE CITY OF WESTLAKE FOR POLICE SERVICES AND MAINTENANCE SERVICES BY CITY FORCES SHALL BE DEDUCTED FROM MONIES DUE OR TO BECOME DUE THE CONTRACTOR IN ACCORDANCE WITH PROVISIONS OF SECTION 105.15.
THE CONTRACTOR SHALL PROVIDE THE MAINTENANCE SERVICE ENTIRELY WITH HIS FORCES OR HE MAY CHOOSE TO ENTER INTO A COOPERATIVE UNDERSTANDING WITH THE LOCAL MAINTAINING AGENCY TO PROVIDE THE MAINTENANCE. THE CONTRACTOR SHALL INFORM THE ENGINEER IN WRITING OF THE MAINTENANCE METHOD SELECTED, AND SHALL PROVIDE A COPY OF THE AGREEMENT WITH THE CITY IN THIS REGARD.
THE CONTRACTOR SHALL BE RESPONSIBLE FOR ANY DAMAGE TO ANY TRAFFIC SIGNAL COMPONENTS REQUIRED TO BE HANDLED DURING THE RELOCATION OF POLES AND REVISIONS TO THE SIGNAL SYSTEM.
WHEN A TRAFFIC SIGNAL MUST BE TAKEN OUT OF SERVICE BY THE CONTRACTOR, DUE TO CONSTRUCTION PROCEDURES, THIS OUTAGE SHALL NOT EXCEED 2 HOURS AND SHALL NOT INCLUDE THE HOURS OF 6:30 AM – 8:30 AM. AND 4 PM – 6 PM, MONDAY THROUGH FRIDAY.
ANY SIGNALIZED INTERSECTION, WHERE THE TRAFFIC SIGNAL IS OUT OF SERVICE DUE TO CONSTRUCTION PROCEDURES, OR DUE TO AN OUTAGE OR MALFUNCTION OF EQUIPMENT AS DESCRIBED ABOVE, SHALL BE PROTECTED BY THE CONTRACTOR WITH THE PRESENCE OF OFF–DUTY CITY OF WESTLAKE POLICE, HIRED BY THE CONTRACTOR.
ANY VEHICULAR TRAFFIC SIGNAL HEAD, EITHER NEW OR EXISTING WHICH WILL BE OUT OF OPERATION SHALL BE COVERED IN THE MANNER DESCRIBED IN 632.24.
ALL COST RESULTING FROM THE ABOVE REQUIREMENTS SHALL BE CONSIDERED TO BE INCLUDED IN THE LUMP SUM PRICE BID FOR ITEM 614, MAINTAINING TRAFFIC.

Revised by B&N 1-6-00

TRAFFIC CONTROL – GENERAL NOTES

CUY–90–0.95

K:\5048\571038TN_1.TNC
11:30AM 07-20-94

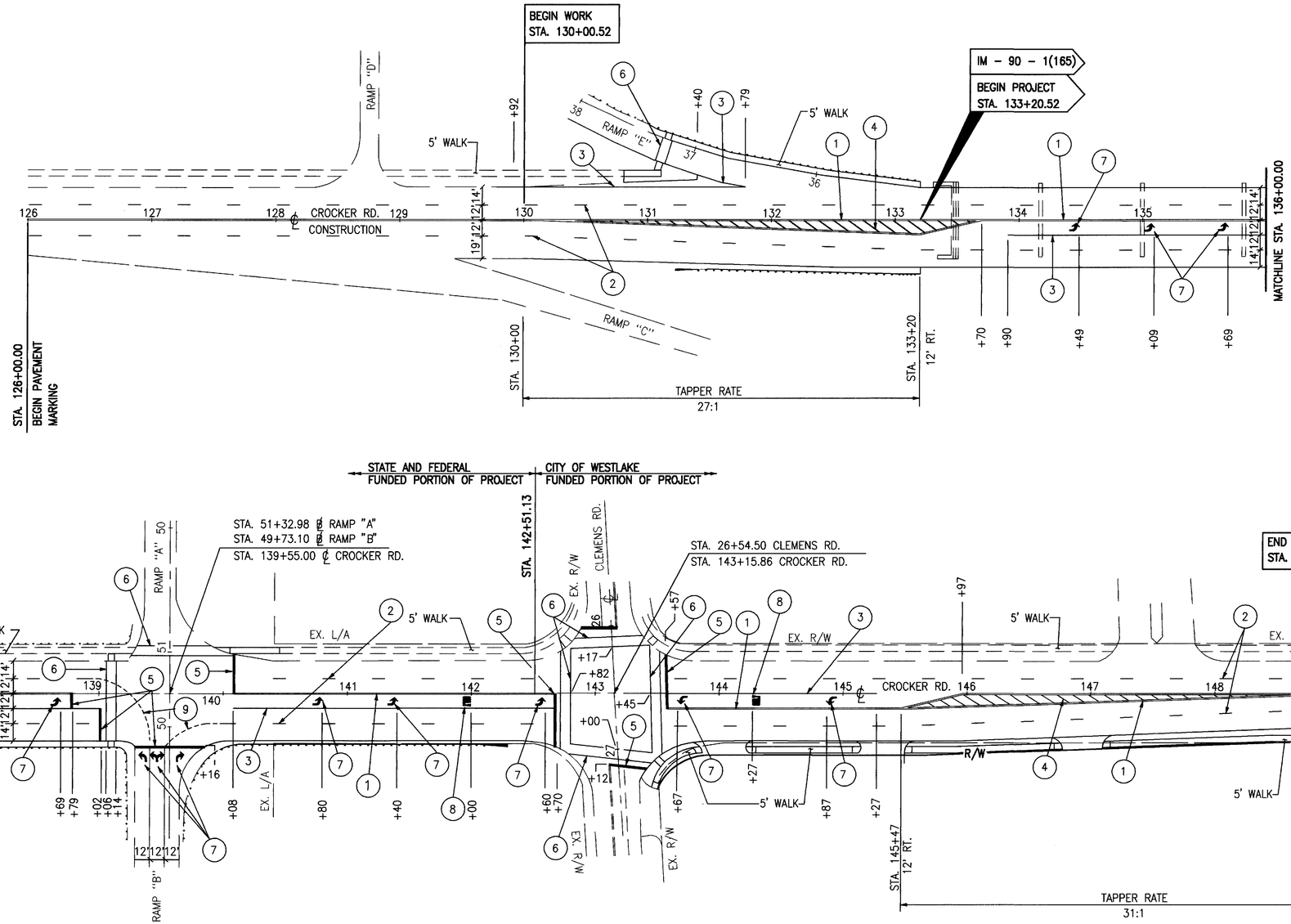

LEGEND

1. CENTERLINE, DOUBLE SOLID
2. LANE LINE
3. CHANNELIZING LINE
4. TRANSVERSE LINE 12'C/C
5. STOP LINE
6. CROSSWALK LINE
7. LANE ARROW
8. WORD "ONLY" ON PAVEMENT, 72"
9. DOTTED LINE, 4"

NOTES:

1. CROSSWALKS SHALL BE 8' WIDE.
2. REFER TO CALCULATIONS TABLE , SHEET 49, FOR PAVEMENT MARKING QUANTITIES.

N

0 50' 100'
HORIZONTAL
SCALE IN FEET

CALCULATED CLH
CHECKED WAW

PAVEMENT MARKING PLAN - CROCKER ROAD
STA. 126+00.00 TO STA. 149+13.25

CUY-90-0.95

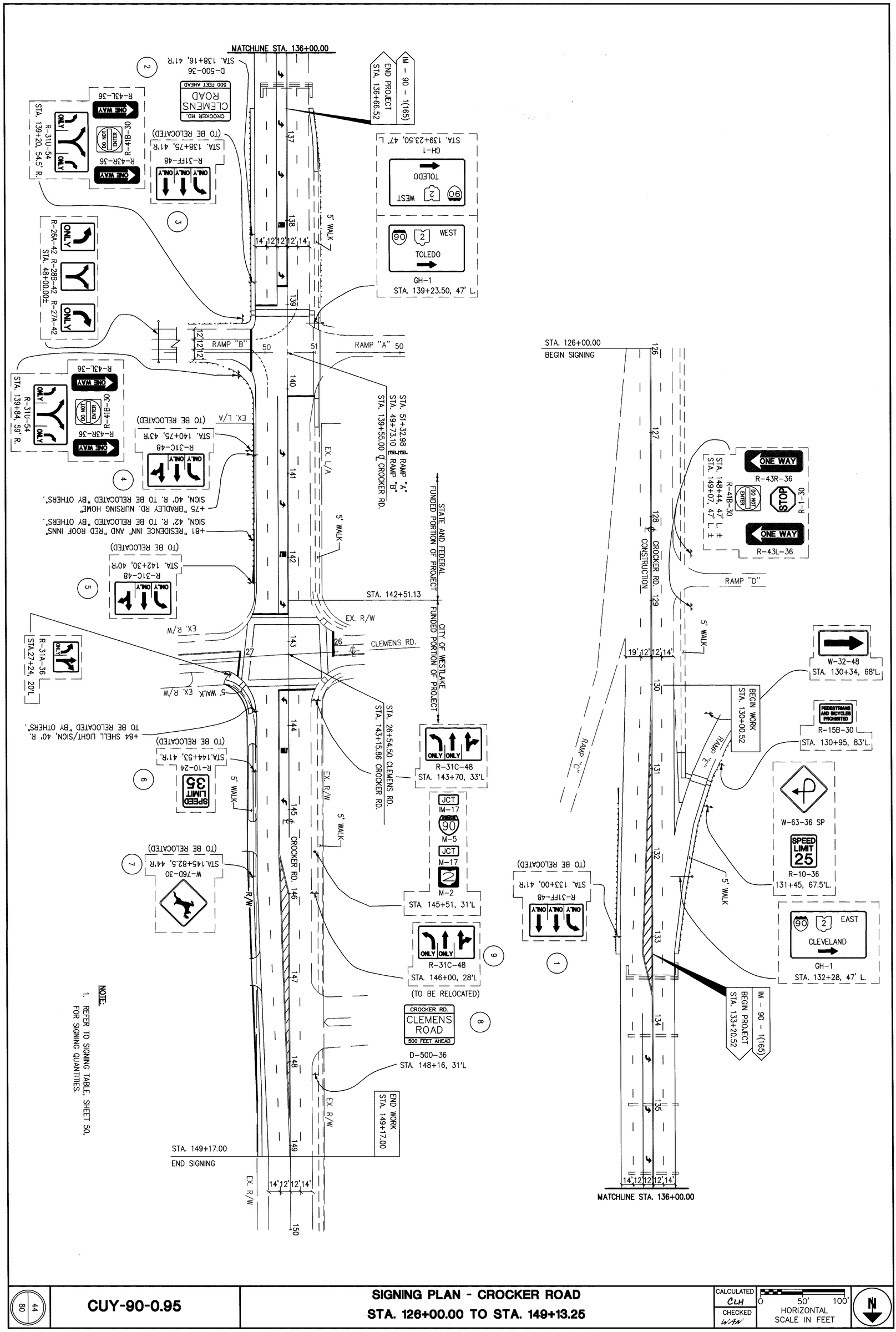

44 / 80	CUY-90-0.95	SIGNING PLAN - CROCKER ROAD STA. 126+00.00 TO STA. 149+13.25	CALCULATED CLH CHECKED WTH 0 50' 100' HORIZONTAL SCALE IN FEET N

PHASING DIAGRAM

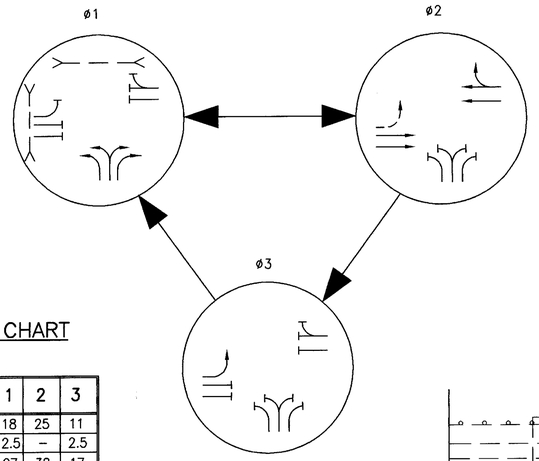

SIGNAL TIMING CHART

INTERVAL	1	2	3
MINIMUM GREEN	18	25	11
PASSAGE	2.5	–	2.5
MAXIMUM GREEN I	27	38	17
YELLOW CLEARANCE	3.6	3.6	3.6
ALL RED CLEARANCE	1.6	1.6	1.6
WALK	4	0	0
PED CLEAR	17	0	0
RECALL	MAX	NONE	NONE

SIGNAL SEQUENCE CHART

SIGNAL HEAD	ø1			ø2			ø3			FLASH
	R/W	CLEAR		R/W	CLEAR		R/W	CLEAR		
A	~~G~~	~~Y~~	R	R	R	R	R	R	R	R
B	~~G~~	~~Y~~	R	R	R	R	R	R	R	R
C	R	R	R	G	Y	R	~~G~~	~~Y~~	R	Y
D	R	R	R	G	Y	R	R	R	R	Y
E	R	R	R	G	Y	R	R	R	R	Y
F	R	R	R	G	Y	R	R	R	R	Y
X	W	FD	D	D	D	D	D	D	D	DARK
Y	W	FD	D	D	D	D	D	D	D	DARK

COORDINATION TIMING

INTERVAL	DIAL 1
CYCLE LENGTH	70 SEC.
PHASE 1 SPLIT	33%
PHASE 2 SPLIT	44%
PHASE 3 SPLIT	23%
PERMISSIVE	5%
OFFSET	0%
TIME OF DAY SCHEDULE	ALL TIMES

NOTES:
1. PHASE SPLITS SHALL INCLUDE ALL GREEN PLUS YELLOW & ALL RED.
2. PERMISSIVE SHALL START AT THE ZERO POINT OF THE CYCLE.
3. OFFSET SHALL BE REFERENCED TO THE BEGINNING OF PHASE 2 YELLOW.

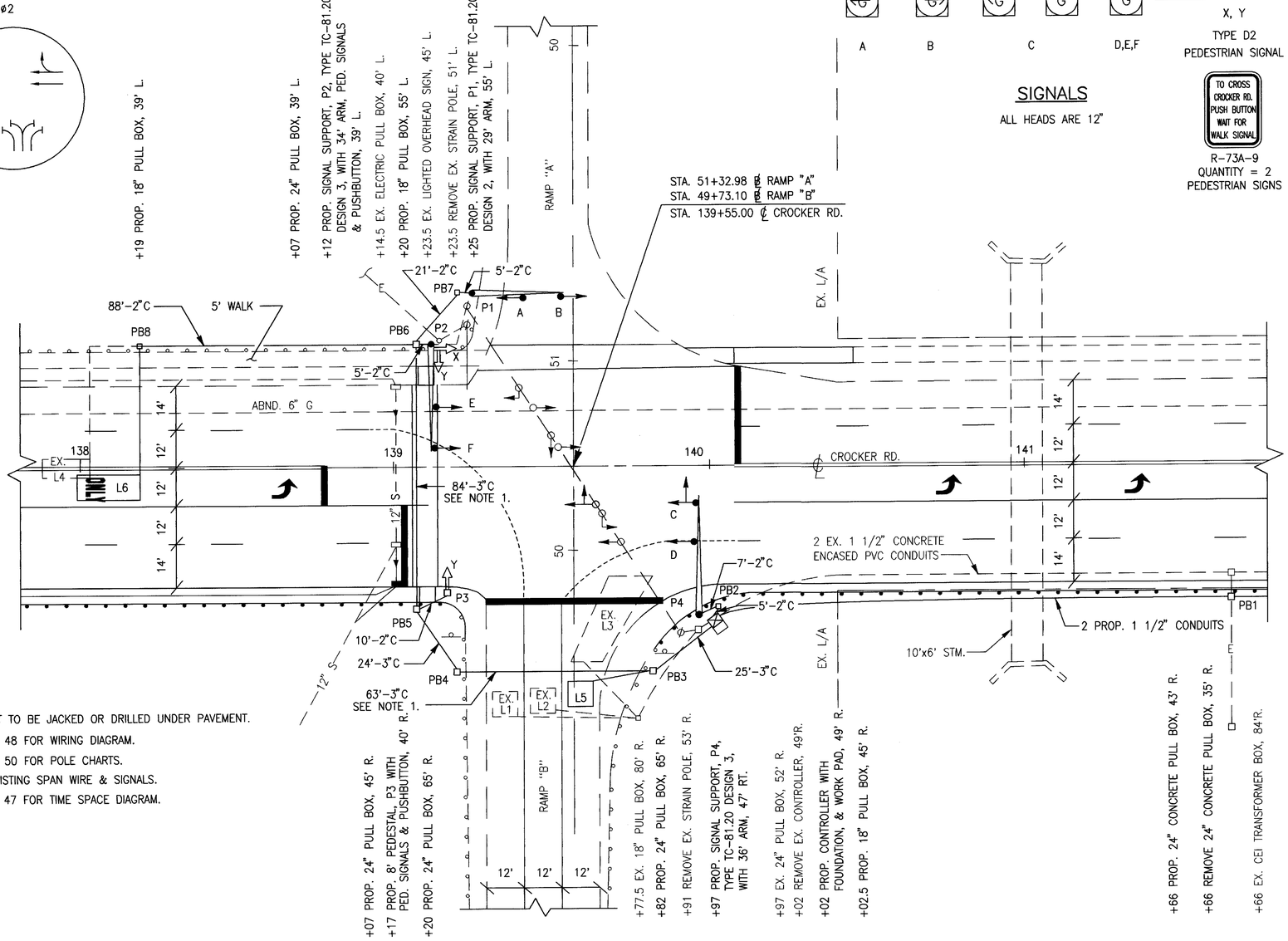

SIGNALS

ALL HEADS ARE 12"

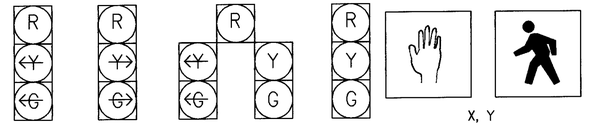

R-73A-9
QUANTITY = 2
PEDESTRIAN SIGNS

NOTES:

1. 3" CONDUIT TO BE JACKED OR DRILLED UNDER PAVEMENT.
2. SEE SHEET 48 FOR WIRING DIAGRAM.
3. SEE SHEET 50 FOR POLE CHARTS.
4. REMOVE EXISTING SPAN WIRE & SIGNALS.
5. SEE SHEET 47 FOR TIME SPACE DIAGRAM.

LOOP DETECTOR CHART

LOOP	SIZE	TURNS	PHASE	MODE	UNIT	DELAY	REMARKS	STA. FRONT LEFT CORNER	STA. FRONT RIGHT CORNER
EX. 1	8' x 8'	–	1	PRESENCE	1	NONE		–	–
EX. 2	8' x 8'	–	1	PRESENCE	2	NONE		–	–
EX. 3	12' x 28'	–	–	PRESENCE	3	–	DISCONNECT	–	–
EX. 4	6' x 15'	–	–	PRESENCE	4	–	DISCONNECT	–	–
5	8' x 8'	2	1	PRESENCE	5	8 SEC.		50+42, 6' Lt	50+42, 2' Rt
6	8' x 15'	2	3	PRESENCE	6	NONE		138+19, 2' Rt	138+19, 10' Rt

N

20' 0 40' HORIZONTAL SCALE IN FEET

CALCULATED CLH CHECKED MM

SIGNALIZATION PLAN
CROCKER ROAD - RAMP "A" & "B" INTERSECTION

CUY-90-0.95

45
80

[O:\81892\SIGPLAN] DLS
03-04-96 11:03AM

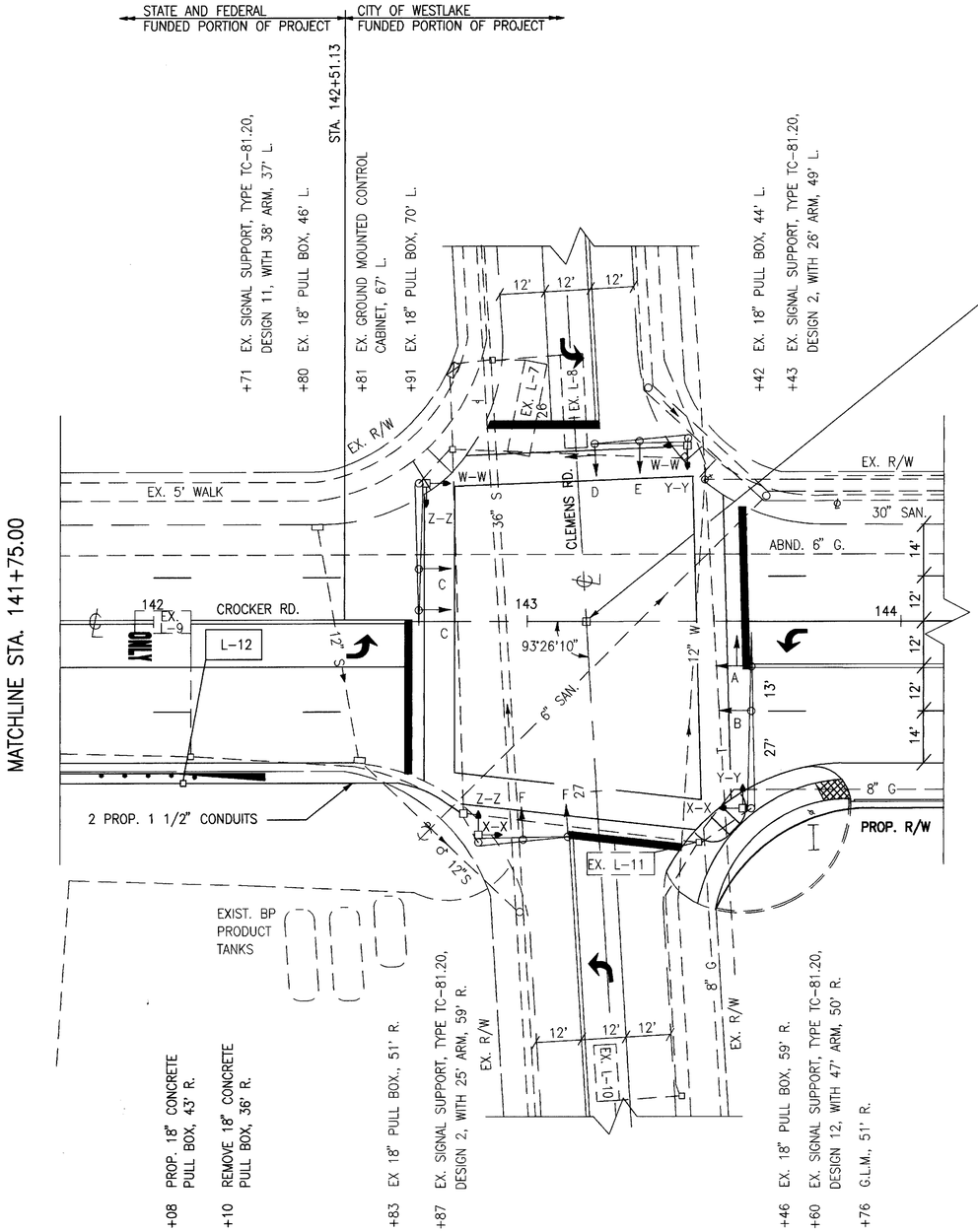

NOTE:

1. SIGNAL HEADS A AND B TO BE RELOCATED AS PER PLAN.
2. SEE SHEET 47 FOR TIME SPACE DIAGRAMS.

COORDINATION TIMING

INTERVAL	DIAL 1
CYCLE LENGTH	70 SEC.
PHASE 2 SPLIT	20%
PHASE 4 SPLIT	17%
PHASE 5 SPLIT	20%
PHASE 6 SPLIT	36%
PHASE 7 SPLIT	17%
PHASE 8 SPLIT	27%
PERMISSIVE	5%
OFFSET	90.9%
TIME OF DAY SCHEDULE	ALL TIMES

(DURING PHASE II CONSTRUCTION)

COORDINATION TIMING

INTERVAL	DIAL 1
CYCLE LENGTH	70 SEC.
PHASE 2 SPLIT	19%
PHASE 4 SPLIT	17%
PHASE 5 SPLIT	19%
PHASE 6 SPLIT	36%
PHASE 7 SPLIT	17%
PHASE 8 SPLIT	28%
PERMISSIVE	5%
OFFSET	2.1%
TIME OF DAY SCHEDULE	ALL TIMES

(END OF CONSTRUCTION)

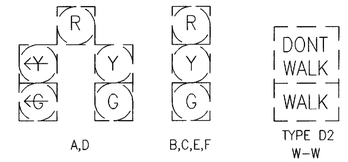

EX. SIGNAL
ALL HEADS ARE 12"

SIGNAL SEQUENCE CHART

SIGNAL HEAD	ø2 + ø5			ø2 + ø6				ø4 + ø7					ø4 + ø8				FLASH
	R/W	CLEARANCE		R/W	CLEARANCE			R/W	CLEARANCE TO ø4+ø8	CLEARANCE TO ø2+ø5 OR ø2+ø6			R/W	CLEARANCE			
A	~~G~~	~~Y~~/G	G	G	G	Y	R	R	R	R	R	R	R	R	R	R	Y
B	G	G	G	G	G	Y	R	R	R	R	R	R	R	R	R	R	Y
C	R	R	R	G	G	Y	R	R	R	R	R	R	R	R	R	R	Y
D	R	R	R	R	R	R	R	~~G~~/G	~~Y~~/G	G	~~Y~~/Y	R	G	G	Y	R	R
E	R	R	R	R	R	R	R	G	G	G	Y	R	G	G	Y	R	R
F	R	R	R	R	R	R	R	R	R	R	R	R	G	G	Y	R	R
W-W	DW	DW	DW	W	FDW	DW	DW	DW	DW	DW	DW	DW	DW	DW	DW	DW	OFF
X-X	W	W	W	W	FDW	DW	DW	DW	DW	DW	DW	DW	DW	DW	DW	DW	OFF
Y-Y	DW	DW	DW	DW	DW	DW	DW	DW	DW	DW	DW	DW	W	FDW	DW	DW	OFF
Z-Z	DW	DW	DW	DW	DW	DW	DW	DW	DW	DW	DW	DW	W	FDW	DW	DW	OFF

(EXISTING SIGNAL SEQUENCE)

SIGNAL TIMING CHART

INTERVAL	2	4	5	6	7	8
MINIMUM GREEN	20	10	8	20	8	10
PASSAGE	–	2.5	3.0	–	2.5	2.5
MAXIMUM GREEN	40	25	15	40	15	25
YELLOW CLEARANCE	3.6	3.0	3.0	3.6	3.0	3.0
ALL RED CLEARANCE	1.9	2.0	1.0	1.9	1.0	2.0
WALK	7.0	5.0	–	7.0	–	5.0
PED. CLEAR	9.0	10.0	–	9.0	–	10.0
RECALL	PED. RECALL	OFF	OFF	PED. RECALL	OFF	OFF
MEMORY	LOCK	LOCK	NONLOCK	LOCK	NONLOCK	NONLOCK

(EXISTING SIGNAL TIMING)

LOOP DETECTOR CHART

LOOP	SIZE	TURNS	PHASE	MODE	UNIT	DELAY	REMARKS	STA. FRONT LEFT CORNER	STA. FRONT RIGHT CORNER
EX. 7	6x25	–	8	PRESENCE	7	NONE		–	–
EX. 8	6x25	–	8	PRESENCE	8	NONE		–	–
EX. 10	6x15	–	7	PRESENCE	10	NONE		–	–
EX. 11	18x6	–	4	PULSE	11	NONE		–	–
12	8x15	2	5	PRESENCE	12	NONE		142+29, 2' R.	142+29, 10' R.

PHASING DIAGRAM

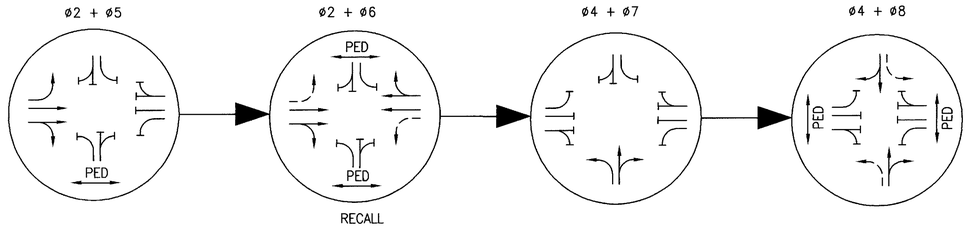

N

20' 0 40'
HORIZONTAL SCALE IN FEET

CALCULATED CLH
CHECKED WAH

SIGNALIZATION PLAN PHASE TWO
CROCKER ROAD - CLEMENS ROAD INTERSECTION

CUY-90-0.95

46
80

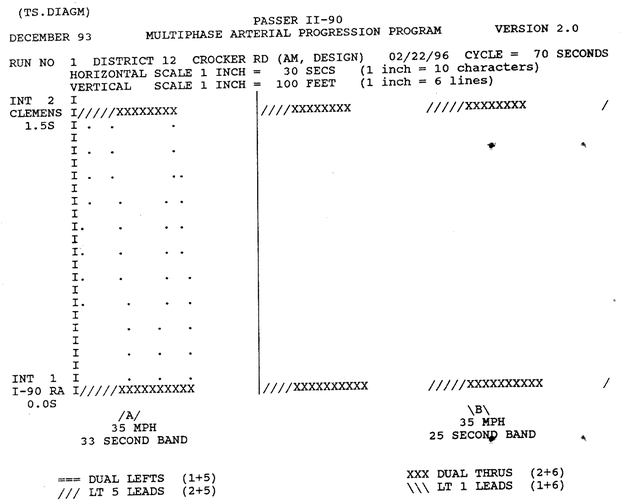

```
(TS.DIAGM)
                                  PASSER II-90
DECEMBER 93        MULTIPHASE ARTERIAL PROGRESSION PROGRAM        VERSION 2.0

RUN NO  1  DISTRICT 12  CROCKER RD (AM, DESIGN)   02/22/96  CYCLE =  70 SECONDS
        HORIZONTAL SCALE 1 INCH =   30 SECS   (1 inch = 10 characters)
        VERTICAL   SCALE 1 INCH =  100 FEET   (1 inch = 6 lines)
INT  2  I
CLEMENS I/////XXXXXXXX          |////XXXXXXXX          /////XXXXXXXX          /
  1.5S  I .  .       .          |
        I                       |
        I .  .       .          |
        I                       |
        I .  .       ..         |
        I                       |
        I .   .     . .         |
        I                       |
        I.    .     . .         |
        I                       |
        I.    .     . .         |
        I                       |
        I.    .     .  .        |
        I                       |
        I.     .    .  .        |
        I                       |
        I      .   .   .        |
        I                       |
        I      .   .   .        |
        I                       |
INT  1  I      .   .   .        |
I-90 RA I/////XXXXXXXXXX        |////XXXXXXXXXX        /////XXXXXXXXXX        /
  0.0S
              /A/                                        \B\
             35 MPH                                     35 MPH
          33 SECOND BAND                             25 SECOND BAND

        === DUAL LEFTS  (1+5)                     XXX DUAL THRUS  (2+6)
        /// LT 5 LEADS  (2+5)                     \\\ LT 1 LEADS  (1+6)
```

DESIGN YEAR, AM

```
(TS.DIAGM)
                                  PASSER II-90
DECEMBER 93        MULTIPHASE ARTERIAL PROGRESSION PROGRAM        VERSION 2.0

RUN NO  2  DISTRICT 12  CROCKER RD (PM, DESIGN)   02/26/96  CYCLE =  70 SECONDS
        HORIZONTAL SCALE 1 INCH =   30 SECS   (1 inch = 10 characters)
        VERTICAL   SCALE 1 INCH =  100 FEET   (1 inch = 6 lines)
INT  2  I
CLEMENS I/////XXXXXXXX          |////XXXXXXXX          /////XXXXXXXX          /
  1.5S  I .  .       .          |
        I                       |
        I .  .       .          |
        I                       |
        I .  .       ..         |
        I                       |
        I .   .     . .         |
        I                       |
        I.    .     . .         |
        I                       |
        I.    .     . .         |
        I                       |
        I.    .     .  .        |
        I                       |
        I.     .    .  .        |
        I                       |
        I      .   .   .        |
        I                       |
        I      .   .   .        |
        I                       |
INT  1  I      .   .   .        |
I-90 RA I/////XXXXXXXXXX        |////XXXXXXXXXX        /////XXXXXXXXXX        /
  0.0S
              /A/                                        \B\
             35 MPH                                     35 MPH
          33 SECOND BAND                             25 SECOND BAND

        === DUAL LEFTS  (1+5)                     XXX DUAL THRUS  (2+6)
        /// LT 5 LEADS  (2+5)                     \\\ LT 1 LEADS  (1+6)
```

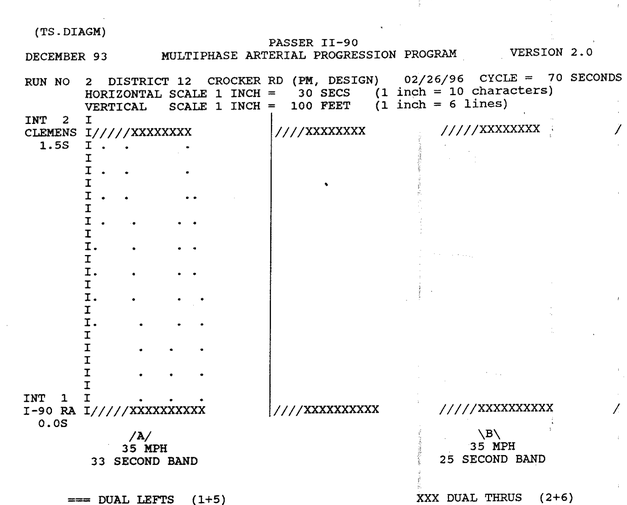

DESIGN YEAR, PM

DESIGN AGENCY
R.E. WARNER & ASSOCIATES
CONSULTING ENGINEERS
WESTLAKE, OHIO 44145

CALCULATED CLH
CHECKED WAN

TIME SPACE DIAGRAMS FOR DESIGN YEAR
CROCKER ROAD - RAMP 'A' & 'B' INTERSECTION

CUY-90-0.95

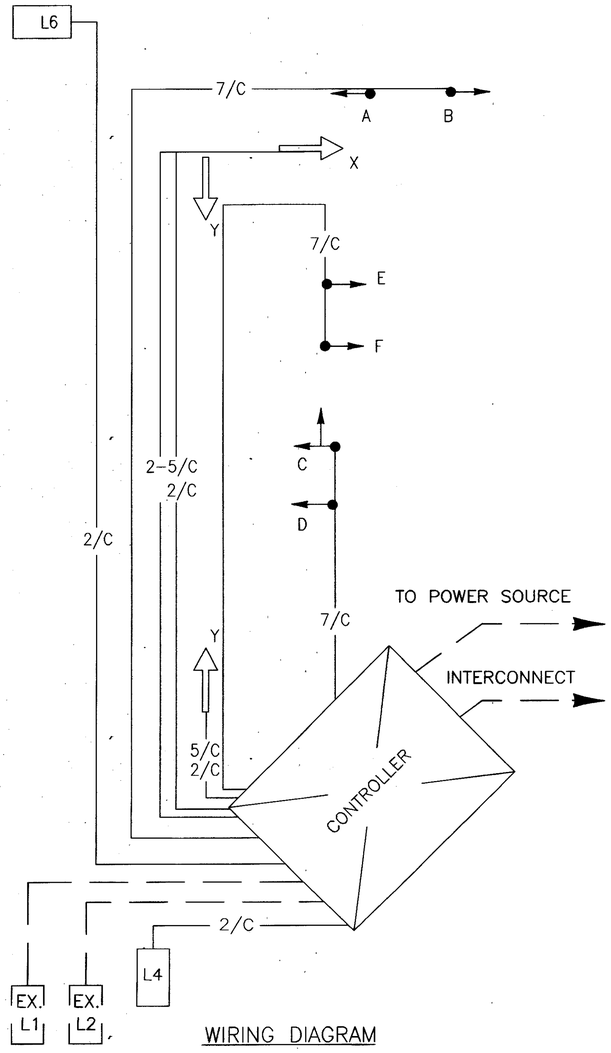

WIRING DIAGRAM

NOTE: USE LOOP DETECTOR LEAD-IN CABLE FOR PEDESTRIAN PUSHBUTTONS.

TRAFFIC CONTROL GENERAL SUMMARY

ODOT					100% CITY OF WESTLAKE						
SHEET 42	SHEET 45	SHEET 46	SHEET 49	SHEET 50	SHEET 49	SHEET 50	ITEM	EXT.	GRAND TOTAL	UNIT	DESCRIPTION
100							603	00400	100	LIN. FT.	4" CONDUIT, TYPE E
	345	215					625	25300	560	LIN. FT.	CONDUIT, 1-1/2", 713.04
	141						625	25400	141	LIN. FT.	CONDUIT, 2", 713.04
	196						625	25500	196	LIN. FT.	CONDUIT, 3", 713.04
	147						625	25900	147	LIN. FT.	CONDUIT, JACKED OR DRILLED UNDER PAVEMENT, 3"
	337						625	29000	337	LIN. FT.	TRENCH
	4						625	30700	4	EACH	PULL BOX, 713.08, 18"
	5						625	30706	5	EACH	PULL BOX, 713.08, 24"
	1	1					625	31510	2	EACH	PULL BOX REMOVED
	5						625	32000	5	EACH	GROUND ROD
				121		39.5	630	03100	160.5	LIN. FT.	GROUND MOUNTED SUPPORT, NO. 3 POST
				7.5		7.5	630	81100	15	SQ. FT.	SIGN ERECTED, FLAT SHEET
				4		3	630	85100	7	EACH	REMOVAL OF GROUND MOUNTED SIGN AND REERECTION
				8		5	630	86002	13	EACH	REMOVAL OF GROUND MOUNTED POST SUPPORT AND DISPOSAL
	5						632	00301	5	EACH	VEHICULAR SIGNAL HEAD, 3 SECTION, 12" LENS, 1-WAY, AS PER PLAN
	1						632	00501	1	EACH	VEHICULAR SIGNAL HEAD, 5 SECTION, 12" LENS, 1 WAY, AS PER PLAN
	3						632	20601	3	EACH	PEDESTRIAN SIGNAL HEAD, TYPE D2, AS PER PLAN
	6						632	25000	6	EACH	COVERING OF VEHICULAR SIGNAL HEAD
	2	1					632	26500	3	EACH	DETECTOR LOOP
	2	1					632	27005	3	EACH	LOOP DETECTOR UNIT, AS PER PLAN
	648						632	40500	648	LIN. FT.	SIGNAL CABLE, 5 CONDUCTOR, NO.14 AWG
	534						632	40700	534	LIN. FT.	SIGNAL CABLE, 7 CONDUCTOR, NO.14 AWG
	251	30					632	53202	281	LIN. FT.	INTERCONNECT CABLE, 6 PAIR, NO. 19 AWG, SOLID, REA (PE-39)
	3						632	64010	3	EACH	SIGNAL SUPPORT FOUNDATION
	1						632	64020	1	EACH	PEDESTAL FOUNDATION
	745						632	65200	745	LIN. FT.	LOOP DETECTOR LEAD-IN CABLE
				1			632	80200	1	EACH	SIGNAL SUPPORT, TYPE TC-81.20, DESIGN 2
				2			632	80300	**2**	EACH	SIGNAL SUPPORT, TYPE TC-81.20, DESIGN 3
	1						632	89900	1	EACH	PEDESTAL, 8', TRANSFORMER BASE
	1						633	33001	1	EACH	CONTROLLER, ACTUATED, 3 PHASE, SOLID STATE DIGITAL MICROPROCESSOR,
											AS PER PLAN
	1						633	60000	1	EACH	COORDINATOR, MULTI-DIAL, SOLID STATE DIGITAL, MASTER
	1.85						633	70000	1.85	CU. YD.	CONCRETE FOR CABINET FOUNDATION
	10						633	70500	10	SQ. FT.	CONTROLLER WORK PAD
			0.63		0.21		642	00202	0.84	MILE	LANE LINE, TYPE 2
			0.32		0.11		642	00302	0.43	MILE	CENTER LINE, TYPE 2
			977		168		642	00402	1145	LIN. FT.	CHANNELIZING LINE, TYPE 2
			163		73		642	00502	236	LIN. FT.	STOP LINE, TYPE 2
			164		286		642	00602	450	LIN. FT.	CROSSWALK LINE, TYPE 2
			370		370		642	00702	740	LIN. FT.	TRANSVERSE LINE, TYPE 2
			13		2		642	01302	15	EACH	LANE ARROW, TYPE 2
			2		1		642	01402	3	EACH	WORD ON PAVEMENT, 72", TYPE 2
			131				642	01502	131	LIN. FT.	DOTTED LINE, 4", TYPE 2

CALCULATED CLH CHECKED WAN

SIGNALIZATION DETAIL

CUY-90-0.95

Revised by B&N 1-6-00

C:\81892\SIGPLAN] DLS
03-04-96 12:56PM

CALCULATION OF PERMANENT PAVEMENT MARKING QUANTITIES

ITEM 642

SHEET NUMBER	LOCATION			CENTERLINE DOUBLE SOLID, TYPE 2	LANE LINE, TYPE 2	CHANNELIZING LINE, TYPE 2	TRANSVERSE LINE, YELLOW, TYPE 2	STOP LINE, TYPE 2	CROSSWALK LINE, TYPE 2	LANE ARROW, TYPE 2	WORD ON PAVEMENT, 72", TYPE 2	DOTTED LINE, 4", TYPE 2	REMARKS
	BEGIN STATION	END STATION	SIDE	L.F.	L.F.	L.F.	L.F.	L.F.	L.F.	EACH	EACH	L.F.	
ODOT													
43	126+00	142+70	L-R		3340								
43	126+00	142+70	CL	1670									
43	129+92	131+79	L			187							
43	130+00	133+70	R				370						
43	131+40	131+79	L			39							
43	133+90	138+79	R			489							
43	134+49		R							1			
43	135+09		R							1			
43	135+69		R							1			
43	136+29		R							1			
43	136+89		R							1			
43	137+49		R							1			
43	138+09		R								1		
43	138+69		R							1			
43	138+77	138+79	R					12					
43	139+00	139+02	R					26					
43	139+06	139+14	L-R						64				
43	50+16		L-R					50					RAMP "B"
43	50+17		L-R							3			RAMP "B"
43	138+93	139+42	R									70	
43	139+54	140+08	R									61	
43	140+08	140+10	L					32					
43	140+08	142+70	R			262							
43	140+80		R							1			
43	141+40		R							1			
43	142+00		R								1		
43	142+60		R							1			
43	142+68	142+70	R					43					
43	37+19	37+27	L						20				RAMP "E"
43	50+94.5	51+02.5	L-R						80				RAMP "A"
TOTALS				1670 L.F. 0.32 MI.	3340 L.F. 0.63 MI.	977 L.F.	370 L.F.	163 L.F.	164 L.F.	13 EACH	2 EACH	131 L.F.	
100% CITY OF WESTLAKE													
43	143+57	149+17	L-R		1120								
43	143+59	145+27	R			168							
43	143+57	149+17	CL	560									
43	142+74	142+82	L-R						77				
43	143+45	143+53	L-R						84				
43	26+09	26+17	L-R						60				CLEMENS ROAD
43	27+00	27+08	L-R						65				CLEMENS ROAD
43	27+12	27+14	L-R					30					CLEMENS ROAD
43	143+57	143+59	L-R					43					
43	143+67		R							1			
43	144+27		R								1		
43	144+87		R							1			
43	145+47	149+17	R				370						
TOTALS				560 L.F. 0.11 MI.	1120 L.F. 0.21 MI.	168 L.F.	370 L.F.	73 L.F.	286 L.F.	2 EACH	1 EACH		

NOTE: THESE QUANTITIES HAVE BEEN CARRIED OVER TO THE GENERAL SUMMARY ON SHEET 48.

CALCULATED CLH CHECKED W.AM

PAVEMENT MARKING QUANTITIES

CUY-90-0.95

[O:\81892\PMQ] GSC
Oct-12-95 8:59AM

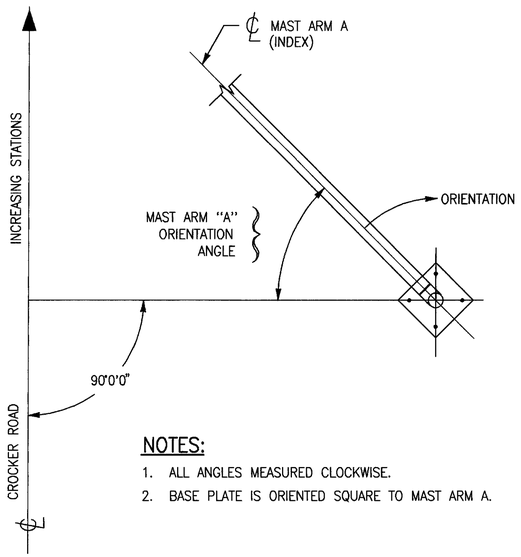

NOTES:

1. ALL ANGLES MEASURED CLOCKWISE.
2. BASE PLATE IS ORIENTED SQUARE TO MAST ARM A.

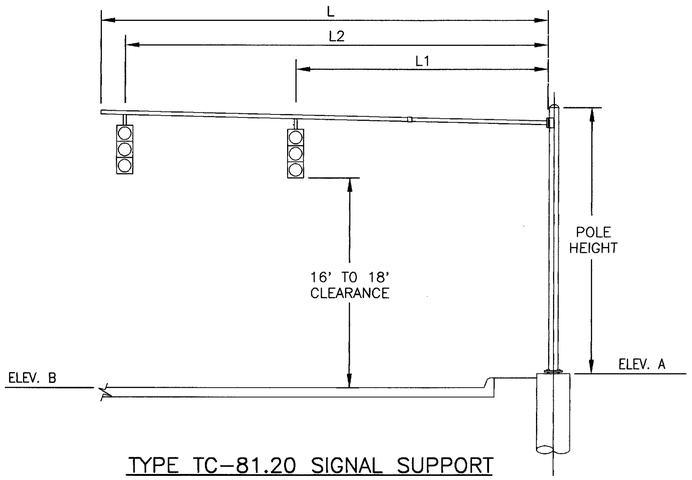

TYPE TC-81.20 SIGNAL SUPPORT

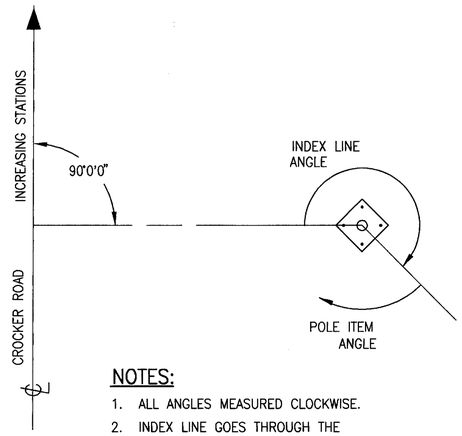

NOTES:

1. ALL ANGLES MEASURED CLOCKWISE.
2. INDEX LINE GOES THROUGH THE CENTER OF THE HANDHOLE.

PEDESTAL ORIENTATION ANGLES

STATE OF OHIO

ITEM 630					GROUND MOUNTED SUPPORT NO.3 POST	REMOVAL OF GROUND MOUNTED SIGN AND REERECTION	REMOVAL OF GROUND MOUNTED POST SUPPORT AND DISPOSAL	SIGNS ERECTED, FLAT SHEET
REF.NO.	STATION	SIDE	SIGN	SIZE	LIN. FT.	EACH	EACH	SQ. FT.
1	EX. 136+80 PROP. 133+00	30'R 41'R	ONLY ONLY ONLY R-31FF-48	48"x30"	13'+14'	1	2	
3	EX. 138+75 PROP. 138+75	30'R 41'R		48"x30"	13'+14'	1	2	
2	PROP. 138+16	41'R	CROCKER RD. CLEMENS RD. 500' 500 FEET AHEAD D-500-36	36"x30"	13'			7.5
4	EX. 140+75 PROP. 140+75	31'R 43'R	ONLY ONLY R-31C-48	48"x30"	13'+14'	1	2	
5	EX. 142+30 PROP. 142+30	37'R 40'R		48"x30"	13'+14'	1	2	
SUMMARY					121'-0"	4	8	7.5

100% CITY OF WESTLAKE

ITEM 630					GROUND MOUNTED SUPPORT NO.3 POSTS	REMOVAL OF GROUND MOUNTED SIGN AND REERECTION	REMOVAL OF GROUND MOUNTED POST SUPPORT AND DISPOSAL	SIGNS ERECTED, FLAT SHEET
REF.NO.	STATION	SIDE	SIGN	SIZE	LIN. FT.	EACH	EACH	SQ. FT.
6	EX. 143+53 PROP. 143+53	29'R 41'R	SPEED LIMIT 35 R-10-24	24"x30"	12'-6"	1	1	
7	EX. 145+82.5 PROP. 145+82.5	30'R 41'R	W-76D-36	30"x30"	14'	1	2	
8	PROP. 148+16	31'L	CROCKER RD. CLEMENS RD. 500' 500 FEET AHEAD D-500-36	36"x30"	13'			7.5
9	EX. 144+65 PROP. 146+00	28'L 28'L	ONLY ONLY R-31C-48	48"x30"	13'+13'	1	2	
SUMMARY					39'-6"	3	5	7.5

POLE CHART

SUPPORT No.	LOCATION		SIGNAL SUPPORT TYPE TC-81.20										
	STATION	OFFSET	DESIGN No.	POLE HEIGHT (FT.)	L (FT)	L1 (FT)	L2 (FT)	MAST ARM A ANGLE FROM ℄ ROAD (DEG)	PEDESTRIAN SIGNAL	PEDESTRIAN PUSHBUTTONS	HANDHOLE	ELEVATION A	ELEVATION B
CROCKER ROAD													
P1	139 + 25	55' LT.	2	21'	29'	16'	28'	270°			180°	666.00	665.98
P2	139 + 12	39' LT.	3	21'	34'	20'	33'	0°	X=180° Y=90°	0°	180°	668.60	668.03
P3	139 + 17	40' RT.	PED	8'					Y=90°	270°	180°		
P4	139 + 97	47' RT.	3	21'	36'	23'	35'	0°			180°	665.70	665.50

CALCULATED CLH CHECKED W/PA

SIGNING TABLE & POLE DETAILS

CUY-90-0.95

50
80

[O:\81892\ST] DLS
03-04-96 7:55AM

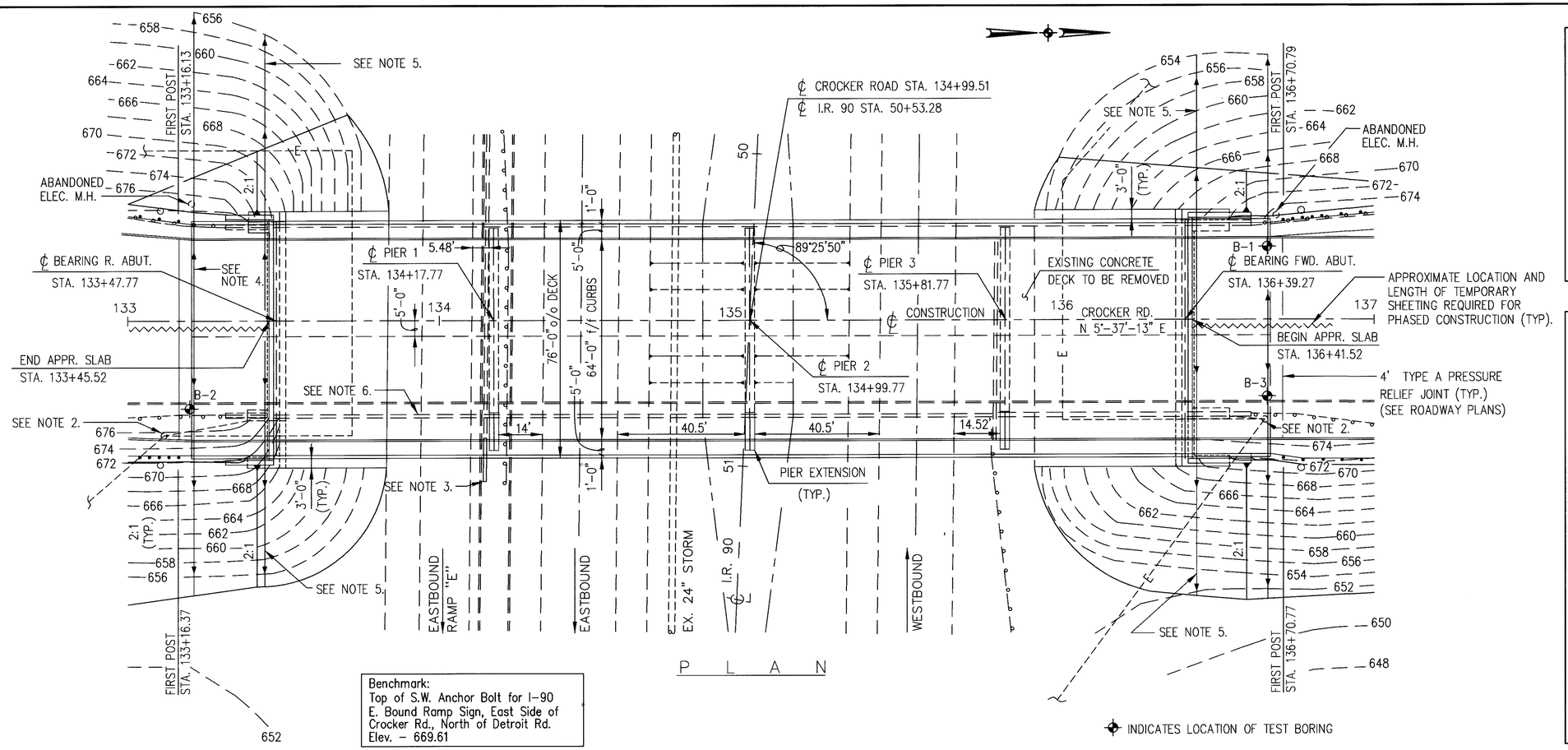

P L A N

Benchmark:
Top of S.W. Anchor Bolt for I-90 E. Bound Ramp Sign, East Side of Crocker Rd., North of Detroit Rd.
Elev. – 669.61

℄ INDICATES LOCATION OF TEST BORING

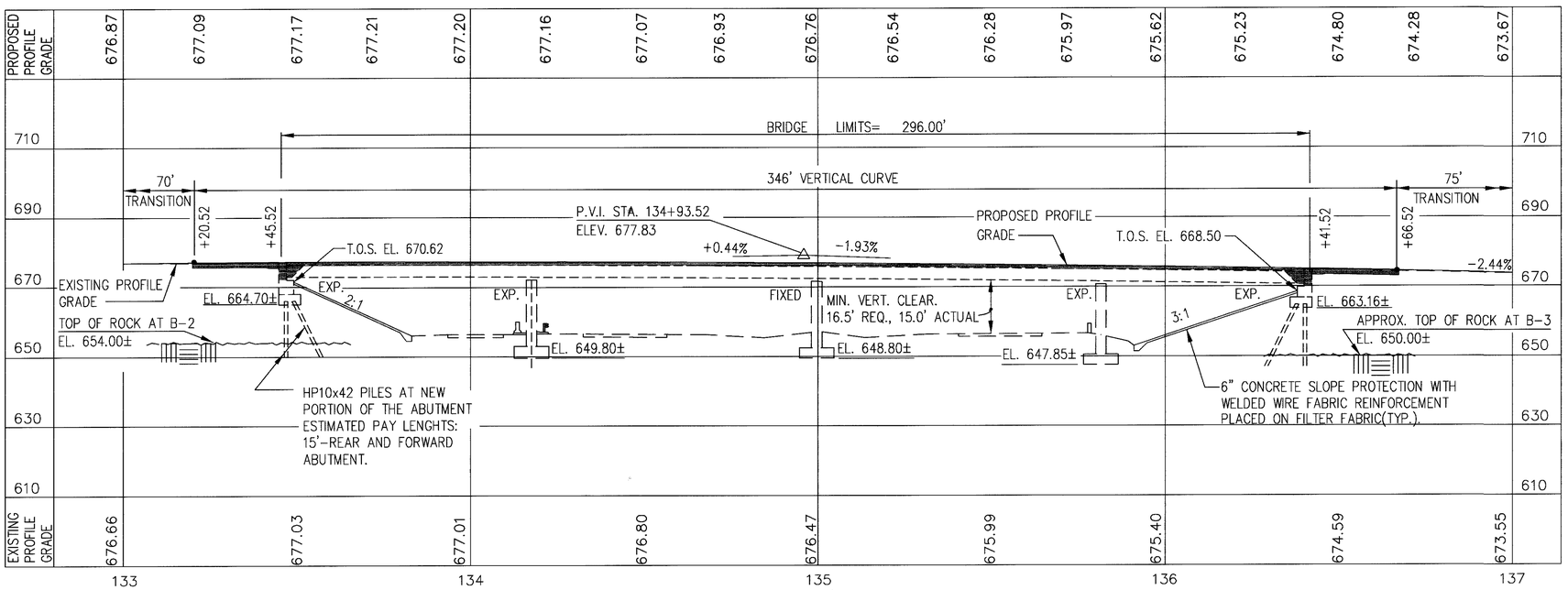

PROFILE ALONG ℄ CONSTRUCTION

EXISTING STRUCTURE DATA
Structure File No. 1807722

TYPE: 4 Span Continuous Steel Beam with Reinf. Conc. Deck and Substructure
SPAN: 70'; 2 at 82';57.5' c/c Bearings
ROADWAY: 52'-0"± f/f of 4' Sidewalks
SUPERSTRUCTURE: Reinforced Concrete Slab
WEARING COURSE: 1" Monolithic Concrete
ALIGNMENT: Tangent
SKEW: None
CONDITION: Fair
DATE BUILT: 1970

PROPOSED STRUCTURE

PROPOSED WORK: New Composite Reinf. Conc. Deck on Widened Substructure. Abut. Rehabilitated using Semi-Integral Design.
TYPE: 4 Span Cont. Composite Steel Beam w/Reinf. Conc. Deck and Substructure
SPAN: 70'; 2 at 82'; 57.5' c/c Bearings
ROADWAY: 64'-0' ± f/f of 5' Sidewalks
SKEW: None
LOADING: HS-20-44, Case II and Alternate Military Loading
WEARING SURFACE: Monolithic Concrete

APPROACH SLAB: (AS-1-81) 25'-0"
ALIGNMENT: Tangent
CROWN: 3/16"/ft.
DESIGN AVG. DAILY TRAFFIC: 29,000 (2015)
DESIGN AVG. DAILY TRUCK TRAFFIC: 1,465 (2015)
LATITUDE AND LONGITUDE: 41°25'00", 81°57'10"

NOTES:

1. EARTHWORK LIMITS SHOWN ARE APPROXIMATE. ACTUAL SLOPES SHALL CONFORM TO PLAN CROSS SECTIONS.
2. EXISTING ELECTRICAL PULL BOXES TO BE REMOVED. SEE ROADWAY PLANS.
3. EXISTING CONCRETE BARRIER TO BE EXTENDED. SEE ROADWAY PLANS.
4. PROPOSED 6" UNDERDRAIN FOR PRESSURE RELIEF JOINT, TYPE A. OUTLET AT TOE OF SLOPE, AND PROVIDE PRECAST REINFORCED CONCRETE OUTLET. SEE ROADWAY PLANS.
5. PROPOSED 6" NON-PERFORATED CORRUGATED PLASTIC PIPE FOR ABUTMENT DRAINAGE. OUTLET AT TOE OF SLOPE, AND PROVIDE PRECAST REINFORCED CONCRETE OUTLET. SEE ROADWAY PLANS.
6. EXISTING ELECTRIC LINE IN SUPERSTRUCTURE CONDUIT TO BE RELOCATED. SEE ROADWAY PLANS.

REVISED BY B&N 1-18-00

DESIGN AGENCY
R.E. WARNER & ASSOCIATES
CONSULTING ENGINEERS
WESTLAKE, OHIO 44145

DATE 2/96
REVIEWED EAD
STRUCTURE FILE NUMBER 1807722
DRAWN GSC
REVISED
DESIGNED CLH
CHECKED WAN

CUYAHOGA COUNTY
STA. 133+45.52
STA. 136+41.52

SITE PLAN
BRIDGE NO. CUY-90-0095
CROCKER-BASSETT ROAD
OVER I.R. 90

CUY-90-0.95

1 / 26

51 / 80

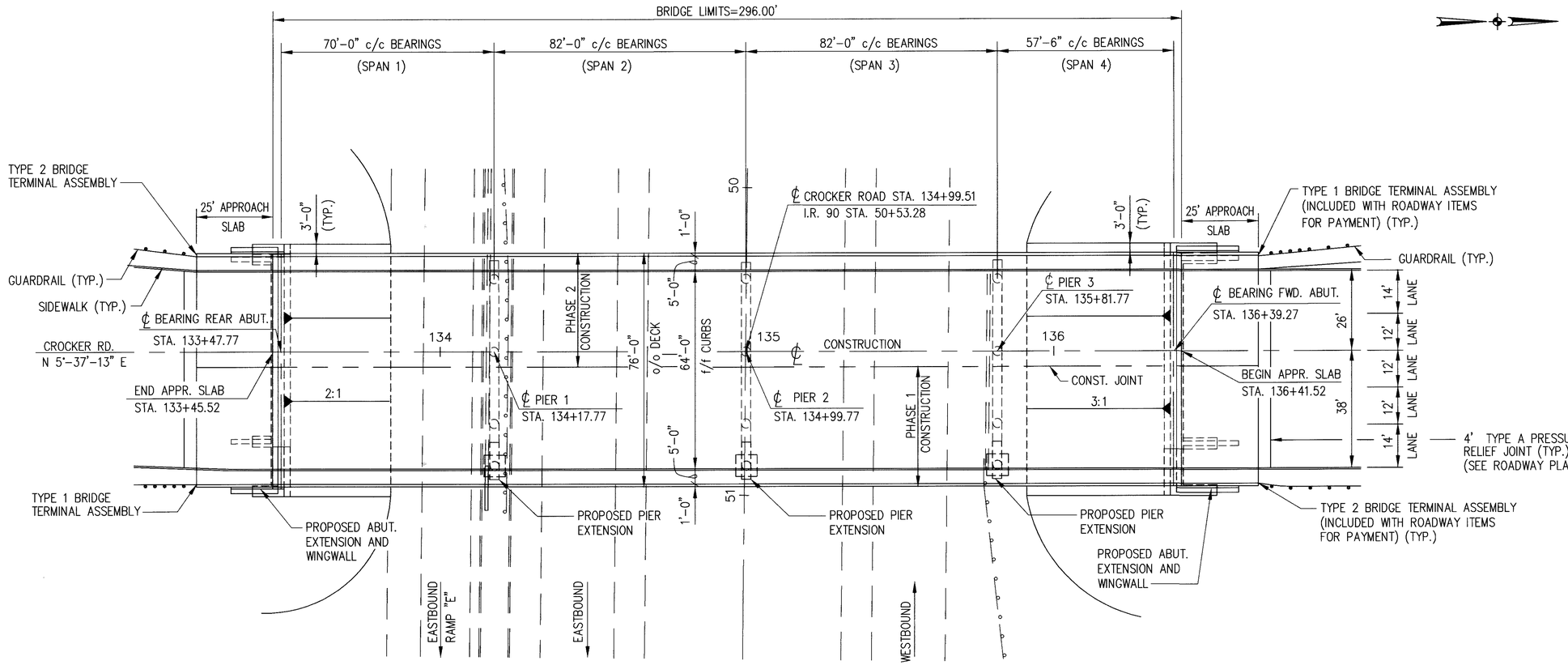

PLAN

PROPOSED WORK:
NEW COMPOSITE REINFORCED CONCRETE DECK ON WIDENED SUBSTRUCTURE. ABUTMENTS REHABILITATED USING SEMI-INTEGRAL DESIGN.

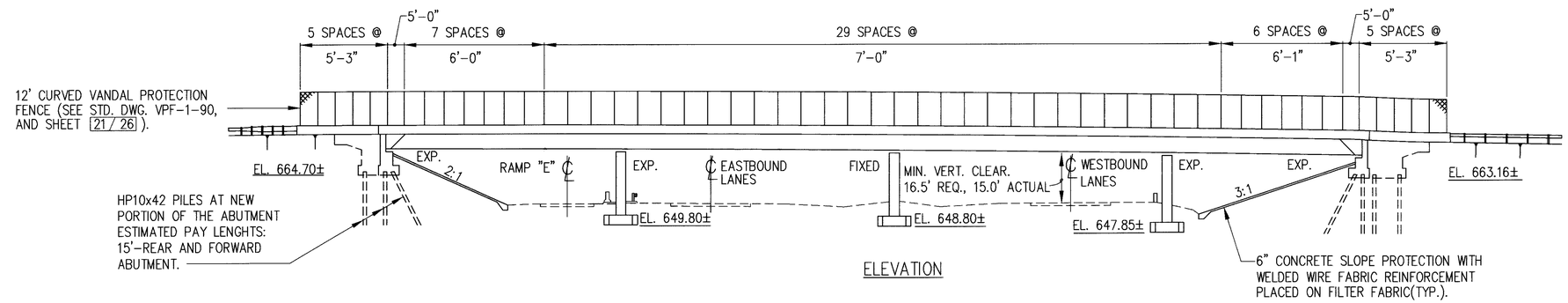

ELEVATION

REVISED BY B&N 1-18-00

DESIGN AGENCY
R.E. WARNER & ASSOCIATES
CONSULTING ENGINEERS
WESTLAKE, OHIO 44145

DESIGNED	DRAWN	REVIEWED	DATE
CLH	GSD	EAD	2/96
CHECKED	REVISED	STRUCTURE FILE NUMBER	
WAN		1807722	

GENERAL PLAN AND ELEVATION
BRIDGE NO. CUY-90-0095
CROCKER-BASSETT ROAD
OVER I.R. 90

CUY-90-0.95

2 / 26

52
80

REFERENCE SHALL BE MADE TO STANDARD DRAWINGS:

AS-1-81	DATED (REVISED)	9-15-94
RB-1-55	DATED (REVISED)	2-2-59
VPF-1-90M	DATED (REVISED)	3-20-95
PCB-91	DATED (REVISED)	7-6-99
A-1-69M	DATED	6-12-69

AND TO SUPPLEMENTAL SPECIFICATIONS:

910	DATED	7-28-98	863	DATED	10-12-99
815	DATED	5-30-96	814	DATED	6-2-98
842	DATED	1-6-99	905	DATED	4-1-98
844	DATED	1-6-99	907	DATED	10-21-98
899	DATED	10-21-98			
846	DATED	9-9-97			
954	DATED	9-9-97			

DESIGN SPECIFICATIONS:
THIS STRUCTURE CONFORMS TO "STANDARD SPECIFICATIONS FOR HIGHWAY BRIDGES" ADOPTED BY THE AMERICAN ASSOCIATION OF STATE HIGHWAY AND TRANSPORTATION OFFICIALS, 1996, INCLUDING THE 1998 INTERIM SPECIFICATIONS AND THE ODOT BRIDGE DESIGN MANUAL, 1995, AND ODOT CMS, 1997.

DESIGN LOADING:
HS20-44, CASE II AND THE ALTERNATE MILITARY LOADING.

DESIGN STRESSES:
HIGH PERFORMANCE CONCRETE - COMPRESSIVE STRENGTH 4500 P.S.I. (SUPERSTRUCTURE)
HIGH PERFORMANCE CONCRETE - COMPRESSIVE STRENGTH 4000 P.S.I. (SUBSTRUCTURE)
REINFORCING STEEL - ASTM A615, A616, OR A617
GRADE 60 MINIMUM YIELD STRENGTH 60,000 P.S.I.
SPIRAL REINFORCEMENT MAY BE PLAIN BAR, ASTM A82 OR A615.
STRUCTURAL STEEL
ASTM A36-YIELD STRENGTH 36,000 P.S.I.

DECK PROTECTION METHOD:
EPOXY COATED REINFORCING STEEL, 2 1/2" CONCRETE COVER AND SEALING OF CONCRETE SURFACES.

MONOLITHIC WEARING SURFACE:
MONOLITHIC WEARING SURFACE IS ASSUMED FOR DESIGN PURPOSES TO BE 1" THICK.

SEALING OF CONCRETE SURFACES (EPOXY-URETHANE):
ITEM SPECIAL, SEALING OF CONCRETE SURFACES: AN EPOXY-URETHANE CONCRETE SEALER SHALL BE APPLIED TO THE CONCRETE SURFACES SHOWN ON SHEET [13/26], [14/26], [15/26], AND [17/26] SEE PROPOSAL NOTE FOR PREPARATION REQUIREMENTS, APPLICATION RATES, MATERIAL REQUIREMENTS AND APPLICATION PROCEDURES.

SEALING OF CONCRETE SURFACES (NON-EPOXY):
ITEM SPECIAL, SEALING OF CONCRETE SURFACES: A NON-EPOXY CONCRETE SEALER SHALL BE APPLIED TO THE CONCRETE SURFACES SHOWN ON SHEETS [13/26], AND [14/26]. SEE PROPOSAL NOTE FOR PREPARATION REQUIREMENTS, APPLICATION RATES, MATERIAL REQUIREMENTS AND APPLICATION PROCEDURES.

PROPOSED WORK SEQUENCE OF OPERATIONS:
THE WORK PROPOSED FOR THIS STRUCTURE SHALL BE ACCOMPLISHED IN TWO CONSTRUCTION PHASES AND IS COMPRISED OF, BUT NOT LIMITED TO, THE FOLLOWING:

PHASE 1
1. ERECT PORTABLE CONCRETE BARRIERS AND MAINTAIN TWO-WAY TRAFFIC ON THE LEFT SIDE OF EXISTING STRUCTURE.
2. INSTALL ALL NECESSARY SHEETING BETWEEN NORTHBOUND AND SOUTHBOUND LANES AT EACH END OF THE BRIDGE AND REMOVE THE RIGHT SIDE OF THE EXISTING STRUCTURE TO THE LIMITS SHOWN ON SHEETS [6/26] AND [7/26].
3. CONSTRUCT THE RIGHT SIDE OF THE PROPOSED STRUCTURE TO THE LIMITS SHOWN.

PHASE 2
4. MOVE PORTABLE CONCRETE BARRIERS TO THE RIGHT SIDE OF STRUCTURE AND MAINTAIN TWO-WAY TRAFFIC ON THE RIGHT SIDE OF THE PROPOSED STRUCTURE.
5. PERFORM REMAINDER OF STRUCTURE REMOVAL AS PER PLAN.
6. CONSTRUCT THE LEFT SIDE OF THE PROPOSED STRUCTURE TO THE LIMITS SHOWN.
7. REMOVE BARRIERS AND OPEN STRUCTURE FULL WIDTH TO TWO-WAY TRAFFIC.

UTILITY LINES:
ALL EXPENSE INVOLVED IN RELOCATION (INSTALLING) ANY AFFECTED UTILITY LINES SHALL BE BORNE BY THE UTILITY. THE CONTRACTOR AND UTILITY ARE TO COOPERATE BY ARRANGING THEIR WORK IN SUCH A MANNER THAT INCONVENIENCE TO EITHER WILL BE HELD TO A MINIMUM. LIGHTING CONDUITS SHALL BE RELOCATED AS PART OF THIS CONTRACT, SEE ROADWAY PLANS

FOUNDATION BEARING PRESSURE:
PIER FOOTINGS, AS DESIGNED, PRODUCE A MAXIMUM BEARING PRESSURE OF 3 TONS PER SQUARE FOOT. THE ALLOWABLE BEARING PRESSURE IS 8 TONS PER SQUARE FOOT.

ITEM 844 HIGH PERFORMANCE CONCRETE, SUPERSTRUCTURE, (DECK) AS PER PLAN
ITEM 844 HIGH PERFORMANCE CONCRETE, SUPERSTRUCTURE, (PARAPET) AS PER PLAN
ITEM 844 HIGH PERFORMANCE CONCRETE, SUBSTRUCTURE, AS PER PLAN

THE PROVISIONS OF 844 SHALL APPLY EXCEPT AS NOTED BELOW.

SLIPFORMING:
THE CONTRACTOR IS ALLOWED THE OPTION OF SLIPFORMING BRIDGE PARAPETS OVER NON TRAVELED WAYS. A MINIMUM OF 3 DAYS AFTER PLACING THE TEST SECTION THE CONTRACTOR SHALL CORE THE TEST SECTION (A MINIMUM OF 3 CORES) AT LOCATIONS AS DIRECTED BY THE ENGINEER. APPROVAL TO SLIPFORM SHALL NOT BE GRANTED UNTIL AFTER THE CORING AND AFTER A SUCCESSFUL SLIPFORMING RESULT IS OBTAINED. IN ADDITION TO THE REQUIREMENTS OF THE LAST PARAGRAPH OF 844.031 THE ENGINEER WILL INSPECT THE SLIPFORMED SURFACE FOR HORIZONTAL CRACKING 6 MONTHS AFTER COMPLETION OF THE SLIPFORMING OPERATION. ANY ADDITIONAL CRACKS FOUND SHALL BE REPAIRED AS PER THE SPECIFICATIONS AT NO ADDITIONAL COST TO THE STATE. IN ADDITION, ALL ANCHOR BOLTS FOR FENCE POSTS SHALL BE CAST IN PLACE.

SLIPFORMING SHALL NOT BE PERFORMED DIRECTLY OVER AREAS WHERE THERE IS OR WILL BE VEHICULAR OR PEDESTRIAN TRAFFIC. AT THESE LOCATIONS, THE PARAPETS SHALL BE FORMED AND THE FOLLOWING REQUIREMENTS FOLLOWED.

THE MINIMUM CONCRETE SLUMP DURING PLACEMENT OF ALL CONCRETE PARAPETS SHALL BE 152.4 MM (6 INCHES). THE MAXIMUM SLUMP ALLOWED DURING PLACEMENT IS 203.2 MM (8 INCHES).

FORMS SHALL NOT BE REMOVED UNTIL AT LEAST 2 HOURS AFTER THE FINAL SET. DETERMINATION OF THE FINAL SET SHALL BE AS PER ASTM C266 (GILLMORE NEEDLE). TESTING SHALL BE PERFORMED BY THE CONTRACTOR AT NO COST TO THE STATE.

ANCHOR BOLTS FOR FENCE POSTS SHALL BE CAST IN PLACE.

THIS ITEM SHALL INCLUDE THE DRILLING OF HOLES PER CMS 510 INTO CONCRETE OR MASONRY AND THE FURNISHING AND PLACING OF GROUT INTO HOLES. NONSHRINKING EPOXY GROUT SHALL BE USED IN ACCORDANCE WITH CMS 705.20. ANCHORING SHALL CONFORM TO CMS 705.20. PAYMENT SHALL BE INCLUDED IN ITEM 844. THE FURNISHING AND PLACEMENT OF STEEL FOR DOWELS IS ALSO INCLUDED WITH THIS ITEM.

THE CONTRACTOR SHALL CONSTRUCT 38 MM (1 1/2 INCHES) DEEP AND 6 MM (1/4 INCHE) WIDE CONTROL JOINTS SPACED AT A MINIMUM OF 1830 MM (6 FEET) AND A MAXIMUM OF 2400 MM (8 FEET) ON CENTER. THE CONTROL JOINTS SHALL BE MADE IN THE COMPLETE CIRCUMFERENCE OF THE PARAPET, STARTING AND ENDING AT THE ELEVATION OF THE TOP OF THE CONCRETE DECK (SEE DETAILS BELOW). THE CONTRACTOR MAY EITHER FORM THE CONTROL JOINTS IN WITH FORM LINERS, OR, WITHIN 24 HOURS OF PLACEMENT, SAW CUT THE CONTROL JOINTS IN WITH THE USE OF AN EDGE GUIDE, FENCE, OR JIG WHICH IS REQUIRED TO ENSURE THAT THE CUT JOINT IS STRAIGHT, TRUE, AND ALIGNED ON ALL FACES OF THE PARAPET. THE ENTIRE LENGTH OF EACH CONTROL JOINT SHALL BE SEALED TO A MINIMUM DEPTH OF 38 MM (1 1/2 INCHES) WITH A CAULKING MATERIAL CONFORMING TO FEDERAL SPECIFICATION, TT-S-00227E.

DECK TEXTURING:

IN LIEU OF THE REQUIREMENTS OF SS 842 OR SS 844, CONCRETE DECK SLABS SHALL BE FINISHED IN ACCORDANCE WITH 451.09 AND 451.12 EXCEPT THAT CONSTRUCTION JOINTS SHALL NOT BE EDGED, AND A STRIP OF SURFACE 9 TO 12 INCHES WIDE ADJACENT TO CURBS AND BARRIERS SHALL NOT BE GROOVED. IF THE TEXTURE AS REQUIRED IS NOT MET, THE CONTRACTOR WILL SAW TEXTURE THE DECK AT NO COST TO THE STATE.

NEOPRENE SHEET INSTALLATION:
INCLUDE WITH ITEM 844 HIGH PERFORMANCE CONCRETE, SUBSTRUCTURE, AS PER PLAN:

INSTALL A 3 FOOT WIDE STRIP, 3/32 INCH THICK, GENERAL PURPOSE, HEAVY DUTY NEOPRENE SHEET WITH NYLON FABRIC REINFORCEMENT AT LOCATIONS SHOWN IN THE PLANS. SECURE THE 3 FOOT WIDE NEOPRENE SHEETING TO THE CONCRETE WITH 1 1/4" x 3/32" x 1/4" (LENGTH x SHANK DIAMETER x HEAD DIAMETER) #10 GALVANIZED SCREWS THROUGH A 1 INCH OUTSIDE DIAMETER, #10 GAGE GALVANIZED WASHER. MAXIMUM FASTENER SPACING IS 9 INCHES. OTHER SIMILAR GALVANIZED DEVICES WHICH WILL NOT DAMAGE EITHER THE NEOPRENE OR THE CONCRETE MAY BE USED SUBJECT TO THE APPROVAL OF THE ENGINEER.

CENTER THE NEOPRENE STRIPS ON ALL JOINTS. FOR HORIZONTAL JOINTS, SECURE THE HORIZONTAL NEOPRENE STRIP BY USING A SINGLE LINE OF FASTENERS, STARTING AT 6 INCHES (+/-) FROM THE TOP OF THE NEOPRENE STRIP. FOR THE VERTICAL JOINTS SECURE THE VERTICAL NEOPRENE STRIP BY USING A SINGLE VERTICAL LINE OF FASTENERS, STARTING AT 6 INCHES (+/-) FROM THE VERTICAL EDGE OF THE NEOPRENE STRIP NEAREST TO THE CENTERLINE OF ROADWAY. FOR VERTICAL JOINTS, INSTALL 2 ADDITIONAL FASTENERS AT 6 INCHES CENTER TO CENTER ACROSS THE TOP HALF OF THE NEOPRENE STRIP ON THE SAME SIDE OF THE VERTICAL JOINT AS WHERE THE SINGLE VERTICAL ROW OF FASTENERS IS LOCATED.

THE VERTICAL NEOPRENE STRIPS SHOULD COMPLETELY OVERLAP THE HORIZONTAL STRIPS. LAPS IN THE LENGTH OF THE HORIZONTAL STRIPS DUE TO MATERIAL MANUFACTURING SHALL BE AT LEAST ONE FOOT IN LENGTH, IF NOT VULCANIZED OR ADHESIVED, OR 6 INCHES IN LENGTH IF THE LAP IS VULCANIZED OR ADHESIVED. NO LAPS ARE ACCEPTABLE IN VERTICALLY INSTALLED NEOPRENE STRIPS.

PAYMENT FOR LABOR, MATERIALS AND INSTALLATION OF THIS ITEM SHALL BE INCLUDED IN ITEM 844 HIGH PERFORMANCE CONCRETE SUBSTRUCTURE, AS PER PLAN.

CHAMFERS:
EXPOSED CONCRETE EDGES SHALL BE CHAMFERED 1" BY 1" EXCEPT AS NOTED OTHERWISE.

CONCRETE DECK:
THE FINAL SURFACE OF THE ROADWAY SHALL CONFORM AS NEARLY AS PRATICABLE TO THE ELEVATIONS SHOWN IN THE PLANS. CONSTRUCTION OF THE NEW DECK SHALL BE IN ACCORDANCE WITH THESE PLANS AND SHALL INCORPORATE THE FOLLOWING REQUIREMENT, THE CONTRACTOR SHALL SUBMIT A PROPOSED DECK PLACEMENT SEQUENCE TO THE ENGINEER FOR APPROVAL.

ITEM 518, 6" PERFORATED CORRUGATED PLASTIC PIPE, AS PER PLAN:
CORRUGATED PIPE USED IN ABUTMENT DRAINAGE SHALL BE 6 INCH DIAMETER, PLASTIC CORRUGATED PIPE AS PER CMS 707.33, AASHTO M294, TYPE SP.

ITEM 518, 6" NON-PERFORATED CORRUGATED PLASTIC PIPE, INCLUDING SPECIALS, AS PER PLAN:
CORRUGATED PIPE USED IN ABUTMENT DRAINAGE SHALL BE 6 INCH DIAMETER, PLASTIC CORRUGATED PIPE AS PER CMS 707.33, AASHTO M294, TYPE S. THIS ITEM SHALL INCLUDE ALL ELBOWS, TEES AND END CAPS REQUIRED TO COMPLETE THE ABUTMENT DRAINAGE SYSTEM.

EXISTING STRUCTURE VERIFICATION:
DETAILS AND DIMENSIONS SHOWN ON THESE PLANS PERTAINING TO THE EXISTING STRUCTURE HAVE BEEN OBTAINED FROM PLANS OF THE EXISTING STRUCTURE AND FROM FIELD OBSERVATIONS AND MEASUREMENTS. CONSEQUENTLY, THEY ARE INDICATIVE OF THE EXISTING STRUCTURE AND THE PROPOSED WORK BUT THEY SHALL BE CONSIDERED TENTATIVE AND APPROXIMATE. THE CONTRACTOR IS REFERRED TO CMS SECTIONS 102.05, 105.02 AND 513.02.

CONTRACT BID PRICES SHALL BE BASED UPON A RECOGNITION OF THE UNCERTAINTIES DESCRIBED ABOVE AND UPON A PREBID EXAMINATION OF THE EXISTING STRUCTURE BY THE CONTRACTOR. HOWEVER, ALL PROJECT WORK SHALL BE BASED UPON ACTUAL DETAILS AND DIMENSIONS WHICH HAVE BEEN VERIFIED BY THE CONTRACTOR IN THE FIELD.

MIX OPTIONS:
ALL DECK CONCRETE AND PARAPET CONCRETE SHALL BE MIX 4, AS PER PLAN.
ALL OTHER CONCRETE SHALL BE MIX 4, AS PER PLAN, OR MIX 2 CONCRETE.
THE FOLLOWING PROPORTIONS WILL BE USED AS A STARTING MIX DESIGN.

CONCRETE TABLE:
QUANTITIES PER CUBIC YARD
AGGREGATES (SSD)

MIX 4, AS PER PLAN (GGBF SLAG + MICROSILICA

AGGREGATE TYPE	FINE AGGRE. (LB)	#8 COARSE AGGRE. (LB)	#57 COARSE AGGRE. (LB)	TOTAL (LB)	CEMENT CONTENT (LB)	GGBF SLAG (LB)	MICRO-SILICA (LB)	WATER TO CEMENTITIOUS RATIO	AIR CONTENT MAX +/-2
GRAVEL	1245	360	1315	2920	400	170	30	0.42	7
LIMESTONE	1245	360	1335	2940	400	170	30	0.42	7
SLAG	1245	315	1155	2715	400	170	30	0.42	7

THE WEIGHTS SPECIFIED IN THE CONCRETE TABLE WERE CALCULATED FOR MATERIALS OF THE FOLLOWING BULK SPECIFIC GRAVITIES (SSD): NATURAL SAND AND GRAVEL 6.2, LIMESTONE SAND 2.68, LIMESTONE 2.65, SLAG 2.30, FLY ASH 2.65, GGBF SLAG 2.90, MICROSILICA SOLID 2.20, AND PORTLAND CEMENT 3.15. FOR AGGREGATES OF SPECIFIC GRAVITIES DIFFERING MORE THAN PLUS OR MINUS 0.02 FROM THESE, THE WEIGHTS IN THE TABLE WILL BE CORRECTED.

BASIS OF PAYMENT:
PAYMENT FOR THE ABOVE COMPLETED AND ACCEPTED QUANTITIES WILL BE MADE AT THE CONTRACT BID PRICE FOR:

ITEM	UNITS	DESCRIPTION
844E48001	CUBIC YARD	HIGH PERFORMANCE CONCRETE SUPERSTRUCTURE (DECK), AS PER PLAN
844E48021	CUBIC YARD	HIGH PERFORMANCE CONCRETE SUPERSTRUCTURE (PARAPET), AS PER PLAN
844E48041	CUBIC YARD	HIGH PERFORMANCE CONCRETE SUBSTRUCTURE, AS PER PLAN
844E49000	LUMP SUM	HIGH PERFORMANCE CONCRETE TRIAL MIX
844E49010	LUMP SUM	HIGH PERFORMANCE CONCRETE TESTING

ALL COSTS OF MATERIAL AND LABOR TO PROVIDE LIGHTING CONDUITS IF SHOWN IN THE BRIDGE PLANS SHALL BE INCLUDED FOR PAYMENT UNDER THIS ITEM.

REVISED BY B&N 1-18-00

DESIGN AGENCY
R.E.WARNER & ASSOCIATES
CONSULTING ENGINEERS
WESTLAKE, OHIO 44145

DESIGNED	DRAWN	REVIEWED	DATE	STRUCTURE FILE NUMBER
CLH	GSC	EAD	2/96	1807722
CHECKED	REVISED			
WAN				

GENERAL NOTES
BRIDGE NO. CUY-90-0095
CROCKER-BASSETT ROAD
OVER I.R. 90

CUY-90-0.95

3 / 26

53
80

PORTIONS OF STRUCTURE REMOVED, OVER 20 FOOT SPAN, AS PER PLAN:

DESCRIPTION: THIS WORK SHALL CONSIST OF THE REMOVAL OF CONCRETE DECKS INCLUDING SIDE-WALKS, PARAPETS, FENCES, DECK JOINTS AND OTHER APPURTENANCES FROM STEEL SUPPORTING SYSTEMS (BEAMS, GIRDERS, CROSS FRAMES, ETC.). CARE SHALL BE TAKEN DURING DECK REMOVALS TO PROTECT PORTIONS OF SUCH SYSTEMS THAT ARE TO BE SALVAGED AND INCORPORATED INTO THE PROPOSED STRUCTURE. IN THIS RESPECT, THE USE OF EXPLOSIVES, HEADACHE BALLS AND/OR HOE RAM TYPE OF EQUIPMENT IS PROHIBITED. SEE SHEET 7/26 FOR EXTENT OF ABUTMENT DEMOLITION.

PROTECTION OF TRAFFIC: PRIOR TO DEMOLITION OF ANY PORTIONS OF THE EXISTING SUPERSTRUCTURE, THE CONTRACTOR SHALL SUBMIT HIS PLANS FOR THE PROTECTION OF TRAFFIC (VEHICULAR, PEDESTRIAN, BOAT, ETC.) ADJACENT TO AND/OR UNDER THE STRUCTURE TO THE DIRECTOR FOR APPROVAL. THESE PLANS SHALL INCLUDE PROVISIONS FOR ANY DEVICES AND STRUCTURES THAT MAY BE NECESSARY TO ENSURE SUCH PROTECTION. TEMPORARY VERTICAL CLEARANCES SPECIFIED ON THE PLANS OR IN THE PROPOSAL SHALL BE MAINTAINED AT ALL TIMES EXCEPT AS OTHERWISE APPROVED BY THE DIRECTOR. THE COST FOR THIS WORK SHALL BE INCLUDED WITH ROADWAY QUANTITIES (ITEM 614, MAINTAINING TRAFFIC) FOR PAYMENT.

PROTECTION OF STEEL SUPPORT SYSTEMS: BEFORE DECK SLAB CUTTING IS PERMITTED, THE OUTLINE OF PRIMARY STEEL MEMBERS IN CONTACT WITH THE BOTTOM OF THE DECK SHALL BE DRAWN ON THE SURFACE OF DECK. SMALL DIAMETER PILOT HOLES SHALL BE DRILLED 2 INCHES OUTSIDE THESE LINES TO CONFIRM THE LOCATION OF FLANGE EDGES. DECK CUTS OVER OR WITHIN 2 INCHES OF FLANGE EDGES SHALL NOT EXTEND LOWER THAN THE BOTTOM LAYER OF DECK SLAB REINFORCING STEEL. CUTS MADE OUTSIDE 2 INCHES OF FLANGE EDGES MAY EXTEND THE FULL DEPTH OF THE DECK. DURING CUTTING OF THE DECK SLAB, CARE SHALL BE TAKEN NOT TO DAMAGE STEEL MEMBERS THAT ARE TO BE INCORPORATED INTO THE PROPOSED STRUCTURE.

REMOVAL METHODS: CONCRETE MAY BE REMOVED BY CUTTING AND BY MEANS OF HAND OPERATED PNEUMATIC HAMMERS EMPLOYING POINTED OR BLUNTED CHISEL TYPE TOOLS. FOR REMOVALS ABOVE STEEL MEMBERS, A HAMMER HEAVIER THAN 35 POUNDS BUT NOT TO EXCEED 90 POUNDS MAY BE USED AT THE APPROVAL OF THE ENGINEER, TO ENSURE ADEQUATE DEPTH CONTROL AND TO PREVENT NICKING OR GOUGING THE PRIMARY STEEL MEMBERS.

DECK REMOVALS: DUE TO THE POSSIBLE PRESENCE OF WELDED ATTACHMENTS TO EXISTING STRUCTURAL STEEL (FINISHING MACHINE, SCUPPER AND FORM SUPPORTS, ETC.), CARE SHALL BE TAKEN DURING DECK REMOVAL TO AVOID DAMAGING STRINGERS WHICH ARE TO REMAIN. STRINGERS DAMAGED BY THE CONTRACTOR'S REMOVAL OPERATIONS SHALL, AT NO COST TO THE PROJECT, BE REPLACED OR REPAIRED. PROPOSED REPAIRS, DEVELOPED BY A REGISTERED PROFESSIONAL ENGINEER, SHALL BE SUBMITTED IN WRITING FOR REVIEW AND APPROVAL BY THE DIRECTOR.

EXTRANEOUS MEMBERS: EXISTING EXTRANEOUS MEMBERS (I.E., FINISHING MACHINE AND FORM SUPPORTS, ETC., AND THE SUPPORT FOR SCUPPERS AND BULB ANGLES WHICH ARE TO BE REMOVED) ATTACHED BY WELDED CONNECTIONS TO PORTIONS OF THE TOP FLANGES DESIGNATED "TENSION" SHALL BE REMOVED AND THE FLANGE SURFACES GROUND SMOOTH. GRINDING SHALL BE CAREFULLY DONE AND PARALLEL TO THE FLANGES. CROSS FRAMES TO BE REMOVED SHALL BE CUT WITHIN 1/8" OF THE WEB AND THEN GROUND SMOOTH.

LOADING LIMITATIONS: NO PART OF THE STRUCTURE SHALL BE SUBJECTED TO UNIT STRESSES THAT EXCEED 136.5% OF THE ALLOWABLE UNIT STRESSES GIVEN IN THE AASHTO STANDARD SPECIFICATIONS FOR HIGHWAY BRIDGES DUE EITHER TO DEMOLITION, ERECTION OR CONSTRUCTION METHODS, OR TO THE USE OR MOVEMENT OF DEMOLITION OR ERECTION EQUIPMENT ON OR ACROSS THE STRUCTURE. STRUCTURAL ANALYSIS COMPUTATIONS, BY A REGISTERED PROFESSIONAL ENGINEER, SHOWING THE ALLOWABLE STRESSES AND THE MAXIMUM STRESSES PRODUCED BY THE CONTRACTOR'S METHODS OR EQUIPMENT SHALL BE SUBMITTED TO THE DIRECTOR FOR REVIEW AND APPROVAL AT LEAST TWO WEEKS PRIOR TO THE START OF THE WORK.

SUBSTRUCTURE CONCRETE REMOVAL:
SUBSTRUCTURE CONCRETE REMOVAL SHALL BE BY MEANS OF APPROVED PNEUMATIC HAMMERS EMPLOYING POINTED AND BLUNT CHISEL TOOLS. HYDRAULIC HOE-RAM TYPE HAMMERS WILL NOT BE PERMITTED. THE WEIGHT OF THE HAMMER SHALL NOT BE MORE THAN 35 POUNDS FOR REMOVAL WITHIN 18-INCHES OF PORTIONS TO BE PRESERVED. OUTSIDE THE 18-INCH LIMIT, A HAMMER HEAVIER THAN 35 POUNDS, BUT NOT TO EXCEED 90 POUNDS, MAY BE USED AT THE APPROVAL OF THE ENGINEER. PNEUMATIC HAMMERS SHALL NOT BE PLACED IN DIRECT CONTACT WITH REINFORCING STEEL THAT IS TO BE RETAINED IN THE REBUILT STRUCTURE.

PAYMENT: THIS WORK WILL BE PAID FOR AT THE CONTRACT LUMP SUM PRICE BID, WHICH PRICE AND PAYMENT SHALL BE FULL COMPENSATION FOR ALL LABOR, EQUIPMENT, MATERIALS AND INCIDENTALS NECESSARY TO COMPLETE THE WORK IN CONFORMANCE WITH THESE REQUIREMENTS, WITH PERTINENT PROVISIONS OF 202, SUPPLEMENTAL SPECIFICATIONS 814,905,907, AND TO THE SATISFACTION OF THE ENGINEER.

REPLACEMENT OF EXISTING REINFORCING STEEL:
ANY EXISTING REINFORCING BARS WHICH ARE TO BE INCORPORATED INTO THE NEW WORK AND WHICH ARE MADE UNUSABLE BY THE CONTRACTOR'S CONCRETE REMOVAL OPERATIONS SHALL BE REPLACED WITH NEW STEEL AT THE CONTRACTOR'S COST. ANY EXISTING REINFORCING BARS DEEMED BY THE ENGINEER TO BE UNUSABLE BECAUSE OF CORROSION SHALL BE REPLACED WITH NEW STEEL. AN ALLOWANCE OF 200 POUNDS IS INCLUDED UNDER ITEM 842-CONCRETE, MISC.: REPLACEMENT OF REINFORCED STEEL FOR PAYMENT. ANY DRILLING AND GROUTING OF DOWEL HOLES REQUIRED FOR CORRODED REINFORCING STEEL SHALL BE INCLUDED UNDER ITEM 842 - CONCRETE, MISC.: DRILLING AND GROUTING DOWEL HOLES FOR PAYMENT.

PILES:
PILES SHALL BE DRIVEN TO REFUSAL ON BEDROCK. REFUSAL SHALL BE CONSIDERED AS OBTAINED BY PENETRATING SOFT BEDROCK FOR SEVERAL INCHES WITH A MINIMUM RESISTANCE OF 20 BLOWS PER INCH OR REFUSAL SHALL BE CONSIDERED AS OBTAINED AFTER THE PILE HAS CONTACTED HARD BEDROCK AND THE PILE HAS THEN RECEIVED AT LEAST 20 BLOWS.
THE ULTIMATE BEARING VALUE IS 70 TONS PER PILE FOR THE HP 10X42 ABUTMENT PILES.
ABUTMENT PILES:
14 PILES 15 FT. LONG, ESTIMATED LENGTH
14 PILES OF ORDER LENGTH 15 FT. LONG
7 SPLICES

PILE DRIVING CONSTRAINTS:
PRIOR TO DRIVING PILES, THE SPILL THROUGH SLOPES AND THE BRIDGE APPROACH EMBANKMENT BEHIND THE ABUTMENTS SHALL BE CONSTRUCTED UP TO THE LEVEL OF THE SUBGRADE ELEVATION FOR A MINIMUM DISTANCE OF 200 FEET BEHIND EACH ABUTMENT. THE EXCAVATION FOR THE ABUTMENT FOOTINGS AND THE INSTALLATION OF THE ABUTMENT PILES SHALL NOT BEGIN UNTIL AFTER THE ABOVE REQUIRED EMBANKMENT HAS BEEN CONSTRUCTED.

ITEM 203 EMBANKMENT, AS PER PLAN:
ALL FILL MATERIAL FOR CONSTRUCTION OF THE APPROACH EMBANKMENT AND FOR FILLING THE EXCAVATION VOID CREATED BY THE REMOVAL OF THE EXISTING FORWARD/REAR ABUTMENT, SHALL BE 203 GRANULAR MATERIAL PLACED IN LIFTS NOT TO EXCEED A THICKNESS OF SIX (6) INCHES.

ITEM 503, UNCLASIFFIED EXCAVATION, AS PER PLAN:
UNCLASSIFIED EXCAVATION SHALL BE IN ACCORDANCE WITH 503 EXCEPT THAT THE BACKFILL MATERIAL BEHIND THE ABUTMENTS SHALL BE 203 GRANULAR MATERIAL IN LIFTS NOT TO EXCEED A THICKNESS OF SIX (6) INCHES.

INSPECTION OF STRUCTURAL STEEL:
THE ENGINEER SHALL VISUALLY INSPECT ALL EXISTING BUTT-WELDED SPLICES AND OR TOP FLANGE COVER PLATE FILLET WELDS TO ENSURE THAT THEY ARE FREE OF DEFECTS. THE DECK SLAB HAUNCH FORMS IMMEDIATELY ADJACENT TO SUCH WELDS SHALL NOT BE ERECTED UNTIL AFTER THE ENGINEER HAS COMPLETED THIS INSPECTION. THIS INSPECTION SHALL NOT TAKE PLACE UNTIL AFTER THE TOP FLANGES ARE CLEANED AS SPECIFIED IN 842.08, BUT IT SHALL BE DONE BEFORE THE DECK SLAB REINFORCEMENT IS INSTALLED. THE COST ASSOCIATED WITH THIS INSPECTION SHALL BE INCLUDED WITH ITEM 844, HIGH PERFORMENCE CONCRETE SUPERSTRUCTURE FOR PAYMENT.

ITEM 516, RESET BEARING, AS PER PLAN:
THIS ITEM SHALL INCLUDE ALL WORK NECESSATY TO PROPERLY ALIGN THE ABUTMENT ROCKER BEARINGS AS NOTED ON THE PLANS AND AS DIRECTED BY THE ENGINEER. INCLUDED IN THIS ITEM SHALL BE THE REPLACEMENT OF ANY DAMAGED SHEET LEAD (711.19) , INSTALLATION OF ANY NECESSARY STEEL SHIMS OF THE SAME SIZE AS THE BEARINGS TO PROVIDE SNUG FIT, REALIGNMENT OF THE UPPER BEARING PLATE BY REMOVING EXISTING WELDS AND REWELDING SO THAT THE BEARINGS ARE VERTICALLY ALIGNED AT 60° F, LUBRICATING SLIDING SURFACES. AND REASSEMBLY OF THE BEARINGS. THE CONTRACTOR SHALL BE SURE THAT ALL BEARINGS ARE SHIMMED ADEQUATELY AND THAT NO BEAMS AND/OR BEARING DEVICES ARE "FLOATING". ALL WORK SHALL BE TO THE SATISFACTION OF THE ENGINEER. PAYMENT FOR ALL THE ABOVE DESCRIBED LABOR AND MATERIALS WILL BE MADE AT THE CONTRACT PRICE BID FOR ITEM 516-RESET BEARING, AS PER PLAN.

REVISED BY B&N 1-18-00

DESIGN AGENCY
R.E.WARNER & ASSOCIATES
CONSULTING ENGINEERS
WESTLAKE, OHIO 44145

DESIGNED	DRAWN	REVIEWED	DATE	STRUCTURE FILE NUMBER
CLH	GSC	EAD	2/96	1807722
CHECKED	REVISED			
WAN				

GENERAL NOTES
BRIDGE NO. CUY-90-0095
CROCKER-BASSETT ROAD
OVER I.R. 90

CUY-90-0.95

4 / 26

54
80

CALC. BY. CLH DATE. 2/96

ESTIMATED QUANTITIES

CHK'D BY WAN DATE 2/96

ITEM	ITEM EXT.	TOTAL	UNIT	DESCRIPTION	CUY-90-0095 PIERS	SUPER.	ABUTS	GEN'L	AS PER PLAN REFERENCE SHEET NO.
202	11203	LUMP	LUMP	PORTIONS OF STRUCTURE REMOVED, OVER 20' SPAN, AS PER PLAN				LUMP	3/26
503	11100	LUMP	LUMP	COFFERDAMS, CRIBS AND SHEETING				LUMP	
503	21101	106	CU.YD.	UNCLASSIFIED EXCAVATION, AS PER PLAN			106		4/26
505	11100	LUMP	LUMP	PILE DRIVING EQUIPMENT MOBILIZATION				LUMP	
507	00100	210	LIN.FT.	STEEL PILES HP 10X42, FURNISHED			210		
507	00150	210	LIN.FT.	STEEL PILES HP 10X42, DRIVEN			210		
507	50500	7	EACH	STEEL PILE SPLICES			7		
512	33010	3	SQ.YD.	TYPE 3 WATERPROOFING			3		
SPECIAL	51267504	1,138	SQ.YD	SEALING OF CONCRETE SURFACES (NON-EPOXY) *		1,138			
SPECIAL	51267510	501	SQ.YD	SEALING OF CONCRETE SURFACES (EPOXY-URETHANE) *	387		114		
516	13600	269	SQ.FT.	1" PREFORMED EXPANSION JOINT FILLER			269		
516	14500	166	SQ.FT.	STRUCTURAL JOINT OR JOINT SEALER, MISC: 4" BITUMEN IMPREGNATED JOINT SEAL			166		
516	41100	10	EACH	1/8" PREFORMED BEARING PAD, 711.21		10			
516	46000	2	EACH	BEARING DEVICE, BOLSTER	2				
516	46200	8	EACH	BEARING DEVICE, ROCKER	4		4		
516	46701	14	EACH	RESET BEARING, AS PER PLAN **			14		4/26, 13/26
518	21201	109	CU.YD.	POROUS BACKFILL WITH FILTER FABRIC, AS PER PLAN			109		13/26
518	40001	146	LIN.FT.	6" PERFORATED CORRUGATED PLASTIC PIPE, AS PER PLAN			146		8/26, 10/26
518	40011	205	LIN.FT.	6" NON-PERFORATED CORRUGATED PLASTIC PIPE, INCLUDING SPECIALS, AS PER PLAN			205		8/26, 10/26
SPECIAL	51912600	10	LIN.FT.	CONCRETE REPAIR BY EPOXY INJECTION			10		
601	21001	728	SQ.YD.	CONCRETE SLOPE PROTECTION, AS PER PLAN			728		24/26
SPECIAL	60739900	688	LIN.FT.	VANDAL PROTECTION FENCE, 6' STRAIGHT, COATED FABRIC		688			
514	27704	LUMP		FIELD PAINTING MISC: FIELD REPAIRING DAMAGE PAINT AREAS		LUMP			***
SPECIAL	51426030	109282	POUND	FIELD PAINTING MISC: SHOP PAINTING AND FIELD TOUCH-UP OF STRUCTURAL STEEL		161,059			***
842	81300	3	EACH	CONCRETE, MISC.: DRILLING AND GROUTING DOWEL HOLES			3		
842	81400	20	POUND	CONCRETE MISC.: REPLACENENT OF DAMAGED REINFORCING STEEL			20		
844	48001	840	CU.YD.	HIGH PERFORMANCE CONCRETE SUPERSTRUCTURE (DECK), AS PER PLAN		840			3/26
844	48021	60	CU.YD.	HIGH PERFORMANCE CONCRETE SUPERSTRUCTURE (PARAPET), AS PER PLAN		60			3/26
844	48041	169	CU.YD.	HIGH PERFORMANCE CONCRETE SUBSTRUCTURE, AS PER PLAN	33		136		8/26, 10/26
844	49000	LUMP	LUMP	HIGH PERFORMANCE CONCRETE TRIAL MIX		LUMP			
844	49010	LUMP	LUMP	HIGH PERFORMANCE CONCRETE TESTING		LUMP			
846	73000	66	SQ.YD	TREATING CONCRETE BRIDGE DECK WITH HMWM RESIN		66			
863	10240	155,035	POUND	STRUCTURAL STEEL MEMBERS, LEVEL TWO (2) FABRICATION		155,035			
863	90000	5,051	POUND	STRUCTURAL STEEL, MISC.(INTERMEDIATE CROSS FRAMES, NEW		5,051			
863	90000	973	POUND	STRUCTURAL STEEL, MISC.(END CROSS FRAMES, NEW		973			
863	20000	4,053	EACH	WELDED STUD SHEAR CONNECTOR		4,053			

* SEE PROPOSAL NOTE

** CONTINGENCY QUANTITY

*** AS PER PLAN IN PART 1, SHEETS 465/582 - 471/582

REVISED BY B&N 5-12-00

I:\PROJECTS\Pid11738\dgn\final plans\estq.dgn 20-JUL-2000 3:28PM jgrmoyse

DESIGN AGENCY
R.E. WARNER & ASSOCIATES
CONSULTING ENGINEERS
WESTLAKE, OHIO 44145

DESIGNED CLH | DRAWN CLG | CHECKED CDW | REVIEWED ART | REVISED NFF | DATE 7/26/99 | STRUCTURE FILE NUMBER 1807722

ESTIMATED QUANTITIES
BRIDGE NO. CUY-90-0095
CROCKER-BASSETT ROAD
OVER I.R. 90

CUY-90-0.95

PHASE 1 – REMOVE EXISTING DECK, SIDEWALK, PARAPET AND FENCE. CONSTRUCT AND WIDEN NEW DECK, WHILE MAINTAINING TWO-WAY TRAFFIC ON EXISTING DECK.

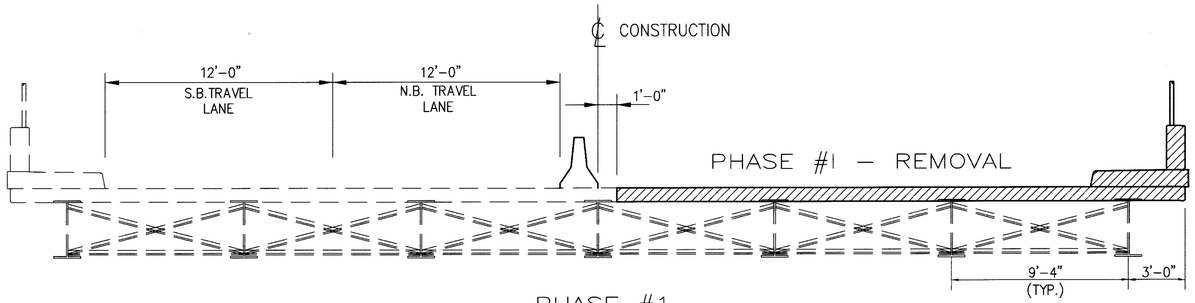

PHASE #1
(LOOKING AHEAD)

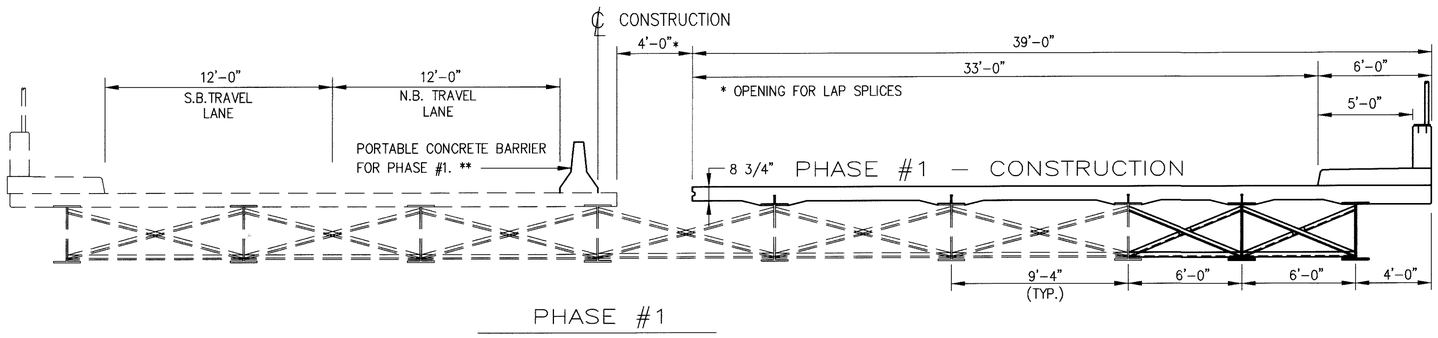

PHASE #1
(LOOKING AHEAD)

PHASE 2 – REMOVE REMAINDER OF EXISITNG DECK, SIDEWALK, PARAPET AND FENCE. CONSTRUCT NEW DECK, AND MAINTAIN TWO-WAY TRAFFIC ON COMPLETED DECK FROM PHASE I.

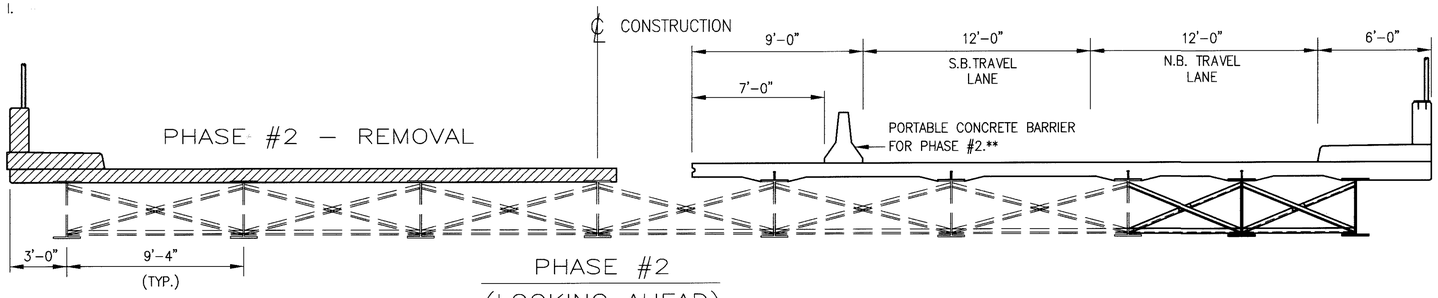

PHASE #2
(LOOKING AHEAD)

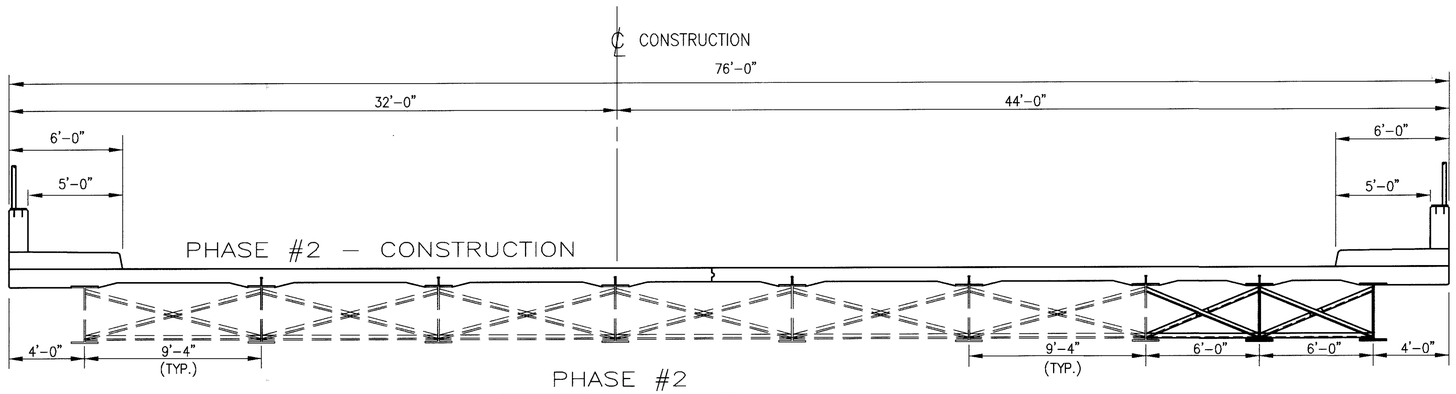

PHASE #2
(LOOKING AHEAD)

NOTES:

** PORTABLE CONCRETE BARRIER SHALL CONFORM TO STANDARD DRAWING PCB-DD AND PCB-91. EACH SECTION OF BARRIER SHALL BE ANCHORED WITH TWO ANCHORS PLACED ON THE TRAFFIC SIDE OF THE BARRIER. FURNISHING, INSTALLING, MAINTAINING, AND REMOVING PORTABLE CONCRETE BARRIER, INCLUDING THE COMPLETE OR PARTIAL REMOVAL OF ANCHOR HARDWARE AND THE FILLING OF THE ANCHOR VOIDS WITH NON-SHRINK GROUT SHALL BE INCLUDED WITH ITEM 622 (ROADWAY PLANS) FOR PAYMENT.

– PROPOSED DECK PROFILE IS ELEVATED 3 INCHES IN ORDER TO PROVIDE A HAUNCH OVER THE BEAMS.

REVISED BY B&N 1-18-00

DESIGN AGENCY
R.E.WARNER & ASSOCIATES
CONSULTING ENGINEERS
WESTLAKE, OHIO 44145

DESIGNED	DRAWN	REVIEWED	DATE
CLH	GSC	EAD	2/96
CHECKED	REVISED	STRUCTURE FILE NUMBER	
WAN		1807722	

PHASED CONSTRUCTION DETAILS
BRIDGE NO. CUY-90-0095
CROCKER-BASSETT ROAD
OVER I.R.90

CUY-90-0.95

6 / 26

56
80

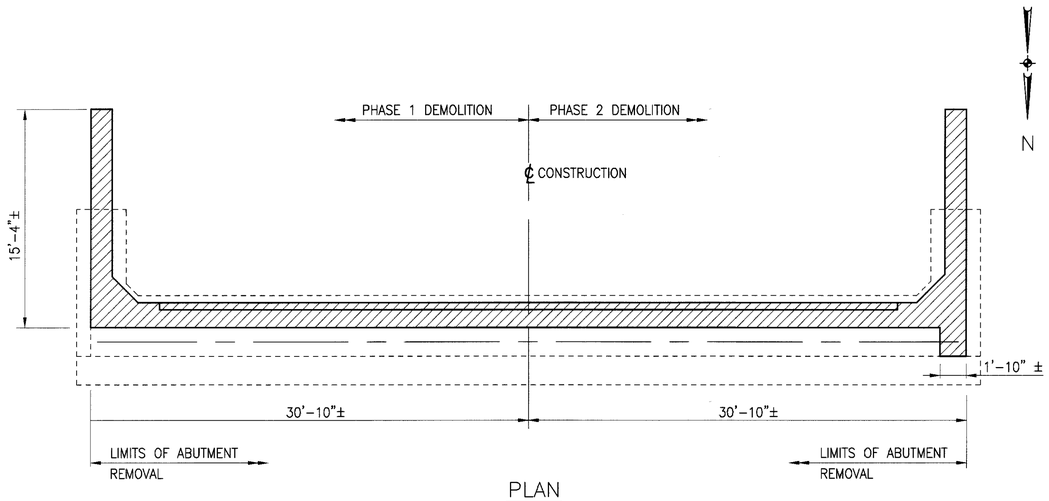

PLAN

REAR ABUTMENT

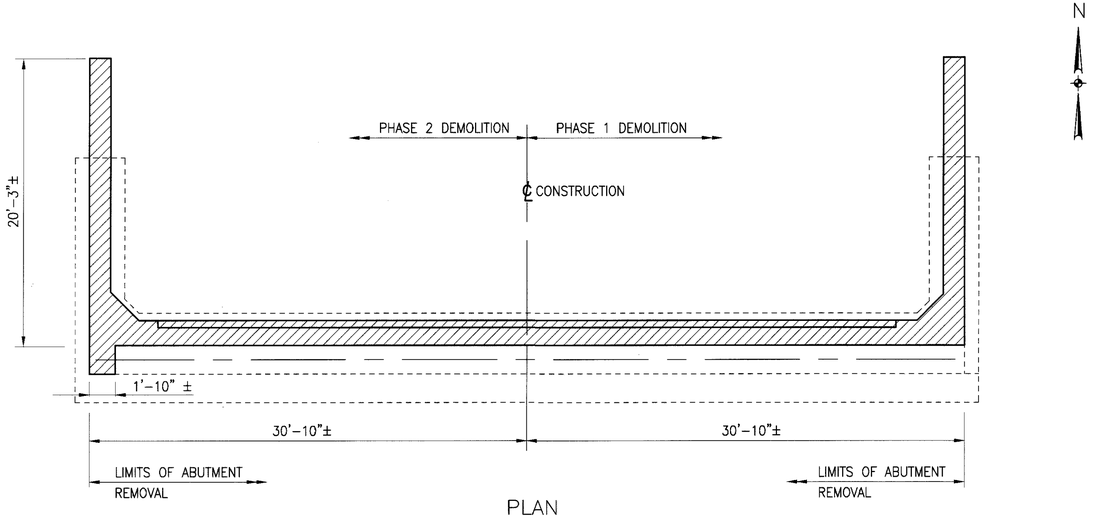

PLAN

FORWARD ABUTMENT

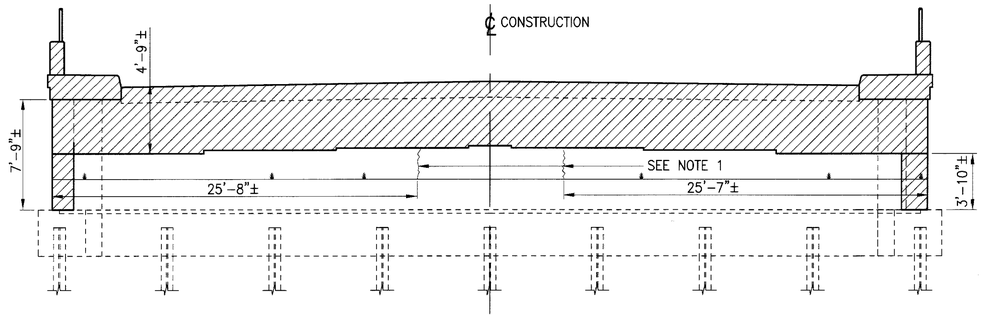

ELEVATION

REAR ABUTMENT

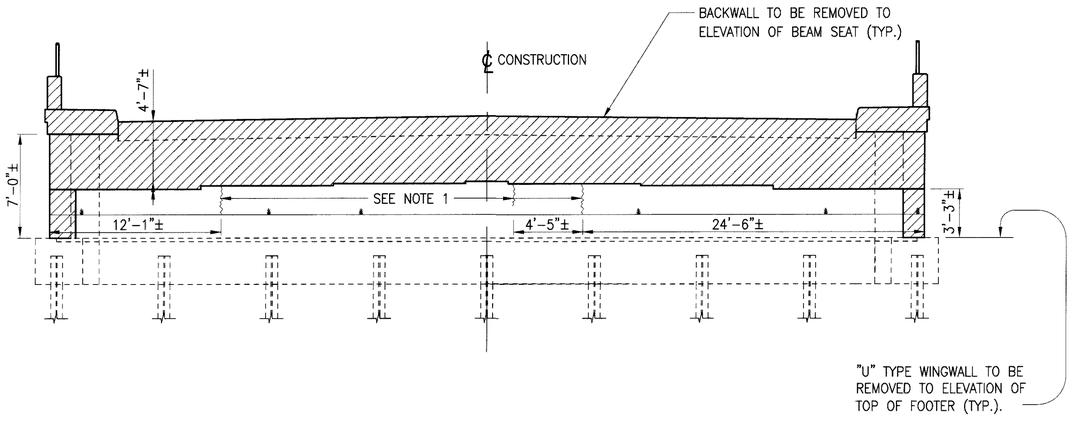

ELEVATION

FORWARD ABUTMENT

LEGEND:

EXISTING PORTIONS TO BE REMOVED (REINFORCING TO BE SALVAGED AS INDICATED IN PLANS).

NOTE:

1. REPAIR CONCRETE BY EPOXY INJECTION.

DESIGN AGENCY
R.E.WARNER & ASSOCIATES
CONSULTING ENGINEERS
WESTLAKE, OHIO 44145

DESIGNED	DRAWN	REVIEWED	DATE
CLH	GSC	EAD	2/96
CHECKED	REVISED	STRUCTURE FILE NUMBER	
WAN		1807722	

DEMOLITION PLAN
BRIDGE NO. CUY-90-0095
CROCKER-BASSETT ROAD
OVER I.R. 90

CUY-90-0.95

7 / 26

57
80

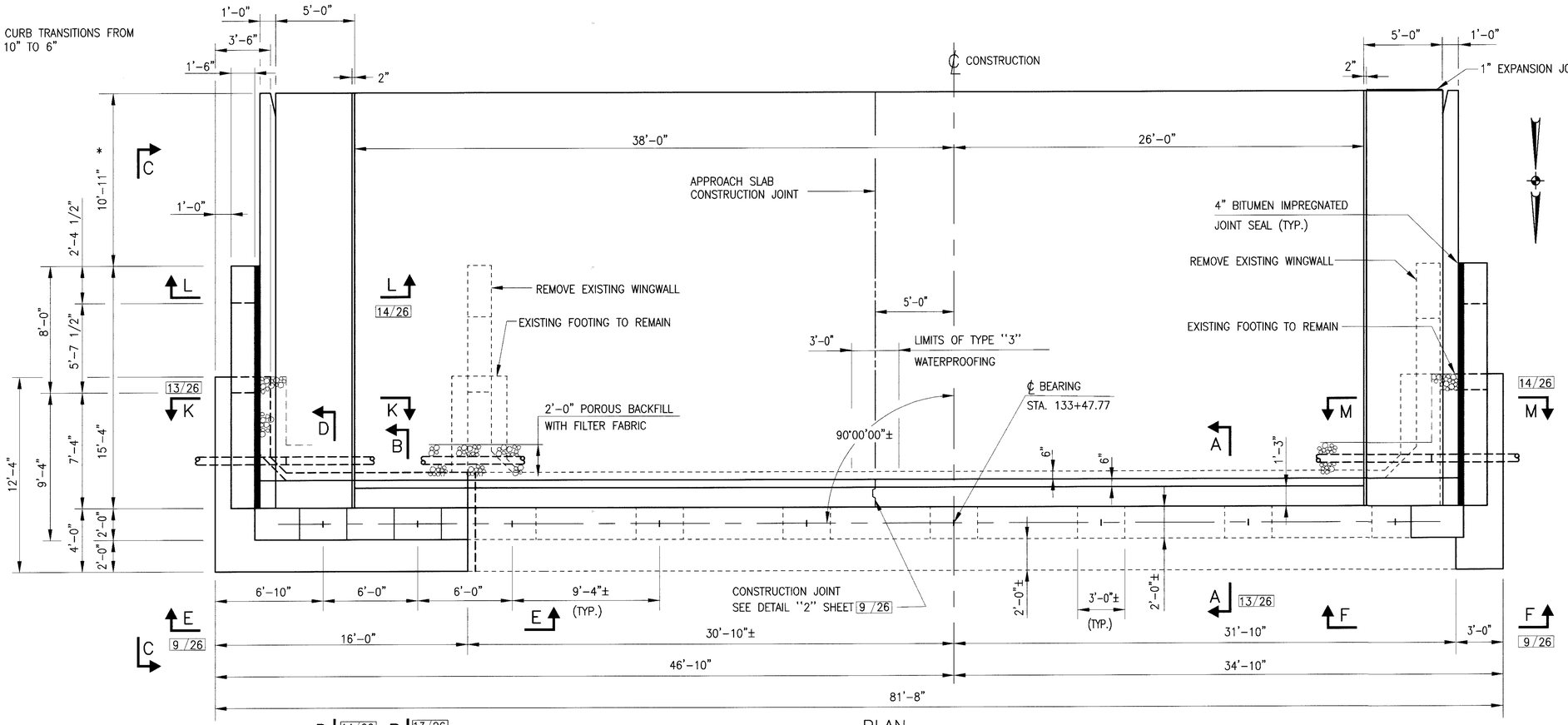

NOTES:

1. ELEVATIONS ON BEAM SEAT ARE FROM FIELD SURVEY. CONTRACTOR SHALL VERIFY ALL ELEVATIONS AND DIMENSIONS WHERE APPLICABLE TO BACKWALL RECONSTRUCTION.
2. SEE SHEET 6/26 FOR LIMITS OF PHASED CONSTRUCTION.
3. ALL CONCRETE INCLUDING ABUTMENT PARAPETS AND SIDEWALKS, IS INCLUDED WITH ITEM 844 HIGH PERFORMANCE CONCRETE SUBSTRUCTURE, AS PER PLAN.
4. REINFORCING SPLICE LENGTH SHALL BE 2'-11" FOR #5 AND 5'-9" FOR #8.
5. REMOVE EXISTING 6" C.M.P. PLUG ONE END OF WEEPHOLE, FILL WITH HIGH PERFORMANCE CONCRETE, THEN PLUG OPEN END. PAYMENT SHALL BE INCLUDED WITH ITEM 844 HIGH PERFORMANCE CONCRETE SUBSTRUCTURE, AS PER PLAN.
6. NOTATION F.F. – FRONT FACE
   R.F. – REAR FACE
   TYP. – TYPICAL
   P.E.J.F. – PREFORMED EXPANSION JOINT FILLER
7. REINFORCING LAP LENGTH FOR #8 BARS SHALL BE 4'-9" IN THIS AREA OF THE BACKWALL.

BEAM SEAT	ELEVATION
A	671.65
B	671.74

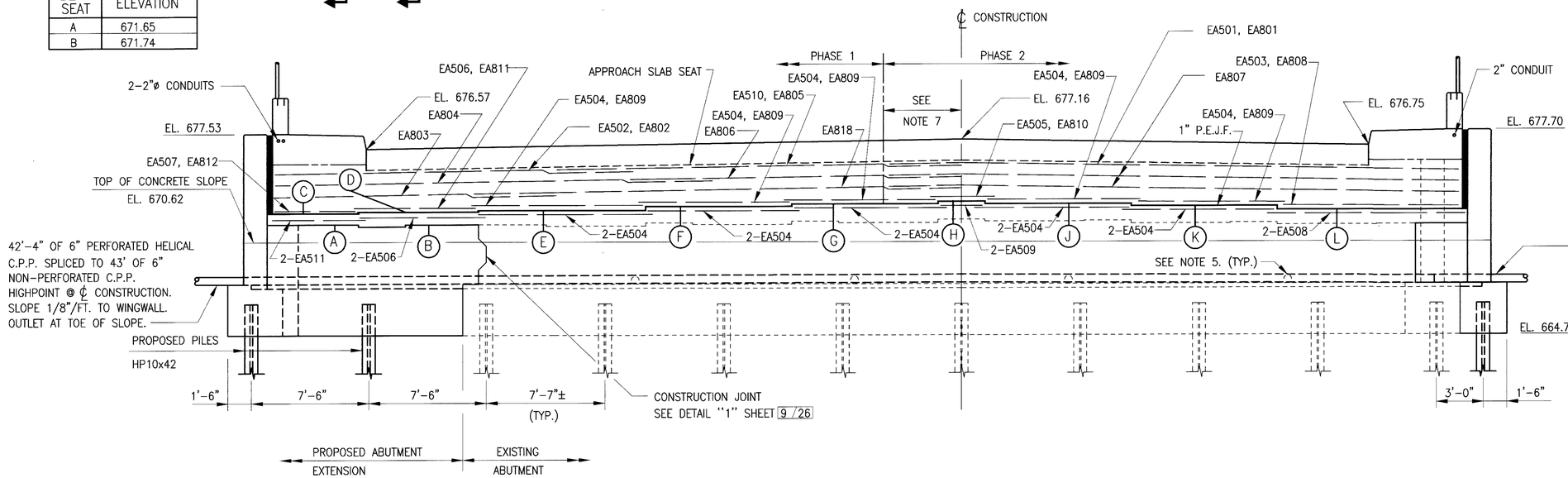

BOTTOM OF 1" P.E.J.F.	ELEVATION
C	672.59
D	672.68
E	672.76
F	672.91
G	673.05
H	673.20
J	673.05
K	672.91
L	672.76

ELEVATION

REVISED BY B&N 1-18-00

DESIGN AGENCY
R.E.WARNER & ASSOCIATES
CONSULTING ENGINEERS
WESTLAKE, OHIO 44145

DESIGNED	DRAWN	REVIEWED	DATE
CLH	GSD	EAD	2/96
CHECKED	REVISED	STRUCTURE FILE NUMBER	
WAN		1807722	

REAR ABUTMENT PLAN AND ELEVATION
BRIDGE NO. CUY-90-0095
CROCKER-BASSETT ROAD
OVER I.R. 90

CUY-90-0.95

8 / 26

58
80

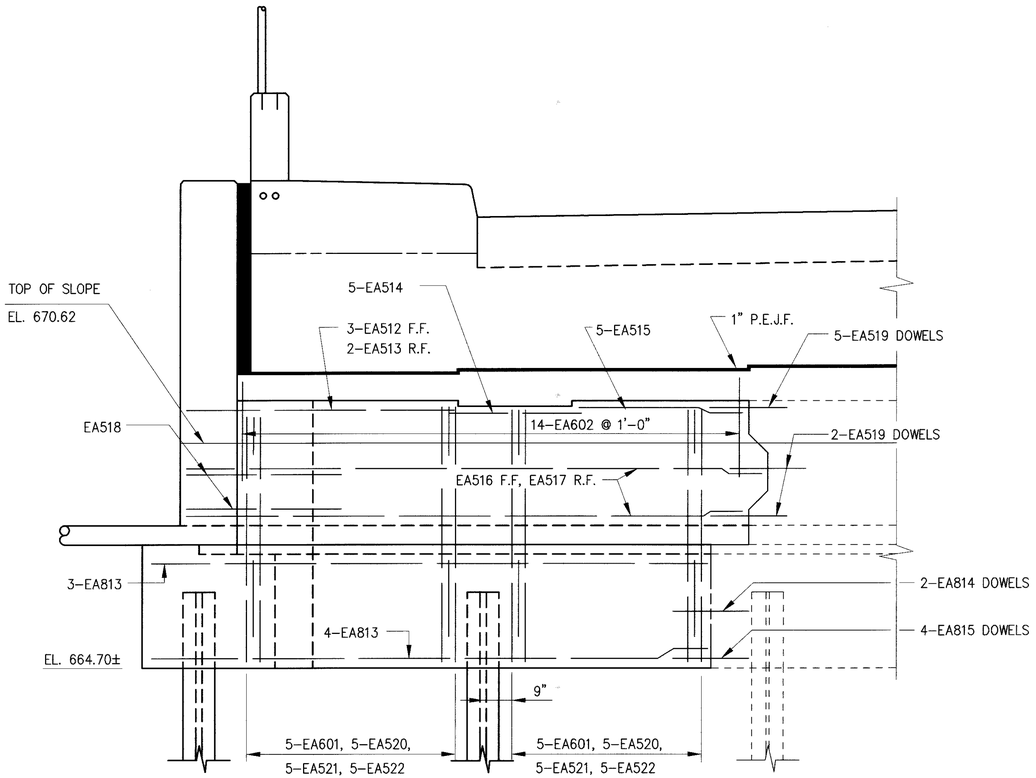

SECTION E–E

SHEET 8/26

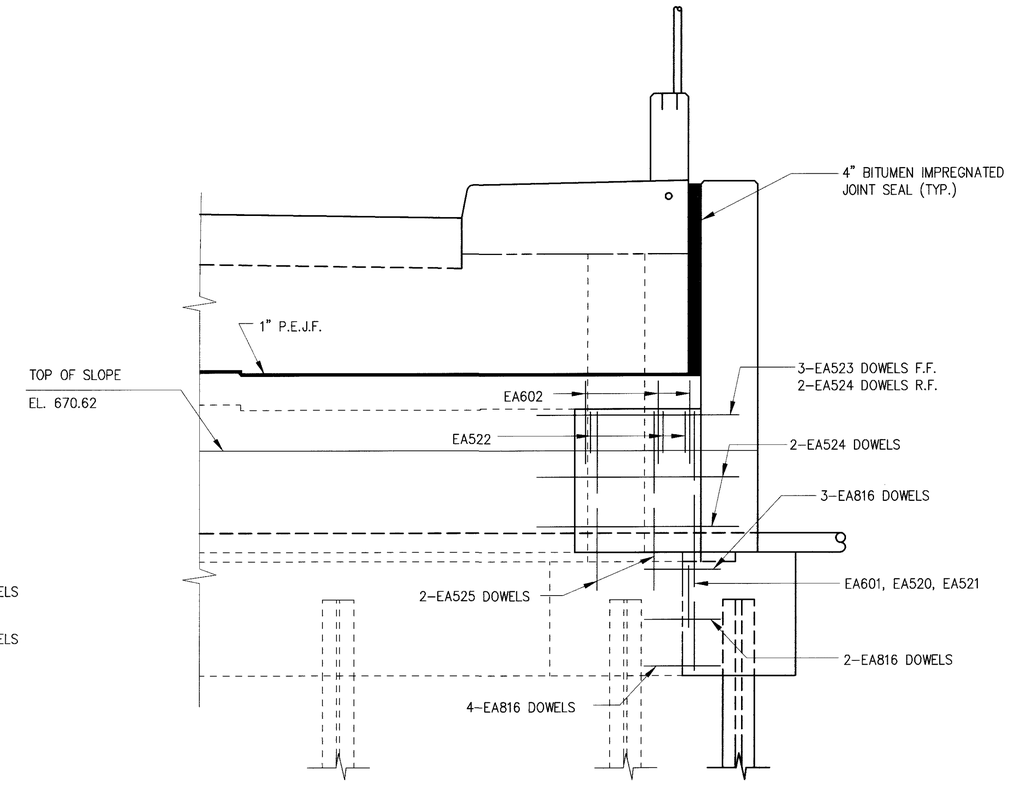

SECTION F–F

SHEET 8/26

NOTE:

1. FOR ABUTMENT NOTES SEE SHEET 8/26.

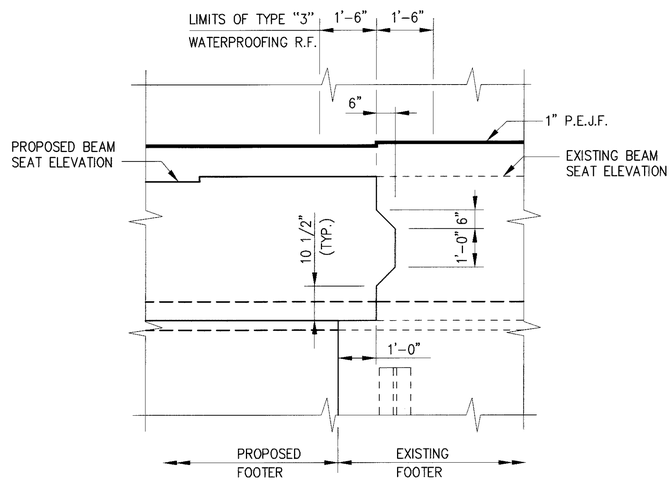

CONSTRUCTION JOINT DETAIL "1"

SHEET 8/26

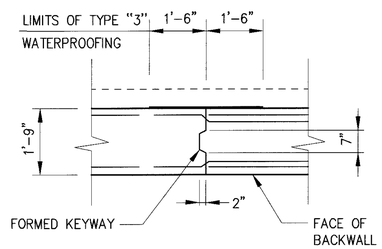

BACKWALL CONSTRUCTION JOINT "2"

SHEET 8/26

(FORWARD ABUTMENT JOINT OPPOSITE HAND)

REVISED BY B&N 1-18-00

DESIGN AGENCY
R.E.WARNER & ASSOCIATES
CONSULTING ENGINEERS
WESTLAKE, OHIO 44145

DESIGNED	DRAWN	REVIEWED	DATE
CLH	GSC	EAD	2/96
CHECKED	REVISED	STRUCTURE FILE NUMBER	
WAN		1807722	

REAR ABUTMENT DETAILS
BRIDGE NO. CUY-90-0095
CROCKER-BASSETT ROAD
OVER I.R. 90

CUY-90-0.95

9/26

59/80

* CURB TRANSITIONS FROM 10" TO 6" IN 10'-0".

1" EXPANSION JOINT SEAL

4" BITUMEN IMPREGNATED JOINT SEAL (TYP.)

℄ CONSTRUCTION

APPROACH SLAB CONSTRUCTION JOINT

REMOVE EXISTING WINGWALL

EXISTING FOOTING TO REMAIN

LIMITS OF TYPE "B" WATERPROOFING

℄ BEARING STA. 136+39.27

90°00'00"±

2'-0" POROUS BACKFILL WITH FILTER FABRIC

CONSTRUCTION JOINT SEE DETAIL "2" SHEET 9/26

NOTES:
1. FOR ABUTMENT NOTES SEE SHEET 8/28

PLAN

BOTTOM OF 1" P.E.J.F.	ELEVATION
O	670.56
P	670.71
Q	670.85
R	671.00
S	670.85
T	670.71
V	670.56
W	670.48
X	670.39

BEAM SEAT	ELEVATION
M	669.66
N	669.57

2" CONDUIT

EL. 675.50

EL. 674.54

EL. 674.95

EL. 674.36

EL. 675.32

2-2"ø CONDUITS

PHASE 2 PHASE 1

SEE NOTE 7

EA501, EA801
EA503, EA808
EA807
EA504, EA809
EA505, EA810
EA818
EA510, EA805
EA502, EA802
EA506, EA811
EA804
EA803

1" P.E.J.F.

TOP OF CONCRETE SLOPE EL. 668.50

30'-4" OF 6" PERFORATED HELICAL C.P.P. SPLICED TO 54' OF 6" NON-PERFORATED C.P.P. HIGHPOINT @ ℄ CONSTRUCTION. SLOPE 1/8"/FT. TO WINGWALL. OUTLET AT TOE OF SLOPE.

EL. 663.16±

2-EA508 2-EA504 2-EA509 2-EA504 2-EA504 2-EA504 2-EA506 2-EA511

EA507, EA812

42'-4" OF 6" PERFORATED HELICAL C.P.P. SPLICED TO 46' OF 6" NON-PERFORATED C.P.P. HIGHPOINT @ ℄ CONSTRUCTION. SLOPE 1/8"/FT. TO WINGWALL. OUTLET AT TOE OF SLOPE.

SEE NOTE 5. (TYP.)

PROPOSED PILES HP10x42

CONSTRUCTION JOINT SEE DETAIL "3" SHEET 11/26

EXISTING ABUTMENT

PROPOSED ABUTMENT EXTENSION

ELEVATION

REVISED BY B&N 1-18-00

DESIGN AGENCY
R.E.WARNER & ASSOCIATES
CONSULTING ENGINEERS
WESTLAKE, OHIO 44145

DESIGNED	DRAWN	REVIEWED	DATE
CLH	GSD	EAD	2/96
CHECKED	REVISED	STRUCTURE FILE NUMBER	
WAN		1807722	

FORWARD ABUTMENT PLAN AND ELEVATION
BRIDGE NO. CUY-90-0095
CROCKER-BASSETT ROAD
OVER I.R. 90

CUY-90-0.95

10/26

60/80

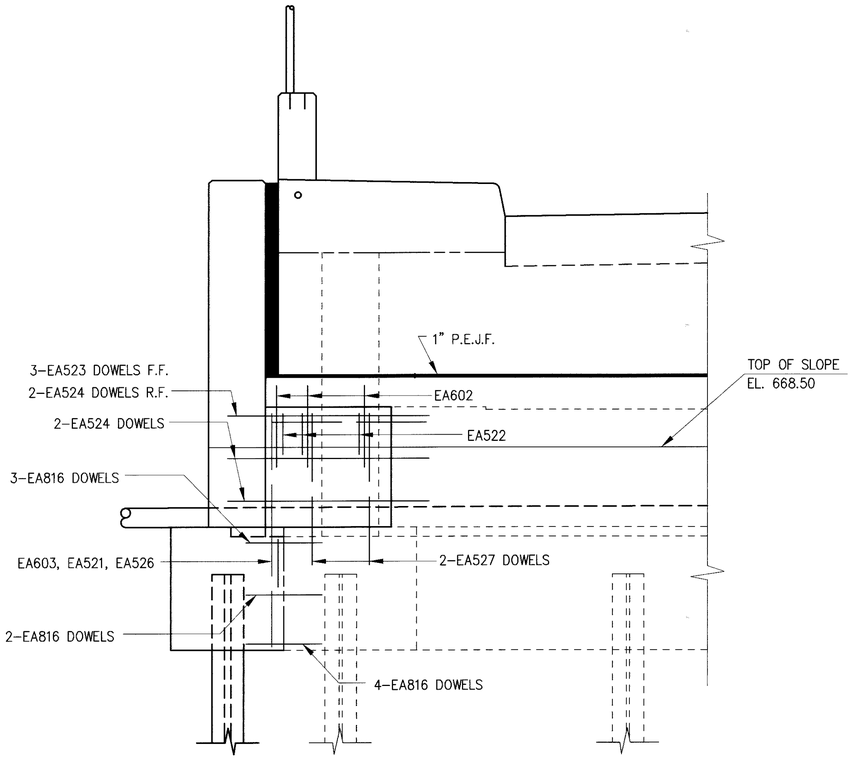

SECTION H–H

SHEET 10/26

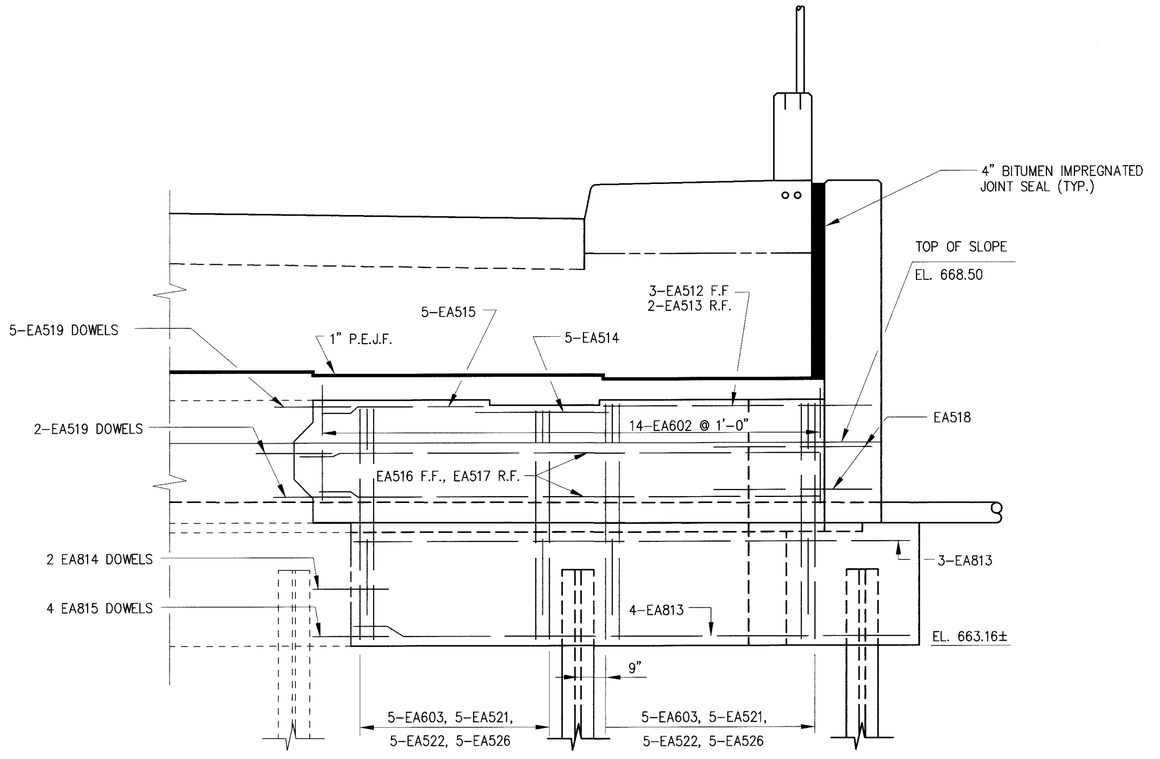

SECTION G–G

SHEET 10/26

NOTE:

1. FOR ABUTMENT NOTES SEE SHEET 8/26.

2. FOR BACKWALL CONSTRUCTION JOINT SEE SHEET 9/26.

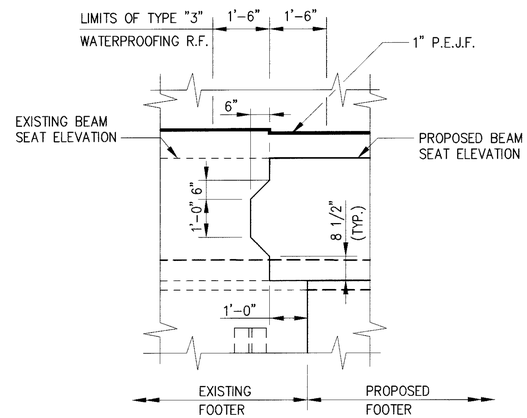

CONSTRUCTION JOINT DETAIL "3"

SHEET 10/26

REVISED BY B&N 1–18–00

DESIGN AGENCY
R.E.WARNER & ASSOCIATES
CONSULTING ENGINEERS
WESTLAKE, OHIO 44145

DESIGNED	DRAWN	REVIEWED	DATE
CLH	GSC	EAD	2/96
CHECKED	REVISED	STRUCTURE FILE NUMBER	
WAN		1807722	

FORWARD ABUTMENT DETAILS
BRIDGE NO. CUY-90-0095
CROCKER-BASSETT ROAD
OVER I.R. 90

CUY–90–0.95

11/26

61/80

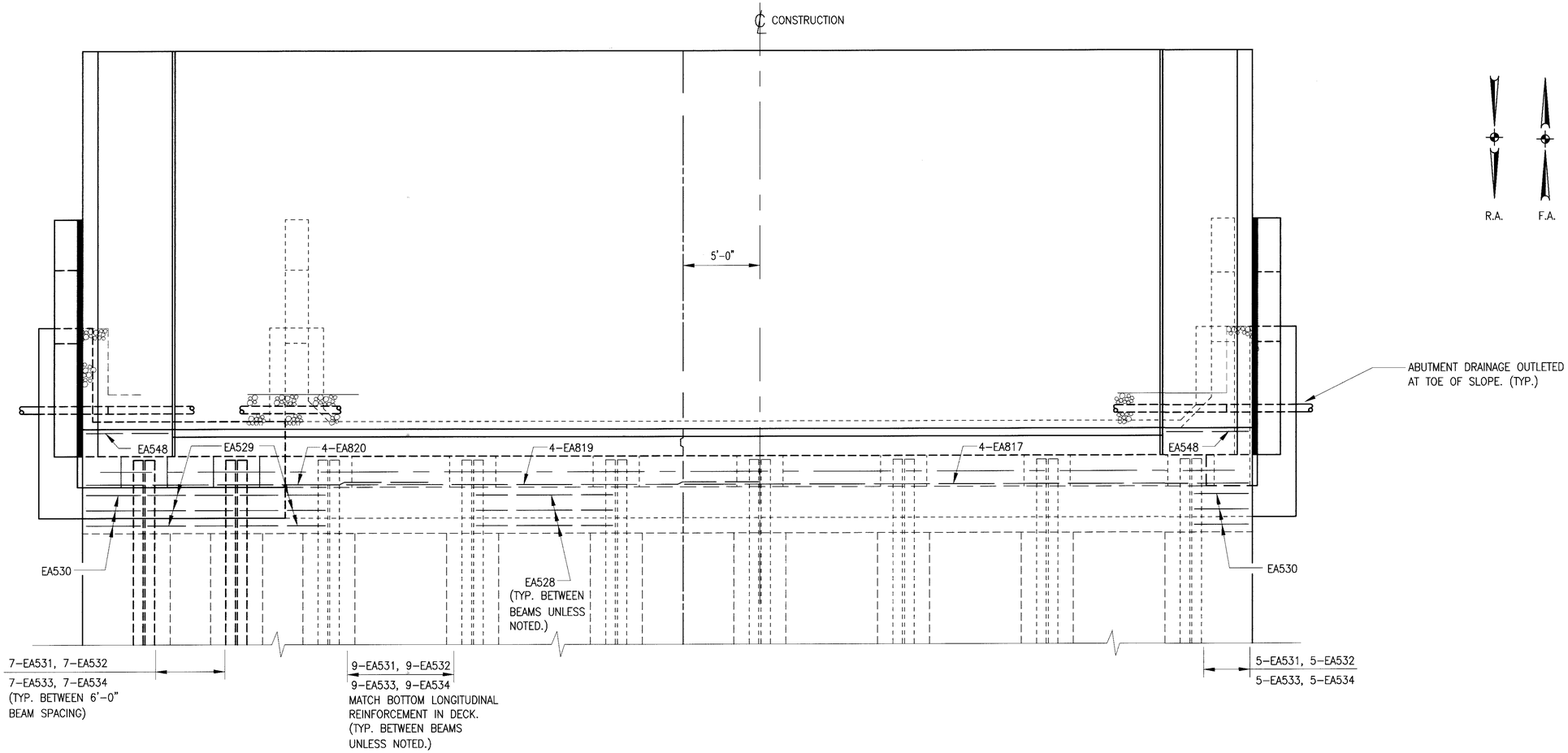

PLAN

REAR ABUTMENT AS SHOWN
FORWARD ABUTMENT OPPOSITE HAND

REVISED BY B&N 1-18-00

DESIGN AGENCY
R.E.WARNER & ASSOCIATES
CONSULTING ENGINEERS
WESTLAKE, OHIO 44145

DESIGNED	DRAWN	REVIEWED	DATE
CLH	GSD	EAD	2/96
CHECKED	REVISED	STRUCTURE FILE NUMBER	
WAN		1807722	

ABUTMENT DETAILS
BRIDGE NO. CUY-90-0095
CROCKER-BASSETT ROAD
OVER I.R. 90

CUY-90-0.95

12/26

62/80

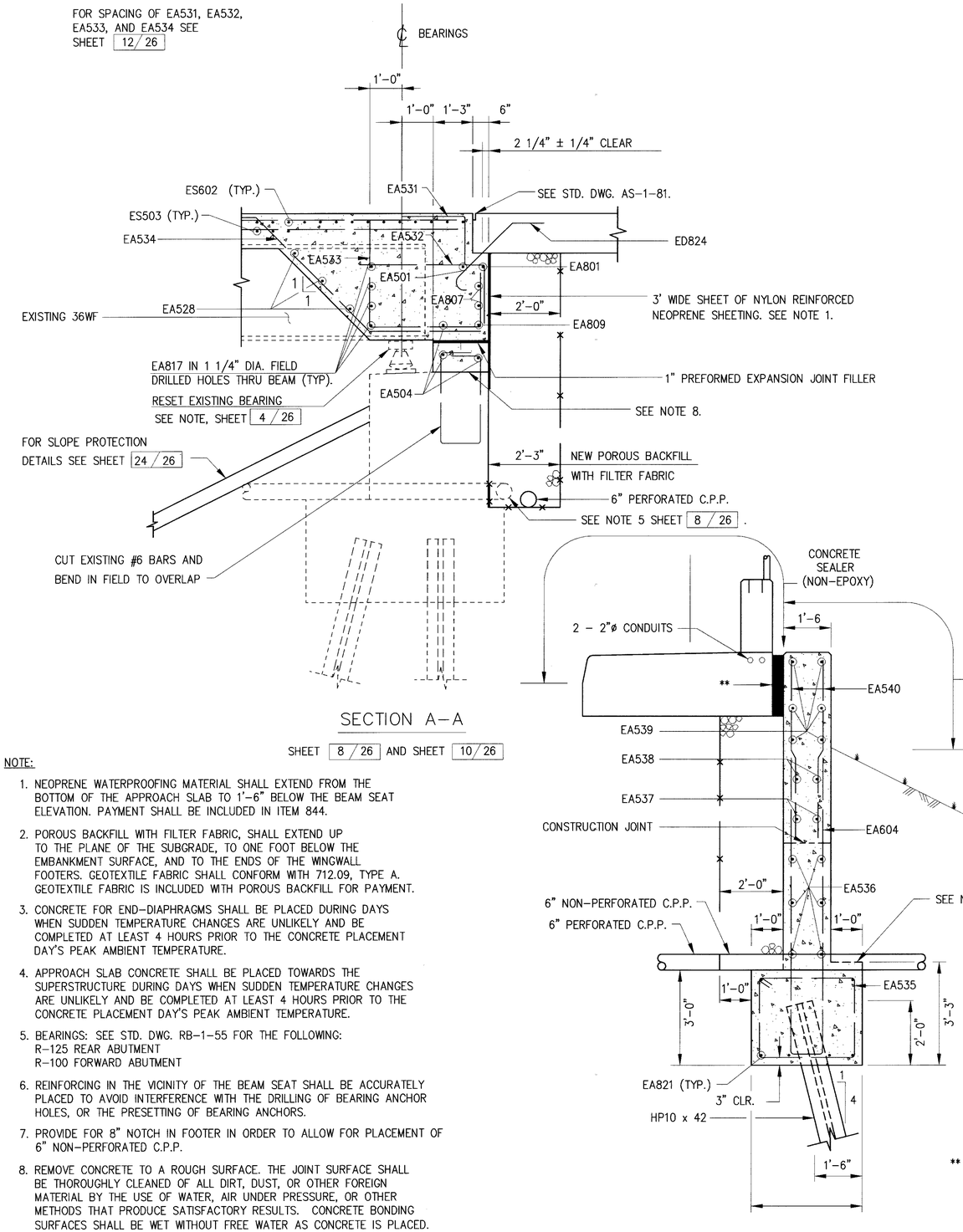

SECTION A-A

SHEET 8 / 26 AND SHEET 10 / 26

NOTE:

1. NEOPRENE WATERPROOFING MATERIAL SHALL EXTEND FROM THE BOTTOM OF THE APPROACH SLAB TO 1'-6" BELOW THE BEAM SEAT ELEVATION. PAYMENT SHALL BE INCLUDED IN ITEM 844.
2. POROUS BACKFILL WITH FILTER FABRIC, SHALL EXTEND UP TO THE PLANE OF THE SUBGRADE, TO ONE FOOT BELOW THE EMBANKMENT SURFACE, AND TO THE ENDS OF THE WINGWALL FOOTERS. GEOTEXTILE FABRIC SHALL CONFORM WITH 712.09, TYPE A. GEOTEXTILE FABRIC IS INCLUDED WITH POROUS BACKFILL FOR PAYMENT.
3. CONCRETE FOR END-DIAPHRAGMS SHALL BE PLACED DURING DAYS WHEN SUDDEN TEMPERATURE CHANGES ARE UNLIKELY AND BE COMPLETED AT LEAST 4 HOURS PRIOR TO THE CONCRETE PLACEMENT DAY'S PEAK AMBIENT TEMPERATURE.
4. APPROACH SLAB CONCRETE SHALL BE PLACED TOWARDS THE SUPERSTRUCTURE DURING DAYS WHEN SUDDEN TEMPERATURE CHANGES ARE UNLIKELY AND BE COMPLETED AT LEAST 4 HOURS PRIOR TO THE CONCRETE PLACEMENT DAY'S PEAK AMBIENT TEMPERATURE.
5. BEARINGS: SEE STD. DWG. RB-1-55 FOR THE FOLLOWING:
   R-125 REAR ABUTMENT
   R-100 FORWARD ABUTMENT
6. REINFORCING IN THE VICINITY OF THE BEAM SEAT SHALL BE ACCURATELY PLACED TO AVOID INTERFERENCE WITH THE DRILLING OF BEARING ANCHOR HOLES, OR THE PRESETTING OF BEARING ANCHORS.
7. PROVIDE FOR 8" NOTCH IN FOOTER IN ORDER TO ALLOW FOR PLACEMENT OF 6" NON-PERFORATED C.P.P.
8. REMOVE CONCRETE TO A ROUGH SURFACE. THE JOINT SURFACE SHALL BE THOROUGHLY CLEANED OF ALL DIRT, DUST, OR OTHER FOREIGN MATERIAL BY THE USE OF WATER, AIR UNDER PRESSURE, OR OTHER METHODS THAT PRODUCE SATISFACTORY RESULTS. CONCRETE BONDING SURFACES SHALL BE WET WITHOUT FREE WATER AS CONCRETE IS PLACED.

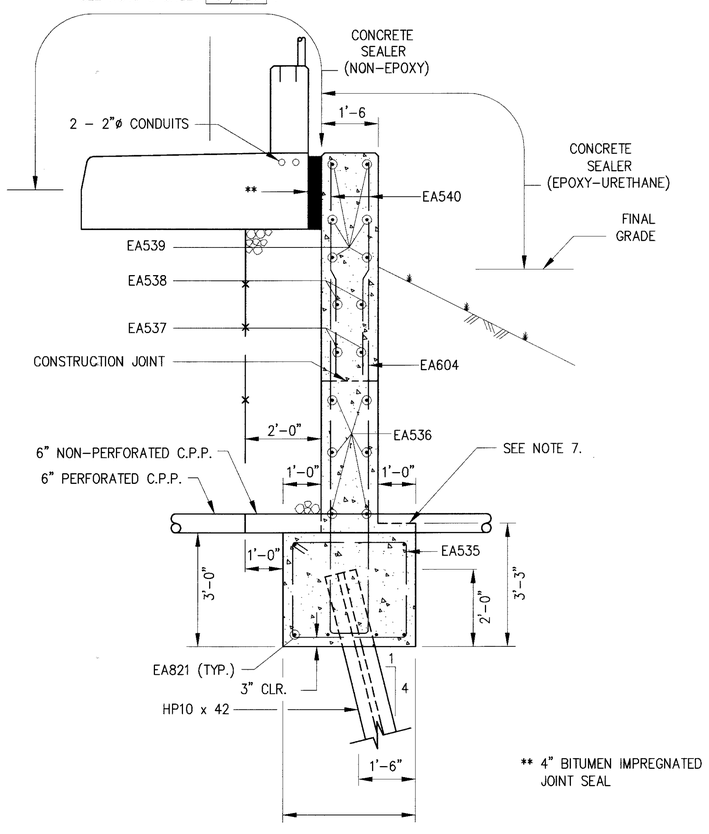

SECTION K-K

8 / 26 SHEET

** 4" BITUMEN IMPREGNATED JOINT SEAL

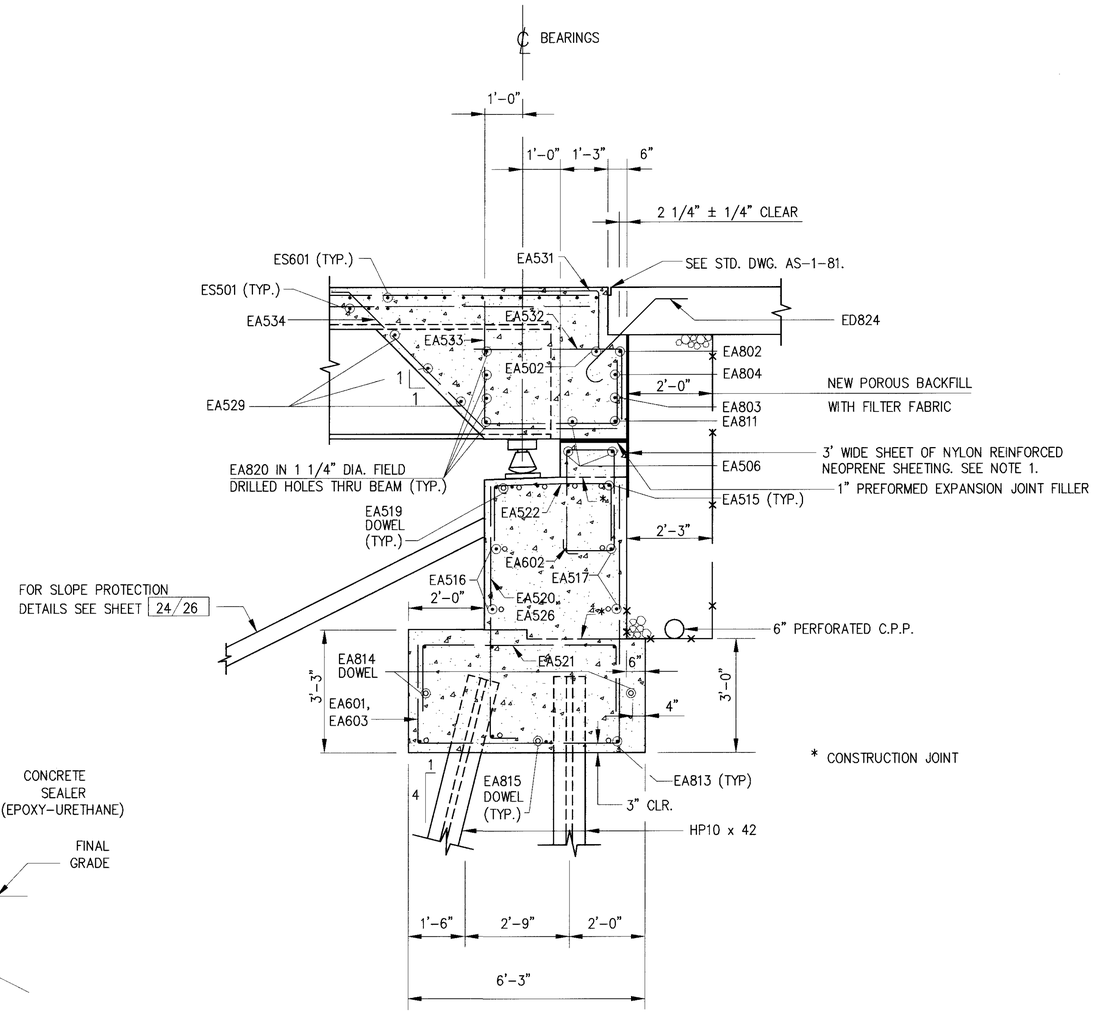

SECTION B-B

SHEET 8 / 26 AND SHEET 10 / 26

* CONSTRUCTION JOINT

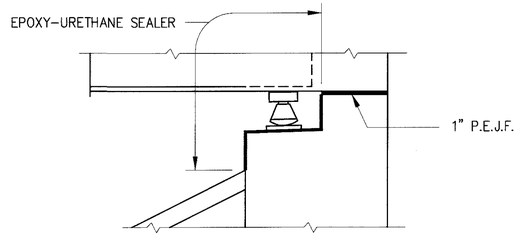

CONCRETE SEALER DETAIL "4"

SEAL EXISTING AND PROPOSED PORTIONS OF ABUTMENTS.

REVISED BY B&N 1-18-00

DESIGN AGENCY
R.E.WARNER & ASSOCIATES
CONSULTING ENGINEERS
WESTLAKE, OHIO 44145

DESIGNED	DRAWN	REVIEWED	DATE
CLH	GSC	EAD	2/96
CHECKED	REVISED	STRUCTURE FILE NUMBER	
WAN		1807722	

ABUTMENT DETAILS
BRIDGE NO. CUY-90-0095
CROCKER-BASSETT ROAD
OVER I.R. 90

CUY-90-0.95

13 / 26

63
80

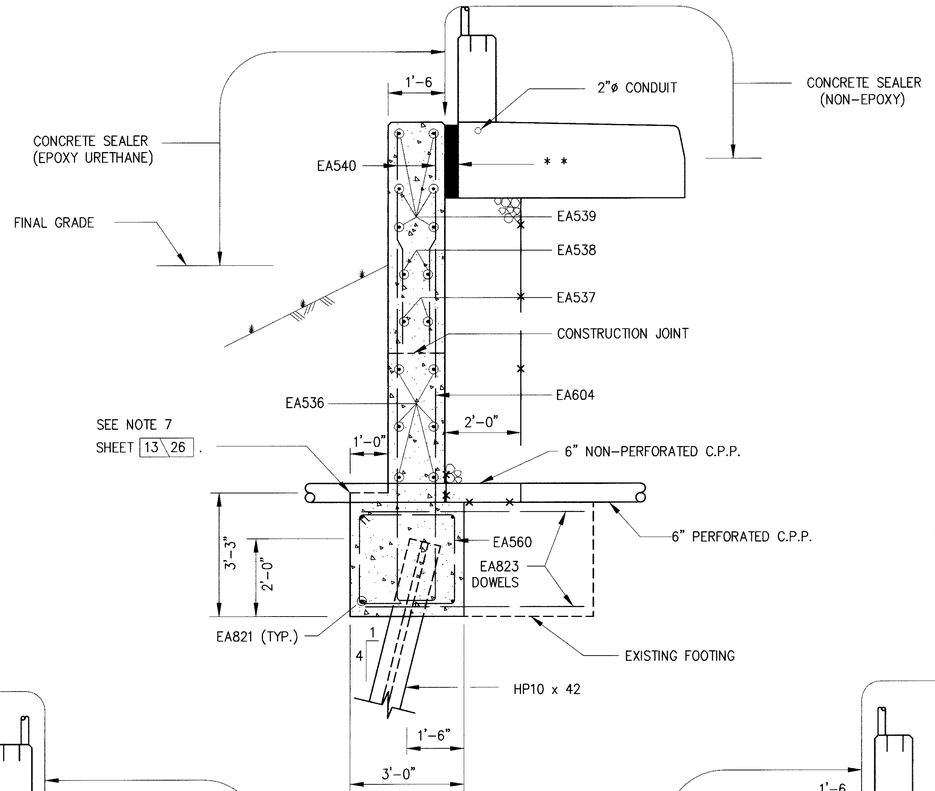

SECTION M-M

8 / 26 SHEET

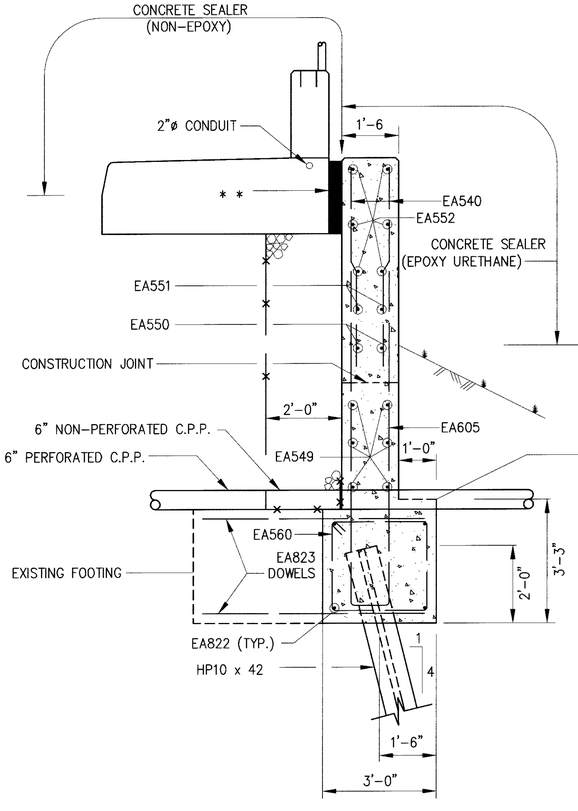

SECTION N-N

10 / 26 SHEET

* * 4" BITUMEN IMPREGNATED JOINT SEAL.

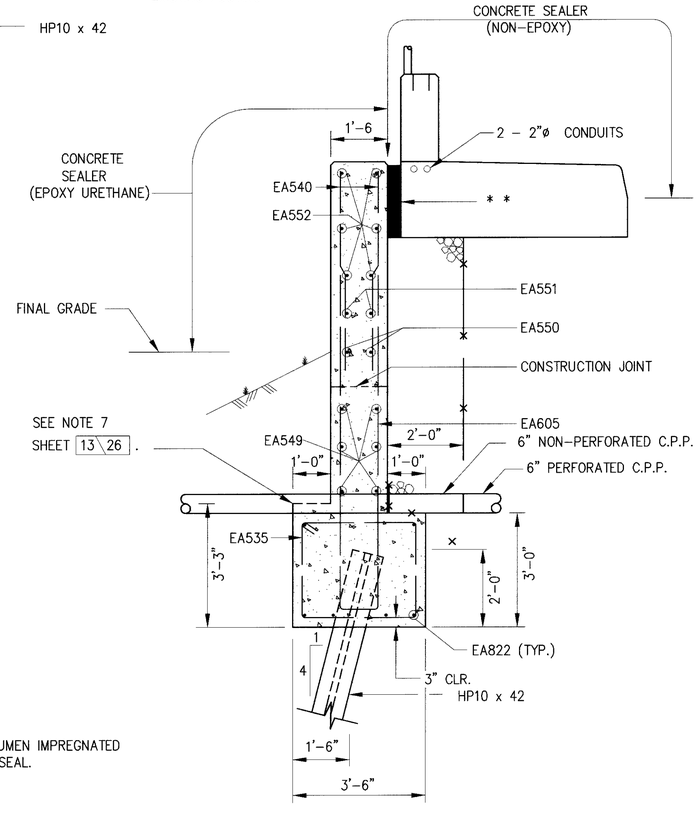

SECTION O-O

10 / 26 SHEET

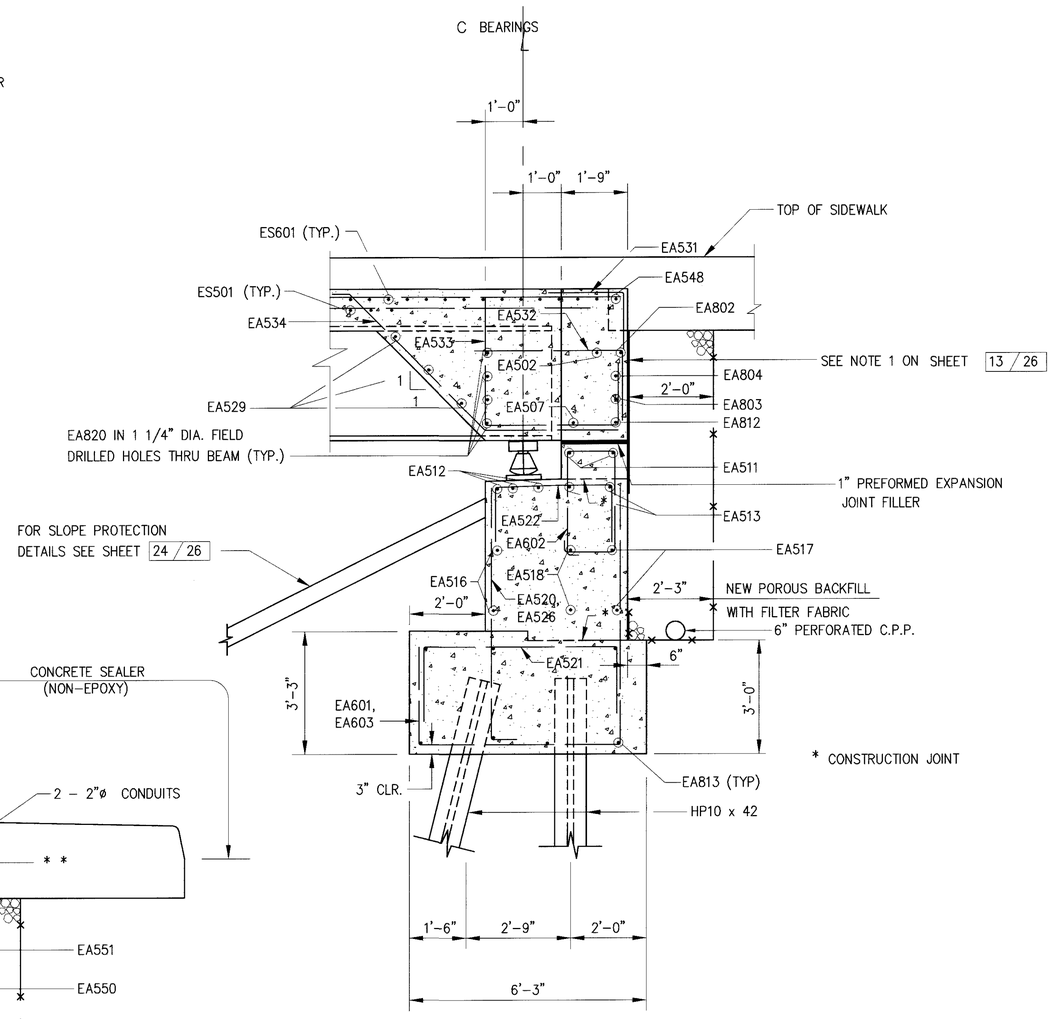

SECTION D-D

SHEET 8 / 26 AND SHEET 10 / 26

FOR NOTES SEE SHEET 13 / 26

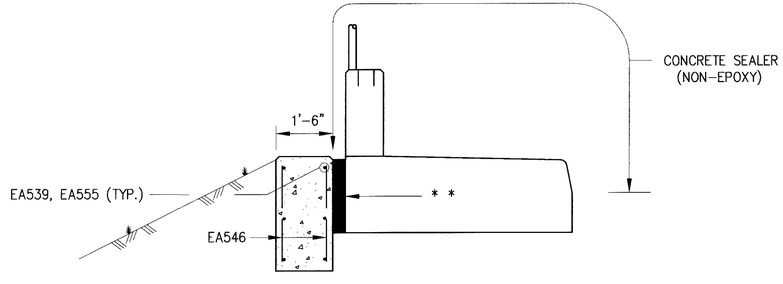

SECTION L-L

SHEET 8 / 26 AND SHEET 10 / 26

Revised by B&N 1-10-00

REVISED BY B&N 1-18-00

DESIGN AGENCY
R.E.WARNER & ASSOCIATES
CONSULTING ENGINEERS
WESTLAKE, OHIO 44145

DESIGNED	DRAWN	REVIEWED	DATE
CLH	GSC	EAD	2/96
CHECKED	REVISED	STRUCTURE FILE NUMBER	
WAN		1807722	

ABUTMENT DETAILS
BRIDGE NO. CUY-90-0095
CROCKER-BASSETT ROAD
OVER I.R. 90

CUY-90-0.95

14 / 26

64 / 80

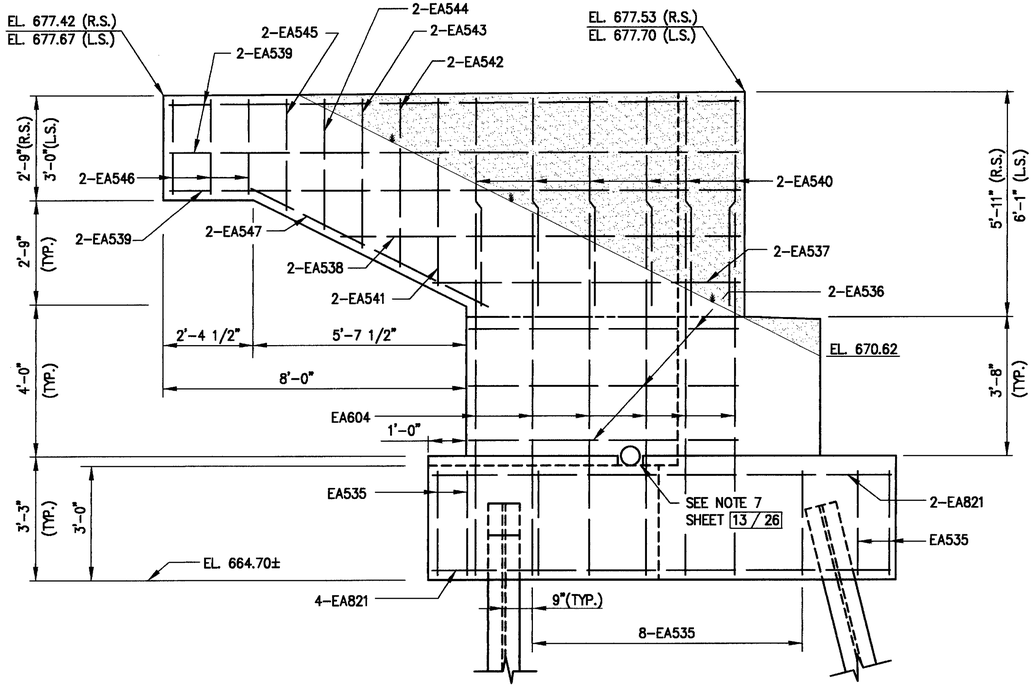

REAR ABUTMENT WINGWALL

SECTION C-C
RIGHT SIDE AS SHOWN
LEFT SIDE OPPOSITE HAND
SHEET 8 / 26

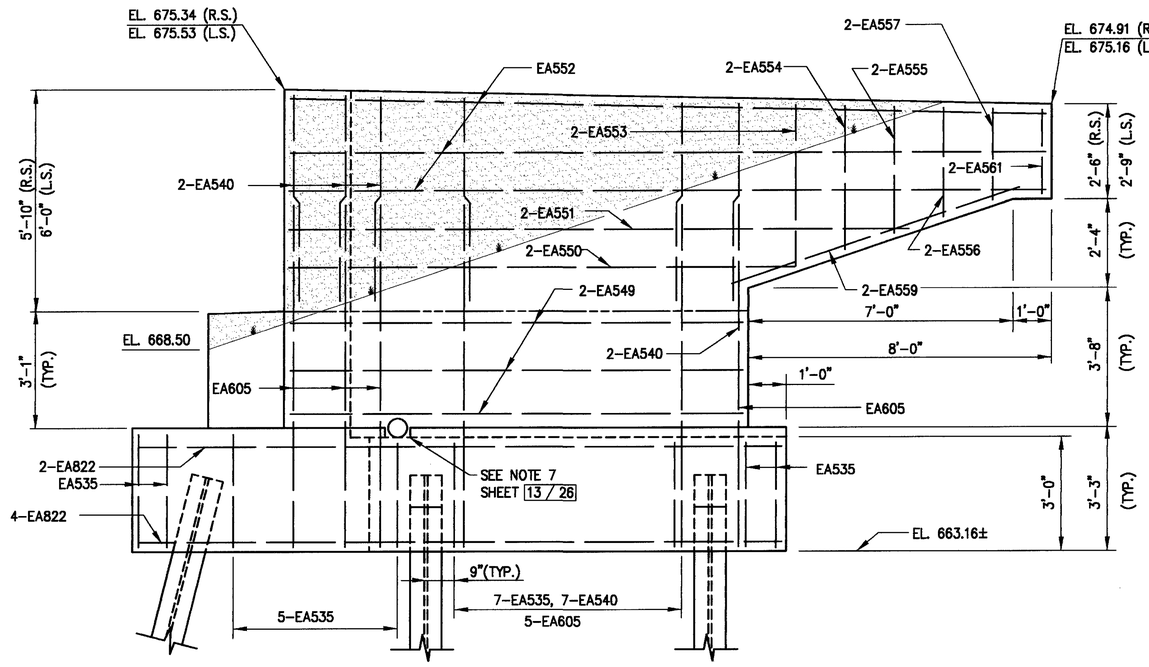

FORWARD ABUTMENT WINGWALL

SECTION J-J
RIGHT SIDE AS SHOWN
LEFT SIDE OPPOSITE HAND
SHEET 10 / 26

EPOXY-URETHANE SEALER. ALSO SEAL TOP AND FRONT FACE OF WINGWALL.

NOTE:

1. NOTATION R.S. - RIGHT SIDE
   L.S. - LEFT SIDE

DESIGN AGENCY
R.E. WARNER & ASSOCIATES
CONSULTING ENGINEERS
WESTLAKE, OHIO 44145

DESIGNED CLH
DRAWN GSC
CHECKED WAW
REVIEWED EAD
DATE 2/96
REVISED
STRUCTURE FILE NUMBER 1807722

WINGWALL DETAILS
BRIDGE NO. CUY-90-0095
CROCKER-BASSETT ROAD
OVER I.R. 90

CUY-90-0.95

15 / 26

65
80

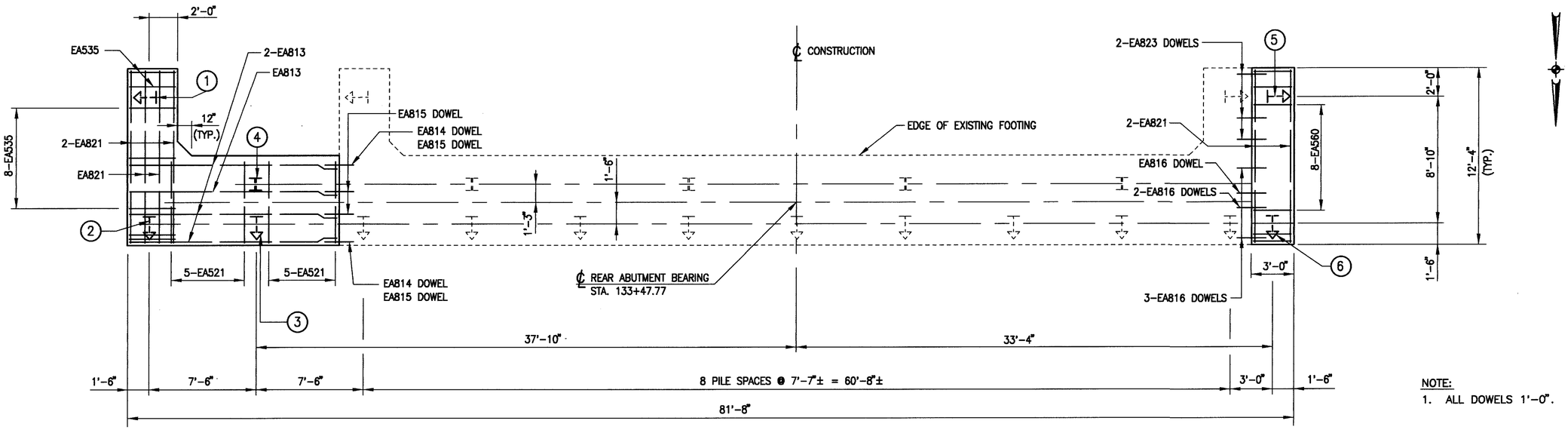

NOTE:
1. ALL DOWELS 1'-0".

REAR ABUTMENT

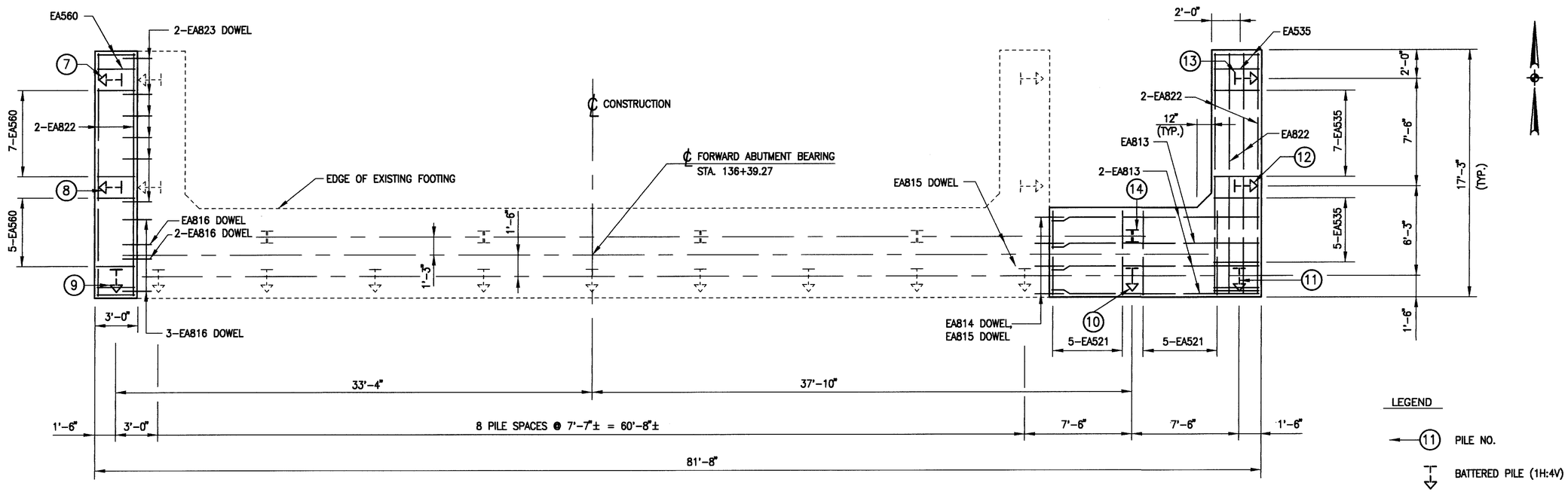

FORWARD ABUTMENT

DESIGN AGENCY
R.E.WARNER & ASSOCIATES
CONSULTING ENGINEERS
WESTLAKE, OHIO 44145

REVIEWED EAD DATE 2/96
DRAWN RBC REVISED
DESIGNED CLH CHECKED WHH
STRUCTURE FILE NUMBER 1807722

FOOTING PLAN
BRIDGE NO. CUY-90-0095
CROCKER-BASSETT ROAD
OVER I.R. 90

CUY-90-0.95

16 / 26

66
80

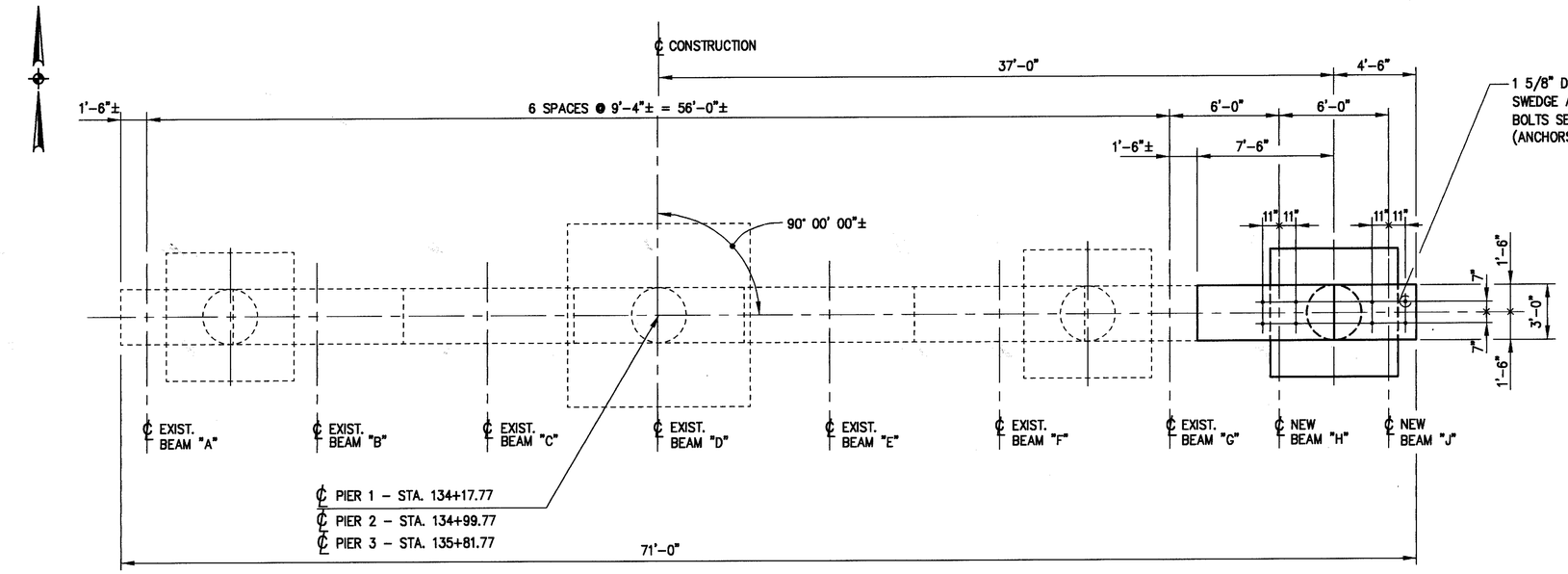

PLAN

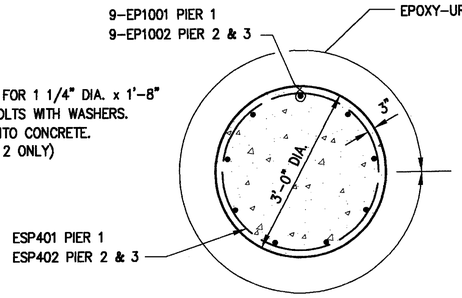

SECTION A–A

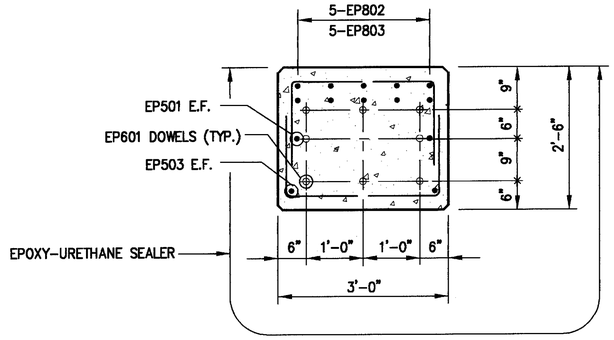

SECTION B–B

BEAM SEAT	ELEVATION PIER 1	ELEVATION PIER 2	ELEVATION PIER 3
A	671.24	670.83	669.97
B	671.15	670.74	669.88

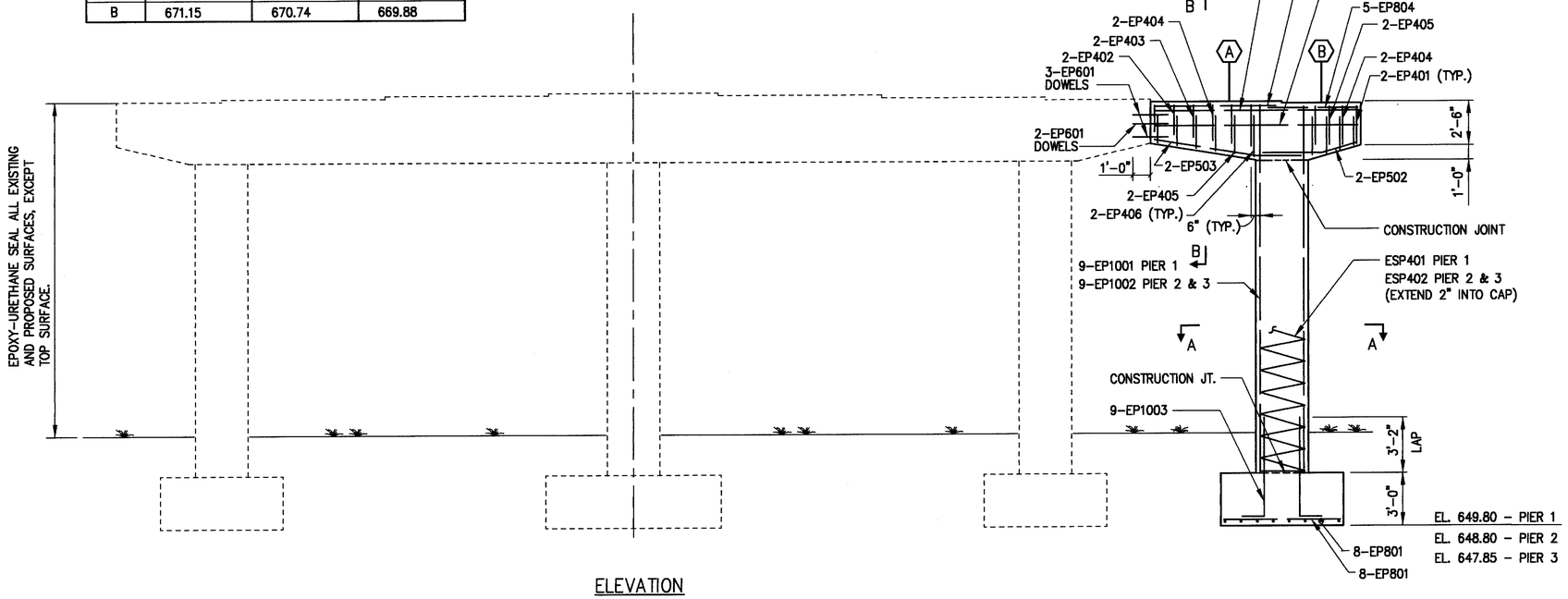

ELEVATION

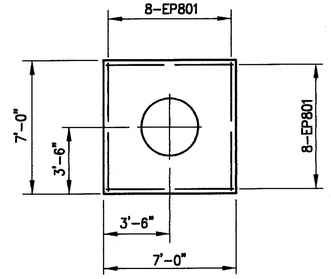

FOOTING PLAN

NOTES:

1. BEARINGS: SEE STD. DWG. RB-1-55 FOR THE FOLLOWING:
   R-250 PIERS 1 & 3
   B-250 PIER 2

2. REINFORCING IN THE VICINITY OF THE BRIDGE SEAT SHALL BE ACCURATELY PLACED TO AVOID INTERFERENCE WITH THE DRILLING OF BEARING ANCHOR HOLES, OR THE PRESETTING OF THE BEARING ANCHORS.

DESIGN AGENCY
R.E. WARNER & ASSOCIATES
CONSULTING ENGINEERS
WESTLAKE, OHIO 44145

DESIGNED CLH | DRAWN ESC | CHECKED WAW | REVISED

REVIEWED EAD | DATE 2/96

STRUCTURE FILE NUMBER 1807722

PIERS
BRIDGE NO. CUY-90-0095
CROCKER-BASSETT ROAD
OVER I.R. 90

CUY-90-0.95

17 / 26

67 / 80

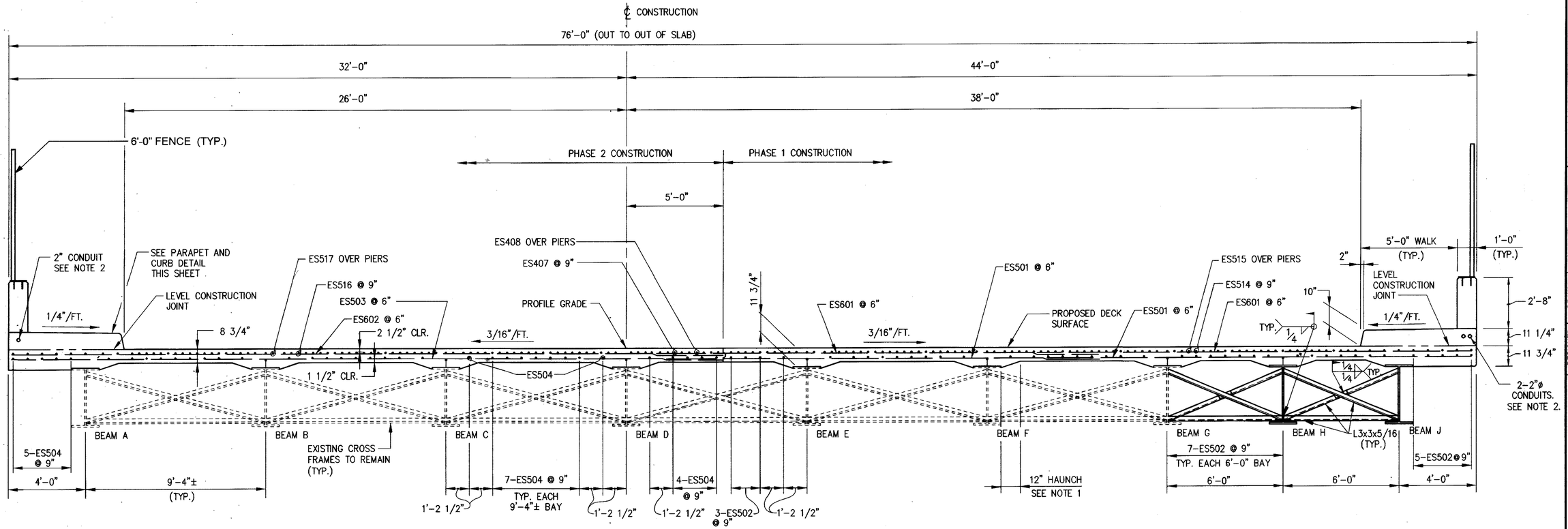

TRANSVERSE SECTION

FOR ADDITIONAL DECK REINFORCING DETAILS SEE SHEET 22/26

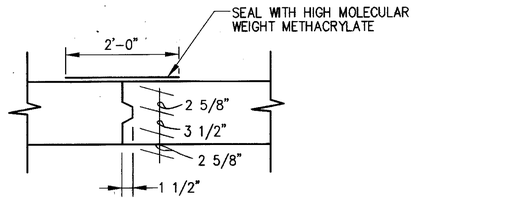

CONSTRUCTION JOINT DETAIL

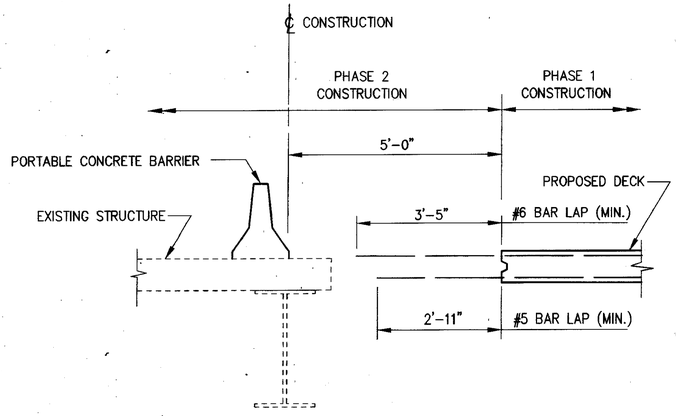

CONSTRUCTION JOINT

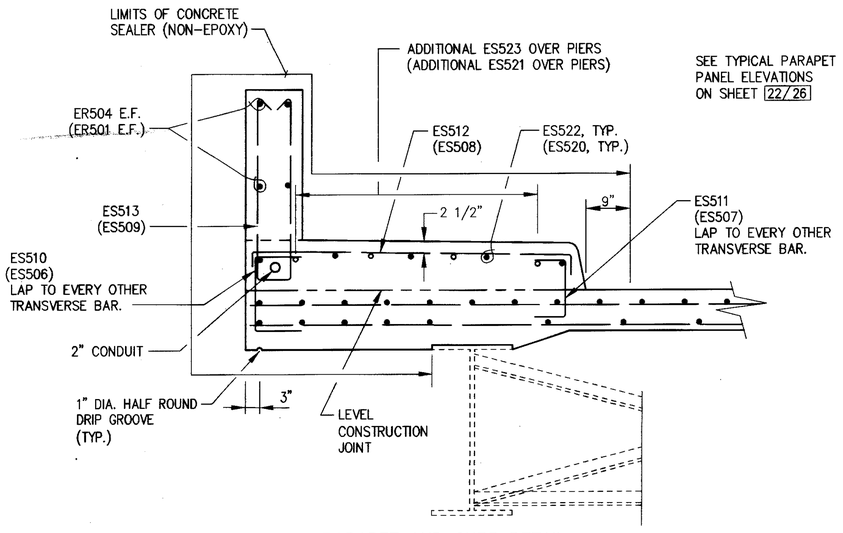

PARAPET AND CURB DETAIL

NOTES:

1. A HAUNCH WIDTH OF 12" SHALL BE USED FOR COMPUTING THE QUANTITY OF CONCRETE. HOWEVER, THE HAUNCH WIDTH MAY VARY BETWEEN 9" AND 15" (PROVIDED THAT THE SLOPE SHALL BE NOT MORE THAN 1:4 FOR A HAUNCH LESS THAN 12" IN WIDTH).
2. PAYMENT FOR THE 2" DIA. CONDUITS IN THE SIDEWALKS SHALL BE INCLUDED IN SPECIAL ITEM 844 – HIGH PERFORMANCE CONCRETE SUBSTRUCTURE OR SUPERSTRUCTURE AS PER PLAN. THE CONDUITS SHALL BE RIGID NON-METALLIC MATERIAL PER 713.07 AND SHALL HAVE WATER TIGHT JOINTS.
3. THE DISTANCE SHOWN FROM TOP OF DECK TO TOP OF STEEL BEAM IS THE THEORETICAL DESIGN DIMENSION. THE QUANTITY OF DECK CONCRETE TO BE PAID FOR SHALL BE BASED ON THIS DIMENSION, EVEN THOUGH DEVIATION FROM IT MAY BE NECESSARY BECAUSE THE TOP FLANGE OF THE BEAM MAY NOT HAVE THE EXACT CAMBER OR CONFORMATION REQUIRED TO PLACE IT PARALLEL TO THE FINISHED GRADE.
4. FOR SHEAR CONNECTOR DETAILS, SEE SHEET 20/26

NOTATION:

CLR. – CLEAR; E.F. – EACH FACE

REVISED BY B&N 1-18-00

DESIGN AGENCY
R.E.WARNER & ASSOCIATES
CONSULTING ENGINEERS
WESTLAKE, OHIO 44145

DESIGNED	DRAWN	REVIEWED	DATE
CLH	GSC	EAD	2/96
CHECKED	REVISED	STRUCTURE FILE NUMBER	
WAN		1807722	

SUPERSTRUCTURE DETAILS
BRIDGE NO. CUY-90-0095
CROCKER-BASSETT ROAD
OVER I.R. 90

CUY-90-0.95

18 / 26

68
80

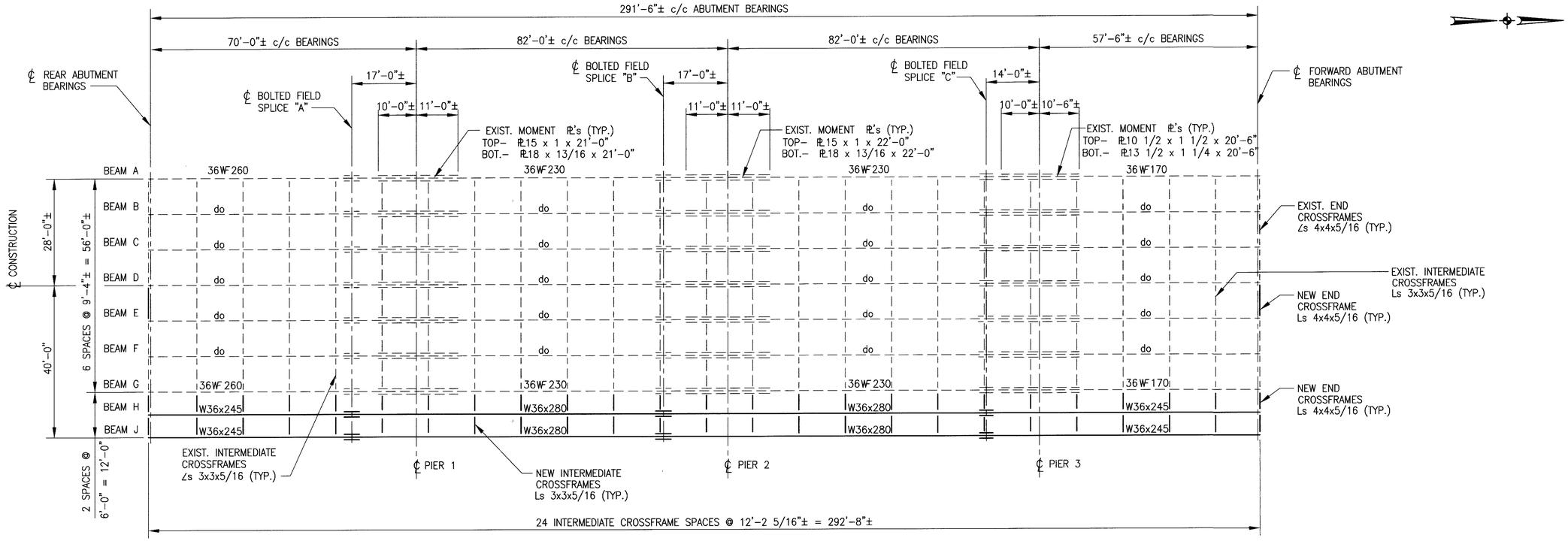

FRAMING PLAN

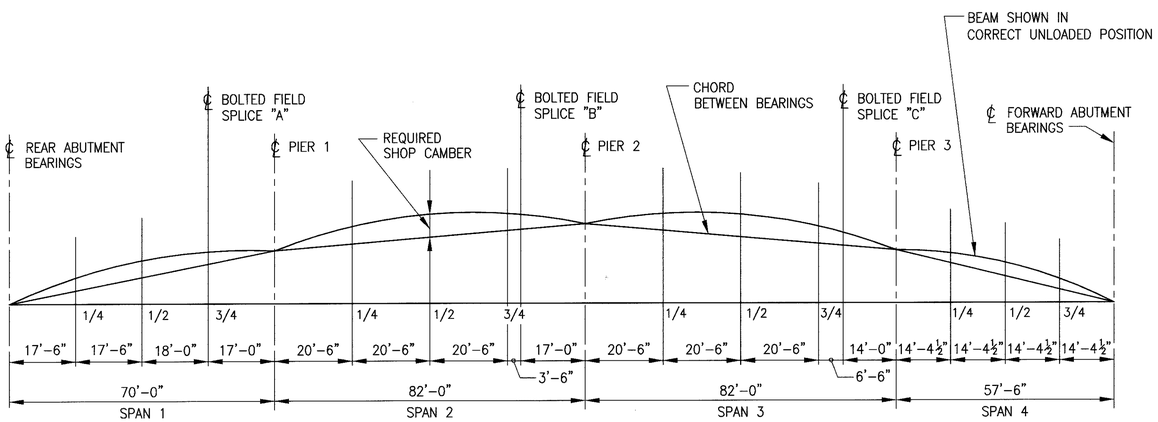

BEAM LAYOUT DIAGRAM

NOTES:

1. WHERE A SHAPE OR PLATE IS DESIGNATED (CVN) THE MATERIAL SHALL MEET SPECIFIED MINIMUM NOTCH TOUGHNESS REQUIREMENTS AS SPECIFIED IN 711.01.
2. WELDED ATTACHMENT OF SUPPORTS FOR CONCRETE DECK FINISHING MACHINE MAY BE MADE TO AREAS OF THE FACIA STRINGER FLANGES DESIGNATED "COMPRESSION". ATTACHMENTS SHALL NOT BE MADE TO AREAS DESIGNATED "TENSION". FILLET WELDS TO COMPRESSION FLANGES SHALL BE NOT CLOSER THAN 1" FROM EDGE OF FLANGE, BE NOT MORE THAN 2" LONG, AND BE NOT SMALLER THAN THE MINIMUM SIZE REQUIRED BY AASHTO.
3. FOR SCREED ELEVATIONS SEE SHEET 23/26 .

DEAD LOAD DEFLECTION AND CAMBER (NEW BEAMS ONLY)

	SPAN 1			SPAN 2				SPAN 3				SPAN 4		
	1/4	1/2	SPLICE "A"	1/4	1/2	3/4	SPLICE "B"	1/4	1/2	3/4	SPLICE "C"	1/4	1/2	3/4
DEFLECTION DUE TO WEIGHT OF STEEL	1/8"	1/8"	1/16"	1/16"	1/8"	1/16"	1/16"	1/16"	1/8"	1/8"	1/16"	0	1/16"	1/16"
DEFLECTION DUE TO REMAINING DEAD LOAD	3/16"	3/8"	3/16"	1/8"	1/4"	1/8"	1/8"	3/16"	5/16"	3/16"	1/8"	1/16"	1/8"	1/8"
ADJUSTMENT REQUIRED FOR VERTICAL CURVE	3/8"	1/2"	3/8"	1/2"	11/16"	1/2"	7/16"	1/2"	11/16"	1/2"	3/8"	1/4"	5/16"	1/4"
REQUIRED SHOP CAMBER	11/16"	1"	5/8"	11/16"	1 1/16"	11/16"	5/8"	3/4"	1 1/8"	13/16"	9/16"	5/16"	1/2"	7/16"

DEAD LOAD DEFLECTION OF EXISTING BEAMS

	SPAN 1			SPAN 2				SPAN 3				SPAN 4		
	1/4	1/2	SPLICE "A"	1/4	1/2	3/4	SPLICE "B"	1/4	1/2	3/4	SPLICE "C"	1/4	1/2	3/4
DEFLECTION DUE TO WEIGHT OF STEEL	1/8"	1/8"	1/16"	1/16"	1/16"	1/16"	0	1/8"	3/16"	1/8"	1/16"	0	1/16"	1/16"
DEFLECTION DUE TO REMAINING DEAD LOAD	7/16"	9/16"	1/4"	5/16"	9/16"	5/16"	3/16"	3/8"	9/16"	5/16"	3/16"	1/8"	1/4"	1/4"
TOTAL DEAD LOAD DEFLECTION	9/16"	11/16"	5/16"	3/8"	5/8"	3/8"	3/16"	1/2"	3/4"	7/16"	1/4"	1/8"	5/16"	5/16"

REVISED BY B&N 1-18-00

DESIGN AGENCY
R.E.WARNER & ASSOCIATES
CONSULTING ENGINEERS
WESTLAKE, OHIO 44145

DESIGNED	DRAWN	REVIEWED	DATE
CLH	CLG	ART	7/26/99
CHECKED	REVISED	STRUCTURE FILE NUMBER	
CDW	NFF	1807722	

FRAMING PLAN
BRIDGE NO. CUY-90-0095
CROCKER-BASSETT ROAD
OVER I.R. 90

CUY-90-0.95

19/26

69
80

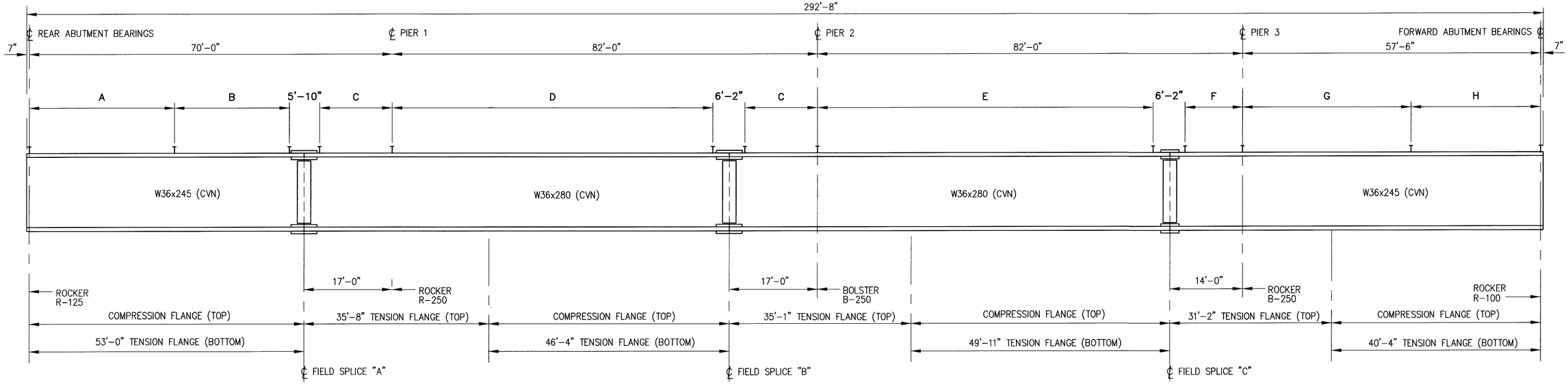

NEW BEAM ELEVATION

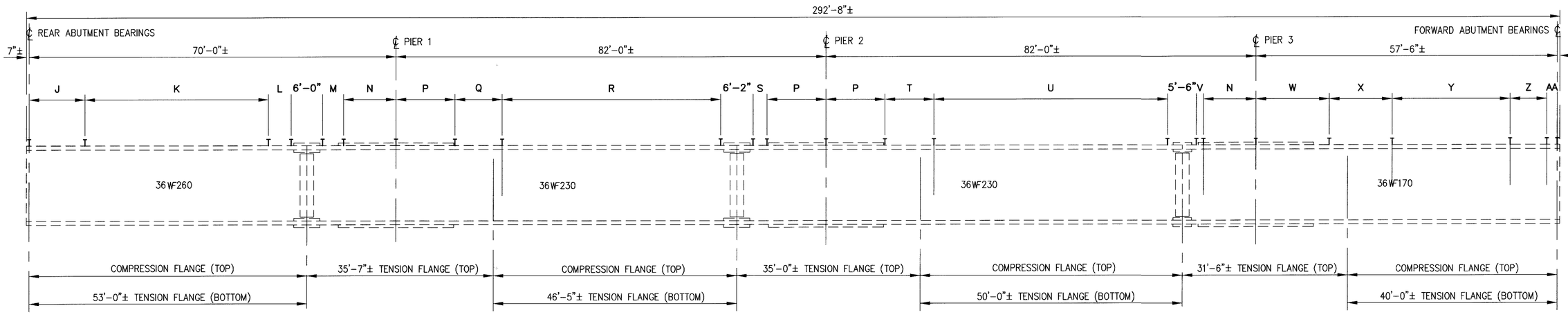

EXISTING BEAM ELEVATION

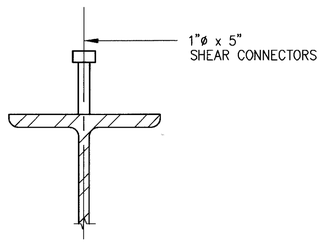

TYPICAL SECTION
BEAM "H" ONLY

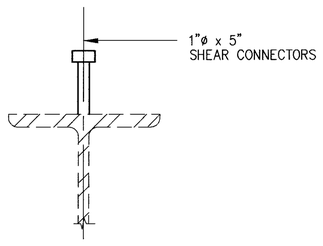

TYPICAL SECTION
(BEAMS B,C,D,E,F,G)

NOTE:

1. WELDING ON FLANGES DESIGNATED "TENSION" IS STRICTLY PROHIBITED. WELDED ATTACHMENT OF SUPPORTS FOR CONCRETE DECK FINISHING MACHINE IS PROHIBITED.

SHEAR STUD SPACING (BEAM H)

A = 56 @ 6" = 28'-0"
B = 38 @ 7" = 22'-2"
C = 24 @ 7" = 14'-0"
D = 106 @ 7" = 61'-10"
E = 111 @ 7" = 64'-9"
F = 19 @ 7" = 11'-1"
G = 65 @ 6" = 32'-6"
H = 60 @ 5" = 25'-0"

SHEAR STUD SPACING (BEAMS B,C,D,E,F,G)

J = 32 @ 4" = 10'-8"
K = 84 @ 5" = 35'-0"
L = 13 @ 4" = 4'-4"
M = 12 @ 4" = 4'-0"
N = 8 @ 15" = 10'-0"
P = 9 @ 15" = 11'-3"
Q = 27 @ 4" = 9'-0"
R = 100 @ 5" = 41'-8"
S = 8 @ 4" = 2'-8"
T = 28 @ 4" = 9'-4"
U = 107 @ 5" = 44'-7"
V = 4 @ 4" = 1'-4"
W = 14 @ 12" = 14'-0"
X = 36 @ 4" = 12'-0"
Y = 54 @ 5" = 22'-6"
Z = 21 @ 4" = 7'-0"
AA = 4 @ 6" = 2'-0"

REVISED BY B&N 1-18-00

DESIGN AGENCY
R.E. WARNER & ASSOCIATES
CONSULTING ENGINEERS
WESTLAKE, OHIO 44145

DATE 7/26/99
STRUCTURE FILE NUMBER 1807722
REVIEWED NFF
DRAWN CLG
REVISED
DESIGNED CLH
CHECKED CDW

BEAM ELEVATIONS
BRIDGE NO. CUY-90-0095
CROCKER-BASSETT ROAD
OVER I.R. 90

CUY-90-0.95

20 / 26

70
80

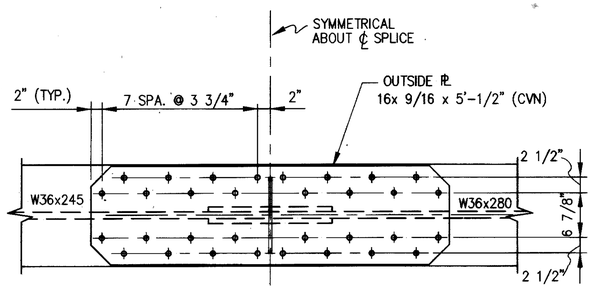

VIEW A – A

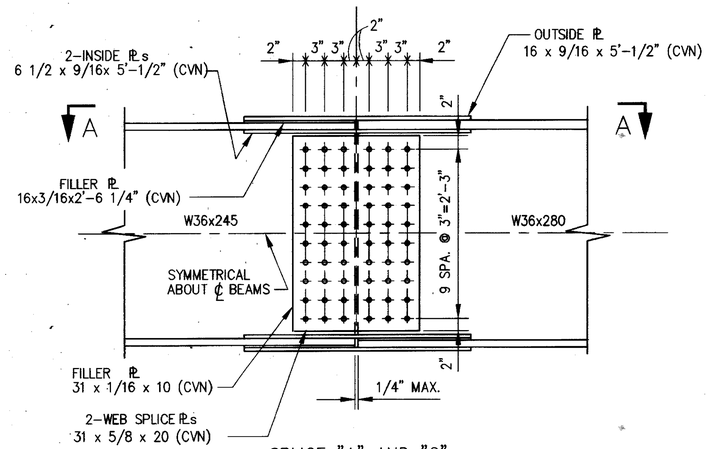

SPLICE "A" AND "C"

FOR ADDITIONAL DETAILS SEE STANDARD DETAILS DRAWING BS-1-93
USE SIMILAR TO W36x245 BEAM SPLICE DETAIL

BOLTED FIELD SPLICE DETAILS

FOR DETAILS OF SPLICE "B" SEE STANDARD DRAWING BS-1-93
USE SIMILAR TO W36x280 BEAM SPLICE DETAIL

NOTES:

1. WHERE A PLATE IS DESIGNATED (CVN) THE MATERIAL SHALL MEET SPECIFIED MINIMUM NOTCH TOUGHNESS REQUIREMENTS AS SPECIFIED IN 711.01.
2. HIGH STRENGTH BOLTS SHALL BE 1" DIAMETER A325, GALVANIZED, UNLESS OTHERWISE NOTED.

REVISED BY B&N 1-18-00

DESIGN AGENCY
R.E. WARNER & ASSOCIATES
CONSULTING ENGINEERS
WESTLAKE, OHIO 44145

DESIGNED	DRAWN	REVIEWED	DATE
CLH	CLG	NFF	1/7/00
CHECKED	REVISED	STRUCTURE FILE NUMBER	
CDW	NFF	1807722	

STEEL FRAME DETAIL
BRIDGE NO. CUY-90-0095
CROCKER-BASSETT ROAD
OVER I.R. 90

CUY-90-0.95

21 / 26

71
80

0:\EX81892\CDROM\SFRMDTR2.DWG NFF DATE 2/5/00

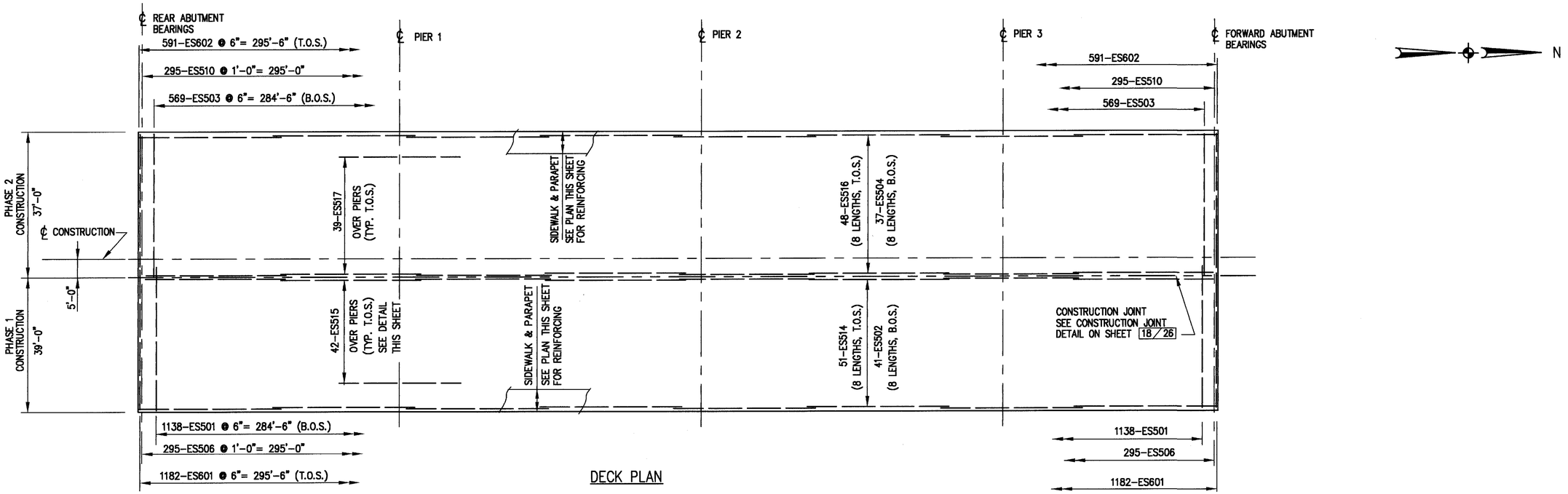

DECK PLAN

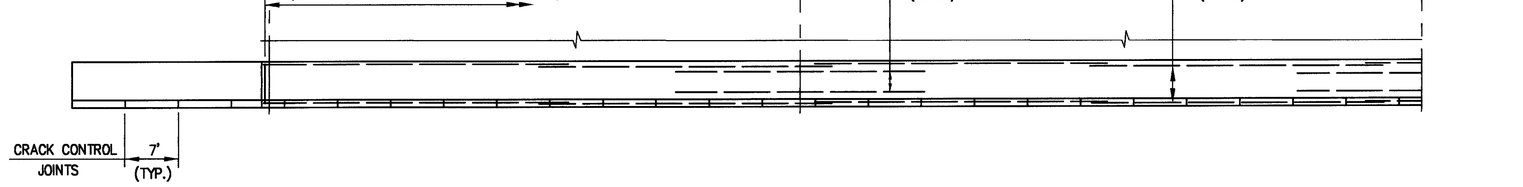

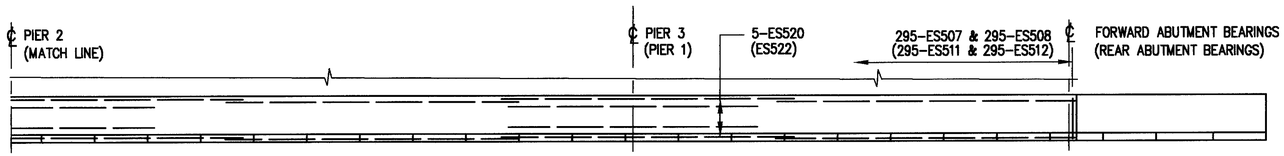

SIDEWALK PLAN

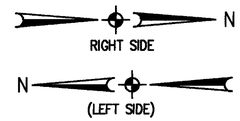

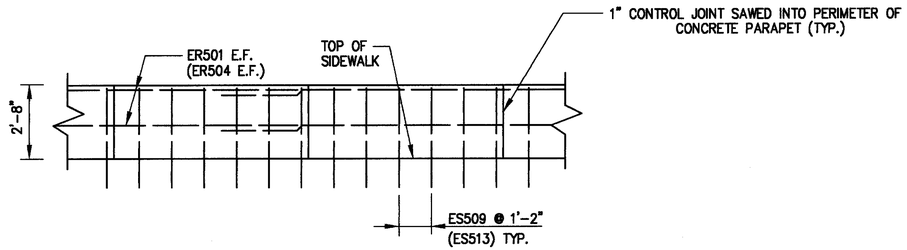

TYPICAL PARAPET REINFORCING ELEVATION VIEW

RIGHT SIDE SHOWN (LEFT SIDE AS NOTED)

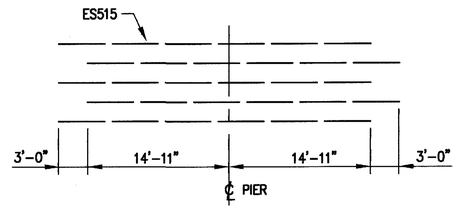

ADDITIONAL REINFORCING OVER PIERS

(PHASE I SHOWN)

DESIGN AGENCY
R.E.WARNER & ASSOCIATES
CONSULTING ENGINEERS
WESTLAKE, OHIO 44145

DESIGNED	DRAWN	REVIEWED	DATE
CLH	GJC	EAD	2/96
CHECKED	REVISED	STRUCTURE FILE NUMBER	
WAH		1807722	

SUPERSTRUCTURE DETAILS
BRIDGE NO. CUY-90-0095
CROCKER-BASSETT ROAD
OVER I.R. 90

CUY-90-0.95

22/26

72
80

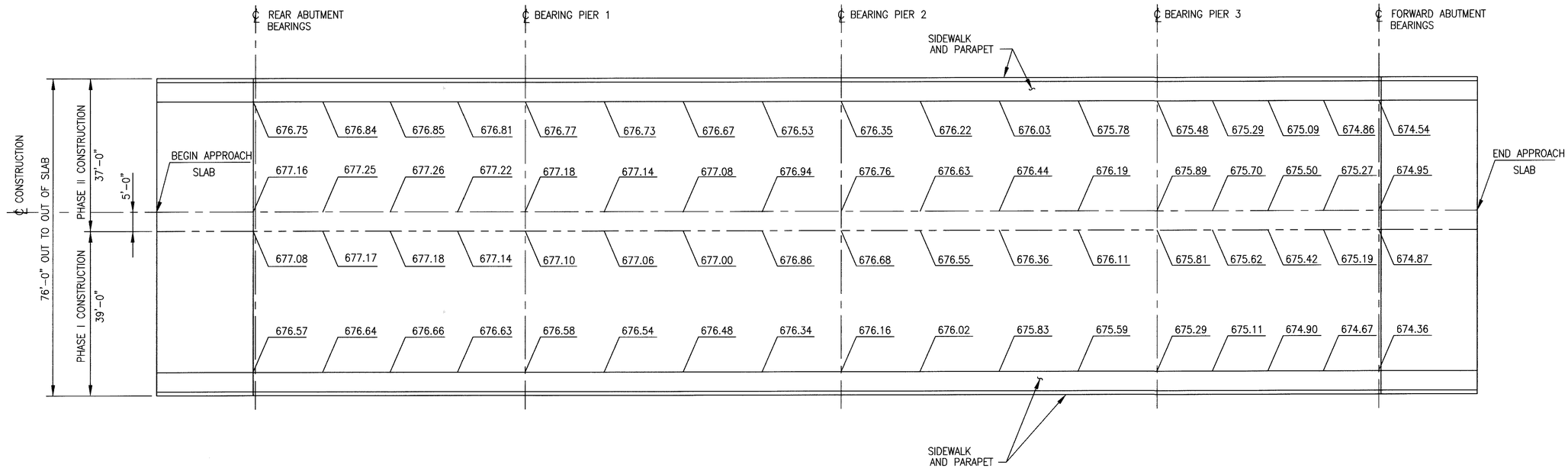

SCREED ELEVATIONS

NOTE:
SCREED ELEVATIONS SHOWN ARE FOR THE DECK SLAB SURFACE PRIOR TO CONCRETE PLACEMENT. ALLOWANCE HAS BEEN MADE FOR ANTICIPATED CALCULATED DEAD LOAD DEFLECTIONS.

REVISED BY B&N 1-18-00

DESIGN AGENCY
R.E.WARNER & ASSOCIATES
CONSULTING ENGINEERS
WESTLAKE, OHIO 44145

DESIGNED	DRAWN	REVIEWED	DATE
CLH	GSC	EAD	2/96
CHECKED	REVISED	STRUCTURE FILE NUMBER	
WAN		1807722	

DECK SCREED ELEVATIONS
BRIDGE NO. CUY-90-0095
CROCKER-BASSETT ROAD
OVER I.R. 90

CUY-90-0.95

23 / 26

73
80

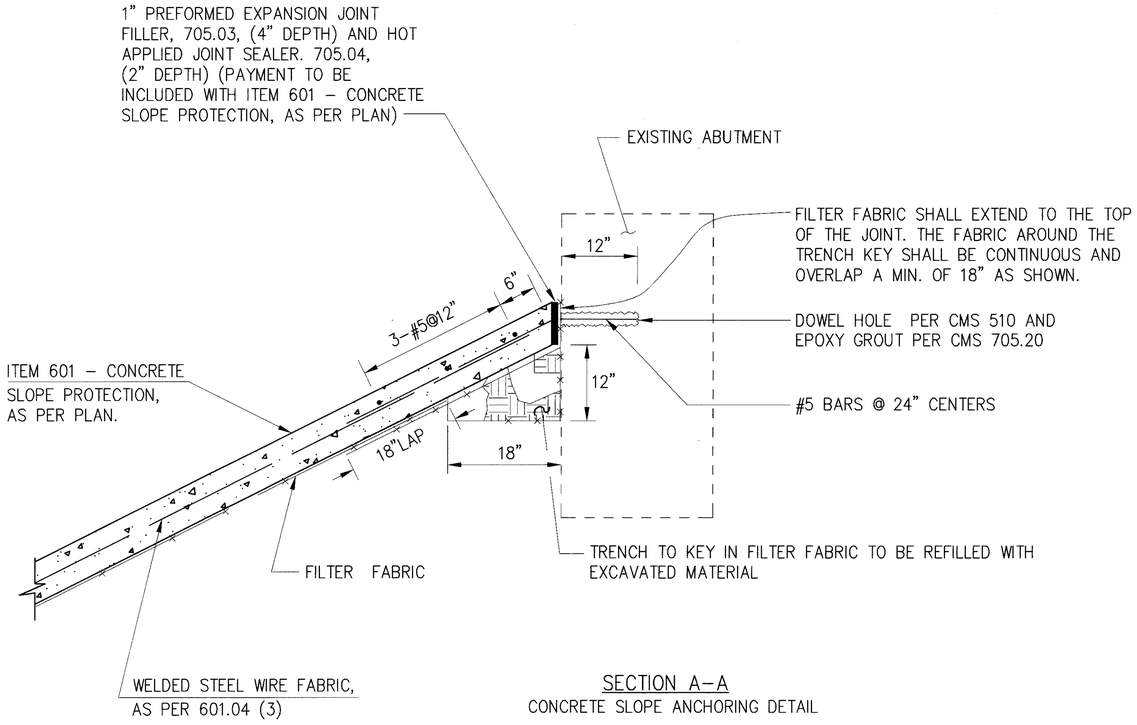

SECTION A–A
CONCRETE SLOPE ANCHORING DETAIL

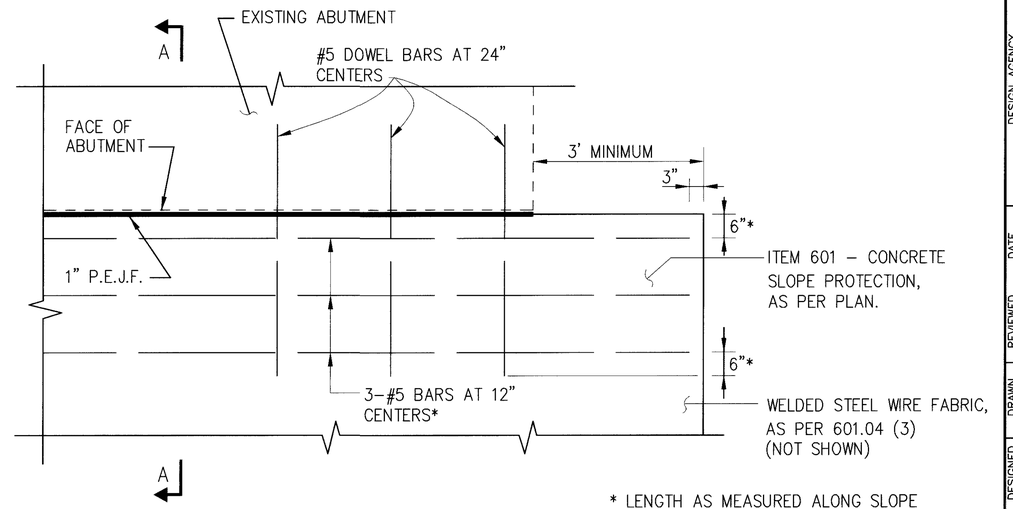

PLAN VIEW
SLOPE PROTECTION REINFORCING DETAIL

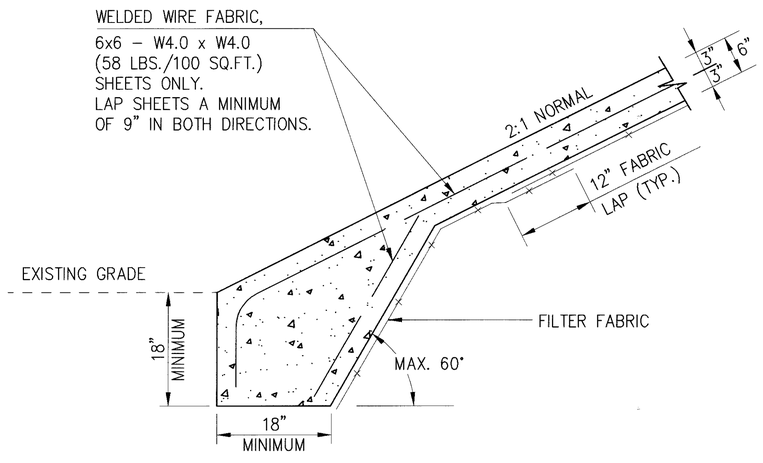

TOE OF SLOPE

ITEM 601 – CONCRETE SLOPE PROTECTION, AS PER PLAN
THIS WORK SHALL INCLUDE THE FOLLOWING:

A. EXCAVATION OF EXISTING CRUSHED AGGREGATE SLOPE PROTECTION TO A DEPTH NECESSARY TO ESTABLISH A PROPER SUBGRADE DEPTH WHICH WILL ACCEPT THE PROPOSED SIX INCH THICK CONCRETE SLOPE PROTECTION. THE EXISTING CRUSHED AGGREGATE NEED NOT BE REMOVED IN ITS ENTIRETY: HOWEVER, THE CONTRACTOR SHALL GRADE THE REMAINING CRUSHED AGGREGATE TO PROVIDE A UNIFORM PLANE FOR THE SUBGRADE. ADDITIONAL MATERIAL MEETING THE REQUIREMENTS OF ITEM 203 MAY BE REQUIRED, AS DIRECTED BY THE ENGINEER, TO FILL VOIDS BETWEEN THE CRUSHED AGGREGATE.

   AT THE CONTRACTOR'S OPTION, THE ENTIRE TWELVE INCH LAYER OF CRUSHED AGGREGATE SLOPE PROTECTION MAY BE EXCAVATED AND REPLACED WITH EMBANKMENT THAT MEETS THE REQUIREMENTS OF 203 AND WILL BRING THE PROPOSED SUBGRADE TO SIX INCHES BELOW THE FINAL GRADE OF THE PROPOSED CONCRETE SLOPE PROTECTION. THIS ADDITIONAL EXCAVATION AND EMBANKMENT WORK WILL BE DONE AT NO ADDITIONAL COST TO THE STATE.

B. PROPOSED SLOPE PROTECTION: THE INSTALLATION OF THE NEW WELDED STEEL WIRE FABRIC REINFORCED SLOPE PROTECTION AS SHOWN ON THIS SHEET ALONG WITH REINFORCING STEEL, WELDED STEEL FABRIC, 709.14, DOWEL HOLES AND GROUT, GEOTEXTILE FILTER, PREFORMED EXPANSION JOINT FILLER AND CONCRETE. THE FABRIC SHALL MEET THE REQUIREMENTS OF 712.09, TYPE B (NONWOVEN). FIELD SPLICES SHALL CONSIST OF 12 INCHES OF OVERLAP SECURED IN ANY MANNER SUITABLE TO THE ENGINEER THAT WILL ASSURE THAT THE OVERLAP IS MAINTAINED. OVERLAP CLOSURE AT THE TOP OF THE TRENCH SHALL BE 18 INCHES, SECURED AS ABOVE.

   ALL COSTS OF CONSTRUCTING THE NEW SLOPE PROTECTION, INCLUDING ALL NECESSARY EMBANKMENT, EXCAVATION, REBARS, DOWELS, WELDED STEEL WIRE FABRIC, FILTER FABRIC, PREFORMED EXPANSION JOINT FILLER, JOINT SEALER, AND CONCRETE SHALL BE INCLUDED UNDER ITEM 601 – CONCRETE SLOPE PROTECTION, AS PER PLAN.

REVISED BY B&N 1-18-00

DESIGN AGENCY
R.E.WARNER & ASSOCIATES
CONSULTING ENGINEERS
WESTLAKE, OHIO 44145

DESIGNED	DRAWN	REVIEWED	DATE
CLH	GSC	EAD	2/96
CHECKED	REVISED	STRUCTURE FILE NUMBER	
WAN		1807722	

SLOPE PROTECTION DETAILS
BRIDGE NO. CUY-90-0095
CROCKER-BASSETT ROAD
OVER I.R. 90

CUY-90-0.95

EPOXY COATED REINFORCEMENT
ABUTMENTS

MARK	NUMBER REAR	NUMBER FWD	NUMBER TOTAL	LENGTH	TYPE	A	B	C	D	E	TOTAL
EA501	1	1	2	36'–7"	STR.						77
EA502	1	1	2	20'–11"	STR.						44
EA503	1	1	2	11'–5"	STR.						24
EA504	15	15	30	9'–4"	STR.						292
EA505	1	1	2	3'–6"	STR.						8
EA506	3	3	6	7'–8"	STR.						48
EA507	1	1	2	5'–1"	STR.						11
EA508	2	2	4	12'–2"	STR.						51
EA509	2	2	4	2'–6"	STR.						11
EA510	1	1	2	23'–10"	STR.						50
EA511	2	2	4	5'–10"	STR.						25
EA512	3	3	6	5'–5"	STR.						34
EA513	2	2	4	6'–11"	STR.						29
EA514	5	5	10	3'–6"	STR.						37
EA515	5	5	10	4'–4"	STR.						45
EA516	2	2	4	13'–6"	STR.						57
EA517	2	2	4	15'–0"	STR.						63
EA518	2	2	4	4'–0"	STR.						17
EAD519	9	9	18	2'–0"	STR.						38
EA520	11	0	11	7'–2"	1	6'–6"	0'–10"				82
EA521	11	11	22	8'–6"	2	1'–9"	5'–3"	1'–9"			195
EA522	13	13	26	6'–2"	2	1'–6"	3'–5"	1'–6"			167
EAD523	3	3	6	4'–0"	STR.						25
EAD524	6	6	12	5'–3"	STR.						66
EAD525	4	0	4	4'–9"	STR.						20
EA526	0	11	11	6'–7"	1	5'–11"	0'–10"				76
EAD527	0	4	4	4'–2"	STR.						18
EA528	18	18	36	8'–11"	STR.						335
EA529	6	6	12	5'–7"	STR.						70
EA530	6	6	12	3'–7"	STR.						45
EA531	78	78	156	3'–4"	6	2'–0"	1'–6"				543
EA532	78	78	156	5'–7"	6	3'–9"	2'–0"				909
EA533	78	78	156	8'–6"	4	2'–0"	3'–6"	3'–3"			1383
EA534	78	78	156	9'–8"	8	2'–9"	3'–6"	3'–6"			1573
EA535	12	16	28	11'–6"	9	3'–0"	2'–6"				336
EA536	12	0	12	6'–11"	STR.						87
EA537	4	0	4	7'–9"	STR.						33
EA538	4	0	4	10'–3"	STR.						43
EA539	12	0	12	14'–11"	STR.						187
EA540	24	44	68	5'–9"	STR.						408
EA541	4	0	4	4'–11"	STR.						21
EA542	4	0	4	4'–5"	STR.						19
EA543	4	0	4	3'–11"	STR.						17
EA544	4	0	4	3'–5"	STR.						15
EA545	4	0	4	2'–11"	STR.						13

EPOXY COATED REINFORCEMENT
ABUTMENTS

MARK	NUMBER REAR	NUMBER FWD	NUMBER TOTAL	LENGTH	TYPE	A	B	C	D	E	TOTAL
EA546	12	0	12	2'–6"	STR.						32
EA547	4	0	4	7'–0"	STR.						29
EA548	2	2	4	5'–6"	STR.						23
EA549	0	12	12	11'–9"	STR.						147
EA550	0	4	4	13'–3"	STR.						56
EA551	0	4	4	16'–3"	STR.						68
EA552	0	12	12	19'–9"	STR.						247
EA553	0	4	4	4'–1"	STR.						17
EA554	0	4	4	3'–9"	STR.						16
EA555	0	4	4	3'–5"	STR.						15
EA556	0	4	4	2'–10"	STR.						12
EA557	0	4	4	2'–7"	STR.						11
EA559	0	4	4	7'–11"	STR.						33
EA560	12	16	28	10'–6"	9	2'–6"	2'–6"				307
EA561	0	4	4	2'–3"							10
EA601	11	0	11	14'–4"	4	2'–9"	5'–3"	6'–8"			237
EA602	17	17	34	9'–4"	5	1'–4"	2'–9"				477
EA603	0	11	11	13'–8"	4	2'–9"	5'–3"	6'–0"			226
EA604	12	0	12	19'–8"	3	9'–6"	1'–0"				246
EA605	0	18	18	18'–8"	3	9'–0"	1'–0"				505
EA801	1	1	2	36'–7"	STR.						196
EA802	1	1	2	22'–4"	STR.						120
EA803	1	1	2	15'–10"	STR.						85
EA804	1	1	2	28'–10"	STR.						154
EA805	1	1	2	27'–1"	STR.						145
EA806	1	1	2	20'–7"	STR.						110
EA807	2	2	4	36'–8"	STR.						392
EA808	1	1	2	11'–5"	STR.						61
EA809	5	5	10	9'–4"	STR.						249
EA810	1	1	2	3'–6"	STR.						19
EA811	1	1	2	7'–8"	STR.						41
EA812	1	1	2	5'–1"	STR.						27
EA813	7	7	14	14'–7"	STR.						545
EAD814	2	2	4	2'–0"	STR.						22
EAD815	4	4	8	2'–0"	STR.						43
EAD816	9	9	18	2'–0"	STR.						97
EA817	4	4	8	36'–7"	STR.						782
EA818	1	1	2	33'–7"	STR.						180
EA819	4	4	8	27'–1"	STR.						579
EA820	4	4	8	22'–4"	STR.						477
EA821	10	0	10	11'–10"	STR.						316
EA822	0	10	10	16'–9"	STR.						448
EAD823	6	12	18	2'–0"	STR.						97
ED824	42	42	84	4'–11"	7	12"	2'–7"				1103

ABUTMENTS TOTAL = 16,758 LBS.

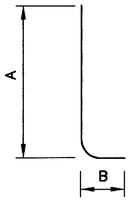

TYPE 1

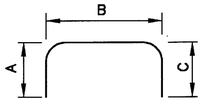

TYPE 2

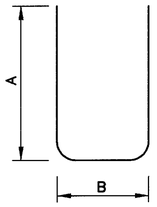

TYPE 3

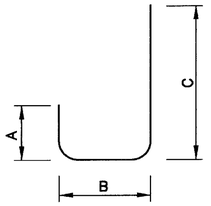

TYPE 4

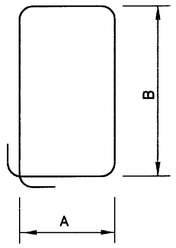

TYPE 5

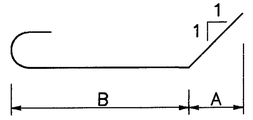

TYPE 7

DESIGN AGENCY
R.E. WARNER & ASSOCIATES
CONSULTING ENGINEERS
WESTLAKE, OHIO 44145

DESIGNED	DRAWN	REVIEWED	DATE
CLH	ESC	EAD	2/96
CHECKED	REVISED	STRUCTURE FILE NUMBER	
WAW		1807722	

REINFORCING STEEL SCHEDULE
BRIDGE NO. CUY-90-0095
CROCKER ROAD
OVER I.R. 90

CUY-90-0.95

EPOXY COATED REINFORCEMENT
PIERS

MARK	NUMBER		TOTAL	LENGTH	TYPE	A	B	C	D	E	TOTAL
EP401			12	5'–4"	2	1'–6"	2'–6"	1'–6"			43
EP402			6	5'–8"	2	1'–8"	2'–6"	1'–8"			23
EP403			6	6'–0"	2	1'–10"	2'–6"	1'–10"			24
EP404			12	6'–4"	2	2'–0"	2'–6"	2'–0"			51
EP405			12	6'–8"	2	2'–2"	2'–6"	2'–2"			54
EP406			12	7'–0"	2	2'–4"	2'–6"	2'–4"			57
ESP401			1	14'–7"	10	4 1/2"	2'–6"				263
ESP402			2	15'–2"	10	4 1/2"	2'–6"				545
EP501			6	11'–6"	STR.						72
EP502			6	5'–11"	STR.						37
EP503			6	8'–5"	STR.						53
EPD601			24	2'–0"	STR.						72
EP801			48	6'–6"	STR.						833
EP802			15	7'–0"	STR.						280
EP803			15	11'–6"	STR.						461
EP804			15	4'–6"	STR.						181
EP1001			9	17'–8"	STR.						685
EP1002			18	18'–3"	STR.						1,414
EP1003			27	7'–1"	1	5'–11"	1'–6"				823

PIERS TOTAL = 5,971 LBS.

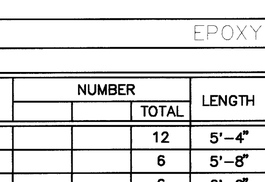

TYPE 6

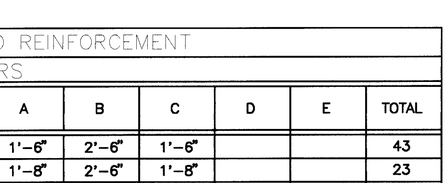

TYPE 8

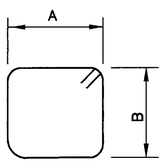

TYPE 9

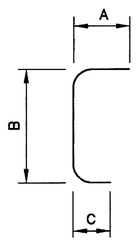

TYPE 11

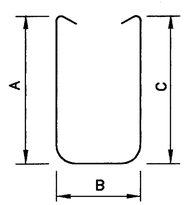

TYPE 12

EPOXY COATED REINFORCEMENT
SUPERSTRUCTURE

MARK	NUMBER		TOTAL	LENGTH	TYPE	A	B	C	D	E	TOTAL
ES501			1138	20'–10"	STR.						24,728
ES502			328	39'–6"	STR.						13,513
ES503			569	36'–9"	STR.						21,810
ES504			296	39'–6"	STR.						12,195
ES506			295	2'–9"	11	0'–10"	1'–4"	0'–10"			847
ES507			295	2'–5"	11	0'–10"	1'–0"	0'–10"			744
ES508			295	6'–9"	11	0'–8"	5'–8"	0'–8"			2,077
ES509			296	7'–10"	12	3'–3"	0'–8"	3'–3"			2,419
ES510			295	2'–9"	11	0'–10"	1'–4"	0'–10"			847
ES511			295	2'–5"	11	0'–10"	1'–0"	0'–10"			744
ES512			295	6'–9"	11	0'–8"	5'–8"	0'–8"			2,077
ES513			296	7'–10"	12	3'–3"	0'–8"	3'–3"			2,419
ES514			408	39'–6"	STR.						16,809
ES515			126	32'–10"	STR.						4,315
ES516			384	39'–6"	STR.						15,821
ES517			117	32'–10"	STR.						4,007
ES520			40	39'–6"	STR.						1,648
ES521			12	32'–10"	STR.						411
ES522			40	39'–6"	STR.						1,648
ES523			12	32'–10"	STR.						411
ER501			40	37'–2"	STR.						1,551
ER504			40	37'–2"	STR.						1,551
ES601			1182	21'–1"	STR.						37,431
ES602			591	36'–9"	STR.						32,623

SUPERSTRUCTURE TOTAL = 202,646 LBS.

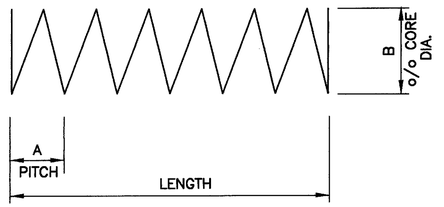

TYPE 10

NOTES:

1. ALL DIMENSIONS ARE OUT TO OUT OF BARS.
2. ALL REINFORCING BARS SHALL BE EPOXY COATED.
3. SPIRAL REINFORCING BARS: THE LENGTH SHOWN IN THE STEEL LIST FOR THE SPIRAL BARS IS THE LENGTH OF THE SPIRAL ALONG THE AXIS OF THE SPIRAL. ONE AND ONE–HALF CLOSED–COIL TURNS SHALL BE PROVIDED AT ENDS OF EACH SPIRAL UNIT. FOUR STEEL CHANNEL, TEE OR ANGLE SPACERS, WEIGHING APPROXIMATELY 0.80 LB PER LINEAR FEET OF SPACER, SHALL BE PROVIDED FOR EACH SPIRAL UNIT. THEY SHALL BE EQUALLY SPACED ALONG THE PERIPHERY OF THE COILS. THE NUMBER OF POUNDS OF THESE SPACERS, BASED ON 3.20 LBS PER LINEAR FOOT, IS INCLUDED IN THE WEIGHT OF SPIRAL BARS.

DESIGN AGENCY
R.E.WARNER & ASSOCIATES
CONSULTING ENGINEERS
WESTLAKE, OHIO 44145

DESIGNED CLH | DRAWN RSC | REVIEWED EAD | DATE 2-96
CHECKED WAW | REVISED | STRUCTURE FILE NUMBER 1807722

REINFORCING STEEL SCHEDULE
BRIDGE NO. CUY–90–0095
CROCKER–BASSETT ROAD
OVER I.R. 90

CUY-90-0.95

26 / 26

76
80

INTRODUCTION

This report presents the results of a soil investigation conducted at the site of the proposed **widening of Crocker Road Bridge over I-90 designated as CUY-90-0.95 in Westlake, Ohio.**

The subsurface investigation was performed to determine the subsurface conditions and structural characteristics of the subsurface soil and its suitability to support the proposed structure.

This investigation was performed for design purposes only and that actual subsurface conditions might be different at the time of construction.

The original drawings and data may be inspected at future dates at Solar Testing Laboratories, Inc.

GEOLOGY

This site lies in the Lake Plains section of the Central Lowland Physiographic Province. The topography of this area is gently rolling with a few scattered beach ridges. The surficial materials consist of silts and clays of a Lacustrine origin that are commonly laminated. In some areas, these Lacustrine deposits may be underlain by glacial tills. The bedrock, which lies approximately twenty (20) feet below the surface at this site, consists of Devonian Age Shales.

FIELD INVESTIGATION

Three (3) soil borings with sampling and rock coring were conducted at the proposed site on between **May 18, and July 1, 1993,** to determine the subsurface conditions.

1. SPLIT-SPOON SAMPLING

Sampling was conducted as outlined below, in accordance with ASTM D-1586.

a. Using approved split-barrel equipment, three (3) to four (4) split-barrel samples were taken in the first ten (10) feet, and one (1) or more samples every five (5) feet thereafter.

b. Hammer blows per six (6) inch penetration intervals (0-6"; 6-12"; 12-18") were logged with a 140 pound hammer at 30 inch free fall. Standard Penetration Test results were entered in a driller's log and identified by boring number and depth.

c. Ground water level was checked and accordingly, measured and recorded upon encounter and at completion of each test boring.

d. Two (2) "undisturbed" soil samples (**thin-walled Shelby Tubes**) were taken in accordance with ASTM D-1587, at depths of five (5) and six (6) feet below ground surface in boring in boring **B-1.**

e. All samples were visually classified immediately upon removal from the sampler, identified in the driller's log by boring number and depth, placed in sealed glass sampling containers which were individually identified as per the driller's log, and collected for removal to our soil mechanics laboratory in accordance with ASTM D-4220.

2. ROCK CORING

Rock coring was performed as outlined below, in accordance with ASTM D-2113.

a. Casing was seated in bedrock to prevent cave-in of the overburden into the test hole during coring operations.

b. Using an approved, NX size, double-tube, swivel-type core barrel, rock was cored in runs up to five (5) feet in length.

c. The rock samples were removed from the core barrel and placed in approved core boxes.

d. The length recovered was measured and the rock was visually classified. The above information was entered in the driller's logs by boring number and depth.

e. The core boxes were identified as per the driller's logs, labeled for stratigraphic sequence and collected for removal to our soil laboratory in accordance with ASTM D-4220.

All soil samples were subjected to laboratory visual-manual soil classification in accordance with ASTM D-2488 utilizing the nomenclature of the **Unified Soil Classification System,** ASTM D-2487. All rock samples were classified in accordance with ASTM C-294.

The **Rock Quality Designation (RQD)** of the rock cores was determined. The RQD is determined by first summing the length of the pieces of the core which are four (4) inches or longer, then dividing this sum by the length of the coring run.

LABORATORY TESTING

Moisture Content testing was performed in accordance with ASTM D-2216 on representative portions of selected split-barrel **samples** to determine the in-place moisture content of the existing soils.

Representative portions of four (4) selected samples were subjected to laboratory **Soil Particle Size Analysis** testing, in accordance with ASTM D-422. Procedures included sieve and hydrometer sedimentation determinations. Further, the same soil samples were subjected to **Plasticity Index** testing, including liquid and plastic limits, in accordance with ASTM D-4318.

INVESTIGATIONAL FINDINGS AND OBSERVATIONS

All borings disclosed approximately fifteen (15) to twenty three (23) inches of pavement components including base material, as they were advanced through the approach slabs. Below the pavement, mostly cohesive **(silt and clay)** fill comprising few interlayers of silty sand and sandstone fragments, was encountered extending to bedrock whose elevation varies between **650** feet and **656 feet.** The bedrock consisted of highly weathered brown and/or gray shale with a very poor Rock Mass Quality as indicated by the Rock Quality Designation values.

Moisture content distribution was fairly uniform. Most of the data varied between **10%** and **15%.** Ground water was encountered only in boring **B-2 (south abutment)** at a depth of eighteen (18) feet below grade **(elevation 659 feet).**

LEGEND

TEST BORING LOCATION - PLAN VIEW

TEST BORING PLOTTED TO VERTICAL SCALE ONLY - PROFILE

X-Y-Z — FIGURES BESIDE THE BORING LOG IN PROFILE INDICATE THE NUMBER OF BLOWS OF STANDARD PENETRATION TEST
- X = NUMBER OF BLOWS FOR FIRST 6 INCHES
- Y = NUMBER OF BLOWS FOR SECOND 6 INCHES
- Z = NUMBER OF BLOWS FOR THIRD 6 INCHES

TR_____ TOP OF ROCK

W_____ WATER ON ENCOUNTER

▼_____ WATER ON COMPLETION

XX_____ FIGURE BESIDE THE BORING LOG IN PROFILE INDICATES THE MOISTURE CONTENT

COMPONENT		SIZE
BOULDERS		Larger than 8"
COBBLES		8" to 3"
GRAVEL	COARSE	3" to 3/4"
	FINE	3/4" to 2.0 mm (3/4" to #10 sieve)
SAND	COARSE	2.0 mm to 0.42 mm (#10 to #40 sieve)
	FINE	0.42 mm to 0.074 mm (#40 to #200 sieve)
SILT		0.074 mm to 0.005 mm (#200 to .005 mm)
CLAY		Smaller than .005 mm

TERMS	RANGE
Trace	0 - 10%
Little	10 - 20%
Some	20 - 35%
And	35 - 50%

SYMBOLS OF SOIL AND ROCK TYPES

Berm Material

Random Fill

Weathered Shale

ADDITIONAL SOIL INFORMATION

The soil profile and/or structure foundation investigation sheets contain all available soil and bedrock information which can be conveniently shown. Additional subsurface investigation may have been made to study some aspect of the project. More information, if any, may be obtained in District (12), the Bureau of Tests at 1600 West Broad Street, the Bureau of Location and Design, or the Bureau Bridges and Structural Design at 25 South Front Street in Columbus, Ohio.

SOLAR TESTING LABORATORIES, INC.

STL FILE NUMBER A93173x10 — STRUCTURE FILE NUMBER

DATE 12-05-94 — APPROVED

DRAWN HND — CHECKED GWA

GEOTECHNICAL INVESTIGATION - CROCKER ROAD

CUY-90-0.95

77/80

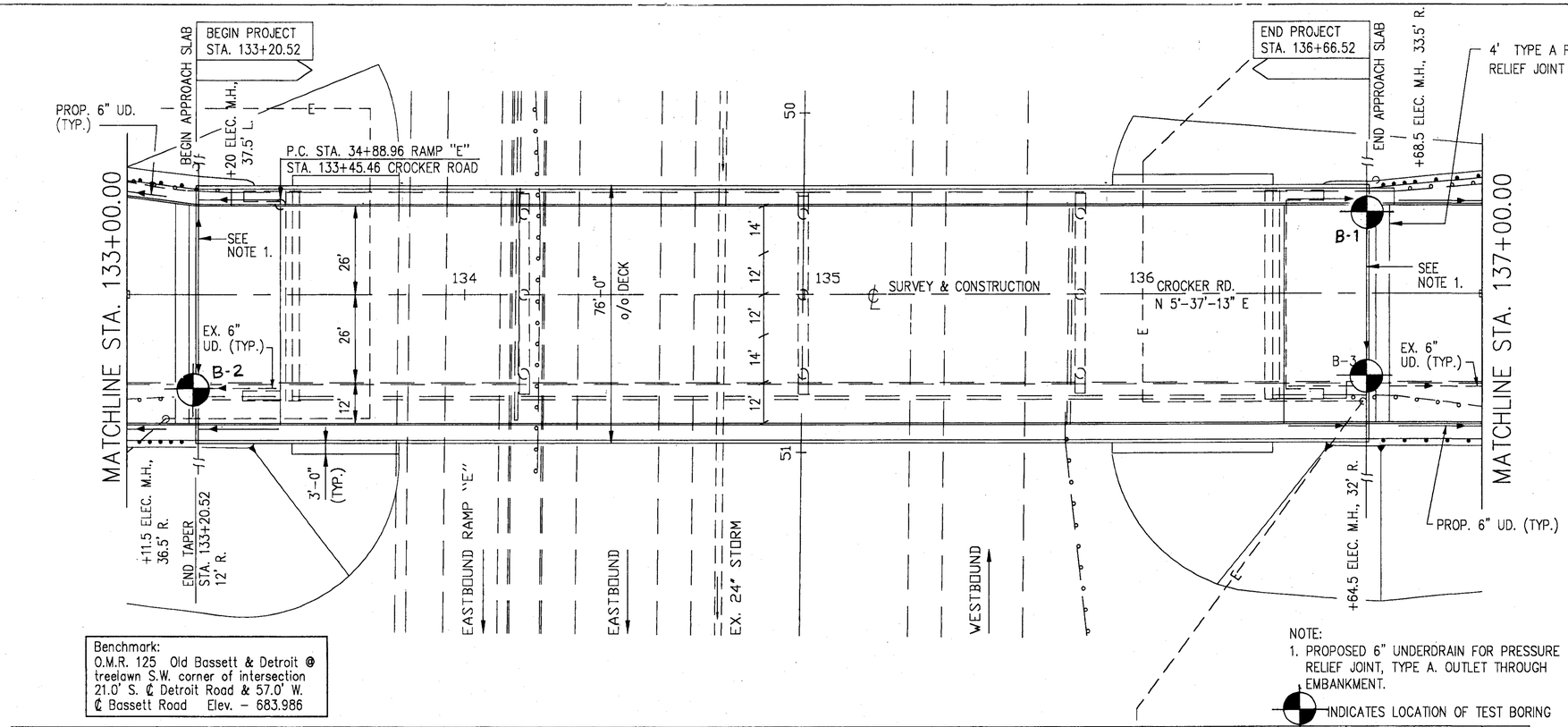

Benchmark:
O.M.R. 125 Old Bassett & Detroit @ treelawn S.W. corner of intersection 21.0' S. ℄ Detroit Road & 57.0' W. ℄ Bassett Road Elev. – 683.986

NOTE:
1. PROPOSED 6" UNDERDRAIN FOR PRESSURE RELIEF JOINT, TYPE A. OUTLET THROUGH EMBANKMENT.

INDICATES LOCATION OF TEST BORING

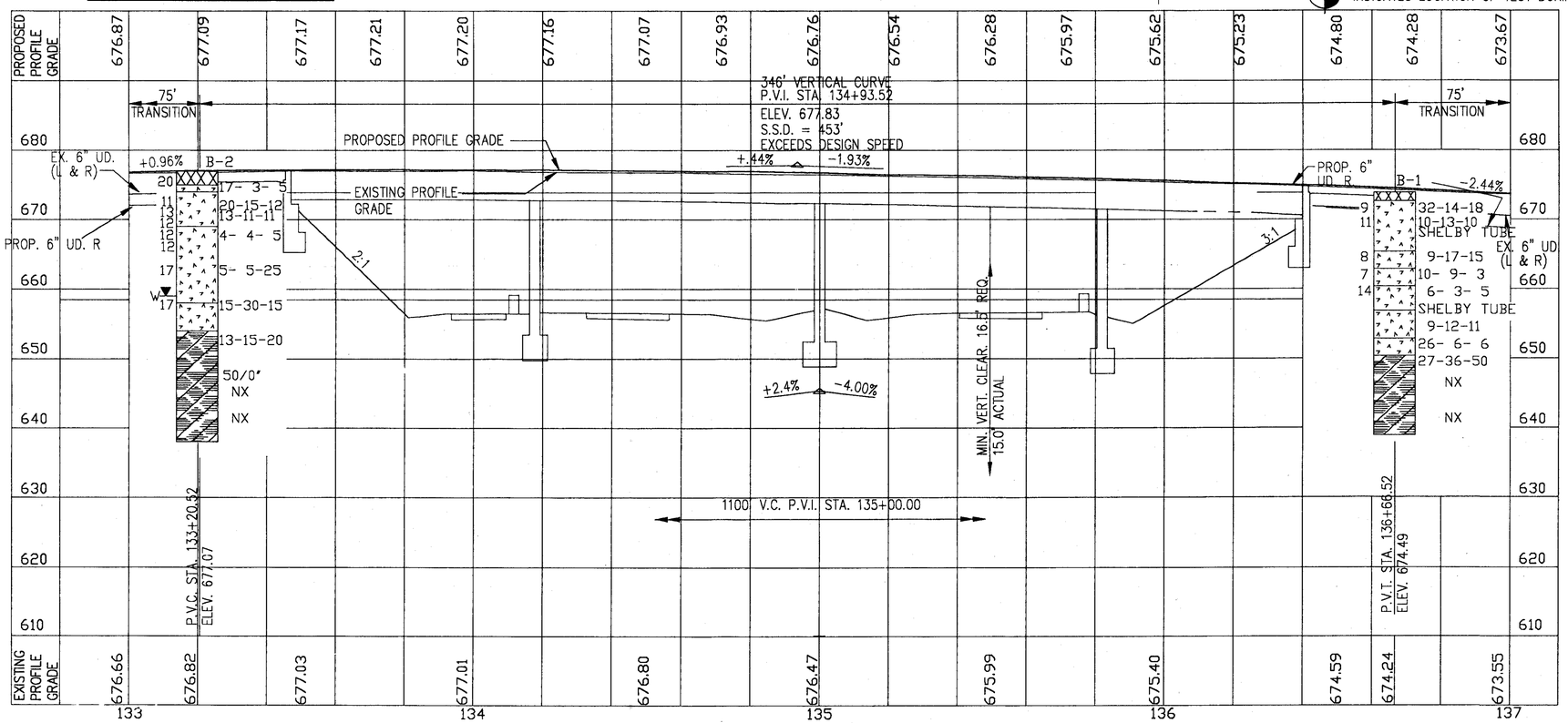

EXISTING STRUCTURE DATA
Structure File No. 1807722

TYPE: 4 Span Continuous Steel Beam Reinf. Conc. Deck and Substructure
SPAN: 70'; 2 at 82'; 57.5' c/c Bearings
ROADWAY: 52'–0"± f/f of 4' Sidewwalks
SUPERSTRUCTURE: Reinforced Concrete Slab
WEARING COURSE: 1" Monolithic Concrete
ALIGNMENT: Tangent
SKEW: None
CONDITION: Fair
DATE BUILT: 1970

PROPOSED STRUCTURE
TYPE: 4 Span Composite Steel Beam Reinf. Conc. Deck and Substructure
SPAN: 70'; 2 at 82'; 57.5' c/c Bearings
ROADWAY: 64'–0" f/f of 5' Sidewwalks
SKEW: None
LOADING: HS–20–44 and Alternate Military Loading (Case II)
WEARING SURFACE: 1" Monolithic Concrete
APPROACH SLAB: (AS–1–81) 25'–0"
ALIGNMENT: Tangent
CROWN: 3/16"/ft.
LAT. & LONG.: 41°28'00", 81°57'10"

SOLAR TESTING LABORATORIES, INC.

STL FILE NUMBER	STRUCTURE FILE NUMBER
A93173x10	
DATE	APPROVED
12-05-94	
DRAWN	CHECKED
HND	GWA

PLAN AND PROFILE – CROCKER ROAD
STA. 133+00.00 TO 137+00.00

CUY–90–0.95

78/80

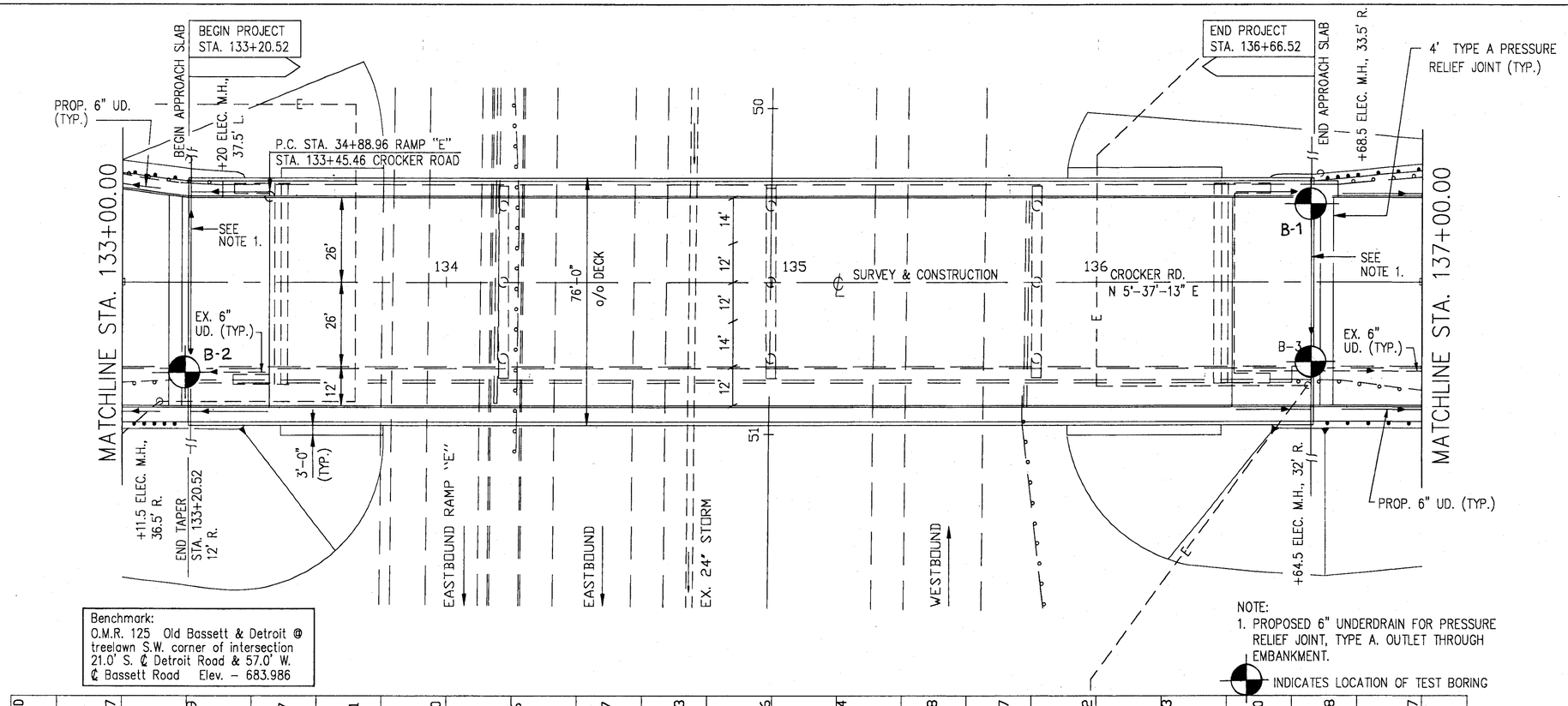

Benchmark:
O.M.R. 125 Old Bassett & Detroit @ treelawn S.W. corner of intersection 21.0' S. ℄ Detroit Road & 57.0' W. ℄ Bassett Road Elev. – 683.986

NOTE:
1. PROPOSED 6" UNDERDRAIN FOR PRESSURE RELIEF JOINT, TYPE A. OUTLET THROUGH EMBANKMENT.

INDICATES LOCATION OF TEST BORING

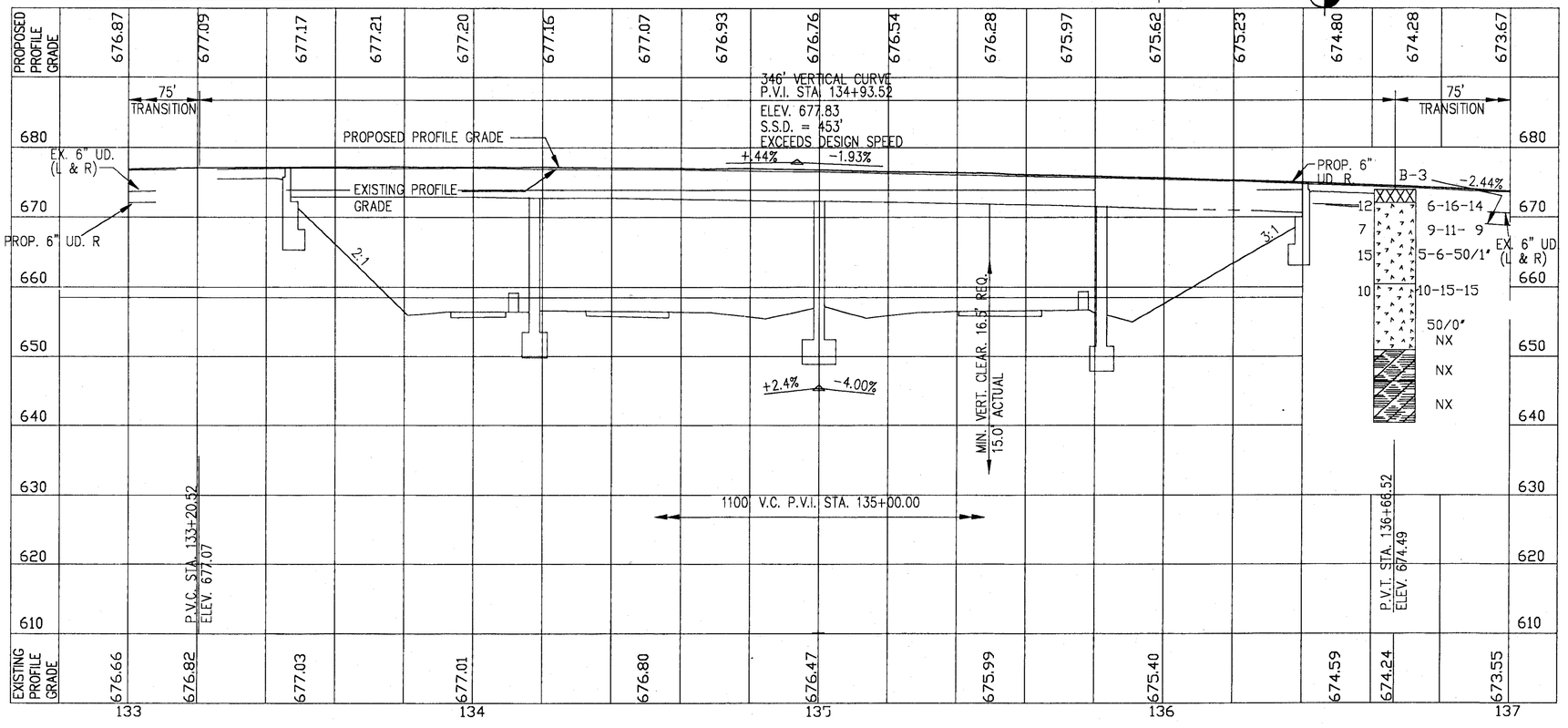

EXISTING STRUCTURE DATA

Structure File No. 1807722

TYPE: 4 Span Continuous Steel Beam Reinf. Conc. Deck and Substructure
SPAN: 70'; 2 at 82'; 57.5' c/c Bearings
ROADWAY: 52'–0"± f/f of 4' Sidewwalks
SUPERSTRUCTURE: Reinforced Concrete Slab
WEARING COURSE: 1" Monolithic Concrete
ALIGNMENT: Tangent
SKEW: None
CONDITION: Fair
DATE BUILT: 1970

PROPOSED STRUCTURE

TYPE: 4 Span Composite Steel Beam Reinf. Conc. Deck and Substructure
SPAN: 70'; 2 at 82'; 57.5' c/c Bearings
ROADWAY: 64'–0" f/f of 5' Sidewwalks
SKEW: None
LOADING: HS–20–44 and Alternate Military Loading (Case II)
WEARING SURFACE: 1" Monolithic Concrete
APPROACH SLAB: (AS–1–81) 25'–0"
ALIGNMENT: Tangent
CROWN: 3/16"/ft.
LAT. & LONG.: 41°28'00", 81°57'10"

SOLAR TESTING LABORATORIES, INC.

STL FILE NUMBER A93173x10 STRUCTURE FILE NUMBER
DATE 12–05–94 APPROVED
DRAWN HND CHECKED GWA

PLAN AND PROFILE – CROCKER ROAD
STA. 133+00.00 TO 137+00.00

CUY–90–0.95

LOG OF TEST BORING

SOLAR TESTING LABORATORIES, INC. — STL PROJECT NO: A93173x10

PROJECT: Crocker Road Bridge over I-90, CUY-90-0.95 — CLIENT: R.E. Warner & Associates — BORING: B-1

LOCATION: STA. 136+65.50, 23.91' Lt., Westlake, OH — DATE STARTED: 05-18-1993 — DATE COMPLETED: 05-18-1993

DRILLING METHOD: Solid Stem Auger

SURFACE ELEVATION: 673.9 ft.

WATER ELEV. ON — ENCOUNTER: None — COMPLETION: None

DEPTH (ft.)	SAMPLE	TYPE	WATER	SOIL DESCRIPTION	SPLIT - BARREL PENETRATION blows/6 inch	PHYSICAL CHARACTERISTICS: AGG. %	COARSE SAND %	FINE SAND %	SILT %	CLAY %	LIQUID LIMIT %	PLASTICITY INDEX %	MOISTURE CONTENT %	UNCONF. COMP. STRENGTH (tsf)	DRY UNIT WEIGHT (pcf)	SOIL CLASSIFICATION
				2" ASPHALT, 13" CONCRETE												
	1	SS			32-14-18								8.5			
	2	SS		Gray with little brown *SILTY CLAY,* and *SHALE FRAGMENTS.* (Fill)	10-13-10								10.8			
5	3	ST			SHELBY TUBE 40% Rec.											
	4	SS		Brown *SILTY SAND* and *SANDSTONE FRAGMENTS.* (Fill)	9-17-15								7.9			
	5	SS		Gray *SILTY SAND* and *SANDSTONE FRAGMENTS.* (Fill)	10- 9- 3								6.8			
15	6	SS		Gray *SILTY CLAY,* some sand and sandstone fragments, trace shale fragments. (Fill)	6- 3- 5								13.5			
	7	ST			SHELBY TUBE 30% Rec.											
	8	SS		Brown *SILTY SAND* and *SANDSTONE FRAGMENTS.* (Fill)	9-12-11											
20	9	SS		Gray *SANDSTONE FRAGMENTS.* (Fill)	26- 6- 6											
	10	SS			27-36-50											
25	11	NX		Highly weathered gray *SHALE,* little red-brown oxide stain.	Rec. = 92% Longest Piece = 3.75" Shortest Piece = frags. RQD = 0											
30	12	NX			Rec. = 93% Longest Piece = 6.5" Shortest Piece = frags. RQD = 18%									315		
35				End of test hole at 35 ft.										176 255		
40																

LOG OF TEST BORING

SOLAR TESTING LABORATORIES, INC. — STL PROJECT NO: A93173x10

PROJECT: Crocker Road Bridge over I-90, CUY-90-0.95 — CLIENT: R.E. Warner & Associates — BORING: B-2

LOCATION: STA. 133+19.75, 28.00' Rt., Westlake, OH — DATE STARTED: 05-24-1993 — DATE COMPLETED: 05-24-1993

DRILLING METHOD: Solid Stem Auger

SURFACE ELEVATION: 677.0 ft.

WATER ELEV. ON — ENCOUNTER: 659.0 ft. — COMPLETION: 659.0 ft.

DEPTH (ft.)	SAMPLE	TYPE	WATER	SOIL DESCRIPTION	SPLIT - BARREL PENETRATION blows/6 inch	PHYSICAL CHARACTERISTICS: AGG. %	COARSE SAND %	FINE SAND %	SILT %	CLAY %	LIQUID LIMIT %	PLASTICITY INDEX %	MOISTURE CONTENT %	UNCONF. COMP. STRENGTH (tsf)	DRY UNIT WEIGHT (pcf)	SOIL CLASSIFICATION
				2" ASPHALT, 12.5" CONCRETE 9.5" SLAG BASE												
	1	SS		Mottled brown and gray *SILTY CLAY,* little sand. (Fill)	17- 3- 5								20.2			
	2	SS			20-15-12								11.1			
5	3	SS		Gray *SILTY CLAY* and *SHALE FRAGMENTS.* (Fill)	13-11-11	66.4	10.7	4.6	8.0	10.3	35	9	12.9 11.6			
	4	SS			4- 4- 5	12.8	14.8	32.6	17.5	22.3	23	9	12.3 12.2			
15	5	SS		Gray *SANDY SILT* and *CLAY,* little gravel, trace shale fragments. (Fill)	5- 5-25								17.4			
	6	SS	W	Brown *SILTY SAND* and *SANDSTONE FRAGMENTS.* (Fill)	15-30-15								17.4			
20	7	SS		Completely to highly weathered brown and gray *SHALE.*	13-15-20											
25	8	SLG			50/0"											
30	9	NX		Highly weathered gray *SHALE.*	Rec. = 52% Longest Piece = 5" Shortest Piece = frags. RQD = 8%											
35	10	NX			Rec. = 100% Longest Piece = 7.5" Shortest Piece = frags. RQD = 24%											
40				End of test hole at 39 ft.										20 186		

LOG OF TEST BORING

SOLAR TESTING LABORATORIES, INC. — STL PROJECT NO: A93173x10

PROJECT: Crocker Road Bridge over I-90, CUY-90-0.95 — CLIENT: R.E. Warner & Associates — BORING: B-3

LOCATION: STA. 136+65.50, 23.91' Rt., Westlake, OH — DATE STARTED: 07-01-1993 — DATE COMPLETED: 07-01-1993

DRILLING METHOD: Solid Stem Auger

SURFACE ELEVATION: 673.9 ft.

WATER ELEV. ON — ENCOUNTER: None — COMPLETION: None

DEPTH (ft.)	SAMPLE	TYPE	WATER	SOIL DESCRIPTION	SPLIT - BARREL PENETRATION blows/6 inch	PHYSICAL CHARACTERISTICS: AGG. %	COARSE SAND %	FINE SAND %	SILT %	CLAY %	LIQUID LIMIT %	PLASTICITY INDEX %	MOISTURE CONTENT %	UNCONF. COMP. STRENGTH (tsf)	DRY UNIT WEIGHT (pcf)	SOIL CLASSIFICATION
				2" ASPHALT, 13" CONCRETE 7" SLAG BASE												
	1	SS			6-16-14	45.6	15.7	11.2	10.9	16.6	33	10	11.6			
5	2	SS		Gray *SILTY CLAY* and *SHALE FRAGMENTS.* (Fill)	9-11- 9								7.3			
10	3	SS			5-6-50/1"								15.2			
15	4	SS		Gray *SILTY CLAY,* some sandstone fragments, little sand, trace gravel. (Fill)	10-15-15	34.0	9.1	18.8	18.9	19.2	22	4	9.6			
20	5	SLG			50/0"											
	6	NX			Rec. = 20% Longest Piece = 4" Shortest Piece = frags. RQD = 7%											
25	7	NX		Highly weathered gray *SHALE,* little orange-brown oxide stain.	Rec. = 100% Longest Piece = 5" Shortest Piece = frags. RQD = 29%											
30	8	NX		Highly to moderately weathered gray *SHALE.*	Rec. = 100% Longest Piece = 7" Shortest Piece = frags. RQD = 33%											
35				End of test hole at 33.5 ft.										38		
40																

SOLAR TESTING LABORATORIES, INC.

STL FILE NUMBER: A93173x10 — STRUCTURE FILE NUMBER

DATE: 12-05-94 — APPROVED

DRAWN: HND — CHECKED: GWA

GEOTECHNICAL INVESTIGATION — CROCKER ROAD

CUY-90-0.95

80/80

INTRODUCTION

THIS REPORT CONSISTS OF THE SUBSURFACE EXPLORATION FOR THE PROPOSED SITE 6, 7A, 7B, 8, 9 AND 10 NOISEWALLS WHICH ARE PART OF THE CUY-90-0.00 THIRD LANE PROJECT AND NOISEWALL CONSTRUCTION. THE PROPOSED SITE 6 NOISEWALL WILL BE LOCATED ALONG THE SOUTH SIDE OF INTERSTATE 90 (I-90) STARTING APPROXIMATELY 48 FEET WEST OF THE LORAIN/CUYAHOGA COUNTY LINE AND EXTENDING APPROXIMATELY 4848 FEET ALONG I-90 AND THE CROCKER ROAD OFF RAMP TO APPROXIMATE STATION 48+00 NEAR CROCKER ROAD. THE SITE 6 NOISEWALL WILL BE DISCONTINUOUS BETWEEN STATIONS 16+20 AND 18+20. THE SITE 7A AND 7B NOISEWALLS ARE LOCATED ALONG THE SOUTH SIDE OF I-90 BETWEEN CROCKER ROAD AND THE CAHOON ROAD OVERPASS BETWEEN STATIONS 63+88 TO 67+72 AND 76+30 TO 79+90, RESPECTIVELY. THE SITE 8, 9 AND 10 NOISEWALLS ARE LOCATED ALONG THE NORTH SIDE OF I-90 STARTING AT THE CAHOON ROAD OVERPASS NEAR STATION 106+00 AND WILL EXTEND APPROXIMATELY 5700 FEET TO ABOUT 230 FEET EAST OF THE CANTURBURY ROAD OVERPASS NEAR STATION 163+00. ALL PROPOSED STRUCTURES, WITH THE EXCEPTION OF 48 FEET OF NOISEWALL IN LORAIN COUNTY, ARE LOCATED IN THE CITY OF WESTLAKE IN CUYAHOGA COUNTY, OHIO. INCLUDED IN THIS REPORT ARE TYPED DRILLING LOGS, TEST BORING PROFILES, AND LAB RESULTS AT THE TEST BORING LOCATIONS.

GEOLOGY AND OBSERVATIONS OF THE PROJECT

THE PROJECT AREA LIES ON THE FLAT LAKE PLAIN JUST SOUTH OF LAKE ERIE AND WEST OF THE MOUTH OF ROCKY RIVER. THE AREA WAS PASSED OVER BY THE WISCONSIN ICE SHEET THAT LEFT A GENERALLY THIN COATING OF DRIFT AVERAGING LESS THAN 25 FEET IN THICKNESS. THESE GLACIALLY DERIVED DEPOSITS OVERLIE SHALE OF THE CHAGRIN FORMATION. SILTY SHALE BEDROCK WAS ENCOUNTERED AT 55 OF 60 TEST BORING LOCATIONS DURING OUR SUBSURFACE EXPLORATION. BEDROCK WAS ENCOUNTERED AT THE STRUCTURE LOCATIONS AT ELEVATIONS RANGING FROM 615.4 TO 661.3 FEET.

EXPLORATION

A TOTAL OF 60 EXPLORATORY BORINGS (26 FOR THE SITE 6 NOISEWALL, THREE FOR EACH OF THE SITE 7A AND 7B NOISEWALLS, EIGHT FOR THE SITE 8 NOISEWALL, 11 FOR THE SITE 9 NOISEWALL AND NINE FOR THE SITE 10 NOISEWALL) WERE ADVANCED BY TWO TRUCK-MOUNTED, MECHANICALLY POWERED, HOLLOW-STEM ROTARY DRILL RIGS FROM OCTOBER 8 THROUGH OCTOBER 24, 1999. INCLUDED IN THIS REPORT ARE LOGS OF SOIL BORINGS MADE FOR THE STRUCTURE FOUNDATION EXPLORATION.

INVESTIGATIONAL FINDINGS

SOILS ENCOUNTERED ACROSS THE PROJECT SITE RANGED IN THICKNESS FROM 4.9 TO 25.0 FEET AND CONSISTED PRIMARILY OF EMBANKMENT FILL WHICH CONSISTED OF SILT AND CLAY (A-6a), SILTY CLAY (A-6b), CLAY (A-7-6), ELASTIC CLAY (A-7-5), SANDY SILT (A-4a), FINE SAND (A-3), COARSE AND FINE SAND (A-3a) AND GRAVEL (A-1-a). THIRTY-THREE (33) OF THE 56 COHESIVE SOIL SAMPLES TESTED FOR ATTERBERG LIMITS HAD MOISTURE CONTENTS GREATER THAN OR EQUAL TO THEIR PLASTIC LIMITS. ALL SOIL SAMPLES TESTED FOR ATTERBERG LIMITS HAD MOISTURE CONTENTS BELOW THEIR LIQUID LIMITS. THE RELATIVE CONSISTENCIES OF THE COHESIVE SOILS RANGED FROM "SOFT" TO "HARD" BUT WERE PRIMARILY "STIFF". THESE SOILS WERE UNDERLAIN BY SILTY SHALE BEDROCK.

BEDROCK IN THE VICINITY OF THE STRUCTURES CONSISTED OF SILTY SHALE THAT RANGED FROM VERY POOR CONDITION TO GOOD CONDITION BUT WAS PRIMARILY IN POOR TO FAIR CONDITION AS DEFINED BY THE ROCK QUALITY DESIGNATION (ROD) VALUES. THE BEDROCK SAMPLES TESTED FOR UNCONFINED COMPRESSIVE STRENGTH RANGED FROM 129 TO 1,919 PSI.

GROUNDWATER WAS ENCOUNTERED IN 21 OF THE TEST BORINGS DURING DRILLING AT ELEVATIONS RANGING FROM 622.85 TO 664.00 FEET.

FOR SPECIFIC CONDITIONS AT VARIOUS DEPTHS, PLEASE REFER TO THE INDIVIDUAL TEST BORING LOGS THAT FORM A PART OF THESE PLANS.

SYMBOLS OF ROCK TYPES

- COAL
- FIRE CLAY OR UNDERCLAY
- WEATHERED MUDSTONE
- MUDSTONE
- WEATHERED SHALE
- SHALE
- WEATHERED CLAY-SHALE
- CLAY-SHALE
- BOULDERS or COBBLES
- WEATHERED SILTSTONE
- SILTSTONE
- WEATHERED SANDSTONE
- SANDSTONE
- LEACHED DOLOMITE
- DOLOMITE
- LEACHED LIMESTONE
- LIMESTONE

PARTICLE SIZE DEFINITIONS

300 mm	75 mm	2.0 mm	0.42 mm	0.074 mm	0.005 mm
Boulders	Cobbles	Gravel	Coarse Sand	Fine Sand	Silt / Clay
			No. 10 SIEVE	No. 40 SIEVE	No. 200 SIEVE

LEGEND

- ⊕ AUGER BORING LOCATION-PLAN VIEW.
- ⊕ PRESS AND/OR DRIVE SAMPLE AND/OR CORE BORING LOCATION-PLAN VIEW.
- TR TOP OF ROCK
- W—— INDICATES FREE WATER ELEVATION
- ▼—— INDICATES STATIC WATER ELEVATION
- ⊢⊣ HORIZONTAL BAR ON BORING LOG INDICATES THE DEPTH THE SAMPLE WAS TAKEN - PROFILE VIEW
- X-Y-Z FIGURES BESIDE THE BORING LOG IN PROFILE INDICATE THE NUMBER OF BLOWS FOR STANDARD PENETRATION TEST.
  - X = NO. OF BLOWS FOR FIRST 6 in
  - Y = NO. OF BLOWS FOR SECOND 6 in
  - Z = NO. OF BLOWS FOR THIRD 6 in

GENERAL INFORMATION

DRIVE SAMPLES

DRIVE SAMPLE BORINGS ARE MADE BY MEANS OF A MECHANICALLY-POWERED, ROTARY-TYPE DRILL RIG EMPLOYING A 2.0 in O.D., 1.4 in I.D., SPLIT-SPOON SAMPLER, AT CONTINUOUS, 2.5 ft AND/OR 5.0 ft DEPTH INTERVALS, DRIVEN BY MEANS OF A 140 lb HAMMER WITH A FREE FALL OF 30 in. THE NUMBER OF BLOWS REQUIRED TO DRIVE THE SAMPLER THREE 6.0 in. INCREMENTS IS CONSIDERED THE STANDARD PENETRATION TEST.

PRESS SAMPLES

PRESS SAMPLES ARE TAKEN BY MEANS OF MECHANICALLY-POWERED, ROTARY-TYPE DRILL RIG, EMPLOYING A 3 in O.D. THIN WALL PRESS SAMPLING TUBE. THE PRESS SAMPLING TUBE IS ADVANCED BY CONTINUOUS UNIFORM PRESSURE APPLIED BY THE DRILL RIG.

CORE BORINGS

CORE BORINGS ARE MADE BY MEANS OF A MECHANICALLY-POWERED, ROTARY-TYPE DRILL RIG, EMPLOYING AN NW-PAM CORE BARREL WITH AN INDUSTRIAL DIAMOND CUTTING HEAD.

SAMPLING AND TESTING

THE BORING LOG SHEETS SHOW A GRAPHIC PLOT OF THE INFORMATION OBTAINED, INCLUDING DEPTH AND ELEVATION OF THE SAMPLE, TYPE OF SAMPLE, NUMBER OF BLOWS FOR THE STANDARD PENETRATION TEST IN THREE 6.0 in INCREMENTS, AND A SAMPLE DESCRIPTION BASED ON LABORATORY TEST RESULTS, UTILIZING THE ODOT CLASSIFICATION SYSTEM. RESULTS OF STRENGTH AND CONSOLIDATION TESTING, IF PERFORMED ON UNDISTURBED SAMPLES, APPEAR GRAPHICALLY ON SEPARATE ENCLOSURES. ROCK SAMPLES ARE DISPLAYED ON THE LOG SHEETS, INCLUDING DEPTH AND ELEVATION OF THE SAMPLE, AMOUNT OF RECOVERY, AND A VISUAL CLASSIFICATION BASED ON TYPE, COLOR, DEGREE OF HARDNESS, GRAIN SIZE, DETERIORATION, BEDDING, ACID REACTION, AND OTHER QUALIFYING FACTORS.

AT DEPTHS WHERE MATERIALS ARE BOULDERY OR GRAVELLY TO THE EXTENT THAT A SAMPLER CANNOT BE UTILIZED, A WASH SAMPLE IS PROCURED AND VISUALLY CLASSIFIED, IN ORDER TO DETERMINE THE GENERAL CHARACTERISTICS OF THE MATERIAL. THESE SAMPLES ARE NOT CONSIDERED SUFFICIENTLY REPRESENTATIVE TO WARRANT LABORATORY TESTING.

NOTES

ALL AVAILABLE SOIL AND BEDROCK INFORMATION WHICH CAN BE CONVENIENTLY SHOWN ON THE STRUCTURE FOUNDATION INVESTIGATION SHEETS HAS BEEN SO REPORTED. ADDITIONAL SUBSURFACE INVESTIGATION MAY HAVE BEEN MADE TO STUDY SOME SPECIAL ASPECT OF THE PROJECT. COPIES OF THIS DATA, IF ANY, MAY BE INSPECTED IN THE DISTRICT DEPUTY DIRECTOR'S OFFICE, THE OFFICE OF MATERIALS MANAGEMENT AT 1600 WEST BROAD STREET, THE OFFICE OF ROADWAY ENGINEERING OR THE OFFICE OF STRUCTURAL ENGINEERING AT 25 SOUTH FRONT STREET, COLUMBUS, OHIO 43215.

PRIME ENGINEERING & ARCHITECTURE, INC.
COLUMBUS: (614) 457-2100
AKRON: (330) 666-8432

DRAWN E.D.S. | REVIEWED B.M. | DATE 1/16/00 | CALCULATED W.I.N. | CHECKED S.S.S.

STRUCTURE FOUNDATION INVESTIGATION

CUY-90-0.00

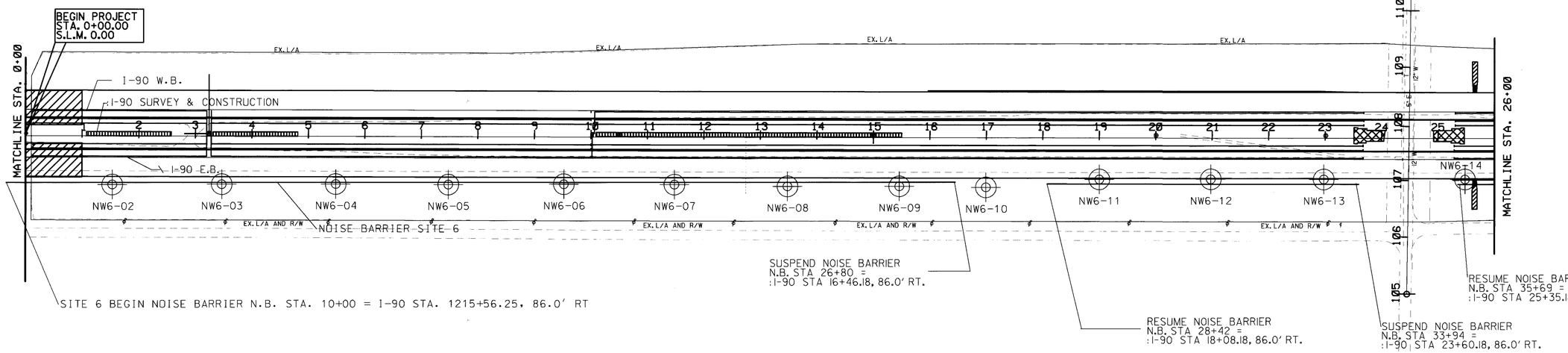

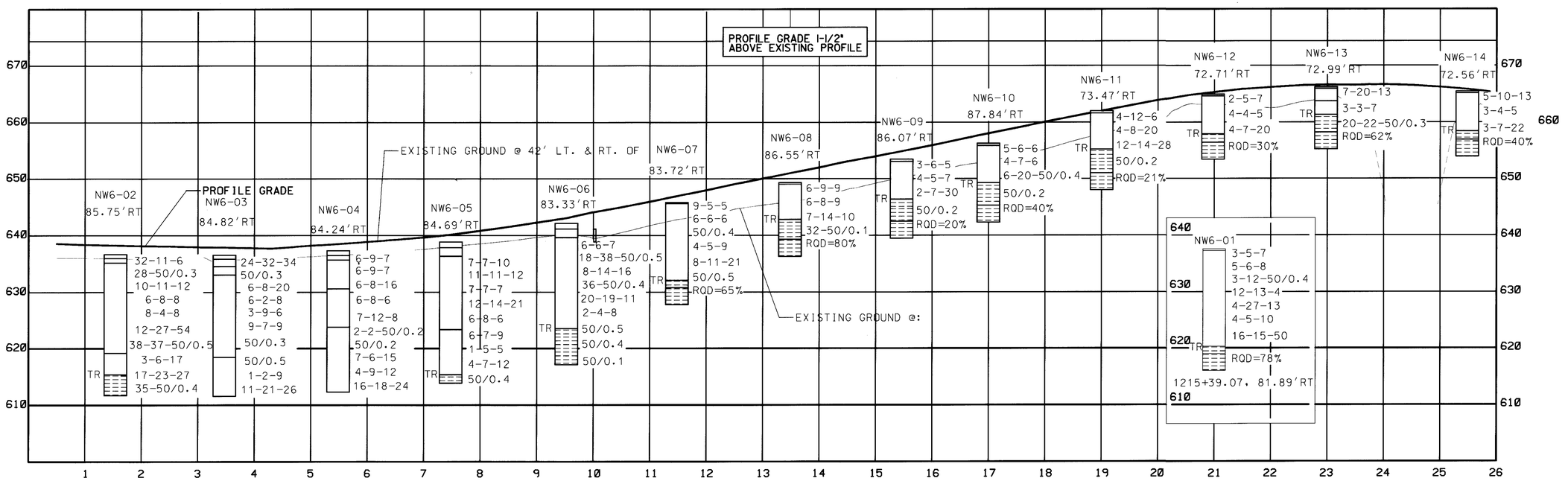

PRIME ENGINEERING & ARCHITECTURE, INC.
COLUMBUS: (614) 457-2100
AKRON: (330) 666-8432

CALCULATED	CHECKED
W.I.N.	S.S.S.
DATE	
1/16/00	
REVIEWED	
B.M.	
DRAWN	
E.D.S.	

STRUCTURE FOUNDATION INVESTIGATION

CUY-90-0.00

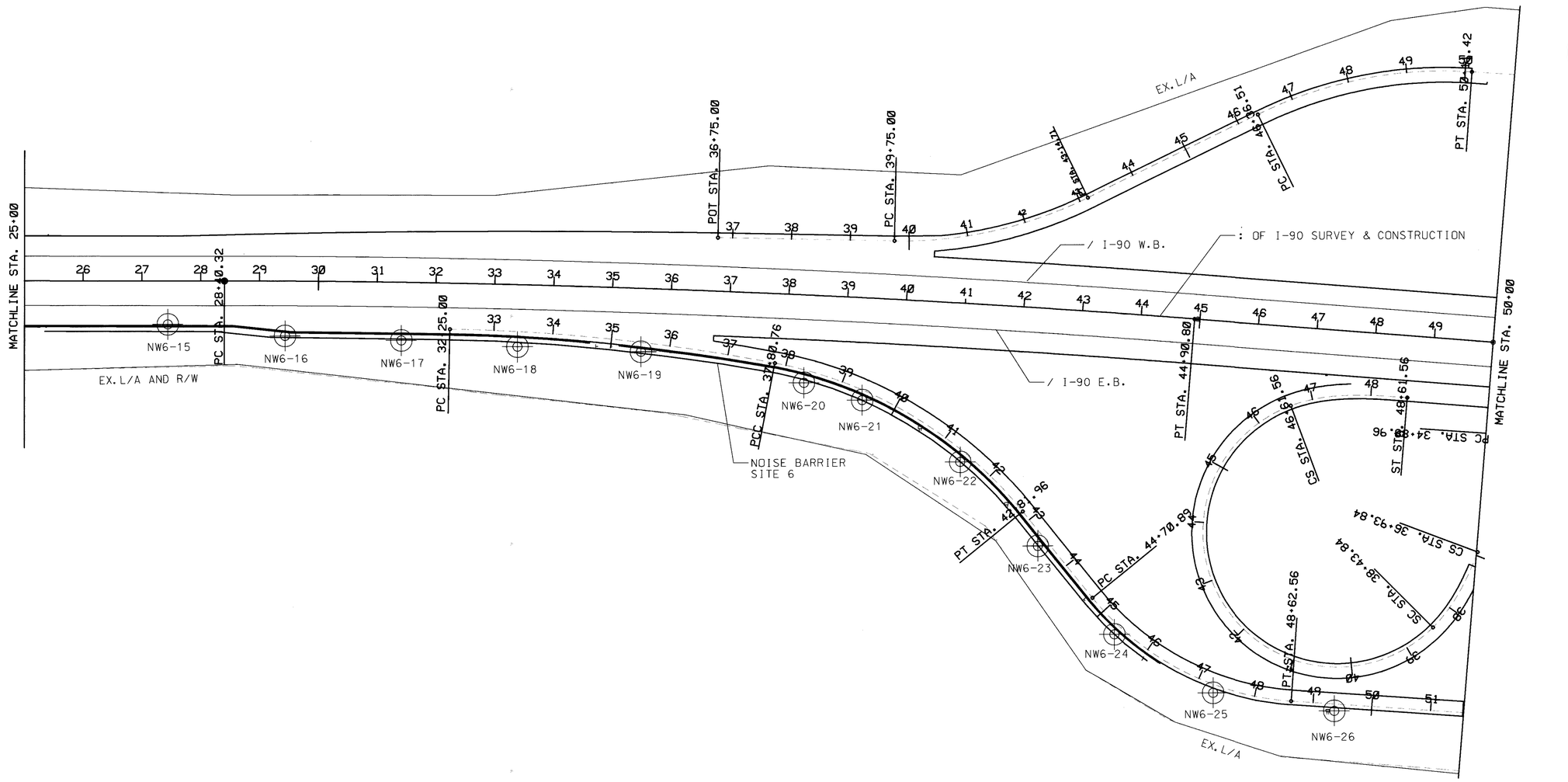

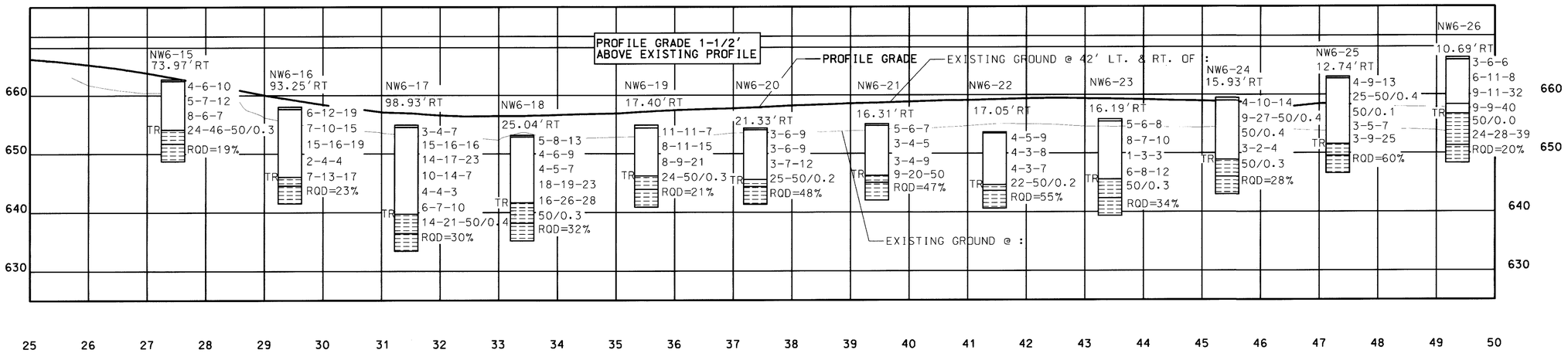

PRIME ENGINEERING & ARCHITECTURE, INC.
COLUMBUS: (614) 457-2100
AKRON: (330) 668-5432

CALCULATED	CHECKED
W.I.N.	S.S.S.

DATE	REVIEWED	DRAWN
1/16/00	B.M.	E.D.S.

STRUCTURE FOUNDATION INVESTIGATION

CUY-90-0.00

3/35

3

56

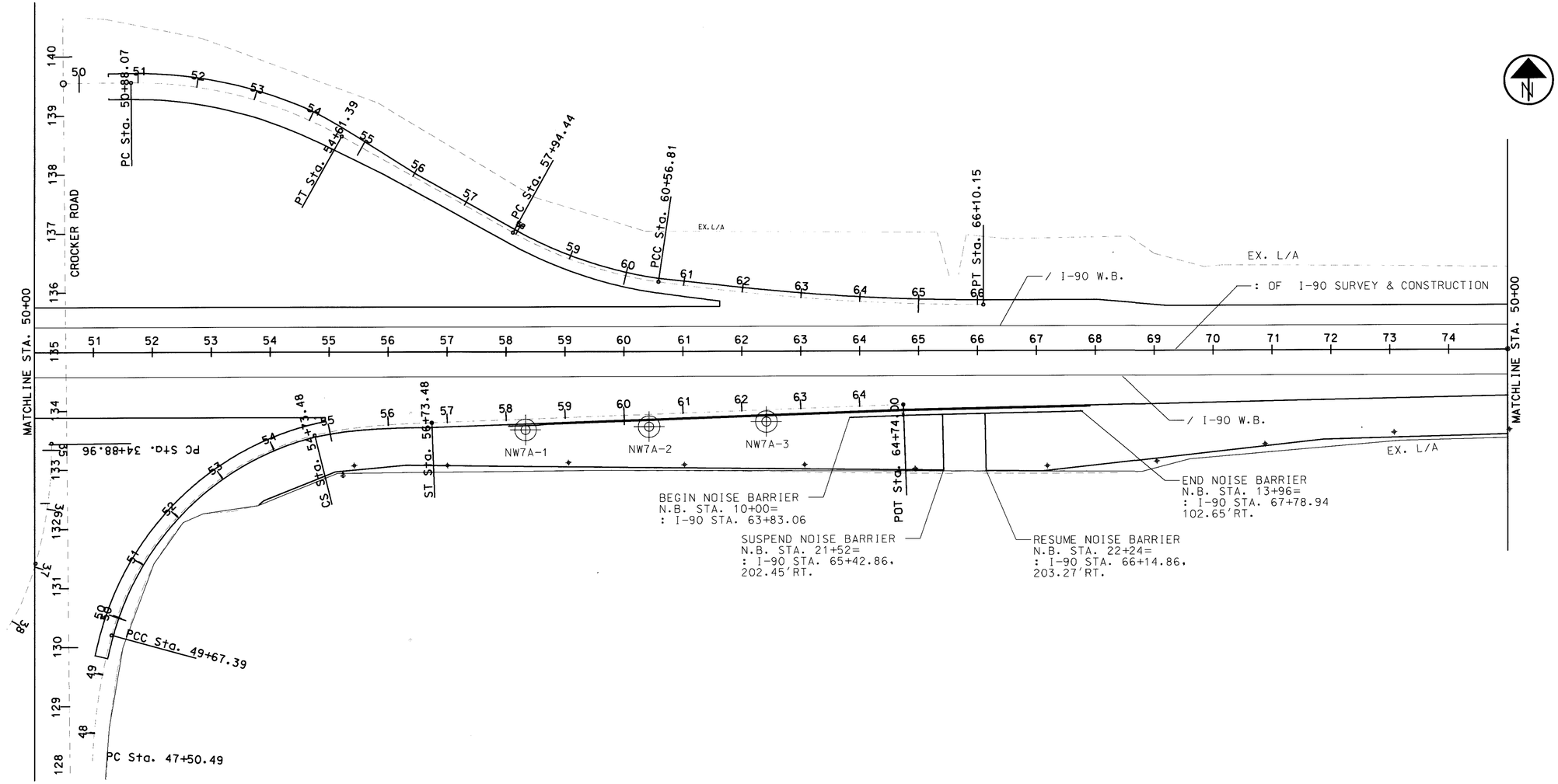

PRIME ENGINEERING & ARCHITECTURE, INC.
COLUMBUS: (614) 457-2100
AKRON: (330) 666-6432

DRAWN	REVIEWED	DATE	CALCULATED	CHECKED
E.D.S.	B.M.	1/16/00	W.I.N.	S.S.S.

INVESTIGATION
STRUCTURE FOUNDATION
CUY-90-0.00
4/35
4
56

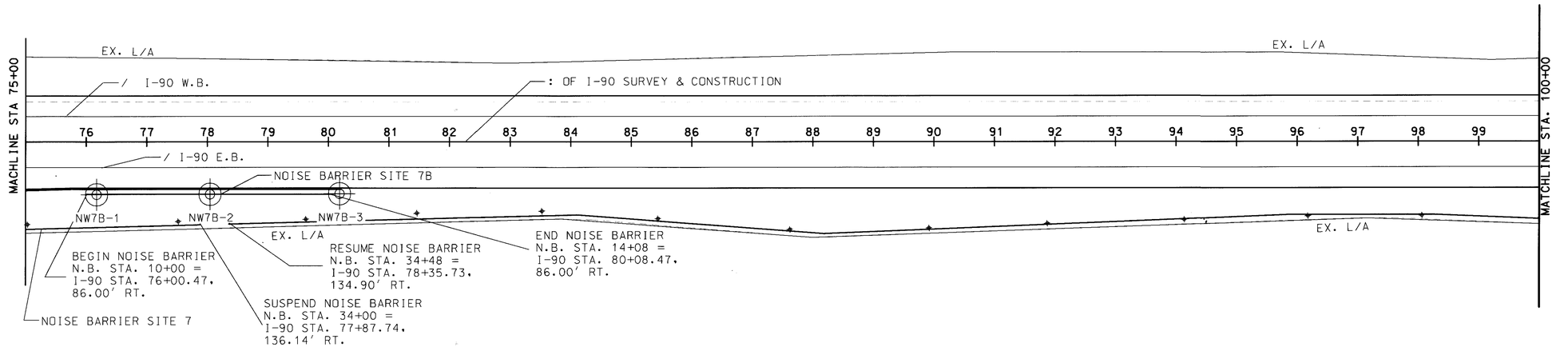

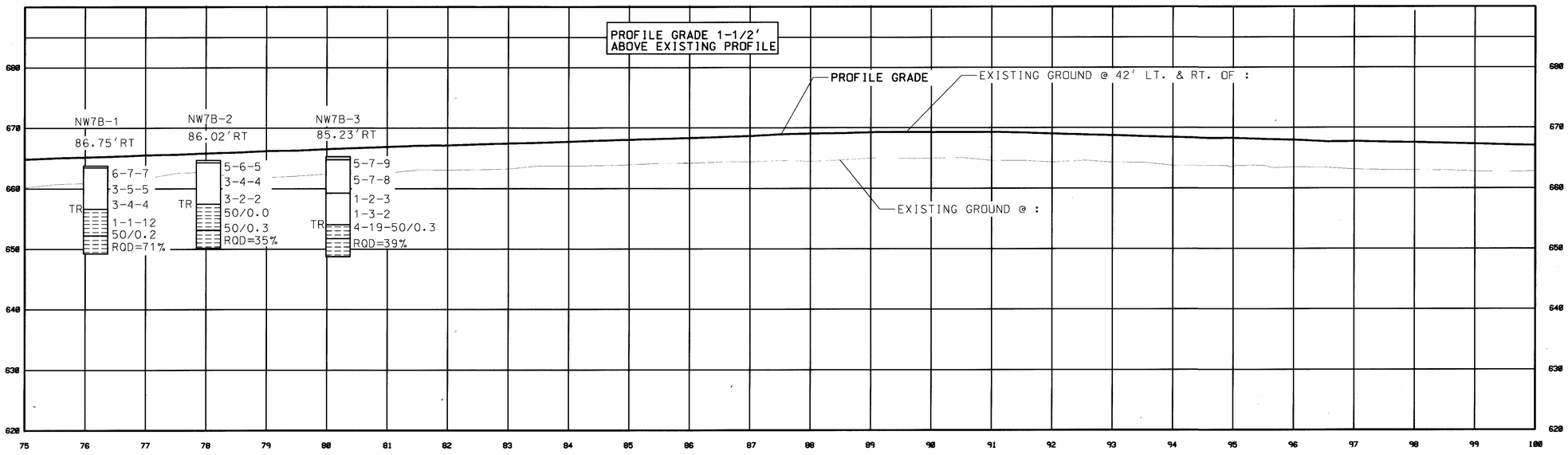

PRIME ENGINEERING & ARCHITECTURE, INC.
COLUMBUS: (614) 457-2100
AKRON: (330) 666-5432

CALCULATED	CHECKED
W.I.N.	S.S.S.
DATE	
1/16/00	
REVIEWED	
B.M.	
DRAWN	
E.D.S.	

STRUCTURE FOUNDATION INVESTIGATION

CUY-90-0.00

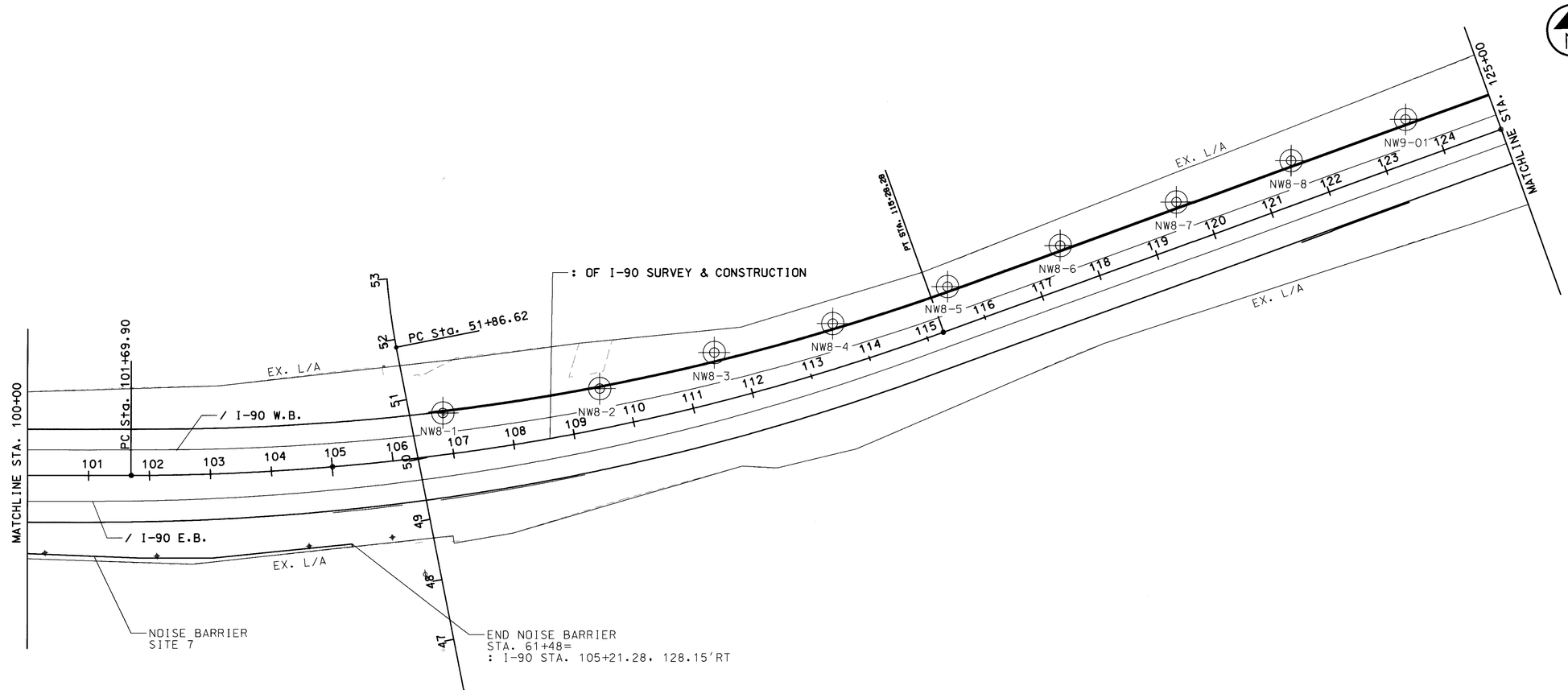

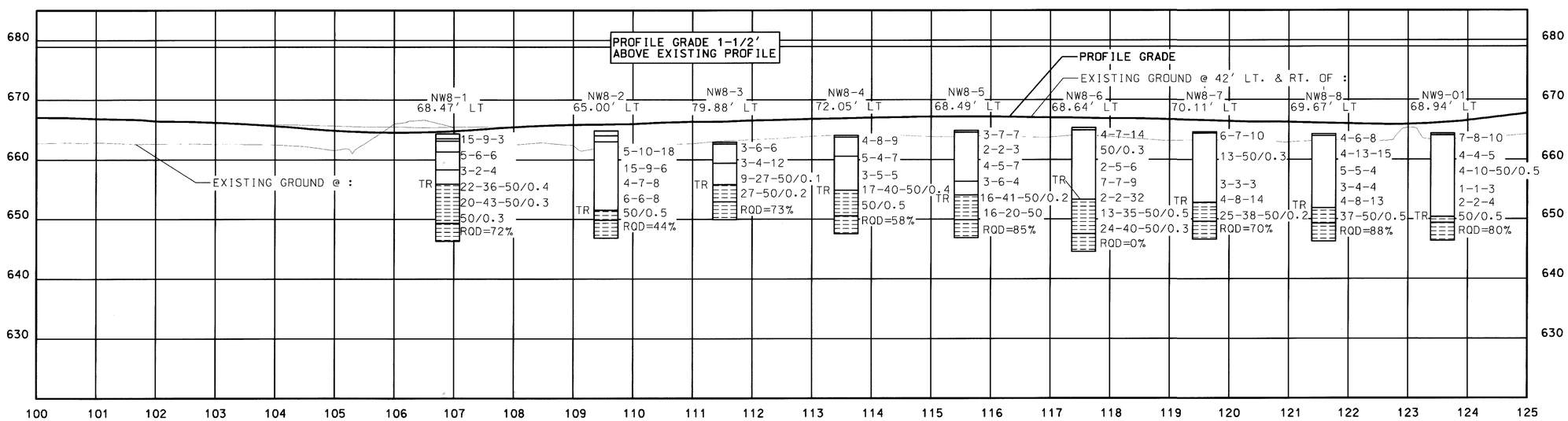

PRIME ENGINEERING & ARCHITECTURE, INC.
COLUMBUS: (614) 457-2100
AKRON: (330) 666-5432

DRAWN	REVIEWED	DATE	CALCULATED	CHECKED
E.D.S.	B.M.	1/16/00	W.I.N.	S.S.S.

STRUCTURE FOUNDATION INVESTIGATION

CUY-90-0.00

6/35

6

56

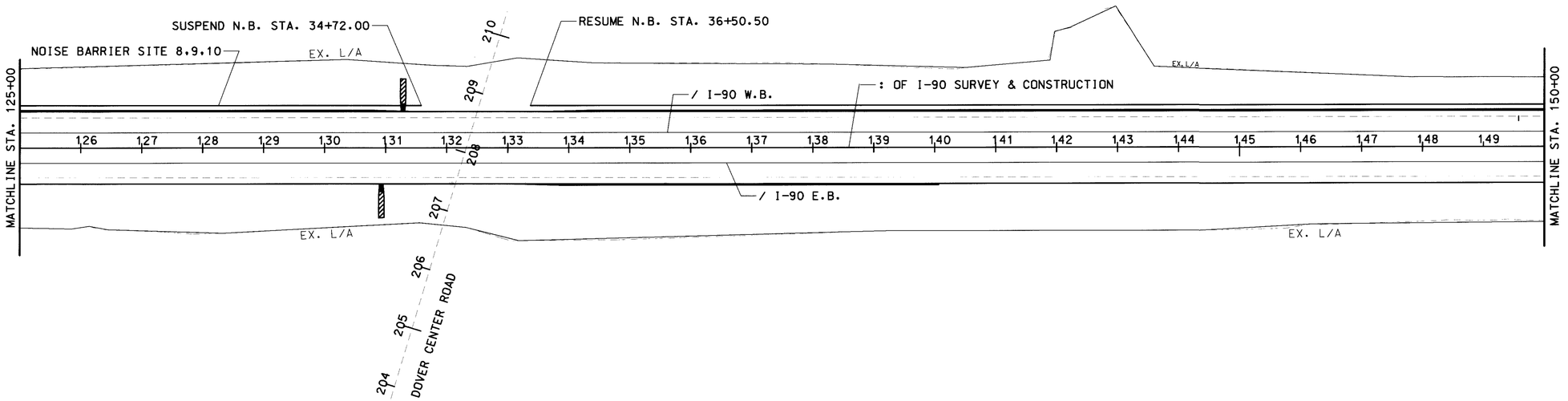

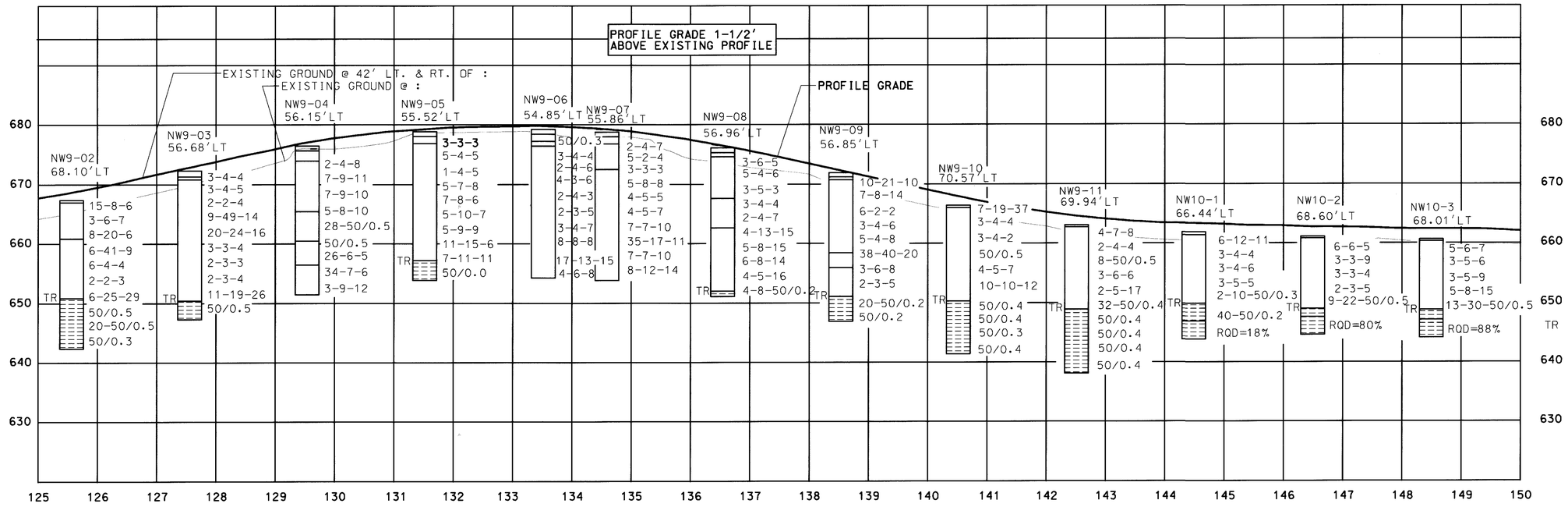

PRIME ENGINEERING & ARCHITECTURE, INC.
COLUMBUS (614) 457-2100
AKRON (330) 666-3432

DRAWN	REVIEWED	DATE	CALCULATED	CHECKED
E.D.S.	B.M.	1/16/00	W.I.N.	S.S.S.

STRUCTURE FOUNDATION INVESTIGATION

CUY-90-0.00

7 / 35

7

56

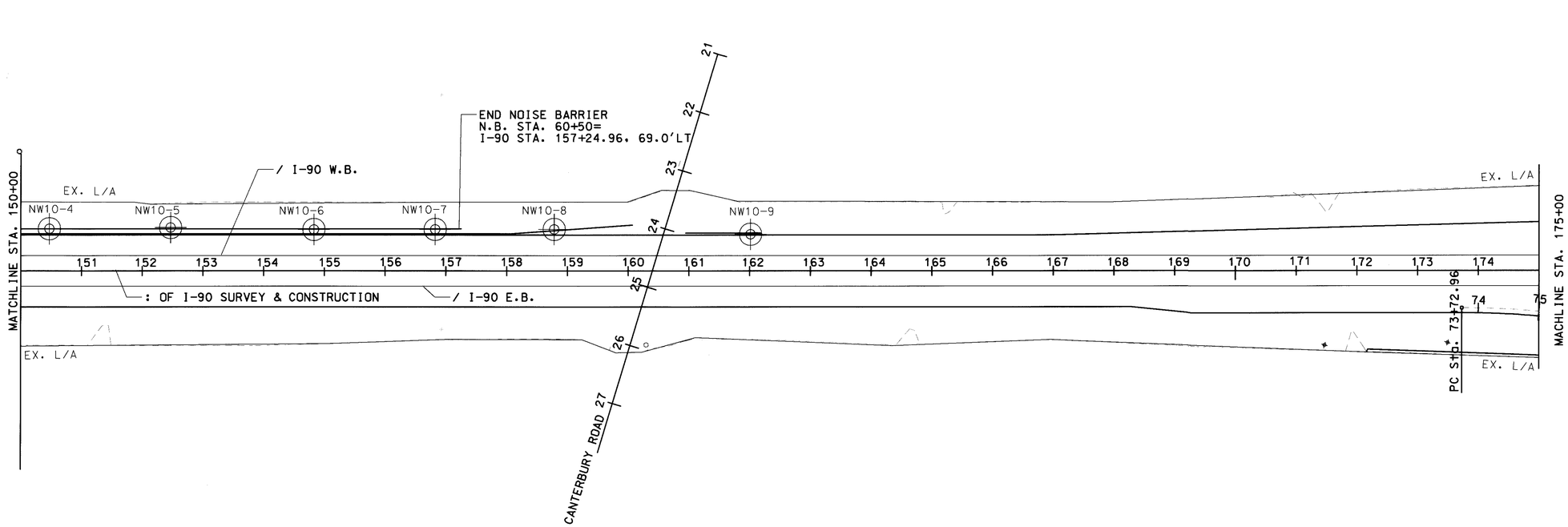

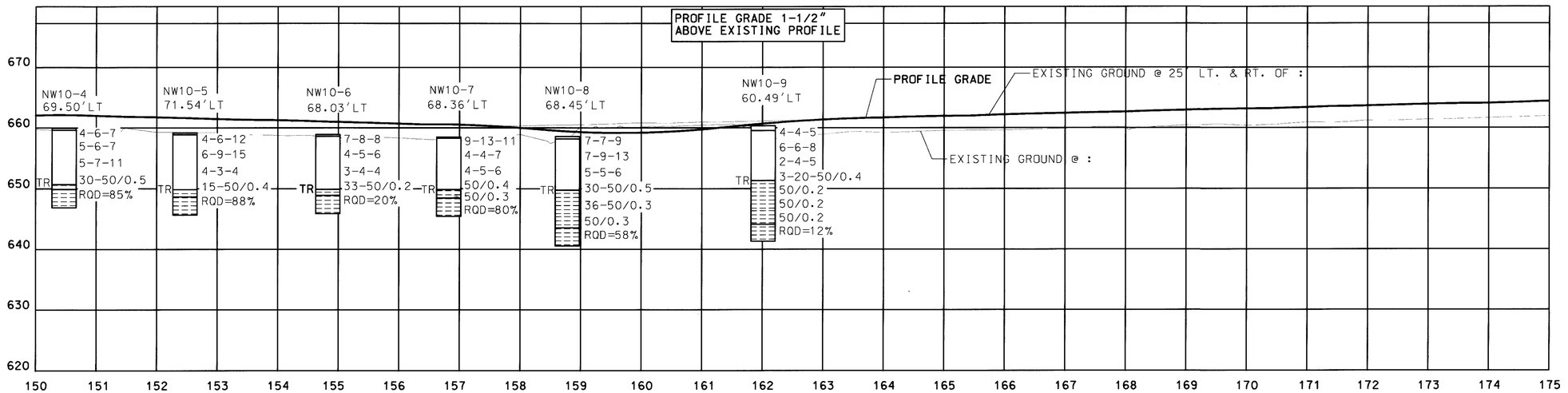

PRIME ENGINEERING & ARCHITECTURE, INC.
COLUMBUS: (614) 457-2100
AKRON: (330) 666-5432

DRAWN	REVIEWED	DATE	CALCULATED	CHECKED
E.D.S.	B.M.	1/16/00	W.I.N.	S.S.S.

INVESTIGATION

STRUCTURE FOUNDATION INV.

CUY-90-0.00

State of Ohio
Department of Transportation
Division of Highways
Testing Laboratory

LOG OF BORING

Date Started 10/20/99 Sampler: Type SS Dia. 2.0" Water Elev. ft
Date Completed 10/20/99 Casing: Length Dia. 3.25"

Project: CUY-90-0.00 (Site 6 Noisewall)
Project No.: 99091
Location: Westlake, Cuyahoga County

Boring No. NW6-01 Station & Offset 1215+39.07, 81.89' RT. Surface Elev. 637.51ft

Elev. (ft)	Depth (ft)	Std. Pen./ ROD	Rec. (ft)	Loss (ft)	Description	Sample No.	Physical Characteristics % Agg	% C.S.	% F.S.	% Silt	% Clay	L.L.	P.I.	W.C.	ODOT Class
637.5	0														
637.2					TOPSOIL										
		3-5-7			Stiff to very stiff, gray CLAY (A-7-6), some to trace rock fragments, trace sand, moist.	1	--	--	--	--	--	--	--	19	VISUAL
		5-6-8				2	--	--	--	--	--	--	--	19	VISUAL
	5														
		3-12-50/0.4				3	--	--	--	--	--	--	--	10	VISUAL
		12-13-4				4	--	--	--	--	--	--	--	10	VISUAL
	10														
		4-27-13				5	--	--	--	--	--	--	--	9	VISUAL
		4-5-10				6	1	1	1	--	97 *	49	25	26	A-7-6
	15														
		16-15-50				7	--	--	--	--	--	--	--	15	VISUAL
620.3					Very soft to medium hard, decomposed to highly weathered, gray SILTY SHALE.										
619.0		ROD = 78%	3.0	0.0	Note: Spoon sampled to 17.5 feet, augered to 18.5 feet and began coring bedrock.										
	20				Soft to medium hard, highly weathered to weathered, gray SILTY SHALE with nearly horizontal laminar bedding (fissile), good quality as per ROD.										
616.0					U.C. Strength at 20.7 feet = 1572 psi										
					TERMINATION DEPTH = 21.5 FEET										

Particle Sizes: Agg = ¢ 2.00mm, Coarse Sand = 2.00-0.42mm, Fine Sand = 0.42-0.074mm, Silt = 0.074-0.005mm, Clay = * 0.005mm (*Indicates silt & clay combined)

State of Ohio
Department of Transportation
Division of Highways
Testing Laboratory

LOG OF BORING

Date Started 10/13/99 Sampler: Type SS Dia. 2.0" Water Elev. ft
Date Completed 10/13/99 Casing: Length Dia. 3.25"

Project: CUY-90-0.00 (Site 6 Noisewall)
Project No.: 99091
Location: Westlake, Cuyahoga County

Boring No. NW6-02 Station & Offset 1+54.02, 85.75' RT. Surface Elev. 636.70ft

Elev. (ft)	Depth (ft)	Std. Pen./ ROD	Rec. (ft)	Loss (ft)	Description	Sample No.	Physical Characteristics % Agg	% C.S.	% F.S.	% Silt	% Clay	L.L.	P.I.	W.C.	ODOT Class
636.7	0														
636.0					ASPHALT										
635.2		32-11-6			ROADBASE MATERIAL	1	--	--	--	--	--		--	9	VISUAL
					Stiff to hard, gray SANDY SILT (A-4a), little sandstone fragments, little clay, moist.										
		28-50/0.3				2	--	--	--	--	--		--	11	VISUAL
	5														
		10-11-12				3	14	7	41	--	38 *		--	12	A-4a
		6-8-8				4	--	--	--	--	--		--	10	VISUAL
	10														
		8-4-8				5	--	--	--	--	--		--	11	VISUAL
		12-27-54				6	--	--	--	--	--		--	10	VISUAL
	15														
		38-37-50/0.5				7	--	--	--	--	--		--	9	VISUAL
619.2					Very stiff, gray CLAY (A-7-6), some rock fragments, little sand, moist.										
		3-6-17				8	31	9	3	--	57 *	42	18	21	A-7-6
	20														
615.4		17-23-27			Very soft to soft, decomposed, gray SILTY SHALE.	9	--	--	--	--	--		--	18	VISUAL
		35-50/0.4				10	--	--	--	--	--		--	16	VISUAL
611.7	25				TERMINATION DEPTH = 25.0 FEET										

Particle Sizes: Agg = ¢ 2.00mm, Coarse Sand = 2.00-0.42mm, Fine Sand = 0.42-0.074mm, Silt = 0.074-0.005mm, Clay = * 0.005mm (*Indicates silt & clay combined)

DRAWN	REVIEWED	DATE	CALCULATED	CHECKED
E.D.S.	B.M.	1/16/00	W.I.N.	S.S.S.

PRIME ENGINEERING & ARCHITECTURE, INC.
COLUMBUS: (614) 457-2100 AKRON: (330) 666-5432

State of Ohio
Department of Transportation
Division of Highways
Testing Laboratory

LOG OF BORING

Date Started 10/13/99 Sampler: Type SS Dia. 2.0" Water Elev. ft
Date Completed 10/13/99 Casing: Length Dia. 3.25"

Project: CUY-90-0.00 (Site 6 Noisewall)
Project No.: 99091
Location: Westlake, Cuyahoga County

Boring No. NW6-03 Station & Offset 3+46.88, 84.82' RT. Surface Elev. 636.55ft

Elev. (ft)	Depth (ft)	Std. Pen./ ROD	Rec. (ft)	Loss (ft)	Description	Sample No.	Physical Characteristics % Agg	% C.S.	% F.S.	% Silt	% Clay	L.L.	P.I.	W.C.	ODOT Class
636.6	0														
635.9					ASPHALT										
		24-32-34			ROADBASE MATERIAL	1	--	--	--	--	--	--	--	10	VISUAL
634.6					Very dense, gray COARSE AND FINE SAND (A-3a), little rock fragments, trace asphalt, trace silt, moist.										
633.1		50/0.3			Hard to stiff, gray and brown SANDY SILT (A-4a), some clay, trace to some rock fragments, moist.	2	--	--	--	--	--	--	--	11	VISUAL
	5														
		6-8-20				3	--	--	--	--	--	--	--	12	VISUAL
		6-2-8				4	--	--	--	--	--	--	--	13	VISUAL
	10														
		3-9-6				5	--	--	--	--	--	--	--	14	VISUAL
		9-7-9			Note: Encountered some sandstone fragments from 13.5 to 17.5 feet.	6	--	--	--	--	--	--	--	10	VISUAL
	15														
		50/0.3				7	--	--	--	--	--	--	--	10	VISUAL
618.5															
		50/0.5			Hard to medium stiff, gray and brown ELASTIC CLAY (A-7-5), some to no rock fragments, trace sand, moist.	8	--	--	--	--	--	--	--	10	VISUAL
	20														
		1-2-9				9	0	0	1	--	98 *	52	21	32	A-7-5
		11-21-26				10	--	--	--	--	--	--	--	29	VISUAL
611.6	25				TERMINATION DEPTH = 25.0 FEET										

Particle Sizes: Agg =¢ 2.00mm, Coarse Sand = 2.00-0.42mm, Fine Sand = 0.42-0.074mm, Silt = 0.074-0.005mm, Clay =* 0.005mm (*Indicates silt & clay combined)

State of Ohio
Department of Transportation
Division of Highways
Testing Laboratory

LOG OF BORING

Date Started 10/13/99 Sampler: Type SS Dia. 2.0" Water Elev. ft
Date Completed 10/13/99 Casing: Length Dia. 3.25"

Project: CUY-90-0.00 (Site 6 Noisewall)
Project No.: 99091
Location: Westlake, Cuyahoga County

Boring No. NW6-04 Station & Offset 5+48.68, 84.24' RT. Surface Elev. 637.31ft

Elev. (ft)	Depth (ft)	Std. Pen./ ROD	Rec. (ft)	Loss (ft)	Description	Sample No.	Physical Characteristics % Agg	% C.S.	% F.S.	% Silt	% Clay	L.L.	P.I.	W.C.	ODOT Class
637.3	0														
636.5					ASPHALT										
635.7		6-9-7			ROADBASE MATERIAL	1	--	--	--	--	--	--	--	--	VISUAL
					Very stiff, gray CLAY (A-7-6), some to and rock fragments, trace sand, moist.										
		6-9-7				2	--	--	--	--	--	--	--	17	VISUAL
	5														
630.6		6-8-16				3	--	--	--	--	--	--	--	10	VISUAL
					Stiff to very stiff, gray SILTY CLAY (A-6b), some rock fragments, trace sand, moist.										
		6-8-6				4	--	--	--	--	--	--	--	13	VISUAL
	10														
		7-12-8				5	--	--	--	--	--	--	--	8	VISUAL
623.8															
		2-2-50/0.2			Hard to very stiff, brown CLAY (A-7-6), some to no rock fragments, little to trace sand, moist.	6	--	--	--	--	--	--	--	13	VISUAL
	15														
		50/0.2				7	--	--	--	--	--	--	--	--	VISUAL
		7-6-15				8	--	--	--	--	--	--	--	12	VISUAL
	20														
		4-9-12				9	0	0	1	--	99 *	45	21	23	A-7-6
		16-18-24				10	--	--	--	--	--	--	--	28	VISUAL
612.3	25				TERMINATION DEPTH = 25.0 FEET										

Particle Sizes: Agg =¢ 2.00mm, Coarse Sand = 2.00-0.42mm, Fine Sand = 0.42-0.074mm, Silt = 0.074-0.005mm, Clay =* 0.005mm (*Indicates silt & clay combined)

DRAWN	REVIEWED	DATE	CALCULATED	CHECKED
E.D.S.	B.M.	1/16/00	W.I.N.	S.S.S.

PRIME ENGINEERING & ARCHITECTURE, INC.
COLUMBUS: (614) 457-2100 AKRON: (330) 666-5432

State of Ohio
Department of Transportation
Division of Highways
Testing Laboratory

LOG OF BORING

Date Started 10/14/99 Sampler: Type SS Dia. 2.0" Water Elev. ft
Date Completed 10/14/99 Casing: Length Dia. 3.25"

Project: CUY-90-0.00 (Site 6 Noisewall)
Project No.: 99091
Location: Westlake, Cuyahoga County

Boring No. NW6-05 Station & Offset 7+47.95, 84.69' RT. Surface Elev. 638.85ft

Elev. (ft)	Depth (ft)	Std. Pen./ ROD	Rec. (ft)	Loss (ft)	Description	Sample No.	Physical Characteristics % Agg	% C.S.	% F.S.	% Silt	% Clay	L.L.	P.I.	W.C.	ODOT Class
638.9	0														
637.9					ASPHALT										
					CONCRETE										
636.4					Stiff to hard, gray SANDY SILT (A-4a), and rock fragments, little clay, moist.										
		7-7-10				1	--	--	--	--	--	--	--	10	VISUAL
	5														
		11-11-12				2	--	--	--	--	--	--	--	10	VISUAL
		7-7-7				3	--	--	--	--	--	--	--	9	VISUAL
	10														
		12-14-21				4	--	--	--	--	--	--	--	6	VISUAL
		6-8-6				5	--	--	--	--	--	--	--	8	VISUAL
	15														
623.4					Stiff to very stiff, gray and brown SILT AND CLAY (A-6a), some to trace shale fragments, trace to little sand, moist.										
		6-7-9				6	--	--	--	--	--	--	--	15	VISUAL
		1-5-5				7	3	2	12	--	83 *	37	14	26	A-6a
	20														
		4-7-12				8	--	--	--	--	--	--	--	22	VISUAL
615.4		50/0.4			Very soft, decomposed, gray SILTY SHALE.	9	--	--	--	--	--	--	--	17	VISUAL
613.9	25				TERMINATION DEPTH = 25.0 FEET										

Particle Sizes: Agg = ¢ 2.00mm, Coarse Sand = 2.00-0.42mm, Fine Sand = 0.42-0.074mm, Silt = 0.074-0.005mm, Clay = * 0.005mm (*Indicates silt & clay combined)

State of Ohio
Department of Transportation
Division of Highways
Testing Laboratory

LOG OF BORING

Date Started 10/14/99 Sampler: Type SS Dia. 2.0" Water Elev. 628.6ft
Date Completed 10/14/99 Casing: Length Dia. 3.25"

Project: CUY-90-0.00 (Noisewalls)
Project No.: 99091
Location: Westlake, Cuyahoga County

Boring No. NW6-06 Station & Offset 9+52.26, 83.33' RT. Surface Elev. 642.12ft

Elev. (ft)	Depth (ft)	Std. Pen./ ROD	Rec. (ft)	Loss (ft)	Description	Sample No.	Physical Characteristics % Agg	% C.S.	% F.S.	% Silt	% Clay	L.L.	P.I.	W.C.	ODOT Class
642.1	0														
641.1					ASPHALT										
					CONCRETE										
639.6					Stiff to hard, gray and brown CLAY (A-7-6), some to no rock fragments, trace sand, moist to wet.										
		6-6-7				1	--	--	--	--	--	--	--	16	VISUAL
	5														
		18-38-50/0.5				2	--	--	--	--	--	--	--	7	VISUAL
		8-14-16				3	--	--	--	--	--	--	--	9	VISUAL
	10														
		36-50/0.4-				4	--	--	--	--	--	--	--	9	VISUAL
		20-19-11				5	--	--	--	--	--	--	--	16	VISUAL
	15														
		2-4-8				6	0	2	2	--	96 *	45	18	28	A-7-6
623.5		50/0.5			Soft to medium hard, decomposed to weathered, gray SILTY SHALE.	7	--	--	--	--	--	--	--	13	VISUAL
	20														
		50/0.4				8	--	--	--	--	--	--	--	23	VISUAL
		50/0.1				9	--	--	--	--	--	--	--	21	VISUAL
617.1	25				TERMINATION DEPTH = 25.0 FEET										

Particle Sizes: Agg = ¢ 2.00mm, Coarse Sand = 2.00-0.42mm, Fine Sand = 0.42-0.074mm, Silt = 0.074-0.005mm, Clay = * 0.005mm (*Indicates silt & clay combined)

DRAWN	REVIEWED	DATE	CALCULATED	CHECKED
E.D.S.	B.M.	1/16/00	W.I.N.	S.S.S.

PRIME ENGINEERING & ARCHITECTURE, INC.
COLUMBUS: (614) 457-2100 AKRON: (330) 666-5432

State of Ohio
Department of Transportation
Division of Highways
Testing Laboratory

LOG OF BORING

Date Started 10/14/99 Sampler: Type SS Dia. 2.0" Water Elev. ft
Date Completed 10/14/99 Casing: Length Dia. 3.25"

Project: CUY-90-0.00 (Site 6 Noisewall)
Project No.: 99091
Location: Westlake, Cuyahoga County

Boring No. NW6-07 Station & Offset 11+48.01, 83.72' RT. Surface Elev. 645.80ft

Elev. (ft)	Depth (ft)	Std. Pen./ ROD	Rec. (ft)	Loss (ft)	Description	Sample No.	Physical Characteristics % Agg	% C.S.	% F.S.	% Silt	% Clay	L.L.	P.I.	W.C.	ODOT Class
645.8	0														
645.6					TOPSOIL										
		9-5-5			Stiff to hard, gray SILT AND CLAY (A-6a), trace to no shale fragments, trace sand, moist to wet.	1	--	--	--	--	--	--	--	14	VISUAL
		6-6-6				2	--	--	--	--	--	--	--	18	VISUAL
	5														
		50/0.4				3	--	--	--	--	--	--	--	20	VISUAL
		4-5-9				4	0	2	8	--	90 *	39	12	31	A-6a
	10														
		8-11-21				5	--	--	--	--	--	--	--	29	VISUAL
632.1		50/0.5				6	--	--	--	--	--	--	--	13	VISUAL
					Very soft, decomposed, gray SILTY SHALE.										
630.8	15				Note: Encountered sample refusal at 14.0 feet, augered to 15.0 feet and began coring bedrock.										
		ROD = 65%	3.0	0.0	Medium hard, weathered, gray SILTY SHALE with nearly horizontal laminar bedding (fissile), fair quality as per ROD.										
					U.C. Strength at 17.0 feet = 1481 psi										
627.8					TERMINATION DEPTH = 18.0 FEET										

Particle Sizes: Agg = ¢ 2.00mm, Coarse Sand = 2.00-0.42mm, Fine Sand = 0.42-0.074mm, Silt = 0.074-0.005mm, Clay = * 0.005mm (*Indicates silt & clay combined)

State of Ohio
Department of Transportation
Division of Highways
Testing Laboratory

LOG OF BORING

Date Started 10/24/99 Sampler: Type SS Dia. 2.0" Water Elev. ft
Date Completed 10/24/99 Casing: Length Dia. 3.25"

Project: CUY-90-0.00 (Site 6 Noisewall)
Project No.: 99091
Location: Westlake, Cuyahoga County

Boring No. NW6-08 Station & Offset 13+48.19, 86.55' RT. Surface Elev. 649.29ft

Elev. (ft)	Depth (ft)	Std. Pen./ ROD	Rec. (ft)	Loss (ft)	Description	Sample No.	Physical Characteristics % Agg	% C.S.	% F.S.	% Silt	% Clay	L.L.	P.I.	W.C.	ODOT Class
649.3	0														
649.0					TOPSOIL										
		6-9-9			Very stiff, gray SILTY CLAY (A-6b), some to trace sand, trace to and rock fragments, moist.	1	--	--	--	--	--	--	--	12	VISUAL
		6-8-9				2	7	6	18	--	68 *	38	17	21	A-6b
	5														
642.8		7-14-10				3	--	--	--	--	--	--	--	17	VISUAL
					Soft to medium hard, decomposed to highly weathered, gray SILTY SHALE.										
		32-50/0.1				4	--	--	--	--	--	--	--	5	VISUAL
639.3	10				Note: Encountered sample refusal at 9.1 feet, augered to 10.0 feet and began coring bedrock.										
		ROD = 80%	2.9	0.1	Medium hard to soft, weathered to highly weathered, gray SILTY SHALE with nearly horizontal laminar bedding (fissile), fair quality as per ROD.										
					U.C. Strength at 11.8 feet = 492 psi										
636.3					TERMINATION DEPTH = 13.0 FEET										

Particle Sizes: Agg = ¢ 2.00mm, Coarse Sand = 2.00-0.42mm, Fine Sand = 0.42-0.074mm, Silt = 0.074-0.005mm, Clay = * 0.005mm (*Indicates silt & clay combined)

DRAWN	REVIEWED	DATE	CALCULATED	CHECKED
E.D.S.	B.M.	1/16/00	W.I.N.	S.S.S.

PRIME ENGINEERING & ARCHITECTURE, INC.
COLUMBUS: (614) 457-2100 AKRON: (330) 666-5432

State of Ohio
Department of Transportation
Division of Highways
Testing Laboratory

LOG OF BORING

Date Started 10/20/99 Sampler: Type SS Dia. 2.0" Water Elev. ft
Date Completed 10/20/99 Casing: Length Dia. 3.25"

Project: CUY-90-0.00 (Site 6 Noisewall)
Project No.: 99091
Location: Westlake, Cuyahoga County

Boring No. NW6-09 Station & Offset 15+46.08, 86.07' RT. Surface Elev. 653.47ft

Elev. (ft)	Depth (ft)	Std. Pen./ ROD	Rec. (ft)	Loss (ft)	Description	Sample No.	Physical Characteristics % Agg	% C.S.	% F.S.	% Silt	% Clay	L.L.	P.I.	W.C.	ODOT Class
653.5	0														
653.1		3-6-5			TOPSOIL Stiff, gray CLAY (A-7-6), trace rock fragments, trace sand, trace wood, moist.	1	--	--	--	--	--	--	--	24	VISUAL
		4-5-7				2	2	5	2	--	91 *	58	30	25	A-7-6
	5	2-7-30				3	--	--	--	--	--	--	--	14	VISUAL
646.4					Very soft to soft, decomposed to highly weathered, gray SILTY SHALE.	4	--	--	--	--	--	--	--	4	VISUAL
	10	50/0.2			Note: Encountered sample refusal at 8.7 feet, augered to 11.0 feet and began coring bedrock.										
642.5		ROD = 20%	3.0	0.0	Soft, weathered to highly weathered, gray SILTY SHALE with nearly horizontal laminar bedding (fissile), poor quality as per ROD. U.C. Strength at 12.3 feet = 262 psi										
639.5					TERMINATION DEPTH = 14.0 FEET										

Particle Sizes: Agg = ¢ 2.00mm, Coarse Sand = 2.00-0.42mm, Fine Sand = 0.42-0.074mm, Silt = 0.074-0.005mm, Clay = * 0.005mm (*Indicates silt & clay combined)

State of Ohio
Department of Transportation
Division of Highways
Testing Laboratory

LOG OF BORING

Date Started 10/20/99 Sampler: Type SS Dia. 2.0" Water Elev. ft
Date Completed 10/20/99 Casing: Length Dia. 3.25"

Project: CUY-90-0.00 (Site 6 Noisewall)
Project No.: 99091
Location: Westlake, Cuyahoga County

Boring No. NW6-10 Station & Offset 16+99.48, 87.84' RT. Surface Elev. 656.27ft

Elev. (ft)	Depth (ft)	Std. Pen./ ROD	Rec. (ft)	Loss (ft)	Description	Sample No.	Physical Characteristics % Agg	% C.S.	% F.S.	% Silt	% Clay	L.L.	P.I.	W.C.	ODOT Class
656.3	0														
655.9		5-6-6			TOPSOIL Stiff, gray CLAY (A-7-6), some to no rock fragments, little to trace sand, moist.	1	--	--	--	--	--	--	--	18	VISUAL
		4-7-6				2	--	--	--	--	--	--	--	26	VISUAL
	5	6-20-50/0.4				3	--	--	--	--	--	--	--	11	VISUAL
649.3					Very soft to soft, decomposed to highly weathered, gray SILTY SHALE.	4	--	--	--	--	--	--	--	7	VISUAL
	10	50/0.2			Note: Encountered sample refusal at 8.7 feet, augered to 11.0 feet and began coring bedrock.										
645.3		ROD = 40%	2.7	0.3	Soft to medium hard, highly weathered to weathered, gray SILTY SHALE with nearly horizontal laminar bedding (fissile), poor quality as per ROD. RODU.C. Strength at 11.3 feet = 803 psi										
642.3					TERMINATION DEPTH = 14.0 FEET										

Particle Sizes: Agg = ¢ 2.00mm, Coarse Sand = 2.00-0.42mm, Fine Sand = 0.42-0.074mm, Silt = 0.074-0.005mm, Clay = * 0.005mm (*Indicates silt & clay combined)

State of Ohio
Department of Transportation
Division of Highways
Testing Laboratory

LOG OF BORING

Date Started 10/20/99 Sampler: Type SS Dia. 2.0" Water Elev. ft
Date Completed 10/20/99 Casing: Length Dia. 3.25"

Project: CUY-90-0.00 (Site 6 Noisewall)
Project No.: 99091
Location: Westlake, Cuyahoga County

Boring No. NW6-11 Station & Offset 19+00.24, 73.47' RT. Surface Elev. 661.68ft

Elev. (ft)	Depth (ft)	Std. Pen./ ROD	Rec. (ft)	Loss (ft)	Description	Sample No.	Physical Characteristics % Agg	% C.S.	% F.S.	% Silt	% Clay	L.L.	P.I.	W.C.	ODOT Class
661.7	0														
661.3		4-12-6			TOPSOIL Very stiff, gray CLAY (A-7-6), little to some rock fragments, trace sand, moist.	1	--	--	--	--	--	--	--	22	VISUAL
		4-8-20				2	--	--	--	--	--	--	--	25	VISUAL
	5	12-14-28				3	--	--	--	--	--	--	--	15	VISUAL
654.9					Very soft to soft, decomposed to highly weathered, gray SILTY SHALE.	4	--	--	--	--	--	--	--	4	VISUAL
	10	50/0.2			Note: Encountered sample refusal at 8.7 feet, augered to 11.0 feet and began coring bedrock.										
650.7		ROD = 21%	2.5	0.5	Soft, highly weathered, gray SILTY SHALE with nearly horizontal laminar bedding (fissile), very poor quality as per ROD.										
647.7					TERMINATION DEPTH = 14.0 FEET										

Particle Sizes: Agg = ¢ 2.00mm, Coarse Sand = 2.00-0.42mm, Fine Sand = 0.42-0.074mm, Silt = 0.074-0.005mm, Clay = * 0.005mm (*Indicates silt & clay combined)

DRAWN	REVIEWED	DATE	CALCULATED
E.D.S.	B.M.	1/16/00	W.I.N.
			CHECKED S.S.S.

PRIME ENGINEERING & ARCHITECTURE, INC.
COLUMBUS: (614) 457-2100 AKRON: (330) 666-5432

State of Ohio
Department of Transportation
Division of Highways
Testing Laboratory

LOG OF BORING

Date Started 10/20/99 Sampler: Type SS Dia. 2.0" Water Elev. ft
Date Completed 10/20/99 Casing: Length Dia. 3.25"

Project: CUY-90-0.00 (Site 6 Noisewall)
Project No.: 99091
Location: Westlake, Cuyahoga County

Boring No. NW6-12 Station & Offset 20+97.75, 72.71' RT. Surface Elev. 664.90ft

Elev. (ft)	Depth (ft)	Std. Pen./ RQD	Rec. (ft)	Loss (ft)	Description	Sample No.	Physical Characteristics % Agg	% C.S.	% F.S.	% Silt	% Clay	L.L.	P.I.	W.C.	ODOT Class
664.9	0														
664.6		2-5-7			TOPSOIL Stiff, gray CLAY (A-7-6), little to trace rock fragments, trace to no wood, trace sand, moist to wet.	1	--	--	--	--	--	--		20	VISUAL
		4-4-5				2	--	--	--	--	--	--		31	VISUAL
	5	4-7-20				3	--	--	--	--	--	--		23	VISUAL
657.9					Very soft, decomposed, gray SILTY SHALE.										
656.4		ROD = 30%	3.0	0.0	Note: Spoon sampled to 7.5 feet, augered to 8.5 feet and began coring bedrock. Very soft to soft, highly weathered, gray SILTY SHALE with nearly horizontal laminar bedding (fissile), poor quality as per ROD. U.C. Strength at 9.8 feet = 166 psi										
	10														
653.4					TERMINATION DEPTH = 11.5 FEET										

Particle Sizes: Agg = ℄ 2.00mm, Coarse Sand = 2.00-0.42mm, Fine Sand = 0.42-0.074mm, Silt = 0.074-0.005mm, Clay = ≠ 0.005mm (*Indicates silt & clay combined)

State of Ohio
Department of Transportation
Division of Highways
Testing Laboratory

LOG OF BORING

Date Started 10/20/99 Sampler: Type SS Dia. 2.0" Water Elev. ft
Date Completed 10/20/99 Casing: Length Dia. 3.25"

Project: CUY-90-0.00 (Site 6 Noisewall)
Project No.: 99091
Location: Westlake, Cuyahoga County

Boring No. NW6-13 Station & Offset 22+97.67, 72.99' RT. Surface Elev. 666.20ft

Elev. (ft)	Depth (ft)	Std. Pen./ RQD	Rec. (ft)	Loss (ft)	Description	Sample No.	Physical Characteristics % Agg	% C.S.	% F.S.	% Silt	% Clay	L.L.	P.I.	W.C.	ODOT Class
666.2	0														
665.9		7-20-13			TOPSOIL Dense, brown COARSE AND FINE SAND (A-3a), some cinders and gravel, trace silt, moist to wet.	1	--	--	--	--	--	--	--	14	VISUAL
663.7		3-3-7			Stiff, gray CLAY (A-7-6), little to trace rock fragments, little sand, moist.	2	8	7	5	--	81 *	42	14	24	A-7-6
661.3	5				Very soft to soft, decomposed to highly weathered, gray SILTY SHALE.										
		20-22-50/0.3				3	--	--	--	--	--	--	--	12	VISUAL
658.2		ROD = 62%	3.0	0.0	Note: Encountered spoon sampler refusal at 7.3 feet, augered to 8.0 feet and began coring bedrock. Soft, highly weathered to weathered, gray SILTY SHALE with nearly horizontal laminar bedding (fissile), fair quality as per ROD.										
	10				U.C. Strength at 9.4 feet = 545 psi										
655.2					TERMINATION DEPTH = 11.0 FEET										

Particle Sizes: Agg = ℄ 2.00mm, Coarse Sand = 2.00-0.42mm, Fine Sand = 0.42-0.074mm, Silt = 0.074-0.005mm, Clay = ≠ 0.005mm (*Indicates silt & clay combined)

State of Ohio
Department of Transportation
Division of Highways
Testing Laboratory

LOG OF BORING

Date Started 10/21/99 Sampler: Type SS Dia. 2.0" Water Elev. ft
Date Completed 10/21/99 Casing: Length Dia. 3.25"

Project: CUY-90-0.00 (Site 6 Noisewall)
Project No.: 99091
Location: Westlake, Cuyahoga County

Boring No. NW6-14 Station & Offset 25+47.88, 72.56' RT. Surface Elev. 665.40ft

Elev. (ft)	Depth (ft)	Std. Pen./ RQD	Rec. (ft)	Loss (ft)	Description	Sample No.	Physical Characteristics % Agg	% C.S.	% F.S.	% Silt	% Clay	L.L.	P.I.	W.C.	ODOT Class
665.4	0														
665.1		5-10-13			TOPSOIL Very stiff to stiff, gray CLAY (A-7-6), little to trace rock fragments, trace sand, moist.	1	--	--	--	--	--	--	--	22	VISUAL
		3-4-5				2	--	--	--	--	--	--	--	30	VISUAL
	5	3-7-22				3	--	--	--	--	--	--	--	19	VISUAL
658.4					Very soft to soft, decomposed to highly weathered, gray SILTY SHALE.										
656.9		ROD = 40%	3.0	0.0	Note: Spoon sampled to 7.5 feet, augered to 8.5 feet and began coring bedrock. Soft, highly weathered to weathered, gray SILTY SHALE with nearly horizontal laminar bedding (fissile), poor quality as per ROD. U.C. Strength at 9.8 feet = 935 psi										
	10	0%													
653.9					TERMINATION DEPTH = 11.5 FEET										

Particle Sizes: Agg = ℄ 2.00mm, Coarse Sand = 2.00-0.42mm, Fine Sand = 0.42-0.074mm, Silt = 0.074-0.005mm, Clay = ≠ 0.005mm (*Indicates silt & clay combined)

State of Ohio
Department of Transportation
Division of Highways
Testing Laboratory

LOG OF BORING

Date Started 10/21/99 Sampler: Type SS Dia. 2.0" Water Elev. ft
Date Completed 10/21/99 Casing: Length Dia. 3.25"

Project: CUY-90-0.00 (Site 6 Noisewall)
Project No.: 99091
Location: Westlake, Cuyahoga County

Boring No. NW6-15 Station & Offset 27+44.09, 73.97' RT. Surface Elev. 662.74ft

Elev. (ft)	Depth (ft)	Std. Pen./ RQD	Rec. (ft)	Loss (ft)	Description	Sample No.	Physical Characteristics % Agg	% C.S.	% F.S.	% Silt	% Clay	L.L.	P.I.	W.C.	ODOT Class
662.7	0														
662.4					TOPSOIL										
		4-6-10			Very stiff to stiff, gray SILTY CLAY (A-6b), some to little rock fragments, trace to little sand, moist.	1	--	--	--	--	--	--	--	17	VISUAL
		5-7-12				2	--	--	--	--	--	--	--	16	VISUAL
	5														
		8-6-7				3	19	7	11	--	64 *	39	17	18	A-6b
654.1															
		24-46-50/0.3			Very soft to soft, decomposed to highly weathered, gray SILTY SHALE.	4	--	--	--	--	--	--	--	12	VISUAL
	10														
651.7					Note: Spoon sampled to 9.8 feet, augered to 11.0 feet and began coring bedrock.										
		RQD = 19%	3.0	0.0	Soft, highly weathered to weathered, gray SILTY SHALE with nearly horizontal laminar bedding (fissile), very poor quality as per RQD.										
					U.C. Strength at 11.2 feet = 347 psi										
648.7					TERMINATION DEPTH = 14.0 FEET										

Particle Sizes: Agg = ℄ 2.00mm, Coarse Sand = 2.00-0.42mm, Fine Sand = 0.42-0.074mm, Silt = 0.074-0.005mm, Clay = * 0.005mm (*Indicates silt & clay combined)

State of Ohio
Department of Transportation
Division of Highways
Testing Laboratory

LOG OF BORING

Date Started 10/21/99 Sampler: Type SS Dia. 2.0" Water Elev. ft
Date Completed 10/21/99 Casing: Length Dia. 3.25"

Project: CUY-90-0.00 (Site 6 Noisewall)
Project No.: 99091
Location: Westlake, Cuyahoga County

Boring No. NW6-16 Station & Offset 29+43.62, 93.25' RT. Surface Elev. 658.04ft

Elev. (ft)	Depth (ft)	Std. Pen./ RQD	Rec. (ft)	Loss (ft)	Description	Sample No.	Physical Characteristics % Agg	% C.S.	% F.S.	% Silt	% Clay	L.L.	P.I.	W.C.	ODOT Class
658.0	0														
657.6					TOPSOIL										
		6-12-19			Hard to medium stiff, gray CLAY (A-7-6), some to and rock fragments, trace sand, moist.	1	--	--	--	--	--	--	--	10	VISUAL
		7-10-15				2	--	--	--	--	--	--	--	17	VISUAL
	5														
		15-16-19				3	--	--	--	--	--	--	--	7	VISUAL
		2-4-4				4	0	0	3	--	97 *	53	27	30	A-7-6
	10														
		7-13-17				5	--	--	--	--	--	--	--	19	VISUAL
646.0															
					Very soft to soft, decomposed to highly weathered, gray SILTY SHALE.										
644.5					Note: Spoon sampled to 12.5 feet, augered to 13.5 feet and began coring bedrock.										
		RQD = 23%	2.7	0.3	Soft, highly weathered to weathered, gray SILTY SHALE with nearly horizontal laminar bedding (fissile), very poor quality as per RQD.										
	15				U.C. Strength at 14.9 feet = 300 psi										
641.5					TERMINATION DEPTH = 16.5 FEET										

Particle Sizes: Agg = ℄ 2.00mm, Coarse Sand = 2.00-0.42mm, Fine Sand = 0.42-0.074mm, Silt = 0.074-0.005mm, Clay = * 0.005mm (*Indicates silt & clay combined)

DRAWN	REVIEWED	DATE	CALCULATED	CHECKED
E.D.S.	B.M.	1/16/00	W.I.N.	S.S.S.

PRIME ENGINEERING & ARCHITECTURE, INC.
COLUMBUS: (614) 457-2100 AKRON: (330) 666-5432

State of Ohio
Department of Transportation
Division of Highways
Testing Laboratory

LOG OF BORING

Date Started 10/21/99 Sampler: Type SS Dia. 2.0" Water Elev. ft
Date Completed 10/21/99 Casing: Length Dia. 3.25"

Project: CUY-90-0.00 (Site 6 Noisewall)
Project No.: 99091
Location: Westlake, Cuyahoga County

Boring No. NW6-17 Station & Offset 31+42.28, 98.93' RT. Surface Elev. 654.94ft

Elev. (ft)	Depth (ft)	Std. Pen./ ROD	Rec. (ft)	Loss (ft)	Description	Sample No.	Physical Characteristics % Agg	% C.S.	% F.S.	% Silt	% Clay	L.L.	P.I.	W.C.	ODOT Class
654.9	0														
654.5		3-4-7			TOPSOIL Hard to medium stiff, gray SANDY SILT (A-4a), some to and rock fragments, little clay, moist to wet.	1	24	10	18	--	47 *	25	8	11	A-4a
		15-16-16				2	--	--	--	--	--	--	--	9	VISUAL
	5	14-17-23				3	--	--	--	--	--	--	--	7	VISUAL
		10-14-7				4	--	--	--	--	--	--	--	6	VISUAL
	10	4-4-3				5	--	--	--	--	--	--	--	6	VISUAL
		6-7-10				6	--	--	--	--	--	--	--		VISUAL
639.7	15	14-21-50/0.4			Very soft to soft, decomposed to highly weathered, gray SILTY SHALE.	7	--	--	--	--	--	--	--	9	VISUAL
636.4		ROD = 30%	2.8	0.2	Note: Encountered spoon sampler refusal at 17.4 feet, augered to 18.5 feet and began coring bedrock. Soft, highly weathered to weathered, gray SILTY SHALE with nearly horizontal laminar bedding (fissile), poor quality as per ROD. U.C. Strength at 18.9 feet = 205 psi										
	20														
633.4					TERMINATION DEPTH = 21.5 FEET										

Particle Sizes: Agg = ℄ 2.00mm, Coarse Sand = 2.00-0.42mm, Fine Sand = 0.42-0.074mm, Silt = 0.074-0.005mm, Clay = * 0.005mm (*Indicates silt & clay combined)

State of Ohio
Department of Transportation
Division of Highways
Testing Laboratory

LOG OF BORING

Date Started 10/19/99 Sampler: Type SS Dia. 2.0" Water Elev. ft
Date Completed 10/19/99 Casing: Length Dia. 3.25"

Project: CUY-90-0.00 (Site 6 Noisewall)
Project No.: 99091
Location: Westlake, Cuyahoga County

Boring No. NW6-18 Station & Offset 33+40.06' 25.04' RT. Surface Elev. 653.19ft

Elev. (ft)	Depth (ft)	Std. Pen./ ROD	Rec. (ft)	Loss (ft)	Description	Sample No.	Physical Characteristics % Agg	% C.S.	% F.S.	% Silt	% Clay	L.L.	P.I.	W.C.	ODOT Class
653.2	0														
652.9		5-8-13			TOPSOIL Stiff to hard, gray and brown ELASTIC CLAY (A-7-5), some to trace rock fragments, some to little sand, moist.	1	--	--	--	--	--	--	--	16	VISUAL
		4-6-9				2	3	5	9	--	83 *	46	16	32	A-7-5
	5	4-5-7				3	--	--	--	--	--	--	--	22	VISUAL
		18-19-23				4	--	--	--	--	--	--	--	15	VISUAL
	10														
641.7		16-26-28			Very soft to soft, decomposed to highly weathered, gray SILTY SHALE.	5	--	--	--	--	--	--	--	8	VISUAL
		50/0.3			Note: Encountered spoon sample refusal at 13.8 feet, augered to 15.0 feet and began coring bedrock.	6	--	--	--	--	--	--	--	6	VISUAL
638.2	15	ROD = 32%	2.9	0.1	Soft to medium hard, weathered, gray SILTY SHALE with nearly horizontal laminar bedding (fissile), fair quality as per ROD.										
635.2					Note: 6 inch thick clay seam at 17.3 feet. TERMINATION DEPTH = 18.0 FEET										

Particle Sizes: Agg = ℄ 2.00mm, Coarse Sand = 2.00-0.42mm, Fine Sand = 0.42-0.074mm, Silt = 0.074-0.005mm, Clay = * 0.005mm (*Indicates silt & clay combined)

DRAWN	REVIEWED	DATE	CALCULATED	CHECKED
E.D.S.	B.M.	1/16/00	W.I.N.	S.S.S.

PRIME ENGINEERING & ARCHITECTURE, INC.
COLUMBUS: (614) 457-2100 AKRON: (330) 666-5432

State of Ohio
Department of Transportation
Division of Highways
Testing Laboratory

LOG OF BORING

Date Started 10/19/99 Sampler: Type SS Dia. 2.0" Water Elev. ft
Date Completed 10/19/99 Casing: Length Dia. 3.25"

Project: CUY-90-0.00 (Site 6 Noisewall)
Project No.: 99091
Location: Westlake, Cuyahoga County

Boring No. NW6-19 Station & Offset 35+51.79, 17.40' RT. Surface Elev. 654.90ft

Elev. (ft)	Depth (ft)	Std. Pen./ RQD	Rec. (ft)	Loss (ft)	Description	Sample No.	Physical Characteristics % Agg	% C.S.	% F.S.	% Silt	% Clay	L.L.	P.I.	W.C.	ODOT Class
654.9	0														
654.4		11-11-7			TOPSOIL Very stiff, brown CLAY (A-7-6), little to trace rock fragments, little sand, moist.	1	--	--	--	--	--	--	--	12	VISUAL
		8-11-15				2	2	3	10	--	85 *	42	21	21	A-7-6
	5	8-9-21				3	--	--	--	--	--	--	--	17	VISUAL
646.2		24-50/0.3			Very soft, decomposed, gray SILTY SHALE.	4	--	--	--	--	--	--	--	9	VISUAL
	10				Note: Encountered spoon sample refusal at 9.3 feet, augered to 11.0 feet and began coring bedrock.										
643.9		ROD = 21%	2.3	0.7	Soft, highly weathered to weathered, gray SILTY SHALE with nearly horizontal laminar bedding (fissile), very poor quality as per ROD. U.C. Strength at 11.7 feet = 208 psi										
640.9					TERMINATION DEPTH = 14.0 FEET										

Particle Sizes: Agg =¢ 2.00mm, Coarse Sand = 2.00-0.42mm, Fine Sand = 0.42-0.074mm, Silt = 0.074-0.005mm, Clay =* 0.005mm (*Indicates silt & clay combined)

State of Ohio
Department of Transportation
Division of Highways
Testing Laboratory

LOG OF BORING

Date Started 10/18/99 Sampler: Type SS Dia. 2.0" Water Elev. ft
Date Completed 10/18/99 Casing: Length Dia. 3.25"

Project: CUY-90-0.00 (Site 6 Noisewall)
Project No.: 99091
Location: Westlake, Cuyahoga County

Boring No. NW6-20 Station & Offset 37+37.73, 21.33' RT. Surface Elev. 654.38ft

Elev. (ft)	Depth (ft)	Std. Pen./ RQD	Rec. (ft)	Loss (ft)	Description	Sample No.	Physical Characteristics % Agg	% C.S.	% F.S.	% Silt	% Clay	L.L.	P.I.	W.C.	ODOT Class
654.4	0														
654.1		3-6-9			TOPSOIL Stiff to very stiff, brown to gray CLAY (A-7-6), trace sand, trace to some shale fragments, moist.	1	--	--	--	--	--	--	--	30	VISUAL
		3-6-9				2	--	--	--	--	--	--	--	21	VISUAL
	5	3-7-12				3	--	--	--	--	--	--	--	21	VISUAL
645.6		25-50/0.2			Very soft to soft, decomposed to highly weathered, gray SILTY SHALE.	4	--	--	--	--	--	--	--	7	VISUAL
644.4	10				Note: Encountered spoon sample refusal at 9.2 feet, augered to 10.0 feet and began coring bedrock.										
		ROD = 48%	3.0	0.0	Soft, highly weathered to weathered, gray SILTY SHALE with nearly horizontal laminar bedding (fissile), poor quality as per ROD. U.C. Strength at 11.8 feet = 238 psi										
641.4					TERMINATION DEPTH = 13.0 FEET										

Particle Sizes: Agg =¢ 2.00mm, Coarse Sand = 2.00-0.42mm, Fine Sand = 0.42-0.074mm, Silt = 0.074-0.005mm, Clay =* 0.005mm (*Indicates silt & clay combined)

State of Ohio
Department of Transportation
Division of Highways
Testing Laboratory

LOG OF BORING

Date Started 10/18/99 Sampler: Type SS Dia. 2.0" Water Elev. ft
Date Completed 10/18/99 Casing: Length Dia. 3.25"

Project: CUY-90-0.00 (Site 6 Noisewall)
Project No.: 99091
Location: Westlake, Cuyahoga County

Boring No. NW6-21 Station & Offset 39+45.00, 16.31' RT. Surface Elev. 655.06ft

Elev. (ft)	Depth (ft)	Std. Pen./ RQD	Rec. (ft)	Loss (ft)	Description	Sample No.	Physical Characteristics % Agg	% C.S.	% F.S.	% Silt	% Clay	L.L.	P.I.	W.C.	ODOT Class
655.1	0														
654.8		5-6-7			TOPSOIL Stiff, gray CLAY (A-7-6), trace to no rock fragments, trace sand, moist.	1	--	--	--	--	--	--	--	23	VISUAL
		3-4-5				2	0	1	3	--	97 *	51	26	26	A-7-6
	5	3-4-9				3	--	--	--	--	--	--	--	23	VISUAL
646.3		9-20-50			Very soft, decomposed, gray SILTY SHALE.	4	--	--	--	--	--	--	--	9	VISUAL
645.1	10				Note: Began coring bedrock at 10.0 feet.										
		ROD = 47%	3.0	0.0	Soft, highly weathered to weathered, gray SILTY SHALE with nearly horizontal laminar bedding (fissile), poor quality as per ROD.										
642.1					U.C. Strength at 12.7 feet = 241 psi TERMINATION DEPTH = 13.0 FEET										

Particle Sizes: Agg =¢ 2.00mm, Coarse Sand = 2.00-0.42mm, Fine Sand = 0.42-0.074mm, Silt = 0.074-0.005mm, Clay =* 0.005mm (*Indicates silt & clay combined)

State of Ohio
Department of Transportation
Division of Highways
Testing Laboratory

LOG OF BORING

Date Started 10/18/99 Sampler: Type SS Dia. 2.0" Water Elev. ft
Date Completed 10/18/99 Casing: Length Dia. 3.25"

Project: CUY-90-0.00 (Noisewalls)
Project No.: 99091
Location: Westlake, Cuyahoga County

Boring No. NW6-22 Station & Offset 41+45.98, 17.05' RT. Surface Elev. 653.65ft

Elev. (ft)	Depth (ft)	Std. Pen./ ROD	Rec. (ft)	Loss (ft)	Description	Sample No.	% Agg	% C.S.	% F.S.	% Silt	% Clay	L.L.	P.I.	W.C.	ODOT Class
653.7	0														
653.5					TOPSOIL										
		4-5-9			Stiff, brown CLAY (A-7-6), trace to no rock fragments, trace to no wood trace sand, moist.	1	--	--	--	--	--	--	--	23	VISUAL
		4-3-8				2	--	--	--	--	--	--	--	22	VISUAL
	5	4-3-7				3	0	0	1	--	99 *	45	19	23	A-7-6
644.7		22-50/0.2				4	--	--	--	--	--	--	--	12	VISUAL
643.7	10	ROD = 55%	3.0	0.0	Soft, decomposed to highly weathered, gray SILTY SHALE. Note: Encountered spoon sample refusal at 9.2 feet, augered to 10.0 feet and began coring bedrock. Soft, highly weathered to weathered, gray SILTY SHALE with nearly horizontal laminar bedding (fissile), fair quality as per ROD. U.C. Strength at 11.3 feet = 579 psi										
640.7					TERMINATION DEPTH = 13.0 FEET										

Particle Sizes: Agg = ℄ 2.00mm, Coarse Sand = 2.00-0.42mm, Fine Sand = 0.42-0.074mm, Silt = 0.074-0.005mm, Clay = * 0.005mm (*Indicates silt & clay combined)

State of Ohio
Department of Transportation
Division of Highways
Testing Laboratory

LOG OF BORING

Date Started 10/19/99 Sampler: Type SS Dia. 2.0" Water Elev. ft
Date Completed 10/19/99 Casing: Length Dia. 3.25"

Project: CUY-90-0.00 (Noisewalls)
Project No.: 99091
Location: Westlake, Cuyahoga County

Boring No. NW6-23 Station & Offset 43+43.18, 16.19' RT. Surface Elev. 655.84ft

Elev. (ft)	Depth (ft)	Std. Pen./ ROD	Rec. (ft)	Loss (ft)	Description	Sample No.	% Agg	% C.S.	% F.S.	% Silt	% Clay	L.L.	P.I.	W.C.	ODOT Class
655.8	0														
655.4					TOPSOIL										
		5-6-8			Medium stiff to very stiff, gray to brown ELASTIC CLAY (A-7-5), some to no shale fragments, trace sand, moist.	1	--	--	--	--	--	--	--	13	VISUAL
		8-7-10				2	--	--	--	--	--	--	--	13	VISUAL
	5	1-3-3				3	0	0	1	--	98 *	60	30	34	A-7-5
		6-8-12				4	--	--	--	--	--	--	--	27	VISUAL
645.5	10	50/0.3			Very soft to soft, decomposed to weathered, gray SILTY SHALE.	5									
642.3		ROD = 34%	2.9	0.1	Note: Encountered spoon sample refusal at 11.3 feet, augered to 13.5 feet and began coring bedrock. Soft, highly weathered to weathered, gray SILTY SHALE with nearly horizontal laminar bedding (fissile), poor quality as per ROD. four inch thick clay seam present at 14.4 feet. U.C. Strength at 14.9 feet = 340 psi										
639.3	15				TERMINATION DEPTH = 16.5 FEET										

Particle Sizes: Agg = ℄ 2.00mm, Coarse Sand = 2.00-0.42mm, Fine Sand = 0.42-0.074mm, Silt = 0.074-0.005mm, Clay = * 0.005mm (*Indicates silt & clay combined)

State of Ohio
Department of Transportation
Division of Highways
Testing Laboratory

LOG OF BORING

Date Started 10/20/99 Sampler: Type SS Dia. 2.0" Water Elev. ft
Date Completed 10/20/99 Casing: Length Dia. 3.25"

Project: CUY-90-0.00 (Noisewalls)
Project No.: 99091
Location: Westlake, Cuyahoga County

Boring No. NW6-24 Station & Offset 45+43.14, 15.93' RT Surface Elev. 659.49ft

Elev. (ft)	Depth (ft)	Std. Pen./ ROD	Rec. (ft)	Loss (ft)	Description	Sample No.	% Agg	% C.S.	% F.S.	% Silt	% Clay	L.L.	P.I.	W.C.	ODOT Class
659.5	0														
659.0					TOPSOIL										
		4-10-14			Hard to medium stiff, gray CLAY (A-7-6), some rock fragments, moist.	1	--	--	--	--	--	--	--	15	VISUAL
		9-27-50/0.4				2	--	--	--	--	--	--	--	8	VISUAL
	5	50/0.4				3	--	--	--	--	--	--	--	9	VISUAL
		3-2-4				4	0	1	1	--	98 *	49	24	26	A-7-6
648.9	10	50/0.3			Very soft to soft, decomposed to highly weathered, gray SILTY SHALE.	5	--	--	--	--	--	--	--	11	VISUAL
646.0		ROD = 28%	2.7	0.3	Note: Encountered spoon sample refusal at 11.3 feet, augered to 13.5 feet and began coring bedrock. Soft, highly weathered to weathered, gray SILTY SHALE with nearly horizontal laminar bedding (fissile), poor quality as per ROD. U.C. Strength at 14.8 feet = 294 psi										
643.0	15				TERMINATION DEPTH = 16.5 FEET										

Particle Sizes: Agg = ℄ 2.00mm, Coarse Sand = 2.00-0.42mm, Fine Sand = 0.42-0.074mm, Silt = 0.074-0.005mm, Clay = * 0.005mm (*Indicates silt & clay combined)

DRAWN	REVIEWED	DATE	CALCULATED	CHECKED
E.D.S.	B.M.	1/16/00	W.I.N.	S.S.S.

PRIME ENGINEERING & ARCHITECTURE, INC.
COLUMBUS: (614) 457-2100 AKRON: (330) 666-5432

State of Ohio
Department of Transportation
Division of Highways
Testing Laboratory

LOG OF BORING

Date Started 10/20/99 Sampler: Type SS Dia. 2.0" Water Elev. ft
Date Completed 10/20/99 Casing: Length Dia. 3.25"

Project: CUY-90-0.00 (Noisewalls)
Project No.: 99091
Location: Westlake, Cuyahoga County

Boring No. NW6-25 Station & Offset 47+31.86, 12.74' RT. Surface Elev. 663.03ft

Elev. (ft)	Depth (ft)	Std. Pen./ ROD	Rec. (ft)	Loss (ft)	Description	Sample No.	Physical Characteristics % Agg	% C.S.	% F.S.	% Silt	% Clay	L.L.	P.I.	W.C.	ODOT Class
663.0	0														
662.7					TOPSOIL										
		4-9-13			Hard to stiff, gray ELASTIC CLAY (A-7-5), some to no rock fragments, trace sand, moist.	1	--	--	--	--	--	--	--	11	VISUAL
		25-50/0.4				2	--	--	--	--	--	--	--	9	VISUAL
	5	50/0.1				3	--	--	--	--	--	--	--	--	VISUAL
		3-5-7				4	0	1	1	--	98 *	54	24	25	A-7-5
	10														
651.5		3-9-25				5	--	--	--	--	--	--	--	17	VISUAL
					Very soft to soft, decomposed to highly weathered, gray SILTY SHALE.										
649.5					Note: Spoon sampled to 12.5 feet, augered to 13.5 feet and began coring bedrock.										
		ROD = 60%	3.0	0.0	Soft, highly weathered to weathered, gray SILTY SHALE with nearly horizontal laminar bedding (fissile), fair quality as per ROD.										
	15														
646.5					U.C. Strength at 16.3 feet = 205 psi										
					TERMINATION DEPTH = 16.5 FEET										

Particle Sizes: Agg = ¢ 2.00mm, Coarse Sand = 2.00-0.42mm, Fine Sand = 0.42-0.074mm, Silt = 0.074-0.005mm, Clay = * 0.005mm (*Indicates silt & clay combined)

State of Ohio
Department of Transportation
Division of Highways
Testing Laboratory

LOG OF BORING

Date Started 10/20/99 Sampler: Type SS Dia. 2.0" Water Elev. ft
Date Completed 10/20/99 Casing: Length Dia. 3.25"

Project: CUY-90-0.00 (Noisewalls)
Project No.: 99091
Location: Westlake, Cuyahoga County

Boring No. NW6-26 Station & Offset 49+36.14, 10.69' RT. Surface Elev. 666.32ft

Elev. (ft)	Depth (ft)	Std. Pen./ ROD	Rec. (ft)	Loss (ft)	Description	Sample No.	Physical Characteristics % Agg	% C.S.	% F.S.	% Silt	% Clay	L.L.	P.I.	W.C.	ODOT Class
666.3	0														
665.9					TOPSOIL										
		3-6-6			Stiff to hard, gray SILT AND CLAY (A-6a), little rock fragments, trace to no roots, trace to some sand, moist.	1	--	--	--	--	--	--	--	19	VISUAL
		6-11-8				2	--	--	--	--	--	--	--	8	VISUAL
	5	9-11-32				3	16	6	16	--	62 *	34	15	16	A-6a
658.3															
		9-9-40			Hard, gray SANDY SILT (A-4a), some rock fragments, little clay, moist.	4	26	7	23	--	44 *	23	5	11	A-4a
656.7	10				Very soft to soft, decomposed to highly weathered, gray SILTY SHALE.										
		50/0.0				5	--	--	--	--	--	--	--	--	VISUAL
		24-28-39				6	--	--	--	--	--	--	--	12	VISUAL
651.3	15				Note: Spoon sampled to 15.0 feet and began coring bedrock.										
		ROD = 20%	3.0	0.0	Soft, highly weathered to weathered, gray SILTY SHALE with nearly horizontal laminar bedding (fissile), poor quality as per ROD. Some iron staining and 4 inch clay seam from 15.0 to 15.8 feet. U.C. Strength at 16.7 feet = 179 psi										
648.3					TERMINATION DEPTH = 18.0 FEET										

Particle Sizes: Agg = ¢ 2.00mm, Coarse Sand = 2.00-0.42mm, Fine Sand = 0.42-0.074mm, Silt = 0.074-0.005mm, Clay = * 0.005mm (*Indicates silt & clay combined)

DRAWN	REVIEWED	DATE	CALCULATED	CHECKED
E.D.S.	B.M.	1/16/00	W.I.N.	S.S.S.

PRIME ENGINEERING & ARCHITECTURE, INC.
COLUMBUS: (614) 457-2100 AKRON: (330) 666-5432

State of Ohio
Department of Transportation
Division of Highways
Testing Laboratory

LOG OF BORING

Date Started 10/21/99 Sampler: Type SS Dia. 2.0" Water Elev. ft
Date Completed 10/21/99 Casing: Length Dia. 3.25"

Project: CUY-90-0.00 (Site 7A Noisewall)
Project No.: 99091
Location: Westlake, Cuyahoga County

Boring No. NW7A-1 Station & Offset 58+33.00, 132.25' RT. Surface Elev. 657.37ft

Elev. (ft)	Depth (ft)	Std. Pen./ ROD	Rec. (ft)	Loss (ft)	Description	Sample No.	Physical Characteristics % Agg	% C.S.	% F.S.	% Silt	% Clay	L.L.	P.I.	W.C.	ODOT Class
657.4	0														
657.1		5-7-6			TOPSOIL Stiff to medium stiff, gray ELASTIC CLAY (A-7-5), little to no rock fragments, little to trace sand, moist.	1	--	--	--	--	--	--	--	14	VISUAL
		5-3-5				2	--	--	--	--	--	--	--	33	VISUAL
	5	3-3-4				3	0	0	1	--	99 *	60	27	33	A-7-5
649.4		50/0.1													
648.9		RQD = 20%	3.0	0.0	Very soft to medium hard, decomposed to highly weathered, gray SILTY SHALE. Note: Encountered spoon sample refusal at 8.6 feet and began coring bedrock.	4	--	--	--	--	--	--	--	6	VISUAL
	10				Soft, highly weathered to weathered, gray SILTY SHALE with nearly horizontal laminar bedding (fissile), very poor quality as per RQD. U.C. Strength at 9.3 feet = 195 psi										
645.9					TERMINATION DEPTH = 11.5 FEET										

Particle Sizes: Agg = ℄ 2.00mm, Coarse Sand = 2.00-0.42mm, Fine Sand = 0.42-0.074mm, Silt = 0.074-0.005mm, Clay = * 0.005mm (*Indicates silt & clay combined)

State of Ohio
Department of Transportation
Division of Highways
Testing Laboratory

LOG OF BORING

Date Started 10/21/99 Sampler: Type SS Dia. 2.0" Water Elev. ft
Date Completed 10/21/99 Casing: Length Dia. 3.25"

Project: CUY-90-0.00 (Site 7A Noisewall)
Project No.: 99091
Location: Westlake, Cuyahoga County

Boring No. NW7A-2 Station & Offset 60+42.85, 127.03' RT. Surface Elev. 657.71ft

Elev. (ft)	Depth (ft)	Std. Pen./ RQD	Rec. (ft)	Loss (ft)	Description	Sample No.	Physical Characteristics % Agg	% C.S.	% F.S.	% Silt	% Clay	L.L.	P.I.	W.C.	ODOT Class
657.7	0														
657.4		4-4-3			TOPSOIL Medium stiff to stiff, gray and brown CLAY (A-7-6), little to no rock fragments, trace sand, moist.	1	--	--	--	--	--	--	--	16	VISUAL
		3-3-6				2	--	--	--	--	--	--	--	26	VISUAL
	5	3-3-7				3	0	0	4	--	96 *	49	22	26	A-7-6
649.7		50/0.4			Very soft to medium hard, decomposed to highly weathered, gray SILTY SHALE. Note: Encountered spoon sample refusal at 8.9 feet, augered to 10.0 feet and began coring bedrock.	4	--	--	--	--	--	--	--	10	VISUAL
647.7	10	ROD = 40%	3.0	0.0	Soft, highly weathered to weathered, gray SILTY SHALE with nearly horizontal laminar bedding (fissile), poor quality as per RQD. U.C. Strength at 12.0 feet = 906 psi										
644.7					TERMINATION DEPTH = 13.0 FEET										

Particle Sizes: Agg = ℄ 2.00mm, Coarse Sand = 2.00-0.42mm, Fine Sand = 0.42-0.074mm, Silt = 0.074-0.005mm, Clay = * 0.005mm (*Indicates silt & clay combined)

State of Ohio
Department of Transportation
Division of Highways
Testing Laboratory

LOG OF BORING

Date Started 10/21/99 Sampler: Type SS Dia. 2.0" Water Elev. ft
Date Completed 10/21/99 Casing: Length Dia. 3.25"

Project: CUY-90-0.00 (Site 7A Noisewall)
Project No.: 99091
Location: Westlake, Cuyahoga County

Boring No. NW7A-3 Station & Offset 62+41.67, 119.18' RT. Surface Elev. 658.88ft

Elev. (ft)	Depth (ft)	Std. Pen./ RQD	Rec. (ft)	Loss (ft)	Description	Sample No.	Physical Characteristics % Agg	% C.S.	% F.S.	% Silt	% Clay	L.L.	P.I.	W.C.	ODOT Class
658.9	0														
658.6		4-6-8			TOPSOIL Stiff to medium stiff, gray CLAY (A-7-6), little to no rock fragments, trace sand, moist.	1	--	--	--	--	--	--	--	21	VISUAL
		3-3-4				2	--	--	--	--	--	--	--	--	VISUAL
	5	6-8-13				3	0	1	3	--	96 *	50	26	23	A-7-6
650.6		19-50/0.3			Very soft to medium hard, decomposed to highly weathered, gray SILTY SHALE. Note: Encountered spoon sample refusal at 9.3 feet, augered to 11.0 feet and began coring bedrock.	4	--	--	--	--	--	--	--	12	VISUAL
648.9	10	ROD = 40%	2.9	0.1	Soft, highly weathered to weathered, gray SILTY SHALE with nearly horizontal laminar bedding (fissile), poor quality as per RQD. U.C. Strength at 12.5 feet = 157 psi										
645.9					TERMINATION DEPTH = 14.0 FEET										

Particle Sizes: Agg = ℄ 2.00mm, Coarse Sand = 2.00-0.42mm, Fine Sand = 0.42-0.074mm, Silt = 0.074-0.005mm, Clay = * 0.005mm (*Indicates silt & clay combined)

DRAWN	REVIEWED	DATE	CALCULATED	CHECKED
E.D.S.	B.M.	1/16/00	W.J.N.	S.S.S.

PRIME ENGINEERING & ARCHITECTURE, INC.
COLUMBUS: (614) 451-2100 AKRON: (330) 666-5432

State of Ohio
Department of Transportation
Division of Highways
Testing Laboratory

LOG OF BORING

Date Started 10/21/99 Sampler: Type SS Dia. 2.0" Water Elev. ft
Date Completed 10/21/99 Casing: Length Dia. 3.25"

Project: CUY-90-0.00 (Site 7B Noisewall)
Project No.: 99091
Location: Westlake, Cuyahoga County

Boring No. NW7B-1 Station & Offset 76+17.49, 86.75' RT. Surface Elev. 663.74ft

Elev. (ft)	Depth (ft)	Std. Pen./ RQD	Rec. (ft)	Loss (ft)	Description	Sample No.	Physical Characteristics % Agg	% C.S.	% F.S.	% Silt	% Clay	L.L.	P.I.	W.C.	ODOT Class
663.7	0														
663.4		6-7-7			TOPSOIL Stiff to medium stiff, brown to gray CLAY (A-7-6), some to and shale fragments, trace sand, moist to wet.	1	--	--	--	--	--	--	--	13	VISUAL
		3-5-5				2	--	--	--	--	--	--	--	16	VISUAL
	5	3-4-4				3	--	--	--	--	--	--	--	16	VISUAL
656.6		1-1-12			Very soft to medium hard, decomposed to highly weathered, gray SILTY SHALE.	4	--	--	--	--	--	--	--	17	VISUAL
	10	50/0.2			Note: Encountered spoon sample refusal at 11.2 feet, augered to 11.5 feet and began coring bedrock.	5	--	--	--	--	--	--	--	8	VISUAL
652.2		RQD = 71%	2.8	0.2	Soft, highly weathered to weathered, gray SILTY SHALE with nearly horizontal laminar bedding (fissile), good quality as per RQD. U.C. Strength at 12.3 feet = 509 psi										
649.2					TERMINATION DEPTH = 14.5 FEET										

Particle Sizes: Agg =¢ 2.00mm, Coarse Sand = 2.00-0.42mm, Fine Sand = 0.42-0.074mm, Silt = 0.074-0.005mm, Clay =* 0.005mm (*Indicates silt & clay combined)

State of Ohio
Department of Transportation
Division of Highways
Testing Laboratory

LOG OF BORING

Date Started 10/21/99 Sampler: Type SS Dia. 2.0" Water Elev. ft
Date Completed 10/21/99 Casing: Length Dia. 3.25"

Project: CUY-90-0.00 (Site 7B Noisewall)
Project No.: 99091
Location: Westlake, Cuyahoga County

Boring No. NW7B-2 Station & Offset 78+04.80, 86.02' RT. Surface Elev. 664.67ft

Elev. (ft)	Depth (ft)	Std. Pen./ RQD	Rec. (ft)	Loss (ft)	Description	Sample No.	Physical Characteristics % Agg	% C.S.	% F.S.	% Silt	% Clay	L.L.	P.I.	W.C.	ODOT Class
664.7	0														
664.3		5-6-5			TOPSOIL Stiff to soft, brown to gray SILT AND CLAY (A-6a), trace to some shale fragments, trace to little sand, moist to wet.	1	--	--	--	--	--	--	--	19	VISUAL
		3-4-4				2	33	11	5	--	50 *	38	12	23	A-6a
	5	3-2-2				3	--	--	--	--	--	--	--	19	VISUAL
657.5		50/0.0			Very soft to medium hard, decomposed to highly weathered, gray SILTY SHALE.	4	--	--	--	--	--	--	--	17	VISUAL
	10	50/0.3			Note: Encountered spoon sample refusal at 11.3 feet, augered to 11.5 feet and began coring bedrock.	5	--	--	--	--	--	--	--	8	VISUAL
653.2		RQD = 35%	3.0	0.0	Soft, highly weathered, gray SILTY SHALE with nearly horizontal laminar bedding (fissile), very poor quality as per RQD.										
650.2					TERMINATION DEPTH = 14.5 FEET										

Particle Sizes: Agg =¢ 2.00mm, Coarse Sand = 2.00-0.42mm, Fine Sand = 0.42-0.074mm, Silt = 0.074-0.005mm, Clay =* 0.005mm (*Indicates silt & clay combined)

State of Ohio
Department of Transportation
Division of Highways
Testing Laboratory

LOG OF BORING

Date Started 10/21/99 Sampler: Type SS Dia. 2.0" Water Elev. ft
Date Completed 10/21/99 Casing: Length Dia. 3.25"

Project: CUY-90-0.00 (Site 7B Noisewall)
Project No.: 99091
Location: Westlake, Cuyahoga County

Boring No. NW7B-3 Station & Offset 80+18.79, 85.23' RT. Surface Elev. 665.26ft

Elev. (ft)	Depth (ft)	Std. Pen./ RQD	Rec. (ft)	Loss (ft)	Description	Sample No.	Physical Characteristics % Agg	% C.S.	% F.S.	% Silt	% Clay	L.L.	P.I.	W.C.	ODOT Class
665.3	0														
664.8		5-7-9			TOPSOIL Stiff to very stiff, brown CLAY (A-7-6), trace rock fragments, trace to little sand, moist.	1	--	--	--	--	--	--	--	18	VISUAL
		5-7-8				2	--	--	--	--	--	--	--	20	VISUAL
659.3	5	1-2-3			Loose, gray FINE SAND (A-3), little silt, wet.	3	--	--	--	--	--	--	--	27	VISUAL
		1-3-2				4	0	0	83	--	17 *	--	--	30	A-3
654.1	10	4-19-50/0.3			Very soft to soft, decomposed to highly weathered, gray SILTY SHALE.	5	--	--	--	--	--	--	--	11	VISUAL
651.8		RQD = 39%	3.0	0.0	Note: Encountered spoon sample refusal at 12.3 feet, augered to 13.5 feet and began coring bedrock. Soft, highly weathered to weathered, gray SILTY SHALE with nearly horizontal laminar bedding (fissile), poor quality as per RQD. U.C. Strength at 15.9 feet = 585 psi										
648.8	15				TERMINATION DEPTH = 16.5 FEET										

Particle Sizes: Agg =¢ 2.00mm, Coarse Sand = 2.00-0.42mm, Fine Sand = 0.42-0.074mm, Silt = 0.074-0.005mm, Clay =* 0.005mm (*Indicates silt & clay combined)

State of Ohio
Department of Transportation
Division of Highways
Testing Laboratory

LOG OF BORING

Date Started 10/13/99 Sampler: Type SS Dia. 2.0" Water Elev. ft
Date Completed 10/13/99 Casing: Length Dia. 3.25"

Project: CUY-90-0.00 (Site 8 Noisewall)
Project No.: 99091
Location: Westlake, Cuyahoga County

Boring No. NW8-1 Station & Offset 106+89.68, 68.47' LT. Surface Elev. 664.31ft

Elev. (ft)	Depth (ft)	Std. Pen./ RQD	Rec. (ft)	Loss (ft)	Description	Sample No.	Physical Characteristics								ODOT Class
							% Agg	% C.S.	% F.S.	% Silt	% Clay	L.L.	P.I.	W.C.	
664.3	0				ASPHALT										
663.5					ROADBASE MATERIAL										
663.1		15-9-3			Medium dense, gray COARSE AND FINE SAND (A-3a), little rock fragments and cinders, moist.	1	--	--	--	--	--	--	--	10	VISUAL
661.3		5-6-6			Stiff, brown CLAY (A-7-6), some sand, trace rock fragments, moist.	2	--	--	--	--	--	--	--	19	VISUAL
	5														
658.3		3-2-4			Loose, brown COARSE AND FINE SAND (A-3a), little rock fragments, some silt and clay, wet.	3	13	4	58	--	58 *	--	--	21	A-3a
655.9		22-36-50/0.4			Very soft to medium hard, decomposed to weathered, gray SILTY SHALE.	4	--	--	--	--	--	--	--	6	VISUAL
	10														
		20-43-50/0.3				5	--	--	--	--	--	--	--	8	VISUAL
		50/0.3				6	--	--	--	--	--	--	--	6	VISUAL
649.3	15				Note: Encountered spoon sample refusal at 13.8 feet, augered to 15.0 feetand began coring bedrock.										
		RQD = 72%	3.0	0.0	Soft to medium hard, highly weathered to weathered, gray SILTY SHALE with nearly horizontal laminar bedding (fissile), fair quality as per RQD. U.C. Strength at 16.5 feet = 1585 psi										
646.3					TERMINATION DEPTH = 18.0 FEET										

Particle Sizes: Agg = ¢ 2.00mm, Coarse Sand = 2.00-0.42mm, Fine Sand = 0.42-0.074mm, Silt = 0.074-0.005mm, Clay = * 0.005mm (*Indicates silt & clay combined)

State of Ohio
Department of Transportation
Division of Highways
Testing Laboratory

LOG OF BORING

Date Started 10/13/99 Sampler: Type SS Dia. 2.0" Water Elev. ft
Date Completed 10/13/99 Casing: Length Dia. 3.25"

Project: CUY-90-0.00 (Site 8 Noisewall)
Project No.: 99091
Location: Westlake, Cuyahoga County

Boring No. NW8-2 Station & Offset 109+55.02, 65.00' LT. Surface Elev. 664.82ft

Elev. (ft)	Depth (ft)	Std. Pen./ RQD	Rec. (ft)	Loss (ft)	Description	Sample No.	Physical Characteristics								ODOT Class
							% Agg	% C.S.	% F.S.	% Silt	% Clay	L.L.	P.I.	W.C.	
664.8	0				ASPHALT										
664.0					ROADBASE MATERIAL										
663.0					Very stiff to stiff, gray SILT AND CLAY (A-6a), little to some rock fragments, trace sand, moist.										
		5-10-18				1	--	--	--	--	--	--	--	17	VISUAL
	5														
		15-9-6				2	--	--	--	--	--	--	--	8	VISUAL
		4-7-8				3	--	--	--	--	--	--	--	15	VISUAL
	10														
		6-6-8				4	0	4	10	--	86 *	38	14	26	A-6a
651.5		50/0.5			Very soft to soft, decomposed to weathered, gray SILTY SHALE.	5	--	--	--	--	--	--	--	7	VISUAL
649.8	15				Note: Encountered spoon sample refusal at 14.0 feet, augered to 15.0 feet and began coring bedrock.										
		RQD = 44%	3.0	0.0	Soft to medium hard, highly weathered to weathered, gray SILTY SHALE with nearly horizontal laminar bedding (fissile), poor quality as per RQD.										
646.8					TERMINATION DEPTH = 18.0 FEET										

Particle Sizes: Agg = ¢ 2.00mm, Coarse Sand = 2.00-0.42mm, Fine Sand = 0.42-0.074mm, Silt = 0.074-0.005mm, Clay = * 0.005mm (*Indicates silt & clay combined)

State of Ohio
Department of Transportation
Division of Highways
Testing Laboratory

LOG OF BORING

Date Started 10/21/99 Sampler: Type SS Dia. 2.0" Water Elev. ft
Date Completed 10/21/99 Casing: Length Dia. 3.25"

Project: CUY-90-0.00 (Site 8 Noisewall)
Project No.: 99091
Location: Westlake, Cuyahoga County

Boring No. NW8-3 Station & Offset 111+54.23, 79.88' LT. Surface Elev. 662.91ft

Elev. (ft)	Depth (ft)	Std. Pen./ ROD	Rec. (ft)	Loss (ft)	Description	Sample No.	Physical Characteristics % Agg	% C.S.	% F.S.	% Silt	% Clay	L.L.	P.I.	W.C.	ODOT Class
662.9	0														
662.6		3-6-6			TOPSOIL Stiff, brown CLAY (A-7-6), trace rock fragments, trace sand, moist.	1	--	--	--	--	--	--	--	28	VISUAL
659.4	5	3-4-12			Very stiff, gray SANDY SILT (A-4g), little rock fragments, little clay, moist.	2	12	3	49	--	36 *	--	--	23	A-4a
		9-27-50/0.1				3	--	--	--	--	--	--	--	15	VISUAL
655.8					Very soft to soft, decomposed to highly weathered, gray SILTY SHALE.										
		27-50/0.2				4	--	--	--	--	--	--	--	13	VISUAL
652.9	10				Note: Encountered spoon sample refusal at 9.2 feet, augered to 10.0 feet and began coring bedrock.										
		ROD = 73%	2.7	0.3	Soft to medium hard, highly weathered to weathered, gray SILTY SHALE with nearly horizontal laminar bedding (fissile), fair quality as per ROD. U.C. Strength at 11.2 feet = 678 psi										
649.9					TERMINATION DEPTH = 13.0 FEET										

Particle Sizes: Agg =¢ 2.00mm, Coarse Sand = 2.00-0.42mm, Fine Sand = 0.42-0.074mm, Silt = 0.074-0.005mm, Clay =* 0.005mm (*Indicates silt & clay combined)

State of Ohio
Department of Transportation
Division of Highways
Testing Laboratory

LOG OF BORING

Date Started 10/13/99 Sampler: Type SS Dia. 2.0" Water Elev. ft
Date Completed 10/13/99 Casing: Length Dia. 3.25"

Project: CUY-90-0.00 (Site 8 Noisewall)
Project No.: 99091
Location: Westlake, Cuyahoga County

Boring No. NW8-4 Station & Offset 113+57.79, 72.05' LT. Surface Elev. 664.07ft

Elev. (ft)	Depth (ft)	Std. Pen./ ROD	Rec. (ft)	Loss (ft)	Description	Sample No.	Physical Characteristics % Agg	% C.S.	% F.S.	% Silt	% Clay	L.L.	P.I.	W.C.	ODOT Class
664.1	0														
663.8		4-8-9			TOPSOIL Very stiff, brown CLAY (A-7-6), trace sand, moist.	1	--	--	--	--	--	--	--	20	VISUAL
660.6	5	5-4-7			Stiff, brown COARSE AND FINE SAND (A-3a), some clay, little rock fragments, moist to wet.	2	--	--	--	--	--	--	--	21	VISUAL
		3-5-5				3	16	4	55	--	25 *	--	--	22	A-3a
654.9		17-40-50/0.4				4	--	--	--	--	--	--	--	7	VISUAL
	10				Very soft to soft, decomposed to highly weathered, gray SILTY SHALE.										
		50/0.5				5	--	--	--	--	--	--	--	11	VISUAL
650.6					Note: Encountered spoon sample refusal at 11.5 feet, augered to 13.5 feet and began coring bedrock.										
		ROD = 58%	3.0	0.0	Soft, highly weathered to weathered, gray SILTY SHALE with nearly horizontal laminar bedding (fissile), fair quality as per ROD.										
	15				U.C. Strength at 15.4 feet = 160 psi										
647.6					TERMINATION DEPTH = 16.5 FEET										

Particle Sizes: Agg =¢ 2.00mm, Coarse Sand = 2.00-0.42mm, Fine Sand = 0.42-0.074mm, Silt = 0.074-0.005mm, Clay =* 0.005mm (*Indicates silt & clay combined)

DRAWN	REVIEWED	DATE	CALCULATED	CHECKED
E.D.S.	B.M.	1/16/00	W.I.N.	S.S.S.

PRIME ENGINEERING & ARCHITECTURE, INC.
COLUMBUS: (614) 457-2100 AKRON: (330) 666-5432

State of Ohio
Department of Transportation
Division of Highways
Testing Laboratory

LOG OF BORING

Date Started 10/13/99 Sampler: Type SS Dia. 2.0" Water Elev. ft
Date Completed 10/13/99 Casing: Length Dia. 3.25"

Project: CUY-90-0.00 (Site 8 Noisewall)
Project No.: 99091
Location: Westlake, Cuyahoga County

Boring No. NW8-5 Station & Offset 115+59.02, 68.49' LT. Surface Elev. 664.87ft

Elev. (ft)	Depth (ft)	Std. Pen./ RQD	Rec. (ft)	Loss (ft)	Description	Sample No.	Physical Characteristics % Agg	% C.S.	% F.S.	% Silt	% Clay	L.L.	P.I.	W.C.	ODOT Class
664.9	0														
664.6					TOPSOIL										
		3-7-7			Stiff to medium stiff, gray CLAY (A-7-6), trace sand, trace grass roots to 1.7 feet, moist.	1	--	--	--	--	--	--	--	23	VISUAL
		2-2-3				2	0	4	3	--	93 *	41	19	23	A-7-6
	5	4-5-7				3	--	--	--	--	--	--	--	23	VISUAL
656.4		3-6-4			Loose, gray SANDY SILT (A-4a), trace shale fragments, little clay, wet.	4	10	7	42	--	41 *	--	--	24	A-4a
	10														
654.1		16-41-50/0.2			Very soft to medium hard, decomposed to weathered, gray SILTY SHALE.	5	--	--	--	--	--	--	--	7	VISUAL
		16-20-50				6	--	--	--	--	--	--	--	9	VISUAL
649.9	15				Note: Spoon sampled to 15.0 feet and began coring bedrock.										
		RQD = 85%	3.0	0.0	Soft to medium hard, weathered, gray SILTY SHALE with nearly horizontal laminar bedding (fissile), good quality as per RQD.										
646.9					Note: U.C. Strength at 17.0 feet = 1508 psi										
					TERMINATION DEPTH = 18.0										

Particle Sizes: Agg = ℄ 2.00mm, Coarse Sand = 2.00-0.42mm, Fine Sand = 0.42-0.074mm, Silt = 0.074-0.005mm, Clay = * 0.005mm (*Indicates silt & clay combined)

State of Ohio
Department of Transportation
Division of Highways
Testing Laboratory

LOG OF BORING

Date Started 10/12/99 Sampler: Type SS Dia. 2.0" Water Elev. ft
Date Completed 10/12/99 Casing: Length Dia. 3.25"

Project: CUY-90-0.00 (Site 8 Noisewall)
Project No.: 99091
Location: Westlake, Cuyahoga County

Boring No. NW8-6 Station & Offset 117+56.00, 68.64' LT. Surface Elev. 665.32ft

Elev. (ft)	Depth (ft)	Std. Pen./ RQD	Rec. (ft)	Loss (ft)	Description	Sample No.	Physical Characteristics % Agg	% C.S.	% F.S.	% Silt	% Clay	L.L.	P.I.	W.C.	ODOT Class
665.3	0														
664.9					TOPSOIL										
		4-7-14			Hard to stiff, brown and gray SILTY CLAY (A-6b), some to no rock fragments, trace sand, moist.	1	--	--	--	--	--	--	--	16	VISUAL
		50/0.3				2	--	--	--	--	--	--	--	18	VISUAL
	5	2-5-6				3	0	5	5	--	91 *	40	18	25	A-6b
		7-7-9				4	--	--	--	--	--	--	--	32	VISUAL
	10	2-2-32				5	--	--	--	--	--	--	--	17	VISUAL
653.3					Very soft to soft, decomposed to highly weathered, gray SILTY SHALE.										
		13-35-50/0.5				6	--	--	--	--	--	--	--	9	VISUAL
	15	24-40-50/0.3				7	--	--	--	--	--	--	--	8	VISUAL
647.5		RQD = 0%	2.5	0.5	Note: Encountered spoon sample refusal at 17.8 feet and began coring bedrock.										
					Soft, highly weathered, gray SILTY SHALE with nearly horizontal laminar bedding (fissile), very poor quality as per RQD.										
	20				Note: U.C. Strength at 19.0 feet = 129 psi										
644.5					TERMINATION DEPTH = 20.8 FEET										

Particle Sizes: Agg = ℄ 2.00mm, Coarse Sand = 2.00-0.42mm, Fine Sand = 0.42-0.074mm, Silt = 0.074-0.005mm, Clay = * 0.005mm (*Indicates silt & clay combined)

State of Ohio
Department of Transportation
Division of Highways
Testing Laboratory

LOG OF BORING

Date Started 10/12/99 Sampler: Type SS Dia. 2.0" Water Elev. ft
Date Completed 10/12/99 Casing: Length Dia. 3.25"

Project: CUY-90-0.00 (Site 8 Noisewall)
Project No.: 99091
Location: Westlake, Cuyahoga County

Boring No. NW8-7 Station & Offset 119+59.06, 70.11' LT. Surface Elev. 664.60ft

Elev. (ft)	Depth (ft)	Std. Pen./ RQD	Rec. (ft)	Loss (ft)	Description	Sample No.	Physical Characteristics % Agg	% C.S.	% F.S.	% Silt	% Clay	L.L.	P.I.	W.C.	ODOT Class
664.6	0														
664.4					TOPSOIL										
		6-7-10			Medium stiff to hard, brown to gray CLAY (A-7-6), trace to no rock fragments, trace sand, moist.	1	--	--	--	--	--	--	--	20	VISUAL
		13-50/0.3				2	--	--	--	--	--	--	--	14	VISUAL
	5				Note: Encountered sandstone boulder at 6.0 feet. Augered through it and resumed sampling at 8.5 feet.										
		3-3-3				3	0	0	4	--	96 *	49	26	29	A-7-6
	10														
		4-8-14				4	--	--	--	--	--	--	--	20	VISUAL
652.8					Very soft to soft, decomposed to highly weathered, gray SILTY SHALE.										
		25-38-50/0.2			Note: Spoon sampled to 14.7 feet and began coring bedrock at 15.0 feet.	5	--	--	--	--	--	--	--	12	VISUAL
649.6	15														
		RQD = 70%	3.0	0.0	Soft, highly weathered, gray SILTY SHALE with nearly horizontal laminar bedding (fissile), fair quality as per RQD. U.C. Strength at 16.1 feet = 307 psi										
646.6															
					TERMINATION DEPTH = 18.0 FEET										

Particle Sizes: Agg = ℄ 2.00mm, Coarse Sand = 2.00-0.42mm, Fine Sand = 0.42-0.074mm, Silt = 0.074-0.005mm, Clay = * 0.005mm (*Indicates silt & clay combined)

State of Ohio
Department of Transportation
Division of Highways
Testing Laboratory

LOG OF BORING

Date Started 10/11/99 Sampler: Type SS Dia. 2.0" Water Elev. ft
Date Completed 10/11/99 Casing: Length Dia. 3.25"

Project: CUY-90-0.00 (Site 8 Noisewall)
Project No.: 99091
Location: Westlake, Cuyahoga County

Boring No. NW8-8 Station & Offset 121+58.71, 69.67' LT. Surface Elev. 664.25ft

Elev. (ft)	Depth (ft)	Std. Pen./ RQD	Rec. (ft)	Loss (ft)	Description	Sample No.	Physical Characteristics % Agg	% C.S.	% F.S.	% Silt	% Clay	L.L.	P.I.	W.C.	ODOT Class
664.3	0														
664.0					TOPSOIL										
		4-6-8			Very stiff to medium stiff, gray to brown CLAY (A-7-6), some to trace gravel and rock fragments, trace sand, moist to wet.	1	--	--	--	--	--	--	--	15	VISUAL
		4-13-15				2	--	--	--	--	--	--	--	11	VISUAL
	5														
		5-5-4			Note: Sandstone cobble at 6.0 feet.	3	--	--	--	--	--	--	--	9	VISUAL
		3-4-4				4	10	2	6	--	82 *	47	21	30	A-7-6
	10														
		4-8-13				5	--	--	--	--	--	--	--	23	VISUAL
651.9					Very soft to medium hard, decomposed to weathered, gray SILTY SHALE.										
		37-50/0.5			Note: Spoon sampled to 14.7 feet and began coring bedrock at 15.0 feet.	6	--	--	--	--	--	--	--	10	VISUAL
649.3	15														
		RQD = 88%	3.0	0.0	Soft to medium hard, weathered, gray SILTY SHALE with nearly horizontal laminar bedding (fissile), good quality as per RQD. U.C. Strength at 15.8 feet = 1919 psi										
646.3															
					TERMINATION DEPTH = 18.0 FEET										

Particle Sizes: Agg = ℄ 2.00mm, Coarse Sand = 2.00-0.42mm, Fine Sand = 0.42-0.074mm, Silt = 0.074-0.005mm, Clay = * 0.005mm (*Indicates silt & clay combined)

State of Ohio
Department of Transportation
Division of Highways
Testing Laboratory

LOG OF BORING

Date Started 10/11/99 Sampler: Type SS Dia. 2.0" Water Elev. ft
Date Completed 10/11/99 Casing: Length Dia. 3.25"

Project: CUY-90-0.00 (Site 9 Noisewall)
Project No.: 99091
Location: Westlake, Cuyahoga County

Boring No. NW9-01 Station & Offset 123+58.14, 68.94' LT. Surface Elev. 664.36ft

Elev. (ft)	Depth (ft)	Std. Pen./ ROD	Rec. (ft)	Loss (ft)	Description	Sample No.	Physical Characteristics % Agg	% C.S.	% F.S.	% Silt	% Clay	L.L.	P.I.	W.C.	ODOT Class
664.4	0														
664.1					TOPSOIL										
		7-8-10			Hard to soft, gray to brown CLAY (A-7-6), and to no shale fragments, trace sand, moist to wet.	1	--	--	--	--	--	--	--	13	VISUAL
		4-4-5				2	--	--	--	--	--	--	--	13	VISUAL
	5														
		4-10-50/0.5				3	--	--	--	--	--	--	--	11	VISUAL
					Note: Encountered a sandstone cobble at 7.1 feet.										
		1-1-3				4	0	0	2	--	97 *	52	24	36	A-7-6
	10														
		2-2-4				5	--	--	--	--	--	--	--	37	VISUAL
650.4		50/0.5				6	--	--	--	--	--	--	--	13	VISUAL
649.4	15				Very soft to medium hard, decomposed to highly weathered, gray SILTY SHALE.										
		RQD = 80%	3.0	0.0	Note: Spoon sampled to 14.5 feet and began coring bedrock at 15.0 feet.										
					Soft to medium hard, highly weathered to weathered, gray SILTY SHALE with nearly horizontal laminar bedding (fissile), good quality as per RQD. U.C. Strength at 16.9 feet = 638 psi										
646.4					TERMINATION DEPTH = 18.0 FEET										

Particle Sizes: Agg = ¢ 2.00mm, Coarse Sand = 2.00-0.42mm, Fine Sand = 0.42-0.074mm, Silt = 0.074-0.005mm, Clay = * 0.005mm (*Indicates silt & clay combined)

State of Ohio
Department of Transportation
Division of Highways
Testing Laboratory

LOG OF BORING

Date Started 10/11/99 Sampler: Type SS Dia. 2.0" Water Elev. 648.9ft
Date Completed 10/11/99 Casing: Length Dia. 3.25"

Project: CUY-90-0.00 (Site 9 Noisewall)
Project No.: 99091
Location: Westlake, Cuyahoga County

Boring No. NW9-02 Station & Offset 125+56.50, 68.10' LT. Surface Elev. 667.36ft

Elev. (ft)	Depth (ft)	Std. Pen./ ROD	Rec. (ft)	Loss (ft)	Description	Sample No.	Physical Characteristics % Agg	% C.S.	% F.S.	% Silt	% Clay	L.L.	P.I.	W.C.	ODOT Class
667.4	0														
667.0					SLAG WITH CLAY										
		15-8-6			Stiff to very stiff, brown SILT AND CLAY (A-6a), trace to some shale fragments, trace sand, moist.	1	--	--	--	--	--	--	--	16	VISUAL
		3-6-7				2	--	--	--	--	--	--	--	22	VISUAL
	5														
660.9		8-20-6			Note: Encountered many shale fragments at 6.0 feet.	3	--	--	--	--	--	--	--	7	VISUAL
					Hard to medium stiff, gray ELASTIC CLAY (A-7-5), and to no rock fragments, trace to no sand, moist.										
		6-41-9				4	--	--	--	--	--	--	--	11	VISUAL
	10														
		6-4-4				5	--	--	--	--	--	--	--	30	VISUAL
		2-2-3				6	0	0	0	--	100*	59	29	37	A-7-5
	15														
650.9		6-25-29				7	--	--	--	--	--	--	--	14	VISUAL
					Very soft to soft, decomposed to highly weathered, gray SILTY SHALE.										
		50/0.5			Note: Decomposed shale wet at 18.5 feet.	8	--	--	--	--	--	--	--	9	VISUAL
	20														
		20-50/0.5				9	--	--	--	--	--	--		6	VISUAL
		50/0.3				10	--	--	--	--	--	--			VISUAL
642.4	25				Note: Upon spoon refusal, augered to 25.0 feet.										
					TERMINATION DEPTH = 25.0 FEET										

Particle Sizes: Agg = ¢ 2.00mm, Coarse Sand = 2.00-0.42mm, Fine Sand = 0.42-0.074mm, Silt = 0.074-0.005mm, Clay = * 0.005mm (*Indicates silt & clay combined)

DRAWN	REVIEWED	DATE	CALCULATED	CHECKED
E.D.S.	B.M.	1/16/00	W.I.N.	S.S.S.

PRIME ENGINEERING & ARCHITECTURE, INC.
COLUMBUS: (614) 457-2100 AKRON: (330) 666-5432

State of Ohio
Department of Transportation
Division of Highways
Testing Laboratory

LOG OF BORING

Date Started 10/13/99 Sampler: Type SS Dia. 2.0" Water Elev. 656.3ft
Date Completed 10/13/99 Casing: Length ____ Dia. 3.25"

Project: CUY-90-0.00 (Site 9 Noisewall)
Project No.: 99091
Location: Westlake, Cuyahoga County

Boring No. NW9-03 Station & Offset 127+55.71, 56.68' LT. Surface Elev. 672.31ft

Elev. (ft)	Depth (ft)	Std. Pen./ ROD	Rec. (ft)	Loss (ft)	Description	Sample No.	Physical Characteristics % Agg	% C.S.	% F.S.	% Silt	% Clay	L.L.	P.I.	W.C.	ODOT Class
672.3	0				ASPHALT										
671.3															
670.8		3-4-4			ROADBASE MATERIAL Medium stiff to hard, gray to light brown CLAY (A-7-6), some to no rock fragments, little to trace sand, moist to wet.	1	--	--	--	--	--	--	--	15	VISUAL
		3-4-5				2	--	--	--	--	--	--	--	13	VISUAL
	5														
		2-2-4				3	32	9	4	--	55 *	41	19	17	A-7-6
		9-49-14				4	--	--	--	--	--	--	--	11	VISUAL
	10														
		20-24-16				5	--	--	--	--	--	--	--	10	VISUAL
		3-3-4				6	--	--	--	--	--	--	--	23	VISUAL
	15														
	▽	2-3-3				7	--	--	--	--	--	--	--	23	VISUAL
		2-3-4				8	0	0	1	--	99 *	51	23	33	A-7-6
	20														
650.4		11-19-26				9	--	--	--	--	--	--	--	16	VISUAL
		50/0.5			Very soft to soft, decomposed to highly weathered, brown to gray SILTY SHALE.	10	--	--	--	--	--	--	--	12	VISUAL
647.3	25				Note: Upon spoon refusal, augered to 25.0 feet.										
					TERMINATION DEPTH = 25.0 FEET										

Particle Sizes: Agg = ℄ 2.00mm, Coarse Sand = 2.00-0.42mm, Fine Sand = 0.42-0.074mm, Silt = 0.074-0.005mm, Clay = * 0.005mm (*Indicates silt & clay combined) Revised 9/94

State of Ohio
Department of Transportation
Division of Highways
Testing Laboratory

LOG OF BORING

Date Started 10/12/99 Sampler: Type SS Dia. 2.0" Water Elev. 658.0ft
Date Completed 10/12/99 Casing: Length ____ Dia. 3.25"

Project: CUY-90-0.00 (Site 9 Noisewall)
Project No.: 99091
Location: Westlake, Cuyahoga County

Boring No. NW9-04 Station & Offset 129+53.70, 56.15' LT. Surface Elev. 676.45ft

Elev. (ft)	Depth (ft)	Std. Pen./ ROD	Rec. (ft)	Loss (ft)	Description	Sample No.	Physical Characteristics % Agg	% C.S.	% F.S.	% Silt	% Clay	L.L.	P.I.	W.C.	ODOT Class
676.5	0				ASPHALT										
675.7					CONCRETE										
674.0															
		2-4-8			Stiff to hard, gray CLAY (A-7-6), some rock fragments, trace sand, moist.	1	--	--	--	--	--	--	--	14	VISUAL
	5														
		7-9-11				2	--	--	--	--	--	--	--	10	VISUAL
		7-9-10				3	--	--	--	--	--	--	--	8	VISUAL
	10														
665.5		5-8-10			Very stiff to hard, gray SANDY SILT (A-4a), some rock fragments, little clay, moist to wet.	4	34	10	10	--	46 *	28	9	11	A-4a
		28-50/0.5				5	--	--	--	--	--	--	--	10	VISUAL
	15														
660.5		50/0.5			Very dense to medium dense, gray COARSE AND FINE SAND (A-3a), some rock fragments, moist to wet.	6	--	--	--	--	--	--	--	11	VISUAL
	▽	26-6-5				7	--	--	--	--	--	--	--	9	VISUAL
656.5	20														
		34-7-6			Stiff to very stiff, gray CLAY (A-7-6), little to no sandstone fragments, trace to no wood, moist.	8	--	--	--	--	--	--	--	34	VISUAL
		3-9-12				9	0	0	0	--	99 *	64	36	31	A-7-6
651.5	25														
					TERMINATION DEPTH = 25.0 FEET										

Particle Sizes: Agg = ℄ 2.00mm, Coarse Sand = 2.00-0.42mm, Fine Sand = 0.42-0.074mm, Silt = 0.074-0.005mm, Clay = * 0.005mm (*Indicates silt & clay combined)

DRAWN	REVIEWED	DATE	CALCULATED	CHECKED
E.D.S.	B.M.	1/16/00	W.I.N.	S.S.S.

PRIME ENGINEERING & ARCHITECTURE, INC.
COLUMBUS: (614) 457-2100 AKRON: (330) 666-5432

State of Ohio
Department of Transportation
Division of Highways
Testing Laboratory

LOG OF BORING

Date Started 10/11/99 Sampler: Type SS Dia. 2.0" Water Elev. ft
Date Completed 10/11/99 Casing: Length Dia. 3.25"

Project: CUY-90-0.00 (Site 9 Noisewall)
Project No.: 99091
Location: Westlake, Cuyahoga County

Boring No. NW9-05 Station & Offset 131+52.10, 55.52' LT. Surface Elev. 678.86ft

Elev. (ft)	Depth (ft)	Std. Pen./ ROD	Rec. (ft)	Loss (ft)	Description	Sample No.	Physical Characteristics % Agg	% C.S.	% F.S.	% Silt	% Clay	L.L.	P.I.	W.C.	ODOT Class
678.9	0														
678.1					ASPHALT										
676.9					CONCRETE										
		3-3-3			Medium stiff to very stiff, gray SILTY CLAY (A-6b), trace to some rock fragments, some to trace sand, moist.	1	--	--	--	--	--	--	--	17	VISUAL
		5-4-5				2	--	--	--	--	--	--	--	14	VISUAL
	5														
		1-4-5				3	28	11	10	--	50 *	36	16	18	A-6b
		5-7-8				4	--	--	--	--	--	--	--	13	VISUAL
	10														
		7-8-6				5	--	--	--	--	--	--	--	8	VISUAL
		5-10-7				6	--	--	--	--	--	--	--	10	VISUAL
	15														
		5-9-9				7	--	--	--	--	--	--	--	13	VISUAL
		11-15-6				8	--	--	--	--	--	--	--	9	VISUAL
	20														
657.2		7-11-11				9	--	--	--	--	--	--	--	8	VISUAL
					Very soft to medium hard, decomposed to weathered, gray SILTY SHALE.										
		50/0.0				10	--	--	--	--	--	--	--	--	VISUAL
653.9	25				Note: Upon spoon refusal, augered to 25.0 feet.										

TERMINATION DEPTH = 25.0 FEET

Particle Sizes: Agg =¢ 2.00mm, Coarse Sand = 2.00-0.42mm, Fine Sand = 0.42-0.074mm, Silt = 0.074-0.005mm, Clay =* 0.005mm (*Indicates silt & clay combined)

State of Ohio
Department of Transportation
Division of Highways
Testing Laboratory

LOG OF BORING

Date Started 10/11/99 Sampler: Type SS Dia. 2.0" Water Elev. ft
Date Completed 10/11/99 Casing: Length Dia. 3.25"

Project: CUY-90-0.00 (Site 9 Noisewall)
Project No.: 99091
Location: Westlake, Cuyahoga County

Boring No. NW9-06 Station & Offset 133+51.76, 54.85' LT. Surface Elev. 679.23ft

Elev. (ft)	Depth (ft)	Std. Pen./ ROD	Rec. (ft)	Loss (ft)	Description	Sample No.	Physical Characteristics % Agg	% C.S.	% F.S.	% Silt	% Clay	L.L.	P.I.	W.C.	ODOT Class
679.2	0														
678.4					ASPHALT										
677.2					CONCRETE										
		50/0.3													
676.4					GRAVEL ROADBASE MATERIAL	1	53	31	12	--	4 *	--	--	8	A-1-a
		3-4-4			Medium stiff to very stiff, gray to brown CLAY (A-7-6), some rock fragments, little to trace sand, moist.	2	--	--	--	--	--	--	--	14	VISUAL
	5														
		2-4-6				3	25	8	4	--	63 *	41	18	18	A-7-6
		4-3-6				4	--	--	--	--	--	--	--	17	VISUAL
	10														
		2-4-3				5	--	--	--	--	--	--	--	13	VISUAL
		2-3-5				6	--	--	--	--	--	--	--	13	VISUAL
	15														
		3-4-7				7	--	--	--	--	--	--	--	17	VISUAL
		8-8-8				8	11	6	5	--	78 *	52	26	24	A-7-6
	20														
		17-13-15				9	--	--	--	--	--	--	--	--	VISUAL
		4-6-8				10	--	--	--	--	--	--	--	26	VISUAL
654.2	25														

TERMINATION DEPTH = 25.0 FEET

Particle Sizes: Agg =¢ 2.00mm, Coarse Sand = 2.00-0.42mm, Fine Sand = 0.42-0.074mm, Silt = 0.074-0.005mm, Clay =* 0.005mm (*Indicates silt & clay combined)

DRAWN	REVIEWED	DATE	CALCULATED	CHECKED
E.D.S.	B.M.	1/16/00	W.I.N.	S.S.S.

PRIME ENGINEERING & ARCHITECTURE, INC.
COLUMBUS: (614) 451-2100 AKRON: (330) 666-5432

State of Ohio
Department of Transportation
Division of Highways
Testing Laboratory

LOG OF BORING

Date Started 10/11/99 Sampler: Type SS Dia. 2.0" Water Elev. ft
Date Completed 10/11/99 Casing: Length Dia. 3.25"

Project: CUY-90-0.00 (Site 9 Noisewall)
Project No.: 99091
Location: Westlake, Cuyahoga County

Boring No. NW9-07 Station & Offset 134+58.71, 55.86' LT. Surface Elev. 678.76ft

Elev. (ft)	Depth (ft)	Std. Pen./ ROD	Rec. (ft)	Loss (ft)	Description	Sample No.	Physical Characteristics % Agg	% C.S.	% F.S.	% Silt	% Clay	L.L.	P.I.	W.C.	ODOT Class
678.8	0														
678.0					ASPHALT										
					CONCRETE										
676.8		2-4-7			Medium stiff to stiff, gray SANDY SILT (A-4a), little clay, trace rock fragments, moist.	1	--	--	--	--	--	--	--	15	VISUAL
		5-2-4				2	--	--	--	--	--	--	--	10	VISUAL
	5														
672.5		3-3-3			Medium stiff to very stiff, gray and brown CLAY (A-7-6), little to some rock fragments, little sand, moist.	3	--	--	--	--	--	--	--	19	VISUAL
		5-8-8				4	--	--	--	--	--	--	--	15	VISUAL
	10														
		4-5-5				5	12	9	4	--	75 *	43	19	22	A-7-6
		4-5-7				6	--	--	--	--	--	--	--	17	VISUAL
	15														
		7-7-10				7	--	--	--	--	--	--	--	15	VISUAL
		35-17-11				8	--	--	--	--	--	--	--	10	VISUAL
	20														
		7-7-10				9	--	--	--	--	--	--	--	19	VISUAL
		8-12-14				10	0	0	1	--	99 *	55	20	36	A-7-6
653.8	25				TERMINATION DEPTH = 25.0 FEET										

Particle Sizes: Agg = ¢ 2.00mm, Coarse Sand = 2.00-0.42mm, Fine Sand = 0.42-0.074mm, Silt = 0.074-0.005mm, Clay = * 0.005mm (*Indicates silt & clay combined)

State of Ohio
Department of Transportation
Division of Highways
Testing Laboratory

LOG OF BORING

Date Started 10/11/99 Sampler: Type SS Dia. 2.0" Water Elev. ft
Date Completed 10/11/99 Casing: Length Dia. 3.25"

Project: CUY-90-0.00 (Site 9 Noisewall)
Project No.: 99091
Location: Westlake, Cuyahoga County

Boring No. NW9-08 Station & Offset 136+53.86, 56.96' LT. Surface Elev. 676.11ft

Elev. (ft)	Depth (ft)	Std. Pen./ ROD	Rec. (ft)	Loss (ft)	Description	Sample No.	Physical Characteristics % Agg	% C.S.	% F.S.	% Silt	% Clay	L.L.	P.I.	W.C.	ODOT Class
676.1	0														
675.3					ASPHALT										
674.6		3-6-5			SANDY ROADBASE MATERIAL Stiff to medium stiff, gray CLAY (A-7-6), some to trace rock fragments, trace sand, moist.	1	--	--	--	--	--	--	--	15	VISUAL
		5-4-6				2	--	--	--	--	--	--	--	9	VISUAL
	5														
		3-5-3				3	--	--	--	--	--	--	--	11	VISUAL
667.6		3-4-4			Medium stiff to very stiff, gray SILT AND CLAY (A-6a), some rock fragments, trace to little sand, moist.	4	--	--	--	--	--	--	--	12	VISUAL
	10														
		2-4-7				5	31	7	4	--	58 *	38	14	16	A-6a
662.6		4-13-15			Very stiff, gray CLAY (A-7-6), trace rock fragments, trace sand, moist.	6	--	--	--	--	--	--	--	15	VISUAL
	15														
		5-8-15				7	--	--	--	--	--	--	--	16	VISUAL
		6-8-14				8	8	4	4	--	84 *	44	21	20	A-7-6
	20														
		4-5-16				9	--	--	--	--	--	--	--	17	VISUAL
652.0		4-8-50/0.2				10	--	--	--	--	--	--	--	20	VISUAL
651.1					Very soft, decomposed, brown SILTY SHALE. Note: Upon spoon refusal, augered to 25.0 feet. TERMINATION DEPTH = 25.0 FEET										

Particle Sizes: Agg = ¢ 2.00mm, Coarse Sand = 2.00-0.42mm, Fine Sand = 0.42-0.074mm, Silt = 0.074-0.005mm, Clay = * 0.005mm (*Indicates silt & clay combined)

DRAWN	REVIEWED	DATE	CALCULATED	CHECKED
E.D.S.	B.M.	1/16/00	W.I.N.	S.S.S.

PRIME ENGINEERING & ARCHITECTURE, INC.
COLUMBUS: (614) 457-2100 AKRON: (330) 666-5432

State of Ohio
Department of Transportation
Division of Highways
Testing Laboratory

LOG OF BORING

Date Started 10/8/99 Sampler: Type SS Dia. 2.0" Water Elev. 661.6ft
Date Completed 10/8/99 Casing: Length Dia. 3.25"

Project: CUY-90-0.00 (Site 9 Noisewall)
Project No.: 99091
Location: Westlake, Cuyahoga County

Boring No. NW9-09 Station & Offset 138+53.07, 56.85' LT. Surface Elev. 671.92ft

Elev. (ft)	Depth (ft)	Std. Pen./ RQD	Rec. (ft)	Loss (ft)	Description	Sample No.	Physical Characteristics % Agg	% C.S.	% F.S.	% Silt	% Clay	L.L.	P.I.	W.C.	ODOT Class
671.9	0														
671.2					ASPHALT										
670.7		10-21-10			ROADBASE MATERIAL Hard to soft, gray CLAY (A-7-6), and to little rock fragments, some to trace sand, trace wood at 8.5 feet, moist.	1	--	--	--	--	--	--	--	6	VISUAL
		7-8-14				2	--	--	--	--	--	--	--	8	VISUAL
	5														
		6-2-2				3	--	--	--	--	--	--	--	8	VISUAL
		3-4-6				4	--	--	--	--	--	--	--	23	VISUAL
	10														
		5-4-8				5	--	--	--	--	--	--	--	16	VISUAL
658.4		38-40-20			Very dense, gray SANDY SILT (A-4a), and rock fragments, wet.	6	--	--	--	--	--	--	--	13	VISUAL
	15														
655.9		3-6-8			Stiff to medium stiff, brown ELASTIC CLAY (A-7-5), trace to no rock fragments, moist.	7	--	--	--	--	--	--	--	24	VISUAL
		2-3-5				8	0	0	0	--	100*	61	28	36	A-7-5
	20														
651.1		20-50/0.2			Very soft to soft, decomposed to highly weathered, brown to gray SILTY SHALE.	9	--	--	--	--	--	--	--	16	VISUAL
		50/0.2			Note: Upon spoon refusal, augered to 25.0 feet.	10	--	--	--	--	--	--	--	7	VISUAL
646.9	25				TERMINATION DEPTH = 25.0 FEET										

Particle Sizes: Agg =¢ 2.00mm, Coarse Sand = 2.00-0.42mm, Fine Sand = 0.42-0.074mm, Silt = 0.074-0.005mm, Clay =* 0.005mm (*Indicates silt & clay combined)

State of Ohio
Department of Transportation
Division of Highways
Testing Laboratory

LOG OF BORING

Date Started 10/11/99 Sampler: Type SS Dia. 2.0" Water Elev. 642.9ft
Date Completed 10/11/99 Casing: Length Dia. 3.25"

Project: CUY-90-0.00 (Site 9 Noisewall)
Project No.: 99091
Location: Westlake, Cuyahoga County

Boring No. NW9-10 Station & Offset 140+51.26, 70.57' LT. Surface Elev. 666.41ft

Elev. (ft)	Depth (ft)	Std. Pen./ RQD	Rec. (ft)	Loss (ft)	Description	Sample No.	Physical Characteristics % Agg	% C.S.	% F.S.	% Silt	% Clay	L.L.	P.I.	W.C.	ODOT Class
666.4	0														
666.0					TOPSOIL										
		7-19-37			Hard to medium stiff, gray to brown CLAY (A-7-6), some to trace rock fragments, trace sand, moist to wet.	1	--	--	--	--	--	--	--	12	VISUAL
		3-4-4				2	--	--	--	--	--	--	--	20	VISUAL
	5														
		3-4-2				3	--	--	--	--	--	--	--	16	VISUAL
		50/0.5				4	--	--	--	--	--	--	--	14	VISUAL
	10														
		4-5-7				5	6	3	3	--	88 *	42	17	23	A-7-6
		10-10-12				6	--	--	--	--	--	--	--	28	VISUAL
	15														
650.3		50/0.4			Very soft to soft, decomposed, gray SILTY SHALE.	7	--	--	--	--	--	--	--	9	VISUAL
		50/0.4				8	--	--	--	--	--	--	--	7	VISUAL
	20														
		50/0.3				9	--	--	--	--	--	--	--	7	VISUAL
		50/0.4			Note: Upon spoon refusal, augered to 25.0 feet.	10	--	--	--	--	--	--	--	21	VISUAL
641.4	25				TERMINATION DEPTH = 25.0 FEET										

Particle Sizes: Agg =¢ 2.00mm, Coarse Sand = 2.00-0.42mm, Fine Sand = 0.42-0.074mm, Silt = 0.074-0.005mm, Clay =* 0.005mm (*Indicates silt & clay combined)

State of Ohio
Department of Transportation
Division of Highways
Testing Laboratory

LOG OF BORING

Date Started 10/12/99 Sampler: Type SS Dia. 2.0" Water Elev. 642.1ft
Date Completed 10/12/99 Casing: Length ____ Dia. 3.25"

Project: CUY-90-0.00 (Site 9 Noisewall)
Project No.: 99091
Location: Westlake, Cuyahoga County

Boring No. NW9-11 Station & Offset 142+50.75, 69.94' LT. Surface Elev. 663.05ft

Elev. (ft)	Depth (ft)	Std. Pen./ RQD	Rec. (ft)	Loss (ft)	Description	Sample No.	Physical Characteristics % Agg	% C.S.	% F.S.	% Silt	% Clay	L.L.	P.I.	W.C.	ODOT Class
663.1	0														
662.7					TOPSOIL										
		4-7-8			Stiff to hard, gray CLAY (A-7-6), little to no rock fragments, trace sand, moist.	1	--	--	--	--	--	--	--	18	VISUAL
		2-4-4				2	--	--	--	--	--	--	--	18	VISUAL
	5														
		8-50/0.5				3	--	--	--	--	--	--	--	11	VISUAL
		3-6-6				4	0	0	3	--	97 *	50	23	29	A-7-6
	10														
		2-5-17				5	--	--	--	--	--	--	--	25	VISUAL
648.9		32-50/0.4				6	--	--	--	--	--	--	--	8	VISUAL
	15				Very soft to soft, decomposed, gray SILTY SHALE.										
		50/0.4				7	--	--	--	--	--	--	--	8	VISUAL
		50/0.4				8	--	--	--	--	--	--	--	6	VISUAL
	20														
	▽	50/0.4			Note: Wet at 21.0 feet during and upon completion of drilling operations.	9	--	--	--	--	--	--	--	20	VISUAL
		50/0.4			Note: Upon spoon refusal, augered to 25.0 feet.	10	--	--	--	--	--	--	--	8	VISUAL
638.1	25														
					TERMINATION DEPTH = 25.0 FEET										

Particle Sizes: Agg =¢ 2.00mm, Coarse Sand = 2.00-0.42mm, Fine Sand = 0.42-0.074mm, Silt = 0.074-0.005mm, Clay =* 0.005mm (*Indicates silt & clay combined)

DRAWN	REVIEWED	DATE	CALCULATED	CHECKED
E.D.S.	B.M.	1/16/00	W.I.N.	S.S.S.

PRIME ENGINEERING & ARCHITECTURE, INC.
COLUMBUS: (614) 457-2100 AKRON: (330) 668-5432

State of Ohio
Department of Transportation
Division of Highways
Testing Laboratory

LOG OF BORING

Date Started 10/19/99 Sampler: Type SS Dia. 2.0" Water Elev. ft
Date Completed 10/19/99 Casing: Length Dia. 3.25"

Project: CUY-90-0.00 (Site 10 Noisewall)
Project No.: 99091
Location: Westlake, Cuyahoga County

Boring No. NW10-1 Station & Offset 144+48.56, 66.44' LT. Surface Elev. 661.86ft

Elev. (ft)	Depth (ft)	Std. Pen./ ROD	Rec. (ft)	Loss (ft)	Description	Sample No.	Physical Characteristics % Agg	% C.S.	% F.S.	% Silt	% Clay	L.L.	P.I.	W.C.	ODOT Class
661.9	0														
661.4					TOPSOIL										
		6-12-11			Very stiff to stiff, gray CLAY (A-7-6), little to no rock fragments, trace sand, moist.	1	--	--	--	--	--	--	--	20	VISUAL
		3-4-4				2	--	--	--	--	--	--	--	25	VISUAL
	5														
		3-4-6				3	--	--	--	--	--	--	--	27	VISUAL
		3-5-5				4	0	1	6	--	93 *	54	28	28	A-7-6
	10														
		2-10-50/0.3				5	--	--	--	--	--	--	--	16	VISUAL
649.9					Very soft to medium hard, decomposed to weathered, gray SILTY SHALE.										
		40-50/0.2				6	--	--	--	--	--	--	--	7	VISUAL
646.9	15				Note: Encountered spoon refusal at 14.2 feet, augered to 15.0 feet and began coring bedrock.										
		ROD = 18%	2.8	0.2	Soft to medium hard, highly weathered to weathered, gray SILTY SHALE with nearly horizontal laminar bedding (fissile), very poor quality as per ROD. U.C. Strength at 16.1 feet = 1623 psi										
643.9					TERMINATION DEPTH = 18.0 FEET										

Particle Sizes: Agg =¢ 2.00mm, Coarse Sand = 2.00-0.42mm, Fine Sand = 0.42-0.074mm, Silt = 0.074-0.005mm, Clay =* 0.005mm (*Indicates silt & clay combined)

State of Ohio
Department of Transportation
Division of Highways
Testing Laboratory

LOG OF BORING

Date Started 10/18/99 Sampler: Type SS Dia. 2.0" Water Elev. ft
Date Completed 10/18/99 Casing: Length Dia. 3.25"

Project: CUY-90-0.00 (Site 10 Noisewall)
Project No.: 99091
Location: Westlake, Cuyahoga County

Boring No. NW10-2 Station & Offset 146+48.99, 68.60' LT. Surface Elev. 661.07ft

Elev. (ft)	Depth (ft)	Std. Pen./ ROD	Rec. (ft)	Loss (ft)	Description	Sample No.	Physical Characteristics % Agg	% C.S.	% F.S.	% Silt	% Clay	L.L.	P.I.	W.C.	ODOT Class
661.1	0														
660.8					TOPSOIL										
		6-6-5			Stiff to medium stiff, gray ELASTIC CLAY (A-7-5), some to no rock fragments, trace sand, moist.	1	--	--	--	--	--	--	--	20	VISUAL
		3-3-9				2	--	--	--	--	--	--	--	26	VISUAL
	5														
		3-3-4				3	--	--	--	--	--	--	--	21	VISUAL
		2-3-5				4	0	3	3	--	94 *	57	27	29	A-7-5
	10														
		9-22-50/0.4				5	--	--	--	--	--	--	--	15	VISUAL
649.0					Very soft to medium hard, decomposed to weathered, gray SILTY SHALE.										
647.6		ROD = 80%	3.0	0.0	Note: Encountered spoon refusal at 12.4 feet, augered to 13.5 feet and began coring bedrock.										
	15				Soft to medium hard, highly weathered to weathered, gray SILTY SHALE with nearly horizontal laminar bedding (fissile), good quality as per ROD.										
644.6					U.C. Strength at 16.0 feet = 1489 psi TERMINATION DEPTH = 16.5 FEET										

Particle Sizes: Agg =¢ 2.00mm, Coarse Sand = 2.00-0.42mm, Fine Sand = 0.42-0.074mm, Silt = 0.074-0.005mm, Clay =* 0.005mm (*Indicates silt & clay combined)

DRAWN	REVIEWED	DATE	CALCULATED	CHECKED
E.D.S.	B.M.	1/16/00	W.I.N.	S.S.S.

PRIME ENGINEERING & ARCHITECTURE, INC.
COLUMBUS: (614) 457-2100 AKRON: (330) 666-5432

State of Ohio
Department of Transportation
Division of Highways
Testing Laboratory

LOG OF BORING

Date Started 10/17/99 Sampler: Type SS Dia. 2.0" Water Elev. ft
Date Completed 10/17/99 Casing: Length Dia. 3.25"

Project: CUY-90-0.00 (Site 10 Noisewall)
Project No.: 99091
Location: Westlake, Cuyahoga County

Boring No. NW10-3 Station & Offset 148+49.12, 68.01' LT. Surface Elev. 660.61ft

Elev. (ft)	Depth (ft)	Std. Pen./ RQD	Rec. (ft)	Loss (ft)	Description	Sample No.	% Agg	% C.S.	% F.S.	% Silt	% Clay	L.L.	P.I.	W.C.	ODOT Class
660.6	0														
660.3					TOPSOIL										
		5-6-7			Stiff to very stiff, gray CLAY (A-7-6), trace rock fragments, trace sand, moist.	1	--	--	--	--	--	--	--	18	VISUAL
		3-5-6				2	--	--	--	--	--	--	--	18	VISUAL
	5														
		3-5-9				3	1	2	6	--	91 *	43	17	26	A-7-6
		5-8-15				4	--	--	--	--	--	--	--	18	VISUAL
	10														
648.8		13-30-50/0.5				5	--	--	--	--	--	--	--	15	VISUAL
					Very soft to soft, decomposed to highly weathered, gray SILTY SHALE.										
647.1					Note: Encountered spoon refusal at 12.5 feet, augered to 13.5 feet and began coring bedrock.										
		RQD = 88%	3.0	0.0	Soft, highly weathered to weathered, gray SILTY SHALE with nearly horizontal laminar bedding (fissile), good quality as per RQD. U.C. Strength at 14.7 feet = 217 psi										
	15														
644.1					TERMINATION DEPTH = 16.5 FEET										

Particle Sizes: Agg = ℄ 2.00mm, Coarse Sand = 2.00-0.42mm, Fine Sand = 0.42-0.074mm, Silt = 0.074-0.005mm, Clay = * 0.005mm (*Indicates silt & clay combined)

State of Ohio
Department of Transportation
Division of Highways
Testing Laboratory

LOG OF BORING

Date Started 10/17/99 Sampler: Type SS Dia. 2.0" Water Elev. ft
Date Completed 10/17/99 Casing: Length Dia. 3.25"

Project: CUY-90-0.00 (Site 10 Noisewall)
Project No.: 99091
Location: Westlake, Cuyahoga County

Boring No. NW10-4 Station & Offset 150+46.77, 69.50' LT. Surface Elev. 659.90ft

Elev. (ft)	Depth (ft)	Std. Pen./ RQD	Rec. (ft)	Loss (ft)	Description	Sample No.	% Agg	% C.S.	% F.S.	% Silt	% Clay	L.L.	P.I.	W.C.	ODOT Class
659.9	0														
659.6					TOPSOIL										
		4-6-7			Stiff to very stiff, gray ELASTIC CLAY (A-7-5), trace to no rock fragments, moist.	1	--	--	--	--	--	--	--	17	VISUAL
		5-6-7				2	--	--	--	--	--	--	--	17	VISUAL
	5														
		5-7-11				3	0	0	0	--	100 *	57	27	35	A-7-5
650.7		30-50/0.5				4	--	--	--	--	--	--	--	12	VISUAL
649.9	10				Very soft to soft, decomposed to highly weathered, gray SILTY SHALE.										
		RQD = 85%	3.0	0.0	Note: Encountered spoon refusal at 9.5 feet, augered to 10.0 feet and began coring bedrock. Soft, highly weathered to weathered, gray SILTY SHALE with nearly horizontal laminar bedding (fissile), good quality as per RQD. U.C. Strength at 11.6 feet = 598 psi										
646.9					TERMINATION DEPTH = 13.0 FEET										

Particle Sizes: Agg = ℄ 2.00mm, Coarse Sand = 2.00-0.42mm, Fine Sand = 0.42-0.074mm, Silt = 0.074-0.005mm, Clay = * 0.005mm (*Indicates silt & clay combined)

State of Ohio
Department of Transportation
Division of Highways
Testing Laboratory

LOG OF BORING

Date Started 10/17/99 Sampler: Type SS Dia. 2.0" Water Elev. ft
Date Completed 10/17/99 Casing: Length Dia. 3.25"

Project: CUY-90-0.00 (Site 10 Noisewall)
Project No.: 99091
Location: Westlake, Cuyahoga County

Boring No. NW10-5 Station & Offset 152+46.52, 71.54' LT. Surface Elev. 659.15ft

Elev. (ft)	Depth (ft)	Std. Pen./ RQD	Rec. (ft)	Loss (ft)	Description	Sample No.	% Agg	% C.S.	% F.S.	% Silt	% Clay	L.L.	P.I.	W.C.	ODOT Class
659.2	0														
658.9					TOPSOIL										
		4-6-12			Very stiff to medium stiff, gray CLAY (A-7-6), trace to no rock fragments, trace sand, moist.	1	--	--	--	--	--	--	--	15	VISUAL
		6-9-15				2	--	--	--	--	--	--	--	12	VISUAL
	5														
		4-3-4				3	0	1	3	--	96 *	46	19	30	A-7-6
649.9		15-50/0.4				4	--	--	--	--	--	--	--	13	VISUAL
	10				Very soft to soft, decomposed to weathered, gray SILTY SHALE.										
648.7		RQD = 88%	3.5	0.0	Note: Encountered spoon refusal at 9.5 feet, augered to 10.0 feet and began coring bedrock. Soft, highly weathered to weathered, gray SILTY SHALE with nearly horizontal laminar bedding (fissile), good quality as per RQD. U.C. Strength at 10.8 feet = 360 psi										
645.7					TERMINATION DEPTH = 13.5 FEET										

Particle Sizes: Agg = ℄ 2.00mm, Coarse Sand = 2.00-0.42mm, Fine Sand = 0.42-0.074mm, Silt = 0.074-0.005mm, Clay = * 0.005mm (*Indicates silt & clay combined)

DRAWN	REVIEWED	DATE	CALCULATED	CHECKED
E.D.S.	B.M.	1/16/00	W.I.N.	S.S.S.

PRIME ENGINEERING & ARCHITECTURE, INC.
COLUMBUS: (614) 457-2100 AKRON: (330) 666-5432

State of Ohio
Department of Transportation
Division of Highways
Testing Laboratory

LOG OF BORING

Date Started 10/17/99 Sampler: Type SS Dia. 2.0" Water Elev. ft
Date Completed 10/17/99 Casing: Length Dia. 3.25"

Project: CUY-90-0.00 (Site 10 Noisewall)
Project No.: 99091
Location: Westlake, Cuyahoga County

Boring No. NW10-6 Station & Offset 154+82.50, 68.03' LT. Surface Elev. 658.9ft

Elev. (ft)	Depth (ft)	Std. Pen./ RQD	Rec. (ft)	Loss (ft)	Description	Sample No.	Physical Characteristics % Agg	% C.S.	% F.S.	% Silt	% Clay	L.L.	P.I.	W.C.	ODOT Class
658.9	0														
658.6		7-8-8			TOPSOIL Medium stiff to very stiff, gray CLAY (A-7-6), trace to no rock fragments trace sand, moist.	1	--	--	--	--	--	--	--	16	VISUAL
		4-5-6				2	--	--	--	--	--	--	--	17	VISUAL
	5	3-4-4				3	0	0	7	--	93 *	51	22	32	A-7-6
649.9		33-50/0.2				4	--	--	--	--	--	--	--	11	VISUAL
648.9	10	RQD = 20%	3.0	0.0	Very soft to soft, decomposed to highly weathered, gray SILTY SHALE. Note: Encountered spoon refusal at 9.2 feet, augered to 10.0 feet and began coring bedrock. Soft, highly weathered to weathered, gray SILTY SHALE with nearly horizontal laminar bedding (fissile), very poor quality as per RQD. U.C. Strength at 11.1 feet = 499 psi										
645.9					TERMINATION DEPTH = 13.0 FEET										

Particle Sizes: Agg = ℄ 2.00mm, Coarse Sand = 2.00-0.42mm, Fine Sand = 0.42-0.074mm, Silt = 0.074-0.005mm, Clay = * 0.005mm (*Indicates silt & clay combined)

State of Ohio
Department of Transportation
Division of Highways
Testing Laboratory

LOG OF BORING

Date Started 10/17/99 Sampler: Type SS Dia. 2.0" Water Elev. ft
Date Completed 10/17/99 Casing: Length Dia. 3.25"

Project: CUY-90-0.00 (Site 10 Noisewall)
Project No.: 99091
Location: Westlake, Cuyahoga County

Boring No. NW10-7 Station & Offset 156+82.18, 68.36' LT. Surface Elev. 658.45ft

Elev. (ft)	Depth (ft)	Std. Pen./ RQD	Rec. (ft)	Loss (ft)	Description	Sample No.	Physical Characteristics % Agg	% C.S.	% F.S.	% Silt	% Clay	L.L.	P.I.	W.C.	ODOT Class
658.5	0														
658.3		9-13-11			TOPSOIL Very stiff to stiff, gray CLAY (A-7-6), trace sand, trace to no asphalt and wood fragments, moist.	1	--	--	--	--	--	--	--	13	VISUAL
		4-4-7				2	--	--	--	--	--	--	--	17	VISUAL
	5	4-5-6				3	0	0	3	--	97 *	53	24	33	A-7-6
649.9		50/0.4				4	--	--	--	--	--	--	--	8	VISUAL
648.5	10	50/0.3			Very soft to medium hard, decomposed to weathered, gray SILTY SHALE. Note: Encountered spoon refusal at 11.3 feet, augered to 11.5 feet and began coring bedrock. Soft, highly weathered to weathered, gray SILTY SHALE with nearly horizontal laminar bedding (fissile), good quality as per RQD.	5	--	--	--	--	--	--	--	7	VISUAL
645.5		RQD = 80%	3.0	0.0	U.C. Strength at 12.8 feet = 442 psi TERMINATION DEPTH = 13.0 FEET										

Particle Sizes: Agg = ℄ 2.00mm, Coarse Sand = 2.00-0.42mm, Fine Sand = 0.42-0.074mm, Silt = 0.074-0.005mm, Clay = * 0.005mm (*Indicates silt & clay combined)

State of Ohio
Department of Transportation
Division of Highways
Testing Laboratory

LOG OF BORING

Date Started 10/13/99 Sampler: Type SS Dia. 2.0" Water Elev. ft
Date Completed 10/13/99 Casing: Length Dia. 3.25"

Project: CUY-90-0.00 (Site 10 Noisewall)
Project No.: 99091
Location: Westlake, Cuyahoga County

Boring No. NW10-8 Station & Offset 158+78.03, 68.45' LT. Surface Elev. 658.56ft

Elev. (ft)	Depth (ft)	Std. Pen./ ROD	Rec. (ft)	Loss (ft)	Description	Sample No.	Physical Characteristics % Agg	% C.S.	% F.S.	% Silt	% Clay	L.L.	P.I.	W.C.	ODOT Class
658.6	0														
658.2					TOPSOIL										
		7-7-9			Very stiff to stiff, gray CLAY (A-7-6), trace to no rock fragments, trace sand, moist.	1	--	--	--	--	--	--	--	17	VISUAL
		7-9-13				2	--	--	--	--	--	--	--	27	VISUAL
	5														
		5-5-6				3	0	1	2	--	97 *	57	28	32	A-7-6
649.8		30-50/0.5				4	--	--	--	--	--	--	--	6	VISUAL
					Very soft to medium hard, decomposed to weathered, gray SILTY SHALE.										
	10														
		36-50/0.3				5	--	--	--	--	--	--	--	7	VISUAL
		50/0.3				6	--	--	--	--	--	--	--	10	VISUAL
					Note: Encountered spoon refusal at 13.8 feet, augered to 15.0 feet and began coring bedrock.										
643.6	15	RQD = 58%	3.0	0.0	Soft, highly weathered to weathered, gray SILTY SHALE with nearly horizontal laminar bedding (fissile), fair quality as per RQD. U.C. Strength at 15.9 feet = 155 psi										
640.6					TERMINATION DEPTH = 18.0 FEET										

Particle Sizes: Agg = ¢ 2.00mm, Coarse Sand = 2.00-0.42mm, Fine Sand = 0.42-0.074mm, Silt = 0.074-0.005mm, Clay = * 0.005mm (*Indicates silt & clay combined)

State of Ohio
Department of Transportation
Division of Highways
Testing Laboratory

LOG OF BORING

Date Started 10/8/99 Sampler: Type SS Dia. 2.0" Water Elev. ft
Date Completed 10/8/99 Casing: Length Dia. 3.25"

Project: CUY-90-0.00 (Site 10 Noisewall)
Project No.: 99091
Location: Westlake, Cuyahoga County

Boring No. NW10-9 Station & Offset 162+01.37, 60.49' LT. Surface Elev. 660.32ft

Elev. (ft)	Depth (ft)	Std. Pen./ ROD	Rec. (ft)	Loss (ft)	Description	Sample No.	Physical Characteristics % Agg	% C.S.	% F.S.	% Silt	% Clay	L.L.	P.I.	W.C.	ODOT Class
660.3	0														
659.5					SHOULDER MATERIAL										
		4-4-5			Stiff, gray CLAY (A-7-6), trace to no rock fragments, trace sand, moist.	1	--	--	--	--	--	--	--	19	VISUAL
		6-6-8				2	--	--	--	--	--	--	--	16	VISUAL
	5														
		2-4-5				3	0	2	3	--	95 *	42	18	26	A-7-6
651.3		3-20-50/0.4				4	--	--	--	--	--	--	--	16	VISUAL
					Very soft to medium hard, decomposed to highly weathered, gray SILTY SHALE.										
	10														
		50/0.2				5	--	--	--	--	--	--	--	7	VISUAL
		50/0.2				6	--	--	--	--	--	--	--	12	VISUAL
	15														
		50/0.2			Note: Encountered spoon refusal at 16.2 feet and began coring bedrock.										
644.1		RQD = 12%	2.8	0.2	Soft, highly weathered to weathered, gray SILTY SHALE with nearly horizontal laminar bedding (fissile), very poor quality as per RQD. U.C. Strength at 16.4 feet = 387 psi	7	--	--	--	--	--	--	--	6	VISUAL
641.3					TERMINATION DEPTH = 19.0 FEET										

Particle Sizes: Agg = ¢ 2.00mm, Coarse Sand = 2.00-0.42mm, Fine Sand = 0.42-0.074mm, Silt = 0.074-0.005mm, Clay = * 0.005mm (*Indicates silt & clay combined)

GENERAL INFORMATION

STRUCTURE FOUNDATION INVESTIGATION

INTRODUCTION

THIS REPORT CONSISTS OF THE SOIL EXPLORATION FOR THE PROPOSED REPLACEMENT OF ODOT BRIDGE NOS. CUY-90-0045 L&R AND CUY-90-0249 L&R FOR THE CUY-90-0.00 THIRD LANE PROJECT. THE EXISTING STRUCTURES SPAN BRADLEY ROAD (CUY-90-0049) AND DOVER CENTER ROAD (CUY-90-0249). RELIEF ACROSS EACH OF THE SITES IS LESS THAN 23 FEET FROM THE TOP OF THE EMBANKMENT TO THE ROADS BELOW. THE BRIDGES ARE LOCATED IN WESTLAKE, CUYAHOGA COUNTY, OHIO. INCLUDED IN THIS REPORT ARE TYPED DRILLING LOGS, TEST BORING PROFILES, AND LAB RESULTS AT THE TEST BORING LOCATIONS.

GEOLOGY AND OBSERVATIONS OF THE PROJECT

THE PROJECT AREA LIES ON THE FLAT LAKE PLAIN JUST SOUTH OF LAKE ERIE AND WEST OF THE MOUTH OF ROCKY RIVER. THE AREA WAS PASSED OVER BY THE WISCONSIN ICE SHEET THAT LEFT A GENERALLY THIN COATING OF DRIFT AVERAGING LESS THAN 25 FEET IN THICKNESS. THESE GLACIALLY DERIVED DEPOSITS OVERLIE SHALE OF THE CHAGRIN FORMATION. SILTY SHALE BEDROCK WAS ENCOUNTERED AT EACH BORING LOCATION DURING OUR SUBSURFACE EXPLORATION. BEDROCK WAS ENCOUNTERED AT THE STRUCTURE LOCATIONS AT ELEVATIONS RANGING FROM 640.6 FEET AND 655.2 FEET.

EXPLORATION

A TOTAL OF EIGHT EXPLORATORY BORINGS (FOUR AT EACH STRUCTURE) WERE ADVANCED BY A TRUCK-MOUNTED, MECHANICALLY POWERED, HOLLOW-STEM ROTARY DRILL FROM NOVEMBER 30 TO DECEMBER 3,1998. INCLUDED IN THIS REPORT ARE LOGS OF SOIL BORINGS MADE FOR THE STRUCTURE FOUNDATION EXPLORATION.

INVESTIGATIONAL FINDINGS

MATERIALS ENCOUNTERED AT THE PROJECT SITE CONSISTED OF EMBANKMENT FILL WHICH CONSISTED PRIMARILY OF HIGHLY WEATHERED TO DECOMPOSED SHALE FRAGMENTS WITH VARYING FRACTIONS OF SAND AND SILT (A-2-4) AND/OR CLAY (A-2-5), SANDY SILT (A-4a), AND SILT AND CLAY (A-6a) WITH VARYING FRACTIONS OF SHALE FRAGMENTS. SHALE FRAGMENTS AND SHALE FRAGMENTS WITH SANDSTONE FRAGMENTS AND LITTLE TO TRACE SILT AND CLAY (A-1-a) WERE ALSO ENCOUNTERED WITHIN THE EMBANKMENT FILL. THE NATURAL SOILS IN THE VICINITY OF THE STRUCTURES CONSISTED OF CLAY (A-7-6), SANDY SILT WITH SHALE FRAGMENTS (A-4a), SILT AND CLAY WITH SHALE FRAGMENTS (A-6a), AND DECOMPOSED TO HIGHLY WEATHERED SHALE FRAGMENTS. THESE SOILS WERE UNDERLAIN BY SILTY SHALE BEDROCK. ONE OF THE COHESIVE SOIL SAMPLES TESTED FOR ATTERBERG LIMITS HAD A MOISTURE CONTENT EQUAL TO ITS PLASTIC LIMIT. ALL SAMPLES TESTED FOR ATTERBERG LIMITS HAD MOISTURE CONTENTS BELOW THEIR LIQUID LIMITS.

BEDROCK IN THE VICINITY OF THE STRUCTURES CONSISTED OF SILTY SHALE IN FAIR TO EXCELLENT CONDITION AS DEFINED BY THE ROCK QUALITY DESIGNATION (RQD) VALUES. THE BEDROCK SAMPLES TESTED FOR UNCONFINED COMPRESSIVE STRENGTH RANGED FROM 1491 TO 6801 PSI.

GROUNDWATER WAS ENCOUNTERED IN TEST BORINGS BS-1, BS-3 AND DS-1 DURING DRILLING AT ELEVATIONS OF 647.25, 640.56 AND 659.85 FEET, RESPECTIVELY.

FOR SPECIFIC CONDITIONS AT VARIOUS DEPTHS, PLEASE REFER TO THE INDIVIDUAL TEST BORING LOGS THAT FORM A PART OF THESE PLANS.

LEGEND FOR PROJECT AVERAGE RESULTS OF TESTS- 28 SAMPLES TESTED

DESCRIPTION	ODOT CLASS	% AGG.	% C.SAND	% F. SAND	% SILT	CLAY	LIQUID LIMIT	PLACTICITY INDEX	WATER CONTENT	SAMPLES TESTED
GRAVEL	A-1-a(0)	58	18	12	--	12	--	--	8	1
GRAVEL WITH SAND	A-1-b( )	--	--	--	--	--	--	--	--	--
FINE SAND	A-3-(0)	9	4	78	--	9	--	--	30	3
COARSE AND FINE SAND	A-3a(0)	8	3	68	--	21	--	--	25	6
GRAVEL WITH SAND AND SILT	A-2-4(0)	46	8	14	--	32	--	--	17	1
GRAVEL WITH SAND, SILT AND CLAY	A-2-6( )	--	--	--	--	--	--	--	--	--
SANDY SILT	A-4a(3)	20	11	19	7	44	4	1.5	21	6
SILT	A-4b( )	--	--	--	--	--	--	--	--	--
SILT AND CLAY	A-6a(11)	7	6	12	--	77	39	14	23	4
SILTY CLAY	A-6b(17)	2	2	3	--	94	40	17	21	2
ELASTIC CLAY	A-7-5(37)	0	0	1	--	99	62	31	26	1
CLAY	A-7-6(27)	1	0	1	--	98	52	23	33	4
RANDOM FILL	VISUAL CLASSIFICATION									
WEATHERED SHALE	VISUAL CLASSIFICATION									
MUDSTONE	VISUAL CLASSIFICATION									
SHALE	VISUAL CLASSIFICATION									
SANDSTONE	VISUAL CLASSIFICATION									
LIMESTONE	VISUAL CLASSIFICATION									
VARIOUS OTHER MATERIAL	VISUAL CLASSIFICATION									

SOD AND/OR TOP SOIL – X – APPROXIMATE DEPTH

BERM MATERIAL

AUGER BORING LOCATION–PLAN VIEW.

PRESS AND/OR DRIVE SAMPLE AND/OR CORE BORING LOCATION–PLAN VIEW.

• WATER CONTENT NEARLY EQUAL TO OR GREATER THAN LIQUID LIMIT

◆ INDICATES A NON–PLASTIC MATERIAL WITH A HIGH WATER CONTENT

W INDICATES FREE WATER ELEVATION

INDICATES STATIC WATER ELEVATION

HORIZONTAL BAR ON BORING LOG INDICATES THE DEPTH THE SAMPLE WAS TAKEN.

X/Y/Z OR X / Y / Z — FIGURES BESIDE THE BORING LOG IN PROFILE INDICATE THE NUMBER OF BLOWS FOR STANDARD PENETRATION TEST.

X = NO. OF BLOWS FOR FIRST 150mm
Y = NO. OF BLOWS FOR SECOND 150mm
Z = NO. OF BLOWS FOR THIRD 150mm

NOTE: FIGURES BESIDE BORINGS INDICATE WAER CONTENT IN PERCENT, e.g. 15

SUMMARY OF SOIL TEST DATA

NOTE: NP SHOWN IN LIQUID LIMIT AND PLASTICITY INDEX COLUMNS INDICATES THAT THE MATERIAL IS NON–PLASTIC.

*DENOTES SAMPLE TAKEN AT OR NEAR GRADE.

NOTES :

ALL AVAILABLE SOIL AND BEDROCK INFORMATION WHICH CAN BE CONVENIENTLY SHOWN ON THE SOIL PROFILE SHEETS HAS BEEN SO REPORTED. ADDITIONAL SOIL TESTS, BEDROCK BORINGS, AND SUBSURFACE INVESTIGATION MAY HAVE BEEN MADE TO STUDY SOME SPECIAL ASPECT OF THE PROJECT. COPIES OF THIS DATA, IF ANY, MAY BE INSPECTED IN THE DISTRICT DEPUTY DIRECTOR'S OFFICE, THE OFFICE OF MATERIALS MANAGEMENT AT 1600 WEST BROAD STREET, THE OFFICE OF ROADWAY ENGINEERING OR THE OFFICE OF STRUCTURAL ENGINEERING AT 1980 WEST BROAD STREET, COLUMBUS, OHIO 43223.

I–90 – Station From 20 To 182

Drilling – Auger – O.T.B. 11/30/98 TO 2/16/99

Drafting – M.I 8/23/99

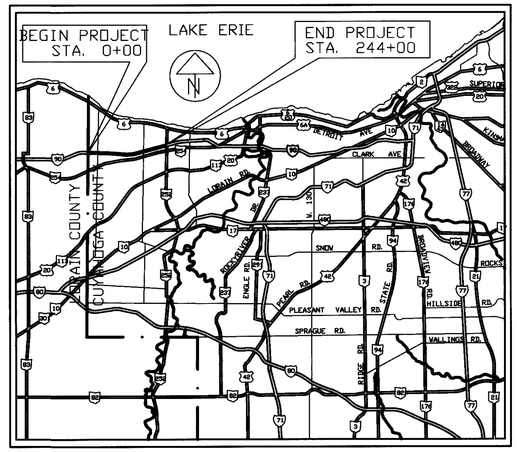

LOCATION MAP

INTRODUCTION

THIS REPORT CONSISTS OF THE SUBSURFACE EXPLORATION FOR THE PROPOSED SITE 7 AND SITE 11 NOISEWALLS WHICH ARE PART OF THE CUY-90-0.00 THIRD LANE PROJECT AND NOISEWALL CONSTRUCTION. THE PROPOSED SITE 7 NOISEWALL WILL BE LOCATED ALONG THE SOUTH SIDE OF INTERSTATE 90 (I-90) BETWEEN THE CROCKER ROAD OVERPASS OVER I-90 AND THE CAHOON ROAD OVERPASS OVER I-90. THE PROPOSED SITE 11 NOISEWALL WILL BE LOCATED ALONG THE SOUTH SIDE OF THE EASTBOUND OFF-RAMP OF I-90 ONTO COLUMBIA ROAD. THE TWO PROPOSED STRUCTURES WILL BE LOCATED IN THE CITY OF WESTLAKE IN CUYAHOGA COUNTY, OHIO. INCLUDED IN THIS REPORT ARE TYPED DRILLING LOGS, TEST BORING PROFILES, AND LAB RESULTS AT THE TEST BORING LOCATIONS.

GEOLOGY AND OBSERVATIONS OF THE PROJECT

THE PROJECT AREA LIES ON THE FLAT LAKE PLAIN JUST SOUTH OF LAKE ERIE AND WEST OF THE MOUTH OF ROCKY RIVER. THE AREA WAS PASSED OVER BY THE WISCONSIN ICE SHEET THAT LEFT A GENERALLY THIN COATING OF DRIFT AVERAGING LESS THAN 25 FEET IN THICKNESS. THESE GLACIALLY DERIVED DEPOSITS OVERLIE SHALE OF THE CHAGRIN FORMATION. SILTY SHALE BEDROCK WAS ENCOUNTERED AT EACH BORING LOCATION DURING OUR SUBSURFACE EXPLORATION. BEDROCK WAS ENCOUNTERED AT THE STRUCTURE LOCATIONS AT ELEVATIONS RANGING FROM 643.2 TO 665.9 FEET.

EXPLORATION

A TOTAL OF 32 EXPLORATORY BORINGS (26 FOR THE SITE 7 NOISEWALL AND SIX FOR THE SITE 11 NOISEWALL) WERE ADVANCED BY A TRUCK-MOUNTED, MECHANICALLY POWERED, HOLLOW-STEM ROTARY DRILL DURING DECEMBER 1998 AND FEBRUARY 1999. INCLUDED IN THIS REPORT ARE LOGS OF SOIL BORINGS MADE FOR THE STRUCTURE FOUNDATION EXPLORATION.

INVESTIGATIONAL FINDINGS

SOILS ENCOUNTERED ACROSS THE PROJECT SITE RANGED IN THICKNESS FROM 2.7 TO 13.7 FEET AND CONSISTED OF SILT AND CLAY (A-6a), SILTY CLAY (A-6b), CLAY (A-7-6), ELASTIC CLAY (A-7-5), SANDY SILT (A-4a), FINE SAND (A-3), AND COARSE AND FINE SAND (A-3a). THREE OF THE NINE COHESIVE SOIL SAMPLES TESTED FOR ATTERBERG LIMITS HAD MOISTURE CONTENTS GREATER THAN THEIR PLASTIC LIMITS. ALL SOIL SAMPLES TESTED FOR ATTERBERG LIMITS HAD MOISTURE CONTENTS BELOW THEIR LIQUID LIMITS. THE RELATIVE CONSISTENCIES OF THE COHESIVE SOILS RANGED FROM "VERY SOFT" TO "HARD" BUT WERE PRIMARILY "MEDIUM STIFF". THESE SOILS WERE UNDERLAIN BY SILTY SHALE BEDROCK.

BEDROCK IN THE VICINITY OF THE STRUCTURES CONSISTED OF SILTY SHALE THAT RANGED FROM POOR TO GOOD CONDITION BUT WAS PRIMARILY IN FAIR CONDITION AS DEFINED BY THE ROCK QUALITY DESIGNATION (RQD) VALUES. THE BEDROCK SAMPLES TESTED FOR UNCONFINED COMPRESSIVE STRENGTH RANGED FROM 251 TO 12,143 PSI.

GROUNDWATER WAS ENCOUNTERED IN SEVEN OF THE TEST BORINGS (NW7-11 THROUGH NW7-17) DURING DRILLING AT ELEVATIONS RANGING FROM 656.6 TO 661.88 FEET.

FOR SPECIFIC CONDITIONS AT VARIOUS DEPTHS, PLEASE REFER TO THE INDIVIDUAL TEST BORING LOGS THAT FORM A PART OF THESE PLANS.

PRIME ENGINEERING & ARCHITECTURE, INC.
AKRON: (330) 666-5432
COLUMBUS: (614) 457-2100

DRAWN	REVIEWED	DATE	CALCULATED	CHECKED
B.M	S.M	8/24/99	W.I.N	S.S.S

SOIL PROFILE

CUY-90-0.00

PRIME ENGINEERING & ARCHITECTURE, INC.
COLUMBUS: (614) 457-2100 AKRON: (330) 666-5432

DRAWN	REVIEWED	DATE	CALCULATED	CHECKED
B.M	S.M	8/24/99	W.I.N	S.S.S

STRUCTURAL FOUNDATION INVESTIGATION
CUY-90-0045 OVER BRADLEY ROAD

CUY-90-0.00

2/21

37/56

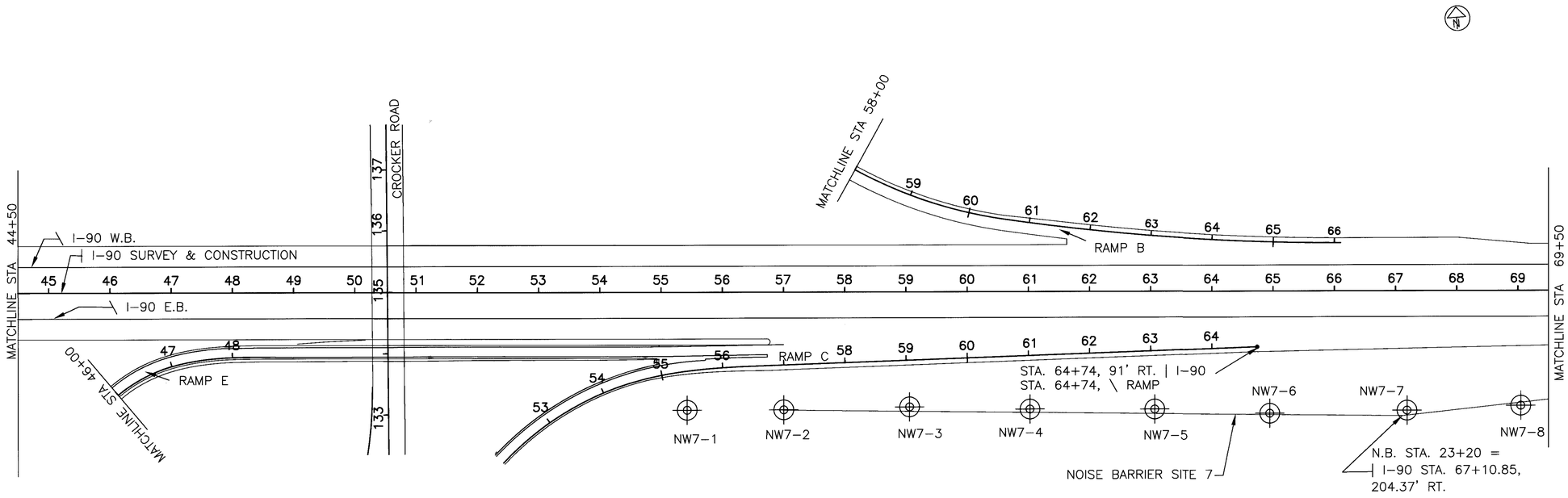

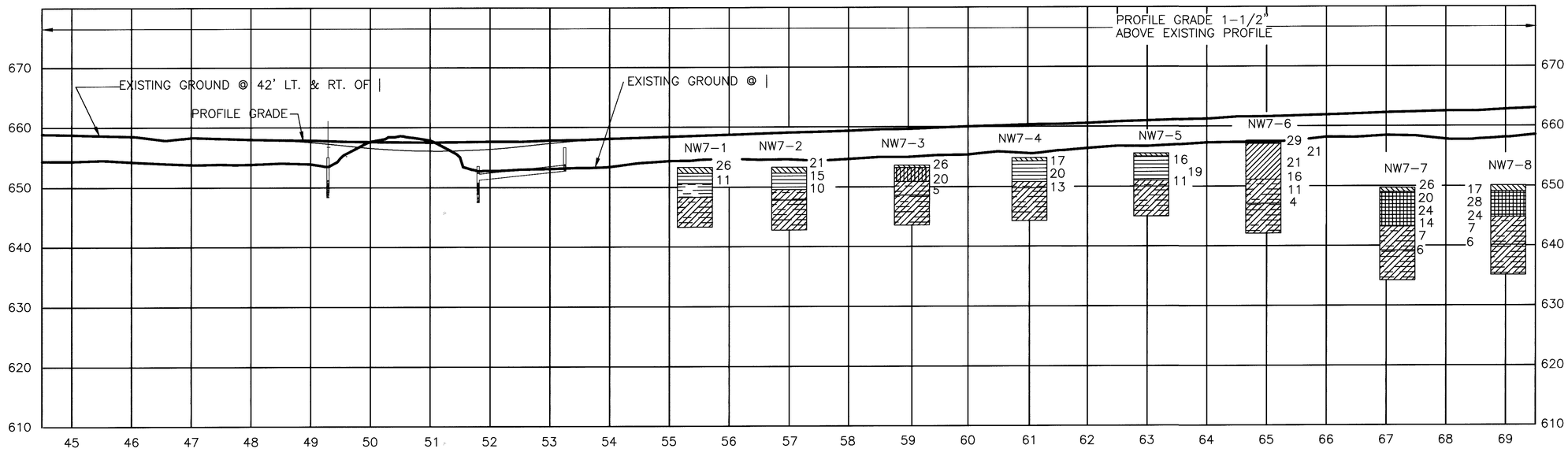

PRIME ENGINEERING & ARCHITECTURE, INC.
COLUMBUS: (614) 457-2100 AKRON: (330) 666-5432

DRAWN	REVIEWED	DATE	CALCULATED	CHECKED
B.M	S.M	8/24/99	W.I.N	S.S.S

SOIL PROFILE

CUY-90-0.00

3 / 21

38 / 56

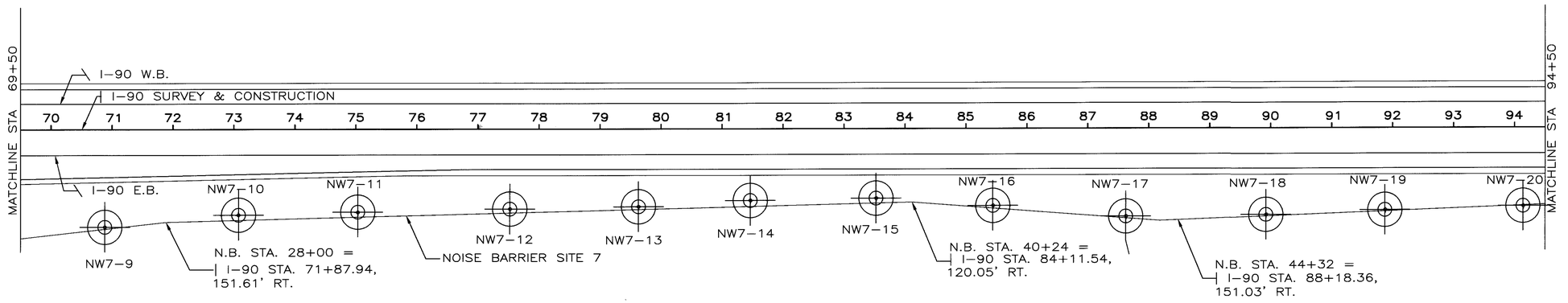

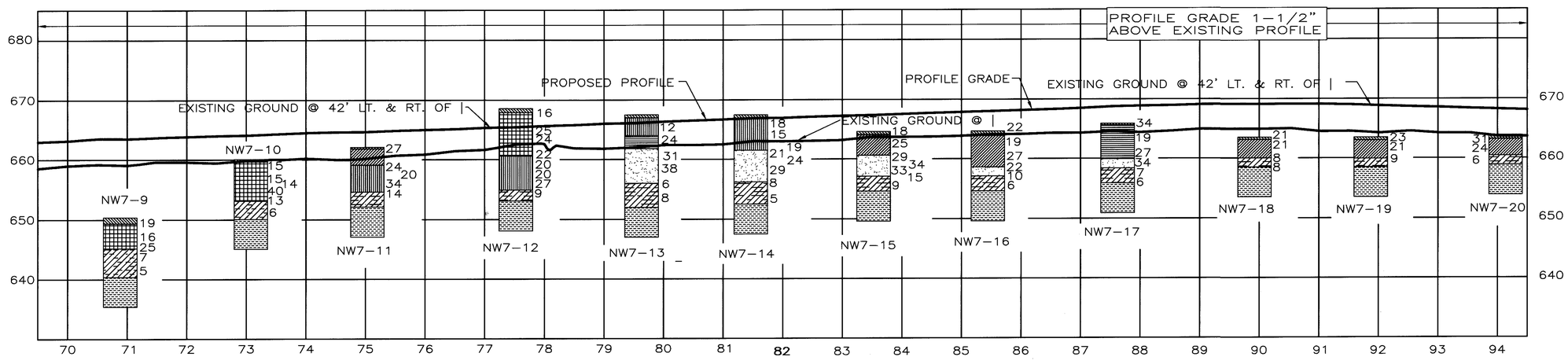

PRIME ENGINEERING & ARCHITECTURE, INC.
COLUMBUS: (614) 457-2100 AKRON: (330) 666-5432

DRAWN	REVIEWED	DATE	CALCULATED	CHECKED
BM	S.M	8/24/99	W.I.N	S.S.S

SOIL PROFILRE

CUY-90-0.00

4/21

39/56

PRIME ENGINEERING & ARCHITECTURE, INC.
COLUMBUS: (614) 457-2100 AKRON: (330) 666-5432

DRAWN	REVIEWED	DATE	CALCULATED	CHECKED
B.M	S.M	8/24/99	W.I.N	S.S.S

SOIL PROFILE

CUY-90-0.00

5/21

40/56

PRIME ENGINEERING & ARCHITECTURE, INC.
COLUMBUS: (614) 457-2100 AKRON: (330) 666-5432

DRAWN	REVIEWED	DATE	CALCULATED	CHECKED
B.M	S.M	8/24/99	W.I.N	S.S.S

STRUCTURAL FOUNDATION INVESTIGATION
CUY-90-0249 OVER DOVER CENTER ROAD

CUY-90-0.00

6 / 21

41 / 56

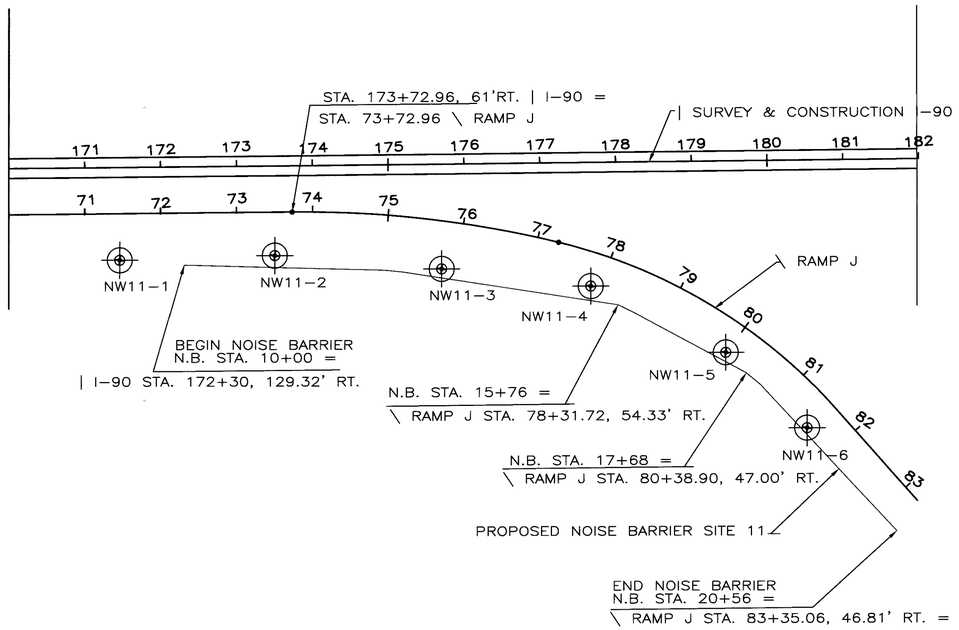

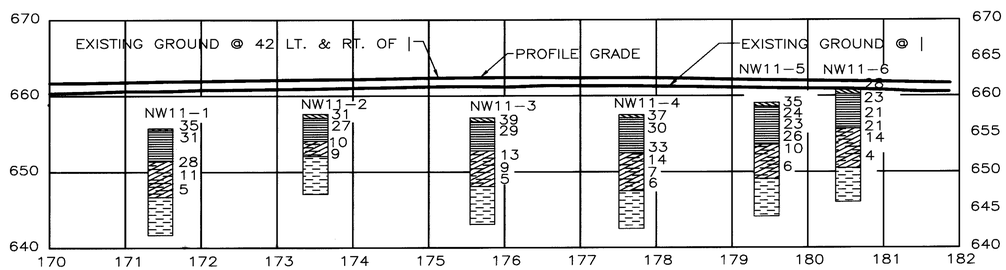

PRIME ENGINEERING & ARCHITECTURE, INC.
COLUMBUS: (614) 457-2100 AKRON: (330) 666-5432

DRAWN	REVIEWED	DATE	CALCULATED	CHECKED
B.M	S.M	8/24/99	W.I.N	S.S.S

SOIL PROFILE

CUY-90-0.00

7/21

42/56

LOG OF BORING

Date Started 12-15-98 Sampler Type SS Dia. 2.0 inches Water Elev. ±
Date Completed 12-15-98 Casing: length Dia. 3.25 inches
Boring No. NW7-1 Station & Offset STA 55+42.88, 192.57' RT. Surface Elev. 653.3±

ELEV.	DEPTH	STD.PEN. (N)	REC. Ft.	LOSS Ft.	DESCRIPTION	SAMPLE NO.	SAMPLE TYPE	PHYSICAL CHARACTERISTICS PERCENT (%) AGG.	COAR. SAND	FINE SAND	SILT	CLAY	L.L.	P.L.	P.I.	W.C. %	ODOT CLASS
653.31	0																
652.3	1.0	5-5-6			TOPSOIL Stiff, gray SILTY CLAY (A-6b), trace sand, moist.	1	SS	--	--	--	--	--	--	--	--	26	VISUAL
650.6	2.7	18-42			Gray, DECOMPOSED SHALE some iron staining. Note: Encountered auger refusal at 5.0 feet, began rock coring.	2	SS	--	--	--	--	--	--	--	--	11	VISUAL
648.3	5.0				Gray SILTY SHALE, highly to slightly weathered, nearly horizontal laminar bedding (fissile), medium strength at tested depth. Note: Fair quality rock as per RQD%. Note: U.C. Strength at 8.3 feet = 2445 psi.												
643.3	10.0				TERMINATION DEPTH = 10.0 FEET												

*SILT AND CLAY COMBINED

LOG OF BORING

Date Started 12-15-98 Sampler Type SS Dia. 2.0 inches Water Elev. ±
Date Completed 12-15-98 Casing: length Dia. 3.25 inches
Boring No. NW7-2 Station & Offset STA 57+00.62, 192.29' RT. Surface Elev. 653.29±

ELEV.	DEPTH	STD.PEN. (N)	REC. Ft.	LOSS Ft.	DESCRIPTION	SAMPLE NO.	SAMPLE TYPE	PHYSICAL CHARACTERISTICS PERCENT (%) AGG.	COAR. SAND	FINE SAND	SILT	CLAY	L.L.	P.L.	P.I.	W.C. %	ODOT CLASS
653.29	0																
652.3	1.0	4-6-8			TOPSOIL Stiff, gray SILTY CLAY (A-6b), trace sand, moist.	1	SS	--	--	--	--	--	--	--	--	21	VISUAL
649.6	3.7	9-23-50			Gray, DECOMPOSED TO HIGHLY WEATHERED SHALE, some iron staining.	2A	SS	--	--	--	--	--	--	--	--	15	VISUAL
647.8	5.5				Note: Encountered auger refusal at 5.5 feet, began rock coring.	2B	SS	--	--	--	--	--	--	--	--	10	VISUAL
					Gray SILTY SHALE, highly to slightly weathered, nearly horizontal laminar bedding (fissile), medium strength at tested depth. Note: Fair quality rock as per RQD%. Note: U.C. Strength at 8.6 feet = 3771 psi.												
642.8	10.5				TERMINATION DEPTH = 10.5 FEET												

*SILT AND CLAY COMBINED

LOG OF BORING

Date Started 12-15-98 Sampler Type SS Dia. 2.0 inches Water Elev. ±
Date Completed 12-15-98 Casing: length Dia. 3.25 inches
Boring No. NW7-3 Station & Offset STA 59+06.12, 187.93' RT. Surface Elev. 653.64±

ELEV.	DEPTH	STD.PEN. (N)	REC. Ft.	LOSS Ft.	DESCRIPTION	SAMPLE NO.	SAMPLE TYPE	PHYSICAL CHARACTERISTICS PERCENT (%) AGG.	COAR. SAND	FINE SAND	SILT	CLAY	L.L.	P.L.	P.I.	W.C. %	ODOT CLASS
653.64	0																
653.2	0.4	4-5-6-11			TOPSOIL Stiff, gray ELASTIC CLAY (A-7-5), trace sand, moist.	1A	SS	0	0	1	--	99 *	62	31	31	26	A-7-5
						1B	SS	--	--	--	--	--	--	--	--	20	VISUAL
650.9	2.7	50/0.4			Gray, DECOMPOSED TO HIGHLY WEATHERED SHALE, some iron staining. Note: Encountered auger refusal at 5.0 feet, began rock coring.	2	SS	--	--	--	--	--	--	--	--	5	VISUAL
648.6	5.0				Gray SILTY SHALE, highly to slightly weathered, nearly horizontal laminar bedding (fissile), medium strength at tested depth. Note: Good quality rock as per RQD%. Note: U.C. Strength at 9.3 feet = 4282 psi.												
643.6	10.0				TERMINATION DEPTH = 10.0 FEET												

*SILT AND CLAY COMBINED

LOG OF BORING

Date Started 12-15-98 Sampler Type SS Dia. 2.0 inches Water Elev. ±
Date Completed 12-15-98 Casing: length Dia. 3.25 inches
Boring No. NW7-4 Station & Offset STA 61+02.76, 192.05' RT. Surface Elev. 654.80±

ELEV.	DEPTH	STD.PEN. (N)	REC. Ft.	LOSS Ft.	DESCRIPTION	SAMPLE NO.	SAMPLE TYPE	PHYSICAL CHARACTERISTICS PERCENT (%) AGG.	COAR. SAND	FINE SAND	SILT	CLAY	L.L.	P.L.	P.I.	W.C. %	ODOT CLASS
654.80	0																
654.3	0.5	5-7-10-13			TOPSOIL Very stiff, light brown SILTY CLAY (A-6b), trace sand, moist.	1	SS	--	--	--	--	--	--	--	--	17	VISUAL
650.8	4.0	8-19-43			Gray, DECOMPOSED TO HIGHLY WEATHERED SHALE, some iron staining.	2A	SS	--	--	--	--	--	--	--	--	20	VISUAL
649.3	5.5				Note: Encountered auger refusal at 5.5 feet, began rock coring.	2B	SS	--	--	--	--	--	--	--	--	13	VISUAL
					Gray SILTY SHALE, highly to slightly weathered, nearly horizontal laminar bedding (fissile), low strength at tested depth. Note: Fair quality rock as per RQD%. Note: U.C. Strength at 7.2 feet = 1130 psi.												
644.3	10.5				TERMINATION DEPTH = 10.5 FEET												

*SILT AND CLAY COMBINED

DRAWN	REVIEWED	DATE	CALCULATED	CHECKED
B.M	S.M	8/24/99	W.I.N	S.S.S

PRIME ENGINEERING & ARCHITECTURE, INC.
COLUMBUS: (614) 457-2100 AKRON: (330) 666-5432

LOG OF BORING

Date Started 12-16-98 Sampler Type SS Dia. 2.0 inches Water Elev. ±
Date Completed 12-16-98 Casing: length Dia. 3.25 inches
Boring No. NW7-5 Station & Offset STA 63+06.69, 192.58' RT. Surface Elev. 655.48±

ELEV.	DEPTH	STD.PEN. (N)	REC. Ft.	LOSS Ft.	DESCRIPTION	SAMPLE NO.	SAMPLE TYPE	PHYSICAL CHARACTERISTICS PERCENT (%) AGG.	COAR. SAND	FINE SAND	SILT	CLAY	L.L.	P.L.	P.I.	W.C. %	ODOT CLASS
655.48	0																
655.0	0.5	7-7-10-13			TOPSOIL Very stiff, light brown SILTY CLAY (A-6b), trace sand, moist.	1	SS	--	--	--	--	--	--	--	--	16	VISUAL
		9-23-40				2A	SS	--	--	--	--	--	--	--	--	19	VISUAL
651.0	4.5				Gray, DECOMPOSED TO HIGHLY WEATHERED SHALE, some iron staining.	2B	SS	--	--	--	--	--	--	--	--	11	VISUAL
650.0	5.5				Note: Encountered auger refusal at 5.5 feet, began rock coring.												
					Gray SILTY SHALE, highly to slightly weathered, nearly horizontal laminar bedding (fissile), low strength at tested depth.												
					Note: Good quality rock as per RQD%.												
645.0	10.5				Note: U.C. Strength at 6.8 feet = 1204 psi TERMINATION DEPTH = 10.5 FEET												

*SILT AND CLAY COMBINED

LOG OF BORING

Date Started 12-16-98 Sampler Type SS Dia. 2.0 inches Water Elev. ±
Date Completed 12-16-98 Casing: length Dia. 3.25 inches
Boring No. NW7-6 Station & Offset STA 64+94.63, 199.69' RT. Surface Elev. 657.6±

ELEV.	DEPTH	STD.PEN. (N)	REC. Ft.	LOSS Ft.	DESCRIPTION	SAMPLE NO.	SAMPLE TYPE	PHYSICAL CHARACTERISTICS PERCENT (%) AGG.	COAR. SAND	FINE SAND	SILT	CLAY	L.L.	P.L.	P.I.	W.C. %	ODOT CLASS
657.61	0																
657.1	0.5	1-2-4-6			TOPSOIL Medium stiff to stiff, light brown SILT AND CLAY (A-6a), trace sand, moist.	1A	SS	--	--	--	--	--	--	--	--	29	VISUAL
						1B	SS	--	--	--	--	--	--	--	--	21	VISUAL
		3-6-8				2	SS	0	4	16	--	80 *	39	25	14	21	A-6a
651.1	6.5	12-61			Gray, DECOMPOSED TO HIGHLY WEATHERED SHALE, some iron staining.	3A	SS	--	--	--	--	--	--	--	--	16	VISUAL
						3B	SS	--	--	--	--	--	--	--	--	11	VISUAL
		50/0.4			Note: Encountered auger refusal at 10.5 feet, began rock coring.	4	SS	--	--	--	--	--	--	--	--	4	VISUAL
647.1	10.5				Gray SILTY SHALE, highly to slightly weathered, nearly horizontal laminar bedding (fissile), low strength at tested depth.												
					Note: Fair quality rock as per RQD%.												
					Note: U.C. Strength at 11.5 feet = 1992 psi.												
642.1	15.5				TERMINATION DEPTH = 15.5 FEET												

*SILT AND CLAY COMBINED

LOG OF BORING

Date Started 12-17-98 Sampler Type SS Dia. 2.0 inches Water Elev. ±
Date Completed 12-17-98 Casing: length Dia. 3.25 inches
Boring No. NW7-7 Station & Offset STA 67+18.83, 195.41' RT. Surface Elev. 649.7±

ELEV.	DEPTH	STD.PEN. (N)	REC. Ft.	LOSS Ft.	DESCRIPTION	SAMPLE NO.	SAMPLE TYPE	PHYSICAL CHARACTERISTICS PERCENT (%) AGG.	COAR. SAND	FINE SAND	SILT	CLAY	L.L.	P.L.	P.I.	W.C. %	ODOT CLASS
649.71	0																
649.0	0.7	1-3-3-8			TOPSOIL Medium stiff to stiff, light brown CLAY (A-7-6), trace sand, moist.	1A	SS	--	--	--	--	--	--	--	--	26	VISUAL
						1B	SS	--	--	--	--	--	--	--	--	20	VISUAL
		4-4-8				2	SS	--	--	--	--	--	--	--	--	24	VISUAL
643.2	6.5	9-30-50/0.3			Gray, HIGHLY WEATHERED TO WEATHERED SHALE, some iron staining.	3A	SS	--	--	--	--	--	--	--	--	14	VISUAL
						3B	SS	--	--	--	--	--	--	--	--	7	VISUAL
		37-50/0.3			Note: Encountered auger refusal at 10.5 feet, began rock coring.	4	SS	--	--	--	--	--	--	--	--	6	VISUAL
639.2	10.5				Gray SILTY SHALE, weathered, nearly horizontal laminar bedding (fissile), low strength at tested depth.												
					Note: Good quality rock as per RQD%.												
					Note: U.C. Strength at 14.2 feet = 1351 psi.												
634.2	15.5				TERMINATION DEPTH = 15.5 FEET												

*SILT AND CLAY COMBINED

LOG OF BORING

Date Started 12-16-98 Sampler Type SS Dia. 2.0 inches Water Elev. ±
Date Completed 12-16-98 Casing: length Dia. 3.25 inches
Boring No. NW7-8 Station & Offset STA 69+04.71, 187.78' RT. Surface Elev. 650.06±

ELEV.	DEPTH	STD.PEN. (N)	REC. Ft.	LOSS Ft.	DESCRIPTION	SAMPLE NO.	SAMPLE TYPE	PHYSICAL CHARACTERISTICS PERCENT (%) AGG.	COAR. SAND	FINE SAND	SILT	CLAY	L.L.	P.L.	P.I.	W.C. %	ODOT CLASS
650.06	0																
649.1	1.0	4-8-10			TOPSOIL Very stiff to stiff, light brown CLAY (A-7-6), trace sand, moist.	1	SS	--	--	--	--	--	--	--	--	17	VISUAL
		4-5-8				2A	SS	0	0	1	--	99 *	50	29	21	28	A-7-6
644.8	5.3					2B	SS	--	--	--	--	--	--	--	--	24	VISUAL
		22-50			Gray, DECOMPOSED TO WEATHERED SHALE some to no iron staining.	3	SS	--	--	--	--	--	--	--	--	7	VISUAL
		50/0.4			Note: Encountered auger refusal at 10.0 feet, began rock coring.	4	SS	--	--	--	--	--	--	--	--	6	VISUAL
640.1	10.0				Gray SILTY SHALE, weathered, nearly horizontal laminar bedding (fissile), medium strength at tested depth.												
					Note: Fair quality rock as per RQD%.												
					Note: U.C. Strength at 14.4 feet = 3811 psi.												
635.1	15.0				TERMINATION DEPTH = 15.0 FEET												

*SILT AND CLAY COMBINED

DRAWN	REVIEWED	DATE	CALCULATED	CHECKED
B.M	S.M	8/24/99	W.I.N	S.S.S

PRIME ENGINEERING & ARCHITECTURE, INC.
COLUMBUS: (614) 457-2100 AKRON: (330) 666-5432

LOG OF BORING

Date Started 12-16-98 Sampler Type SS Dia. 2.0 inches Water Elev. ±
Date Completed 12-16-98 Casing: length Dia. 3.25 inches
Boring No. NW7-9 Station & Offset STA 70+88.33, 159.16' RT. Surface Elev. 650.43±

ELEV.	DEPTH	STD.PEN. (N)	REC. Ft.	LOSS Ft.	DESCRIPTION	SAMPLE NO.	SAMPLE TYPE	PHYSICAL CHARACTERISTICS PERCENT (%) AGG.	COAR. SAND	FINE SAND	SILT	CLAY	L.L.	P.L.	P.I.	W.C. %	ODOT CLASS
650.43	0																
649.4	1.0	5-8-8			TOPSOIL Very stiff, light brown CLAY (A-7-6), trace sand, moist.	1	SS	--	--	--	--	--	--	--	--	19	VISUAL
		6-7-11				2A	SS	--	--	--	--	--	--	--	--	16	VISUAL
645.2	5.2					2B	SS	--	--	--	--	--	--	--	--	25	VISUAL
		26-45			Gray, DECOMPOSED TO WEATHERED SHALE some to no iron staining.	3	SS	--	--	--	--	--	--	--	--	7	VISUAL
		50/0.4			Note: Encountered auger refusal at 10.0 feet, began rock coring.	4	SS	--	--	--	--	--	--	--	--	5	VISUAL
640.4	10.0				Gray SILTY SHALE, weathered, nearly horizontal laminar bedding (fissile), low strength at tested depth. Note: Good quality rock as per RQD%. Note: U.C. Strength at 12.6 feet = 1924 psi.													
635.4	15.0				TERMINATION DEPTH = 15.0 FEET												

*SILT AND CLAY COMBINED

LOG OF BORING

Date Started 12-16-98 Sampler Type SS Dia. 2.0 inches Water Elev. ±
Date Completed 12-16-98 Casing: length Dia. 3.25 inches
Boring No. NW7-10 Station & Offset STA 73+07.56, 139.76' RT. Surface Elev. 660.10±

ELEV.	DEPTH	STD.PEN. (N)	REC. Ft.	LOSS Ft.	DESCRIPTION	SAMPLE NO.	SAMPLE TYPE	PHYSICAL CHARACTERISTICS PERCENT (%) AGG.	COAR. SAND	FINE SAND	SILT	CLAY	L.L.	P.L.	P.I.	W.C. %	ODOT CLASS
660.10	0																
659.7	0.4	7-9-12			TOPSOIL Very stiff to hard, light brown CLAY (A-7-6), trace sand, moist.	1	SS	--	--	--	--	--	--	--	--	15	VISUAL
		10-12-21				2A	SS	--	--	--	--	--	--	--	--	15	VISUAL
						2B	SS	--	--	--	--	--	--	--	--	14	VISUAL
		2-4-21				3A	SS	3	1	1	--	95 *	54	32	22	40	A-7-6
653.1	7.0					3B	SS	--	--	--	--	--	--	--	--	13	VISUAL
		50/0.4			Gray, HIGHLY WEATHERED TO WEATHERED SHALE Note: Encountered auger refusal at 10.0 feet, began rock coring.	4	SS	--	--	--	--	--	--	--	--	6	VISUAL
650.1	10.0				Gray SILTY SHALE, weathered, nearly horizontal laminar bedding (fissile), some vertical fractures, low strength at tested depth. Note: Fair quality rock as per RQD%. Note: U.C. Strength at 11.9 feet = 1025 psi.													
645.1	15.0				TERMINATION DEPTH = 15.0 FEET												

*SILT AND CLAY COMBINED

LOG OF BORING

Date Started 12-17-98 Sampler Type SS Dia. 2.0 inches Water Elev. ±
Date Completed 12-17-98 Casing: length Dia. 3.25 inches
Boring No. NW7-11 Station & Offset STA 75+03.13, 135.62' RT. Surface Elev. 662.10±

ELEV.	DEPTH	STD.PEN. (N)	REC. Ft.	LOSS Ft.	DESCRIPTION	SAMPLE NO.	SAMPLE TYPE	PHYSICAL CHARACTERISTICS PERCENT (%) AGG.	COAR. SAND	FINE SAND	SILT	CLAY	L.L.	P.L.	P.I.	W.C. %	ODOT CLASS
662.10	0																
661.8	0.3	3-3-5			TOPSOIL Medium stiff, gray and brown SILT AND CLAY (A-6a), trace sand, moist.	1	SS	--	--	--	--	--	--	--	--	27	VISUAL
659.1	3.0																
		2-2-2			Very loose to loose, brown to gray SANDY SILT (A-4a), trace gravel, trace clay, moist to wet. Note: Wet at 5.5 feet during drilling.	2A	SS	--	--	--	--	--	--	--	--	24	VISUAL
						2B	SS	--	--	--	--	--	--	--	--	20	VISUAL
		1-1-5				3A	SS	3	10	30	43	15	--	--	--	34	A-4a
654.6	7.5					3B	SS	--	--	--	--	--	--	--	--	14	VISUAL
652.1	10.0				Gray, HIGHLY WEATHERED TO WEATHERED SHALE Note: Encountered auger refusal at 10.0 feet, began rock coring.												
					Gray SILTY SHALE, weathered, nearly horizontal laminar bedding (fissile), some vertical fractures, medium strength at tested depth. Note: Fair quality rock as per RQD%. Note: U.C. Strength at 13.0 feet = 3211 psi.												
647.1	15.0				TERMINATION DEPTH = 15.0 FEET												

*SILT AND CLAY COMBINED

DRAWN	REVIEWED	DATE	CALCULATED	CHECKED
B.M	S.M	8/24/99	W.I.N	S.S.S

PRIME ENGINEERING & ARCHITECTURE, INC.
COLUMBUS: (614) 457-2100 AKRON: (330) 666-5432

LOG OF BORING

Date Started 12-17-98 Sampler Type SS Dia. 2.0 inches Water Elev. ±
Date Completed 12-17-98 Casing: length Dia. 3.25 inches
Boring No. NW7-12 Station & Offset STA 77+52.24, 130.51' RT. Surface Elev. 668.58±

ELEV.	DEPTH	STD.PEN. (N)	REC. Ft.	LOSS Ft.	DESCRIPTION	SAMPLE NO.	SAMPLE TYPE	PHYSICAL CHARACTERISTICS PERCENT (%) AGG.	COAR. SAND	FINE SAND	SILT	CLAY	L.L.	P.L.	P.I.	W.C. %	ODOT CLASS
668.58	0																
667.9	0.7	7-11-14			TOPSOIL Very stiff to stiff, light brown CLAY (A-7-6), trace sand, moist.	1	SS	--	--	--	--	--	--	--	--	16	VISUAL
		6-9-12				2	SS	--	--	--	--	--	--	--	--	25	VISUAL
		3-5-8				3A	SS	--	--	--	--	--	--	--	--	24	VISUAL
						3B	SS	--	--	--	--	--	--	--	--	22	VISUAL
660.6	8.0																
		3-4-5			Loose, brown to gray SANDY SILT (A-4a), some shale fragments, to wet.	4A	SS	--	--	--	--	--	--	--	--	20	VISUAL
						4B	SS	--	--	--	--	--	--	--	--	20	VISUAL
		2-2-3			Note: Wet at 10.5 feet during drilling.	5	SS	--	--	--	--	--	--	--	--	27	VISUAL
654.9	13.7	50/0.3			Gray, HIGHLY WEATHERED TO WEATHERED SHALE	6	SS	--	--	--	--	--	--	--	--	9	VISUAL
653.1	15.5				Note: Encountered auger refusal at 15.5 feet, began rock coring. Gray SILTY SHALE, weathered to slightly weathered, nearly horizontal laminar bedding (fissile), high strength at tested depth, some vertical fractures. Note: U.C. Strength at 18.4 feet = 10,144 psi. Note: Fair quality rock as per RQD%.												
648.1	20.5				TERMINATION DEPTH = 20.5 FEET												

*SILT AND CLAY COMBINED

LOG OF BORING

Date Started 12-17-98 Sampler Type SS Dia. 2.0 inches Water Elev. ±
Date Completed 12-17-98 Casing: length Dia. 3.25 inches
Boring No. NW7-13 Station & Offset STA 79+63.12, 126.99' RT. Surface Elev. 667.49±

ELEV.	DEPTH	STD.PEN. (N)	REC. Ft.	LOSS Ft.	DESCRIPTION	SAMPLE NO.	SAMPLE TYPE	PHYSICAL CHARACTERISTICS PERCENT (%) AGG.	COAR. SAND	FINE SAND	SILT	CLAY	L.L.	P.L.	P.I.	W.C. %	ODOT CLASS
667.49	0																
667.0	0.5	8-12-16			TOPSOIL Stiff, gray SANDY SILT (A-4a), little clay, moist.	1	SS	--	--	--	--	--	--	--	--	12	VISUAL
664.0	3.5	9-9-14			Very stiff, gray and brown SILTY CLAY (A-6a), little sand, moist.	2	SS	--	--	--	--	--	--	--	--	24	VISUAL
661.8	5.7	1-2-2			Very loose, gray FINE SAND (A-3), trace to no gravel, wet.	3	SS	4	4	81	--	10 *	--	--	--	31	A-3
		1-1-2				4	SS	0	2	90	--	8 *	--	--	--	38	A-3
656.0	11.5	13-35-39			Gray, HIGHLY WEATHERED TO WEATHERED SHALE	5	SS	--	--	--	--	--	--	--	--	6	VISUAL
		21-32-57				6	SS	--	--	--	--	--	--	--	--	8	VISUAL
652.0	15.5				Note: Encountered auger refusal at 15.5 feet, began rock coring. Gray SILTY SHALE, weathered to slightly weathered, nearly horizontal laminar bedding (fissile), high strength at tested depth, many vertical fractures. Note: U.C. Strength at 16.2 feet = 9501 psi. Note: Poor quality rock as per RQD%.												
647.0	20.5				TERMINATION DEPTH = 20.5 FEET												

*SILT AND CLAY COMBINED

LOG OF BORING

Date Started 12-17-98 Sampler Type SS Dia. 2.0 inches Water Elev. ±
Date Completed 12-17-98 Casing: length Dia. 3.25 inches
Boring No. NW7-14 Station & Offset STA 81+46.49, 117.08' RT. Surface Elev. 667.46±

ELEV.	DEPTH	STD.PEN. (N)	REC. Ft.	LOSS Ft.	DESCRIPTION	SAMPLE NO.	SAMPLE TYPE	PHYSICAL CHARACTERISTICS PERCENT (%) AGG.	COAR. SAND	FINE SAND	SILT	CLAY	L.L.	P.L.	P.I.	W.C. %	ODOT CLASS
667.46	0																
666.9	0.6	8-12-12			TOPSOIL Very stiff, gray and brown SANDY SILT (A-4a), little sandstone fragments, little clay, moist.	1	SS	--	--	--	--	--	--	--	--	18	VISUAL
		6-9-10				2A	SS	--	--	--	--	--	--	--	--	15	VISUAL
						2B	SS	--	--	--	--	--	--	--	--	19	VISUAL
661.5	6.0	2-1-2			Very loose, gray COARSE AND FINE SAND (A-3a), little to some silt, trace gravel, moist to wet.	3A	SS	2	2	78	--	18 *	--	--	--	21	A-3a
						3B	SS	8	3	66	--	23 *	--	--	--	24	A-3a
		1-1-1			Note: Wet at 8.0 feet during drilling.	4	SS	1	0	82	--	17 *	--	--	--	29	A-3a
656.2	11.3	40-55			Gray, HIGHLY WEATHERED TO WEATHERED SHALE	5	SS	--	--	--	--	--	--	--	--	8	VISUAL
		50/0.3			Note: Encountered auger refusal at 15.0 feet, began rock coring.	6	SS	--	--	--	--	--	--	--	--	5	VISUAL
652.5	15.0				Gray SILTY SHALE, weathered to slightly weathered, nearly horizontal laminar bedding (fissile), high strength at tested depth, some vertical fractures. Note: U.C. Strength at 18.3 feet = 5421 psi. Note: Fair quality rock as per RQD%.												
647.5	20.0				TERMINATION DEPTH = 20.0 FEET												

*SILT AND CLAY COMBINED

DRAWN	REVIEWED	DATE	CALCULATED	CHECKED
B.M	S.M	8/24/99	W.I.N	S.S.S

PRIME ENGINEERING & ARCHITECTURE, INC.
COLUMBUS: (614) 457-2100 AKRON: (330) 666-5432

LOG OF BORING

Date Started 12-15-98 Sampler Type SS Dia. 2.0 inches Water Elev. ±
Date Completed 12-15-98 Casing: length Dia. 3.25 inches
Boring No. NW7-15 Station & Offset STA 83+52.58, 113.71' RT. Surface Elev. 664.61±

ELEV.	DEPTH	STD.PEN. (N)	REC. Ft.	LOSS Ft.	DESCRIPTION	SAMPLE NO.	SAMPLE TYPE	PHYSICAL CHARACTERISTICS PERCENT (%) AGG.	COAR. SAND	FINE SAND	SILT	CLAY	L.L.	P.L.	P.I.	W.C. %	ODOT CLASS
664.61	0																
664.1	0.5	1-2-3-6			TOPSOIL	1A	SS	--	--	--	--	--	--	--	--	18	VISUAL
					Medium stiff, gray SILT AND CLAY (A-6a), little sand, little gravel, moist.	1B	SS	--	--	--	--	--	--	--	--	25	VISUAL
660.6	4.0	1-1-1			Very loose to medium dense, gray COARSE AND FINE SAND (A-3a), little silt, wet.	2A	SS	--	--	--	--	--	--	--	--	29	VISUAL
						2B	SS	--	--	--	--	--	--	--	--	34	VISUAL
		1/1.0-11				3A	SS	--	--	--	--	--	--	--	--	33	VISUAL
657.1	7.5					3B	SS	--	--	--	--	--	--	--	--	15	VISUAL
		50/0.4			Dark gray, HIGHLY WEATHERED TO WEATHERED SHALE	4	SS	--	--	--	--	--	--	--	--	9	VISUAL
654.6	10.0				Note: Encountered auger refusal at 10.0 feet, began rock coring.												
					Gray SILTY SHALE, weathered, nearly horizontal laminar bedding (fissile), many vertical fractures, medium strength at tested depth.												
					Note: Poor quality rock as per RQD%.												
					Note: U.C. Strength at 12.5 feet = 3666 psi.												
649.6	15.0				TERMINATION DEPTH = 15.0 FEET												

*SILT AND CLAY COMBINED

LOG OF BORING

Date Started 2-11-99 Sampler Type SS Dia. 2.0 inches Water Elev. ±
Date Completed 2-11-99 Casing: length Dia. 3.25 inches
Boring No. NW7-16 Station & Offset STA 85+44.22, 126.01' RT. Surface Elev. 664.64±

ELEV.	DEPTH	STD.PEN. (N)	REC. Ft.	LOSS Ft.	DESCRIPTION	SAMPLE NO.	SAMPLE TYPE	PHYSICAL CHARACTERISTICS PERCENT (%) AGG.	COAR. SAND	FINE SAND	SILT	CLAY	L.L.	P.L.	P.I.	W.C. %	ODOT CLASS
664.64	0																
663.9	0.7	1-2-4-6			TOPSOIL	1A	SS	--	--	--	--	--	--	--	--	22	VISUAL
					Medium stiff, gray SILT AND CLAY (A-6a), little sand, little gravel, moist.	1B	SS	--	--	--	--	--	--	--	--	19	VISUAL
		3-4-4				2	SS	12	6	9	--	74 *	41	28	13	27	A-6a
658.6	6.0	3-3-36			Loose, gray FINE SAND (A-3), some gravel, trace silt, wet.	3A	SS	23	6	62	--	9 *	--	--	--	22	A-3
657.1	7.5				Dark gray, HIGHLY WEATHERED TO WEATHERED SHALE	3B	SS	--	--	--	--	--	--	--	--	10	VISUAL
		63/0.5			Note: Encountered auger refusal at 10.0 feet, began rock coring.	4	SS	--	--	--	--	--	--	--	--	6	VISUAL
654.6	10.0				Gray SILTY SHALE, weathered, nearly horizontal laminar bedding (fissile), some vertical fractures, medium strength at tested depth.												
					Note: Fair quality rock as per RQD%.												
					Note: U.C. Strength at 14.5 feet = 4394 psi.												
649.6	15.0				TERMINATION DEPTH = 15.0 FEET												

*SILT AND CLAY COMBINED

LOG OF BORING

Date Started 2-11-99 Sampler Type SS Dia. 2.0 inches Water Elev. ±
Date Completed 2-11-99 Casing: length Dia. 3.25 inches
Boring No. NW7-17 Station & Offset STA 87+62.22, 143.87' RT. Surface Elev. 665.88±

ELEV.	DEPTH	STD.PEN. (N)	REC. Ft.	LOSS Ft.	DESCRIPTION	SAMPLE NO.	SAMPLE TYPE	PHYSICAL CHARACTERISTICS PERCENT (%) AGG.	COAR. SAND	FINE SAND	SILT	CLAY	L.L.	P.L.	P.I.	W.C. %	ODOT CLASS
665.88	0																
665.6	0.3	1-1-2-5			TOPSOIL	1A	SS	--	--	--	--	--	--	--	--	34	VISUAL
					Soft to medium stiff, gray SILTY CLAY (A-6b), little sand, moist.	1B	SS	--	--	--	--	--	--	--	--	19	VISUAL
		2-3-4				2	SS	--	--	--	--	--	--	--	--	27	VISUAL
659.9	6.0	1-2-36			Very loose, gray COARSE AND FINE SAND (A-3a), some silt, wet.	3A	SS	0	0	76	--	23 *	--	--	--	34	A-3a
658.4	7.5				Gray, HIGHLY WEATHERED TO WEATHERED SHALE	3B	SS	--	--	--	--	--	--	--	--	7	VISUAL
		50/0.3			Note: Encountered auger refusal at 10.0 feet, began rock coring.	4	SS	--	--	--	--	--	--	--	--	6	VISUAL
655.9	10.0				Gray SILTY SHALE, weathered, nearly horizontal laminar bedding (fissile), some vertical fractures, medium strength at tested depth.												
					Note: Fair quality rock as per RQD%.												
					Note: U.C. Strength at 14.4 feet = 7768 psi.												
650.9	15.0				TERMINATION DEPTH = 15.0 FEET												

*SILT AND CLAY COMBINED

DRAWN	REVIEWED	DATE	CALCULATED	CHECKED
B.M	S.M	8/24/99	W.I.N	S.S.S

PRIME ENGINEERING & ARCHITECTURE, INC.
COLUMBUS: (614) 457-2100 AKRON: (330) 666-5432

LOG OF BORING

Date Started 2-11-98 Sampler Type SS Dia. 2.0 inches Water Elev. ±
Date Completed 2-11-98 Casing: length Dia. 3.25 inches
Boring No. NW7-18 Station & Offset STA 89+92.15, 141.57' RT. Surface Elev. 663.50±

ELEV.	DEPTH	STD.PEN. (N)	REC. Ft.	LOSS Ft.	DESCRIPTION	SAMPLE NO.	SAMPLE TYPE	PHYSICAL CHARACTERISTICS PERCENT (%) AGG.	COAR. SAND	FINE SAND	SILT	CLAY	L.L.	P.L.	P.I.	W.C. %	ODOT CLASS
663.50	0																
663.1	0.4	1-1-3-5			TOPSOIL	1A	SS	--	--	--	--	--	--	--	--	21	VISUAL
					Soft, gray SILT AND CLAY (A-6b), some sand, trace gravel, moist.	1B	SS	--	--	--	--	--	--	--	--	21	VISUAL
660.0	3.5	27-50			Dark gray, HIGHLY WEATHERED TO WEATHERED SHALE some to no iron staining	2A	SS	--	--	--	--	--	--	--	--	8	VISUAL
658.5	5.0				Note: Encountered auger refusal at 5.0 feet/ began rock coring.	2B	SS	--	--	--	--	--	--	--	--	8	VISUAL
					Gray SILTY SHALE, weathered, nearly horizontal laminar bedding (fissile), medium strength at tested depth.												
					Note: Good quality rock as per RQD%.												
					Note: U.C. Strength at 8.3 feet = 3840 psi.												
653.5	10.0				TERMINATION DEPTH = 10.0 FEET												

*SILT AND CLAY COMBINED

LOG OF BORING

Date Started 2-11-98 Sampler Type SS Dia. 2.0 inches Water Elev. ±
Date Completed 2-11-98 Casing: length Dia. 3.25 inches
Boring No. NW7-19 Station & Offset STA 91+87.21, 134.16' RT. Surface Elev. 663.49±

ELEV.	DEPTH	STD.PEN. (N)	REC. Ft.	LOSS Ft.	DESCRIPTION	SAMPLE NO.	SAMPLE TYPE	PHYSICAL CHARACTERISTICS PERCENT (%) AGG.	COAR. SAND	FINE SAND	SILT	CLAY	L.L.	P.L.	P.I.	W.C. %	ODOT CLASS
663.49	0																
663.0	0.5	1-2-3-4			TOPSOIL	1A	SS	--	--	--	--	--	--	--	--	23	VISUAL
					Medium stiff, gray SILT AND CLAY (A-6b), some sand, trace gravel, moist.	1B	SS	4	10	19	--	67 *	35	20	15	21	A-6a
659.9	3.6	17-65			Dark gray, HIGHLY WEATHERED TO WEATHERED SHALE some to no iron staining	2	SS	--	--	--	--	--	--	--	--	9	VISUAL
658.5	5.0				Note: Encountered auger refusal at 5.0 feet/ began rock coring.												
					Gray SILTY SHALE, weathered to slightly weathered, nearly horizontal laminar bedding (fissile), very low to medium strength at tested depths.												
					Note: Good quality rock as per RQD%.												
653.5	10.0				Note: U.C. Strength at 5.8 feet = 251 psi.												
					Note: U.C. Strength at 8.7 feet = 4014 psi.												
					TERMINATION DEPTH = 10.0 FEET												

*SILT AND CLAY COMBINED

LOG OF BORING

Date Started 2-16-98 Sampler Type SS Dia. 2.0 inches Water Elev. ±
Date Completed 2-16-98 Casing: length Dia. 3.25 inches
Boring No. NW7-20 Station & Offset STA 94+13.72, 127.99' RT. Surface Elev. 663.88±

ELEV.	DEPTH	STD.PEN. (N)	REC. Ft.	LOSS Ft.	DESCRIPTION	SAMPLE NO.	SAMPLE TYPE	PHYSICAL CHARACTERISTICS PERCENT (%) AGG.	COAR. SAND	FINE SAND	SILT	CLAY	L.L.	P.L.	P.I.	W.C. %	ODOT CLASS
663.88	0																
663.2	0.7	1-1-2-3			TOPSOIL	1A	SS	--	--	--	--	--	--	--	--	31	VISUAL
					Soft, gray SILT AND CLAY (A-6b), little sand, moist.	1B	SS	--	--	--	--	--	--	--	--	24	VISUAL
660.4	3.5	50/0.5			Gray, HIGHLY WEATHERED TO WEATHERED SHALE	2	SS	--	--	--	--	--	--	--	--	6	VISUAL
658.9	5.0				Note: Encountered auger refusal at 5.0 feet/ began rock coring.												
					Gray SILTY SHALE, weathered to slightly weathered, nearly horizontal laminar bedding (fissile), low strength at tested depth.												
					Note: Good quality rock as per RQD%.												
					Note: U.C. Strength at 6.3 feet = 1470 psi.												
653.9	10.0				TERMINATION DEPTH = 10.0 FEET												

*SILT AND CLAY COMBINED

LOG OF BORING

Date Started 2-11-98 Sampler Type SS Dia. 2.0 inches Water Elev. ±
Date Completed 2-11-98 Casing: length Dia. 3.25 inches
Boring No. NW7-21 Station & Offset STA 96+17.93, 121.86' RT. Surface Elev. 664.34±

ELEV.	DEPTH	STD.PEN. (N)	REC. Ft.	LOSS Ft.	DESCRIPTION	SAMPLE NO.	SAMPLE TYPE	PHYSICAL CHARACTERISTICS PERCENT (%) AGG.	COAR. SAND	FINE SAND	SILT	CLAY	L.L.	P.L.	P.I.	W.C. %	ODOT CLASS
664.34	0																
663.7	0.6	1-1-2-2			TOPSOIL	1A	SS	--	--	--	--	--	--	--	--	26	VISUAL
					Soft, gray SILT AND CLAY (A-6a), little sand, moist.	1B	SS	--	--	--	--	--	--	--	--	23	VISUAL
660.3	4.0	5-45-50/0.2			Gray, DECOMPOSED TO HIGHLY WEATHERED SHALE, some iron staining.	2A	SS	--	--	--	--	--	--	--	--	19	VISUAL
658.8	5.5				Note: Encountered auger refusal at 5.5 feet, began rock coring.	2B	SS	--	--	--	--	--	--	--	--	7	VISUAL
					Gray SILTY SHALE, highly to slightly weathered, nearly horizontal laminar bedding (fissile), low strength at tested depth.												
					Note: Fair quality rock as per RQD%.												
					Note: U.C. Strength at 5.8 feet = 1093 psi.												
653.8	10.5				TERMINATION DEPTH = 10.5 FEET												

*SILT AND CLAY COMBINED

LOG OF BORING

Date Started 2-12-98 Sampler Type SS Dia. 2.0 inches Water Elev. ±
Date Completed 2-12-98 Casing: length Dia. 3.25 inches
Boring No. NW7-22 Station & Offset STA 98+06.44, 121.14' RT. Surface Elev. 664.99±

ELEV.	DEPTH	STD.PEN. (N)	REC. Ft.	LOSS Ft.	DESCRIPTION	SAMPLE NO.	SAMPLE TYPE	PHYSICAL CHARACTERISTICS PERCENT (%) AGG.	COAR. SAND	FINE SAND	SILT	CLAY	L.L.	P.L.	P.I.	W.C. %	ODOT CLASS
664.99	0																
664.6	0.4	1/1.0-2-2			TOPSOIL	1A	SS	--	--	--	--	--	--	--	--	28	VISUAL
664.0	1.0				Soft, gray SILT AND CLAY (A-6a), little sand, moist.	1B	SS	--	--	--	--	--	--	--	--	22	VISUAL
		2-8-38			Medium stiff, light brown SANDY SILT (A-4a), little to some clay, moist.	2A	SS	0	2	33	--	66 *	25	16	9	21	A-4a
660.6	4.4				Gray, HIGHLY WEATHERED TO WEATHERED SHALE, some iron staining.	2B	SS	--	--	--	--	--	--	--	--	10	VISUAL
659.5	5.5				Note: Encountered auger refusal at 5.5 feet, began rock coring.												
					Gray SILTY SHALE, weathered, nearly horizontal laminar bedding (fissile), medium strength at tested depth.												
					Note: Fair quality rock as per RQD%.												
					Note: U.C. Strength at 7.7 feet = 4848 psi.												
654.5	10.5				TERMINATION DEPTH = 10.5 FEET												

*SILT AND CLAY COMBINED

LOG OF BORING

Date Started 2-12-98 Sampler Type SS Dia. 2.0 inches Water Elev. ±
Date Completed 2-12-98 Casing: length Dia. 3.25 inches
Boring No. NW7-23 Station & Offset STA 100+29.00, 125.97' RT. Surface Elev. 667.36±

ELEV.	DEPTH	STD.PEN. (N)	REC. Ft.	LOSS Ft.	DESCRIPTION	SAMPLE NO.	SAMPLE TYPE	PHYSICAL CHARACTERISTICS PERCENT (%) AGG.	COAR. SAND	FINE SAND	SILT	CLAY	L.L.	P.L.	P.I.	W.C. %	ODOT CLASS
667.36	0																
666.8	0.6	1-1-2-4			TOPSOIL	1A	SS	--	--	--	--	--	--	--	--	18	VISUAL
					Soft, gray SILT AND CLAY (A-6a), little sand, moist.	1B	SS	--	--	--	--	--	--	--	--	25	VISUAL
664.7	2.7				Medium dense, gray SANDY SILT (A-4a), trace gravel, trace clay, moist.												
663.4	4.0	3-7-15			Medium dense, gray COARSE AND FINE SAND (A-3a), some silt, trace gravel, moist.	2A	SS	--	--	--	--	--	--	--	--	29	VISUAL
						2B	SS	--	--	--	--	--	--	--	--	34	VISUAL
661.4	6.0	50/0.3			Gray, HIGHLY WEATHERED TO WEATHERED SHALE, some iron staining.	3	SS	1	2	76	--	20 *	--	--	--	33	A-3a
					Note: Encountered auger refusal at 8.5 feet, began rock coring.												
658.9	8.5				Gray SILTY SHALE, weathered, nearly horizontal laminar bedding (fissile), some vertical fractures, medium strength at tested depth.												
					Note: Poor quality rock as per RQD%.												
					Note: U.C. Strength at 10.6 feet = 4194 psi.												
653.9	13.5				TERMINATION DEPTH = 13.5 FEET												

*SILT AND CLAY COMBINED

LOG OF BORING

Date Started 2-16-98 Sampler Type SS Dia. 2.0 inches Water Elev. ±
Date Completed 2-16-98 Casing: length Dia. 3.25 inches
Boring No. NW7-24 Station & Offset STA 102+11.20, 131.33' RT. Surface Elev. 668.94±

ELEV.	DEPTH	STD.PEN. (N)	REC. Ft.	LOSS Ft.	DESCRIPTION	SAMPLE NO.	SAMPLE TYPE	PHYSICAL CHARACTERISTICS PERCENT (%) AGG.	COAR. SAND	FINE SAND	SILT	CLAY	L.L.	P.L.	P.I.	W.C. %	ODOT CLASS
668.94	0																
668.2	0.7	1-1-1-3			TOPSOIL.	1A	SS	--	--	--	--	--	--	--	--	29	VISUAL
					Very soft to very stiff, gray and brown SILT AND CLAY (A-6a), little sand, moist.	1B	SS	--	--	--	--	--	--	--	--	22	VISUAL
		4-7-9				2	SS	--	--	--	--	--	--	--	--	23	VISUAL
663.1	5.8	50/0.3			Gray, HIGHLY WEATHERED TO WEATHERED SHALE	3	SS	--	--	--	--	--	--	--	--	4	VISUAL
		50/0.3				4	SS	--	--	--	--	--	--	--	--	11	VISUAL
658.9	10.0				Note: Encountered auger refusal at 10.0 feet, began rock coring.												
					Gray SILTY SHALE, weathered to slightly weathered, nearly horizontal laminar bedding (fissile), high strength at tested depth.												
					Note: Good quality rock as per RQD%.												
					Note: U.C. Strength at 11.3 feet = 12,143 psi.												
653.9	15.0				TERMINATION DEPTH = 15.0 FEET												

*SILT AND CLAY COMBINED

LOG OF BORING

Date Started 2-12-98 Sampler Type SS Dia. 2.0 inches Water Elev. ±
Date Completed 2-12-98 Casing: length Dia. 3.25 inches
Boring No. NW7-25 Station & Offset STA 104+53.40, 125.77' RT. Surface Elev. 669.72±

ELEV.	DEPTH	STD.PEN. (N)	REC. Ft.	LOSS Ft.	DESCRIPTION	SAMPLE NO.	SAMPLE TYPE	PHYSICAL CHARACTERISTICS PERCENT (%) AGG.	COAR. SAND	FINE SAND	SILT	CLAY	L.L.	P.L.	P.I.	W.C. %	ODOT CLASS
669.72	0																
		1-1-3-3			TOPSOIL.	1A	SS	--	--	--	--	--	--	--	--	19	VISUAL
668.7	1.0				Very loose to medium dense, gray and brown SANDY SILT (A-4a), trace gravel, moist.	1B	SS	--	--	--	--	--	--	--	--	21	VISUAL
		4-7-10				2	SS	--	--	--	--	--	--	--	--	15	VISUAL
663.7	6.0	30-50/0.2			Dark gray, HIGHLY WEATHERED TO WEATHERED SHALE	3	SS	--	--	--	--	--	--	--	--	17	VISUAL
661.7	8.0				Note: Encountered auger refusal at 8.0 feet, began rock coring.												
					Gray SILTY SHALE, weathered, nearly horizontal laminar bedding (fissile), medium strength at tested depth.												
					Note: Good quality rock as per RQD%.												
					Note: U.C. Strength at 12.5 feet = 4671 psi.												
656.7	13.0				TERMINATION DEPTH = 13.0 FEET												

*SILT AND CLAY COMBINED

LOG OF BORING

Date Started 2-16-98 Sampler Type SS Dia. 2.0 inches Water Elev. ±
Date Completed 2-16-98 Casing: length Dia. 3.25 inches
Boring No. NW7-26 Station & Offset STA 105+85.97, 123.54' RT. Surface Elev. 672.88±

ELEV.	DEPTH	STD.PEN. (N)	REC. Ft.	LOSS Ft.	DESCRIPTION	SAMPLE NO.	SAMPLE TYPE	PHYSICAL CHARACTERISTICS PERCENT (%) AGG.	COAR. SAND	FINE SAND	SILT	CLAY	L.L.	P.L.	P.I.	W.C. %	ODOT CLASS
672.88	0																
672.6	0.3	1-1-6-6			TOPSOIL.	1A	SS	--	--	--	--	--	--	--	--	27	VISUAL
					Medium stiff to stiff, gray and brown SILT AND CLAY (A-6a), little sand, no to trace gravel, moist.	1B	SS	--	--	--	--	--	--	--	--	17	VISUAL
		2-5-9				2A	SS	--	--	--	--	--	--	--	--	26	VISUAL
						2B	SS	--	--	--	--	--	--	--	--	21	VISUAL
		12-25-45				3A	SS	7	4	2	--	87 *	40	25	15	21	A-6a
665.9	7.0				Gray, HIGHLY WEATHERED TO WEATHERED SHALE	3B	SS	--	--	--	--	--	--	--	--	11	VISUAL
		50/0.4				4	SS	--	--	--	--	--	--	--	--	7	VISUAL
662.9	10.0				Note: Encountered auger refusal at 10.0 feet, began rock coring.												
					Gray SILTY SHALE, weathered, nearly horizontal laminar bedding (fissile), some vertical fractures, medium strength at tested depth.												
					Note: Poor quality rock as per RQD%.												
					Note: U.C. Strength at 13.9 feet = 2558 psi.												
657.9	15.0				TERMINATION DEPTH = 15.0 FEET												

*SILT AND CLAY COMBINED

DRAWN	REVIEWED	DATE	CALCULATED	CHECKED
B.M	S.M	8/24/99	W.I.N	S.S.S

PRIME ENGINEERING & ARCHITECTURE, INC.
COLUMBUS: (614) 457-2100 AKRON: (330) 666-5432

LOG OF BORING

Date Started 2-17-98 Sampler Type SS Dia. 2.0 inches Water Elev. ±
Date Completed 2-17-98 Casing: length Dia. 3.25 inches
Boring No. NW11-1 Station & Offset STA 171+46.95, 121.94' RT. Surface Elev. 655.74±

ELEV.	DEPTH	STD.PEN. (N)	REC. Ft.	LOSS Ft.	DESCRIPTION	SAMPLE NO.	SAMPLE TYPE	PHYSICAL CHARACTERISTICS PERCENT (%) AGG.	COAR. SAND	FINE SAND	SILT	CLAY	L.L.	P.L.	P.I.	W.C. %	ODOT CLASS
655.74	0																
655.2	0.5	1-1-4-4			TOPSOIL.	1A	SS	--	--	--	--	--	--	--	--	35	VISUAL
					Medium stiff, gray and brown SILTY CLAY (A-6b), little sand, moist.	1B	SS	--	--	--	--	--	--	--	--	31	VISUAL
651.5	4.2	2-10-32			Gray, HIGHLY WEATHERED TO WEATHERED SHALE, some iron staining.	2A	SS	--	--	--	--	--	--	--	--	28	VISUAL
						2B	SS	--	--	--	--	--	--	--	--	11	VISUAL
		50/0.4				3	SS	--	--	--	--	--	--	--	--	5	VISUAL
646.7	9.0				Note: Encountered auger refusal at 9.0 feet, began rock coring. Gray SILTY SHALE, weathered, nearly horizontal laminar bedding (fissile), medium strength at tested depth. Note: Good quality rock as per RQD%. Note: U.C. Strength at 11.2 feet = 3057 psi.												
641.7	14.0				TERMINATION DEPTH = 14.0 FEET												

*SILT AND CLAY COMBINED

LOG OF BORING

Date Started 2-17-98 Sampler Type SS Dia. 2.0 inches Water Elev. ±
Date Completed 2-17-98 Casing: length Dia. 3.25 inches
Boring No. NW11-2 Station & Offset STA 173+49.59, 117.86' RT. Surface Elev. 657.61±

ELEV.	DEPTH	STD.PEN. (N)	REC. Ft.	LOSS Ft.	DESCRIPTION	SAMPLE NO.	SAMPLE TYPE	PHYSICAL CHARACTERISTICS PERCENT (%) AGG.	COAR. SAND	FINE SAND	SILT	CLAY	L.L.	P.L.	P.I.	W.C. %	ODOT CLASS
657.61	0																
657.1	0.5	1-2-4-5			TOPSOIL.	1A	SS	--	--	--	--	--	--	--	--	31	VISUAL
					Medium stiff, gray and brown SILTY CLAY (A-6b), little sand, moist.	1B	SS	--	--	--	--	--	--	--	--	27	VISUAL
654.1	3.5	19-29-50/0.4			Gray, HIGHLY WEATHERED TO WEATHERED SHALE, some iron staining.	2A	SS	--	--	--	--	--	--	--	--	10	VISUAL
652.1	5.5				Note: Encountered auger refusal at 5.5 feet, began rock coring.	2B	SS	--	--	--	--	--	--	--	--	9	VISUAL
647.1	10.5				Gray SILTY SHALE, weathered, nearly horizontal laminar bedding (fissile), medium strength at tested depth. Note: Fair quality rock as per RQD%. Note: U.C. Strength at 8.8 feet = 3489 psi. TERMINATION DEPTH = 10.5 FEET												

*SILT AND CLAY COMBINED

LOG OF BORING

Date Started 2-17-98 Sampler Type SS Dia. 2.0 inches Water Elev. ±
Date Completed 2-17-98 Casing: length Dia. 3.25 inches
Boring No. NW11-3 Station & Offset STA 175+69.58, 137.70' RT. Surface Elev. 657.13

ELEV.	DEPTH	STD.PEN. (N)	REC. Ft.	LOSS Ft.	DESCRIPTION	SAMPLE NO.	SAMPLE TYPE	PHYSICAL CHARACTERISTICS PERCENT (%) AGG.	COAR. SAND	FINE SAND	SILT	CLAY	L.L.	P.L.	P.I.	W.C. %	ODOT CLASS
657.13	0																
656.6	0.5	1-3-4-7			TOPSOIL.	1A	SS	--	--	--	--	--	--	--	--	39	VISUAL
					Medium stiff, gray and brown SILTY CLAY (A-6b), little sand, moist.	1B	SS	--	--	--	--	--	--	--	--	29	VISUAL
652.8	4.3	13-26-50/0.3			Gray, HIGHLY WEATHERED TO WEATHERED SHALE, some iron staining.	2A	SS	--	--	--	--	--	--	--	--	13	VISUAL
						2B	SS	--	--	--	--	--	--	--	--	9	VISUAL
		50/0.5				3	SS	--	--	--	--	--	--	--	--	5	VISUAL
648.1	9.0				Note: Encountered auger refusal at 9.0 feet, began rock coring. Gray SILTY SHALE, weathered, nearly horizontal laminar bedding (fissile), medium strength at tested depth. Note: Fair quality rock as per RQD%. Note: U.C. Strength at 13.2 feet = 5140 psi.												
643.1	14.0				TERMINATION DEPTH = 14.0 FEET												

*SILT AND CLAY COMBINED

LOG OF BORING

Date Started 2-18-98 Sampler Type SS Dia. 2.0 inches Water Elev. ±
Date Completed 2-18-98 Casing: length Dia. 3.25 inches
Boring No. NW11-4 Station & Offset STA 177+66.05, 162.61' RT. Surface Elev. 657.48±

ELEV.	DEPTH	STD.PEN. (N)	REC. Ft.	LOSS Ft.	DESCRIPTION	SAMPLE NO.	SAMPLE TYPE	PHYSICAL CHARACTERISTICS PERCENT (%) AGG.	COAR. SAND	FINE SAND	SILT	CLAY	L.L.	P.L.	P.I.	W.C. %	ODOT CLASS
657.48	0																
657.1	0.4	2-3-5-8			TOPSOIL.	1A	SS	--	--	--	--	--	--	--	--	37	VISUAL
					Medium stiff to stiff, gray and brown SILTY CLAY (A-6b), little sand, moist.	1B	SS	--	--	--	--	--	--	--	--	30	VISUAL
		2-7-19				2A	SS	--	--	--	--	--	--	--	--	33	VISUAL
652.5	5.0				Dark gray to gray, HIGHLY WEATHERED TO WEATHERED SHALE some to no iron staining.	2B	SS	--	--	--	--	--	--	--	--	14	VISUAL
		24-50/0.5				3	SS	--	--	--	--	--	--	--	--	7	VISUAL
		58/0.5				4	SS	--	--	--	--	--	--	--	--	6	VISUAL
647.5	10.0				Note: Encountered auger refusal at 10.0 feet, began rock coring. Gray SILTY SHALE, weathered, nearly horizontal laminar bedding (fissile), medium strength at tested depth. Note: Fair quality rock as per RQD%. Note: U.C. Strength at 12.7 feet = 3925 psi.												
642.5	15.0				TERMINATION DEPTH = 15.0 FEET												

*SILT AND CLAY COMBINED

DRAWN	REVIEWED	DATE	CALCULATED	CHECKED
B.M	S.M	8/24/99	W.I.N	S.S.S

PRIME ENGINEERING & ARCHITECTURE, INC.
COLUMBUS: (614) 457-2100 AKRON: (330) 666-5432

LOG OF BORING

Date Started 2-18-98 Sampler Type SS Dia. 2.0 inches Water Elev. ±
Date Completed 2-18-98 Casing: length Dia. 3.25 inches
Boring No. NW11-5 Station & Offset STA 179+43.49, 252.15' RT. Surface Elev. 659.06±

ELEV.	DEPTH	STD.PEN. (N)	REC. Ft.	LOSS Ft.	DESCRIPTION	SAMPLE NO.	SAMPLE TYPE	PHYSICAL CHARACTERISTICS PERCENT (%) AGG.	COAR. SAND	FINE SAND	SILT	CLAY	L.L.	P.L.	P.I.	W.C. %	ODOT CLASS
659.06	0																
658.6	0.5	1-1-3-1			TOPSOIL.	1A	SS	--	--	--	--	--	--	--	--	35	VISUAL
					Soft to stiff, gray and brown SILTY CLAY (A-6b), little sand, moist.	1B	SS	--	--	--	--	--	--	--	--	24	VISUAL
		3-5-7				2A	SS	--	--	--	--	--	--	--	--	23	VISUAL
						2B	SS	--	--	--	--	--	--	--	--	26	VISUAL
653.6	5.5				Dark gray to gray, HIGHLY WEATHERED TO WEATHERED SHALE some to no iron staining.												
		14-50/0.4				3	SS	--	--	--	--	--	--	--	--	10	VISUAL
		50/0.4			Note: Encountered auger refusal at 10.0 feet, began rock coring.	4	SS	--	--	--	--	--	--	--	--	6	VISUAL
649.1	10.0				Gray SILTY SHALE, weathered, nearly horizontal laminar bedding (fissile), medium strength at tested depth.												
					Note: Fair quality rock as per RQD%.												
					Note: U.C. Strength at 12.0 feet = 2705 psi.												
644.1	15.0				TERMINATION DEPTH = 15.0 FEET												

*SILT AND CLAY COMBINED

LOG OF BORING

Date Started 2-18-98 Sampler Type SS Dia. 2.0 inches Water Elev. ±
Date Completed 2-18-98 Casing: length Dia. 3.25 inches
Boring No. NW11-6 Station & Offset STA 180+50.03, 352.65' RT. Surface Elev. 660.95±

ELEV.	DEPTH	STD.PEN. (N)	REC. Ft.	LOSS Ft.	DESCRIPTION	SAMPLE NO.	SAMPLE TYPE	PHYSICAL CHARACTERISTICS PERCENT (%) AGG.	COAR. SAND	FINE SAND	SILT	CLAY	L.L.	P.L.	P.I.	W.C. %	ODOT CLASS
660.95	0																
660.2	0.8	1-3-5-7			TOPSOIL.	1A	SS	--	--	--	--	--	--	--	--	28	VISUAL
					Medium stiff to stiff, gray and brown SILTY CLAY (A-6b), little sand, moist.	1B	SS	0	4	6	--	91 *	--	--	--	23	A-6b
		3-6-11				2A	SS	--	--	--	--	--	--	--	--	21	VISUAL
						2B	SS	--	--	--	--	--	--	--	--	21	VISUAL
655.7	5.3				Dark gray to gray, HIGHLY WEATHERED TO WEATHERED SHALE some to no iron staining.												
		28-50/0.3				3	SS	--	--	--	--	--	--	--	--	14	VISUAL
		50/0.4				4	SS	--	--	--	--	--	--	--	--	4	VISUAL
650.5	10.5				Note: Encountered auger refusal at 10.5 feet, began rock coring.												
					Gray SILTY SHALE, weathered, nearly horizontal laminar bedding (fissile), medium strength at tested depth.												
					Note: Fair quality rock as per RQD%.												
					Note: U.C. Strength at 14.4 feet = 2469 psi.												
646.0	15.0				TERMINATION DEPTH = 15.0 FEET												

*SILT AND CLAY COMBINED

LOG OF BORING

Date Started 11-30-98 Sampler Type SS Dia. 2.0 inches Water Elev. ±
Date Completed 11-30-98 Casing: length Dia. 3.25 inches
Boring No. BS-1 Station & Offset STA 23+58.179, 24.925' RT. Surface Elev. 665.75±

ELEV.	DEPTH	STD.PEN. (N)	REC. Ft.	LOSS Ft.	DESCRIPTION	SAMPLE NO.	SAMPLE TYPE	PHYSICAL CHARACTERISTICS PERCENT (%) AGG.	COAR. SAND	FINE SAND	SILT	CLAY	L.L.	P.L.	P.I.	W.C. %	ODOT CLASS
665.75	0																
665.2	0.5	10-16-25			TOPSOIL. Dense to loose, black and brown, decomposed to highly weathered SHALE FRAGMENTS, moist. (embankment fill)	1	SS	58	18	12	--	12 *	--	--	--	8	A-1-a
		7-8-16				2	SS	--	--	--	--	--	--	--	--	9	VISUAL
		6-9-21			Note: Little sandstone fragments from 6.0 to 9.0 feet.	3	SS	--	--	--	--	--	--	--	--	12	VISUAL
		4-5-5				4A	SS	--	--	--	--	--	--	--	--	13	VISUAL
						4B	SS	--	--	--	--	--	--	--	--	11	VISUAL
655.7	10.0	2-3-3			Loose to very dense, gray SHALE FRAGMENTS AND SANDY SILT(A-2-4), little clay, moist to wet. (embankment fill)	5	SS	--	--	--	--	--	--	--	--	16	VISUAL
		4-4-9			Note: Some sandstone fragments from 13.5 to 19.5 feet.	6	SS	--	--	--	--	--	--	--	--	12	VISUAL
		19-18-17				7	SS	--	--	--	--	--	--	--	--	11	VISUAL
		13-12-50/0.3			Note: Wet during drilling at 18.5 feet.	8	SS	46	8	14	--	32 *	--	--	--	17	A-2-4
646.2	19.5																
645.2	20.5	6-16-20			Very dense, light gray SANDSTONE COBBLES. (bottom of embankment) Hard, light brown CLAY (A-7-6), trace sand, moist.	9	SS	0	0	1	--	99 *	49	28	21	28	A-7-6
642.2	23.5	9-11-33				10A	SS	--	--	--	--	--	--	--	--	10	VISUAL
641.3	24.4				Very soft, black DECOMPOSED SHALE, trace silt and clay, moist.	10B	SS	--	--	--	--	--	--	--	--	16	VISUAL
		26-25-50/0.4			Black SILTY SHALE, highly weathered to fresh, horizontal laminar bedding (fissile), medium strength at tested depth.	11	SS	--	--	--	--	--	--	--	--	9	VISUAL
		50/0.3			Note: Highly weathered to 28.5 feet. Weathered to 33.0 feet.	12	SS	--	--	--	--	--	--	--	--	4	VISUAL
					Note: Began coring at 33.0 feet. Very few diagonal fractures throughout core sample. Excellent quality rock as per RQD%.												
					Note: U.C. Strength at 36.0 feet = 4693 psi												
627.7	38.0				TERMINATION DEPTH = 38.0 FEET												

*SILT AND CLAY COMBINED

LOG OF BORING

Date Started 12-3-98 Sampler Type SS Dia. 2.0 inches Water Elev. ±
Date Completed 12-3-98 Casing: length Dia. 3.25 inches
Boring No. BS-2 Station & Offset STA 24+17.198, 29.240' LT. Surface Elev. 646.01±

ELEV.	DEPTH	STD.PEN. (N)	REC. Ft.	LOSS Ft.	DESCRIPTION	SAMPLE NO.	SAMPLE TYPE	PHYSICAL CHARACTERISTICS PERCENT (%) AGG.	COAR. SAND	FINE SAND	SILT	CLAY	L.L.	P.L.	P.I.	W.C. %	ODOT CLASS
646.01	0																
645.6	0.4	11-11-8			TOPSOIL. Medium dense, black and gray DECOMPOSED TO HIGHLY WEATHERED SHALE FRAGMENTS WITH CLAY, moist.	1	SS	--	--	--	--	--	--	--	--	8	VISUAL
		3-4-9				2	SS	--	--	--	--	--	--	--	--	20	VISUAL
641.2	4.8																
639.5	6.5	38-50/0.4			Very soft, black DECOMPOSED TO HIGHLY WEATHERED SHALE moist.	3	SS	--	--	--	--	--	--	--	--	11	VISUAL
					Black SILTY SHALE, highly to slightly weathered, horizontal laminar bedding (fissile), medium strength at tested depth. Note: Began coring at 8.5 feet. Very few diagonal fractures throughout core sample. Good quality rock as per RQD%.												
					Note: U.C. Strength at 17.3 feet = 2482 psi.												
627.5	18.5				TERMINATION DEPTH = 18.5 FEET												

*SILT AND CLAY COMBINED

STRUCTURAL FOUNDATION INVESTIGATION
CUY-90-0045 OVER BRADLEY ROAD

DRAWN	REVIEWED	DATE	CALCULATED	CHECKED
B.M	S.M	8/24/99	W.I.N	S.S.S

PRIME ENGINEERING & ARCHITECTURE, INC.
COLUMBUS: (614) 457-2100 AKRON: (330) 666-5432

LOG OF BORING

Date Started 12-2-98 Sampler Type SS Dia. 2.0 inches Water Elev. ±
Date Completed 12-2-98 Casing: length Dia. 3.25 inches
Boring No. BS-3 Station & Offset STA 24+79.515, 28.870' RT. Surface Elev. 646.06±

ELEV.	DEPTH	STD.PEN. (N)	REC. Ft.	LOSS Ft.	DESCRIPTION	SAMPLE NO.	SAMPLE TYPE	PHYSICAL CHARACTERISTICS PERCENT (%) AGG.	COAR. SAND	FINE SAND	SILT	CLAY	L.L.	P.L.	P.I.	W.C. %	ODOT CLASS
646.06	0																
645.7	0.4				TOPSOIL												
		9-12-6			Medium dense, gray STONE FRAGMENTS WITH SAND AND SILT (A-2-4), moist. (fill)	1	SS	--	--	--	--	--	--	--	--	13	VISUAL
643.1	3.0	8-22-13			Dense, gray and black SLAG WITH DECOMPOSED SHALE moist. (fill)	2	SS	--	--	--	--	--	--	--	--	20	VISUAL
640.6	5.5	41-50/0.3			Black SILTY SHALE, highly weathered to slightly weathered, horizontal laminar bedding (fissile), medium strength at tested depths.	3	SS	--	--	--	--	--	--	--	--	12	VISUAL
		50/0.3				4	SS	--	--	--	--	--	--	--	--	19	VISUAL
					Note: Began coring at 9.0 feet. Few diagonal fractures throughout core sample. Good quality rock as per RQD%.												
					Note: One inch thick highly weathered to decomposed seam at 9.9 feet.												
					Note: U.C. Strength at 12.0 feet = 2065 psi.												
					Note: U.C. Strength at 16.0 feet = 2398 psi.												
627.1	19.0				TERMINATION DEPTH = 19.0 FEET												

*SILT AND CLAY COMBINED

LOG OF BORING

Date Started 12-1-98 Sampler Type SS Dia. 2.0 inches Water Elev. ±
Date Completed 12-1-98 Casing: length Dia. 3.25 inches
Boring No. BS-4 Station & Offset STA 25+37.879, 27.373' LT. Surface Elev. 664.89±

ELEV.	DEPTH	STD.PEN. (N)	REC. Ft.	LOSS Ft.	DESCRIPTION	SAMPLE NO.	SAMPLE TYPE	PHYSICAL CHARACTERISTICS PERCENT (%) AGG.	COAR. SAND	FINE SAND	SILT	CLAY	L.L.	P.L.	P.I.	W.C. %	ODOT CLASS
664.89	0																
664.3	0.6	14-20-31			TOPSOIL Dense, brown COARSE AND FINE SAND (A-3a), some shale fragments, little silt and clay, moist. (embankment fill)	1	SS	37	12	27	--	24 *	--	--	--	10	A-3a
661.9	3.0	6-6-10			Medium dense to very dense, black and gray SHALE FRAGMENTS WITH CLAY little to some sand, moist. (embankment fill)	2	SS	--	--	--	--	--	--	--	--	12	VISUAL
		20-19-38				3	SS	--	--	--	--	--	--	--	--	9	VISUAL
		6-14-30				4	SS	--	--	--	--	--	--	--	--	12	VISUAL
		14-13-21				5	SS	--	--	--	--	--	--	--	--	11	VISUAL
		12-50/0.3				6	SS	--	--	--	--	--	--	--	--	9	VISUAL
650.9	14.0				Very dense, light gray SANDSTONE COBBLES, (fill)												
649.8	15.1																
648.9	16.0	1-3-6			Loose, gray SANDY SILT (A-4a), some silt, little shale fragments, trace clay, moist. (embankment fill)	7	SS	37	13	14	--	36 *	--	--	--	19	A-4a
		7-13-12			Medium dense, gray STONE FRAGMENTS WITH SAND AND SILT (A-2-4). (embankment fill)	8	SS	--	--	--	--	--	--	--	--	20	VISUAL
644.4	20.5	4-7-12			Medium dense, brown CLAY (A-7-6), trace sand.	9	SS	--	--	--	--	--	--	--	--	28	VISUAL
641.9	23.0	50/0.4			Very soft, black DECOMPOSED TO HIGHLY WEATHERED SHALE moist.	10	SS	--	--	--	--	--	--	--	--	10	VISUAL
640.9	24.0	50/0.2			Black SILTY SHALE, highly weathered to fresh, horizontal laminar bedding (fissile), low to medium strength at tested depths.	11	SS	--	--	--	--	--	--	--	--	4	VISUAL
					Note: Began coring at 28.5 feet. Very few diagonal fractures throughout core sample. Good to excellent quality rock as per RQD%.												
					Note: Concoidal fractures from 28.5 to 31.0 feet.												
					Note: One inch thick highly weathered to decomposed seams at 31.0 and 31.8 feet.												
					Note: U.C. Strength at 32.6 feet = 1491 psi.												
					Note: U.C. Strength at 35.8 feet = 4214 psi.												
626.4	38.5				TERMINATION DEPTH = 38.5 FEET												

*SILT AND CLAY COMBINED

STRUCTURAL FOUNDATION INVESTIGATION
CUY-90-0045 OVER BRADLEY ROAD

DRAWN	REVIEWED	DATE	CALCULATED	CHECKED
B.M	S.M	8/24/99	W.I.N	S.S.S

PRIME ENGINEERING & ARCHITECTURE, INC.
COLUMBUS: (614) 457-2100 AKRON: (330) 666-5432

LOG OF BORING

Date Started 11-30-98 Sampler Type SS Dia. 2.0 inches Water Elev. ±
Date Completed 11-30-98 Casing: length Dia. 3.25 inches
Boring No. DS-1 Station & Offset STA 131+48.610, 12.602' LT. Surface Elev. 678.35±

ELEV.	DEPTH	STD.PEN. (N)	REC. Ft.	LOSS Ft.	DESCRIPTION	SAMPLE NO.	SAMPLE TYPE	PHYSICAL CHARACTERISTICS PERCENT (%) AGG.	COAR. SAND	FINE SAND	SILT	CLAY	L.L.	P.L.	P.I.	W.C. %	ODOT CLASS
678.35	0																
677.7	0.7	9-8-9			TOPSOIL Medium dense, brown, SANDY SILT (A-4a), little shale fragments, trace clay, moist. (embankment fill)	1	SS	27	16	10	--	46 *	--	--	--	11	A-4a
674.8	3.5	8-9-10			Medium dense, black and brown SHALE FRAGMENTS, little silt and clay, moist. (embankment fill)	2	SS	--	--	--	--	--	--	--	--	10	VISUAL
		4-7-14				3	SS	--	--	--	--	--	--	--	--	15	VISUAL
		9-9-9				4	SS	--	--	--	--	--	--	--	--	11	VISUAL
		9-9-10				5	SS	--	--	--	--	--	--	--	--	13	VISUAL
		4-6-9				6	SS	--	--	--	--	--	--	--	--	13	VISUAL
662.3	16.0	11-10-13				7	SS	--	--	--	--	--	--	--	--	10	VISUAL
661.3	17.0				Medium dense, gray STONE FRAGMENTS WITH SAND AND SILT (A-2-4), moist. (embankment fill)												
		18-6-8			Medium dense, gray SANDY SILT (A-4a), some shale fragments, trace clay, moist. (embankment fill)	8	SS	32	12	11	--	45 *	--	--	--	23	A-4a
657.8	20.5	6-11-15			Medium dense, gray SANDY SILT (A-4a), little shale fragments, little clay, moist. (natural soil)	9	SS	19	13	15	--	53 *	--	--	--	19	A-4a
		3-6-6				10	SS	--	--	--	--	--	--	--	--	18	VISUAL
653.3	25.0				Very soft to hard, DECOMPOSED SHALE												
652.0	26.3	38-50/0.3			Black SILTY SHALE, weathered to slightly weathered, horizontal laminar bedding (fissile), medium strength at tested depth.	11	SS	--	--	--	--	--	--	--	--	10	VISUAL
		50/0.3			Note: Weathered from 30.0 to 33.8 feet with some thin (<1 inch) decomposed seams.	12	SS	--	--	--	--	--	--	--	--	7	VISUAL
					Note: Began coring at 30.0 feet. Very few diagonal fractures throughout core sample. Good quality rock as per RQD%.												
					Note: U.C. Strength at 35.2 feet = 4739 psi												
640.8	37.5				TERMINATION DEPTH = 37.5 FEET												

*SILT AND CLAY COMBINED

LOG OF BORING

Date Started 12-2-98 Sampler Type SS Dia. 2.0 inches Water Elev. ±
Date Completed 12-2-98 Casing: length Dia. 3.25 inches
Boring No. DS-2 Station & Offset STA 131+95.103, 13.515' RT. Surface Elev. 658.79±

ELEV.	DEPTH	STD.PEN. (N)	REC. Ft.	LOSS Ft.	DESCRIPTION	SAMPLE NO.	SAMPLE TYPE	PHYSICAL CHARACTERISTICS PERCENT (%) AGG.	COAR. SAND	FINE SAND	SILT	CLAY	L.L.	P.L.	P.I.	W.C. %	ODOT CLASS
658.79	0																
658.5	0.3	10-6-5			TOPSOIL Loose to medium dense, gray and black SANDY SILT WITH SHALE FRAGMENTS (A-4a), moist.	1	SS	--	--	--	--	--	--	--	--	16	VISUAL
		2-3-4				2	SS	--	--	--	--	--	--	--	--	17	VISUAL
		7-4-10				3	SS	--	--	--	--	--	--	--	--	17	VISUAL
651.5	7.3				Very soft, black DECOMPOSED TO HIGHLY WEATHERED SHALE, moist.												
650.3	8.5	50/0.4			Black SILTY SHALE, highly to slightly weathered, horizontal laminar bedding (fissile), medium strength at tested depths.	4	SS	--	--	--	--	--	--	--	--	7	VISUAL
					Note: Began coring at 10.0 feet. Good to excellent quality rock as per RQD%.												
					Note: Highly weathered from 12.8 to 13.5 feet with some diagonal fractures.												
					Note: U.C. Strength at 14.3 feet = 2426 psi.												
					Note: U.C. Strength at 18.4 feet = 5553 psi.												
638.8	20.0				TERMINATION DEPTH = 20.0 FEET												

*SILT AND CLAY COMBINED

STRUCTURAL FOUNDATION INVESTIGATION
CUY-90-0249 OVER DOVER CENTER ROAD

DRAWN	REVIEWED	DATE	CALCULATED	CHECKED
B.M	S.M	8/24/99	W.I.N	S.S.S

PRIME ENGINEERING & ARCHITECTURE, INC.
COLUMBUS: (614) 457-2100 AKRON: (330) 666-5432

LOG OF BORING

Date Started 12-2-98 Sampler Type SS Dia. 2.0 inches Water Elev. ±
Date Completed 12-2-98 Casing: length Dia. 3.25 inches
Boring No. DS-3 Station & Offset STA 132+64.317, 13.852' LT. Surface Elev. 657.66±

ELEV.	DEPTH	STD.PEN. (N)	REC. Ft.	LOSS Ft.	DESCRIPTION	SAMPLE NO.	SAMPLE TYPE	PHYSICAL CHARACTERISTICS PERCENT (%) AGG.	COAR. SAND	FINE SAND	SILT	CLAY	L.L.	P.L.	P.I.	W.C. %	ODOT CLASS
657.66	0																
657.3	0.4				TOPSOIL												
		3-9-12			Very stiff, gray SILT AND CLAY (A-6a), little shale fragments, little sand, moist.	1	SS	--	--	--	--	--	--	--	--	17	VISUAL
655.2	2.5				Soft, black DECOMPOSED TO HIGHLY WEATHERED SHALE, moist.												
		5-8-17				2	SS	--	--	--	--	--	--	--	--	12	VISUAL
		5-25-50/0.3				3	SS	--	--	--	--	--	--	--	--	17	VISUAL
651.2	6.5				Black SILTY SHALE, highly weathered to slightly weathered, horizontal laminar bedding (fissile), medium strength at tested depth.												
		50/0.5				4	SS	--	--	--	--	--	--	--	--	7	VISUAL
					Note: Began coring at 10.0 feet. Few diagonal fractures throughout core sample. Good quality rock as per RQD%.												
					Note: Highly weathered from 12.0 to 13.2 feet with some diagonal and concoidal fractures.												
					Note: U.C. Strength at 15.0 feet = 4772 psi.												
638.2	19.5				TERMINATION DEPTH = 19.5 FEET												

*SILT AND CLAY COMBINED

LOG OF BORING

Date Started 12-1-98 Sampler Type SS Dia. 2.0 inches Water Elev. ±
Date Completed 12-1-98 Casing: length Dia. 3.25 inches
Boring No. DS-4 Station & Offset STA 133+22.870, 12.475 RT. Surface Elev. 679.37±

ELEV.	DEPTH	STD.PEN. (N)	REC. Ft.	LOSS Ft.	DESCRIPTION	SAMPLE NO.	SAMPLE TYPE	PHYSICAL CHARACTERISTICS PERCENT (%) AGG.	COAR. SAND	FINE SAND	SILT	CLAY	L.L.	P.L.	P.I.	W.C. %	ODOT CLASS
679.37	0																
678.6	0.8				TOPSOIL												
		5-6-6			Stiff to very stiff, brown SILTY CLAY (A-6b), little rock fragments, trace sand, moist. (embankment fill)	1	SS	4	0	0	--	96 *	38	22	16	19	A-6b
		4-8-9				2	SS	--	--	--	--	--	--	--	--	19	VISUAL
674.4	5.0				Hard to stiff, light brown SILT AND CLAY (A-6a), some shale fragments, trace sand, moist. (embankment fill)												
		4-8-32				3	SS	--	--	--	--	--	--	--	--	18	VISUAL
		5-5-8				4	SS	--	--	--	--	--	--	--	--	16	VISUAL
669.4	10.0				Very stiff to stiff, brown and black CLAY (A-7-6), trace rock fragments, trace sand, moist. (embankment fill)												
		4-9-14				5	SS	--	--	--	--	--	--	--	--	12	VISUAL
		4-6-10			Note: Shale fragments encountered within this clay fill at 11.0, 16.0 and 21.0 feet.	6	SS	--	--	--	--	--	--	--	--	27	VISUAL
		5-8-16				7	SS	--	--	--	--	--	--	--	--	15	VISUAL
		5-10-16				8	SS	--	--	--	--	--	--	--	--	25	VISUAL
		6-9-14				9	SS	--	--	--	--	--	--	--	--	13	VISUAL
656.4	23.0				Stiff, brown CLAY (A-7-6), trace sand, moist. (natural soil)												
		3-5-7				10	SS	0	0	0	--	100 *	56	29	27	35	A-7-6
		4-6-41				11	SS	--	--	--	--	--	--	--	--	36	VISUAL
652.5	26.9				Black SILTY SHALE, highly weathered to slightly weathered, horizontal laminar bedding (fissile), medium strength at tested depth.												
		50/0.3				12	SS	--	--	--	--	--	--	--	--	5	VISUAL
					Note: Began coring at 33.5 feet. Few diagonal fractures throughout core sample. Fair quality rock as per RQD%.												
					Note: One inch thick highly weathered to decomposed shale seams at 34.4 and 35.5 feet.												
					Note: U.C. Strength at 37.2 feet = 6801 psi.												
640.9	38.5				TERMINATION DEPTH = 38.5 FEET												

*SILT AND CLAY COMBINED

GENERAL: THIS DRAWING PROVIDES DESIGN AND CONSTRUCTION DETAILS. THE PROJECT PLANS SHALL SHOW THE LOCATION OF SPLICES PLUS A REFERENCE TO THIS DRAWING FOR PERTINENT DETAILS AND NOTES. FOR SPLICING BEAMS OF DIFFERENT SIZES OR WHERE SPLICES ARE LOCATED AT BEAM BEND POINTS. THE PROJECT PLANS SHALL INCLUDE SUFFICIENT DETAILS SUPPLEMENTING THIS DRAWING TO COMPLETELY DESCRIBE THE SPLICE.

DESIGN SPECIFICATIONS: THIS DRAWING CONFORMS TO "STANDARD SPECIFICATIONS FOR HIGHWAY BRIDGES" ADOPTED BY THE AMERICAN ASSOCIATION OF STATE HIGHWAY AND TRANSPORTATION OFFICIALS, 1992, INCLUDING THE 1993 INTERIM SPECIFICATIONS, AND THE OHIO DEPARTMENT OF TRANSPORTATION BRIDGE DESIGN MANUAL, 1993.

DESIGN METHOD: LOAD FACTOR DESIGN

METRIC DIMENSIONS: ALL DIMENSIONS GIVEN IN THIS STANDARD ARE IN MILLIMETERS.

ALLOWABLE STRESSES:

STRUCTURAL STEEL	ASTM	A-36M	YIELD STRESS = 250 MPa
	ASTM	A-572M, A-588M	YIELD STRESS = 345 MPa
HIGH STRENGTH BOLTS	ASTM	A-325M	DESIGN SLIP RESISTANCE = 145 MPa

(DESIGN SLIP RESISTANCE IS BASED ON THE AASHTO CLASS A MINIMUM SLIP COEFFICIENT OF 0.33)

DESIGN: FOR EACH STRUCTURE THE DESIGNER SHALL CHOOSE A SPLICE LOCATION AND DETERMINE THE MAXIMUM TOTAL STRESSES (MOMENT AND SHEAR) AT THAT POINT. IN CONTINUOUS SPANS, SPLICES PREFERABLY SHALL BE MADE NEAR POINTS OF CONTRAFLEXURE. THE SPLICE SHALL BE DESIGNED FOR NOT LESS THAN (1) THE AVERAGE OF THE REQUIRED STRENGTH AT THE POINT OF SPLICE AND THE STRENGTH OF THE MEMBER AT THE SAME POINT. (2) THE MODIFIED MAXIMUM STRESS SPECIFIED IN THE FATIGUE UNIT STRESSES NOTE, OR (3) 75% OF THE STATIC STRENGTH OF THE BEAM. THE SPLICE DESIGNS SHOWN HEREON ARE DESIGNED FOR (3). SEE NOTE FOR DESIGN LOADS. IF STRESSES (1) OR (2) ARE MORE CRITICAL, THIS DESIGN SHALL NOT BE USED AND SUCH SPLICES SHOULD BE DESIGNED TO MEET THE ESTABLISHED REQUIREMENTS. THE STATIC BEAM STRENGTH AT THE SPLICE IS BASED ON THE NET SECTION FOR BENDING AND THE GROSS SECTION FOR SHEAR USING THE BASIC UNIT STRESSES. WHEN SPLICING BEAMS OF DIFFERENT SIZES, THE SPLICE DESIGN SHALL BE BASED ON THE LIGHTER WEIGHT BEAM.

DESIGN LOADS: DESIGN MOMENT [N-m] = $0.75 \left(\frac{Fy\ I}{500\ d} \right)$

DESIGN SHEAR [N] = 0.75 (0.58 Fy Tw (d - 2 Tf))

WHERE: I = MOMENT OF INERTIA BASED ON THE BEAM'S GROSS-SECTION OR ON THE NET-SECTION IF THE FLANGE AREA REMOVED EXCEEDING 15% OF THE GROSS-SECTION IS DEDUCTED [mm^4] (SEE AASHTO 10.18.1.1)

Fy = YIELD STRESS [MPa]

d = MEMBER DEPTH [mm]

Tw = WEB THICKNESS [mm]

Tf = FLANGE THICKNESS [mm]

FATIGUE STRESSES: THIS SPLICE STANDARD HAS NOT BEEN EVALUATED FOR FATIGUE STRESSES. THE DESIGNER IS REQUIRED TO CALCULATE THE MAXIMUM MOMENT RANGE AND EVALUATE THOSE ACTUAL STRESSES AGAINST ALLOWABLES GIVEN IN AASHTO TABLE 10.3.1A.

FASTENERS: 27 mm DIAMETER HIGH STRENGTH BOLTS ASTM A-325M

SPLICE MATERIAL WEIGHT PLUS THE WEIGHT OF FILLS, WHERE REQUIRED, SHALL BE INCLUDED WITH THE STRUCTURAL STEEL QUANTITY FOR PAYMENT.

FABRICATION AND ASSEMBLY: BEAM ENDS AT SPLICES SHALL BE CUT AND FIT AS PER PLAN. THE OPENING BETWEEN BEAM ENDS AFTER ASSEMBLY SHALL NOT EXCEED 6 mm.

FILLS SHOWN ON THE PROJECT PLANS AND SHOP DRAWINGS SHALL BE DIMENSIONED TO THE NEAREST 2 mm IN THICKNESS, BUT NOT LESS THAN 3 mm THICK, BASED ON THE DIMENSIONS FOR DETAILING AND INTENDED RELATIVE POSITION OF THE ABUTTING FLANGES AND WEBS TO BE SPLICED. HOWEVER, IN THE FINAL SHOP ASSEMBLY, FILLS SHALL BE FURNISHED WITH THICKNESSES SUFFICIENT TO COMPENSATE FOR ANY MISALIGNMENT OF ABUTTING FLANGES AND WEBS DUE TO STANDARD ROLLING MILL TOLERANCES. THE ACTUAL FILLS USED IN THE SPLICE SHALL BE SUCH AS TO COMPENSATE FOR DIFFERENCES IN TOTAL THICKNESS OR RELATIVE POSITIONS OF MORE THAN 2 mm.

VERTICAL CLEARANCE: FOR GRADE SEPARATION STRUCTURES AN ALLOWANCE OF 40 mm PLUS THE THICKNESS OF THE OUTSIDE FLANGE SPLICE PLATE SHALL BE USED IN COMPUTING THE ACTUAL VERTICAL CLEARANCE UNDER A BEAM SPLICE.

DESIGN AGENCY: BUREAU OF BRIDGES AND STRUCTURAL DESIGN

STATE OF OHIO DEPARTMENT OF TRANSPORTATION
Richard L. Engel 12-15-94
ENGINEER OF BRIDGES DATE

REVISIONS	DESIGNED GEA	DRAWN SAM	CHECKED SAM	REVISED

STANDARD
METRIC BOLTED BEAM SPLICE
FOR STEEL BEAM BRIDGES

BS-1-93M

BEAM SPLICE DETAILS

BEAM	FLANGE PLATES			FLANGE BOLTS						WEB SPLICE			WT. OF SPLICE MAT'RL kg ≠
	TYPE	OUTSIDE 2 REQ'D	Inside 4 REQ'D	NUM.	N SPA.	PITCH	A	B	C	TYPE	WEB PLATES 2 REQ'D	WEB BOLTS NO.	
W1000X399	B	440X16X1390	180X16X1390	64	7	85	55	80	180	B	820X16X540	54	460
W1000X371	B	390X16X1390	150X16X1390	64	7	85	60	50	160	B	820X16X540	54	425
W1000X363	B	440X14X1390	180X14X1390	64	7	85	55	80	180	B	820X16X540	54	425
W1000X328	B	440X12X1050	180X12X1050	48	5	85	55	80	180	B	820X16X540	54	330
W1000X321	B	390X14X1050	150X14X1050	48	5	85	60	50	160	B	820X14X540	54	320
W1000X296	B	390X14X1050	150X14X1050	48	5	85	60	50	160	B	820X14X540	54	320
W1000X286	B	440X10X1050	180X10X1050	48	5	85	55	80	180	B	820X16X540	54	305
W1000X272	A	290X16X710	100X16X710	32	3	85	60	-	180	B	820X14X540	54	235
W1000X249	A	290X14X710	100X14X710	32	3	85	60	-	180	B	820X14X540	54	225
W1000X222	A	290X12X540	100X12X540	24	2	85	60	-	180	B	820X14X540	54	195
W920X446	B	410X20X1390	160X20X1390	64	7	85	60	60	183	C	780X22X710	72	595
W920X417	B	410X18X1390	160X18X1390	64	7	85	60	60	182	B	780X18X540	54	475
W920X387	B	410X16X1390	160X16X1390	64	7	85	60	60	180	B	780X18X540	54	445
W920X365	B	410X16X1390	160X16X1390	64	7	85	60	60	179	B	780X18X540	54	445
W920X342	B	410X14X1050	160X14X1050	48	5	85	60	60	178	B	780X16X540	54	335
W920X313	A	300X16X880	110X16X880	40	4	85	60	-	189	B	780X18X540	54	290
W920X289	A	300X16X880	110X16X880	40	4	85	60	-	188	B	780X16X540	54	280
W920X271	A	300X14X710	110X14X710	32	3	85	60	-	187	B	780X16X540	54	240
W920X253	A	300X14X710	110X14X710	32	3	85	60	-	186	B	780X16X540	54	240
W920X238	A	300X12X710	110X12X710	32	3	85	60	-	185	B	780X14X540	54	215
W920X223	A	300X12X710	110X12X710	32	3	85	60	-	184	A	780X12X370	36	165
W920X201	A	300X10X540	110X10X540	24	2	85	60	-	184	A	780X12X370	36	135
W840X392	B	390X18X1390	160X18X1390	64	7	85	60	60	161	C	730X20X710	64	520
W840X359	B	390X16X1390	160X16X1390	64	7	85	60	60	163	B	730X18X540	48	425
W840X329	B	390X14X1050	160X14X1050	48	5	85	60	60	161	B	730X16X540	48	320
W840X299	B	390X14X1050	160X14X1050	48	5	85	60	60	160	B	730X16X540	48	320
W840X226	A	285X12X710	110X12X710	32	3	85	60	-	174	B	730X14X540	48	205
W840X210	A	285X12X540	110X12X540	24	2	85	60	-	173	A	730X12X370	32	135
W840X193	A	285X10X540	110X10X540	24	2	85	60	-	172	A	730X12X370	32	130
W840X176	A	285X10X540	110X10X540	24	2	85	60	-	172	A	730X12X370	32	130
W760X314	B	370X14X1050	155X14X1050	48	5	85	55	55	164	B	640X18X540	42	310
W760X284	B	370X14X1050	155X14X1050	48	5	85	55	55	162	B	640X16X540	42	300
W760X257	B	370X12X1050	155X12X1050	48	5	85	55	55	161	B	640X16X540	42	275
W760X196	A	255X12X540	100X12X540	24	2	85	55	-	158	B	640X14X540	42	160
W760X185	A	255X12X540	100X12X540	24	2	85	55	-	157	B	640X14X540	42	160
W760X173	A	255X10X540	100X10X540	24	2	85	55	-	157	A	640X12X370	28	115
W760X161	A	255X10X540	100X10X540	24	2	85	55	-	156	A	640X12X370	28	115
W760X147	A	255X8X540	100X8X540	24	2	85	55	-	155	A	640X12X370	28	105
W760X134	A	255X8X540	100X8X540	24	2	85	55	-	154	A	640X10X370	28	100
W690X289	A	345X16X880	145X16X880	40	4	85	75	-	206	C	550X22X710	48	330
W690X265	A	345X14X880	145X14X880	40	4	85	75	-	208	C	550X22X710	48	310
W690X240	A	345X12X880	145X12X880	40	4	85	75	-	206	B	550X18X540	36	235
W690X217	A	345X12X710	145X12X710	32	3	85	75	-	205	B	550X16X540	36	200
W690X170	A	245X12X540	95X12X540	24	2	85	55	-	146	B	550X16X540	36	155
W690X152	A	245X10X540	95X10X540	24	2	85	55	-	144	A	550X12X370	24	105
W690X140	A	245X10X540	95X10X540	24	2	85	55	-	144	A	550X12X370	24	105
W690X125	A	245X8X540	95X8X540	24	2	85	55	-	143	A	550X12X370	24	95
W610X241	A	315X14X880	125X14X880	40	4	85	65	-	199	B	525X16X540	36	225
W610X217	A	315X12X710	125X12X710	32	3	85	65	-	198	B	525X16X540	36	190
W610X195	A	315X12X710	125X12X710	32	3	85	65	-	197	B	525X16X540	36	190
W610X174	A	315X10X540	125X10X540	24	2	85	65	-	195	A	525X12X370	24	115
W610X155	A	315X10X540	125X10X540	24	2	85	65	-	194	A	525X12X370	24	115

≠ TABULATED WEIGHTS ARE APPROXIMATE AND ARE FOR ESTIMATING PURPOSES ONLY. THEY INCLUDE AN ALLOWANCE FOR WEIGHT OF BOLTS AND WASHERS.

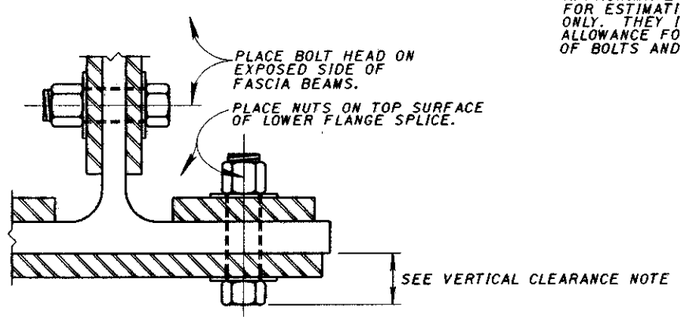

PARTIAL SECTION
(AT ℄ OF BEAM SPLICE)

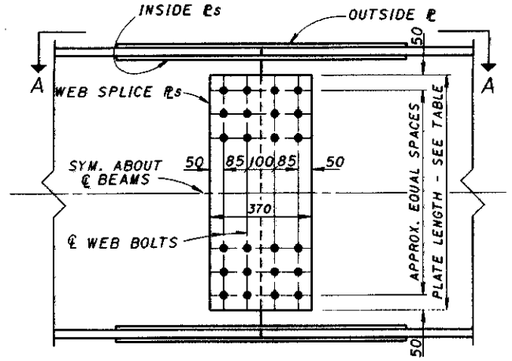

BEAM SPLICE DETAIL
WEB SPLICE - TYPE A

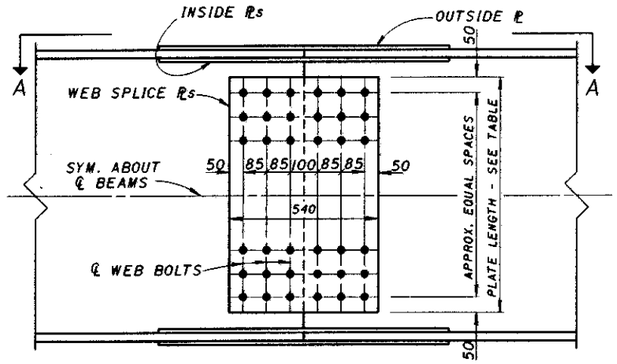

BEAM SPLICE DETAIL
WEB SPLICE - TYPE B

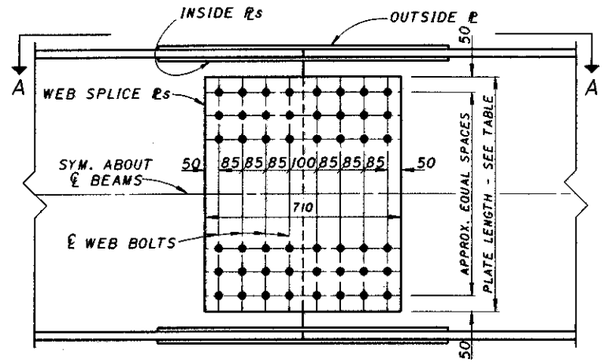

BEAM SPLICE DETAIL
WEB SPLICE - TYPE C

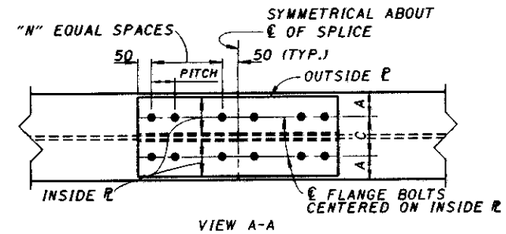

VIEW A-A
FLANGE SPLICE - TYPE A

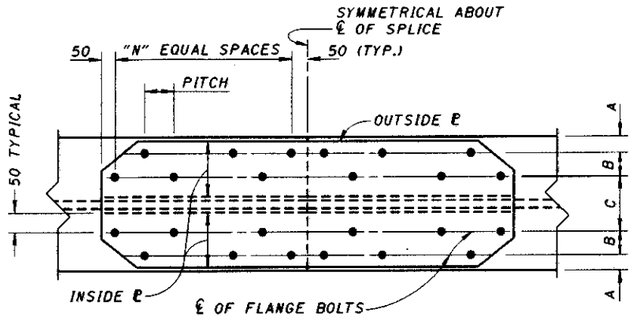

VIEW A-A
FLANGE SPLICE - TYPE B

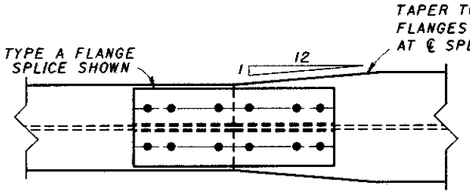

VIEW A-A
SPLICE DETAIL FOR BEAMS HAVING DIFFERENT FLANGE WIDTHS

NOTE: ALL SHAPES AND PLATES SHALL BE DESIGNATED (CVN), AND SHALL MEET SPECIFIED MINIMUM NOTCH TOUGHNESS REQUIREMENTS AS SPECIFIED IN 711.01 OF CMS.

NOTE: ALL FASTENERS ARE 27 mm DIAMETER HIGH STRENGTH BOLTS, ASTM A-325M.

DESIGN AGENCY
BUREAU OF BRIDGES AND STRUCTURAL DESIGN

STATE OF OHIO DEPARTMENT OF TRANSPORTATION
Richard L. Engel — ENGINEER OF BRIDGES
12-15-94 — DATE

REVISIONS	DESIGNED GEA / DRAWN SAM	CHECKED SAM	REVIEWED

STANDARD
METRIC BOLTED BEAM SPLICE
FOR STEEL BEAM BRIDGES
(FOR 250 Mpa STEEL)

BS-1-93M

BEAM SPLICE DETAILS

BEAM	FLANGE PLATES			FLANGE BOLTS						WEB SPLICE				WT. OF SPLICE MAT'RL kg ≠
	TYPE	OUTSIDE 2 REQ'D	Inside 4 REQ'D	NUM.	N SPA.	PITCH	A	B	C	TYPE	WEB PLATES 2 REQ'D	WEB BOLTS NO.		
W1000X399	B	440X16X1730	180X16X1730	80	9	85	55	80	180	C	820X18X740	72		610
W1000X371	B	390X16X1730	150X16X1730	80	9	85	60	50	160	C	820X18X740	72		565
W1000X363	B	440X14X1730	180X14X1730	80	9	85	55	80	180	C	820X18X740	72		570
W1000X328	B	440X12X1390	180X12X1390	64	7	85	55	80	180	C	820X18X740	72		465
W1000X321	B	390X14X1390	150X14X1390	64	7	85	60	50	160	C	820X16X740	72		445
W1000X296	B	390X14X1390	150X14X1390	64	7	85	60	50	160	C	820X16X740	72		445
W1000X286	B	440X10X1050	180X10X1050	48	5	85	55	80	180	C	820X18X740	72		375
W1000X272	A	290X16X1050	100X16X1050	48	5	85	60	-	180	C	820X16X740	72		355
W1000X249	A	290X14X880	100X14X880	40	4	85	60	-	180	C	820X16X740	72		315
W1000X222	A	290X12X710	100X12X710	32	3	85	60	-	180	C	820X16X740	72		280
W920X446	B	410X20X2070	160X20X2070	96	11	85	60	60	183	C	780X22X710	72		770
W920X417	B	410X18X1730	160X18X1730	80	9	85	60	60	182	C	780X20X710	72		625
W920X387	B	410X16X1730	160X16X1730	80	9	85	60	60	180	C	780X20X710	72		585
W920X365	B	410X16X1730	160X16X1730	80	9	85	60	60	179	C	780X18X710	72		565
W920X342	B	410X14X1390	160X14X1390	64	7	85	60	60	178	C	780X18X710	72		460
W920X313	A	300X16X1220	110X16X1220	56	6	85	60	-	189	C	780X20X710	72		410
W920X289	A	300X16X1050	110X16X1050	48	5	85	60	-	188	C	780X18X710	72		365
W920X271	A	300X14X1050	110X14X1050	48	5	85	60	-	187	C	780X18X710	72		350
W920X253	A	300X14X880	110X14X880	40	4	85	60	-	186	C	780X16X710	72		310
W920X238	A	300X12X880	110X12X880	40	4	85	60	-	185	C	780X16X710	72		295
W920X223	A	300X12X880	110X12X880	40	4	85	60	-	184	C	780X16X710	72		295
W920X201	A	300X10X710	110X10X710	32	3	85	60	-	184	B	780X14X540	54		205
W840X392	B	390X18X1730	160X18X1730	80	9	85	60	60	161	C	730X20X710	64		595
W840X359	B	390X16X1730	160X16X1730	80	9	85	60	60	163	C	730X20X710	64		560
W840X329	B	390X14X1390	160X14X1390	64	7	85	60	60	161	C	730X18X710	64		440
W840X299	B	390X14X1390	160X14X1390	64	7	85	60	60	160	C	730X18X710	64		440
W840X226	A	285X12X880	110X12X880	40	4	85	60	-	174	C	730X16X710	64		275
W840X210	A	285X12X880	110X12X880	40	4	85	60	-	173	C	730X16X710	64		275
W840X193	A	285X10X710	110X10X710	32	3	85	60	-	172	B	730X12X540	48		180
W840X176	A	285X10X710	110X10X710	32	3	85	60	-	172	B	730X12X540	48		180
W760X314	B	370X14X1390	155X14X1390	64	7	85	55	55	164	C	640X20X740	56		430
W760X284	B	370X14X1390	155X14X1390	64	7	85	55	55	162	C	640X18X740	56		415
W760X257	B	370X12X1390	155X12X1390	64	7	85	55	55	161	C	640X18X740	56		385
W760X196	A	255X12X710	100X12X710	32	3	85	55	-	158	C	640X16X740	56		235
W760X185	A	255X12X710	100X12X710	32	3	85	55	-	157	C	640X16X740	56		235
W760X173	A	255X10X710	100X10X710	32	3	85	55	-	157	C	640X16X740	56		225
W760X161	A	255X10X540	100X10X540	24	2	85	55	-	156	B	640X14X540	42		155
W760X147	A	255X8X540	100X8X540	24	2	85	55	-	155	B	640X12X540	42		135
W760X134	A	255X8X540	100X8X540	24	2	85	55	-	154	B	640X12X540	42		135
W690X289	A	345X16X1220	145X16X1220	56	6	85	75	-	206	C	550X22X740	48		400
W690X265	A	345X14X1220	145X14X1220	56	6	85	75	-	208	C	550X22X740	48		375
W690X240	A	345X12X1050	145X12X1050	48	5	85	75	-	206	C	550X20X740	48		310
W690X217	A	345X12X1050	145X12X1050	48	5	85	75	-	205	C	550X18X740	48		300
W690X170	A	245X12X710	95X12X710	32	3	85	55	-	146	C	550X18X740	48		220
W690X152	A	245X10X540	95X10X540	24	2	85	55	-	144	C	550X16X740	48		185
W690X140	A	245X10X540	95X10X540	24	2	85	55	-	144	B	550X14X540	36		140
W690X125	A	245X8X540	95X8X540	24	2	85	55	-	143	B	550X12X540	36		120
W610X241	A	315X14X1050	125X14X1050	48	5	85	65	-	199	C	525X20X710	48		305
W610X217	A	315X12X1050	125X12X1050	48	5	85	65	-	198	C	525X18X710	48		275
W610X195	A	315X12X880	125X12X880	40	4	85	65	-	197	C	525X18X710	48		250
W610X174	A	315X10X710	125X10X710	32	3	85	65	-	195	B	525X14X540	36		165
W610X155	A	315X10X710	125X10X710	32	3	85	65	-	194	B	525X12X540	36		160

≠ TABULATED WEIGHTS ARE APPROXIMATE AND ARE FOR ESTIMATING PURPOSES ONLY. THEY INCLUDE AN ALLOWANCE FOR WEIGHT OF BOLTS AND WASHERS.

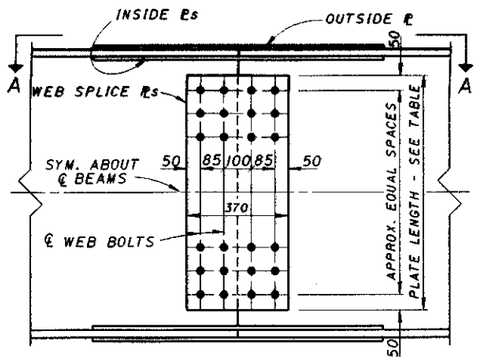

BEAM SPLICE DETAIL
WEB SPLICE - TYPE A

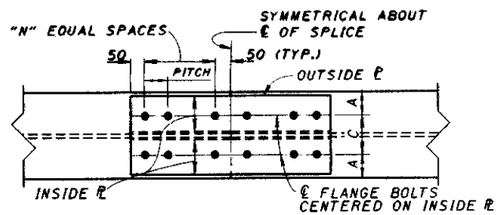

VIEW A-A
FLANGE SPLICE - TYPE A

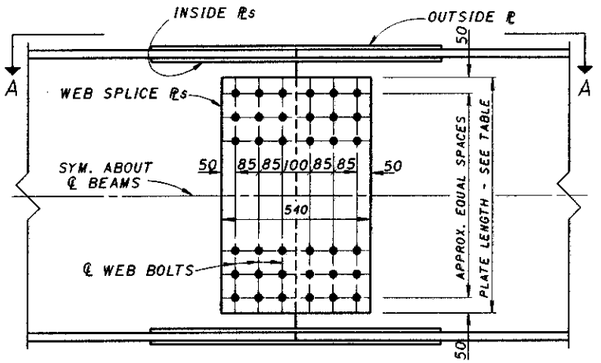

BEAM SPLICE DETAIL
WEB SPLICE - TYPE B

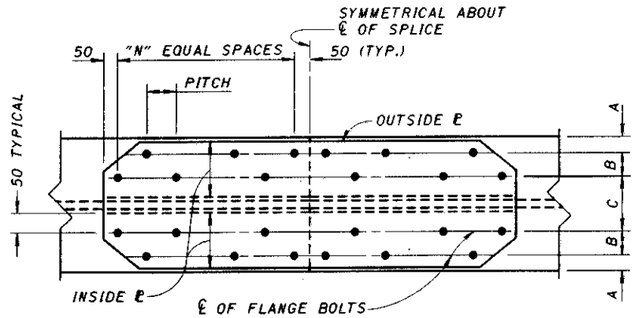

VIEW A-A
FLANGE SPLICE - TYPE B

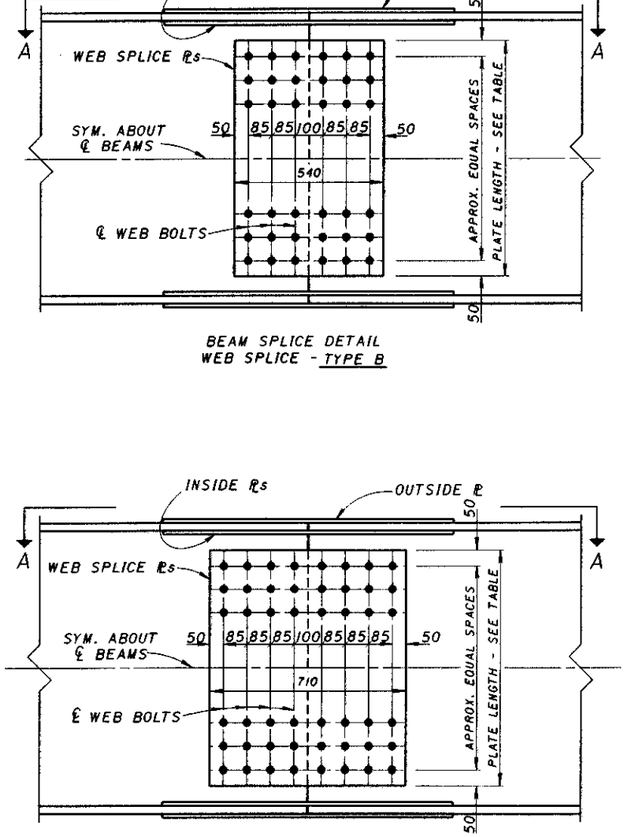

BEAM SPLICE DETAIL
WEB SPLICE - TYPE C

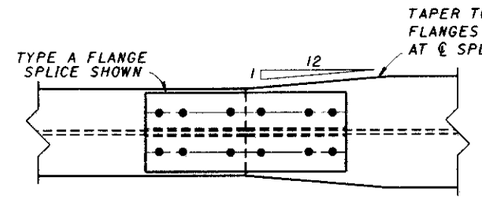

VIEW A-A
SPLICE DETAIL FOR BEAMS HAVING DIFFERENT FLANGE WIDTHS

NOTE: ALL SHAPES AND PLATES SHALL BE DESIGNATED (CVN). AND SHALL MEET SPECIFIED MINIMUM NOTCH TOUGHNESS REQUIREMENTS AS SPECIFIED IN 711.01 OF CMS.

NOTE: ALL FASTENERS ARE 27 mm DIAMETER HIGH STRENGTH BOLTS, ASTM A-325M.

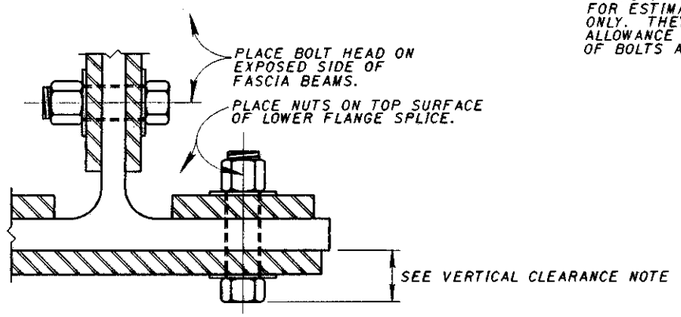

PARTIAL SECTION
(AT ℄ OF BEAM SPLICE)

DESIGN UNIT
BUREAU OF BRIDGES AND STRUCTURAL DESIGN

STATE OF OHIO DEPARTMENT OF TRANSPORTATION
Richard D. Engel
ENGINEER OF BRIDGES
12-15-94
DATE

REVISIONS	DESIGNED	CHECKED	REVISED
	GEA	SAM	
	DRAWN SAM		

STANDARD
METRIC BOLTED BEAM SPLICE
FOR STEEL BEAM BRIDGES
(FOR 345 Mpa STEEL)

BS-1-93M

3 / 3

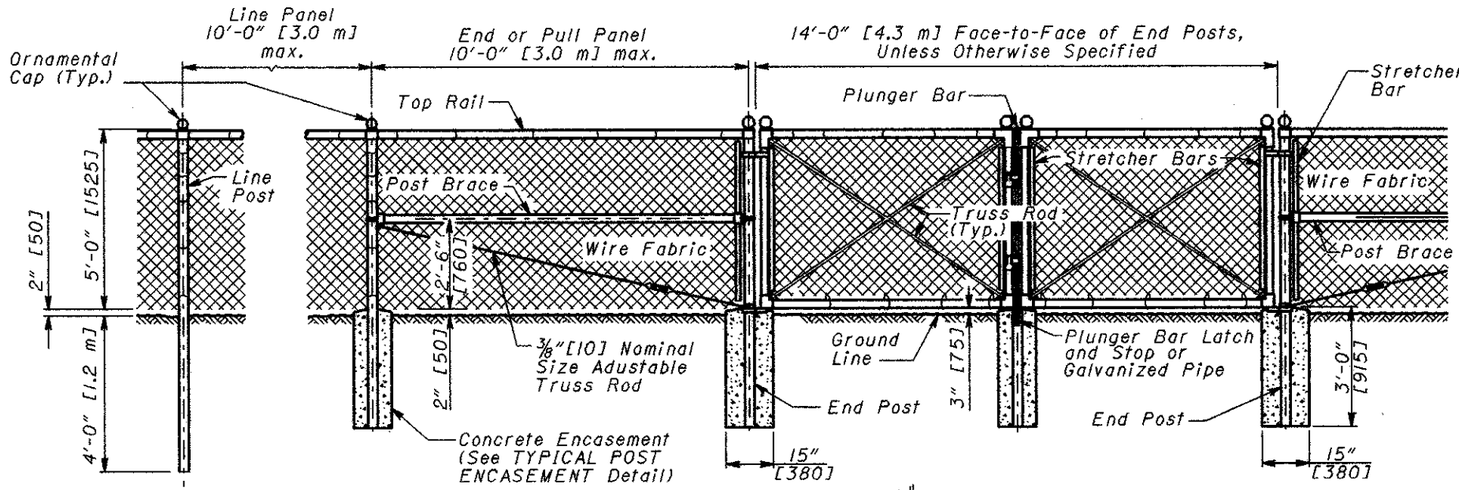

TYPE CL FENCE

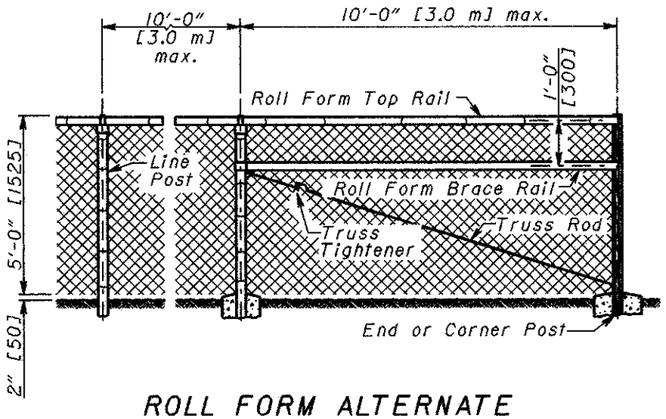

ROLL FORM ALTERNATE

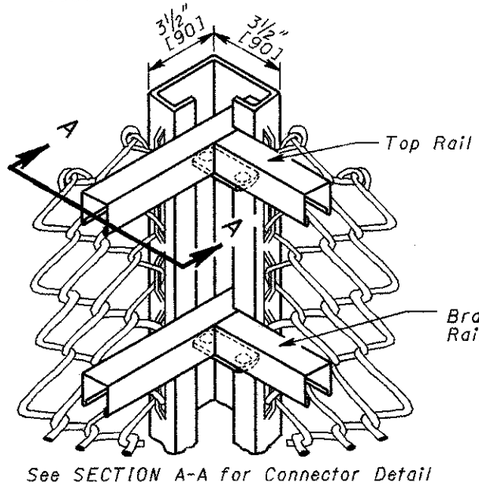

See SECTION A-A for Connector Detail

ROLL FORM ALTERNATE CORNER POST
Fabric Outside

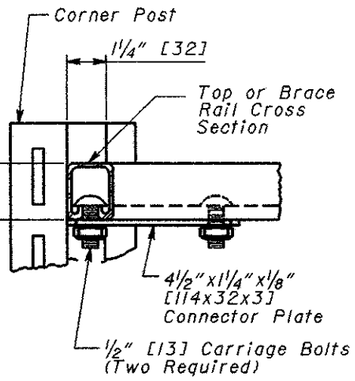

SECTION A-A

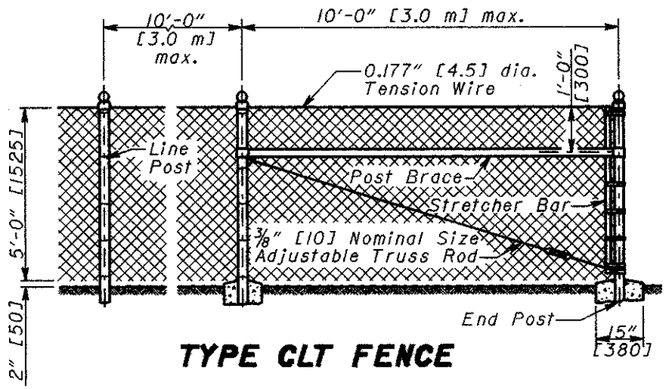

TYPE CLT FENCE

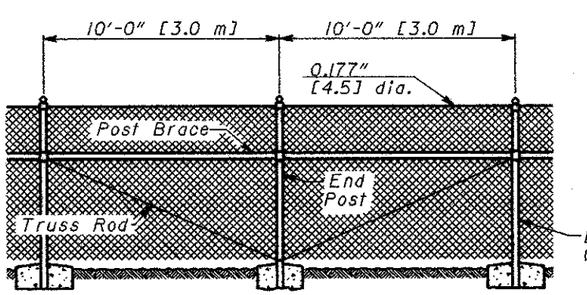

INTERMEDIATE ANCHOR POST ASSEMBLY
For Type CLT Fence

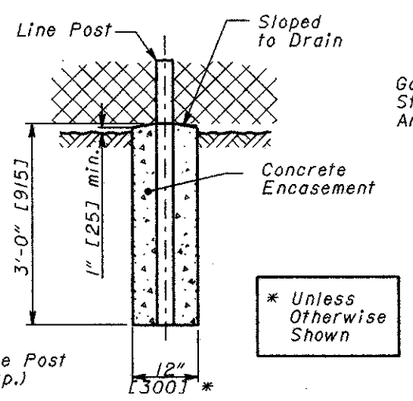

TYPICAL POST ENCASEMENT

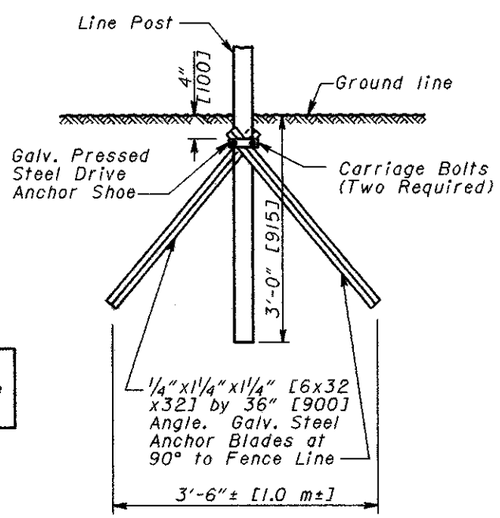

DRIVE ANCHOR DETAIL
For Line Post Alternate

NOTES

STREAM CROSSINGS: *Where chain link fence is to be constructed continuously across streams, and stream crossing closures are required by the plans, the closure shall be constructed in accordance with the details shown on* ***SCD F-3.4,*** *modified as necessary to conform to chain link fence dimensions and details.*

TENSION WIRE: *Wire shall be used instead of the top rail when specified on the plans as Item 607 - Fence, Type CLT. The wire shall be stretched taut and fastened to or passed through the top fitting. The fence shall be fastened to the tension wire with fabric ties consisting of hog rings every 24" [600] or less.*

GATES: *Each gate shall be equipped with an approved padlock with a double locking bolt, a five-pin tumbler, a laminated steel case, and a brass cylinder, and shall be rust-proof. Where companion gates are installed on opposite sides of the highway, tumblers shall be identically set in each lock so that the same key will open each lock. Two keys shall be furnished with each padlock. The cost of the padlock and keys shall be included in the cost of the gate.*

POST ENCASEMENT: *Line posts shall normally be driven to an embedment depth of 48" [1.2 m]. Where soil or other conditions do not permit driving to this depth, post holes shall be dug or bored and the posts encased in concrete. Posts located in unconsolidated fills or other loose soils, in dips or other depressions in the ground surface, or installed with fabric exceeding 60" [1525] in height shall also be encased in concrete.*

Steel drive anchors may be used as an alternate to concrete encasement of line posts. All end, corner and pull panel posts shall be encased in concrete. See DRIVE ANCHOR DETAIL.

FRAMEWORK AND FABRIC: *Materials may be any type permitted by CMS 710.03.*

FENCE GROUNDING: *When needed for overhead electrical lines, grounding is to be in accordance with the* ***Office of Traffic Engineering's SCD HL-50.11.***

THIS DRAWING REPLACES F-1.1M DATED 4-8-97.

OHIO DEPARTMENT OF TRANSPORTATION
Paul F. Imhoff 7-28-00
ROADWAY DESIGN ENGINEER — DATE

REVISIONS

STDS. ENGR. M. Evans
DRAWN D. Focke

All metric dimensions (in brackets [ ]) are in millimeters unless otherwise noted.

ROADWAY ENGINEERING SERVICES

STANDARD ROADWAY CONSTRUCTION DRAWING
CHAIN LINK FENCE

NUMBER F-1.1

1 / 1

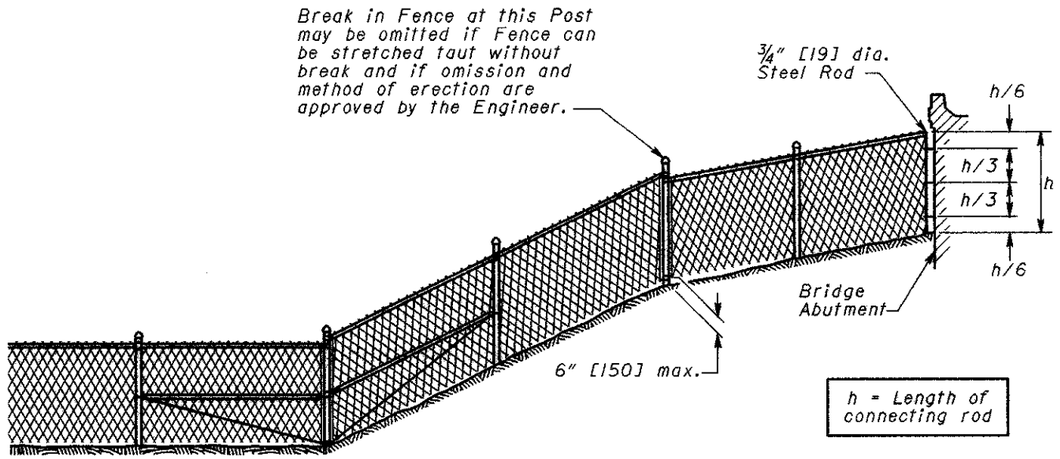

CHAIN LINK FENCE

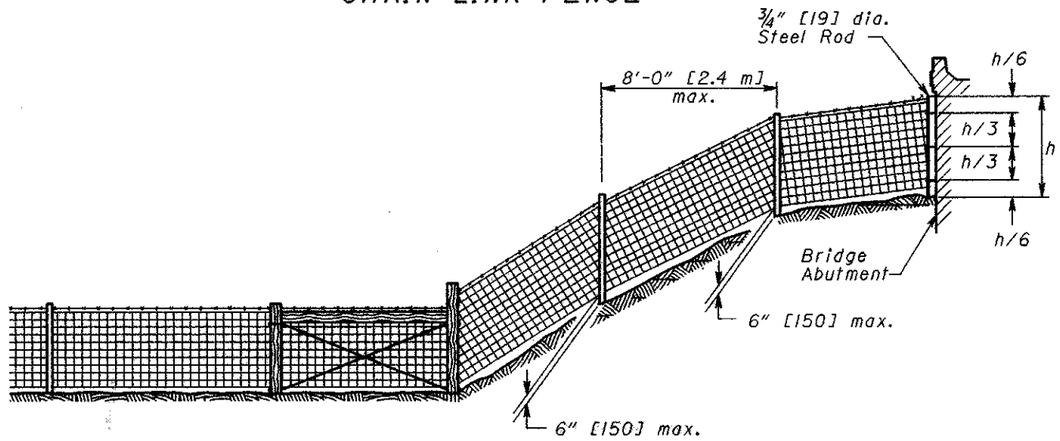

WOVEN WIRE FENCE

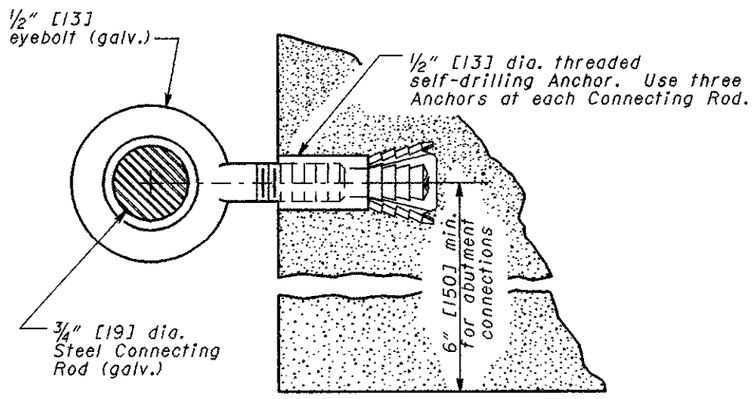

ABUTMENT CONNECTION

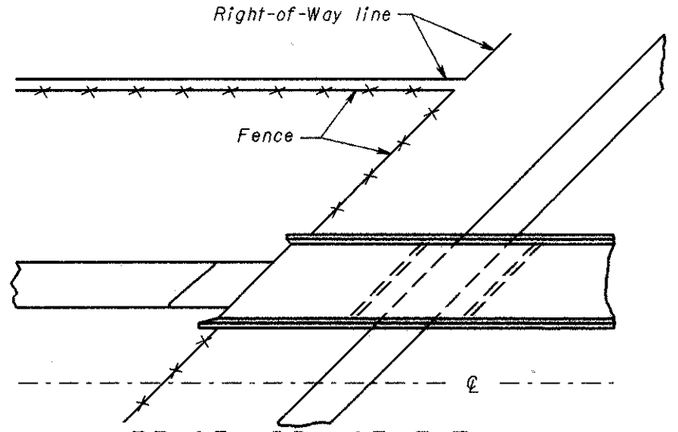

FENCE ARRANGEMENT AT FREEWAY OVERPASS

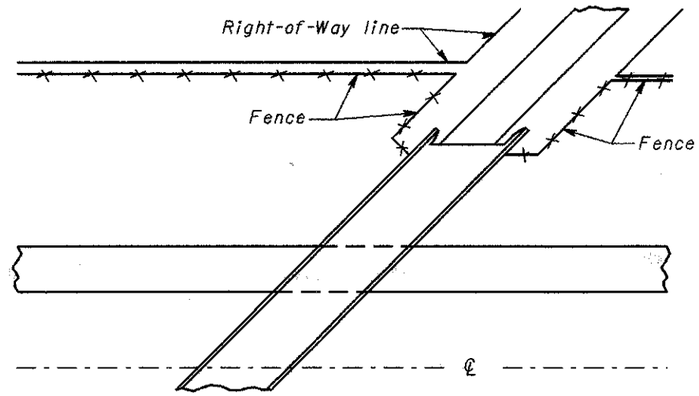

FENCE ARRANGEMENT CROSS ROAD ON ORIGINAL PROFILE

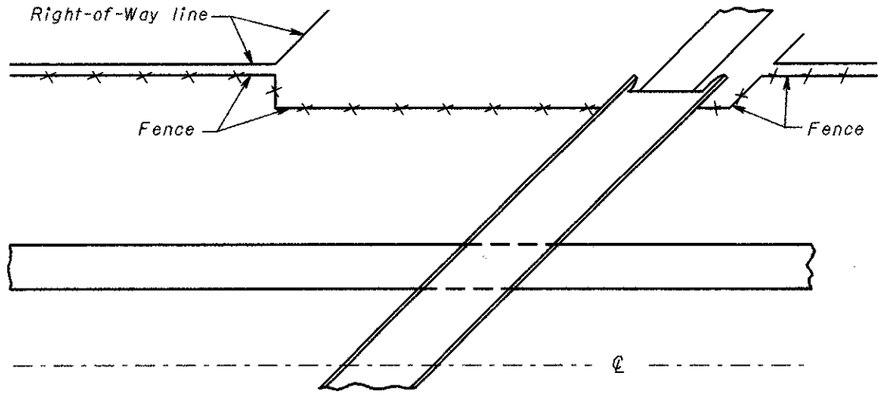

FENCE ARRANGEMENT CROSS ROAD ON HIGH FILL

NOTES

GENERAL: Details shown hereon shall be used with **SCD F-1.1** and **SCD F-2.1.**

ABUTMENT CONNECTION: The cost of furnishing and installing connecting rods, eyebolts, and anchors shall be included in the unit price bid per Linear Foot [Meter] of fence. Where needed to clear deck projections or other irregularities, the shaft length of the eyebolt may vary.

ANCHORS: Self-drilling anchors shall conform to CMS 712.01. Threaded steel inserts may be cast-in-place when the structure is constructed instead of using using self-drilling anchors.

EYEBOLTS: The steel shall be in accordance with ASTM A 489, except that the bend test is waived. The eyebolt shall be galvanized in accordance with ASTM A 153.

CLEARANCE: On embankments approaching bridges, the clearance of the lower fence wires may vary from 0 to 6" [150].

THIS DRAWING REPLACES F-3.1M DATED 4-21-95.

OHIO DEPARTMENT OF TRANSPORTATION	1-28-00
ROADWAY DESIGN ENGINEER	DATE
REVISIONS	
STDS. ENGR. M. Evans	DRAWN D. Focke
All metric dimensions (in brackets [ ]) are in millimeters unless otherwise noted.	
ROADWAY ENGINEERING SERVICES	
STANDARD ROADWAY CONSTRUCTION DRAWING	FENCE DETAILS AT BRIDGES
NUMBER	F-3.1
1/1	

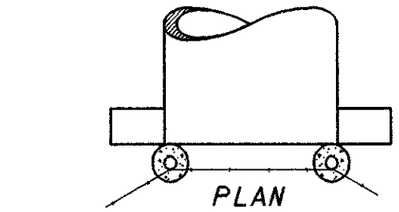

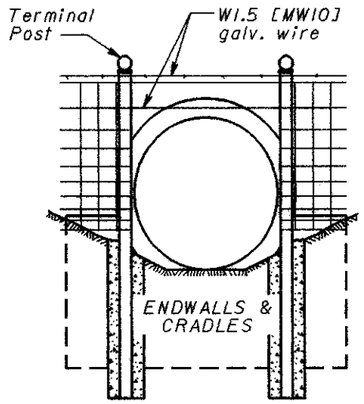

48", 54" & 60" [1200, 1350, and 1500] diameters

TYPE A

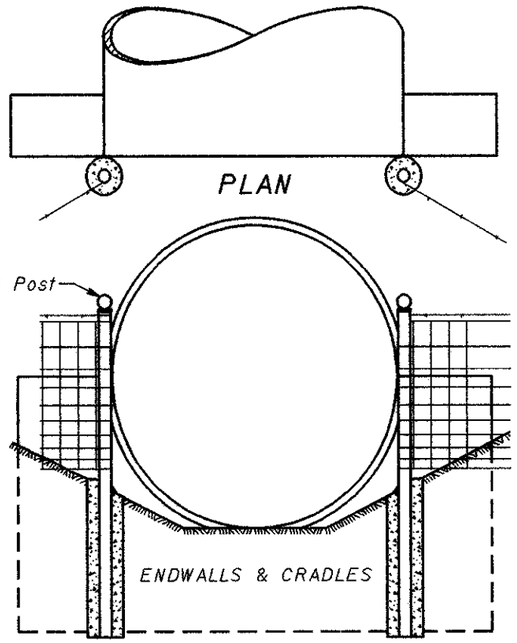

66" [1650] diameter and larger

TYPE B

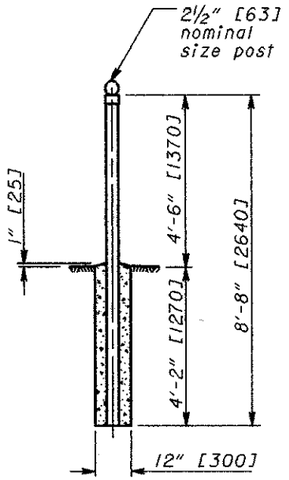

TERMINAL POST

NOTES

FENCE TYPE: Fence terminals shown on this drawing apply to Type 47 fence as detailed, however, the same designs may be used in the construction of all types of fence if modified for differences in basic design such as anchor assembly, height of fence, length of panel, or any other variance that would affect the terminal design.

Cost of furnishing and installing connecting rods, eyebolts and anchors for wall connections shall be included in the unit price bid per meter of fence.

ANCHORS: Self-drilling anchors shall conform to CMS 712.01. Threaded steel inserts may be cast-in-place when the structure is constructed, instead of using self-drilling anchors.

EYEBOLT: The steel shall be in accordance with ASTM A 489, except that the bend test is waived. The eyebolt shall be galvanized in accordance with ASTM A 153.

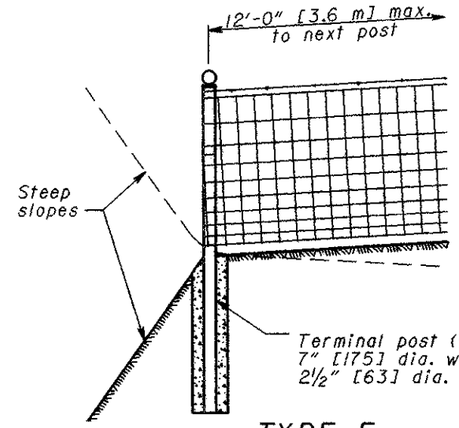

TYPE E

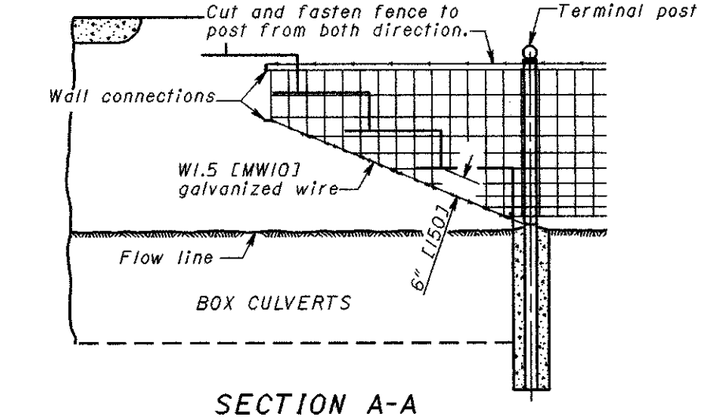

PLAN

SECTION A-A

TYPE C

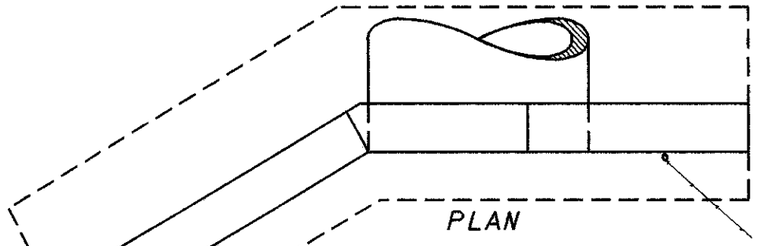

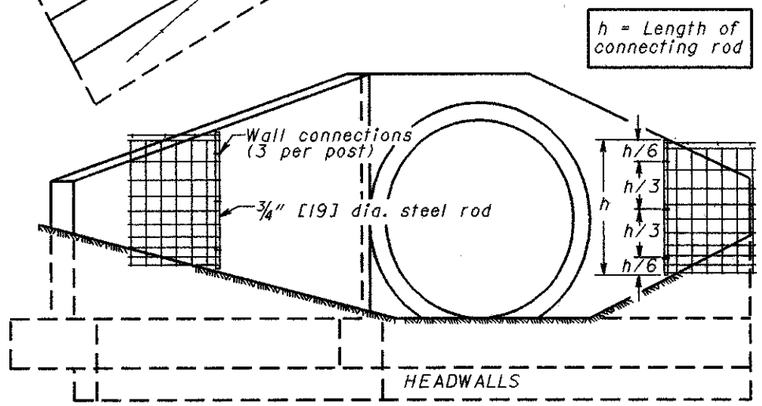

ELEVATION

TYPE D

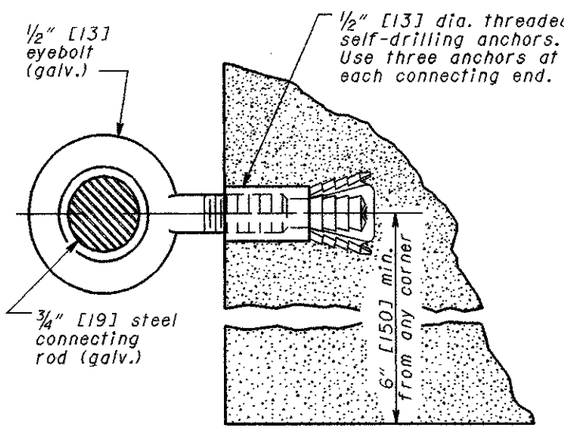

WALL CONNECTION

THIS DRAWING REPLACES F-3.3M DATED 4-21-95.

OHIO DEPARTMENT OF TRANSPORTATION
ROADWAY DESIGN ENGINEER
DATE 7-28-00

REVISIONS

STDS. ENGR. M. Evans
DRAWN D. Focke

All metric dimensions (in brackets [ ]) are in millimeters unless otherwise noted.

ROADWAY ENGINEERING SERVICES

STANDARD ROADWAY CONSTRUCTION DRAWING

FENCE TERMINALS

NUMBER F-3.3

1 / 1

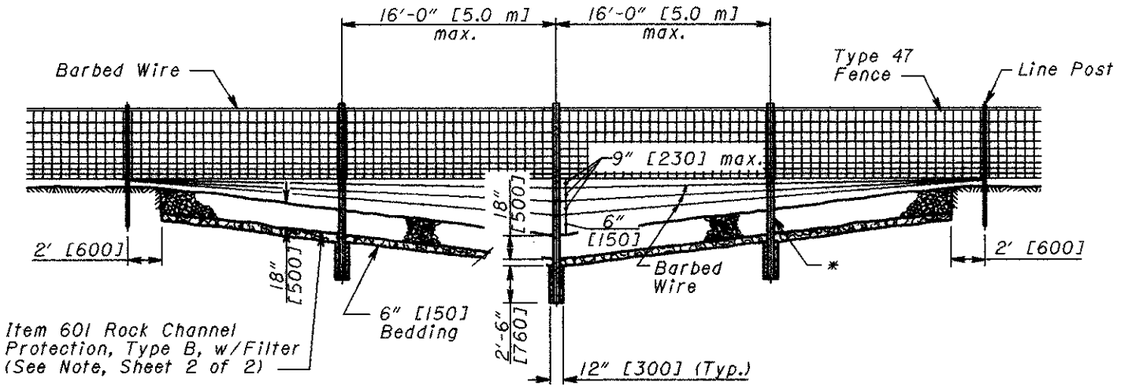

CROSSING TYPE 1

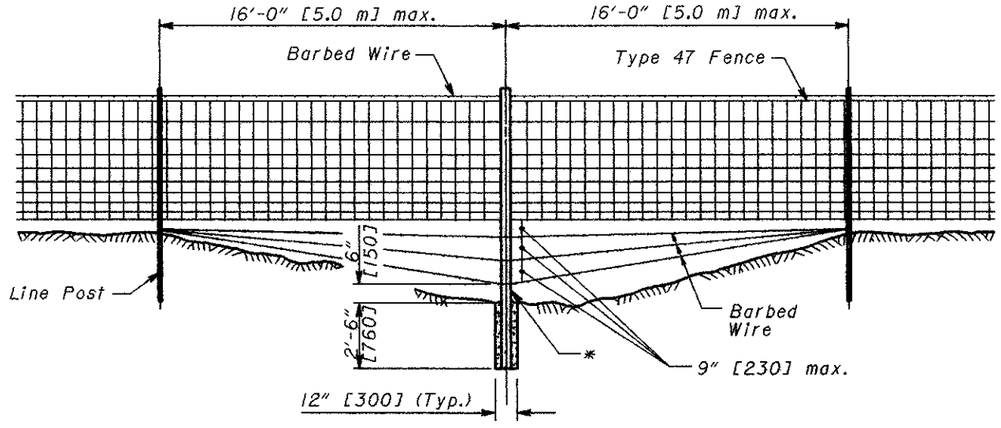

CROSSING TYPE 3

* Extra length Posts shall be 2½" [63] dia. Steel Pipe or 3"x3"x¼" [75x75x6.4] Angle, galvanized and set in Concrete.

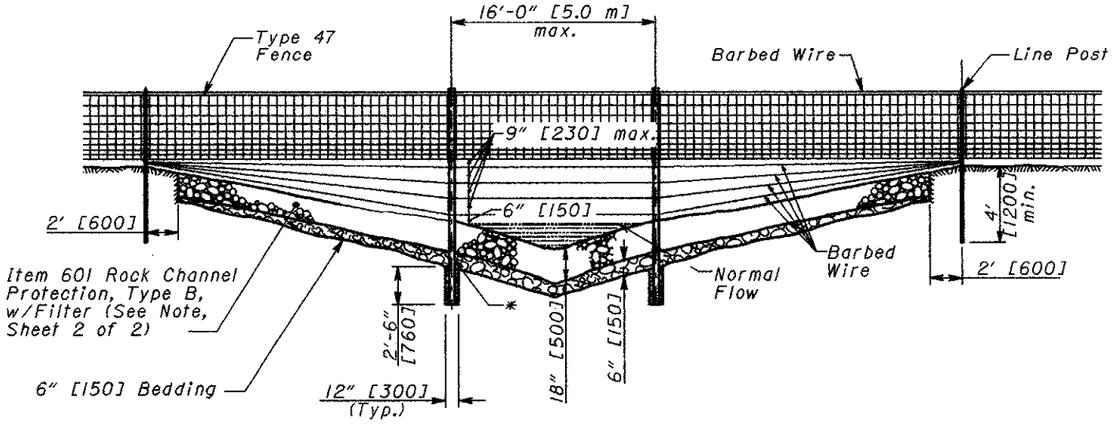

CROSSING TYPE 2

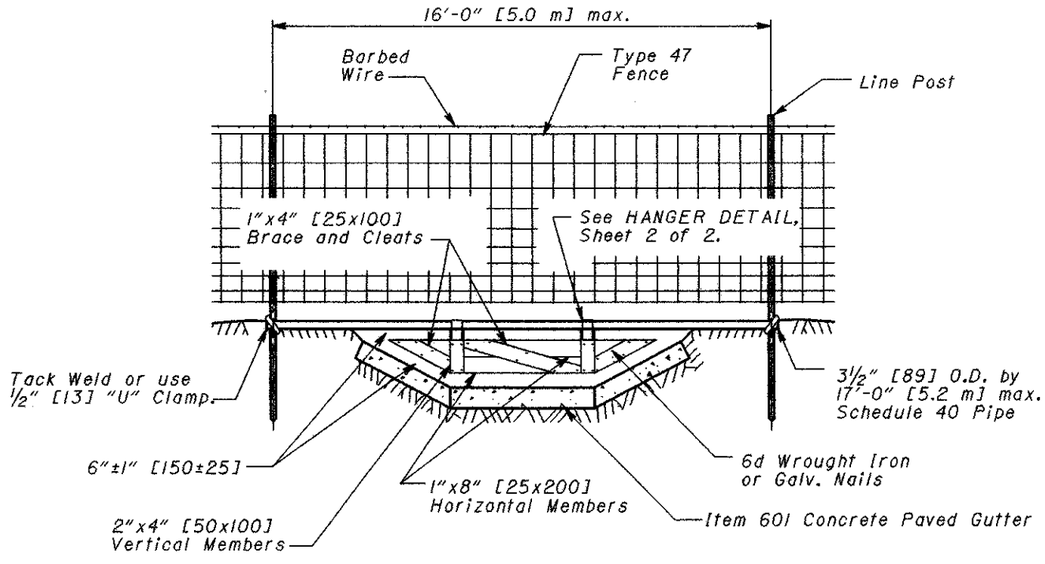

CROSSING TYPE 4

THIS DRAWING REPLACES F-3.4M DATED 4-8-97.

OHIO DEPARTMENT OF TRANSPORTATION	7-28-00
ROADWAY DESIGN ENGINEER	DATE
REVISIONS	
STDS. ENGR. M. Evans	DRAWN D. Focke
All metric dimensions (in brackets [ ]) are in millimeters unless otherwise noted.	
ROADWAY ENGINEERING SERVICES	
STANDARD ROADWAY CONSTRUCTION DRAWING	FENCE DETAILS
NUMBER	F-3.4
1/2	

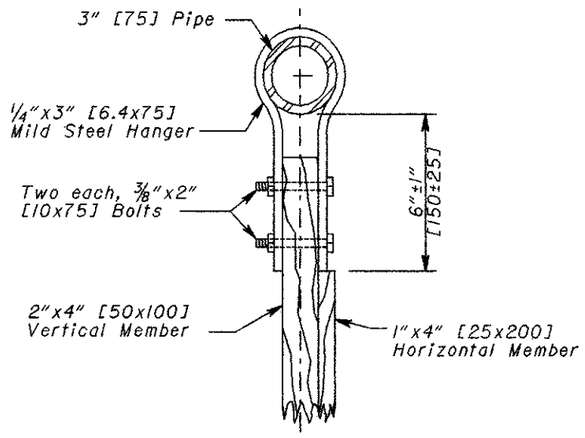

HANGER DETAIL

See CROSSING TYPE 4 Detail, Sheet 1 of 2.

NOTES

FENCE DETAILS: Details shown on this drawing apply to standard Type 47 Fence as detailed; however, the same designs may be used in the construction of all types of Fence if modified for differences in basic design, such as anchor assembly, height of fence, length of panel, or other variances that would affect the design.

CROSSINGS: Types 1, 2, or 3, shall be provided at earth side ditches and streams served by culverts smaller than 48" [1200] in rise. A Type 4 crossing shall be provided where fence crosses a paved channel that is over 18" [0.5 m] deep. (For Crossing Types, see Sheet 1 of 2.)

TYPE 2 CROSSING: This Type (Sheet 1 of 2) is shown crossing a live stream, but it may also be used for intermittent flow channels. For a live stream crossing, the barbed wire may be deleted or its spacing varied, when directed by the Engineer, to prevent or reduce the collection of debris.

ROCK CHANNEL PROTECTION: Rock shall consist of 18" [0.5 m] of Item 601 - Rock Channel Protection, Type B, with Filter, unless otherwise shown on the plans or determined by the Engineer. It shall be placed 6' [1.8 m] wide (2' [0.6 m] outside the fence and 4' [1.2 m] inside the fence), and shall be paid for as **Item 601 - Rock Channel Protection, Type ___ , w/Filter.**

CONCRETE ENCASEMENT: When no rock channel protection is required, the 2'-6" [760] depth of concrete encasement shall be measured from the bottom of the channel.

MAINTENANCE OPENING: Barbed wire and fence fabric in the opening shall be separate from the approach wire fabric, and shall be installed after the wire and fabric have been stretched and fastened on both approaches.

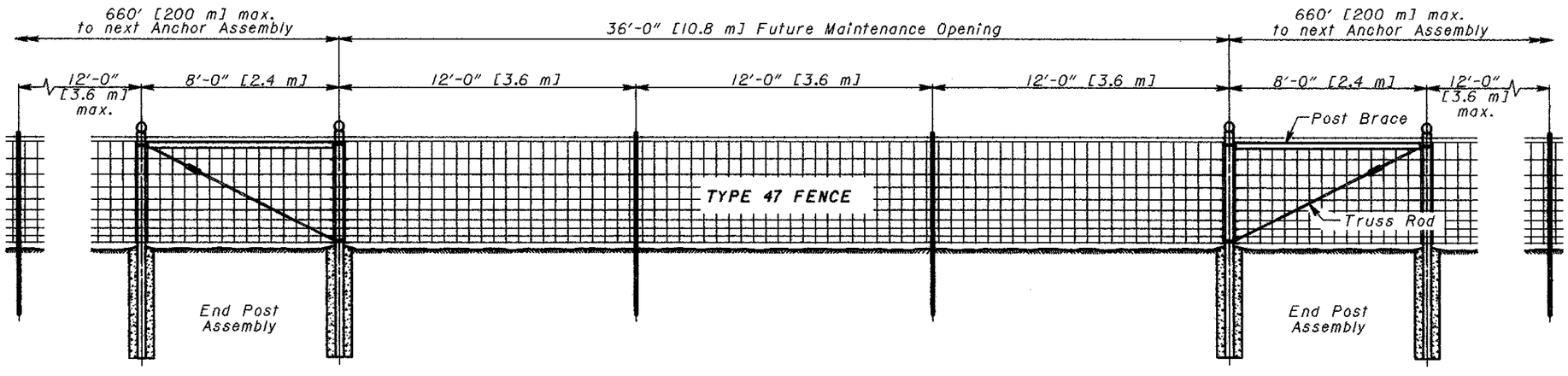

FUTURE MAINTENANCE OPENING

THIS DRAWING REPLACES F-3.4M DATED 4-8-97.

OHIO DEPARTMENT OF TRANSPORTATION
ROADWAY DESIGN ENGINEER
DATE 1-28-00

REVISIONS

STDS. ENGR. M. Evans
DRAWN D. Focke

All metric dimensions (in brackets [ ]) are in millimeters unless otherwise noted.

ROADWAY ENGINEERING SERVICES

STANDARD ROADWAY CONSTRUCTION DRAWING
FENCE DETAILS

NUMBER F-3.4

2/2

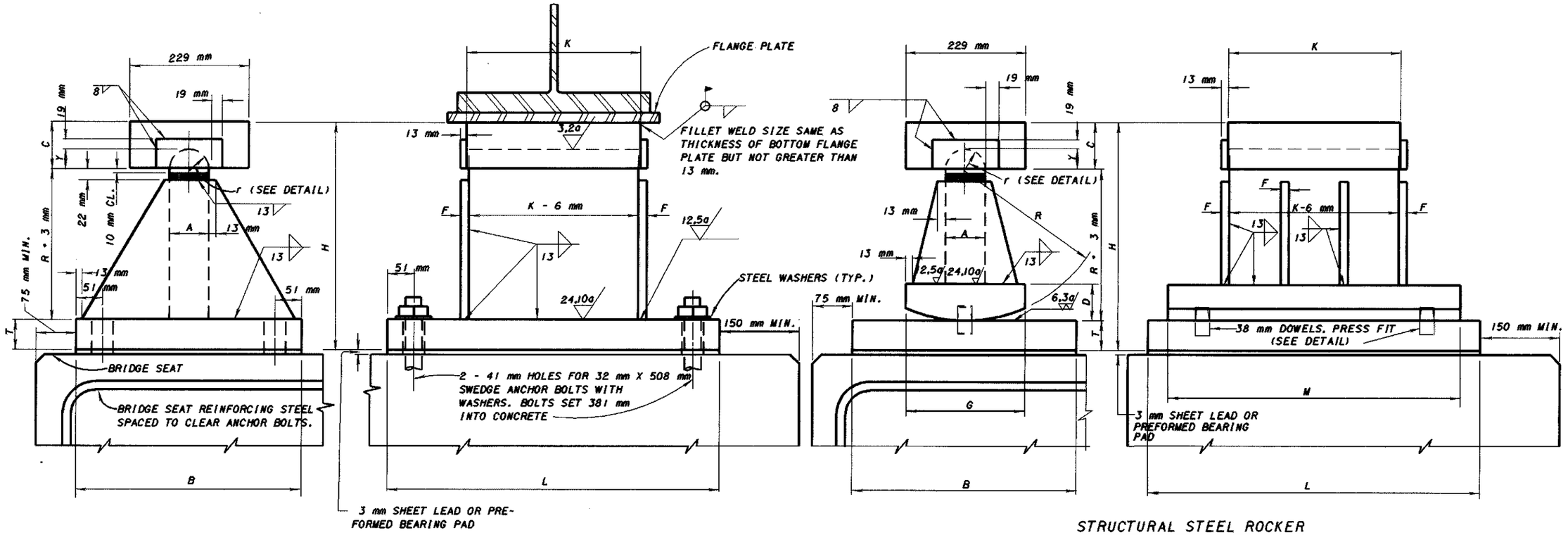

STRUCTURAL STEEL BOLSTER
SEE TABLE BELOW FOR ADDITIONAL DIMENSIONS.

STRUCTURAL STEEL ROCKER
SEE TABLE BELOW FOR ADDITIONAL DIMENSIONS

BOLSTER NO.	ROCKER NO.	DIMENSIONS (MILLIMETERS)													WEIGHT EACH (Kg)		MAXIMUM LOAD (kN)
		A	B	C	D	F	G	H	K	L	M	R	T	Y	BOLSTER	ROCKER	
	R-340	64	203	64	44	13	178	244	229	457	406	140	38	30		93	340
B-450	R-450	64	254	64	51	13	191	270	229	483	432	165	38	30	102	114	450
B-575	R-575	76	279	76	51	13	203	308	267	508	457	191	38	37	134	143	575
B-675	R-675	76	305	76	57	13	216	340	292	559	483	216	44	37	164	182	675
B-775	R-775	76	356	89	64	13	229	384	305	584	508	241	51	37	207	230	775
B-900	R-900	76	406	89	70	16	229	416	305	610	533	267	57	37	245	275	900
B-1000	R-1000	76	432	89	70	16	229	429	330	635	559	279	57	37	268	302	1000
B-1100	R-1100	89	457	89	70	19	254	448	330	660	584	292	64	43	316	352	1100
B-1225	R-1225	89	483	89	83	19	305	467	356	686	610	305	70	43	363	429	1225
B-1325	R-1325	89	508	89	83	19	305	486	356	711	635	318	76	43	406	477	1325
B-1550	R-1550	102	559	102	89	19	356	537	381	762	686	343	89	48	610	509	1550

WEIGHTS GIVEN ARE FOR ONE ROCKER OR BOLSTER COMPLETE (INCLUDING SHEET LEAD, ANCHOR BOLTS AND WASHERS).

LEGEND

Kg - KILOGRAM
kN - KILONEWTONS

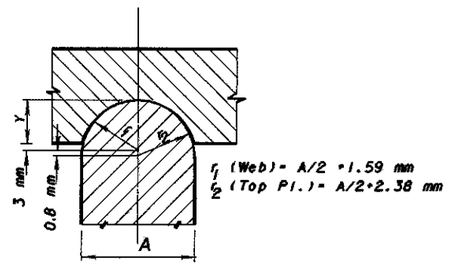

r_1 (Web) = A/2 + 1.59 mm
r_2 (Top Pl.) = A/2 + 2.38 mm

TOP BEARING DETAIL

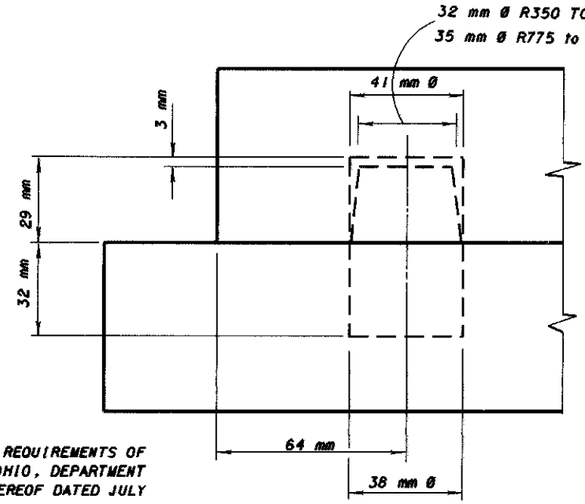

DOWEL DETAIL

DESIGN SPECIFICATIONS: THIS STANDARD DRAWING CONFORMS TO THE REQUIREMENTS OF "DESIGN SPECIFICATIONS FOR HIGHWAY STRUCTURES" OF THE STATE OHIO, DEPARTMENT OF HIGHWAYS, DATED OCTOBER 1, 1951, TOGETHER WITH REVISIONS THEREOF DATED JULY 15, 1952, APRIL 1, 1954 AND FEBRUARY 1, 1955.

LIMITATION: THIS ROCKER AND BOLSTER DESIGN SHALL NOT BE USED WHERE THE ANTICIPATED MOVEMENT IN ONE DIRECTION IS IN EXCESS OF 50 mm.

ROADWAY GRADE: IF THE ROADWAY GRADE EXCEEDS 2 % THE UPPER LOAD PLATE OF THE BEARING SHALL BE BEVELED TO MATCH THE GRADE, DIMENSION "C" SHALL BE MAINTAINED AT THE CENTER OF THE PLATE.

BOLSTER AND ROCKER CAPACITIES SHOWN ON THIS STANDARD DRAWING ARE BASED ON ACTUAL DEAD LOAD, LIVE LOAD AND IMPACT.

DESIGN AGENCY
BUREAU OF BRIDGES AND STRUCTURAL DESIGN

STATE OF OHIO DEPARTMENT OF TRANSPORTATION
ENGINEER OF BRIDGES — 10-25-94 DATE

REVISIONS	DESIGNED	CHECKED	REVISED
	JFF	JAM	LWW
	plans JFF	RB-1-55M	

STANDARD
ROCKERS AND BOLSTERS FOR STEEL BEAM AND GIRDER BRIDGES
METRIC

1 / 1