ms consultants, inc.
www.msconsultants.com

ERI - US 250-00.59
170087 PID - 90939
Dist 3 2/16/2017

Contract Proposal Available @ www.contracts.dot.state.oh.us/home

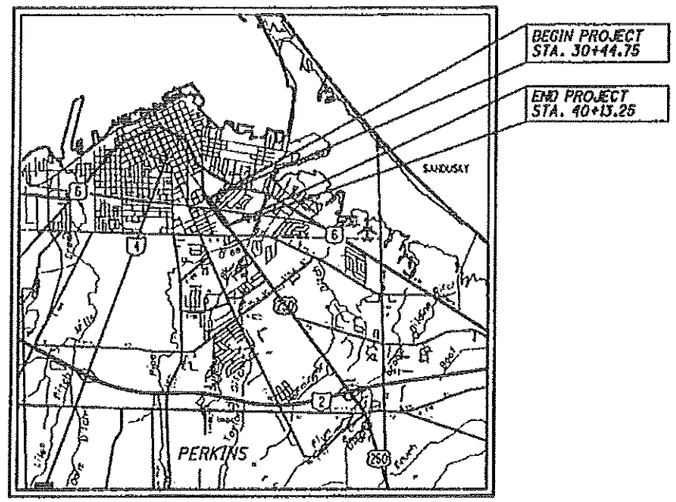

LOCATION MAP

LATITUDE: 41°26'20" LONGITUDE: 82°41'39"

SCALE IN MILES
0 1 2 3 4

N

PORTION TO BE IMPROVED
INTERSTATE HIGHWAY
STATE & FEDERAL ROUTES
COUNTY & TOWNSHIP ROADS
OTHER ROADS

DESIGN DESIGNATION

CURRENT ADT (2018)	23,000
DESIGN YEAR ADT (2038)	25,000
DESIGN HOURLY VOLUME (2038)	2,200
DIRECTIONAL DISTRIBUTION	53%
TRUCKS (24 HOUR B&C)	6%
DESIGN SPEED	35 MPH
LEGAL SPEED	35 MPH
DESIGN FUNCTIONAL CLASSIFICATION: PRINCIPLE ARTERIAL (RURAL)	
NHS PROJECT	YES

DESIGN EXCEPTIONS:

NONE

UNDERGROUND UTILITIES

CONTACT BOTH SERVICES
CALL TWO WORKING DAYS
BEFORE YOU DIG

CALL
1-800-362-2764
(TOLL FREE)
OHIO UTILITIES PROTECTION SERVICE
NON-MEMBERS
MUST BE CALLED DIRECTLY

OIL & GAS PRODUCERS UNDERGROUND
PROTECTION SERVICE CALL: 1-800-925-0988

PLAN PREPARED BY:
ms consultants, inc.
CONSULTING ENGINEERS, ARCHITECTS & PLANNERS
333 E. FEDERAL STREET
YOUNGSTOWN, OHIO 44503
PHONE: 330-744-5321

STATE OF OHIO
DEPARTMENT OF TRANSPORTATION

ERI-250-00.59

CITY OF SANDUSKY
ERIE COUNTY

INDEX OF SHEETS:

TITLE SHEET	1
TYPICAL SECTION	2
GENERAL NOTES	3
GENERAL SUMMARY	4
MAINTENANCE OF TRAFFIC	5-12
PLAN AND PROFILE	13-14
TRAFFIC CONTROL	15-19
STRUCTURE PLANS	20-52

GRADE SEPARATION WITH THE NORFOLK SOUTHERN RAILROAD

PROJECT DESCRIPTION

THIS PROJECT WILL PROVIDE BRIDGE REPAIRS FOR THE ERI-250-0059 STRUCTURE OVER NORFOLK SOUTHERN RAILROAD, 42ND STREET AND BUTLER STREET. BRIDGE REPAIR WORK INCLUDES: REHABILITATING EXPANSION JOINTS, PATCHING PORTIONS OF OUTSIDE PARAPETS AND SAFETY CURBS, PATCHING PORTIONS OF SUBSTRUCTURES, SEALING OF PATCH REPAIR AREAS, SEAL ENTIRE SURFACE OF CONCRETE DECK AND PAINTING OF BEAM ENDS ADJACENT TO EXPANSION JOINTS. WORK ALSO INCLUDES MAINTENANCE OF TRAFFIC, PAVEMENT MARKING AND SIGNING.

PROJECT EARTH DISTURBED AREA: 0.06 ACRES
ESTIMATED CONTRACTOR EARTH DISTURBED AREA: 0.250 ACRES
NOTICE OF INTENT EARTH DISTURBED AREA: N/A
(NOI NOT REQUIRED)

2016 SPECIFICATIONS

THE STANDARD SPECIFICATIONS OF THE STATE OF OHIO, DEPARTMENT OF TRANSPORTATION, INCLUDING CHANGES AND SUPPLEMENTAL SPECIFICATIONS LISTED IN THE PROPOSAL SHALL GOVERN THIS IMPROVEMENT.

I HEREBY APPROVE THESE PLANS AND DECLARE THAT THE MAKING OF THIS IMPROVEMENT WILL NOT REQUIRE THE CLOSING TO TRAFFIC OF THE HIGHWAY EXCEPT AS NOTED ON SHEET 5-6 AND THAT PROVISIONS FOR THE MAINTENANCE AND SAFETY OF TRAFFIC WILL BE AS SET FORTH ON THE PLANS AND ESTIMATES.

ENGINEERS SEAL:
STATE OF OHIO
SAMUEL J. RANDO
E-51771
REGISTERED
PROFESSIONAL ENGINEER
SEAL
SIGNED:
DATE: 9-27-16

ENGINEERS SEAL:
STATE OF OHIO
JONATHAN DAVID HREN
66551
REGISTERED
PROFESSIONAL ENGINEER
SEAL
SIGNED:
DATE: 9/27/2016

STANDARD CONSTRUCTION DRAWINGS						SUPPLEMENTAL SPECIFICATIONS	
DP-3.1	7/18/14					800	10/21/16
						821	4/20/12
DM-1.1	1/15/16					902	12/31/12
						921	4/20/12
MT-95.30	7/15/16						
MT-95.31	7/18/14						
MT-95.32	7/18/14						
MT-101.90	7/17/15						
						SPECIAL PROVISIONS	
TC-65.10	1/17/14						
TC-71.10	7/15/16						
TC-72.20	7/15/16						
EXJ-4-87	7/19/02						

OHIO DEPARTMENT OF TRANSPORTATION

APPROVED
DATE 11/18/2016 DISTRICT DEPUTY DIRECTOR

APPROVED
DATE 12-22-16 DIRECTOR, DEPARTMENT OF TRANSPORTATION

FEDERAL PROJECT NO. E-140784

PID NO. 90939

CONSTRUCTION PROJECT NO.

RAILROAD INVOLVEMENT NORFOLK SOUTHERN

ERI-250-00.59

ms consultants, inc.

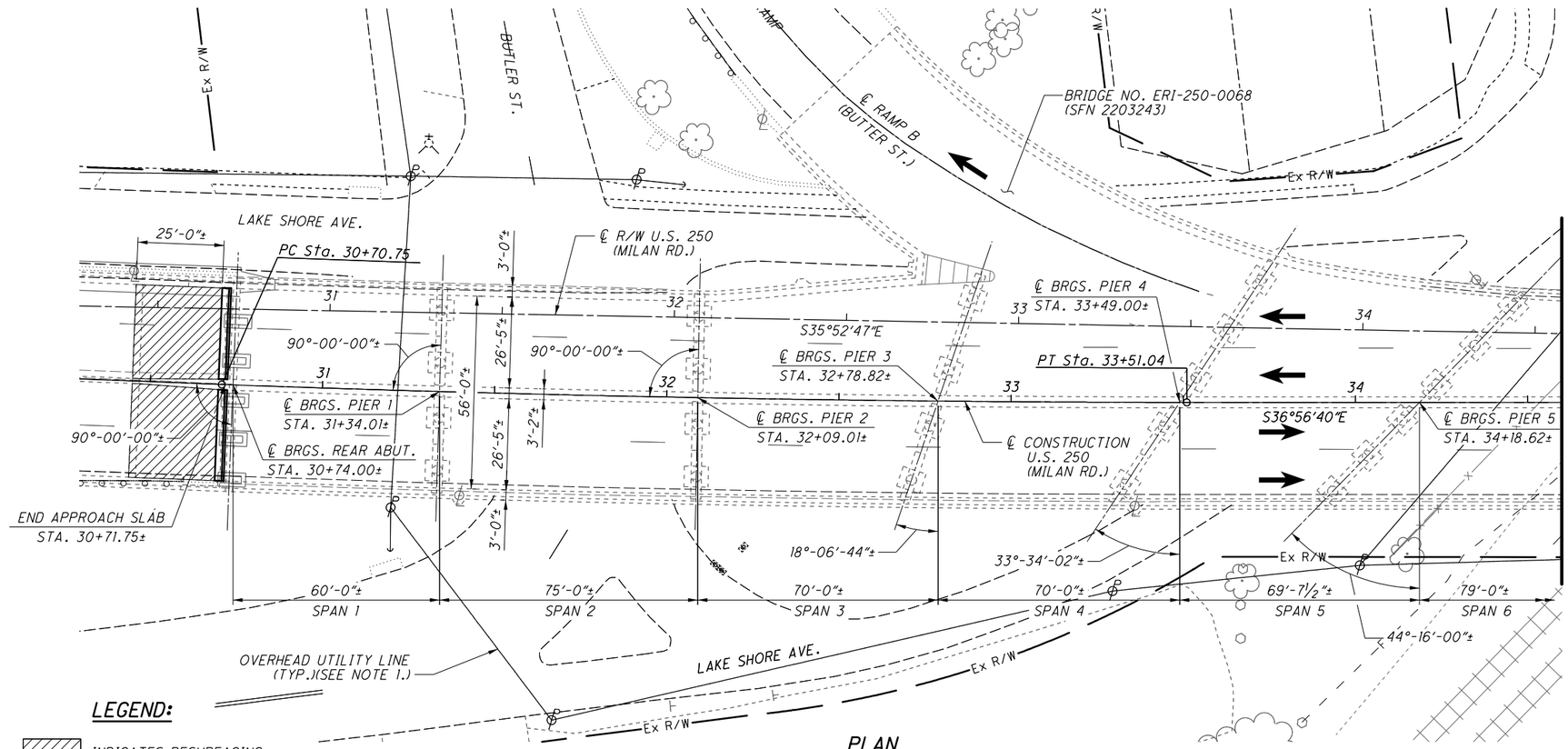

PLAN

(ALL UTILITIES TO REMAIN)

LEGEND:

INDICATES RESURFACING (SEE ROADWAY PLANS)

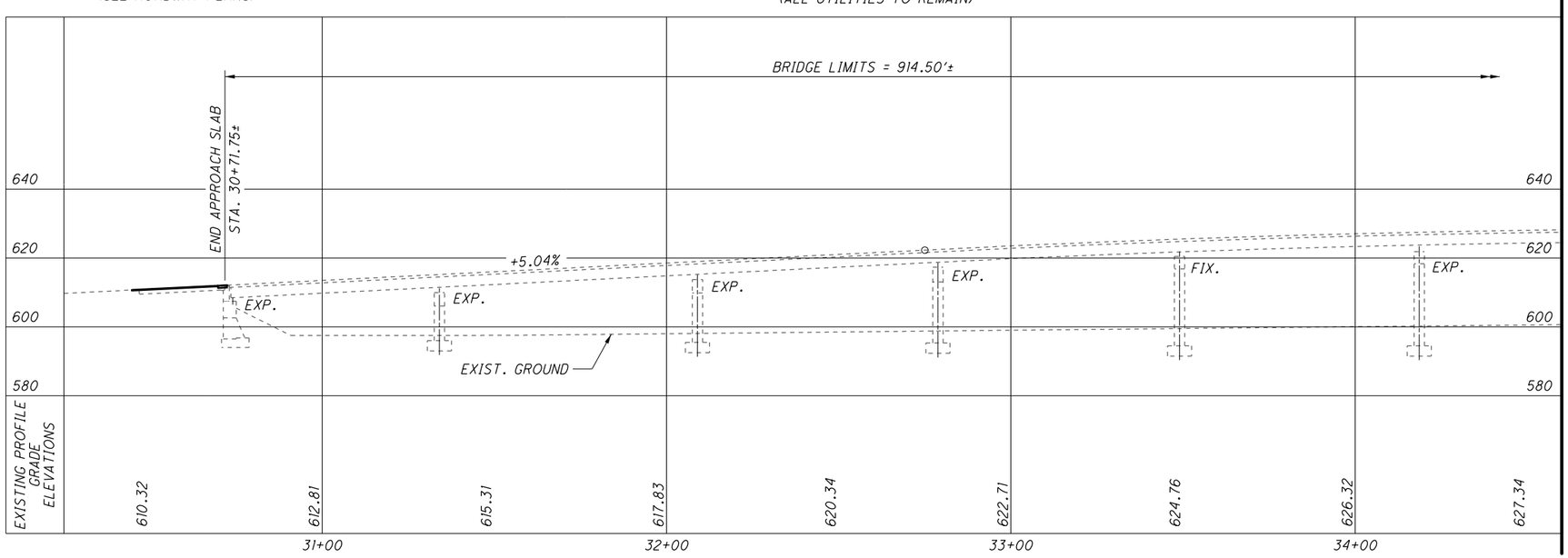

PROFILE ALONG ℄ CONSTRUCTION AT PROFILE GRADE

DESIGN TRAFFIC:
2018 ADT = 23,000 2018 ADTT = 1380
2038 ADT = 25,000 2038 ADTT = 1500
DIRECTIONAL DISTRIBUTION = 53%

HORIZONTAL CURVE DATA:

℄ CONSTRUCTION U.S. 250 (MILAN ROAD)

P.I. Sta. 32+10.91
Δ = 2° 03' 20" (LT)
Dc = 0° 44' 00"
R = 7,813.06'
T = 140.16'
L = 280.29'
E = 1.26'
C = 280.27'
C.B. = S 35° 52' 51" E

NOTE:

1. SEE ROADWAY PLANS FOR VOLTAGE IN OVERHEAD UTILITY LINES.

EXISTING STRUCTURE

TYPE: CONTINUOUS STEEL BEAM WITH REINFORCED CONCRETE DECK AND SUBSTRUCTURE SPAN 8
SPANS: 60'-0"±, 75'-0"±, 70'-0"±, 70'-0"±, 69'-7½"±, 79'-0"±, 76'-0"±, 66'-4½"±, 67'-0"±, 67'-0"±, 75'-0"±, 75'-0"±, 60'-0"± c/c BEARINGS
ROADWAY: 26'-5"± TOE OF OUTSIDE SAFETY CURB TO TOE OF MEDIAN PARAPET (EACH DIRECTION)
LOADING: CF400(57)
SKEW: VARIES 0°± AT ENDS TO 44°-16'± AT CENTER
WEARING SURFACE: 2½"± THK. MICRO-SILICA MODIFIED CONC.
APPROACH SLABS: AS-1-54 (25'-0"± LONG)
ALIGNMENT: 0°-44'± CURVE, TANGENT
SUPERELEVATION: NONE
STRUCTURAL FILE NUMBER: 2203189
DATE BUILT: 1968 REHABILITATED: 1986
DISPOSITION: PATCHING AND MINOR REPAIRS

PROPOSED STRUCTURE

PROPOSED WORK: REMOVE AND REPLACE EXP. JT. AT THE FWD. ABUT. PATCH AREAS OF SUBSTRUCTURE CONCRETE SURFACES. SEAL REAR ABUT. AND HINGE EXP. JTS. WITH CRACK SEALER. SEAL DECK WITH HMWM. PAINT ENDS OF BEAMS WITHIN 10'-0" OF EACH DECK JT. REPLACE PORTIONS OF REAR ABUT. BACKWALL AND APPR. SLAB. PATCH OUTSIDE CURB & PARAPETS. SEAL SELECTED AREAS OF CONCRETE REPAIR.
SPANS: SAME
ROADWAY: SAME
LOADING: SAME
SKEW: SAME
WEARING SURFACE: SAME
APPROACH SLABS: SAME
ALIGNMENT: SAME
LATITUDE: N 41°-26'-20"
LONGITUDE: W 82°-41'-39"

DESIGN AGENCY
ms consultants, inc.
333 E. Federal Street
Youngstown, Ohio 44503

DESIGNED	DRAWN	REVIEWED	DATE
SJR	KRM	JDH	10-23-15
CHECKED	REVISED	STRUCTURE FILE NUMBER	
LAW		2203189	

GENERAL PLAN AND PROFILE

BRIDGE NO. ERI-250-0059
OVER THE NORFOLK SOUTHERN RR, 42ND STREET AND BUTLER STREET

ERI-250-00.59
PID No. 90939

PLOT.CEL
ms consultants, inc.
msconsultants.com
www.msconsultants.com
Ohio DOT Workspace
UGF: ohdot\V8i
PCF: 60-08308_Youngstown
Batchplot Spec: \\youngstown-fs1\n\60\08308\standards\plotdrv\batchplt.spc
Pen Table: S:\std\plotting\usln\V8\pen\V8_ms_std.tbl
Plot Driver: S:\std\plotting\usln\V8\PDF.pltcfg
34" x 22"
View: SHEET
By: mnieder
Model: Sheet
Printed: 9/26/2016 @ 8:24:47 AM
File: \\youngstown-fs1\n\60\08308\structures\sheets\250_0059CGP001.dgn
ms consultants, inc.

PLOT.CEL

ms consultants, inc.
msconsultants.com

www.msconsultants.com

Ohio DOT Workspace

UCF: ohdot1V8i
PCF: 60-08308_Youngstown

Batchplot Spec: \\youngstown-fs1\n\60\08308\standards\plotdrv\batchplt.spc
Pen Table: S:\stdplotting\usetn\V8\pen\V8_ms_std.tbl
Plot Driver: S:\stdplotting\usetn\V8\PDF.pltcfg

34" x 22"

Model: Sheet
Printed: 9/26/2016 @ 8:24:48 AM
File: \\youngstown-fs1\n\60\08308\structures\sheets\250_0059CGP002.dgn
View: SHEET
By: mmeider

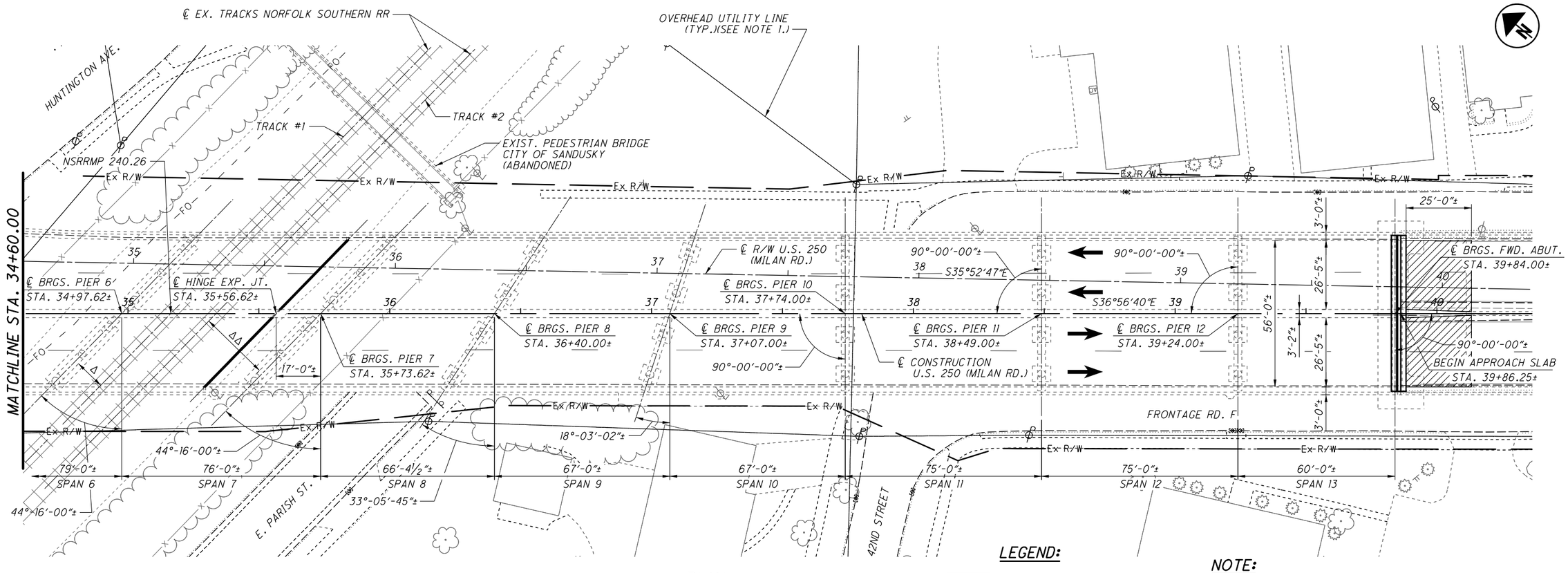

* MINIMUM VERTICAL CLEARANCE:
23.00' REQUIRED
23.05' ACTUAL

Δ MIN. HORIZONTAL CLEARANCE: 9.60' ACTUAL
ΔΔ MIN. HORIZONTAL CLEARANCE: 24.73' ACTUAL

PLAN

LEGEND:

INDICATES RESURFACING (SEE ROADWAY PLANS)

NOTE:

1. SEE ROADWAY PLANS FOR VOLTAGE IN OVERHEAD UTILITY LINES.

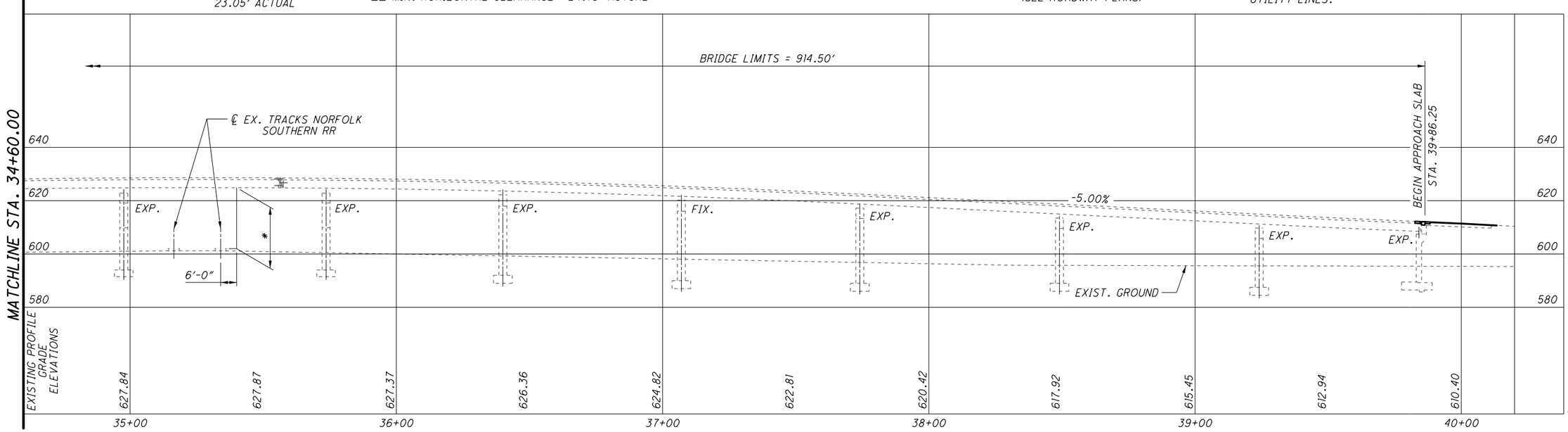

PROFILE ALONG ℄ CONSTRUCTION AT PROFILE GRADE

DESIGN AGENCY
ms consultants, inc.
333 E. Federal Street
Youngstown, Ohio 44503

DESIGNED	DRAWN	REVIEWED	DATE
SJR	KRM	JDH	10-23-15
CHECKED	REVISED	STRUCTURE FILE NUMBER	
LAW		2203189	

GENERAL PLAN AND PROFILE

BRIDGE NO. ERI-250-0059
OVER THE NORFOLK SOUTHERN RR, 42ND STREET AND BUTLER STREET

ERI-250-00.59
PID No. 90939

ms consultants, inc.

STANDARD DRAWINGS AND SUPPLEMENTAL SPECIFICATIONS

REFER TO THE FOLLOWING STANDARD BRIDGE DRAWINGS:

EXJ-4-87 REVISED 7-19-02

AND TO THE FOLLOWING SUPPLEMENTAL SPECIFICATION:

SS800-2016 DATED 1-20-17 SS921 DATED 4-20-12
SS821 DATED 4-20-12

DESIGN SPECIFICATIONS

THIS STRUCTURE CONFORMS TO "STANDARD SPECIFICATIONS FOR HIGHWAY BRIDGES" ADOPTED BY THE AMERICAN ASSOCIATION OF STATE HIGHWAY AND TRANSPORTATION OFFICALS, 17TH EDITION, INCLUDING THE 2002 INTERIM SPECIFICATIONS AND THE ODOT BRIDGE DESIGN MANUAL.

DESIGN LOADING

HS20-44, CASE II AND ALTERNATE MILITARY LOADING

DESIGN STRESSES

CONCRETE CLASS QC2 - COMPRESSIVE STRENGTH 4500 PSI (SUPERSTRUCTURE)
STRUCTURAL STEEL- ASTM A709 GRADE 50 - YIELD STRENGTH 50,000 psi
REINFORCING STEEL - ASTM A615 OR A996, GRADE 60, MINIMUM YIELD STRENGTH 60,000 PSI

DECK PROTECTION METHOD

EPOXY COATED REINFORCING STEEL (PROPOSED)
2½" CONCRETE COVER (EXISTING)
HMWM (PROPOSED)

MONOLITHIC WEARING SURFACE

MONOLITHIC WEARING SURFACE IS ASSUMED, FOR DESIGN PURPOSES, TO BE 1" THICK.

EXISTING STRUCTURE VERIFICATION

DETAILS AND DIMENSIONS SHOWN ON THESE PLANS PERTAINING TO THE EXISTING STRUCTURE HAVE BEEN OBTAINED FROM PLANS OF THE EXISTING STRUCTURES AND FROM FIELD OBSERVATIONS AND MEASUREMENTS. CONSEQUENTLY, THEY ARE INDICATIVE OF THE EXISTING STRUCTURES AND THE PROPOSED WORK BUT THEY SHALL BE CONSIDERED TENTATIVE AND APPROXIMATE. THE CONTRACTOR IS REFERRED TO CMS SECTIONS 102.05, 105.02 AND 513.04.

BASE CONTRACT BID PRICES UPON A RECOGNITION OF THE UNCERTAINTIES DESCRIBED ABOVE AND UPON A PREBID EXAMINATION OF THE EXISTING STRUCTURE. HOWEVER, PAYMENT FOR ALL PROJECT WORK SHALL BE BASED UPON ACTUAL DETAILS AND DIMENSIONS THAT HAVE BEEN VERIFIED IN THE FIELD.

ITEM 202 - PORTIONS OF STRUCTURE REMOVED, OVER 20 FOOT SPAN, AS PER PLAN

THIS WORK CONSISTS OF THE PARTIAL REMOVAL OF CONCRETE DECKS INCLUDING SIDEWALKS, PARAPETS, DECK JOINTS AND OTHER APPURTENANCES FROM STEEL SUPPORTING SYSTEMS (BEAMS, GIRDERS, CROSS FRAMES, ETC.) AS SHOWN ON THE PLANS. THIS ITEM ALSO INCLUDES THE STEEL PLATES NECESSARY TO COVER THE WORK AREA OPENING AS NOTED ON SHEETS 7/33 AND 8/33. THE PROVISIONS OF ITEM 202 APPLY EXCEPT AS SPECIFIED BY THE FOLLOWING NOTES. PERFORM WORK CAREFULLY DURING DECK REMOVALS TO PROTECT PORTIONS OF SUCH SYSTEMS THAT ARE TO BE SALVAGED AND INCORPORATED INTO THE PROPOSED REHABILITATION. THE USE OF EXPLOSIVES, HEADACHE BALLS AND/OR HOE RAM TYPE OF EQUIPMENT IS PROHIBITED. SUBMIT CONSTRUCTION PLANS ACCORDING TO CMS 501.05.

PROTECTION OF STEEL SUPPORT SYSTEMS: BEFORE DECK SLAB CUTTING IS PERMITTED, DRAW THE OUTLINE OF PRIMARY STEEL MEMBERS IN CONTACT WITH THE BOTTOM OF THE DECK ON THE SURFACE OF THE DECK. DRILL SMALL DIAMETER PILOT HOLES 2 INCHES OUTSIDE THESE LINES TO CONFIRM THE LOCATION OF FLANGE EDGES. DECK CUTS OVER OR WITHIN 2 INCHES OF FLANGE EDGES SHALL NOT EXTEND LOWER THAN THE BOTTOM LAYER OF DECK SLAB REINFORCING STEEL. CUTS MADE OUTSIDE 2 INCHES OF FLANGE EDGES MAY EXTEND THE FULL DEPTH OF THE DECK. PERFORM WORK CAREFULLY DURING CUTTING OF THE DECK SLAB TO AVOID DAMAGING STEEL MEMBERS THAT ARE TO BE INCORPORATED INTO THE PROPOSED REHABILITATION. REPLACE OR REPAIR STEEL MEMBERS DAMAGED BY THE DECK SLAB CUTTING OPERATIONS AT NO COST TO THE PROJECT. AT LEAST 7 DAYS BEFORE PERFORMING REPAIR WORK, SUBMIT A PROPOSED REPAIR PLAN, DEVELOPED BY AN OHIO REGISTERED PROFESSIONAL ENGINEER TO THE ENGINEER. OBTAIN THE ENGINEER'S APPROVAL BEFORE PERFORMING REPAIR.

REMOVAL METHODS: THE CONTRACTOR MAY REMOVE CONCRETE BY CUTTING AND BY MEANS OF HAND OPERATED PNEUMATIC HAMMERS EMPLOYING POINTED OR BLUNTED CHISEL TYPE TOOLS. FOR REMOVALS OVER STRUCTURAL MEMBERS (STEEL BEAM OR GIRDER), THE CONTRACTOR MAY USE A HAMMER HEAVIER THAN 35 POUNDS BUT NOT TO EXCEED 90 POUNDS UNLESS APPROVED BY THE ENGINEER. REMOVAL METHODS OVER STRUCTURAL MEMBERS SHALL ENSURE ADEQUATE DEPTH CONTROL AND PREVENT NICKING OR GOUGING THE PRIMARY STRUCTURAL MEMBERS.

DUE TO THE POSSIBLE PRESENCE OF ATTACHMENTS (E.G., FINISHING MACHINE, SCUPPER AND FORM SUPPORTS, ETC.) TO EXISTING STRUCTURAL MEMBERS, PERFORM WORK CAREFULLY DURING DECK REMOVAL TO AVOID DAMAGING STRUCTURAL MEMBERS THAT ARE TO REMAIN. REPLACE OR REPAIR STRUCTURAL MEMBERS DAMAGED BY THE REMOVAL OPERATIONS AT NO COST TO THE PROJECT. AT LEAST 7 DAYS BEFORE PERFORMING REPAIR WORK, SUBMIT A PROPOSED REPAIR PLAN, DEVELOPED BY AN OHIO REGISTERED PROFESSIONAL ENGINEER TO THE ENGINEER. OBTAIN THE ENGINEER'S APPROVAL BEFORE PERFORMING REPAIR.

MEASUREMENT & PAYMENT: THE DEPARTMENT WILL MEASURE THE QUANTITY OF REMOVALS ON A LUMP SUM BASIS. THE DEPARTMENT WILL PAY FOR THE ACCEPTED QUANTITIES OF REMOVALS AT THE CONTRACT PRICE FOR ITEM 202, PORTIONS OF STRUCTURE REMOVED, OVER 20 FOOT SPAN, AS PER PLAN.

CUT LINE CONSTRUCTION JOINT PREPARATION

SAW CUT BOUNDARIES OF PROPOSED CONCRETE REMOVALS 1 INCH DEEP. REMOVE CONCRETE TO A ROUGH SURFACE. LEAVE THE EXISTING REINFORCING STEEL, IF REQUIRED IN THE PLANS, IN PLACE. INSTALL DOWEL BARS IF SPECIFIED. PRIOR TO CONCRETE PLACEMENT ABRASIVELY CLEAN JOINT SURFACES AND EXISTING EXPOSED REINFORCEMENT TO REMOVE LOOSE AND DISINTEGRATED CONCRETE AND LOOSE RUST. THOROUGHLY CLEAN THE JOINT SURFACE AND EXPOSED REINFORCEMENT OF ALL DIRT, DUST, RUST OR OTHER FOREIGN MATERIAL BY THE USE OF WATER, AIR UNDER PRESSURE, OR OTHER METHODS THAT PRODUCE SATISFACTORY RESULTS. EXISTING REINFORCING STEEL DOES NOT HAVE TO HAVE A BRIGHT STEEL FINISH, BUT REMOVE ALL PACK AND LOOSE RUST. THOROUGHLY DRENCH EXISTING CONCRETE SURFACES WITH CLEAN WATER AND ALLOW TO DRY TO A DAMP CONDITION BEFORE PLACING CONCRETE.

ITEM 509 - REINFORCING STEEL, REPLACEMENT OF EXISTING REINFORCING STEEL, AS PER PLAN

REPLACE ALL EXISTING REINFORCING BARS DEEMED BY THE ENGINEER TO BE UNUSABLE BECAUSE OF CORROSION. THE DEPARTMENT WILL MEASURE THE REPLACEMENT REINFORCING STEEL BY THE NUMBER OF POUNDS ACCEPTED IN PLACE.

REPLACE ALL EXISTING REINFORCING STEEL BARS WHICH ARE TO BE INCORPORATED INTO THE NEW WORK AND ARE DEEMED BY THE ENGINEER TO BE MADE UNUSABLE BY CONCRETE REMOVAL OPERATIONS WITH NEW EPOXY COATED REINFORCING STEEL OF THE SAME SIZE AT NO COST TO THE DEPARTMENT.

A CONTINGENCY QUANTITY OF 100 POUNDS IS INCLUDED IN THE ESTIMATED QUANTITIES.

ABBREVIATIONS:

ABUT. - ABUTMENT
APPR. - APPROACH
APPROX. - APPROXIMATE
BOT. - BOTTOM
BRG. - BEARING
C/C - CENTER TO CENTER
C.J. - CONSTRUCTION JOINT
COL. - COLUMN
CONC. - CONCRETE
CONST. - CONSTRUCTION
C.P.P. - CORRUGATED PLASTIC PIPE
DIA. - DIAMETER
EL. - ELEV. - ELEVATION
EX. - EXIST. - EXISTING
EXP. - EXPANSION
EQ. SPA. - EQUAL SPACE
E.F. - EACH FACE
F.A. - FORWARD ABUTMENT
F.F. - FAR FACE
F/F - FACE TO FACE
FTG. - FOOTING
FWD. - FORWARD
H.M.W.M. - HIGH MOLECULAR WEIGHT METHACRYLATE
MAX. - MAXIMUM
M.O.T. - MAINTENACE OF TRAFFIC
MIN. - MINIMUM
N.F. - NEAR FACE
O/O - OUT TO OUT
PB - PORTABLE BARRIER
P.E.J.F. - PREFORMED EXPANSION JOINT FILLER
R.A. - REAR ABUTMENT
REINF. - REINFORCING
RT. - RIGHT
SER. - SERIES
SPA. - SPACING
STA. - STATION
T & B - TOP AND BOTTOM
TYP. - TYPICAL
T/T - TOE TO TOE
U.N.O. - UNLESS NOTED OTHERWISE
VAR. - VARIES
V.C. - VERTICAL CURVE
VERT. - VERTICAL

DESIGN AGENCY
ms consultants, inc.
333 E. Federal Street
Youngstown, Ohio 44503

DESIGNED	DRAWN	REVIEWED	DATE
SJR	KRM	JDH	10-23-15
CHECKED	REVISED	STRUCTURE FILE NUMBER	
LAW		2203189	

GENERAL NOTES
BRIDGE NO. ERI-250-0059
OVER THE NORFOLK SOUTHERN RR, 42ND STREET AND BUTLER STREET

ERI-250-00.59
PID No. 90939

PLOT.CEL
ms consultants, inc.
msconsultants.com
www.msconsultants.com
Ohio DOT Workspace
UCF: ohdot1V8i
PCF: 60-08308_Youngstown
Batchplot Spec: \\youngstown-fs1\n\60\08308\standards\plotdrv\batchplt.spc
Pen Table: S:\std\plotting\usstn\V8\pen\V8_ms_std.tbl
Plot Driver: S:\std\plotting\usstn\V8\PDP.pltcfg
34" x 22"
Model: Sheet View: SHEET
Printed: 9/26/2016 @ 8:24:49 AM By: mneider
File: \\youngstown-fs1\n\60\08308\structures\sheets\250_0059GCN001.dgn
ms consultants, inc.

WORK INVOLVING RAILROADS

ALL WORK WITHIN OR DIRECTLY ADJACENT TO THE RAILROAD R/W SHALL BE SUBJECT TO APPROVAL OF THE RAILROAD COMPANIES AND TO INSPECTION AT ALL TIMES BY THEIR PROPERLY DESIGNATED REPRESENTATIVE. SAFETY AND CONTINUITY OF OPERATIONS OF THE RAILROADS SHALL BE A MAJOR IMPORTANCE TO THE CONTRACTOR. THE SAFETY OF THE RAILROAD TRAFFIC, PERSONNEL AND PROPERTY SHALL AT ALL TIMES BE PROTECTED AND SAFEGUARDED. EACH RAILROAD COMPANY SHALL BE GIVEN ADVANCE NOTICE, IN WRITING, OF THE CONTRACTOR'S PLANNED OPERATIONS WITHIN RAILROAD RIGHT-OF-WAY PER THE NOTIFICATION REQUIREMENTS OF THAT RAILROAD. THE CONTRACTOR SHALL SUBMIT FOR APPROVAL TO THE APPROPRIATE RAILROAD COMPANY PLANS AND DETAILS OF PROPOSED WORK HAVING THE POTENTIAL TO AFFECT RAILROAD OPERATIONS. NO SUCH WORK SHALL BE COMMENCED OR PROSECUTED WITHOUT THE RAILROAD'S PRIOR APPROVAL. APPROVAL OF SUCH WORK SHALL NOT BE CONSTRUED AS A RELEASE FROM RESPONSIBILITY OR LIABILTY FOR ANY DAMAGE THE RAILROAD MAY SUFFER.

THE CONTRACTOR SHALL NOT AT ANY TIME PERMIT EQUIPMENT IN HIS USE TO ENTER UPON OR FOUL THE RAILROAD COMPANY'S TRACKS EXCEPT WHEN SUCH EQUIPMENT IS PROTECTED BY THE AUTHORIZED EMPLOYEES OF THE RAILROAD COMPANY.

CONSTRUCTION CLEARANCES:
A TEMPORARY VERTICAL CONSTRUCTION CLEARANCE OF 22 FEET, MEASURED VERTICALLY FROM A POINT LEVEL WITH THE TOP OF THE HIGHEST RAIL AND 6 FEET HORIZONTALLY FROM THE CENTERLINE OF THE TRACK, SHALL BE MAINTAINED AT ALL TIMES.

A MINIMUM HORIZONTAL CLEARANCE OF 13'-0" FROM CENTERLINE OF TANGENT TRACK OR 14'-0" FROM CENTERLINE OF CURVED TRACK SHALL BE MAINTAINED AT ALL TIMES. ADDITIONAL HORIZONTAL CLEARANCE MAY BE REQUIRED IN SPECIAL CASES TO BE SAFE FOR OPERATING CONDITIONS. THIS ADDITIONAL CLEARANCE WILL BE DETERMINED BY THE RAILROAD ENGINEER.

ALL PROPOSED TEMPORARY CLEARANCES WHICH ARE LESS THAN THOSE LISTED ABOVE MUST BE SUBMITTED TO RAILROAD ENGINEER FOR APPROVAL PRIOR TO CONSTRUCTION AND MUST ALSO BE AUTHORIZED BY THE REGULATORY BODY OF THE STATE IF LESS THAN THE LEGALLY PRESCRIBED CLEARANCES. EXISTING SUBSTANDARD CLEARANCES SHALL NOT BE REDUCED AT ANY TIME DURING CONSTRUCTION WITHOUT WRITTEN APPROVAL FROM THE RAILROAD.

PLANS AND CALCULATIONS COVERING ANY FALSEWORK, SHORING, EXCAVATION SUPPORTS, ETC., ADJACENT TO RAILROAD TRACKS SHOULD BE CERTIFIED TO BE COMPLETE AND SATISFACTORY BY THE SUBMITTING PUBLIC AGENCY PRIOR TO BEING SUBMITTED TO THE RAILROADS CHIEF ENGINEER OF BRIDGES AND STRUCTURES FOR REVIEW. FOUR (4) COPIES OF PLANS AND CALCULATIONS SHOULD BE SUBMITTED. A MINIMUM OF 50 DAYS SHOULD BE ALLOWED FOR THE RAILROAD'S REVIEW OF SUCH PLANS. NO EXCAVATION WILL BE ALLOWED UNTIL THE PLANS AND CALCULATIONS ARE REVIEWED AND APPROVED BY THE RAILROADS CHIEF ENGINEER OF BRIDGES AND STRUCTURES.

ALL WASTE MATERIALS GENERATED BY THIS PROJECT, INCLUDING WASHING WITH CLEANING SOLVENTS, BLASTING, SCRAPING, BRUSHING, ETC., SHALL BE THE RESPONSIBILITY OF THE CONTRACTOR AND SHALL BE CONTAINED, COLLECTED AND PROPERLY DISPOSED OF BY THE CONTRACTOR. THE CONTRACTOR AGREES TO FULLY COMPLY WITH ALL FEDERAL, STATE, AND LOCAL ENVIRONMENTAL LAWS, REGULATIONS, STATUTES AND ORDINANCES AT ALL TIMES.

NORFOLK SOUTHERN RAILWAY

"ONE CALL" SERVICES DO NOT LOCATE BURIED RAILROAD SIGNAL AND COMMUNICATION LINES. THE CONTRACTOR SHALL CONTACT THE RAILROAD'S REPRESENTATIVE, AS LISTED BELOW, 2 DAYS IN ADVANCE OF WORK AT THOSE PLACES WHERE EXCAVATION, PILE DRIVING, OR HEAVY LOADS MAY DAMAGE RAILROAD UNDERGROUND LINES ON RAILROAD PROPERTY. UPON THE REQUEST FROM THE CONTRACTOR OR AGENCY, RAILROAD SIGNAL FORCES WILL LOCATE AND PAINT MARK OR FLAG RAILROAD UNDERGROUND SIGNAL, COMMUNICATION, AND POWER LINES IN THE AREA TO BE DISTURBED FOR THE CONTRACTOR. THE CONTRACTOR SHALL AVOID EXCAVATION OR OTHER DISTURBANCE OF THESE LINES WHICH ARE CRITICAL TO THE SAFETY OF THE RAILROAD AND PUBLIC. IF DISTURBANCE OR EXCAVATION IS REQUIRED NEAR A BURIED RAILROAD SIGNAL, COMMUNICATION, OR POWER LINE, THE CONTRACTOR SHALL COORDINATE WITH THE RAILROAD TO HAVE THE LINE POTHOLED MANUALLY WITH CAREFUL HAND EXCAVATION. THE LINE SHALL BE PROTECTED BY THE CONTRACTOR DURING THE COURSE OF THE DISTURBANCE UNDER THE SUPERVISION AND DIRECTION OF A RAILROAD SIGNAL REPRESENTATIVE.

NORFOLK SOUTHERN CORPORATION
ENGINEERING DEPARTMENT
1200 PEACHTREE STREET, NE
ATLANTA, GEORGIA 30309
ATTN: D.S. STARLING
(404) 529-1436

THE CONTRACTOR SHALL NOT COMMENCE ANY WORK ON RAILROAD RIGHT-OF-WAY UNTIL HE HAS COMPLIED WITH THE FOLLOWING CONDITIONS:

1. SIGNED AND RECEIVED A FULLY EXECUTED COPY OF THE REQUIRED NORFOLK SOUTHERN CONSTRUCTION RIGHT OF ENTRY AGREEMENT.
2. GIVEN THE RAILROAD WRITTEN NOTICE IN ELECTRONIC FORMAT TO THE RAILROAD ENGINEER, WITH COPY TO THE CITY ENGINEER AT LEAST TEN DAYS IN ADVANCE OF THE DATE HE PROPOSES TO BEGIN WORK ON THE RAILROAD RIGHT-OF-WAY.
3. OBTAINED WRITTEN APPROVAL FROM THE RAILROAD PROTECTIVE LIABILITY INSURANCE COVERAGE.
4. OBTAINED RAILROAD'S FLAGGING SERVICES.
5. OBTAINED WRITTEN AUTHORIZATION FROM THE RAILROAD TO BEGIN WORK ON RAILROAD'S RIGHT-OF-WAY.
6. FURNISHED A SCHEDULE FOR ALL WORK WITHIN THE RAILROAD'S RIGHT-OF-WAY.

THE CONTRACTOR SHALL SO ARRANGE AND CONDUCT HIS WORK THAT THERE WILL BE NO INTERFERENCE WITH RAILROAD'S OPERATIONS, INCLUDING TRAIN, SIGNAL, TELEPHONE AND TELEGRAPHIC SERVICES, OR DAMAGE TO THE PROPERTY OF THE RAILROAD OR TO POLES, WIRES AND OTHER FACILITIES OF TENANTS ON THE RIGHT-OF-WAY OF THE RAILROAD. WHENEVER WORK IS LIABLE TO AFFECT THE OPERATIONS OR SAFETY OF TRAINS, THE METHOD OF DOING SUCH WORK SHALL FIRST BE SUBMITTED TO THE RAILROAD ENGINEER FOR APPROVAL, BUT SUCH APPROVAL SHALL NOT RELIEVE THE CONTRACTOR FROM LIABLITY. ANY WORK TO BE PERFORMED BY THE CONTRACTOR WHICH REQUIRES FLAGGING SERVICE OR INSPECTION SERVICE SHALL BE DEFERRED BY THE CONTRACTOR UNTIL THE FLAGGING SERVICE OR INSPECTION SERVICE REQUIRED BY THE RAILROAD IS AVAILABLE AT THE JOB SITE.

BEFORE UNDERTAKING ANY WORK WITHIN RAILROAD RIGHT-OF-WAY

1. NOTIFY THE RAILROAD'S REPRESENTATIVE AT LEAST 72 HOURS IN ADVANCE OF THE WORK.
2. RECEIVE ASSURANCE FROM THE RAILROAD'S REPRESENTATIVE THAT ARRANGEMENTS HAVE BEEN MADE FOR FLAGGING SERVICE AS MAY BE NECESSARY.
3. RECEIVE PERMISSION FROM THE RAILROAD'S REPRESENTATIVE TO PROCEED WITH THE WORK.
4. ASCERTAIN THAT THE CITY'S ENGINEER HAS RECEIVED COPIES OF NOTICE TO THE RAILROAD AND OF THE RAILROAD'S RESPONSE THERETO.

THE CONTRACTOR SHALL SUBMIT ALL CONSTRUCTION RELATED CORRESPONDENCE AND SUBMITTALS ELECTRONICALLY TO THE RAILROAD ENGINEER.

ALL WORK ON, OVER, UNDER, OR ADJACENT TO NORFOLK SOUTHERN (NS) RIGHT-OF-WAY SHALL BE DONE IN ACCORDANCE WITH THE NORFOLK SOUTHERN 'SPECIAL PROVISIONS FOR THE PROTECTION OF RAILWAY INTERESTS' (NS SPECIAL PROVISIONS).

NORFOLK SOUTHERN CHICAGO LINE CLEVELAND-ELKHART		
DEARBORN DIVISION		
TRACK NO.	TRAINS PER DAY	SPEED (MPH)
1	45	60
2	45	60

ITEM 519 - PATCHING CONCRETE STRUCTURE, AS PER PLAN

PRIOR TO THE SURFACE CLEANING SPECIFIED IN 519.04 AND WITHIN 24 HOURS OF PLACING PATCHING MATERIAL, BLAST CLEAN ALL SURFACES TO BE PATCHED INCLUDING THE EXPOSED REINFORCING STEEL. ACCEPTABLE METHODS INCLUDE HIGH-PRESSURE WATER BLASTING WITH OR WITHOUT ABRASIVES IN THE WATER, ABRASIVE BLASTING WITH CONTAINMENT, OR VACUUM ABRASIVE BLASTING.

UTILITY LINES

THE UTILITIES SHALL BORE ALL EXPENSE INVOLVED IN RELOCATING (INSTALLING) THE AFFECTED UTILITY LINES. THE CONTRACTOR AND UTILITIES ARE TO COOPERATE BY ARRANGING THEIR WORK IN SUCH A MANNER THAT INCONVENIENCE TO EITHER WILL BE HELD TO A MINIMUM.

NO UTILITY RELOCATIONS ARE ANTICIPATED FOR UTILITY CONTACT INFORMATION, SEE ROADWAY GENERAL NOTES.

ZONE PAINTING STRUCTURAL STEEL

PAINT THE LAST 10 FT. OF EACH BEAM END ADJACENT TO THE ABUTMENTS AND THE EXPANSION HINGE JOINT INCLUDING ALL CROSSFRAMES, HINGES AND OTHER STEEL WITHIN THESE LIMITS PER ITEM 513. THE PRIME COAT SHALL BE 708.01. THE TOP COAT SHALL CLOSELY MATCH THE EXISTING.

PLOT.CEL
ms consultants, inc.
msconsultants.com
www.msconsultants.com
Ohio DOT Workspace
UCF: ohdot\V8i
PCF: 60-08308_Youngstown
Batchplot Spec: \\youngstown-fs1\n\60\08308\standards\plotdrv\batchplt.spc
Pen Table: S:\std\plotting\ustn\V8\pen\V8_ms_std.tbl
Plot Driver: S:\std\plotting\ustn\V8\PDF.pltcfg
34" x 22"
Model: Sheet
Printed: 9/26/2016 @ 8:24:50 AM
File: \\youngstown-fs1\n\60\08308\structures\sheets\250_0059CGN002.dgn
View: SHEET
By: mneider

DESIGN AGENCY
ms consultants, inc.
333 E. Federal Street
Youngstown, Ohio 44503

DESIGNED	DRAWN	REVIEWED	DATE
SJR	KRM	JDH	10-23-15
CHECKED	REVISED	STRUCTURE FILE NUMBER	
LAW		2203189	

GENERAL NOTES
BRIDGE NO. ERI-250-0059
OVER THE NORFOLK SOUTHERN RR, 42ND STREET AND BUTLER STREET

ERI-250-00.59
PID No. 90939

ms consultants, inc.

CALC:	SJR	DATE:	10-06-15
CHECKED:	LAW	DATE:	10-12-15

ESTIMATED QUANTITIES

ITEM	ITEM EXT.	TOTAL	UNIT	DESCRIPTION	ABUTS.	PIER	SUPER.	GENERAL	SEE SHEET
202	11203	LS		PORTIONS OF STRUCTURE REMOVED, OVER 20 FOOT SPAN, AS PER PLAN				LS	3/33
509	10000	914	LB	EPOXY COATED REINFORCING STEEL			914		
509	20001	100 *	LB	REINFORCING STEEL, REPLACEMENT OF EXISTING REINFORCING STEEL, AS PER PLAN				100 *	3/33
510	10000	24	EACH	DOWEL HOLES WITH NONSHRINK, NONMETALLIC GROUT			24		
511	34410	15	CY	CLASS QC2 CONCRETE, SUPERSTRUCTURE			15		
512	10100	42	SY	SEALING OF CONCRETE SURFACES (EPOXY URETHANE)	42				
512	10300	5528	SY	SEALING CONCRETE BRIDGE DECKS WITH HMWM RESIN			5528		
513	95030	12	EACH	STRUCTURAL STEEL, MISC.: RECONNECT (RE-WELD) EXISTING CROSSFRAME MEMBER			12		15/33
514	00050	4376	SF	SURFACE PREPARATION OF EXISTING STRUCTURAL STEEL			4376		
514	00056	4376	SF	FIELD PAINTING OF EXISTING STRUCTURAL STEEL, PRIME COAT			4376		
514	00060	4376	SF	FIELD PAINTING STRUCTURAL STEEL, INTERMEDIATE COAT			4376		
514	00066	4376	SF	FIELD PAINTING STRUCTURAL STEEL, FINISH COAT			4376		
514	00504	6	MAN HOUR	GRINDING FINS, TEARS, SLIVERS ON EXISTING STRUCTURAL STEEL			6		
514	10000	4	EACH	FINAL INSPECTION REPAIR			4		
516	11211	60	FT	STRUCTURAL EXPANSION JOINT INCLUDING ELASTOMERIC STRIP SEAL, AS PER PLAN			60		13/33
516	31000	127	FT	JOINT SEALER			127		
519	11101	4803	SF	PATCHING CONCRETE STRUCTURE, AS PER PLAN	92.5	247.5	4463		4/33, 32/33

* INDICATES CONTINGENCY QUANTITY

DESIGN AGENCY
ms consultants, inc.
333 E. Federal Street
Youngstown, Ohio 44503

DESIGNED	DRAWN	REVIEWED	DATE
SJR	KRM	JDH	10-23-15
CHECKED	REVISED	STRUCTURE FILE NUMBER	
LAW		2203189	

ESTIMATED QUANTITIES
BRIDGE NO. ERI-250-0059
OVER THE NORFOLK SOUTHERN RR, 42ND STREET AND BUTLER STREET

ERI-250-00.59
PID No. 90939

PLOT.CEL
ms consultants, inc.
msconsultants.com
www.msconsultants.com
Ohio DOT Workspace
UCF: ohdot\V8i
PCF: 60-08308_Youngstown
Batchplot Spec: \\youngstown-fs1\n\60\08308\standards\plotdrv\batchplt.spc
Pen Table: S:\std\plotting\astn\V8\pen\V8_ms_std.tbl
Plot Driver: S:\std\plotting\astn\V8\PDF.pltcfg
34" x 22"
Model: Sheet
Printed: 9/26/2016 @ 8:24:51 AM
File: \\youngstown-fs1\n\60\08308\structures\sheets\250_0059CE0001.dgn
View: SHEET
By: mieider
ms consultants, inc.

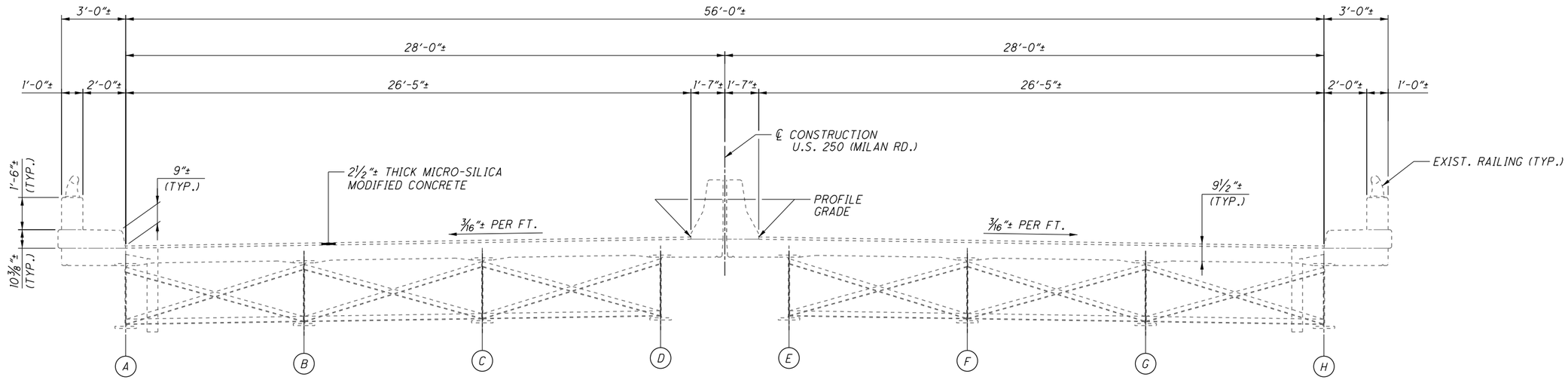

EXISTING TRANSVERSE SECTION

(56'-0"± TOE/TOE OF OUTSIDE SAFETY CURBS SHOWN)
(WIDER TRANSVERSE SECTION SIMILAR)

PROPOSED WORK

(TO BE PERFORMED IN 2 PHASES)

- PLACE TRAFFIC CONTROL SIGNS.
- PLACE PORTABLE DRUMS, INSTALL TEMPORARY STRIPING.
- DIVERT AND MAINTAIN ONE LANE OF TRAFFIC IN EACH DIRECTION AT ALL TIMES.
- REMOVE PORTIONS OF EXITING REAR ABUTMENT BACKWALL, APPROACH SLAB, AND STRIP SEAL. REMOVE PORTIONS OF HINGE STRIP SEAL. REMOVE PORTIONS OF EXISTING FORWARD ABUTMENT BACKWALL, APPROACH SLAB, JOINT ARMOR, STRIP SEAL, DECK, SAFETY CURB AND MEDIAN PARAPET.
- PLACE PORTIONS OF NEW CONCRETE AT REAR ABUTMENT AND APPROACH SLAB.
- SEAL THE EXPANSION JOINTS AT THE REAR ABUTMENT AND HINGE WITH RUBBERIZED CRACK SEALER.
- PLACE NEW STRIP SEAL JOINT ARMOR AT THE FORWARD ABUTMENT.
- PLACE PORTIONS OF NEW CONCRETE AT FORWARD ABUTMENT, DECK, SAFETY CURB AND MEDIAN PARAPET.
- INSTALL NEW ELASTOMERIC STRIP SEAL AT FORWARD ABUTMENT (INSTALL IN ONE CONTINUOS PIECE).
- PRIOR TO PAINTING, CLEAN AND PREPARE THE SURFACE OF ALL STRUCTURAL STEEL (WITHIN TEN FEET OF EACH EXPANSION JOINT) FOR PAINTING AS PER CMS 514.13 AND AS NOTED ON THE PLANS.
- PAINT ALL STRUCTURAL STEEL WITHIN TEN FEET OF EACH EXPANSION JOINT (3 TOTAL). THE TOP COAT COLOR SHALL CLOSELY MATCH THE EXISTING.
- SEAL ENTIRE DECK SURFACE WITH HMWM RESIN.
- PATCH CONCRETE SURFACES AS SHOWN ON THE PLANS.
- SEAL SELECTED LOCATIONS OF CONCRETE SURFACES AS SHOWN ON THE PLANS.
- REMOVE PORTABLE DRUMS AND TRAFFIC CONTROL SIGNS, INSTALL NEW PAVEMENT MARKINGS AND RESUME NORMAL TRAFFIC.

PLOT.CEL
ms consultants, inc.
msconsultants.com
www.msconsultants.com

Ohio DOT Workspace
UGF: ohdot\V8i
PGF: 60-08308_Youngstown
Batchplot Spec: \\youngstown-fs1\n\60\08308\standards\plotdrv\batchplt.spc
Pen Table: S:\std\plotting\usth\V8\pen\V8i_ms_std.tbl
Plot Driver: S:\std\plotting\usth\V8\PDF.pltcfg
34" x 22"
Model: Sheet View: SHEET
Printed: 9/26/2016 @ 8:24:52 AM By: mwelder
File: \\youngstown-fs1\n\60\08308\structures\sheets\250_0059CTS001.dgn

DESIGN AGENCY
ms consultants, inc.
333 E. Federal Street
Youngstown, Ohio 44503

DESIGNED	DRAWN	REVIEWED	DATE
SJR	KRM	JDH	10-23-15
CHECKED	REVISED	STRUCTURE FILE NUMBER	
LAW		2203189	

TRANSVERSE SECTION AND PROPOSED WORK NOTE

BRIDGE NO. ERI-250-0059
OVER THE NORFOLK SOUTHERN RR, 42ND STREET AND BUTLER STREET

ERI-250-00.59
PID No. 90939

ms consultants, inc.

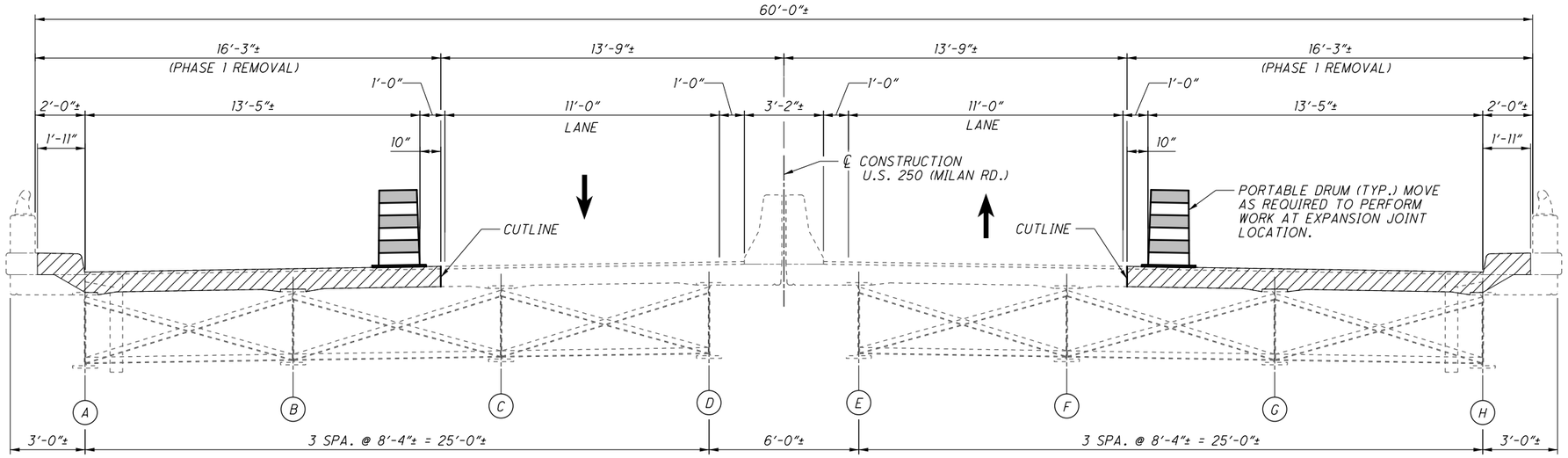

PHASE 1 REMOVAL

(AT ℄ BEARING FORWARD ABUTMENT)

NOTE:

DURING NON-CONSTRUCTION HOURS AFTER CONCRETE REMOVAL AT FORWARD ABUTMENT EXPANSION JOINT LOCATION, THE CONTRACTOR SHALL PLACE A STEEL PLATE(S), FIXED FROM SLIDING, OVER THE ENTIRE OPENED AREA. MINIMUM THICKNESS OF PLATE SHALL BE ¾". THE MINIMUM LENGTH OF PLATE SHALL BE 36" LARGER THAN THE OPENING. INCLUDE WITH ITEM 202 FOR PAYMENT.

LEGEND:

- ITEM 202, PORTIONS OF STRUCTURE REMOVED, OVER 20' SPAN, AS PER PLAN.

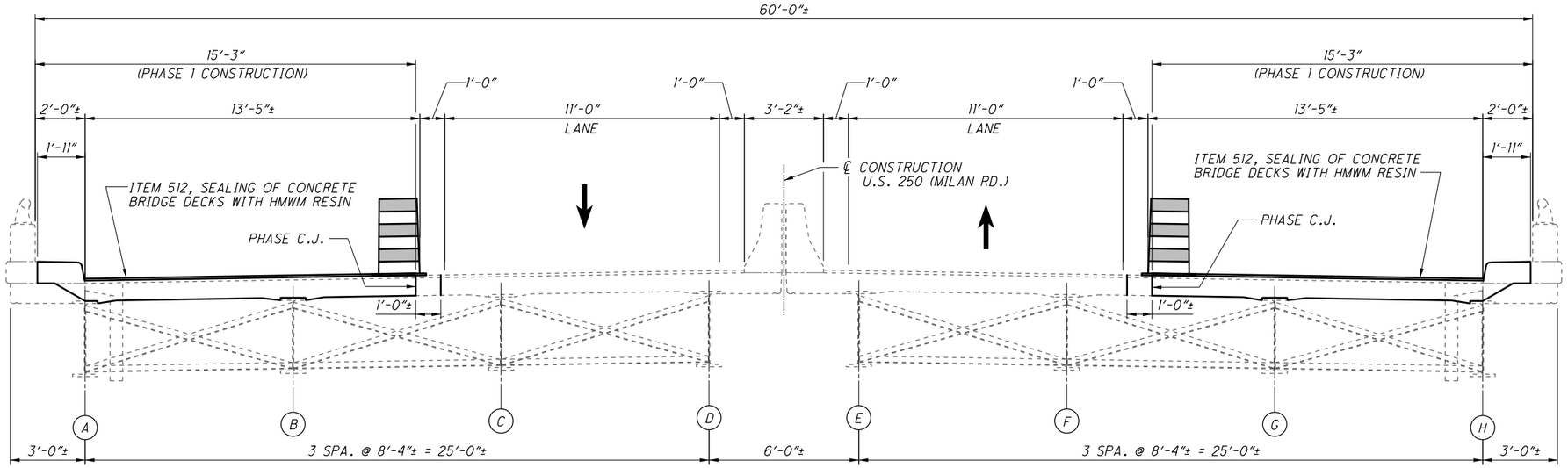

PHASE 1 CONSTRUCTION

(AT ℄ BEARING FORWARD ABUTMENT)

PLOT.CEL

ms consultants, inc.
msconsultants.com

www.msconsultants.com

Ohio DOT Workspace

UCF: ohdot1V8i
PCF: 60-08308_Youngstown

Batchplot Spec: \\youngstown-fs1\n\60\08308\standards\plotdrv\batchplt.spc
Pen Table: S:\std\plotting\usth\V8\pen\V8_ms_std.tbl
Plot Driver: S:\std\plotting\usth\V8\PDF.pltcfg

34" x 22"

View: SHEET
By: mneider

Model: Sheet
Printed: 9/26/2016 @ 8:24:53 AM
File: \\youngstown-fs1\n\60\08308\structures\sheets\250_0059CPC001.dgn

DESIGN AGENCY
ms consultants, inc.
333 E. Federal Street
Youngstown, Ohio 44503

DESIGNED	DRAWN	REVIEWED	DATE
SJR	KRM	JDH	10-23-15
CHECKED	REVISED	STRUCTURE FILE NUMBER	
LAW		2203189	

PHASE 1 REMOVAL AND CONSTRUCTION

BRIDGE NO. ERI-250-0059
OVER THE NORFOLK SOUTHERN RR, 42ND STREET AND BUTLER STREET

ERI-250-00.59
PID No. 90939

ms consultants, inc.

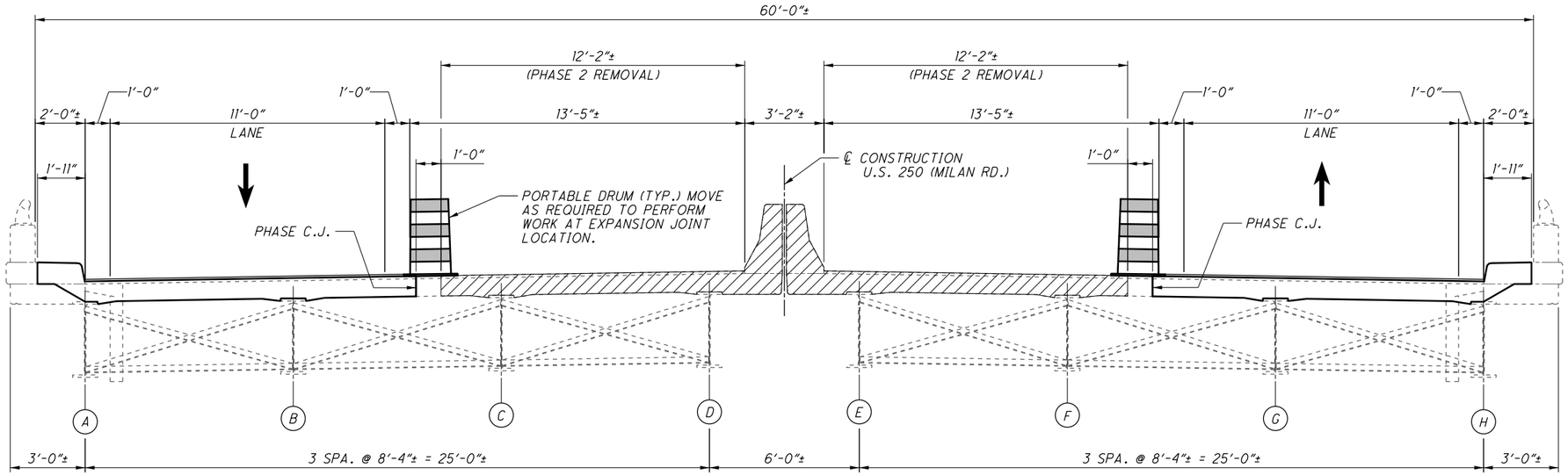

PHASE 2 REMOVAL

(AT ℄ BEARING FORWARD ABUTMENT)

NOTE:

DURING NON-CONSTRUCTION HOURS AFTER CONCRETE REMOVAL AT FORWARD ABUTMENT EXPANSION JOINT LOCATION, THE CONTRACTOR SHALL PLACE A STEEL PLATE(S), FIXED FROM SLIDING, OVER THE ENTIRE OPENED AREA. MINIMUM THICKNESS OF PLATE SHALL BE ¾". THE MINIMUM LENGTH OF PLATE SHALL BE 36" LARGER THAN THE OPENING. INCLUDE WITH ITEM 202 FOR PAYMENT.

LEGEND:

- ITEM 202, PORTIONS OF STRUCTURE REMOVED, OVER 20' SPAN, AS PER PLAN.

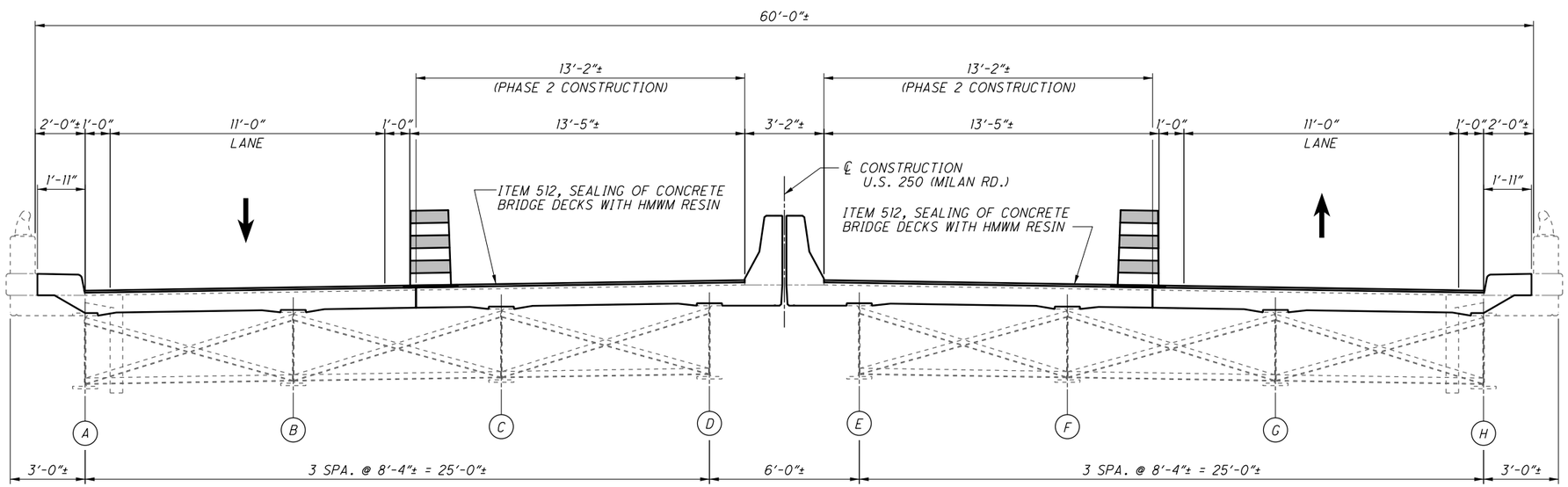

PHASE 2 CONSTRUCTION

(AT ℄ BEARING FORWARD ABUTMENT)

DESIGN AGENCY
ms consultants, inc.

DESIGNED	DRAWN	REVIEWED	DATE
SJR	KRM	JDH	10-23-15
CHECKED	REVISED	STRUCTURE FILE NUMBER	
LAW		2203189	

PHASE 2 REMOVAL AND CONSTRUCTION
BRIDGE NO. ERI-250-0059
OVER THE NORFOLK SOUTHERN RR, 42ND STREET AND BUTLER STREET

ERI-250-00.59
PID No. 90939

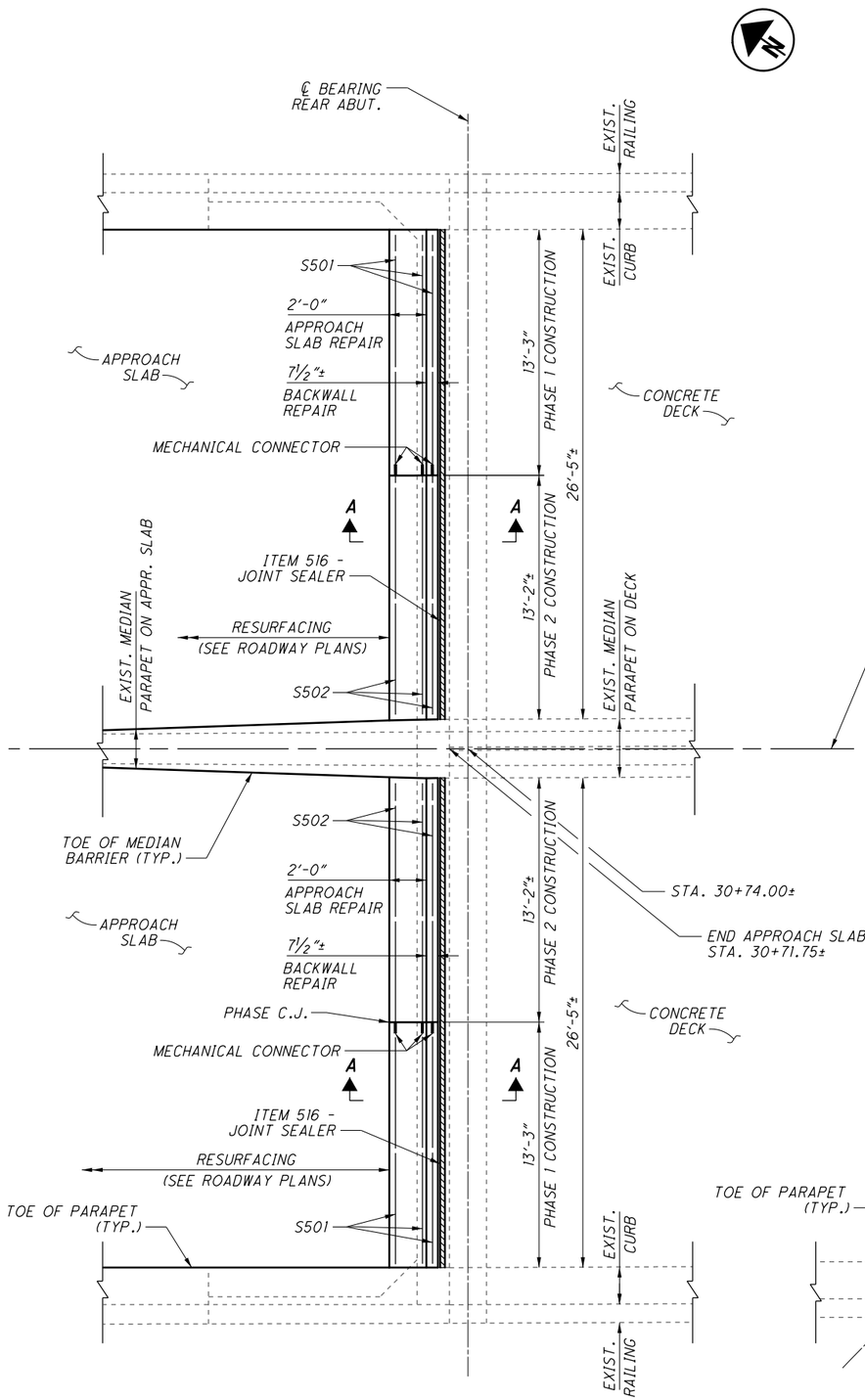

REAR ABUTMENT JOINT PLAN

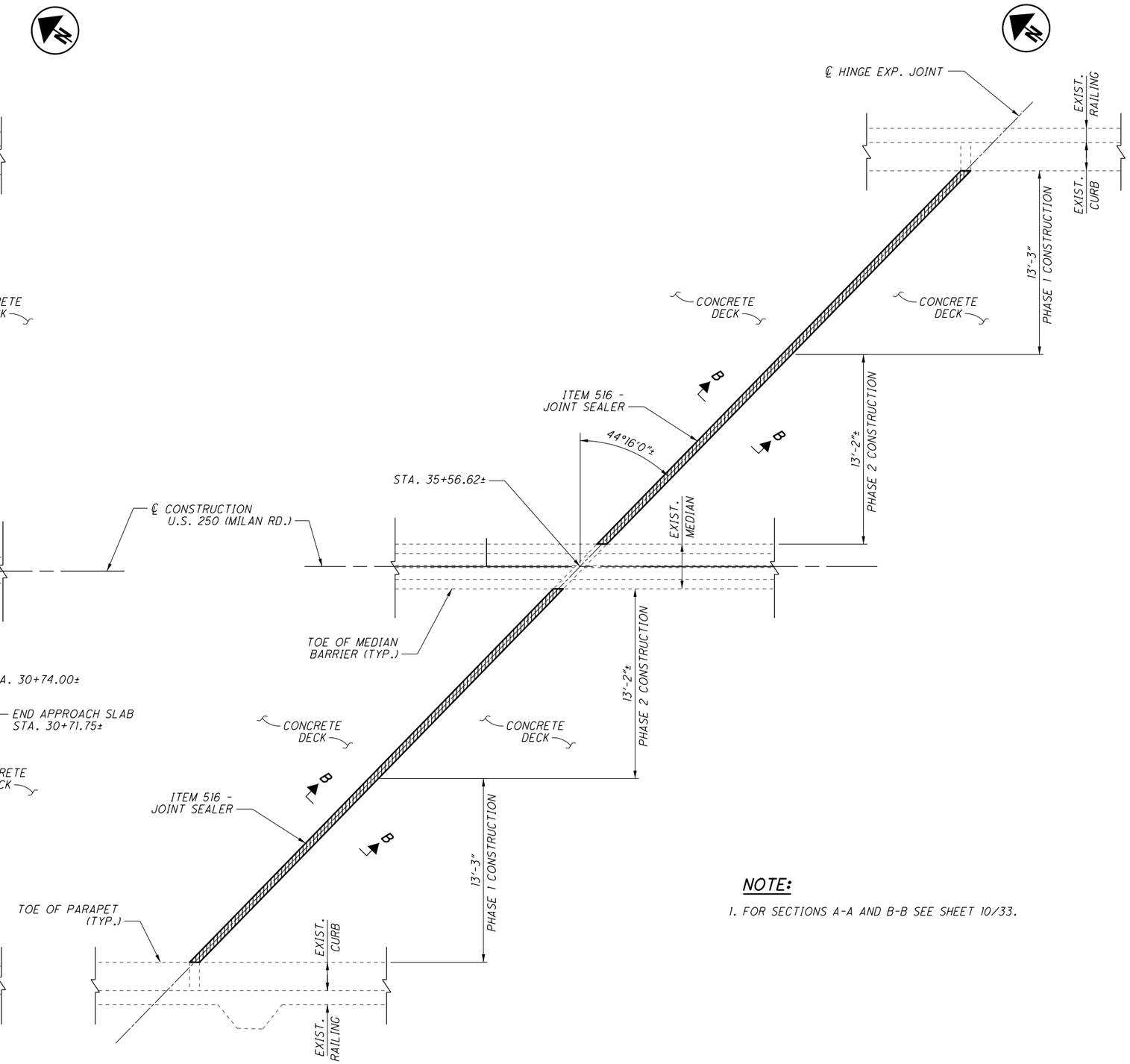

HINGE JOINT PLAN

NOTE:

1. FOR SECTIONS A-A AND B-B SEE SHEET 10/33.

PLOT.CEL

ms consultants, inc.
msconsultants.com

www.msconsultants.com

Ohio DOT Workspace

UCF: ohdot1V8i
PCF: 60-08308_Youngstown

Batchplot Spec: \\youngstown-fs1\n\60\08308\standards\plotdrv\batchplt.spc
Pen Table: S:\std\plotting\usfn\V8\pen\V8_ms_std.tbl
Plot Driver: S:\std\plotting\usfn\V8\PDF.pltcfg

34" x 22"

View: SHEET
By: mmeider

Model: Sheet
Printed: 9/26/2016 @ 8:24:56 AM
File: \\youngstown-fs1\n\60\08308\structures\sheets\250_0059CW0001.dgn

DESIGN AGENCY
ms consultants, inc.
333 E. Federal Street
Youngstown, Ohio 44503

DESIGNED	DRAWN	REVIEWED	DATE
SJR	KRM	JDH	10-23-15
CHECKED	REVISED	STRUCTURE FILE NUMBER	
LAW		2203189	

REAR ABUTMENT AND HINGE JOINT PLAN

BRIDGE NO. ERI-250-0059
OVER THE NORFOLK SOUTHERN RR, 42ND STREET AND BUTLER STREET

ERI-250-00.59
PID No. 90939

ms consultants, inc.

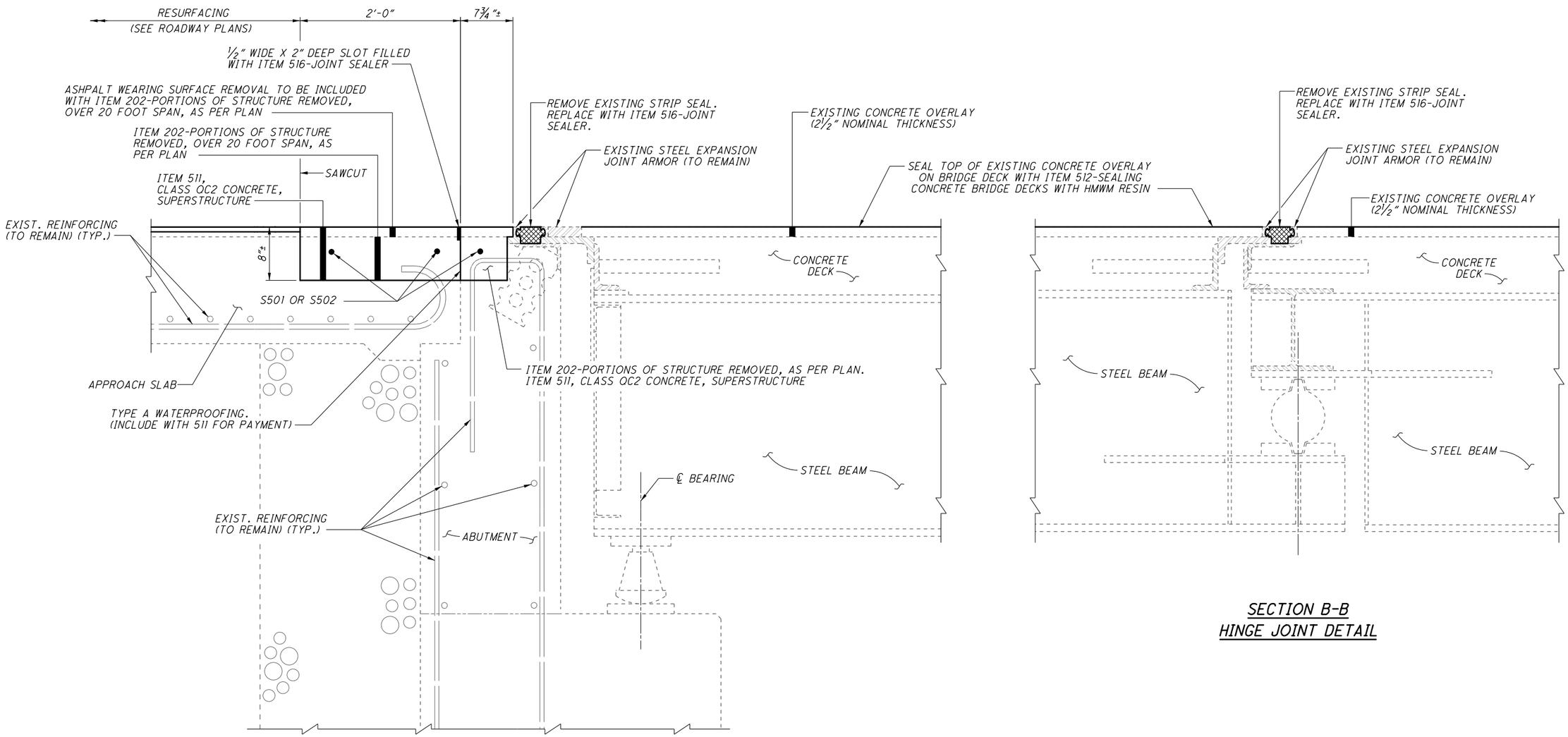

SECTION A-A
REAR ABUTMENT DETAIL

SECTION B-B
HINGE JOINT DETAIL

NOTE:

1. FOR LOCATION OF SECTIONS A-A AND B-B, SEE SHEET 9/33.

PLOT.CEL

ms consultants, inc.
msconsultants.com

www.msconsultants.com

Ohio DOT Workspace

UCF: ohdot\V8i
PCF: 60-08308_Youngstown

Batchplot Spec: \\youngstown-fs1\n\60\08308\standards\ploldrv\batchplt.spc
Pen Table: S:\std\plotting\usth\V8\pen\V8_ms_std.tbl
Plot Driver: S:\std\plotting\usth\V8\PDF.pltcfg

34" x 22"

Model: Sheet
Printed: 9/26/2016 @ 8:24:57 AM View: SHEET
By: mreider
File: \\youngstown-fs1\n\60\08308\structures\sheets\250_0059CMD002.dgn

DESIGN AGENCY
ms consultants, inc.
333 E. Federal Street
Youngstown, Ohio 44503

DESIGNED	DRAWN	REVIEWED	DATE
SJR	KRM	JDH	10-23-15
CHECKED	REVISED	STRUCTURE FILE NUMBER	
LAW		2203189	

REAR ABUTMENT AND HINGE JOINT SECTIONS
BRIDGE NO. ERI-250-0059
OVER THE NORFOLK SOUTHERN RR, 42ND STREET AND BUTLER STREET

ERI-250-00.59
PID No. 90939

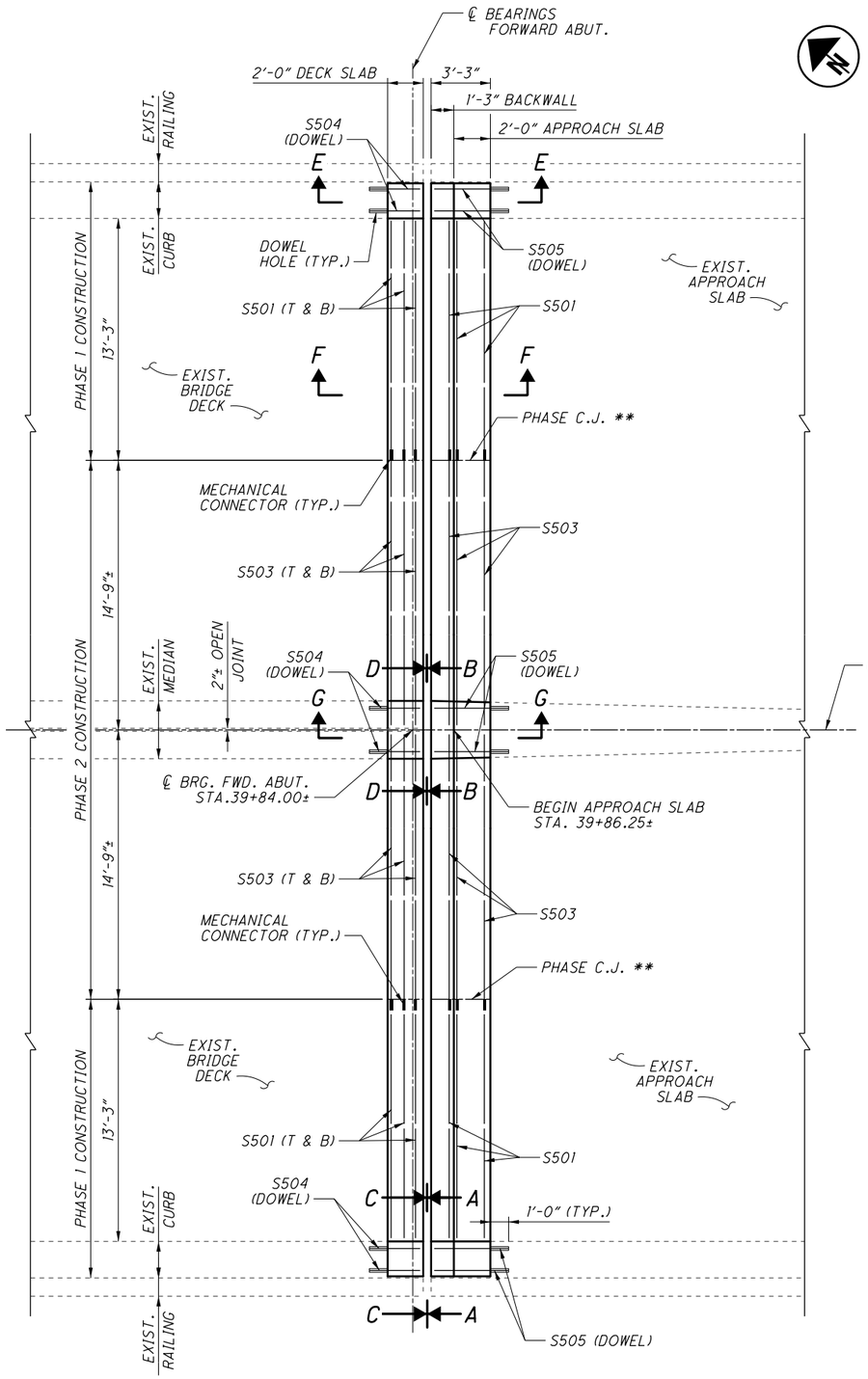

FORWARD ABUTMENT PLAN

** - SEE SHEET 12/33 FOR PHASED CONSTRUCTION JOINT DETAILS.

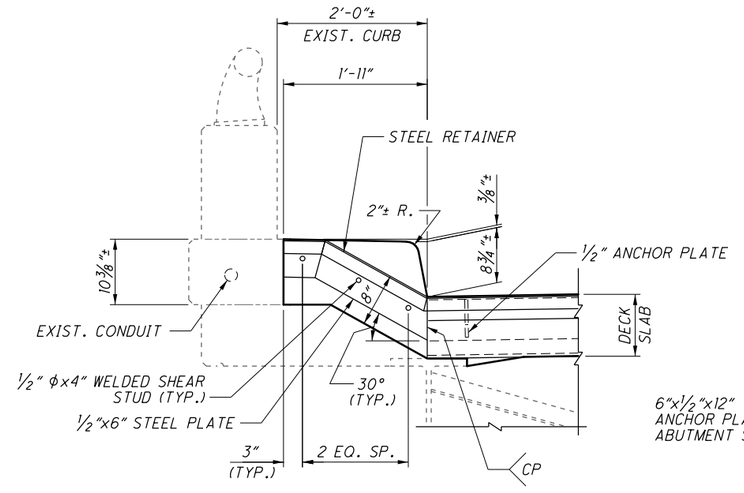

VIEW A-A

(TYPICAL JOINT ARMOR AT BRIDGE DECK CURB)

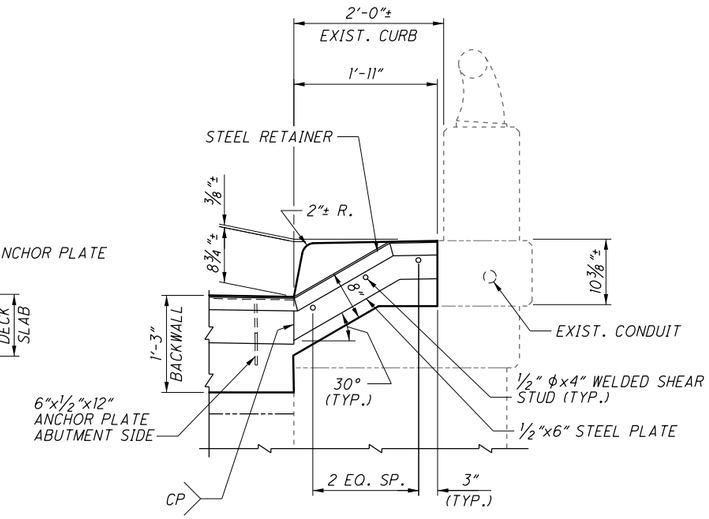

VIEW C-C

(TYPICAL JOINT ARMOR AT APPROACH SLAB CURB DETAIL ON BACKWALL)

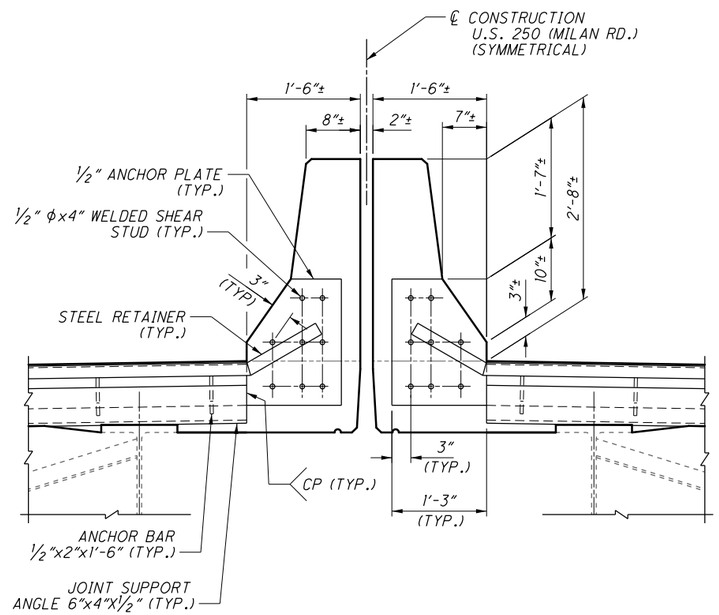

VIEW B-B

(JOINT ARMOR AT BRIDGE DECK MEDIAN BARRIER)

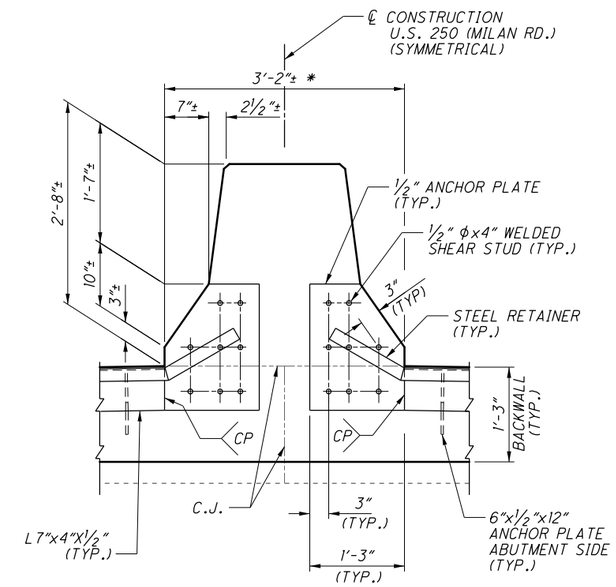

VIEW D-D

(JOINT ARMOR AT APPROACH SLAB MEDIAN BARRIER ON BACKWALL)
* - WIDTH VARIES. MATCH EXISTING AT ENDS.

NOTES:

1. FOR SECTIONS F-F, SEE SHEET 12/33.
2. FOR SECTIONS E-E AND G-G SEE SHEET 14/33.

DESIGN AGENCY
ms consultants, inc.
333 E. Federal Street
Youngstown, Ohio 44503

DESIGNED	DRAWN	REVIEWED	DATE
SJR	KRM	JDH	10-23-15
CHECKED	REVISED	STRUCTURE FILE NUMBER	
LAW		2203189	

FORWARD ABUTMENT EXPANSION JOINT DETAILS

BRIDGE NO. ERI-250-0059
OVER THE NORFOLK SOUTHERN RR, 42ND STREET AND BUTLER STREET

ERI-250-00.59
PID No. 90939

PLOT.CEL
ms consultants, inc.
msconsultants.com
www.msconsultants.com
Ohio DOT Workspace
UCF: ohdot1V8i
PCF: 60-08308_Youngstown
Batchplot Spec: \\youngstown-fs1\n\60\08308\standards\plotdrv\batchplt.spc
Pen Table: S:\std\plotting\usln\V8I\pen\V8I_ms_std.tbl
Plot Driver: S:\std\plotting\usln\V8I\PDF.pltcfg
34" x 22"
View: SHEET
By: mneider
Model: Sheet
Printed: 9/26/2016 @ 8:24:58 AM
File: \\youngstown-fs1\n\60\08308\structures\sheets\250_0059CMD003.dgn
ms consultants, inc.

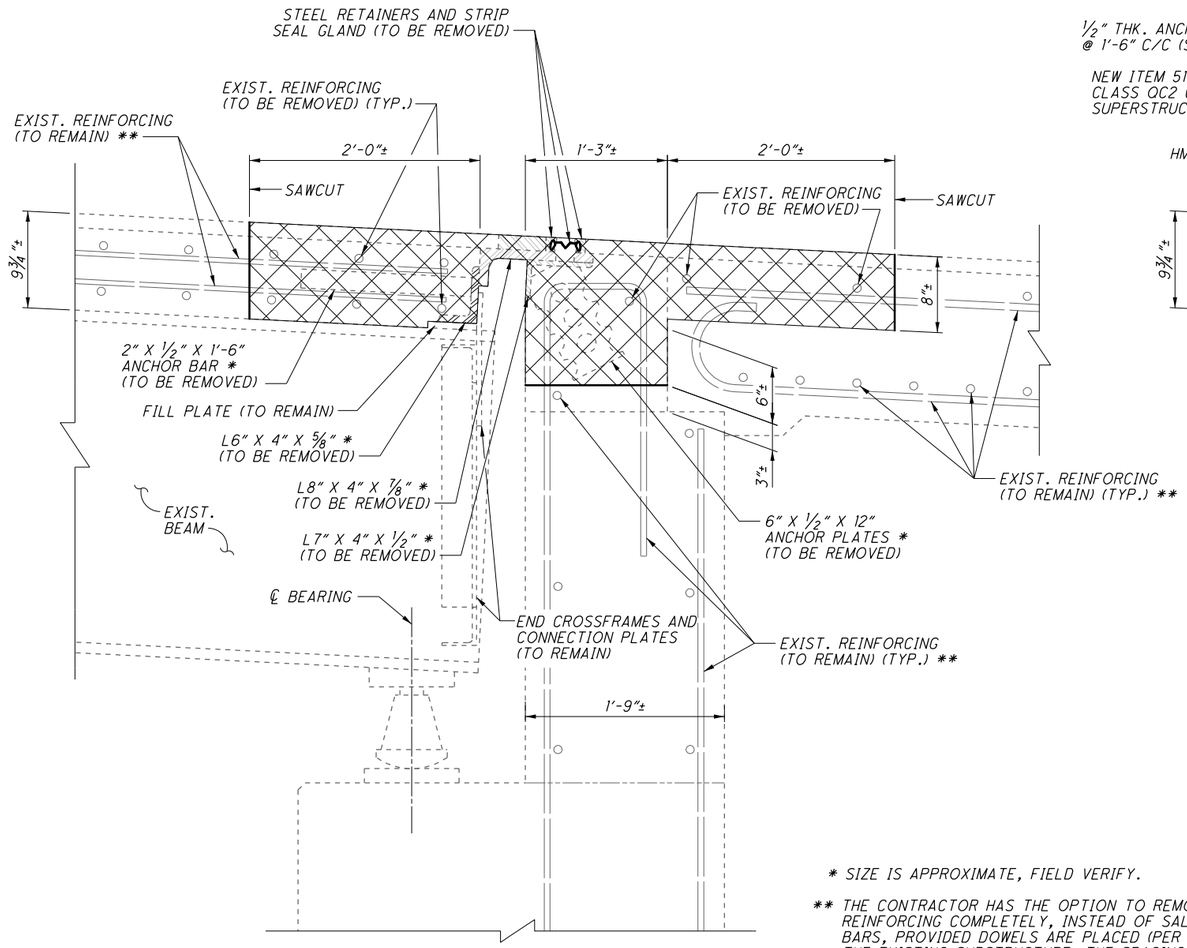

SECTION F-F
FORWARD ABUTMENT REMOVAL SECTION

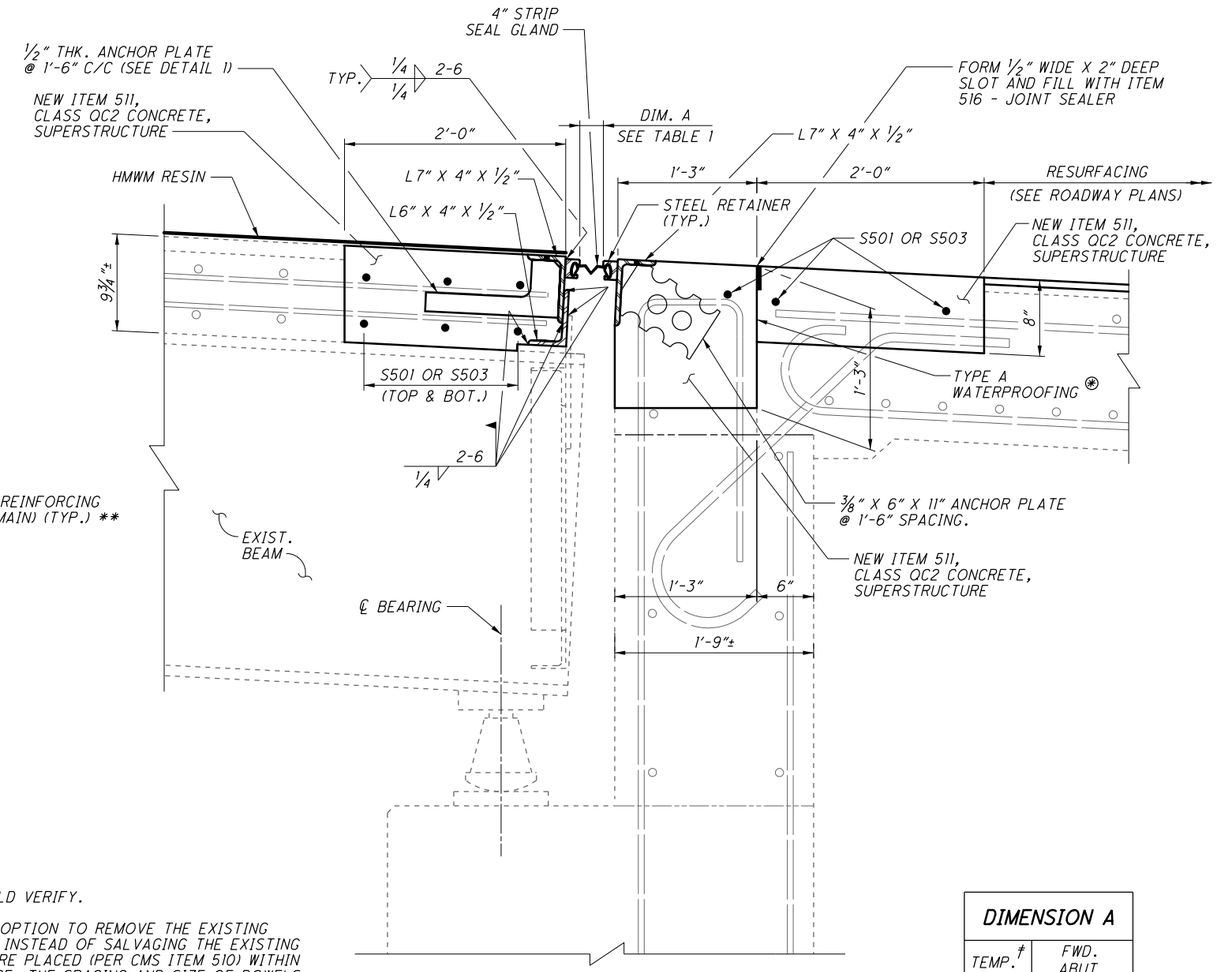

SECTION F-F
FORWARD ABUTMENT REHABILITATION SECTION

* SIZE IS APPROXIMATE, FIELD VERIFY.

** THE CONTRACTOR HAS THE OPTION TO REMOVE THE EXISTING REINFORCING COMPLETELY, INSTEAD OF SALVAGING THE EXISTING BARS, PROVIDED DOWELS ARE PLACED (PER CMS ITEM 510) WITHIN THE EXISTING SUBSTRUCTURE. THE SPACING AND SIZE OF DOWELS SHOULD MATCH THE SPACING AND SIZE OF THE EXISTING BARS.

⊛ INCLUDE WITH 511 FOR PAYMENT

ITEM 202 - PORTIONS OF STRUCTURE REMOVED, OVER 20' SPAN, AS PER PLAN

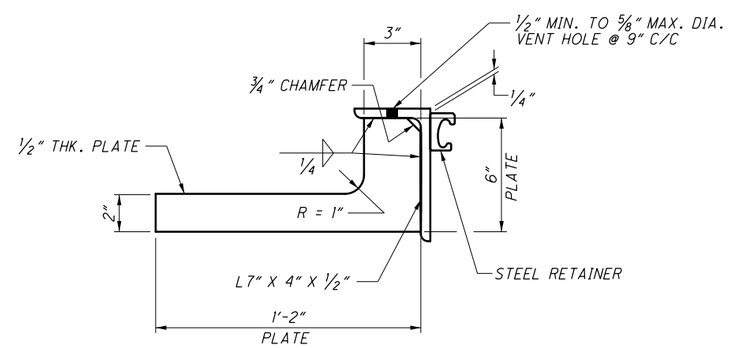

DETAIL 1

DIMENSION A	
TEMP.†	FWD. ABUT.
90°	1¼"
80°	1½"
70°	1 11/16"
60°	1 15/16"
50°	2⅛"
40°	2⅜"
30°	2 9/16"

† AMBIENT AIR TEMPERATURE (°F) AT TIME OF JOINT INSTALLATION

TABLE 1

NOTE:

1. FOR ADDITIONAL STRIP SEAL DETAILS, SEE SCD EXJ-4-87.
2. FOR LOCATION OF SECTION F-F, SEE SHEET 11/33.
3. ARMOR STEEL: ALL ANGLE SHAPES AND PLATES SHALL BE ASTM A709, GRADE 50. ALL OTHER PARTS INCLUDING RETAINERS, SHALL BE ASTM A709, GRADE 36 OR 50.

   PAYMENT WILL BE MADE AT THE CONTRACT PRICE FOR ITEM 516, STRUCTURAL EXPANSION JOINT INCLUDING ELASTOMERIC STRIP SEAL, AS PER PLAN.

DESIGN AGENCY
ms consultants, inc.
333 E. Federal Street
Youngstown, Ohio 44503

DESIGNED	DRAWN	REVIEWED	DATE
SJR	KRM	JDH	10-23-15
CHECKED	REVISED	STRUCTURE FILE NUMBER	
LAW		2203189	

FORWARD ABUTMENT SECTIONS

BRIDGE NO. ERI-250-0059
OVER THE NORFOLK SOUTHERN RR, 42ND STREET AND BUTLER STREET

ERI-250-00.59
PID No. 90939

PLOT.CEL
ms consultants, inc.
msconsultants.com
www.msconsultants.com
Ohio DOT Workspace
UCF: ohdot\V8i
PCF: 60-08308_Youngstown
Batchplot Spec: \\youngstown-fs1\n\60\08308\standards\plotdrv\batchplt.spc
Pen Table: S:\std\plotting\usfn\V8\pen\V8_ms_std.tbl
Plot Driver: S:\std\plotting\usfn\V8\PDF.pltcfg
34" x 22"
View: SHEET
By: mmeider
Model: Sheet
Printed: 9/26/2016 @ 8:24:59 AM
File: \\youngstown-fs1\n\60\08308\structures\sheets\250_0059CM0004.dgn
ms consultants, inc.

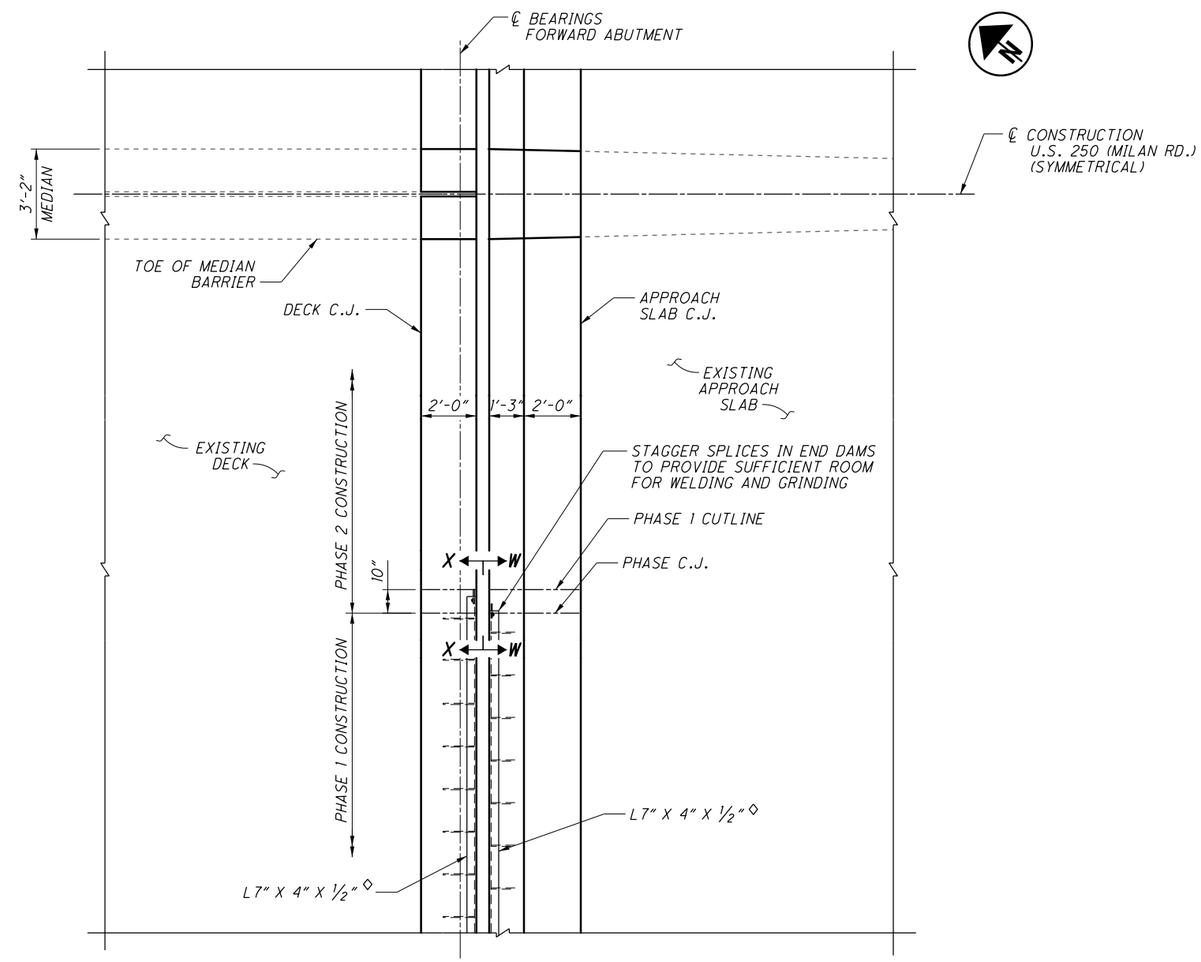

PARTIAL PLAN - FORWARD ABUTMENT
END DAM/FIELD SPLICE DETAIL

LEGEND:

◇ INCLUDE FOR PAYMENT WITH ITEM 516 - STRUCTURAL EXPANSION JOINT INCLUDING ELASTOMERIC STRIP SEAL, AS PER PLAN.

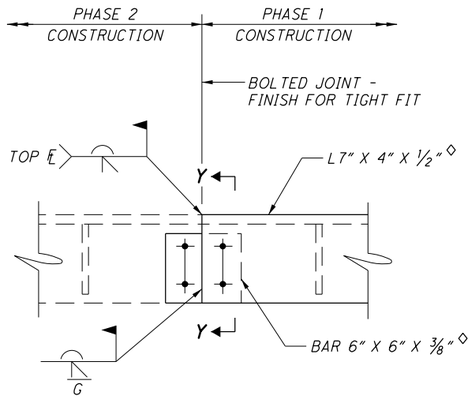

SECTION W-W
(AT ABUTMENT)

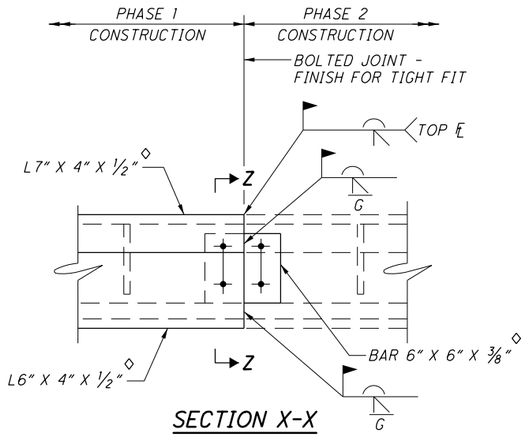

SECTION X-X
(AT DECK)

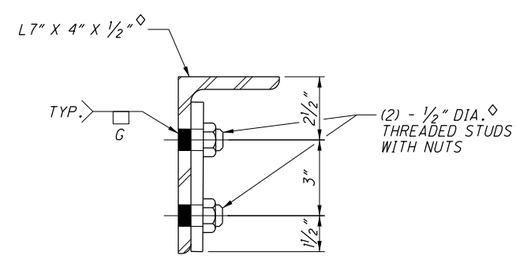

SECTION Y-Y

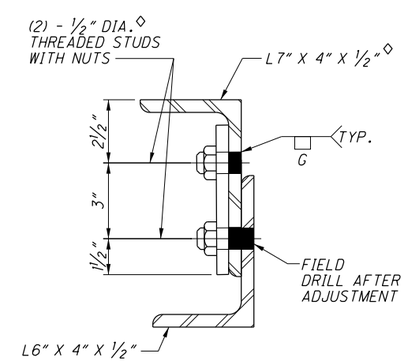

SECTION Z-Z

DESIGN AGENCY
ms consultants, inc.
333 E. Federal Street
Youngstown, Ohio 44503

DESIGNED	DRAWN	REVIEWED	DATE
SJR	KRM	JDH	10-23-15
CHECKED	REVISED	STRUCTURE FILE NUMBER	
LAW		2203189	

FORWARD ABUTMENT PHASE CONSTRUCTION DETAILS
BRIDGE NO. ERI-250-0059
OVER THE NORFOLK SOUTHERN RR, 42ND STREET AND BUTLER STREET

ERI-250-00.59
PID No. 90939

PLOT.CEL
ms consultants, inc.
msconsultants.com
www.msconsultants.com
Ohio DOT Workspace
UCF: ohdot\V8i
PCF: 60-08308_Youngstown
Batchplot Spec: \\youngstown-fs1\n\60\08308\standards\plotdrv\batchplt.spc
Pen Table: S:\std\plotting\ustn\V8\pen\V8i_ms_std.tbl
Plot Driver: S:\std\plotting\ustn\V8i\PDF.pltcfg
34" x 22"
Model: Sheet View: SHEET
Printed: 9/26/2016 @ 8:25:00 AM By: mneider
File: \\youngstown-fs1\n\60\08308\structures\sheets\250_0059CMD005.dgn
ms consultants, inc.

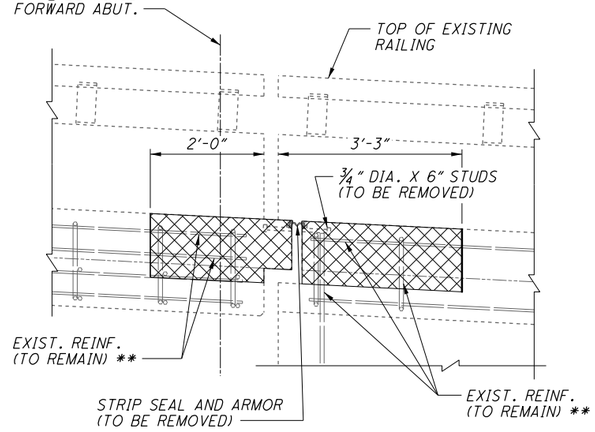

SECTION E-E
(AT CURB REMOVAL)

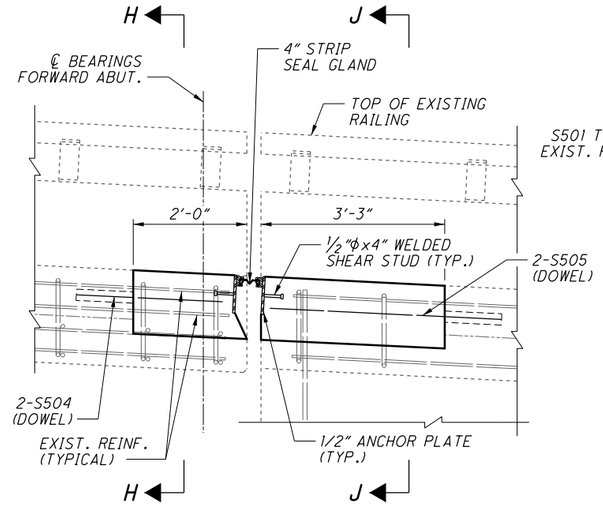

SECTION E-E
(AT CURB REHABILITATION)

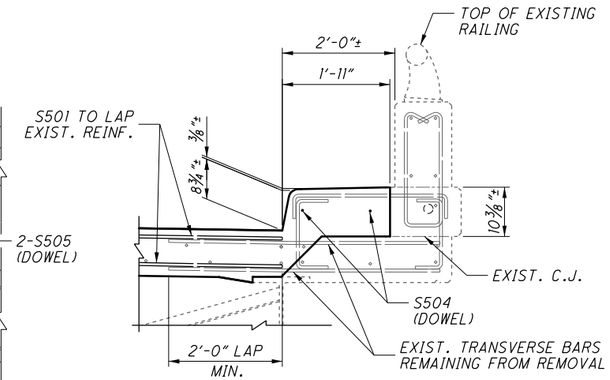

SECTION H-H
(AT CURB REHABILITATION)

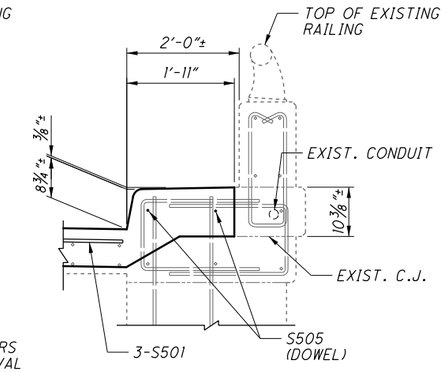

SECTION J-J
(AT CURB REHABILITATION)

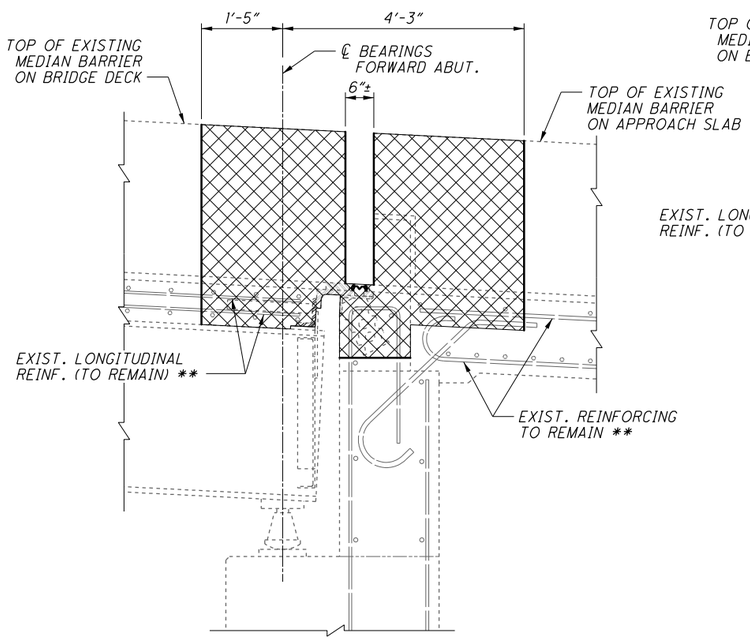

SECTION G-G
(AT FORWARD ABUTMENT MEDIAN REMOVAL)

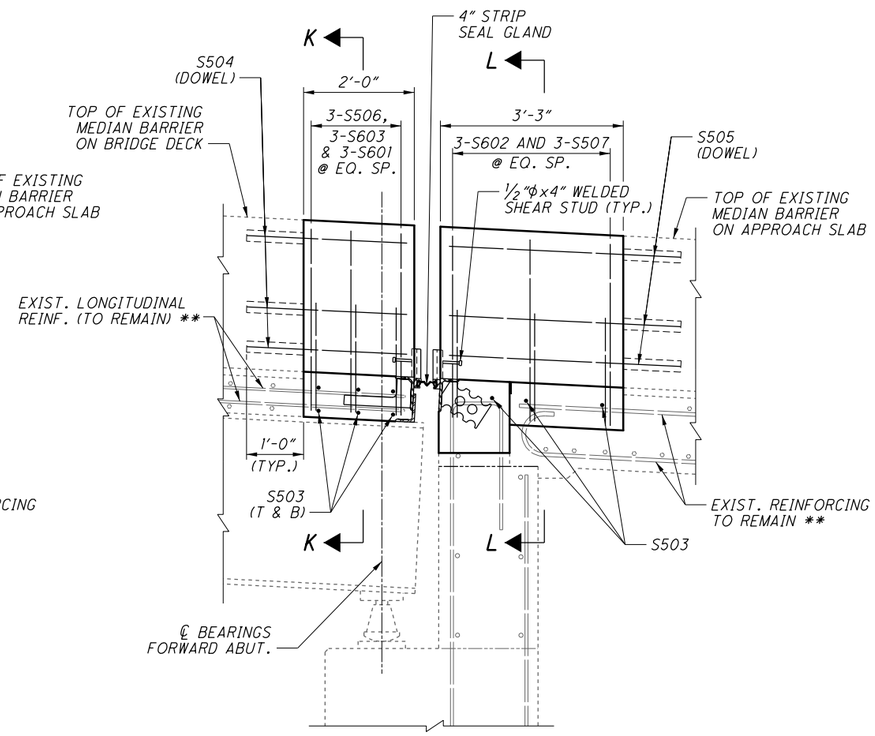

SECTION G-G
(AT FORWARD ABUTMENT MEDIAN REHABILITATION)

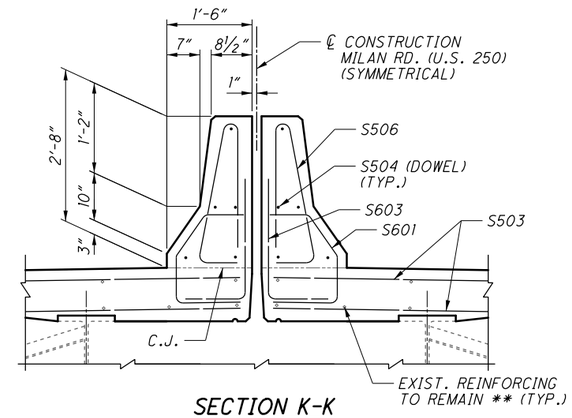

SECTION K-K
(AT MEDIAN DECK SLAB REHABILITATION)

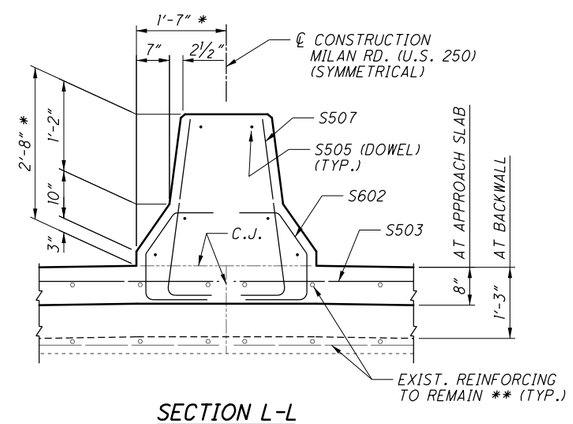

SECTION L-L
(AT MEDIAN APPROACH SLAB REHABILITATION)

LEGEND:

* SIZE IS APPROXIMATE, FIELD VERIFY.

** THE CONTRACTOR HAS THE OPTION TO REMOVE THE EXISTING REINFORCING COMPLETELY, INSTEAD OF SALVAGING THE EXISTING BARS, PROVIDED DOWELS ARE PLACED (PER CMS ITEM 510) WITHIN THE EXISTING SUBSTRUCTURE. THE SPACING AND SIZE OF DOWELS SHOULD MATCH THE SPACING AND SIZE OF THE EXISTING BARS.

ITEM 202 - PORTIONS OF STRUCTURE REMOVED, OVER 20' SPAN, AS PER PLAN

NOTES:

1. FOR ADDITIONAL STRIP SEAL DETAILS, SEE SCD EXJ-4-87.
2. DOWEL BARS SHALL BE EMBEDDED A MINIMUM OF 1'-0".
3. FOR LOCATION OF SECTION E-E AND G-G, SEE SHEET 11/33.

DESIGN AGENCY
ms consultants, inc.
333 E. Federal Street
Youngstown, Ohio 44503

DESIGNED	DRAWN	REVIEWED	DATE
LAW	LAW	JDH	10-23-15
CHECKED	REVISED	STRUCTURE FILE NUMBER	
SJR		2203189	

EXPANSION JOINT REPAIR DETAILS AT FORWARD ABUTMENT

BRIDGE NO. ERI-250-0059
OVER THE NORFOLK SOUTHERN RR, 42ND STREET AND BUTLER STREET

ERI-250-00.59
PID No. 90939

PLOT.CEL
ms consultants, inc.
msconsultants.com
www.msconsultants.com
Ohio DOT Workspace
UCF: ohdot\V8i
PCF: 60-08308_Youngstown
Batchplot Spec: \\youngstown-fs1\n\60\08308\standards\plotdrv\batchplt.spc
Pen Table: S:\std\plotting\usln\V8\pen\V8_ms_std.tbl
Plot Driver: S:\std\plotting\usln\V8\PDF.pltcfg
34" x 22"
View: SHEET
By: mmeider
Model: Sheet
Printed: 9/26/2016 @ 8:25:02 AM
File: \\youngstown-fs1\n\60\08308\structures\sheets\250_0059CMD006.dgn

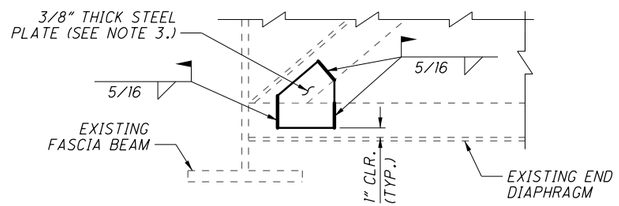

DETAIL 1

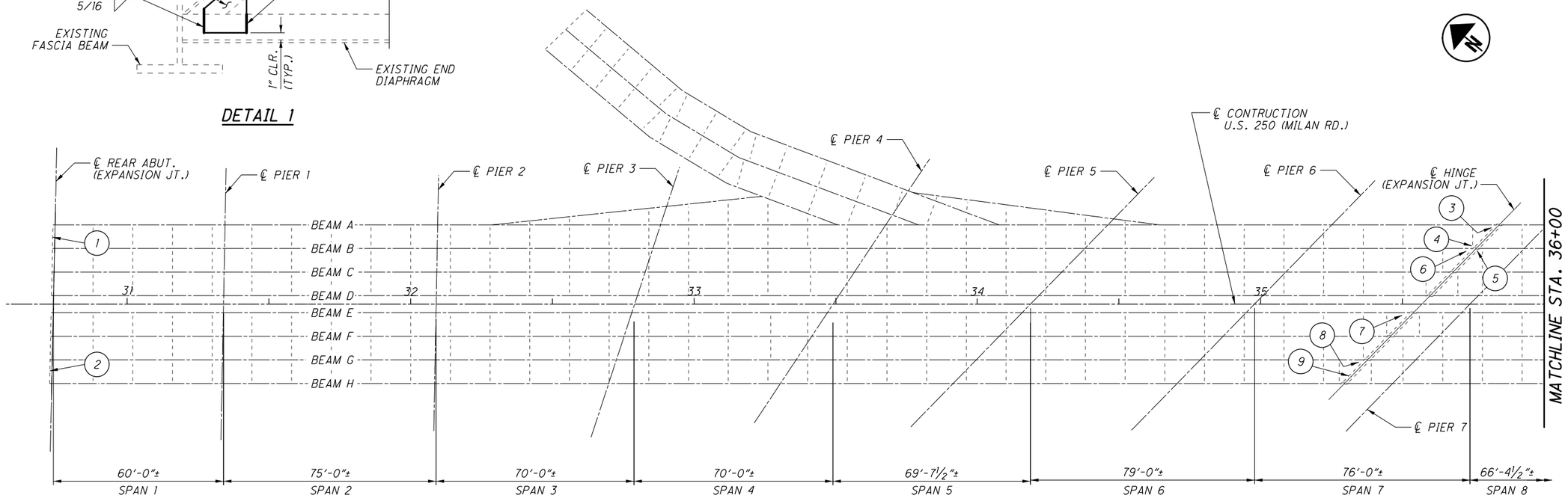

FRAMING PLAN

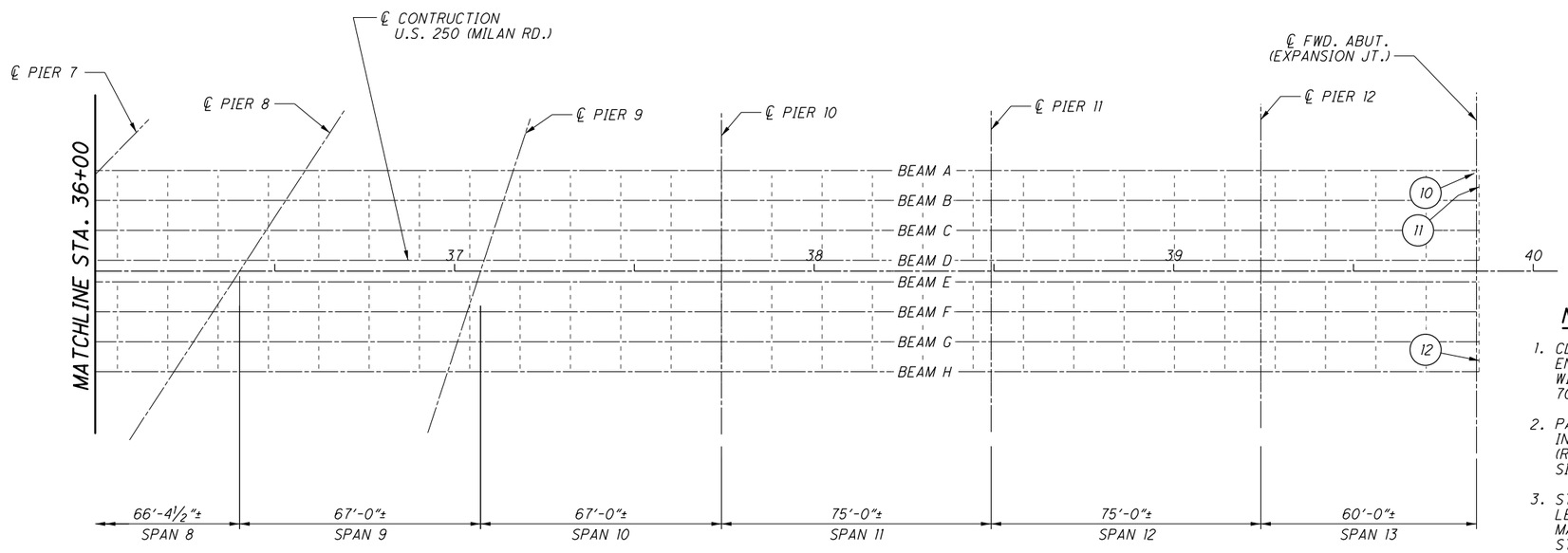

FRAMING PLAN

LEGEND:

LOCATION	DESCRIPTION
1	RE-WELD DIAG. CROSSFRAME TO TOP CONN. PLATE
2	RE-WELD DIAG. CROSSFRAME TO TOP CONN. PLATE
3	RE-WELD DIAGONAL CROSSFRAME AT CONN. PL.
4	RE-WELD DIAPHRAGM WEB CONN. TO BEAM WEB STIFFENER
5	RE-WELD DIAPHRAGM WEB CONN. TO BEAM WEB STIFFENER
6	RE-WELD DIAGONAL CROSSFRAME AT BOTTOM
7	RE-WELD DIAGONAL CROSSFRAME AT BOTTOM
8	RE-WELD DIAPHRAGM WEB CONN. TO BEAM WEB STIFFENER
9	RE-WELD DIAPHRAGM CROSSFRAME AT CENTER CONN. PL.
10	REPAIR END DIAPHRAGM (SEE DETAIL 1)
11	RE-WELD BOTH DIAPHRAGM CROSSFRAMES AT BOTT. CENTER PL.
12	RE-WELD DIAGONAL CROSSFRAME AT TOP PLATE

NOTES:

1. CLEAN AND PAINT ALL STRUCTURAL STEEL INCLUDING STEEL BEAMS, END CROSSFRAMES, STIFFENERS, HINGES, AND CONNECTION PLATES WITHIN 10 FT. OF EXPANSION JOINTS. THE PRIME COAT SHALL BE 708.01. THE TOP COAT COLOR SHALL CLOSELY MATCH EXISTING COLOR.
2. PAYMENT FOR RE-WELDING DISCONNECTED CROSSFRAMES SHALL BE INCLUDED WITH ITEM 513, STRUCTURAL STEEL. MISC.: RECONNECT (RE-WELD) EXISTING CROSSFRAME MEMBER, AS PER PLAN. MIMIMUM WELD SIZE SHALL BE 5/16".
3. STEEL PLATE SHALL BE ASTM A709 GRADE 36 OR 50 AND SUBJECT TO LEVEL UF FABRICATION REQUIREMENTS OF ODOT CONSTRUCTION AND MATERIAL SPECIFICATION 513. PRIOR TO FIELD WELDING OF THE NEW STRUCTURAL STEEL PLATE, THE CONTRACTOR SHALL REMOVE AND CLEAN ALL LOOSE AND DISINTEGRATED DEBRIS AT LEAST ONE INCH OVER THE AREA TO BE WELDED.

   INCLUDE WITH ITEM 513, STRUCTURAL STEEL, MISC.: RECONNECT (RE-WELD) EXISTING CROSSFRAME MEMBER FOR PAYMENT.

DESIGN AGENCY
ms consultants, inc.
333 E. Federal Street
Youngstown, Ohio 44503

DESIGNED	DRAWN	REVIEWED	DATE
SJR	KRM	JDH	10-23-15
CHECKED	REVISED	STRUCTURE FILE NUMBER	
LAW		2203189	

FRAMING PLAN
BRIDGE NO. ERI-250-0059
OVER THE NORFOLK SOUTHERN RR, 42ND STREET AND BUTLER STREET

ERI-250-00.59
PID No. 90939

PLOT.CEL
ms consultants, inc.
msconsultants.com
www.msconsultants.com
Ohio DOT Workspace
UGF: ohdot\V8i
PGF: 60-08308_Youngstown
Batchplot Spec: \\youngstown-fs1\n\60\08308\standards\ploldrv\batchplt.spc
Pen Table: S:\std\plotting\usth\V8\pen\V8_ms_std.tbl
Plot Driver: S:\std\plotting\usth\V8\PDF.pltcfg
34" x 22"
View: SHEET
By: mrieder
Model: Sheet
Printed: 9/26/2016 @ 8:25:04 AM
File: \\youngstown-fs1\n\60\08308\structures\sheets\250_0059CS0001.dgn
ms consultants, inc.

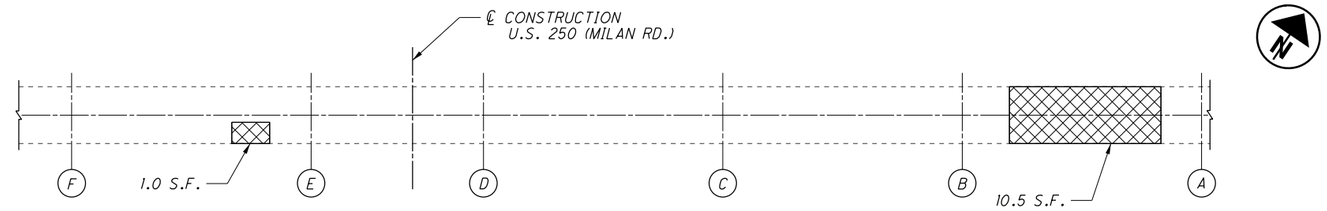

PART PLAN

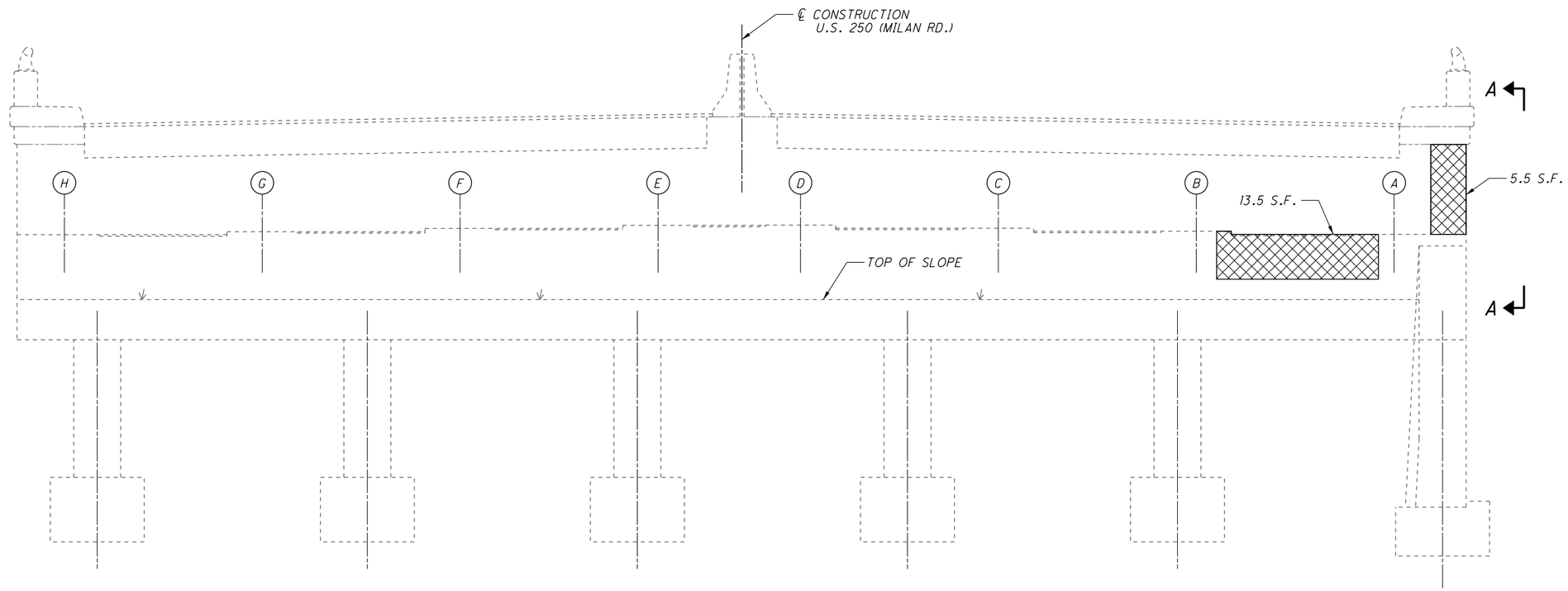

REAR ABUTMENT PATCHING ELEVATION

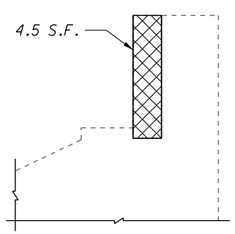

VIEW A-A

KEY	ITEM 519 - PATCHING CONCRETE STRUCTURES, AS PER PLAN	ESTIMATED PATCHING QUANITIES (SQ. FEET)		
- AREA OF SPALLING OR DELAMINATION TO BE REPAIRED PER ITEM 519	PHYSICAL INVENTORY OF MEASURED QUANTITIES OF DETERIORATION WAS PERFORMED IN MAY 2015. * ESTIMATED QUANTITIES HAVE BEEN INCREASED BY 50% OVER MEASURED QUANTITIES TO ALLOW FOR ADDITIONAL DETERIORATION. EXACT DIMENSIONS AND LOCATIONS OF PATCHES SHALL BE DETERMINED BY THE ENGINEER IN THE FIELD FOR FINAL PAY QUANTITY.	LOCATION	MEASURED QUANTITIES	ESTIMATED QUANTITIES
		REAR ABUT.	35.0	52.5 *
		TOTAL	35.0	52.5 *

NOTE:
ALL REPAIR AREAS DESIGNATED AS SHALL BE SEALED AS PER ITEM 512, SEALING OF CONCRETE SURFACES (EPOXY-URETHANE). SEALING SHALL BE CLEAR AND OVERLAP REPAIR AREA A MINIMUM OF 6". COLOR SHALL MATCH EXISTING.

DESIGN AGENCY
ms consultants, inc.
333 E. Federal Street
Youngstown, Ohio 44503

DESIGNED	DRAWN	REVIEWED	DATE
SJR	KRM	JDH	10-23-15
CHECKED	REVISED	STRUCTURE FILE NUMBER	
LAW		2203189	

REAR ABUTMENT PATCHING DETAILS
BRIDGE NO. ERI-250-0059
OVER THE NORFOLK SOUTHERN RR, 42ND STREET AND BUTLER STREET

ERI-250-00.59
PID No. 90939

PLOT.CEL
ms consultants, inc.
msconsultants.com
www.msconsultants.com
Ohio DOT Workspace
UCF: ohdotV8i
PCF: 60-08308_Youngstown
Batchplot Spec: \\youngstown-fs1\n\60\08308\standards\plotdrv\batchplt.spc
Pen Table: S:\std\plotting\ustn\V8i\pen\V8i_ms_std.tbl
Plot Driver: S:\std\plotting\ustn\V8i\PDF.pltcfg
34" x 22"
Model: Sheet
Printed: 9/26/2016 @ 8:25:05 AM
File: \\youngstown-fs1\n\60\08308\structures\sheets\250_0059CAR001.dgn
View: SHEET
By: mneider
ms consultants, inc.

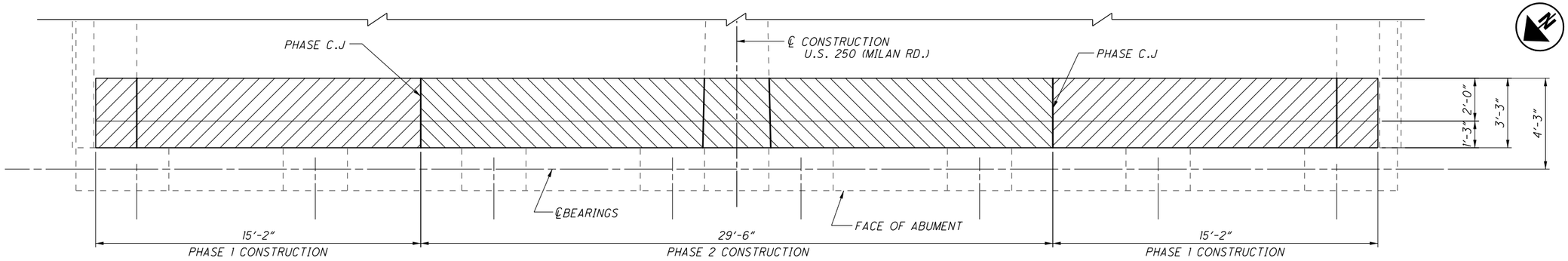

PLAN

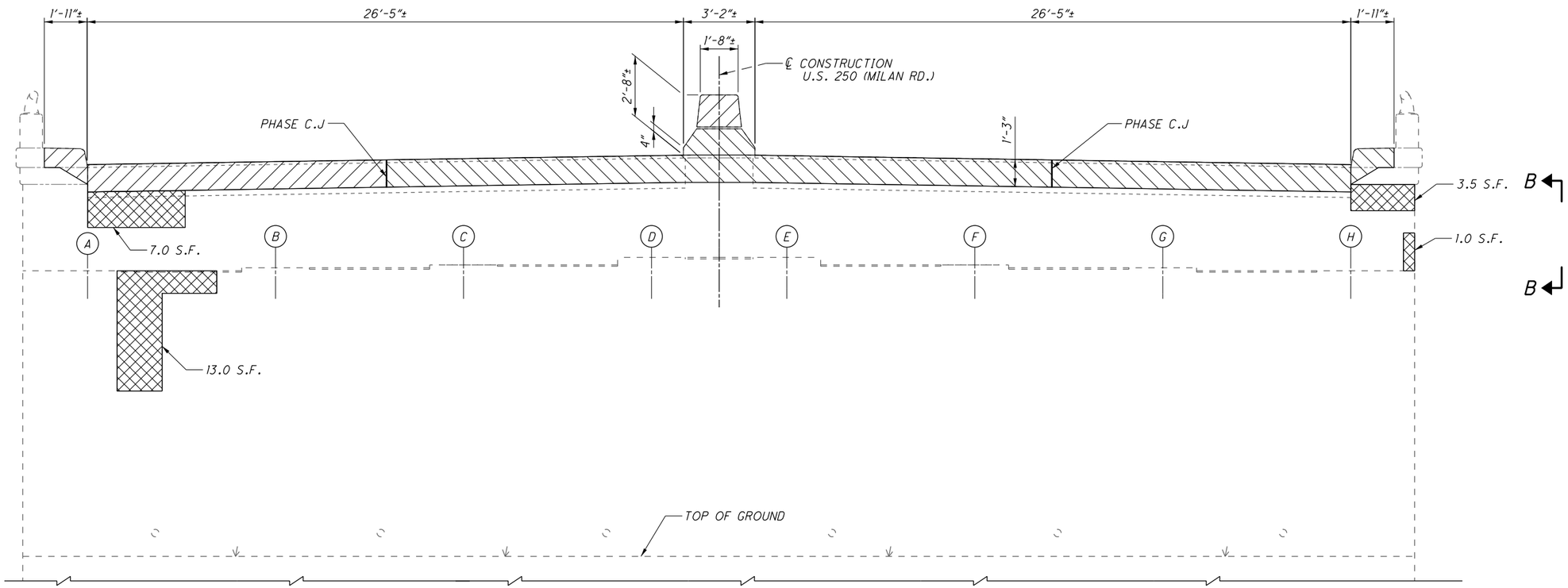

FORWARD ABUTMENT PATCHING AND REMOVAL ELEVATION

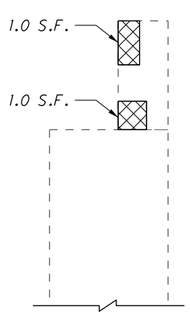

VIEW B-B

- PORTION OF STRUCTURE TO BE REMOVED

KEY
- AREA OF SPALLING OR DELAMINATION TO BE REPAIRED PER ITEM 519

ITEM 519 - PATCHING CONCRETE STRUCTURES, AS PER PLAN

PHYSICAL INVENTORY OF MEASURED QUANTITIES OF DETERIORATION WAS PERFORMED IN MAY 2015.

* ESTIMATED QUANTITIES HAVE BEEN INCREASED BY 50% OVER MEASURED QUANTITIES TO ALLOW FOR ADDITIONAL DETERIORATION.

EXACT DIMENSIONS AND LOCATIONS OF PATCHES SHALL BE DETERMINED BY THE ENGINEER IN THE FIELD FOR FINAL PAY QUANTITY.

ESTIMATED PATCHING QUANITIES
(SQ. FEET)

LOCATION	MEASURED QUANTITIES	ESTIMATED QUANTITIES
FWD. ABUT.	26.5	40.0 *
TOTAL	26.5	40.0 *

NOTE:
ALL REPAIR AREAS DESIGNATED AS ▨ SHALL BE SEALED AS PER ITEM 512, SEALING OF CONCRETE SURFACES (EPOXY-URETHANE). SEALING SHALL OVERLAP REPAIR AREA A MINIMUM OF 6". COLOR SHALL MATCH EXISTING.

DESIGN AGENCY
ms consultants, inc.
333 E. Federal Street
Youngstown, Ohio 44503

DESIGNED	DRAWN	REVIEWED	DATE
SJR	KRM	JDH	10-23-15
CHECKED	REVISED	STRUCTURE FILE NUMBER	
LAW		2203189	

FORWARD ABUTMENT PATCHING AND REMOVAL DETAILS

BRIDGE NO. ERI-250-0059
OVER THE NORFOLK SOUTHERN RR, 42ND STREET AND BUTLER STREET

ERI-250-00.59
PID No. 90939

PLOT.CEL
ms consultants, inc.
msconsultants.com
www.msconsultants.com
Ohio DOT Workspace
UGF: ohdot1V8i
PGF: 60-08308_Youngstown
Batchplot Spec: \\youngstown-fs1\n\60\08308\standards\plotdrv\batchplt.spc
Pen Table: S:\std\plotting\usin\V8\pen\V8_ms_std.tbl
Plot Driver: S:\std\plotting\usin\V8\PDF.pltcfg
34" x 22"
View: SHEET
By: mnelder
Model: Sheet
Printed: 9/26/2016 @ 8:25:06 AM
File: \\youngstown-fs1\n\60\08308\structures\sheets\250_0059CAF001.dgn
ms consultants, inc.

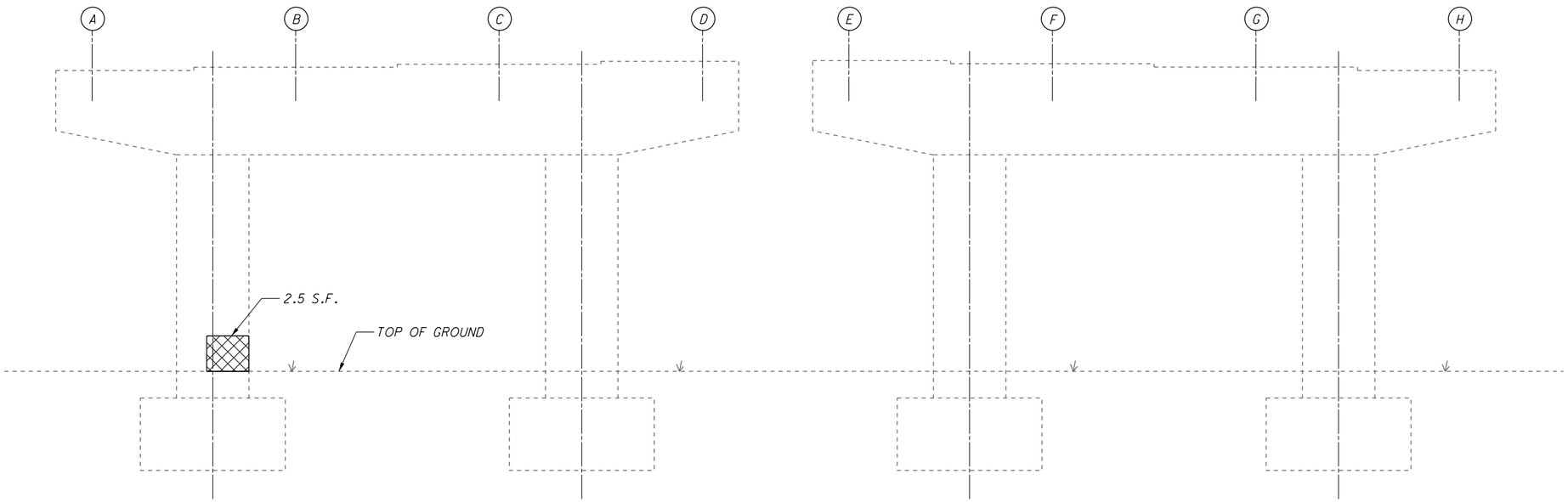

ELEVATION
(WEST FACE)

KEY	ITEM 519 - PATCHING CONCRETE STRUCTURES, AS PER PLAN
- AREA OF SPALLING OR DELAMINATION TO BE REPAIRED PER ITEM 519	PHYSICAL INVENTORY OF MEASURED QUANTITIES OF DETERIORATION WAS PERFORMED IN MAY 2015. * ESTIMATED QUANTITIES HAVE BEEN INCREASED BY 50% OVER MEASURED QUANTITIES TO ALLOW FOR ADDITIONAL DETERIORATION. EXACT DIMENSIONS AND LOCATIONS OF PATCHES SHALL BE DETERMINED BY THE ENGINEER IN THE FIELD FOR FINAL PAY QUANTITY.

ESTIMATED PATCHING QUANITIES
(SQ. FEET)

LOCATION	MEASURED QUANTITIES	ESTIMATED QUANTITIES
PIER NO. 1	2.5	4.0 *
TOTAL	2.5	4.0 *

NOTE:
ALL REPAIR AREAS DESIGNATED AS SHALL BE SEALED AS PER ITEM 512, SEALING OF CONCRETE SURFACES (EPOXY-URETHANE). SEALING SHALL BE CLEAR AND OVERLAP REPAIR AREA A MINIMUM OF 6". COLOR SHALL MATCH EXISTING.

PLOT.CEL
ms consultants, inc.
msconsultants.com
www.msconsultants.com
Ohio DOT Workspace
UCF: ohdot V8i
PCF: 60-08308_Youngstown
0 0.5" 1"
34" x 22"
Batchplot Spec: \\youngstown-fs1\n\60\08308\standards\plotdrv\batchplt.spc
Pen Table: S:\std\plotting\usth\V8i\pen\V8i_ms_std.tbl
Plot Driver: S:\std\plotting\usth\V8i\PDF.pltcfg
Model: Sheet
Printed: 9/26/2016 @ 8:25:07 AM
File: \\youngstown-fs1\n\60\08308\structures\sheets\250_0059CPI001.dgn
View: SHEET
By: mrieder

DESIGN AGENCY
ms consultants, inc.
333 E. Federal Street
Youngstown, Ohio 44503

DESIGNED	DRAWN	REVIEWED	DATE
SJR	KRM	JDH	10-23-15
CHECKED	REVISED	STRUCTURE FILE NUMBER	
LAW		2203189	

PIER NO. 1 PATCHING DETAILS
BRIDGE NO. ERI-250-0059
OVER THE NORFOLK SOUTHERN RAILROAD, 42ND STREET AND BUTLER STREET

ERI-250-00.59
PID No. 90939

ms consultants, inc.

PLOT.CEL
ms consultants, inc.
msconsultants.com
www.msconsultants.com
Ohio DOT Workspace
UGF: ohdot V8i
PGF: 60-08308_Youngstown
Batchplot Spec: \\youngstown-fs1\n\60\08308\standards\plotdrv\batchplt.spc
Pen Table: S:\std\plotting\usth\V8\pen\V8i_ms_std.tbl
Plot Driver: S:\std\plotting\usth\V8\PDF.pltcfg
34" x 22"
Model: Sheet
Printed: 9/26/2016 @ 8:25:07 AM
View: SHEET
By: mleider
File: \\youngstown-fs1\n\60\08308\structures\sheets\250_0059CPI002.dgn

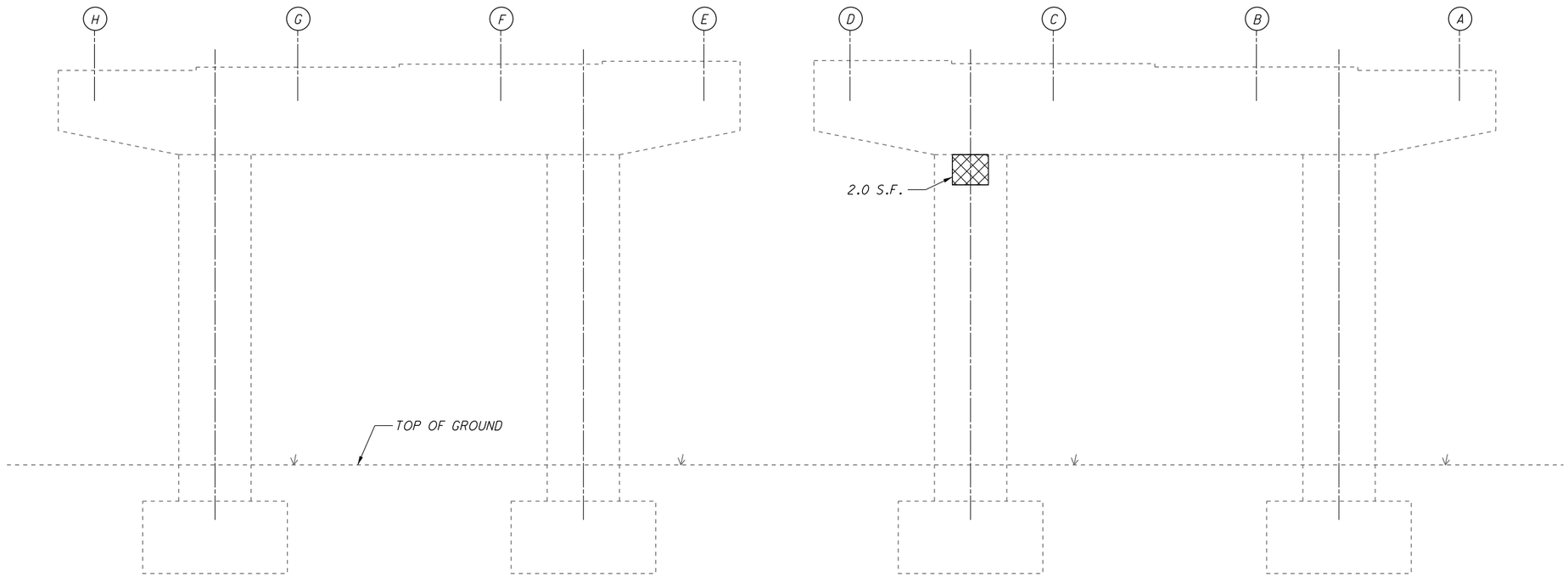

ELEVATION
(EAST FACE)

KEY	ITEM 519 - PATCHING CONCRETE STRUCTURES, AS PER PLAN
- AREA OF SPALLING OR DELAMINATION TO BE REPAIRED PER ITEM 519	PHYSICAL INVENTORY OF MEASURED QUANTITIES OF DETERIORATION WAS PERFORMED IN MAY 2015. * ESTIMATED QUANTITIES HAVE BEEN INCREASED BY 50% OVER MEASURED QUANTITIES TO ALLOW FOR ADDITIONAL DETERIORATION. EXACT DIMENSIONS AND LOCATIONS OF PATCHES SHALL BE DETERMINED BY THE ENGINEER IN THE FIELD FOR FINAL PAY QUANTITY.

ESTIMATED PATCHING QUANITIES
(SQ. FEET)

LOCATION	MEASURED QUANTITIES	ESTIMATED QUANTITIES
PIER NO. 2	2.0	3.0 *
TOTAL	2.0	3.0 *

NOTE:
ALL REPAIR AREAS DESIGNATED AS SHALL BE SEALED AS PER ITEM 512, SEALING OF CONCRETE SURFACES (EPOXY-URETHANE). SEALING SHALL BE CLEAR AND OVERLAP REPAIR AREA A MINIMUM OF 6". COLOR SHALL MATCH EXISTING.

DESIGN AGENCY
ms consultants, inc.
333 E. Federal Street
Youngstown, Ohio 44503

DESIGNED	DRAWN	REVIEWED	DATE
SJR	KRM	JDH	10-23-15
CHECKED	REVISED	STRUCTURE FILE NUMBER	
LAW		2203189	

PIER NO. 2 PATCHING DETAILS
BRIDGE NO. ERI-250-0059
OVER THE NORFOLK SOUTHERN RR, 42ND STREET AND BUTLER STREET

ERI-250-00.59
PID No. 90939

ms consultants, inc.

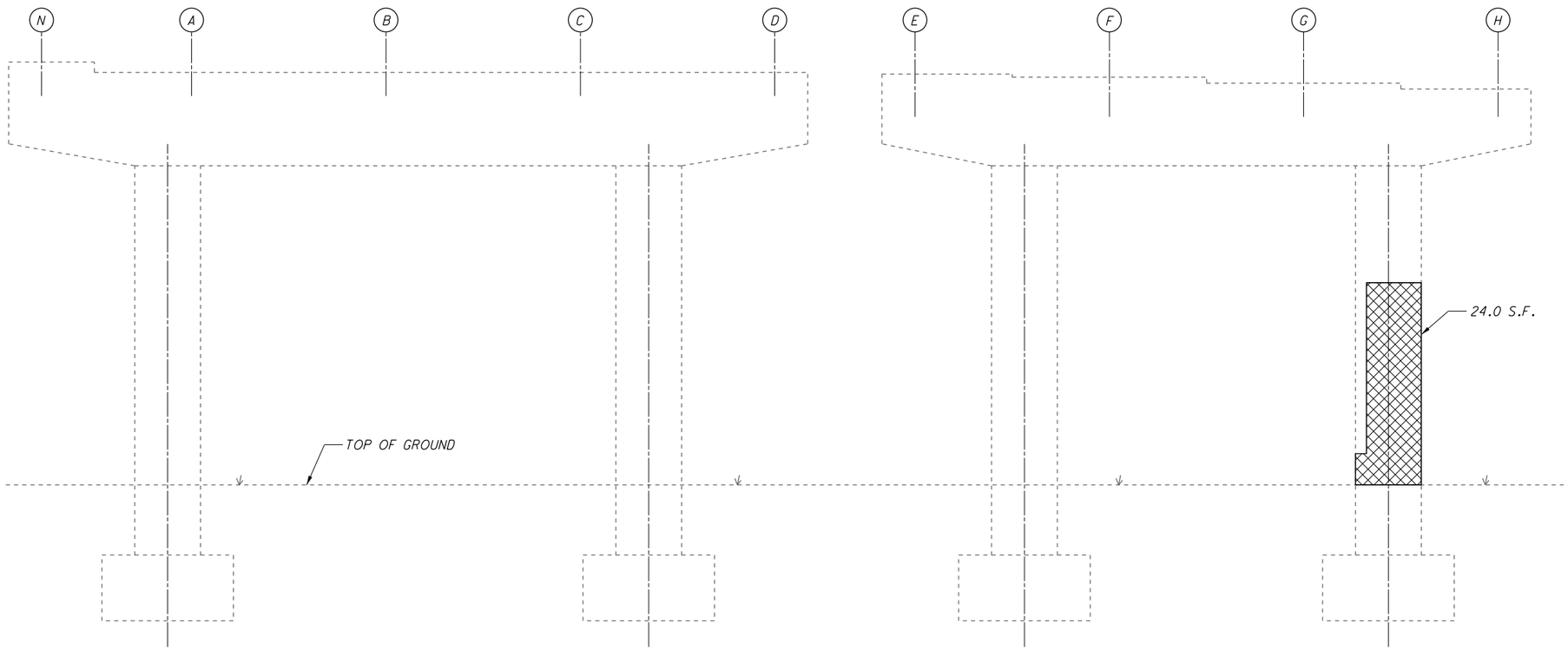

ELEVATION
(WEST FACE)

KEY	ITEM 519 - PATCHING CONCRETE STRUCTURES, AS PER PLAN
- AREA OF SPALLING OR DELAMINATION TO BE REPAIRED PER ITEM 519	PHYSICAL INVENTORY OF MEASURED QUANTITIES OF DETERIORATION WAS PERFORMED IN MAY 2015. * ESTIMATED QUANTITIES HAVE BEEN INCREASED BY 50% OVER MEASURED QUANTITIES TO ALLOW FOR ADDITIONAL DETERIORATION. EXACT DIMENSIONS AND LOCATIONS OF PATCHES SHALL BE DETERMINED BY THE ENGINEER IN THE FIELD FOR FINAL PAY QUANTITY.

ESTIMATED PATCHING QUANITIES
(SQ. FEET)

LOCATION	MEASURED QUANTITIES	ESTIMATED QUANTITIES
PIER NO. 3	24.0	36.0 *
TOTAL	24.0	36.0 *

NOTE:
ALL REPAIR AREAS DESIGNATED AS SHALL BE SEALED AS PER ITEM 512, SEALING OF CONCRETE SURFACES (EPOXY-URETHANE). SEALING SHALL BE CLEAR AND OVERLAP REPAIR AREA A MINIMUM OF 6". COLOR SHALL MATCH EXISTING.

PIER NO. 3 PATCHING DETAILS
BRIDGE NO. ERI-250-0059
OVER THE NORFOLK SOUTHERN RR, 42ND STREET AND BUTLER STREET

DESIGN AGENCY
ms consultants, inc.
333 E. Federal Street
Youngstown, Ohio 44503

DESIGNED	DRAWN	REVIEWED	DATE
SJR	KRM	JDH	10-23-15
CHECKED	REVISED	STRUCTURE FILE NUMBER	
LAW		2203189	

ERI-250-00.59
PID No. 90939

PLOT.CEL
ms consultants, inc.
msconsultants.com
www.msconsultants.com
Ohio DOT Workspace
UCF: ohdot1V8i
PCF: 60-08308_Youngstown
Batchplot Spec: \\youngstown-fs1\n\60\08308\standards\plotdrv\batchplt.spc
Pen Table: S:\std\plotting\usfn\V8\pen\V8_ms_std.tbl
Plot Driver: S:\std\plotting\usfn\V8\PDF.pltcfg
34" x 22"
View: SHEET
By: mnieder
Model: Sheet
Printed: 9/26/2016 @ 8:25:08 AM
File: \\youngstown-fs1\n\60\08308\structures\sheets\250_0059CP1003.dgn
ms consultants, inc.

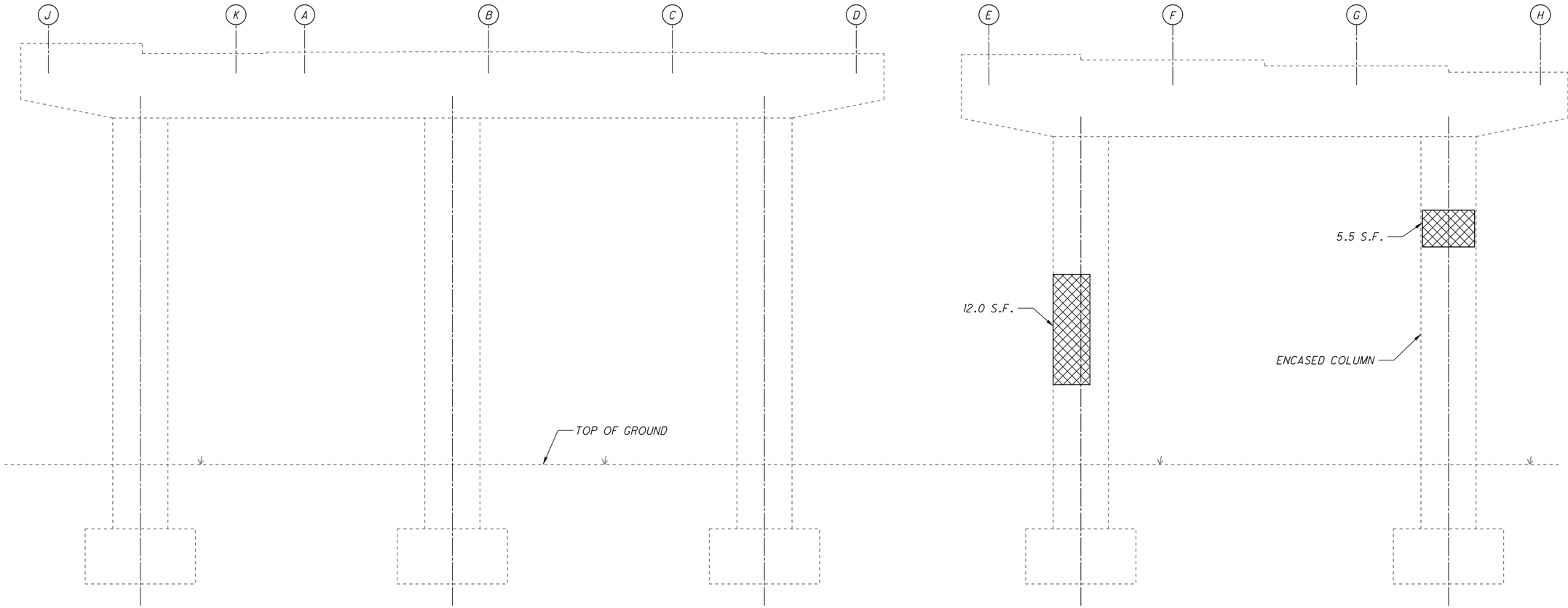

ELEVATION
(WEST FACE)

KEY	ITEM 519 - PATCHING CONCRETE STRUCTURES, AS PER PLAN
- AREA OF SPALLING OR DELAMINATION TO BE REPAIRED PER ITEM 519	PHYSICAL INVENTORY OF MEASURED QUANTITIES OF DETERIORATION WAS PERFORMED IN MAY 2015. * ESTIMATED QUANTITIES HAVE BEEN INCREASED BY 50% OVER MEASURED QUANTITIES TO ALLOW FOR ADDITIONAL DETERIORATION. EXACT DIMENSIONS AND LOCATIONS OF PATCHES SHALL BE DETERMINED BY THE ENGINEER IN THE FIELD FOR FINAL PAY QUANTITY.

ESTIMATED PATCHING QUANITIES
(SQ. FEET)

LOCATION	MEASURED QUANTITIES	ESTIMATED QUANTITIES
PIER NO. 4	17.5	26.0 *
TOTAL	17.5	26.0 *

NOTE:
ALL REPAIR AREAS DESIGNATED AS SHALL BE SEALED AS PER ITEM 512, SEALING OF CONCRETE SURFACES (EPOXY-URETHANE). SEALING SHALL BE CLEAR AND OVERLAP REPAIR AREA A MINIMUM OF 6". COLOR SHALL MATCH EXISTING.

PLOT.CEL
ms consultants, inc.
msconsultants.com
www.msconsultants.com
Ohio DOT Workspace
UCF: ohdot1V8i
PCF: 60-08308_Youngstown
0 0.5" 1"
34" x 22"
Batchplot Spec: \\youngstown-fs1\n\60\08308\standards\ploldrv\batchplt.spc
Pen Table: S:\std\plotting\usth\V8i\pen\V8i_ms_std.tbl
Plot Driver: S:\std\plotting\usth\V8i\PDF.pltcfg
Model: Sheet
Printed: 9/26/2016 @ 8:25:09 AM
File: \\youngstown-fs1\n\60\08308\structures\sheets\250_0059CPI004.dgn
View: SHEET
By: mrieder

DESIGN AGENCY
ms consultants, inc.
333 E. Federal Street
Youngstown, Ohio 44503

DESIGNED	DRAWN	REVIEWED	DATE
SJR	KRM	JDH	10-23-15
CHECKED	REVISED	STRUCTURE FILE NUMBER	
LAW		2203189	

PIER NO. 4 PATCHING DETAILS
BRIDGE NO. ERI-250-0059
OVER THE NORFOLK SOUTHERN RR, 42ND STREET AND BUTLER STREET

ERI-250-00.59
PID No. 90939

ms consultants, inc.

PLOT.CEL
ms consultants, inc.
msconsultants.com
www.msconsultants.com
Ohio DOT Workspace
0 0.5" 1"
UCF: ohdot1V8i
PCF: 60-08308_Youngstown
Batchplot Spec: \\youngstown-fs1\n\60\08308\standards\ploldrv\batchplt.spc
Pen Table: S:\std\plotting\usth\V8i\pen\V8i_ms_std.tbl
Plot Driver: S:\std\plotting\usth\V8i\PDF.pltcfg
34" x 22"
Model: Sheet View: SHEET
Printed: 9/26/2016 @ 8:25:10 AM By: mnelder
File: \\youngstown-fs1\n\60\08308\structures\sheets\250_0059CP1005.dgn

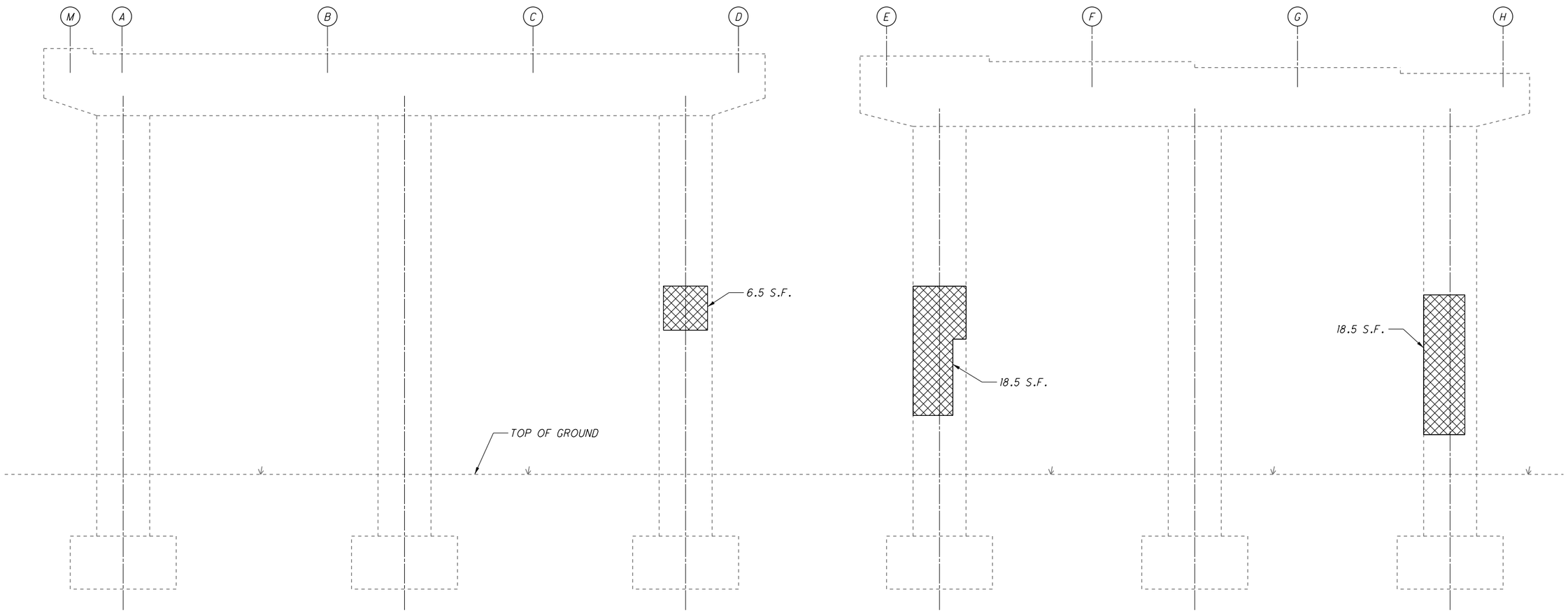

ELEVATION
(WEST FACE)

KEY
- AREA OF SPALLING OR DELAMINATION TO BE REPAIRED PER ITEM 519

ITEM 519 - PATCHING CONCRETE STRUCTURES, AS PER PLAN

PHYSICAL INVENTORY OF MEASURED QUANTITIES OF DETERIORATION WAS PERFORMED IN MAY 2015.

* ESTIMATED QUANTITIES HAVE BEEN INCREASED BY 50% OVER MEASURED QUANTITIES TO ALLOW FOR ADDITIONAL DETERIORATION.

EXACT DIMENSIONS AND LOCATIONS OF PATCHES SHALL BE DETERMINED BY THE ENGINEER IN THE FIELD FOR FINAL PAY QUANTITY.

ESTIMATED PATCHING QUANITIES
(SQ. FEET)

LOCATION	MEASURED QUANTITIES	ESTIMATED QUANTITIES
PIER NO. 5	43.5	65.0 *
TOTAL	43.5	65.0 *

NOTE:
ALL REPAIR AREAS DESIGNATED AS SHALL BE SEALED AS PER ITEM 512, SEALING OF CONCRETE SURFACES (EPOXY-URETHANE). SEALING SHALL BE CLEAR AND OVERLAP REPAIR AREA A MINIMUM OF 6". COLOR SHALL MATCH EXISTING.

DESIGN AGENCY
ms consultants, inc.
333 E. Federal Street
Youngstown, Ohio 44503

DESIGNED	DRAWN	REVIEWED	DATE
SJR	KRM	JDH	10-23-15
CHECKED	REVISED	STRUCTURE FILE NUMBER	
LAW		2203189	

PIER NO. 5 PATCHING DETAILS
BRIDGE NO. ERI-250-0059
OVER THE NORFOLK SOUTHERN RR, 42ND STREET AND BUTLER STREET

ERI-250-00.59
PID No. 90939

ms consultants, inc.

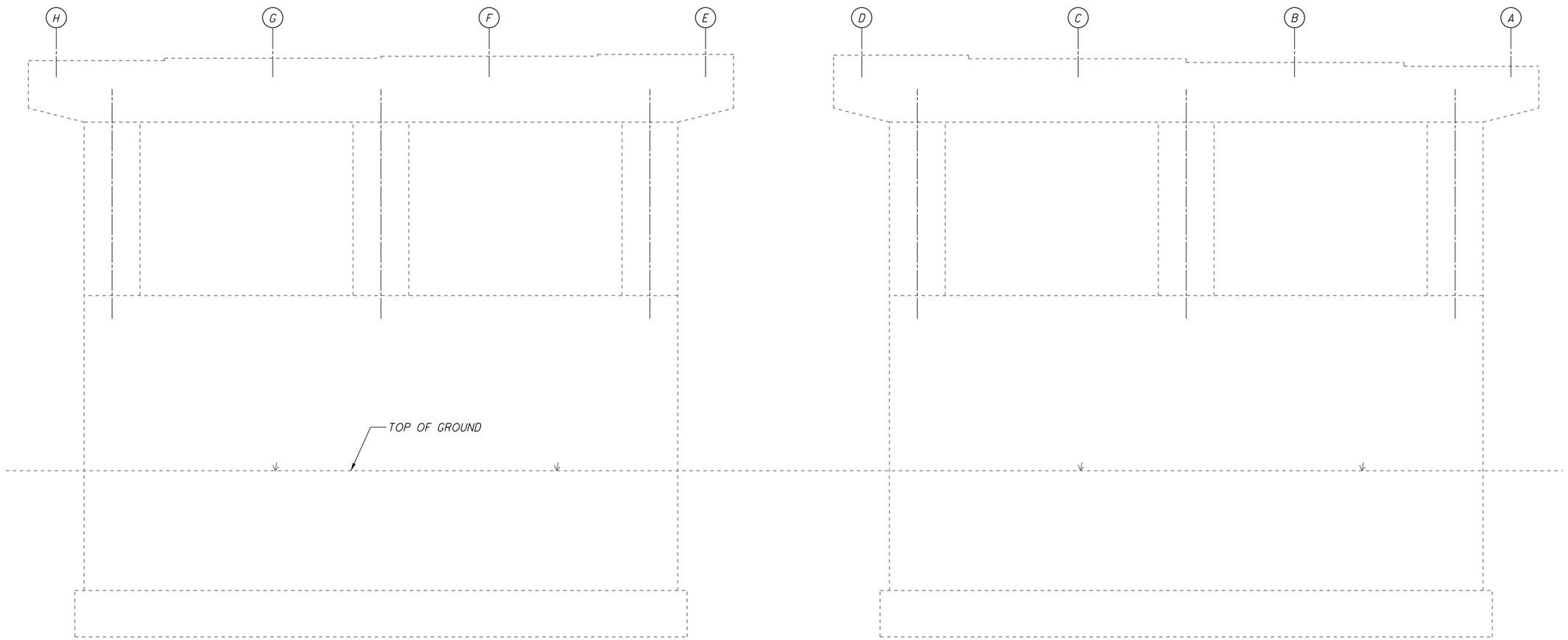

ELEVATION
(EAST FACE)

KEY	ITEM 519 - PATCHING CONCRETE STRUCTURES, AS PER PLAN	ESTIMATED PATCHING QUANITIES (SQ. FEET)		
	PHYSICAL INVENTORY OF MEASURED QUANTITIES OF DETERIORATION WAS PERFORMED IN MAY 2015.	LOCATION	MEASURED QUANTITIES	ESTIMATED QUANTITIES
- AREA OF SPALLING OR DELAMINATION TO BE REPAIRED PER ITEM 519	* ESTIMATED QUANTITIES HAVE BEEN INCREASED BY 50% OVER MEASURED QUANTITIES TO ALLOW FOR ADDITIONAL DETERIORATION.	PIER NO. 6	0.0	0.0 *
	EXACT DIMENSIONS AND LOCATIONS OF PATCHES SHALL BE DETERMINED BY THE ENGINEER IN THE FIELD FOR FINAL PAY QUANTITY.			
		TOTAL	0.0	0.0 *

NOTE:
ALL REPAIR AREAS DESIGNATED AS SHALL BE SEALED AS PER ITEM 512, SEALING OF CONCRETE SURFACES (EPOXY-URETHANE). SEALING SHALL BE CLEAR AND OVERLAP REPAIR AREA A MINIMUM OF 6". COLOR SHALL MATCH EXISTING.

NO PATCHING IS TO BE PERFORMED

PLOT.CEL
ms consultants, inc.
msconsultants.com
www.msconsultants.com
Ohio DOT Workspace
UCF: ohdot V8i
PCF: 60-08308_Youngstown
Batchplot Spec: \\youngstown-fs1\n\60\08308\standards\plotdrv\batchplt.spc
Pen Table: S:\std\plotting\ustn\V8\pen\V8i_ms_std.tbl
Plot Driver: S:\std\plotting\ustn\V8\PDF.pltcfg
34" x 22"
View: SHEET
By: mneider
Model: Sheet
Printed: 9/26/2016 @ 8:25:11 AM
File: \\youngstown-fs1\n\60\08308\structures\sheets\250_0059CPI006.dgn

DESIGN AGENCY
ms consultants, inc.
333 E. Federal Street
Youngstown, Ohio 44503

DESIGNED	DRAWN	REVIEWED	DATE
SJR	KRM	JDH	10-23-15
CHECKED	REVISED	STRUCTURE FILE NUMBER	
LAW		2203189	

PIER NO. 6 PATCHING DETAILS
BRIDGE NO. ERI-250-0059
OVER THE NORFOLK SOUTHERN RR, 42ND STREET AND BUTLER STREET

ERI-250-00.59
PID No. 90939

ms consultants, inc.

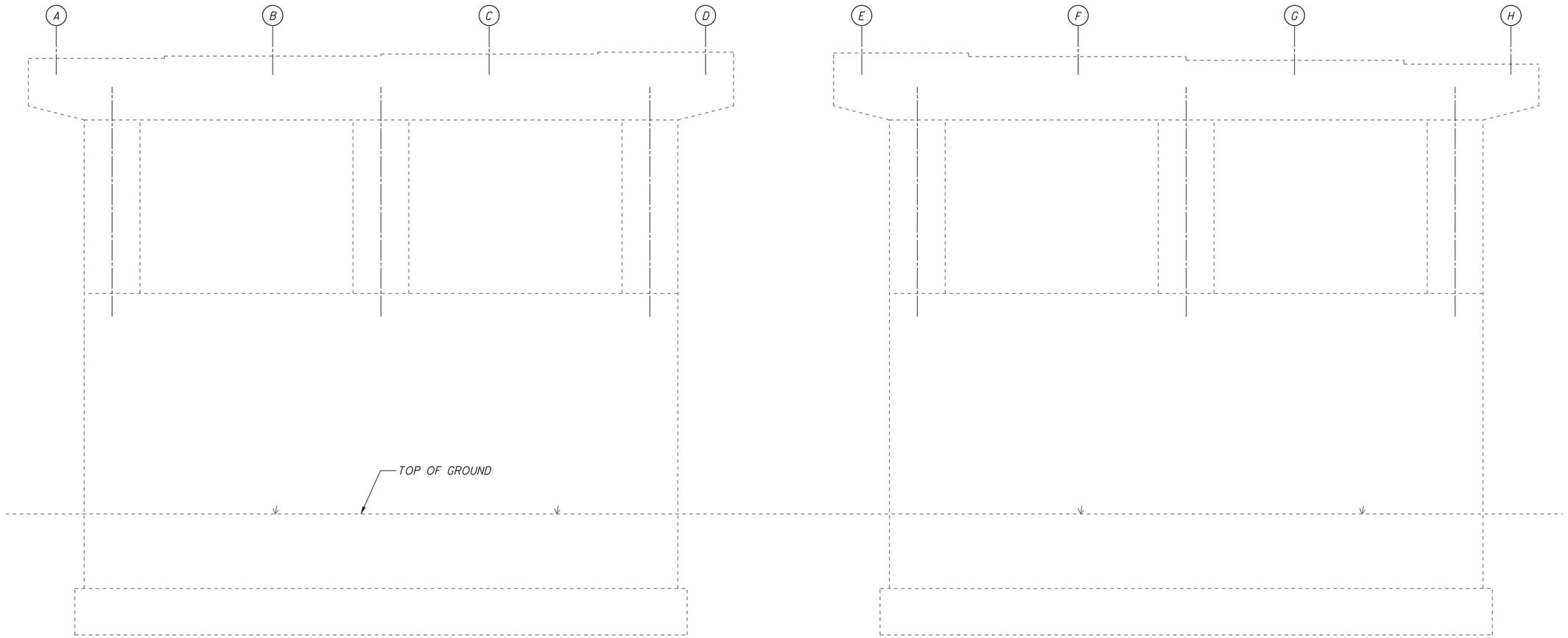

ELEVATION
(WEST FACE)

KEY	ITEM 519 - PATCHING CONCRETE STRUCTURES, AS PER PLAN
- AREA OF SPALLING OR DELAMINATION TO BE REPAIRED PER ITEM 519	PHYSICAL INVENTORY OF MEASURED QUANTITIES OF DETERIORATION WAS PERFORMED IN MAY 2015. * ESTIMATED QUANTITIES HAVE BEEN INCREASED BY 50% OVER MEASURED QUANTITIES TO ALLOW FOR ADDITIONAL DETERIORATION. EXACT DIMENSIONS AND LOCATIONS OF PATCHES SHALL BE DETERMINED BY THE ENGINEER IN THE FIELD FOR FINAL PAY QUANTITY.

ESTIMATED PATCHING QUANITIES
(SQ. FEET)

LOCATION	MEASURED QUANTITIES	ESTIMATED QUANTITIES
PIER NO. 6	0.0	0.0 *
TOTAL	0.0	0.0 *

NOTE:
ALL REPAIR AREAS DESIGNATED AS SHALL BE SEALED AS PER ITEM 512, SEALING OF CONCRETE SURFACES (EPOXY-URETHANE). SEALING SHALL BE CLEAR AND OVERLAP REPAIR AREA A MINIMUM OF 6". COLOR SHALL MATCH EXISTING.

NO PATCHING IS TO BE PERFORMED

DESIGN AGENCY
ms consultants, inc.
333 E. Federal Street
Youngstown, Ohio 44503

DESIGNED	DRAWN	REVIEWED	DATE
SJR	KRM	JDH	10-23-15
CHECKED	REVISED	STRUCTURE FILE NUMBER	
LAW		2203189	

PIER NO. 6 PATCHING DETAILS
BRIDGE NO. ERI-250-0059
OVER THE NORFOLK SOUTHERN RR, 42ND STREET AND BUTLER STREET

ERI-250-00.59
PID No. 90939

PLOT.CEL
ms consultants, inc.
msconsultants.com
www.msconsultants.com
Ohio DOT Workspace
UCF: ohdot\V8i
PCF: 60-08308_Youngstown
Batchplot Spec: \\youngstown-fs1\n\60\08308\standards\plotdrv\batchplt.spc
Pen Table: S:\std\plotting\usstn\V8\pen\V8_ms_std.tbl
Plot Driver: S:\std\plotting\usstn\V8\PDP.pltcfg
34" x 22"
View: SHEET
By: mreider
Model: Sheet
Printed: 9/26/2016 @ 8:25:12 AM
File: \\youngstown-fs1\n\60\08308\structures\sheets\250_0059GP0007.dgn
ms consultants, inc.

PLOT.CEL
ms consultants, inc.
msconsultants.com
www.msconsultants.com
Ohio DOT Workspace
UGF: ohdot\V8i
PGF: 60-08308_Youngstown
Batchplot Spec: \\youngstown-fs1\n\60\08308\standards\plotdrv\batchplt.spc
Pen Table: S:\std\plotting\usth\V8\pen\V8_ms_std.tbl
Plot Driver: S:\std\plotting\usth\V8\PDF.pltcfg
34" x 22"
View: SHEET
By: mreider
Model: Sheet
Printed: 9/26/2016 @ 8:25:12 AM
File: \\youngstown-fs1\n\60\08308\structures\sheets\250_0059CP0008.dgn

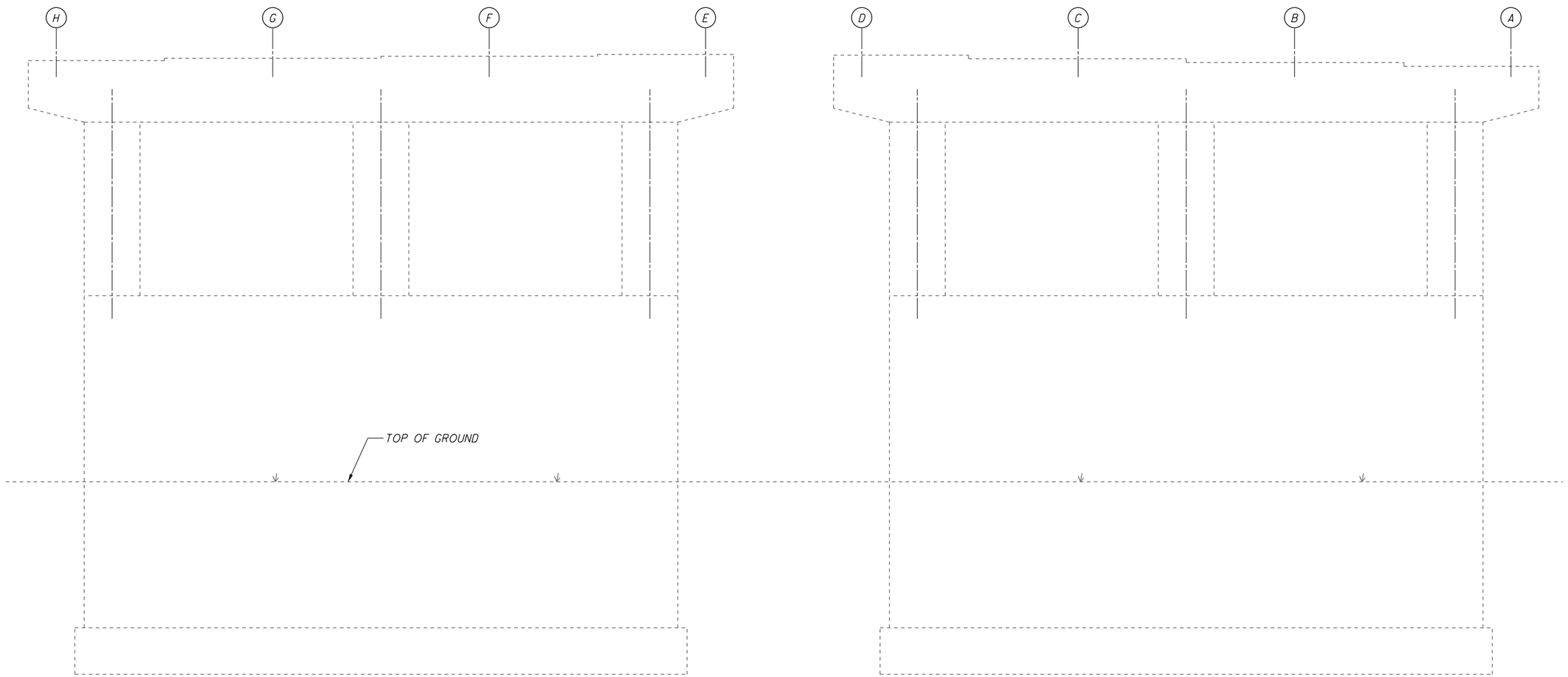

ELEVATION
(EAST FACE)

KEY
- AREA OF SPALLING OR DELAMINATION TO BE REPAIRED PER ITEM 519

ITEM 519 - PATCHING CONCRETE STRUCTURES, AS PER PLAN

PHYSICAL INVENTORY OF MEASURED QUANTITIES OF DETERIORATION WAS PERFORMED IN MAY 2015.

* ESTIMATED QUANTITIES HAVE BEEN INCREASED BY 50% OVER MEASURED QUANTITIES TO ALLOW FOR ADDITIONAL DETERIORATION.

EXACT DIMENSIONS AND LOCATIONS OF PATCHES SHALL BE DETERMINED BY THE ENGINEER IN THE FIELD FOR FINAL PAY QUANTITY.

ESTIMATED PATCHING QUANITIES
(SQ. FEET)

LOCATION	MEASURED QUANTITIES	ESTIMATED QUANTITIES
PIER NO. 7	0.0	0.0 *
TOTAL	0.0	0.0 *

NOTE:
ALL REPAIR AREAS DESIGNATED AS SHALL BE SEALED AS PER ITEM 512, SEALING OF CONCRETE SURFACES (EPOXY-URETHANE). SEALING SHALL BE CLEAR AND OVERLAP REPAIR AREA A MINIMUM OF 6". COLOR SHALL MATCH EXISTING.

NO PATCHING IS TO BE PERFORMED

DESIGN AGENCY
ms consultants, inc.
333 E. Federal Street
Youngstown, Ohio 44503

DESIGNED	DRAWN	REVIEWED	DATE
SJR	KRM	JDH	10-23-15
CHECKED	REVISED	STRUCTURE FILE NUMBER	
LAW		2203189	

PIER NO. 7 PATCHING DETAILS
BRIDGE NO. ERI-250-0059
OVER THE NORFOLK SOUTHERN RR, 42ND STREET AND BUTLER STREET

ERI-250-00.59
PID No. 90939

ms consultants, inc.

PLOT.CEL
ms consultants, inc.
msconsultants.com
www.msconsultants.com
Ohio DOT Workspace
UCF: ohdot\V8i
PCF: 60-08308_Youngstown
Batchplot Spec: \\youngstown-fs1\n\60\08308\standards\plotdrv\batchplt.spc
Pen Table: S:\std\plotting\usth\V8\pen\V8_ms_std.tbl
Plot Driver: S:\std\plotting\usth\V8\PDP.pltcfg
34" x 22"
View: SHEET
By: mreider
Model: Sheet
Printed: 9/26/2016 @ 8:25:13 AM
File: \\youngstown-fs1\n\60\08308\structures\sheets\250_0059CP1009.dgn

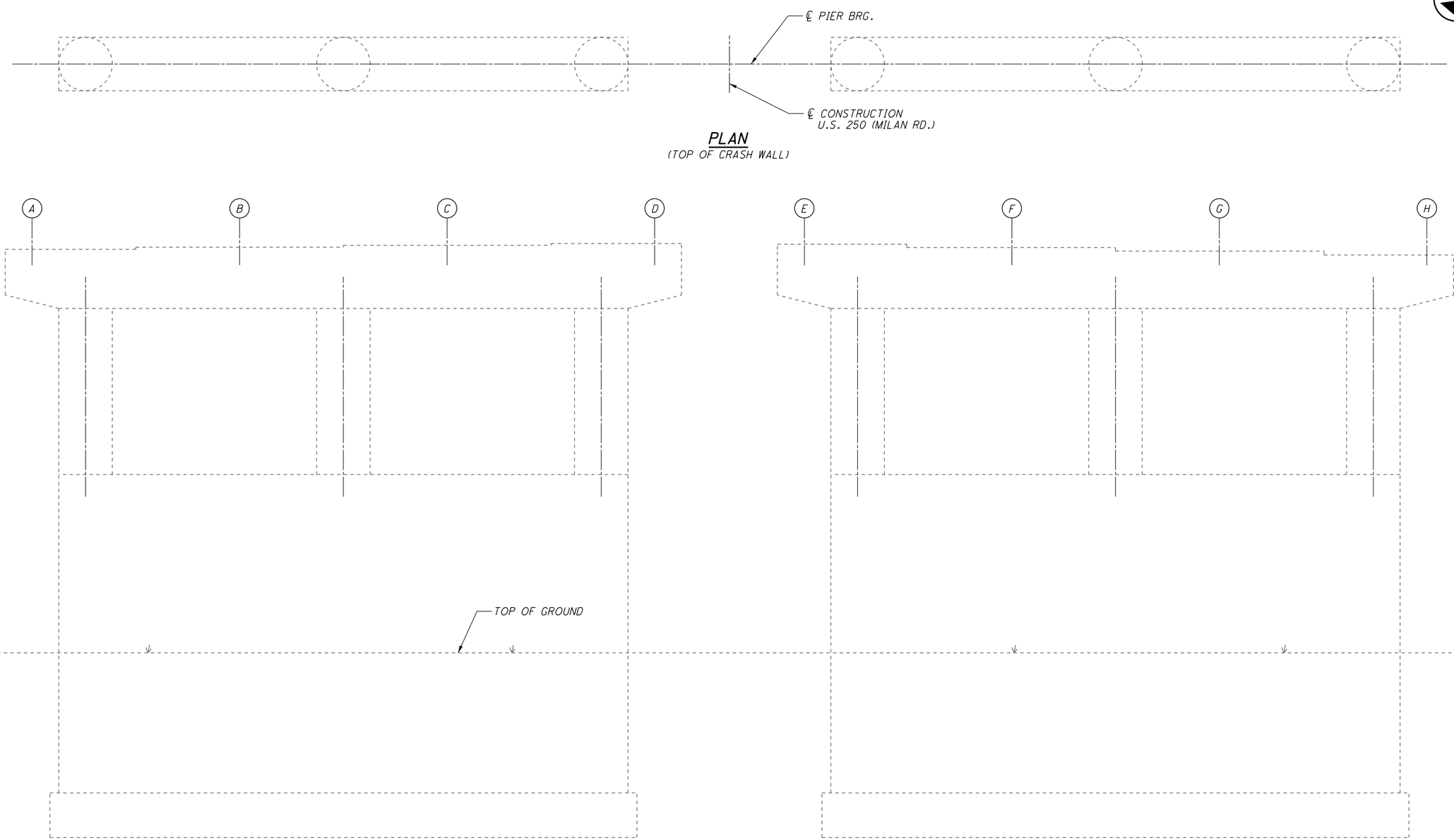

KEY
- AREA OF SPALLING OR DELAMINATION TO BE REPAIRED PER ITEM 519

ITEM 519 - PATCHING CONCRETE STRUCTURES, AS PER PLAN

PHYSICAL INVENTORY OF MEASURED QUANTITIES OF DETERIORATION WAS PERFORMED IN MAY 2015.

* ESTIMATED QUANTITIES HAVE BEEN INCREASED BY 50% OVER MEASURED QUANTITIES TO ALLOW FOR ADDITIONAL DETERIORATION.

EXACT DIMENSIONS AND LOCATIONS OF PATCHES SHALL BE DETERMINED BY THE ENGINEER IN THE FIELD FOR FINAL PAY QUANTITY.

ESTIMATED PATCHING QUANITIES
(SQ. FEET)

LOCATION	MEASURED QUANTITIES	ESTIMATED QUANTITIES
PIER NO. 7	0.0	0.0 *
TOTAL	0.0	0.0 *

NOTE:
ALL REPAIR AREAS DESIGNATED AS SHALL BE SEALED AS PER ITEM 512, SEALING OF CONCRETE SURFACES (EPOXY-URETHANE). SEALING SHALL BE CLEAR AND OVERLAP REPAIR AREA A MINIMUM OF 6". COLOR SHALL MATCH EXISTING.

NO PATCHING IS TO BE PERFORMED

DESIGN AGENCY
ms consultants, inc.
333 E. Federal Street
Youngstown, Ohio 44503

DESIGNED	DRAWN	REVIEWED	DATE
SJR	KRM	JDH	10-23-15
CHECKED	REVISED	STRUCTURE FILE NUMBER	
LAW		2203189	

PIER NO. 7 PATCHING DETAILS

BRIDGE NO. ERI-250-0059
OVER THE NORFOLK SOUTHERN RR, 42ND STREET AND BUTLER STREET

ERI-250-00.59
PID No. 90939

ms consultants, inc.

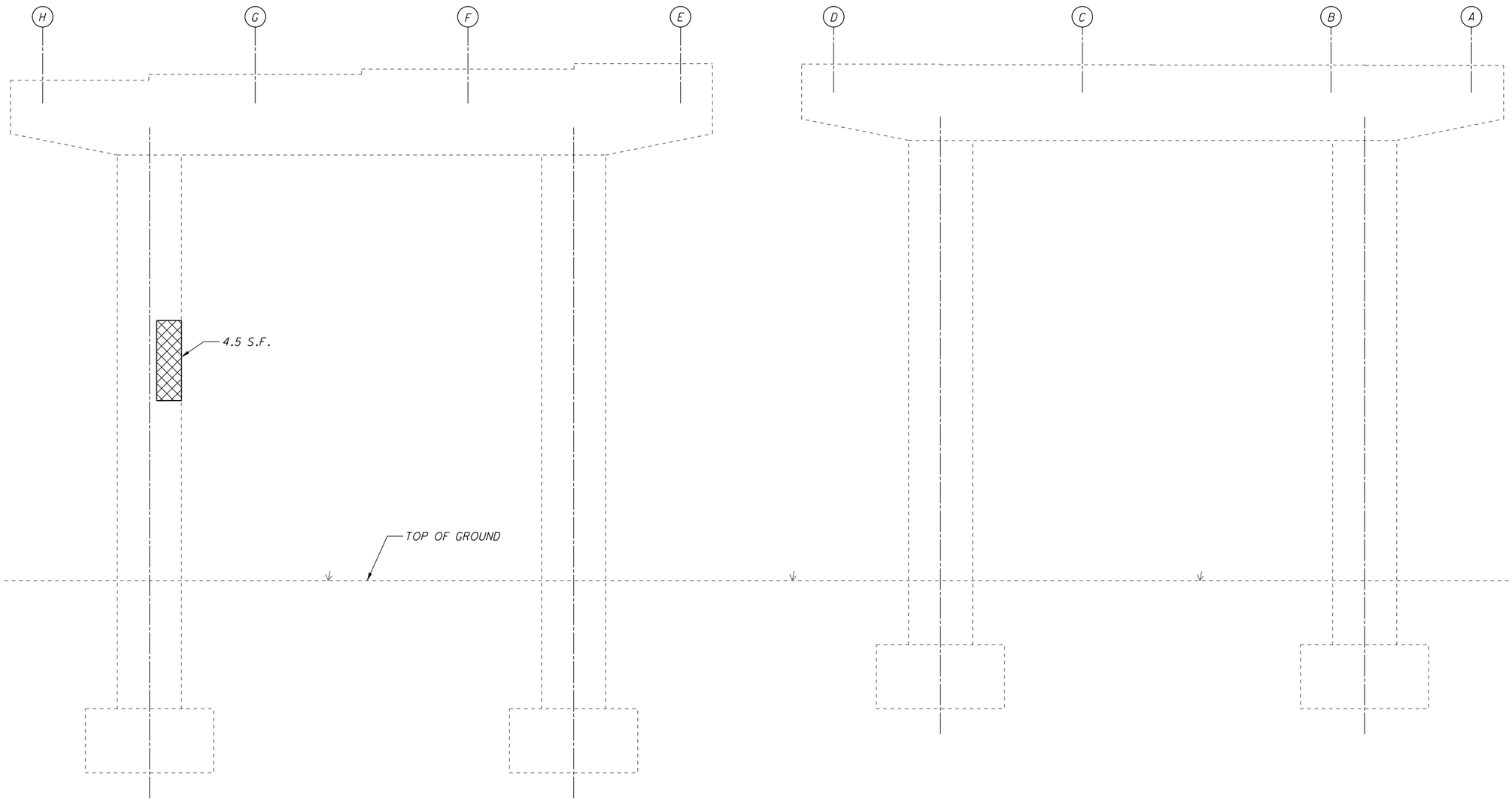

ELEVATION
(EAST FACE)

KEY	ITEM 519 - PATCHING CONCRETE STRUCTURES, AS PER PLAN
- AREA OF SPALLING OR DELAMINATION TO BE REPAIRED PER ITEM 519	PHYSICAL INVENTORY OF MEASURED QUANTITIES OF DETERIORATION WAS PERFORMED IN MAY 2015. * ESTIMATED QUANTITIES HAVE BEEN INCREASED BY 50% OVER MEASURED QUANTITIES TO ALLOW FOR ADDITIONAL DETERIORATION. EXACT DIMENSIONS AND LOCATIONS OF PATCHES SHALL BE DETERMINED BY THE ENGINEER IN THE FIELD FOR FINAL PAY QUANTITY.

ESTIMATED PATCHING QUANITIES
(SQ. FEET)

LOCATION	MEASURED QUANTITIES	ESTIMATED QUANTITIES
PIER NO. 8	4.5	7.0 *
TOTAL	4.5	7.0 *

NOTE:
ALL REPAIR AREAS DESIGNATED AS SHALL BE SEALED AS PER ITEM 512, SEALING OF CONCRETE SURFACES (EPOXY-URETHANE). SEALING SHALL BE CLEAR AND OVERLAP REPAIR AREA A MINIMUM OF 6". COLOR SHALL MATCH EXISTING.

DESIGN AGENCY
ms consultants, inc.
333 E. Federal Street
Youngstown, Ohio 44503

DESIGNED	DRAWN	REVIEWED	DATE
SJR	KRM	JDH	10-23-15
CHECKED	REVISED	STRUCTURE FILE NUMBER	
LAW		2203189	

PIER NO. 8 PATCHING DETAILS
BRIDGE NO. ERI-250-0059
OVER THE NORFOLK SOUTHERN RR, 42ND STREET AND BUTLER STREET

ERI-250-00.59
PID No. 90939

PLOT.CEL
ms consultants, inc.
msconsultants.com
www.msconsultants.com
Ohio DOT Workspace
UCF: ohdot\V8i
PCF: 60-08308_Youngstown
0 0.5" 1"
34" x 22"
Batchplot Spec: \\youngstown-fs1\n\60\08308\standards\ploldrv\batchplt.spc
Pen Table: S:\std\plotting\usth\V8\pen\V8_ms_std.tbl
Plot Driver: S:\std\plotting\usth\V8\PDF.pltcfg
Model: Sheet View: SHEET
Printed: 9/26/2016 @ 8:25:14 AM By: mmeider
File: \\youngstown-fs1\n\60\08308\structures\sheets\250_0059CP0010.dgn
ms consultants, inc.

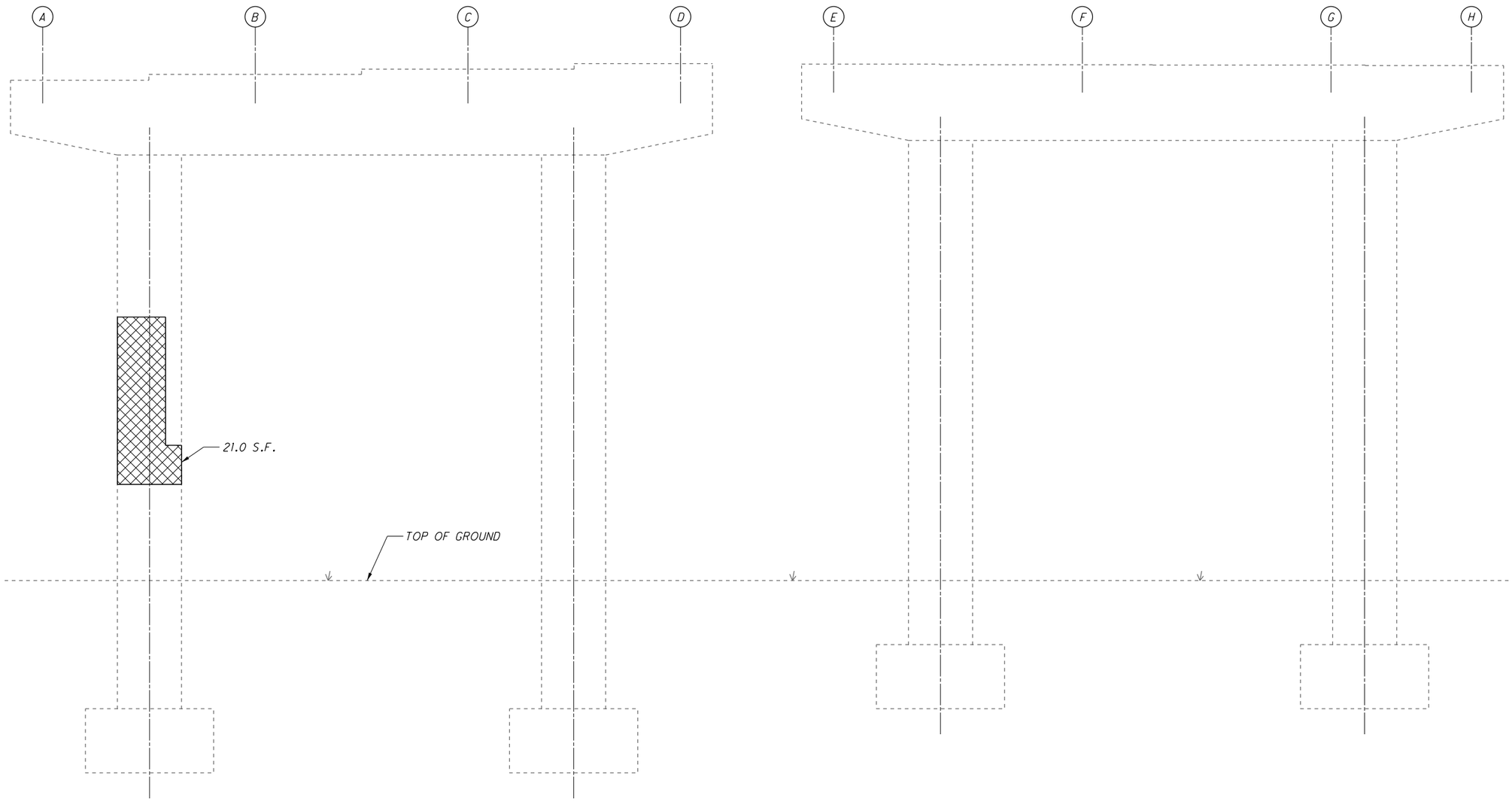

ELEVATION
(WEST FACE)

KEY	ITEM 519 - PATCHING CONCRETE STRUCTURES, AS PER PLAN
- AREA OF SPALLING OR DELAMINATION TO BE REPAIRED PER ITEM 519	PHYSICAL INVENTORY OF MEASURED QUANTITIES OF DETERIORATION WAS PERFORMED IN MAY 2015. * ESTIMATED QUANTITIES HAVE BEEN INCREASED BY 50% OVER MEASURED QUANTITIES TO ALLOW FOR ADDITIONAL DETERIORATION. EXACT DIMENSIONS AND LOCATIONS OF PATCHES SHALL BE DETERMINED BY THE ENGINEER IN THE FIELD FOR FINAL PAY QUANTITY.

ESTIMATED PATCHING QUANITIES
(SQ. FEET)

LOCATION	MEASURED QUANTITIES	ESTIMATED QUANTITIES
PIER NO. 8	21.0	31.5 *
TOTAL	21.0	31.5 *

NOTE:
ALL REPAIR AREAS DESIGNATED AS SHALL BE SEALED AS PER ITEM 512, SEALING OF CONCRETE SURFACES (EPOXY-URETHANE). SEALING SHALL BE CLEAR AND OVERLAP REPAIR AREA A MINIMUM OF 6". COLOR SHALL MATCH EXISTING.

DESIGN AGENCY
ms consultants, inc.
333 E. Federal Street
Youngstown, Ohio 44503

DESIGNED	DRAWN	REVIEWED	DATE
SJR	KRM	JDH	10-23-15
CHECKED	REVISED	STRUCTURE FILE NUMBER	
LAW		2203189	

PIER NO. 8 PATCHING DETAILS
BRIDGE NO. ERI-250-0059
OVER THE NORFOLK SOUTHERN RR, 42ND STREET AND BUTLER STREET

ERI-250-00.59
PID No. 90939

PLOT.CEL
ms consultants, inc.
msconsultants.com
www.msconsultants.com
Ohio DOT Workspace
UCF: ohdot\V8i
PCF: 60-08308_Youngstown
0 0.5" 1"
34" x 22"
Batchplot Spec: \\youngstown-fs1\n\60\08308\standards\plotdrv\batchplt.spc
Pen Table: S:\std\plotting\usth\V8\pen\V8_ms_std.tbl
Plot Driver: S:\std\plotting\usth\V8\PDF.pltcfg
Model: Sheet View: SHEET
Printed: 9/26/2016 @ 8:25:15 AM By: mmeider
File: \\youngstown-fs1\n\60\08308\structures\sheets\250_0059CP1011.dgn
ms consultants, inc.

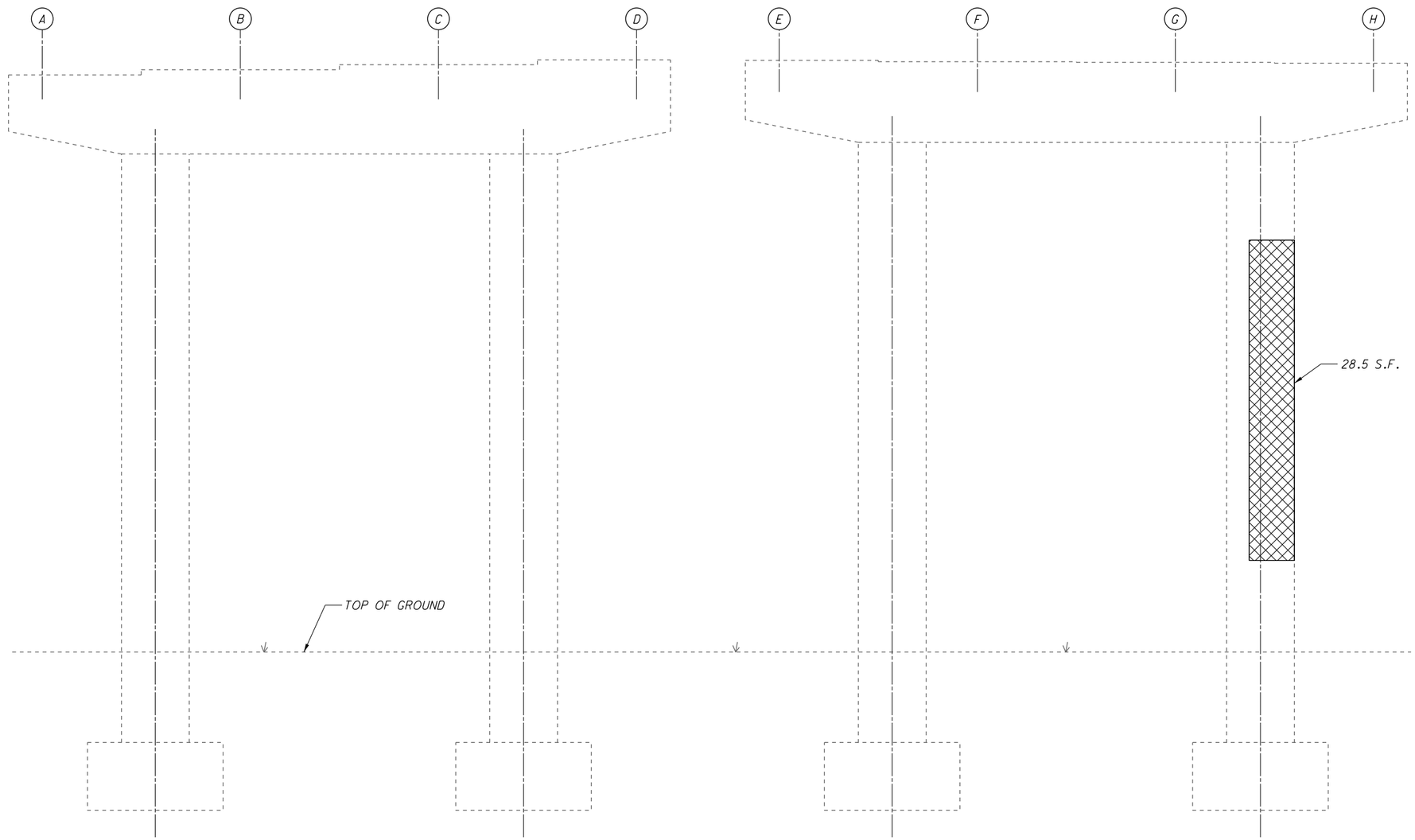

ELEVATION
(WEST FACE)

KEY
- AREA OF SPALLING OR DELAMINATION TO BE REPAIRED PER ITEM 519

ITEM 519 - PATCHING CONCRETE STRUCTURES, AS PER PLAN

PHYSICAL INVENTORY OF MEASURED QUANTITIES OF DETERIORATION WAS PERFORMED IN MAY 2015.

* ESTIMATED QUANTITIES HAVE BEEN INCREASED BY 50% OVER MEASURED QUANTITIES TO ALLOW FOR ADDITIONAL DETERIORATION.

EXACT DIMENSIONS AND LOCATIONS OF PATCHES SHALL BE DETERMINED BY THE ENGINEER IN THE FIELD FOR FINAL PAY QUANTITY.

ESTIMATED PATCHING QUANITIES
(SQ. FEET)

LOCATION	MEASURED QUANTITIES	ESTIMATED QUANTITIES
PIER NO. 9	28.5	43.0 *
TOTAL	28.5	43.0 *

NOTE:
ALL REPAIR AREAS DESIGNATED AS SHALL BE SEALED AS PER ITEM 512, SEALING OF CONCRETE SURFACES (EPOXY-URETHANE). SEALING SHALL BE CLEAR AND OVERLAP REPAIR AREA A MINIMUM OF 6". COLOR SHALL MATCH EXISTING.

DESIGN AGENCY
ms consultants, inc.
333 E. Federal Street
Youngstown, Ohio 44503

DESIGNED	DRAWN	REVIEWED	DATE
SJR	KRM	JDH	10-23-15
CHECKED	REVISED	STRUCTURE FILE NUMBER	
LAW		2203189	

PIER NO. 9 PATCHING DETAILS
BRIDGE NO. ERI-250-0059
OVER THE NORFOLK SOUTHERN RR, 42ND STREET AND BUTLER STREET

ERI-250-00.59
PID No. 90939

PLOT.CEL
ms consultants, inc.
msconsultants.com
www.msconsultants.com
Ohio DOT Workspace
UCF: ohdot1V8i
PCF: 60-08308_Youngstown
Batchplot Spec: \\youngstown-fs1\n\60\08308\standards\plotdrv\batchplt.spc
Pen Table: S:\std\plotting\usth\V8i\pen\V8i_ms_std.tbl
Plot Driver: S:\std\plotting\usth\V8i\PDF.pltcfg
34" x 22"
Model: Sheet
Printed: 9/26/2016 @ 8:25:16 AM
File: \\youngstown-fs1\n\60\08308\structures\sheets\250_0059CPI012.dgn
View: SHEET
By: mrieder
ms consultants, inc.

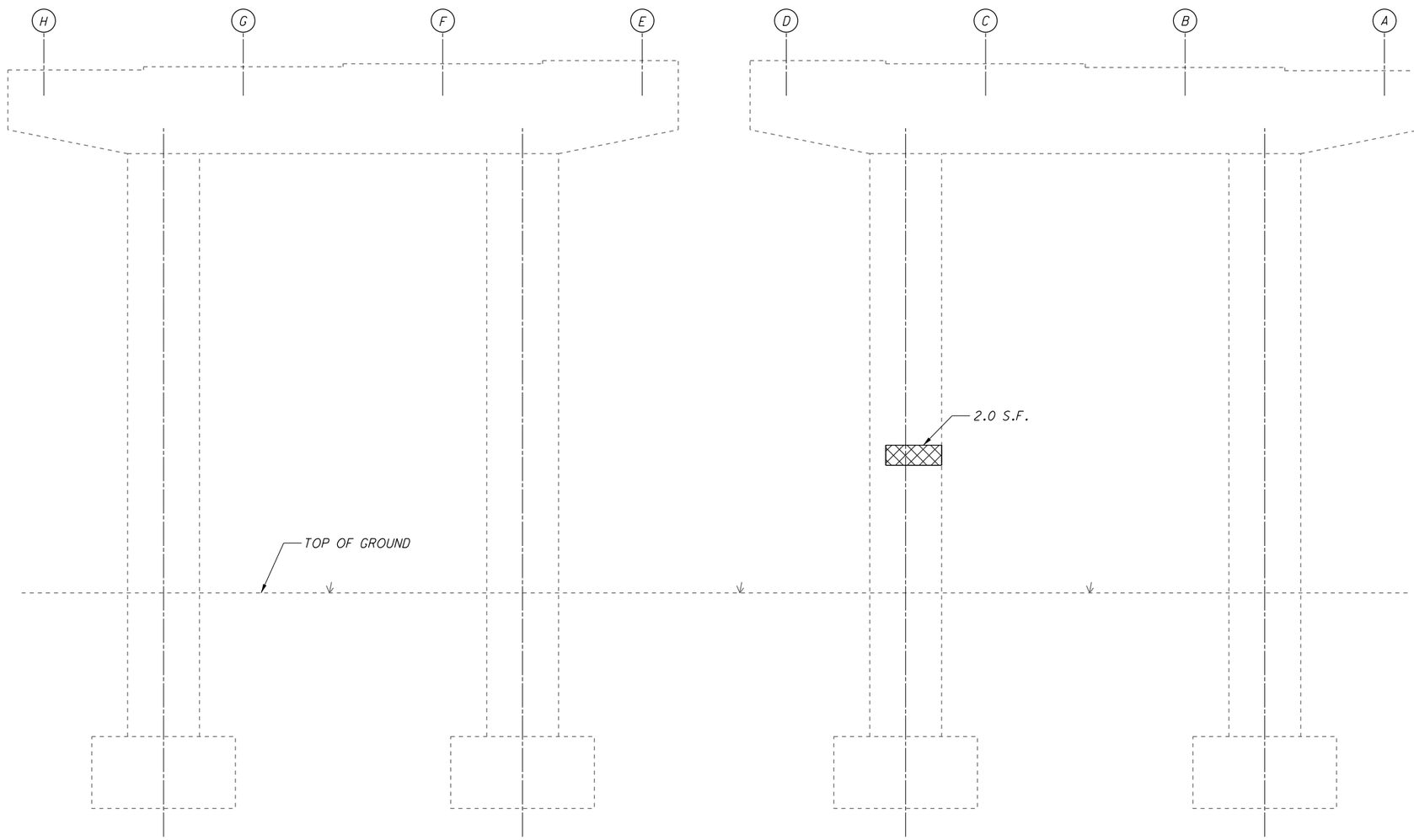

ELEVATION
(EAST FACE)

KEY	ITEM 519 - PATCHING CONCRETE STRUCTURES, AS PER PLAN	ESTIMATED PATCHING QUANITIES (SQ. FEET)		
		LOCATION	MEASURED QUANTITIES	ESTIMATED QUANTITIES
- AREA OF SPALLING OR DELAMINATION TO BE REPAIRED PER ITEM 519	PHYSICAL INVENTORY OF MEASURED QUANTITIES OF DETERIORATION WAS PERFORMED IN MAY 2015. * ESTIMATED QUANTITIES HAVE BEEN INCREASED BY 50% OVER MEASURED QUANTITIES TO ALLOW FOR ADDITIONAL DETERIORATION. EXACT DIMENSIONS AND LOCATIONS OF PATCHES SHALL BE DETERMINED BY THE ENGINEER IN THE FIELD FOR FINAL PAY QUANTITY.	PIER NO. 10	2.0	3.0 *
		TOTAL	2.0	3.0 *

NOTE:
ALL REPAIR AREAS DESIGNATED AS SHALL BE SEALED AS PER ITEM 512, SEALING OF CONCRETE SURFACES (EPOXY-URETHANE). SEALING SHALL BE CLEAR AND OVERLAP REPAIR AREA A MINIMUM OF 6". COLOR SHALL MATCH EXISTING.

PLOT.CEL
ms consultants, inc.
msconsultants.com
www.msconsultants.com
Ohio DOT Workspace
UCF: ohdot1V8i
PCF: 60-08308_Youngstown
Batchplot Spec: \\youngstown-fs1\n\60\08308\standards\ploldrv\batchplt.spc
Pen Table: S:\std\plotting\usln\V8i\pen\V8i_ms_std.tbl
Plot Driver: S:\std\plotting\usln\V8i\PDP.pltcfg
34" x 22"
View: SHEET
By: mrielder
Model: Sheet
Printed: 9/26/2016 @ 8:25:17 AM
File: \\youngstown-fs1\n\60\08308\structures\sheets\250_0059CPI013.dgn

DESIGN AGENCY
ms consultants, inc.
333 E. Federal Street
Youngstown, Ohio 44503

DESIGNED	DRAWN	REVIEWED	DATE
SJR	KRM	JDH	10-23-15
CHECKED	REVISED	STRUCTURE FILE NUMBER	
LAW		2203189	

PIER NO. 10 PATCHING DETAILS
BRIDGE NO. ERI-250-0059
OVER THE NORFOLK SOUTHERN RR, 42ND STREET AND BUTLER STREET

ERI-250-00.59
PID No. 90939

ms consultants, inc.

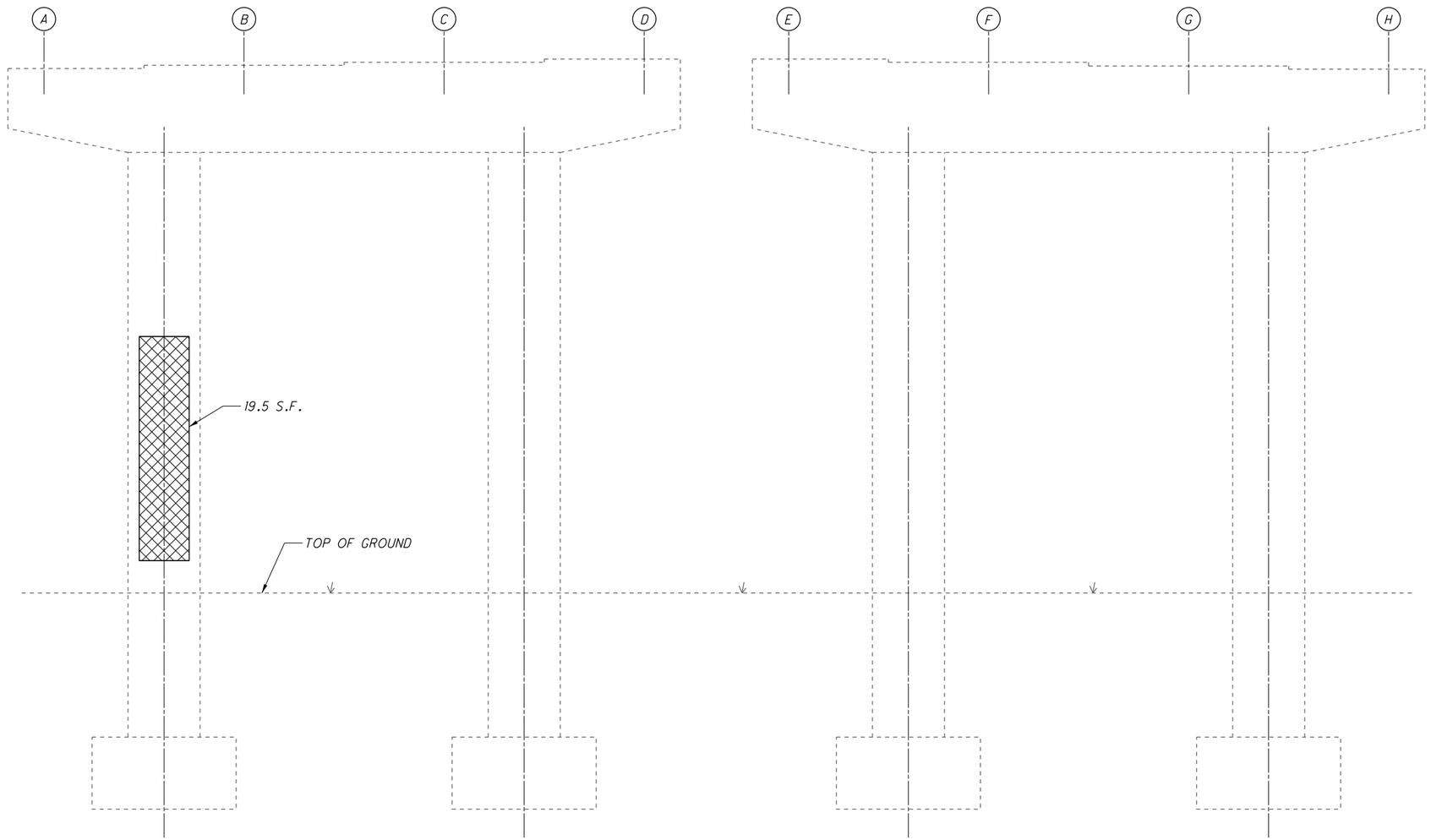

ELEVATION
(WEST FACE)

KEY	ITEM 519 - PATCHING CONCRETE STRUCTURES, AS PER PLAN
- AREA OF SPALLING OR DELAMINATION TO BE REPAIRED PER ITEM 519	PHYSICAL INVENTORY OF MEASURED QUANTITIES OF DETERIORATION WAS PERFORMED IN MAY 2015. * ESTIMATED QUANTITIES HAVE BEEN INCREASED BY 50% OVER MEASURED QUANTITIES TO ALLOW FOR ADDITIONAL DETERIORATION. EXACT DIMENSIONS AND LOCATIONS OF PATCHES SHALL BE DETERMINED BY THE ENGINEER IN THE FIELD FOR FINAL PAY QUANTITY.

ESTIMATED PATCHING QUANITIES
(SQ. FEET)

LOCATION	MEASURED QUANTITIES	ESTIMATED QUANTITIES
PIER NO. 10	19.5	29.0 *
TOTAL	19.5	29.0 *

NOTE:
ALL REPAIR AREAS DESIGNATED AS ▨ SHALL BE SEALED AS PER ITEM 512, SEALING OF CONCRETE SURFACES (EPOXY-URETHANE). SEALING SHALL BE CLEAR AND OVERLAP REPAIR AREA A MINIMUM OF 6". COLOR SHALL MATCH EXISTING.

NO WORK IS REQUIRED ON PIERS 11 AND 12

DESIGN AGENCY
ms consultants, inc.
333 E. Federal Street
Youngstown, Ohio 44503

DESIGNED	DRAWN	REVIEWED	DATE
SJR	KRM	JDH	10-23-15
CHECKED	REVISED	STRUCTURE FILE NUMBER	
LAW		2203189	

PIER NO. 10 PATCHING DETAILS
BRIDGE NO. ERI-250-0059
OVER THE NORFOLK SOUTHERN RR, 42ND STREET AND BUTLER STREET

ERI-250-00.59
PID No. 90939

PLOT.CEL
ms consultants, inc.
msconsultants.com
www.msconsultants.com
Ohio DOT Workspace
UCF: ohdot1V8i
PCF: 60-08308_Youngstown
Batchplot Spec: \\youngstown-fs1\n\60\08308\standards\plotdrv\batchplt.spc
Pen Table: S:\std\plotting\usth\V8i\pen\V8i_ms_std.tbl
Plot Driver: S:\std\plotting\usth\V8i\PDF.pltcfg
34" x 22"
View: SHEET
By: mneider
Model: Sheet
Printed: 9/26/2016 @ 8:25:17 AM
File: \\youngstown-fs1\n\60\08308\structures\sheets\250_0059CP1014.dgn
ms consultants, inc.

PLOT.CEL

ms consultants, inc.
msconsultants.com

www.msconsultants.com

Ohio DOT Workspace

UCF: ohdot1V8i
PCF: 60-08308_Youngstown

Batchplot Spec: \\youngstown-fs1\n\60\08308\standards\plotdrv\batchplt.spc
Pen Table: S:\std\plotting\usin\V8i\pen\V8i_ms_std.tbl
Plot Driver: S:\std\plotting\usin\V8i\PDF.pltcfg

34" x 22"

Model: Sheet
Printed: 9/26/2016 @ 8:25:18 AM
File: \\youngstown-fs1\n\60\08308\structures\sheets\250_0059CRA001.dgn
View: SHEET
By: mnelder

SOUTH PARAPET

FACE	STATION	SIZE (S.F.)
℄ REAR ABUT.	30+74.00±	**
T, R, O	30+74.0	3.0
R	30+78.5	7.0
R	31+04.7	3.0
R	31+21.1	3.0
TC	31+38.1	6.5
℄ PIER 1	31+34.01±	**
O, R	31+76.3	4.0
TC	31+96.3	3.5
TC	32+03.0	3.0
℄ PIER 2	32+09.01±	**
℄ PIER 3	32+78.82±	**
R	33+44.3	10.0
℄ PIER 4	33+49.00±	**
T, R	33+61.2	10.5
T, R	33+68.3	48.5
R	34+02.7	6.5
R	34+06.1	25.5
℄ PIER 5	34+18.62±	**
R	34+28.8	8.5
R	34+36.5	4.0
R	34+51.7	4.5
TC	34+53.2	4.0
T	34+71.9	14.0
TC	34+75.2	7.5
TC	34+75.8	25.0
℄ PIER 6	34+97.62±	**
R	35+00.7	3.5
TC	35+07.8	25.0
R	35+17.7	3.0
T	35+21.8	3.0
R	35+25.2	6.0
T, R	35+30.2	8.5
T, R, O	35+33.6	3.0
TC	35+37.9	3.0
TC	35+41.0	86.0
RC	35+47.2	3.0
℄ HINGE EXP. JT.	35+56.62±	**
℄ PIER 7	35+73.62±	**
R	35+79.4	4.0
TC	35+83.2	15.5
R	35+91.7	5.0
TC	35+98.5	24.0
T, TC	36+07.5	126.5
R	36+23.5	5.0

SOUTH PARAPET

FACE	STATION	SIZE (S.F.)
R	36+27.8	10.0
℄ PIER 8	36+40.00±	**
TC	36+55.2	31.0
TC	36+80.2	45.0
R	36+82.5	6.5
R	36+97.9	3.0
TC	37+03.6	4.5
℄ PIER 9	37+07.00±	**
TC	37+08.5	14.0
T	37+15.3	3.5
T, TC	37+27.6	64.5
℄ PIER 10	37+74.00±	**
TC	37+65.7	35.0
T	37+71.9	8.0
T	37+85.0	3.0
TC	37+92.1	126.5
R	38+24.1	3.0
T	38+34.4	7.5
T	38+47.6	12.5
℄ PIER 11	38+49.00±	**
R, TC	38+55.5	125.0
T, R	38+71.9	3.0
T, R	38+86.6	5.0
R	39+02.2	3.0
T, R	39+17.6	5.0
℄ PIER 12	39+24.00±	**
R, TC	39+34.2	71.0
R	39+66.7	3.0
℄ FWD. ABUT.	39+84.00±	**
	TOTAL = 1118.0	

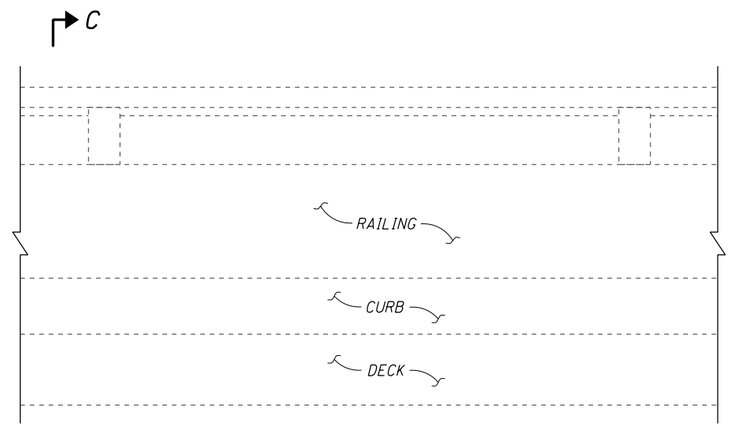

ELEVATION

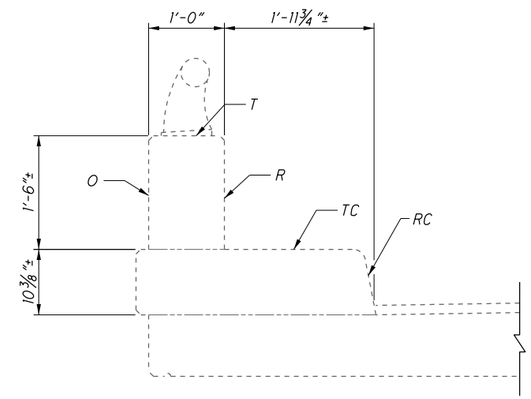

SECTION C-C

LIMITING STATIONS

SOUTH PARAPET
STA. 30+69.75 TO 39+88.25

NORTH PARAPET
STA. 30+69.75 TO 32+13.5
SUSPEND: STA. 32+13.5 TO 34+23.0
RESUME: STA. 34+23.0 TO 39+88.25

NORTH PARAPET

FACE	STATION	SIZE (S.F.)
℄ REAR ABUT.	30+74.00±	**
TC, RC	30+72.4	4.0
TC, RC	31+20.6	96
TC, RC	31+23.7	7.5
℄ PIER 1	31+34.01±	**
T, O	31+35.1	10.0
TC	31+38.7	16.5
T, R, TC	31+45.4	11.0
O, R	31+60.6	6.5
T	31+61.5	5.5
O	31+65.4	4.5
T	31+74.5	3.0
R	31+75.2	11.5
O, RC	31+86.8	21.0
TC	31+86.8	53.5
R	31+92.0	9.5
O, T	31+94.9	10.5
T	32+09.0	4.5
℄ PIER 2	32+09.01±	**
R	32+13.3	25.5
℄ PIER 3	32+78.82±	**
℄ PIER 4	33+49.00±	**
℄ PIER 5	34+18.62±	**
T	34+54.0	7.5
TC	34+58.0	28.5
RC	34+60.0	20.5
T	34+69.7	11.5
TC, RC	34+75.5	31.5
TC	34+80.8	9.5
℄ PIER 6	34+97.62±	**
RC	34+99.5	4.0
R	35+09.0	40.0
R, T	35+17.3	38.5
T, TC	35+23.6	12.0
R	35+24.0	10.0
T	35+32.0	7.5
TC, RC	35+40.9	45.0
TC	35+56.5	15.5
℄ HINGE EXP. JT.	35+56.62±	**
TC	35+72.5	32.5
℄ PIER 7	35+73.62±	**
O, TC, T, R	35+84.6	50.0
R	35+86.9	3.0
R	35+98.7	3.0

NORTH PARAPET

FACE	STATION	SIZE (S.F.)
R, TC	36+11.6	21.0
O, T	36+22.3	56.5
R	36+29.4	17.0
℄ PIER 8	36+40.00±	**
T	36+50.9	4.0
TC	36+53.9	29.5
T, R, TC	36+60.9	48.0
RC	36+65.5	7.5
TC	36+74.1	9.0
T	36+79.3	3.0
RC	36+91.0	5.0
T, TC	37+03.8	39.0
℄ PIER 9	37+07.00±	**
TC, RC	37+10.6	144.0
T	37+23.5	18.5
R	37+24.8	72.0
T, R	37+40.7	31.5
TC	37+50.7	58.0
TC, RC	37+64.6	18.5
T, R	37+73.8	7.0
℄ PIER 10	37+74.00±	**
O	37+91.4	5.5
TC, RC	38+03.5	72.0
R	38+06.6	34.5
T	38+14.6	43.0
R	38+17.4	8.0
TC	38+20.8	21.5
T	38+22.5	5.5
TC	38+39.2	44.0
T, R	38+47.3	16.0
℄ PIER 11	38+49.00±	**
T, R	38+62.8	15.5
T, TC	38+72.3	21.5
R, RC	38+93.2	38.0
T	39+11.8	7.5
℄ PIER 12	39+24.00±	**
R, TC	39+35.1	65.5
RC	39+48.7	30.0
TC	39+55.9	35.0
T, R, TC	39+84.0	134.5
℄ FWD. ABUT.	39+84.00±	**
	TOTAL = 1857.0	

KEY

T = TOP FACE
R = ROADWAY FACE
O = OUTSIDE FACE
RC = ROADWAY CURB
TC = TOP CURB

ITEM 519 - PATCHING CONCRETE STRUCTURES, AS PER PLAN

PHYSICAL INVENTORY OF MEASURED QUANTITIES OF DETERIORATION WAS PERFORMED IN MAY 2015.

* ESTIMATED QUANTITIES HAVE BEEN INCREASED BY 50% OVER MEASURED QUANTITIES TO ALLOW FOR ADDITIONAL DETERIORATION.

EXACT DIMENSIONS AND LOCATIONS OF PATCHES SHALL BE DETERMINED BY THE ENGINEER IN THE FIELD FOR FINAL PAY QUANTITY.

ESTIMATED PATCHING QUANITIES

(SQ. FEET)

LOCATION	MEASURED QUANTITIES	ESTIMATED QUANTITIES
SOUTH PARAPET	1118	1677 *
NORTH PARAPET	1857	2786 *
TOTAL	2975	4463 *

LEGEND:

** - INFORMATION PROVIDED TO AID IN LOCATION OF PATCHING. PIER STATIONS GIVEN AT ℄ CONSTRUCTION U.S. 250.

NOTE:

1. CARE SHALL BE TAKEN TO SALVAGE THE EXISTING ALUMINIUM PARAPET RAILING, SUPPORTS AND ANCHOR BOLTS.

DAMAGE TO ALUMINUM PARAPET RAILING, SUPPORTS AND ANCHOR BOLTS, AS A RESULT OF CONSTRUCTION, SHALL BE REPAIRED AT THE CONTRACTOR'S EXPENSE.

DESIGN AGENCY
ms consultants, inc.
333 E. Federal Street
Youngstown, Ohio 44503

DESIGNED	DRAWN	REVIEWED	DATE
SJR	KRM	JDH	10-23-15
CHECKED	REVISED	STRUCTURE FILE NUMBER	
LAW		2203189	

PARAPET PATCHING TABLE AND DETAILS

BRIDGE NO. ERI-250-0059
OVER THE NORFOLK SOUTHERN RR, 42ND STREET AND BUTLER STREET

ERI-250-00.59
PID No. 90939

ms consultants, inc.

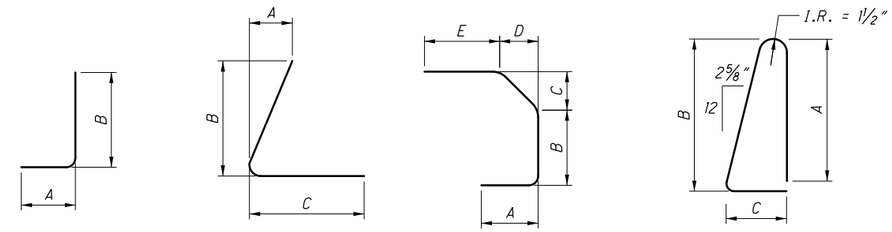

REINFORCING LIST

MARK	TOTAL	LENGTH	WEIGHT (POUNDS)	TYPE	DIMENSIONS				
					A	B	C	D	E
S501*	24	13'-0"	325	STR					
S502	6	13'-1"	82	STR					
S503	18	14'-8"	275	STR					
S504	14	2'-10"	41	STR					
S505	10	4'-1"	43	STR					
S506	6	5'-5"	34	23	2'-2"	2'-5"	0'-9"		
S507	6	4'-2"	26	11	0'-6"	3'-0"	0'-9"		
S601	6	3'-5"	31	14	1'-0"	0'-10"	0'-8 1/2"	0'-6"	0'-8"
S602	6	3'-3"	29	14	1'-0"	0'-8"	0'-8 1/2"	0'-6"	0'-8"
S603	6	3'-1"	28	1	1'-0"	2'-3"			
		TOTAL =	914						

LEGEND:

* - INDICATED BARS WITH MECHANICAL CONNECTORS. SEE NOTE 3.

NOTES:

1. BAR SIZE: THE BAR SIZE NUMBER IS SPECIFIED ON THE PLANS IN THE BAR MARK COLUMN. THE FIRST DIGIT WHERE THREE DIGITS ARE USED AND THE FIRST TWO DIGITS WHERE FOUR DIGITS ARE USED INDICATES THE BAR SIZE NUMBER. FOR EXAMPLE, AN A601 IS A #6 BAR. BAR DIMENSIONS SHOWN ARE OUT TO OUT UNLESS OTHERWISE INDICATED. R INDICATES INSIDE RADIUS, UNLESS OTHERWISE NOTED. "STD." WRITTEN IN PLACE OF A DIMENSION INDICATES A STANDARD BEND AT THE END OF THE BAR.
2. ALL REINFORCING SHALL BE EPOXY COATED.
3. MECHANICAL SPLICE CONNECTORS SHALL BE INCLUDED FOR PAYMENT WITH REINFORCING STEEL.

DESIGN AGENCY
ms consultants, inc.
333 E. Federal Street
Youngstown, Ohio 44503

DESIGNED	DRAWN	REVIEWED	DATE
SJR	KRM	JDH	10-23-15
CHECKED	REVISED	STRUCTURE FILE NUMBER	
LAW		2203189	

REINFORCING STEEL LIST

BRIDGE NO. ERI-250-0059
OVER THE NORFOLK SOUTHERN RR, 42ND STREET AND BUTLER STREET

ERI-250-00.59
PID No. 90939

PLOT.CEL
ms consultants, inc.
msconsultants.com
www.msconsultants.com
Ohio DOT Workspace
UCF: ohdot1V8i
PCF: 60-08308_Youngstown
0 0.5" 1"
34" x 22"
Batchplot Spec: \\youngstown-fs1\n\60\08308\standards\plotdrv\batchplt.spc
Pen Table: S:\std\plotting\usstn\V8\pen\V8_ms_std.tbl
Plot Driver: S:\std\plotting\usstn\V8\PDF.pltcfg
Model: Sheet View: SHEET
Printed: 9/26/2016 @ 8:25:19 AM By: mmelder
File: \\youngstown-fs1\n\60\08308\structures\sheets\250_0059GRL001.dgn
ms consultants, inc.