STATE OF OHIO

DEPARTMENT OF TRANSPORTATION

MED - 71 - 15.78

City of Brunswick
Medina, Granger, Brunswick Hills And Montville Townships
Medina County

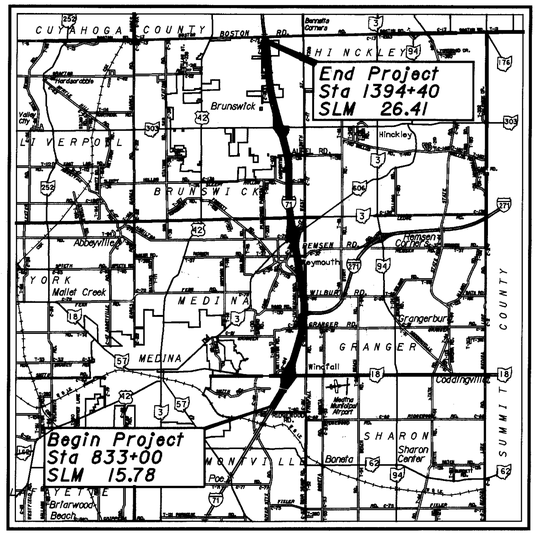

LOCATION MAP

LATITUDE: 41° 08′ 38″ LONGITUDE: 81° 47′ 30″

0 1 2 3 4
SCALE IN MILES

N

PORTION TO BE IMPROVED
STATE & FEDERAL ROUTES
OTHER ROADS

DESIGN DESIGNATION

CURRENT ADT (2000)	56,530
DESIGN YEAR ADT (2020)	72,470
DESIGN HOURLY VOLUME (2020)	7,247
DIRECTIONAL DISTRIBUTION	55 %
TRUCKS (24 HOUR B&C)	22 %
DESIGN SPEED	70 MPH
LEGAL SPEEDS	55 MPH and 65 MPH

DESIGN FUNCTIONAL CLASSIFICATION -
Interstate Rural/Urban

DESIGN EXCEPTIONS

IR 71 - NONE REQUIRED

GRANGER RD SSD	APPRV DATE 12/14/99	SHT 408, 409
SHOULDER WIDTH	12/14/99	402

PLAN PREPARED BY:
District One
Ohio Department
of Transportation

INDEX OF SHEETS:

Title Sheet	1
Schematic Plan	2-7
Typical Sections - Proposed	8-22
Typical Sections - Existing	23-30
General Notes	31-36
Maintenance Of Traffic	37-67, 42A, 42B, 42C, 63A
General Summary	68-74
Subsummary Sheets	75-76, 76A, 77-128
Calculation Sheets	129-146A
Superelevation Tables	147-148
Storm Water Pollution Prevention Plan	149-171
IR 71 Plan & Profile Sheets	172-218
IR 71 Cross-Sections	219-374
SR 18	375-382, 384-401
Granger Road	402-419
IR 271 Connector "W"	421-448
IR 271 Connector "E"	449-452
SR 3	453-457, 457A, 458-465
Rest Areas	466-480
SR 303	482-484, 484A, 485, 485A, 486-500
Miscellaneous Details	501-502
Drainage Details	503-512, 512A, 513-516
Culvert Details	517-530
Drainage Profiles	531-536, 536A
Underdrain Details	537-550
Traffic Control	551-560, 560A-560B
Signing	561-606, 561A, 569A-E, 574A-C
Lighting	607-643
Landscaping	647-663
Noise Walls	664-679
Structure Index & Misc. Sheets	680-686
MED-71-1685 L&R over SR 18	687-720, 720A
MED-71-1828 Granger Road over IR 71	721-736
MED-71-1870 L&R OVER IR 271	737-775
MED-71-1918 L&R over Wilbur Road	776-797
MED-71-1988 over ROCKY RIVER	798-820
MED-71-2088E RAMP B @ SR3	821-836
MED-71-2090 L&R over SR 3	837-867
MED-71-2092W RAMP C @ SR 3	868-895
MED-71-2402 L&R over SR 303	896-931
Miscellaneous Overhead Sheets	932-940

Sheets Not Used - 383, 420, 481, 644, 645 & 646

UNDERGROUND UTILITIES
TWO WORKING DAYS
BEFORE YOU DIG
CALL 1-800-362-2764 (TOLL FREE)
OHIO UTILITIES PROTECTION SERVICE
NON-MEMBERS
MUST BE CALLED DIRECTLY

OIL & GAS PRODUCERS
UNDERGROUND PROTECTION SERVICE
P.O. Box 206
Granville, OH 43023-0206
800-925-0988
(Fax) 740-587-0446

PROJECT DESCRIPTION

Reconstruction of 10.6 miles of IR 71 existing lanes and shoulders including construction of widened inside shoulders from Begin Project to SR 303 and additional lanes from SR 303 to End Project. Also reconstruction of the connection lanes between IR 71 and IR 271. The work shall consist of but is not limited to new pavement and shoulders, new underdrains, rehabilitation or replacement of existing drainage, new guardrail, upgrading of signing, replacement of fencing, lighting at the IR 271, SR 3 and SR 303 interchanges, noise walls, replacement of Rest Area parking Areas, pavement markings and rehabilitation or replacement of structures.

LIMITED ACCESS

THIS IMPROVEMENT IS ESPECIALLY DESIGNED FOR THROUGH TRAFFIC AND HAS BEEN DECLARED A LIMITED ACCESS HIGHWAY OR FREEWAY BY ACTION OF THE DIRECTOR IN ACCORDANCE WITH THE PROVISIONS OF SECTION 5511.02 OF THE REVISED CODE OF OHIO.

1997 SPECIFICATIONS

The Standard Specifications of the State of Ohio, Department of Transportation, including changes and supplemental specifications listed in the proposal shall govern this improvement.

I hereby approve the plans and declare that the making of this improvement will not require the closing to traffic of the highway and provisions for the maintenance and safety of the traffic will be as set forth on the plans and estimate.

"Under authority of Section 4511.21, Division (I) of the Revised Code of Ohio, the revised prima facia speed limits as indicated herein are determined to be reasonable andsafe and are hereby established for the duration of this project. The prima facia speed limit or limits hereby established shall become effective when appropriate signs giving notice thereof are erected."

APPROVED James D. Mawhorr
DATE 12-17-99 DISTRICT DEPUTY DIRECTOR

APPROVED Gordon Proctor Jr.
DATE 2-18-00 DIRECTOR, DEPARTMENT OF TRANSPORTATION

ENGINEERS SEAL:

STATE OF OHIO
John Wesley Rogers
E-43881
REGISTERED PROFESSIONAL ENGINEER

For Signing, Pavement Marking, Guardrail, Pavement Calculations & Maintenance of Traffic, except at SR 18, Granger Road and IR 271.

SIGNED John W. Rogers
DATE: December 15, 1999

For additional Seal Blocks, See Sheet 2 of 940.

STANDARD CONSTRUCTION DRAWINGS

BP-1.1M	10-28-94	GR-1.1M	10-21-97	CB-1.2M	7-12-95	AS-1-81	09-15-94	TC-22.10M	03-13-97	TC-61.10M	03-31-94	HL-20.22M	03-31-95	MT-95.40M	04-25-94	806	09-09-97
BP-2.1M	04-08-97	GR-1.2M	1-3-96	CB-2.1M	7-12-95	GR-3.5M	10-21-97	TC-22.20M	02-01-94	TC-65.10M	11-01-95	HL-20.23M	03-31-95	MT-97.10M	04-25-94	814	06-02-98
BP-2.2M	10-21-97	GR-1.3M	11-30-94	CB-2.2M	7-12-95	BR-1M	01-06-99	TC-31.21M	03-31-94	TC-65.11M	11-01-95			MT-98.12M	06-24-93	815	05-30-96
BP-2.3	04-29-99	GR-2.1M	04-14-98	CB-3.1M	7-12-95	BS-1-93	12-19-94	TC-32.10M	03-31-94	TC-65.12M	11-01-95	HL-30.11M	03-31-95	MT-98.13M	06-24-93	816	04-21-97
BP-2.4M	10-28-94	GR-3.1M	10-21-97	CB-3.2M	7-12-95	CS-1-93	06-30-95	TC-32.11M	03-31-94	TC-71.10M	09-01-93	HL-30.21M	05-01-95	MT-98.14M	06-24-93	825	9-14-99
BP-2.5M	04-08-97	GR-3.2M	10-21-97	CB-3.4M	7-12-95	EXJ-4-87M	02-18-97	MT-102.10M	01-30-95	TC-72.20M	09-01-93	HL-30.22M	03-31-95	MT-98.15M	06-24-93	842	01-06-99
BP3.1M	10-28-94	GR-4.1M	11-30-94	HW-2.1M	07-12-95	VPF-1-90M	03-20-95	TC-41.10M	03-31-94	TC-82.10M	11-24-93	HL-30.31M	05-01-95	MT-98.16M	06-24-93	844	01-06-99
BP-4.1M	10-28-94	GR-4.2M	10-21-97	HW-2.2M	07-12-95	GSD-1-96	02-12-97	TC-41.20M	07-01-94	TC-83.10M	11-24-93	GR-4.3M	10-27-97	MT-98.17M	04-25-94	855	6-30-98
BP-5.1M	10-28-94	GR-6.1M	1-3-96	I-2.2M	09-06-95	PCB-1-91	07-06-99	TC-41.50M	07-01-94	RM-4.5M	10-21-97	HL-40.10M	03-31-95	MT-98.18M	04-25-94	863	10-12-99
BP-9.1	04-29-99	GR-6.2M	1-3-96	MH-1.1M	10-21-97	SBR-1-99	01-12-99	TC-42.10M	03-31-94	HL-10.11M	05-01-95	HL-50.11M	03-31-95	MT-99.20M	01-30-95	870	08-10-99
BP-9.2	04-29-99	RM-1.1	04-29-99	MH-1.2M	09-06-95	HW-1.1M	07-12-95	TC-42.20M	03-31-94	HL-10.12M	05-01-95	HL-50.21M	08-31-94	MT-101.60M	04-25-94	899	10-21-98
F-1.1M	4-8-97	RM-4.1M	10-21-97	MH-3.1M	09-06-95	TC-7.65M	02-01-94	TC-82.11M	01-19-99	HL-10.13M	05-01-95	HL-60.11M	05-01-95	MT102.20M	01-30-95	880	06-15-99
F-2.1M	4-8-97	RM-4.2M	10-21-97	DM-1.1M	10-21-97	TC-12.30M	02-01-94	TC-51.11M	09-30-94	HL-10.31M	03-31-95	HL-60.21M	03-31-95	MT-105.10M	04-25-94	904	05-05-98
F-3.1M	4-21-95	RM-4.3M	10-21-97	DM-4.2M	6-30-95	TC-18.26M	02-01-94	TC-51.12M	03-31-94	HL-20.11M	03-31-95	HL-60.31M	03-31-95	MT-105.11M	04-25-94	905	04-01-98
F-3.3M	4-21-95	RM-4.4M	10-21-97	DM-4.3	04-29-99	TC-21.10M	12-10-96	TC-52.10M	07-29-94	HL-20.15M	03-31-95	MT-95.31M	04-25-94	MT-95.32M	04-25-94	906	05-05-98
F-3.4M	4-8-97	CB-1.1M	7-12-95	DM-4.4	04-29-99	TC-21.20M	12-10-96	TC-52.20M	07-29-94	HL-20.21M	08-31-94	MT-95.30M	04-25-94			887	08-10-99

SUPPLEMENTAL SPECIFICATIONS		SPECIAL PROVISIONS	
		Waterway Permit	
		NWP#	DATE:
		3 & 14	01-28-98
		SUPPLEMENTAL SPECIFICATIONS	
910	07-28-98		
911	07-10-97		
954	09-09-97		
877	4-13-99		
925	9-14-99		

FEDERAL PROJECT NO. TE21-6000(267)
PID NO. 7885
CONSTRUCTION PROJECT NO.
RAILROAD INVOLVEMENT NONE

MED - 71 - 15.78

MED - IR 71 - 15.78
000239
PID#7885
05/10/00
DIST.03

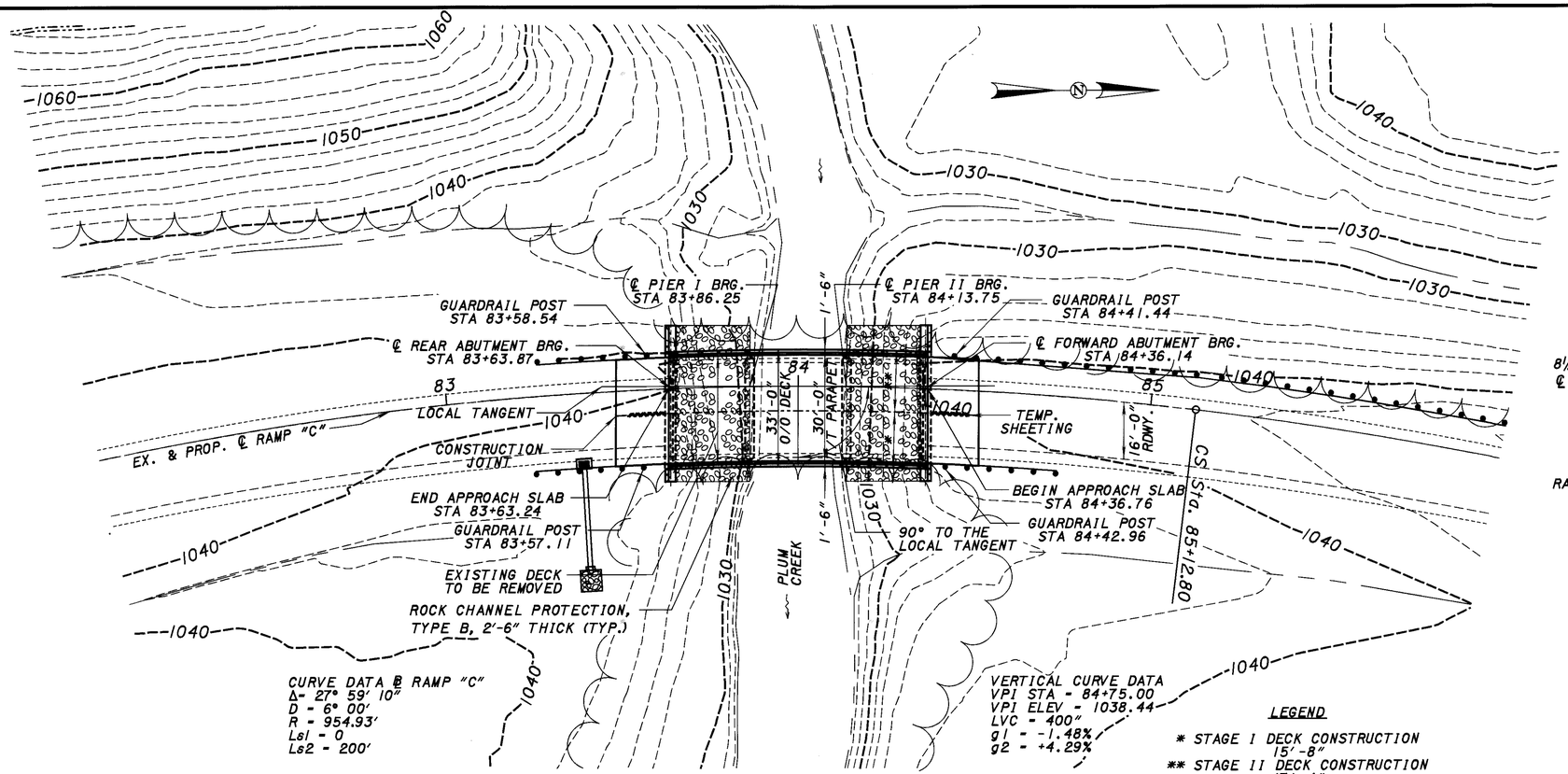

PLAN

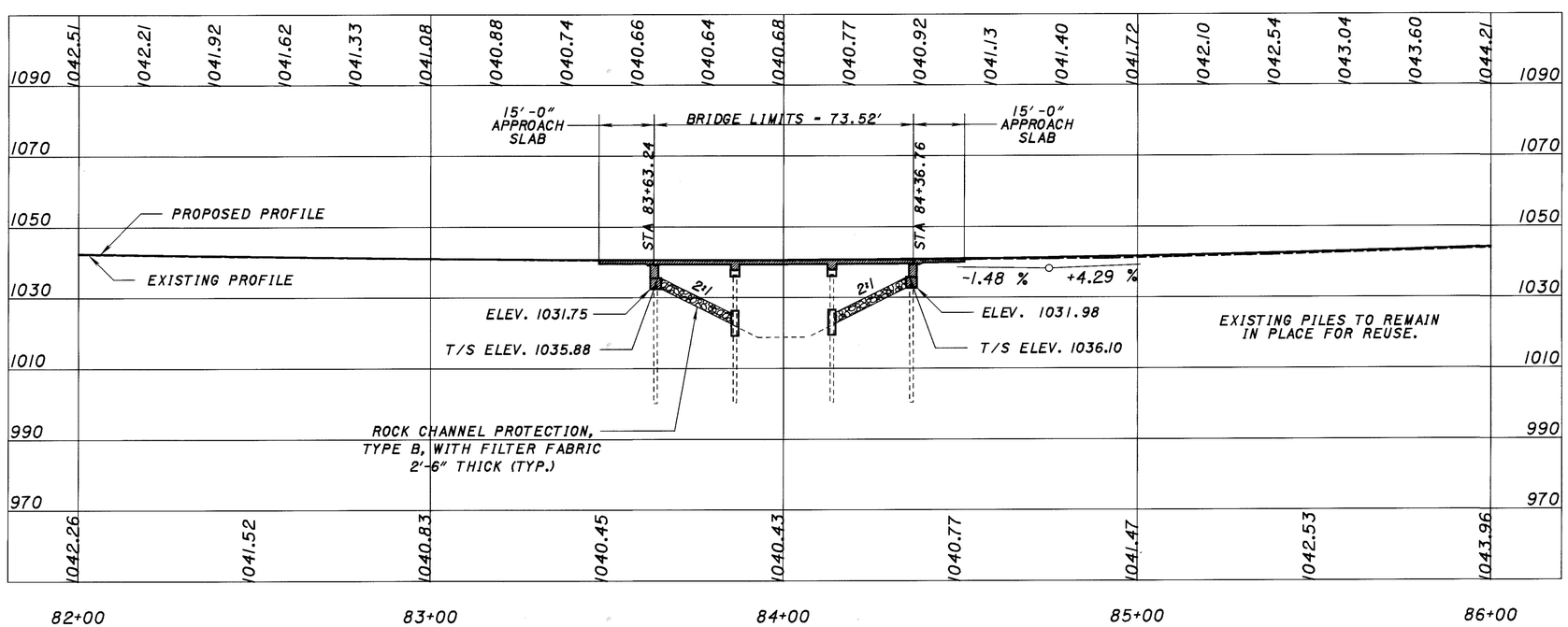

PROFILE

BENCHMARK DATA

BM #1 - STATION 1110+35.99 IR-71 ELEVATION - 1069.77
ODOT DISC IN HEADWALL, STAMPED

TRAFFIC DATA

CURRENT YEAR ADT (2000) - 6180
DESIGN YEAR ADT (2020) - 8960
DESIGN YEAR ADTT (2020) - 450

NOTES:

1. EARTHWORK LIMITS SHOWN ARE APPROXIMATE. ACTUAL SLOPES SHALL CONFORM TO PLAN CROSS-SECTIONS

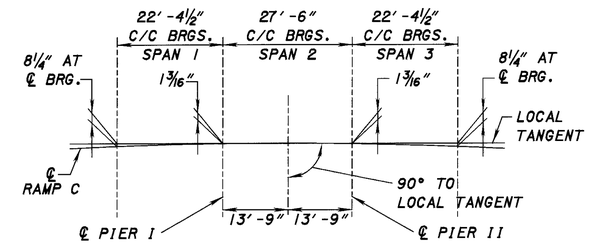

TANGENT SCHEMATIC

EXISTING STRUCTURE

TYPE: CONTINUOUS SLAB BRIDGE WITH CAPPED PILE PIERS

SPANS: 22'-0"±, 27'-6"±, 22'-0"± C/C BRGS.

ROADWAY: 25'-10"± F/F SAFETY CURBS

LOADING: CF-400 (57)

SKEW: NONE

WEARING SURFACE: ASPHALT CONCRETE

APPROACH SLABS: 25'-0"± LONG (AS-1-54)

ALIGNMENT: 6°00'± CURVE RIGHT

SUPERELEVATION: 0.063± FT./FT.

DATE BUILT: 1964

SFN: 5203996

PROPOSED STRUCTURE

TYPE: CONTINUOUS SLAB BRIDGE WITH CAPPED PILE PIERS

SPANS: 22'-4½"±, 27'-6"±, 22'-4½"± C/C BRGS.

ROADWAY: 30'-0"± T/T PARAPETS

LOADING: HS-20-44 AND ALTERNATE MILITARY LOADING

SKEW: NONE

WEARING SURFACE: 1" MONOLITHIC CONCRETE

APPROACH SLABS: 15' LONG, AS-1-81; 30'-0" T/T CURB

ALIGNMENT: 6°00'± CURVE RIGHT

SUPERELEVATION: 0.063± FT./FT.

COORDINATES: LAT. N 41° 11' 39"
LONG. W 81° 47' 35"

DESIGN AGENCY: ODOT CENTRAL OFFICE OFFICE OF PRODUCTION

REVIEWED DFT | DATE 9-20-99 | STRUCTURE FILE NUMBER 5203996

DRAWN BKL | REVISED

DESIGNED BKL | CHECKED RJH

MEDINA COUNTY
STA. 83+63.24
STA. 84+36.76

SITE PLAN
MED-71-2092 W, RAMP "C"
OVER PLUM CREEK, S.R. 3 INTERCHANGE

MED-71-15.78

MED-71-2092 W				ESTIMATED QUANTITIES	ABUTMENTS		PIERS	SUPER.	GEN.	SEE SHEET NO.
ITEM	EXTENSION	TOTAL	UNIT	DESCRIPTION	REAR	FORWARD				
202	11203	LUMP		PORTIONS OF STRUCTURE REMOVED, OVER 20 FOOT SPAN, AS PER PLAN	LUMP	LUMP	LUMP	LUMP		3
503	11100	LUMP		COFFERDAMS, CRIBS AND SHEETING					LUMP	
503	21301	LUMP		UNCLASSIFIED EXCAVATION, AS PER PLAN	LUMP	LUMP				3
SPECIAL	50771200	156	LIN FT	PILE ENCASEMENT			156			
512	44400	4	SQ YD	TYPE B WATERPROOFING	2	2				
SPECIAL	51267510	291	SQ YD	SEALING OF CONCRETE SURFACES (EPOXY-URETHANE)	25	25	60*	181		
516	13200	18	SQ FT	1/2" PREFORMED EXPANSION JOINT FILLER	9	9				
518	12200	3	EACH	SCUPPER, INCLUDING SUPPORTS				3		
518	21231	LUMP		POROUS BACKFILL WITH FILTER FABRIC, AS PER PLAN	LUMP	LUMP				3
518	40000	90	LIN FT	6" PERFORATED CORRUGATED PLASTIC PIPE	45	45				
518	40010	60	LIN FT	6" NON-PERFORATED CORRUGATED PLASTIC PIPE, INCLUDING SPECIALS	30	30				
601	32104	195	CU YD	ROCK CHANNEL PROTECTION, TYPE B WITH FABRIC FILTER					195	
842	42501	4	CU YD	CLASS C CONCRETE, PIER CAP, AS PER PLAN			4			3
842	43501	60	CU YD	CLASS C CONCRETE, ABUTMENT INCLUDING FOOTING, AS PER PLAN	30	30				3
844	48001	113	CU YD	HIGH PERFORMANCE CONCRETE SUPERSTRUCTURE (DECK), AS PER PLAN, MIX 4				113		3
844	48021	23	CU YD	HIGH PERFORMANCE CONCRETE SUPERSTRUCTURE (PARAPET), AS PER PLAN, MIX 4			23			3
844	49000	LUMP		HIGH PERFORMANCE CONCRETE TRIAL MIX				LUMP		

* EXPOSED SURFACES OF PIER CAP, NEW AND EXISTING, TO BE SEALED.

DESIGN AGENCY
ODOT CENTRAL OFFICE
OFFICE OF PRODUCTION

REVIEWED DFT
DATE 9-20-99
STRUCTURE FILE NUMBER 5203996

DRAWN BKL
REVISED

DESIGNED BKL
CHECKED RJH

ESTIMATED QUANTITIES
BRIDGE NO. MED-71-2092 W
RAMP "C" OVER PLUM CREEK, S.R. 3 INTERCHANGE

MED-71-15.78

GENERAL NOTES

STANDARD DRAWINGS AND SPECIFICATIONS:

REFERENCE SHALL BE MADE TO STANDARD DRAWINGS:

AS-1-81	REVISED 09-15-94
SBR-1-99	DATED 01-12-99
PCB-1-91	REVISED 07-06-99
CS-1-93	DATED 06-30-95

AND TO SUPPLEMENTAL SPECIFICATIONS:

842	DATED 01-06-99
844	DATED 01-06-99
899	DATED 10-21-98
911	DATED 07-10-97
954	DATED 09-09-97

DESIGN SPECIFICATIONS:

THIS STRUCTURE CONFORMS TO "STANDARD SPECIFICATIONS FOR HIGHWAY BRIDGES" ADOPTED BY THE AMERICAN ASSOCIATION OF STATE HIGHWAY AND TRANSPORTATION OFFICIALS, 1996 INCLUDING THE 1997 AND 1998 INTERIM SPECIFICATIONS AND THE ODOT DESIGN MANUAL.

DESIGN LOADING:

HS20-44, CASE I AND THE ALTERNATE MILITARY LOADING.

DESIGN DATA:

HIGH PERFORMANCE CONCRETE - COMPRESSIVE STRENGTH 4500 PSI (SUPERSTRUCTURE)
ITEM 842 CONCRETE - COMPRESSIVE STRENGTH 4000 PSI (SUBSTRUCTURE)

REINFORCING STEEL - ASTM A615, A616 OR A617 GRADE 60 MINIMUM YIELD STRENGTH 60 Ksi. SPIRAL REINFORCEMENT MAY BE PLAIN BARS, ASTM A82 OR A615

DECK PROTECTION METHOD - EPOXY COATED REINFORCING STEEL AND 2½" CONCRETE COVER AND HIGH PERFORMANCE CONCRETE.

MONOLITHIC WEARING SURFACE IS ASSUMED, FOR DESIGN PURPOSES, TO BE 1" THICK.

EXISTING STRUCTURE VERIFICATION:

DETAILS AND DIMENSIONS SHOWN ON THESE PLANS PERTAINING TO THE EXISTING STRUCTURE HAVE BEEN OBTAINED FROM PLANS OF THE EXISTING STRUCTURE AND FROM FIELD OBSERVATIONS AND MEASUREMENTS. CONSEQUENTLY, THEY ARE INDICATIVE OF THE EXISTING STRUCTURE AND THE PROPOSED WORK BUT THEY SHALL BE CONSIDERED TENTATIVE AND APPROXIMATE. THE CONTRACTOR IS REFERRED TO CMS SECTIONS 102.05 AND 105.02.

CONTRACT BID PRICES SHALL BE BASED UPON A RECOGNITION OF THE UNCERTAINTIES DESCRIBED ABOVE AND UPON A PREBID EXAMINATION OF THE EXISTING STRUCTURE BY THE CONTRACTOR. HOWEVER, ALL PROJECT WORK SHALL BE BASED UPON ACTUAL DETAILS AND DIMENSIONS WHICH HAVE BEEN VERIFIED BY THE CONTRACTOR IN THE FIELD.

EXISTING BRIDGE PLANS MAY BE INSPECTED IN THE OFFICE OF STRUCTURAL ENGINEERING IN COLUMBUS, OHIO OR AT THE ODOT DISTRICT THREE OFFICE IN ASHLAND, OHIO.

TRAFFIC MAINTENANCE:

SEE ROADWAY PLANS FOR ADDITIONAL TRAFFIC NOTES AND DETAILS.

ITEM 202 PORTIONS OF STRUCTURE REMOVED OVER 20 FOOT SPAN, AS PER PLAN:

PORTION OF THE STRUCTURE REMOVED, AS PER PLAN, SHALL INCLUDE THE ELEMENTS INDICATED IN THE PLANS AND GENERAL NOTES AND ARE NOT SEPARATELY LISTED FOR PAYMENT, EXCEPT FOR WEARING COURSE REMOVAL. ITEMS TO BE REMOVED INCLUDE ALL EXISTING MATERIALS BEING REPLACED BY NEW CONSTRUCTION AND MISCELLANEOUS ITEMS THAT ARE NOT SHOWN TO BE INCORPORATED INTO THE FINAL CONSTRUCTION AND ARE DIRECTED TO BE REMOVED BY THE ENGINEER. THE USE OF EXPLOSIVES, HEADACHE BALLS AND/OR HOE-RAMS WILL NOT BE PERMITTED. THE METHOD OF REMOVAL AND THE WEIGHT OF HAMMER SHALL BE APPROVED BY THE ENGINEER. ALL WORK SHALL BE DONE IN A MANNER THAT WILL NOT CUT, ELONGATE OR DAMAGE THE EXISTING REINFORCING STEEL TO BE PRESERVED.

PROTECTION OF TRAFFIC:

PRIOR TO DEMOLITION OF ANY PORTIONS OF THE EXISTING SUPERSTRUCTURE, THE CONTRACTOR SHALL SUBMIT PLANS FOR THE PROTECTION OF TRAFFIC (VEHICULAR, PEDESTRIAN, BOAT, ETC.) ADJACENT TO AND/OR UNDER THE STRUCTURE TO THE ENGINEER FOR APPROVAL. THESE PLANS SHALL INCLUDE PROVISIONS FOR ANY DEVICES AND STRUCTURES THAT MAY BE NECESSARY TO ENSURE SUCH PROTECTION. TEMPORARY VERTICAL CLEARANCES SPECIFIED IN THE PROPOSAL SHALL BE MAINTAINED AT ALL TIMES EXCEPT WHERE OTHERWISE APPROVED BY THE ENGINEER.

CUT LINE CONSTRUCTION JOINT PREPARATION:

SAW CUT BOUNDARIES OF PROPOSED CONCRETE REMOVALS 1" DEEP. REMOVE CONCRETE TO A ROUGH SURFACE. WHERE PRACTICABLE, THE EXISTING REINFORCING STEEL REQUIRED IN THE PLANS SHALL BE LEFT IN PLACE. INSTALL DOWEL BARS IF SPECIFIED. PRIOR TO CONCRETE PLACEMENT ABRASIVELY CLEAN JOINT SURFACE AND EXPOSED REINFORCEMENT TO REMOVE LOOSE AND DISINTEGRATED CONCRETE AND LOOSE RUST. THE JOINT SURFACE AND EXPOSED REINFORCEMENT SHALL BE THOROUGHLY CLEANED OF ALL DIRT, DUST OR OTHER FOREIGN MATERIAL BY THE USE OF WATER, AIR UNDER PRESSURE, OR OTHER METHODS THAT PRODUCE SATISFACTORY RESULTS. CONCRETE BONDING SURFACES SHALL BE WET WITHOUT FREE FREE WATER AS CONCRETE IS PLACED.

SUBSTRUCTURE CONCRETE REMOVAL:

SUBSTRUCTURE CONCRETE REMOVAL SHALL BE BY MEANS OF APPROVED PNEUMATIC HAMMERS EMPLOYING POINTED AND BLUNT CHISEL TOOLS. HYDRAULIC HOE-RAM TYPE HAMMERS WILL NOT BE PERMITTED. THE WEIGHT OF THE HAMMER SHALL NOT BE MORE THAN 35 POUNDS FOR REMOVAL WITHIN 18 INCHES OF PORTIONS TO BE PRESERVED. OUTSIDE THE 18 INCH LIMIT, A HAMMER HEAVIER THAN 35 POUNDS, BUT NOT TO EXCEED 90 POUNDS, MAY BE USED AT THE APPROVAL OF THE ENGINEER. PNEUMATIC HAMMERS SHALL NOT BE PLACED IN DIRECT CONTACT WITH REINFORCING STEEL THAT IS TO BE RETAINED IN THE REBUILT STRUCTURE. ALL WORK SHALL BE PAID FOR UNDER ITEM 202 - PORTION OF STRUCTURES REMOVED, AS PER PLAN.

ITEM 503, UNCLASSIFIED EXCAVATION, AS PER PLAN:

UNCLASSIFIED EXCAVATION SHALL BE IN ACCORDANCE WITH 503 EXCEPT THAT THE BACKFILL MATERIAL BEHIND THE ABUTMENTS SHALL BE 203 MATERIAL PLACED IN 6" LIFTS. EXCAVATION AT ABUTMENTS IN ADDITION TO THAT NECESSARY TO REMOVE PORTIONS OF THE EXISTING STRUCTURE SHALL BE INCLUDED IN THE LUMP SUM PRICE BID FOR ITEM 503, UNCLASSIFIED EXCAVATION, AS PER PLAN, FOR PAYMENT.

ITEM 518 - POROUS BACKFILL WITH FILTER FABRIC, AS PER PLAN:

POROUS BACKFILL SHALL BE #57 GRAVEL ONLY.

ITEM 842 CLASS C CONCRETE, FOOTING, PIER AND ABUTMENT, AS PER PLAN:

THE COARSE AGGREGATE SHALL BE NO. 8 LIMESTONE. THESE ITEMS SHALL INCLUDE THE COST OF THE REINFORCING STEEL.

ITEM 844 HIGH PERFORMANCE CONCRETE, SUPERSTRUCTURE (DECK), AS PER PLAN, MIX 4:
ITEM 844 HIGH PERFORMANCE CONCRETE, SUPERSTRUCTURE (PARAPET), AS PER PLAN, MIX 4:

THE DESIGN MIX SHALL BE MIX NO. 4 LIMESTONE. THE OPTION OF SLIPFORM CONSTRUCTION OF THE BRIDGE PARAPET IS NOT PERMITTED. THIS ITEM SHALL INCLUDE THE COST OF THE REINFORCING STEEL.

REPLACEMENT OF EXISTING REINFORCING STEEL:

ANY EXISTING REINFORCING BARS WHICH ARE TO BE INCORPORATED INTO THE NEW WORK AND WHICH ARE MADE UNUSABLE BY THE CONTRACTOR'S CONCRETE REMOVAL OPERATIONS SHALL BE REPLACED WITH NEW STEEL AT THE CONTRACTOR'S COST. ANY EXISTING REINFORCING BARS DEEMED BY THE ENGINEER TO BE UNUSABLE BECAUSE OF CORROSION SHALL BE REPLACED WITH NEW STEEL. AN ALLOWANCE OF 200 POUNDS SHALL BE INCLUDED IN THE COST OF THE APPROPRIATE PIER CONCRETE BID ITEM.

REINFORCING STEEL:

NEW REINFORCING STEEL MAY REQUIRE FIELD CUTTING OR BENDING TO BE PROPERLY FITTED. PAYMENT SHALL BE INCLUDED UNDER ITEM 844 HIGH PERFORMANCE CONCRETE.

ITEM SPECIAL - SEALING OF CONCRETE SURFACES (EPOXY-URETHANE):

EPOXY-URETHANE SHALL BE THE "BUFF" COLOR MEETING FEDERAL COLOR STANDARD NO. 37722 AS PER THE DETAILS IN THE PLAN. FOR ADDITIONAL NOTES SEE THE NOTE IN THE PROPOSAL "ITEM SPECIAL - SEALING OF CONCRETE SURFACES".

SURVEY DISC ON STRUCTURE:

THE CONTRACTOR SHALL NOTIFY THE ENGINEER AT LEAST ONE (1) WEEK IN ADVANCE OF POURING THE CONCRETE FOR COMPLETION OF THE ABUTMENT. THE ENGINEER WILL PROVIDE THE CONTRACTOR ONE (1) SURVEY DISC FOR EACH STRUCTURE (OBTAINED FROM THE DISTRICT SURVEYOR) WHICH THE CONTRACTOR SHALL PLACE IN THE SURFACE OF THE FRESH CONCRETE. THE LOCATION OF THE DISC SHALL BE ON THE ABUTMENT, AND ON A FLAT, HORIZONTAL SURFACE BEYOND THE EDGE OF DECK AND PARAPET. THE BENCHMARK SHALL BE ACCESSIBLE TO A SURVEYOR'S ROD WITHOUT ANY OBSTRUCTIONS. COST OF THIS WORK IS CONSIDERED INCIDENTAL TO THE CONCRETE BID ITEM.

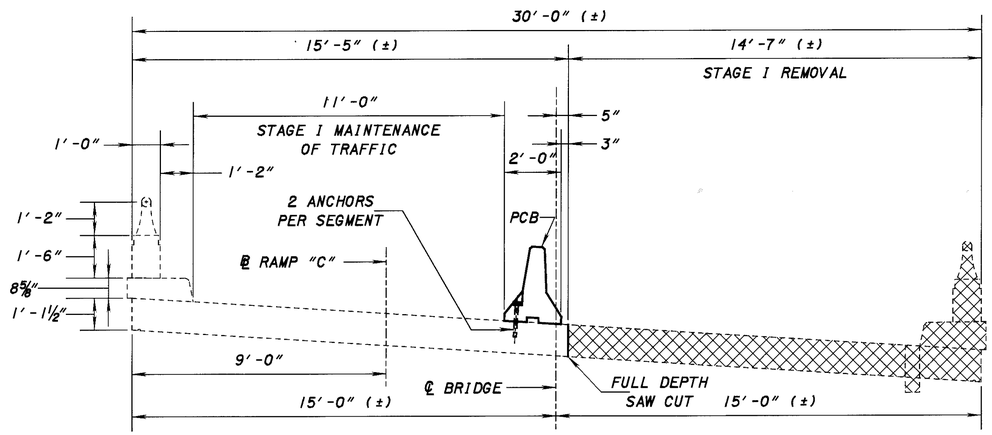

STAGE I REMOVAL

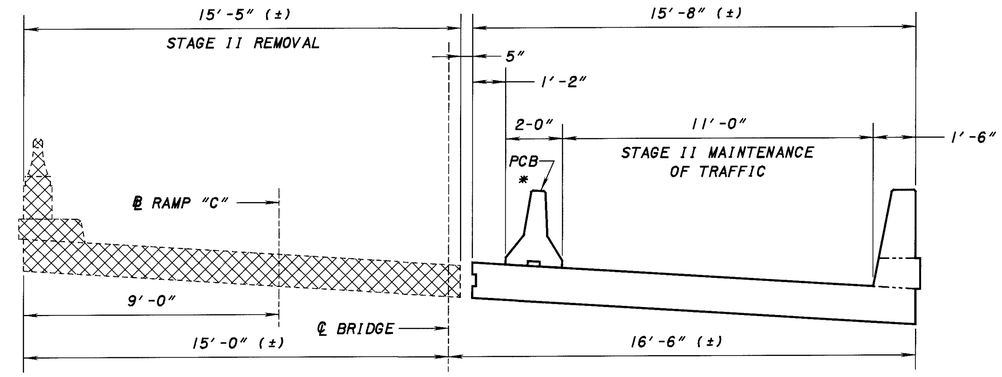

STAGE II REMOVAL

* BARRIER UNANCHORED

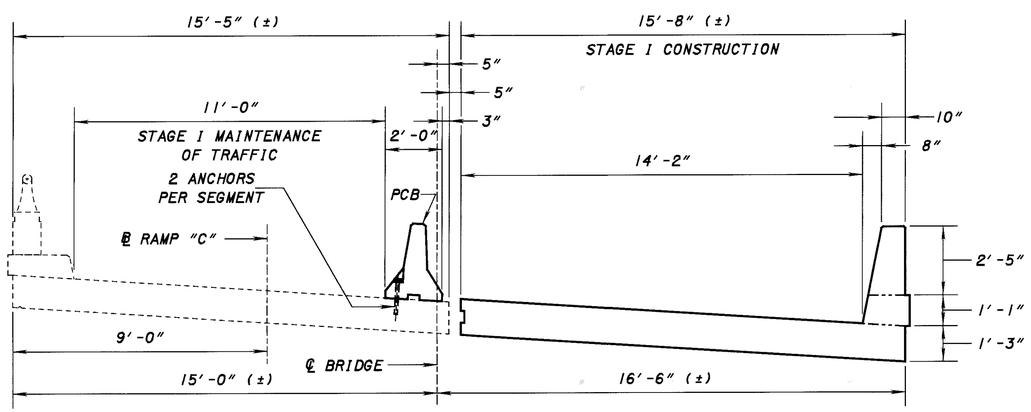

STAGE I CONSTRUCTION

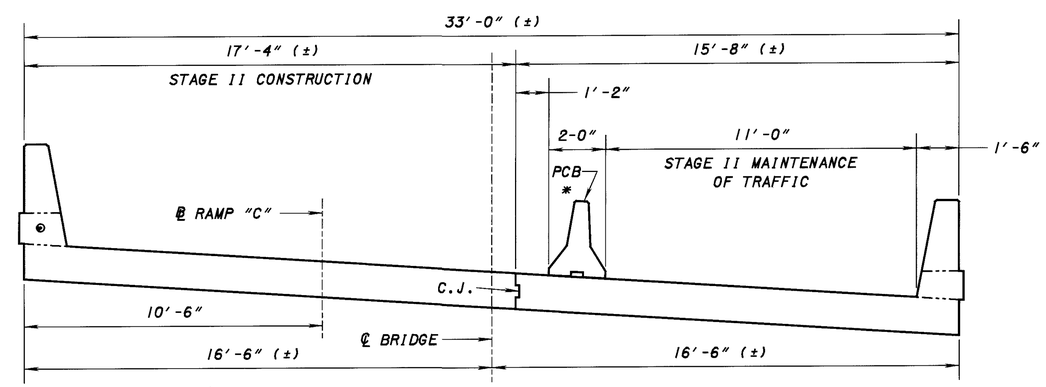

STAGE II CONSTRUCTION

* BARRIER UNANCHORED

PORTION OF STRUCTURE TO BE REMOVED

DESIGN AGENCY
ODOT CENTRAL OFFICE
OFFICE OF PRODUCTION

DESIGNED	DRAWN	REVIEWED	DATE
BKL	BKL	DFT	9-20-99
CHECKED	REVISED	STRUCTURE FILE NUMBER	
RJH		5203996	

STAGE CONSTRUCTION DETAILS
MED-71-2092 W
RAMP "C" OVER PLUM CREEK, S.R. 3 INTERCHANGE

MED-71-15.78

871/940

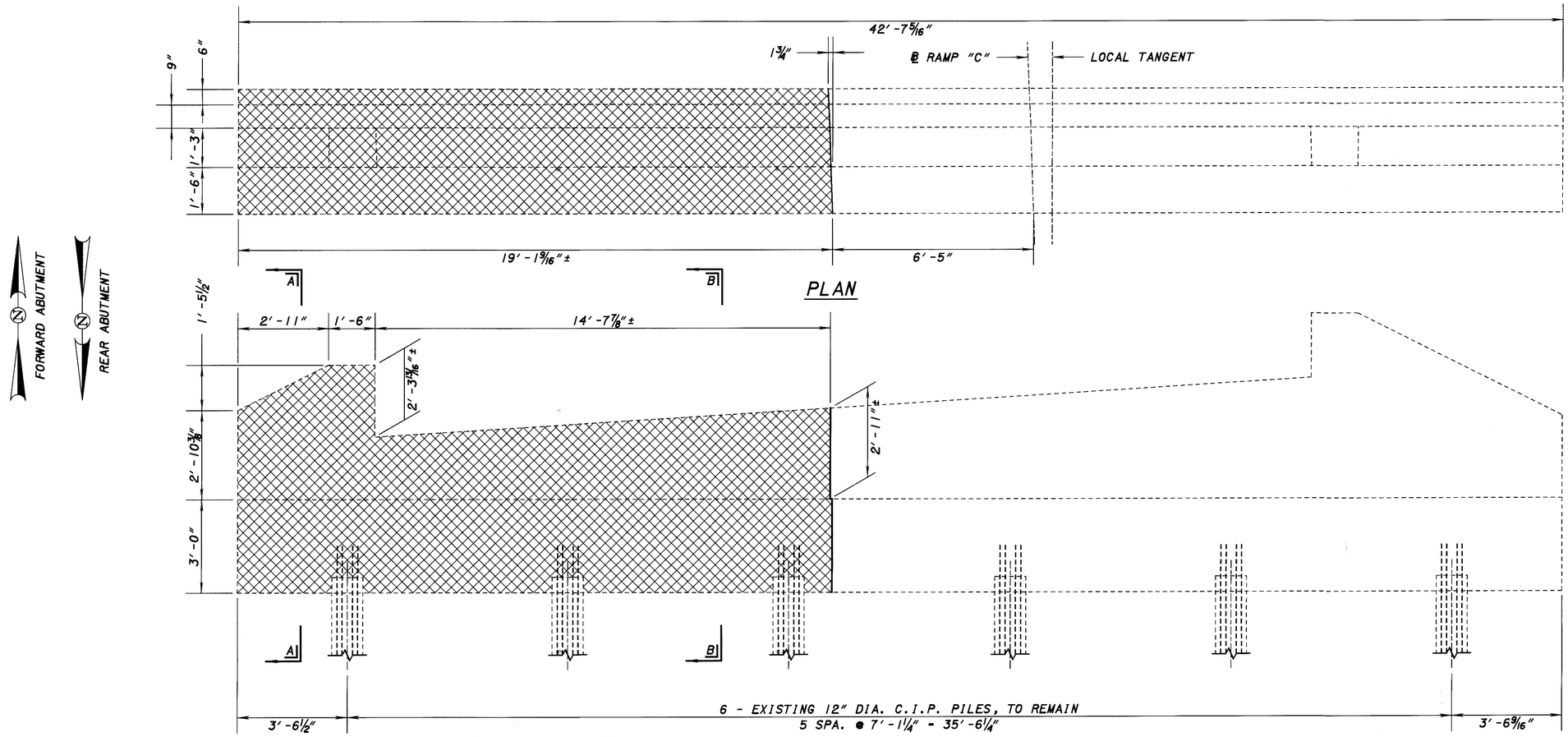

REAR ABUTMENT SHOWN
FORWARD ABUTMENT IS
OPPOSITE HAND

FOR SECTION A-A & B-B
SEE SHEET 7/18

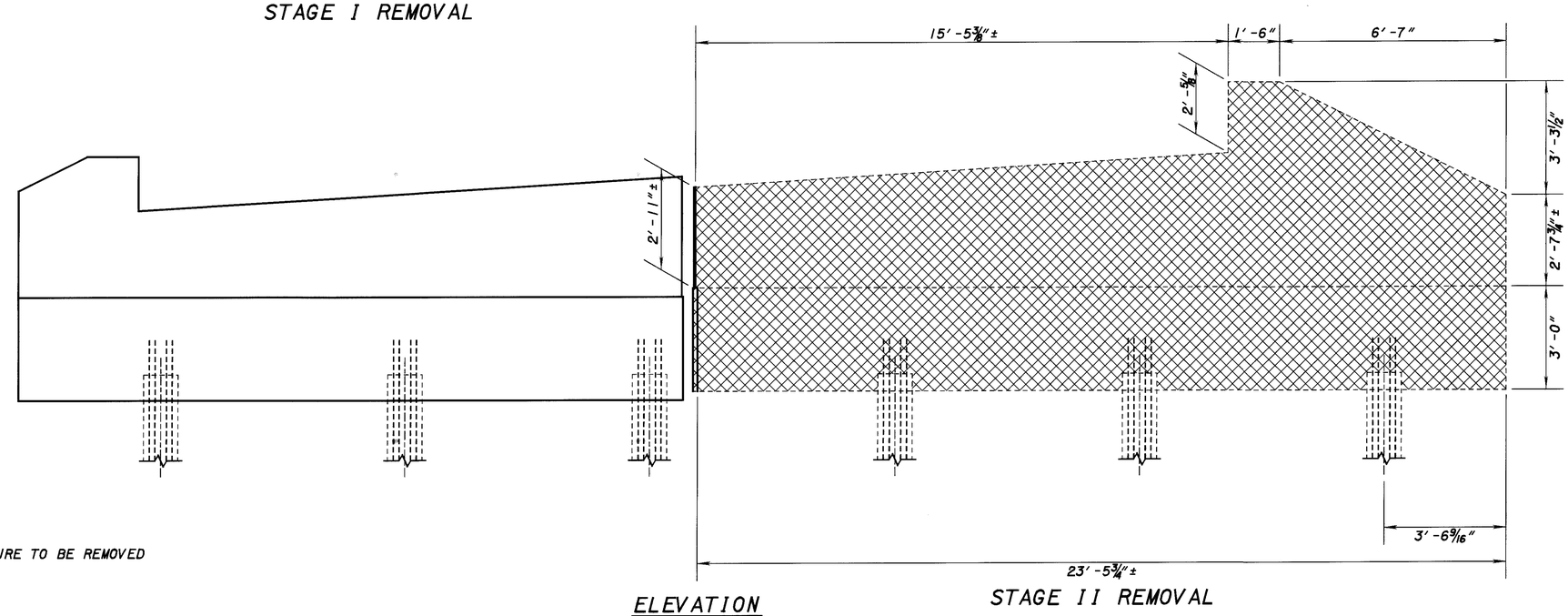

PORTION OF STRUCTURE TO BE REMOVED

DESIGN AGENCY
ODOT CENTRAL OFFICE
OFFICE OF PRODUCTION

DESIGNED	DRAWN	REVISED	DATE
BKL	BKL	DFT	9-20-99
CHECKED	REVISED	STRUCTURE FILE NUMBER	
RJH		5203996	

ABUTMENT DEMOLITION PLAN

MED-71-2092 W

RAMP "C" OVER PLUM CREEK, S.R. 3 INTERCHANGE

MED-71-15.78

872/940

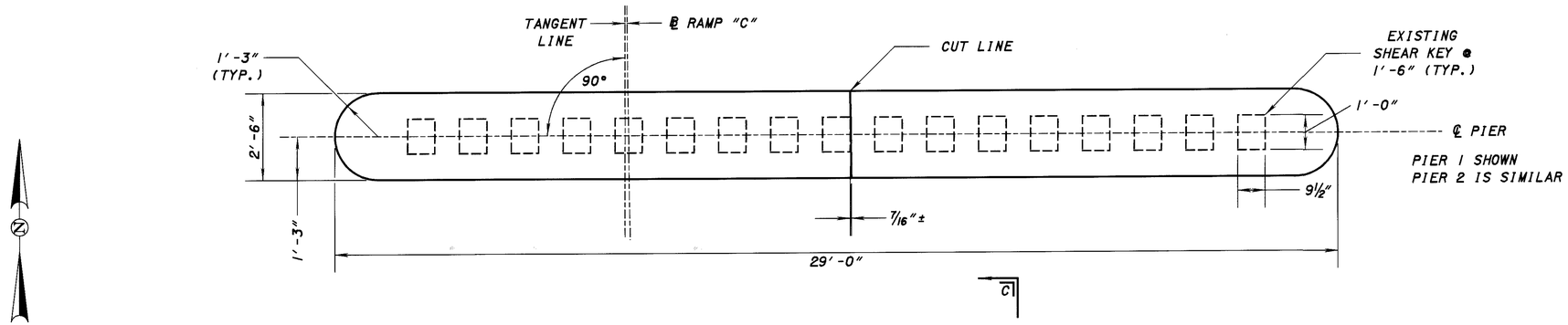

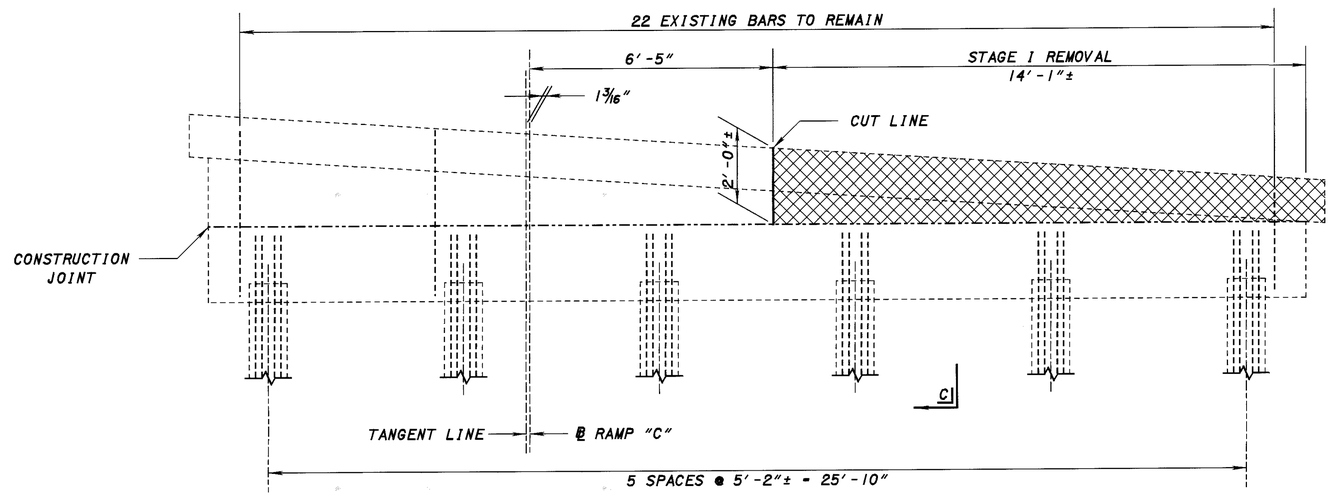

STAGE I REMOVAL

FOR SECTION C-C
SEE SHEET 7/18

PORTION OF STRUCTURE TO BE REMOVED

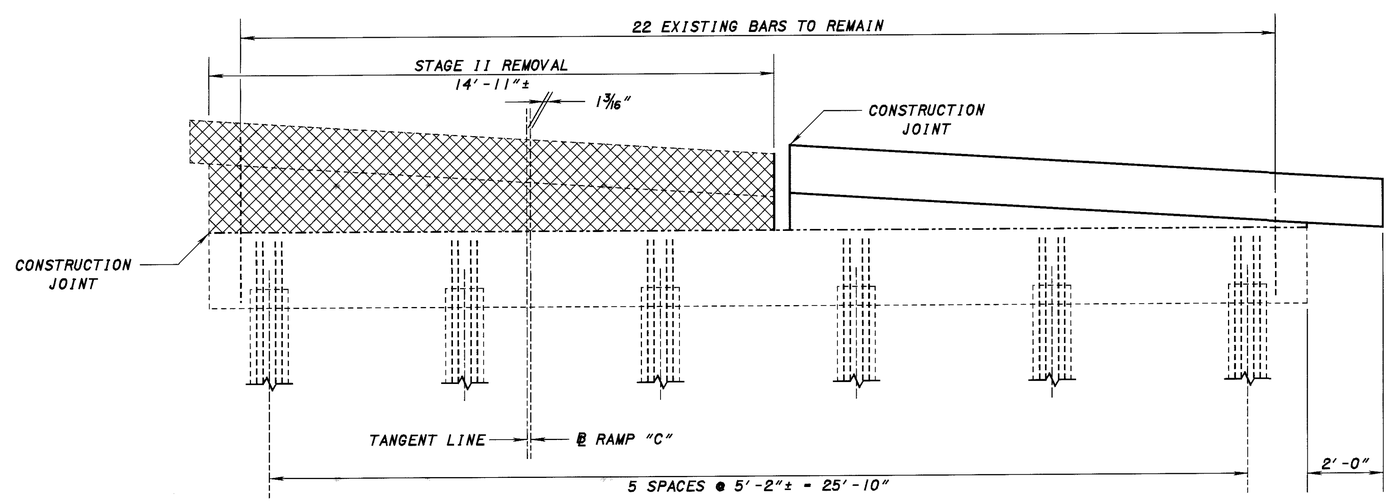

STAGE II REMOVAL

DESIGN AGENCY
ODOT CENTRAL OFFICE
OFFICE OF PRODUCTION

REVIEWED	DATE	STRUCTURE FILE NUMBER
DFT	9-20-99	5203996

DRAWN	REVISED
BKL	

DESIGNED	CHECKED
BKL	RJH

PIER DEMOLITION PLAN
MED-71-2092 W
RAMP "C" OVER PLUM CREEK, S.R. 3 INTERCHANGE

MED-71-15.78

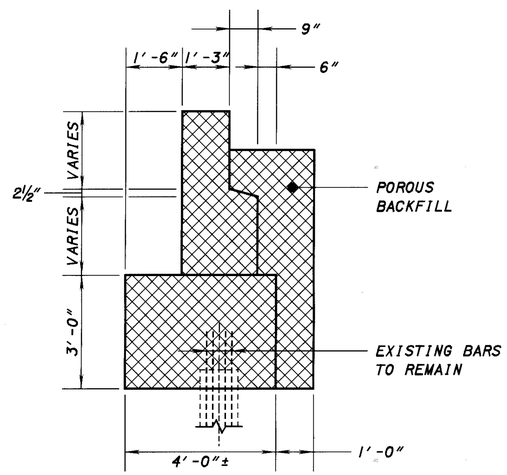

SECTION A-A

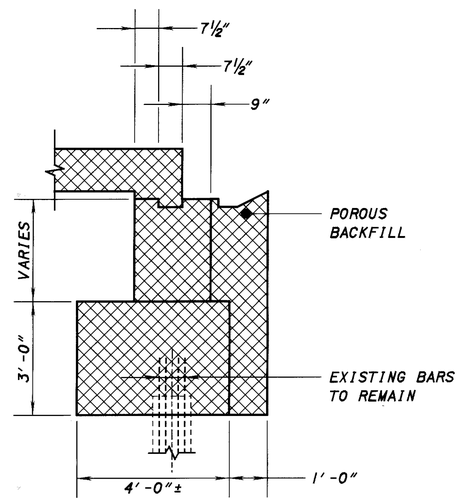

SECTION B-B

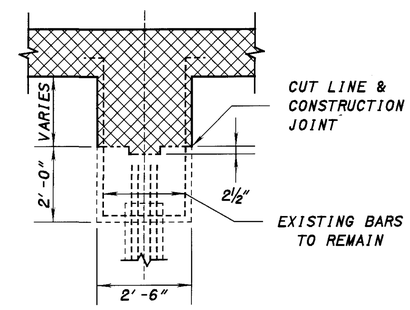

SECTION C-C

PIER REMOVAL NOTES

1. ALL ELEVATIONS AND DIMENSIONS ARE MEASURED ALONG THE ℄ BEARINGS.
2. PIER CAP SHALL BE REMOVED AND REPLACED ABOVE ORIGINAL CONSTRUCTION JOINT AS SHOWN IN THE DETAILS.
3. CONCRETE SHALL BE SUFFICIENTLY REMOVED FROM THE ORIGINAL SHEAR KEYS TO PRODUCE A POSITIVE CONNECTION BETWEEN THE EXISTING AND NEW CONCRETE.
4. VERTICAL REINFORCING STEEL SHALL REMAIN IN PLACE.

DESIGN AGENCY
ODOT CENTRAL OFFICE
OFFICE OF PRODUCTION

DESIGNED	DRAWN	REVISED	DATE
BKL	BKL	DFT	9-20-99
CHECKED	REVISED	STRUCTURE FILE NUMBER	
RJH		5203996	

ABUTMENT & PIER DEMOLITION DETAILS
MED-71-2092 W
RAMP "C" OVER PLUM CREEK, S.R. 3 INTERCHANGE

MED-71-15.78

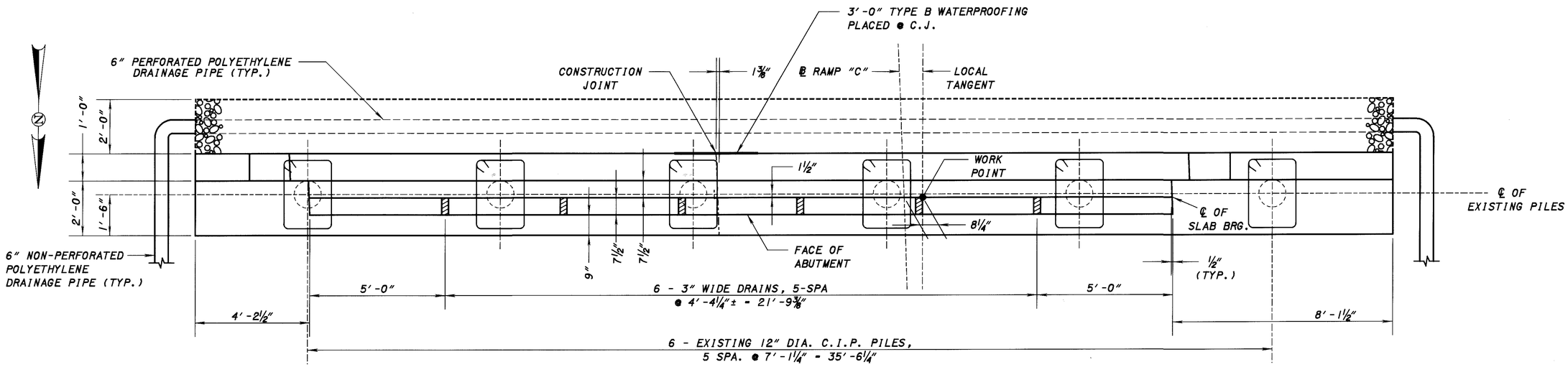

PLAN - REAR ABUTMENT

FOR SECTIONS A-A & B-B SEE SHEET 10/18

NOTE:
ONLY LOW SIDE OF APPROACH SLAB HAS A CURB SECTION.

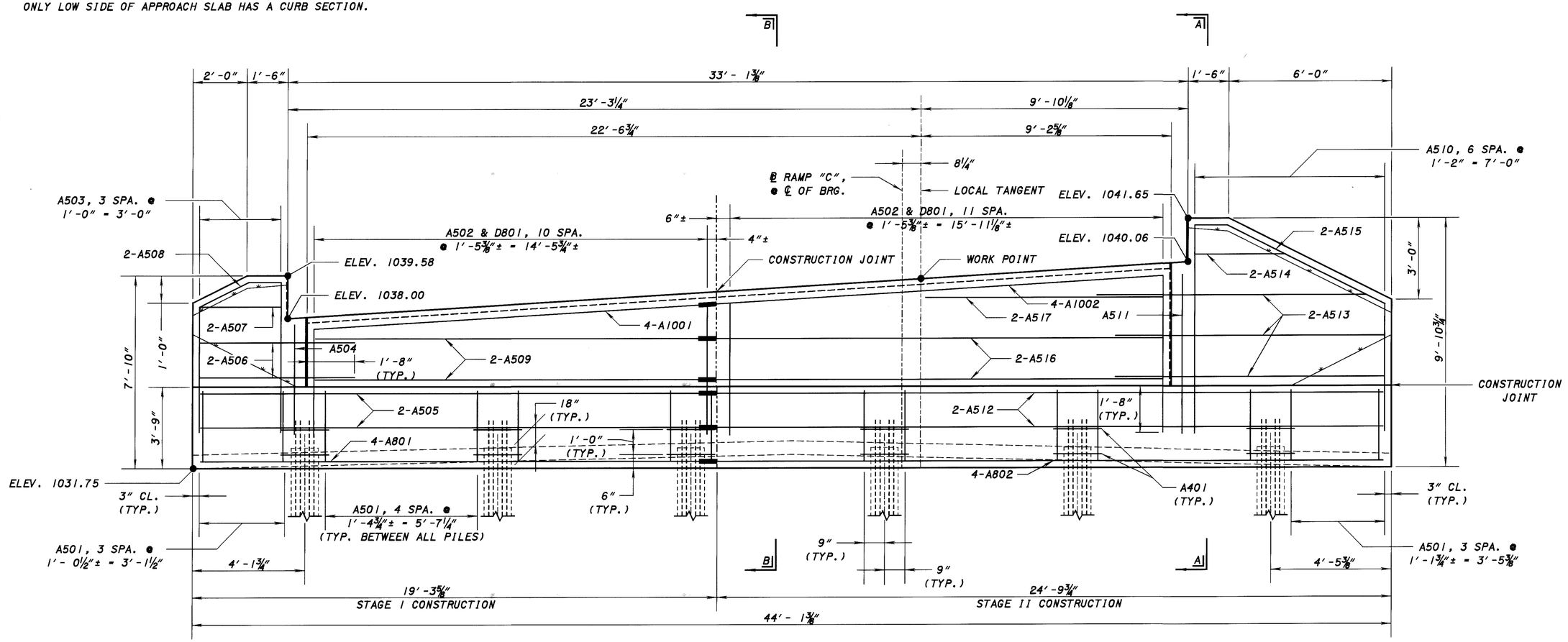

ALL DIMENSIONS AND ELEVATIONS ARE SHOWN ALONG THE FACES OF THE ABUTMENTS.

ELEVATION - REAR ABUTMENT

ADJUST REBAR TO FIT @ CONSTRUCTION JOINT

DESIGN AGENCY	ODOT CENTRAL OFFICE OFFICE OF PRODUCTION
REVIEWED DFT	DATE 9-20-99
STRUCTURE FILE NUMBER	5203996
DRAWN BKL	REVISED
DESIGNED BKL	CHECKED RJH

ABUTMENT DETAILS
MED-71-2092 W
RAMP "C" OVER PLUM CREEK, S.R. 3 INTERCHANGE

MED-71-15.78

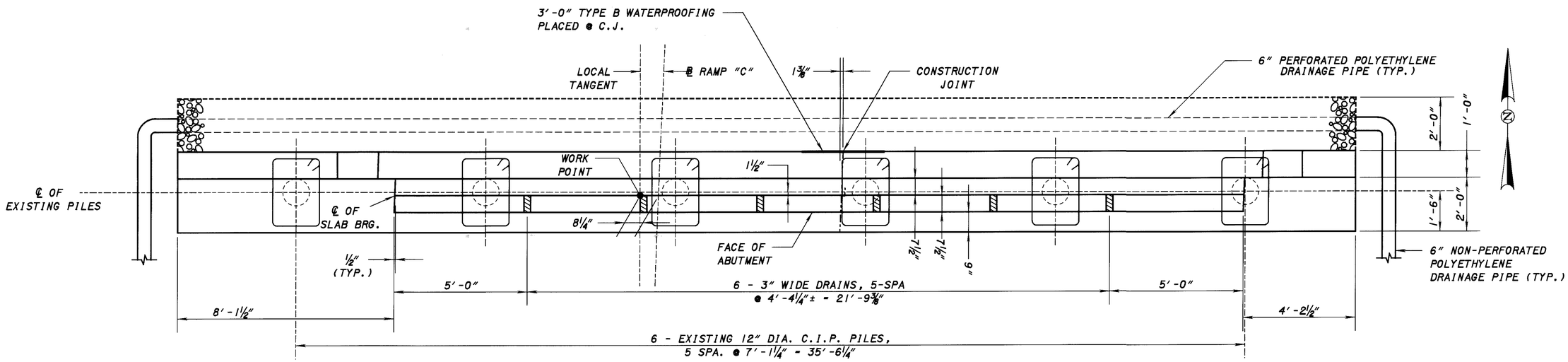

PLAN - FORWARD ABUTMENT

NOTE:
ONLY LOW SIDE OF APPROACH SLAB HAS A CURB SECTION.

FOR SECTIONS A-A & B-B SEE SHEET 10/18

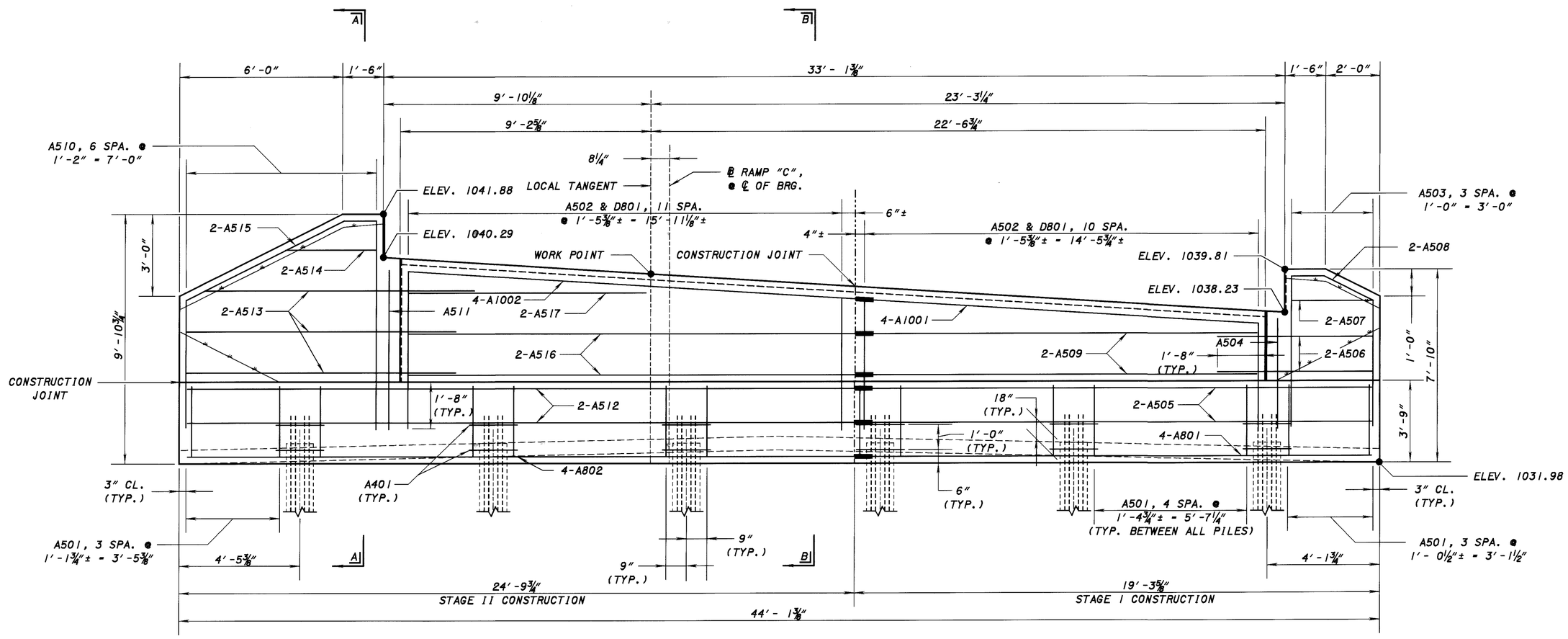

ADJUST REBAR TO FIT @ CONSTRUCTION JOINT

ELEVATION - FORWARD ABUTMENT

ALL DIMENSIONS AND ELEVATIONS ARE SHOWN ALONG THE FACES OF THE ABUTMENTS.

DESIGN AGENCY	ODOT CENTRAL OFFICE OFFICE OF PRODUCTION
DESIGNED BKL	CHECKED RJH
DRAWN BKL	REVISED
REVIEWED DFT	DATE 9-20-99
STRUCTURE FILE NUMBER 5203996	

ABUTMENT DETAILS
MED-71-2092 W
RAMP "C" OVER PLUM CREEK, S.R. 3 INTERCHANGE

MED-71-15.78

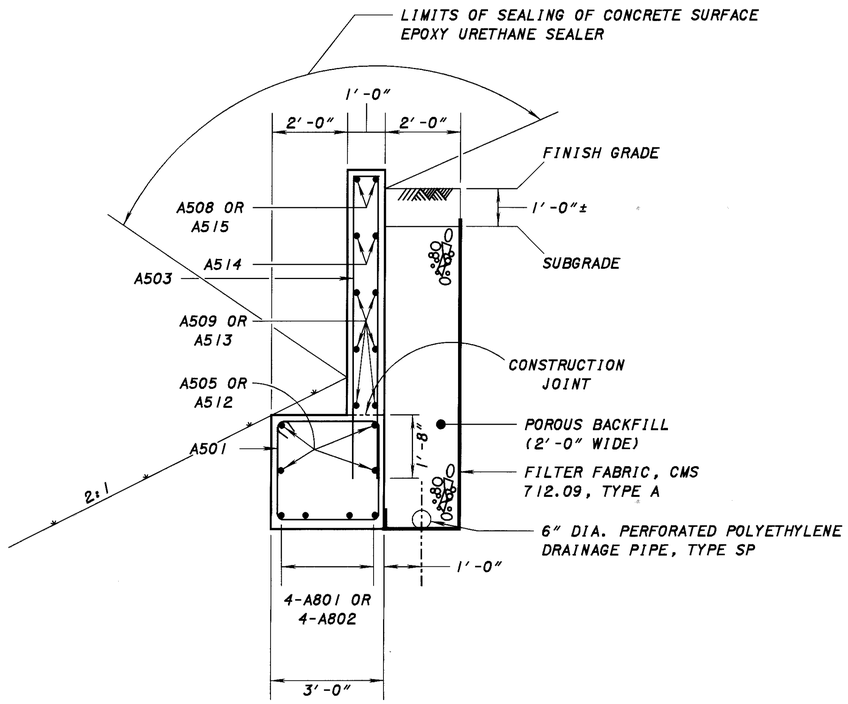

SECTION A-A

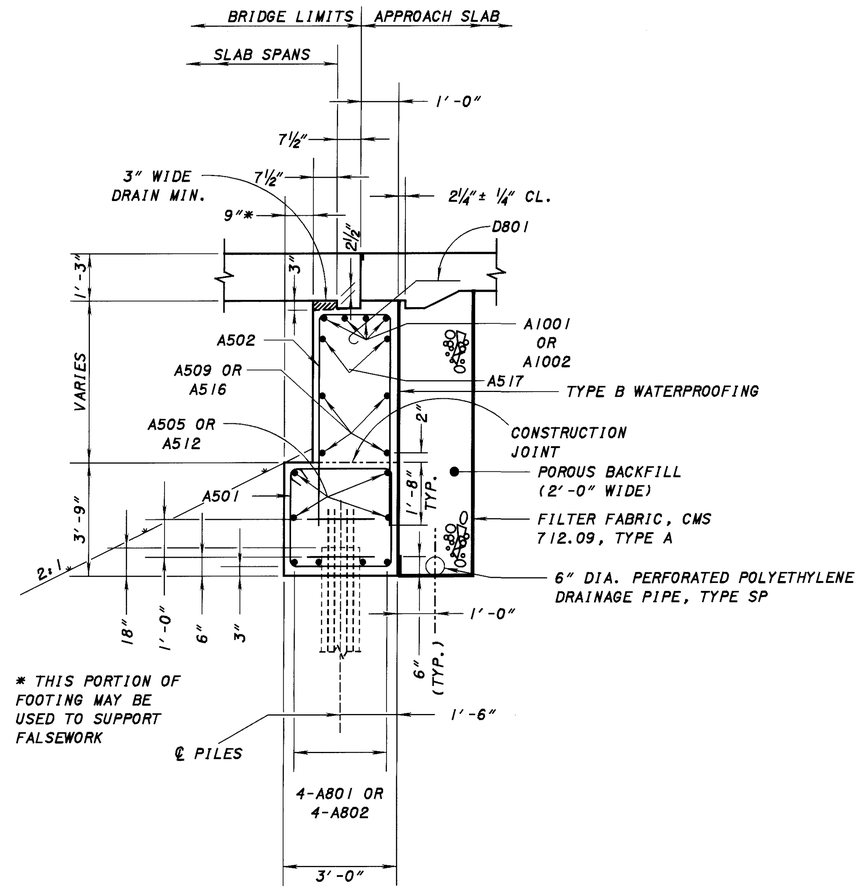

SECTION B-B

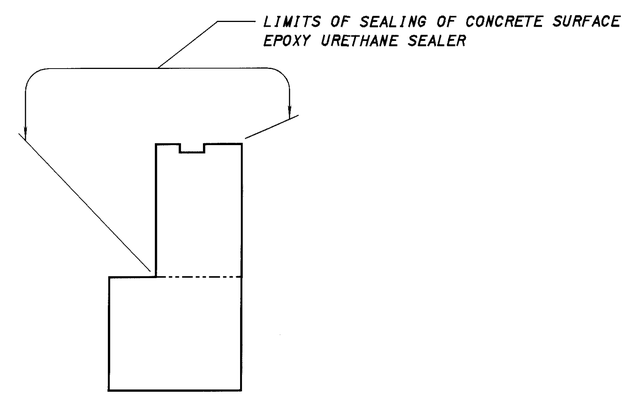

SEALING LIMITS

NOTES

1. ALL ELEVATIONS AND DIMENSIONS MEASURED ALONG THE FACE OF ABUTMENT.

2. MINIMUM SPLICES ARE AS FOLLOWS:
   #5 BAR = 3'-0"
   #6 BAR = 3'-6"
   #8 BAR = 5'-9"

3. TYPE B WATERPROOFING, 3'-0" WIDE, CENTERED AT THE CONSTRUCTION JOINT, SHALL EXTEND FROM THE BOTTOM OF THE APPROACH SLAB TO THE BOTTOM OF THE FOOTING. NEOPRENE SHEETING MAYBE USED IN LIEU OF THE TYPE B WATERPROOFING.

DESIGN AGENCY
ODOT CENTRAL OFFICE
OFFICE OF PRODUCTION

REVIEWED	DATE	DRAWN	DESIGNED
DFT	9-20-99	BKL	BKL
STRUCTURE FILE NUMBER		REVISED	CHECKED
5203996			RJH

ABUTMENT DETAILS
MED-71-2092 W
RAMP "C" OVER PLUM CREEK, S.R. 3 INTERCHANGE

MED-71-15.78

10/18

877/940

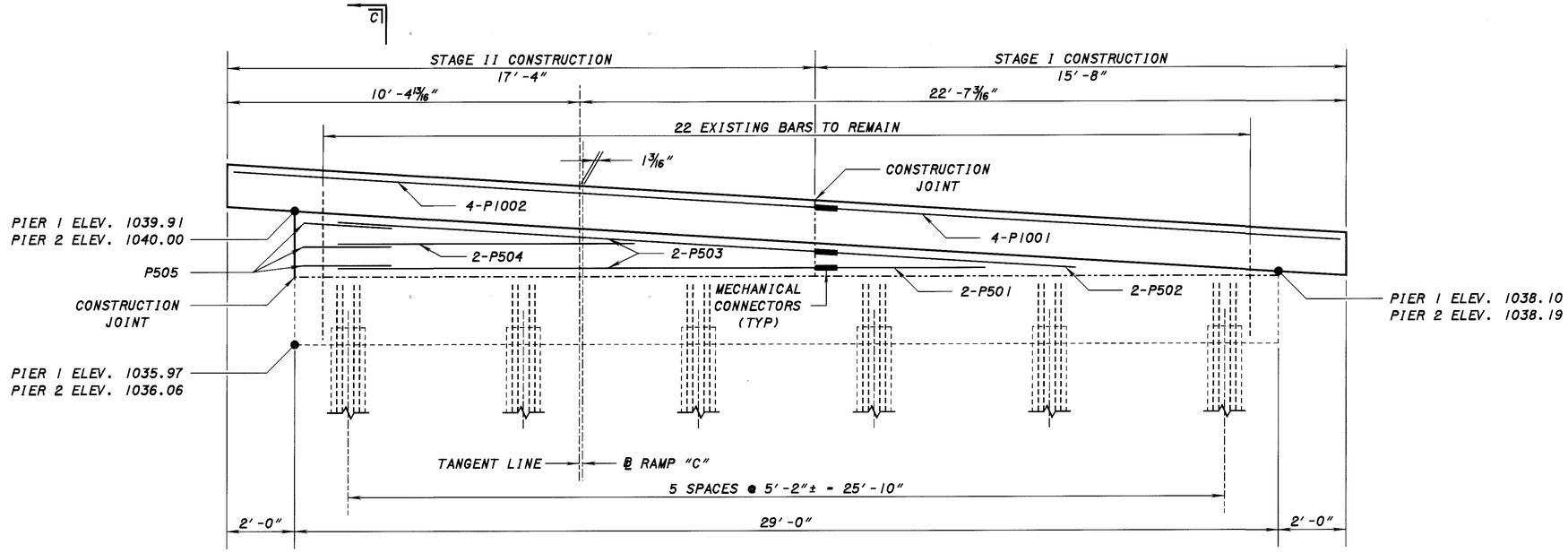

ELEVATION - PIERS 1 & 2

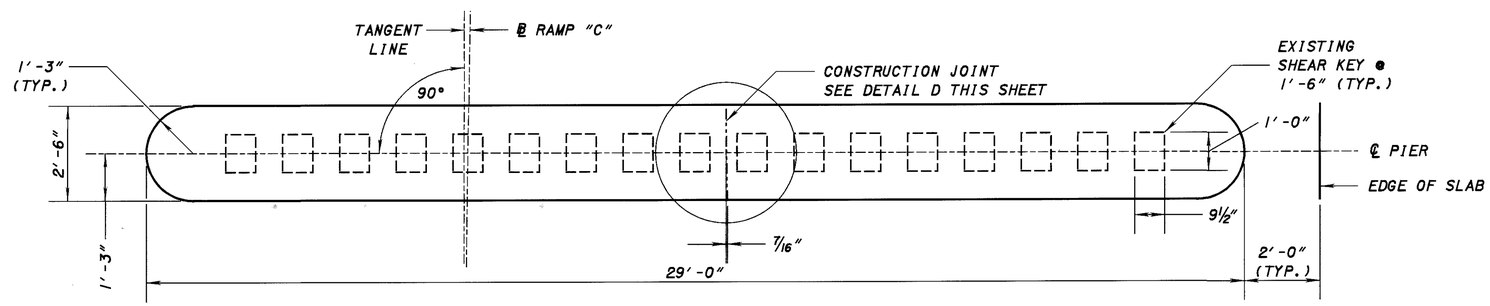

PLAN - PIERS 1 & 2

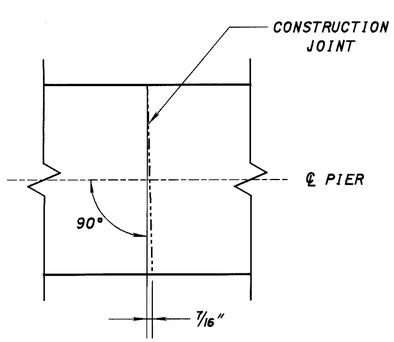

DETAIL D

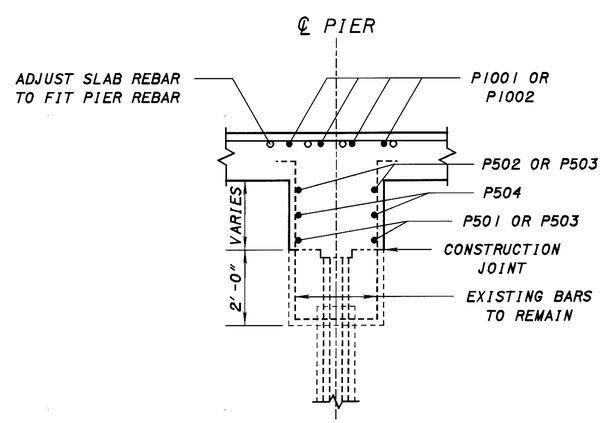

SECTION C-C

NOTES

1. ALL ELEVATIONS AND DIMENSIONS ARE MEASURED ALONG THE ℄ BEARINGS.
2. PIER CAP SHALL BE REMOVED AND REPLACED ABOVE ORIGINAL CONSTRUCTION JOINT AS SHOWN IN THE DETAILS.
3. CONCRETE SHALL BE SUFFICIENTLY REMOVED FROM THE ORIGINAL SHEAR KEYS TO PRODUCE A POSITIVE CONNECTION BETWEEN THE EXISTING AND NEW CONCRETE.
4. VERTICAL REINFORCING STEEL SHALL REMAIN IN PLACE.

DESIGN AGENCY: ODOT CENTRAL OFFICE OFFICE OF PRODUCTION

DESIGNED	DRAWN	REVIEWED	DATE
BKL	BKL	DFT	9-20-99
CHECKED	REVISED	STRUCTURE FILE NUMBER	
RJH		5203996	

PIER DETAILS
MED-71-2092 W
RAMP "C" OVER PLUM CREEK, S.R. 3 INTERCHANGE

MED-71-15.78

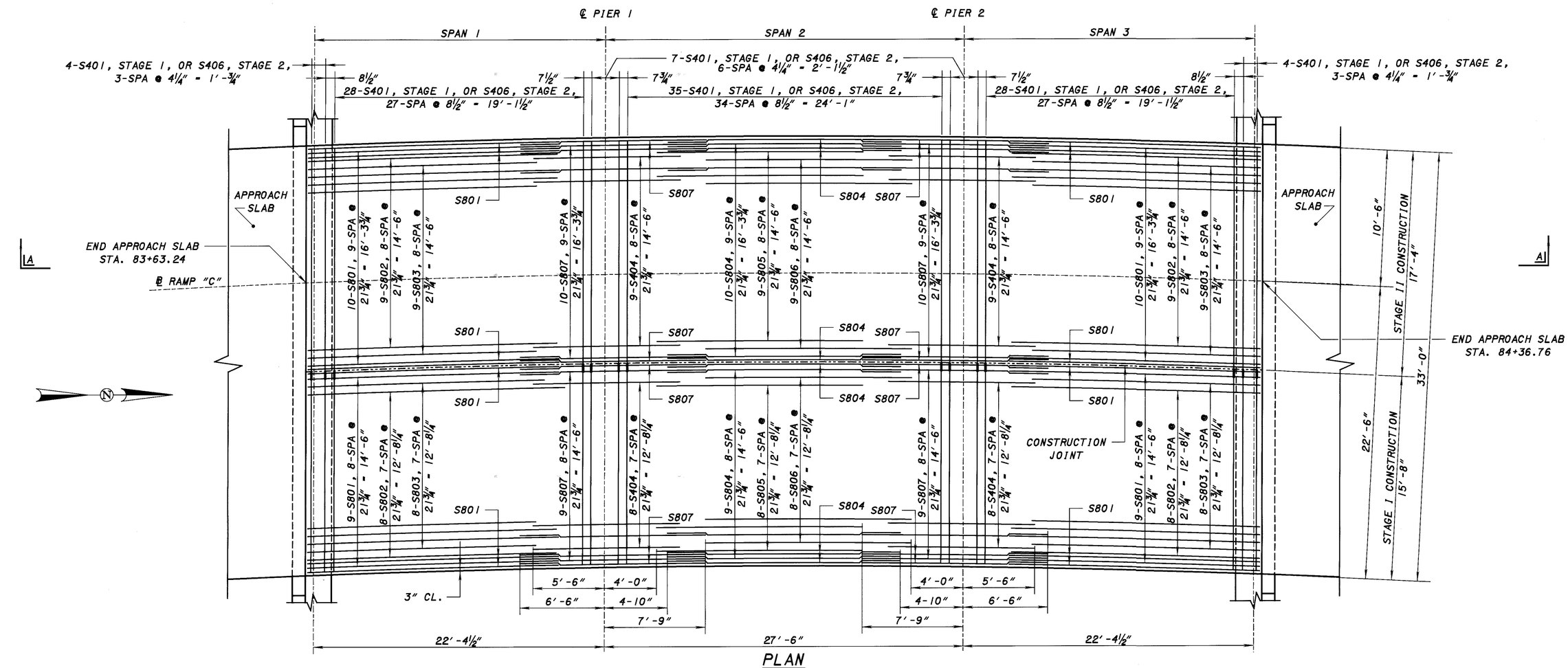

PLAN

BOTTOM REINFORCEMENT

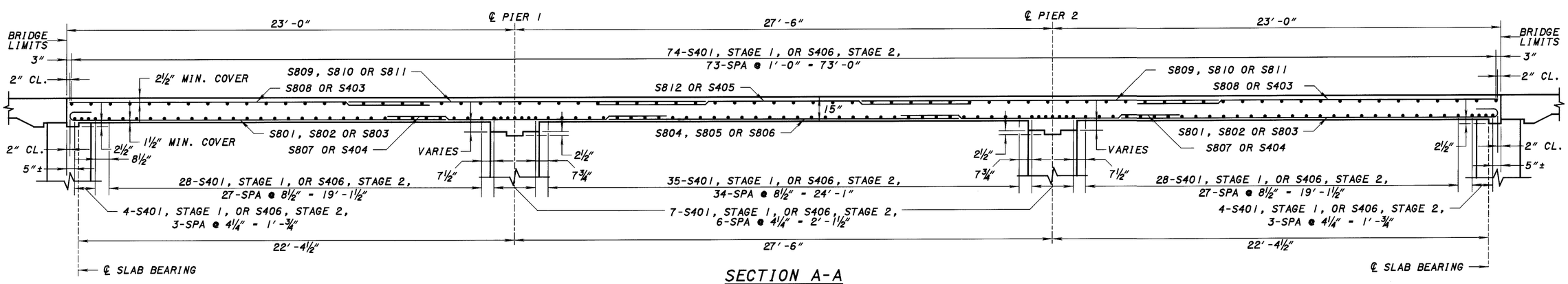

SECTION A-A

DESIGN AGENCY
ODOT CENTRAL OFFICE
OFFICE OF PRODUCTION

DESIGNED	DRAWN	REVIEWED	DATE
BKL	BKL	DFT	9-20-99
CHECKED	REVISED	STRUCTURE FILE NUMBER	
RJH		5203996	

SUPERSTRUCTURE DETAILS

MED-71-2092 W

RAMP "C" OVER PLUM CREEK, S.R. 3 INTERCHANGE

MED-71-15.78

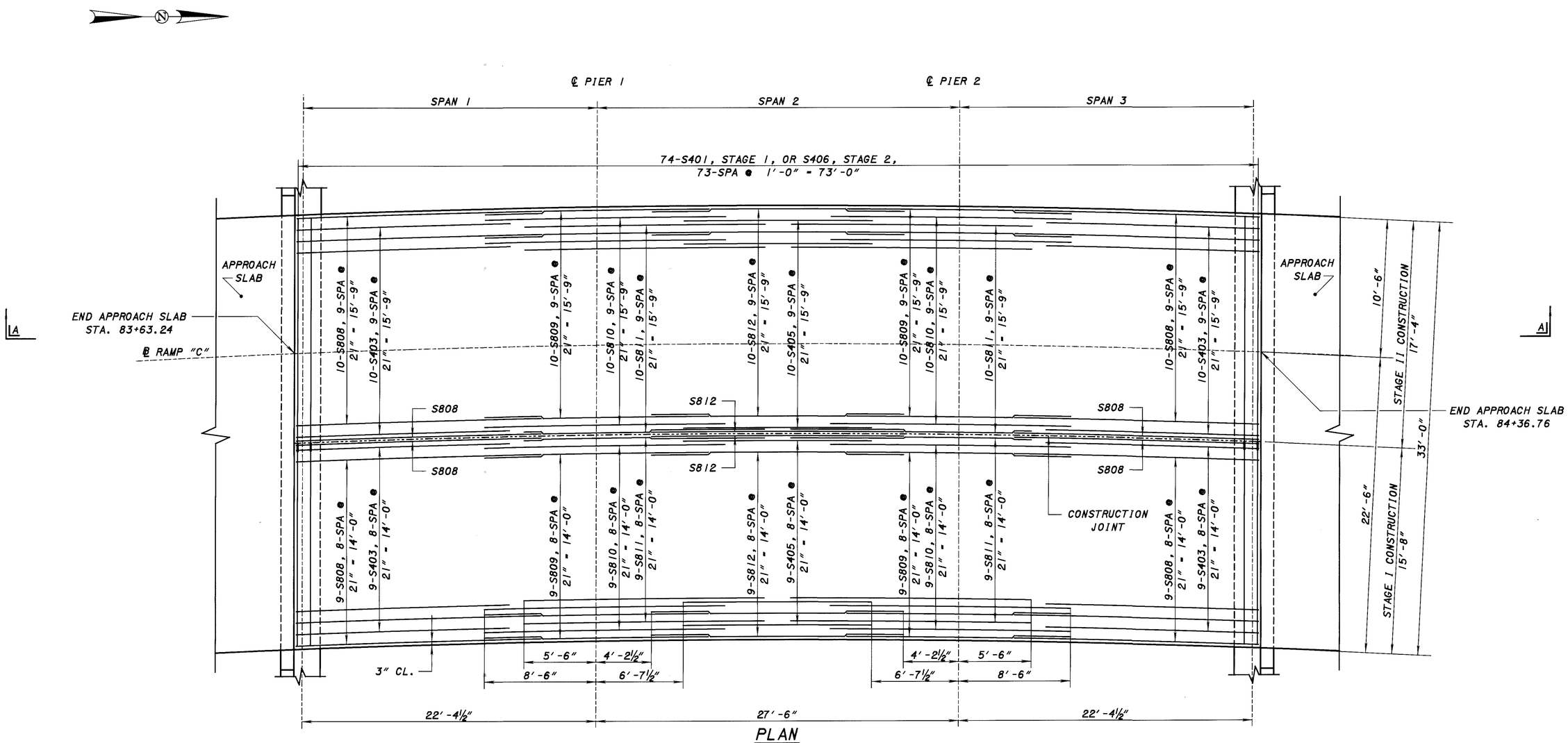

PLAN

TOP REINFORCEMENT

FOR SCUPPER DETAILS
SEE SHEET 17/18

DESIGN AGENCY
ODOT CENTRAL OFFICE
OFFICE OF PRODUCTION

DESIGNED	DRAWN	REVISED	DATE
BKL	BKL	DFT	9-20-99
CHECKED	REVISED	STRUCTURE FILE NUMBER	
RJH		5203996	

SUPERSTRUCTURE DETAILS
MED-71-2092 W
RAMP "C" OVER PLUM CREEK, S.R. 3 INTERCHANGE

MED-71-15.78

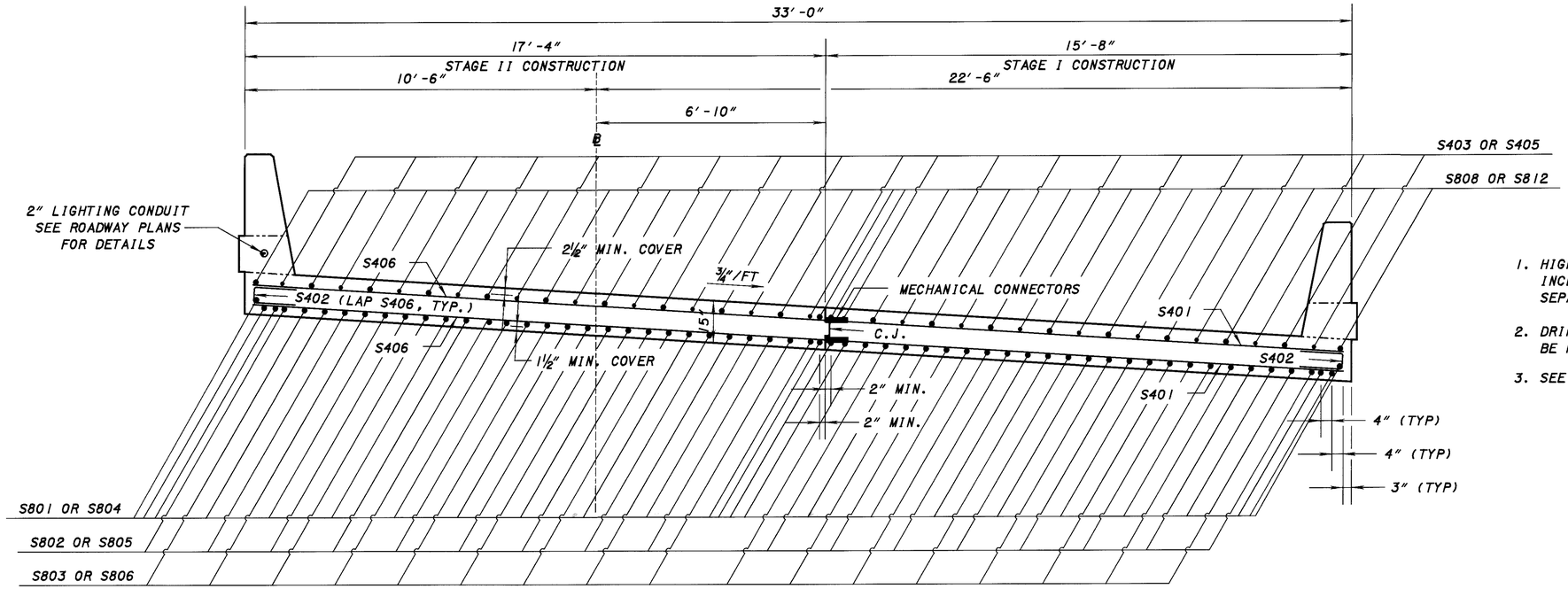

TRANSVERSE SECTION AT SPAN 1, SPAN 2 AND SPAN 3

DECK NOTES

1. HIGH MOLECULAR WEIGHT METHACRYLATE SHALL BE INCLUDED IN THE COST OF THE CONCRETE AND NO SEPARATE PAYMENT WILL BE MADE.
2. DRIP GROOVES, AS DETAILED IN CS-1-93 SHALL BE NON-PERFORMED.
3. SEE STD. DRWG. CS-1-93 FOR ADDITIONAL DETAILS.

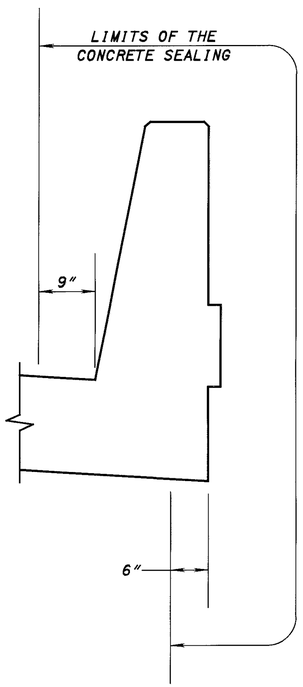

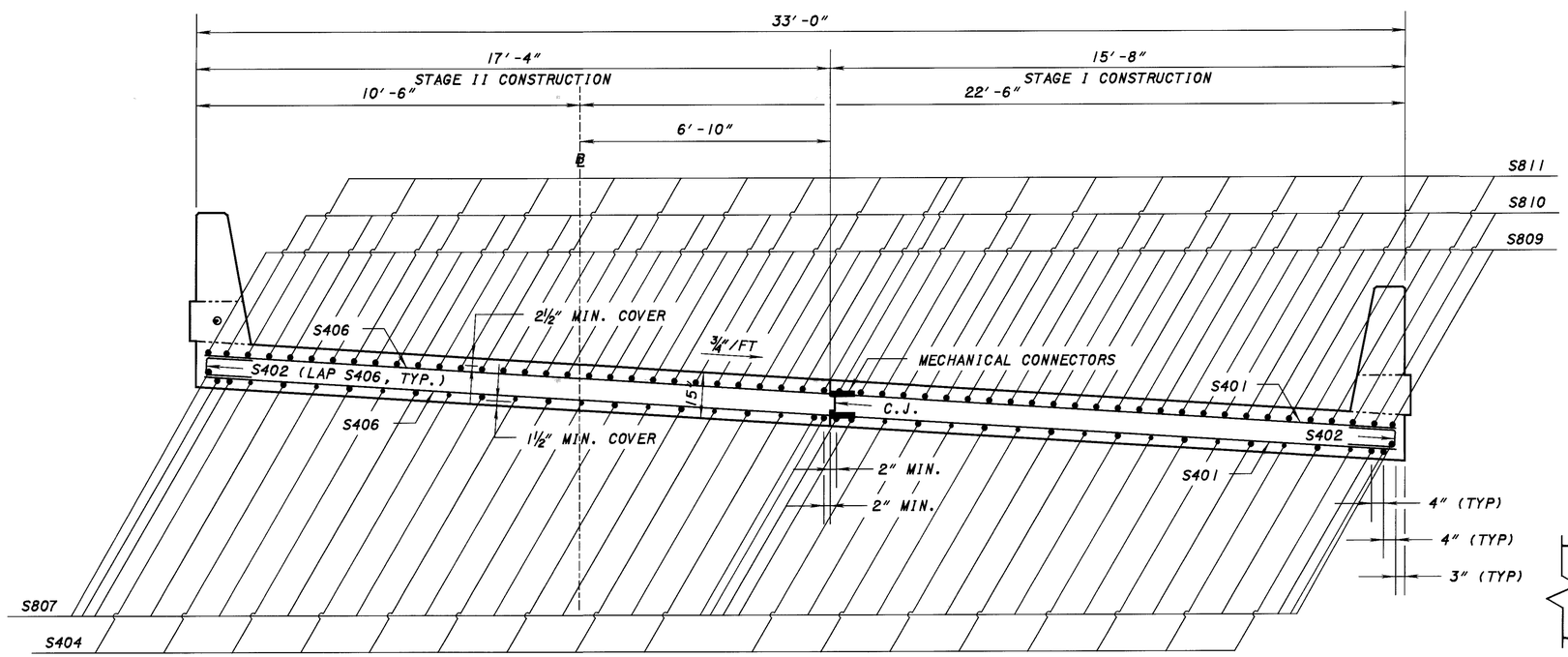

TRANSVERSE SECTION AT THE PIERS

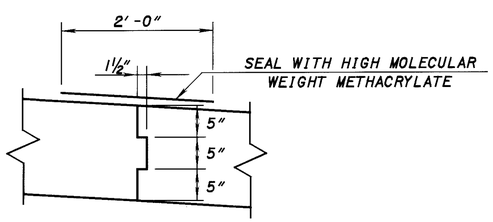

CONSTRUCTION JOINT

DESIGN AGENCY: ODOT CENTRAL OFFICE OFFICE OF PRODUCTION

DESIGNED	DRAWN	REVISED	DATE
BKL	BKL	DFT	9-20-99
CHECKED	REVISED	STRUCTURE FILE NUMBER	
RJH		5203996	

SUPERSTRUCTURE DETAILS

MED-71-2092 W

RAMP "C" OVER PLUM CREEK, S.R. 3 INTERCHANGE

MED-71-15.78

881/340

LEGEND: N.S. - NEAR SIDE
F.S. - FAR SIDE

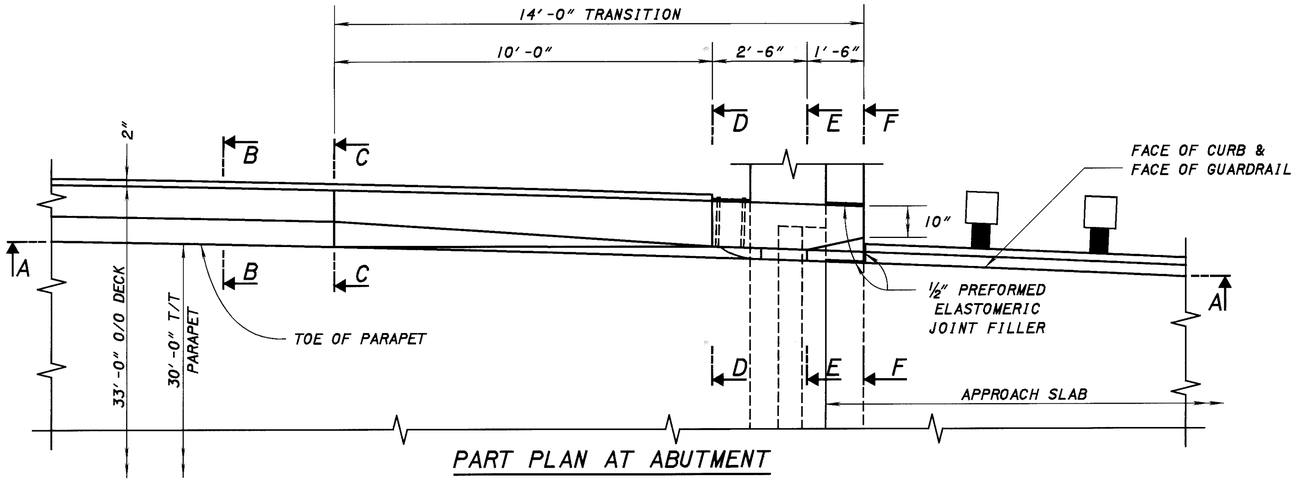

PART PLAN AT ABUTMENT

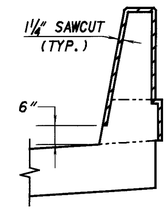

DETAIL A

(Section through sawcut)
Sawcut Perimeter = 7'-6"

CONTROL JOINTS FOR CONCRETE PARAPETS: THE JOINTS SHALL BE CONSTRUCTED BY SAWING 1 1/4 INCH DEEP ALONG THE PERIMETER OF THE PARAPET AS SOON AS THE SAW CAN BE OPERATED WITHOUT DAMAGING THE CONCRETE.

THE USE OF AN EDGE GUIDE, FENCE, OR JIG IS REQUIRED TO ENSURE THAT THE CUT JOINT IS STRAIGHT, TRUE, AND ALIGNED ON ALL FACES OF THE PARAPET. THE JOINT WIDTH SHALL BE THE WIDTH OF THE SAW BLADE, A NOMINAL WIDTH OF 1/4 INCH.

THE PERIMETER OF THE DEFLECTION CONTROL JOINT SHALL BE SEALED WITH A CAULKING MATERIAL TO A MINIMUM DEPTH OF ONE INCH CONFORMING TO FEDERAL SPECIFICATION TT-S-00227E. THE BOTTOM ONE-HALF INCH OF THE OUTSIDE FACE OF THE PARAPET SHOULD BE LEFT UNSEALED TO ALLOW ANY WATER WHICH MAY ENTER THE JOINT TO ESCAPE.

QUANTITIES OF CONCRETE, REINFORCING STEEL, DEFLECTION JOINT SAWCUT AND CAULKING MATERIAL FOR PARAPET ARE INCLUDED WITH ITEM 844 HIGH PERFORMANCE CONCRETE, SUPERSTRUCTURE (PARAPET).

FOR BRIDGE TERMINAL ASSEMBLY SEE STANDARD CONSTRUCTION DRAWING GR-3.1 AND GR-3.2.

MIN. LAP SPLICES: #5 BAR - 2'-6"
#6 BAR - 3'-0"

NOTE
CURB DETAIL APPLIES ONLY TO THE RIGHT SIDE (LOW SIDE OF SUPERELEVATION) OF THE APPROACH SLAB. LEFT SIDE SHALL BE FLUSH WITH FACE OF GUARDRAIL

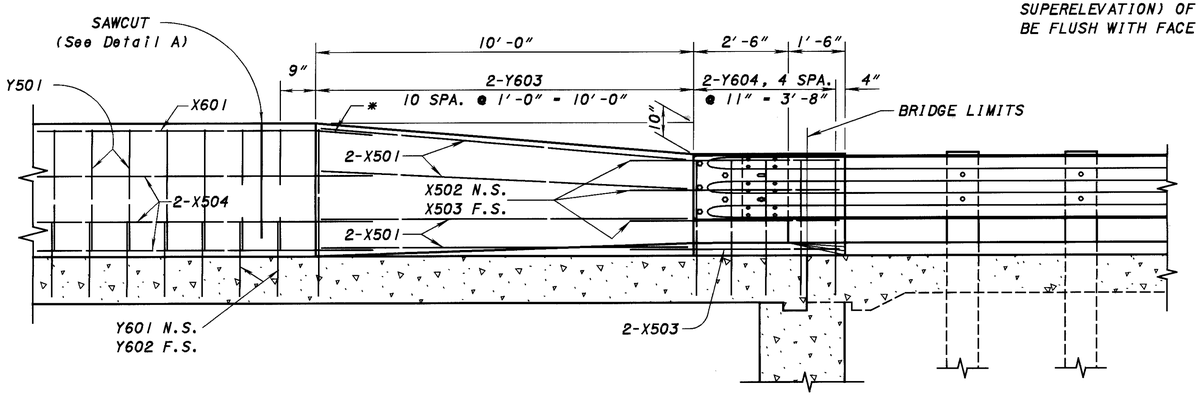

SECTION A-A

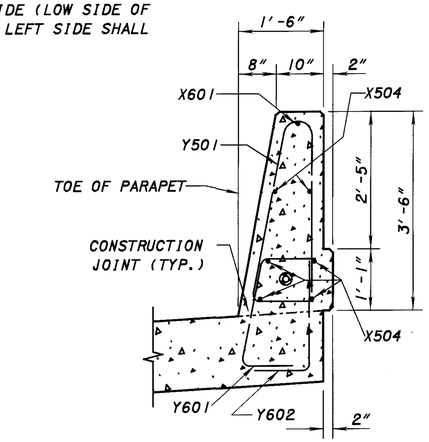

SECTION B-B & C-C

Area = 4.26 ft²

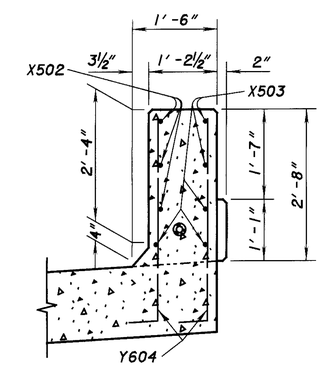

SECTION D-D

2" CONDUIT (WEST SIDE ONLY)

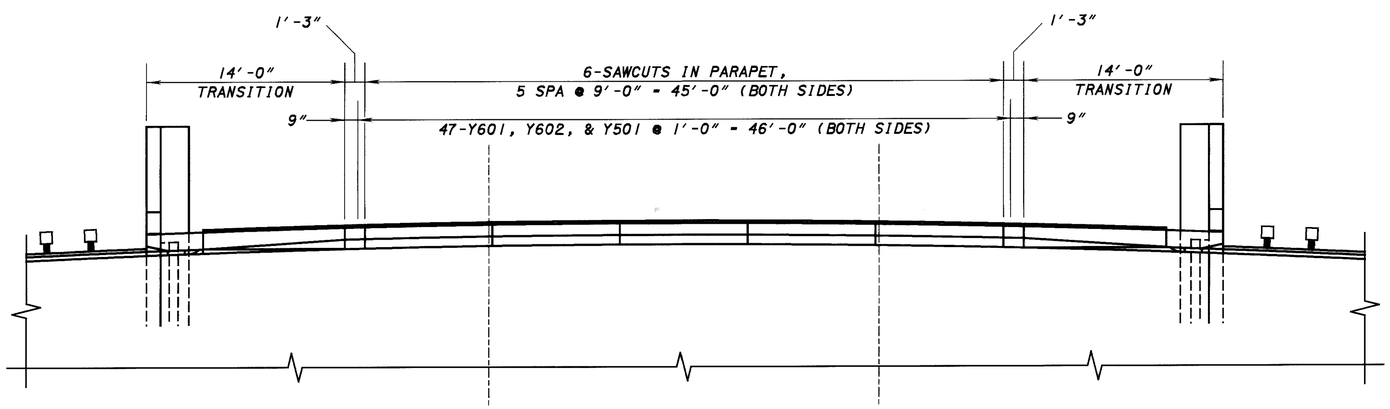

PART PLAN

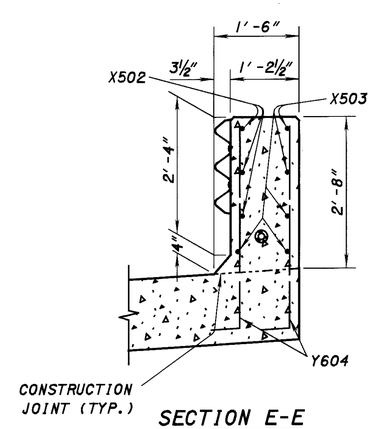

SECTION E-E

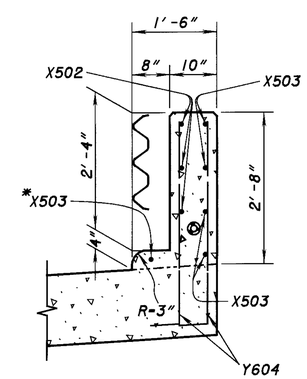

SECTION F-F

* FIELD BEND IF NECESSARY

DESIGN AGENCY: ODOT CENTRAL OFFICE OFFICE OF PRODUCTION

REVISED	DATE
DFT	9-20-99

STRUCTURE FILE NUMBER 5203996

DRAWN	REVISED
BKL	

DESIGNED	CHECKED
BKL	RJH

SUPERSTRUCTURE DETAILS
MED-71-2092 W
RAMP "C" OVER PLUM CREEK, S.R. 3 INTERCHANGE

MED-71-15.78

15/18

882/942

MARK	NUMBER: REAR ABUT. STAGE I	REAR ABUT. STAGE II	FWD. ABUT. STAGE I	FWD. ABUT. STAGE II	TOTAL	LENGTH	WEIGHT LB	TYPE	DIMENSIONS: A	B	C	R	INC
ABUTMENTS - MED-71-2092 W													
A401	6	6	6	6	24	9'-0"	144	3	1'-9"	2'-6"			
A501	15	18	15	18	66	12'-4	849	3	2'-8"	3'-3"			
A502	11 OF 1 SERIES OF 23	12 OF 1 SERIES OF 23	11 OF 1 SERIES OF 23	12 OF 1 SERIES OF 23	2 SERIES OF 23	9'-6" TO 13'-2"	544	2	3'-11" TO 5'-9"	1'-11"	3'-11" TO 5'-9"		1"
A503	1 SERIES OF 4		1 SERIES OF 4		2 SERIES OF 4	9'-9" TO 12'-3"	92	2	4'-8" TO 5'-11"	8"	4'-8" TO 5'-11"		5"
A504	1		1		2	8'-5"	18	2	4'-0"	8"	4'-0"		
A505	4		4		8	18'-11"	158	STR					
A506	4		4		8	5'-9"	48	STR					
A507	2		2		4	3'-0"	13	STR					
A508	2		2		4	3'-1"	13	19	2'-0"	1'-0"	6"		
A509	4		4		8	14'-9"	123	STR					
A510		1 SERIES OF 7		1 SERIES OF 7	2 SERIES OF 7	9'-9" TO 16'-9"	193	2	4'-8" TO 8'-2"	8"	4'-8" TO 8'-2"		7"
A511		1		1	2	12'-7"	26	2	6'-1"	8"	6'-1"		
A512		4		4	8	24'-6"	205	STR					
A513		6		6	12	9'-11"	124	STR					
A514		2		2	4	3'-4"	14	STR					
A515		2		2	4	7'-7"	32	19	6'-6"	1'-1"	6"		
A516		4		4	8	16'-5"	137	STR					
A517		2		2	4	8'-9"	37	STR					
A801	4		4		8	18'-9"	401	STR					
A802		4		4	8	24'-4"	520	STR					
A1001	4		4		8	14'-9"	508	STR					
A1002		4		4	8	16'-5"	565	STR					
D801	11	12	11	12	46	4'-11"	604	18	2'-7"	1'-0"	1'-0"		

MARK	NUMBER: PIER 1 STAGE I	PIER 1 STAGE II	PIER 2 STAGE I	PIER 2 STAGE II	TOTAL	LENGTH	WEIGHT LB	TYPE	DIMENSIONS: A	B	C	R	INC
PIERS - MED-71-2092 W													
P501	2		2		4	5'-0"	21	STR					
P502	2		2		4	7'-8"	32	STR					
P503		4		4	8	14'-0"	117	STR					
P504		2		2	4	8'-7"	36	STR					
P505		3		3	6	6'-9"	42	24	2'-1/4"	1'-10"		11 1/2"	
P1001	4		4		8	15'-5"	531	STR					
P1002		4		4	8	17'-1"	588	STR					

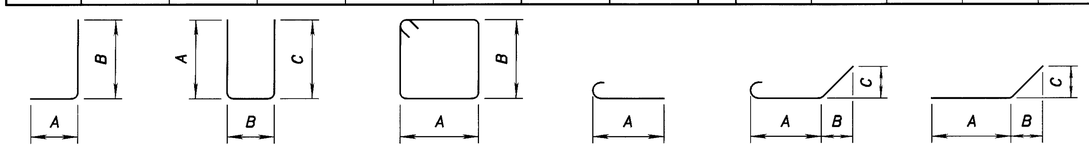

TYPE-1 TYPE-2 TYPE-3 TYPE-16 TYPE-18 TYPE-19

MARK	NUMBER: SUPER STAGE I	SUPER STAGE II	TOTAL	LENGTH	WEIGHT LB	TYPE	DIMENSIONS: A	B	C	D	E	R	INC
SUPERSTRUCTURE - MED-71-2092 W													
S401	187		187	15'-5"	1926	STR							
S402	74	74	148	3'-1"	305	2	1'-3"	9"	1'-3"				
S403	18	20	38	16'-2 1/2"	411	STR							
S404	16	18	34	11'-3"	256	STR							
S405	9	10	19	14'-3"	181	STR							
S406		187	187	17'-1"	2134	STR							
S801	24	26	50	19'-3 1/2"	2575	STR							
S802	16	18	34	19'-1 1/2"	1736	STR							
S803	16	18	34	17'-3 1/2"	1570	16	16'-4 1/2"						
S804	12	13	25	17'-10"	1190	STR							
S805	8	9	17	15'-9"	715	STR							
S806	8	9	17	15'-9"	715	STR							
S807	24	26	50	14'-3"	1902	STR							
S808	20	22	42	18'-7 1/2"	2089	STR							
S809	18	20	38	17'-0"	1725	STR							
S810	18	20	38	18'-3"	1852	STR							
S811	18	20	38	18'-3"	1852	STR							
S812	10	11	21	19'-1"	1070	STR							

MARK	NUMBER: SUPER STAGE I	SUPER STAGE II	TOTAL	LENGTH	WEIGHT LB	TYPE	DIMENSIONS: A	B	C	D	E	R	INC
PARAPETS - MED-71-2092 W													
X501	16	16	32	10'-0"	334	STR							
X502	6	6	12	5'-6"	69	25	1'-8"	2'-5"	1'-4"	1 1/2"	5"		
X503	10	10	20	5'-6"	115	STR							
X504	18	18	36	19'-4"	726	STR							
X601	3	3	6	20'-0"	180	STR							
Y501	47	47	94	7'-5"	727	23	1'-1"	3'-2"	3'-0"			2 3/4"	
Y601	47	47	94	4'-0"	565	33	1'-1"	2'-0"	1'-3"	0"			
Y602	47	47	94	2'-11"	412	1	1'-1"	2'-0"					
Y603	4 SERIES OF 11	4 SERIES OF 11	8 SERIES OF 11	4'-5" TO 5'-3"	639	1	1'-1"	3'-6" TO 4'-4"					1"
Y604	20	20	40	4'-5"	265	1	1'-1"	3'-6"					

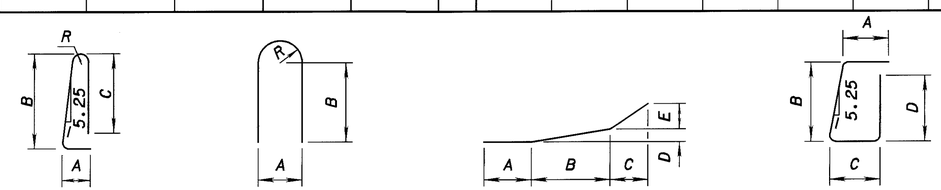

TYPE-23 TYPE-24 TYPE-25 TYPE-33

NOTES:

1. THIS REINFORCING SCHEDULE IS FOR INFORMATION ONLY.
2. ALL REINFORCING STEEL SHALL BE EPOXY COATED.
3. THE BAR SIZE IS INDICATED IN THE BAR MARK. THE FIRST DIGIT INDICATES THE BAR SIZE. FOR EXAMPLE, AN A501 IS A #5 BAR. THE DIMENSIONS SHOWN ARE OUT TO OUT UNLESS OTHERWISE INDICATED. "R" INDICATES THE INSIDE RADIUS.

DESIGN AGENCY: ODOT CENTRAL OFFICE OFFICE OF PRODUCTION

DESIGNED BKL | CHECKED RJH | DRAWN BKL | REVISED | REVIEWED DFT | DATE 9-20-99 | STRUCTURE FILE NUMBER 5203996

REINFORCING SCHEDULE

MED-71-2092 W

RAMP "C" OVER PLUM CREEK, S.R. 3 INTERCHANGE

MED-71-15.78

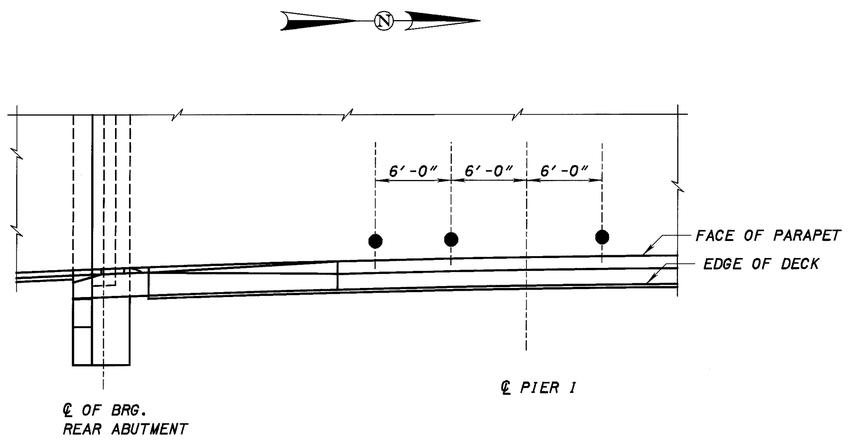

SCUPPER LOCATION

NOTES:

1. THE SUPPORT ANGLES AND BARS ARE INCLUDED WITH SCUPPERS FOR PAYMENT.
2. SCUPPERS INCLUDING SUPPORT ANGLES AND BARS SHALL BE GALVANIZED IN ACCORDANCE WITH CMS 711.02.
3. REARRANGE THE REINFORCING STEEL IN THE DECK TO ACCOMODATE THE PLACEMENT OF THE SCUPPER.
4. PLACE 30° BEND IN SCUPPER, 12" FROM BOTTOM, SLOPE SCUPPER AWAY FROM PIER.

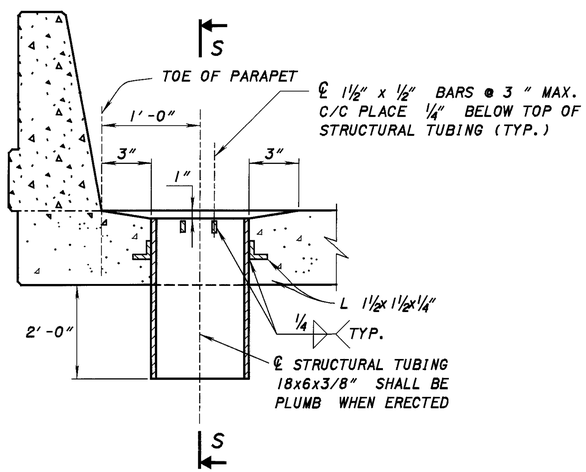

SCUPPER DETAILS

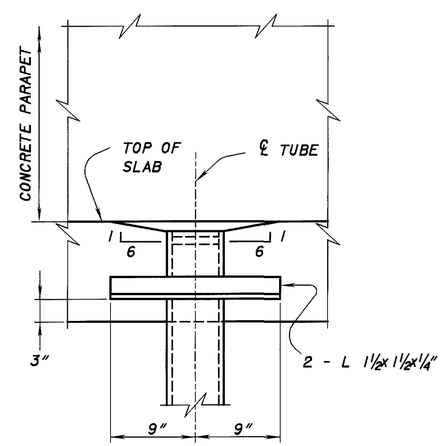

SECTION S-S

DESIGN AGENCY
ODOT CENTRAL OFFICE
OFFICE OF PRODUCTION

DESIGNED	DRAWN	REVIEWED	DATE
BKL	BKL	DFT	9-20-99
CHECKED	REVISED	STRUCTURE FILE NUMBER	
RJH		5203996	

SCUPPER DETAILS
MED-71-2092 W
RAMP "C" OVER PLUM CREEK, S.R. 3 INTERCHANGE

MED-71-15.78

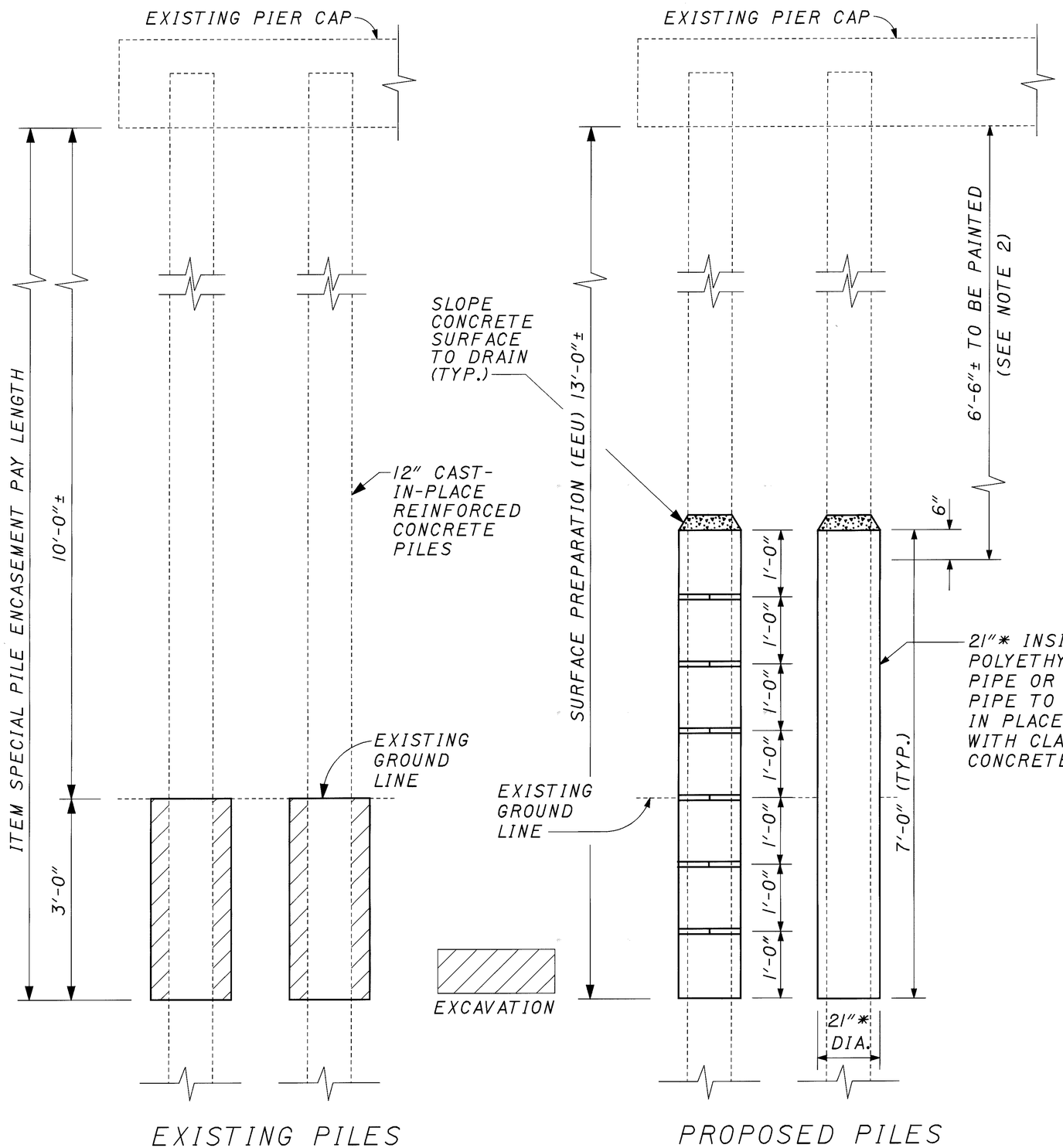

NOTE:

1. ALL PAINTING AS PER THE FIELD PAINTING OF EXISTING STEEL, USING EPOXY AND URETHANE (EEU) PROPOSAL NOTE OMITTING THE QUALITY CONTROL SPECIALIST AND TEST SECTION.

   THERE ARE 6 (SIX) COLUMNS PER PIER.
   THERE ARE 2 (TWO) PIERS ON STRUCTURE.

2. AT THE CONTRACTOR'S OPTION AT NO ADDITIONAL COST TO THE STATE, THE CONTRACTOR MAY EXTEND THE ENCASEMENT TO THE BOTTOM OF THE EXISTING PIER CAP IN LIEU OF PAINTING. SURFACE PREPARATION SHALL STILL BE PERFORMED.

3. STABILITY OF CAPPED PILE PIERS SHALL BE MAINTAINED DURING CONSTRUCTION. THE WORK ON THE EXISTING PIER PILES SHALL TAKE PLACE PRIOR TO STAGE CONSTRUTION OR AFTER ALL WORK IS COMPLETE ON THE SUPERSTRUCTURE.

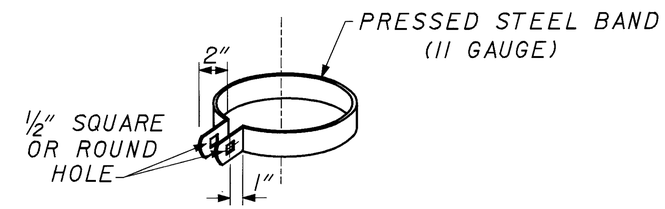

* 24" DIA. PIPE MAY BE USED AT THE CONTRACTOR'S OPTION AT NO ADDITIONAL COST TO THE STATE.

ITEM SPECIAL PILE ENCASEMENT

THIS ITEM SHALL INCLUDE THE FOLLOWING: EXCAVATION AND REPLACEMENT OF THE EMBANKMENT TO ITS NATURAL STATE AT THE EXISTING PILES, POLYETHYLENE OR PVC PIPE, GALVANIZED STEEL BANDS, NUTS AND BOLTS. THE POLYETHYLENE 707.33 OR PVC PIPE (707.45) SHALL BE CUT LENGTHWISE ON ONE SIDE OR IN TWO (2) SECTIONS AS NEEDED TO ENCOMPASS THE EXISTING 12" CAST-IN-PLACE PILES. THE BANDS SHALL BE 1" IN WIDTH AND THICKNESS SHALL NOT BE LESS THAN 11 GAUGE (.1196"). BANDS SHALL BE TIGHTENED SO AS NOT TO ELONGATE WHEN CONCRETE IS PLACED WITHIN THE PIPE. MAXIMUM SPACING OF THE BANDS SHALL BE 1'-0". ALTERNATE METHODS MAY BE USED TO CLAMP THE SECTIONS TOGETHER AS APPROVED BY THE ENGINEER. THE POLYETHYLENE OR PVC PIPE SHALL BE FILLED WITH CLASS C CONCRETE AND INCLUDED WITH ITEM SPECIAL, PILE ENCASEMENT FOR PAYMENT. ALL PAINTING PER PLAN NOTES SHALL BE INCLUDED WITH ITEM SPECIAL, PILE ENCASEMENT FOR PAYMENT.

DESIGN AGENCY	ODOT CENTRAL OFFICE OFFICE OF PRODUCTION
REVIEWED DFT	DATE 9-20-99
STRUCTURE FILE NUMBER	5203396
DRAWN DS	REVISED
DESIGNED DS	CHECKED RJH

PIER ENCASEMENT
MED-71-2092 W
RAMP "C" OVER PLUM CREEK, S.R. 3 INTERCHANGE

MED-71-15.78

885/940