MED-76-0.61	OHIO	1 / 299
	FHWA REGION 5	
IM-76-1(29)	FEDERAL PROJECT	

MICROFILMED
MAR 13 1996

STATE OF OHIO
DEPARTMENT OF TRANSPORTATION
MED-76-0.61

VILLAGE OF SEVILLE
WESTFIELD, GUILFORD, WADSWORTH TOWNSHIP
MEDINA COUNTY

DESIGN DESIGNATION

Current Year ADT (1993)	= 22,930
Design Year ADT (2013)	= 32,110
D H V	= 3211
D	= 55%
T	= 18%
V	= 70 m.p.h.
Legal Speed	= 65 m.p.h.
Functional Classification	= Interstate

Design Exceptions: Approval Date June 11, 1992

Design Element	Criteria	Proposed
Graded Shoulder Width	Mainline 15' Rt.	Mainline 12' Rt.
Vertical Alignment and Stopping Sight Distance	Mainline V=70mph–SSD=625'	PVI Sta.–SSD–Vact. 904+60–540'–63mph Same as Existing
	Crossroads V=55mph–SSD=450'	Same as Existing
Horizontal Clearance	Mainline–4'Lt.&10'Rt.	
	Chippewa Ditch 0112 L/R	8'–6"Lt. & 8'–6"Rt.
	Hubbard Creek 0299L	5'–0"Lt. & 9'–0"Rt.
	Hubbard Creek 0299R	8'–6"Lt. & 8'–6"Rt.
	C.H. 49 0622 L/R	9'–8"Lt. & 9'–8"Rt.
	River Styx 0690 L/R	8'–6"Lt. & 8'–6"Rt.
	Crossroads 3'Lt.& Rt.	

CONVENTIONAL SIGNS

County Line
Township Line
Section Line
Corporation Line
Fence Line(existing) (proposed)
Center Line
Trees, Stumps, (to be removed)
Utility Poles: Telephone, Power, Light
Limited Access (only) — LA
Right of Way (only) — RW
Limited Access & Right of Way — LA&RW
Existing Right of Way — EX RW
Property Line (in existing fence)
Railroad or
Guardrail (existing) (proposed)

INDEX OF SHEETS

TITLE SHEET	1	MAINLINE PLAN	88–111
SCHEMATIC PLAN	2	MAINLINE CROSS–SECTIONS	112–130*
TYPICAL SECTIONS	3–11	LIGHT POLE CROSS–SECTIONS	131–132
GENERAL NOTES	12–13	CROSS–ROAD PLAN & PROFILE	133–138
MAINTENANCE OF TRAFFIC	14–60, 46A, 18A	CROSS–ROAD CROSS–SECTIONS	139–141
CALCULATIONS	61–83	DETAILS	142–148
SUB–SUMMARIES	84–85	TRAFFIC CONTROL	149–180
GENERAL SUMMARY	86–87	STRUCTURES, OVER 20' SPAN	181–299
* – 116A, 118A-B, 129A-D, 130A-G		C.H. 49 CROSS–SECTION	141A

BEGIN PROJECT STA. 854+29.39

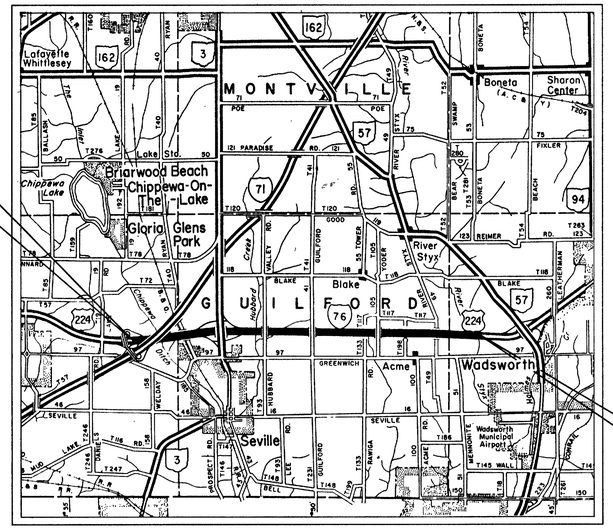

END PROJECT STA. 1190+00

LOCATION MAP

SCALE IN MILES 0 1 2 3 4 5

Portion to be Improved
State & Federal Routes
Other Roads

SCALES

Plan 0 50 100
Profile Horizontal 0 50 100 Vertical 0 5 10
Cross Section Horzt 0 5 10 Vertical 0 5 10

LIMITED ACCESS

This improvement is especially designed for through traffic and has been declared a limited access highway or freeway by action of the Director in accordance with the provisions of Section 5511.02 of the Revised Code of Ohio.

1993 SPECIFICATIONS

The standard specifications of the State of Ohio, Department of Transportation, including changes and supplemental specifications listed in the proposal shall govern this improvement.

I hereby approve these plans and declare that the making of this improvement will not require the closing to traffic of the highway, except as noted on sheets 15-18 and that provisions for the maintenance and safety of traffic will be as set forth on the plans and estimates.

Under authority of Section 4511.21. Division (1) of the Revised Code of Ohio. The revised prima facie speed limits as indicated herein are determined to be reasonable and safe, and are hereby established for the duration of this project. The prima facie speed limit or limits hereby established shall become effective when appropriate signs giving notice thereof are erected.

SUPPLEMENTAL SPECIFICATIONS

802	✓	4–13–90	942	✓	3–18–92
820	✓	3-18-92	944	✓	3–18–92
849	✓	12–24–85	949	✓	9–26–86
852	✓	7-30-93	962	✓	1–23–90
862	✓	12–16–88	933	✓	2-10-87
902	✓	8–31–79			
921	✓	12–04–72			
923	✓	1–10–69			
931	✓	3–18–92			

Approved Phillip A. Harwood
Date 11-3-93 District Deputy Director of Transportation

Approved B.D. Hehlmann / WC
Date 11/25/94 Engineer, Bureau of Bridges and Structural Design

Approved Christopher L. Runyan
Date 2-15-94 Deputy Director, Design

Approved Jerry Wray
Date 2-15-94 Director, Department of Transportation

LINE DATA

BEGIN PROJECT	STA. 854+29.39
END PROJECT	STA. 1190+00
LENGTH OF PROJECT	33,570.61 L.F. = 6.358 MI.
ADD FOR WORK:	
I–76 STA. 845+20 TO STA. 854+29.39	909.39 L.F.
I–76 STA. 1190+00 TO STA. 1198+23	823.00 L.F.
S.R. 3 STA. 4+00 TO STA. 18+50	1,450.00 L.F.
T.H. 93 STA. 10+95 TO STA. 22+43	1,148.00 L.F.
C.H. 41 STA. 11+11 TO STA. 19+55	844.00 L.F.
C.H. 105 STA. 20+45 TO STA. 28+44	799.00 L.F.
TOTAL LENGTH OF WORK	39,544.00 L.F. = 7.489 MI.

UNDERGROUND UTILITIES
TWO WORKING DAYS
BEFORE YOU DIG
Call 800–362–2764 (Toll Free)
OHIO UTILITIES PROTECTION SERVICE
NON–MEMBERS
MUST BE CALLED DIRECTLY

Project MED–76–0.61 MEDINA COUNTY
Date of Letting _____ 19__ Contract No. _____

Plan Prepared By:
THOMAS FOK & ASSOCIATES, LTD.
3896 MAHONING AVE.
YOUNGSTOWN, OHIO 44515
216–799–1501

SUPPLEMENTAL PRINTS OF STANDARD CONSTRUCTION DRAWINGS

CB-2-2A & B ✓ 5-1-79

A–1–69	✓	6–12–69	GR–1.2	✓	10–30–92	MC–4	✓	7–26–76	TC–51.11	✓	1–20–84	MT–99.10	✓	11–14–86
BP–2.2	✓	2–21–92	GR–1.3	✓	2–21–92	MC–9A	✓	1–11–85	TC–52.10	✓	4–03–79	MT–99.20	✓	4–29–88
BP–2.4	✓	2–21–92	GR–2.1	✓	5–06–91	MC–9.1	✓	10–30–92	TC–52.20	✓	4–03–79	MT–100.00	✓	2–23–90
BP–2.5	✓	2–21–92	GR–3.1	✓	5–06–91	MC–9.2	✓	5–06–91	MH–3	✓	12-18-84	MT–101.60	✓	7–01–92
BP–3.1	✓	2–21–92	GR–3.2	✓	5–06–91	MC–9.3	✓	10–30–92	MT–95.30	✓	10–10–88	MT–105.10	✓	7–01–92
BP–5.1	✓	2–21–92	GR–4.1	✓	5–06–91	MC–11	✓	8–01–78	MT–95.40	✓	10–01–92	MT–105.11	✓	7–01–92
CB–458 A	✓	5–1–79	GR–4.2	✓	5–06–91	MH–1	✓	12–18–84	MT–95.70	✓	2–23–90	BP-2.1	✓	2-21-92
CB–3A	✓	5–01–79	GR–5.1	✓	10–30–92	TC–22.20	✓	9–01–92	MT–96.11	✓	9–09–88	BP-1.1	✓	2-21-92
CB–5	✓	11–10–83	MC-9.4	✓	10-30-92	TC–35.10	✓	8–29–84	MT–96.20	✓	9–09–88	AS–1–81	✓	11–27–81
CB–8	✓	11–10–83	GR–5.3	✓	10–30–92	TC–41.10	✓	8–29–84	MT–96.25	✓	9–09–88	BR–1	✓	5–29–79
F–2	✓	5–1–76	GR–6	✓	2–05–82	TC–41.20	✓	3–26–79	MT–97.10	✓	4–29–88	EXJ–2–81	✓	4–02–84
F–3	✓	5–1–76	GR–7.1	✓	10–30–92	TC–41.50	✓	3–26–79	MT–98.12	✓	8–25–89	SD–1–69	✓	6–12–69
F–5	✓	5–1–76	GR–8	✓	10–25–90	TC–42.10	✓	8–19–77	MT–98.13	✓	8–25–89	PCB–91	✓	4–24–92
F–6	✓	5–1–76	MH-5	✓	6-12-75	TC–42.20	✓	3–26–79	MT–98.14	✓	8–25–89	EXJ-4-87	✓	1-5-89
GR–1.1	✓	5–6–91	HW–4B	✓	4–01–80	TC–51.10	✓	1–20–84	MT–98.15	✓	8–25–89	ICD-1-82	✓	8-1-84

DEPARTMENT OF TRANSPORTATION
FEDERAL HIGHWAY ADMINISTRATION
APPROVED

DIVISION ADMINISTRATOR DATE

TITLEPT 1=1 08-11-93

REGION	STATE	PROJECT	
5	OHIO		

204/299

MEDINA COUNTY
MED-76-0.61

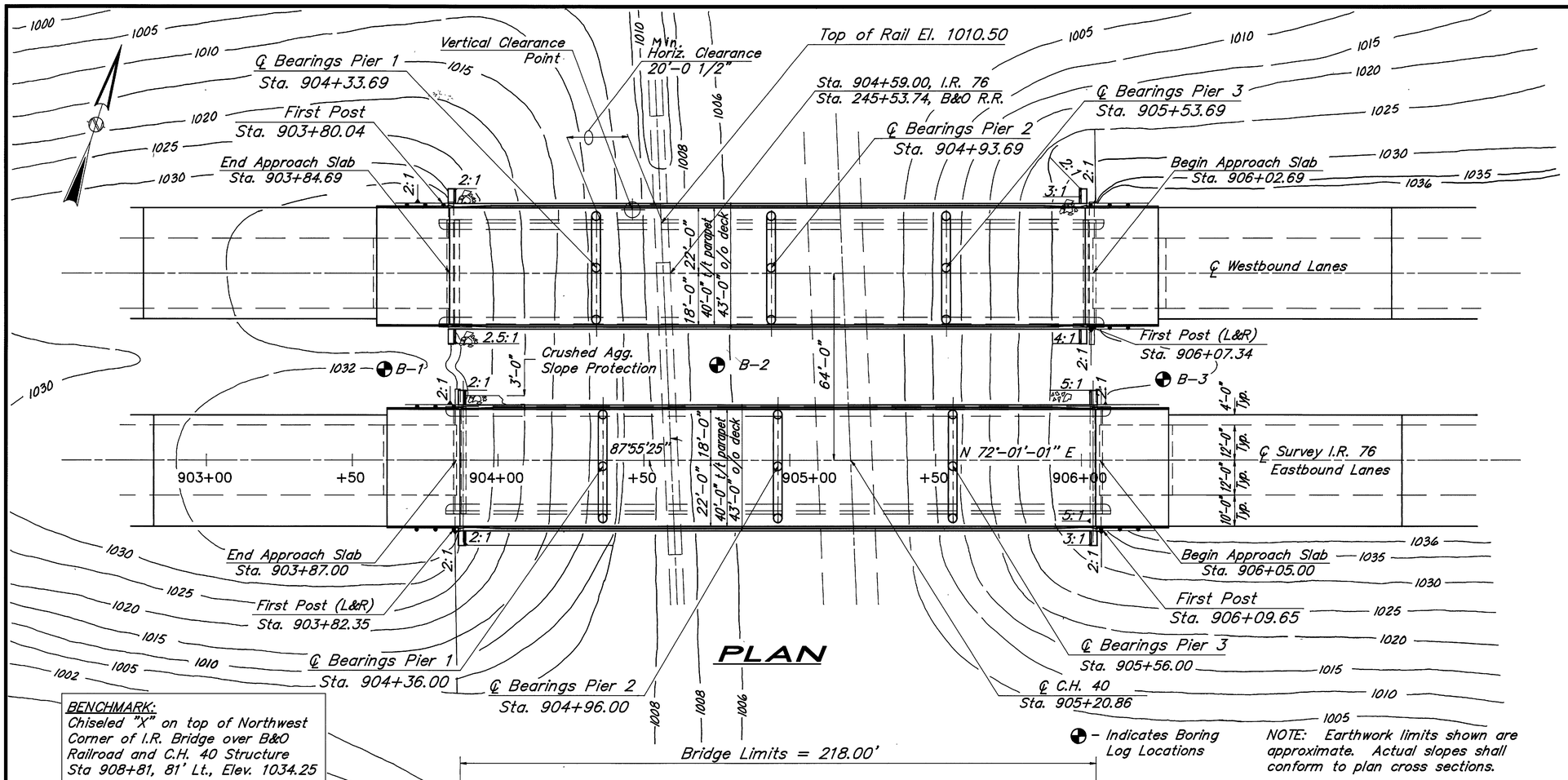

PLAN

BENCHMARK:
Chiseled "X" on top of Northwest Corner of I.R. Bridge over B&O Railroad and C.H. 40 Structure
Sta 908+81, 81' Lt., Elev. 1034.25

◐ - Indicates Boring Log Locations

NOTE: Earthwork limits shown are approximate. Actual slopes shall conform to plan cross sections.

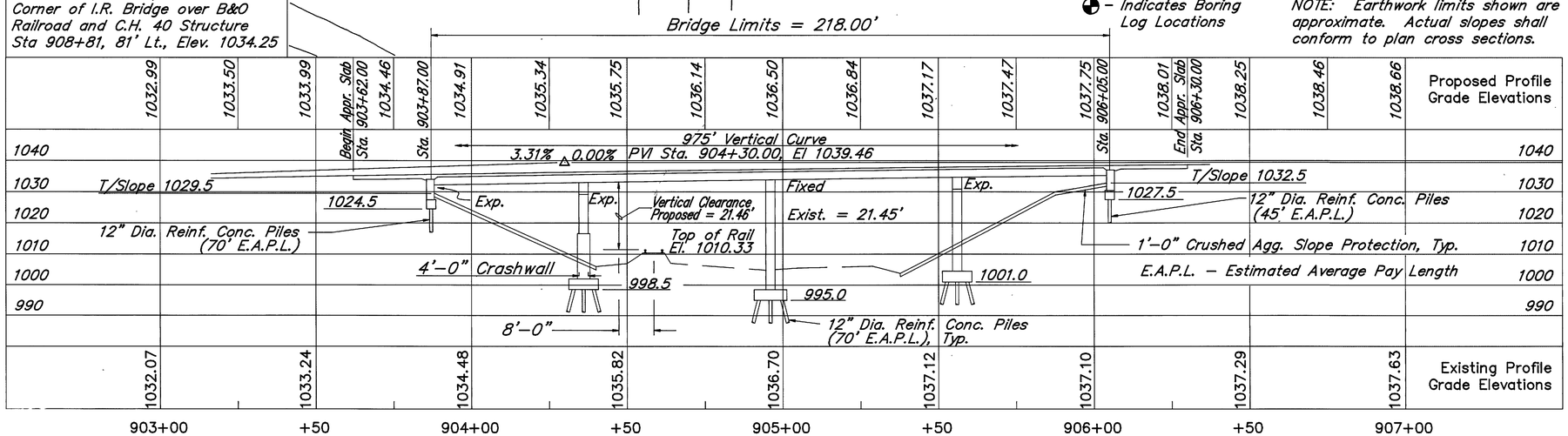

PROFILE AT ℄ CONSTRUCTION

EASTBOUND SHOWN, WESTBOUND SIMILAR

REMOVAL OF EXISTING STRUCTURE: When no longer needed to maintain traffic the existing structure shall be removed. Suitable waste masonry may be placed as Bank Protection as directed by the Engineer.

EXISTING STRUCTURE

TYPE : 4 Span Continuous Steel Beam Bridge with Reinforced Concrete Deck and Substructure
SPANS : 48', 60', 60', 48'
ROADWAY : 30' f/f Curb
SKEW : 0°
ALIGNMENT : Tangent
CONDITION : Poor
YEAR BUILT: 1958
STRUCTURE FILE NOS : 5204410(L) 5204445(R)

PROPOSED STRUCTURE

TYPE : 4 Span Continuous Steel Beam Bridge with Reinforced Concrete Deck and Substructure
SPANS : 48', 60', 60', 48' c/c Brgs.
ROADWAY : 40'-0" t/t Parapets
SKEW : 0°
ALIGNMENT : Tangent
DESIGN LOADING: HS-20-44, Case 1 and Alternate Military Loading
APPROACH SLAB : AS-1-81 (25'-0")
CROWN : 3/16"/Ft.
WEARING SURFACE : Monolithic Conc.
AVG. DAILY TRAFFIC:
1993 ADT = 22930
2013 ADT = 32110 ADTT = 5780 | 1 | 14

THOMAS FOK & ASSOCIATES, LTD.
CONSULTING ENGINEERS, SURVEYORS & PLANNERS
3896 MAHONING AVE. YOUNGSTOWN, OHIO

SITE PLAN

BRIDGE NO. MED-76-0158 (Lt. & Rt.)
OVER B & O RAILROAD

MEDINA COUNTY
STA. 903+84.69 to 906+02.69 (L)
STA. 903+87.00 to 906+05.00 (R)

PRESENT TOPOGRAPHY		PROPOSED WORK			
SURVEYED	DRAWN	DESIGNED	DRAWN	CHECKED	REVIEWED
R.E.B. 10/90	R.J.B. 10/90	F.D.V. 10/91	D.L.G. 11/91	D.L.G. 11/91	J.G. 12/91

SITEPLAN 4-1-83 rev20

REGION	STATE	PROJECT	
5	OHIO		

205/299

MEDINA COUNTY
MED-76-0.61

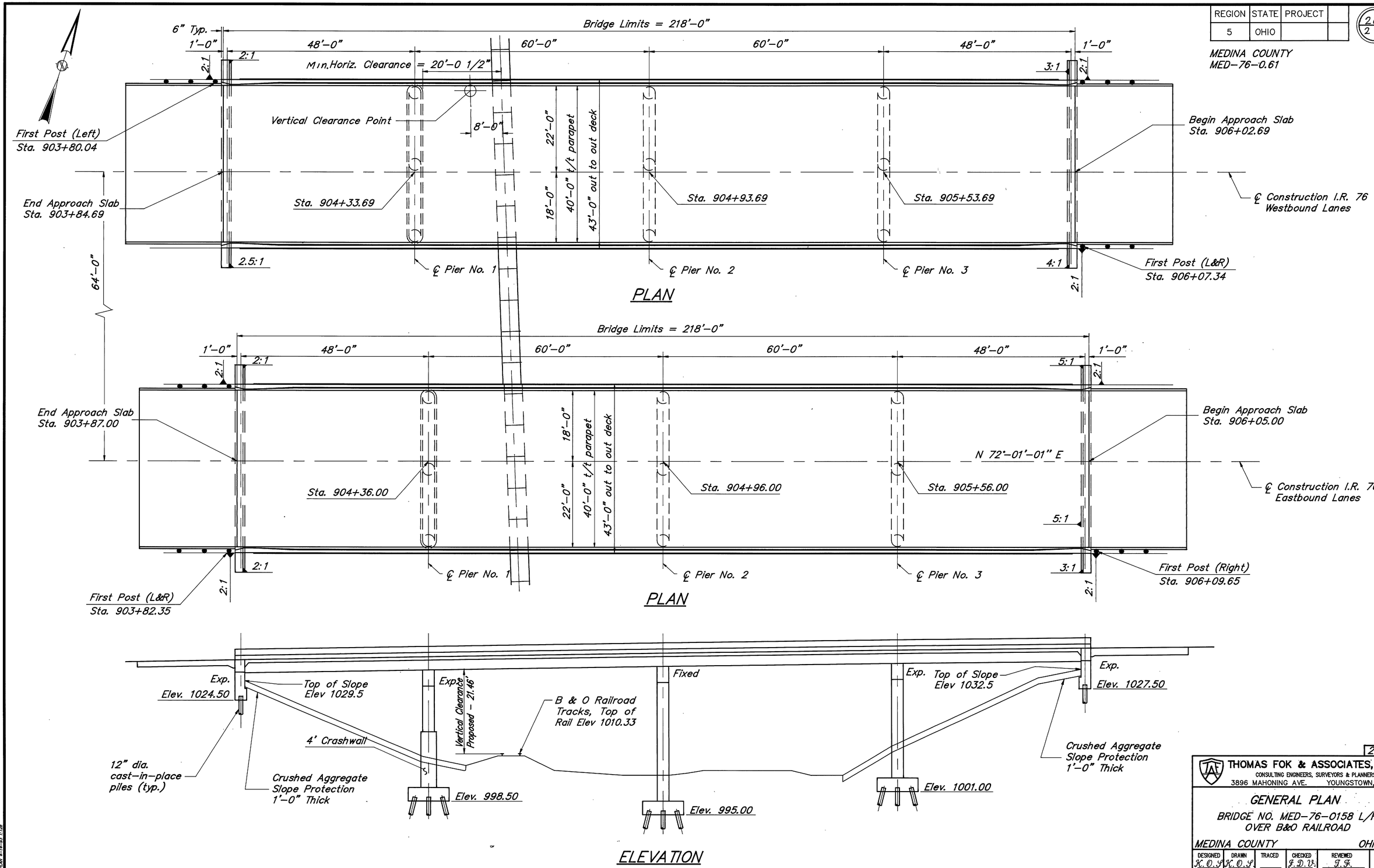

2 | 14

THOMAS FOK & ASSOCIATES, LTD.
CONSULTING ENGINEERS, SURVEYORS & PLANNERS
3896 MAHONING AVE. YOUNGSTOWN, OHIO

GENERAL PLAN

BRIDGE NO. MED-76-0158 L/R
OVER B&O RAILROAD

MEDINA COUNTY OHIO

DESIGNED	DRAWN	TRACED	CHECKED	REVIEWED	REVISED
K.O.S. 11/92	K.O.S. 12/92		J.D.V. 12/92	J.F. 12/92	

GENERAL 4-16-93 1/128

REGION	STATE	PROJECT	
5	OHIO		

206/299

MEDINA COUNTY
MED–76–0.61

GENERAL NOTES

REFERENCE shall be made to standard Drawing(s):

AS–1–81	Dated 11/27/81
ICD–1–82	Dated (Revised) 8/1/84
SD–1–69	Dated 6/12/69

DESIGN SPECIFICATION These structures conform to "Standard Specifications for Highway Bridges" adopted by the American Association of State Highway and Transportation Officials, 1992 and the Ohio "Supplement" to these specifications. Reference is also made to the Ohio Department Of Transportation's "Construction and Material Specifications", 1993 edition.

DESIGN DATA:

DESIGN LOADING:

Design Loading – HS20–44 Case I and the Alternate Military Loading

DESIGN STRESSES:

Concrete, Class S – Compressive Strength 4500 p.s.i.

Concrete, Class C – Compressive Strength 4000 p.s.i.

Reinforcing Steel – ASTM A615, A616, or A617, Grade 60, minimum yield strength 60,000 p.s.i.

Structural Steel – ASTM A572, Yield Strength 50,000 p.s.i.

Spiral Reinforcing may be plain bars, ASTM A82 A615.

DECK PROTECTION METHOD – Epoxy Coated reinforcing steel, both mats, 2½" concrete cover on top mat and sealing of concrete surfaces.

MONOLITHIC WEARING SURFACE: is assumed, for design purposes, to be 1" thick.

ITEM 511 – CONCRETE, AS PER PLAN
Coarse aggregate for all concrete shall be limestone.

STRUCTURAL STEEL: The structural steel for these structures shall be ASTM A572. Beams and beam splice plates shall meet the 711.01 notch toughness requirements of the CMS.

REMOVAL OF EXISTING STRUCTURES:
When no longer needed to maintain traffic, remove each of the existing structures.

TRAFFIC MAINTENANCE: Traffic maintenance for Phase 1E can be found on project plan sheet 36.

UTILITY LINES: All expenses involved in relocating the affected utility lines shall be borne by the owners. The Contractor and owners are requested to cooperate by arranging their work in such a manner that inconvenience to either will be held to a minimum.

CALC. BY K.O.S. 3/93 — ESTIMATED QUANTITIES — CHK'D BY J.D.V. 3/93

ITEM	ITEM EXT.	TOTAL	UNIT	DESCRIPTION	SUPER.	ABUT.	PIER	GEN'L
202	11002	Lump	Lump	Structure Removed, Over 20' Span				Lump
503	11100	Lump	Lump	Cofferdams, Cribs, and Sheeting				Lump
503	21100	204	Cu.Yd.	Unclassified Excavation		82	122	
505	11100	Lump	Lump	Pile Driving Equipment Mobilization				Lump
507	22200	11,920	Lin.Ft.	12" Cast–in–place Reinforced Concrete Piles		1840	10,080	
509	15840	256,716	Pound	Epoxy Coated Reinforcing Steel, Grade 60	163,369	15,627	77,720	
Special	51148000	560	Cu.Yd.	High Performance Concrete Superstructure (Deck) (See Proposal Note)	560			
Special	51148020	100	Cu.Yd.	High Performance Concrete Superstructure (Parapet) (See Proposal Note)	100			
Special	51149000	Lump	Lump	High Performance Concrete Trial Mix (See Proposal Note)	Lump			
Special	51149010	Lump	Lump	High Performance Concrete Testing (See Proposal Note)	Lump			
Special	85050070	1938	Sq.Yd.	Bridge Deck Grooving (See Proposal Note)	1938			
511	41001	351	Cu.Yd.	Class C Concrete, Pier Above Footing, As Per Plan			351	
511	44001	152	Cu.Yd.	Class C Concrete, Abutment Including Footing, As Per Plan		152		
511	46501	226	Cu.Yd.	Class C Concrete, Footing, As Per Plan			226	
Special	51267502	1039	Sq.Yd.	Sealing of Concrete Surfaces (Epoxy) (See Proposal Note)	846		193	
Special	51271500	1039	Sq.Yd.	Urethane Top Coat Sealer for Concrete Surfaces	846		193	
513	11400	377,900	Pound	Structural Steel, A572–50 AISC Category I	377,900			
513	20000	6336	Each	Welded Stud Shear Connector	6336			
514	00610	377,900	Pound	Painting of New Steel, System IZEU, (See Proposal Note) FIELD	377,900			
516	44000	24	Each	Elastomeric Bearing with Internal Laminates and Load Plate (NEOPRENE) (1⅝" x9" x14½" elastomeric pad with 1½" x10" x1'–3½" load plate)				24
516	44000	12	Each	Elastomeric Bearing with Internal Laminates and Load Plate (NEOPRENE) (1½" x8½" x14" elastomeric pad with 1½" x9½" x1'–8" load plate)				12
518	21200	75	Cu.Yd.	Porous Backfill, with filter fabric		75		
518	41100	246	Lin.Ft.	6" Perforated Helical Corrugated Steel Pipe, 707.01		246		
518	41200	52	Lin.Ft.	6" Non–Perforated Helical Corrugated Steel Pipe, Including Specials, 707.01		52		
523	11100	7	Hour	Dynamic Load Test				7

RAILROAD AERIAL LINES: will be relocated by the Railroad. The Contractor shall use all precautions necessary to see that the lines are not disturbed during the construction stage and shall cooperate with the Railroad in the relocation of these lines. The cost of the relocation shall be included in the Railroad force account work.

PILE DESIGN LOADS:

The design load for the abutment piles is 34 tons per pile.
The design load for the pier piles is 33 tons per pile.

DYNAMIC LOAD TEST:
Due to the type of soils encountered at this site and the history of settlement of the existing structure, Dynamic Load Test shall be performed at each substructrue unit.

CONSTRUCTION CLEARANCE: of 10'–0" horizontally from the center of tracks and 21'–0" vertically from a point level with the top of the higher rail, shall be maintained at all times.

PAINTING OF A–572 STEEL: All steel to be painted per System IZEU, ITEM Special, except for portions to be encased in concrete at deck ends.

ITEM SPECIAL – SEALING OF CONCRETE SURFACES (EPOXY):
An epoxy concrete sealer shall be applied to the following concrete surfaces:
– Exposed faces of the parapet and the gutter line
– All columns adjacent to traffic lanes,

See proposal note for surface preparation requirements, application rates, material requirements and application procedures.

PROTECTION OF TRAFFIC: Prior to the demolition of any portions of the existing superstructure, the Contractor shall submit his plans for the protection of traffic under the structure to the Director for approval. These plans shall include provisions for any devices and structures that may be necessary to insure such protection. The cost for this protection shall be included in ITEM 202 for payment.

EMBANKMENT: The embankment shall be constructed to the level of the subgrade. Excavation may then be made for the abutments and for the benches and piles driven.

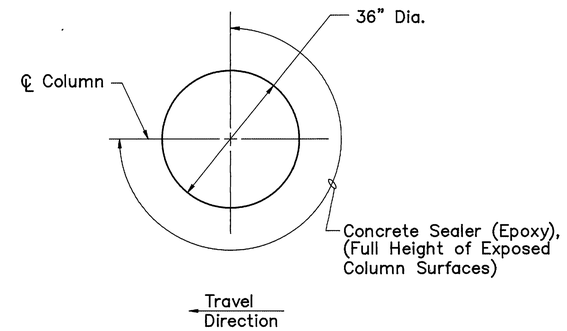

SEALING OF CONCRETE SURFACES
(Typical at 12 Columns)

ITEM SPECIAL – URETHANE TOP COAT SEALER FOR CONCRETE SURFACES: This Item shall consist of the application of a urethane top coat sealer over concrete areas coated with epoxy sealer or solvent free epoxy resin. The color shall be federal standard no. 595A–16187.

The urethane top coat shall be applied according to the manufacturer's recommendations at the minimum application rate of 150 sq. ft. per gallon after the epoxy sealer has become dry tacky and 1 1/2 to 6 hours have elapsed since the epoxy was applied. The surface shall be clean when the urethane is applied. Application shall be airless spray, brush or roller as directed by the Engineer.

The uerthane topcoat shall be one of the following:
1) AMERON AMERCOAT 450 H.S.
2) POLY–CARB MARK 73
3) TNEMEC SERIES 70 ENDURA SHIELD
4) DURAL AQUATHANE

The cost of all labor, equipment and materials necessary to accomplish this item of work shall be paid for under:

ITEM	UNIT	DESCRIPTION
Special	Sq.Yd.	Urethane top coat Sealer for Concrete Surfaces

3/14

THOMAS FOK & ASSOCIATES, LTD.
CONSULTING ENGINEERS, SURVEYORS & PLANNERS
3896 MAHONING AVE. YOUNGSTOWN, OHIO

GENERAL NOTES & ESTIMATED QUANTITIES
BRIDGE NO. MED–76–0158 L/R
OVER B&O RAILROAD
MEDINA COUNTY OHIO

DESIGNED	DRAWN	TRACED	CHECKED	REVIEWED	REVISED
K.O.S. 3/93	K.O.S. 3/93		J.D.V. 3/93	J.F. 3/93	

GNOTE 4-14-93 1-1

REGION	STATE	PROJECT	
5	OHIO		

MEDINA COUNTY
MED-76-0.61

207/299

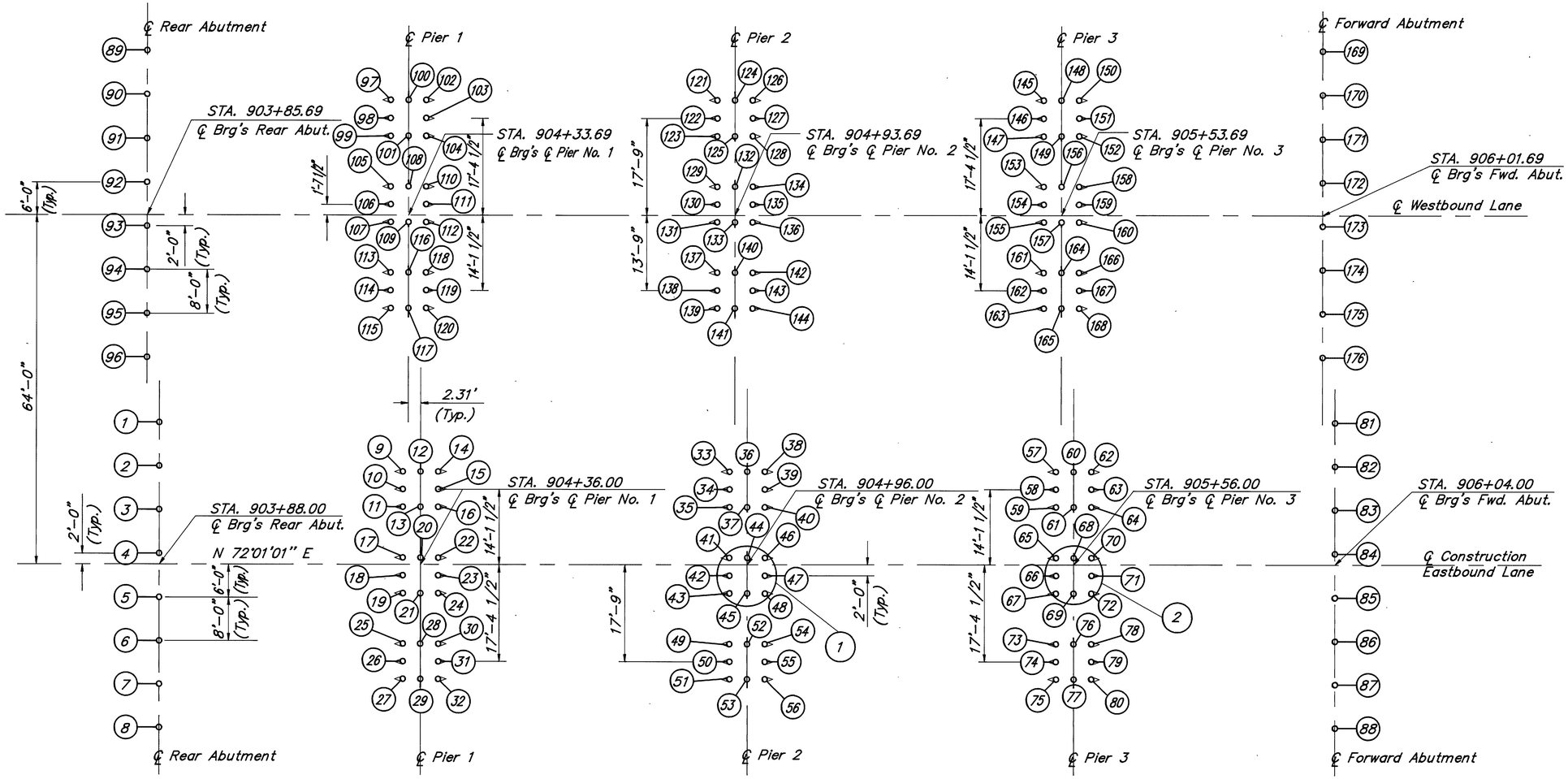

PILE PLAN

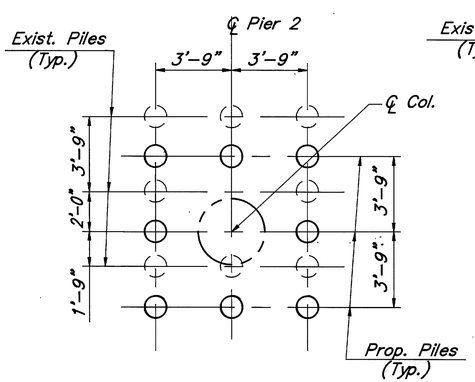

(Eastbound Shown, Westbound Opp. Hand)

DETAIL 1

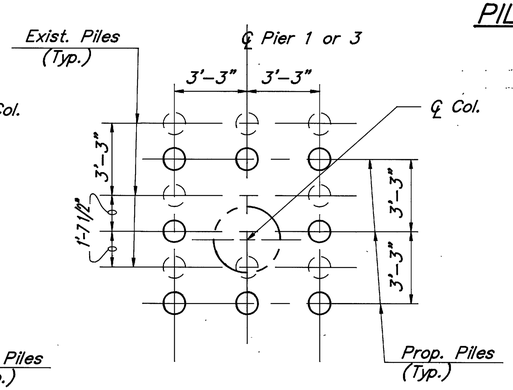

(Eastbound Shown, Westbound Opp. Hand)

DETAIL 2

LEGEND	
○	12" Dia. Cast-In-Place Vertical Piles
◁	12" Dia. Cast-In-Place Battered Piles (1:4)

For Pile batter directions, locations, and slopes, refer to pier and abutment drawings, Sheets 5-8/14.

Exercise caution to avoid hitting or damaging existing piles. Existing piles to remain in place. Those within the limits of the new pile cap are to be cut flush with the underside of the pile cap. Those outside to be cut 12" min. below new pile cap.

4/14

THOMAS FOK & ASSOCIATES, LTD.
CONSULTING ENGINEERS, SURVEYORS & PLANNERS
3896 MAHONING AVE. YOUNGSTOWN, OHIO

PILE PLAN
BRIDGE NO. MED-76-0158 L/R
OVER B&O RAILROAD

MEDINA COUNTY OHIO

DESIGNED	DRAWN	TRACED	CHECKED	REVIEWED	REVISED
K.O.S. 11/92	K.O.S. 11/92		J.D.V. 11/92	J.F. 12/92	

PLPLAN 4-16-93 1:128

REGION	STATE	PROJECT	
5	OHIO		

208/299

MEDINA COUNTY
MED-76-0.61

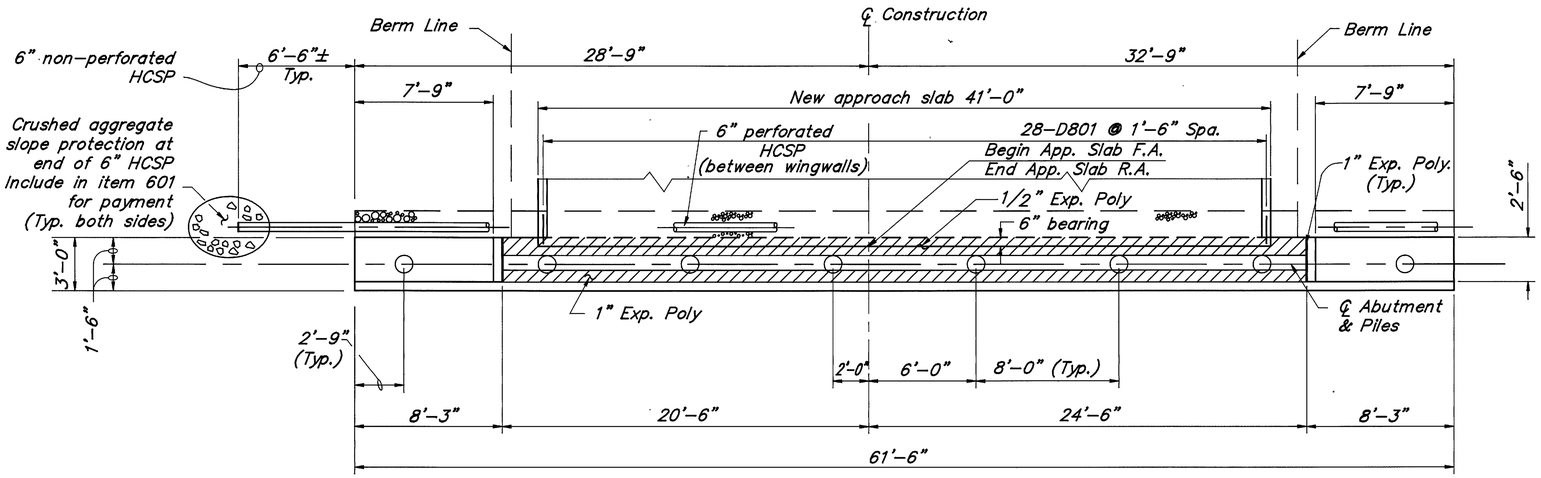

PLAN

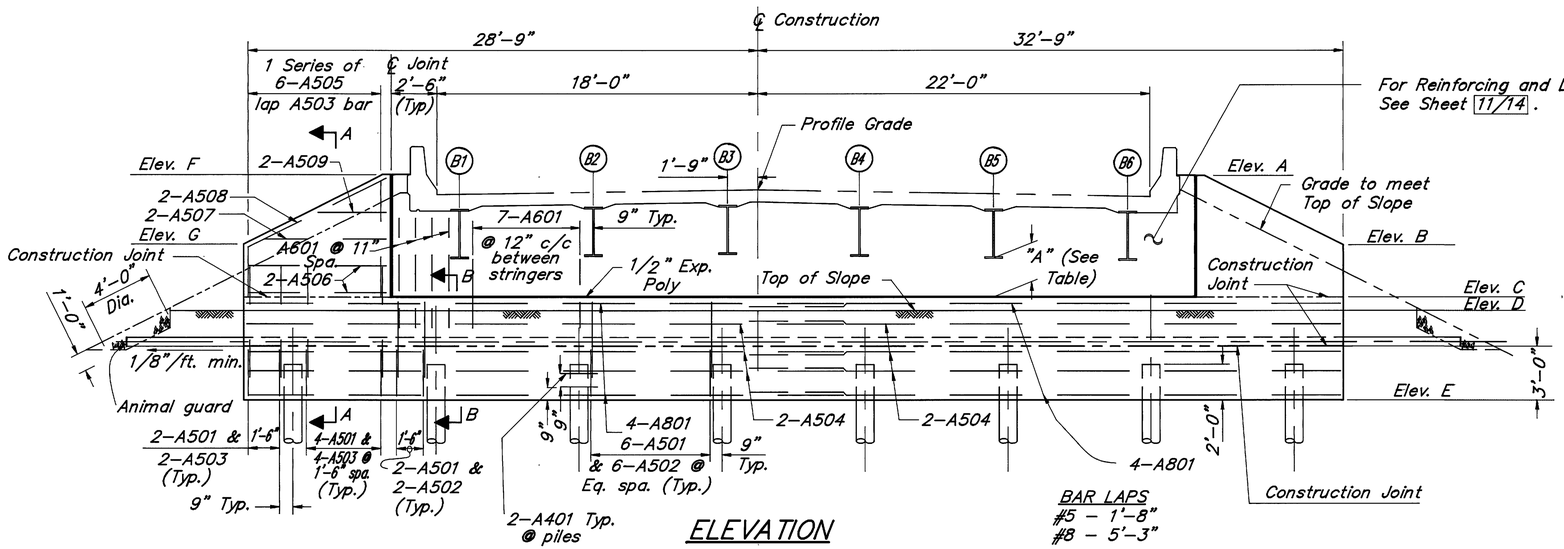

ELEVATION

R.A. Westbound & F.A. Eastbound Shown,
F.A. Westbound & R.A. Eastbound, Opposite Hand

BAR LAPS
#5 – 1'-8"
#8 – 5'-3"

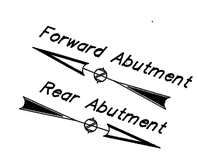

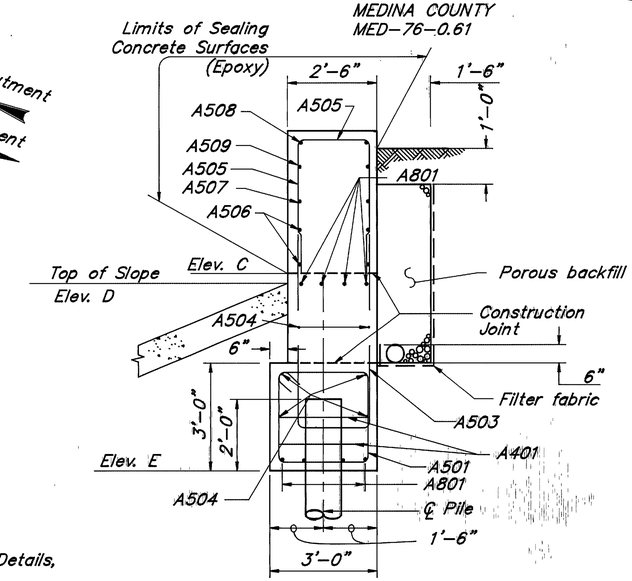

SECTION A-A

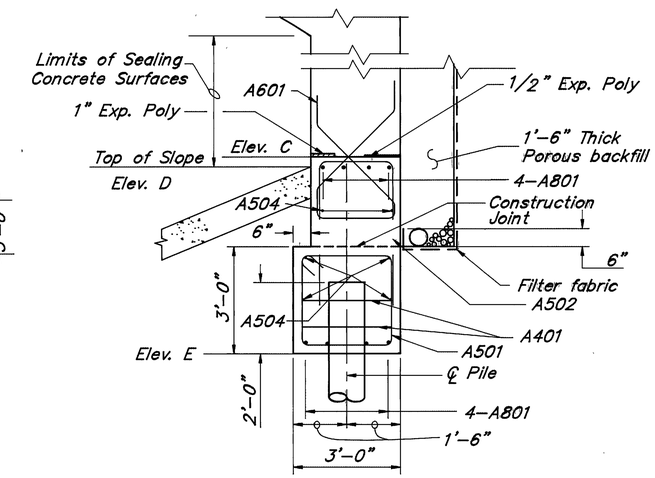

SECTION B-B

For additional details, refer to ODOT Standard Drawing ICD-1-82

NOTES: POROUS BACKFILL extends upward to the plane of the subgrade, to 1'-0" below the embankment surface and laterally to the end of the wingwalls. Place filter fabric between the porous backfill and the soil backfill. Include filter fabric (712.09, Type A) with porous backfill for payment.

ELEVATION TABLE

LOCATION	ELEV. A	ELEV. B	ELEV. C	ELEV. D	ELEV. E	ELEV. F	ELEV. G
F.A. EASTBOUND	1038.53	1034.75	1033.09	1032.50	1027.50	1038.59	1034.75
R.A. EASTBOUND	1035.44	1031.75	1030.00	1029.50	1024.50	1035.50	1031.75
F.A. WESTBOUND	1038.50	1034.75	1033.10	1032.50	1027.50	1038.56	1034.75
R.A. WESTBOUND	1035.40	1031.75	1030.00	1029.50	1024.50	1035.46	1031.75

Dim. "A"		Dim. "A"	
Eastbound (R.A.&F.A.)		Westbound (R.A.&F.A.)	
BEAM No.	OFFSET "A"	BEAM No.	OFFSET "A"
B1	1'-1 1/16"	B1	1'-0 5/8"
B2	1'-2 1/2"	B2	1'-2"
B3	1'-3 15/16"	B3	1'-3 7/16"
B4	1'-3 3/16"	B4	1'-2 11/16"
B5	1'-1 3/4"	B5	1'-1 1/4"
B6	1'-0 3/8"	B6	1'-0"

LEGEND

HCSP.	Helical Corrugated Steel Pipe
Exp.Poly.	Expanded Polystyrene
F.A.	Forward Abutment
R.A.	Rear Abutment
E.B.	Eastbound
W.B.	Westbound

5/14

THOMAS FOK & ASSOCIATES, LTD.
CONSULTING ENGINEERS, SURVEYORS & PLANNERS
3896 MAHONING AVE. YOUNGSTOWN, OHIO

ABUTMENT DETAILS
BRIDGE NO. MED-76-0158 L/R
OVER B&O RAILROAD

MEDINA COUNTY OHIO

DESIGNED	DRAWN	TRACED	CHECKED	REVIEWED	REVISED
K.O.S.	K.O.S.		G.D.M.	G.S.	
11/92	11/92		12/92	12/92	

ABUTM 4-14-93 11:48

REGION	STATE	PROJECT	
5	OHIO		

209/299

MEDINA COUNTY
MED-76-0.61

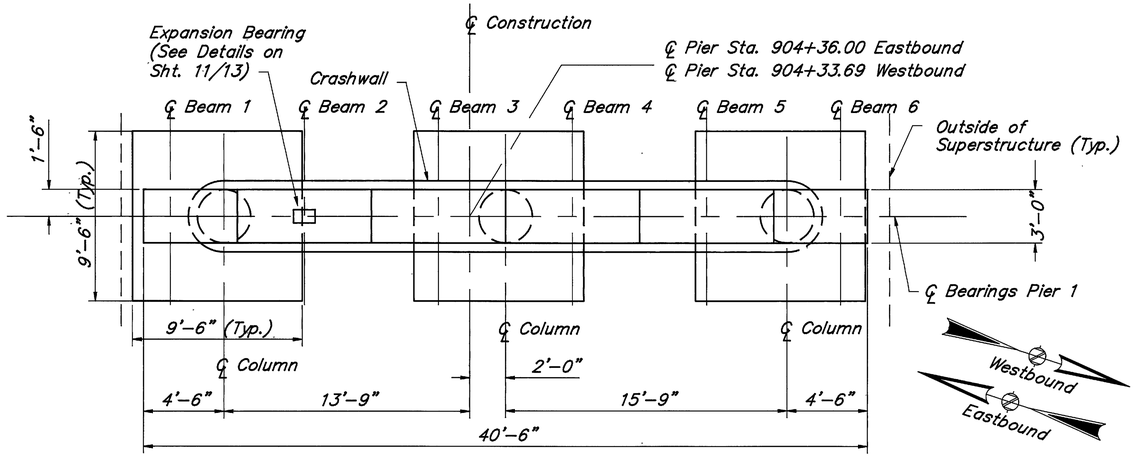

PLAN

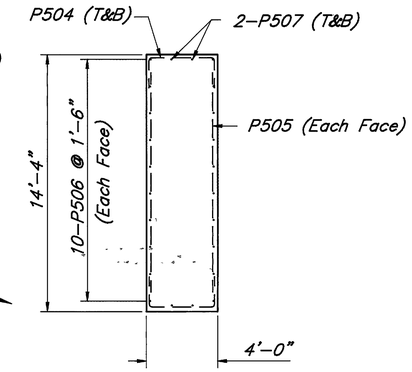

SECTION A-A

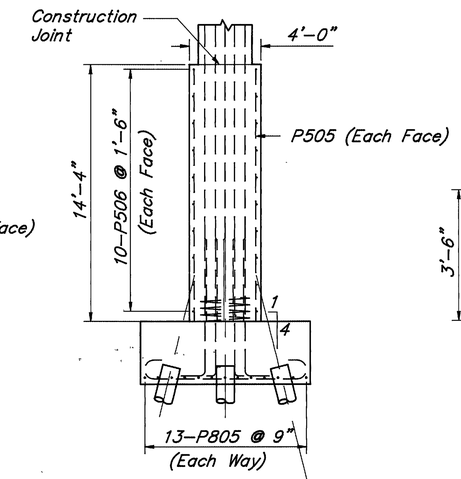

SECTION B-B

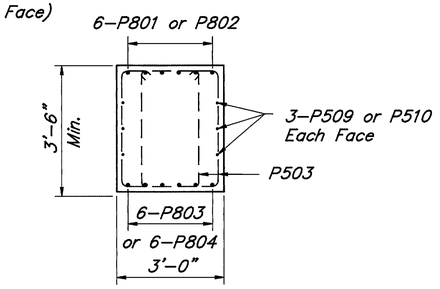

SECTION C-C

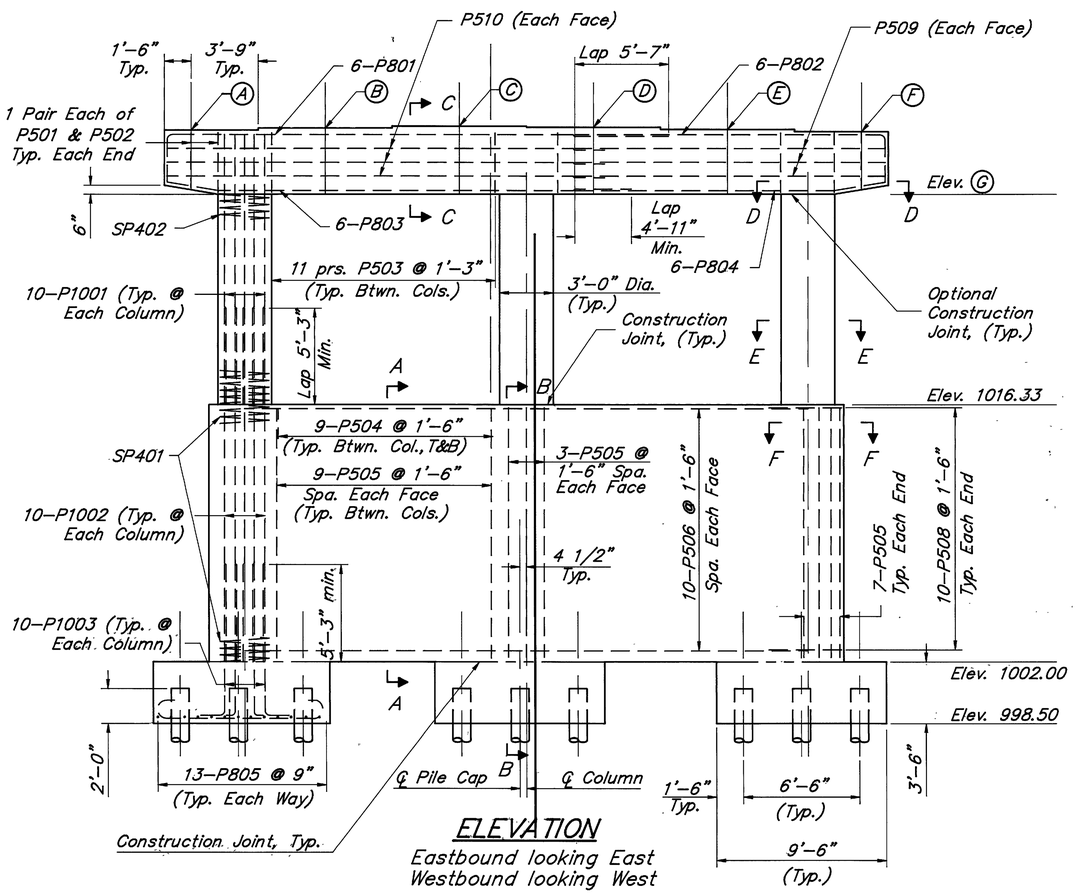

ELEVATION
Eastbound looking East
Westbound looking West

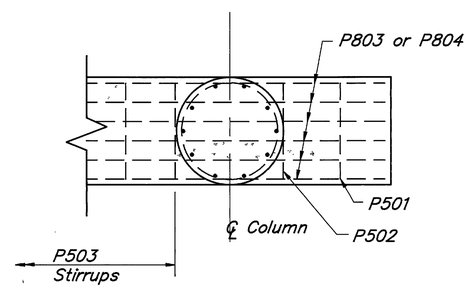

SECTION D-D

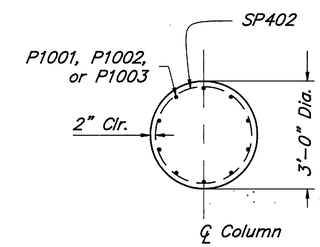

SECTION E-E

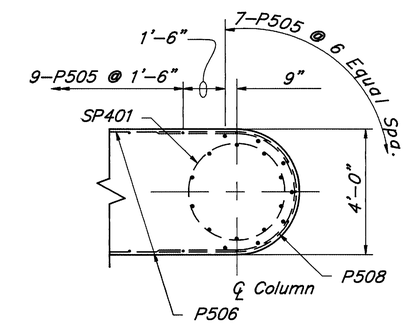

SECTION F-F

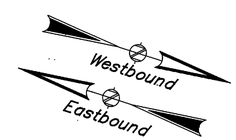

ELEVATIONS		
Location	Eastbound looking East	Westbound looking West
A	1031.65	1031.61
B	1031.77	1031.73
C	1031.88	1031.84
D	1031.82	1031.78
E	1031.70	1031.66
F	1031.58	1031.55
G	1028.08	1028.05

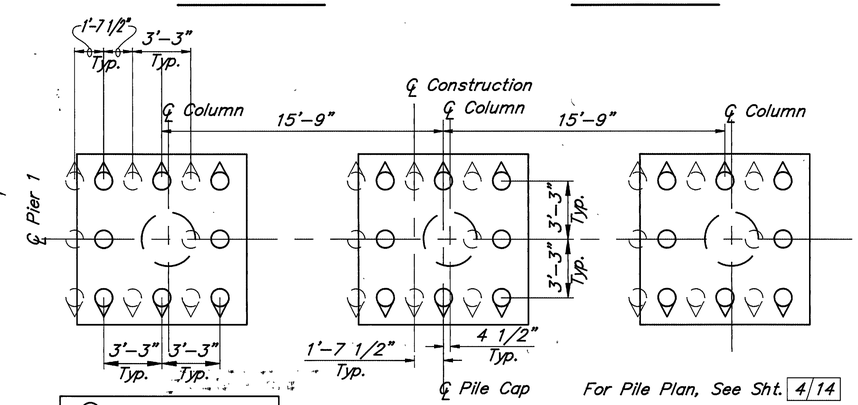

PILE PLAN

For Pile Plan, See Sht. 4/14

6/14

THOMAS FOK & ASSOCIATES, LTD.
CONSULTING ENGINEERS, SURVEYORS & PLANNERS
3896 MAHONING AVE. YOUNGSTOWN, OHIO

PIER 1 DETAILS
BRIDGE NO. MED-76-0158 L/R
OVER B&O RAILROAD

MEDINA COUNTY OHIO

DESIGNED	DRAWN	TRACED	CHECKED	REVIEWED	REVISED
K.O.S. 11/92	K.O.S. 11/92		J.D.V. 12/92	J.F. 12/92	

DETAIL 4-14-93 7:48

REGION	STATE	PROJECT	
5	OHIO		

210/299

MEDINA COUNTY
MED-76-0.61

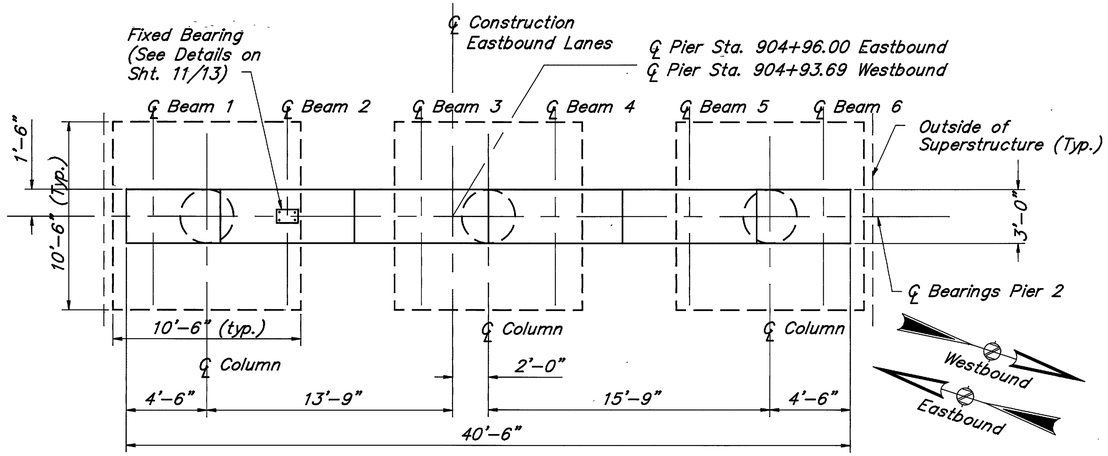

PLAN

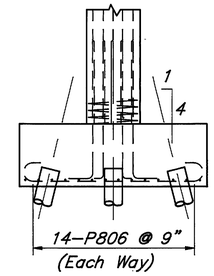

SECTION A-A

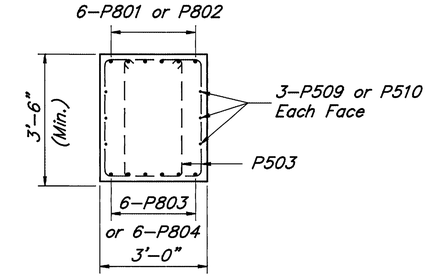

SECTION B-B

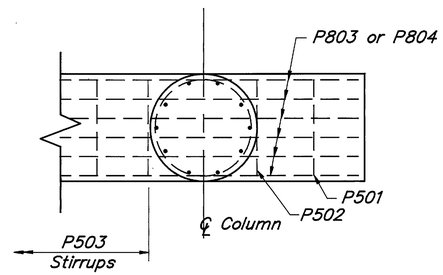

SECTION C-C

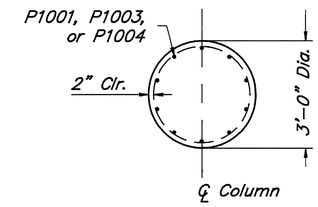

SECTION D-D

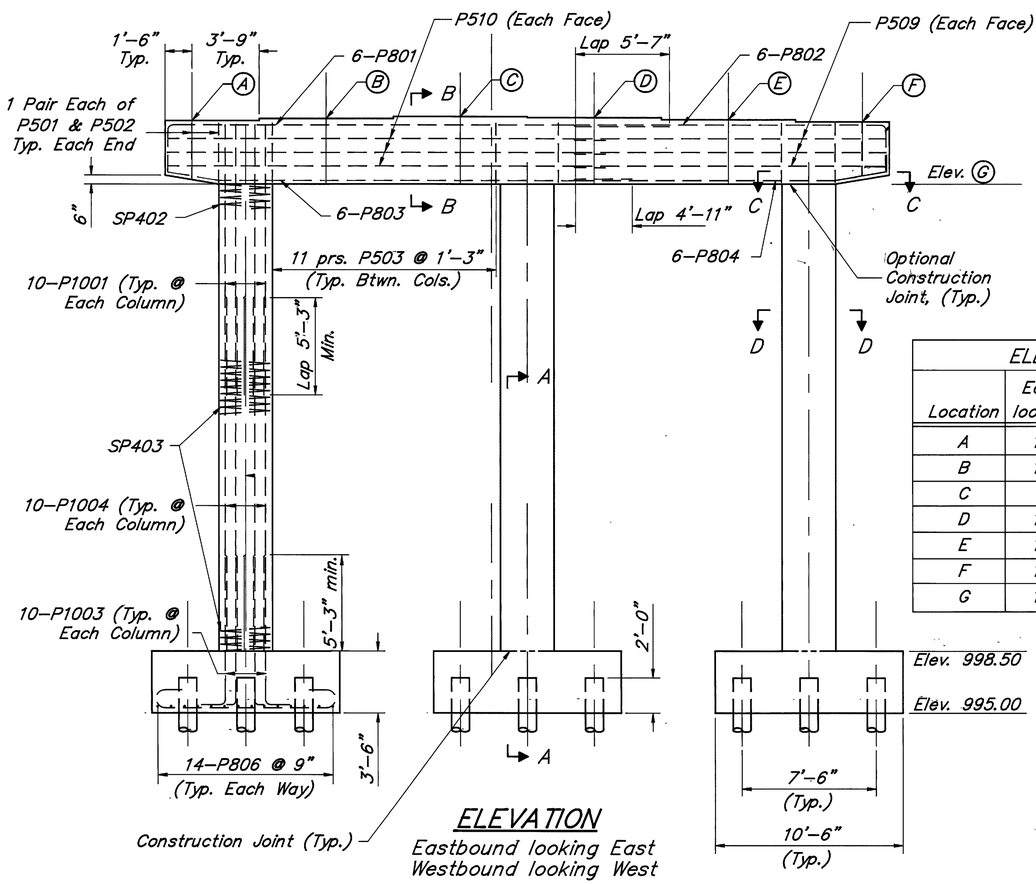

ELEVATION
Eastbound looking East
Westbound looking West

ELEVATIONS		
Location	Eastbound looking East	Westbound looking West
A	1032.58	1032.55
B	1032.70	1032.67
C	1032.81	1032.78
D	1032.75	1032.72
E	1032.63	1032.60
F	1032.52	1032.49
G	1029.02	1028.99

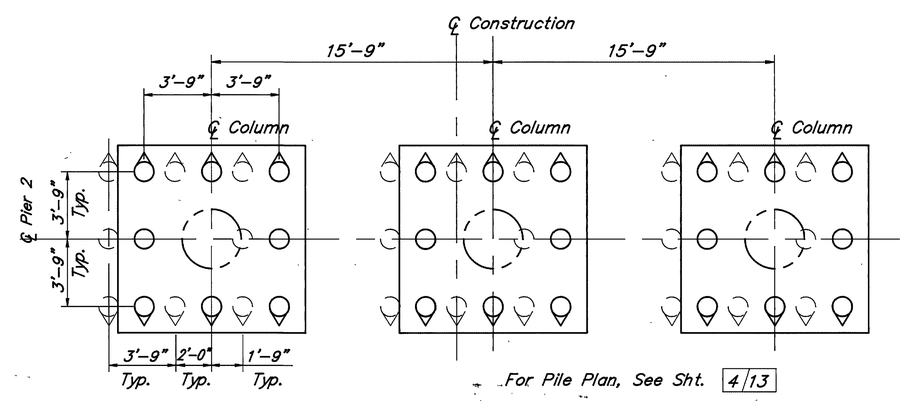

PILE PLAN

○	Proposed Pile
◠	Existing Pile

7/14

THOMAS FOK & ASSOCIATES, LTD.
CONSULTING ENGINEERS, SURVEYORS & PLANNERS
3896 MAHONING AVE. YOUNGSTOWN, OHIO

PIER 2 DETAILS
BRIDGE NO. MED-76-0158 L/R
OVER B&O RAILROAD

MEDINA COUNTY OHIO

DESIGNED	DRAWN	TRACED	CHECKED	REVIEWED	REVISED
K.O.S. 11/92	K.O.S. 11/92		J.D.V. 12/92	J.F. 12/92	

DETAILS 4-14-93 1:48

REGION	STATE	PROJECT	
5	OHIO		

211/299

MEDINA COUNTY
MED-76-0.61

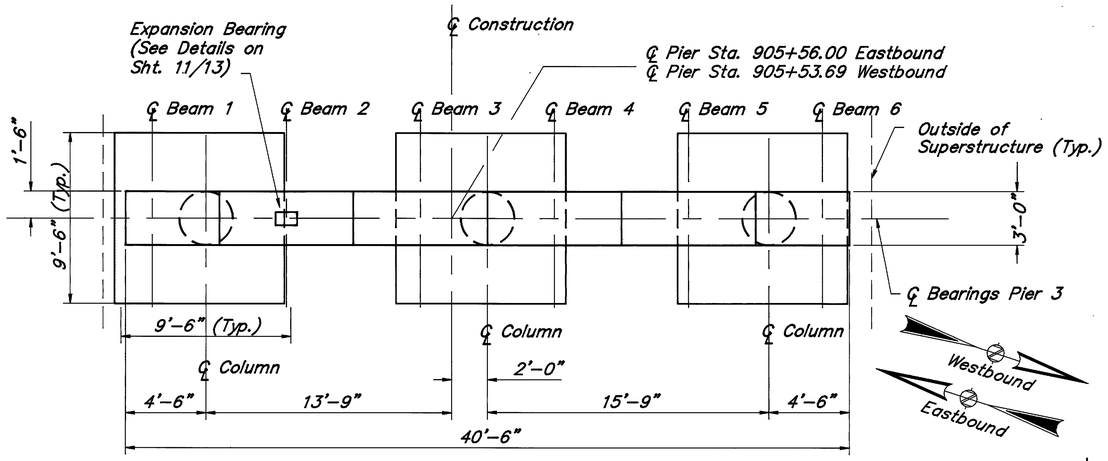

PLAN

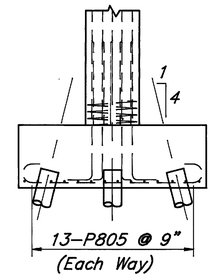

SECTION A-A

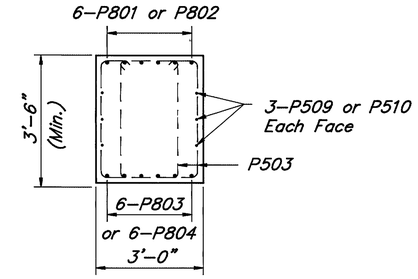

SECTION B-B

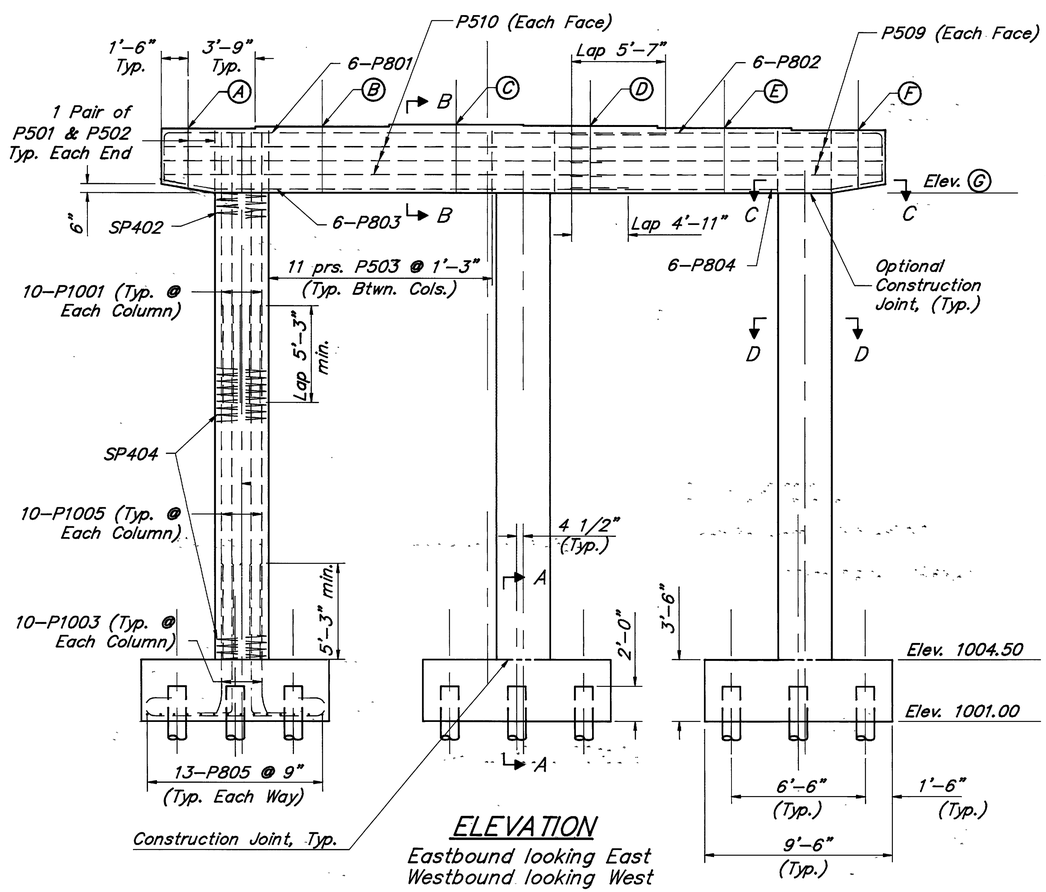

ELEVATION
Eastbound looking East
Westbound looking West

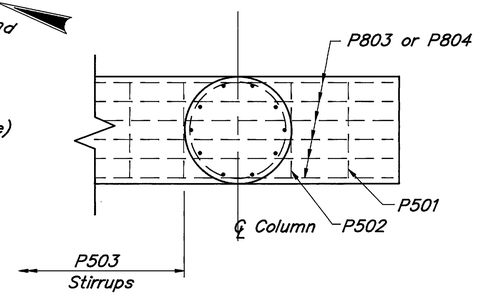

SECTION C-C

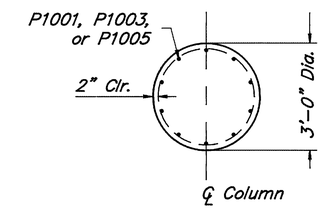

SECTION D-D

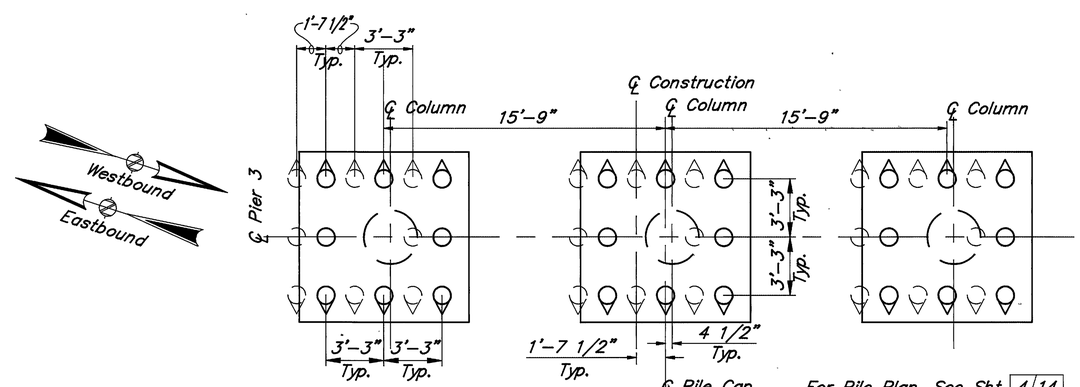

For Pile Plan, See Sht. 4/14

Proposed Pile
Existing Pile

PILE PLAN

ELEVATIONS		
Location	Eastbound looking East	Westbound looking West
A	1033.37	1033.34
B	1033.49	1033.46
C	1033.60	1033.57
D	1033.54	1033.51
E	1033.42	1033.39
F	1033.31	1033.28
G	1029.81	1029.78

8/14

THOMAS FOK & ASSOCIATES, LTD.
CONSULTING ENGINEERS, SURVEYORS & PLANNERS
3896 MAHONING AVE. YOUNGSTOWN, OHIO

PIER 3 DETAILS
BRIDGE NO. MED-76-0158 L/R
OVER B&O RAILROAD

MEDINA COUNTY OHIO

DESIGNED	DRAWN	TRACED	CHECKED	REVIEWED	REVISED
K.O.S. 11/92	K.O.S. 11/92		J.D.V. 12/92	T.F. 12/92	

DETAILS 4-14-93 1:48

REGION	STATE	PROJECT	
5	OHIO		

212/299

MEDINA COUNTY
MED-76-0.61

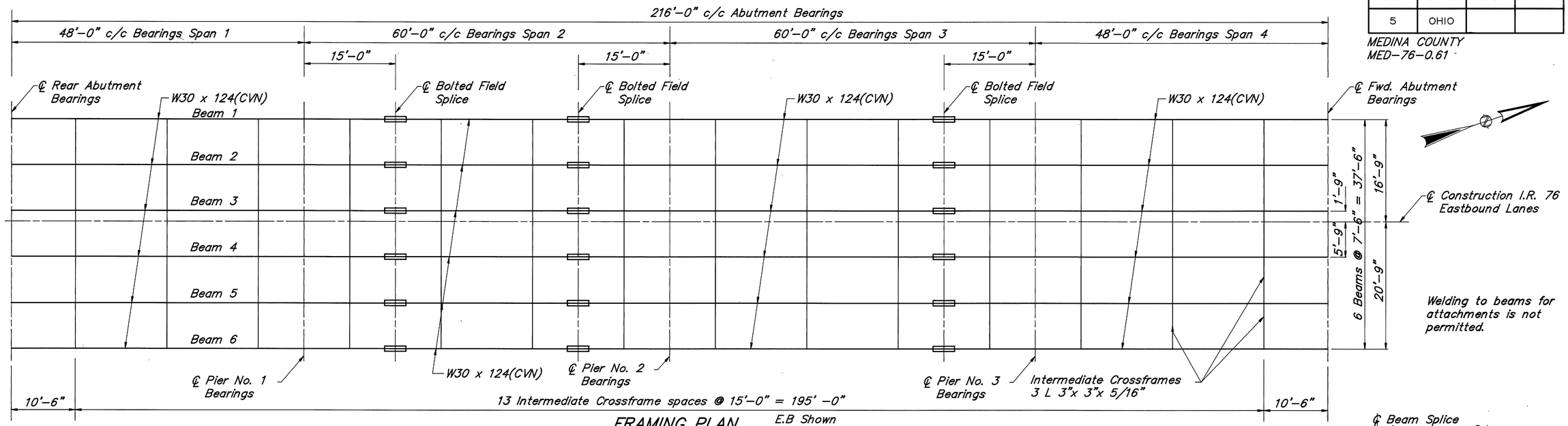

FRAMING PLAN

E.B Shown
W.B. Opposite Hand

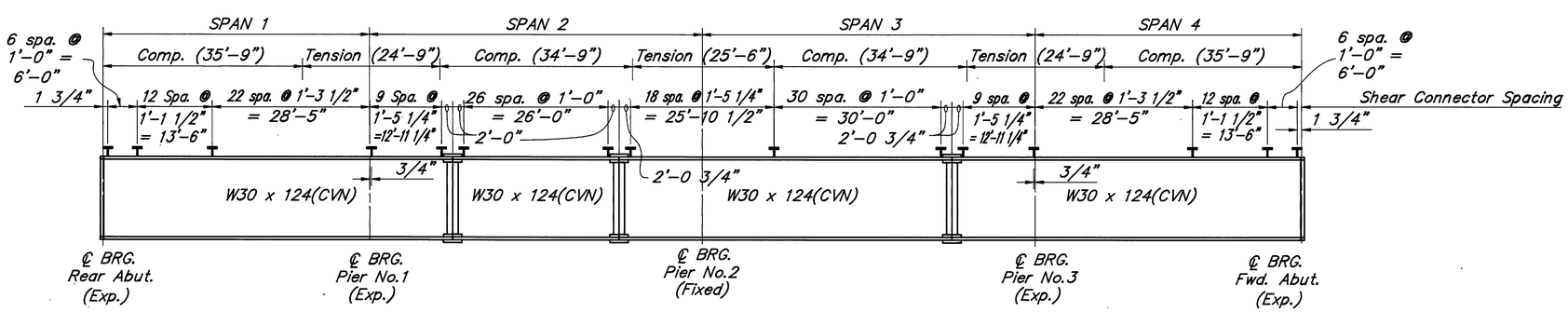

BEAM ELEVATION

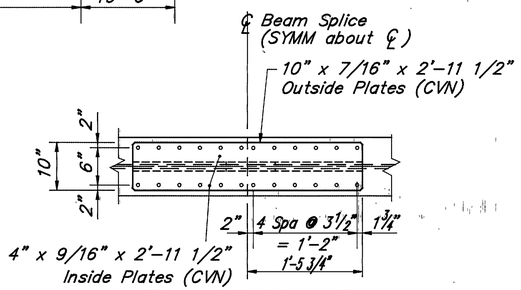

FLANGE SPLICE

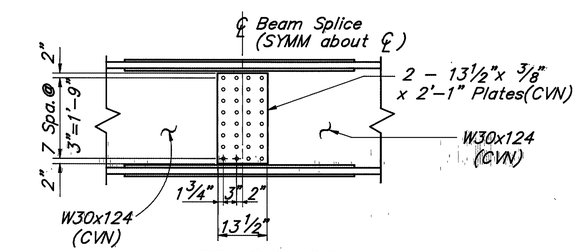

WEB SPLICE

Splice Bolts to be 1"ø A325

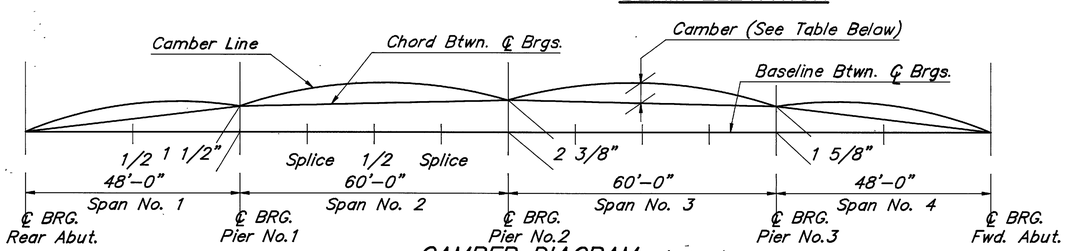

CAMBER DIAGRAM

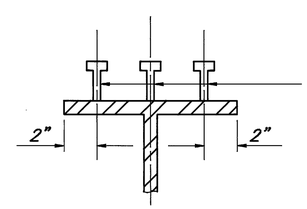

7/8"ø x 4" automatically end welded studs. For spacing see BEAM ELEV. The Contractor may, at his option, weld the studs after placement of the bottom lateral reinforcing steel.

SHEAR STUD CONNECTOR

DEFLECTION AND CAMBER (INCHES)

LOCATION	DESCRIPTION	48'-0" (Span 1)	PIER	60'-0" (Span 2)			PIER	60'-0" (Span 3)			PIER	48'-0" (Span 4)
		1/2	NO. 1	Splice	1/2	Splice	NO. 2	1/4"	1/2	Splice	NO. 3	1/2
BEAM 1 THRU BEAM 6	Deflection due to Steel Weight	1/16"	0	1/16"	1/16"	1/16"	0	1/16"	1/16"	1/16"	0	1/16"
	Deflection due to Slab Weight	5/16"	0	1/4"	7/16"	1/4"	0	1/4"	7/16"	1/4"	0	5/16"
	Adjustment for Vertical Curve	1/8"	0	1/8"	1/4"	1/8"	0	1/8"	1/8"	1/8"	0	0
	Required Shop Camber	1/2"	0	7/16"	3/4"	7/16"	0	7/16"	5/8"	7/16"	0	3/8"

NOTES:

For Additional Superstructure Details, See Sht. 10&11/14.

CVN: Where a beam or plate is designated CVN, the material shall meet the specified Minimum notch toughness requirement as specified in 711.01 of CMS.

9 14

THOMAS FOK & ASSOCIATES, LTD.
CONSULTING ENGINEERS, SURVEYORS & PLANNERS
3896 MAHONING AVE. YOUNGSTOWN, OHIO

FRAMING PLAN

BRIDGE NO. MED-76-0158 L/R
OVER B&O RAILROAD

MEDINA COUNTY OHIO

DESIGNED	DRAWN	TRACED	CHECKED	REVIEWED	REVISED
K.O.S 2/92	K.O.S 2/92		J.D.V. 10/92	T.F. 12/92	

SDETAIL 4-14-93 11:08

REGION	STATE	PROJECT	
5	OHIO		

MEDINA COUNTY
MED-76-0.61

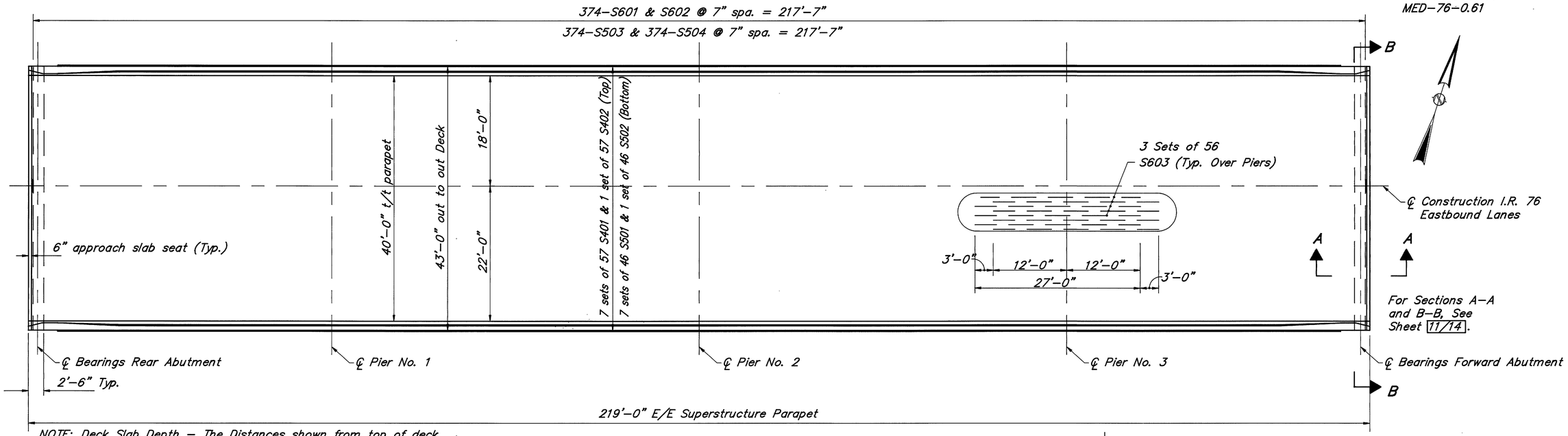

NOTE: Deck Slab Depth – The Distances shown from top of deck slab to top of steel beams are the design dimensions. The quantity of deck concrete to be paid for shall be based on these dimensions, even though deviation from them may be necessary because the top flange of the beam may not have the exact camber or conformation required to place them parallel to the finished grade.

SLAB PLAN

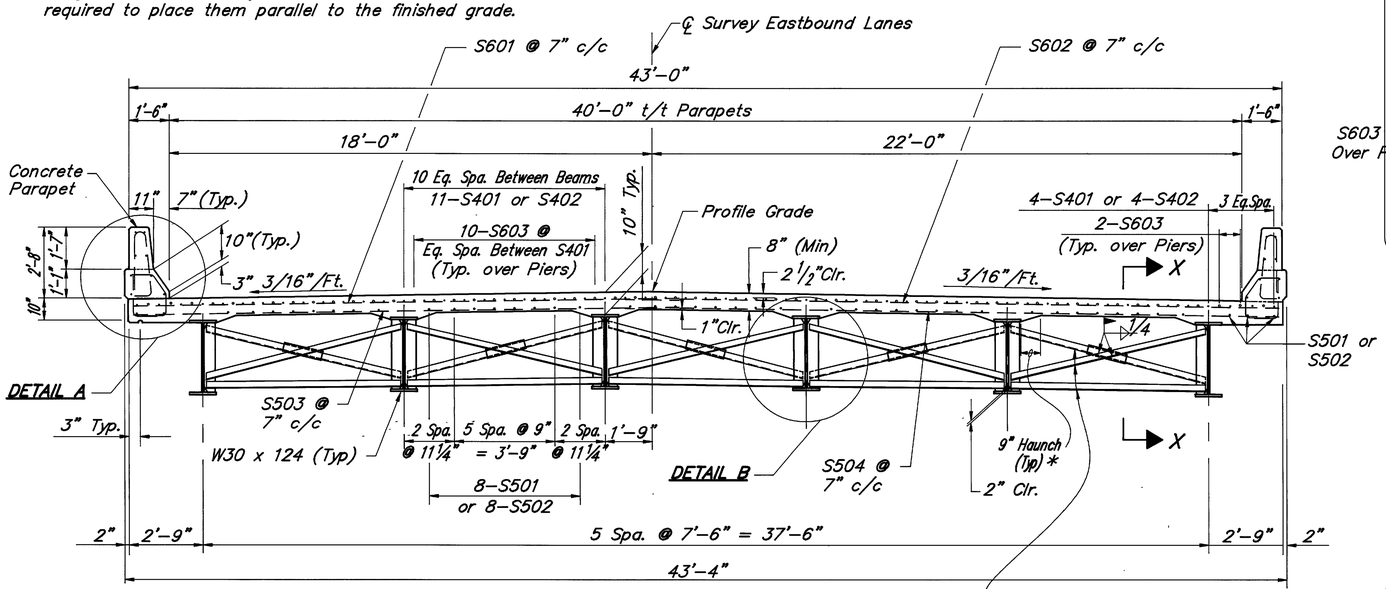

* A haunch width of 9" shall be used for computiong quantity of concrete. The haunch width may be greater than 9" at the contractor's option.

TRANSVERSE SECTION

EASTBOUND STRUCTURE SHOWN, WESTBOUND STRUCTURE OPPOSITE HAND

Intermediate crossframe, Type A – 3"x3"x5/16" weld both sides of vertical leg & top side of horizontal leg to beam with 1/4" continuous fillet weld.

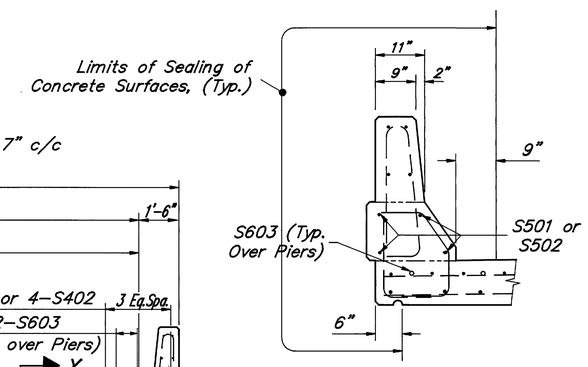

DETAIL A

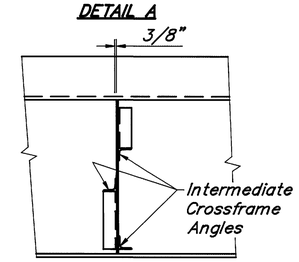

SECTION X-X

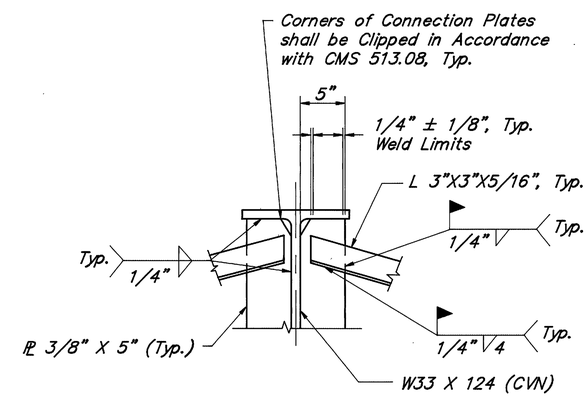

Plate and Angle Welding Detail same at Bottom of Beam

DETAIL B

10/14

THOMAS FOK & ASSOCIATES, LTD.
CONSULTING ENGINEERS, SURVEYORS & PLANNERS
3896 MAHONING AVE. YOUNGSTOWN, OHIO

SUPERSTRUCTURE DETAILS
BRIDGE NO. MED-76-0158 L/R
OVER B&O RAILROAD

MEDINA COUNTY OHIO

DESIGNED	DRAWN	TRACED	CHECKED	REVIEWED	REVISED
D.L.C. 2/92	D.L.C. 2/92		J.D.V. 12/92	T.F. 12/92	

SCFD61 4-14-93 11:39

REGION	STATE	PROJECT	
5	OHIO	-	

MEDINA COUNTY
MED-76-0.61

214/299

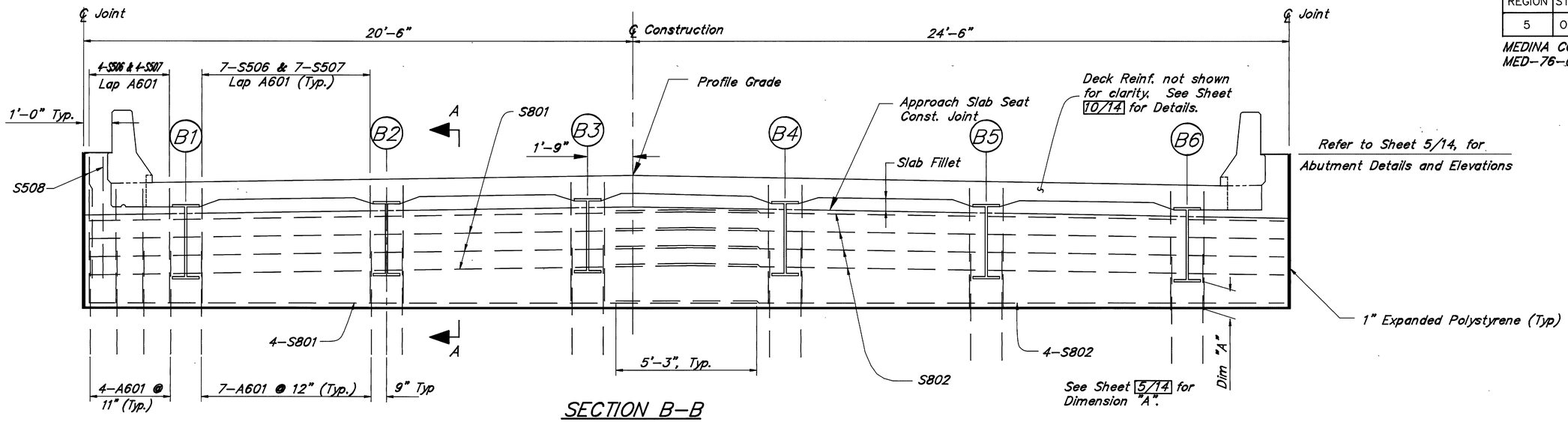

SECTION B-B

R.A. Westbound & F.A. Eastbound Shown,
F.A. Westbound & R.A. Eastbound, Opposite Hand
This Section is taken from Sheet 10/14

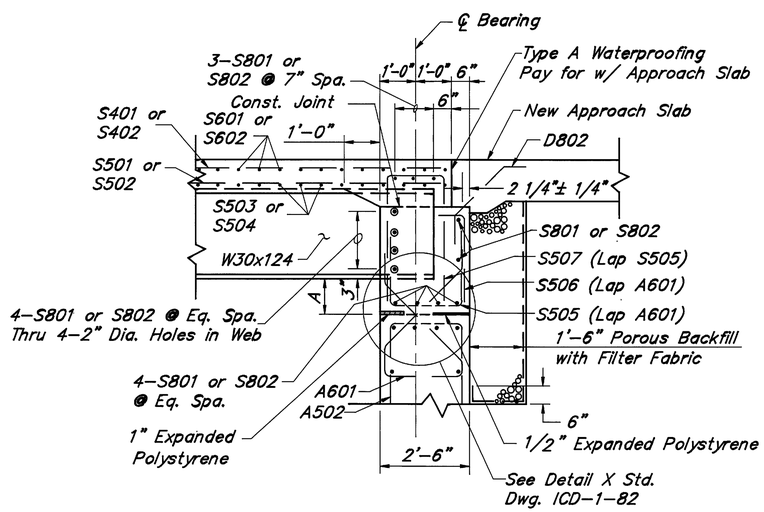

SECTION A-A

NOTE:
All embedded steel shall be abrasive blasted to a SSPC-SP10. Include for payment with Class S Concrete, Superstructure, as per plan.

11/14

THOMAS FOK & ASSOCIATES, LTD.
CONSULTING ENGINEERS, SURVEYORS & PLANNERS
3896 MAHONING AVE. YOUNGSTOWN, OHIO

INTEGRAL ABUTMENT DETAILS
BRIDGE NO. MED-76-0158 L/R
OVER B&O RAILROAD

MEDINA COUNTY OHIO

DESIGNED	DRAWN	TRACED	CHECKED	REVIEWED	REVISED
K.O.S.	K.O.S.		F.D.V.	T.F.	
11/92	2/93		2/93	2/93	

REGION	STATE	PROJECT	
5	OHIO		

215/299

MEDINA COUNTY
MED-76-0.61

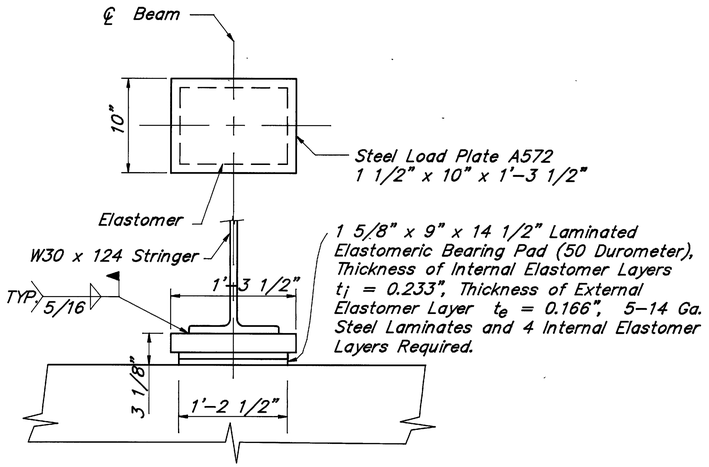

LAMINATED ELASTOMERIC BEARING
AT PIERS NO. 1 & 3

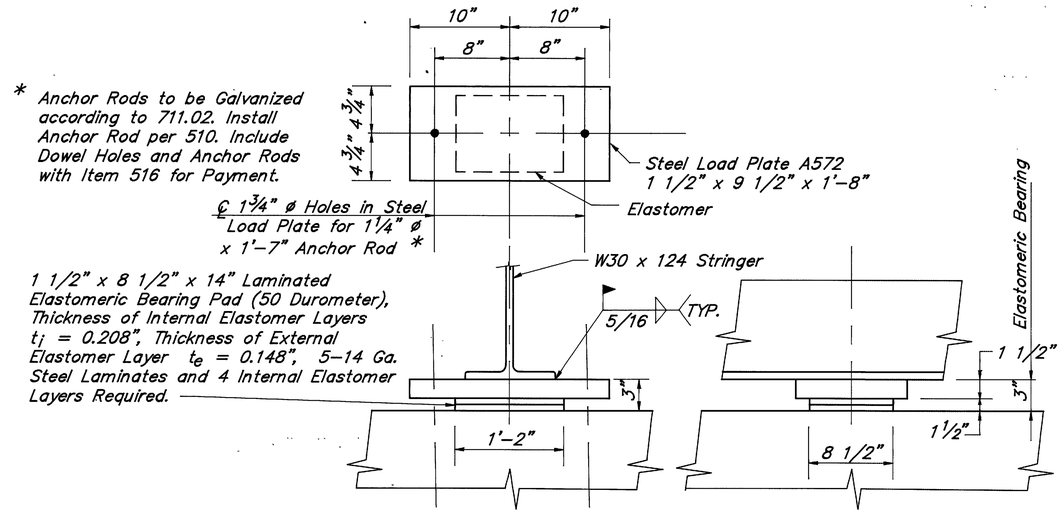

FIXED LAMINATED ELASTOMERIC BEARING
AT PIER NO. 2

LAMINATED ELASTOMERIC BEARINGS (PIERS)

Design Loading: Dead Load = 76K
Live Load without impact = 52K
Maximum Design Load = 128K

Load Plate: The steel load plate shall be bonded by vulcanization to the elastomer during the molding process. Welding of the load plate to the superstructure shall be controlled so that the plate temperature at the elastomer bonded surface shall not exceed 400 degrees F as determined by the use of pyrometric sticks or other temperature monitoring devices.

Basis of payment, the unit bid price shall include all materials, labor and incidentals necessary to furnish and install laminated elastomeric bearings either fixed or expansion. Payment will be made at the contract price for Item 516, Each, Laminated Elastomeric Bearings (1 5/8" x 9" x 14 1/2" Laminated Elastomeric Pad with 1 1/2" x 10" x 1'-3 1/2" Steel Load Plate); or Item 516, Each, Laminated Elastomeric Bearings (1 1/2" x 8 1/2" x 14" Laminated Elastomeric Pad with 1 1/2" x 9 1/2" x 1'-8" Steel Load Plate).

BEARING REPOSITIONING: If placement of Stringers is done at an ambient temperature higher than 80°F or lower than 40°F. The beams or girders shall be raised when the ambient temperature is 60°F ±10°F to allow the bearings to return to their undeformed shape.

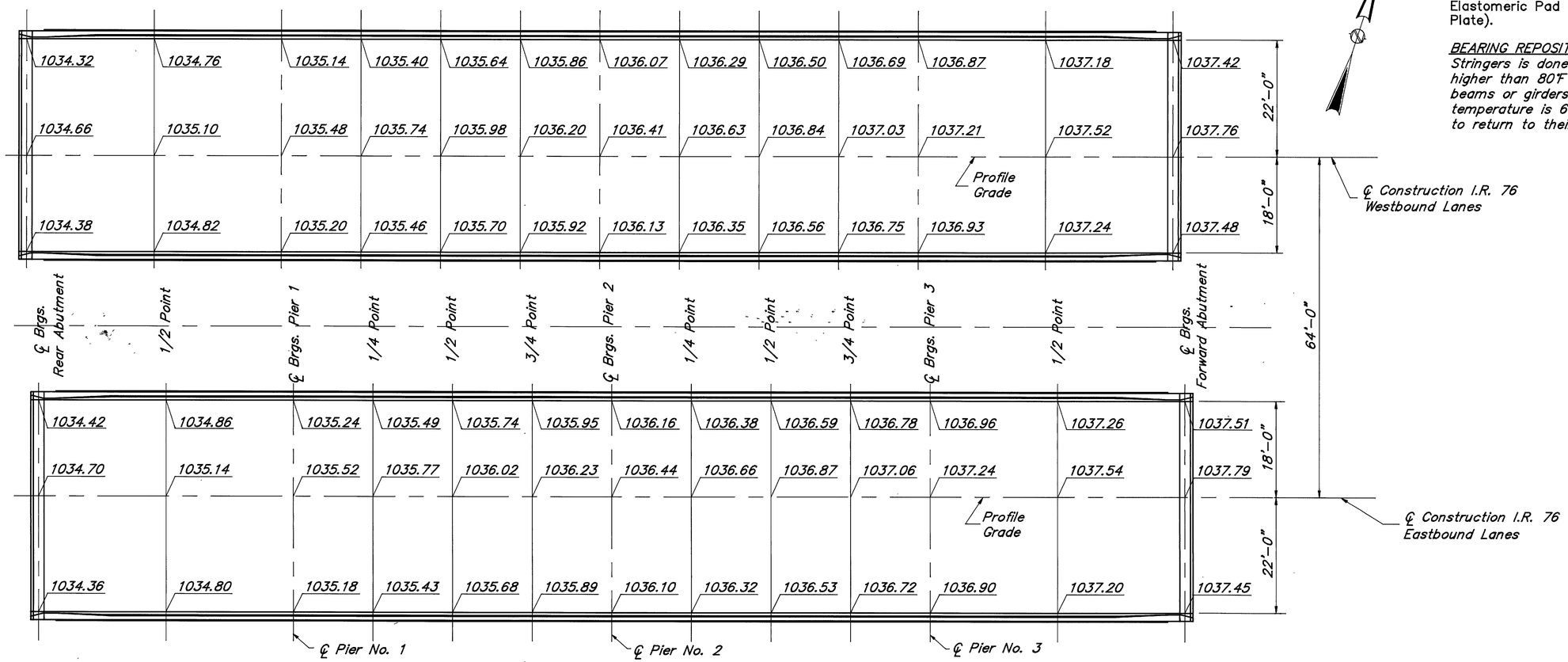

SCREED ELEVATIONS

12/14

THOMAS FOK & ASSOCIATES, LTD.
CONSULTING ENGINEERS, SURVEYORS & PLANNERS
3896 MAHONING AVE. YOUNGSTOWN, OHIO

SCREED ELEVATIONS
AND BEARING DETAILS

BRIDGE NO. MED-76-0158 L/R
OVER B&O RAILROAD

MEDINA COUNTY OHIO

DESIGNED	DRAWN	TRACED	CHECKED	REVIEWED	REVISED
K.O.S. 11/92	K.O.S. 12/92		J.D.V. 12/92	J.F. 12/92	

BRIDGE71 4-14-93 1:128

REGION	STATE	PROJECT	
5	OHIO		

216/299

MEDINA COUNTY
MED-76-0.61

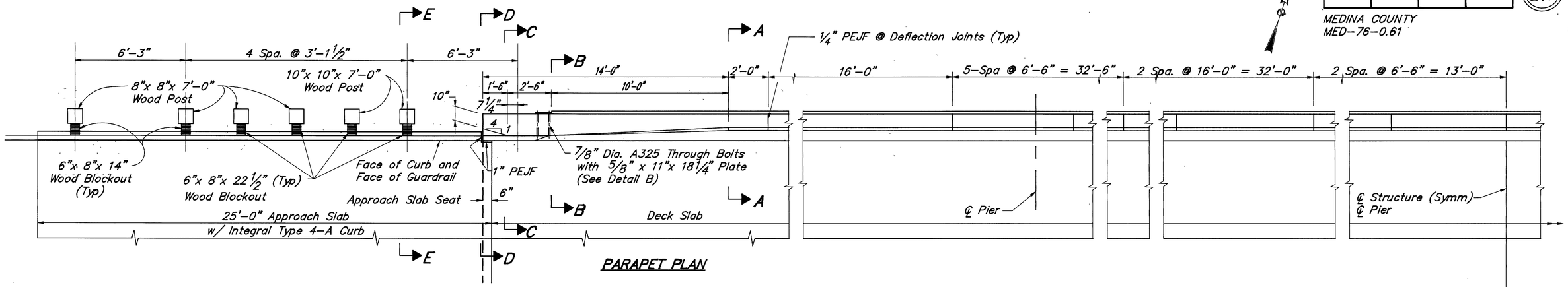

PARAPET PLAN

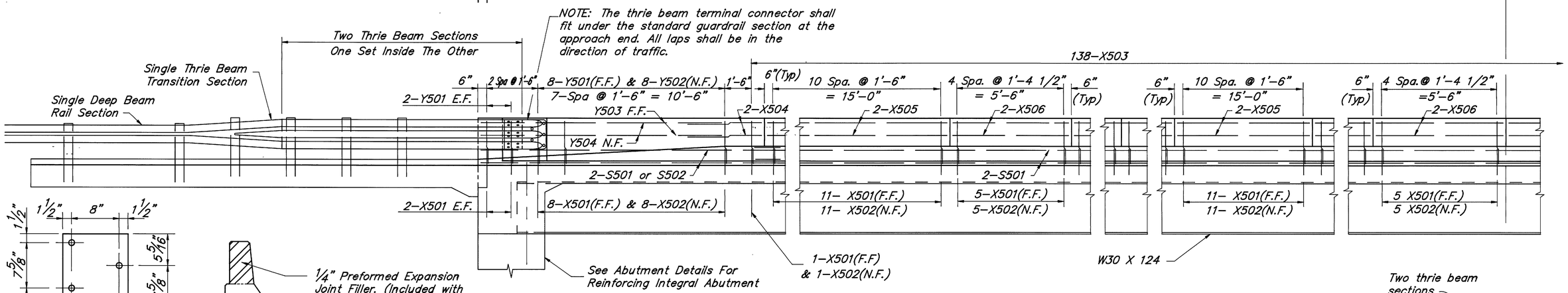

PARAPET ELEVATION

WEST PARAPET SHOWN, EAST PARAPET SIMILAR

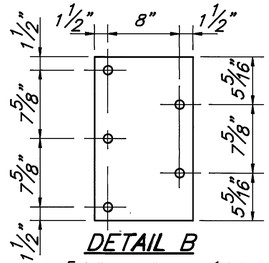

DETAIL B

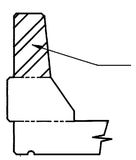

SECTION F-F

Through Deflector Joint

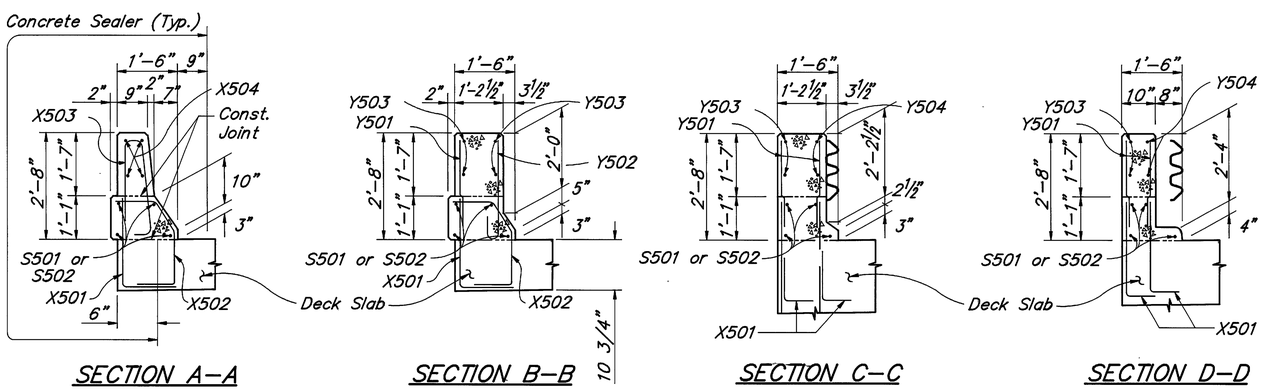

SECTION A-A

SECTION B-B

SECTION C-C

SECTION D-D

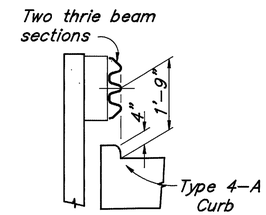

SECTION E-E

NOTES

1. Concrete shall be Class S, f'_c=4500 P.S.I., f_c=1800 P.S.I. Reinforcing steel ASTM A615, A616, or A617, Grade 60
2. Payment: Additional guardrail cost in excess of normal guardrail cost, such as: Terminal connector, steel plate, bolts, nuts, plate washers and other hardware shall be included with bridge terminal assembly for payment. Quantities of concrete and reinforcing steel for parapet are included with superstructure for payment.
3. PREFORMED EXPANSION JOINT FILLER in the parapet deflection joints may be either 1/4 inch gray sponge rubber or 1/4 inch gray cellular polyvinyl chloride (PVC) sponge. If rubber is used it shall meet the requirements of AASHTO M-153, Type 1. Density of PVC sponge shall not be less than 20 pounds per cubic foot.
4. CONCRETE PARAPETS above the upper construction joint shall be placed in alternate sections by use of bulkheads. Closing sections shall be placed after removal of bulkheads and after placement of expansion joint filler. Exposed edges of the filler shall be flush with the surface of the concrete and shall be free of mortar.
5. QUANTITIES of concrete and reinforcing steel for the parapet are included with the superstructure for payment.

13 | 14

THOMAS FOK & ASSOCIATES, LTD.
CONSULTING ENGINEERS, SURVEYORS & PLANNERS
3896 MAHONING AVE. YOUNGSTOWN, OHIO

PARAPET DETAILS

BRIDGE NO. MED-76-0158 L/R
OVER B&O RAILROAD

MEDINA COUNTY OHIO

DESIGNED	DRAWN	TRACED	CHECKED	REVIEWED	REVISED
K.O.S. 12/92	K.O.S. 12/92		J.D.V. 12/92	T.F. 12/92	

PARPDN 4-14-93 14.30

REGION	STATE	PROJECT	
5	OHIO		

217/299

MEDINA COUNTY
MED-76-0.61

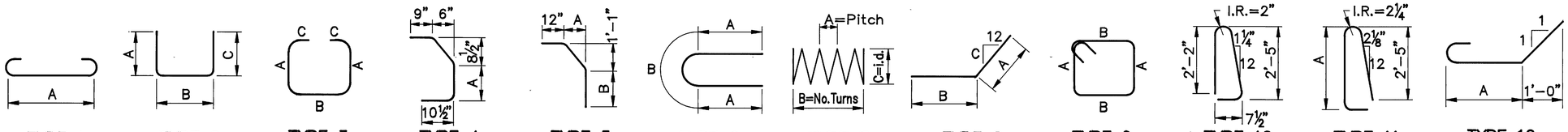

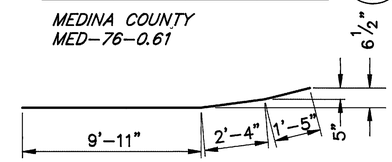

TYPE 14

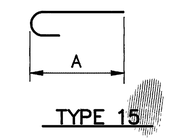

TYPE 15

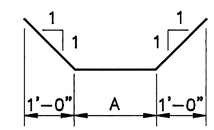

TYPE 16

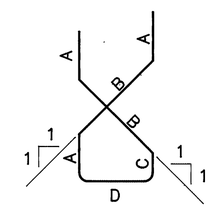

TYPE 17

REINFORCING STEEL – EASTBOUND AND WESTBOUND

MARK	LENGTH	TYPE	A	B	C	D	INCR.	E.B. NO.	W.B. NO.	TOTAL NO.	WEIGHT LBS.
ABUTMENT											
A401	9'-0"	9	1'-9"	2'-7"				32	32	64	385
A501	11'-0"	9	2'-7"	2'-8"				92	92	184	2111
A502	10'-2"	2	4'-3"	2'-2"	4'-3"			68	68	136	1442
A503	13'-3"	2	5'-8"	2'-2"	5'-8"			24	24	48	663
A504	31'-4"	Str.						24	24	48	1568
A505	4'-11" to 12'-5"	2	1'-6" to 5'-3"	2'-2"	1'-6" to 5'-3"		9"	4 Ser. of 6	4 Ser. of 6	8 Ser. of 6	434
A506	7'-10"	Str.						16	16	32	261
A507	6'-9"	Str.						8	8	16	113
A508	8'-6"	Str.						8	8	16	142
A509	3'-9"	Str.						8	8	16	63
A601	10'-9"	17	10"	3'-1"	5"	2'-2"		86	86	172	2777
A801	33'-2"	Str.						32	32	64	5668
										Sub-Total	*15,627*
PIERS											
P501	10'-9"	9	2'-11"	2'-2"				12	12	24	269
P502	11'-1"	9	3'-1"	2'-2"				12	12	24	277
P503	11'-5"	9	3'-3"	2'-2"				132	132	264	3144
P504	6'-9"	2	1'-8"	3'-8"	1'-8"			36	36	72	507
P505	13'-10"	Str.						56	56	112	1616
P506	31'-6"	Str.						20	20	40	1314
P507	12'-9"	Str.						8	8	16	213
P508	9'-1"	6	1'-8"	5'-9"				20	20	40	379
P509	16'-9"	Str.						18	18	36	629
P510	25'-0"	Str.						18	18	36	939
P801	27'-8"	2	2'-8"	25'-2"				18	18	36	2659
P802	22'-11"	2	2'-8"	20'-5"				18	18	36	2203
P803	26'-8"	8	2'-10"	23'-10"	2			18	18	36	2563
P804	18'-6"	8	2'-10"	15'-8"	2			18	18	36	1778
P805	10'-10"	1	9'-0"					156	156	312	9025
P806	11'-10"	1	10'-0"					84	84	168	5308
P1001	14'-9"	Str.						90	90	180	11,424
P1002	19'-7"	Str.						30	30	60	5056
P1003	9'-10"	2	8'-4"	1'-9"				90	90	180	7616
P1004	24'-6"	Str.						30	30	60	6325
P1005	19'-0"	Str.						30	30	60	4905
SP401	15'-9"	7	4 1/2"	42	2'-7"			3	3	6	1691
SP402	12'-9"	7	4 1/2"	34	2'-7"			9	9	18	4106
SP403	20'-3"	7	4 1/2"	54	2'-7"			3	3	6	2174
SP404	15'-0"	7	4 1/2"	40	2'-7"			3	3	6	1610
										Sub-Total	*77,720*
										Total	*93,347*

REINFORCING STEEL – EASTBOUND AND WESTBOUND

MARK	LENGTH	TYPE	A	B	C	D	INCR.	E.B. NO.	W.B. NO.	TOTAL NO.	WEIGHT LBS.
PARAPET											
X501	2'-4"	2	10 1/2"	1'-7"				316	316	632	1538
X502	3'-0"	4	9"					308	308	616	1927
X503	5'-3"	10						276	276	552	3023
X504	3'-0"	Str.						16	16	32	100
X505	15'-8"	Str.						48	48	96	1569
X506	6'-2"	Str.						112	112	224	1441
Y501	4'-7"	Str.						48	48	96	459
Y502	2'-11"	15	2'-4"					32	32	64	195
Y503	13'-8"	Str.						8	8	16	228
Y504	13'-8"	14						8	8	16	228
										Sub-Total	*10,708*
SUPERSTRUCTURE											
S401	30'-0"	Str.						399	399	798	15,992
S402	17'-0"	Str.						57	57	114	1295
S501	30'-0"	Str.						378	378	756	23,655
S502	20'-2"	Str.						54	54	108	2272
S503	21'-0"	Str.						374	374	748	16,383
S504	23'-4"	Str.						374	374	748	18,204
S505	6'-11"	2	2'-6"	2'-2"	2'-6"			82	82	164	1183
S506	3'-5"	2	2'-0"	1'-6"				82	82	164	584
S507	8'-5"	2	3'-6"	1'-8"	3'-6"			82	82	164	1440
S601	20'-4"	Str.						374	374	748	22,844
S602	24'-4"	Str.						374	374	748	27,338
S603	27'-0"	Str.						168	168	336	13,626
S801	22'-7"	Str.						26	26	52	3135
S802	23'-4"	Str.						26	26	52	3240
D802	4'-11"	16	2'-1"					56	56	112	1470
										Sub-Total	*152,661*
										Grand Total	*256,716*

NOTES :

BAR SIZE : The bar size is indicated in the bar mark. The first digit where three digits are used, and the first two digits where four are used, indicate the bar size number. For example: A506 is No. 5 size bar and P1101 is a No. 11 size bar.

All Bars are Epoxy Coated.
Str. = Straight

14/14

THOMAS FOK & ASSOCIATES, LTD.
CONSULTING ENGINEERS, SURVEYORS & PLANNERS
3896 MAHONING AVE. YOUNGSTOWN, OHIO

REINFORCING STEEL LIST

BRIDGE NO. MED-76-0158 L/R
OVER B&O RAILROAD

MEDINA COUNTY *OHIO*

DESIGNED	DRAWN	TRACED	CHECKED	REVIEWED	REVISED
K.O.S. 12/92	K.O.S. 12/92		F.D.V. 12/92	J.F. 12/92	

STDSLST 4-14-83 1=1