STATE OF OHIO
DEPARTMENT OF TRANSPORTATION

D12-CU-FY2024

CITY OF INDEPENDENCE, CITY OF EUCLID, & CITY OF GARFIELD HEIGHTS
CUYAHOGA COUNTY
AUBURN & CLARIDON TOWNSHIPS
GEAUGA COUNTY
CONCORD TOWNSHIP
LAKE COUNTY

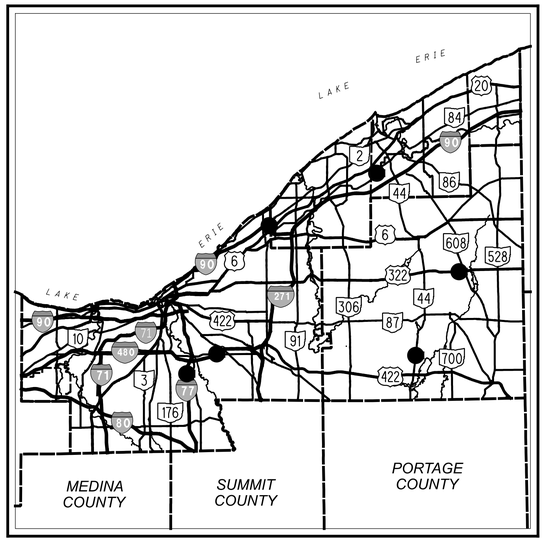

LOCATION MAP

SEE SHEET P.2 FOR CULVERT LOCATIONS

PROJECT LOCATIONS ●

DESIGN DESIGNATION
SEE SHEET P.2 FOR DESIGN DESIGNATIONS

DESIGN EXCEPTIONS
NONE REQUIRED

INDEX OF SHEETS:

TITLE SHEET	*P.1*
LOCATION MAPS AND DESIGN DESIGNATIONS	*P.2*
TYPICAL SECTIONS	*P.3 - P.5*
GENERAL NOTES	*P.6 - P.8*
MAINTENANCE OF TRAFFIC	*P.9 - P.28*
GENERAL SUMMARY	*P.29 - P.31*
SUBSUMMARIES	*P.32 - P.33*
PLAN AND PROFILES	*P.34 - P.36*
CROSS SECTIONS	*P.37 - P.50*
CULVERT DETAILS	*P.51 - P.69*
TRAFFIC CONTROL	*P.70 - P.75*
GEOTECHNICAL PROFILES	*P.76 - P.86*

FEDERAL PROJECT NUMBER

E230111

RAILROAD INVOLVEMENT

NONE

PROJECT DESCRIPTION

REHABILITATION OF CULVERTS CUY-77-7.84 AND CUY-18271-0.13, REPLACEMENT OF CULVERT CUY-90-29.92, EXTENSION OF CULVERTS GEA-322-13.88 AND GEA-44-4.52, AND FILLING AND PLUGGING CULVERT LAK-84-14.25.

EARTH DISTURBED AREAS

PROJECT EARTH DISTURBED AREA: * *ACRES*
ESTIMATED CONTRACTOR EARTH DISTURBED AREA: * *ACRES*
NOTICE OF INTENT EARTH DISTURBED AREA: * *ACRES*

* *SEE PLAN AND PROFILE AND CULVERT DETAIL SHEETS*

LIMITED ACCESS

THIS IMPROVEMENT IS ESPECIALLY DESIGNED FOR THROUGH TRAFFIC AND HAS BEEN DECLARED A LIMITED ACCESS HIGHWAY OR FREEWAY BY ACTION OF THE DIRECTOR IN ACCORDANCE WITH THE PROVISIONS OF SECTION 5511.02 OF THE OHIO REVISED CODE.

2023 SPECIFICATIONS

THE STANDARD SPECIFICATIONS OF THE STATE OF OHIO, DEPARTMENT OF TRANSPORTATION, INCLUDING SUPPLEMENTAL SPECIFICATIONS LISTED IN THE PLANS AND CHANGES LISTED IN THE PROPOSAL SHALL GOVERN THIS IMPROVEMENT.

I HEREBY APPROVE THESE PLANS AND DECLARE THAT THE MAKING OF THESE IMPROVEMENTS WILL NOT REQUIRE THE CLOSING TO TRAFFIC OF THE HIGHWAY, EXCEPT AS NOTED ON SHEET P.24 AND THAT PROVISIONS FOR THE MAINTENANCE AND SAFETY OF TRAFFIC WILL BE AS SET FORTH ON THE PLANS AND ESTIMATES.

John Picuri, P.E., P.S.
District 12 Deputy Director

Pamela Boratyn
Director, Department of Transportation

STANDARD CONSTRUCTION DRAWINGS

BP-3.1	1/21/22	RM-1.1	1/20/23	MT-95.45	7/21/23	TC-41.20	10/18/13		
BP-5.1	7/15/22	RM-4.2	4/17/20	MT-96.11	7/21/23	TC-42.10	10/18/13		
BP-9.1	1/18/19			MT-96.20	7/21/23	TC-42.20	10/18/13		
		HW-1.1	7/20/18	MT-96.26	1/18/19	TC-61.10	4/21/23		
		HW-2.1	7/15/22	MT-97.10	4/19/19	TC-61.30	7/19/19		
CB-2-2A, 2B, 2C	1/20/23	HW-2.2	7/20/18	MT-97.11	1/20/17	TC-65.10	1/17/14		
CB-8	7/16/21			MT-99.30	1/17/20	TC-65.11	7/15/22		
		F-1.1	7/19/13	MT-101.70	4/21/23				
DM-1.1	7/17/20			MT-101.75	7/21/23				
DM-2.1	1/18/13			MT-102.10	7/21/23				
				MT-105.10	1/17/20				
MGS-1.1	7/16/21								
MGS-2.1	1/19/18								
MGS-4.2	7/19/13								
MGS-4.3	1/18/13								
MGS-5.3	7/15/16								

SUPPLEMENTAL SPECIFICATIONS		***SPECIAL PROVISIONS***
800-2023	1/17/25	*WATERWAY PERMITS CONDITIONS 2/16/2024*
821	4/20/12	
832	7/21/23	
836	1/19/18	
873	4/16/21	
899	1/20/23	
921	4/20/12	

ENGINEER'S SEAL

FOR ENTIRE PLAN EXCEPT GEA-322-13.88 & GEA-44-4.52 EXTENSION DETAILS

STATE OF OHIO
SCOTT A. COOK
E-62189
REGISTERED
PROFESSIONAL ENGINEER

Scott A Cook
Digitally signed by Scott A Cook
Date: 2025.02.13 08:55:09-05'00'

ENGINEER'S SEAL

GEA-322-13.88 & GEA-44-4.52 EXTENSION DETAILS

STATE OF OHIO
JULIA A. HART
E-69738
REGISTERED
PROFESSIONAL ENGINEER

Julia A Hart
Date: 2025.02.13 08:32:22-05'00'

UNDERGROUND UTILITIES
Contact Two Working Days Before You Dig
OHIO811.org Before You Dig
OHIO811, 8-1-1, or 1-800-362-2764
(Non members must be called directly)

PLAN PREPARED BY:

Environmental Design Group
AKRON / CLEVELAND / COLUMBUS
HQ 450 GRANT ST., AKRON, OH 44311
P 330.375.1390 / TF 800.835.1390
W ENVDESIGNGROUP.COM

D12-CU-FY2024

MODEL: Sheet PAPERSIZE: 34x22 (in.) DATE: 2/3/2025 TIME: 8:50:26 AM USER: scook
E:\ODOT\21-00121-010 ODOT D-12 Culvert Replacement 112947\112947\400-Engineering\Roadway\Sheets\112947_GT001.dgn

TITLE SHEET

DESIGN AGENCY
Environmental Design Group
AKRON / CLEVELAND / COLUMBUS
450 GRANT ST. AKRON, OH 44311
330.375.1390 TF 800.835.1390
ENVDESIGNGROUP.COM

DESIGNER
MSD

REVIEWER
SAC 12/29/23

PROJECT ID
112947

SHEET P.1 TOTAL 86

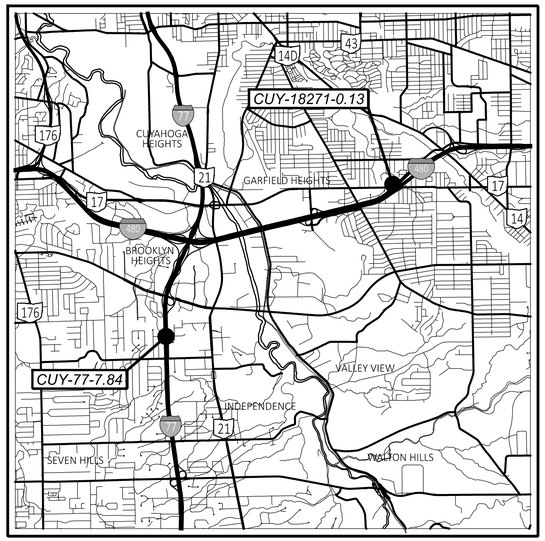

LOCATION MAP

CUY-77-7.84 & CUY-18271-0.13

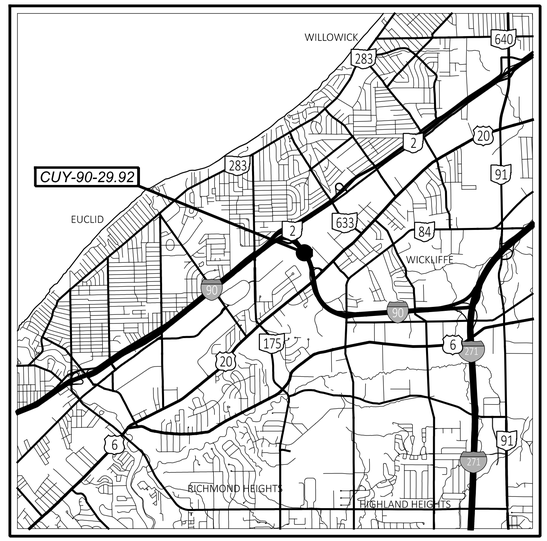

LOCATION MAP

CUY-90-29.92

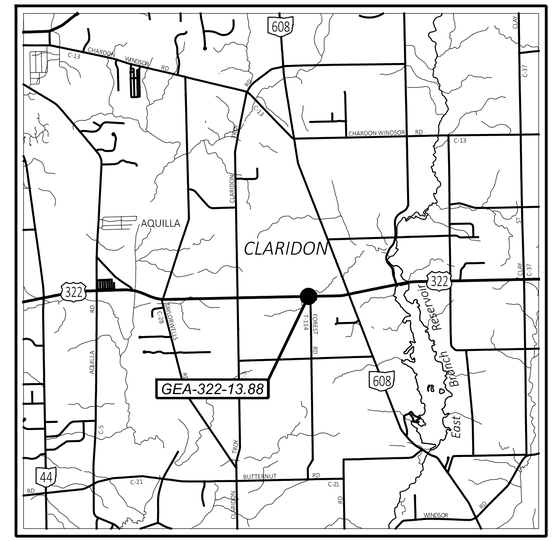

LOCATION MAP

GEA-322-13.88

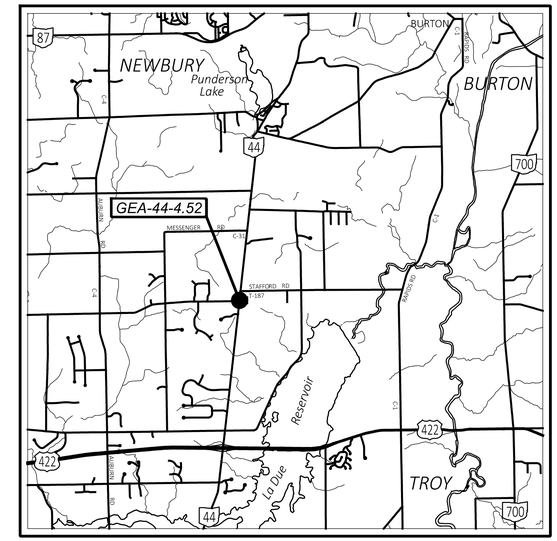

LOCATION MAP

GEA-44-4.52

MAP LEGEND

- PROJECT LOCATIONS
- INTERSTATE HIGHWAY
- FEDERAL ROUTES
- STATE ROUTES
- COUNTY & TOWNSHIP ROADS
- OTHER ROADS
- SCALE IN MILES: 0 1 2

WORK LOCATIONS

CUY-77-7.84	LATITUDE: 41° 23' 21" N	LONGITUDE: 81° 39' 11" W	CFN #: 1976310
CUY-90-29.92	LATITUDE: 41° 36' 05" N	LONGITUDE: 81° 29' 26" W	CFN #: 1812421
CUY-18271-0.13	LATITUDE: 41° 25' 05" N	LONGITUDE: 81° 35' 39" W	CFN #: 1827233
GEA-322-13.88	LATITUDE: 41° 31' 56" N	LONGITUDE: 81° 07' 35" W	CFN #: 1833243
GEA-44-4.52	LATITUDE: 41° 24' 43" N	LONGITUDE: 81° 12' 44" W	CFN #: 1812909
LAK-84-14.25	LATITUDE: 41° 40' 39" W	LONGITUDE: 81° 16' 58" W	CFN #: 1827355

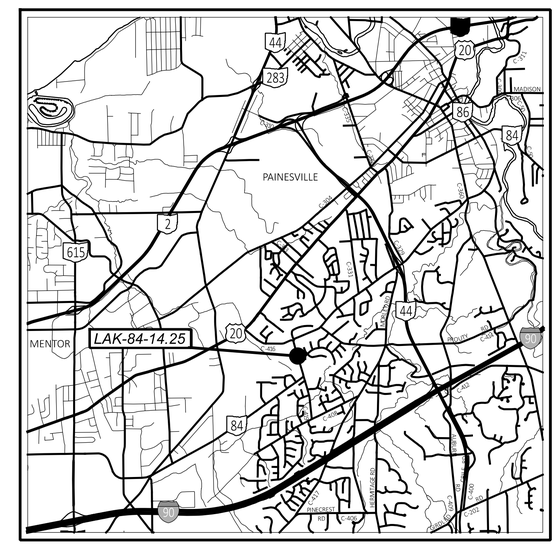

LOCATION MAP

LAK-84-14.25

DESIGN DESIGNATION

	CUY-77-7.84	CUY-90-29.92	CUY-18271-0.13	GEA-322-13.88	GEA-44-4.52	LAK-84-14.25
CURRENT ADT (2024)	108,000	73,000	4,746	6,400	6,500	12,000
DESIGN YEAR ADT (2044)	132,000	86,500	7,053	8,500	7,000	12,500
DESIGN HOURLY VOLUME (2044)	13,000	8,600	635	850	900	1,500
DIRECTIONAL DISTRIBUTION	55%	51%	100%	50%	50%	51%
TRUCKS (24 HOUR B&C)	7%	13%	5%	8%	26%	4%
DESIGN SPEED	70	70	35	60	60	40
LEGAL SPEED	60	60	35/50/60	55	55	35
DESIGN FUNCTIONAL CLASSIFICATION:	URBAN INTERSTATE	URBAN INTERSTATE	RAMP	RURAL MINOR ARTERIAL	RURAL PRINCIPAL ARTERIAL	URBAN MINOR ARTERIAL
NHS PROJECT	YES	YES	YES	NO	YES	NO

LOCATION MAPS & DESIGN DESIGNATIONS

DESIGN AGENCY
Environmental Design Group
AKRON, LAKEWOOD, COLUMBUS
350 SOUTH MAIN ST. AKRON, OH 44311
PHONE: 330.434.1515 FAX: 330.434.1520
E-MAIL: ENVIRONMENTALDESIGNGROUP.COM

DESIGNER: MSD
REVIEWER: SAC 12/29/23
PROJECT ID: 112947
SHEET: P.2 TOTAL: 86

D12-CU-FY2024

MODEL: Sheet PAPERSIZE: 34x22 (in.) DATE: 1/27/2025 TIME: 1:05:10 PM USER: scook
E:\ODOT\121-00121-010 ODOT D-12 Culvert Replacement 112947\112947\400-Engineering\Roadway\Sheets\112947_GT002.dgn

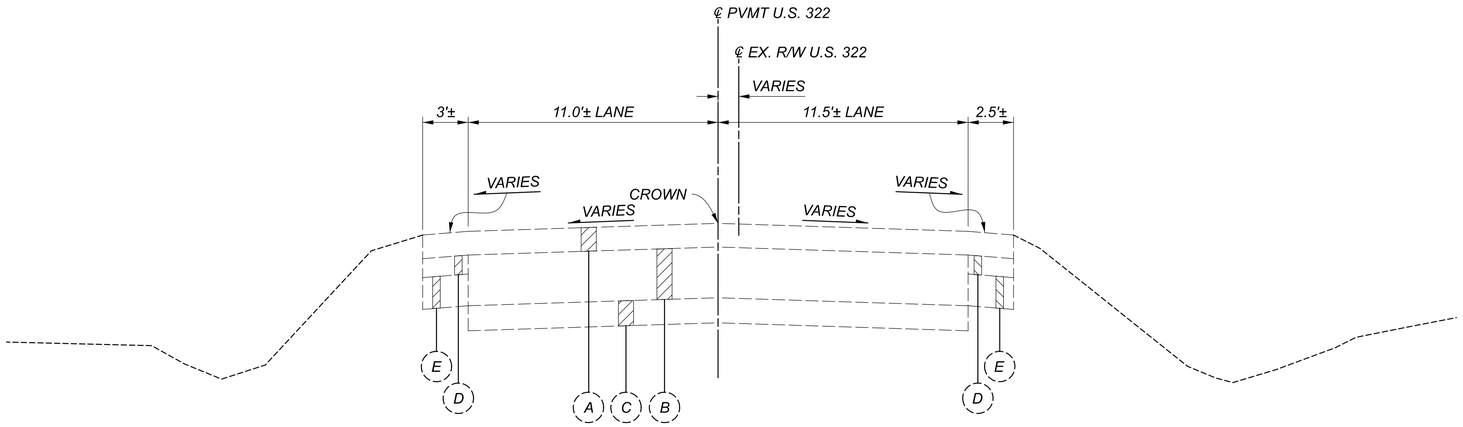

EXISTING NORMAL SECTION: GEA-322-13.88

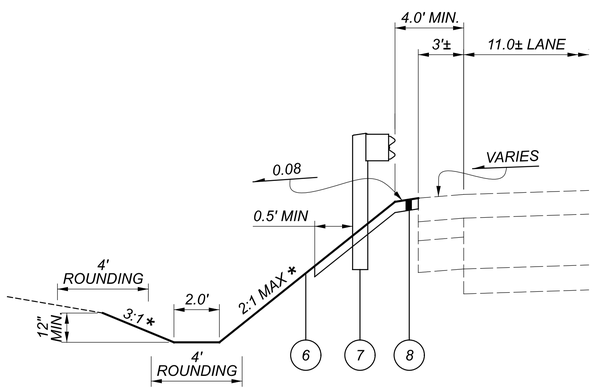

GUARDRAIL SECTION: GEA-322-13.88

ADJACENT TO EXISTING PAVEMENT (LEFT SIDE)

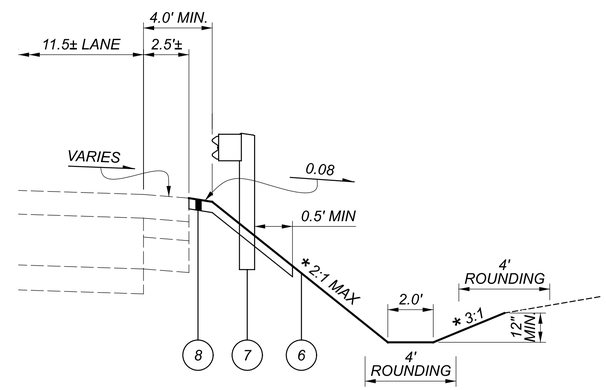

GUARDRAIL SECTION: GEA-322-13.88

ADJACENT TO EXISTING PAVEMENT (RIGHT SIDE)

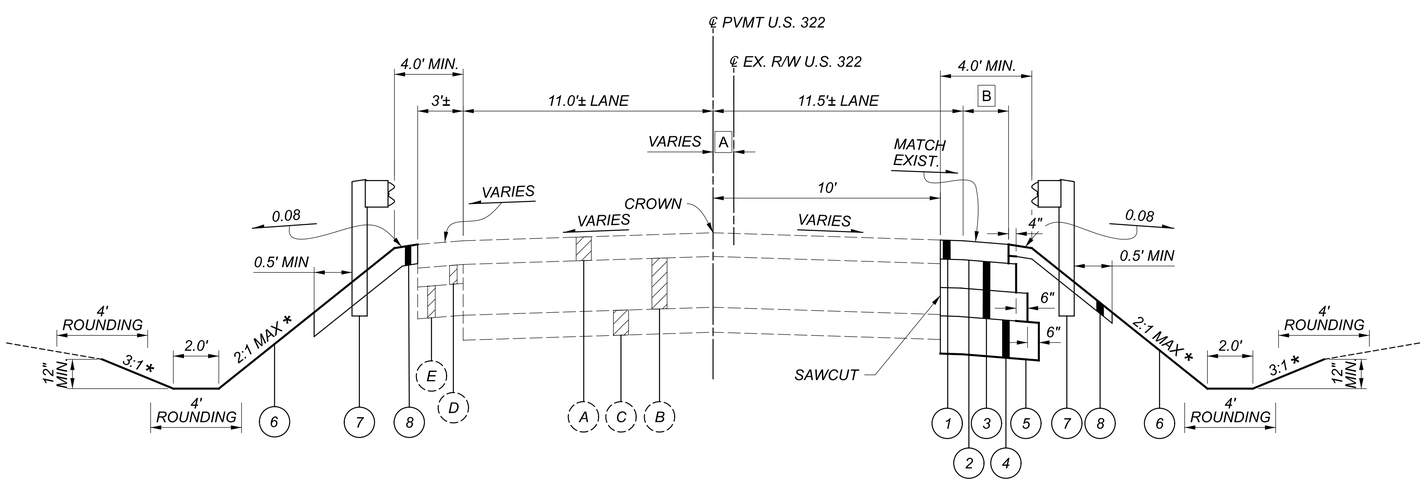

PROPOSED NORMAL SECTION: GEA-322-13.88

STA. 587+94.00 TO STA. 588+15.00

EXISTING LEGEND:

- (A) 3.75"± ASPHALT CONCRETE
- (B) 8"± CONCRETE PAVEMENT
- (C) AGGREGATE BASE
- (D) 3"± ASPHALT CONCRETE
- (E) 5"± GRANULAR SLAG

PROPOSED LEGEND:

1. *ITEM 441 - 3" ASPHALT CONCRETE SURFACE COURSE, TYPE 1, (449), PG70-22M (INSTALL IN TWO 1-1/2" LIFTS), AS PER PLAN*
2. *ITEM 407 - TACK COAT*
3. *ITEM 301 - 9" ASPHALT CONCRETE BASE, PG64-22, (449) (INSTALL IN TWO 4-1/2" LIFTS)*
4. *ITEM 304 - 6" AGGREGATE BASE*
5. *ITEM 204 - SUBGRADE COMPACTION*
6. *ITEM 659 - SEEDING AND MULCHING*
7. *ITEM 606 - GUARDRAIL, TYPE MGS WITH LONG POSTS*
8. *ITEM 441 - 3" ASPHALT CONCRETE INTERMEDIATE COURSE, TYPE 1, (449), (UNDER GUARDRAIL), AS PER PLAN*

* *SEE CROSS SECTIONS FOR SIDE SLOPE GRADING*

A *VARIES FROM 0.34' AT STA. 587+94 TO 0.26' AT STA. 588+15*

B *VARIES FROM 2.24' AT STA. 587+94 TO 2.28' AT STA. 588+15*

TYPICAL SECTIONS
GEA-322-13.88

DESIGN AGENCY
Environmental Design Group
ARCHITECTS / ENGINEERS
350 SOUTH 5TH STREET, PO BOX 351
MARION, OHIO 43302-0351
EDG@EDGROUP.COM

DESIGNER
MSD

REVIEWER
SAC 12/29/23

PROJECT ID
112947

SHEET P.3 TOTAL 86

D12-CU-FY2024

MODEL: Sheet PAPERSIZE: 34x22 (in.) DATE: 1/27/2025 TIME: 1:05:12 PM USER: scook
E:\ODOT\21-0012I-010 ODOT D-12 Culvert Replacement 112947\112947\400-Engineering\Roadway\Sheets\112947_GY004.dgn

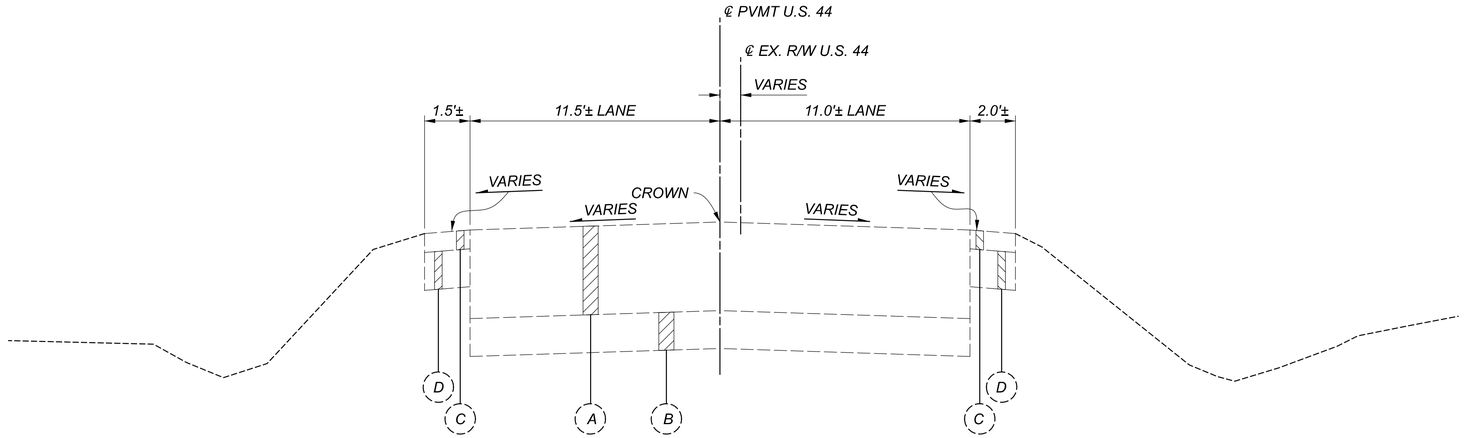

EXISTING NORMAL SECTION: GEA-44-4.52

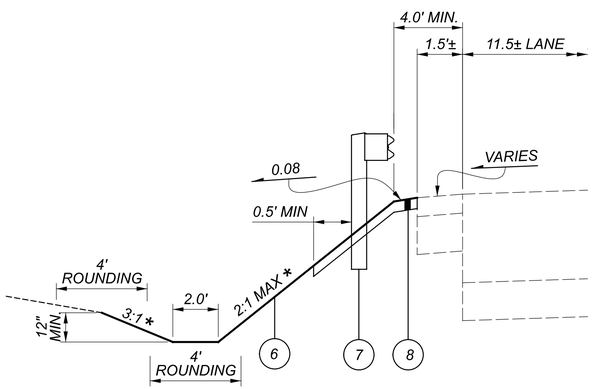

GUARDRAIL SECTION: GEA-44-4.52
ADJECENT TO EXISTING PAVEMENT (LEFT SIDE)

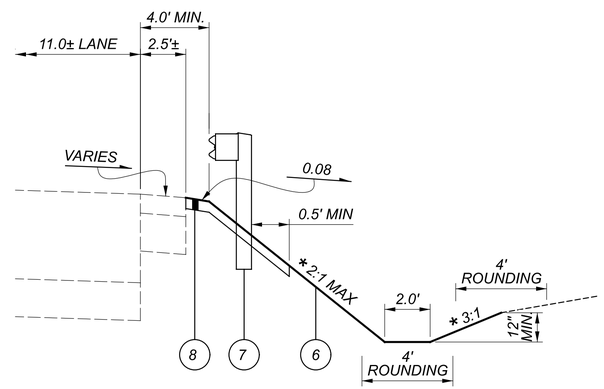

GUARDRAIL SECTION: GEA-44-4.52
ADJECENT TO EXISTING PAVEMENT (RIGHT SIDE)

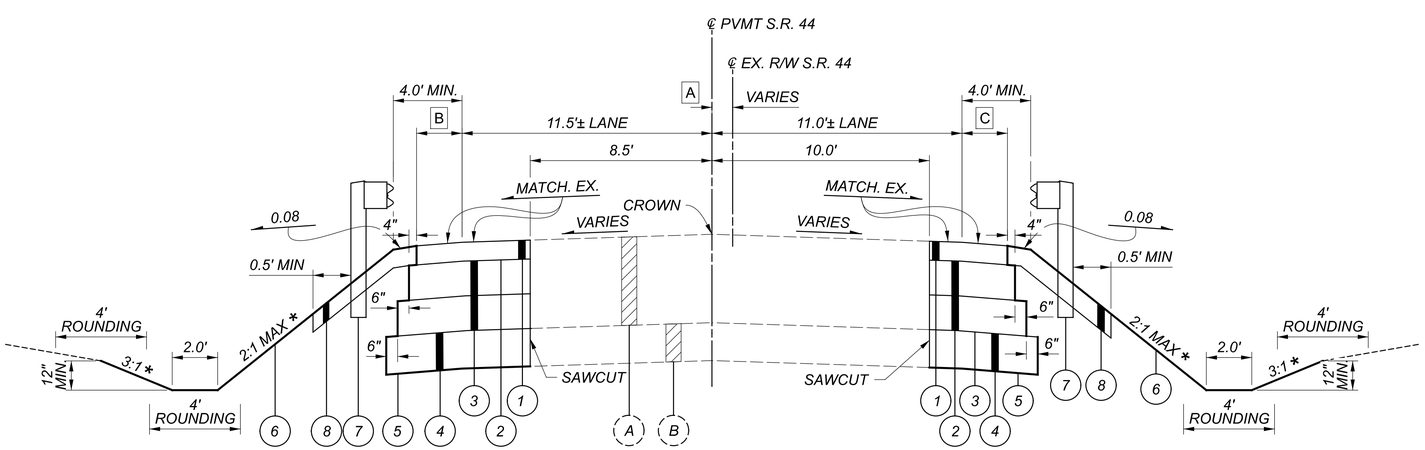

PROPOSED NORMAL SECTION: GEA-44-4.52
STA. 90+93.00 TO STA. 91+10.00

EXISTING LEGEND:

- (A) 14"± ASPHALT CONCRETE
- (B) AGGREGATE BASE
- (C) 3"± ASPHALT CONCRETE
- (D) 6"± GRANULAR SLAG

PROPOSED LEGEND:

1. *ITEM 441 - 3" ASPHALT CONCRETE SURFACE COURSE, TYPE 1, (449), PG70-22M (INSTALL IN TWO 1-1/2" LIFTS), AS PER PLAN*
2. *ITEM 407 - TACK COAT*
3. *ITEM 301 - 11" ASPHALT CONCRETE BASE, PG64-22, (449) (INSTALL IN TWO 5-1/2" LIFTS)*
4. *ITEM 304 - 6" AGGREGATE BASE*
5. *ITEM 204 - SUBGRADE COMPACTION*
6. *ITEM 659 - SEEDING AND MULCHING*
7. *ITEM 606 - GUARDRAIL, TYPE MGS WITH LONG POSTS*
8. *ITEM 441 - 3" ASPHALT CONCRETE INTERMEDIATE COURSE, TYPE 1, (449), (UNDER GUARDRAIL), AS PER PLAN*

* *SEE CROSS SECTIONS FOR SIDE SLOPE GRADING*

- A *VARIES FROM 0.12' AT STA. 90+93 TO 0.29' AT STA. 91+10*
- B *VARIES FROM 1.53' AT STA. 90+93 TO 1.29 AT STA. 91+10*
- C *VARIES FROM 2.36' AT STA. 90+93 TO 2.28' AT STA. 91+10*

TYPICAL SECTIONS
GEA-44-4.52

DESIGN AGENCY
Environmental Design Group
LANDSCAPE ARCHITECTURE
910 CAMPUS VIEW BLVD., STE. 103
COLUMBUS, OHIO 43235
(614) 755-9770
ENVIRONMENTALDESIGNGROUP.COM

DESIGNER: MSD
REVIEWER: SAC 12/29/23
PROJECT ID: 112947
SHEET: P.4 TOTAL: 86

D12-CU-FY2024

MODEL: Sheet PAPERSIZE: 34x22 (in.) DATE: 1/27/2025 TIME: 1:05:14 PM USER: scook
E:\ODOT\21-0012I-010 ODOT D-12 Culvert Replacement 112947\112947\400-Engineering\Roadway\Sheets\112947_GY005.dgn

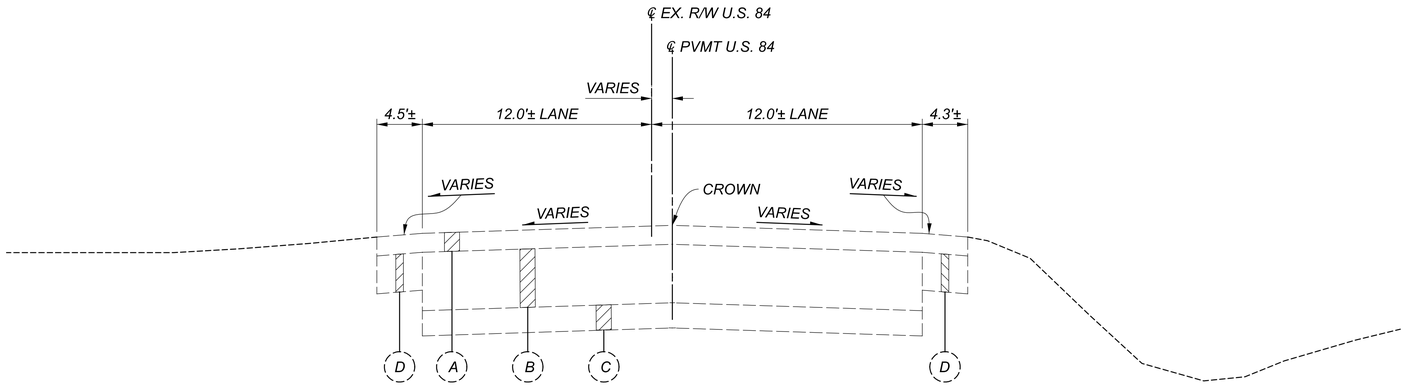

EXISTING NORMAL SECTION: LAK-84-14.25

EXISTING LEGEND:

- (A) 3"± ASPHALT CONCRETE
- (B) 9.25"± CONCRETE PAVEMENT
- (C) AGGREGATE BASE
- (D) 6"± CONCRETE BASE

PROPOSED LEGEND:

1. *ITEM 441 - 3" ASPHALT CONCRETE SURFACE COURSE, TYPE 1, (449), PG70-22M (INSTALL IN TWO 1-1/2" LIFTS), AS PER PLAN*
2. *ITEM 407 - TACK COAT*
3. *ITEM 301 - 9" ASPHALT CONCRETE BASE, PG64-22, (449) (INSTALL IN TWO 4-1/2" LIFTS)*
4. *ITEM 304 - 6" AGGREGATE BASE*
5. *ITEM 204 - SUBGRADE COMPACTION*
6. *ITEM 659 - SEEDING AND MULCHING*

* *SEE CROSS SECTIONS FOR SIDE SLOPE GRADING*

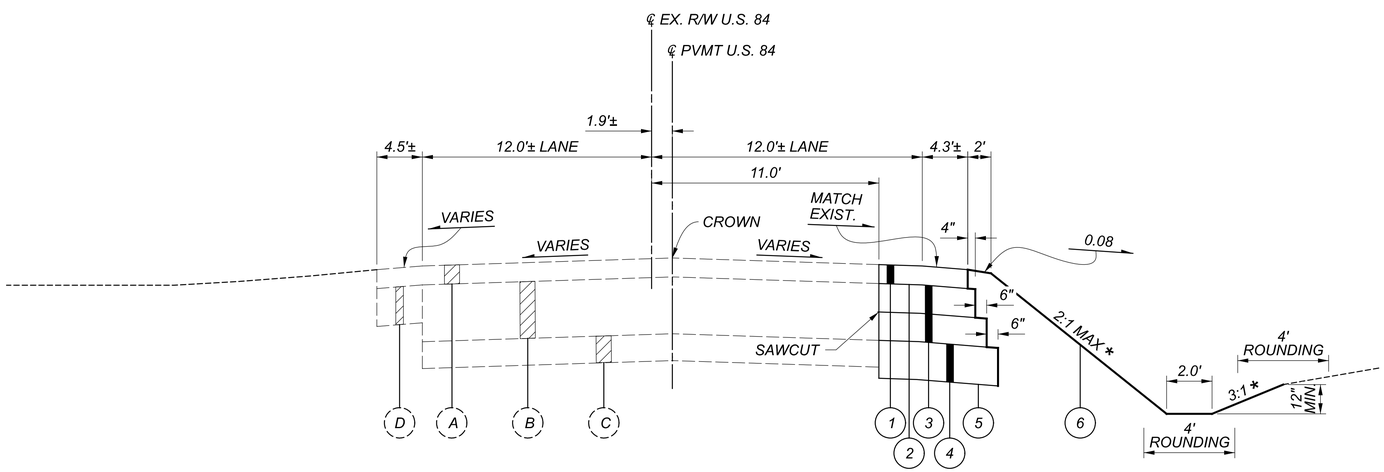

PROPOSED NORMAL SECTION: LAK-84-14.25

STA. 366+68.00 TO STA. 366+90.00

TYPICAL SECTIONS
LAK-84-14.25

DESIGN AGENCY
Environmental Design Group
ENVIRONMENTAL DESIGN GROUP, LTD.
350 CENTER ST. MARION, OH 43302
P: 740-387-1777 F: 740-387-1778
W: ENVIRONMENTALDESIGNGROUP.COM

DESIGNER
MSD

REVIEWER
SAC 12/29/23

PROJECT ID
112947

SHEET P.5 TOTAL 86

D12-CU-FY2024

MODEL: Sheet PAPERSIZE: 34x22 (in.) DATE: 1/27/2025 TIME: 1:05:15 PM USER: scook
E:\ODOT\21-0012I-010 ODOT D-12 Culvert Replacement 112947\112947\400-Engineering\Roadway\Sheets\112947_GY006.dgn

GENERAL

ROUNDING

THE ROUNDING AT SLOPE BREAKPOINTS SHOWN ON THE TYPICAL SECTIONS APPLIES TO ALL CROSS-SECTIONS, EVEN THOUGH OTHERWISE SHOWN.

UTILITIES

LISTED BELOW ARE ALL UTILITIES LOCATED WITHIN THE PROJECT CONSTRUCTION LIMITS TOGETHER WITH THEIR RESPECTIVE OWNERS:

ADESTA, A G4S COMPANY
4 WALKER WAY, SUITE 1
ALBANY, NY 12205
ATTN: MARK BRADFORD
PH: (518) 869-5053, EXT. 107
EM: MARK.BRADFORD@AUS.COM

AQUA OHIO
9345 PROGRESSIVE PKWY
MENTOR, OH 44060
ATTN: SUE PAWLOWSKI
PH: (440) 255-3984, EXT. 50613
EM: SJPAWLOWSKI@AQUAAMERICA.COM

AT&T
13630 LORAIN RD
CLEVELAND, OH 44111
ATTN: P. JAMES JANIS
PH: (216) 476-6142, C: (216) 534-7285
EM: PJ8191@ATT.COM

CHARTER COMMUNICATIONS
7820 DIVISION DR
MENTOR, OH 44060
ATTN: CHRIS HODGSON
PH: (216) 317-4492
EM: CHRISTOPHER.HODGSON@CHARTER.COM

CHARTER COMMUNICATIONS
7 SEVERANCE CIRCLE
CLEVELAND HEIGHTS, OH 44118
ATTN: JAMES UDICS
PH: (216) 402-3772
EM: JAMES.UDICS@CHARTER.COM
ATTN: MARK JACKSON
PH: (216) 214-7780
EM: MARK.JACKSON@CHARTER.COM

CLEVELAND DIVISION OF WATER
1201 LAKESIDE AVE
CLEVELAND, OH 44114
ATTN: FRED ROBERTS
PH: (216) 664-2444
EM: WATERSERVICEAPPLICATION@CLEVELANDWATER.COM

CUYAHOGA COUNTY PUBLIC WORKS
SANITARY DIVISION
2079 EAST 9TH ST
CLEVELAND, OH 44115
ATTN: LAURA WEBER
PH: (216) 443-8205
EM: LAWEBER@CUYAHOGACOUNTY.US

SUDDENLINK/ALTICE USA
115 DYE DR
BECKLEY, WV 25801
ATTN: GREG LESTER
PH: (304) 716-0572
CELL: (304) 228-9652
EM: GREGORY.LESTER@ALTICEUSA.COM

CENTURYLINK/LUMEN
ATTN: RELOCATIONS TEAM
EM: RELOCATIONS@LUMEN.COM

DOMINION ENERGY OHIO
320 SPRINGSIDE DR, SUITE 320
AKRON, OHIO 44333
EM: RELOCATION@DOMINIONENERGY.COM

THE ILLUMINATING CO.
6896 MILLER RD, SUITE 101
BRECKSVILLE, OH 44141
ATTN: JOHN ZASSICK
PH: (440) 546-8706
EM: JMZASSICK@FIRSTENERGYCORP.COM

LAKE COUNTY UTILITIES
105 MAIN ST, 4TH FLOOR
PAINESVILLE, OH 44077
ATTN: SARAH CEROVSKI
PH: (440) 350-2652
EM: SARAH.CEROVSKI@LAKECOUNTYOHIO.GOV

NORTHEAST OHIO NATURAL GAS CORP.
8470 STATION ST
MENTOR, OH 44060
ATTN: TIM REILLY
PH: (440) 701-5100
EM: TREILLY@EGAS.NET

WINDSTREAM
100 OWEN BROWN ST
HUDSON, OH 44236
ATTN: ADRIAN GRIFFIN
PH:
EM: ADRIAN.E.GRIFFIN@WINDSTREAM.COM
ATTN: RAMON FRENCH
PH: (440) 285-5537
EM: RAMON.FRENCH@WINDSTREAM.COM

ZITO MEDIA
P.O. BOX 45
ROCK CREEK, OH 44084
ATTN: MIKE PICCOLI
PH: (304) 224-3956
EM: MIKE. PICCOLI@ZITOMEDIA.COM

THE LOCATION OF THE UNDERGROUND UTILITIES SHOWN ON THE PLANS ARE AS OBTAINED FROM THE OWNERS AS REQUIRED BY SECTION 153.64 O.R.C.

WORK LIMITS

THE WORK LIMITS SHOWN ON THESE PLANS ARE FOR PHYSICAL CONSTRUCTION ONLY. PROVIDE THE INSTALLATION AND OPERATION OF ALL WORK ZONE TRAFFIC CONTROL AND WORK ZONE TRAFFIC CONTROL DEVICES REQUIRED BY THESE PLANS WHETHER INSIDE OR OUTSIDE THESE WORK LIMITS.

SURVEYING PARAMETERS

PRIMARY PROJECT CONTROL MONUMENTS GOVERN ALL POSITIONING ON ODOT PROJECTS. SEE TABLE BELOW FOR PROJECT CONTROL INFORMATION.

USE THE FOLLOWING PROJECT CONTROL, VERTICAL POSITIONING, AND HORIZONTAL POSITIONING PARAMETERS FOR ALL SURVEYING:

PROJECT CONTROL

POSITIONING METHOD: ODOT VRS
MONUMENT TYPE: A

VERTICAL POSITIONING

ORTHOMETRIC HEIGHT DATUM: NAVD 88
GEOID: GEOID 12B

HORIZONTAL POSITIONING

REFERENCE FRAME: NAD83 (2011)
ELLIPSOID: GRS80
MAP PROJECTION: LAMBERT CONFORMAL CONIC
COORDINATE SYSTEM: OHIO STATE PLANE (NORTH)
COMBINED SCALE FACTOR: (SEE TABLE BELOW)
ORIGIN OF COORDINATE SYSTEM: 0 , 0

USE THE POSITIONING METHODS AND MONUMENT TYPE USED IN THE ORIGINAL SURVEY TO RESTORE ALL MONUMENTS RELATED TO PRIMARY PROJECT CONTROL THAT ARE DAMAGED OR DESTROYED BY CONSTRUCTION ACTIVITIES. RESTORE THE DAMAGED OR DESTROYED MONUMENTS IN ACCORDANCE WITH CMS 623.

UNITS ARE IN U.S. SURVEY FEET.

CONSTRUCTION NOISE

ACTIVITIES AND LAND USE ADJACENT TO THIS PROJECT MAY BE AFFECTED BY CONSTRUCTION NOISE. IN ORDER TO MINIMIZE ANY ADVERSE CONSTRUCTION NOISE IMPACTS, DO NOT OPERATE POWER-OPERATED CONSTRUCTION-TYPE DEVICES BETWEEN THE HOURS OF 7 PM AND 7 AM AT THE GEA-322-13.88, GEA-44-4.52, AND LAK-84-14.25 PROJECT SITES. IN ADDITION, DO NOT OPERATE AT ANY TIME ANY DEVICE IN SUCH A MANNER THAT THE NOISE CREATED SUBSTANTIALLY EXCEEDS THE NOISE CUSTOMARILY AND NECESSARILY ATTENDANT TO THE REASONABLE AND EFFICIENT PERFORMANCE OF SUCH EQUIPMENT.

EXISTING PLANS

THE FOLLOWING EXISTING PLANS MAY BE INSPECTED IN THE ODOT DISTRICT 12 OFFICE AT 5500 TRANSPORTATION BLVD., GARFIELD HEIGHTS, OH 44125:

CUY-77-6.45, 1967
CUY-77-1.89, PID 22222, 2008
CUY-2-28.16 / CUY-525-0.00 / LAK-525-0.00, 1961
CUY-IR90-29.89, PID 81275, 2006
CUY-480-19.43, 1975
GEA-322-10.42, PID 83621, 2009
GEA-44-4.524, (SLM 2.81), PID 16977, 1999
LAK-84-13,17 PID 85608, 2016
CLEVELAND-MEADVILLE RD (CLARIDON & HUNTSBURG TWP.), 1929
PAINESVILLE-RAVENNA RD (AUBURN & NEWBURY TWP.), 1927
WICKLIFFE-MADISON RD (MENTOR, CONCORD, & PAINSVILLE TWP.),1927

ITEM 619 - FIELD OFFICE, TYPE B, AS PER PLAN

IN ADDITION TO THE REQUIREMENTS OF CMS 619, THE CONTRACTOR SHALL FURNISH AND SET UP A WI-FI ROUTER MEETING THE REQUIREMENTS OF IEEE 802.11AC FOR THE EXCLUSIVE USE OF THE DEPARTMENT.

ALL OTHER FIELD OFFICE ITEMS SUPPLIED SHALL MEET THE REQUIREMENTS OF A TYPE B FIELD OFFICE.

ITEM 619 FIELD OFFICE, TYPE B, AS PER PLAN 9 MONTHS

PRIMARY CONTROL INFORMATION

CULVERT LOCATION	CTRL POINT	STATION & OFFSET I-77, I-90, E.126th ST, U.S. 322, S.R. 44, & S.R. 84	GRID COORDINATES U.S. SURVEY FEET		SCALED COORDINATES U.S. SURVEY FEET		ORTHOMETRIC HEIGHT (ELEVATION)	COMBINED SCALE FACTOR (GRID TO GROUND):	DESCRIPTION
			NORTHING (Y)	EASTING (X)	NORTHING (Y)	EASTING (X)			
CUY-77-7.84	CNPT-A	412+91.86, 81.81' LT	628435.72	2200832.70	628463.89	2200931.35	823.55	1.00004482	5/8" CAPPED IRON PIN
	CNPT-B	417+21.31, 79.39' LT	628865.05	2200823.24	628893.24	2200921.89	821.68		5/8" CAPPED IRON PIN
	CNPT-C	413+08.39, 198.58' RT	628460.00	2201112.51	628488.17	2201211.17	845.51		5/8" CAPPED IRON PIN
	CNPT-D	415+16.33, 195.41' RT	628667.76	2201103.59	628695.94	2201202.25	845.54		5/8" CAPPED IRON PIN
CUY-90-29.92	CNPT-E	49+32.64, 71.56' LT	706568.80	2244779.60	706600.48	2244880.26	684.82	1.00004484	5/8" CAPPED IRON PIN
	CNPT-F	51+83.01, 87.22' RT	706273.33	2244779.58	706305.00	2244880.24	679.92		5/8" CAPPED IRON PIN
	CNPT-G	55+07.47, 94.36' RT	705989.84	2244914.80	706021.50	2245015.47	680.71		5/8" CAPPED IRON PIN
	CNPT-H	57+65.29, 126.31' LT	705826.79	2245213.41	705858.44	2245314.09	687.91		5/8" CAPPED IRON PIN
CUY-18271-0.13	CNPT-I	13+28.36, 350.88' RT	639348.23	2216862.45	639400.12	2217042.36	926.63	1.00008116	5/8" CAPPED IRON PIN
	CNPT-J	13+34.49, 60.89' RT	639351.45	2216572.43	639403.34	2216752.32	918.16		5/8" CAPPED IRON PIN
GEA-322-13.88	CNPT-K	584+97.20, 22.05' LT	682646.37	2344246.73	682702.45	2344439.30	1243.22	1.00008215	5/8" CAPPED IRON PIN
	CNPT-L	590+74.99, 19.66' RT	682616.47	2344825.20	682672.54	2345017.82	1238.86		5/8" CAPPED IRON PIN
GEA-44-4.52	CNPT-M	87+97.21, 21.63' LT	638201.10	2321670.77	638263.85	2321899.03	1269.77	1.00009832	5/8" CAPPED IRON PIN
	CNPT-N	93+99.25, 24.07' LT	638799.83	2321733.24	638862.64	2321961.52	1275.09		5/8" CAPPED IRON PIN
LAK-84-14.25	CNPT-O	363+40.15, 20.01' LT	734585.74	2301076.54	734611.92	2301158.53	764.97	1.00003563	5/8" CAPPED IRON PIN
	CNPT-P	370+13.07, 24.14' RT	735243.69	2300928.74	735269.89	2301010.73	760.32		5/8" CAPPED IRON PIN

GENERAL NOTES

DESIGN AGENCY
Environmental Design Group
A MEMBER OF THE HULL GROUP OF COMPANIES
HQ: 250 GARFIELD ST., PALOS VERDES, KY 41351
P: 859.264.0115 F: 859.264.0116
W: ENVIRONMENTALDESIGNGROUP.COM

DESIGNER
MSD

REVIEWER
SAC 12/29/23

PROJECT ID
112947

SHEET P.6 TOTAL 86

D12-CU-FY2024
MODEL: Sheet PAPERSIZE: 34x22 (in.) DATE: 1/27/2025 TIME: 1:05:16 PM USER: scook
E:\ODOT\21-00121-010 ODOT D-12 Culvert Replacement 112947\112947\400-Engineering\Roadway\Sheets\112947_GN001.dgn

GENERAL (CONT.)

WINDOW CONTRACT TABLE

DESCRIPTION OF CRITICAL WORK	CALENDAR DAYS TO COMPLETE	DISINCENTIVE $ PER DAY	WORK WINDOW	
			START	END
COMPLETION OF PHASE 2 WORK AT GEA-44-4.52	14	$3,000	6/1/2025	10/15/2025

TIME LIMITATIONS AND DISINCENTIVES

1. NO WORK AT CUY-77-7.84 SHALL BEGIN EARLIER THAN APRIL 1, 2025. ALL WORK SHALL BE COMPLETED AND TRAFFIC SHALL BE BACK IN THE NORMAL TRAFFIC CONFIGURATION BY THE INTERIM COMPLETION DATE OF SEPTEMBER 30, 2025. A DISINCENTIVE SHALL BE ASSESSED IN THE AMOUNT OF $20,000 PER DAY FOR EACH CALENDAR DAY THE WORK IS NOT DONE BY THE SPECIFIED TIME.

2. NO WORK AT CUY-77-7.84 SHALL BEGIN EARLIER THAN APRIL 1, 2026. ALL WORK SHALL BE COMPLETED AND TRAFFIC SHALL BE BACK IN THE NORMAL TRAFFIC CONFIGURATION BY THE PROJECT COMPLETION DATE OF AUGUST 31, 2026. A DISINCENTIVE SHALL BE ASSESSED IN THE AMOUNT OF $20,000 PER DAY FOR EACH CALENDAR DAY THE WORK IS NOT DONE BY THE SPECIFIED TIME.

3. NO WORK AT GEA-322-13.88 AND LAK-84-14.25 SHALL BEGIN EARLIER THAN APRIL 1, 2025. ALL WORK SHALL BE COMPLETED AND TRAFFIC SHALL BE BACK IN THE NORMAL TRAFFIC CONFIGURATION BY THE INTERIM COMPLETION DATE OF SEPTEMBER 30, 2025. A DISINCENTIVE SHALL BE ASSESSED IN THE AMOUNT OF $5,000 PER DAY FOR EACH CALENDAR DAY THE WORK IS NOT DONE BY THE SPECIFIED TIME.

4. NO WORK AT GEA-322-13.88 AND LAK-84-14.25 SHALL BEGIN EARLIER THAN APRIL 1, 2026. ALL WORK SHALL BE COMPLETED AND TRAFFIC SHALL BE BACK IN THE NORMAL TRAFFIC CONFIGURATION BY THE PROJECT COMPLETION DATE OF AUGUST 31, 2026. A DISINCENTIVE SHALL BE ASSESSED IN THE AMOUNT OF $5,000 PER DAY FOR EACH CALENDAR DAY THE WORK IS NOT DONE BY THE SPECIFIED TIME.

5. NO WORK ON THE RAMP OR MAINLINE PAVEMENT SHALL BEGIN EARLIER THAN APRIL 1, 2025 AT CUY-18271-0.1 AND CUY-90-29.92. ALL WORK SHALL BE COMPLETED AND TRAFFIC SHALL BE BACK IN THE NORMAL TRAFFIC CONFIGURATION BY THE INTERIM COMPLETION DATE OF SEPTEMBER 30, 2025. A DISINCENTIVE SHALL BE ASSESSED IN THE AMOUNT OF $20,000 PER DAY FOR EACH CALENDAR DAY THE WORK IS NOT DONE BY THE SPECIFIED TIME. CONTRACTOR ACCESS TO PROJECT LOCATIONS VIA LOCAL ROADS WILL NOT HAVE TIME LIMITATIONS. CONTRACTOR TO MAINTAIN NORMAL TRAFFIC CONFIGURATIONS AT LOCAL ROAD ACCESS POINTS.

6. NO WORK ON THE RAMP OR MAINLINE PAVEMENT SHALL BEGIN EARLIER THAN APRIL 1, 2026 AT CUY-18271-0.1 AND CUY-90-29.92. ALL WORK SHALL BE COMPLETED AND TRAFFIC SHALL BE BACK IN THE NORMAL TRAFFIC CONFIGURATION BY THE PROJECT COMPLETION DATE OF AUGUST 31, 2026. A DISINCENTIVE SHALL BE ASSESSED IN THE AMOUNT OF $20,000 PER DAY FOR EACH CALENDAR DAY THE WORK IS NOT DONE BY THE SPECIFIED TIME. CONTRACTOR ACCESS TO PROJECT LOCATIONS VIA LOCAL ROADS WILL NOT HAVE TIME LIMITATIONS. CONTRACTOR TO MAINTAIN NORMAL TRAFFIC CONFIGURATIONS AT LOCAL ROAD ACCESS POINTS.

AIRWAY/HIGHWAY CLEARANCE FOR AIRPORTS AND HELIPORTS

THIS PROJECT HAS BEEN IDENTIFIED AS BEING WITHIN THE INFLUENCE AREA OF A PUBLIC USE AIRPORT OR HELIPORT. NO TEMPORARY STRUCTURES OR CONSTRUCTION EQUIPMENT AT MAXIMUM OPERATING HEIGHT SHALL EXCEED A HEIGHT OF 250 FT. IF ANY TEMPORARY STRUCTURES OR CONSTRUCTION EQUIPMENT WILL EXCEED THIS HEIGHT, FURTHER COORDINATION WITH THE FEDERAL AVIATION ADMINISTRATION (FAA), AND ODOT OFFICE OF AVIATION, WILL BE NECESSARY PRIOR TO ERECTING SUCH TEMPORARY STRUCTURES OR OPERATING SUCH EQUIPMENT ON THE PROJECT. THE CONTRACTOR WILL BE REQUIRED TO SUBMIT FORM 7460-1 TO THE FAA. NOTIFY THE ODOT OFFICE OF AVIATION WHEN SUBMITTING FAA FORM 7460-1.

NO TEMPORARY STRUCTURES OR CONSTRUCTION EQUIPMENT SHALL EXCEED THE PERMISSIBLE HEIGHT, UNTIL A COPY OF THE FAA APPROVAL AND THE ODOT OFFICE OF AVIATION PERMIT HAS BEEN FURNISHED TO THE PROJECT ENGINEER.

FEDERAL AVIATION ADMINISTRATION SOUTHWEST REGIONAL OFFICE OBSTRUCTION EVALUATION GROUP 10101 HILLWOOD PARKWAY FORT WORTH, TX 76177 FAX: (817) 222-5920 HTTP://CEAAA.FAA.GOV

OHIO DEPARTMENT OF TRANSPORTATION OFFICE OF AVIATION 2829 WEST DUBLIN-GRANVILLE ROAD COLUMBUS, OHIO 43235 OHIO.AIRPORT.PROTECTION@DOT.OHIO.GOV

ROADWAY

CLEARING AND GRUBBING

ALTHOUGH THERE ARE NO TREES OR STUMPS SPECIFICALLY MARKED FOR REMOVAL WITHIN THE LIMITS OF THE PROJECT. A LUMP SUM QUANTITY IS INCLUDED IN THE GENERAL SUMMARY FOR ITEM 201, CLEARING AND GRUBBING. ALL PROVISIONS AS SET FORTH IN THE SPECIFICATIONS UNDER THIS ITEM ARE INCLUDED IN THE LUMP SUM PRICE BID FOR ITEM 201, CLEARING AND GRUBBING

ITEM 202 - REMOVAL MISC.: CONCRETE SLABS

THIS ITEM PERTAINS TO THE CONCRETE SLABS IN FRONT OF THE RESIDENCE AT 14411 MAYFIELD ROAD (US 322). REMOVE THE EXISTING CONRETE SLABS AND DISPOSE OF MATERIALS AS SPECIFIED IN SECTION 105.17 OF THE CMS. THE CONCRETE SLABS MAY BE PROVIDED TO THE PROPERTY OWNER AS DIRECTED BY THE ENGINEER.

ALL EQUIPMENT, LABOR, MATERIALS, SUBMITTALS, AND INCIDENTALS NECESSARY TO COMPLETE THIS WORK SHALL BE INCLUDED IN THE UNIT BID PRICE PER LUMP SUM FOR ITEM 202 - REMOVAL MISC.: CONCRETE SLABS.

ITEM 202 - REMOVAL MISC.: WOOD ADDRESS POST

REMOVE EXISTING WOOD ADDRESS POST AND SIGN AND DISPOSE OF MATERIALS AS SPECIFIED IN SECTION 105.17 OF THE CMS. FILL ALL HOLES REMAINING AFTER REMOVAL OF THE POST WITH GRANULAR MATERIAL. DO NOT USE FILL MATERIAL CONTAINING SOD. ALL FILL MATERIAL SHALL BE APPROVED BY THE ENGINEER AND SHALL BE COMPACTED AS DIRECTED BY THE ENGINEER.

PAYMENT FOR THE ABOVE WORK AND ALL EQUIPMENT, LABOR, TOOLS, MATERIALS, SUBMITTALS, AND INCIDENTALS NECESSARY TO COMPLETE THIS ITEM SHALL BE INCLUDED IN THE UNIT BID PRICE PER EACH FOR ITEM 202 - REMOVAL MISC.: WOOD ADDRESS SIGN.

ITEM 202 - REMOVAL MISC.: WOOD POST

REMOVE EXISTING WOOD POST AND DISPOSE OF MATERIALS AS SPECIFIED IN CMS SECTION 105.17. FILL ALL HOLES REMAINING AFTER REMOVAL OF THE POST WITH GRANULAR MATERIAL. DO NOT USE FILL MATERIAL CONTAINING SOD. ALL FILL MATERIAL SHALL BE APPROVED BY THE ENGINEER AND SHALL BE COMPACTED AS DIRECTED BY THE ENGINEER.

PAYMENT FOR THE ABOVE WORK AND ALL EQUIPMENT, LABOR, TOOLS, MATERIALS, SUBMITTALS, AND INCIDENTALS NECESSARY TO COMPLETE THIS ITEM SHALL BE INCLUDED IN THE UNIT BID PRICE PER EACH FOR ITEM 202 - REMOVAL MISC.: WOOD POST

ITEM 202 - REMOVAL MISC.: ADDRESS SIGN WITH LIGHT

REMOVE THE EXISTNG ADDRESS SIGN AND EXISTING LIGHT AND DISPOSE OF MATERIALS AS SPECIFIED IN SECTION 105.17 OF THE CMS. THE ADDRESS SIGN AND LIGHT MAY BE PROVIDED TO THE PROPERTY OWNER AS DIRECTED BY THE ENGINEER.

DISCONNECT ANY UTILITY CONNECTIONS TO THE LIGHT AND REMOVE ANY CONDUIT AND WIRING, IF APPLICABLE, TO THE PROPOSED STANDARD HIGHWAY EASEMENT. CAP AND MARK ALL CONNECTIONS AT THE FINAL LIMIT OF THEIR REMOVAL.

ALL EQUIPMENT, LABOR, MATERIALS, SUBMITTALS, AND INCIDENTALS NECESSARY TO COMPLETE THIS WORK SHALL BE INCLUDED IN THE UNIT BID PRICE PER EACH FOR ITEM 202 - REMOVAL MISC.: ADDRESS SIGN WITH LIGHT.

ITEM 606 - ANCHOR ASSEMBLY, MGS TYPE E

THIS ITEM SHALL CONSIST OF FURNISHING AND INSTALLING ANY OF THE GUARDRAIL END TERMINALS FOR TYPE MGS GUARDRAIL AS LISTED ON ROADWAY ENGINEERING'S WEB PAGE UNDER ROADSIDE SAFETY DEVICES FOR APPROVED GUARDRAIL END TREATMENTS. INSTALLATION SHALL BE AT THE LOCATIONS SPECIFIED IN THE PLANS, IN ACCORDANCE WITH THE MANUFACTURER'S SPECIFICATIONS.

THE FACE OF THE TYPE E IMPACT HEAD SHALL BE COVERED WITH A SHEET OF TYPE J, ASTM D4956 TYPE XI REFLECTIVE SHEETING, PER CMS 730.193.

REFER TO THE MANUFACTURER'S INSTRUCTIONS REGARDING THE INSTALLATION OF, AND THE GRADING AROUND THE FOUNDATION TUBES AND GROUND STRUT. THE TOP OF ANY FOUNDATION TUBE SHOULD BE LESS THAN 4 INCHES ABOVE THE GROUND. THE PLACEMENT OF THE FOUNDATION TUBES SHOULD BE AN APPROPRIATE DEPTH BELOW THE LEVEL LINE IN ORDER TO MAINTAIN THE FINISHED GUARDRAIL HEIGHT OF 31 INCHES FROM THE EDGE OF THE SHOULDER.

ON-SITE GRADING IS REQUIRED IF THE TOP OF THE FOUNDATION TUBES OR TOP OF THE GROUND STRUT DOES PROJECT MORE THAN 4 INCHES ABOVE THE GROUND LINE.

PAYMENT FOR THE ABOVE WORK SHALL BE MADE AT THE UNIT PRICE BID FOR ITEM 606, ANCHOR ASSEMBLY, MGS TYPE E, EACH, AND SHALL INCLUDE ALL LABOR, TOOLS, EQUIPMENT AND MATERIALS NECESSARY TO CONSTRUCT A COMPLETE AND FUNCTIONAL ANCHOR ASSEMBLY SYSTEM, INCLUDING ALL RELATED TRANSITIONS, REFLECTIVE SHEETING, HARDWARE, GRADING, EMBANKMENT AND EXCAVATION NOT SEPARATELY SPECIFIED, AS REQUIRED BY THE MANUFACTURER.

EROSION CONTROL

SEEDING AND MULCHING

THE FOLLOWING QUANTITIES ARE PROVIDED TO PROMOTE GROWTH AND CARE OF PERMANENT SEEDED AREAS:

659, SOIL ANALYSIS TEST	3	EACH
659, TOPSOIL	195	CU. YD.
659, SEEDING AND MULCHING CLASS 1 SEE SHEET P.32	1738	SQ. YD.
659, REPAIR SEEDING AND MULCHING	88	SQ. YD.
659, INTER-SEEDING	88	SQ. YD.
659, COMMERCIAL FERTILIZER	0.25	TON
659, LIME	0.37	ACRES
659, WATER	10	M. GAL.

SEEDING AND MULCHING SHALL BE APPLIED TO ALL AREAS OF EXPOSED SOIL BETWEEN THE RIGHT-OF-WAY LINES, AND WITHIN THE CONSTRUCTION LIMITS FOR AREAS OUTSIDE THE RIGHT-OF-WAY LINES COVERED BY WORK AGREEMENT OR SLOPE EASEMENT. QUANTITY CALCULATIONS FOR SEEDING AND MULCHING ARE BASED ON THESE LIMITS.

DESIGN AGENCY
Environmental Design Group
LANDSCAPE ARCHITECTURE
PH 330.336.9115 FAX 330.336.4331
2893 SANDY LAKE ROAD, RAVENNA, OHIO 44266
W EDGROUP@AOL.COM

DESIGNER MSD
REVIEWER SAC 12/29/23
PROJECT ID 112947
SHEET P.7 TOTAL 86

DRAINAGE

CROSSINGS AND CONNECTIONS TO EXISTING PIPES AND UTILITIES

WHERE PLANS PROVIDE FOR A PROPOSED CONDUIT TO BE CONNECTED TO, OR CROSS OVER OR UNDER AN EXISTING SEWER OR UNDERGROUND UTILITY, THE CONTRACTOR SHALL LOCATE THE EXISTING PIPES OR UTILITIES BOTH AS TO LINE AND GRADE BEFORE STARTING TO LAY THE PROPOSED CONDUIT.

IF IT IS DETERMINED THAT THE ELEVATION OF THE EXISTING CONDUIT, OR EXISTING APPURTENANCE TO BE CONNECTED, DIFFERS FROM THE PLAN ELEVATION OR RESULTS IN A CHANGE IN THE PLAN CONDUIT SLOPE, THE ENGINEER SHALL BE NOTIFIED BEFORE STARTING CONSTRUCTION OF ANY PORTION OF THE PROPOSED CONDUIT WHICH WILL BE AFFECTED BY THE VARIANCE IN THE EXISTING ELEVATIONS.

IF IT IS DETERMINED THAT THE PROPOSED CONDUIT WILL INTERSECT AN EXISTING SEWER OR UNDERGROUND UTILITY IF CONSTRUCTED AS SHOWN ON THE PLAN, THE ENGINEER SHALL BE NOTIFIED BEFORE STARTING CONSTRUCTION OF ANY PORTION OF THE PROPOSED CONDUIT WHICH WOULD BE AFFECTED BY THE INTERFERENCE WITH AN EXISTING FACILITY.

PAYMENT FOR ALL THE OPERATIONS DESCRIBED ABOVE SHALL BE INCLUDED IN THE CONTRACT PRICE FOR THE PERTINENT 611 CONDUIT ITEM.

ITEM SPECIAL - FILL AND PLUG EXISTING CONDUIT

THIS ITEM CONSISTS OF THE CONSTRUCTION OF BULKHEADS IN AN EXISTING CONDUIT (SIZE AS SHOWN IN THE PLANS) AND FILLING THE AREA SEALED OFF WITH ITEM 613, SAND OR OTHER MATERIAL APPROVED BY THE ENGINEER.

LOCATE THE BULKHEADS AT THE LIMITS OF THE AREA TO BE FILLED, AS INDICATED ON THE PLANS. THE BULKHEADS CONSIST OF BRICK OR CONCRETE MASONRY WITH A MINIMUM THICKNESS OF 12 INCHES.

PUMP THE FILL MATERIAL INTO PLACE OR BY OTHER MEANS APPROVED BY THE ENGINEER, SO THAT AFTER SETTLEMENT, AT LEAST 90 PERCENT OF THE CROSS- SECTIONAL AREA OF THE CONDUIT, FOR ITS ENTIRE LENGTH IS FILLED. THE LENGTH OF FILLED AND PLUGGED CONDUIT TO BE PAID FOR IS THE ACTUAL NUMBER OF FEET (MEASURED ALONG THE CENTERLINE OF EACH CONDUIT FROM OUTER FACE TO OUTER FACE OF BULKHEADS) FILLED AND PLUGGED AS DESCRIBED ABOVE.

IN LIEU OF FILLING AND PLUGGING THE EXISTING CONDUIT, THE PIPE MAY BE CRUSHED AND BACKFILLED PER 203, OR IT MAY BE REMOVED. THE LENGTH, MEASURED AS PROVIDED ABOVE, WILL BE PAID FOR AT THE CONTRACT PRICE PER FOOT FOR, ITEM SPECIAL, FILL AND PLUG EXISTING CONDUIT.

REVIEW OF DRAINAGE FACILITIES

BEFORE ANY WORK IS STARTED ON THE PROJECT AND AGAIN BEFORE FINAL ACCEPTANCE BY THE STATE, REPRESENTATIVES OF THE STATE AND THE CONTRACTOR, ALONG WITH LOCAL REPRESENTATIVES, SHALL MAKE AN INSPECTION OF ALL EXISTING SEWERS WHICH ARE TO REMAIN IN SERVICE AND WHICH MAY BE AFFECTED BY THE WORK. THE CONDITION OF THE EXISTING CONDUITS AND THEIR APPURTENANCE SHALL BE DETERMINED FROM FIELD OBSERVATIONS. RECORDS OF THE INSPECTION SHALL BE KEPT IN WRITING BY THE STATE.

ALL NEW CONDUITS, INLETS, CATCH BASINS, AND MANHOLES CONSTRUCTED AS A PART OF THE PROJECT SHALL BE FREE OF ALL FOREIGN MATTER AND IN A CLEAN CONDITION BEFORE THE PROJECT WILL BE ACCEPTED BY THE STATE.

ALL EXISTING SEWERS INSPECTED INITIALLY BY THE ABOVE MENTIONED PARTIES SHALL BE MAINTAINED AND LEFT IN A CONDITION REASONABLY COMPARABLE TO THAT DETERMINED BY THE ORIGINAL INSPECTION. ANY CHANGE IN THE CONDITION RESULTING FROM THE CONTRACTOR'S OPERATIONS SHALL BE CORRECTED BY THE CONTRACTOR TO THE SATISFACTION OF THE ENGINEER.

PAYMENT FOR ALL OPERATIONS DESCRIBED ABOVE SHALL BE INCLUDED IN THE CONTRACT PRICE FOR THE PERTINENT 611 CONDUIT ITEMS.

ITEM SPECIAL - PIPE CLEANOUT

THIS WORK CONSISTS OF REMOVING SEDIMENT AND DEBRIS FROM THE EXISTING DRAINAGE CONDUITS SPECIFIED IN THE PLANS. DISPOSE OF ALL MATERIAL PER 105.16 AND 105.17. CLEAN OUT TO THE APPROVAL OF THE ENGINEER.

CLEANOUT OF THE PIPE IS PAID FOR AT THE UNIT PRICE BID FOR ITEM SPECIAL, PIPE CLEANOUT. THIS PRICE INCLUDES THE COST FOR MATERIAL, EQUIPMENT, LABOR, AND ALL INCIDENTALS REQUIRED TO COMPLETE THE CLEANOUT.

PAVEMENT

ITEM 441 - ASPHALT CONCRETE SURFACE COURSE, TYPE 1, (449), PG70-22M, AS PER PLAN

THE COARSE VIRGIN AGGREGATE FOR THIS ITEM SHALL CONSIST OF A BLEND OF 60% MINIMUM AIR COOLED BLAST FURNACE SLAB (ACBFS) OR TRAP ROCK FROM ONTARIO WITH LIMESTONE COMPRISING THE REMAINING PERCENTAGE.

PART-WIDTH CONSTRUCTION

BECAUSE OF THE NECESSITY TO BUILD THIS PROJECT UNDER TRAFFIC AND TO CONSTRUCT THE FULL PAVEMENT WIDTH IN STAGES, EXERCISE CARE TO PREVENT THE CONSTRUCTION OF A BUTT JOINT IN THE BASE COURSES. LAP LONGITUDINAL JOINTS AS SHOWN ON STANDARD CONSTRUCTION DRAWING BP-3.1.

PAVING UNDER GUARDRAIL

THIS OPERATION SHALL INCLUDES PAVING UNDER THE GUARDRAIL USING ITEM 441 ASPHALT CONCRETE INTERMEDIATE COURSE, TYPE 1, (449), (UNDER GUARDRAIL), AS PER PLAN.

PAVING UNDER GUARDRAIL SHALL CONSIST OF PLACING ITEM 441 ASPHALT CONCRETE TO A DEPTH AND WIDTH INDICATED IN THE TYPICAL SECTIONS USING ONE OF THE FOLLOWING METHODS:

METHOD A:

1. SET GUARDRAIL POSTS
2. PLACE ITEM 441

METHOD B:

1. PLACE ITEM 441
2. BORE ASPHALT AT POST LOCATIONS (MAY BE OMITTED IF STEEL POSTS ARE USED)
3. SET GUARDRAIL POSTS
4. PATCH AROUND POSTS. THE MATERIALS USED FOR PATCHING SHALL BE AN ASPHALT CONCRETE APPROVED BY THE ENGINEER. PATCHED AREAS SHALL BE COMPACTED USING EITHER HAND OR MECHANICAL METHODS. FINISHED SURFACES SHALL BE SMOOTH AND SLOPED TO DRAIN AWAY FROM THE POSTS.

ALL EQUIPMENT, MATERIALS AND LABOR REQUIRED TO PERFORM THE WORK OUTLINED ABOVE, WITH THE EXCEPTION OF SETTING GUARDRAIL POSTS, SHALL BE INCLUDED FOR PAYMENT UNDER ITEM 441 ASPHALT CONCRETE INTERMEDIATE COURSE, TYPE 1, (449), (UNDER GUARDRAIL), AS PER PLAN

TRAFFIC CONTROL

ITEM 621 - RAISED PAVEMENT MARKER REMOVED, AS PER PLAN

THIS WORK PERTAINS TO THE RAISED PAVEMENT MARKERS ON I-77. REMOVE THE REFLECTORS OF THE EXISTING RAISED PAVEMENT MARKERS THAT ARE IN CONFLICT WITH THE WORK ZONE LANE CONFIGURATIONS PER MT-102.10.

ENVIRONMENTAL

ENDANGERED BAT HABITAT REMOVAL

NO TREES SHALL BE REMOVED UNDER THIS PROJECT FROM APRIL 1 THROUGH SEPTEMBER 30. ALL NECESSARY TREE REMOVAL SHALL OCCUR FROM OCTOBER 1 THROUGH MARCH 31. THIS REQUIREMENT IS NECESSARY TO AVOID AND MINIMIZE IMPACTS TO FEDERALLY AND STATE LISTED BAT SPECIES AS REQUIRED BY THE ENDANGERED SPECIES ACT. FOR THE PURPOSE OF THIS NOTE, A TREE IS DEFINED AS A LIVE, DYING, OR DEAD WOODY PLANT WITH A TRUNK THREE (3) INCHES OR GREATER IN DIAMETER AT A HEIGHT OF 4.5 FEET ABOVE THE GROUND SURFACE, AND WITH A MINIMUM HEIGHT OF 13 FEET.

GENERAL NOTES

DESIGN AGENCY
Environmental Design Group
LANDSCAPE ARCHITECTURE
PO 350 SANTINI ST. PADUCAH, KY 42001
P 270.443.7117 F 270.443.7119
W ENVIRONMENTALDG.COM

DESIGNER MSD
REVIEWER SAC 12/29/23
PROJECT ID 112947
SHEET P.8 TOTAL 86

ITEM 614, MAINTENANCE OF TRAFFIC

THIS ITEM SHALL CONSIST OF MAINTENANCE OF TRAFFIC ON EXISTING ROADWAYS IN ACCORDANCE WITH THE OHIO MANUAL OF UNIFORM TRAFFIC CONTROL DEVICES FOR STREETS AND HIGHWAYS, (OMUTCD) CURRENT EDITION, LATEST REVISION, THE CONSTRUCTION AND MATERIAL SPECIFICATIONS (C&MS) AND THE FOLLOWING:

1. THE CONTRACTOR SHALL INFORM THE DISTRICT 12 OFFICE (216) 584-2007, FOURTEEN (14) DAYS PRIOR TO THE BEGINNING OF WORK.

2. THE CONTRACTOR SHALL FURNISH, ERECT, MAINTAIN, AND SUBSEQUENTLY REMOVE ALL FLAGS, DRUMS, BARRICADES, SIGNS, SIGN SUPPORTS, AND FURNISH AND MAINTAIN ALL FLAGGERS, WATCHERS, AND INCIDENTALS RELATED THERETO.

3. ONLY DURING OFF-PEAK PERIODS SHALL THE CONTRACTOR INSTALL AND SUBSEQUENTLY RESET OR REMOVE ALL TRAFFIC CONTROL DEVICES NECESSARY FOR THE WORK ZONE FOR EACH CONSTRUCTION PHASE.

PEAK PERIODS ARE CONSIDERED AS FOLLOWS:
1-77, NORTHBOUND, WEEKDAY, 6 AM - 9:30 AM
1-77, SOUTHBOUND, WEEKDAY, 3 PM - 6:30 PM
ALL OTHER PROJECT SITES: WEEKDAY, 6AM - 8AM & 3 PM - 6 PM

4. THE CONTRACTOR SHALL MAINTAIN VEHICULAR ACCESS TO ALL PROPERTIES WITHIN THE PROJECT AT ALL TIMES.

ALL WORK AND TRAFFIC CONTROL DEVICES SHALL BE IN ACCORDANCE WITH THE C&MS ITEM 614 AND OTHER APPLICABLE PORTIONS OF THE SPECIFICATIONS, AS WELL AS THE OMUTCD.

PAYMENT FOR ALL LABOR, EQUIPMENT, MATERIALS, AND INCIDENTALS SHALL BE INCLUDED IN THE LUMP SUM CONTRACT PRICE FOR ITEM 614, MAINTAINING TRAFFIC, UNLESS SEPARATELY ITEMIZED IN THE PLAN.

ITEM 614, MAINTAINING TRAFFIC (ESTIMATED QUANTITIES)

THE FOLLOWING ESTIMATED QUANTITIES HAVE BEEN INCLUDED IN THE GENERAL SUMMARY FOR USE AS DETERMINED BY THE ENGINEER FOR THE MAINTENANCE OF TRAFFIC.

ITEM 410, TRAFFIC COMPACTED SURFACE, TYPE A OR B	30 CU. YD.
ITEM 616, WATER	60 M. GAL.

ITEM 630 - SIGNING MISC.: ADDITIONAL SIGNS, GROUND MOUNTED, AS DIRECTED BY THE ENGINEER

WHEN ADDITIONAL SIGNING IS NEEDED TO MAINTAIN TRAFFIC, THE CONTRACTOR SHALL FURNISH THE SIGN OR SIGNS AS DIRECTED BY THE ENGINEER. THESE SIGNS SHALL BE GROUND MOUNTED AND MEET ALL THE SPECIFICATIONS OF THE PLAN, PROPOSAL AND CURRENT YEAR CMS.

PAYMENT FOR THIS ITEM SHALL INCLUDE, BUT NOT BE LIMITED TO, THE COST TO FURNISH AND ERECT THE SIGN, INCLUDING DRIVING POSTS OR OTHER APPROVED METHODS OF SIGN SUPPORT, MAINTAINING THE SIGN AND REMOVAL OF THE SIGN. THE FOLLOWING ESTIMATED QUANTITY HAS BEEN CARRIED TO THE GENERAL SUMMARY FOR USE AS DIRECTED BY THE ENGINEER:

ITEM 630 SIGNING MISC.: ADDITIONAL SIGNS, GROUND MOUNTED, AS DIRECTED BY THE ENIGNEER	300 SF

ITEM 614, PORTABLE CHANGEABLE MESSAGE SIGNS, AS PER PLAN

THE CONTRACTOR SHALL FURNISH, INSTALL, MAINTAIN AND REMOVE, WHEN NO LONGER NEEDED, A CHANGEABLE MESSAGE SIGN. THE SIGN SHALL BE OF A TYPE SHOWN ON A LIST OF APPROVED PCMS UNITS AVAILABLE ON THE OFFICE OF MATERIALS MANAGEMENT WEB PAGE. THE LIST CONTAINS CLASS A AND B UNITS WITH MINIMUM LEGIBILITY DISTANCES OF 800 FEET AND 650 FEET, RESPECTIVELY.

EACH SIGN SHALL BE TRAILER-MOUNTED AND EQUIPPED WITH A FUNCTIONAL DIMMING MECHANISM, TO DIM THE SIGN DURING DARKNESS, AND A TAMPER AND VANDAL PROOF ENCLOSURE. EACH SIGN SHALL BE PROVIDED WITH APPROPRIATE TRAINING AND OPERATION INSTRUCTIONS TO ENABLE ON-SITE PERSONNEL TO OPERATE AND TROUBLESHOOT THE UNIT. THE SIGN SHALL ALSO BE CAPABLE OF BEING POWERED BY AN ELECTRICAL SERVICE DROP FROM A LOCAL UTILITY COMPANY. THE PCMS SHALL BE DELINEATED IN ACCORDANCE WITH C&MS 614.03.

THE PROBABLE PCMS LOCATIONS AND WORK LIMITS FOR THOSE LOCATIONS ARE AT THE BEGINNING AND END OF THE PROJECT. PLACEMENT, OPERATION, MAINTENANCE AND ALL ACTIVATION OF THE SIGNS BY THE CONTRACTOR SHALL BE AS DIRECTED BY THE ENGINEER. THE PCMS SHALL BE LOCATED IN A HIGHLY VISIBLE POSITION YET PROTECTED FROM TRAFFIC. THE CONTRACTOR SHALL, AT THE DIRECTION OF THE ENGINEER, RELOCATE THE PCMS TO IMPROVE VISIBILITY OR ACCOMMODATE CHANGED CONDITIONS. WHEN NOT IN USE, THE PCMS SHALL BE TURNED OFF. ADDITIONALLY, WHEN NOT IN USE FOR EXTENDED PERIODS OF TIME, THE PCMS SHALL BE TURNED AWAY FROM ALL TRAFFIC.

THE ENGINEER SHALL BE PROVIDED ACCESS TO EACH SIGN UNIT AND SHALL BE PROVIDED WITH APPROPRIATE TRAINING AND OPERATION INSTRUCTIONS TO ENABLE ODOT PERSONNEL TO OPERATE AND TROUBLESHOOT THE UNIT, AND TO REVISE SIGN MESSAGES, IF NECESSARY.

ALL MESSAGES TO BE DISPLAYED ON THE SIGN WILL BE PROVIDED BY THE ENGINEER. A LIST OF ALL REQUIRED PRE-PROGRAMMED MESSAGES WILL BE GIVEN TO THE CONTRACTOR AT THE PROJECT PRECONSTRUCTION CONFERENCE. THE SIGN SHALL HAVE THE CAPABILITY TO STORE UP TO 99 MESSAGES. MESSAGE MEMORY OR PRE-PROGRAMMED DISPLAYS SHALL NOT BE LOST AS A RESULT OF POWER FAILURES TO THE ON-BOARD COMPUTER. THE SIGN LEGEND SHALL BE CAPABLE OF BEING CHANGED IN THE FIELD. THREE-LINE PRESENTATION FORMATS WITH UP TO SIX MESSAGE PHASES SHALL BE SUPPORTED. PCMS FORMAT SHALL PERMIT THE COMPLETE MESSAGE FOR EACH PHASE TO BE READ AT LEAST TWICE.

THE PCMS SHALL CONTAIN AN ACCURATE CLOCK AND PROGRAMMING LOGIC WHICH WILL ALLOW THE SIGN TO BE ACTIVATED, DEACTIVATED OR MESSAGES CHANGED AUTOMATICALLY AT DIFFERENT TIMES OF THE DAY FOR DIFFERENT DAYS OF THE WEEK.

THE CONTRACTOR SHALL BE RESPONSIBLE FOR 24-HOUR-PER-DAY OPERATION AND MAINTENANCE OF THESE SIGNS ON THE PROJECT FOR THE DURATION OF THE PHASES WHEN THE PLAN REQUIRES THEIR USE.

PAYMENT FOR THE ABOVE DESCRIBED ITEM SHALL BE AT THE CONTRACT UNIT PRICE. PAYMENT SHALL INCLUDE ALL LABOR, MATERIALS, EQUIPMENT, FUELS, LUBRICATING OILS, SOFTWARE, HARDWARE, AND INCIDENTALS TO PERFORM THE ABOVE DESCRIBED WORK.

ITEM 614, PORTABLE CHANGEABLE MESSAGE SIGN, AS PER PLAN
16 SIGN MONTH ASSUMING 2 PCMS SIGN(S) FOR 2 MONTHS AT SITES CUY-77-7.84, GEA-322-13.88, GEA-44-4.52, AND LAK-84-14.25.

ITEM 614, WORK ZONE IMPACT ATTENUATOR FOR 24" WIDE HAZARDS (UNIDIRECTIONAL OR BIDIRECTIONAL)

THIS ITEM SHALL CONSIST OF FURNISHING AND INSTALLING A NON-GATING IMPACT ATTENUATOR. FURNISH AN IMPACT ATTENUATOR FROM THE OFFICE OF ROADWAY ENGINEERING'S APPROVED LIST FOR WORK ZONE IMPACT ATTENUATORS, FROM THE ROADWAY STANDARDS APPROVED PRODUCTS WEB PAGE.

INSTALLATION SHALL BE AT THE LOCATIONS SPECIFIED IN THE PLANS IN ACCORDANCE WITH THE MANUFACTURER'S SPECIFICATIONS.

THE CONTRACTOR SHALL REPAIR OR REPLACE A DAMAGED UNIT WITHIN 24 HOURS OF A DAMAGING IMPACT.

WHEN BIDIRECTIONAL DESIGNS ARE SPECIFIED, THE CONTRACTOR SHALL SUPPLY APPROPRIATE TRANSITIONS.

WHEN GATING IMPACT ATTENUATORS ARE DESIRED, THE CONTRACTOR SHALL SUBMIT DOCUMENTATION TO THE ENGINEER FOR ACCEPTANCE.

THE COST FOR THE ADDITIONAL BARRIER REQUIRED FOR A GATING IMPACT ATTENUATOR SHALL BE INCLUDED IN THE COST OF THE GATING IMPACT ATTENUATOR.

PAYMENT FOR THE ABOVE WORK SHALL BE MADE AT THE UNIT PRICE BID AND SHALL INCLUDE ALL LABOR, TOOLS, EQUIPMENT AND MATERIALS NECESSARY TO CONSTRUCT AND MAINTAIN A COMPLETE AND FUNCTIONAL IMPACT ATTENUATOR SYSTEM, INCLUDING ALL RELATED BACKUPS, TRANSITIONS, LEVELING PADS, HARDWARE AND GRADING, NOT SEPARATELY SPECIFIED, AS REQUIRED BY THE MANUFACTURER.

DUST CONTROL

THE CONTRACTOR SHALL FURNISH AND APPLY WATER FOR DUST CONTROL AS DIRECTED BY THE ENGINEER. THE FOLLOWING ESTIMATED QUANTITIES HAVE BEEN INCLUDED FOR DUST CONTROL PURPOSES:

ITEM 616, WATER	3 M. GAL.

ITEM 442, - ASPHALT CONCRETE SURFACE COURSE,12.5mm.TYPE A (449), AS PER PLAN, PG70-22M

THE COARSE AGGREGATE FOR THIS ITEM SHALL BE LIMITED TO A BLEND OF AIR COOLED BLAST FURNACE SLAG (ACBFS) AND LIMESTONE. THE CONTRACTOR SHALL USE A MINIMUM 50% ACBFS WITH LIMESTONE COMPRISING THE REMAINING PERCENTAGE.

IN ADDITION TO THE JOINT SEALING REQUIREMENTS SPECIFIED IN 401.17, THE CONTRACTOR SHALL SEAL THE PERIMETER OF ALL RUMBLE STRIP PAVEMENT REPLACEMENT AREAS. THE MATERIAL USED SHALL BE A CERTIFIED 702.01 PG BINDER. THE WIDTH OF THE SEALER SHALL BE 2-3 INCHES.

PAYMENT FOR ALL LABOR, MATERIALS, EQUIPMENT, AND INCIDENTALS REQUIRED TO PERFORM THE ABOVE WORK SHALL BE INCLUDED IN THE CONTRACT PRICE FOR ITEM 442 – ASPHALT CONCRETE SURFACE COURSE, 12.5MM, TYPE A (449), AS PER PLAN, PG70-22M.

DELINEATION OF PORTABLE AND PERMANENT BARRIER

BARRIER REFLECTORS AND OBJECT MARKERS SHALL BE INSTALLED ON ALL PORTABLE BARRIER (PB) USED FOR TRAFFIC CONTROL LOCATED WITHIN 5 FEET OF THE EDGE OF THE ADJACENT TRAVEL LANE.

BARRIER REFLECTORS SHALL CONFORM TO C&MS 626, EXCEPT THAT THE SPACING SHALL BE AS PER TRAFFIC SCD MT-101.70. OBJECT MARKERS AND THEIR INSTALLATION SHALL CONFORM TO C&MS 614.03 AND SCD MT-101.70. WHEN THE PB CONTAINS GLARE SCREEN, ONE SET OF THREE VERTICAL STRIPES OF SHEETING SHALL BE CONSIDERED EQUIVALENT TO AN OBJECT MARKER, ONE-WAY.

INCREASED BARRIER DELINEATION, AS SPECIFIED HEREIN, SHALL BE INSTALLED ON ALL PB AND PERMANENT CONCRETE BARRIER LOCATED WITHIN 5 FEET OF THE EDGE OF THE TRAVELED LANE UNDER EITHER OF THE FOLLOWING CONDITIONS: ALONG TAPERS AND TRANSITION AREAS; OR ALONG CURVES (OUTSIDE ONLY) WITH DEGREE OF CURVATURE GREATER THAN OR EQUAL TO 3 DEGREES.

THE INCREASED BARRIER DELINEATION SHALL CONSIST OF EITHER DELINEATION PANELS OR THE TRIPLE STACKING OF WORK ZONE BARRIER REFLECTORS.

DELINEATION PANELS SHALL CONSIST OF PANELS OF DELINEATION, APPROXIMATELY 34 INCHES LONG AND 6 INCHES WIDE AND SHALL BE "CRIMPED." PANELS SHALL BE INSTALLED AND SPACED PER TRAFFIC SCD MT-101.70.

TRIPLE-STACKED BARRIER REFLECTORS SHALL CONSIST OF ALIGNING THREE BARRIER REFLECTORS VERTICALLY, AT LOCATIONS WHERE A SINGLE BARRIER REFLECTOR WOULD BE OTHERWISE ATTACHED. THERE SHALL BE NO OPEN SPACE BETWEEN THE ADJACENT BARRIER REFLECTORS. THE TRIPLE-STACKED BARRIER REFLECTORS SHALL CONFORM TO C&MS 626, EXCEPT THAT THEY SHALL BE SPACED AND ALIGNED PER TRAFFIC SCD MT-101.70.

THE FOLLOWING ITEMS HAVE BEEN INCLUDED IN THE PLANS FOR THE WORK MENTIONED ABOVE. ESTIMATED QUANTITIES ARE SHOWN IN THE MAINTENANCE OF TRAFFIC SUBSUMMARY:

ITEM 614, BARRIER REFLECTOR, TYPE 1 (BIDIRECTIONAL)

ITEM 614, OBJECT MARKER, TWO-WAY

ITEM 614, INCREASED BARRIER DELINEATION

PAYMENT SHALL BE FULL COMPENSATION FOR ALL MATERIAL, LABOR, INCIDENTALS AND EQUIPMENT NECESSARY FOR FURNISHING, INSTALLING, MAINTAINING AND REMOVING EACH OF THE ABOVE ITEMS.

ALONG RUNS OF INCREASED BARRIER DELINEATION WHERE THIS ITEM IS PROVIDED, THE QUANTITY SHALL BE MEASURED AS THE ENTIRE LENGTH OF THE RUN OF INCREASED BARRIER DELINEATION, INCLUDING THE SPACES BETWEEN THE INDIVIDUAL DELINEATION PANELS OR STACKS OF BARRIER REFLECTORS.

MAINTENANCE OF TRAFFIC NOTES

DESIGN AGENCY
Environmental DesignGroup
AKRON / CLEVELAND / COLUMBUS
HQ 450 GRANT ST., AKRON, OH 44311
P 330.375.1390 / TF 800.835.1390
W ENVDESIGNGROUP.COM
DESIGNER MSD
REVIEWER SAC 12/29/23
PROJECT ID 112947
SHEET P.9 TOTAL 86

ITEM 614 - WORK ZONE LIGHTING SYSTEM

LIGHTING SHALL BE PROVIDED AT EACH END OF THE LANE CLOSURE FOR THE CLOSING OF ONE LANE OF A TWO LANE HIGHWAY.

LIGHTING SHALL BE BY CONVENTIONAL METHODS, WITH LUMINAIRE ARMS ATTACHED TO THE SIGNAL SUPPORTS. AREA ILLUMINATION SHALL BE PROVIDED BY USING 150 WATT MINIMUM HIGH PRESSURE SODIUM LUMINARIES OR 250 WATT MINIMUM MERCURY LUMINARIES. THE MINIMUM HEIGHT OF THE LUMINAIRE SHALL BE 27 FT FROM THE GROUND SURFACE.

PAYMENT FOR LIGHTING SHALL BE FOR EACH SYSTEM AND SHALL INCLUDE DELIVERY, ERECTION, MAINTENANCE, AND REMOVAL AS WELL AS ALL EQUIPMENT, MATERIALS, TOOLS, LABOR, POWER SUPPLY, AND INCIDENTALS. PAYMENT SHALL BE FOR THE CONTRACT PRICE PER UNIT EACH FOR ITEM 614, WORK ZONE LIGHTING SYSTEM.

ITEM SPECIAL, WORK ZONE TRAFFIC SIGNAL

THE CONTRACTOR SHALL FURNISH, INSTALL, MAINTAIN, ADJUST, AND SUBSEQUENTLY REMOVE A WORK ZONE TRAFFIC SIGNAL INSTALLATION FOR MAINTAINING TRAFFIC AS SHOWN IN THE PLANS. THE INSTALLATION SHALL BE IN COMPLIANCE WITH THE LATEST CMS AND VARIOUS STANDARD CONSTRUCTION DRAWINGS LISTED THROUGHOUT THE PLANS.

THE WORK ZONE TRAFFIC SIGNAL INSTALLATION SHALL BE TWO-PHASE FIXED-TIMING FOR THE MAINLINE ROAD WITH ADDITIONAL TRAFFIC ACTUATED PHASES FOR SIDE ROADS AND ADJACENT DRIVEWAYS. SEE STANDARD DRAWING MT-96.26 FOR FURTHER INFORMATION. NON-INTRUSIVE VEHICLE DETECTORS MAY BE USED INSTEAD OF LOOP DETECTORS.

THE CONTRACTOR SHALL BE RESPONSIBLE FOR THE PROCUREMENT OF AND PAYMENT FOR ELECTRIC POWER FROM THE LOCAL UTILITY OR FOR PROVIDING AND MAINTAINING A GENERATOR FOR THE WORK ZONE SIGNAL INSTALLATION.

PAYMENT FOR ALL LABOR, EQUIPMENT, MATERIALS, AND INCIDENTALS SHALL BE INCLUDED IN THE UNIT BID PRICE FOR ITEM SPECIAL WORK ZONE TRAFFIC SIGNAL.

RUMBLE STRIP REMOVAL AND REPLACEMENT

ALL EXISTING RUMBLE STRIPS ON THE I-77 SOUTHBOUND OUTSIDE SHOULDER THAT ARE IN CONFLICT WITH THE PROPOSED MOVEMENT OF TRAFFIC DURING THE MOT OPERATIONS SHALL BE REMOVED BY PAVEMENT PLANING. THE REMOVED RUMBLE STRIP AREAS SHALL THEN BE FILLED WITH ASPHALT CONCRETE SURFACE COURSE. THE RUMBLE STRIP REMOVAL AND REPLACEMENT AREA SHALL BE 2.5 FEET WIDE AND 1.5 INCHES DEEP, CENTERED ON THE RUMBLE STRIP. THE PAVEMENT PLANING AND PLACEMENT OF THE ASPHALT CONCRETE SURFACE COURSE SHOULD BE COMPLETED IN THE SAME OPERATION. THE ESTIMATED REMOVAL AND REPLACEMENT LENGTH IS 1890 FT.

IMMEDIATELY FOLLOWING COMPLETION OF MOT OPERATIONS AND RESTORING THE TRAFFIC TO ITS ORIGINAL POSITION, NEW RUMBLE STRIPS SHALL BE INSTALLED AT THE LOCATION WHERE THE EXISTING RUMBLE STRIPS WERE REMOVED.

THE FOLLOWING ESTIMATED QUANTITIES HAVE BEEN CARRIED TO THE GENERAL SUMMARY:

ITEM 254 - PAVEMENT PLANING, ASPHALT CONCRETE (1.5" DEPTH)	525 SY
ITEM 407 - NON-TRACKING TACK COAT	45 GAL
ITEM 442 - ASPHALT CONCRETE SURFACE COURSE, 12.5 MM, TYPE A (449), AS PER PLAN, PG70-22M, 1-1/2"	22 CY
ITEM 618 - RUMBLE STRIPS, SHOULDER (ASPHALT CONCRETE)	0.36 MILE

NOTIFICATION OF TRAFFIC RESTRICTIONS

THROUGHOUT THE DURATION OF THE PROJECT, THE CONTRACTOR SHALL NOTIFY THE PROJECT ENGINEER IN WRITING OF ALL TRAFFIC RESTRICTIONS AND UPCOMING MAINTENANCE OF TRAFFIC CHANGES. THE CONTRACTOR SHALL NOTIFY THE ENGINEER AT LEAST EIGHTEEN (18) DAYS PRIOR TO IMPLEMENTATION OF ANY WORK ZONE RESTRICTIONS THAT WILL REDUCE THE WIDTH OF ANY LANE ON WHICH TRAFFIC WILL BE MAINTAINED DURING CONSTRUCTION TO MEET THE REQUIRED TIME FRAMES SET FORTH IN THE TABLE BELOW TO INFORM THE SPECIAL HAULING PERMITS SECTION (HAULING.PERMITS@DOT.OHIO.GOV) AND THE DISTRICT PUBLIC INFORMATION OFFICE (PIO). THIS NOTIFICATION SHALL BE RECEIVED BY THE PROJECT ENGINEER PRIOR TO THE PHYSICAL SETUP OF ANY APPLICABLE SIGNS OR MESSAGE BOARDS.

INFORMATION SHOULD INCLUDE, BUT IS NOT LIMITED TO, ALL CONSTRUCTION ACTIVITIES THAT IMPACT OR INTERFERE WITH TRAFFIC AND SHALL LIST THE SPECIFIC LOCATION, TYPE OF WORK, ROAD STATUS, DATE AND TIME OF RESTRICTION, DURATION OF RESTRICTION, NUMBER OF LANES MAINTAINED, NUMBER OF LANES CLOSED, MINIMUM VERTICAL CLEARANCE, MINIMUM WIDTH OF DRIVEABLE PAVEMENT, DETOUR ROUTES, IF APPLICABLE, AND ANY OTHER INFORMATION REQUESTED BY THE PROJECT ENGINEER.

NOTIFICATION TIME TABLE:

ITEM	DURATION OF CLOSURE	NOTICE DUE TO PERMITS & PIO
RAMP & ROAD CLOSURES	>= 2 WEEKS	21 CALENDAR DAYS PRIOR TO CLOSURE
	> 12 HOURS & < 2 WEEKS	14 CALENDAR DAYS PRIOR TO CLOSURE
	<= 12 HOURS	4 CALENDAR DAYS PRIOR TO CLOSURE
LANE CLOSURES & RESTRICTIONS	>= 2 WEEKS	14 CALENDAR DAYS PRIOR TO CLOSURE
	< 2 WEEKS	5 BUSINESS DAYS PRIOR TO CLOSURE
START OF CONSTRUCTION & TRAFFIC PATTERN CHANGES	N/A	14 CALENDAR DAYS PRIOR TO IMPLEMENTATION

ANY UNFORESEEN CONDITIONS NOT SPECIFIED IN THE PLANS REQUIRING TRAFFIC RESTRICTIONS SHALL ALSO BE REPORTED TO THE PROJECT ENGINEER USING THE NOTIFICATION TIME TABLE.

ITEM 614, MAINTAINING TRAFFIC (LANE CLOSURE/REDUCTION REQUIRED)

LENGTH AND DURATION OF LANE CLOSURES AND RESTRICTIONS SHALL BE AT THE APPROVAL OF THE ENGINEER. IT IS THE INTENT TO MINIMIZE THE IMPACT TO THE TRAVELING PUBLIC. LANE CLOSURES OR RESTRICTIONS OVER SEGMENTS OF THE PROJECT IN WHICH NO WORK IS ANTICIPATED WITHIN A REASONABLE TIME FRAME, AS DETERMINED BY THE ENGINEER, SHALL NOT BE PERMITTED. THE LEVEL OF UTILIZATION OF MAINTENANCE OF TRAFFIC DEVICES SHALL BE COMMENSURATE WITH THE WORK IN PROGRESS.

ITEM 614, MAINTAINING TRAFFIC (LANES OPEN DURING HOLIDAYS OR SPECIAL EVENTS)

NO WORK SHALL BE PERFORMED AND ALL EXISTING LANES SHALL BE OPEN TO TRAFFIC DURING THE FOLLOWING DESIGNATED HOLIDAYS OR SPECIAL EVENTS:

NEW YEAR'S (OBSERVED)	GENERAL/REGULAR ELECTION DAY (NOV)
TOTAL SOLAR ECLIPSE (4/8/24)	THANKSGIVING
MEMORIAL DAY	CHRISTMAS (OBSERVED)
FOURTH OF JULY (OBSERVED)	(OTHER HOLIDAY OR SPECIAL EVENT)
LABOR DAY	

THE PERIOD OF TIME THAT THE LANES ARE TO BE OPEN DEPENDS ON THE DAY OF THE WEEK ON WHICH THE HOLIDAY OR SPECIAL EVENT FALLS. THE FOLLOWING SCHEDULE SHALL BE USED TO DETERMINE THIS PERIOD:

DAY OF HOLIDAY OR SPECIAL EVENT	TIME ALL LANES MUST BE OPEN TO TRAFFIC
SUNDAY	12:00N FRIDAY THROUGH 6:00 AM MONDAY
MONDAY	12:00N FRIDAY THROUGH 6:00 AM TUESDAY
MONDAY (TOTAL SOLAR ECLIPSE)	12:00N MONDAY THROUGH 6:00 AM WEDNESDAY
TUESDAY	12:00N MONDAY THROUGH 6:00 AM WEDNESDAY
TUESDAY (GEN./REG. ELECTION)	5:00 AM TUESDAY THROUGH 12:00 AM WEDNESDAY
WEDNESDAY	12:00N TUESDAY THROUGH 6:00 AM THURSDAY
THURSDAY	12:00N WEDNESDAY THROUGH 6:00 AM FRIDAY
THURSDAY (THANKSGIVING ONLY)	6:00 AM WEDNESDAY THROUGH 6:00 AM MONDAY
FRIDAY	12:00N THURSDAY THROUGH 6:00 AM MONDAY
SATURDAY	12:00N FRIDAY THROUGH 6:00 AM MONDAY

DURING THE SAME PERIODS, MAINTAIN PEDESTRIAN ACCESS IF PEDESTRIAN ACCESS WAS PRESENT PRIOR TO CONSTRUCTION.

SHOULD THE CONTRACTOR FAIL TO MEET ANY OF THESE REQUIREMENTS, THE CONTRACTOR SHALL BE ASSESSED A DISINCENTIVE PER THE LANE VALUE CONTRACT.

FLOODLIGHTING

NIGHT TIME WORK SHALL ONLY BE ALLOWED AT PROJECT SITE CUY-77-7.84 AND ONLY WITH THE APPROVAL OF THE ENGINEER.

FLOODLIGHTING OF THE WORK SITE FOR OPERATIONS CONDUCTED DURING NIGHTTIME PERIODS SHALL BE ACCOMPLISHED SO THAT THE LIGHTS DO NOT CAUSE GLARE TO THE DRIVERS ON THE ROADWAY. TO ENSURE THE ADEQUACY OF THE FLOODLIGHT PLACEMENT, THE CONTRACTOR AND THE ENGINEER SHALL DRIVE THROUGH THE WORK SITE EACH NIGHT WHEN THE LIGHTING IS IN PLACE AND OPERATIVE PRIOR TO COMMENCING ANY WORK. IF GLARE IS DETECTED, THE LIGHT PLACEMENT AND SHIELDING SHALL BE ADJUSTED TO THE SATISFACTION OF THE ENGINEER BEFORE WORK PROCEEDS.

PAYMENT FOR ALL LABOR, EQUIPMENT AND MATERIALS SHALL BE INCLUDED IN THE LUMP SUM CONTRACT PRICE FOR ITEM 614, MAINTAINING TRAFFIC.

MAINTENANCE OF TRAFFIC NOTES

DESIGN AGENCY
Environmental Design Group
ENGINEERING & PLANNING CONSULTANTS
250 GARFIELD ST. | MACEDO, OH. 44251
P. 330.468.1179 | F. 330.468.1180
W. ENVIRONMENTALDESIGNGROUP.COM

DESIGNER MSD
REVIEWER SAC 12/29/23
PROJECT ID 112947
SHEET P.10 TOTAL 86

D12-CU-FY2024

MODEL: Sheet PAPERSIZE: 34x22 (in.) DATE: 1/27/2025 TIME: 1:05:21 PM USER: scook
E:\ODOT\21-00121-010 ODOT D-12 Culvert Replacement 112947\112947\400-Engineering\MOT\Sheets\112947_MN002.dgn

ITEM 614, LAW ENFORCEMENT OFFICER (WITH PATROL CAR) FOR ASSISTANCE DURING CONSTRUCTION OPERATIONS

USE OF LAW ENFORCEMENT OFFICERS (LEOS) BY CONTRACTORS OTHER THAN THE USES SPECIFIED BELOW WILL NOT BE PERMITTED AT PROJECT COST. LEOS SHOULD NOT BE USED WHERE THE OMUTCD INTENDS THAT FLAGGERS BE USED.

IN ADDITION TO THE REQUIREMENTS OF C&MS 614 AND THE OMUTCD, A UNIFORMED LEO WITH AN OFFICIAL PATROL CAR (CAR WITH TOP-MOUNTED EMERGENCY FLASHING LIGHTS AND COMPLETE MARKINGS OF THE APPROPRIATE LAW ENFORCEMENT AGENCY) SHALL BE PROVIDED FOR THE FOLLOWING TRAFFIC CONTROL TASKS:

DURING THE ENTIRE ADVANCE PREPARATION AND CLOSURE SEQUENCE WHERE COMPLETE BLOCKAGE OF TRAFFIC IS REQUIRED.

IN ADDITION TO THE REQUIREMENT OF C&MS 614 AND THE OMUTCD, A UNIFORMED LEO WITH AN OFFICIAL PATROL CAR (CAR WITH TOP-MOUNTED EMERGENCY FLASHING LIGHTS AND COMPLETE MARKINGS OF THE APPROPRIATE LAW ENFORCEMENT AGENCY) SHOULD BE PROVIDED FOR THE FOLLOWING TRAFFIC CONTROL TASKS AS APPROVED BY THE ENGINEER:

FOR LANE CLOSURES: DURING INITIAL SET-UP PERIODS, TEAR DOWN PERIODS, SUBSTANTIAL SHIFTS OF A CLOSURE POINT OR WHEN NEW LANE CLOSURE ARRANGEMENTS ARE INITIATED FOR LONG-TERM LANE CLOSURES/SHIFTS (FOR THE FIRST AND LAST DAY OF MAJOR CHANGES IN TRAFFIC CONTROL SETUP).

FOR OPERATIONS WITHOUT POSITIVE PROTECTION OCCURRING WITHIN 10 FEET OF AN OPEN TRAVELED LANE THAT MEET ALL OF THE FOLLOWING CRITERIA:

- ON A MULTI-LANE DIVIDED INTERSTATE, OTHER FREEWAY OR EXPRESSWAY; AND
- AN AUTHORIZED SPEED LIMIT OF 45 MPH OR GREATER THAT IS IN EFFECT AT THE TIME OF THE OPERATION; AND,
- AADT OF 50,000 (OR AADT OF 30,000 WITH 25% OR HIGHER PERCENT TRUCKS)

"WITHOUT POSITIVE PROTECTION" MEANS USE OF DRUMS, CONES, SHADOW VEHICLE, ETC, WITHOUT PROTECTION FROM PORTABLE BARRIER OR OTHER RIGID BARRIER ALONG THE WORK AREA. THIS PHRASE DOES NOT APPLY TO CASES WHERE POSITIVE PROTECTION IS REQUIRED. MOBILE OPERATIONS ARE REGARDED AS "WITHOUT POSITIVE PROTECTION". FOR WORK ZONES USING A COMBINATION OF BARRIER AND TEMPORARY TRAFFIC CONTROL DEVICES (CONES, DRUMS, ETC), THE DESIGNATION SHALL BE BASED UPON THE TYPE OF DEVICES USED IN THE AREA THAT WORKERS ARE LOCATED.

IF MULTIPLE ACTIVE LOCALIZED QUALIFYING WORK AREAS OCCUR WITHOUT POSITIVE PROTECTION, PER MAINLINE TRAFFIC DIRECTION, PROVIDE A UNIFORMED LEO AND OFFICIAL PATROL CAR IN ADVANCE OF:

- THE FIRST ACTIVE WORK AREA THAT DRIVERS WILL ENCOUNTER; OR
- THE ACTIVE WORK AREA LATERALLY CLOSEST TO THE OPEN TRAVELED LANE; OR
- OTHER LOCATION AS APPROVED BY THE ENGINEER.

THE UNIFORMED LEO AND OFFICIAL PATROL CAR MAY RELOCATE AMONG THE LISTED LOCATIONS AS APPROPRIATE AS THE OPERATIONS PROCEED IN THE LOCALIZED QUALIFYING WORK AREAS.

IN GENERAL, LEOS SHOULD BE POSITIONED IN ADVANCE OF AND ON THE SAME SIDE AS THE LANE RESTRICTION (OR AT THE POINT OF ROAD CLOSURE), AND TO MANUALLY CONTROL TRAFFIC MOVEMENTS THROUGH SIGNALIZED INTERSECTIONS IN WORK ZONES.

ITEM 614, LAW ENFORCEMENT OFFICER (WITH PATROL CAR) FOR ASSISTANCE DURING CONSTRUCTION OPERATIONS (CONTINUED)

LEOS SHOULD NOT FORGO THEIR TRAFFIC CONTROL RESPONSIBILITIES TO APPREHEND MOTORISTS FOR ROUTINE TRAFFIC VIOLATIONS. HOWEVER, IF A MOTORIST'S ACTIONS ARE CONSIDERED TO BE RECKLESS, THEN PURSUIT OF THE MOTORIST IS APPROPRIATE.

THE LEOS WORK AT THE DIRECTION OF THE CONTRACTOR. THE CONTRACTOR IS RESPONSIBLE FOR SECURING THE SERVICES OF THE LEOS WITH THE APPROPRIATE AGENCIES AND COMMUNICATING THE INTENTIONS OF THE PLANS WITH RESPECT TO DUTIES OF THE LEOS. THE ENGINEER SHALL HAVE FINAL CONTROL OVER THE LEOS' DUTIES AND PLACEMENT, AND WILL RESOLVE ANY ISSUES THAT MAY ARISE BETWEEN THE TWO PARTIES.

ENSURE PROVIDED LEOS HAVE BEEN TRAINED APPROPRIATE TO THE JOB DECISIONS THEY ARE REQUIRED TO MAKE WHILE ON THE PROJECT, IN ACCORDANCE WITH C&MS 614.03.

THE LEO SHALL REPORT IN TO THE CONTRACTOR PRIOR TO THE START OF THE SHIFT, IN ORDER TO RECEIVE INSTRUCTIONS REGARDING SPECIFIC WORK ASSIGNMENTS DURING HIS/HER SHIFT. THE LEO IS EXPECTED TO STAY AT THE PROJECT SITE FOR THE ENTIRE DURATION OF HIS/HER SHIFT. THE LEO SHALL REPORT TO THE CONTRACTOR AT THE END OF HIS/HER SHIFT. SHOULD IT BE NECESSARY TO LEAVE THE PROJECT SITE, THE LEO SHALL NOTIFY THE ENGINEER. THE CONTRACTOR SHALL PROVIDE THE LEO WITH A TWO-WAY COMMUNICATION DEVICE THAT SHALL BE RETURNED TO THE CONTRACTOR AT THE END OF HIS/HER SHIFT.

LEOS (WITH PATROL CAR) REQUIRED BY THE TRAFFIC MAINTENANCE TASKS ABOVE SHALL BE PAID FOR ON A UNIT PRICE (HOURLY) BASIS UNDER ITEM 614, LAW ENFORCEMENT OFFICER (WITH PATROL CAR) FOR ASSISTANCE. THE FOLLOWING ESTIMATED QUANTITIES HAVE BEEN CARRIED TO THE GENERAL SUMMARY.

ITEM 614, LAW ENFORCEMENT OFFICER WITH PATROL CAR
FOR ASSISTANCE 40 HOURS

THE HOURS PAID SHALL INCLUDE ANY MINIMUM SHOW-UP TIME REQUIRED BY THE LAW ENFORCEMENT AGENCY INVOLVED.

ANY ADDITIONAL COSTS (ADMINISTRATIVE OR OTHERWISE) INCURRED BY THE CONTRACTOR TO OBTAIN THE SERVICES OF A LEO ARE INCLUDED WITH THE BID UNIT PRICE FOR ITEM 614, LAW ENFORCEMENT OFFICER WITH PATROL CAR FOR ASSISTANCE.

LAND VALUE CONTRACT

THE CONTRACTOR SHALL BE ASSESSED DISINCENTIVES AS DESIGNATED IN THE LANE VALUE CONTRACT TABLE FOR EACH UNIT OF TIME THE DESCRIBED CRITICAL LANE/RAMP IS RESTRICTED FROM FULL USE BY THE TRAVELING PUBLIC WITHIN THE RESTRICTED TIME PERIOD. THE LANE VALUE CONTRACT TABLE IS LOCATED BELOW. THE DISINCENTIVES WILL BE ASSESSED FOR ALL RESTRICTIONS OF THE CRITICAL WORK.

CRITICAL WORK IS SHOWN IN THE LANE VALUE CONTRACT TABLE.

CRITICAL WORK IS DEFINED AS HAVING THE DESIGNATED SECTIONS OPEN TO UNRESTRICTED TRAFFIC AS SHOWN IN THE TABLE, OR THE ENTIRE PROJECT IF NOT OTHERWISE LISTED.

UNRESTRICTED TRAFFIC IS DEFINED AS ALL TRAFFIC LANES BEING AVAILABLE FOR USE WITH SPECIFIED STRIPING AND SAFETY FEATURES IN PLACE.

DESCRIPTION OF CRITICAL LANE/RAMP TO BE MAINTAINED	RESTRICTED TIME PERIOD	TIME UNIT	DISINCENTIVE $ PER TIME UNIT
4 LANES OF CUY IR 77, NORTHBOUND, FROM MM7 TO MM8	6:00AM-9:30AM	EACH HOUR	$15,900
4 LANES OF CUY IR 77, SOUTHBOUND, FROM MM7 TO MM8	3:00PM-6:30PM	EACH HOUR	$15,900

MAINTENANCE OF TRAFFIC NOTES

DESIGN AGENCY
Environmental Design Group
AKRON | CLEVELAND | COLUMBUS
330.434.1515 | 800.510.4330
2900 AIRPORT DRIVE, STE 100
ENVIRONMENTALDESIGNGROUP.COM

DESIGNER MSD
REVIEWER SAC 12/29/23
PROJECT ID 112947
SHEET P.11 TOTAL 86

LEGEND

- PORTABLE CONCRETE BARRIER
- IMPACT ATTENUATOR
- DRUMS
- DIRECTION OF TRAVEL, LANE USE (SHOWN FOR CLARITY)

MOT PHASING

PH. 1: INSTALL WORK ZONE PAVEMENT MARKINGS.

PH. 2: RE-LINE EXISTING STORM SEWER CROSSINGS.

PH. 3: RESTORE EXISTING PAVEMENT MARKING PATTERNS.

NOTES:

1. SEE SCDS MT-95.45, MT-99.30, MT-102.10 FOR ADDITIONAL DETAILS.

MOT PAVEMENT MARKING LEGEND

- WZCH — WORK ZONE CHANNELIZING LINE, CLASS I, 12", 873 PAINT (WHITE)
- WZDL — WORK ZONE DOTTED LINE, CLASS I, 6", 873 PAINT (WHITE)
- WZELW — WORK ZONE EDGE LINE, CLASS I, 6", 873 PAINT (WHITE)
- WZELY — WORK ZONE EDGE LINE, CLASS I, 6", 873 PAINT (YELLOW)

SIGNING LEGEND

- EXISTING SIGN

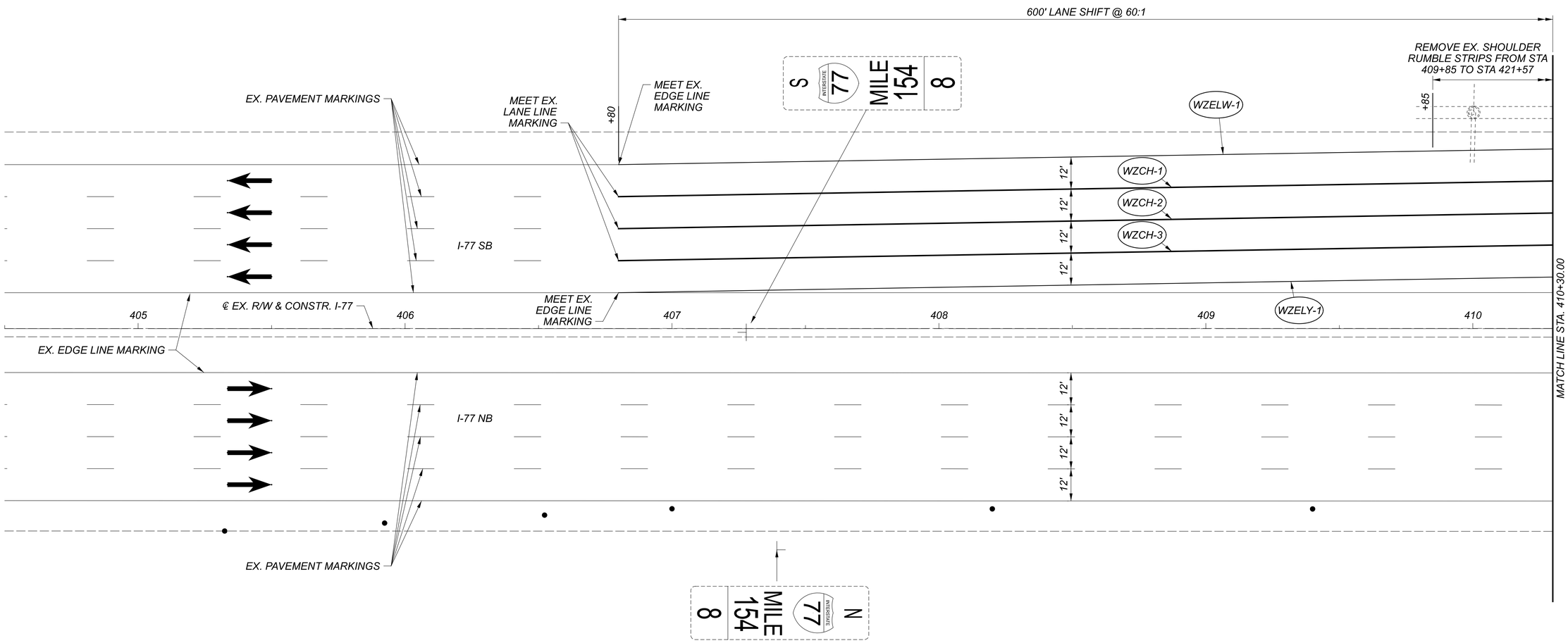

HORIZONTAL SCALE IN FEET
0 10 20 40

MAINTENANCE OF TRAFIC PLAN - PHASES 1 & 2
CUY-77-7.84 STA. 404+50.00 TO STA. 410+30.00

DESIGN AGENCY
Environmental Design Group, LLC
AKRON, OHIO 44312
PH. 330.644.1167 FAX 330.644.1185
W. ENVIRONMENTALDESIGNGROUP.COM

DESIGNER: MSD
REVIEWER: SAC 12/29/23
PROJECT ID: 112947
SHEET: P.12 TOTAL: 86

D12-CU-FY2024

MODEL: CLX_RW_77 - Plan 1 PAPERSIZE: 34x22 (in.) DATE: 1/27/2025 TIME: 1:05:36 PM USER: scook
E:\ODOT\21-0012-010 ODOT D-12 Culvert Replacement 112947\112947\400-Engineering\MOT\Sheets\112947_MP101.dgn

FOR MOT LEGEND, SEE SHEET P.12

NOTES:

1. SEE SCDS MT-95.45, MT-99.30, MT-102.10 FOR ADDITIONAL DETAILS.

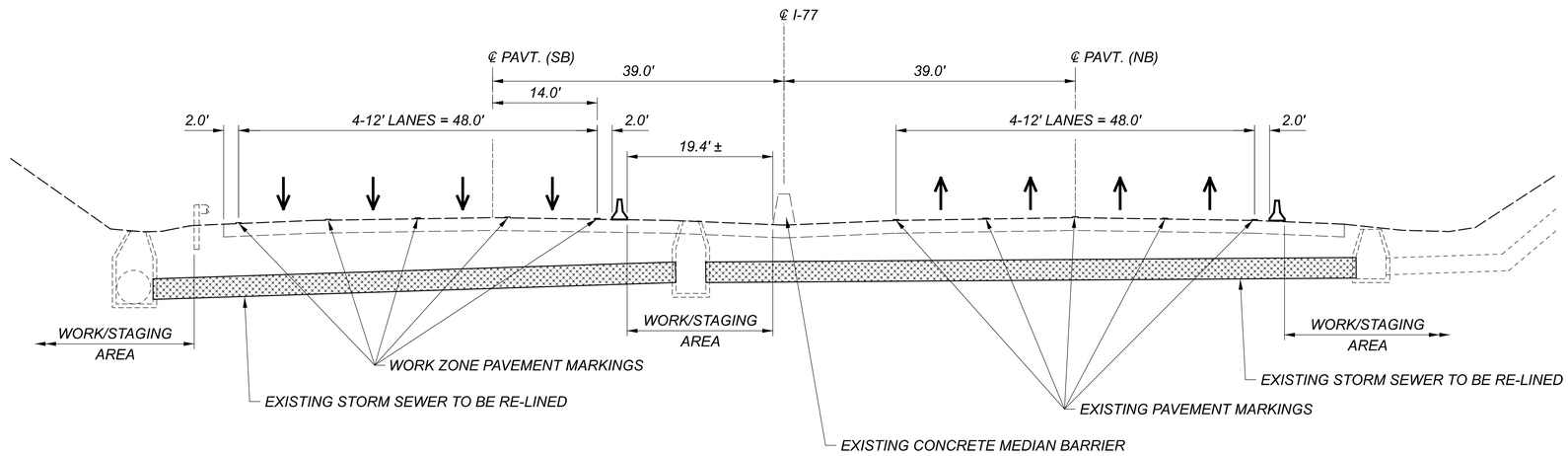

SECTION A-A

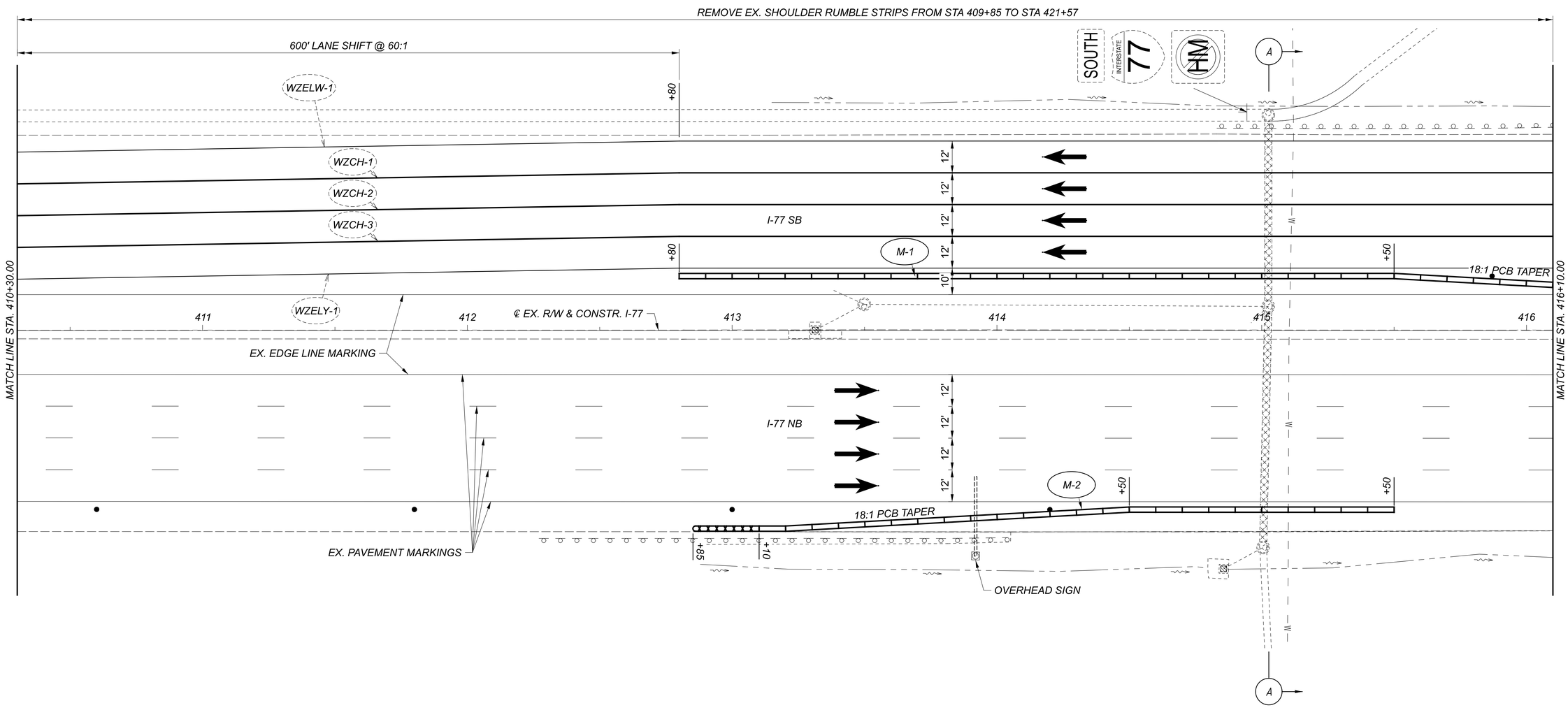

HORIZONTAL SCALE IN FEET
0 10 20 40

MAINTENANCE OF TRAFIC PLAN - PHASES 1 & 2
CUY-77-7.84 STA. 410+30.00 TO STA. 416+10.00

DESIGN AGENCY
Environmental DesignGroup
AKRON, CLEVELAND, COLUMBUS
PH 330.253.1177 FAX 330.253.1633
2900 CLAY AVE. AKRON, OH 44311
W ENVIDESIGNGROUP.COM

DESIGNER
MSD

REVIEWER
SAC 12/29/23

PROJECT ID
112947

SHEET P.13 TOTAL 86

D12-CU-FY2024

MODEL: CLX_RW_77 - Plan 2 PAPERSIZE: 34x22 (in.) DATE: 1/27/2025 TIME: 11:05:49 PM USER: scook
E:\ODOT\21-0021-010 ODOT D-12 Culvert Replacement 112947\112947\400-Engineering\MOT\Sheets\112947_MPI02.dgn

FOR MOT LEGEND, SEE SHEET P.12

NOTES:

1. SEE SCDS MT-95.45, MT-99.30, MT-102.10 FOR ADDITIONAL DETAILS.

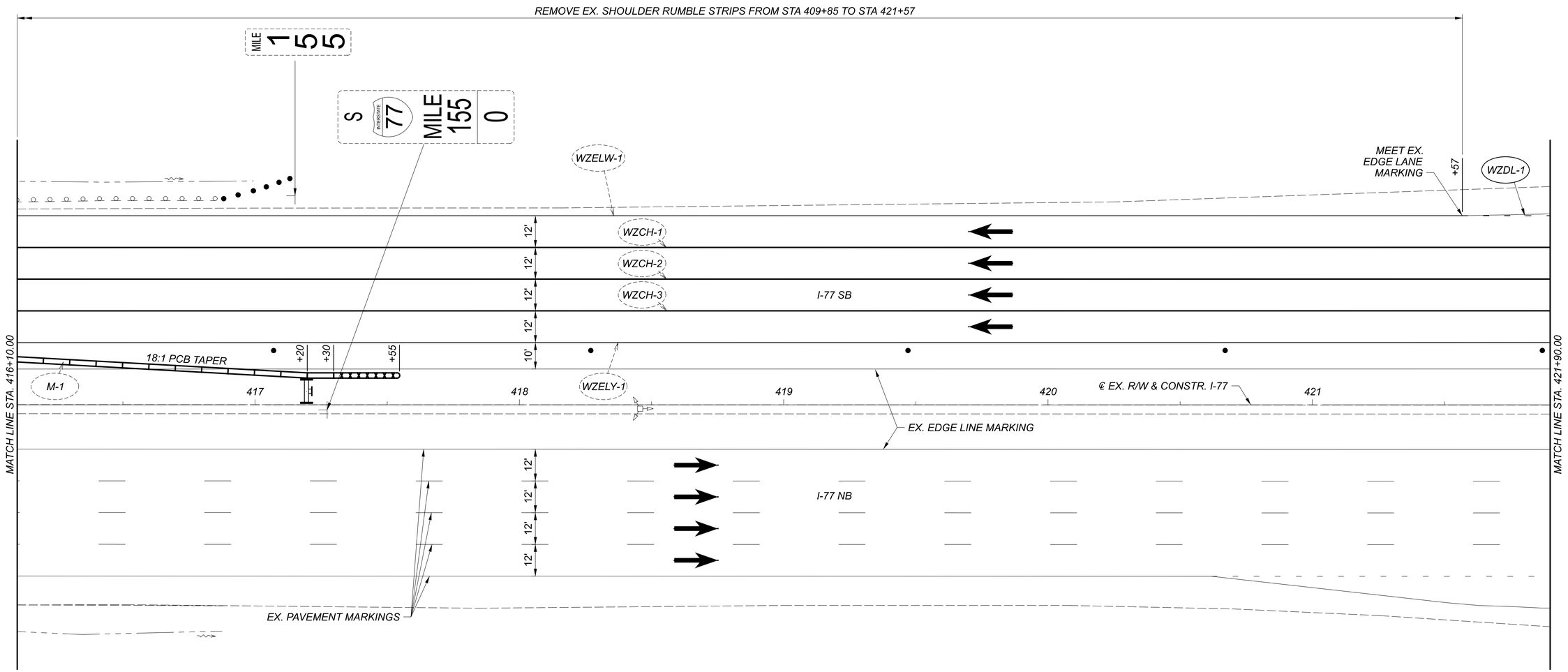

HORIZONTAL SCALE IN FEET
0 10 20 40

MAINTENANCE OF TRAFIC PLAN - PHASES 1 & 2
CUY-77-7.84 STA. 416+10.00 TO STA. 421+90.00

DESIGN AGENCY
Environmental Design Group
ADVANCING CULVERT SOLUTIONS
P: 330.674.5777 F: 330.674.5781
2510 CLARK ST. MILLERSBURG, OHIO 44654
W: ENVIRONMENTALDESIGNGROUP.COM

DESIGNER	MSD
REVIEWER	SAC 12/29/23
PROJECT ID	112947
SHEET	P.14
TOTAL	86

D12-CU-FY2024

MODEL: CLX_RW_77 - Plan 3 PAPERSIZE: 34x22 (in.) DATE: 1/27/2025 TIME: 1:05:52 PM USER: scook
E:\ODOT\21-0012-010 ODOT D-12 Culvert Replacement 112947\112947\400-Engineering\MOT\Sheets\112947_MP103.dgn

FOR MOT LEGEND, SEE SHEET P.12

NOTES:

1. SEE SCDS MT-95.45, MT-99.30, MT-102.10 FOR ADDITIONAL DETAILS.

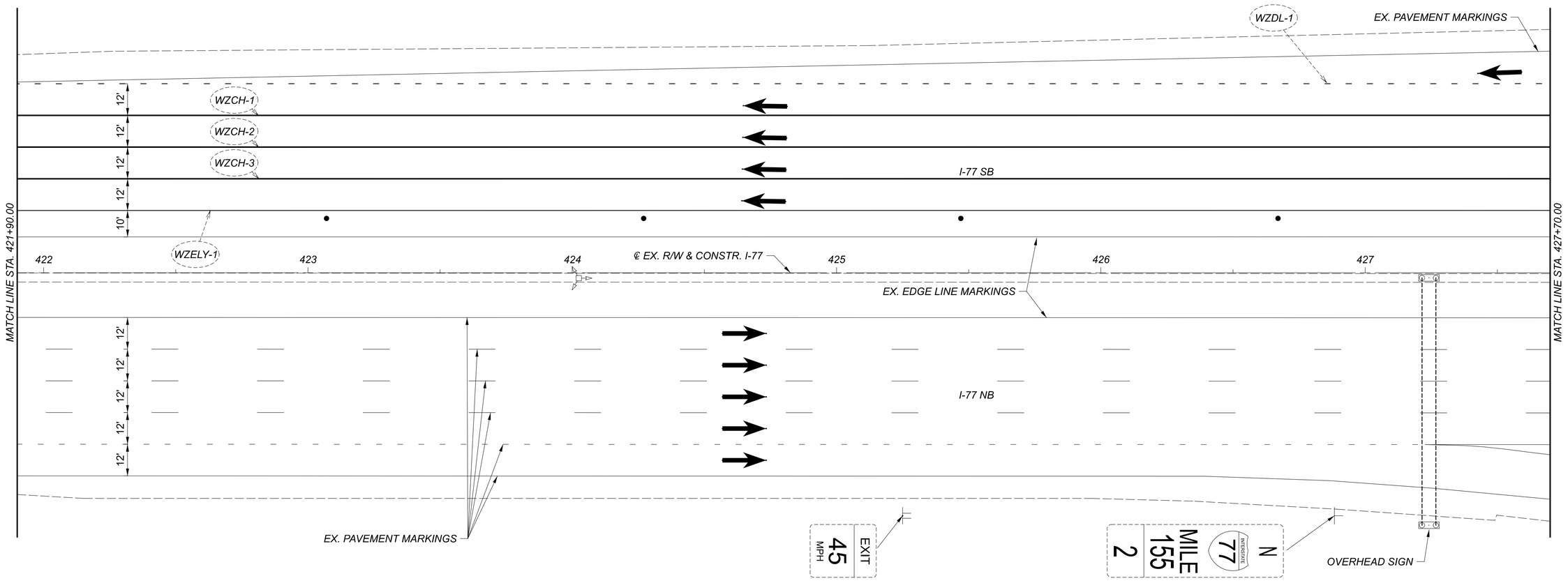

HORIZONTAL SCALE IN FEET
0 10 20 40

MAINTENANCE OF TRAFIC PLAN - PHASES 1 & 2
CUY-77-7.84 STA. 421+90.00 TO STA. 427+70.00

DESIGN AGENCY
Environmental Design Group
AKRON | CLEVELAND | COLUMBUS
ph 330.628.5757 fax 330.628.5760
w ENVIRONMENTALDESIGNGROUP.COM

DESIGNER
MSD

REVIEWER
SAC 12/29/23

PROJECT ID
112947

SHEET P.15 TOTAL 86

D12-CU-FY2024

MODEL: CLX_RW_77 - Plan 4 PAPERSIZE: 34x22 (in.) DATE: 1/27/2025 TIME: 1:05:56 PM USER: scook
E:\ODOT\21-0021-010 ODOT D-12 Culvert Replacement 112947\112947\400-Engineering\MOT\Sheets\112947_MP104.dgn

FOR MOT LEGEND, SEE SHEET P.12

NOTES:

1. SEE SCDS MT-95.45, MT-99.30, MT-102.10 FOR ADDITIONAL DETAILS.

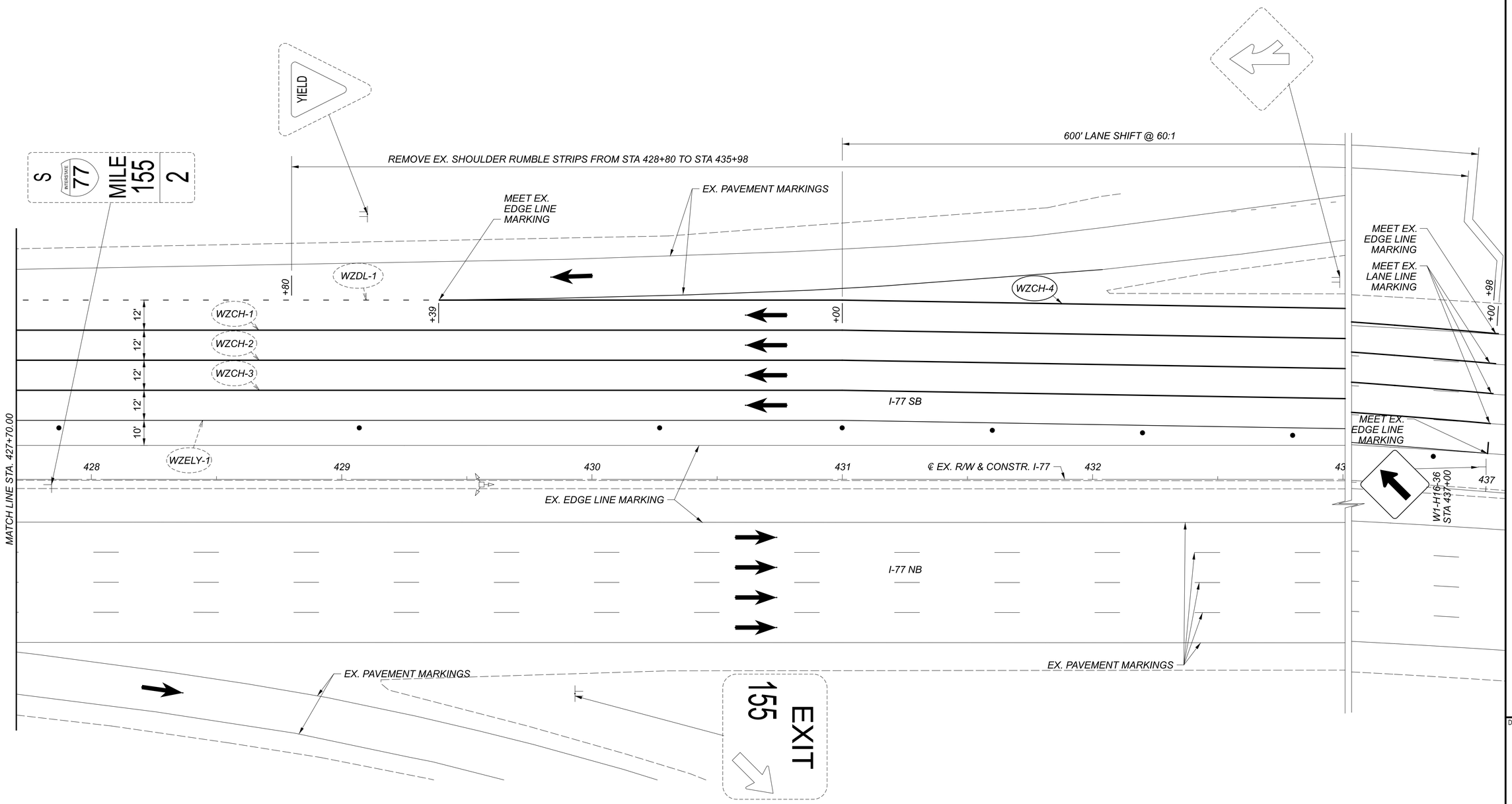

HORIZONTAL SCALE IN FEET
0 10 20 40

MAINTENANCE OF TRAFIC PLAN - PHASES 1 & 2
CUY-77-7.84 STA. 427+70.00 TO STA. 437+00.00

DESIGN AGENCY
Environmental Design Group
A WHOLLY OWNED SUBSIDIARY OF CTL ENGINEERING, INC. OF OHIO
P 330.336.6715 F 330.336.7474 1400 SOUTH MAIN ST. AKRON, OH 44301
W ENVIRONMENTALDESIGNGROUP.COM

DESIGNER	MSD
REVIEWER	SAC 12/29/23
PROJECT ID	112947
SHEET	P.16
TOTAL	86

D12-CU-FY2024

MODEL: CLX_RW_77 - Plan 5 PAPERSIZE: 34x22 (in.) DATE: 1/27/2025 TIME: 1:05:58 PM USER: scook
E:\ODOT\21-0012I-010 ODOT D-12 Culvert Replacement 112947\112947\400-Engineering\MOT\Sheets\112947_MP105.dgn

SHEET NO.	REFERENCE NO.	STATION FROM	STATION TO	SIDE	614 WORK ZONE TRAFFIC SIGNAL	INCREASED BARRIER DELINEATION	WORK ZONE IMPACT ATTENUATOR, 24" WIDE HAZARDS, (UNIDIRECTIONAL)	WORK ZONE IMPACT ATTENUATOR, 24" WIDE HAZARDS, (BIDIRECTIONAL)	WORK ZONE LIGHTING SYSTEM	BARRIER REFLECTOR, TYPE 1, (1 WAY)	BARRIER REFLECTOR, TYPE 1, (BIDIRECTIONAL)	OBJECT MARKER, ONE WAY	OBJECT MARKER, TWO WAY	WORK ZONE CENTER LINE, CLASS 1, 642 PAINT	WORK ZONE EDGE LINE, CLASS 1, 6", 642 PAINT	WORK ZONE EDGE LINE, CLASS 1, 6", 873	WORK ZONE CHANNELIZING LINE, CLASS 1, 12", 873	WORK ZONE DOTTED LINE, CLASS 1, 6", 873	WORK ZONE STOP LINE, CLASS 1, 642 PAINT	622 PORTABLE BARRIER, UNANCHORED
					EACH	FT	EACH	EACH	EACH	EACH		EACH	EACH	FT	FT	FT	FT	FT	FT	FT
		CUY-77-7.84																		
		PHASE 1																		
		I-77 SB																		
P.12-P.16	WZELW-1	406+80.00	421+57.00	LT												1477				
P.12-P.16	WZCH-1	406+80.00	437+00.00	LT													3020			
P.12-P.16	WZCH-2	406+80.00	437+00.00	LT													3020			
P.12-P.16	WZCH-3	406+80.00	437+00.00	LT													3020			
P.16	WZCH-4	429+39.00	437+00.00	LT												761				
P.12-P.16	WZELY-1	406+80.00	437+00.00	LT												3020				
P.14	WZDL-1	421+57.00	429+39.00	LT														782		
P.13-P.14	M-1	412+80.00	417+30.00	LT		450	1			10		10								450
		PHASE 1																		
		I-77 NB																		
P.13	M-2	413+10.00	415+50.00	RT		240	1			6		6								240
				SUBTOTAL, CARRIED TO SHEET P.28	0	690	2	0	0	16	0	16	0	0 FT 0.00 MILE	0 FT 0.00 MILE	5258 FT 1.00 MILE	9060	782	0	690

MAINTENANCE OF TRAFFIC SUBSUMMARY
CUY-77-7.84

DESIGN AGENCY
Environmental Design Group
ARCHITECTURE • CIVIL • LANDSCAPE
350 SOUTH 5TH ST. • PO BOX 04 A.S.U.
COLUMBUS, OHIO 43215-4193
EDG@EDGRGROUP.COM

DESIGNER
MSD

REVIEWER
SAC 12/29/23

PROJECT ID
112947

SHEET P.17 TOTAL 86

D12-CU-FY2024

MODEL: Sheet PAPERSIZE: 34x22 (in.) DATE: 1/27/2025 TIME: 4:05:59 PM USER: scook
E:\ODOT\21-0012I-010 ODOT D-12 Culvert Replacement 112947\112947\400-Engineering\MOT\Sheets\112947_MS101.dgn

LEGEND

CONSTRUCTION ACCESS ROUTE

DIRECTION OF TRAVEL, LANE USE (SHOWN FOR CLARITY)

CONSTRUCTION LIMITS

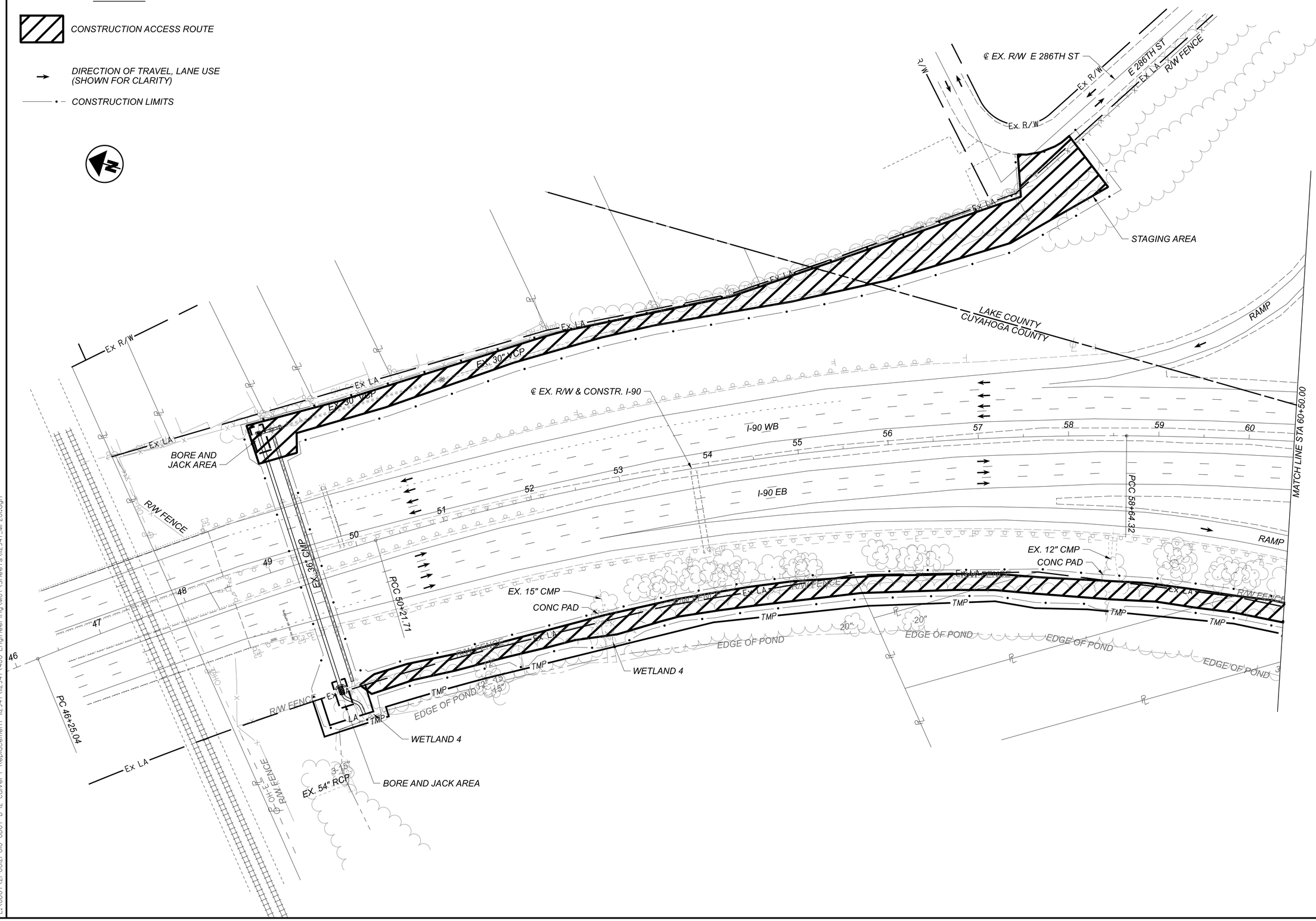

HORIZONTAL SCALE IN FEET
0 25 50 100

CONTRACTOR ACCESS ROUTE
CUY-90-29.92 STA 46+00.00 TO STA 60+50.00

DESIGN AGENCY
Environmental Design Group, INC.
LANDSCAPE ARCHITECTURE
3100 CLARK AVE. PH (216) 781-9820
CLEVELAND, OHIO 44115 FX (216) 781-9821
ENVDESIGNGROUP.COM

DESIGNER
MSD

REVIEWER
SAC 12/29/23

PROJECT ID
112947

SHEET P.18 TOTAL 86

D12-CU-FY2024

MODEL: Sheet PAPERSIZE: 34x22 (in.) DATE: 1/27/2025 TIME: 1:06:06 PM USER: scook
E:\ODOT\21-0012I-010 ODOT D-12 Culvert Replacement 112947\112947\400-Engineering\MOT\Sheets\112947_MP20I.dgn

LEGEND

CONSTRUCTION ACCESS ROUTE

DIRECTION OF TRAVEL, LANE USE (SHOWN FOR CLARITY)

CONSTRUCTION LIMITS

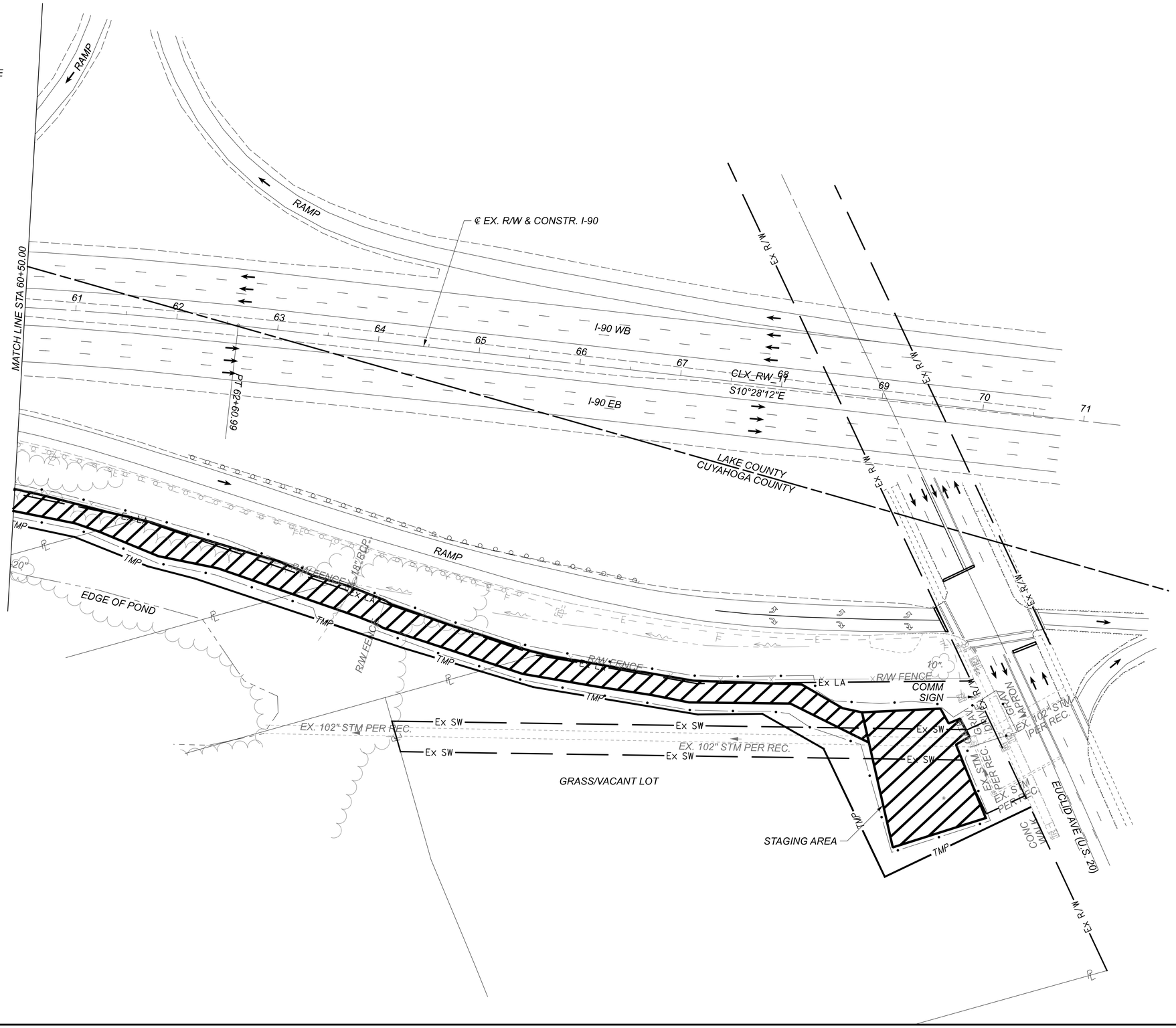

HORIZONTAL SCALE IN FEET
0 25 50 100

CONTRACTOR ACCESS ROUTE
CUY-90-29.92 STA 60+50.00 TO STA 71+50.00

DESIGN AGENCY
Environmental Design Group
LANDSCAPE ARCHITECTURE
216 EAST 9TH ST. PA 204, STE. 450
CLEVELAND, OHIO 44114
W: ENVIRONMENTALDESIGNGROUP.COM

DESIGNER	MSD
REVIEWER	SAC 12/29/23
PROJECT ID	112947
SHEET	P.19
TOTAL	86

D12-CU-FY2024

MODEL: Sheet PAPERSIZE: 34x22 (in.) DATE: 1/27/2025 TIME: 1:06:09 PM USER: scook
E:\ODOT\21-0012I-010 ODOT D-12 Culvert Replacement 112947\112947\400-Engineering\MOT\Sheets\112947_MP202.dgn

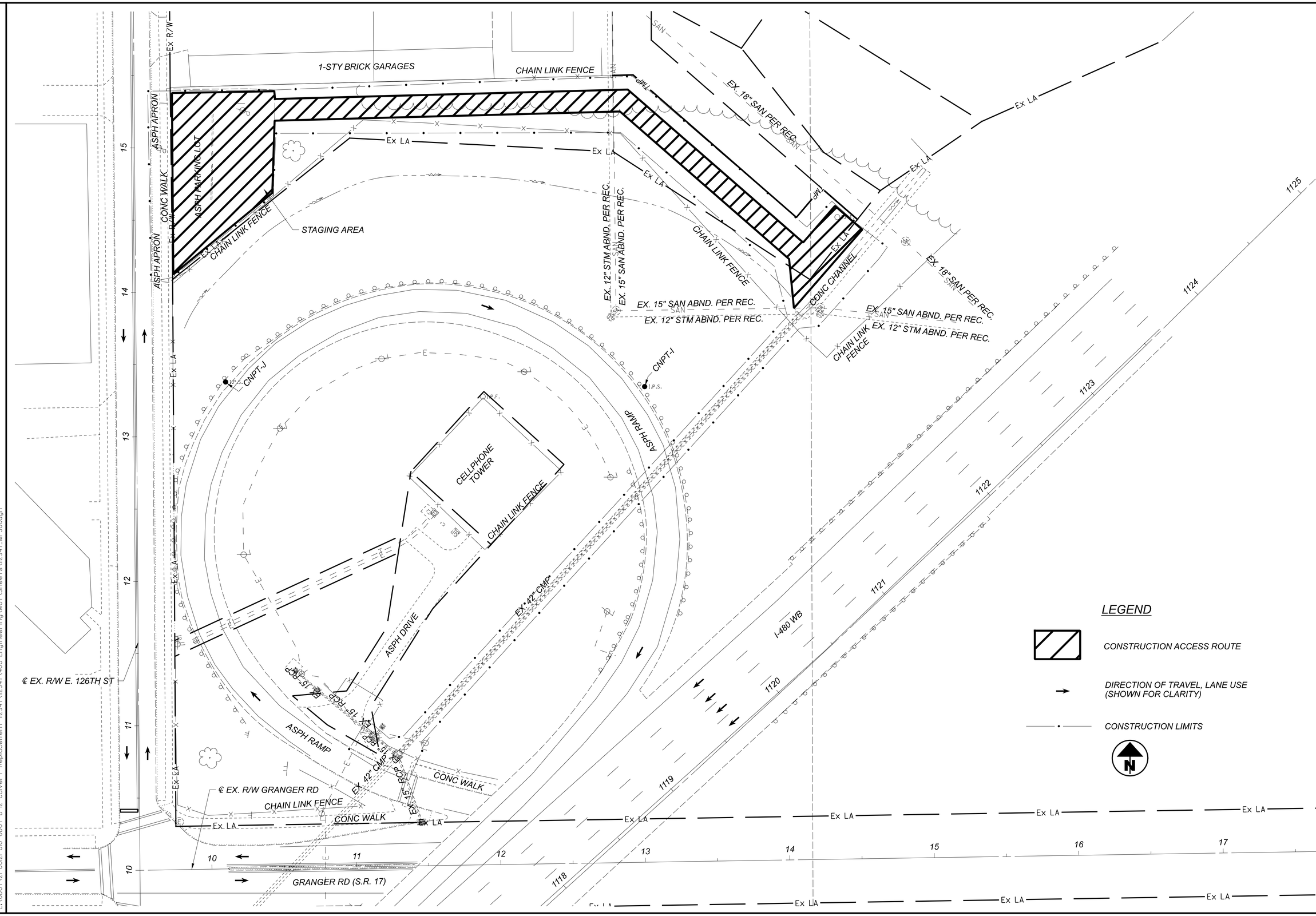

LEGEND

- CONSTRUCTION ACCESS ROUTE
- DIRECTION OF TRAVEL, LANE USE (SHOWN FOR CLARITY)
- CONSTRUCTION LIMITS

HORIZONTAL SCALE IN FEET
0 15 30 60

CONTRACTOR ACCESS ROUTE
CUY-18271-0.13

DESIGN AGENCY
Environmental Design Group
ARCHITECTS ENGINEERS PLANNERS
810 CANTON ST. TEL (216) 781-1460
CLEVELAND, OHIO 44115 FAX (216) 781-1461
E-MAIL: ENVIRDESIGNGROUP@AOL.COM

DESIGNER
MSD

REVIEWER
SAC 12/29/23

PROJECT ID
112947

SHEET P.20 TOTAL 86

D12-CU-FY2024

MODEL: Sheet PAPERSIZE: 34x22 (in.) DATE: 1/27/2025 TIME: 1:06:31 PM USER: scook
E:\ODOT\21-0012-010 ODOT D-12 Culvert Replacement 112947\112947\400-Engineering\MOT\Sheets\112947_MP301.dgn

PHASE 1: CONSTRUCT GUARDRAIL IN THE LEFT (NORTH) SIDE OF THE ROADWAY USING FLAGGERS.

PHASE 2: INSTALL TEMPORARY TRAFFIC SIGNAL.

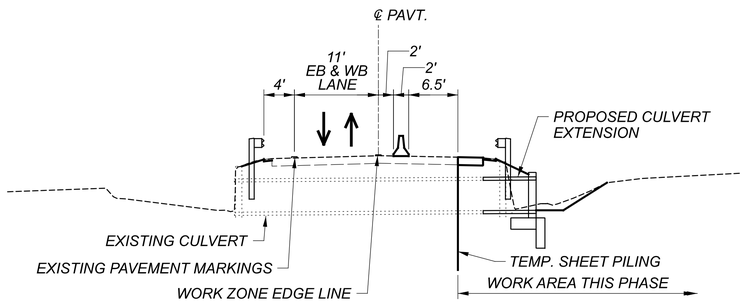

PHASE 3: CONSTRUCT INLET EXTENSION, HEADWALL, AND WINGWALLS.
REPAIR RIGHT (SOUTH) PAVEMENT EDGE.
CONSTRUCT GUARDRAIL ON THE RIGHT (SOUTH) SIDE OF ROADWAY.

SECTION A-A

PHASE	1 (US 322 EB)			2 (US 322 WB)		
INTERVAL	1	2	3	4	5	6
TIMING (SEC)	16	4	20	16	4	20

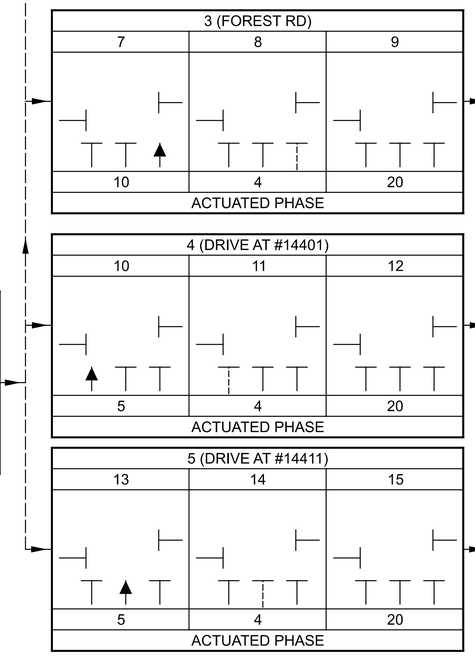

SIGNAL TIMING DIAGRAM

LEGEND

- PORTABLE CONCRETE BARRIER
- IMPACT ATTENUATOR
- DRUMS
- TEMPORARY SHEET PILING
- DIRECTION OF TRAVEL, LANE USE (SHOWN FOR CLARITY)
- TEMPORARY SIGNAL SUPPORT

MOT PAVEMENT MARKING LEGEND

- WZCL — WORK ZONE CENTER LINE, CLASS I, 642 PAINT (DOUBLE SOLID YELLOW)
- WZEL — WORK ZONE EDGE LINE, CLASS I, 6", 642 PAINT (WHITE)
- WZSL — WORK ZONE STOP LINE, CLASS I, 642 PAINT

NOTES:

1. SEE SCD MT-96.11 FOR ADDITIONAL DETAILS

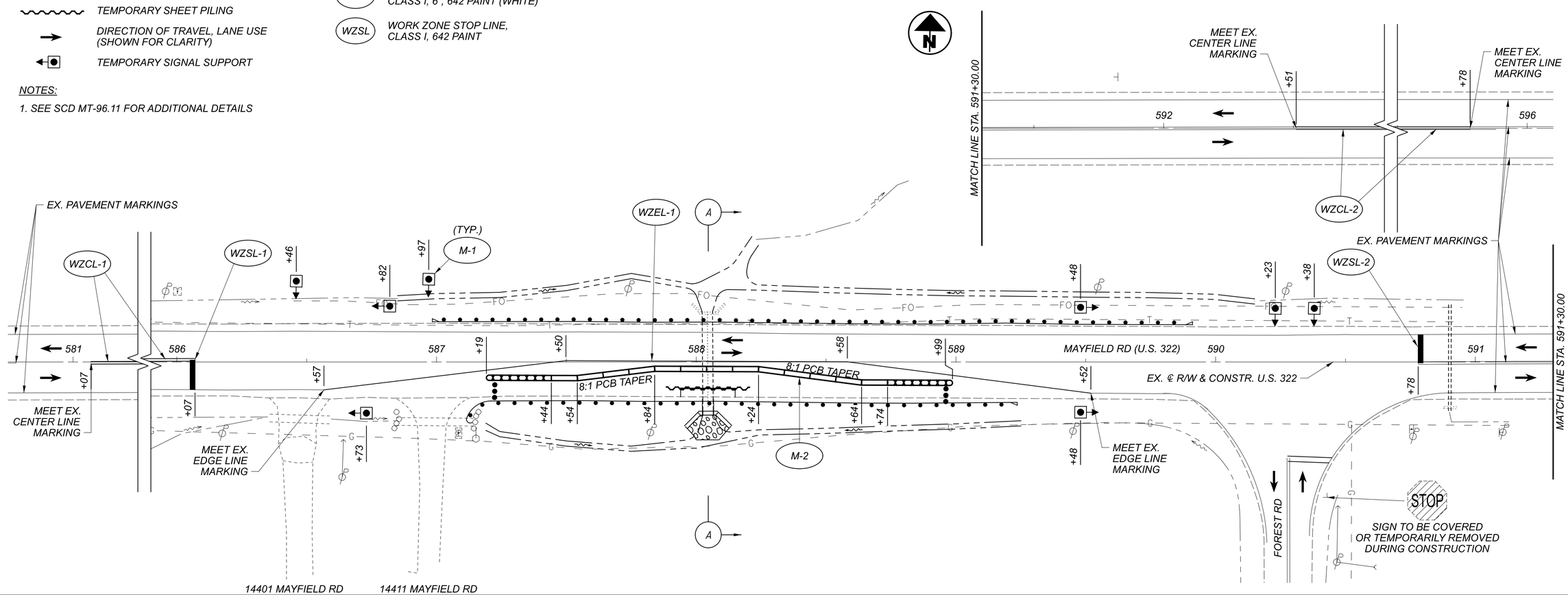

HORIZONTAL SCALE IN FEET
0 10 20 40

MAINTENANCE OF TRAFIC PLAN - PHASE 3
GEA-322-13.88

DESIGN AGENCY
Environmental Design Group
LANDSCAPE ARCHITECTURE
PO 350 SANTA FE · PACIFIC, MO 63069
P 636.938.7474 · F 636.938.7475
W ENVIRONMENTALDESIGNGROUP.COM

DESIGNER
MSD

REVIEWER
SAC 12/29/23

PROJECT ID
112947

SHEET P.21 TOTAL 86

D12-CU-FY2024

MODEL: CLX_RW_322 - Plan 1 PAPERSIZE: 34x22 (in.) DATE: 1/27/2025 TIME: 10:16 PM USER: scook
EN\ODOT\21-0012I-010 ODOT D-12 Culvert Replacement 112947\112947\400-Engineering\MOT\Sheets\112947_MP401.dgn

SHEET NO.	REFERENCE NO.	STATION FROM	STATION TO	SIDE	WORK ZONE TRAFFIC SIGNAL	INCREASED BARRIER DELINEATION	WORK ZONE IMPACT ATTENUATOR, 24" WIDE HAZARDS, (UNIDIRECTIONAL)	WORK ZONE IMPACT ATTENUATOR, 24" WIDE HAZARDS, (BIDIRECTIONAL)	WORK ZONE LIGHTING SYSTEM	BARRIER REFLECTOR, TYPE 1, (1 WAY)	BARRIER REFLECTOR, TYPE 1, (BIDIRECTIONAL)	OBJECT MARKER, ONE WAY	OBJECT MARKER, TWO-WAY	WORK ZONE CENTER LINE, CLASS 1, 642 PAINT	WORK ZONE EDGE LINE, CLASS 1, 6", 642 PAINT	WORK ZONE EDGE LINE, CLASS 1, 6", 873	WORK ZONE CHANNELIZING LINE, CLASS 1, 12", 873	WORK ZONE DOTTED LINE, CLASS 1, 6", 873	WORK ZONE STOP LINE, CLASS 1, 642 PAINT	PORTABLE BARRIER, UNANCHORED
													614							622
					EACH	FT	EACH	EACH	EACH	EACH		EACH	EACH	FT	FT	FT	FT	FT	FT	FT
		GEA-322-13.88																		
		PHASE 2																		
		US 322																		
P.21	*M-1*	*586+46.00*	*590+38.00*	*LT/RT*	*1*				*1*											
P.21																				
		PHASE 3																		
		US 322																		
P.21	*WZCL-1*	*581+07.00*	*586+07.00*	*CL*										*500*						
P.21	*WZSL-1*	*586+07.00*		*RT*															*12*	
P.21	*WZEL-1*	*586+57.00*	*589+52.00*	*RT*											*297*					
P.21	*WZSL-2*	*590+78.00*		*LT*															*11*	
P.21	*WZCL-2*	*592+51.00*	*595+78.00*	*CL*										*327*						
P.21	*M-2*	*587+44.00*	*588+74.00*	*RT*		*130*		*2*			*4*		*4*							*130*
SUBTOTAL, CARRIED TO SHEET P.28					*1*	*130*	*0*	*2*	*1*	*0*	*4*	*0*	*4*	*827 FT* *0.16 MILE*	*297 FT* *0.06 MILE*	*0 FT* *0.00 MILE*	*0*	*0*	*23*	*130*

D12-CU-FY2024

MODEL: Sheet PAPERSIZE: 34x22 (in.) DATE: 1/27/2025 TIME: 4:07:19 PM USER: scook
E:\ODOT\21-0012I-010 ODOT D-12 Culvert Replacement 112947\112947\400-Engineering\MOT\Sheets\112947_MS401.dgn

MAINTENANCE OF TRAFFIC SUBSUMMARY
GEA-322-13.88

DESIGN AGENCY
Environmental Design Group
ARCHITECTURE • CIVIL • LANDSCAPE
250 SOUTH 5TH ST. PO BOX 151
COLUMBUS, OHIO 43215
ENVIRESIGNGROUP.COM

DESIGNER
MSD

REVIEWER
SAC 12/29/23

PROJECT ID
112947

SHEET P.22 TOTAL 86

PHASE 1: INSTALL TEMPORARY TRAFFIC SIGNAL.

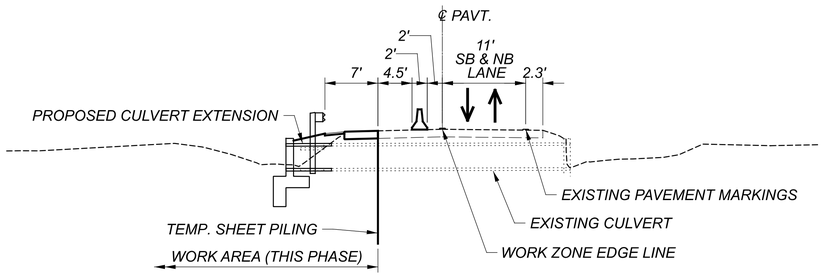

PHASE 2: ESTABLISH STAFFORD ROAD (WEST) DETOUR ROUTE.
CONSTRUCT OUTLET EXTENSION, HEADWALL, AND WINGWALLS.
REPAIR LEFT (WEST) PAVEMENT EDGE.
CONSTRUCT PROPOSED GUARDRAIL ON LEFT (WEST) SIDE OF ROAD.

SECTION A-A

PHASE	1 (SR 44 NB)			2 (SR 44 SB)		
INTERVAL	1	2	3	4	5	6
TIMING (SEC)	26	4	20	26	4	20

SIGNAL TIMING DIAGRAM

3 (STAFFORD RD)		
7	8	9
NOT USED IN THIS PHASE		
10	4	20
ACTUATED PHASE		

4 (DRIVE AT #16834)		
10	11	12
5	4	20
ACTUATED PHASE		

5 (DRIVE AT #16831)		
13	14	15
5	4	20
ACTUATED PHASE		

6 (DRIVE AT #16821)		
16	17	18
5	4	20
ACTUATED PHASE		

HORIZONTAL SCALE IN FEET 0 10 20 40

LEGEND

- PORTABLE CONCRETE BARRIER
- IMPACT ATTENUATOR
- DRUMS
- TEMPORARY SHEET PILING
- DIRECTION OF TRAVEL, LANE USE (SHOWN FOR CLARITY)
- TEMPORARY SIGNAL SUPPORT

NOTES:

1. SEE SCD MT-96.11 FOR ADDITIONAL DETAILS

M-3 NOT USED

SIGNING LEGEND

EXISTING SIGN

MOT PAVEMENT MARKING LEGEND

- WZCL — WORK ZONE CENTER LINE, CLASS I, 642 PAINT (DOUBLE SOLID YELLOW)
- WZEL — WORK ZONE EDGE LINE, CLASS I, 6", 642 PAINT (WHITE)
- WZSL — WORK ZONE STOP LINE, CLASS I, 642 PAINT

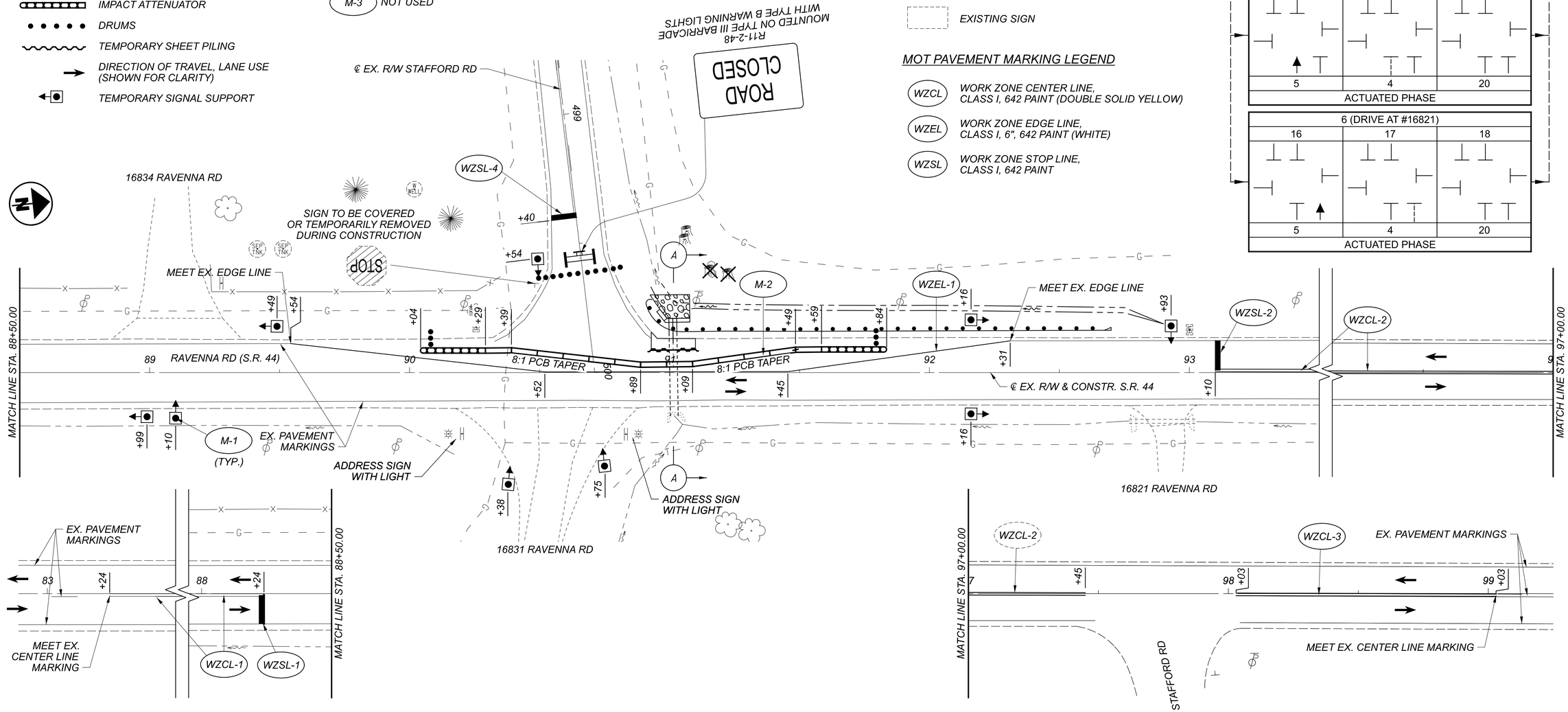

MAINTENANCE OF TRAFFIC PLAN - PHASE 1 & 2
GEA-44-4.52

DESIGN AGENCY
Environmental Design Group, LLC
ADVANCE ENGINEERING & DESIGN
350 SOUTH 5TH ST. PO BOX 351, MARION, OHIO 43302
P: 740.387.3.7 F: 740.387.3.8
ENVIRONMENTALDESIGNGROUP.COM

DESIGNER MSD
REVIEWER SAC 12/29/23
PROJECT ID 112947
SHEET P.23 TOTAL 86

D12-CU-FY2024

MODEL: CLX_RW_44 - Plan | PAPERSIZE: 34x22 (in.) DATE: 3/26/2025 TIME: 4:27:36 PM USER: scook
E:\ODOT\21-0012|-010 ODOT D-12 Culvert Replacement 112947\112947\400-Engineering\MOT\Sheets\112947_MP501.dgn

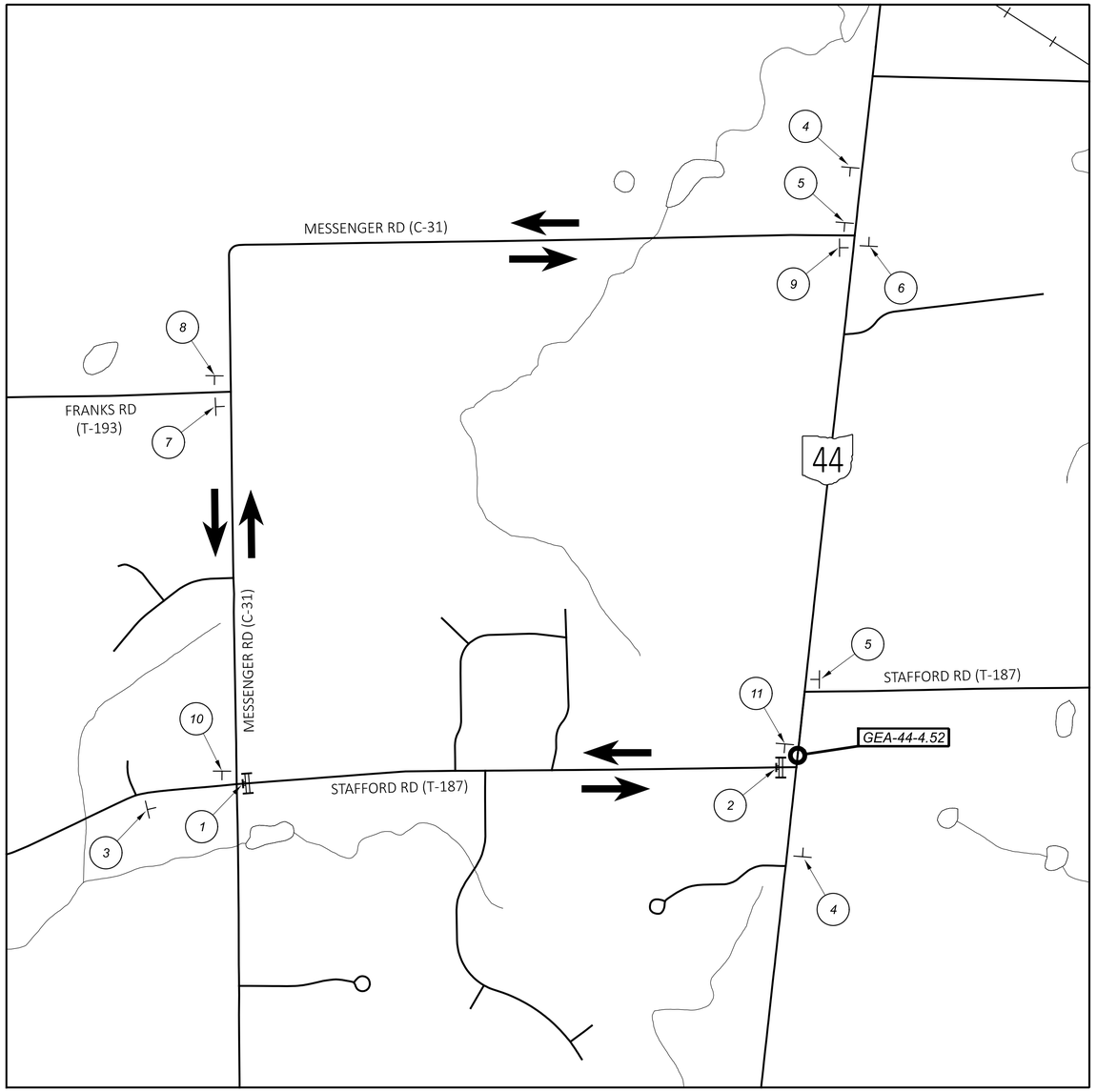

DETOUR ROUTE

NOT TO SCALE

NOTE:
ALL DETOUR RELATED SIGNS SHALL BE PAID FOR UNDER ITEM 614, DETOUR SIGNING, AS PER PLAN.

1

ROAD CLOSED
2.7 MILES AHEAD
LOCAL TRAFFIC ONLY

R11-3a-60

DETOUR

M4-10L-48

BOTH SIGNS MOUNTED ON TYPE III BARRICADE

2

ROAD CLOSED

R11-3-48

MOUNTED ON TYPE III BARRICADE

3

ROAD CLOSED AHEAD

W20-3-36

STAFFORD ROAD

W16-H8P-48

EAST

M3-2-24

4

ROAD CLOSED AHEAD

W20-3-36

STAFFORD ROAD

W16-H8P-48

WEST

M3-4-24

5

DETOUR

M4-8-24

STAFFORD ROAD

W16-H8P-48

WEST

M3-4-24

M6-1R-21

6

DETOUR

M4-8-24

STAFFORD ROAD

W16-H8P-48

WEST

M3-4-24

M6-1-21

7

DETOUR

M4-8-24

STAFFORD ROAD

W16-H8P-48

EAST

M3-2-24

M6-1-21

8

DETOUR

M4-8-24

STAFFORD ROAD

W16-H8P-48

WEST

M3-4-24

M6-3-21

9

DETOUR

M4-8-24

STAFFORD ROAD

W16-H8P-48

EAST

M3-2-24

M6-1R-21

10

END DETOUR

M4-8a-24

STAFFORD ROAD

W16-H8P-48

WEST

M3-4-24

11

END DETOUR

M4-8a-24

STAFFORD ROAD

W16-H8P-48

EAST

M3-2-24

STAFFORD ROAD (WEST) DETOUR ROUTE, PHASE 2
GEA-44-4.52

DESIGN AGENCY
Environmental Design Group
AKRON, OHIO
PH. 330.633.1777 FAX 330.633.1820
E. ENVIDESIGNGROUP@AOL.COM
W. ENVIDESIGNGROUP.COM

DESIGNER
MSD

REVIEWER
SAC 12/29/23

PROJECT ID
112947

SHEET P.24 TOTAL 86

D12-CU-FY2024

MODEL: Sheet PAPERSIZE: 34x22 (in.) DATE: 1/27/2025 TIME: 1:07:26 PM USER: scook
E:\ODOT\21-0021-010 ODOT D-12 Culvert Replacement 112947\112947\400-Engineering\MOT\Sheets\112947_MD005.dgn

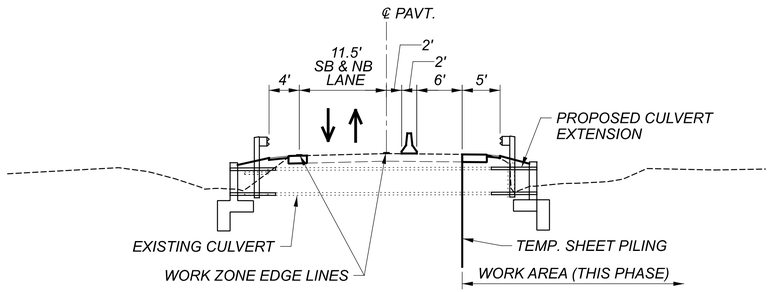

PHASE 3: CONSTRUCT INLET EXTENSION, HEADWALL, AND WINGWALLS.
REPAIR RIGHT (EAST) PAVEMENT EDGE.
CONSTRUCT PROPOSED GUARDRAIL ON RIGHT (EAST) SIDE OF ROAD.

SECTION A-A

PHASE	1 (SR 44 NB)			2 (SR 44 SB)		
INTERVAL	1	2	3	4	5	6
TIMING (SEC)	26	4	20	26	4	20

SIGNAL TIMING DIAGRAM

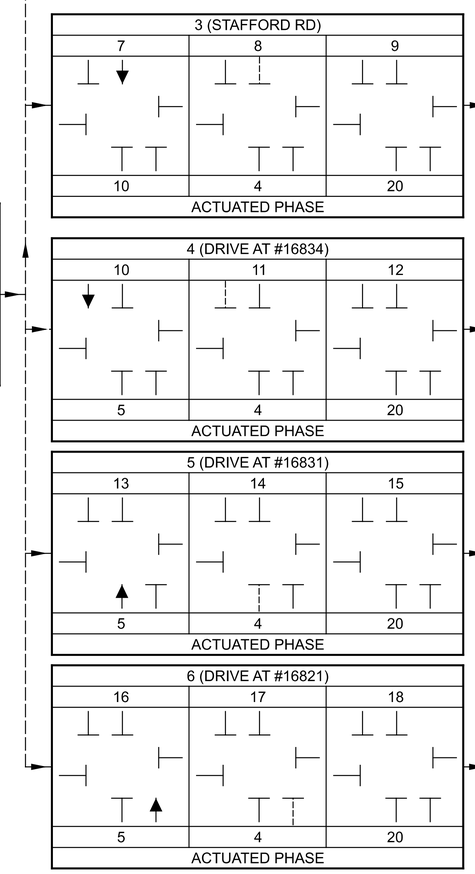

LEGEND

- PORTABLE CONCRETE BARRIER
- IMPACT ATTENUATOR
- DRUMS
- TEMPORARY SHEET PILING
- DIRECTION OF TRAVEL, LANE USE (SHOWN FOR CLARITY)
- TEMPORARY SIGNAL SUPPORT

MOT PAVEMENT MARKING LEGEND

- WZCL — WORK ZONE CENTER LINE, CLASS I, 642 PAINT (DOUBLE SOLID YELLOW)
- WZEL — WORK ZONE EDGE LINE, CLASS I, 6", 642 PAINT (WHITE)
- WZSL — WORK ZONE STOP LINE, CLASS I, 642 PAINT

SIGNING LEGEND

- EXISTING SIGN

NOTES:

1. SEE SCD MT-96.11 FOR ADDITIONAL DETAILS

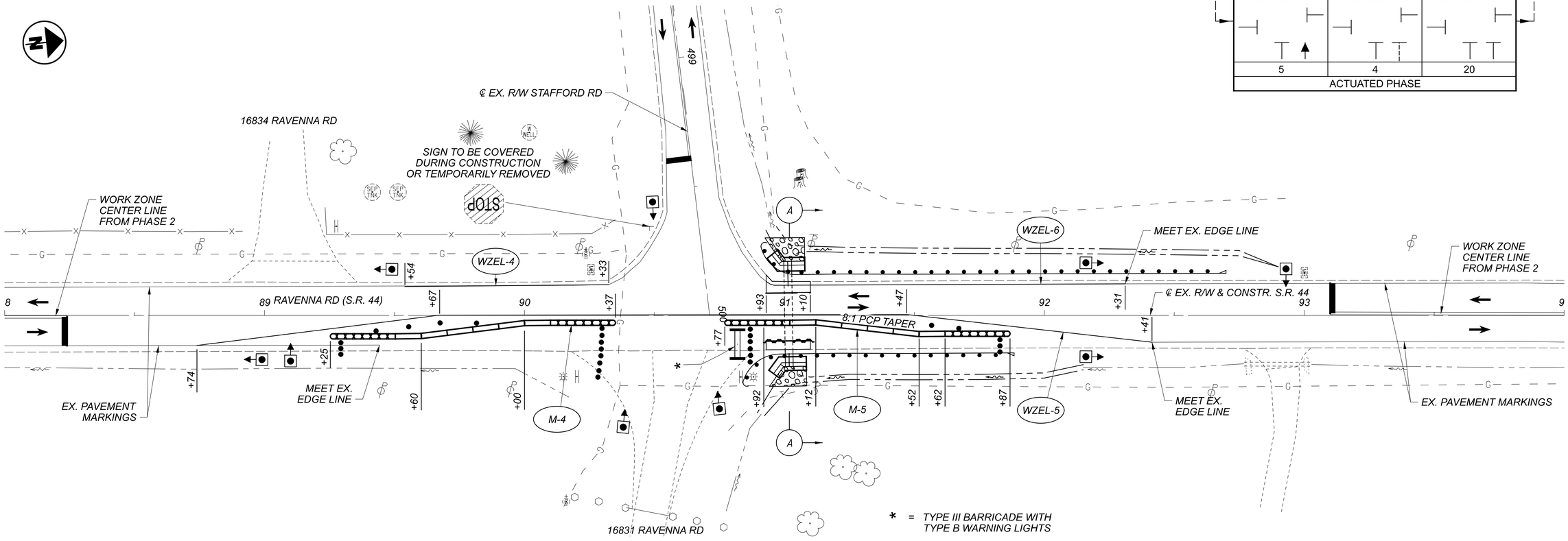

HORIZONTAL SCALE IN FEET
0 10 20 40

MAINTENANCE OF TRAFIC PLAN - PHASE 3
GEA-44-4.52

DESIGN AGENCY
Environmental Design Group
ASHLAND, OHIO & COLUMBUS
P: 419.289.1377 F: 419.289.1820
W: ENVIRONMENTALDESIGNGROUP.COM

DESIGNER: MSD
REVIEWER: SAC 12/29/23
PROJECT ID: 112947
SHEET: P.25 TOTAL: 86

D12-CU-FY2024

MODEL: CLX_RW_S44 - Plan | PAPERSIZE: 34x22 (in.) DATE: 3/27/2025 TIME: 9:52:14 AM USER: scook
E:\ODOT\21-00121-010 ODOT D-12 Culvert Replacement 112947\112947\400-Engineering\MOT\Sheets\112947_MP502.dgn

SHEET NO.	REFERENCE NO.	STATION FROM	STATION TO	SIDE	614 WORK ZONE TRAFFIC SIGNAL	INCREASED BARRIER DELINEATION	WORK ZONE IMPACT ATTENUATOR, 24" WIDE HAZARDS, (UNIDIRECTIONAL)	WORK ZONE IMPACT ATTENUATOR, 24" WIDE HAZARDS, (BIDIRECTIONAL)	WORK ZONE LIGHTING SYSTEM	BARRIER REFLECTOR, TYPE 1, (1 WAY)	BARRIER REFLECTOR, TYPE 1, (BIDIRECTIONAL)	OBJECT MARKER, ONE WAY	OBJECT MARKER, TWO-WAY	WORK ZONE CENTER LINE, CLASS 1, 642 PAINT	WORK ZONE EDGE LINE, CLASS 1, 6", 642 PAINT	WORK ZONE EDGE LINE, CLASS 1, 6", 873	WORK ZONE CHANNELIZING LINE, CLASS 1, 12", 873	WORK ZONE DOTTED LINE, CLASS 1, 6", 873	WORK ZONE STOP LINE, CLASS 1, 642 PAINT	622 PORTABLE BARRIER, UNANCHORED
					EACH	FT	EACH	EACH	EACH	EACH		EACH	EACH	FT	FT	FT	FT	FT	FT	FT
		GEA-44-4.52																		
		PHASE 1																		
		SR 44																		
P.23	M-1	88+99.00	92+93.00	LT/RT	1				1											
		PHASE 2																		
		SR 44																		
P.23	WZCL-1	83+24.00	88+24.00	CL										500						
P.23	WZSL-1	88+24.00		RT															11	
P.23	WZEL-1	89+54.00	92+31.00	LT											277					
P.23	WZSL-2	93+10.00		LT															12	
P.23	WZCL-2	93+10.00	97+45.00	CL										435						
P.23	WZCL-3	98+03.00	99+03.00	CL										100						
P.23	M-2	90+04.00	91+84.00	LT		130		2			4		4							130
		STAFFORD RD																		
P.23	WZSL-4	499+40.00		RT															10	
P.23	M-3	NOT USED																		
		PHASE 3																		
		SR 44																		
P.25	WZEL-4	89+54.00	90+33.00	RT											79					
P.25	WZEL-5	88+74.00	92+41.00	RT											299					
P.25	WZEL-6	90+93.00	92+31.00	LT											138					
P.25	M-4	89+25.00	90+35.00	RT		60		2			3		3							60
P.25	M-5	90+77.00	91+87.00	RT		60		2			3		3							60
SUBTOTAL, CARRIED TO SHEET P.28					1	250	0	6	1	0	10	0	10	1035 FT 0.20 MILE	793 FT 0.15 MILE	0 FT 0.00 MILE	0	0	33	250

MAINTENANCE OF TRAFFIC SUBSUMMARY
GEA-44-4.52

DESIGN AGENCY
Environmental Design Group
ARVADA, COLORADO, 80004
PH 303.431.6417 FAX 303.431.6431
WWW.ENVIRONMENTALDESIGNGROUP.COM
ENVIDESIGNGROUP@GMAIL.COM

DESIGNER
MSD

REVIEWER
SAC 12/29/23

PROJECT ID
112947

SHEET P.26 TOTAL 86

D12-CU-FY2024

MODEL: Sheet PAPERSIZE: 34x22 (in.) DATE: 3/26/2025 TIME: 4:27:44 PM USER: scook
E:\ODOT\2D-0012-010 ODOT D-12 Culvert Replacement 112947\112947\400-Engineering\MOT\Sheets\112947_MS50I.dgn

LEGEND

- PORTABLE CONCRETE BARRIER
- IMPACT ATTENUATOR
- DRUMS
- DIRECTION OF TRAVEL, LANE USE (SHOWN FOR CLARITY)
- TEMPORARY SIGNAL SUPPORT

NOTES:

1. SEE SCD MT-96.11 FOR ADDITIONAL DETAILS

MOT PAVEMENT MARKING LEGEND

- WZEL — WORK ZONE EDGE LINE, CLASS I, 6", 642 PAINT (WHITE)
- WZSL — WORK ZONE STOP LINE, CLASS I, 642 PAINT

PHASE	1 (SR 84 NB)			2 (SR 84 SB)		
INTERVAL	1	2	3	4	5	6
TIMING, AM & PM PEAKS (SEC)	76	4	20	76	4	20
TIMING, OFF PEAKS (SEC)	36	4	20	36	4	20

AM Peak = 7AM to 9AM, PM Peak = 2PM to 6PM

SIGNAL TIMING DIAGRAM

3 (#9925, SOUTH CHURCH DRIVEWAY)		
7	8	9
10	4	20
ACTUATED PHASE		

4 (DRIVE AT #9910)		
10	11	12
5	4	20
ACTUATED PHASE		

5 (DRIVE AT #9918)		
13	14	15
5	4	20
ACTUATED PHASE		

PHASE 1: INSTALL TEMPORARY TRAFFIC SIGNAL.

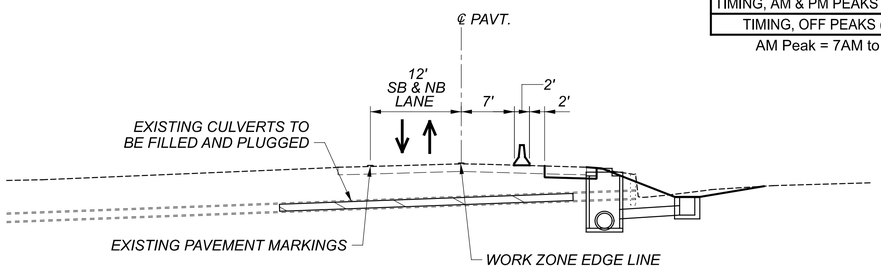

PHASE 2: FILL AND PLUG EXISTING DUAL CULVERT PIPES AND REMOVE EXISTING HEADWALL. CONSTRUCT PROPOSED MANHOLE OVER THE EXISTING STORM SEWER AND THE PROPOSED CATCH BASIN. REPAIR RIGHT (EAST) PAVEMENT EDGE.

SECTION A-A

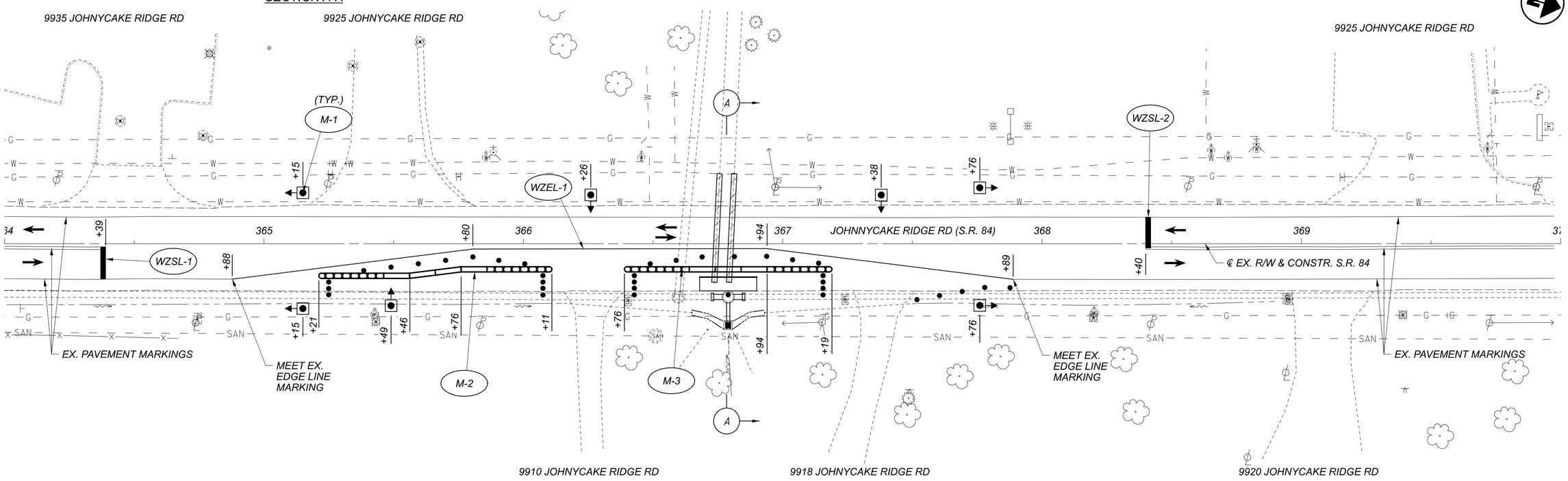

HORIZONTAL SCALE IN FEET 0 10 20 40

MAINTENANCE OF TRAFIC PLAN - PHASE 1 & 2
LAK-84-14.25

DESIGN AGENCY
Environmental Design Group
AKRON, OHIO 44312
PH. 330.644.1167 FAX 330.644.1183
WWW.ENVIRONMENTALDESIGNGROUP.COM

DESIGNER: MSD
REVIEWER: SAC 12/29/23
PROJECT ID: 112947
SHEET: P.27 TOTAL: 86

D12-CU-FY2024

MODEL: CLX_RW_I - Plan I PAPERSIZE: 34x22 (in.) DATE: 3/26/2025 TIME: 4:27:50 PM USER: scook
E:\ODOT\2I-0012I-0I0 ODOT D-12 Culvert Replacement I12947\I2947\400-Engineering\MOT\Sheets\I2947_MP60I.dgn

SHEET NO.	REFERENCE NO.	STATION FROM	STATION TO	SIDE	614 WORK ZONE TRAFFIC SIGNAL	INCREASED BARRIER DELINEATION	WORK ZONE IMPACT ATTENUATOR, 24" WIDE HAZARDS, (UNIDIRECTIONAL)	WORK ZONE IMPACT ATTENUATOR, 24" WIDE HAZARDS, (BIDIRECTIONAL)	WORK ZONE LIGHTING SYSTEM	BARRIER REFLECTOR, TYPE 1, (1 WAY)	BARRIER REFLECTOR, TYPE 1, (BIDIRECTIONAL)	OBJECT MARKER, ONE WAY	OBJECT MARKER, TWO-WAY	WORK ZONE CENTER LINE, CLASS 1, 642 PAINT	WORK ZONE EDGE LINE, CLASS 1, 6", 642 PAINT	WORK ZONE EDGE LINE, CLASS 1, 6", 873	WORK ZONE CHANNELIZING LINE, CLASS 1, 12", 873	WORK ZONE DOTTED LINE, CLASS 1, 6", 873	WORK ZONE STOP LINE, CLASS 1, 642 PAINT	622 PORTABLE BARRIER, UNANCHORED
					EACH	FT	EACH	EACH	EACH	EACH		EACH	EACH	FT	FT	FT	FT	FT	FT	FT
		LAK-84-14.25																		
		PHASE 1																		
		SR 84																		
P.27	M-1	365+15.00	367+76.00	LT/RT	1				1											
		PHASE 2																		
		SR 84																		
P.27	WZSL-1	364+39.00		RT															12	
P.27	WZEL-1	364+88.00	367+89.00	RT											301					
P.27	WZSL-2	368+40.00		LT															12	
P.27	M-2	365+21.00	366+11.00	RT		40		2			2		2							40
P.27	M-3	366+76.00	367+19.00	RT		30		2			2		2							30
SUBTOTAL, THIS SHEET (LAK-84-14.25)					1	70	0	4	1	0	4	0	4	0 FT 0.00 MILE	301 FT 0.06 MILE	0 FT 0.00 MILE	0	0	24	70
SUBTOTAL, CARRIED FROM SHEET P.17 (CUY-77-7.84)					0	690	2	0	0	16	0	16	0	0.00 MILE	0.00 MILE	1.00 MILE	9060	782	0	690
SUBTOTAL, CARRIED FROM SHEET P.22 (GEA-322-13.88)					1	130	0	2	1	0	4	0	4	0.16 MILE	0.06 MILE	0.00 MILE	0	0	23	130
SUBTOTAL, CARRIED FROM SHEET P.26 (GEA-44-4.52)					1	250	0	6	1	0	10	0	10	0.20 MILE	0.15 MILE	0.00 MILE	0	0	33	250
TOTALS CARRIED TO GENERAL SUMMARY					**3**	**1140**	**2**	**12**	**3**	**16**	**18**	**16**	**18**	**0.36 MILE**	**0.27 MILE**	**1.00 MILE**	**9060**	**782**	**80**	**1140**

MAINTENANCE OF TRAFFIC SUBSUMMARY
LAK-84-14.25

DESIGN AGENCY
Environmental Design Group
ADVANCE TRANSPORTATION
P.O. 245 DAILY ST., AURORA, OH. 44202
P.H. 330-562-7070 FAX: 330-562-7139
W. ENVIRONMENTALDESIGNGROUP.COM

DESIGNER
MSD

REVIEWER
SAC 12/29/23

PROJECT ID
112947

SHEET P.28 TOTAL 86

D12-CU-FY2024

MODEL: Sheet PAPERSIZE: 34x22 (in.) DATE: 3/27/2025 TIME: 7:59:01 AM USER: cwuethrich
E:\ODOT\21-0012-010 ODOT D-12 Culvert Replacement 112947\112947\400-Engineering\MOT\Sheets\112947_MS601.dgn

SHEET NUM.										PART.				ITEM	ITEM EXT	GRAND TOTAL	UNIT	DESCRIPTION	SEE SHEET NO.
P.7		P.32	P.33			P.55	P.62		OFFICE CALCS	01/IMS/CV	02/NHS/CV	03/S>2/CV	04/STR/CV						
																		ROADWAY	
LS										LS	LS	LS	LS	201	11000	LS		CLEARING AND GRUBBING	
			2							1		1		202	20010	2	EACH	HEADWALL REMOVED	
									22		7	11	4	202	23000	22	SY	PAVEMENT REMOVED	
			65									65		202	35100	65	FT	PIPE REMOVED, 24" AND UNDER	
			18				7			18	7			202	35200	25	FT	PIPE REMOVED, OVER 24"	
			1							1				202	58100	1	EACH	CATCH BASIN REMOVED	
			84									84		SPECIAL	20270000	84	FT	FILL AND PLUG EXISTING CONDUIT, 12" DIAMETER	P.8
			285							285				SPECIAL	20270000	285	FT	FILL AND PLUG EXISTING CONDUIT, 36" DIAMETER	P.8
			174							174				SPECIAL	20270110	174	FT	PIPE CLEANOUT, 24" AND UNDER	P.8
			576							576				SPECIAL	20270120	576	FT	PIPE CLEANOUT, 27" TO 48"	P.8
		1,818								1,818				202	75000	1,818	FT	FENCE REMOVED	
		LS											LS	202	98000	LS		REMOVAL MISC.: CONCRETE SLABS	P.7
		1											1	202	98100	1	EACH	REMOVAL MISC.: WOOD ADDRESS POST	P.7
		2									2			202	98100	2	EACH	REMOVAL MISC.: WOOD POST	P.7
		2									2			202	98100	2	EACH	REMOVAL MISC.:ADDRESS SIGN WITH LIGHT	P.7
		434									164	22	248	203	10000	434	CY	EXCAVATION	
		194									70	2	122	203	20000	194	CY	EMBANKMENT	
									33		12	14	7	204	10000	33	SY	SUBGRADE COMPACTION	
		500									162.5		337.5	606	15050	500	FT	GUARDRAIL, TYPE MGS	
		5									2		3	606	26150	5	EACH	ANCHOR ASSEMBLY, MGS TYPE E, (MASH 2016)	
		3									2		1	606	26550	3	EACH	ANCHOR ASSEMBLY, MGS TYPE T	
		1,818								1,818				607	23000	1,818	FT	FENCE, TYPE CLT	
																		EROSION CONTROL	
						11							11	601	32100	11	CY	ROCK CHANNEL PROTECTION, TYPE B WITH FILTER	
			3				11			3	11			601	32200	14	CY	ROCK CHANNEL PROTECTION, TYPE C WITH FILTER	
3											1	1	1	659	00100	3	EACH	SOIL ANALYSIS TEST	
195											63	9	123	659	00300	195	CY	TOPSOIL	
1,738											566	78	1,094	659	00500	1,738	SY	SEEDING AND MULCHING, CLASS 1	
88											29	4	55	659	14000	88	SY	REPAIR SEEDING AND MULCHING	
88											29	4	55	659	15000	88	SY	INTER-SEEDING	
0.25											0.08	0.02	0.15	659	20000	0.25	TON	COMMERCIAL FERTILIZER	
0.37											0.12	0.02	0.23	659	31000	0.37	ACRE	LIME	
10											3	1	6	659	35000	10	MGAL	WATER	
		177									85		92	670	00700	177	SY	DITCH EROSION PROTECTION	
											10,000	10,000	10,000	832	30000	30,000	EACH	EROSION CONTROL	
		91											91	836	10000	91	SY	SEEDING AND EROSION CONTROL WITH TURF REINFORCING MAT, TYPE 1	
		68											68	836	10020	68	SY	SEEDING AND EROSION CONTROL WITH TURF REINFORCING MAT, TYPE 2	
																		DRAINAGE	
			7.2							7.2				602	20000	7.2	CY	CONCRETE MASONRY	
			11									11		611	06100	11	FT	15" CONDUIT, TYPE C	
			12									12		611	10400	12	FT	24" CONDUIT, TYPE B, 706.02	
			25							25				611	13600	25	FT	30" CONDUIT, TYPE C, 706.08	
			20							20				611	96550	20	FT	FIELD PAVING OF EXISTING PIPE, CPP, 33" DIAMETER	
			152							152				611	96550	152	FT	FIELD PAVING OF EXISTING PIPE, CMP, 42" DIAMETER	
			294							294				611	96600	294	FT	CONDUIT, BORED OR JACKED, TYPE B, 42", 748.06	
			1							1				611	98410	1	EACH	CATCH BASIN, NO. 8	
			1									1		611	98470	1	EACH	CATCH BASIN, NO. 2-2B	
			1									1		611	99574	1	EACH	MANHOLE, NO. 3	
			163							163				899	10000	163	FT	CURED-IN-PLACE PIPE LINER (33" DIAMETER)	
			413							413				899	10000	413	FT	CURED-IN-PLACE PIPE LINER (42" DIAMETER)	

GENERAL SUMMARY

D12-CU-FY2024

MODEL: Sheet PAPERSIZE: 34x22 (in.) DATE: 1/27/2025 TIME: 1:07:40 PM USER: scook
E:\ODOT\21-00121-010 ODOT D-12 Culvert Replacement 112947\112947\400-Engineering\Roadway\Sheets\112947_GG001.dgn

DESIGN AGENCY
Environmental Design Group, LLC
ENVIRONMENTAL DESIGN GROUP, LLC
310 CASTLE PARK DR. 443
LOUISVILLE, KY 40223
ENVIRONMENDGROUP.COM

DESIGNER
MSD

REVIEWER
SAC 12/29/23

PROJECT ID
112947

SHEET P.29 TOTAL 86

SHEET NUM.									PART.				ITEM	ITEM EXT	GRAND TOTAL	UNIT	DESCRIPTION	SEE SHEET NO.
P.10		P.32		P.55	P.62	P.70		OFFICE CALCS	01/IMS/CV	02/NHS/CV	03/S>2/CV	04/STR/CV						
																	PAVEMENT	
525									525				254	01000	525	SY	PAVEMENT PLANING, ASPHALT CONCRETE, (1.5" DEPTH)	
								7		3	3	1	301	56000	7	CY	ASPHALT CONCRETE BASE, PG64-22, (449)	
								5		2	2	1	304	20000	5	CY	AGGREGATE BASE	
								3		1	1	1	407	10000	3	GAL	TACK COAT	
45									45				407	20000	45	GAL	NON-TRACKING TACK COAT	
								3		1	1	1	441	70101	3	CY	ASPHALT CONCRETE SURFACE COURSE, TYPE 1, (449), AS PER PLAN, PG70-22M	P.8
		23								9		14	441	70801	23	CY	ASPHALT CONCRETE INTERMEDIATE COURSE, TYPE 1, (449), (UNDER GUARDRAIL), AS PER PLAN	P.8
22									22				442	22101	22	CY	ASPHALT CONCRETE SURFACE COURSE, 12.5 MM, TYPE A (449), AS PER PLAN, PG70-22M, (1.5")	P.9
0.36									0.36				618	40600	0.36	MILE	RUMBLE STRIPS, SHOULDER (ASPHALT CONCRETE)	
																	STRUCTURE 20 FOOT SPAN AND UNDER (GEA-322-13.88)	
				LS								LS	202	11201	LS		PORTIONS OF STRUCTURE REMOVED, AS PER PLAN	P.55
				LS								LS	503	11100	LS		COFFERDAMS AND EXCAVATION BRACING	
				15								15	503	21100	15	CY	UNCLASSIFIED EXCAVATION	
				2,271								2,271	509	10000	2,271	LB	EPOXY COATED STEEL REINFORCEMENT	
				16								16	510	10000	16	EACH	DOWEL HOLES WITH NONSHRINK, NONMETALLIC GROUT	
				5								5	511	46010	5	CY	CLASS QC1 CONCRETE, RETAINING/WINGWALL NOT INCLUDING FOOTING	
				10								10	511	46510	10	CY	CLASS QC1 CONCRETE, FOOTING	
				1								1	511	46610	1	CY	CLASS QC1 CONCRETE, HEADWALL	
				4								4	511	47011	4	CY	CLASS QC1 CONCRETE, CULVERT, AS PER PLAN	P.55
				14								14	512	10100	14	SY	SEALING OF CONCRETE SURFACES (EPOXY-URETHANE)	
				20								20	512	33000	20	SY	TYPE 2 WATERPROOFING	
				20								20	516	13600	20	SF	1" PREFORMED EXPANSION JOINT FILLER	
				2								2	518	21201	2	CY	POROUS BACKFILL WITH GEOTEXTILE FABRIC, AS PER PLAN	P.55
																	STRUCTURE 20 FOOT SPAN AND UNDER (GEA-44-4.52)	
					LS					LS			202	11201	LS		PORTIONS OF STRUCTURE REMOVED, AS PER PLAN	P.62
					LS					LS			503	11100	LS		COFFERDAMS AND EXCAVATION BRACING	
					13					13			503	21100	13	CY	UNCLASSIFIED EXCAVATION	
					2,828					2,828			509	10000	2,828	LB	EPOXY COATED STEEL REINFORCEMENT	
					24					24			510	10000	24	EACH	DOWEL HOLES WITH NONSHRINK, NONMETALLIC GROUT	
					5					5			511	46010	5	CY	CLASS QC1 CONCRETE, RETAINING/WINGWALL NOT INCLUDING FOOTING	
					12					12			511	46510	12	CY	CLASS QC1 CONCRETE, FOOTING	
					1					1			511	46610	1	CY	CLASS QC1 CONCRETE, HEADWALL	
					8					8			511	47011	8	CY	CLASS QC1 CONCRETE, CULVERT, AS PER PLAN	P.62
					18					18			512	10100	18	SY	SEALING OF CONCRETE SURFACES (EPOXY-URETHANE)	
					34					34			512	33000	34	SY	TYPE 2 WATERPROOFING	
					32					32			516	13600	32	SF	1" PREFORMED EXPANSION JOINT FILLER	
					2					2			518	21201	2	CY	POROUS BACKFILL WITH GEOTEXTILE FABRIC, AS PER PLAN	P.62
																	TRAFFIC CONTROL	
		8								4		4	620	00500	8	EACH	DELINEATOR, POST GROUND MOUNTED	
						16				6	5	5	621	00100	16	EACH	RPM	
						112			112				621	00300	112	EACH	RPM REFLECTOR	
						16				6	5	5	621	54000	16	EACH	RAISED PAVEMENT MARKER REMOVED	
						112			112				621	54001	112	EACH	RAISED PAVEMENT MARKER REMOVED, AS PER PLAN	P.8
		15								7		8	626	00110	15	EACH	BARRIER REFLECTOR, TYPE 2, (BIDIRECTIONAL)	
						0.23				0.11	0.06	0.06	642	00104	0.23	MILE	EDGE LINE, 6", TYPE 1	
						0.6				0.28	0.08	0.24	642	00300	0.6	MILE	CENTER LINE, TYPE 1	
						15				15			642	00500	15	FT	STOP LINE, TYPE 1	
						0.47			0.47				646	10010	0.47	MILE	EDGE LINE, 6"	
						1.72			1.72				646	10110	1.72	MILE	LANE LINE, 6"	
						1,086			1,086				646	20504	1,086	FT	DOTTED LINE, 6"	

GENERAL SUMMARY

D12-CU-FY2024

MODEL: Sheet PAPERSIZE: 34x22 (in.) DATE: 3/26/2025 TIME: 4:27:54 PM USER: scook
E:\ODOT\21-00121-010 ODOT D-12 Culvert Replacement 112947\112947\400-Engineering\Roadway\Sheets\112947_GG002.dgn

DESIGN AGENCY
Environmental Design Group
ALBANY | CLEVELAND | COLUMBUS
P. 330.725.1177 F. 330.725.1181
E. INFO@EDGRPLLC.COM
W. ENVIRONMENTALDESIGNGROUP.COM

DESIGNER MSD
REVIEWER SAC 12/29/23
PROJECT ID 112947

SHEET NUM.										PART.				ITEM	ITEM EXT	GRAND TOTAL	UNIT	DESCRIPTION	SEE SHEET NO.
P.6				P.9	P.11		P.28			01/IMS/CV	02/NHS/CV	03/S>2/CV	04/STR/CV						
																		MAINTENANCE OF TRAFFIC	
				30							10	10	10	410	12000	30	CY	TRAFFIC COMPACTED SURFACE, TYPE A OR B	
					40					10	10	10	10	614	11110	40	HOUR	LAW ENFORCEMENT OFFICER WITH PATROL CAR FOR ASSISTANCE	
							3				1	1	1	SPECIAL	61411300	3	EACH	WORK ZONE TRAFFIC SIGNAL	P.10
							1,140			690	250	70	130	614	11630	1,140	FT	INCREASED BARRIER DELINEATION	
							2			2				614	12380	2	EACH	WORK ZONE IMPACT ATTENUATOR, 24" WIDE HAZARDS, (UNIDIRECTIONAL)	
							12				6	4	2	614	12384	12	EACH	WORK ZONE IMPACT ATTENUATOR, 24" WIDE HAZARDS, (BIDIRECTIONAL)	
							3				1	1	1	614	12740	3	EACH	WORK ZONE LIGHTING SYSTEM	
							16			16				614	13310	16	EACH	BARRIER REFLECTOR, TYPE 1, (1 WAY)	
							18				10	4	4	614	13310	18	EACH	BARRIER REFLECTOR, TYPE 1, (BIDIRECTIONAL)	
							16			16				614	13350	16	EACH	OBJECT MARKER, ONE WAY	
							18				10	4	4	614	13360	18	EACH	OBJECT MARKER, TWO WAY	
				16						4	4	4	4	614	18601	16	SNMT	PORTABLE CHANGEABLE MESSAGE SIGN, AS PER PLAN	P.9
							0.36				0.2		0.16	614	21100	0.36	MILE	WORK ZONE CENTER LINE, CLASS I, 642 PAINT	
							0.27				0.15	0.06	0.06	614	22110	0.27	MILE	WORK ZONE EDGE LINE, CLASS I, 6", 642 PAINT	
							1			1				614	22326	1	MILE	WORK ZONE EDGE LINE, CLASS I, 6", 873	
							9,060			9,060				614	23130	9,060	FT	WORK ZONE CHANNELIZING LINE, CLASS I, 12", 873	
							782			782				614	24122	782	FT	WORK ZONE DOTTED LINE, CLASS I, 6", 873	
							80				33	24	23	614	26200	80	FT	WORK ZONE STOP LINE, CLASS I, 642 PAINT	
				63							21	21	21	616	10000	63	MGAL	WATER	
							1,140			690	250	70	130	622	41100	1,140	FT	PORTABLE BARRIER, UNANCHORED	
				300							100	100	100	630	97800	300	SF	SIGNING, MISC.: ADDITIONAL SIGNS, GROUND MOUNTED, AS DIRECTED BY THE ENGINEER	P.9
																		INCIDENTALS	
										LS	LS	LS	LS	103	05000	LS		PREMIUM FOR CONTRACT PERFORMANCE BOND AND FOR PAYMENT BOND	
										LS	LS	LS	LS	108	10000	LS		CPM PROGRESS SCHEDULE	
										LS	LS	LS	LS	614	11000	LS		MAINTAINING TRAFFIC	
9										6	1	1	1	619	16011	9	MNTH	FIELD OFFICE, TYPE B, AS PER PLAN	P.6
										LS	LS	LS	LS	623	10000	LS		CONSTRUCTION LAYOUT STAKES AND SURVEYING	
										LS	LS	LS	LS	624	10000	LS		MOBILIZATION	

GENERAL SUMMARY

DESIGN AGENCY
Environmental Design Group
AMERICAN UNITED GROUPS
4900 CLEVELAND AVE.
P.O. BOX 16158
COLUMBUS, OHIO 43216
W: ENVIRESIGNGROUP.COM

DESIGNER
MSD

REVIEWER
SAC 12/29/23

PROJECT ID
112947

SHEET P.31 TOTAL 86

D12-CU-FY2024

MODEL: Sheet PAPERSIZE: 34x22 (in.) DATE: 3/26/2025 TIME: 4:27:56 PM USER: scook
E:\ODOT\21-00121-010 ODOT D-12 Culvert Replacement 112947\112947\400-Engineering\Roadway\Sheets\112947_GG003.dgn

SHEET NO.	REFERENCE NO.	STATION FROM	STATION TO	SIDE	202 FENCE REMOVED	202 REMOVAL MISC.: CONCRETE SLABS	202 REMOVAL MISC.: WOOD ADDRESS POST	202 REMOVAL MISC.: WOOD POST	202 REMOVAL MISC.: ADDRESS SIGN WITH LIGHT	441 ASPHALT CONCRETE INTERMEDIATE COURSE, TYPE 1, (449), (UNDER GUARDRAIL), AS PER PLAN	606 GUARDRAIL, TYPE MGS	606 ANCHOR ASSEMBLY, MGS TYPE E, (NCHRP 350)	606 ANCHOR ASSEMBLY, MGS TYPE T	607 FENCE, TYPE CLT	620 DELINEATOR, POST GROUND MOUNTED	626 BARRIER REFLECTOR, TYPE 2, (BIDIRECTIONAL)
					FT	LS	EACH	EACH	EACH	CY	FT	EACH	EACH	FT	EACH	EACH
		CUY-90-29.92														
P.52	R-1	49+14.00	64+30.00	RT	1490									1490		
		57+49.00	58+17.00	LT	95									95		
		(Adjacent to E 286th St)														
CUY-90-29.92 SUBTOTAL					1585									1585		
		CUY-18271-0.13														
		(CULVERT BASELINE)														
P.53	R-1	2+99.00	3+07.00	LT/RT	40									40		
P.53	R-2	5+94.00	7+22.00	LT	193									193		
CUY-18271-0.13 SUBTOTAL					233									233		
		GEA-322-13.88														
P.34	GR-1	587+01.00	589+88.50	LT						8	187.50	2			2	4
P.34	GR-2	587+11.52	589+21.00	RT						6	150.00	1	1		2	4
P.34	R-1	587+14.00		RT		LS										
P.34	R-2	587+15.00		RT			1									
GEA-322-13.88 SUBTOTAL						LS	1			14	337.50	3	1		4	8
		GEA-44-4.52														
P.35	R-1	91+16.00		LT				2								
P.35	R-2	90+85.00		RT					1							
P.35	R-3	90+18.00		RT					1							
P.35	GR-1	90+84.16	91+85.75	RT						3	43.75	1	1		2	3
P.35	GR-2	90+91.03	92+67.29	LT						6	118.75	1	1		2	4
GEA-44-4.52 SUBTOTAL								2	2	9	162.50	2	2		4	7
TOTALS CARRIED TO GENERAL SUMMARY					1818	LS	1	2	2	23	500.00	5	3	1818	8	15

SHEET NO.	REFERENCE NO.	STATION FROM	STATION TO	WIDTH	SIDE	670 DITCH EROSION PROTECTION	836 SEEDING AND EROSION CONTROL WITH TURF REINFORCING MAT, TYPE 1	836 SEEDING AND EROSION CONTROL WITH TURF REINFORCING MAT, TYPE 2
				FT		SY	SY	SY
		GEA-322-13.88						
P.34	E-1	586+90.00	588+00.00	7.5	LT	92		
P.34	E-2	587+19.00	588+00.00	7.5	RT			68
P.34	E-3	588+11.00	589+20.00	7.5	RT		91	
GEA-322-13.88 SUBTOTAL						92	91	68
		GEA-44-4.52						
P.35	E-1	91+08.50	92+10.00	7.5	RT	85		
GEA-44-4.52 SUBTOTAL						85		
TOTALS CARRIED TO GENERAL SUMMARY						177	91	68

SHEET NO.	STATION FROM	STATION TO	203 EXCAVATION	203 EMBANKMENT	659 SEEDING AND MULCHING, CLASS 1
			CY	CY	SY
	GEA-322-13.88				
P.44	586+85.00	590+15.00	248	122	1094
	GEA-44-4.52				
P.49	90+80.00	92+90.00	164	70	566
	LAK-84-14.25				
P.50	366+62.00	366+98.00	22	2	78
TOTALS CARRIED TO GENERAL SUMMARY			434	194	1738

ROADWAY, EARTHWORK, AND EROSION CONTROL SUBSUMMARIES

DESIGN AGENCY
Environmental Design Group
ALWAYS CONSIDERING THE ENVIRONMENT
p 330.628.8757 FAX 330.628.7431
2900 CLAY ST. MANSFIELD, OH 44903
w ENVIDESIGNGROUP.COM

DESIGNER: MSD
REVIEWER: SAC 12/29/23
PROJECT ID: 112947
SHEET: P.32 TOTAL: 86

SHEET NO.	REFERENCE NO.	STATION FROM	STATION TO	SIDE	202 HEADWALL REMOVED EACH	202 PIPE REMOVED, 24" AND UNDER FT	202 PIPE REMOVED, OVER 24" FT	202 CATCH BASIN REMOVED EACH	SPECIAL FILL AND PLUG EXISTING CONDUIT, 12" DIAMETER FT	SPECIAL FILL AND PLUG EXISTING CONDUIT, 36" DIAMETER FT	202 SPECIAL - PIPE CLEANOUT, 24" AND UNDER FT	202 SPECIAL - PIPE CLEANOUT, 27" TO 48" FT	601 ROCK CHANNEL PROTECTION, TYPE C, WITH FILTER CY	602 CONCRETE MASONRY CY	611 15" CONDUIT, TYPE C FT	611 24" CONDUIT, TYPE B, 706.02 FT	611 30" CONDUIT, TYPE C, 706.08 FT	611 FIELD PAVING OF EXISTING PIPE, CPP, 33" DIAMETER FT	611 FIELD PAVING OF EXISTING PIPE, CMP, 42" DIAMETER FT	611 CONDUIT, BORED OR JACKED, TYPE B, 42", 748.06 FT	611 CATCH BASIN, NO. 8 EACH	611 CATCH BASIN, NO. 2-2B EACH	611 MANHOLE, NO. 3 EACH	899 CURED-IN-PLACE PIPE LINER (33" DIAMETER) FT	899 CURED-IN-PLACE PIPE LINER (42" DIAMETER) FT
		CUY-77-7.84																							
P.51	D-1	413+31.40	415+02.48	LT							174														
P.51	D-2	415+00.55	415+02.48	LT/RT								91						10						91	
P.51	D-3	415+02.48	415+02.51	LT								72						10						72	
CUY-77-7.84 SUBTOTAL											174	163						20						163	
		CUY-90-29.92																							
P.52	D-1	49+33.82	49+35.02	LT/RT									2.8	7.2						294	1				
P.52	D-2	49+33.82	49+57.87	LT													25								
P.52	D-3	49+48.25	49+50.60	LT/RT	1		8			285															
P.52	D-4	49+50.60	49+57.87	LT			10	1																	
CUY-90-29.92 SUBTOTAL					1		18	1		285			2.8	7.2			25			294	1				
		CUY-18271-0.13																							
		(CULVERT BASELINE)																							
P.53	D-1	3+00.00	7+13.00	LT/RT								413							152						413
CUY-18271-0.13 SUBTOTAL												413							152						413
		LAK-84-14.25																							
P.36	D-1	366+73.00	366+85.00	RT		12										12							1		
P.36	D-2	366+74.00		RT	1	10																			
P.36	D-3	366+79.00		RT		10																			
P.36	D-4	366+74.00	366+76.00	LT/RT					42																
P.36	D-5	366+79.00	366+81.00	LT/RT					42																
P.36	D-6	366+79.00		RT											11							1			
P.36	D-7	366+65.00	366+72.00	RT		7																			
P.36	D-8	366+71.00	366+74.00	RT		5																			
P.36	D-9	366+79.00	366+79.00	RT		5																			
P.36	D-10	366+80.00	366+82.00	RT		5																			
P.36	D-11	366+82.00	366+93.00	RT		11																			
LAK-84-14.25 SUBTOTAL					1	65			84						11	12						1	1		
TOTALS CARRIED TO GENERAL SUMMARY					2	65	18	1	84	285	174	576	3	7.2	11	12	25	20	152	294	1	1	1	163	413

DRAINAGE SUBSUMMARIES

D12-CU-FY2024

MODEL: Sheet PAPERSIZE: 34x22 (in.) DATE: 1/27/2025 TIME: 1:07:43 PM USER: scook
E:\ODOT\21-00121-010 ODOT D-12 Culvert Replacement 112947\112947\400-Engineering\Drainage\Sheets\112947_DS001.dgn

DESIGN AGENCY
Environmental Design Group, LLC
ENVIRONMENTAL CONSULTANTS
4900 CLEVELAND AVE., STE. 1
P.O. BOX 341, 43221
COLUMBUS, OHIO
614.486.6565
ENVIDESIGNGROUP.COM

DESIGNER
MSD

REVIEWER
SAC 12/29/23

PROJECT ID
112947

SHEET P.33 TOTAL 86

LEGEND

- CONSTRUCTION LIMITS
- TREE REMOVED
- (DND) DO NOT DISTURB
- (TBR) TO BE REMOVED
- DITCH EROSION PROTECTION
- TURF REINFORCING MAT, TYPE 1
- TURF REINFORCING MAT, TYPE 2
- EXISTING WETLANDS
- PAVEMENT REPLACEMENT AREA

PROJECT EARTH DISTURBED AREA: 0.31 ACRES
ESTIMATED CONTRACTOR EARTH DISTURBED AREA: 0.05 ACRES
NOTICE OF INTENT EARTH DISTURBED AREA: NO NOI REQUIRED

HORIZONTAL SCALE IN FEET 0 10 20 40

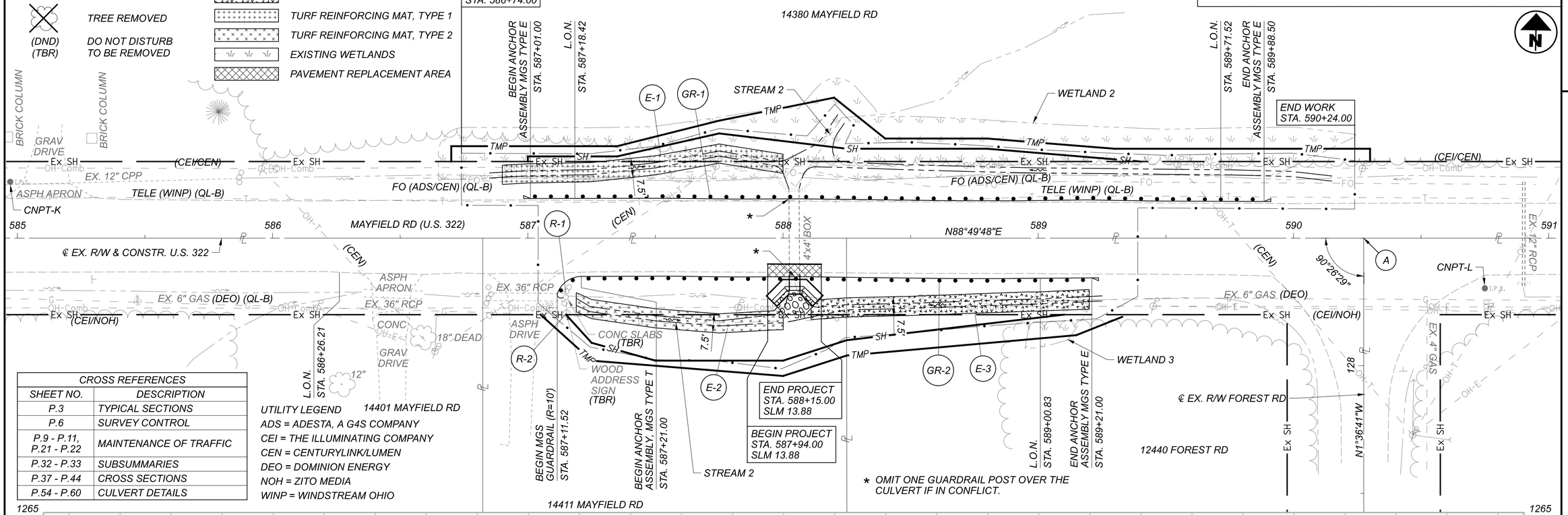

CROSS REFERENCES	
SHEET NO.	DESCRIPTION
P.3	TYPICAL SECTIONS
P.6	SURVEY CONTROL
P.9 - P.11, P.21 - P.22	MAINTENANCE OF TRAFFIC
P.32 - P.33	SUBSUMMARIES
P.37 - P.44	CROSS SECTIONS
P.54 - P.60	CULVERT DETAILS

UTILITY LEGEND
ADS = ADESTA, A G4S COMPANY
CEI = THE ILLUMINATING COMPANY
CEN = CENTURYLINK/LUMEN
DEO = DOMINION ENERGY
NOH = ZITO MEDIA
WINP = WINDSTREAM OHIO

* OMIT ONE GUARDRAIL POST OVER THE CULVERT IF IN CONFLICT.

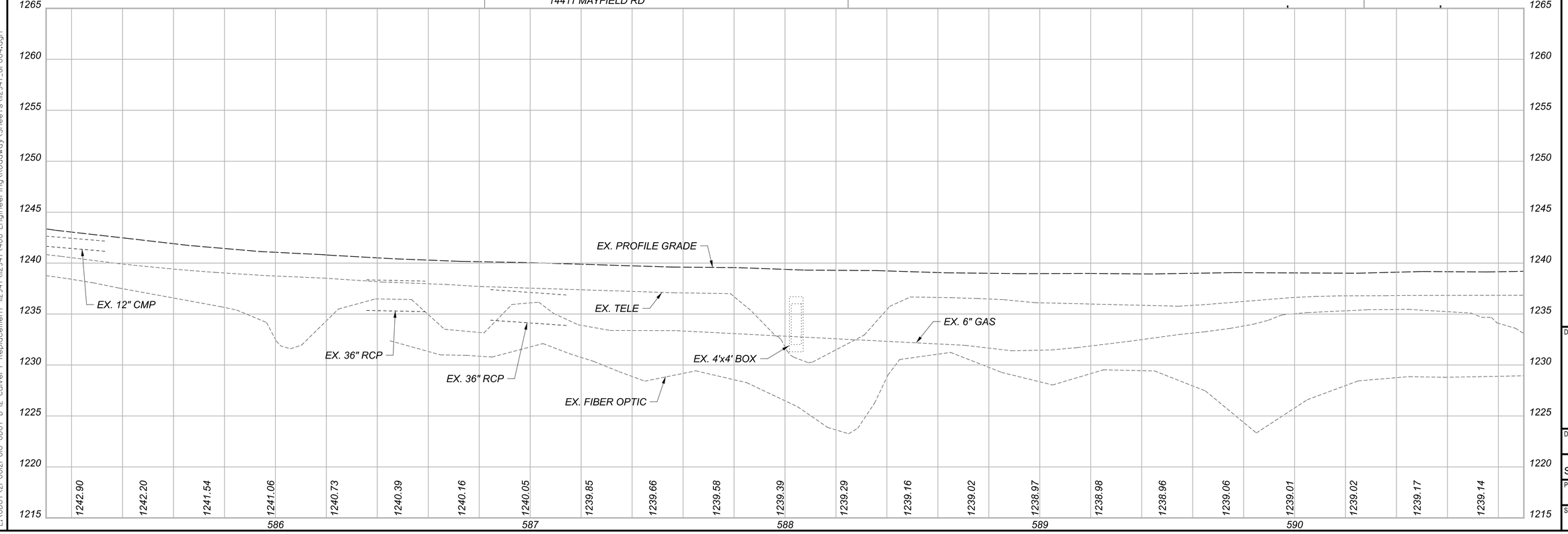

PLAN AND PROFILE
GEA-322-13.88

DESIGN AGENCY
Environmental Design Group
AKRON, CLEVELAND, COLUMBUS
330 SOUTH MAIN ST. AKRON, OH 44311
PH. 330.434.1515 FAX 330.434.1520
ENVIRONMENTALDESIGNGROUP.COM

DESIGNER MSD
REVIEWER SAC 12/29/23
PROJECT ID 112947
SHEET P.34 TOTAL 86

D12-CU-FY2024

MODEL: CLX_RW_U322 - Plan | PAPERSIZE: 34x22 (in.) DATE: 1/27/2025 TIME: 1:07:48 PM USER: scook
E:\ODOT\21-0012I-010 ODOT D-12 Culvert Replacement 112947\112947\400-Engineering\Roadway\Sheets\112947_GP004.dgn

LEGEND

- CONSTRUCTION LIMITS
- TREE REMOVED / STUMP REMOVED
- (DND) DO NOT DISTURB
- (TBR) TO BE REMOVED
- DITCH EROSION PROTECTION
- EXISTING WETLANDS
- PAVEMENT REPLACEMENT AREA

PROJECT EARTH DISTURBED AREA: 0.19 ACRES
ESTIMATED CONTRACTOR EARTH DISTURBED AREA: 0.08 ACRES
NOTICE OF INTENT EARTH DISTURBED AREA: NO NOI REQUIRED

HORIZONTAL SCALE IN FEET 0 10 20 40

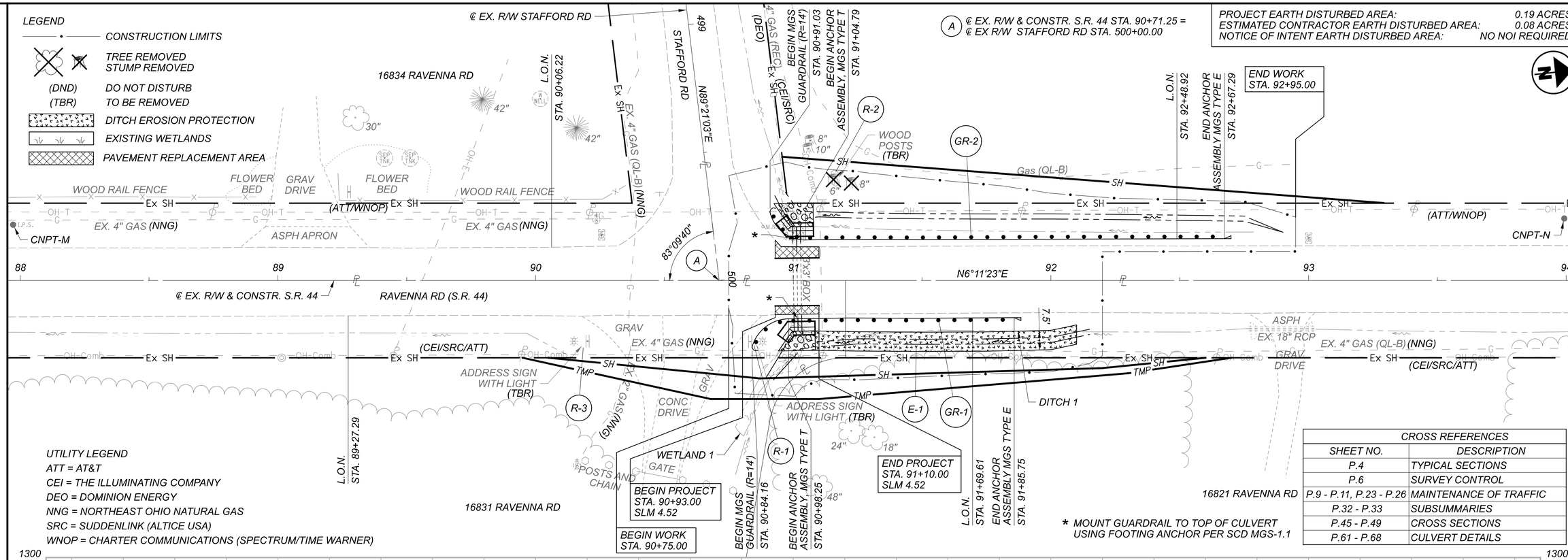

UTILITY LEGEND
ATT = AT&T
CEI = THE ILLUMINATING COMPANY
DEO = DOMINION ENERGY
NNG = NORTHEAST OHIO NATURAL GAS
SRC = SUDDENLINK (ALTICE USA)
WNOP = CHARTER COMMUNICATIONS (SPECTRUM/TIME WARNER)

* MOUNT GUARDRAIL TO TOP OF CULVERT USING FOOTING ANCHOR PER SCD MGS-1.1

CROSS REFERENCES	
SHEET NO.	DESCRIPTION
P.4	TYPICAL SECTIONS
P.6	SURVEY CONTROL
P.9 - P.11, P.23 - P.26	MAINTENANCE OF TRAFFIC
P.32 - P.33	SUBSUMMARIES
P.45 - P.49	CROSS SECTIONS
P.61 - P.68	CULVERT DETAILS

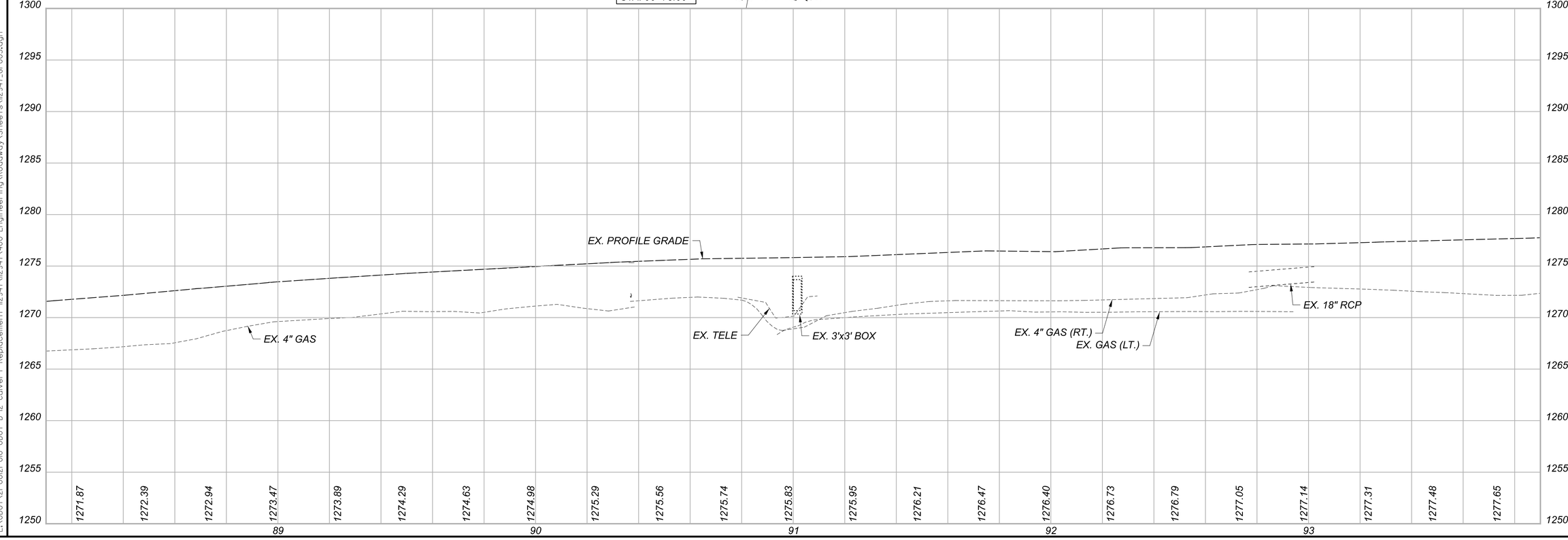

PLAN AND PROFILE
GEA-44-4.52

DESIGN AGENCY
Environmental Design Group
AKRON | CLEVELAND | COLUMBUS
P.O. BOX 1319 • AKRON, OH 44311
330.434.1175 • FAX 330.434.1177
ENVIRONMENTALDESIGNGROUP.COM

DESIGNER MSD
REVIEWER SAC 12/29/23
PROJECT ID 112947
SHEET P.35 TOTAL 86

D12-CU-FY2024

MODEL: CLX_RW_S44-4.52 - Plan | PAPERSIZE: 34x22 (in.) DATE: 1/27/2025 TIME: 10:71:52 PM USER: scook
E:\ODOT\21-0012I-010 ODOT D-12 Culvert Replacement 112947\112947\400-Engineering\Roadway\Sheets\112947_GP005.dgn

LEGEND

CONSTRUCTION LIMITS
TREE REMOVED
(DND) DO NOT DISTURB
(TBR) TO BE REMOVED
PIPES TO BE FILLED AND PLUGGED
PAVEMENT REPLACEMENT AREA

PROJECT EARTH DISTURBED AREA: 0.04 ACRES
ESTIMATED CONTRACTOR EARTH DISTURBED AREA: 0.03 ACRES
NOTICE OF INTENT EARTH DISTURBED AREA: NO NOI REQUIRED

HORIZONTAL SCALE IN FEET 0 10 20 40

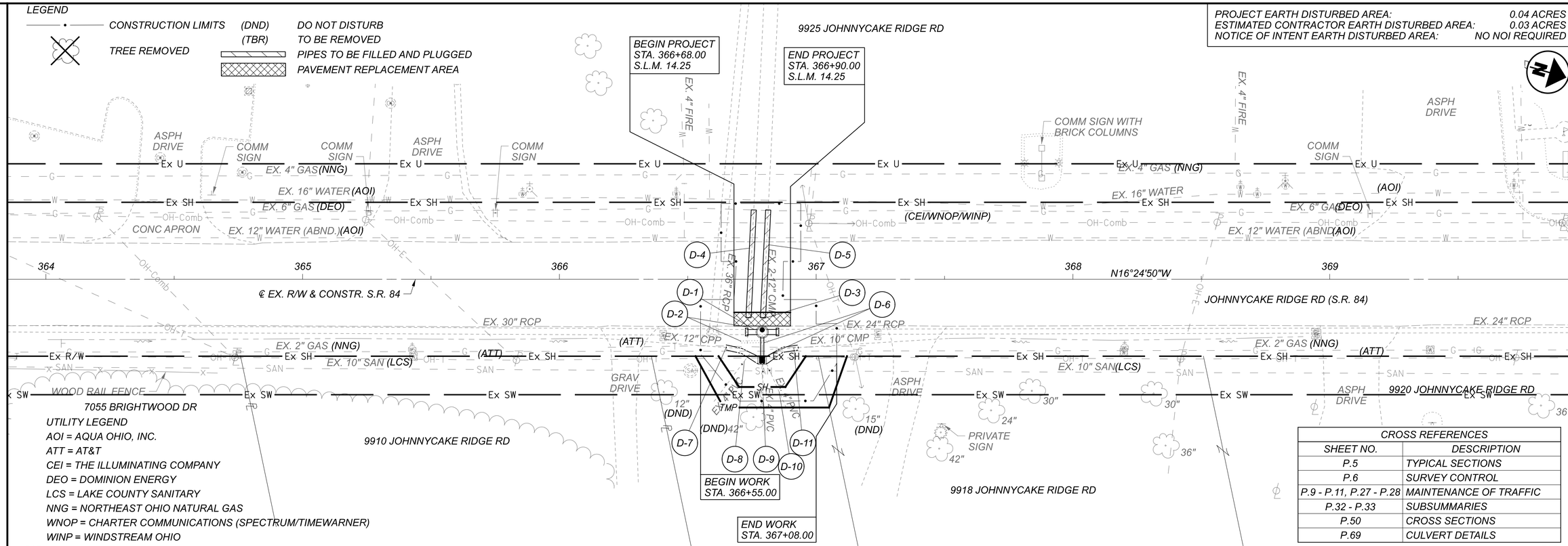

UTILITY LEGEND
AOI = AQUA OHIO, INC.
ATT = AT&T
CEI = THE ILLUMINATING COMPANY
DEO = DOMINION ENERGY
LCS = LAKE COUNTY SANITARY
NNG = NORTHEAST OHIO NATURAL GAS
WNOP = CHARTER COMMUNICATIONS (SPECTRUM/TIMEWARNER)
WINP = WINDSTREAM OHIO

CROSS REFERENCES	
SHEET NO.	DESCRIPTION
P.5	TYPICAL SECTIONS
P.6	SURVEY CONTROL
P.9 - P.11, P.27 - P.28	MAINTENANCE OF TRAFFIC
P.32 - P.33	SUBSUMMARIES
P.50	CROSS SECTIONS
P.69	CULVERT DETAILS

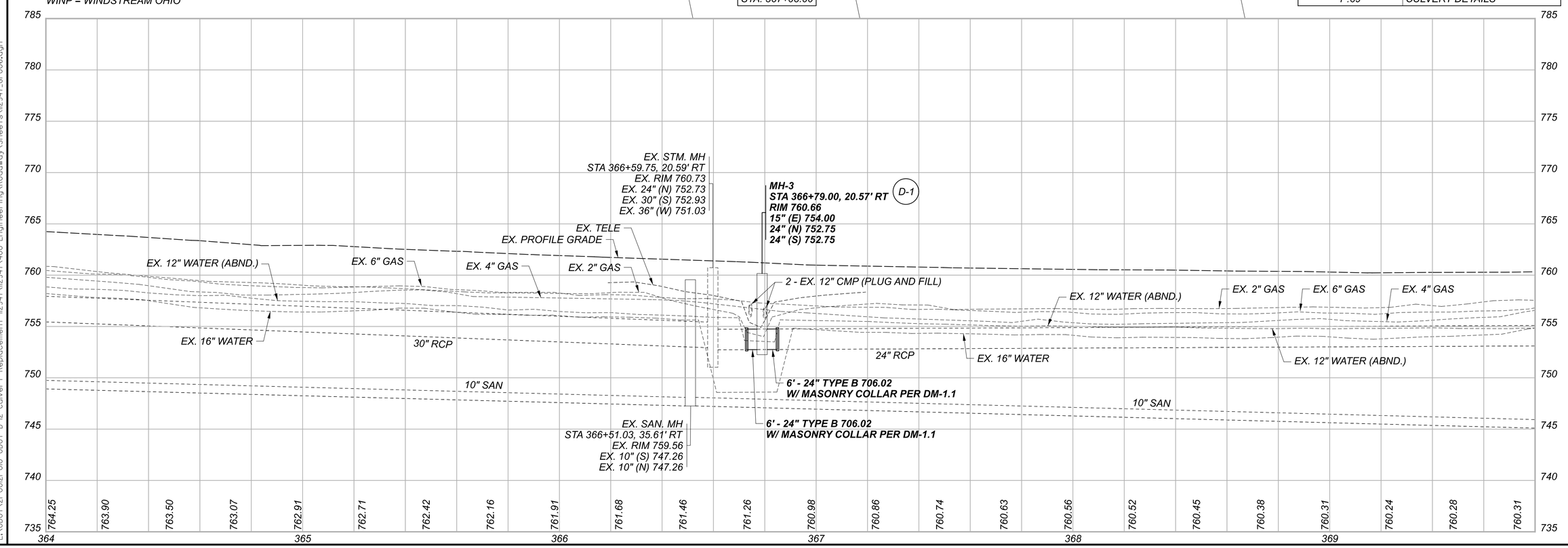

PLAN AND PROFILE
LAK-84-14.25

DESIGN AGENCY
Environmental Design Group
LANDSCAPE ARCHITECTS
PO 350 SANTINI PLACE, OH 43231
P 614.866.1611 F 614.866.1610
W ENVIRONMENTALDESIGNGROUP.COM

DESIGNER MSD
REVIEWER SAC 12/29/23
PROJECT ID 112947
SHEET P.36 TOTAL 86

D12-CU-FY2024

MODEL: CLX_RW_LAK-84-14.25 - Plan I PAPERSIZE: 34x22 (in.) DATE: 1/27/2025 TIME: 11:08:07 PM USER: scook
EX:\ODOT\21-0012I-010 ODOT D-12 Culvert Replacement 112947\400-Engineering\Roadway\Sheets\112947_GP006.dgn

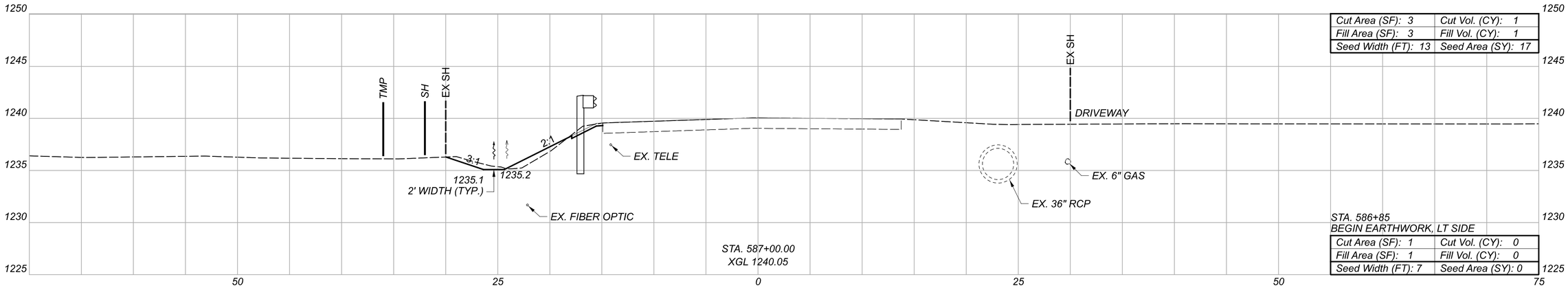

Cut Area (SF): 3	Cut Vol. (CY): 1
Fill Area (SF): 3	Fill Vol. (CY): 1
Seed Width (FT): 13	Seed Area (SY): 17

STA. 586+85
BEGIN EARTHWORK, LT SIDE

Cut Area (SF): 1	Cut Vol. (CY): 0
Fill Area (SF): 1	Fill Vol. (CY): 0
Seed Width (FT): 7	Seed Area (SY): 0

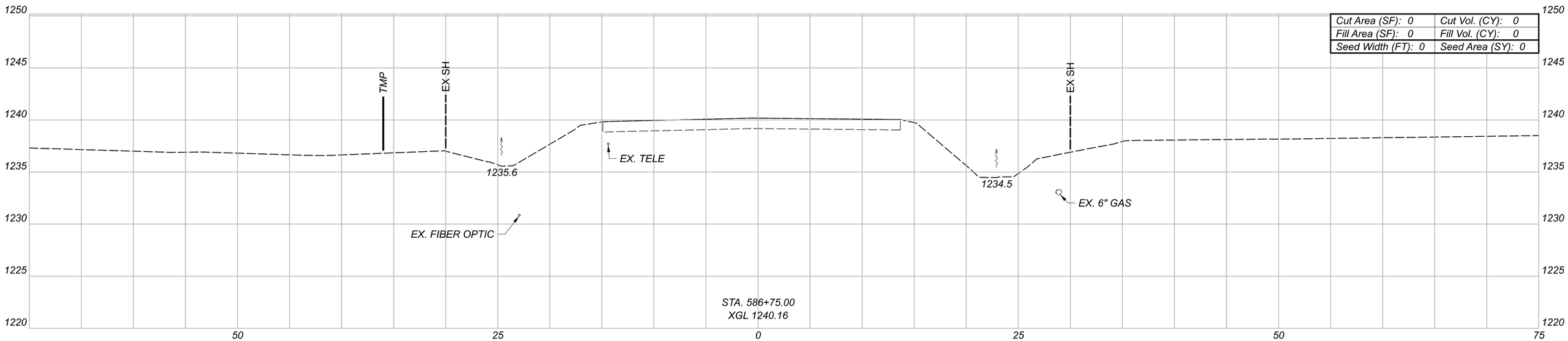

Cut Area (SF): 0	Cut Vol. (CY): 0
Fill Area (SF): 0	Fill Vol. (CY): 0
Seed Width (FT): 0	Seed Area (SY): 0

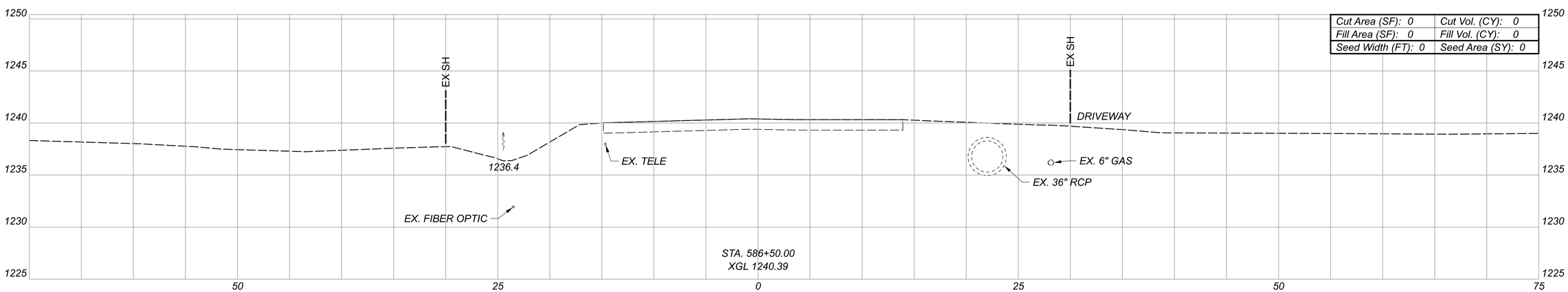

Cut Area (SF): 0	Cut Vol. (CY): 0
Fill Area (SF): 0	Fill Vol. (CY): 0
Seed Width (FT): 0	Seed Area (SY): 0

Sheet Totals		
Seeding	Cut	Fill
17	1	1

CROSS SECTIONS GEA-322-13.88
U.S. 322 STA. 586+50.00 TO STA. 587+00.00

DESIGN AGENCY
Environmental Design Group, LLC
ENGINEERING COMPANY
4500 CARLISLE PKWY, STE. 440
BIRMINGHAM, AL 35243
205.326.5171 FAX 205.591.9440
ENVDESIGNGROUP.COM

DESIGNER
MSD

REVIEWER
SAC 12/29/23

PROJECT ID
112947

SHEET P.37 TOTAL 86

D12-CU-FY2024

MODEL: CLX_RW_U322 - 586+50.00 [Sheet] PAPERSIZE: 34x22 (in.) DATE: 1/27/2025 TIME: 1:08:11PM USER: scook
E:\ODOT\21-0012I-010 ODOT D-12 Culvert Replacement 112947\400-Engineering\Roadway\Sheets\112947_XS402.dgn

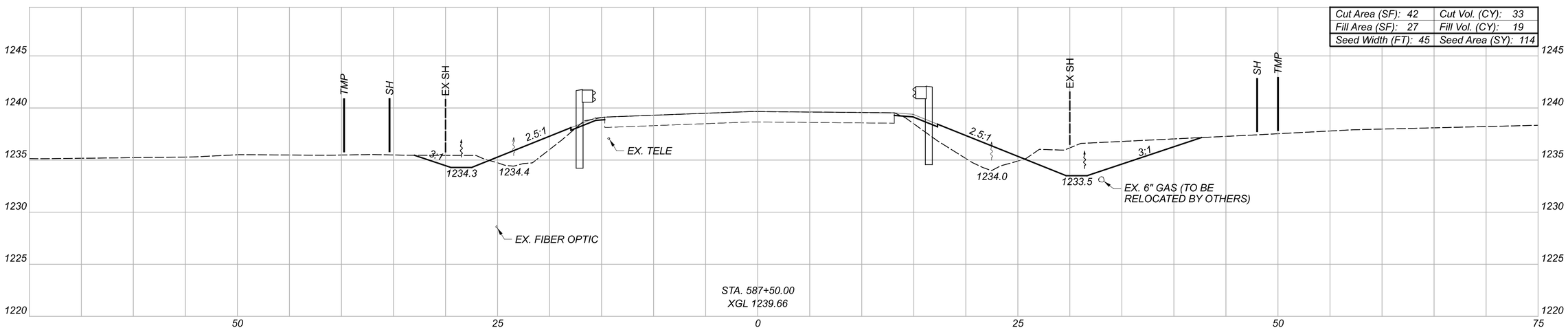

Cut Area (SF): 42	Cut Vol. (CY): 33
Fill Area (SF): 27	Fill Vol. (CY): 19
Seed Width (FT): 45	Seed Area (SY): 114

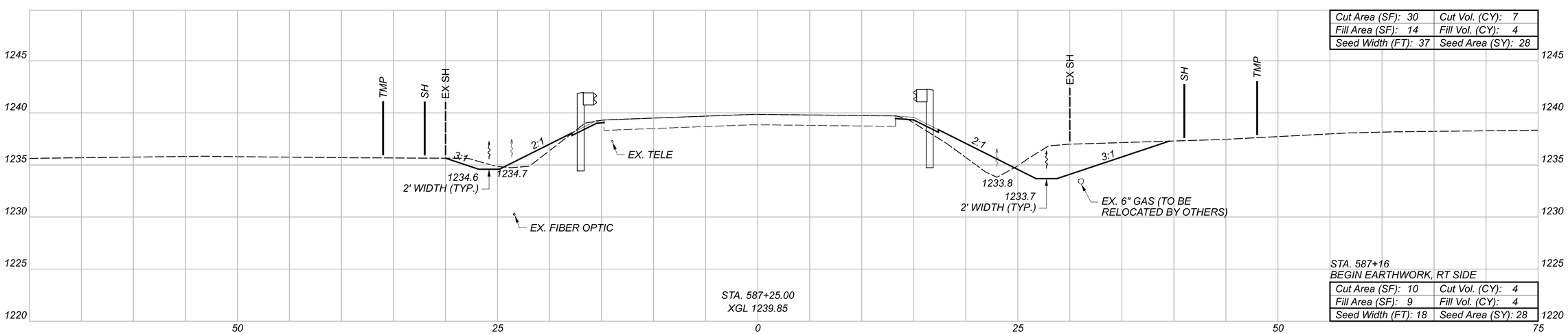

Cut Area (SF): 30	Cut Vol. (CY): 7
Fill Area (SF): 14	Fill Vol. (CY): 4
Seed Width (FT): 37	Seed Area (SY): 28

STA. 587+16
BEGIN EARTHWORK, RT SIDE

Cut Area (SF): 10	Cut Vol. (CY): 4
Fill Area (SF): 9	Fill Vol. (CY): 4
Seed Width (FT): 18	Seed Area (SY): 28

Sheet Totals		
Seeding	Cut	Fill
170	44	27

CROSS SECTIONS GEA-322-13.88
U.S. 322 STA. 587+25.00 TO STA. 587+50.00

DESIGN AGENCY
Environmental Design Group
LANDSCAPE ARCHITECTURE
3150 COLEMAN ST. PH (614) 291-9933
SUITE A, COLUMBUS, OH 43213 FAX (614) 291-9935
ENVIRONMENTALDESIGNGROUP.COM

DESIGNER: MSD
REVIEWER: SAC 12/29/23
PROJECT ID: 112947
SHEET: P.38 TOTAL: 86

D12-CU-FY2024

MODEL: CLX_RW_U322 - 587+25.00 [Sheet] PAPERSIZE: 34x22 (in.) DATE: 1/27/2025 TIME: 11:56:52 PM USER: scook
E:\ODOT\21-0012I-010 ODOT D-12 Culvert Replacement 112947\112947\400-Engineering\Roadway\Sheets\112947_XS402.dgn

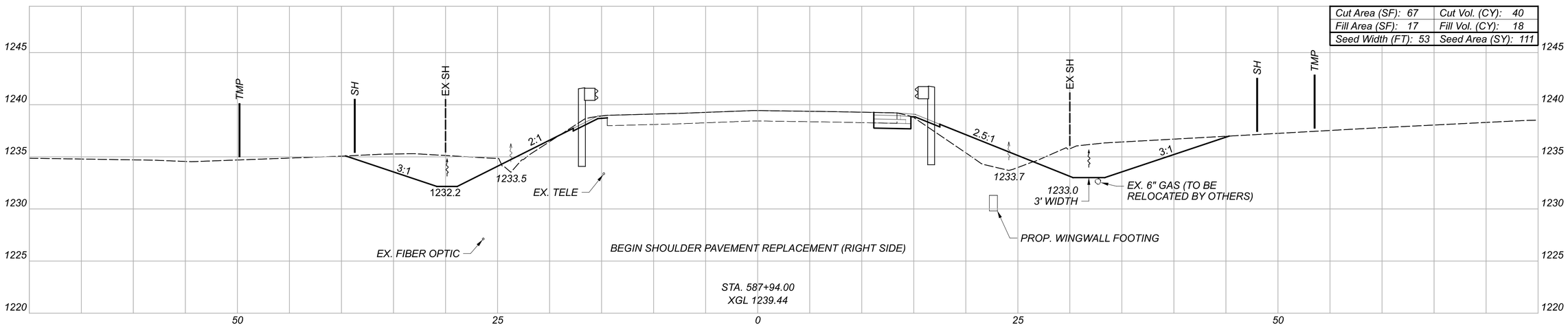

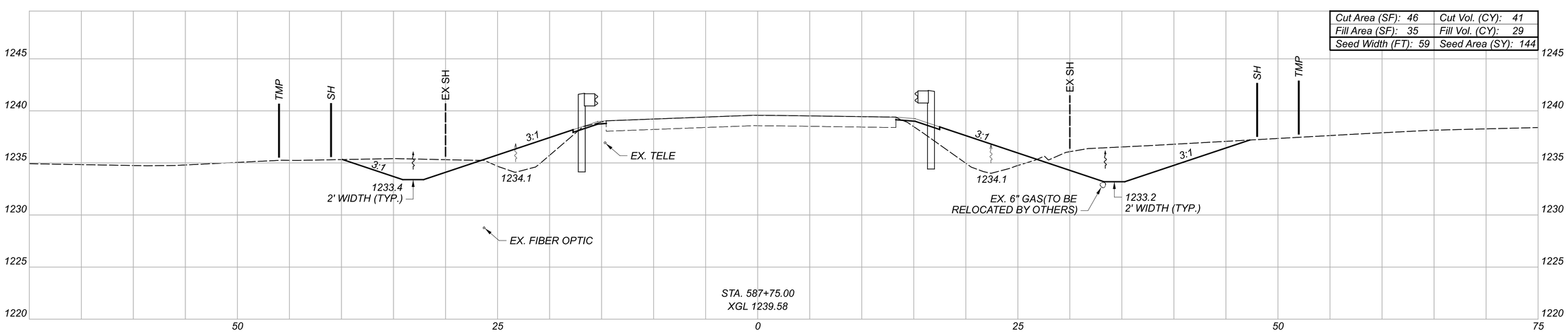

CROSS SECTIONS GEA-322-13.88
U.S. 322 STA. 587+75.00 TO STA. 587+94.00

Sheet Totals		
Seeding	Cut	Fill
246	81	47

DESIGN AGENCY
Environmental Design Group
ALBANY, SARATOGA SPRINGS, CORTLAND
192 SARATOGA TRACK DR. ALBANY, NY 12203
P: 518.453.1515 F: 518.453.1516
E: ENVIRONMENDGROUP.COM

DESIGNER
MSD

REVIEWER
SAC 12/29/23

PROJECT ID
112947

SHEET P.39 TOTAL 86

D12-CU-FY2024

MODEL: CLX_RW_U322 - 587+75.00 [Sheet1] PAPERSIZE: 34x22 (in.) DATE: 1/27/2025 TIME: 1:08:14 PM USER: scook
E:\ODOT\21-0012I-010 ODOT D-12 Culvert Replacement 112947\400-Engineering\Roadway\Sheets\112947_XS402.dgn

Cut Area (SF): 35	Cut Vol. (CY): 12
Fill Area (SF): 19	Fill Vol. (CY): 6
Seed Width (FT): 45	Seed Area (SY): 44

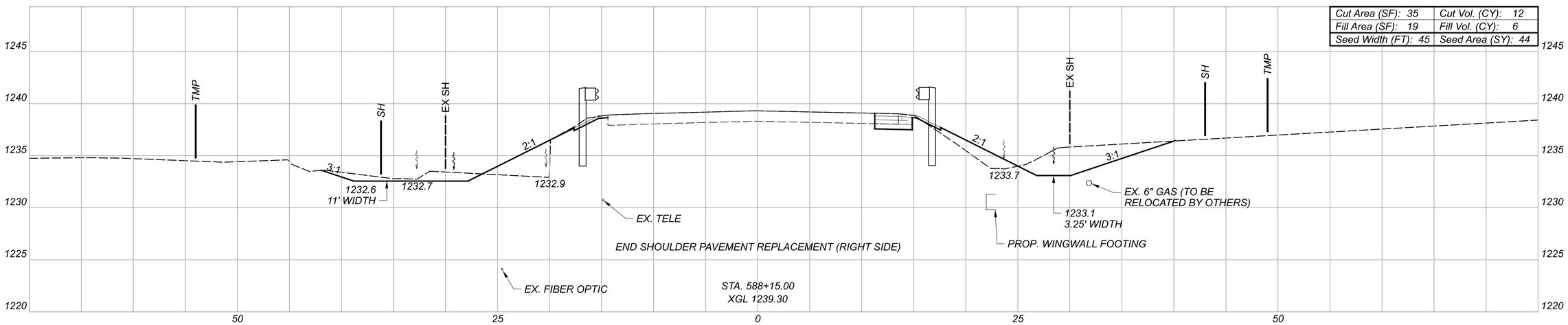

Cut Area (SF): 26	Cut Vol. (CY): 18
Fill Area (SF): 12	Fill Vol. (CY): 6
Seed Width (FT): 26	Seed Area (SY): 46

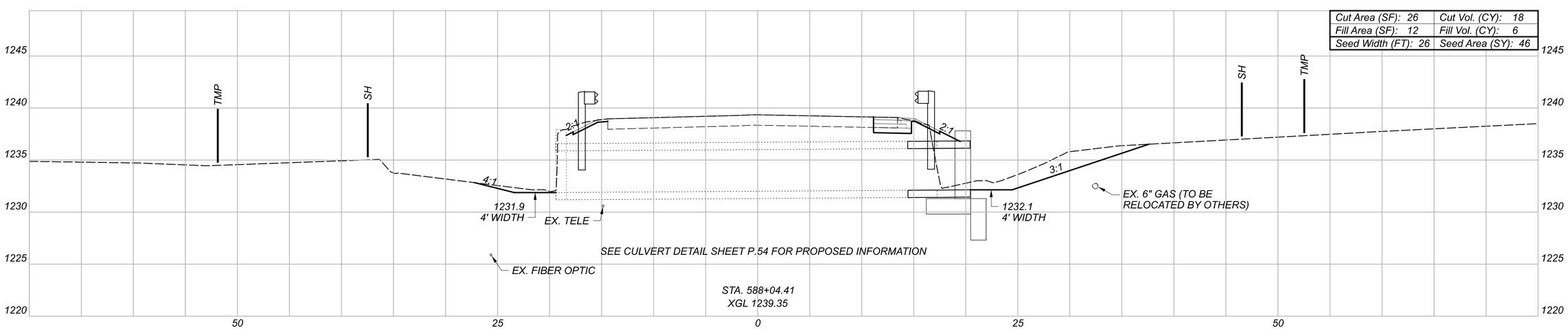

CROSS SECTIONS GEA-322-13.88
U.S. 322 STA. 588+04.41 TO STA. 588+15.00

Sheet Totals		
Seeding	Cut	Fill
90	30	12

DESIGN AGENCY
Environmental Design Group
4800 E. 131st ST., CLEVELAND, OHIO 44105
PH 216.663.1116 FAX 216.663.1120
W ENVIRONMENTALDESIGNGROUP.COM

DESIGNER
MSD

REVIEWER
SAC 12/29/23

PROJECT ID
112947

SHEET P.40 TOTAL 86

D12-CU-FY2024

MODEL: CLX_RW_U322 - 588+04.41[Sheet] PAPERSIZE: 34x22 (in.) DATE: 1/27/2025 TIME: 11:08:15 PM USER: scook
E:\ODOT\21-00121-00 ODOT D-12 Culvert Replacement 112947\112947\400-Engineering\Roadway\Sheets\112947_XS402.dgn

Cut Area (SF): 16	Cut Vol. (CY): 19
Fill Area (SF): 6	Fill Vol. (CY): 7
Seed Width (FT): 32	Seed Area (SY): 96

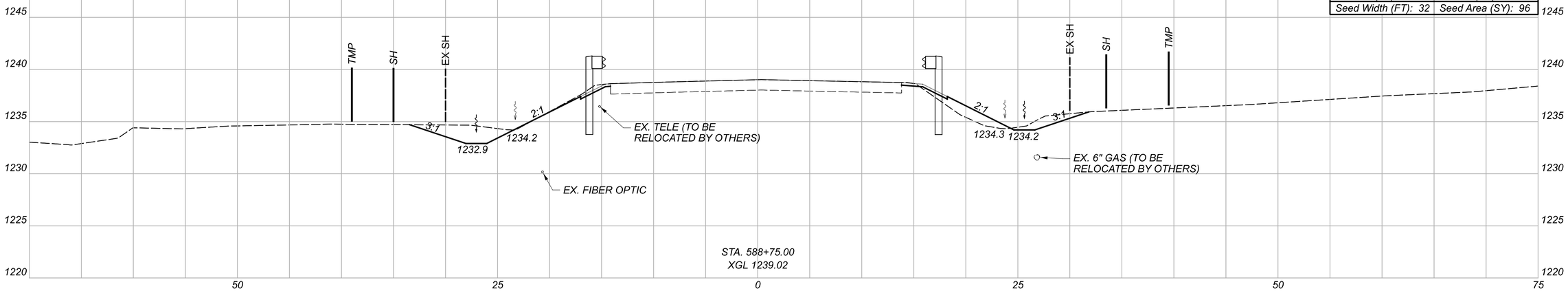

Cut Area (SF): 25	Cut Vol. (CY): 25
Fill Area (SF): 9	Fill Vol. (CY): 9
Seed Width (FT): 37	Seed Area (SY): 108

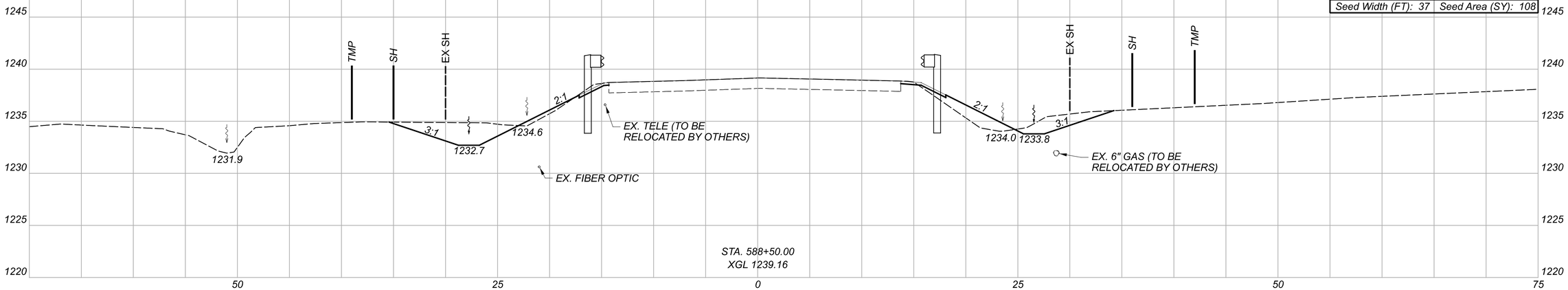

Cut Area (SF): 29	Cut Vol. (CY): 12
Fill Area (SF): 11	Fill Vol. (CY): 6
Seed Width (FT): 41	Seed Area (SY): 50

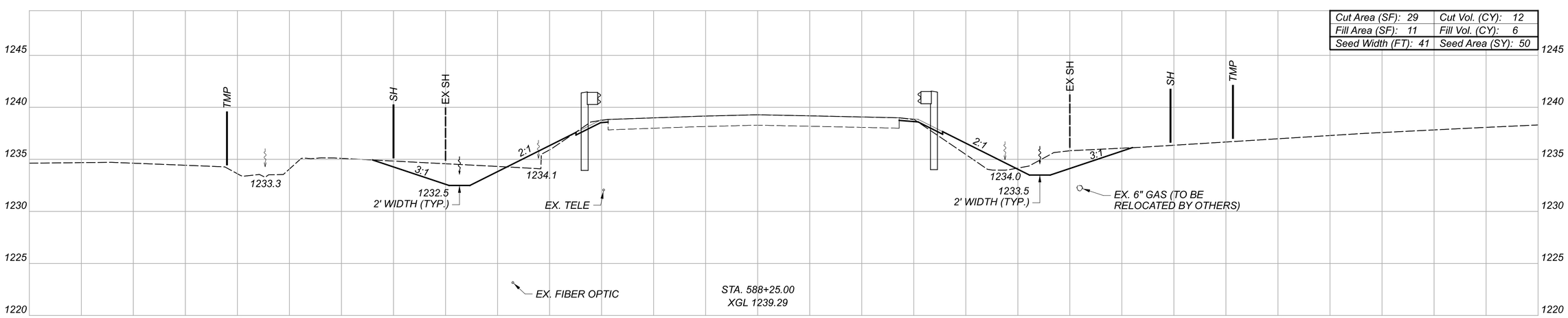

Sheet Totals		
Seeding	Cut	Fill
254	56	22

CROSS SECTIONS GEA-322-13.88
U.S. 322 STA. 588+25.00 TO STA. 588+75.00

DESIGN AGENCY
Environmental Design Group
LANDSCAPE ARCHITECTURE
210 GALLOWAY AVE, COLUMBUS, OHIO 43213
P: 614.866.1177 F: 614.866.1183
W: ENVIRONMENTALDESIGNGROUP.COM

DESIGNER: MSD
REVIEWER: SAC 12/29/23
PROJECT ID: 112947
SHEET: P.41 TOTAL: 86

D12-CU-FY2024

MODEL: CLX_RW_U322 - 588+25.00 [Sheet] PAPERSIZE: 34x22 (in.) DATE: 1/27/2025 TIME: 1:08:16 PM USER: scook
E:\ODOT\21-00121-010 ODOT D-12 Culvert Replacement 112947\400-Engineering\Roadway\Sheets\112947_XS402.dgn

STA. 598+25
END EARTHWORK, RT SIDE

Cut Area (SF): 5	Cut Vol. (CY): 7
Fill Area (SF): 1	Fill Vol. (CY): 2
Seed Width (FT): 24	Seed Area (SY): 72

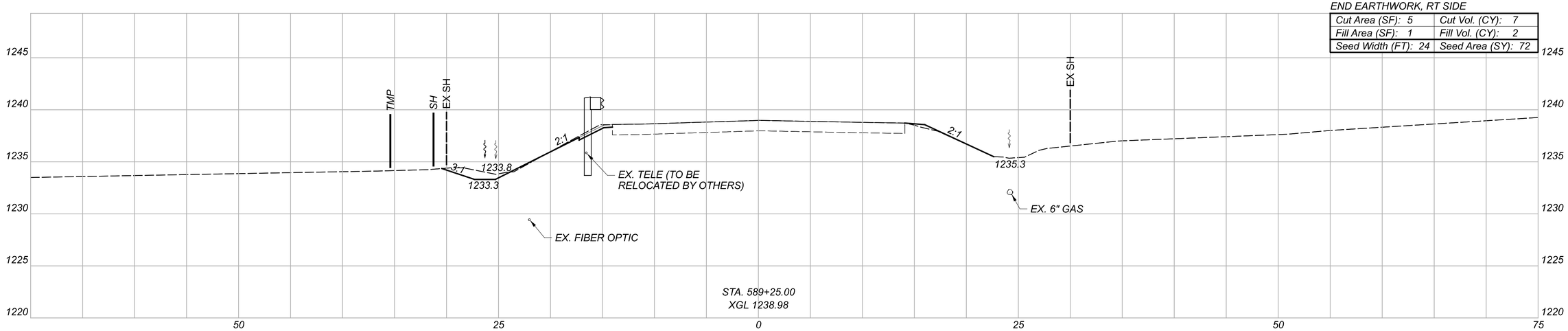

Cut Area (SF): 10	Cut Vol. (CY): 12
Fill Area (SF): 3	Fill Vol. (CY): 4
Seed Width (FT): 28	Seed Area (SY): 83

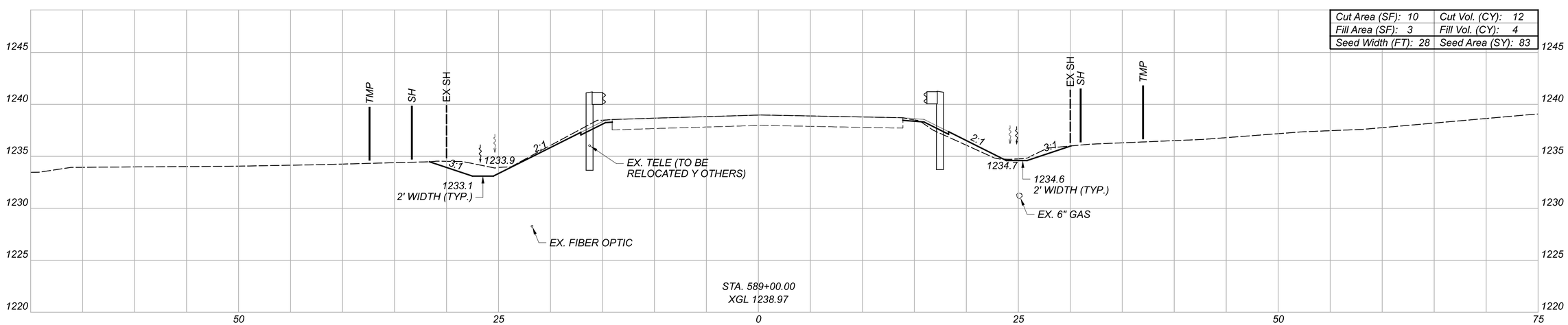

Sheet Totals		
Seeding	Cut	Fill
155	19	6

CROSS SECTIONS GEA-322-13.88
U.S. 322 STA. 589+00.00 TO STA. 589+25.00

DESIGN AGENCY
Environmental Design Group
ARCHITECTURE • ENGINEERING • PLANNING
PH. 740.349.1177 FAX 740.349.1183
2 SOUTH PARKSIDE PLAZA, NEWARK, OHIO 43055
W: ENVIDESIGNGROUP.COM

DESIGNER
MSD

REVIEWER
SAC 12/29/23

PROJECT ID
112947

SHEET P.42 TOTAL 86

D12-CU-FY2024

MODEL: CLX_RW_U322 - 589+00.00 [Sheet] PAPERSIZE: 34x22 (in.) DATE: 1/27/2025 TIME: 11:08:17 PM USER: scook
E:\ODOT\21-0012-010 ODOT D-12 Culvert Replacement 112947\112947\400-Engineering\Roadway\Sheets\112947_XS402.dgn

Cut Area (SF): 8	Cut Vol. (CY): 6
Fill Area (SF): 2	Fill Vol. (CY): 3
Seed Width (FT): 18	Seed Area (SY): 46

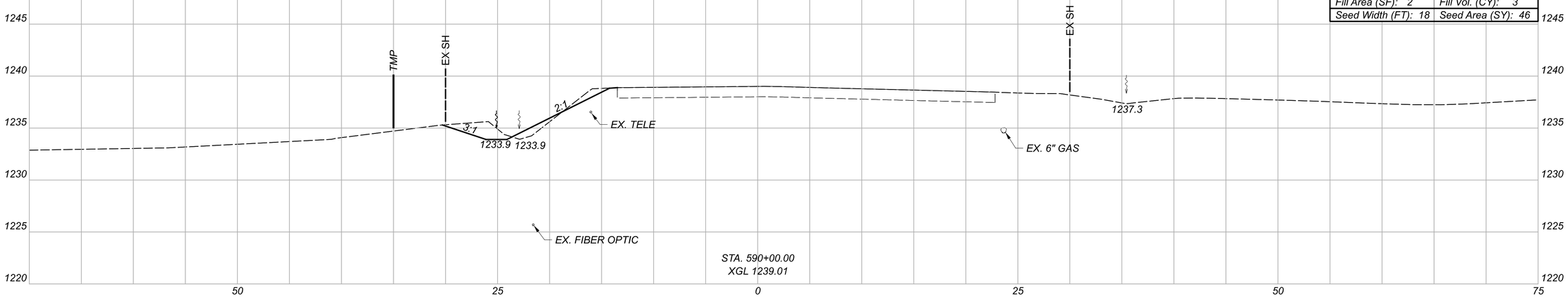

Cut Area (SF): 6	Cut Vol. (CY): 4
Fill Area (SF): 4	Fill Vol. (CY): 2
Seed Width (FT): 15	Seed Area (SY): 40

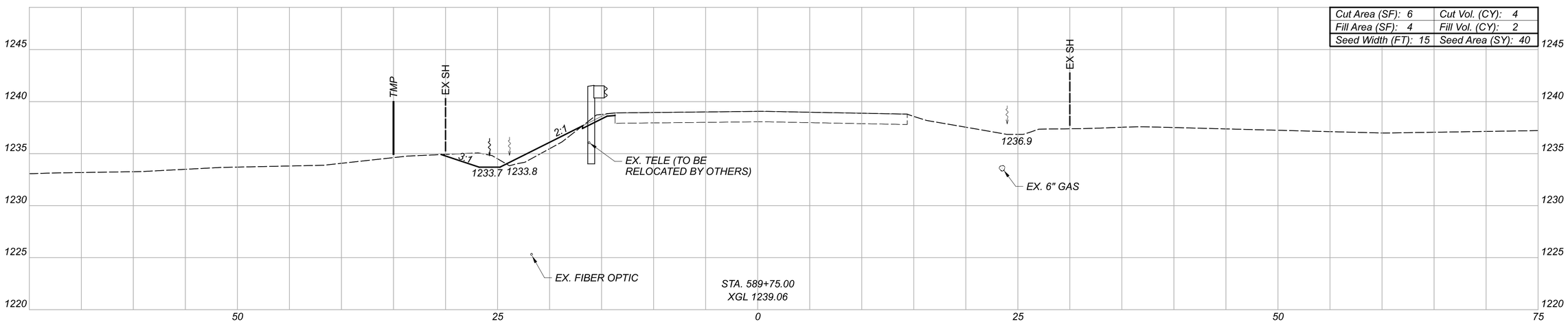

Cut Area (SF): 3	Cut Vol. (CY): 4
Fill Area (SF): 1	Fill Vol. (CY): 1
Seed Width (FT): 14	Seed Area (SY): 53

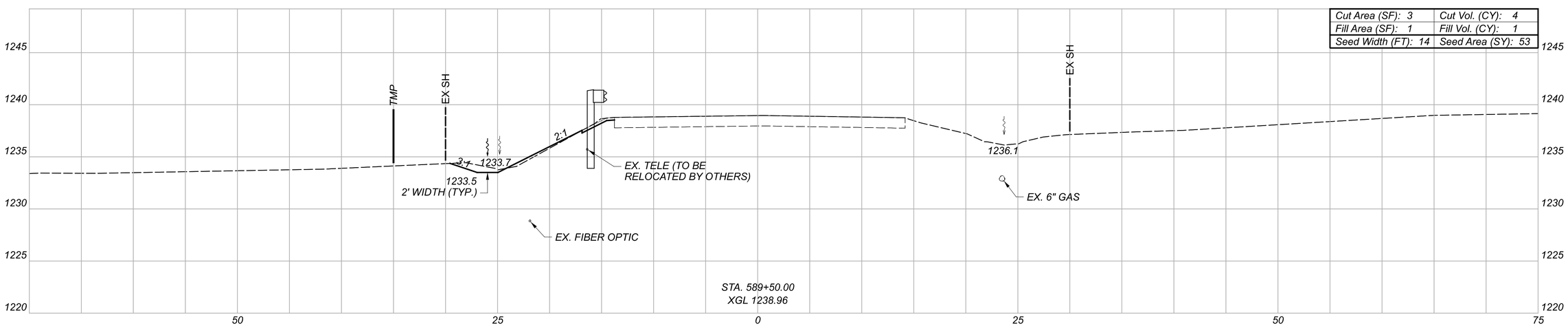

Sheet Totals		
Seeding	Cut	Fill
139	14	6

CROSS SECTIONS GEA-322-13.88
U.S. 322 STA. 589+50.00 TO STA. 590+00.00

DESIGN AGENCY
Environmental Design Group
ADVANCE CONSULTING ENGINEERS
PH. 330.659.1757 FAX 330.659.1820
2 S. MAIN ST. CLINTON, OHIO 44216
W: ENVIRONMENTALDESIGNGROUP.COM

DESIGNER: MSD
REVIEWER: SAC 12/29/23
PROJECT ID: 112947
SHEET: P.43 TOTAL: 86

D12-CU-FY2024

MODEL: CLX_RW_U322 - 589+50.00 [Sheet] PAPERSIZE: 34x22 (in.) DATE: 1/27/2025 TIME: 11:08:18 PM USER: scook
E:\ODOT\21-0021-010 ODOT D-12 Culvert Replacement 112947\112947\400-Engineering\Roadway\Sheets\112947_XS402.dgn

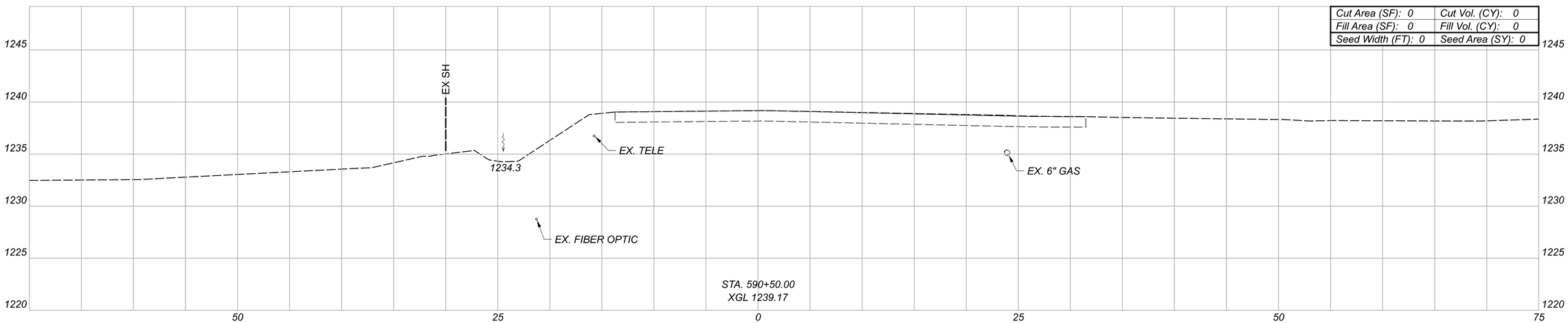

Cut Area (SF): 0	Cut Vol. (CY): 0
Fill Area (SF): 0	Fill Vol. (CY): 0
Seed Width (FT): 0	Seed Area (SY): 0

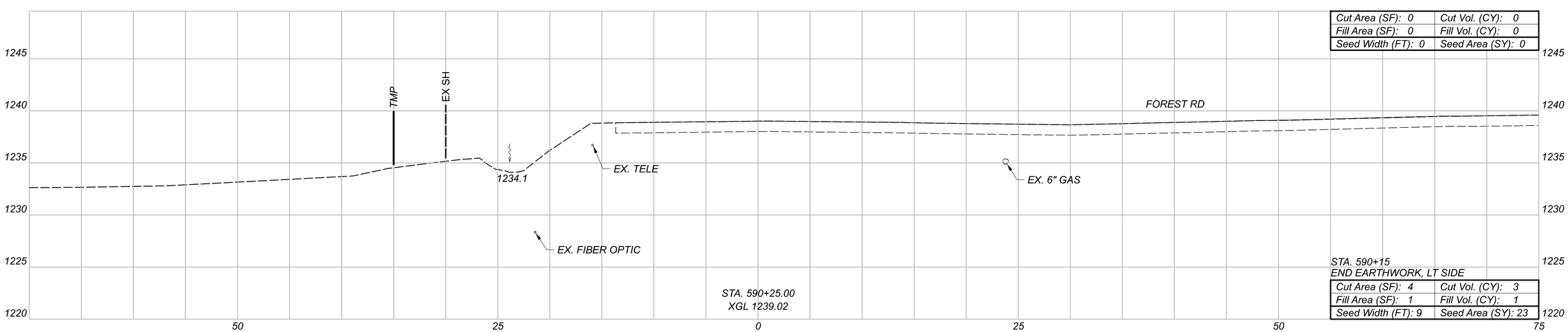

Cut Area (SF): 0	Cut Vol. (CY): 0
Fill Area (SF): 0	Fill Vol. (CY): 0
Seed Width (FT): 0	Seed Area (SY): 0

STA. 590+15
END EARTHWORK, LT SIDE

Cut Area (SF): 4	Cut Vol. (CY): 3
Fill Area (SF): 1	Fill Vol. (CY): 1
Seed Width (FT): 9	Seed Area (SY): 23

GEA-322-13.88 TOTALS
CARRIED TO THE EARTHWORK
SUBSUMMARY, SHEET P.32

Culvert Totals			Sheet Totals		
Seeding	Cut	Fill	Seeding	Cut	Fill
1094	248	122	23	3	1

CROSS SECTIONS GEA-322-13.88
U.S. 322 STA. 590+25.00 TO STA. 590+50.00

DESIGN AGENCY
Environmental Design Group
ALBANY, CLEVELAND, COLUMBUS
350 SOUTH HIGH STREET, SUITE 400
COLUMBUS, OHIO 43215
614.221.3555 FAX 614.221.3557
EDG@EDGGROUP.COM

DESIGNER
MSD

REVIEWER
SAC 12/29/23

PROJECT ID
112947

SHEET P.44 TOTAL 86

D12-CU-FY2024

MODEL: CLX_RW_U322 - 590+25.00 [Sheet1] PAPERSIZE: 34x22 (in.) DATE: 1/27/2025 TIME: 1:08:19 PM USER: scook
E:\ODOT\21-0012I-010 ODOT D-12 Culvert Replacement 112947\400-Engineering\Roadway\Sheets\112947_XS402.dgn

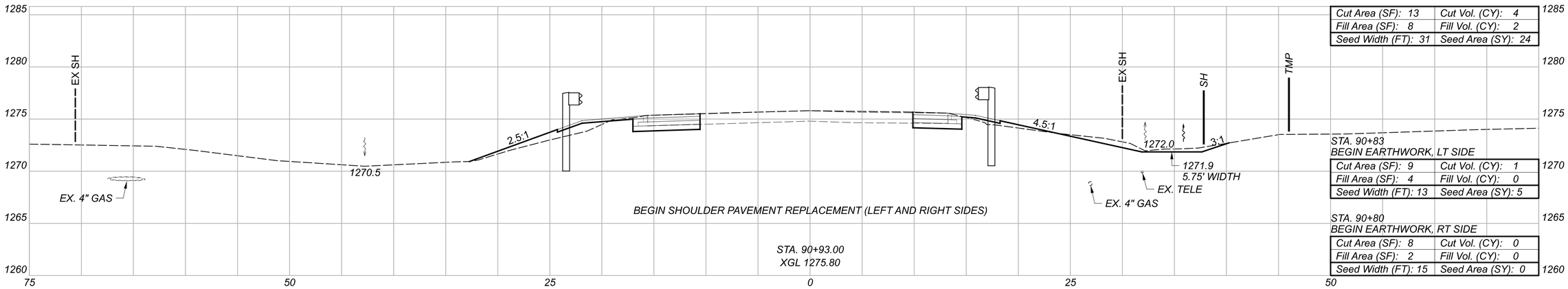

Cut Area (SF): 13	Cut Vol. (CY): 4
Fill Area (SF): 8	Fill Vol. (CY): 2
Seed Width (FT): 31	Seed Area (SY): 24

STA. 90+83
BEGIN EARTHWORK, LT SIDE

Cut Area (SF): 9	Cut Vol. (CY): 1
Fill Area (SF): 4	Fill Vol. (CY): 0
Seed Width (FT): 13	Seed Area (SY): 5

STA. 90+80
BEGIN EARTHWORK, RT SIDE

Cut Area (SF): 8	Cut Vol. (CY): 0
Fill Area (SF): 2	Fill Vol. (CY): 0
Seed Width (FT): 15	Seed Area (SY): 0

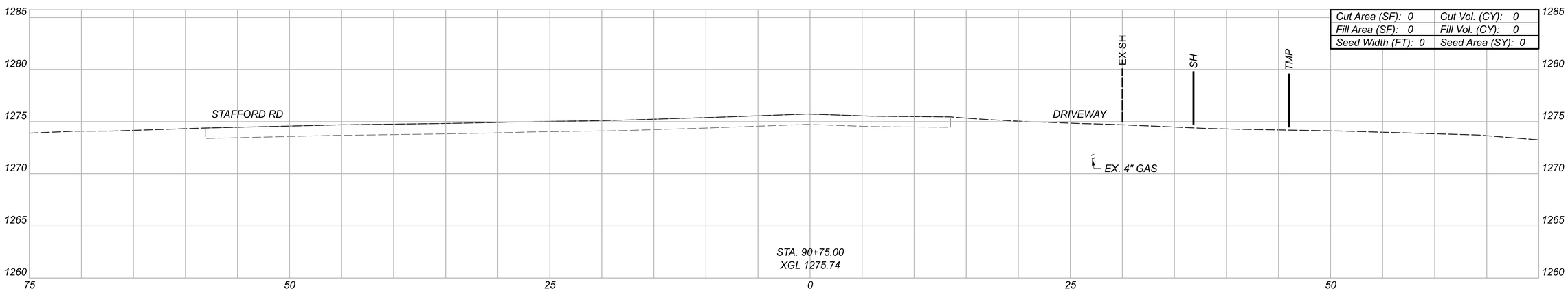

Cut Area (SF): 0	Cut Vol. (CY): 0
Fill Area (SF): 0	Fill Vol. (CY): 0
Seed Width (FT): 0	Seed Area (SY): 0

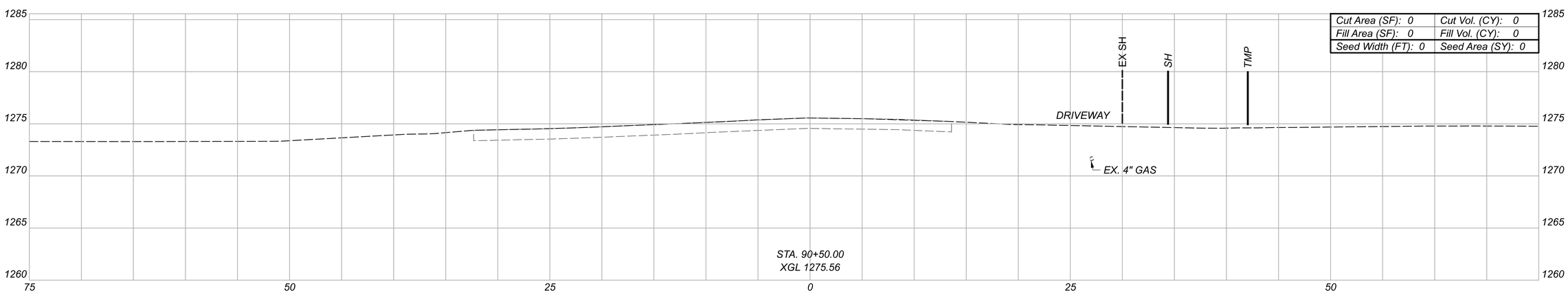

Cut Area (SF): 0	Cut Vol. (CY): 0
Fill Area (SF): 0	Fill Vol. (CY): 0
Seed Width (FT): 0	Seed Area (SY): 0

Sheet Totals		
Seeding	Cut	Fill
29	5	2

CROSS SECTIONS GEA-44-4.52
S.R. 44 STA. 90+50.00 TO STA. 90+93.00

DESIGN AGENCY
Environmental Design Group
ADVANCE CONSULTING ENGINEERS
P: 330.425.3.7 F: 330.425.3430
2705 CORPORATE EXCHANGE DR. STE. 100
W: ENVIDESIGNGROUP.COM

DESIGNER
MSD

REVIEWER
SAC 12/29/23

PROJECT ID
112947

SHEET P.45 TOTAL 86

D12-CU-FY2024

MODEL: CLX_RW_2 - 90+50.00 [Sheet] PAPERSIZE: 34x22 (in.) DATE: 1/27/2025 TIME: 11:57:00 PM USER: scook
E:\ODOT\21-0012-010 ODOT D-12 Culvert Replacement 112947\112947\400-Engineering\Roadway\Sheets\112947_XS502.dgn

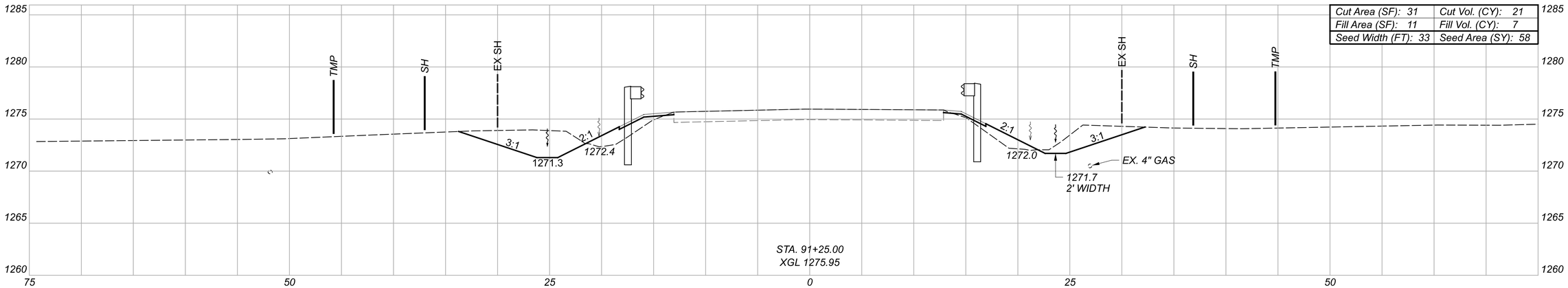

Cut Area (SF): 31	Cut Vol. (CY): 21
Fill Area (SF): 11	Fill Vol. (CY): 7
Seed Width (FT): 33	Seed Area (SY): 58

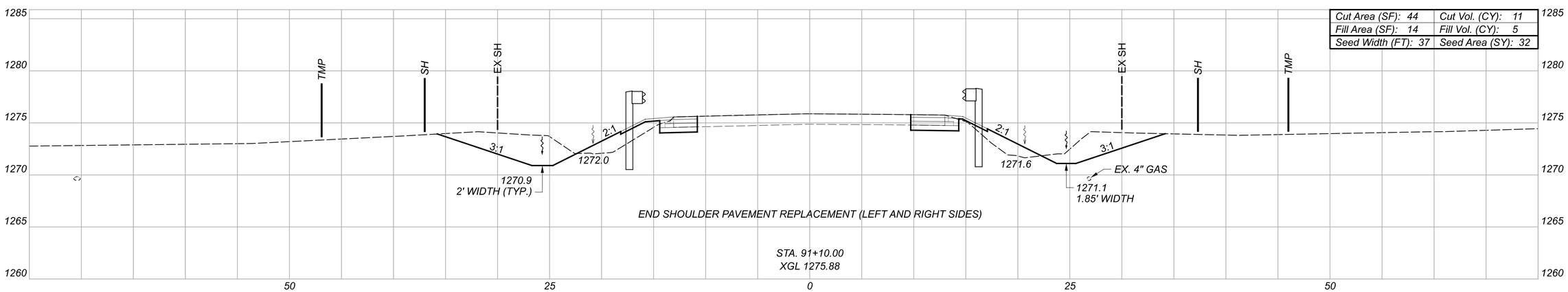

Cut Area (SF): 44	Cut Vol. (CY): 11
Fill Area (SF): 14	Fill Vol. (CY): 5
Seed Width (FT): 37	Seed Area (SY): 32

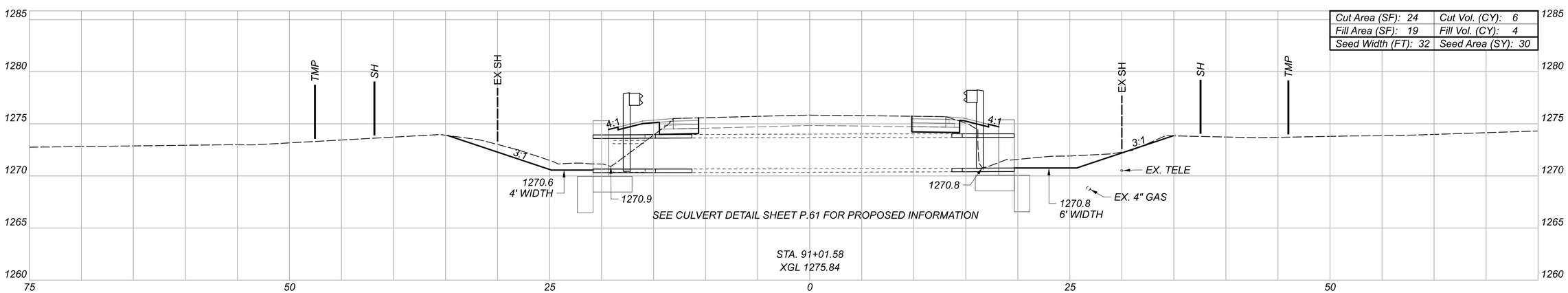

Cut Area (SF): 24	Cut Vol. (CY): 6
Fill Area (SF): 19	Fill Vol. (CY): 4
Seed Width (FT): 32	Seed Area (SY): 30

CROSS SECTIONS GEA-44-4.52
S.R. 44 STA. 91+01.58 TO STA. 91+25.00

Sheet Totals		
Seeding	Cut	Fill
120	38	16

DESIGN AGENCY
Environmental Design Group
LANDSCAPE ARCHITECTURE
PO 350 CLAYTON ST. PLACIDO, CA 93291
P 805.544.3161 F 805.544.3169
W ENVIRONMENTALDESIGNGROUP.COM

DESIGNER
MSD

REVIEWER
SAC 12/29/23

PROJECT ID
112947

SHEET P.46 TOTAL 86

D12-CU-FY2024

MODEL: CLX_RW_2 - 91+01.58 [Sheet] PAPERSIZE: 34x22 (in.) DATE: 1/27/2025 TIME: 1:57:02 PM USER: scook
EX:ODOT\21-0012I-010 ODOT D-12 Culvert Replacement 112947\400-Engineering\Roadway\Sheets\112947_XS502.dgn

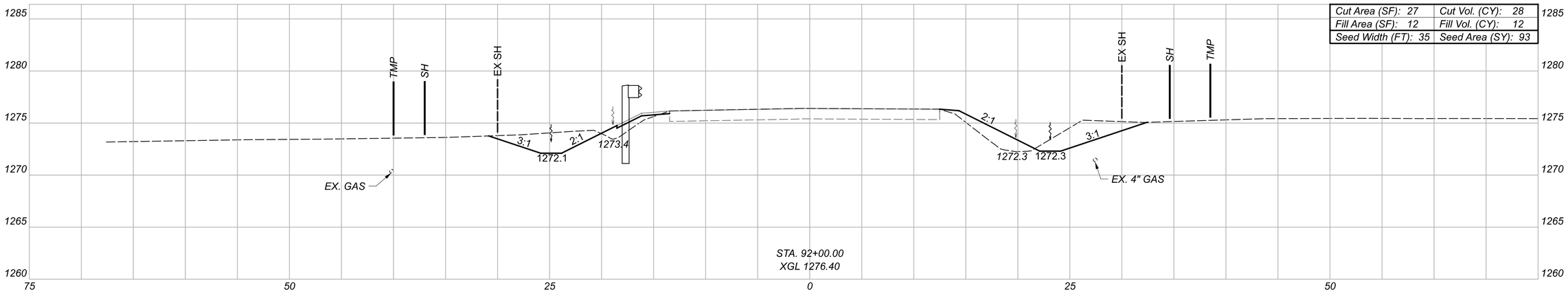

Cut Area (SF): 27	Cut Vol. (CY): 28
Fill Area (SF): 12	Fill Vol. (CY): 12
Seed Width (FT): 35	Seed Area (SY): 93

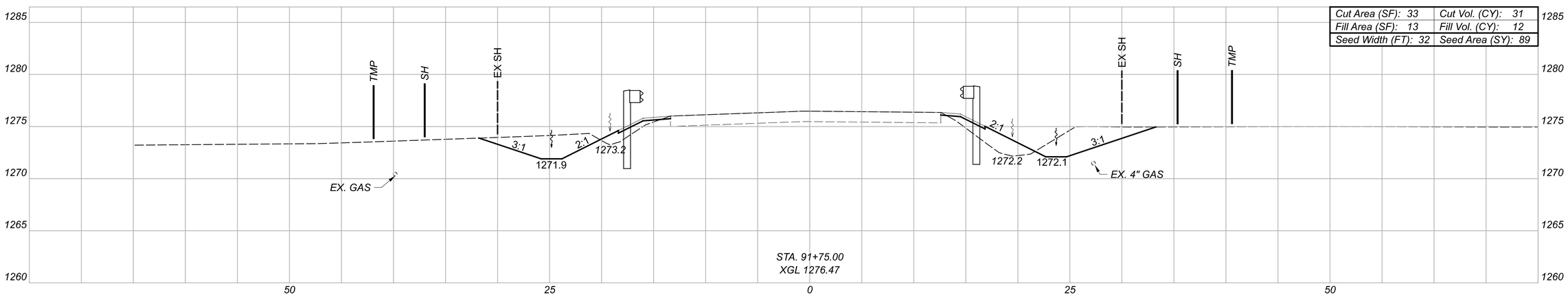

Cut Area (SF): 33	Cut Vol. (CY): 31
Fill Area (SF): 13	Fill Vol. (CY): 12
Seed Width (FT): 32	Seed Area (SY): 89

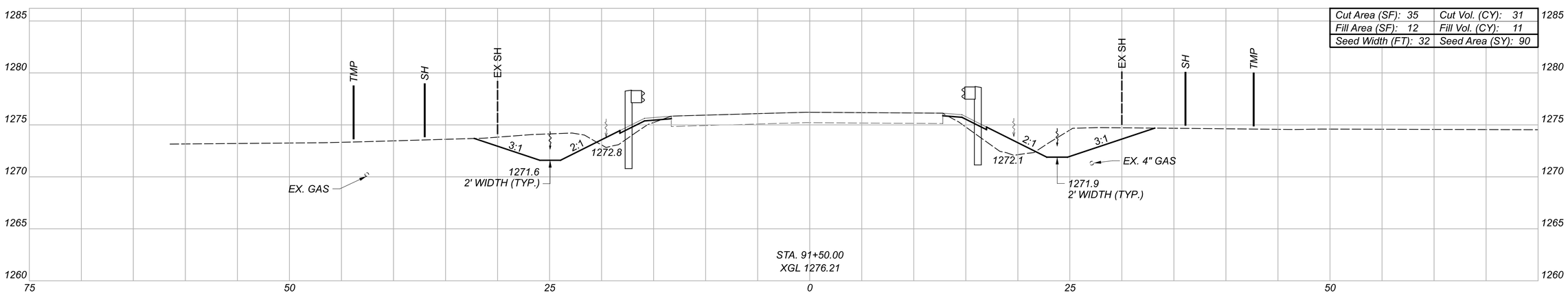

Cut Area (SF): 35	Cut Vol. (CY): 31
Fill Area (SF): 12	Fill Vol. (CY): 11
Seed Width (FT): 32	Seed Area (SY): 90

Sheet Totals		
Seeding	Cut	Fill
272	90	35

CROSS SECTIONS GEA-44-4.52
S.R. 44 STA. 91+50.00 TO STA. 92+00.00

DESIGN AGENCY
Environmental Design Group
ARCHITECTURE & ENGINEERING
410 CASSITY PL. PHONE 291-1820
COLUMBUS, OHIO 43235 FAX 291-1822
E-MAIL: ENVDESIGNGROUP@AOL.COM

DESIGNER
MSD

REVIEWER
SAC 12/29/23

PROJECT ID
112947

SHEET P.47 TOTAL 86

D12-CU-FY2024

MODEL: CLX_RW_2 - 91+50.00 [Sheet] PAPERSIZE: 34x22 (in.) DATE: 1/27/2025 TIME: 1:57:04 PM USER: scook
E:\ODOT\21-0012-010 ODOT D-12 Culvert Replacement 112947\400-Engineering\Roadway\Sheets\112947_XS502.dgn

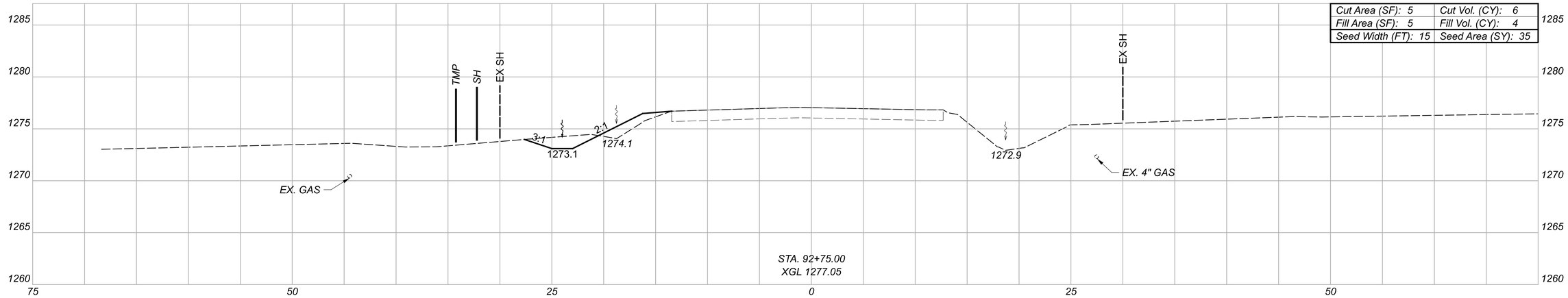

Cut Area (SF): 5	Cut Vol. (CY): 6
Fill Area (SF): 5	Fill Vol. (CY): 4
Seed Width (FT): 15	Seed Area (SY): 35

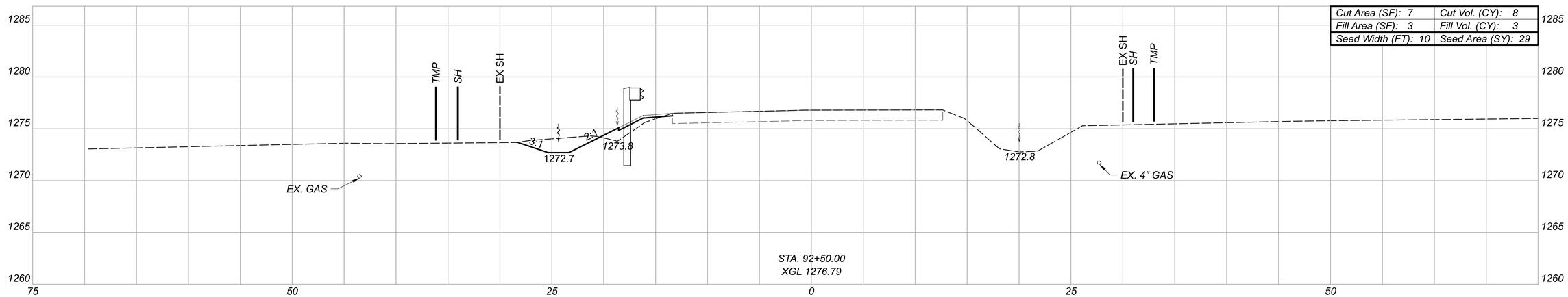

Cut Area (SF): 7	Cut Vol. (CY): 8
Fill Area (SF): 3	Fill Vol. (CY): 3
Seed Width (FT): 10	Seed Area (SY): 29

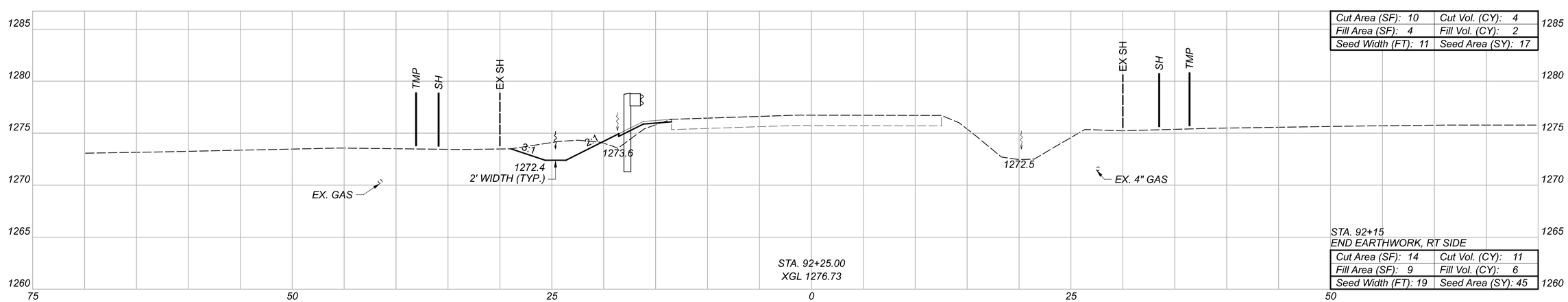

Cut Area (SF): 10	Cut Vol. (CY): 4
Fill Area (SF): 4	Fill Vol. (CY): 2
Seed Width (FT): 11	Seed Area (SY): 17

STA. 92+15
END EARTHWORK, RT SIDE

Cut Area (SF): 14	Cut Vol. (CY): 11
Fill Area (SF): 9	Fill Vol. (CY): 6
Seed Width (FT): 19	Seed Area (SY): 45

Sheet Totals		
Seeding	Cut	Fill
126	29	15

CROSS SECTIONS GEA-44-4.52
S.R. 44 STA. 92+25.00 TO STA. 92+75.00

DESIGN AGENCY
Environmental Design Group
LANDSCAPE ARCHITECTURE
210 SANDUSKY STREET, PARKVILLE, MD 21131
P 410.244.7115 F 410.244.7119
W ENVIRONMENTALDESIGNGROUP.COM

DESIGNER
MSD

REVIEWER
SAC 12/29/23

PROJECT ID
112947

SHEET P.48 TOTAL 86

D12-CU-FY2024

MODEL: CLX_RW_2 - 92+25.00 [Sheet] PAPERSIZE: 34x22 (in.) DATE: 1/27/2025 TIME: 1:08:28 PM USER: scook
E:\ODOT\21-0012I-010 ODOT D-12 Culvert Replacement 112947\400-Engineering\Roadway\Sheets\112947_XS502.dgn

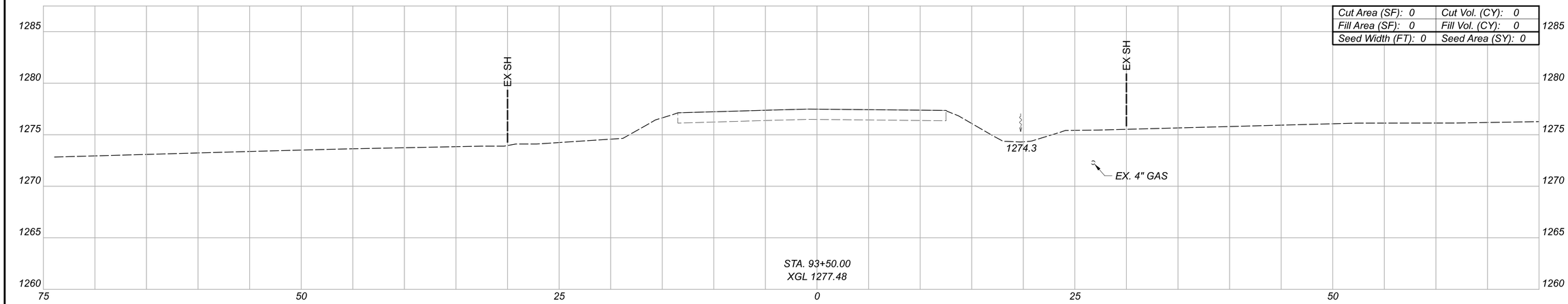

Cut Area (SF): 0	Cut Vol. (CY): 0
Fill Area (SF): 0	Fill Vol. (CY): 0
Seed Width (FT): 0	Seed Area (SY): 0

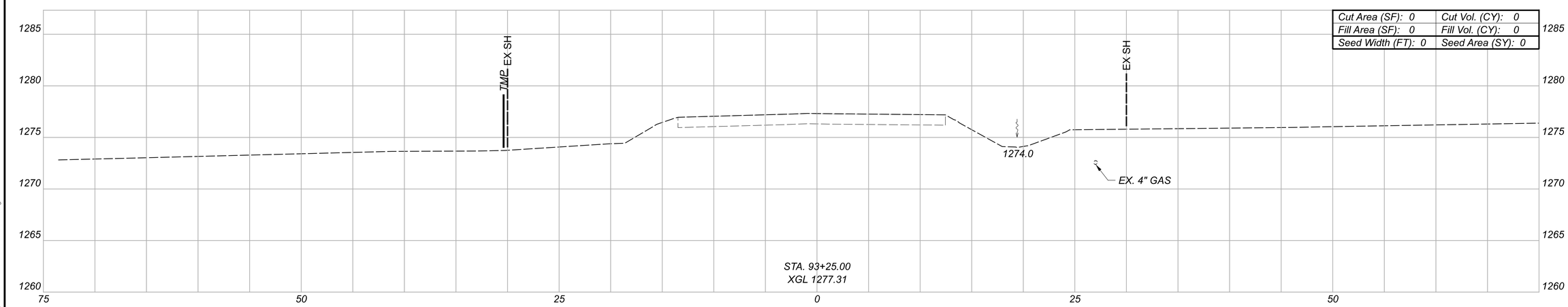

Cut Area (SF): 0	Cut Vol. (CY): 0
Fill Area (SF): 0	Fill Vol. (CY): 0
Seed Width (FT): 0	Seed Area (SY): 0

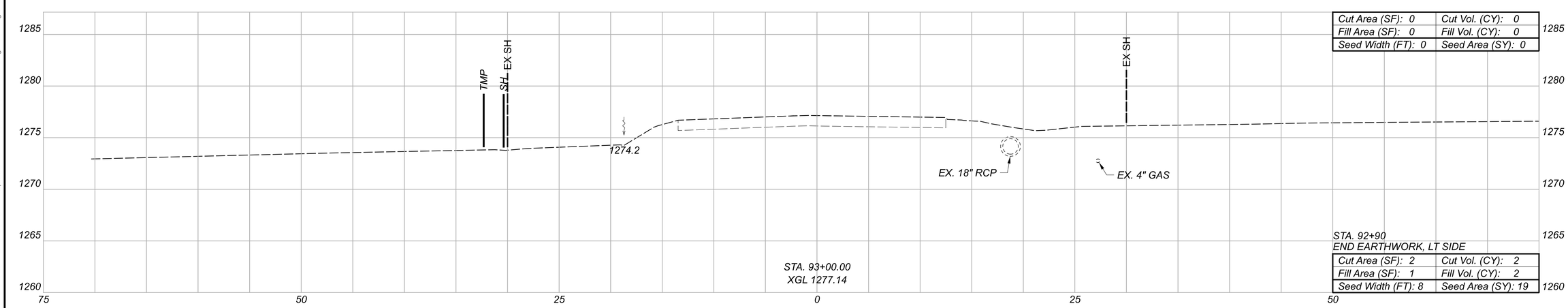

Cut Area (SF): 0	Cut Vol. (CY): 0
Fill Area (SF): 0	Fill Vol. (CY): 0
Seed Width (FT): 0	Seed Area (SY): 0

STA. 92+90
END EARTHWORK, LT SIDE

Cut Area (SF): 2	Cut Vol. (CY): 2
Fill Area (SF): 1	Fill Vol. (CY): 2
Seed Width (FT): 8	Seed Area (SY): 19

GEA-44-4.52 TOTALS
CARRIED TO THE EARTHWORK
SUBSUMMARY, SHEET P.31

Culvert Totals			Sheet Totals		
Seeding	Cut	Fill	Seeding	Cut	Fill
566	164	70	19	2	2

CROSS SECTIONS GEA-44-4.52
S.R. 44 STA. 93+00.00 TO STA. 93+50.00

DESIGN AGENCY
Environmental Design Group
ARCHITECTURE & ENGINEERING
410 CANNON ST. NORTH, STE. 1400
SPRINGFIELD, OHIO 45505
(937) 324-5671 FAX (937) 324-5672
E-MAIL: ENVIRESIGNGROUP@AOL.COM

DESIGNER
MSD

REVIEWER
SAC 12/29/23

PROJECT ID
112947

SHEET P.49 TOTAL 86

D12-CU-FY2024

MODEL: CLX_RW_2 - 93+00.00 [Sheet] PAPERSIZE: 34x22 (in.) DATE: 1/27/2025 TIME: 1:08:30 PM USER: scook
E:\ODOT\21-0012-010 ODOT D-12 Culvert Replacement 112947\112947\400-Engineering\Roadway\Sheets\112947_X5502.dgn

STA. 366+98
END EARTHWORK, RT SIDE

Cut Area (SF): 12	Cut Vol. (CY): 5
Fill Area (SF): 0	Fill Vol. (CY): 0
Seed Width (FT): 10	Seed Area (SY): 14

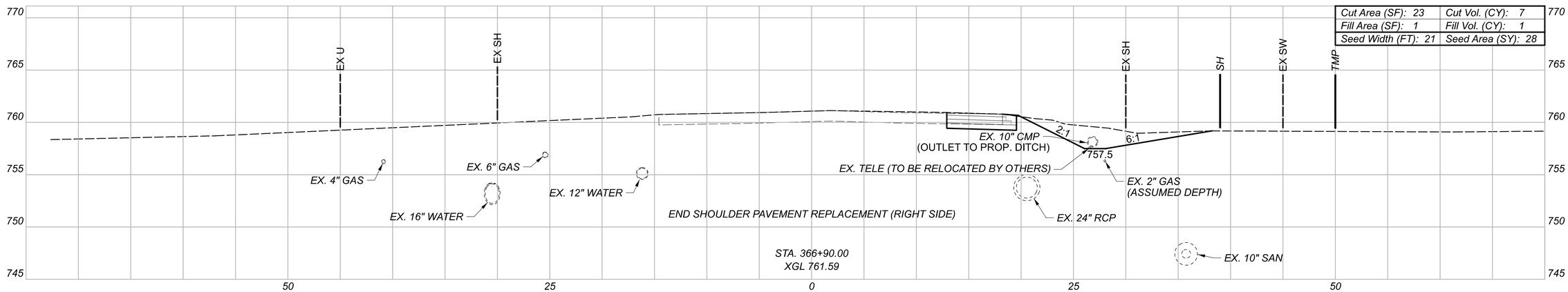

Cut Area (SF): 23	Cut Vol. (CY): 7
Fill Area (SF): 1	Fill Vol. (CY): 1
Seed Width (FT): 21	Seed Area (SY): 28

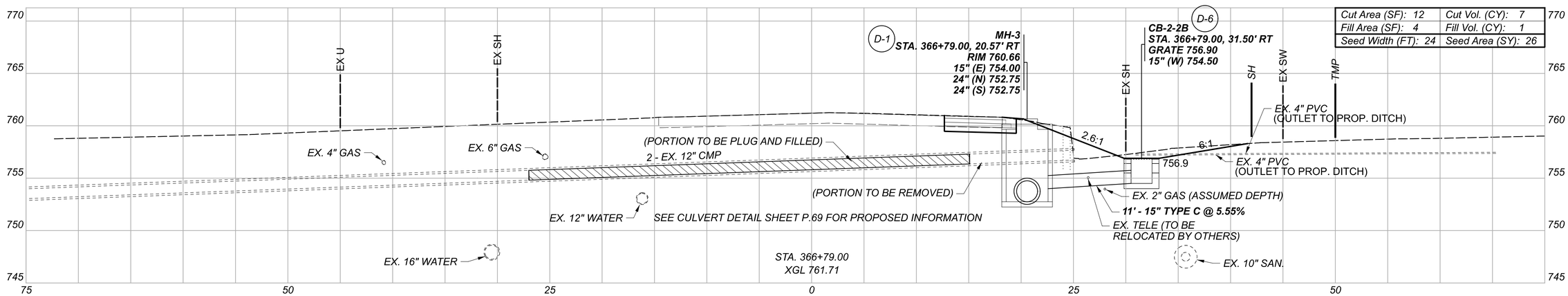

Cut Area (SF): 12	Cut Vol. (CY): 7
Fill Area (SF): 4	Fill Vol. (CY): 1
Seed Width (FT): 24	Seed Area (SY): 26

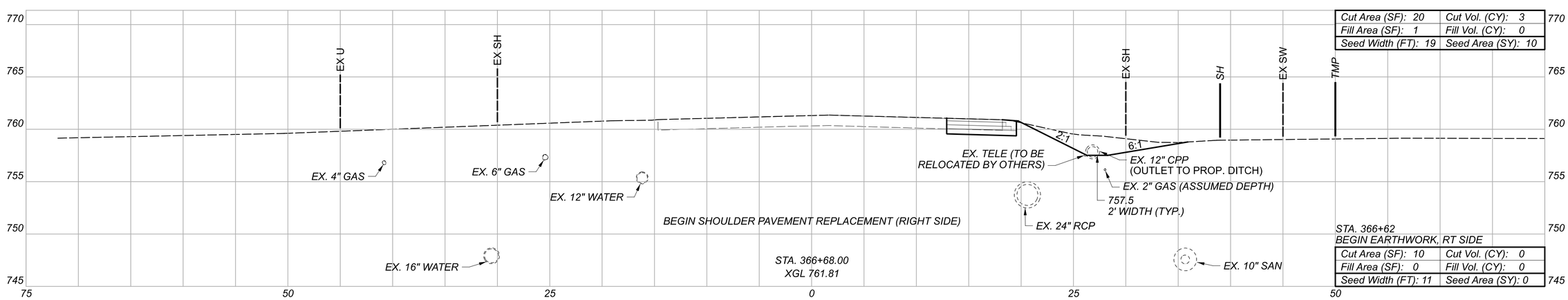

Cut Area (SF): 20	Cut Vol. (CY): 3
Fill Area (SF): 1	Fill Vol. (CY): 0
Seed Width (FT): 19	Seed Area (SY): 10

STA. 366+62
BEGIN EARTHWORK, RT SIDE

Cut Area (SF): 10	Cut Vol. (CY): 0
Fill Area (SF): 0	Fill Vol. (CY): 0
Seed Width (FT): 11	Seed Area (SY): 0

LAK-84-14.25 TOTALS
CARRIED TO THE EARTHWORK
SUBSUMMARY, SHEET P.32

Culvert Totals			Sheet Totals		
Seeding	Cut	Fill	Seeding	Cut	Fill
78	22	2	78	22	2

CROSS SECTIONS LAK-84-14.25
S.R. 84 STA. 366+68.00 TO STA. 366+90.00

DESIGN AGENCY
Environmental Design Group
ALBANY, SARATOGA & COLUMBUS
150 SARATOGA - PO BOX 351
ALBANY, OHIO 43010
W W W . ENVIRONMENTALDESIGNGROUP.COM

DESIGNER
MSD

REVIEWER
SAC 12/29/23

PROJECT ID
112947

SHEET P.50 TOTAL 86

D12-CU-FY2024

MODEL: CLX_RW_2 - 366+71.00 [Sheet] PAPERSIZE: 34x22 (in.) DATE: 1/27/2025 TIME: 1:57:10 PM USER: scook
E:\ODOT\21-0012I-010 ODOT D-12 Culvert Replacement 112947\400-Engineering\Roadway\Sheets\112947_XS601.dgn

LEGEND

LIMITS OF CONSTRUCTION

PIPE TO BE LINED

(A) ℄ EX R/W & CONSTR. I-77 STA 415+02.29 = ℄ CULVERT STA 1+00.00

UTILITY LEGEND
CWD = CLEVELAND WATER DEPARTMENT

PROJECT EARTH DISTURBED AREA: 0.00 ACRES
ESTIMATED CONTRACTOR EARTH DISTURBED AREA: 0.03 ACRES
NOTICE OF INTENT EARTH DISTURBED AREA: NO NOI REQUIRED

HORIZONTAL SCALE IN FEET 0 5 10 20

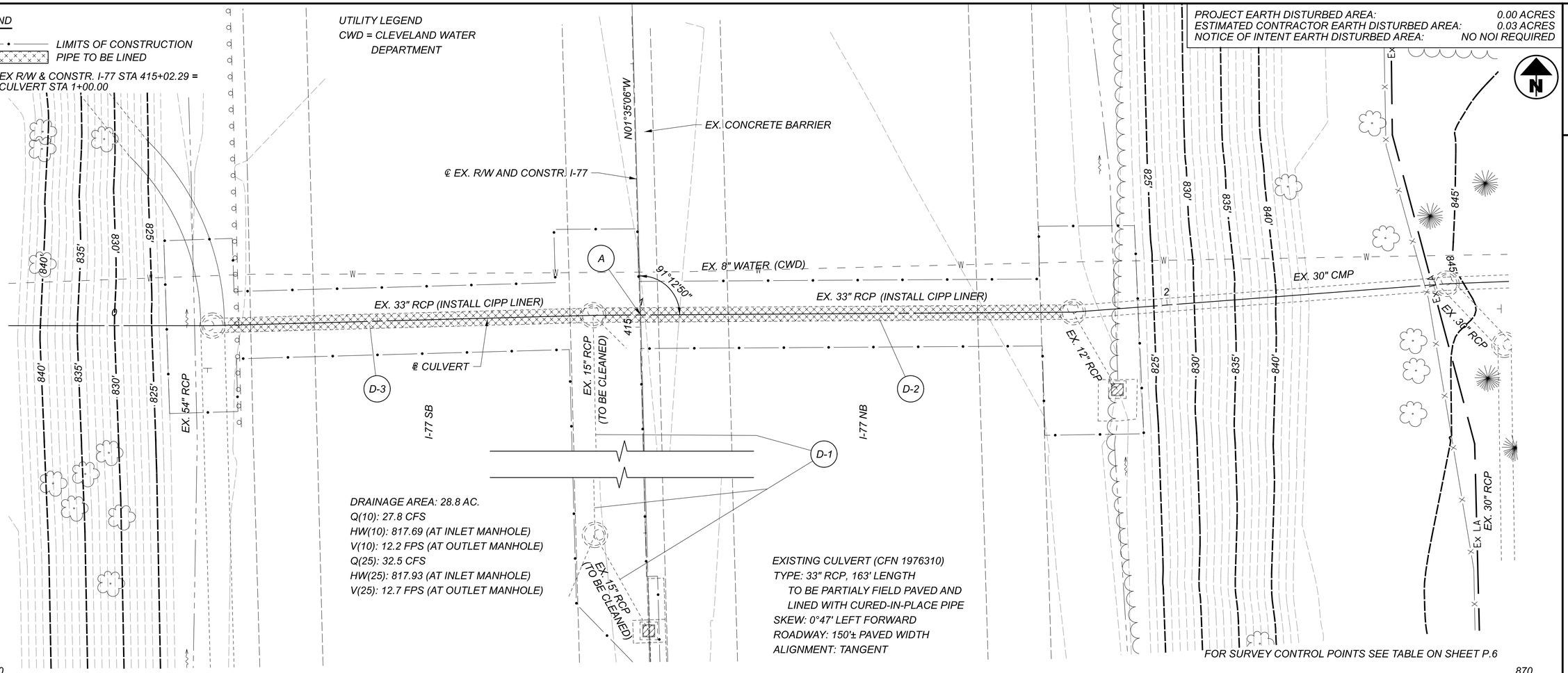

DRAINAGE AREA: 28.8 AC.
Q(10): 27.8 CFS
HW(10): 817.69 (AT INLET MANHOLE)
V(10): 12.2 FPS (AT OUTLET MANHOLE)
Q(25): 32.5 CFS
HW(25): 817.93 (AT INLET MANHOLE)
V(25): 12.7 FPS (AT OUTLET MANHOLE)

EXISTING CULVERT (CFN 1976310)
TYPE: 33" RCP, 163' LENGTH
TO BE PARTIALY FIELD PAVED AND LINED WITH CURED-IN-PLACE PIPE
SKEW: 0°47' LEFT FORWARD
ROADWAY: 150'± PAVED WIDTH
ALIGNMENT: TANGENT

FOR SURVEY CONTROL POINTS SEE TABLE ON SHEET P.6

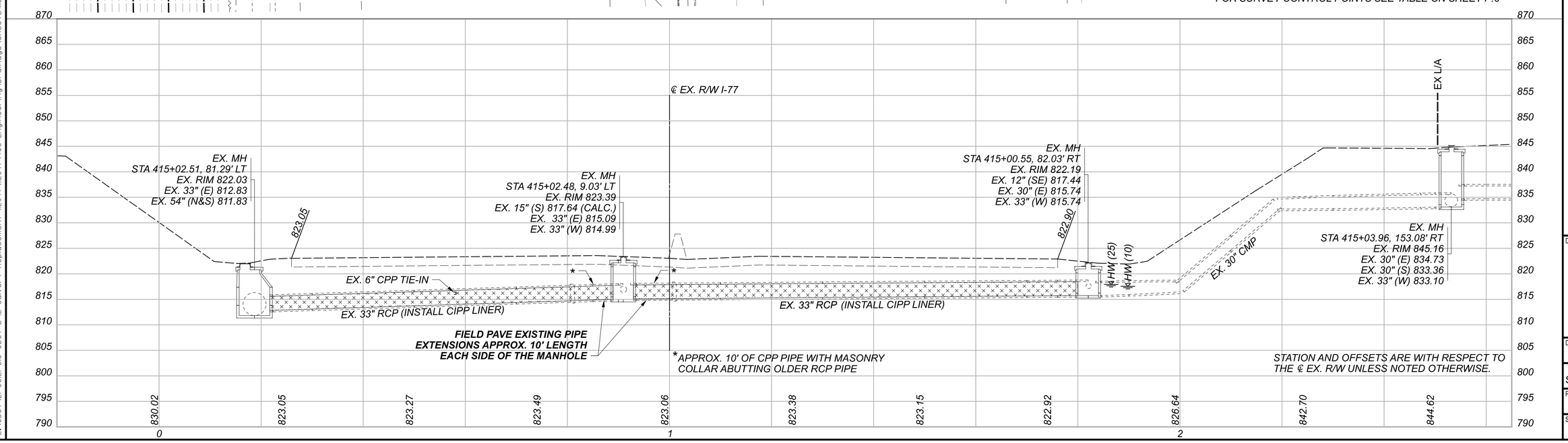

CULVERT DETAIL
CUY-77-7.84

DESIGN AGENCY
Environmental Design Group
ARCHITECTS ENGINEERS
350 SOUTH 5TH STREET, PORTLAND, OR 97201
PHONE: 503.223.1942 FAX: 503.223.5227
ENVIRONMENTALDG.COM

DESIGNER: MSD
REVIEWER: SAC 12/29/23
PROJECT ID: 112947
SHEET: P.51 TOTAL: 86

D12-CU-FY2024

MODEL: ll2947_DP101 PAPERSIZE: 34x22 (in.) DATE: 1/27/2025 TIME: 1:08:42 PM USER: scook
E:\ODOT\21-0012I-010 ODOT D-12 Culvert Replacement ll2947\ll2947\400-Engineering\Drainage\Sheets\ll2947_DP101.dgn

LEGEND

- LIMITS OF CONSTRUCTION
- PIPE TO BE FILLED AND PLUGGED
- EXISTING WETLANDS

(A) ℄ EX. R/W & CONSTR. I-90 STA 49+34.41 = ℄ CULVERT STA 4+00.00

DRAINAGE AREA: 15.1 AC.
Q(10): 35 CFS
HW(10): 647.14 (AT CATCH BASIN)
V(10): 6.8 FPS (AT OUTLET)
Q(25): 39 CFS
HW(25): 647.37 (AT CATCH BASIN)
V(25): 6.9 FPS (AT OUTLET)
ORDINARY HIGH WATER MARK
(OHWM): 644.61
pH: 8.3
STREAMBED: ABRASIVE LEVEL 1

PROPOSED CULVERT (CFN (TBD))
TYPE: 42" CONDUIT, BORED OR JACKED,
TYPE B, 748.06, 294' LENGTH
SKEW: 0°14' RIGHT FORWARD
ROADWAY: 140'± (OUT TO OUT)
ALIGNMENT: CURVE (RIGHT)

EXISTING CULVERT (CFN 1812421)
TYPE: 36" CMP
293' TOTAL LENGTH
SKEW: 0°28' RIGHT FORWARD
ROADWAY: 140'± (OUT TO OUT)
ALIGNMENT: CURVE (RIGHT)

APPROXIMATE TOP OF ROCK:
B-001-0-22 ELEV. 646.3
B-002-0-22 ELEV. 647.1
B-003-0-22 ELEV. 644.7

UTILITY LEGEND
CEI = THE ILLUMINATING COMPANY
WNOP = CHARTER COMMUNICATIONS (SPECTRUM)

PROJECT EARTH DISTURBED AREA: 0.19 ACRES
ESTIMATED CONTRACTOR EARTH DISTURBED AREA: 2.52 ACRES
NOTICE OF INTENT EARTH DISTURBED AREA: 2.71 ACRES

HORIZONTAL SCALE IN FEET 0 10 20 40

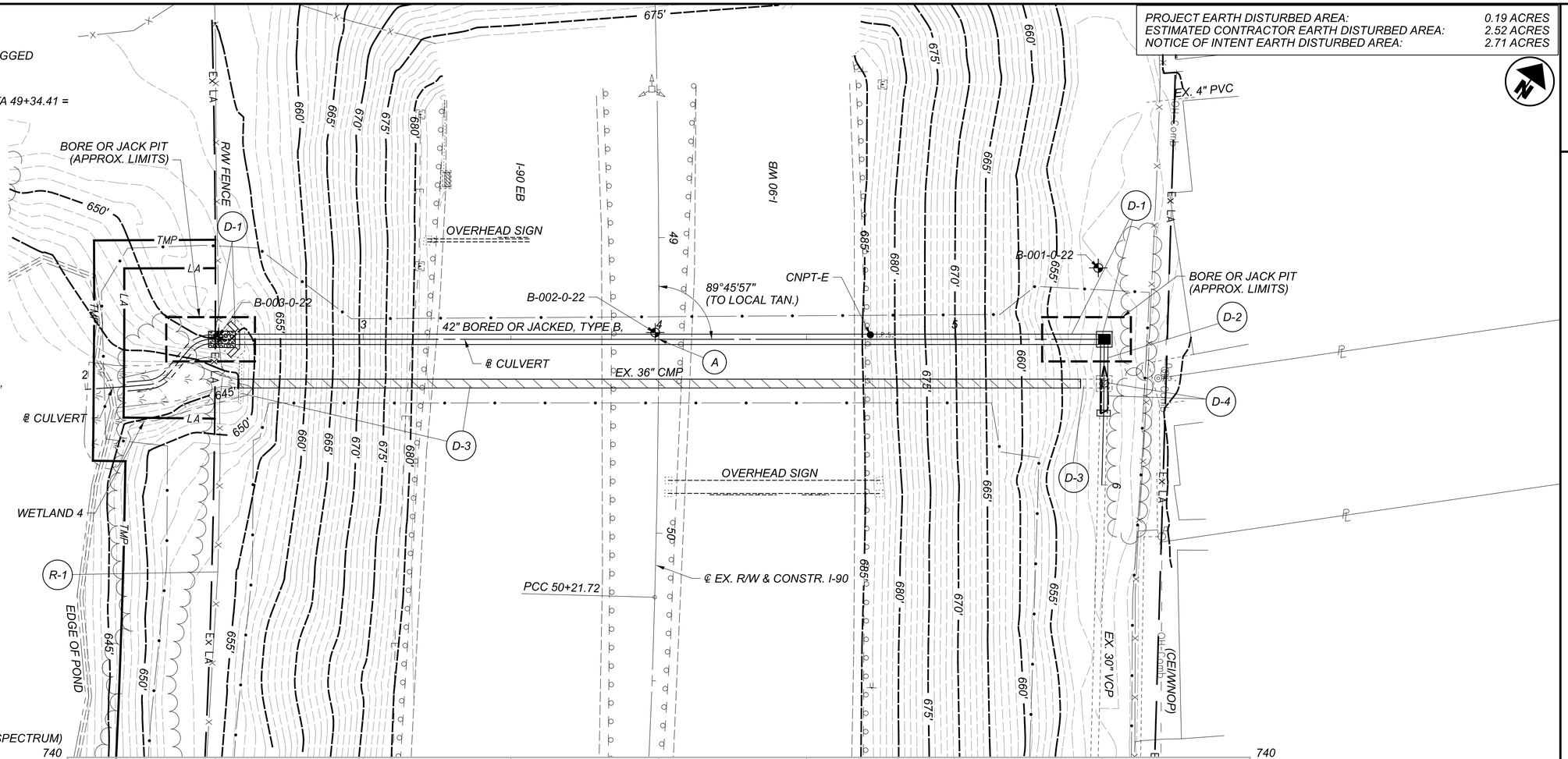

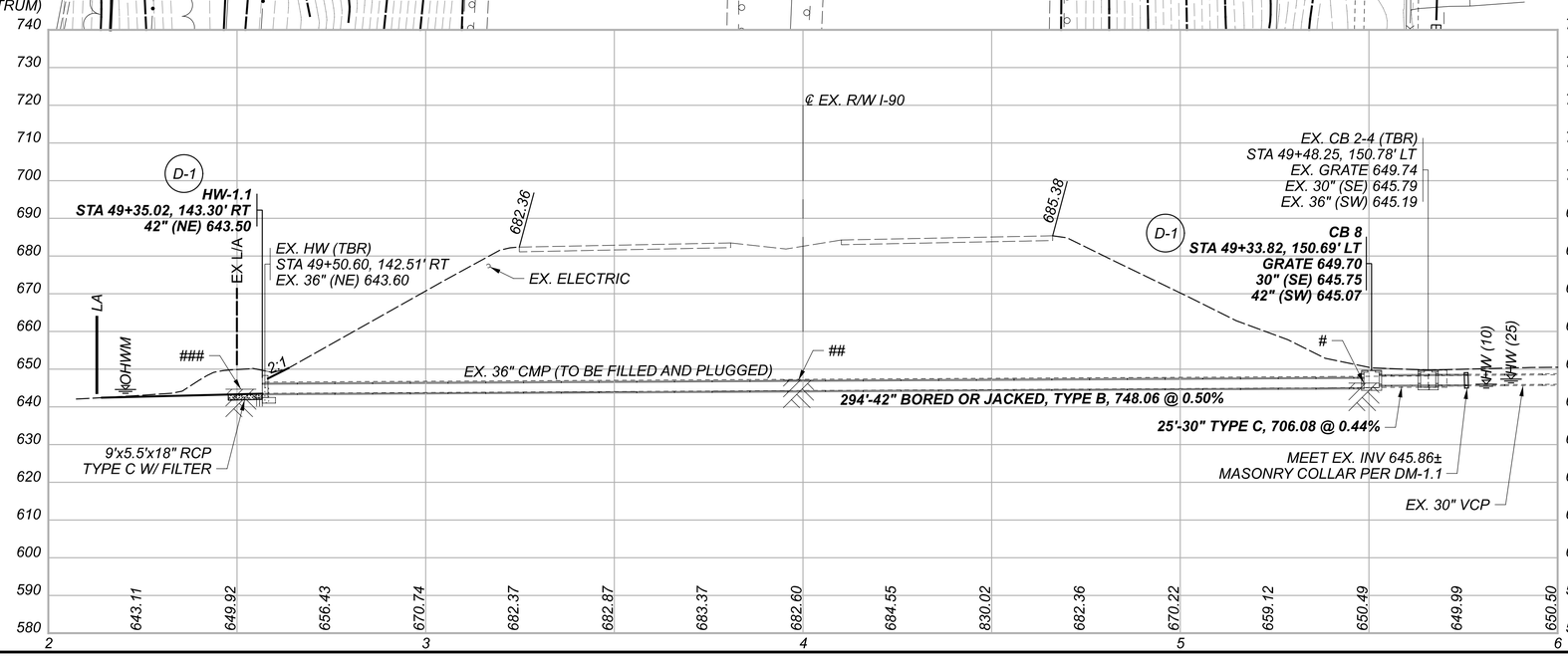

STATION AND OFFSETS ARE WITH RESPECT TO THE ℄ EX. R/W UNLESS NOTED OTHERWISE.

CULVERT DETAIL
CUY-90-29.92

DESIGN AGENCY
Environmental Design Group
ADRIAN C. CLARK, P.E. OHIO
HQ: 330.239.1173 FAX: 330.239.1183
2 SOUTH MAIN STREET, SUITE 1
WADSWORTH, OHIO 44281
E-MAIL: ENVIRDESIGNGROUP@GMAIL.COM

DESIGNER: MSD
REVIEWER: SAC 12/29/23
PROJECT ID: 112947
SHEET: P.52 TOTAL: 86

D12-CU-FY2024

MODEL: 112947_DP20 PAPERSIZE: 34x22 (in.) DATE: 1/27/2025 TIME: 1:08:48 PM USER: scook
E:\ODOT\2I-001I-010 ODOT D-12 Culvert Replacement 112947\112947\400-Engineering\Drainage\Sheets\112947_DP20I.dgn

PROJECT EARTH DISTURBED AREA: 0.08 ACRES
ESTIMATED CONTRACTOR EARTH DISTURBED AREA: 0.38 ACRES
NOTICE OF INTENT EARTH DISTURBED AREA: NO NOI REQUIRED

HORIZONTAL SCALE IN FEET 0 10 20 40

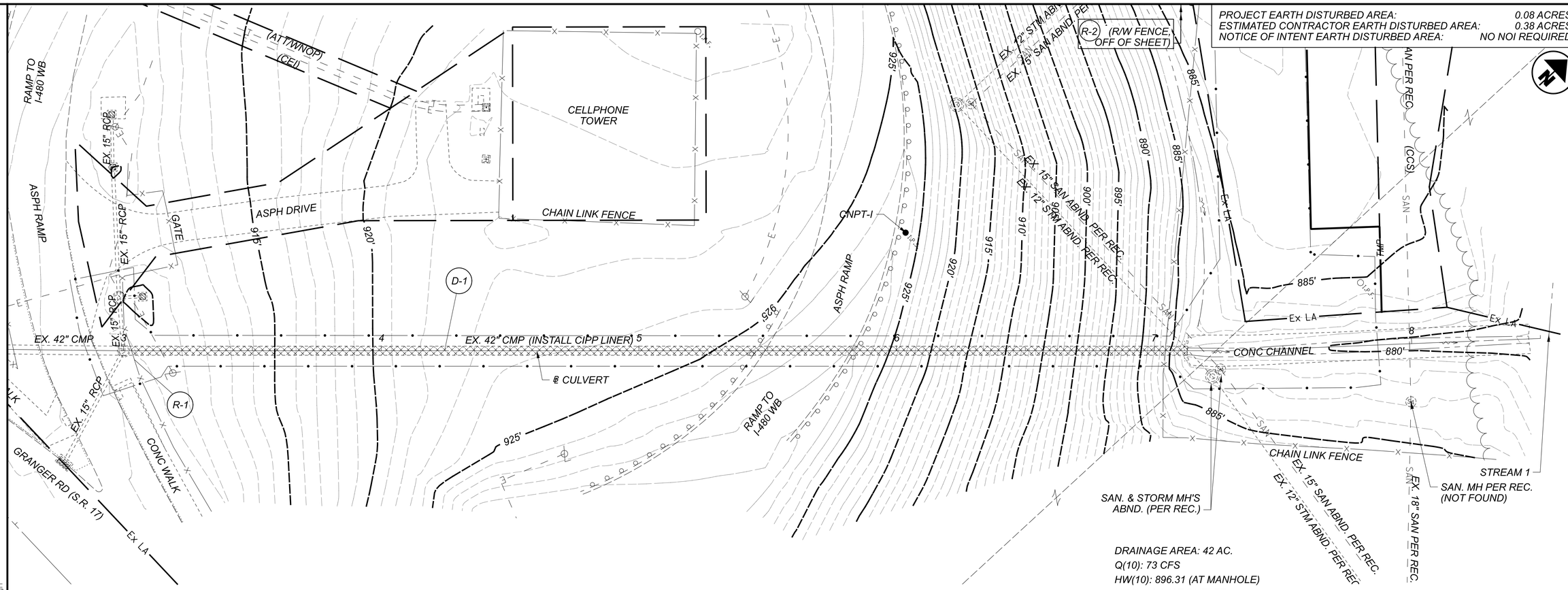

DRAINAGE AREA: 42 AC.
Q(10): 73 CFS
HW(10): 896.31 (AT MANHOLE)
V(10): 16.6 (AT OUTLET)
Q(25): 83 CFS
HW(25): 896.49 (AT MANHOLE)
V(25): 17.1 FPS (AT OUTLET)
ORDINARY HIGH WATER MARK (OHWM): 880.93 (AT OUTLET)
pH: 7.3
STREAMBED: ABRASIVE LEVEL 1

LEGEND

LIMITS OF CONSTRUCTION
PIPE TO BE LINED

UTILITY LEGEND
ATT = AT&T
CEI = THE ILLUMINATING COMPANY
CCS = CUYAHOGA COUNTY SANITARY DIVISION
CWD = CLEVELAND WATER DEPARTMENT
WNOP = CHARTER COMMUNICATIONS (SPECTRUM)

EXISTING CULVERT (CFN 1827233)
TYPE: 42" CMP, 413'± LENGTH
TO BE FIELD PAVED AND LINED
WITH CURED-IN-PLACE PIPE
SKEW: 32° 27' RT FWD
ROADWAY: 29'±
ALIGNMENT: CURVE (RIGHT)

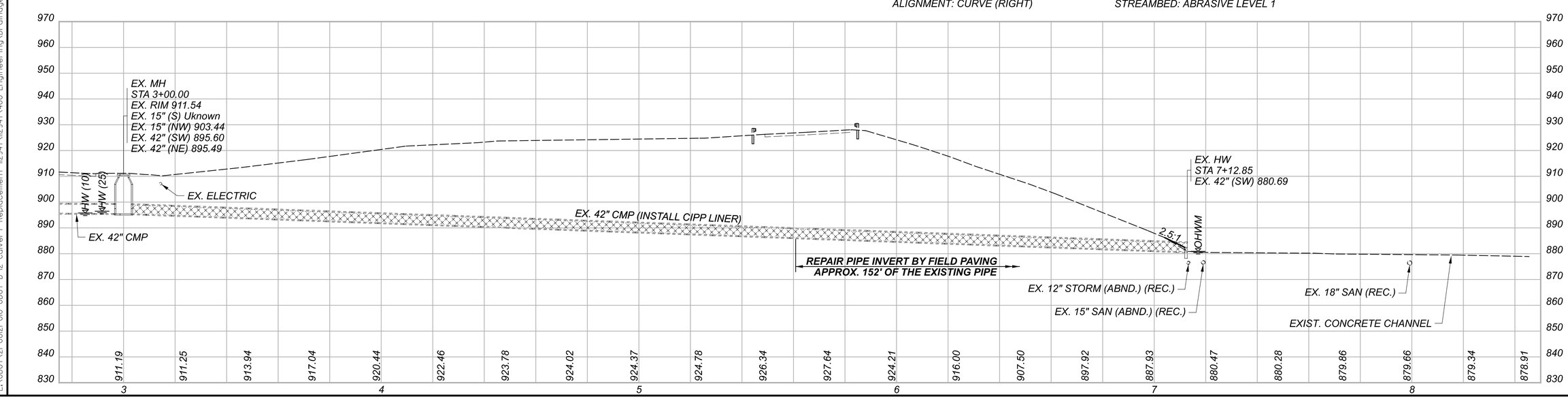

CULVERT DETAIL
CUY-18271-0.13

DESIGN AGENCY
Environmental Design Group
ALBANY, NEW YORK | COLUMBUS
350 SOUTH 5TH ST. | MINDEN, OH 44501
P: 740.767.4500 | F: 740.767.4501
E: ENVIRONMENTALDESIGNGROUP.COM

DESIGNER MSD
REVIEWER SAC 12/29/23
PROJECT ID 112947
SHEET P.53 TOTAL 86

D12-CU-FY2024

MODEL: BLX_CULV_480-RA-0.13 - Plan | PAPERSIZE: 34x22 (in.) DATE: 1/27/2025 TIME: 1:08:51 PM USER: scook
E:\ODOT\21-0012I-010 ODOT D-12 Culvert Replacement 112947\112947\400-Engineering\Drainage\Sheets\112947_DP30I.dgn

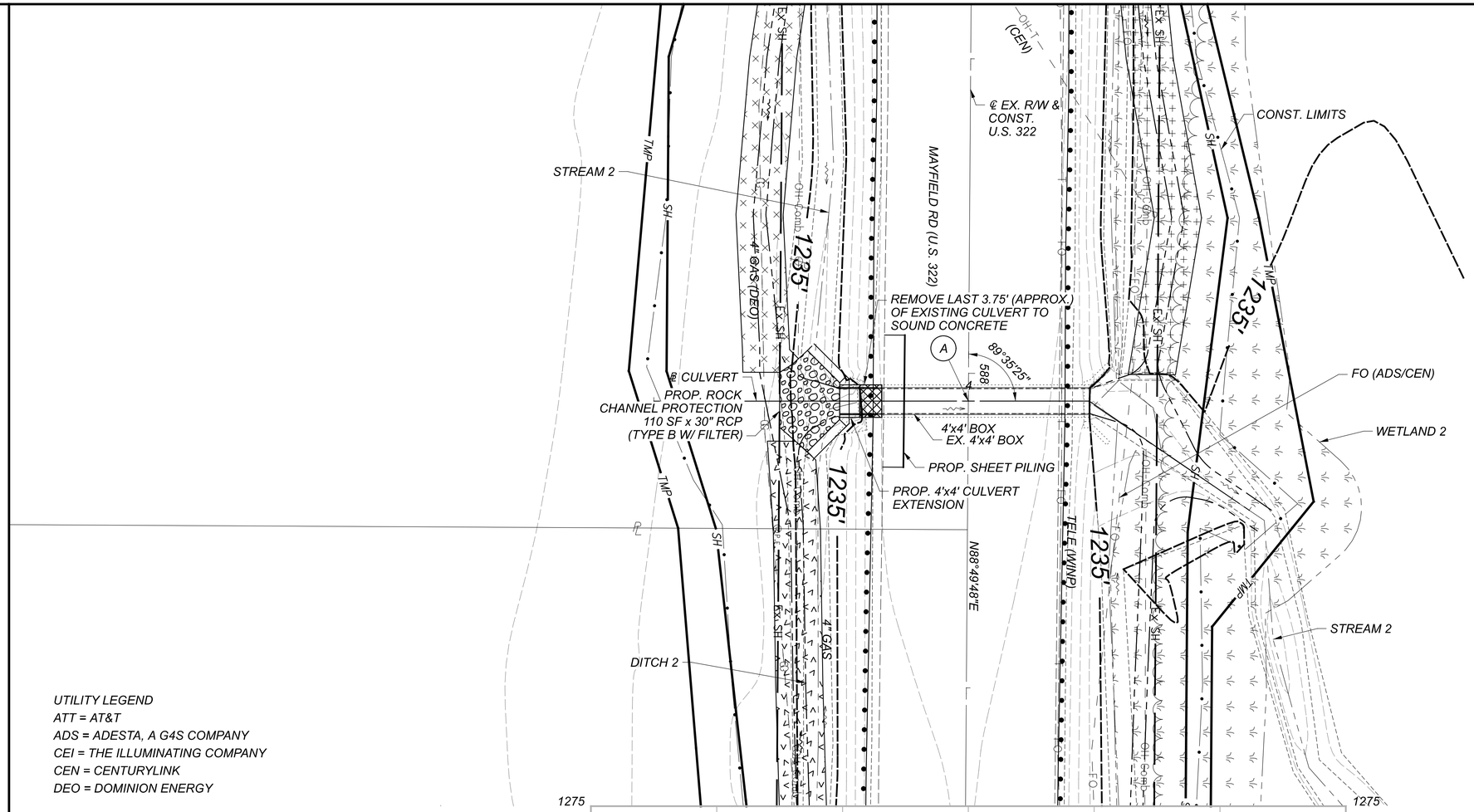

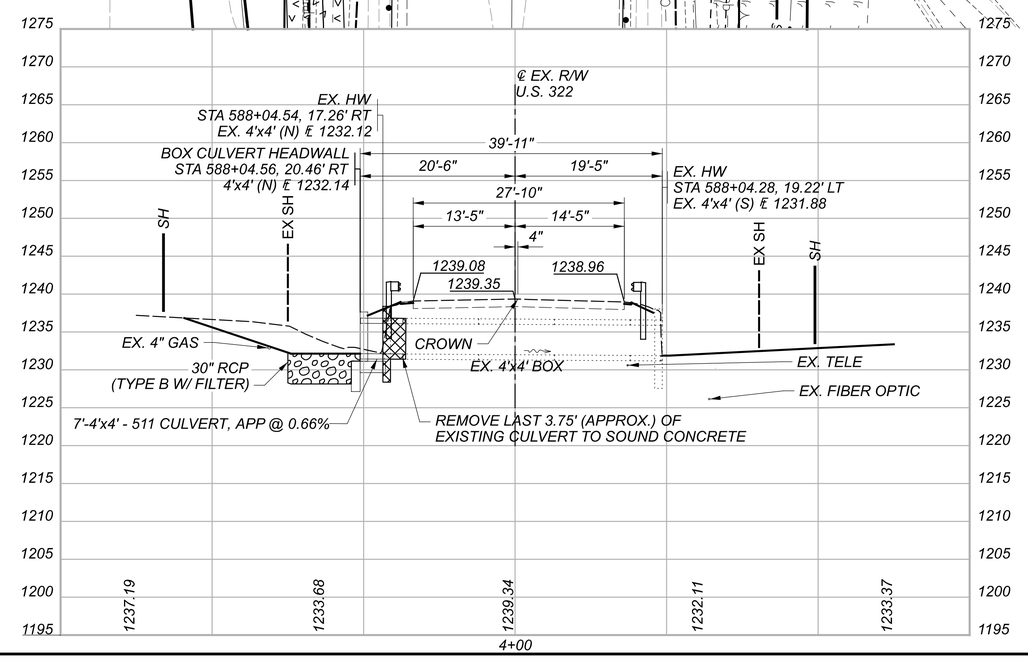

UTILITY LEGEND
ATT = AT&T
ADS = ADESTA, A G4S COMPANY
CEI = THE ILLUMINATING COMPANY
CEN = CENTURYLINK
DEO = DOMINION ENERGY

HYDRAULIC DATA
ORDINARY HIGH WATER MARK (OHWM): 1234.59
pH: 7.7
STREAMBED: ABRASIVE LEVEL 1

LEGEND
- LIMITS OF CONSTRUCTION
- (A) ℄ EX R/W & CONST. U.S. 322 STA 588+04.41 = ℄ CULVERT STA 4+00.00
- EXISTING WETLAND
- DITCH EROSION PROTECTION
- TURF REINFORCING MAT, TYPE 1
- TURF REINFORCING MAT, TYPE 2
- REMOVE PORTIONS OF EXISTING CULVERT AND HEADWALL
- ROCK CHANNEL PROTECTION

EXISTING STRUCTURE
TYPE: 4'x4' CONCRETE BOX
LENGTH: 37'±
SKEW: 0°24' R.F.
ALIGNMENT: TANGENT
ROADWAY WIDTH: 28'± PAVED WIDTH
CFN: 1833243

PROPOSED STRUCTURE
TYPE: 4'x4' CONCRETE BOX
LENGTH: 40'±
SKEW: 0°24' R.F.
ALIGNMENT: TANGENT
ROADWAY WIDTH: 28'± PAVED WIDTH
CFN: 1833243
DISPOSITION: REMOVE LAST 3.75' (APPROX.) OF EXISTING CULVERT (AT INLET) TO SOUND CONCRETE. REPLACE WITH 7' OF 4'x4' - 511 CULVERT, APP.

NOTE:
STATIONS AND OFFSETS ARE WITH RESPECT TO THE ℄ EX. R/W UNLESS NOTED OTHERWISE.

HORIZONTAL SCALE IN FEET 0 5 10 20

CULVERT DETAIL
GEA-322-13.88

DESIGN AGENCY: 2LMN
DESIGNER: RTF
REVIEWER: JAH 10-30-23
PROJECT ID: 112947
SUBSET 1 TOTAL 7
SHEET P.54 TOTAL 86

D12-CU-FY2024

MODEL: 112947_DP401 PAPERSIZE: 34x22 (in.) DATE: 1/3/2024 TIME: 9:16:44 AM USER: Steve_Hart
V:\Projects\EDGL_112947_D12-Culv Replacements FY2024\400-Engineering\Drainage\Sheets\112947_DP401.dgn

DESIGN SPECIFICATIONS:

THIS STANDARD DRAWING CONFORMS TO "STANDARD SPECIFICATIONS FOR HIGHWAY BRIDGES" ADOPTED BY THE AMERICAN ASSOCIATION OF STATE HIGHWAY AND TRANSPORTATION OFFICIALS, 2002 AND THE ODOT BRIDGE DESIGN MANUAL.

DESIGN DATA:

THE FOLLOWING DESIGN DATA IS ASSUMED:

INTERNAL ANGLE OF FRICTION OF BACKFILL SOIL, Φ_{sf} = 30°
TOTAL UNIT WEIGHT OF BACKFILL SOIL = 120 PCF
INTERNAL ANGLE OF FRICTION (DRAINED), FOUNDATION SOIL, Φf= 28°
UDRAINED SHEAR STRENGTH (COHESIVE), FOUNDATION SOIL, S_u = 1500 PSF
UNIT WEIGHT OF CONCRETE = 150 PCF
SLOPE OF BACKFILL = 2:1

CONCRETE CLASS – COMPRESSIVE STRENGTH 4000 PSI
(FOOTING, WINGWALL AND FORESLOPE WALL)

REINFORCING STEEL – ASTM A615, A616, OR 617
GRADE 60 MINIMUM YIELD STRENGTH
60,000 PSI (ALL REINFORCING SHALL BE
EPOXY COATED)

BASED ON THE ASSUMED DESIGN DATA, THE WINGWALLS ACHIEVE FACTORED BEARING RESISTANCES THAT ARE GREATER THAN THEIR RESPECTIVE BEARING PRESSURES. IF A BACKFILL MATERIAL WITH A HIGHER INTERNAL ANGLE OF FRICTION OR A LIGHTER TOTAL UNIT WEIGHT IS USED; OR IF A FOUNDATION SOIL WITH A HIGHER DRAINED INTERNAL ANGLE OF FRICTION OR A HIGHER UNDRAINED SHEAR STRENGTH IS ENCOUNTERED; THEN THE STABILITY OF THE WINGWALLS IS SATISFACTORY.

PREFORMED EXPANSION JOINT FILLER

PREFORMED EXPANSION JOINT FILLER (PEJF) CONFORMING TO CMS 705.03, 1 INCH THICK, SHALL BE PLACED ABOVE THE FOOTING BETWEEN THE SIDES OF THE BOX CULVERT AND THE ENDS OF THE WINGWALLS. PAYMENT FOR MATERIALS AND INSTALLATION SHALL BE INCLUDED WITH ITEM 516 - 1" PREFORMED EXPANSION JOINT FILLER.

SEALING OF FORESLOPE WALL AND WINGWALLS:

ALL EXPOSED CONCRETE OF THE INLET HEADWALL SHALL BE SEALED WITH EPOXY-URETHANE SEALER. THE LIMITS SHALL BE AS SHOWN IN THE DIAGRAMS BELOW. PAYMENT FOR THE EPOXY-URETHANE SEALER SHALL BE PER ITEM 512 - SEALING OF CONCRETE SURFACES

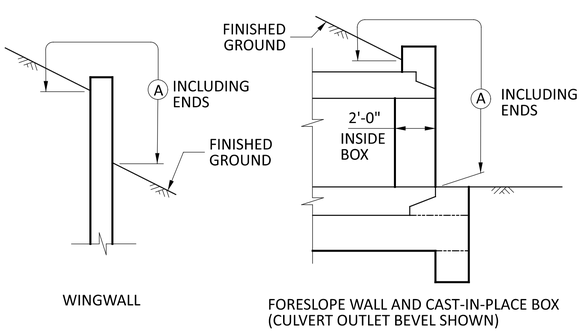

LIMITS OF ITEM 512-SEALING CONCRETE SURFACES

WATERPROOFING

TYPE 2 WATERPROOFING, PER CMS 512.09 AND 711.25, SHALL EXTEND VERTICALLY DOWN THE ENTIRE SIDES OF THE CULVERT SECTIONS FOR ALL PORTIONS OF THE CULVERT WHICH SHALL BE IN CONTACT WITH THE BACKFILL. PAYMENT FOR THE MEMBRANE WATERPROOFING SHALL BE AT THE CONTRACT PRICE BID PER SQUARE YARD FOR ITEM 512 - TYPE 2 WATERPROOFING.

IF PAVEMENT IS NOT PLACED DIRECTLY ON TOP OF THE CULVERT, TYPE 2 WATERPROOFING, PER CMS 512.09 AND 711.25 SHALL BE APPLIED TO THE ENTIRE TOP SURFACE OF THE CULVERT SECTIONS AND SHALL EXTEND ONE FOOT VERTICALLY DOWN THE SIDES FOR ALL PORTIONS OF THE CULVERT WHICH SHALL BE IN CONTACT WITH THE BACKFILL. PAYMENT FOR THE MEMBRANE WATERPROOFING SHALL BE IN THE CONTRACT PRICE BID PER SQUARE YARD FOR ITEM 512 - TYPE 2 WATERPROOFING.

IF PAVEMENT IS TO BE USED DIRECTLY ON TOP OF THE CULVERT, TYPE 3 WATERPROOFING, PER CMS 512.10 AND 712.29 SHALL BE APPLIED TO THE ENTIRE TOP SURFACE OF THE CULVERT SECTIONS AND SHALL EXTEND ONE FOOT VERTICALLY DOWN THE SIDES FOR ALL PORTIONS OF THE CULVERT WHICH SHALL BE IN CONTACT WITH THE BACKFILL. PAYMENT FOR THE MEMBRANE WATERPROOFING SHALL BE AT THE CONTRACT PRICE BID PER SQUARE YARD FOR ITEM 512 - TYPE 3 WATERPROOFING.

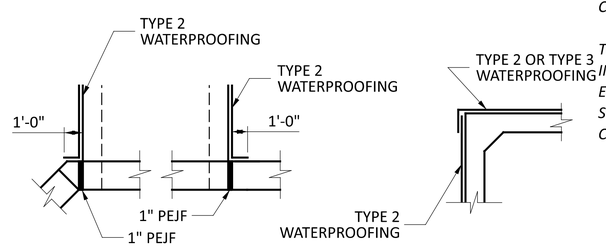

WATERPROOFING DETAILS

BASIS OF PAYMENT: ALL LABOR, EQUIPMENT AND INCIDENTALS REQUIRED TO CONSTRUCT THE FOOTING, CUTOFF WALL, WINGWALLS AND FORESLOPE WALL SHALL BE INCLUDED WITH ITEM 511 - CLASS C CONCRETE (RET-WALL/WINGWALL- INCLUDING FOOTING). PAYMENT FOR REINFORCING STEEL SHALL BE INCLUDED WITH ITEM 509 - EPOXY COATED REINFORCING STEEL.

POROUS BACKFILL WITH GEOTEXTILE FABRIC, AS PER PLAN

1'-6" THICK SHALL BE PLACED BEHIND THE WINGWALLS ONLY AND SHALL EXTEND TO 12" BELOW THE EMBANKMENT SURFACE. GEOTEXTILE FABRIC SHALL BE PLACED BETWEEN THE POROUS BACKFILL AND REPLACED EXCAVATION ADJACENT TO THE STRUCTURE. IT SHALL TURN UNDER THE BOTTOM OF THE POROUS BACKFILL AND RETURN 6" ABOVE THE TOP ELEVATION OF THE WEEPHOLE.

WEEPHOLES SHALL BE PLACED 6" TO 12" ABOVE THE NORMAL WATER ELEVATION OR GROUND LINE AND SHALL HAVE A MAXIMUM SPACING OF 10'-0". A MINIMUM OF ONE WEEPHOLE SHALL BE PROVIDED PER WINGWALL.

FURNISH POROUS BACKFILL CONSISTING OF GRAVEL OR STONE ONLY. AIR-COOLED BLAST FURNACE SLAG IS NOT ACCEPTABLE.

ITEM 202 - PORTIONS OF STRUCTURE REMOVED, AS PER PLAN

MEET ALL REQUIREMENTS OF CMS 202, AS WELL AS THE FOLLOWING: REMOVE PORTIONS OF THE EXISTING CAST IN PLACE CULVERT AND ENTIRE REMAINING HEADWALL AND WINGWALLS AT THE INLET OF THE EXISTING CULVERT AS DETAILED IN THE PLANS. ITEMS TO BE REMOVED INCLUDE ALL EXISTING MATERIALS BEING REPLACED BY NEW CONSTRUCTION AND MISCELLANEOUS ITEMS THAT ARE NOT SHOWN TO BE INCORPORATED INTO THE FINAL CONSTRUCTION AND ARE DIRECTED TO BE REMOVED BY THE ENGINEER. THE DEPARTMENT WILL NOT PERMIT THE USE OF EXPLOSIVES, HEADACHE BALLS AND/OR HOE-RAMS. DO NOT BEGIN WORK UNTIL THE ENGINEER ACCEPTS THE METHOD OF REMOVAL AND THE WEIGHT OF HAMMER SHALL BE APPROVED BY THE ENGINEER. PERFORM ALL WORK IN A MANNER THAT WILL NOT CUT, ELONGATE OR DAMAGE THE EXISTING CONCRETE REINFORCEMENT TO BE PRESERVED. CHIPPING HAMMERS SHALL NOT BE HEAVIER THAN THE NOMINAL 90-POUND CLASS. PNEUMATIC HAMMERS SHALL NOT BE PLACED IN DIRECT CONTACT WITH CONCRETE REINFORCEMENT THAT IS TO BE RETAINED IN THE REBUILT STRUCTURE.

MAXIMUM REMOVAL LIMITS: SAWCUT LINES SHOWN ARE APPROXIMATE AND BASED ON PREVIOUS FIELD INSPECTION. AT THE BEGINNING OF CONSTRUCTION, THE CONTRACTOR SHALL VERIFY THE AMOUNT OF REMOVAL TO REACH SOUND CONCRETE AND THIS AMOUNT SHALL BE CONFIRMED BY THE ENGINEER PRIOR TO REMOVAL BEING PERFORMED.

THE EXTENSION SHOULD BE BUILT TO THE STATION AND OFFSET SHOWN IN THE PLANS. IF THE REMOVAL LOCATION DETERMINED BY THE PROJECT ENGINEER IS MORE THAN INDICATED IN THE PLAN, THE CONTRACTOR SHOULD BE PAID FOR THE ADDITIONAL MATERIAL BASED ON THE UNIT COST OF THE CONCRETE FOR THE EXTENSION.

ITEM 511 - CLASS QC1 CONCRETE, CULVERT, AS PER PLAN

PAYMENT FOR THE CAST-IN PLACE CULVERT AND TRANSITION BETWEEN THE PROPOSED CULVERT AND THE EXISTING CULVERT SHALL BE INCLUDED UNDER THIS ITEM. THE CONCRETE SHALL MEET ALL REQUIREMENT OF CMS 511 AND THE REINFORCING STEEL SHALL MEET ALL REQUIREMENTS OF CMS 509.

BASIS OF PAYMENT: ALL LABOR, MATERIALS, EQUIPMENT AND INCIDENTALS REQUIRED TO CONSTRUCT THE CULVERT SHALL BE INCLUDED WITH ITEM 511 - CLASS QC1 CONCRETE, CULVERT, AS PER PLAN.

ABBREVIATIONS

C.J.	CONSTRUCTION JOINT	N.F.	NEAR FACE
℄	CENTER LINE	PEJF	PREFORMED EXPANSION JOINT FILLER
CLR.	CLEAR		
CONC.	CONCRETE	QTY.	QUANTITY
DIA.	DIAMETER	REINF.	REINFORCING
DIM.	DIMENSION	SER.	SERIES
EXTEN.	EXTENSION	SHT.	SHEET
E.F.	EACH FACE	SPA.	SPACING
F.F.	FAR FACE	T & B	TOP AND BOTTOM
MAX.	MAXIMUM	TYP.	TYPICAL
MIN.	MINIMUM	UNO	UNLESS NOTED OTHERWISE

ESTIMATED QUANTITIES

ITEM	EXT.	QUANTITY	UNIT	DESCRIPTION	SHT. REF.
202	11201	LS		PORTIONS OF STRUCTURE REMOVED, AS PER PLAN	2 / 7
503	11100	LS		COFFERDAMS AND EXCAVATION BRACING	
503	21100	15	CY	UNCLASSIFIED EXCAVATION	
509	10000	2,271	LB	EPOXY COATED STEEL REINFORCEMENT	
510	10000	16	EACH	DOWEL HOLES WITH NONSHRINK, NONMETALLIC GROUT	
511	46010	5	CY	CLASS QC1 CONCRETE, RETAINING/WINGWALL NOT INCLUDING FOOTING	
511	46510	10	CY	CLASS QC1 CONCRETE, FOOTING	
511	46610	1	CY	CLASS QC1 CONCRETE, HEADWALL	
511	47011	4	CY	CLASS QC1 CONCRETE, CULVERT, AS PER PLAN	2 / 7
512	10100	14	SY	SEALING OF CONCRETE SURFACES (EPOXY-URETHANE)	
512	33000	20	SY	TYPE 2 WATERPROOFING	
516	13600	20	SF	1" PREFORMED EXPANSION JOINT FILLER	
518	21201	2	CY	POROUS BACKFILL WITH GEOTEXTILE FABRIC, AS PER PLAN	2 / 7
601	32100	11	CY	ROCK CHANNEL PROTECTION, TYPE B, WITH FILTER	

CULVERT NOTES
GEA-322-13.88

DESIGN AGENCY
2LMN

DESIGNER
BIM

REVIEWER
JAH 10-30-23

PROJECT ID
112947

SUBSET 2 | TOTAL 7

SHEET P.55 | TOTAL 86

D12-CU-FY2024

MODEL: Sheet PAPERSIZE: 34x22 (in.) DATE: 1/7/2025 TIME: 12:32:33 PM USER: Julia_Hart
pw:\\2lmn-pw.bentley.com:2lmn-pw-01\Documents\Projects\OHDOT\112947\400-Engineering\Drainage\Sheets\112947_DN401.dgn

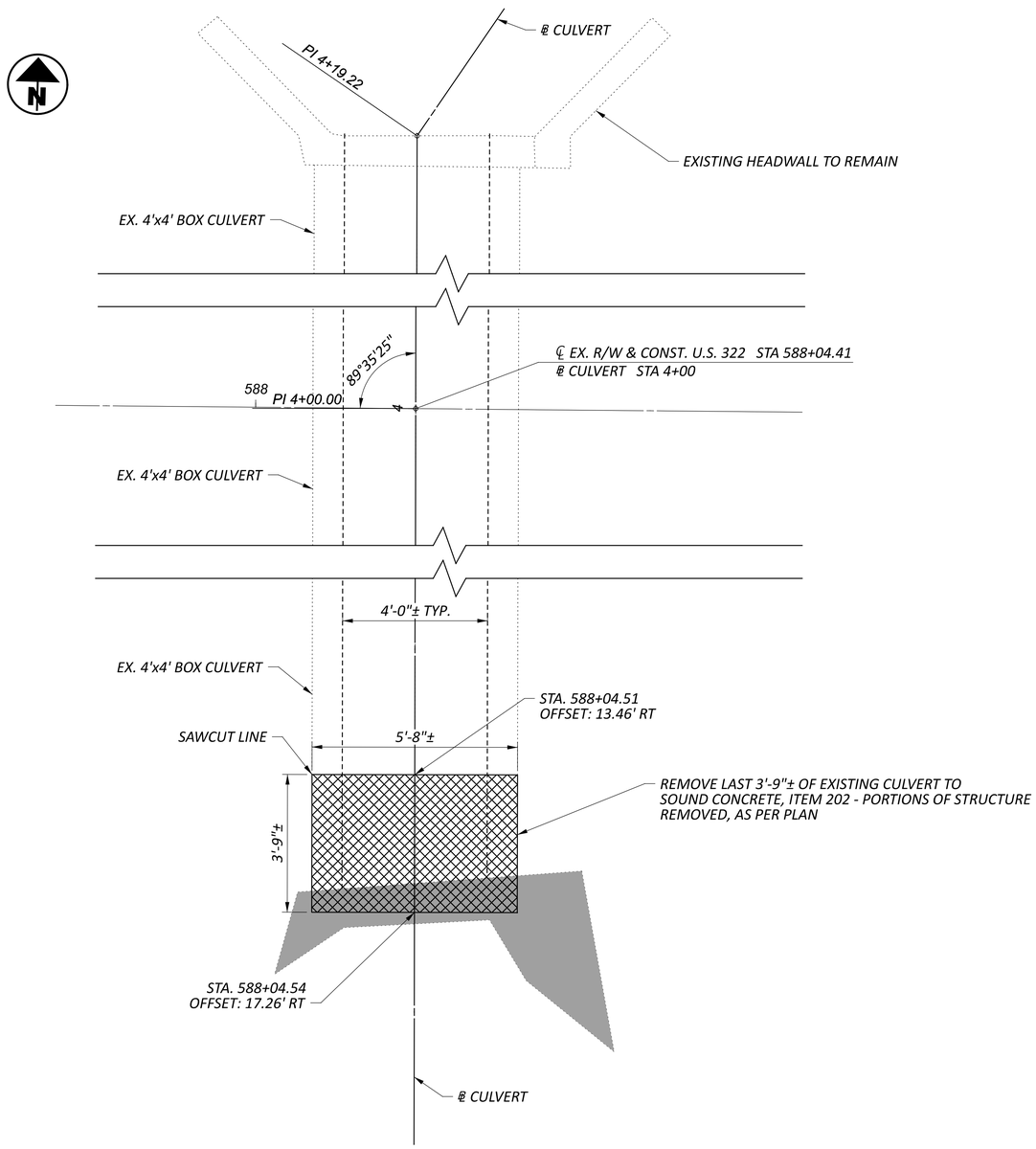

CULVERT & WINGWALL LAYOUT

LEGEND

HEADWALL TO BE REMOVED, PAID FOR UNDER ITEM 202 - PORTIONS OF STRUCTURE REMOVED, AS PER PLAN

EXISTING 4'x4' BOX CULVERT TO BE REMOVED, PAID FOR UNDER ITEM 202 - PORTIONS OF STRUCTURE REMOVED, AS PER PLAN

NOTES:

1. LIMITS OF THE REMOVED AREA ARE APPROXIMATED BASED ON FIELD INSPECTION FROM 2022 AND SHALL BE RE-EVALUATED BY CONTRACTOR TO DETERMINE FINAL REMOVAL LIMITS TO SOUND CONCRETE AT THE BEGINNING OF CONSTRUCTION. NO REMOVAL SHALL OCCUR UNTIL THE REMOVAL LIMITS ARE CONFIRMED BY THE ENGINEER.

CULVERT REMOVAL
GEA-322-13.88

DESIGN AGENCY
2LMN

DESIGNER
BIM

REVIEWER
JAH 10-30-23

PROJECT ID
112947

SUBSET 3 | TOTAL 7

SHEET P.56 | TOTAL 86

D12-CU-FY2024

MODEL: Sheet PAPERSIZE: 34x22 (in.) DATE: 1/3/2024 TIME: 9:16:59 AM USER: Steve_Hart
V:\Projects\EDGL_112947_D12-Culv Replacements FY2024\400-Engineering\Drainage\Sheets\112947_DM401.dgn

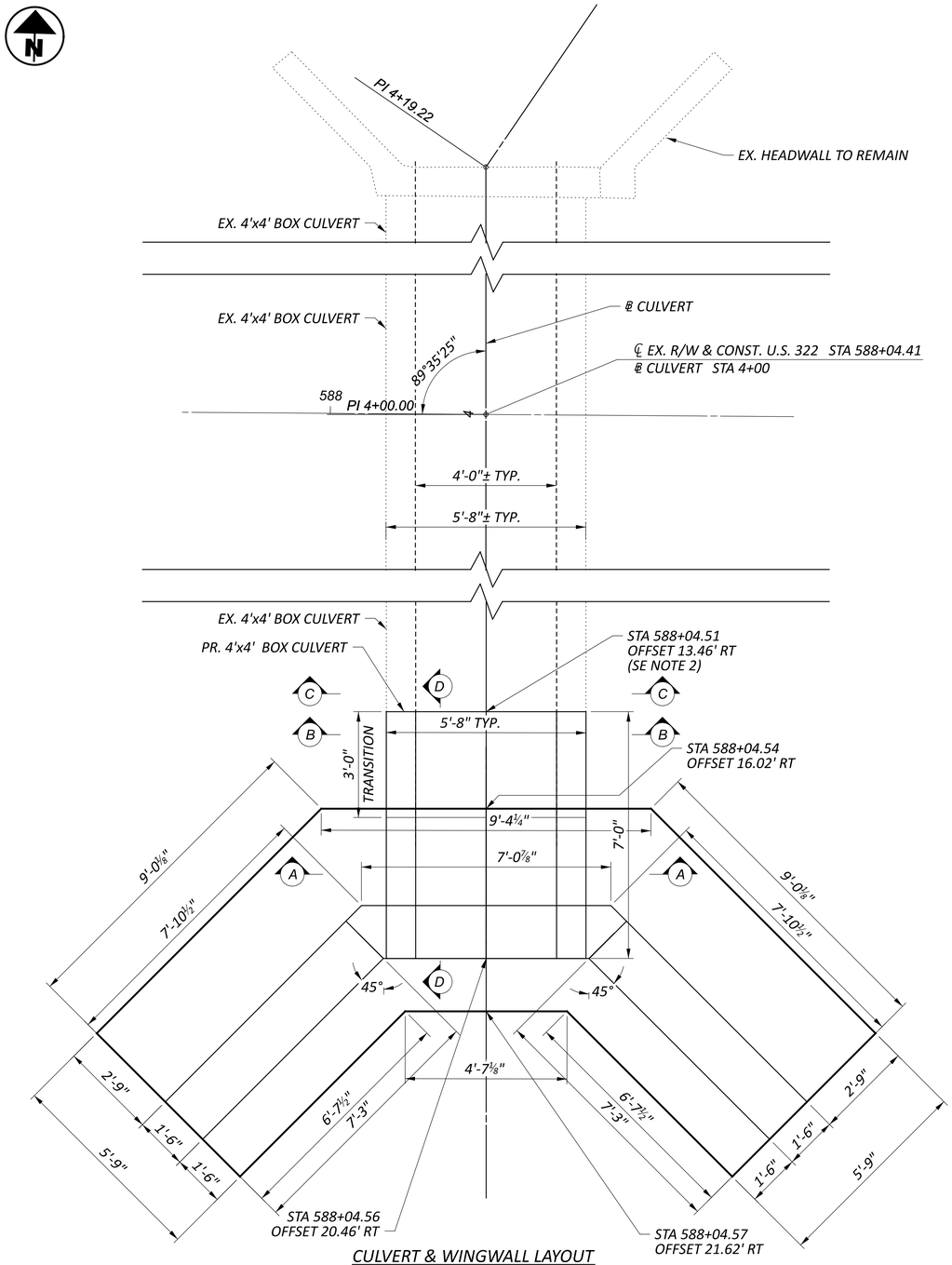

CULVERT & WINGWALL LAYOUT

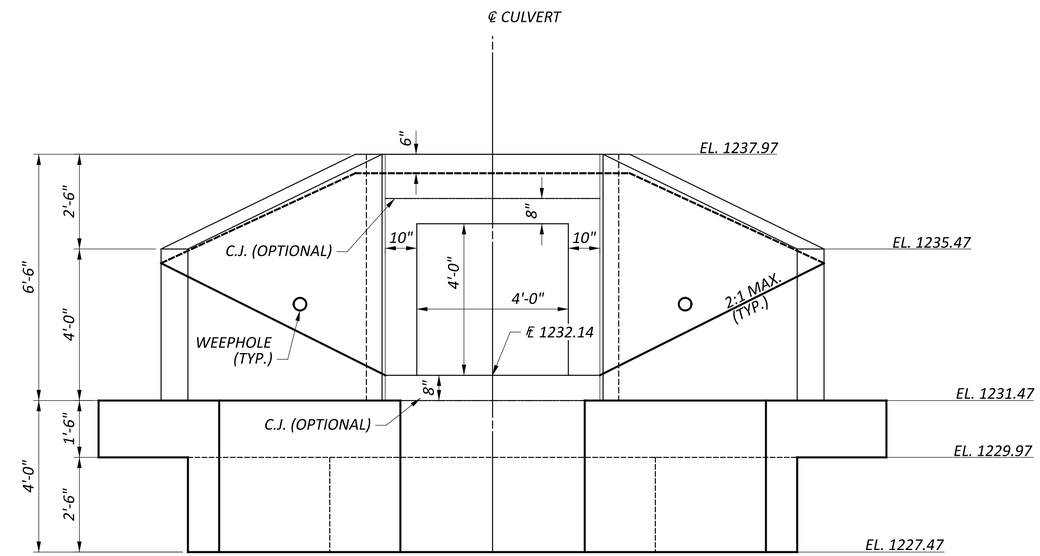

ELEVATION

NOTES

1. SEE SHEET 6/7 FOR SECTIONS A-A, B-B, C-C, AND D-D.
2. LIMITS OF THE REMOVED AREA ARE APPROXIMATED BASED ON FIELD INSPECTION FROM 2022 AND SHALL BE RE-EVALUATED BY CONTRACTOR TO DETERMINE FINAL REMOVAL LIMITS TO SOUND CONCRETE AT THE BEGINNING OF CONSTRUCTION. NO REMOVAL SHALL OCCUR UNTIL THE REMOVAL LIMITS ARE CONFIRMED BY THE ENGINEER.

CULVERT LAYOUT DETAILS
GEA-322-13.88

DESIGN AGENCY
2LMN

DESIGNER
BIM

REVIEWER
JAH 10-30-23

PROJECT ID
112947

SUBSET 4 | TOTAL 7

SHEET P.57 | TOTAL 86

D12-CU-FY2024

MODEL: Sheet PAPERSIZE: 34x22 (in.) DATE: 1/3/2024 TIME: 9:17:01 AM USER: Steve_Hart
V:\Projects\EDGL_112947_D12-Culv Replacements FY2024\400-Engineering\Drainage\Sheets\112947_DD401.dgn

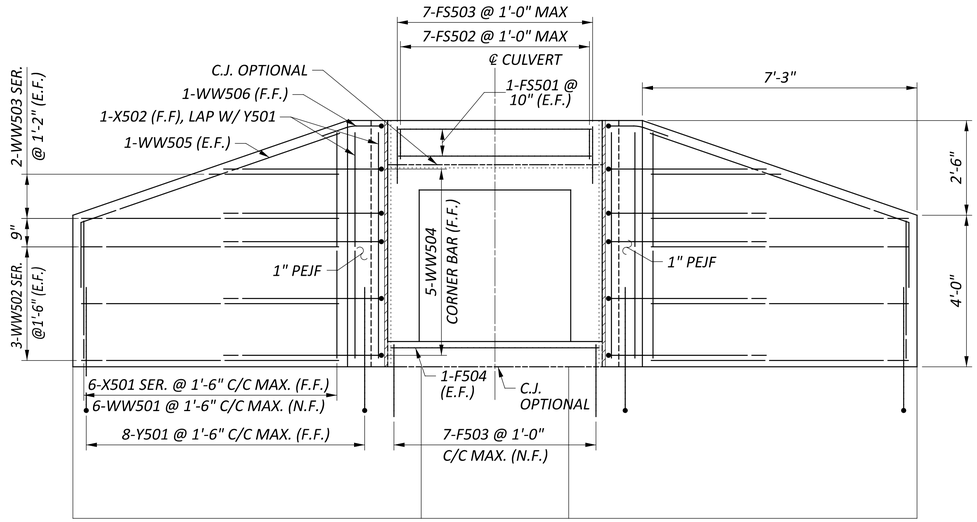

WINGWALL ELEVATION

(ELEVATION SHOWN ALONG WINGWALL FACE)

NOTE:
WINGWALLS ARE MIRROR IMAGE ABOUT ℄ CULVERT

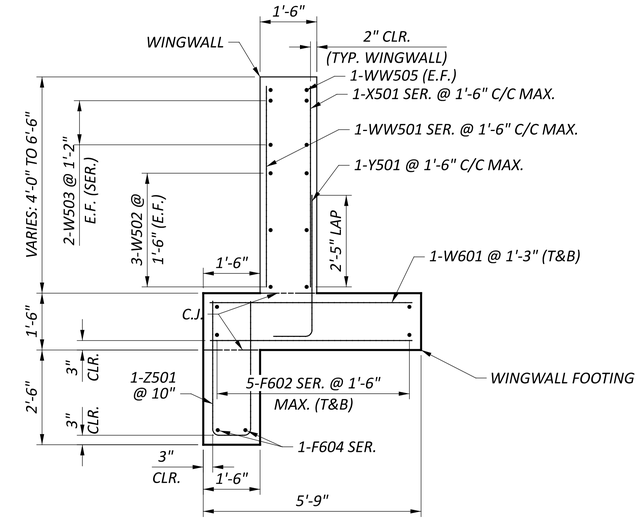

WINGWALL SECTION

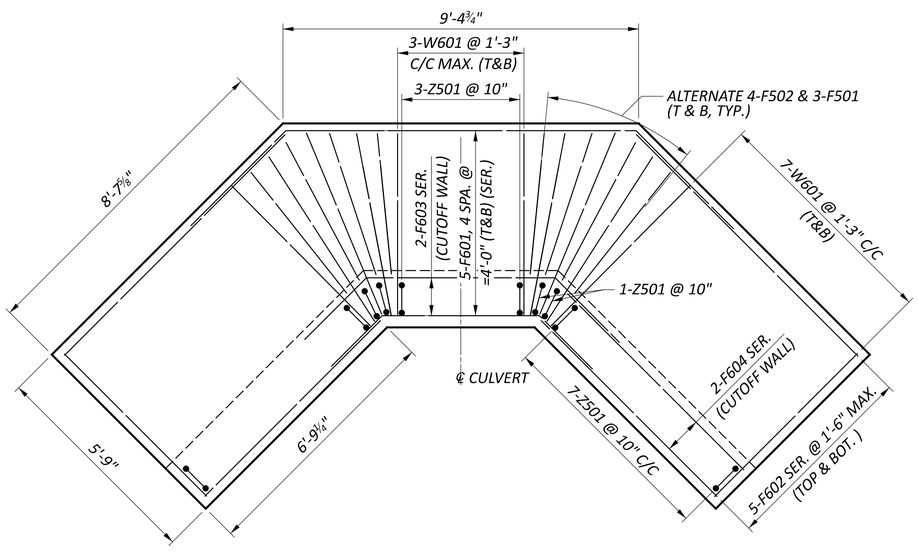

FOOTING PLAN

NOTE:
FOOTINGS ARE MIRROR IMAGE ABOUT ℄ CULVERT

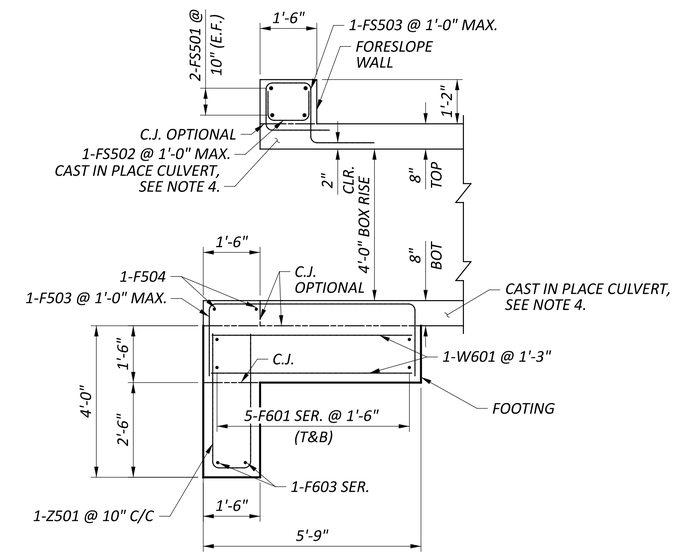

CULVERT INLET SECTION

NOTES:

1. HEADWALL IS PAID FOR UNDER ITEM 511 - CLASS QC1 CONCRETE, HEADWALL.
2. WINGWALLS ARE PAID FOR UNDER ITEM 511 - CLASS QC1 CONCRETE, RETAINING/WINGWALL NOT INCLUDING FOOTING.
3. FOOTING IS PAID FOR UNDER ITEM 511 - CLASS QC1 CONCRETE, FOOTING.
4. CAST IN PLACE CULVERT IS PAID FOR UNDER ITEM 511 - CLASS QC1 CONCRETE, CULVERT, AS PER PLAN. SEE THE "CULVERT & TRANSITION DETAILS" SHEET FOR CULVERT REINFORCING DETAILS.

HEADWALL DETAILS
GEA-322-13.88

DESIGN AGENCY
2LMN

DESIGNER	RTF
REVIEWER	JAH 10-30-23
PROJECT ID	112947
SUBSET	5
TOTAL	7
SHEET	P.58
TOTAL	86

D12-CU-FY2024

MODEL: Sheet PAPERSIZE: 34x22 (in.) DATE: 1/3/2024 TIME: 9:17:03 AM USER: Steve_Hart
V:\Projects\EDGL_112947_D12-Culv Replacements FY2024\400-Engineering\Drainage\Sheets\112947_DD402.dgn

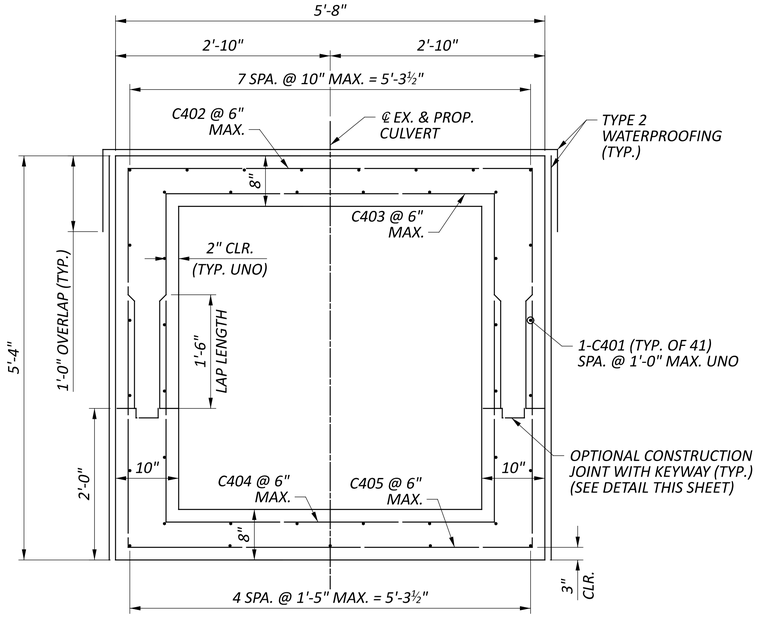

SECTION A-A
PROPOSED CULVERT SECTION

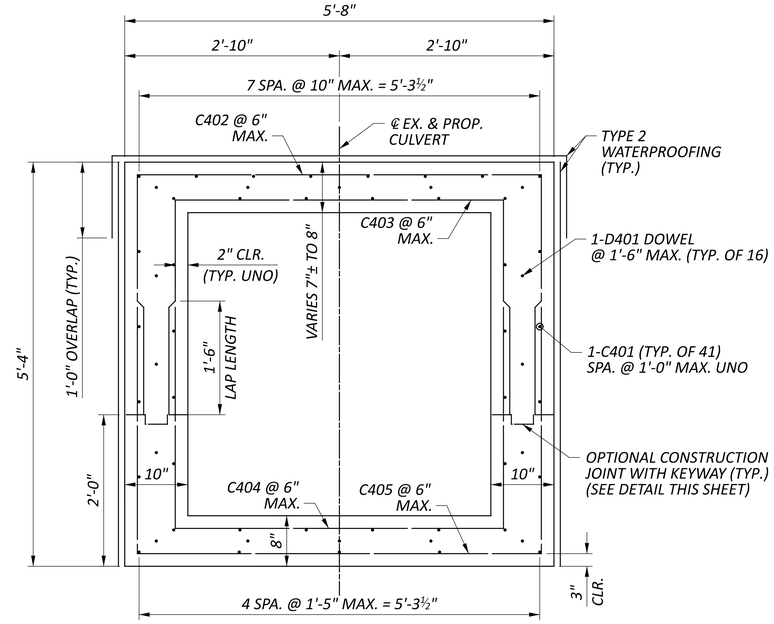

SECTION B-B
TRANSITION SECTION

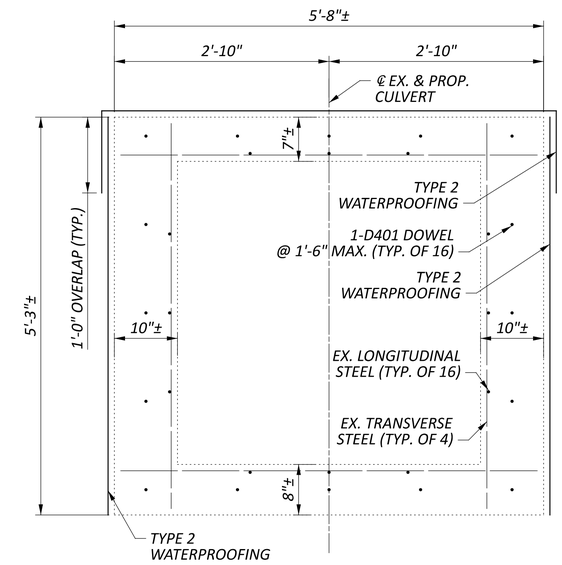

SECTION C-C
EXISTING CULVERT SECTION (SEE NOTE 1)

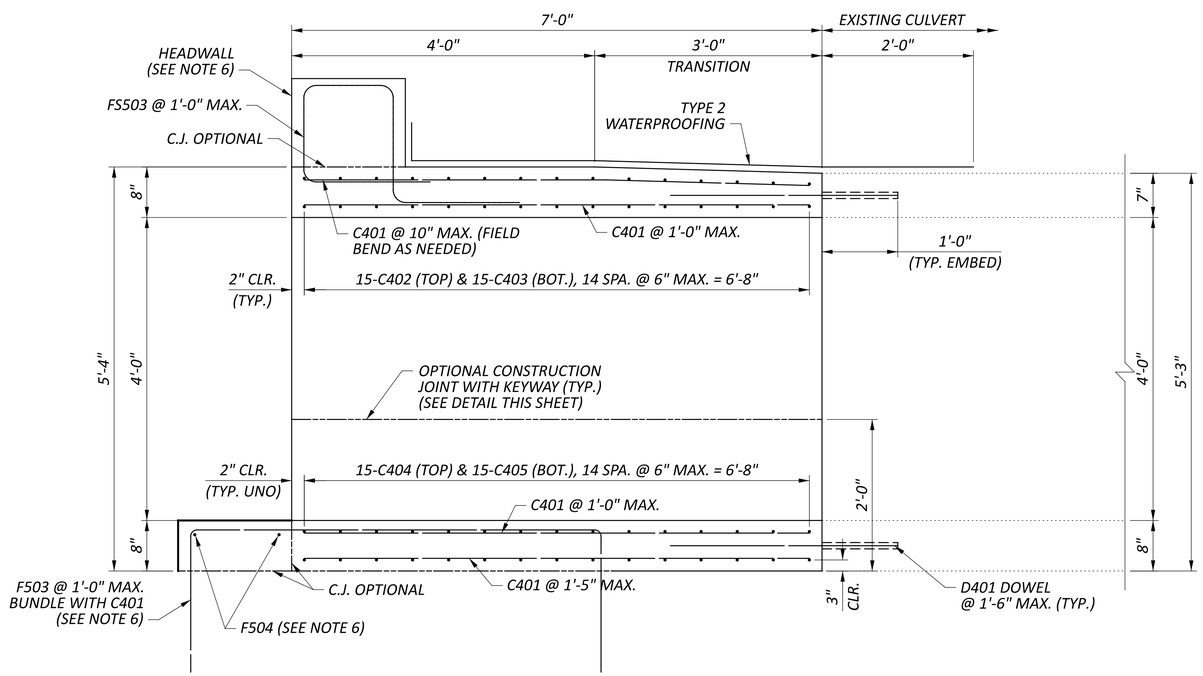

SECTION D-D
PROPOSED HEADWALL & FOOTING NOT SHOWN FOR CLARITY

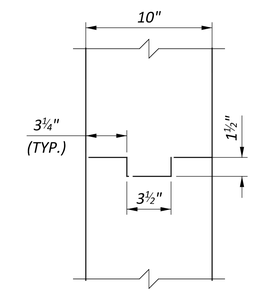

CONSTRUCTION JOINT WITH KEYWAY

NOTES:

1. THE EXISTING CULVERT REINFORCING STEEL IS APPROXIMATED FROM ARCHIVED STANDARD DRAWING FOR REINFORCED CONCRETE CULVERT, 4 FT X 4 FT DATED 10-01-1912.
2. SEE SHEET 4/7 FOR THE LOCATIONS OF SECTIONS A-A, B-B, C-C, AND D-D.
3. FIELD BEND C401 BARS AS NEEDED.
4. FIELD CUT C402 AND C403 BARS WITHIN TRANSITION AS NEEDED.
5. LIMITS OF THE CULVERT REPLACEMENT ARE APPROXIMATED BASED ON FIELD INSPECTION FROM 2022 AND SHALL BE RE-EVALUATED BY CONTRACTOR TO DETERMINE FINAL CONSTRUCTION LIMITS AND THE PROPOSED CULVERT LIMITS SHALL CONFIRMED BY THE ENGINEER PRIOR TO CONSTRUCTING THE PROPOSED CULVERT.
6. SEE THE "HEADWALL DETAILS" SHEET FOR HEADWALL AND FOOTING REINFORCING INFORMATION.

CULVERT & TRANSITION DETAILS
GEA-322-13.88

DESIGN AGENCY
2LMN

DESIGNER RTF
REVIEWER JAH 10-30-23
PROJECT ID 112947
SUBSET 6 TOTAL 7
SHEET P.59 TOTAL 86

D12-CU-FY2024

MODEL: Sheet PAPERSIZE: 34x22 (in.) DATE: 1/3/2024 TIME: 9:17:04 AM USER: Steve_Hart
V:\Projects\EDGL_112947_D12-Culv Replacements FY2024\400-Engineering\Drainage\Sheets\112947_DD403.dgn

TYPE A HEADWALL REINFORCING SCHEDULE

BAR MARK	NUMBER	LENGTH	WEIGHT (LBS.)	TYPE	BAR TYPE DIMENSIONS A	B	C	D	INC.
				WINGWALLS					
	2	3'- 10''							
X501	SERIES	TO	64	STR.					0'- 6 ''
	of 6	6'- 4''							
X502	4	6'- 4''	27	STR.					
Y501	16	4'- 4''	72	1	0'- 10''	3'- 8''			
	2	3'- 10''							
WW501	SERIES	TO	64	STR.					0'- 6 ''
	of 6	6'- 4''							
WW502	12	6'- 11''	87	STR.					
	4	3'- 6''							
WW503	SERIES	TO	44	STR.					3'- 5 ''
	of 2	6'- 11''							
WW504	10	4'- 5''	47	2	1'- 1''	0'- 4 1/2''	2'- 2 ''	3'- 1/2''	
WW505	4	9'- 9''	41	3	2'- 5''	2'- 4''	6'- 11''		
WW506	2	2'- 0''	5	4	1'- 1''	0'- 4 1/2''			
				FOOTING & CUTOFF WALL					
Z501	18	8'- 2''	154	5	3'- 7''	1'- 2''			
W601	28	5'- 5''	228	STR.					
F501	12	4'- 11''	62	STR.					
F502	16	3'- 10''	64	STR.					
F503	7	8'- 8''	64	5	1'- 9''	5'- 5''			
F504	2	5'- 5''	12	STR.					
	2	10'- 7''					4'- 8 3/4''		
F601	SERIES	TO	193	6	2'- 1''	2'- 1''	TO		1'- 1 1/2''
	of 5	15'- 1''					9'- 2 3/4''		
	4	6'- 6''							
F602	SERIES	TO	230	STR.					0'- 6 3/4''
	of 5	8'- 9''							
	1	10'- 7''					4'- 8 3/4''		
F603	SERIES	TO	34	6	2'- 1''	2'- 1''	TO		0'- 11 3/4''
	of 2	11'- 7''					5'- 8 1/2''		
	2	6'- 6''							
F604	SERIES	TO	41	STR.					0'- 5 ''
	of 2	6'- 11''							
				FORESLOPE WALL					
FS501	4	5'- 5''	23	STR.					
FS502	7	2'- 7''	19	5	0'- 10''	1'- 2''			
FS503	7	7'- 0''	52	7	1'- 10''	1'- 2''	1'- 2''	1'- 6''	
		SUBTOTAL	1,627						

MARK	TOTAL	LENGTH	WEIGHT (LBS)	TYPE	DIMENSIONS A	B	C	D	INC.
				BOX CULVERT					
C401	41	6'-8"	183	STR.					
C402	15	11'-6"	116	5	3'-2"	5'-4"			
C403	15	9'-10"	99	5	2'-10"	4'-4"			
C404	15	10'-2"	102	5	3'-0"	4'-4"			
C405	15	11'-8"	117	5	3'-3"	5'-4"			
*D401	16	2'-6"	27	STR.					
		SUBTOTAL BOX CULVERT =	644						
		SUBTOTAL INLET =	1,627						
		TOTAL =	2271						

* - DOWEL BAR

BAR BEND DIAGRAMS

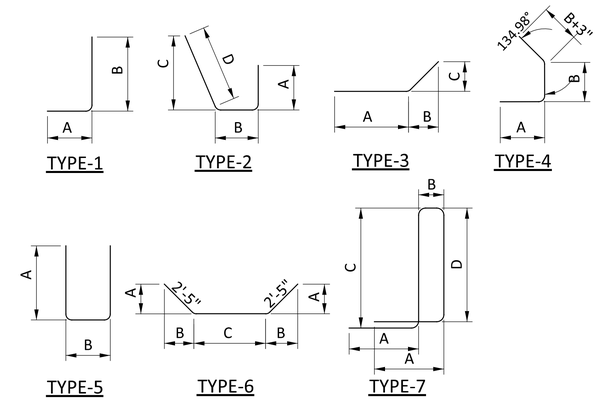

NOTES:

1. THE BAR SIZE NUMBER IS SPECIFIED ON THE PLANS IN THE BAR MARK COLUMN. THE FIRST DIGIT WHERE 3 DIGITS ARE USED, AND THE FIRST 2 DIGITS WHERE FOUR DIGITS ARE USED, INDICATES THE BAR SIZE NUMBER FOR EXAMPLE, W501 IS A NO. 5 BAR AND 01 INDICATES BAR SEQUENCE NUMBER.
2. ALL REINFORCING SHALL BE EPOXY COATED STEEL.
3. FOR BEND DIAGRAMS, SEE THIS SHEET. REFER TO CMS SECTION 509.05 FOR STANDARD BEND DIMENSIONS.
4. ALL DIMENSIONS ARE OUT TO OUT.
5. REINFORCING BAR SPLICE LENGTHS SHALL CONFORM TO THE MINIMUM LENGTHS SPECIFIED BY CMS SECTION 509.07 UNLESS OTHERWISE NOTED ON THE PLANS.

REINFORCING STEEL LIST
GEA-322-13.88

DESIGN AGENCY
2LMN

DESIGNER
JAH

REVIEWER
RTF 10-30-23

PROJECT ID
112947

SUBSET 7 | TOTAL 7

SHEET P.60 | TOTAL 86

D12-CU-FY2024

MODEL: Sheet PAPERSIZE: 34x22 (in.) DATE: 1/3/2024 TIME: 9:17:05 AM USER: Steve_Hart
V:\Projects\EDGL_112947_D12-Culv Replacements FY2024\400-Engineering\Drainage\Sheets\112947_DD404.dgn

LEGEND

- LIMITS OF CONSTRUCTION
- TREE REMOVED / STUMP REMOVED
- (DND) DO NOT DISTURB
- (TBR) TO BE REMOVED
- EXISTING WETLAND
- DITCH EROSION PROTECTION
- REMOVE EXISTING CPP
- REMOVE PORTIONS OF EXISTING CULVERT AND HEADWALL
- ROCK CHANNEL PROTECTION

(A) ℄ EX R/W & CONST. S.R. 44 STA 90+71.25 = ℄ EX R/W STAFFORD RD STA 500+00.00

(B) ℄ R/W & CONST. S.R. 44 STA 91+01.58 = ℄ CULVERT STA 5+00.00

UTILITY LEGEND
ATT = AT&T
CEI = THE ILLUMINATING COMPANY
DEO = DOMINION ENERGY
NNG = NORTHEAST OHIO NATURAL GAS
SRC = SUDDENLINK (ALTICE USA)

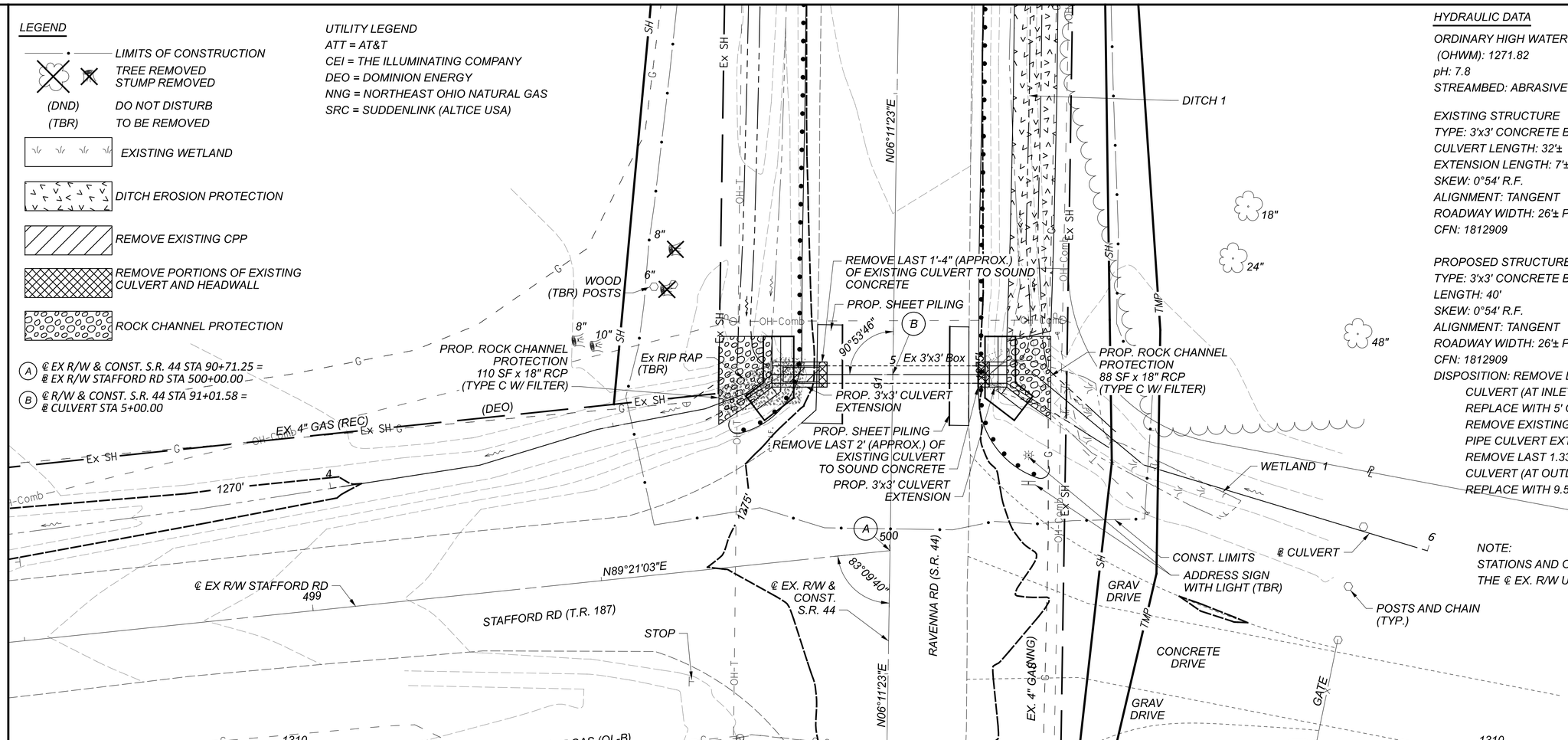

HYDRAULIC DATA

ORDINARY HIGH WATER MARK (OHWM): 1271.82
pH: 7.8
STREAMBED: ABRASIVE LEVEL 1

EXISTING STRUCTURE
TYPE: 3'x3' CONCRETE BOX WITH 30" CPP EXTENSION
CULVERT LENGTH: 32'±
EXTENSION LENGTH: 7'±
SKEW: 0°54' R.F.
ALIGNMENT: TANGENT
ROADWAY WIDTH: 26'± PAVED WIDTH
CFN: 1812909

PROPOSED STRUCTURE
TYPE: 3'x3' CONCRETE BOX
LENGTH: 40'
SKEW: 0°54' R.F.
ALIGNMENT: TANGENT
ROADWAY WIDTH: 26'± PAVED WIDTH
CFN: 1812909
DISPOSITION: REMOVE LAST 2' (APPROX.)OF EXISTING CULVERT (AT INLET) TO SOUND CONCRETE. REPLACE WITH 5' OF 3'x3' - 511 CULVERT, APP. REMOVE EXISTING 30" CORRUGATED PLASTIC PIPE CULVERT EXTENSION (AT OUTLET) AND REMOVE LAST 1.33' (APPROX.) OF EXISTING CULVERT (AT OUTLET) TO SOUND CONCRETE. REPLACE WITH 9.5' OF 3'x3' - 511 CULVERT, APP.

NOTE:
STATIONS AND OFFSETS ARE WITH RESPECT TO THE ℄ EX. R/W UNLESS NOTED OTHERWISE.

HORIZONTAL SCALE IN FEET 0 5 10 20

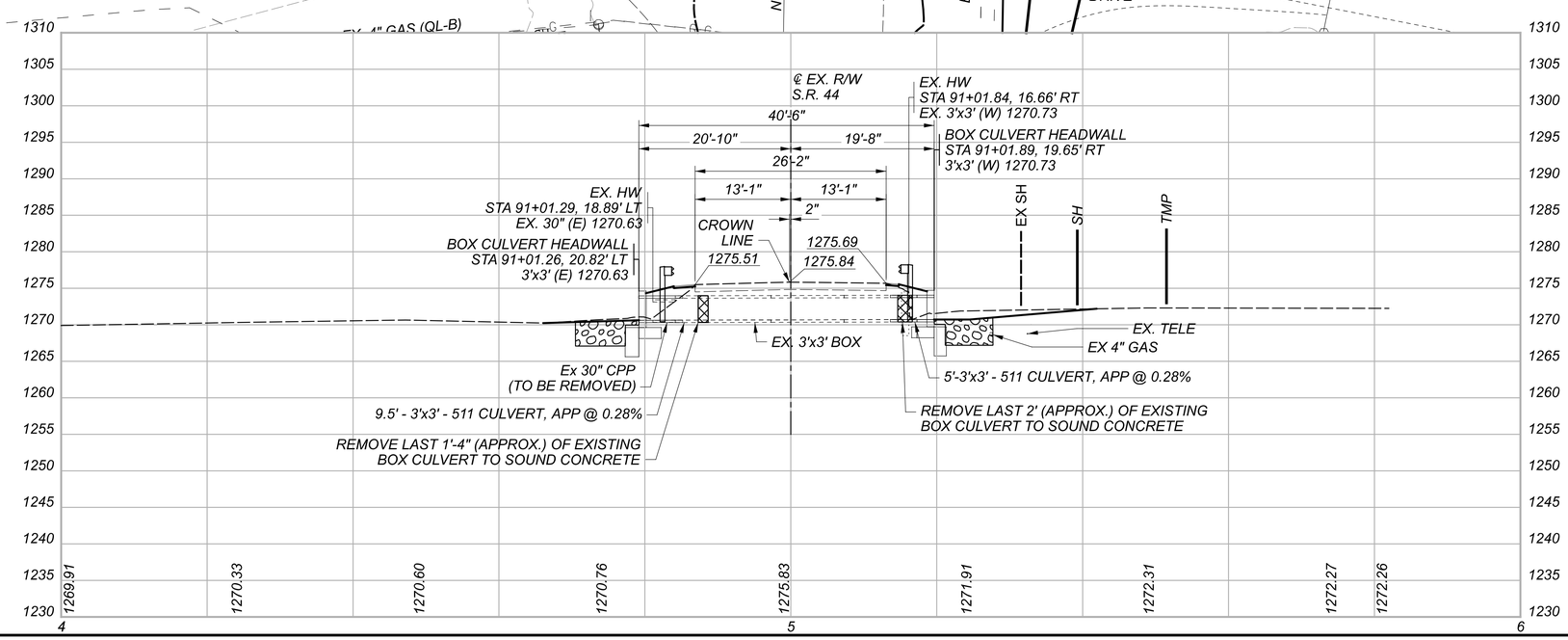

CULVERT DETAIL
GEA-44-4.52

DESIGN AGENCY: 2LMN
DESIGNER: RTF
REVIEWER: JAH 10-30-23
PROJECT ID: 112947
SUBSET 1 TOTAL 8
SHEET P.61 TOTAL 86

D12-CU-FY2024

MODEL: 112947_DP501 PAPERSIZE: 34x22 (in.) DATE: 1/3/2024 TIME: 9:17:08 AM USER: Steve_Hart
V:\Projects\EDGL_112947_D12-Culv Replacements FY2024\400-Engineering\Drainage\Sheets\112947_DP501.dgn

DESIGN SPECIFICATIONS:

THIS STANDARD DRAWING CONFORMS TO "STANDARD SPECIFICATIONS FOR HIGHWAY BRIDGES" ADOPTED BY THE AMERICAN ASSOCIATION OF STATE HIGHWAY AND TRANSPORTATION OFFICIALS, 2002 AND THE ODOT BRIDGE DESIGN MANUAL.

DESIGN DATA:

THE FOLLOWING DESIGN DATA IS ASSUMED:

INTERNAL ANGLE OF FRICTION OF BACKFILL SOIL, Φ_u = 30°
TOTAL UNIT WEIGHT OF BACKFILL SOIL = 120 PCF
INTERNAL ANGLE OF FRICTION (DRAINED), FOUNDATION SOIL, Φf= 28°
UNDRAINED SHEAR STRENGTH (COHESIVE), FOUNDATION SOIL, S_u = 1500 PSF
UNIT WEIGHT OF CONCRETE = 150 PCF
SLOPE OF BACKFILL = 2:1

CONCRETE CLASS QC1 – COMPRESSIVE STRENGTH = 4000 PSI

REINFORCING STEEL – GRADE 60 MINIMUM YIELD STRENGTH
60,000 PSI (ALL REINFORCING SHALL BE EPOXY COATED.)

BASED ON THE ASSUMED DESIGN DATA, THE HEADWALLS FOR THE STANDARD DESIGN ACHIEVE FACTORED BEARING RESISTANCES THAT ARE GREATER THAN THEIR RESPECTIVE FACTORED BEARING PRESSURES. IF A BACKFILL MATERIAL WITH A HIGHER INTERNAL ANGLE OF FRICTION OR A LIGHTER TOTAL UNIT WEIGHT IS USED; OR IF A FOUNDATION SOIL WITH A HIGHER DRAINED INTERNAL ANGLE OF FRICTION OR A HIGHER UNDRAINED SHEAR STRENGTH IS ENCOUNTERED; THEN THE STABILITY OF THE WALL IS SATISFACTORY.

SEALING OF FORESLOPE WALL AND WINGWALLS:

ALL EXPOSED CONCRETE OF THE INLET HEADWALL SHALL BE SEALED WITH EPOXY-URETHANE SEALER. THE LIMITS SHALL BE AS SHOWN IN THE DIAGRAMS BELOW. PAYMENT FOR THE EPOXY-URETHANE SEALER SHALL BE PER ITEM 512 - SEALING OF CONCRETE SURFACES

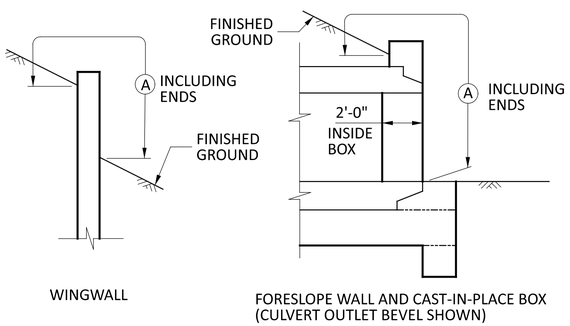

LIMITS OF ITEM 512-SEALING CONCRETE SURFACES

ABBREVIATIONS			
C.J.	CONSTRUCTION JOINT	N.F.	NEAR FACE
℄	CENTER LINE	PEJF	PREFORMED EXPANSION JOINT FILLER
CLR.	CLEAR		
CONC.	CONCRETE	QTY.	QUANTITY
DIA.	DIAMETER	REINF.	REINFORCING
DIM.	DIMENSION	SER.	SERIES
EXTEN.	EXTENSION	SHT.	SHEET
E.F.	EACH FACE	SPA.	SPACING
F.F.	FAR FACE	T & B	TOP AND BOTTOM
MAX.	MAXIMUM	TYP.	TYPICAL
MIN.	MINIMUM	UNO	UNLESS NOTED OTHERWISE

WATERPROOFING

TYPE 2 WATERPROOFING, PER CMS 512.09 AND 711.25, SHALL EXTEND VERTICALLY DOWN THE ENTIRE SIDES OF THE CULVERT SECTIONS FOR ALL PORTIONS OF THE CULVERT WHICH SHALL BE IN CONTACT WITH THE BACKFILL. PAYMENT FOR THE MEMBRANE WATERPROOFING SHALL BE AT THE CONTRACT PRICE BID PER SQUARE YARD FOR ITEM 512 - TYPE 2 WATERPROOFING.

IF PAVEMENT IS NOT PLACED DIRECTLY ON TOP OF THE CULVERT, TYPE 2 WATERPROOFING, PER CMS 512.09 AND 711.25 SHALL BE APPLIED TO THE ENTIRE TOP SURFACE OF THE CULVERT SECTIONS AND SHALL EXTEND ONE FOOT VERTICALLY DOWN THE SIDES FOR ALL PORTIONS OF THE CULVERT WHICH SHALL BE IN CONTACT WITH THE BACKFILL. PAYMENT FOR THE MEMBRANE WATERPROOFING SHALL BE IN THE CONTRACT PRICE BID PER SQUARE YARD FOR ITEM 512 - TYPE 2 WATERPROOFING.

IF PAVEMENT IS TO BE USED DIRECTLY ON TOP OF THE CULVERT, TYPE 3 WATERPROOFING, PER CMS 512.10 AND 712.29 SHALL BE APPLIED TO THE ENTIRE TOP SURFACE OF THE CULVERT SECTIONS AND SHALL EXTEND ONE FOOT VERTICALLY DOWN THE SIDES FOR ALL PORTIONS OF THE CULVERT WHICH SHALL BE IN CONTACT WITH THE BACKFILL. PAYMENT FOR THE MEMBRANE WATERPROOFING SHALL BE AT THE CONTRACT PRICE BID PER SQUARE YARD FOR ITEM 512 - TYPE 3 WATERPROOFING.

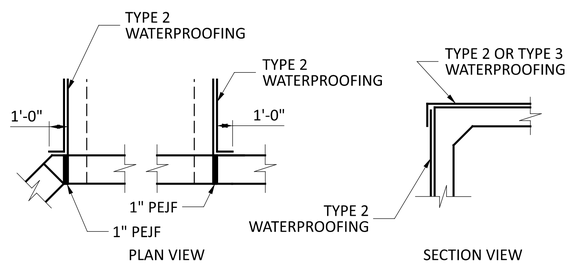

WATERPROOFING DETAILS

BASIS OF PAYMENT: ALL LABOR, EQUIPMENT AND INCIDENTALS REQUIRED TO CONSTRUCT THE FOOTING, CUTOFF WALL, WINGWALLS AND FORESLOPE WALL SHALL BE INCLUDED WITH ITEM 511 - CLASS C CONCRETE (RET-WALL/WINGWALL- INCLUDING FOOTING). PAYMENT FOR REINFORCING STEEL SHALL BE INCLUDED WITH ITEM 509 - EPOXY COATED REINFORCING STEEL.

POROUS BACKFILL WITH GEOTEXTILE FABRIC, AS PER PLAN

1'-6" THICK SHALL BE PLACED BEHIND THE WINGWALLS ONLY AND SHALL EXTEND TO 12" BELOW THE EMBANKMENT SURFACE. GEOTEXTILE FABRIC SHALL BE PLACED BETWEEN THE POROUS BACKFILL AND REPLACED EXCAVATION ADJACENT TO THE STRUCTURE. IT SHALL TURN UNDER THE BOTTOM OF THE POROUS BACKFILL AND RETURN 6" ABOVE THE TOP ELEVATION OF THE WEEPHOLE.

WEEPHOLES SHALL BE PLACED 6" TO 12" ABOVE THE NORMAL WATER ELEVATION OR GROUND LINE AND SHALL HAVE A MAXIMUM SPACING OF 10'-0". A MINIMUM OF ONE WEEPHOLE SHALL BE PROVIDED PER WINGWALL.

FURNISH POROUS BACKFILL CONSISTING OF GRAVEL OR STONE ONLY. AIR-COOLED BLAST FURNACE SLAG IS NOT ACCEPTABLE .

ITEM 202 - PORTIONS OF STRUCTURE REMOVED, AS PER PLAN

MEET ALL REQUIREMENTS OF CMS 202, AS WELL AS THE FOLLOWING: REMOVE PORTIONS OF THE EXISTING CAST IN PLACE CULVERT AND ENTIRE REMAINING HEADWALL AND WINGWALLS AT THE INLET OF THE EXISTING CULVERT AS DETAILED IN THE PLANS. ITEMS TO BE REMOVED INCLUDE ALL EXISTING MATERIALS BEING REPLACED BY NEW CONSTRUCTION AND MISCELLANEOUS ITEMS THAT ARE NOT SHOWN TO BE INCORPORATED INTO THE FINAL CONSTRUCTION AND ARE DIRECTED TO BE REMOVED BY THE ENGINEER. THE DEPARTMENT WILL NOT PERMIT THE USE OF EXPLOSIVES, HEADACHE BALLS AND/OR HOE-RAMS. DO NOT BEGIN WORK UNTIL THE ENGINEER ACCEPTS THE METHOD OF REMOVAL AND THE WEIGHT OF HAMMER SHALL BE APPROVED BY THE ENGINEER. PERFORM ALL WORK IN A MANNER THAT WILL NOT CUT, ELONGATE OR DAMAGE THE EXISTING CONCRETE REINFORCEMENT TO BE PRESERVED. CHIPPING HAMMERS SHALL NOT BE HEAVIER THAN THE NOMINAL 90-POUND CLASS. PNEUMATIC HAMMERS SHALL NOT BE PLACED IN DIRECT CONTACT WITH CONCRETE REINFORCEMENT THAT IS TO BE RETAINED IN THE REBUILT STRUCTURE.

MAXIMUM REMOVAL LIMITS: SAWCUT LINES SHOWN ARE APPROXIMATE AND BASED ON PREVIOUS FIELD INSPECTION. AT THE BEGINNING OF CONSTRUCTION, THE CONTRACTOR SHALL VERIFY THE AMOUNT OF REMOVAL TO REACH SOUND CONCRETE AND THIS AMOUNT SHALL BE CONFIRMED BY THE ENGINEER PRIOR TO REMOVAL BEING PERFORMED.

THE EXTENSION SHOULD BE BUILT TO THE STATION AND OFFSET SHOWN IN THE PLANS. IF THE REMOVAL LOCATION DETERMINED BY THE PROJECT ENGINEER IS MORE THAN INDICATED IN THE PLAN, THE CONTRACTOR SHOULD BE PAID FOR THE ADDITIONAL MATERIAL BASED ON THE UNIT COST OF THE CONCRETE FOR THE EXTENSION.

ITEM 511 - CLASS QC1 CONCRETE, CULVERT, AS PER PLAN

PAYMENT FOR THE CAST-IN PLACE CULVERT AND TRANSITION BETWEEN THE PROPOSED CULVERT AND THE EXISTING CULVERT SHALL BE INCLUDED UNDER THIS ITEM. THE CONCRETE SHALL MEET ALL REQUIREMENT OF CMS 511 AND THE REINFORCING STEEL SHALL MEET ALL REQUIREMENTS OF CMS 509.

BASIS OF PAYMENT: ALL LABOR, MATERIALS, EQUIPMENT AND INCIDENTALS REQUIRED TO CONSTRUCT THE CULVERT SHALL BE INCLUDED WITH ITEM 511 - CLASS QC1 CONCRETE, CULVERT, AS PER PLAN.

ESTIMATED QUANTITIES

ITEM	EXT.	QUANTITY	UNIT	DESCRIPTION	SHT. REF.
202	11201	LS		PORTIONS OF STRUCTURE REMOVED, AS PER PLAN	2 / 8
202	35200	7	FT	PIPE REMOVED, OVER 24"	
503	11100	LS		COFFERDAMS AND EXCAVATION BRACING	
503	21100	13	CY	UNCLASSIFIED EXCAVATION	
509	10000	2828	LB	EPOXY COATED STEEL REINFORCEMENT	
510	10000	24	EACH	DOWEL HOLES WITH NONSHRINK, NONMETALLIC GROUT	
511	46010	5	CY	CLASS QC1 CONCRETE, RETAINING/WINGWALL NOT INCLUDING FOOTING	
511	46510	12	CY	CLASS QC1 CONCRETE, FOOTING	
511	46610	1	CY	CLASS QC1 CONCRETE, HEADWALL	
511	47011	8	CY	CLASS QC1 CONCRETE, CULVERT, AS PER PLAN	2 / 8
512	10100	18	SY	SEALING OF CONCRETE SURFACES (EPOXY-URETHANE)	
512	33000	34	SY	TYPE 2 WATERPROOFING	
516	13600	32	SF	1" PREFORMED EXPANSION JOINT FILLER	
518	21201	2	CY	POROUS BACKFILL WITH GEOTEXTILE FABRIC, AS PER PLAN	2 / 8
601	32200	11	CY	ROCK CHANNEL PROTECTION, TYPE C, WITH FILTER	

CULVERT NOTES
GEA-44-4.52

DESIGN AGENCY
2LMN
DESIGNER
BIM
REVIEWER
JAH 10-30-23
PROJECT ID
112947
SUBSET 2 TOTAL 8
SHEET P.62 TOTAL 86

D12-CU-FY2024

MODEL: Sheet PAPERSIZE: 34x22 (in.) DATE: 1/7/2025 TIME: 12:38:22 PM USER: Julia_Hart
pw:\\2lmn-pw.bentley.com:2lmn-pw-01\Documents\Projects\OHDOT\112947\400-Engineering\Drainage\Sheets\112947_DN501.dgn

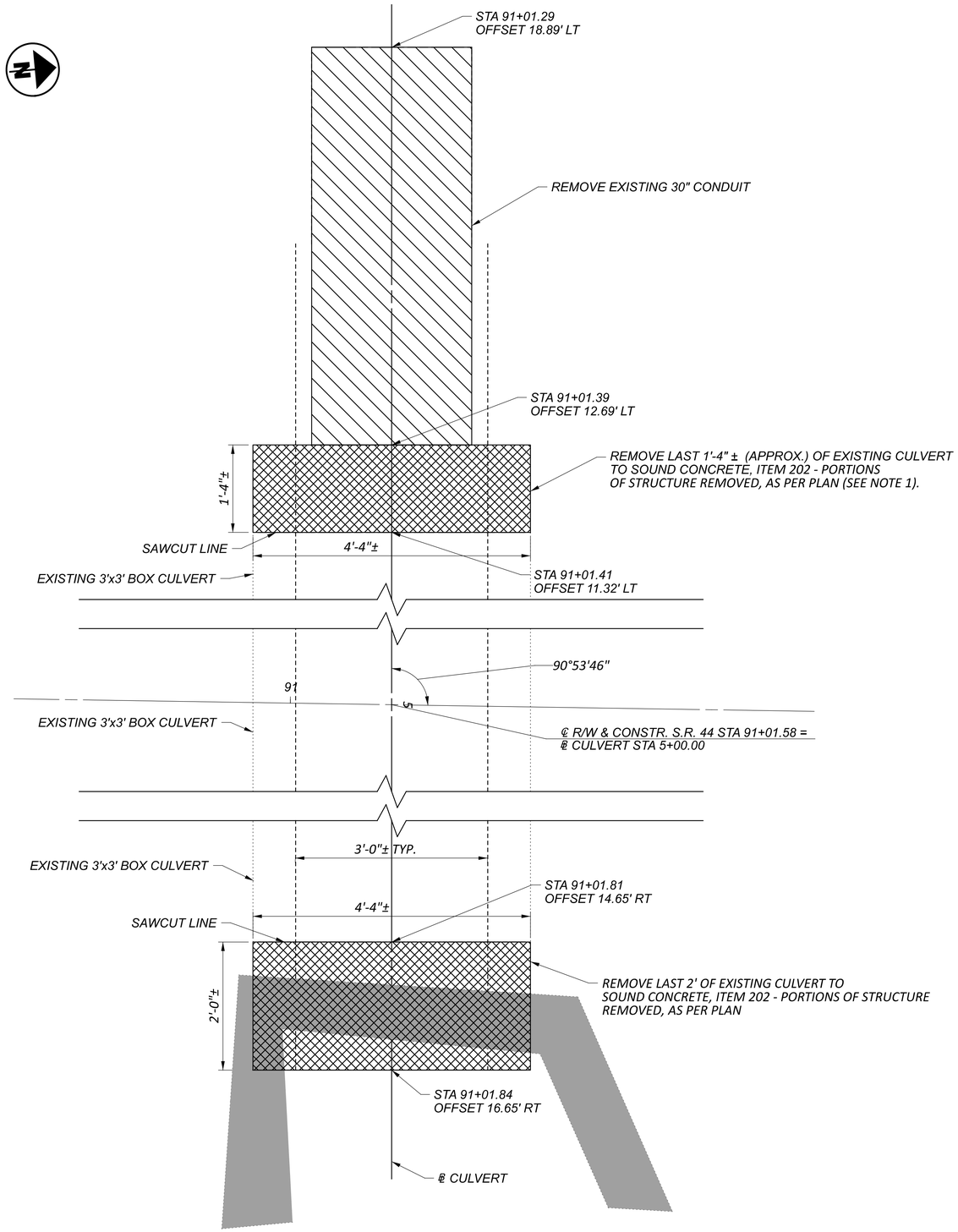

CULVERT & WINGWALL LAYOUT

LEGEND

HEADWALL TO BE REMOVED, PAID FOR UNDER ITEM 202 - PORTIONS OF STRUCTURE REMOVED, AS PER PLAN

EXISTING 3'x3' BOX CULVERT TO BE REMOVED, PAID FOR UNDER ITEM 202 - PORTIONS OF STRUCTURE REMOVED, AS PER PLAN

REMOVE EXISTING 30" CONDUIT, PAID FOR UNDER ITEM 202 - PIPE REMOVED, OVER 24"

NOTES:

1. LIMITS OF THE REMOVED AREA ARE APPROXIMATED BASED ON FIELD INSPECTION FROM 2022 AND SHALL BE RE-EVALUATED BY CONTRACTOR TO DETERMINE FINAL REMOVAL LIMITS TO SOUND CONCRETE AT THE BEGINNING OF CONSTRUCTION. NO REMOVAL SHALL OCCUR UNTIL THE REMOVAL LIMITS ARE CONFIRMED BY THE ENGINEER.

CULVERT REMOVAL
GEA-44-4.52

DESIGN AGENCY
2LMN

DESIGNER
BIM

REVIEWER
JAH 10-30-23

PROJECT ID
112947

SUBSET 3 | TOTAL 8

SHEET P.63 | TOTAL 86

D12-CU-FY2024

MODEL: Sheet PAPERSIZE: 34x22 (in.) DATE: 1/3/2024 TIME: 9:17:13 AM USER: Steve_Hart
V:\Projects\EDGL_112947_D12-Culv Replacements FY2024\400-Engineering\Drainage\Sheets\112947_DM501.dgn

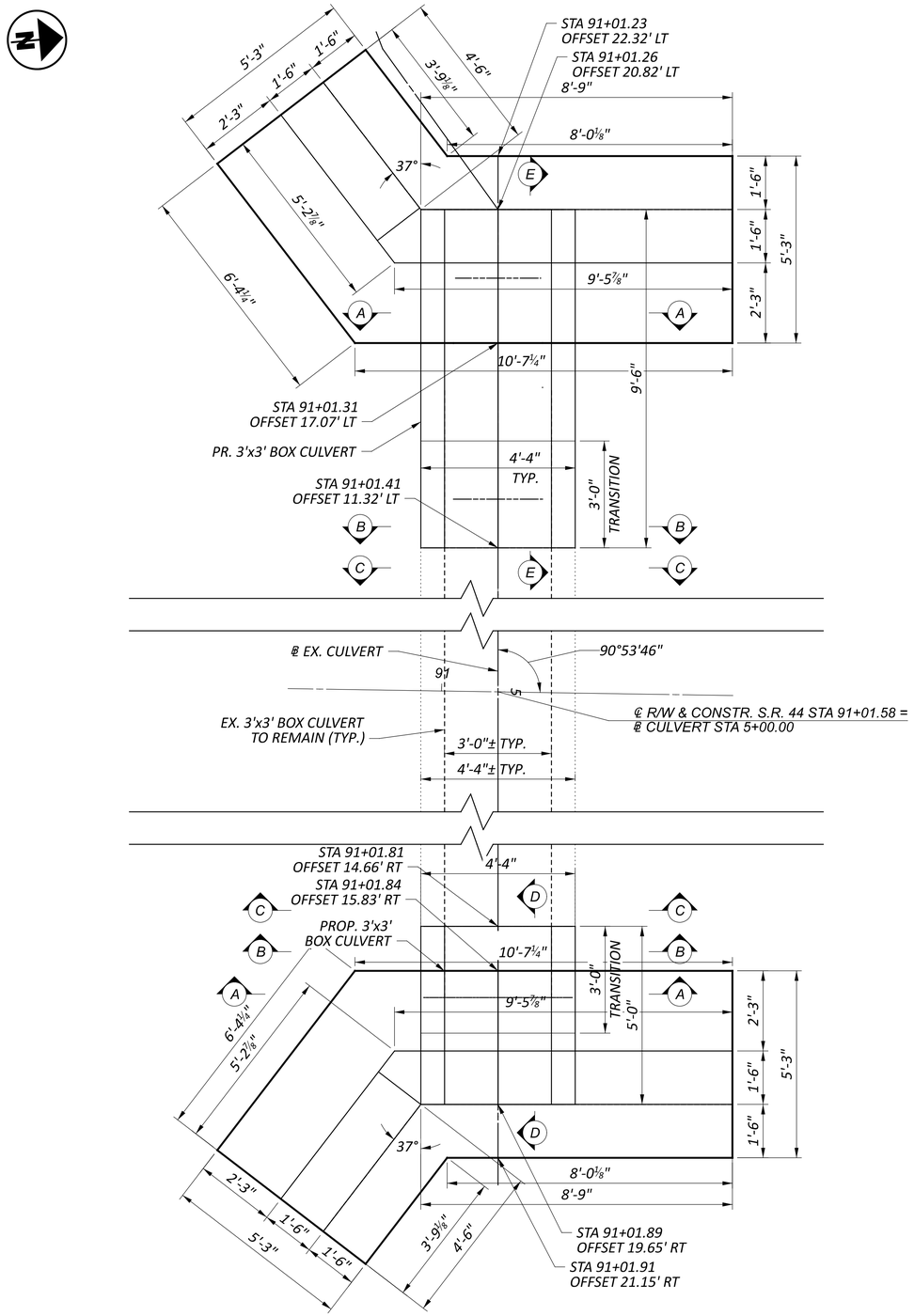

CULVERT & WINGWALL LAYOUT

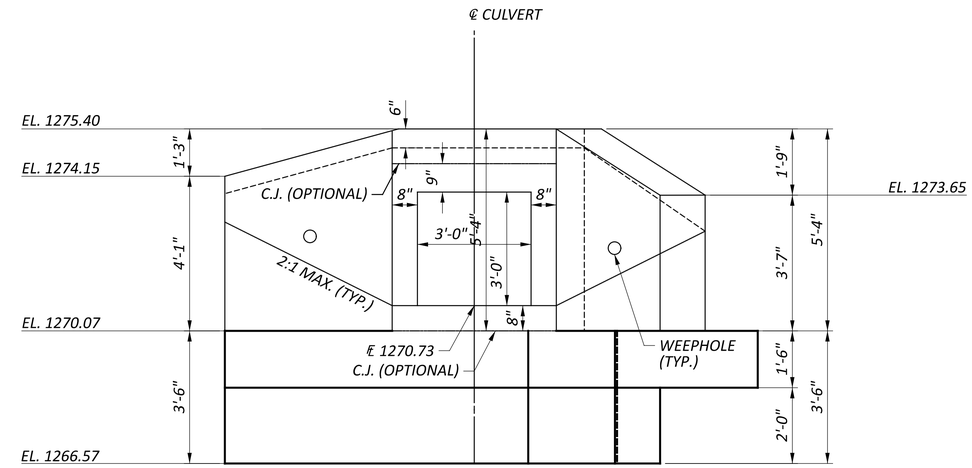

INLET

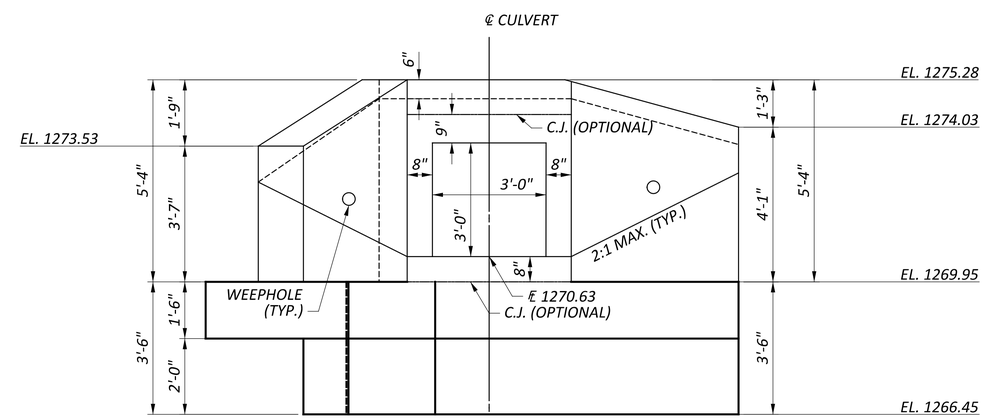

OUTLET

NOTES

1. SEE SHEET 7/8 FOR SECTIONS A-A, B-B, C-C, D-D AND E-E.
2. LIMITS OF THE REMOVED AREA ARE APPROXIMATED BASED ON FIELD INSPECTION FROM 2022 AND SHALL BE RE-EVALUATED BY CONTRACTOR TO DETERMINE FINAL REMOVAL LIMITS TO SOUND CONCRETE AT THE BEGINNING OF CONSTRUCTION. NO REMOVAL SHALL OCCUR UNTIL THE REMOVAL LIMITS ARE CONFIRMED BY THE ENGINEER.

CULVERT LAYOUT DETAILS
GEA-44-4.52

DESIGN AGENCY
2LMN

DESIGNER	BIM
REVIEWER	JAH 10-30-23
PROJECT ID	112947
SUBSET	4
TOTAL	8
SHEET	P.64
TOTAL	86

D12-CU-FY2024

MODEL: Sheet PAPERSIZE: 34x22 (in.) DATE: 1/3/2024 TIME: 9:17:15 AM USER: Steve_Hart
V:\Projects\EDGL_112947_D12-Culv Replacements FY2024\400-Engineering\Drainage\Sheets\112947_DD501.dgn

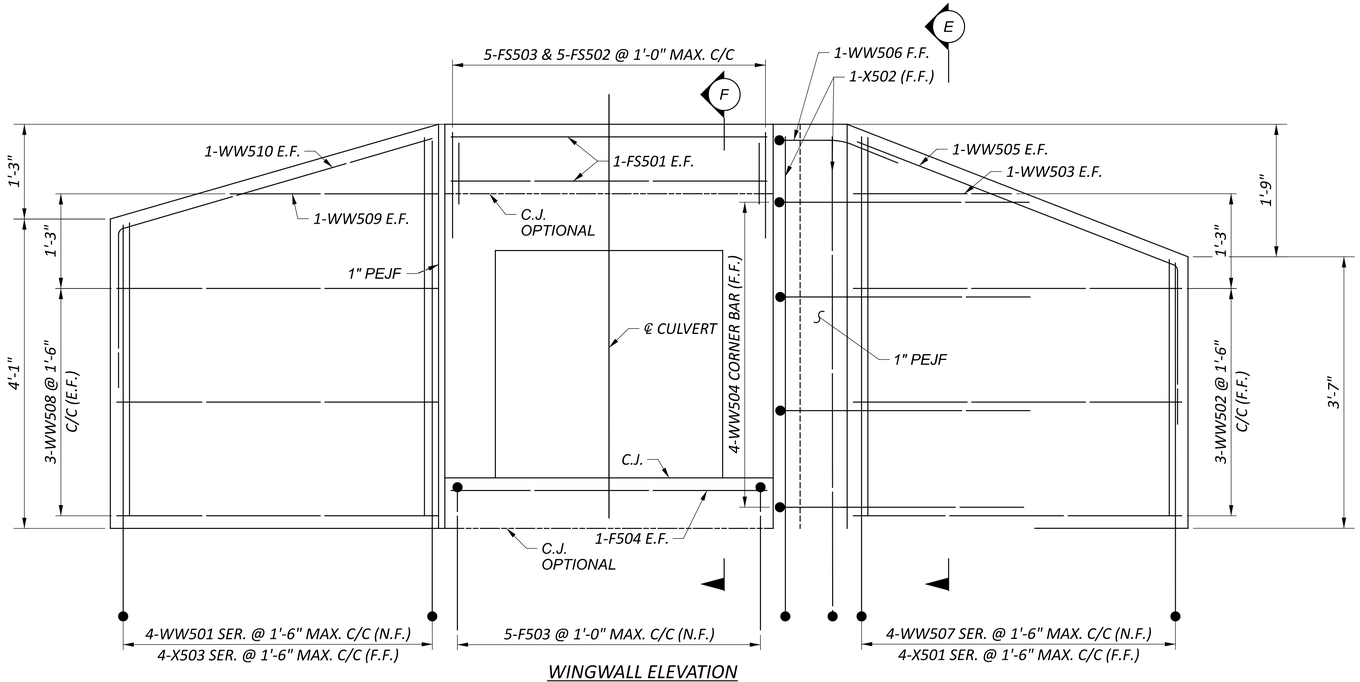

WINGWALL ELEVATION

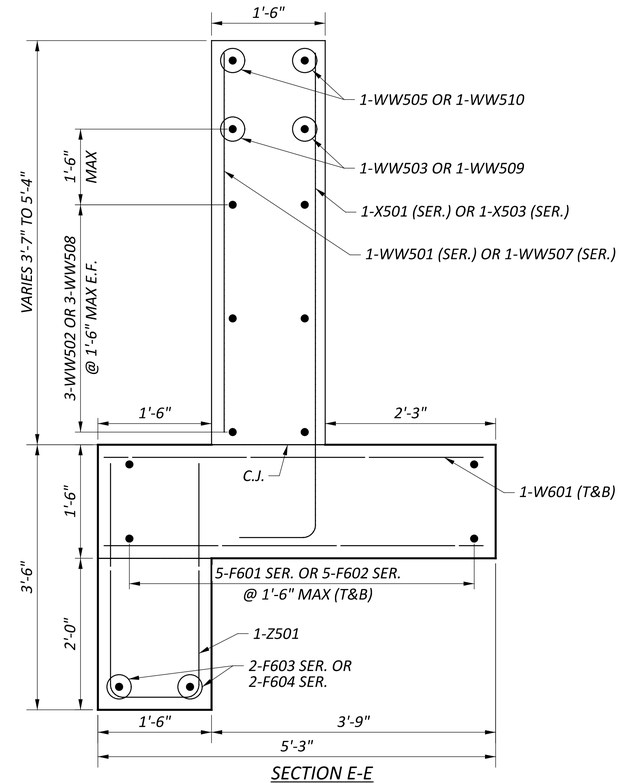

SECTION E-E

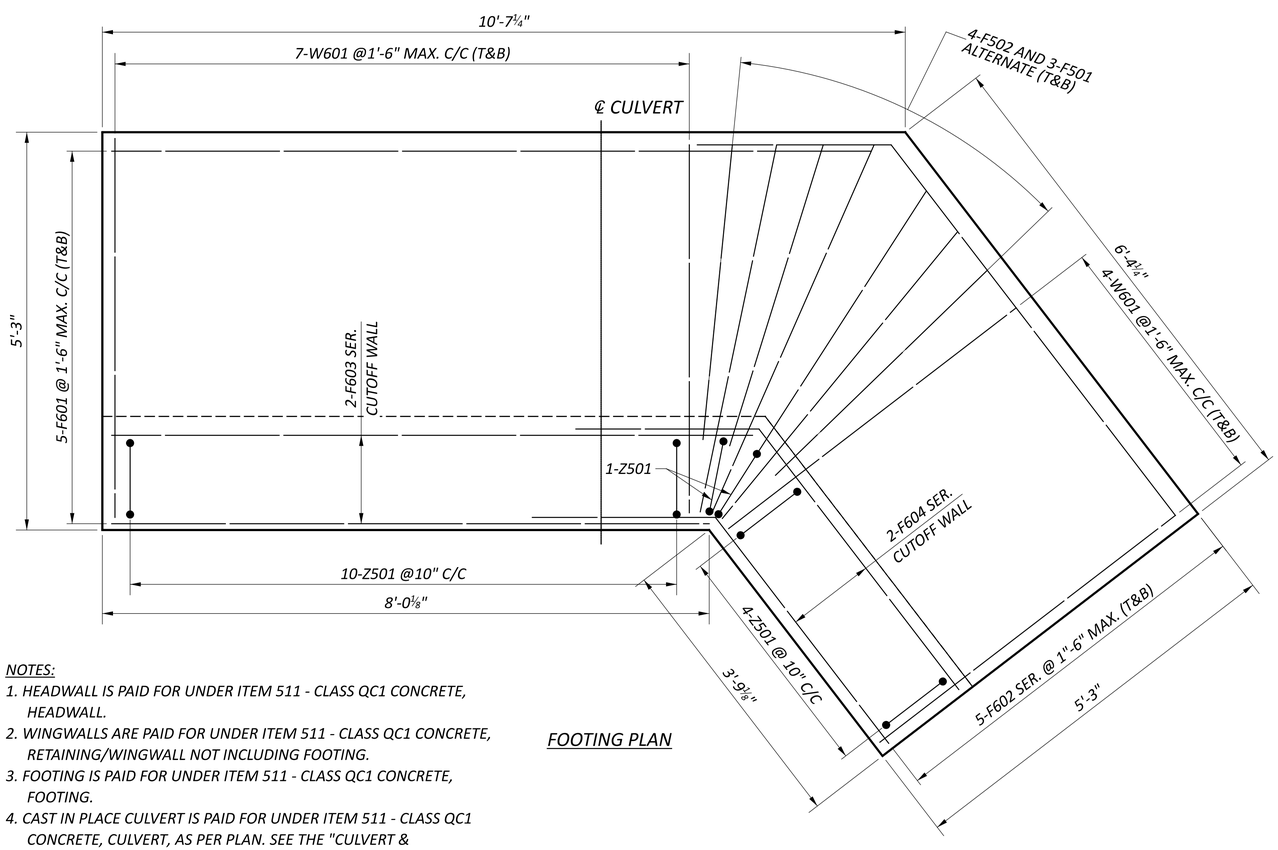

FOOTING PLAN

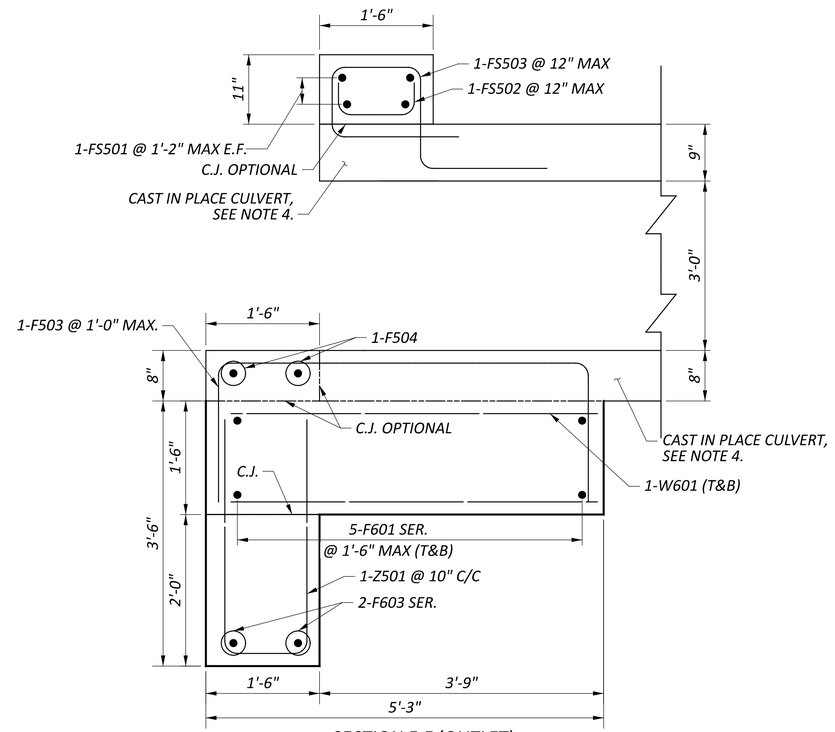

SECTION F-F (OUTLET)

NOTES:

1. HEADWALL IS PAID FOR UNDER ITEM 511 - CLASS QC1 CONCRETE, HEADWALL.
2. WINGWALLS ARE PAID FOR UNDER ITEM 511 - CLASS QC1 CONCRETE, RETAINING/WINGWALL NOT INCLUDING FOOTING.
3. FOOTING IS PAID FOR UNDER ITEM 511 - CLASS QC1 CONCRETE, FOOTING.
4. CAST IN PLACE CULVERT IS PAID FOR UNDER ITEM 511 - CLASS QC1 CONCRETE, CULVERT, AS PER PLAN. SEE THE "CULVERT & TRANSITION DETAILS" SHEET FOR CULVERT REINFORICING DETAILS.

CULVERT OUTLET DETAILS
GEA-44-4.52

DESIGN AGENCY
2LMN

DESIGNER	BIM
REVIEWER	JAH 10-30-23
PROJECT ID	112947
SUBSET 5	TOTAL 8
SHEET P.65	TOTAL 86

D12-CU-FY2024

MODEL: Sheet PAPERSIZE: 34x22 (in.) DATE: 1/3/2024 TIME: 9:17:18 AM USER: Steve_Hart
V:\Projects\EDGL_112947_D12-Culv Replacements FY2024\400-Engineering\Drainage\Sheets\112947_DD502.dgn

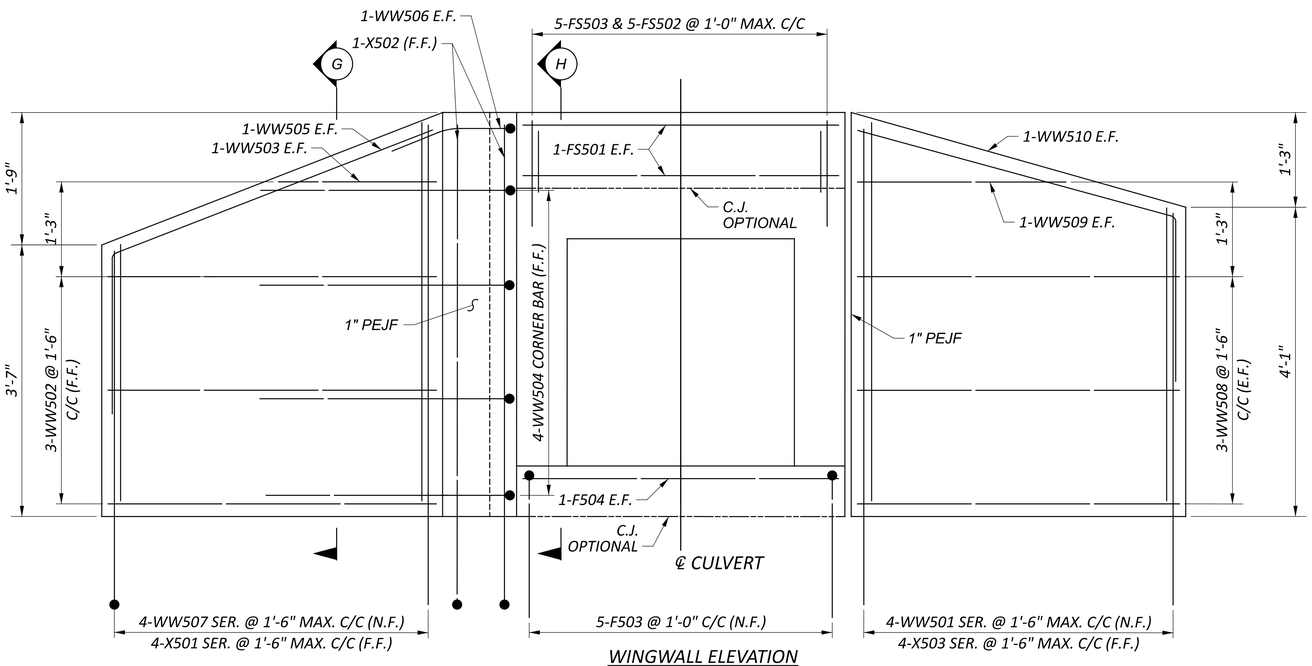

WINGWALL ELEVATION

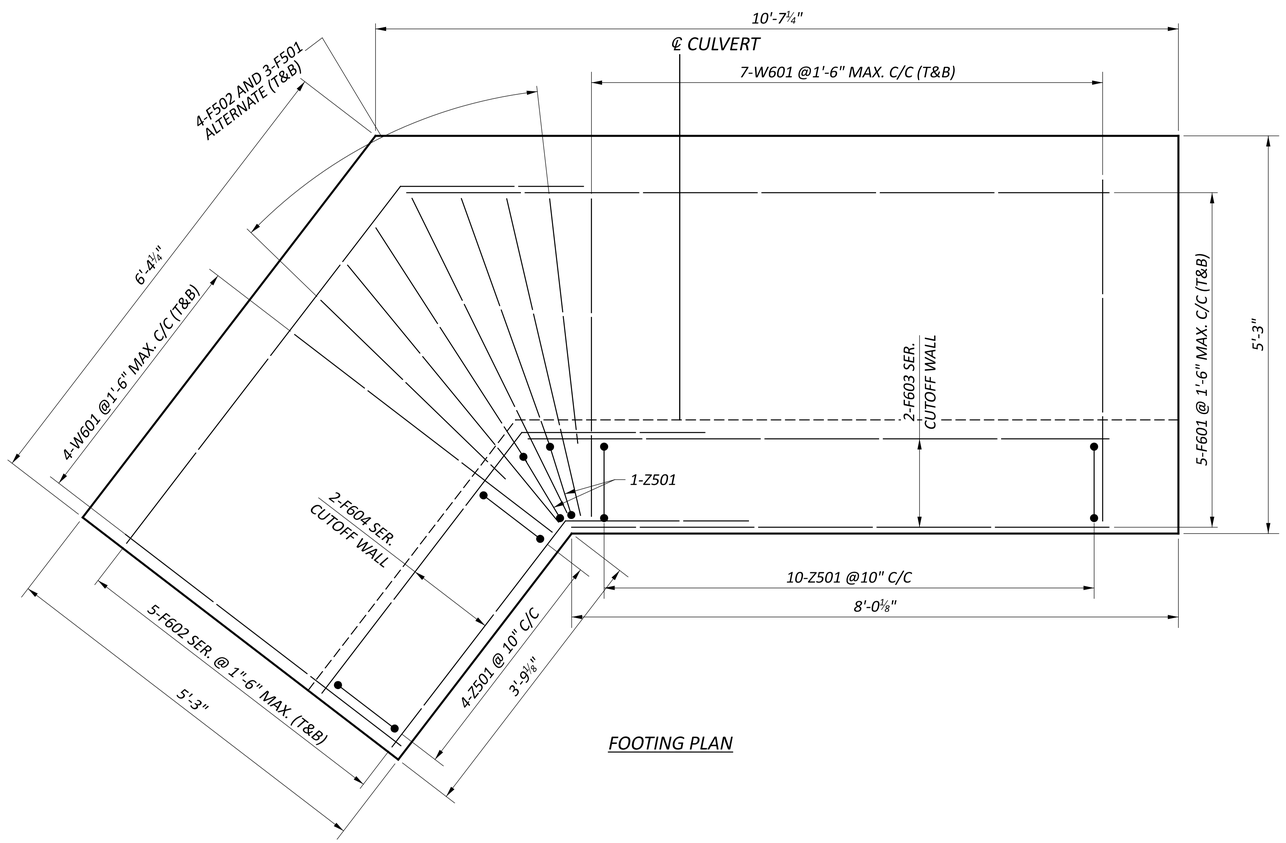

FOOTING PLAN

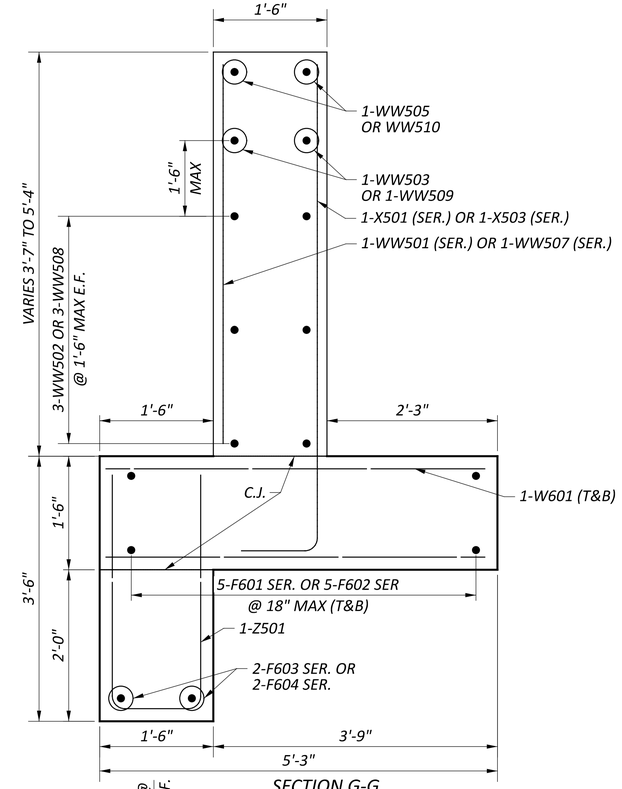

SECTION G-G

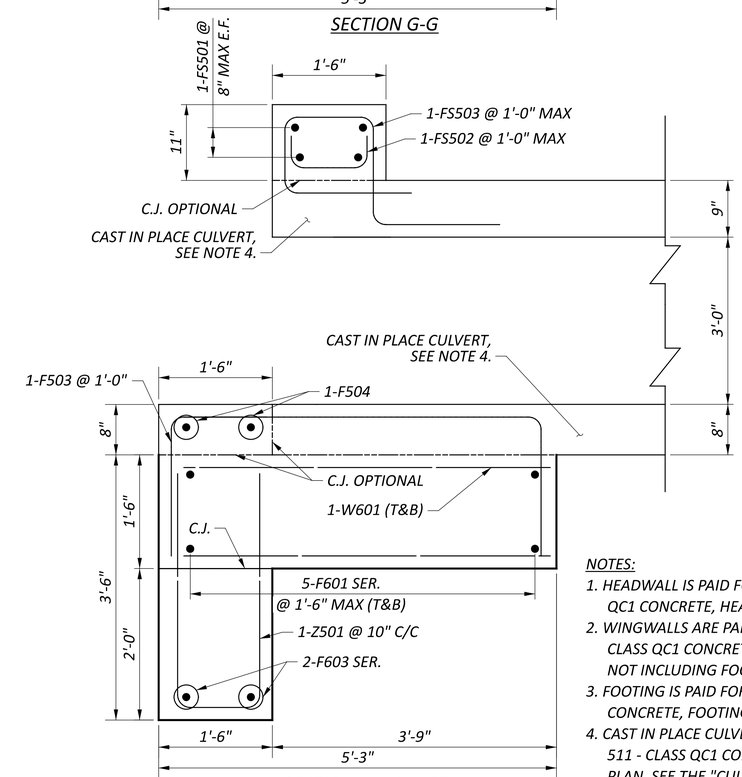

SECTION H-H (INLET)

NOTES:

1. HEADWALL IS PAID FOR UNDER ITEM 511 - CLASS QC1 CONCRETE, HEADWALL.
2. WINGWALLS ARE PAID FOR UNDER ITEM 511 - CLASS QC1 CONCRETE, RETAINING/WINGWALL NOT INCLUDING FOOTING.
3. FOOTING IS PAID FOR UNDER ITEM 511 - CLASS QC1 CONCRETE, FOOTING.
4. CAST IN PLACE CULVERT IS PAID FOR UNDER ITEM 511 - CLASS QC1 CONCRETE, CULVERT, AS PER PLAN. SEE THE "CULVERT & TRANSITION DETAILS" SHEET FOR CULVERT REINFORICING DETAILS.

CULVERT INLET DETAILS
GEA-44-4.52

DESIGN AGENCY
2LMN

DESIGNER	BIM
REVIEWER	JAH 10-30-23
PROJECT ID	112947
SUBSET	6
TOTAL	8
SHEET	P.66
TOTAL	86

D12-CU-FY2024

MODEL: Sheet PAPERSIZE: 34x22 (in.) DATE: 1/3/2024 TIME: 9:17:21 AM USER: Steve_Hart
V:\Projects\EDGL_112947_D12-Culv Replacements FY2024\400-Engineering\Drainage\Sheets\112947_DD503.dgn

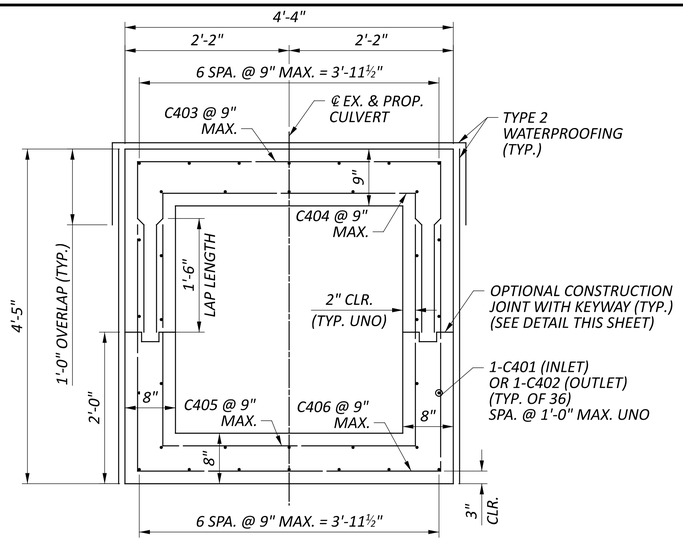

SECTION A-A
PROPOSED CULVERT SECTION

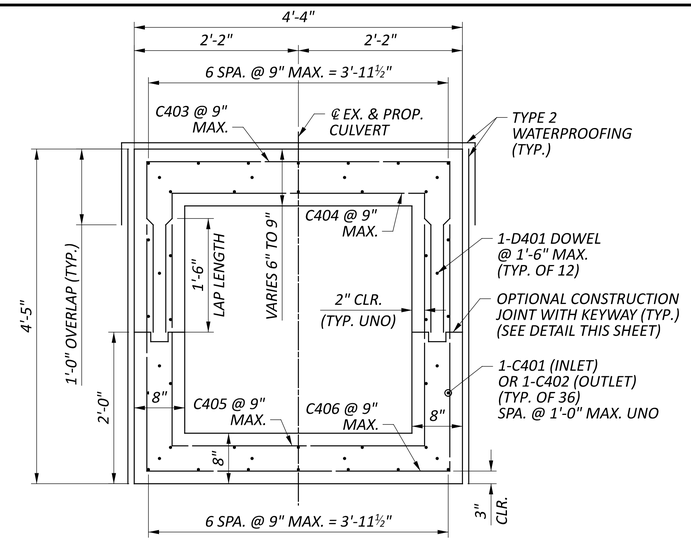

SECTION B-B
TRANSITION CULVERT SECTION
EXISTING CULVERT

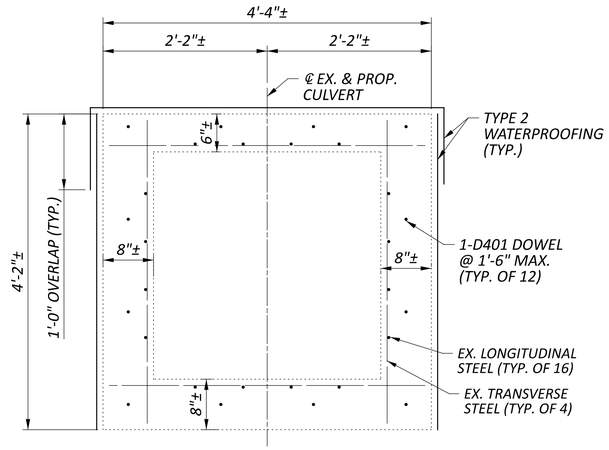

SECTION C-C
EXISTING CULVERT SECTION (SEE NOTE 1)

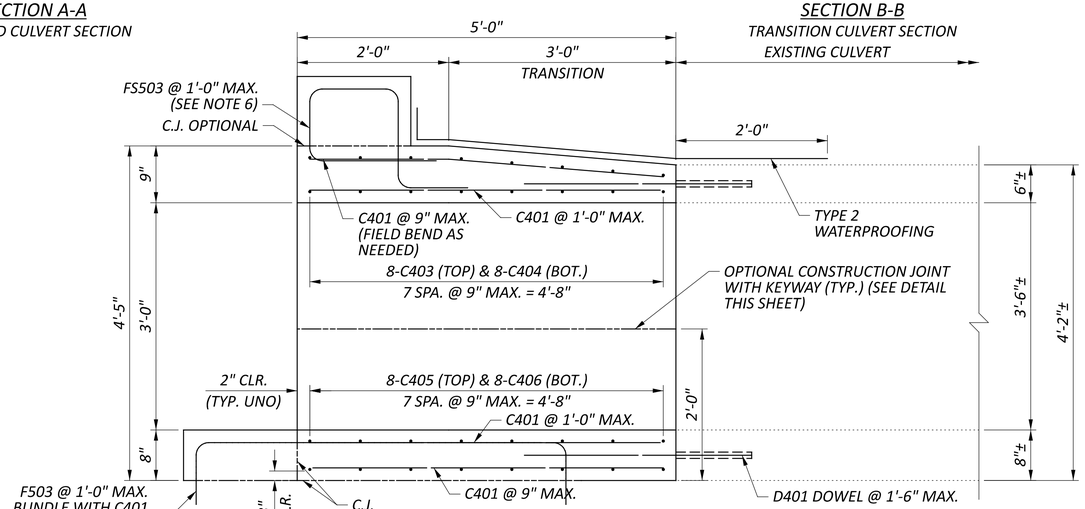

SECTION D-D
INLET

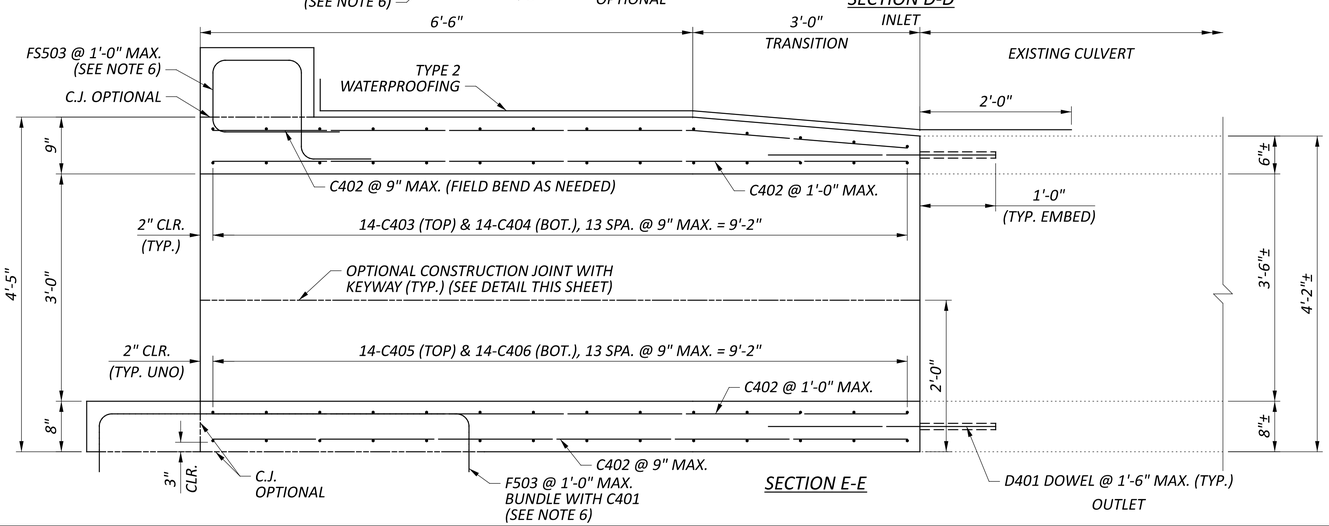

SECTION E-E

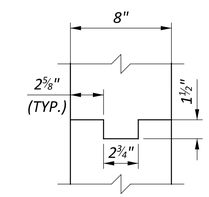

CONSTRUCTION JOINT WITH KEYWAY

NOTES:

1. THE EXISTING CULVERT REINFORCING STEEL IS APPROXIMATED FROM ARCHIVED STANDARD DRAWING FOR REINFORCED CONCRETE CULVERT, 3 FT X 3 FT DATED 9-14-1911.
2. SEE SHEET 4/8 FOR THE LOCATIONS OF SECTIONS A-A, B-B, C-C, D-D AND E-E.
3. FIELD BEND C401 AND C402 BARS AS NEEDED.
4. FIELD CUT C403 AND C404 BARS WITHIN TRANSITION AS NEEDED.
5. LIMITS OF THE CULVERT REPLACEMENT ARE APPROXIMATED BASED ON FIELD INSPECTION FROM 2022 AND SHALL BE RE-EVALUATED BY CONTRACTOR TO DETERMINE FINAL CONSTRUCTION LIMITS AND THE PROPOSED CULVERT LIMITS SHALL CONFIRMED BY THE ENGINEER PRIOR TO CONSTRUCTING THE PROPOSED CULVERT.
6. SEE THE "HEADWALL DETAILS" SHEET FOR HEADWALL AND FOOTING REINFORCING INFORMATION.

CULVERT & TRANSITION DETAILS
GEA-44-4.52

DESIGN AGENCY
2LMN

DESIGNER
RTF

REVIEWER
JAH 10-30-23

PROJECT ID
112947

SUBSET 7 | TOTAL 8

SHEET P.67 | TOTAL 86

D12-CU-FY2024

MODEL: Sheet PAPERSIZE: 34x22 (in.) DATE: 1/3/2024 TIME: 9:17:22 AM USER: Steve_Hart
V:\Projects\EDGL_112947_D12-Culv Replacements FY2024\400-Engineering\Drainage\Sheets\112947_DD504.dgn

INLET - TYPE B HEADWALL REINFORCING SCHEDULE

BAR MARK	NUMBER	LENGTH	WEIGHT (LBS.)	TYPE	BAR TYPE DIMENSIONS A	B	C	D	INC.
					WINGWALLS				
	1	4'- 3"				3'- 5"			
X501	SERIES	TO	20	1	0'- 10"				0'- 3 "
	of 4	5'- 0"				5'- 2"			
X502	2	5'- 0"	11	1	0'- 10"	5'- 2"			
	1	4'- 9"				3'- 11"			
X503	SERIES	TO	21	1	0'- 10"				0'- 1 "
	of 4	5'- 0"				5'- 2"			
	1	4'- 3"							
WW501	SERIES	TO	20	STR.					0'- 3 "
	of 4	5'- 0"							
WW502	6	4'- 2"	27	STR.					
WW503	2	2'- 1"	5	STR.					
WW504	4	5'- 0"	21	2	1'- 1"	0'- 8 1/4"	3'- 1/4"	3'- 4 1/4"	
WW505	2	6'- 11"	15	3	2'- 5"	1'- 7"	4'- 2"		
WW506	1	2'- 7"	3	8	1'- 1"	0'- 8 1/4"			
	1	3'- 11"							
WW507	SERIES	TO	19	STR.					0'- 4 3/8"
	of 4	5'- 0"							
WW508	6	4'- 1"	26	STR.					
WW509	2	2'- 9"	6	STR.					
WW510	2	6'- 3"	14	3	4'- 1"	0'- 7"	2'- 1"		
					FOOTING & CUTOFF WALL				
W601	22	4'- 11"	163	STR.					
Z501	16	7'- 2"	120	5	3'- 1"	1'- 2"			
F501	6	4'- 6"	29	STR.					
F502	8	3'- 6"	30	STR.					
F503	5	8'- 2"	43	5	1'- 9"	4'- 11"			
F504	2	4'- 0"	9	STR.					
	2	10'- 9"			7'- 9 1/4"				
F601	SERIES	TO	184	3	TO	1'- 3 3/4"	2'- 7 1/2"		0'- 9 "
	of 5	13'- 9"			10'- 9 3/4"				
	2	3'- 5"							
F602	SERIES	TO	75	STR.					0'- 9 1/4"
	of 5	6'- 6"							
	1	10'- 9"			7'- 9 1/4"				
F603	SERIES	TO	34	3	TO	1'- 3 3/4"	2'- 7 1/2"		0'- 8 "
	of 2	11'- 5"			8'- 6 "				
	1	3'- 5"							
F604	SERIES	TO	12	STR.					0'- 9 "
	of 2	4'- 2"							
					FORESLOPE WALL				
FS501	4	4'- 0"	17	STR.					
FS502	5	2'- 1"	11	5	0'- 7"	1'- 2"			
FS503	5	6'- 7"	35	7	1'- 10"	1'- 2"	0'- 11"	1'- 4"	
		SUBTOTAL	970						

OUTLET - TYPE B HEADWALL REINFORCING SCHEDULE

BAR MARK	NUMBER	LENGTH	WEIGHT (LBS.)	TYPE	BAR TYPE DIMENSIONS A	B	C	D	INC.
					WINGWALLS				
	1	4'- 3"				3'- 5"			
X501	SERIES	TO	20	1	0'- 10"				0'- 3 "
	of 4	5'- 0"				5'- 2"			
X502	2	5'- 0"	11	1	0'- 10"	5'- 2"			
	1	4'- 9"				3'- 11"			
X503	SERIES	TO	21	1	0'- 10"				0'- 1 "
	of 4	5'- 0"				5'- 2"			
	1	4'- 3"							
WW501	SERIES	TO	20	STR.					0'- 3 "
	of 4	5'- 0"							
WW502	6	4'- 2"	27	STR.					
WW503	2	2'- 1"	5	STR.					
WW504	4	5'- 0"	21	2	1'- 1"	0'- 8 1/4"	3'- 1/4"	3'- 4 1/4"	
WW505	2	6'- 11"	15	3	2'- 5"	1'- 7"	4'- 2"		
WW506	1	2'- 7"	3	8	1'- 1"	0'- 8 1/4"			
	1	3'- 11"							
WW507	SERIES	TO	19	STR.					0'- 4 3/8"
	of 4	5'- 0"							
WW508	6	4'- 1"	26	STR.					
WW509	2	2'- 9"	6	STR.					
WW510	2	6'- 3"	14	3	4'- 1"	0'- 7"	2'- 1"		
					FOOTING & CUTOFF WALL				
W601	22	4'- 11"	163	STR.					
Z501	16	7'- 2"	120	5	3'- 1"	1'- 2"			
F501	6	4'- 6"	29	STR.					
F502	8	3'- 6"	30	STR.					
F503	5	8'- 2"	43	5	1'- 9"	4'- 11"			
F504	2	4'- 0"	9	STR.					
	2	10'- 9"			7'- 9 1/4"				
F601	SERIES	TO	184	3	TO	1'- 3 3/4"	2'- 7 1/2"		0'- 9 "
	of 5	13'- 9"			10'- 9 3/4"				
	2	3'- 5"							
F602	SERIES	TO	75	STR.					0'- 9 1/4"
	of 5	6'- 6"							
	1	10'- 9"			7'- 9 1/4"				
F603	SERIES	TO	34	3	TO	1'- 3 3/4"	2'- 7 1/2"		0'- 8 "
	of 2	11'- 5"			8'- 6 "				
	1	3'- 5"							
F604	SERIES	TO	12	STR.					0'- 9 "
	of 2	4'- 2"							
					FORESLOPE WALL				
FS501	4	4'- 0"	17	STR.					
FS502	5	2'- 1"	11	5	0'- 7"	1'- 2"			
FS503	5	6'- 7"	35	7	1'- 10"	1'- 2"	0'- 11"	1'- 4"	
		SUBTOTAL	970						

BAR BEND DIAGRAMS

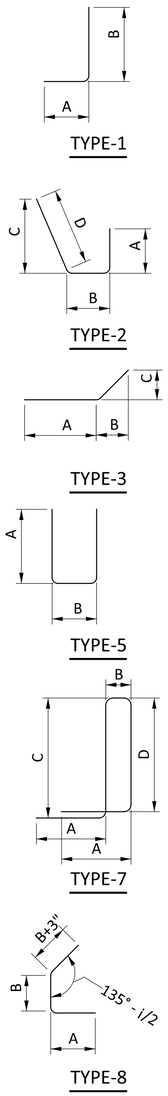

MARK	NUMBER INLET	OUTLET	TOTAL	LENGTH	WEIGHT (LBS)	TYPE	DIMENSIONS A	B	C	D	INC.
					BOX CULVERT						
C401	36	0	36	4'-8"	113	STR.					
C402	0	36	36	9'-2"	221	STR.					
C403	8	14	22	8'-4"	123	5	2'-3"	4'-0"			
C404	8	14	22	7'-0"	103	5	1'-11"	3'-4"			
C405	8	14	22	9'-2"	135	5	3'-0"	3'-4"			
C406	8	14	22	10'-4"	152	5	3'-3"	4'-0"			
* D401	12	12	24	2'-6"	41	STR.					
				SUBTOTAL BOX CULVERT =	888						
				SUBTOTAL INLET & OUTLET =	1,940						
				TOTAL =	2828						

* - DOWEL BAR

NOTES:

1. THE BAR SIZE NUMBER IS SPECIFIED ON THE PLANS IN THE BAR MARK COLUMN. THE FIRST DIGIT WHERE 3 DIGITS ARE USED, AND THE FIRST 2 DIGITS WHERE FOUR DIGITS ARE USED, INDICATES THE BAR SIZE NUMBER FOR EXAMPLE, W501 IS A NO. 5 BAR AND 01 INDICATES BAR SEQUENCE NUMBER.
2. ALL REINFORCING SHALL BE EPOXY COATED STEEL.
3. FOR BEND DIAGRAMS, SEE THIS SHEET. REFER TO CMS SECTION 509.05 FOR STANDARD BEND DIMENSIONS.
4. ALL DIMENSIONS ARE OUT TO OUT.
5. REINFORCING BAR SPLICE LENGTHS SHALL CONFORM TO THE MINIMUM LENGTHS SPECIFIED BY CMS SECTION 509.07 UNLESS OTHERWISE NOTED ON THE PLANS.

REINFORCING STEEL LIST
GEA-44-4.52

DESIGN AGENCY
2LMN

DESIGNER RTF
REVIEWER JAH 10-30-23
PROJECT ID 112947
SUBSET 8 TOTAL 8
SHEET P.68 TOTAL 86

D12-CU-FY2024

MODEL: Sheet PAPERSIZE: 34x22 (in.) DATE: 1/3/2024 TIME: 9:17:23 AM USER: Steve_Hart
V:\Projects\EDGL_112947_D12-Culv Replacements FY2024\400-Engineering\Drainage\Sheets\112947_DD505.dgn

LEGEND

LIMITS OF CONSTRUCTION
PIPE TO BE FILLED AND PLUGGED

(A) ℄ EX R/W & CONSTR. S.R. 84 STA 366+79.21 =
℄ CULVERT STA 6+00.00

NOTES:
1. FILL AND PLUG EXISTING TWIN PIPES BENEATH THE ROADWAY PAVEMENT AND TO WITHIN 3' OF THE WEST EXISTING RIGHT OF WAY. SECTIONS OF PIPE TO THE WEST SHALL BE PLUGGED WITHIN 3' INSIDE OF THE WEST EXISTING RIGHT OF WAY.
2. GRADE THE PROPOSED DITCH TO PERPETUATE THE SURFACE DISCHARGES OF THE ADJACENT STORM PIPES TO THE PROPOSED CATCH BASIN GRATE.

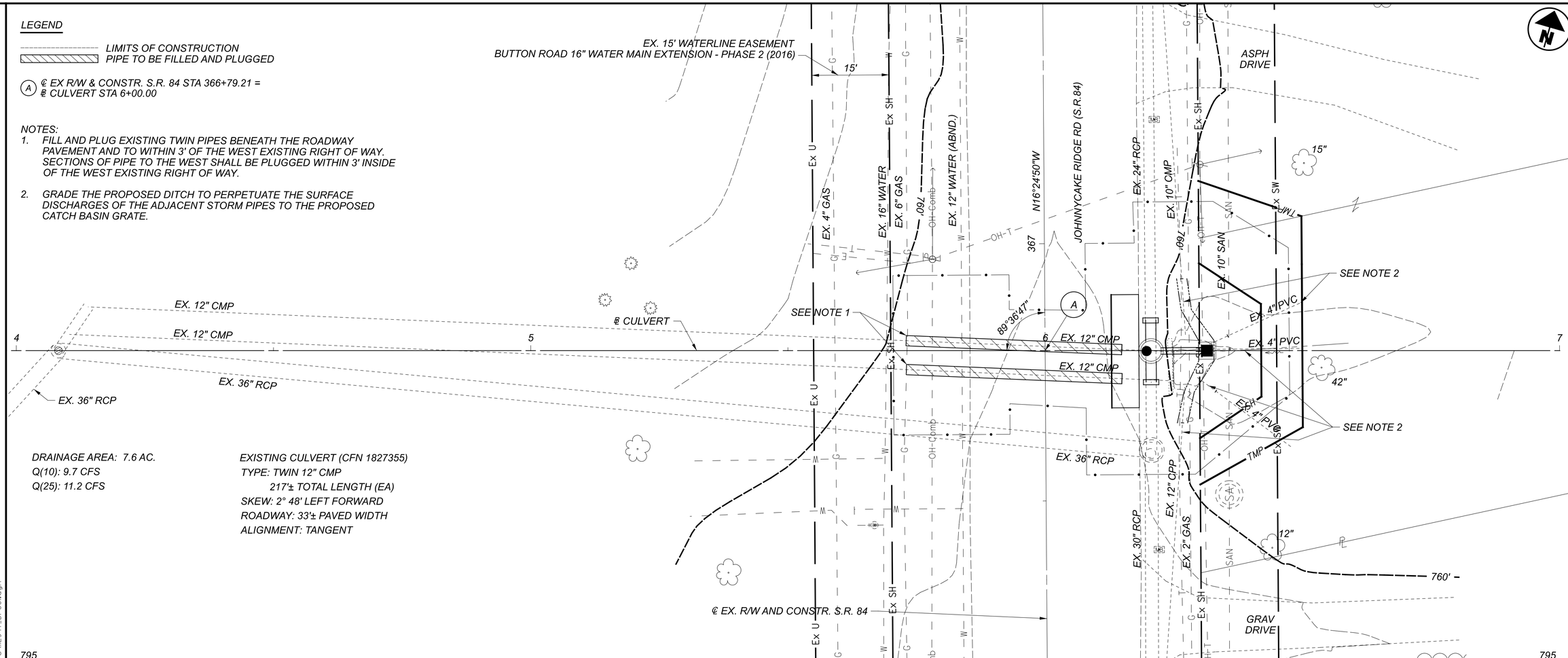

DRAINAGE AREA: 7.6 AC.
Q(10): 9.7 CFS
Q(25): 11.2 CFS

EXISTING CULVERT (CFN 1827355)
TYPE: TWIN 12" CMP
217'± TOTAL LENGTH (EA)
SKEW: 2° 48' LEFT FORWARD
ROADWAY: 33'± PAVED WIDTH
ALIGNMENT: TANGENT

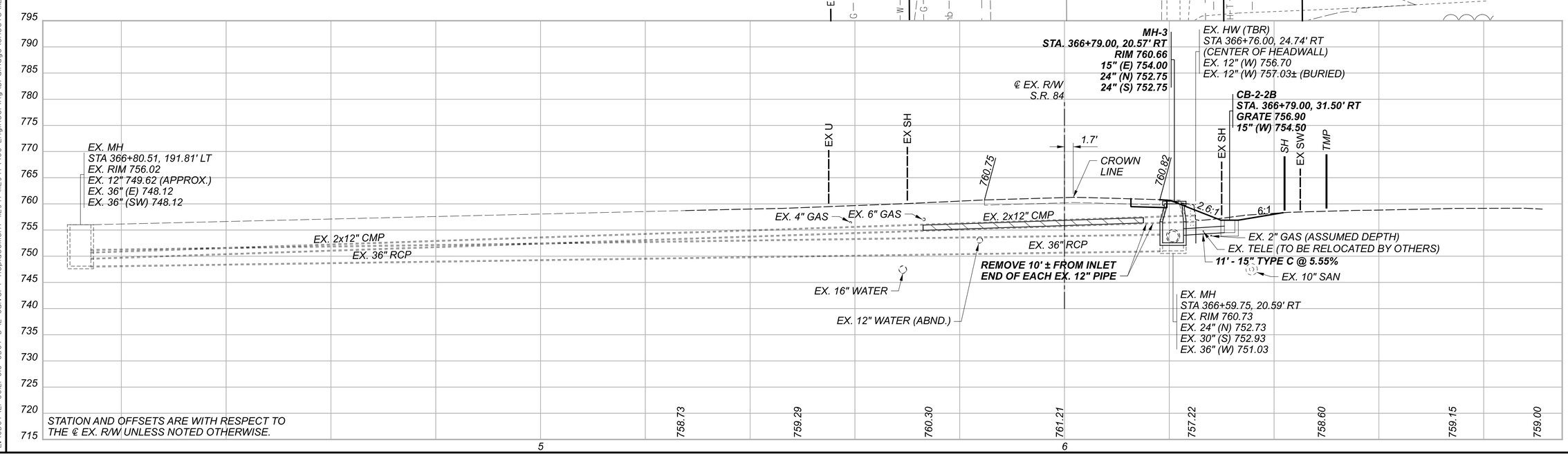

STATION AND OFFSETS ARE WITH RESPECT TO THE ℄ EX. R/W UNLESS NOTED OTHERWISE.

HORIZONTAL SCALE IN FEET 0 5 10 20

CULVERT DETAIL
LAK-84-14.25

DESIGN AGENCY
Environmental Design Group
ADRIAN C. CUMMINGS, CORPUS
PO 1510 CLEVELAND, OHIO 44101
P 216.241.7075 F 216.241.1821
W ENVIRONMENTALDESIGNGROUP.COM

DESIGNER MSD
REVIEWER SAC 12/29/23
PROJECT ID 112947
SHEET P.69 TOTAL 86

D12-CU-FY2024

MODEL: 112947_DP601 PAPERSIZE: 34x22 (in.) DATE: 1/27/2025 TIME: 1:09:11 PM USER: scook
E:\ODOT\21-0021-010 ODOT D-12 Culvert Replacement 112947\112947\400-Engineering\Drainage\Sheets\112947_DP601.dgn

SHEET NO.	REFERENCE NO.	STATION FROM	STATION TO	SIDE	621 RPM Y/Y EACH	621 RPM W/R EACH	621 RPM REFLECTOR W/R EACH	621 RAISED PAVEMENT MARKER REMOVED EACH	621 RAISED PAVEMENT MARKER REMOVED, AS PER PLAN EACH	642 EDGE LINE, 6", TYPE 1 FT	642 CENTER LINE, TYPE 1 FT	642 STOP LINE, TYPE 1 FT	646 EDGE LINE, 6" WHITE FT	646 LANE LINE, 6" FT	646 DOTTED LINE, 6" FT
		CUY-77-7.84													
P-71-P.72	EL-101	406+80.00	421+57.00	LT									1477		
P-71-P.72	LL-101	406+80.00	437+00.00	LT										3020	
P-71-P.72	LL-102	406+80.00	437+00.00	LT										3020	
P-71-P.72	LL-103	406+80.00	437+00.00	LT										3020	
P-71-P.72		407+39.00	436+96.00	LT			112		112						
P-71-P.72	DL-101	416+57.00	427+43.00	LT											1086
P.72	EL-102	427+43.00	437+00.00	LT									957		
CUY-77-7.84 SUBTOTAL					0	0	112	0	112	0 FT / 0.00 MILE	0 FT / 0.00 MILE	0	2434 FT / 0.47 MILE	9060 FT / 1.72 MILE	1086
		GEA-322-13.88													
P.73	CD-401	581+07.00	585+94.00	CL							487				
P.73	CR-401	585+94.00	590+01.00	CL							407				
P.73		586+56.00	589+76.00	CL	5			5							
P.73	EL-401	586+57.00	589+52.00	RT						295					
P.73	CR-402	592+51.00	595+78.00	CL							327				
GEA-322-13.88 SUBTOTAL					5	0	0	5	0	295 FT / 0.06 MILE	1221 FT / 0.24 MILE	0	0 FT / 0.00 MILE	0 FT / 0.00 MILE	0
		GEA-44-4.52													
P.74	CD-501	83+24.00	90+11.00	CL							687				
P.74	CD-502	90+95.00	97+45.00	CL							650				
P.74	CR-501	98+03.00	99+03.00	CL							100				
P.74		88+32.00	92+80.00	CL	6			6							
P.74	EL-501	88+74.00	92+41.00	RT						367					
P.74	EL-502	89+54.00	90+33.00	LT						79					
P.74	EL-503	90+93.00	92+31.00	LT						138					
		STAFFORD RD													
P.74	CL-501	499+40.00	499+67.00	CL							27				
P.74	SL-501	499+67.00		RT								15			
GEA-44-4.52 SUBTOTAL					6	0	0	6	0	584 FT / 0.11 MILE	1464 FT / 0.28 MILE	15	0 FT / 0.00 MILE	0 FT / 0.00 MILE	0
		LAK-84-14.25													
P.75	CS-601	364+39.00	368+40.00	CL							401				
P.75	EL-601	364+88.00	367+89.00	RT						301					
P.75		364+44.00	367+64.00	CL	5			5							
LAK-84-14.25 SUBTOTAL					5	0	0	5	0	301 FT / 0.06 MILE	401 FT / 0.08 MILE	0	0 FT / 0.00 MILE	0 FT / 0.00 MILE	0
SUBTOTALS					16	0	112	16	112	0.23	0.60	15	0.47	1.72	1086
TOTALS CARRIED TO GENERAL SUMMARY					**16**		**112**	**16**	**112**	**0.23**	**0.60**	**15**	**0.47**	**1.72**	**1086**
					EACH	EACH	EACH	EACH	EACH	MILE	MILE	FEET	MILE	MILE	FEET

PAVEMENT MARKING SUBSUMMARY

DESIGN AGENCY
Environmental Design Group, LLC
4400 ALUM CREEK DRIVE
STE. 3 STOCKSDALE, OH 43147
PH. 614.324.5175 FAX 614.324.5177
E-MAIL: ENVDESIGNGROUP@GMAIL.COM

DESIGNER: MSD
REVIEWER: SAC 12/29/23
PROJECT ID: 112947
SHEET: P.70 TOTAL: 86

D12-CU-FY2024

MODEL: Sheet PAPERSIZE: 34x22 (in.) DATE: 3/26/2025 TIME: 4:29:37 PM USER: scook
E:\ODOT\21-00121-010 ODOT D-12 Culvert Replacement 112947\112947\400-Engineering\Traffic\Sheets\112947_TS001.dgn

PAVEMENT MARKING LEGEND

- DL — DOTTED LINE
- EL — EDGE LINE, 6", WHITE
- LL — LANE LINE, 6", WHITE
- EXISTING RAISED PAVEMENT MARKER (RPM)
- PROPOSED RAISED PAVEMENT MARKER (RPM)

SIGNING LEGEND

- EXISTING SIGN TO REMAIN

NOTE:
DEPICTED LOCATION OF RPMS IS BASED ON PRE-CONSTRUCTION CONFIGURATION.

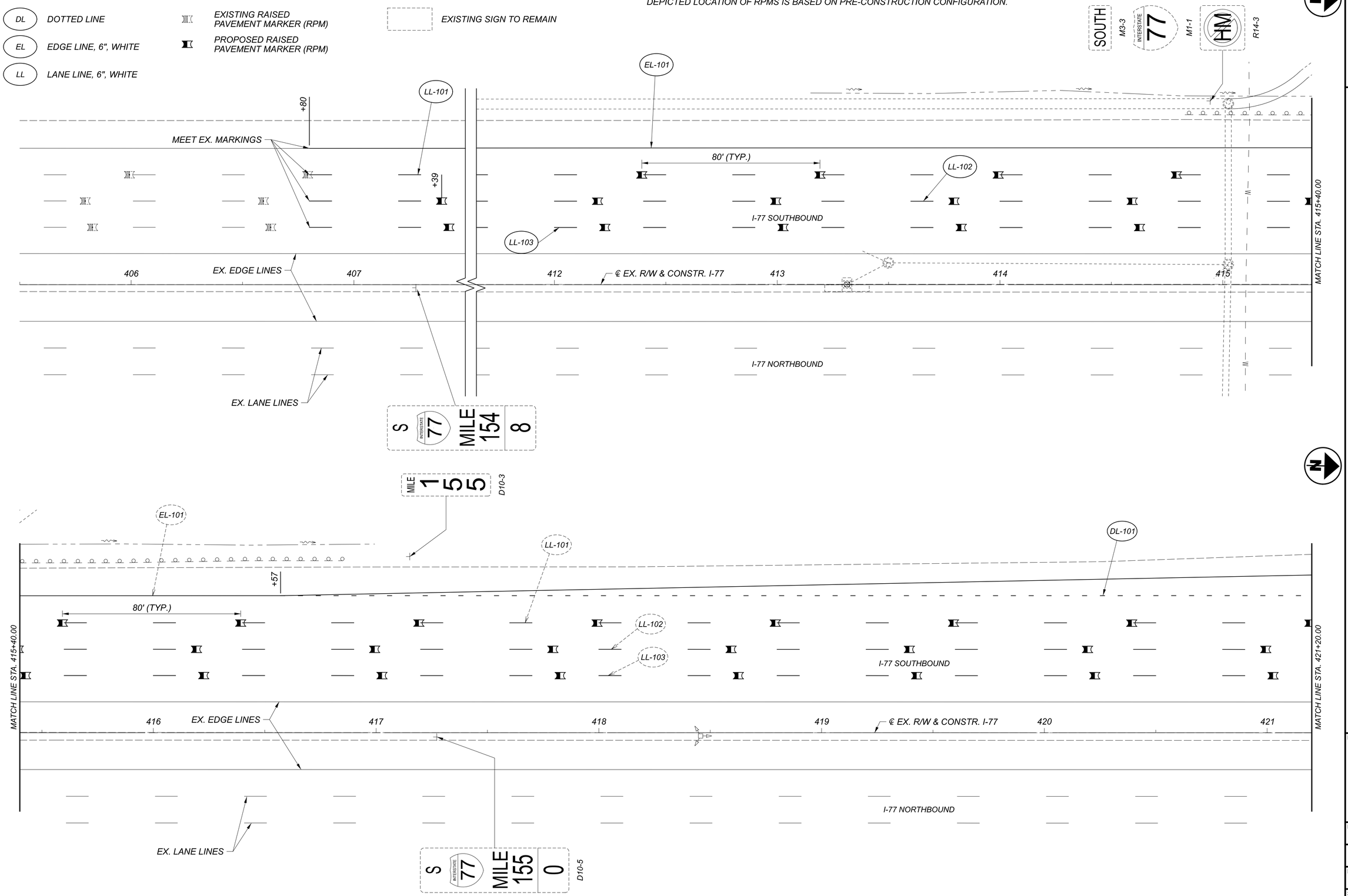

HORIZONTAL SCALE IN FEET
0 10 20 40

TRAFFIC CONTROL PLAN
CUY-77-7.84

DESIGN AGENCY
Environmental Design Group
A DIVISION OF CLEARY BUILDING CORP.
910 CAMPUS DRIVE, MACON, MO 63552
P: 660.385.6448 F: 660.385.6450
W: ENVIRONMENTALDESIGNGROUP.COM

DESIGNER	MSD
REVIEWER	SAC 12/29/23
PROJECT ID	112947
SHEET	P.71
TOTAL	86

D12-CU-FY2024

MODEL: CLX_RW_I-77 - Plan | PAPERSIZE: 34x22 (in.) DATE: 1/27/2025 TIME: 1:09:16 PM USER: scook
E:\ODOT\21-00121-010 ODOT D-12 Culvert Replacement 112947\112947\400-Engineering\Traffic\Sheets\112947_TP01.dgn

PAVEMENT MARKING LEGEND

- DL — DOTTED LINE
- EL — EDGE LINE, 6", WHITE
- LL — LANE LINE, 6", WHITE
- EXISTING RAISED PAVEMENT MARKER (RPM)
- PROPOSED RAISED PAVEMENT MARKER (RPM)

SIGNING LEGEND

- EXISTING SIGN TO REMAIN

NOTE:
DEPICTED LOCATION OF RPMS IS BASED ON PRE-CONSTRUCTION CONFIGURATION.

HORIZONTAL SCALE IN FEET
0 10 20 40

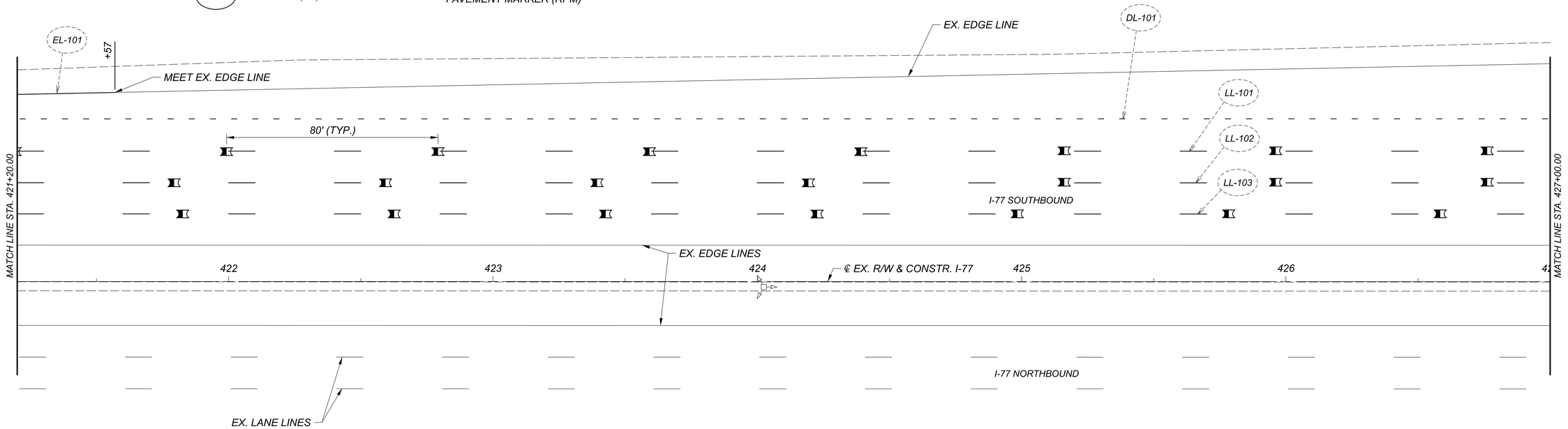

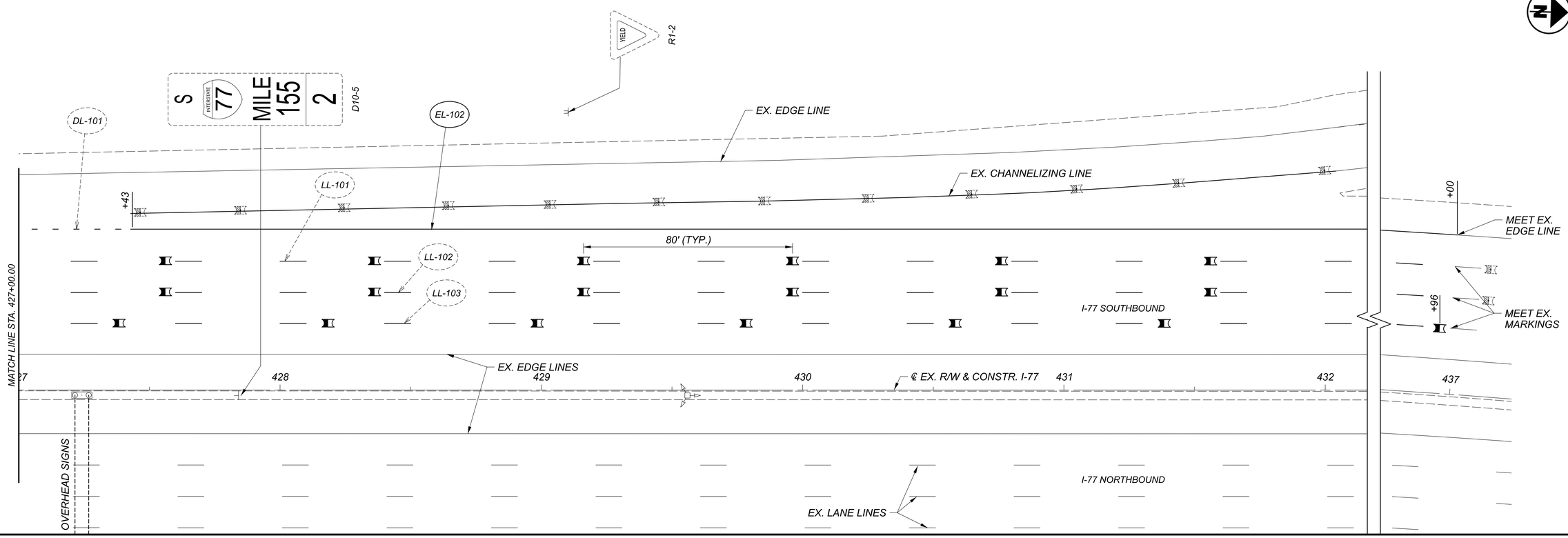

TRAFFIC CONTROL PLAN
CUY-77-7.84

DESIGN AGENCY
Environmental Design Group
ARCHITECTS / ENGINEERS
350 SOUTH 5TH STREET, SUITE 1420
MINNEAPOLIS, MN 55415
612.338.2519 FAX 612.338.7110
EDG-INC.COM

DESIGNER
MSD

REVIEWER
SAC 12/29/23

PROJECT ID
112947

SHEET P.72 TOTAL 86

D12-CU-FY2024

MODEL: CLX_RW_I-77 - Plan 3 PAPERSIZE: 34x22 (in.) DATE: 1/27/2025 TIME: 1:09:18 PM USER: scook
E:\ODOT\21-0012I-010 ODOT D-12 Culvert Replacement 112947\400-Engineering\Traffic\Sheets\112947_TP102.dgn

PAVEMENT MARKING LEGEND

- CD — CENTER LINE, DASHED
- CL — CENTER LINE, PASSING PROHIBITED LEFT
- CR — CENTER LINE, PASSING PROHIBITED RIGHT
- CS — CENTER LINE, DOUBLE SOLID
- EL — EDGE LINE, 6", WHITE
- EXISTING RAISED PAVEMENT MARKER (RPM)
- PROPOSED RAISED PAVEMENT MARKER (RPM)

SIGNING LEGEND

- EXISTING SIGN TO REMAIN

HORIZONTAL SCALE IN FEET 0 10 20 40

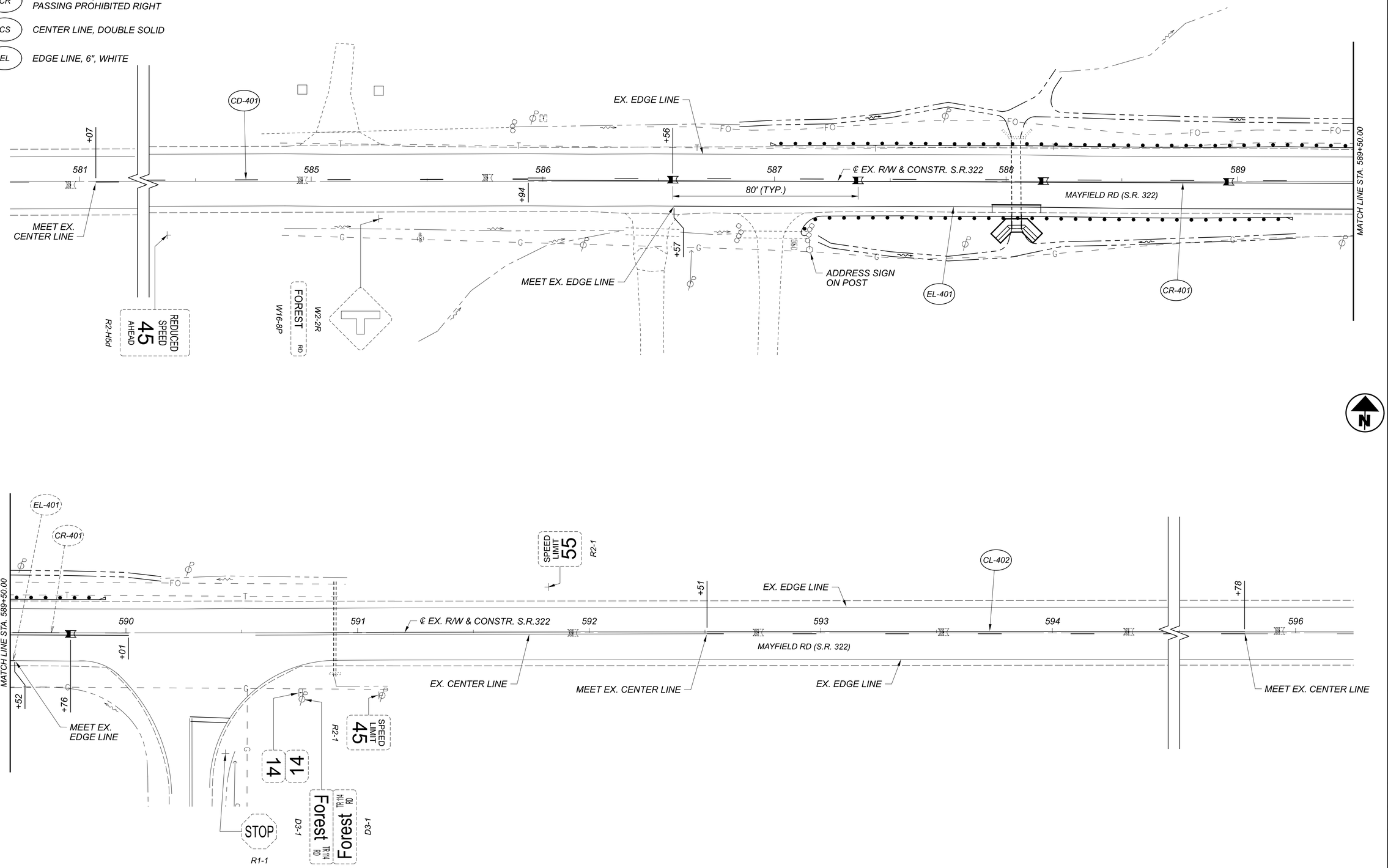

TRAFFIC CONTROL PLAN
GEA-322-13.88

DESIGN AGENCY
Environmental Design Group
AKRON | CLEVELAND | COLUMBUS
210 SOUTH MAIN ST. AKRON, OH 44311
P: 330.434.1515 F: 330.434.1517
W: ENVIRONMENTALDESIGNGROUP.COM

DESIGNER: MSD
REVIEWER: SAC 12/29/23
PROJECT ID: 112947
SHEET: P.73 TOTAL: 86

D12-CU-FY2024

MODEL: CLX_RW_1 - Plan | PAPERSIZE: 34x22 (in.) DATE: 1/27/2025 TIME: 1:09:23 PM USER: scook
E:\ODOT\21-0012I-010 ODOT D-12 Culvert Replacement 112947\112947\400-Engineering\Traffic\Sheets\112947_TP40.dgn

PAVEMENT MARKING LEGEND

- CD — CENTER LINE, DASHED
- CL — CENTER LINE, PASSING PROHIBITED LEFT
- CR — CENTER LINE, PASSING PROHIBITED RIGHT
- EL — EDGE LINE, 6", WHITE
- SL — STOP LINE, 24", WHITE
- EXISTING RAISED PAVEMENT MARKER (RPM)
- PROPOSED RAISED PAVEMENT MARKER (RPM)

SIGNING LEGEND

- EXISTING SIGN TO REMAIN

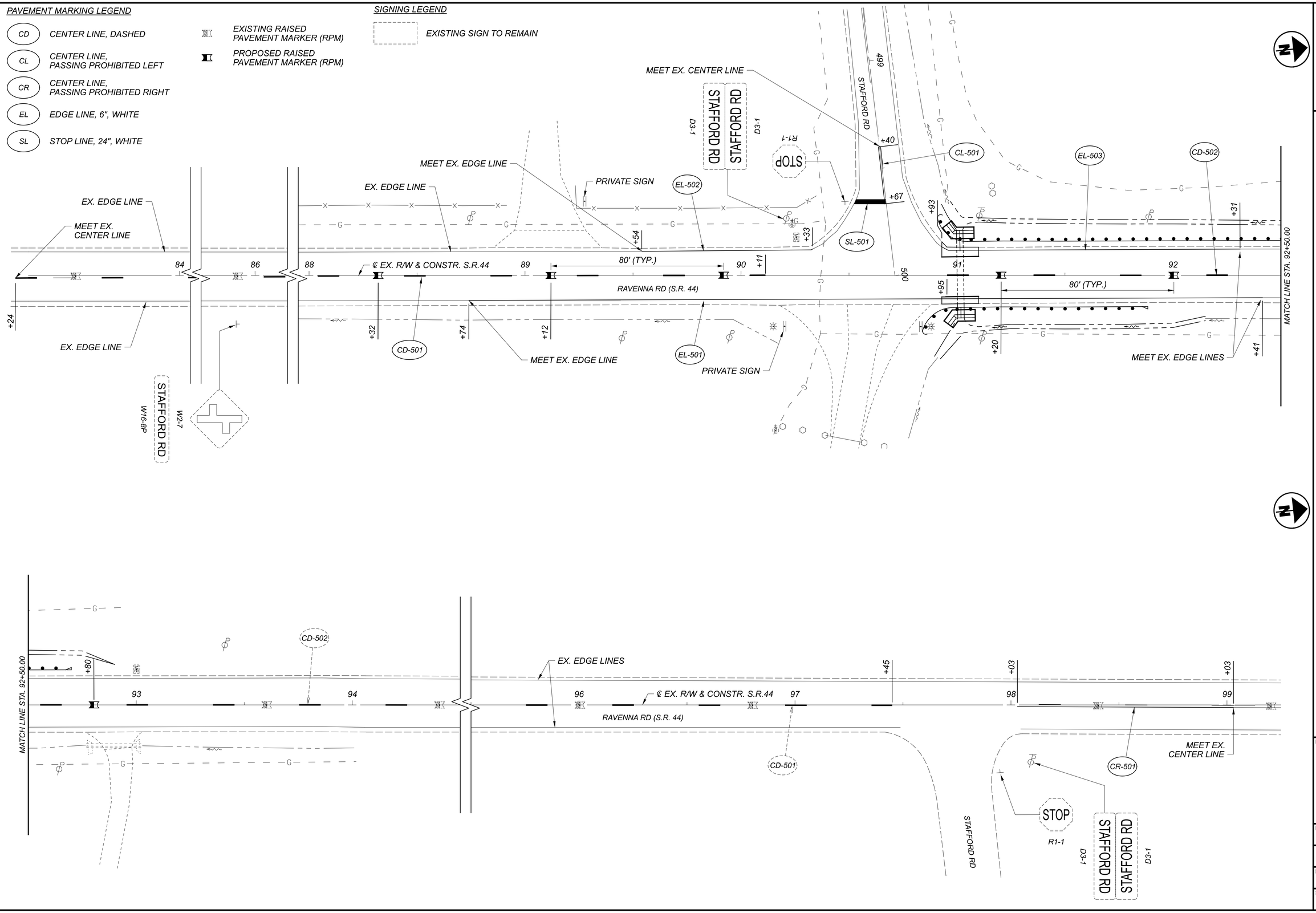

HORIZONTAL SCALE IN FEET 0 10 20 40

TRAFFIC CONTROL PLAN
GEA-44-4.52

D12-CU-FY2024

MODEL: CLX_RW_I - Plan | PAPERSIZE: 34x22 (in.) DATE: 3/26/2025 TIME: 4:30:18 PM USER: scook
E:\ODOT\21-0012I-010 ODOT D-12 Culvert Replacement 112947\112947\400-Engineering\Traffic\Sheets\112947_TP501.dgn

DESIGN AGENCY
Environmental Design Group, LLC
ARCHITECTURE • ENGINEERING • PLANNING
350 SALLIE ST. • FAIRBORN, OH 45324
P: 937.429.1151 • F: 937.429.1159
WWW.ENVIRONMENTALDESIGNGROUP.COM

DESIGNER	MSD
REVIEWER	SAC 12/29/23
PROJECT ID	112947
SHEET	P.74
TOTAL	86

PAVEMENT MARKING LEGEND

CS — CENTER LINE, YELLOW, DOUBLE SOLID

EL — EDGE LINE, 6", WHITE

EXISTING RAISED PAVEMENT MARKER (RPM)

PROPOSED RAISED PAVEMENT MARKER (RPM)

SIGNING LEGEND

EXISTING SIGN TO REMAIN

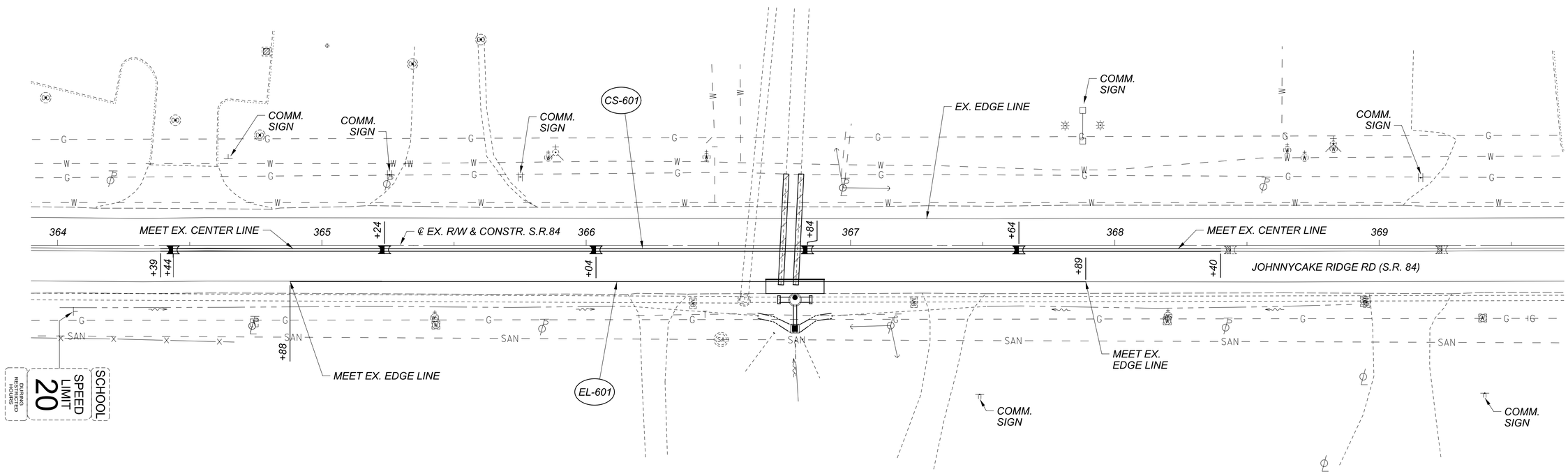

HORIZONTAL SCALE IN FEET
0 10 20 40

TRAFFIC CONTROL PLAN
LAK-84-14.25

DESIGN AGENCY
Environmental Design Group
AKRON | CLEVELAND | COLUMBUS
330.434.1175 | FAX 330.434.4331
2929 S. ARLINGTON ROAD, AKRON, OHIO 44312
W W W . ENVIRONMENTALDESIGNGROUP.COM

DESIGNER	MSD
REVIEWER	SAC 12/29/23
PROJECT ID	112947
SHEET	P.75
TOTAL	86

D12-CU-FY2024

MODEL: CLX_RW_1 - Plan | PAPERSIZE: 34x22 (in.) DATE: 3/26/2025 TIME: 4:30:23 PM USER: scook
E:\ODOT\21-0012I-010 ODOT D-12 Culvert Replacement\112947\400-Engineering\Traffic\Sheets\112947_TP601.dgn

PROJECT DESCRIPTION

RESOURCE INTERNATIONAL, INC. (RII) HAS COMPLETED STRUCTURE FOUNDATION EXPLORATION PERFORMED FOR THE REPLACEMENT OF THE EXISTING CULVERT STRUCTURE, CUY-90-29.92, LOCATED UNDER I-90 IN CUYAHOGA COUNTY, OHIO. THE PROPOSED CULVERT IS A 42-INCH DIAMETER, TYPE B CONDUIT WITH A TOTAL LENGTH OF 294 FEET. ADDITIONALLY, AVAILABLE PLANS INDICATE THAT A HEADWALL STRUCTURE WILL BE CONSTRUCTED AT THE OUTLET OF THE PROPOSED CONDUIT. BASED ON THE AVAILABLE INFORMATION, INVERT ELEVATIONS OF THE PROPOSED CONDUIT ARE 645.07 FEET MSL AND 643.50 FEET MEAN SEA LEVEL (MSL) AT INLET AND OUTLET, RESPECTIVELY. RII UNDERSTANDS THAT THE PROPOSED CULVERT IS PLANNED TO BE INSTALLED VIA BORE OR JACK.

THE EXPLORATION WAS PERFORMED WITHIN GENERAL ACCORDANCE OF THE OHIO DEPARTMENT OF TRANSPORTATION'S (ODOT) SPECIFICATIONS FOR GEOTECHNICAL EXPLORATIONS (SGE), DATED JULY 2022.

HISTORIC RECORDS

HISTORIC BORINGS ALONG THE EXISTING I-90 ALIGNMENT, FROM THE CONSTRUCTION PLANS FOR CUY-90-29.85 (DATED 03/21/01), ARE PRESENTED ON THIS SOIL PROFILE. TWO (2) BORINGS, DESIGNATED AT S-19 AND S-20, WERE OBTAINED FROM THESE HISTORIC EXPLORATIONS.

GEOLOGY

PHYSIOGRAPHICALLY, THE SUBJECT SITE LIES WITHIN THE GLACIATED REGION KNOWN AS ERIE LAKE PLAIN OF THE HURON-ERIE LAKE PLAINS. ERIE LAKE PLAIN CONSISTS OF AN ICE-AGE LAKE BASIN SEPARATED FROM MODERN LAKE ERIE BY SHORELINE CLIFFS, WITH MAJOR STREAMS IN DEEP GORGES. THE ERIE LAKE PLAIN CONSIST OF PLEISTOCENE-AGE SAND, SILT, CLAY AND WAVE-PLANED TILL. ACCORDING TO THE UNITED STATES DEPARTMENT OF AGRICULTURE, NATURAL RESOURCE CONSERVATION SERVICE SOILS MAPS, THE SURFICIAL SOILS WITHIN THE PROJECT SITE ARE DESCRIBED AS UDORTHENTS, LOAMY (UA) WITH 0 TO 6 PERCENT SLOPES.

BASED ON OHIO DEPARTMENT OF NATURAL RESOURCES (ODNR) BEDROCK GEOLOGY MAPS, THE BEDROCK WITHIN THE PROJECT SITE IS IDENTIFIED AS DEVONIAN-AGE OHIO SHALE. THE OHIO SHALE CONSISTS OF BROWNISH BLACK TO GREENISH GRAY CARBONACEOUS SHALE AND SILTSTONE WITH CARBONATE AND SIDERITE CONCRETIONS, WITH AN ORIGIN OF MARINE TO MARGINAL MARINE DEPOSITIONAL ENVIRONMENT. THIS BEDROCK GENERALLY TURNS BROWN UPON WEATHERING. THE THICKNESS OF OHIO SHALE RANGES FROM 250 TO MORE THAN 500 FEET.

BASED ON ODNR BEDROCK TOPOGRAPHY MAPS, THE BEDROCK SURFACE ELEVATION IN THE VICINITY OF THE PROJECT SITE IS APPROXIMATELY AROUND 650 FEET MSL CORRESPONDING TO APPROXIMATELY 0 TO 32 FEET BELOW THE EXISTING GRADE WITHIN THE PROJECT SITE.

RECONNAISSANCE

FIELD RECONNAISSANCE WAS COMPLETED BY PERSONNEL FROM RII ON SEPTEMBER 16, 2022. AREA IS RELATIVELY LOW TOPOGRAPHICALLY WITH I-90 ELEVATED APPROXIMATLEY 70 FEET ABOVE THE PROPOSED STRUCTURE. THE PROJECT IS LOCATED UNDER I-90 IN CUYAHOGA COUNTY, THE ADJACENT LAND USAGE IS A MIX OF COMMERCIAL AND OPEN GRASSY FIELDS. THE PAVEMENT ON I-90 APPEARS TO BE IN GOOD CONDITION.

SUBSURFACE EXPLORATION

BETWEEN SEPTEMBER 19 AND 21, 2022, A TOTAL OF THREE (3) STRUCTURE BORINGS, DESIGNATED AS B-001-0-22, B-002-0-22 AND B-003-0-22, WERE PERFORMED FOR THE PROJECT. ALL THREE (3) BORINGS WERE PERFORMED FOR THE PROPOSED CULVERT REPLACEMENT. THE BORINGS WERE DRILLED WITH DIEDRICH D-50 ALL-TERRAIN VEHICLE (ATV) DRILL RIG, UTILIZING 3.25 INCH INSIDE DIAMETER HOLLOW STEM AUGERS TO ADVANCE THE BORINGS THROUGH THE SOIL. DISTURBED SAMPLES WERE COLLECTED IN ACCORDANCE WITH STANDARD PENETRATION TESTING (SPT) (AASHTO T206) AT 2.5-FOOT INTERVALS WITHIN THE OVERBURDEN SOILS. THE HAMMER UTILIZED IN DIEDRICH D-50 WAS CALIBRATED ON MARCH 21, 2022 AND HAD ENERGY RATIO OF 86.4 PERCENT. THE BORINGS WERE ADVANCED INTO BEDROCK AND SAMPLED (AASHTO T225) USING AN N SERIES WIRELINE CORE BARREL, WATER METHOD.

EXPLORATION FINDINGS

EACH BORING ENCOUNTERED BEDROCK AT DEPTHS RANGING FROM 5.5 FEET TO 35.5 FEET BELOW THE EXISTING GRADE CORRESPONDING TO ELEVATIONS RANGING FROM 644.7 TO 647.1 FEET MSL. THE AUGERED BEDROCK WAS DESCRIBED AS BROWN TO DARK GRAY, SEVERELY WEATHERED, VERY WEAK SHALE. ROCK CORING WAS PERFORMED IN EACH BORING. THE RECOVERED CORED ROCK SAMPLES WERE DESCRIBED AS DARK GRAY TO BLACK, HIGHLY TO SEVERELY WEATHERED, VERY WEAK TO WEAK SHALE BEDROCK. GROUNDWATER WAS NOT ENCOUNTERED DURING DRILLING IN ANY OF THE BORINGS PERFORMED FOR THIS INVESTIGATION.

BENEATH THE SURFICIAL MATERIALS, BORINGS ENCOUNTERED COHESIVE SOILS EXTENDING TO THE BEDROCK SURFACE. THE ENCOUNTERED COHESIVE SOILS WERE DESCRIBED AS BROWN TO GRAY SANDY SILT, SILT AND CLAY, SILTY CLAY, AND CLAY SOILS (ODOT A-4A, A6A, A6B, A-7-6) WITH VARYING AMOUNTS OF SAND AND GRAVEL.

THE SHEAR STRENGTH AND CONSISTENCY OF THE COHESIVE SOILS ARE PRIMARILY DERIVED FROM THE HAND PENETROMETER VALUES (HP). HOWEVER, WHERE THE HP TEST COULD NOT BE PERFORMED IN COHESIVE SOIL SAMPLES, THE SPT-N60 VALUE WAS UTILIZED TO DETERMINE CONSISTENCY. THE COHESIVE SOILS ENCOUNTERED EXHIBITED HP VALUES RANGING FROM STIFF (1.0 HP 2.0 TSF) TO VERY STIFF (2.0 HP 4.0 TSF). HP TESTING COULD NOT BE PERFORMED ON FEW SAMPLES FROM BORING B-001-0-22 AND B-002-0-22 AND, THEREFORE SPT-N60 VALUES WERE UTILIZED TO DETERMINE CONSISTENCY. THE UNCONFINED COMPRESSIVE STRENGTH OF THE COHESIVE SOIL SAMPLES TESTED, OBTAINED FROM THE HAND PENETROMETER, RANGED FROM 1.75 TO 4.0 TSF. THE SPT-N60 VALUES DETERMINED WITHIN THE COHESIVE SOILS RANGED FROM 13 TO 53 BLOWS PER FOOT (BPF).

MOISTURE CONTENTS OF THE COHESIVE SOIL SAMPLES TESTED RANGED FROM 10 TO 35 PERCENT. THE NATURAL MOISTURE CONTENTS OF THE COHESIVE SOIL SAMPLES TESTED FOR PLASTICITY RANGED FROM 5 PERCENT ABOVE TO 9 PERCENT BELOW THEIR CORRESPONDING PLASTIC LIMITS. THESE SOILS, ON WHICH PLASTIC INDEX TESTS WERE PERFORMED, EXHIBITED NATURAL MOISTURE CONTENTS RANGING FROM SIGNIFICANTLY ABOVE TO MODERATELY BELOW THEIR ESTIMATED OPTIMUM MOISTURE LEVELS.

LEGEND

DESCRIPTION	ODOT CLASS	CLASSIFIED MECH./VISUAL	
SANDY SILT	A-4a	1	4
SILT AND CLAY	A-6a	1	3
SILTY CLAY	A-6b	1	0
CLAY	A-7-6	3	5
	TOTAL	6	12
(ROCK) SHALE	VISUAL		
PAVEMENT OR BASE = X = APPROXIMATE THICKNESS	VISUAL		
SOD AND TOPSOIL = X = APPROXIMATE THICKNESS	VISUAL		

BORING LOCATION - PLAN VIEW.

HISTORIC BORING LOCATION - PLAN VIEW

DRIVE SAMPLE AND/OR ROCK CORE BORING PLOTTED TO VERTICAL SCALE ONLY. HORIZONTAL BAR INDICATES A CHANGE IN STRATIGRAPHY.

WC INDICATES WATER CONTENT IN PERCENT.

N_{60} INDICATES STANDARD PENETRATION RESISTANCE NORMALIZED TO 60% DRILL ROD ENERGY RATIO.

X/Y/Z NUMBER OF BLOWS FOR STANDARD PENETRATION TEST (SPT):
X= NUMBER OF BLOWS FOR FIRST 6 INCHES.
Y= NUMBER OF BLOWS FOR SECOND 6 INCHES.
Z= NUMBER OF BLOWS FOR THIRD 6 INCHES.

SS INDICATES A SPLIT SPOON SAMPLE.

NQ "N" SERIES ROCK CORE BARREL OF "Q" WIRELINE BIT SIZE.

Qu INDICATES UNCONFINED COMPRESSION TEST, ASTM D7012.

Sc INDICATES POINT LOAD STRENGTH VALUE, ASTM D5731.

TR INDICATES TOP OF ROCK ELEVATION.

SPECIFICATIONS

THIS GEOTECHNICAL EXPLORATION WAS PERFORMED IN ACCORDANCE WITH THE STATE OF OHIO, DEPARTMENT OF TRANSPORTATION, OFFICE OF GEOTECHNICAL ENGINEERING, SPECIFICATIONS FOR GEOTECHNICAL EXPLORATIONS, DATED JULY 2021.

AVAILABLE INFORMATION

THE SOIL, BEDROCK, AND GROUNDWATER INFORMATION COLLECTED FOR THIS SUBSURFACE EXPLORATION THAT CAN BE CONVENIENTLY DISPLAYED ON THE SOIL PROFILE SHEETS HAS BEEN PRESENTED. GEOTECHNICAL REPORTS, IF PREPARED, ARE AVAILABLE FOR REVIEW ON THE OFFICE OF CONTRACT SALES WEBSITE.

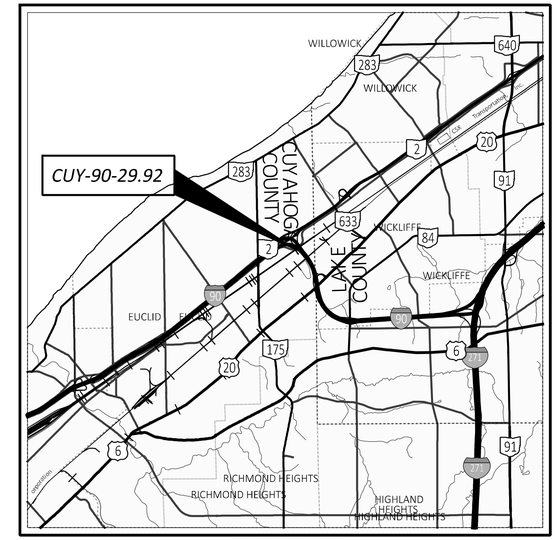

LOCATION MAP

SCALE IN MILES

0 1 2 3 4

N

PARTICLE SIZE DEFINITIONS

BOULDERS	12" – 3"	COBBLES	3" – 2.0 mm	GRAVEL	2.0 mm – 0.42 mm (No. 10 SIEVE)	COARSE SAND	0.42 mm – 0.074 mm (No. 40 SIEVE)	FINE SAND	0.074 mm – 0.005 mm (No. 200 SIEVE)	SILT	0.005 mm –	CLAY

BEDROCK TEST SUMMARY					
BORING NO.	SAMPLE	SAMPLE ELEVATION (FT MSL)	DEPTH (FT)	Qu (PSI)	Sc (PSI)
B-001-0-22	NQ2-2	633.0	18.8	554	-
B-002-0-22	NQ2-2	632.0	49.9	784	-
B-003-0-22	NQ2-2	627.7	22.5	-	489

RECON. - BS 09/16/22
DRILLING - TG, MJ 09/19/22 TO 09/21/22
DRAWN - JS 03/01/23
REVIEWED - DK 03/01/23

STRUCTURE FOUNDATION EXPLORATION
CULVERT CUY-90-29.92

DESIGN AGENCY
RESOURCE INTERNATIONAL Rii
6350 PRESIDENTIAL GATEWAY
COLUMBUS, OHIO 43231
(614) 825-4949

DESIGNER	JAS
REVIEWER	DEK 03-01-23
PROJECT ID	112947
SUBSET	1
TOTAL	11
SHEET	P.76
TOTAL	86

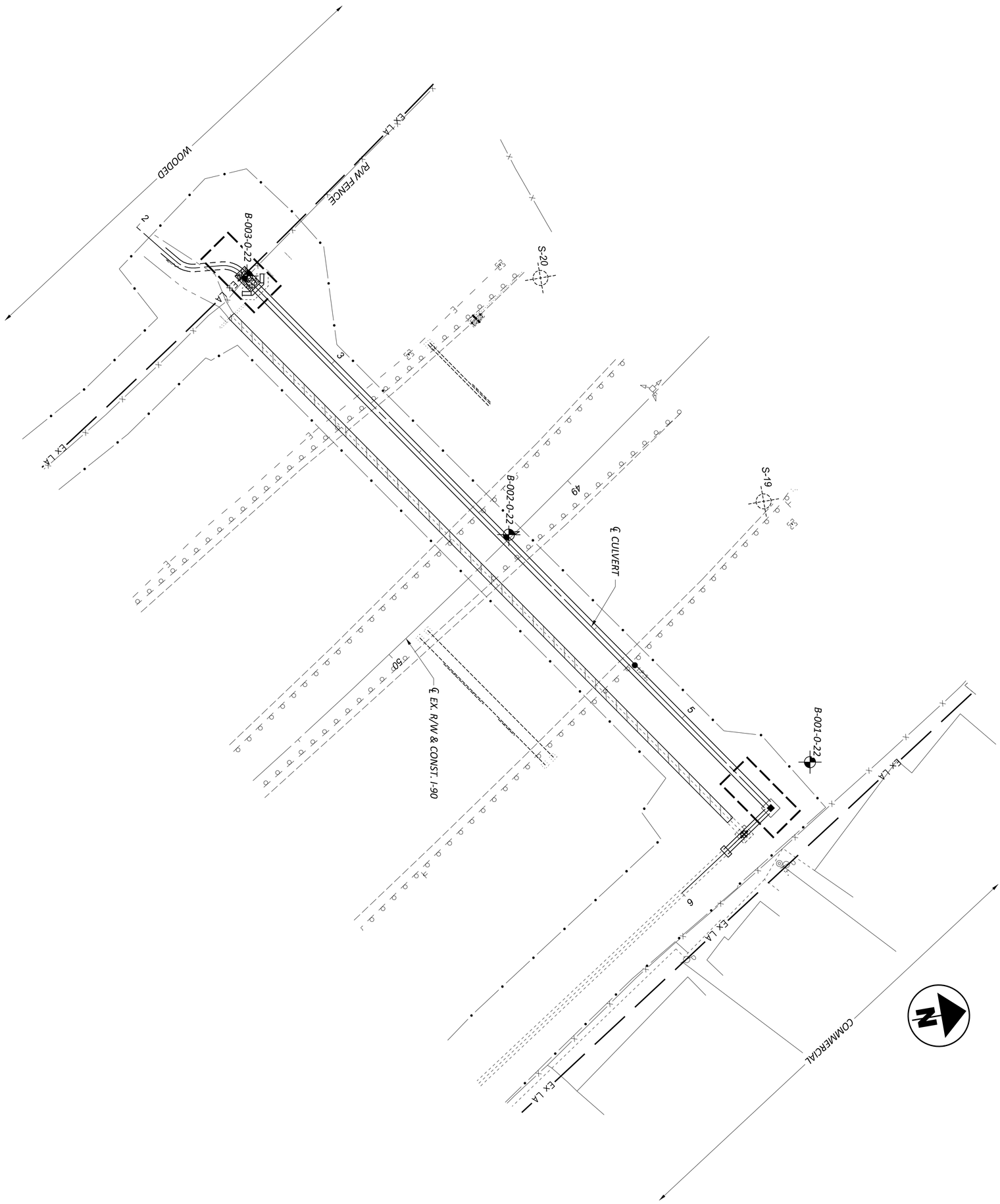

DESIGN AGENCY: ODOT OLDCE	REVIEWER: DEK 03-01-23	SUBSET: 2 / TOTAL: 11	SHEET: P.77 / TOTAL: 86
6560 PRESIDENTIAL GATEWAY COLUMBUS, OHIO 43231 (614) 892-4949	PROJECT ID: 112947		
	DESIGNER: JAS		

GEOTECHNICAL PROFILE - CULVERT
CULVERT CUY-90-29.92

HORIZONTAL SCALE IN FEET
0 10
5 20

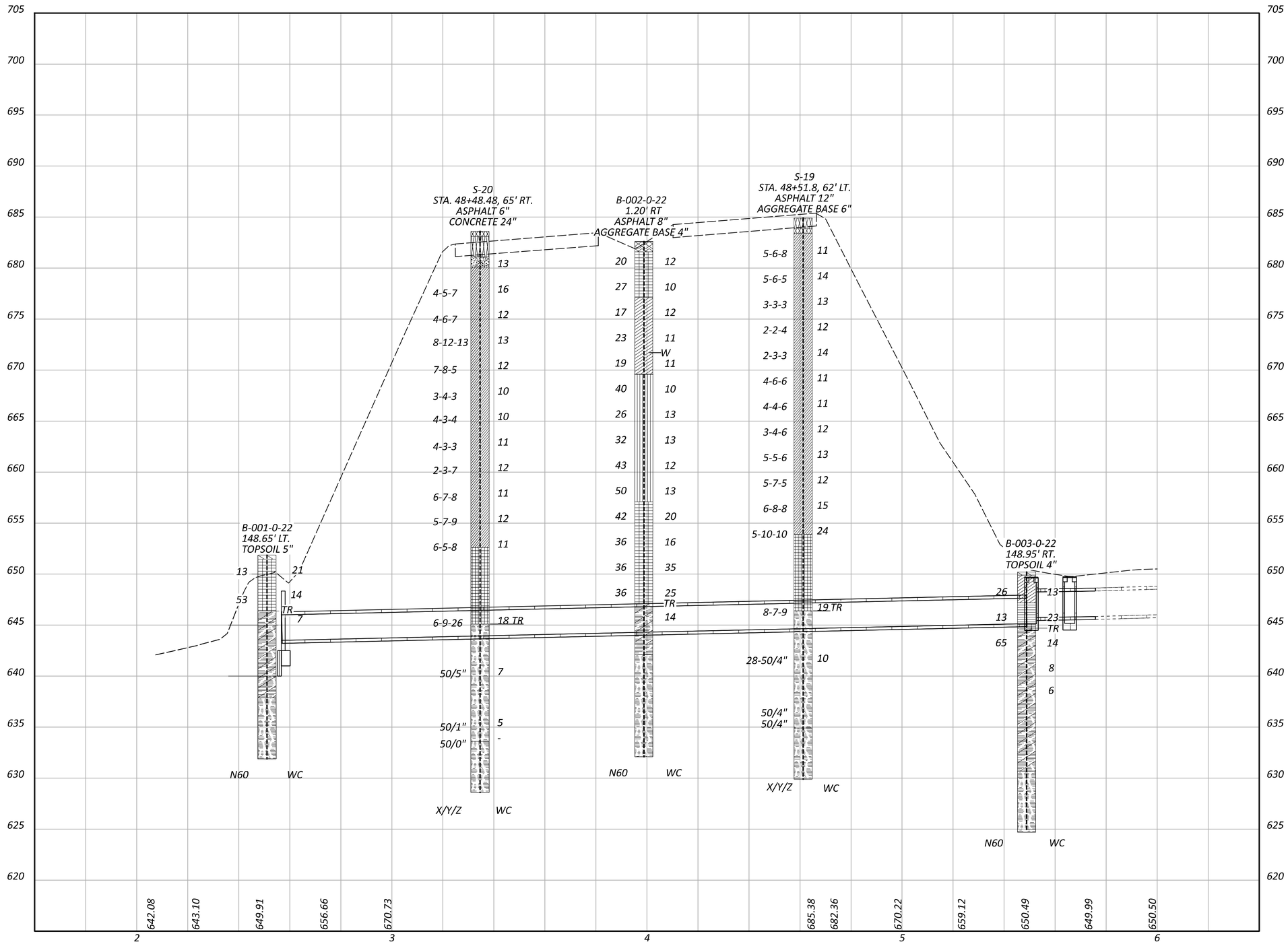

HORIZONTAL SCALE IN FEET
0 5 10 20

GEOTECHNICAL PROFILE - CULVERT
CULVERT CUY-90-29.92

DESIGN AGENCY
RESOURCE INTERNATIONAL
6350 PRESIDENTIAL GATEWAY
COLUMBUS, OHIO 43231
(614) 823-4949

DESIGNER	JAS
REVIEWER	DEK 03-01-23
PROJECT ID	112947
SUBSET	3
TOTAL	11
SHEET	P.78
TOTAL	86

D12-CU-FY2004

MODEL: BLP_I90-29.93 - Plan 4 PAPERSIZE: 17x11 (in.) DATE: 12/28/2023 TIME: 9:46:26 AM USER: juans
G:\Design Connect Projects\2022\M-22-029 ODOT VAR D12\112947\400-Engineering\Geotechnical\Sheets\112947_JF101.dgn

RESOURCE INTERNATIONAL, INC.
Engineering Consultants

6350 Presidential Gatew. Columbus, OH 43231 Phone (614) 823-4949
9885 Rockside Road Cleveland, OH 44125 Phone (216) 573-0955
4480 Lake Forest Drive Cincinnati, Ohio 45242 Phone (513) 769-6998

Unconfined Compressive Strength of Intact Rock Core Specimens

(ASTM D 7012-14)

Project: CUY-90-29.92 Culvert Replacement
Rii Project No.: N-22-029
Date of Testing: 10/26/2022
Test Performed by: KL

Rock Description: Dark Gray SHALE
Rock Formation: Devonian-age

Boring No.:	B-001-0-22		Average Length:	4.149	in
Sample No:	RC-2		Average Diameter:	1.998	in
Depth (ft):	18.8	feet	Length to diameter ratio:	2.077	
Moisture condition:	as received		Cross Sectional Area:	3.135	in^2
Sample Mass:	565.53	grams	Volume:	0.0075	ft^3
Testing Temperature:	21	°C	Unit Weight (sample specimen)*:	165.62	lbs/ft3
Rate of Loading:	5.0	lbs/sec	Failure Load:	1,738	lbs
Testing Time:	347	sec	Axial Strain at Failure:	0.0386	in/in
(Rate 2-15 min			Compressive Strength:	554	psi

Sample Preparation: Per ASTM D4543

**Actual test sample used for unit weight prior to testing.*

Unconfined Compression Test

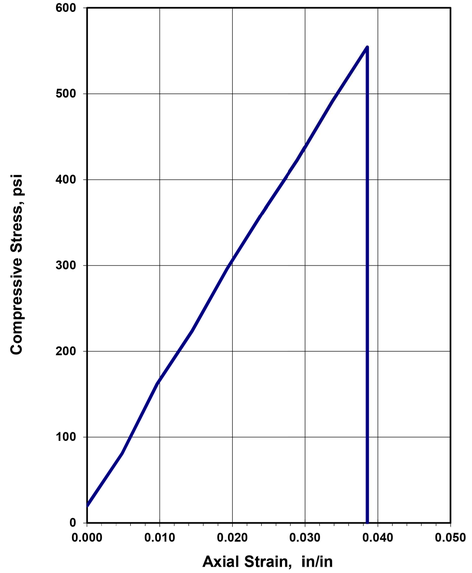

Before Testing

After Failure

REMARKS: Broken at bedding line

RESOURCE INTERNATIONAL, INC.
Engineering Consultants

6350 Presidential Gatew. Columbus, OH 43231 Phone (614) 823-4949
9885 Rockside Road Cleveland, OH 44125 Phone (216) 573-0955
4480 Lake Forest Drive Cincinnati, Ohio 45242 Phone (513) 769-6998

Unconfined Compressive Strength of Intact Rock Core Specimens

(ASTM D 7012-14)

Project: CUY-90-29.92 Culvert Replacement
Rii Project No.: N-22-029
Date of Testing: 10/26/2022
Test Performed by: KL

Rock Description: Black SHALE
Rock Formation: Devonian-age

Boring No.:	B-002-0-22		Average Length:	4.159	in
Sample No:	RC-3		Average Diameter:	1.999	in
Depth (ft):	49.9	feet	Length to diameter ratio:	2.081	
Moisture condition:	as received		Cross Sectional Area:	3.138	in^2
Sample Mass:	552.32	grams	Volume:	0.0076	ft^3
Testing Temperature:	21	°C	Unit Weight (sample specimen)*:	161.20	lbs/ft3
Rate of Loading:	7.1	lbs/sec	Failure Load:	2,459	lbs
Testing Time:	347	sec	Axial Strain at Failure:	0.0421	in/in
(Rate 2-15 min			Compressive Strength:	784	psi

Sample Preparation: Per ASTM D4543

**Actual test sample used for unit weight prior to testing.*

Unconfined Compression Test

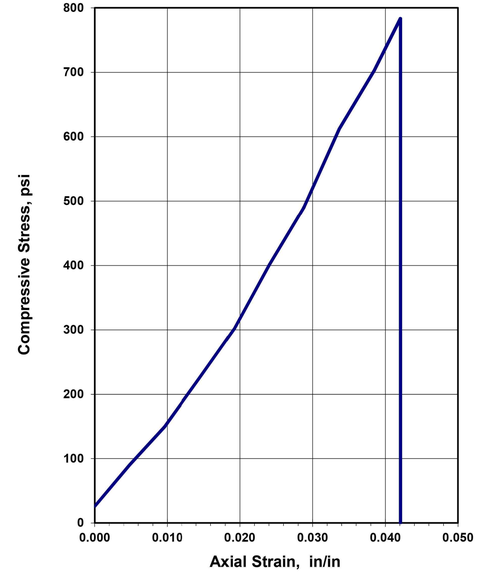

Before Testing

After Failure

REMARKS:

GEOTECHNICAL PROFILE - CULVERT
CULVERT CUY-90-29.92
UNCONFINED COMPRESSION RESULTS, B-001-0-22 & B-002-0-22

DESIGN AGENCY
RESOURCE INTERNATIONAL

DESIGNER	JAS
REVIEWER	DEK 03-01-23
PROJECT ID	112947
SUBSET	4
TOTAL	11
SHEET	P.79
TOTAL	86

GEA-700-1.72

MODEL: Sheet PAPERSIZE: 17x11 (in.) DATE: 12/28/2023 TIME: 9:46:35 AM USER: juans
G:\Design Connect Projects\2022\N-22-029 ODOT VAR D12\112947\400-Engineering\Geotechnical\Sheets\112947_ZL101.dgn

RESOURCE INTERNATIONAL, INC.
Engineering Consultants

6350 Presidential Gatew.
Columbus, OH 43231
Phone (614) 823-4949

9885 Rockside Road
Cleveland, OH 44125
Phone (216) 573-0955

4480 Lake Forest Drive
Cincinnati, Ohio 45242
Phone (513) 769-6998

Point Load Strength Index
of Rock Specimens
(ASTM D 5731-08)

Project: CUY-90-29.92 Culvert Replacement
Project No.: N-22-029
Date of Testing: 10/26/2022
Test Performed by: KL

Rock Description: Black Shale

Boring No.: B-003-0-22
Sample No: RC-2
Moisture condition: As received

Test Apparatus: Forney-LA 0080
Serial Number: A125/AZ/0014
Date of Calibration: 4/11/2022

Sample No.	Test Type	Depth (ft)	Width (mm)	Diameter (mm)	Load (N)	D_e^2 (mm^2)	D_e (mm)	F	Is (MPa)	$Is_{(50)}$ (MPa)	σ_c (MPa)
1	a ⊥	21.0-21.6	50.2	24.4	494	1,556	39.4	0.90	0.32	0.29	3.81
2	a ⊥	21.0-21.6	50.2	28.6	374	1,831	42.8	0.93	0.20	0.19	2.45
3	a ⊥	21.0-21.6	50.2	23.1	347	1,475	38.4	0.89	0.24	0.21	2.82
4	a ⊥	21.0-21.6	50.2	21.8	512	1,392	37.3	0.88	0.37	0.32	4.41

STATISTICS	
Mean $Is_{(50)}$ ⊥	0.25 MPa (37 psi)
Mean $Is_{(50)}$ ‖	
$Ia_{(50)}$	

Specific Specimen Shape:
d = diametrical
a = axial
b = block
i = irregular lump
⊥ = perpendicular to bedding plane
‖ = parallel to bedding plane

Estimated Unaxial Compression, σ_c = K*Is
K = 12
*Per Section 206.1.3 of 2011 ODOT Rock Slope Design Guide

Mean σ_c = 3.37 MPa (0,489 psi)

Remarks:

GEOTECHNICAL PROFILE - CULVERT
CULVERT CUY-90-29.92
UNCONFINED COMPRESSION RESULTS, B-001-0-22 & B-002-0-22

DESIGN AGENCY
RESOURCE INTERNATIONAL

DESIGNER
JAS
REVIEWER
DEK 03-01-23
PROJECT ID
112947
SUBSET 5 | TOTAL 11
SHEET P.80 | TOTAL 86

GEA-700-1.72
MODEL: Sheet PAPERSIZE: 17x11 (in.) DATE: 12/28/2023 TIME: 9:46:45 AM USER: juans
G:\Design Connect Projects\2022\N-22-029 ODOT VAR D12\112947\400-Engineering\Geotechnical\Sheets\112947_ZL102.dgn

RESOURCE INTERNATIONAL, INC.

PROJECT: CUY - 90 - 29.92	DRILLING FIRM / OPERATOR: RII / TG	DRILL RIG: DIEDRICH D-50 (# 313)	STATION / OFFSET: 49+10.57 / 148.65' LT
TYPE: STRUCTURE	SAMPLING FIRM / LOGGER: RII / MJ	HAMMER: AUTOMATIC	ALIGNMENT: EXISTING I-90
PID: 112947 SFN: 1812421	DRILLING METHOD: 3.25" HSA / NQ2	CALIBRATION DATE: 3/21/22	ELEVATION: 651.8 (MSL) EOB: 20.0 ft.
START: 9/20/22 END: 9/21/22	SAMPLING METHOD: SPT	ENERGY RATIO (%): 86.4	LAT / LONG: 41.601766, -81.489600

EXPLORATION ID B-001-0-22

PAGE 1 OF 1

MATERIAL DESCRIPTION AND NOTES	ELEV. 651.8	DEPTHS	SPT/ RQD	N_{60}	REC (%)	SAMPLE ID	HP (tsf)	GR	CS	FS	SI	CL	LL	PL	PI	WC	ODOT CLASS (GI)	HOLE SEALED
0.4'- TOPSOIL (5.0")	651.4																	
VERY STIFF TO HARD, BROWN AND GRAY **CLAY**, AND SILT, LITTLE COARSE TO FINE SAND, TRACE FINE GRAVEL, MOIST TO DAMP.		1	3 4 5	13	83	SS-1	4.00	-	-	-	-	-	-	-	-	21	A-7-6 (V)	
		2																
		3																
		4	5 14 23	53	56	SS-2	-	3	6	6	42	43	42	23	19	14	A-7-6 (12)	
	646.3	5 TR																
SHALE : DARK GRAY, SEVERELY WEATHERED.		6	22 34 50/3"	-	100	SS-3	-	-	-	-	-	-	-	-	-	7	Rock (V)	
		7																
		8																
		9	19 50/6"	-	100	SS-4	-	-	-	-	-	-	-	-	-	-	Rock (V)	
		10																
		11	42 50/4"	-	100	SS-5	-	-	-	-	-	-	-	-	-	-	Rock (V)	
		12																
		13																
	637.8	14	50/5"	-	100	SS-6	-	-	-	-	-	-	-	-	-	-	Rock (V)	
SHALE : DARK GRAY, MODERATELY WEATHERED, VERY WEAK, VERY THIN TO THIN BEDDED, FISSILE, HIGHLY TO MODERATELY FRACTURED, TIGHT TO NARROW APERATURES, SLIGHTLY ROUGH, BLOCKY/DISTURBED/SEAMY, FAIR.		15	0		83	NQ2-1											CORE	
		16																
		17																
		18	48		100	NQ2-2											CORE	
-Qu @ 18.8' = 554 PSI		19																
	631.8	20 EOB																

NOTES: GROUNDWATER WAS NOT ENCOUNTERED INITIALLY DURING DRILLING AND COULD NOT BE DETERMINED AFTER DRILLING DUE TO THE USE OF WASH WATER DURING THE ROCK CORING PROCESS.

ABANDONMENT METHODS, MATERIALS, QUANTITIES: PUMPED 23.5 LBS CEMENT / 25 LBS BENTONITE POWDER / 10 GAL WATER .

GEOTECHNICAL PROFILE - CULVERT
CULVERT CUY-90-29.92
BORING LOGS B-001-0-22

Project: CUY-90-29.92 Culvert Replacement	**Location:** Cuyahoga County, Ohio	**Project No.:** Rii. N-22-029

Photo No.
1

Boring:
B-001-0-22

RC-1: 14.0'-15.0'
REC (%):83%
RQD (%):0%

RC-2: 15.0'-20.0'
REC (%):100%
RQD (%):48.0%

GEOTECHNICAL PROFILE - CULVERT
CULVERT CUY-90-29.92
BORING ROCK CORE PHOTO FOR B-001-0-22

MODEL: Sheet PAPERSIZE: 17x11 (in.) DATE: 12/28/2023 TIME: 9:47:14 AM USER: juans
G:\Design Connect Projects\2022\N-22-029 ODOT VAR D12\112947\400-Engineering\Geotechnical\Sheets\112947_ZL104.dgn

RESOURCE INTERNATIONAL, INC.

PROJECT: CUY - 90 - 29.92	DRILLING FIRM / OPERATOR: RII / TG	DRILL RIG: DIEDRICH D-50 (# 313)	STATION / OFFSET: 49+32.16 / 1.2' RT	EXPLORATION ID B-002-0-22
TYPE: STRUCTURE	SAMPLING FIRM / LOGGER: RII / MJ	HAMMER: AUTOMATIC	ALIGNMENT: EXISTING I-90	
PID: 112947 SFN: 1812421	DRILLING METHOD: 3.25" HSA / NQ2	CALIBRATION DATE: 3/21/22	ELEVATION: 682.6 (MSL) EOB: 50.5 ft.	PAGE 1 OF 1
START: 9/19/22 END: 9/20/22	SAMPLING METHOD: SPT	ENERGY RATIO (%): 86.4	LAT / LONG: 41.601521, -81.490049	

MATERIAL DESCRIPTION AND NOTES	ELEV. 682.6	DEPTHS	SPT/RQD	N_{60}	REC (%)	SAMPLE ID	HP (tsf)	GR	CS	FS	SI	CL	LL	PL	PI	WC	ODOT CLASS (GI)	HOLE SEALED
0.7'- ASPHALT (8.0")	681.9																	
0.3'- AGGREGATE BASE (4.0")	681.6																	
VERY STIFF, GRAY TO BROWN **CLAY**, AND SILT, LITTLE COARSE TO FINE SAND, TRACE FINE GRAVEL, DAMP.		1–2	4 6 8	20	72	SS-1	3.50	-	-	-	-	-	-	-	-	12	A-7-6 (V)	
		3																
		4–5	7 8 11	27	78	SS-2	-	-	-	-	-	-	-	-	-	10	A-7-6 (V)	
	677.1																	
VERY STIFF, GRAY TO BROWN **SILT AND CLAY**, LITTLE COARSE TO FINE GRAVEL, TRACE COARSE TO FINE SAND, DAMP.		6–7	3 5 7	17	83	SS-3	3.50	17	2	6	53	22	33	20	13	12	A-6a (9)	
		8																
		9–10	6 8 8	23	100	SS-4	3.50	-	-	-	-	-	-	-	-	11	A-6a (V)	
		W 11–12	5 6 7	19	100	SS-5	3.00	-	-	-	-	-	-	-	-	11	A-6a (V)	
	669.6																	
VERY STIFF TO HARD, GRAY TO BROWN **SANDY SILT**, AND COARSE TO FINE GRAVEL, TRACE COARSE TO FINE SAND, DAMP.		13																
		14–15	11 14 14	40	100	SS-6	-	52	2	5	31	10	29	19	10	10	A-4a (1)	
		16																
		17	5 7 11	26	100	SS-7	-	-	-	-	-	-	-	-	-	13	A-4a (V)	
		18																
		19–20	9 11 11	32	100	SS-8	3.50	-	-	-	-	-	-	-	-	13	A-4a (V)	
		21																
		22	8 14 16	43	100	SS-9	3.75	-	-	-	-	-	-	-	-	12	A-4a (V)	
		23																
		24–25	14 17 18	50	89	SS-10	4.00	-	-	-	-	-	-	-	-	13	A-4a (V)	
	657.1																	
VERY STIFF, GRAY TO BROWN **CLAY**, "AND" SILT, TRACE TO LITTLE COARSE TO FINE SAND, TRACE FINE GRAVEL, MOIST.		26																
		27	8 14 15	42	100	SS-11	4.00	3	1	3	49	44	46	22	24	20	A-7-6 (15)	
		28																
		29–30	10 13 12	36	100	SS-12	3.75	-	-	-	-	-	-	-	-	16	A-7-6 (V)	
		31																
-ORGANICS PRESENT IN SS-13		32	6 12 13	36	100	SS-13	3.00	-	-	-	-	-	-	-	-	35	A-7-6 (V)	
		33																
		34–35	9 12 13	36	100	SS-14	2.25	4	1	12	34	49	49	23	26	25	A-7-6 (16)	
	647.1	TR																
SHALE : BROWN TO GRAY, SEVERELY WEATHERED.		36–37	23 47 50/3"	-	100	SS-15	-	-	-	-	-	-	-	-	-	14	Rock (V)	
		38																
	643.1	39	46 50/3"	-	100	SS-16	-	-	-	-	-	-	-	-	-	-	Rock (V)	
POSSIBLE SHALE	642.1	40	0		0	NQ2-1											CORE	
SHALE : DARK GRAY, HIGHLY TO SEVERELY WEATHERED, VERY WEAK TO WEAK, VERY THIN TO THIN BEDDED, FISSILE, FRACTURED TO MODERATELY FRACTURED, NARROW TO OPEN APERATURES, SLIGHTLY ROUGH, BLOCKY/DISTURBED/SEAMY, POOR. -RUBBILIZED from 40.5'-41.0' -THIN CLAY SEAMS THROUGHOUT		41–45	54		87	NQ2-2											CORE	
-Qu @ 49.9' = 784 PSI		46–50	40		100	NQ2-3											CORE	
	632.1	EOB																

NOTES: GROUNDWATER SEEPAGE WAS ENCOUNTERED @ 11.0', HOWEVER GROUNDWATER COULD NOT BE DETERMINED AFTER DRILLING DUE TO THE USE OF WASH WATER DURING THE ROCK CORING PROCESS.

ABANDONMENT METHODS, MATERIALS, QUANTITIES: PUMPED 23.5 LBS CEMENT / 25 LBS BENTONITE POWDER / 10 GAL WATER .

000-23 RII STA ODOT BORING LOG (11X17) - OH DOT.GDT - 2/24/23 12:35 - U:\GI8\PROJECTS\2022\N-22-029.GPJ

SHEET	TOTAL	SUBSET	TOTAL	PROJECT ID	REVIEWER	DESIGNER	DESIGN AGENCY
P.83	86	8	11	112947	DEK 03-01-23	JAS	RESOURCE INTERNATIONAL

GEOTECHNICAL PROFILE - CULVERT
CULVERT CUY-90-29.92
BORING LOG B-002-0-22

Project Name: CUY-90-29.92 Culvert Replacement	**Location:** Cuyahoga County, Ohio	**Project No.:** Rii. N-22-029

Photo No.
2

Boring:
B-002-0-22

RC-1: 39.5'-40.5'
REC (%):0%
RQD (%):0%

RC-2: 40.5'-45.5'
REC (%):87%
RQD (%):54%

RC-3: 45.5'-50.5'
REC (%):100%
RQD (%):40%

SHEET	TOTAL	SUBSET	TOTAL	PROJECT ID	REVIEWER	DESIGNER	DESIGN AGENCY
P.84	86	9	11	112947	DEK 03-01-23	JAS	Rii RESOURCE INTERNATIONAL

GEOTECHNICAL PROFILE - CULVERT
CULVERT CUY-90-29.92
BORING ROCK CORE PHOTO FOR B-002-0-22

MODEL: Sheet PAPERSIZE: 17x11 (in.) DATE: 12/28/2023 TIME: 9:47:39 AM USER: juans
G:\Design Connect Projects\2022\N-22-029 ODOT VAR D12\112947\400-Engineering\Geotechnical\Sheets\112947_ZL105.dgn

RESOURCE INTERNATIONAL, INC.

PROJECT: CUY - 90 - 29.92	DRILLING FIRM / OPERATOR: RII / TG	DRILL RIG: DIEDRICH D-50 (# 313)	STATION / OFFSET: 49+32.41 / 140.95' RT
TYPE: STRUCTURE	SAMPLING FIRM / LOGGER: RII / MJ	HAMMER: AUTOMATIC	ALIGNMENT: EXISTING I-90
PID: 112947 SFN: 1812421	DRILLING METHOD: 3.25" HSA / NQ2	CALIBRATION DATE: 3/21/22	ELEVATION: 650.2 (MSL) EOB: 25.5 ft.
START: 9/20/22 END: 9/20/22	SAMPLING METHOD: SPT	ENERGY RATIO (%): 86.4	LAT / LONG: 41.301290, -81.490493

EXPLORATION ID B-003-0-22

PAGE 1 OF 1

MATERIAL DESCRIPTION AND NOTES	ELEV. 650.2	DEPTHS	SPT/ RQD	N_{60}	REC (%)	SAMPLE ID	HP (tsf)	GR	CS	FS	SI	CL	LL	PL	PI	WC	ODOT CLASS (GI)	HOLE SEALED
0.3'- TOPSOIL (4.0")	649.9																	
VERY STIFF, BROWN **SILT AND CLAY**, LITTLE FINE GRAVEL, LITTLE COARSE TO FINE SAND, DAMP.	647.2	1–2	6 8 10	26	89	SS-1	4.00	-	-	-	-	-	-	-	-	13	A-6a (V)	
STIFF, BROWN TO GRAY **SILTY CLAY**, SOME SILT, SOME COARSE TO FINE SAND, VERY MOIST.	644.7	4–5	3 4 5	13	94	SS-2	1.75	0	0	22	35	43	38	18	20	23	A-6b (12)	
SHALE : BROWN TO GRAY, SEVERELY WEATHERED.		TR																
		7	10 17 28	65	100	SS-3	-	-	-	-	-	-	-	-	-	14	Rock (V)	
		9	20 35 50/5"	-	100	SS-4	-	-	-	-	-	-	-	-	-	8	Rock (V)	
		11	43 50/4"	-	100	SS-5	-	-	-	-	-	-	-	-	-	6	Rock (V)	
		14	41 50/3"	-	100	SS-6	-	-	-	-	-	-	-	-	-	-	Rock (V)	
		16	50/4"	-	100	SS-7	-	-	-	-	-	-	-	-	-	-	Rock (V)	
	630.7	19	50/3"	-	100	SS-8	-	-	-	-	-	-	-	-	-	-	Rock (V)	
SHALE : DARK GRAY TO BLACK, HIGHLY WEATHERED, VERY WEAK, VERY THIN TO THIN BEDDED, FISSILE, HIGHLY FRACTURED TO MODERATELY FRACTURED, NARROW TO OPEN APERATURES, SLIGHTLY ROUGH, BLOCKY/SEAMY/DISTURBED, FAIR. -ESTIMATED UNAXIAL COMPRESSION = 489 PSI		20	51		71	NQ2-1											CORE	
-THIN CLAY SEAMS ENCOUNTERED AT VARIOUS DEPTHS BETWEEN 22.0'-25.0'	624.7	23	20		90	NQ2-2											CORE	
		EOB																

NOTES: GROUNDWATER WAS NOT ENCOUNTERED INITIALLY DURING DRILLING AND COULD NOT BE DETERMINED AFTER DRILLING DUE TO THE USE OF WASH WATER DURING THE ROCK CORING PROCESS.

ABANDONMENT METHODS, MATERIALS, QUANTITIES: PUMPED 23.5 LBS CEMENT / 25 LBS BENTONITE POWDER / 10 GAL WATER .

000-23 RII STA ODOT BORING LOG (11X17) - OH DOT.GDT - 2/24/23 12:35 - U:\GI8\PROJECTS\2022\N-22-029.GPJ

GEOTECHNICAL PROFILE - CULVERT
CULVERT CUY-90-29.92
BORING LOGS B-003-0-22

Project Name: CUY-90-29.92 Culvert Replacement	**Location:** Cuyahoga County, Ohio	**Project No.:** Rii. N-22-029

Photo No.
3

Boring:
B-003-0-22

RC-1: 19.5'-20.5'
REC (%): 71%
RQD (%): 51%

RC-2: 20.5'-25.5'
REC (%): 90%
RQD (%): 20%

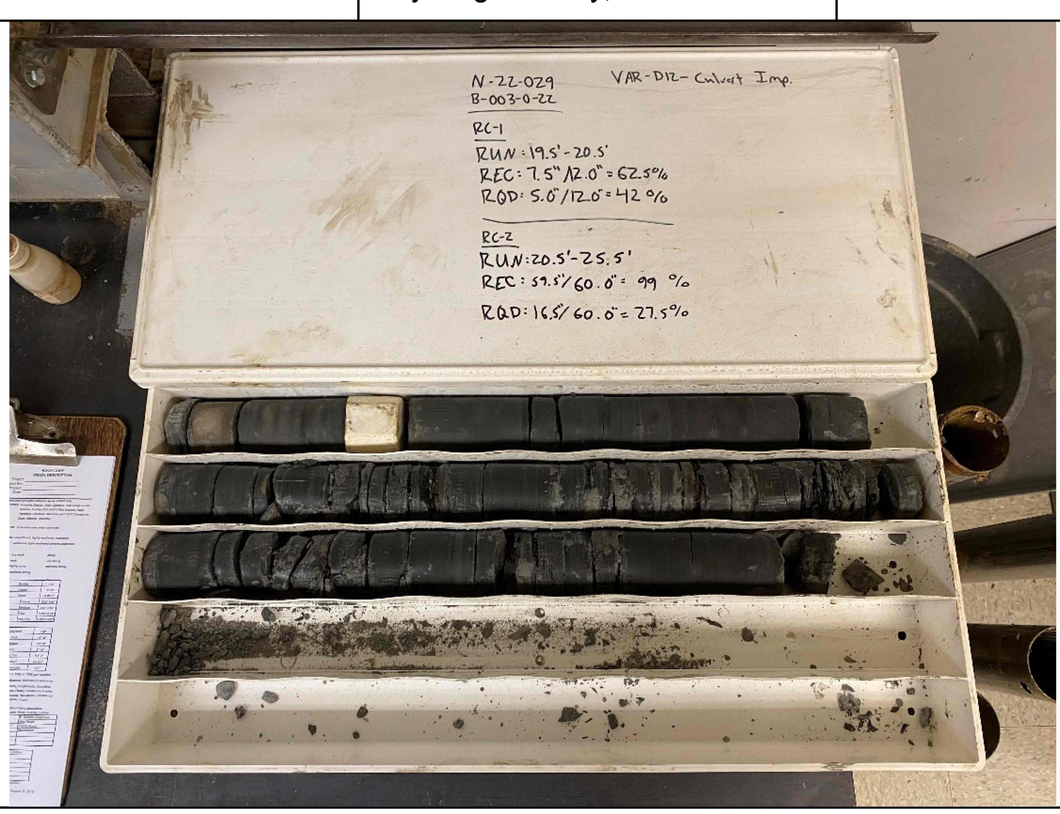

SHEET	TOTAL	SUBSET	TOTAL	PROJECT ID	REVIEWER	DESIGNER	DESIGN AGENCY
P 86	86	11	11	112947	DEK 03-01-23	JAS	Rii RESOURCE INTERNATIONAL

GEOTECHNICAL PROFILE - CULVERT
CULVERT CUY-90-29.92
BORING ROCK CORE PHOTO FOR B-003-0-22