MAINTENANCE OF TRAFFIC SIGNAL INSTALLATIONS (CONT'D)

B) TEMPORARY CONTROLLER OR TRAFFIC SIGNALS
IN ADDITION TO 614.10, THE FOLLOWING SHALL APPLY:

IF THE CONTRACTOR IS REQUIRED TO ERECT AND/OR INSTALL ANY TEMPORARY TRAFFIC CONTROL DEVICE OR TEMPORARY SIGNAL/SUPPORT POLE THAT IS NOT SPECIFIED IN THESE PLANS, THEN THE CONTRACTOR SHALL SUBMIT THE DESIGN CHANGE TO THE CITY OF COLUMBUS, FOR APPROVAL PRIOR TO THE INSTALLATION. THE CITY ALSO RESERVES THE RIGHT TO MAKE, OR HAVE THE CONTRACTOR MAKE, CHANGES TO THE TRAFFIC SIGNAL OPERATION.

IF A TEMPORARY CONTROLLER AND/OR A TS1 CABINET ASSEMBLY IS REQUIRED AT ANY INTERSECTION, THEN THE EQUIPMENT SHALL MEET NEMA STANDARDS TS1-1989 OR TS2-1998 (TYPE 2) AND SHALL BE APPROVED BY THE CITY OF COLUMBUS.

C) EXISTING TRAFFIC SIGNAL DEVICES
THE CITY OF COLUMBUS, (ELECTRONICS MAINTENANCE SHOP, 614-645-7933), SHALL PERFORM ROUTINE MAINTENANCE ON ALL EXISTING CABINET ASSEMBLY ITEMS ONLY. THE GENERAL CONTRACTOR SHALL BE RESPONSIBLE FOR THE MAINTENANCE OF ALL OTHER EXISTING TRAFFIC SIGNAL DEVICES ONCE ANY PROJECT SIGNAL WORK HAS STARTED. IF, IN THE COURSE OF WORK, THE GENERAL CONTRACTOR OR ANY PROJECT SUB-CONTRACTOR CAUSES DAMAGE TO ANY EXISTING TRAFFIC SIGNAL DEVICE OTHER THAN THE CABINET ASSEMBLY, THEN THE CONTRACTOR, AT THE CONTRACTOR'S COST, SHALL REPAIR AND/OR REPLACE THE DAMAGED DEVICE TO THE SATISFACTION OF THE CITY. DAMAGE TO THE CABINET ASSEMBLY BY ANY PROJECT CONTRACTOR SHALL BE REPAIRED BY THE CITY AND BILLED TO THE GENERAL CONTRACTOR.

ALL COSTS RESULTING FROM THE ABOVE REQUIREMENTS, EXCEPT AS NOTED, SHALL BE CONSIDERED TO BE INCLUDED IN THE LUMP SUM BID PRICE FOR ITEM 614 MAINTAINING TRAFFIC, AS PER PLAN.

WORKSITE TRAFFIC SUPERVISOR

SUBJECT TO APPROVAL OF THE ENGINEER, THE CONTRACTOR SHALL EMPLOY AND IDENTIFY (SOMEONE OTHER THAN THE SUPERINTENDENT) A PREQUALIFIED WORKSITE TRAFFIC SUPERVISOR (WTS) BEFORE STARTING WORK IN THE FIELD. THE WTS SHALL BE TRAINED IN ACCORDANCE WITH C&MS 614.03, SHALL HAVE SUCCESSFULLY COMPLETED ODOT ADMINISTERED WTS TESTING (AND RE-TESTING WHEN APPLICABLE) AND BE LISTED ON THE ODOT PREQUALIFIED WTS ROSTER. PREQUALIFICATION EXPIRES EVERY 5 YEARS. RE-TESTING SHALL BE SUCCESSFULLY REPEATED EVERY 5 YEARS TO REMAIN PREQUALIFIED.

THE NAME OF THE PREQUALIFIED WTS AND RELATED 24-HOUR CONTACT INFORMATION SHALL BE PROVIDED TO THE ENGINEER AT THE PRECONSTRUCTION CONFERENCE. IF THE DESIGNATED WTS WILL NOT BE AVAILABLE FULL TIME (24/7), THE CONTRACTOR MAY DESIGNATE AN ALTERNATE (SECONDARY) WTS TO BE AVAILABLE WHEN THE PRIMARY IS OFF DUTY; HOWEVER THE PRIMARY WTS SHALL REMAIN THE POINT OF CONTACT AT ALL TIMES. ANY ALTERNATE (SECONDARY) WTS IS SUBJECT TO THE SAME TRAINING, REQUALIFICATION AND OTHER REQUIREMENTS OUTLINED WITHIN THIS PLAN NOTE. AT ALL TIMES THE ENGINEER, OR ENGINEER'S REPRESENTATIVES, MUST BE INFORMED OF WHO THE PRIMARY WTS (AND SECONDARY WTS, IF APPLICABLE) IS AT THE CURRENT TIME.

THE WTS POSITION HAS THE PRIMARY RESPONSIBILITY OF IMPLEMENTING THE TRAFFIC MANAGEMENT PLAN (TMP), MONITORING THE SAFETY AND MOBILITY OF THE ENTIRE WORK ZONE, AND CORRECTING TEMPORARY TRAFFIC CONTROL (TTC) DEFICIENCIES FOR THE ENTIRE WORK ZONE. THE WTS, AND ALTERNATE WTS WHEN ON DUTY, SHALL HAVE SUFFICIENT AUTHORITY TO EFFECTIVELY CARRY OUT THE IDENTIFIED WTS RESPONSIBILITIES AND DUTIES. THE DUTIES OF THE WTS ARE AS FOLLOWS:

WORKSITE TRAFFIC SUPERVISOR - CONT'D

1. BE AVAILABLE ON A 24-HOUR PER DAY BASIS.
2. BE ON SITE FOR ALL EMERGENCY TTC NEEDS WITHIN ONE HOUR OF NOTIFICATION BY POLICE OR PROJECT STAFF, AND EFFECT CORRECTIVE MEASURES IMMEDIATELY ON EXISTING WORK ZONE TTC DEVICES.
3. ATTEND PRECONSTRUCTION MEETING AND ALL PROJECT MEETINGS WHERE TTC MANAGEMENT IS DISCUSSED.
4. BE AVAILABLE ON SITE FOR OTHER MEETINGS OR DISCUSSIONS WITH THE ENGINEER UPON REQUEST.
5. BE AWARE OF ALL EXISTING AND PROPOSED TTC OPERATIONS OF THE CONTRACTOR, SUBCONTRACTORS AND SUPPLIERS, AND ENSURE COORDINATION OCCURS BETWEEN THEM TO ELIMINATE CONFLICTING TEMPORARY AND/OR PERMANENT TRAFFIC CONTROL.
6. COORDINATE PROJECT ACTIVITIES WITH ALL LAW ENFORCEMENT OFFICERS (LEOS). THE WTS SHALL ALSO BE THE MAIN CONTACT PERSON WITH THE LEOS WHILE LEOS ARE ON THE PROJECT.
7. COORDINATE AND FACILITATE MEETINGS WITH ODOT PERSONNEL, LEOS AND OTHER APPLICABLE ENTITIES BEFORE EACH PLAN PHASE SWITCH TO DISCUSS THE WORK ZONE TTC FOR IMPLEMENTING THE PHASE SWITCH. SUBMIT A WRITTEN DETAIL OF MOT OPERATIONS AND SCHEDULE OF EVENTS TO IMPLEMENT THE SWITCH BETWEEN PHASE PLANS TO THE ENGINEER 5 CALENDAR DAYS PRIOR TO THIS MEETING.
8. BE PRESENT, ON SITE FOR, AND INVOLVED WITH, EACH TTC SET UP/TAKE DOWN AND EACH PHASE CHANGE IN ACCORDANCE WITH CMS 614.03.
9. ON A CONTINUAL BASIS ENSURE THAT THE TTC ZONE AND ALL RELATED DEVICES ARE INSTALLED, MAINTAINED AND REMOVED IN COMPLIANCE WITH THE CONTRACT DOCUMENTS.
10. ON A CONTINUAL BASIS FACILITATE CORRECTIVE ACTION(S) NECESSARY TO BRING DEFICIENT TTC ZONES AND ALL RELATED DEVICES INTO COMPLIANCE WITH CONTRACT DOCUMENTS IN THE TIMEFRAME DETERMINED BY THE ENGINEER.
11. INSPECT, EVALUATE, PROPOSE NECESSARY MODIFICATIONS TO, AND DOCUMENT THE EFFECTIVENESS OF, THE TTC DEVICES AND TRAFFIC OPERATIONS ON A DAILY BASIS (7 DAYS A WEEK). IN ADDITION, PERFORM ONE WEEKLY NIGHT INSPECTION OF THE WORK ZONE SETUP FOR DAYTIME WORK OPERATIONS; AND ONE DAYTIME INSPECTION PER WEEK FOR NIGHTTIME PROJECTS. THIS SHALL INCLUDE (BUT NOT BE LIMITED TO) DOCUMENTATION ON THE FOLLOWING PROJECT EVENTS:
    A. INITIAL TTC SETUP (DAY AND NIGHT REVIEW).
    B. DAILY TTC SETUP AND REMOVAL.
    C. WHEN CONSTRUCTION STAGING CAUSES A CHANGE IN THE TTC SETUP.
    D. CRASH OCCURRENCES WITHIN THE CONSTRUCTION AREA AND WITHIN THE INFLUENCE AREA(S) APPROACHING THE WORK ZONE.
    E. REMOVAL OF TTC DEVICES AT THE END OF A PHASE OR PROJECT.
    F. ALL OTHER EMERGENCY TTC NEEDS.
12. COMPLETE THE DEPARTMENT APPROVED LONG TERM INSPECTION FORM (CA-D-8) AFTER EACH INSPECTION AS REQUIRED IN #11 AND SUBMIT IT TO THE ENGINEER THE FOLLOWING WORKDAY. THESE REPORTS SHALL INCLUDE A CHECKLIST OF ALL TTC MAINTENANCE ITEMS TO BE REVIEWED. A COPY OF THE FORM WILL BE PROVIDED AT THE PRE-CONSTRUCTION MEETING. ANY DEFICIENCIES OBSERVED SHALL BE NOTED, ALONG WITH RECOMMENDED OR COMPLETED CORRECTIVE ACTIONS AND THE DATES BY WHICH SUCH CORRECTIONS WERE, OR WILL BE, COMPLETED. A COPY OF THE CURRENT CA-D-8 DOCUMENT CAN BE FOUND ON THE OFFICE OF CONSTRUCTION ADMINISTRATION'S INSPECTION FORMS WEBSITE.
13. HAVE COPIES OF THE ODOT TEMPORARY TRAFFIC CONTROL MANUAL AND CONTRACT DOCUMENTS AVAILABLE AT ALL TIMES ON THE PROJECT.

THE DEPARTMENT WILL DEDUCT:
A. THE PRORATED DAILY AMOUNT OF ITEM 614 MAINTAINING TRAFFIC FOR ANY DAY IN WHICH THE WTS FAILS TO PERFORM THE DUTIES SET FORTH ABOVE. THE PRORATED DAILY AMOUNT WILL BE EQUAL TO THE ORIGINAL BID AMOUNT FOR ITEM 614 MAINTAINING TRAFFIC DIVIDED BY THE DIFFERENCE BETWEEN THE ORIGINAL COMPLETION DATE AND THE FIRST DAY OF WORK, IN CALENDAR DAYS.
B. 1% OF THE ORIGINAL BID AMOUNT FOR ITEM 614 MAINTAINING TRAFFIC FOR ANY DAY THAT A TTC ISSUE IS IDENTIFIED IN THE FIELD AND IS NOT CORRECTED IN THE GIVEN TIMEFRAME PER THE ENGINEER. DEDUCTION B SHALL NOT APPLY TO SITUATIONS COVERED BY DEDUCTION C.
C. 1% OF THE ORIGINAL BID AMOUNT FOR ITEM 614 MAINTAINING TRAFFIC FOR ANY DAY THAT A LANE OR RAMP IS BLOCKED (FULLY OR PARTIALLY) WITHOUT TTC, AS DETERMINED BY THE ENGINEER. THIS DEDUCTION SHALL BE IN ADDITION TO ANY OTHER DISINCENTIVES ESTABLISHED FOR UNAUTHORIZED LANE USE.

FOR DAYS IN WHICH MORE THAN ONE DEDUCTION LISTED ABOVE OCCUR, THE HIGHEST DEDUCTION AMOUNT WILL APPLY.

WORKSITE TRAFFIC SUPERVISOR - CONT'D

IF THREE OR MORE TOTAL DAYS RESULT IN TTC ISSUES DESCRIBED IN DEDUCTION B OR C ABOVE, THE PRIMARY WTS SHALL BE IMMEDIATELY REMOVED FROM THE WORK IN ACCORDANCE WITH C&MS 108.05. UPON REMOVAL THE ENGINEER SHALL NOTIFY ODOT CENTRAL OFFICE (WTSPREQUALIFICATION@DOT.OHIO.GOV) TO REGISTER A REMOVAL AGAINST THE STATEWIDE PREQUALIFICATION FOR THE PRIMARY WTS. THREE REMOVALS SHALL CAUSE STATEWIDE DISQUALIFICATION FOR ANY PREVIOUSLY PREQUALIFIED WTS.

PAYMENT FOR THE ABOVE REQUIREMENTS, RESPONSIBILITIES AND DUTIES SHALL BE INCLUDED IN THE LUMP SUM PRICE BID FOR ITEM 614, MAINTAINING TRAFFIC.

TRAFFIC INCIDENT MANAGEMENT (TIM) DURING MOT

OHIO TIM IS OHIO'S TRAFFIC INCIDENT MANAGEMENT PROGRAM WHICH IS COMMITTED TO MAINTAINING THE SAFE AND EFFECTIVE FLOW OF TRAFFIC DURING EMERGENCIES AS TO PREVENT FURTHER DAMAGE, INJURY OR UNDUE DELAY OF THE MOTORING PUBLIC. IN ADDITION TO COMPLYING WITH THE PROVISION OF OMUTCD CHAPTER 6I, CONTROL OF TRAFFIC THROUGH TRAFFIC INCIDENT MANAGEMENT AREAS, THE CONTRACTOR SHALL ACTIVELY PARTICIPATE IN TIM PLANNING AND IMPLEMENTATION AS OUTLINED BELOW.

1. SUPERINTENDENT SHALL IDENTIFY THE INDIVIDUAL PERSONS ON THE PROJECT WHO WILL, OR MAY NEED TO, PERFORM THE DUTIES HEREIN. AT A MINIMUM, INCLUDE THE SUPERINTENDENT, FOREMEN AND SUPERVISORS (OR EQUIVALENT) AS WELL AS THE WORKSITE TRAFFIC SUPERVISOR (WTS; IF APPLICABLE TO THE PROJECT). THESE INDIVIDUALLY IDENTIFIED PERSONS SHALL COLLECTIVELY BE KNOWN AS CONTRACTOR TRAFFIC INCIDENT MANAGEMENT (TIM) CONTACTS. NOTIFY THE PROJECT ENGINEER OF THE CONTRACTOR TIM CONTACTS (ALONG WITH CONTACT INFORMATION FOR EACH) AT OR BEFORE THE PRECONSTRUCTION MEETING.

2. SUPERINTENDENT SHALL NOTIFY THE ENGINEER IMMEDIATELY IF ANY CONTRACTOR TIM CONTACT IS ADDED, REMOVED OR THE CONTACT INFORMATION CHANGES OVER THE COURSE OF THE PROJECT.

3. PRIOR THE FIRST DAY OF WORK IN THE FIELD, EACH CONTRACTOR TIM CONTACT ON THE PROJECT SHALL HAVE ATTENDED AND SUCCESSFULLY COMPLETED OHIO TIM TRAINING PROVIDED BY THE DEPARTMENT OR DESIGNEE. TRAINING INFORMATION CAN BE FOUND AT WWW.OHIOTIM.COM.

4. SUPERINTENDENT, AT A MINIMUM, SHALL ATTEND AND ACTIVELY PARTICIPATE IN A DEPARTMENT SCHEDULED TIM MEETING BEFORE CONSTRUCTION WORK BEGINS AND BEFORE EACH PHASE CHANGE. THESE MEETINGS WILL RESULT IN A DEPARTMENT ISSUED PROJECT SPECIFIC TRAFFIC INCIDENT MANAGEMENT PLAN (TIMP). AT THE TIM MEETINGS THE ATTENDING CONTRACTOR TIM CONTACTS SHALL:

A. COLLABORATE WITH ODOT AND SAFETY FORCES;
B. SHARE PROJECT SPECIFIC DETAILS THAT IMPACT TIM RESPONDERS; AND
C. RECOMMEND WAYS TO INCORPORATE NECESSARY EMERGENCY ACCESS AND OTHER TIM ELEMENTS FOR TIM RESPONDERS GIVEN PROJECT SPECIFIC WORK BEING COMPLETED AND PROJECT SPECIFIC PHASING.

5. CONTRACTOR TIM CONTACTS SHALL IMPLEMENT COMPONENTS OF THE RESULTING TIMP (SUCH AS APPROVED EMERGENCY INGRESS/EGRESS POINTS, ETC), AS DIRECTED BY THE ENGINEER IN ACCORDANCE WITH 109.05.

6. CONTRACTOR TIM CONTACTS SHALL PERFORM, AT A MINIMUM, THE FOLLOWING FUNCTIONS WHEN AN INCIDENT/CRASH OCCURS:

A. IF OBSERVED OR PRESENT WHEN OCCURS, CALL 911 AND THEN NOTIFY THE TRAFFIC MANAGEMENT CENTER (TMC) TO PROVIDE THE FOLLOWING:
 I. LOCATION, INCLUDING MILEPOST NUMBER AND DIRECTION OF TRAVEL
 II. NUMBER AND TYPE OF VEHICLES INVOLVED, IF KNOWN
 III. ESTIMATED EXTENT OF DAMAGE OR INJURY, IF KNOWN
 IV. ESTIMATED NUMBER OF PATIENTS INVOLVED, IF KNOWN
 V. ANY POTENTIAL HAZARDOUS CONDITIONS, IF KNOWN
 VI. THE PLACARD NUMBER ON ANY HAZARDOUS MATERIALS PLACARD FROM A SAFE DISTANCE, IF APPLICABLE AND VISIBLE
B. FOLLOWING AN INCIDENT/CRASH:
 I. INITIATE TRAFFIC MANAGEMENT/PROVIDE TEMPORARY TRAFFIC CONTROL AS INDICATED IN THE TIMP, AS DIRECTED BY THE ENGINEER IN ACCORDANCE WITH 109.05.
 II. RECOMMEND ROADWAY REPAIR NEEDS.
 III. PROVIDE REPAIR RESOURCES AND INITIATE REPAIRS, AS DIRECTED BY THE ENGINEER IN ACCORDANCE WITH 109.05.
 IV. ATTEND AND PARTICIPATE IN AN AFTER ACTION REVIEW (AAR).

TRAFFIC INCIDENT MANAGEMENT (TIM) DURING MOT (CONT'D)

ALL COSTS, UNLESS OTHERWISE SPECIFIED, RESULTING FROM THE ABOVE REQUIREMENTS SHALL BE CONSIDERED TO BE INCLUDED IN THE LUMP SUM PRICE FOR ITEM 614, MAINTAINING TRAFFIC. FAILURE TO PERFORM THE REQUIREMENTS OF THIS PLAN NOTE WILL RESULT IN A DAILY FINE OF 2% OF ITEM 614, MAINTAINING TRAFFIC AND MAY RESULT IN ONE OR MORE CONTRACTOR TIM CONTACTS BEING REMOVED FROM THE LIST OF OHIO TIM TRAINED INDIVIDUALS (AT THE SOLE DISCRETION OF THE OHIO TIM EXECUTIVE COMMITTEE). IN THE EVENT AN INDIVIDUAL IS REMOVED FROM THE OHIO TIM TRAINED LIST, THE INDIVIDUAL WILL BE REMOVED FROM CONTRACTOR TIM CONTACT RESPONSIBILITIES ON ALL PROJECTS.

ITEM 614 - WORK ZONE RAISED PAVEMENT MARKER, AS PER PLAN

WORK ZONE RAISED PAVEMENT MARKERS, AS PER PLAN, AND THEIR INSTALLATION SHALL CONFORM TO C&MS 614 OR C&MS 621 AS SPECIFIED HEREIN.

- RAISED PAVEMENT MARKERS IN USE DURING THE SNOW-PLOWING SEASON SHALL CONFORM TO 621.
- RAISED PAVEMENT MARKERS IN USE DURING THE NON-SNOW-PLOW SEASON SHALL CONFORM TO EITHER 614 OR TO 621.

THE SNOW-PLOWING SEASON SHALL RUN FROM OCTOBER 15 THROUGH APRIL 1.

IF PROJECT DELAYS, NOT THE FAULT OF ODOT, CAUSE THE WORK TO EXTEND INTO THE SNOW-PLOWING SEASON, THE CONTRACTOR SHALL BE RESPONSIBLE FOR REPLACING WORK ZONE RAISED PAVEMENT MARKERS (WZRPMS) CONFORMING TO C&MS 614, WITH RAISED PAVEMENT MARKERS CONFORMING TO 621, AS DETERMINED BY THE ENGINEER, AT THE CONTRACTOR'S EXPENSE.

THIS ITEM SHALL INCLUDE PURCHASE, INSTALLATION AND REMOVAL OF ITEM 614 WORK ZONE RAISED PAVEMENT MARKER, AS PER PLAN, INCLUDING FILLING OF ANY DEPRESSIONS CREATED IN THE PAVEMENT AS PER C&MS 621.08.

RESURFACING OF THE TRANSITION AREAS SHALL BE PERFORMED AT THE TIME THAT THE SURFACE COURSE IS BEING APPLIED TO THE ENTIRE PROJECT. PRIOR TO APPLICATION OF THE SURFACE COURSE ON THE PROJECT, THE EXISTING PAVEMENT WITHIN THE TRANSITION AREA SHALL BE REMOVED TO A DEPTH NECESSARY TO REACH THE LEVEL OF THE INTERMEDIATE COURSE OF THE PAVEMENT, AS DETERMINED BY THE ENGINEER.

PAYMENT FOR RESURFACING WITHIN THE TRANSITION AREA SHALL BE PAID FOR UNDER THE APPROPRIATE BID ITEMS FOR THE WORK REQUIRED, AS PROVIDED FOR IN THE PLANS.

AS PART OF THE SETTLEMENT BETWEEN ODOT AND KFC, THE PARTIES AGREE AS FOLLOWS:

A. DURING ALL TIME WHEN THE BRICE ROAD ENTRANCE DRIVE IS CLOSED BY THE CONSTRUCTION PROJECT, THE ODOT CONSTRUCTION ENGINEER SHALL PUT UP A SIMPLE SIGN NEAR THE BRICE ROAD ENTRANCE DRIVEWAY DIRECTING KFC CUSTOMERS TO USE SCARBOROUGH ROAD TO GET TO THE DRIVEWAY ENTRANCE AT THE REAR OF THE PROPERTY.
B. CONTRACTOR AND ODOT AGREES THAT IT WILL NOT STORE MATERIALS OR EQUIPMENT IN THE TEMPORARY EASEMENT AREA AND THAT CONSTRUCTION ACTIVITIES WILL ONLY OCCUR IN THE EXISTING RIGHT OF WAY AND IN THE NEW RIGHT OF WAY PARCEL.
C. CONTRACTOR SHALL PROVIDE 72 HOURS NOTICE TO ODOT CONSTRUCTION ENGINEER BEFORE CLOSURE OF THE KENTUCKY FRIED CHICKEN BRICE ROAD ENTRANCE. ODOT SHALL HAVE THE OBLIGATION TO PROVIDE 48 HOURS NOTICE TO KFC BEFORE THE BRICE ROAD ENTRANCE DRIVEWAY IS TEMPORARILY CLOSED. SUCH NOTICE SHALL BE PROVIDED TO MS. DOLLY POERSCH, KFC REAL ESTATE PORTFOLIO MANAGER, 1900 COLONEL SANDERS LANE, LOUISVILLE, KENTUCKY 40213 TELEPHONE: (502) 874-8264 E MAIL: DOLLY.POERSCH@YUM.COM.
D. CONTRACTOR AND ODOT SHALL CLOSE THE BRICE ROAD ENTRANCE DRIVEWAY FOR ONLY THAT TIME PERIOD AS IS NECESSARY TO COMPLETE ITS WORK.

CALCULATED JZM
CHECKED EMK

MAINTENANCE OF TRAFFIC NOTES

FRA-70-22.85

3646-E

P:\PR56140\FRA\98232\Design\MOT\Sheets\98232_MN001.dgn Sheet 2/20/2025 12:39:03 PM pryfogle

ITEM 614 SPECIAL - WORK ZONE TRAFFIC SIGNAL (CONTINUED)

ALL COSTS FOR THE ABOVE WORK SHALL BE INCLUDED IN THE PRICE BID FOR ITEM 614 SPECIAL - WORK ZONE TRAFFIC SIGNAL AND SHALL BE PER EACH INTERSECTION AT WHICH TEMPORARY SIGNALS OR MODIFICATIONS ARE INSTALLED. 8/27/21

DELINEATION OF PORTABLE AND PERMANENT BARRIER

BARRIER REFLECTORS AND OBJECT MARKERS SHALL BE INSTALLED ON ALL PORTABLE BARRIER (PB) USED FOR TRAFFIC CONTROL; AND, ON PERMANENT CONCRETE BARRIER (INCLUDING BRIDGE PARAPETS) LOCATED WITHIN 5 FEET OF THE EDGE OF THE ADJACENT TRAVEL LANE.

BARRIER REFLECTORS SHALL CONFORM TO C&MS 626, EXCEPT THAT THE SPACING SHALL BE AS PER TRAFFIC SCD MT-101.70. OBJECT MARKERS AND THEIR INSTALLATION SHALL CONFORM TO C&MS 614.03 AND SCD MT-101.70. WHEN THE PB CONTAINS GLARE SCREEN, ONE SET OF THREE VERTICAL STRIPES OF SHEETING SHALL BE CONSIDERED EQUIVALENT TO AN OBJECT MARKER, ONE-WAY.

INCREASED BARRIER DELINEATION, AS SPECIFIED HEREIN, SHALL BE INSTALLED ON ALL PB AND PERMANENT CONCRETE BARRIER LOCATED WITHIN 5 FEET OF THE EDGE OF THE TRAVELED LANE UNDER EITHER OF THE FOLLOWING CONDITIONS: ALONG TAPERS AND TRANSITION AREAS; OR ALONG CURVES (OUTSIDE ONLY) WITH DEGREE OF CURVATURE GREATER THAN OR EQUAL TO 3 DEGREES.

THE INCREASED BARRIER DELINEATION SHALL CONSIST OF EITHER DELINEATION PANELS OR THE TRIPLE STACKING OF WORK ZONE BARRIER REFLECTORS.

DELINEATION PANELS SHALL CONSIST OF PANELS OF DELINEATION, APPROXIMATELY 34 INCHES LONG AND 6 INCHES WIDE AND SHALL BE "CRIMPED." PANELS SHALL BE INSTALLED AND SPACED PER TRAFFIC SCD MT101.70.

TRIPLE-STACKED BARRIER REFLECTORS SHALL CONSIST OF ALIGNING THREE BARRIER REFLECTORS VERTICALLY, AT LOCATIONS WHERE A SINGLE BARRIER REFLECTOR WOULD BE OTHERWISE ATTACHED. THERE SHALL BE NO OPEN SPACE BETWEEN THE ADJACENT BARRIER REFLECTORS. THE TRIPLE-STACKED BARRIER REFLECTORS SHALL CONFORM TO C&MS 626, EXCEPT THAT THEY SHALL BE SPACED AND ALIGNED PER TRAFFIC SCD MT101.70.

THE FOLLOWING ESTIMATED QUANTITIES HAVE BEEN INCLUDED IN THE PLANS AND CARRIED TO THE GENERAL SUMMARY:

ITEM 614, BARRIER REFLECTOR, TYPE 1, ONE-WAY 1057 EACH
ITEM 614, OBJECT MARKER, ONE-WAY 2521 EACH
ITEM 614, BARRIER REFLECTOR, TYPE 2, ONE-WAY 567 EACH
ITEM 614, INCREASED BARRIER DELINEATION 46,996 FEET

PAYMENT SHALL BE FULL COMPENSATION FOR ALL MATERIAL, LABOR, INCIDENTALS AND EQUIPMENT NECESSARY FOR FURNISHING, INSTALLING, MAINTAINING AND REMOVING EACH OF THE ABOVE ITEMS.

ALONG RUNS OF INCREASED BARRIER DELINEATION WHERE THIS ITEM IS PROVIDED, THE QUANTITY SHALL BE MEASURED AS THE ENTIRE LENGTH OF THE RUN OF INCREASED BARRIER DELINEATION, INCLUDING THE SPACES BETWEEN THE INDIVIDUAL DELINEATION PANELS OR STACKS OF BARRIER REFLECTORS.

WORK ZONE MARKINGS

THE FOLLOWING ESTIMATED QUANTITIES HAVE BEEN CARRIED TO THE GENERAL SUMMARY FOR USE AT LOCATIONS IDENTIFIED BY THE ENGINEER FOR WORK ZONE PAVEMENT MARKINGS PER THE REQUIREMENTS OF C&MS 614.04 AND 614.11. THESE QUANTITIES HAVE BEEN PROVIDED AS A CONTINGENCY FOR PLACEMENT ON THE ASPHALT SURFACE COURSE PRIOR TO APPLICATION OF PERMANENT PAVEMENT MARKINGS.
ITEM 614, WORK ZONE LANE LINE, 4", CLASS III, 642 PAINT 2.98 MILE
ITEM 614, WORK ZONE LANE LINE, 6", CLASS III, 642 PAINT 5.83 MILE
ITEM 614, WORK ZONE EDGE LINE, 4", CLASS III, 642 PAINT 1.71 MILE
ITEM 614, WORK ZONE EDGE LINE, 6", CLASS III, 642 PAINT 10.94 MILE
ITEM 614, WORK ZONE CENTER LINE, CLASS III, 642 PAINT 0.17 MILE
ITEM 614, WORK ZONE CHANNELIZING LINE, 8", CLASS III, 642 PAINT 9,347 FEET
ITEM 614, WORK ZONE CHANNELIZING LINE, 12", CLASS III, 642 PAINT 14,809 FEET
ITEM 614, WORK ZONE DOTTED LINE, 6", CLASS III, 642 PAINT 7915 FEET
ITEM 614, WORK ZONE DOTTED LINE, 8", CLASS III, 642 PAINT 1411 FEET

DELINEATION OF TEMPORARY AND PERMANENT GUARDRAIL

BARRIER REFLECTORS SHALL BE INSTALLED ON ALL TEMPORARY GUARDRAIL USED FOR TRAFFIC CONTROL; AND, ON ALL PERMANENT GUARDRAIL LOCATED WITHIN 5 FEET OF THE EDGE OF THE ADJACENT TRAVEL LANE. BARRIER REFLECTORS SHALL CONFORM TO C&MS 626 AND THE SPACING SHALL BE APPROXIMATELY 50 FEET.

OBJECT MARKERS SHALL BE INSTALLED ON ALL TEMPORARY AND PERMANENT GUARDRAIL LOCATED WITHIN 5 FEET OF THE EDGE OF THE ADJACENT TRAVEL LANE. GUARDRAIL-MOUNTING OF OBJECT MARKERS SHALL BE MADE BY INSTALLING THE OBJECT MARKERS ON THE EXTENSION BLOCKS RATHER THAN DIRECTLY ONTO THE GUARDRAIL ITSELF. OBJECT MARKERS SHALL CONFORM TO C&MS 614.03 AND THE SPACING SHALL BE APPROXIMATELY 50 FEET WITH A 25 FOOT OFFSET FROM THE BARRIER REFLECTORS.

THE FOLLOWING ESTIMATED QUANTITIES HAVE BEEN INCLUDED IN THE PLANS AND CARRIED TO THE GENERAL SUMMARY:

ITEM 614, BARRIER REFLECTOR, TYPE 2, ONE-WAY 497 EACH
ITEM 614, OBJECT MARKER, ONE-WAY 1,394 EACH

PAYMENT SHALL BE FULL COMPENSATION FOR ALL MATERIAL, LABOR, INCIDENTALS AND EQUIPMENT NECESSARY FOR FURNISHING, INSTALLING, MAINTAINING AND REMOVING THE ABOVE ITEMS.

EARTHWORK FOR MAINTAINING TRAFFIC

THE FOLLOWING QUANTITIES HAVE BEEN INCLUDED IN THE PLAN FOR INFORMATION ONLY.

EXCAVATION FOR MAINTAINING TRAFFIC 3950 CU. YD.

EMBANKMENT FOR MAINTAINING TRAFFIC 8725 CU. YD.

WHEN UNDERCUTS ARE NECESSARY FOR MAINLINE PAVEMENT OR EMBANKMENT CONSTRUCTION, EVALUATE THE NEED FOR TEMPORARY ROAD UNDERCUTS IF WITHIN A CLOSE PROXIMITY TO THE MAINLINE UNDERCUTS. A GEOTECHNICAL EVALUATION SHOULD BE CONSIDERED TO DETERMINE IF THE EXISTING SOIL CONDITIONS ARE ADEQUATE TO SUPPORT THE TEMPORARY ROAD. ADDITIONAL SOIL BORINGS ALONG THE TEMPORARY ROAD ARE NOT NORMALLY REQUIRED.

ITEM 618 - RUMBLE STRIPS (ASPHALT CONCRETE), AS PER PLAN

THE CONTRACTOR SHALL MILL 2 INCHES BY 2 FEET WIDE OF THE EXISTING ASPHALT SHOULDER IN ORDER TO REMOVE THE EXISTING RUMBLE STRIPS ALONG THE MEDIAN SHOULDER OF IR-70 IN THE AREA WHERE TRAFFIC IS SHIFTED. THE CONTRACTOR SHALL THEN COAT ALL MILLED SURFACES HORIZONTAL AND VERTICAL WITH APPROVED AC LIQUID. NEXT THE CONTRACTOR SHALL PLACE 2 INCHES OF ITEM 448 ASPHALT CONCRETE SURFACE COURSE, TYPE 1, PG 64-28.

ONCE THE PROJECT IS COMPLETE, THE CONTRACTOR SHALL INSTALL NEW RUMBLE STRIPS AS PER THE CONSTRUCTION AND MATERIAL SPECIFICATIONS SECTION 618.

ALL COST ASSOCIATED WITH THE REMOVAL OF THE EXISTING PAVEMENT, PLACEMENT OF THE SURFACE COURSE AND INSTALLATION OF THE RUMBLE STRIPS SHALL BE INCLUDED IN UNIT PRICE BID PER FOOT OF ITEM 618 - RUMBLE STRIPS (ASPHALT CONCRETE), AS PER PLAN.

AN ESTIMATED QUANTITY OF 13,127 FEET HAS BEEN CARRIED TO THE MAINTENANCE OF TRAFFIC SUBSUMMARY.

ITEM 614 - LAW ENFORCEMENT OFFICER (WITH PATROL CAR) FOR ASSISTANCE DURING CONSTRUCTION OPERATIONS

USE OF LAW ENFORCEMENT OFFICERS (LEOS) BY CONTRACTORS OTHER THAN THE USES SPECIFIED BELOW WILL NOT BE PERMITTED AT PROJECT COST. LEOS SHOULD NOT BE USED WHERE THE OMUTCD INTENDS THAT FLAGGERS BE USED.

IN ADDITION TO THE REQUIREMENTS OF C&MS 614 AND THE OMUTCD, A UNIFORMED LEO WITH AN OFFICIAL PATROL CAR (CAR WITH TOP-MOUNTED EMERGENCY FLASHING LIGHTS AND COMPLETE MARKINGS OF THE APPROPRIATE LAW ENFORCEMENT AGENCY) SHALL BE PROVIDED FOR THE FOLLOWING TRAFFIC CONTROL TASKS:
- DURING THE ENTIRE ADVANCE PREPARATION AND CLOSURE SEQUENCE WHERE COMPLETE BLOCKAGE OF TRAFFIC IS REQUIRED.
- DURING A TRAFFIC SIGNAL INSTALLATION WHEN IMPACTING THE NORMAL FUNCTION OF THE SIGNAL OR THE FLOW OF TRAFFIC, OR WHEN TRAFFIC NEEDS TO BE DIRECTED THROUGH AN ENERGIZED TRAFFIC SIGNAL CONTRARY TO THE SIGNAL DISPLAY (E.G., DIRECTING MOTORISTS THROUGH A RED LIGHT).

IN ADDITION TO THE REQUIREMENT OF C&MS 614 AND THE OMUTCD, A UNIFORMED LEO WITH AN OFFICIAL PATROL CAR (CAR WITH TOP-MOUNTED EMERGENCY FLASHING LIGHTS AND COMPLETE MARKINGS OF THE APPROPRIATE LAW ENFORCEMENT AGENCY) SHOULD BE PROVIDED FOR THE FOLLOWING TRAFFIC CONTROL TASKS AS APPROVED BY THE ENGINEER:
-FOR LANE CLOSURES: DURING INITIAL SET-UP PERIODS, TEAR DOWN PERIODS, SUBSTANTIAL SHIFTS OF A CLOSURE POINT OR WHEN NEW LANE CLOSURE ARRANGEMENTS ARE INITIATED FOR LONG-TERM LANE CLOSURES/SHIFTS (FOR THE FIRST AND LAST DAY OF MAJOR CHANGES IN TRAFFIC CONTROL SETUP).
-FOR OPERATIONS WITHOUT POSITIVE PROTECTION OCCURRING WITHIN 10 FEET OF AN OPEN TRAVELED LANE THAT MEET ALL OF THE FOLLOWING CRITERIA:
  -ON A MULTI-LANE DIVIDED INTERSTATE, OTHER FREEWAY OR EXPRESSWAY; AND
  -AN AUTHORIZED SPEED LIMIT OF 45 MPH OR GREATER THAT IS IN EFFECT AT THE TIME OF THE OPERATION; AND,
  -AADT OF 50,000 (OR AADT OF 30,000 WITH 25% OR HIGHER PERCENT TRUCKS)

"WITHOUT POSITIVE PROTECTION" MEANS USE OF DRUMS, CONES, SHADOW VEHICLE, ETC, WITHOUT PROTECTION FROM PORTABLE BARRIER OR OTHER RIGID BARRIER ALONG THE WORK AREA. THIS PHRASE DOES NOT APPLY TO CASES WHERE POSITIVE PROTECTION IS REQUIRED. MOBILE OPERATIONS ARE REGARDED AS WITHOUT POSITIVE PROTECTION. FOR WORK ZONES USING A COMBINATION OF BARRIER AND TEMPORARY TRAFFIC CONTROL DEVICES (CONES, DRUMS, ETC), THE DESIGNATION SHALL BE BASED UPON THE TYPE OF DEVICES USED IN THE AREA THAT WORKERS ARE LOCATED.

IF MULTIPLE ACTIVE LOCALIZED QUALIFYING WORK AREAS OCCUR WITHOUT POSITIVE PROTECTION, PER MAINLINE TRAFFIC DIRECTION, PROVIDE A UNIFORMED LEO AND OFFICIAL PATROL CAR IN ADVANCE OF:
-THE FIRST ACTIVE WORK AREA THAT DRIVERS WILL ENCOUNTER; OR
-THE ACTIVE WORK AREA LATERALLY CLOSEST TO THE OPEN TRAVELED LANE; OR
-OTHER LOCATION AS APPROVED BY THE ENGINEER.

THE UNIFORMED LEO AND OFFICIAL PATROL CAR MAY RELOCATE AMONG THE LISTED LOCATIONS AS APPROPRIATE AS THE OPERATIONS PROCEED IN THE LOCALIZED QUALIFYING WORK AREAS.

IN GENERAL, LEOS SHOULD BE POSITIONED IN ADVANCE OF AND ON THE SAME SIDE AS THE LANE RESTRICTION (OR AT THE POINT OF ROAD CLOSURE), AND TO MANUALLY CONTROL TRAFFIC MOVEMENTS THROUGH SIGNALIZED INTERSECTIONS IN WORK ZONES.

LEOS SHOULD NOT FORGO THEIR TRAFFIC CONTROL RESPONSIBILITIES TO APPREHEND MOTORISTS FOR ROUTINE TRAFFIC VIOLATIONS. HOWEVER, IF A MOTORISTS ACTIONS ARE CONSIDERED TO BE RECKLESS, THEN PURSUIT OF THE MOTORIST IS APPROPRIATE.

THE LEOS WORK AT THE DIRECTION OF THE CONTRACTOR. THE CONTRACTOR IS RESPONSIBLE FOR SECURING THE SERVICES OF THE LEOS WITH THE APPROPRIATE AGENCIES AND COMMUNICATING THE INTENTIONS OF THE PLANS WITH RESPECT TO DUTIES OF THE LEOS. THE ENGINEER SHALL HAVE FINAL CONTROL OVER THE LEOS DUTIES AND PLACEMENT, AND WILL RESOLVE ANY ISSUES THAT MAY ARISE BETWEEN THE TWO PARTIES.

ENSURE PROVIDED LEOS HAVE BEEN TRAINED APPROPRIATE TO THE JOB DECISIONS THEY ARE REQUIRED TO MAKE WHILE ON THE PROJECT, IN ACCORDANCE WITH C&MS 614.03.

ITEM 614 - LAW ENFORCEMENT OFFICER (WITH PATROL CAR) FOR ASSISTANCE DURING CONSTRUCTION OPERATIONS

THE LEO SHALL REPORT IN TO THE CONTRACTOR PRIOR TO THE START OF THE SHIFT, IN ORDER TO RECEIVE INSTRUCTIONS REGARDING SPECIFIC WORK ASSIGNMENTS DURING HIS/HER SHIFT. THE LEO IS EXPECTED TO STAY AT THE PROJECT SITE FOR THE ENTIRE DURATION OF HIS/HER SHIFT. THE LEO SHALL REPORT TO THE CONTRACTOR AT THE END OF HIS/HER SHIFT. SHOULD IT BE NECESSARY TO LEAVE THE PROJECT SITE, THE LEO SHALL NOTIFY THE ENGINEER. THE CONTRACTOR SHALL PROVIDE THE LEO WITH A TWO-WAY COMMUNICATION DEVICE THAT SHALL BE RETURNED TO THE CONTRACTOR AT THE END OF HIS/HER SHIFT.

LEOS (WITH PATROL CAR) REQUIRED BY THE TRAFFIC MAINTENANCE TASKS ABOVE SHALL BE PAID FOR ON A UNIT PRICE (HOURLY) BASIS UNDER ITEM 614, LAW ENFORCEMENT OFFICER (WITH PATROL CAR) FOR ASSISTANCE. THE FOLLOWING ESTIMATED QUANTITIES HAVE BEEN CARRIED TO THE GENERAL SUMMARY.

ITEM 614 - LAW ENFORCEMENT OFFICER (WITH PATROL CAR) FOR ASSISTANCE 2000 HOURS

ITEM 614, LAW ENFORCEMENT OFFICER WITH PATROL CAR FOR ASSISTANCE 2000 HOURS THE HOURS PAID SHALL INCLUDE ANY MINIMUM SHOW-UP TIME REQUIRED BY THE LAW ENFORCEMENT AGENCY INVOLVED. THE HOURS PAID SHALL INCLUDE ANY MINIMUM SHOW-UP TIME REQUIRED BY THE LAW ENFORCEMENT AGENCY INVOLVED.

ANY ADDITIONAL COSTS (ADMINISTRATIVE OR OTHERWISE) INCURRED BY THE CONTRACTOR TO OBTAIN THE SERVICES OF AN LEO ARE INCLUDED WITH THE BID UNIT PRICE FOR ITEM 614, LAW ENFORCEMENT OFFICER WITH PATROL CAR FOR ASSISTANCE.

NOTIFICATON OF TRAFFIC RESTRICTIONS

THROUGHOUT THE DURATION OF THE PROJECT, THE CONTRACTOR SHALL NOTIFY THE PROJECT ENGINEER IN WRITING OF ALL TRAFFIC RESTRICTIONS AND UPCOMING MAINTENANCE OF TRAFFIC CHANGES. THE CONTRACTOR SHALL ENSURE THE WRITTEN NOTIFICATION IS SUBMITTED IN A TIMELY MANNER TO ALLOW THE PROJECT ENGINEER TO MEET THE REQUIRED TIME FRAMES SET FORTH IN THE TABLE BELOW TO INFORM THE SPECIAL HAULING PERMITS SECTION (HAULING.PERMITS@DOT.OHIO.GOV) AND THE DISTRICT PUBLIC INFORMATION OFFICE (PIO). THIS NOTIFICATION SHALL BE RECEIVED BY THE PROJECT ENGINEER PRIOR TO THE PHYSICAL SETUP OF ANY APPLICABLE SIGNS OR MESSAGE BOARDS.

INFORMATION SHOULD INCLUDE, BUT IS NOT LIMITED TO, ALL CONSTRUCTION ACTIVITIES THAT IMPACT OR INTERFERE WITH TRAFFIC AND SHALL LIST THE SPECIFIC LOCATION, TYPE OF WORK, ROAD STATUS, DATE AND TIME OF RESTRICTION, DURATION OF RESTRICTION, NUMBER OF LANES MAINTAINED, NUMBER OF LANES CLOSED, MINIMUM VERTICAL CLEARANCE, MINIMUM WIDTH OF DRIVABLE PAVEMENT, DETOUR ROUTES, IF APPLICABLE, AND ANY OTHER INFORMATION REQUESTED BY THE PROJECT ENGINEER.

NOTIFICATION TIME TABLE

ITEM	DURATION OF CLOSURE	NOTIFICATION DUE TO PERMITS AND PIO
RAMP AND ROAD CLOSURES	>= 2 WEEKS	21 CALENDAR DAYS PRIOR TO CLOSURE
	> 12 HOURS AND < 2 WEEKS	14 CALENDAR DAYS PRIOR TO CLOSURE
	<= 12 HOURS	4 BUSINESS DAYS PRIOR TO CLOSURE
LANE CLOSURES/ RESTRICTIONS	>= 2 WEEKS	14 CALENDAR DAYS PRIOR TO CLOSURE
	< 2 WEEKS	5 BUSINESS DAYS PRIOR TO CLOSURE
START OF CONSTRUCTION & TRAFFIC PATTERN CHANGES	N/A	14 CALENDAR DAYS PRIOR TO IMPLEMENTATION

ANY UNFORSEEN CONDITIONS NOT SPECIFIED IN THE PLANS REQUIRING TRAFFIC RESTRICTIONS SHALL ALSO BE REPORTED TO THE PROJECT ENGINEER USING THE NOTIFICATION TIME TABLE.

WORK ZONE EGRESS WARNING SYSTEM

THE CONTRACTOR SHALL FURNISH, INSTALL, AND MAINTAIN AN APPROVES WORK ZONE EGRESS WARNING SYSTEM (WZEWS) AS PER SUPPLEMENTAL SPECIFICATION 829.

THE PROBABLE INITIAL LOCATIONS OF THE WZEWS DEVICES ARE SHOWN ON SHEETS 98 & 99 AND 163 & 164 OF THE PLAN. IT IS EXPECTED THAT THESE LOCATIONS WILL VARY BASED ON PLANNED OR UNPLANNED PHASE AND TRAFFIC PATTERN CHANGES. PLACEMENT, OPERATION, AND MAINTENANCE AND ALL ACTIVATION OF DEVICES BY THE CONTRACTOR SHALL BE DIRECTED BY THE ENGINEER.

WZEWS SHALL BE USED IN ACCORDANCE WITH MT-103.10. THE FOLLOWING ESTIMATED QUANTITY HAS BEEN CARRIED TO THE GENERAL SUMMARY.

ITEM 829, WORK ZONE EGRESS WARNING SYSTEM 12 SIGN MONTH
ASSUMING 2 WORK ZONE EGRESS WARNING SYSTEM(S) FOR 6 MONTHS

3646-E

CALCULATED JZM CHECKED EMK

MAINTENANCE OF TRAFFIC NOTES

FRA-70-22.85

P:\PR56140\FRA\98232\Design\MOT\Sheets\98232_MN001.dgn Sheet 2/20/2025 9:56:14 AM pryfogle

ITEM	EXTENSION	TOTAL FROM SHEET														TOTAL	UNIT	DESCRIPTION	SEE SHEET
		59-65	67A	68	69	70	71	72	73	74	75	76	77	78	79				
411	10000			123			90									213	CY	STABILIZED CRUSHED AGGREGATE	
601	32200						3									3	CY	ROCK CHANNEL PROTECTION, TYPE C WITH FILTER	
602	20000						1									1.4	CY	CONCRETE MASONRY	
606	15050			645					488		213					1346	FT	GUARDRAIL, TYPE MGS	
606	26150										1					1	EACH	ANCHOR ASSEMBLY, MGS TYPE E, MASH 2016	
606	26500			1					1		1					3	EACH	ANCHOR ASSEMBLY, TYPE T	
611	04400						46									46	FT	12" CONDUIT, TYPE B	
611	05900						224									224	FT	15" CONDUIT, TYPE B	
611	07400						122									122	FT	18" CONDUIT, TYPE B	
611	98450						2									2	EACH	CATCH BASIN, NO. 2-2A	
614	11110	2000														2000	HOUR	LAW ENFORCEMENT OFFICER WITH PATROL CAR FOR ASSISTANCE	65
SPECIAL	61411300	6														6	EACH	WORK ZONE TRAFFIC SIGNAL	64
614	11630	46466														46466	FT	INCREASED BARRIER DELINEATION	65
614	12380	46														46	EACH	WORK ZONE IMPACT ATTENUATOR, 24" WIDE HAZARDS, (UNIDIRECTIONAL)	
614	12420															LS		DETOUR SIGNING	
614	12484	42														42	EACH	WORK ZONE INCREASED PENALTIES SIGN	61
614	12500	50														50	EACH	REPLACEMENT SIGN	60
614	12600	300														300	EACH	REPLACEMENT DRUM	60
614	12801		112	728			409				295			572		2116	EACH	WORK ZONE RAISED PAVEMENT MARKER, AS PER PLAN	62
614	13310	1057														1057	EACH	BARRIER REFLECTOR, TYPE 1, ONE-WAY	65
614	13312	1064														1064	EACH	BARRIER REFLECTOR, TYPE 2, ONE-WAY	65
614	13350	3915														3915	EACH	OBJECT MARKER, ONE WAY	65
614	18601	224														224	SNMT	PORTABLE CHANGEABLE MESSAGE SIGN, AS PER PLAN	61
614	20056			3.42			3.69				2.53			5.83		15.47	MILE	WORK ZONE LANE LINE, CLASS I, 6", 807 PAINT	
614	22056		0.63	3.33		0.27	3.61		0.20	0.12	4.27		0.14	4.06		16.63	MILE	WORK ZONE, EDGE LINE, CLASS I, 6", 807 PAINT, WHITE	
614	22056		0.73	2.86		0.23	3.67		0.20	0.12	3.98		0.10	4.44		16.33	MILE	WORK ZONE, EDGE LINE, CLASS I, 6", 807 PAINT, YELLOW	
614	23110		4830	10933			9075				6002		54	10580		41474	FT	WORK ZONE CHANNELIZING LINE, CLASS I, 12", 807 PAINT	
614	24102			779			1639				3878			4607		10903	FT	WORK ZONE DOTTED LINE, CLASS I, 6" 807 PAINT	
614	27070										164	200				364	FT	WORK ZONE CROSSWALK LINE. CLASS 1, 12", 740.06, TYPE I	
614	31200					2				2						4	EACH	WORK ZONE WORD ON PAVEMENT, 72", CLASS I, 642 PAINT	
614	31650			4			4									8	EACH	WORK ZONE WORD ON PAVEMENT, 96", CLASS I, 642 PAINT	
614	98000				0.40	0.01		0.81	0.06	0.04		0.97	0.43		0.92	3.64	MILE	WORK ZONE PAVEMENT MARKING, MISC.: LANE LINE, CLASS I, 6" 642 PAINT	60
614	98000				0.73	0.54		0.44	0.31	0.24			0.30		0.34	2.89	MILE	WORK ZONE PAVEMENT MARKING, MISC.: CENTER LINE, CLASS I, 6" 642 PAINT, DOUBLE SOLID	60
614	98000				1.12	0.71		0.39	0.49	0.47			0.66		0.16	4.00	MILE	WORK ZONE PAVEMENT MARKING, MISC.: EDGE LINE, CLASS I, 6", 642 PAINT, WHITE	60
614	98000							0.04	0.03			0.78	0.27		0.36	1.47	MILE	WORK ZONE PAVEMENT MARKING, MISC.: EDGE LINE, CLASS I, 6", 642 PAINT, YELLOW	60
614	98100				2435	3130		2661	2403	1482		2540	2580		4582	21813	FT	WORK ZONE PAVEMENT MARKING, MISC.: CHANNELIZING LINE, CLASS I, 12", 642 PAINT	60
614	98100				585	873		522	127	182		490	112		489	3380	FT	WORK ZONE PAVEMENT MARKING, MISC.: DOTTED LINE, CLASS I, 6", 642 PAINT, WHITE	60
614	98100				270					152						422	FT	WORK ZONE PAVEMENT MARKING, MISC.: DOTTED LINE, CLASS I, 6", 642 PAINT, YELLOW	60
614	98100				106	154		134	56	55	47	174	157		220	1103	FT	WORK ZONE PAVEMENT MARKING, MISC.:WORK ZONE STOP LINE, 24", 642 PAINT	60
614	98200				17	17		20	22	12		22	27		26	163	EACH	WORK ZONE PAVEMENT MARKING, MISC.: ARROW, CLASS I, 642 PAINT	60
614	98200			1			1				1					3	EACH	WORK ZONE PAVEMENT MARKING, MISC.: LANE REDUCTION ARROW, CLASS I, 642 PAINT	60
614	98200			4			4									8	EACH	WORK ZONE PAVEMENT MARKING, MISC.: ROUTE SHIELD SYMBOL, CLASS 1, 814 HEAT-FUSED PREFORMED THERMOPLASTIC	
615	10000															LS		ROADS FOR MAINTAINING TRAFFIC	
615	20001		1359													1359	SY	PAVEMENT FOR MAINTAINING TRAFFIC, CLASS A, AS PER PLAN	66
615	25000		1330	2123	1400	2649	1988		868	282	1189					11829	SY	PAVEMENT FOR MAINTAINING TRAFFIC, CLASS B	
616	10000	737														737	MGAL	WATER	60
618	40101	13127														13127	FT	RUMBLE STRIPS, (ASPHALT CONCRETE), AS PER PLAN	65
622	41060	1														1	EACH	DUAL PORTABLE BARRIER TRANSITION/TERMINATION	
622	41011		1510													1510	FT	PORTABLE BARRIER, 50", AS PER PLAN	66
622	41100		4060	17630	1541	2656	10820		1371	548	8070			4380		51076	FT	PORTABLE BARRIER, UNANCHORED	
622	41110			80		90			321							491	FT	PORTABLE BARRIER, ANCHORED	
808	18700	120														120	SNMT	DIGITAL SPEED LIMIT (DSL) SIGN ASSEMBLY	60
~~829~~	~~00100~~	~~12~~														~~12~~	~~SNMT~~	~~WORK ZONE EGRESS WARNING SYSTEM~~	~~65~~
614	20550	2.98														2.98	MILE	WORK ZONE LANE LINE, CLASS III, 4", 642 PAINT	65
614	20560	5.83														5.83	MILE	WORK ZONE LANE LINE, CLASS III, 6", 642 PAINT	65
614	22350	1.71														1.71	MILE	WORK ZONE EDGE LINE, CLASS III, 4", 642 PAINT	65
614	22360	10.94														10.94	MILE	WORK ZONE EDGE LINE, CLASS III, 6", 642 PAINT	65
614	21550	0.17														0.17	MILE	WORK ZONE CENTER LINE, CLASS III, 642 PAINT	65
614	23680	9347														9347	FEET	WORK ZONE CHANNELIZING LINE, CLASS III, 8", 642 PAINT	65
614	23690	14809														14809	FEET	WORK ZONE CHANNELIZING LINE, CLASS III, 12", 642 PAINT	65
614	24612	7915														7915	FEET	WORK ZONE DOTTED LINE, CLASS III, 6", 642 PAINT	65
614	24614	1411														1411	FEET	WORK ZONE DOTTED LINE, CLASS III, 8", 642 PAINT	65
																TOTALS CARRIED TO GENERAL SUMMARY SHEET			

CALCULATED GMR
CHECKED EMK

MAINTENANCE OF TRAFFIC SUBSUMMARY

FRA-70-22.85

P:\PR56140\FRA\98232\Design\MOT\Sheets\98232_MS001.dgn Sheet 2/20/2025 9:56:19 AM pryfogle

SHEET NUM. 67	SHEET NUM. 238	SHEET NUM. 1142	PART. 01/NHS/03	PART. 03/IMS/04	PART. 06/S>2/03	PART. 07/IMS/08	ITEM	ITEM EXT	GRAND TOTAL	UNIT	DESCRIPTION	SEE SHEET NO.
											STRUCTURE OVER 20 FOOT SPAN (FRA-70-23.919)	
		LS				LS	503	11101	LS		COFFERDAMS AND EXCAVATION BRACING, AS PER PLAN (WALL A)	1141
		LS				LS	503	21300	LS		UNCLASSIFIED EXCAVATION	
		LS				LS	505	11100	LS		PILE DRIVING EQUIPMENT MOBILIZATION	
		7,400				7,400	507	00500	7,400	FT	12" CAST-IN-PLACE REINFORCED CONCRETE PILES, DRIVEN	
		8,060				8,060	507	00551	8,060	FT	12" CAST-IN-PLACE REINFORCED CONCRETE PILES, FURNISHED, AS PER PLAN	1141
		132				132	507	93300	132	EACH	STEEL POINTS OR SHOES	
		182,444				182,444	509	10000	182,444	LB	EPOXY COATED STEEL REINFORCEMENT	
		1,080				1,080	509	30020	1,080	FT	NO. 4 DEFORMED GFRP REINFORCEMENT	
		617				617	511	34446	617	CY	CLASS QC2 CONCRETE WITH QC/QA, BRIDGE DECK	
		39				39	511	34451	39	CY	CLASS QC2 CONCRETE WITH QC/QA, BRIDGE DECK (PARAPET), AS PER PLAN	1141
		91				91	511	44112	91	CY	CLASS QC1 CONCRETE WITH QC/QA, ABUTMENT NOT INCLUDING FOOTING	
		62				62	511	45600	62	CY	CLASS QC4 MASS CONCRETE, SUBSTRUCTURE	
		318				318	511	46512	318	CY	CLASS QC1 CONCRETE WITH QC/QA, FOOTING	
		88				88	511	51510	88	CY	CLASS QC2 CONCRETE, SIDEWALK	
		1,084				1,084	512	10100	1,084	SY	SEALING OF CONCRETE SURFACES (EPOXY-URETHANE)	
		44				44	512	10300	44	SY	SEALING CONCRETE BRIDGE DECKS WITH HMWM RESIN	
		35				35	512	33000	35	SY	TYPE 2 WATERPROOFING	
		240,726				240,726	513	10280	240,726	LB	STRUCTURAL STEEL MEMBERS, LEVEL 4	
		4,485				4,485	513	20000	4,485	EACH	WELDED STUD SHEAR CONNECTORS	
		16,558				16,558	514	00060	16,558	SF	FIELD PAINTING STRUCTURAL STEEL, INTERMEDIATE COAT	
		16,558				16,558	514	00066	16,558	SF	FIELD PAINTING STRUCTURAL STEEL, FINISH COAT	1141
		128				128	516	13600	128	SF	1" PREFORMED EXPANSION JOINT FILLER	
		80				80	516	13900	80	SF	2" PREFORMED EXPANSION JOINT FILLER	
		413				413	516	14020	413	FT	SEMI-INTEGRAL ABUTMENT EXPANSION JOINT SEAL	
		16				16	516	44201	16	EACH	ELASTOMERIC BEARING WITH INTERNAL LAMINATES AND LOAD PLATE (NEOPRENE), AS PER PLAN (16"x16"x3.078" ELASTOMERIC PAD WITH 17"x2'-6 1/2"x1 ¾" LOAD PLATE)	1155
		16				16	516	44201	16	EACH	ELASTOMERIC BEARING WITH INTERNAL LAMINATES AND LOAD PLATE (NEOPRENE), AS PER PLAN (16"x16"x3.078" ELASTOMERIC PAD WITH 17"x17"x1 ¾" LOAD PLATE)	1156
		136				136	518	21200	136	CY	POROUS BACKFILL WITH GEOTEXTILE FABRIC	
		435				435	518	40000	435	FT	6" PERFORATED CORRUGATED PLASTIC PIPE	
		2				2	523	20000	2	EACH	DYNAMIC LOAD TESTING	
		2				2	523	20500	2	EACH	RESTRIKE	
		1,287				1,287	526	30000	1,287	SY	REINFORCED CONCRETE APPROACH SLABS (T=17")	
		421				421	526	90031	421	FT	TYPE C INSTALLATION, AS PER PLAN	1141
		199				199	607	39900	199	FT	VANDAL PROTECTION FENCE, 6' STRAIGHT, COATED FABRIC	
		3,162				3,162	863	00100	3,162	SY	GEOGRID, TYPE P1	
		772				772	863	00801	772	CY	REINFORCED EMBANKMENT, AS PER PLAN	1141
		LS				LS	867	00100	LS		TEMPORARY WIRE FACED MECHANICALLY STABILIZED EARTH WALL (WALL B)	
											SANITARY SEWER	
	5			5			611	99654	5	EACH	MANHOLE ADJUSTED TO GRADE (SANITARY)	
											MAINTENANCE OF TRAFFIC	
213			213				411	10000	213	CY	STABILIZED CRUSHED AGGREGATE	
3			3				601	32200	3	CY	ROCK CHANNEL PROTECTION, TYPE C WITH FILTER	
1.4			1.4				602	20000	1.4	CY	CONCRETE MASONRY	
1,346			858		488		606	15050	1,346	FT	GUARDRAIL, TYPE MGS	
1			1				606	26150	1	EACH	ANCHOR ASSEMBLY, MGS TYPE E (MASH 2016)	
3			2		1		606	26500	3	EACH	ANCHOR ASSEMBLY, TYPE T	
46			46				611	04400	46	FT	12" CONDUIT, TYPE B	
224			224				611	05900	224	FT	15" CONDUIT, TYPE B	
122			122				611	07400	122	FT	18" CONDUIT, TYPE B	
2			2				611	98450	2	EACH	CATCH BASIN, NO. 2-2A	
2,000			2,000				614	11110	2,000	HOUR	LAW ENFORCEMENT OFFICER WITH PATROL CAR FOR ASSISTANCE	65
6			6				SPECIAL	61411300	6	EACH	WORK ZONE TRAFFIC SIGNAL	64
46,466			46,466				614	11630	46,466	FT	INCREASED BARRIER DELINEATION	65
46			46				614	12380	46	EACH	WORK ZONE IMPACT ATTENUATOR, 24" WIDE HAZARDS, (UNIDIRECTIONAL)	
LS			LS				614	12420	LS		DETOUR SIGNING	

QUANTITIES MOVED FROM SHEET 232 WITH NO CHANGES TO TOTALS.

CALCULATED TGW
CHECKED SJB

GENERAL SUMMARY

FRA-70-22.85

J:\2017\0913\ODOT\FRA\98232_FRA_70\Design\Roadway\Sheets\98232_GG002.dgn 2/21/2025 10:33:25 AM sbeal

SHEET NUM. 67							PART. 01/NHS/03	03/IMS/04	06/S>2/03	ITEM	ITEM EXT	GRAND TOTAL	UNIT	DESCRIPTION	SEE SHEET NO.
														MAINTENANCE OF TRAFFIC CONT.	
42							42			614	12484	42	EACH	WORK ZONE INCREASED PENALTIES SIGN	61
50							50			614	12500	50	EACH	REPLACEMENT SIGN	60
300							300			614	12600	300	EACH	REPLACEMENT DRUM	60
2,116							2,116			614	12801	2,116	EACH	WORK ZONE RAISED PAVEMENT MARKER, AS PER PLAN	62
1,057							1,057			614	13310	1,057	EACH	BARRIER REFLECTOR, TYPE 1, ONE-WAY	65
1,064							1,064			614	13312	1,064	EACH	BARRIER REFLECTOR, TYPE 2, ONE-WAY	65
3,915							3,915			614	13350	3,915	EACH	OBJECT MARKER, ONE WAY	63
224							224			614	18601	224	SNMT	PORTABLE CHANGEABLE MESSAGE SIGN, AS PER PLAN	61
15.47							15.47			614	20056	15.47	MILE	WORK ZONE LANE LINE, CLASS I, 6", 807 PAINT	
2.98									2.98	614	20550	2.98	MILE	WORK ZONE LANE LINE, CLASS III, 4", 642 PAINT	65
5.83								5.83		614	20560	5.83	MILE	WORK ZONE LANE LINE, CLASS III, 6", 642 PAINT	65
0.17									0.17	614	21550	0.17	MILE	WORK ZONE CENTER LINE, CLASS III, 642 PAINT	65
16.63							15.27		1.36	614	22056	16.63	MILE	WORK ZONE EDGE LINE, CLASS I, 6", 807 PAINT, WHITE	
16.33							14.94		1.39	614	22056	16.33	MILE	WORK ZONE EDGE LINE, CLASS I, 6", 807 PAINT, YELLOW	
1.71									1.71	614	22350	1.71	MILE	WORK ZONE EDGE LINE, CLASS III, 4", 642 PAINT	65
10.94								10.94		614	22360	10.94	MILE	WORK ZONE EDGE LINE, CLASS III, 6", 642 PAINT	65
41,474							41,420		54	614	23110	41,474	FT	WORK ZONE CHANNELIZING LINE, CLASS I, 12", 807 PAINT	
9,347									9,347	614	23680	9,347	FT	WORK ZONE CHANNELIZING LINE, CLASS III, 8", 642 PAINT	65
14,809								14,809		614	23690	14,809	FT	WORK ZONE CHANNELIZING LINE, CLASS III, 12", 642 PAINT	65
10,903							10,903			614	24102	10,903	FT	WORK ZONE DOTTED LINE, CLASS I, 6", 807 PAINT	
7,915								7,193	722	614	24612	7,915	FT	WORK ZONE DOTTED LINE, CLASS III, 6", 642 PAINT	65
1,411									1,411	614	24614	1,411	FT	WORK ZONE DOTTED LINE, CLASS III, 8", 642 PAINT	65
364							364			614	27070	364	FT	WORK ZONE CROSSWALK LINE, CLASS I, 12", 740.06, TYPE I	
4									4	614	31200	4	EACH	WORK ZONE WORD ON PAVEMENT, 72", CLASS I, 642 PAINT	
8									8	614	31650	8	EACH	WORK ZONE WORD ON PAVEMENT, 96", CLASS I, 642 PAINT	
3.64									3.64	614	98000	3.64	MILE	WORK ZONE PAVEMENT MARKING, MISC.:LANE LINE, CLASS I, 6" 642 PAINT	60
2.89									2.89	614	98000	2.89	MILE	WORK ZONE PAVEMENT MARKING, MISC.:CENTER LINE, CLASS I, 6" 642 PAINT, DOUBLE SOLID	60
4									4	614	98000	4	MILE	WORK ZONE PAVEMENT MARKING, MISC.:EDGE LINE, CLASS I, 6", 642 PAINT, WHITE	60
1.47									1.47	614	98000	1.47	MILE	WORK ZONE PAVEMENT MARKING, MISC.:EDGE LINE, CLASS I, 6", 642 PAINT, YELLOW	60
21,813									21,813	614	98100	21,813	FT	WORK ZONE PAVEMENT MARKING, MISC.:CHANNELIZING LINE, CLASS I, 12" PAINT	60
3,380									3,380	614	98100	3,380	FT	WORK ZONE PAVEMENT MARKING, MISC.:DOTTED LINE, CLASS I, 6", 642 PAINT, WHITE	60
422									422	614	98100	422	FT	WORK ZONE PAVEMENT MARKING, MISC.:DOTTED LINE, CLASS I, 6", 642 PAINT, YELLOW	60
1,103									1,103	614	98100	1,103	FT	WORK ZONE PAVEMENT MARKING, MISC.:WORK ZONE STOP LINE, 24", 642 PAINT	60
163									163	614	98200	163	EACH	WORK ZONE PAVEMENT MARKING, MISC.:ARROW, CLASS I, 642 PAINT	60
3							3			614	98200	3	EACH	WORK ZONE PAVEMENT MARKING, MISC.:LANE REDUCTION ARROW, CLASS I, 642 PAINT	60
8							8			614	98200	8	EACH	WORK ZONE PAVEMENT MARKING, MISC.:ROUTE SHIELD SYMBOL, CLASS 1, 814 HEAT-FUSED PREFORMED THERMOPLASTIC	
LS							LS		LS	615	10000	LS		ROADS FOR MAINTAINING TRAFFIC	
1,359							1,359			615	20001	1,359	SY	PAVEMENT FOR MAINTAINING TRAFFIC, CLASS A, AS PER PLAN	66
11,829							4,111		7,718	615	25000	11,829	SY	PAVEMENT FOR MAINTAINING TRAFFIC, CLASS B	
737							737			616	10000	737	MGAL	WATER	60
13,127							13,127			618	40101	13,127	FT	RUMBLE STRIPS, SHOULDER (ASPHALT CONCRETE), AS PER PLAN	65
1							1			622	41060	1	EACH	DUAL PORTABLE BARRIER TRANSITION/TERMINATION	
1,510							1,510			622	41011	1,510	FT	PORTABLE BARRIER, 50", AS PER PLAN	66
51,076							39,620		11,456	622	41100	51,076	FT	PORTABLE BARRIER, UNANCHORED	
491							80		411	622	41110	491	FT	PORTABLE BARRIER, ANCHORED	
120							120			808	18700	120	SNMT	DIGITAL SPEED LIMIT (DSL) SIGN ASSEMBLY	60
12							12			829	00100	12	SNMT	WORK ZONE EGRESS WARNING SYSTEM	65
														INCIDENTALS	
							LS			108	10000	LS		CPM PROGRESS SCHEDULE	
							5,500			SPECIAL	11110100	5,500	EACH	DEPARTMENTS SHARE FACILITATED PARTNERING COSTS	
							LS			614	11000	LS		MAINTAINING TRAFFIC	59
							35			619	16020	35	MNTH	FIELD OFFICE, TYPE C	
							LS			623	10000	LS		CONSTRUCTION LAYOUT STAKES AND SURVEYING	
							LS			624	10000	LS		MOBILIZATION	

CALCULATED TGW
CHECKED SJB

GENERAL SUMMARY

FRA-70-22.85

3646-E

J:\2017093\ODOT\FRA\98232_FRA_70\Design\Roadway\Sheets\98232_GG001.dgn 2/21/2025 12:07:01 PM sbeal

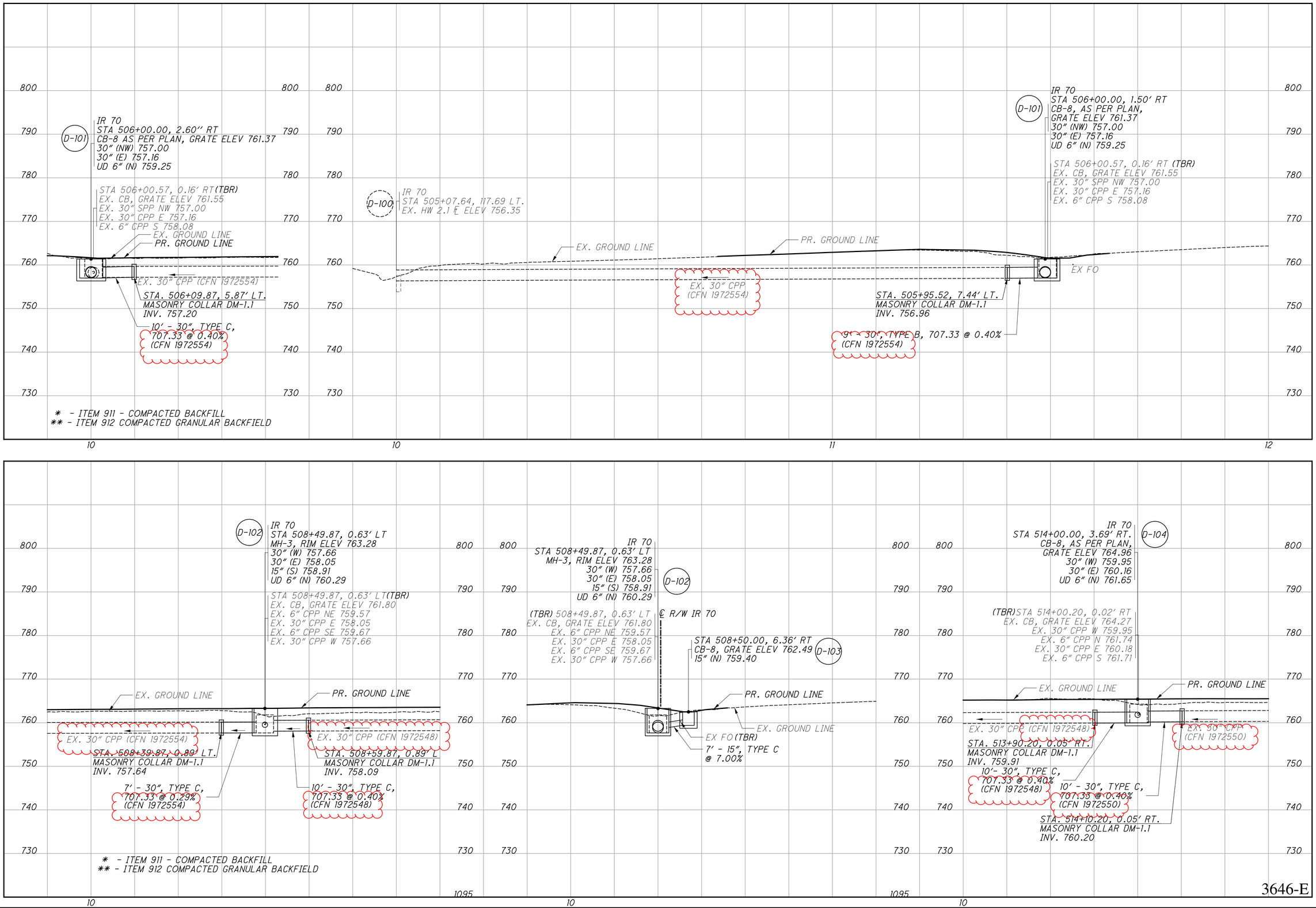

3646-E

CALCULATED CFR
CHECKED ECH

STORM SEWER PROFILE - IR 70

FRA-70-22.85

689
1356

G:\ProjectData\2017\FRA\98232-FRA-70-22.85 W-I7-I40\Design\Drainage\Sheets\98232_DF001.dgn 1/22/2025 2:05:36 PM jugns

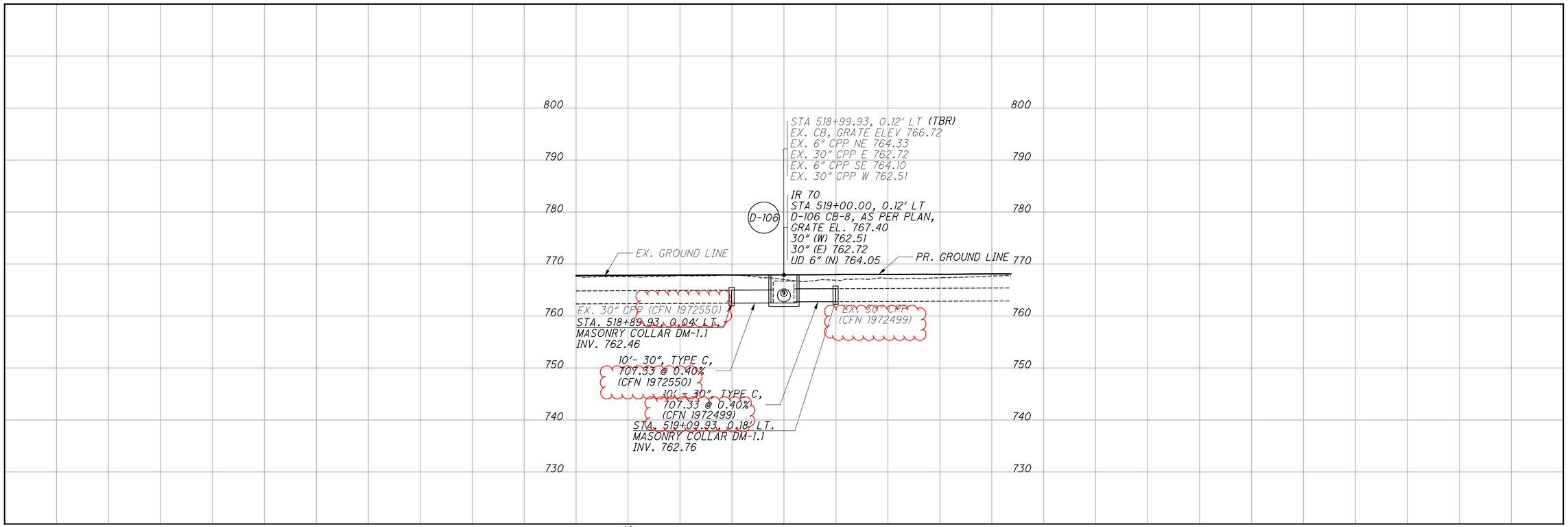

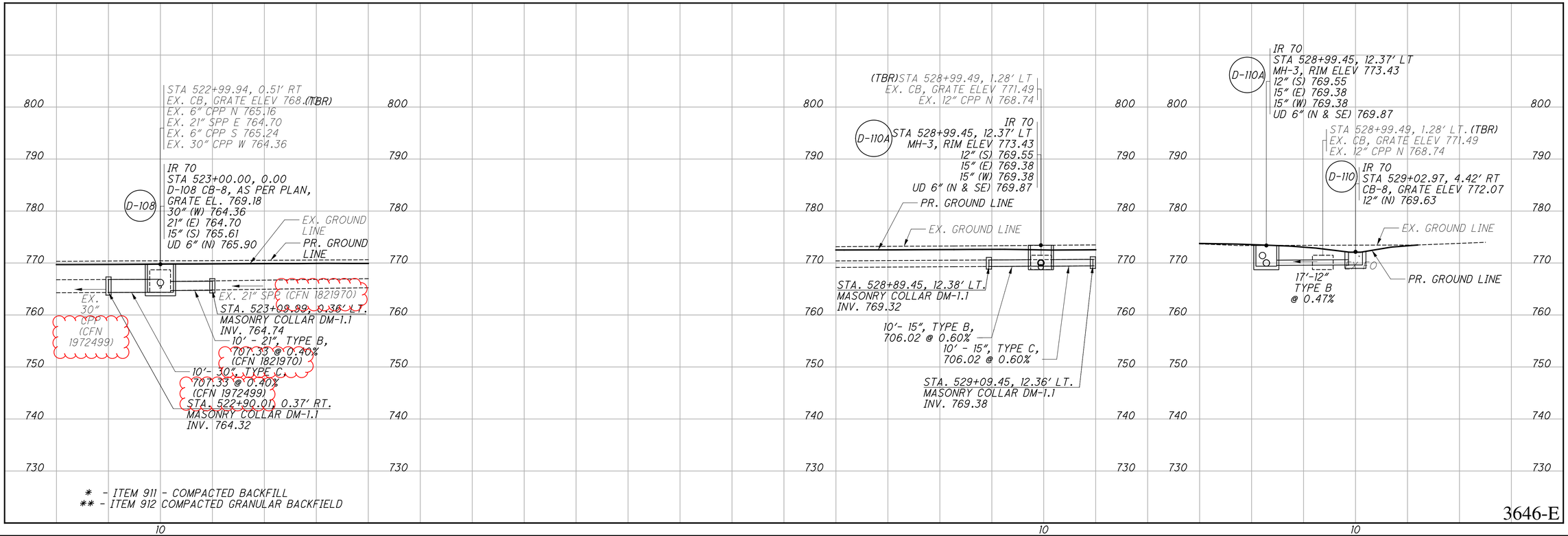

3646-E

CALCULATED CFR
CHECKED ECH

STORM SEWER PROFILE - IR 70

FRA-70-22.85

690
1356

G:\ProjectData\2017\FRA\98232_FRA-70-22.85 W-17-140\Design\Drainage\Sheets\98232_DF001.dgn 1/22/2025 2:05:37 PM jugns

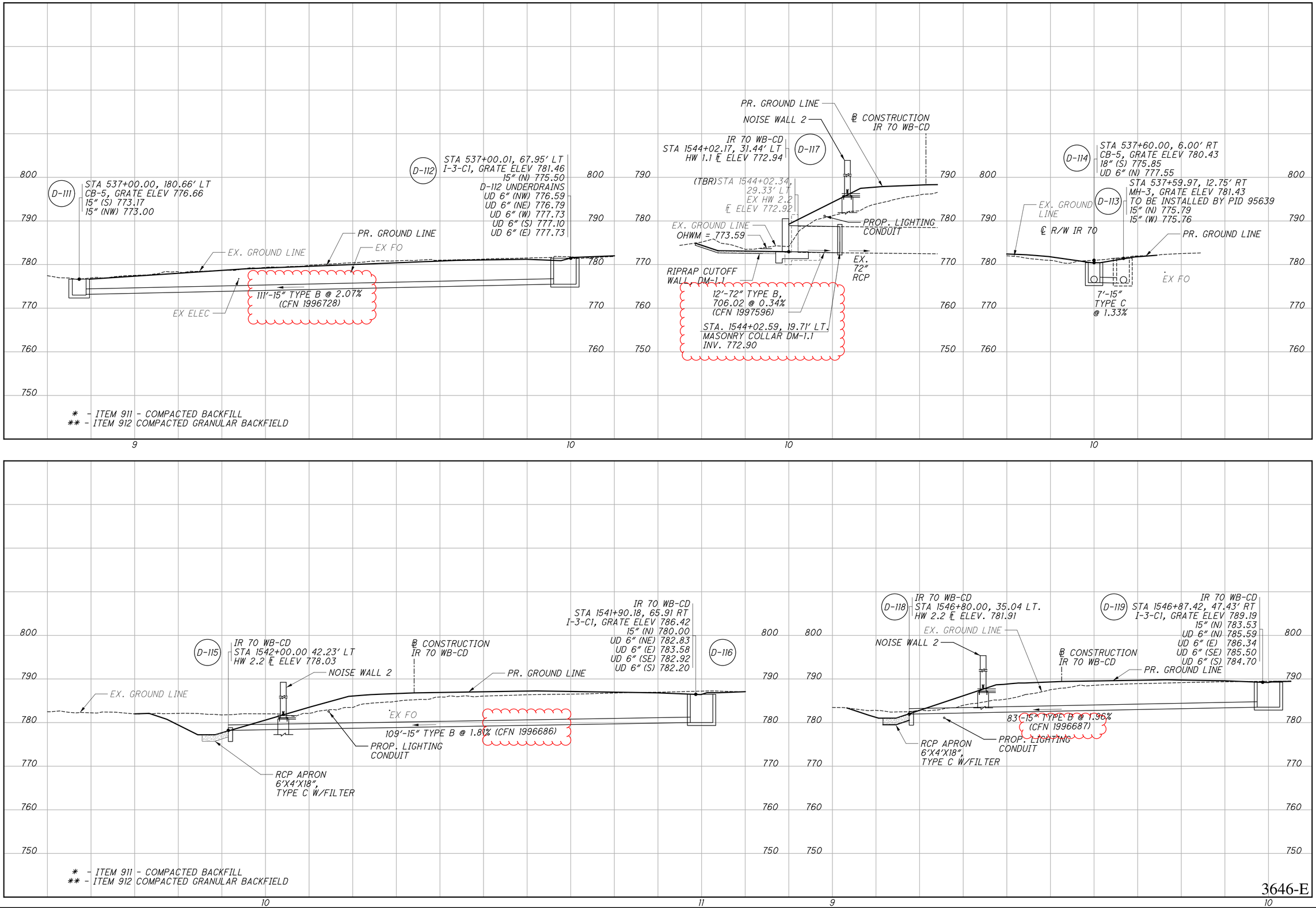

CALCULATED CFR
CHECKED ECH

STORM SEWER PROFILE - IR 70 & IR 70 WB-CD

FRA-70-22.85

G:\ProjectData\2017\FRA\98232_FRA-70-22.85 W-17-140\Design\Drainage\Sheets\98232_DF001.dgn 2/21/2025 10:35:59 AM jwans

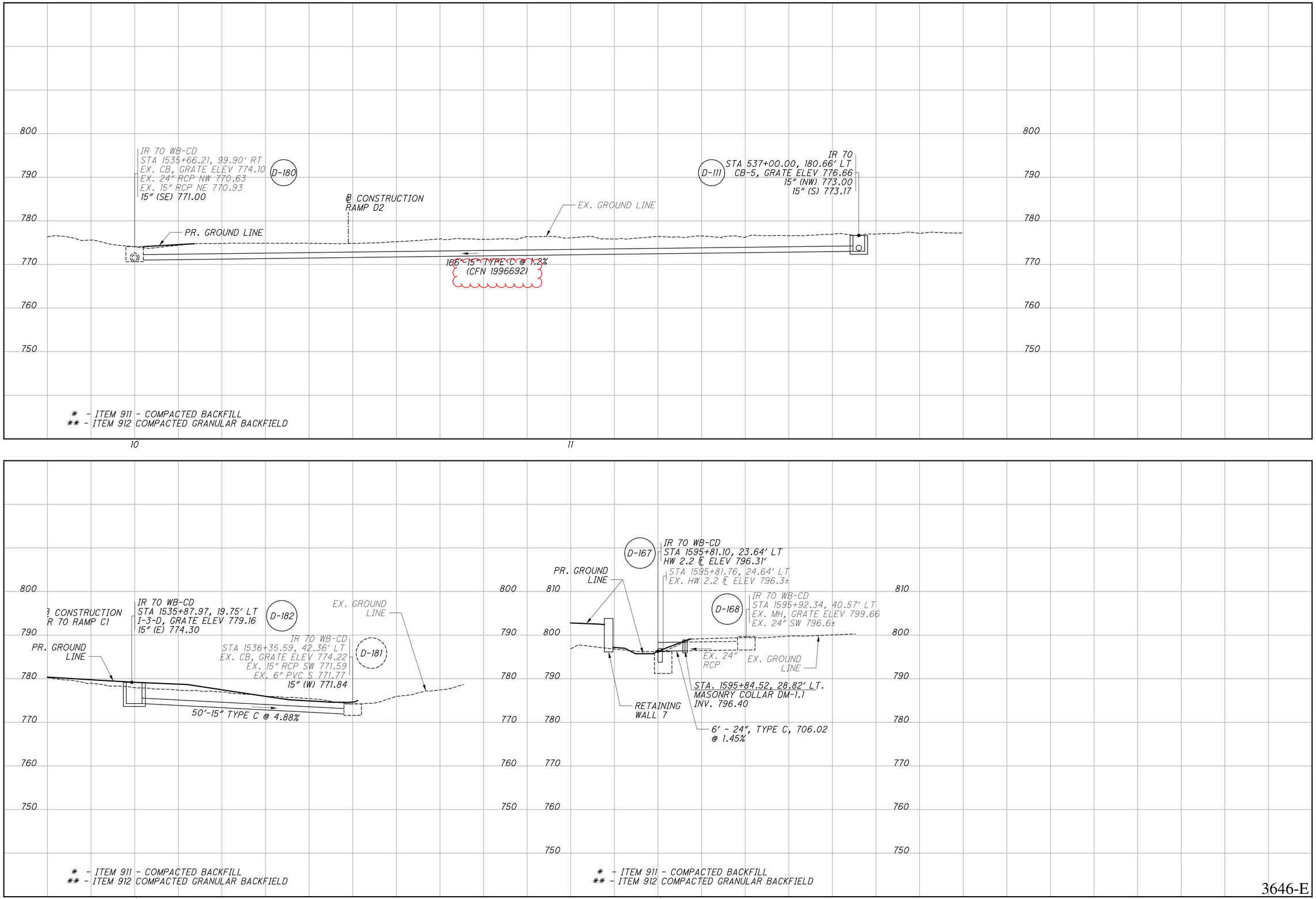

CALCULATED CFR
CHECKED JWE

STORM SEWER PROFILE - IR 70 & IR 70 WB-CD

FRA-70-22.85

G:\ProjectData\2017\FRA\98232_FRA-70-22.85 W-17-140\Design\Drainage\Sheets\98232_DF001.dgn 1/22/2025 2:05:38 PM jugns

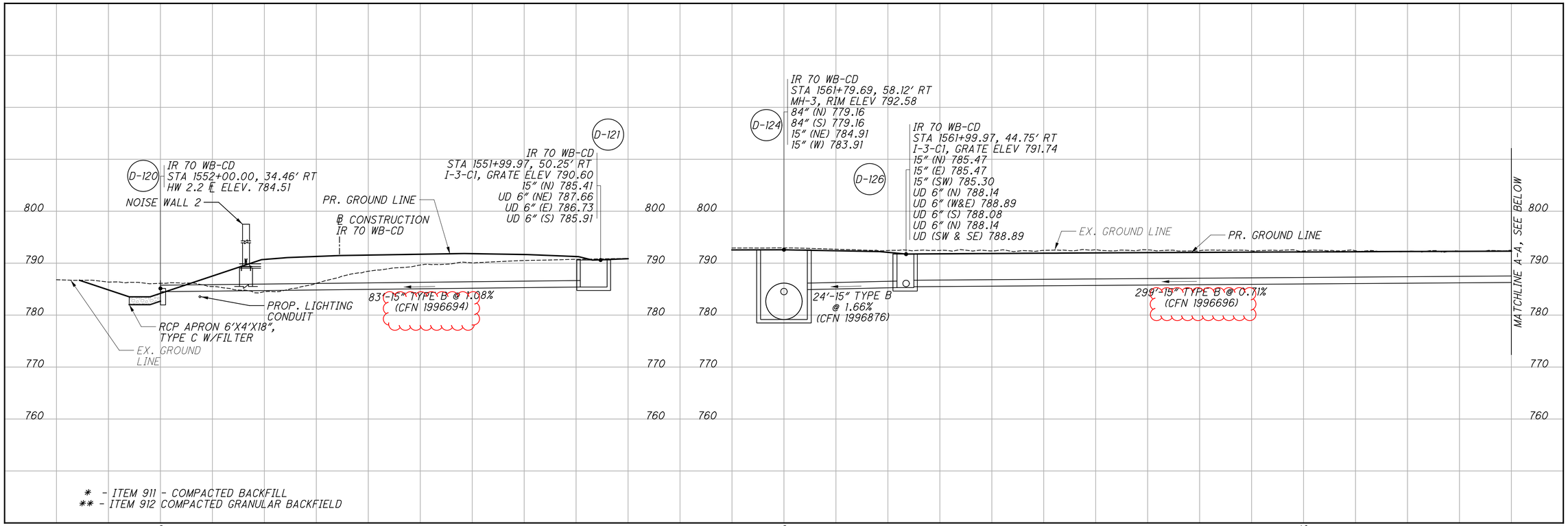

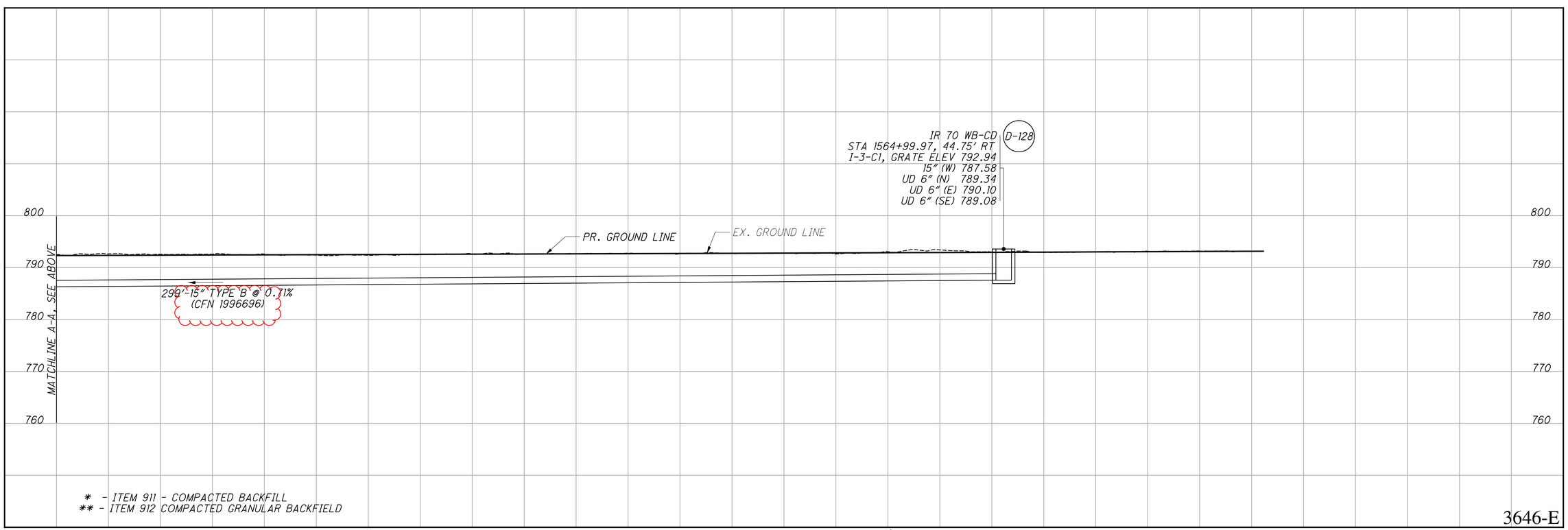

3646-E

CALCULATED CFR
CHECKED ECH

STORM SEWER PROFILE - IR 70 WB-CD

FRA-70-22.85

G:\ProjectData\2017\FRA\98232_FRA-70-22.85 W-17-140\Design\Drainage\Sheets\98232_DF001.dgn 1/22/2025 2:05:39 PM jugns

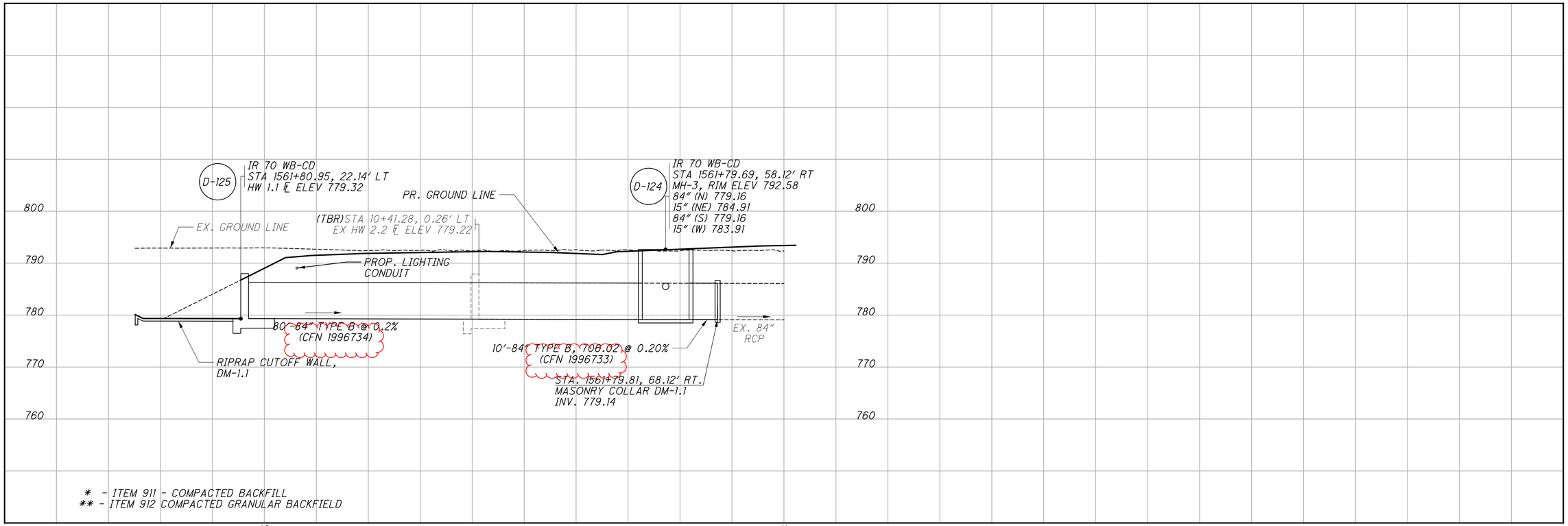

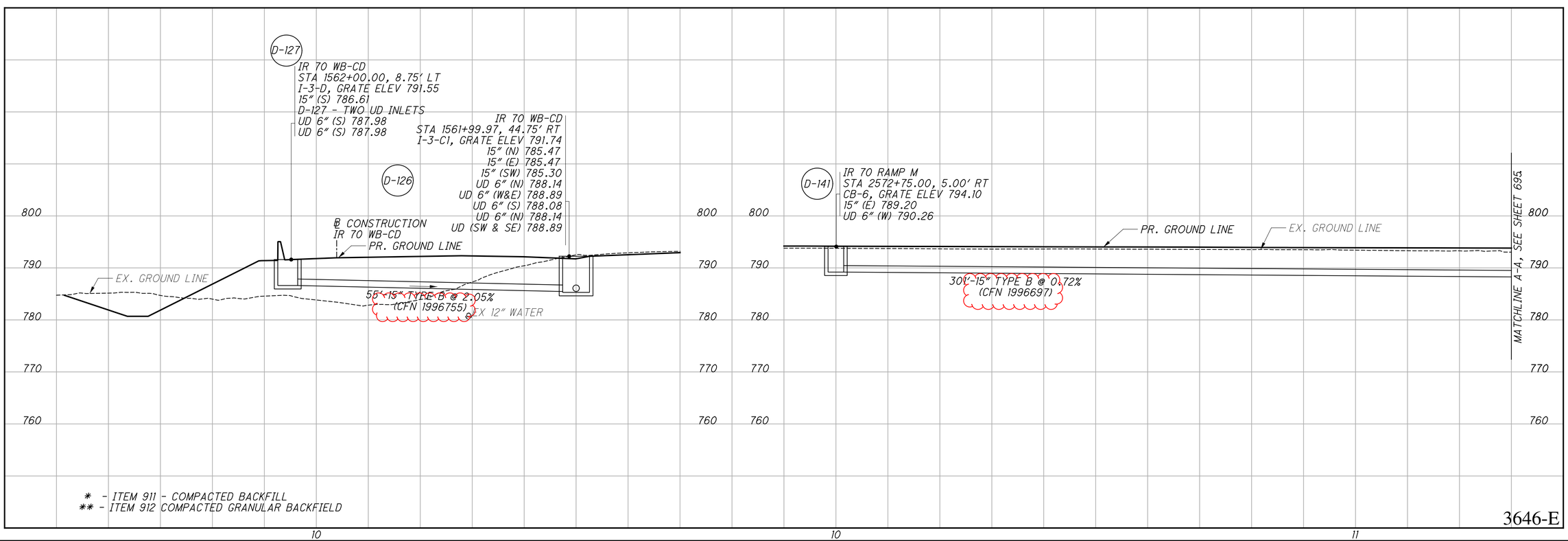

3646-E

CALCULATED CFR
CHECKED ECH

STORM SEWER PROFILE - IR 70 WB-CD & RAMP M

FRA-70-22.85

694
1356

G:\ProjectData\2017\FRA\98232_FRA-70-22.85 W-17-140\Design\Drainage\Sheets\98232_DF001.dgn 1/22/2025 2:05:39 PM jugns

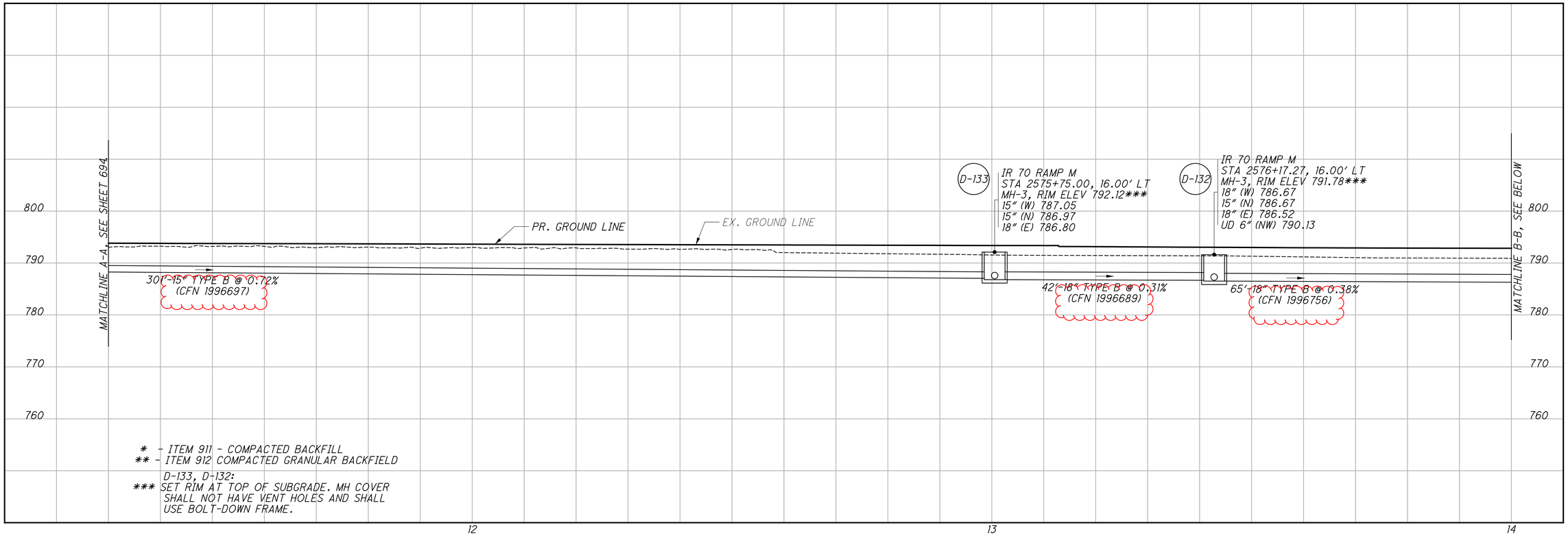

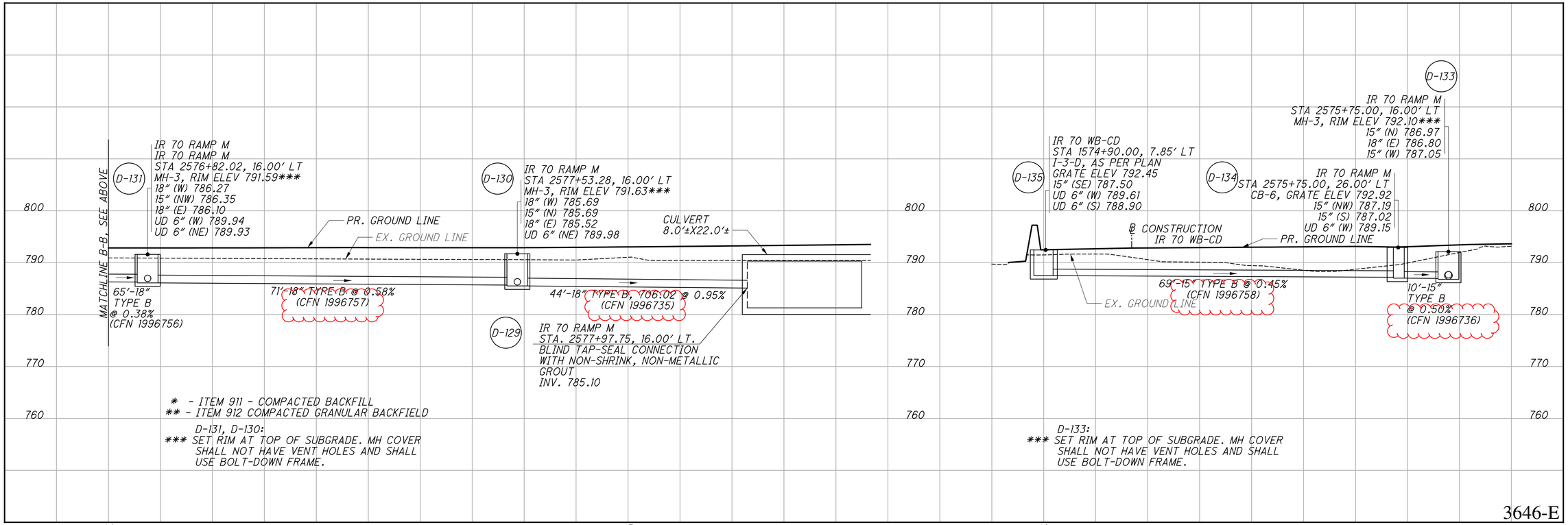

3646-E

CALCULATED CFR
CHECKED ECH

STORM SEWER PROFILE - IR 70

FRA-70-22.85

G:\ProjectData\2017\FRA\98232_FRA-70-22.85 W-17-140\Design\Drainage\Sheets\98232_DF001.dgn 1/22/2025 2:05:40 PM jugns

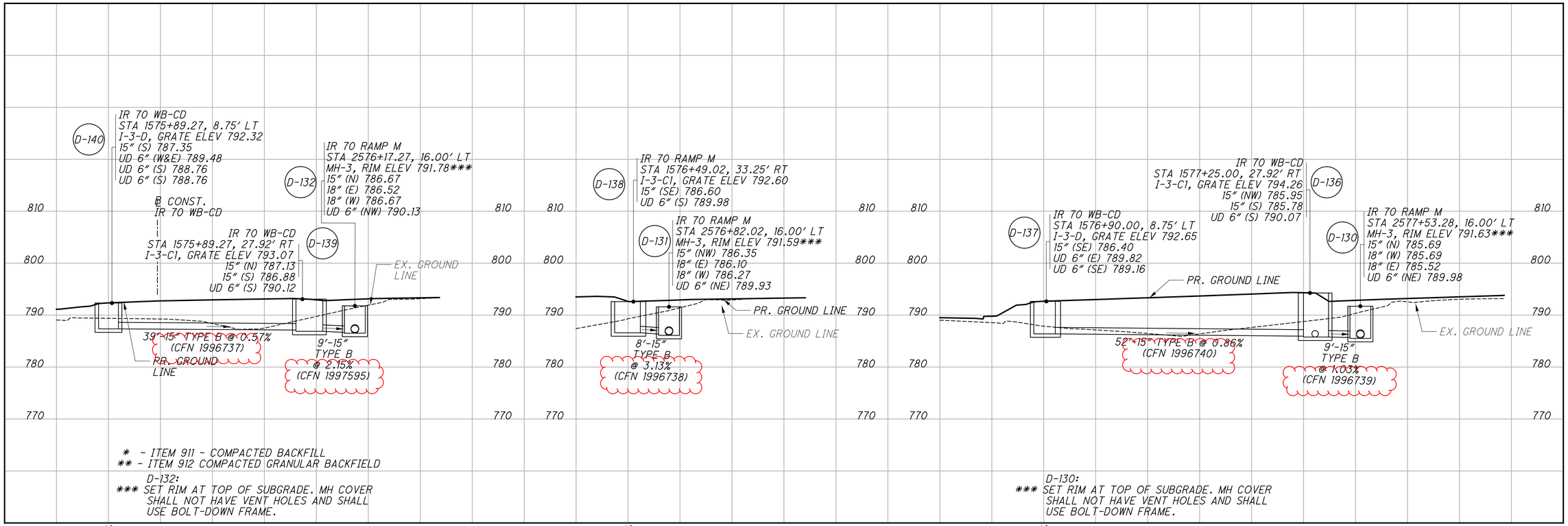

* - ITEM 911 - COMPACTED BACKFILL
** - ITEM 912 COMPACTED GRANULAR BACKFIELD

D-132:
*** SET RIM AT TOP OF SUBGRADE. MH COVER SHALL NOT HAVE VENT HOLES AND SHALL USE BOLT-DOWN FRAME.

D-130:
*** SET RIM AT TOP OF SUBGRADE. MH COVER SHALL NOT HAVE VENT HOLES AND SHALL USE BOLT-DOWN FRAME.

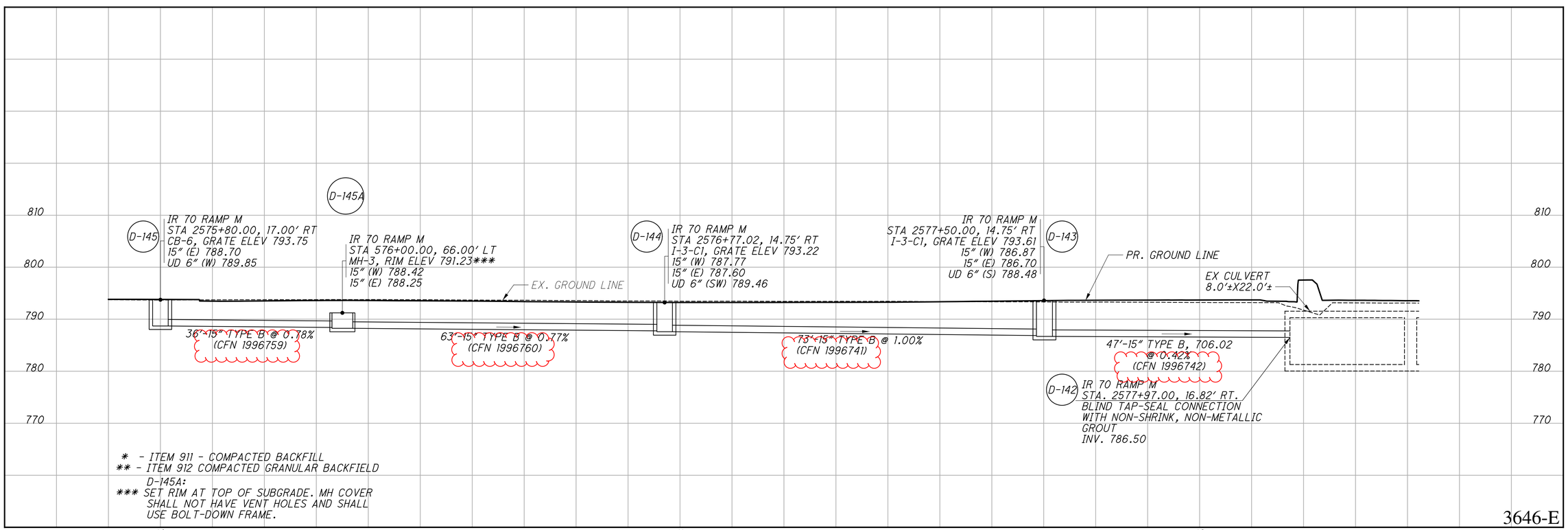

* - ITEM 911 - COMPACTED BACKFILL
** - ITEM 912 COMPACTED GRANULAR BACKFIELD

D-145A:
*** SET RIM AT TOP OF SUBGRADE. MH COVER SHALL NOT HAVE VENT HOLES AND SHALL USE BOLT-DOWN FRAME.

3646-E

CALCULATED CFR
CHECKED ECH

STORM SEWER PROFILE - IR 70 WB-CD & RAMP M

FRA-70-22.85

G:\ProjectData\2017\FRA\98232-FRA-70-22.85 W-17-140\Design\Drainage\Sheets\98232_DF001.dgn 2/21/2025 10:39:22 AM juans

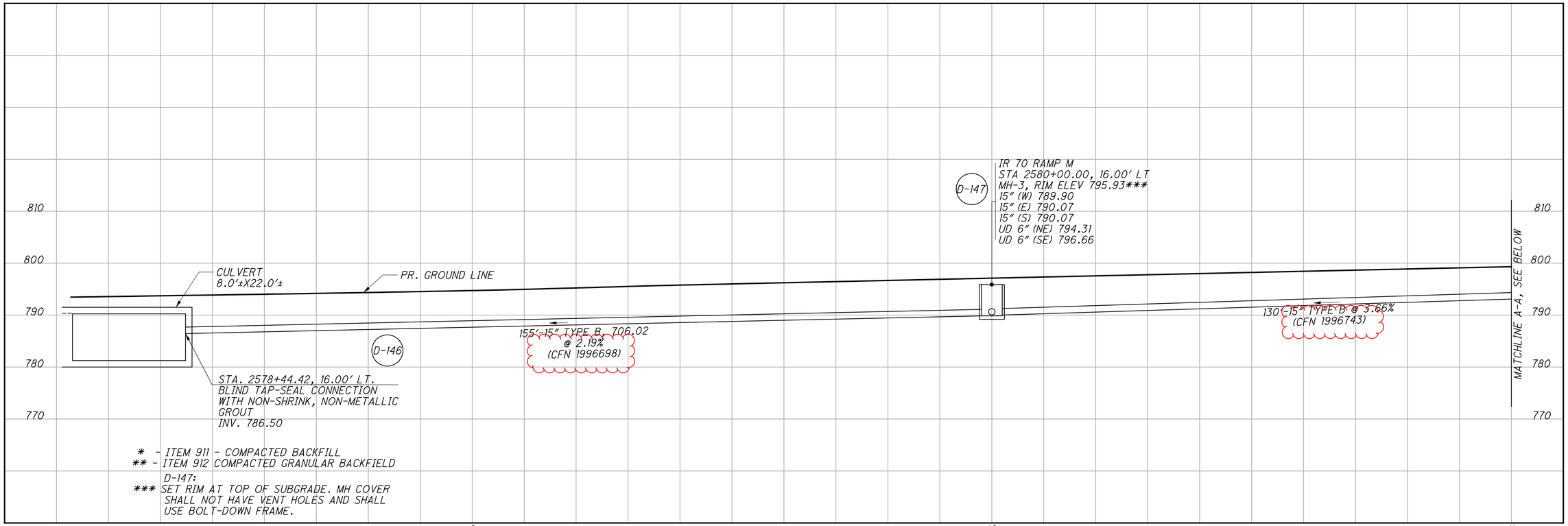

* - ITEM 911 - COMPACTED BACKFILL
** - ITEM 912 COMPACTED GRANULAR BACKFIELD

D-147:
*** SET RIM AT TOP OF SUBGRADE. MH COVER SHALL NOT HAVE VENT HOLES AND SHALL USE BOLT-DOWN FRAME.

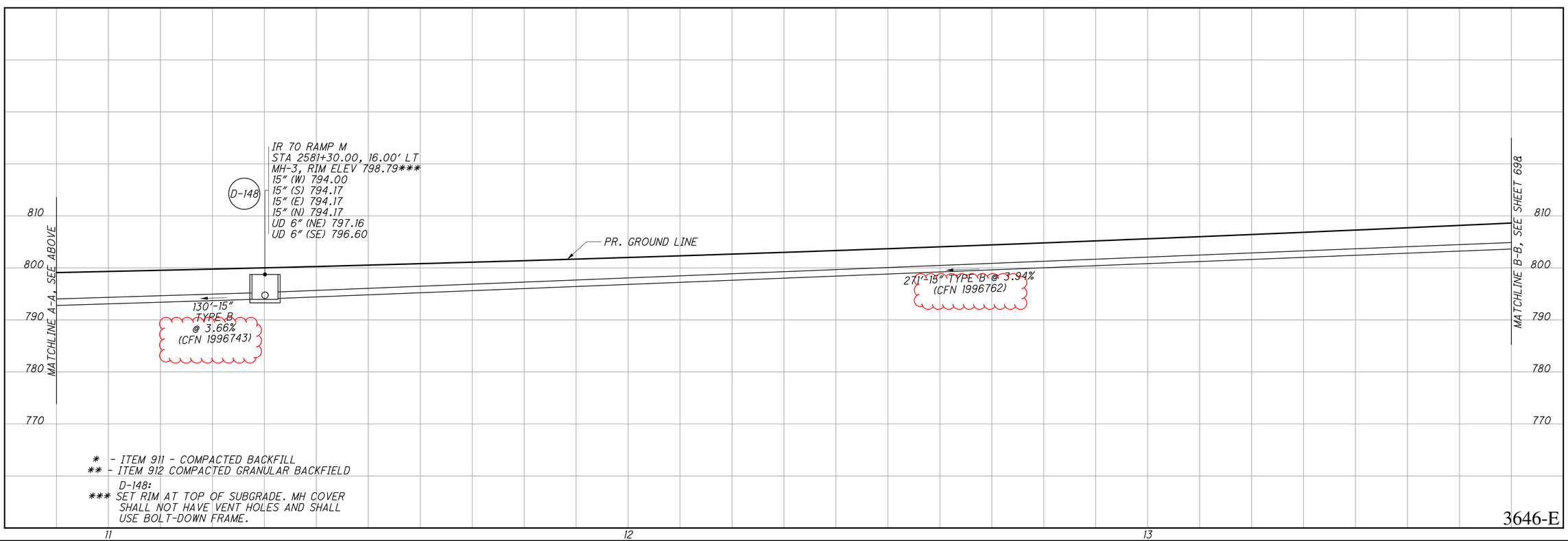

* - ITEM 911 - COMPACTED BACKFILL
** - ITEM 912 COMPACTED GRANULAR BACKFIELD

D-148:
*** SET RIM AT TOP OF SUBGRADE. MH COVER SHALL NOT HAVE VENT HOLES AND SHALL USE BOLT-DOWN FRAME.

3646-E

CALCULATED CFR
CHECKED ECH

STORM SEWER PROFILE - IR 70 RAMP M

FRA-70-22.85

697
1356

G:\ProjectData\2017\FRA\98232_FRA-70-22.85 W-17-140\Design\Drainage\Sheets\98232_DF001.dgn 1/22/2025 2:05:41PM jwans

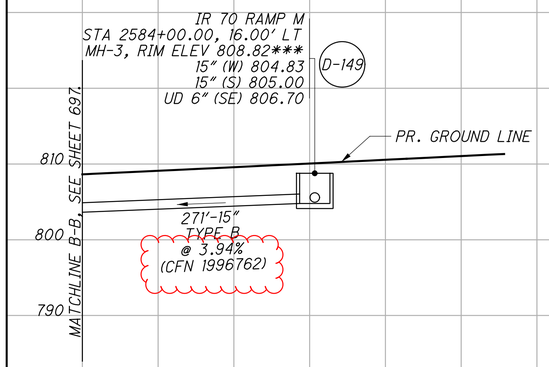

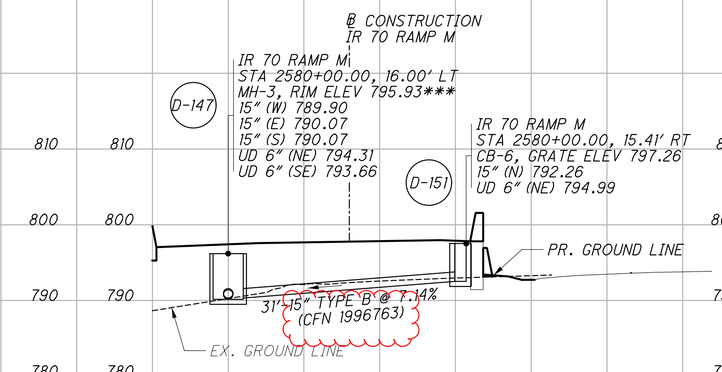

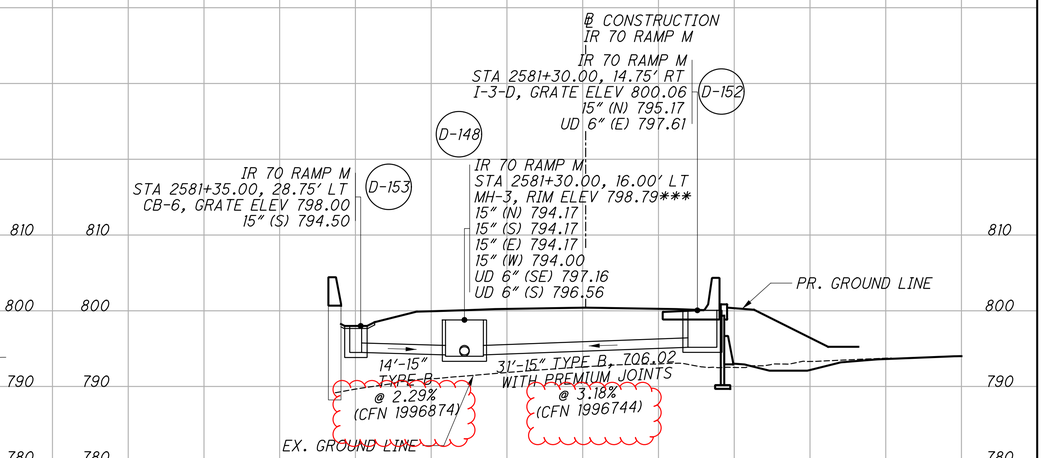

* - ITEM 911 - COMPACTED BACKFILL
** - ITEM 912 COMPACTED GRANULAR BACKFIELD

D-149:
*** SET RIM AT TOP OF SUBGRADE. MH COVER SHALL NOT HAVE VENT HOLES AND SHALL USE BOLT-DOWN FRAME.

D-147:
*** SET RIM AT TOP OF SUBGRADE. MH COVER SHALL NOT HAVE VENT HOLES AND SHALL USE BOLT-DOWN FRAME.

D-148:
*** SET RIM AT TOP OF SUBGRADE. MH COVER SHALL NOT HAVE VENT HOLES AND SHALL USE BOLT-DOWN FRAME.

14 10 10

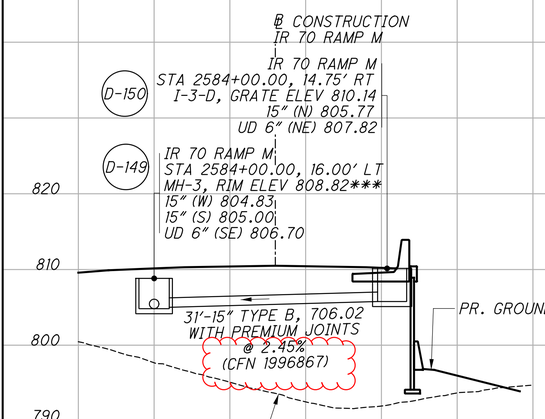

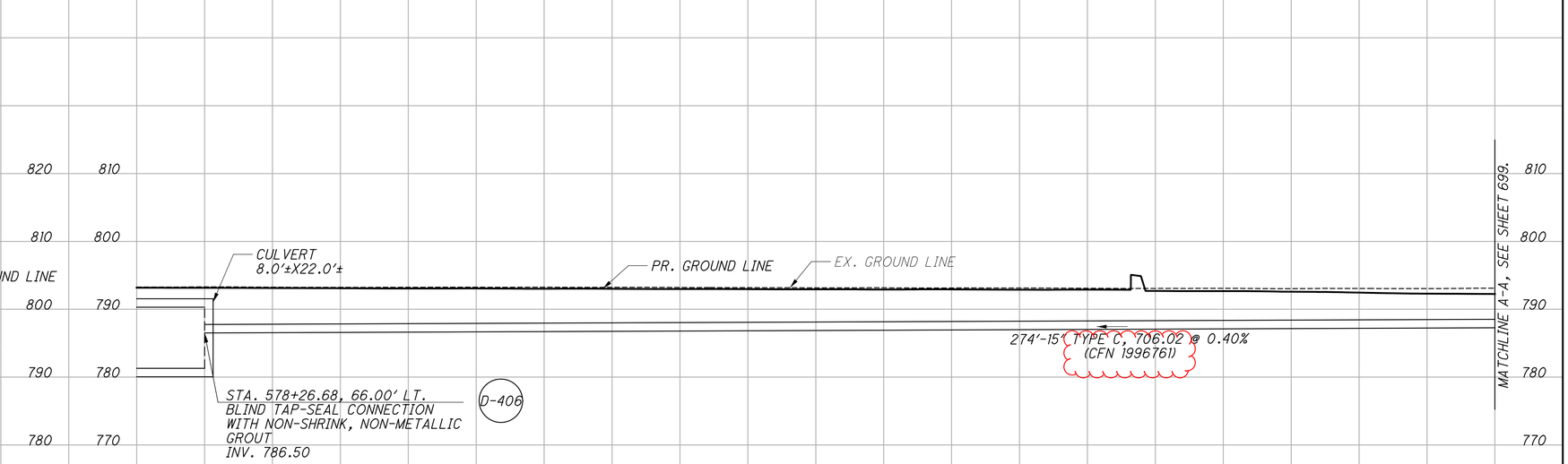

* - ITEM 911 - COMPACTED BACKFILL
** - ITEM 912 COMPACTED GRANULAR BACKFIELD

D-149:
*** SET RIM AT TOP OF SUBGRADE. MH COVER SHALL NOT HAVE VENT HOLES AND SHALL USE BOLT-DOWN FRAME.

10 10 11

3646-E

CALCULATED CFR
CHECKED ECH

STORM SEWER PROFILE - IR 70 RAMP M

FRA-70-22.85

G:\ProjectData\2017\FRA\98232_FRA-70-22.85 W-17-140\Design\Drainage\Sheets\98232_DF001.dgn 1/22/2025 2:05:41PM juans

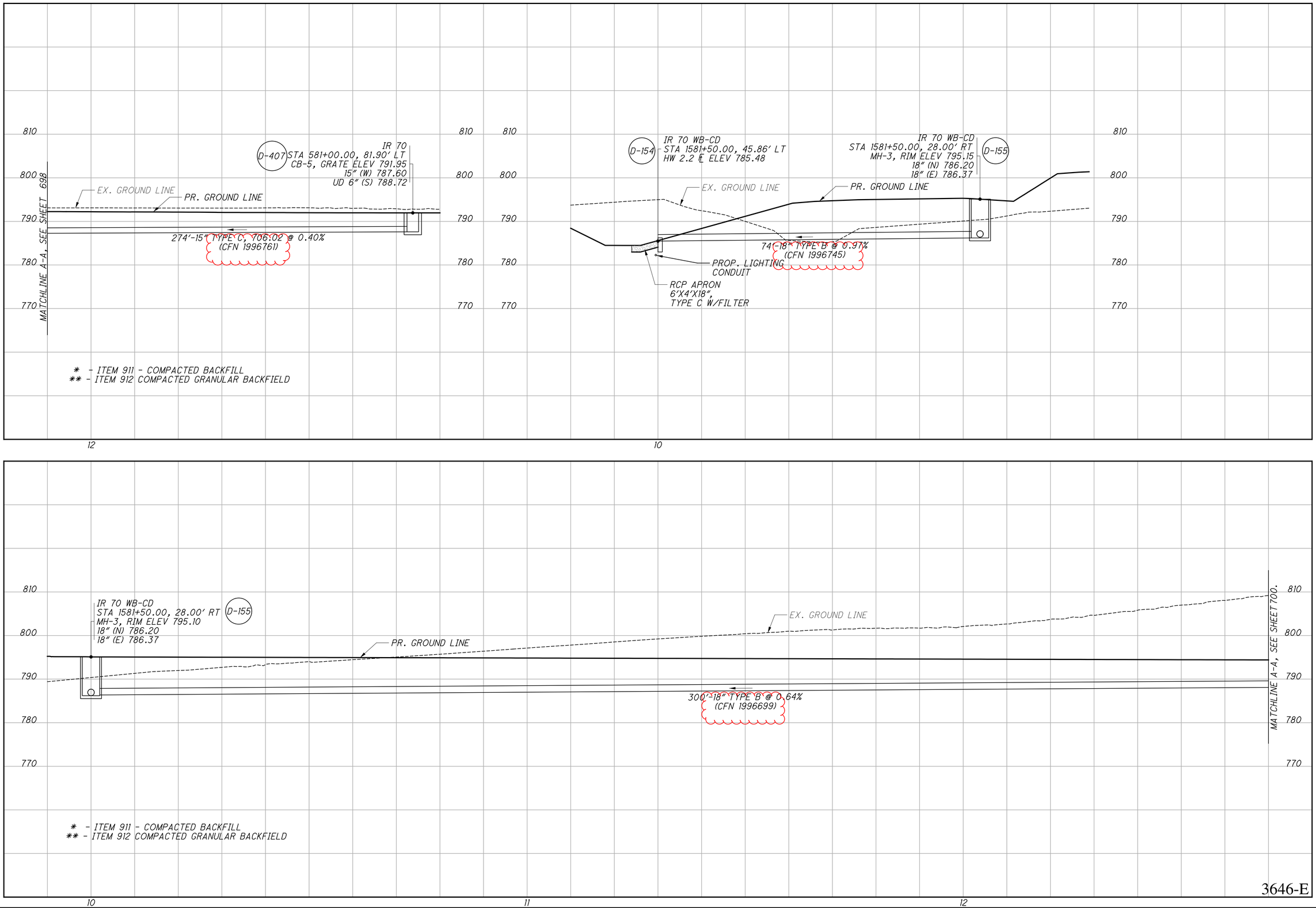

CALCULATED CFR
CHECKED ECH

STORM SEWER PROFILE - IR 70

FRA-70-22.85

699
1356

G:\ProjectData\2017\FRA\98232_FRA-70-22.85 W-17-140\Design\Drainage\Sheets\98232_DF001.dgn 1/22/2025 2:05:42 PM jugns

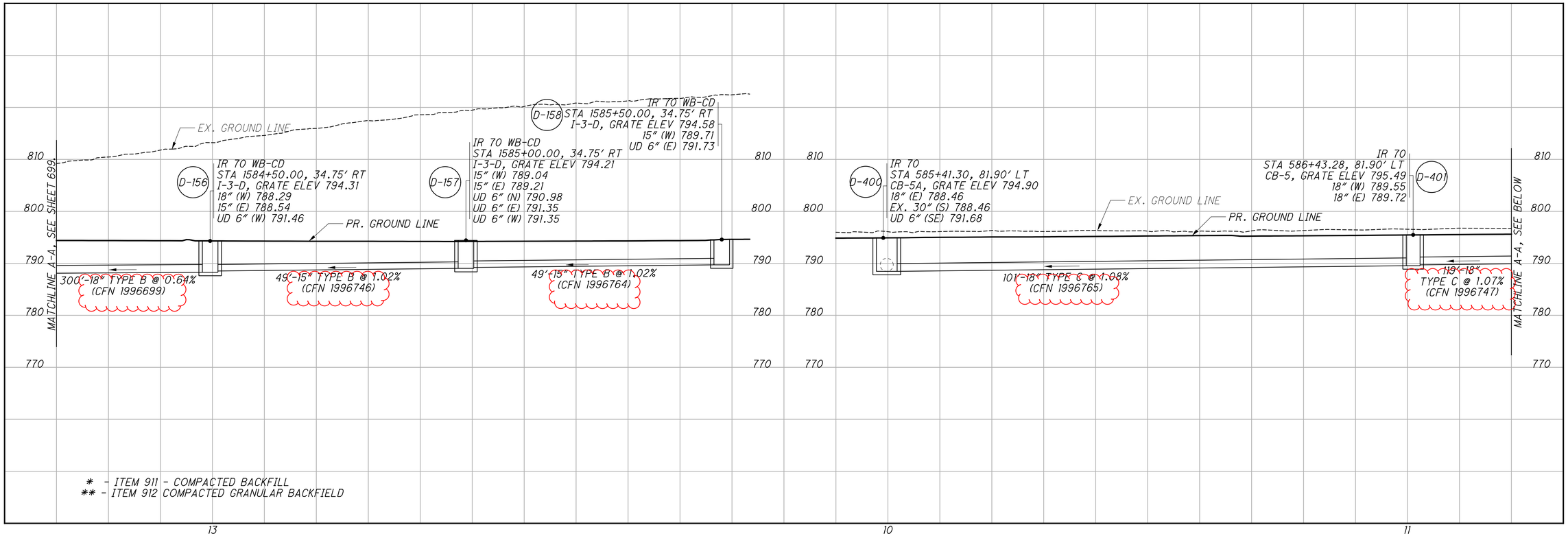

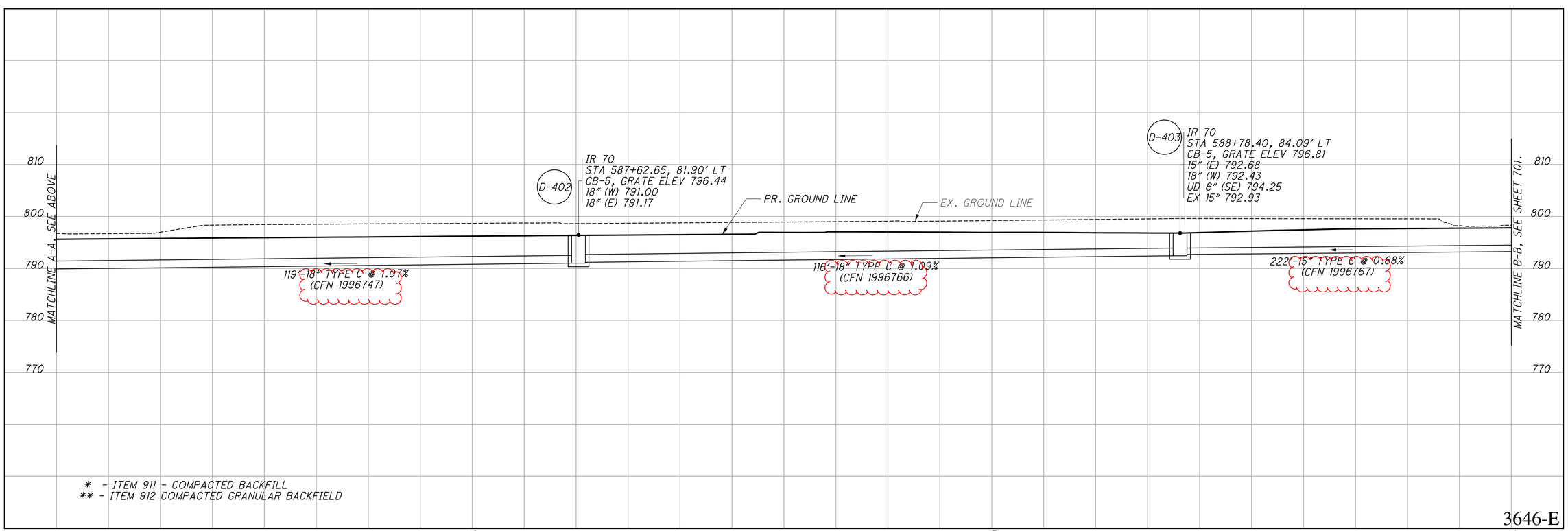

3646-E

CALCULATED CFR
CHECKED ECH

STORM SEWER PROFILE - IR 70 & IR 70WB-CD

FRA-70-22.85

700
1356

G:\ProjectData\2017\FRA\98232_FRA-70-22.85 W-I7-I40\Design\Drainage\Sheets\98232_DF001.dgn 1/22/2025 2:05:42 PM jugns

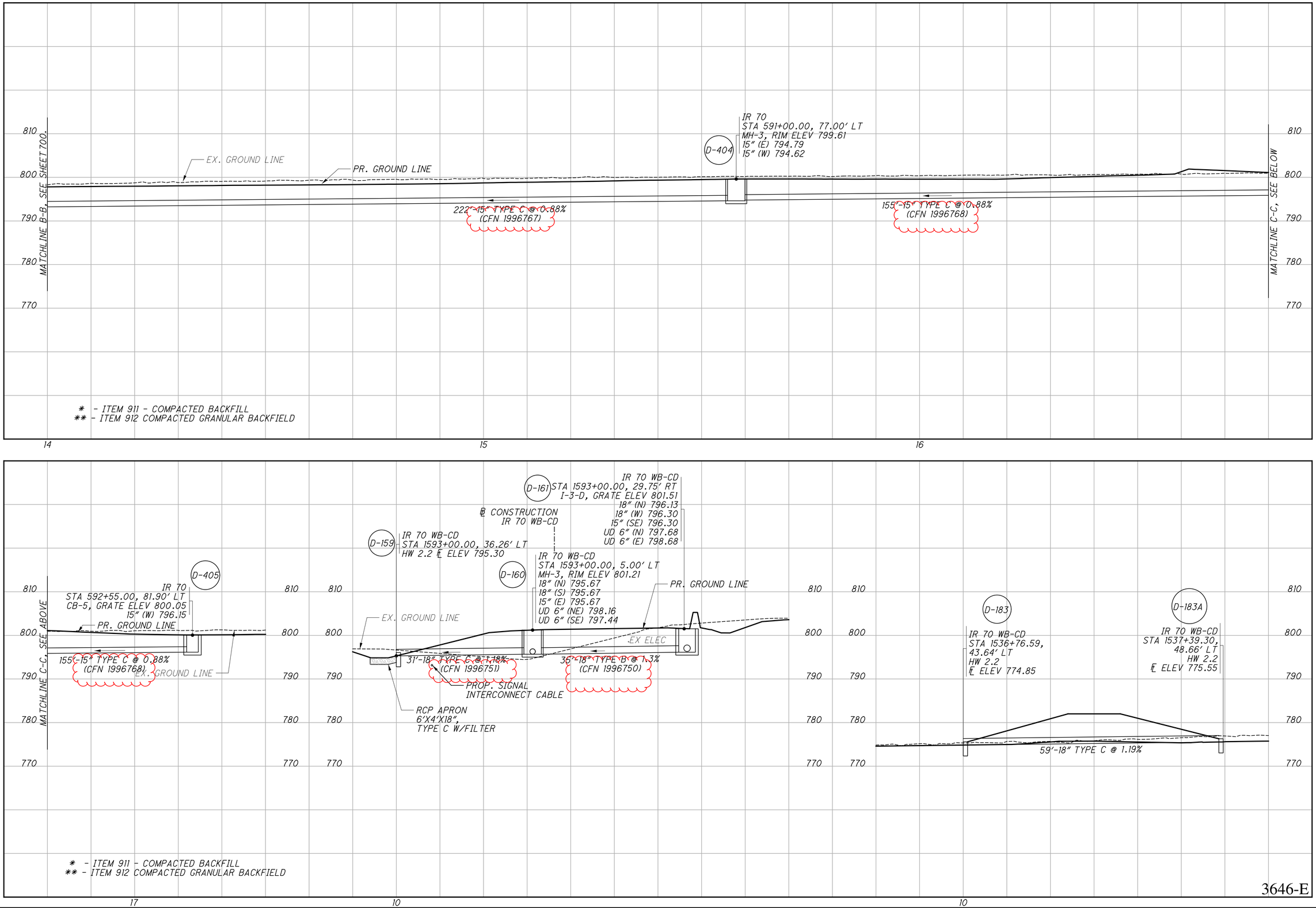

3646-E

CALCULATED CFR
CHECKED ECH

STORM SEWER PROFILE - IR 70

FRA-70-22.85

701
1356

G:\ProjectData\2017\FRA\98232_FRA-70-22.85 W-17-140\Design\Drainage\Sheets\98232_DF001.dgn 1/22/2025 2:05:43 PM jugns

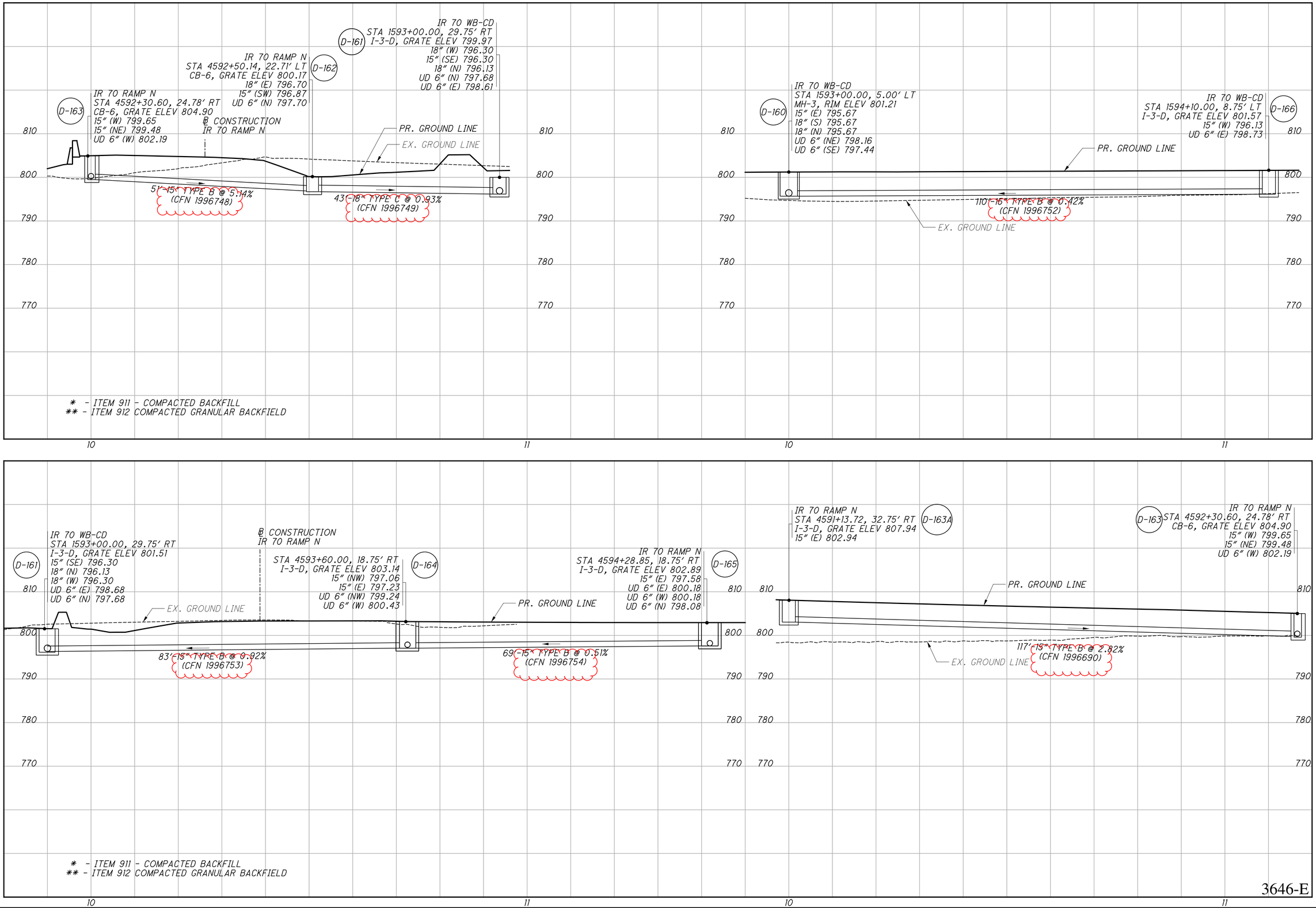

3646-E

CALCULATED CFR
CHECKED ECH

STORM SEWER PROFILE - IR 70

FRA-70-22.85

G:\ProjectData\2017\FRA\98232_FRA-70-22.85 W-I7-I40\Design\Drainage\Sheets\98232_DF001.dgn 1/22/2025 2:05:44 PM jugns

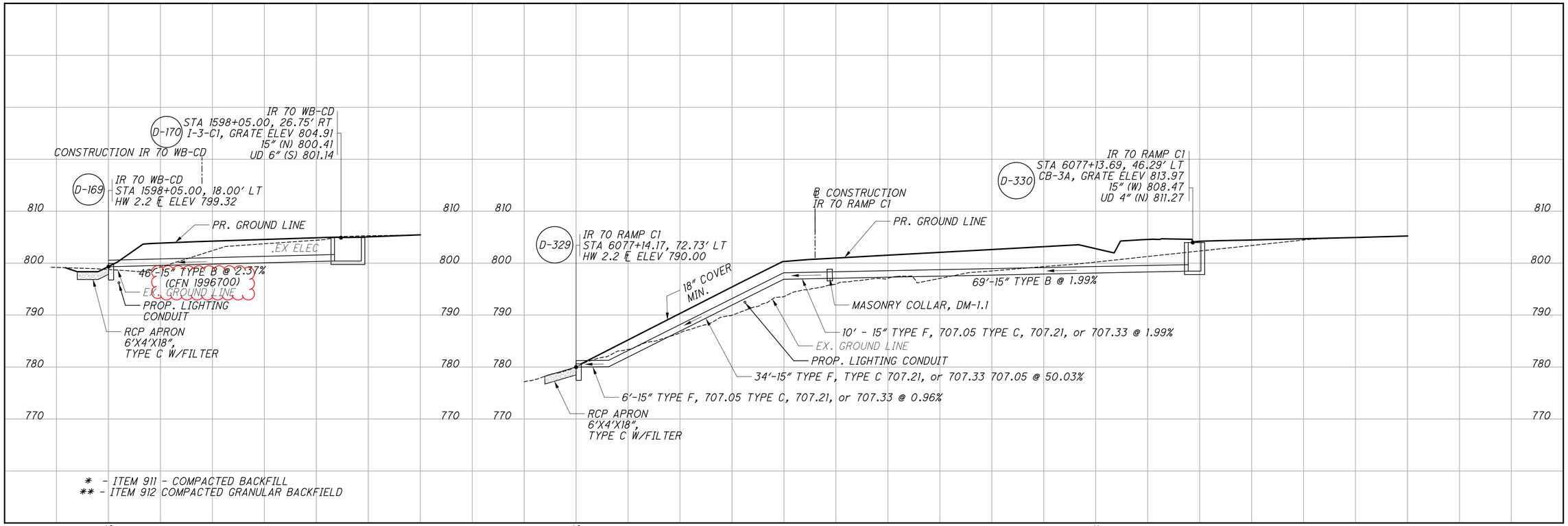

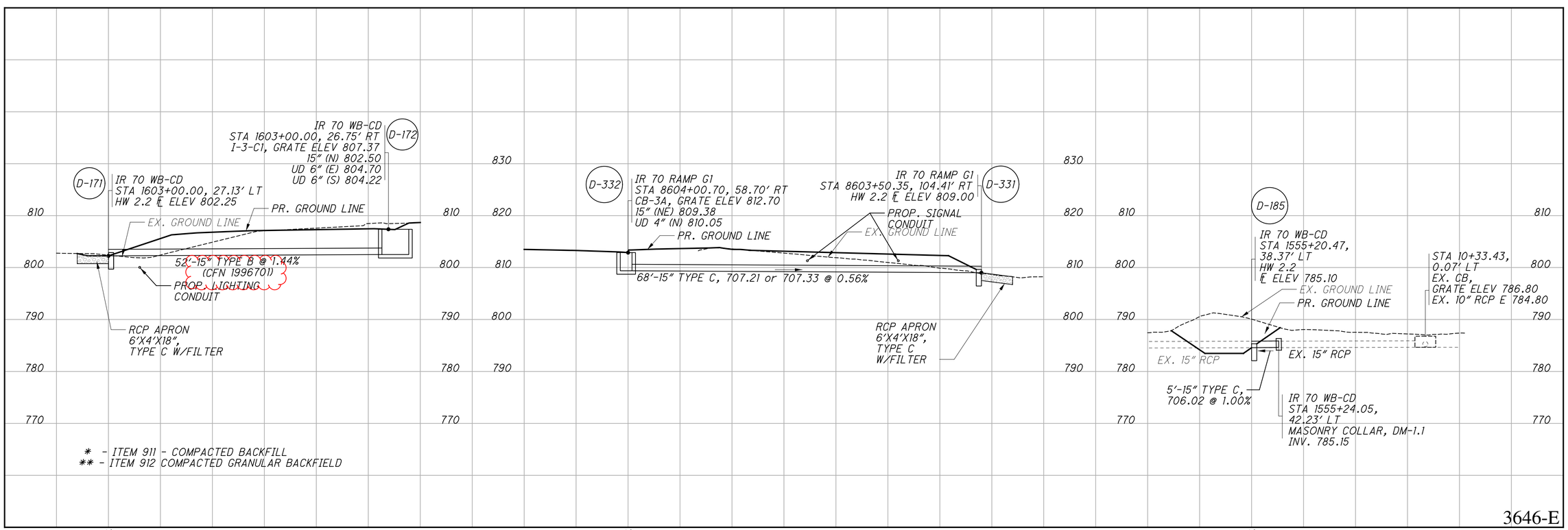

3646-E

CALCULATED CFR
CHECKED ECH

STORM SEWER PROFILE - IR 70 WB-CD

FRA-70-22.85

703
1356

G:\ProjectData\2017\FRA\98232_FRA-70-22.85 W-17-140\Design\Drainage\Sheets\98232_DF001.dgn 1/22/2025 2:05:44 PM jugns

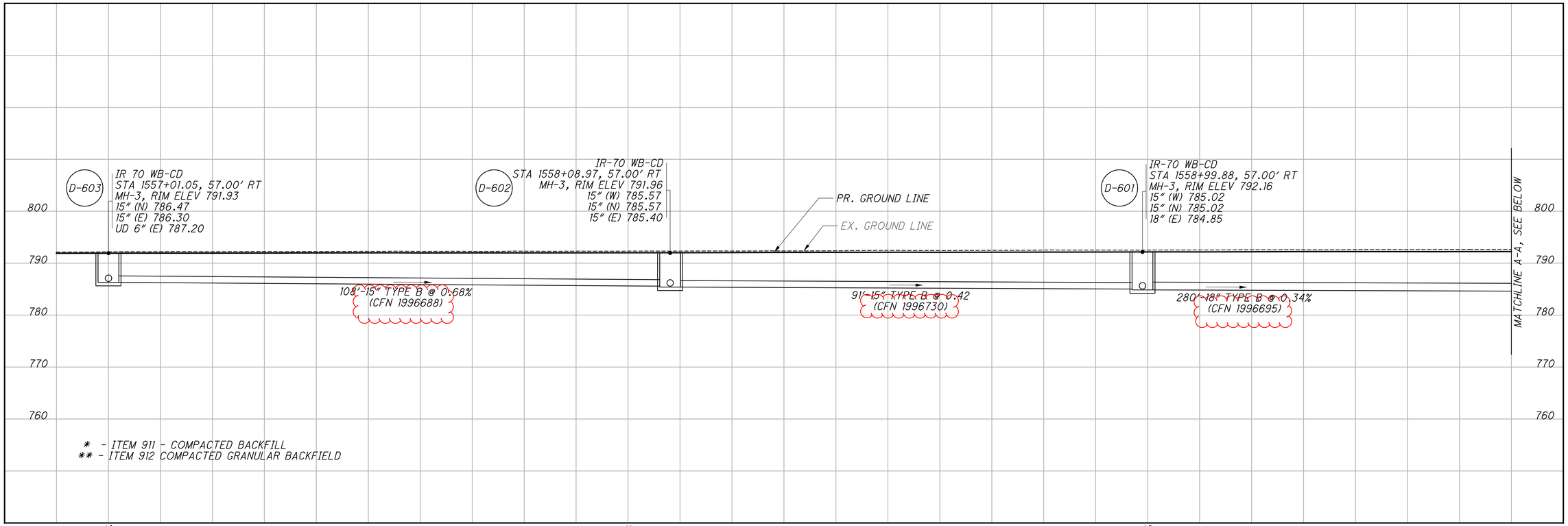

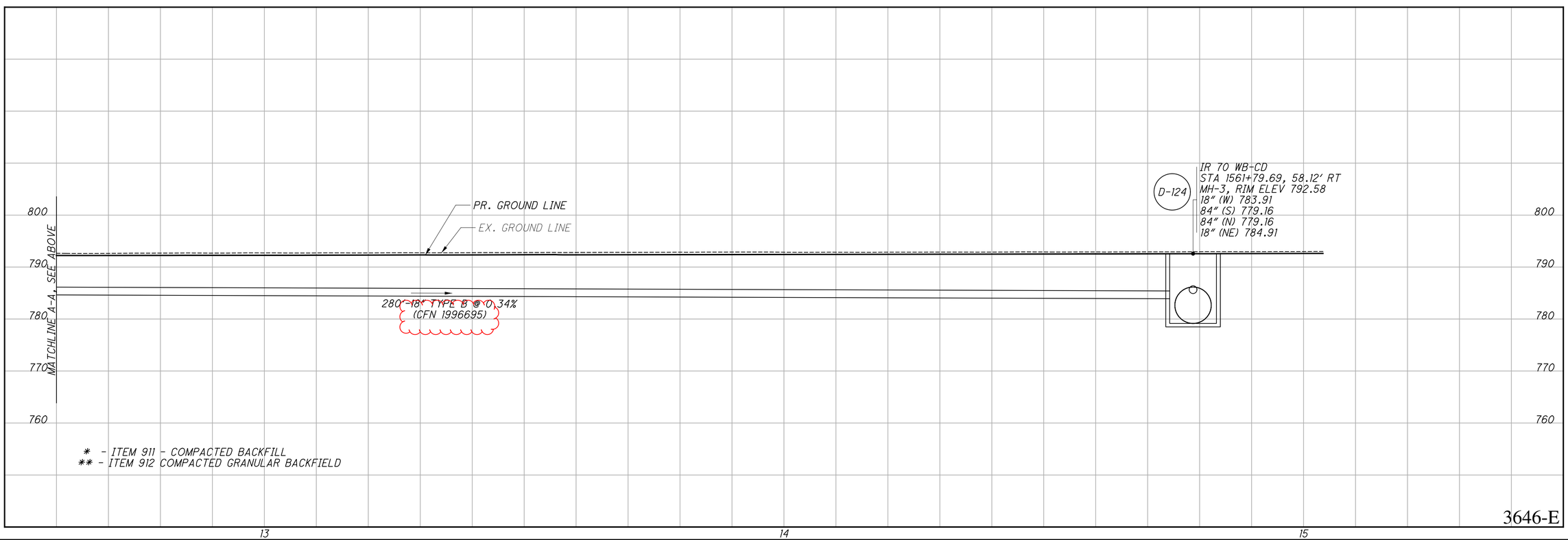

3646-E

CALCULATED CFR
CHECKED ECH

STORM SEWER PROFILE - IR 70 WB-CD

FRA-70-22.85

704
1356

G:\ProjectData\2017\FRA\98232_FRA-70-22.85 W-I7-I40\Design\Drainage\Sheets\98232_DF001.dgn 1/22/2025 2:05:45 PM jugns

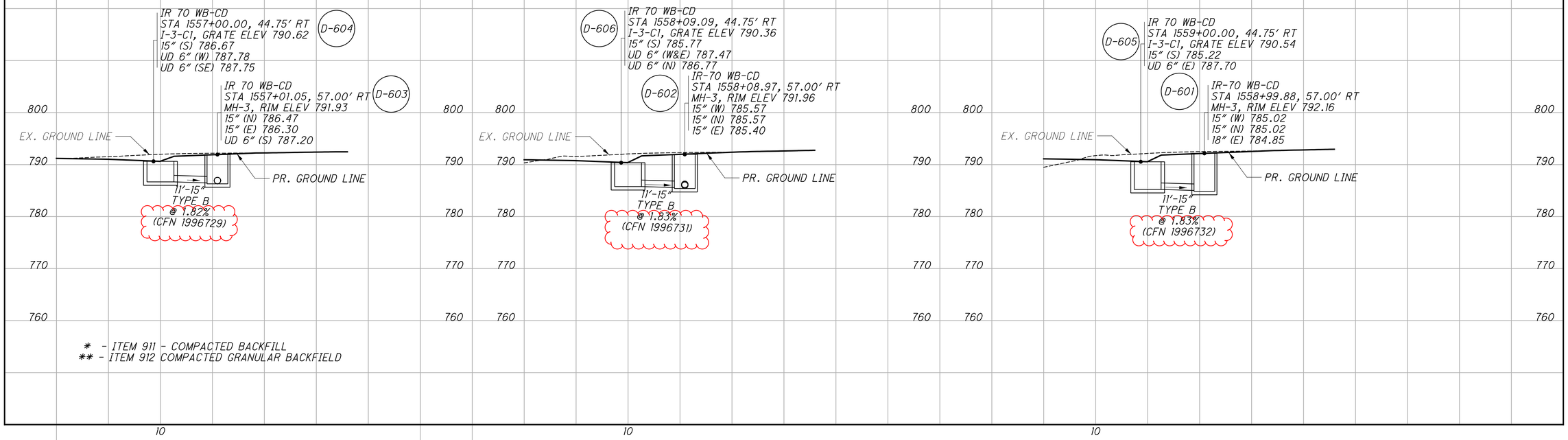

* - ITEM 911 - COMPACTED BACKFILL
** - ITEM 912 COMPACTED GRANULAR BACKFIELD

3646-E

CALCULATED CFR
CHECKED ECH

STORM SEWER PROFILE - IR 70 WB-CD

FRA-70-22.85

705
1356

G:\ProjectData\2017\FRA\98232_FRA-70-22.85 W-17-140\Design\Drainage\Sheets\98232_DF001.dgn 2/21/2025 10:45:25 AM juans

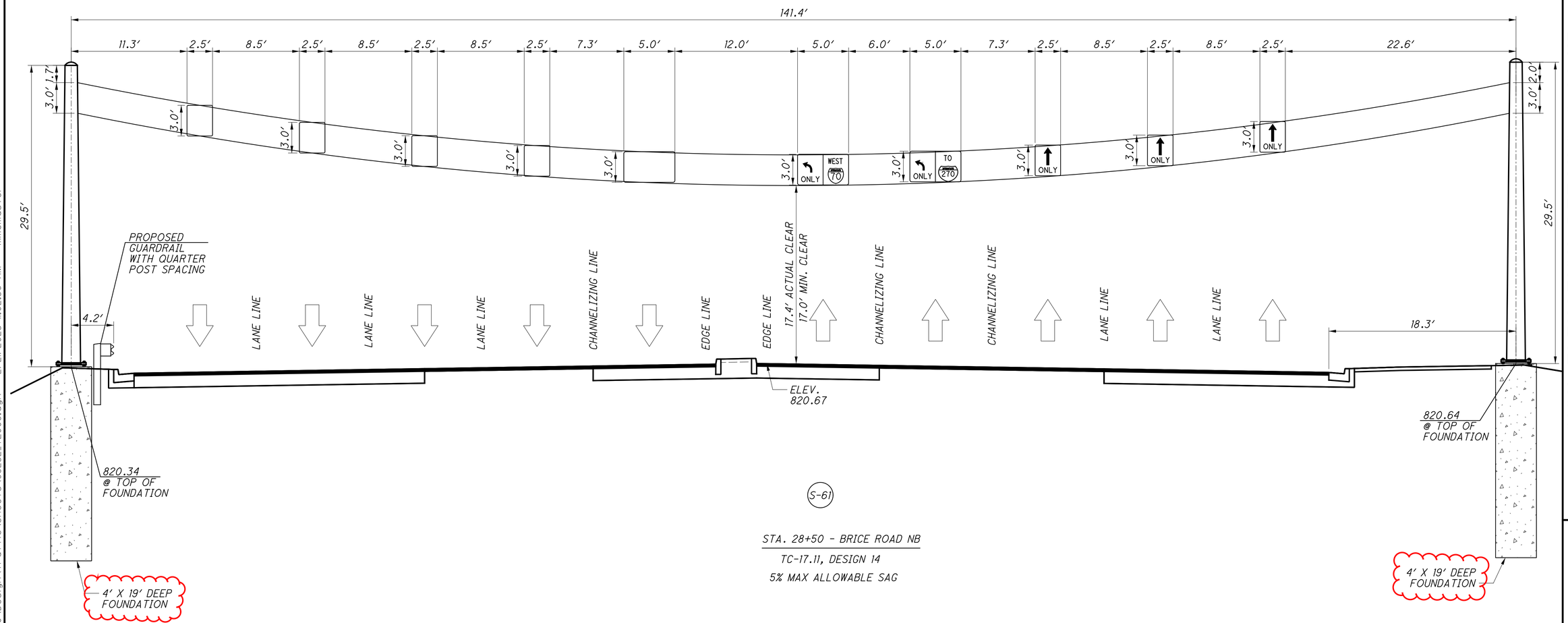

HORIZONTAL SCALE IN FEET
0 2.5 5 10

CALCULATED MKM
CHECKED SMM

SIGN ELEVATION DETAILS S-61 NB
BRICE ROAD - STA. 28+50

FRA-70-22.85

909
1356

3646-E

J:\2017091\3\ODOT\FRA\98232_FRA_70\Design\Traffic\Sheets\98232_TE008.dgn 2/21/2025 11:02:36 AM mmcmaster

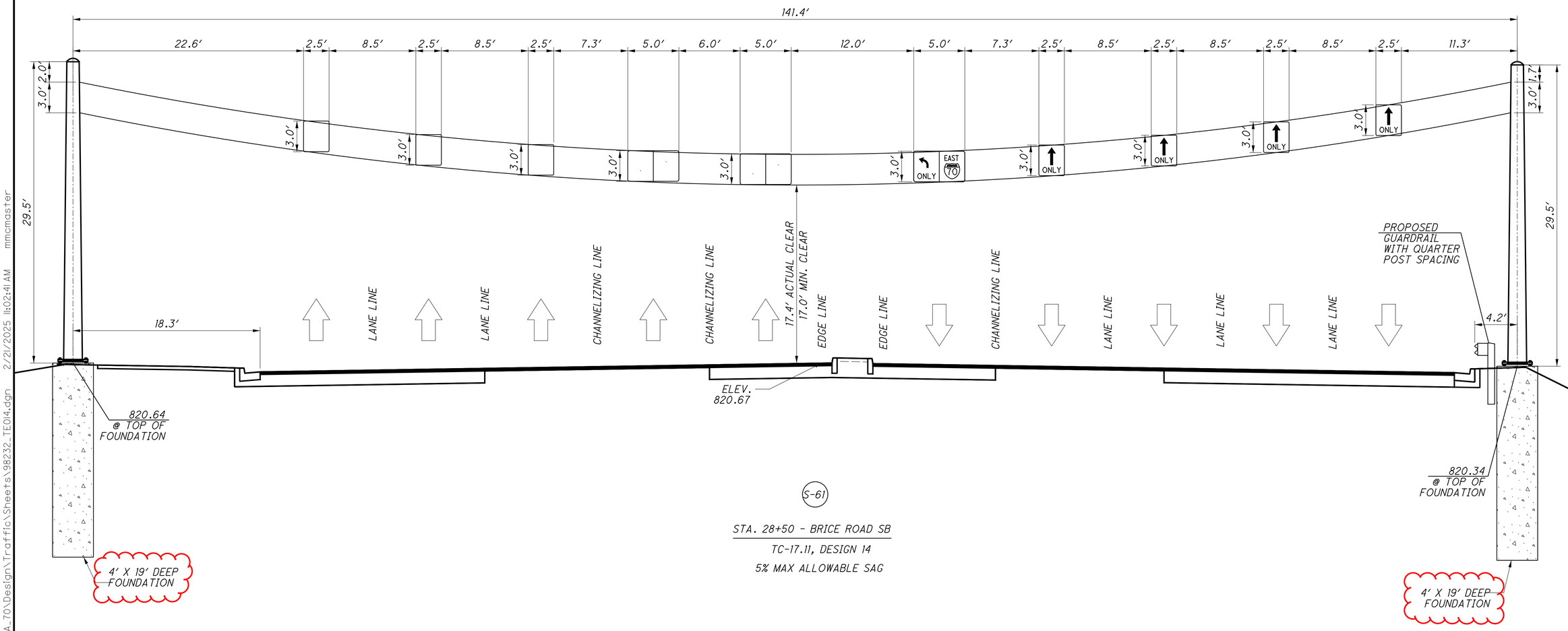

3646-E

0 2.5 5 10
HORIZONTAL SCALE IN FEET

CALCULATED MKM
CHECKED SMM

SIGN ELEVATION DETAILS S-61 SB
BRICE ROAD - STA. 28+50

FRA-70-22.85

910
1356

J:\2017093\ODOT\FRA\98232_FRA_70\Design\Traffic\Sheets\98232_TE014.dgn 2/21/2025 11:02:41 AM mmcmaster