LEGEND

1. ITEM 442 - 1 ½" ASPHALT CONCRETE SURFACE COURSE, 12.5MM, TYPE A (447), AS PER PLAN
2. ITEM 407 - NON-TRACKING TACK COAT (@0.055 GAL/SY)
3. ITEM 442 - 1 ¾" ASPHALT CONCRETE INTERMEDIATE COURSE, 12.5MM, TYPE A (446)
4. ITEM 302 - 13" ASPHALT CONCRETE BASE (2-6.5" LIFTS)
5. ITEM 304 - 6" AGREGGATE BASE
6. ITEM 452 - 6" NON-REINFORCED CONCRETE PAVEMENT
7. ITEM 605 - 6" BASE PIPE UNDERDRAINS
8. ITEM 204 - PROOF ROLLING
9. ITEM 659 - SEEDING AND MULCHING
10. ITEM 606 - GUARDRAIL, TYPE MGS
11. ITEM 452 - 15" NON-REINFORCED CONCRETE PAVEMENT
12. ITEM 206 - CEMENT STABILIZED SUBGRADE, 14" DEEP
13. ITEM 605 - 6" SHALLOW PIPE UNDERDRAINS
14. ITEM 605 - 6" UNCLASSIFIED PIPE UNDERDRAINS
15. ITEM 526 - REINFORCED CONCRETE APPROACH SLAB (T=17")
16. ITEM 302 - 9" ASPHALT CONCRETE BASE (2-4.5" LIFTS)
17. ITEM 609 - CURB, TYPE 6
18. ITEM 608 - 4" CONCRETE WALK
19. ITEM 254 - 1 ½" PAVEMENT PLANING, ASPHALT CONCRETE
20. ITEM 411 - 8" STABILIZED CRUSHED AGGREGATE
21. ITEM 622 - CONCRETE BARRIER, SINGLE SLOPE, TYPE B1
22. ITEM 622 - CONCRETE BARRIER, SINGLE SLOPE, TYPE C1
23. ITEM 622 - CONCRETE BARRIER, SINGLE SLOPE, TYPE D
24. ITEM 618 - RUMBLE STRIPS, SHOULDER (ASPHALT CONCRETE)
25. ITEM 407 - NON-TRACKING TACK COAT (@0.085 GAL/SY)
26. ITEM 609 - CURB, TYPE 4-C, AS PER PLAN
27. ITEM 204 - SUBGRADE COMPACTION
28. ITEM 302 - 4 3/4" ASPHALT CONCRETE BASE
29. ITEM 659 - TOPSOIL
30. ITEM 441 - 1 1/2" ASPHALT CONCRETE SURFACE COURSE, TYPE 1 (448), PG 64-22
31. ITEM 408 - PRIME COAT
32. ITEM 441 - 1 3/4" ASPHALT CONCRETE INTERMEDIATE COURSE, TYPE 1 (448)

[1] VARIES 10.0' TO 8.1'
STA 466+22.08 TO STA 467+25.00

[2] VARIES 0.0' TO 1.9'
STA 466+22.08 TO STA 467+25.00

[3] VARIES 0.0' TO 12'
STA 466+22.08 TO STA 466+65.00
12'
STA 466+65.00 TO STA 467+25.00

[4] VARIES 16.9'± TO 8.0'
STA 466+22.08 TO STA 466+65.00
8.0'
STA 466+65.00 TO STA 467+25.00

[5] VARIES 8.1' TO 8.0'
STA 467+25.00 TO STA 467+29.10
8.0'
STA 467+29.10 TO STA 472+00.00

[6] VARIES 1.9' TO 11.7'
STA 467+25.00 TO STA 472+00.00

[7] 12'
STA 467+25.00 TO STA 469+74.52
VARIES 12' TO 21.6'
STA 469+74.52 TO STA 472+00.00

[A] 0.04 OR RATE OF SUPER IF GREATER

[B] 0.07 MAX BREAK

[C] VARIES 0.04 TO 0.01

[S] SEE SHEET 19 FOR GRADING DETAILS.
SEE SHEET 21 FOR ROADSIDE BARRIER DETAILS

FOR EXISTING LEGEND, SEE SHEET 10

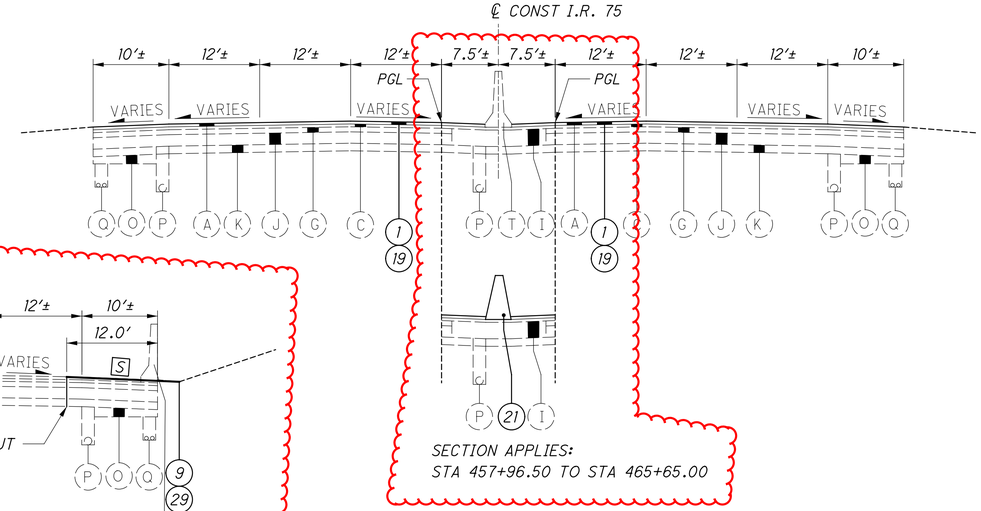

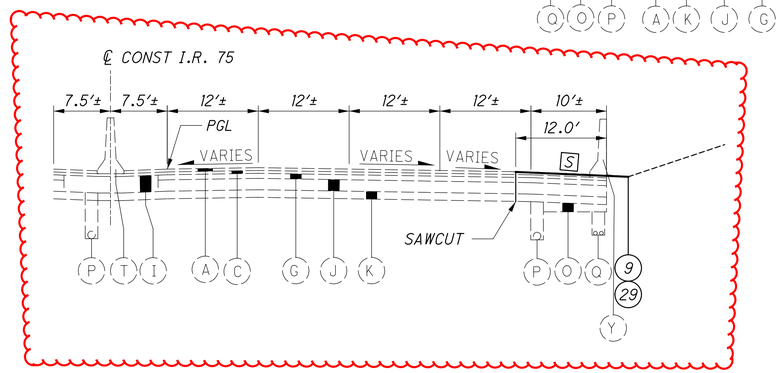

NORMAL SECTION - I.R. 75

STA 453+25.20 TO STA 465+65.00

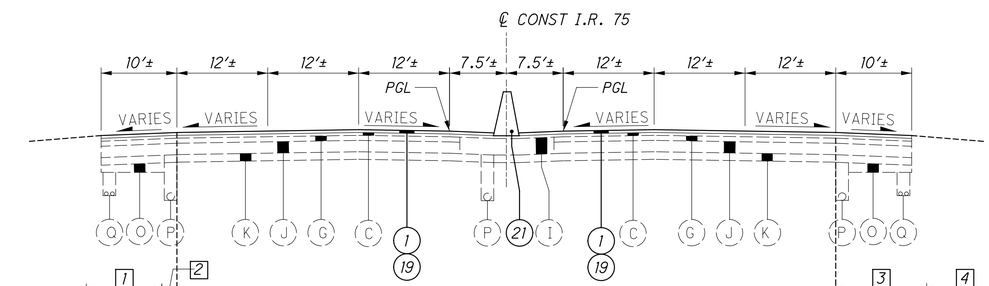

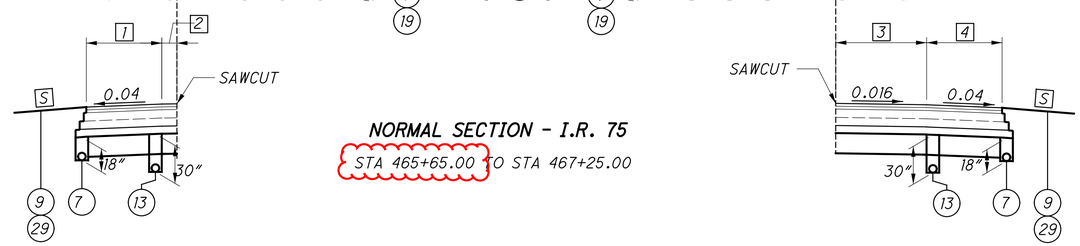

NORMAL SECTION - I.R. 75

STA 465+65.00 TO STA 467+25.00

SECTION APPLIES
STA 466+22.08 TO STA 467+25.00

SECTION APPLIES:
STA 465+65.00 TO STA 467+25.00

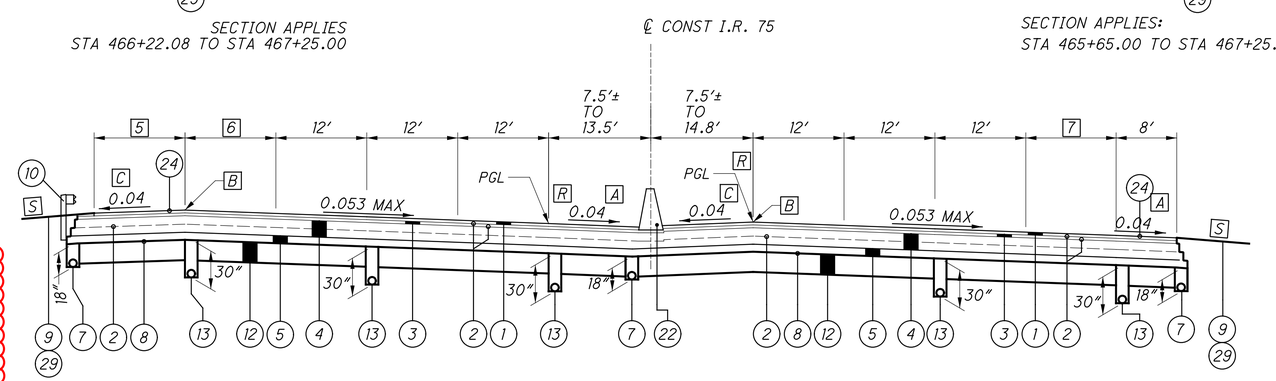

SUPERELEVATED SECTION - I.R. 75

STA 467+25.00 TO STA 472+00.00

TYPICAL SECTIONS - RESURFACING I.R. 75

HAM-75-8.91

J:\2024044S\ODOT\HAM\117525\Design\Roadway\Sheets\77889GY401.dgn 3/10/2025 1:33:30 PM hbrendlinger

SEEDING AND MULCHING

THE FOLLOWING QUANTITIES ARE PROVIDED TO PROMOTE GROWTH AND CARE OF PERMANENT SEEDED AREAS:

659, SOIL ANALYSIS TEST	2 EACH
659, TOPSOIL	6,479 CU. YD.
659, SEEDING AND MULCHING	58,372 SQ. YD.
659, REPAIR SEEDING AND MULCHING	2,919 SQ. YD
659, INTER-SEEDING	2,919 SQ. YD.
659, COMMERCIAL FERTILIZER	13.13 TON
659, LIME	12.06 ACRES
659, WATER	331 M. GAL.
659, MOWING	525 M. SQ. FT.

ITEM 606 - IMPACT ATTENUATOR, TYPE 3 (UNIDIRECTIONAL OR BIDIRECTIONAL)

THIS ITEM SHALL CONSIST OF FURNISHING AND INSTALLING ANY OF THE TYPE 3 IMPACT ATTENUATORS AS LISTED ON THE OFFICE OF ROADWAY ENGINEERING'S WEB PAGE (REFER TO THE POSTED SHOP DRAWINGS FOR THE MOST CURRENT APPROVED PRODUCT MODELS). WHEN BI-DIRECTIONAL DESIGNS ARE SPECIFIED, THE CONTRACTOR SHALL SUPPLY APPROPRIATE TRANSITIONS.

PAYMENT FOR THE ABOVE WORK SHALL BE MADE AT THE UNIT PRICE BID FOR ITEM 606, IMPACT ATTENUATOR, TYPE 3 [(SPEED (IN MPH), HAZARD WIDTH (IN INCHES)), (UNIDIRECTIONAL OR BIDIRECTIONAL)], EACH, AND SHALL INCLUDE ALL LABOR, TOOLS, EQUIPMENT AND MATERIALS NECESSARY TO CONSTRUCT A COMPLETE AND FUNCTIONAL IMPACT ATTENUATOR SYSTEM, INCLUDING ALL RELATED BACKUPS/BACKSTOPS, TRANSITIONS, HARDWARE AND GRADING, NOT SEPARATELY SPECIFIED, AS REQUIRED BY THE MANUFACTURER. INSTALLATION SHALL BE AT THE LOCATIONS SPECIFIED IN THE PLANS, IN ACCORDANCE WITH THE MANUFACTURER'S SPECIFICATIONS.

ITEM 606 - ANCHOR ASSEMBLY, MGS TYPE E

THIS ITEM SHALL CONSIST OF FURNISHING AND INSTALLING ANY OF THE GUARDRAIL END TERMINALS FOR TYPE MGS GUARDRAIL AS LISTED ON ROADWAY ENGINEERING'S WEB PAGE UNDER ROADSIDE SAFETY DEVICES FOR APPROVED GUARDRAIL END TREATMENTS. INSTALLATION SHALL BE AT THE LOCATIONS SPECIFIED IN THE PLANS, IN ACCORDANCE WITH THE MANUFACTURER'S SPECIFICATIONS.

THE FACE OF THE TYPE E IMPACT HEAD SHALL BE COVERED WITH A SHEET OF TYPE G REFLECTIVE SHEETING, PER CMS 730.19.

REFER TO THE MANUFACTURER'S INSTRUCTIONS REGARDING THE INSTALLATION OF, AND THE GRADING AROUND THE FOUNDATION TUBES AND GROUND STRUT. THE TOP OF ANY FOUNDATION TUBE SHOULD BE LESS THAN 4 INCHES ABOVE THE GROUND. THE PLACEMENT OF THE FOUNDATION TUBES SHOULD BE AN APPROPRIATE DEPTH BELOW THE LEVEL LINE IN ORDER TO MAINTAIN THE FINISHED GUARDRAIL HEIGHT OF 31 INCHES FROM THE EDGE OF THE SHOULDER.

ON-SITE GRADING IS REQUIRED IF THE TOP OF THE FOUNDATION TUBES OR TOP OF THE GROUND STRUT DOES PROJECT MORE THAN 4 INCHES ABOVE THE GROUND LINE.

PAYMENT FOR THE ABOVE WORK SHALL BE MADE AT THE UNIT PRICE BID FOR ITEM 606, ANCHOR ASSEMBLY, MGS TYPE E, EACH, AND SHALL INCLUDE ALL LABOR, TOOLS, EQUIPMENT AND MATERIALS NECESSARY TO CONSTRUCT A COMPLETE AND FUNCTIONAL ANCHOR ASSEMBLY SYSTEM, INCLUDING ALL RELATED TRANSITIONS, REFLECTIVE SHEETING, HARDWARE, GRADING, EMBANKMENT AND EXCAVATION NOT SEPARATELY SPECIFIED, AS REQUIRED BY THE MANUFACTURER.

CONNECTION BETWEEN EXISTING AND PROPOSED GUARDRAIL

WHEN IT IS NECESSARY TO SPLICE PROPOSED GUARDRAIL TO EXISTING GUARDRAIL, ONLY THE EXISTING GUARDRAIL SHALL BE CUT, DRILLED, OR PUNCHED. THE CONNECTION SHALL BE MADE USING A W-BEAM, BEAM SPLICE AS SHOWN IN AASHTO M 180-12, EXCEPT THE BEAM WASHERS ARE NOT TO BE USED. PAYMENT SHALL BE INCLUDED IN THE CONTRACT PRICE FOR THE RESPECTIVE GUARDRAIL ITEMS.

ITEM 611 - INLET, NO. 3 FOR SINGLE SLOPE BARRIER, TYPE B1, AS PER PLAN

THE CONTRACTOR SHALL RE-CONSTRUCT THE MEDIAN INLET PER SCD I-3B, 3B1. ALL LABOR, EQUIPMENT, AND MATERIALS ASSOCIATED WITH THIS WORK SHALL BE INCLUDED IN PAYMENT FOR ITEM 611 - INLET, NO. 3 FOR SINGLE SLOPE BARRIER, TYPE B1, AS PER PLAN

ITEM 611 - INLET, NO. 3 FOR SINGLE SLOPE BARRIER, TYPE D, AS PER PLAN C

THE INLET BOX AND GRATE PROTION OF STRUCTURES 708, 709 AND 710 WERE CONSTRUCTED WITH A PREVIOUS PROJECT. THE CONTRACTOR SHALL CONSTRUCT THE REMAINING PORTIONS OF THE INLET IN ACCORDANCE WITH THE STANDARD CONSTRUCTION DRAWINGS.

ALL MATERIAL, EQUIPMENT AND LABOR NECESSARY TO PERFORM THIS WORK IS INCICENTAL TO ITEM 611 - INLET, NO. 3 FOR SINGLE SLOPE BARRIER, TYPE D, AS PER PLAN C

ITEM 611 - MANHOLE NO.3, AS PER PLAN

THE CONTRACTOR SHALL CONSTRUCT A MANHOLE NO. 3 PER SCD MH-1 AND MH-3, EXCEPT THAT IT SHALL HAVE A CB-6 FRAME AND GRATE. ALL LABOR, EQUIPMENT, AND MATERIALS ASSOCIATED WITH THIS WORK SHALL BE INCLUDED IN PAYMENT FOR ITEM 611 - MANHOLE NO.3, AS PER PLAN

ITEM 611 - CATCH BASIN, NO. 3, AS PER PLAN

THE CONTRACTOR SHALL RE-CONSTRUCT THE CURB INLET PER SCD CB-3. ALL LABOR, EQUIPMENT, AND MATERIALS ASSOCIATED WITH THIS WORK SHALL BE INCLUDED IN PAYMENT FOR ITEM 611 - CATCH BASIN, NO. 3, AS PER PLAN

ITEM 607 - FENCE, TYPE CLT, AS PER PLAN

THE PROPOSED FENCE ALONG LONGVIEW AVENUE (A PRIVATE ACCESS ROAD), ADJACENT TO THE GIVAUDAN FLAVORS FACILITY SHALL INCLUDE ALL NECESSARY TOOLS, LABOR, MATERIALS, AND INCIDENTALS NECESSARY TO INSTALL THE CHAIN LINK FENCE WITH BARBED WIRE AS INDICATED ON THE FENCING PLAN. THE MATERIALS AND SPECIFICATIONS INCLUDED IN THE FOLLOWING NOTE ARE NECESSARY TO ENSURE THE PROPOSED FENCE MEETS FDA REQUIREMENTS FOR SAFETY AND SECURITY FOR FOOD PROCESSING FACILITIES.

THE EXISTING FACILITY MUST REMAIN SECURED AT ALL TIMES PER FDA REGULATIONS. THE CONTRACTOR SHALL COORDINATE WITH GIVAUDAN FLAVORS TO DISCUSS THE TEMPORARY FENCE THAT WILL BE REQUIRED DURING CONSTRUCTION, WHICH WILL REMAIN IN PLACE UNTIL THE PROPOSED FENCE IS INSTALLED. A SUGGESTED LOCATION OF THE TEMPORARY FENCE IS SHOWN IN THE FENCING PLAN, BUT SHALL BE CONFIRMED WITH GIVAUDAN PRIOR TO INSTALLATION. ALL COSTS ASSOCIATED WITH COORDINATING, PLACING AND REMOVING OF THE TEMPORARY FENCE SHALL BE INCLUDED WITHIN THIS PAY ITEM. THE CONTRACTOR WILL COORDINATE WITH GIVAUDAN REGARDING ACCESS FOR TEMPORARY FENCE INSTALLATION AS WELL AS REPLACEMENT OF THE EXISTING SIDEWALK AND CONCRETE TRUCK TURNING AREA FOLLOWING THE REMOVAL OF THE TEMPORARY FENCE. THE REMOVAL AND REPLACEMENT OF THE SIDEWALK AND TRUCK TURNING AREA ARE PAID FOR UNDER SEPERATE PAY ITEMS.

ITEM 607 - FENCE, TYPE CLT, AS PER PLAN

THE PROPOSED FENCE ALONG LONGVIEW AVENUE (A PRIVATE ACCESS ROAD), ADJACENT TO THE GIVAUDAN FLAVORS FACILITY SHALL INCLUDE ALL NECESSARY TOOLS, LABOR, MATERIALS, AND INCIDENTALS NECESSARY TO INSTALL THE CHAIN LINK FENCE WITH BARBED WIRE AS INDICATED ON THE FENCING PLAN. THE MATERIALS AND SPECIFICATIONS INCLUDED IN THE FOLLOWING NOTE ARE NECESSARY TO ENSURE THE PROPOSED FENCE MEETS FDA REQUIREMENTS FOR SAFETY AND SECURITY FOR FOOD PROCESSING FACILITIES.

THE EXISTING FACILITY MUST REMAIN SECURED AT ALL TIMES PER FDA REGULATIONS. THE CONTRACTOR SHALL COORDINATE WITH GIVAUDAN FLAVORS TO DISCUSS THE TEMPORARY FENCE THAT WILL BE REQUIRED DURING CONSTRUCTION, WHICH WILL REMAIN IN PLACE UNTIL THE PROPOSED FENCE IS INSTALLED. A SUGGESTED LOCATION OF THE TEMPORARY FENCE IS SHOWN IN THE FENCING PLAN, BUT SHALL BE CONFIRMED WITH GIVAUDAN PRIOR TO INSTALLATION. ALL COSTS ASSOCIATED WITH COORDINATING, PLACING AND REMOVING OF THE TEMPORARY FENCE SHALL BE INCLUDED WITHIN THIS PAY ITEM. THE CONTRACTOR WILL COORDINATE WITH GIVAUDAN REGARDING ACCESS FOR TEMPORARY FENCE INSTALLATION AS WELL AS REPLACEMENT OF THE EXISTING SIDEWALK AND CONCRETE TRUCK TURNING AREA FOLLOWING THE REMOVAL OF THE TEMPORARY FENCE. THE REMOVAL AND REPLACEMENT OF THE SIDEWALK AND TRUCK TURNING AREA ARE PAID FOR UNDER SEPERATE PAY ITEMS.

PRIOR TO REMOVING THE EXISTING FENCE AND INSTALLING THE NEW SYSTEM, THE CONTRACTOR SHALL NOTIFY GIVAUDAN FLAVORS IN WRITING A MINIMUM OF 30 DAYS IN ADVANCE PER THE CONTACT INFORMATION PROVIDED IN THE UTILITY SECTION OF THE PLAN NOTES:

SUMMARY

1.01 QUALITY ASSURANCE

A. INSTALLER QUALIFICATIONS: INSTALLER SHALL BE FENCE MANUFACTURER OR AUTHORIZED DEALER/DISTRIBUTOR OR INSTALLER CERTIFIED BY MANUFACTURER, WITH NO LESS THAN FIVE (5) YEARS' EXPERIENCE IN INSTALLATION SIMILAR TO THAT REQUIRED.

1.02 DELIVERY, HANDLING AND STORAGE

A. PACKAGE MATERIALS IN MANUFACTURER'S SUITABLE CONTAINERS
TO PREVENT DAMAGE DURING TRANSIT, HANDLING AND STORAGE.

1. UNWRAPPED MATERIAL SHALL BE ROLLED, BUNDLED, BOUND OR OTHERWISE FASHIONED TO AVOID DISPLACEMENT AND DAMAGE.

B. STORE MATERIAL IN ACCORDANCE WITH MANUFACTURER'S INSTRUCTION, OFF THE GROUND, IN A DRY LOCATION UNTIL READY FOR INSTALLATION.

1. STORE IN A MANNER THAT DOES NOT DISTORT, BEND, CRUSH OR OTHERWISE DEFORM FRAMING MEMBERS OR FABRIC.

PRODUCTS

2.01 STEEL FABRIC

A. FABRIC: NO. 9 GAGE (0.148" ± 0.005") SIZE STEEL WIRES, 2" MESH, BY 8'-0" WIDE WITH TOP AND BOTTOM SALVAGES TWISTED AND BARBED.

1. FABRIC FINISH: GALVANIZED, ASTM A-392, CLASS I, WITH NOT LESS THAN 1.2 OUNCE ZINC PER SQUARE FOOT OF SURFACE.

ITEM 607 - FENCE, TYPE CLT, AS PER PLAN (CONT)

2.02 FRAMING AND ACCESSORIES

A. STEEL FRAMEWORK, GENERAL: GALVANIZED STEEL, ASTM A-120 OR A-123, WITH NOT LESS THAN 1.8 OUNCE ZINC PER SQUARE FOOT OF SURFACE.

1. FITTINGS AND ACCESSORIES: GALVANIZED, ASTM A-153, WITH ZINC WEIGHTS PER TABLE I.

B. END, CORNER AND PULL POSTS: MINIMUM SIZES AND WEIGHTS AS FOLLOWS:

1. UP TO 6' FABRIC HEIGHT, 2.375" OD STEEL PIPE, 3.65 POUNDS PER LIN. FOOT OR 3.5" BY 3.5" ROLL-FORMED SECTIONS, 4.85 POUNDS PER LIN. FOOT.

2. OVER 6' FABRIC HEIGHT, 2.875" OD STEEL PIPE, 5.79 POUNDS PER LIN. FOOT OR 3.5" BY 3.5" ROLL-FORMED SECTIONS, 4.85 POUNDS PER LIN. FOOT.

C. LINE POSTS: SPACE 10' O.C. MAXIMUM, UNLESS OTHERWISE INDICATED, OF FOLLOWING MINIMUM SIZES AND WEIGHTS.

1. UP TO 6' FABRIC HEIGHT, 1.90" OD STEEL PIPE, 2.70 POUNDS PER LIN. FOOT OR 1.875" BY 1.625" C-SECTIONS, 2.28 POUNDS PER LIN. FOOT.

2. OVER 6' FABRIC HEIGHT, 2.875" OD STEEL PIPE, 5.79 POUNDS PER LIN. FOOT OR 3.5" BY 3.5" ROLL-FORMED SECTIONS, 4.85 POUNDS PER LIN. FOOT.

D. GATE POSTS: FURNISH POSTS FOR SUPPORTING SINGLE GATE LEAF, OR ONE LEAF OF A DOUBLE GATE INSTALLATION, FOR NOMINAL GATE WIDTHS AS FOLLOWS:

LEAF WIDTH	GATE POST	LBS/LIN FEET
UP TO 6'	3/8"X3/8" ROLL-FORMED SECTION OR	4.85
	2.875" OD PIPE	5.79
OVER 6' TO 13'	4.00" OD PIPE	9.11
OVER 13' TO 18'	6.625" OD PIPE	18.97
OVER 18'	8.625" OD PIPE	28.55

E. TENSION WIRE: 7 GAGE, COATED COIL SPRING WIRE, METAL AND FINISH TO MATCH FABRIC.

1. LOCATE AT BOTTOM OF FABRIC.

F. WIRE TIES: 11 GAGE GALVANIZED STEEL OR 11 GAGE ALUMINUM WIRE, TO MATCH FABRIC CORE MATERIAL.

G. POST BRACE ASSEMBLY: MANUFACTURER'S STANDARD ADJUSTABLE BRACE AT END AND GATEPOSTS AND AT BOTH SIDES OF CORNER AND PULL POSTS, WITH HORIZONTAL BRACE LOCATED AT MID-HEIGHT OF FABRIC. USE SAME MATERIAL AS TOP RAIL FOR BRACE, AND TRUSS TO LINE POSTS WITH 0.375" DIAMETER ROD AND ADJUSTABLE TIGHTENER.

H METALLIC COATED STEEL BARBED WIRE: COMPLY WITH ASTM A121, DESIGN NUMBER 12-4-5-14R, DOUBLE 12-1/2 GAUGE TWISTED STRAND WIRE, WITH 4 POINT 14 GAUGE ROUND BARBS SPACED 5 INCHES ON CENTER. MATCH COATING TYPE TO THAT OF THE CHAIN LINK FABRIC.

1. PROVIDE 3 BARBED WIRE STRANDS

I. BARBED WIRE ARMS: IN COMPLIANCE WITH ASTM F626, PRESSED STEEL GALVANIZED AFTER FABRICATION, MINIMUM ZINC COATING OF 1.20 OZ. / SQ FT, CAPABLE OF SUPPORTING A VERTICAL 250 LB LOAD. TYPE I - THREE STRAND 45 DEGREE ARM.

CALCULATED SEA
CHECKED DLR

GENERAL NOTES

HAM-75-8.91

J:\20240445\ODOT\HAM\117525\Design\Roadway\Sheets\77889GN001.dgn 3/7/2025 10:22:05 AM hbrendlinger

ITEM 611 - INLET NO.3 FOR SINGLE SLOPE BARRIER, TYPE B1, AS PER PLAN, A

THE FOLLOWING DETAILS ARE PROVIDED FOR THE STRUCTURES LISTED BELOW. ALL LABOR, EQUIPMENT, AND MATERIALS NECESSARY TO PERFORM THE WORK DETAILED BELOW SHALL BE INCLUDED IN THE THIS PAY ITEM PER THE GENERAL SUMMARY.

STR. NO.	STATION	SIDE
302	480+69	LT
607	502+00	LT
622	505+00	LT
725	527+00	RT

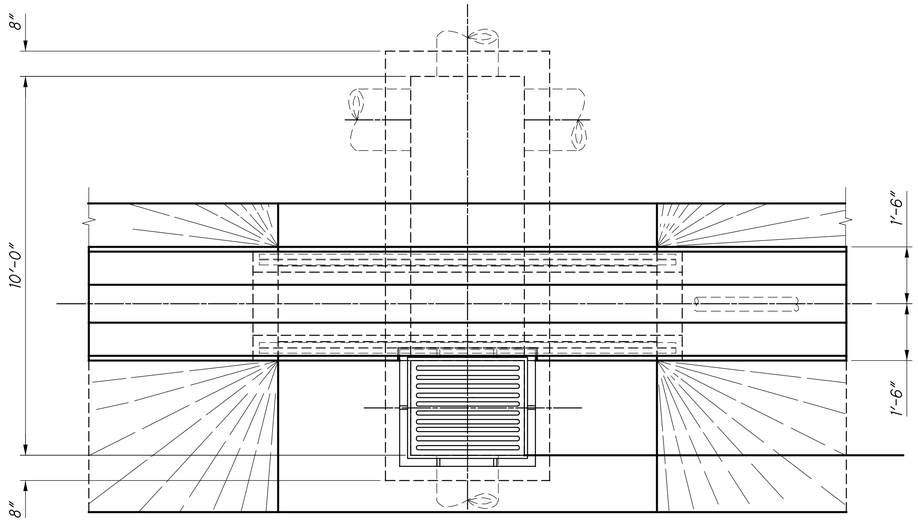

PLAN

THIS DETAIL APPLIES TO INLETS AT THE FOLLOWING LOCATIONS: SEE TABLE ABOVE

INLET REINFORCING LIST

BAR A			BAR B			BAR C			BAR D		
NUMBER	SIZE	LENGTH	NUMBER	SIZE	LENGTH	NUMBER	SIZE	LENGTH	NUMBER	SIZE	LENGTH
10	#6	10'-10"	10	#6	5'-4"	8	#6	8'-1"	8	#6	6'-0"

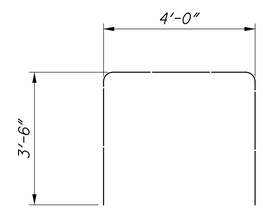

A BAR

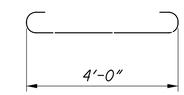

B BAR

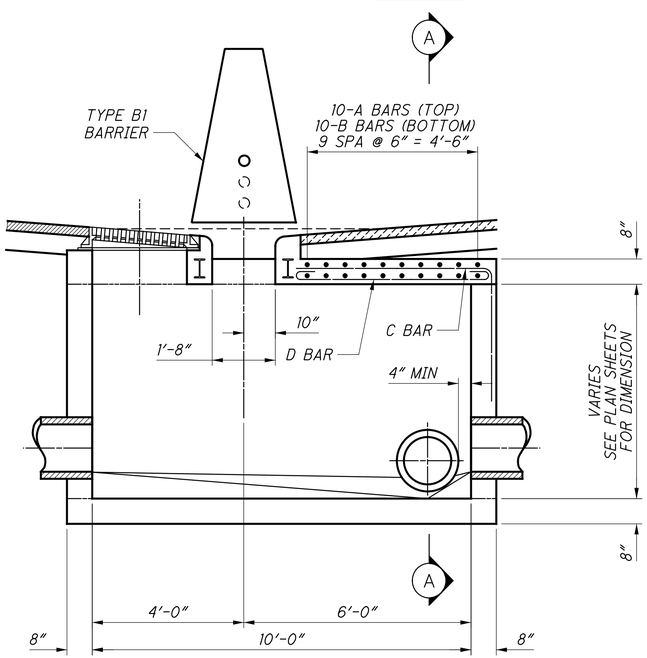

SECTION D-D

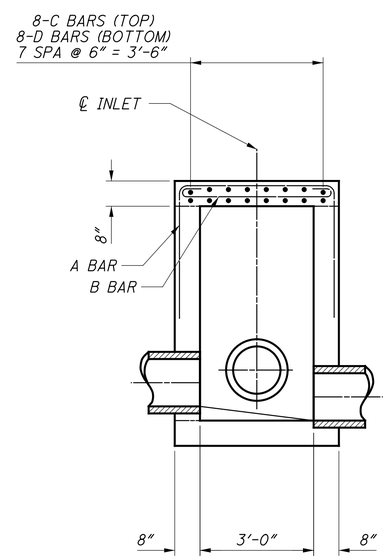

SECTION A-A

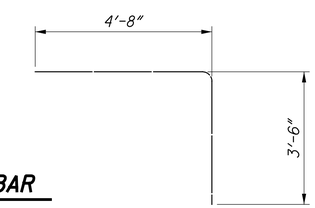

C BAR

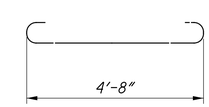

D BAR

NOTES

1. FOR ADDITIONAL DETAILS, DIMENSIONS AND REINFORCING, SEE STANDARD CONSTRUCTION DRAWING I-2.1.
2. ROTATE BARS AS NECESSARY TO MAINTAIN REQUIRED MINIMUM CONCRETE COVER.

CALCULATED RJE
CHECKED RSH

GENERAL NOTES

HAM-75-7.85

PLOTTED BY kbrendlinger 3/7/2025 4:15:56 PM k:\20240445\ODOT\HAM\117525\Design\Roadway\Sheets\77889GN002.dgn

ITEM 611 - INLET NO.3 FOR SINGLE SLOPE BARRIER, TYPE C1, AS PER PLAN

THE FOLLOWING DETAILS ARE PROVIDED FOR THE STRUCTURES LISTED BELOW. ALL LABOR, EQUIPMENT, AND MATERIALS NECESSARY TO PERFORM THE WORK DETAILED BELOW SHALL BE INCLUDED IN THE THIS PAY ITEM PER THE GENERAL SUMMARY.

STR. NO.	STATION	SIDE
303	478+50	LT

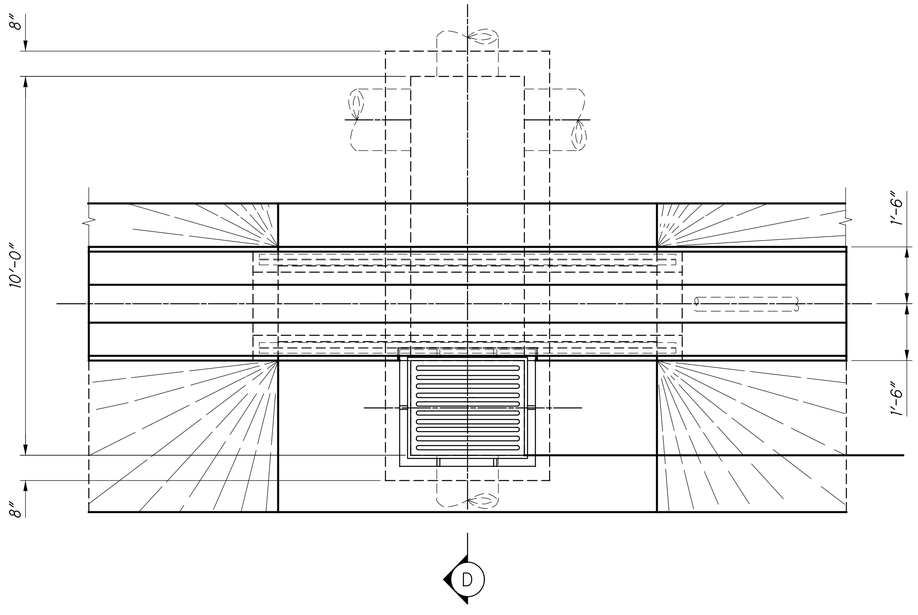

PLAN

THIS DETAIL APPLIES TO INLETS AT THE FOLLOWING LOCATIONS: SEE TABLE ABOVE

INLET REINFORCING LIST

BAR A			BAR B			BAR C			BAR D		
NUMBER	SIZE	LENGTH	NUMBER	SIZE	LENGTH	NUMBER	SIZE	LENGTH	NUMBER	SIZE	LENGTH
10	#6	10'-8"	10	#6	5'-4"	8	#6	8'-0"	8	#6	6'-0"

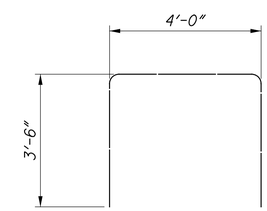

A BAR

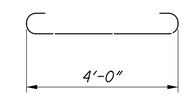

B BAR

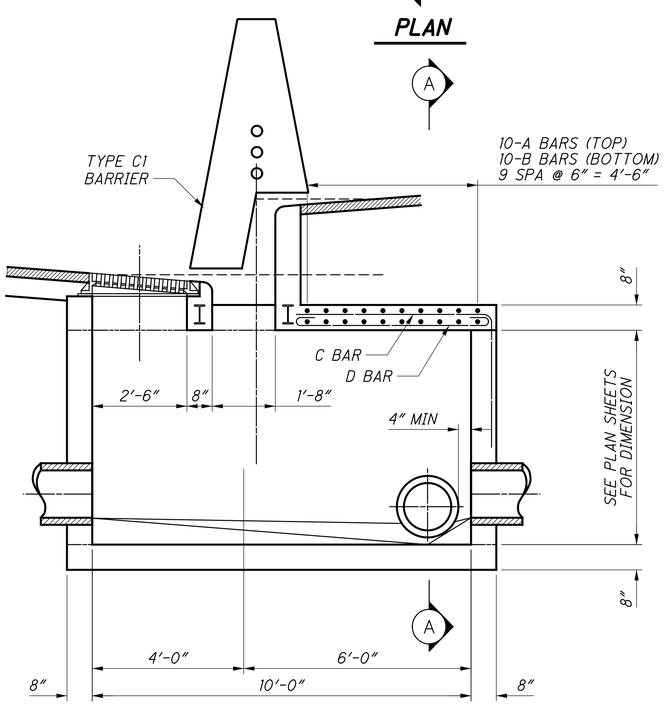

SECTION D-D

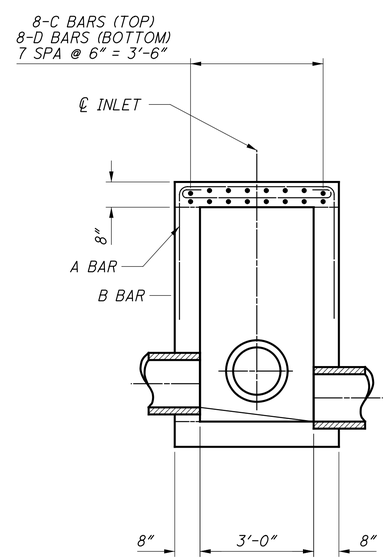

SECTION A-A

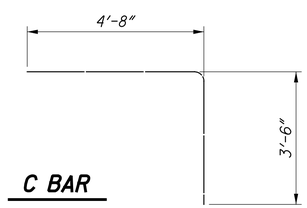

C BAR

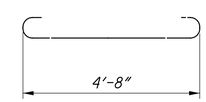

D BAR

NOTES

1. FOR ADDITIONAL DETAILS, DIMENSIONS AND REINFORCING, SEE STANDARD CONSTRUCTION DRAWING I-3C.
2. ROTATE BARS AS NECESSARY TO MAINTAIN REQUIRED MINIMUM CONCRETE COVER.

CALCULATED RJE CHECKED RSH

GENERAL NOTES

HAM-75-8.91

PLOTTED BY hbrendlinger 3/7/2025 10:41:27 AM,J:\20240445\ODOT\HAM\117525\Design\Roadway\Sheets\77889GN011.dgn

SHEET NUM. 24	27	164	165	166	167	168	169	179	171		PART. 01/IMS/04	02/IMS/03	03/IMS/10	ITEM	ITEM EXT	GRAND TOTAL	UNIT	DESCRIPTION	SEE SHEET NO.
																		ROADWAY	
	LUMP										LUMP	LUMP		202	11201	LS		PORTIONS OF STRUCTURE REMOVED, AS PER PLAN	
				3							2	1		202	20010	3	EACH	HEADWALL REMOVED	
		56,389	28,044	7,484							67,099	24,818		202	23001	91,917	SY	PAVEMENT REMOVED, AS PER PLAN	27
		56,389	27,966	7,484							67,042	24,797		202	23500	91,839	SY	WEARING COURSE REMOVED	
		2,248	638	768							2,667	987		202	30000	3,654	SF	WALK REMOVED	
		789				5,370	3,765				7,245	2,679		202	30700	9,924	FT	CONCRETE BARRIER REMOVED	
			1,827	2,115							2,878	1,064		202	32000	3,942	FT	CURB REMOVED	
		815	500								960	355		202	32600	1,315	FT	GUTTER REMOVED	
		3,639	1,976	3,406							6,585	2,436		202	35100	9,021	FT	PIPE REMOVED, 24" DIAMETER AND UNDER	
		1,087	2,025	41							2,302	851		202	35200	3,153	FT	PIPE REMOVED, OVER 24" DIAMETER	
						2,546	4,326				5,016	1,856		202	38000	6,872	FT	GUARDRAIL REMOVED	
		7	13	22							31	11		202	58000	42	EACH	MANHOLE REMOVED	
		17	32	11							44	16		202	58100	60	EACH	CATCH BASIN REMOVED	
		21	8								21	8		202	58200	29	EACH	INLET REMOVED	
			2								1	1		202	58700	2	EACH	MANHOLE ABANDONED	
			1,348	36							1,010	374		SPECIAL	20270000	1,384	FT	FILL AND PLUG EXISTING CONDUITVARIES	23
100											73	27		SPECIAL	20270110	100	FT	PIPE CLEANOUT, 24" AND UNDER	24
100											73	27		SPECIAL	20270120	100	FT	PIPE CLEANOUT, 27" TO 48"	24
100											73	27		SPECIAL	20270130	100	FT	PIPE CLEANOUT OVER 48"	24
								9,367			6,838	2,529		202	75000	9,367	FT	FENCE REMOVED	
								1			1			202	75250	1	EACH	GATE REMOVED	
											LUMP	LUMP		202	98000	LS		REMOVAL MISC.: ACCESS HATCH REMOVAL	26
	56										41	15		202	98100	56	EACH	REMOVAL MISC.: DRAINAGE STRUCTURE ABANDONED, AS PER PLAN	27
	1,824										1,332	492		202	98200	1,824	FT	REMOVAL MISC.: DRAINAGE PIPE ABANDONED, 24" AND UNDER, AS PER PLAN	27
197									162,256		118,591	43,862		203	10000	162,453	CY	EXCAVATION	
197									25,780		18,963	7,014		203	20000	25,977	CY	EMBANKMENT	
50											37	13		204	45000	50	HOUR	PROOF ROLLING	
4,174											3,047	1,127		206	10500	4,174	TON	CEMENT	
135,130											98,645	36,485		206	11000	135,130	SY	CURING COAT	
135,130											98,645	36,485		206	15020	135,130	SY	CEMENT STABILIZED SUBGRADE, 14 INCHES DEEP	
LUMP											LUMP	LUMP		206	30000	LS		MIXTURE DESIGN FOR CHEMICALLY STABILIZED SOILS	
						4,900	3,333				6,010	2,223		606	15050	8,233	FT	GUARDRAIL, TYPE MGS	
						25					18	7		606	15150	25	FT	GUARDRAIL, TYPE MGS HALF POST SPACING	
						6	2				6	2		606	26150	8	EACH	ANCHOR ASSEMBLY, MGS TYPE E (MASH 2016)	
						6	1				5	2		606	26550	7	EACH	ANCHOR ASSEMBLY, MGS TYPE T	
						6	4				7	3		606	35002	10	EACH	MGS BRIDGE TERMINAL ASSEMBLY, TYPE 1	
						5					4	1		606	35102	5	EACH	MGS BRIDGE TERMINAL ASSEMBLY, TYPE 2	
						2	1				2	1		606	60040	3	EACH	IMPACT ATTENUATOR, TYPE 3 UNIDIRECTIONALSEE PLANS FOR WIDTH AND SPEED INFORMATION	
								8,736			6,377	2,359		607	23000	8,736	FT	FENCE, TYPE CLT	
								508			371	137		607	23001	508	FT	FENCE, TYPE CLT, AS PER PLAN	25
								8,736			6,377	2,359		607	70000	8,736	FT	FENCELINE SEEDING AND MULCHING	
					250			250			365	135		607	98000	500	FT	FENCE, MISC.: WOOD FENCE	
					1,251						913	338		608	10000	1,251	SF	4" CONCRETE WALK	
					236						172	64		608	52000	236	SF	CURB RAMP	
						2,157	2,767				3,595	1,329		622	10100	4,924	FT	CONCRETE BARRIER, SINGLE SLOPE, TYPE B1	
						2,151					1,570	581		622	10140	2,151	FT	CONCRETE BARRIER, SINGLE SLOPE, TYPE C1	
						267	3,288				2,595	960		622	10160	3,555	FT	CONCRETE BARRIER, SINGLE SLOPE, TYPE D	
						1					1			622	10200	1	EACH	BARRIER TRANSITION	
						2					1	1		622	24850	2	EACH	CONCRETE BARRIER END SECTION, TYPE B1	
						1					1			622	24860	1	EACH	CONCRETE BARRIER END SECTION, TYPE C1	
						4	6				7	3		622	25000	10	EACH	CONCRETE BARRIER END SECTION, TYPE D	
						23	31				39	15		622	25006	54	EACH	CONCRETE BARRIER, END ANCHORAGE, REINFORCED, TYPE B1	
						3	7				7	3		622	25007	10	EACH	CONCRETE BARRIER, END ANCHORAGE, REINFORCED, TYPE B1, AS PER PLAN	29
						18					13	5		622	25014	18	EACH	CONCRETE BARRIER, END ANCHORAGE, REINFORCED, TYPE C1	
						2					1	1		622	25015	2	EACH	CONCRETE BARRIER, END ANCHORAGE, REINFORCED, TYPE C1, AS PER PLAN	29
						6	26				23	9		622	25050	32	EACH	CONCRETE BARRIER, END ANCHORAGE, REINFORCED, TYPE D	
							1				1			622	25051	1	EACH	CONCRETE BARRIER, END ANCHORAGE, REINFORCED, TYPE D, AS PER PLAN	29

CALCULATED DLR
CHECKED EDK

GENERAL SUMMARY

HAM-75-8.91

J:\20240445\ODOT\HAM\117525\Design\Roadway\Sheets\77889GG001.dgn 3/10/2025 3:16:18 PM hbrendlinger

SHEET NUM.											PART.			ITEM	ITEM EXT	GRAND TOTAL	UNIT	DESCRIPTION	SEE SHEET NO.
23	186	187	188	189	190	180	494				01/IMS/04	02/IMS/03	03/IMS/10						
																		DRAINAGE	
						8					6	2		601	32200	8	CY	ROCK CHANNEL PROTECTION, TYPE C WITH FILTER	
						3					2	1		602	20000	3	CY	CONCRETE MASONRY	
	8,119	8,553	6,736	7,527							22,583	8,352		605	11100	30,935	FT	6" SHALLOW PIPE UNDERDRAINS	
			108	322	189						452	167		605	13300	619	FT	6" UNCLASSIFIED PIPE UNDERDRAINS	
	4,390	5,639	4,038	4,991	798						14,495	5,361		605	14000	19,856	FT	6" BASE PIPE UNDERDRAINS	
200	646	546	512	611	32						1,859	688		611	00510	2,547	FT	6" CONDUIT, TYPE F FOR UNDERDRAIN OUTLETS	
100											73	27		611	00900	100	FT	6" CONDUIT, TYPE B	
100							644				73	671		611	01100	744	FT	6" CONDUIT, TYPE C	
100											73	27		611	01400	100	FT	6" CONDUIT, TYPE E	
100											73	27		611	01500	100	FT	6" CONDUIT, TYPE F	
100											73	27		611	01800	100	FT	8" CONDUIT, TYPE B	
100											73	27		611	02000	100	FT	8" CONDUIT, TYPE C	
						159					116	43		611	04400	159	FT	12" CONDUIT, TYPE B	
						90					66	24		611	04600	90	FT	12" CONDUIT, TYPE C	
						2,951					2,154	797		611	05900	2,951	FT	15" CONDUIT, TYPE B	
						114					83	31		611	05900	114	FT	15" CONDUIT, TYPE B, WITH JOINTS PER 706.11	
						934					682	252		611	06100	934	FT	15" CONDUIT, TYPE C	
						149					109	40		611	06100	149	FT	15" CONDUIT, TYPE C, WITH CLASS II BEDDING	
						34					25	9		611	06700	34	FT	15" CONDUIT, TYPE F, WITH CLASS II BEDDING	
						907					662	245		611	07400	907	FT	18" CONDUIT, TYPE B	
						160					117	43		611	07600	160	FT	18" CONDUIT, TYPE C	
						158					115	43		611	07600	158	FT	18" CONDUIT, TYPE C, WITH CLASS II BEDDING	
						53					39	14		611	08200	53	FT	18" CONDUIT, TYPE F, WITH CLASS II BEDDING	
						37					27	10		611	08900	37	FT	21" CONDUIT, TYPE B	
						53					39	14		611	09100	53	FT	21" CONDUIT, TYPE C	
						1,092					797	295		611	10400	1,092	FT	24" CONDUIT, TYPE B	
						200					146	54		611	10600	200	FT	24" CONDUIT, TYPE C	
						581					424	157		611	13400	581	FT	30" CONDUIT, TYPE B	
						798					583	215		611	13600	798	FT	30" CONDUIT, TYPE C	
						135					99	36		611	13600	135	FT	30" CONDUIT, TYPE C, WITH CLASS II BEDDING	
						70					51	19		611	14200	70	FT	30" CONDUIT, TYPE F	
						719					525	194		611	16400	719	FT	36" CONDUIT, TYPE B	
						15					11	4		611	16600	15	FT	36" CONDUIT, TYPE C	
						90					66	24		611	16600	90	FT	36" CONDUIT, TYPE C, WITH CLASS II BEDDING	
						878					641	237		611	19400	878	FT	42" CONDUIT, TYPE B	
						302					220	82		611	19600	302	FT	42" CONDUIT, TYPE C	
						984					718	266		611	20900	984	FT	48" CONDUIT, TYPE B	
						295					215	80		611	20900	295	FT	48" CONDUIT, TYPE B, WITH CLASS II BEDDING	
						10					7	3		611	22400	10	FT	54" CONDUIT, TYPE B, WITH CLASS II BEDDING	
						265					193	72		611	52502	265	FT	24" X 38" CONDUIT, TYPE B, 706.04	
						252					184	68		611	96600	252	FT	CONDUIT, BORED OR JACKED 15", TYPE B	
						310					226	84		611	96600	310	FT	CONDUIT, BORED OR JACKED 18", TYPE B	
						80					58	22		611	96600	80	FT	CONDUIT, BORED OR JACKED 24", TYPE B	
						190					139	51		611	96600	190	FT	CONDUIT, BORED OR JACKED 30" TYPE B	
						69					50	19		611	96600	69	FT	CONDUIT, BORED OR JACKED 36", TYPE B	
						472					345	127		611	96600	472	FT	CONDUIT, BORED OR JACKED 42", TYPE B	

CALCULATED DLR
CHECKED EDK

GENERAL SUMMARY

HAM-75-8.91

J:\20240445\ODOT\HAM\117525\Design\Roadway\Sheets\77889GG001.dgn 3/18/2025 11:31:44 AM bmccutchen

SHEET NUM. 23	24	180									PART. 01/IMS/04	02/IMS/03	03/IMS/10	ITEM	ITEM EXT	GRAND TOTAL	UNIT	DESCRIPTION	SEE SHEET NO.
																		DRAINAGE	
		14									10	4		611	98150	14	EACH	CATCH BASIN, NO. 3	
		9									7	2		611	98180	9	EACH	CATCH BASIN, NO. 3A	
		11									8	3		611	98300	11	EACH	CATCH BASIN, NO. 5	
		12									9	3		611	98370	12	EACH	CATCH BASIN, NO. 6	
		9									7	2		611	98410	9	EACH	CATCH BASIN, NO. 8	
		4									3	1		611	98434	4	EACH	CATCH BASIN, NO. 8A	
		1									1			611	98470	1	EACH	CATCH BASIN, NO. 2-2B	
		11									8	3		611	98510	11	EACH	CATCH BASIN, NO. 2-3	
		2									1	1		611	99100	2	EACH	INLET, NO. 3 FOR SINGLE SLOPE BARRIER, TYPE B1	
		5									4	1		611	99101	5	EACH	INLET, NO. 3 FOR SINGLE SLOPE BARRIER, TYPE B1, AS PER PLAN	
		6									4	2		611	99101	6	EACH	INLET, NO. 3 FOR SINGLE SLOPE BARRIER, TYPE B1, AS PER PLAN, A	25
		7									5	2		611	99101	7	EACH	INLET, NO. 3 FOR SINGLE SLOPE BARRIER, TYPE B1, AS PER PLAN, B	32
		2									1	1		611	99101	2	EACH	INLET, NO. 3 FOR SINGLE SLOPE BARRIER, TYPE B1, AS PER PLAN, C	33
		8									6	2		611	99110	8	EACH	INLET, NO. 3 FOR SINGLE SLOPE BARRIER, TYPE C1	
		1									1			611	99111	1	EACH	INLET, NO. 3 FOR SINGLE SLOPE BARRIER, TYPE C1, AS PER PLAN	34
		9									7	2		611	99114	9	EACH	INLET, NO. 3 FOR SINGLE SLOPE BARRIER, TYPE D	
		1									1			611	99115	1	EACH	INLET, NO. 3 FOR SINGLE SLOPE BARRIER, TYPE D, AS PER PLAN, A	35
		1									1			611	99115	1	EACH	INLET, NO. 3 FOR SINGLE SLOPE BARRIER, TYPE D, AS PER PLAN, B	36
		22									16	6		611	99574	22	EACH	MANHOLE, NO. 3	
		1									1			611	99900	1	EACH	DRAINAGE STRUCTURE, MISC.: CHECK VALVE FOR 54" CONDUIT	24
		4									3	1		SPECIAL	69098000	4	EACH	MANHOLE MISC.: SANITARY MANHOLE PER MSD ACC NO. 49037	
		2									1	1		SPECIAL	69098000	2	EACH	MANHOLE MISC.: SANITARY MANHOLE PER MSD ACC NO. 49040	
		876									639	237		839	30000	876	FT	TRENCH DRAIN, TYPE B WITH STANDARD GRATE	
5											4	1		611	99710	5	EACH	PRECAST REINFORCED CONCRETE OUTLET	
	12										9	3		SPECIAL	69099550	12	MNTH	TEMPORARY DRAINAGE PUMP	24
																		DRAINAGE ALTERNATES - 69TH STREET - STA 481	
												34		611	06100	34	FT	15" CONDUIT, TYPE C, WITH CLASS II BEDDING (ALTERNATE 1)	
												126		611	13400	126	FT	30" CONDUIT, TYPE B, WITH CLASS II BEDDING (ALTERNATE 1)	
												2		SPECIAL	69098000	2	EACH	MANHOLE MISC.: SANITARY MANHOLE PER MSD ACC NO. 49037 (ALTERNATE 1)	
		34										34		611	06100	34	FT	15" CONDUIT, TYPE C, WITH CLASS II BEDDING (ALTERNATE 2)	
		126										126		611	13400	126	FT	30" CONDUIT, TYPE B, WITH CLASS II BEDDING (ALTERNATE 2)	
		2										2		SPECIAL	69098000	2	EACH	MANHOLE MISC.: SANITARY MANHOLE PER MSD ACC NO. 49037 (ALTERNATE 2)	
		18										18		611	16600	18	FT	36" CONDUIT, TYPE C, WITH CLASS II BEDDING (ALTERNATE 2)	
		252										252		611	96600	252	FT	CONDUIT, BORED OR JACKED 36", TYPE B, WITH JOINTS PER 706.11 (ALTERNATE 2)	
		3										3		611	99574	3	EACH	MANHOLE, NO. 3 (ALTERNATE 2)	
																		DRAINAGE ALTERNATES - SEYMORE AVE - STA 492	
												93		611	06100	93	FT	15" CONDUIT, TYPE C, WITH CLASS II BEDDING (ALTERNATE 1)	
												256		611	96600	256	FT	CONDUIT, BORED OR JACKED 36", TYPE B, WITH JOINTS PER 706.11 (ALTERNATE 1)	
												23		611	16600	23	FT	36" CONDUIT, TYPE C, WITH CLASS II BEDDING (ALTERNATE 1)	
												3		SPECIAL	69098000	3	EACH	MANHOLE MISC.: SANITARY MANHOLE PER MSD ACC NO. 49037 (ALTERNATE 1)	
		256										256		611	96600	256	FT	CONDUIT, BORED OR JACKED 36", TYPE B, WITH JOINTS PER 706.11 (ALTERNATE 2)	
		23										23		611	16600	23	FT	36" CONDUIT, TYPE C, WITH CLASS II BEDDING (ALTERNATE 2)	
		2										2		SPECIAL	69098000	2	EACH	MANHOLE MISC.: SANITARY MANHOLE PER MSD ACC NO. 49037 (ALTERNATE 2)	
		235										235		611	22400	235	FT	54" CONDUIT, TYPE B, WITH CLASS II BEDDING (ALTERNATE 2)	
		112										112		611	22600	112	FT	54" CONDUIT, TYPE C, WITH CLASS II BEDDING (ALTERNATE 2)	
		2										2		SPECIAL	69098000	2	EACH	MANHOLE MISC.: SANITARY MANHOLE PER MSD ACC NO. 49040 (ALTERNATE 2)	
																		DRAINAGE ALTERNATES - WOODLAND/SUMMIT - STA 525	
		32										32		611	05900	32	FT	15" CONDUIT, TYPE B (ALTERNATE 1)	
		79										79		611	07400	79	FT	18" CONDUIT, TYPE B (ALTERNATE 1)	
		147										147		611	08900	147	FT	21" CONDUIT, TYPE B (ALTERNATE 1)	
		312										312		611	10400	312	FT	24" CONDUIT, TYPE B (ALTERNATE 1)	
		244										244		611	10600	244	FT	24" CONDUIT, TYPE C (ALTERNATE 1)	
												223		611	10400	223	FT	24" CONDUIT, TYPE B (ALTERNATE 2)	
												32		611	13400	32	FT	30" CONDUIT, TYPE B (ALTERNATE 2)	
												135		611	16400	135	FT	36" CONDUIT, TYPE B (ALTERNATE 2)	
												244		611	16600	244	FT	36" CONDUIT, TYPE C (ALTERNATE 2)	
												180		611	19400	180	FT	42" CONDUIT, TYPE B (ALTERNATE 2)	

CALCULATED DLR
CHECKED EDK

GENERAL SUMMARY

HAM-75-8.91

J:\20240445\ODOT\HAM\117525\Design\Roadway\Sheets\77889GG001.dgn 3/10/2025 3:52:43 PM hbrendlinger

SHEET NUM. 435	465										PART. 01/IMS/04	02/IMS/03	03/IMS/10	ITEM	ITEM EXT	GRAND TOTAL	UNIT	DESCRIPTION	SEE SHEET NO.
																		RETAINING WALLS (SOLDIER PILE)	
LUMP												LUMP		503	21301	LS		UNCLASSIFIED EXCAVATION, AS PER PLAN	433
14,230												14,230		507	00400	14,230	FT	STEEL PILES, MISC.: HP12X53	433
297,098												297,098		509	10000	297,098	LB	EPOXY COATED STEEL REINFORCEMENT	
2,312												2,312		511	46011	2,312	CY	CLASS QC1 CONCRETE, RETAINING/WINGWALL NOT INCLUDING FOOTING, AS PER PLAN	433
4,745												4,745		512	10001	4,745	SY	SEALING OF CONCRETE SURFACES, AS PER PLAN	433
4,745												4,745		512	10101	4,745	SY	SEALING OF CONCRETE SURFACES (EPOXY-URETHANE), AS PER PLAN	433
774												774		512	33001	774	SY	TYPE 2 WATERPROOFING, AS PER PLAN	433
8,650												8,650		516	13600	8,650	SF	1" PREFORMED EXPANSION JOINT FILLER	
995												995		518	20000	995	SY	PREFABRICATED GEOCOMPOSITE DRAIN	
668												668		518	39900	668	FT	4" NON-PERFORATED CORRUGATED PLASTIC PIPE, INCLUDING SPECIALS	
13,589												13,589		524	94603	13,589	FT	DRILLED SHAFTS, 30" DIAMETER, ABOVE BEDROCK, AS PER PLAN	433
49,169												49,169		SPECIAL	53051020	49,169	SF	RETAINING WALL, TIMBER LAGGING	434
11												11		866	00100	11	EACH	GROUND ANCHOR, 78 KIP MAX TEST LOAD	
266												266		866	00100	266	EACH	GROUND ANCHOR, 105 KIP MAX TEST LOAD	
243												243		866	00100	243	EACH	GROUND ANCHOR, 128 KIP MAX TEST LOAD	
9												9		866	00100	9	EACH	GROUND ANCHOR, 138 KIP MAX TEST LOAD	
76												76		866	00100	76	EACH	GROUND ANCHOR, 150 KIP MAX TEST LOAD	
38												38		866	00100	38	EACH	GROUND ANCHOR, 172 KIP MAX TEST LOAD	
18												18		866	00100	18	EACH	GROUND ANCHOR, 175 KIP MAX TEST LOAD	
24												24		866	00100	24	EACH	GROUND ANCHOR, 215 KIP MAX TEST LOAD	
LUMP												LUMP		866	00300	LS		INVESTIGATIVE ANCHOR PULLOUT TESTS	
35												35		866	00400	35	EACH	PERFORMANCE TEST	
6												6		866	00500	6	EACH	EXTENDED CREEP TEST	
																		RETAINING WALLS (CAST-IN-PLACE)	
	85											85		203	22000	85	CY	EMBANKMENT, USING NATURAL SOILS, 703.16.A	
	LUMP											LUMP		503	11100	LS		COFFERDAMS AND EXCAVATION BRACING	
	LUMP											LUMP		503	11101	LS		COFFERDAMS AND EXCAVATION BRACING, AS PER PLAN	464
	LUMP											LUMP		503	21301	LS		UNCLASSIFIED EXCAVATION, AS PER PLAN	464
	LUMP											LUMP		505	11100	LS		PILE DRIVING EQUIPMENT MOBILIZATION	
	475											475		507	00600	475	FT	14" CAST-IN-PLACE REINFORCED CONCRETE PILES, DRIVEN	
	570											570		507	00650	570	FT	14" CAST-IN-PLACE REINFORCED CONCRETE PILES, FURNISHED	
	473											473		507	92201	473	FT	PREBORED HOLES, AS PER PLAN	464
	143,037											143,037		509	10000	143,037	LB	EPOXY COATED STEEL REINFORCEMENT	
	1,183											1,183		511	50212	1,183	CY	CLASS QC1 CONCRETE WITH QC/QA, SUBSTRUCTURE	
	874											874		512	10001	874	SY	SEALING OF CONCRETE SURFACES, AS PER PLAN	464
	874											874		512	10100	874	SY	SEALING OF CONCRETE SURFACES (EPOXY-URETHANE)	
	100											100		512	33000	100	SY	TYPE 2 WATERPROOFING	
	447											447		516	13600	447	SF	1" PREFORMED EXPANSION JOINT FILLER	
	460											460		518	21200	460	CY	POROUS BACKFILL WITH GEOTEXTILE FABRIC	
	1,024											1,024		518	40000	1,024	FT	6" PERFORATED CORRUGATED PLASTIC PIPE	
	371											371		518	40010	371	FT	6" NON-PERFORATED CORRUGATED PLASTIC PIPE, INCLUDING SPECIALS	
	1											1		523	20000	1	EACH	DYNAMIC LOAD TESTING	
	2,646											2,646		SPECIAL	53013000	2,646	SF	FORM LINER	464
	120											120		601	37500	120	FT	PAVED GUTTER, TYPE 1-2	
	502											502		601	37501	502	FT	PAVED GUTTER, TYPE 1-2, AS PER PLAN	481

CALCULATED DLR
CHECKED EDK

GENERAL SUMMARY

HAM-75-8.91

J:\20240445\ODOT\HAM\117525\Design\Roadway\Sheets\77889GG001.dgn 3/17/2025 12:20:13 PM hbrendlinger

REF NO.	SHEET NO.	STATION TO STATION			SIDE	CENTERLINE ROADWAY REFERENCE	202 CONCRETE BARRIER REMOVED (FT)	202 GUARDRAIL REMOVED (FT)	606 GUARDRAIL, TYPE MGS (FT)	606 GUARDRAIL, TYPE MGS HALF POST SPACING (FT)	606 ANCHOR ASSEMBLY, MGS TYPE E (MASH 2016) (EACH)	606 ANCHOR ASSEMBLY, MGS TYPE T (EACH)	606 MGS BRIDGE TERMINAL ASSEMBLY, TYPE 1 (EACH)	606 MGS BRIDGE TERMINAL ASSEMBLY, TYPE 2 (EACH)	606 IMPACT ATTENUATOR, TYPE 3 UNIDIRECTIONAL (EACH)	622 CONCRETE BARRIER, SINGLE SLOPE, TYPE B1 (FT)	622 CONCRETE BARRIER, SINGLE SLOPE, TYPE C1 (FT)	622 CONCRETE BARRIER, SINGLE SLOPE, TYPE D (FT)	622 BARRIER TRANSITION (EACH)	622 CONCRETE BARRIER END SECTION, TYPE B1 (EACH)	622 CONCRETE BARRIER END SECTION, TYPE C1 (EACH)	622 CONCRETE BARRIER END SECTION, TYPE D (EACH)	622 CONCRETE BARRIER, END ANCHORAGE, REINFORCED, TYPE B1 (EACH)	622 CONCRETE BARRIER, END ANCHORAGE, REINFORCED, TYPE B1, AS PER PLAN (EACH)	622 CONCRETE BARRIER, END ANCHORAGE, REINFORCED, TYPE C1 (EACH)	622 CONCRETE BARRIER, END ANCHORAGE, REINFORCED, TYPE C1, AS PER PLAN (EACH)	622 CONCRETE BARRIER, END ANCHORAGE, REINFORCED, TYPE D (EACH)
			TO																								
R1	506	457+96		469+50	CL	IR 75	1154																				
R2	506	467+53		469+50	LT	IR 75		197																			
B1	506	457+96		469+50	CL	IR 75										848.5			1				11				
R1	507	469+50		469+68	LT	IR 75		17																			
R2	507	472+37		482+00	LT	IR 75		982																			
R3	507	469+50		482+00	CL	IR 75	1250																				
R4	507	476+20		477+65	RT	IR 75	34	106																			
G1	507	472+00		479+46	LT	IR 75			765			1		1													
G2	507	481+77		484+17	RT	RAMP E			337		1	1															
B1	507	469+50		482+00	CL	IR 75										241	774						2		4	2	
B2	507	475+21		482+00	RT	IR 75									1		515			1	1				4		
B3	507	479+46		480+63	LT	IR 75												88				1					1
R1	508	482+00		482+20	LT	IR 75		20																			
R2	508	482+00		494+50	CL	IR 75	1250																				
R3	508	487+25		488+77	RT	IR 75		153																			
R4	508	10+37		11+38	LT	SEYMOUR		101																			
G1	508	485+75		490+48	LT	RAMP E			481	25				1													
G2	508	485+58		491+42	RT	RAMP D			552			1			1												
G3	508	487+88		490+26	RT	RAMP E			175		1	1															
G4	508	491+38		493+66	LT	RAMP D			233			1		1													
G5	508	486+00		489+50	LT	RAMP C			322				1	1													
G6	508	493+87		494+50	RT	IR 75			63					1													
B1	508	493+23		493+87	RT	IR 75												35				1					1
B2	508	482+00		490+65	RT	IR 75											700								7		
B3	508	482+00		494+50	CL	IR 75										978							10	3			
B4	508	489+50		491+73	LT	RAMP C												144				1					3
B5	508	491+00		494+41	RT	RAMP C										89	162			1					3		
B6	508	491+11		491+38	LT	RAMP D																1					1
R1	509	498+15		502+55	LT	IR 75	234	206																			
R2	509	505+27		507+02	RT	RAMP B	4	173																			
R3	509	495+43		499+31	RT	IR 75	194	193																			
R4	509	494+50		507+00	CL	IR 75	1250																				
R5	509	17+65		21+60	LT	SUMMIT		398																			
G1	509	494+41		496+82	RT	RAMP C			213		1		1														
G2	509	500+50		507+00	LT	IR 75			625				1														
G3	509	502+29		507+01	RT	RAMP B			464.5			1															
G4	509	494+50		496+96	RT	IR 75			221.5				1														
G5	509	503+01		504+63	RT	RAMP A			100		1		1														
G6	509	497+25		498+13	LT	RAMP C			12.5		1		1														
G7	509	17+65		21+60	LT	SUMMIT			335		1																
TOTALS CARRIED TO GENERAL SUMMARY							5370	2546	4900	25	6	6	6	5	2	2157	2151	267	1	2	1	4	23	3	18	2	6

CALCULATED SEA
CHECKED DLR

ROADSIDE BARRIER ESTIMATED QUANTITIES

HAM-75-8.91

J:\20240445\ODOT\HAM\117525\Design\Roadway\Sheets\77889GS003_Roadside Barrier.dgn 3/7/2025 2:40:42 PM hbrendlinger

REF NO.	SHEET NO.	STATION TO STATION	SIDE	CENTERLINE ROADWAY REFERENCE	202 CONCRETE BARRIER REMOVED (FT)	202 GUARDRAIL REMOVED (FT)	606 GUARDRAIL, TYPE MGS (FT)	606 GUARDRAIL, TYPE MGS HALF POST SPACING (FT)	606 ANCHOR ASSEMBLY, MGS TYPE E (MASH 2016) (EACH)	606 ANCHOR ASSEMBLY, MGS TYPE T (EACH)	606 MGS BRIDGE TERMINAL ASSEMBLY, TYPE 1 (EACH)	606 MGS BRIDGE TERMINAL ASSEMBLY, TYPE 2 (EACH)	606 IMPACT ATTENUATOR, TYPE 3 UNIDIRECTIONAL (EACH)	622 CONCRETE BARRIER, SINGLE SLOPE, TYPE B1 (FT)	622 CONCRETE BARRIER, SINGLE SLOPE, TYPE C1 (FT)	622 CONCRETE BARRIER, SINGLE SLOPE, TYPE D (FT)	622 BARRIER TRANSITION (EACH)	622 CONCRETE BARRIER END SECTION, TYPE B1 (EACH)	622 CONCRETE BARRIER END SECTION, TYPE C1 (EACH)	622 CONCRETE BARRIER END SECTION, TYPE D (EACH)	622 CONCRETE BARRIER, END ANCHORAGE, REINFORCED, TYPE B1 (EACH)	622 CONCRETE BARRIER, END ANCHORAGE, REINFORCED, TYPE B1, AS PER PLAN (EACH)	622 CONCRETE BARRIER, END ANCHORAGE, REINFORCED, TYPE C1 (EACH)	622 CONCRETE BARRIER, END ANCHORAGE, REINFORCED, TYPE C1, AS PER PLAN (EACH)	622 CONCRETE BARRIER, END ANCHORAGE, REINFORCED, TYPE D (EACH)	622 CONCRETE BARRIER, END ANCHORAGE, REINFORCED, TYPE D, AS PER PLAN (EACH)
		TO																								
B1	509	494+50 TO 507+00	CL	IR 75										910							14					
B2	509	496+96 TO 499+20	RT	IR 75												195				1					1	
B3	509	498+20 TO 500+50	LT	IR 75												201				1					1	
B4	509	504+64 TO 506+99	RT	RAMP A												173				1					1	1
B5	509	496+20 TO 497+25	LT	RAMP C												75				1					1	
R1	510	507+02 TO 513+94	LT	RAMP B	45	650																				
R2	510	519+07 TO 519+50	LT	IR 75		42																				
R3	510	21+60 TO 34+14	LT	SUMMIT		1258																				
R4	510	518+84 TO 519+50	RT	IR 75		67																				
R5	510	507+00 TO 519+50	CL	IR 75	1250																					
G1	510	519+30 TO 519+50	LT	IR 75							1															
G2	510	21+60 TO 34+14	LT	SUMMIT			1258																			
G3	510	507+00 TO 507+72	LT	IR 75			100						1													
B1	510	507+00 TO 519+50	CL	IR 75										911							10	3				
B2	510	508+50 TO 519+30	LT	IR 75												848				1					9	
B3	510	507+00 TO 519+50	RT	IR 75												1055									8	
R1	511	519+50 TO 525+13	LT	IR 75		575																				
R2	511	519+50 TO 522+18	RT	IR 75		271																				
R3	511	519+50 TO 522+26	LT	IR 75		282																				
R4	511	522+18 TO 522+60	RT	IR 75	43																					
R5	511	37+21 TO 45+15	LT	SUMMIT		796																				
R6	511	522+51 TO 526+31	RT	IR 75		385																				
R7	511	519+50 TO 531+74	CL	IR 75	1224																					
R8	511	525+10 TO 531+34	LT	IR 75	616																					
R9	511	526+31 TO 532+12	RT	IR 75	587																					
G1	511	519+54 TO 526+79	LT	IR 75			575		1		1															
G2	511	34+14 TO 36+92	LT	SUMMIT			250				1															
G3	511	37+53 TO 45+15	LT	SUMMIT			750			1																
G4	511	527+52 TO 532+21	RT	IR 75			400		1		1									1						
B1	511	519+50 TO 531+74	CL	IR 75										946							7	4				
B2	511	519+50 TO 527+73	RT	IR 75												741									5	
TOTALS CARRIED TO GENERAL SUMMARY					3765	4326	3333		2	1	4		1	2767		3288				6	31	7			26	1

CALCULATED SEA
CHECKED DLR

ROADSIDE BARRIER ESTIMATED QUANTITIES

HAM-75-8.91

J:\20240445\ODOT\HAM\117525\Design\Roadway\Sheets\77889GS003_Roadside Barrier.dgn 3/7/2025 2:41:27 PM hbrendlinger

ESTIMATED QUANTITIES SHEET NO.	601 ROCK CHANNEL PROTECTION, TYPE C WITH FILTER	602 CONCRETE MASONRY	611 12" CONDUIT, TYPE B	611 12" CONDUIT, TYPE C	611 15" CONDUIT, TYPE B	611 15" CONDUIT, TYPE B WITH JOINTS PER 706.11	611 15" CONDUIT, TYPE C	611 15" CONDUIT, TYPE C, WITH CLASS II BEDDING	611 15" CONDUIT, TYPE F, WITH CLASS II BEDDING	611 18" CONDUIT, TYPE B	611 18" CONDUIT, TYPE C	611 18" CONDUIT, TYPE C, WITH CLASS II BEDDING	611 18" CONDUIT, TYPE F, WITH CLASS II BEDDING	611 21" CONDUIT, TYPE B	611 21" CONDUIT, TYPE C	611 24" CONDUIT, TYPE B	611 24" CONDUIT, TYPE C	611 30" CONDUIT, TYPE B	611 30" CONDUIT, TYPE C	611 30" CONDUIT, TYPE B, WITH CLASS II BEDDING	611 30" CONDUIT, TYPE C, WITH CLASS II BEDDING	611 30" CONDUIT, TYPE F	611 36" CONDUIT, TYPE B	611 36" CONDUIT, TYPE C	611 36" CONDUIT, TYPE B, WITH CLASS II BEDDING	611 42" CONDUIT, TYPE B	611 42" CONDUIT, TYPE C	611 48" CONDUIT, TYPE B	611 48" CONDUIT, TYPE B, WITH CLASS II BEDDING	611 54" CONDUIT, TYPE B, WITH CLASS II BEDDING	611 54" CONDUIT, TYPE C, WITH CLASS II BEDDING	611 24" X 38" CONDUIT, TYPE B, 706.04		
	CU YD	CU YD	FT	FT	FT	FT	FT	FT	FT	FT	FT	FT	FT	FT	FT	FT	FT	FT	FT		FT	FT	FT	FT	FT	FT	FT	FT	FT	FT	FT		
181					630	114	8	183	34	42	148	159	53			555		490		126	176		307		18		302						
182	8	1			882		139			314									40				102	15	23					245	112		
183					876		65			404	12				53	200		91	158			70	310			300						265		
184					438		689									307	444		600							578		984						
185		2	159	90	125		33			147				184		30									49				295					
TOTALS CARRIED TO GENERAL SUMMARY	8	3	159	90	2,951	114	934	183	34	907	160	159	53	184	53	1,092	444	581	798	126	176	70	719	15	90	878	302	984	295	245	112	265		

ESTIMATED QUANTITIES SHEET NO.	611 CONDUIT BORED OR JACKED: 15", TYPE B	611 CONDUIT BORED OR JACKED: 18", TYPE B	611 CONDUIT BORED OR JACKED: 24", TYPE B	611 CONDUIT BORED OR JACKED: 30", TYPE B	611 CONDUIT BORED OR JACKED: 36", TYPE B	611 CONDUIT BORED OR JACKED: 36", TYPE B WITH JOINTS PER 706.11	611 CONDUIT BORED OR JACKED: 42", TYPE B	611 CATCH BASIN, NO. 3	611 CATCH BASIN, NO. 3A	611 CATCH BASIN, NO. 5	611 CATCH BASIN, NO. 6	611 CATCH BASIN, NO. 8	611 CATCH BASIN, NO. 8A	611 CATCH BASIN, NO. 2-2B	611 CATCH BASIN, NO. 2-3	611 INLET, NO. 3 FOR SINGLE SLOPE BARRIER, TYPE B1	611 INLET, NO. 3 FOR SINGLE SLOPE BARRIER, TYPE B1, AS PER PLAN	611 INLET, NO. 3 FOR SINGLE SLOPE BARRIER, TYPE B1, AS PER PLAN, A	611 INLET, NO. 3 FOR SINGLE SLOPE BARRIER, TYPE B1, AS PER PLAN, B	611 INLET, NO. 3 FOR SINGLE SLOPE BARRIER, TYPE B1, AS PER PLAN, C	611 INLET, NO. 3 FOR SINGLE SLOPE BARRIER, TYPE C1	611 INLET, NO. 3 FOR SINGLE SLOPE BARRIER, TYPE C1, AS PER PLAN	611 INLET, NO. 3 FOR SINGLE SLOPE BARRIER, TYPE D	611 INLET, NO. 3 FOR SINGLE SLOPE BARRIER, TYPE D, AS PER PLAN, A	611 INLET, NO. 3 FOR SINGLE SLOPE BARRIER, TYPE D, AS PER PLAN, B	611 MANHOLE NO. 3	690 DRAINAGE STRUCTURE, MISC.: CHECK VALVE FOR 54" CONDUIT	690 MANHOLE MISC.: SANITARY MANHOLE PER MSD ACC NO. 49037	690 MANHOLE MISC.: SANITARY MANHOLE PER MSD ACC NO. 49040	839 TRENCH DRAIN, TYPE B WITH STANDARD GRATE		
	FT	FT	FT	FT	FT	EACH	EACH	EACH	EACH	EACH	EACH	EACH	EACH	EACH	EACH	EACH	EACH	EACH	EACH	EACH	EACH	EACH	EACH	EACH	EACH	EACH	EACH	EACH	FT	FT			
181	252			190		252	323		1	5	1	7	2	1		2	5	1			7	1	2			8		6					
182		145			69	256	149				8	1	2					2			1		2			7	1	2	3	876			
183		85	80					3	8	5		1			1			2	4				1	1		2							
184								8			2				10				3	2			3		1	6							
185								3		1	1							1					1			2			1				
TOTALS CARRIED TO GENERAL SUMMARY	252	230	80	190	69	508	472	14	9	11	12	9	4	1	11	2	5	6	7	2	8	1	9	1	1	25	1	8	4	876			

TOTALS CARRIED TO GENERAL SUMMARY

CALCULATED RSH
CHECKED DLR

DRAINAGE SUBSUMMARY

HAM-75-8.91

J:\20240445\ODOT\HAM\117525\Design\Drainage\Sheets\77889DS001_Drainage.dgn 3/18/2025 11:33:44 AM bmccutchen

REF. NO.	SHEET NO.	STATION FROM	STATION TO	SIDE	CENTERLINE ROADWAY REFERENCE	611 15" CONDUIT, TYPE B FT	611 15" CONDUIT, TYPE B WITH JOINTS PER 706.11 FT	611 15" CONDUIT, TYPE C, WITH CLASS II BEDDING FT	611 15" CONDUIT, TYPE C FT	611 15" CONDUIT, TYPE F, WITH CLASS II BEDDING FT	611 18" CONDUIT, TYPE B FT	611 18" CONDUIT, TYPE C FT	611 18" CONDUIT, TYPE C, WITH CLASS II BEDDING FT	611 18" CONDUIT, TYPE F, WITH CLASS II BEDDING FT	611 24" CONDUIT, TYPE B FT	611 30" CONDUIT, TYPE B FT	611 30" CONDUIT, TYPE B, WITH CLASS II BEDDING FT	611 30" CONDUIT, TYPE C, WITH CLASS II BEDDING FT	611 36" CONDUIT, TYPE B FT	611 36" CONDUIT, TYPE B, WITH CLASS II BEDDING FT	611 42" CONDUIT, TYPE C FT	611 CONDUIT BORED OR JACKED: 15", TYPE B FT	611 CONDUIT BORED OR JACKED: 30", TYPE B FT	611 CONDUIT BORED OR JACKED: 42", TYPE B FT	611 CATCH BASIN, NO. 3A EACH	611 CATCH BASIN, NO. 5 EACH	611 CATCH BASIN, NO. 6 EACH	611 CATCH BASIN, NO. 8 EACH	611 CATCH BASIN, NO. 8A EACH	611 CATCH BASIN, NO. 2-2B EACH	611 INLET, NO. 3 FOR SINGLE SLOPE BARRIER, TYPE B1 EACH	611 INLET, NO. 3 FOR SINGLE SLOPE BARRIER, TYPE B1, AS PER PLAN EACH	611 INLET, NO. 3 FOR SINGLE SLOPE BARRIER, TYPE B1, AS PER PLAN, A EACH	611 INLET, NO. 3 FOR SINGLE SLOPE BARRIER, TYPE C1 EACH	611 INLET, NO. 3 FOR SINGLE SLOPE BARRIER, TYPE C1, AS PER PLAN EACH	611 INLET, NO. 3 FOR SINGLE SLOPE BARRIER, TYPE D EACH	611 MANHOLE NO. 3 EACH	611 CONDUIT BORED OR JACKED: 36", TYPE B WITH JOINTS PER 706.11 FT	690 MANHOLE MISC.: SANITARY MANHOLE PER MSD ACC NO. 49037 EACH
D1	397	440+42		RT	I.R. 75																							1													
D2	397	443+25		RT	I.R. 75																							1													
D2	398	446+29		RT	I.R. 75																							1													
D3	398	451+33		RT	I.R. 75																							1													
D4	398	452+08		RT	I.R. 75																							1													
D5	398	453+16		RT	I.R. 75																							1													
D6	398	455+33		RT	I.R. 75																							1													
D1	399	458+26		CL	I.R. 75																												1								
D2	399	459+27		CL	I.R. 75																												1								
D3	399	460+27		CL	I.R. 75																												1								
D4	399	462+48		CL	I.R. 75																												1								
D5	399	465+19		CL	I.R. 75																												1								
D6	399	467+95		CL	I.R. 75																											1									
D1	400	473+82	474+10	LT	I.R. 75																	92															1				
D2	400	474+10	474+36	RT	I.R. 75																	77														1					
D3	400	476+00	476+07	RT	I.R. 75						42															1															
D4	400	476+08	476+20	RT	I.R. 75																	83														1					
D5	400	478+50	480+69	RT	I.R. 75	219																															1				
D6	400	480+68	480+75	RT	I.R. 75	72																												1							
D7	400	480+58	480+68	LT	I.R. 75		114																				1														
D8	400	480+75	484+40	RT	I.R. 75											365																				1					
D9	400	479+01	480+75	LT	I.R. 75										173																					1					
D10	400	480+75	480+75	RT	I.R. 75	44																				1															
D11	400	475+87	477+84	RT	I.R. 75			183																																	1
D12	400	477+84	479+41	RT	I.R. 75								151																												1
D13	400	479+41	479+41	RT	I.R. 75								8	53																											1
D14	400	479+41	481+17	RT	I.R. 75													176																							1
D15	400	474+36	476+07	RT	I.R. 75	165																																	1		
D16	400	480+96	480+96	RT	I.R 75														18																				1		
D17	400	480+74	480+96	RT/LT	I.R 75																																		2	252	
D18	400	481+17	481+17	RT	I.R 75					34																															1
D19	400	481+14	481+17	RT	I.R 75												126																								1
D20	400	476+07	479+01	LT	I.R 75										282																								1		
D1	402	484+40	486+41	RT	I.R 75														200																	1					
D2	402	486+41	486+90	RT	I.R 75														61																	1					
D3	402	486+86	486+90	RT	I.R 75														46																				1		
D4	402	486+86	489+86	RT	I.R 75															302									1												
D5	402	484+40	485+88	RT	I.R 75							148														1															
D6	402	485+88	486+86	RT	I.R 75										100											1															
D7	402	489+86	493+09	RT	I.R 75																			323															1		
D8	402	489+85	489+86	RT	I.R 75				8																	1															
D9	402	489+40	490+24	LT	I.R 75	84																																1			
D10	402	489+40	489+40	LT	I.R 75	5																								1											
D11	402	489+40	489+50	LT	I.R 75	41																			1																
D12	402	489+50	489+50	RT	I.R 75																		73																1		
D13	402	489+50	489+50	RT	I.R 75																		117									1									
D14	402	489+90	489+91	RT	I.R 75											42																				1					
D15	402	489+86	489+91	RT	I.R 75											83													1												
TOTALS CARRIED TO DRAINAGE SUBSUMMARY						630	114	183	8	34	42	148	159	53	555	490	126	176	307	18	302	252	190	323	1	5	1	7	2	1	2	5	1	7	1	2	8	252	6

DRAINAGE ESTIMATED QUANTITIES

CALCULATED RSH
CHECKED DLR

HAM-75-8.91

J:\20240445\ODOT\HAM\117525\Design\Drainage\Sheets\77889DS001_Drainage.dgn 3/18/2025 11:34:53 AM bmccutchen

REF. NO.	SHEET NO.	STATION FROM	STATION TO	SIDE	CENTERLINE ROADWAY REFERENCE	601 ROCK CHANNEL PROTECTION, TYPE C WITH FILTER	602 CONCRETE MASONRY	611 15" CONDUIT, TYPE B	611 15" CONDUIT, TYPE C	611 18" CONDUIT, TYPE B	611 30" CONDUIT, TYPE C	611 36" CONDUIT, TYPE B	611 36" CONDUIT, TYPE B, WITH CLASS II BEDDING	611 36" CONDUIT, TYPE C	611 54" CONDUIT, TYPE B, WITH CLASS II BEDDING	611 54" CONDUIT, TYPE C, WITH CLASS II BEDDING	611 CONDUIT BORED OR JACKED: 18", TYPE B	611 CONDUIT BORED OR JACKED: 36", TYPE B	611 CONDUIT BORED OR JACKED: 36", TYPE B WITH JOINTS PER 706.11	611 CONDUIT BORED OR JACKED: 42", TYPE B	611 CATCH BASIN, NO. 6	611 CATCH BASIN, NO. 8	611 CATCH BASIN, NO. 8A	611 INLET, NO. 3 FOR SINGLE SLOPE BARRIER, TYPE B1, AS PER PLAN, A	611 INLET, NO. 3 FOR SINGLE SLOPE BARRIER, TYPE C1	611 INLET, NO. 3 FOR SINGLE SLOPE BARRIER, TYPE D	611 MANHOLE NO. 3	690 DRAINAGE STRUCTURE, MISC.: CHECK VALVE FOR 54" CONDUIT	690 MANHOLE MISC.: SANITARY MANHOLE PER MSD ACC NO. 49037	690 MANHOLE MISC.: SANITARY MANHOLE PER MSD ACC NO. 49040	839 TRENCH DRAIN, TYPE B WITH STANDARD GRATE
						CU YD	CU YD	FT	FT	FT	FT	FT	FT	FT	FT	FT	FT	FT	FT	FT	EACH	EACH	EACH	EACH	EACH	EACH	EACH	EACH	LUMP	EACH	FT
D16	402	492+99	493+28	LT/RT	RAMP D															149			1								
D17	402	492+00	492+99	RT	RAMP D					92												1									
D18	402	491+53	491+93	RT	I.R. 75	8	0.25		40																		1				
D19	402	493+50	494+34	RT	I.R. 75			85																1							
D20	402	492+00	493+50	RT	I.R. 75			150																1							
D21	402	494+34		RT	I.R. 75																						1				
D22		NOT USED																													
D23	402	493+05	494+50	LT	I.R. 75												145										1				
D24	402	492+99	493+05	LT	I.R. 75			41																		1					
D25	402	492+98	492+99	LT	I.R. 75			6													1										
D26	402	492+08	492+99	RT	RAMP C				91																	1					
D27	402	492+08	493+05	LT	I.R. 75					97															1						
D28	402	491+78	491+95	LT/RT	I.R. 75														256										1		
D29	402	491+56	491+71	LT/RT	I.R. 75										235													1		1	
D30	402	491+54	491+56	LT	I.R. 75										10															1	
D31	402	491+56	491+78	LT	I.R. 75								23																1		
D32	402	489+50	491+00	LT	I.R. 75					125											1										150
D33	402	489+50	489+91	RT	I.R. 75						40												1								
D34	402	491+71	491+78	RT	I.R. 75											112														1	
D35	402	489+84		RT	I.R. 75				8																		1				
D36	402	491+78	491+92	LT	I.R. 75									15													1				
D37	402	491+92	491+94	LT	I.R. 75							60															1				
D38	402	491+94	492+36	LT	I.R. 75							42															1				
D39	402	492+36	492+43	LT	I.R. 75													69													
D40	402	482+00	484+50	LT	I.R. 75			100													1										244
D41	402	484+50	485+50	LT	I.R. 75			100													1										96
D42	402	485+50	486+50	LT	I.R. 75			100													1										96
D43	402	486+50	487+50	LT	I.R. 75			100													1										96
D44	402	487+50	488+50	LT	I.R. 75			100													1										96
D45	402	488+50	489+50	LT	I.R. 75			100													1										98
TOTALS CARRIED TO DRAINAGE SUBSUMMARY						8	0.3	882	139	314	40	102	23	15	245	112	145	69	256	149	8	1	2	2	1	2	7	1	2	3	876

CALCULATED RSH
CHECKED DLR

DRAINAGE ESTIMATED QUANTITIES

HAM-75-8.91

J:\20240445\ODOT\HAM\117525\Design\Drainage\Sheets\77889DS001_Drainage.dgn 3/10/2025 2:26:15 PM hbrendlinger

REF. NO.	SHEET NO.	STATION FROM	STATION TO	SIDE	CENTERLINE ROADWAY REFERENCE	611 15" CONDUIT, TYPE B	611 15" CONDUIT, TYPE C	611 18" CONDUIT, TYPE B	611 18" CONDUIT, TYPE C	611 21" CONDUIT, TYPE C	611 24" CONDUIT, TYPE B	611 30" CONDUIT, TYPE B	611 30" CONDUIT, TYPE C	611 30" CONDUIT, TYPE F	611 36" CONDUIT, TYPE B	611 42" CONDUIT, TYPE B	611 24" X 38" CONDUIT, TYPE B, 706.04	611 CONDUIT BORED OR JACKED: 18", TYPE B	611 CONDUIT BORED OR JACKED: 24", TYPE B	611 CATCH BASIN, NO. 3	611 CATCH BASIN, NO. 3A	611 CATCH BASIN, NO. 5	611 CATCH BASIN, NO. 8	611 CATCH BASIN, NO. 2-3	611 INLET, NO. 3 FOR SINGLE SLOPE BARRIER, TYPE B1, AS PER PLAN, B	611 INLET, NO. 3 FOR SINGLE SLOPE BARRIER, TYPE B1, AS PER PLAN, A	611 INLET, NO. 3 FOR SINGLE SLOPE BARRIER, TYPE D	611 INLET, NO. 3 FOR SINGLE SLOPE BARRIER, TYPE D, AS PER PLAN, A	611 MANHOLE NO. 3
						FT	FT	FT	FT	FT	FT	FT	FT	FT	FT	FT	FT	FT	FT	EACH	EACH	EACH	EACH	EACH	EACH	EACH	EACH	EACH	EACH
D1	404	494+50	494+76	LT	I.R. 75	74																					1		
D2	404	494+50	496+64	LT	I.R. 75			214															1						
D3	404	494+35	495+64	RT	I.R. 75										129										1				
D4	404	495+64	496+64	RT	I.R. 75										100										1				
D6	404	496+64	497+45	LT	I.R. 75										81										1				
D7	404	497+45	500+10	LT	I.R. 75												265								1				
D8	404	499+65	500+10	RT	I.R. 75													85				1							
D9	404	500+10	500+50	LT	I.R. 75														80			1							
D10	404	500+28	500+50	LT	I.R. 75		65																						
D11	404	500+10	502+00	RT	I.R. 75			190																		1			
D12	404	502+00	502+50	RT	I.R. 75	94																1							
D13	404	502+00	505+00	RT	I.R. 75	300																				1			
D14	404	504+48	505+96	RT	RAMP A								148											1					
D15	404	504+46	504+51	RT	RAMP A				12																				
D16	404	504+47	504+48	RT	RAMP A								10																1
D17	404	504+37	504+47	RT	RAMP A							38								1									
D18	404	504+37	504+50	RT	RAMP A									70						1									
D19	404	504+50	505+00	RT	RAMP A							53										1							
D20	404	505+00	506+50	RT	RAMP A											150												1	
D21	404	502+50	503+80	LT	RAMP B	130															1								
D22	404	503+80	504+60	LT	RAMP B	80															1								
D23	404	504+60	505+30	LT	RAMP B	70															1								
D24	404	505+30	505+90	LT	RAMP B	60															1								
D25	404	505+90	506+58	LT	RAMP B	68															1								
D26	404	506+58	507+25	LT	RAMP B						67									1									
D27	404	506+58	506+58	LT	RAMP B					11												1							
D28	404	506+50	508+00	RT	RAMP A											150													1
D29	404	494+50	495+90	RT	I.R. 75																								
D1	405	507+25	507+80	LT	RAMP B						55										1								
D2	405	507+80	508+22	LT	RAMP B					42											1								
D3	405	508+22	509+00	LT	RAMP B						78										1								
D4-D7		NOT USED																											
TOTALS CARRIED TO DRAINAGE SUBSUMMARY						876	65	404	12	53	200	91	158	70	310	300	265	85	80	3	8	5	1	1	4	2	1	1	2

CALCULATED RSH
CHECKED DLR

DRAINAGE ESTIMATED QUANTITIES

HAM-75-8.91

J:\20240445\ODOT\HAM\117525\Design\Drainage\Sheets\77889DS001_Drainage.dgn 3/18/2025 11:43:01 AM bmccutchen

CROSS REFERENCES	
SHEET NO	DESCRIPTION
397-407	DRAINAGE PLANS
408-428	STORM SEWER PROFILES
428	SANITARY SEWER PROFILES
164-191	ESTIMATED QUANTITIES
375-384	SUPERELEVATION TABLES
506-511	ROADSIDE BARRIER PLANS
385-393	INTERCHANGE DETAILS
595-614	LIGHTING PLANS
633-637	FENCING PLANS

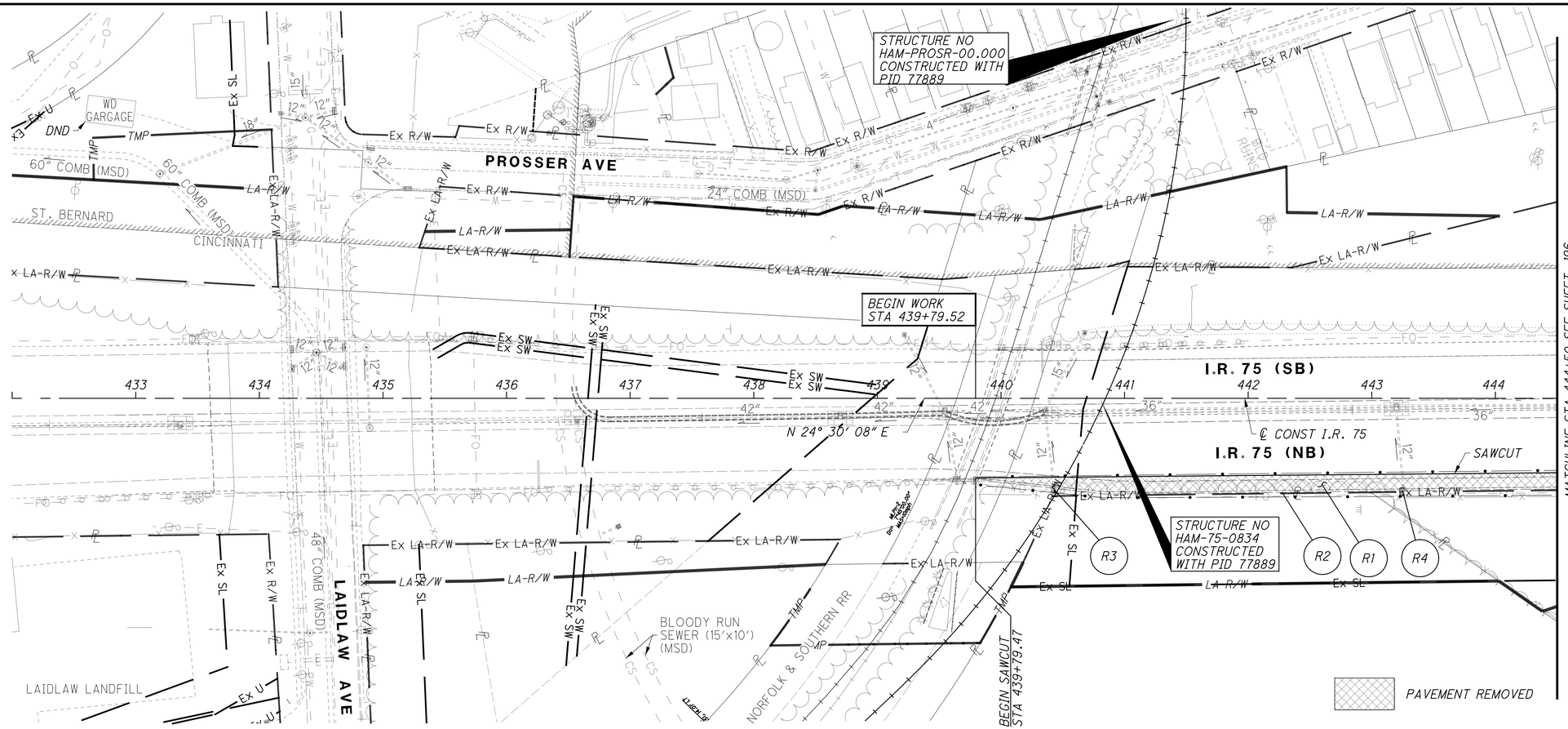

CFN	LENGTH (FT)	SIZE	TYPE	SLOPE	START STRUCTURE	START INVERT ELEV	STOP STRUCTURE	STOP INVERT ELEV
1997466	169.00	15"	TYPE B	3.37%	306	563.17	323	557.49
1997491	83.00	15"	TYPE B	3.11%	304	553.70	322	551.12
1997479	187.00	15"	TYPE B	1.04%	317	538.96	307	536.75
1997465	44.00	15"	TYPE B	1.07%	321	539.50	307	538.75
1997489	251.00	36"	TYPE B	4.48%	319	532.00	307	520.73
1997490	126.00	30"	TYPE B	5.40%	312	526.39	311	519.59
1997486	191.00	30"	TYPE B	0.26%	402	526.25	407	525.75
1997667	41.00	15"	TYPE B	1.22%	402	528.50	402	528.00
1997668	42.00	15"	TYPE B	0.48%	506	529.50	501	528.00
1997469	83.00	30"	TYPE B	0.78%	501	525.65	500	525.00
1997463	256.00	36"	TYPE B	0.49%	906	528.00	905	526.75
1997476	235.00	54"	TYPE B	0.66%	904	526.81	902	525.25
1997480	68.00	36"	TYPE B	0.47%	EX INLET	526.48	T102	526.19
1997464	42.00	15"	TYPE B	0.60%	924	526.50	922	526.25
1997670	59.00	36"	TYPE B	0.91%	T101	525.98	T100	525.44
1997470	84.00	18"	TYPE B	0.28%	619	529.25	606	529.01
1997470	80.00	18"	TYPE B	0.30%	620	529.25	606	529.01
1997483	94.00	15"	TYPE B	0.26%	608	530.63	607	530.39
1997482	98.00	42"	TYPE B	0.17%	739	528.5	738	528.33
1997472	93.00	15"	TYPE B	0.47%	737	535.62	736	535.18
1997477	88.00	15"	TYPE B	1.00%	733	537.09	732	536.21
1997485	83.00	15"	TYPE B	1.01%	730	540.04	729	539.2
1997487	84.00	48"	TYPE B	0.15%	728	526.25	707	526.12
1997488	180.00	42"	TYPE B	1.30%	771	536.35	770	534
1997478	105.00	21"	TYPE B	1.05%	725	528.5	704	527.4
1997669	93.00	15"	TYPE B	3.20%	726	539.59	725	536.61

HORIZONTAL SCALE IN FEET 0 25 50 100

CALCULATED SEA
CHECKED DLR

PLAN - I.R. 75
STA 432+00 TO STA 444+50

HAM-75-8.91

J:\2024045\ODOT\HAM\117525\Design\Roadway\Sheets\77889GP004.dgn 3/7/2025 4:18:46 PM hbrendlinger

CROSS REFERENCES	
SHEET NO	DESCRIPTION
397 - 407	DRAINAGE PLANS
408 - 428	STORM SEWER PROFILES
428	SANITARY SEWER PROFILES
164 - 191	ESTIMATED QUANTITIES
375 - 384	SUPERELEVATION TABLES
506 - 511	ROADSIDE BARRIER PLANS
385 - 393	INTERCHANGE DETAILS
595 - 614	LIGHTING PLANS
633 - 637	FENCING PLANS

CURVE 75-5
PI STA 523+96.89
Δ = 16°02'37" (LT)
Dc = 1°06'00"
R = 5,208.71'
T = 734.06'
L = 1,458.52'
E = 51.47'
emax = 0.029

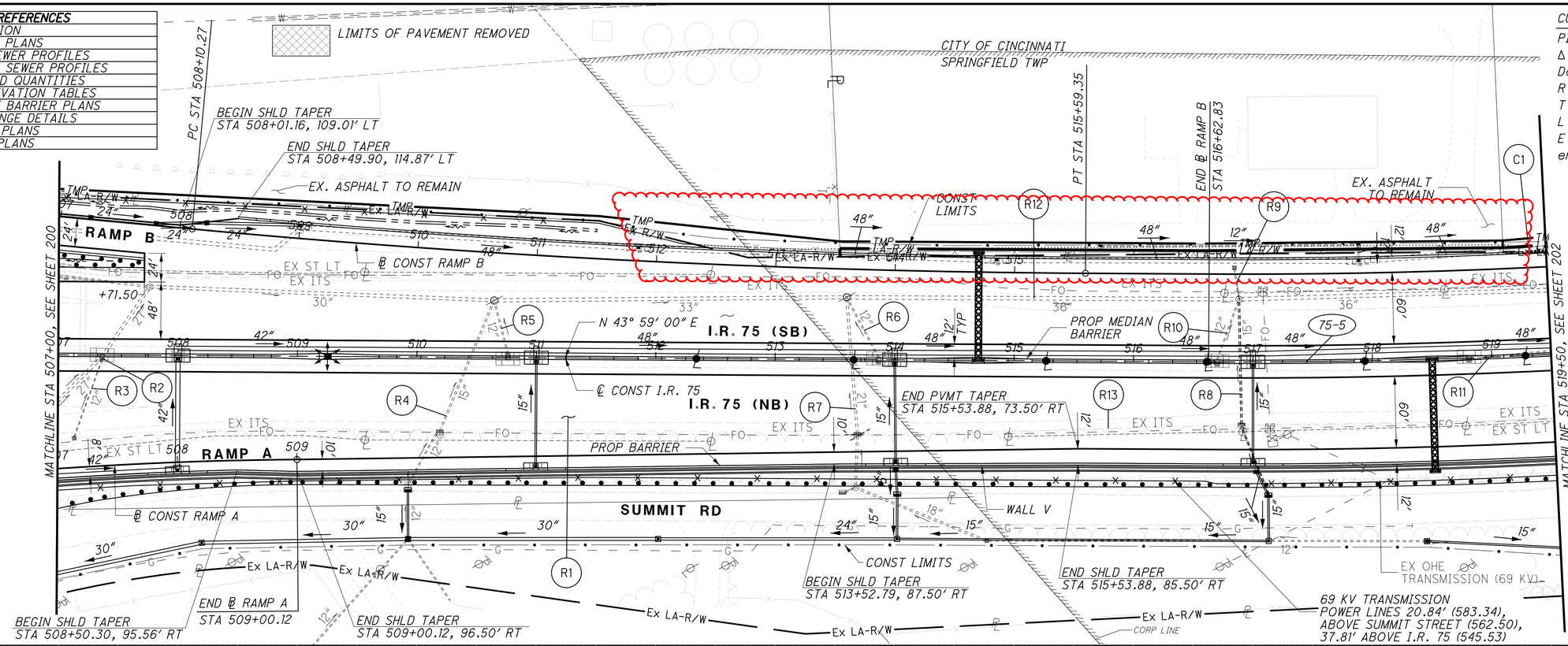

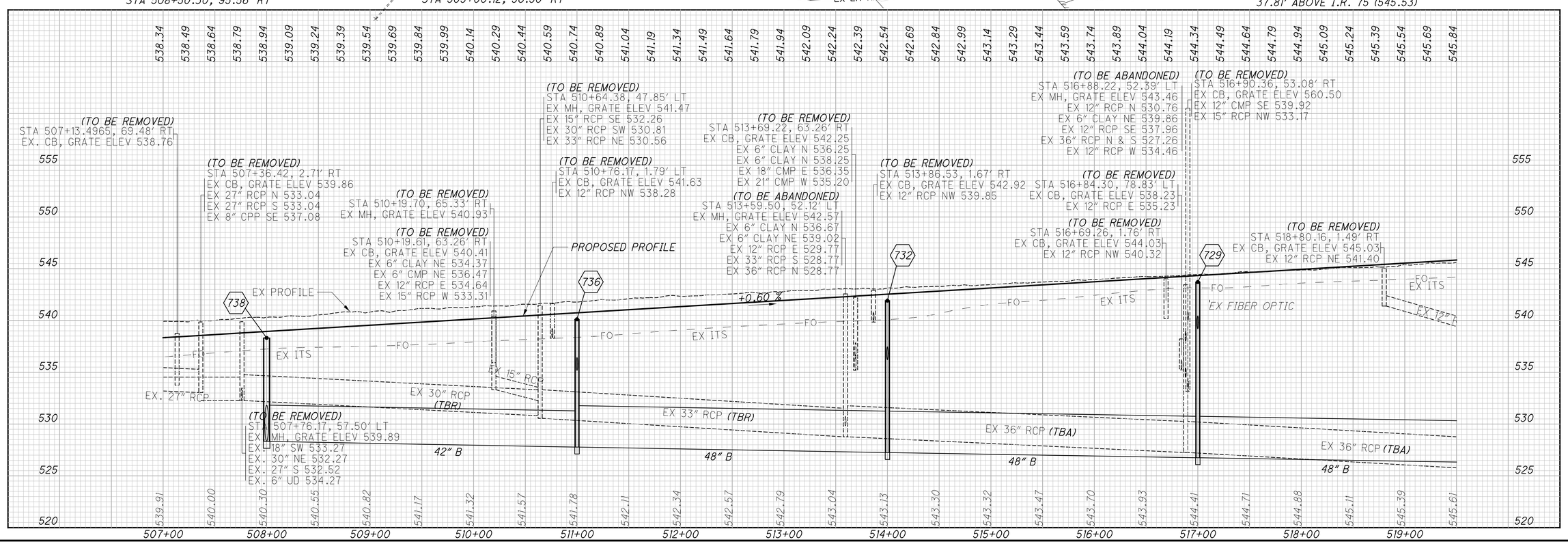

HORIZONTAL SCALE IN FEET
0 25 50 100

CALCULATED CFR
CHECKED JLM

PLAN AND PROFILE - I.R. 75
STA 507+00 TO STA 519+50

HAM-75-8.91

J:\2024045\ODOT\HAM\117525\Design\Roadway\Sheets\77889GP406.dgn 3/7/2025 10:43:14 AM hbrendlinger

SEEDING	
END WIDTH	SQ. YDS.
28	174
35	187
63	361

PAVEMENT REMOVAL QUANTITIES HAVE BEEN DEDUCTED FROM EXCAVATION QUANTITIES

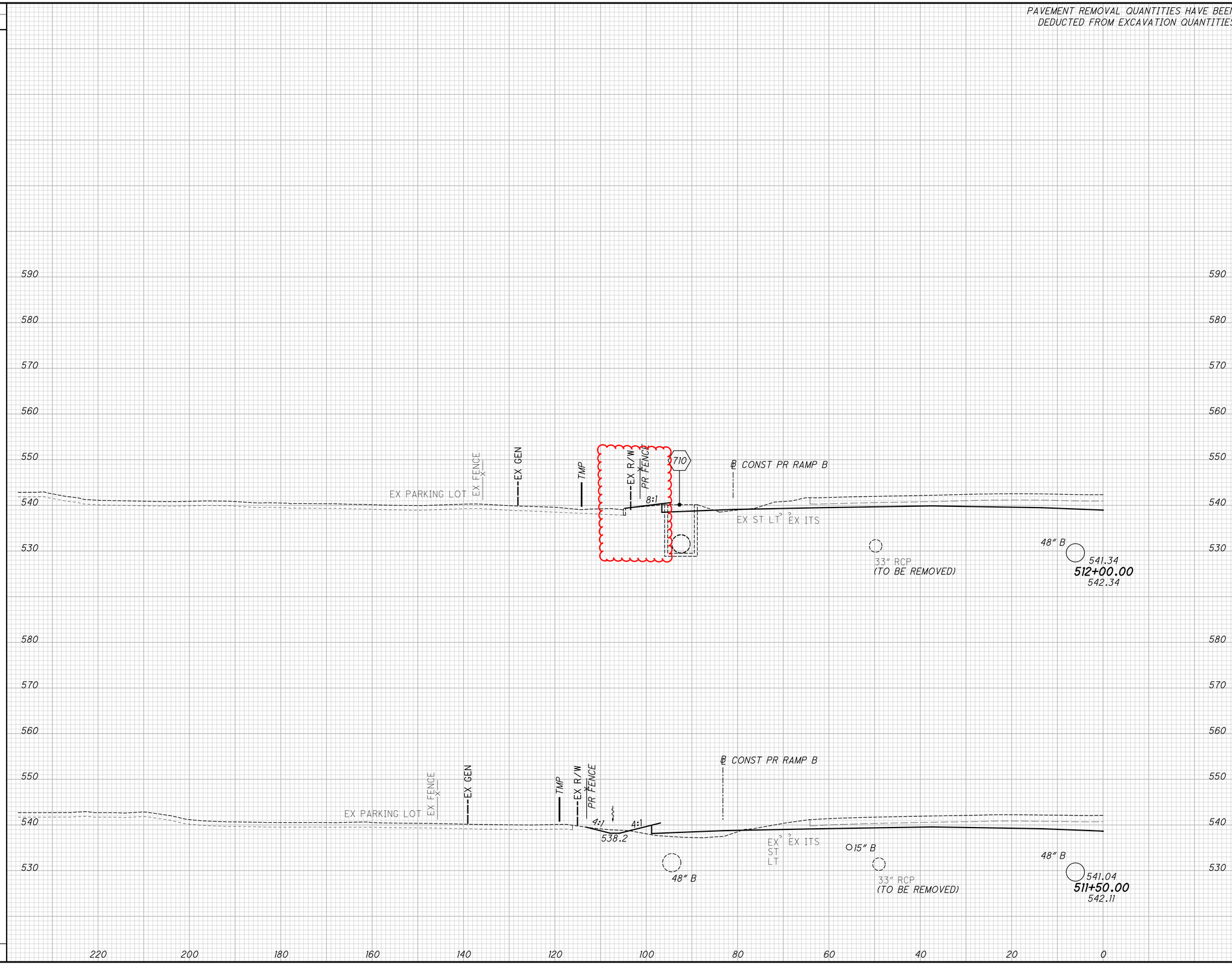

END AREA		VOLUME	
CUT	FILL	CUT	FILL

CALCULATED CFR
CHECKED SSK

CROSS SECTIONS I.R. 75 SOUTHBOUND
STA. 511+50.00 TO STA. 512+00.00

HAM-75-8.91

J:\20240445\ODOT\HAM\117525\Design\Roadway\Sheets\77889XS542.dgn 3/10/2025 4:52:20 PM hbrendlinger

SEEDING	
END WIDTH	SQ. YDS.
28	145
24	145
52	290

PAVEMENT REMOVAL QUANTITIES HAVE BEEN DEDUCTED FROM EXCAVATION QUANTITIES

END AREA		VOLUME	
CUT	FILL	CUT	FILL

CALCULATED CFR
CHECKED SSK

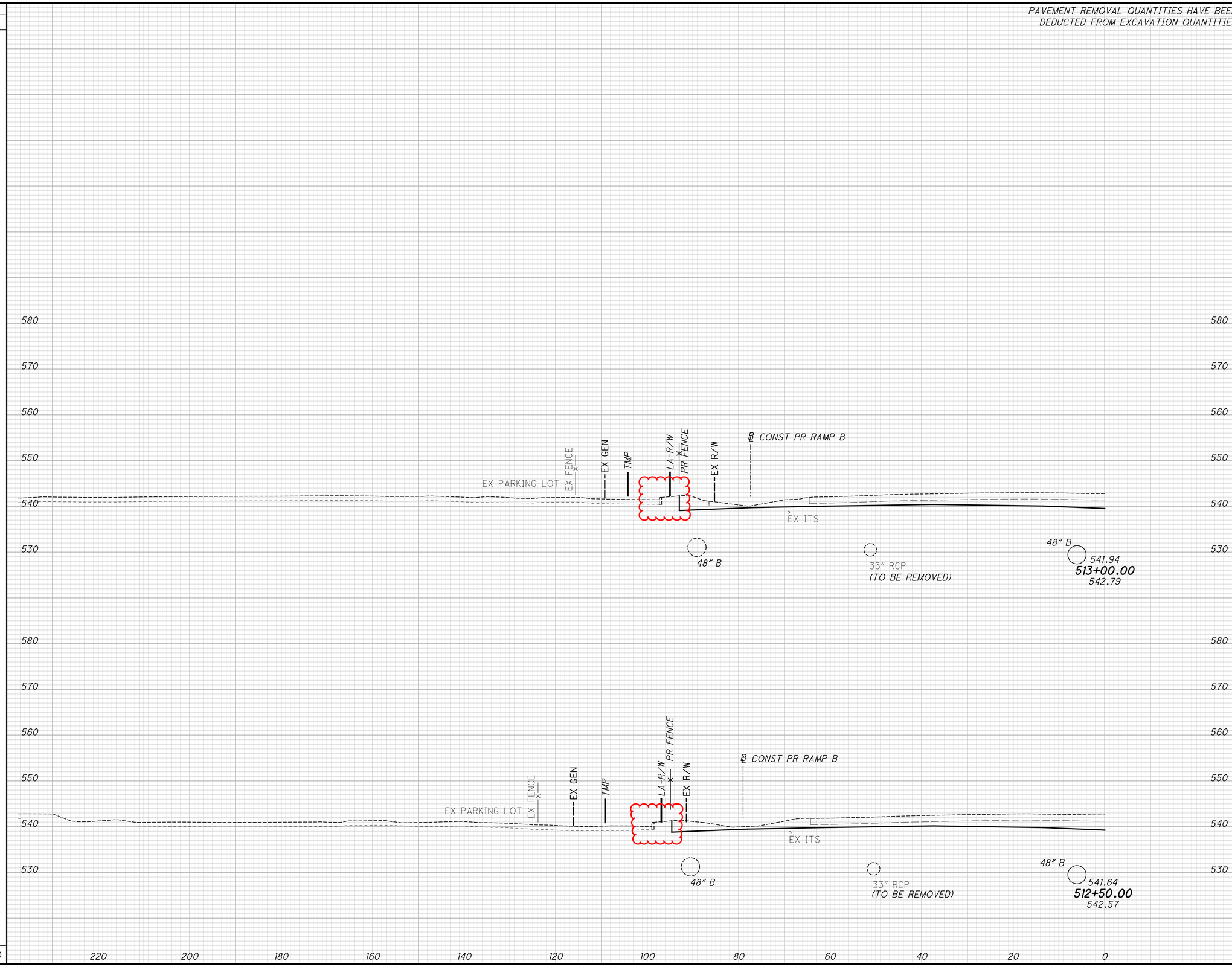

CROSS SECTIONS I.R. 75 SOUTHBOUND
STA. 512+50.00 TO STA. 513+00.00

HAM-75-8.91

J:\20240445\ODOT\HAM\117525\Design\Roadway\Sheets\77889XS544.dgn 3/10/2025 4:59:06 PM hbrendlinger

SEEDING	
END WIDTH	SQ. YDS.
28	
	156
28	
	156
56	312

PAVEMENT REMOVAL QUANTITIES HAVE BEEN DEDUCTED FROM EXCAVATION QUANTITIES

END AREA		VOLUME	
CUT	FILL	CUT	FILL

CALCULATED CFR
CHECKED SSK

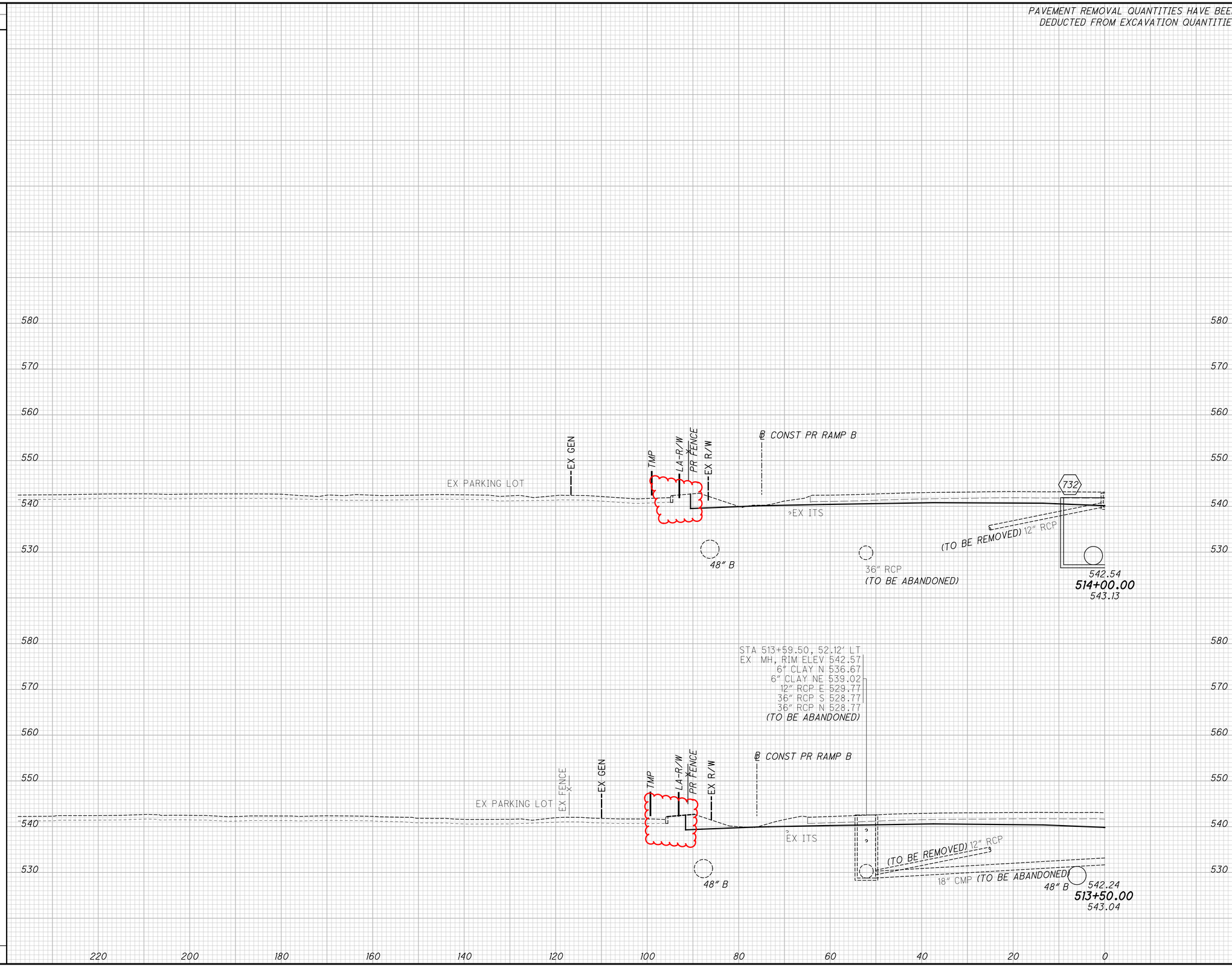

CROSS SECTIONS I.R. 75 SOUTHBOUND
STA. 513+50.00 TO STA. 514+00.00

HAM-75-8.91

J:\20240445\ODOT\HAM\117525\Design\Roadway\Sheets\77889XS546.dgn 3/10/2025 5:00:08 PM hbrendlinger

SEEDING	
END WIDTH	SQ. YDS.
27	
	156
29	
	158
56	314

PAVEMENT REMOVAL QUANTITIES HAVE BEEN DEDUCTED FROM EXCAVATION QUANTITIES

END AREA		VOLUME	
CUT	FILL	CUT	FILL

CALCULATED CFR
CHECKED SSK

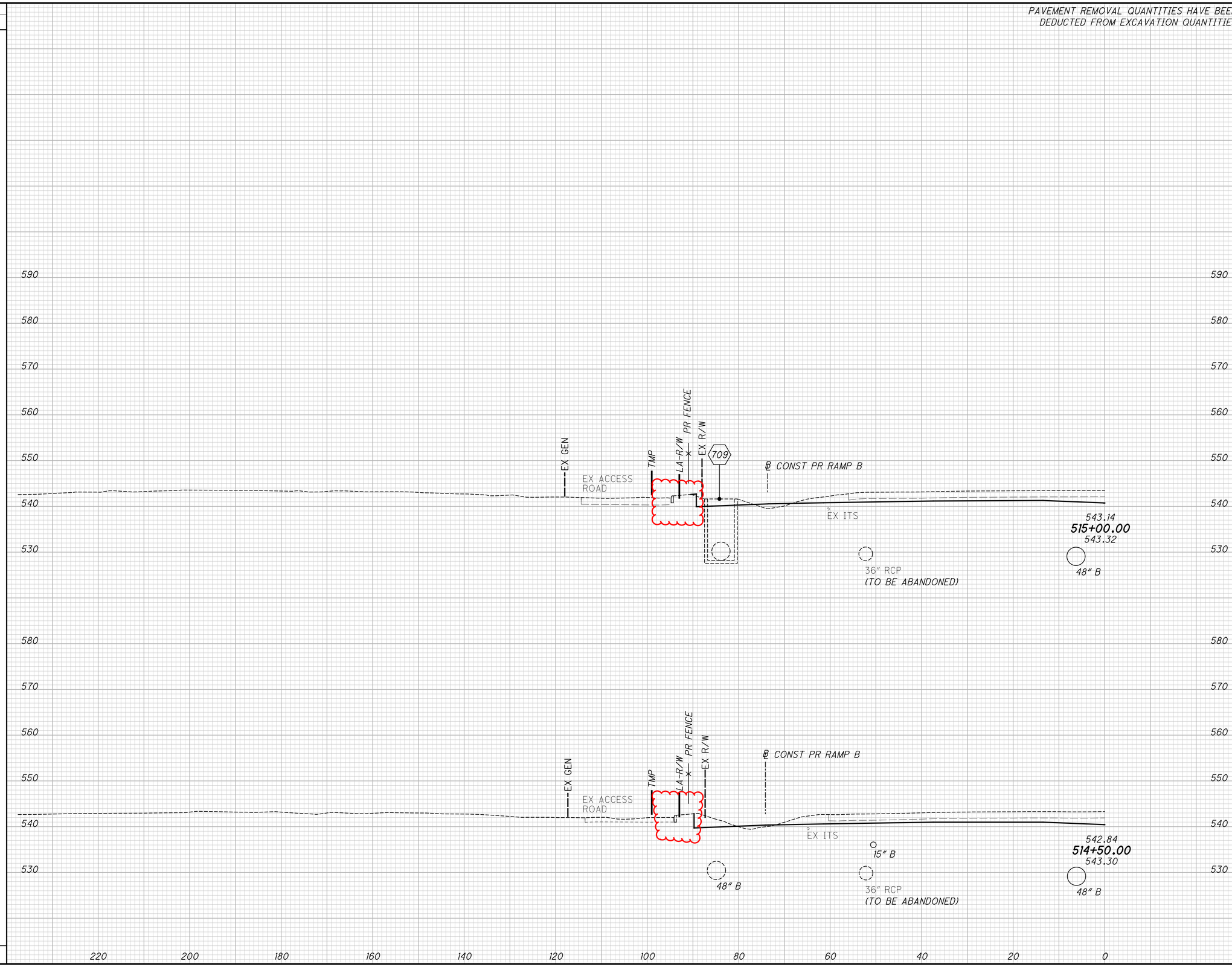

CROSS SECTIONS I.R. 75 SOUTHBOUND
STA. 514+50.00 TO STA. 515+00.00

HAM-75-8.91

J:\20240445\ODOT\HAM\117525\Design\Roadway\Sheets\77889XS548.dgn 3/10/2025 5:01:02 PM hbrendlinger

SEEDING	
END WIDTH	SQ. YDS.
30	171
31	163
61	334

PAVEMENT REMOVAL QUANTITIES HAVE BEEN DEDUCTED FROM EXCAVATION QUANTITIES

END AREA		VOLUME	
CUT	FILL	CUT	FILL

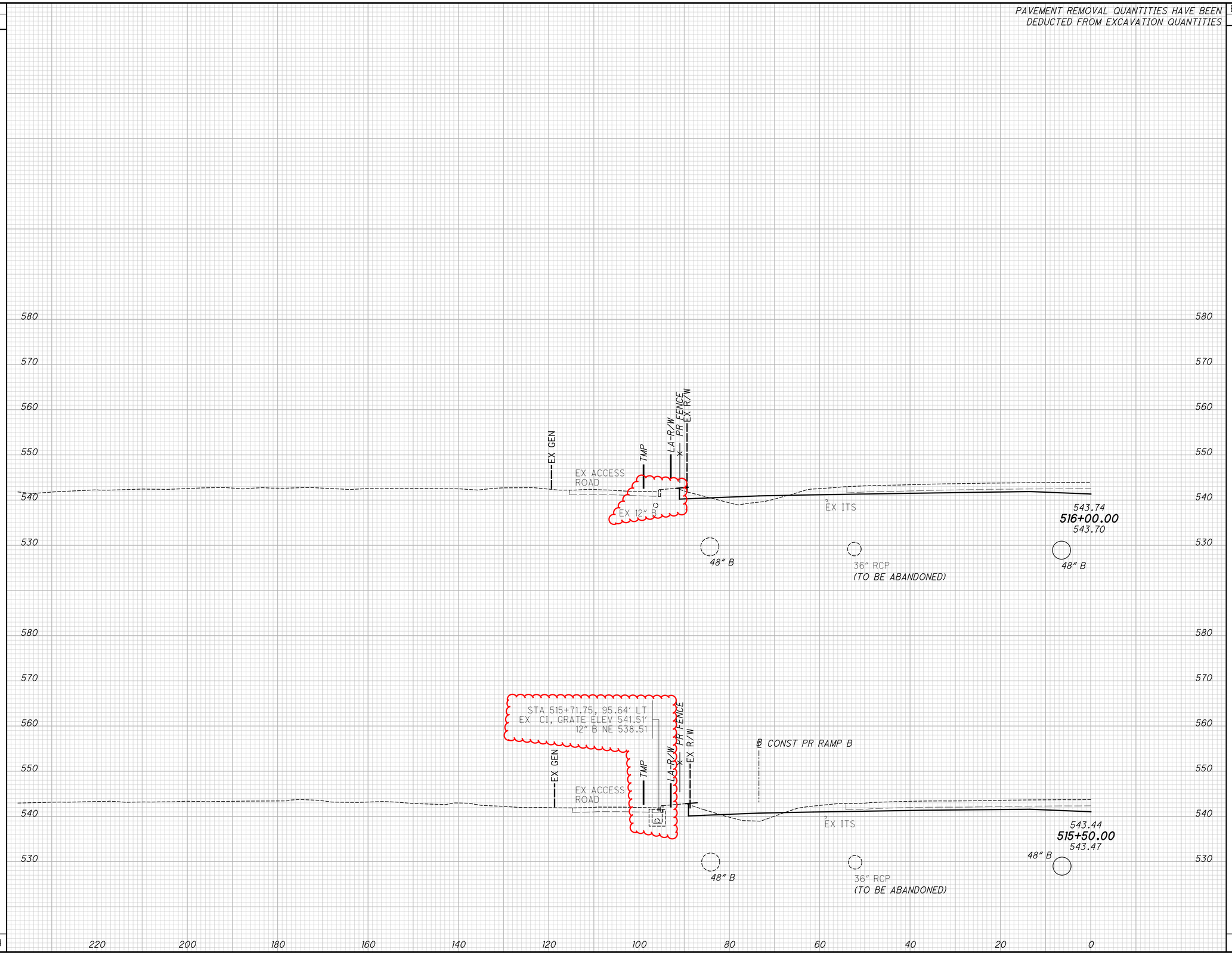

CALCULATED CFR
CHECKED SSK

CROSS SECTIONS I.R. 75 SOUTHBOUND
STA. 515+50.00 TO STA. 516+00.00

HAM-75-8.91

J:\20240445\ODOT\HAM\117525\Design\Roadway\Sheets\77889XS550.dgn 3/10/2025 5:02:01 PM hbrendlinger

SEEDING	
END WIDTH	SQ. YDS.
34	186
33	176
67	362

PAVEMENT REMOVAL QUANTITIES HAVE BEEN DEDUCTED FROM EXCAVATION QUANTITIES

END AREA		VOLUME	
CUT	FILL	CUT	FILL

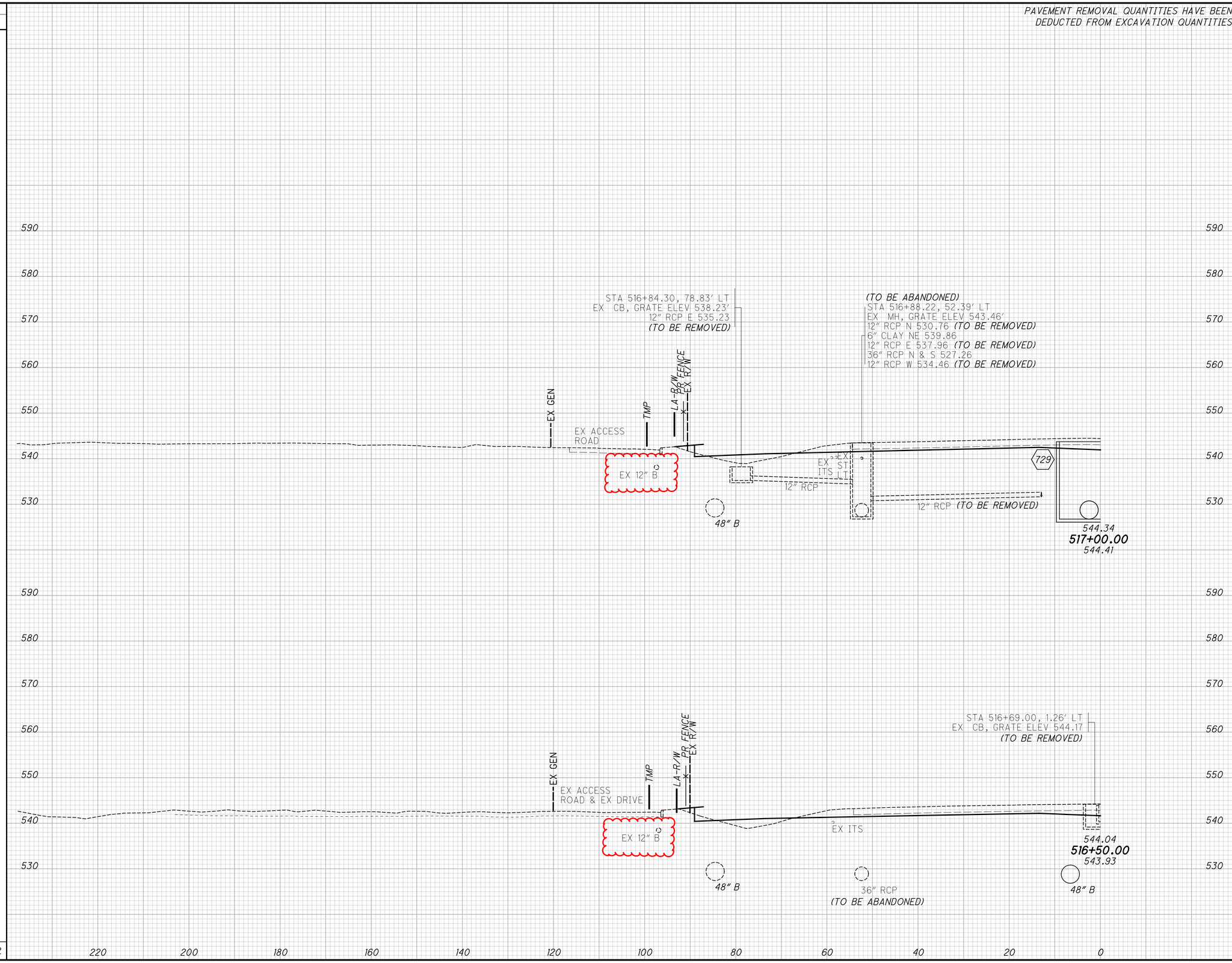

CALCULATED CFR
CHECKED SSK

CROSS SECTIONS I.R. 75 SOUTHBOUND
STA. 516+50.00 TO STA. 517+00.00

HAM-75-8.91

J:\20240445\ODOT\HAM\117525\Design\Roadway\Sheets\77889XS552.dgn 3/10/2025 5:03:05 PM hbrendlinger

SEEDING	
END WIDTH	SQ. YDS.
31	176
32	184
63	360

PAVEMENT REMOVAL QUANTITIES HAVE BEEN DEDUCTED FROM EXCAVATION QUANTITIES

END AREA		VOLUME	
CUT	FILL	CUT	FILL

CALCULATED CFR
CHECKED SSK

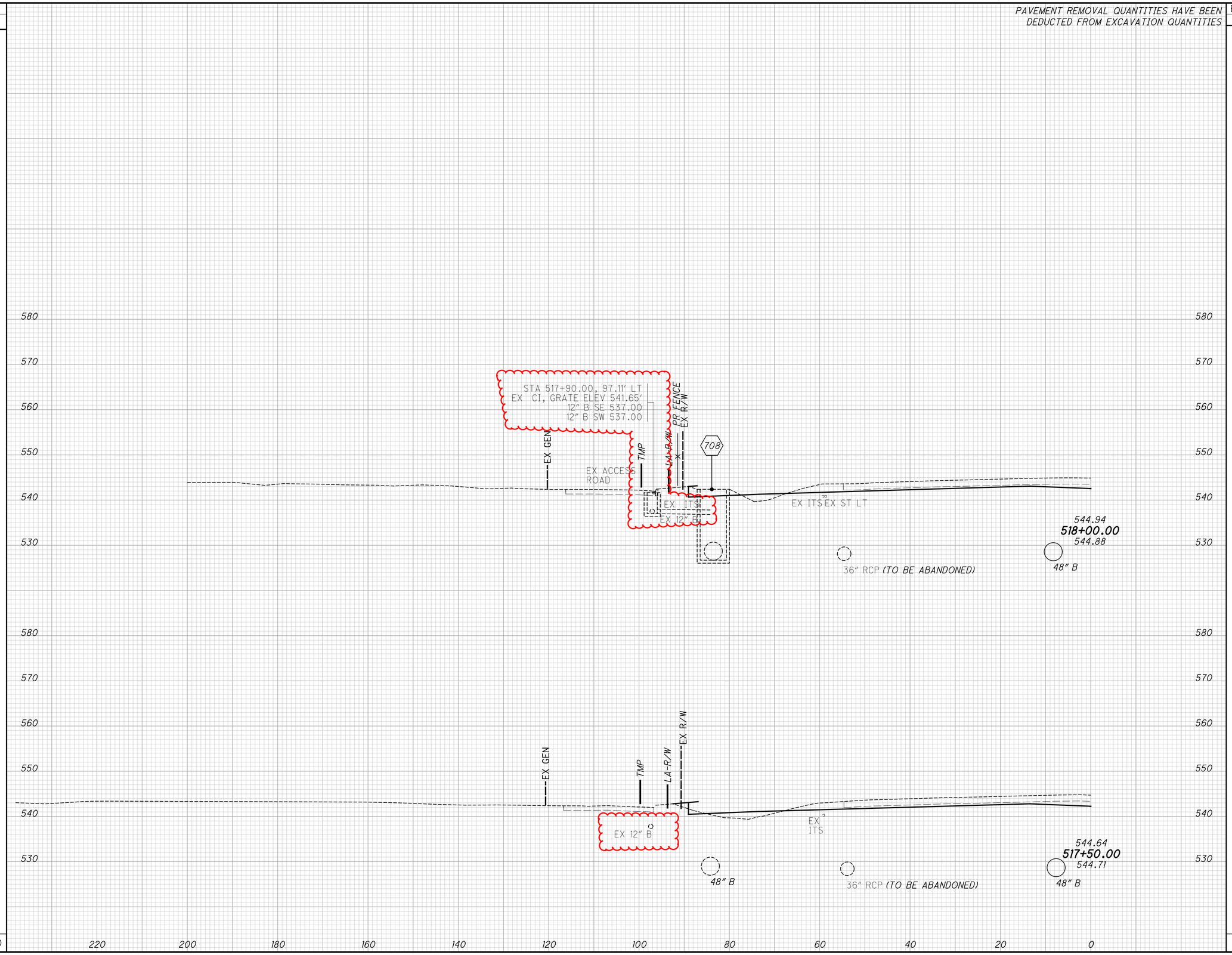

CROSS SECTIONS I.R. 75 SOUTHBOUND
STA. 517+50.00 TO STA. 518+00.00

HAM-75-8.91

J:\20240445\ODOT\HAM\117525\Design\Roadway\Sheets\77889XS554.dgn 3/10/2025 5:04:17 PM hbrendlinger

PAVEMENT REMOVAL QUANTITIES HAVE BEEN DEDUCTED FROM EXCAVATION QUANTITIES

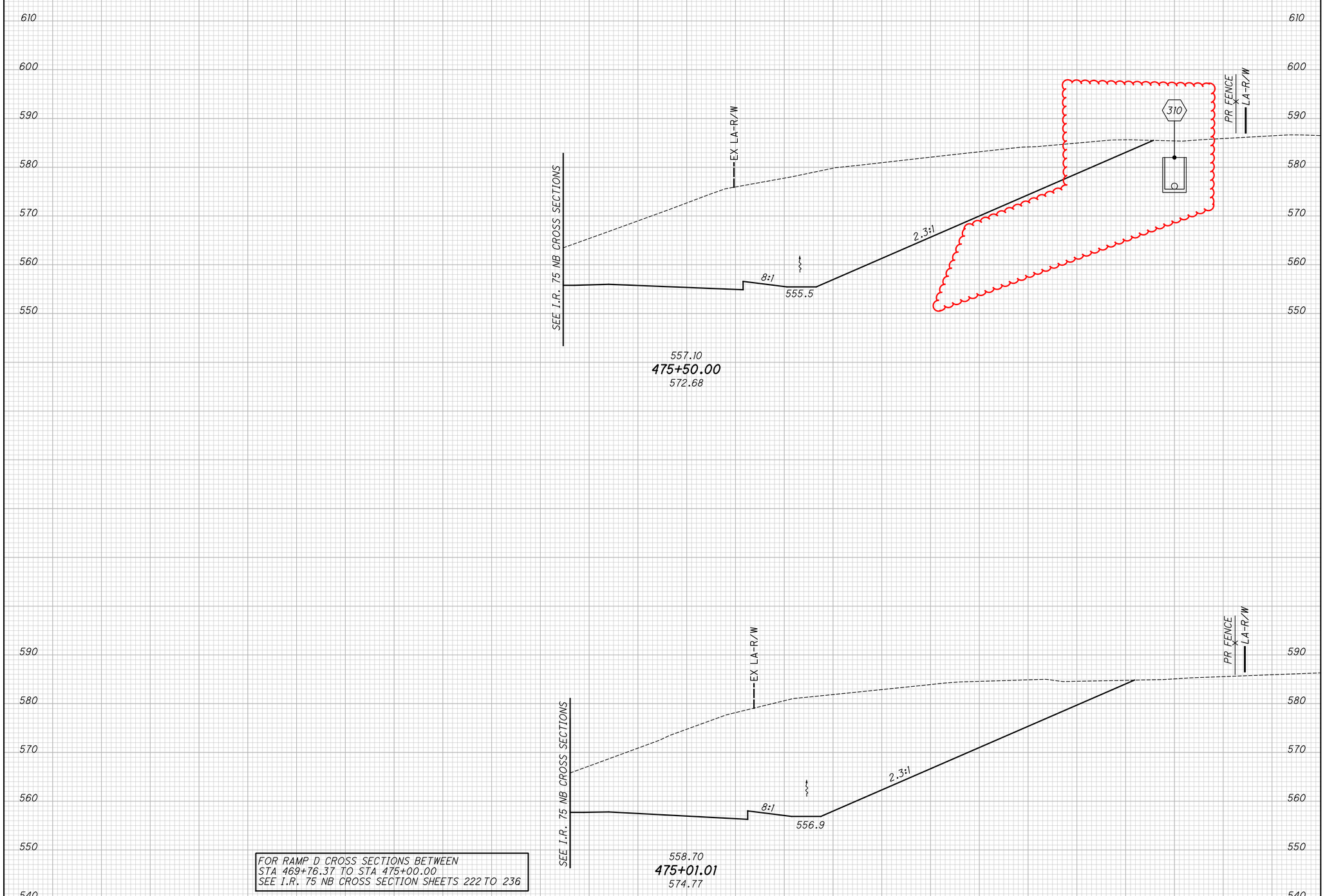

FOR RAMP D CROSS SECTIONS BETWEEN
STA 469+76.37 TO STA 475+00.00
SEE I.R. 75 NB CROSS SECTION SHEETS 222 TO 236

SEEDING END WIDTH	SEEDING SQ. YDS.	END AREA CUT	END AREA FILL	VOLUME CUT	VOLUME FILL
95	503	1734	0	3161	0
90	0	1751	0	0	0
285	503	3485	0	3161	0

CALCULATED CFR
CHECKED SSK

CROSS SECTIONS RAMP D
STA. 475+01.01 TO STA. 475+50.00

HAM-75-8.91

J:\20240445\ODOT\HAM\117525\Design\Roadway\Sheets\77889XS919A.dgn 3/10/2025 5:05:41 PM hbrendlinger

PAVEMENT REMOVAL QUANTITIES HAVE BEEN DEDUCTED FROM EXCAVATION QUANTITIES

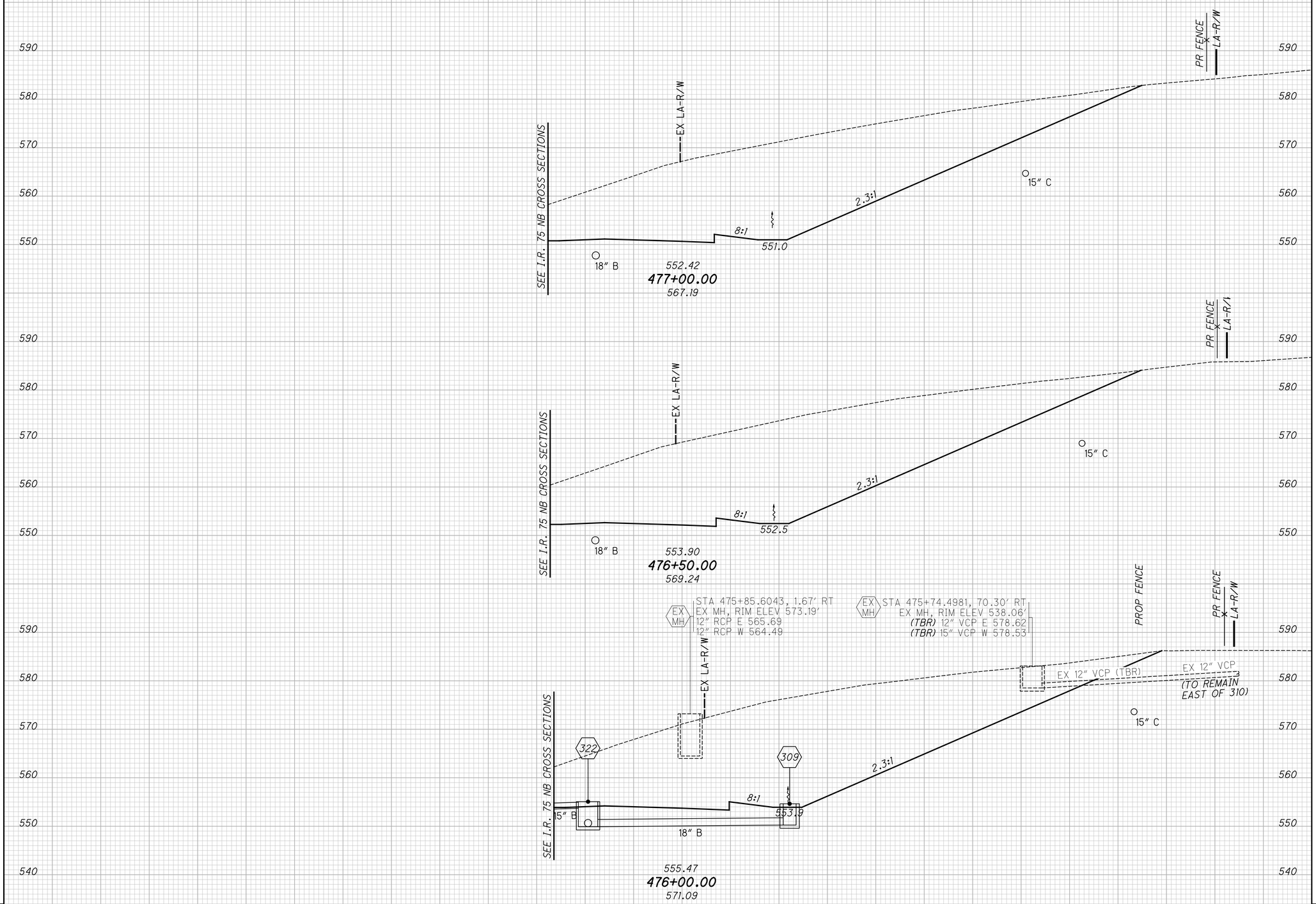

SEEDING END WIDTH	SEEDING SQ. YDS.	END AREA CUT	END AREA FILL	VOLUME CUT	VOLUME FILL
99		1511	0		
	551			2875	0
99		1594	0		
	556			1561	0
101		1712	0		
	543			3190	0
1650				7626	0

CALCULATED CFR
CHECKED SSK

CROSS SECTIONS RAMP D
STA. 476+00.00 TO STA. 477+00.00

HAM-75-7.85

359A
826

bmcdutchen
H:\2024\24-0207\HAM\75\07.85\Design\Roadway\Sheets\Xs\RD\RD_XS.dgn 3/17/2025 11:40:10 AM

PAVEMENT REMOVAL QUANTITIES HAVE BEEN DEDUCTED FROM EXCAVATION QUANTITIES

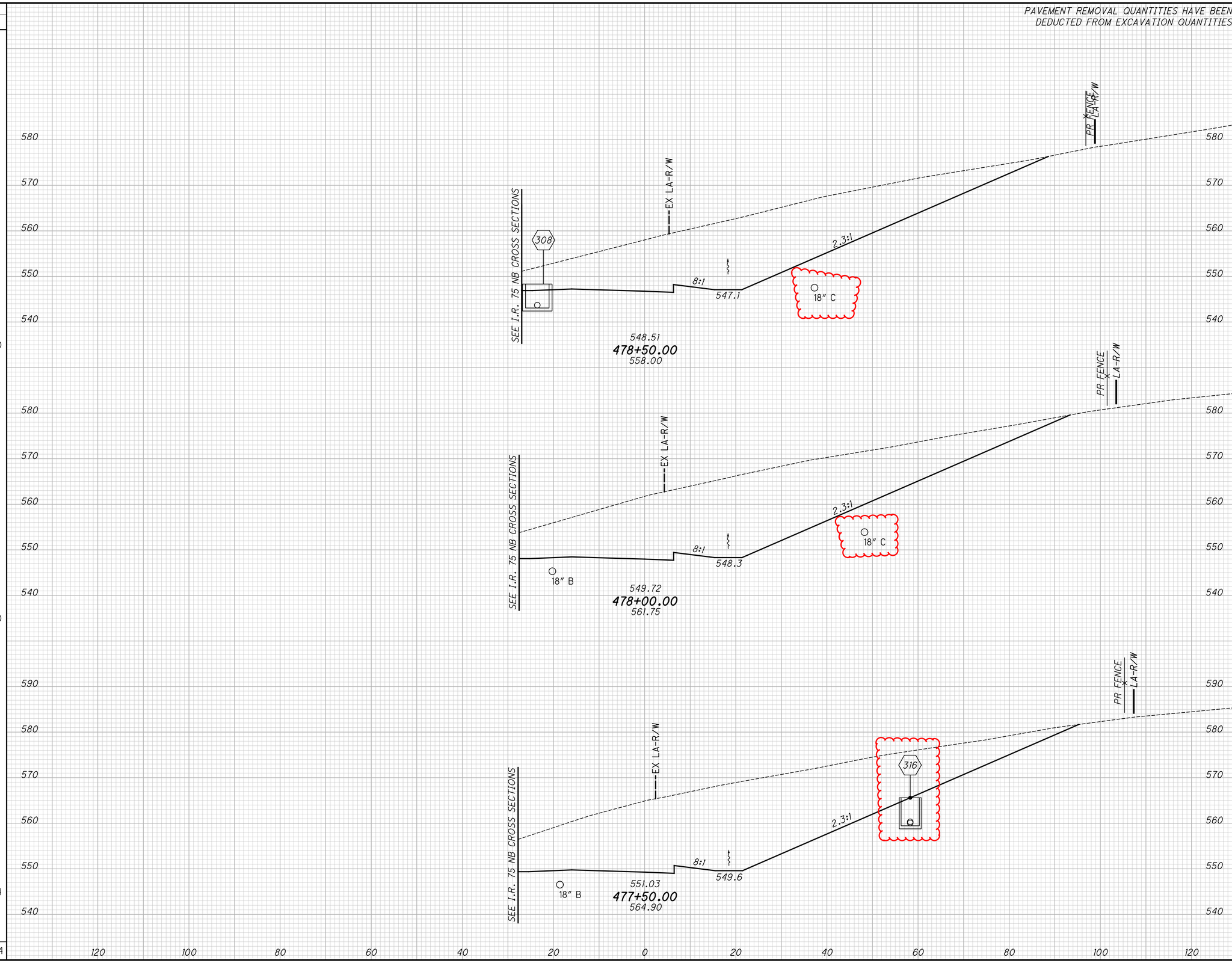

SEEDING END WIDTH	SEEDING SQ. YDS.	END AREA CUT	END AREA FILL	VOLUME CUT	VOLUME FILL
93	530	1063	0	2156	
98	550	1266	0	2494	0
100	554	1428	0	2721	0
291	1634	3757	0	7371	0

CALCULATED CFR
CHECKED SSK

CROSS SECTIONS RAMP D
STA. 477+50.00 TO STA. 478+50.00

HAM-75-8.91

360
826

J:\20240445\ODOT\HAM\117525\Design\Roadway\Sheets\77889XS920.dgn 3/10/2025 5:11:48 PM hbrendlinger

PAVEMENT REMOVAL QUANTITIES HAVE BEEN DEDUCTED FROM EXCAVATION QUANTITIES

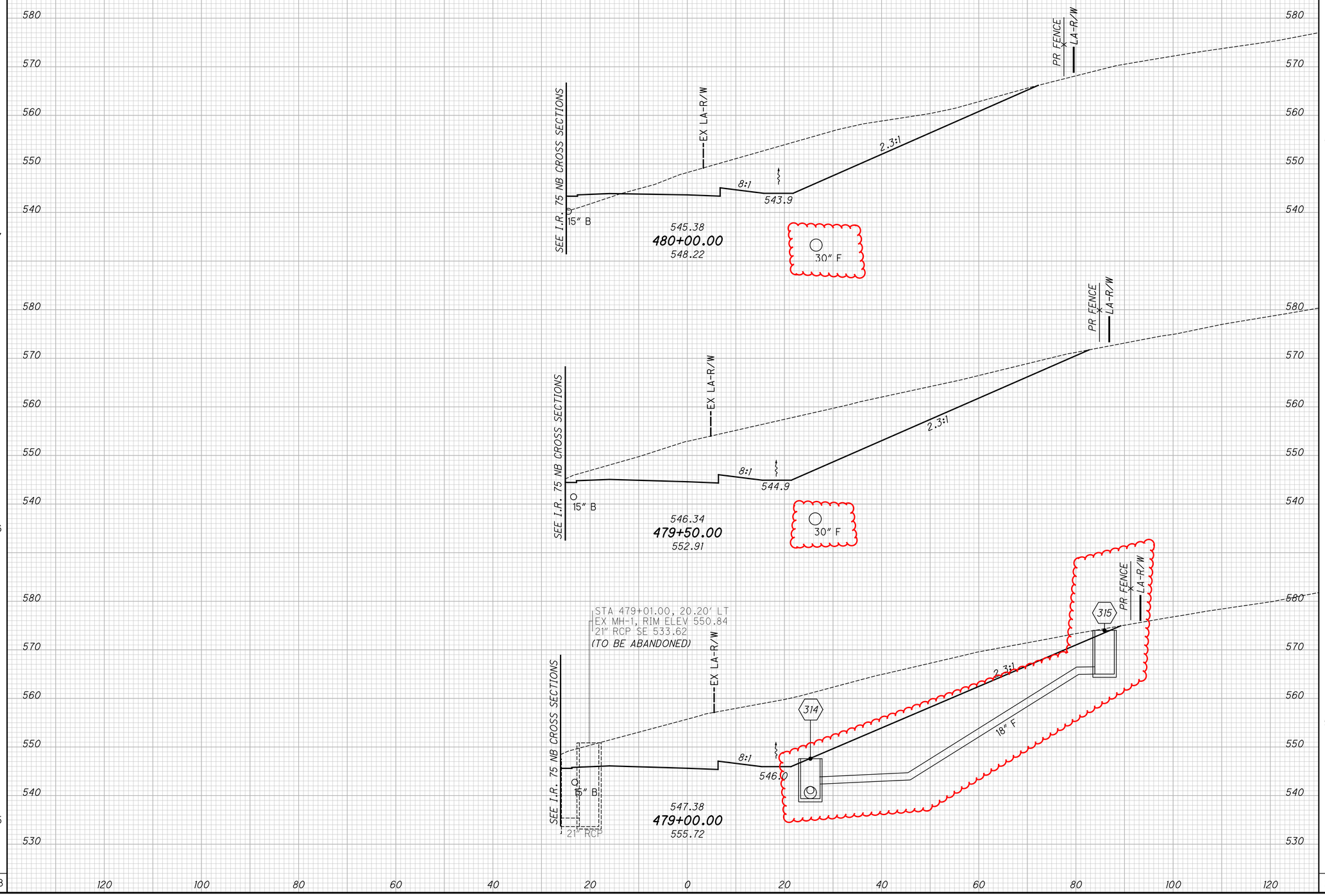

SEEDING END WIDTH	SEEDING SQ. YDS.	END AREA CUT	END AREA FILL	VOLUME CUT	VOLUME FILL
75	447	447	19	1082	17
86	486	722	0	1540	0
89	505	942	0	1856	0
250	1438	2111	19	4478	17

CALCULATED CFR
CHECKED SSK

CROSS SECTIONS RAMP D
STA. 479+00.00 TO STA. 480+00.00

HAM-75-8.91

J:\20240445\ODOT\HAM\117525\Design\Roadway\Sheets\77889XS921.dgn 3/10/2025 5:07:00 PM hbrendlinger

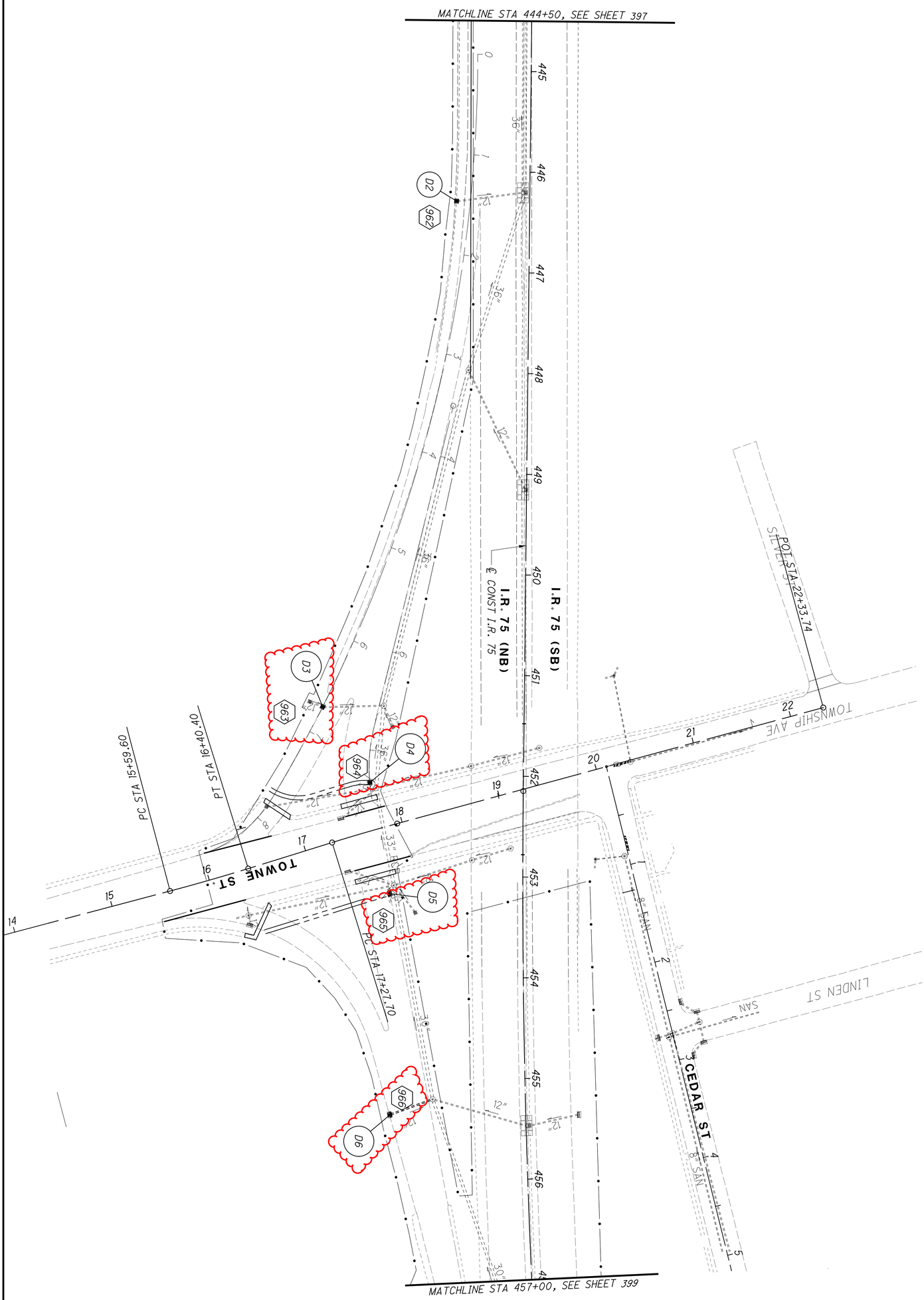

398 / 826	HAM-75-8.91	DRAINAGE PLANS - I.R. 75 STA 444+50 TO STA 457+00	CALCULATED CT CHECKED SSK	0 50 / 25 100 HORIZONTAL SCALE IN FEET

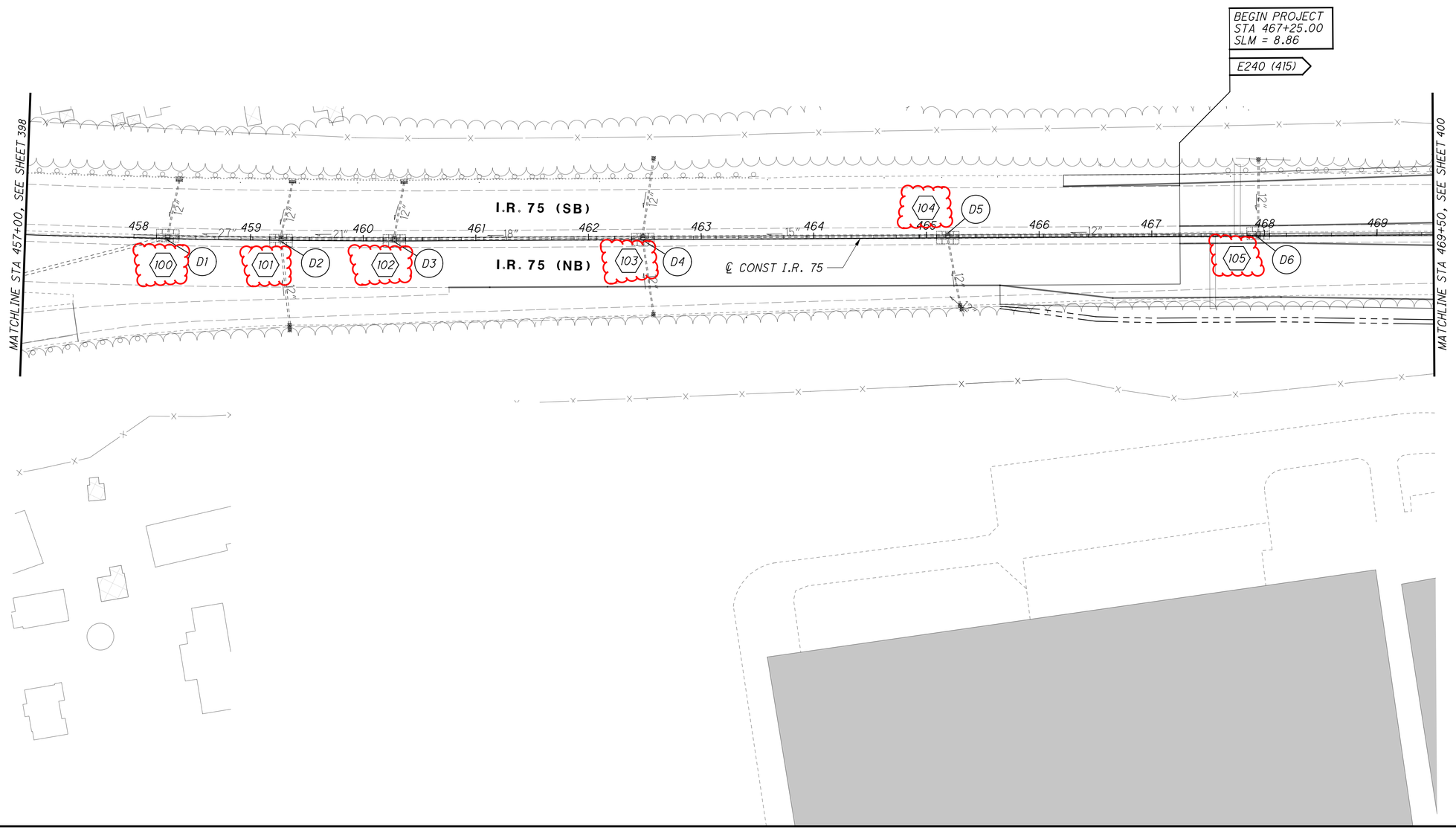

N

0 25 50 100
HORIZONTAL SCALE IN FEET

CALCULATED CT
CHECKED SSK

DRAINAGE PLANS - I.R. 75
STA 457+00 TO STA 469+50

HAM-75-8.91

J:\2024044 5\ODOT\HAM\117525\Design\Drainage\Sheets\77889DM402.dgn 3/7/2025 10:49:13 AM hbrendlinger

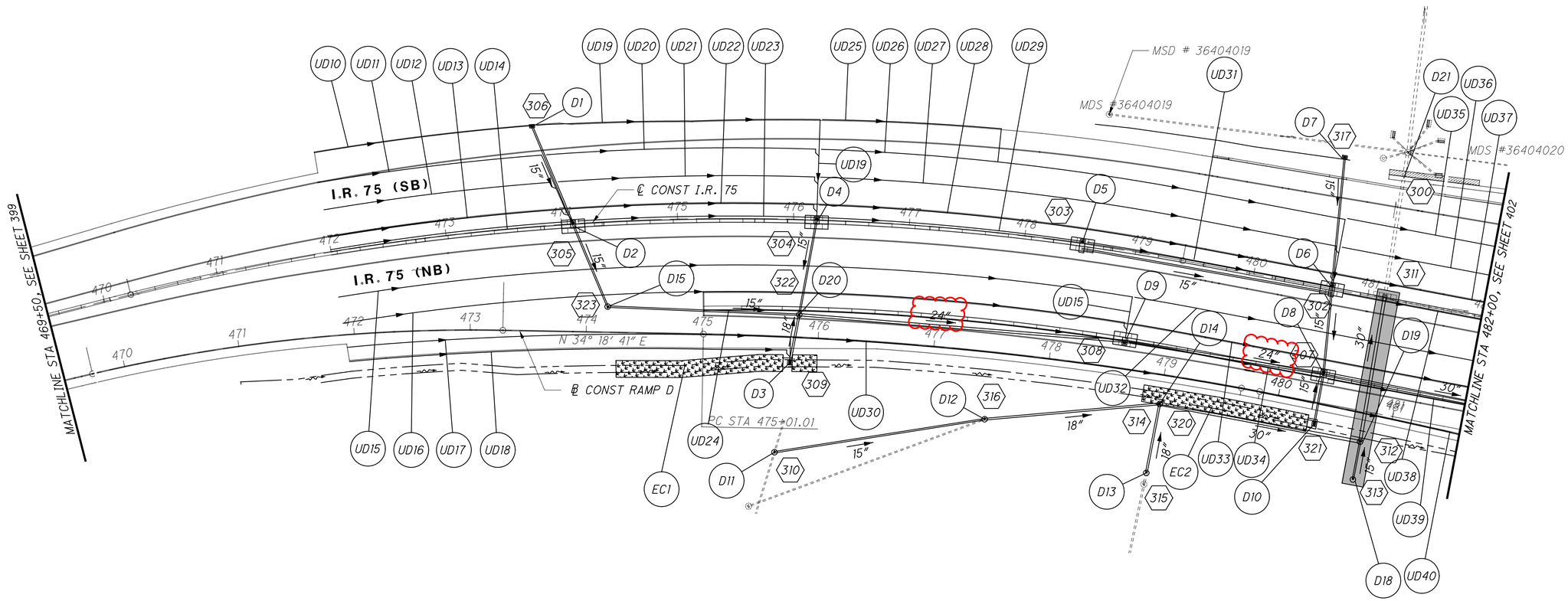

LEGEND

DRAINAGE ALTERNATE 1

NOTE: SHEETS 400 AND 401 ARE IDENTICAL WITH THE EXCEPTION OF THE SHADED DRAINAGE ALTERNATE

HORIZONTAL SCALE IN FEET
0 25 50 100

CALCULATED CT
CHECKED SSK

DRAINAGE PLANS - I.R. 75
STA 469+50 TO STA 482+00

HAM-75-8.91

J:\20240445\ODOT\HAM\117525\Design\Drainage\Sheets\77889DM403.dgn 3/18/2025 11:37:05 AM bmccutchen

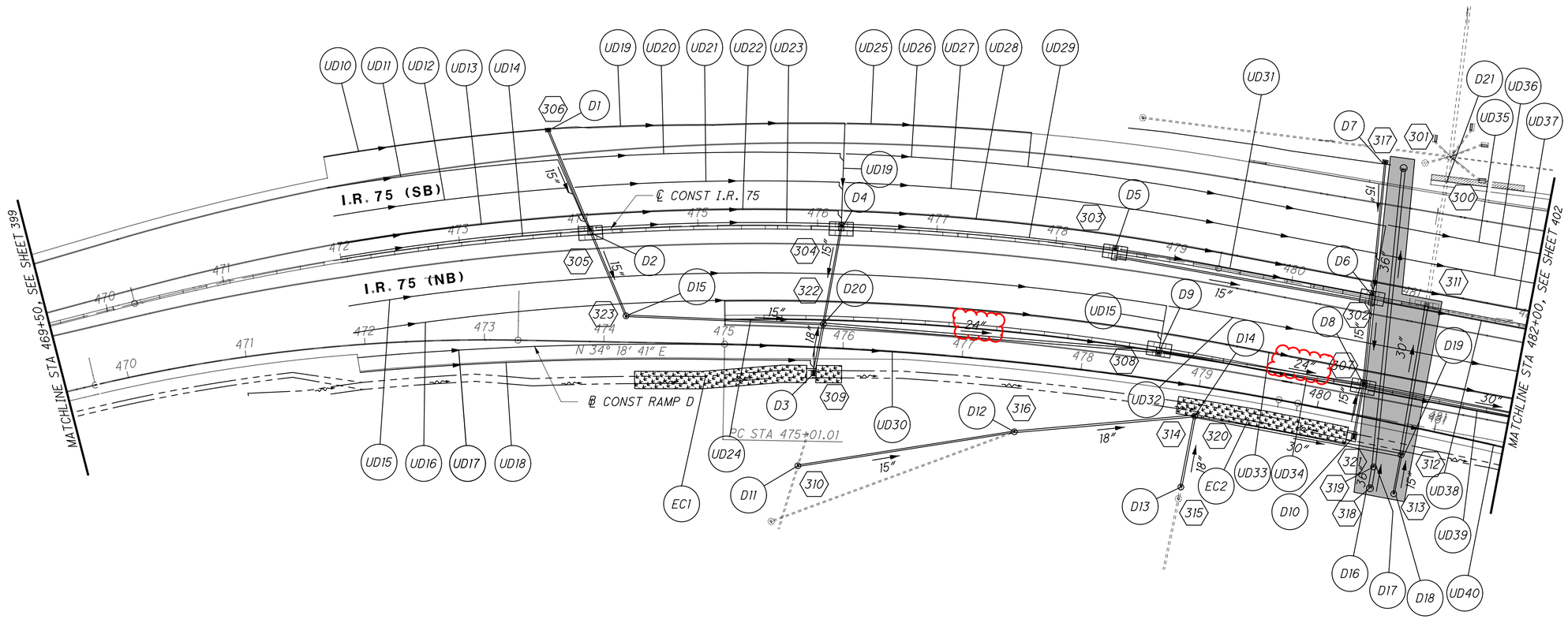

LEGEND

DRAINAGE ALTERNATE 2

NOTE: SHEETS 400 AND 401 ARE IDENTICAL WITH THE EXCEPTION OF THE SHADED DRAINAGE ALTERNATE

HORIZONTAL SCALE IN FEET
0 25 50 100

CALCULATED CT
CHECKED SSK

DRAINAGE PLANS - I.R. 75
STA 469+50 TO STA 482+00

HAM-75-8.91

J:\2024044 5\ODOT\HAM\117525\Design\Drainage\Sheets\77889DM403A.dgn 3/18/2025 11:37:59 AM bmccutchen

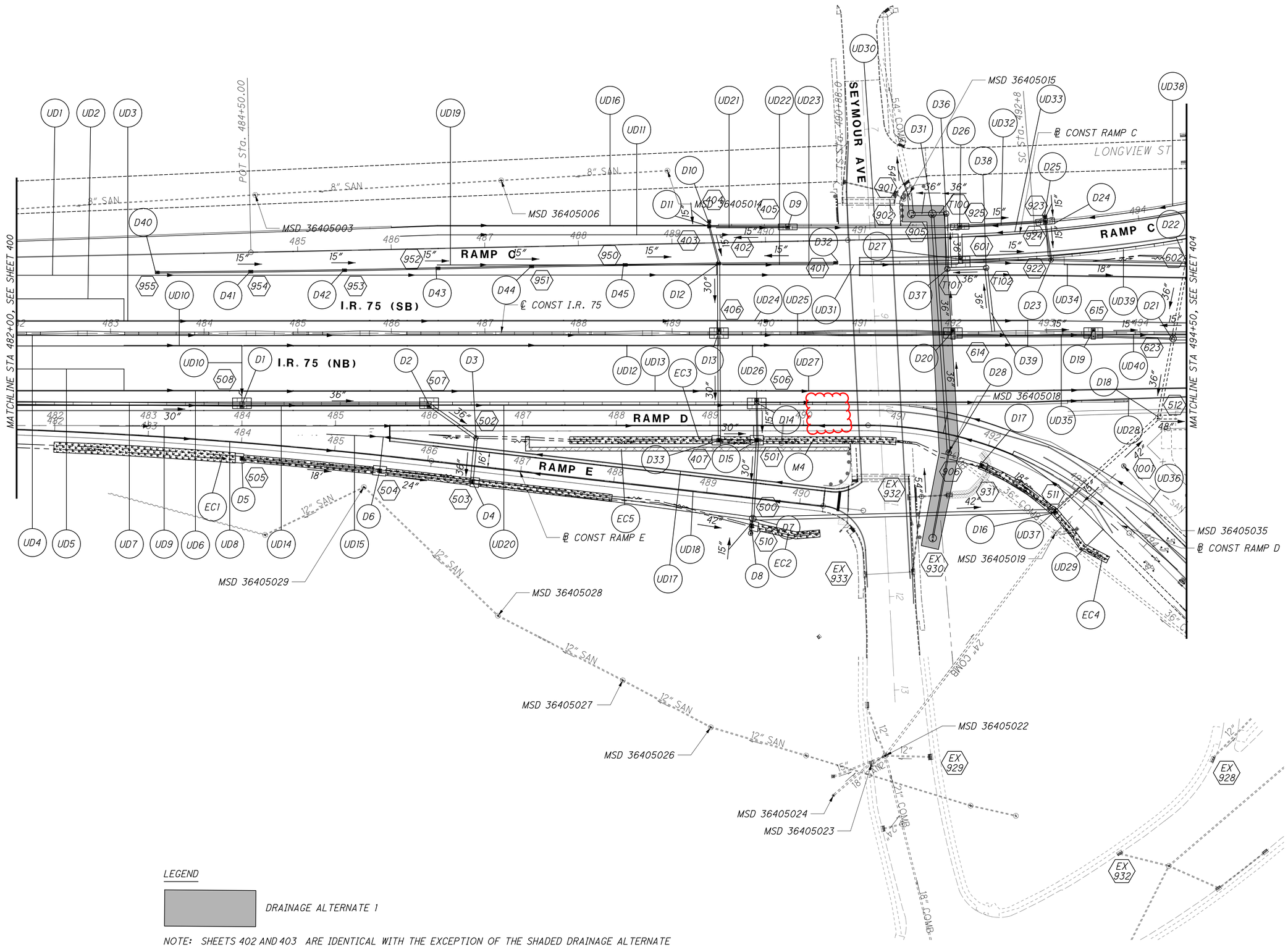

LEGEND

DRAINAGE ALTERNATE 1

NOTE: SHEETS 402 AND 403 ARE IDENTICAL WITH THE EXCEPTION OF THE SHADED DRAINAGE ALTERNATE

HORIZONTAL SCALE IN FEET 0 25 50 100

CALCULATED CT
CHECKED SSK

DRAINAGE PLANS - I.R. 75
STA 482+00 TO STA 494+50

HAM-75-8.91

J:\20240445\ODOT\HAM\117525\Design\Drainage\Sheets\77889DM404.dgn 3/7/2025 10:50:35 AM hbrendlinger

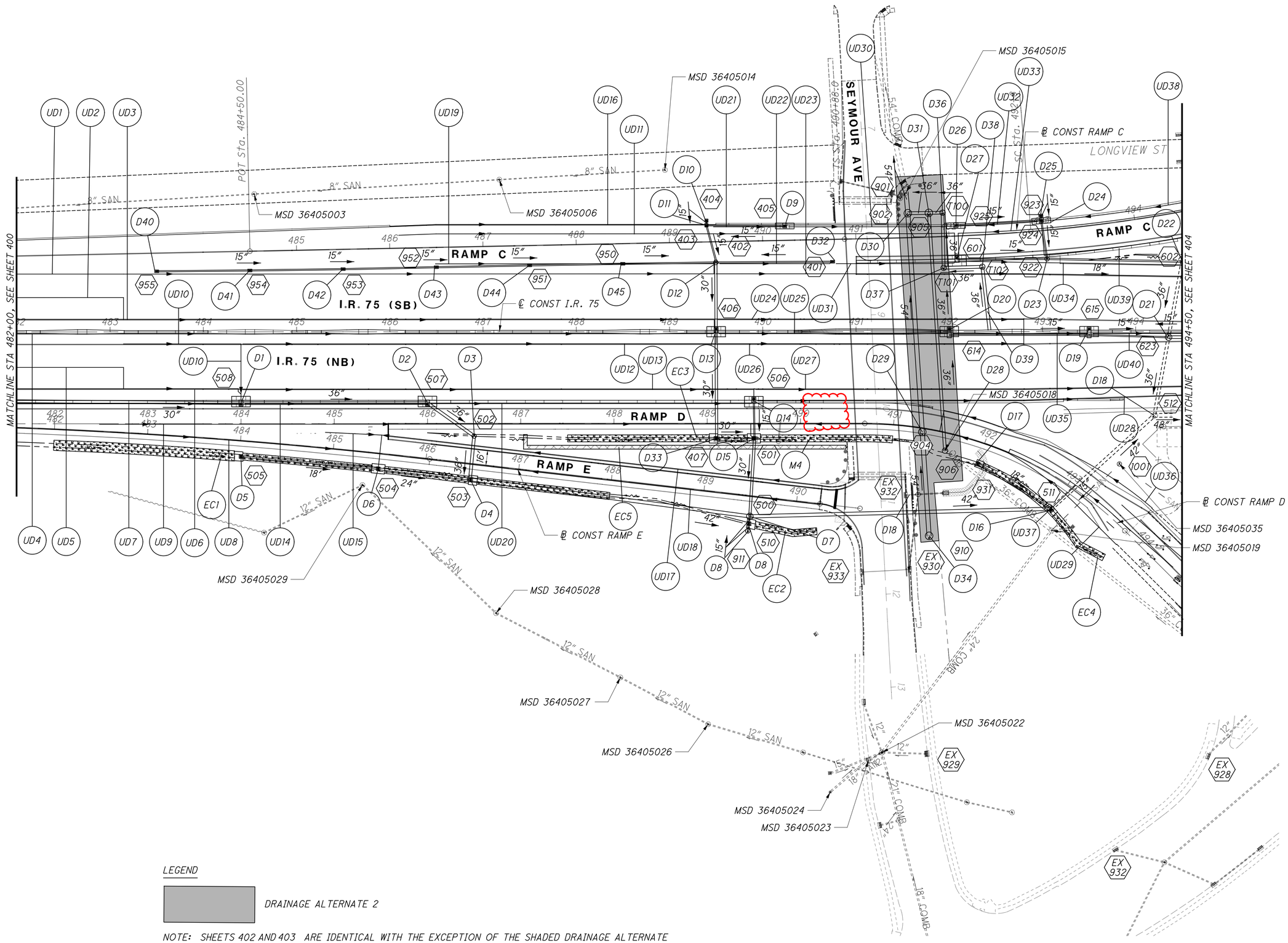

NOTE: SHEETS 402 AND 403 ARE IDENTICAL WITH THE EXCEPTION OF THE SHADED DRAINAGE ALTERNATE

HORIZONTAL SCALE IN FEET 0 25 50 100

CALCULATED CT
CHECKED SSK

DRAINAGE PLANS - I.R. 75
STA 482+00 TO STA 494+50

HAM-75-8.91

J:\20240445\ODOT\HAM\117525\Design\Drainage\Sheets\77889DM404A.dgn 3/7/2025 10:51:44 AM hbrendlinger

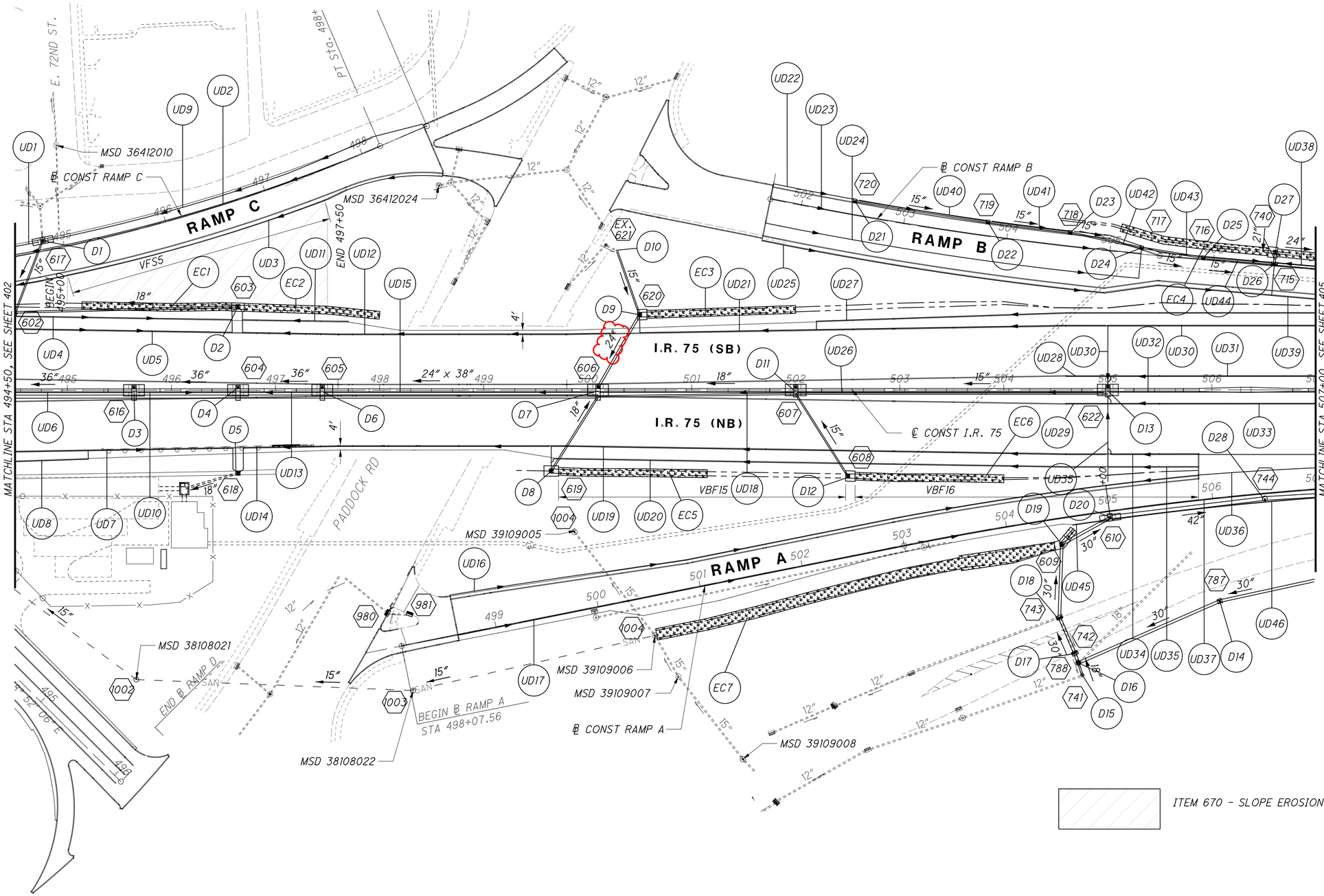

HORIZONTAL SCALE IN FEET
0 25 50 100

CALCULATED CT
CHECKED SSK

DRAINAGE PLANS - I.R. 75
STA 494+50 TO STA 507+00

HAM-75-8.91

J:\20240445\ODOT\HAM\117525\Design\Drainage\Sheets\77889DM405.dgn 3/18/2025 11:41:15 AM bmccutchen

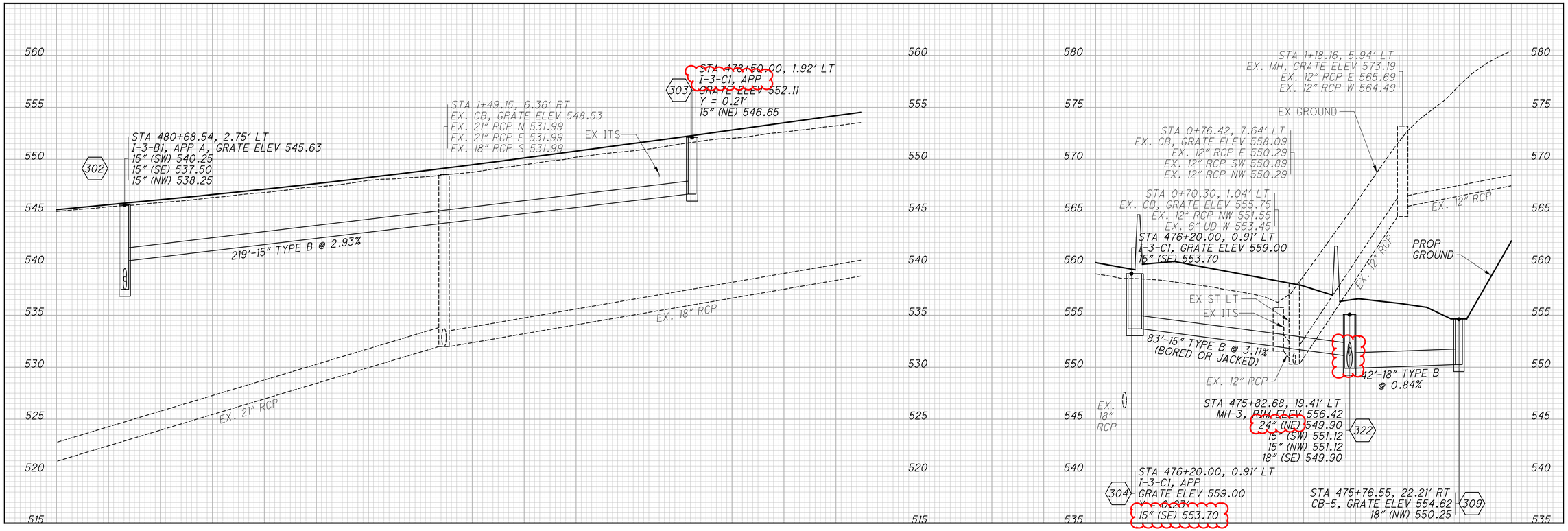

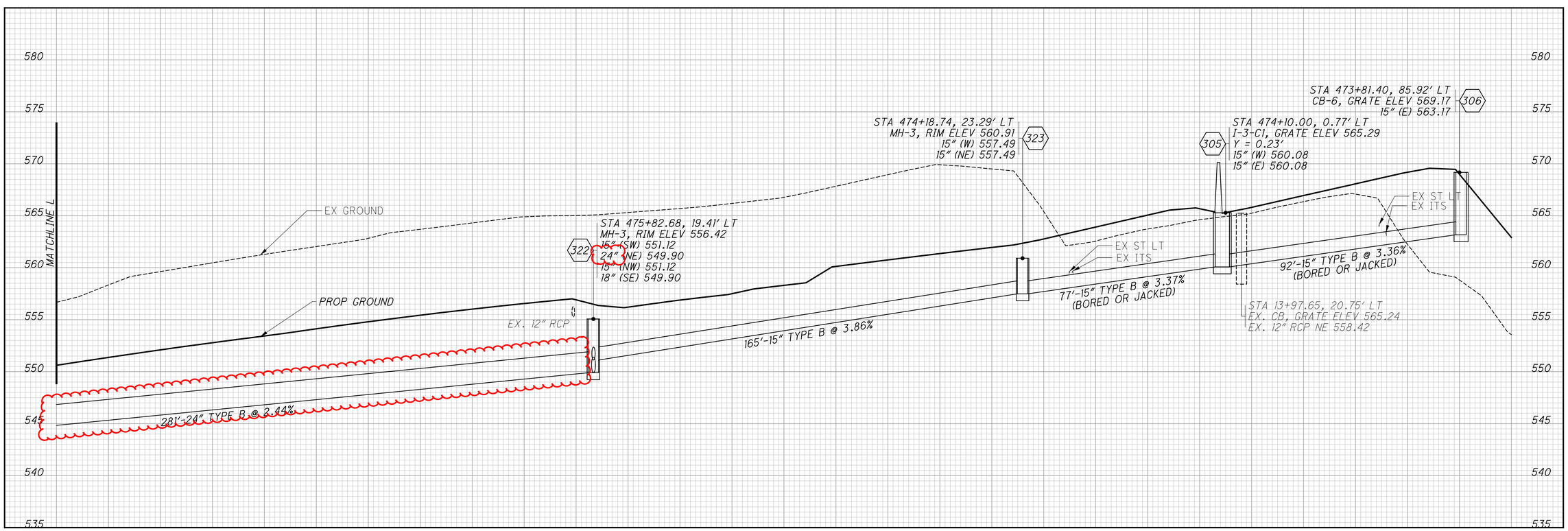

CALCULATED ECH
CHECKED SSK

STORM SEWER PROFILES

HAM-75-8.91

J:\2024045\ODOT\HAM\117525\Design\Drainage\Sheets\77889DF406.dgn 3/18/2025 11:44:26 AM bmccutchen

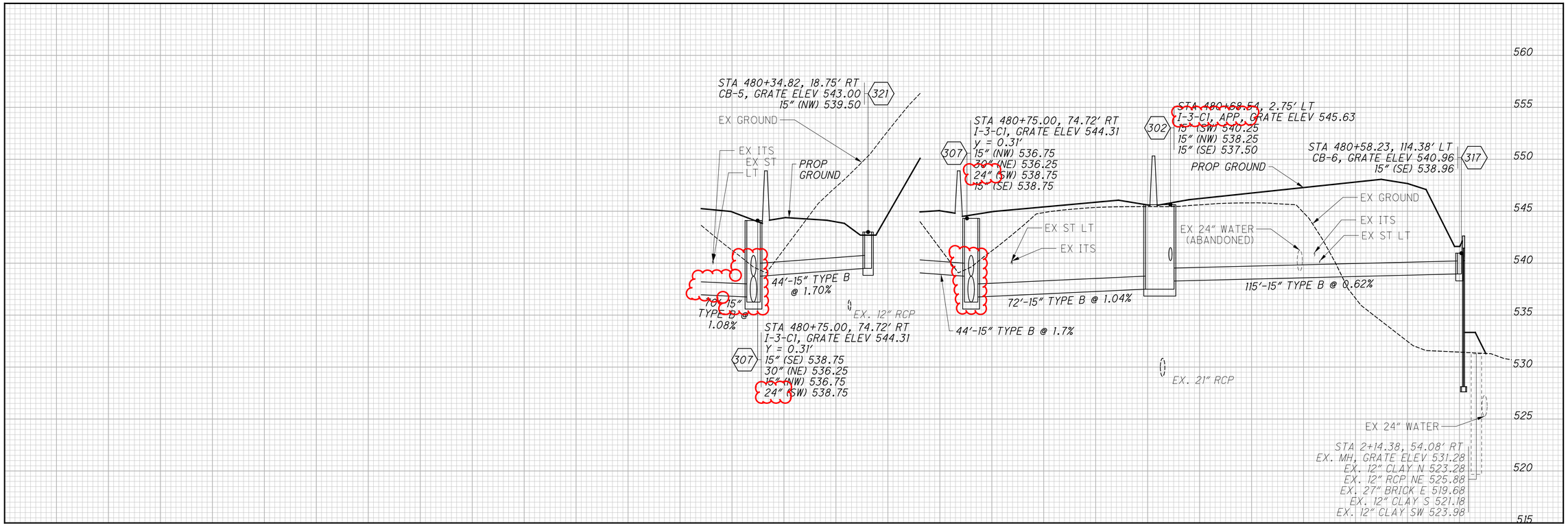

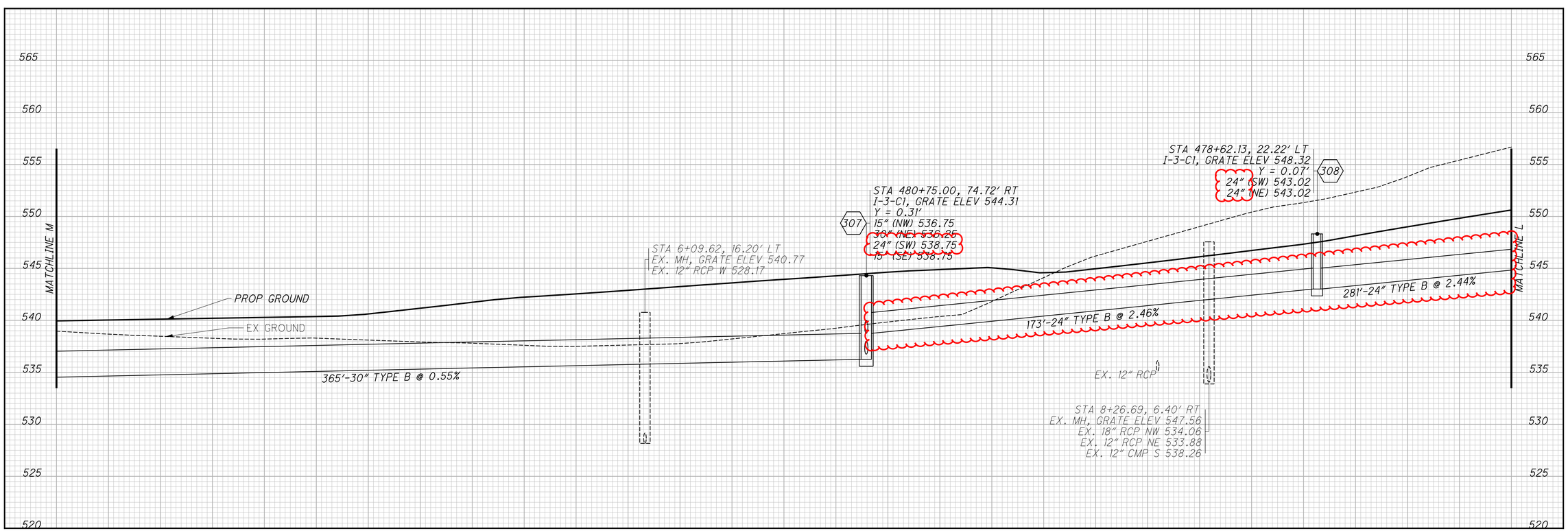

CALCULATED ECH
CHECKED SSK

STORM SEWER PROFILES

HAM-75-8.91

410
826

J:\2024045\ODOT\HAM\117525\Design\Drainage\Sheets\77889DF407.dgn 3/18/2025 1:10:46 PM bmccutchen

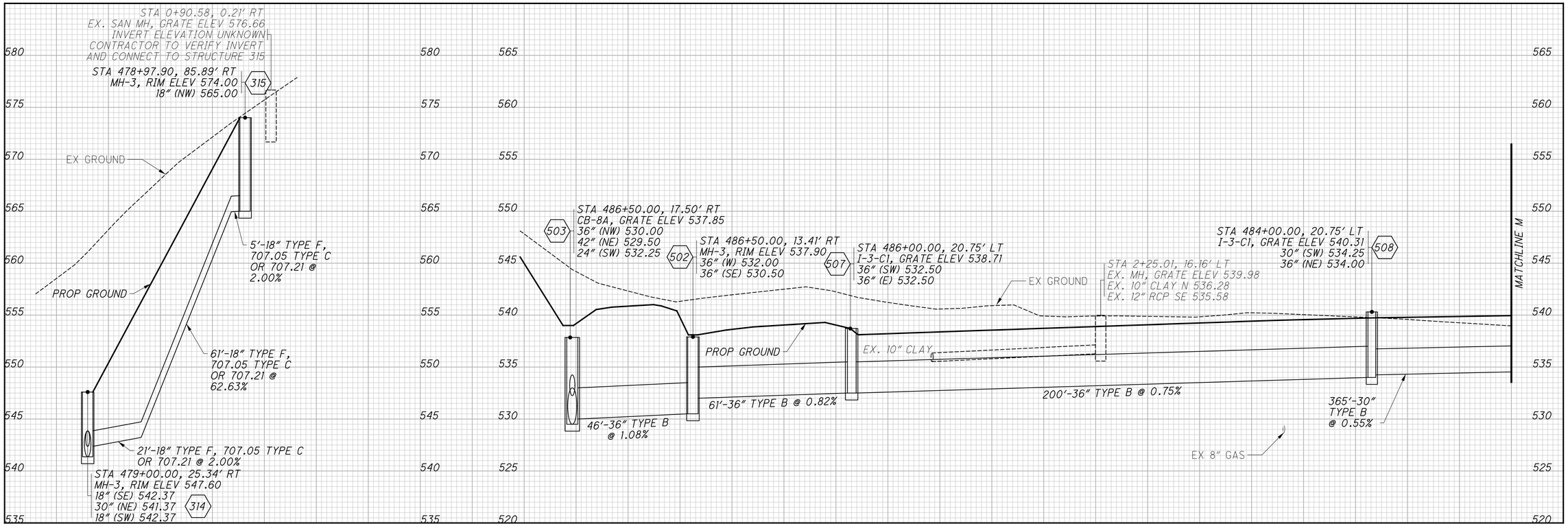

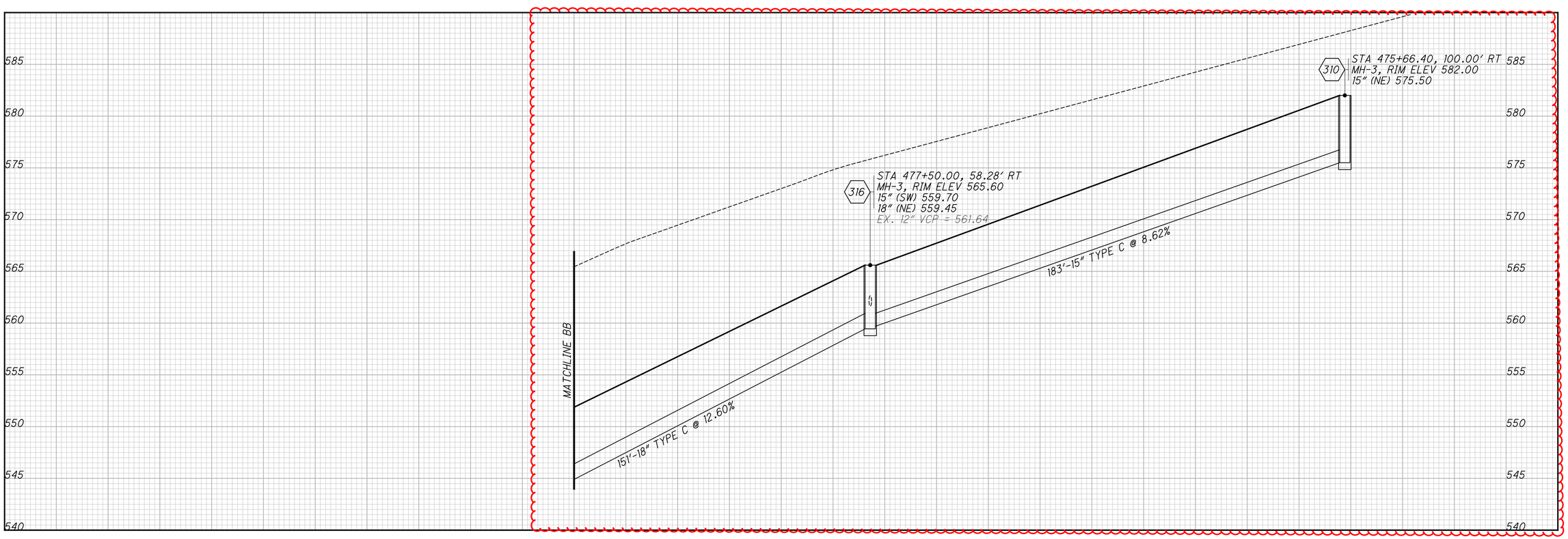

CALCULATED ECH
CHECKED SSK

STORM SEWER PROFILES

HAM-75-8.91

J:\20240445\ODOT\HAM\117525\Design\Drainage\Sheets\77889DF407A.dgn 3/3/2025 10:32:30 AM rhoops

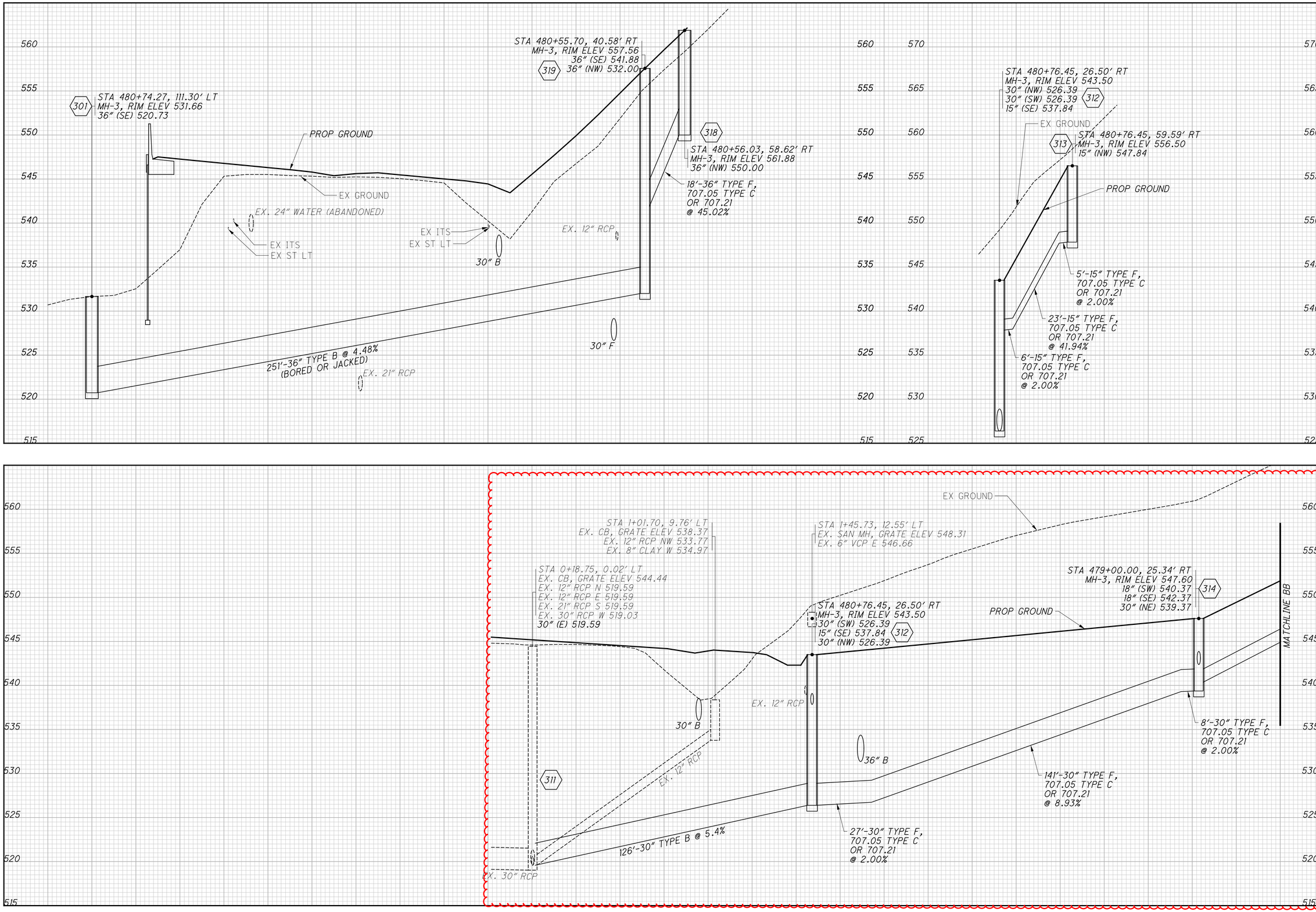

CALCULATED ECH
CHECKED SSK

STORM SEWER PROFILES

HAM-75-8.91

J:\20240445\ODOT\HAM\117525\Design\Drainage\Sheets\77889DF407B.dgn 3/7/2025 10:56:35 AM hbrendlinger

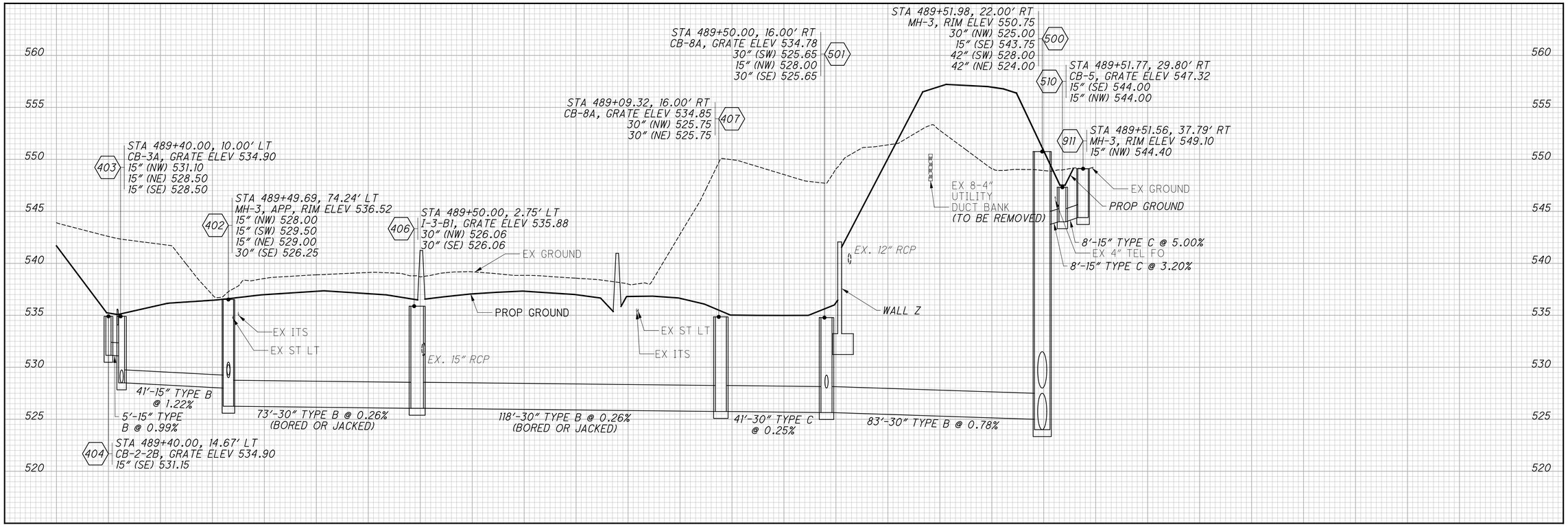

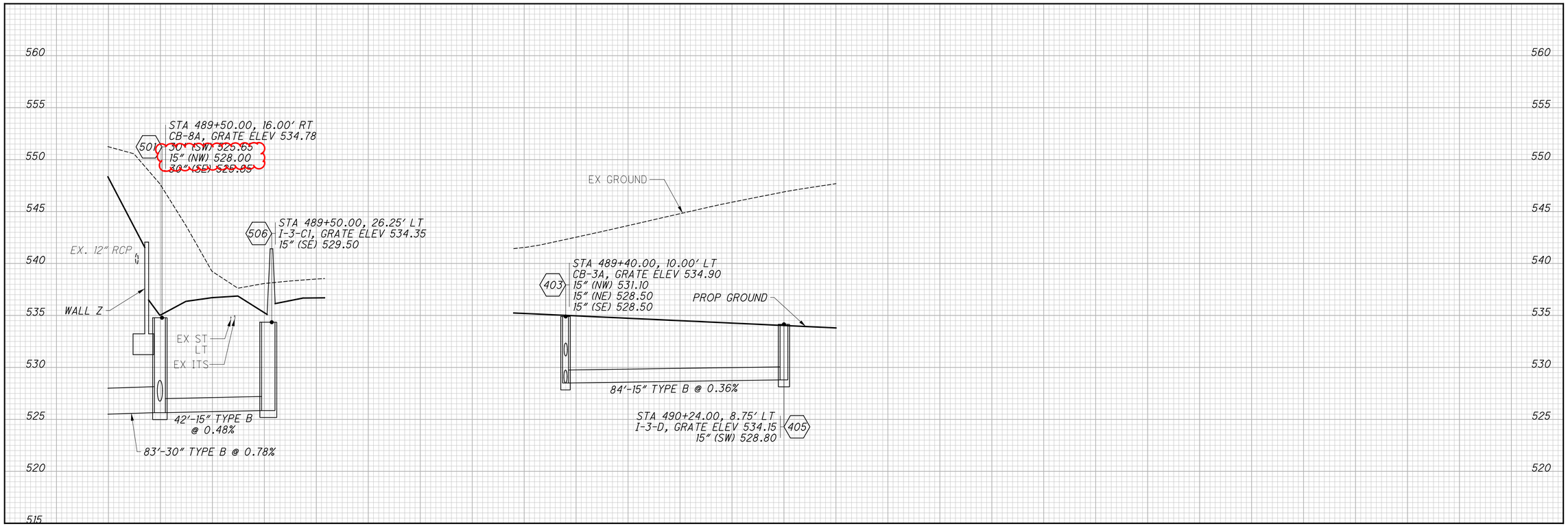

CALCULATED ECH
CHECKED SSK

STORM SEWER PROFILES

HAM-75-8.91

J:\20240445\ODOT\HAM\117525\Design\Drainage\Sheets\77889DF408.dgn 3/7/2025 10:58:31 AM hbrendlinger

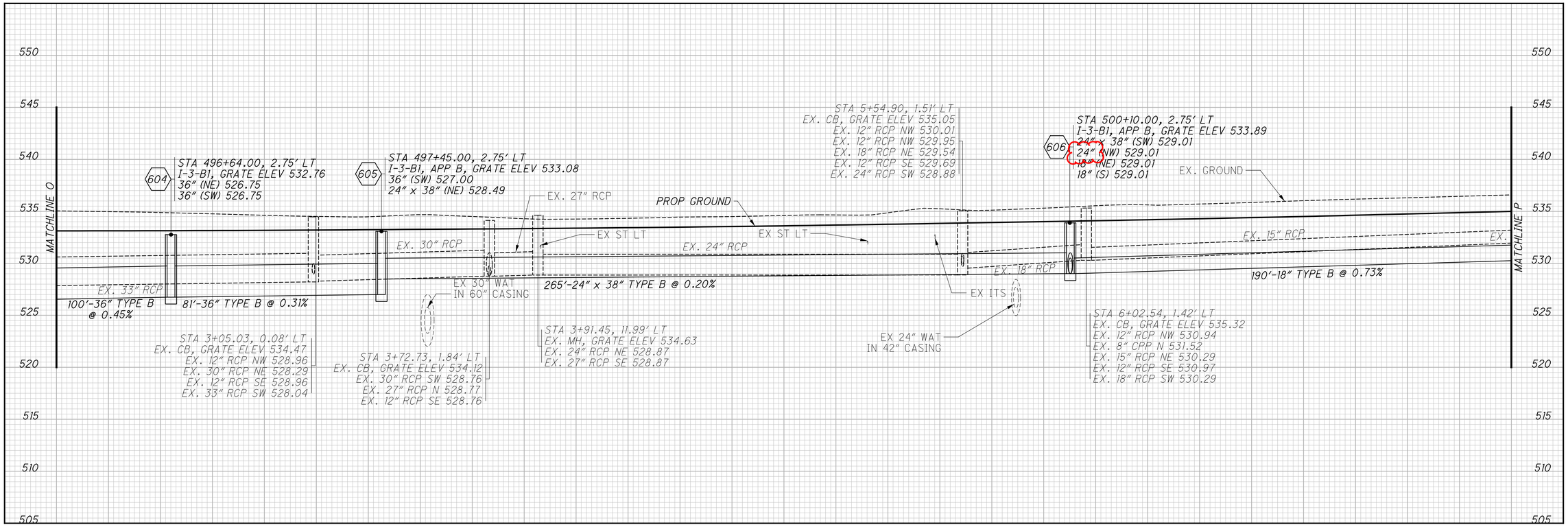

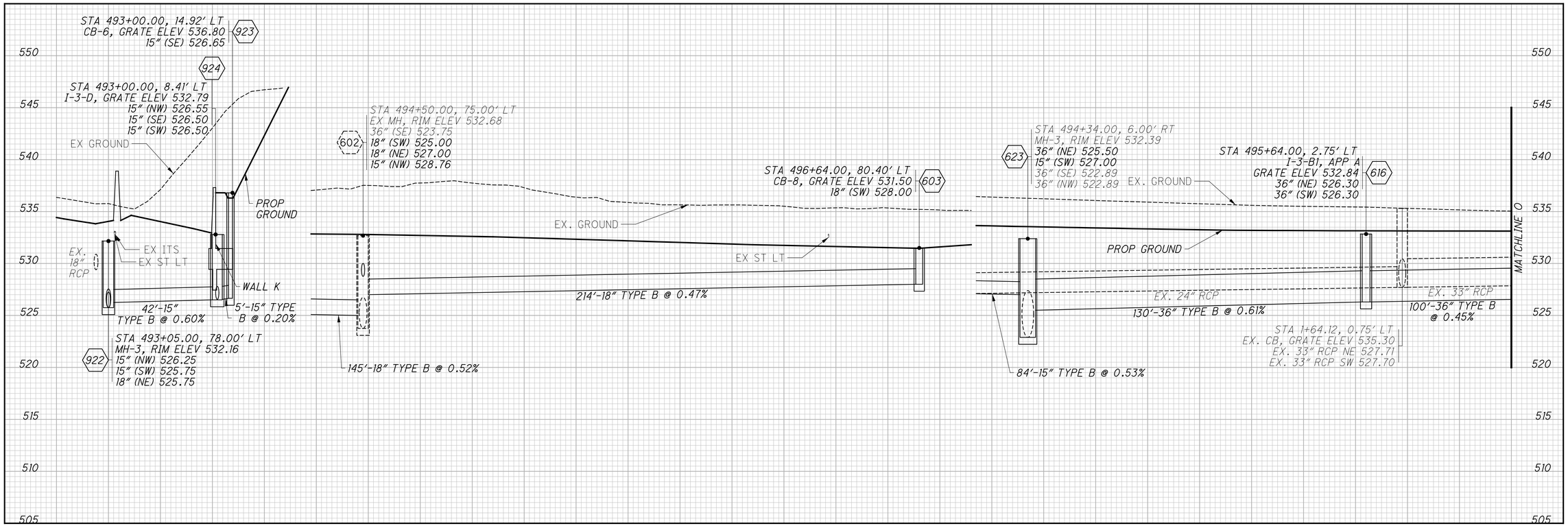

CALCULATED ECH
CHECKED SSK

STORM SEWER PROFILES

HAM-75-8.91

J:\20240445\ODOT\HAM\117525\Design\Drainage\Sheets\77889DF412.dgn 3/18/2025 1:12:06 PM bmccutchen

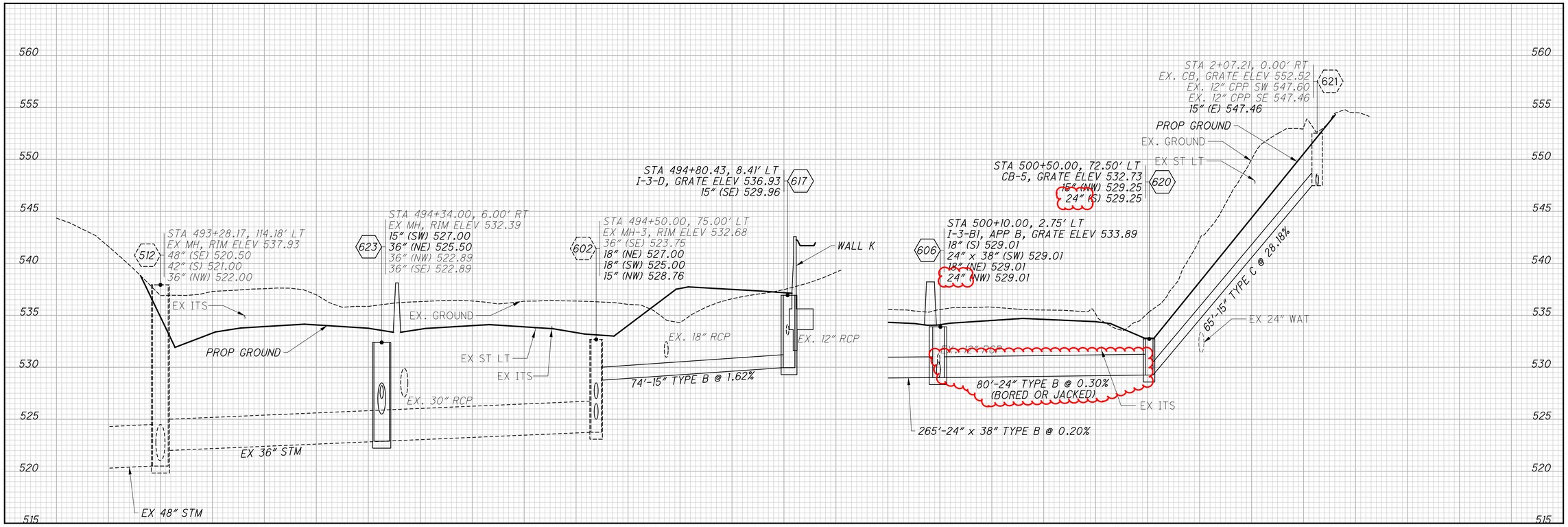

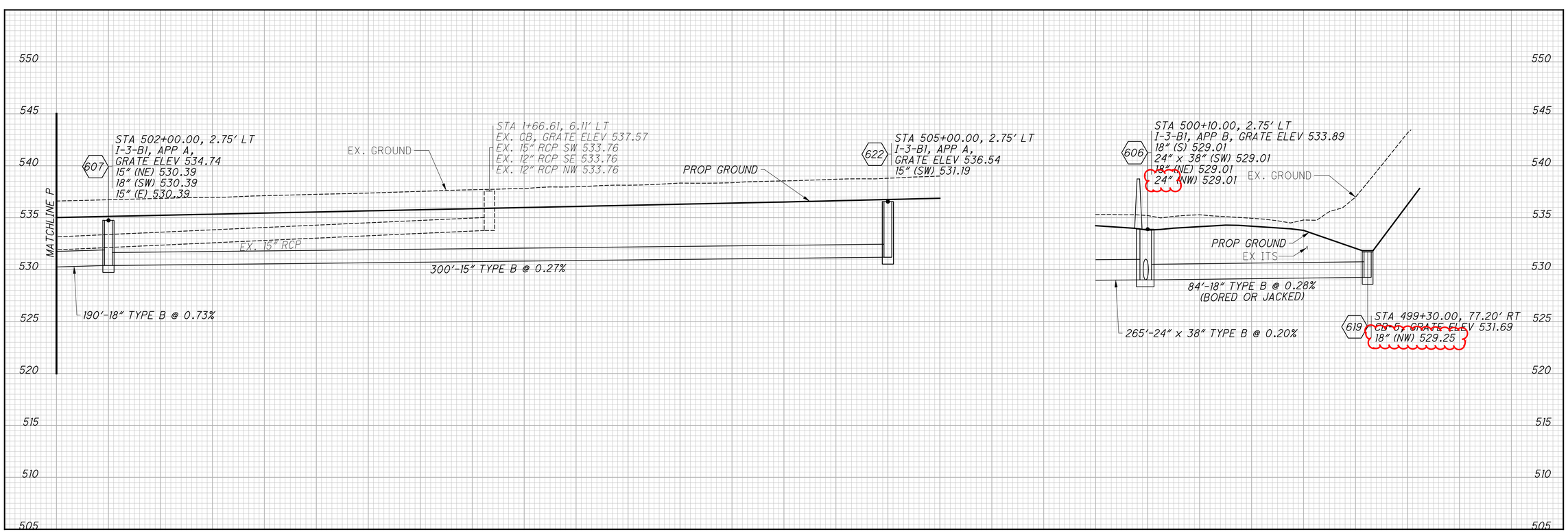

CALCULATED ECH
CHECKED SSK

STORM SEWER PROFILES

HAM-75-8.91

J:\20240445\ODOT\HAM\117525\Design\Drainage\Sheets\77889DF413.dgn 3/18/2025 1:13:04 PM bmccutchen

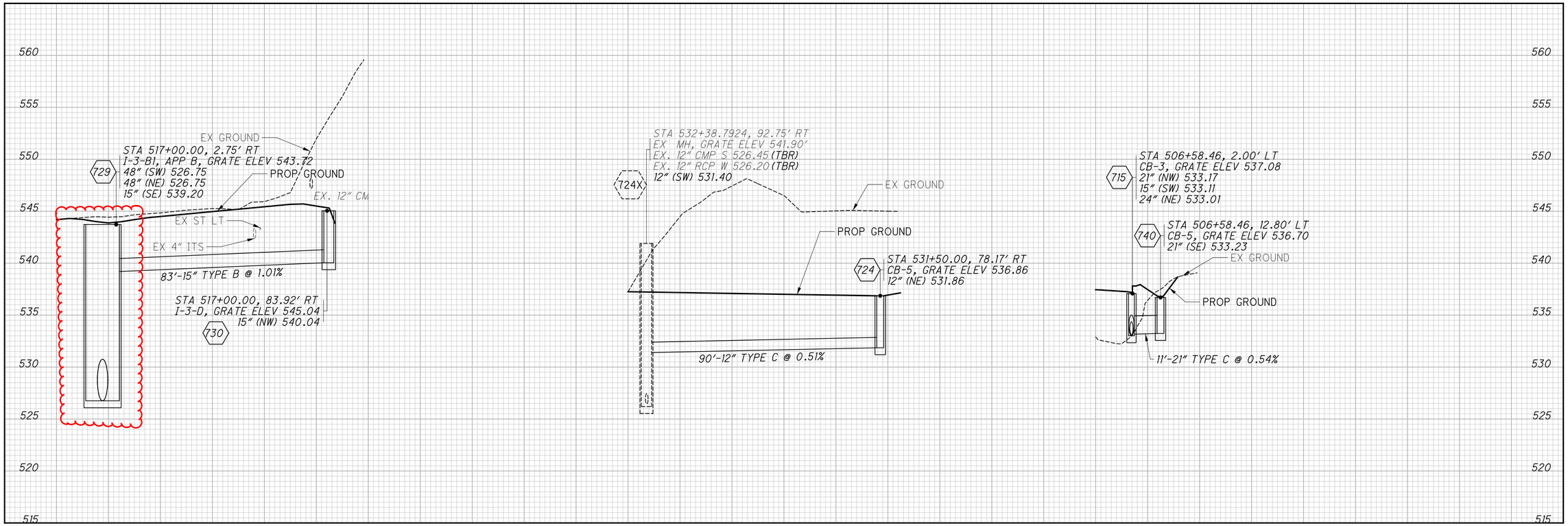

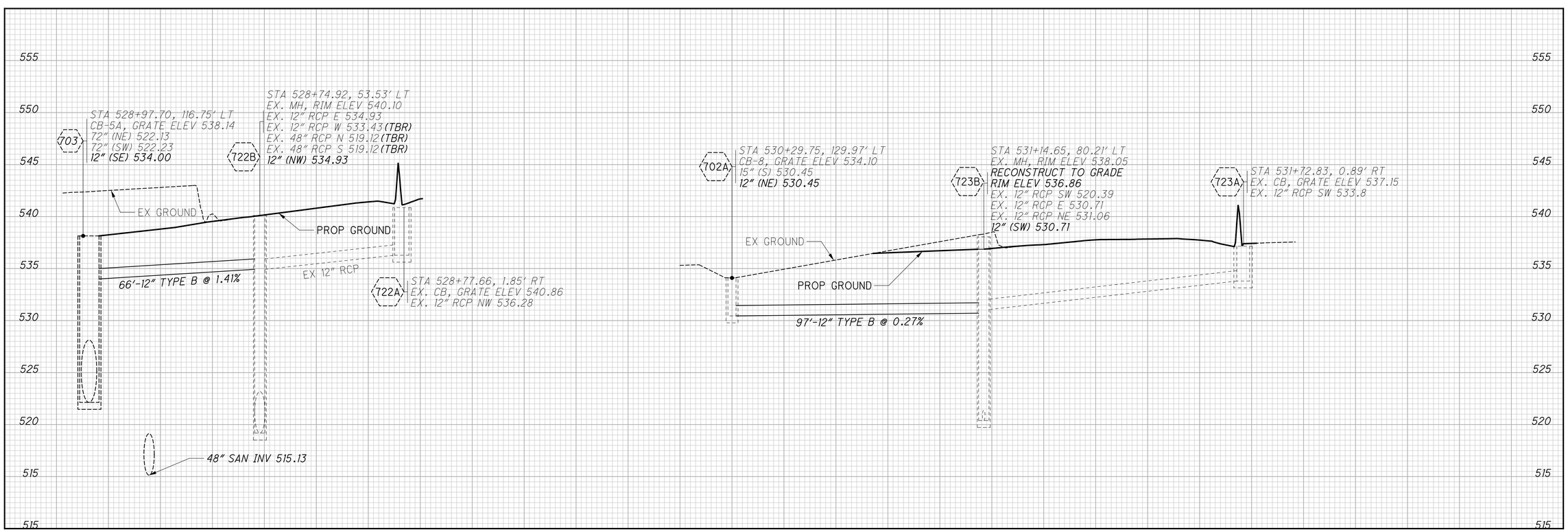

CALCULATED ECH
CHECKED SSK

STORM SEWER PROFILES

HAM-75-8.91

J:\20240445\ODOT\HAM\117525\Design\Drainage\Sheets\77889DF418.dgn 3/7/2025 11:00:39 AM hbrendlinger

LEGEND

E.A. = END ANCHORAGE
E.S. = END SECTION
A.A. = ANCHOR ASSEMBLY
BTA = BRIDGE TERMINAL ASSEMBLY
APP = AS PER PLAN

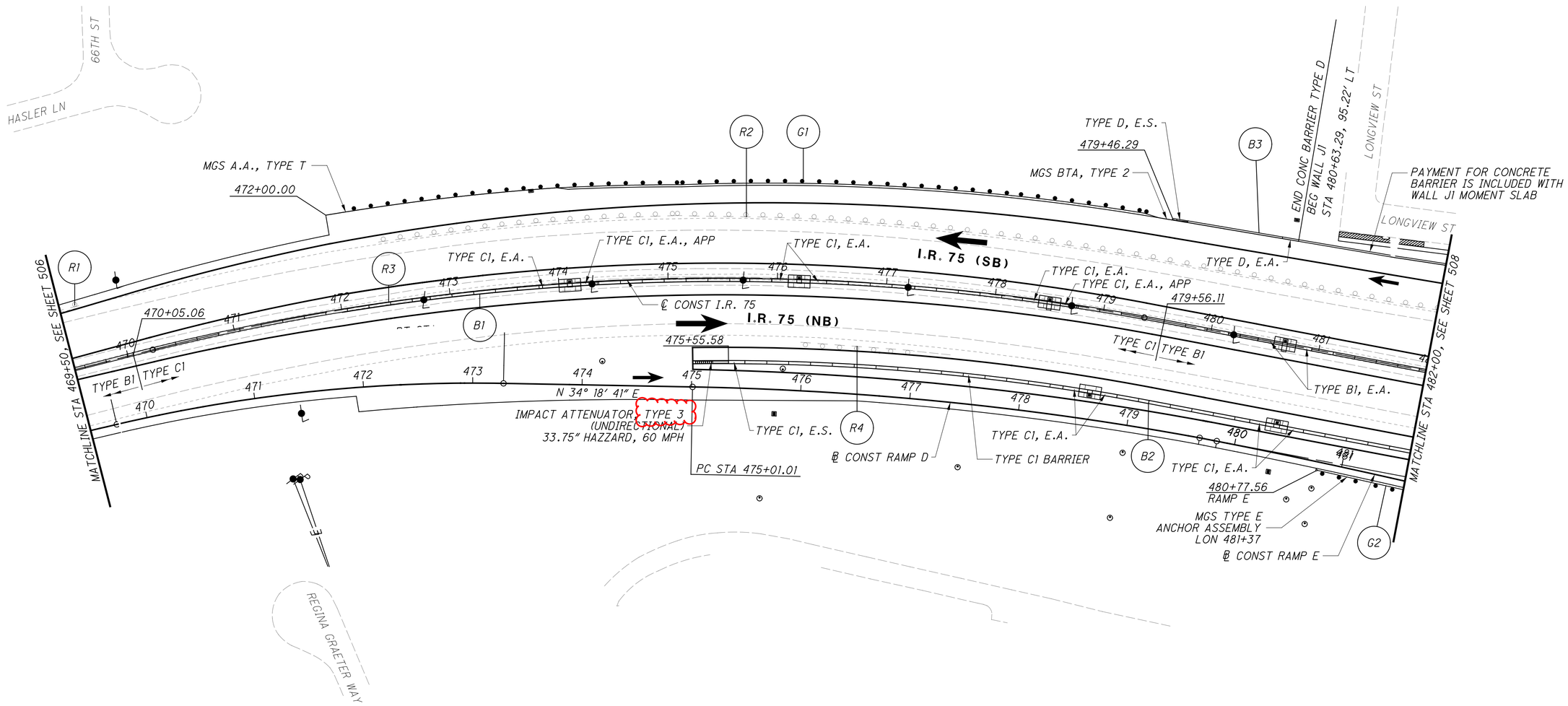

FOR ESTIMATED QUANTITIES SEE SHEET 168 - 169

ALL GUARDRAIL ASSUMED TO BE TYPE MGS, UNLESS OTHERWISE NOTED

HORIZONTAL SCALE IN FEET
0 25 50 100

CALCULATED BLM
CHECKED SSK

ROADSIDE BARRIER PLAN
STA 469+50 TO STA 482+00

HAM-75-8.91

J:\20240445\ODOT\HAM\117525\Design\Roadway\Sheets\77889GR403.dgn 3/7/2025 11:11:27 AM hbrendlinger

LEGEND

E.A. = END ANCHORAGE
E.S. = END SECTION
A.A. = ANCHOR ASSEMBLY
BTA = BRIDGE TERMINAL ASSEMBLY
APP = AS PER PLAN

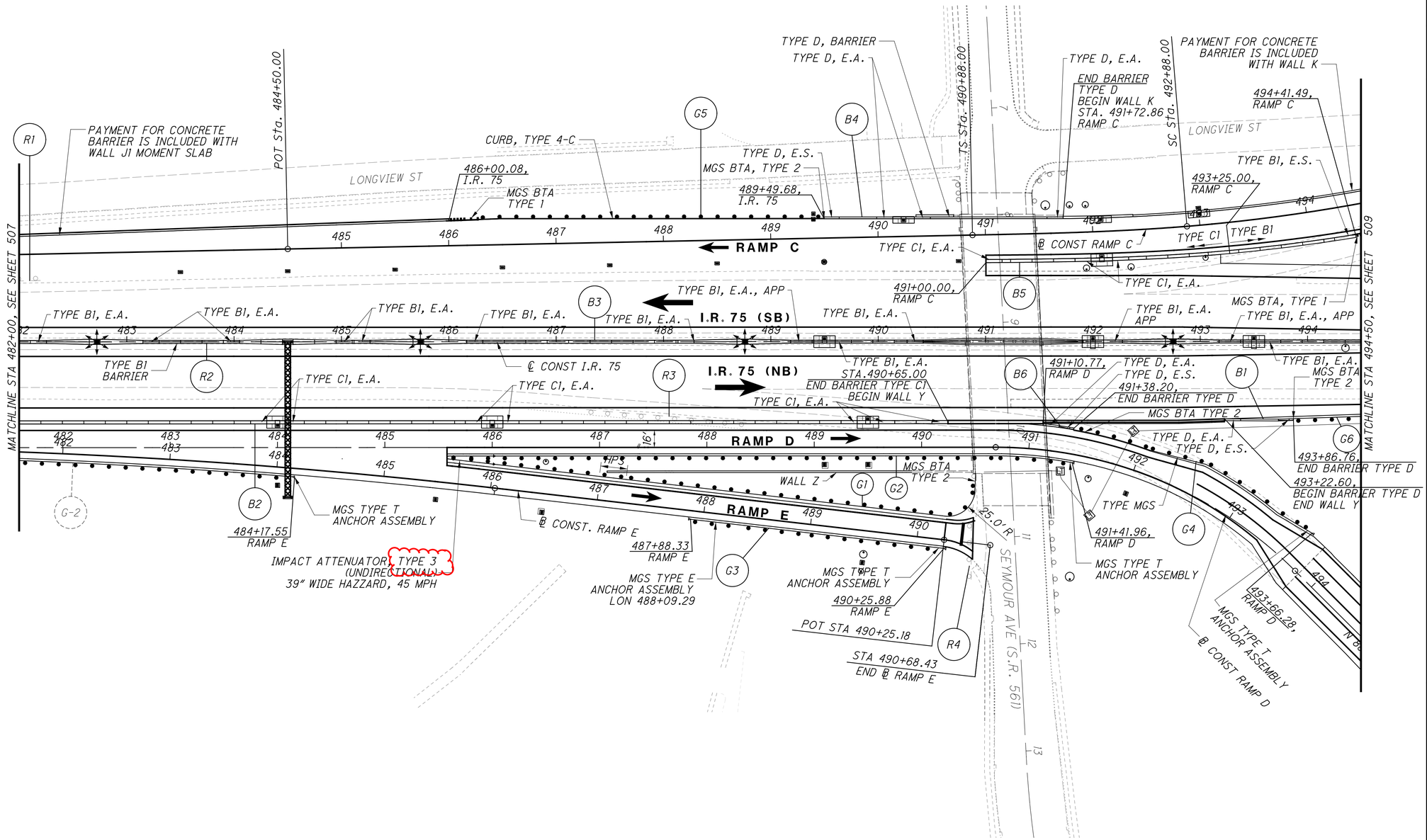

FOR ESTIMATED QUANTITIES SEE SHEET 168 - 169

ALL GUARDRAIL ASSUMED TO BE TYPE MGS, UNLESS OTHERWISE NOTED
HPS = HALF POST SPACING MGS GUARDRAIL 487+00 TO 487+25 RAMP E

HORIZONTAL SCALE IN FEET 0 25 50 100

CALCULATED BLM
CHECKED SSK

ROADSIDE BARRIER PLAN STA 482+00 TO STA 494+50

HAM-75-8.91

J:\2024044\5\ODOT\HAM\117525\Design\Roadway\Sheets\77889GR404.dgn 3/7/2025 11:13:11 AM hbrendlinger

LEGEND

E.A. = END ANCHORAGE
E.S. = END SECTION
A.A. = ANCHOR ASSEMBLY
BTA = BRIDGE TERMINAL ASSEMBLY
APP = AS PER PLAN

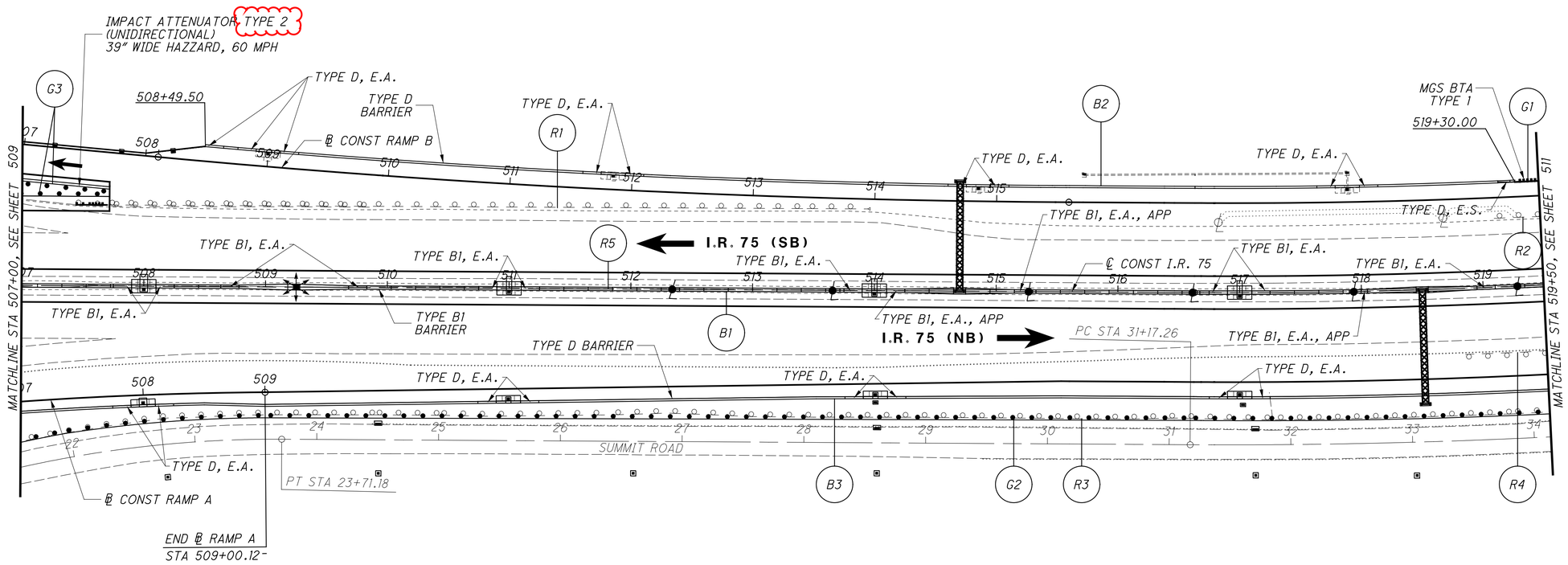

FOR ESTIMATED QUANTITIES SEE SHEET 168 - 169

ALL GUARDRAIL ASSUMED TO BE TYPE MGS, UNLESS OTHERWISE NOTED

HORIZONTAL SCALE IN FEET 0 25 50 100

CALCULATED BLM
CHECKED SSK

ROADSIDE BARRIER PLAN
STA 507+00 TO STA 519+50

HAM-75-8.91

J:\20240445\ODOT\HAM\117525\Design\Roadway\Sheets\77889GR406.dgn 3/7/2025 11:15:04 AM hbrendlinger