2570 Orange I-78

MICROFILMED
MAY 2 1995

	OHIO
	FHWA REGION 5
	FEDERAL PROJECT

1/338

HAM-75-9.75

IM-75-1 (149)

STATE OF OHIO
DEPARTMENT OF TRANSPORTATION
HAM-75-9.75

CITY OF CINCINNATI CITY OF READING
CITY OF LINCOLN HEIGHTS VILLAGE OF LOCKLAND
VILLAGE OF ARLINGTON HEIGHTS VILLAGE OF EVENDALE
SPRINGFIELD TOWNSHIP
HAMILTON COUNTY

DESIGN DESIGNATION

CURRENT ADT 1992	118,676
DESIGN YEAR ADT 2009	148,850
D.H.V.	17,862
D	62%
T	12%
DESIGN SPEED	60 MPH
LEGAL SPEED	55 MPH
FUNCTIONAL CLASSIFICATION	URBAN INTERSTATE
DESIGN EXCEPTIONS:	DATE APPROVED:
SHOULDER WIDTH	10-27-89
CROSS SLOPE	10-27-89
SUPERELEVATION	9-17-92
STOPPING SIGHT DISTANCE	9-17-92

CONVENTIONAL SIGNS

County Line
Township Line
Section Line
Corporation Line
Fence Line (existing) proposed
Center Line 352 353
Trees, Stumps, (to be removed)
Utility Poles: Telephone, Power, Light
Limited Access (only) LA
Right of Way RW
Limited Access & Right of Way LA & RW
Existing Right of Way
Property Line (in existing fence)
Railroad or
Guardrail (existing) (proposed)
Guardrail, existing to be replaced

INDEX OF SHEETS

TITLE SHEET	1	DETAILS	163
SCHEMATIC PLAN	2-4	DRAINAGE DETAILS	164-167
TYPICAL SECTIONS	5-17	TRAFFIC CONTROL	168-188
GENERAL NOTES	18-20A-22,22A,22B	SIGN DETAILS	189-190
MAINTENANCE OF TRAFFIC	23-27A,27B-78	LIGHTING	191-229
GENERAL SUMMARY	79-86	WATER WORK	230-232
ESTIMATED QUANTITIES (CALCULATIONS)	87-135,135A	STRUCTURES 20' SPAN AND OVER	234-299A,299B,299C,299D-338
PLAN SHEETS & PROFILES	136-162,136A-B	SHEET 233 NOT USED.	

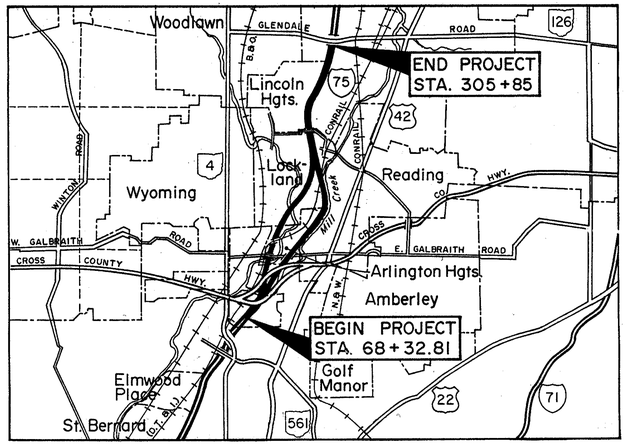

LOCATION MAP

0 1 2
SCALE IN MILES

Portions to be Improved
State & Federal Routes
Other Roads

SCALES IN FEET

Plan 0 50 100
Profile Hor. 0 50 100 Ver. 0 5 10
Cross Sections Hor. 0 5 10 Ver. 0 5 10

TWO WORKING DAYS
BEFORE YOU DIG
CALL 800-362-2764
TOLL FREE
OHIO UTILITIES PROTECTION SERVICE
NON-MEMBERS MUST BE CALLED DIRECTLY

SUPPLEMENTAL SPECIFICATIONS

802	4-13-90
820	3-18-92
849	12-24-85
852	6-10-87
862	12-16-88
933	2-10-87
931	3-18-92
944	3-18-92
949	9-26-86
910	5-20-91
962	1-23-90

THIS IMPROVEMENT IS ESPECIALLY DESIGNED FOR THROUGH TRAFFIC AND HAS BEEN DECLARED A LIMITED ACCESS HIGHWAY OR FREEWAY BY ACTION OF THE DIRECTOR, IN ACCORDANCE WITH THE PROVISIONS OF SECTION 5511.02 OF THE REVISED CODE OF OHIO.

1993 SPECIFICATIONS

THE STANDARD SPECIFICATIONS OF THE STATE OF OHIO, DEPARTMENT OF TRANSPORTATION, INCLUDING CHANGES AND SUPPLEMENTAL SPECIFICATIONS LISTED IN THE PROPOSAL SHALL GOVERN THIS IMPROVEMENT.

I HEREBY APPROVE THESE PLANS AND DECLARE THAT THE MAKING OF THIS IMPROVEMENT WILL NOT REQUIRE THE CLOSING TO TRAFFIC OF THE HIGHWAY AND THAT PROVISIONS FOR THE MAINTENANCE AND SAFETY OF TRAFFIC WILL BE AS SET FORTH ON THE PLANS AND ESTIMATES.

UNDER AUTHORITY OF SECTION 4511.21, DIVISION (I) OF THE REVISED CODE OF OHIO, THE REVISED PRIMA FACIE SPEED LIMITS AS INDICATED HEREIN ARE DETERMINED TO BE REASONABLE AND SAFE, AND ARE HEREBY ESTABLISHED FOR THE DURATION OF THIS PROJECT. THE PRIMA FACIE SPEED LIMIT OR LIMITS HEREBY ESTABLISHED SHALL BECOME EFFECTIVE WHEN APPROPRIATE SIGNS GIVING NOTICE THEREOF ARE ERECTED.

APPROVED Gary M. Kiefer
DATE 2-18-93, DISTRICT DEPUTY DIRECTOR OF TRANSPORTATION

APPROVED B.D. Hablanian
DATE 4/5/93, ENGINEER, BUREAU OF BRIDGES & STRUCTURAL DESIGN

APPROVED Christopher L. Runyan
DATE 4-26-93, DEPUTY DIRECTOR, DESIGN

APPROVED Jerry Wray
DATE 4-28-93, DIRECTOR, DEPARTMENT OF TRANSPORTATION

LINE DATA

Begin Project	Sta. 68+32.81	
Equation	Sta. 103+68.24 ℄ BK= Sta. 103+59.04 NB B AH	3,535.43 L.F.
Equation	Sta. 219+76.92 NB ℄ BK= Sta. 219+76.92 ℄ AH	11,617.88 L.F.
End Project	Sta. 305+85	8,608.08 L.F.
Length of Project		23,761.39 L.F. OR 4.500 Miles
Add For Work		
Begin Work Begin Project	Sta. 66+57.81 Sta. 68+32.81	175.00 L.F.
End Project	Sta. 305+85	
Equation	Sta. 306+85.00 ℄ BK= Sta. 27+00.00 ℄ AH	100.00 L.F.
End Work	Sta. 39+35.00	1,235.00 L.F.
Add For Work		1,510.00 L.F.
Length of Work		25,271.39 L.F. OR 4.786 Miles

PLAN PREPARED BY:

LJB
engineers
architects
1563 E. Dorothy Lane
Dayton, Ohio 45429
TEL: (513) 293-6967
FAX: (513) 293-5850
LOCKWOOD, JONES AND BEALS INC.

STANDARD CONSTRUCTION DRAWINGS

NO.	DATE	NO.	DATE	NO.	DATE	NO.	DATE	NO.	DATE	NO.	DATE	NO.	DATE	NO.	DATE
HL-10.11	5-1-87	HL-50.11	5-1-87	MT-101.60	7-1-92	GR-1.1	5-6-91	GR-5.2	10-30-92	TC-12.30	1-20-84	TC-41.50	3-26-79	FSB-1-62	1-15-63
HL-10.12	5-1-87	HL-60.11	5-1-87	MT-102.20	8-25-89	GR-1.2	10-30-92	GR-5.3	10-30-92	TC-18.24	4-25-79	TC-42.10	8-19-77	ICD-1-82	8-1-84
HL-10.13	5-1-87	HL-60.12	5-1-87	F-1	11-10-83	GR-1.3	2-21-92	GR-8	10-25-90	TC-21.20	9-1-92	TC-42.20	3-26-79	CSB-1-46	9-4-46
HL-10.31	5-1-87	HL-60.21	5-1-87	F-3	5-1-76	GR-2.1	5-6-91	LA-1	6-1-79	TC-21.41	9-1-92	TC-51.10	1-20-84	SD-1-63	11-12-63
HL-20.11	5-1-87	HL-60.31	5-1-87	F-5	5-1-76	GR-2.2	10-30-92	I-2A	12-18-84			TC-51.11	1-20-84	VPF-1-90	2-1-92
HL-20.13	5-1-87	MT-95.30	10-10-88	F-6	5-1-76	BP-7.1	10-30-92	I-3A & B	4-1-80	TC-22.20	9-1-92	TC-52.10	4-03-79	BR-1	5-29-79
HL-20.14	5-1-87	MT-95.81	2-23-90	BP-1.1	2-21-92	GR-3A	2-5-82	CB-3	5-1-79			TC-52.20	4-03-79		
HL-20.21	5-1-87	MT-97.10	4-29-88	BP-2.1	2-21-92	GR-3B	1-21-85	MC-4	7-26-76	TC-31.21	9-1-92	TC-61.10	4-05-82	SD-1-69	6-12-69
HL-30.11	5-1-87	MT-98.12	8-25-89	BP-2.2	2-21-92	GR-3.1	5-6-91	MC-6	1-30-84	TC-32.10	9-1-92	TC-65.10	2-01-90	RB-1-55	2-2-59
HL-30.21	5-1-87	MT-98.13	8-25-89	BP-2.3	2-21-92	GR-3.2	5-6-91			TC-32.11	9-1-92	TC-65.11	2-01-90	EXJ-3-82	8-1-84
HL-30.22	5-1-87	MT-98.14	8-25-89	BP-2.5	2-21-92	GR-4.2	5-6-91	MC-9.2	5-6-91	TC-35.10	8-29-84	TC-72.20	2-26-82	EXJ-4-87	1-5-89
HL-30.31	5-1-87	MT-98.15	8-25-89	BP-3.1	2-21-92	GR-4.3	2-21-92	MC-9.3	10-30-92	TC-41.10	8-29-84			AS-1-81	11-27-81
HL-30.33	5-1-87	MT-99.10	11-14-86	BP-5.1	2-21-92	GR-4.4	2-21-92	MC-9.4	10-30-92	TC-41.20	3-26-79			BR-2-82	11-1-82
HL-40.10	5-1-87	MT-99.20	4-29-88	BP-6.1	2-21-92	GR-5.1	10-30-92	MC-11	8-1-78	TC-41.40	6-18-79			DBR-2-73	4-10-73

REVISED 6-14-93

DEPARTMENT OF TRANSPORTATION
FEDERAL HIGHWAY ADMINISTRATION

APPROVED:

DIVISION ADMINISTRATOR DATE

Project: HAM-75-9.75
Date of Letting 19, Contract No.

##CODE
##ESTIMATE
##STANDARD SPECIFICATIONS##

F.H.W.A. REGION	STATE	PROJECT	
5	OHIO		

2
338

HAM-75-9.75

PROJECT SCOPE

THIS PROJECT SHALL CONSIST OF REMOVAL OF THE EXISTING 2-1/2" ASPHALT WEARING COURSE ON THE MAINLINE, JOINT REPAIRS, INSTALLATION OF EDGE DRAINS OR UNDERDRAINS, CURB REPLACEMENT, FULL DEPTH PAVEMENT REPLACEMENT AT APPROACHES TO MAINLINE BRIDGES AND UNDER SOME CROSSROAD BRIDGES, OVERLAYING WITH 6" ASPHALT CONCRETE ON THE MAINLINE AND 3" OF ASPHALT CONCRETE ON THE RAMPS AND COLLECTORS, GUARDRAIL REPLACEMENT, REMOVAL OF CONCRETE MEDIANS AND CONSTRUCTION OF CONCRETE BARRIER BETWEEN THE MAINLINE AND COLLECTORS, MANHOLE ADJUSTMENTS AND CATCH BASINS AND INLETS SHALL BE ADJUSTED OR REPLACED.

ALL SIGNS SHALL BE REPLACED (EXISTING OVERHEAD SUPPORTS SHALL REMAIN), ALL LIGHTING CIRCUITS SHALL BE REPLACED AND NEW HIGH MAST LIGHTING SHALL BE INSTALLED AT SOME INTERCHANGES.

ALL MAINLINE AND RAMP STRUCTURES AND ONE CROSSROAD STRUCTURE SHALL BE OVERLAYED WITH CONCRETE, EXISTING PARAPETS SHALL BE RETROFITTED AND NEW STRIP SEALS SHALL BE INSTALLED. CROSSROAD STRUCTURES SHALL RECEIVE MINOR REPAIRS AND PROTECTIVE FENCING SHALL BE INSTALLED. ONE CROSSROAD STRUCTURE AND ONE PEDESTRIAN STRUCTURE SHALL BE REPLACED.

SCHEMATIC PLAN

0 200 400

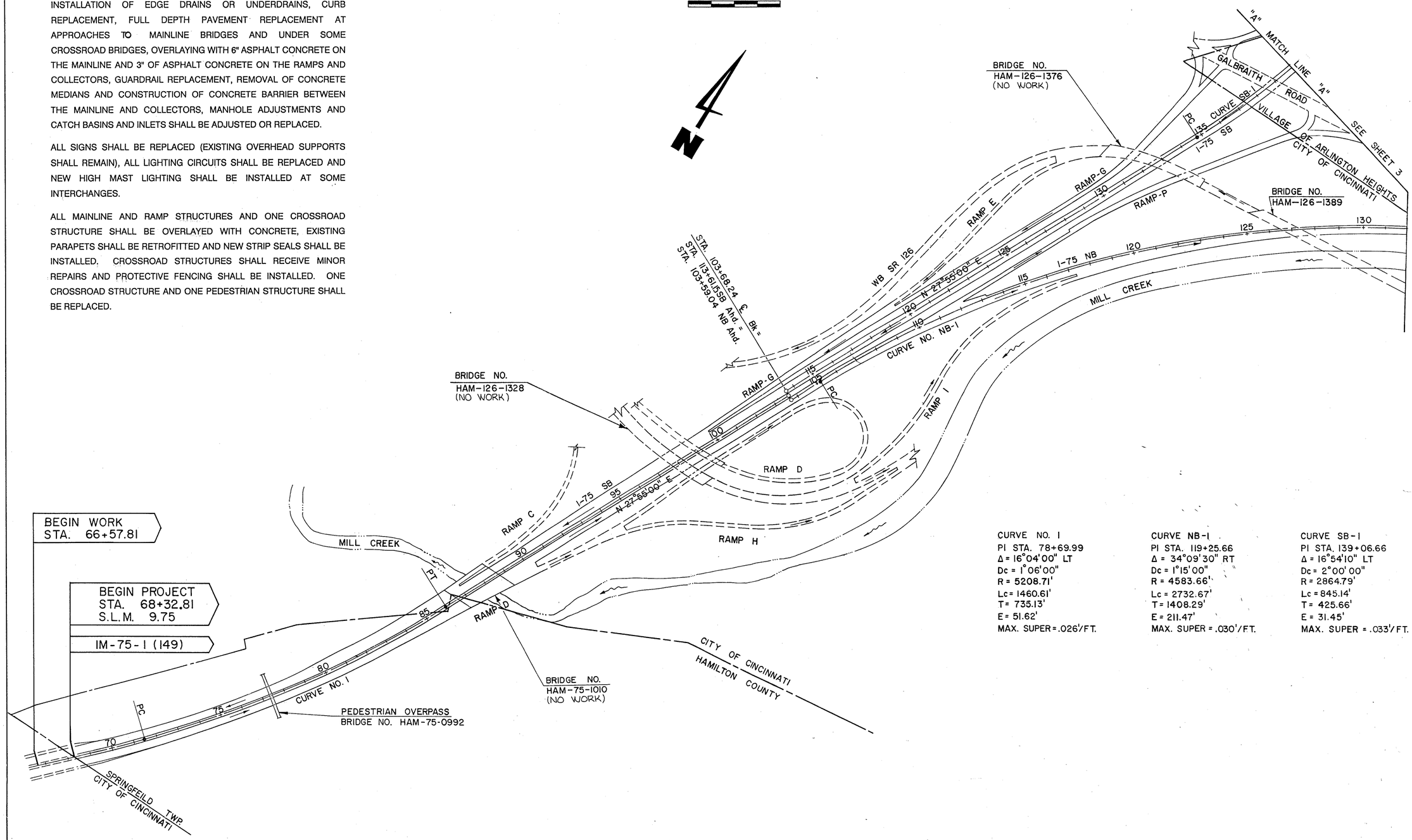

CURVE NO. 1
PI STA. 78+69.99
Δ = 16°04'00" LT
Dc = 1°06'00"
R = 5208.71'
Lc = 1460.61'
T = 735.13'
E = 51.62'
MAX. SUPER = .026'/FT.

CURVE NB-1
PI STA. 119+25.66
Δ = 34°09'30" RT
Dc = 1°15'00"
R = 4583.66'
Lc = 2732.67'
T = 1408.29'
E = 211.47'
MAX. SUPER = .030'/FT.

CURVE SB-1
PI STA. 139+06.66
Δ = 16°54'10" LT
Dc = 2°00'00"
R = 2864.79'
Lc = 845.14'
T = 425.66'
E = 31.45'
MAX. SUPER = .033'/FT.

MEDIA RESOURCES CORP.

F.H.W.A. REGION	STATE	PROJECT	
5	OHIO		

3/338

HAM-75-9.75

SCHEMATIC PLAN

0 200 400

CURVE SB-2
PI STA. 161+99.07
Δ = 28°32'10" RT
Dc = 2°00'00"
R = 2864.79'
Lc = 1426.81'
T = 728.52'
E = 91.18'
MAX. SUPER = .033'/FT.

CURVE SB-3
PI STA. 183+00.08
Δ = 1°00'00" RT
Dc = 0°20'00"
R = 17,188.73'
Lc = 300.00'
T = 150.00'
E = 0.65'
NORMAL CROWN

CURVE SB-4
PI STA. 188+50.07
Δ = 2°00'00" LT
Dc = 0°20'00"
R = 17,188.73'
Lc = 600.00'
T = 300.03'
E = 2.62'
NORMAL CROWN

CURVE SB-5
PI STA. 194+00
Δ = 1°00'00" RT
Dc = 0°20'00"
R = 17,188.73'
Lc = 300.00'
T = 150.00'
E = 0.65'
NORMAL CROWN

CURVE NB-2
PI STA. 154+60.90
Δ = 32°56'43" LT
Dc = 2°30'00"
R = 2291.83'
Lc = 867.81'
T = 903.70'
Ls = 450.00'
θs = 5°37'30"
E = 101.93'
MAX. SUPER = .059'/FT.

CURVE NB-3
PI STA. 180+15.27
Δ = 40°00'30" LT
Dc = 1°45'00"
R = 3274.04'
Lc = 1936.19'
T = 1367.48'
Ls = 350.00'
θs = 3°03'45"
E = 211.87'
MAX. SUPER = .042'/FT.

CITY OF CINCINNATI
VILLAGE OF ARLINGTON HEIGHTS
VILLAGE OF LOCKLAND
CITY OF READING
CONRAIL RAILROAD
WEST BRANCH MILL CREEK
MILL CREEK
BRANCH CREEK
WEST MILL
SOUTHBOUND I-75
NORTHBOUND I-75
RAMP F
RAMP N
RAMP M
CALBRAITH ROAD
CLARK STREET
DAVIS STREET
LOCK ST.
COOPER AVE.
WYOMING AVENUE
PC
PT
SC
CS
ST
TS
N 11°00'56" E
N 39°33'06" E
N 40°33'06" E
N 38°33'06" E
N 62°04'36" E
N 29°07'53" E
BRIDGE NO. HAM-75-1105 L (NO WORK)
BRIDGE NO. HAM-75-1160 L
BRIDGE NO. HAM-75-1187 L
BRIDGE NO. HAM-75-1198 L
BRIDGE NO. HAM-75-1102 R
BRIDGE NO. HAM-75-1152 R
BRIDGE NO. HAM-75-1184 R
BRIDGE NO. HAM-75-1192 R
SEC. 1 SEC. 3
SEC. 2 SEC. 32
SEC. 33 SEC. 32
"A" MATCH LINE "A" SEE SHEET - 2
"B" MATCH LINE "B" SEE SHEET - 4

MEDIA RESOURCES CORP

F.H.W.A. REGION	STATE	PROJECT	
5	OHIO		

4
338

HAM - 75 - 9.75

SCHEMATIC PLAN

0 200 400

SEC. 33

CURVE SB-6
PI STA. 206+75.19
Δ = 37°52'50" LT
Dc = 3°15'00"
R = 1762.95'
Lc = 1165.56'
T = 604.98'
E = 100.91'
MAX. SUPER = .054'/FT.

CITY OF LINCOLN HEIGHTS

BRIDGE NO.
HAM-75-1292

LOCKLAND

MANGHAM DR.

RAMP Q

RAMP R

RAMP P

SB COLLECTOR

SEC. 33

"B" MATCH LINE "B"

PC

205 CURVE SB-6 210 PT 215 N 01°40'16" E SOUTHBOUND I-75 225 230 235 N 12°49'13" W

ST SC CS

240 245 250

CURVE NO. 8

CURVE NO. 9

NB COLLECTOR

SC PCC

GE GATE 10

TS

VILLAGE OF EVENDALE

"C" MATCH LINE "C"

SEC. 32
SEC. 33

205 200 N 10°52'37" W

NORTHBOUND I-75 TS SC

210 215 CURVE NB-4 CS

220

ST. STA. 219+76.92 NB Bk=
STA. 219+76.92 SB Bk=
STA. 219+76.92 ℄ AHD.

RAMP A

RAMP B

OF

SHEPHERD LANE

VILLAGE

SEE SHEET - 3

CITY OF LOCKLAND
CITY OF READING

BRIDGE NO.
HAM-75-1192 R

CONRAIL R.R.

CURVE NB-4
PI STA. 214+35.40
Δ = 12°32'53"
Dc = 1°30'00"
R = 3819.72'
Lc = 586.54'
T = 545.02'
Ls = 250.00'
θs = 1°52'30"
E = 23.70'
MAX. SUPER = .036'/FT.

CURVE NO. 7
PI STA. 228+58.75
Δ = 14°29'29"
Dc = 2°00'00"
R = 2864.79'
Lc = 324.57'
T = 564.49'
Ls = 400.00'
θs = 4°00'00"
E = 25.41'
MAX. SUPER = .047'/FT.
NB & SB

CURVE NO. 8
PI STA. 244+69.45
Δ = 20°31'39"
Dc = 3°00'00"
R = 1909.86'
Lc = 384.25'
T1 = 624.63'
T2 = 368.21'
Ls = 600.00'
θs = 9°00'00"
E = 35.17'
MAX. SUPER = .071'/FT.
NB & SB

CURVE NO. 9
PI STA. 255+15.07
Δ = 26°44'16"
Dc = 2°00'00"
R = 2864.79'
Lc = 1136.89'
T1 = 686.02'
T2 = 876.19'
Ls = 400.00'
θs = 4°00'00"
E = 80.99'
MAX. SUPER = .047'/FT.
NB & SB

CITY OF LINCOLN HEIGHTS

MAGNOLIA DRIVE

CHICAGO AVE.

VILLAGE OF EVENDALE
CITY OF LINCOLN HEIGHTS

RAMP B

RAMP N

GLENDALE-MILFORD ROAD (S.R. 126)

END WORK
STA. 39+35

STA. 306+85 ℄ BACK =
STA. 27+00 ℄ AHEAD

BRIDGE NO.
HAM-75-1338

"C" MATCH LINE "C"

GE GATE 12

CS

RAMP C

RAMP E

RAMP H

SB COLLECTOR

265 270 275 280 SB I-75 285 290 295 N 20°32'25" E 300 305

30 35 40

RAMP G

CURVE NO. 10

NB I-75

RAMP K

ST

SEC. 33

RAMP D

PC

GE GATE 17

NB COLLECTOR

NEUMAN WAY

PT

BRIDGE NO.
HAM-75-1390

GE GATE 57A

RAMP J

GE GATE 57

BRIDGE NO.
HAM-75-1426
(NO WORK)

RAMP M

RAMP L

RAMP F

CURVE NO. 10
PI STA. 274+25.87
Δ = 13°54'17"
Dc = 1°00'00"
R = 5729.58'
Lc = 1390.47'
T = 689.67'
E = 42.44'
MAX. SUPER = .024'/FT.
NB & SB

VILLAGE OF EVENDALE

END PROJECT
STA. 305+85
S.L.M. 14.25

IM-75-1 (149)

SCHEMATIC PLAN

F.H.W.A. REGION	STATE	PROJECT	CALC. DATE
5	OHIO		CHECK DATE

5
338

HAM-75-9.75

TYPICAL SECTIONS

TYPE 446

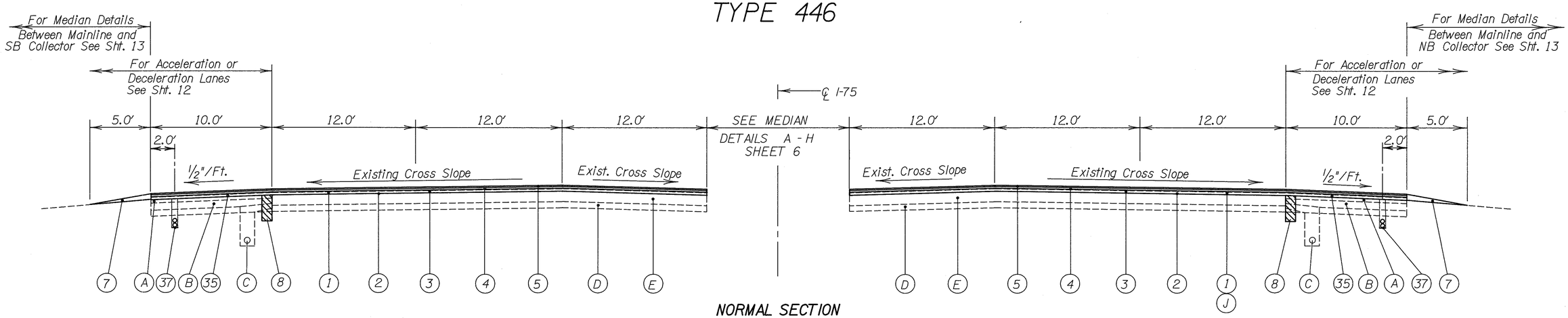

NORMAL SECTION

LIMITING STATIONS

STA. 68+32.81 TO STA. 71+34.87
STA. 90+69.11 TO STA. 103+68.24 BK.
STA. 103+59.04 AH TO STA. 105+17.37 NB
STA. 113+61.15 AH TO STA. 116+96.00 SB
STA. 215+80.00 TO STA. 222+94.26
STA. 234+18.83 TO STA. 238+44.82
STA. 263+65.24 TO STA. 267+27.20
STA. 281+17.67 TO STA. 305+85.00

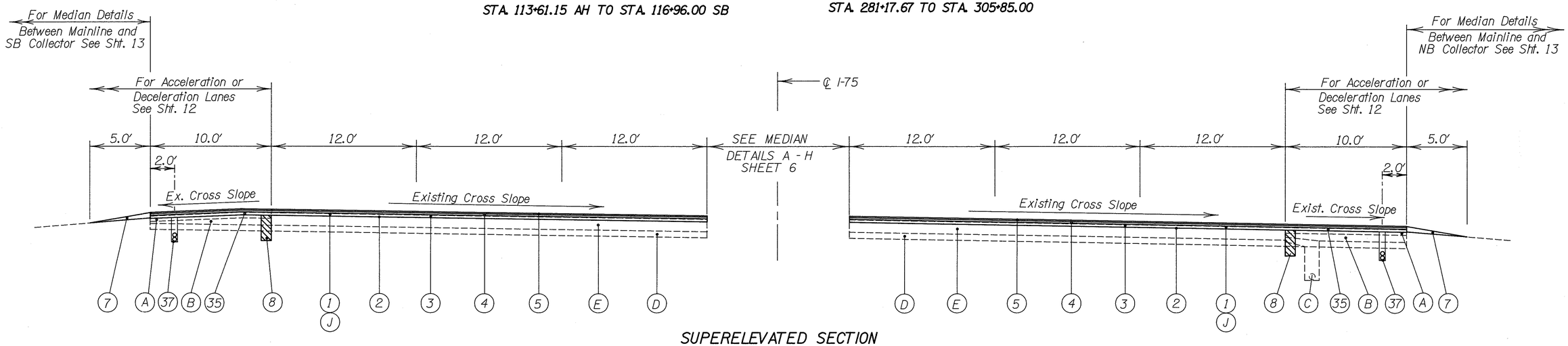

SUPERELEVATED SECTION

LIMITING STATIONS

STA. 71+34.87 TO STA. 84+68.91
STA. 222+94.26 TO STA. 234+18.83
STA. 238+44.82 TO STA. 263+65.24
STA. 267+27.20 TO STA. 281+17.67

FOR LEGEND SEE SHT. 16

TYPICAL SECTIONS

F.H.W.A. REGION	STATE	PROJECT	CALC. DATE
5	OHIO		CHECK DATE

6
338

HAM-75-9.75

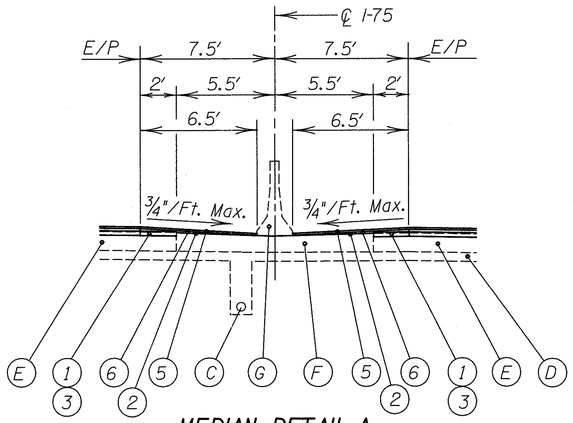

MEDIAN DETAIL A

LIMITING STATIONS
STA. 68+32.81 TO STA. 84.68.91

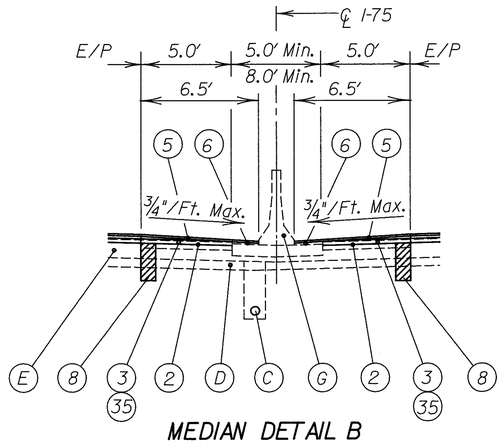

MEDIAN DETAIL B

LIMITING STATIONS
STA. 90+69.11 TO STA. 103+68.24 BK.
STA. 103+59.04 N.B. AH. TO STA. 106+96.00 N.B.
STA. 113+61.15 S.B. AH. TO STA. 116+97.91 S.B.

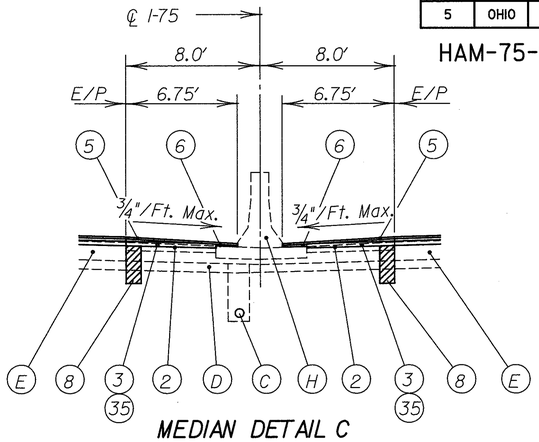

MEDIAN DETAIL C

LIMITING STATIONS
STA. 219+76.92 TO STA. 297+00.00

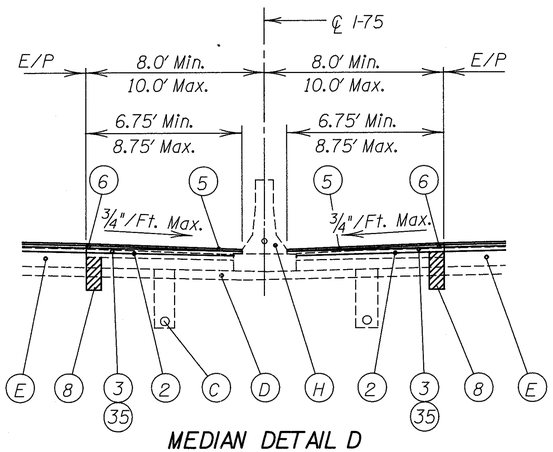

MEDIAN DETAIL D

LIMITING STATIONS
STA. 297+00.00 TO STA. 299+60.00

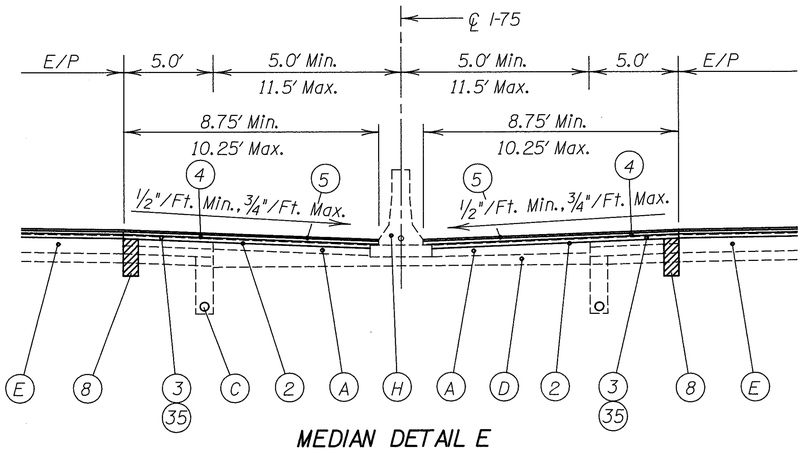

MEDIAN DETAIL E

LIMITING STATIONS
STA. 299+60.00 TO STA. 302+75.00

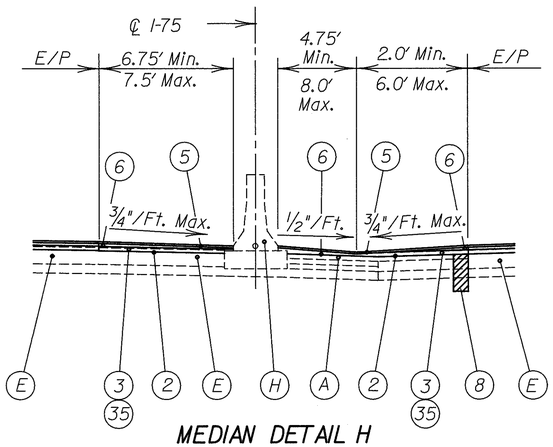

MEDIAN DETAIL H

LIMITING STATIONS
STA. 215+80 TO STA. 219+76.92

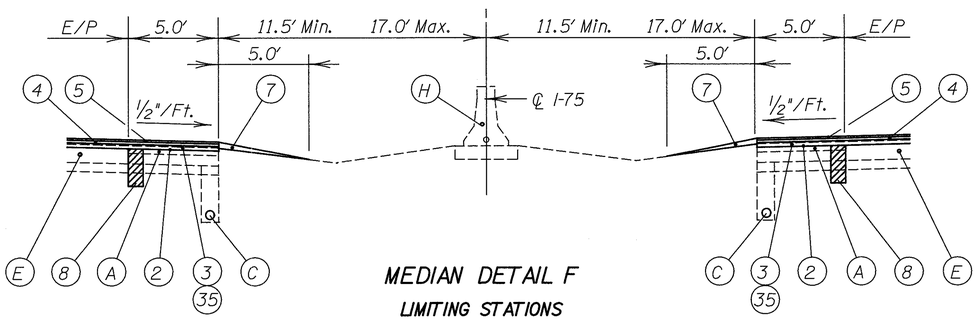

MEDIAN DETAIL F

LIMITING STATIONS
STA. 302+75.00 TO STA. 305+85.00

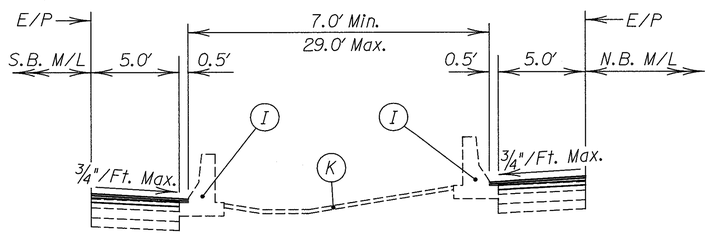

LIMITING STATIONS
STA. 116+97.91 SB. TO STA. 123+00.00 SB.

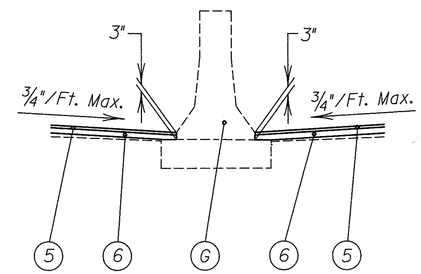

INSIDE SHOULDER PAVEMENT DETAIL

FOR LEGEND SEE SHT. 16

TYPICAL SECTIONS

F.H.W.A. REGION	STATE	PROJECT	CALC. DATE
5	OHIO		CHK. DATE

7
338

HAM-75-9.75

TYPICAL SECTIONS

TYPE 446 ON 451

FULL DEPTH PAVEMENT

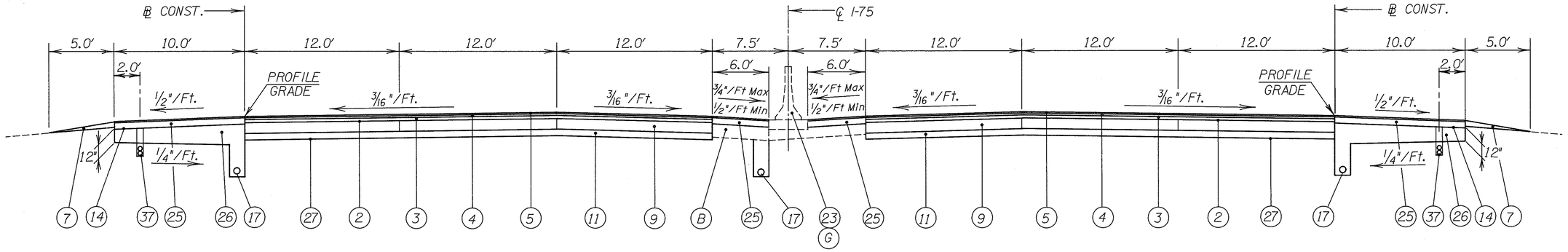

NORMAL SECTION

LIMITING STATIONS

STA. 85+95.47 TO STA. 86+43.91

(BRIDGE NO. HAM-75-1010)

STA. 88+94.11 TO STA. 90+69.11

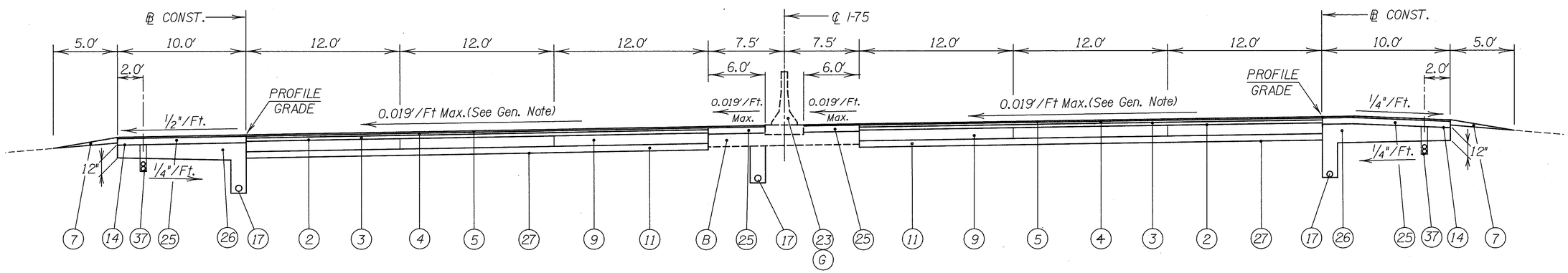

SUPERELEVATED SECTION

LIMITING STATIONS

STA. 84+68.91 TO STA. 85+95.47

LONGITUDINAL JOINTS : ALL LONGITUDINAL JOINTS ON THIS PROJECT SHALL BE TIED AS PER BP-2.1.

FOR LEGEND SEE SHT. 16

TYPT.000

F.H.W.A. REGION	STATE	PROJECT	CALC. DATE
5	OHIO		CHK. DATE

8
338

HAM-75-9.75

TYPICAL SECTIONS

TYPE 446

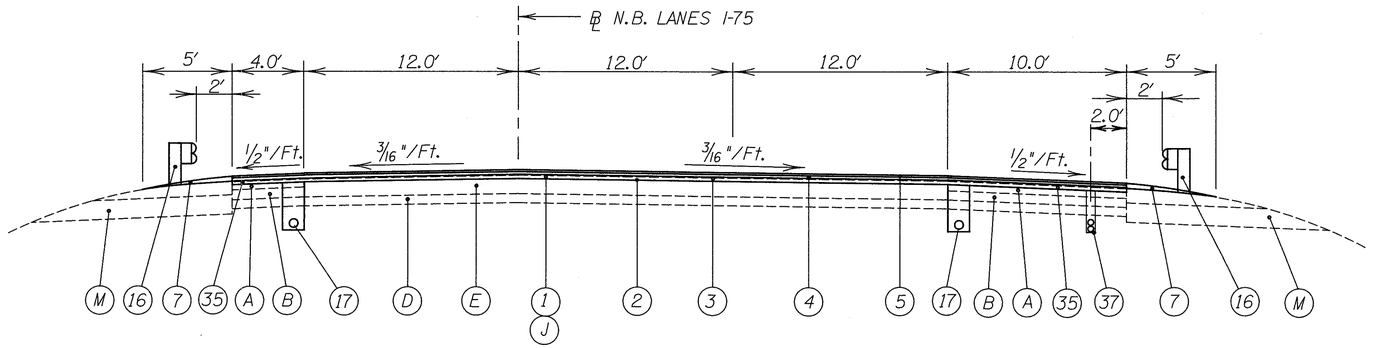

NORMAL SECTION - NORTHBOUND

LIMITING STATIONS

STA. 132+50.03 TO STA. 132+82.08
STA. 142+39.08 TO STA. 145+57.20
STA. 165+30.64 TO STA. 166+47.79

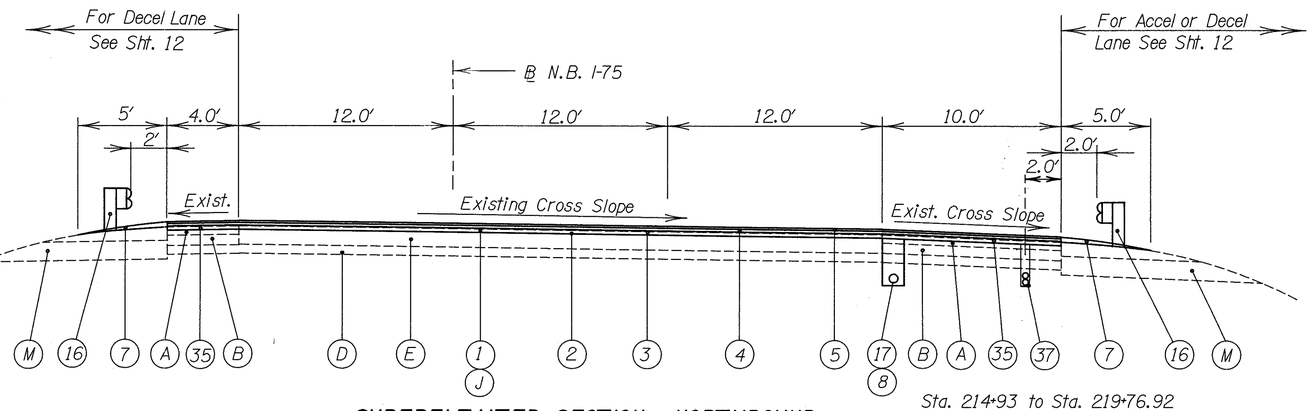

Sta. 214+93 to Sta. 219+76.92

SUPERELEVATED SECTION - NORTHBOUND

LIMITING STATIONS

STA. 106+95.80 TO STA. 132+50.03
STA. 145+57.20 TO STA. 159+51.14
STA. 166+47.79 TO STA. 176+36.45
STA. 209+40.49 TO STA. 219+76.92

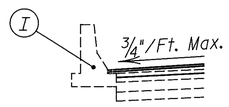

STA. 107+50.00 TO STA. 112+65.00

FOR LEGEND SEE SHT. 16

F.H.W.A. REGION	STATE	PROJECT	CALC. DATE
5	OHIO		CHECK DATE

9
338

HAM-75-9.75

TYPICAL SECTIONS

TYPE 446 ON 451

FULL DEPTH PAVEMENT AT MAINLINE BRIDGES

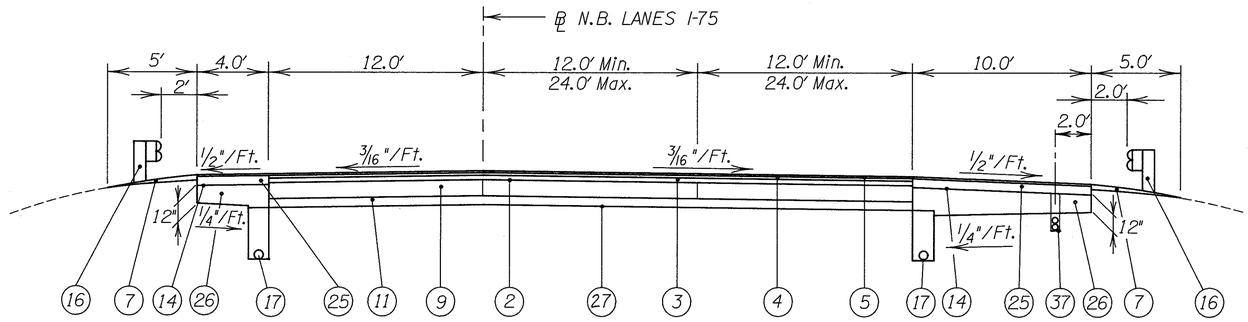

NORMAL SECTION - NORTHBOUND

LIMITING STATIONS

STA. 132+82.08 TO STA. 134+82.08
(BRIDGE NO. HAM-75-1102 R)
STA. 140+39.08 TO STA. 142+39.08
(BRIDGE NO. HAM-75-1152 R)
STA. 163+25.01 TO STA. 165+30.64
STA. 207+40.49 TO STA. 209+40.49

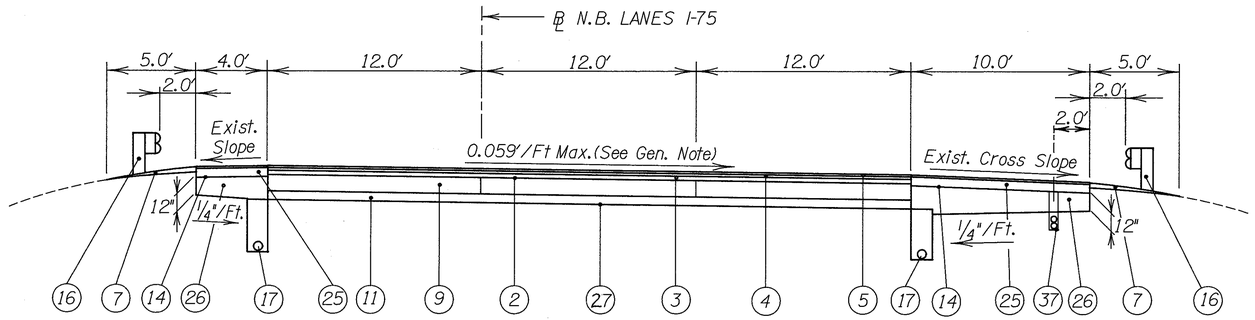

SUPERELEVATED SECTION - NORTHBOUND

LIMITING STATIONS

STA. 159+51.14 TO STA. 161+51.14
STA. 176+36.45 TO STA. 178+36.45
(BRIDGE NO. HAM-75-1184 R)
STA. 180+01.96 TO STA. 182+72.99
(BRIDGE NO. HAM-75-1192 R)

FOR LEGEND SEE SHT. 16

TYPICAL SECTIONS

F.H.W.A. REGION	STATE	PROJECT	CALC. DATE
5	OHIO		CHECK DATE

10
338

HAM-75-9.75

TYPICAL SECTIONS

TYPE 446

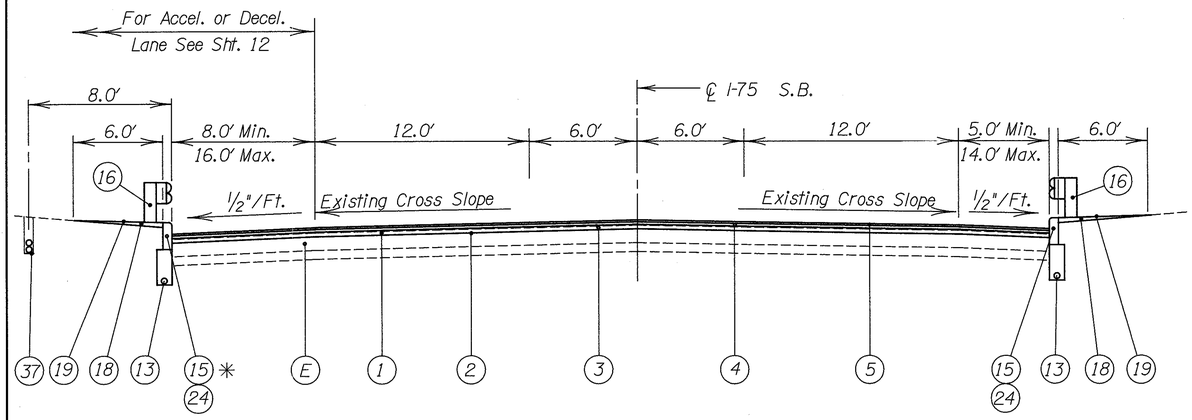

* NO CURB ON LEFT FROM STA. 152+88 TO STA. 171+00.

NORMAL SECTION - SOUTHBOUND

LIMITING STATIONS

STA. 151+55.00 TO STA. 154+70.54
STA. 168+97.35 TO STA. 173+53.00
STA. 179+25.00 TO STA. 185+96.80

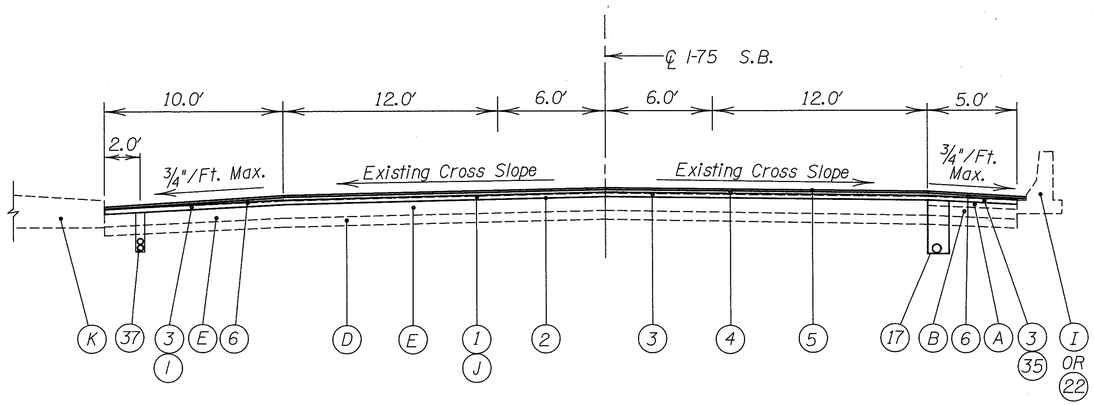

NORMAL SECTION - SOUTHBOUND

LIMITING STATIONS

STA. 116+96.00 TO STA. 130+24.69

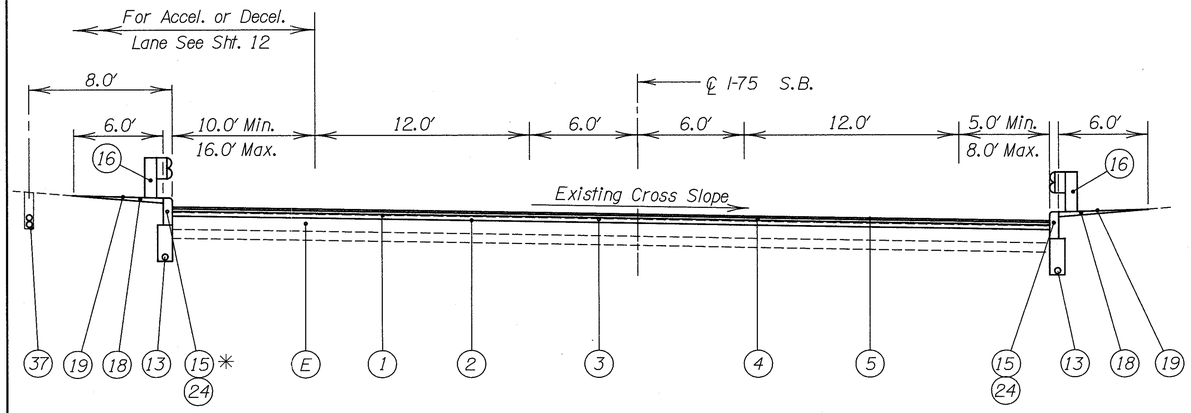

SUPERELEVATED SECTION - SOUTHBOUND

LIMITING STATIONS

STA. 154+70.54 TO STA. 168+97.35

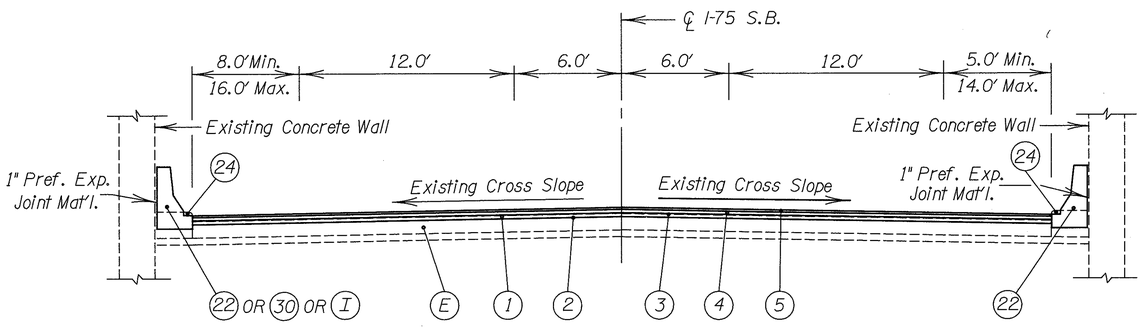

NORMAL SECTION - SOUTHBOUND

LIMITING STATIONS

STA. 185+96.80 TO STA. 237+18.00

STA. 189+30.00 TO STA. 210+60.00

FOR LEGEND SEE SHT. 16

77715.000

F.H.W.A. REGION	STATE	PROJECT	CALC. DATE
5	OHIO		CHECK DATE

11
338

HAM-75-9.75

TYPICAL SECTIONS

TYPE 446 ON 451

FULL DEPTH PAVEMENT REPLACEMENT

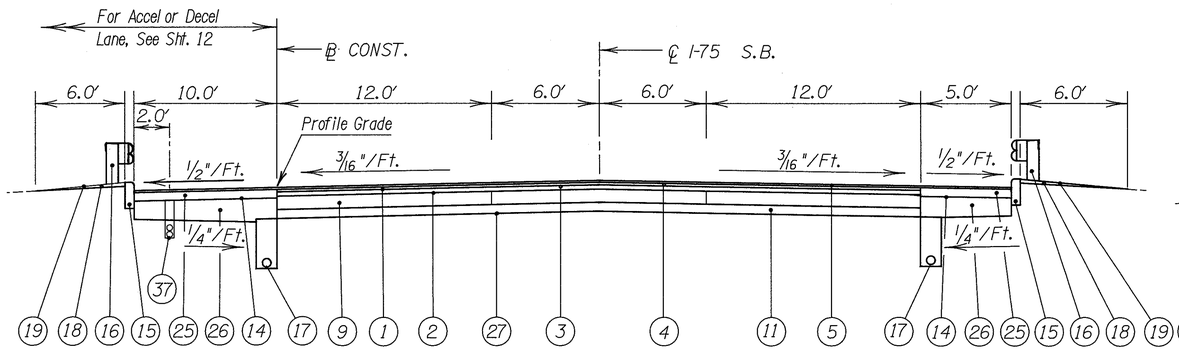

SOUTHBOUND NORMAL SECTION

LIMITING STATIONS
STA. 130+24.69 TO STA. 134+81.00
STA. 143+26.14 TO STA. 151+55.00
STA. 173+53.00 TO STA. 175+63.00
(BRIDGE NO. HAM-75-1160 L)
STA. 177+15.00 TO STA. 179+25.00

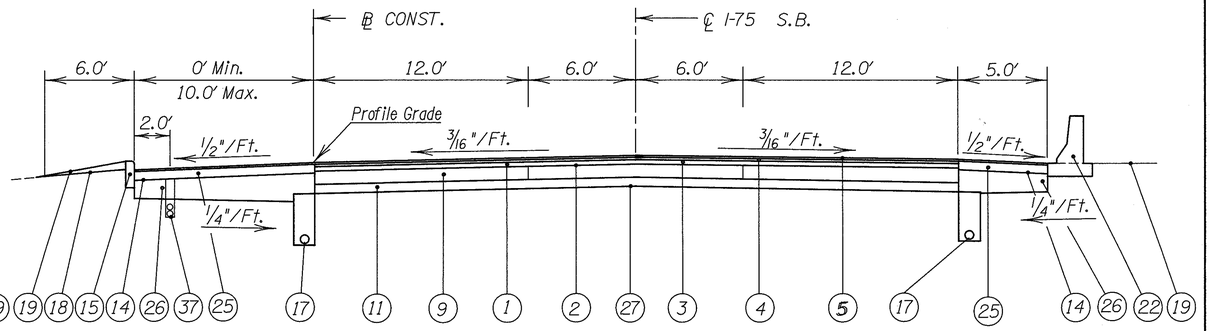

SOUTHBOUND SECTION

LIMITING STATIONS
STA. 130+24.69 TO STA. 133+42.00

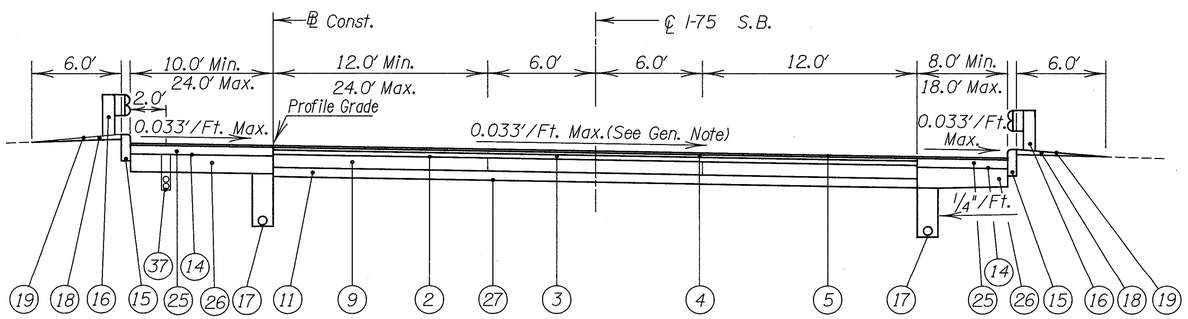

SUPERELEVATED SECTION - SOUTHBOUND

LIMITING STATIONS
STA. 134+81.00 TO STA. 143+26.14

FOR LEGEND SEE SHT. 16

TYP2SL000

F.H.W.A. REGION	STATE	PROJECT	CALC. DATE
5	OHIO		CHECK DATE

12
338

HAM-75-9.75

TYPICAL SECTIONS

TYPE 446

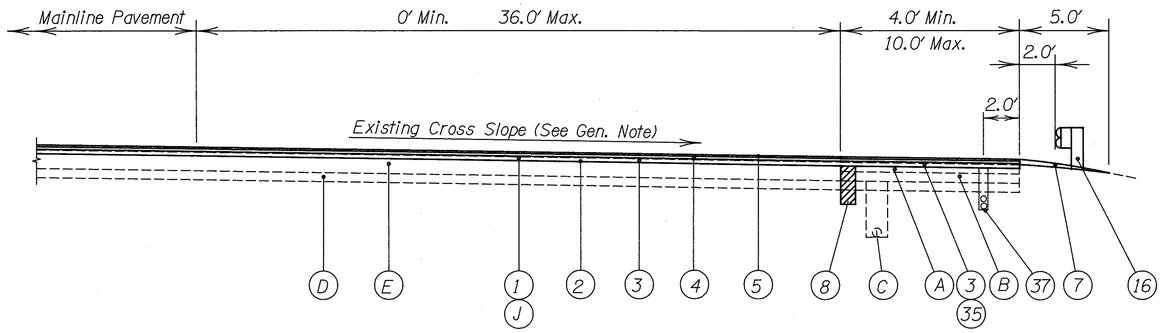

ACCELERATION AND DECELERATION LANE

LIMITING STATIONS

STA. 68+32.81 TO STA. 69+68.30 S.B.

STA. 68+32.81 TO STA. 72+20.37 N.B.
STA. 108+70.63 TO STA. 112+66.00 N.B.
STA. 115+39.00 TO STA. 127+39.00 N.B.

STA. 151+55.00 TO STA. 152+88.00 S.B.

STA. 151+37.00 TO STA. 159+51.14 N.B.

STA. 179+25.00 TO STA. 202+00.00 S.B.

STA. 165+30.64 TO STA. 172+35.39 N.B.

STA. 223+00.00 TO STA. 235+00.00 S.B.

STA. 212+19.06 TO STA. 220+19.06 N.B.

STA. 269+96.51 TO STA. 275+27.15 S.B.

STA. 270+00.00 TO STA. 275+27.15 N.B.

STA. 280+95.00 TO STA. 286+15.00 S.B.

STA. 281+62.88 TO STA. 290+50.00 N.B.

TYPE 446 ON 451

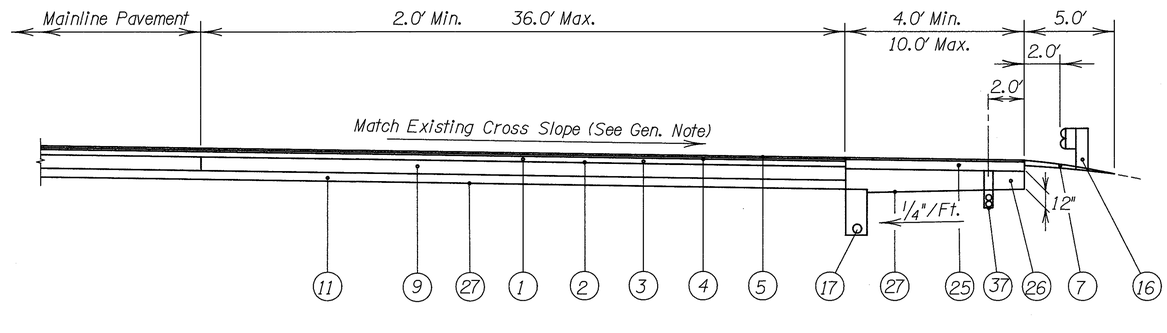

ACCELERATION AND DECELERATION LANE

LIMITING STATIONS

STA. 84+43.80 TO STA. 86+18.80 S.B.

STA. 84+94.02 TO STA. 86+69.02 N.B.

STA. 89+88.00 TO STA. 90+44.00 S.B.

STA. 89+19.22 TO STA. 90+33.50 N.B.

STA. 144+55.00 TO STA. 151+55.00 S.B.

STA. 159+51.14 TO STA. 161+37.00 N.B.

STA. 177+15.00 TO STA. 179+25.00 S.B.

STA. 163+95.65 TO STA. 165+30.64 N.B.

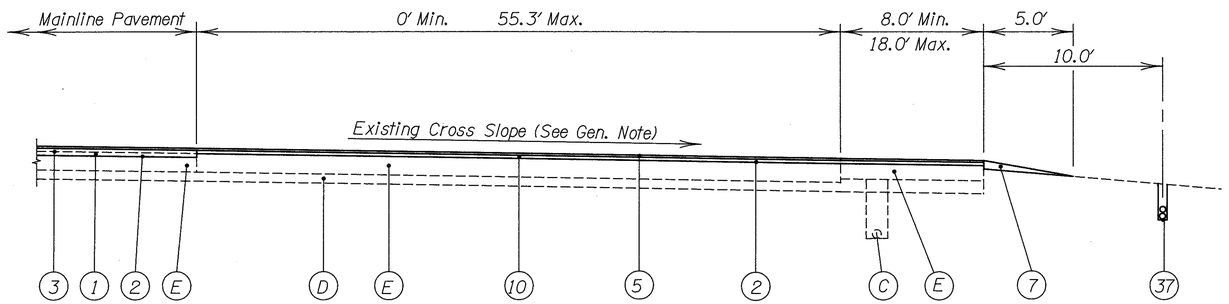

ACCELERATION AND DECELERATION LANE

LIMITING STATIONS

STA. 77+00.00 TO STA. 84+43.80 S.B.

STA. 78+00.00 TO STA. 84+94.02 N.B.

STA. 90+44.00 TO STA. 116+96.00 S.B.

FOR LEGEND SEE SHT. 16

TYPTS.000

TYPICAL SECTIONS

F.H.W.A. REGION	STATE	PROJECT	CALC. DATE
5	OHIO		CHECK DATE

13
338

HAM-75-9.75

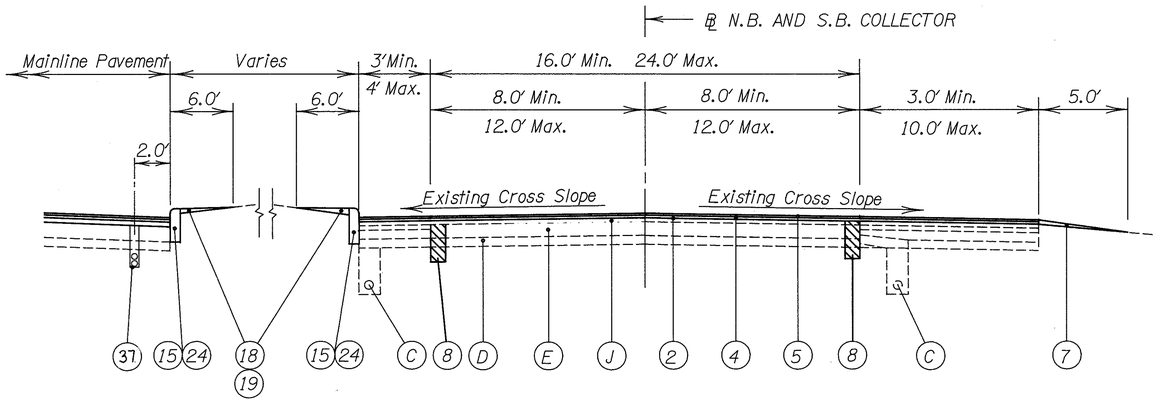

NORTHBOUND AND SOUTHBOUND COLLECTOR

LIMITING STATIONS

NB COLLECTOR STA. 5+13.71 TO STA 91+69.00 BK

NB COLLECTOR STA. 27+00.00 AH TO STA 38+28.86

SB COLLECTOR STA. 0+00.00 TO STA 67+28.86

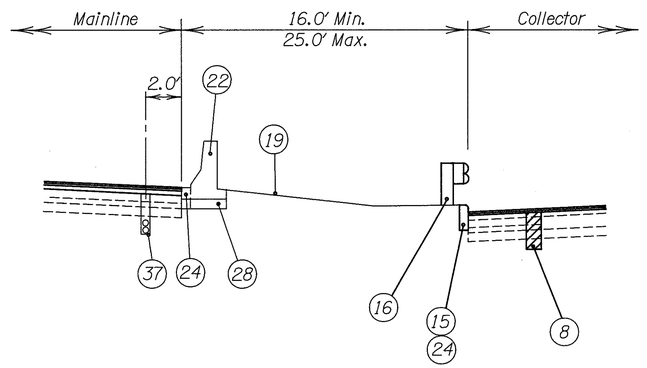

STA. 281+61.00 TO STA. 287+18.81 NB

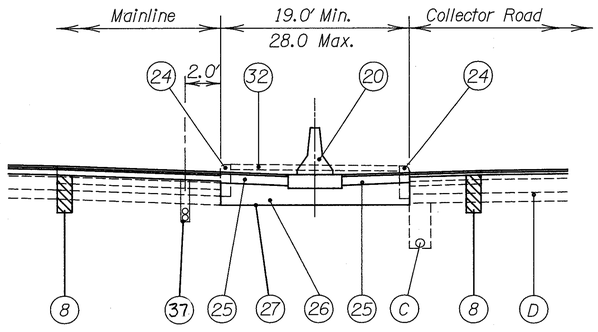

NB STA. 221+40.00 TO STA 223+00.00

NB STA. 235+00.00 TO STA 240+10.00

NB STA. 260+50.00 TO STA 267+87.00

NB STA. 289+67.88 TO STA 290+57.88

NB STA. 291+00.00 TO STA 291+70.00

SB STA. 238+50.00 TO STA 258+50.00

SB STA. 268+70.00 TO STA 269+50.00

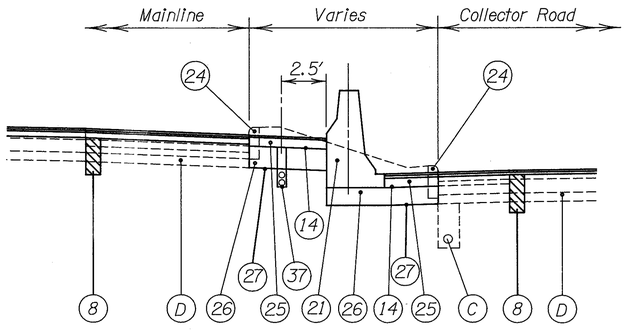

NB STA. 223+00.00 TO STA 235+00.00

NB STA. 240+10.00 TO STA 260+50.00

NB STA. 306+44.00 TO STA 306+85.00 BK

NB STA. 27+00.00 AH TO STA 39+12.00

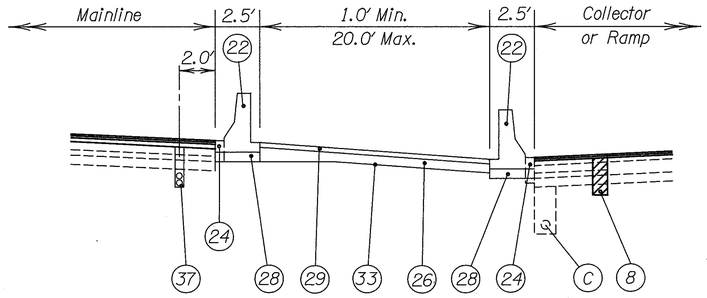

MEDIAN BETWEEN MAINLINE & COLLECTOR

LIMITING STATIONS

NB STA. 287+18.81 TO STA. 289+67.88

NB STA. 291+70.00 TO STA. 306+44.00

SB STA. 123+00.00 TO STA. 129+97.10

SB STA. 258+50.00 TO STA. 268+70.00

SB STA. 301+00.00 TO STA. 306+44.00

FOR LEGEND SEE SHT. 16

TYPICAL SECTIONS

F.H.W.A. REGION	STATE	PROJECT	CALC. DATE
5	OHIO		CHK. DATE

14
338

HAM-75-9.75

TYPICAL SECTIONS

TYPE 446

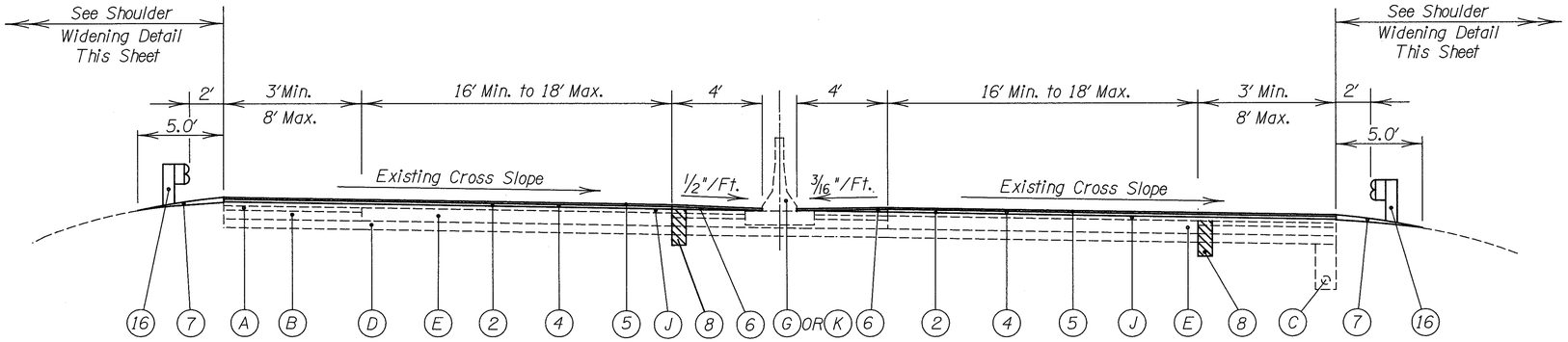

TWO-WAY RAMP SECTION
LIMITING STATIONS

RAMP 'A' STA. 17+20.20 TO STA. 18+78.00 (SHEPHERD LANE)
RAMP 'B' STA. 6+15.00 TO STA. 17+95.00 (SHEPHERD LANE)
RAMP 'C' STA. 4+55.00 TO STA. 8+95.19 (NB COLLECTOR)
RAMP 'C' STA. 12+97.47 TO STA. 17+80.00 (SB COLLECTOR)

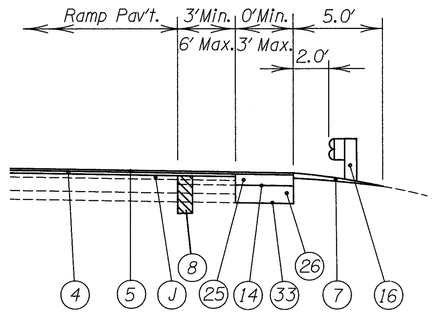

SHOULDER WIDENING DETAIL

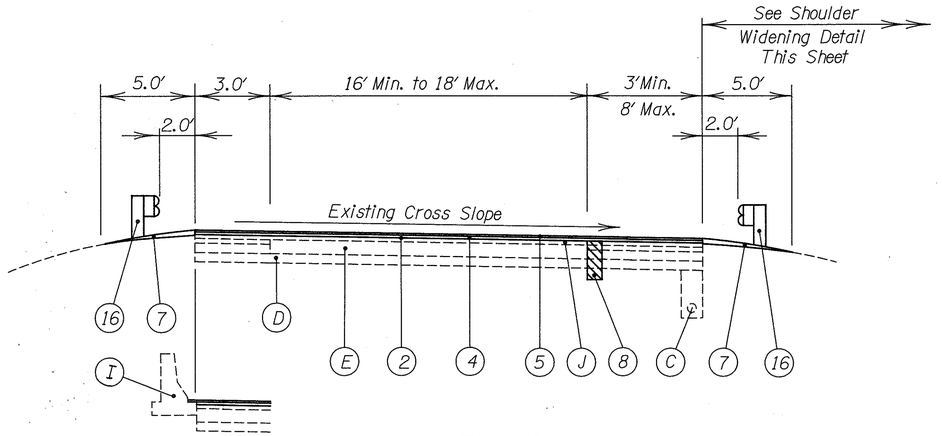

RAMP 'P' STA. 5+09.50 TO STA. 14+00 (GALBRAITH ROAD)
RAMP 'B' STA. 0+00 TO STA. 13+38 (GLENDALE-MILFORD RD)
RAMP 'L' STA. 1+50 TO STA. 6+50 (GLENDAL-MILFORD RD)

LIMITING STATIONS

NB RAMP 'P' STA. 5+09.50 TO STA. 10+34.50 (GALBRAITH ROAD)
NB RAMP 'N' STA. 2+30 TO STA. 12+00 (GALBRAITH ROAD)
NB RAMP 'M' STA. 5+88.16 TO STA. 12+75 (DAVIS ST.)
RAMP 'A' STA. 13+23.20 TO STA. 17+20.20 (SHEPHERD LANE)
RAMP 'B' STA. 13+63.50 TO STA. 17+20.20 (SHEPHERD LANE)
RAMP 'B' STA. 17+95.00 TO STA. 19+20.00 (SHEPHERD LANE)
NB COLLECTOR RAMP 'C' STA. 1+74.00 TO STA. 4+55.00
NB COLLECTOR RAMP 'D' STA. 1+10.00 TO STA. 6+80.84
NB COLLECTOR RAMP 'G' STA. 3+70.00 TO STA. 8+40.98
NB COLLECTOR RAMP 'J' STA. 1+64.00 TO STA. 8+95.69
SB COLLECTOR RAMP 'Q' STA. 0+58.00 TO STA. 1+80.00 (MANGHAM DR.)
SB COLLECTOR RAMP 'C' STA. 17+80.00 TO STA. 21+74.25
SB COLLECTOR RAMP 'E' STA. 3+22.00 TO STA. 7+65.00
SB COLLECTOR RAMP 'J' STA. 13+37.19 TO STA. 23+82.69
RAMP 'N' STA. 0+00.00 TO STA. 4+70.34 (GLENDALE-MILFORD RD.)
RAMP 'B' STA. 6+06.00 TO STA. 13+80.00 (GLENDALE-MILFORD DR.)
RAMP 'M' STA. 1+80.00 TO STA. 10+83.19 (GLENDALE-MILFORD RD.)
RAMP 'L' STA. 0+62.00 TO STA. 10+11.22 (GLENDALE-MILFORD RD.)

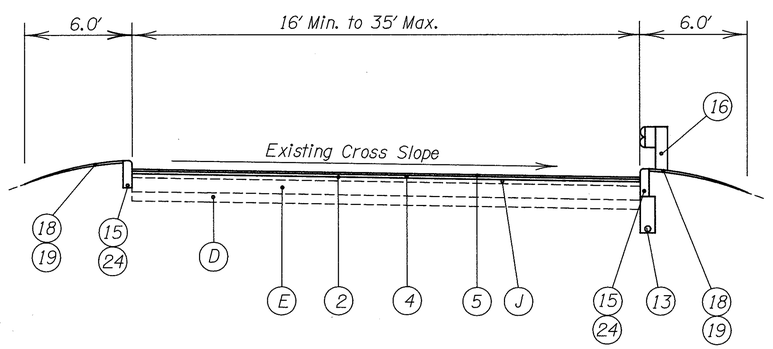

LIMITING STATIONS

NB RAMP 'P' STA. 10+34.50 TO STA. 23+55 (GALBRAITH ROAD)
SB RAMP 'G' STA. 121+65.69 TO STA. 127+60 (GALBRAITH ROAD)
RAMP 'P' STA. 0+74.00 TO STA. 6+50.81 (MANGHAM DR.)
RAMP 'Q' STA. 1+80.00 TO STA. 4+08.00 (MANGHAM DR.)
RAMP 'R' STA. 1+36.35 TO STA. 2+24.00 (MANGHAM DR.)

FOR LEGEND SEE SHT. 16

F.H.W.A. REGION	STATE	PROJECT	CALC. DATE
5	OHIO		CHK. DATE

15
338

HAM-75-9.75

TYPICAL SECTIONS

TYPE 446 ON 451

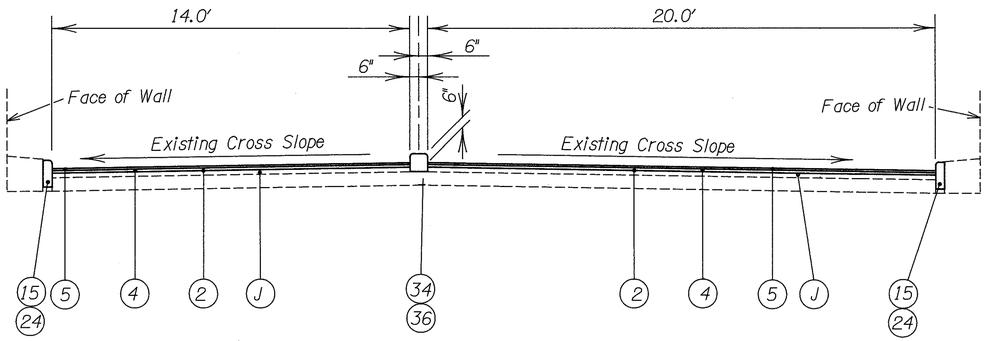

COOPER AVE. NORMAL SECTION
STA. 1+63.99 TO STA. 2+93.00

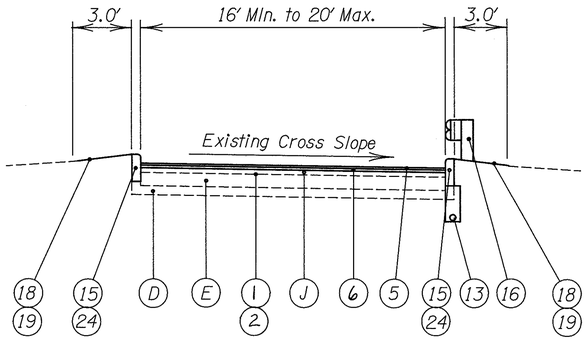

RAMP SECTION
FULL DEPTH PAVEMENT REPLACEMENT

LIMITING STATIONS
SB RAMP 'F' STA. 6+00 TO STA. 7+89 (GALBRAITH ROAD)

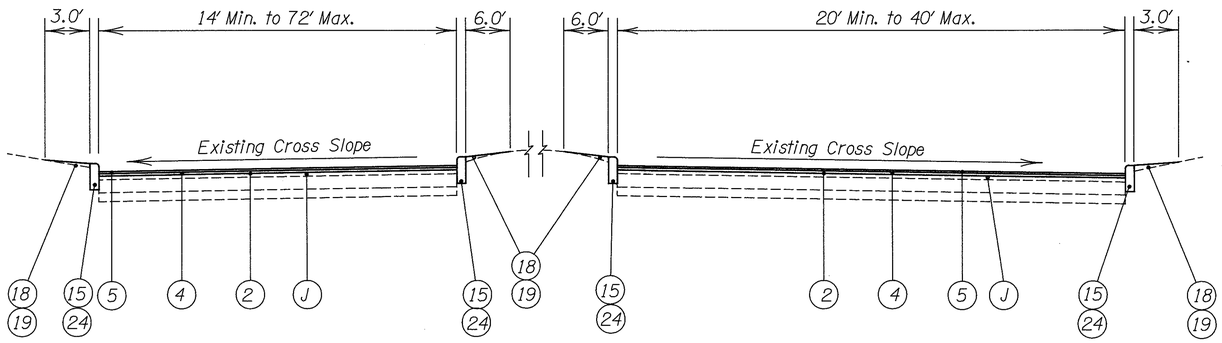

STA. 2+93 TO STA. 4+08

STA. 2+93 TO STA. 4+29

COOPER AVE. NORMAL SECTION

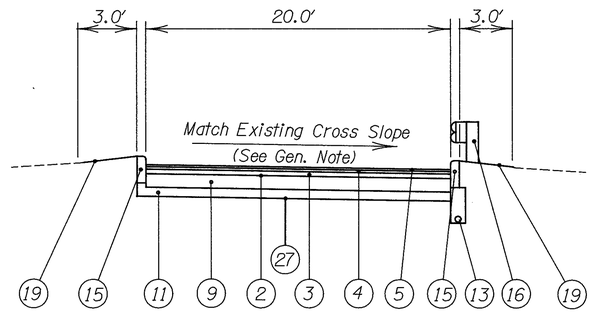

RAMP SECTION
FULL DEPTH PAVEMENT REPLACEMENT

LIMITING STATIONS
SB RAMP 'F' STA. 6+00 (GALBRAITH ROAD)

FOR LEGEND SEE SHT. 16

TYP15.000

TYPICAL SECTIONS

F.H.W.A. REGION	STATE	PROJECT	CALC. DATE
5	OHIO		CHK. DATE

16
338

HAM-75-9.75

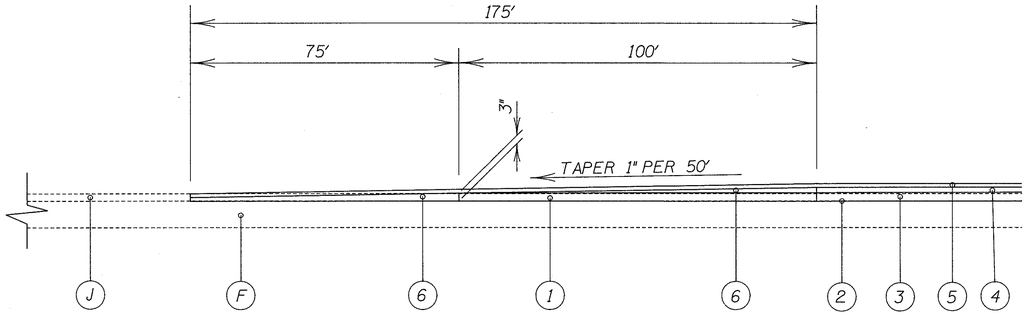

FEATHER DETAIL AT BEGINNING OF PROJECT

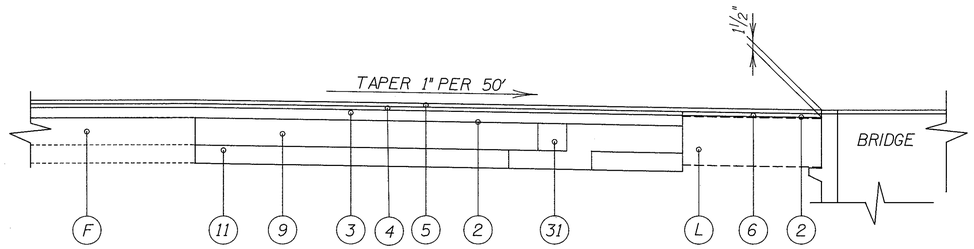

DETAIL AT BRIDGES USING EXISTING APPROACH SLABS

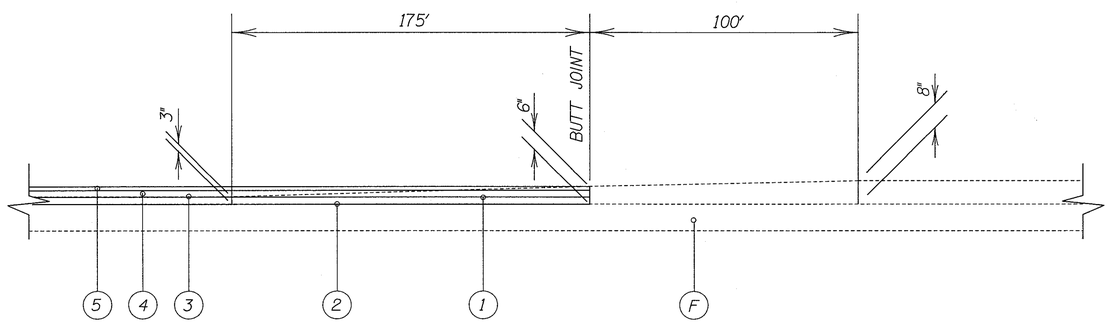

DETAIL AT END PROJECT STA. 305+85

LEGEND

1. ITEM 202 WEARING COURSE REMOVED (APPROX. 2½")
2. ITEM 407 TACK COAT (SEE GEN. NOTE)
3. ITEM 301 3" BITUMINOUS AGGREGATE BASE, AC-20
4. ITEM 446 1¾" ASPHALT CONCRETE INTERMEDIATE COURSE, TYPE 2, AC-20
5. ITEM 446 1¼" ASPHALT CONCRETE SURFACE COURSE, TYPE 1, AC-20, AS PER PLAN
6. ITEM 446 VARIABLE DEPTH ASPHALT CONCRETE INTERMEDIATE COURSE, TYPE 2, AC-20
7. ITEM 617 COMPACTED AGGREGATE TYPE B
8. ITEM 605 SHALLOW UNDERDRAIN, AS PER PLAN
9. ITEM 451 9" REINFORCED CONCRETE PAVEMENT, AS PER PLAN
10. ITEM 446 2¼" ASPHALT CONCRETE INTERMEDIATE COURSE, TYPE 2, AC-20
11. ITEM 310 6" SUBBASE, AS PER PLAN
12. ITEM 301 VARIABLE DEPTH BITUMINOUS AGGREGATE BASE, AC-20
13. ITEM 605 4" SHALLOW PIPE UNDERDRAIN, AS PER PLAN
14. ITEM 408 BITUMINOUS PRIME COAT, (APPLIED AT 0.40 GAL. PER SQ. YD.)
15. ITEM 609 CURB, TYPE 6
16. ITEM 606 GUARDRAIL, TYPE 5
17. ITEM 605 6" SHALLOW OR UNCLASSIFIED PIPE UNDERDRAINS
18. ITEM 203 EMBANKMENT
19. ITEM 659 SEEDING & MULCHING
20. ITEM 622 CONCRETE BARRIER, TYPE B-50
21. ITEM 622 CONCRETE BARRIER, TYPE C
22. ITEM 622 CONCRETE BARRIER, TYPE D
23. ITEM 622 CONCRETE BARRIER, TYPE A-50
24. ITEM 202 CURB REMOVED, AS PER PLAN, OR SAFETY CURB REMOVED, AS PER PLAN, (SEE GENERAL NOTES)
25. ITEM 301 6" BITUMINOUS AGGREGATE BASE, AC-20, AS PER PLAN
26. ITEM 304 VARIABLE DEPTH AGGREGATE BASE, AS PER PLAN
27. ITEM 203 SUBGRADE COMPACTION
28. ITEM 304 6" AGGREGATE BASE, AS PER PLAN
29. ITEM 612 4" CONCRETE MEDIAN
30. ITEM 622 CONCRETE BARRIER, TYPE D-50, AS PER PLAN
31. ITEM SPECIAL PRESSURE RELIEF JOINT, TYPE A (SEE GENERAL NOTE)
32. ITEM 202 PAVEMENT REMOVED
33. ITEM 203 LINEAR GRADING, AS PER PLAN
34. ITEM 612 CONCRETE MEDIAN, AS PER PLAN
35. ITEM 254 PAVEMENT PLANING, BITUMINOUS
36. ITEM 202 CONCRETE MEDIAN REMOVED
37. ITEM 625 CONDUIT, 713.04, 4"

- (A) EXISTING BITUMINOUS AGGREGATE BASE
- (B) EXISTING AGGREGATE BASE, VARIABLE DEPTH
- (C) EXISTING 6" PIPE UNDERDRAIN
- (D) EXISTING 6" SUBBASE
- (E) EXISTING CONCRETE PAVEMENT
- (F) EXISTING 9" PLAIN CONCRETE PAVEMENT
- (G) EXISTING CONCRETE BARRIER, TYPE A 50
- (H) EXISTING CONCRETE BARRIER, TYPE B 50 WITH 4" P.V.C. RACEWAY
- (I) EXISTING CONCRETE BARRIER, TYPE D
- (J) EXISTING 2½" ASPHALT OVERLAY
- (K) EXISTING CONCRETE MEDIAN
- (L) EXISTING CONCRETE APPROACH SLAB
- (M) EXISTING AGGREGATE DRAINS

77916.000

F.H.W.A. REGION	STATE	PROJECT	
5	OHIO		

17
338

HAM-75-9.75

WYOMING AVENUE
TYPICAL SECTIONS
TYPE 611 ON 304

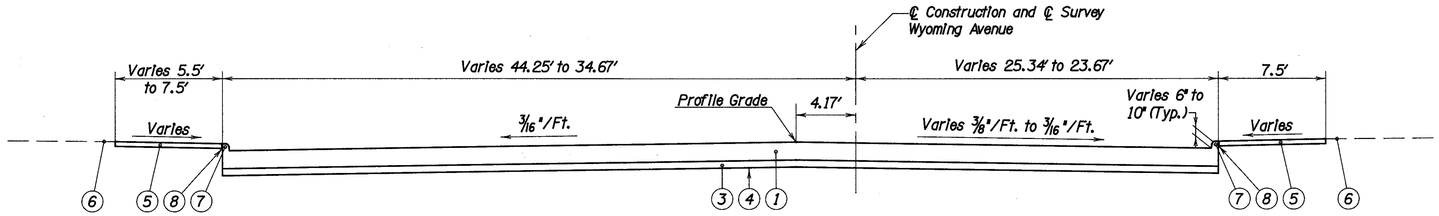

APPROACH SLAB SECTION
LIMITING STATIONS
STA. 9+29.50 TO STA. 9+54.50 = 25.00 L.F.

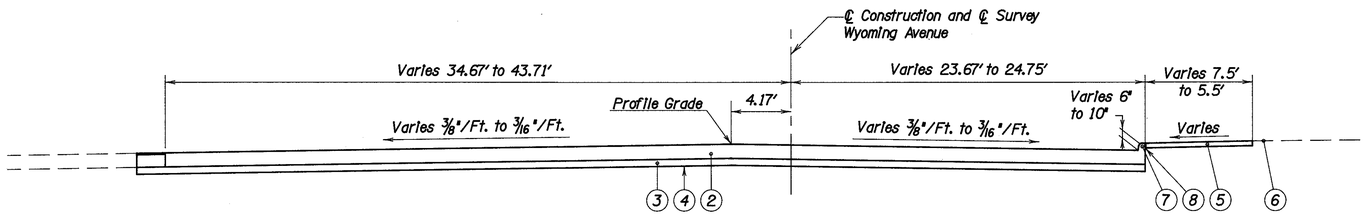

APPROACH SLAB SECTION
LIMITING STATIONS
STA. 10+28.38 TO STA. 10+43.38 = 15.00 L.F.

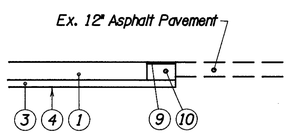

2" TRENCH DETAIL
LIMITING STATIONS
STA. 9+27.5 TO STA. 9+29.5 = 2 L.F.

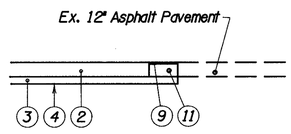

2" TRENCH DETAIL
LIMITING STATIONS
STA. 10+43.38 TO STA. 10+45.38= 2 L.F.

LEGEND
WYOMING AVENUE ONLY

1. ITEM 611 - REINFORCED CONCRETE APPROACH SLAB (T=15"), AS PER PLAN
2. ITEM 611 - REINFORCED CONCRETE APPROACH SLAB (T=12"), AS PER PLAN
3. ITEM 304 - 6" AGGREGATE BASE, AS PER PLAN
4. ITEM 203 - SUBGRADE COMPACTION
5. ITEM 608 - 4" CONCRETE WALK
6. ITEM 659 - SEEDING & MULCHING
7. - CONCRETE CURB, TYPE 2-A (INCLUDED IN THE COST OF ITEM 611)
8. - 1/2" PREFORMED FILLER (INCLUDED IN THE COST OF ITEM 608)
9. ITEM 404 - 1 1/4" ASPHALT CONCRETE, AC-20
10. ITEM 301 - 13 3/4" BITUMINOUS AGGREGATE BASE, AC-20
11. ITEM 301 - 10 3/4" BITUMINOUS AGGREGATE BASE, AC-20

GENERAL NOTES

UNDERGROUND UTILITIES
The locations of the underground utilities shown on the plans are as obtained from the owners of the utility as required by Section 153.64 ORC.

UTILITY OWNERSHIP
The following utilities and owners are located within the work limits of this project.

ELECTRIC AND GAS
Cincinnati Gas & Electric
P.O. Box 960
Cincinnati, Ohio 45201-0960
Electric Service: Bernard Karwisch (513)632-3792
Gas Service: Peter Sorrentino (513)287-3631

WATER
Cincinnati Water Works
4747 Spring Grove Avenue
Cincinnati, Ohio 45232
Russell Weber
(513)352-4636

Village of Lockland
Water Dept.
101 N. Cooper Avenue
Lockland, Ohio 45215
Lonnie McKinney
(513)761-1124

Southwestern Ohio Water Co.
11300 Cornell Park Drive
Cincinnati, Ohio 45242
Richard McConnell
(513)489-4844

TELEPHONE
Cincinnati Bell Co.
201 East Fourth Street
P.O. Box 2301
Cincinnati, Ohio 45201
Chuck Frederick
(513)397-5775

SANITARY
Metropolitan Sewer District
16 Gest Street
Cincinnati, Ohio 45204
Alice Oliver
(513)244-5122

EXISTING DATUM
Elevations shown on these plans are based on the original construction drawings. It shall be the Contractor's responsibility to verify these elevations and make the proper adjustments where necessary. Local bench marks are based upon field measurements using Elev. 100.00 as a base.

PROFILE AND ALIGNMENT
The proposed pavement resurfacing course shall follow the alignment and profile of the existing pavement. Previous construction plans showing the original alignment and profile grade are on file for inspection, if necessary, at the ODOT, District 8 office, Lebanon, Ohio, as Project No.HAM-75-9.30, HAM-75-9.75, HAM-75-9.93, HAM-126-13.00 and HAM-75-12.10. The station limits of this project are based on the original plans. The proposed asphalt concrete overlay shall have a uniform thickness of approximately 6 inches on the mainline, 3 inches on collectors and ramps, as indicated on the Typical Sections and Plan Sheets.

DIMENSIONS AND CONDITIONS
Dimensions and conditions at the site shall be verified by the Contractor as per 102.05. Plans of the existing bridges, roadways, and culverts should be utilized and are available for reference at the District 8 office of the Ohio Department of Transportation, Lebanon, Ohio.

CONTINGENCY QUANTITIES
The Contractor shall not order materials or perform work listed in the General Summary for items designated by plan note to be used "As Directed by the Engineer" unless authorized by the Engineer. The actual work locations and quantities used at the Engineer's discretion shall be made a matter of record by incorporation into the final change order governing completion of this project.

PART-WIDTH CONSTRUCTION
Because of the necessity of building portions of this project under traffic and constructing the full pavement width in stages, extreme care shall be taken to prevent the construction of a butt joint on centerline in the base courses. Longitudinal joints shall be lapped as shown on Standard Construction Drawing BP-3.1.

MILE MARKER LOCATION
The location of mile markers on the plans are approximate and a more precise location will be provided by the Department. The Contractor shall notify the Engineer at least 30 days in advance of the planned date of marker installation. The Engineer will contact the Bureau of Technical Services which will locate the longitudinal position of mile markers by means of a point mark on the pavement edge. Alternate marks will not be provided on divided highways. The Contractor shall set markers for the opposite roadway across from the provided mark. Delineators whose normal position falls within 50 feet of mile marker shall be omitted.

EXISTING CONCRETE PAVEMENT REPAIRS
The Contractor is hereby advised that the existing concrete pavement has been repaired within the limits of this project. These bituminous repairs have been finished to the same elevation as the existing concrete surface.

ITEM 201 - CLEARING AND GRUBBING
Although there are no trees and/or stumps specifically marked for removal within the limits of this project, a lump sum quantity has been included in the General Summary for Item 201 - Clearing And Grubbing. All provisions as set forth in the specifications under this item shall be included in the specifications under this item shall be included in the lump sum price bid for Item 201 - Clearing And Grubbing.

ITEM 666 - PRUNING EXISTING TREE, AS PER PLAN
Existing tree branches overhanging the highway shall be trimmed as directed by the Engineer so luminaire optics and signs will not be blocked. The Engineer shall mark all trees for trimming. The Contractor shall not cut down any trees which screen the highway from adjacent properties, unless so directed by the Engineer.

All branches shall be disposed of off of the site. Burning of the branches shall not be permitted within the right-of-way.

Approximate locations for this work are:
NB - Sta. 70+00 to Sta. 82+00, 5 - Trees
NB - Sta. 225+00 to Sta. 235+00, 5 - Trees
SB - Sta. 145+00 to Sta. 155+00, 5 - Trees

A lump sum quantity for Item 666 - Pruning Existing Tree, As Per Plan has been included in the General Summary.

ITEM 202 - FENCE REMOVED, AS PER PLAN
All existing right-of-way fence and posts shall be removed and disposed of off site by the Contractor. None will be salvaged. Concrete encased wood posts may be removed at the top of concrete unless otherwise directed by the Engineer to maintain proper alignment. Any remaining holes shall be filled and tamped to the satisfaction of the Engineer.

The Contractor shall reference the existing fence line so as to permit installation of new fence in the same location as the existing fence.

The removal and disposal of any and all trees, brush, or other items necessary for the installation of new fence shall be included with this item. Payment for all of the above shall be included with Item 202 - Fence Removed, As Per Plan.

ITEM 202 - CURB REMOVED, AS PER PLAN, METHOD A
ITEM 202 - CURB REMOVED, AS PER PLAN, METHOD B

This work shall include full depth sawing of the existing concrete pavement to remove the existing integral concrete curb. Details for curb removal methods A and B are shown on the detail sheet 163.

ITEM 202 - SAFETY CURB REMOVED AS PER PLAN
This work shall include removing the 24" wide concrete safety curb in front of the retaining walls. Do not remove safety curbs that are part of the I-2A inlets. See detail on sheet 166.

ITEM 202 - CONCRETE MEDIAN REMOVED, AS PER PLAN
Removal of the concrete curbs adjacent to the concrete median have been included in the sq. yd. quantity for Item 202, Concrete Median Removed, As Per Plan for payment.

ITEM 202 - CONCRETE BARRIER REMOVED, AS PER PLAN
This Item shall include saw cutting the concrete barrier prior to removing the portion of the barrier designated for removal.

ITEM 202 - EXISTING CROSS SLOPE
The Contractor shall be responsible for referencing existing cross scope and pavement elevations prior to removing the pavement the new pavement cross slope shall conform to the existing cross slope.

Removal of the existing asphalt wearing course in the areas of pavement removal shall be included in Item 202 - Pavement Removed

ITEM 203 - LINEAR GRADING, AS PER PLAN
This work shall consist of preparing a subgrade for the shoulder widening on the right side of ramps and collector by excavating the embankment material adjacent to the existing shoulder to the depth shown in the plan. All unstable material shall be removed and the subgrade shall be shaped and compacted. The unsound or broken edge of existing shoulder pavements to remain shall first be trimmed to a line established by the Engineer. The existing embankment then shall be excavated and the subgrade shaped and compacted. Compaction shall be carried out to the satisfaction of the Engineer by means of a trench roller, 410.11. Areas graded in excess of depths specified or directed by the Engineer shall be backfilled to desired grade using 203 embankment at the Contractor's expense. Excavated material shall be disposed of as indicated in the plan. The cost of the above work will be incidental to Item 203, Linear Grading, As Per Plan.

ITEM 203 - EMBANKMENT, AS PER PLAN
Item 203 Embankment shall consist of placing embankment at the outside edges of the pavement as shown on typical sections. The existing slope areas where embankment is to be placed shall require disking, or a method approved by the Engineer, prior to placing embankment.

All embankment shall be placed and compacted in accordance with Spec. 203.09, except that requirements for moisture, density control, and benching are hereby waived. Care shall be exercised when placing embankment around existing drainage systems. Embankment around existing drainage systems shall be placed at the direction of the Engineer.

The Contractor will provide stakes at 200' intervals to insure that slopes are constructed according to plan. Cost of the stakes to be included in the unit price bid for Item 623 Construction Layout Stakes, Lump Sum.

The following estimated quantity has been carried to the General Summary.

Item 203 Embankment 1465 Cu. Yd.

ITEM 659 - SEEDING AND MULCHING
Quantities for seeding and mulching are calculated for the soil areas between ten (10) feet outside the embankment limits, as shown on the typical sections. Also included are the soil areas 10' wide for fence replacement.

The following quantity was used to estimate the areas for seeding and mulching. The final area shall be determined by the Engineer.

The following quantities have been carried to the General Summary.

Item 659 Seeding and Mulching 62,475 Sq. Yds.

Item 659 Commercial Fertilizer 5.6 tons

WATERING PERMANENT SEEDED AREAS
The following estimated quantities are to be used as directed by the Engineer to promote growth and to care for the permanent seeded areas, as per 659.09:

ITEM 659 Water 135 M.Gal.

TEMPORARY SOIL EROSION AND SEDIMENT CONTROL
The following quantities are to be used, as directed by the Engineer, for temporary erosion and sediment control measures:

297	Straw or hay bales	450 each
659	Commercial fertilizer	1.4 ton
659	Repair seeding and mulching	3125 sq. yds.
659	Water	17 M. Gal.
207	Temporary seeding and mulching	12,500 sq. yds.

ITEM 616 - DUST CONTROL
A quantity of 50 M. Gallons of water and 5 tons of calcium chloride has been carried to the General Summary for the purpose of dust control and shall be used as directed by the Engineer.

GENERAL NOTES

MEDIAN CONSTRUCTION EQUIPMENT CROSSINGS
Construction equipment may cross the median only at the legal crossovers, whether on or off the project. The Contractor shall be responsible for the repairs to the crossovers and any other disturbed areas, resulting from his use.

ITEM 407 - TACK COAT
The rate of application of Item 407 - Tack Coat shall be subject to adjustment, as directed by the Engineer. Plan quantities indicate an average appliacation rate of 0.075 Gallons per square yard of Item 407 - Tack Coat for estimating purposes only.

ITEM 604 - CATCH BASIN ADJUSTED TO GRADE, AS PER PLAN
See Sheet 165 for details.

ITEM 604 - CATCH BASIN NO. 3 AS PER PLAN
See Sheet 165 for details.

ITEM 604 - INLET NO. 3A, AS PER PLAN
For Details on Inlet No. 3A, Modification A thru E, As Per Plan See Sheet 165

CONNECTION TO EXISTING PIPE
Where the plans provide for proposed conduit to be connected to, or to cross either over or under an existing sewer, it shall be the responsibility of the Contractor to locate the existing pipe both as to line and grade before he starts to lay the proposed conduit.

ITEM 604 - MANHOLE ADJUSTED TO GRADE, AS PER PLAN
This work shall include removing the existing lid and frame, adjusting the manhole to the proper elevation, installation of new frame anchor bolts where required and installing the existing frame and lid. (Per 604.03 METHOD (a) ONLY.)

Manhole frames and lids shall be cleaned of debris and heavy rust so that the lid is property seated.

Any manhole lids that are bolted down to the frame shall be bolted back down. Any bolts that are damaged or broken shall be removed and replaced with new stainless steel bolts meeting the requirements of ASTM A-320. Any damaged threads in manhole frames shall be re-threaded or drilled and tapped and oversize bolts used when necessary as determined by the Engineer.

Any manhole frames, lids, bolts, threads, etc. that become damaged due to improper removal, handling or storage shall be repaired or replaced at the Contractor's expense.

ITEM 604 - MANHOLE RECONSTRUCTED TO GRADE AS PER PLAN
This work shall include removing the existing lid, frame and cone. Install a new eccentric cone rotated to allow the opening to be between the Type D barriers and re-set the existing frame and lid at the proper elevation.

ITEM 605 - 4" & 6" SHALLOW PIPE UNDERDRAIN AS PER PLAN
See Sheet 163 for details.

ITEM 605 = SHALLOW UNDERDRAIN, AS PER PLAN
See Sheet 167 for details.

REVIEW OF DRAINAGE FACILITIES
Before any work is started on the project, and again before final acceptance by the State, representatives of the State and the Contractor, along with local representatives, shall make an inspection of the existing sewers within the work limits which are to remain in service and which may be affected by the work. The condition of the existing conduits and their appurtenances shall be determined from field observations. Records of the inspections shall be kept in writing by the State.

All new conduits, inlets, catch basins and manholes constructed as a part of the project shall be free of all foriegn matter and in a clean condition before the project will be accepted by the State.

All existing sewers inspected initially by the above-mentioned parties shall be maintained ans left in a condition reasonably comparable to that determined by the original inspection. Any change in the condition resulting from the Contractor's operations shall be corrected by the Contractor's operations shall be corrected by the Contractor to the satisfaction of the Engineer.

Payment for all operations described above shall be included in the unit prices bid for the pertinent 603 conduit items of the contract.

ITEM 622 - CONCRETE BARRIER, TYPE D, TYPE D-50, AS PER PLAN
See sheet 163 for details.

ITEM 607 - FENCE, TYPE CLT
Items shown on the estimated quantity sheet designated as "FOR INFORMATION ONLY" shall be included in Item 607 - Fence for Payment

ITEM 446 - ASPHALT CONCRETE SURFACE COURSE, TYPE 1, AC-20, AS PER PLAN
The requirements of CMS Section 441.03 and Section 703.05 shall apply except that 100% mechanically fractured limestone or air cooled slag shall be used. The use of gravel shall be prohibited.

ITEM 304 AGGREGATE BASE, AS PER PLAN
Materials furnished for this item shall exclude all slag except granulated slag or crushed air-cooled blast furnace slag.
[The maximum total percent passing the no. 200 sieve for 304 shall be 8 percent as opposed to the 13 percent shown in 304.02]

ITEM 612 - CONCRETE MEDIAN AS PER PLAN
See Sheet 15 for details.

ITEM 617 - WATER
To aid in compaction and prevent segregation of the Type B Aggregate, the following estimated quantity of water is provided in the General Summary and is to be applied as directed by the Engineer. This quantity is calculated at 5 Gal. per cu. yd. of aggregate for estimating purposed.

Item 617 - Water 157 M Gal.

ITEM 604 - CATCH BASIN GRATE

AN ESTIMATED QUANTITY OF 25 CATCH BASIN GRATES HAVE BEEN CARRIED TO THE GENERAL SUMMARY TO BE USED AS DIRECTED BY THE ENGINEER TO REPLACE DAMAGED GRATES. THIS WORK SHALL INCLUDE FURNISHING AND INSTALLING GRATES IN ACCORDANCE WITH THE SPECIFICATIONS AND STANDARD DRAWINGS AND PER THE DIMENSIONS AS REQUIRED BY FIELD MEASUREMENTS. PAYMENT FOR THIS WORK SHALL BE INCLUDED IN THE UNIT PRICE BID PER EACH FOR

ITEM 604 - CATCH BASIN GRATE 25 EACH

ITEM 622 CONCRETE BARRIER TYPE A-50 AND TYPE B-50
The following estimated quantities have been included in the General Summary to be used as directed by the Engineer to replace any damaged sections of the existing concrete barrier separating the Northbound and Southbound mainline.

The Engineer shall inspect the barrier and mark the sections to be replaced. The concrete barrier shall be replaced in entire sections as determined by the locations of the expansion joints. Payment shall include all labor, material and equipment necessary for removing and replacing the concrete barrier.

Item 622 - Concrete Barrier, Type A-50 500 Lin. Ft.
Item 622 - Concrete Barrier, Type B-50 500 Lin. Ft.

ITEM 630 - BARRIER WALL ASSEMBLY, TYPE TC-21.41, DESIGN 3, AS PER PLAN AND DESIGN 4, AS PER PLAN
See Sheet 163 for details.

LOCATION OF GUARDRAIL
The locations of guardrail runs, as shown on these plans, are subject to adjustment prior to final acceptance. The Engineer shall be satisfied that all installations will afford maximum protection for traffic.

GUARDRAIL REPLACEMENT
No hazard shall be left unprotected except for the actual time necessary to widen the shoulder or to remove, grade, and reinstall guardrail in a continuous operation. The removal of all guardrail shall at all times be as directed by the Engineer. No guardrail shall be removed until the replacement material is on the site, ready for installation. Failure to comply with this requirement shall be deemed sufficient cause to order work suspended on this project until such time that the Engineer is assured of said compliance.

ITEM SPECIAL - SAWING AND SEALING ASPHALT CONCRETE PAVEMENT JOINTS, 705.04
Description: This work shall consist of saw cutting and sealing transverse joints across the finished intermediate course and surface course of the asphalt concrete pavement and paved shoulders. Joints shall be constructed directly over, and in line with, the existing underlying transverse portland cement concrete pavement joints in accordance with plans and as directed by the Engineer.

Materials: The joint sealant shall meet the requirements of 705.04 and shall be pretested by the Laboratory before shipment to the project. Backer rod material shall be on the approved list by the Laboratory.

Construction Details: The Contractor shall conduct his operation so that saw cutting, cleaning, and sealing of transverse joints is a continuous operation. Joints shall be sawed as soon as the saw can be operated without damaging the asphalt concrete. If the surface course is not placed within five (5) days, a 1/8-inch wide cut shall be made that is 1/4 the depth of the intermediate course(s) over contraction joints and a 1/2-inch saw cut that is 1/4 the depth of the intermediate course(s) over expansion joints. Saw cuts in the intermediate course(s) shall be made at no additional cost to the Department.

Traffic shall not be allowed to knead together or damage the sawed joints prior to sealing.

The Contractor shall saw transverse joints in accordance with the following table of joint configurations:

EXISTING* PCC JOINT	SAWCUT DEPTH (in.)	JOINT SEALANT RESERVOIR, Width (in.)	Depth (in.)	Recess Below Surface Course (in.)	INCHES Backer Rod Diameter (in.)
Contraction	2	3/8	3/4	1/8	1/2
Expansion	2	1/2	1	1/8	5/8

*This item shall include the sawing and sealing of transverse joints of both existing and new full depth and full lane width rigid pavement repairs. All tied or doweled repairs, (Type T, TU, Y and YU) shall be sawed and sealed as a contraction joint listed above. All transverse expansion joints (Type E or X) shall be sawed and sealed as an expansion joint listed above.

The sawed joints shall be directly over each existing transverse pavement joint, including joints at full depth pavement repairs, and shall be accurately located by a method employing pins or stakes. The pins or stakes shall be accurately located prior to paving. The saw cut shall be pre-marked on the new asphalt surface by a chalk line or other acceptable method. Details of the method for locating and accurately marking the proposed saw cuts shall be subject to the approval of the Engineer prior to starting any resurfacing operations.

The blade or blades shall be of such size that the full width and depth of the saw cut can be made with one pass. Dry or wet cutting will be allowed.

The transverse saw cut joints shall extend the full width of the asphalt over the concrete pavement and paved shoulders.

Dry sawed joints shall be thoroughly cleaned with sufficient amount of compressed air to remove any dirt, dust, or deleterious matter. The air compressor shall have a minimum rated capacity of 100 PSI and shall have sufficient hose for continuous cleaning operations.

Wet sawed joints shall be cleaned with a water blast to remove any sawing slurry, dirt, or deleterious matter. Wet sawed joints shall be dried with a propane torch or lance unit capable of producing a blast of hot air at 2000 degrees F and with a gas velocity of 2000 feet per second.

Joint sealant material shall be heated in a kettle or melter constructed as a double boiler, with the space between the inner and outer shells filled with oil or other heat transfer medium. Positive temperature control and mechanical agitation shall be provided.

Heating must be in strict accordance with the manufacturer's recommendation. The first gallon of material to flow out of the applicator wand at the start of the day shall be considered spoil and shall be discarded into a container so designated.

GENERAL NOTES

After cleaning, the joints shall be immediately sealed with hot-poured sealant applied through a nozzle which must project into the sawed joint filling from the bottom up. The seal shall completely fill the joint such that after cooling, the level of the sealer will not be greater than 1/8-inch below the pavement surface. Any depression in the seal greater than 3/16-inch shall be brought up to the specified limit by further addition of hot-poured sealant. Care shall be taken in the sealing of the joints so that the final appearance will present a neat line.

Method of Measurement: The quantity to be paid for under this item will be the number of linear feet of joints sawed and sealed as per the above requirements.

Basis of Payment: The unit price per linear foot for sawing and sealing asphalt concrete pavement joints shall included the cost of all labor, materials, and equipment necessary to complete the work, including the furnishing and placing of the joint sealant material.

Item	Unit	Description
Special	126,000 Lin. Ft.	Sawing and sealing asphalt concrete pavement joints, 705.04

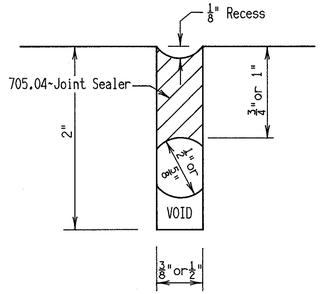

SAW AND SEAL ABOVE JOINTS AND REPAIRS

TRAFFIC CONTROL STANDARD CONSTRUCTION DRAWINGS
References to Supplemental Specifications 857, 858, 861, 957, 958 and 961 on the "Traffic Control Standard Construction Drawings" in these plans shall be considered to read as respective references to Items 630, 631, 633, 730, 731 and 733.

630 - PREPARATION AND SHIPMENT OF STORED SIGNS, BY TYPE
Flatsheet and Extrusheet signs removed under other items of work shall be processed and shipped to the ODOT Central Office Traffic Maintenance Shop, 1606 West Broad Street, Columbus, Ohio.

Processing of Flatsheet signs shall include the stacking and banding together of similar size signs into 150 pound (maximum) bundles. Banding shall be with two steel straps and clips placed perpendicular to each other. Flatsheet signs weigh approximately 1.25 pounds per square foot. Bundles shall be loaded onto wooden pallets approximately 4' X 4'. Sign bundles shall also be banded to the pallets. Loaded pallets shall have a maximum weight of 1000 pounds.

The transporting of Extrusheet signs shall be by suitable means to avoid damage to the sign panels. Large signs may be carefully disassembled as necessary into smaller assemblies to facilitate transportation. Signs shall be loaded and unloaded by hand. Care shall be taken in the loading, securing, transporting, and unloading of extrusheet signs to avoid damage to the sign panels.

Deliveries shall be made between 8:00 a.m. and 2:00 p.m. Late arrivals must unload the following day. No deliveries will accepted on Saturday, Sunday and holidays. The Traffic Maintenance Shop Superintendent shall be notified at least three (3) days prior to the delivery of the signs.

The signs shall be transported by the contractor to the Traffic Maintenance Shop where they will be unloaded and stored. A fork lift of 1000 pound minimum capacity will be provided by the state for unloading palletized flat sheet signs. Personnel will be provided by the state to assist in the unloading of extrusheet signs.

Payment will be at the contract price per each sign including all labor, equipment, banding material, pallets, transportation and miscellaneous material necessary to perform the work.

630 Each Preparation and Shipment of Stored Signs, Flatsheet

630 Each Preparation and Shipment of Stored Signs, Extrusheet

ITEM 606 ANCHOR ASSEMBLY, TYPE E
This item shall consist of furnishing and installing an ET-2000, Option "C" guardrail end terminal as manufactured by Syro Steel Company, 1170 N. State Street, Girard, Ohio 44420 (Telephone: 216-545-4373).

The anchor assembly shall be placed in accordance with the manufacturer's specifications and at the locations shown in the plans.

Payment for the above work shall be made at the unit bid price for Item 606, Each, Anchor Assembly, Type E. Payment shall include all labor, tools, equipment and materials necessary to construct the 25' long anchor assembly, including all related hardware, not separately specified, as required by the manufacturer to construct a complete and functional anchor assembly. This item shall also include payment over and above the cost of standard Type 5 guardrail for installing Type 1 breakaway posts (as per standard construction drawing GR-1.3) at the following locations: 1: At the point where the anchor assembly and the guardrail run meet; and 2) at the next three (3) post locations into the guardrail run.

ITEM SPECIAL IMPACT ATTENUATOR, TYPE 1
This work shall consist of furnishing and installing an impact attenuator system.

The impact attenuator system shall be one of the following:

1. The Brakemaster Impact Attenuating System manufactured by Energy-Absorption Systems, Inc., One East Wacker Drive, Chicago, Illinois 60601 (Telephone 312-467-6750).

2. The C.A.T. Impact Attenuating System manufactured by Syro Steel Company, 1170 N. State Street, Girard, Ohio 44420 (Telephone 216-545-4374).

The attenuator shall be placed in accordance with the manufacturer's specifications and at the locations shown on the plans.

The nose of the attenuator shall be marked with three, evenly spaced, four (4) inch wide horizontal stripes of white reflective material meeting the requirements of CMS 730.19.

Payment for the above work shall be made at the unit bid price for Item Special, Each, Impact Attenuator, Type 1. This item shall include all labor, tools, equipment and materials necessary to complete this item in place, including all related hardware, not separately specified, as required by the manufacturer to construct a complete and functional impact attenuator system.

ITEM SPECIAL - IMPACT ATTENUATOR ASSEMBLY, SAND BARREL SYSTEM
This work shall consist of an impact attenuator composed of frangible plastic barrels filled with sand in accordance with the manufacturer's specifications and placed in conformity with the design shown on the plans. The barrels shall be as supplied by Fibco, Inc., One Boston Place, Boston, Mass., (Fitch Barrels) or Energy Absorption Systems, Inc., One IBM, Chicago, Ill., (Energite Barrels).

Each module shall be placed as per location and dimensions shown on the plans.

The Contractor shall prior to filling the barrels, outline in yellow spray-type paint the location of each module and paint the respective sand weights (minimum height of numbers --6") inside said outline as indicated on the plan sheets. To facilitate lid installation, there shall be a 1" clearance between adjacent barrels. The Contractor shall drill holes in the rim and barrel at four equi-distant points and pop-rivet the top to the barrel.

The exposed portion of each outside barrel, except those on the inside at the rear, shall be marked with two 6" horizontal stripes of white reflective material. The first stripe shall be placed 4" from top of barrel and the second 14" from top of barrel.

The sand placed in the plastic barrels shall be approved by the Engineer before use. The Contractor shall use washed concrete sand, Spec. 703.02 (gradation only) with a water content by weight of 5 percent or less. Sand placed within the barrels shall have a density between 90 - 100 lbs. per cubic foot. To deter freezing of sand in the barrels, a salt brine solution shall be added uniformly to the sand following each layer of sand of a maximum height of 6.5 inches. The solution shall contain salt dissolved in water at the rate of one pound of salt (97% pure sodium chloride) for every 5 pounds of water. Equal amounts of said solution shall be added to each layer of sand placed in the barrels. The total amount of salt brine solution added to each barrel shall be 5% of the sand weight per respective barrel. The salt brine solution shall be uniformly sprinkled or sprayed over the surface of each layer of sand. An alternative method would be to premix with the same proportions as stated above, the sand and salt brine solution by agitation or other methods which would achieve a thorough blend of materials.

The accepted quantity of impact attenuators will be paid for at the contract price per each location which price shall be full compensation for furnishing and placing all materials in accordance with the plan detail sheets, including all labor, materials, and equipment necessary to construct a complete and functional sand barrel impact attenuator, in place. See sheet 163 for details.

ITEM 310 - SUBBASE, AS PER PLAN
Materials furnished for this item shall exclude all slag except granulated slag or crushed air-cooled blast furnace slag and shall exclude broken salvaged portland cement pavement. All other requirements of 310 shall apply.

ITEM 451 - 9" REINFORCED CONCRETE PAVEMENT, AS PER PLAN
This work shall conform to the same specifications and requirements as 451 except that:

Sealing is required for transverse joints only, using material meeting requirements of 705.04.

The final surface shall have a uniform gritty texture as obtained with a broom or artificial turf drag in the longitutinal direction.

Smoothness shall be as specified in 451.12 except that the specified tolerance shall be 1/4 inch.

ITEM 255 - FULL DEPTH RIGID PAVEMENT REMOVAL AND RIGID REPLACEMENT, CLASS C, AS PER PLAN, OR CLASS FS, AS PER PLAN
This work shall be used for slab replacements in joint repair areas. Class C shall be used on the Mainline and Collectors. Class FS shall be used on the Ramps.

The requirements of Item 255 shall apply except:

255.01 shall read:
"This work shall consist of full depth removal of existing pavement; existing asphalt concrete and portland cement concrete repairs; correction of subbase and subgrade; furnishing and placing dowels, tiebars and mesh where specified; replacement with portland cement concrete; and restoration of affected shoulders".

255.02 shall read:
"Concrete.....499 Class C, S, FS, or MS
Joint sealer.....705.04
Preformed filler.....705.03
Curing Materials.....705.07 (Type 2 Class B)
Welded steel wire fabric.....709.10
Reinforcing steel.....709.00
Dowel bars and basket assemblies.....709.13

Bond-breaker material shall be on the spproved list isssued by the laboratory. Non-shrink non-metallic grout shall meet the requirements of CMS 705.20. The grout shall firmly anchor the dowel or tie bar within 30 minutes. The grout shall be on the approved list by the Laboratory".

255.03 shall read:
"All repair areas will be located and marked by the Engineer prior to the start of the work. Aerosol spray paint for outlining shall be provided by the Contractor. In those lanes which are adjacent to and abutting with proposed underdrains, the pavement repairs shall be completed prior to the installation of the underdrains".

"The existing rigid pavement shall be sawed full depth at the limits of the designated areas using a diamond saw blade. When there is an existing bituminous overlay, the full depth saw cut may be made through the overlay. At the option of the Contractor, an off-set saw cut may be made through the overlay and the overlay removed as necessary to provide clearance for the full depth saw cut through the rigid pavement. The Contractor may elect to make additional cuts to faciliate the removal of the pavement: however, only cuts designated by the Engineer will be measured for payment".

GENERAL NOTES

"Where plan details indicate existing pavement thicknesses, these thicknesses are original design thicknesses and may not represent the as-built thickness which will be encountered by the Contractor during removal. Pavement coring data from original construction testing may be on record with the Department. If these records exist they are available to the Contractor for his review prior to bidding and during construction at ODOT Testing Laboratory, 1600 West Broad Street, Columbus, Ohio 43216. Previous pavement repair information may be found in completed project plans. Completed plans are available to the Contractor for his review prior to bidding and during construction at ODOT District Office. Where this information is available to Contractors it is not to be used as verfiable as-built thickness and material information. Where depth of sawing requirements are different than indicated in plan details, no additional payment will be made".

"Pavement in the repair area shall be removed by the lift out method in a manner which shall not damage or undermine the pavement to remain in place. This requires that after the repair area is isolated using full-depth sawcuts, the deteriorated concrete is lifted vertically. To enable the deteriorated slab to be lifted, holes shall be drilled through the slab from the top and fitted with lift pins. It may be necessary to remove loose concrete debris (which is not removed by the lift out method) by hand methods. Pavement removed shall be disposed of in accordance with Item 202".

"Breaking the pavement and cleaning the material out with a backhoe will not be permitted unless the Engineer determines the lift out method is not feasible due to deteriorated pavement, existing asphalt concrete repairs, or deteriorated portland cement concrete repairs. No additional payment will be made for removal of material by backhoe. If the adjacent pavement is damaged during the pavement sawing or pavement removal, an additional full depth diamond blade sawcut shall be made thefull width of the lane or lanes at a length that will encompass the damaged pavement. This additional work will be performed at no additional cost to the Department".

255.04 shall read:
"Prior to placing the concrete for the rigid replacement, any subbase or subgrade material that is disturbed below the proposed bottom of slab repair shall be removed and the patch area compacted to the satisfaction of the Engineer. The Contractor shall replace the removed subbase or subgrade material with concrete as part of the rigid replacement at no additional cost to the Department. Removal of subbase for undercut repair shall be done at no additional cost to the Department".

255.05 shall read:
"Dowel and tie bar holes shall be drilled with hydraulic or electric drills without spalling or damaging the existing concrete. All drilled holes shall be blown clean with compressed air prior to grouting the dowels or tie bars. Enough grout shall be pneumatically injected into the rear portion of the drilled hole to provide complete coverage around the bars to insure they are anchored into the existing pavement. The Contractor shall use a nominal 1/16-inch thickness nylon or plastic washer of sufficient size to allow the flow of grout as indicated in the plan details. Dowels and tie bars shall be inserted through the nylon or plastic washer, while the washer is placed flush with the sawed edge of pavement and in alignment with the drilled hole, such that the grout is forced out through weep holes. If grout is not forced out through the weep hole the Contractor will be required to begin the operation over as directed by the Engineer".

The following Items have been included in the General Summary for Joint Repair:

Item 251 - Partial Depth Pavement Repair	4075 Sq.Yd.
Item 255 - Full Depth Rigid Pavement Removal and Rigid Replacement, Class C, As Per Plan	27000 Sq.Yd.
Item 255 - Full Depth Rigid Pavement Removal and Rigid Replacement, Class FS, As Per Plan	5138 Sq.Yd.
Item 255 - Full Depth Pavement Sawing	124,080 Lin.Ft.

INTERSTATE SURVEILLANCE SYSTEM
The Contractor shall install two (2) 4" diameter conduits as shown in the plans to accomodate a future Interstate Surveillance System.

The following items shall be used for this purpose:

Item 625 - Conduit, 713.04, 4"
Item 625 - Conduit Jacked or Drilled under Pavement
Item 625 - Trench
Item 625 - Trench in Paved Area, Type B
Item 625 - Pull Box, 24"

WATERWORK GENERAL NOTES

ITEM SPECIAL - FURNISHING, INSTALLING AND REMOVING TEMPORARY WATER MAIN

The Contractor shall install a Temporary Water Main in accordance with Item 638 as detailed on sheet 230.

The Contractor shall coordinate work with The Village of Lockland Water Department Southwest Water Department, and The Stearns and Foster Company as indicated on sheet. 230. Construction times are restricted to the times indicated in the Restrictions Note on sheet 230.

The Temporary Water Main Support Structure shall be fabricated and erected in accordance with CMS Item 513 and as detailed on sheet 231. For short term closure notes, see sheet 25.

The Structure shall become the property of the Contractor after removal.

The following Items are included in the Lump Sum payment for Item Special - Furnishing, Installing and Removing Temporary Water Main.

Item 638 - 12" Water Main Ductile Iron Pipe ANSI Class 53(Boltless - Restrained Joints and Fittings) (Mechanical Joints and Fittings)	108 L.F. See Note 210 L.F. Sh. 230
Item 513 - Structural Steel, Aisc Category I, including Paint, Shop Applied	9825 lbs.
Item 516 - 1/2" Elastomeric Bearing Pad	2 - Each
Item 516 - 1" Elastomeric Bearing Pad	1 - Each
Item 202 - Water Main Removed	138 L.F.
Item 202 - Water Main Plugged and Abandoned in Place	180 L.F.
Item 202 - Structure Removed	1 - Each

ITEM 638 - 12" WATER MAIN DUCTILE IRON PIPE ANSI CLASS 53 BOLTLESS RESTRAINED JOINTS AND FITTINGS, AS PER PLAN

ITEM 638 - 8" WATER MAIN DUCTILE IRON PIPE ANSI CLASS 53 BOLTLESS RESTRAINED JOINTS AND FITTINGS, AS PER PLAN

The Permanent Water Main shall be constructed as shown on sheet 232 and shall be attached to the Wyoming Ave. Bridge with hangers. Sleeves in the Bridge Abutments and Hangers shall be included with the Water Main for payment. For details of the Water Main on the Structure, see sheets 313, 319 and 320.

The Contractor shall coordinate all temporary and permanent water work on Wyoming Ave. with The Village of Lockland Water Department and the Southwestern Ohio Water Co.

All water main suspended from the bridge shall be insulated. Pipe insulation shall be Class "C" standard density, premolded mineral fiber, wrapped with a factory applied moisture proof jacket or class "G" premolded flexible elastomeric foam. Insulation shall be 3" thickness for 8" water main. Insulation shall be 2" thickness for 12" water main.

Insulation shall be included with the water main for payment.

An Estimated Quantitiy of 140 Lin. Ft. of Item 638 - 8" Water Main Ductile Iron Pipe, ANSI Class 53, Boltless Retrained Joints and Fittings, As Per Plan has been included in the General Summary.

An Estimated Quantitiy of 128 Lin. Ft. of Item 638 - 12" Water Main Ductile Iron Pipe, ANSI Class 53, Boltless Retrained Joints and Fittings, As Per Plan has been included in the General Summary.

PROTECTIVE COATING OF OVERHEAD SIGN SUPPORT SECTIONS

GENERAL

OVERHEAD SIGN SUPPORTS CAN BE SEPARATED INTO MAJOR SECTIONS SUCH AS END FRAMES, TRUSSES, VERTICAL POLES AND CANTILEVER ARMS. FOR THE IMPLEMENTATION OF THIS WORK ITEM IT WILL BE BENEFICIAL TO REFER TO THE MAJOR SECTIONS OF THE OVERHEAD SIGN SUPPORTS RATHER THAN THE WHOLE SUPPORT. MORE SPECIFIC INSTRUCTIONS AND FLEXIBILITY CAN BE GIVEN BASED UPON THE UNIT OF MEASURE AND PAYMENT PER MAJOR SUPPORT SECTION.

THE PROTECTIVE COATING OF OVERHEAD SIGN SUPPORT SECTIONS SHALL BE A FOUR PART PROCESS TO INCLUDE SURFACE PREPARATION FOLLOWED BY A THREE STEP COATING SYSTEM. THIS THREE STEP COATING SYSTEM SHALL CONSIST OF AN EPOXY PRIME COAT, AN EPOXY INTERMEDIATE COAT AND A URETHANE TOP COAT, WITH EACH COAT A DIFFERENT COLOR. FOR AN EXPLANATION OF THE MATERIALS TO BE USED SEE NOTE ENTITLED "COATING SYSTEM." THE PURPOSE OF THIS COATING IS TO PROVIDE PROTECTION FOR NEW (UNWEATHERED) AND OLDER GALVANIZED STEEL SUPPORT SECTIONS FROM CORROSIVE ELEMENTS IN THE ATMOSPHERE. COATING AND SURFACE PREPARATION OF NEW GALVANIZED SUPPORT SECTIONS SHOULD BE DONE BY THE MANUFACTURER.

THE CONTRACTOR SHALL TAKE ALL NECESSARY PRECAUTIONS TO COMPLY WITH POLLUTION LAWS, RULES OR REGULATIONS OF FEDERAL, STATE OR LOCAL AGENCIES. THE COATING MATERIALS SPECIFIED FOR THE WORK CAN BE HAZARDOUS TO THE HEALTH OF THE APPLICATOR IF NOT APPLIED AS PER MANUFACTURER'S INSTRUCTIONS. THE CONTRACTOR SHALL FOLLOW THE DATA SHEET AND THE LABEL ON THE PAINT CONTAINERS. THESE PRECAUTIONS SHALL INCLUDE THE USE OF RESPIRATORS AND EYE AND SKIN PROTECTION AS SPECIFIED. THE CONTRACTOR SHALL ALSO INSURE THAT HIS PAINTING OPERATIONS AND LOCATIONS WILL NOT ENDANGER OR ADVERSELY AFFECT THE PUBLIC IN GENERAL.

THE PROPOSED CLEANING AND COATING OPERATIONS SHALL BE PERFORMED ONLY WHEN THE AMBIENT TEMPERATURE IS 50 DEGREES F OR ABOVE. ALL STEEL SURFACES OF TRUSSES AND END FRAMES INCLUDING THE WELDED AREAS, BALLAST ENCLOSURE MOUNTING BRACKET AND BASE PLATES ARE TO BE CLEANED AND COATED. BEFOR EACH COATING IS APPLIED, IT SHALL BE MIXED WITH AN APPROVED POWER MECHANICAL MIXER TO A UNIFORM CONSISTENCY WHICH SHALL BE MAINTAINED DURING ITS APPLICATION. EACH COAT SHALL BE APPLIED IN A WORKMANLIKE MANNER AS A CONTINUOUS FILM OF UNIFORM THICKNESS WHICH IS FREE OF HOLIDAYS, PORES, RUNS OR SAGS. ALL COATS SHALL BE APPLIED BY BRUSH. THINNING OF PAINT IS STRICTLY PROHIBITED. PAINT NOT CAPABLE OF BEING APPLIED AS SPECIFIED SHALL NOT BE USED. THE COATING SHALL PENETRATE ALL JOINTS AND CONNECTIONS. THE ENGINEER SHALL BE NOTIFIED 24 HOURS PRIOR TO ANY CLEANING OR COATING OPERATIONS SO THAT INSPECTION SERVICES CAN BE PROVIDED.

COATING SYSTEM

THE COATING SYSTEM SHALL CONSIST OF A POLYAMIDE-CURED EPOXY PRIME COAT, A POLYAMIDE-CURED INTERMEDIATE COAT AND AN ALIPHATIC POLYURETHANE TOP COAT. THE COATING MATERIALS USED SHALL BE THOSE AS LISTED FROM ONE OF THE FOLLOWING MANUFACTURERS OR AN APPROVED EQUAL.

1. AMERON
   210 NORTH BERRY STREET
   BREA, CALIFORNIA 92621
   LOCAL TELEPHONE CONTACT: (216) 896-3602
   PRIME COAT: AMERCOAT 71
   INTERMEDIATE COAT: AMERLOCK 400 (LIGHT GREY)
   TOP COAT: AMERCOAT 450 HS (MEDIUM GREY)

2. GLIDDEN COATINGS AND RESINS
   801 CANTERBURY ROAD
   WESTLAKE, OHIO 44145
   LOCAL TELEPHONE CONTACT: (216) 835-7167
   PRIME COAT: GLID-GUARD EPOXY CHROMATE METAL PRIMER NO. 5251/5252 (OLIVE GREEN)
   INTERMEDIATE COAT: GLID-GUARD EPOXY CHEMICAL RESISTANT FINISH NO. 5240 SERIES (LIGHT GREY)
   TOP COAT: GLID-THANE ONE ALIPHATIC POLYURETHANE COATINGS NO. 6100 SERIES (MEDIUM GREY)

3. PORTER PAINT CO.
   400 SOUTH 13TH STREET
   LOUISVILLE, KY. 40201
   LOCAL TELEPHONE CONTACT: (216) 562-6709
   PRIME COAT: PORTER PAINTS MCR 4300
   INTERMEDIATE COAT: PORTER PAINTS MCR 4300
   TOP COAT: PORTER PAINTS HYTHANE

4. POLY-CARB
   33095 BAINBRIDGE ROAD
   P. O. BOX 39278
   SOLON, OHIO 44139
   LOCAL TELEPHONE CONTACT: (216) 248-1223
   PRIME COAT: MARK-60 (ULTRAPOX)
   INTERMEDIATE COAT: MARK-60 (ULTRAPOX) (LIGHT GREY)
   TOP COAT: MARK-73 (ULTRA-KOTE) (MEDIUM GREY)

5. SHERWIN WILLIAMS COMPANY
   761 BETA DRIVE
   MAYFIELD VILLAGE, OHIO 44143
   LOCAL TELEPHONE CONTACT: (216) 461-8287
   PRIME COAT: TILE-CLAD II HI-BILD PRIMER
   INTERMEDIATE COAT: HI-SOLIDS CATALYZED EPOXY (PURE WHITE) (SLATE GREY)
   TOP COAT: HI-BILD ALIPHATIC POLYURETHANE ENAMEL

ALL THREE COATS OF THE SYSTEM SHALL BE MANUFACTURED BY THE SAME COMPANY TO INSURE COMPATIBILITY AMONG COATS.

SURFACE PREPARATION, EXISTING SUPPORT SECTIONS

EXISTING, WEATHERED GALVANIZED SUPPORT SECTIONS SHOULD HAVE THEIR SURFACE PREPARATION AS WELL AS THEIR PROTECTIVE COATING DONE UNDER CONDITIONS OF TEMPERATURE AND HUMIDITY WITHIN THE SAME RANGE AS SPECIFIED BY THE MANUFACTURER OF THE EPOXY-PRIME COAT MATERIAL TO BE USED IMMEDIATELY AFTER THIS CLEANING OPERATION. THE SUPPORT SECTIONS SHALL BE PREPARED FOR COATING BY SSPC-SP1 FOLLOWED BY SSPC-SP10 (SOLVENT CLEANING FOLLOWED BY A COMMERCIAL BLAST CLEANING). BEFORE THE PREPARED SURFACE DEGRADES FROM THE PRESCRIBED STANDARDS, THE PRIME COAT SHALL BE APPLIED. IN EVERY CASE, THE SURFACE SHALL BE COATED WITH EPOXY PRIME COAT ON THE SAME DAY AS THE SURFACE PREPARATION. CAREFUL HANDLING AND STORAGE WILL BE REQUIRED TO PREVENT ANY SCRAPING, MARRING, OR OTHER DAMAGE TO THE PREPARED SURFACE.
PAYMENT SHALL INCLUDE ALL LABOR, EQUIPMENT, HANDLING, TRANSPORTATION COSTS AND MATERIALS NECESSARY TO ACCOMPLISH THIS ITEM OF WORK PER MAJOR SUPPORT SECTION.

BASIS OF PAYMENT WILL BE AS FOLLOWS:

ITEM SPECIAL- SURFACE PREPARATION, EXISTING SUPPORT SECTIONS AT CONTRACT BID PRICE PER EACH MAJOR SUPPORT SECTION.

SURFACE PREPARATION, NEW SUPPORT SECTIONS

NEW, UNWEATHERED GALVANIZED SUPPORT SECTIONS SHOULD HAVE THEIR SURFACE PREPARATION AS WELL AS THEIR PROTECTIVE COATING DONE AT THE MANUFACTURER OF THE SUPPORT SECTIONS.

THE SUPPORT SECTIONS SHALL BE PREPARED FOR COATING BY SSPC-SP1 FOLLOWED BY SSPC-SP7 (SOLVENT CLEANING FOLLOWED BY A BRUSH BLAST). BEFORE THE PREPARED SURFACE DEGRADES FROM THE PRESCRIBED STANDARDS, THE PRIME COAT SHALL BE APPLIED. IN EVERY CASE, THE SURFACE SHALL BE COATED WITH THE EPOXY PRIME COAT ON THE SAME DAY OF SURFACE PREPARATION. CAREFUL HANDLING AND STORAGE WILL BE REQUIRED TO PREVENT ANY SCRAPING, MARRING, OR OTHER DAMAGE TO THE PREPARED SURFACE.
PAYMENT SHALL INCLUDE ALL LABOR, EQUIPMENT, HANDLING, TRANSPORTATION COSTS AND MATERIALS NECESSARY TO ACCOMPLISH THIS ITEM OF WORK PER MAJOR SUPPORT SECTION.

BASIS OF PAYMENT WILL BE AS FOLLOWS:

ITEM SPECIAL- SURFACE PREPARATION, NEW SUPPORT SECTIONS AT CONTRACT BID PRICE PER EACH MAJOR SUPPORT SECTION.

COATING, EPOXY-PRIME COAT, SUPPORT SECTIONS

THIS ITEM SHALL CONSIST OF THE APPLICATION OF ONE (1) COAT OF AN EPOXY PRIMER TO SUPPORT SECTIONS. THE TOTAL DRY FILM THICKNESS OF THIS COAT SHALL BE BETWEEN 1.5 TO 2.0 MILS. IF MORE THAN ONE PASS IS NECESSARY TO OBTAIN THE REQUIRED THICKNESS, THAT COST SHALL BE BORNE BY THE CONTRACTOR. THE COLOR OF THIS COAT SHALL BE NOTICEABLY DIFFERENT FROM THE BASE MATERIAL AND OTHER PROPOSED COATS.
THIS COAT SHALL IN ALL CASES BE APPLIED OVER SURFACES THAT WERE PREPARED EARLIER THAT SAME DAY. THE THINNING OF THE EPOXY MATERIAL IS STRICTLY PROHIBITED. MATERIAL NOT CAPABLE OF BEING APPLIED AS SPECIFIED SHALL NOT BE USED.
WHEN THE AVERAGE DRY FILM THICKNESS OF THIS COAT OVER THE ENTIRE SUPPORT SECTION IS LESS THAN THE SPECIFIED 1.5 TO 2.0 MILS BUT IS AT LEAST 1.25 MILS, THE CONTRACT BID PRICE FOR THIS ITEM SHALL BE REDUCED IN DIRECT PROPORTION TO THE PERCENT DEFICIENCY OF COATING UP TO 16-2/3%. IF THE DEFICIENCY OF COATING IS MORE THAN THAT 16-2/3% (I.E., THE AVERAGE DRY FILM THICKNESS IS LESS THAN 1.25 MILS) THE WORK FOR THIS ITEM SHALL BE CONSIDERED UNSATISFACTORY AND SHALL BE RECOATED AT THE FULL EXPENSE OF THE CONTRACTOR, INCLUDING ALL LABOR, EQUIPMENT AND MATERIAL.
THE EPOXY PRIME COAT CHOSEN BY THE CONTRACTOR SHALL BE ONE OF THE FOLLOWING TWO-COMPONENT COMPOSITIONS CONFORMING TO ITS LISTED PROPERTIES:

AMERCOAT 71:
% SOLIDS BY VOLUME: 47% +/- 3%
POT LIFE: 8 HRS. @ 77 DEGREES F (25 DEGREES C)
DRYING TIME: 4 HRS. @ 77 DEGREES F

EPOXY CHROMATE METAL PRIMER NO. 5251/5252:
% SOLIDS BY VOLUME: 35.1% +/- 2%
POT LIFE: 24 HRS. @ 80 DEGREES F, 5 HRS. @ 100 DEGREES F.
DRYING TIME: 1 HR. TO TOUCH, 3-4 HRS. RECOAT
VISCOSITY: BASE 67-72 KU (STORMER)
CURING AGENT 53-57 KU (STORMER)
% SOLIDS BY WEIGHT: 47.9% +/- 2%

MCR-4301 EPOXY PRIMER::
% SOLIDS BY VOLUME 48.0% +/- 2%
POT LIFE: 30 HRS. @ 50-60 DEGREES F.
16 HRS. @ 80-100 DEGREES F.
DRYING TIME: 4-6 HRS. @ 50-60 DEGREES F.

MARK-60 (ULTRAPOX):
% SOLIDS BY WEIGHT: 50% +/- 5%
POT LIFE: 6 HRS. @ 75 DEGREES F.
DRYING TIME: 2-3 HRS. INITIAL SET @ 75 DEGREES F.
VISCOSITY: 300-500 CPS @ 75 DEGREES F.

TILE-CLAD II HI-BILD PRIMER:
% SOLIDS BY VOLUME: 48% +/- 2%
% SOLIDS BY WEIGHT: 63% +/- 2%
POT LIFE: 8 HRS. @ 77 DEGREES F.
DRYING TIME: 1 HR. TO TOUCH, 6 HRS. TO RECOAT @ 77 DEGREES F.

FOR NEW SUPPORT SECTIONS THIS PRIME COAT SHOULD BE DONE AT THE MANUFACTURER OF THE SUPPORT SECTIONS. VERIFICATION BY THE MANUFACTURER OF THE COATING MATERIAL FOR THE PRIME COAT PROCEDURES WILL BE REQUIRED. CAREFUL HANDLING AND STORAGE WILL BE REQUIRED TO PREVENT ANY SCRAPING, MARRING OR OTHER SURFACE DAMAGE TO THE PRIME COAT.

PAYMENT SHALL INCLUDE ALL LABOR, EQUIPMENT, HANDLING COSTS AND MATERIALS NECESSARY TO ACCOMPLISH THIS ITEM OF WORK.
THIS PRIME COAT SHALL BE MANUFACTURED BY THE SAME COMPANY SUPPLYING THE INTERMEDIATE AND TOP COATS. A PROPERLY CALIBRATED DRY FILM THICKNESS INSTRUMENT WILL BE USED TO CHECK THE COATING.

BASIS OF PAYMENT WILL BE AS FOLLOWS:
ITEM SPECIAL- COATING, EPOXY PRIME COAT, SUPPORT SECTIONS AT CONTRACT BID PRICE PER EACH MAJOR SUPPORT SECTION.

COATING, EPOXY INTERMEDIATE COAT, SUPPORT SECTIONS

THIS ITEM SHALL CONSIST OF THE APPLICATION OF ONE (1) COAT OF EPOXY TO SUPPORT SECTIONS. THE TOTAL DRY FILM THICKNESS OF THIS COAT SHALL NOT BE LESS THAN SIX (6.0) MILS. IF MORE THAN ONE PASS IS NECESSARY TO OBTAIN THE REQUIRED THICKNESS, THAT COST SHALL BE BORNE BY THE CONTRACTOR. THINNING OF THE EPOXY MATERIAL IS STRICTLY PROHIBITED. MATERIAL NOT CAPABLE OF BEING APPLIED AS SPECIFIED SHALL NOT BE USED. THE COLOR OF THIS COAT SHALL BE LIGHT GREY.
WHEN THE AVERAGE DRY FILM THICKNESS OF THIS COAT OVER THE ENTIRE SUPPORT SECTION IS LESS THAN THE SPECIFIED SIX (6.0) MILS, BUT IS AT LEAST (5.0) MILS, THE CONTRACT PRICE FOR THIS ITEM SHALL BE REDUCED IN DIRECT PROPORTION TO THE PERCENT DEFICIENCY OF COATING UP TO 16-2/3%. IF THE DEFICIENCY OF COATING IS MORE THAN 16-2/3%, (I.E. THE AVERAGE DRY FILM THICKNESS IS LESS THAN 5.0 MILS), THE WORK FOR THIS ITEM SHALL BE CONSIDERED UNSATISFACTORY AND SHALL BE RECOATED AT THE FULL EXPENSE OF THE CONTRACTOR, INCLUDING ALL LABOR, EQUIPMENT AND MATERIAL.
THE EPOXY INTERMEDIATE COAT CHOSEN BY THE CONTRACTOR SHALL BE ONE OF THE FOLLOWING TWO-COMPONENT COMPOSITIONS CONFORMING TO ITS LISTED PROPERTIES:

AMERLOCK 400:

% SOLIDS BY VOLUME:	83% +/- 2%
POT LIFE:	2-1/2 HRS. @ 70 DEGREES F.
DRYING TIME:	20 HRS. @ 70 DEGREES F.

GLID-GUARD EPOXY CHEMICAL RESISTANT FINISH NO. 5240 SERIES:

% SOLIDS BY VOLUME:	44.7% +/- 2%
POT LIFE:	10 HRS. @ 80 DEGREES F. TO HANDLE
DRYING TIME:	4 HRS. @ 77 DEGREES F. TO HANDLE
VISCOSITY:	68-72 KU
% SOLIDS BY WEIGHT:	60% +/- 2%

MCR 4361 HIGH BUILD EPOXY (OFF-WHITE):

% SOLIDS BY VOLUME:	49.4% +/- 2%
POT LIFE:	30 HRS. @ 50-60 DEGREES F. 16 HRS. @ 80-100 DEGREES F.
DRYING TIME:	1-2 HRS. @ 60-80 DEGREES F.

MARK-60 ULTRAPOX:

% SOLIDS BY WEIGHT:	52% +/- 5%
POT LIFE:	6 HRS. @ 75 DEGREES F.
DRYING TIME:	2-3 HRS. INITIAL SET @ 75 DEGREES F.
VISCOSITY:	300-500 CPS @ 75 DEGREES F.

HI-SOLIDS CATALYZED EPOXY:

% SOLIDS BY VOLUME:	61% +/- 2% (PURE WHITE)
% SOLIDS BY WEIGHT:	77% +/- 2% (PURE WHITE)
POT LIFE:	5 HRS. @ 77 DEGREES F.
DRYING TIME:	1 HR. TO TOUCH, 4 HRS. TACK FREE, 6 HRS. TO RECOAT @ 77 DEGREES F.& 50% R.H.

AT LEAST 24 HOURS BUT NO MORE THAN THREE (3) DAYS SHALL ELAPSE AFTER THE APPLICATION OF THE EPOXY PRIME COAT AND BEFORE THE APPLICATION OF THE EPOXY INTERMEDIATE COAT. SURFACES SHALL IN ALL CASES BE CLEAN BEFORE THE INTERMEDIATE COAT IS APPLIED.
FOR NEW SUPPORT SECTIONS, THIS INTERMEDIATE COAT SHOULD BE DONE AT THE MANUFACTURER OF THE SUPPORT SECTIONS. VERIFICATION BY THE MANUFACTURER FOR THE INTERMEDIATE COAT PROCEDURE WILL BE REQUIRED. CAREFUL HANDLING AND STORAGE WILL BE REQUIRED TO PREVENT ANY SCRAPING, MARRING OR OTHER SURFACE DAMAGE TO THE INTERMEDIATE COAT.

PAYMENT SHALL INCLUDE ALL LABOR, EQUIPMENT, HANDLING COST AND MATERIAL NECESSARY TO ACCOMPLISH THIS ITEM OF WORK. THIS INTERMEDIATE COAT SHALL BE MANUFACTURED BY THE SAME COMPANY SUPPLYING THE PRIME AND TOP COATS. A PROPERLY CALIBRATED DRY FILM THICKNESS INSTRUMENT WILL BE USED TO CHECK THE COATING.

BASIS OF PAYMENT WILL BE AS FOLLOWS:

ITEM SPECIAL- COATING, EPOXY INTERMEDIATE COAT, SUPPORT SECTIONS SECTIONS AT CONTRACT BID PRICE PER EACH MAJOR SUPPORT SECTION.

COATING, URETHANE TOP COAT, SUPPORT SECTIONS

THIS ITEM SHALL CONSIST OF THE APPLICATION OF ONE (1) COAT OF URETHANE TO SUPPORT SECTIONS. THE TOTAL DRY FILM THICKNESS OF THIS COAT SHALL NOT BE LESS THAN ONE AND ONE-HALF (1.5) MILS. IF MORE THAN ONE PASS IS NECESSARY TO OBTAIN THE REQUIRED THICKNESS, THAT COST SHALL BE BORNE BY THE CONTRACTOR. THINNING OF THE URETHANE MATERIAL IS STRICTLY PROHIBITED. MATERIAL NOT CAPABLE OF BEING APPLIED AS SPECIFIED SHALL NOT BE USED. THE COLOR OF THIS COAT SHALL BE MEDIUM GREY.
WHEN THE AVERAGE DRY FILM THICKNESS OF THIS COAT OVER THE ENTIRE SUPPORT SECTION IS LESS THAN THE SPECIFIED ONE AND ONE-HALF (1.5) MILS BUT IS AT LEAST ONE (1.0) MIL, THE CONTRACT PRICE FOR THIS ITEM SHALL BE REDUCED IN DIRECT PROPORTION TO THE PERCENT DEFICIENCY OF COATING UP TO 33-1/3%. IF THE DEFICIENCY OF COATING IS MORE THAN 33-1/3%, (I.E. THE AVERAGE DRY FILM THICKNESS IS LESS THAN 1.0 MIL), THE WORK FOR THIS ITEM SHALL CONSIDERED UNSATISFACTORY AND SHALL BE RECOATED AT THE FULL EXPENSE OF THE CONTRACTOR, INCLUDING ALL LABOR, EQUIPMENT AND MATERIAL.
THE URETHANE TOP COAT CHOSEN BY THE CONTRACTOR SHALL BE ONE OF THE FOLLOWING MATERIALS CONFORMING TO ITS LISTED PROPERTIES:

AMERCOAT 450 HS:

% SOLIDS BY VOLUME:	66% +/- 3%
POT LIFE:	4 HRS. @ 70 DEGREES F.
DRYING TIME:	8 HRS. @ 70 DEGREES F DRY-THROUGH

GLID-THANE ONE POLYURETHANE COATINGS NO. 6100 SERIES:

% SOLIDS BY VOLUME:	39% +/- 2%
DRYING TIME:	8-12 HRS. @ 77 DEGREES F. TO HANDLE
VISCOSITY:	100-250 CPS
% SOLIDS BY WEIGHT:	52-56%

HYTHANE 4610 ALIPHATIC POLYURETHANE:

% SOLIDS BY VOLUME:	43.4% +/- 2%
POT LIFE:	12 HRS. @ 75 DEGREES F.
DRYING TIME:	3/4 HRS. TO TOUCH @ 75 DEGREES F.

MARK-73 (ULTRA-KOTE):

% SOLIDS BY VOLUME:	52.5% +/- 2%
POT LIFE:	8 HRS. @75 DEGREES F.
DRYING TIME:	4-5 HRS. @ 75 DEGREES F. TACK FREE
VISCOSITY:	70-75 KU @ 75 DEGREES F.
% SOLIDS BY WEIGHT:	55% +/- 2%

HI-BILD ALIPHATIC POLYURETHANE ENAMEL:

% SOLIDS BY VOLUME:	40% +/- 2% (CATALYZED)
% SOLIDS BY WEIGHT:	48% +/- 2%
POT LIFE:	6 HRS. @ 77 DEGREES F.
DRYING TIME:	30 MIN. TO TOUCH, 4 HRS. TACK FREE, 18 HRS. MINIMUM, 72 HRS. MAXIMUM TO RECOAT.

AT LEAST 24 HOURS BUT NO MORE THAN THREE (3) DAYS SHALL ELAPSE AFTER THE APPLICATION OF THE EPOXY INTERMEDIATE COAT AND BEFORE THE APPLICATION OF THE URETHANE TOP COAT. SURFACES SHALL IN ALL CASES BE CLEAN BEFORE THE TOP COAT IS APPLIED.
FOR NEW SUPPORT SECTIONS, THIS TOP COAT SHOULD BE DONE BY THE MANUFACTURER OF THE SUPPORT SECTIONS. VERIFICATION BY THE MANUFACTURER FOR TOP COAT PROCEDURE WILL BE REQUIRED. CAREFUL HANDLING AND STORAGE WILL BE REQUIRED TO PREVENT ANY SCRAPING, MARRING OR OTHER SURFACE DAMAGE TO THE TOP COAT.
PAYMENT SHALL INCLUDE ALL LABOR, EQUIPMENT, HANDLING COST AND MATERIALS NECESSARY TO ACCOMPLISH THIS ITEM OF WORK. THIS TOP COAT SHALL BE MANUFACTURED BY THE SAME COMPANY SUPPLYING THE PRIME AND INTERMEDIATE COATS. A PROPERLY CALIBRATED, DRY FILM THICKNESS INSTRUMENT WILL BE USED TO CHECK THE COATING.

BASIS OF PAYMENT WILL BE AS FOLLOWS:

ITEM SPECIAL- COATING, URETHANE TOP COAT, SUPPORT SECTIONS AT CONTRACT BID PRICE PER EACH MAJOR SUPPORT SECTION.

PREQUALIFICATION

PRIOR TO USE, THE CONTRACTOR SHALL SUBMIT TO THE DIRECTOR COPIES OF THE MANUFACTURER'S CERTIFIED TEST DATA SHOWING THAT THE MATERIAL COMPLIES WITH THE REQUIREMENTS OF THIS SPECIFICATION. THE TEST DATA SHALL INCLUDE THE BRAND NAME OF THE PAINT, NAME OF MANUFACTURER, NUMBER OF THE LOT TESTED AND DATE OF MANUFACTURE. WHEN THE PAINT HAS BEEN APPROVED BY THE DIRECTOR, FURTHER PERFORMANCE TESTING BY THE MANUFACTURER WILL NOT BE REQUIRED UNLESS THE FORMULATION OR MANUFACTURING PROCESS HAS BEEN CHANGED, IN WHICH CASE NEW CERTIFIED TEST RESULTS WILL BE REQUIRED.

ACCEPTANCE

THE MANUFACTURER SHALL SUBMIT CERTIFIED TEST DATA IN ACCORDANCE WITH THE REQUIREMENTS OF THIS SPECIFICATION. THE STATE RESERVES THE RIGHT TO SAMPLE AND TEST DELIVERED LOTS FOR COMPLIANCE.

RAILROAD PROTECTIVE LIABILITY INSURANCE.

The Contractor shall furnish evidence to the highway department that, with respect to the operations he or any of his sub-contractors perform, he has provided for and in behalf of the Consolidated Rail Corporation, 12th Floor, 15 North 32nd Street, Philadelphia, PA 19104 a Railroad Protective Liability policy of insurance providing a combined single limit for damages arising out of bodily injuries to or death of one or more persons and out of injury to or destruction of property including such property in the care, custody and control of the Railroad Company in the amount of $2,000,000.00 per occurrence and subject to that limit per occurrence, an aggregate limit in the amount of $6,000,000.00 for each annual period.

The above railroad protective policy of insurance shall conform to the Railroad Liability requirements prescribed by the Federal Highway Administration in FHPM: 6-6-2-2 as amended.

The insurance hereinbefore specified shall be with an acceptable insurance company authorized to do business in the State of Ohio, and shall be taken out before execution of the Contract by the Director and kept in effect until all work required to be performed under the terms of the contract is satisfactorily completed as evidenced by the formal acceptance by the State. Such policy shall include a thirty (30) days canceling notice.

"Evidence" as above set forth shall consist of furnishing the Director of Transportation one (1) original and two (2) certified copies of the policy.

Payment will be made at the contract price bid under:

Item	Unit	Description
Special	Lump Sum	Premium on Railroad's Protective Public Liability and Property Damage Liability Insurance.

COOPERATION WITH RAILROADS

To cooperate at all times with the local officials of the railroad company. He shall use all reasonable care and diligence in the work in order to avoid accidents, damage or unnecessary delay to, or interference with the trains and other property of the railroad. The Contractor shall notify the local officials of the railroad prior to starting work that may affect railroad property and facilities and shall pay the Railroad Company the cost of flagmen furnished by the Railroad Company and made necessary because of any of the Contractor's operations over or adjacent to the tracks.

No scaffold, planks or other equipment shall be suspended or erected above or within 10 feet of a rail over which trains are operating without prior written approval of the Chief Engineer of the Railroad Company, or his authorized representative.

Methods and procedures for performing work on property of the Consolidated Rail Corporation must be approved by Mr. G.N. Myers, Area Engineer, Consolidated Rail Corporation, 31 E. Georgia Street, Indianapolis, Indiana 46204.

Failure to notify the Railroad Company as noted above shall be cause for stopping work until all provisions for protecting Railroad property have been provided.

DOWEL BASKET ASSEMBLIES

WHERE DOWEL BASKET ASSEMBLIES ARE USED BY THE CONTRACTOR, ALL SPACER WIRES (SHIPPING WIRES) SHALL BE REMOVED FROM THE BASKET ASSEMBLIES PRIOR TO PAVING. IT SHALL BE THE RESPONSIBILITY OF THE CONTRACTOR TO INSURE THE DOWEL BASKET ASSEMBLIES ARE STABLE AND HELD FIRMLY IN PLACE.

CALC BY DATE		OHIO	22A
CHKD BY DATE		FHWA REGION 5	338

HAM-75-9.75

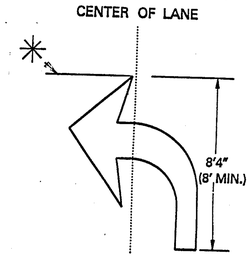

TURN ARROW
(LEFT ARROW SHOWN
RIGHT ARROW OPPOSITE)

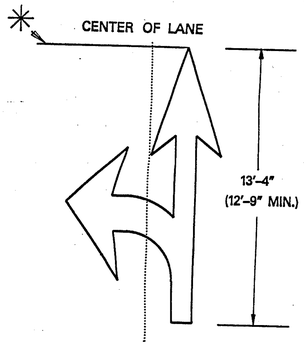

COMBINED ARROW
(THREE HEAD DIRECTIONAL ARROWS
CAN BE ACHIEVED BY THE COMBINATION
OF TURN ARROWS.)

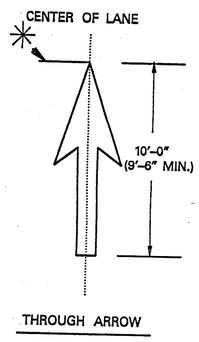

THROUGH ARROW

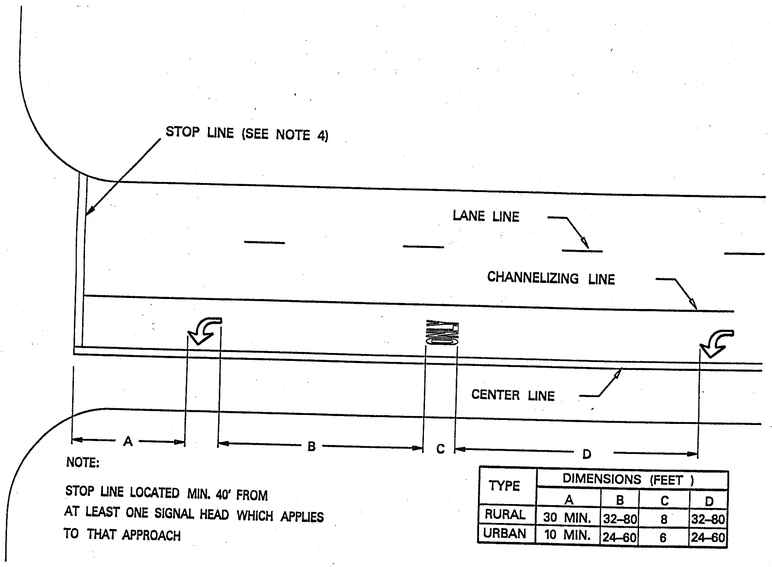

NOTE:

STOP LINE LOCATED MIN. 40' FROM
AT LEAST ONE SIGNAL HEAD WHICH APPLIES
TO THAT APPROACH

TYPE	DIMENSIONS (FEET)			
	A	B	C	D
RURAL	30 MIN.	32-80	8	32-80
URBAN	10 MIN.	24-60	6	24-60

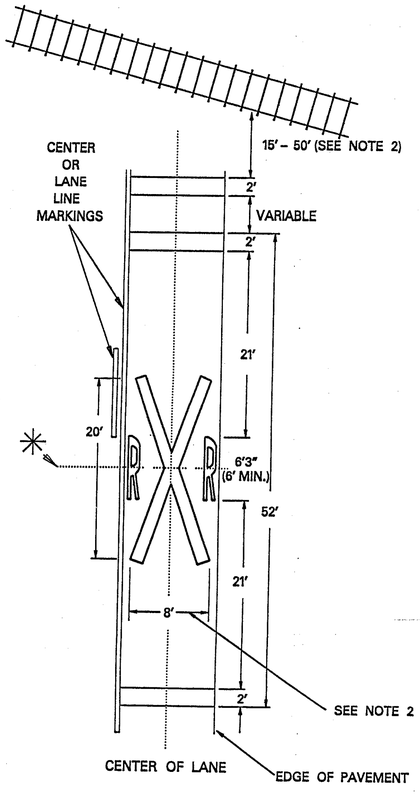

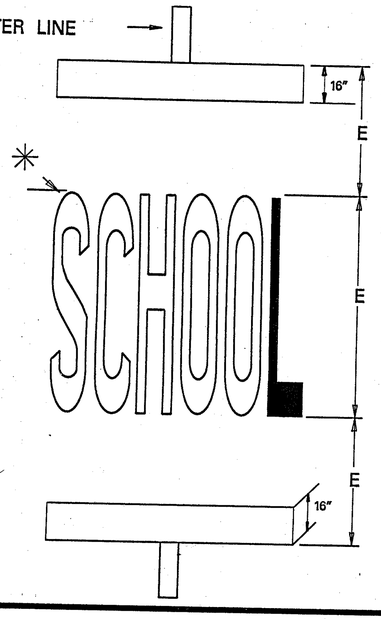

TYPE	E (INCHES)	
	STANDARD	OPTIONAL
RURAL	96	100
URBAN	72	75

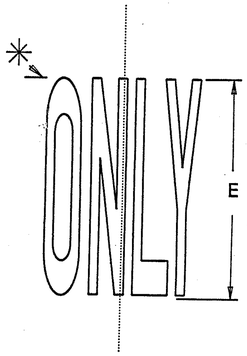

NOTES:

1. ON MULTI-LANE APPROACHES, THE TRANSVERSE LINES USED WITH THE RAILROAD SYMBOLS SHALL EXTEND ACROSS ALL APPROACH LANES AND SYMBOLS SHALL BE PLACED IN EACH APPROACH LANE.

2. THE RAILROAD SYMBOL SHALL BE LOCATED SO THAT THE W-94, "RAILROAD ADVANCE WARNING SIGN", IS WITHIN THE TWO TRANSVERSE BOUNDARY LINES OF THE RAILROAD SYMBOL. THE STOP LINE SHALL BE LOCATED FOR BEST SIGHT DISTANCE WITHIN 15 FEET TO 50 FEET OF THE NEAR EDGE OF THE TRACKS. STOP LINES SHALL BE PERPENDICULAR TO THE CENTER LINE OF THE ROADWAY. WIDTH OF "X" MAY VARY ACCORDING TO LANE WIDTH.

3. PREFERABLY, THE WORD "SCHOOL" SHOULD BE CONTAINED IN A SINGLE LANE. ON ONE LANE APPLICATIONS, THE TRANSVERSE LINES SHALL EXTEND ACROSS THE LANE WHICH APPROACHES THE ZONE WITH THE WORD "SCHOOL" CENTERED ACROSS THAT LANE. FOR TWO APPROACH LANES, EACH LANE SHOULD HAVE A SEPARATE WORD "SCHOOL" CENTERED ACROSS IT. ON TWO LANE, TWO WAY ROADWAYS WITH INSUFFICIENT PAVEMENT WIDTH, THE WORD AND TRANSVERSE LINES SHALL EXTEND ACROSS BOTH LANES OF TRAFFIC. ON FOUR LANE, TWO WAY ROADWAYS WITH INSUFFICIENT PAVEMENT WIDTH, THE WORD AND TRANSVERSE LINES SHALL EXTEND ACROSS BOTH LANES ENTERING THE SCHOOL ZONE. CENTER OR LANE LINES SHALL NOT PASS THROUGH THE "SCHOOL" MARKING.

4. THE STOP LINE SHOULD BE PLACED WHERE CROSS-CORNER VISION IS MAXIMUM, IN NO CASE MORE THAN 30 FEET OR LESS THAN 4 FEET FROM THE NEAREST EDGE OF THE INTERSECTING ROADWAY. FOR NORMAL INTERSECTIONS A MAXIMUM DISTANCE OF 10 FEET IS RECOMMENDED.

   IF A MARKED CROSSWALK IS PRESENT, THE STOP LINE SHOULD BE PLACED 4 FEET IN ADVANCE OF AND PARALLEL TO THE NEAREST CROSSWALK.

5 FOR TRAFFIC PAINT AND POLYESTER APPLICATION, TEMPLATE GAPS SHALL BE FILLED WITH MARKING MATERIAL IN ACCORDANCE WITH 641.03. FOR EXTRUDED THERMOPLASTIC MATERIAL, THESE GAPS MAY REMAIN UNFILLED IN ACCORDANCE WITH 644.03.

6. USE STANDARD DIMENSIONS CONFORMING TO REQUIREMENTS OF OMUTCD SECTIONS 3B-40, 3B-41 AND 3B-43 WHICH CONFORMS TO THE 1977 METRIC EDITION STANDARD ALPHABETS FOR HIGHWAY SIGNS AND PAVEMENT MARKING WITH ERRATA.

✳ - INDICATES STATION REFERENCE POINT

REVISED BY:	DATE:

207111	DATE
WORDS, SYMBOLS AND ARROWS	02/21/91 08/02/91
PLAN INSERT SHEET	

GENERAL NOTES WCC

F.H.W.A. REGION	STATE	PROJECT	CALC. DATE
5	OHIO		CHECK DATE

22B
338

HAM-75-9.75

W-68-36

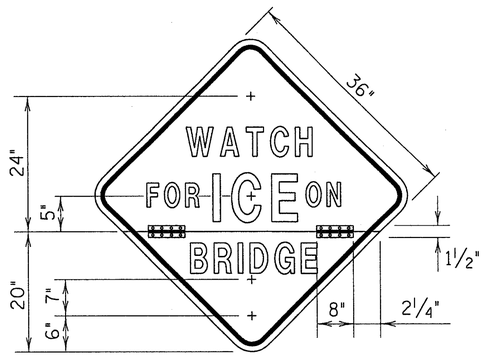

W-68-48

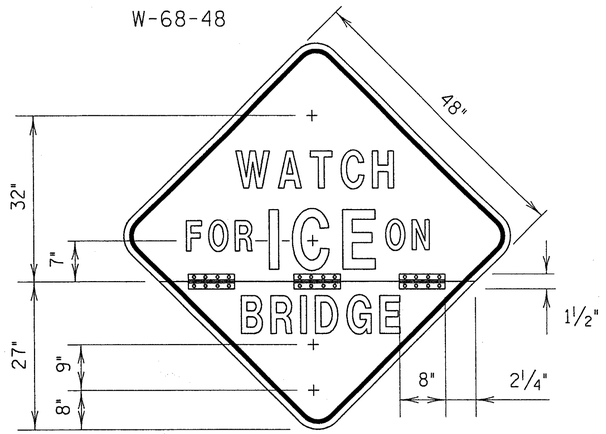

NOTES

1) The Department's policy shall be to hinge all "Watch For Ice on Bridge" (W-68) signs fabricated at the Traffic Maintenance Shops. The legend on these signs shall only be displayed from November 1st to May 1st; during the remainder of the year, the sign shall be folded down to conceal the legend.

2) The location of the sign shall be in accordance with Section 2N-33 and Table S-1 if the OMUTCD.

3) The sign shall be hinged with 8" lengths of 1 1/2" brass-plated hinge which is riveted to each section of the sign and then covered with yellow reflective sheeting (Type F-730.18) to match the background of the sign.

4) To fold the sign down, remove the top two bolts, fold the upper part of the sign down and insert a bolt through the lowest hole in the sign and into the post. Tighten the bolt to prevent the sign from flapping in the wind and sustaining damage.

5) Generally a 48 inch warning sign is mounted on two number 3 drive posts; however, in order to accommodate the sign hole alignment, only one number 4 sign support shall be used in mounting the W-68-48 sign.

BUREAU OF TRAFFIC
OHIO DEPARTMENT OF TRANSPORTATION

"HINGED" WATCH FOR ICE ON BRIDGE SIGN W-68	DATE 10/82

APPROVED _____
ENGINEER OF TRAFFIC

DR. WC	CK., CR	AS 2C-10

GENERAL NOTES

DGN: W-68.DGN

F.H.W.A. REGION	STATE	PROJECT	
5	OHIO		

HAM-75-9.75

MAINTENANCE OF TRAFFIC NOTES

CONSTRUCTION INITIATION
The Contractor shall maintain traffic at all times in accordance with the requirements of Item 614. It is the intention to perform the required work with the least inconvenience to, and the maximum safety of, the Contractor and the traveling public. Any variances from the intent of these maintenance of traffic notes must be approved in advance in writing by the Director. Except as modified below or as shown in the Maintenance of Traffic plans, the requirements for maintaining traffic as indicated on the Ohio Manual of Uniform Traffic Control Devices for Streets and Highways, current edition, and pertinent items of the specifications shall apply.

CONSTRUCTION INITIATION
The Contractor will advise the District Communications officer at 614-363-1251 extension 261 or by FAX at 614-469-0235 seven days prior to the start of construction activities. The Project Engineer will provide assistance/clarification for any questions.

GENERAL REQUIREMENTS
A minimum of two lanes of traffic in each direction shall be maintained at all times except as otherwise noted in the plans. The length and duration of restricted traffic zones shall be kept to a minimum consistent with the specification requirements for protection of completed courses and as outlined in the Sequence of Operations.

The Contractor shall coordinate his work with any work being done in adjacent projects to assure safe traffic flow.

The Contractor shall submit, in writing, a schedule of operations to the Engineer and receive approval before work is started on the project.

The Contractor shall submit a written schedule of operation, every month, to the Engineer for his approval. The schedule shall be submitted at least two (2) weeks prior to any traffic restriction or closure of any lane of the freeway, ramp or crossroad.

The Contractor shall notify the Engineer and the Village of Lockland Engineer two (2) weeks in advance of the Cooper Avenue interchange, Ramps P and R at Mangham Drive, and the Wyoming Avenue bridge closure. The Contractor shall notify the Engineer, who will notify the General Electric Traffic Engineering Department two (2) weeks in advance of closing ramps C, D, E or J and any access drives along the Collectors for night time construction .

Two weeks prior to construction on Galbraith Road or Shepherd Lane the Contractor shall notify the Engineer, who will notify the proper municipality to make any necessary timing adjustments to traffic signals on Galbraith Road, Shepherd Lane or Mangham Drive.

Before work begins, the Contractor shall submit to the Engineer the names and telephone numbers of a person or persons who can be contacted 24 hours per day by the Ohio Department of Transportation and all interested police agencies. This person or persons shall be responsible for placing or replacing necessary traffic control devices. During all hours when traffic is restricted to less than the number of existing lanes in any direction, this person or persons shall be available at all times to maintain all lights, drums, signs, barricades, etc. In order to provide a safe facility for the traveling public he shall have available all tools and materials necessary to perform this function at all times.

Traffic is to be maintained in a uniform pattern throughout the entire length of the project including ramps and is not to be subjected to constant lane shifts. Work can be performed simultaneously in the northbound and southbound lanes provided the operations do not interfere with each other. The Contractor shall arrange his operations so as to prevent any interference to the continuous flow of traffic. All vehicles, equipment, workers and their activities are restricted at all times to one side of the directional pavement.

Vehicles and equipment shall always move with, and not across or against the flow of traffic. Vehicles and equipment shall not park or stop except within designated work areas, and shall enter and leave work areas in a manner which will not be hazardous to, or interfere with the normal traffic flow. Personal vehicles will not be permitted to park within the right-of- way except in specific areas designated by the Engineer.

Equipment, vehicles and material shall not be stored or parked on the project within thirty (30) feet of the edge of the traveled pavement, unless a minimum of six (6) feet behind guardrail or protective barrier.

The shoulders shall be used to maintain traffic during certain stages of construction. Should any existing or new shoulder areas become damaged or destroyed during construction due to the Contractor's negligence or failure to provide adequate signs, drums, or other traffic control devices, the restoration of the shoulder will be at the Contractor's expense.

Two lanes of traffic shall be open at all times in each direction; and all ramps shall be maintained at all times except as shown in the plans. Traffic on the routes crossing the interstate shall also be maintained, with the exception of Wyoming Avenue which will be closed for a maximum of 90 days for construction, subject to liquidated damages as per 108.07.

The Contractor shall erect temporary fence, portable concrete barrier gates and Type III barricades with lights and signs on Wyoming Avenue at each end of work and Type III barricades with lights and signs at the intersection of East Forrer Avenue and Wyoming Avenue. Any required detour signing will be provided and maintained by the Village of Lockland. Any adjustments to traffic signals that may be required due to the closing of the Wyoming Avenue bridge shall be the responsibility of the Village of Lockland.

At the beginning of Southbound lane construction the Cooper Avenue interchange shall be closed for the duration of the project.

The Contractor shall establish a constant system of communication between the Contractor and the Engineer for the purpose of maintaining traffic. This system of communication shall be 2-way radios or equivalent furnished and serviced by the Contractor. This cost of furnishing and servicing the radios or equivalent shall be included in the lump sum bid price for Item 614 - Maintaining Traffic.

Properly reflectorized, weighted drums shall be used to channel traffic. Drums shall be as per Item 614 or an approved equal, spaced as shown on the maintenance of traffic standard drawings.

The Contractor shall be required to provide, erect, maintain (in proper position, clean, legible, and good working condition) and remove all lights, signs, barricades, portable concrete barriers, and all other traffic control devices necessary for the maintenance of traffic, including regulatory signs and pavement markings. All post mounted signs shall use posts 4 lbs. per ft. or less. Placement of all traffic control devices shall start and proceed in the direction of the flow of traffic.

OW-128-48 signs shall be placed on all entrance ramps and at 3 miles, 2 miles and 1 mile in advance of any lane closure.

The Contractor shall provide Type A flashing yellow lights, on the OW-128-48 signs in accordance with the Ohio Manual of Uniform Traffic Control Devices for Streets and Highways, current edition.

Removal of traffic control devices shall start at the end of the construction area and proceed toward oncoming traffic. The Contractor shall provide for the installation of all necessary traffic control devices before beginning work and their immediate removal as soon as work is suspended or completed.

During any sequence of operations where traffic is to be maintained within 2 feet of the edge of the paved shoulder, the graded shoulder area adjacent to the paved shoulder shall be strengthened by placing an aggregate base 2 foot wide and 6 inches deep adjacent to the paved shoulder. This treatment shall be included in Item 617 for payment.

The Contractor shall be required to place, maintain and remove temporary pavement wedges using Item 404 in front of or along the edge of the overlay, at ramps, ends of runs or at other areas as designated by the Engineer for smooth and safe traffic flow during roadway construction, except where specified otherwise in the notes. Temporary pavement wedges shall be sloped at 1 inch per foot for longitudinal joints and 25:1 for transverse joints. Payment for the above shall be included in the lump sum bid for Item 614 Maintaining Traffic.

ITEM 614 - WORK ZONE SPEED LIMIT SIGN
The Contractor shall furnish, install, maintain, cover during suspension of work, and remove work zone speed limit signs and supports (R-10-48) (45 MPH) within the work limits in accordance with the following requirements.

The Contractor shall cover or remove any existing speed limit or minimum speed signs within the reduced speed zone. These signs shall be restored during suspension or termination of the reduced speed limit. The expense of covering or removal and restoration of existing speed limit or minimum speed signs is incidental to the pay item for work zone speed limit signs.

The work zone speed limit signs may be erected and covered prior to starting work or may be erected uncovered no more than 4 hours before the actual start of work. The signs shall be removed or covered no later than 4 hours following restoration of all lanes to traffic with no restrictions or sooner as directed by the Engineer.

The Contractor shall erect a work zone speed limit sign in advance of any lane restriction which is 1/2 mile or more in length and which is expected to last at least 30 consecutive calendar days or as directed by the Engineer. The sign shall be mounted on both sides of divided highways, 500 ft. in advance of the lane reduction taper. The sign shall be mounted on the right side, 250 ft. in advance of the lane reduction taper on undivided highways. The sign shall be repeated, on the side nearest traffic every 1/2 mi. These signs shall also be erected immediately after each open entrance ramp within the zone. A sign to indicate the resumption of the statutory speed limit shall be erected at the end of any reduced speed zone near the last drum. This sign shall be an R-8A-48.

The Contractor may use signs and supports in used but good condition provided the signs meet current ODOT specifications. Sign faces shall be reflectorized with Type G sheeting complying with the requirements of 730.19 and U.S. Department of Transportation Specifications for Type III sheeting, FP-85. Work zone speed limit signs shall be mounted on two (2) Item 630 Ground Mounted Supports, No. 4 posts.

Work zone speed limit signs and supports will be measured as the number of sign installations, including the sign and necessary supports. If a sign and support combination is removed and reerected at another location within the project due to changes in the speed zone directed by the Engineer, it shall be considered another unit.

Payment for accepted quantities, complete, in place will be made at the contract unit price. Payment shall be full compensation for all materials, labor, incidental and equipment for furnishing, erecting, maintaining, covering during suspension of work and removing the signs and supports.

Item 614 - Work Zone Speed Limit Signs 60 Each

ITEM SPECIAL - REPLACEMENT SIGN
Flat Sheet Signs furnished by the Contractor in accordance with the rrequirements of the plans, specifications and proposal which become damaged by traffic for reasons beyond the control of the Contractor shall be replaced in kind when ordered by the Engineer. Replacement signs shall be new. Other materials may be in used but good condition subject to approval by the Engineer.

Payment for the new signs shall be made at the bid price per square foot for "Item Special-Replacement Signs" and shall include the cost of removing and disposing of the damaged signs, hardware and supports; and providing the necessary replacement hardware, supports, etc..

An estimated quantity of 200 square feet has been provided in the General Summary.

ITEM SPECIAL - REPLACEMENT OF DRUM
Drums furnished by the Contractor in accordance with the requirements of the plans, specifications and proposal which become damaged by traffic for reasons beyond the control of the Contractor shall be replaced in kind when ordered by the Engineer. Replacement drums shall be new.

MAINTENANCE OF TRAFFIC NOTES

F.H.W.A. REGION	STATE	PROJECT	
5	OHIO		

24
338

HAM-75-9.75

Payment for the new drum shall be made at the bid price per each for "Item Special-Replacement Drum" and shall include the cost of removing and disposing of the damaged drum; and providing and maintaining the replacement drum in accordance with the contract requirements for the original drum.

An estimated quantity of 500 each has been provided in the General Summary.

RESTRICTIONS TO ACCELERATION OR DECELERATION LANES
All work in the vicinity of ramps, for which the traffic control causes a lane restriction or shortens the normal acceleration, deceleration lanes shall be expedited and completed as quickly as possible so as to minimize the disruption to traffic. Any maintenance of traffic which affects usage shall be placed only immediately prior to starting work in the ramp vicinity and shall be removed immediately upon completing the work in the ramp vicinity or at any other time that the traffic may safely use the ramp in its normal fashion. The traffic control shall be placed to provide the longest acceleration or deceleration lane in all stages of construction. This may involve moving the drums several times in the ramp area as determined by the Engineer.

Scheduling of work and/or traffic control which may affect ramp usage shall be coordinated with and approved by the Engineer and shall be made a part of the progress schedule. This schedule and any modifications thereto shall be strictly adhered to.

The Contractor shall work 24 hours a day on the acceleration and deceleration lanes, until such work affecting ramp usage is completed to the satisfaction of the Engineer. The cost of working 24 hours a day shall be paid for under Item 614 - Maintaining Traffic.

MAINTAINING TRAFFIC ON EXISTING RAMP SHOULDER
During any stage of construction where traffic is to be maintained on the existing ramp shoulders, the following work shall be completed prior to maintaining traffic on any shoulder.

Remove all concrete curbs and noses in gores of exit and entrance ramps according to the plans. Regrade gore areas, adjust or reconstruct catch basins as shown in the plans, and remove all ground mounted signs located in the gores. Payment included in bid price for Item 614. Upgrade all signs not behind guardrail along the existing berm, according to the signing plan. Any sign removed by the Contractor shall be reerected at the Contractor's expense unless indicated otherwise on the signing plan. All existing catch basins and inlet grates must be in place. Repair berm and place Item 617 - Aggregate next to paved shoulder.

COVERING OF SIGNS
Where the plans call for a permanent sign to be covered, the Contractor shall do so in such a manner so as to avoid damaging the permanent sign when the cover is removed. The cover shall be totally opaque. The use of adhesive tape applied directly to a sign face is strictly prohibited.

When a permanent sign is to receive an overlay panel for construction purposes, the overlay shall be Black Lettering on an Orange Background.

PERMANENT SIGNING AND PAVEMENT MARKING
Prior to opening any completed ramp, crossroad, or mainline section to normal flow traffic, the Contractor shall have completed the installation of all permanent signing and pavement marking pertinent to the safe operation of the traffic. If permanent pavement markings can not be placed at this time, temporary Class I pavement markings shall be placed.

Prior to opening any lanes to traffic which have Item 446 Surface Course in place, the Contractor shall install Temporary Lane Lines, Class II. An estimated quantity of 17.75 miles of Item 614 - Temporary Lane Lines, Class II has been included in the General Summary.

GENERAL
It is the intent of the following Sequence of Operations to provide a work area for the Contractor while also maintaining traffic in a manner which is safe for the traveling public; therefore, the work STAGES shall be strictly adhered to.

Two portable, changeable message signs shall be used at all times during construction to implement and enhance the regular traffic control devices used on the project.

All temporary and / or permanent pavement markings shall be in place before any pavement is opened to traffic.

The work limits shown on these plans are for physical construction only. The installation and operation of all traffic control devices required by "Ohio Manual of Uniform Traffic Control Devices for Streets and Highways" current edition, these plans, and pertinent items of the specification and proposal shall be provided by the Contractor whether inside or outside these limits.

SEQUENCE OF OPERATIONS
STAGE I
Erect signs, drums and portable concrete barrier for NB and / or SB traffic. Maintain traffic in each direction in two (2) eleven foot lanes unless otherwise shown on the plans using the center and inside lanes of mainline pavement and the outside lane of the collectors.

Remove the wearing course (t = 2-1/2" +/-) on the outside lanes and plane the outside shoulder of the mainline. Remove portions of concrete medians between the mainline and collectors.

Construct pavement joints repairs, concrete barrier, concrete curbs, catch basin and manhole adjustments, new edge drains, full depth pavement, pressure relief joints and guardrail on the outside shoulder, and outside lane of the mainline and the inside lane and shoulder of the collectors. Place Item 301, 3" bituminous aggregate base on the mainline. Place Item 446 1-3/4" intermediate course on the mainline and the collectors. Place temporary pavement markings.

STAGE II
Erect signs, drums and portable concrete barrier to maintain traffic in two (2) eleven foots lanes unless otherwise shown in the plans using the outside lane and the outside shoulder of the mainline upon the new 446 intermediate course. Also maintain one (1) lane of traffic in the inside lane of the collectors.

Remove the wearing course (t = 2-1/2" +/-) on the center and inside lanes of the mainline and plane the inside shoulder of the mainline.

Construct pavement joint repairs, catch basin and manhole adjustments, new edge drains, full depth pavement replacement, curb replacement, pressure relief joints, guardrail and concrete barrier repairs on the center and inside lanes and inside shoulder of the mainline and the outside lane and shoulder of the collectors.

Place Item 301, 3" Bituminous Aggregate Base Course Item 446, 1-3/4" Intermediate Course and Item 446, 1-1/4" Asphalt Concrete Surface Course and Temporary Pavement Markings on the center and inside lanes and inside shoulder of the mainline.

Place Item 446, 1-3/4" Asphalt Concrete Intermediate Course, Item 446 1-1/4" Asphalt Surface Course and Temporary Pavement Markings on the outside lane and outside shoulder of the collector-distributor roads.

STAGE III
Using drums, as required, maintain two (2) lanes of traffic in the center and inside lane of the mainline and outside lane of the collectors.

Place Item 446, 1-1/4" Asphalt Concrete Surface Course on the outside lane and outside shoulder of the mainline and the inside lane and shoulder of the collectors. Place temporary or permanent pavement markings and open to traffic.

STAGE IV
Between the hours of 9:00 PM and 6:00 AM only, the Contractor shall maintain one (1) lane traffic.

Place final pavement markings and raised pavement markers throughout the project.

A Law Enforcement Officer with Patrol Car shall be used during this stage.

No closures will be permitted during the July 4th and Labor Day weekends or during any Riverfront Stadium and Colliseum event.

Refer to the M.U.T.C.D, current edition, Part 7, Figure 20 for closure details.

RAMP CONSTRUCTION

GALBRAITH ROAD - ENTRANCE RAMPS G & N AND EXIT RAMP P,
DAVIS STREET - RAMP M
MANGHAM DRIVE - RAMP Q
DURING STAGE I CONSTRUCTION
A) Maintain one lane traffic on the left side (inside) of the ramp. Construct joint repairs, shoulder widening, guardrail and curb replacements as required, edge drains, etc., and Item 446 1-3/4" Intermediate Course on the right side (outside) of the ramp and right shoulder.

B) Maintain one lane traffic on the right side (outside) of the ramp and the right shoulder. Construct joint repairs, edge drains, guardrail and curb replacements, Item 446 Intermediate Course on the left side (inside) of the ramp and the left shoulder. Place Temporary Pavement Markings.

DURING STAGE III CONSTRUCTION
Maintain one lane traffic on the left and /or right side of the ramp. Place Item 446 Surface Course using half width construction. Place Temporary Pavement Markings.

SHEPHERD LANE - RAMPS A & B
GLENDALE - MILFORD ROAD - RAMPS L, M & N
A) Maintain one lane traffic on the right side (outside) of the ramp. Construct joint repairs, edge drains, guardrail, etc., and Item 446 1-3/4" Intermediate Course on the left side (inside) of the ramp and left shoulder.

B) Maintain one lane traffic on the left side (inside) portion of the ramp and the left shoulder.

Construct joint repairs, edge drains, guardrail, etc. and Item 446 Intermediate Course on the right side (outside) of the ramp and the right shoulder. Place Temporary Pavement Markings.

DURING STAGE III CONSTRUCTION
Maintain one lane traffic on the left and / or right side of the ramp. Place Item 446 Surface Course using half width construction. Place Temporary Pavement Markings.

SB RAMP F (EXIT RAMP AT GALBRAITH ROAD)
PHASE I

DURING STAGE I CONSTRUCTION
Maintain one lane traffic in a 10′ lane on the right side of Ramp F. Remove the existing curb on the left. Construct temporary pavement 4′ wide along the left side of existing ramp pavement using 8" of Item 301. (See Strengthened Shoulders at Bridges Note on Sheet 26)

PHASE II
DURING STAGE I CONSTRUCTION
Maintain one-lane traffic in a 10′ lane on the left side of Ramp "F" and on the temporary pavement. Construct 12′ of new pavement and curb on the right side of Ramp "F", including underdrains, Items 451, 9" Plain Concrete Pavement and 301, 3" Bituminous Base Course and 1-3/4" Item 446 Intermediate Course. Construct joint repairs, edge drains and Item 446 Intermediate Course on the right side on the overlay portion of the ramp.

PHASE III
DURING STAGE I CONSTRUCTION
Maintain one lane traffic in a minimum 10′ lane on the right side of Ramp F. Maintain traffic exiting to Ramp F on the right shoulder of the deceleration lane. Construct the left portion of the deceleration lane and the right lane of the southbound mainline

PHASE IV
DURING STAGE I PHASE III CONSTRUCTION
Remove the temporary pavement and construct 8′ of new pavement, underdrains and curb on the left side of Ramp "F" including Items 451, 9" Plain Concrete Pavement 301, 3" Bituminous Base Course, Item 446 Intermediate Course and Item 446 Surface Course. Construct joint repairs, edge drains and Item 446 Intermediate Course on the overlay portion of the ramp.

PHASE V
DURING STAGE III CONSTRUCTION
Complete final Item 446, 1-1/4" Surface Course and Pavement Markings on Ramp "F" on the right side maintaining one lane of traffic in a 10′ minimum lane on the left with drums.

RAMPS P & R AT MANGHAM DRIVE
Construction on Ramp P shall be done full width with the ramp closed between the hours of 11:00 PM and 6:00 AM and shall be completed within four (4) consecutive work days, subject to C.M.S. Section 108.07, Liquidated Damages.

Construction on Ramp R shall proceed full width on a 24 hour basis with the ramp closed and shall be completed within three (3) consecutive working days subject to C.M.S. Section 108.07, Liquidated Damages.

MAINTENANCE OF TRAFFIC NOTES

F.H.W.A. REGION	STATE	PROJECT	
5	OHIO		

HAM-75-9.75

25
338

RAMPS C, D, E & F AT GENERAL ELECTRIC
Construction on Ramps C-D-E-F from the North shall be done full width with the ramps closed to traffic.

Construction shall proceed on a 24 hour per day basis during the General Electric shutdown period subject to CMS Section 108.07, Liquidated Damages.

The Engineer shall verify these dates with General Electric at the pre-construction conference.

No construction will be permitted on Shepherd Lane, Ramps A and B at Shepherd Lane, Ramps P, Q, R at Mangham Drive and Ramp J while Ramps C-D-E-F are closed for construction.

The Contractor shall notify the Engineer who will notify GE Traffic Engineering, the City of Evendale and the City of Lincoln Heights two (2) weeks prior to closing Ramps C-D-E-F and/or if any change to the traffic control plans is intended.

The Engineer shall coordinate with General Electric and the City of Lincoln Heights any adjustments to the signal timing on Shepherd Lane.

Payment for the above shall be included in the lump sum bid for Item 614 Maintaining Traffic.

RAMP J AT GENERAL ELECTRIC
Between the hours of 12:00 midnight and 4:00 A.M. only, the ramps may be closed to traffic for construction. The Contractor shall proceed with all ramp construction operations the full width of the ramp and shoulders. All pavement surfaces shall be brought back to normal elevation, or provide tapers or wedges, and shall be open to traffic by 4:00 AM. The bridge shall be constructed using part width construction methods and construction may proceed on a 24 hour basis. Construction on Ramp J shall not be permitted to occur simultaneously with construction on Ramps C, D, E or F.

SLIP RAMPS

NB RAMP G
Ramp G shall be closed for the duration of the project.

SB RAMP H
NB RAMP K
Prior to Stage I construction, remove existing curb and fill the gap with full depth asphalt concrete pavement as shown in the details on SHEET 163.

PIN AND LINK ASSEMBLY MODIFICATIONS
The Contractor shall follow these Maintenance Of Traffic Notes during the Pin and Link Assembly Modifications.

DURING STAGE I CONSTRUCTION
Between the hours of 12:00 Midnight and 12:00 Noon, on Sunday mornings only, the Contractor shall maintain one lane of traffic in the left lane on Bridge Ham-75-1102R and on Bridge Ham-75-1192R.

The Contractor shall perform the proposed modifications as described in Phase I on sht.

The Contractor shall perform the proposed modifications as described in Phase II on sht.

DURING STAGE II CONSTRUCTION
Between the hours of 12:00 Midnight and 12:00 Noon, on Sunday mornings only, the Contractor shall maintain one lane of traffic in the right lane on Bridge Ham-75-1102R and on Bridge Ham-75-1192R.

The Contractor shall perform the proposed modifications as described in Phase III on sht.

GALBRAITH ROAD, BRIDGE NO. HAM-75-1089L OVER SB I- 75 (SHEET 66)
The Contractor shall maintain one lane traffic in each direction and the center left turn lane while closing the outside lanes of the bridge with portable concrete barrier. Remove the existing railing and install new parapets and protective fencing. Refurbishing of abutment bearings and repairing of the damaged fascia-beam shall be performed over closed mainline lanes, as directed by the Engineer.

LOCK STREET OVER SB I-75 (SHEET 67)
No Lane closures will be permitted on Lock Street while the Wyoming Street bridge is out of service.

PHASE I
Maintain one lane in each direction while closing the west parking lane across the structure. Remove the existing railing, install new parapets and protective fence and other items as shown in the bridge plans on the west side of the bridge.

PHASE II
Maintain one lane in each direction while closing the east parking lane across the structure. Remove the existing railing, install new parapets and protective fence and other items as shown on the bridge plans on the east side of the bridge.

SHEPHERD LANE BRIDGE NO. HAM-75-1292 OVER NB & SB I-75
PHASE I (SHEET 69)
Maintain one lane in each direction on the south side of the bridge.

Construct new overlay, strip seals, curb and sidewalk sealing and protective fence on the north side of the bridge.

PHASE II (SHEET 70)
Maintain one lane in each direction on the north side of the bridge.

Construct new overlay, strip seals, curb and sidewalk sealing and protective fence on the south side of the bridge. Refurbishing of abutment bearings and repair of damaged beam shall be performed over closed mainline lanes as directed by the Engineer.

DEMOLITION OF PEDESTRIAN BRIDGE NO. HAM-75 0992 OVER NB & SB MAINLINE STATION 77 + 40+/-

DURING STAGE I CONSTRUCTION
Erect Portable Concrete Barrier, nets and any other protection as required by the Engineer. Remove the two end spans and any other items which can be removed without interrupting the flow of mainline traffic.

DURING STAGE II CONSTRUCTION
Between the hours of 12:00 AM (midnight) and 4:00 AM the Contractor shall close the Interstate for a period of not more than thirty (30) minutes, as outlined in the "Short Duration Closing of the Highway" section of the Maintenance of Traffic Notes.

Position one crane behind the outside pier and a second crane in the inside lane portion of the mainline which is under construction.

While each crane holds one end of the slab, saw cut the slab free of the outside pier and center pier. Lower the slab onto a tractor-trailer unit equipped with an appropriate number of axles and remove the slab from the site.

The Contractor shall submit his method to perform the work outlined above, for approval by the Engineer and the Director, no later than two (2) weeks after the Pre Construction Meeting.

DEMOLITION OF THE WYOMING AVENUE BRIDGE OVER I-75 SB MAINLINE STATION 196 + 50+/-

DURING STAGE I CONSTRUCTION
Erect Portable Concrete Barrier, nets and any other protection as required by the Engineer to prevent debris from falling into the travelled lanes. Remove the portion of the deck over the closed outside lanes and shoulder.

DURING STAGE II CONSTRUCTION
Erect Portable Concrete Barrier, nets and any other protection as required by the Engineer. Remove the remaining portion of the deck over the closed center and inside lanes and shoulder.

Between the hours of 12:00 AM (midnight) and 4:00 AM the contractor shall close the SB Interstate for not more than thirty (30) minutes per beam, as outlined in the "Short Duration Closing of the Highway" section of the Maintenance of Traffic notes.

Remove each beam from the superstructure and place it on a tractor-trailer unit equipped with an appropriate number of axles and remove the beam from the site.

The Contractor shall submit his method to perform the work outlined above, for approval by the Engineer and the Director, no later than two (2) weeks after the Pre Construction Meeting.

SHORT DURATION CLOSING OF THE HIGHWAY (SHEET 78)
The following notes shall apply for the demolition of the Pedestrian bridge and the erection of new beams for the Pedestrian bridge and the Wyoming Avenue bridge, *including the erection and removal of the temporary water line.*

1. Closures for the removal and erection of beams will be permitted between the hours of 12:00 AM (midnight) and 4:00 AM only. The Contractor shall coordinate closure times with the City of Cincinnati, Hamilton County, the Village of Lockland and the State of Ohio respective traffic and police departments so closures do not occur during crowd events which increase I-75 traffic.

2. The maximum duration of three lane closures shall not exceed 30 minutes, unless otherwise noted, removing or setting only one (1) beam at a time. Traffic shall be completely cleared before beginning the next closing.

3. "Prepare to Stop" (OW-152-48) signs shall be erected on each side of the directional traffic lanes one-half mile in advance of the structure where the removal or erection is in progress.

4. The Contractor shall furnish and install three (3) "Stop" signs (R-1-48) at the point of closure. The Contractor shall furnish and install two (2) "Watch for Stopped Traffic" signs (Special) 1800 feet upstream from the Road Construction Ahead signs on I-75 NB and SB and at the same location of the Road Construction Ahead signs on all "ON" ramps to I-75. The Contractor shall install additional "Watch for Stopped Traffic" every 2000 feet upstream from the "Watch for Stopped Traffic" on I-75 if traffic backups reach the first set of signs. The need for these signs shall be constantly monitored by the Contractor. All "Watch for Stopped Traffic" signs and "Prepare to Stop" signs shall be equipped with a Type B high intensity flashing warning light.

5. At least one flagger shall be provided at the point of closure. A minimum of three (3) law enforcement officers with patrol vehicles shall be used to pace motorists to a stop. After traffic has been stopped, one (1) patrol vehicle shall travel along the roadway shoulder 50 feet behind the backup of stopped vehicles when stoppages occur. In the vicinity of freeway entrances or exits, the Contractor shall place flaggers on the ramps to slow traffic.

6. An additional law enforcement officer with patrol vehicle shall be used to pace to a stop traffic entering SB I-75 from the Cross County Highway on Ramp C when SB I-75 is to be closed at the pedestrian bridge. The Contractor shall provide at least one flagger at the stopping point on Ramp C which shall be located on the ramp before entering the acceleration lane.

7. Patrol vehicles shall have flashing beacons to provide adequate visibility to approaching traffic.

Information regarding the fees, arrangements and payment for special duty patrol services may be obtained by contacting the appropriate law enforcement agencies as specified in the note covering law enforcement officer with patrol car.

Payment for the above is included in Item Special - Law Enforcement Officer with Patrol Car.

ITEM 614 - PORTABLE CHANGEABLE MESSAGE SIGN, AS PER PLAN
The Contractor shall furnish, install, maintain and remove, when no longer needed, a diesel powered changeable message sign, on site, for the duration of the project. Each sign shall be either a Wink-o-Matic Generation 3, 4, 6, 10 or 12, American Signal Co. CMS-T300 or an Addco Digi-Dot sign or a Tele-Spot Sentinal sign or an approved equal.

Each sign shall be trailer mounted and equipped with a functional dimming mechanism to dim the sign during darkness and a tamper and vandal proof enclosure. Each sign shall be provided with appropiate training and operation instructions to enable on-site personnel to operate and troubleshoot the unit. The sign shall also be capable of being powered by an electrical service drop from a local utility company.

MTNS.DGN

MAINTENANCE OF TRAFFIC NOTES

F.H.W.A. REGION	STATE	PROJECT	
5	OHIO		

HAM-75-9.75

26
338

The probable locations and work limits for those locations shall be determined by the Engineer. Placement, operation, maintenance and all activation of the signs by the Contractor shall be as directed by the Engineer. The PCMS shall be located in a highly visible position yet protected from traffic. The Contractor shall, at the direction of the Engineer, relocate the PCMS to improve visibility or accommodate changed conditions. When not in use, the PCMS will be off, facing away from all traffic and shall display one or more high intensity yellow reflective sheeting surfaces of 9-inch by 15-inch minimum size facing traffic.

The Engineer shall be provided access to each sign unit and shall be provided with appropiate training and operation instructions to enable ODOT personnel to operate and troubleshoot the unit and to revise sign messages, if necessary.

All messages to be displayed on the sign will be provided by the Engineer. A list of all required preprogrammed messages will be given to the Contractor at the project preconstruction conference. The sign shall have two different memories (PROM and RAM) and capability to store up to 99 messages in each memory. Sign messages shall be legible from 650 ft. minimum. The sign legend shall be capable of being changed in the field. In order to convey a maximum of information at a single glance, only three-line presentation formats with a maximum of six message phases will be permitted. Normally, only a maximum of three message phases should be employed. PCMS format shall permit the complete message for each phase to be read at least once.

STRENGTHENED SHOULDERS AT BRIDGES

In the areas where the existing 4 ft. median shoulder is to be strengthened, the Contractor shall excavate the existing shoulder to a depth of 8" and place 8" of Item 301 Bituminous Aggregate Base.

This work shall be done prior to Stage I Construction at the approaches to the mainline bridges and also on Ramp F at Galbraith Road for widening the right side of the ramp pavement.

The 301 material shall remain in place at the mainline bridges and shall be removed on Ramp F.

The following estimated quantities have been included in the General Summary for Strengthened Shoulders at Bridges.

Item 301 - Bituminous Aggregate	400 Cu. Yd.
Item 203 - Excavation not including Embankment Construction	400 Cu. Yd.

NOTICE OF CLOSURE SIGNS

Notice of Closure (OC-60A) Signs shall be erected by the Contractor at least one week in advance of the scheduled road or ramp closure. The signs shall be erected on the right hand side of the road/ramp facing traffic. They shall be located in the field so as not to interfere with any permanent signs. On roadways they should be erected anywhere along it; as long as it is visible to the motorists using the ramp. On entrance ramps the sign shall be erected well in advance of the merge area to avoid distracting the motorists. (See sign detail on Sheet 28)

Payment for this work shall be included in the lump sum bid for item 614 maintaining traffic and shall include furnishing, erecting, maintaining and removing the signs including supports.

EXISTING PAVEMENT MARKINGS

If during the duration of the contract, the Contractor has to alter the pavement markings outside the project limits, they shall be required to replace all such markings with the same material; or, if the State or any other maintaining agency is called to suspend painting operation due to the existing construction, the Contractor shall be required to repaint the existing pavement markings which the maintaining agency was unable to paint. Payment for this work shall be included under the appropriate pavement marking pay item.

RESURFACING OPERATIONS

Prior to commencing resurfacing operations, the Contractor shall reference both edges of the mainline and ramp traveled pavement on both sides of the roadway in a manner satisfactory to the Engineer. Mainline pavement shall be referenced a maximum of 1,000 feet in tangent sections and 200 feet in curve sections.

Ramp pavement shall be referenced a maximum of 200 feet in tangent sections and 50 feet in curve sections. These referenced points shall be used to reestablish the traveled lanes during and at the conclusion of the resurfacing operations to provide the necessary control for pavement marking layout.

All material used in referencing the above shall be removed at the completion of the work.

The application of Item 407 - Tack Coat will not be permitted until just prior to placing the base course. Traffic shall not be permitted on any tacked areas.

Traffic shall not be maintained on a lane adjacent to a shoulder during resurfacing operations unless the leveling course or surface course has been placed on both lane and shoulder. The surface course cannot be placed on a lane until the intermediate course and/or base courses have been placed on the adjacent lane and shoulder.

Temporary pavement wedges shall be provided at all times where traffic is required to travel from or onto a pavement surface of different elevation. These wedges shall be removed prior to placing the specified pavement courses. The minimum slope of the temporary pavement wedges shall be 1" per foot along longitudinal joints and 25:1 at transverse joints. Cost for these wedges shall be included in Item 614, Maintaining Traffic.

ITEM 622 - PORTABLE CONCRETE BARRIER, 32"

This item of work shall consist of providing portable concrete barrier where bridge parapets are being totally removed, in the areas of full depth mainline pavement construction and in the areas where overhead bridges are being removed.

The portable concrete barrier shall conform to the specifications shown on Standard Drawing MC-9.2 and/or MC-9A. All portable concrete barrier sections shall be connected together in a run using pin connections. Tongue and groove connections shall not be permitted.

The approach ends of the portable concrete barrier shall be flared back at the rate of 13:1 and temporary tapered end terminals shall be placed at the approach end of each portable concrete barrier run.

All of the above including all labor, equipment, and material shall be included in the unit price bid for Item 622 - Portable Concrete Barrier, 32".

The following quantities have been carried to the General Summary for this purpose:

Item 622 Portable Concrete Barrier, 32" 31,400 Lin. Ft.

Movement of the portable concrete barriers on appropriate side roads between phases shall be accomplished in one working day. Flaggers shall be utilized for protection of vehicular traffic until movement of the barriers is compete and traffic is maintained.

ITEM 614 - BARRIER REFLECTORS AND OBJECT MARKERS

Barrier reflectors shall be mounted on Portable Concrete Barrier, 32" in accordance with the requirements of Supplemental Specification 802 except that the barrier reflectors shall be spaced at 25 foot intervals. A quantity of 1010 each of Item 614 - Barrier Reflector, Type B has been carried to the General Summary. Also, 614 - Object Markers, 1010 each at 25 foot intervals have been carried to the General Summary.

ITEM SPECIAL - TEMPORARY IMPACT ATTENUATOR (G.R.E.A.T. Type)

This work shall consist of furnishing, installing, relocating and removing Temporary Impact Attenuators as required in the plans. This item shall include all related hardware, not separately specified, as required by the manufacturer to construct complete and functional G.R.E.A.T. Impact Attenuator Systems. The attenuators shall be placed in accordance with the manufacturer's specifications and at the locations shown on the plans. the impact attenuator shall be manufactured by The Energy Absorption Systems, Inc., One East Wacker Drive, Chicago, Illinois 60601: Telephone: (312) 467- 6750.

The backup system shall be designed per the manufacturer who shall provide the details for this shape and transition. The costs for this work necessary for completion of this item shall be considered incidental.

The nose cover of the attenuator shall meet the requirements of Standard Drawing MT-95.81.

Payment for the above work shall be make at the unit price bid for each, Item Special, Temporary Impact Attenuator (G.R.E.A.T. Type) and shall be considered full payment for furnishing, installing at the specified locations, restoration after each vehicle impact, including all labor, tools, equipment and miscellaneous hardware and materials necessary to complete these items of work.

ITEM SPECIAL - Temporary Impact Attenuator (G.R.E.A.T. Type)
Model No. 200200NF6GCZ 2 - Each

ITEM SPECIAL - Remove and replace Temporary Impact Attenuator
1 - Each.

For locations of Temporary Impact Attenuators see the Maintenance of Traffic plan;

STAGE I, Sheet 30 and 35
STAGE I-A, Sheet 31 and 34

ITEM SPECIAL - TEMPORARY IMPACT ATTENUATOR (G.R.E.A.T. Type) REPLACEMENT

The Contractor shall be responsible for inspection, repairing, and otherwise restoring the impact attenuator in accordance with the manufacturer's maintenance instructions while it is in use on the project. Such repairs shall be performed within 12 hours of the incident which caused damage to the project. In addition to any extra units supplied for this project, the contractor shall be responsible for supplying all necessary materials, labor and equipment required to perform the above described restoration of the attenuator.

An estimated quantity as listed below shall be used as directed by the Engineer for use in the above mentioned restoration only when it is decided that minor or major repairs cannot be performed in a safe and timely manner:

ITEM SPECIAL - Temporary Impact Attenuator, (G.R.E.A.T. Type)
Replacement Model No. 200200NF6GCZ, 1 - Each

ITEM 404 - BITUMINOUS CONCRETE FOR MAINTAINING TRAFFIC

This quantity is provided for use as directed by the Engineer to patch chuck holes, and for other such places as may be necessary, as directed by the Engineer, to maintain safe traffic flow. Where materials are to be placed in small quantities or under adverse conditions the composition may be either Item 404 - Asphalt Concrete, AC-20, or a bituminous premixed surface course approved by the Engineer. Specification requirements for placing and finishing may be waived if, in the judgment of the Engineer it is determined that satisfactory results can be obtained in providing a smooth and durable pavement surface. Where premixed surface course is used the conversion of weight to cubic yards shall be in accordance with the conversion table under 401.17. A quantity of 800 cu. yds., Item 404 - Bituminous Concrete for Maintaining Traffic, is carried to the General Summary.

ITEM SPECIAL, LAW ENFORCEMENT OFFICER WITH PATROL CAR

In addition to the requirements of Item 614, uniformed law enforcement officers and official patrol cars with emergency flashers operating, shall be provided during any intermittent first day setup period and last day teardown period and for short duration closings of the highway.

The following estimate has been included in the General Summary.

Item Special - Law Enforcement Officer with Patrol Car,
1000 hours

Information regarding arrangements and payments by the Contractor for special duty patrol services may be obtained by contacting:

THE OHIO HIGHWAY PATROL
660 East Main Street
Columbus, Ohio
(614) 466-2660

CITY OF LOCKLAND
POLICE DEPARTMENT
Wyoming & N. Cooper Avenue
Lockland, Ohio 45215
(513) 761-1699

CITY OF CINCINNATI
POLICE DIVISION
310 Ezzard Charles Drive
Cincinnati, Ohio 45214
(513) 352-3536

HAMILTON COUNTY
SHERIFF'S DEPARTMENT
Hamilton County Justice Center
1000 Sycamore, Room 110
Cincinnati, Ohio 45202
(513) 632-8822

MTMN.DGN

MAINTENANCE OF TRAFFIC NOTES

F.H.W.A. REGION	STATE	PROJECT	
5	OHIO		

HAM-75-9.75

27
338

ITEM SPECIAL - PATCHING EXISTING PAVED SHOULDERS
This item is to be used, as directed by the Engineer, to patch deteriorated paved shoulders where chuck holes exist. This work shall consist of removing all loose debris, squaring up the hole, applying tack coat and compacting a minimum of 3" of Item 301 material in the void to finish flush with the surrounding surface. Payment for this item shall include all labor, material and equipment necessary to obtain the desired results. Payment shall be per cubic yard of Item Special - Patching Existing Paved Shoulder. An estimated quantity of 100 cu. yd. has been carried to the General Summary.

RESTRICTIONS
No lane restrictions on Glendale-Milford, S.R. 126 and the ramps at the S.R. 126 and I-75 interchange will be permitted during the St. Rita's festival, July 10, & 11, 1993. (Rain Dates - July 17, & 18, 1993). Subject to liquidated damages, CMS 108.07.

INTERIM COMPLETION LIMITS
The Contractor shall schedule the repair of mainline pavement and bridges to permit the full opening all three lanes of traffic northbound and southbound from October 31 to March 1. This requires completion of pavement courses through the Type 1, 446 Surface Course, guardrail, berm, and pavement markings. During the period of from October 31 to March 1 only short term daylight closures will be permitted subject to approval by the Engineer. Failure to comply with this requirement will subject the Contractor to Liquidated Damages a shown in the Liquidated Damages note below.

FINAL COMPLETION DATE
In lieu of the schedule of liquidated damages found in Section 108.07 of the Ohio Department of Transportation's Construction and Material Specifications dated 1993, the Department shall assess $20,000 in liquidated damages for each and every calendar day work is continued beyond the completion date.

LIQUIDATED DAMAGES
Should the Contractor fail to meet any of the requirements set forth in the plans, including the limits set for interim completion or the date set for final completion, the Contractor shall be subject to liquidated damages in the amount of $20,000 per day.

MULTIPLE SHIFTS AND WORK AT NIGHT AND ON SATURDAYS MAY BE PERMITTED IF NOT OTHERWISE DIRECTLY PROHIBITED BY THE PLANS, SPECIAL PROVISIONS OR SPECIFICATIONS. WORK ON SUNDAYS AND HOLIDAYS MAY BE PERMITTED AT THE DISCRETION OF THE ENGINEER.

ITEM 614- MAINTAINING TRAFFIC
Payment for all items listed under maintenance of traffic shall be included in the lump sum bid price for Item 614 - Maintaining Traffic with the following exceptions.

Item 203	-	Excavation, not including Embankment Construction
Item 301	-	Bituminous Aggregate Base,
Item 614	-	Portable Changeable Message Sign, As Per Plan
Item 614	-	Barrier Reflector, Type B
Item 614	-	Temporary Edge Lines, Class I
Item 614	-	Temporary Center Line, Class I, 740.05, Type C
Item 614	-	Temporary Channelizing Lines, Class I
Item 614	-	Temporary Edge Line, Class I, 740.05, Type C
Item 614	-	Temporary Lane Line, Class I
Item 614	-	Temporary Lane Line, Class II
Item 614	-	Temporary Lane Line, Class I, 740.05, Type C
Item 614	-	Work Zone Speed Limit Signs
Item 622	-	Portable Concrete Barrier, 32"
Item Special	-	Temporary Impact Attenuator (G.R.E.A.T. Type) Model No. 200200NF6GCZ
Item Special	-	Remove and Replace Temporary Impact Attenuator
Item Special	-	Temporary Impact Attenuator (G.R.E.A.T. Type) Replacement Model No. 200200NF6GCZ
Item Special	-	Law Enforcement Officer with Patrol Car

The following items are "As Directed by the Engineer."

Item 404	-	Bituminous Concrete for Maintaining Traffic
Item Special	-	Replacement Signs
Item Special	-	Replacement Drums

TEMPORARY SIGN SUPPORT REQUIREMENTS

A. PLACEMENT OF SIGNS WHICH WILL REMAIN MORE THAN ONE DAY:

1) LATERAL PLACEMENT TO NEAREST EDGE OF SIGNS SHALL BE AS FOLLOWS:

   a) ON THE RIGHT SIDE OF THE ROAD FOR APPROACHING TRAFFIC (EXCEPT FOR DUAL MOUNTED SIGNS AND SIGNS DESIGNATED IN THE PLANS FOR LEFT SIDE MOUNTING).

   b) CURBED ROADWAY - PREFERABLY 2 FT. (MINIMUM 1 FT.) BEHIND FACE OF CURB.

   c) UNCURBED ROADWAY-12 FT. FROM EDGE OF TRAFFIC LANE OR 6 FT. FROM EDGE OF PAVED OR USEABLE SHOULDER, WHICHEVER IS GREATER.

   d) BEHIND GUARDRAIL OR BARRIER - PREFERABLY 2 FT. BEHIND FACE OF GUARDRAIL (MINIMUM 1 FT.) FOR SIGNS ON CLASS A SUPPORTS: 4 FT. FOR CLASS B OR C SUPPORTS 1 FT. BEHIND FACE OF CONCRETE BARRIER UNLESS BARRIER TOP MOUNTING IS REQUIRED BY THE PLAN.

2) VERTICAL CLEARANCE OF SIGNS, MEASURED ABOVE ROADWAY ELEVATION; SHALL BE AS FOLLOWS:

   a) RURAL - 5 FT. WHEN PARKED CARS, CONSTRUCTION EQUIPMENT, ETC WILL NOT OBSCURE SIGN VISIBILITY.

   b) RURAL AREAS WITH PARKED CARS OR CONSTRUCTION EQUIPMENT - 7 FT.

   c) URBAN - 7 FT.

   d) CARE SHALL BE TAKEN TO ASSURE THAT SIGNS WILL NOT BE OBSCURED BY CONSTRUCTION EQUIPMENT, TREES, WEEDS OR OTHER OBSTACLES. BRUSH, WEEDS OR GRASS WITHIN THE RIGHT OF WAY SHALL BE TRIMMED AS NECESSARY. SIGNS SHALL NORMALLY BE VISIBLE TO TRAFFIC 400 TO 600 FT. IN ADVANCE OF THE SIGN.

3) SUPPORTS FOR SIGNS WHICH WILL REMAIN IN PLACE MORE THAN ONE DAY SHALL BE FIXED RATHER THAN PORTABLE EXCEPT IN SITUATIONS WHERE THE SIGN MUST REST ON PERMANENT PAVEMENT OR OTHER SURFACE WHICH WOULD BE DAMAGED BY INSERTION OF POST TYPE SUPPORTS.

B. PLACEMENT OF SIGNS WHICH WILL REMAIN FOR ONE DAY OR LESS:

1) SAME AS A-1 ABOVE EXECPT THAT SIGNS MAY BE PLACED ON THE ROADWAY ONLY IF THEY DO NOT INTRUDE INTO A TRAFFIC LANE IN USE.

2) MINIMUM OF 1 FT. ABOVE ROADWAY

C. CLASSES OF SUPPORTS:

ALL TEMPORARY SIGN SUPPORTS SHALL BE OF THE FOLLOWING TYPES:

1) CLASS A:

SUPPORTS SHALL BE USED FOR EXPOSED LOCATIONS ON HIGHWAYS WHERE TRAFFIC APPROACH SPEEDS OF 40 MPH AND HIGHER ARE ENCOUNTERED. THEY ARE ALSO SUITABLE FOR USE IN ALL OTHER LOCATIONS.

2) CLASS B:

SUPPORTS SHALL BE USED FOR EXPOSED LOCATIONS ON HIGHWAYS WHERE TRAFFIC APPROACH SPEEDS OF LESS THAN 40 MPH ARE ENCOUNTERED. THEY ARE ALSO SUITABLE FOR USE IN ALL APPLICATIONS DEFINED FOR CLASS C SUPPORTS.

3) CLASS C:

SUPPORTS MAY ONLY BE USED WHERE FULLY PROTECTED BY GUARDRAIL, CONCRETE BARRIER AND IN LOCATIONS POSITIVELY PROTECTED FROM TRAFFIC SUCH AS ON RETAINING WALLS OR WHERE TRAFFIC APPROACH SPEEDS ARE LESS THAN 25 MPH.

D. TRAFFIC APPROACH SPEEDS:

TRAFFIC APPROACH SPEEDS SHALL BE THE LOCALLY POSTED SPEED (NOT ADVISORY SPEED SIGNS) OR THE MEASURED ACTUAL (85TH PERCENTILE) SPEED (IF AVAILABLE) OF APPROACHING TRAFFIC, WHICHEVER IS HIGHER, ADJACENT TO THE SIGN LOCATION.

TABLE

APPROACH SPEED (MPH)	COMPLETELY PROTECTED BY GUARDRAIL OR BARRIER	PARTLY PROTECTED BY GUARDRAIL OR BARRIER *	GREATER THAN 30' FROM EDGE OF PAVEMENT	WITHIN 30' FROM EDGE OF PAVEMENT
40 AND HIGHER	A, B OR C	A OR B	A OR B **	A ONLY
26 TO 39	A, B OR C	A OR B	A OR B	A OR B
0 TO 25	A, B OR C	A, B OR C	A, B OR C	A, B OR C

* IF SUPPORTS ARE BEHIND GUARDRAIL BUT NOT FULLY 5.5' BEHIND FACE OF RAIL OR IF SIGN IS NOT 1' BEHIND FACE OF CONCRETE BARRIER.

** 30' CRITERION IS BASED UPON STRAIGHT ROADWAY AND A SLOPE OF 6:1 OR FLATTER. SUPPORTS ON THE OUTSIDE OF CURVES OR LOCATED DOWN A SLOPE (STEEPER THAN 6:1) WILL REQUIRE USE OF CLASS A SUPPORTS.

E. BALLASTING

BALLASTING OF PORTABLE SUPPORTS SHALL BE WITH SANDBAGS PLACED WITHIN 1 FT. OF THE GROUND. IN NO CASE SHALL HARD OBJECTS BE USED FOR BALLAST.

F. STRENGTH OF SIGN SUPPORTS

THE CONTRACTOR SHALL CHOOSE SIGN SUPPORTS OF ADEQUATE STRENGTH AND WITH ADEQUATE FOUNDATIONS AND ANCHORAGE TO SUPPORT THE SIGN SIZES ERECTED. PROPRIETARY DEVICES SHALL NOT BE LOADED BEYOND THE LIMITS RECOMMENDED BY THE MANUFACTURER. SLIP BASE TYPE BREAKAWAY BEAM CONNECTIONS SHALL BE AT LEAST PARTIALLY EMBEDDED IN CONCRETE CONSISTING OF A 1 FT. DEEP BY 12" DIAMETER COLLAR. SIGN SUPPORTS WHICH FAIL UNDER TYPICAL WIND LOAD CONDITIONS SHALL BE IMMEDIATELY MODIFIED OR REPLACED WITH A SUPPORT OF ADEQUATE STRENGTH.

G. PROHIBITED SUPPORTS

THE FOLLOWING SUPPORT TYPES SHALL NOT BE PERMITTED ON PROJECTS:

1) SUPPORTS FABRICATED FROM AUTOMOTIVE AXLE DIFFERENTIAL ASSEMBLIES AND SIMILARLY HEAVY ASSEMBLIES WHICH CANNOT BE CONSIDERED BREAKAWAY TYPE.

2) SUPPORTS CONSISTING OF VERTICAL POSTS WITH ANGLED BRACES MADE FROM DRIVEPOST OR OTHER RIGID ELEMENTS.

CALC BY _____ DATE _____
CHKD BY _____ DATE _____

HAM-75-9.75

OHIO | FHWA REGION 5 | 27 A | 338

HAM-75-9.75

CLASS A SUPPORTS

FIXED SUPPORTS

1) ALL #2, #3, AND #4 POST WHEN INSTALLED SINGLY OR IN PAIRS ACCORDING TO THE DETAILS OF TC-41.20. THE NUMBER OF SUPPORTS SHALL BE AS SHOWN ON TC-52.10 AND TC-52.20.

2) THE FOLLOWING POST TYPES, WHEN INSTALLED SINGLY, BY IMBEDMENT OR DRIVING INTO EARTH TO A DEPTH OF ABOUT 42 INCHES:

   a) - UP TO 4" X 4" WOOD

   b) - UP TO 2 INCH DIAMETER SCHEDULE 40 STEEL PIPE

   c) - UP TO 3 INCH DIAMETER SCHEDULE 40 ALUMINUM PIPE

   d) - UP TO 2 1/4 INCH SQUARE, 12 GAUGE WALL, PUNCHED STEEL POST

   e) - UP TO 6" X 8" WOOD WITH BREAKAWAY HOLES SHOWN BELOW

3) THE FOLLOWING POST TYPES WHEN INSTALLED IN PAIRS WITH LESS THAN 7 FT. BETWEEN POSTS, BY IMBEDMENT OR DRIVING INTO EARTH TO A DEPTH OF ABOUT 42 INCHES:

   a) - UP TO 4" X 4" WOOD

   b) - UP TO 2 INCH DIAMETER SCHEDULE 40 STEEL PIPE

   c) - UP TO 3 INCH DIAMETER SCHEDULE 40 ALUMINUM PIPE

   d) - UP TO 2 INCH SQUARE, 14 GAUGE WALL, PUNCHED STEEL POST

4) FIXED TYPE III BARRICADES:

5) ALL BREAKAWAY CONNECTION BEAM SUPPORTS, WHEN INSTALLED ACCORDING TO THE PROPER DETAILS SHOWN ON TC-41.10 WITH A MINIMUM CLEAR DISTANCE BETWEEN SUPPORTS OF 7 FT. FOR SUPPORTS LARGER THAN W6 X 9.

6) ANY BREAKAWAY POST OR POST AND CONNECTION WHICH HAS BEEN CRASH TESTED AND APPROVED BY THE FHWA AS SATISFYING THE BREAKAWAY CRITERIA DESCRIBED IN 630.06.

( )

ALL WORK AND TRAFFIC CONTROL DEVICES SHALL BE IN ACCORDANCE WITH 614 AND OTHER APPLICABLE PORTIONS OF THE C & M SPECIFICATIONS AS WELL AS IN ACCORDANCE WITH PART 7 OF THE OMUTCD. PAYMENT FOR ALL LABOR, EQUIPMENT AND MATERIALS TO PROVIDE THIS METHOD OF TRAFFIC CONTROL SHALL BE INCLUDED IN THE LUMP SUM BID FOR 614 MAINTAINING TRAFFIC, UNLESS SEPARATELY ITEMIZED IN THE PLAN.

REVISED BY:	DATE:

210510	DATE 05/07/90
TEMPORARY SIGN SUPPORT	
PLAN INSERT SHEET	

CALC BY / DATE	HAM-75-9.75	OHIO	27B
CHKD BY / DATE		FHWA REGION 5	338

CLASS A SUPPORTS

FIXED

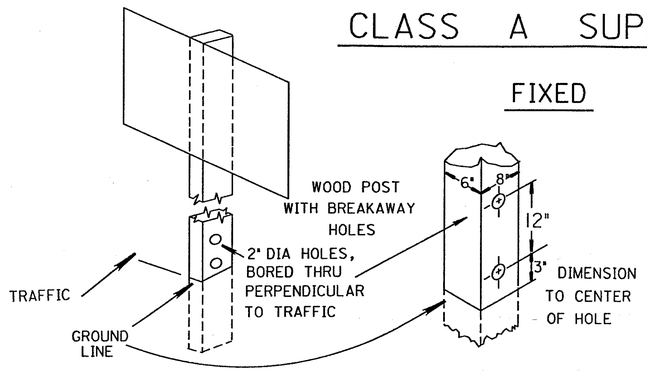

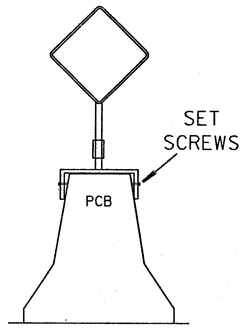

PORTABLE

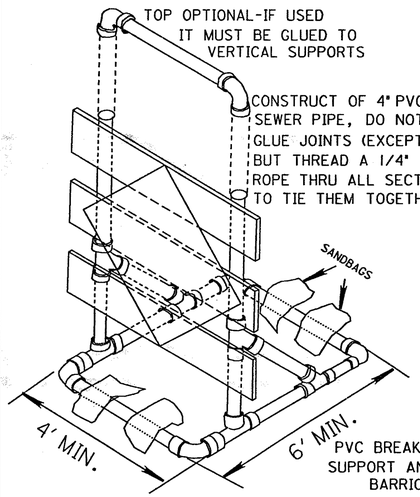

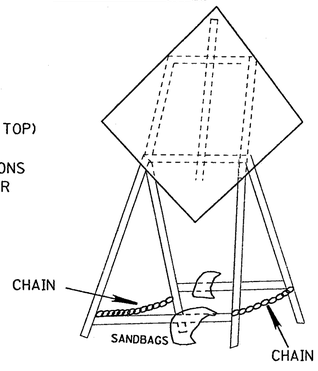

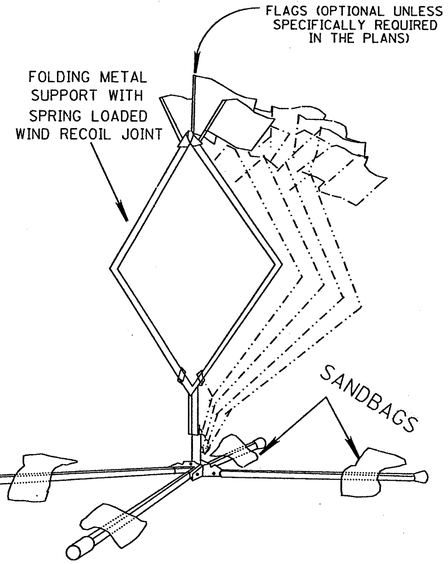

STUBBING STANDARD

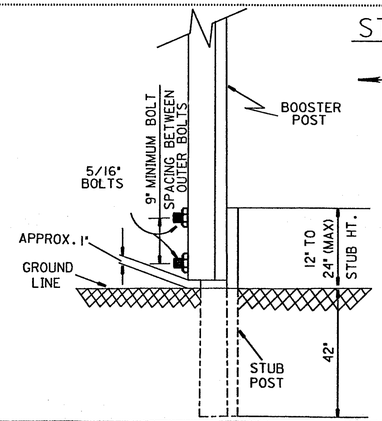

NOTES

1. FOR USE WITH #3 POST OR SMALLER ONLY
2. BOLTS SHALL BE STEEL OR ALUMINUM
3. A MINIMUM OF TWO FASTENERS SHALL BE USED PER ASSEMBLY
4. BOOSTER POST SHALL BE MOUNTED BEHIND STUB POST
5. BOOSTER POST SHALL BE THE SAME OR 1 LB./FT. LESS THAN STUB POST

CLASS B SUPPORTS

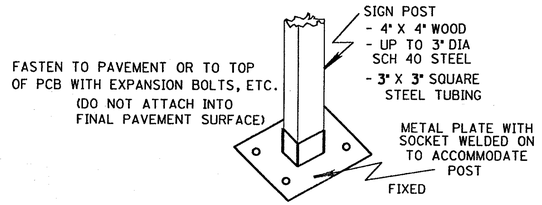

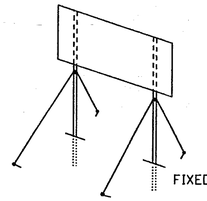

ANY CLASS A SIGN POST WITH GUY WIRES ADDED TO INCREASE SIGN CARRYING ABILITY. (GUY WIRES SHALL NOT BE HEAVIER THAN 1/8" DIA. BRAIDED CABLE. GUY ANCHORS SHALL NOT EXTEND MORE THAN 6" ABOVE GROUND SURFACE).

CLASS C SUPPORTS

1. ALL BEAM TYPE SUPPORTS WITHOUT BREAKAWAY CONNECTIONS.
2. SUPPORTS SIMILAR TO BUT LARGER THAN PERMITTED FOR CLASS A OR B.
3. THE STEEL DRUM(S) SHOWN BELOW MAY BE USED ONLY WHEN LOCATED BEHIND GUARDRAIL OR BARRIER.

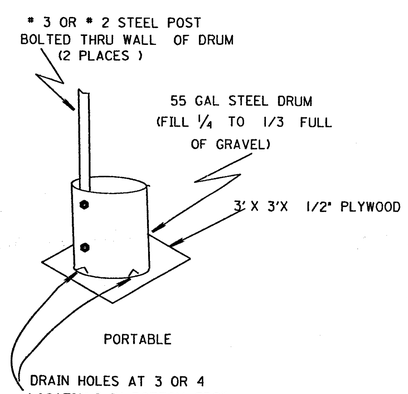

ALL WORK AND TRAFFIC CONTROL DEVICES SHALL BE IN ACCORDANCE WITH 614 AND OTHER APPLICABLE PORTIONS OF THE C & M SPECIFICATIONS AS WELL AS IN ACCORDANCE WITH PART 7 OF THE OMUTCD. PAYMENT FOR ALL LABOR, EQUIPMENT AND MATERIALS TO PROVIDE THIS METHOD OF TRAFFIC CONTROL SHALL BE INCLUDED IN THE LUMP SUM BID FOR 614 MAINTAINING TRAFFIC, UNLESS SEPARATELY ITEMIZED IN THE PLAN.

REVISED BY:	DATE:
210511	DATE 05/07/90
TEMPORARY SIGN SUPPORT	
PLAN INSERT SHEET	

MAINTENANCE OF TRAFFIC NOTES WCC

F.H.W.A. REGION	STATE	PROJECT	
5	OHIO		

28/338

HAM - 75 - 9.75

Maintenance Of Traffic Estimated Quantities

LINE	LOCATION	SHT. NO.	614 Temporary Lane Line Class I (Mile)	614 Temporary Lane Line Class II (Mile)	614 Temporary Lane Line Class I 740.05, Type C (Mile)	614 Temporary Center Line Class I 740.05, Type C (Mile)	614 Temporary Edge Line (White) Class I (Mile)	614 Temporary Edge Line (Yellow) Class I (Mile)	614 Temporary Edge Line (W) Class I 740.05, Type C (Mile)	614 Temporary Edge Line (Y) Class I 740.05, Type C (Mile)	614 Temporary Channelizing Line, Class I (Lin.Ft.)	614 Barrier Reflector (White) Type B (Each)	614 Barrier Reflector (Yellow) Type B (Each)	622 Portable Concrete Barrier, 32" (Lin.Ft.)
1														
2	STAGE I CONSTRUCTION		8.80				0.21	0.76	1.04	0.47	2325	372	108	15950
3														
4	STAGE 1A CONSTRUCTION										500			2760
5														
6	STAGE II CONSTRUCTION				8.80		8.77	0.96	0.56	1.45	1265	30	452	11505
7														
8														
9														
10	STAGE III CONSTRUCTION				8.80		0.21	0.76	1.04	0.47	2325			
11														
12														
13														
14	STAGE IV CONSTRUCTION			17.75										
15														
16														
17														
18	GALBRAITH ROAD											36		840
19														
20														
21														
22	WYOMING AVENUE		0.013				0.021							140
23														
24														
25	LOCK STREET													
26	PHASE I											6		100
27	PHASE II											6		100
28														
29	SHEPHERD LANE													
30	PHASE I				0.015	0.167	0.148				40			
31	PHASE II				0.015	0.04	0.133							
	TOTALS TO GENERAL SUMMARY		8.82	17.75	17.90	0.21	11.98	5.06			6455	1010		31395

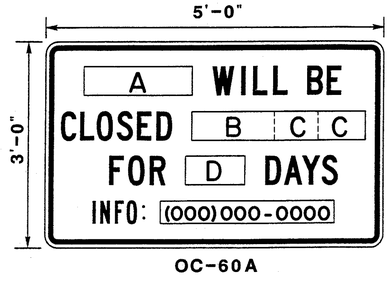

OC-60A

NOTICE OF CLOSURE SIGN

A) RAMP
BRIDGE
ROAD

B) 3 Letter month

C) 1 Digit

D) 3 Digit * number
Maximum

* 30, 60, 90, 180
or other

MAINTENANCE OF TRAFFIC
STAGES I & III

0 50 100

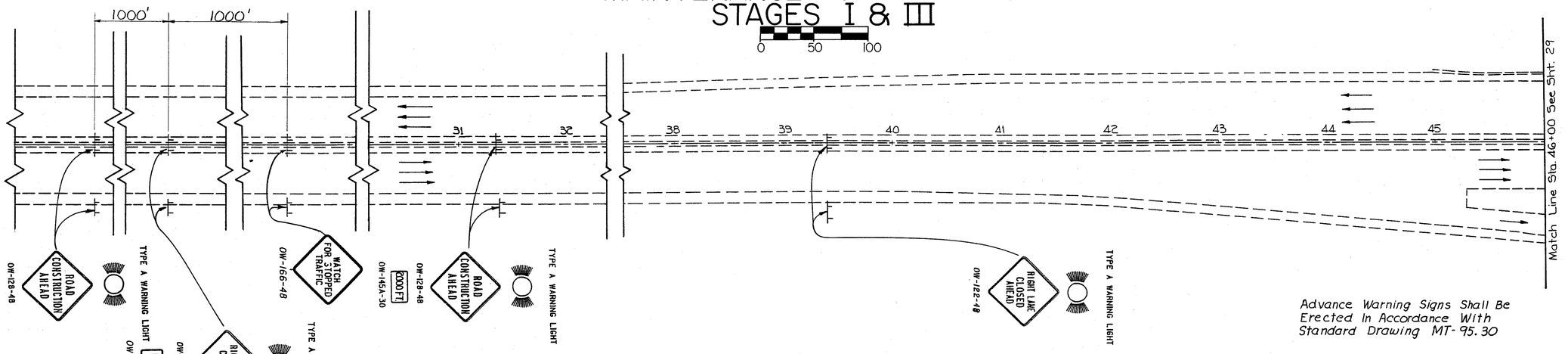

Advance Warning Signs Shall Be Erected In Accordance With Standard Drawing MT-95.30

STAGES I & III

MAINTENANCE OF TRAFFIC STA 34+00 TO STA 46+00

MEDIA RESOURCES CO.-P

F.H.W.A. REGION	STATE	PROJECT	
5	OHIO		

29
338

HAM - 75-9.75

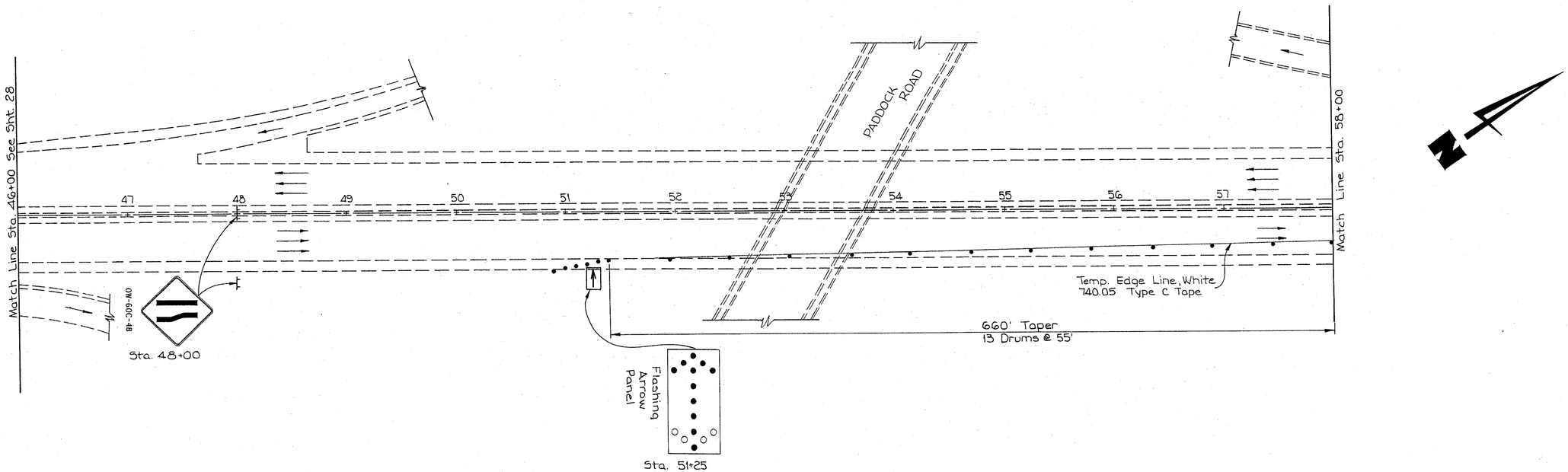

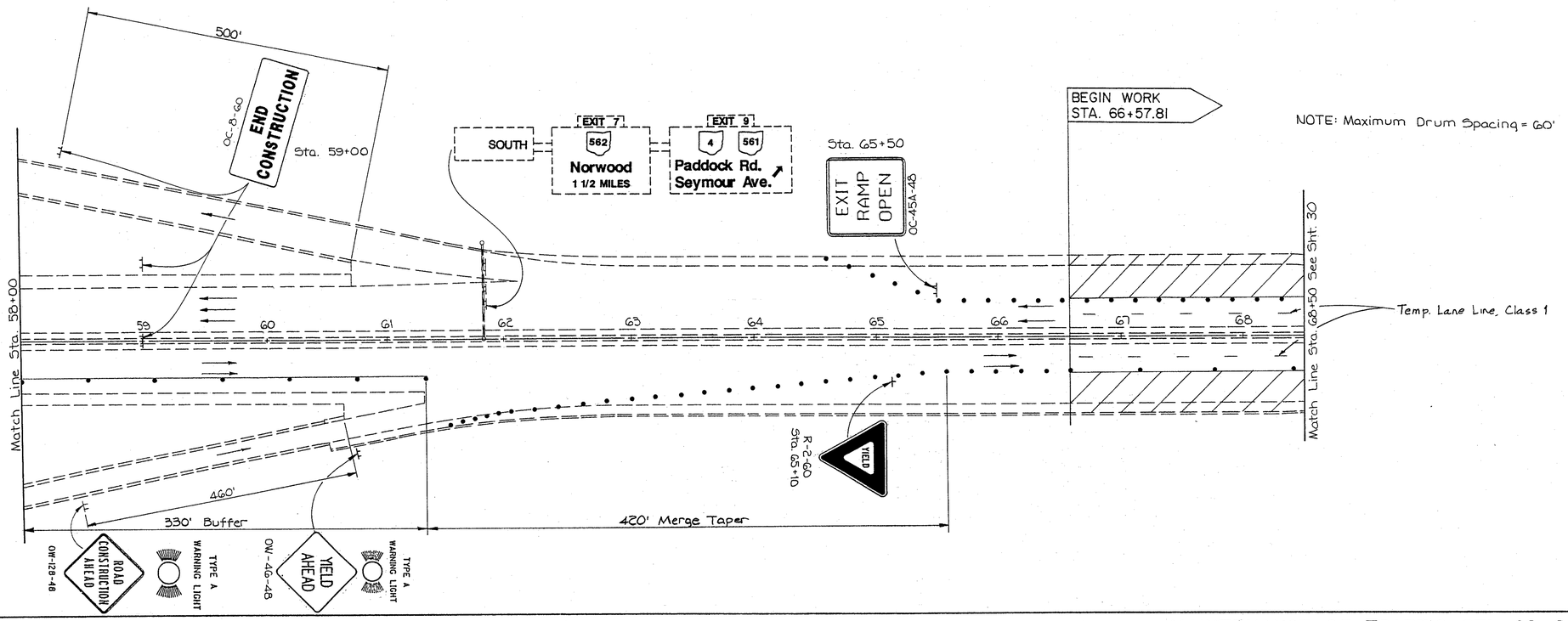

STAGES I & III

MAINTENANCE OF TRAFFIC STA. 46+00 TO STA. 68+50

MEDIA RESOURCES CORP

F.H.W.A. REGION	STATE	PROJECT	
5	OHIO		

30
338

HAM - 75 - 9.75

LEGEND

AREA TO BE OVERLAYED

FULL DEPTH PAVEMENT REPLACEMENT AREA

PCB shall be used during the demolition of the pedestrian bridge to help keep debris out of the travel lanes. The PCB shall be removed when it is no longer needed for that purpose and replaced with drums.

See Sht. 29
Match Line Sta. 68+50

Sta. 70+50
EXIT RAMP OPEN AHEAD
OC-45-48

P.C. Sta. 71+34.87

Fair Trl. 1
CINTI GARDENS NEXT RIGHT

End Terminal

325' Taper @ 13:1

PCB

Existing Pedestrian Overpass

150'

+85

480' Merge Taper

YIELD
R-2-GO
Sta. 78+15

325' Taper @ 13:1

End Terminal

PCB

Match Line Sta. 83+00

Bridge No.
Ham-75-0992

OW-143-24

30 M.P.H.

OC-45-48
EXIT RAMP OPEN AHEAD
Sta. 78+60

Fair Trl. 2
Arlington Hts NEXT LEFT

Fair Trl. 3
Cross County Highway 1/4 MILE

Fair Trl. 4

10' Shoulder	12'	12'	12'	Shoulder	12'	12'	12'	10' Shoulder
Work Area	2'	11'	11'	℄	11'	11'	2'	Work Area
Drums or P.C.B.								Drums or P.C.B.
Temp. Lane Line, Class I								Temp. Lane Line, Class I

Normal Lanes

ROAD CONSTRUCTION AHEAD
TYPE A WARNING LIGHT
500'

KEEP RIGHT
OC-38R-36
Sta. 42+00

NOTE: Portable concrete barrier (PCB) shall be replaced with drums for Stage III Construction unless otherwise noted.

NOTE: Maximum Drum Spacing = 60'

480' Cont.

Sta. 84+43.80
Begin Full Depth Pavement

City of Cincinnati

Sta. 85+00
OW-49R-48

Bridge No.
Ham-75-1010

200' Taper @ 13:1

Mill Creek

Temp. Edge Line, Yellow Type C.

YIELD
R-2-GO
Sta. 92+35

390' Taper @ 13:1

480' Merge Taper

End Terminal

Match Line Sta. 97+00 See Sht. 31 & 32

See Detail Sht. No. 35

PCB

Temp. Edge Line, Yellow

350' Taper @ 55:1

Temp. Edge Line White

Temp. Impact Attenuator (GREAT Type)

Temp. Channelizing Line, Class I

Hamilton County

320' Opening

420' Taper Cont'd.

Fair Trl. 5
Galbraith Rd LEFT 1/2 MILE

Fair Trl. 6
Cross County Highway

Fair Trl. 7

P.T. Sta. 85+95.47

Cincinnati CORP LIMIT

OW-143-24

30 M.P.H.

OC-96R-48

EXIT

Sta. 87+40

EXIT RAMP OPEN
OC-45A-48
Sta. 83+60

Dc = 10°00'

Dc = 10°00'

Ramp C

Ramp D

RAMP 40 M.P.H.

EXIT 10A

Sta. 90+94.24
End Full Depth Pavement

END CONSTRUCTION
OC-8-60
Sta. 65+00

STAGES I & III

MAINTENANCE OF TRAFFIC STA. 68+50 TO STA. 97+00

MEDIA RESOURCES CORP

F.H.W.A. REGION	STATE	PROJECT	
5	OHIO		

HAM-75-9.75

STAGE IA

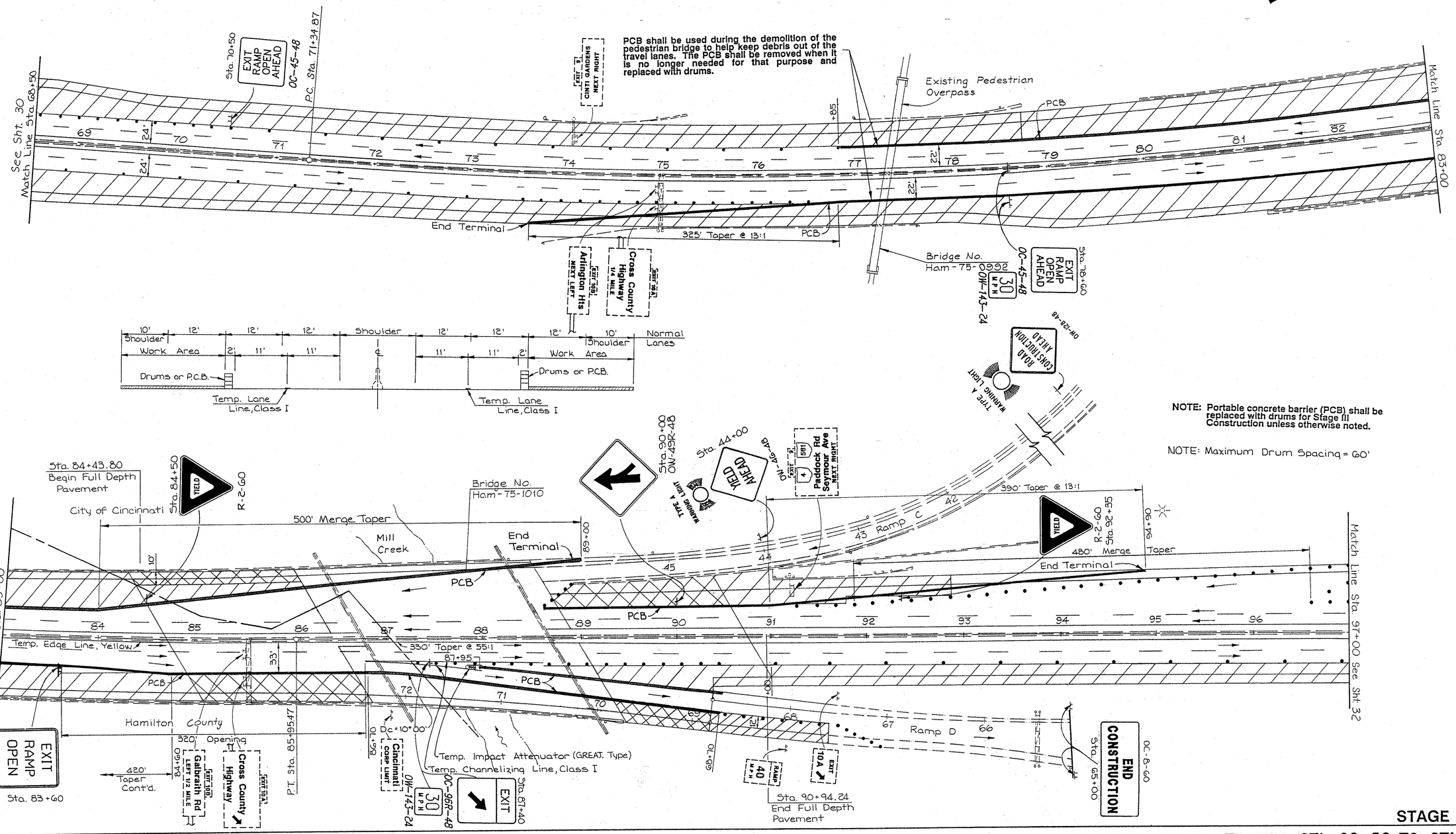

NOTE: Portable concrete barrier (PCB) shall be replaced with drums for Stage III Construction unless otherwise noted.

NOTE: Maximum Drum Spacing = 60'

STAGE IA

MAINTENANCE OF TRAFFIC STA. 68+50 TO STA. 97+00

MEDIA RESOURCES CORP

F.H.W.A. REGION	STATE	PROJECT	
5	OHIO		

HAM-75-9.75

32
338

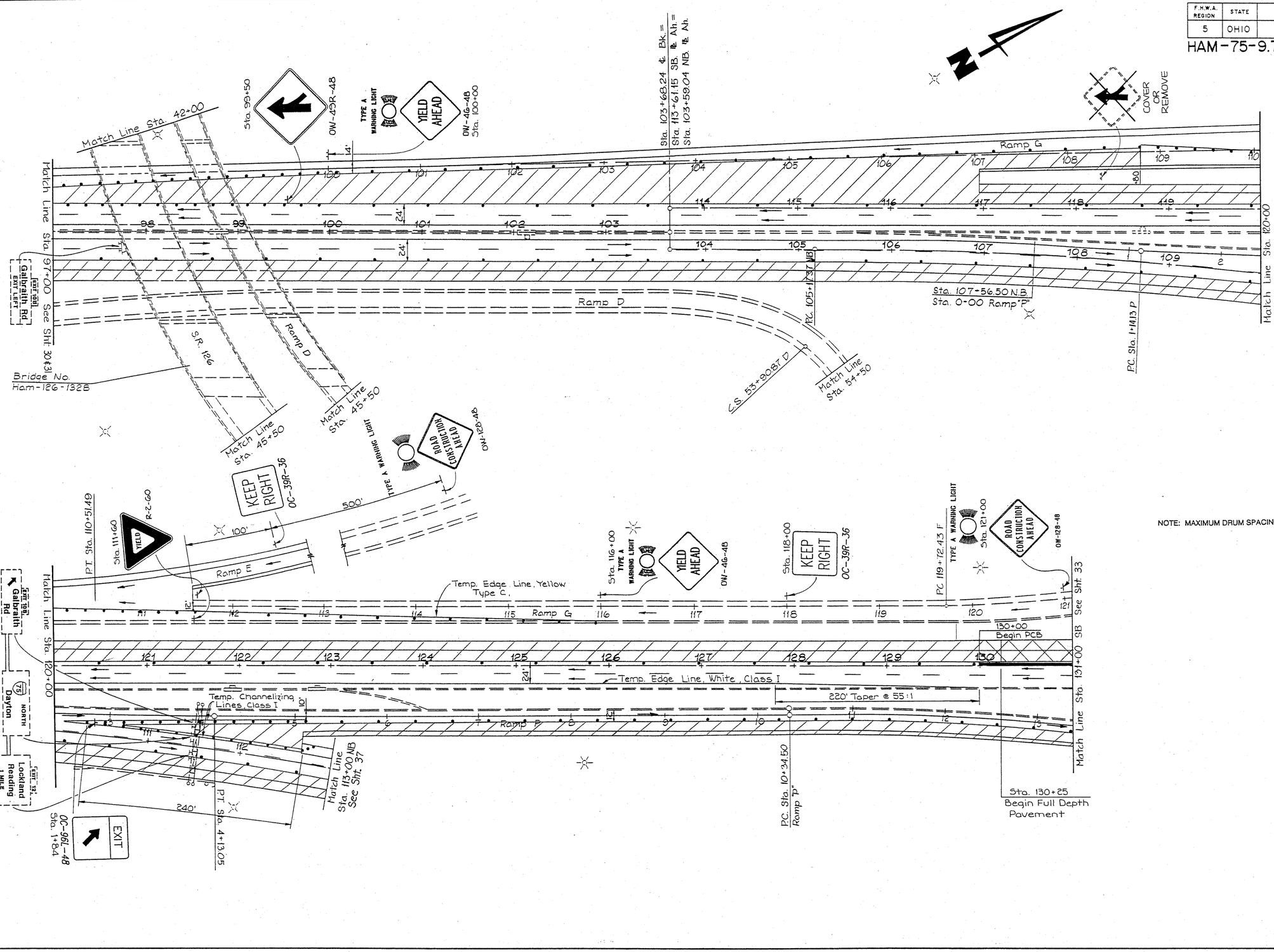

NOTE: MAXIMUM DRUM SPACING = 60'

STAGES I & III

MAINTENANCE OF TRAFFIC STA. 97+00 TO STA. 113+00 NB AND STA. 131+00 SB

"MEDIA" RESOURCES CORP

F.H.W.A. REGION	STATE	PROJECT	
5	OHIO		

HAM-75-9.75

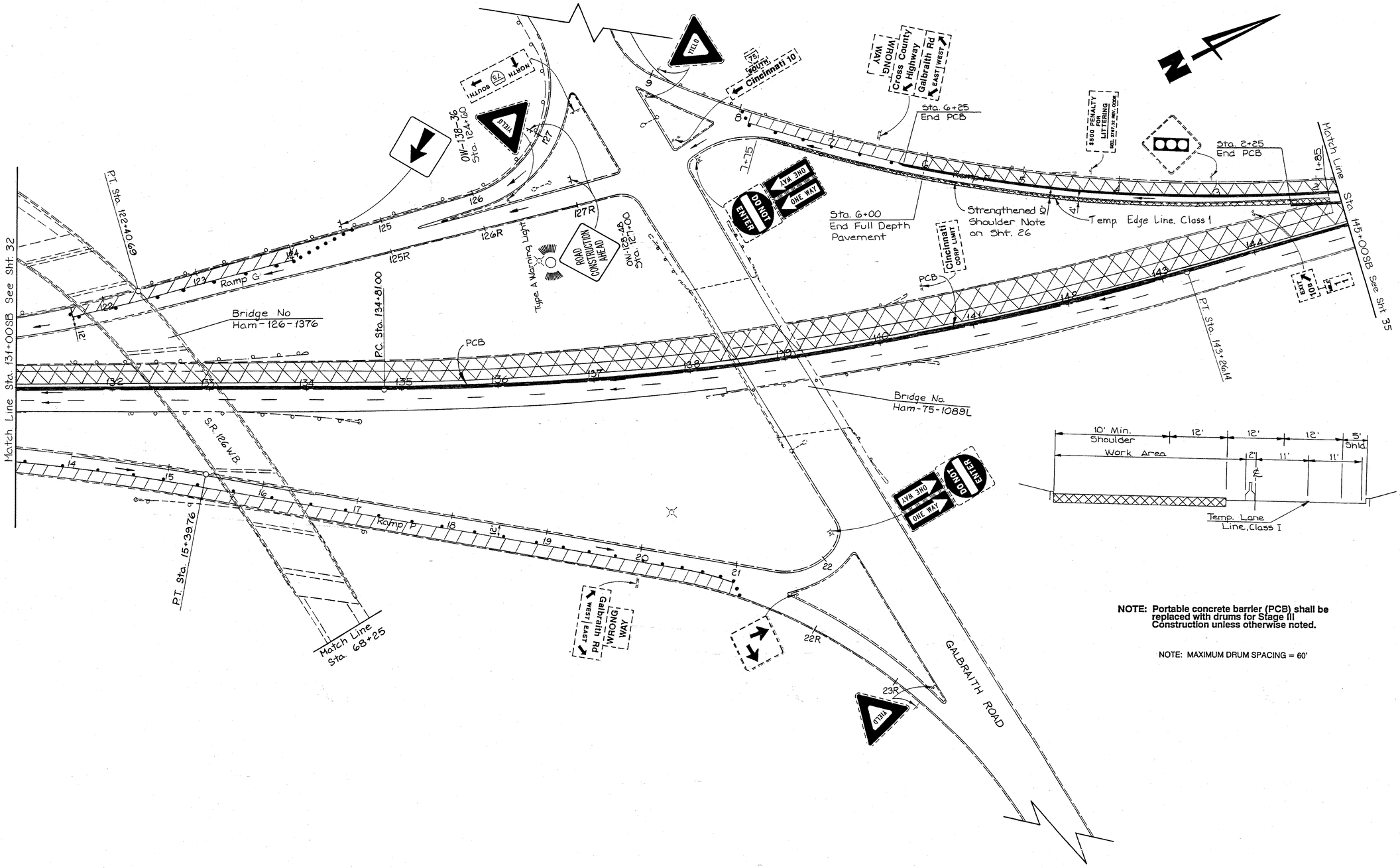

NOTE: Portable concrete barrier (PCB) shall be replaced with drums for Stage III Construction unless otherwise noted.

NOTE: MAXIMUM DRUM SPACING = 60'

STAGES I & III

MAINTENANCE OF TRAFFIC STA. 131+00SB TO STA. 145+00SB

MEDIA RESOURCES CORP

F.H.W.A REGION	STATE	PROJECT	
5	OHIO		

34
338

HAM-75-9.75

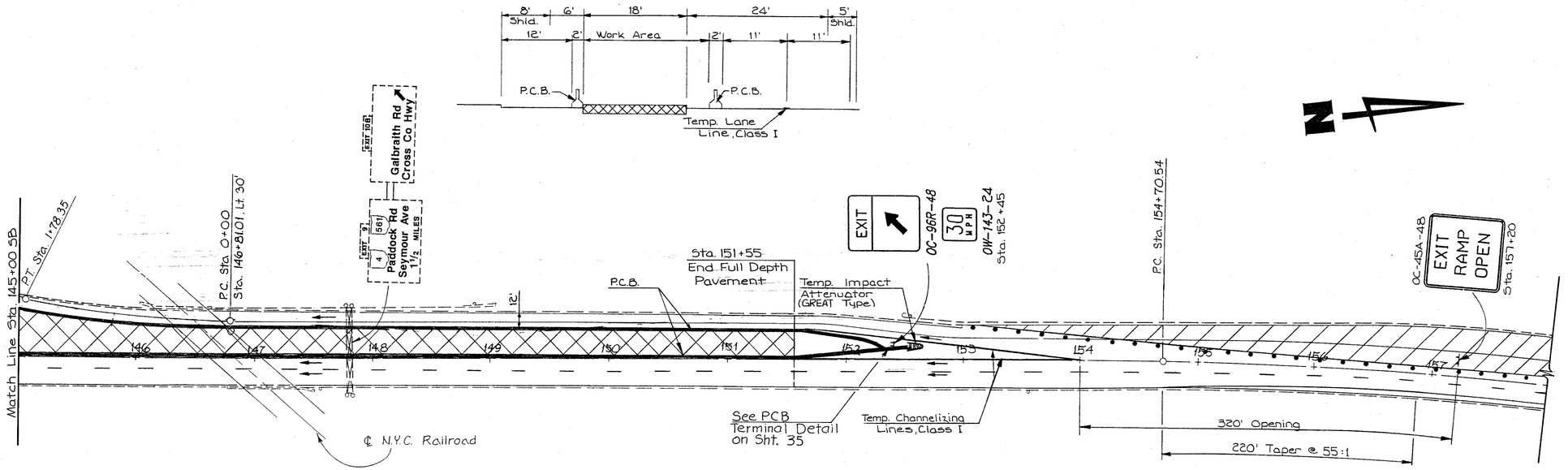

MAINTENANCE OF TRAFFIC
STAGE IA

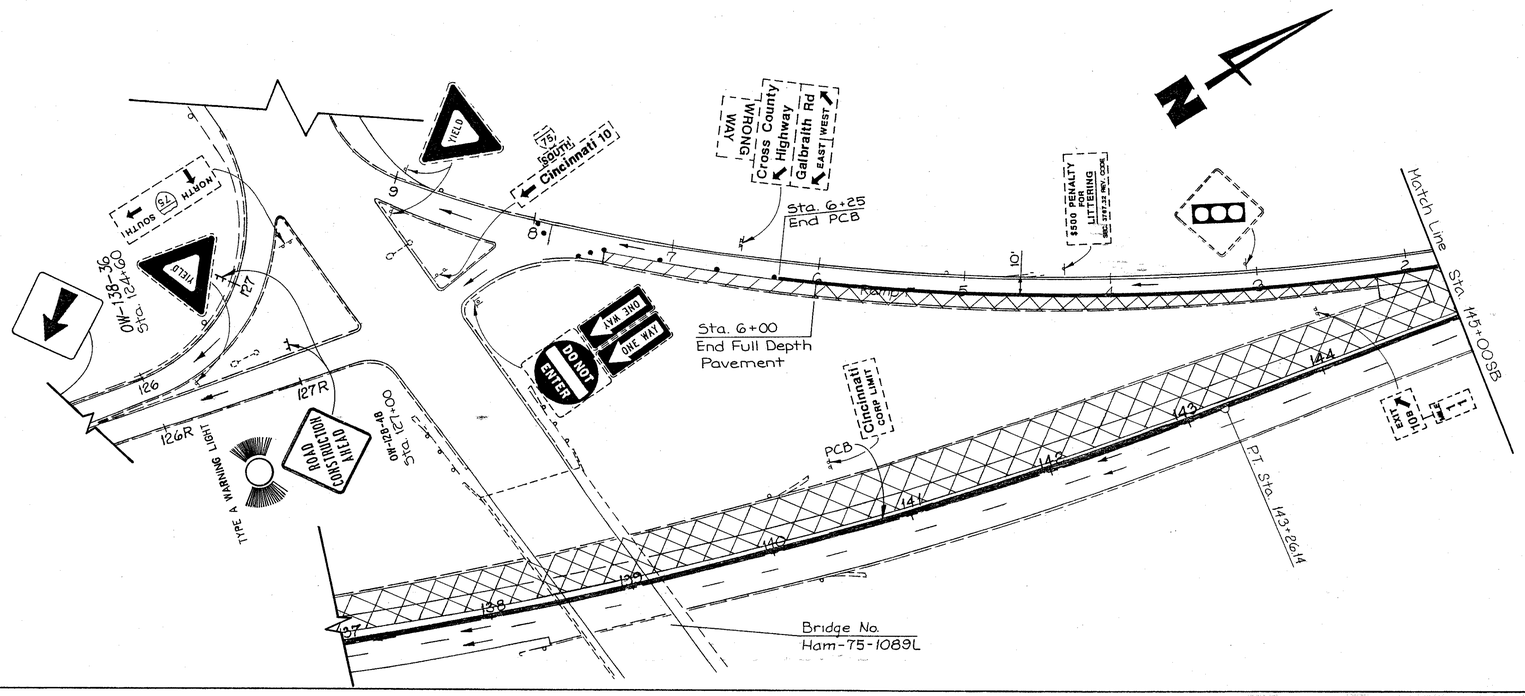

NOTE: Maximum Drum Spacing = 60'

STAGE IA

MAINTENANCE OF TRAFFIC STA. 142+00 TO STA. 158+00

F.H.W.A. REGION	STATE	PROJECT	
5	OHIO		

35
338

HAM - 75 - 9.75

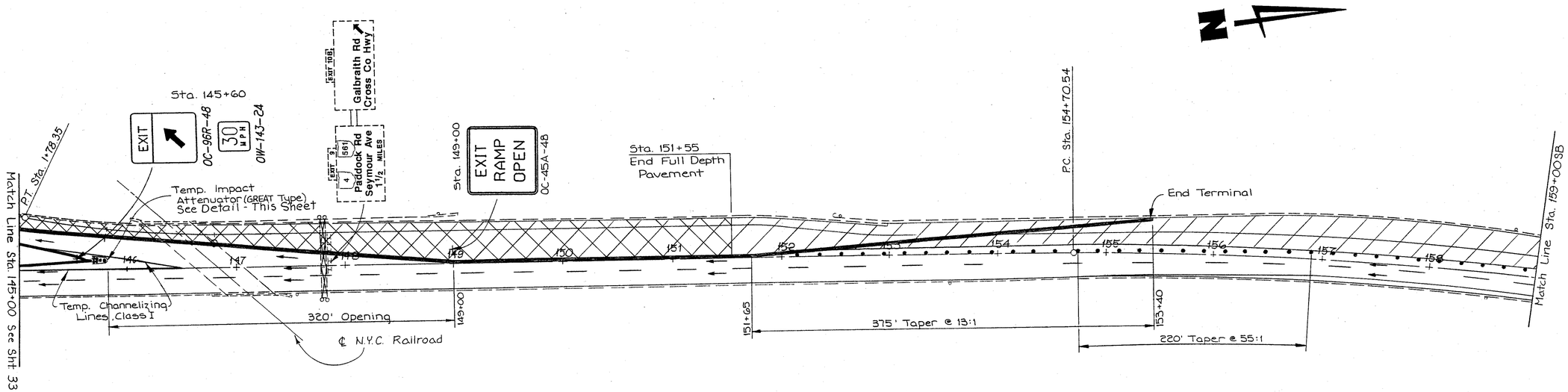

NOTE: Portable concrete barrier (PCB) shall be replaced with drums for Stage III Construction unless otherwise noted.

NOTE: MAXIMUM DRUM SPACING = 60'

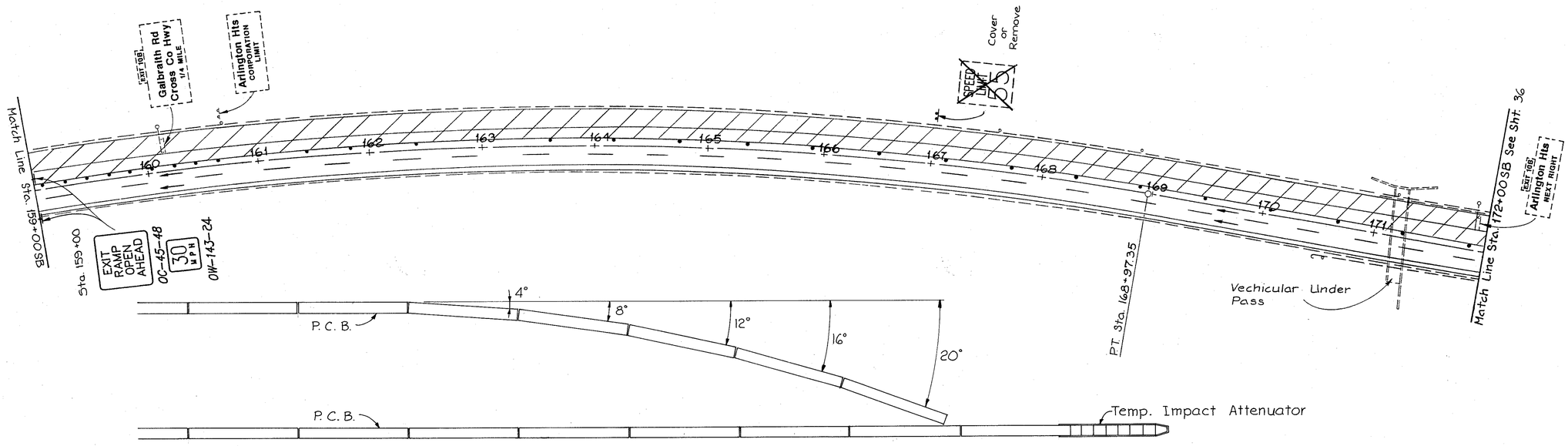

P.C.B. TERMINAL DETAIL

STAGES I & III

MAINTENANCE OF TRAFFIC STA. 145+00SB TO STA. 172+00SB

MEDIA RESOURCES CORP.

F.H.W.A. REGION	STATE	PROJECT	
5	OHIO		

HAM-75-9.75

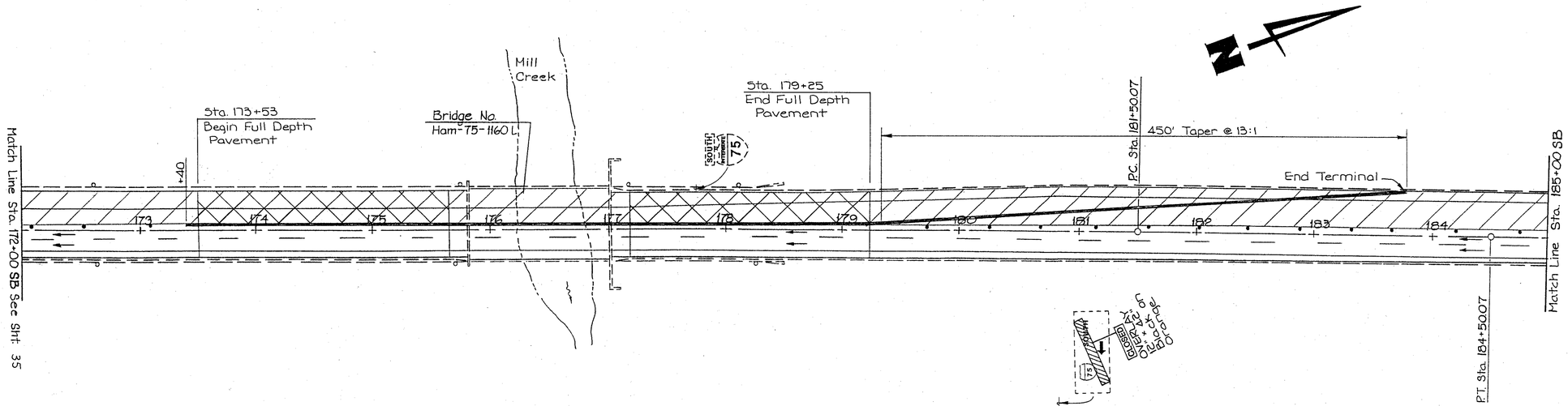

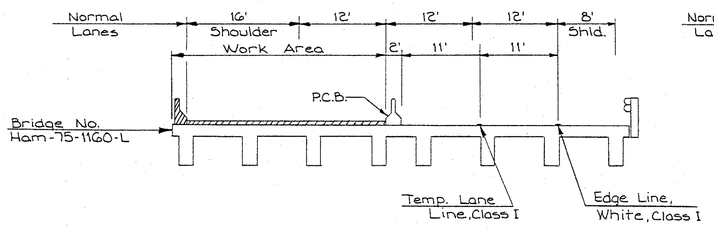

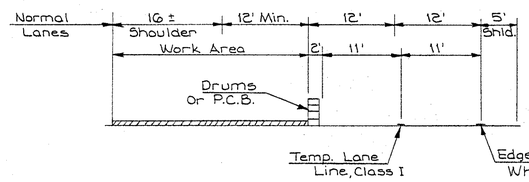

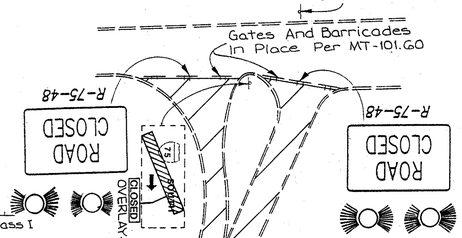

NOTE: Portable concrete barrier (PCB) shall be replaced with drums for Stage III Construction unless otherwise noted.

NOTE: MAXIMUM DRUM SPACING = 60'

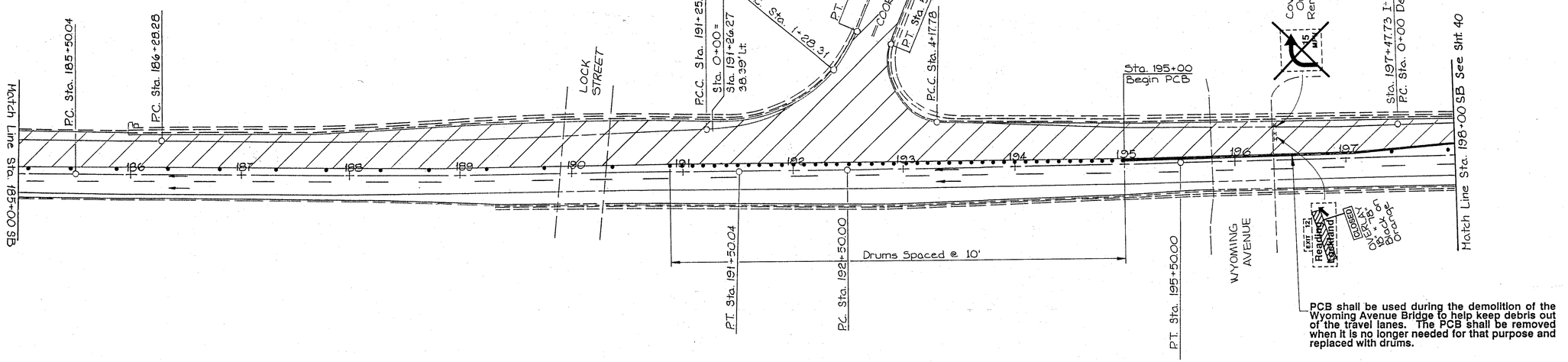

PCB shall be used during the demolition of the Wyoming Avenue Bridge to help keep debris out of the travel lanes. The PCB shall be removed when it is no longer needed for that purpose and replaced with drums.

STAGES I & III

MAINTENANCE OF TRAFFIC STA. 172+00SB TO STA. 198+00 SB

MEDIA RESOURCES CORP

F.H.W.A. REGION	STATE	PROJECT	
5	OHIO		

37
338

HAM-75-9.75

℄ I-75 Southbound

Match Line Sta. 113+00
See Sht. 32

Ramp I

Temp. Lane Line, Class I

500' Merge Taper

Maintain Traffic Entering From Ramp I Per Standard Drawing MT-98.15 And Plan Insert Sheet No. 77

YIELD R-2-60

Sta. 123+50

Bridge No. Ham-126-1389

FOR ICE ON BRIDGE WATCH

Match Line Sta. 128+00

TYPE A WARNING LIGHT

ROAD CONSTRUCTION AHEAD OW-128-48

YIELD AHEAD OW-46-48

TYPE A WARNING LIGHT

460'

NOTE: Portable concrete barrier (PCB) shall be replaced with drums for Stage III Construction unless otherwise noted.

NOTE: MAXIMUM DRUM SPACING = 60'

Match Line Sta. 128+00

275' Taper @ 55:1

Class I Temp. Edge Line, Yellow

Temp. Lane Line, Class I

Strengthened Shoulder See Note On Sht. No. 26

End Terminal

350' Taper @ 13:1

Koehler Ave Davis St NEXT RIGHT

LEFT TFL

P.T. Sta. 132+50.03

132+70

Sta. 132+82.08 Begin Full Depth Pavement

PCB

Bridge No. Ham-75-1102 R

Creek

Mill

Galbraith Road

Strengthened Shoulder See Note On Sht. No. 26

Lockland Reading NEXT RIGHT

LEFT TFL

142+50

Sta. 142+39.08 End Full Depth Pavement

Match Line Sta. 143+00 See Sht. 38

Ramp N

3

6

8

10

5' Shld. | 12' | 12' | 12' | 10' Shoulder | Normal Lane

11' | 11' | 2' Work Area

Temp. Lane Line, Class I

Drums Or P.C.B.

5' | 12' | 12' | 12' | 9' | Normal Lines

7' | 5'

11' | 11' | 2' Work Area

P.C.B.

Bridge Ham-75-1102R

G1 G2 G3 Temp. Lane Line, Class I G4 G5 G6 G7

Dayton NLMON (4) (75) NORTH Dayton

(75) SOUTH Cincinnati KEEP LEFT

STAGES I & III

MAINTENANCE OF TRAFFIC STA. 113+00 NB TO STA. 143+00 NB

MEMA RESOURCES CORP

F.H.W.A. REGION	STATE	PROJECT	
5	OHIO		

HAM-75-9.75

38
338

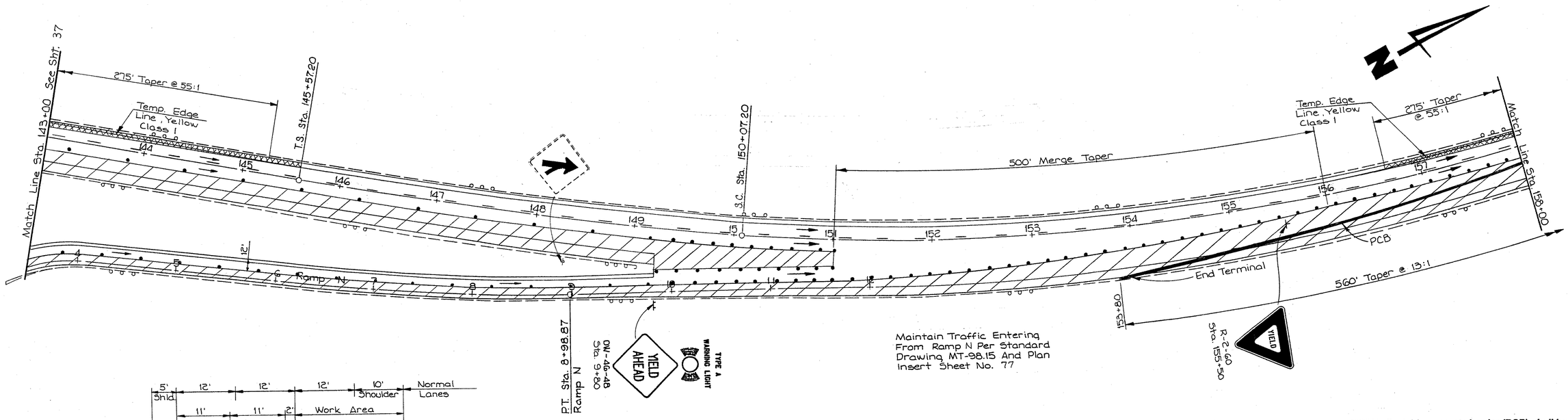

NOTE: Portable concrete barrier (PCB) shall be replaced with drums for Stage III Construction unless otherwise noted.

NOTE: MAXIMUM DRUM SPACING = 60'

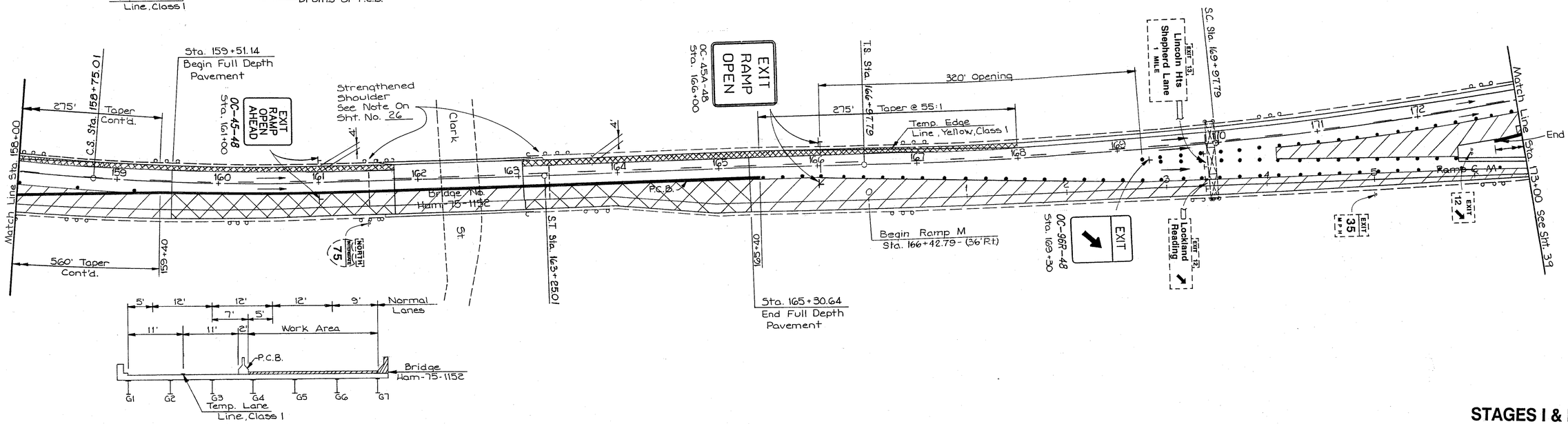

STAGES I & III

MAINTENANCE OF TRAFFIC STA. 143+00 NB TO STA. 173+00 NB

MEDIA RESOURCES CORP

F.H.W.A. REGION	STATE	PROJECT	
5	OHIO		

39
338

HAM-75-9.75

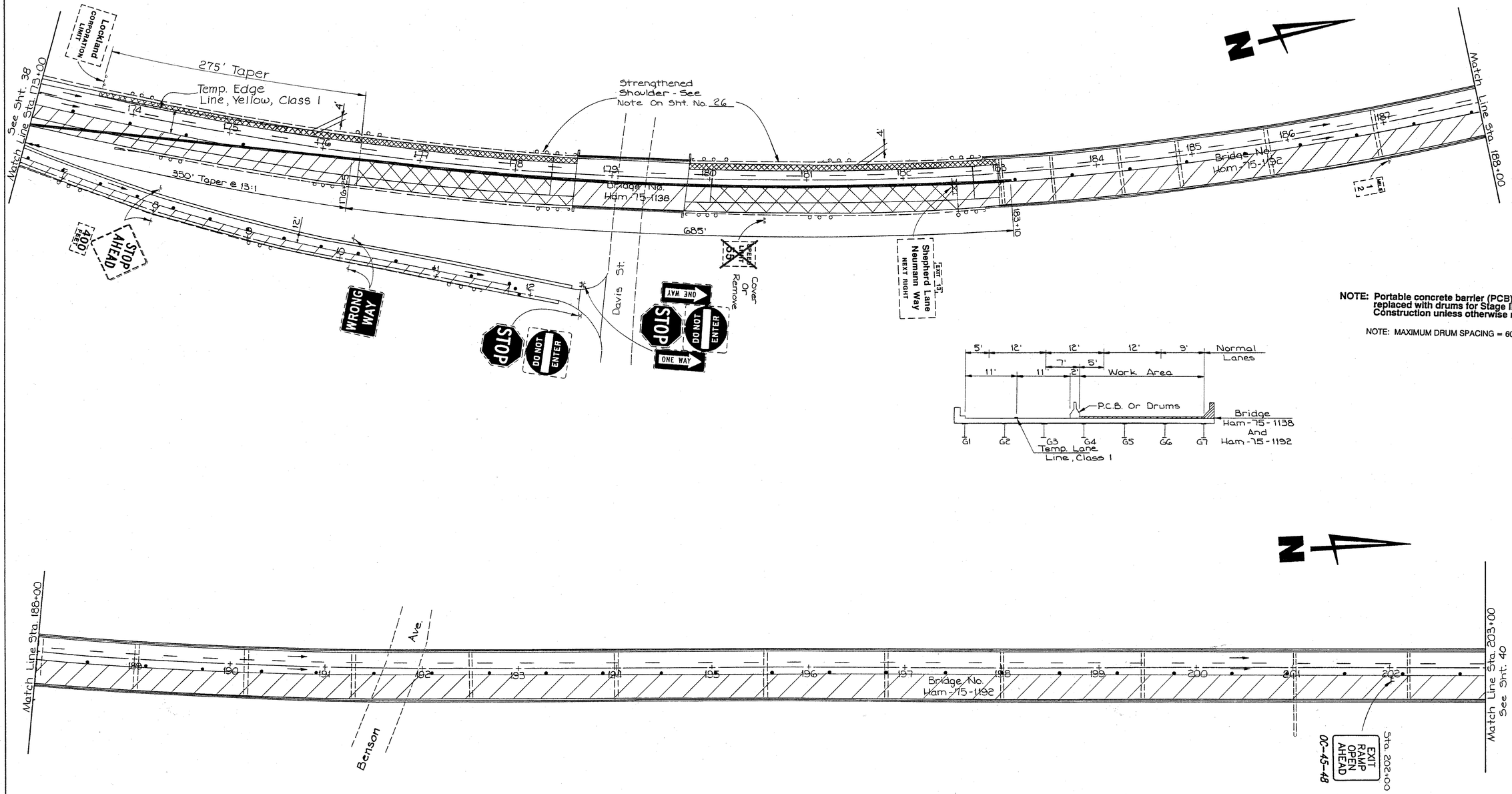

NOTE: Portable concrete barrier (PCB) shall be replaced with drums for Stage III Construction unless otherwise noted.

NOTE: MAXIMUM DRUM SPACING = 60'

STAGES I & III

MAINTENANCE OF TRAFFIC STA 173+00 NB TO STA 203+00 NB

MEDIA RESOURCES CORP

F.H.W.A. REGION	STATE	PROJECT	
5	OHIO		

40
338

HAM-75-9.75

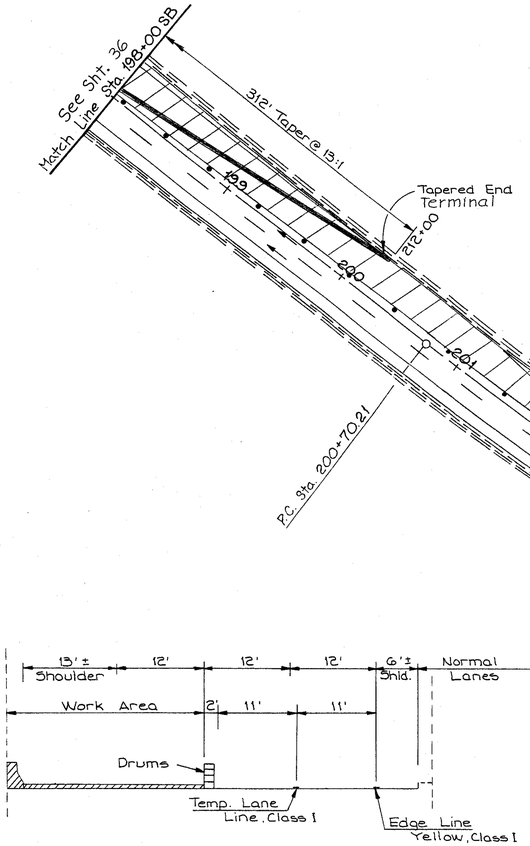

SOUTHBOUND

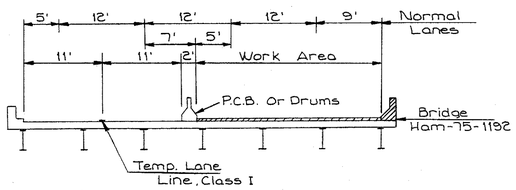

NORTHBOUND

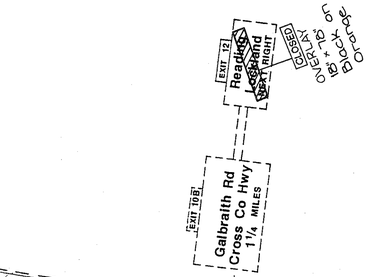

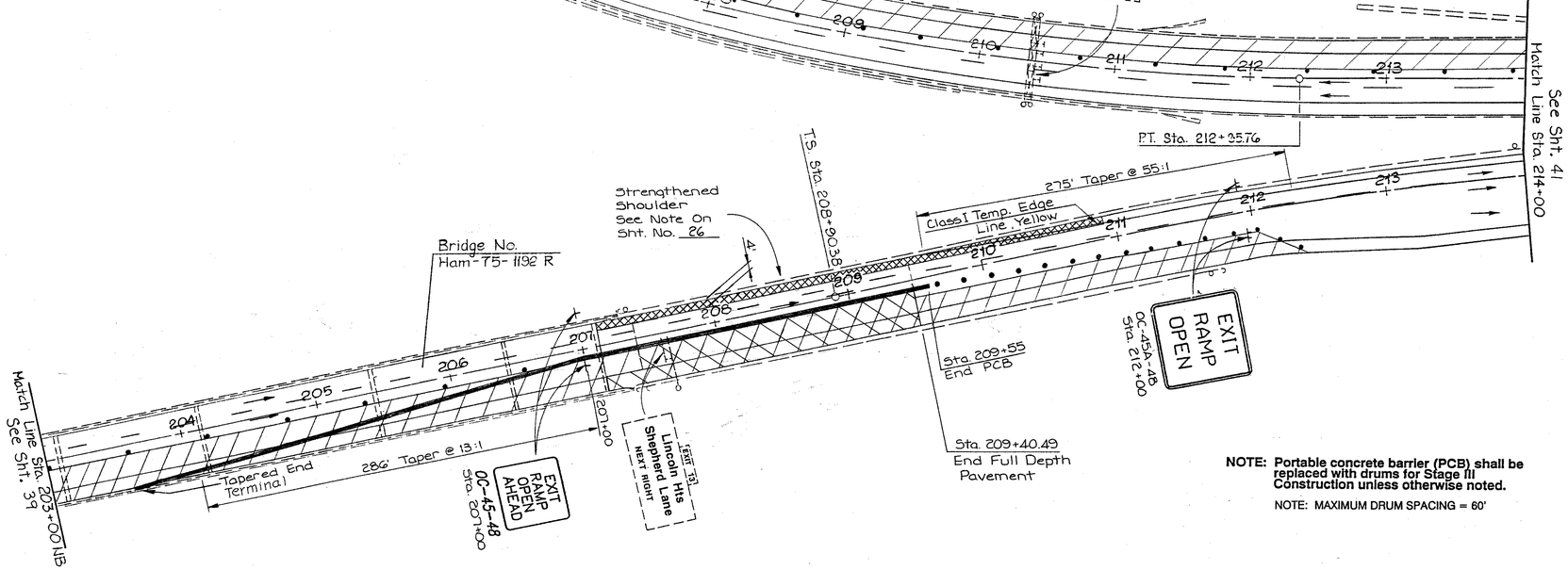

NOTE: Portable concrete barrier (PCB) shall be replaced with drums for Stage III Construction unless otherwise noted.

NOTE: MAXIMUM DRUM SPACING = 60'

STAGES I & III

MAINTENANCE OF TRAFFIC STA. 203+00NB TO STA. 214+00NB AND STA. 198+00SB TO STA. 214+00SB

MEDIA RESOURCES CORP

F.H.W.A. REGION	STATE	PROJECT	
5	OHIO		

41
338

HAM-75-9.75

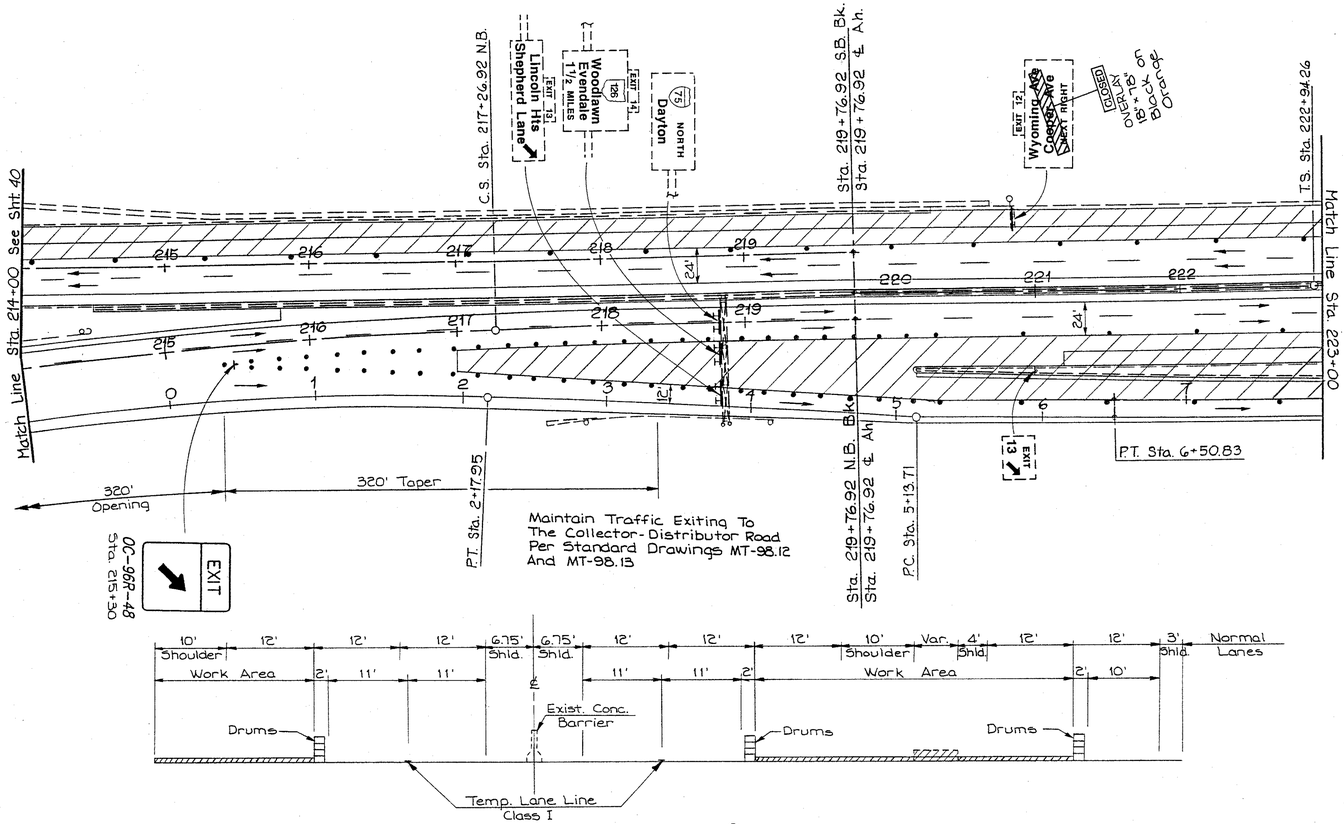

NOTE: MAXIMUM DRUM SPACING = 60'

STAGES I & III

MAINTENANCE OF TRAFFIC STA. 214+00 TO STA. 237+00

MEDIA RESOURCES CORP

F.H.W.A. REGION	STATE	PROJECT	
5	OHIO		

42
338

HAM-75-9.75

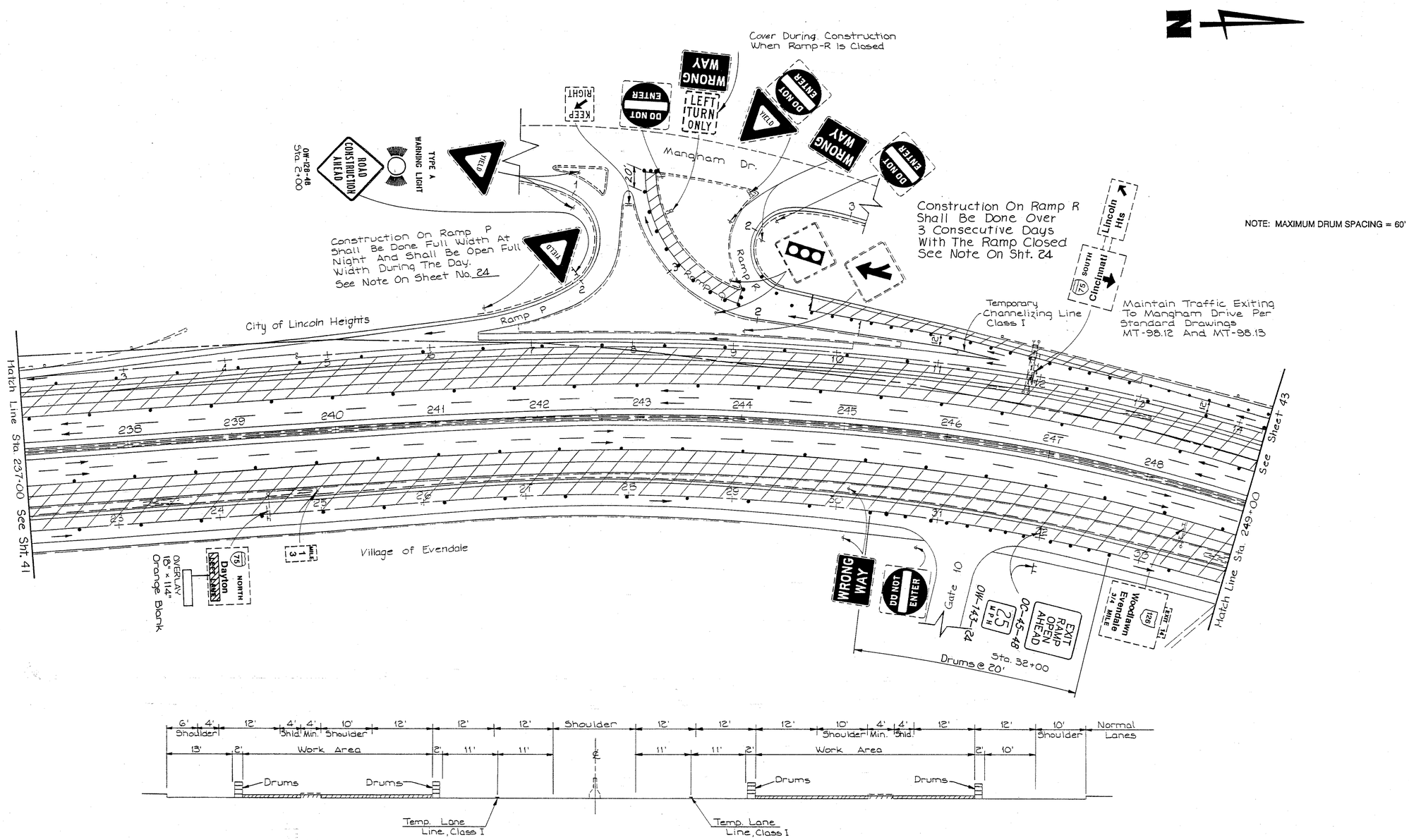

NOTE: MAXIMUM DRUM SPACING = 60'

STAGES I & III

MAINTENANCE OF TRAFFIC STA. 237+00 TO STA. 249+00

F.H.W.A. REGION	STATE	PROJECT	
5	OHIO		

43
338

HAM - 75 - 9.75

Sta. 14+30 Southbound Collector

Match Line See Sht. 42

Sta. 249+00

Sta. 33+84 Northbound Collector

Lincoln Hts Shepherd Lane

Cincinnati SOUTH (75)

OVERLAY 28" x 38" Orange Blank

500' Merge Taper

Ramp C

Sta. 26+60 Southbound Collector

Match Line Sta. 261+00

Sta. 45+50 Northbound Collector

320' Taper

EXIT 25 M.P.H.

Woodlawn Evendale 3/4 MILE (126) EXIT 14

WRONG WAY

OC-45-48 Sta. 37+80

EXIT RAMP OPEN AHEAD

DO NOT ENTER

Gate 12

ONE WAY

EXIT RAMP OPEN Sta. 42+80

Maintain Traffic Exiting To Ramp C Per Standard Drawings MT-98.12 And MT-98.13

Note: Construction On Ramps C, D & E Shall Be Done Full Width At Night With The Ramps Closed. All Lanes Shall Be Open During The Day, With The Exception Of The Bridge Construction Which Shall Be Done Using Part-Width Construction. See Note On Sheet No. 25.

NOTE: MAXIMUM DRUM SPACING = 60'

Sta. 26+60 Southbound Collector

YIELD

Temp. Channelizing Lines

500' Taper Cont'd.

Ramp C

Sta. 20+00 Match Line

SLOPE LIMIT 2:1 Cover Or Remove

Remove Curb And Fill Gap Prior To Proceeding With Stage I Construction.

See Sht. 71 Sta. 4+50 Match Line

Ramp E

Temp. Channelizing Lines, Class I

Neumann Way

Berm Widening See Note On Sht. 26

Maintain Traffic Exiting To Ramp E Per Standard Drawings MT-98.12 And MT-98.13

Sta. 38+10 Southbound Collector

Ramp H

EXIT

OC-96R-48 Sta. 272+50

Match Line Sta. 261+00

Sta. 272+59 See Sht. 44

Shepherd Lane Lincoln Hts

Ramp G

ONE WAY

Readers Rd Kenwood

Orange Black on Orange

Drums @ 20'

Temp. Channelizing Lines Class I

Ramp C

Match Line Sta. 2+50 See Sht. 71

Sta. 45+50 Northbound Collector

OVERLAY 15" x 78" Black on Orange

CLOSED

Dayton (75) SOUTH

Neumann Way

LANE CLOSED

OVERLAY 22" x 38" Black on Orange

OW-136-36 Sta. 4+30

Ramp D

Match Line Sta. 4+00

YIELD

Temp. Channelizing Lines, Class I

Maintain Traffic Entering From Ramp D Per Standard Drawing MT-98.15 And Plan Insert Sheet No.

WRONG WAY

DO NOT ENTER

Gate 17

500' Merge Taper

Sta. 57+22 Northbound Collector

Cincinnati SOUTH (75)

STAGES I & III

MAINTENANCE OF TRAFFIC STA. 249+00 TO STA. 272+59

MEDIA RESOURCES CORP

F.H.W.A. REGION	STATE	PROJECT	
5	OHIO		

44
338

HAM-75-9.75

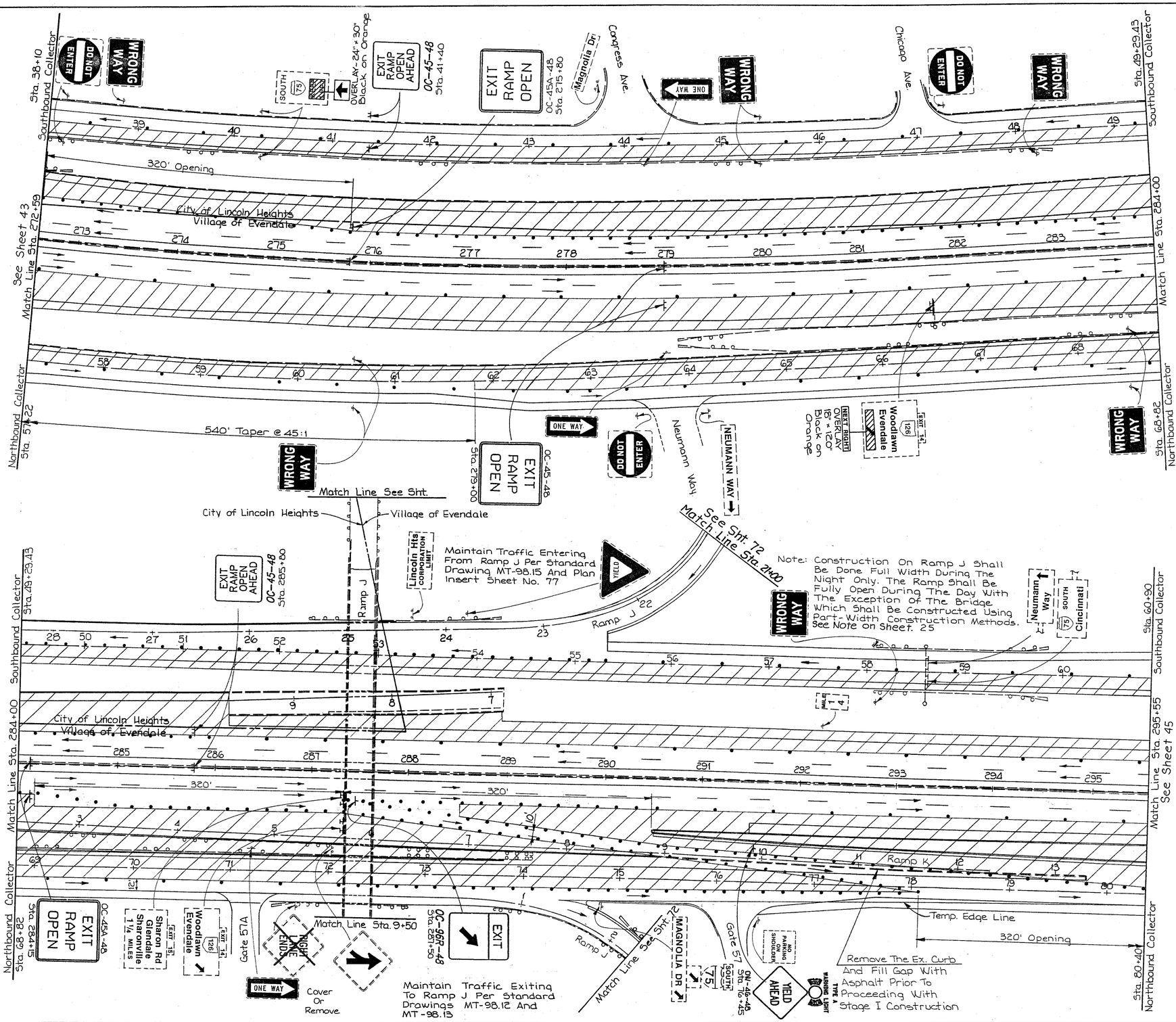

NOTE: MAXIMUM DRUM SPACING = 60'

STAGES I & III

MAINTENANCE OF TRAFFIC STA. 272+59 TO STA. 295+55

519725
MEDIA RESOURCES CORP

F.H.W.A. REGION	STATE	PROJECT	
5	OHIO		

45
338

HAM-75-9.75

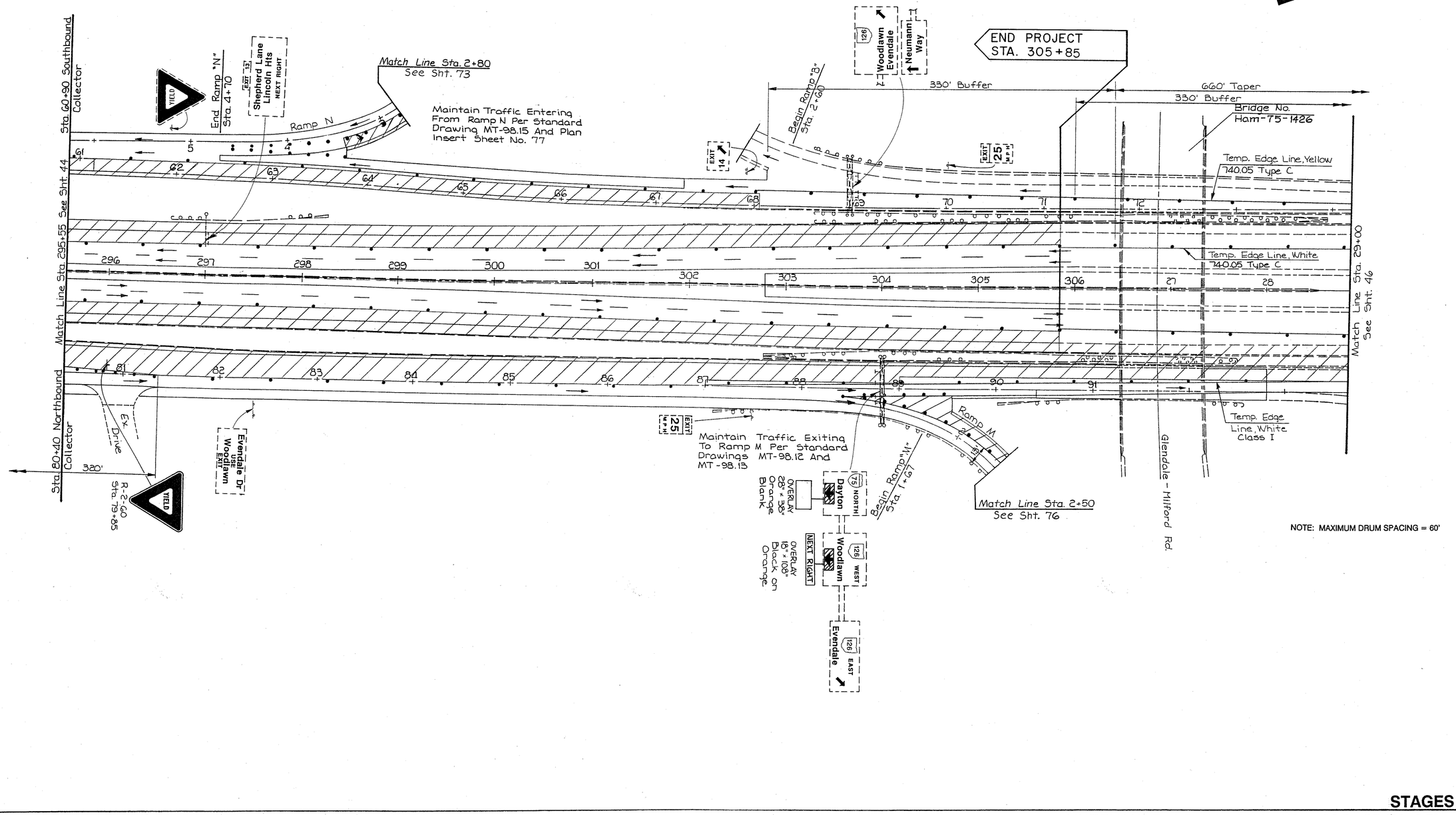

STAGES I & III

MAINTENANCE OF TRAFFIC STA. 295+55 TO STA. 29+00

MEDIA RESOURCES CORP

F.H.W.A. REGION	STATE	PROJECT	
5	OHIO		

HAM-75-9.75

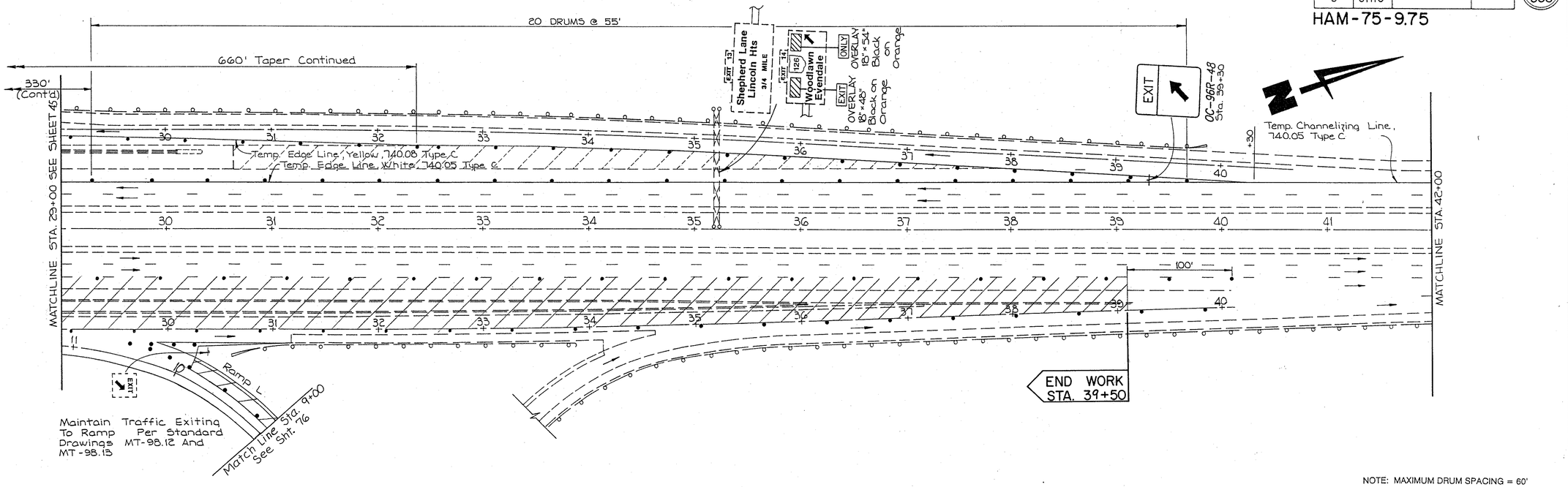

NOTE: MAXIMUM DRUM SPACING = 60'

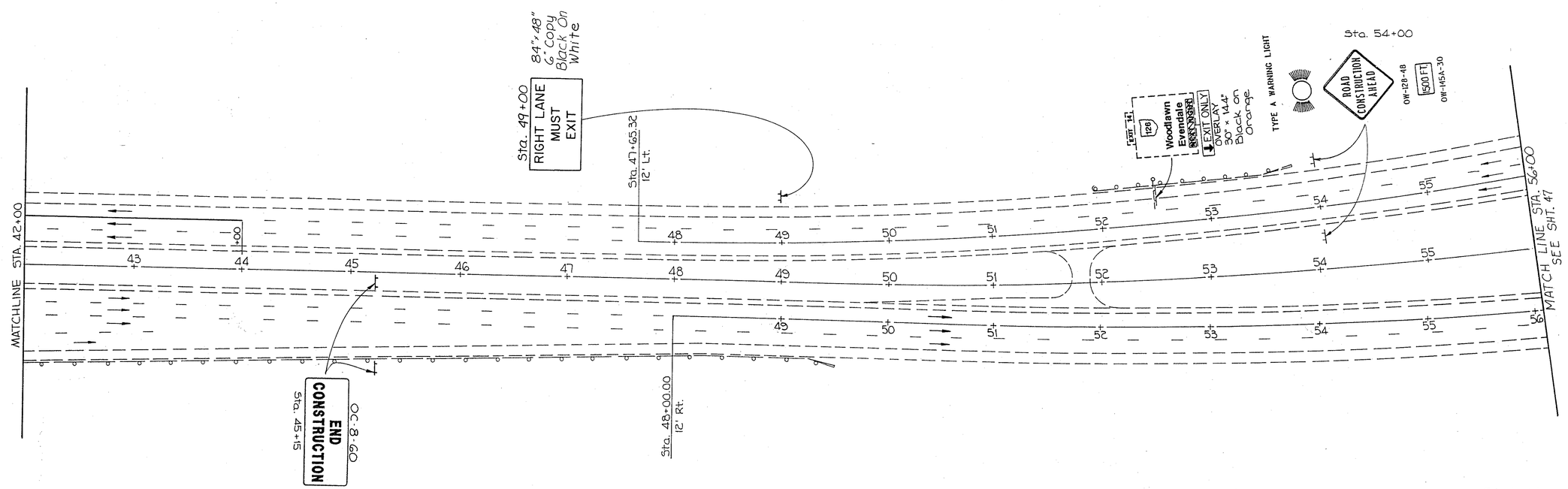

Erect Advanced Warning Signs Per Std. Drawing MT-95.30 One Mile North Of The Work Zone.

STAGES I & III

MAINTENANCE OF TRAFFIC STA. 29+00 TO STA. 56+00

MEDIA RESOURCES CORP.

F.H.W.A. REGION	STATE	PROJECT	
5	OHIO		

47
338

HAM - 75 - 9.75

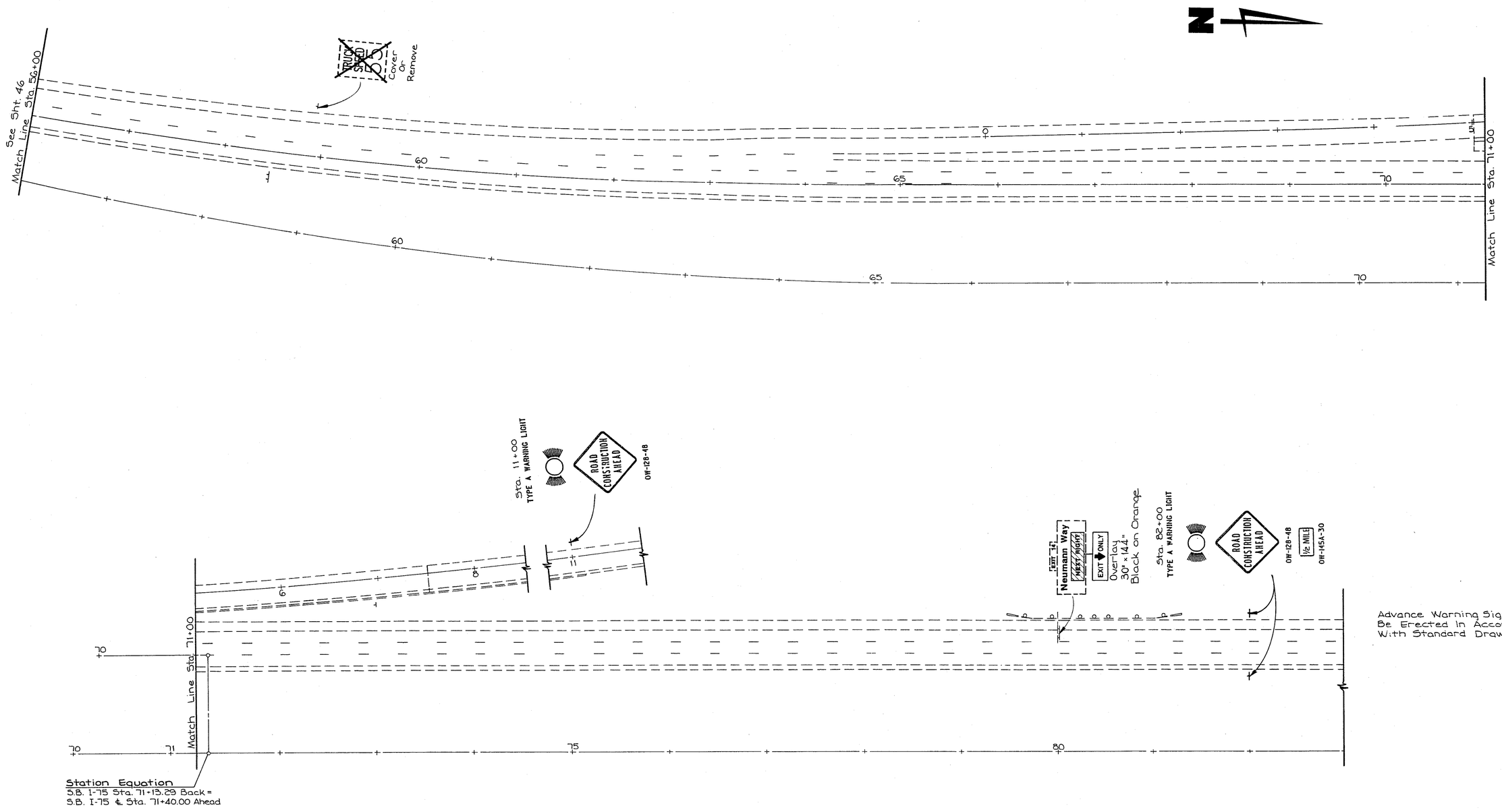

Advance Warning Signs Shall Be Erected In Accordance With Standard Drawing MT-95.30

STAGE I & III

MAINTENANCE OF TRAFFIC STA. 56+00 TO STA. 83+00

516735
MEDIA RESOURCES CORP

F.H.W.A. REGION	STATE	PROJECT	
5	OHIO		

48
338

HAM-75-9.75

MAINTENANCE OF TRAFFIC
STAGE II

Advance Warning Signs Shall
Be Erected In Accordance
With Standard Drawing MT-95.30

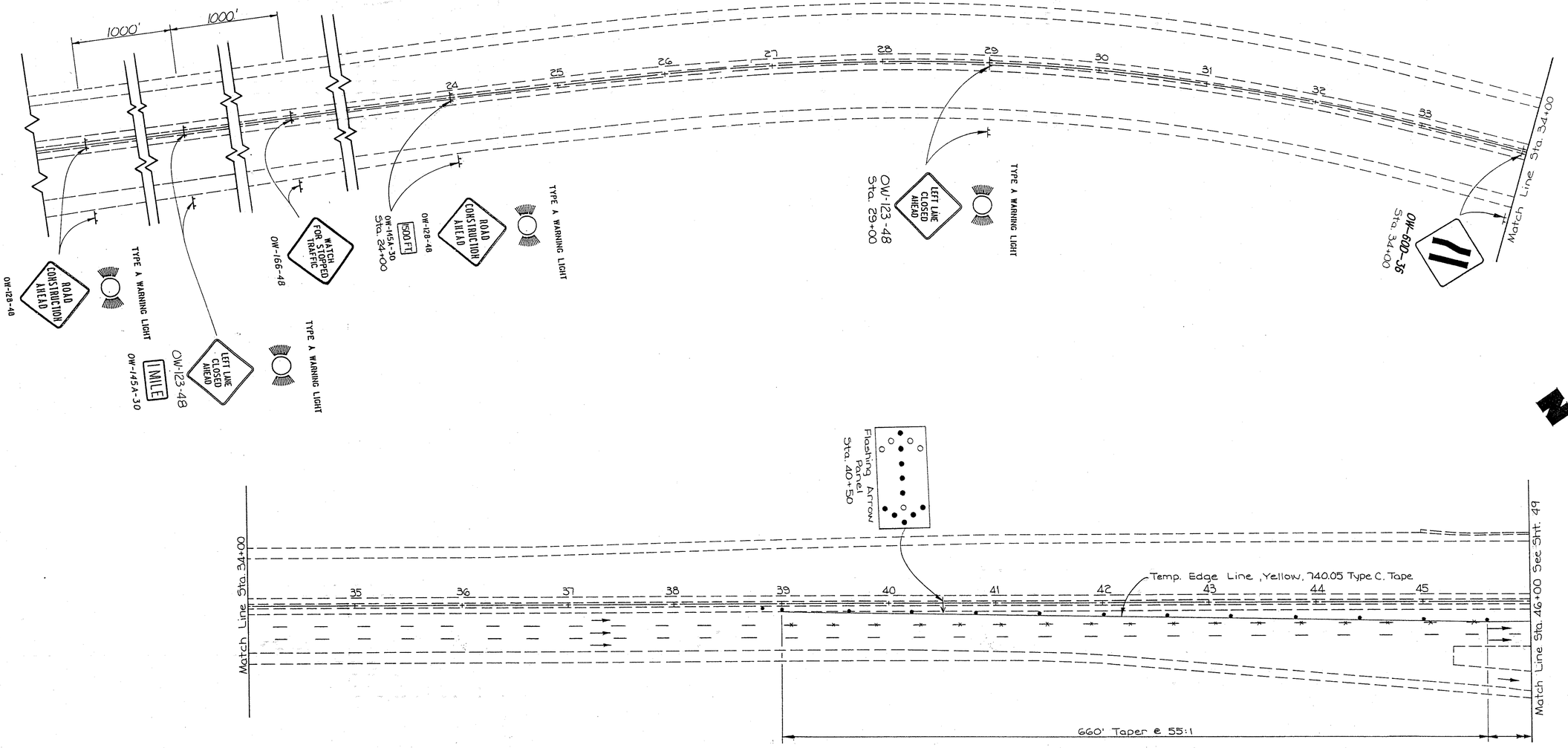

N

STAGE II

MAINTENANCE OF TRAFFIC STA. 22+00 TO STA. 46+00

MEDIA RESOURCES CORP.

F.H.W.A. REGION	STATE	PROJECT	
5	OHIO		

HAM - 75-9.75

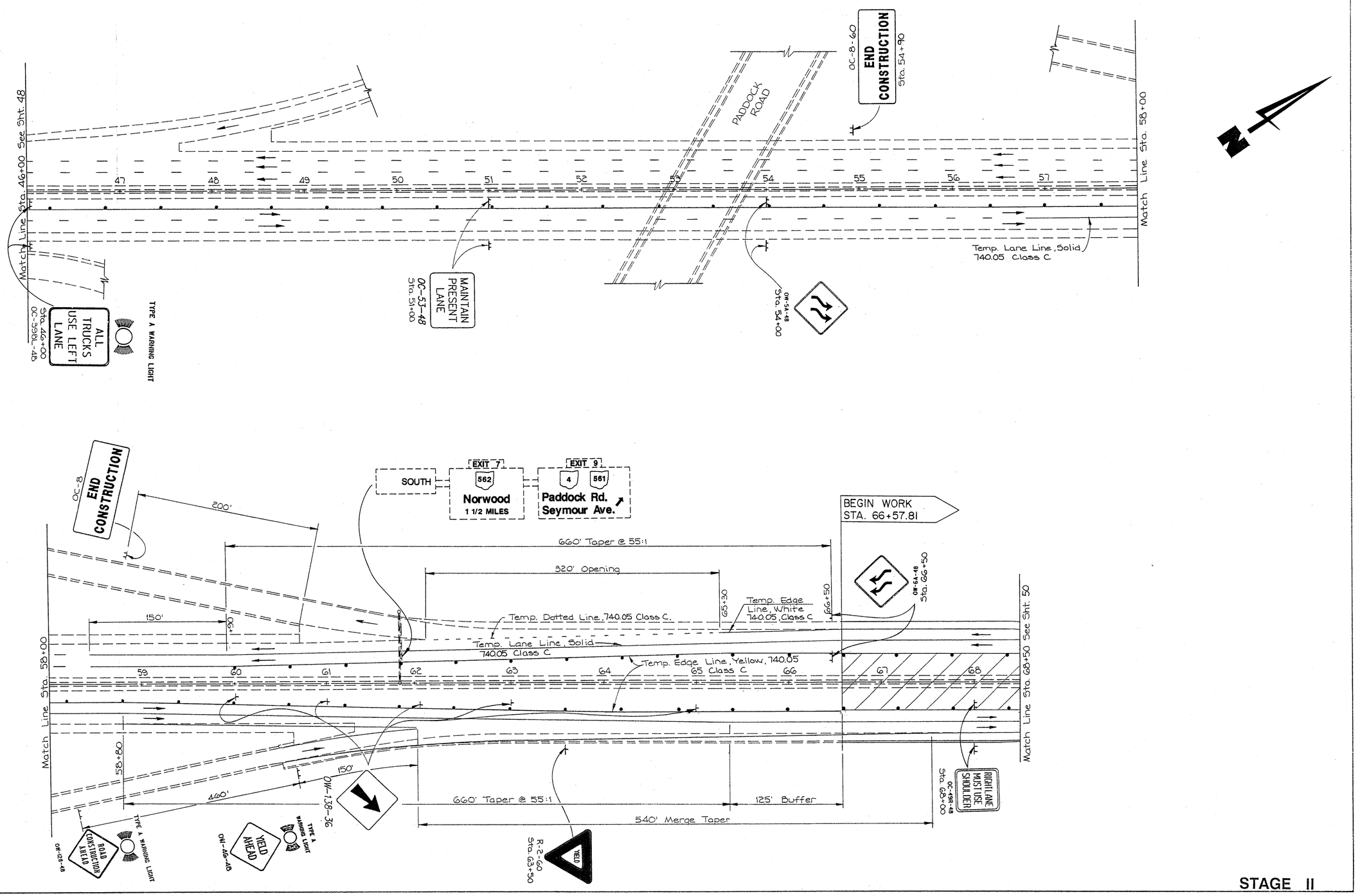

STAGE II

MAINTENANCE OF TRAFFIC STA. 46+00 TO STA. 68+50

519725
MEDIA RESOURCES CORP

F.H.W.A. REGION	STATE	PROJECT	
5	OHIO		

HAM - 75 - 9.75

50
338

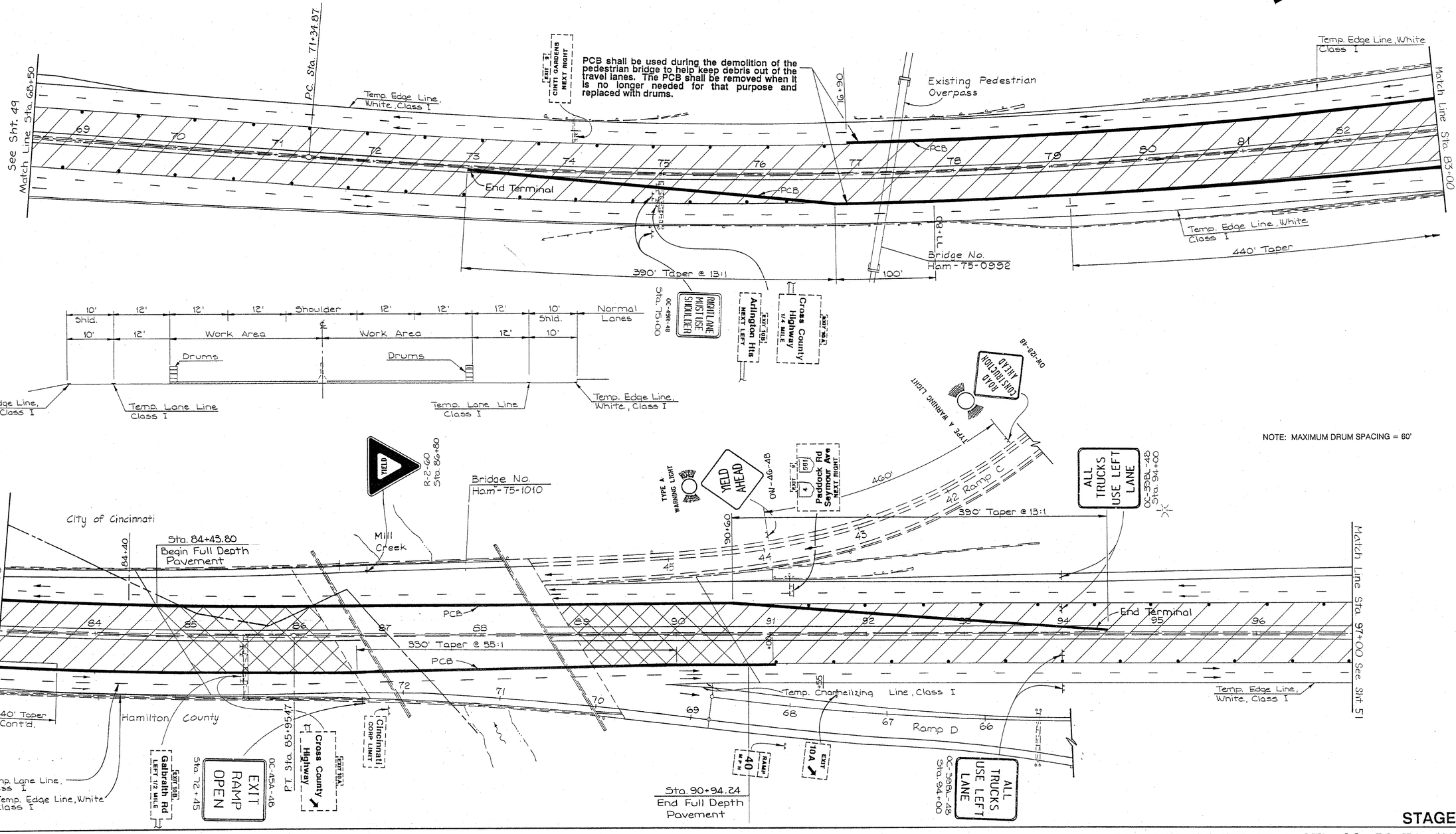

STAGE II

MAINTENANCE OF TRAFFIC STA. 68+50 TO STA. 97+00

519725
MEDIA RESOURCES CORP

F.H.W.A. REGION	STATE	PROJECT	
5	OHIO		

HAM-75-9.75

51
338

NOTE: MAXIMUM DRUM SPACING = 60'

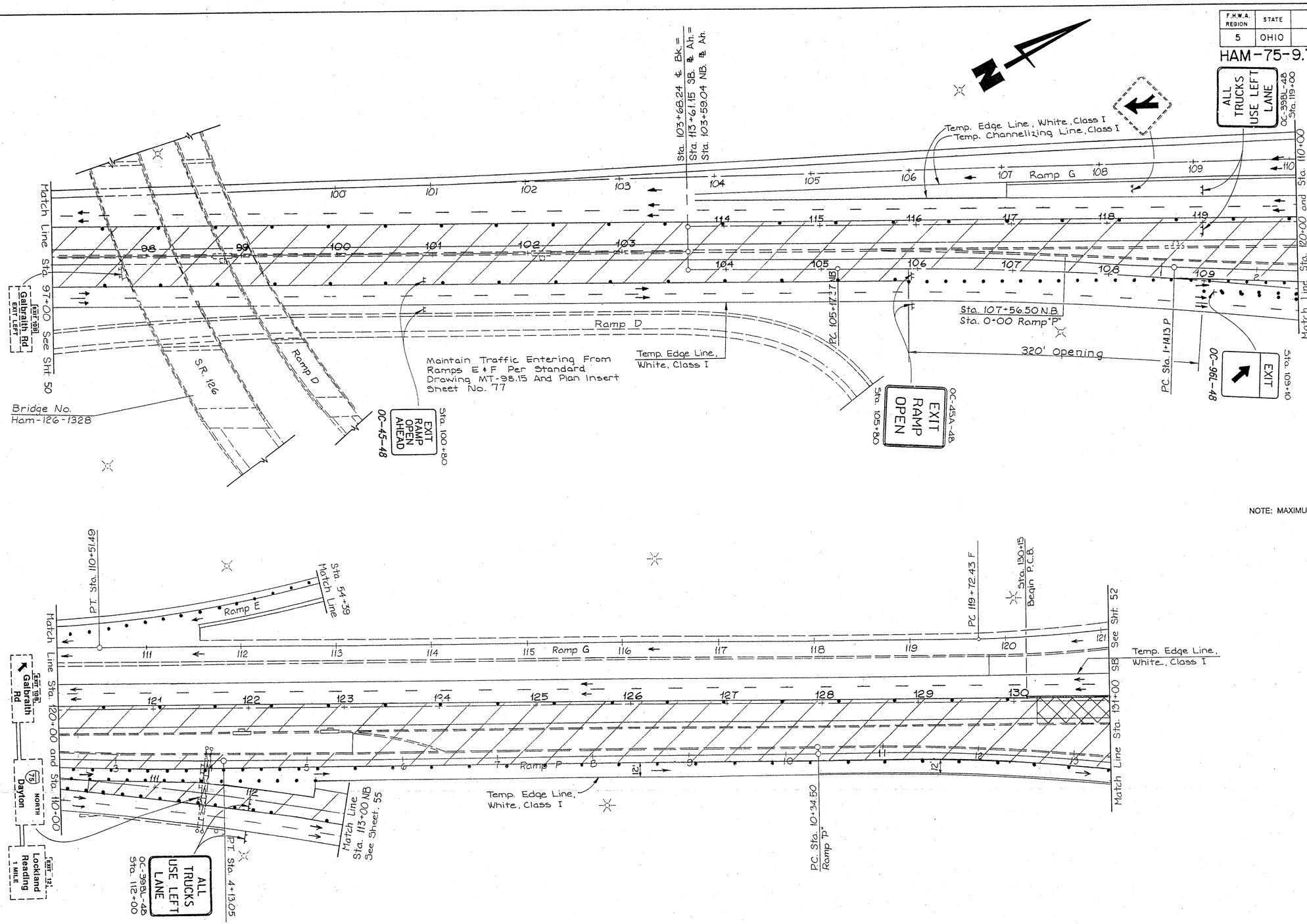

STAGE II

MAINTENANCE OF TRAFFIC STA. 97+00 TO STA. 113+00 NB AND STA. 131+00 SB

MEDIA RESOURCES CORP.

F.H.W.A REGION	STATE	PROJECT	
5	OHIO		

52
338

HAM-75-9.75

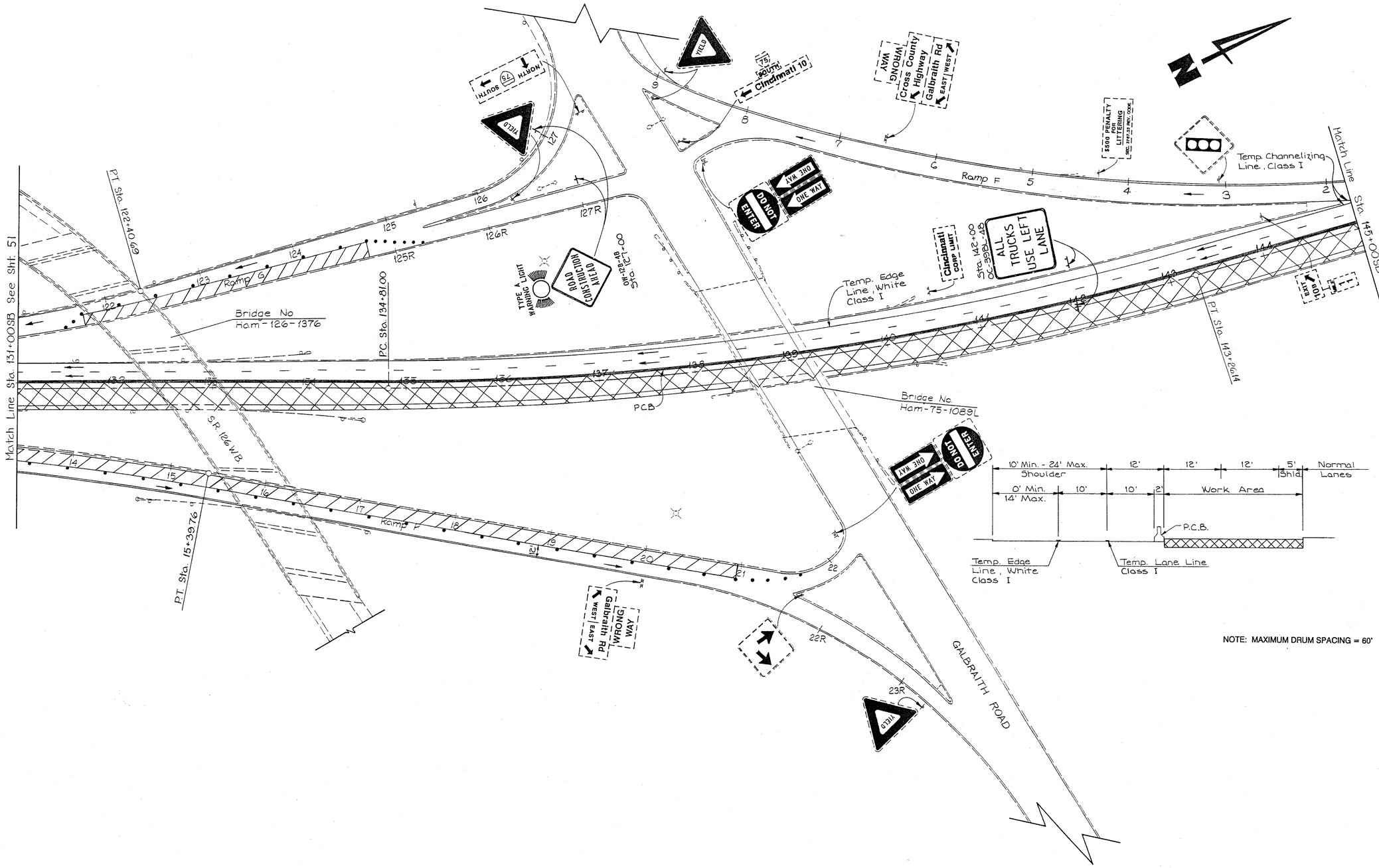

NOTE: MAXIMUM DRUM SPACING = 60'

STAGE II

MAINTENANCE OF TRAFFIC STA. 131+00SB TO STA. 145+00SB

516725
MEDIA RESOURCES CORP.

F.H.W.A. REGION	STATE	PROJECT	
5	OHIO		

53
338

HAM - 75 - 9.75

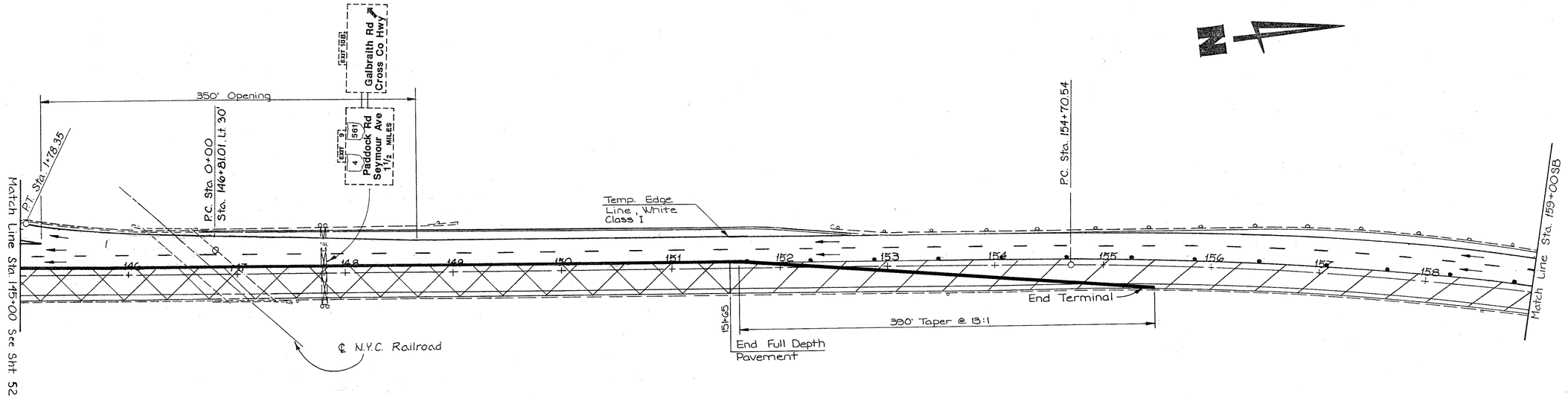

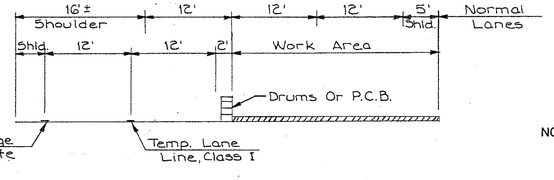

NOTE: MAXIMUM DRUM SPACING = 60'

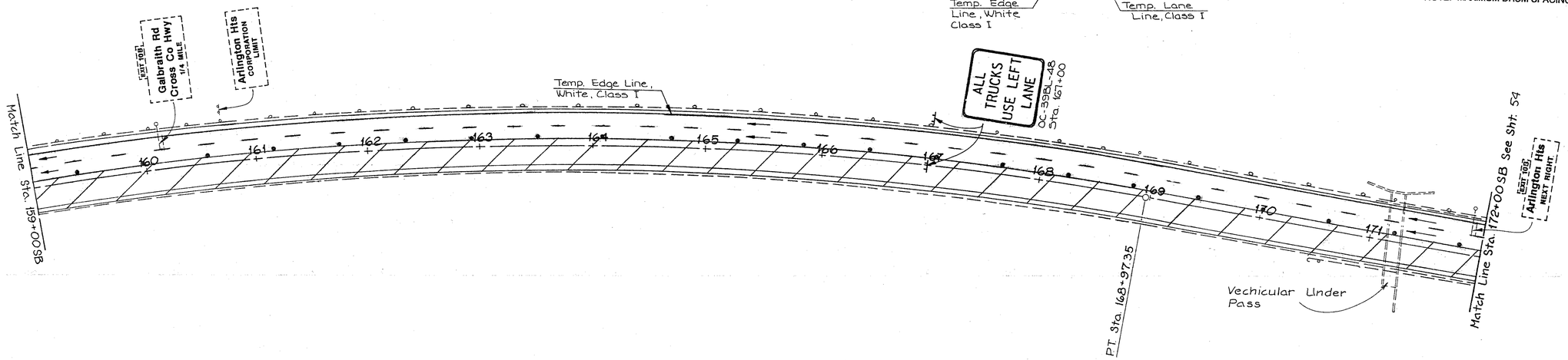

STAGE II

MAINTENANCE OF TRAFFIC STA. 145+00SB TO STA. 172+00SB

510725
MEDIA RESOURCES CORP.

F.H.W.A. REGION	STATE	PROJECT	
5	OHIO		

54
338

HAM-75-9.75

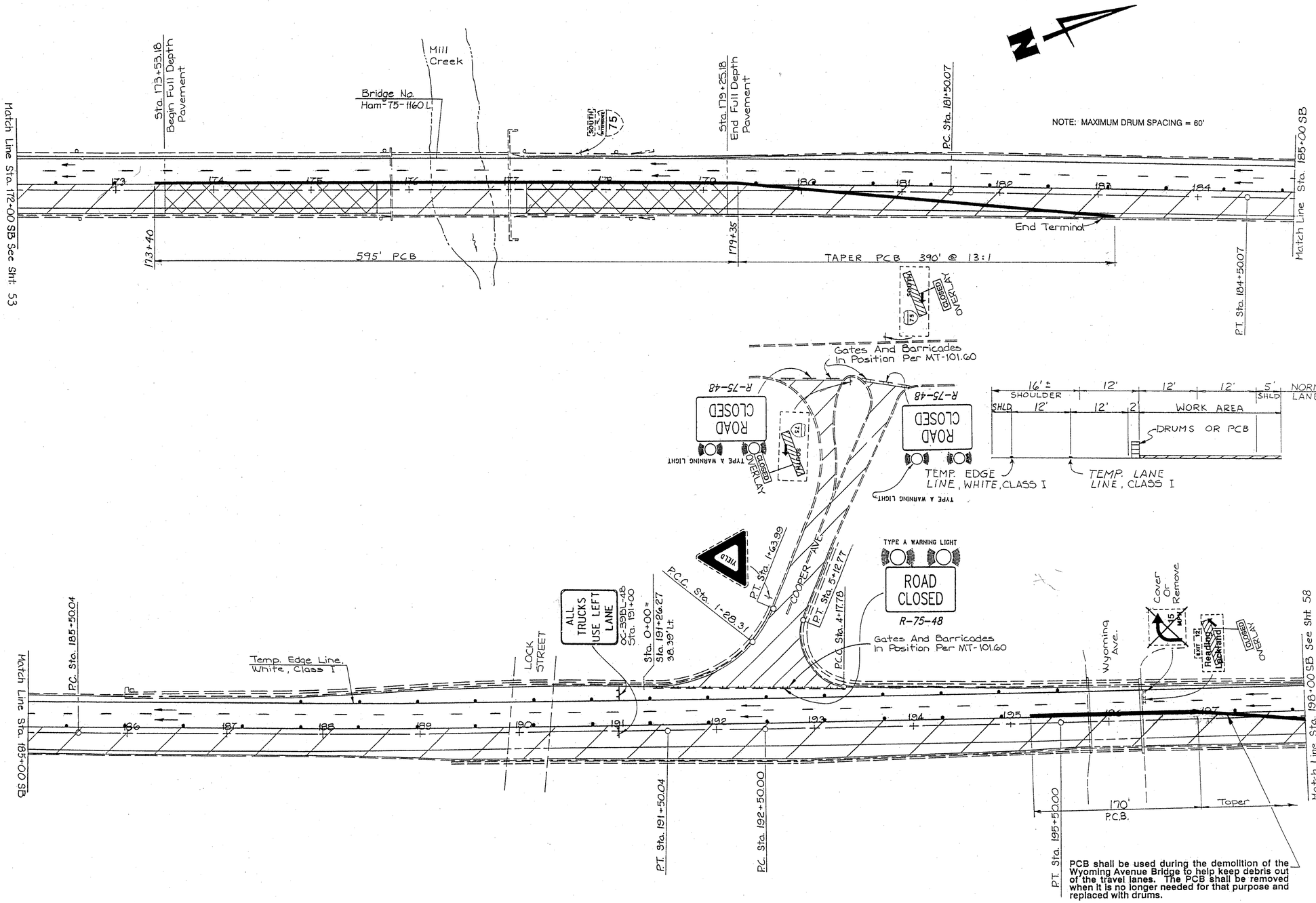

PCB shall be used during the demolition of the Wyoming Avenue Bridge to help keep debris out of the travel lanes. The PCB shall be removed when it is no longer needed for that purpose and replaced with drums.

STAGE II

MAINTENANCE OF TRAFFIC STA. 172+00SB TO STA. 198+00SB

MEDIA RESOURCES CORP

F.H.W.A. REGION	STATE	PROJECT	
5	OHIO		

55
338

HAM-75-9.75

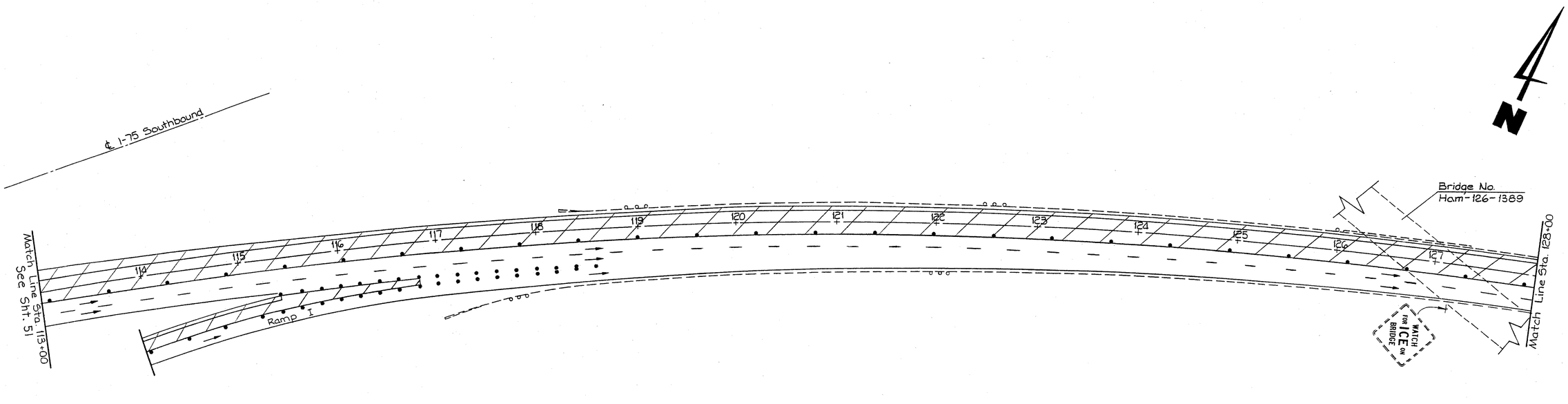

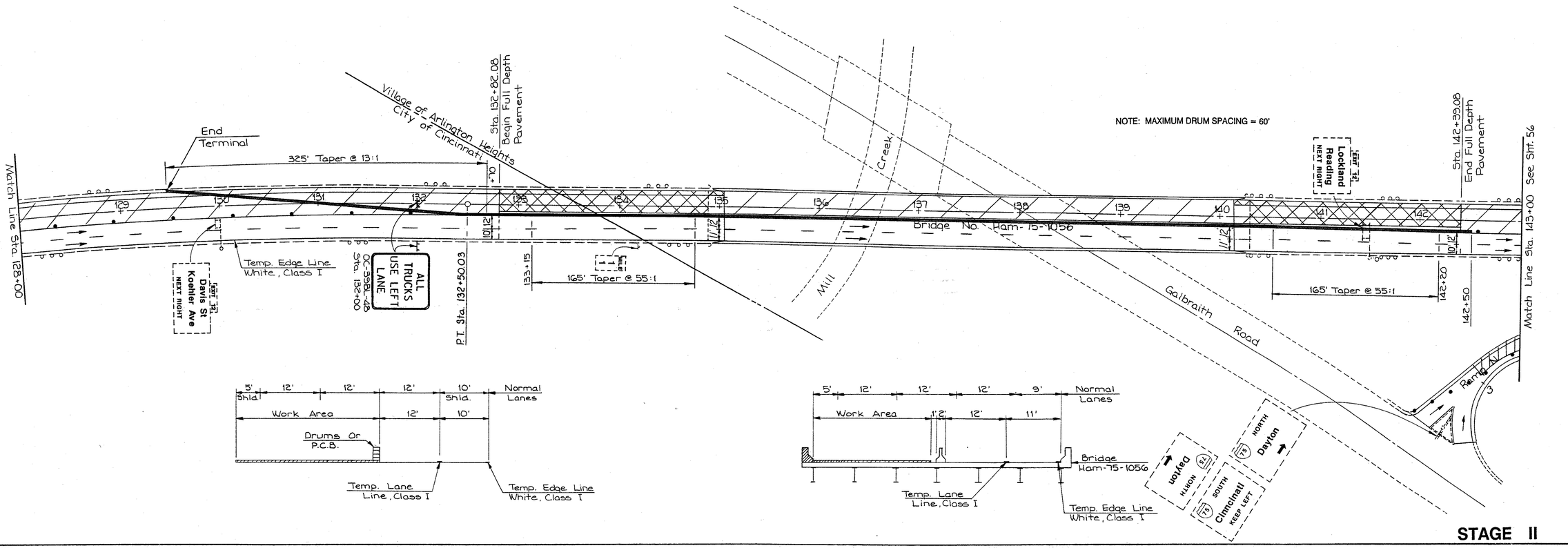

STAGE II

MAINTENANCE OF TRAFFIC STA. 113+00 NB TO STA. 143+00 NB

MEDIA RESOURCES CORP

F.H.W.A. REGION	STATE	PROJECT	
5	OHIO		

HAM-75-9.75

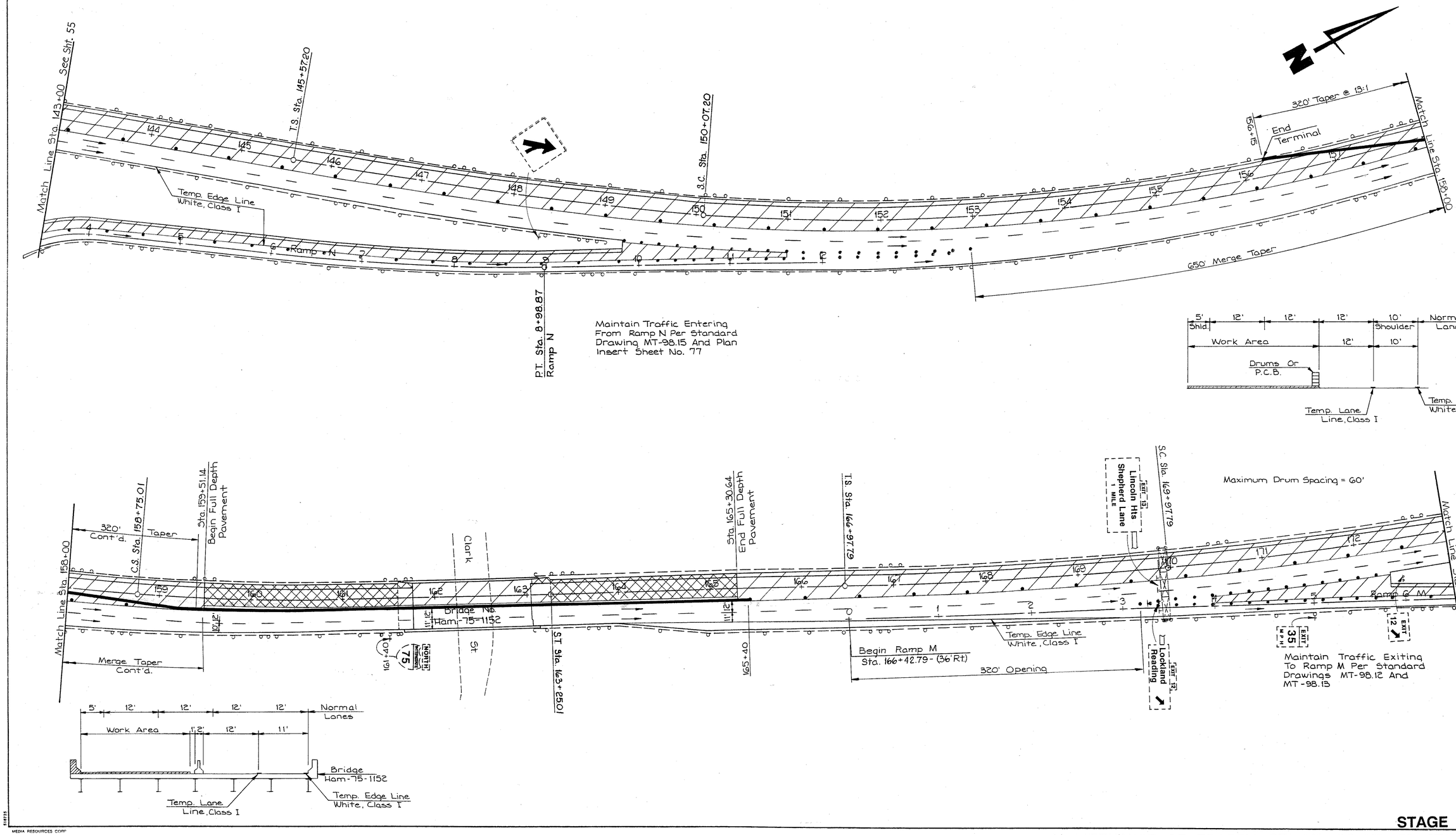

STAGE II

MAINTENANCE OF TRAFFIC STA. 143+00 NB TO STA. 173+00 NB

MEDIA RESOURCES CORP

F.H.W.A. REGION	STATE	PROJECT	
5	OHIO		

57
338

HAM-75-9.75

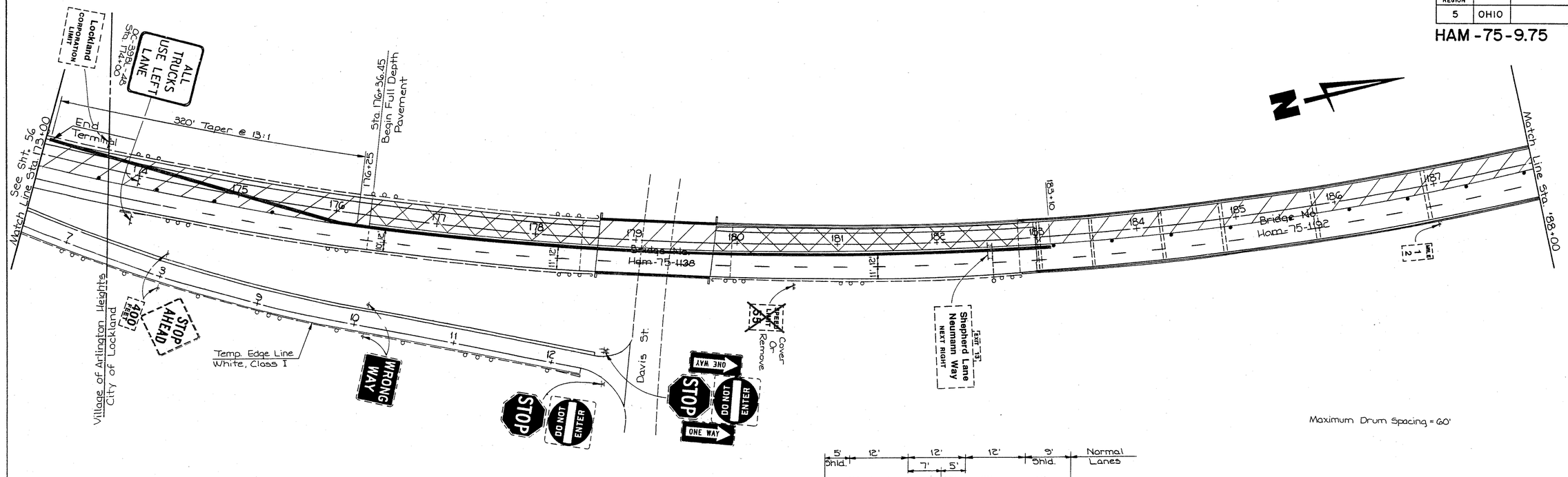

STAGE II

MAINTENANCE OF TRAFFIC STA. 173+00 NB TO STA. 203+00 NB

MEDIA RESOURCES CORP

F.H.W.A. REGION	STATE	PROJECT	
5	OHIO		

58/338

HAM-75-9.75

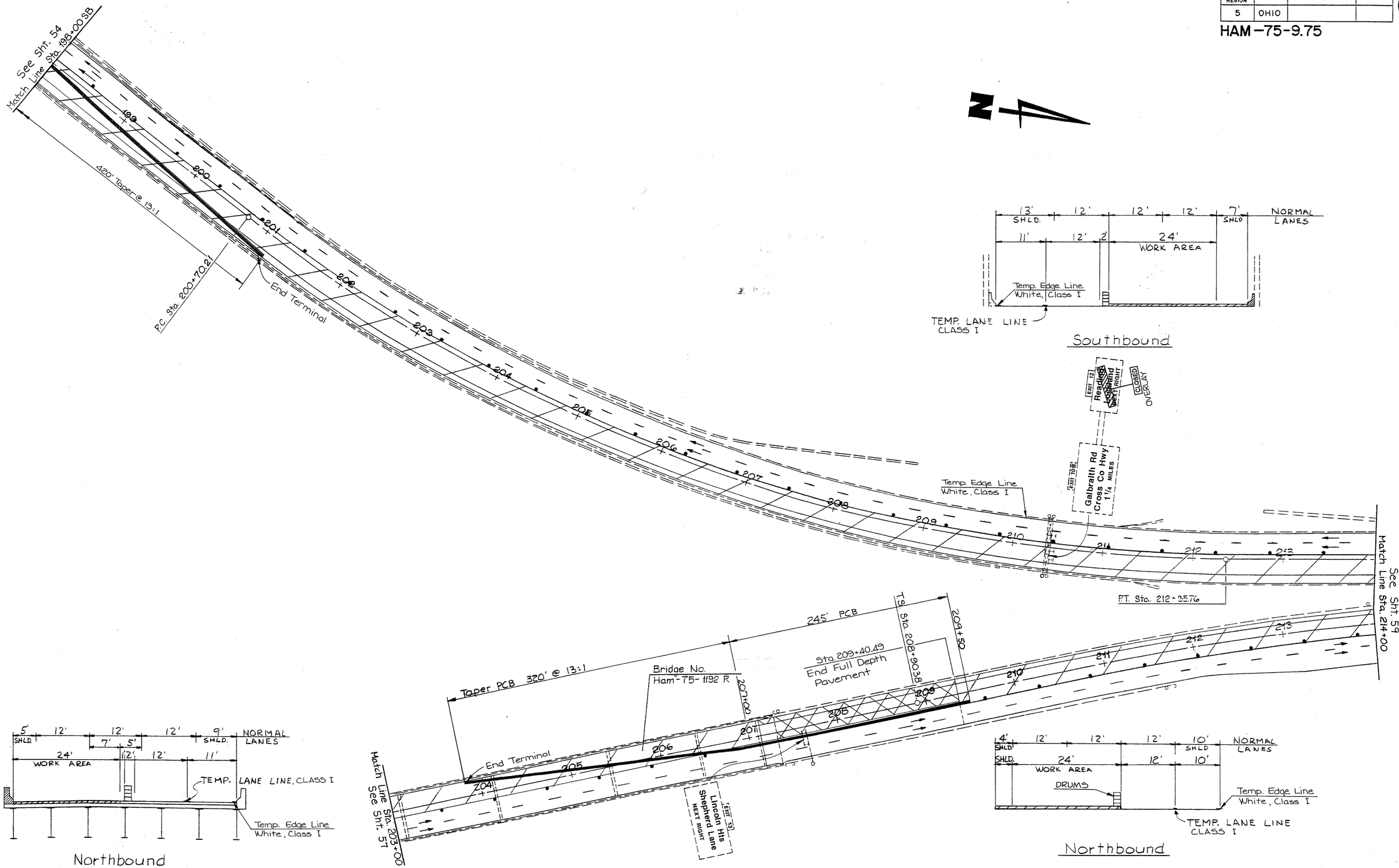

Southbound

Northbound
Bridge No. 1192-R

Northbound

STAGE II

MAINTENANCE OF TRAFFIC STA. 203+00NB TO STA. 214+00NB AND STA. 198+00 SB TO STA. 214+00 SB

MEDIA RESOURCES CORP.

F.H.W.A. REGION	STATE	PROJECT	
5	OHIO		

59
338

HAM-75-9.75

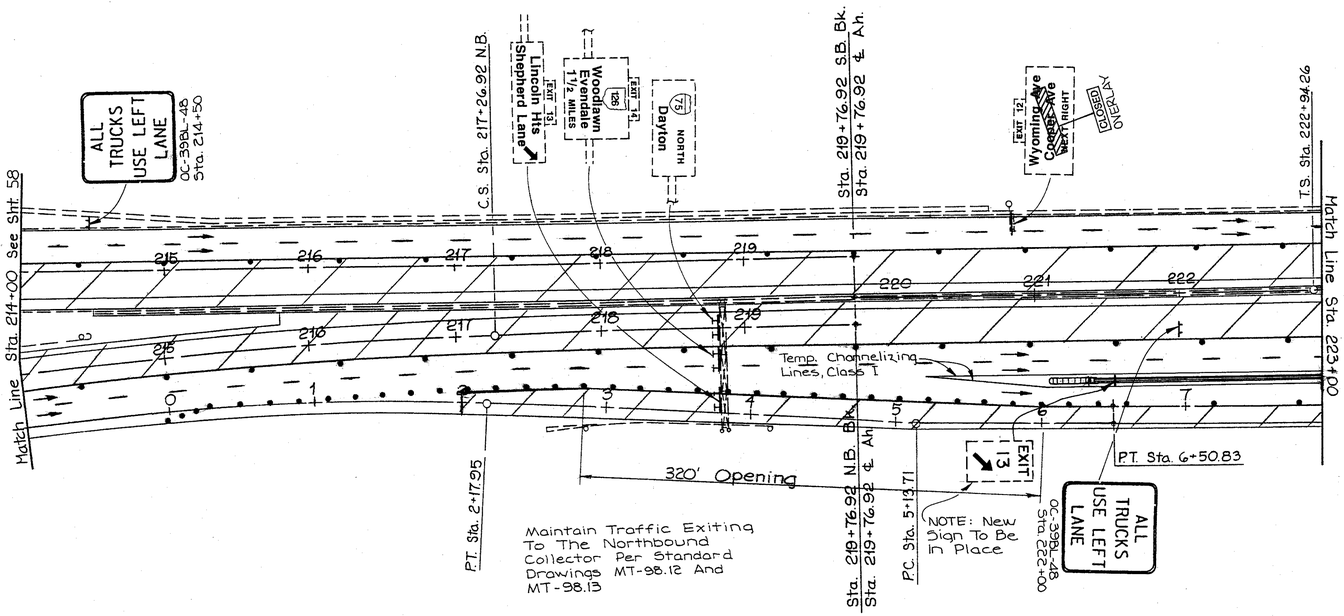

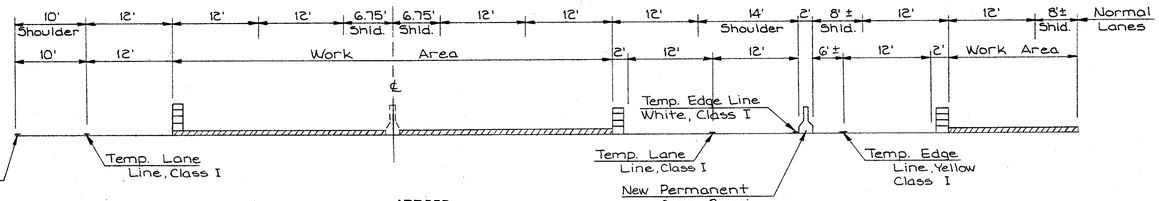

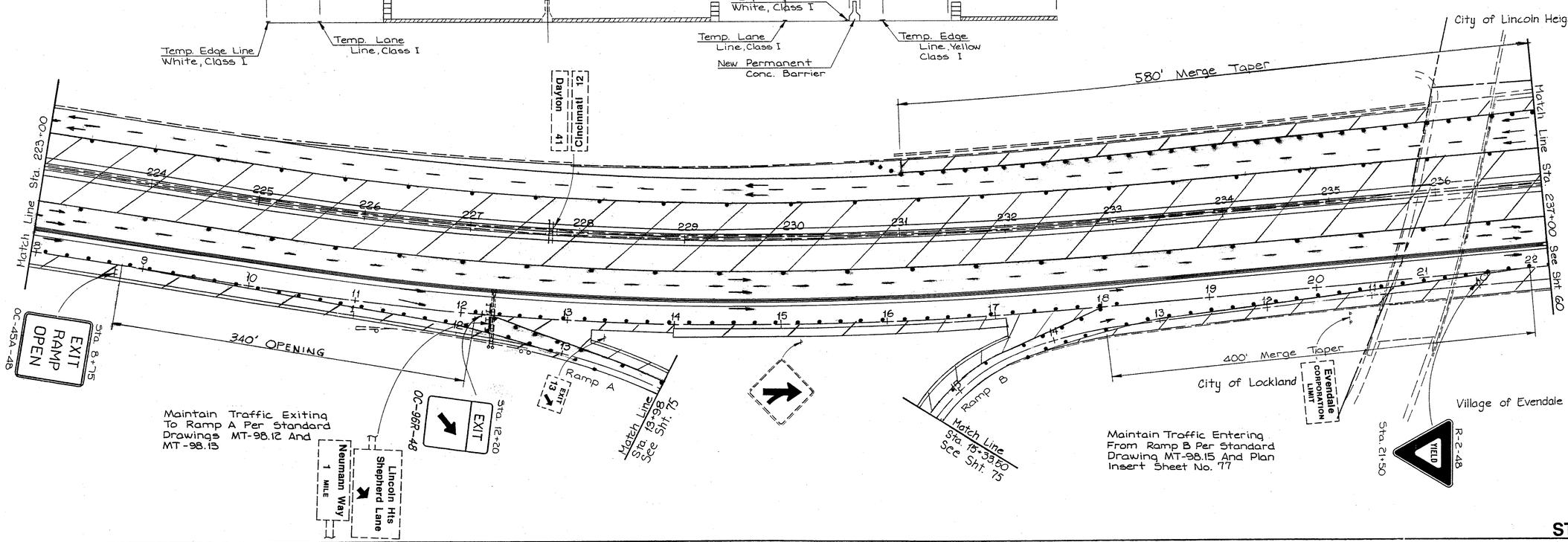

NOTE: MAXIMUM DRUM SPACING = 60'

STAGE II

MAINTENANCE OF TRAFFIC STA. 214+00 TO STA. 237+00

MEDIA RESOURCES CORP

F.H.W.A. REGION	STATE	PROJECT	
5	OHIO		

60
338

HAM –75–9.75

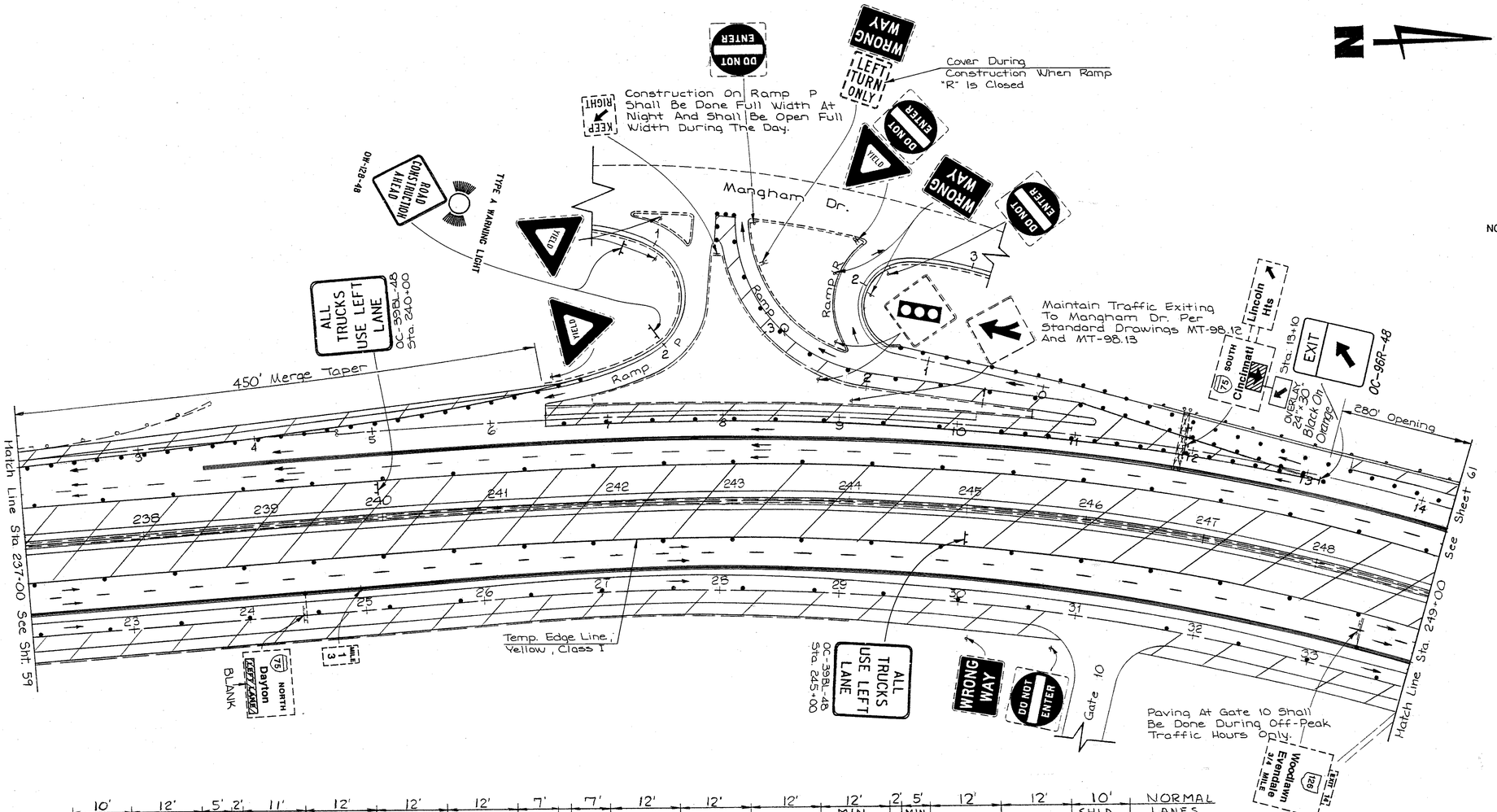

NOTE: MAXIMUM DRUM SPACING = 60'

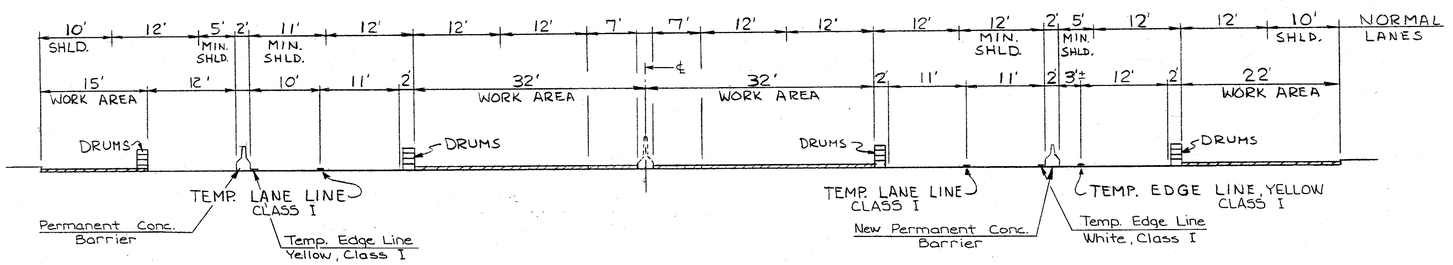

STAGE II

MAINTENANCE OF TRAFFIC STA. 237+00 TO STA. 249+00

USDA RESOURCES CORP

F.H.W.A. REGION	STATE	PROJECT	
5	OHIO		

61
338

HAM - 75 - 9.75

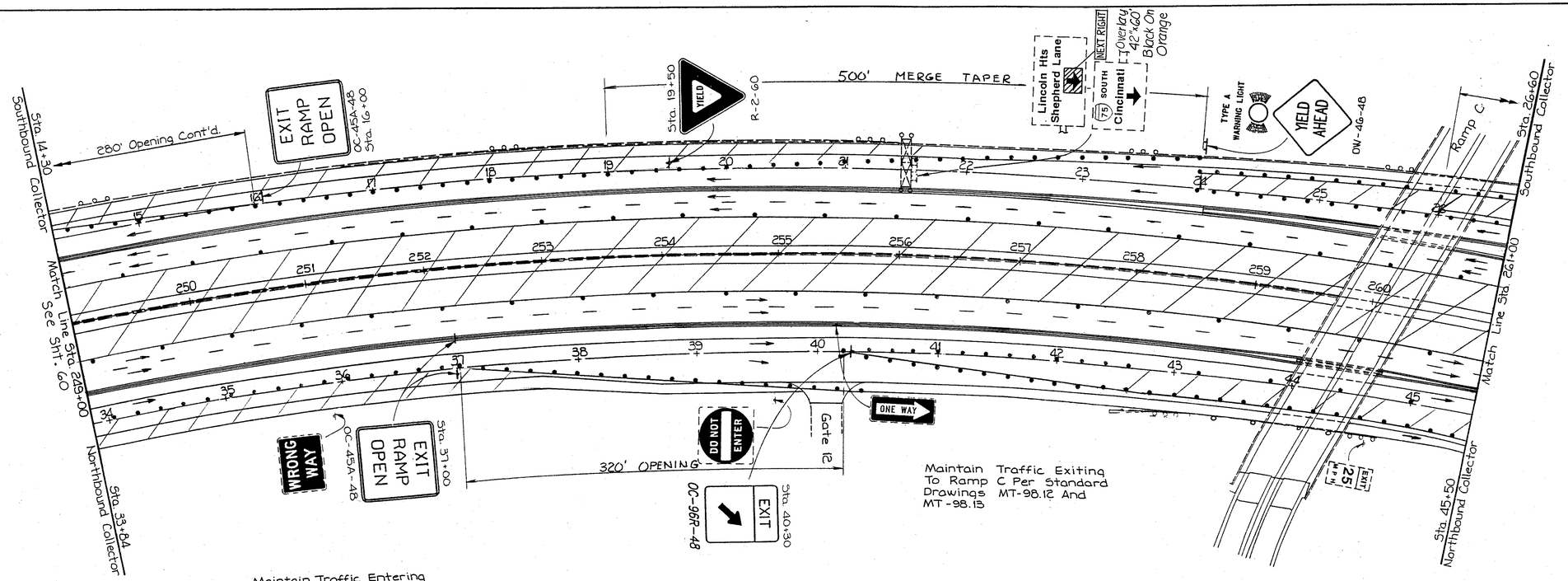

Maintain Traffic Entering From Ramp C Per Standard Drawing MT-98.15 And Plan Insert Sheet No. 77

Maintain Traffic Exiting To Ramp E Per Standard Drawings MT-98.12 And MT-98.13

Note: Construction On Ramps C, D & E Shall Be Done Full Width At Night.
Except For The Bridge Which Shall Be Constructed Half Width, The Ramps Shall Be Fully Open During The Day.

NOTE: MAXIMUM DRUM SPACING = 60'

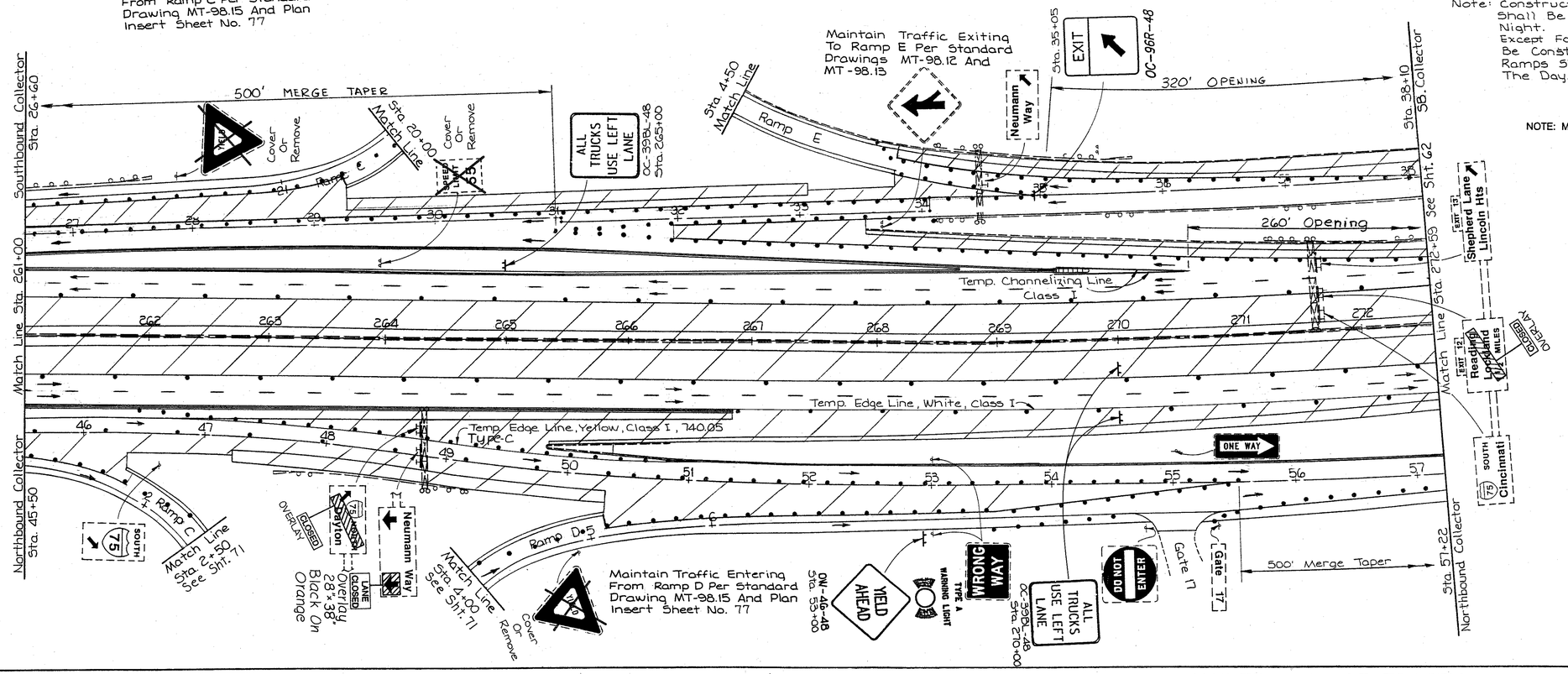

STAGE II

MAINTENANCE OF TRAFFIC STA. 249+00 TO STA. 272+59

MEDIA RESOURCES CORP

F.H.W.A. REGION	STATE	PROJECT		
5	OHIO			

62
338

HAM-75-9.75

NOTE: MAXIMUM DRUM SPACING = 60'

Sta. 38+10 Southbound Collector
DO NOT ENTER
WRONG WAY
EXIT RAMP OPEN
OC-45A-48 Sta. 38+10
I SOUTH 75
Overlay
Magnolia Dr.
WRONG WAY
R-2-60 YIELD
ROAD CLOSED
R-75-48
TYPE A WARNING LIGHT
Chicago Ave.
Gates And Barricades In Position Per MT-101.60
500' MERGE TAPER
DO NOT ENTER
Sta. 49+29.43 Southbound Collector
ROAD CLOSED
R-75-48 Sta. 47+55
ONE WAY
Drums @ 10'
Temp. Edge Line White, Class I
See Sht. 61 Match Line Sta. 272+59
Match Line Sta. 284+00
Temp. Edge Line White, Class I
Temp Lane Line, Class I
Northbound Collector Sta. 57+22
500' Merge Taper Cont'd.
R-2-60 YIELD Sta. 60+10
WRONG WAY
ONE WAY
DO NOT ENTER
Neumann Way
NEUMANN WAY
Match Line Sta. 21+00
Woodlawn Evendale
I 75 SOUTH
126
Note: Construction On Neuman Way And Magnolia Drive Shall Be Done During Off-Peak Hours Only.
THROUGH TRAFFIC KEEP LEFT
OC-47L-30 Sta. 66+00
WRONG WAY
Sta. 68+82 Northbound Collector
84"-48" 6" Copy Black On White
RIGHT LANE MUST EXIT
Sta. 68+40
Note: Construction On Ramp J Shall Be Done Full Width At Night. Except For The Bridge Which Shall Be Constructed Half Width, The Ramp Shall Be Fully Open During The Day. See Note On Sht. 25
ALL TRUCKS USE LEFT LANE
OC-39BL-48 Sta. 285+00
Lincoln Hts CORPORATION LIMIT
Maintain Traffic Entering From Ramp J Per Standard Drawing MT-98.15 And Plan Insert Sheet No. 77
Cover Or Remove
Ramp J
Match Line Sta. 21+00
Neumann Way
I 75 SOUTH
Cincinnati
Sta. 58+65
YIELD R-2-60
RIGHT LANE MUST USE SHOULDER
OC-49R-48 Sta. 294+00
WRONG WAY
500' MERGE TAPER
Sta. 60+90 Southbound Collector
500' Merge Taper Cont'd.
TYPE A WARNING LIGHT
YIELD AHEAD
OW-46-48 Sta. 51+00
Sta. 48+29.43 Southbound Collector
Drums @ 20' (Con't.)
Temp. Edge Line, White, Class I
Temp. Edge Line Yellow, Class I
Match Line Sta. 284+00
Match Line Sta. 295+55 See Sht. 63
Temp. Channelizing Lines, Class I
Temp. Edge Line, Yellow
Northbound Collector Sta. 68+82
ONE WAY
Sharon Rd Glendale Sharonville 1 1/4 MILES
I 75 SOUTH
Woodlawn Evendale
126
Remove Cover Or
RIGHT LANE ENDS
DO NOT ENTER
R-41B-36
OC-96R-48
EXIT
Sta. 73+30
NOTE: New Sign To Be In Place
EXIT 14
Ramp J
Match Line See Sht. 72
MAGNOLIA DR
I 75 SOUTH
Gate 57
NO PARKING OR STANDING
ALL TRUCKS USE LEFT LANE
OC-39BL-48 Sta. 295+00
Sta. 80+40 Northbound Collector

STAGE II

MAINTENANCE OF TRAFFIC STA. 272+59 TO STA. 295+55

MEDIA RESOURCES CORP.

F.H.W.A. REGION	STATE	PROJECT	
5	OHIO		

63
338

HAM-75-9.75

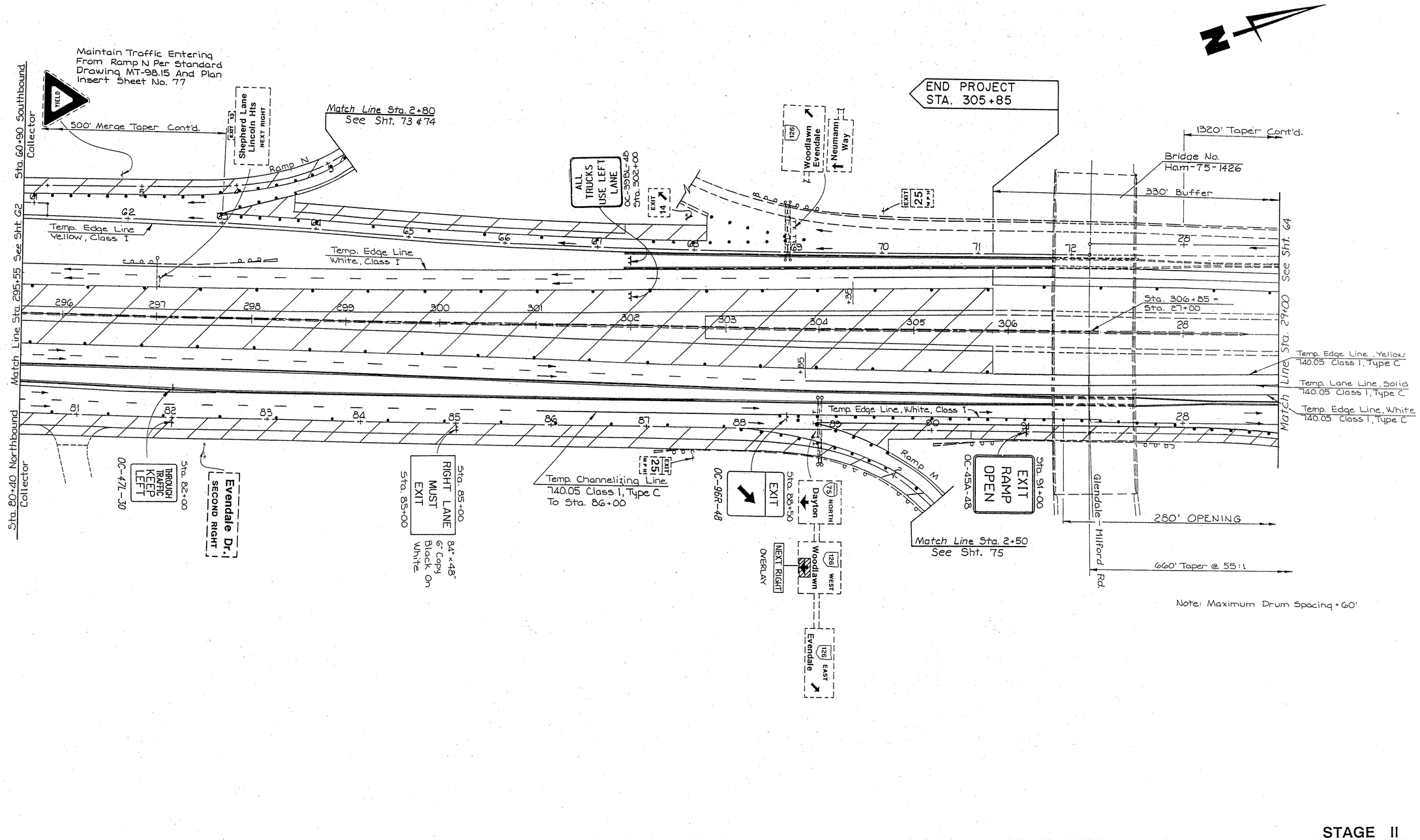

STAGE II

MAINTENANCE OF TRAFFIC STA. 295+55 TO STA. 29+00

MEDIA RESOURCES CORP

F.H.W.A. REGION	STATE	PROJECT	
5	OHIO		

64
338

HAM-75-9.75

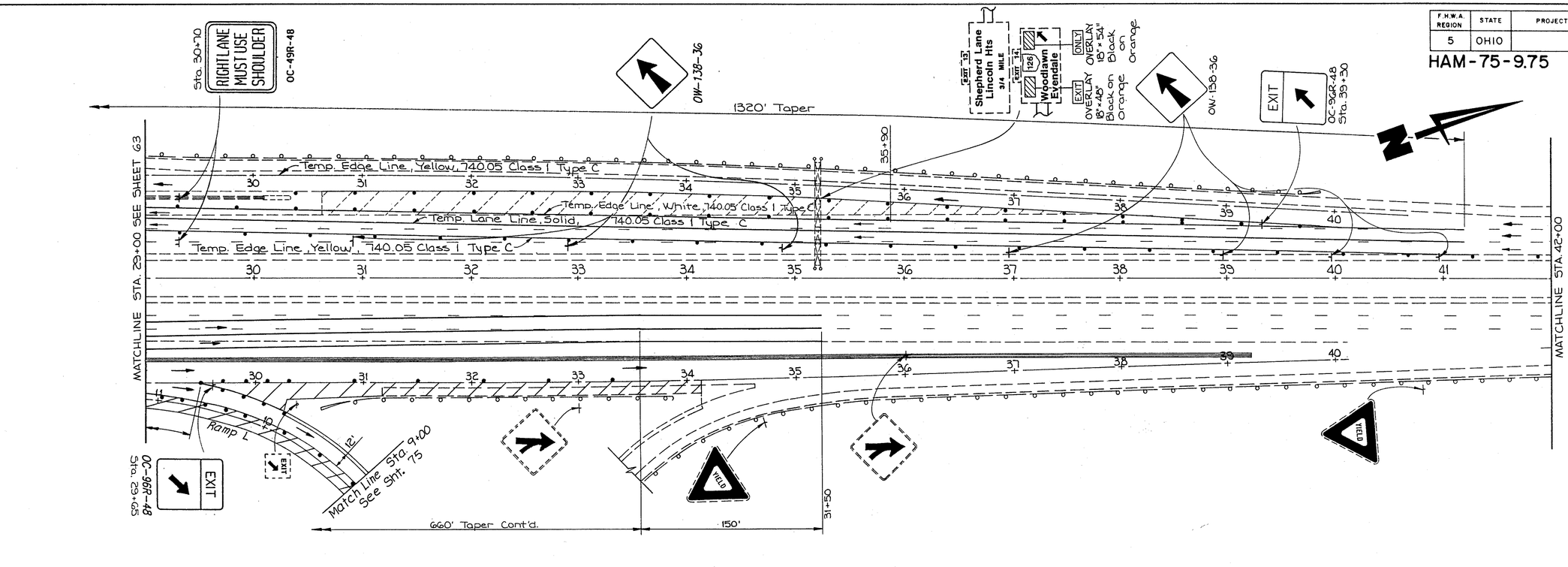

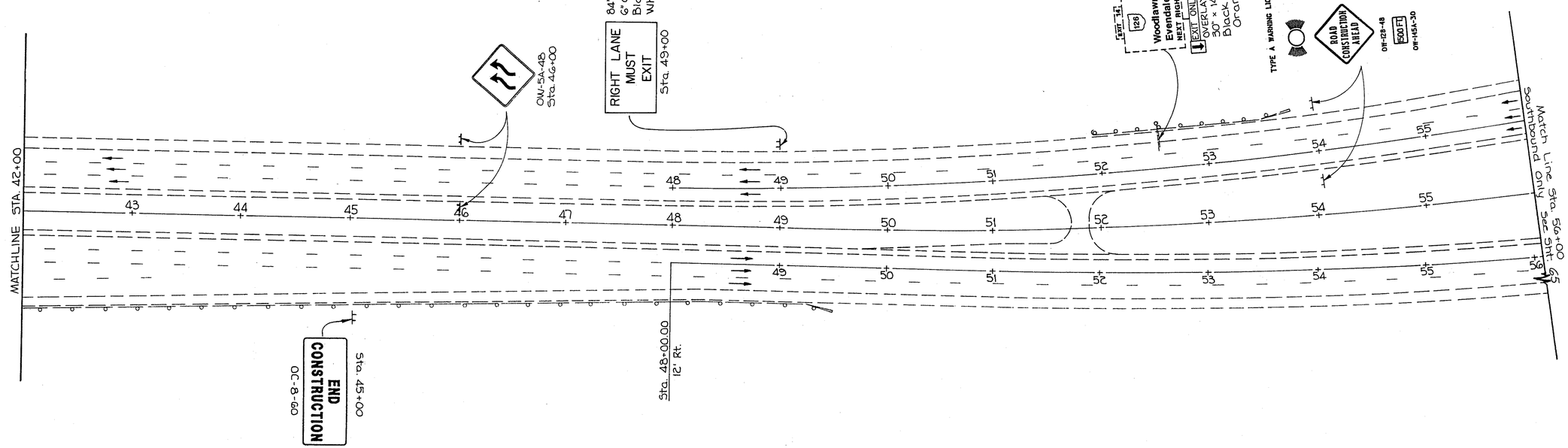

STAGE II

MAINTENANCE OF TRAFFIC STA. 29+00 TO STA. 56+00

519125
MEDIA RESOURCES CORP

F.H.W.A. REGION	STATE	PROJECT	
5	OHIO		

65
338

HAM - 75 - 9.75

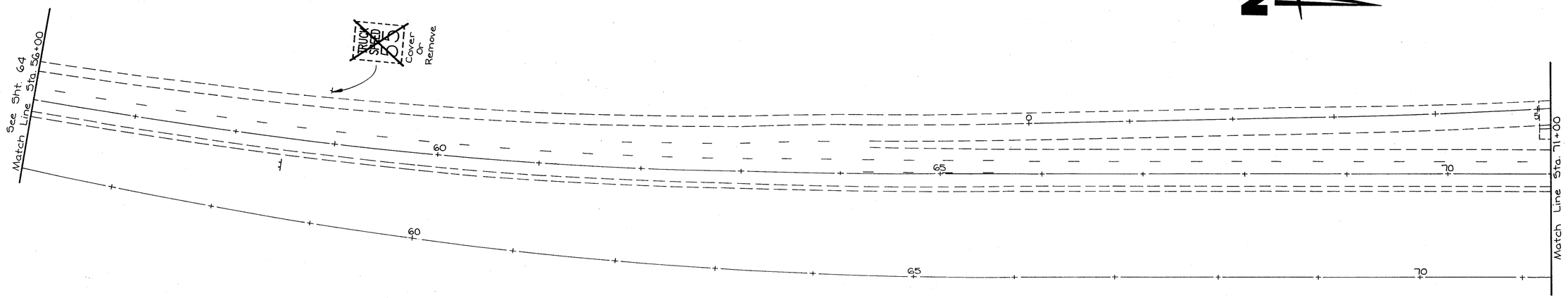

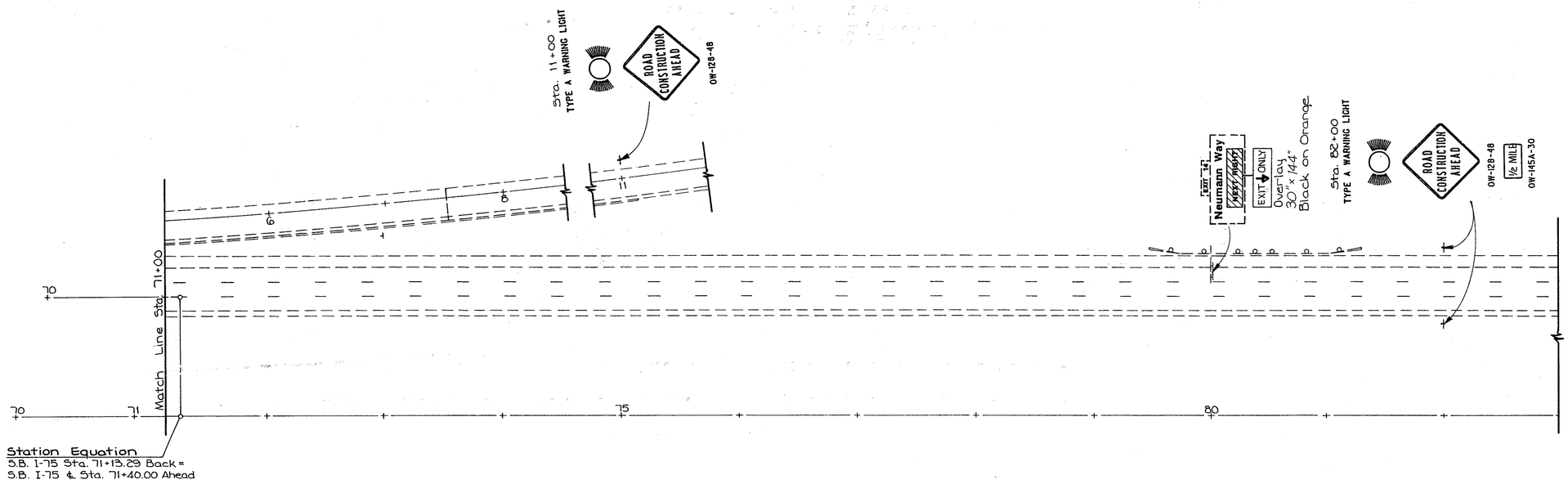

Advance Warning Signs Shall Be Erected In Accordance With Standard Drawing MT-95.30

STAGE II

MAINTENANCE OF TRAFFIC STA. 56+00 TO STA. 83+00

518725
MEDIA RESOURCES CORP

F.H.W.A. REGION	STATE	PROJECT	
5	OHIO		

66
338

HAM - 75-9.75

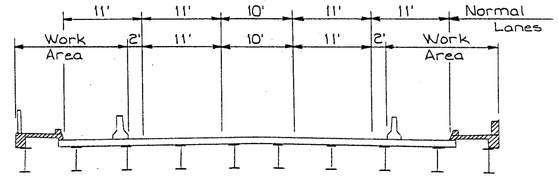

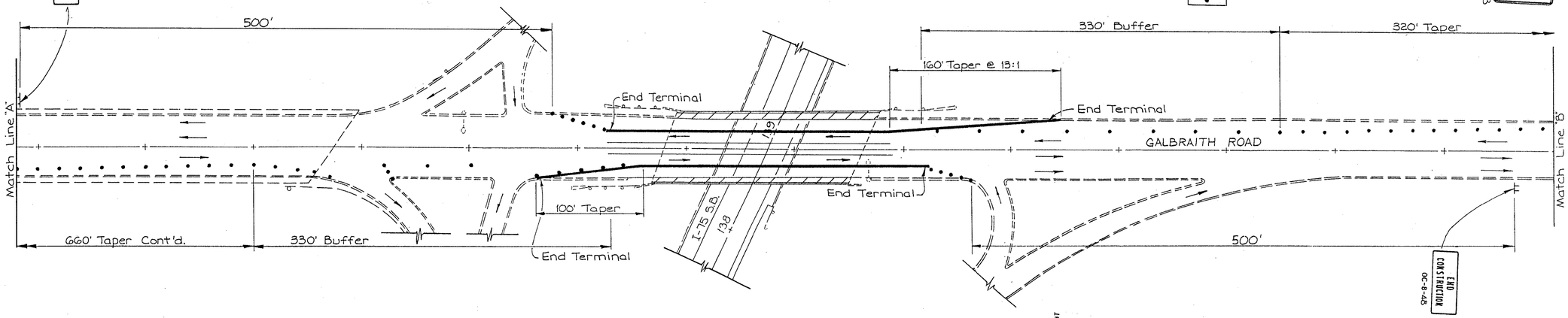

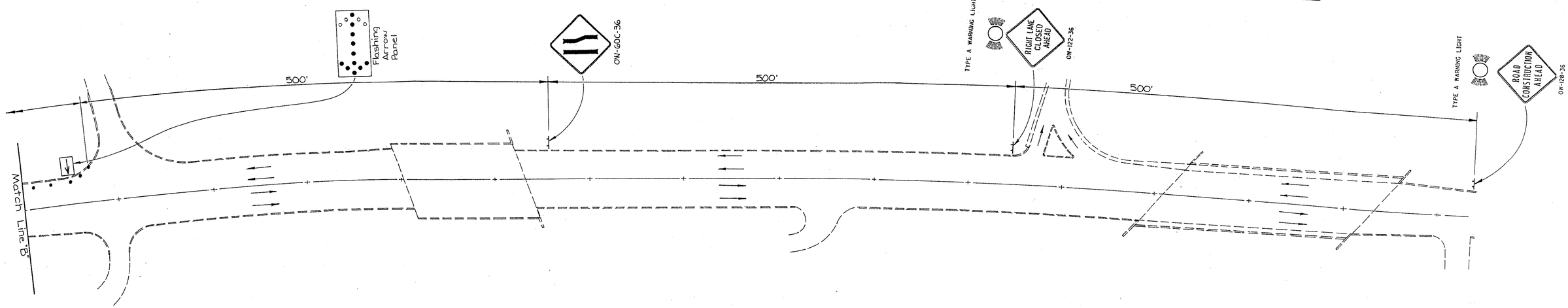

MAINTENANCE OF TRAFFIC GALBRAITH ROAD

F.H.W.A. REGION	STATE	PROJECT	
5	OHIO		

67
338

HAM - 75 - 9.75

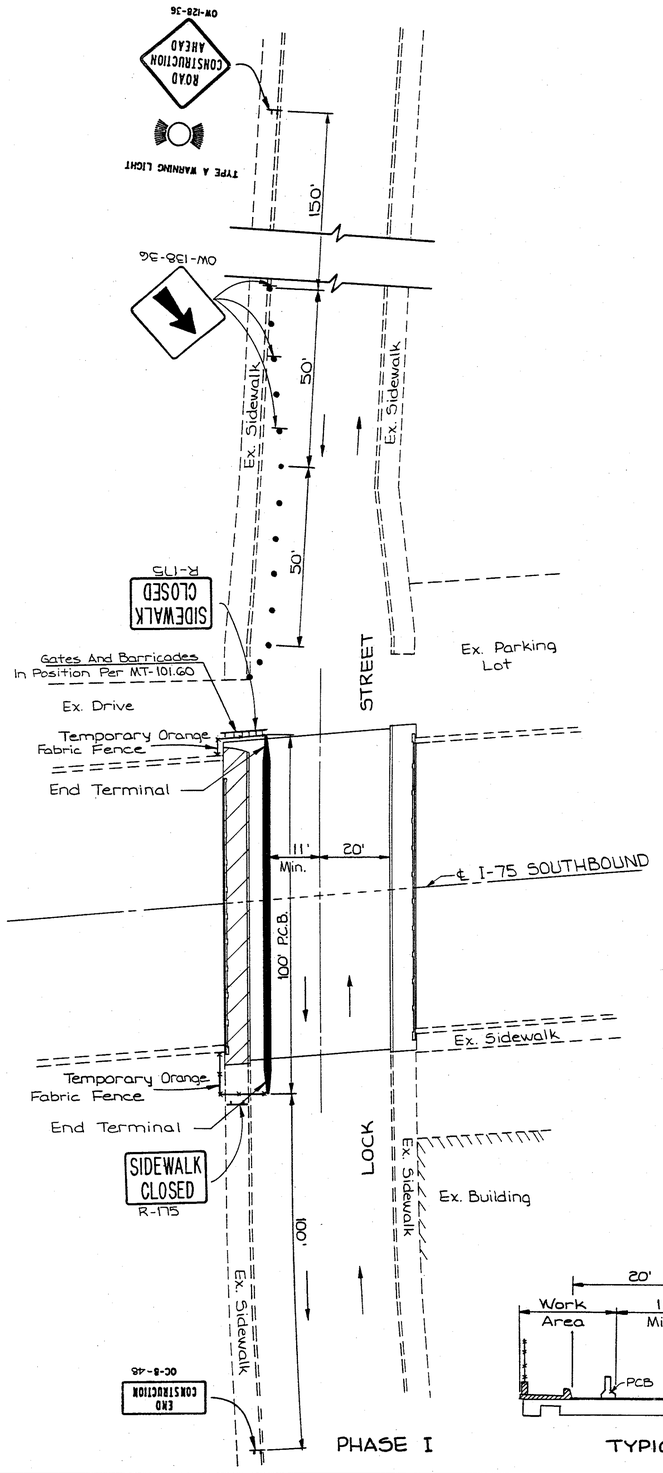

PHASE I

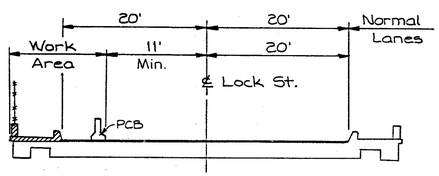

TYPICAL SECTION
PHASE I

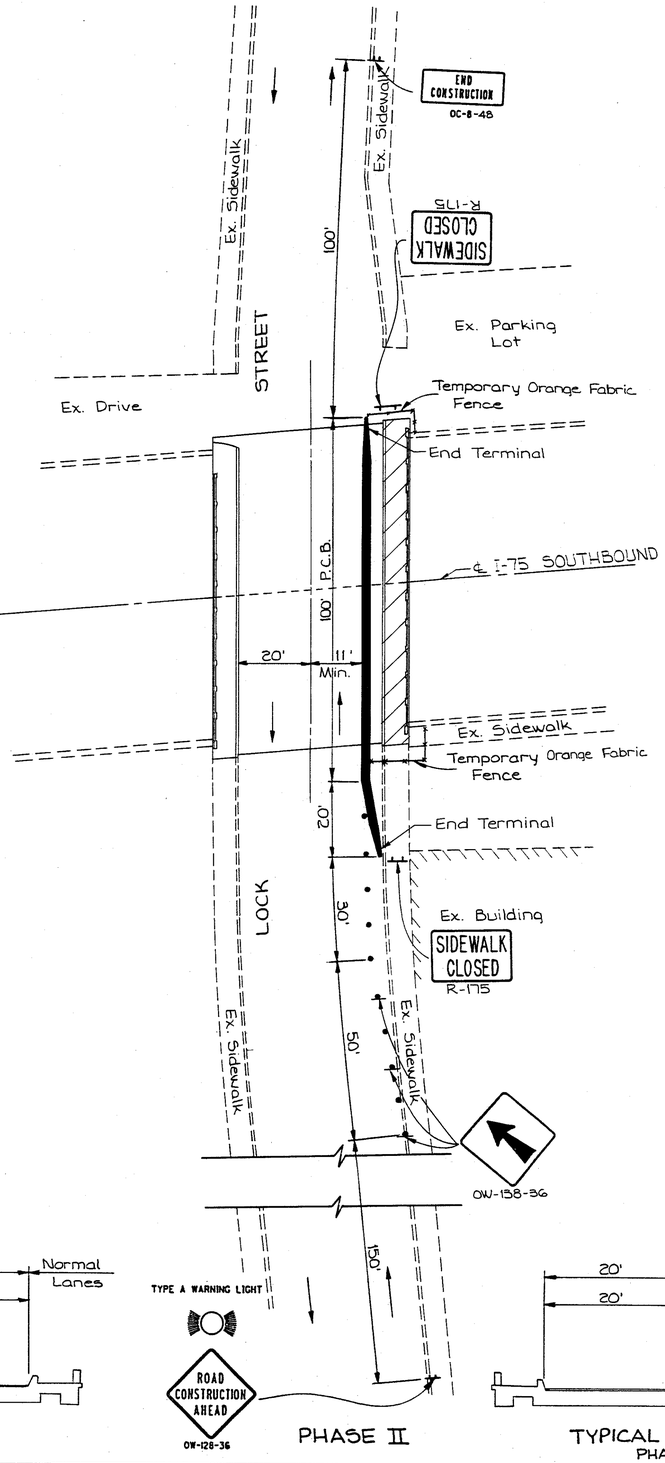

PHASE II

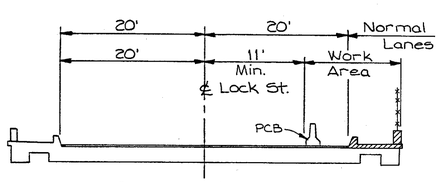

TYPICAL SECTION
PHASE II

MAINTENANCE OF TRAFFIC LOCK ST.

MEDIA RESOURCES CORP

F.H.W.A. REGION	STATE	PROJECT	
5	OHIO		

68
338

HAM - 75 - 9.75

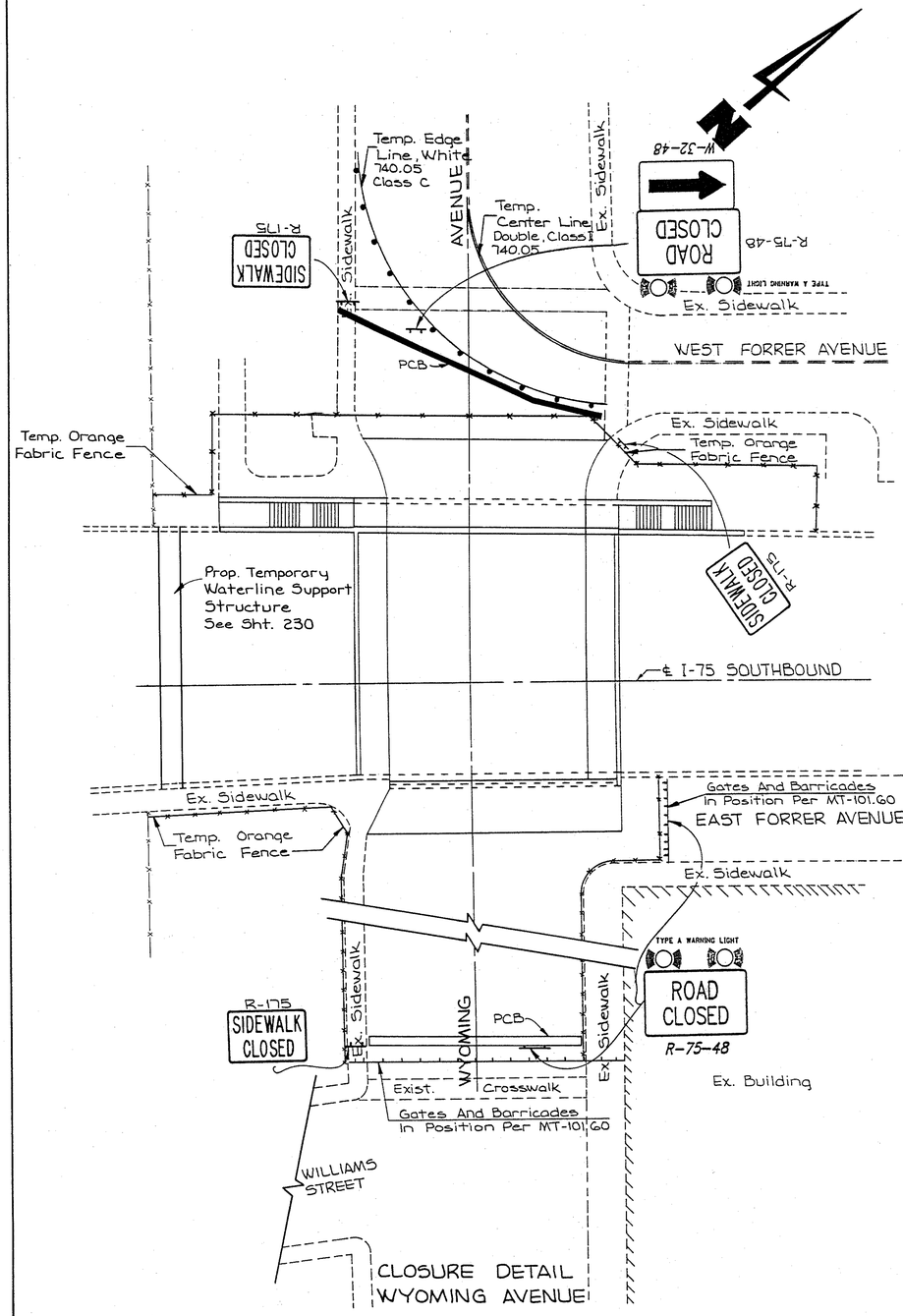

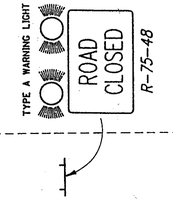

MAINTENANCE OF TRAFFIC WYOMING AVE.

MEDIA RESOURCES CORP.

F.H.W.A. REGION	STATE	PROJECT	
5	OHIO		

69
338

HAM-75-9.75

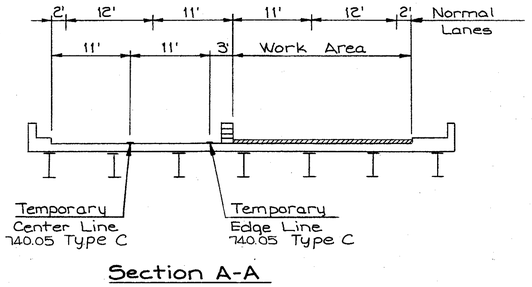

Section A-A

PHASE I

MAINTENANCE OF TRAFFIC SHEPHERD LN.

MEDIA RESOURCES CORP

F.H.W.A. REGION	STATE	PROJECT	
5	OHIO		

70
338

HAM-75-9.75

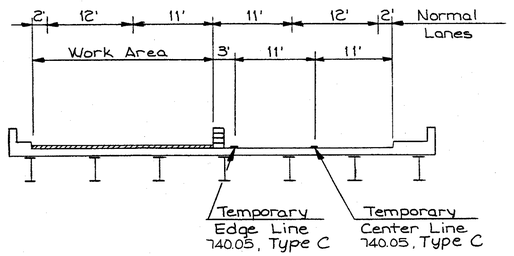

Section B-B

PHASE II

MAINTENANCE OF TRAFFIC SHEPHERD LN.

MEDIA RESOURCES CORP

F.H.W.A. REGION	STATE	PROJECT	
5	OHIO		

71
338

HAM-75-9.75

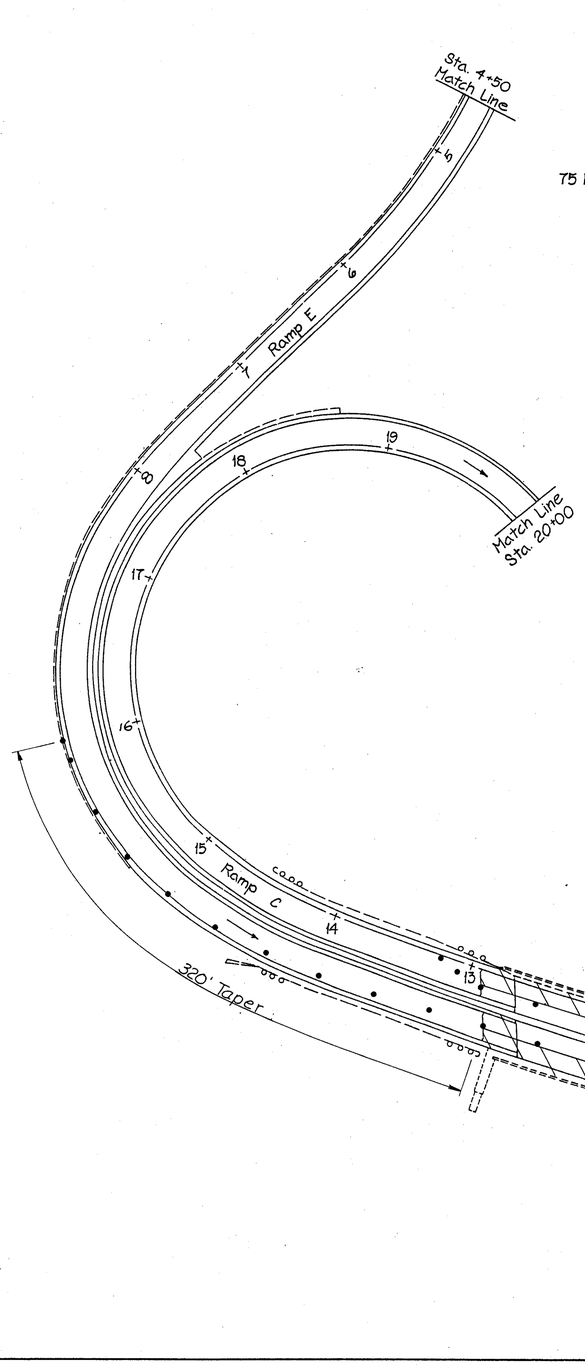

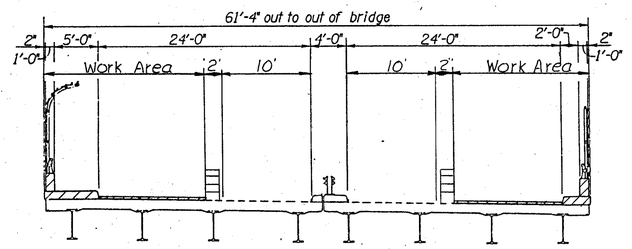

PHASE I

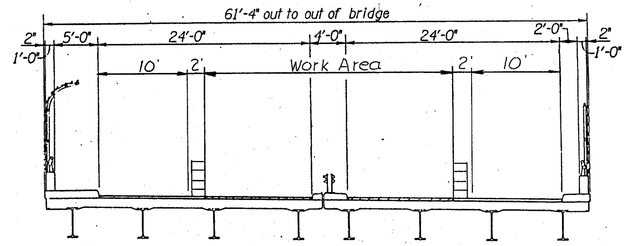

PHASE II

MAINTENANCE OF TRAFFIC RAMPS C,D,E & F

MEDIA RESOURCES CORP

F.H.W.A. REGION	STATE	PROJECT	
5	OHIO		

72
338

HAM-75-9.75

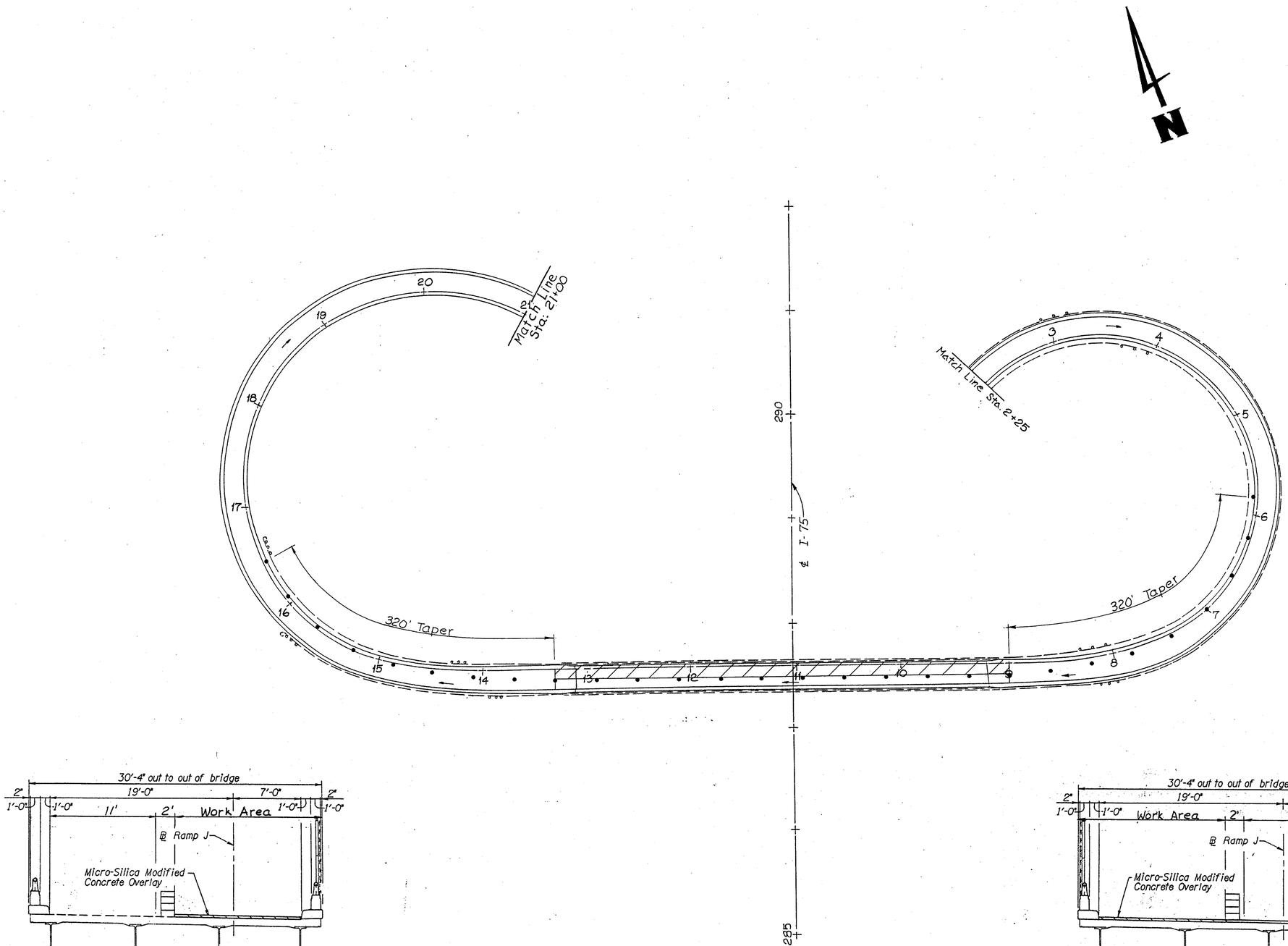

PHASE I

PHASE II

MAINTENANCE OF TRAFFIC RAMP J

MEDIA RESOURCES CORP.

F.H.W.A. REGION	STATE	PROJECT	
5	OHIO		

73
338

HAM-75-9.75

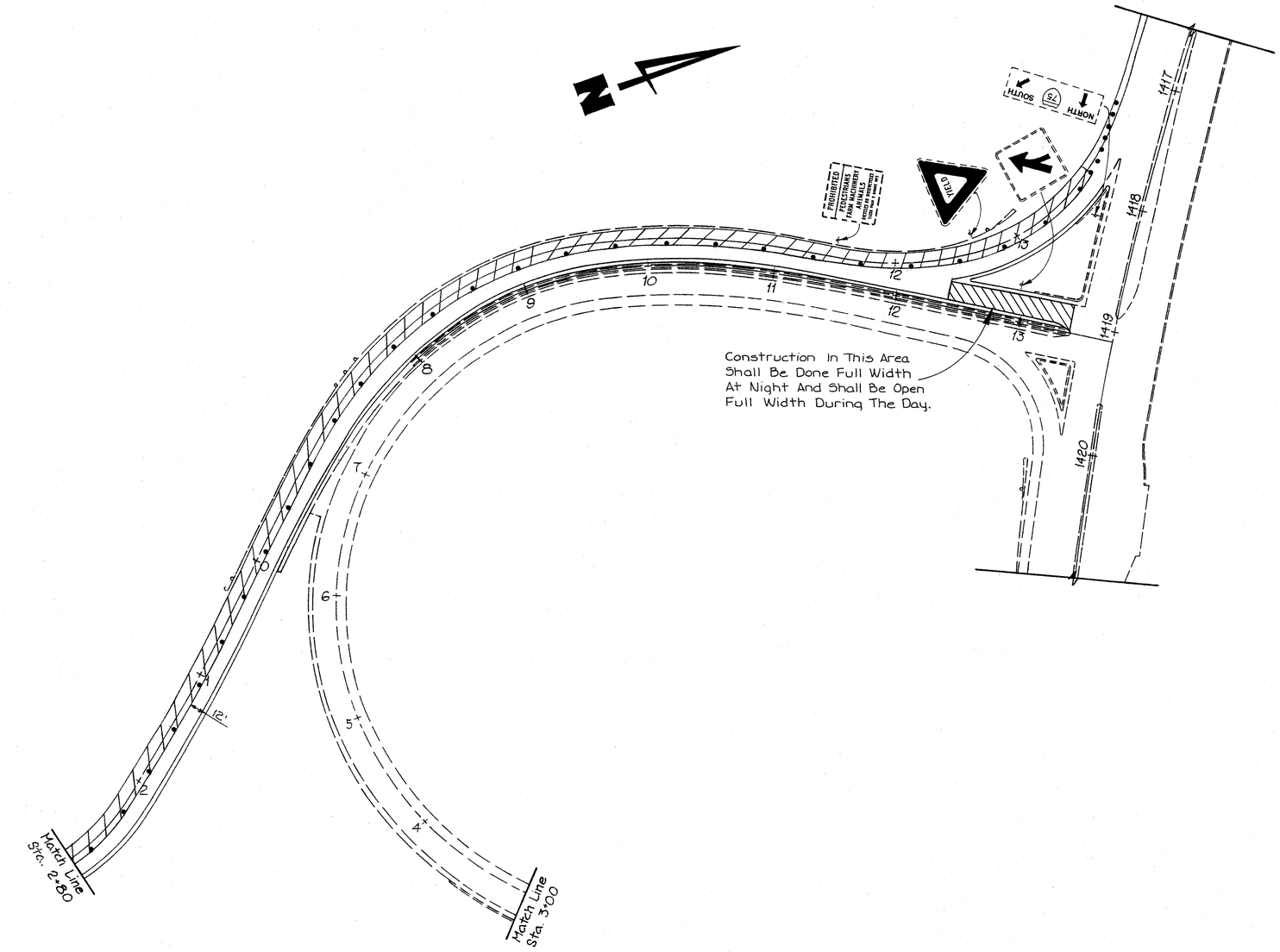

MEDIA RESOURCES CORP

MAINTENANCE OF TRAFFIC RAMPS B & N GLENDALE-MILFORD ROAD INTERCHANGE

F.H.W.A. REGION	STATE	PROJECT	
5	OHIO		

74
338

HAM-75-9.75

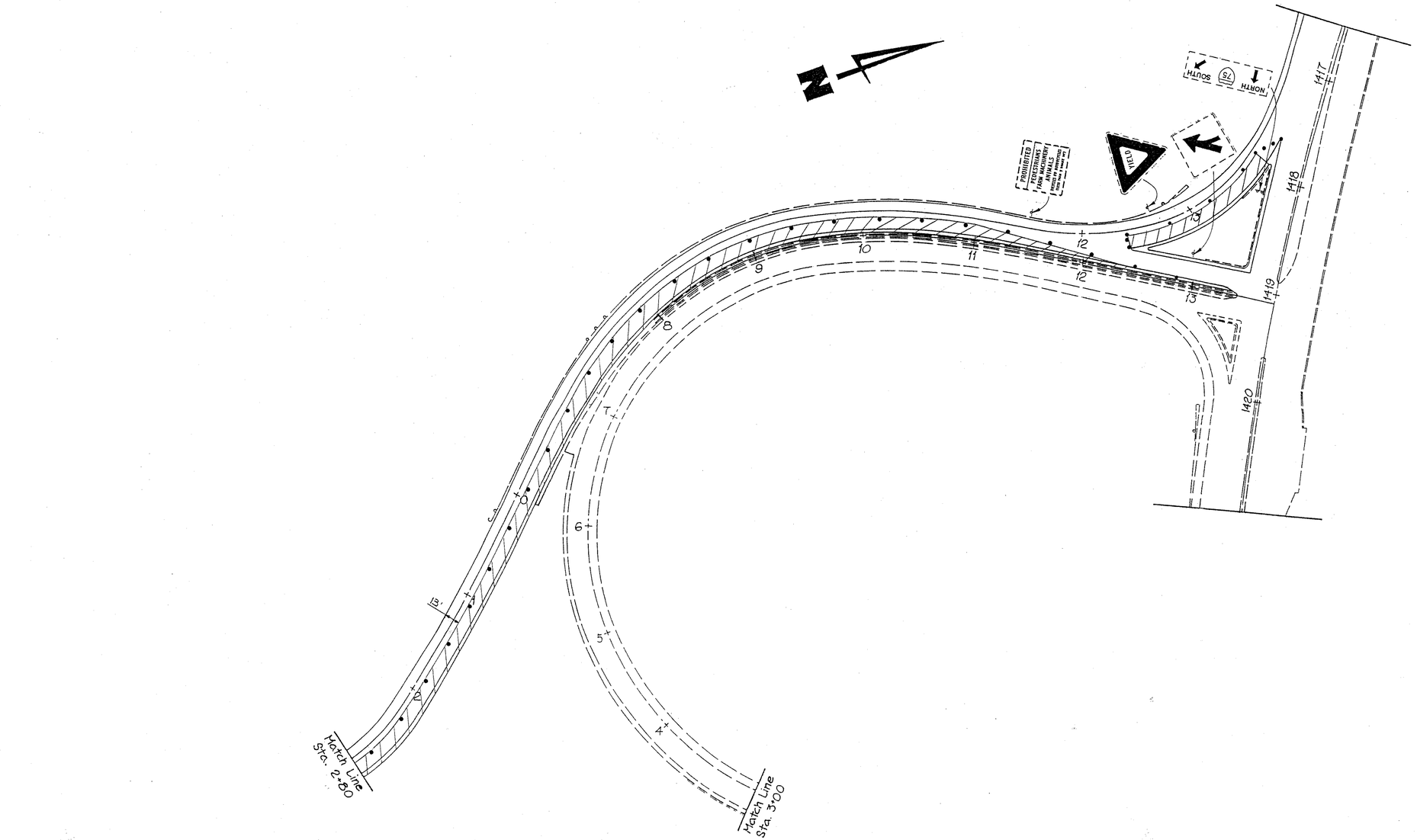

MEDIA RESOURCES CORP

MAINTENANCE OF TRAFFIC RAMPS B & N GLENDALE-MILFORD ROAD INTERCHANGE

F.H.W.A REGION	STATE	PROJECT	
5	OHIO		

75
338

HAM-75-9.75

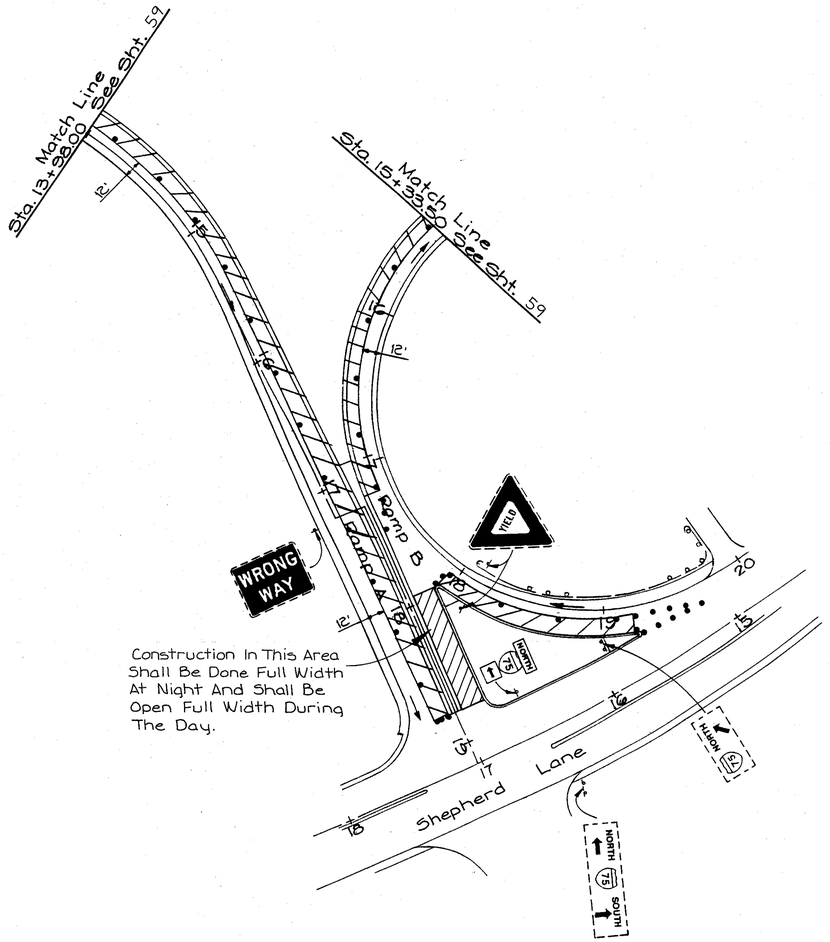

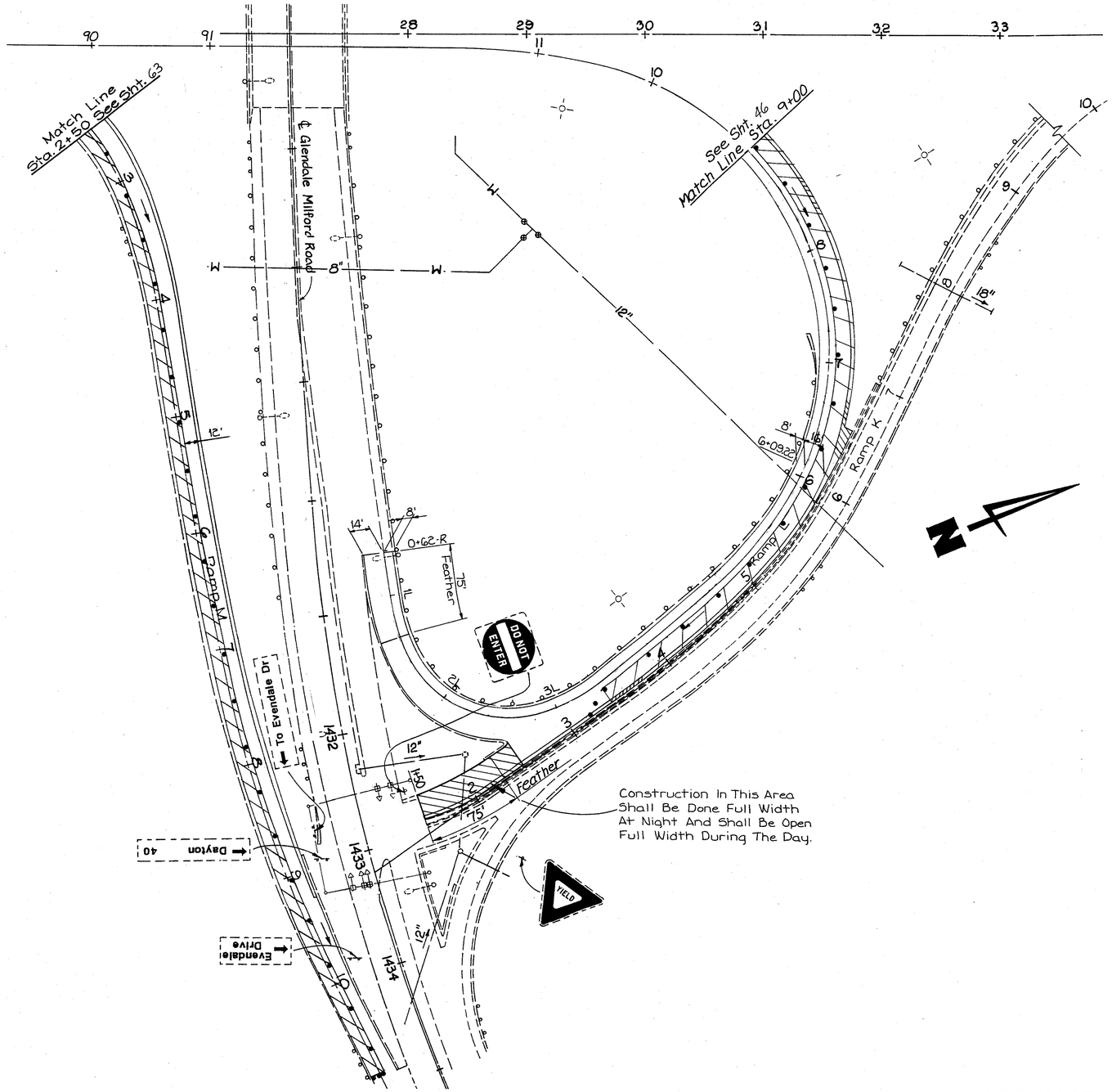

MAINTENANCE OF TRAFFIC
SHEPHERD LN. RAMPS A&B
GLENDALE-MILFORD RAMPS M&L

F.H.W.A. REGION	STATE	PROJECT	
5	OHIO		

76
338

HAM-75-9.75

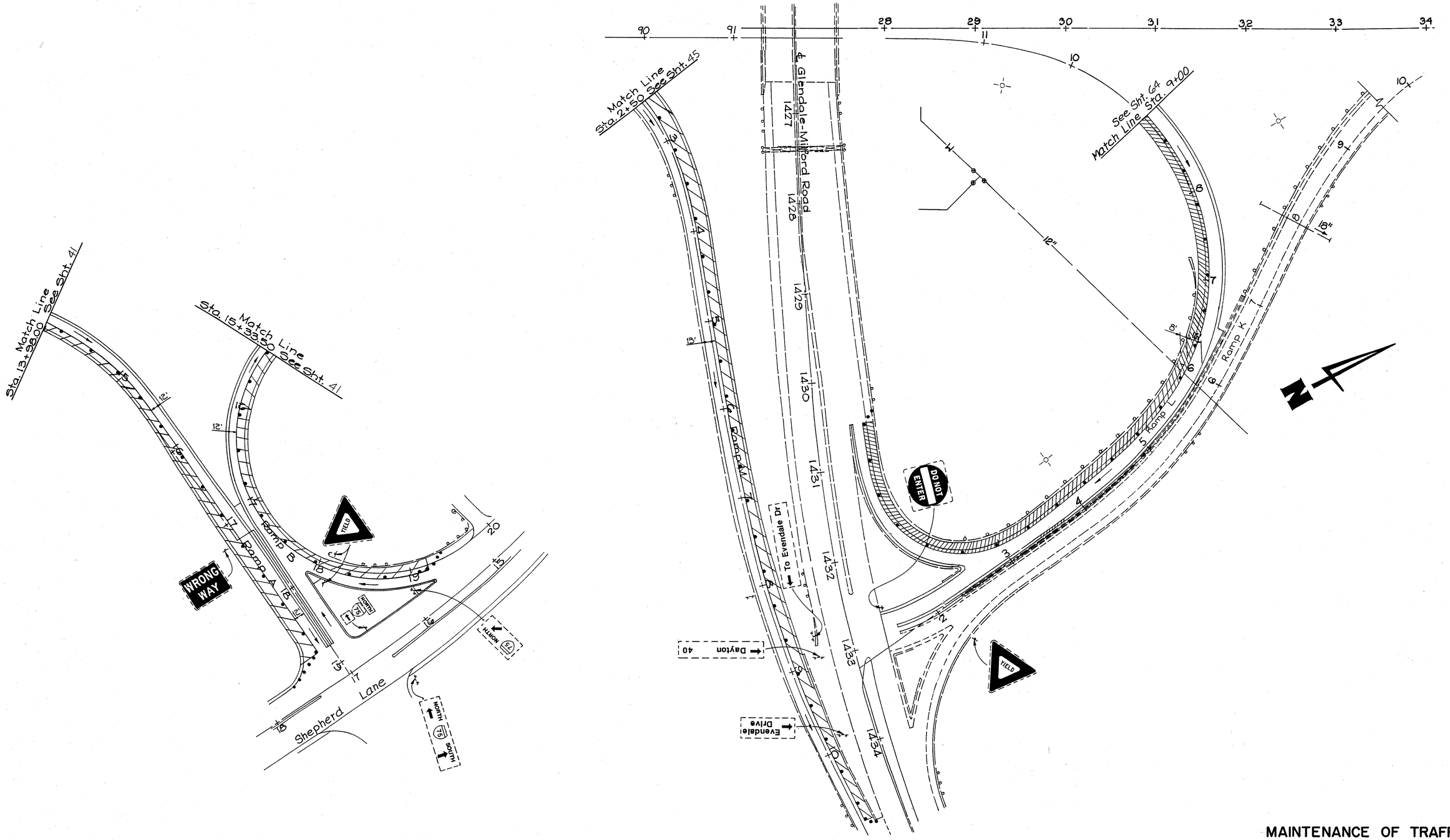

MAINTENANCE OF TRAFFIC
SHEPHERD LN. RAMPS A&B
GLENDALE-MILFORD RAMPS M&L

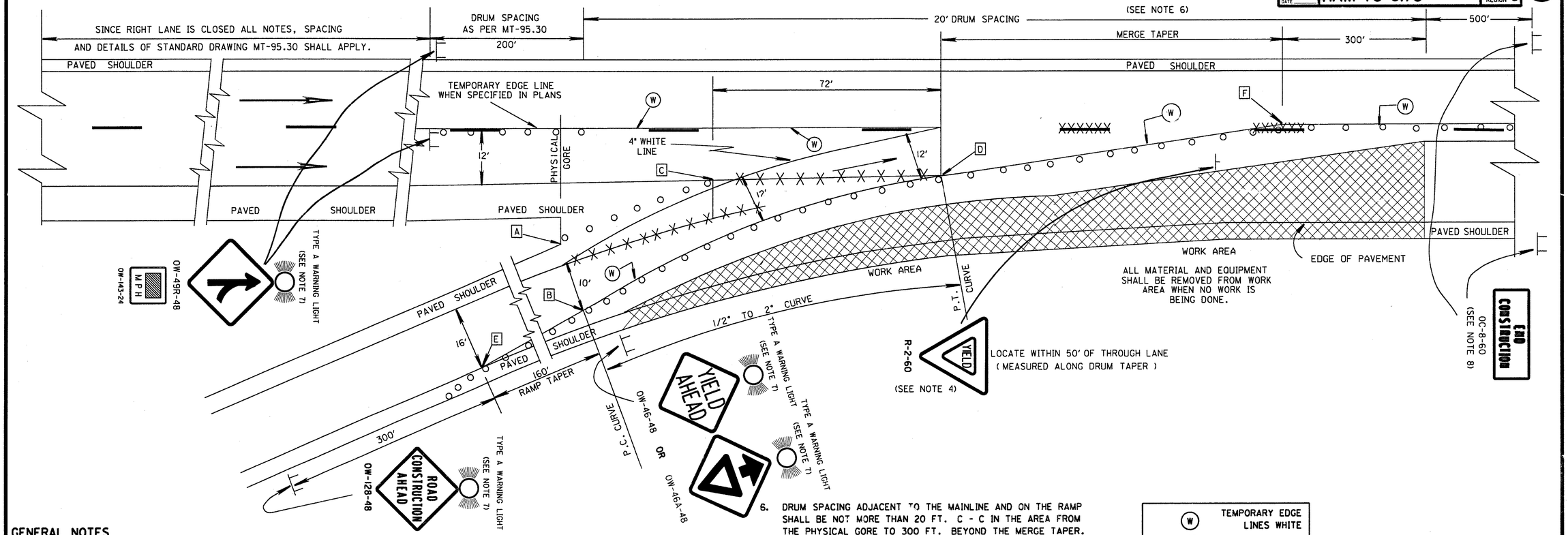

GENERAL NOTES

1. THIS WORK AREA TRAFFIC CONTROL APPLICATION SHALL BE EMPLOYED WHEN: (1) THE LATERAL CLEARANCE BETWEEN CHANNELIZING DEVICES AT THE RIGHT EDGE OF THE WORK AREA AND THE EDGE OF PAVEMENT IS LESS THAN 10 FT. (12 FT. IF THE SHOULDER PAVEMENT IS USED) AS SHOWN ON DRAWING MT-98.15, AND (2) THE REQUIRED RAMP TAPERS AND CURVES CAN BE PROVIDED AS SHOWN. IN THE EVENT THE WORK ZONE CONDITION WOULD PERMIT THE USE OF EITHER MT-98.15 OR MT-98.15 SHALL BE USED. THIS TRAFFIC CONTROL MEASURE SHALL NOT BE PLACED IN EFFECT UNTIL IMMEDIATELY BEFORE THE CONTRACTOR IS FULLY PREPARED TO PERFORM THE WORK ON THE RAMP OR LANE ADJACENT TO IT. ONCE THIS MEASURE IS PLACED INTO EFFECT, THE CONTRACTOR SHALL EXPEDITIOUSLY PURSUE THE WORK (WORKING CONTINUOUSLY WITH FULL CREW IN THE RAMP AREA ON ALL NORMAL WORKING DAYS) UNTIL IT IS COMPLETED AND SHALL IMMEDIATELY OPEN THE AREA TO NORMAL TRAFFIC OR, AS A MINIMUM, REVERT TO THE METHODS SHOWN ON MT-98.15. IT IS THE INTENT THAT THE LONGEST MERGING TAPER LENGTH POSSIBLE SHALL BE CHOSEN, COMMENSURATE WITH THE REQUIREMENTS OF CONSTRUCTION.

2. THE RAMP TAPER SHALL DESIRABLY BE LOCATED TO PROVIDE A 10' MINIMUM PATH BETWEEN DRUMS AND THE PAVED SHOULDER IN THE GORE. THE RAMP TRAFFIC MAY BE PLACED ON THE PAVED GORE AS SHOWN ABOVE ONLY IF (1) THE TRAFFIC WILL USE THE PAVED SHOULDER PAVEMENT LESS THAN ONE DAY AND THE SHOULDER PAVEMENT IS IN GOOD CONDITION AND IS LEVEL AND SMOOTH OR (2) IF THE SHOULDER PAVEMENT IS ADEQUATELY STRENGTHENED, LEVELED AND SMOOTHED TO CARRY THE ANTICIPATED LOAD. A MINIMUM OF 3 DRUMS SHALL BE USED IN THE RAMP SHOULDER TAPER.

3. WHEN THE RAMP IS NOT LONG ENOUGH TO ALLOW PLACEMENT AS SPECIFIED ABOVE, THE SIGNS MAY BE SPACED PROPORTIONATELY WITHIN THE SPACE AVAILABLE AS DETERMINED BY THE ENGINEER (A 200 FOOT MINIMUM SPACING MUST BE MAINTAINED).

4. IT WILL BE NECESSARY TO MOVE THE LOCATION OF ANY EXISTING YIELD CONDITION. IN THESE CASES, THE PERMANENT R-2 SIGN INSTALLATION SHALL BE COVERED AND THE TEMPORARY INSTALLATION SHALL BE MOUNTED APPROPRIATELY. IF THE REQUIRED DISTANCES (RAMP TAPER, CURVE AND MERGE TAPER) CANNOT BE OBTAINED, THE ENGINEER MAY APPROVE SLIGHTLY LOWER VALUES FOR A SHORT TIME, IN WHICH CASE THE YIELD SIGN SHALL BE REMOVED AND A 48" STOP SIGN PLACED APPROPRIATELY TO BE VISIBLE TO RAMP TRAFFIC BUT NOT BE OBTRUSIVE TO MAINLINE TRAFFIC.

5. IF THE CONSTRUCTION OPERATION REQUIRES THE LANE CLOSURE FOR MORE THAN ONE DAY THEN THE EXISTING CONFLICTING PAVEMENT MARKINGS AND REFLECTORS FROM THE RAISED PAVEMENT MARKERS (RPM'S) SHALL BE REMOVED AND THE APPROPRIATE COLOR TEMPORARY EDGE LINES SHALL BE APPLIED ALONG THE TAPER. TEMPORARY EDGE LINES WHICH WOULD CONFLICT WITH FINAL TRAFFIC LANES SHALL BE REMOVABLE (740.05 TYPE-C) TAPE UNLESS THE AREA WILL BE RESURFACED IN THE NEXT WORK PHASE. AFTER COMPLETION OF THE WORK, TEMPORARY MARKINGS SHALL BE REMOVED IN ACCORDANCE WITH 641.10 AND THE ORIGINAL MARKINGS AND RAISED PAVEMENT MARKER REFLECTORS SHALL BE RESTORED.

6. DRUM SPACING ADJACENT TO THE MAINLINE AND ON THE RAMP SHALL BE NOT MORE THAN 20 FT. C - C IN THE AREA FROM THE PHYSICAL GORE TO 300 FT. BEYOND THE MERGE TAPER. CONES HAVING A MINIMUM HEIGHT OF 28 INCHES MAY BE SUBSTITUTED FOR DRUMS FOR DAYTIME LANE CLOSURES. PROVISIONS SHALL BE MADE TO SAFELY STABILIZE THE CONES TO PREVENT THEM FROM BLOWING OVER. IF THIS CANNOT BE ACHIEVED, DRUMS SHALL BE USED.

7. TYPE A FLASHING WARNING LIGHTS ARE REQUIRED ON THE ROAD CONSTRUCTION AHEAD (OW-128-48), MERGE (OW-49R-48), AND THE YIELD AHEAD (OW-46-48) SIGNS WHENEVER A NIGHT LANE CLOSURE IS NECESSARY.

8. THE OC-8 SIGNS ARE ONLY REQUIRED FOR LANE CLOSURES OF MORE THAN ONE DAY AND MAY BE OMITTED IF THEY FALL WITHIN THE LIMITS OF A CONSTRUCTION PROJECT.

9. FROM THE END OF THE GORE AREA GRADED SHOULDER (POINT A), LOCATE THE PC OF THE CURVE BY MEASURING PERPENDICULAR TO THE RAMP CENTERLINE 10' OF RAMP PAVEMENT, NOT INCLUDING PAVED SHOULDER WIDTH (POINT B). FROM THE END OF THE GORE AREA PAVED SHOULDER (POINT C), LOCATE THE PT OF THE CURVE BY MEASURING 72' FROM POINT C ALONG THE EDGE OF PAVEMENT EXTENDED (POINT D).

10. PLACEMENT OF DRUMS SHALL BEGIN AT (POINT E) 160' UPSTREAM FROM THE PREVIOUSLY LOCATED PC (POINT B) AND AT THE RIGHT EDGE OF RAMP PAVEMENT. FROM THIS POINT A DRUM TAPER SHALL BE PLACED TO THE PC (POINT B) AND THEN ALONG A CURVE AS SHOWN TO THE PT (POINT D) WHERE A 48:1 (MIN.) MERGE TAPER SHALL MEET MAINLINE TRAFFIC CONTROL (POINT F).

(W)	TEMPORARY EDGE LINES WHITE
[A]	LAYOUT POINTS
XXXXXXXXX	MARKINGS REMOVED

ALL WORK AND TRAFFIC CONTROL DEVICES SHALL BE IN ACCORDANCE WITH 614 AND OTHER APPLICABLE PORTIONS OF THE C & M SPECIFICATIONS AS WELL AS IN ACCORDANCE WITH PART 7 OF THE OMUTCD. PAYMENT FOR ALL LABOR, EQUIPMENT AND MATERIALS TO PROVIDE THIS METHOD OF TRAFFIC CONTROL SHALL BE INCLUDED IN THE LUMP SUM BID FOR 614 MAINTAINING TRAFFIC, UNLESS SEPARATELY ITEMIZED IN THE PLAN.

REVISED BY: DATE:

209816	DATE 05/07/90
LANE CLOSURE AT ENTRANCE RAMP PLAN B	
PLAN INSERT SHEET	

WCC

FED. RD. DIVISION	STATE	PROJECT	
5	OHIO	HAM-75-9.75	

PLAN NO.

78
338

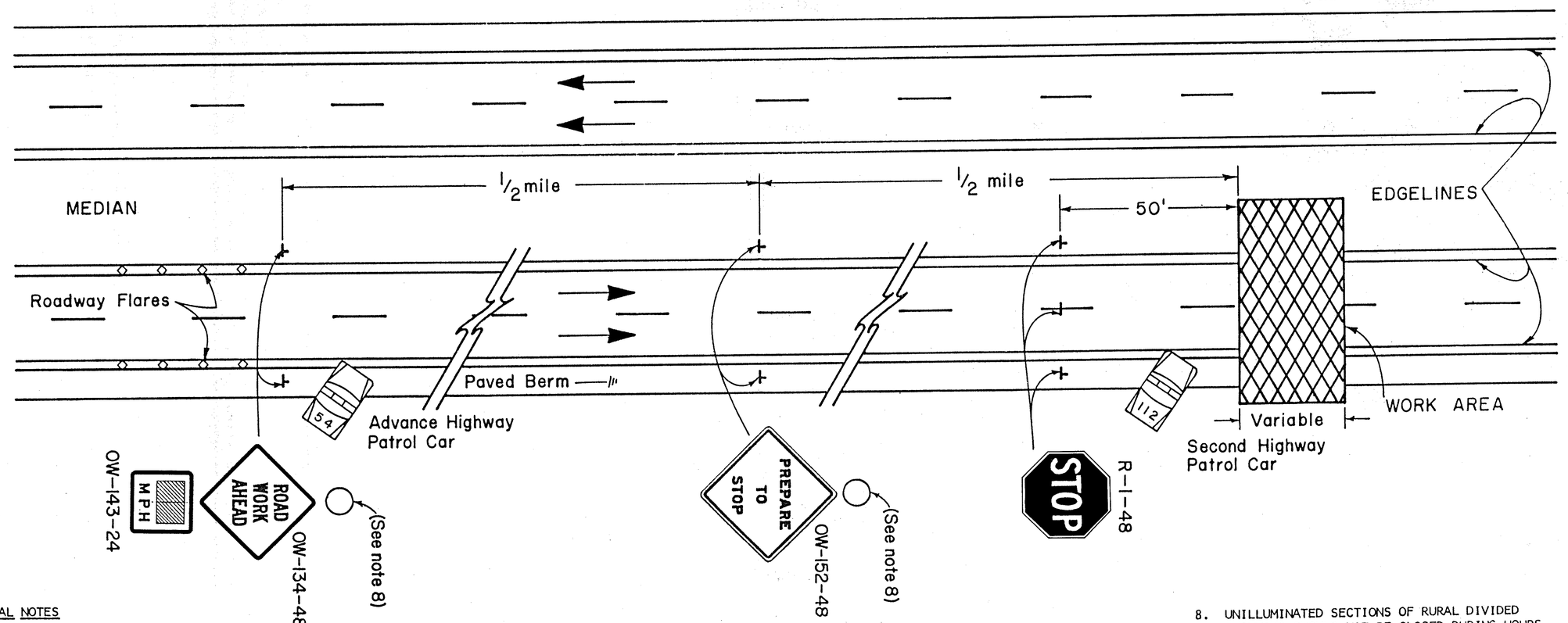

GENERAL NOTES

1. THIS TYPE OF HIGHWAY CLOSURE SHALL ONLY BE USED FOR EMERGENCIES OR FOR CONSTRUCTION OPERATIONS WHEN THE DURATION OF CLOSURE WILL NOT EXCEED 30 MINUTES. AFTER THE RURAL DIVIDED HIGHWAY HAS BEEN CLOSED AND REOPENED VIA THIS PROCEDURE A MINIMUM PERIOD OF 30 MINUTES SHALL ELAPSE BEFORE ANOTHER SHORT DURATION CLOSURE, EXCEPT WITH THE APPROVAL OF THE ENGINEER.

2. AT LEAST TWO PATROLMEN AND TWO PATROL CARS SHALL BE PROVIDED ON EACH APPROACH TO THE CLOSURE. EACH PATROL CAR SHALL HAVE A ROOF MOUNTED ROTATING RED LIGHT OR A LIGHT BAR.

3. A MINIMUM OF FOUR FLARES SHALL BE BURNING CONTINUOUSLY ON EACH SIDE OF THE ROADWAY IN ADVANCE OF THE "OW-134-48" SIGN DURING THE TIME THAT TRAFFIC IS STOPPED ON THE RURAL DIVIDED HIGHWAY.

4.

5. THE ADVANCE PATROL CAR AND THE "OW-134-48", "OW-143-24", AND "OW-152-48" SIGNS SHALL BE MOVED BACK AS REQUIRED BY THE QUEUING OF STOPPED VEHICLES. NEW FLARES SHALL BE PLACED WHENEVER THE ADVANCE PATROL CAR IS REQUIRED TO RELOCATE.

6. TRAFFIC CONTROL FOR THE CLOSURE SHALL BE ACCOMPLISHED IN THE FOLLOWING ORDER:

   A. ADVANCE PATROL CAR, LIGHTS AND FLASHER ON; AT LEAST FOUR FLARES BURNING ON EACH SIDE OF ROADWAY.
   B. "OW-134-48" AND "OW-143-24" SIGNS ERECTED.
   C. "OW-152-48" SIGNS ERECTED.
   D. SECOND PATROL CAR, LIGHTS AND FLASHERS ON.
   E. "R-1-48" SIGNS ERECTED BY FLAGMEN WITH FLARE OR FLAG USED TO STOP TRAFFIC. THE ORDER OF ERECTION SHALL BE TOWARD THE MEDIAN SHOULDER IN THE FOLLOWING ORDER: RIGHT SHOULDER, THEN CENTER, THEN MEDIAN SHOULDER.

7. TRAFFIC CONTROL SHALL BE REMOVED IN THE FOLLOWING ORDER:

   A. WITH TRAFFIC STOPPED ONE MAN WITH A FLARE OR FLAG SHOULD HOLD TRAFFIC AND OTHER FLAGMAN SHALL REMOVE THE "R-1-48" SIGNS TOWARD THE RIGHT SHOULDER IN THE FOLLOWING ORDER: MEDIAN, THEN CENTER, THEN SIGN ON RIGHT SHOULDER.
   B. AFTER ALL STOPPED VEHICLES HAVE STARTED MOVING, THE "OW-152-48" SIGNS SHALL BE REMOVED. THESE SIGNS MAY BE COVERED IF RE-USE IS IMMINENT.
   C. AFTER ALL CARS HAVE RESUMED APPROXIMATELY NORMAL SPEED, THE "OW-134-48" AND "OW-143-24" SIGNS SHALL BE REMOVED. THESE SIGNS MAY BE COVERED IF RE-USE IS IMMINENT.
   D. LIGHTS AND FLASHERS SHALL BE TURNED OFF ON BOTH PATROL CARS.
   E. REMOVE ALL ROADWAY FLARES IF THEY ARE STILL BURNING.

8. UNILLUMINATED SECTIONS OF RURAL DIVIDED HIGHWAYS SHOULD NOT BE CLOSED DURING HOURS OF DARKNESS EXCEPT FOR EMERGENCIES OR WITH THE APPROVAL OF THE ENGINEER. WHEN A RURAL DIVIDED HIGHWAY MUST BE CLOSED DURING HOURS OF DARKNESS, A TYPE B HIGH INTENSITY FLASHING BARRICADE WARNING LIGHT SHALL BE USED ON EACH OW-134 AND OW-152 SIGN.

9. IF AN ENTRANCE RAMP IS LOCATED BETWEEN THE OW-134 AND R-1 SIGNS, THE "OW-134-48", "OW-143-24", AND THE "OW-152-48" SIGNS SHALL ALSO BE ERECTED ON THE RAMP SHOULDER.

OHIO DEPARTMENT OF TRANSPORTATION

SHORT DURATION CLOSING OF RURAL DIVIDED HIGHWAY

DATE 5/77

DR. BSE CK. MOW

7E-1

Rev. EEF 9/84

258 Orange
79-162

F.H.W.A. REGION	STATE	PROJECT	CALC. DATE
5	OHIO		CHECK DATE

79
338

HAM-75-9.75

GENERAL SUMMARY

SHEET NUMBER													TOTAL THIS SHEET	ITEM	ITEM EXT.	GRAND TOTAL	UNIT	DESCRIPTION
GEN NOTES	87	88	89	90	91	93	94	95	96	97	98	M/T NOTES						
																		ROADWAY
LUMP														201	11000	SEE SHT. 80		CLEARING AND GRUBBING (SEE SHT. 18)
	8280	12578	331	5505			1009						27703	202	23000	SEE SHT. 80	SQ YD	PAVEMENT REMOVED
	85399	90605	403	403			1828	753	342	271			180004	202	23500	SEE SHT. 80	SQ YD	WEARING COURSE REMOVED
														202	30000	SEE SHT. 80	SQ FT	WALK REMOVED
											231		231	202	30500	SEE SHT. 80	LIN FT	CONCRETE MEDIAN REMOVED (SEE SHT. 15)
						64		55					119	202	30601	SEE SHT. 80	SQ YD	CONCRETE MEDIAN REMOVED, AS PER PLAN (SEE SHT. 18)
														202	30701	SEE SHT. 80	LIN FT	CONCRETE BARRIER REMOVED, AS PER PLAN
											16178		16178	202	32000	SEE SHT. 80	LIN FT	CURB REMOVED
											12781		12781	202	32001	SEE SHT. 80	LIN FT	CURB REMOVED, AS PER PLAN, METHOD A (SEE SHT. 18)
											784		784	202	32001	SEE SHT. 80	LIN FT	CURB REMOVED, AS PER PLAN, METHOD B (SEE SHT. 18)
											5425		5425	202	98200	SEE SHT. 80	LIN FT	REMOVAL MISCELLANEOUS: CURB REMOVED, AS PER PLAN, METHOD B (See Sht 18)
														202	38000	SEE SHT. 80	LIN FT	GUARDRAIL REMOVED
														202	54100.	SEE SHT. 80	EACH	RAISED PAVEMENT MARKER REMOVED FOR STORAGE
														202	58100	SEE SHT. 80	EACH	CATCH BASIN REMOVED
														202	58200	SEE SHT. 80	EACH	INLET REMOVED
														202	58400	SEE SHT. 80	EACH	INLET ABANDONED
														202	58500	SEE SHT. 80	EACH	CATCH BASIN ABANDONED
														202	75001	SEE SHT. 80	LIN FT	FENCE REMOVED, AS PER PLAN (SEE SHT. 18)
	2753	4227	1787	3200	48	1094	266	57				400	13832	203	12000	SEE SHT. 80	CU YD	EXCAVATION NOT INCLUDING EMBANKMENT CONSTRUCTION
1465													1465	203	20001	SEE SHT. 80	CU YD	EMBANKMENT, AS PER PLAN (SEE SHT. 18)
	8241	12539	3136	5739			962						30617	203	50000	SEE SHT. 80	SQ YD	SUBGRADE COMPACTION
			1.77			14.28	15.30	33.81	13.81	9.95			88.92	203	60001	SEE SHT. 80	STATION	LINEAR GRADING, AS PER PLAN (SEE SHEET 18)
														606	13000	SEE SHT. 80	LIN FT	GUARDRAIL, TYPE 5
														606	13050	SEE SHT. 80	LIN FT	GUARDRAIL, TYPE 5A
														606	26000	SEE SHT. 80	EACH	ANCHOR ASSEMBLY, TYPE B
														606	26500	SEE SHT. 80	EACH	ANCHOR ASSEMBLY, TYPE T
														606	26100	SEE SHT. 80	EACH	ANCHOR ASSEMBLY, TYPE E (SEE SHT. 20)
														606	35000	SEE SHT. 80	EACH	BRIDGE TERMINAL ASSEMBLY, TYPE 1
														606	35100	SEE SHT. 80	EACH	BRIDGE TERMINAL ASSEMBLY, TYPE 2
														607	23000	SEE SHT. 80	LIN FT	FENCE, TYPE CLT
														SPECIAL	69010350	SEE SHT. 80	EACH	IMPACT ATTENUATOR, TYPE 1 (SEE SHT. 20)
														SPECIAL	69010000		EACH	IMPACT ATTENUATOR, SAND BARREL TYPE, 10-MODULES (SEE SHT. 20)
50													50	616	10000	SEE SHT. 80	M GAL	WATER
5													5	616	20000	SEE SHT. 80	TON	CALCIUM CHLORIDE

GSL.DGN

F.H.W.A. REGION	STATE	PROJECT	CALC. TAM DATE 12/92
5	OHIO		CHECK DJB DATE 12/92

80 / 338

HAM-75-9.75

GENERAL SUMMARY

SHEET NUMBER												TOTAL SHEET 79		ITEM	ITEM EXT.	GRAND TOTAL	UNIT	DESCRIPTION
99	100	101	103	104	106	107	114	115	118	119	136A							
																		ROADWAY
														201	11000	LUMP		CLEARING AND GRUBBING (SEE SHT. 18)
								239				27703		202	23000	27942	SQ YD	PAVEMENT REMOVED
												180004		202	23500	180004	SQ YD	WEARING COURSE REMOVED
								677			417			202	30000	1094	SQ FT	WALK REMOVED
												231		202	30500	231	LIN FT	CONCRETE MEDIAN REMOVED (SEE SHT. 15)
4419	1489											119		202	30601	6027	SQ YD	CONCRETE MEDIAN REMOVED, AS PER PLAN (SEE SHT. 18)
	128													202	30700	128	LIN FT	CONCRETE BARRIER REMOVED
30		15												202	30701	45	LIN FT	CONCRETE BARRIER REMOVED, AS PER PLAN (SEE SHT. 18)
								77				16178		202	32000	16255	LIN FT	CURB REMOVED
												12781		202	32001	12781	LIN FT	CURB REMOVED, AS PER PLAN, METHOD A (SEE SHT. 18)
												784		202	32001	784	LIN FT	CURB REMOVED, AS PER PLAN, METHOD B (SEE SHT. 18)
												5425		202	98200	5425	LIN FT	REMOVAL MISCELLANEOUS; SAFETY CURB REMOVED, AS PER PLAN, METHOD B (See Sheet 18)
18225	13125	9137.5												202	38000	40487.5	LIN FT	GUARDRAIL REMOVED
									953	1115				202	54100	2068	EACH	RAISED PAVEMENT MARKER REMOVED FOR STORAGE
											2			202	58000	2	EACH	MANHOLE REMOVED
					5									202	58100	5	EACH	CATCH BASIN REMOVED
						1								202	58200	1	EACH	INLET REMOVED
			1	1										202	58400	2	EACH	INLET ABANDONED
					6									202	58500	6	EACH	CATCH BASIN ABANDONED
							38146							202	75001	38146	LIN FT	FENCE REMOVED, AS PER PLAN (SEE SHT. 18)
											325	13832		203	12000	14157	CU YD	EXCAVATION NOT INCLUDING EMBANKMENT CONSTRUCTION
											69			203	20000	69	CU YD	EMBANKMENT
												1465		203	20001	1465	CU YD	EMBANKMENT, AS PER PLAN (SEE SHT. 18)
								316				30617		203	50000	30933	SQ YD	SUBGRADE COMPACTION
												88.92		203	60001	89	STATION	LINEAR GRADING, AS PER PLAN (SEE SHT. 18)
13600	11512.5	8900												606	13000	34012	LIN FT	GUARDRAIL, TYPE 5
50	50													606	13050	100	LIN FT	GUARDRAIL, TYPE 5A
		7												606	26000	7	EACH	ANCHOR ASSEMBLY, TYPE B
5	10	11												606	26500	26	EACH	ANCHOR ASSEMBLY, TYPE T
15	20	5												606	26100	40	EACH	ANCHOR ASSEMBLY, TYPE E (SEE SHT. 20)
		2												606	31500	2	EACH	BRIDGE TERMINAL ASSEMBLY, TYPE D
		1												606	32000	1	EACH	BRIDGE TERMINAL ASSEMBLY, TYPE E
		3												606	34000	3	EACH	BRIDGE TERMINAL ASSEMBLY, TYPE J
16	13	2												606	35000	31	EACH	BRIDGE TERMINAL ASSEMBLY, TYPE 1
7	5	2												606	35100	14	EACH	BRIDGE TERMINAL ASSEMBLY, TYPE 2
							39748							607	23000	39843	LIN FT	FENCE, TYPE CLT
2	1													SPECIAL	69010350	3	EACH	IMPACT ATTENUATOR, TYPE 1 (SEE SHT. 20)
		1												SPECIAL	69010000	1	EACH	IMPACT ATTENUATOR, SAND BARREL TYPE, 10-MODULES (SEE SHT. 20)
												50		616	10000	50	M GAL	WATER
												5		616	20000	5	TON	CALCIUM CHLORIDE

GENERAL SUMMARY

F.H.W.A. REGION	STATE	PROJECT	
5	OHIO		

81/338

HAM-75-9.75

SHEET NUMBER															ITEM	ITEM EXT.	GRAND TOTAL	UNIT	DESCRIPTION
GEN NOTES	87	88	102	103	104	105	106	107	108	109	110	111	112	113					
																			EROSION CONTROL
12500															207	10000	12500	SQ YD	TEMPORARY SEEDING AND MULCHING
450															207	70000	450	EACH	STRAW OR HAY BALES
62475															659	10000	62475	SQ YD	SEEDING AND MULCHING
3125															659	14000	3125	SQ YD	REPAIR SEEDING AND MULCHING
7															659	20000	7	TON	COMMERCIAL FERTILIZER
152															659	35000	152	M GAL	WATER
																			DRAINAGE
											50		80		603	00900	130	LIN FT	6" CONDUIT, TYPE B, 707.17, NON-PERFORATED, ASTM D3034, SDR-35, SS-931 OR SS-944
									840	310	270	225	635	595	603	01500	2875	LIN FT	6" CONDUIT, TYPE F, 707.17, NON-PERFORATED, ASTM D3034, SDR-35, SS-931 OR SS-944
			166	28	36	32	52	36							603	04400	350	LIN FT	12" CONDUIT, TYPE B, 706.02
			28		4		8	4							603	05900	44	LIN FT	15" CONDUIT, TYPE B, 706.02
				8	12										603	07400	20	LIN FT	18" CONDUIT, TYPE B, 706.02
				4											603	10400	4	LIN FT	24" CONDUIT, TYPE B, 706.02
									20			5	5	6	SPECIAL	60436600	36	EACH	PRECAST REINFORCED CONCRETE OUTLET
			3	1		2									604	00500	6	EACH	CATCH BASIN, NO. 3 WITH V GRATE
							1	1							604	00501	2	EACH	CATCH BASIN, NO. 3 WITH V GRATE, AS PER PLAN (SEE SHT. 19)
	*		2	3	3	18	7	6							604	09000	39	EACH	CATCH BASIN ADJUSTED TO GRADE
			1	3	1	1	1								604	09001	7	EACH	CATCH BASIN ADJUSTED TO GRADE, AS PER PLAN (SEE SHT. 19)
			1			1	1								604	09500	3	EACH	CATCH BASIN RECONSTRUCTED TO GRADE
25															604	09900	25	EACH	CATCH BASIN GRATE
				3	5	2	2	3							604	14500	15	EACH	INLET NO. 3A
			1		2	3	5	3							604	14501	14	EACH	INLET NO.3A, MODIFICATION A, AS PER PLAN (SEE SHT. 19)
				5											604	14501	5	EACH	INLET NO.3A, MODIFICATION B, AS PER PLAN (SEE SHT. 19)
					2		1								604	14501	3	EACH	INLET NO.3A, MODIFICATION C, AS PER PLAN (SEE SHT. 19)
								2							604	14501	2	EACH	INLET NO.3A, MODIFICATION D, AS PER PLAN (SEE SHT. 19)
					3		1								604	14501	4	EACH	INLET NO.3A, MODIFICATION E, AS PER PLAN (SEE SHT. 19)
			1												604	17500	1	EACH	INLET NO. 2-A-6
			2												604	18300	2	EACH	INLET NO. 2-A-10
			18	9	27	6		6							604	20600	66	EACH	INLET ADJUSTED TO GRADE
				15		4									604	20601	19	EACH	INLET ADJUSTED TO GRADE, AS PER PLAN (SEE DETAIL ON SHEET 166)
			16	10	3	1	14	8							604	20800	52	EACH	INLET RECONSTRUCTED TO GRADE
				15		4									604	33300	19	EACH	MANHOLE FRAME (SEE ODOT STD. DWG. I-2A)
			4	5	13	4		15							604	34500	41	EACH	MANHOLE ADJUSTED TO GRADE
			15	22											604	34501	37	EACH	MANHOLE ADJUSTED TO GRADE, AS PER PLAN (SEE SHT. 19)
					1										604	35501	1	EACH	MANHOLE RECONSTRUCTED TO GRADE, AS PER PLAN (SEE SHT. 19)
										1323	2283	2079			605	05101	5685	LIN FT	4" SHALLOW PIPE UNDERDRAIN, AS PER PLAN (SEE SHT. 19)
	595	245							9698	3762	830	602			605	11101	15732	LIN FT	6" SHALLOW PIPE UNDERDRAIN, AS PER PLAN (SEE SHT. 19)
										1807				223	605	13300	2030	LIN FT	6" UNCLASSIFIED PIPE UNDERDRAIN
									10368	6565	12324	2107	23669	7170	605	30001	62203	LIN FT	SHALLOW UNDERDRAIN, AS PER PLAN (SEE SHT. 19)

REVISED 6-15-93

GENERAL SUMMARY

F.H.W.A. REGION	STATE	PROJECT	CALC TAM DATE 12/92
5	OHIO		CHK'D DJB DATE 12/92

82
338

HAM-75-9.75

SHEET NUMBER																ITEM	ITEM EXT.	GRAND TOTAL	UNIT	DESCRIPTION
GEN NOTES	87	88	89	90	91	92	93	94	95	96	97	98	115	136A	M/T NOTES					
																				PAVEMENT
4075																251	01000	4075	SQ YD	PARTIAL DEPTH PAVEMENT REPAIR
			15777	20364	22035	104			104	202	59					254	01000	58645	SQ YD	PAVEMENT PLANING, BITUMINOUS
27000																255	10001	27000	SQ YD	FULL DEPTH PAVEMENT REMOVAL AND RIGID REPLACEMENT, CLASS C, AS PER PLAN (SEE SHT. 20)
5138																255	10101	5138	SQ YD	FULL DEPTH PAVEMENT REMOVAL AND RIGID REPLACEMENT, CLASS FS, AS PER PLAN (SEE SHT. 20)
124080																255	20000	124080	LIN FT	FULL DEPTH PAVEMENT SAWING
	7298	8608	2073	3136	1831		434	179	199	75	69		12		400	301	10002	24314	CU YD	BITUMINOUS AGGREGATE BASE, AC-20
			1538	2582	85		958	173	398	149	139		53			304	20001	SEE SHT. 83	CU YD	AGGREGATE BASE, AS PER PLAN (SEE SHT. 19)
	1192	2090						161								310	10001	3443	CU YD	SUBBASE, AS PER PLAN (SEE SHEET 20)
													2			404	20000	2	CU YD	ASPHALT CONCRETE, AC-20
	7286	8530	1441	1835	1775	3845	1666	1246	965	1014	574					407	10000	30177	GAL	TACK COAT (SEE SHT. 19)
			1551	3007	102		974	207	477	179	166					408	10000	6663	GAL	BITUMINOUS PRIME COAT
	4517	5586	808	953	973	2487	1054	650	576	613	361					446	01200	18578	CU YD	ASPHALT CONCRETE INTERMEDIATE COURSE, TYPE 2, AC-20
	3374	3927	801	1152	829	1781	895	583	491	487	294					446	01401	14614	CU YD	ASPHALT CONCRETE SURFACE COURSE, TYPE 1, AC-20, AS PER PLAN (SEE SHT. 19)
	8280	12539						962								451	14001	21781	SQ YD	9" REINFORCED CONCRETE PAVEMENT, AS PER PLAN (SEE SHT. 20)
	415	168														SPECIAL	45130000	583	LIN FT	PRESSURE RELIEF JOINT, TYPE A
													724	482		608	10000	1206	SQ FT	4" CONCRETE WALK
													1			608	51000	1	EACH	CURB RAMP, TYPE 2
													61			608	53000	61	SQ FT	CURB RAMP, TYPE 1
													96			608	54000	96	SQ FT	CURB RAMP, TYPE 2
												29369	14			609	26000	29383	LIN FT	CURB, TYPE 6
													115			611	10001	115	SQ YD	REINFORCED CONCRETE APPROACH SLAB (T=12"), AS PER PLAN (SEE BRIDGE PLANS)
													167			611	25001	167	SQ YD	REINFORCED CONCRETE APPROACH SLAB (T=15"), AS PER PLAN (SEE BRIDGE PLANS)
																612	40000	SEE SHT. 83	SQ YD	4" CONCRETE MEDIAN
												136				612	42101	136	CU YD	CONCRETE MEDIAN, AS PER PLAN (SEE SHT. 19)
		6	9421	3871		50	8176	2258	2857	2843	1991					617	20000	31473	SQ YD	SHOULDER PREPARATION
		155	706	293		4	567	154	194	198	139					617	10200	2410	CU. Yd.	COMPACTED AGGREGATE, TYPE B
157																617	25000	157	M. GAL	WATER

05402R

GENERAL SUMMARY

F.H.W.A. REGION	STATE	PROJECT	CALC. TAM DATE 12/92
5	OHIO		CHK'D DJB DATE 12/92

83/338

HAM-75-9.75

SHEET NUMBER													TOTAL SHEET 82		ITEM	ITEM EXT.	GRAND TOTAL	UNIT	DESCRIPTION
GEN NOTES	27	99	100	101		107		135A		20A									
																			PAVEMENT CONTINUED
		1225	1099	2									6070		304	20001	8396	CU YD	AGGREGATE BASE, AS PER PLAN (SEE SHT. 19)
		2860	2598												612	40000	5458	SQ YD	4" CONCRETE MEDIAN
		1427	2021												622	23300	3448	LIN FT	CONCRETE BARRIER, TYPE A
500		187													622	23304	687	LIN FT	CONCRETE BARRIER, TYPE A-50 (SEE SHT. 19)
500															622	23404	500	LIN FT	CONCRETE BARRIER, TYPE B-50 (SEE SHT. 19)
		4340													622	23500	4340	LIN FT	CONCRETE BARRIER, TYPE C (SEE SHT. 19)
		5447	10054	48											622	24000	15549	LIN FT	CONCRETE BARRIER, TYPE D (SEE SHT. 19)
			125												622	24001	125	LIN FT	CONCRETE BARRIER, TYPE D, AS PER PLAN (SEE SHT. 19)
			970												622	24005	970	LIN FT	CONCRETE BARRIER, TYPE D-50, AS PER PLAN (SEE SHT. 19)
126,000															SPECIAL	45014600	126,000	LIN FT	SAWING AND SEALING ASPHALT CONCRETE PAVEMENT JOINTS, 705.04 (See Sht. 19)
	100														SPECIAL	69098700	100	CU.YD.	PATCHING EXISTING PAVED SHOULDERS (SEE SHT. 27)
																			WATER WORK Y-060
										140					638	98600	140	LIN FT	8" WATER MAIN DUCTILE IRON PIPE ANSI CLASS 53, BOLTLESS-RESTRAINED JOINTS AND FITTINGS, AS PER PLAN (SEE SHEET 20A)
										128					638	02605	128	LIN FT	12" WATER MAIN DUCTILE IRON PIPE ANSI CLASS 53, BOLTLESS-RESTRAINED JOINTS AND FITTINGS, AS PER PLAN (SEE SHEET 20A)
						7													
															638	10800	7	EACH	VALVE BOX ADJUSTED TO GRADE
										LUMP					SPECIAL	63898100	LUMP		FURNISHING, INSTALLING AND REMOVING TEMPORARY WATER MAIN
																			LIGHTING
																			FOR LIGHTING GENERAL SUMMARY, SEE SHT. 195
																			LANDSCAPING
LUMP															666	20000	LUMP		PRUNING EXISTING TREE, AS PER PLAN (SEE SHT. 18)
																			TRAFFIC CONTOL
								81574							625	25600	81574	LIN FT	CONDUIT, 4", 713.04
								730							625	25900	730	LIN FT	CONDUIT JACKED OR DRILLED UNDER PAVEMENT, SIZE 4"
								7800							625	29000	7800	LIN FT	TRENCH
								33020							625	29600	33020	LIN FT	TRENCH IN PAVED AREA, TYPE B
								111							625	30706	111	EACH	PULL BOX, 713.08, 24"

GENERAL SUMMARY

F.H.W.A. REGION	STATE	PROJECT	
5	OHIO		

84
338

HAM-75-9.75

SHEET NUMBER														ITEM	ITEM EXT.	GRAND TOTAL	UNIT	DESCRIPTION
GEN NOTES	121		122	124	125	126	127	128	130	132	134							
																		TRAFFIC CONTROL
	120													620	10300	120	EACH	DELINEATOR, TYPE C, POST MOUNTED
	7													620	11000	7	EACH	DELINEATOR, TYPE C, BRACKET MOUNTED
	93													620	15300	93	EACH	DELINEATOR, TYPE D, POST MOUNTED
	3													620	16000	3	EACH	DELINEATOR, TYPE D, BRACKET MOUNTED
			3.82	7.33										630	00000	11.2	CU YD	CONCRETE FOR ANCHOR BASE FOUNDATION
				2.16		3.24		4.9	2.16	3.82	5.14			630	00100	21.4	CU YD	CONCRETE FOR EMBEDDED FOUNDATION
			52	35		115		49	91	39	81			630	02100	462	LIN FT	GROUND MOUNTED SUPPORT, NO. 2 POST
			26	88		299		100	123	291.5	169			630	03100	1097	LIN FT	GROUND MOUNTED SUPPORT, NO. 3 POST
			77.5	76.5		213		88	405	90	103.5			630	04100	689	LIN FT	GROUND MOUNTED SUPPORT, NO. 4 POST
			91.5	131		177		151	114	89	83			630	06400	837	LIN FT	GROUND MOUNTED SUPPORT, S4 x 7.7 BEAM
											78			630	06500	78	LIN FT	GROUND MOUNTED SUPPORT, W6 x 9 BEAM
			41					37		37.5	41			630	07500	157	LIN FT	GROUND MOUNTED SUPPORT, W10 x 22 BEAM
									42.5	15	14			630	08100	72	LIN FT	ONE WAY SUPPORT, NO. 4 POST
			6	6		12		12	8	6	8			630	09000	58	EACH	BREAKAWAY BEAM CONNECTION
			11	14		11		6	3					SPECIAL	63009100	45	EACH	SURFACE PREPARTION, EXISTING SUPPORT SECTION (SEE SHT. 21)
			11	14		11		6	3					SPECIAL	63009104	45	EACH	COATING, EPOXY PRIME COAT, SUPPORT SECTION (SEE SHT. 21)
			11	14		11		6	3					SPECIAL	63009106	45	EACH	COATING, EPOXY INTERMEDIATE COAT, SUPPORT SECTION (SEE SHT. 21 & 22)
			11	14		11		6	3					SPECIAL	63009108	45	EACH	COATING, URETHANE TOP COAT, SUPPORT SECTION (SEE SHT. 22)
				1										630	20300	1	EACH	OVERHEAD SIGN SUPPORT, TYPE TC-12.30, DESIGN NO. 3
					1									630	89706	1	EACH	REMOVAL OF OVERHEAD SIGN SUPPORT AND DISPOSAL, TYPE TC-12.30
			1	2										630	75000	3	EACH	SIGN ATTACHMENT ASSEMBLY
			2	3										630	75106	5	EACH	LUMINAIRE SUPPORT ASSEMBLY, TYPE TC-31.21
			3											630	77000	3	EACH	OVERPASS STRUCTURE MOUNTED SIGN SUPPORT, TYPE TC-18.24
				2										630	79500	2	EACH	SIGN SUPPORT ASSSEMBLY, POLE MOUNTED
											1			630	79601	1	EACH	SIGN SUPPORT ASSEMBLY, BRIDGE MOUNTED, TYPE-1, AS PER PLAN (SEE SHT. 20)
			61.5	117.5		363		128.36	182.72	290.9	199.11			630	80102	1343	SQ FT	SIGN, FLAT SHEET, TYPE G
			1670.5	2111.75		1018.75		1361.75	456	130.5	177			630	80204	6926	SQ FT	SIGN, EXTRUSHEET, TYPE G
					1		2							630	84100	3	EACH	BARRIER WALL ASSEMBLY, TYPE TC-21.41, DESIGN 1
					1									630	84200	1	EACH	BARRIER WALL ASSEMBLY, TYPE TC-21.41, DESIGN 2
					1									630	84301	2	EACH	BARRIER WALL ASSEMBLY, TYPE TC-21.41, DESIGN 3, AS PER PLAN (SEE SHT. 19)
					2									630	84401	1	EACH	BARRIER WALL ASSEMBLY, TYPE TC-21.41, DESIGN 4, AS PER PLAN (SEE SHT. 19)

GSSJOH

GENERAL SUMMARY

F.H.W.A. REGION	STATE	PROJECT	
5	OHIO		

85/338

HAM-75-9.75

SHEET NUMBER															ITEM	ITEM EXT.	GRAND TOTAL	UNIT	DESCRIPTION
GEN NOTES	120	123	125	127	129	131	133	135	116	117	118	119							
																			TRAFFIC CONTROL CONTINUED
		6	12	32	17	25	33	32							630	85000	157	EACH	REMOVAL OF GROUND MOUNTED SIGN AND STORAGE
		7	5	1	4	6	1	9							630	85500	33	EACH	REMOVAL OF GROUND MOUNTED MAJOR SIGN AND STORAGE
		7	14	39	20	18	27	27							630	86002	152	EACH	REMOVAL OF GROUND MOUNTED POST SUPPORT AND DISPOSAL
		8	6	2	6	6	2	14							630	86102	44	EACH	REMOVAL OF GROUND MOUNTED BEAM SUPPORT AND DISPOSAL
		3			4										630	~~97~~100	7	EACH	SIGNING MISC: REMOVAL OF STRUCTURE MOUNTED SIGN AND STORAGE
		18	~~25~~ 1	12	9	3									630	87000	67	EACH	REMOVAL OF OVERHEAD MOUNTED SIGN AND STORAGE
			1												630	87510	1	EACH	REMOVAL OF POLE MOUNTED SIGN AND STORAGE
			1												630	89100	1	EACH	REMOVAL OF OVERHEAD SIGN SUPPORT AND REERECTION, TYPE TC-12.30
		4	11	32	17	24	~~33~~ 34	31							630	91000	152	EACH	PREPARATION AND SHIPMENT OF STORED SIGNS, FLAT SHEET (SEE SHT. 20)
		25	29	13	15	9	1	8							630	91010	100	EACH	PREPARATION AND SHIPMENT OF STORED SIGNS, EXTRUSHEET (SEE SHT. 20)
			2												631	84000	2	EACH	SIGN SERVICE
			2												631	84300	2	EACH	SIGN WIRED
		1													631	84400	1	EACH	SIGN WIRED, OVERPASS STRUCTURE MOUNTED
			6	3	2										631	87102	11	EACH	BALLAST, TYPE CMRI-100-480, INTEGRAL
		2			2										631	87200	4	EACH	BALLAST, TYPE CMRI-175-480, REMOTE
		12	21	10	10	4									631	87202	57	EACH	BALLAST, TYPE CMRI-175-480, INTEGRAL
					2										631	87300	2	EACH	BALLAST, TYPE CMRI-250-480, REMOTE
		4	6	2											631	87302	12	EACH	BALLAST, TYPE CMRI-250-480, INTEGRAL
			2												631	88100	2	EACH	MERCURY VAPOR LUMINAIRE, TYPE TC-31.20 WITH 100 WATT LAMP
		2	1												631	88200	3	EACH	MERCURY VAPOR LUMINAIRE, TYPE TC-31.20 WITH 175 WATT LAMP
		2	4	2											631	94000	8	EACH	REMOVAL OF LUMINAIRE AND STORAGE
		1	1	1											631	94408	3	EACH	REMOVAL OF SIGN WIRING AND DISPOSAL
									18.10	13.93					644	00100	32.03	MILE	EDGE LINE
									11.44	10.21					644	00200	21.65	MILE	LANE LINE
										0.12					644	00300	0.12	MILE	CENTER LINE
									8257	5299					644	00400	13556	LIN FT	CHANNELIZING LINE
									548	136					644	00500	684	LIN FT	STOP LINE
										273					644	00600	273	LIN FT	CROSSWALK LINE
									1936	1521					644	00700	3457	LIN FT	TRANSVERSE LINE
									4	8					644	01300	12	EACH	LANE ARROW
										3					644	01400	3	EACH	WORD ON PAVEMENT, 72"
									1	2					644	01410	3	EACH	WORD ON PAVEMENT, 96"
	410														802	00100	410	EACH	BARRIER REFLECTOR, TYPE A
	761														802	00200	761	EACH	BARRIER REFLECTOR, TYPE B
											953	1115			862	00100	2068	EACH	RAISED PAVEMENT MARKER

GST2R04

GENERAL SUMMARY

F.H.W.A. REGION	STATE	PROJECT	
5	OHIO		

HAM-75-9.75

SHEET NUMBER															ITEM	ITEM EXT.	GRAND TOTAL	UNIT	DESCRIPTION
GEN NOTES		M/T NOTES	26	28		120													
																			MAINTENANCE OF TRAFFIC
		800													404	35000	800	CU YD	BITUMINOUS CONCRETE FOR MAINTAINING TRAFFIC (SEE SHT. 26)
		1000													SPECIAL	61411100	1000	HOUR	LAW ENFORCEMENT OFFICER WITH PATROL CAR (SEE SHT. 26)
		200													SPECIAL	61412500	200	SQ FT	REPLACEMENT SIGN (SEE SHT. 23)
		500													SPECIAL	61412600	500	EACH	REPLACEMENT DRUM (SEE SHT. 23)
		60													614	12470	60	EACH	WORK ZONE SPEED LIMIT SIGN (SEE SHT. 23)
				1010											614	13350	1010	EACH	OBJECT MARKERS
			1010												614	13300	1010	EACH	BARRIER REFLECTOR, TYPE B
		2													614	18501	2	EACH	PORTABLE CHANGEABLE MESSAGE SIGN, AS PER PLAN (SEE SHT. 25)
				8.82											614	20000	8.82	MILE	TEMPORARY LANE LINE, CLASS I
				17.90											614	20300	17.90	MILE	TEMPORARY LANE LINE, CLASS I, 740.05, TYPE C
				17.75											614	20400	17.75	MILE	TEMPORARY LANE LINE, CLASS II
				0.21											614	21300	0.21	MILE	TEMPORARY CENTER LINE, CLASS I, 740.05, TYPE C
				11.98											614	22000	11.98	MILE	TEMPORARY EDGE LINE, CLASS I
				5.06											614	22300	5.06	MILE	TEMPORARY EDGE LINE, CLASS I, 740.05, TYPE C
				6455											614	23000	6455	LIN FT	TEMPORARY CHANNELIZING LINE, CLASS I
				31395											622	40020	31395	LIN FT	PORTABLE CONCRETE BARRIER, 32"
		2													SPECIAL	69010300	2	EACH	TEMPORARY IMPACT ATTENUATOR (G.R.E.A.T. TYPE) MODEL NO. 200200NF6 GCZ (SEE SHT. 26)
		1													SPECIAL	69010300	1	EACH	TEMPORARY IMPACT ATTENUATOR (G.R.E.A.T. TYPE) REPLACEMENT MODEL NO. 200200NF6 GCZ (SEE SHT. 26)
		1													SPECIAL	69010500	1	EACH	REMOVE AND REPLACE TEMPORARY IMPACT ATTENUATOR (SEE SHT. 26)
																			STRUCTURES, 20' SPAN AND OVER
																			STRUCTURE NO. HAM-75-0992 ESTIMATED QUANTITIES, SEE SHT. 241
																			STRUCTURE NO. HAM-75-1089L ESTIMATED QUANTITIES, SEE SHT. 237
																			STRUCTURE NO. HAM-75-1160L ESTIMATED QUANTITIES, SEE SHT. 237
																			STRUCTURE NO. HAM-75-1187L ESTIMATED QUANTITIES, SEE SHT. 237
																			STRUCTURE NO. HAM-75-1198L ESTIMATED QUANTITIES, SEE SHT. 309
																			STRUCTURE NO. HAM-75-1102R ESTIMATED QUANTITIES, SEE SHT. 237
																			STRUCTURE NO. HAM-75-1152R ESTIMATED QUANTITIES, SEE SHT. 237
																			STRUCTURE NO. HAM-75-1184R ESTIMATED QUANTITIES, SEE SHT. 237
																			STRUCTURE NO. HAM-75-1192R ESTIMATED QUANTITIES, SEE SHT. 238
																			STRUCTURE NO. HAM-75-1292 ESTIMATED QUANTITIES, SEE SHT. 238
																			STRUCTURE NO. HAM-75-1338 ESTIMATED QUANTITIES, SEE SHT. 238
																			STRUCTURE NO. HAM-75-1390 ESTIMATED QUANTITIES, SEE SHT. 238
		LUMP													614	11000	LUMP		MAINTAINING TRAFFIC
															619	15020	LUMP		FIELD OFFICE, TYPE C
															623	10000	LUMP		CONSTRUCTION LAYOUT STAKES
															624	10000	LUMP		MOBILIZATION

ESTIMATED QUANTITIES

F.H.W.A. REGION	STATE	PROJECT	CALC. DJB DATE 10-91
5	OHIO		CHK. WJB DATE 5-92

87/338

HAM-75-9.75

LINE	REF. NO.	LOCATION STATION TO STATION	SIDE	SHT. NO.	PAVEMENT CALCULATIONS PAV'T. WIDTH FEET	PAV'T. LENGTH FEET	PAVEMENT AREA SQ. YD.	NORTHBOUND MAINLINE PAVEMENT 202 PAVEMENT REMOVED SQ.YD.	202 WEARING COURSE REMOVED SQ.YD.	203 EXCAVATION NOT INCLUDING EMBANKMENT CONSTRUCTION CU.YD.	203 SUBGRADE COMPACTION SQ.YD.	301 BITUMINOUS AGGREGATE BASE, AC-20 VARIABLE DEPTH CU.YD.	301 3" BITUMINOUS AGGREGATE BASE, AC-20 CU.YD.	310 SUBBASE, AS PER PLAN CU.YD.	407 TACK COAT GAL.	446 ASPHALT CONCRETE LEVELING COURSE, TYPE 2 AC-20, 1½" DEPTH CU.YD.	446 ASPHALT CONCRETE INTERMEDIATE COURSE, TYPE 2 AC-20 VARIABLE DEPTH CU.YD.	446 ASPHALT CONCRETE SURFACE COURSE TYPE 1, AC-20 AS PER PLAN, 1½" DEPTH CU.YD.	451 9" REINFORCED CONCRETE PAVEMENT AS PER PLAN SQ.YD.	SPECIAL PRESSURE RELIEF JOINT TYPE A LIN. FT.	605 6" SHALLOW PIPE UNDERDRAIN LIN. FT.	707.17, ASTM D 3034, SDR-35, SS-931 OR SS-944, PERFORATED PER 707.15	REMARKS	LINE
1																								1
2		NB MAINLINE																						2
3																								3
4	1-P	66+57.81 TO 68+32.81		136	48	175	933.33		933.3			33.3			70	19.4		32.4						FEATHER AREA	4
5	2-P	68+32.81 TO 72+20.37		136	VARIES	387.56	1808.61		1808.6				150.7		135.6	87.9		62.8							5
6	3-P	72+20.37 TO 85+22.50		136	36	1302.13	5208.52		5208.5				434		390.6	253.1		180.9							6
7	4-P	78+00 TO 85+24.79	RT	136	VARIES	678.14	904.19								67.8		56	31.1						DECEL LANE	7
8																									8
9	5-P	10+25 S TO 12+00 S		136	VARIES	175	1030.56	1030.6		130.8	991.7		82.6	82.6	74.4	48.2		34.4	1030.6	52	75			FULL DEPTH	9
10	6-P	NOT USED																							10
11	7-P	NOT USED																							11
12	8-P	10+25 N TO 12+00 N		136	VARIES	175	1185.92	1185.9		1156.5	1185.9		98.8	98.8	88.9	57.6		41.2	1185.9	75	95			FULL DEPTH	12
13																									13
14	9-P	90+42 TO 107+56.50		136	36	1714.5	6858.00		6858				571.5		514.4	333.3		238.2							14
15	10-P	107+56.50 TO 112+66		136	VARIES	509.5	3141.92		3141.2				261.8		235.6	152.7		109.1						INCLUDES DECEL LANE	15
16	11-P	112+66 TO 115+39		136,143	36	273	1092.00		1092				91		81.9	53.1		37.9							16
17	12-P	115+39 TO 127+39		143	36	1200	4800.00		4800				400		360	233.3		166.7							17
18	13-P	115+39 TO 127+39	RT	143	VARIES	1200	2600.00								195		162.5	90.3						ACCEL LANE	18
19	14-P	127+39 TO 132+82.08		143	36	543.08	2172.32		2172.3				181		162.9	105.6		75.5							19
20																									20
21	15-P	10+25 S TO 12+25 S		143	36	200	800.00	800		183.3	800		66.7	133.3	60	38.9		27.8	800	36	55			FULL DEPTH	21
22	16-P	134+82.08 TO 135+07.08		143	36	25	100.00		100						7.5		8.3	3.5						APPROACH SLAB	22
23	17-P	140+14.08 TO 140+39.08		143	36	25	100.00		100						7.5		8.3	3.5						APPROACH SLAB	23
24	18-P	10+25 N TO 12+25 N		143	36	200	800.00	800		183.3	800		66.7	133.3	60	38.9		27.8	800	36	55			FULL DEPTH	24
25																									25
26	19-P	142+39.08 TO 151+37		143,144	36	897.92	3591.68		3591.7				299.3		269.4	174.6		124.8							26
27	20-P	151+37 TO 159+51.14		144	VARIES	814.14	4543.83		4543.8				378.7		340.8	220.8		157.8							27
28																									28
29	21-P	22+25 S TO 20+25 S		144	VARIES	200	845.49	845.5		193.8	845.5		70.5	140.9	63.4	41.1		29.4	845.5	36	55			FULL DEPTH	29
30	22-P	161+51.14 TO 161+76.14		144	36	25	100.00		100						7.5		6.6	3.5						APPROACH SLAB	30
31	23-P	163+05.64 TO 163+30.64		144	36	25	100.00		100						7.5		4.9	3.5						APPROACH SLAB	31
32	24-P	20+25 N TO 22+25 N		144	VARIES	200	913.32	913.3		209.3	913.3		76.1	152.2	68.5	44.4		31.7	913.3	36	55			FULL DEPTH	32
33																									33
34	25-P	165+30.64 TO 172+35.95		144	VARIES	705.31	4033.77		4033.8				336.2		302.5	196		140.1						INCLUDES DECEL LANE	34
35	26-P	172+35.95 TO 176+36.45		144,146	VARIES	400.50	1724.67		1724.8				143.7		129.4	83.8		59.9							35
36																									36
37	27-P	32+25 S TO 30+25 S		146	36	200	800.00	800		183.3	800		66.7	133.3	60	38.9		27.8	800	36	55			FULL DEPTH	37
38	28-P	178+36.45 TO 178+61.45		146	36	25	100.00		100						7.5		2.8	3.5						APPROACH SLAB	38
39	29-P	179+76.96 TO 180+01.96		146	36	25	100.00		100						7.5		2.8	3.5						APPROACH SLAB	39
40	30-P	30+25 N TO 33+01.02 N		146	36	276.02	1104.07	1104.1		329.7	1104.1		92	184	82.8	53.7		38.3	1104.1	72	95			FULL DEPTH	40
41																									41
42	31-P	182+72.99 TO 182+97.99		146	36	25	100.00		100						7.5		5.2	3.5						APPROACH SLAB	42
43	32-P	207+15.49 TO 207+40.49		147	36	25	100.00		100						7.5		4.3	3.5						APPROACH SLAB	43
44	33-P	40+25 N TO 42+25 N		147	36	200	800.00	800		183.3	800		66.7	133.3	60	38.9		27.8	800	36	55			FULL DEPTH	44
45																									45
46	34-P	209+40.49 TO 212+19.06		147	36	278.57	1114.28		1114.3				92.8		83.6	54.2		38.7							46
47	35-P	212+19.06 TO 221+19.06		147,149	VARIES	800	5355.57		5355.6				446.3		401.7	260.3		186						INCLUDES DECEL LANE	47
48	36-P	221+19.06 TO 237+00		149	36	1584.94	6323.76		6323.8				131.7		474.3	76.8		219.6							48
49	37-P	NOT USED																							49
50	38-P	237+00 TO 249+00		150	36	1200	4800.00		4800				400		360	233.3		166.7							50
51	39-P	249+00 TO 261+00		151	36	1200	4800.00		4800				400		360	233.3		166.7							51
52	40-P	261+00 TO 270+00		152	36	900	3600.00		3600				300		270	175		125							52
53																									53
54	41-P	270+00 TO 275+27.15		152,153	VARIES	527.15	3192.19		3192.2				266		239.4	151.1		110.9						INCLUDES DECEL LANE	54
55	42-P	275+27.15 TO 281+62.88		153	48	635.73	3390.56		3390				282.5		254.3	167.8		117.8							55
56	43-P	281+62.88 TO 290+50		153,154	VARIES	887.12	5864.85		5864				488.7		439.9	285		203.7						INCLUDES DECEL LANE	56
57	44-P	290+50 TO 295+55		154	VARIES	505	2131.11		2131				177.6		159.8	103.6		74							57
58	45-P	295+55 TO 305+85		155	36	1030	4120.00		4120				343.3		309	200.2		143.1							58
59																									59
60	46-P	NOT USED																							60
61	47-P	NOT USED																							61
62	48-P	NOT USED																							62
63	49-P	NOT USED																							63
64	50-P	NOT USED																							64
65																									65
TOTALS TO GENERAL SUMMARY								8280	85399	2753	8241	34	7264	1192	7286	4255	262	3374	8280	415	595				

DATE SAVED 10/31/91
G:\US\HAM\95\ESTQTY01.DGN

ESTIMATED QUANTITIES

F.H.W.A. REGION	STATE	PROJECT	CALC. DJB DATE 10-91
5	OHIO		CHK. LJB DATE 5-92

88
338

HAM-75-9.75

LINE	REF. NO.	LOCATION STATION TO STATION	SIDE	SHT. NO.	PAVEMENT CALCULATIONS PAV'T. WIDTH FEET	PAV'T. LENGTH FEET	PAVEMENT AREA SQ. YD.	SOUTHBOUND MAINLINE PAVEMENT 202 PAVEMENT REMOVED SQ.YD.	202 WEARING COURSE REMOVED SQ.YD.	203 EXCAVATION NOT INCLUDING EMBANKMENT CONSTRUCTION CU.YD.	203 SUBGRADE COMPACTION SQ.YD.	301 BITUMINOUS AGGREGATE BASE, AC-20 VARIABLE DEPTH CU.YD.	301 3" BITUMINOUS AGGREGATE BASE, AC-20 CU.YD.	310 SUBBASE, AS PER PLAN CU.YD.	407 TACK COAT GAL.	446 ASPHALT CONCRETE INTERMEDIATE COURSE, TYPE 2 AC-20, 1¾" DEPTH CU.YD.	446 ASPHALT CONCRETE INTERMEDIATE COURSE, TYPE 2 AC-20 VARIABLE DEPTH CU.YD.	446 ASPHALT CONCRETE SURFACE COURSE TYPE 1, AC-20 AS PER PLAN, 1¼" DEPTH CU.YD.	617 SHOULDER PREPARATION SQ. YD.	617 COMPACTED AGGREGATE TYPE B CU.YD.	451 9" REINFORCED CONCRETE PAVEMENT AS PER PLAN SQ.YD.	SPECIAL PRESSURE RELIEF JOINT LIN. FT.	605 6" SHALLOW PIPE UNDERDRAIN AS PER PLAN LIN. FT.	707.17, ASTM D3034, SDR-35, SS-931 OR SS-944, PERFORATED PER 707.15	REMARKS	LINE
1																										1
2		SB MAINLINE																								2
3																										3
4	51-P	66•57.81 TO 68•32.81		136	48	175	933.33		933.3			33.3			70		15.3	32.4							FEATHER AREA	4
5	52-P	68•32.81 TO 69•68.30		136	VARIES	135.49	655.95		656				49.2		49.2	28.7		22.8								5
6	53-P	69•68.30 TO 77•00		136	36	731.70	2926.80		2926.8				243.9		219.5	142.2		101.7								6
7	54-P	77•00 TO 84•97		136	36	797	3108.00		3108				259		233.1	151		108							SKEWED	7
8	55-P	77•00 TO 84•68.80	LT	136	VARIES	762.38	775.09								58.1		48.4	26.9							ACCEL. LANE	8
9																										9
10	56-P	3•00-S TO 1•25-S		136	57	175	1108.33	1108.3		126.3	1069.4		89.1	178.2	80.2	52		37.1			1069.4	60	80		FULL DEPTH	10
11	57-P	NOT USED																								11
12	58-P	NOT USED																								12
13	59-P	1•25-N TO 3•00-N		136	36	175	700.00	700		82.6	700		58.3	116.7	52.5	34		24.3			700	36	55		FULL DEPTH	13
14																										14
15	60-P	90•44 TO 116•96		136,138	36	2639.4	10557.80		10558				879.8		791.8	513.1		366.7								15
16	61-P	90•44 TO 116•96	LT	138	VARIES	2652.0	8294.87								622.1		518.4	288.1							ACCEL. LANE	16
17	62-P	116•96 TO 130•24.69		138	36	1328.6	5314.76		5314.8				442.9		398.6	258.3		184.6								17
18																										18
19	63-P	130•24.69 TO 144•55		138,139	36	1430.3	5721.24	5721.2		2860.6	5721.2		476.8	953.3	429.1	278.1		198.7			5721.2				FULL DEPTH	19
20	64-P	144•55 TO 151•55		139,140	VARIES	700	3368.00	3368		771.8	3368		280.7	561.3	252.6	163.7		117			3368				FULL DEPTH	20
21																										21
22	65-P	151•55 TO 152•88		140	VARIES	133	642.67		642.7				53.6		48.2	31.2		22.3								22
23	66-P	152•88 TO 159•00		140	36	612	2448.00		2448.0				204		183.6	119		85								23
24	67-P	159•00 TO 173•53		140,142	36	1453	5812.00		5812.0				484.3		435.9	282.5		201.9								24
25																										25
26	68-P	173•53 TO 1•15-S		142	36	210	840.00	840		192.5	840		70	140	63	40.8		29.2			840	36	55		FULL DEPTH	26
27	69-P	175•63 TO 175•78		142	36	15	60.00		60						4.5		1.7	2.1							APPROACH SLAB	27
28	70-P	177•00 TO 177•15		142	36	15	60.00		60						4.5		1.7	2.1							APPROACH SLAB	28
29	71-P	1•30-N TO 3•40-N		142	36	210	840.00	840		192.5	840		70	140	63	40.8		29.2			840	36	55		FULL DEPTH	29
30																										30
31	72-P	179•25 TO 186•28.28		142	36	703.28	2813.12		2813.1				234.4		211	136.7		97.7								31
32	73-P	186•28.28 TO 191•25.24		142	VARIES	496.96	2898.93		2898.9				241.6		217.4	140.9		100.7								32
33	74-P	191•25.24 TO 193•29.95		142	VARIES	204.71	1330.62		1330.6				110.9		99.8	64.7		46.2								33
34	75-P	193•29.95 TO 197•47.73		142	VARIES	417.78	2506.68		2506.7				208.9		188	121.8		87.1							INCLUDES DECEL LANE	34
35																										35
36	76-P	197•47.73 TO 202•00		142,147	VARIES	456.27	2366.77		2366.8				197.2		177.5	115		82.2								36
37	77-P	202•00 TO 214•00		147	36	1200	4800.00		4800				400		360	233.3		166.7								37
38	78-P	214•00 TO 223•00		149	36	900	3600.00		3600				300		270	175		125								38
39	79-P	223•00 TO 235•00		149	VARIES	1200	6466.67		6466.7				538.9		485	314.3		224.6							INCLUDES DECEL LANE	39
40	80-P	235•00 TO 249•00		149,150	36	1400	5600.00		5600				466.7		420	272.2		194.5								40
41																										41
42	81-P	249•00 TO 261•00		151	36	1200	4800.00		4800				400		360	233.3		166.7								42
43	82-P	261•00 TO 269•96.61		152	VARIES	896.61	3697.55		3697.6				308.1		277.3	179.7		128.4								43
44	83-P	269•96.61 TO 275•27.15		152,153	VARIES	530.54	3507.46		3507.5				292.3		263.1	170.5		121.8							INCLUDES DECEL LANE	44
45	84-P	275•27.15 TO 280•95		153	48	567.85	3028.53		3028.5				252.4		277.1	147.2		105.2								45
46	85-P	280•95 TO 286•15		153,154	VARIES	520.00	3148.89		3148.9				262.4		236.2	153		109.4							INCLUDES EXTRA LANE	46
47																										47
48	86-P	286•15 TO 295•55		154	36	940.00	3760.00		3760.0				313.3		282	182.8		130.6								48
49	87-P	295•55 TO 305•85		155	36	1030.0	4120.00		3760.0				343.3		309	200.2		143.1								49
50																										50
51	88-P	286•15 TO 288•94		154	16	279	496.00						41.3		37.2	24.1		17.2	155	6.5						51
52	89-P	NOT USED																								52
53	90-P	NOT USED																								53
54																										54
55																										55
56																										56
57																										57
58																										58
59																										59
60																										60
61																										61
62																										62
63																										63
64																										64
65																										65
		TOTALS TO GENERAL SUMMARY						12578	90605	4227	12539	34	8574	2090	8530	5000	586	3927	155	6	12539	168	245			

DATE:03/05/96
G:\DRAWINGS\92\76\D02.DGN

ESTIMATED QUANTITIES

F.H.W.A. REGION	STATE	PROJECT	CALC. DJB DATE 10-91
5	OHIO		CHK. LJB DATE 5-92

89
338

HAM-75-9.75

LINE	REF. NO.	LOCATION STATION TO STATION	SIDE	SHT. NO.	PAVEMENT CALCULATIONS PAV'T. WIDTH FEET	PAV'T. LENGTH FEET	PAVEMENT AREA SQ. YD.	MAINLINE SHOULDER PAVEMENT 202 PAVEMENT REMOVED SQ.YD.	202 WEARING COURSE REMOVED SQ.YD.	203 SUBGRADE COMPACTION SQ.YD.	203 EXCAVATION NOT INCLUDING EMBANKMENT CONSTRUCTION CU.YD.	203 LINEAR GRADING STA.	254 PAVEMENT PLANING BITUMINOUS SQ.YD.	301 2¼" BITUMINOUS AGGREGATE BASE, AC-20 CU.YD.	301 3" BITUMINOUS AGGREGATE BASE, AC-20 CU.YD.	301 6" BITUMINOUS AGGREGATE BASE, AC-20 CU.YD.	304 VARIABLE DEPTH AGGREGATE BASE AS PER PLAN CU.YD.	407 TACK COAT GAL.	408 BITUMINOUS PRIME COAT GAL.	446 ASPHALT CONCRETE INTERMEDIATE COURSE, TYPE 2 AC-20, 1¾" DEPTH CU.YD.	446 ASPHALT CONCRETE INTERMEDIATE COURSE, TYPE II AC-20 VARIABLE DEPTH CU.YD.	446 ASPHALT CONCRETE SURFACE COURSE AC-20 AS PER PLAN, 1¼" DEPTH CU.YD.	617 SHOULDER PREPARATION SQ.YD.	617 COMPACTED AGGREGATE TYPE B CU.YD.	REMARKS	LINE
1																										1
2		NB SHOULDERS																								2
3																										3
4	91-P	66+57.81 TO 68+32.81	LT	136	6.5	175	126.39		38.9						3.2			9.5			6.1	4.4				4
5	92-P	66+57.81 TO 68+32.81	RT	136	8	175	155.56						155.6		13			11.7		7.6		5.4		97.2	7.4		5
6	93-P	68+32.81 TO 68+68.91	LT	136	6.5	1636.1	363.58		363.6						30.3			88.6			22.1	41					6
7	94-P	68+32.81 TO 72+20.37	RT	136	VARIES	387.6	387.60						387.6		32.2			29.1		18.8		13.5		215.3	16.5		7
8	95-P	72+20.37 TO 78+00	RT	136	10	579.63	644.03						644		53.7			48.3		31.3		22.4		332	24.6		8
9	96-P	78+00 TO 85+03.26	RT	136	8	711.	632.00							39.5				47.4				22		177.8	13.6		9
10																										10
11	97-P	84+68.91 TO 86+43.91	LT	136	7.5	175	145.83			145.8	17.2					19.4	48.6		58.3			4.1				FULL DEPTH	11
12	98-P	85+03.26 TO 86+78.26	RT	136	8	175	155.56	155.6		155.6	25.9					25.9	64.9		62.2			5.4				FULL DEPTH	12
13	99-P	88+94.11 TO 90+69.11	LT	136	7.5	175	145.83			145.8	67.9					19.4	48.6		58.3			4.1				FULL DEPTH	13
14	100-P	88+91.26 TO 90+33.50	RT	136	8	142.24	126.44	126.4		126.4	21.1					21.1	52.6		50.6			4.4				FULL DEPTH	14
15	101-P	90+39.24 TO 90+94.24	RT	136	8	55	48.89	48.9		48.9	8.1					8.1	20.4		19.6			1.7		30.6	2.1	FULL DEPTH	15
16																										16
17	102-P	90+69.11 TO 103+68.24 BK	LT	136,138	5	1299.13	721.74						721.7		60.1			70.4			15	32.6					17
18	103-P	90+94.24 TO 103+68.24 BK	RT	136,138	10	1274	1415.56						1415.6		118			106.2		68.8		49.2		364.3	27.8		18
19	104-P	103+59.04 AH TO 107+56.50	LT	138	5	397.46	220.81						220.8		18.4			21.5			4.6	10					19
20	105-P	103+59.04 AH TO 107+56.50	RT	138	10	397.46	441.26						441.3		36.8			33.1		21.5		15.3		220.8	16.7		20
21																										21
22	106-P	107+56.50 TO 112+66	LT	138	4.5	509.50	226.44						226.4		18.9			19.1			8.9	8.8				DECEL LANE	22
23	107-P	113+26.26 TO 115+39	LT	138,143	VARIES	212.74	165.46						165.5		13.8			12.4		8		5.7		153.2	11.7		23
24	108-P	107+56.50 TO 115+39	RT	138,143	10	777.55	863.94						863.9		72			64.8		42		30		432	33		24
25	109-P	115+39 TO 132+82.08	LT	143	4	1748.40	777.07						777.1		64.8			58.3		37.8		27		971.2	74.2		25
26	110-P	115+39 TO 127+39	RT	143	VARIES	1187.40	1187.40						1187.4		99			89		57.7		41.2		659.7	50.4		26
27	111-P	127+39 TO 132+82.08	RT	143	10	539.66	599.62						599.6		50			45		29.1		20.8		299.8	22.9		27
28																										28
29	112-P	132+82.08 TO 135+07.08	LT	143	4	225	100.00			100	53.5					16.7	37.5		40			3.5		125	9.6	FULL DEPTH	29
30	113-P	132+82.08 TO 135+07.08	RT	143	10	225	250.00			250	133.7					41.7	109.3		100			8.7		125	9.6	FULL DEPTH	30
31	114-P	140+14.08 TO 142+39.08	LT	143	4	225	100.00			100	53.5					16.7	37.5		40			3.5		125	9.6	FULL DEPTH	31
32	115-P	140+14.08 TO 142+39.08	RT	143	10	225	250.00			250	133.7					41.7	109.3		100			8.7		125	9.6	FULL DEPTH	32
33																										33
34	116-P	142+39.08 TO 159+51.14	LT	143,144	4	1703.60	757.16						757.1		63.1			56.8		36.8		26.3		946.4	66.2		34
35	117-P	142+39.08 TO 149+20	RT	143,144	10	680.92	756.58						756.6		63.1			56.7		36.8		26.3		378.3	26.5		35
36	118-P	149+20 TO 151+37	RT	144	VARIES	217	397.83						397.8		33.2			29.8		19.3		13.8				GORE AREA	36
37	119-P	151+37 TO 159+51.14	RT	144	VARIES	828.70	828.70								69.1			62.2		40.3		28.8		460.4	32.2		37
38																										38
39	120-P	159+51.14 TO 161+76.14	LT	144	4	225	100.00			100	53.5					16.7	37.5		40			3.5		125	9.6	FULL DEPTH	39
40	121-P	159+51.14 TO 161+76.14	RT	144	10	225	250.00			250	133.7					41.7	109.3		100			8.7		125	9.6	FULL DEPTH	40
41	122-P	163+05.64 TO 165+30.64	LT	144	4	225	100.00			100	53.5					16.7	37.5		40			3.5		125	9.6	FULL DEPTH	41
42	123-P	163+05.64 TO 165+30.64	RT	144	VARIES	225	236.67			236.7	126.6					39.4	103.6		94.7			8.2		125	9.6	FULL DEPTH	42
43																										43
44	124-P	165+30.64 TO 176+36.45	LT	144,146	4	984.41	489.58						489.6		40.8			36.7		23.8		17		612	46.8		44
45	125-P	165+30.64 TO 172+39.95	RT	144	10	706.15	784.61						784.6		65.4			58.8		38.1		27.3		392.3	30		45
46	126-P	172+95 TO 176+36.45	RT	144,146	10	344.47	382.74						382.7		31.9			28.7		18.6		13.3		224.7	17.2		46
47																										47
48	127-P	176+36.45 TO 178+61.45	LT	146	4	225	100.00			100	53.5					16.7	37.5		40			3.5		125	9.6	FULL DEPTH	48
49	128-P	176+36.45 TO 178+61.45	RT	146	10	225	250.00			250	133.7					41.7	109.3		100			8.7		125	9.6	FULL DEPTH	49
50	129-P	180+01.96 TO 182+72.99	LT	146	4	269.86	119.38			119.4	64.1					20	45		48			4.2				FULL DEPTH	50
51	130-P	179+98.96 TO 182+72.99	RT	146	10	276.47	307.19			307.2	164.3					51.2	134.4		122.9			10.7				FULL DEPTH	51
52	131-P	207+15.49 TO 209+40.49	LT	147	4	225	100.00			100	53.5					16.7	37.5		40			3.5		125	9.6	FULL DEPTH	52
53	132-P	207+15.49 TO 209+40.49	RT	147	10	225	250.00			250	133.7					41.7	109.3		100			8.7		125	9.6	FULL DEPTH	53
54																										54
55	133-P	209+40.49 TO 215+80	LT	147,149	4	641.85	285.27						285.3		23.8			21.4		13.9		10		356.6	27.2		55
56	134-P	209+40.49 TO 212+19.06	RT	147	10	278.57	309.52						309.5		25.8			23.2		15		10.8		154.8	11.8		56
57	135-P	212+19.06 TO 215+00	RT	147,149	VARIES	280.94	260.84						260.8		21.7			19.6		12.7		9.1		156.1	11.9		57
58																										58
59	136-P	215+80 TO 219+76.92	LT	149	VARIES	396.92	435.51						435.5		14.7			34.3			19.5	15.9					59
60	137-P	219+76.92 TO 237+00	LT	149	6.75	1723.08	1292.31						957.3		79.8			96.9			13.3	44.9					60
61	138-P	215+00 TO 220+19.06	RT	149	VARIES	513.71	403.07					1.77	374.5		31.2	4.9	9.9	28.1	11.8	18.2		14		285.4	20	DECEL LANE	61
62	139-P	221+19.06 TO 237+00	RT	149	14	1600.96	2490.38				301.4		1778.8		148.2	118.6	237.2	133.4	284.6	121		86.5					62
63																										63
64																										64
65																										65
	TOTALS TO GENERAL SUMMARY							331	403	3136	1787	1.77	15777	40	1396	637	1538	1441	1551	718	90	801		9421	706		

ESTIMATED QUANTITIES

F.H.W.A. REGION	STATE	PROJECT	CALC. DJB DATE 5-92
5	OHIO		CHK. LJB DATE 5-92

90
338

HAM-75-9.75

LINE	REF. NO.	LOCATION STATION TO STATION		SIDE	SHT. NO.	PAVEMENT CALCULATIONS PAV'T. WIDTH FEET	PAV'T. LENGTH FEET	PAVEMENT AREA SQ. YD.	MAINLINE SHOULDER PAVEMENT 202 PAVEMENT REMOVED SQ.YD.	202 WEARING COURSE REMOVED SQ.YD.	203 EXCAVATION NOT INCLUDING EMBANKMENT CONSTRUCTION CU.YD.	203 SUBGRADE COMPACTION SQ.YD.	254 PAVEMENT PLANING BITUMINOUS SQ.YD.	301 2¼" BITUMINOUS AGGREGATE BASE, AC-20 CU.YD.	301 3" BITUMINOUS AGGREGATE BASE, AC-20 CU.YD.	301 6" BITUMINOUS AGGREGATE BASE, AC-20 CU.YD.	304 VARIABLE DEPTH AGGREGATE BASE AS PER PLAN CU.YD.	407 TACK COAT GAL.	408 BITUMINOUS PRIME COAT GAL.	446 ASPHALT CONCRETE INTERMEDIATE COURSE, TYPE 2 AC-20, 1¾" DEPTH CU.YD.	446 ASPHALT CONCRETE INTERMEDIATE COURSE, TYPE 2, AC-20, VAR. DEPTH CU.YD.	446 ASPHALT CONCRETE SURFACE, TYPE 1, AC-20 AS PER PLAN, 1¼ DEPTH CU.YD.	617 SHOULDER PREPARATION SQ.YD.	617 COMPACTED AGGREGATE TYPE B CU.YD.	REMARKS	LINE
1																										1
2		NB SHOULDERS																								2
3																										3
4	140-P	237+00	TO 249+00	LT	150	6.75	1200	900.00					666.7		55.6			50			16.3	31.3				4
5	141-P	237+00	TO 249+00	RT	150	VARIES	1218.78	1922.96			240.9		1354.2		112.9	94.8	135.4	101.6	227.5	93.5		66.8				5
6	142-P	249+00	TO 261+00	LT	151	6.75	1200	900.00					666.7		55.6			50			16.3	31.3				6
7	143-P	249+00	TO 261+00	RT	151	16	1221.36	2171.31			452.2		1357.1		125.7	150.8	301.6	101.8	361.9	73.3		75.4				7
8																										8
9	144-P	261+00	TO 272+60	LT	152	6.75	1160	870.00					644.4		53.7			48.3			13.5	30.2				9
10	145-P	261+00	TO 267+87	RT	152	VARIES	687	992.33			97		763.3		63.6	38.2	76.3	57.3	91.6	48.2		34.5				10
11	146-P	267+87	TO 270+00	RT	152	VARIES	213	355.00					355		29.6			26.6		17.3		12.3			GORE AREA	11
12	147-P	270+00	TO 275+27.15	RT	152,153	VARIES	527.15	527.15					527.2		43.9			39.5		25.6		18.3				12
13																										13
14	148-P	272+60	TO 284+00	LT	153	6.75	1140	855.00					633.3		52.8			47.5			13.3	29.7				14
15	149-P	275+27.15	TO 281+62.88	RT	153	10	635.73	706.37					706.4		58.9			53		34.3		24.5				15
16	150-P	284+00	TO 297+00	LT	154,155	6.75	1300	975.00					722.2		60.2			54.2			15.1	33.9				16
17																										17
18	151-P	281+62.88	TO 290+57.88	RT	153,154	VARIES	895	626.60					610.6		50.9	2.7	5.4	45.8	6.4	29.7		21.8				18
19	152-P	291+59.67	TO 305+85	RT	154,155	10	1425.33	1583.70					1583.7		132			118.8		77		55				19
20	153-P	297+00	TO 302+75	LT	155	VARIES	575	544.15					471.2		39.3			35.3		22.9		18.9				20
21	154-P	302+75	TO 305+85	LT	155	5	310	172.22					172.2		14.4			12.9		8.4		6				21
22																										22
23	155-P	305+85	TO 306+85	RT	155	VARIES	100	33.33			14.1				0.9		3.7		0.8			0.4				23
24	156-P																									24
25	157-P	NOT USED																								25
26	158-P	NOT USED																								26
27	159-P	NOT USED																								27
28	160-P	NOT USED																								28
29																										29
30																										30
31		SB SHOULDERS																								31
32																										32
33	161-P	66+57.81	TO 68+32.81	RT	136	6.5	175	126.39		38.9					3.2			9.5			5.3	4.4				33
34	162-P	66+57.81	TO 68+32.81	RT	136	8	175	155.56					155.6		13			11.7		7.6		5.4		97.2	7.4	34
35	163-P	68+32.81	TO 84+68.91	RT	136	6.5	1636.1	1181.63		363.6					30.3			88.6			48.9	41				35
36	164-P	68+32.81	TO 77+00	LT	136	VARIES	867.19	867.19					944.6		78.7			70.8		45.9		32.8		481.8	36.8	36
37	165-P	77+00	TO 84+32.25	LT	136	VARIES	723.10	723.10						45.2				54.2				25.1		401.7	30.7	37
38																										38
39	166-P	84+68.91	TO 86+43.91	RT	136	6	175	116.67	155.6		17.2	116.7				19.4	48.6		58.3			4.1				FULL DEPTH 39
40	167-P	84+32.25	TO 86+07.25	LT	136	8	175	155.56			25.9	155.6				25.9	64.9		62.2			5.4				FULL DEPTH 40
41	168-P	88+94.11	TO 90+69.11	RT	136	6	175	116.67	233.3		67.9	116.7				19.4	48.6		58.3			4.1				FULL DEPTH 41
42	169-P	88+69	TO 90+44	LT	136	VARIES	175	233.33			38.2	233.3				38.8	95.8		93.3			8.1				FULL DEPTH 42
43																										43
44	170-P	90+69.11	TO 103+68.24BK	RT	136,138	6.5	1299.13	938.26					721.7		60.1			70.4			13.3	32.6				44
45	171-P	90+44	TO 103+68.24BK	LT	136,138	VARIES	1324.24	1335.00						83.4				100.1				46.4		735.7	56.2	45
46	172-P	113+61.15AH	TO 116+96	RT	138	6.5	334.85	241.84					186		15.5			14			3.4	8.4				46
47	173-P	113+61.15AH	TO 116+96	LT	138	8	334.85	297.64						18.6				22.3				10.3		186	14.2	47
48																										48
49	174-P	116+96	TO 130+24.69	RT	138	6.5	1328.69	959.61					738.2		61.5			72			13.3	33.3				49
50	175-P	116+96	TO 130+24.69	LT	138	10	1328.69	1476.32					1476.3		123			110.7		71.7		51.3				50
51																										51
52	176-P	130+24.69	TO 144+55	RT	138,139	5	1436.06	797.81	797.8		438.8	797.8				133	265.9		319.1			27.7		438.9	30.7	FULL DEPTH 52
53	177-P	130+24.69	TO 144+55	LT	138,139	VARIES	1423.23	2502.53	2502.5		1376.4	2502.5				417.1	834.2		1001			86.9				FULL DEPTH 53
54	178-P	144+55	TO 151+55	RT	139,140	5	700	388.89	388.9		71.3	388.9				64.8	129.6		155.6			13.5				FULL DEPTH 54
55	179-P	145+00	TO 151+55	LT	139,140	VARIES	655	501.78	501.8		92	501.8				83.6	167.3		200.7			17.4				FULL DEPTH 55
56																										56
57	180-P	151+55	TO 173+53	RT	140,142	5	2187.73	1215.41					1215.4		101.3			91.2		59.1		42.2				57
58	181-P	151+55	TO 154+85	LT	140	VARIES	330	348.22					348.2		29			26.1		16.9		12.1		109.4	8.4	58
59	182-P	154+85	TO 173+53	LT	140,142	16	1880.85	3343.73					3343		278.6			250.8		162.5		116.1		1044.9	79.8	59
60																										60
61	183-P	173+53	TO 175+78	RT	142	5	225	125.00	125		35.6	125				20.8	46.9		50			4.3		125	9.6	FULL DEPTH 61
62	184-P	173+53	TO 175+78	LT	142	16	225	400.00	400		113.9	400				66.7	183.3		160			13.9		125	9.6	FULL DEPTH 62
63	185-P	177+15	TO 179+25	RT	142	5	225	125.00	125		35.6	125				20.8	46.9		50			4.3				FULL DEPTH 63
64	186-P	177+15	TO 179+25	LT	142	VARIES	225	275.00	275		78.3	275				45.8	126.1		110			9.6		125	9.6	FULL DEPTH 64
65			TO																							65
TOTALS TO GENERAL SUMMARY									5505	403	3396	5739	20364	148	1745	1243	2582	1835	3007	794	159	1152		3871	293	

DATE/DRAWN
DGN/RWKS/SEET.DGN

ESTIMATED QUANTITIES

F.H.W.A. REGION	STATE	PROJECT	CALC. DJB DATE 10-91
5	OHIO		CHK. LJB DATE 5-92

91
338

HAM-75-9.75

LINE	REF. NO.	LOCATION STATION TO STATION	SIDE	SHT. NO.	PAVEMENT CALCULATIONS PAV'T. WIDTH FEET	PAV'T. LENGTH FEET	PAVEMENT AREA SQ. YD.	MAINLINE SHOULDER PAVEMENT 203 EXCAVATION NOT ALLOWING EMBANKMENT CONSTRUCTION CU.YD.	254 PAVEMENT PLANING BITUMINOUS SQ.YD.	301 3" BITUMINOUS AGGREGATE BASE, AC-20 CU.YD.	301 6" BITUMINOUS AGGREGATE BASE, AC-20 CU.YD.	304 VARIABLE DEPTH AGGREGATE BASE AS PER PLAN CU.YD.	407 TACK COAT GAL.	408 BITUMINOUS PRIME COAT GAL.	446 ASPHALT CONCRETE INTERMEDIATE COURSE, TYPE 2, AC-20, 1¾" DEPTH CU.YD.	446 ASPHALT CONCRETE INTERMEDIATE COURSE, TYPE 2, AC-20, VARI. DEPTH CU.YD.	446 ASPHALT CONCRETE SURFACE COURSE TYPE 1, AC-20 AS PER PLAN, 1¼" DEPTH CU.YD.	REMARKS	LINE
1																			1
2		SB SHOULDERS																	2
3																			3
4	187-P	179+25 TO 187+70	RT	142	5	845	469.44		469.4				35.2		22.8		16.3		4
5	188-P	179+25 TO 187+70	LT	142	8	845	751.11		751.1				56.3		36.5		26.1		5
6	189-P	187+70 TO 195+50	RT	142	VARIES	780	931.11		931.1				69.8		45.3		32.3		6
7	190-P	187+70 TO 191+26.27	LT	142	VARIES	356.27	388.56		388.6				29.1		18.9		13.5		7
8	191-P	193+29.95 TO 197+47.73	LT	142	VARIES	417.78	185.68		185.7				13.9		9		6.4		8
9																			9
10	192-P	195+50 TO 202+00	RT	142,147	VARIES	650	566.67		566.7				42.5		27.5		19.7		10
11	193-P	197+47.73 TO 202+00	LT	142,147	VARIES	452.27	397.54		397.5				28.5		19.3		13.8		11
12	194-P	202+00 TO 219+76.92	RT	147	VARIES	1789.26	1351.89		1351.9				101.4		65.7		47		12
13	195-P	202+00 TO 219+76.92	LT	147	VARIES	1773.10	2482.35		2482.4				186.2		120.6		86.2		13
14																			14
15	196-P	219+76.92 TO 235+00	RT	149	6.75	1523.08	1142.31		846.2				85.7			17.6	39.7		15
16	197-P	219+76.92 TO 235+00	LT	149	VARIES	1499.13	1442.13		1442.1				108.2		70.1		50		16
17	198-P	235+00 TO 249+00	RT	149,150	6..75	1400	1050.00		777.8				78.8			16.2	36.5		17
18	199-P	235+00 TO 239+05	LT	149,150	VARIES	405	652.50		652.5				49		31.7		22.7	GORE AREA	18
19	200-P	239+05 TO 249+00	LT	150	11.25	1020.87	1276.09		1134.3			28.4	95.7	34	55.2		44.3		19
20																			20
21	201-P	249+00 TO 261+00	RT	151	6.75	1200	900.00		666.7				67.5			13.9	31.3		21
22	202-P	249+00 TO 258+50	LT	151	11.25	974.70	1218.38		1083			26.4	81.2	31.7	51.3		41.2		22
23	203-P	261+00 TO 272+60	RT	152	6.75	1160	870.00		644.4				65.3			13.5	30.2		23
24	204-P	258+50 TO 268+96.61	LT	151,152	VARIES	1046.61	1251.79	47.5	1251.8			29.6	93.9	35.6	56.5		43.5		24
25																			25
26	205-P	272+60 TO 284+00	RT	153	6.75	1140	855.00		633.3				64.1			13.2	29.7		26
27	206-P	269+96.61 TO 286+15	LT	153,154	VARIES	1606.51	1668.94		1668.9				125.2		81.1		58		27
28	207-P	284+00 TO 297+00	RT	154	6.75	1300	975.00		722.2				73.1			15.1	33.9		28
29	208-P	286+15 TO 288+94	LT	154	VARIES	279	465.00		465				34.9		22.6		16.2		29
30																			30
31	209-P	288+94 TO 305+85	LT	154,155	10	1691	1878.89		1878.9				140.9		91.3		65.3		31
32	210-P	297+00 TO 302+75	RT	155	VARIES	575	559.03		471.2				35.3			49.1	18.9		32
33	211-P	302+75 TO 305+85	RT	155	5	310	172.22		172.2				12.9		8.4		6		33
34																			34
35	212-P	NOT USED																	35
36	213-P	NOT USED																	36
37	214-P	NOT USED																	37
38	215-P	NOT USED																	38
39	216-P	NOT USED																	39
40	217-P	NOT USED																	40
41	218-P	NOT USED																	41
42	219-P	NOT USED																	42
43																			43
44																			44
45																			45
46																			46
47																			47
48																			48
49																			49
50																			50
51																			51
52																			52
53																			53
54																			54
55																			55
56																			56
57																			57
58																			58
59																			59
60																			60
61																			61
62																			62
63																			63
64																			64
65																			65
		TOTALS TO GENERAL SUMMARY						48	22035	1788	43	85	1775	102	834	139	829		

DATA DRIVEN BUSINESS SERVICES

ESTIMATED QUANTITIES

F.H.W.A. REGION	STATE	PROJECT	CALC. DJB DATE 10-91
5	OHIO		CHK. LJB DATE 5-92

92
338

HAM-75-9.75

LINE	REF. NO.	LOCATION STATION TO STATION	SIDE	SHT. NO.	PAVEMENT CALCULATIONS PAV'T. WIDTH FEET	PAV'T. LENGTH FEET	PAVEMENT AREA SQ. YD.	COLLECTOR - DISTRIBUTOR PAVEMENT 254 PAVEMENT PLANING BITUMINOUS SQ.YD.	407 TACK COAT GAL.	446 ASPHALT CONCRETE INTERMEDIATE COURSE, TYPE 2, AC-20, 1¾" DEPTH CU.YD.	446 ASPHALT CONCRETE SURFACE COURSE, TYPE 1, AC-20 AS PER PLAN, 1¼" DEPTH CU.YD.	617 SHOULDER PREPARATION SQ.YD.	617 COMPACTED AGGREGATE TYPE B CU.YD.	REMARKS	LINE
1		NORTHBOUND													1
2															2
3	220-P	6+19.06 TO 10+01.91		149	24	382.85	1020.93		76.6	49.6	35.5				3
4	221-P	10+01.91 TO 13+23		149	VARIES	321.09	1337.88		100.3	65	46.5			DECEL LANE & GORE	4
5	222-P	13.23 TO 17+87.90		149	VARIES	464.90	852.16		63.9	41.4	29.6				5
6	223-P	17+87.90 TO 20+82.67		149	VARIES	294.77	982.57		73.7	47.8	34.1				6
7	224-P	20+82.67 TO 37+70		149-151	24	1687.33	4499.55		337.5	218.7	156.3				7
8	225-P	NOT USED													8
9															9
10	226-P	37+70 TO 44+55.22		151	VARIES	685.22	2674.21		200.6	130	92.9				10
11	227-P	44+55.22 TO 46+36		151,152	VARIES	180.78	873.77		65.5	42.5	30.3			DECEL LANE & GORE	11
12	228-P	46+36 TO 49+86		152	VARIES	350	1438.89		107.9	69.9	50			INCL. ACCEL LANE	12
13	229-P	49+86 TO 52+01.63		152	VARIES	215.63	628.59		47.1	30.5	21.8				13
14	230-P	52+01.63 TO 55+41		152	VARIES	339.37	1508.31		113.1	73.3	52.4			INCL. ACCEL LANE	14
15															15
16	231-P	55+41 TO 61+37.50		152,153	VARIES	596.50	1724.13		129.3	83.8	59.9				16
17	232-P	61+37.50 TO 72+99.98		153,154	VARIES	1162.4	4583.25		343.7	222.7	159.2				17
18	233-P	72+99.98 TO 74+70		154	VARIES	170.02	806.67		60.5	39.2	28			INCL. DECEL LANE	18
19	234-P	74+70 TO 79+79.21		154	VARIES	509.21	1681.63		126.1	81.7	58.4				19
20	235-P	79+79.21 TO 87+68.07		154,155	VARIES	788.86	3250.72		243.8	158	112.9				20
21															21
22	236-P	87+68.07 TO 89+56		155	VARIES	187.93	931.54		69.9	45.3	32.4			INCL. DECEL LANE	22
23	237-P	89+56 TO 91+69 BK		155	VARIES	213	662.44		49.7	32.2	23				23
24	238-P	27+00 AH TO 30+26.67		155,156	VARIES	326.67	1124.00		84.3	54.6	39			INCL. DECEL LANE	24
25	239-P	30+26.67 TO 31+16.67		156	24	90	240.00		18	11.7	8.3	50	3.5		25
26	240-P	31+16.67 TO 34+63.67		156	16	347	616.89		46.3	30	21.4				26
27	241-P	34+63.67 TO 38+12.26		156	VARIES	348.59	620.40		46.5	30.2	21.5				27
28	242-P	NOT USED													28
29	243-P	NOT USED													29
30	244-P	NOT USED													30
31															31
32															32
33															33
34															34
35		SOUTHBOUND													35
36															36
37	245-P	0+00 TO 6+50.81		149,150	VARIES	650.81	1843.96		138.3	89.6	64			INCL. ACCEL LANE	37
38	246-P	6+50.81 TO 11+15.16		150	VARIES	464.35	892.18		66.9	43.4	31				38
39	247-P	11+15.16 TO 21+98.36		150,151	VARIES	1083.20	3120.68		234.1	151.7	108.4				39
40	248-P	21+98.36 TO 27+98.36		151,152	VARIES	600	2266.67		170	110.2	78.7			INCL. ACCEL LANE	40
41	249-P	27+98.36 TO 31+04.40		152	VARIES	306.04	1003.13		75.2	48.8	34.8				41
42	250-P	31+04.40 TO 33+78.40		152	VARIES	274	518.84		38.9	25.2	18				42
43															43
44	251-P	33+78.40 TO 37+00		152	VARIES	321.60	1286.40		96.5	62.5	44.7				44
45	252-P	37+00 TO 51+20		152-154	24	1420	3786.67		284	184	131.5				45
46	253-P	51+20 TO 53+84.88		154	VARIES	264.80	882.67		66.2	42.9	30.6				46
47	254-P	53+84.88 TO 59+44.45		154	24	559.57	1492.20		111.9	72.5	51.8				47
48	255-P	59+44.45 TO 62+44.45		154,155	VARIES	300	1000.00		75	48.6	34.7				48
49															49
50	256-P	62+44.45 TO 67+28.86		155	16	484.14	861.17		64.6	41.9	29.9				50
51	257-P	67+28.86 TO 68+03.86		155	30	75	250.00	104	18.8	7.1	8.7			FEATHER AREA	51
52	258-P	NOT USED													52
53	259-P	NOT USED													53
54	260-P	NOT USED													54
55															55
56															56
57															57
58															58
59															59
60															60
61															61
62															62
63															63
64															64
65															65
		TOTALS TO GENERAL SUMMARY						104	3845	2487	1781	50	4		

DATE:6/5/2014
G:\DRAWINGS\SEQ1008

ESTIMATED QUANTITIES

F.H.W.A. REGION	STATE	PROJECT	CALC. DJB DATE 5-92
5	OHIO		CHK. LJB DATE 5-92

93
338

HAM-75-9.75

LINE	REF. NO.	LOCATION STATION TO STATION		SIDE	SHT. NO.	PAVEMENT CALCULATIONS: PAV'T. WIDTH FEET	PAV'T. LENGTH FEET	PAVEMENT AREA SQ. YD.	SHOULDER PAVEMENT NB & SB COLLECTOR - DISTRIBUTORS: 202 CONCRETE MEDIAN REMOVED AS PER PLAN SQ.YD.	203 EXCAVATION NOT INCLUDING EMBANKMENT CONSTRUCTION CU.YD.	203 LINEAR GRADING STA.	301 3" BITUMINOUS AGGREGATE BASE, AC-20 CU.YD.	301 6" BITUMINOUS AGGREGATE BASE, AC-20 CU.YD.	304 12" AGGREGATE BASE AS PER PLAN CU.YD.	407 TACK COAT GAL.	408 BITUMINOUS PRIME COAT GAL.	446 ASPHALT CONCRETE INTERMEDIATE COURSE, TYPE 2 1¾" DEPTH CU.YD.	446 ASPHALT CONCRETE SURFACE COURSE TYPE 1, AC-20 AS PER PLAN, 1¼" DEPTH CU.YD.	617 SHOULDER PREPARATION SQ.YD.	617 COMPACTED AGGREGATE TYPE B CU.YD.	REMARKS	LINE
1																						1
2		NORTHBOUND																				2
3																						3
4	261-P	5+13.71	TO 13+23	RT	149	6	809.29	539.27			8.09		45	89.9	20.2	107.9	13.1	18.7	449.6	31.2		4
5	262-P	6+13.71	TO 22+18	LT	149	VARIES	1604.20	1302.78		249.8			98.3	196.6	53.5	235.9	34.6	45.2				5
6	263-P	14+00	TO 17+87.90	RT	149	VARIES	387.90	383.75							28.8		13.3	18.7	215	14.9	INCL. GORE AREA	6
7	264-P	17+87.90	TO 30+91.60	RT	149,150	VARIES	1303.70	1415.80							106.2		49.2	68.8	100.9	7		7
8	265-P	22+18	TO 33+85	LT	150,151	VARIES	1167	933.34		198.8			69.1	138.2	38.9	165.9	25.2	32.4				8
9																						9
10	266-P	31+59.50	TO 39+85	RT	150,151	VARIES	825.5	880.56							66		42.8	30.6	458.6	31.8		10
11	267-P	33+85	TO 45+50	LT	151	VARIES	1165	1124.18		268.5			101.1	202.1	38.8	242.6	25.2	39				11
12	268-P	40+29	TO 46+37	RT	151,152	VARIES	608	501.28			0.68		1.9	3.8	36.7	4.5	23.8	17.4	337.8	23.5		12
13	269-P	45+50	TO 49+85	LT	152	VARIES	435	314.17		51.2			20.1	40.3	14.5	48.3	9.4	10.9				13
14	270-P	45+50	TO 52+01.63	RT	152	VARIES	651.63	608.00							45.6		29.5	21.1	219.2	15.2	INCL. GORE AREA	14
15																						15
16	271-P	50.82.44	TO 57+23	LT	152	4	640.56	285.33							21.4		13.8	10				16
17	272-P	52+01.63	TO 54+79.50	RT	152	8	277.87	246.67							18.5		12	8.6	154.4	10.7		17
18	273-P	57+23	TO 68+82	LT	152,153	4	1159	515.11							38.6		25	17.9				18
19	274-P	55+25.20	TO 63+53.80	RT	152,153	VARIES	828.60	859.71							64.5		41.8	29.9	460.3	32		19
20	275-P	64+13.50	TO 70+97	RT	152,153	8	683.5	607.60							45.6		29.5	21.1	397.7	26.4		20
21																						21
22	276-P	68+82	TO 75+39.07	LT	154	VARIES	657.07	328.28							24.6		16	11.4				22
23	277-P	71+39	TO 74+68	RT	154	VARIES	329	262.00			0.90		2.5	5	18.5	6	12	9.1	182.8	12.7		23
24	278-P	75+39.07	TO 79+79.21	LT	154	VARIES	440.14	562.40							42.2		27.3	19.5			GORE AREA	24
25	279-P	76+46.80	TO 80+71.30	RT	154,155	VARIES	424.50	458.78							34.4		22.3	15.9	235.8	16.4		25
26																						26
27	280-P	79+79.21	TO 91+69 BK	LT	154,155	4	1189.79	528.80							39.7		25.7	18.4				27
28	281-P	81+21	TO 89+55	RT	155	10	834	926.67							69.5		45	32.2	463.3	32.1		28
29	282-P	90+41	TO 30+26.67	RT	155,156	VARIES	454.67	480.52							36		23.4	16.7	244.8	17	91+69 BK=27+00 AH	29
30	283-P	27+00 AH	TO 39+13	LT	156	VARIES	1213	539.11		228.4				44.9	179.7		40.4		18.7				30
31	284-P	31+16.67	TO 38+12.26	RT	156	8	695.59	618.30							46.4			30	21.5	219.8	15.3		31
32																						32
33																						33
34		SOUTHBOUND																				34
35																						35
36	285-P	0+00	TO 6+60.81	LT	149,150	VARIES	650.81	459.38			2.80		7.8	15.6	34.5	18.7	22.3	17.6	244.9	17		36
37	286-P	4+05	TO 14+30	RT	150	4.75	1025	540.97		36.2			14.2	28.5	34.2	34.2	22.1	18.8				37
38	287-P	6+48	TO 6+88	LT	150	VARIES	40	22.22	22.2	9.4			3.7	7.4		8.9		0.8				38
39	288-P	6+50.81	TO 10+15.16	LT	150	VARIES	364.35	257.76		6.3			2.5	5	18.2	5.9	11.8	9			INCL. GORE AREA	39
40	289-P	10+62	TO 11+15.16	LT	150	VARIES	53.16	41.35	41.4	17.5			6..9	13.8		16.5						40
41	290-P	10+62	TO 14+13.64	LT	150	VARIES	351.64	273.51			1.81		5	10.1	18.2	12.1	11.8	9.5	195.4	13.6		41
42																						42
43	291-P	14+30	TO 26+60	RT	150,151	VARIES	1230	610.36		27.1			10.7	21.3	41	25.6	26.6	21.2				43
44	292-P	14+30	TO 27+98.36	LT	151,152	VARIES	1368.3	1487.07							111.5		72.3	51.7	760.2	52.8		44
45	293-P	27+98.36	TO 33+07	LT	152	VARIES	508.64	567.54							42.6		27.6	19.7	249.2	17.3	INCL. GORE AREA	45
46	294-P	26+60	TO 31+04.40	RT	152	4	444.40	197.51							14.8		9.6	6.9				46
47	295-P	31+04.40	TO 33+52.86	RT	152	VARIES	248.46	317.48							23.8		15.4	11			GORE AREA	47
48																						48
49	296-P	33+77	TO 43+87	LT	152,153	10	1010	1122.22							84.2		54.5	39				49
50	297-P	44+37.50	TO 46+75	LT	153	10	237.50	263.89							19.8		12.8	9.2				50
51	298-P	33+52.86	TO 49+29.43	RT	153	4	1576.5	700.70							52.6		34.1	24.3	875.9	60.8		51
52	299-P	47+25	TO 53+84.88	LT	153,154	VARIES	659.88	653.16							49		31.7	22.7	37.4	2.6		52
53																						53
54	300-P	53+84.88	TO 62+44.45	LT	154,155	VARIES	859.57	932.83							70		45.3	32.4	477.5	33.2	INCL. GORE AREA	54
55	301-P	49+29.43	TO 60+90	RT	154	4	1160.5	515.81							38.7		25.1	17.9	644.8	44.8		55
56	302-P	62+44.45	TO 67+28.86	LT	155	VARIES	484.41	557.91							41.8		27.1	19.4	195.2	13.6	INCL. GORE AREA	56
57	303-P	60+90	TO 67+28.86	RT	155	4	638.86	283.94							21.3		13.8	9.9	354.9	24.6		57
58																						58
59	304-P	NOT USED																				59
60	305-P	NOT USED																				60
61	306-P	NOT USED																				61
62	307-P	NOT USED																				62
63	308-P	NOT USED																				63
64	309-P	NOT USED																				64
65																						65
	TOTALS TO GENERAL SUMMARY								64	1094	14.28	45	389	958	1666	974	1054	895	8176	567		

DATE / DATA/MARK/SHEET.PMT

ESTIMATED QUANTITIES

F.H.W.A. REGION	STATE	PROJECT	CALC. DJB DATE 5-92
5	OHIO		CHK. LJB DATE 5-92

94
338

HAM-75-9.75

LINE	REF. NO.	LOCATION STATION TO STATION	SIDE	SHT. NO.	PAV'T. WIDTH FEET	PAV'T. LENGTH FEET	PAVEMENT AREA SQ. YD.	MAINLINE RAMP PAVEMENT AND SHOULDER																									REMARKS	LINE
								202 PAVEMENT REMOVED SQ.YD.	202 WEARING COURSE REMOVED SQ.YD.		203 EXCAVATION NOT INCLUDING EMBANKMENT CONSTRUCTION CU.YD.	203 SUBGRADE COMPACTION SQ.YD.	203 LINEAR GRADING STA.		301 3" BITUMINOUS AGGREGATE BASE, AC-20 CU.YD.	301 6" BITUMINOUS AGGREGATE BASE, AC-20 CU.YD.		304 12" AGGREGATE BASE AS PER PLAN CU.YD.	310 SUBBASE AS PER PLAN SQ.YD.		407 TACK COAT GAL.	408 BITUMINOUS PRIME COAT GAL.		446 ASPHALT CONCRETE INTERMEDIATE COURSE, TYPE 2 AC-20, 1¾" DEPTH CU.YD.	446 ASPHALT CONCRETE INTERMEDIATE COURSE, TYPE 2 AC-20, VAR. DEPTH CU.YD.	446 ASPHALT CONCRETE BASE, TYPE 1 AC-20 AS PER PLAN, 11" DEPTH CU.YD.	451 9" REINFORCED CONCRETE PAVEMENT AS PER PLAN SQ.YD.		617 SHOULDER PREPARATION SQ.YD.	617 COMPACTED AGGREGATE TYPE B CU.YD.		
1																																		1
2		RAMP-D																																2
3	310-P	67+60.76 TO 68+80.76		136	24	120	320.00													24				4.1	11.1						FEATHER AREA	3
4	311-P	67+60.76 TO 68+80.76	LT	136	10	120	133.33													10				1.7	4.6						SHOULDER	4
5	312-P	67+60.76 TO 68+80.76	RT	136	8	120	106.67													8				1.4	3.7						SHOULDER	5
6	313-P	NOT USED																																6
7																																		7
8		RAMP-G																																8
9	314-P	107+05 TO 108+80		138	VARIES	175	615.42													46.2				12	17.6						FEATHER AREA	9
10	315-P	107+05 TO 108+80	LT	138	8	175	155+56													11.7				3.1	4.4						SHOULDER	10
11	316-P	107+05 TO 108+80	RT	138	3	175	58.33													4.4				1.2	1.7						SHOULDER	11
12	317-P	NOT USED																																12
13																																		13
14		RAMP-G																																14
15	318-P	121+65.69 TO 122+40.69		139	VARIES	75	266.67													20				3.8	7.3						INCL. SHOULDERS	15
16	319-P	122+40.69 TO 126+22		139	VARIES	381.31	1355.77				12.7					5		10		101.7	12		65.9		47.1							16
17	320-P	126+22 TO 127+48	LT	139	18	126	252.00		62.5											18.9				7.1	8.8							17
18	321-P	126+22 TO 127+60	RT	139	18	138	276.00		62.5											20.7				8.2	9.6							18
19	322-P	NOT USED																																19
20																																		20
21		RAMP-P																																21
22	323-P	5+09.50 TO 10+34.50		138	VARIES	525	940.1													70.5			45.7		32.7							22
23	324-P	5+09.50 TO 10+34.50	LT	138	5	525	291.67													21.9			14.2		10.1						SHOULDER	23
24	325-P	5+09.50 TO 10+34.50	RT	138	3	525	175.00													13.1			8.5		6.1				291.7	20.3	SHOULDER	24
25	326-P	10+34.50 TO 21+50		138,139	VARIES	1115.50	3063.56													229.8			148.9		106.4							25
26	327-P	21+50 TO 22+23	LT	139	VARIES	73	154.11		26.2											11.6				0.9	5.4							26
27	328-P	21+50 TO 23+55	RT	139	VARIES	205	423.78		62.5											32.5				15.6	12.7							27
28	329-P	NOT USED																																28
29																																		29
30		RAMP-F																																30
31	330-P	1+67.31 TO 6+00		139	20	432.69	961.53	1009.			252.4	961.5						160.3		75.7			46.7		33.4	961.5					FULL DEPTH	31
32	331-P	6+00 TO 8+64	RT	139	20	264	586.67		62.5											42.8				24.1	19.8							32
33	332-P	7+00 TO 8+16	LT	139	VARIES	95	128.89		22.2											9.7				1	4.5							33
34																																		34
35																																		35
36		COOPER AVE.																																36
37	333-P	0+00 TO 1+64		142	VARIES		876.00		876					61.3						65.7				3.9	30.4							37
38	335-P	3+08 TO 4+08	LT	142	14	144	224.00													16.8			10.9		7.8							38
39	335-P	3+08 TO 4+08	LT	142	VARIES	172														26.1				8.5	12.1							39
40	336-P	1+64 TO 3+36	RT	142	20	172	382.22													28.7			18.6		13.3							40
41	337-P	3+36 TO 4+29	RT	142	VARIES	93	71.44													15.7				5.1	7.3							41
42																																		42
43																																		43
44																																		44
45		RAMP-I																																45
46	338-P	61+70.50 TO 62+58		143	19	87.50	184.72													13.9				2.2	6.4				97.2	3.4		46
47																																		47
48		RAMP-N																																48
49	339-P	2+30 TO 9+83		143,144	VARIES	753	1428.67		118.1											107.2				60.5	49.6							49
50	340-P	9+83 TO 12+00		144	VARIES	217	361.67		361.7					30.1						27.1			17.6		12.6							50
51	341-P	2+30 TO 9+83	LT	144	3	753	251.00													18.8			12.2		8.7				418.3	29.1	SHOULDER	51
52	342-P	2+30 TO 12+00	RT	144	VARIES	970	607.49						8.90			45.6		91.3		25.1	109.5		16.4		21.1				538.9	37.4	SHOULDER	52
53																																		53
54		RAMP-M																																54
55	343-P	5+88.16 TO 12+75		144,145	VARIES	686.84	1267.42		173.6											95.1				58.2	44							55
56	344-P	5+88.16 TO 12+40	LT	145	3	651.84	217.78													16.3			10.6		7.6				388.9	27	SHOULDER	56
57	345-P	5+88.16 TO 12+30	RT	145	6	641.84	427.89						6.40			35.7		71.3		16	85.5		10.4		14.9				388.9	27	SHOULDER	57
58																																		58
59																																		59
60																																		60
61																																		61
62																																		62
63																																		63
64																																		64
65																																		65
TOTALS TO GENERAL SUMMARY								1009	1828		266	962	15.30		92	87		173	161		1246	207		427	223	583	962		2258	154			

ESTIMATED QUANTITIES

F.H.W.A. REGION	STATE	PROJECT	CALC. DJB DATE 5-92
5	OHIO		CHK. LJB DATE 6-92

95/338

HAM-75 9.75

COLLECTOR-DISTRIBUTOR RAMP PAVEMENT AND SHOULDERS

LINE	REF. NO.	LOCATION STATION TO STATION	SIDE	SHT. NO.	PAV'T. WIDTH FEET	PAV'T. LENGTH FEET	PAVEMENT AREA SQ. YD.	202 CONCRETE MEDIAN REMOVED SQ.YD.	202 WEARING COURSE REMOVED SQ.YD.	203 EXCAVATION NOT INCLUDING EMBANKMENT CONSTRUCTION CU.YD.	203 LINEAR GRADING AS PER PLAN STA.	254 PAVEMENT PLANING BITUMINOUS SQ.YD.	301 6" BITUMINOUS AGGREGATE BASE, AC-20 CU.YD.	304 12" AGGREGATE BASE AS PER PLAN CU.YD.	407 TACK COAT GAL.	408 BITUMINOUS PRIME COAT GAL.	446 ASPHALT CONCRETE INTERMEDIATE COURSE, TYPE 2 AC-20, 1¾" DEPTH CU.YD.	446 ASPHALT CONCRETE SURFACE COURSE, TYPE 1, AS PER PLAN, ¼" DEPTH CU.YD.	617 SHOULDER PREPARATION SQ.YD.	617 COMPACTED AGGREGATE TYPE B CU.YD.	REMARKS	LINE
1		NORTHBOUND																				1
2		RAMP A																				2
3	346-P	13+23 TO 18+78		149,157	VARIES	555	1179.73		83.3						88.5		50.5	41				3
4	347-P	13+23 TO 18+78	LT	149,157	3	555	185.00					10.4			13.9		8.1	6.4	202.8	14.1	SHOULDER	4
5	348-P	13+23 TO 18+78	RT	149,157	6	555	370.00				5.55	10.4	30.8	61.7	13.9	74	8.1	12.8	308.3	21.4	SHOULDER	5
6	349-P	NOT USED																				6
7																						7
8		RAMP B																				8
9	350-P	13+63.50 TO 19+20	LT	149,157	18	556.50	1113.00		62.5						83.5		48.9	38.7				9
10	351-P	17+20 TO 18+78	RT	149,157	VARIES	158	207.11		55.6						15.5		5.5	7.2				10
11	352-P	14+35 TO 18+78	RT	149,157	3	433	147.67					10.4			11.1		6.3	5.1	141.7	9.8	SHOULDER	11
12	353-P	13+63.50 TO 19+20	LT	149,157	VARIES	556.5	385.80				4.14	10.4	17.5	35	24.9	42	30.2	13.4	309.2	21.5	SHOULDER	12
13	354-P	NOT USED																				13
14																						14
15	355-P	G.E. GATE 10		150	VARIES	30	200.34		59.7						15		3.2	7				15
16																						16
17	356-P	G.E. GATE 12		157	VARIES	20	83.76		29.6						6.3		1.6	2.9				17
18																						18
19		RAMP C																				19
20	357-P	1+74 TO 9+20.19	RT	152,158	18	746.19	1492.38		62.5						111.9		64.9	51.8				20
21	358-P	1+74 TO 9+20.19	LT	152,158	3	768.58	256.19					10.4			19.2		11.1	8.9	157.9	6.6	SHOULDER	21
22	359-P	1+74 TO 9+20.19	RT	152,158	6	746.19	497.46				7.46	10.4	41.5	82.9	18.7	99.5	10.8	17.3			SHOULDER	22
23	360-P	5+40.76 TO 9+01.29	LT	152,158	18	440.93	881.86		62.5						66.1		36.2	30.6				23
24	361-P	5+40.76 TO 9+01.29	RT	152,158	3	416.77	138.92					10.4			10.4		5.3	4.8			SHOULDER	24
25	362-P	5+40.76 TO 9+01.29	LT	152,158	6	468.69	312.46				3.19	10.4	17.7	35.5	11.7	42.6	5.9	10.9	267.2	18.5	SHOULDER	25
26																						26
27	363-P	RAMP F		158	VARIES		146.67		33.3						11		4.4	5.1				27
28	364-P	NOT USED																				28
29																						29
30		RAMP D																				30
31	365-P	0+00 TO 6+80.84		152,158	VARIES	680.84	1207.86								90.6		58.7	42				31
32	366-P	0+00 TO 5+11	LT	152,158	3	511	170.33								12.8		8.3	5.9	186.7	13	SHOULDER	32
33	367-P	0+00 TO 6+80.84	RT	152,158	VARIES	680.84	463.53				5.92		29.2	58.3	17.6	70	11.4	16.1	378.2	26.3	SHOULDER	33
34																						34
35																						35
36	368-P	3+69.79 TO 4+24.79	RT	152,158	VARIES	55	55.00	55		29.4			9.2	18.3		22		1.9				36
37	369-P	3+71.79 TO 8+40.98		152,158	VARIES	469.19	825.21								61.9		40.1	28.7				37
38	370-P	3+71.79 TO 8+40.98	RT	152,158																		38
39																						39
40	371-P	G.E. GATE 17		152	VARIES	15	76.50		24.3						5.7		1.2	2.7				40
41																						41
42	372-P	NEUMAN WAY		153	VARIES	10	69.77		69.8						5.2		3.4	2.4				42
43																						43
44	373-P	G.E. GATE 57-A		154	VARIES	10	45.36		45.4						3.4		2.2	1.6				44
45	374-P	NOT USED																				45
46																						46
47		RAMP J																				47
48	375-P	1+65 TO 9+20.16		154,159	VARIES	800.17	1575.66		55.6						118.2		71.4	54.7				48
49	376-P	1+65 TO 9+20.16	LT	154,159	3	852.58	284.19					10.4			21.3		12.8	9.9	484.8	33.7	SHOULDER	49
50	377-P	1+65 TO 9+20.16	RT	154,159	6	755.16	503.44				7.55	10.4	42	83.9	18.9	100.7	11.3	17.5	419.5	29.1	SHOULDER	50
51	378-P																					51
52																						52
53	379-P	G.E. GATE 57		154	VARIES	10	76.77		76.8						5.8		3.7	2.7				53
54																						54
55		RAMP K																				55
56	380-P	8+77.12 TO 13+34.94		154	VARIES	457.82	847.40								63.6		41.2	29.4				56
57	381-P	8+77.12 TO 13+34.94	LT	154	VARIES	457.82	215.93			27.3			10.7	21.5	11.4	25.8	7.4	7.5			SHOULDER	57
58																						58
59	382-P	DRIVE RIGHT OF 81+00		155	VARIES	18	93.00		31.7						7		1.6	3.2				59
60																						60
61	383-P	NOT USED																				61
62																						62
63																						63
64																						64
65																						65
TOTALS TO GENERAL SUMMARY								55	753	57	33.81	104	199	398	965	477	576	491	2857	194		

ESTIMATED QUANTITIES

F.H.W.A. REGION	STATE	PROJECT	CALC. DJB DATE 5-92
5	OHIO		CHK. LJB DATE 6-92

96
338

HAM-75-9.75

LINE	REF. NO.	LOCATION STATION TO STATION	SIDE	SHT. NO.	PAV'T. WIDTH FEET	PAV'T. LENGTH FEET	PAVEMENT AREA SQ. YD.	COLLECTOR - DISTRIBUTOR RAMP PAVEMENT AND SHOULDER																							REMARKS	LINE
										202			203	254			301			304			407	408			446	446			617	617		
										WEARING COURSE REMOVED			LINEAR GRADING	PAVEMENT PLANING BITUMINOUS			6" BITUMINOUS AGGREGATE BASE, AC-20			12" AGGREGATE BASE AS PER PLAN			TACK COAT	BITUMINOUS PRIME COAT			ASPHALT CONCRETE INTERMEDIATE COURSE, 1¼" DEPTH AC-20	ASPHALT CONCRETE SURFACE COURSE TYPE 1, AC-20, AS PER PLAN, 1¼" DEPTH			SHOULDER PREPARATION	COMPACTED AGGREGATE TYPE B		
										SQ.YD.			STA.	SQ.YD.			CU.YD.			CU.YD.			GAL.	GAL.			CU.YD.	CU.YD.			SQ.YD.	SQ.YD.		
1		NORTHBOUND																														1
2																																2
3		RAMP M																														3
4	384-P	1+80 TO 10+83.19		155,161	VARIES	903.19	1579.87			48.6													118.5				76.8	54.9						4
5	385-P	1+80 TO 9+25	LT	155,161	3	745	248.33																18.6				12.1	8.6			391.7	27.2	SHOULDER	5
6	386-P	1+80 TO 10+83.19	RT	155,161	8	903.19	802.84							27.8									60.2				36.7	27.9			501.8	34.8	SHOULDER	6
7	387-P	NOT USED																														7
8																																8
9		RAMP L																														9
10	388-P	1+50 TO 10+11.22		155,161	VARIES	861.22	1641.04																123.1				74.3	57						10
11	389-P	0+62 L TO 2+80 L		155,161	VARIES	218	399.67			48.6													30				15.1	13.9						11
12	390-P	1+50 TO 10+11.22	RT	155,161	VARIES	861.22	302.63							10.4									22.7				14	10.5			198.3	13.8	SHOULDER	12
13	391-P	0+62 R TO 10+11.22	LT	155,161	8	949.22	843.75							27.8									63.3				38.4	29.3			527.3	36.6	SHOULDER	13
14																																14
15		RAMP K																														15
16	392-P	9+88 TO 11+13		156	27	125	375.00							93.8									28.1				18.2	13			208.3	14.5		16
17	393-P	NOT USED																														17
18	394-P	NOT USED																														18
19																																19
20																																20
21																																21
22																																22
23																																23
24																																24
25																																25
26																																26
27																																27
28																																28
29		SOUTHBOUND																														29
30																																30
31		RAMP P																														31
32	395-P	0+74 TO 3+04.92		150	VARIES	230.92	490.93			27.8													36.8				21.8	17.1						32
33	396-P	0+70 L TO 1+50 L		150	VARIES	80	80.28			23.6													6				0.8	2.8						33
34																																34
35																																35
36		RAMP Q																														36
37	397-P	0+05 TO 2+28.81		150	VARIES	223.81	740.76																55.6				36	25.7						37
38	398-P	2+28.81 TO 4+08		150	24	179.19	477.84			33.3													35.8				19.8	16.6						38
39	399-P	0+05 TO 2+74.17	RT	150	6	269.17	179.45						2.69				15			29.9			6.7	35.9			4.4	6.2			144	10	SHOULDER	39
40																																40
41																																41
42		RAMP R																														42
43	400-P	1+55 TO 2+24		150	25	69	191.67			34.7													14.4				5.8	6.7						43
44	401-P	NOT USED																														44
45																																45
46																																46
47		RAMP C																														47
48	402-P	12+73.37 TO 21+74.25	RT	152,158	18	900.88	1801.76			62.5													133.1				80	62.6						48
49	403-P	12+73.37 TO 20+50	LT	152,158	3	776.63	258.88							10.4									19.4				12.2	9			188.5	13.1	SHOULDER	49
50	404-P	12+73.37 TO 21+74.25	RT	152,158	6	900.88	600.59						8.41	10.4			44.2			88.4			25.1	106.1			16.3	20.9			500.5	34.8	SHOULDER	50
51																																51
52	405-P	12+54.47 TO 17+02.37	LT	152,158	18	527.89	1055.78			62.5													79.2				43.7	36.7						52
53	406-P	12+54.47 TO 17+02.37	RT	152,158	3	503.87	167.96							10+4									12.6				7.3	5.8					SHOULDER	53
54	407-P	12+54.47 TO 17+02.37	LT	152,158	VARIES	550.74	293.67						2.71	10+4			15			30.1			13.8	36.1			7.7	10.2			182.3	12.7	SHOULDER	54
55	408-P	NOT USED																														55
56																																56
57																																57
58		RAMP E																														58
59	409-P	3+17 TO 8+60.17		152,158	18	543.17	1086.34																81.5				52.8	37.7						59
60	410-P	3+17 TO 8+60.17	LT	152,158	VARIES	543.17	204.41																15.3				9.9	7.1					SHOULDER	60
61	411-P	3+17 TO 8+60.17	RT	152,158	3	543.17	181.06																13.6				8.8	6.3					SHOULDER	61
62																																62
63	412-P	NOT USED																														63
64																																64
65																																65
TOTALS TO GENERAL SUMMARY										342			13.81	202			75			149			1014	179			613	487			2843	198		

ESTIMATED QUANTITIES

F.H.W.A. REGION	STATE	PROJECT	CALC. DJB DATE 5-92
5	OHIO		CHK. LJB DATE 6-92

97
338

HAM-75-9.75

LINE	REF. NO.	LOCATION STATION TO STATION	SIDE	SHT. NO.	PAV'T. WIDTH FEET	PAV'T. LENGTH FEET	PAVEMENT AREA SQ. YD.	COLLECTOR - DISTRIBUTOR RAMP PAVEMENT AND SHOULDERS																						REMARKS	LINE
										202			203	254			301		304			407	408			446	446			617	617	
										WEARING COURSE REMOVED			LINEAR GRADING	PAVEMENT PLAINING BITUMINOUS			6" BITUMINOUS AGGREGATE BASE, AC-20		12" AGGREGATE BASE AS PER PLAN			TACK COAT	BITUMINOUS PRIME COAT			ASPHALT CONCRETE INTERMEDIATE COURSE, TYPE 2 AC-20, 1¼" DEPTH	ASPHALT CONCRETE SURFACE COURSE, TYPE 1, 448 AS PER PLAN, 1¼" DEPTH			SHOULDER PREPARATION	COMPACTED AGGREGATE TYPE B		
										SQ.YD.			STA.	SQ.YD.			CU.YD.		CU.YD.			GAL.	GAL.			CU.YD.	CU.YD.			SQ.YD.	SQ.YD.		
1																															1
2		SOUTHBOUND																													2
3																															3
4																															4
5		RAMP H																													5
6	413-P	5+23.82 TO 9+76.46		152	VARIES	452.64	765.51															57.4				37.2	26.6						6
7	414-P	5+23 TO 7+28	RT	152	3	205	68.33															5.1				3.3	2.3					SHOULDER	7
8	415-P	5+23.82 TO 9+76.46	LT	152	VARIES	452.64	250.48										16.8		33.5			11.3	40.2			7.3	8.7					SHOULDER	8
9																															9
10	416-P	NOT USED																													10
11																															11
12																															12
13	417-P	MAGNOLIA DRIVE		153	VARIES	30	145.00			41.7												10.9				2.5	5						13
14																															14
15																															15
16	418-P	CHICAGO AVE.		153	VARIES	30	145.00			41.7												10.9				2.5	5						16
17																															17
18																															18
19		RAMP J																													19
20	419-P	13+12.19 TO 23+82.69		154,159	VARIES	1070.50	2081.81			55.6												156.1				94.4	72.3						20
21	420-P	13+12.19 TO 22+39	LT	154,159	3	926.81	308.94							10.4								23.2				13.7	10.7			514.9	35.8	SHOULDER	21
22	421-P	13+12.19 TO 23+82.69	RT	154,159	VARIES	1070.50	722.65						9.95	10.4			52.3		104.6				125.5			18.6	25.1			594.7	41.3	SHOULDER	22
23																															23
24	422-P	NOT USED																													24
25																															25
26																															26
27		RAMP N																													27
28	423-P	0+00 TO 4+70.34		155,160	VARIES	470.34	821.90															61.6				40	28.5						28
29	424-P	0+00 TO 4+70.34	RT	155,160	8	470.34	418.08															31.4				20.3	14.5			261.3	18.1	SHOULDER	29
30	425-P	0+00 TO 3+42	LT	155,160	3	342	114.00															8.6				5.5	4			190	13.2	SHOULDER	30
31																															31
32		RAMP B																													32
33	426-P	6+06 TO 13+80		160	VARIES	774	1404.89			66												105.4				63.8	48.8						33
34	427-P	11+50 TO 13+38		160	VARIES	188	291.33			66												21.8				8.7	10.1						34
35	428-P	6+06 TO 13+38	LT	160	3	732	244.00							10.4								18.3				11.1	8.5					SHOULDER	35
36	429-P	6+06 TO 13+80	RT	160	8	774	688.00							27.8								51.6				31.5	23.9			430	29.9	SHOULDER	36
37																															37
38																															38
39																															39
40																															40
41																															41
42																															42
43																															43
44																															44
45																															45
46																															46
47																															47
48																															48
49																															49
50																															50
51																															51
52																															52
53																															53
54																															54
55																															55
56																															56
57																															57
58																															58
59																															59
60																															60
61																															61
62																															62
63																															63
64																															64
65																															65
		TOTALS TO GENERAL SUMMARY								271			9.95	59			69		139			574	166			361	294			1991	139		

ESTIMATED QUANTITIES

F.H.W.A. REGION	STATE	PROJECT	CALC. DJB DATE 5-92
5	OHIO		CHK. LJB DATE 6-92

98
338

HAM-75-9.75

LINE	REF. NO.	LOCATION STATION TO STATION	SIDE	SHT. NO.	202 SAFETY CURB REMOVED AS PER PLAN LIN FT	202 CURB REMOVED LIN FT	202 CURB REMOVED AS PER PLAN METHOD-A LIN FT	202 CURB REMOVED AS PER PLAN METHOD-B LIN FT	202 CONCRETE MEDIAN REMOVED LIN FT	609 CURB TYPE 6 LIN FT
1										
2		NORTHBOUND M/L								
3	1-C	66+57.81 TO 78+00	RT	136		1110.2				1110.2
4	2-C	292+15 TO 305+63		154,155		1348				
5				152						
6				154,155						
7		SOUTHBOUND M/L								
8										
9	3-C	123+00 TO 130+24.69	RT	138			724.7			
10	4-C	133+42 TO 146+80	RT	139,140						1338
11	5-C	148+00 TO 151+55	RT	140						3555
12	6-C	151+55 TO 173+53	RT	138,139			2198			2198
13	7-C	173+53 TO 175+78	RT	138-142						225
14										
15	8-C	129+85 TO 130+24.69	LT	138			39.7			
16	9-C	129+85 TO 144+55	LT	138,139						1470
17	10-C	144+55 TO 145+55	LT	139,140						100
18	11-C	146+80 TO 151+55	LT	140						475
19	12-C	151+55 TO 152+88	LT	140			133			133
20	13-C	171+00 TO 173+53	LT	140,142			253			
21	14-C	171+00 TO 175+78	LT	140,142		365				478
22										
23	15-C	177+00 TO 189+30	RT	142		180	1230			1230
24	16-C	177+00 TO 185+96.80	LT	142			896.8			896.8
25										
26	17-C	189+30 TO 209+90	RT	142,147	2060					
27	18-C	185+96.80 TO 192+60	LT	142,147	693.5					
28	19-C	192+90 TO 206+45	LT	142,147	1355					
29	20C-	NOT USED								
30	21-C	209+90 TO 210+60	RT	147			70			
31	22-C	210+60 TO 214+50	RT	147			390			390
32	23-C	206+45 TO 215+20	LT	147			875			
33	24-C	215+20 TO 220+30	LT	147,149	510					
34	25-C	NOT USED								
35	26-C	227+72 TO 235+00	LT	149	728			350		
36	27-C	235+00 TO 238+50	LT	149,150						
37										
38	28-C	259+78 TO 269+97	LT	151,152		1019				
39	29-C	269+96.61 TO 286+15	LT	152,154		1618.4				1618.4
40	30-C	286+15 TO 288+94	LT	155		279				
41	31-C	301+95 TO 306+30	LT	155		435				
42	32-C	NOT USED								
43										
44		NORTHBOUND COLL.								
45	33-C	17+10 TO 29+10	RT	149,150		1200				1200
46	34-C	50+35 TO 72+00	LT	152-154		2165				2138
47	35-C	79+79.21 TO 90+41	LT	154,155		1061.8				
48										
49		SOUTHBOUND COLL.								
50	36-C	0+00 TO 0+78	LT	149	78					
51	37-C	6+49 TO 6+89	LT	149					40	
52	38-C	6+68 TO 10+62	LT	150		394				
53	39-C	10+62 TO 11+17	LT	150					55	394
54	40-C	16+75 TO 21+45	LT	151		470				
55										
56	41-C	25+35 TO 31+04.40	RT	151,152		569.4				569.4
57	42-C	34+08 TO 43+90	LT	152,153		984				984
58	43-C	44+35 TO 46+78	LT	153		247				247
59										
60	44-C	47+23 TO 52+63.93	LT	153,154		540.9				540.9
61	45-C	52+63.93 TO 53+17.57	LT	153,154		53.6				53.6
62	46-C	67+28.86 TO 71+65	RT	155		436.2				
63	47-C	NOT USED								
64	48-C	NOT USED								
65										
		TOTAL			5425	14477	6811	350	95	18145

REF. NO.	LOCATION STATION TO STATION	SIDE	SHT. NO.	202 CURB REMOVED AS PER PLAN METHOD-B LIN FT	202 CURB REMOVED LIN FT	202 CURB REMOVED AS PER PLAN METHOD-A LIN FT	202 CONCRETE MEDIAN REMOVED LIN FT	609 CURB TYPE 6 LIN FT	612 CONCRETE MEDIAN AS PER PLAN CU.YD.	LINE
										1
	RAMPS									2
										3
	GALBRAITH ROAD									4
	RAMP P									5
49-C	10+34.50 TO 23+55	RT	138,139			1521		1521		6
50-C	16+55 TO 22+23	LT	139			648		648		7
51-C	NOT USED									8
	RAMP G									9
52-C	122+40.69 TO 127+60	RT	138,139			519.3		519.3		10
53-C	126+22 TO 127+50	RT	139			128		128		11
54-C	122+40.69 TO 127+48	LT	139			507.3		507.3		12
55-C	126+22 TO 127+48	LT	139			126		126		13
56-C	NOT USED									14
	RAMP F									15
57-C	1+60 TO 6+00	RT	139					440		16
58-C	6+00 TO 8+64	RT	139			264		264		17
59-C	7+90 TO 8+64	RT	139			74		74		18
										19
60-C	1+60 TO 6+00	LT	139					440		20
61-C	6+00 TO 8+16	LT	139			216		216		21
62-C	7+90 TO 8+16	LT	139			51		51		22
63-C	NOT USED									23
	COOPER AVE.									24
64-C	1+63.99 TO 4+29	RT	142			265		265		25
65-C	3+00 TO 4+10	RT	142			110		110		26
66-C	1+63.99 TO 3+83	LT	142			262		262		27
67-C	3+00 TO 4+08	LT	142			108		108		28
68-C	1+64 TO 3+00	℄	142				136		136	29
69-C	NOT USED									30
	MANGHAM DRIVE									31
	RAMP P									32
70-C	1+07 TO 2+85	LT	150			168		178		33
71-C	0+75 TO 1+00	LT	150			25		25		34
72-C	0+74 TO 3+15	RT	150			231		241		35
73-C	0+74 TO 1+25	RT	150			51		51		36
74-C	NOT USED									37
	RAMP Q									38
75-C	2+25 TO 4+08	RT	150			183		183		39
76-C	0+57 TO 3+75	LT	150			318		318		40
77-C	NOT USED									41
	RAMP R									42
78-C	1+20 TO 2+24	RT	150			94		104		43
79-C	1+55 TO 2+24	LT	150			100		100		44
80-C	NOT USED									45
	GENERAL ELECTRIC									46
	RAMP C									47
81-C	5+85 TO 6+45	LT	152,158		90			90		48
82-C	15+25 TO 17+02.38	LT	152,158		234			234		49
										50
	RAMP E									51
83-C	2+88 TO 8+60.17	RT	152,158		572.2			572.2		52
84-C	NOT USED									53
	SLIP RAMPS									54
	RAMP G									55
85-C	4+21.60 TO 4+68.60	RT	152		47					56
										57
	RAMP H									58
86-C	5+23.82 TO 9+76.46	RT	152	150	302.6					59
87-C	5+22 TO 7+28	LT	152		206					60
88-C	7+28 TO 9+76.46	LT	152		248.5			248.5		61
										62
	RAMP K									63
89-C	10+51.79 TO 13+34.94	RT	154	283.2						64
										65
	TOTAL			434	1701	5970	136	8025	136	

PITT. DATE/ DENNIS

CURB
ESTIMATED QUANTITIES

ESTIMATED QUANTITIES

F.H.W.A. REGION	STATE	PROJECT	CALC. DJB DATE 1-92
5	OHIO		CHK. LJB DATE 6-92

99 / 338

HAM-75-9.75

LINE	REF. NO.	LOCATION (STATION TO STATION)	SIDE	SHT. NO.	ROADWAY 202 Concrete Median Removed As Per Plan (Sq.Yd.)	202 Concrete Barrier Removed As Per Plan (Lin.Ft.)	202 Guardrail Removed (Lin.Ft.)	606 Guardrail Type 5 (Lin.Ft.)	606 Guardrail Type 5A (Lin.Ft.)	606 Anchor Assembly Type T (Each)	606 Anchor Assembly Type E (Each)	606 Bridge Terminal Assembly Type 1 (Each)	606 Bridge Terminal Assembly Type 2 (Each)	Special Impact Attenuator Type 1 (Each)	PAVEMENT 304 Aggregate Base As Per Plan (Cu. Yd.)	612 4" Concrete Median (Sq. Yd.)	622 Concrete Barrier Type A (Lin. Ft.)	622 Concrete Barrier Type A-50 (Lin. Ft.)	622 Concrete Barrier Type C (Lin. Ft.)	622 Concrete Barrier Type D (Lin. Ft.)	LINE
1																					1
2	1-G	NOT USED																			2
3	2-G	73+68.60 TO 77+25.50	RT	136			400	287.5	25		1	1								34	3
4	3-G	76+33.46 TO 77+26.29	CTR	136											1.3			93.33			4
5	4-G	77+36.45 TO 78+29.28	CTR	136														93.33			5
6	5-G	79+53.5 TO 81+25	RT	136				112.5			1	1								34	6
7																					7
8																					8
9																					9
10		NORTHBOUND																			10
11	6-G	109+75.60 TO 111+57.50	RT	138			150	137.5			1	1			1.3					34	11
12	7-G	116+94.64 TO 134+93.93	RT	143			1775	1462.5			1	2	1		11.6					312	12
13	8-G	117+87.50 TO 134+93.93	LT	138,143		30	1712.5	1700			1	1								30	13
14	9-G	140+23.33 TO 161+67.50	LT	143,144			2137.5	2137.5				1	1								14
15	10-G	140+25.33 TO 148+00	RT	143,144			712.5	625		1			1		5.5					148.7	15
16																					16
17	11-G	NOT USED																			17
18	12-G	151+38.95 TO 161+67.50	RT	144			1037.5	1037.5				1									18
19	13-G	163+14.40 TO 178+65.58	LT	144,146			1550	1550				1	1								19
20	14-G	163+14.40 TO 172+39.40	RT	144			925	925					1								20
21	15-G	173+90.85 TO 178+61.10	RT	146			475	462.5			1	1									21
22																					22
23	16-G	NOT USED																			23
24	17-G	179+78.48 TO 182+86.74	LT	146			312.5								11.4					306.7	24
25	18-G	179+74 TO 182+86.74	RT	146			325								11.7					315.9	25
26	19-G	207+31.24 TO 214+44.74	LT	147,149			712.5	700		1			1								26
27	20-G	207+33.24 TO 211+82	RT	147			450	387.5		1			1		1.9					50.8	27
28																					28
29	21-G	NOT USED																			29
30	22-G	220+19.06 TO 237+00	RT	149	1230		325							1	120.4		320		1215		30
31	23-G	237+00 TO 249+00	RT	150	1079		375								90.2		290		847		31
32	24-G	249+00 TO 261+00	RT	151	1370		725								80.6		50		1025		32
33	25-G	261+00 TO 267+87	RT	152	611		325								55.7		587				33
34																					34
35	26-G	NOT USED																			35
36	27-G	279+13 TO 289+67.88	RT	153,154			1012.5	250			1	1			29.1					786.9	36
37	28-G	289+67.88 TO 290+57.88	RT	154											8.5		90				37
38	29-G	290+68.50 TO 291+70	RT	154	129									1	6.6		70				38
39	30-G	291+70 TO 306+85 BK	RT	154,155			487.5								55.4				41	1414	39
40																					40
41		306+85 BK = 27+00 AH																			41
42																					42
43	31-G	27+00 AH TO 39+32	RT	155,156			487.5								86.8		20		1212		43
44	32-G	NOT USED																			44
45	33-G	NOT USED																			45
46	34-G	NOT USED																			46
47	35-G	NOT USED																			47
48																					48
49		NB COLLECTOR																			49
50	36-G	2+10.35 TO 3+92.25	RT	149			162.5	137.5			1	1			1.3					34	50
51	37-G	10+48.25 TO 12+32.25	RT	149			162.5	137.5			1	1			1.3					34	51
52	38-G	42+21.10 TO 44+45.17	RT	151			225	112.5	25		1	1			2.8					76.2	52
53	39-G	47+33.50 TO 49+21	RT	152			162.5	162.5		1	1										53
54	40-G	63+89.60 TO 74+49.07	LT	153,154				800			1				56.9	242				229.1	54
55																					55
56	41-G	71+39.50 TO 72+81	RT	154			37.5	62.5			1	1			1.7					45	56
57	42-G	10+07.12 TO 13+34.94	RAMP-K	154											98.1	430				327.8	57
58	43-G	79+79.21 TO 91+28	LT	154,155			487.5								480.9	2188				1168.8	58
59	44-G	89+95 TO 27+48	RT	155			250	112.5			1	1			3.7					99	59
60																					60
61		91+69 BK = 27+00 AH																			61
62																					62
63	45-G	30+55 TO 33+80	LT	156			325	300		1	1										63
64	46-G	NOT USED																			64
65	47-G	NOT USED																			65
TOTAL					4419	30	18225	13600	50	5	15	16	7	2	1225	2860	1427	187	4340	5447	

GUARDRAIL & BARRIER
ESTIMATED QUANTITIES

PFFS DATED 1/1/92 DGN/MET.DGN

ESTIMATED QUANTITIES

F.H.W.A. REGION	STATE	PROJECT	CALC. DJB DATE 1-92
5	OHIO		CHK. LJB DATE 6-92

HAM-75-9.75

100 / 338

LINE	REF. NO.	LOCATION STATION TO STATION	SIDE	SHT. NO.	ROADWAY 202 Concrete Median Removed As Per Plan Lin.Ft.	202 Concrete Barrier Removed Lin.Ft.	202 Guardrail Removed Lin.Ft.	606 Guardrail Type 5 Lin.Ft.	606 Guardrail Type 5A Lin.Ft.	606 Anchor Assembly Type T Each	606 Anchor Assembly Type E Each	606 Bridge Terminal Assembly Type 1 Each	606 Bridge Terminal Assembly Type 2 Each	Special Impact Attenuator Type 1 Each	PAVEMENT 304 Aggregate Base As Per Plan Cu. Yd.	612 4" Concrete Median Sq. Yd.	622 Concrete Barrier Type A Lin. Ft.	622 Concrete Barrier Type D Lin. Ft.	622 Concrete Barrier Type D As Per Plan Lin. Ft.	622 Concrete Barrier Type D-50 As Per Plan Lin. Ft.	LINE
1																					1
2		SB MAINLINE																			2
3																					3
4	48-G	NOT USED																			4
5	49-G	NOT USED																			5
6																					6
7	50-G	66+60 TO 68+85	LT	136			225	225			1										7
8	51-G	73+85.50 TO 80+02	LT	136			450	562.5	25	1			1		0.5			15			8
9	52-G	91+19 TO 92+44	LT	136			150	112.5			1	1			1.3			34			9
10	53-G	123+00 TO 141+08.30	RT	138,139		125	100	600	775		1	1			410	1858		1042			10
11	54-G	NOT USED																			11
12	55-G	NOT USED																			12
13																					13
14	56-G	131+75 TO 141+11.44	LT	139			450	900		1	1										14
15	57-G	NOT USED																			15
16	58-G	145+55 TO 149+02.90	LT	140			237.5	212.5			1	1			4.6				125		16
17	59-G	146+80 TO 161+53.81	RT	140			1400	1337.5			1	1			4.4			120			17
18	60-G	152+48.23 TO 175+80.25	LT	140,142			2350	2337.5		1			1								18
19																					19
20	61-G	NOT USED																			20
21	62-G	170+42.75 TO 175+80.25	RT	140,142			525	525		1			1								21
22	63-G	176+97.90 TO 178+47.90	LT	142			150	137.5			1	1									22
23	64-G	176+97.90 TO 178+47.90	RT	142			150	137.5			1	1									23
24	65-G	NOT USED																			24
25																					25
26	66-G	185+96.80 TO 192+60	LT	142											25.7			693.5			26
27	67-G	189+30 TO 211+86.90	RT	142,147			125	112.5			1	1			79.4			2144.6			27
28	68-G	192+90 TO 220+30	LT	142,147			162.5								108.8			1724.6		970	28
29	69-G	227+72 TO 3+65.90	LT	149			150	137.5			1							920			29
30		235+00 - 0+00 COLL.																			30
31	70-G	NOT USED																			31
32	71-G	238+50 TO 249+00	LT	150	788		325								94.1		991.8				32
33	72-G	249+00 TO 258+50	LT	151	456		325								90		948.6				33
34	73-G	258+50 TO 269+81.50	LT	151,152	120		225							1	44.2		80	989			34
35	74-G	271+24 TO 272+86.50	LT	152,153			162.5	137.5		1	1										35
36	75-G	NOT USED																			36
37																					37
38	76-G	296+63 TO 298+25.50	LT	155			162.5	137.5		1	1										38
39	77-G	301+00 TO 306+44	LT	155		14	300								168.1	740		544			39
40	78-G	NOT USED																			40
41	79-G	NOT USED																			41
42	80-G	NOT USED																			42
43																					43
44																					44
45		SB COLLECTOR																			45
46	81-G	11+56.70 TO 28+00	LT	150-152			1625	1475	25	1	1	2	2		5.3			142.5			46
47	82-G	24+03 TO 6+57.15(H)	RT	152			225								37.8			1020.1			47
48		13+31.12(H) - 27+49.10 COLL.																			48
49	83-G	34+45 TO 48+42.84	RT	152,153			1437.5	1362.5			1	1			1.3			34			49
50	84-G	34+45 TO 36+07.50	LT	152			162.5	137.5		1	1										50
51	85-G	52+30 TO 54+48.58	LT	154			200	137.5			1	1			1.6			43			51
52	86-G	52+30 TO 54+48.58	RT	154			200	137.5			1	1			1.6			43			52
53	87-G	58+10 TO 60+10	LT	154			175	150		1	1										53
54	88-G	58+10 TO 61+85	RT	154			175	325		1	1										54
55	89-G	66+35 TO 71+79	RT	155		14	300								20.1			544			55
56																					56
57	90-G	NOT USED																			57
58																					58
59																					59
60																					60
61																					61
62																					62
63																					63
64																					64
65																					65
	TOTAL				1489	128	13125	11512.5	50	10	20	13	5	1	1099	2598	2021	10054	125	970	

GUARDRAIL & BARRIER
ESTIMATED QUANTITIES

ESTIMATED QUANTITIES

F.H.W.A. REGION	STATE	PROJECT	CALC. DJB DATE 1-92
5	OHIO		CHK. LJB DATE 6-92

101
338

HAM-75-9.75

LINE	REF. NO.	LOCATION STATION TO STATION	SIDE	SHT. NO.	ROADWAY 202 Concrete Barrier Removed As Per Plan Lin.Ft.	202 Guardrail Removed Lin.Ft.	606 Guardrail Type 5 Lin.Ft.	606 Anchor Assembly Type B Each	606 Anchor Assembly Type T Each	606 Anchor Assembly Type E Each	606 Bridge Terminal Assembly Type 1 Each	606 Bridge Terminal Assembly Type 2 Each	606 Bridge Terminal Assembly Type D Each	606 Bridge Terminal Assembly Type E Each	606 Bridge Terminal Assembly Type J Each	SPECIAL Impact Attenuator Sand Barrel System 10-Modules Each	PAVEMENT 304 Aggregate Base As Per Plan Cu. Yd.	622 Concrete Barrier Type D Lin. Ft.	LINE
1																			1
2		M/L RAMPS																	2
3																			3
4		RAMP-D NB																	4
5		TO S.R.-126																	5
6	91-G	67+60.76 TO 69+98.26	RT	136		237.5	237.5					1							6
7																			7
8		RAMP-G SB																	8
9	92-G	99+45 TO 100+85	LT	138	15	125	112.5			1	1							15	9
10	93-G	122+45 TO 128+07.50	LT	139		500	487.5		1										10
11	94-G	NOT USED																	11
12																			12
13		RAMP-P AT																	13
14		GALBRAITH ROAD																	14
15	95-G	14+75 TO 17+12.5	RT	139		237.5	212.5		1	1									15
16																			16
17		RAMP-F																	17
18	96-G	4+55 TO 9+50	RT	139		412.5	437.5			1									18
19	97-G	NOT USED																	19
20																			20
21		NB RAMP-N																	21
22		FROM GALBRAITH DOAD																	22
23	98-G	3+26.95 TO 12+01.95	RT	143,146		875	862.5			1									23
24																			24
25																			25
26		NB RAMP-M																	26
27		TO DAVIS ST.																	27
28	99-G	5+91.60 TO 11+54.1	RT	144,146		562.5	550		1										28
29	100-G	NOT USED																	29
30																			30
31		SHEPHERD LANE																	31
32		RAMP-B																	32
33	101-G	18+07.50 TO 19+20	LT	157		112.5	100		1										33
34																			34
35		RAMP-C																	35
36	102-G	1+15 (F) TO 8+87 (C)	LT	158		375	362.5			1									36
37	103-G	7+42.75 TO 9+14.08	RT	158		162.5	150	1						1					37
38	104-G	12+72 TO 14+59.50	LT	158		187.5	162.5	1	1										38
39	105-G	12+81.14 TO 14+56	RT	158		175	162.5		1						1		1		39
40	106-G	NOT USED																	40
41																			41
42		RAMP-D																	42
43	107-G	6+43 (C) TO 1+15 (D)	RT	158		350	325		2										43
44	108-G	NOT USED																	44
45																			45
46		RAMP-J																	46
47	109-G	2+06.20 TO 9+11.71	RT	154,159		675	662.5	1					1						47
48	110-G	5+25.50 TO 9+11.71	LT	159		425	412.5	1					1						48
49	111-G	13+21.44 TO 15+82	LT	159		275	262.5		1						1				49
50	112-G	13+21.44 TO 16+67.75	RT	159		337.5	325		1						1				50
51	113-G	NOT USED																	51
52																			52
53		GLENDALE-MILFORD RD.																	53
54		RAMPS B&N																	54
55	114-G	0+20 (N) TO 13+40 (B)		160		812.5	787.5	1	1										55
56																			56
57		RAMP-M																	57
58	115-G	87+08 (COLL) TO 10+71.43		155,161		1125	1075	1			1	1					1.7	48	58
59																			59
60		RAMP-L																	60
61	116-G	0+62 TO 7+40		161		625	612.5	1											61
62																			62
63		RAMP-K																	63
64	117-G	9+88 TO 14+63		156		475	475												64
65																			65
TOTAL					15	9137.5	8900	9	11	3	2	2	2	1	3	1	2	63	

GUARDRAIL & BARRIER
ESTIMATED QUANTITIES

REF. DWG'S /

ESTIMATED QUANTITIES

F.H.W.A. REGION	STATE	PROJECT	CALC. DJB DATE 1-92
5	OHIO		CHK. LJB DATE 6-92

HAM-75-9.75

102
338

LINE	REF. NO.	LOCATION STATION TO STATION	SIDE	SHT. NO.	603 12" Conduit Type "B" 706.02 Lin.Ft.	603 15" Conduit Type "B" 706.02 Lin.Ft.	604 Catch Basin No. 3 with V Grate Each	604 Catch Basin Adjusted to Grade Each	604 Catch Basin Reconstructed to Grade Each	604 Catch Basin Adjusted to Grade As Per Plan Each	604 Inlet No. I-3A Modification A As Per Plan Each	604 Inlet No. 2-A-6 Each	604 Inlet No. 2-A-10 Each	604 Inlet Adjusted to Grade Each	604 Inlet Reconstructed to Grade Each	604 Manhole Adjusted to Grade Each	604 Manhole Adjusted to Grade As Per Plan Each	Catch Basin Depth (Ft) Grade To E. Outlet	LINE
1																			1
2	1-D	68+40	LT & RT	136											1				2
3	2-D	68+50	LT	136										1					3
4	3-D	71+40	RT	136										1					4
5	4-D	71+65	LT	136											1	1			5
6	5-D	73+50	RT	136										1					6
7																			7
8	6-D	74+80	LT & RT	136				1						1	1				8
9	7-D	75+70	RT	136										1					9
10	8-D	77+75	LT	136													1		10
11	9-D	81+00	LT & RT	136										1			1		11
12	10-D	83+50	LT	136										1			1		12
13																			13
14	11-D	NOT USED																	14
15	12-D	NOT USED																	15
16	13-D	90+05	RT	136										1					16
17	14-D	90+50	RT	136										1					17
18	15-D	92+12	RT	136										1					18
19																			19
20	16-D	95+45	RT	136										1					20
21	17-D	98+80	RT	138										1					21
22	18-D	102+15	RT	138										1					22
23	19-D	105+15 SB & 115+15 NB	LT & RT	138										2					23
24	20-D	118+75 SB	RT	138										1					24
25																			25
26	21-D	121+92 SB	RT	138										1					26
27	22-D	122+86 SB	RT	138										1					27
28	23-D	123+94 SB	RT	138	4						1								3.52 28
29	24-D	129+21 SB	RT	138						1									29
30	25-D	132+42 SB	LT & RT	139				1								1			30
31																			31
32	26-D	136+90 SB	LT & RT	139					1								1		32
33	27-D	138+65 SB	LT	139	36		1										1		3.5 33
34	28-D	140+26 to 140+41 SB	LT	139	4	28							1				1		3.5 34
35	29-D	142+35 SB	LT	139	34								1				1		3.5 35
36	30-D	144+47 to 144+84 SB	LT	139	42		1										1		3.27 36
37																			37
38	31-D	145+50 to 145+53 SB	LT & RT	140								1					1		4.15 38
39	32-D	146+00 SB	LT	140													1		39
40	33-D	146+50 to 146+94 SB	RT	140	46		1										1		3.5 40
41	34-D	147+50 SB	LT	140											1				41
42	35-D	147+60 SB	RT	140											1				42
43																			43
44	36-D	149+12 SB	LT	140													1		44
45	37-D	152+45 SB	LT & RT	140											1	1			45
46	38-D	145+75 SB	RT	140											1				46
47	39-D	157+04 SB	RT	140											1				47
48	40-D	159+33 SB	RT	140											1				48
49																			49
50	41-D	161+63 SB	RT	140											1				50
51	42-D	163+93 SB	RT	140											1				51
52	43-D	166+22 SB	RT	140											1				52
53	44-D	168+54 SB	RT	140											1				53
54	45-D	170+55 SB	LT	140												1			54
55																			55
56	46-D	NOT USED																	56
57	47-D	170+88 SB	RT	140											1				57
58	48-D	173+80 SB	LT	142													1		58
59	49-D	174+12 to 174+38 SB	LT & RT	142											2				59
60	50-D	177+10 SB	LT	142													1		60
61																			61
62																			62
63																			63
64																			64
65																			65
	TOTAL				166	28	3	2	1	1	1	1	2	18	16	4	15		

PFFC2001
DATE:02/12/98
DGN:ESTQ.DGN

ESTIMATED QUANTITIES

F.H.W.A. REGION	STATE	PROJECT	CALC. DJB DATE 1-92
5	OHIO		CHK. LJB DATE 6-92

103
338

HAM-75-9.75

LINE	REF. NO.	LOCATION STATION TO STATION	SIDE	SHT. NO.	202 Inlet Abandoned Each	603 12" Conduit Type "B" 706.02 Lin.Ft.	603 18" Conduit Type "B" 706.02 Lin.Ft.	603 24" Conduit Type "B" 706.02 Lin.Ft.	604 Catch Basin Adjusted to Grade Each	604 Catch Basin Adjusted to Grade As Per Plan Each	604 Catch Basin No. 3 with V Grate Each	604 Inlet No. 3A Each	604 Inlet No. 3A Modification B As Per Plan Each	604 Inlet Adjusted to Grade Each	604 Inlet Adjusted to Grade As Per Plan Each	604 Inlet Reconstructed to Grade Each	604 Manhole Frame Each	604 Manhole Adjusted to Grade Each	604 Manhole Adjusted to Grade As Per Plan Each	Catch Basin or Inlet Depth (Ft) Grate To E. Outlet	LINE
1																					1
2	51-D	177+53 SB	RT	142														1			2
3	52-D	179+18 SB	LT&RT	142												2					3
4	53-D	179+62 SB	LT	142															1		4
5	54-D	181+44 SB	LT&RT	142												2					5
6	55-D	182+43 SB	LT	142															1		6
7																					7
8	56-D	183+68 SB	LT&RT	142												2					8
9	57-D	184+43 SB	LT	142															1		9
10	58-D	185+33 SB	RT	142												1					10
11	59-D	185+94 SB	LT	142												1			1		11
12	60-D	186+20 SB	LT	142															1		12
13																					13
14	61-D	NOT USED																			14
15	62-D	188+20 SB	LT&RT	142											1	1	1		1		15
16	63-D	188+60 SB	LT&RT	142											1	1	1				16
17	64-D	189+10 SB	RT	142														1			17
18	65-D	190+28 SB	RT	142														1			18
19																					19
20	66-D	190+60 SB	LT&RT	142											2		2		1		20
21	67-D	191+58 SB	LT	142															1		21
22	68-D	192+46 SB	LT	142															1		22
23	69-D	192+60 SB	LT&RT	142											1		1		1		23
24	70-D	194+60 SB	LT&RT	142											2		2		1		24
25																					25
26	71-D	NOT USED																			26
27	72-D	196+59 TO 196+86 SB	LT&RT	142											2		2		1		27
28	73-D	198+32 SB	LT	147											1		1		1		28
29	74-D	200+74 SB	LT	147											1		1		1		29
30	75-D	203+25 SB	LT	147											1		1		1		30
31																					31
32	76-D	205+58 SB	LT	147											1		1		1		32
33	77-D	207+90 SB	LT	147		4							1						1		33
34	78-D	210+15 SB	LT	147		4							1						1	4.13	34
35	79-D	212+42 SB	LT	147		4							1						1		35
36	80-D	214+62 SB	LT	149			4						1						1	6.86	36
37																					37
38	81-D	NOT USED																			38
39	82-D	216+57 NB	LT	149				1													39
40	83-D	216+86 SB	LT	149											1		1		1		40
41	84-D	219+00 TO 219+08 SB	LT&RT	149										1	1		1		1		41
42	85-D	220+37	RT	149	1																42
43																					43
44	86-D	220+50	LT	149										1							44
45	87-D	220+00	LT&RT	149		4						1		1						4.24	45
46	88-D	228+00	RT	149										1							46
47	89-D	230+00	LT	149			4	4					1							4.22	47
48	90-D	231+00	RT	149										1							48
49																					49
50	91-D	NOT USED																			50
51	92-D	233+00	LT&RT	149						1				1							51
52	93-D	235+05	RT	149		4						1		1						5.05	52
53	94-D	235+25	LT	149						1											53
54	95-D	235+45 & 235+50	RT	149										1				1			54
55																					55
56	96-D	235+75	RT	149		4					1									3.30	56
57	97-D	235+76	LT	149						1											57
58	98-D	236+00 & 236+25	LT	149				2													58
59	99-D	236+50	RT	149		4						1		1						3.19	59
60	100-D	236+96	LT	149														1			60
61																					61
62																					62
63																					63
64																					64

ESTIMATED QUANTITIES

F.H.W.A. REGION	STATE	PROJECT	CALC. DJB DATE 1-92
5	OHIO		CHK. LJB DATE 6-92

HAM-75-9.75

104
338

DRAINAGE

LINE	REF. NO.	LOCATION STATION TO STATION	SIDE	SHT. NO.	202 Inlet Abandoned Each	603 12" Conduit Type B 706.02 Lin.Ft.	603 15" Conduit Type B 706.02 Lin.Ft.	603 18" Conduit Type B 706.02 Lin.Ft.	604 Catch Basin Adjusted to Grade As Per Plan Each	604 Catch Basin Adjusted to Grade Each	604 Inlet No. 3A Each	604 Inlet No. 3A Modification A As Per Plan Each	604 Inlet No. 3A Modification C As Per Plan Each	604 Inlet No. 3A Modification E As Per Plan Each	604 Inlet Adjusted to Grade Each	604 Inlet Reconstructed to Grade Each	604 Manhole Adjusted to Grade Each	604 Manhole Adjusted to Grade As Per Plan Each	Catch Basin Depth (Ft) Grate To IE Outlet	LINE
1																				1
2	101-D	NOT USED																		2
3	102-D	237+50	LT	150						2										3
4	103-D	238+50	LT & RT	150											1		1			4
5	104-D	240+00	LT & RT	150			4				1				1		1		4.16	5
6	105-D	241+82 & 242+00	LT	150											1		1			6
7																				7
8	106-D	244+00	LT	150											1					8
9	107-D	244+48	RT	150		4							1						3.56	9
10	108-D	249+18	LT	151											1					10
11	109-D	250+17	RT	151										1						11
12	110-D	252+00	LT	151											1					12
13																				13
14	111-D	252+25	RT	151										1						14
15	112-D	254+27	RT	151										1						15
16	113-D	254+75	LT & RT	151	1*	4									1					16
17	114-D	256+45	RT	151									1						4.52	17
18	115-D	257+37	LT	151											1					18
19																				19
20	116-D	258+90	LT	151											1					20
21	117-D	259+40	LT	151											1					21
22	118-D	259+78	LT	151														1		22
23	119-D	260+05	LT	151													1			23
24	120-D	261+50	RT	152											1					24
25																				25
26	121-D	NOT USED																		26
27	122-D	261+50	RT	152		4		4			1								4.04	27
28	123-D	263+25	RT	152											1					28
29	124-D	264+00	RT	152		4		8			1								4.77	29
30	125-D	264+50	LT & RT	152		8						1			1				4.07	30
31																				31
32	126-D	264+70	LT	152													1			32
33	127-D	264+85 & 265+05	RT	152		4					1				1				3.92	33
34	128-D	265+18	LT	152					1											34
35	129-D	265+85 TO 266+00	LT & RT	152		4						1							3.73	35
36						4					1				1				5.13	36
37	130-D	266+50	LT & RT	152											1		1			37
38	131-D	NOT USED																		38
39	132-D	267+65	RT	152						1					1					39
40	133-D	269+34	RT	152											1					40
41	134-D	269+95	LT	152													1			41
42	135-D	271+00	RT	152											1					42
43																				43
44	136-D	271+75	LT	152												1				44
45	137-D	272+58	LT	152													1			45
46	138-D	272+61	RT	153											1					46
47	139-D	274+50	RT	153											1					47
48	140-D	276+10 TO 276+37	LT	153												1	2			48
49																				49
50	141-D	NOT USED																		50
51	142-D	276+25	RT	153											1					51
52	143-D	277+18	RT	153											1					52
53	144-D	278+00 & 278+18	LT & RT	153											1		1			53
54	145-D	278+27	RT	153													1			54
55																				55
56	146-D	279+50	LT	153													1			56
57	147-D	279+75	RT	153											1					57
58	148-D	281+50	RT	153											1					58
59	149-D	280+00	LT	153												1				59
60	150-D	282+50	RT	153											1					60
61																				61
62																				62
63																				63
64																				64
65																				65
TOTAL					1	36	4	12	1	3	5	2	2	3	27	3	13	1		

*CONNECT PIPES THROUGH INLET

DRAINAGE
ESTIMATED QUANTITIES

ESTQ_DRN.DGN

ESTIMATED QUANTITIES

F.H.W.A. REGION	STATE	PROJECT	CALC. DJB DATE 1-92
5	OHIO		CHK. LJB DATE 6-92

105
338

HAM-75-9.75

LINE	REF. NO.	LOCATION STATION TO STATION	SIDE	SHT. NO.	DRAINAGE 603 12" Conduit Type B 706.02 Lin.Ft.	604 Catch Basin No. 3 with V Grate Each	604 Catch Basin Adjusted to Grade Each	604 Catch Basin Reconstructed to Grade Each	604 Catch Basin Adjusted to Grade As Per Plan Each	604 Inlet No. 3A Each	604 Inlet No. 3A Mod. A As Per Plan Each	604 Inlet Adjusted To Grade Each	604 Inlet Adjusted To Grade As Per Plan Each	604 Inlet Reconstructed To Grade Each	604 Manhole Frame Each	604 Manhole Adjusted to Grade Each	Catch Basin Inlet Depth (Ft) Grate To E. Outlet	LINE
1																		1
2	151-D	NOT USED																2
3	152-D	286+00 & 286+17	LT	154			1							1				3
4	153-D	286+00 & 286.10	RT	154	4						1	1					3.83	4
5	154-D	286+75 & 287+25	LT	154			3									1		5
6	155-D	289+50	LT & RT	154								1				1		6
7																		7
8	156-D	291+05	LT	154												1		8
9	157-D	292+00	RT	154												1		9
10	158-D	294+50	RT	154								1						10
11	159-D	297+00	RT	155								1						11
12	160-D	299+25	RT	155	8						1	1					4.85	12
13																		13
14	161-D	290+54	RT	155				1										14
15	162-D	300+50	RT	155					1			1						15
16	163-D	302+00	RT	155	4						1						3.89	16
17	164-D	305+70	RT	155	4					1							2.67	17
18	165-D	30+00	RT	156	4					1								18
19	166-D	35+00	RT	156	4					1								19
20																		20
21		GALBRAITH ROAD																21
22		INTERCHANGE																22
23		RAMP-F																23
24	167-D	1+50	RT	139		1											4.13	24
25	168-D	4+50	RT	139	4	1											3.60	25
26																		26
27		RAMP-G																27
28	169-D	122+64	LT	139			1											28
29	170-D	125+28	LT	139			1											29
30	171-D	125+50	RT	139			1											30
31																		31
32		RAMP-P																32
33	172-D	7+25	LT	138			1											33
34	173-D	7+75	LT	138			1											34
35	174-D	8+35	LT	138			1											35
36	175-D	8+42	LT	138			1											36
37																		37
38	176-D	11+55	LT	138			1											38
39	177-D	16+20	RT	139			1											39
40	178-D	19+00	RT	139			1											40
41	179-D	21+60	RT	139			1											41
42	180-D	NOT USED																42
43																		43
44																		44
45																		45
46																		46
47		COOPER AVE.																47
48	181-D	1+32		142									1		1			48
49	182-D	4+40		142									1		1			49
50	183-D	4+58		142									1		1			50
51	184-D	5+17		142									1		1			51
52	185-D	NOT USED																52
53																		53
54																		54
55		RAMP-N																55
56	186-D	10+40	LT	144			1											56
57	187-D	11+00	LT	144			1											57
58																		58
59		RAMP-M																59
60	188-D	5+60	LT	144			1											60
61	189-D	NOT USED																61
62	190-D	NOT USED																62
63																		63
64																		64
65																		65
TOTAL					32	2	18	1	1	2	3	6	4	1	4	4		

DRAINAGE
ESTIMATED QUANTITIES

ESTIMATED QUANTITIES

F.H.W.A. REGION	STATE	PROJECT	CALC. DJB DATE 1-92
5	OHIO		CHK. LJB DATE 6-92

106
338

HAM-75-9.75

LINE	REF. NO.	LOCATION STATION TO STATION	SIDE	SHT. NO.	202 Catch Basin Removed Each	202 Catch Basin Abandoned Each	603 12" Conduit Type B 706.02 Lin.Ft.	603 15" Conduit Type B 706.02 Lin.Ft.	604 Catch Basin Adjusted to Grade Each	604 Catch Basin Reconstructed to Grade Each	604 Catch Basin Adjusted To Grade As Per Plan Each	604 Catch Basin No. 3 Grate As Per Plan Each	604 Inlet No. 3A Each	604 Inlet No. 3A Mod. A As Per Plan Each	604 Inlet No. 3A Mod. C As Per Plan Each	604 Inlet No. 3A Mod. E As Per Plan Each	604 Inlet Reconstructed To Grade Each	Catch Basin or Inlet Depth (Ft) Grate To ℄ Outlet	LINE
1																			1
2		NB COLLECTOR																	2
3																			3
4	191-D	5+95	LT	149						1									4
5	192-D	6+95	LT	149	1														5
6	193-D	17+92	RT	149					1										6
7	194-D	18+20	LT	149			8								1			3.62	7
8	195-D	20+40	RT	149													1		8
9	196-D	20+92	LT	149			4					1						3.88	9
10			RT	149			8						1					4.39	10
11	197-D	21+45	RT	149													1		11
12	198-D	35+00	LT	151	1														12
13	199-D	37+00	LT	151	1														13
14	200-D	39+00	LT	151	1														14
15																			15
16	201-D	NOT USED																	16
17	202-D	41+00	LT	151	1														17
18	203-D	42+75	LT	151		1													18
19	204-D	43+48	LT	151												1			19
20	205-D	44+00	LT	151		1													20
21																			21
22	206-D	45+25	LT	151		1													22
23	207-D	46+50	LT	152		1*													23
24	208-D	47+75	LT	152		1*													24
25	209-D	48+75	LT	152		1													25
26	210-D	49+84	LT	152					1										26
27																			27
28	211-D	NOT USED																	28
29	212-D	50+75	LT	152					1										29
30	213-D	4+90 RAMP G	LT	152			4						1					4.97	30
31	214-D	51+75	LT	152													1		31
32	215-D	55+00	LT	152													1		32
33																			33
34	216-D	56+50	LT	152													1		34
35	217-D	57+75	LT	153													1		35
36	218-D	59+25	LT	153													1		36
37	219-D	60+75	LT	153													1		37
38	220-D	62+00	LT	153													1		38
39																			39
40	221-D	NOT USED																	40
41	222-D	63+25	LT	153													1		41
42	223-D	65+00	LT	153													1		42
43	224-D	67+00	LT	153													1		43
44	225-D	68+25	LT	153													1		44
45																			45
46	226-D	70+00	LT	154													1		46
47	227-D	73+75	LT	154			8							1				3.91	47
48	228-D	74+69	RT	154					1										48
49	229-D	77+80	LT	154					1										49
50	230-D	78+25	LT	154					1										50
51																			51
52	231-D	NOT USED																	52
53	232-D	79+76	LT	154					1										53
54	233-D	80+50	LT	155			4							1				4.03	54
55	234-D	81+25	LT	155							1								55
56	235-D	82+30	LT	155			4							1				4.17	56
57																			57
58	236-D	84+12	LT	155			4	4						1				5.92	58
59	237-D	86+25	LT	155			8	4						1				5.77	59
60	238-D	NOT USED																	60
61	239-D	NOT USED																	61
62	240-D	NOT USED																	62
63																			63
64																			64
65																			65
TOTAL					5	6	52	8	7	1	1	1	2	5	1	1	14		

DRAINAGE
ESTIMATED QUANTITIES

PFL
DATE 6-4-92
CHECKED LJM

ESTIMATED QUANTITIES

F.H.W.A. REGION	STATE	PROJECT	CALC. DJB DATE 1-92
5	OHIO		CHK. LJB DATE 6-92

107
338

HAM-75-9.75

LINE	REF. NO.	LOCATION STATION TO STATION	SIDE	SHT. NO.	202 Inlet Removed Each	603 12" Conduit Type B 706.02 Lin.Ft.	603 15" Conduit Type B 706.02 Lin.Ft.	604 Catch Basin Ad Justed to Grade Each	604 Catch Basin No. 3 with V Grate As Per Plan Each	604 Inlet No. 3A Each	604 Inlet No. 3A Mod. A As Per Plan Each	604 Inlet No. 3A Mod. D As Per Plan Each	604 Inlet Ad Justed to Grade Each	604 Inlet Reconstructed to Grade Each	604 Manhole Ad Justed to Grade Each	814 Valve Box Ad Justed to Grade Each	Catch Basin Depth (Ft) Grate To F. Outlet	LINE
1																		1
2		SB COLLECTOR																2
3																		3
4	241-D	NOT USED																4
5	242-D	4+00	RT	150		4				1							3.28	5
6	243-D	5+00	RT	150		4				1							4.87	6
7	244-D	6+68	LT	150				1										7
8	245-D	7+30	RT	150								1						8
9																		9
10	246-D	8+58	LT & RT	150		4		1				1						10
11	247-D	17+35 & 17+50	RT	151	1	4				1							4.37	11
12	248-D	25+25	RT	151		4					1						4.69	12
13	249-D	29+00	RT	152		4					1						4.23	13
14	250-D	8+50 RAMP-H	RT	152		4					1						5.13	14
15																		15
16	251-D	NOT USED																16
17	252-D	33+30	RT	152											1			17
18	253-D	6+20 RAMP-H	LT & RT	152		8	4	1	1								6.54	18
19	254-D	5+25 RAMP-H	LT	152										1				19
20	255-D	36+07	LT	152											1			20
21																		21
22	256-D	38+58 & 38+75	LT	153										1	1			22
23	257-D	41+16 & 41+37	LT & RT	153											2	1		23
24	258-D	41+75	LT	153										1				24
25	259-D	44+10	LT	153											1	1		25
26	260-D	46+65 & 46+90	LT	153										1	1			26
27																		27
28	261-D	NOT USED																28
29	262-D	47+00	LT & RT	153												2		29
30	263-D	49+85	LT	154											1			30
31	264-D	50+25	LT	154										1				31
32	265-D	51+50	RT	154												1		32
33																		33
34	266-D	52+56	RT	154											1			34
35	267-D	53+00	LT & RT	154										1	1			35
36	268-D	55+50	RT	154											1			36
37	269-D	55+80 & 5+91	RT	154												2		37
38	270-D	57+10	LT	154											1			38
39																		39
40	271-D	57+85	LT	154											1			40
41	272-D	NOT USED																41
42	273-D	NOT USED																42
43	274-D	NOT USED																43
44																		44
45		SHEPHERD LANE																45
46	275-D	18+25 RAMP-B	LT	157				1										46
47																		47
48		MANGHAM DRIVE																48
49	276-D	2+90 RAMP-P	RT	150				1										49
50	277-D	2+60 RAMP-Q	LT	150											1			50
51	278-D	2+96 RAMP-Q	RT	150				1										51
52	279-D	3+90 RAMP-Q	LT	150											1			52
53	280-D	NOT USED																53
54																		54
55	281-D	1+00 RAMP-C	LT	158									1					55
56	282-D	16+00 RAMP-C	LT	158									1					56
57	283-D	3+46 RAMP-E	RT	158										1				57
58	284-D	4+00 RAMP-E	RT	158									1					58
59	285-D	4+19 RAMP-E	RT	158										1				59
60	286-D	7+78 RAMP-E	LT	158									1					60
61	287-D	8+20 RAMP-E	LT	158									1					61
62																		62
63		GLENDALE-MILFORD RD.																63
64	288-D	8+00 RAMP-B	RT	160									1					64
65																		65
TOTAL					1	36	4	6	1	3	3	2	6	8	15	7		

DRAINAGE
ESTIMATED QUANTITIES

ESTIMATED QUANTITIES

F.H.W.A. REGION	STATE	PROJECT	CALC. DJB DATE 1-92
5	OHIO		CHK. LJB DATE 6-92

108
338

HAM-75-9.75

LINE	REF. NO.	LOCATION STATION TO STATION	SIDE	SHT. NO.	DRAINAGE 603 6" Conduit Type "F" 707.17 Non-Perforated ASTM D 3034, SDR 35, SS-931 Or SS-944 Lin.Ft.	DRAINAGE SPECIAL Precast Reinforced Concrete Outlet Each	DRAINAGE 605 6" Shallow Pipe Underdrain As Per Plan Lin.Ft.	DRAINAGE 605 Shallow Underdrain As Per Plan Lin.Ft.	For Information Only 4" x 4" Wye Each	4" x 45° Bend Each	4" x 90° Bend Each	4" x 4" Tee Each	4" End Cap Each	4" Conduit Type "F" Each	4" x 6" Wye Each	4" x 6" Reducer Each	6" x 45° Bend Each	6" x 90° Bend Each	6" x 6" Tee Each	6" End Cap Each	Prefab. Edge Drains For Info. Only Standard End Cap Each	Standard Outlet Fitting Each	Standard Tee Fitting Each	LINE
1		NORTHBOUND M/L																						1
2	300-D	68+40 TO 71+35	RT	136	15			295		1			1			1					1	1		2
3	301-D	84+78 TO 86+53	LT	136	5		175										1		1					3
4	302-D	85+03 TO 86+78	RT	136	15		175											1	2					4
5	303-D	89+10 TO 90+05	LT	136			95												1					5
6	304-D	90+05 TO 90+48	LT	136			43	493											1					6
7	305-D	90+50 TO 95+43	LT	136	5					1				5	1							1		7
8																								8
9	306-D	91+90 TO 95+25	RT	136	20			335		1												1		9
10	307-D	NOT USED																						10
11	308-D	95+10 TO 98+55	RT	136,138	35			345	1				1								1	1	1	11
12	309-D	95+45 TO 98+78	LT	136,138	5			333	1					5	1							1	1	12
13	310-D	98+55 TO 101+90	RT	138	15			335	1													1	1	13
14																								14
15	311-D	NOT USED																						15
16	312-D	98+80 TO 102+13	LT	138	5			333	1					5	1							1	1	16
17	313-D	101+87 TO 105+50	RT	138	15			363	1				1								1	1	1	17
18	314-D	102+15 TO 105+18	LT	138	5			303	1				1	5	1						1	1	1	18
19	315-D	105+50 TO 113+00	RT	138	60	1	750											2						19
20																								20
21	316-D	115+45 TO 121+75	RT	138	35	1	630												1	1				21
22	317-D	121+75 TO 126+75	RT	138	30		500												1					22
23	318-D	126+75 TO 132+82	RT	138,139	30	1	607												1					23
24	319-D	132+82 TO 135+07	LT	139	20	1	225											1		1				24
25	320-D	132+82 TO 135+07	RT	139	30	1	225												1	1				25
26																								26
27	321-D	NOT USED																						27
28	322-D	140+14 TO 142+39	LT	139	20	1	225												1	1				28
29	323-D	140+14 TO 142+39	RT	139	30	1	225												1	1				29
30	324-D	142+39 TO 155+00	LT	139,140	25	1	1261												1					30
31	325-D	142+39 TO 145+57	RT	139,140	30	1	318											1		1				31
32																								32
33	326-D	155+00 TO 159+51	LT	140	25	1	451												1					33
34	327-D	159+51 TO 161+76	LT	140	25	1	225												1	1				34
35	328-D	163+05 TO 165+30	LT	140	25	1	225												1	1				35
36	329-D	163+05 TO 165+30	RT	140	30	1	225											1		1				36
37	330-D	165+30 TO 176+36	LT	140,142	25	1	1106												1					37
38																								38
39	331-D	NOT USED																						39
40	332-D	176+37 TO 178+61	LT	142	25	1	224												1	1				40
41	333-D	179+85 TO 182+95	LT	142	25	1	310											1		1				41
42	334-D	207+24 TO 209+49	LT	147	25	1	225											1		1				42
43	335-D	207+24 TO 219+76.92	RT	147	30	2	1253												2	1				43
44																								44
45	336-D	4+76.92 TO 10+25 COLL.	RT	147,149				548								1						1		45
46	337-D	222+00 TO 228+00	LT	149	15			600		1	1			5	1	1						1	1	46
47	338-D	228+00 TO 231+00	LT	149	5			300		1				5	1							1	1	47
48	339-D	231+00 TO 235+50	LT	149	5			450			1			5	1							1		48
49	340-D	234+20 TO 240+00	RT	149,150	5			580				1	1	5							1	1	1	49
50																								50
51	341-D	NOT USED																						51
52	342-D	235+50 TO 238+45	LT	149,150	5			295			1		1	5	1						1	1		52
53	343-D	240+00 TO 244+50	RT	150	15			450		1												1	1	53
54	344-D	244+50 TO 254+25	RT	150,151	30			975		2				5	1	1						2	2	54
55	345-D	254+25 TO 258+90	RT	151	15			465		1				5	1							1	1	55
56																								56
57	346-D	258+90 TO 267+70	RT	151,152	10			880				1	1	5	1						1	1	1	57
58	347-D	265+10 TO 269+34	LT	152	5			424			1			5	1							1		58
59	348-D	269+34 TO 272+60	LT	152	5			326			1			5	1							1		59
60	349-D	272+60 TO 278+00	LT	153	5			540		1				5	1							1	1	60
61	350-D	278+00 TO 282+00	LT	153	5			400		1				5	1							1	1	61
62																								62
63																								63
64																								64
65																								65
	TOTAL				840	20	9698	10368																

UNDERDRAINS
ESTIMATED QUANTITIES

ESTIMATED QUANTITIES

F.H.W.A. REGION	STATE	PROJECT	CALC. DJB DATE 1-92
5	OHIO		CHK. LJB DATE 6-92

109 / 338

HAM-75-9.75

LINE	REF. NO.	LOCATION (STATION TO STATION)	SIDE	SHT. NO.	DRAINAGE 603 6" Conduit Type "F" 707.17 Non-Perforated ASTM D 3034, SDR-35, SS-931 Or SS-944 Lin.Ft.	DRAINAGE 605 4" Shallow Pipe Underdrain As Per Plan Lin.Ft.	DRAINAGE 605 6" Shallow Pipe Underdrain As Per Plan Lin.Ft.	DRAINAGE 605 6" Unclassified Pipe Underdrain Lin.Ft.	DRAINAGE 605 Shallow Underdrain As Per Plan Lin.Ft.	For Information Only: 4" x 4" Wye Each	4" x 45° Bend Each	4" x 90° Bend Each	4" x 4" Tee Each	4" End Cap Each	4" Conduit Type "F" Each	4" x 6" Wye Each	4" x 6" Reducer Each	6" x 45° Bend Each	6" x 90° Bend Each	6" x 6" Tee Each	6" End Cap Each	Prefab. Edge Drains For Info. Only: Standard End Cap Each	Standard Outlet Fitting Each	Standard Tee Fitting Each	LINE
1																									1
2		NORTHBOUND M/L																							2
3	351-D	NOT USED																							3
4	352-D	282+20 TO 286+10	RT	153,154	35				390			1				1						1			4
5	353-D	282+50 TO 286+00	LT	153,154	5				350	1					5	1							1	1	5
6	354-D	286+10 TO 290+50	RT	154	10				440	1				1								1	1	1	6
7	355-D	286+00 TO 289+50	LT	154	5				350	1					5	1							1	1	7
8																									8
9	356-D	289+50 TO 294+50	LT	154	10				500	2					5	1							2	2	9
10	357-D	292+00 TO 299+25	RT	154,155	10				725	1				1	5	1						1	1	1	10
11	358-D	294+50 TO 305+80	LT	154,155	5				1130				1	1			1					1	1	1	11
12	359-D	299+25 TO 305+80	RT	155	10				655				1	1	5	1						1	1	1	12
13	360-D	NOT USED																							13
14	361-D	NOT USED																							14
15	362-D	NOT USED																							15
16	363-D	NOT USED																							16
17	364-D	NOT USED																							17
18	365-D	NOT USED																							18
19																									19
20																									20
21																									21
22																									22
23																									23
24																									24
25		SOUTHBOUND M/L																							25
26	366-D	68+40 TO 71+60	LT	136	5				320		1						1						1		26
27	367-D	71+60 TO 77+00	LT	136	10				540	1				1								1	1	1	27
28	368-D	84+34 TO 85+90	LT	136	5			156										1			1				28
29	369-D	90+50 TO 95+45	RT	136	10				495		1						1						1		29
30	370-D	95+45 TO 98+80	RT	136,138	10				335	1					5	1							1	1	30
31																									31
32	371-D	NOT USED																							32
33	372-D	98+80 TO 102+15	RT	138	10				335	1					5	1							1	1	33
34	373-D	102+15 TO 118+75	RT	138	20			660												1					34
35	374-D	NOT USED	LT	138																					35
36	375-D	118+75 TO 126+00	RT	138	5			725												1	1		2	1	1	36
37																									37
38	376-D	NOT USED	LT	138																					38
39	377-D	126+00 TO 129+20	RT	138	5			320												1			1	1	39
40	378-D	130+25 TO 132+42	LT	138,139	10				217									1			1				40
41	379-D	129+20 TO 134+81	RT	138,139	20			561												1	1				41
42	380-D	132+42 TO 140+40	LT	139	30			798										1		1					42
43																									43
44	381-D	NOT USED																							44
45	382-D	NOT USED	RT	139				239																	45
46	383-D	140+30 TO 144+85	LT	139	15			455											1						46
47	384-D	143+25 TO 145+53	RT	139,140	10			228										1			1				47
48	385-D	145+50 TO 147+55	LT	140	10				205									1			1				48
49																									49
50	386-D	145+50 TO 147+65	RT	140	5			215												1	2				50
51	387-D	147+55 TO 150+05	LT	140	10			250										1			1				51
52	388-D	147+65 TO 150+00	RT	140	10			235										1			1				52
53	389-D	150+05 TO 154+70	LT	140	10	315		150						1			1	3			1				53
54	390-D	150+00 TO 152+45	RT	140	10	90		155						1			1	3			1				54
55																									55
56	391-D	NOT USED																							56
57	392-D	152+45 TO 154+75	RT	140		230									5										57
58	393-D	154+75 TO 157+04	RT	140		229				1					5										58
59	394-D	157+04 TO 159+33	RT	140		229				1					5										59
60	395-D	159+33 TO 161+63	RT	140		230				1					5										60
61																									61
62																									62
63																									63
64																									64
65																									65
	TOTAL				310	1323		3762	1807	6565															

UNDERDRAINS
ESTIMATED QUANTITIES

PITT, CASE & DENUNE

ESTIMATED QUANTITIES

F.H.W.A. REGION	STATE	PROJECT	CALC. DJB DATE 1-92
5	OHIO		CHK. LJB DATE 6-92

110
338

HAM-75-9.75

LINE	REF. NO.	LOCATION STATION TO STATION	SIDE	SHT. NO.	DRAINAGE 603 6" Conduit Type "F" 707.17 NON-PERFORATED ASTM D 3034, SDR-35, SS-931, Or SS-944 Lin.Ft.	DRAINAGE 603 6" Conduit Type "B" 707.17 NON-PERFORATED ASTM D 3034, SDR-35, SS-931, Or SS-944 Lin.Ft.	DRAINAGE 605 4" Shallow Pipe Underdrain As Per Plan Lin.Ft.	DRAINAGE 605 6" Shallow Pipe Underdrain As Per Plan Lin.Ft.	DRAINAGE 605 Shallow Underdrain As Per Plan Lin.Ft.	For Information Only 4" x 4" Wye Each	4" x 45° Bend Each	4" x 90° Bend Each	4" x 4" Tee Each	4" End Cap Each	4" Conduit Type "F" Each	4" x 6" Wye Each	4" x 6" Reducer Each	6" x 90° Bend Each	6" End Cap Each	6" x 6" Cross Each	Prefab. Edge Drains For Info. Only Standard End Cap Each	Standard Outlet Fitting Each	Standard Tee Fitting Each	LINE
1																								1
2		SOUTHBOUND M/L																						2
3	396-D	161+63 TO 163+93	RT	140			230			1					5									3
4	397-D	163+93 TO 166+22	RT	140			229			1					5									4
5	398-D	166+22 TO 168+54	RT	140			232			1					5									5
6	399-D	168+54 TO 170+88	RT	140			234			1					5									6
7	400-D	170+88 TO 173+53	RT	140,142			265			1				1	5									7
8																								8
9	401-D	NOT USED																						9
10	402-D	173+53 TO 175+58	LT	142	20			205										1	1					10
11	403-D	173+53 TO 175+58	RT	142	10			205										1	1					11
12	404-D	177+15 TO 179+25	LT	142	20			210										1	1					12
13	405-D	177+15 TO 179+25	RT	142	10			210										1	1					13
14																								14
15	406-D	179+25 TO 181+94	LT	142			269			1				1	5									15
16	407-D	179+25 TO 183+63	RT	142	5				438	1				1	5	1					1	1	1	16
17	408-D	181+94 TO 183+68	LT	142			174			1					5									17
18	409-D	183+63 TO 190+55	RT	142	5				692				1	1			1				1	1	1	18
19	410-D	183+68 TO 185+94	LT	142			226								5									19
20	411-D	207+90 TO 209+89	LT	147			199				1			1	5									20
21	412-D	210+15 TO 212+40	LT	147			225				1			1	5									21
22	413-D	224+00 TO 230+00	LT	149	15				600	1				1							1	1	1	22
23	414-D	230+00 TO 233+00	LT	149	10				300	1					5	1						1	1	23
24	415-D	233+00 TO 235+76	LT	149	10				276		1				5	1						1		24
25	416-D	235+50 TO 238+50	RT	149,150	10				300		1				5	1						1		25
26																								26
27	417-D	236+00 TO 238+45	LT	149,150	10				245		1			1	5	1					1	1		27
28	418-D	238+50 TO 244+00	RT	150	5				550	1												1	1	28
29	419-D	244+00 TO 249+18	RT	150,151	10				518	2					10	1						2	2	29
30	420-D	249+18 TO 252+00	RT	151	5				282	1					5	1						1	1	30
31	421-D	252+00 TO 257+00	RT	151	5				500	1					5	1						1	1	31
32																								32
33																								33
34	422-D	257+00 TO 259+40	RT	151	5				240	1					5	1						1	1	34
35	423-D	259+40 TO 265+10	RT	151,152	5				570		1				5	1						1		35
36	424-D	263+65 TO 268+96	LT	152	15				531			1	2	5	1						2	1	1	36
37	425-D	270+00 TO 276+10	LT	152,153	5				610		1				5	1						1		37
38																								38
39	426-D	276+10 TO 282+00	LT	153	5				590	1					5	1						1	1	39
40	427-D	281+50 TO 286+00	RT	153,154	5				450		1						1					1		40
41	428-D	282+00 TO 288+92	LT	153,154	10				692	1				1							1	1	1	41
42	429-D	286+00 TO 289+50	RT	154	5				350	1					5	1						1	1	42
43	430-D	286+17 TO 298+37	LT	154,155	45				1220		1		1		10	1						2	1	43
44																								44
45	431-D	NOT USED																						45
46	432-D	289+50 TO 294+50	RT	154	5				500	2					5							1	2	46
47	433-D	294+50 TO 300+50	RT	154,155	5				600						5	1						1		47
48	434-D	298+50 TO 305+85	LT	155		50			735				1	2			1				2	1	1	48
49	435-D	300+50 TO 305+85	RT	155	10				535		1			1	5					1	1	1		49
50																								50
51	436-D	NOT USED																						51
52	437-D	NOT USED																						52
53	438-D	NOT USED																						53
54	439-D	NOT USED																						54
55	440-D	NOT USED																						55
56	441-D	NOT USED																						56
57	442-D	NOT USED																						57
58	443-D	NOT USED																						58
59	444-D	NOT USED																						59
60	445-D	NOT USED																						60
61																								61
62																								62
63																								63
64																								64
65																								65
TOTAL					270	50	2283	830	12324															

ESTIMATED QUANTITIES

F.H.W.A. REGION	STATE	PROJECT	CALC. DJB DATE 1-92
5	OHIO		CHK. LJB DATE 6-92

111
338

HAM-75-9.75

LINE	REF. NO.	LOCATION STATION TO STATION	SIDE	SHT. NO.	DRAINAGE 603 6" Conduit Type "F" 707.17 Non-Perforated ASTM D 3034, SDR-35, SS-931 Or SS-944 Lin.Ft.	SPECIAL Precast Reinforced Concrete Outlet Each	605 4" Shallow Pipe Underdrain As Per Plan Lin.Ft.	605 6" Shallow Pipe Underdrain As Per Plan Lin.Ft.	605 Shallow Underdrain As Per Plan Lin.Ft.	For Information Only 4" x 4" Wye Each	4" x 45° Bend Each	4" x 90° Bend Each	4" x 4" Tee Each	4" End Cap Each	4" Conduit Type "F" Each	4" x 6" Wye Each	4" x 6" Reducer Each	6" x 6" Tee Each	6" End Cap Each	Prefab. Edge Drains For Info. Only Standard End Cap Each	Standard Outlet Fitting Each	Standard Tee Fitting Each	LINE
1																							1
2		CROSS COUNTY HWY																					2
3		RAMP-D																					3
4	446-D	68+85 TO 69+75	LT	136	30	1		90										1	2				4
5																							5
6																							6
7		GALBRAITH ROAD																					7
8		RAMP-F																					8
9	447-D	0+68 TO 1+30	RT	139,140	5			62															9
10	448-D	1+30 TO 4+50	RT	139	5			300															10
11	449-D	4+50 TO 8+64	RT	139	5		264	150								1							11
12	450-D	NOT USED																					12
13																							13
14		RAMP-G																					14
15	451-D	122+50 TO 125+25	LT	139			275			1					5								15
16	452-D	125+28 TO 127+48	LT	139			220							1	5								16
17	453-D	NOT USED																					17
18																							18
19		RAMP-P																					19
20	454-D	5+25 TO 10+34	RT	138	30	1			729				1	2	5	1				2	1	1	20
21	455-D	10+35 TO 13+00	RT	138	25	1	265					1					1						21
22	456-D	13+00 TO 16+20	RT	138,139			320			1					5								22
23	457-D	16+20 TO 19+00	RT	139			280			1					5								23
24	458-D	19+00 TO 23+55	RT	139			455			1				1	5								24
25	459-D	NOT USED																					25
26																							26
27		RAMP-N																					27
28	460-D	3+05 TO 5+50	RT	143,144	20				245				1	2			1			2	1	1	28
29	461-D	5+50 TO 10+40	LT	144	55	1			490		1	1					2				2		29
30	462-D	10+40 TO 11+00	LT	144	10				60		1			1			1			1	1		30
31	463-D	11+00 TO 12+00	LT	144	10				100					1			1			1	1		31
32	464-D	NOT USED																					32
33																							33
34		DAVIS ST. RAMP-M																					34
35	465-D	5+60 TO 10+43	LT	144,146	30	1			483			1			10	1	1				2		35
36	466-D	NOT USED																					36
37	467-D	NOT USED																					37
38	468-D	NOT USED																					38
39	469-D	NOT USED																					39
40																							40
41																							41
42																							42
43																							43
44																							44
45																							45
46																							46
47																							47
48																							48
49																							49
50																							50
51																							51
52																							52
53																							53
54																							54
55																							55
56																							56
57																							57
58																							58
59																							59
60																							60
61																							61
62																							62
63																							63
64																							64
65																							65
TOTAL					225	5	2079	602	2107														

UNDERDRAINS
ESTIMATED QUANTITIES

ESTIMATED QUANTITIES

F.H.W.A. REGION	STATE	PROJECT	CALC. DJB DATE 1-92
5	OHIO		CHK. LJB DATE 6-92

HAM-75-9.75

112
338

LINE	REF. NO.	LOCATION STATION TO STATION	SIDE	SHT. NO.	DRAINAGE 603 6" Conduit Type "B" 707.17 Non-Perforated, ASTM D 3034, SDR-35, SS-931 Or SS-944 Lin.Ft.	DRAINAGE 603 6" Conduit Type "F" 707.17 Non-Perforated, ASTM D 3034, SDR-35, SS-931 Or SS-944 Lin.Ft.	DRAINAGE Special Precast Reinforced Concrete Outlet Each	DRAINAGE 605 Shallow Underdrain As Per Plan Lin.Ft.	For Information Only 4" x 4" Wye Each	4" x 45° Bend Each	4" x 90° Bend Each	4" x 4" Tee Each	4" End Cap Each	4" Conduit Type "F" Each	4" x 6" Wye Each	4" x 6" Reducer Each	6" x 90° Bend Each	Prefab. Edge Drains For Info. Only Standard End Cap Each	Standard Outlet Fitting Each	Standard Tee Fitting Each	LINE
1																					1
2		NB COLLECTOR																			2
3	470-D	5+95 TO 18+20	LT	149		10		1225	1	1						1			2	1	3
4	471-D	14+00 TO 17+85	RT	149		15		385		1			1	5	1			1	1		4
5	472-D	18+20 TO 20+92	LT	149		5		272						5	1				1		5
6	473-D	20+92 TO 26+00	LT	149,150		5		508					1	5	1			1	1		6
7	474-D	20+92 TO 4+00(RAMP-C)	RT	149,152		40		2755		2				10	2				2		7
8	475-D	NOT USED																			8
9																					9
10	476-D	47+23 TO 49+25	LT	152		55	1	202			1		1	5	1			1	1		10
11	477-D	2+00(RAMP-D) TO 57+41	RT	152,158	80			1025				1	2	5	1			2	1	1	11
12	478-D	RAMP-G 4+20TO 7+49	LT	152		5		329		1			1	5	1			1	1		12
13	479-D	50+75 TO 55+00	LT	152		5		425						5	1				1		13
14	480-D	55+00 TO 59+25	LT	152,153		5		425	1					5	1				1	1	14
15																					15
16	481-D	NOT USED																			16
17	482-D	59+25 TO 63+25	LT	153		10		400	1										1	1	17
18	483-D	63+25 TO 70+00	LT	153,154		5		675	1					5	1				1	1	18
19	484-D	63+25 TO 74+32	RT	153,154		45		1107	1				1	5	1			1	1	1	19
20	485-D	70+00 TO 78+25	LT	154		5		825	1	1				10	1	1			2	1	20
21																					21
22	486-D	76+63 TO 83+30	RT	154,155		40	1	667		1		1	1	5				2	1	1	22
23	487-D	11+40(RAMP-K) TO 84+12	LT	154,155		10		628				1	2			1		2	1	1	23
24	488-D	83+30 TO 88+35	RT	155		30	1	505				1	1	5	1			1	1	1	24
25	489-D	84+12 TO 86+25	LT	155		5		213	1					5	1				1	1	25
26	490-D	86+25 TO 33+00	LT	155,156		10		1144	1				1			1			1	1	26
27	491-D	89+83 TO 29+35	RT	155,156		65	1	421					1			1	1		1		27
28																					28
29	492-D	NOT USED																			29
30	493-D	NOT USED																			30
31	494-D	NOT USED																			31
32	495-D	NOT USED																			32
33																					33
34		SB COLLECTOR																			34
35	496-D	0+72 TO 6+68	LT	149,150		15		596			1		1	5	1			1	1		35
36	497-D	1+00 TO 5+00	RT	149,150		5		400		1				5	1				1		36
37	498-D	5+00 TO 8+58	RT	150		10		358	1										1	1	37
38	499-D	8+58 TO 17+35	RT	150,151		10		877	2										1	2	38
39	500-D	17+35 TO 25+25	RT	151		10		790	1										1	1	39
40																					40
41	501-D	NOT USED																			41
42	502-D	25+25 TO 29+00	RT	151,152		10		375			1								1		42
43	503-D	28+00 TO 33+07	LT	153		20		507			1		1	2	5	1					43
44	504-D	RAMP-H 6+20TO 11+80	RT	152		30		560		1	1		1				2		3	2	44
45	505-D	4+00(RAMP-E) TO 38+75	LT	152,153		10		575			1				5	1			1		45
46																					46
47	506-D	NOT USED																			47
48	507-D	38+75 TO 44+05	LT	153		15		530		1				1					1	1	48
49	508-D	44+11 TO 54+45	LT	153,154		10		1034					1	2			1		2	1	1	49
50	509-D	46+54 TO 52+56	RT	153,154		5		602		1				1					1	1	1	50
51	510-D	53+00 TO 63+70	RT	154		25		1070				1			5	1	1			2		51
52																						52
53	511-D	NOT USED																				53
54	512-D	57+14 TO 0+00(RAMP-N)	LT	154,160		40	1	1001					1	2	5	1			2	1	1	54
55	513-D	64+70 TO 67+28	LT	155		50		258				1		1			1		1	1		55
56	514-D	NOT USED																				56
57	515-D	NOT USED																				57
58																						58
59																						59
60																						60
61																						61
62																						62
63																						63
64																						64
65																						65
TOTAL					80	635	5	23669													

UNDERDRAINS
ESTIMATED QUANTITIES

ESTIMATED QUANTITIES

F.H.W.A. REGION	STATE	PROJECT	CALC. DJB DATE 1-92
5	OHIO		CHK. LJB DATE 6-92

113
338

HAM-75-9.75

LINE	REF. NO.	LOCATION STATION TO STATION	SIDE	SHT. NO.	DRAINAGE 603 6" Conduit Type "F" 707.17 Non-Perforated ASTM D 3034, SDR-35, SS-931 Or SS-944 Lin.Ft.	DRAINAGE Special Precast Reinforced Concrete Outlet Each	DRAINAGE 605 6" Unclassified Pipe Underdrain Lin.Ft.	DRAINAGE 605 Shallow Underdrain As Per Plan Lin.Ft.	For Information Only 4" x 45° Bend Each	4" x 90° Bend Each	4" x 4" Tee Each	4" End Cap Each	4" Conduit Type "F" Each	4" x 6" Wye Each	4" x 6" Reducer Each	6" x 90° Bend Each	6" x 6" Tee Each	6" End Cap Each	Prefab. Edge Drains For Info. Only Standard End Cap Each	Standard Outlet Fitting Each	Standard Tee Fitting Each	LINE
1																						1
2		COLLECTOR RAMPS																				2
3																						3
4		RAMP-A																				4
5	516-D	10+25 TO 18+10	RT	149,157	20			785		1					1				1	1		5
6	517-D	NOT USED																				6
7																						7
8		RAMP-B																				8
9	518-D	11+45 TO 19+20	LT	149,157	45			775	1		1	1	10	2					1	2	1	9
10	519-D	NOT USED																				10
11																						11
12		RAMP-C																				12
13	520-D	3+80 TO 8+95	RT	158	20			515			1	1	5	1					1	1	1	13
14	521-D	12+98 TO 19+90	RT	158	10			692	1			1	5	1					1	1		14
15	522-D	19+90 TO 21+75	RT	152,158	10			185	1			1	5	1					1	1		15
16	523-D	NOT USED																				16
17																						17
18		RAMP-D																				18
19	524-D	1+12 TO 2+00	LT	158	60			88	1			1	5	1					1	1		19
20																						20
21		RAMP-E																				21
22	525-D	4+00 TO 8+60	LT	152,158	5			460	1			1	5	1					1	1		22
23	526-D	NOT USED																				23
24																						24
25		RAMP-J																				25
26	527-D	1+24 TO 8+95	RT	154,159	35	1		771			1	2	5	1					2	1	1	26
27	528-D	13+37 TO 23+23	RT	154,159	40	1	223	763				1			1		1	1	1	1		27
28	529-D	NOT USED																				28
29	530-D	NOT USED																				29
30																						30
31		GLENDALE-MILFORD RD																				31
32		RAMP-B																				32
33	531-D	8+00 TO 13+33	RT	160				533					10							2		33
34																						34
35		RAMP-M																				35
36	532-D	2+95 TO 5+55	RT	161	20	1		260			1	1	5	1					1	1		36
37	533-D	3+00 TO 8+85	LT	161	270	1		330				1			1		1		1	1		37
38	534-D	NOT USED																				38
39																						39
40		RAMP-L																				40
41	535-D	0+62 TO 4+75	RT	161	30	1		413			1	1							1	1	1	41
42	536-D	4+75 TO 10+75	RT	156,161	30	1		600			1	2	5	1					2	1	1	42
43																						43
44																						44
45																						45
46																						46
47																						47
48																						48
49																						49
50																						50
51																						51
52																						52
53																						53
54																						54
55																						55
56																						56
57																						57
58																						58
59																						59
60																						60
61																						61
62																						62
63																						63
64																						64
65																						65
TOTAL					595	6	223	7170														

UNDERDRAINS
ESTIMATED QUANTITIES

ESTIMATED QUANTITIES

F.H.W.A. REGION	STATE	PROJECT	CALC. DJB DATE 4-92
5	OHIO		CHK. LJB DATE 4-92

114
338

HAM-75-9.75

LINE	REF. NO.	LOCATION STATION TO STATION	SIDE	SHT. NO.	Roadway 202 Fence Removed As Per Plan Lin Ft	607 Fence Type CLT Lin Ft	625 Ground Rod Each	659 Seeding And Mulching Sq Yd	For Information Only: End Post Assembly Each	Intermediate Anchor Post Assembly Each	Corner Post Each	Abutment Connection Each	LINE
1													1
2		NORTHBOUND											2
3													3
4	1-F	66+58 TO 84+27	LT	136	1769	1769		1966		9			4
5	2-F	125+50 TO 130+40	LT	143	575	575	2	639		1	3	1	5
6	3-F	132+00 TO 135+60	LT & RT	143	845	845	3	939	1		8	1	6
7	4-F	137+50 TO 161+80	LT	143,144	3060	3060		3400	5	13	5	1	7
8	5-F	2+85 (N) TO 10+65 (N)	RT	143,144	785	785	3	872	1	6			8
9													9
10	6-F	150+70 TO 161+80	RT	144	1185	1185	4	1317		5	2	1	10
11	7-F	163+04 TO 178+68	LT	144,146	1670	1670		1856		5	4	2	11
12	8-F	163+04 TO 178+86	RT	144,146	1843	1843	6	2048	2	5	7	2	12
13	9-F	179+74 TO 183+00	LT	146	511	511		568		2	2	2	13
14	10-F	179+68 TO 183+00	RT	146	445	445		494		4	2	2	14
15													15
16	11-F	NOT USED											16
17	12-F	207+16.5 TO 210+34	LT	147	415	415		461		1	3	2	17
18	13-F	207+16.5 TO 215+00	RT	147,149	860	860		956		4	3	1	18
19													19
20													20
21		NB COLLECTOR											21
22	14-F	0+00 TO 14+00	RT	149	1400	1400		1556		10			22
23													23
24		RAMP A											24
25	15-F	14+00 TO 18+80	RT	157	480	480		533	1	5			25
26													26
27													27
28	16-F	NOT USED											28
29	17-F	NOT USED											29
30													30
31		NB COLLECTOR											31
32	18-F	77+00 TO 80+70	RT	154,155	370	370		411	1	1			32
33	19-F	81+20 TO 82+75	RT	155	200	175		222	1		2	1	33
34	20-F	83+40 TO 89+85	RT	155	685	730		811		1	2	1	34
35													35
36	21-F	NOT USED											36
37	22-F	NOT USED											37
38	23-F	NOT USED											38
39	24-F	NOT USED											39
40													40
41													41
42		SOUTHBOUND											42
43	25-F	66+58 TO 77+08	RT	136	150	1050		1167	1	2			43
44	26-F	77+18 TO 87+18	RT	136		682		1136	1		2	1	44
45	27-F	132+35 TO 145+87	LT	139,140	1510	1510		1678	1	4	5		45
46	28-F	135+85 TO 140+25	RT	139	590	590	2	656		1	2		46
47	29-F	139+55 TO 147+00	RT	139,140	865	865		961	1	1	2	1	47
48	30-F	NOT USED											48
49													49
50	31-F	146+83 TO 175+80	LT	140,142	2920	2920		3244	1	6	1	1	50
51	32-F	147+55 TO 175+80	RT	140,142	2805	2805		3117	1	6		1	51
52	33-F	177+03 TO 185+95	LT	147	892	892		991	1	2		1	52
53	34-F	177+03 TO 189+75	RT	147	1248	1248		1387	1	3	1	1	53
54	35-F	NOT USED											54
55													55
56	36-F	208+80 TO 213+45	LT	147	460	460		511				2	56
57	37-F	220+70 TO 225+25	LT	149	455	455		506	2	1			57
58	38-F	227+75 TO 231+00	LT	149	325	325		361	2	2			58
59	39-F	231+00 TO 236+00	LT	149	500	500			2				59
60	40-F	236+65 TO 237+20	LT	149,150	55	55			2				60
61													61
62													62
63													63
64													64
65													65
		TOTAL TO GENERAL SUMMARY			29873	31475	20	34764					

LINE	REF. NO.	LOCATION STATION TO STATION	SIDE	SHT. NO.	Roadway 202 Fence Removed As Per Plan Lin Ft	607 Fence Type CLT Lin Ft	659 Seeding And Mulching Sq Yd	For Information Only: End Post Assembly Each	Intermediate Anchor Post Assembly Each	Corner Post Each	LINE
		SB COLLECTOR									
41-F	2+10	TO 6+90	LT	150	565	565	628	2	1	2	
42-F	10+10	TO 25+33	LT	150,151	1530	1530	1700	1	4	1	
43-F	35+94	TO 43+79	LT	152,153	790	790	878	1	5	2	
44-F	44+29	TO 46+65	LT	153	236	236	262	2			
45-F		NOT USED									
46-F	47+25	TO 51+87	LT	153,154	462	462	513	1	2	1	
47-F	58+20	TO 63+15	LT	154,155	495	495	550		4	1	
48-F		NOT USED									
49-F		NOT USED									
50-F		NOT USED									
		RAMP C									
51-F	11+90	TO 17+02.38	LT	158	690	690	767			6	
		RAMP E									
52-F	2+70	TO 8+60.17	RT	152,158	300	300	333		6		
53-F		NOT USED									
		RAMP J									
54-F	12+85	TO 21+00	LT	159	1250	1250	1389		6	2	
55-F		NOT USED									
		GLENDALE-MILFORD RD.									
		RAMP N									
56-F	0+00	TO 4+15	RT	155,160	315	315	350			1	
		RAMP B									
57-F	6+06	TO 14+35	LT	160	950	950	960	1	2	5	
58-F		NOT USED									
59-F		NOT USED									
		RAMP M									
60-F	4+15	TO 10+75	LT	161	690	690	767		3		

ESTIMATED QUANTITIES

*See Detail On Sheet

F.H.W.A. REGION	STATE	PROJECT	CALC. CRB DATE 5/92
5	OHIO		CHECK GKB DATE 5/92

HAM-75-9.75

115
338

LINE	REF. NO.	LOCATION STATION TO STATION	SIDE	SHT. NO.	ROADWAY 202 Walk Removed Sq.Ft.	202 Pavement Removed Sq.Yd.	202 Curb Removed Lin.Ft.	203 Subgrade Compaction Sq.Yd.	608 4" Concrete Walk Sq.Ft.	608 Curb Ramp Type 1 Sq.Ft.	608 Curb Ramp Type 2 Each	608 Curb Ramp Type 2 Sq.Ft.	PAVEMENT 301 Bituminous Aggregate Base, AC-20 Cu.Yd.	304 Aggregate Base As Per Plan Cu.Yd.	404 Asphalt Concrete, AC-20 Cu.Yd.	609 Curb, Type 6 Lin.Ft.	611 *Reinforced Concrete Approach Slab, T=12" As Per Plan Sq.Yd.	611 *Reinforced Concrete Approach Slab, T=15" As Per Plan Sq.Yd.	LINE
1		ROADWAY																	1
2	450-R	9+29.5 TO 9+54.5	Rt.	162			25												2
3	451-R	9+34.4 TO 9+54.5	Lt.&Rt.	162		132													3
4	452-R	10+28.38 TO 10+43.38	Rt.	162			15												4
5	453-R	10+28.38 TO 10+43.38	Lt.&Rt.	162		107													5
6																			6
7																			7
8																			8
9																			9
10																			10
11																			11
12																			12
13		PAVEMENT																	13
14	450-P	9+24.5 TO 9+54.5	Lt.	162	243				294										14
15	451-P	9+24.5 TO 9+54.5	Lt.	162			37									14			15
16	452-P	9+27.5 TO 9+29.5	Lt.&Rt.	162				16					6	3	1				16
17	453-P	9+29.5 TO 9+54.5	Lt.&Rt.	162				166						28				166.3	17
18	454-P	9+29.5 TO 9+54.5	Rt.	162	245				254										18
19	455-P	9+30	Lt.	162							1								19
20	456-P	10+28.38 TO 10+43.38	Rt.	162	189				176										20
21	457-P	10+28.38 TO 10+43.38	Lt.&Rt.	162				115						19			114.8		21
22	458-P	10+43.38 TO 10+45.38	Lt.&Rt.	162				19					6	3	1				22
23	459-P	8+91	Rt.	162								59							23
24	460-P	8+91	Lt.	162						61									24
25	461-P	10+55 TO 10+61	Lt.	162								37							25
26																			26
27																			27
28																			28
29																			29
30																			30
31																			31
32																			32
33																			33
34																			34
35																			35
36																			36
37																			37
38																			38
39																			39
40																			40
41																			41
42																			42
43																			43
44																			44
45																			45
46																			46
47																			47
48																			48
49																			49
50																			50
51																			51
52																			52
53																			53
54																			54
55																			55
56																			56
57																			57
58																			58
59																			59
60																			60
61																			61
62																			62
63																			63
64																			64
65																			65
		TOTAL			677	239	77	316	724	61	1	96	12	53	2	14	114.8	166.3	

WYOMING AVENUE ESTIMATED QUANTITIES

ESTIMATED QUANTITIES

F.H.W.A. REGION	STATE	PROJECT	CALC. TAM DATE 4-92
5	OHIO		CHK. DJB DATE 6-92

116
338

HAM-75-9.75

LINE	REF. NO.	LOCATION STATION TO STATION	SIDE	SHT. NO.	TRAFFIC CONTROL 644 Edge Line White Mile	644 Edge Line Yellow Mile	644 Lane Line Mile	644 Channelizing Line Ln Ft	644 Stop Line Ln Ft	644 Transverse Line White Ln Ft
1										
2		NB MAINLINE								
3										
4		66+57.81 TO 103+68.24 BK		168,169	0.70	0.70	1.41			
5		103+59.04 AHT0 219+76.92 BK		169,177	2.20	2.20	4.4			
6		219+76.92 AHT0 308+85		177,181	1.69	1.69	3.37			
7										
8										
9										
10		MAINLINE RAMPS								
11										
12	RAMP D	83+55 TO 87+55		168			0.08			
13		88+05 TO 91+45	LT	168				340		
14		68+50.76 TO 71+15	LT	168				264		300
15		73+70.65 TO 68+50.76	RT	168	0.10					
16										
17	RAMP P	110+90 TO 112+65	RT	169				175		
18		3+35 TO 6+10	RT	169				275		225
19		6+10 TO 23+55R	RT	169,170	0.33					
20		0+00 TO 22+15	LT	169,170		0.42			16	
21										
22	RAMP I	61+70.50 TO 64+53.86	LT	173		0.02		196		
23		61+70.50 TO 64+53.86	RT	173	0.05					
24		117+72 TO 121+42		173			0.07			
25										
26	RAMP N	2+30 TO 9+85	LT	173,174		0.14				
27		9+85 TO 12+63	LT	174				278		
28		2+10 TO 12+00	RT	174	0.19					
29		152+15 TO 155+05		174			0.06			
30										
31	RAMP M	0+70 TO 2+80	LT	174			0.05			
32		3+00 TO 5+85	LT	174				285		385
33		5+85 TO 12+85	LT	174,175		0.13				
34		0+00 TO 12+85	RT	174,175	0.24					
35		169+43 TO 172+95		175				352		
36										
37		NB COLLECTOR								
38										
39		1+00 TO 2+30		177			0.02			
40		217+50 TO 221+40	GORE	177				390		
41		2+45 TO 6+35	GORE	177				390		480
42		3+00 TO 10+00	℄	177			0.13			
43		0+00 TO 10+00	RT	177	0.19					
44										
45		6+35 TO 46+14.21	LT	177,179		0.75				
46		10+00 TO 14+00	℄	177				400		
47		14+00 TO 20+00	℄	177	0.11					
48		20+00 TO 30+65	RT	177,178	0.20					
49		20+35 TO 88+25	℄	177,178			1.28			
50										
51		31+85 TO 39+70	RT	178,179	0.15					
52		39+15 TO 45+25	RT	179			0.12			
53		40+45 TO 44+55.22	RT	179	0.08					
54		45+60 TO 47+25	RT	179				165		
55		47+25 TO 53+50	RT	179	0.12					
56										
57		48+85 TO 50+85	LT	179				200		
58		50+85 TO 77+44.27	LT	179,180		0.50				
59		53+65 TO 54+55	RT	179			0.02			
60		55+40 TO 63+40	RT	179,180	0.15					
61		62+60 TO 75+50	RT	180			0.24			
62										
63		64+30 TO 70+80	RT	180	0.12					
64		71+50 TO 73+00	RT	180	0.03					
65		74+45 TO 74+80	RT	180				35		
		TOTAL			13.20		11.25	3745	16	1390

LINE	REF. NO.	LOCATION STATION TO STATION	SIDE	SHT. NO.	TRAFFIC CONTROL 644 Edge Line White Mile	644 Edge Line Yellow Mile	644 Lane Line Mile	644 Channelizing Line Ln Ft	644 Stop Line Ln Ft	644 Transverse Line White Ln Ft	644 Lane Arrow Each	644 Word On Pavement 96" Each
1												
2		NB COLLECTOR										
3		74+80 TO 75+65	RT	180	0.02							
4		76+75 TO 80+55	RT	180	0.07							
5												
6		77+44.27 TO 81+20.27	LT	180				376				
7		81+55 TO 91+69 BK	LT	180,181			0.19					
8		81+40 TO 89+41	RT	181	0.15							
9		88+60 TO 90+40	℄	181				180				
10		90+40 TO 91+69 BK	RT	181	0.02							
11		81+20.27 TO 91+69 BK	LT	181		0.20						
12		29+00 TO 39+32.26	LT	182		0.20						
13		29+30 TO 31+16	℄	182				186				
14		31+16 TO 35+42.54	℄	182	0.08							
15		35+66 TO 38+12.26	RT	182	0.05							
16												
17		NB COLLECTOR RAMPS										
18	RAMP A	10+00 TO 18+78	RT	177,183	0.17							
19		12+00 TO 13+25	LT	177				125		126		
20		13+25 TO 18+78	LT	177,183		0.10						
21		17+20 TO 18+78	RT	183				158	32		4	1
22	RAMP B	11+52.71 TO 19+20	LT	177,183	0.15							
23		11+52.71 TO 14+35	RT	177				282				
24		14+35 TO 18+78	RT	177,183		0.08						
25												
26	RAMP C	0+00 TO 21+74.25	℄	179,184	0.41							
27		1+00 TO 1+78	RT	179				78				
28		1+78 TO 20+50	RT	179,184		0.35						
29		20+50 TO 20+70 COLL.	RT	179				223				
30		5+40.76 TO 17+02.38	RT	184	0.20	0.22		30				
31												
32	RAMP D	0+00 TO 54+65 COLL.	℄	179,184	0.18							
33		0+00 TO 5+10	LT	179,184		0.10						
34		5+10 TO 53+50 COLL.	LT	179,184				319				
35												
36	RAMP F	0+00 TO 1+17	℄	184	0.02							
37		0+60 TO 0+90	LT	184				30				
38		0+90 TO 1+17	LT	184		0.01						
39												
40	RAMP G	0+00 TO 5+05	LT	179		0.10						
41		5+05 TO 9+42		179				437				
42		2+75 TO 4+25		179				150		180		
43		4+25 TO 9+42		179	0.10							
44												
45	RAMP J	0+00 TO 23+82.69	℄	180,185	0.45							
46		1+40 TO 23+67.57	LT	180,185		0.39		153				
47												
48	RAMP K	3+88 TO 8+90	GORE	180				502	500			
49		285+50 TO 291+50	GORE	180				600				
50		3+88 TO 11+00	RT	180	0.14							
51		8+90 TO 14+76	LT	180		0.11						
52		11+00 TO 14+76	RT	180				376				
53												
54	RAMP M	0+90 TO 1+80	GORE	181,187				90		100		
55		1+66.70 TO 10+88	℄	181,187	0.17							
56		1+80 TO 10+88	LT	181,187		0.17						
57		TO										
58	RAMP L	0+62 TO 27+00 COLL.	LT	182,187	0.24							
59		0+62 TO 2+55		182,187		0.04						
60		1+40 TO 2+55		182,187	0.02							
61		2+55 TO 9+90	RT	182,187		0.14						
62		9+90 TO 10+80	GORE	182				90		140		
63												
64	RAMP K	9+85 TO 11+76.54	LT	182		0.01		127				
65		9+85 TO 12+00	RT	182	0.04							
		TOTAL			4.90		0.19	4512	532	546	4	1

PAVEMENT MARKINGS
ESTIMATED QUANTITIES

ESTIMATED QUANTITIES

F.H.W.A. REGION	STATE	PROJECT	CALC. TAM DATE 4-92
5	OHIO		CHK. DJB DATE 6-92

117
338

HAM-75-9.75

LINE	REF. NO.	LOCATION STATION TO STATION	SIDE	SHT. NO.	TRAFFIC CONTROL 644 Edge Line White Mile	644 Edge Line Yellow Mile	644 Lane Line Mile	644 Channelizing Line Lin Ft	644 Stop Line Lin Ft	644 Transverse Line White Lin Ft
1										
2		SB MAINLINE								
3										
4		66+57.81 TO 103+68.24 BK		168,169	0.70	0.70	1.41			
5		113+61.15 AH TO 305+85		169-181	3.64	3.64	7.28			
6										
7										
8										
9										
10		SB MAINLINE RAMPS								
11										
12	RAMP C	83+05 TO 85+15		168			0.04			
13		85+50 TO 88+70		168				320		
14										
15	RAMP G	96+05 TO 98+15		169			0.08			
16		98+50 TO 107+05		169				855		
17		98+50 TO 127+48	℄	169,170	0.55					
18		107+05 TO 127+45	RT	169,170		0.39				
19										
20	RAMP F	0+44 TO 8+64	RT	170,171	0.16					
21		1+60 TO 8+03	℄	170		0.12			16	
22		0+44 TO 1+60	GORE	170,171				116		170
23		144+55 M/L TO 145+70 M/L	GORE	171						115
24		146+05 M/L TO 148+95 M/L	LT	171			0.05			
25										
26	COOPER	186+10 TO 191+00		172			0.09			
27	AVE.	191+35 TO 193+35		172				475		505
28		193+78 TO 197+48		172			0.07			
29		0+00 TO 4+17	LT & RT	172	0.15					
30										
31										
32										
33										
34										
35		SB COLLECTOR								
36		231+50 TO 233+60		177			0.04			
37		0+00 TO 3+70	RT	177,178				370		
38		0+00 TO 30+50	RT	177-179		0.58				
39		30+50 TO 33+60	RT	179				310		
40		33+60 TO 71+80	RT	179-181		0.72				
41										
42		0+00 TO 10+60	LT	177,178	0.20					
43		10+60 TO 14+85	℄	178,179				425		
44		10+62 TO 27+98.36	LT	178-180	0.33					
45		11+15 TO 12+50	LT	178				135		132
46										
47		15+05 TO 30+35	℄	179			0.29			
48		25+50 TO 26+80	LT	179			0.02			
49		27+00 TO 33+05	LT	179	0.11					
50		24+25 TO 30+35	℄	179			0.12			
51		30+45 TO 33+60	℄	179				315		
52										
53		33+05 TO 35+20	LT	179				215		
54		35+35 TO 61+05	℄	179-181			0.49			
55		36+00 TO 42+40	LT	179,180	0.12					
56		44+85 TO 53+82.69	LT	180	0.17					
57		53+75 TO 54+65	LT	180			0.02			
58										
59		54+00 TO 62+44.45	LT	180,181	0.16					
60		61+30 TO 68+14	LT	181	0.13					
61										
62										
63										
64										
65										
		TOTAL			12.57		10	3536	16	922

REF. NO.	LOCATION STATION TO STATION	SIDE	SHT. NO.	TRAFFIC CONTROL 644 Edge Line White Mile	644 Edge Line Yellow Mile	644 Lane Line Mile	644 Center Line Mile	644 Crosswalk Line Lin Ft	644 Channelizing Line Lin Ft	644 Stop Line Lin Ft	644 Transverse Line White Lin Ft	644 Lane Arrow Each	644 Word On Pavement 72" Each	644 Word On Pavement 96" Each
	SB COLLECTOR RAMPS													
RAMP P	0+74 TO 4+87	RT	178	0.08										
	2+70 TO 4+87	LT	178						217					
RAMP Q	1+50 TO 2+90	RT	178			0.03								
	1+90 TO 2+25	RT	178						35					
	3+25 TO 4+05	RT	178	0.01					80	24		2		2
RAMP R	0+58 TO 2+24	℄	178	0.03										
	1+35 TO 1+65	LT	178						30		12			
	11+15 COLL. TO 12+50 COLL.	GORE	178						135		132			
RAMP E	1+00 TO 8+60.17	℄	179,184	0.14										
	1+80 TO 3+20	GORE	179											
	3+20 TO 8+60.17		179,184		0.10									
RAMP H	0+00 TO 2+10	LT	179			0.04								
	2+45 TO 7+25	RT	179	0.09										
	7+25 TO 10+35	RT	179						310					
	2+45 TO 5+40	GORE	179						295		325			
	5+40 TO 10+35	LT	179		0.09									
RAMP B-N	0+00 B TO 13+80	℄	186	0.26	0.03									
	0+00 B TO 13+25	RT	186	0.02	0.25									
	0+00 N TO 5+85	℄	181,186	0.11										
	0+00 N TO 3+40	LT	181,186		0.06									
	3+40 TO 5+85	LT	181,186						245					
	CROSS ROADS													
	WYOMING AVE.													
	7+75 TO 11+55	℄	188				0.07							
	7+75 TO 10+35	LT	188			0.05						6	3	
		RT	188							28				
	8+80	RT	188					133						
	8+82 TO 8+92	LT & RT	188					81						
	8+92 TO 9+41.30	LT	188			0.02								
	9+45 TO 10+35	RT	188						85	34				
	9+45 TO 10+29.50	LT	188					59						
	10+25 TO 10+59.20	LT	188						191	34				
	10+60 TO 11+55	RT	188											
	SHEPHERD LANE			0.04		0.03								
	9+05 TO 11+35	LT	183				0.05							
	9+12 TO 11+45	℄	183	0.05		0.04								
	9+20 TO 11+57	RT	183											
	TOTAL			1.63		0.21	0.12	273	1763	120	599	8	3	2

LINE
1
2
3
4
5
6
7
8
9
10
11
12
13
14
15
16
17
18
19
20
21
22
23
24
25
26
27
28
29
30
31
32
33
34
35
36
37
38
39
40
41
42
43
44
45
46
47
48
49
50
51
52
53
54
55
56
57
58
59
60
61
62
63
64
65

PAVEMENT MARKINGS
ESTIMATED QUANTITIES

ESTIMATED QUANTITIES

F.H.W.A. REGION	STATE	PROJECT	CALC. TAM DATE 6-91
5	OHIO		CHK. DJB DATE 6-92

118
338

HAM-75-9.75

LINE		LOCATION STATION TO STATION		PAVEMENT MARKING SUPPLEMENTED	INTERVAL	TRAFFIC CONTROL 202 Raised Pavement Marker Removed For Storage Each		ITEM 862 - Raised Pavement Marker 1 - Way White Each		1 - Way Yellow Each		2 - Way White/Red Each				REMARKS
1																
2		SB MAINLINE														
3																
4		66+70	TO 103+50	Lane Line	80'	94		94								
5		114+30	TO 144+70	Lane Line	80'	76		76								
6																
7		144+70	TO 159+90	Lane Line	80'	40		20				20				
8		159+90	TO 191+90	Lane Line	80'	78		78								
9																
10		191+90	TO 207+10	Lane Line	80'	40		20				20				
11		207+10	TO 270+30	Lane Line	80'	156		156								
12																
13		270+30	TO 285+50	Lane Line	80'	40		20				20				
14		285+50	TO 307+90	Lane Line	80'	56		56								
15																
16																
17																
18																
19																
20																
21		SB MAINLINE RAMPS														
22																
23	Ramp-C	85+50	TO 91+10	Edge Line	40'	15		15								
24		85+50	TO 88+70	Channel	40'	9		9								
25																
26	Ramp-G	98+50	TO 106+90	Edge Line	40'	22		22								
27		98+50	TO 99+70	Channel	40'	4		4								
28		100+10	TO 107+70	Edge Line	40'	20				20						
29																
30	Ramp-F	143+65	TO 145+65	Channel	* 20'	9		9								
31		1+00	TO 2+20	Channel	20'	7		7								* 2 @ 40'
32		2+60	TO 3+00	Edge Line	40'	2				2						
33																
34																
35																
36																
37																
38	Cooper Ave.	191+45	TO 193+25	Channel	20'	10		10								
39		0+00	TO 1+37	Channel	20'	9		9								
40		4+03	TO 4+98	Channel	20'	7		7								
41			TO													
42																
43																
44																
45	Ramp-H	269+05	TO 272+65	Channel	* 20'	17		17								* 2 @ 40'
46		2+40	TO 6+20	Channel	* 20'	17		15		2						* 2 @ 40'
47																
48																
49																
50																
51																
52																
53																
54																
55																
56																
57																
58																
59																
60																
61																
62																
63																
64																
65		SUB-TOTAL				728		644		24		60				
		TOTAL TO GENERAL SUMMARY				728		728								

LINE		LOCATION STATION TO STATION		PAVEMENT MARKING SUPPLEMENTED	INTERVAL	TRAFFIC CONTROL 202 Raised Pavement Marker Removed For Storage Each		ITEM 862 - Raised Pavement Marker 1 - Way White Each		1 - Way Yellow Each		2 - Way White/Red Each				REMARKS	LINE
1																	1
2		SB COLLECTOR															2
3																	3
4		234+00	TO 239+20	Edge Line	40'	14		14									4
5		234+00	TO 234+80	Channel	40'	3		3								235+00 = 0+00	5
6		0+20	TO 4+60	Channel	40'	12		11		1							6
7																	7
8		13+10	TO 29+90	Lane Line	80'	22						22				* 2 @ 20'	8
9																	9
10		36+20	TO 51+40	Lane Line	80'	20						20					10
11		52+20	TO 60+20	Lane Line	80'	11		11									11
12																	12
13		70+05	TO 73+25	Lane Line	80'	5						5					13
14																	14
15																	15
16																	16
17																	17
18																	18
19																	19
20		SB COLLECTOR RAMPS															20
21	Ramp-P	5+00	TO 7+40	Edge Line	40'	7		7								Collector	21
22		2+20	TO 2+60	Edge Line	40'	2				2							22
23		3+00	TO 5+00	Channel	40'	6		6									23
24																	24
25	Ramp-R	10+60	TO 12+40	Channel	* 20'	8		8								* 2 @ 40'	25
26		1+75	TO 3+75	Channel	* 20'	6		4		2						* 2 @ 40'	26
27		4+90	TO 5+30	Channel	20'	3		3								-	27
28																	28
29	Ramp-Q	2+15	TO 2+95	Lane Line	40'	3						3					29
30		2+05	TO 2+25	Channel	20'	2		2									30
31																	31
32	Ramp-C	27+30	TO 30+10	Edge Line	40'	8		8									32
33		19+63	TO 22+83	Channel	40'	9		7		2							33
34																	34
35	Ramp-H	30+70	TO 34+30	Channel	40'	10		8		2							35
36		6+95	TO 10+15	Channel	40'	9		9									36
37																	37
38	Ramp-E	33+00	TO 35+00	Channel	* 20'	9		9								* 2 @ 40'	38
39		1+60	TO 4+00	Channel	* 20'	11		9		2						* 2 @ 40'	39
40																	40
41	Ramp-J	54+20	TO 55+80	Edge Line	40'	5		5									41
42		21+90	TO 23+90	Channel	40'	6		4		2							42
43																	43
44	Ramp-N	61+40	TO 64+20	Edge Line	40'	8		8									44
45		2+95	TO 5+35	Channel	40'	7		5		2							45
46																	46
47	Ramp-B	67+30	TO 69+30	Channel	* 20'	9		9								* 2 @ 40'	47
48		1+20	TO 3+40	Channel	* 20'	10		8		2						* 2 @ 40'	48
49																	49
50																	50
51																	51
52																	52
53																	53
54																	54
55																	55
56																	56
57																	57
58																	58
59																	59
60																	60
61																	61
62																	62
63																	63
64																	64
65		SUB-TOTAL				225		158		17		50					65
		TOTAL TO GENERAL SUMMARY				225		225									

DGN:TSPEM1.DGN

RAISED PAVEMENT MARKER
ESTIMATED QUANTITIES

ESTIMATED QUANTITIES

F.H.W.A. REGION	STATE	PROJECT	CALC. TAM DATE 6-91
5	OHIO		CHK. DJB DATE 6-92

119
338

HAM-75-9.75

LINE		LOCATION STATION TO STATION		PAVEMENT MARKING SUPPLEMENTED	INTERVAL	TRAFFIC CONTROL 202 Raised Pavement Marker Removed for Storage Each	ITEM 862 - RAISED PAVEMENT MARKER 1 - Way White Each	1 - Way Yellow Each	2 - Way White/Red Each	REMARKS
1										
2		NB MAINLINE								
3										
4		66+70	TO 74+70	Lane Line	80′	20	20			
5		74+70	TO 89+90	Lane Line	80′	40	20		20	
6		89+90	TO 97+10	Lane Line	80′	16	16			
7		97+10	TO 112+30	Lane Line	80′	40	20		20	
8										
9										
10		112+30	TO 157+10	Lane Line	80′	110	110			
11		157+10	TO 172+30	Lane Line	80′	40	20		20	
12		172+30	TO 205+90	Lane Line	80′	82	82			
13		205+90	TO 221+10	Lane Line	80′	40	20		20	
14										
15		221+10	TO 274+70	Lane Line	80′	132	132			
16		274+70	TO 289+90	Lane Line	80′	40	20		20	
17		289+90	TO 307+50	Lane Line	80′	44	44			
18										
19										
20										
21										
22										
23		NB RAMPS								
24										
25	Ramp-D	88+15	TO 91+35	Channel	* 20′	15	15			* 2 @ 40′
26		68+10	TO 71+30	Channel	* 20′	15	13	2		* 2 @ 40′
27										
28	Ramp-P	111+10	TO 113+40	Channel	* 20′	11	9	2		* 2 @ 40′
29		3+25	TO 5+85	Channel	* 20′	12	12			* 2 @ 40′
30										
31	Ramp-I	114+60	TO 117+40	Edge Line	40′	8	8			
32		62+15	TO 64+55	Channel	40′	7	5	2		
33										
34	Ramp-N	148+40	TO 152+00	Edge Line	40′	10	10			
35		9+00	TO 12+60	Channel	40′	10	8	2		
36										
37	Ramp-M	169+60	TO 173+20	Channel	* 20′	17	17			* 2 @ 40′
38		2+90	TO 6+70	Channel	* 20′	18	16	2		* 2 @ 40′
39										
40	Ramp-G	267+00	TO 271+00	Edge Line	40′	11	11			
41		4+55	TO 8+55	Channel	40′	11	9	2		
42										
43	Ramp-K	285+50	TO 291+30	Channel	* 20′	28	28			* 2 @ 40′
44		3+80	TO 9+60	Channel	* 20′	28	26	2		* 2 @ 40′
45										
46										
47										
48										
49										
50										
51										
52										
53										
54										
55										
56										
57										
58										
59										
60										
61										
62										
63										
64										
65		SUB TOTAL				805	691	14	100	
		TOTAL TO GENERAL SUMMARY				805	805			

LINE		LOCATION STATION TO STATION		PAVEMENT MARKING SUPPLEMENTED	INTERVAL	TRAFFIC CONTROL 202 Raised Pavement Marker Removed for Storage Each	ITEM 862 - RAISED PAVEMENT MARKER 1 - Way White Each	1 - Way Yellow Each	2 - Way White/Red Each	REMARKS
1										
2		NB COLLECTOR								
3										
4		217+60	TO 221+40	Channel	* 20′	22	22			* 2 @ 40′
5		2+40	TO 6+80	Channel	* 20′	21	19	2		* 2 @ 40′
6										
7		2+85	TO 11+65	Lane Line	80′	12			12	
8										
9		20+20	TO 38+60	Lane Line	80′	24			24	
10		39+40	TO 45+00	Lane Line	80′	16	8		8	
11										
12		45+80	TO 61+80	Lane Line	80′	21	21			
13		62+60	TO 75+40	Lane Line	80′	34	17		17	
14										
15		76+20	TO 81+00	Lane Line	80′	7			7	
16		81+80	TO 87+40	Lane Line	80′	16	8		8	
17		88+20	TO 92+20	Lane Line	80′	6	6			
18										
19										
20										
21										
22		NB COLLECTOR RAMPS								
23	Ramp-A	12+05	TO 14+05	Channel	* 20′	19	19			* 2 @ 40′
24		11+95	TO 14+05	Channel	* 20′	19	17	2		* 2 @ 40′
25										
26	Ramp-B	16+40	TO 19+60	Edge Line	40′	9	9			
27		11+30	TO 14+90	Channel	40′	10	8	2		
28										
29	Ramp-C	45+70	TO 47+30	Channel	* 20′	7	7			* 2 @ 40′
30		0+95	TO 2+55	Channel	* 20′	7	5	2		* 2 @ 40′
31										
32	Ramp-G	48+95	TO 50+55	Channel	* 20′	7	5	2		* 2 @ 40′
33		2+60	TO 4+60	Channel	* 20′	9	9			* 2 @ 40′
34										
35	Ramp-D	49+80	TO 53+40	Edge Line	40′	10	10			
36		4+45	TO 8+45	Channel	40′	11	9	2		
37										
38	Ramp-J	74+55	TO 75+55	Channel	* 20′	4	4			* 2 @ 40′
39		1+30	TO 2+30	Channel	* 20′	4	2	2		* 2 @ 40′
40										
41	Ramp-M	88+70	TO 90+30	Channel	* 20′	7	7			* 2 @ 40′
42		0+80	TO 2+60	Channel	* 20′	8	6	2		* 2 @ 40′
43										
44										
45										
46										
47										
48										
49										
50										
51										
52										
53										
54										
55										
56										
57										
58										
59										
60										
61										
62										
63										
64										
65		SUB TOTAL				310	218	16	76	
		TOTAL TO GENERAL SUMMARY				310	310			

DGN: 75PVM2

RAISED PAVEMENT MARKER
ESTIMATED QUANTITIES

ITEM 802 BARRIER REFLECTORS

CALC. TAM	F.H.W.A. REGION	STATE	PROJECT	
DATE 4-92				
CHECK DJB	5	OHIO		
DATE 6-92				

120
338

HAM-75-9.75

STATIONING FROM	STATIONING TO	SIDE	SPACING (FT.)	TYPE A W	TYPE A Y	TYPE B W	TYPE B Y	TYPE A2 W	TYPE A2 Y	TYPE B2 W	TYPE B2 Y	REMARKS
NORTHBOUND												
67+00	107+00	LT	100				41					
73+69	75+69	RT	100	3								
75+69	77+25	RT	78	1		1						
81+20	89+20	RT	100			9						
109+76	110+76	RT	100	2								
110+76	111+57	RT	81			1						
116+96	148+96	RT	100	23		9						
117+88	212+88	LT	100		59		37					
212+88	214+44	LT	78		2							
151+39	172+39	RT	100	21		1						
173+91	210+91	RT	100	9		29						
210+91	211+82	RT	91	+1								
214+50	305+50	LT	100				92					
221+10	267+10	RT	100		1		46					
267+10	267+86	RT	76				1					
279+14	289+14	RT	100	3		8						
289+14	290+57	RT	71.5			2						
290+65	306+65	RT	100	1		16						
27+80	36+80	RT	100			9						
36+80	39+11	RT	115.5			2						
NB COLLECTOR												
6+10	50+10	LT	100		1		44					
50+10	52+41	LT	65.5				2					
10+49	12+32	RT	91.5	2		1						
42+22	44+44	RT	111	2		1						
47+34	49+20	RT	93	3								
63+90	72+90	LT	100		9		1					
72+90	75+39	LT	83				3					
71+53	72+36	RT	83	1		1						
87+08	88+08	RT	100	2								
89+96	27+47	RT	110	2		1						
30+61	32+61	RT	100	3								
32+61	33+84	RT	123	1								
34+10	38+10	RT	100	5								
TOTALS				85	72	82	267					
				157		349						

STATIONING FROM	STATIONING TO	SIDE	SPACING (FT.)	TYPE A W	TYPE A Y	TYPE B W	TYPE B Y	TYPE A2 W	TYPE A2 Y	TYPE B2 W	TYPE B2 Y	REMARKS
SOUTHBOUND												
67+00	139+00	RT	100		9		64					
139+00	140+61	RT	80.5		2							
66+84	68+84	LT	100	3								
73+90	87+90	LT	100	7		8						
91+08	92+57	LT	74.5	3								
131+75	133+99	LT	112	3								
138+05	140+29	LT	112	3								
145+56	147+56	LT	100	1		2						
147+56	149+02	LT	98	2								
152+59	177+49	LT	100	25		1						
177+49	178+47	LT	98	1								
185+97	190+97	LT	100			6						
190+97	192+60	LT	96.5			2						
192+91	194+00	LT	82.5			3						
194+00	235+00	LT	100			41						
189+31	211+81	RT	100				21					
214+50	305+50	RT	100				92					
238+50	267+50	LT	100			30						
267+50	269+80	LT	115	1		1						
271+24	272+86	LT	81	3								
296+90	305+90	LT	100	5		5						
SB COLLECTOR												
1+00	3+65	LT	88.33	2		2						
3+50	34+50	RT	100				32					
34+50	35+56	RT	106		1							
11+57	26+57	LT	100	15		1						
26+57	28+00	LT	71.5	2								
34+45	36+07	LT	81	3								
34+45	47+45	RT	100		14							
47+45	48+42	RT	97		1							
52+64	54+54	LT	95	2		1						
58+35	59+85	LT	75	3								
58+35	59+85	RT	75		3							
TOTALS				84	30	103	209					
				114		312						

STATIONING FROM	STATIONING TO	SIDE	SPACING (FT.)	TYPE A W	TYPE A Y	TYPE B W	TYPE B Y	TYPE A2 W	TYPE A2 Y	TYPE B2 W	TYPE B2 Y	REMARKS
RAMP D												
68+00	69+00	LT	100	2								
GALBRAITH ROAD												
RAMP P												
0+43	14+43	LT	100				15					
14+43	16+54	LT	105.5				2					
RAMP G												
122+45	125+45	LT	100	4								
125+45	127+45	LT	50	4								
RAMP F												
4+56	8+56	RT	100	5								
RAMP N												
3+27	5+00	RT	57.67	4								
5+00	11+00	RT	100	6								
DAVIS STREET												
RAMP M												
5+91	9+91	RT	100	5								
9+91	11+54	RT	81.5	2								
RAMP C												
4+10	9+10	CTR	50				11	11				
9+10	14+10	CTR	100	3	3		2	2				ON BARRIER BOTH SIDES
14+10	17+10	CTR	50				3	3				
17+10	18+30	CTR	40				2	2				
6+59	8+59	LT	50	5								
8+59	14+59	LT	100	2			4					
7+42	8+92	RT	50	4								
8+92	12+92	RT	100	1			3					
12+92	14+56	RT	82	3								
RAMP D												
6+43 (C)	1+15 (D)	RT	85.67	4								
RAMP J												
2+06	8+06	RT	50	13								
8+06	14+06	RT	100	2			4					
14+06	15+06	RT	50	2								
15+06	16+67	RT	40.25	4								
5+26	8+26	LT	50		7							
8+26	14+26	LT	100		2		4					
14+26	15+85	LT	53		3							
GLENDALE-MILFORD												
RAMP B-N												
0+20 (N)	13+30(N)	RT	50	28								
0+00	10+50	LT	50				22					
10+50	11+50	LT	100				1					
11+50	13+38	LT	94				2					
RAMP M												
0+90	3+40	RT	50	4			1					
3+40	10+40	RT	100	7								
RAMP L												
0+90	3+40	LT	50	6								
3+40	7+40	LT	100	4								
1+50	6+50	RT	100				6					
TOTALS				124	15	30	70					
				139		100						

75BRQ1.DGN

BARRIER REFLECTOR QUANTITIES

ESTIMATED QUANTITIES

F.H.W.A. REGION	STATE	PROJECT	CALC. TAM DATE 4-92
5	OHIO		CHK. DJB DATE 6-92

121
338

HAM-75-9.75

LINE	LOCATION STATION TO STATION		SIDE	INTERVAL	TRAFFIC CONTROL 620 Delineator Type-C Post Mounted Each	620 Delineator Type-C Bracket Mounted Each	620 Delineator Type-D Post Mounted Each
1							
2	GALBRAITH ROAD						
3							
4	RAMP P						
5	5+20	TO 23+20	RT	200'	10		
6	14+00	TO 22+00	LT	200'			5
7							
8							
9	RAMP G						
10	123+00	TO 125+00	LT	200'	2		
11	126+00	TO 127+00	LT & RT	100'	2		2
12							
13	RAMP F						
14	2+00	TO 8+00	RT	100'	7		
15							
16	RAMP N						
17	2+50	TO 4+00	LT	50'			4
18	5+00	TO 6+50	RT	150'	2		
19	8+50	TO 10+50	RT	200'	2		
20							
21							
22							
23							
24	DAVIS STREET						
25							
26	RAMP M						
27	5+50	TO 11+50	RT	50'	4		
28							
29							
30							
31							
32	SHEPHERD LANE						
33							
34	RAMP A						
35	12+80	TO 14+60	LT	60'			4
36		15+20	LT & RT		1		1
37	16+40	TO 18+40	RT	200'	2		
38							
39	RAMP B						
40	13+50	TO 19+00	LT	50'			12
41							
42							
43							
44							
45	GENERAL ELECTRIC						
46							
47	RAMP C						
48	0+00	TO 1+00	RT	100'	2		
49		1+50	RT		1		
50		2+00	LT & RT		1		1
51	2+50	TO 4+00	LT	50'			4
52	6+00	TO 8+50	LT & RT	50'	12		
53	9+00	TO 11+00	LT & RT	200'		4	
54	13+00	TO 15+00	LT & RT	100'	6		
55	15+50	TO 16+50	LT & RT	50'	6		
56	18+00	TO 20+00	LT	50'			5
57		20+50	LT & RT		1		1
58		21+50	RT		1		
59							
60	RAMP D						
61	0+00	TO 2+00	RT	200'	2		
62		3+00	LT & RT		1		1
63	4+00	TO 5+00	LT	50'			3
64		6+00	RT		1		
65		TO					
	TOTAL TO GENERAL SUMMARY				[illegible]	[illegible]	[illegible]

LOCATION STATION TO STATION		SIDE	INTERVAL	TRAFFIC CONTROL 620 Delineator Type-C Post Mounted Each	620 Delineator Type-C Bracket Mounted Each	620 Delineator Type-D Post Mounted Each	620 Delineator Type-D Bracket Mounted Each	LINE
								1
GENERAL ELECTRIC								2
								3
RAMP E								4
3+50	TO 6+30	LT	70'			5		5
6+30	TO 8+40	RT	70'	4				6
								7
								8
								9
MANGHAM DRIVE								10
								11
RAMP P								12
1+00	TO 3+50	LT	50'			3		13
								14
RAMP Q								15
1+00	TO 3+50	LT	50'			6		16
								17
RAMP R								18
1+60	TO 2+10	LT	50'			2		19
								20
								21
								22
								23
GENERAL ELECTRIC								24
								25
RAMP J								26
2+00	TO 8+00	LT	50'			13		27
9+00	TO 13+00	LT & RT	200'		3		3	28
14+00	TO 22+00	LT	50'			17		29
								30
								31
								32
								33
GLENDALE-MILFORD ROAD								34
								35
RAMP N								36
2+00		LT & RT		1				37
2+50	TO 3+50	LT	50'	3				38
								39
RAMP B								40
2+60	TO 6+10	LT	50'	8				41
6+60	TO 10+10	LT	50'	8				42
11+10	TO 12+10	LT & RT	100'	4				43
12+60	TO 13+40	LT & RT	50'	4				44
								45
RAMP M								46
2+00	TO 3+00	LT	50'			3		47
4+00		LT & RT		1		1		48
6+00	TO 10+00	RT	200'	3				49
								50
RAMP L								51
1+00	TO 9+50	LT	50'	18				52
								53
								54
								55
								56
								57
								58
								59
								60
								61
								62
								63
								64
								65
TOTAL TO GENERAL SUMMARY				54	3	50	3	

DELINEATORS
ESTIMATED QUANTITIES

ESTIMATED QUANTITIES

F.H.W.A. REGION	STATE	PROJECT	CALC. TAM DATE 4-92
5	OHIO		CHK. DJB DATE 6-92

122
338

HAM-75-9.75

LINE	REF. NO.	LOCATION STATION	SIDE	SHT. NO.	SIGN CODE	SIGN SIZE	630 Sign Flat Sheet Type G Sq. Ft.	630 Sign Extrusheet Type G Sq. Ft.		630 Concrete for Embedded Foundation Cu. Yd.	630 Ground Mounted Support, No. 2 Post Lin. Ft.	630 Ground Mounted Support, No. 3 Post Lin. Ft.	630 Ground Mounted Support, No. 4 Post Lin. Ft.	630 Ground Mounted Support, S4x7.7 Beam Lin. Ft.		630 Ground Mounted Support, W10x22 Beam Lin. Ft.		630 Breakaway Beam Connection Each	630 Surface Preparation, Existing Support Section Each	630 Coating, Epoxy Prime Coat, Support Section Each	630 Coating, Epoxy Intermediate Coat, Support Section Each	630 Coating, Urethane Top Coat, Support Section Each	630 Sign Attachment Assembly Each	630 Luminaire Support Assembly, Type TC-31.21 Each	630 Overpass Structure Mounted Sign Support Type TC-18.24 Each		LINE
1																											1
2	1-S	74+00 SB	LT	168	GEP-72	72"x24"		12																			2
3			LT	168	GB	16'x7'		112																			3
4																											4
5	2-S	81+40 SB	LT	168	N-41	12"x36"	3				13.0/13.0																5
6																											6
7	3-S	81+40 NB	RT	168	N-41	12"x36"	3				13.0/13.0																7
8																											8
9	4-S	91+20 SB	LT	168	GEP-72	72"x24"		12																			9
10			LT	168	GB	17'x11.5'		195.5																			10
11																											11
12	5-S	97+75 NB	LT	169	GEP-96	96"x24"		16																			12
13			LT	169	GH	17'x6.5'		110.5																			13
14																											14
15	6-S	118+25 SB	LT	169	W-49R-48	48"x48"	16					13.0/13.0															15
16																											16
17	7-S	111+50 NB	LT	169	GEP-96	96"x24"		16																			17
18			LT	169	GE	16'x7'		112																			18
19			CTR	169	GG															2	2	2	2				19
20			RT	169	GEP-84	84"x24"		14																			20
21			RT	169	GB	12'x8.5'		102																			21
22																											22
23	8-S	112+80 NB	RT	169	GF	96"x60"		40		0.54				16.0/16.0				2									23
24																											24
25	9-S	136+80 SB	LT	170	GN	108"x42"		31.5		0.54				13.0/14.5				2									25
26																											26
27	10-S	144+15 SB	LT	170	GF	96"x60"		40		0.54				16.0/16.0				2									27
28			LT	170	N-41	12"x36"	3																				28
29																											29
30	11-S	NOT USED																									30
31																											31
32	12-S	147+80 SB	LT	171	GEP-84	84"x24"		14												3	3	3	3				32
33																											33
34	13-S	160+15 SB	LT	171	GEP-84	84"x24"		14																			34
35																											35
36																											36
37	14-S	160+75 SB	LT	171	GN	144"x42"		42																			37
38																											38
39	15-S	167+00 SB	LT	171	R-10-48	48"x60"	20						15.5/15.5														39
40																											40
41	16-S	171+90 SB	LT	171	GEP-84	84"x24"		14																			41
42			LT	171	GB	15'x5.5'		82.5												2	2	2	2				42
43																											43
44	17-S	177+75 SB	LT	172	IM-38-36	36"x18"	4.5																				44
45			LT	172	M-5-36-2	36"x36"	9						14.5														45
46																											46
47	18-S	196+35 SB MOUNTED ON WYOMING ST. BRIDGE	LT	172	W-99-R	10'x11'		110																		1	47
48			LT	172	GEP-84	84"x24"		14																			48
49			LT	172	GE	16'x7'		112																		1	49
50			RT	172	GEP-84	84"x24"		14																			50
51			RT	172	GB	19'x9'		171																	1	2	1	51
52																											52
53	19-S	127+20 NB	RT	173	W-68-48	48"x48"							15.5/16.5														53
54																											54
55	20-S	130+00 NB	RT	173	GEP-84	84"x24"		14																			55
56			RT	173	GC	13'x7.5'		97.5												2	2	2	2				56
57																											57
58	21-S	NOT USED																									58
59																											59
60	22-S	134+20 NB	RT	173	GN	144"x42"		42		2.20						18.5/22.5											60
61			RT	173	N-41	12"x36"	3																				61
62																											62
63	23-S	141+50 NB	RT	173	GEP-84	84"x24"		14																			63
64			RT	173	GC	12'x8.5'		102												2	2	2	2				64
65																											65
TOTAL TO GENERAL SUMMARY							61.5	1670.5		3.82	52	26	77.5	91.5		41		6	11	11	11	11	1	2	3		

TRAFFIC CONTROL
ESTIMATED QUANTITIES

PFE: DATE: 6/30/2011 3:04 PM

ESTIMATED QUANTITIES

F.H.W.A. REGION	STATE	PROJECT	CALC. TAM DATE 4-92
5	OHIO		CHK. DJB DATE 6-92

123
338

HAM-75-9.75

LINE	REF. NO.	LOCATION STATION	SIDE	SHT. NO.	SIGN CODE	SIGN SIZE	630 Removal of Ground Mounted Sign And Storage Each	630 Removal of Ground Mounted Major Sign And Storage Each	630 Removal of Ground Mounted Post Support And Disposal Each	630 Removal of Ground Mounted Beam Support And Disposal Each	630 Removal of Structure Mounted Sign And Storage Each	630 Removal of Overhead Mounted Sign And Storage Each	630 Preparation And Shipment of Stored Signs, Flat Sheet Each	630 Preparation And Shipment of Stored Signs, Extrusheet Each	631 Sign Wired Overhead Structure Mounted Each	631 Ballast, Type CMRI-175-480 Each	631 Ballast, Type CMRI-175-480, Integral Each	631 Ballast, Type CMRI-250-480, Integral Each	631 Removal of Luminaire And Storage Each	631 Removal of Sign Wiring And Disposal Each	631 Mercury Vapor Luminaire, Type TF-31.21 With 175 Watt Lamp Each	LINE
1																						1
2	1-S	74+00 SB	LT	168	GEP-72	72"x24"						1		1								2
3			LT	168	GB	16'x6'						1		1								3
4																						4
5																						5
6																						6
7																						7
8																						8
9	4-S	91+20 SB	LT	168	GEP-72	72"x24"						1		1								9
10			LT	168	GB	17'x10.5						1		1								10
11																						11
12	5-S	97+75 NB	LT	169	GEP-96	96"x24"						1		1								12
13			LT	169	GH	17'x5.5'						1		1								13
14																						14
15	6-S	118+25 SB	LT	169	W-49R-48	48"x48"	1		2				1									15
16																						16
17	7-S	115+50 NB	LT	169	GEP-96	96"x24"						1		1								17
18			LT	169	GE	16'x6'						1		1								18
19			CTR	169	GG							1		1					2	1		19
20			RT	169	GEP-84	84"x24"						1		1								20
21			RT	169	GB	12'x8.5'						1		1								21
22																						22
23	8-S	112+80 NB	RT	169	GF	96"x60"		1		2		1		1								23
24																						24
25	9-S	136+80 SB	LT	170	GN	84"x48"		1		2				1								25
26																						26
27	10-S	144+15 SB	LT	170	GF	96"x60"		1		2				1								27
28			LT	170	N-41	12"x36"	1						1									28
29																						29
30	11-S	NOT USED																				30
31	12-S	147+80 SB	LT	171	GEP-96	96"x24"						1										31
32			LT	171	GE	22'x9.5'											3					32
33			RT	171	GB	18'x12'												2				33
34																						34
35	13-S	160+15 SB	LT	171	GB	19'x12'												2				35
36			LT	171	GEP-96	96"x24"						1										36
37	14-S	160+75 SB	LT	171	GN	144"x48"		1						1								37
38																						38
39	15-S	167+00 SB	LT	171	R-10-48	48"x60"	1		2				1									39
40																						40
41	16-S	171+90 SB	LT	171	GEP-96	96"x24"		1						1								41
42			LT	171	GB	15'x5.5'		1						1			2					42
43																						43
44	17-S	177+75 SB	LT	172	IM-38-36	36"x18"	1															44
45			LT	172	M-5-36-2	36"x36"	1		1													45
46																						46
47	18-S	196+35 SB MOUNTED ON WYOMING ST. BRIDGE	LT	172	W-99-R	10'x11'					1			1			1					47
48			LT	172	GEP-84	84"x24"					1			1								48
49			LT	172	GE	16'x7'					1			1		2						49
50			RT	172	GEP-96	96"x24"																50
51			RT	172	GB	19'x9'									1		2				2	51
52																						52
53	19-S	127+20 NB	RT	173		48"x48"	1		2				1									53
54																						54
55	20-S	130+00 NB	RT	173	GEP-84	84"x24"						1		1								55
56			RT	173	GC	13'x7.5'						1		1			2					56
57																						57
58	21-S	NOT USED																				58
59																						59
60	22-S	133+20 NB	LT	173	GN	108"x48"		1		2				1								60
61																						61
62																						62
63	23-S	141+50 NB	RT	173	GEP-84	84"x24"						1		1								63
64			RT	173	GC	12'x8.5'						1		1			2					64
65																						65
TOTAL TO GENERAL SUMMARY							6	7	7	8	3	18	4	25	1	2	12	4	2	1	2	

TRAFFIC CONTROL
ESTIMATED QUANTITIES

PLOTTED: 06/16/92
DGN: ESTQUA

ESTIMATED QUANTITIES

F.H.W.A. REGION	STATE	PROJECT	CALC. TAM DATE 4-92
5	OHIO		CHK. DJB DATE 6-92

124
338

HAM-75-9.75

LINE	REF. NO.	LOCATION STATION	SIDE	SHT. NO.	SIGN CODE	SIGN SIZE	630 Sign Flat Sheet Type G Sq. Ft.	630 Sign Extrusheet Type G Sq. Ft.	630 Concrete for Anchor Base Foundation Cu. Yd.	630 Concrete for Embedded Foundation Cu. Yd.	630 Ground Mounted Support, No. 2 Post Lin. Ft.	630 Ground Mounted Support, No. 3 Post Lin. Ft.	630 Ground Mounted Support, No. 4 Post Lin. Ft.	630 Ground Mounted Support, S4x7.7 Beam Lin. Ft.			630 Overhead Sign Support Type TC-12.30 Design 3 Each	630 Breakaway Beam Connection Each	630 Surface Preparation, Existing Support Section Each	630 Coating, Epoxy Prime Coat, Support Section Each	630 Coating, Epoxy Intermediate Coat, Support Section Each	630 Coating, Urethane Top Coat, Support Section Each	630 Sign Attachment Assembly Each	630 Luminaire Support Assembly, Type TC-31.21 Each		630 Sign Support Assembly Pole Mounted Each	LINE
1																											1
2	24-S	148+35 NB	RT	174	W-49R-48	48"x48"	16						14.5/16.0														2
3	25-S	161+50 NB	RT	174	IM-37-36	36"x18"	4.5																				3
4			RT	174	M-5-36-2	36"x36"	9						15.0														4
5																											5
6	26-S	170+20 NB	LT	174	GEP-84	84"x24"		14																			6
7			LT	174	GC	19'x9.5'		180.5																			7
8			RT	174	GEP-84	84"x24"		14																			8
9			RT	174	GE	15'x7'		105																			9
10																											10
11	27-S	172+50 NB	RT	174	GF	72"x60"		30																			11
12	28-S	173+60 NB	LT	175	GN	96"x42"		28		0.54				16.5/18.5													12
13	29-S	180+50 NB	RT	175	R-10-48	48"x60"	20						15.5/15.5														13
14	30-S	182+50 NB	RT	175	GEP-84	84"x24"		14																			14
15			RT	175	GC	16'x7.5'		120											2	2	2	2					15
16																											16
17	31-S	NOT USED																									17
18	32-S	187+00 NB	RT	175	N-41	12"x36"	3																			1	18
19	33-S	207+60 NB	RT	176	GEP-84	84"x24"		14																			19
20			RT	176	GC	19'x9.5'		180.5																			20
21																											21
22	34-S	210+40 SB	LT	176	GEP-84	84"x24"		14																			22
23			LT	176	GC	12'x8.5'		102																			23
24			RT	176	GB																						24
25			RT	176	GEP-84	84"x24"		14																			25
26	35-S	218+85 NB	LT	177	GG																						26
27			CTR	177	GEP-84	84"x24"		14																			27
28			CTR	177	GB	13'x12'		156											3	3	3	3					28
29			RT	177	GEP-84	84"x24"		14																			29
30			RT	177	GE	22'x7'		154																			30
31																											31
32	36-S	220+85 SB	LT	177	GEP-84	84"x24"		14											2	2	2	2					32
33			LT	177	GC	15'x7.5'		112.5																			33
34																											34
35																											35
36	38-S	6+55 NB COLL.	LT	177	GF	78"x54"		29.25		0.54				16.5/16.5				2									36
37																											37
38	39-S	12+25 NB COLL.	LT	177	GB	12'x6'		72																			38
39			RT	177	GE	16'x8'		128																			39
40																											40
41	40-S	227+75	℄	177	GJ	15'x4.5'		67.5																			41
42			℄	177	GJ	15'x4.5'		67.5																			42
43																											43
44	41-S	13+30 NB COLL.	RT	177	GF	72"x60"		30		0.54				16.0/16.0				2									44
45	42-S	15+20 NB COLL.	RT	177	W-49R-48	48"x48"	16					13.0/13.0															45
46	43-S	20+25 NB COLL.	RT	177	GN	96"x42"		28		0.54				16.5/14.5				2									46
47	44-S	2+00 SB COLL.	LT	178	GN	84"x42"		24.5																			47
48	45-S	239+30 SB	LT	178	N-41	12"x36"	3				13.0																48
49																											49
50	46-S	24+50 NB COLL.	LT	178	GC	10'x8.5'		8	2.88								1		2	2	2	2	1	1			50
51			LT	178	N-41	12"x36"	3																			1	51
52																											52
53	47-S	28+65 NB COLL.	LT & RT	178	R-41A-36	36"X24"	6/6					11.5/11.5															53
54	48-S	9+10 SB COLL.	LT	178	W-49R-48	48"x48"	16					13.0/13.0															54
55	49-S	30+80 NB COLL.	RT	178	R-41B-36	36"x36"	9					13.0															55
56	50-S	31+35 NB COLL.	LT	178	R-43R-48	48"X18"	6				11.0/11.0																56
57	51-S	NOT USED																									57
58																											58
59	52-S	11+90 SB COLL.	LT	178	GE	18'x5.5'		99											3	3	3	3	1	2			59
60			RT	178	GG	11'x8.5'		93.5																			60
61																											61
62	53-S	RELOCATE FROM	LT	178	GEP-84	84"x24"		14																			62
63		250+00 TO 248+50 NB	LT	178	GB	13'x12'		156	4.45										2	2	2	2					63
64																											64
65																											65
TOTAL TO GENERAL SUMMARY							117.5	2111.75	7.33	2.16	35	88	76.5	131			1	6	14	14	14	14	2	3		1	

PPS DATA Distribution

ESTIMATED QUANTITIES

F.H.W.A. REGION	STATE	PROJECT	CALC. TAM DATE 4-92
5	OHIO		CHK. DJB DATE 6-92

125
338

HAM-75-9.75

LINE	REF. NO.	LOCATION STATION	SIDE	SHT. NO.	SIGN CODE	SIGN SIZE	630 Removal Of Overhead Sign Support And Disposal Type TC-12.30 Each	630 Barrier Wall Assembly Type TC-21.41 Design 1 Each	630 Barrier Wall Assembly Type TC-21.41 Design 2 Each	630 Barrier Wall Assembly, Type TC-21.41, Design 3 As Per Plan Each	630 Barrier Wall Assembly, Type TC-21.41, Design 4 As Per Plan Each	630 Removal of Ground Mounted Sign And Storage Each	630 Removal of Ground Mounted Major Sign And Storage Each	630 Removal of Ground Mounted Post Support And Disposal Each	630 Removal of Ground Mounted Beam Support And Disposal Each		630 Removal of Overhead Mounted Sign And Storage Each	630 Removal of Overhead Sign Support And Reerection Type TC-12.30 Each	630 Preparation And Shipment of Stored Signs, Flat Sheet Each	630 Preparation And Shipment of Stored Signs, Extruded Each	630 Removal of Post Mounted Sign And Storage Each	631 Sign Wired Each			631 Ballast, Type CMRI-100-480, Integral Each		631 Ballast, Type CMRI-175-480, Integral Each		631 Ballast, Type CMRI-250-480, Integral Each	631 Sign Service Each	631 Removal of Luminaire And Storage Each	631 Removal of Sign Wiring And Disposal Each	631 Mercury Vapor Luminaire, Type TC-31.21 With 100 Watt Lamp Each	631 Mercury Vapor Luminaire, Type TC-31.21 With 175 Watt Lamp Each	LINE
1																																		1
2	24-S	148+35 NB	RT	174	W-49R-48	48"x48"						1		2					1															2
3	25-S	161+50 NB	RT	174	IM-37-36	36"x18"						1																						3
4			RT	174	M-5-36-2	36"x36"						1		1					1															4
5																																		5
6	26-S	170+20 NB	LT	174	GEP-84	84"x24"											1			1														6
7			LT	174	GC	19'x9.5'											1			1				2										7
8			RT	174	GEP-84	84"x24"											1			1														8
9			RT	174	GE	15'x7'											1			1				2										9
10																																		10
11	27-S	172+50 NB	RT	174	GF	72"x60"							1							1														11
12	28-S	173+60 NB	LT	175	GN	72"x48"							1		2					1														12
13	29-S	180+50 NB	RT	175	R-10-48	48"x60"						1		2					1															13
14	30-S	182+50 NB	RT	175	GEP-84	84"x24"											1			1														14
15			RT	175	GC	16'x7.5'											1			1				2										15
16																																		16
17	31-S	NOT USED																																17
18	32-S	187+00 NB	RT	175	N-41	12"x36"																1												18
19	33-S	207+60 NB	RT	176	GEP-84	84"x24"											1			1														19
20			RT	176	GC	19'x9.5'											1			1				2										20
21																																		21
22	34-S	210+40 SB	LT	176	GEP-84	84"x24"																												22
23			LT	176	GC	12'x8.5'																		2										23
24			RT	176	GB																							2						24
25			RT	176	GEP-96	GEP-96"x24"											1																	25
26	35-S	218+85 NB	LT	177	GG												1			1										2	1			26
27			CTR	177	GEP-84	84"x24"											1			1														27
28			CTR	177	GB	13'x12'											1			1									2						28
29			RT	177	GEP-84	84"x24"											1			1														29
30			RT	177	GE	22'x7'											1			1				3										30
31																																		31
32	36-S	220+85 SB	LT	177	GEP-84	84"x24"											1			1														32
33			LT	177	GC	15'x7.5'											1			1				2										33
34																																		34
35	37-S	5+95 NB COLL.	LT	177	GF								1		2					1														35
36	38-S	6+55 NB COLL.	LT	177	GF	78"x54"																												36
37																																		37
38	39-S	12+25 NB COLL.	LT	177	GB	12'x6'				1							1			1				2										38
39			RT	177	GE	16'x8'				1							1			1				2										39
40																																		40
41	40-S	227+75	℄	177	GJ	15'x4.5'											1			1						2								41
42			℄	177	GJ	15'x4.5'											1			1						2								42
43																																		43
44																																		44
45	42-S	15+20 NB COLL.	RT	177	W-49R-48	48"x48"						2		2					2															45
46	43-S	20+25 NB COLL.	RT	177	GN	96"x42"							1		2					1														46
47	44-S	2+00 SB COLL.	LT	178	GN	84"x42"							1							1														47
48																																		48
49																																		49
50	46-S	24+50 NB COLL.	LT	178	GC	10'x8'	1		1								1			1		1		1						1			1	50
51			LT	178	N-41	12"x36"						1							1															51
52																																		52
53	47-S	28+65 NB COLL.	LT & RT	178	R-41A-36	36"x24"						2		2					2															53
54	48-S	9+10 SB COLL.	LT	178	W-49R-48	48"x48"						1		2					1															54
55	50-S	30+80 NB COLL.	RT	178	R-41B-36	36"x36"						1		1					1															55
56	50-S	31+35 NB COLL.	LT	178	R-43R-48	48"x18"						1		2					1															56
57	51-S	NOT USED																																57
58																																		58
59	52-S	11+90 SB COLL.	LT	178	GE	18'x5.5'		1									1			1		1				2					1		2		59
60			RT	178	GG	11'x8.5'											1			1				1										60
61																																		61
62	53-S	RELOCATE FROM 250+00 TO 248+50 NB	LT	178	GEP-84	84"x24"											1			1											1				62
63			LT	178	GB	13'x12'					1						1	1		1									2						63
64																																		64
65																																		65
TOTAL TO GENERAL SUMMARY							1	1	1	2	1	12	5	14	6		25	1	11	29	1	2			6		21		6	2	4	1	2	1	

PLOT DATE=6-4-92
DGN:ODOT4.DGN

ESTIMATED QUANTITIES

F.H.W.A. REGION	STATE	PROJECT	CALC. TAM DATE 4-92
5	OHIO		CHK. DJB DATE 6-92

126
338

HAM-75-9.75

LINE	REF. NO.	LOCATION STATION	SIDE	SHT. NO.	SIGN CODE	SIGN SIZE	630 Sign Flat Sheet Type G Sq. Ft.	630 Sign Extrusheet Type G Sq. Ft.		630 Concrete for Embedded Foundation Cu. Yd.	630 Ground Mounted Support, No. 2 Post Lin. Ft.	630 Ground Mounted Support, No. 3 Post Lin. Ft.	630 Ground Mounted Support, No. 4 Post Lin. Ft.	630 Ground Mounted Support, S4X7.7 Beam Lin. Ft.				630 Breakaway Beam Connection Each	630 Surface Preparation, Existing Support Section Each	630 Coating, Epoxy Prime Coat, Support Section Each	630 Coating, Epoxy Intermediate Coat, Support Section Each	630 Coating, Urethane Top Coat, Support Section Each					LINE
1																											1
2																											2
3	55-S	37+50 NB COLL.	LT & RT	179	R-41A-36	36"x24"	6/6					12.0/13.0															3
4	56-S	39+65 NB COLL.	RT	179	R-41B-36	36"x36"	9					14.0															4
5	57-S	40+20 NB COLL.	LT	179	R-43R-48	48"x18"	6				11.5/11.5																5
6																											6
7	58-S	21+50 SB COLL.	LT	179	GG	14'x6'		84										3	3	3	3						7
8			RT	179	GG	11'x8.5'		93.5																			8
9																											9
10	59-S	44+70 NB COLL.	RT	179	W-97-48	48"x60"	20						15.0/15.0														10
11	60-S	46+60 NB COLL.	RT	179	M-45	42"x60"	17.5						17.0/17.0														11
12																											12
13	61-S	NOT USED																									13
14	62-S	264+00 SB	LT	179	R-10-48	48"x60"	20						15.0/15.0														14
15																											15
16	63-S	48+80 NB COLL.	LT	179	GE	12'x6.5'		78										3	3	3	3						16
17			RT	179	GG	16'x6'		96																			17
18																											18
19	64-S	50+60 NB COLL.	RT	179	GF	72"x60"		30		0.54				16.0/16.0				2									19
20	65-S	33+70 SB COLL.	LT	179	GF	72"x60"		30		0.54				16.0/16.0				2									20
21	66-S	33+70 SB COLL.	RT	179	W-49R-48	48"x48"	16					13.0/13.0															21
22	67-S	53+00 NB COLL.	LT & RT	179	R-41A-36	36"x24"	6/6					12.0/12.0															22
23																											23
24	68-S	34+50 SB COLL.	LT	179	GE	11'x6'		66																			24
25																											25
26	70-S	269+40 SB	LT	179	GF	78"x54"		29.25		0.54				16.5/16.5				2									26
27	71-S	34+50 SB COLL.	RT	179	W-97-48	48"x60"	20						14.5/14.5														27
28																											28
29	72-S	54+80 NB COLL.	RT	179	R-41B-36	36"x36"	9					14.0															29
30	73-S	55+00 NB COLL.	LT	179	R-43R-48	48"x18"	6				11.5/11.5																30
31																											31
32	74-S	271+70 SB	LT	179	GEP-84	84"x24"		14																			32
33			LT	179	GE	22'x7'		154										3	3	3	3						33
34			CTR	179	GEP-84	84"x24"		14																			34
35			CTR	179	GB	14'x8'		112																			35
36																											36
37																											37
38	75-S	38+25 SB COLL.	LT & RT	180	R-41B-36	36"x36"	9/9					14.0/14.0															38
39	76-S	38+80 SB COLL.	LT & RT	180	R-41A-36	36"x24"	6/6					12.0/12.0															39
40	77-S	40+25 SB COLL.	LT	180	M-45	66"x42"	19.25						15.0/15.0														40
41			RT	180	M-45	66"x42"	19.25						15.0/15.0														41
42																											42
43	78-S	60+55 NB COLL.	LT & RT	180	R-41A-36	36"x24"	6/6					12.0/12.0															43
44	79-S	43+70 SB COLL.	LT	180	D-11	108"x18"		13.5		0.54				13.0/13.0				2									44
45	80-S	44+20 SB COLL.	RT	180	R-43R-48	48"x18"	6				11.5/11.5																45
46																											46
47	81-S	59+00 NB COLL.	RT	180	M-45	66"x42"	19.25						15.0/15.0														47
48	82-S	45+00 SB COLL.	LT & RT	180	R-41B-36	36"x36"	9/9					14.0/14.0															48
49																											49
50	83-S	45+40 SB COLL.	LT	180	D-11A	132"x18"		16.5		0.54				12.5/12.5				2									50
51			LT	180	R-41A-36	36"x24"	6																				51
52			RT	180	R-41A-36	36"x24"	6					12.0															52
53																											53
54	84-S	63+80 NB COLL.	LT	180	R-43R-48	48"x18"	6				11.5/11.5																54
55	85-S	63+45 NB COLL.	LT & RT	180	R-41B-36	36"x36"	9/9					14.0/14.0															55
56	86-S	64+15 NB COLL.	RT	180	D-11A	144"x18"		18		0.54				14.5/14.5				2									56
57	87-S	47+00 SB COLL.	RT	180	R-43R-48	48"x18"	6				11.5/11.5																57
58																											58
59	88-S	47+30 SB COLL.	LT &RT	180	R-41B-36	36"x36"	9/9					14.0/14.0															59
60	89-S	48+20 SB COLL.	LT & RT	180	R-41A-36	36"x24"	6/6					12.0/12.0															60
61																											61
62	90-S	281+75 NB	LT	180	GEP-84	84"x24"		14																			62
63			LT	180	GE	13'x12'		156										2	2	2	2						63
64	91-S	69+00 NB COLL.	RT	180	M-45	66"x42"	19.25						15.0/15.0														64
65																											65
TOTAL TO GENERAL SUMMARY							363	1018.75		3.24	115	299	243	177				12	11	11	11	11					

PITT, GATES & CARLSON, Ltd.

ESTIMATED QUANTITIES

F.H.W.A. REGION	STATE	PROJECT	CALC. TAM DATE 4-22
5	OHIO		CHK. DJB DATE 6-22

127
338

HAM-75-9.75

LINE	REF. NO.	LOCATION STATION	SIDE	SHT. NO.	SIGN CODE	SIGN SIZE	630																631											LINE
									Barrier Wall Assembly Type TC-21.41 Design 1					Removal of Ground Mounted Sign And Storage	Removal of Ground Mounted Major Sign And Storage	Removal of Ground Mounted Post Support And Disposal	Removal of Ground Mounted Beam Support And Disposal		Removal of Overhead Mounted Sign And Storage		Preparation And Shipment of Stored Signs, Flat Sheet	Preparation And Shipment of Stored Signs, Extrusheet					Ballast, Type CMRI-100-480, Integral		Ballast, Type CMRI-175-480, Integral		Ballast, Type CMRI-250-480, Integral		Removal of Luminaire And Storage	Removal of Sign Wiring And Disposal			
									Each					Each	Each	Each	Each		Each		Each	Each					Each		Each		Each		Each	Each			
1																																		1
2	54-S	35+90 NB COLL.	RT	179	R-41A-36	36"x24"								1		1					1													2
3																																		3
4	56-S	39+65 NB COLL.	RT	179	R-41B-36	36"x36"								1		1					1													4
5	57-S	40+20 NB COLL.	LT	179	R-43R-48	48"x18"								1		2					1													5
6																																		6
7	58-S	21+50 SB COLL.	LT	179	GG	14'x6'			1										1			1						2						7
8			RT	179	GG	11'x8.5'													1			1						1						8
9																																		9
10	59-S	44+70 NB COLL.	RT	179	W-97-48	48"x60"								1		2					1													10
11	60-S	46+60 NB COLL.	RT	179	M-45	42"x60"								1		1					1													11
12																																		12
13	61-S	NOT USED																																13
14	62-S	264+00 SB	LT	179	R-10-48	48"x60"								1		2					1													14
15																																		15
16	63-S	48+80 NB COLL.	LT	179	GE	12'x6.5'			1										1			1						2						16
17			RT	179	GG	16'x6'													1			1					2							17
18																																		18
19																																		19
20																																		20
21	66-S	33+70 SB COLL.	LT	179	W-49R-48	48"x48"								1		2					1													21
22	67-S	53+00 NB COLL	LT & RT	179	R-41A-36	36"x24"								2		2					2													22
23																																		23
24	68-S	34+50 SB COLL.	LT	179	GE	11'x6'													1			1					1							24
25	69-S	269+10 SB	LT	179	GF	72"x60"									1		2					1												25
26																																		26
27	71-S	34+50 SB COLL.	LT	179	W-97-48	48"x60"								1		2					1													27
28																																		28
29	72-S	54+80 NB COLL.	RT	179	R-41B-36	36"x36"								1		1					1													29
30	73-S	55+00 NB COLL.	LT	179	R-43R-48	48"x18"								1		2					1													30
31																																		31
32	74-S	271+70 SB	LT	179	GEP-84	84"x24"													1			1												32
33			LT	179	GE	22'x7'													1			1						3						33
34			CTR	179	GEP-84	84"x24"													1			1												34
35			CTR	179	GB	14'x8'													1			1						2						35
36			RT	179	GG	16'x8.5'													1			1										2	1		36
37																																		37
38	75-S	38+25 SB COLL.	LT & RT	180	R-41B-36	36"x36"								2		2					2													38
39	76-S	38+80 SB COLL.	LT	180	R-41A-36	36"x24"								1		1					1													39
40																																		40
41	77-S	40+25 SB COLL.	LT & RT	180	M-5	ASSEMBLY								6		2					6													41
42																																		42
43	78-S	60+55 NB COLL.	LT & RT	180	R-41A-36	36"x24"								2		2					2													43
44	79-S	43+70 SB COLL.	LT	180	D-11	84"x18"								1		2					1													44
45	80-S	44+20 SB COLL.	RT	180	R-43R-48	48"x18"								1		2					1													45
46																																		46
47	81-S	NOT USED																																47
48																																		48
49																																		49
50																																		50
51	83-S	45+40 SB COLL.	LT	180	R-41A-36	36"X24"								1		1					1													51
52																																		52
53																																		53
54	84-S	63+80 NB COLL.	LT	180	R-43R-48	48"x18"								1		2					1													54
55	85-S	63+45 NB COLL.	RT	180	R-41B-36	36"x24"								1		1					1													55
56	86-S	64+15 NB COLL.	RT	180	D-11A	120"x18"								1		2					1													56
57	87-S	47+00 SB COLL.	RT	180	R-43R-48	48"x18"								1		2					1													57
58																																		58
59	88-S	47+30 SB COLL.	LT	180	R-41B-36	36"x36"								1		1					1													59
60	89-S	48+20 SB COLL.	LT	180	R-41A-36	36"x24"								1		1					1													60
61																																		61
62	90-S	281+75 NB	LT	180	GEP-84	84"x24"													1			1												62
63			LT	180	GE	13'X12'													1			1								2					63
64	91-S	NOT USED																																64
65																																		65
TOTAL TO GENERAL SUMMARY									2					32	1	39	2		12		32	13					3		10		2		2	1			

TRAFFIC CONTROL

ESTIMATED QUANTITIES

PFFL DATED 6-6-22 DGN:SUM4.dgn

ESTIMATED QUANTITIES

F.H.W.A. REGION	STATE	PROJECT	CALC. TAM DATE 4-92
5	OHIO		CHK. DJB DATE 6-92

128
338

HAM-75-9.75

LINE	REF. NO.	LOCATION STATION	SIDE	SHT. NO.	SIGN CODE	SIGN SIZE	630 Sign Flat Sheet Type G Sq. Ft.	630 Sign Extrusheet Type G Sq. Ft.		630 Concrete For Embedded Foundation Cu. Yd.	630 Ground Mounted Support, No. 2 Post Lin. Ft.	630 Ground Mounted Support, No. 3 Post Lin. Ft.	630 Ground Mounted Support, No. 4 Post Lin. Ft.	630 Ground Mounted Support, S4x7.7 Beam Lin. Ft.		630 Ground Mounted Support, W10x22 Beam Lin. Ft.		630 Breakaway Beam Connection Each	630 Surface Preparation, Existing Support Section Each	630 Coating, Epoxy Prime Coat, Support Section Each	630 Coating, Epoxy Intermediate Coat, Support Section Each	630 Coating, Urethane Top Coat, Support Section Each					LINE
1																											1
2	92-S	68+55 NB COLL.	LT & RT	180	R-41A-36	36"x24"	6/6																				2
3												12.0/12.0															3
4	93-S	287+35 NB	LT	180	GEP-84	84"x24"		14																			4
5			LT	180	GB	15'x11.5'		172.5																			5
6			RT	180	GEP-84	84"x24"		14																			6
7			RT	180	GE	16'x10'		160																			7
8																											8
9	94-S	71+20 NB COLL.	LT	180	R-43R-48	48"x18"	6				11.5/11.5																9
10	95-S	71+70 NB COLL.	RT	180	W-53-48	48"x48"	16					13.0/13.0															10
11	96-S	72+05 NB COLL.	LT	180	W-49L-48	48"x48"	16					13.0/13.0															11
12	97-S	72+75 NB COLL.	RT	180	D-11A	132"x18"		16.5		0.54				12.5/12.5				2									12
13																											13
14	98-S	53+35 SB COLL.	LT	180	GN	120"x42"		35		0.54				14.5/14.5				2									14
15	99-S	53+90 SB COLL.	LT	180	R-2-48	48"x48"	6.93						14.0														15
16																											16
17	100-S	74+80 NB COLL.	RT	180	M-45	42"x60"	17.5						15.0/15.0														17
18			RT	180	R-41B-36	36"x36"	9																				18
19																											19
20	101-S	291+10 NB	RT	180	GF	78"x54"		29.25		0.54				16.5/16.5				2									20
21	102-S	292+20 NB & SB	LT & RT	180	N-41	12"x36"	3/3				13.0/13.0																21
22	103-S	58+05 SB COLL.	LT & RT	180	R-41A-36	36"x24"	6/6					12.0/12.0															22
23																											23
24	104-S	58+60 SB COLL.	LT	180	GG	11'x6'		66																			24
25			RT	180	GG	14'x6.5'		91																			25
26																											26
27	105-S	297+00 SB	LT	181	GEP-84	84"x24"		14																			27
28			LT	181	GB	19'x9.5'		180.5																			28
29																											29
30	106-S	82+50 NB COLL.	RT	181	GC	13'x5'		65		2.20						18.0/19.0		2									30
31	107-S	67+95 SB COLL.	LT	181	GF	72"x60"		30		0.54				16.0/16.0				2									31
32																											32
33	108-S	69+00 SB COLL.	LT	181	GE	13'x8.5'		93.5																			33
34			RT	181	GG	11'x6'		66											3	3	3	3					34
35																											35
36	109-S	87+50 NB COLL.	RT	181	W-97-48	48"x60"	20						15.0/15.0														36
37																											37
38	110-S	88+80 NB COLL.	LT	181	GG	9'x8.5'		76.5																			38
39			CTR	181	GG	11'x8.5'		93.5											3	3	3	3					39
40			RT	181	GE	13'x6.5'		84.5																			40
41																											41
42	111-S	89+60 NB COLL.	RT	181	GF	72"x60"		30		0.54				16.0/16.0				2									42
43																											43
44	112-S	30+40 NB COLL.	RT	182	GF	72"x60"		30																			44
45	113-S	61+90 SB COLL.	LT	181	R-2-48	48"x48"	6.93						14.0														45
46																											46
47	114-S	NOT USED																									47
48	115-S	NOT USED																									48
49	116-S	NOT USED																									49
50	117-S	NOT USED																									50
51	118-S	NOT USED																									51
52	119-S	NOT USED																									52
53	120-S	NOT USED																									53
54																											54
55																											55
56																											56
57																											57
58																											58
59																											59
60																											60
61																											61
62																											62
63																											63
64																											64
65																											65
TOTAL TO GENERAL SUMMARY							128.36	1361.75		4.9	49	100	88	151		37		12	6	6	6	6					

TRAFFIC CONTROL
ESTIMATED QUANTITIES

FFP_DATE_DESIGNER_Date

ESTIMATED QUANTITIES

F.H.W.A. REGION	STATE	PROJECT	CALC. TAM DATE 4-92
5	OHIO		CHK. DJB DATE 6-92

129
338

HAM-75-9.75

LINE	REF. NO.	LOCATION STATION	SIDE	SHT. NO.	SIGN CODE	SIGN SIZE	630 Removal of Ground Mounted Sign And Storage Each	630 Removal of Ground Mounted Major Sign And Storage Each	630 Removal of Ground Mounted Post Support And Disposal Each	630 Removal of Ground Mounted Beam Support And Disposal Each	630 Removal of Structure Mounted Sign And Storage Each	630 Removal of Overhead Mounted Sign And Storage Each	630 Preparation And Shipment of Stored Signs, Flat Sheet Each	630 Preparation And Shipment of Stored Signs, Extrusheet Each	631 Ballast, Type CMRI-100-480, Integral Each	631 Ballast, Type CMRI-175-480 Each	631 Ballast, Type CMRI-175-480, Integral Each	631 Ballast, Type CMRI-250-480 Each	LINE
1																			1
2	92-S	68+55 NB COLL.	LT &RT	180	R-41A-36	36"x24"	2		2				2						2
3																			3
4	93-S	287+35 NB	LT	180	GEP-84	84"x24"					1			1					4
5			LT	180	GB	15'x11.5'					1			1				2	5
6			RT	180	GEP-84	84"x24"					1			1					6
7			RT	180	GE	16'x10'					1			1		2			7
8																			8
9	94-S	71+20 NB COLL.	LT	180	R-43R-48	48"x18"	1		2				1						9
10	95-S	71+70 NB COLL.	RT	180	W-53-48	48"x48"	1		2				1						10
11	96-S	72+05 NB COLL.	LT	180	W-49L-48	48"x48"	1		2				1						11
12	97-S	72+75 NB COLL.	RT	180	D-11A	108"x18"	1		2				1						12
13																			13
14	98-S	53+35 SB COLL.	LT	180	GN	96"x48"		1		2				1					14
15	99-S	53+90 SB COLL.	LT	180	R-2-48	48"x48"	1		1				1						15
16																			16
17	100-S	74+80 NB COLL.	RT	180	D-11A	108"x18"	1		2				1						17
18			RT	180	M-5	ASSEMBLY	3						3						18
19																			19
20																			20
21	102-S	292+20 NB & SB	LT & RT	180	N-41	12"x36"	2		2				2						21
22	103-S	58+05 SB COLL.	LT & RT	180	R-41A-36	36"x24"	2		2				2						22
23																			23
24	104-S	58+60 SB COLL.	LT	180	GG	11'x6'						1		1	1				24
25			RT	180	GG	14'x6.5'						1		1			2		25
26																			26
27	105-S	297+00 SB	LT	181	GEP-84	84"x24"						1		1					27
28			LT	181	GB	19'x9.5'						1		1			2		28
29																			29
30	106-S	82+50 NB COLL.	RT	181	GC	16'x6.5'		1		2				1					30
31	107-S	67+95 SB COLL.	LT	181	GF	72"x60"		1		2				1					31
32																			32
33	108-S	69+00 SB COLL.	LT	181	GE	13'x8.5'						1					2		33
34			RT	181	GG	11'x6'						1			1				34
35																			35
36	109-S	87+50 NB COLL.	RT	181	W-97-48	48"x60"	1		2				1						36
37																			37
38	110-S	88+80 NB COLL.	LT	181	GG	9'x8.5'						1		1			1		38
39			CTR	181	GG	11'x8.5'						1		1			1		39
40			RT	181	GE	13'x6.5'						1		1			2		40
41																			41
42																			42
43																			43
44	112-S	30+40 NB COLL.	RT	182	GF	72"x60"		1						1					44
45	113-S	61+90 SB COLL.	LT	181	R-2-48	48"x48"	1		1				1						45
46																			46
47	114-S	NOT USED																	47
48	115-S	NOT USED																	48
49	116-S	NOT USED																	49
50	117-S	NOT USED																	50
51	118-S	NOT USED																	51
52	119-S	NOT USED																	52
53	120-S	NOT USED																	53
54																			54
55																			55
56																			56
57																			57
58																			58
59																			59
60																			60
61																			61
62																			62
63																			63
64																			64
65																			65
TOTAL TO GENERAL SUMMARY							17	4	20	6	4	9	17	15	2	2	10	2	

PTTC CONTROL 1.dgn

ESTIMATED QUANTITIES

F.H.W.A. REGION	STATE	PROJECT	CALC. TAM DATE 4-92
5	OHIO		CHK. DJB DATE 6-92

130
338

HAM-75-9.75

LINE	REF. NO.	LOCATION STATION	SIDE	SHT. NO.	SIGN CODE	SIGN SIZE	630 Sign Flat Sheet Type G Sq. Ft.	630 Sign Extrusheet Type G Sq. Ft.		630 Concrete for Embedded Foundation Cu. Yd.	630 Ground Mounted Support, No. 2 Post Lin. Ft.	630 Ground Mounted Support, No. 3 Post Lin. Ft.	630 Ground Mounted Support, No. 4 Post Lin. Ft.	630 Ground Mounted Support, S4x7.7 Beam Lin. Ft.			630 One Way Support No. 4 Post Lin. Ft.	630 Breakaway Beam Connection Each	630 Surface Preparation, Existing Support Section Each	630 Coating, Epoxy Prime Coat, Support Section Each	630 Coating, Epoxy Intermediate Coat, Support Section Each	630 Coating, Urethane Top Coat, Support Section Each					LINE
1																											1
2		GALBRAITH ROAD																									2
3		RAMP G																									3
4	121-S	126+30	LT	170	R-2-48	48"x48"	6.93						14.0														4
5	122-S	127+15	LT & RT	170	R-15B-30	30"x18"	3.75/3.75				13.0/13.0																5
6	123-S	127+30	LT	170	M-52A	108"x30"		22.5		0.54				13.5/13.5				2									6
7	124-S	NOT USED																									7
8		RAMP P																									8
9			RT	170	D-4	132"x24"		22																			9
10	125-S	20+00	LT & RT	170	R-41A-36	36"x24"	6/6				13.0																10
11			RT	170	D-4E	108"x36"		27																			11
12	126-S	21+70	CTR	170	W-28-24	24"x24"	4				13.0																12
13																											13
14			LT	170	R-43L-36	36"x12"	3																				14
15	127-S	22+20	LT	170	R-43R-36	36"x12"	3										14.0										15
16			LT	170	R-41B-36	36"x36"	9																				16
17	128-S	23+35	RT	170	R-2-48	48"x48"	6.93					14.0/14.0															17
18	129-S	NOT USED																									18
19																											19
20		RAMP F																									20
21																											21
22	131-S	2+50	RT	170	W-47-48	48"x48"	16					13.0/13.0															22
23	132-S	3+75	RT	170	R-81-48	48"x30"	10						13.0														23
24																											24
25			LT & RT	170	R-41A-36	36"x24"	6/6				13.0																25
26	133-S	6+00	RT	170	D-4A	108"x36"		27																			26
27			RT	170	D-4E	108"x36"		27																			27
28			RT	170	D-4A	132"x24"		22																			28
29	134-S	8+00	LT	170	GH-1	84"x66"		38.5		0.54				16.5/16.5				2									29
30	135-S	8+50	RT	170	R-2-48	48"x48"	6.93					14.0/14.0															30
31			LT	170	R-41B-36	36"x36"	9																				31
32	136-S	8+00	LT	170	R-43L-36	36"x12"	3										14.0										32
33			LT	170	R-43R-36	36"x12"	3																				33
34		COOPER AVE.																									34
35	137-S	1+75	LT	172	R-2-48	48"x48"	6.93					14.0/14.0															35
36	138-S	2+75	LT	172	R-15B-30	30"x18"	3.75				13.0																36
37																											37
38	139-S	4+00	LT	172	R-41B-36	36"x36"	9					13.0															38
39			LT	172	R-1-48	48"x48"	16																				39
40			RT	172	R-1-48	48"x48"	16																				40
41	140-S	4+05	RT	172	R-43L-36	36"x12"	3						13.5				14.5										41
42			RT	172	R-43R-36	36"x12"	3																				42
43			RT	172	R-41B-36	36"x36"	9																				43
44																											44
45	141-S	4+10	LT	172	M-52A	108"x30"		22.5		0.54				13.5/13.5				2									45
46	142-S	4+70	LT	172	M-52A	108"x30"		22.5		0.54				13.5/13.5				2									46
47	143-S	NOT USED																									47
48																											48
49		RAMP N																									49
50			LT	173	GH	12'x7.5'		90																			50
51	144-S	2+50	LT	173	GH-1	9'x7.5'		67.5											3	3	3	3					51
52			LT	173	GH-1	9'x7.5'		67.5																			52
53																											53
54	145-S	5+00	RT	173	R-15B-30	30"x18"	3.75				13.0																54
55	146-S	NOT USED																									55
56																											56
57																											57
58																											58
59																											59
60																											60
61																											61
62																											62
63																											63
64																											64
65																											65
TOTAL TO GENERAL SUMMARY							182.72	456		2.16	91	123	40.5	114			42.5	8	3	3	3	3					

MTD DATA DATABOOK.DGN

ESTIMATED QUANTITIES

F.H.W.A. REGION	STATE	PROJECT	CALC. TAM DATE 4-92
5	OHIO		CHK. DJB DATE 6-92

131
338

HAM-75-9.75

LINE	REF. NO.	LOCATION STATION	SIDE	SHT. NO.	SIGN CODE	SIGN SIZE	630 Removal of Ground Mounted Sign And Storage Each	630 Removal of Ground Mounted Major Sign And Storage Each	630 Removal of Ground Mounted Post Support And Disposal Each	630 Removal of Ground Mounted Beam Support And Disposal Each	630 Removal of Overhead Mounted Sign And Storage Each	630 Preparation And Shipment of Stored Signs, Flat Sheet Each	630 Preparation And Shipment of Stored Signs, Extrusheet Each	631 Ballast, Type CMRI-175-480, Integral Each	LINE
1															1
2		GALBRAITH ROAD													2
3		RAMP G													3
4	121-S	126+30	LT	170	R-2-48	48"x48"	1		1			1			4
5															5
6	123-S	127+30	LT	170	M-52A	108"x30"		1		2			1		6
7	124-S	NOT USED													7
8															8
9		RAMP P													9
10	125-S	20+00	RT	170	R-41A-36	36"x24"	1								10
11			RT	170	D-4E	108"x36"		1					1		11
12	126-S	21+70	CTR	170	W-28-24	24"x24"	1		1			1			12
13															13
14			LT	170	R-43L-36	36"x12"	1					1			14
15	127-S	22+20	LT	170	R-43R-36	36"x12"	1		1			1			15
16			LT	170	R-41B-36	36"x36"	1					1			16
17	128-S	23+35	RT	170	R-2-48	48"x48"	1		1			1			17
18	129-S	NOT USED													18
19															19
20		RAMP F													20
21	130-S	2+05	RT	170	W-75-36	36"x36"	1		1			1			21
22	131-S	2+50	RT	170	W-47-48	48"x48"	1		2			1			22
23	132-S	3+75	RT	170	W-81-48	48"x30"	1		1			1			23
24															24
25			RT	170	R-41A-36	36"x24"	1					1			25
26	133-S	6+00	RT	170	D-4A	108"x36"		1					1		26
27			RT	170	D-4E	108"x36"		1					1		27
28			LT	170	M-5-30-2	30"x30"	1					1			28
29	134-S	8+00	LT	170	IM-38	24"x12"	1					1			29
30			LT	170	D-4A	96"x18"	1		2			1			30
31	135-S	8+50	RT	170	R-2-48	48"x48"	1		2			1			31
32	136-S	8+00	LT	170	R-41B-36	36"x36"	1		1			1			32
33			LT	170	R-43-36	36"x12"	2					2			33
34		COOPER AVE.													34
35	137-S	1+75	LT	172	R-2-48	48"x48"	1		2			1			35
36															36
37	139-S	4+00	LT	172	R-1-48	48"x48"	1					1			37
38			LT	172	R-41B-36	36"x36"	1		2			1			38
39															39
40	140-S	4+05	RT	172	R-1-48	48"x48"	1					1			40
41			RT	172	R-43L-36	36"x12"	1		1			1			41
42			RT	172	R-43R-36	36"x12"	1					1			42
43			RT	172	R-41B-36	36"x36"	1					1			43
44															44
45	141-S	4+10	LT	172	M-52A	108"x30"		1		2			1		45
46	142-S	4+70	LT	172	M-52A	108"x30"		1		2			1		46
47	143-S	NOT USED													47
48															48
49		RAMP N													49
50	144-S	2+50	LT	173	GH	12'x7.5'					1		1	2	50
51			LT	173	GH-1	9'x7.5'					1		1	1	51
52			LT	173	GH-1	9'x7.5'					1		1	1	52
53															53
54															54
55	146-S	NOT USED													55
56															56
57															57
58															58
59															59
60															60
61															61
62															62
63															63
64															64
65															65
TOTAL TO GENERAL SUMMARY							25	6	18	6	3	24	9	4	

ESTIMATED QUANTITIES

F.H.W.A. REGION	STATE	PROJECT	CALC. TAM DATE 4-92
5	OHIO		CHK. DJB DATE 6-92

132 / 338

HAM-75-9.75

LINE	REF. NO.	LOCATION STATION	SIDE	SHT. NO.	SIGN CODE	SIGN SIZE	630 Sign Flat Sheet Type G Sq. Ft.	630 Sign Extrusheet Type G Sq. Ft.		630 Concrete For Embedded Foundation Cu. Yd.	630 Ground Mounted Support, No. 2 Post Lin. Ft.	630 Ground Mounted Support, No. 3 Post Lin. Ft.	630 Ground Mounted Support, No. 4 Post Lin. Ft.	630 Ground Mounted Support, S4x7.7 Beam Lin. Ft.		630 Ground Mounted Support, W10x22 Beam Lin. Ft.	630 One Way Support No. 4 Post Lin. Ft.	630 Breakaway Beam Connection Each									LINE
1																										1
2		DAVIS ST.																								2
3		RAMP M																								3
4	147-S	5+00	RT	174	W-97-48	48"x60"	20						15.5/17.5													4
5																										5
6	148-S	8+00	LT	175	W-45A-48	48"x48"	16					13.0/13.5														6
7			RT	175	W-45A-48	48"x48"	16					14.0/15.0														7
8																										8
9	149-S	10+10	RT	175	D-4E	108"x36"		27																		9
10			RT	175	D-4A	108"x24"		18		2.20						17.5/20.0										10
11			LT & RT	175	R-41A-36	36"x24"	6/6					13.0														11
12																										12
13	150-S	12+50	RT	175	R-1-48	48"x48"	16					14.0/14.0														13
14			RT	175	R-41B-36	36"x36"	9																			14
15																										15
16	151-S	12+50	LT	175	R-1-48	48"x48"	16																			16
17			LT	175	R-41B-36	36"x36"	9						14.0				15.0									17
18			LT	175	R-43L-36	36"x12"	3																			18
19			LT	175	R-43R-36	36"x12"	3																			19
20	152-S	NOT USED																								20
21																										21
22		SHEPHERD LANE																								22
23		RAMP A																								23
24	153-S	15+00	LT & RT	183	R-41A-36	36"x24"	6/6				13.0/13.0															24
25																										25
26		RAMP B																								26
27	154-S	17+00	LT	183	R-15B-30	30"x18"	3.75				13.0															27
28	155-S	18+10	LT	183	R-2-48	48"x48"	6.93						14.0													28
29																										29
30	157-S	18+95	RT	183	M-52A	108"x30"	17.5						14.5/14.5													30
31																										31
32	158-S	SHEPHERD LANE	RT	183	M-45	42"x60"		22.5		0.54				14.5/15.5				2								32
33																										33
34		MANGHAM DR.																								34
35		RAMP P																								35
36	159-S	0+95	LT	178	R-2-48	48"x48"	6.93					13.5														36
37			RT	178	R-2-48	48"x48"	6.93					13.5														37
38	160-S	3+00	RT	178	R-2-48	48"x48"	6.93					13.5														38
39																										39
40		RAMP Q																								40
41	161-S	0+80	LT	178	GF	72"x60"		30		0.54				16.0/16.0				2								41
42	162-S	0+80	RT	178	D-11A	132"x18"		16.5																		42
43			RT	178	D-11A	132"x18"		16.5		0.54				13.5/13.5				2								43
44																										44
45	163-S	2+40	LT	178	W-47-48	48"X48"	16					13.0/13.0														45
46			RT	178	W-47-48	48"x48"	16					13.0/13.0														46
47																										47
48	164-S	3+15	LT	178	R-31KK-36	36"x30"	7.5					12.5														48
49			LT	178	R-41A-36	36"x24"	6																			49
50			RT	178	R-31KK-36	36"x30"	7.5					12.5														50
51			RT	178	R-41A-36	36"x24"	6																			51
52																										52
53	166-S	3+72	LT	178	R-37R-24	24"x30"	5					12.0														53
54	167-S	4+00	RT	178	R-41B-36	36"x36"	9					13.0														54
55	168-S	NOT USED																								55
56																										56
57		RAMP R																								57
58	169-S	1+95	LT & RT	178	R-41A-36	36"x24"	6/6					13.0/13.0														58
59	170-S	2+20	LT	178	R-41B-36	36"x36"	9																			59
60			LT	178	R-2-48	48"x48"	6.93					13.5														60
61																										61
62	171-S	2+20	RT	178	R-41B-36	36"x36"	9					13.0														62
63	172-S	NOT USED																								63
64	173-S	NOT USED																								64
65	174-S	NOT USED																								65
TOTAL TO GENERAL SUMMARY							290.9	130.5		3.82	39	291.5	90	89		37.5	15	6								

ESTIMATED QUANTITIES

F.H.W.A. REGION	STATE	PROJECT	CALC. TAM DATE 4-92
5	OHIO		CHK. DJB DATE 6-92

133
338

HAM-75-9.75

LINE	REF. NO.	LOCATION STATION	SIDE	SHT. NO.	SIGN CODE	SIGN SIZE	630 Removal of Ground Mounted Sign And Storage Each	630 Removal of Ground Mounted Major Sign And Storage Each	630 Removal of Ground Mounted Post Support And Disposal Each	630 Removal of Ground Mounted Beam Support And Disposal Each	630 Preparation And Shipment of Stored Signs, Flat Sheet Each	630 Preparation And Shipment of Stored Signs, Extrusheet Each	LINE
1													1
2		DAVIS ST.											2
3		RAMP M											3
4	147-S	5+00	RT	175	W-97-48	48"x60"	1		2		1		4
5													5
6	148-S	8+00	LT & RT	175	W-45-48	48"x48"	2		2		2		6
7			LT & RT	175	W-145-B	24"x12"	2				2		7
8													8
9													9
10	149-S	10+00	LT & RT	175	R-41A-36	36"x24"	2		2		2		10
11													11
12													12
13	150-S	12+50	LT	175	R-1-48	48"x48"	1		2		1		13
14			LT	175	R-41B-36	36"x36"	1				1		14
15													15
16	151-S	12+50	LT	175	R-1-48	48"X48"	1				1		16
17			LT	175	R-41B-36	36"X36"	1		2		1		17
18			LT	175	R-43L-48	48"x18"	1				1		18
19			LT	175	R-43R-48	48"X18"	1				1		19
20	152-S	NOT USED											20
21													21
22		SHEPHERD LANE											22
23		RAMP A											23
24	153-S	15+00	RT	183	R-41A-36	36"x24"	1		1		1		24
25													25
26		RAMP B											26
27													27
28	155-S	18+10	LT	183	R-2-48	48"x48"	1		1		1		28
29	156-S	18+85	LT	183	M-5	ASSEMBLY	3		1		3		29
30	157-S	18+95	RT	183	M-52A	72"x30"	1		2		1		30
31													31
32	158-S	SHEPHERD LANE	RT	183	M-52A	96"x30"		1		2		1	32
33													33
34		MANGHAM DR.											34
35		RAMP P											35
36	159-S	0+95	LT	178	R-2-48	48"x48"	1		1		1		36
37			RT	178	R-2-48	48"x48"	1		1		1		37
38	160-S	3+00	RT	178	R-2-48	48"x48"	1		1		1		38
39													39
40		RAMP Q											40
41													41
42													42
43													43
44													44
45	163-S	2+40	LT & RT	178	W-47-48	48"X48"	2		2		2		45
46													46
47													47
48													48
49													49
50													50
51	165-S	3+50	RT	178	R-24-30	24"X30"	1		1		1		51
52			RT	178	R-41A-36	36"X24"	1				1		52
53	166-S	3+72	LT	178	R-37R-24	24"x30"	1		1		1		53
54	167-S	4+00	RT	178	R-41B-36	36"x36"	1		1		1		54
55	168-S	NOT USED											55
56													56
57		RAMP R											57
58	169-S	1+95	LT & RT	178	R-41A-36	36"x24"	2		2		2		58
59	170-S	2+20	LT	178	R-41B-36	36"x36"	1				1		59
60			LT	178	R-2-48	48"X48"	1		1		1		60
61													61
62	171-S	2+20	RT	178	R-41B-36	36"x36"	1		1		1		62
63	172-S	NOT USED											63
64	173-S	NOT USED											64
65	174-S	NOT USED											65
TOTAL TO GENERAL SUMMARY							33	1	27	2	33	1	

ESTIMATED QUANTITIES

F.H.W.A. REGION	STATE	PROJECT	CALC. TAM DATE 4-92
5	OHIO		CHK. DJB DATE 6-92

134
338

HAM-75-9.75

LINE	REF. NO.	LOCATION STATION	SIDE	SHT. NO.	SIGN CODE	SIGN SIZE	630 Sign Flat Sheet Type G Sq. Ft.	630 Sign Extrusheet Type G Sq. Ft.		630 Concrete for Embedded Foundation Cu. Yd.	630 Ground Mounted Support, No. 2 Post Lin. Ft.	630 Ground Mounted Support, No. 3 Post Lin. Ft.	630 Ground Mounted Support, No. 4 Post Lin. Ft.	630 Ground Mounted Support, S4x7.7 Beam Lin. Ft.	630 Ground Mounted Support, W6 x 9 Beam Lin. Ft.	630 Ground Mounted Support, W10x22 Beam Lin. Ft.	630 One Way Support No. 4 Post Lin. Ft.	630 Breakaway Beam Connection Each								630 Sign Support Assembly Bridge Mounted Type 1 As Per Plan Each	LINE
1																											1
2		RAMP C																									2
3																											3
4	176-S	7+50	LT	184	R-41B-36	36"x36"	9					13.0															4
5																											5
6																											6
7			LT	184	IM-37-24	24"x12"	2																				7
8			LT	184	M-5-24-2	24"x24"	4																				8
9	178-S	8+25	LT	184	IM-22-21	21"x15"	2.19																				9
10			LT	184	D-11A	132"x30"		27.5		2.20						19.0/22.0											10
11			LT	184	D-11A	132"x18"		16.5																			11
12			LT	184	R-41A-36	36"x24"	6																				12
13																											13
14	179-S	9+10	RT	184	X-6R	12"x36"	3				11.0																14
15	180-S	9+18	LT	184	X-6L	12"x36"	3				10.5																15
16	181-S	12+45	LT	184	X-6L	12"x36"	3				10.5																16
17	182-S	12+80	LT	184	X-6R	12"x36"	3				11.0																17
18	183-S	19+50	LT & RT	184	R-41A-36	36"x24"	6/6					12.5/12.5															18
19	184-S	21+85	RT	184	R-2-48	48"x48"	6.93						15.5														19
20		RAMP F																									20
21	185-S	1+10	LT & RT	184	12-41A-36	36"x24"	6/6					12.5/12.5															21
22		RAMP D																									22
23	186-S	4+85	RT	184	R-2-48	48"x48"	6.93						15.0														23
24																											24
25		RAMP J																									25
26	187-S	9+05	LT	185	X-6L	12"x36"	3				12.0																26
27	188-S	9+05	RT	185	X-6R	12"x36"	3				13.0																27
28																											28
29																											29
30	191-S	20+00	LT & RT	185	R-41A-36	36"x24"	6/6					13.0/13.0															30
31																											31
32	193-S	NOT USED																									32
33		GLENDALE-MILFORD RD																									33
34		RAMP B-N																									34
35	194-S	11+50	LT	186	R-15B-30	30"x18"	3.75				13.0																35
36	195-S	12+65	LT	186	R-2-48	48"x48"	6.93						14.0														36
37	196-S	12+95	RT	186	W-49R-48	48"x48"	16					13.0/13.0															37
38	197-S	13+60	RT	186	M-52A	108"x30"		22.5		0.54				13.5/13.5				2									38
39	198-S	NOT USED																									39
40																											40
41		RAMP M																									41
42	199-S	8+10	RT	187	SPECIAL	48"x36"	12						15.0/16.0														42
43	200-S	8+70	LT	187	D-11A	132"x18"		16.5		0.54				13.5/13.5				2									43
44																											44
45	201-S	8+95	LT	187	GH-1	84"x66"		38.5		0.66					20.0/19.0			2									45
46	202-S	9+90	LT	187	D-11A	108"x30"		22.5		0.54				14.5/14.5				2									46
47	203-S	NOT USED																									47
48		RAMP L																									48
49			LT	187	R-43L-36	36"x12"	3																				49
50	204-S	1+40	LT	187	R-41B-36	36"x36"	9										14										50
51			LT	187	R-43R-36	36"x12"	3																				51
52			LT	187	M-25-21	21"x15"	2.2																				52
53			LT	187	M-2-24-3	30"x24"	5																				53
54	205-S	4+10	LT	187	D-11	132"x18"		16.5		0.66					18.0/21.0												54
55			LT	187	D-11A	132"x18"		16.5																			55
56			LT	187	R-41A-36	36"x24"	6																				56
57																											57
58	207-S	6+80	RT	187	W-47-48	48"x48"	16						14.0/14.0														58
59	208-S	8+60	LT & RT	187	R-41A-36	36"x24"	6/6					13.0/13.0															59
60	209-S	0+75	RT	187	R-2-48	48"x48"	6.93					14.0/14.0															60
61																											61
62		WYOMING AVE.																									62
63	210-S	10+26.50	LT	188	R-1-30	30"x30"	6.25																			1	63
64																											64
65																											65
TOTAL TO GENERAL SUMMARY							199.11	177		5.14	81	169	103.5	83	78	41	14	8								1	

PFEIFER DATA DESIGNS 1.0W

ESTIMATED QUANTITIES

F.H.W.A. REGION	STATE	PROJECT	CALC. TAM DATE 4-92
5	OHIO		CHK. DJB DATE 6-92

135
338

HAM-75-9.75

LINE	REF. NO.	LOCATION STATION	SIDE	SHT. NO.	SIGN CODE	SIGN SIZE	630 Removal of Ground Mounted Sign And Storage Each	630 Removal of Ground Mounted Major Sign And Storage Each	630 Removal of Ground Mounted Post Support And Disposal Each	630 Removal of Ground Mounted Beam Support And Disposal Each	630 Preparation And Shipment of Stored Signs, Flat Sheet Each	630 Preparation And Shipment of Stored Signs, Extrusheet Each	LINE
1													1
2		RAMP C											2
3	175-S	6+40	LT	184	GG	11'x5'		1		2		1	3
4	176-S	7+50	LT	184	R-41B-36	36"x36"	1		1		1		4
5	177-S	8+10	LT	184	M-5	ASSEMBLY	3		1		3		5
6													6
7													7
8			LT	184	M-5	ASSEMBLY	3				3		8
9	178-S	8+25	LT	184	D-11A	132"x18"		1		2			9
10			LT	184	R-41A-36	36"X24"	1				1		10
11													11
12													12
13													13
14	179-S	9+10	RT	184	X-6R	12"x36"	1		1		1		14
15	180-S	9+18	LT	184	X-6L	12"x36"	1		1		1		15
16	181-S	12+45	LT	184	X-6L	12"x36"	1		1		1		16
17	182-S	12+80	LT	184	X-6R	12"x36"	1		1		1		17
18	183-S	19+50	LT	184	R-41A-36	36"x24"	1		1		1		18
19	184-S	21+85	RT	184	R-2-48	48"x48"	1		1		1		19
20	185-S	NOT USED											20
21													21
22		RAMP D											22
23	186-S	4+85	RT	184	R-2-48	48"x48"	1		1		1		23
24													24
25		RAMP J											25
26	187-S	9+05	LT	185	X-6L	12"x36"	1		1		1		26
27	188-S	9+05	RT	185	X-6R	12"x36"	1		1		1		27
28	189-S	16+40	RT	185	D-11A	108"x18"		1		2		1	28
29	190-S	20+00	LT	185	GH	12'x4'		1		2		1	29
30													30
31	192-S	20+35	LT	185	R-41A-36	36"x24"	1		1		1		31
32	193-S	NOT USED											32
33		GLENDALE-MILFORD RD											33
34		RAMP B-N											34
35	194-S	11+50	LT	186	R-15A-36	36"x36"	1		1		1		35
36	195-S	12+65	LT	186	R-2-48	48"x48"	1		1		1		36
37	196-S	12+95	RT	186	W-49R-48	48"x48"	1		2		1		37
38	197-S	13+60	RT	186	M-52A	108"x30"		1		2		1	38
39	198-S	NOT USED											39
40													40
41		RAMP M											41
42	199-S	8+10	RT	187	SPECIAL	48"x36"	1		2		1		42
43	200-S	8+70	LT	187	D-11A	132"x18"	1		2		1		43
44	201-S	8+95	LT	187	M-5	ASSEMBLY	3				3		44
45			LT	187	D-4A	72"x24"	1		2		1		45
46	202-S	9+90	LT	187	D-11A	108"x30"		1		2		1	46
47	203-S	NOT USED											47
48													48
49		RAMP L											49
50	204-S	1+40	LT	187	R-41B-36	36"x36"	1		1		1		50
51													51
52	205-S	4+10	LT	187	M-50	66"x24"		1		2		1	52
53			LT	187	D-11A	66"x18"		1				1	53
54			LT	187	D-11	66"x18"		1				1	54
55			LT	187	R-41A-36	36"x24"	1				1		55
56													56
57	206-S	6+80	LT	187	R-41A-36	36"X24"	1		1		1		57
58	207-S	6+80	RT	187	W-47-48	48"x48"	1		2				58
59													59
60	209-S	NOT USED											60
61													61
62		WYOMING AVE.											62
63	210-S	10+26.50	LT	188	R-1-30	30"x30"	1		1		1		63
64													64
65													65
TOTAL TO GENERAL SUMMARY							32	9	27	14	31	8	

PPS DATE 08/30/94 10:00:00AM J:\DGN

ESTIMATED QUANTITIES

F.H.W.A. REGION	STATE	PROJECT	CALC. TAM DATE 10-92
5	OHIO		CHK. DJB DATE 10-92

135A / 338

HAM-75-9.75

LINE	REF. NO.	LOCATION STATION TO STATION	SIDE	SHT. NO.	TRAFFIC CONTROL 625 Conduit 713.04 4" Lin Ft	625 Conduit Jacked or Drilled under Pavement, 4" Lin Ft	625 Trench Lin Ft	625 Trench in Paved Area, Type B Lin Ft	625 Pull Box 713.08 24" Each	LINE
1										1
2		NORTHBOUND								2
3										3
4		67+57 TO 87+00	RT	168	3886		905	1038	4	4
5										5
6		89+35 TO 134+95	RT		9120	180	130	4440	13	6
7										7
8		140+20 TO 161+70	RT	168,169,173	4300	60	10	2150	7	8
9										9
10		163+10 TO 178+55	RT	174,175	3090	50	12	1545	6	10
11										11
12		179+80 TO 182+95	RT	175	630			315	2	12
13										13
14		207+20 TO 305+84	RT	176-181	19728	210		9864	25	14
15										15
16										16
17										17
18										18
19										19
20										20
21										21
22										22
23										23
24										24
25										25
26										26
27										27
28										28
29										29
30		SOUTHBOUND								30
31										31
32		67+57 TO 86+20	LT	168	3726		925	938	4	32
33										33
34		88+80 TO 103+68.24BK	LT	168,169	2978	60	1269	220	5	34
35										35
36		113+61.15AH TO 175+75	LT	169-172	12498	30	2859	3390	16	36
37										37
38		177+05 TO 185+95	LT	172	1780		890		3	38
39										39
40		207+00 TO 305+84	LT	176-181	19838	140	800	9120	26	40
41										41
42										42
43										43
44										44
45										45
46										46
47										47
48										48
49										49
50										50
51										51
52										52
53										53
54										54
55										55
56										56
57										57
58										58
59										59
60										60
61										61
62										62
63										63
64										64
65										65
		TOTAL			81574	730	7800	33020	111	

DGN:TS-ESQNT.DGN

F.H.W.A. REGION	STATE	PROJECT	
5	OHIO		

136
338

HAM-75-9.75

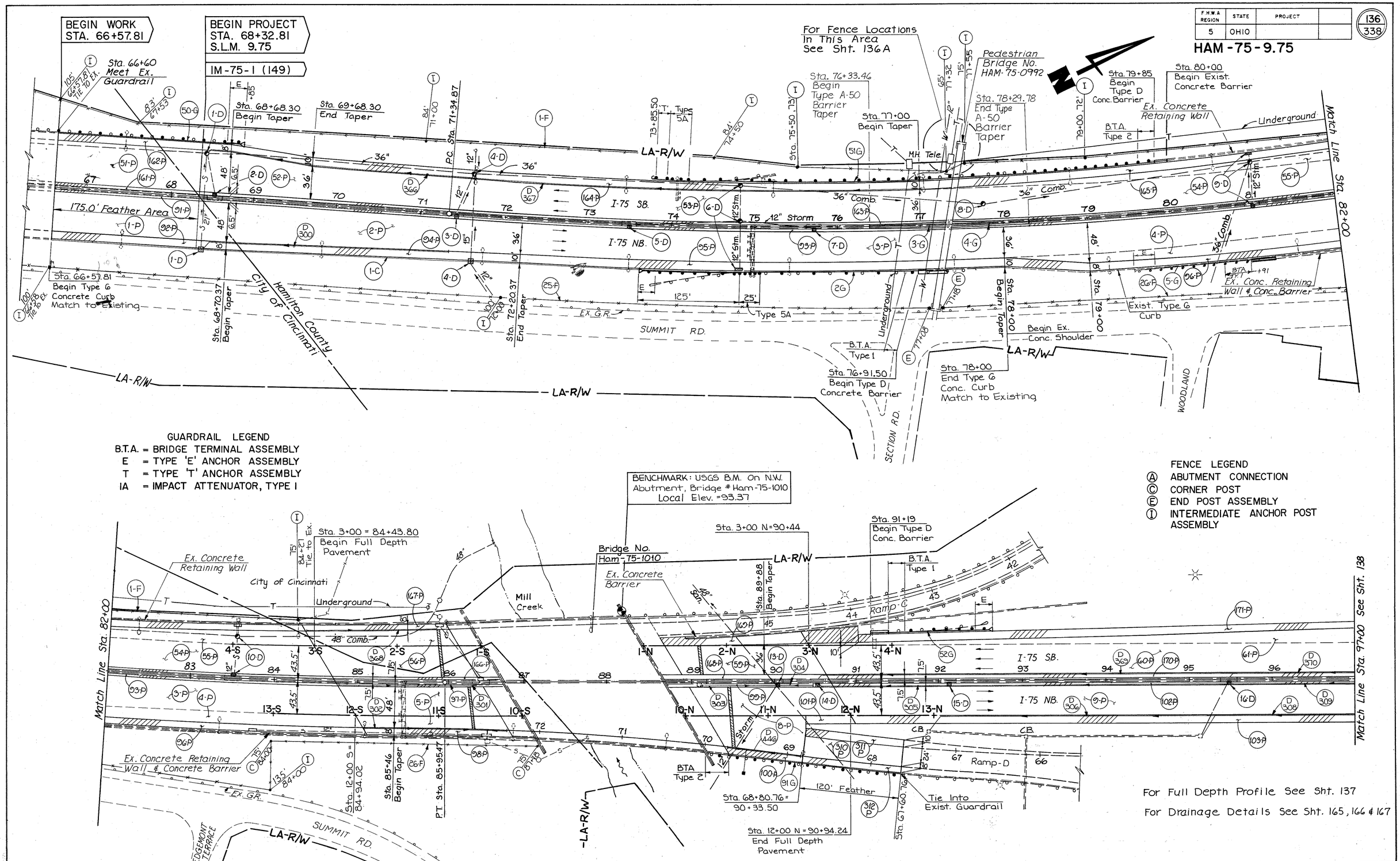

GUARDRAIL LEGEND
B.T.A. = BRIDGE TERMINAL ASSEMBLY
E = TYPE 'E' ANCHOR ASSEMBLY
T = TYPE 'T' ANCHOR ASSEMBLY
IA = IMPACT ATTENUATOR, TYPE I

FENCE LEGEND
Ⓐ ABUTMENT CONNECTION
Ⓒ CORNER POST
Ⓔ END POST ASSEMBLY
Ⓘ INTERMEDIATE ANCHOR POST ASSEMBLY

For Full Depth Profile See Sht. 137
For Drainage Details See Sht. 165, 166 & 167

STA. 66+57.81 TO STA. 97+00

F.H.W.A. REGION	STATE	PROJECT	
5	OHIO		

136A
338

HAMILTON COUNTY
HAM-75-09.75

BENCH MARK
U.S.G.S. Concrete Monument on S.W. Corner of North Headwall of Bridge over Mill Creek and I-75 Southbound Entrance Ramp from Cross County Highway, Highway Bridge *75-1010.
Elevation 534.70

Payment for Joint Materials to be included under Item 608-Concrete Walk.

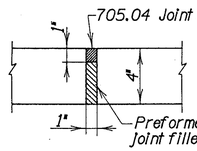

EXPANSION JOINT DETAIL

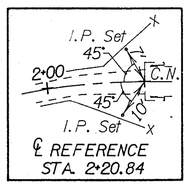

EXISTING STRUCTURE

TYPE: Four span reinforced concrete rigid frame
SPANS: 42'-0", 60'-0", 60'-0", 42'-0"
WALKWAY: 7'-0" face to face of railings
LOADING: 85 PSF
ALIGNMENT: Tangent
SKEW: None
DATE BUILT: 1948 (±)
CONDITION: Good, Inadequate underclearance
STRUCTURE FILE NO. 3110354

PROPOSED STRUCTURE

TYPE: Four span continuous composite rolled steel (ASTM A572, painted) beam superstructure with reinforced concrete deck supported by wall type piers and integral abutments.
SPANS: 38'-0", 76'-3", 60'-0", 35'-0" center to center of bearings
WALKWAY: 8'-0" face to face of curbs.
LOADING: 85 PSF
ALIGNMENT: Tangent
SKEW: None
WEARING SURFACE: Monolithic concrete

FENCE LOCATIONS	
1+40	3.5' Rt.
1+85	9' Rt.
2+06	12' Rt.
2+61	28' Rt.
1+56	3.5' Lt.
1+74	8.5' Lt.
1+85	16' Lt.
2+40.5	41' Lt.

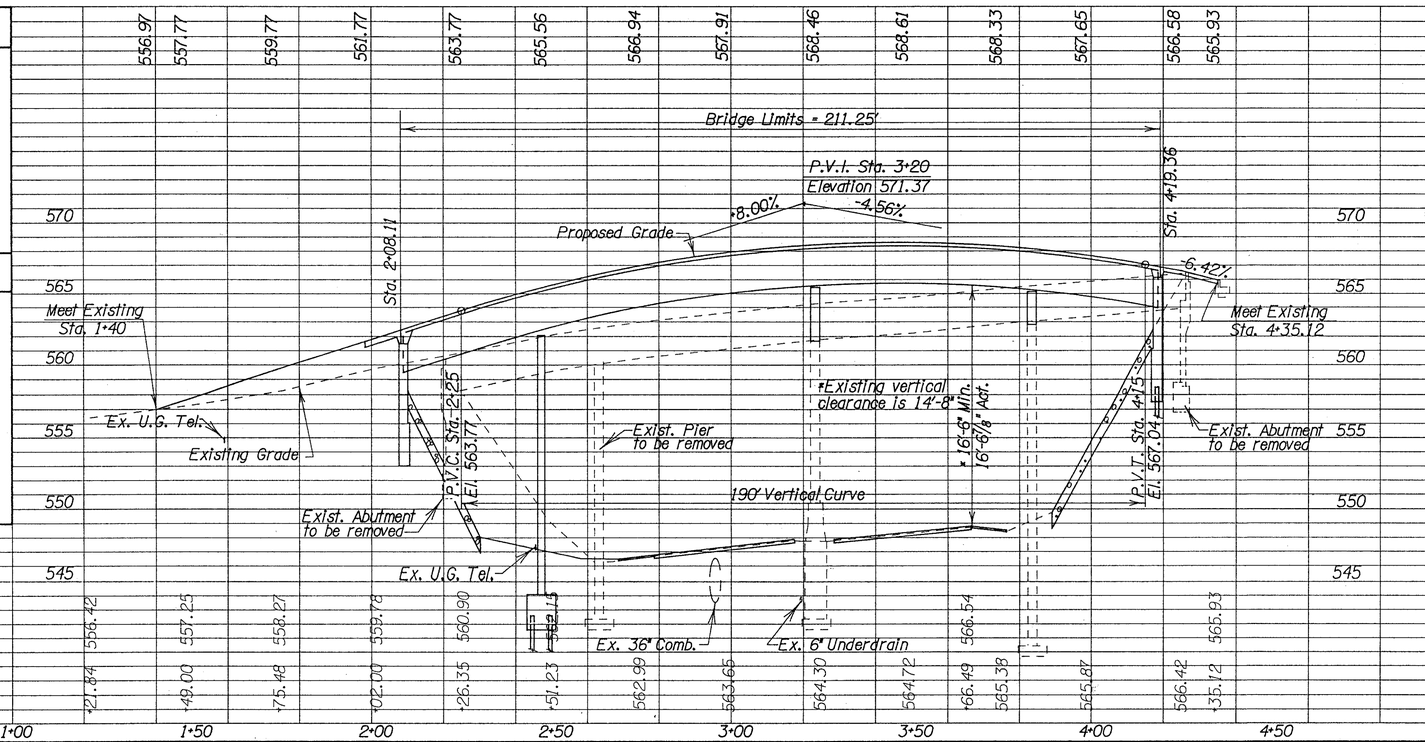

HAM-75-0992 (PEDESTRIAN OVERPASS) ESTIMATED QUANTITIES

Reference	Station	Side	202 Manhole Removed	202 Walk Removed	608 4" Concrete Walk
			Each	Sq.Ft.	Sq.Ft.
500P	1+40 TO 2+08.11	LT&RT			356
501P	4+19.36 TO 4+35.12	LT&RT			126
500R	1+40 TO 2+19	LT&RT		417	
501R	1+65	RT.	1		
502R	2+48	RT.	1		
For Structure Quantities, See HAM-75-0992 Details					
TOTALS TO GENERAL SUMMARY			2	417	482

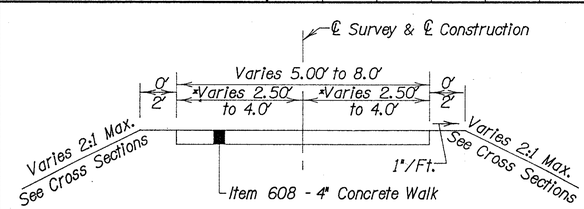

TYPICAL SECTION

LIMITING STATIONS
*Sta. 1+40.00 to Sta. 2+08.11
Sta. 4+19.36 to Sta. 4+35.12

PEDESTRIAN OVERPASS STA. 1+40.00 TO STA. 4+35.12	
Item 203 Excavation not Including Embankment	325 C.Y.
Item 203 Embankment	69 C.Y.
Item 659 Seeding and Mulching	436 S.Y.
See Cross Sections, Sheets 136B.	

HAM-75-0992 (PEDESTRIAN OVERPASS) PLAN AND PROFILE

s:\ohdot\6272\6272prop.dgn Dec. 31, 1992 10:42:27

SEEDING END WIDTH	SEEDING SQ. YDS.	
	436	PEDESTRIAN OVERPASS SEEDING TOTAL

FHWA REGION	STATE	PROJECT	
5	OHIO		CALC. SRP DATE 12/92
			CHECK DCF DATE 12/92

136B
338

HAMILTON COUNTY
HAM-75-9.75

STA.4+35.12 END EARTHWORK

RESUME STA.3+88 RESUME EARTHWORK

STA.2+60 SUSPEND EARTHWORK

			END AREA CUT	END AREA FILL	VOLUME CUT	VOLUME FILL
		PEDESTRIAN OVERPASS EARTHWORK TOTAL			325	69
57	555	ADJUST FOR EARTHWORK AT ABUTMENT 2			0	5
	550					
57	545	565.56				
		2+50 Proposed Bridge Deck not shown.				
		549.00				
146	560		78	0		
	555	Crushed Aggregate Slope Protection for Quantity, see Bridge Details.			181	0
48	550	561.77	312	0		
		2+25 Proposed Bridge Deck not shown.				
	545	560.75				
113	560				144	21
	555	561.77				
33		2+00				
	550	559.70	0	45		
68	545					
	560				0	27
	555	559.77				
16		1+75				
	550	557.30	0	14		
53	545					
	560				0	16
	555	556.97				
0		1+40 BEGIN EARTHWORK				
	550	556.97 BEGIN SEEDING	0	0		
	545					

PEDESTRIAN OVERPASS CROSS SECTIONS STA. 1+40.00 TO STA. 2+25.00

F.H.W.A. REGION	STATE	PROJECT	
5	OHIO		

137
338

HAM-75-9.75

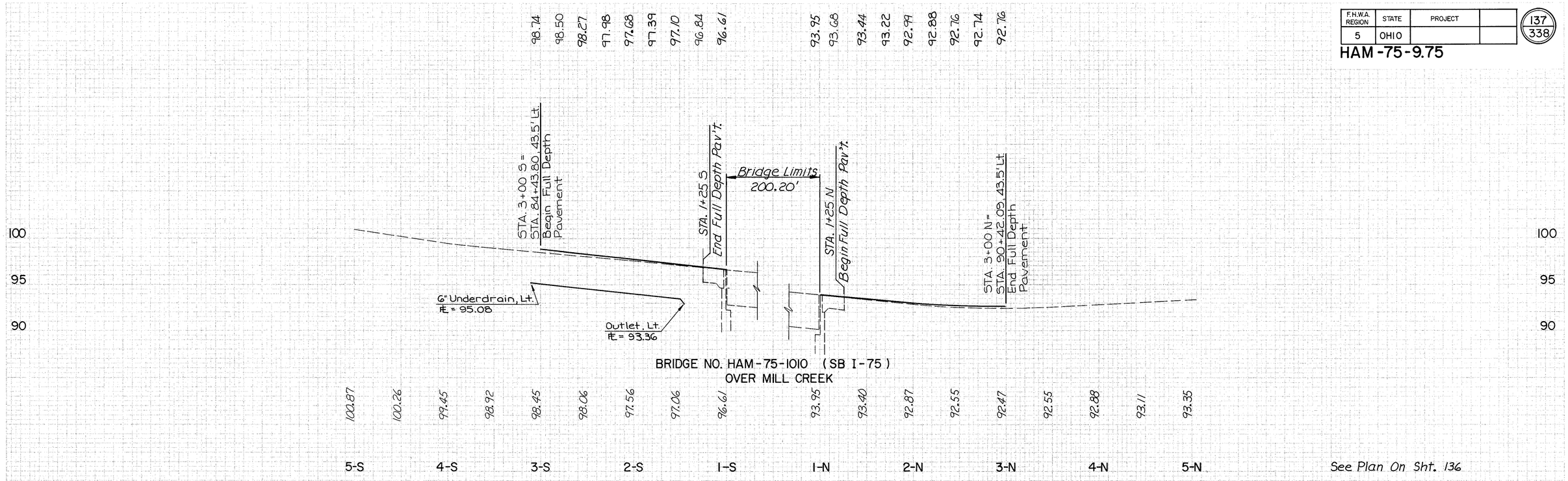

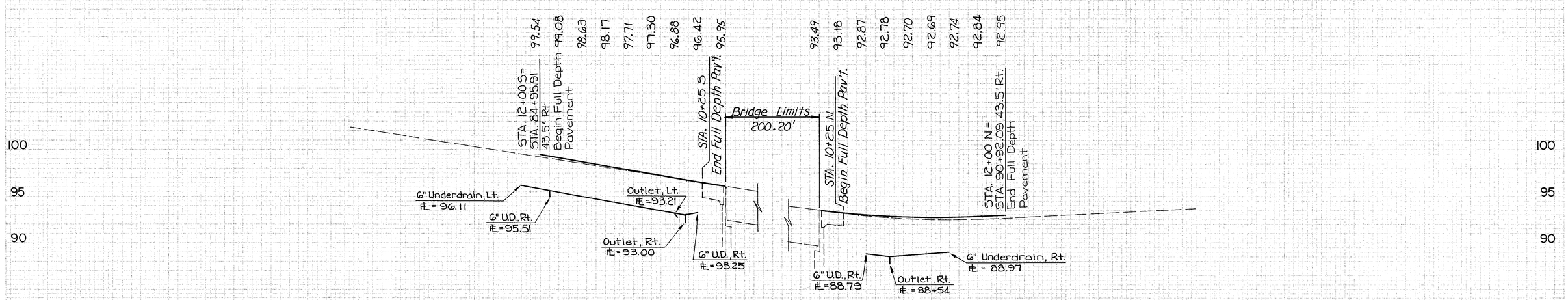

HIGHWAY DESIGN MANUAL
PLATE 3 FULL CROSS SECTION-FULL LINE
STRUCTURE

PROFILE STA. 84+68.80 TO STA. 90+67.09

F.H.W.A. REGION	STATE	PROJECT	
5	OHIO		

HAM-75-9.75

138
338

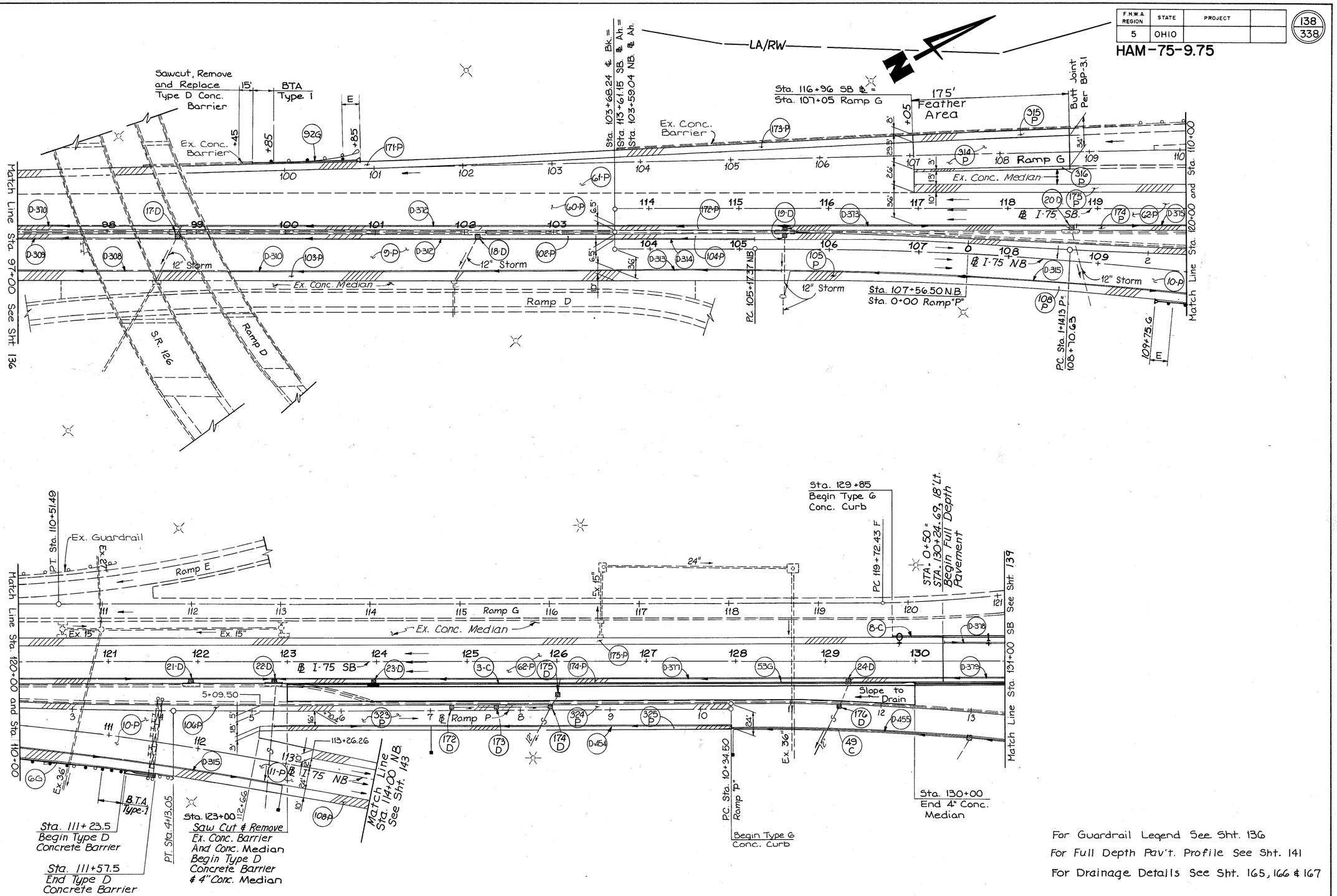

For Guardrail Legend See Sht. 136

For Full Depth Pav't. Profile See Sht. 141

For Drainage Details See Sht. 165, 166 & 167

STA. 97+00 TO STA. 114+00 NB AND STA. 131+00 SB

MEDIA RESOURCES CORP.

F.H.W.A. REGION	STATE	PROJECT	
5	OHIO		

139
338

HAM-75-9.75

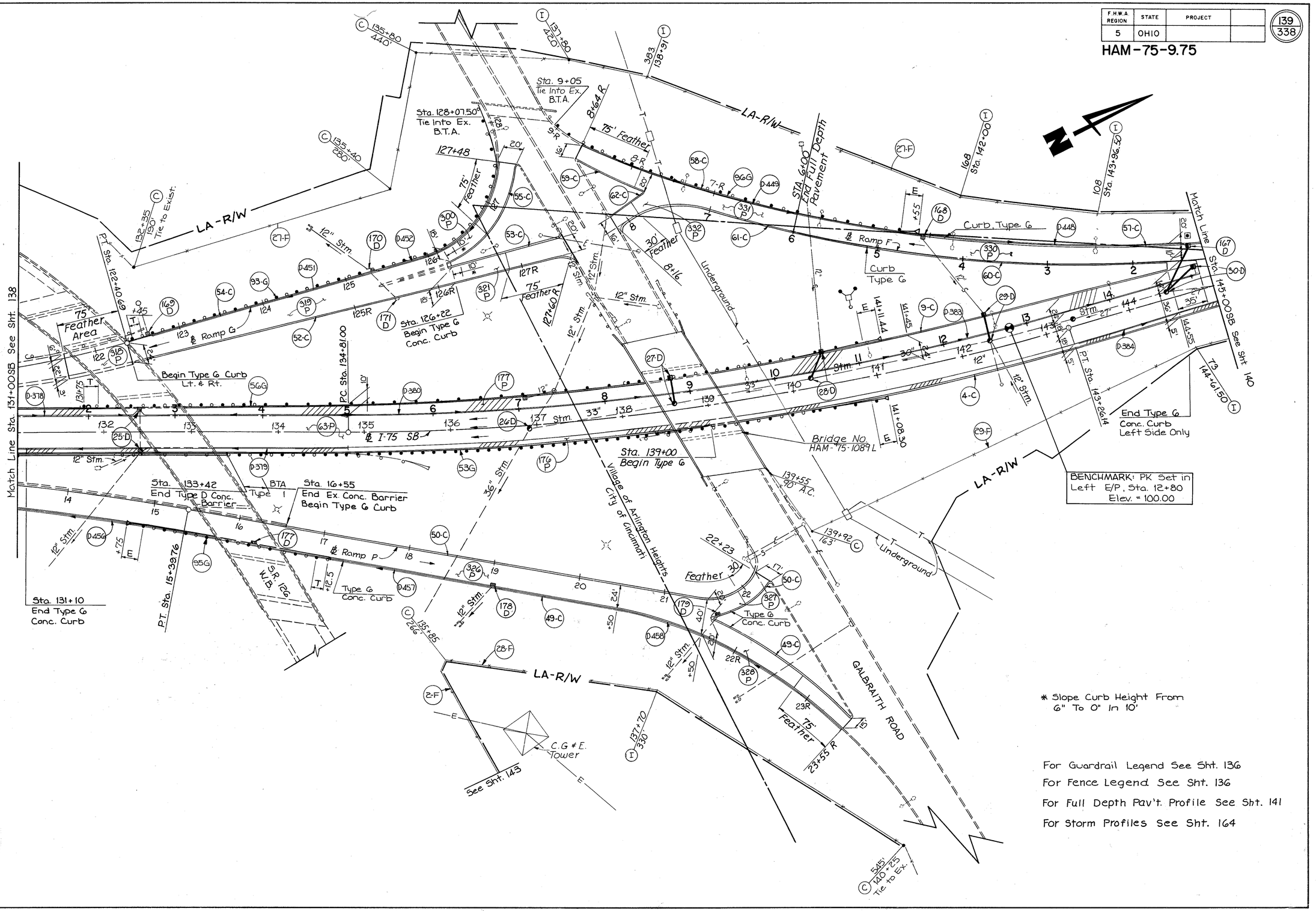

* Slope Curb Height From 6" To 0" In 10'

For Guardrail Legend See Sht. 136

For Fence Legend See Sht. 136

For Full Depth Pav't. Profile See Sht. 141

For Storm Profiles See Sht. 164

MEDIA RESOURCES CORP.

STA. 131+00SB TO STA. 145+00SB

F.H.W.A. REGION	STATE	PROJECT	
5	OHIO		

140
338

HAM - 75 - 9.75

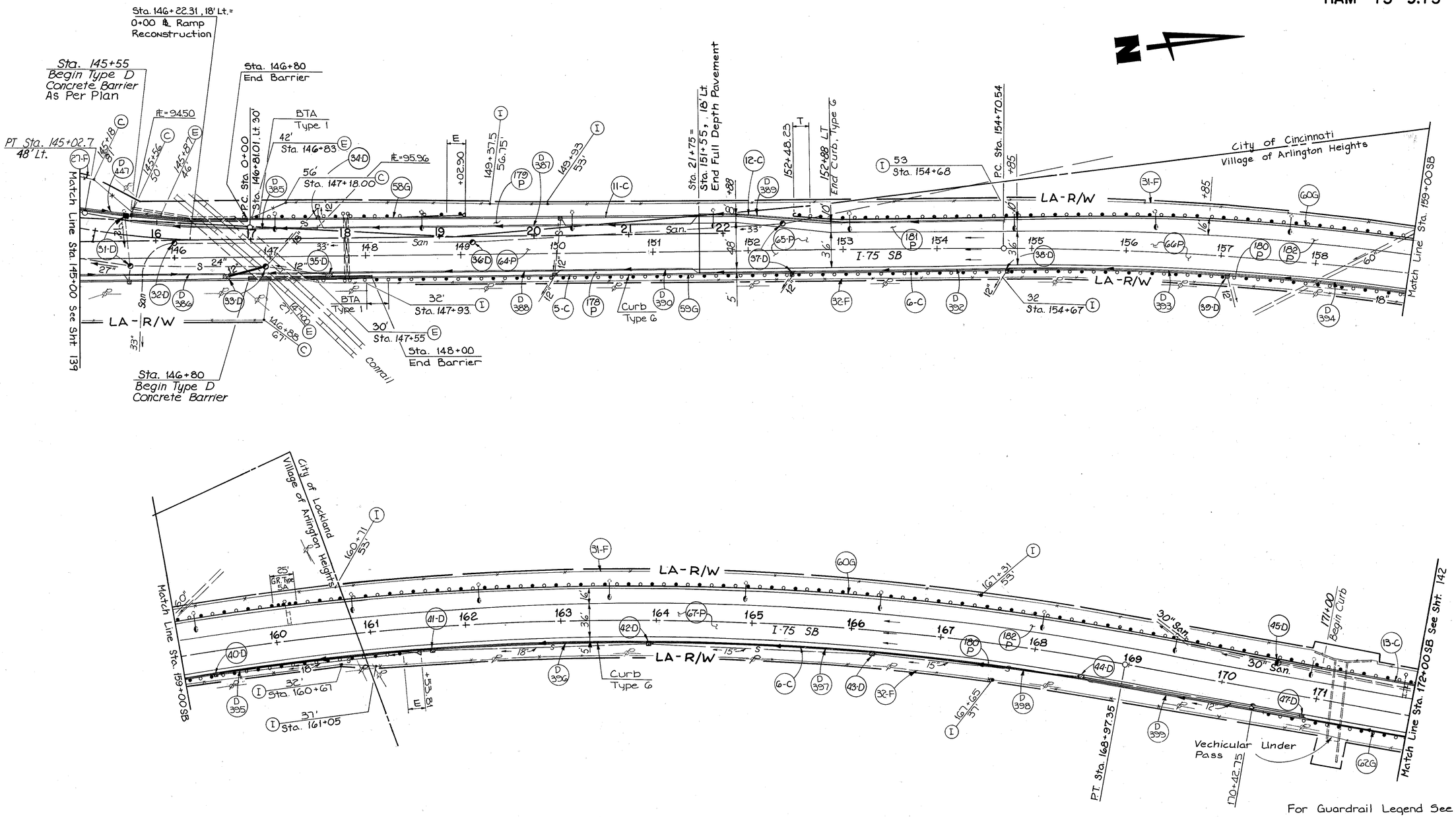

For Guardrail Legend See Sht. 136

For Fence Legend See Sht. 136

For Full Depth Pav't. Profile See Sht. 141

For Drainage Details See Sht. 165, 166 & 167

MEDIA RESOURCES CORP.

STA. 145+00SB TO STA. 172+00SB

F.H.W.A. REGION	STATE	PROJECT	
5	OHIO		

141
338

HAM-75-9.75

GALBRAITH ROAD
BRIDGE NO. HAM-75-1089 L

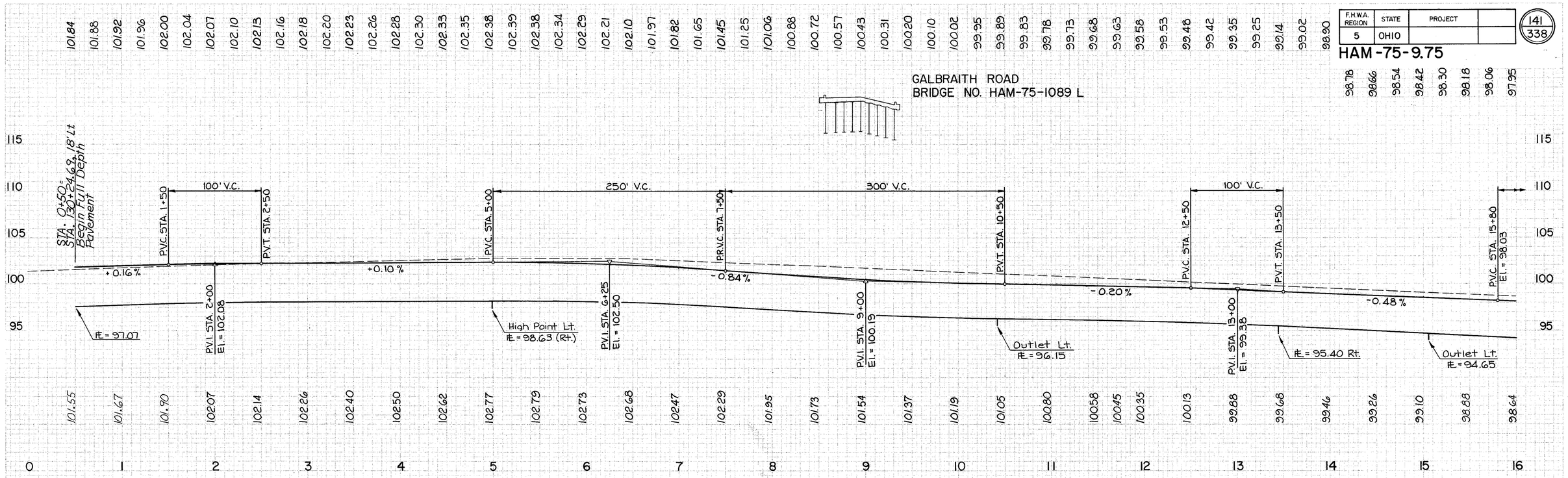

See Plan On Sht. 138, 139 & 140

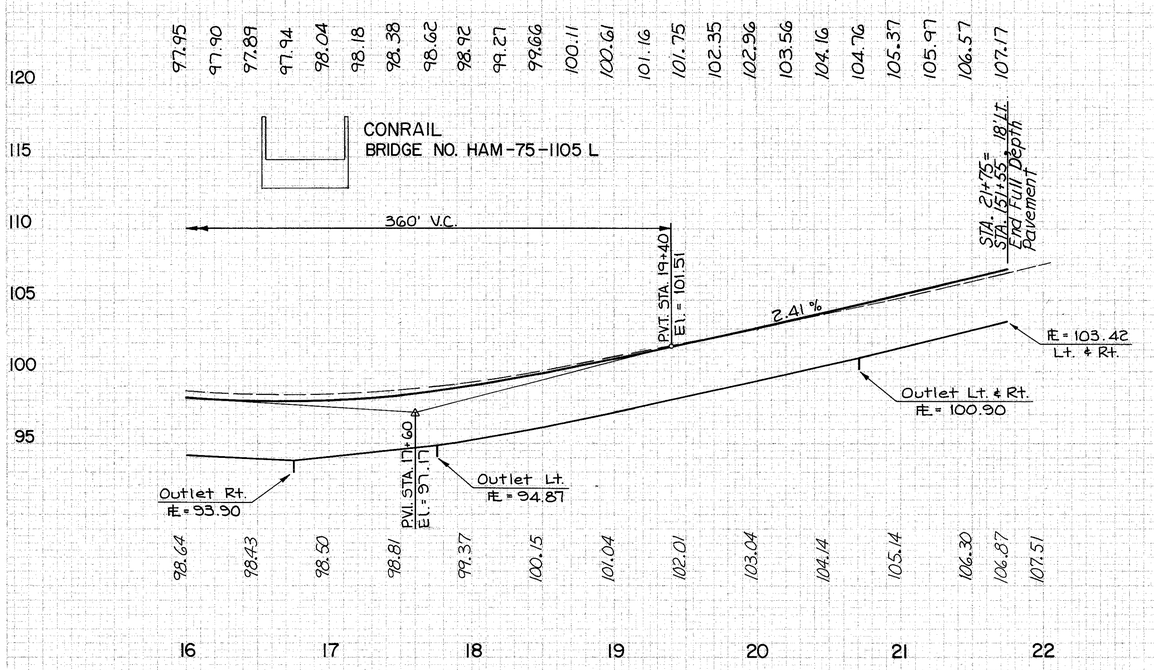

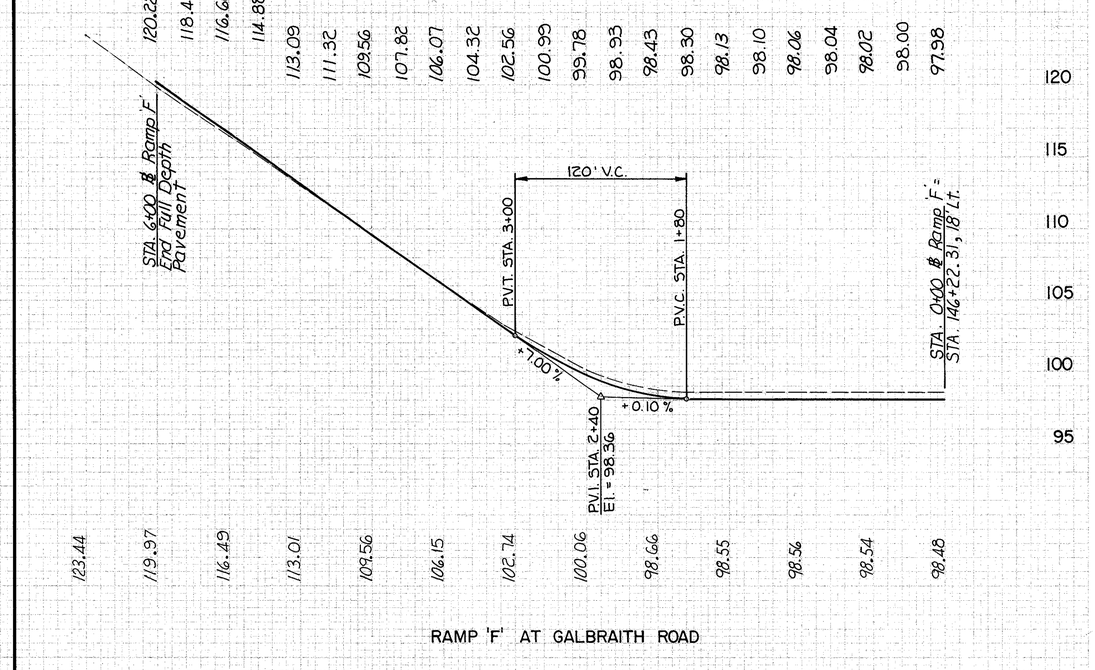

RAMP 'F' AT GALBRAITH ROAD

PLATE 3-FULL CROSS SECTION SHEET LINE

PROFILE S.B. STA. 130+24.69 TO STA. 151+55

F.H.W.A. REGION	STATE	PROJECT	
5	OHIO		

142
338

HAM-75-9.75

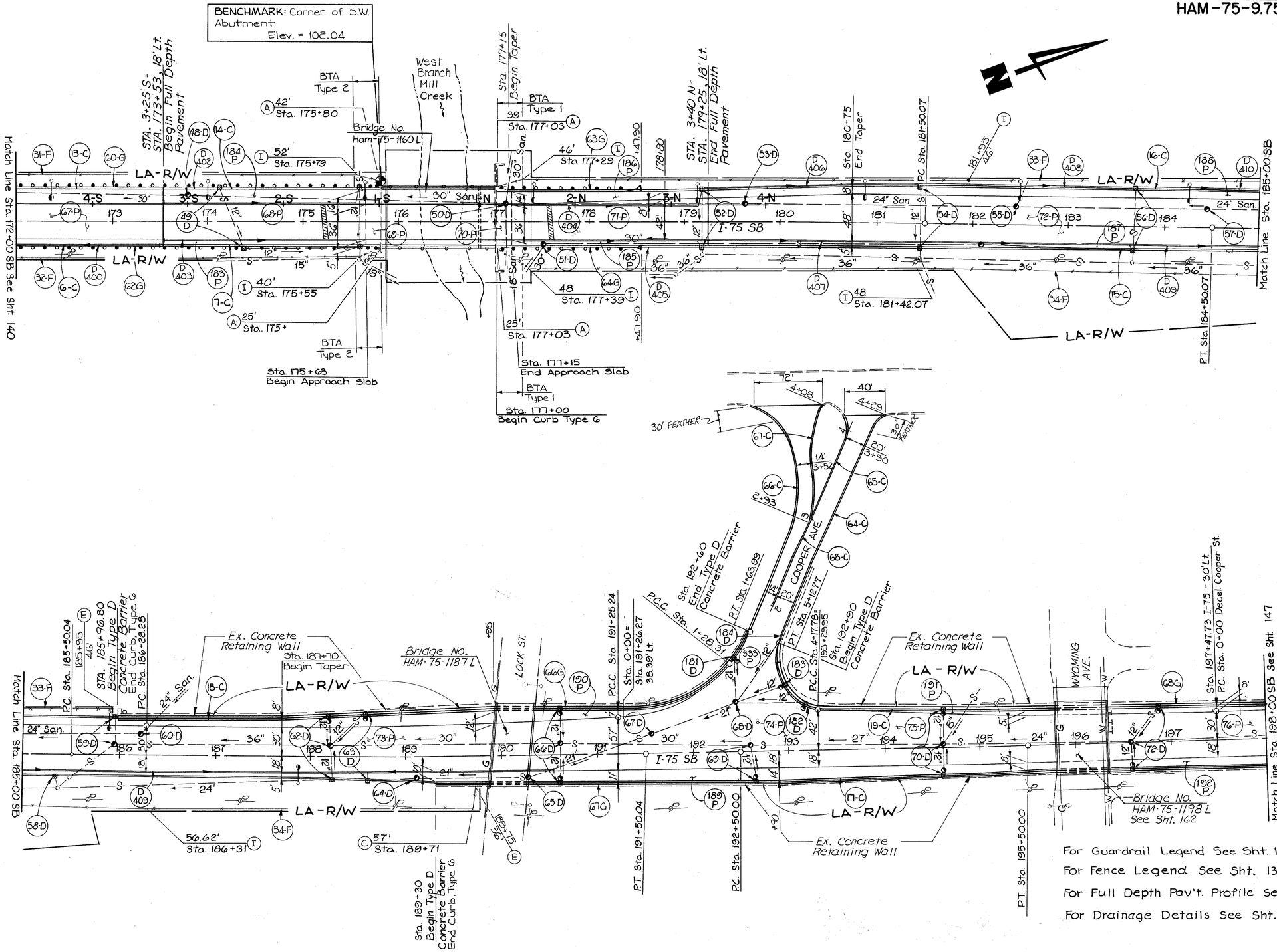

MEDIA RESOURCES CORP.

STA. 172+00 SB TO STA. 198+00 SB

F.H.W.A. REGION	STATE	PROJECT	
5	OHIO		

143
338

HAM-75-9.75

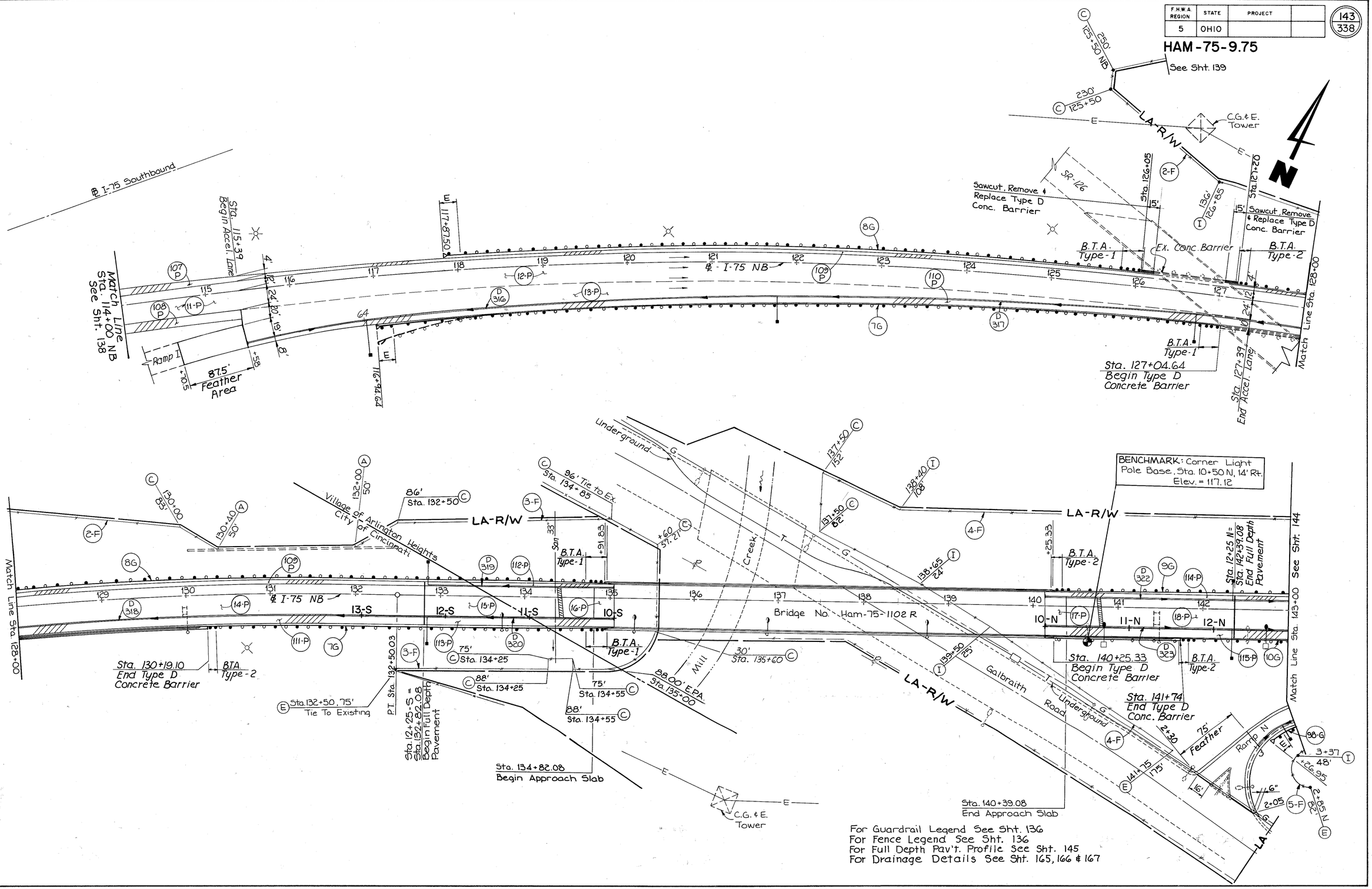

For Guardrail Legend See Sht. 136
For Fence Legend See Sht. 136
For Full Depth Pav't. Profile See Sht. 145
For Drainage Details See Sht. 165, 166 & 167

STA. 114+00 NB TO STA. 143+00 NB

MEDIA RESOURCES CORP

F.H.W.A. REGION	STATE	PROJECT	
5	OHIO		

144
338

HAM-75-9.75

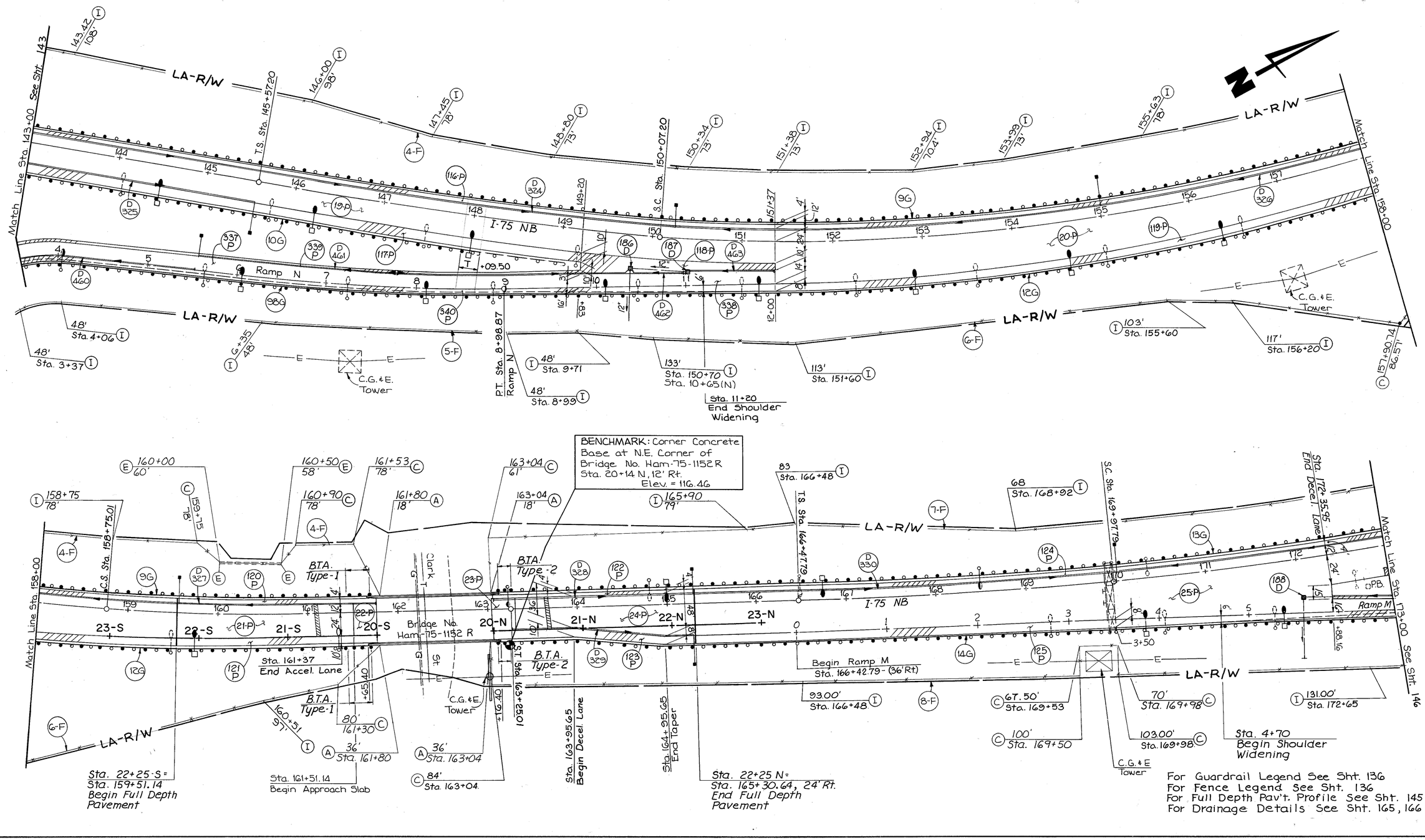

For Guardrail Legend See Sht. 136
For Fence Legend See Sht. 136
For Full Depth Pav't. Profile See Sht. 145
For Drainage Details See Sht. 165, 166 & 167

MEDIA RESOURCES CORP

STA. 143+00 NB TO STA. 173+00 NB

F.H.W.A. REGION	STATE	PROJECT	
5	OHIO		

145
338

HAM-75-9.75

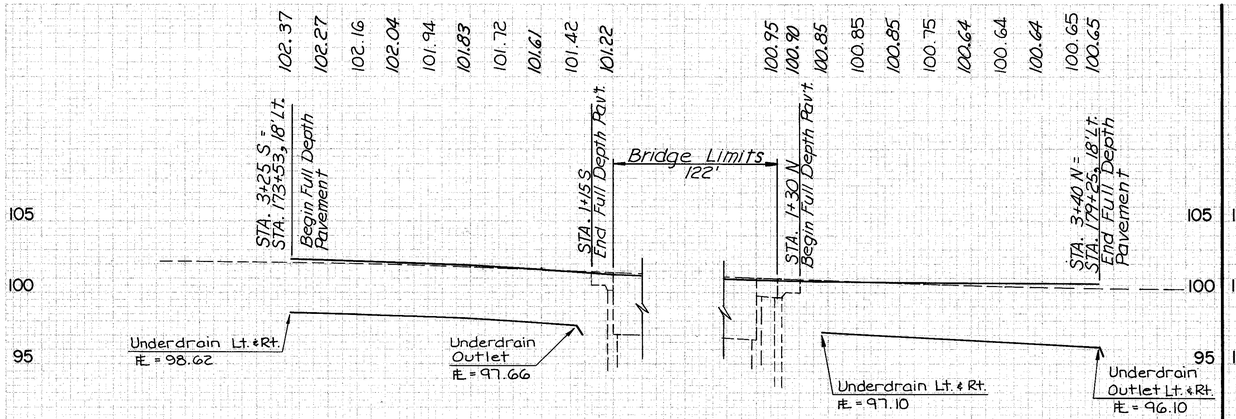

BRIDGE NO. HAM-75-1160 L
OVER WEST BRANCH OF
MILL CREEK

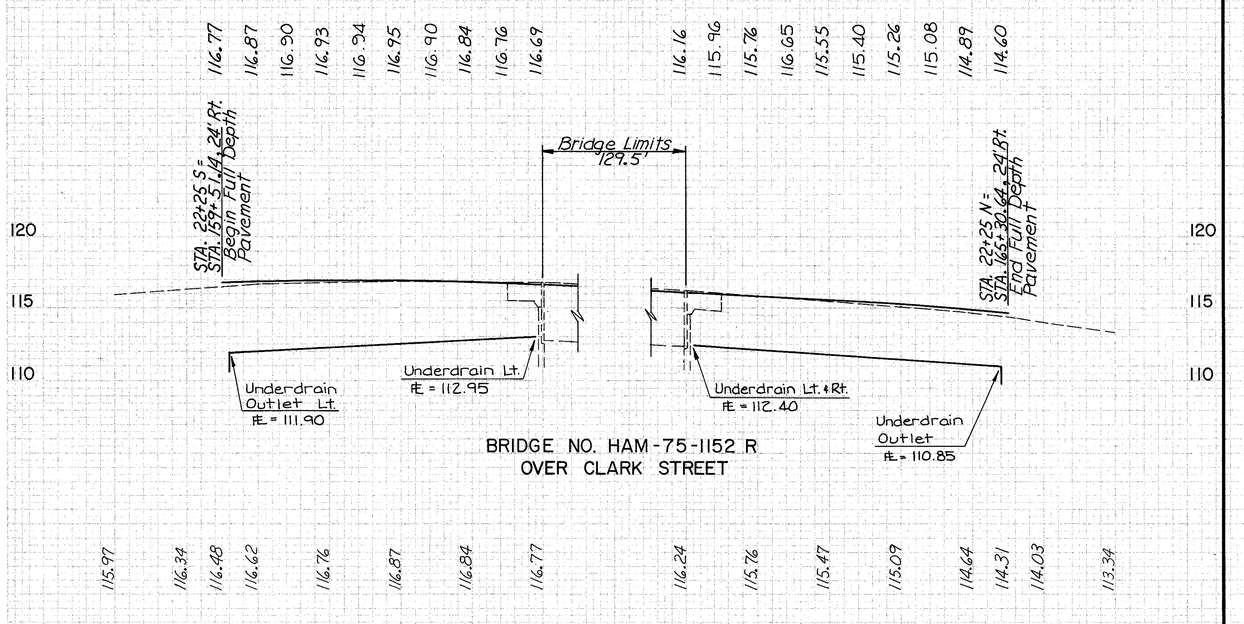

See Plan On Sht. 142

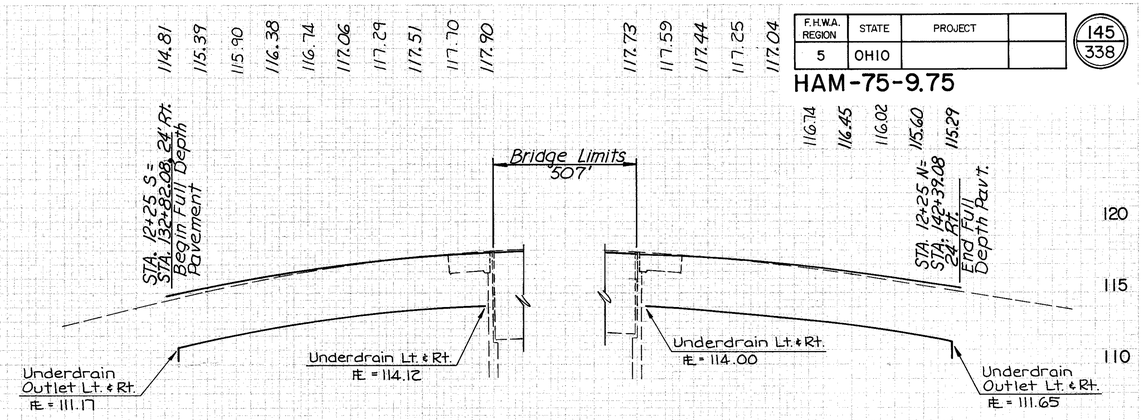

BRIDGE NO. HAM-75-1102 R
OVER GALBRAITH ROAD

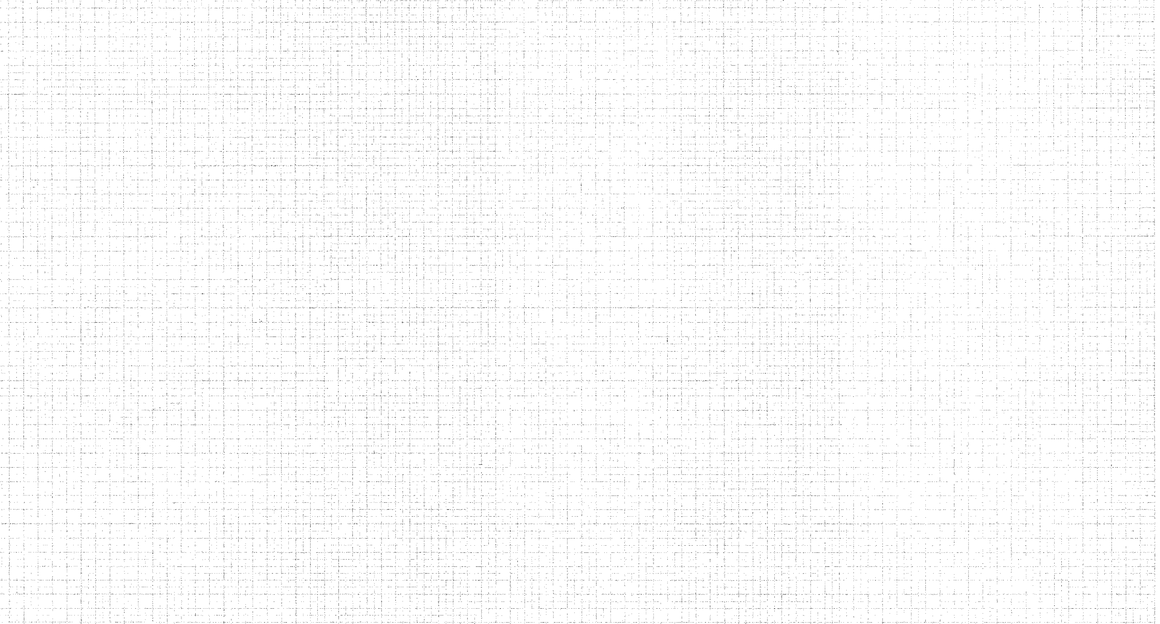

See Plan On Sht. 143

BRIDGE NO. HAM-75-1152 R
OVER CLARK STREET

See Plan On Sht. 144

PROFILE S.B. STA. 173+53 TO STA. 179+25
N.B. STA. 132+82.08 TO STA. 142+39.08
N.B. STA. 159+51.14 TO STA. 165+30.64

F.H.W.A. REGION	STATE	PROJECT	
5	OHIO		

146
338

HAM-75-9.75

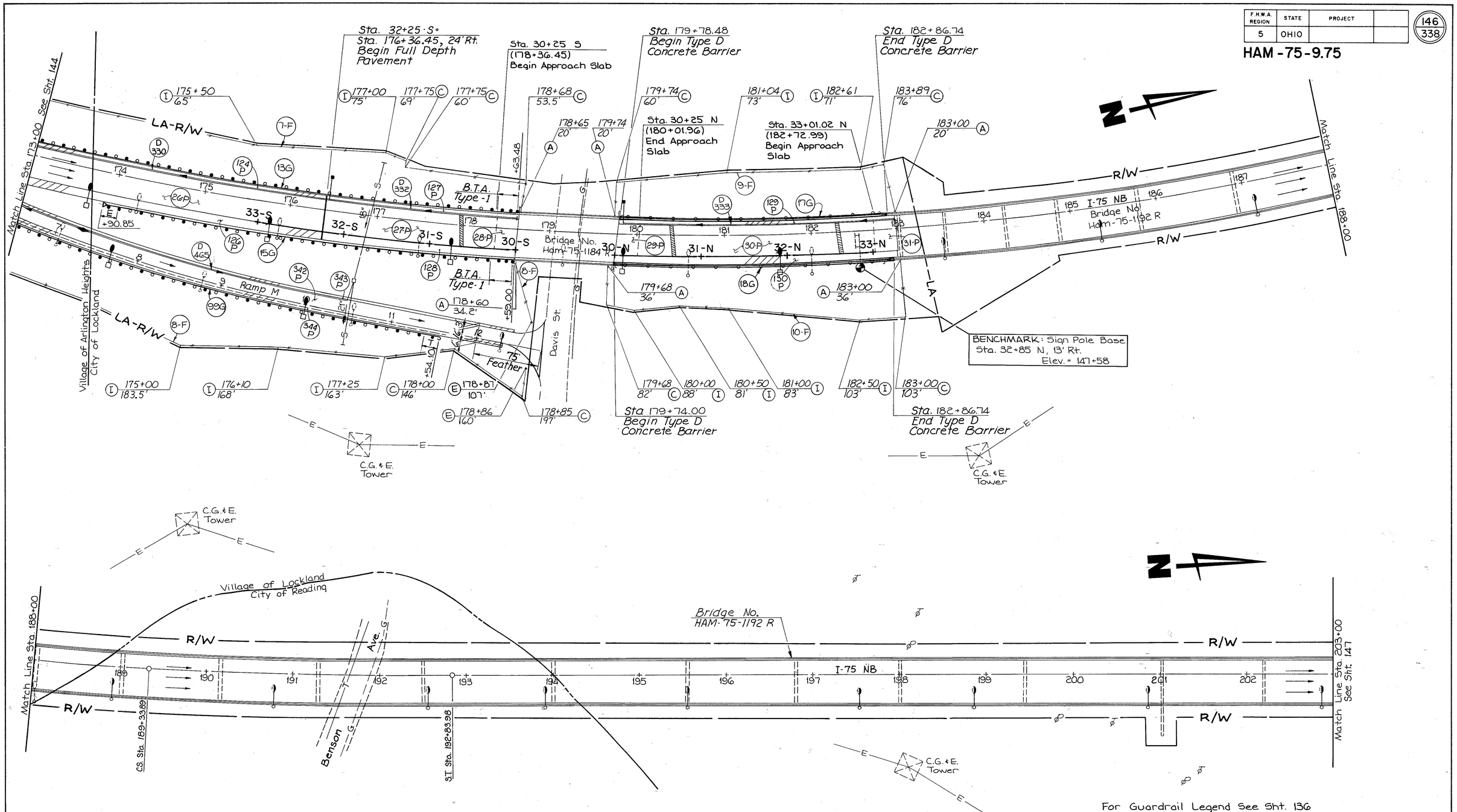

For Guardrail Legend See Sht. 136
For Fence Legend See Sht. 136
For Full Depth Pav't. Profile See Sht. 148
For Drainage Details See Sht. 165, 166 & 167

MEDIA RESOURCES CORP.

STA. 173+00 NB TO STA. 203+00 NB

F.H.W.A. REGION	STATE	PROJECT	
5	OHIO		

147
338

HAM-75-9.75

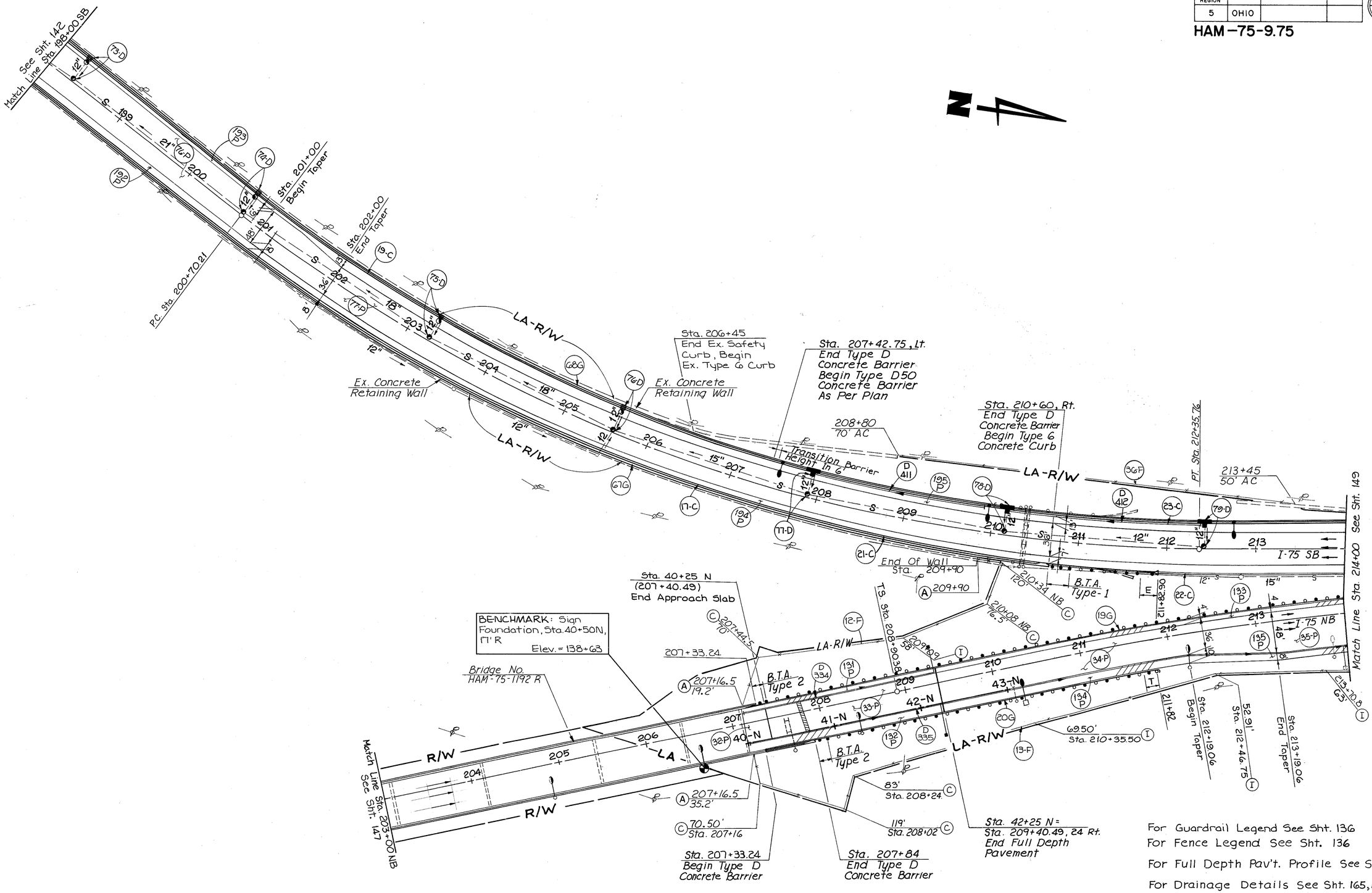

For Guardrail Legend See Sht. 136
For Fence Legend See Sht. 136
For Full Depth Pav't. Profile See Sht. 148
For Drainage Details See Sht. 165, 166 & 167

MEDIA RESOURCES CORP.

STA. 203+00NB TO STA. 214+00NB AND STA. 198+00 SB TO STA. 214+00 SB

F.H.W.A. REGION	STATE	PROJECT	
5	OHIO		

148/338

HAM-75-9.75

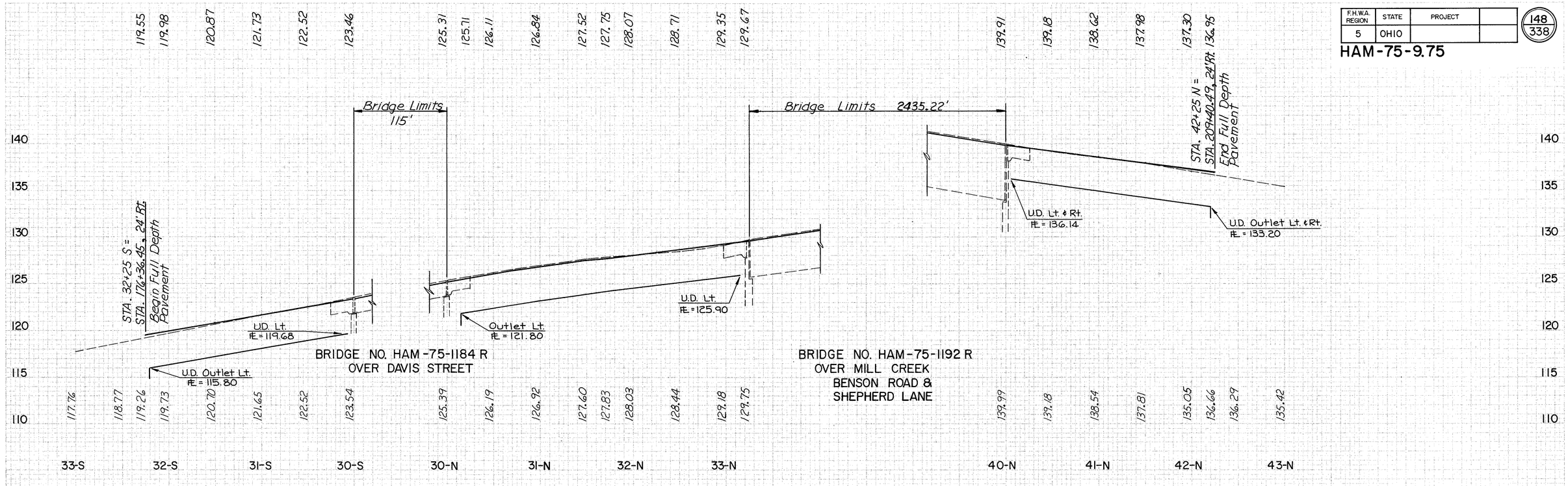

PROFILE N.B. STA. 176+36.45 TO STA. 209+40.49

F.H.W.A. REGION	STATE	PROJECT	
5	OHIO		

149
338

HAM-75-9.75

For Guardrail Legend See Sht. 136
For Fence Legend See Sht. 136
For Drainage Details See Sht. 165, 166 & 167

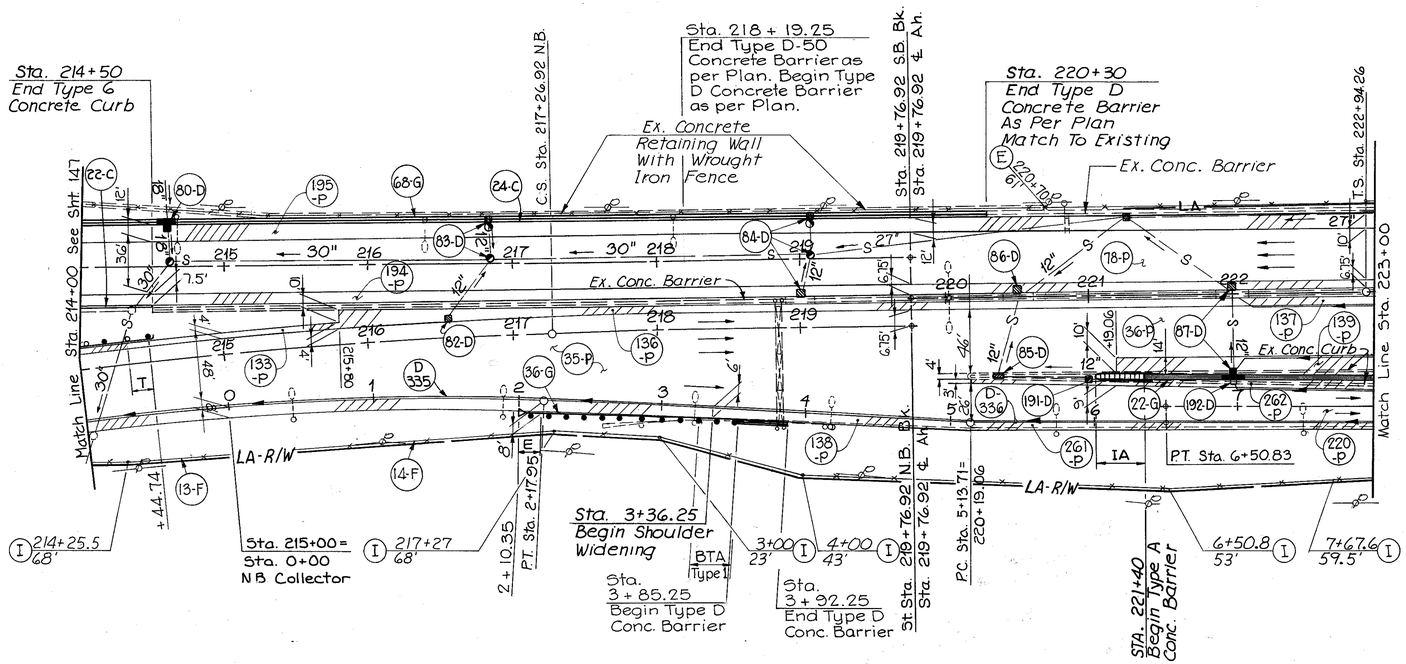

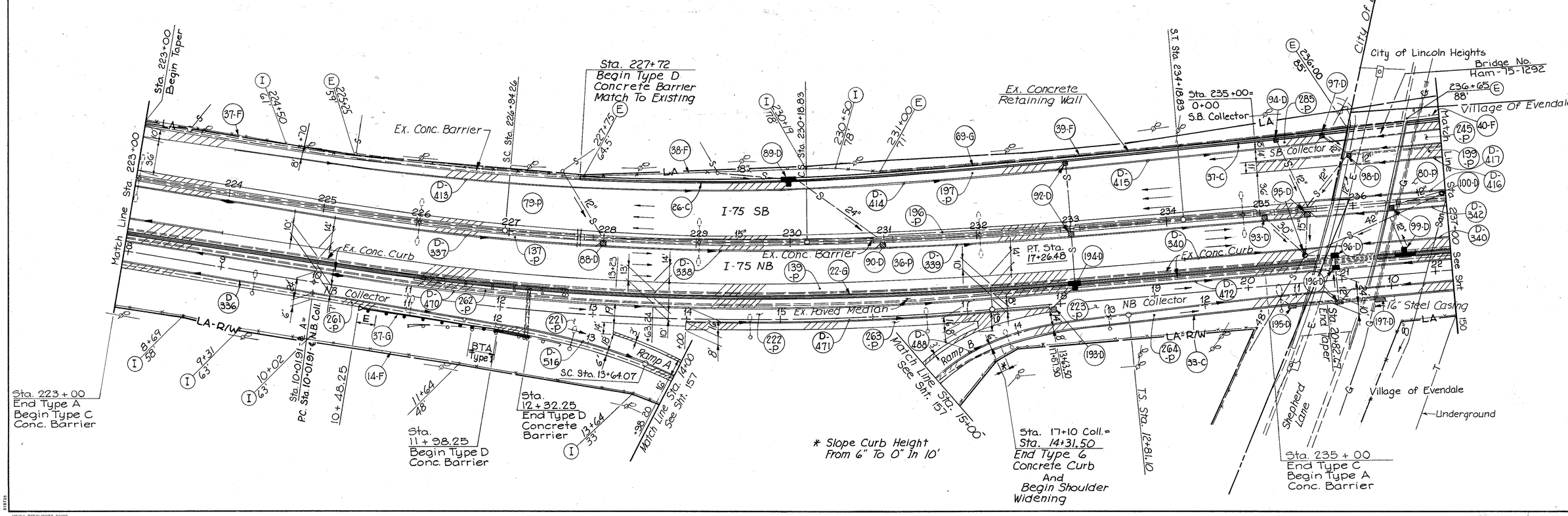

STA. 214+00 TO STA. 237+00

MEDIA RESOURCES CORP.

F.H.W.A. REGION	STATE	PROJECT	
5	OHIO		

150
338

HAM –75–9.75

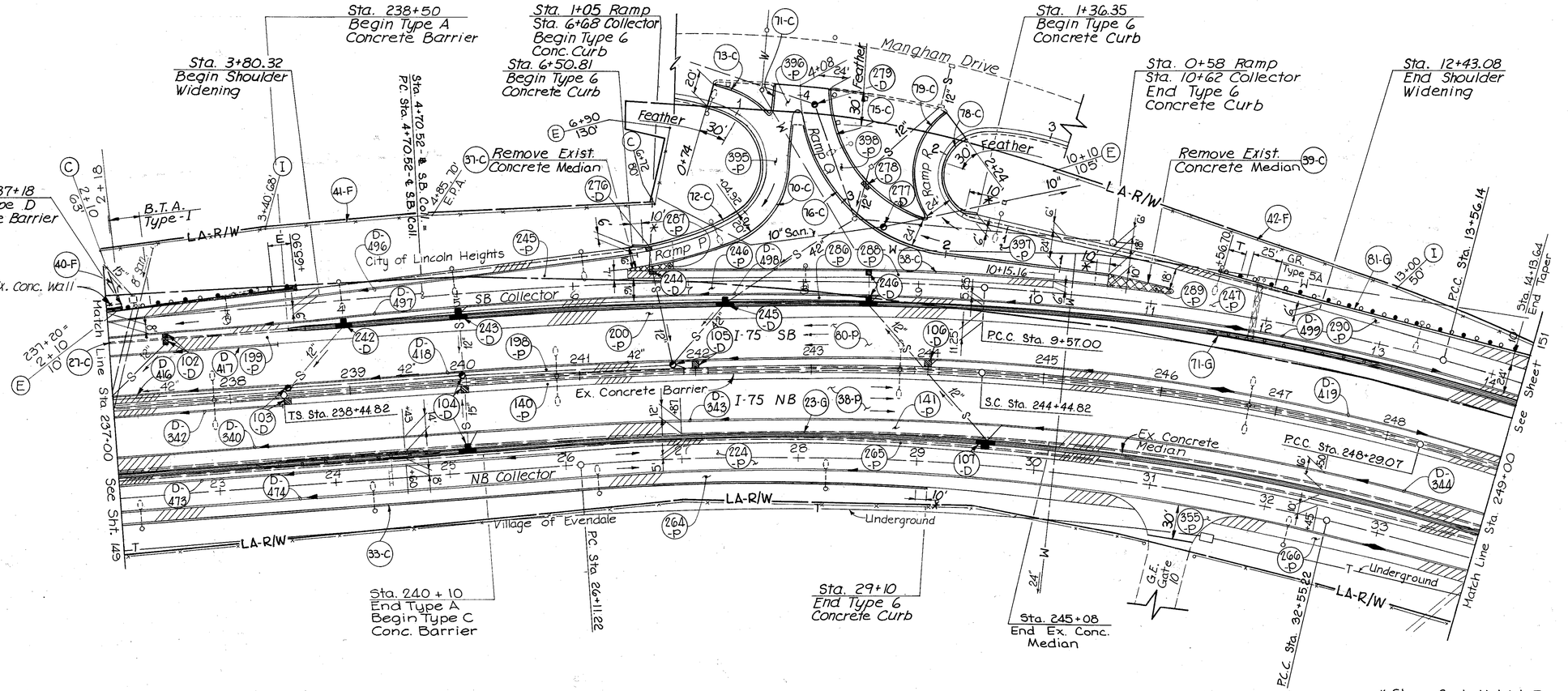

* Slope Curb Height From 6" To 0" In 10'

For Guardrail Legend See Sht. 136
For Fence Legend See Sht. 136
For Drainage Details See Sht. 165, 166 & 167

MEDIA RESOURCES CORP

STA. 237+00 TO STA. 249+00

F.H.W.A. REGION	STATE	PROJECT	
5	OHIO		

151
338

HAM-75-9.75

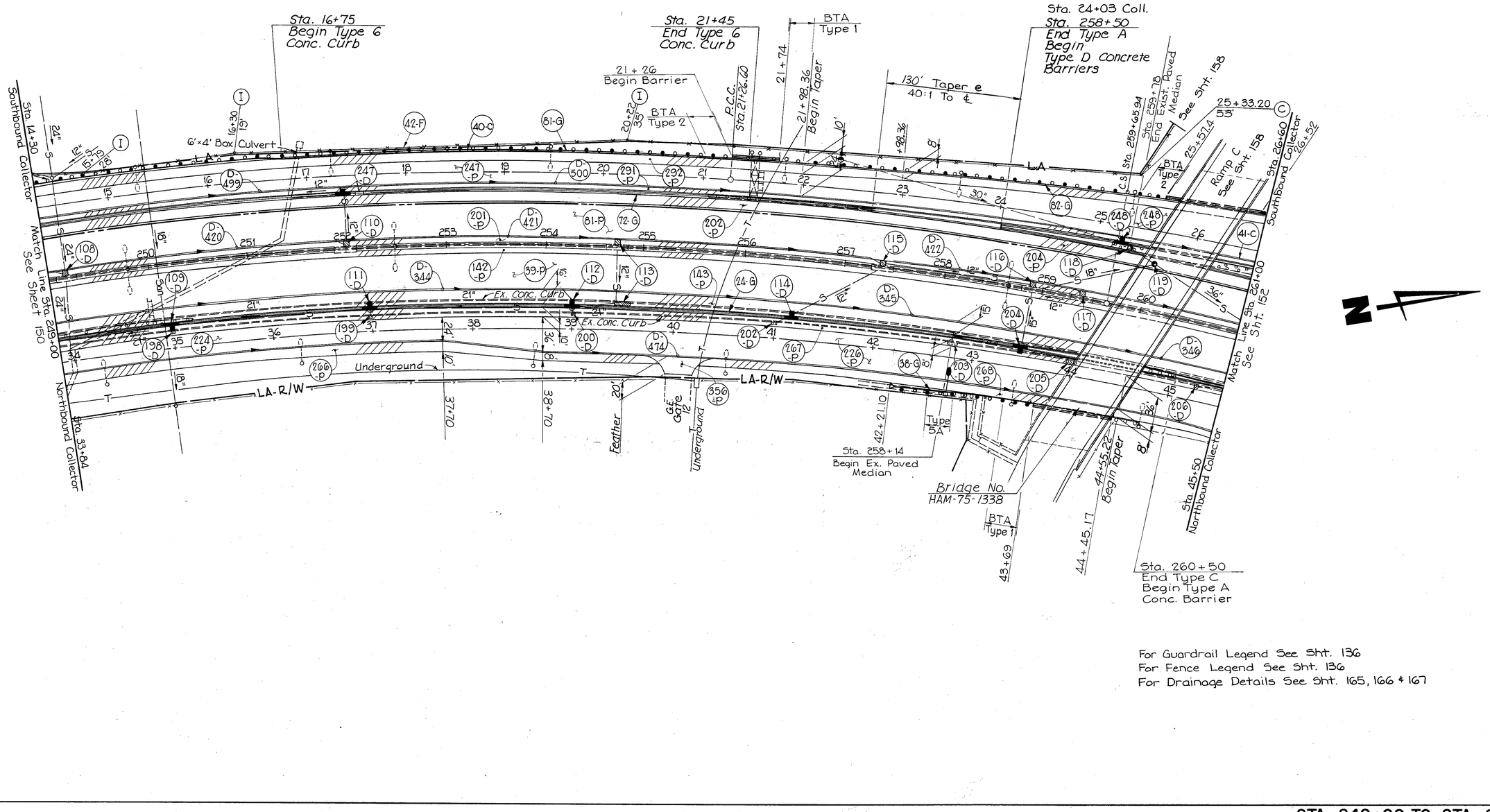

For Guardrail Legend See Sht. 136
For Fence Legend See Sht. 136
For Drainage Details See Sht. 165, 166 & 167

STA. 249+00 TO STA. 261+00

FHWA REGION	STATE	PROJECT	
5	OHIO		

152
338

HAM-75-9.75

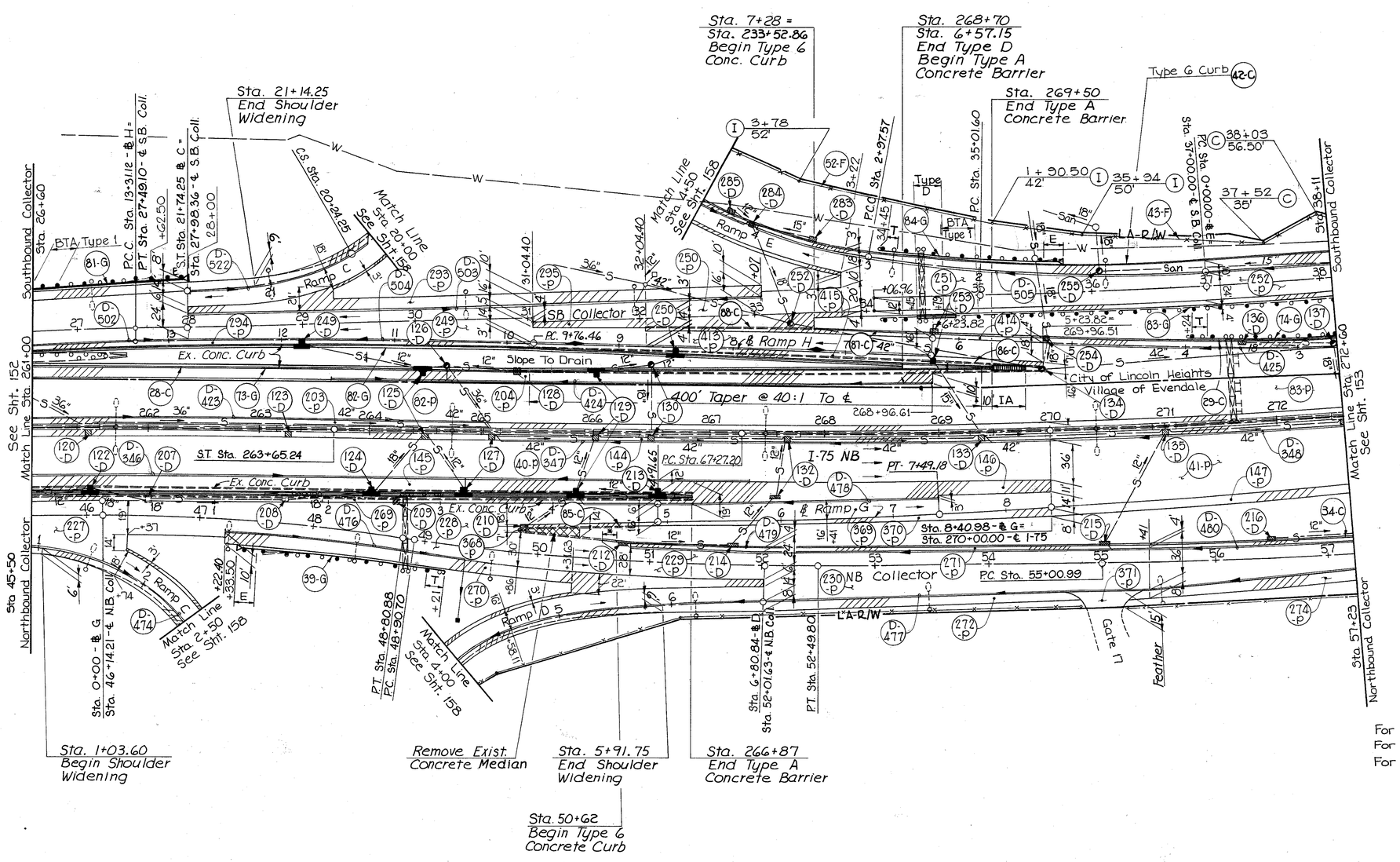

For Guardrail Legend See Sht. 136
For Fence Legend See Sht. 136
For Drainage Details See Sht. 165, 166 & 167

STA. 261+00 TO STA. 272+59

F.H.W.A. REGION	STATE	PROJECT	
5	OHIO		

153
338

HAM – 75 – 9.75

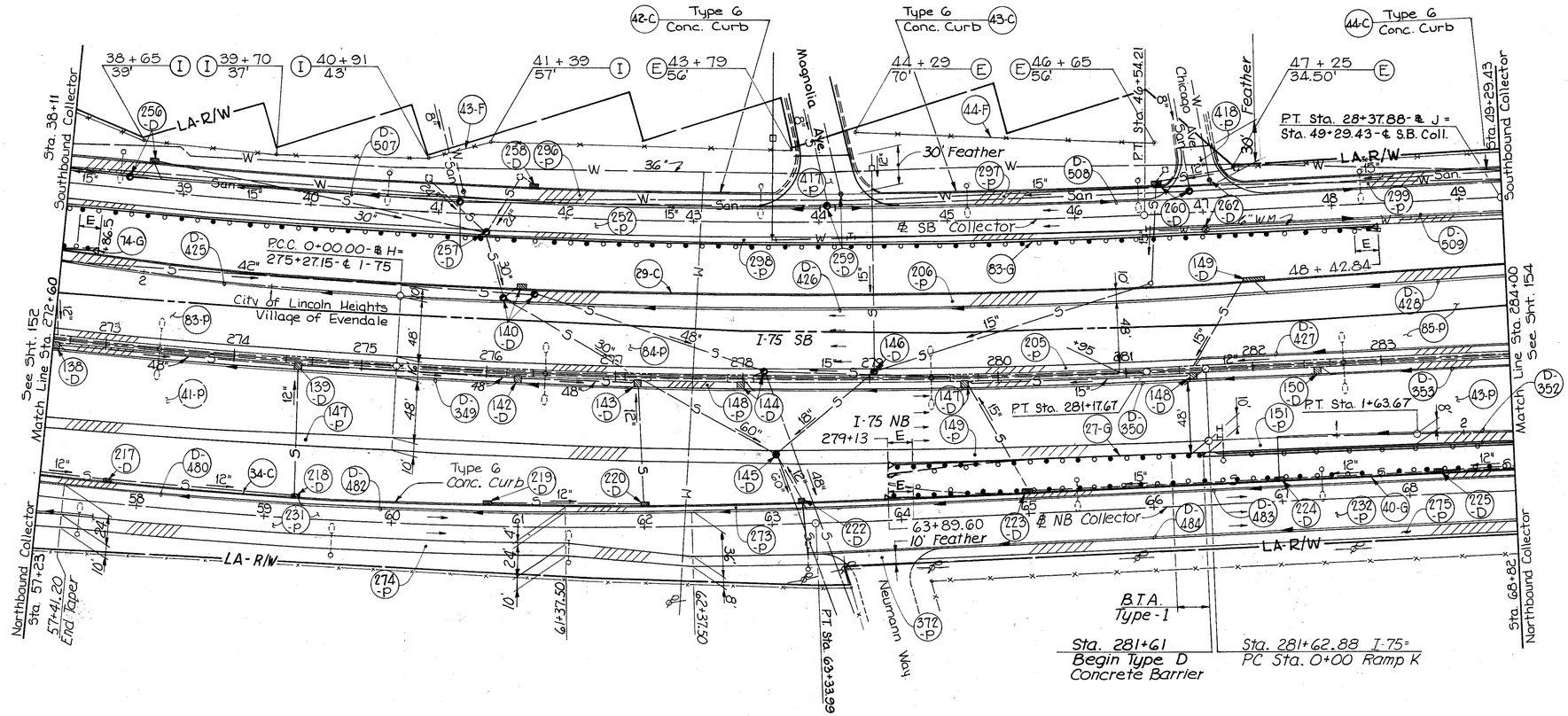

For Guardrail Legend See Sht. 136
For Fence Legend See Sht. 136
For Drainage Details See Sht. 165, 166 & 167

STA. 272+59 TO STA. 284+00

F.H.W.A REGION	STATE	PROJECT	
5	OHIO		

154
338

HAM-75-9.75

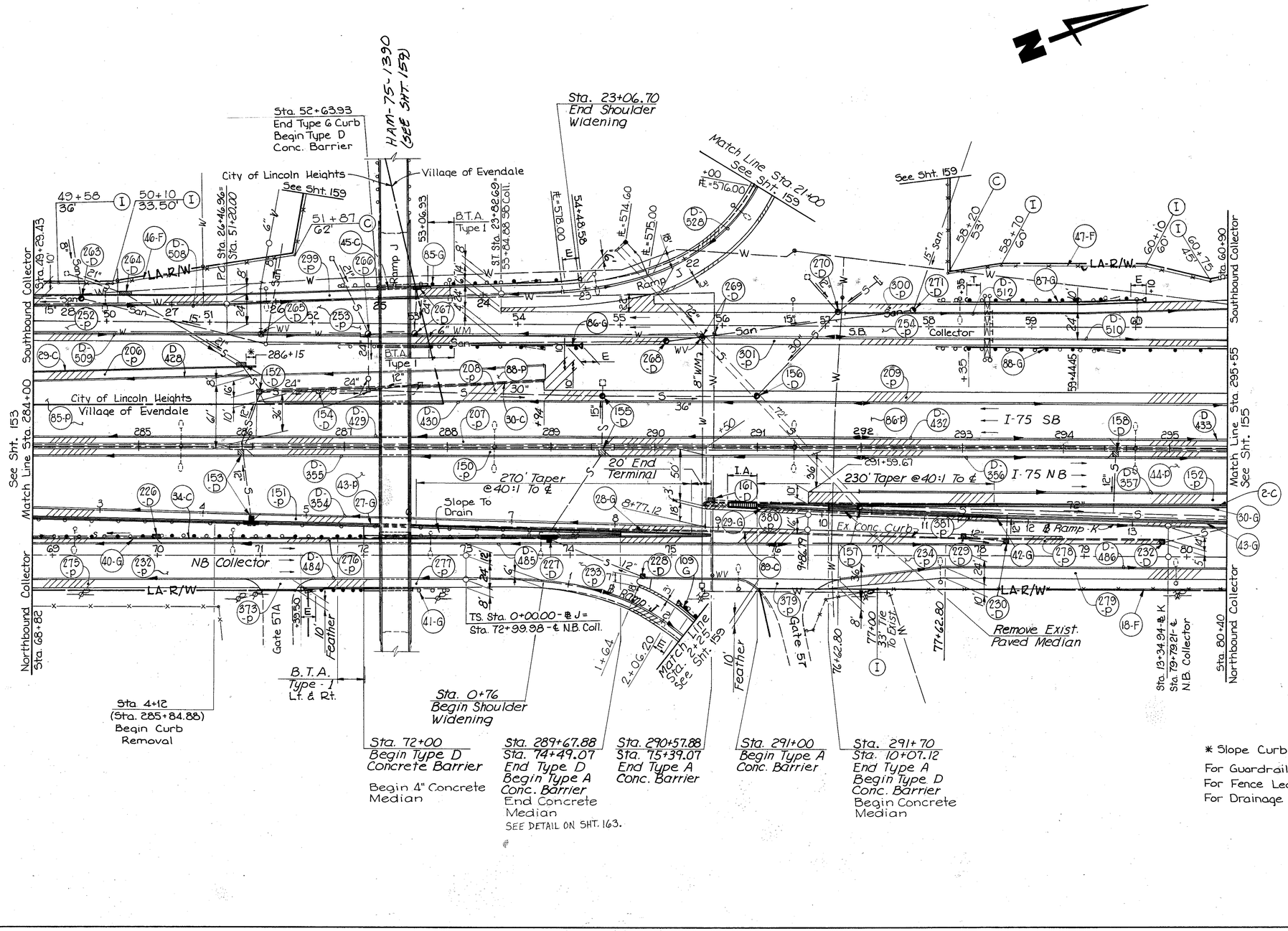

* Slope Curb Height From 6" To 0" In 10'

For Guardrail Legend See Sht. 136

For Fence Legend See Sht. 136

For Drainage Details See Sht. 165, 166, & 167

STA. 284+00 TO STA. 295+55

F.H.W.A. REGION	STATE	PROJECT	
5	OHIO		

155
338

HAM-75-9.75

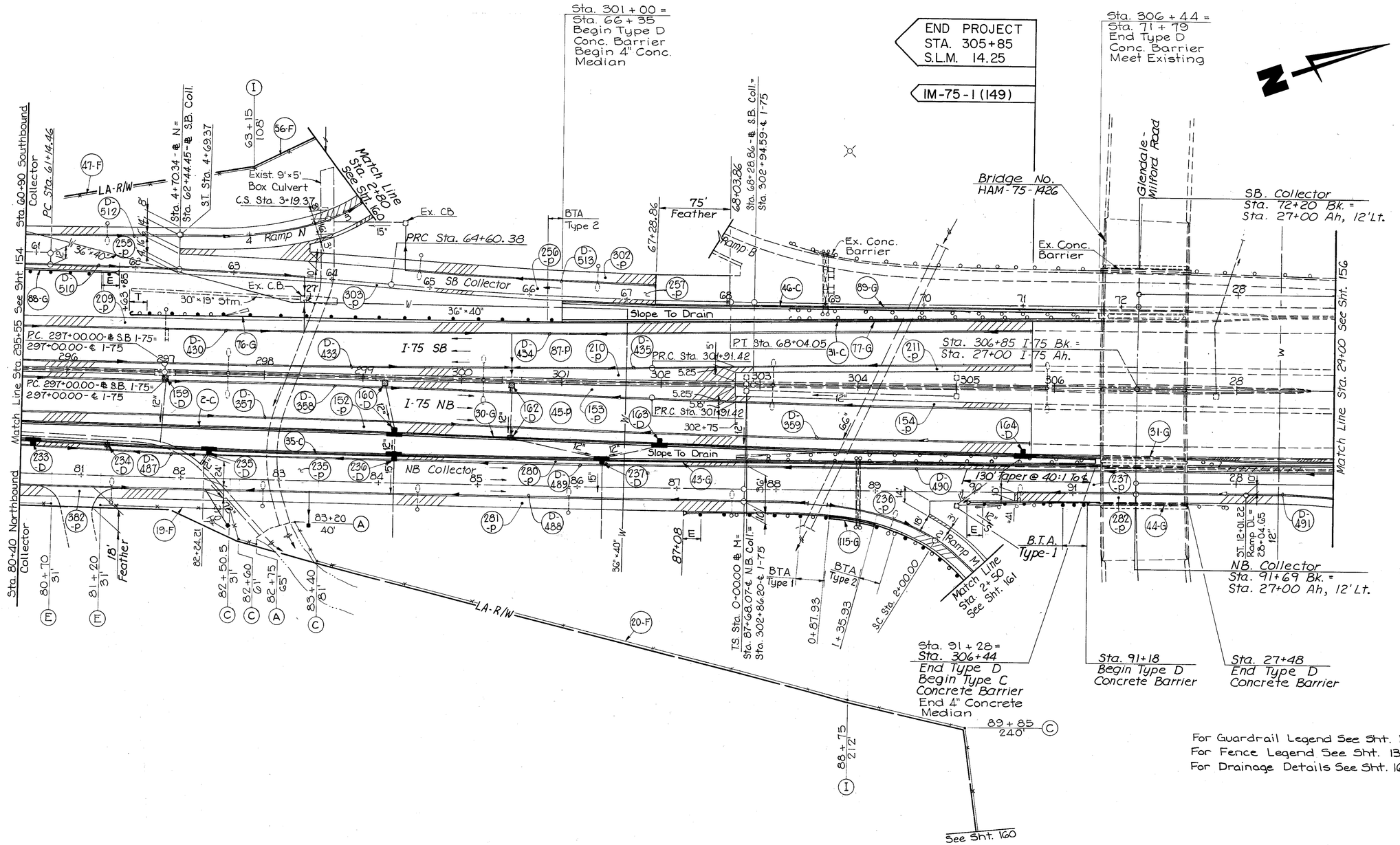

MEDIA RESOURCES CORP

STA. 295+55 TO STA. 29+00

F.H.W.A. REGION	STATE	PROJECT	
5	OHIO		

156
338

HAM-75-9.75

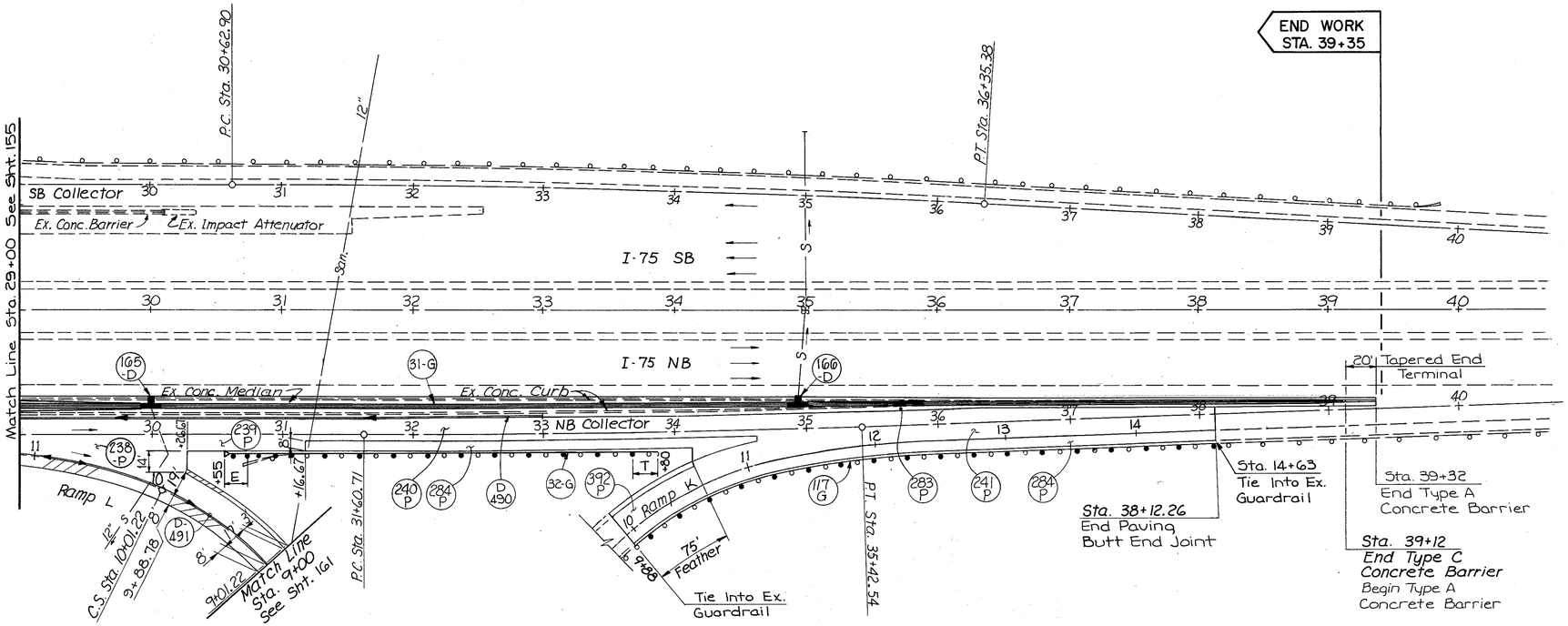

For Guardrail Legend See Sht. 136
For Drainage Details See Sht. 165, 166 & 167

STA. 29+00 TO STA. 39+15

MEDIA RESOURCES CORP.

F.H.W.A. REGION	STATE	PROJECT	
5	OHIO		

157
338

HAM-75-9.75

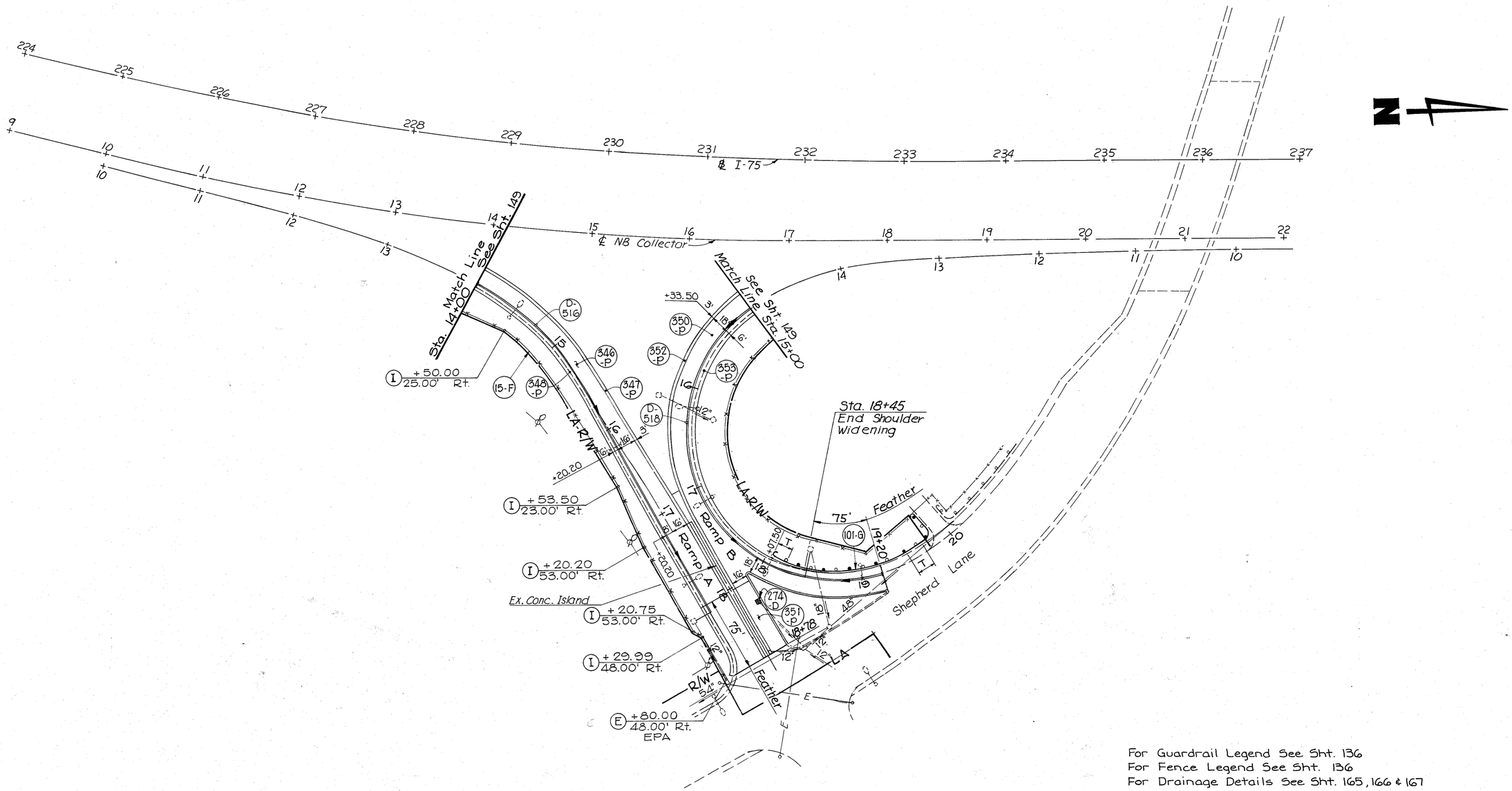

For Guardrail Legend See Sht. 136
For Fence Legend See Sht. 136
For Drainage Details See Sht. 165, 166 & 167

RAMPS A & B

F.H.W.A REGION	STATE	PROJECT	
5	OHIO		

158
338

HAM-75-9.75

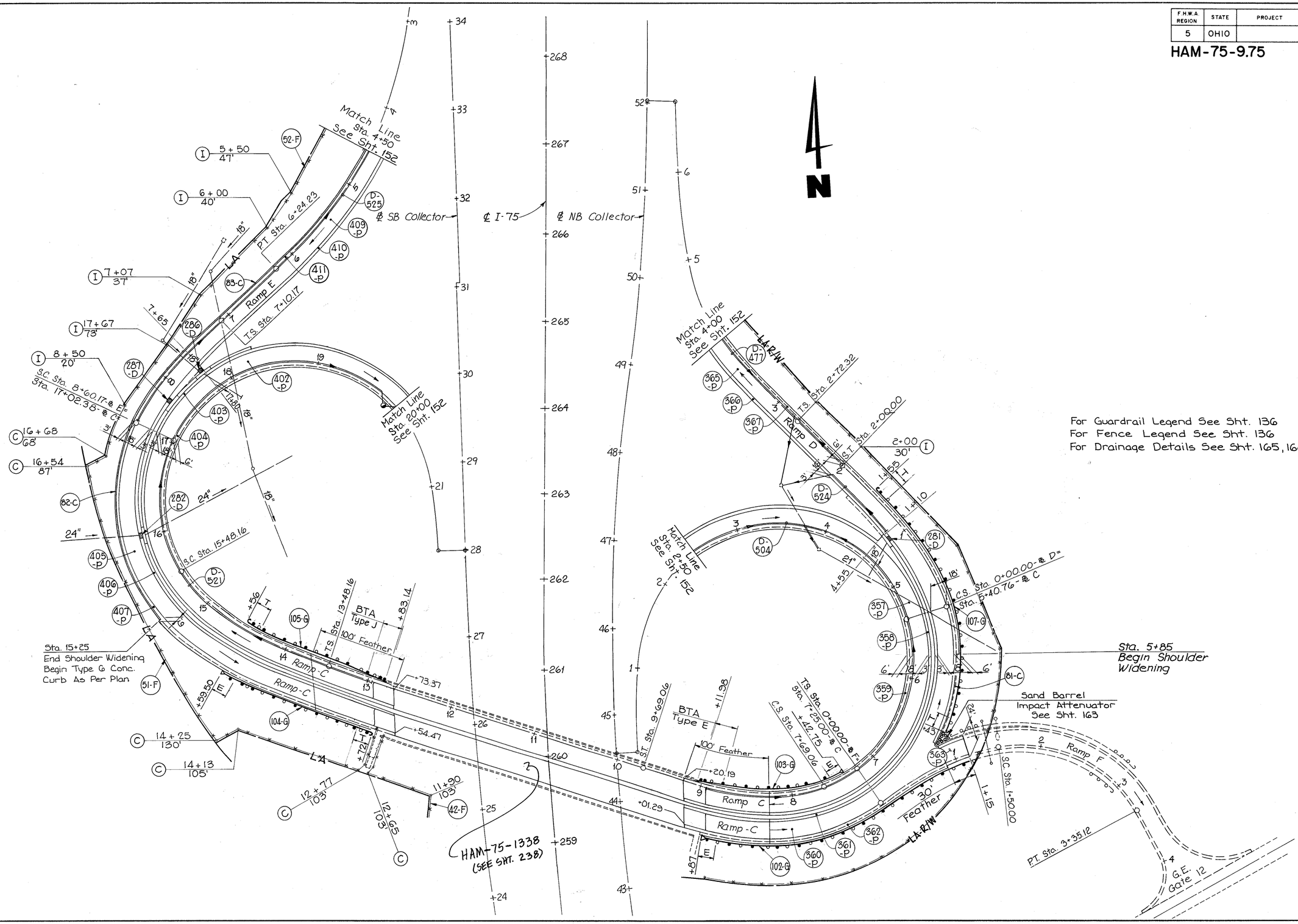

For Guardrail Legend See Sht. 136
For Fence Legend See Sht. 136
For Drainage Details See Sht. 165, 166 & 167

RAMPS C,D,E & F

MEDIA RESOURCES CORP.

F.H.W.A. REGION	STATE	PROJECT	
5	OHIO		

159
338

HAM-75-9.75

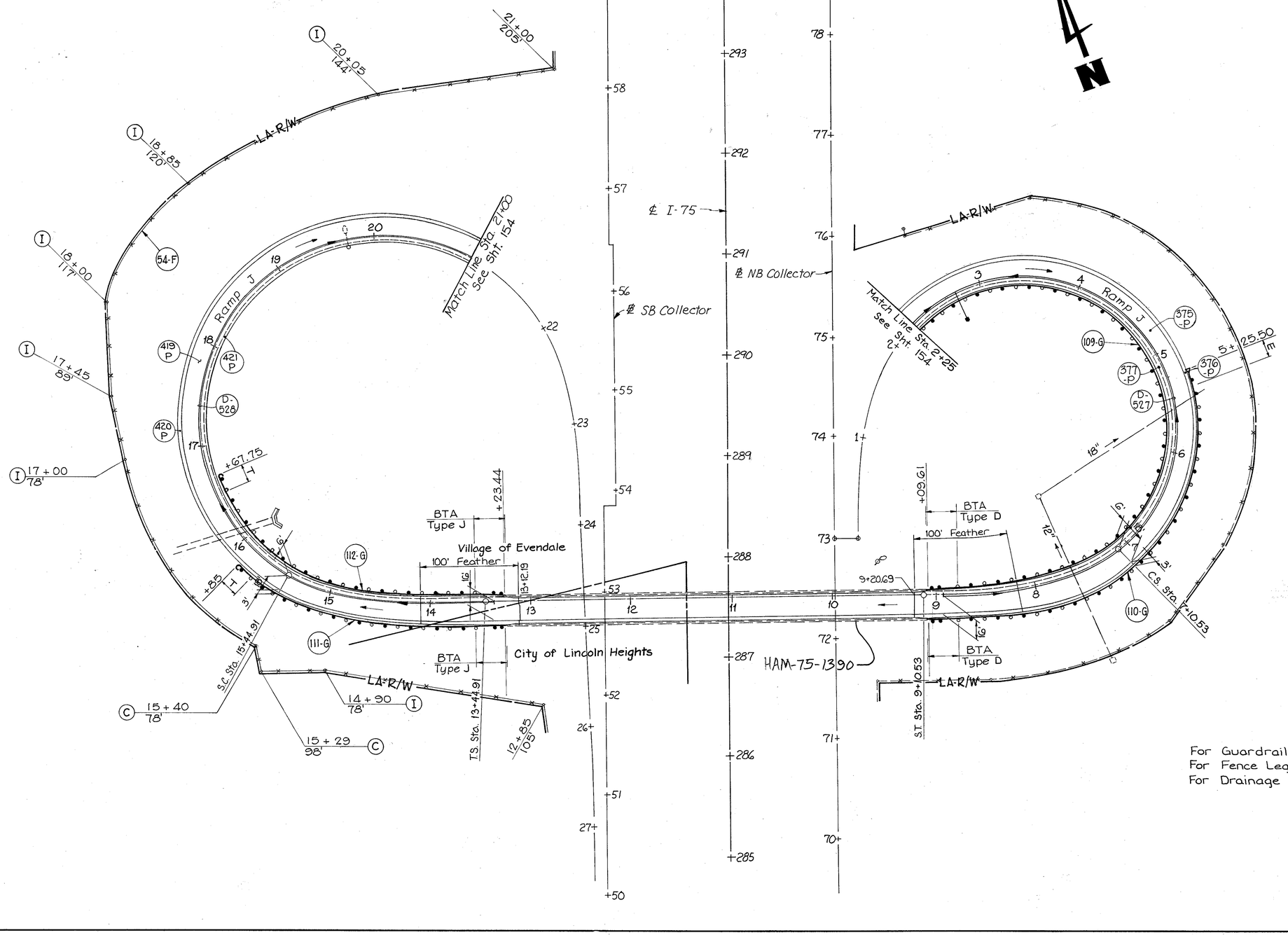

For Guardrail Legend See Sht. 136
For Fence Legend See Sht. 136
For Drainage Details See Sht. 165, 166 & 167

MEDIA RESOURCES CORP.

RAMP J

F.H.W.A. REGION	STATE	PROJECT	
5	OHIO		

160
338

HAM-75-9.75

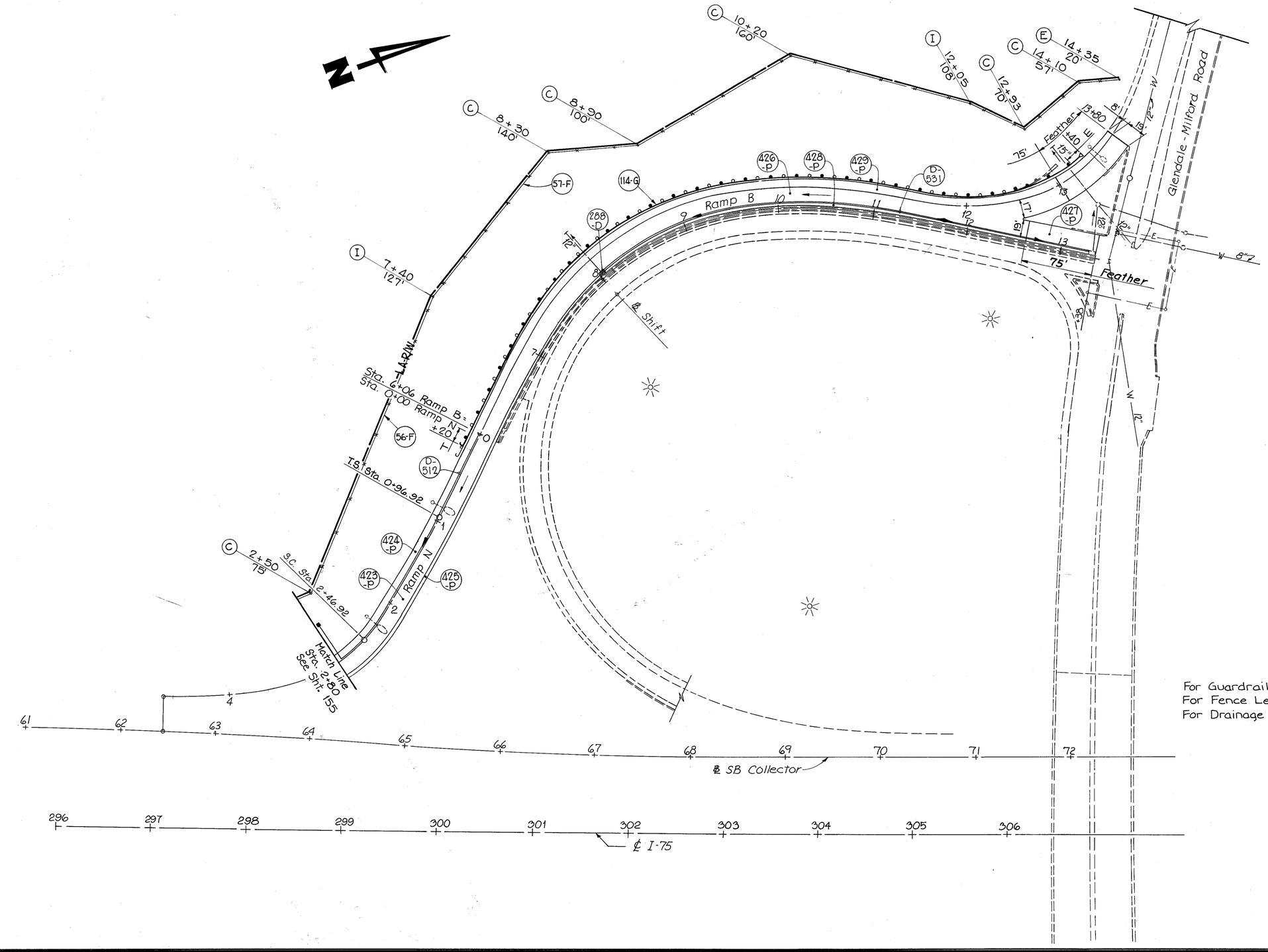

For Guardrail Legend See Sht. 136
For Fence Legend See Sht. 136
For Drainage Details See Sht. 165, 166 & 167

F.H.W.A. REGION	STATE	PROJECT	
5	OHIO		

161
338

HAM-75-9.75

℄ I-75

℄ - Northbound Collector

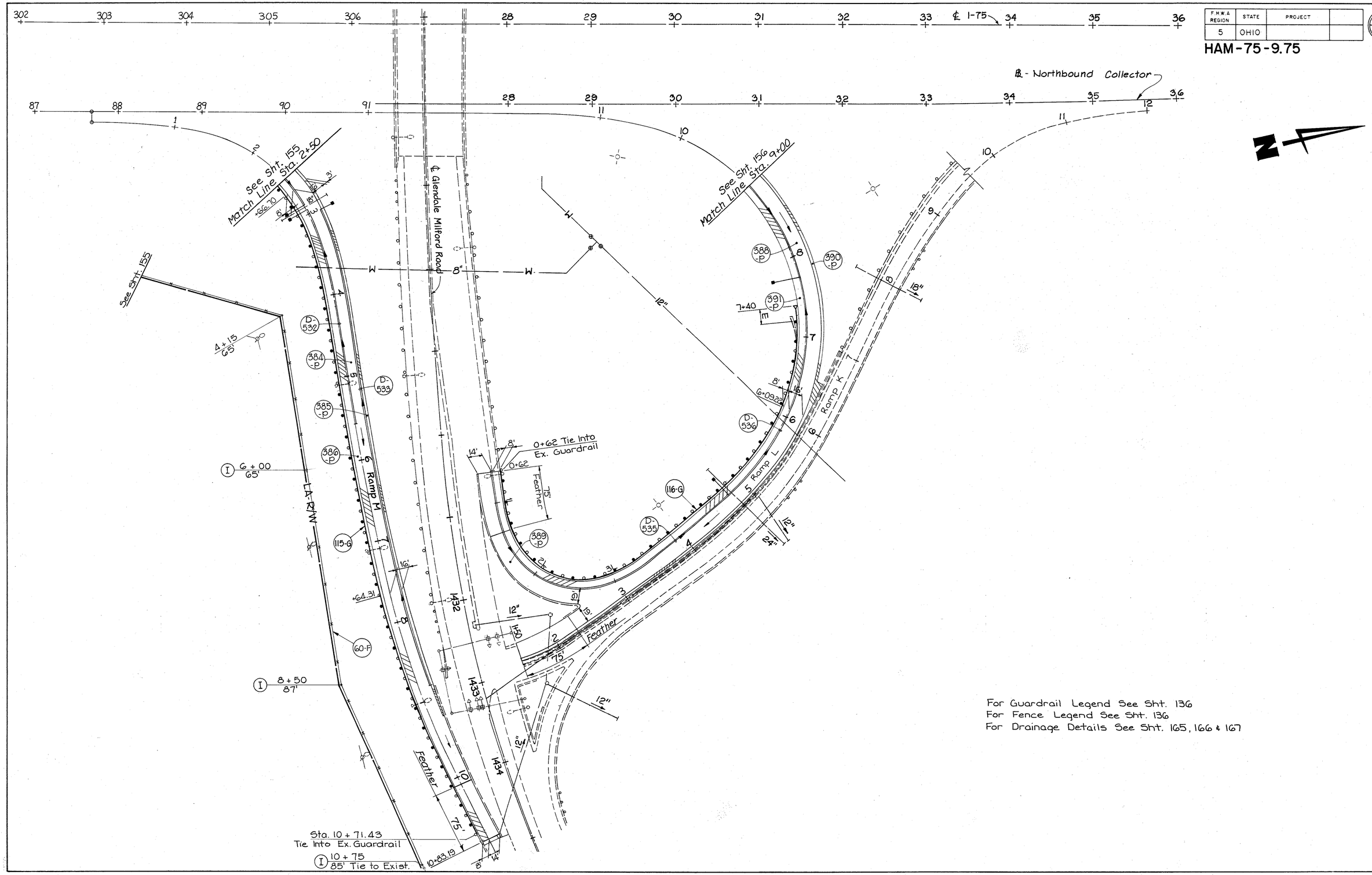

For Guardrail Legend See Sht. 136
For Fence Legend See Sht. 136
For Drainage Details See Sht. 165, 166 & 167

RAMPS M & L GLENDALE-MILFORD ROAD

F.H.W.A. REGION	STATE	PROJECT	CALC. CRB DATE 5/92
5	OHIO		CHECK GKH DATE 5/92

162
338

HAM-75-9.75

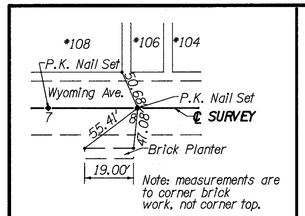

℄ REFERENCE STA. 8+00

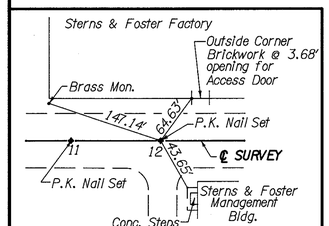

℄ REFERENCE STA. 12+00

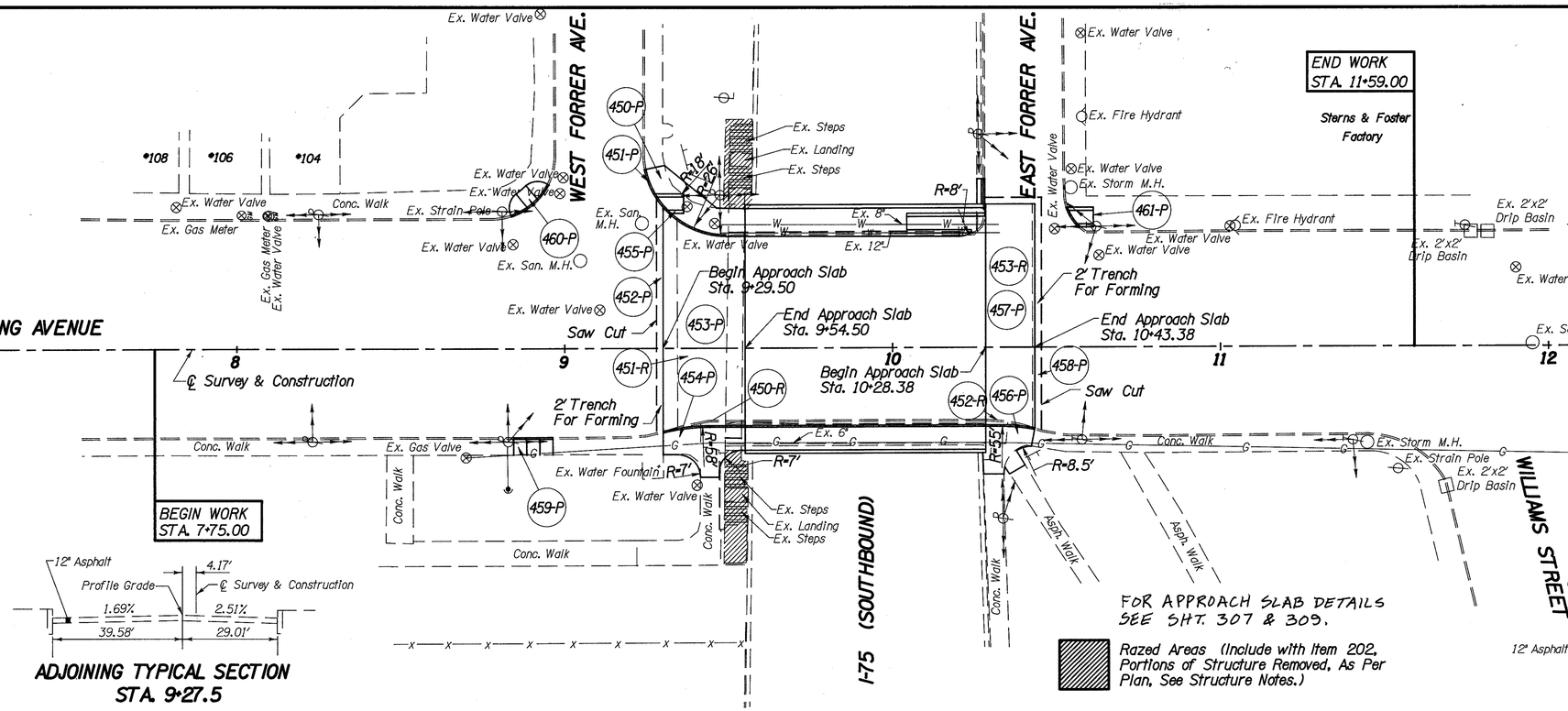

ADJOINING TYPICAL SECTION STA. 9+27.5

ADJOINING TYPICAL SECTION STA. 10+45.38

BENCHMARK #1
Brass Monument in walk N.E. corner of bridge.
Sta. 10+58.58, 40.80' Lt.
Elev.=583.03

BENCHMARK #2
Railroad spike set in center of walk to tennis court @ S.W. corner of bridge.
Sta. 8+48.80, 65.66' Rt.
Elev.=584.18

EARTHWORK STA. 9+29.50 TO 10+43.38

Excavation not Including Embankment Construction	42 C.Y.
Seeding and Mulching	64 S.Y.

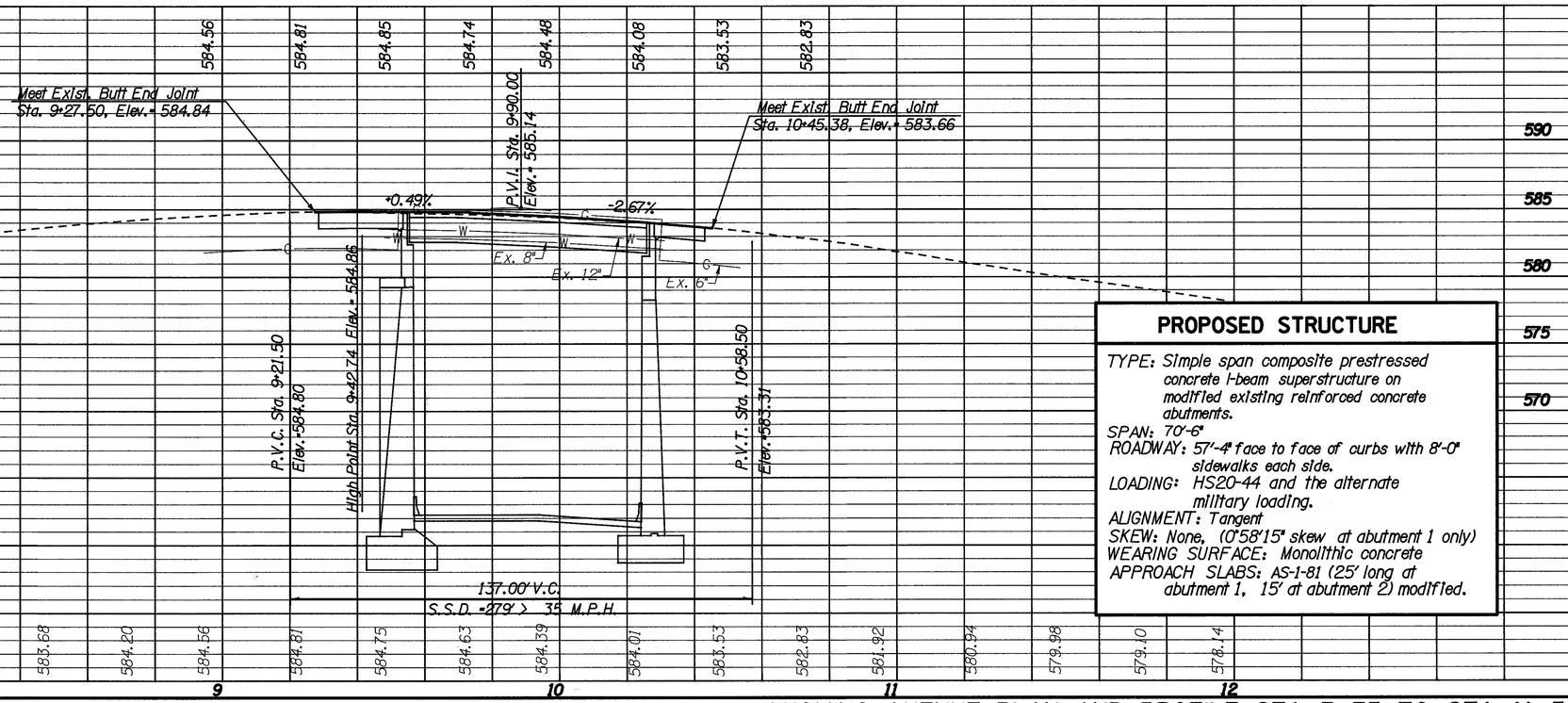

EXISTING STRUCTURE

TYPE: Simple span reinforced concrete beam superstructure with reinforced concrete abutments.
SPAN: 69'-0" ±
ROADWAY: 56' plus two 8'-0" sidewalks
LOADING: S-20-40 & Street railway
ALIGNMENT: Tangent
SKEW: None, (0°58'15" skew at abutment 1 only)
WEARING SURFACE: Monolithic concrete
APPROACH SLABS: 15' long
DATE BUILT: 1943(±)
CONDITION: Poor, superstructure to be replaced
STRUCTURE FILE NO. 3110680

PROPOSED STRUCTURE

TYPE: Simple span composite prestressed concrete I-beam superstructure on modified existing reinforced concrete abutments.
SPAN: 70'-6"
ROADWAY: 57'-4" face to face of curbs with 8'-0" sidewalks each side.
LOADING: HS20-44 and the alternate military loading.
ALIGNMENT: Tangent
SKEW: None, (0°58'15" skew at abutment 1 only)
WEARING SURFACE: Monolithic concrete
APPROACH SLABS: AS-1-81 (25' long at abutment 1, 15' at abutment 2) modified.

WYOMING AVENUE PLAN AND PROFILE STA. 7+75 TO STA. 11+59

259 Orange 163-229

F.H.W.A. REGION	STATE	PROJECT	
5	OHIO		

163
338

HAM-75-9.75

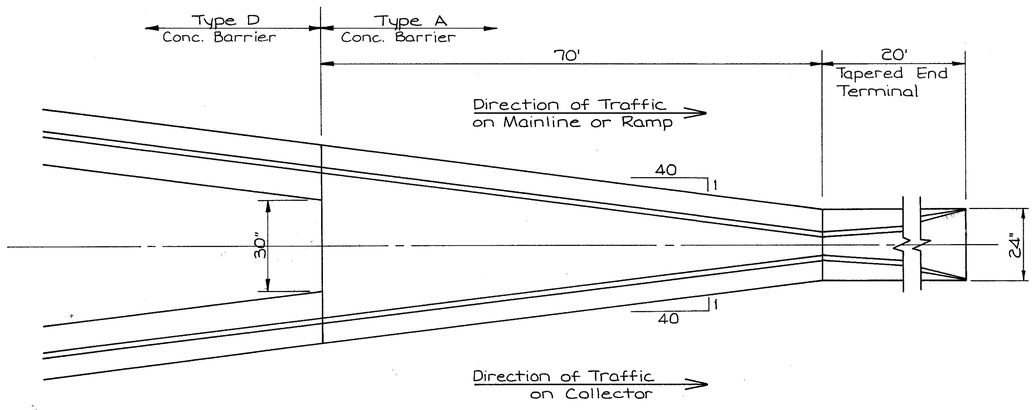

CONCRETE BARRIER END TREATMENT

Sta. 289+67.88 to Sta. 290+57.88 (SHT. 154)

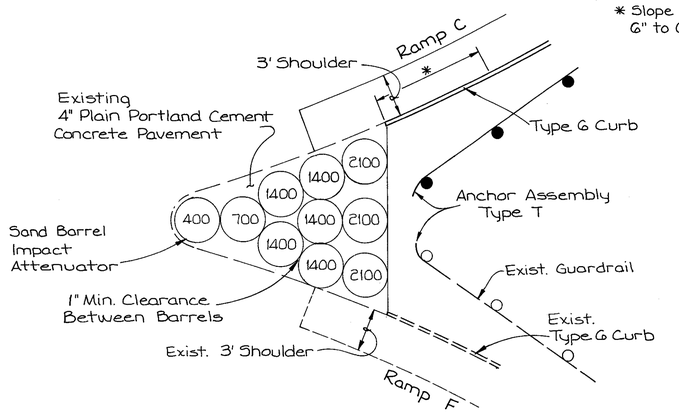

IMPACT ATTENUATOR SAND BARREL SYSTEM

(SHT. 158)

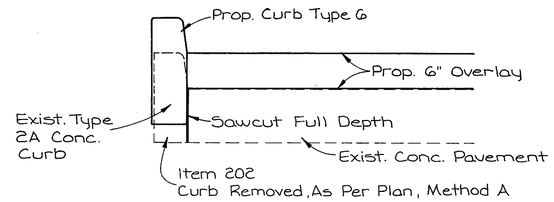

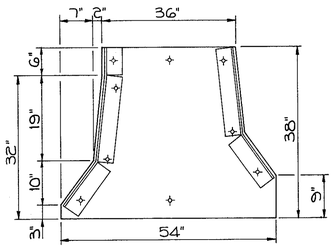

DESIGN NO. 3

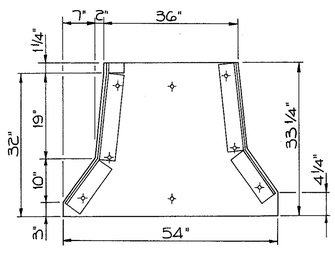

DESIGN NO. 4

BARRIER WALL ASSEMBLY TYPE TC-21.41, AS PER PLAN

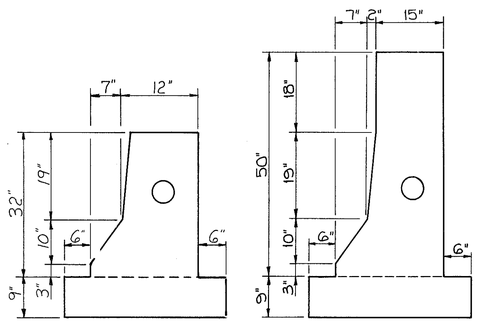

BARRIER TYPE-D, AS PER PLAN

BARRIER TYPE-D50, AS PER PLAN

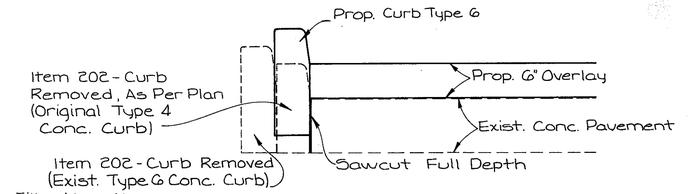

Fill voids with Embankment; Paid with Item 202 Curb Removed

LIMITING STATIONS

SB	Sta. 129+85	To	Sta. 138+25
SB	Sta. 139+10	To	Sta. 143+26
SB	Sta. 172+13	To	Sta. 175+78
SB	Sta. 177+00	To	Sta. 178+80

CURB REMOVED, AS PER PLAN METHOD A

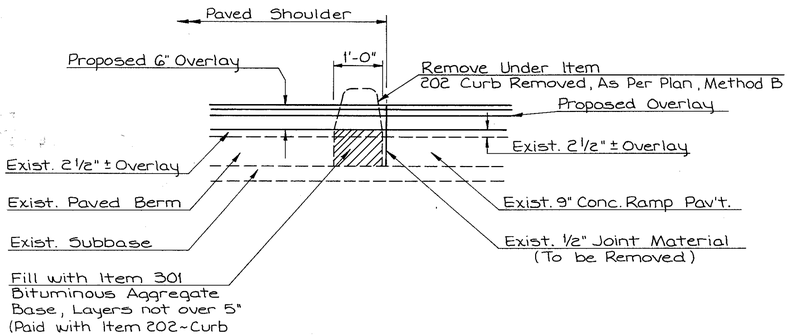

CURB REMOVED, AS PER PLAN METHOD B

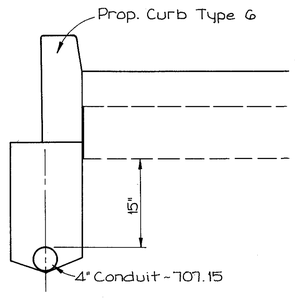

4" SHALLOW PIPE UNDERDRAIN AS PER PLAN

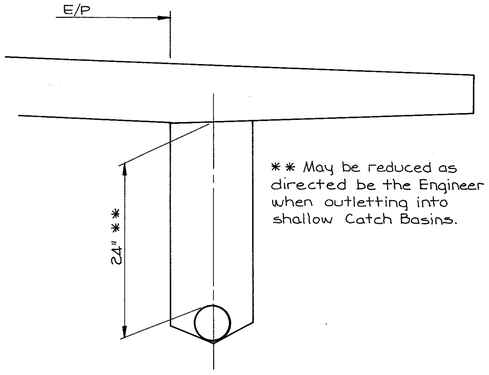

** May be reduced as directed be the Engineer when outletting into shallow Catch Basins.

6" SHALLOW PIPE UNDERDRAIN AS PER PLAN

DETAILS

MEDIA RESOURCES CORP

F.H.W.A. REGION	STATE	PROJECT	
5	OHIO		

164
338

HAM-75-9.75

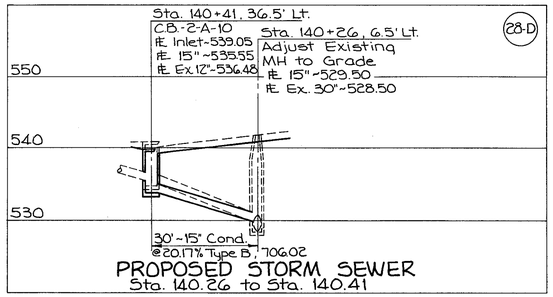

PROPOSED STORM SEWER
Sta. 140.26 to Sta. 140.41

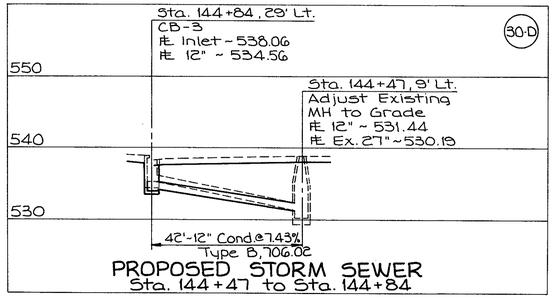

PROPOSED STORM SEWER
Sta. 144+47 to Sta. 144+84

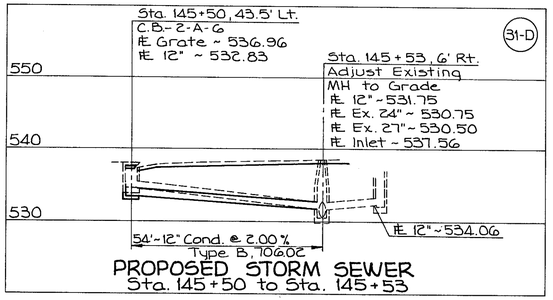

PROPOSED STORM SEWER
Sta. 145+50 to Sta. 145+53

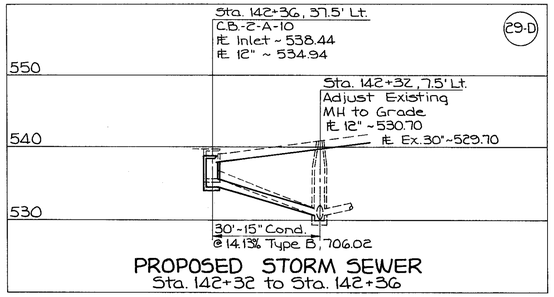

PROPOSED STORM SEWER
Sta. 142+32 to Sta. 142+36

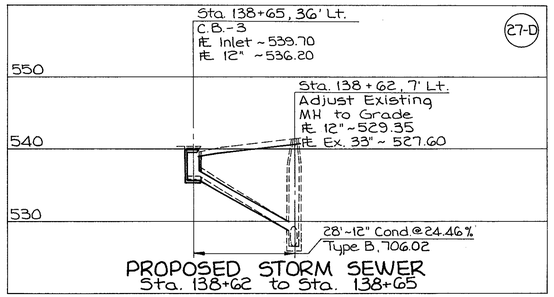

PROPOSED STORM SEWER
Sta. 138+62 to Sta. 138+65

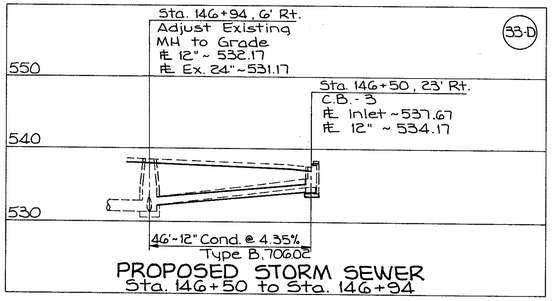

PROPOSED STORM SEWER
Sta. 146+50 to Sta. 146+94

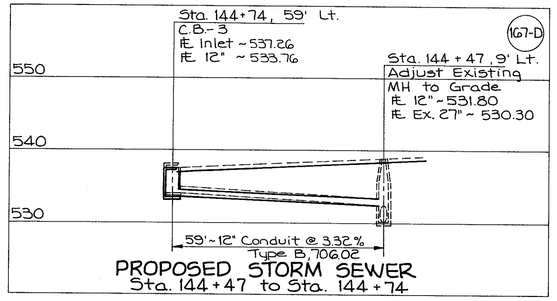

PROPOSED STORM SEWER
Sta. 144+47 to Sta. 144+74

818725
MEDIA RESOURCES CORP

STORM PROFILES

F.H.W.A. REGION	STATE	PROJECT	
5	OHIO		

HAM-75-9.75

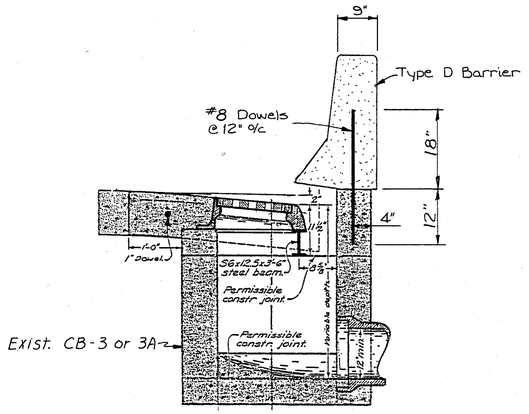

CATCH BASIN ADJUSTED TO GRADE, AS PER PLAN

CATCH BASIN, NO. 3, AS PER PLAN

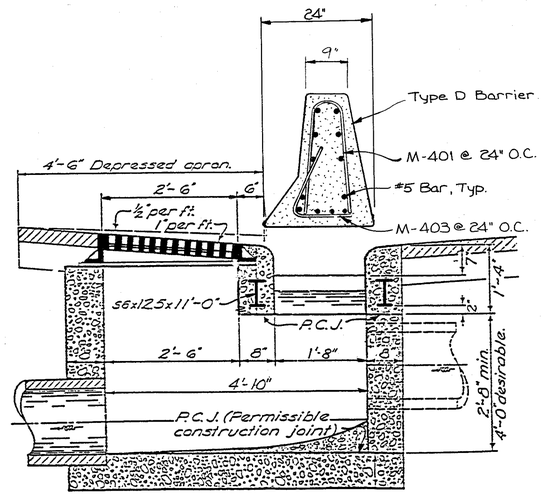

INLET NO. 3A MODIFICATION A, AS PER PLAN

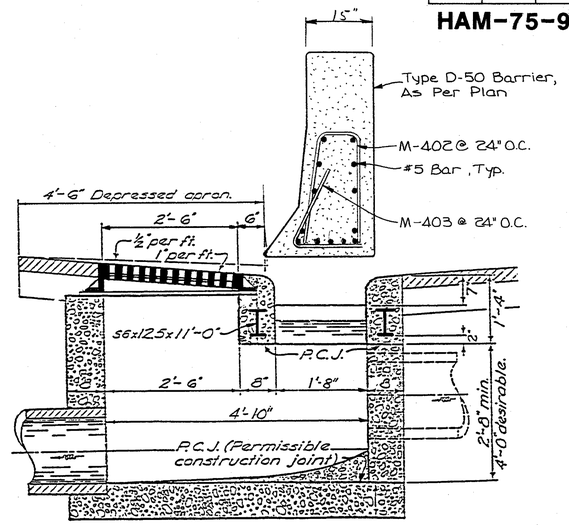

INLET NO. 3A MODIFICATION B, AS PER PLAN

For Details Not Shown See Std. Dwgs. CB-3 And I-3A & B

For Reinforcing Bar Details See Sheet 166.

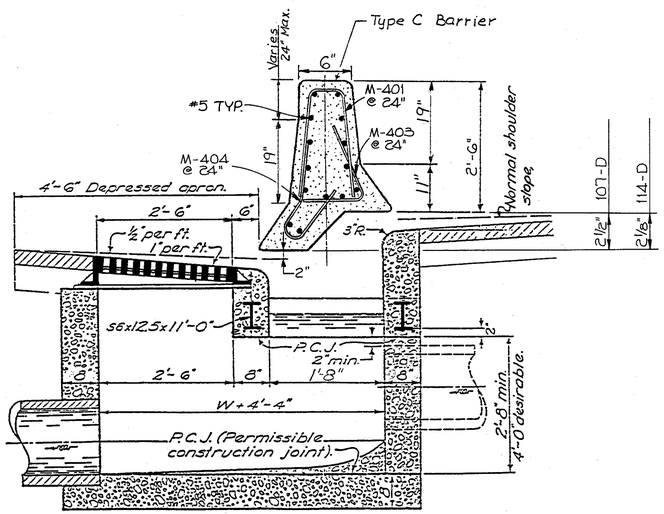

INLET NO. 3A MODIFICATION C, AS PER PLAN

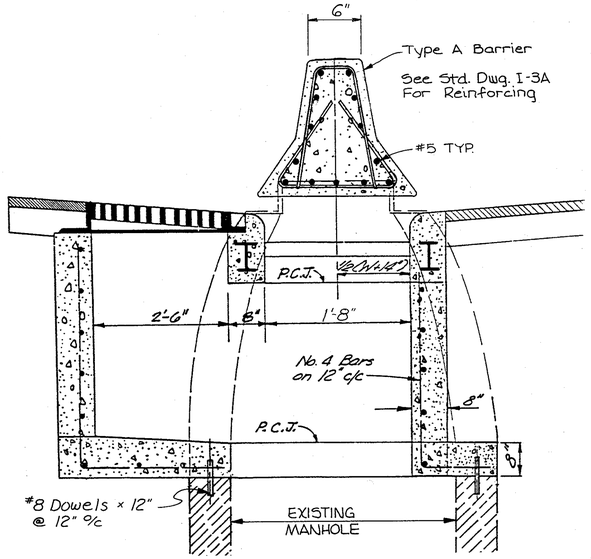

INLET NO. 3A MODIFICATION D, AS PER PLAN

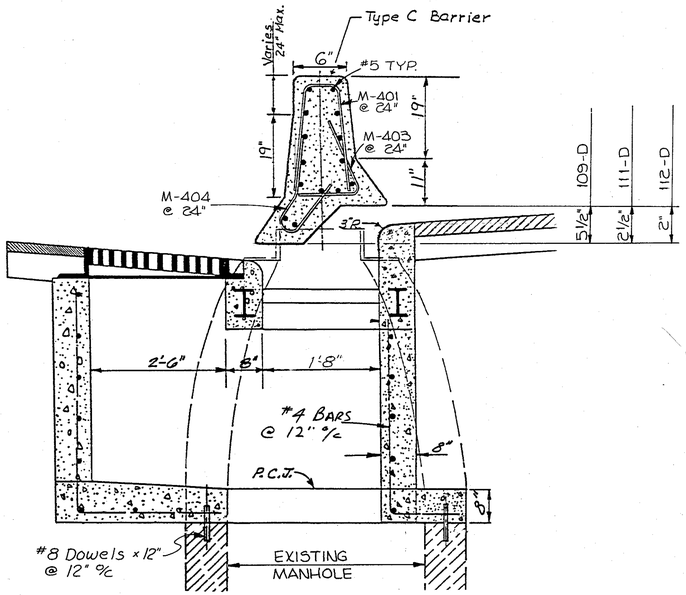

INLET NO. 3A MODIFICATION E, AS PER PLAN

DRAINAGE DETAILS

MEDIA RESOURCES CORP.

F.H.W.A. REGION	STATE	PROJECT	
5	OHIO		

166
338

HAM-75-9.75

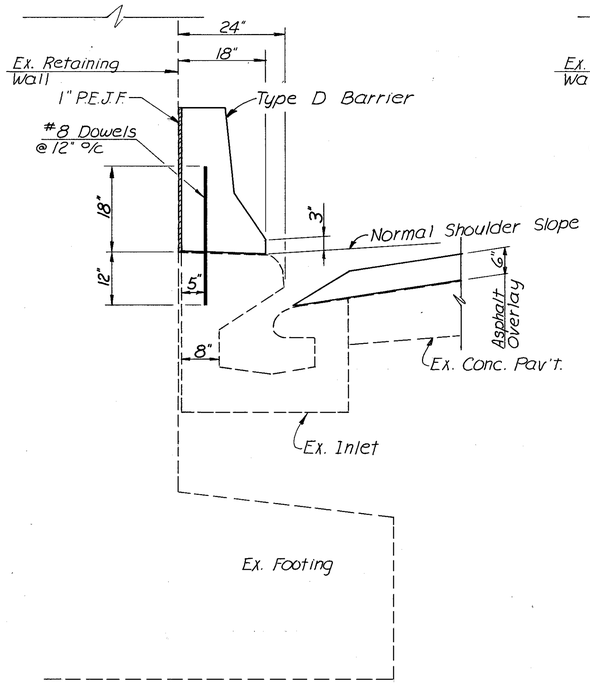

CONCRETE BARRIER ON INLETS

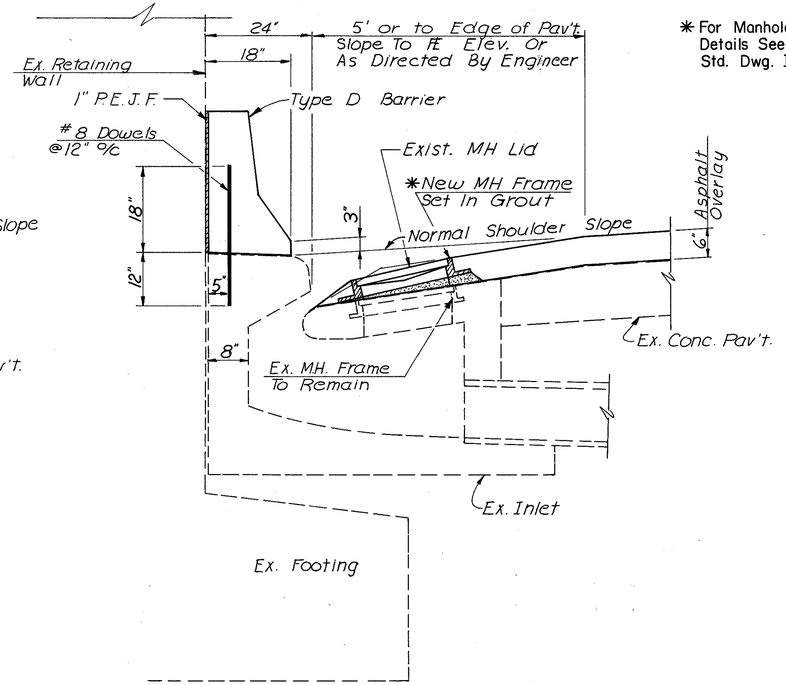

INLET ADJUSTED TO GRADE AS PER PLAN

* For Manhole Frame Details See O.D.O.T. Std. Dwg. I-2A.

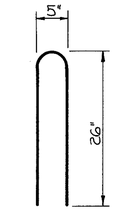

M-401

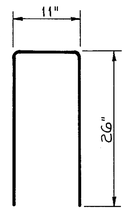

M-402

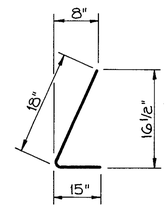

M-403

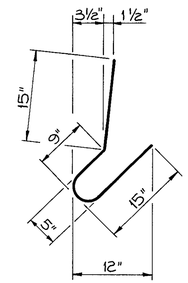

M-405

REBAR DETAILS FOR MODIFIED NO. 3A INLETS

EXISTING INLETS AT LOCKLAND RETAINING WALLS
SOUTHBOUND I-75

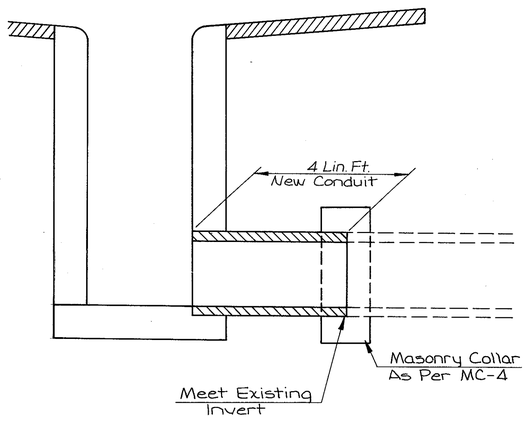

INLET REPLACEMENT DETAIL

818925
MEDIA RESOURCES CORP.

FHWA REGION	STATE	PROJECT		167
5	OHIO			338

HAM-75-9.75

ITEM SPECIAL - PRECAST REINFORCED CONCRETE OUTLET

The Concrete outlet shall meet the requirements of Item 604 in the Construction & Materials Specifications. Payment shall be made on an Each basis. Payment shall include the cost of the Sod & Wire Cloth.

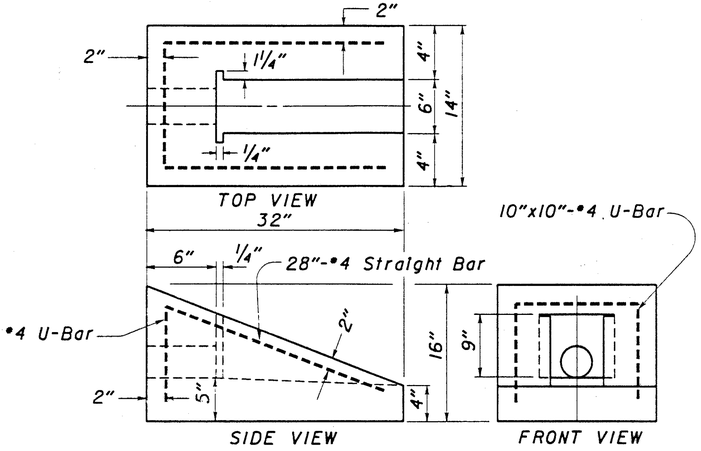

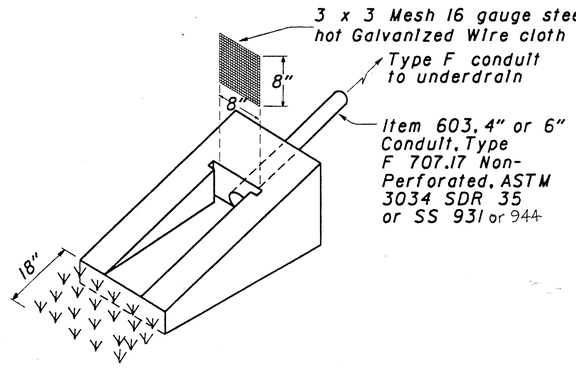

NOTE: The Sod shall be in accordance with Item 660 and staked at each corner approximately 3 inches in from the edge.

OUTLET DETAILS

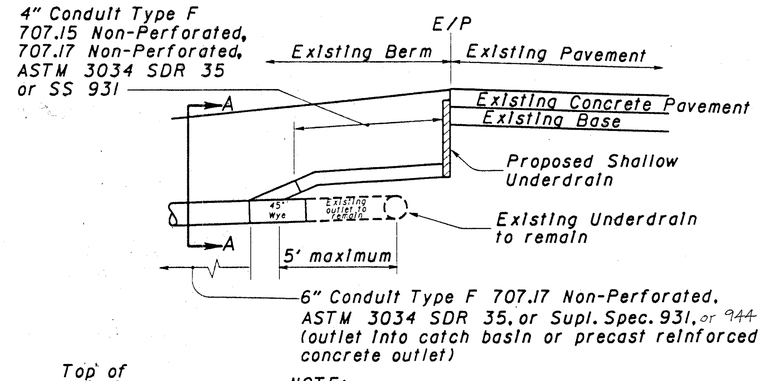

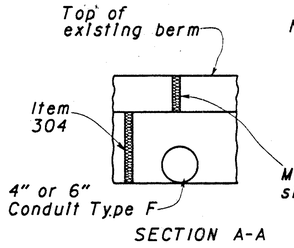

SECTION A-A

NOTE: The cost of the 4" conduit Type F and necessary pipe bends and branches needed to connect the existing and proposed underdrains shall be included with the cost of the 6" conduit Type F beyond the existing underdrain.

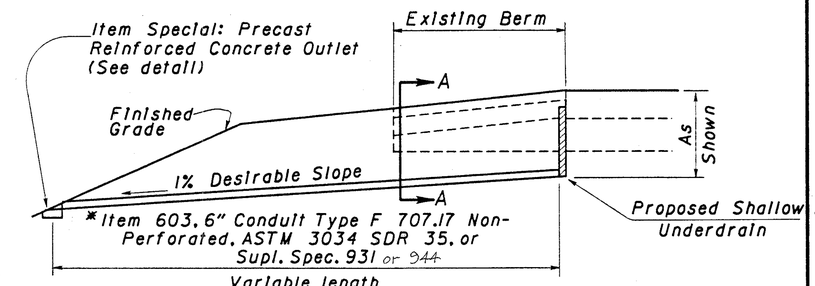

NOTE: For underdrain outlets into catch basins the above Type F Conduit shall be used entirely between the underdrain & catch basin.

* If prefabricated edge drain is used then 4" Conduit shall be used for the outlet in lieu of 6" Conduit. The 4" Conduit shall be paid at the unit price bid for the 6" Conduit.

PIPE UNDERDRAIN SYSTEM

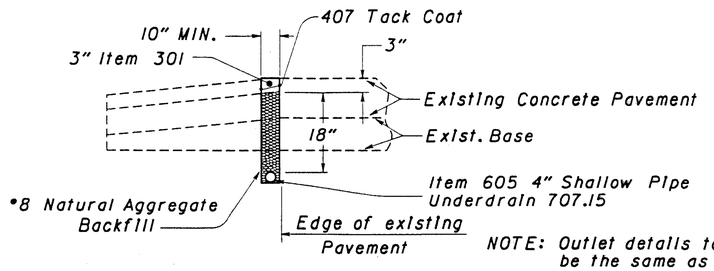

NOTE: Outlet details to be the same as shown above.

PREFABRICATED EDGE DRAIN SYSTEM

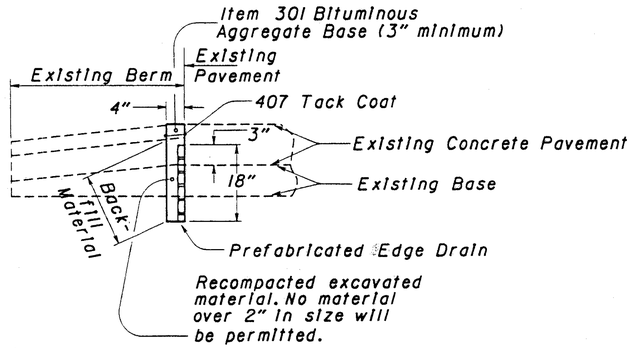

DESCRIPTION: The Item shall consist of furnishing and installing a pipe underdrain system or prefabricated edge drain system in accordance with the specifications, details as shown on the plans, and as directed by the Engineer.

MATERIALS: The underdrain shall be a pipe underdrain system per Item 605 or a prefabricated edge drain system meeting the following requirements. The prefabricated edge drain shall consist of a polymeric core with a minimum thickness of one inch wrapped in fabric meeting 712.09 Type A. The drain shall be flexible, rectangular in shape and of hollow construction. The core material shall be resistant to petroleum based chemicals, natural occuring soil chemicals, and road de-icing agents.

The core shall provide a minimum of 100 square inches unobstructed (one side only) drainage area per foot of width. Side walls of the core shall provide at least 5% open area to permit unobstructed flow through the filter and wall to the core.

The prefabricated edge drain shall have a minimum compressive strength of 6000 pounds per square foot with a maximum 20% compression in a parallel plate compression test (ASTM-D 695). The minimum (single side) core flow capacity shall be 10 gallons per minute per foot of width for a 0.1 gradient at 10 pounds per square inch bladder load per ASTM D 4716

In lieu of the above requirements the following products are acceptable prefabricated edge drains:

Hydraway Drain by Monsanto Company
PDS 25 by Prodrain Sytems
Strip Drain 100 by Contech Construction Products, Inc.
AdvanEDGE by Advanced Drainage Systems, Inc.

CONSTRUCTION: The prefabricated edge drain shall be installed in a trench as shown on the plans and in accordance with the manufacturer's recommendations. The contractor has the option to backfill the trench with the excavated material or No. 8 natural aggregate. If the excavated material is used for the backfill it shall be placed in three (3) lifts minimum with each lift of uncompacted material not exceeding 8" in thickness. Each lift shall be compacted to 95% of the maximum dry weight density as determined by AASHTO T99. If No. 8 natural aggregate is used it shall be placed in one (1) or more lifts with a vibratory compactor run over the final lift to consolidate the aggregate prior to placing the asphalt plug. The first layer of the backfill material shall be placed simultaneously with the trenching operation to hold the edge drain flush against the trench wall.

The prefabricated edge drain shall be spliced as required prior to placement in the trench, using material furnished by the manufacturer and in accordance with the manufacturer's directions. All material required for the splices will be supplied by the manufacturer, but any equipment required shall be furnished by the Contractor.

The underdrain outlets shall be placed in accordance with Item 603 as directed by the Engineer, using outlet fittings. The manufacturer shall supply outlet fittings which will make the transition between the prefabricated edge drain and the outlet pipe. Fittings shall be installed as recommended by the manufacturer.

The outlets for the underdrain system shall be constructed as soon as possible after placement of the underdrain. The outlets on crack & seat projects shall be in place and functional prior to cracking and seating the existing pavement.

METHOD OF MEASUREMENT: Completed and accepted underdrains will be measured by the linear foot in place.

BASIS OF PAYMENT: Work completed and accepted under this Item and measured will be paid for at the contract unit price bid per linear foot for Item 605 - Shallow Underdrain, as per plan. Which price shall be full compensation for excavation and backfill; removing and disposing all surplus excavation in accordance with 203; for furnishing materials, including material for splices; outlet fittings and Item 301; for all labor, tools equipment, and incidentals necessary to complete the work.

ITEM 605-SHALLOW UNDERDRAIN, AS PER PLAN

DATE 3-20-91

F.H.W.A. REGION	STATE	PROJECT	
5	OHIO		

168
338

HAM - 75 - 9.75

SIGN LEGEND

- Existing Sign To Remain
- Existing Sign To Be Removed
- Existing Major Sign To Be Replaced - Same Copy
- New Sign

EXIT SIGN

LOCATE EXIT PANEL ON THE SIDE OF THE SIGN THAT THE EXIT IS ON. (EVEN THOUGH PLANS DON'T SHOW THIS, THIS IS THE INTENT.)

PAVEMENT MARKING LEGEND

- (A) Edge Line, White
- (B) Edge Line, Yellow
- (C) Lane Line
- (D) Center Line
- (E) Channelizing Line
- (F) Stop Line
- (G) Transverse Line (White)
- (H) Lane Arrow
- (I) Word on Pavement, 96"

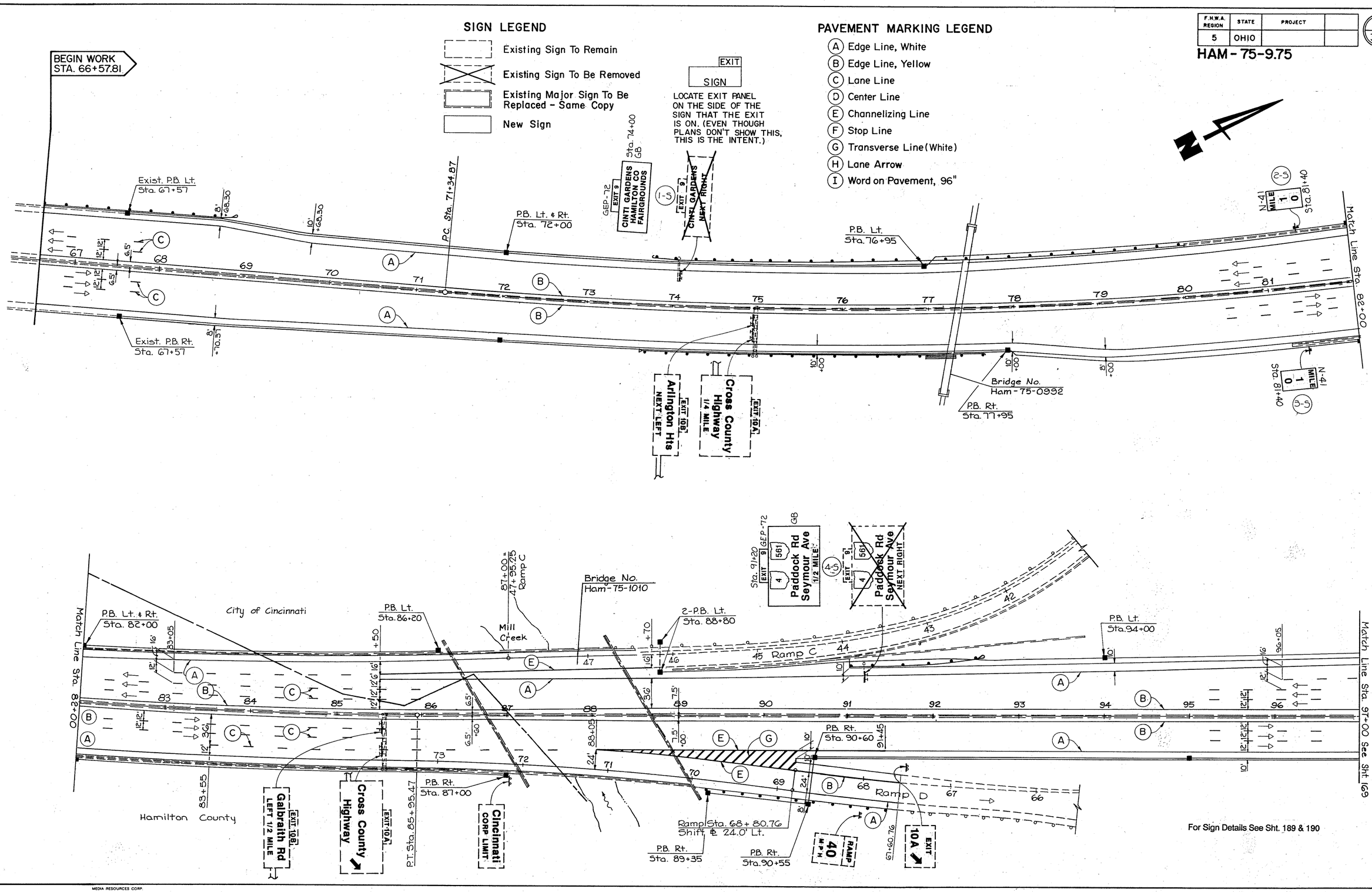

MEDIA RESOURCES CORP.

TRAFFIC CONTROL STA. 66+57.81 TO STA. 97+00

F.H.W.A. REGION	STATE	PROJECT	
5	OHIO		

HAM-75-9.75

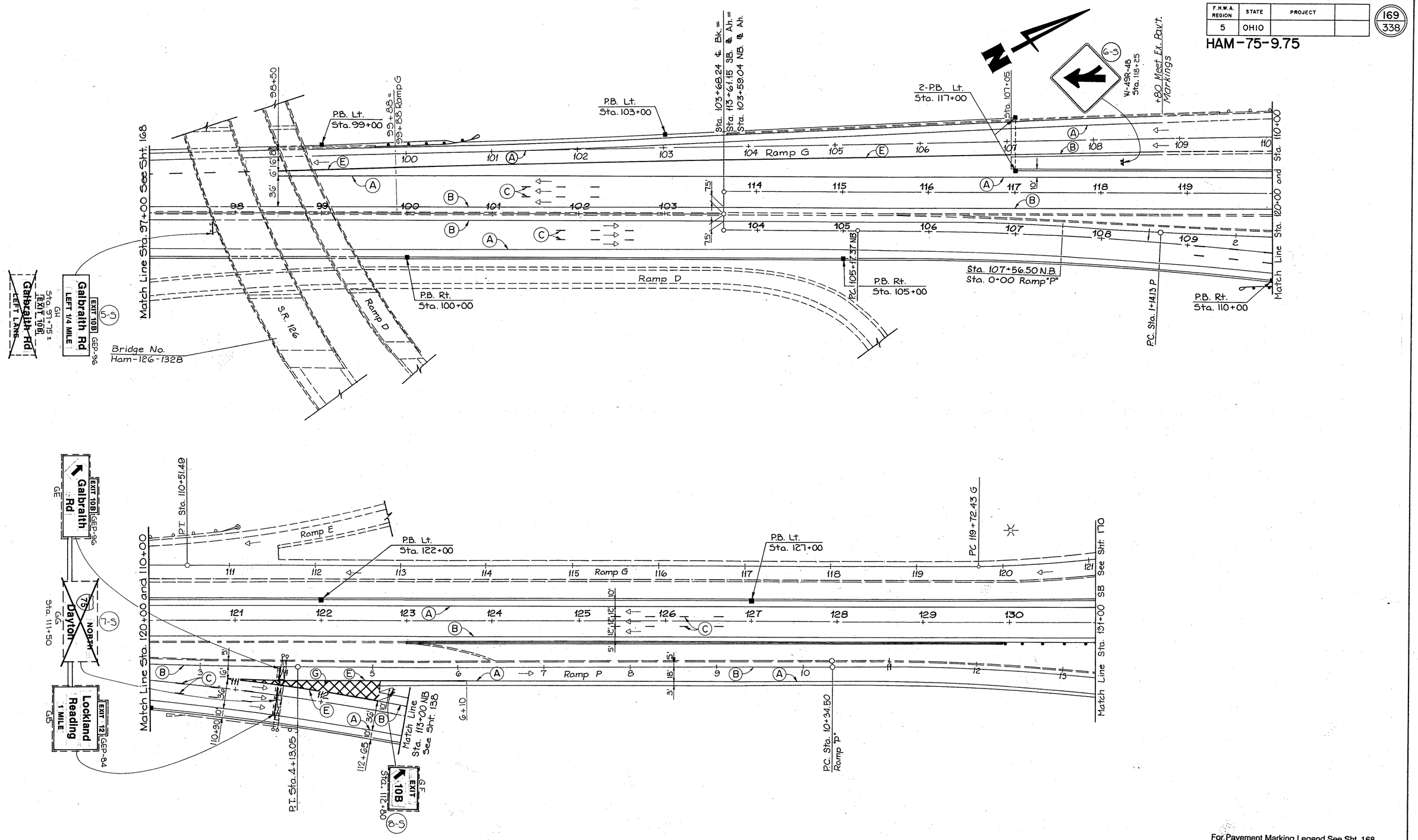

For Pavement Marking Legend See Sht. 168
For Sign Details See Sht. 189 & 190
For Sign Legend See Sht. 168

519723
MEDIA RESOURCES CORP.

TRAFFIC CONTROL STA. 97+00 TO STA. 113+00 NB AND STA. 131+00 SB

F.H.W.A. REGION	STATE	PROJECT	
5	OHIO		

170
338

HAM-75-9.75

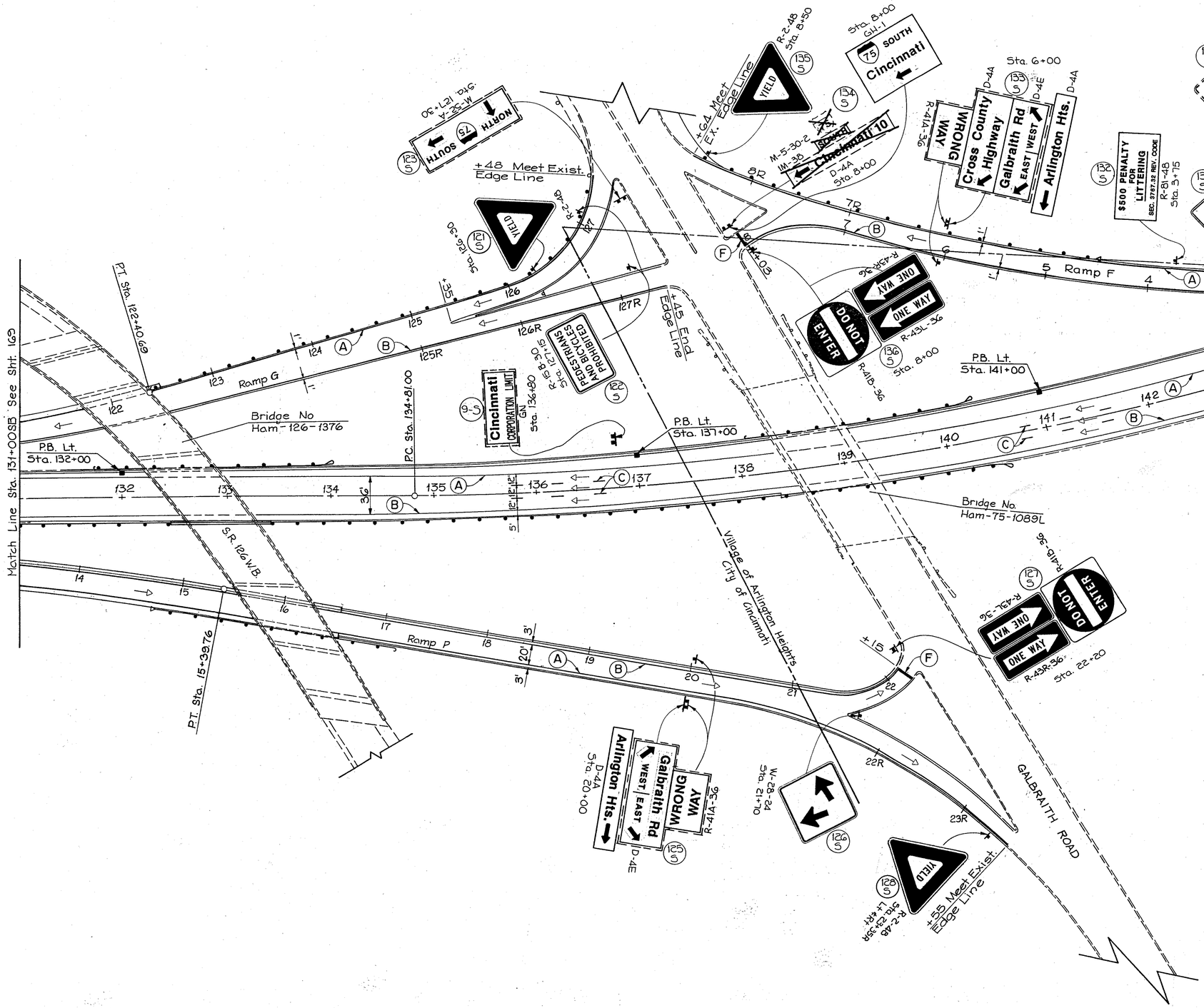

For Pavement Marking Legend See Sht. 168
For Sign Details See Sht. 189 & 190
For Sign Legend See Sht. 168

MEDIA RESOURCES CORP

TRAFFIC CONTROL STA. 131+00SB TO STA. 145+00SB

F.H.W.A. REGION	STATE	PROJECT	
5	OHIO		

171
338

HAM - 75 - 9.75

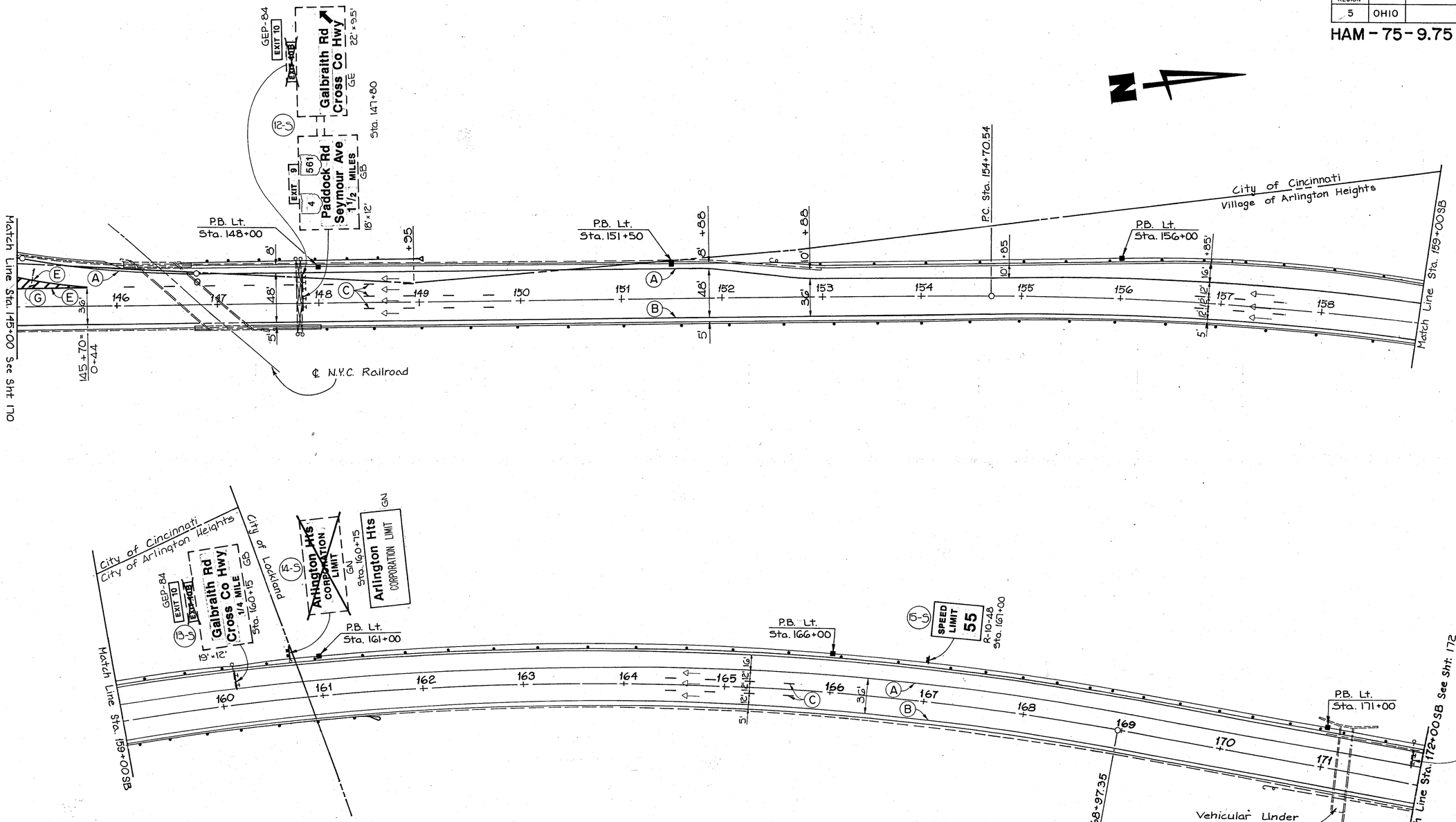

For Pavement Marking Legend See Sht. 168
For Sign Details See Sht. 189 & 190
For Sign Legend See Sht. 168

MEDIA RESOURCES CORP.

TRAFFIC CONTROL STA. 145+00SB TO STA. 172+00SB

F.H.W.A. REGION	STATE	PROJECT	
5	OHIO		

172/338

HAM-75-9.75

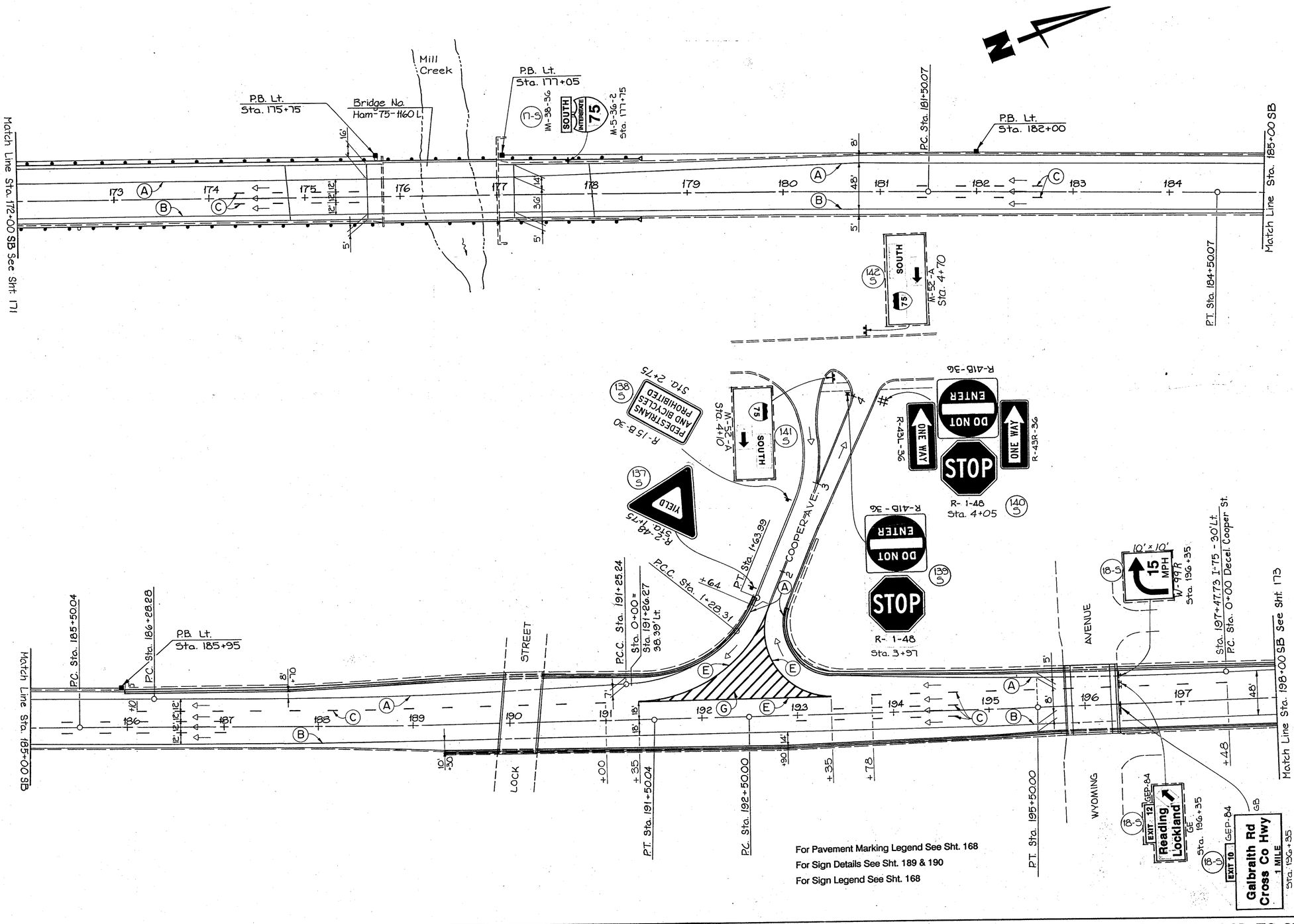

For Pavement Marking Legend See Sht. 168
For Sign Details See Sht. 189 & 190
For Sign Legend See Sht. 168

TRAFFIC CONTROL STA. 172+00 SB TO STA. 198+00 SB

MEDIA RESOURCES CORP

F.H.W.A. REGION	STATE	PROJECT	
5	OHIO		

173
338

HAM-75-9.75

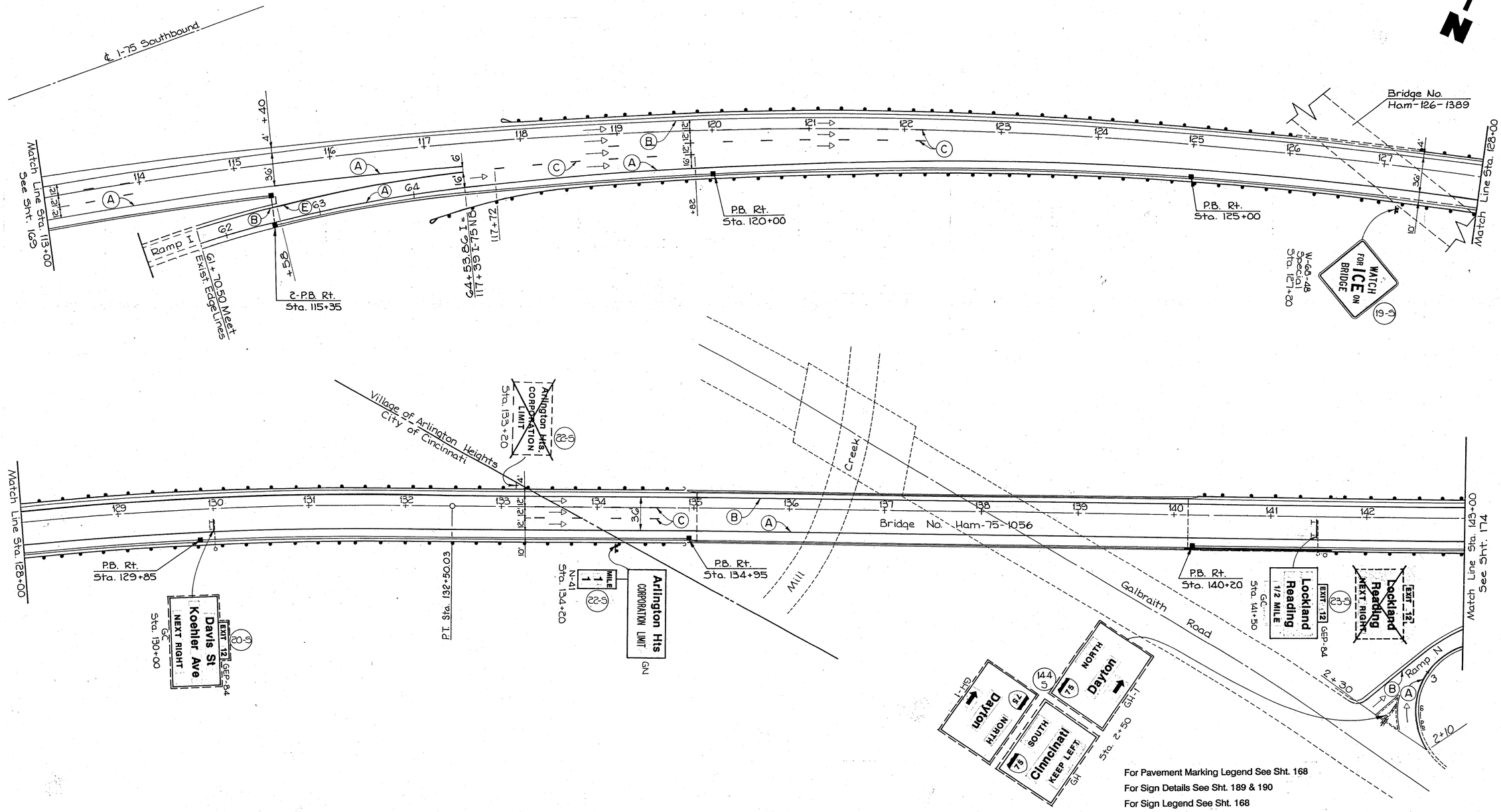

For Pavement Marking Legend See Sht. 168
For Sign Details See Sht. 189 & 190
For Sign Legend See Sht. 168

TRAFFIC CONTROL STA. 113+00 NB TO STA. 143+00 NB

MEDIA RESOURCES CORP

F.H.W.A. REGION	STATE	PROJECT	
5	OHIO		

174
338

HAM-75-9.75

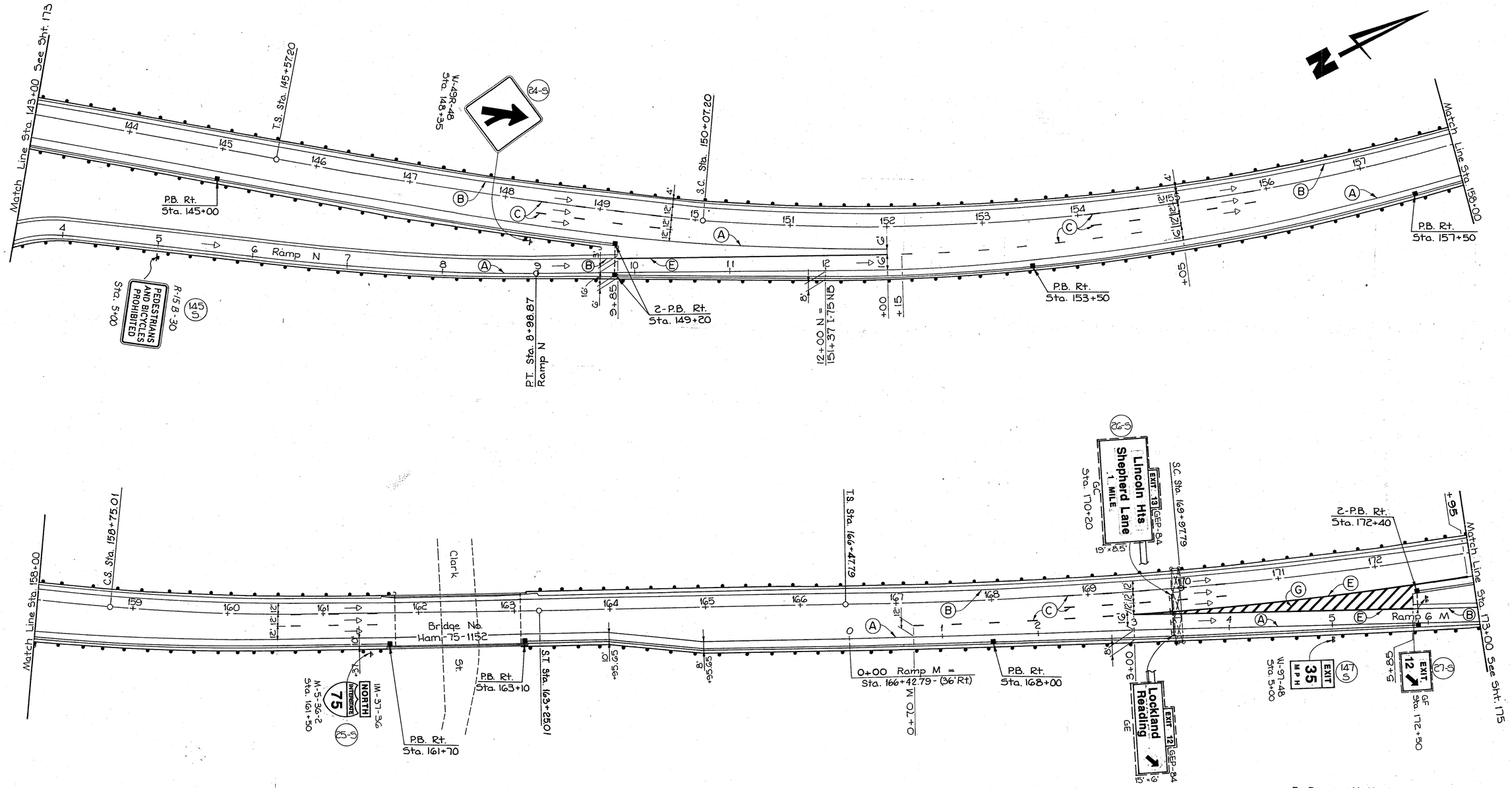

For Pavement Marking Legend See Sht. 168
For Sign Details See Sht. 189 & 190
For Sign Legend See Sht. 168

MEDIA RESOURCES CORP.

TRAFFIC CONTROL STA. 143+00 NB TO STA. 173+00 NB

F.H.W.A. REGION	STATE	PROJECT	
5	OHIO		

175
338

HAM-75-9.75

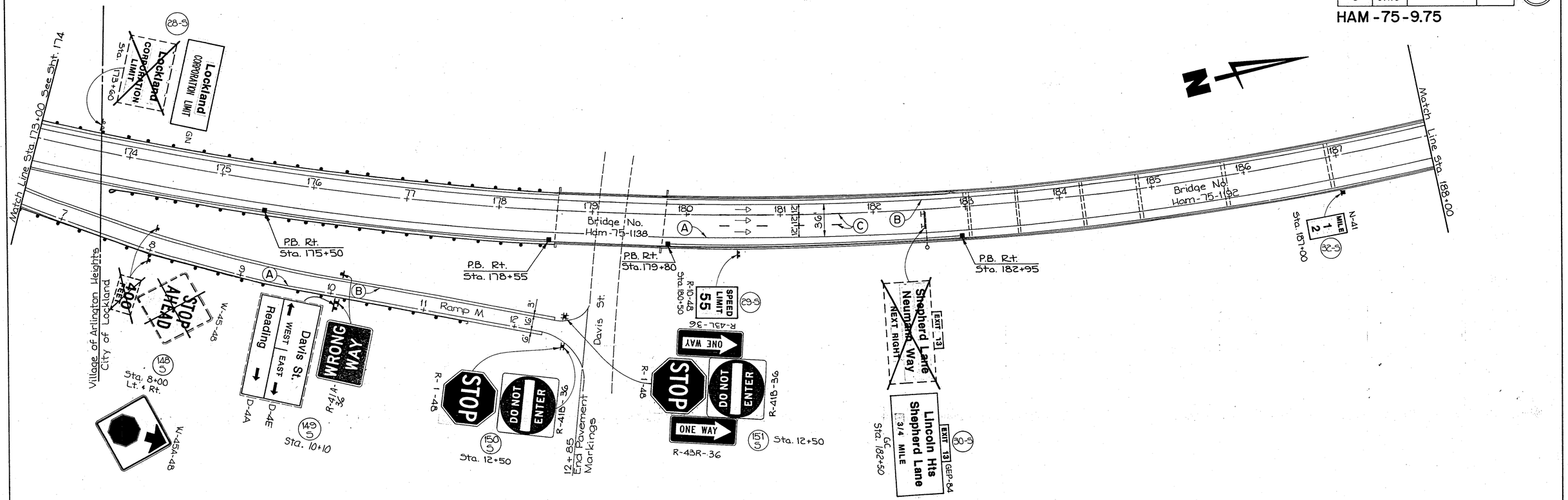

For Pavement Marking Legend See Sht. 168
For Sign Details See Sht. 189 & 190
For Sign Legend See Sht. 168

MEDIA RESOURCES CORP.

TRAFFIC CONTROL STA. 173+00 NB TO STA. 203+00 NB

F.H.W.A. REGION	STATE	PROJECT	
5	OHIO		

HAM-75-9.75

176
338

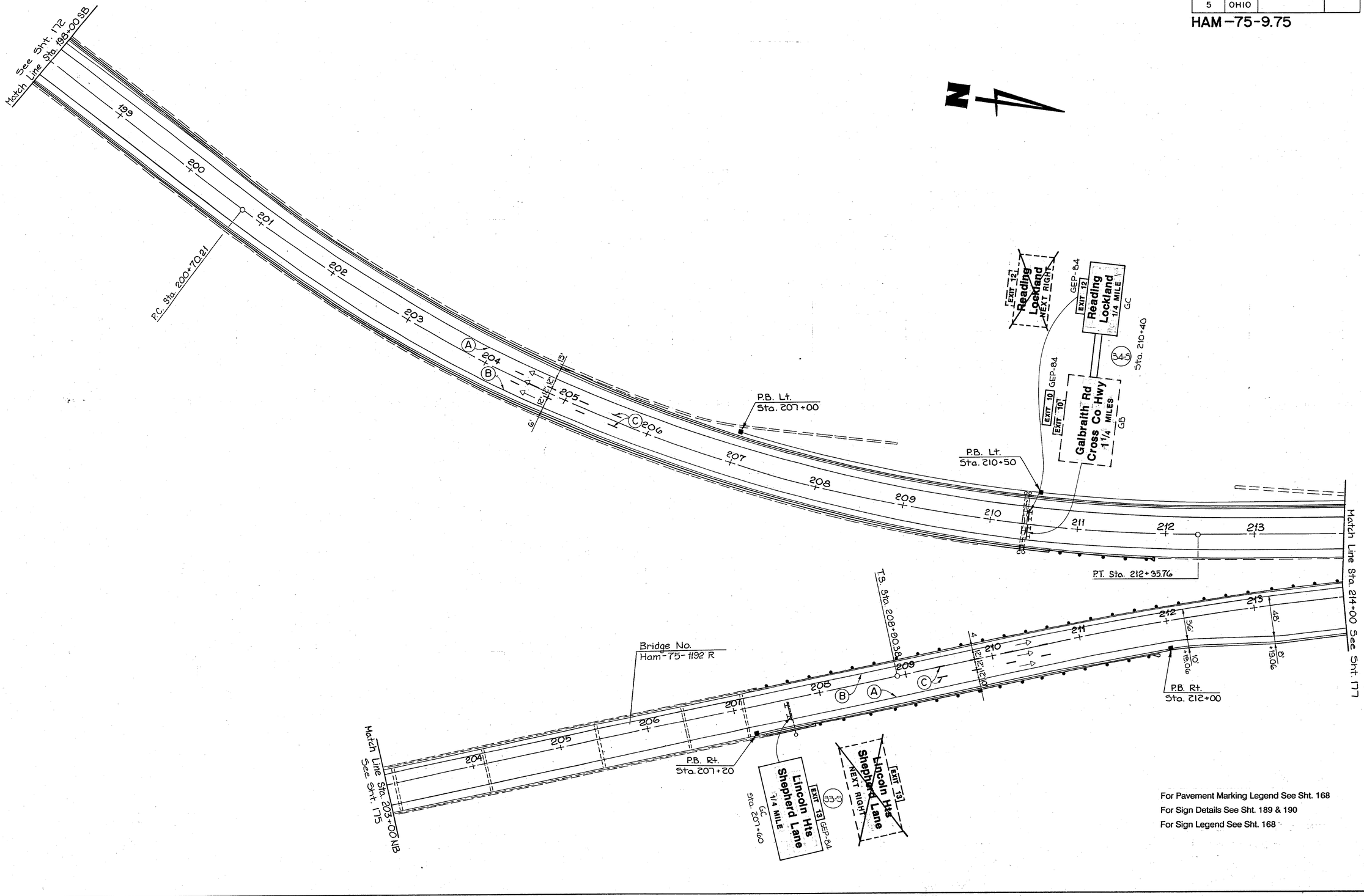

For Pavement Marking Legend See Sht. 168
For Sign Details See Sht. 189 & 190
For Sign Legend See Sht. 168

TRAFFIC CONTROL STA. 203+00NB TO STA. 214+00NB AND STA. 198+00 SB TO STA. 214+00 SB

MEDIA RESOURCES CORP

F.H.W.A. REGION	STATE	PROJECT	
5	OHIO		

177
338

HAM-75-9.75

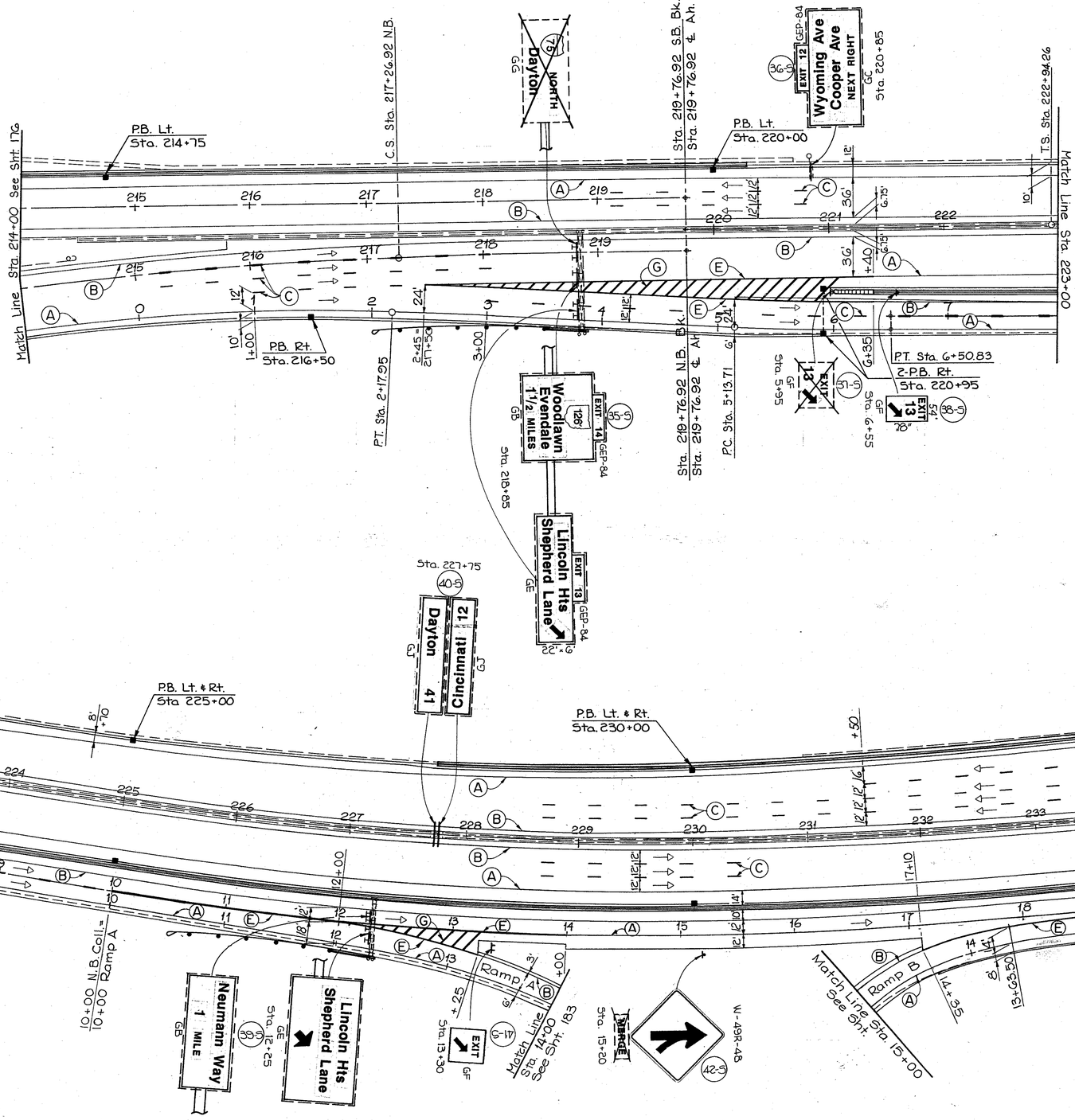

For Pavement Marking Legend See Sht. 168
For Sign Details See Sht. 189 & 190
For Sign Legend See Sht. 168

MEDIA RESOURCES CORP.

TRAFFIC CONTROL STA. 214+00 TO STA. 237+00

F.H.W.A. REGION	STATE	PROJECT	
5	OHIO		

178
338

HAM-75-9.75

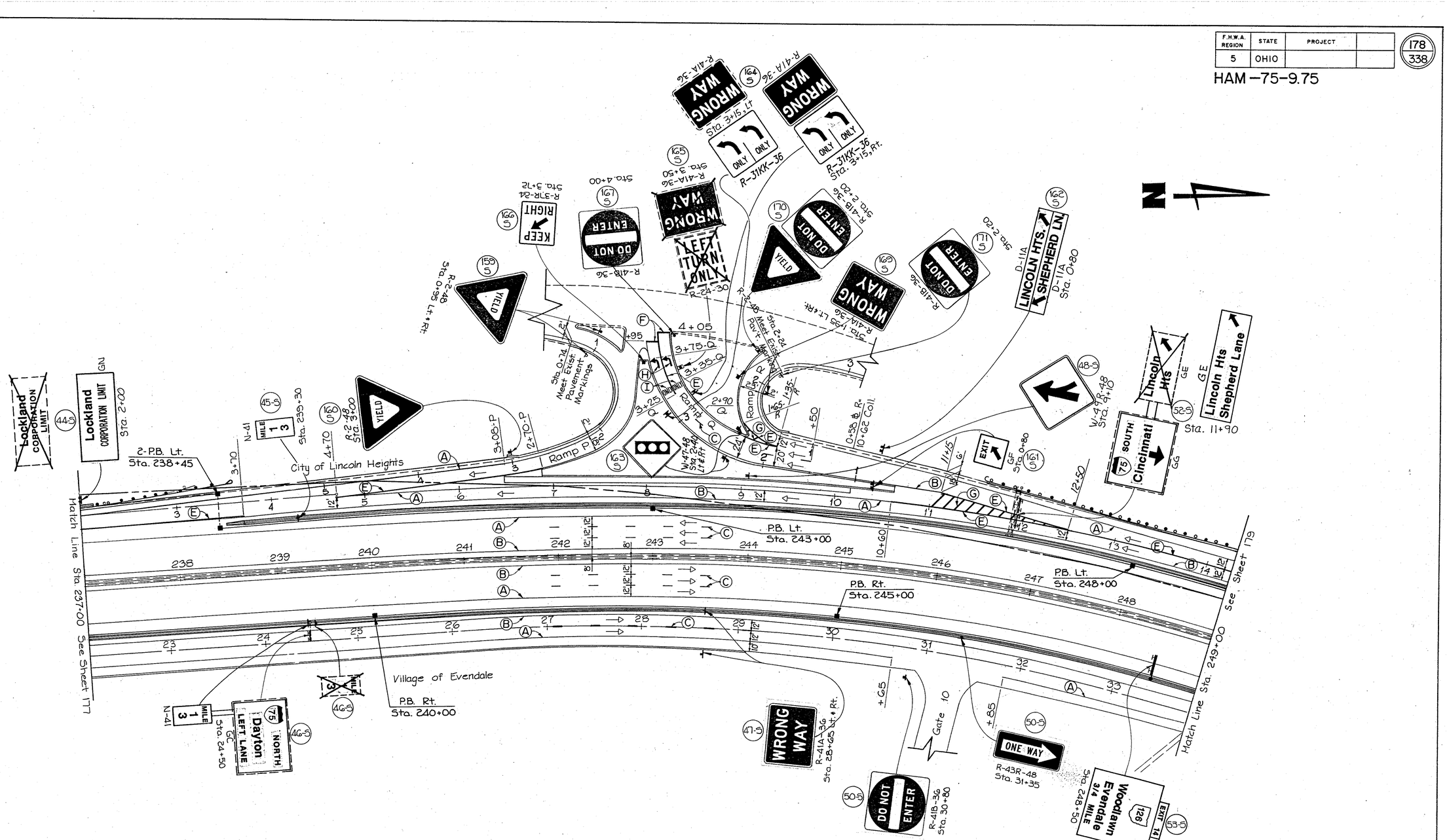

For Pavement Marking Legend See Sht. 168
For Sign Details See Sht. 189 & 190
For Sign Legend See Sht. 168

TRAFFIC CONTROL STA. 237+00 TO STA. 249+00

F.H.W.A. REGION	STATE	PROJECT	
5	OHIO		

179
338

HAM-75-9.75

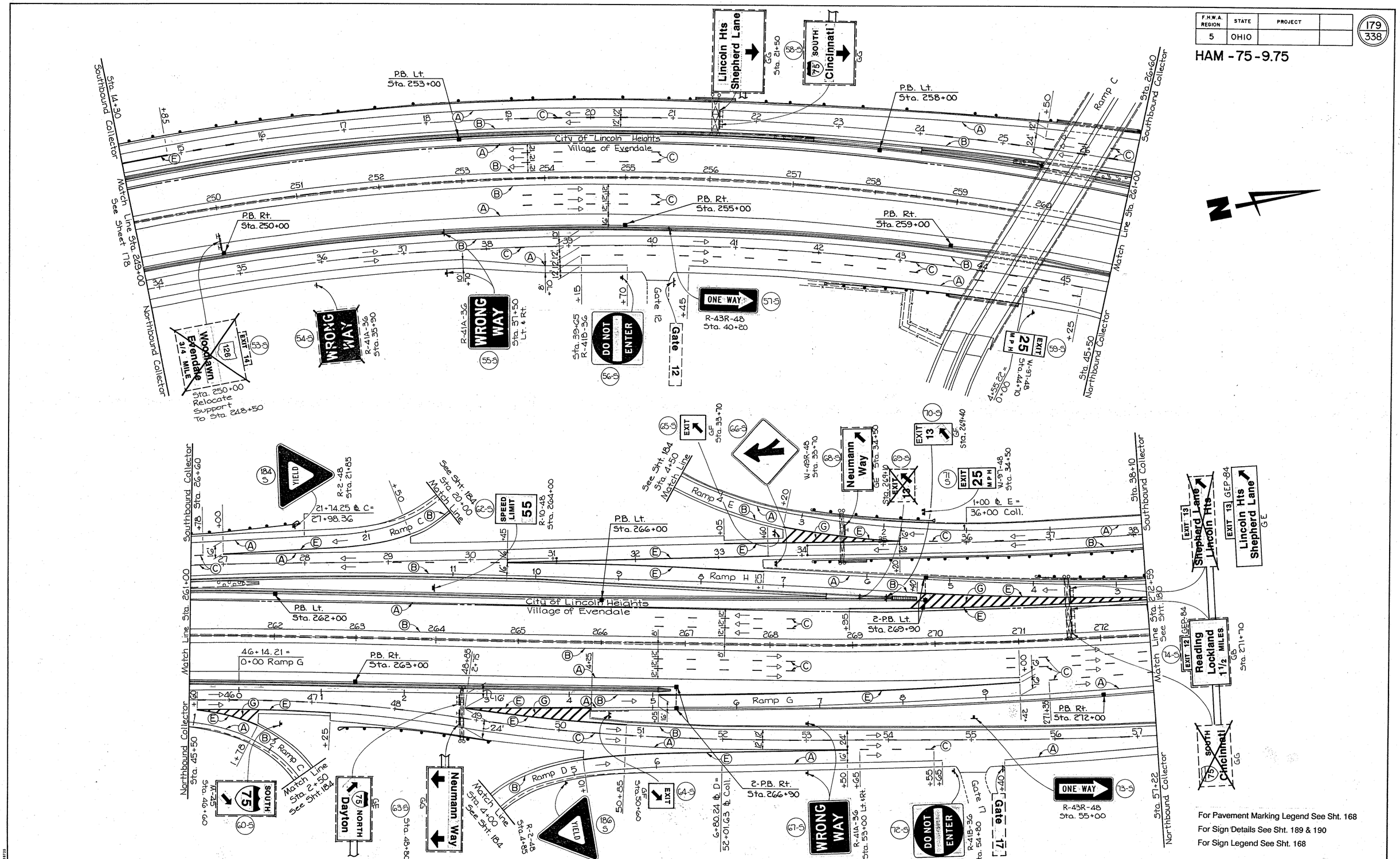

For Pavement Marking Legend See Sht. 168
For Sign Details See Sht. 189 & 190
For Sign Legend See Sht. 168

MEDIA RESOURCES CORP

TRAFFIC CONTROL STA. 249+00 TO STA. 272+59

F.H.W.A. REGION	STATE	PROJECT		
5	OHIO			

180
338

HAM-75-9.75

TRAFFIC CONTROL STA. 272+59 TO STA. 295+55

For Pavement Marking Legend See Sht. 168
For Sign Details See Sht. 189 & 190
For Sign Legend See Sht. 168

MEDIA RESOURCES CORP.

F.H.W.A. REGION	STATE	PROJECT	
5	OHIO		

181
338

HAM-75-9.75

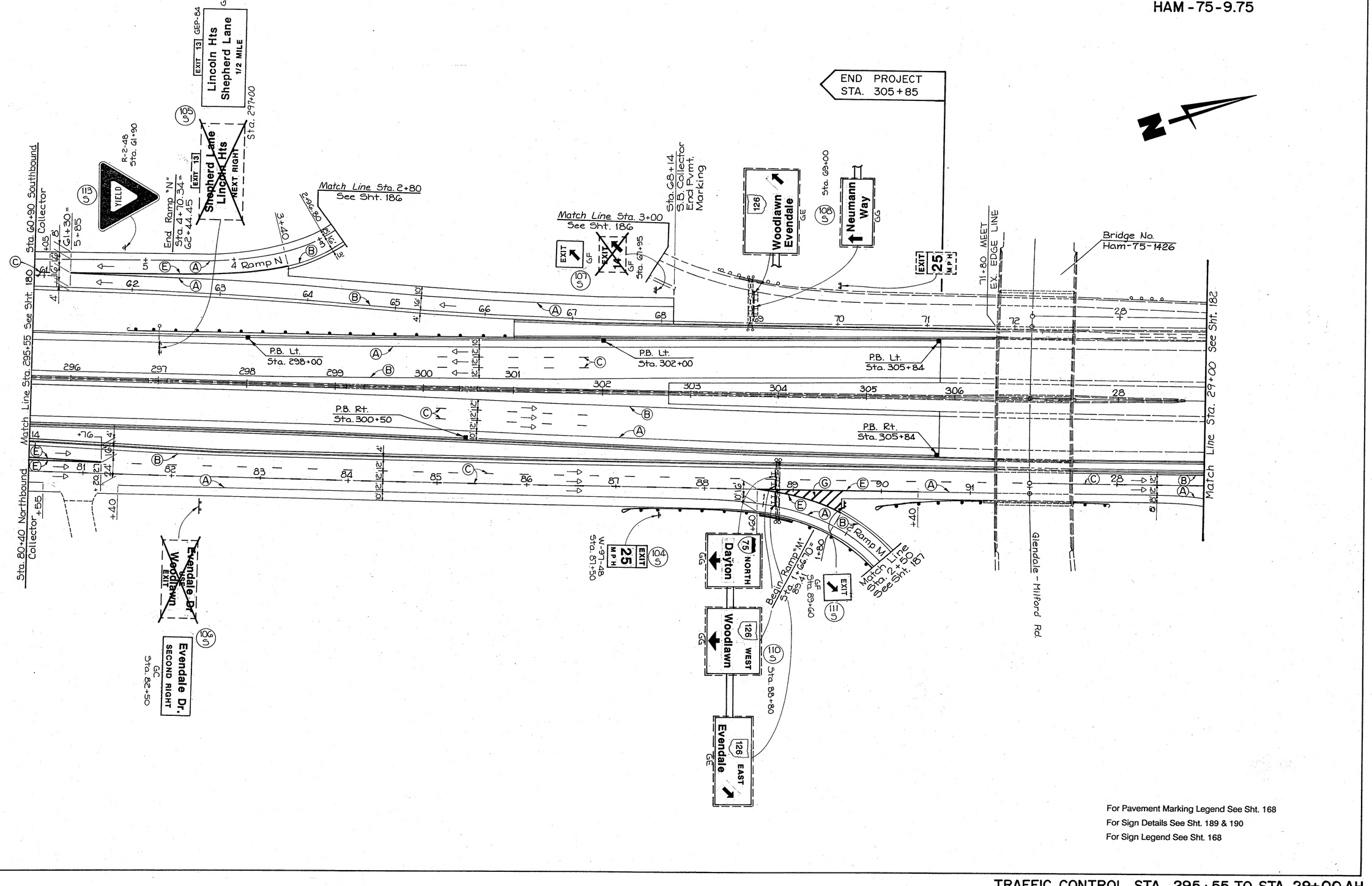

For Pavement Marking Legend See Sht. 168
For Sign Details See Sht. 189 & 190
For Sign Legend See Sht. 168

MEDIA RESOURCES CORP

TRAFFIC CONTROL STA. 295+55 TO STA. 29+00 AH.

F.H.W.A. REGION	STATE	PROJECT	
5	OHIO		

182
338

HAM-75-9.75

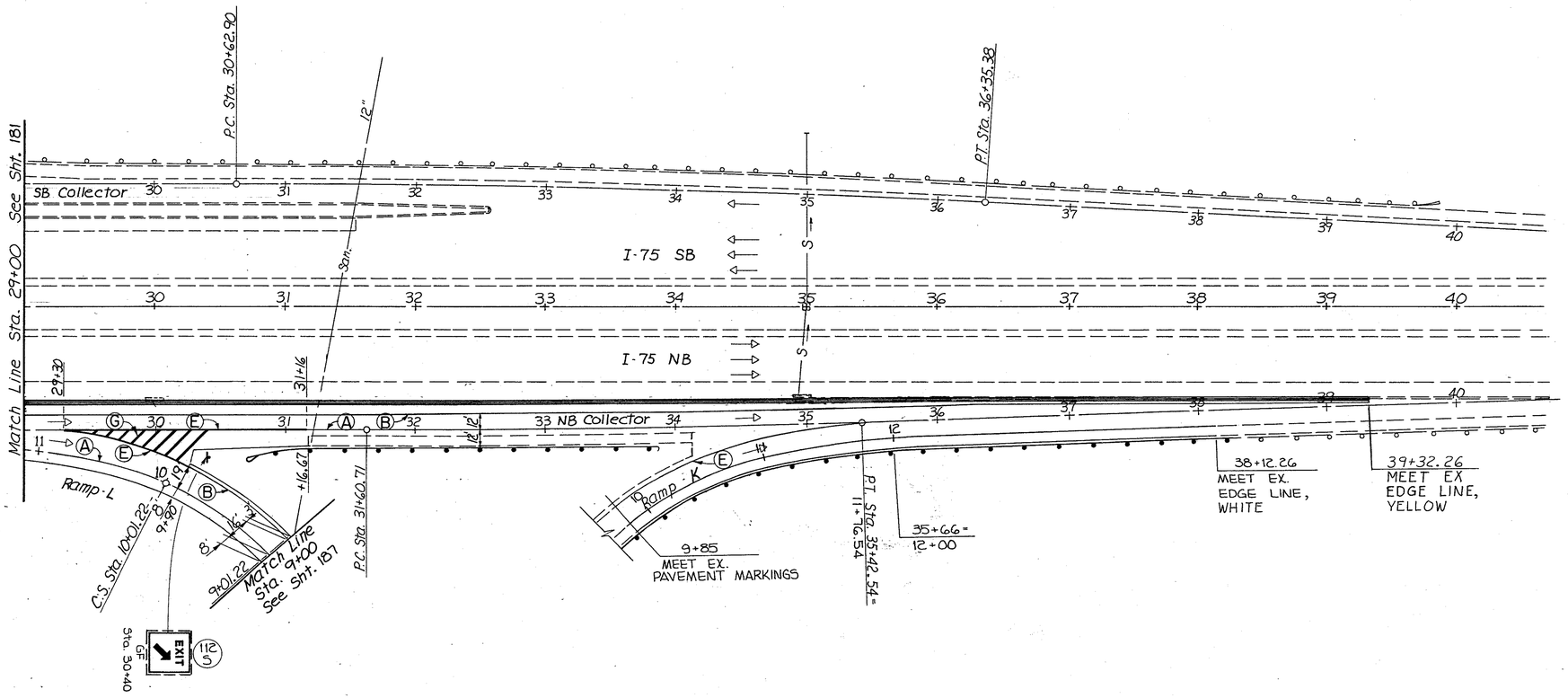

For Pavement Marking Legend See Sht. 168
For Sign Details See Sht. 189 & 190
For Sign Legend See Sht. 168

MEDIA RESOURCES CORP.

TRAFFIC CONTROL STA. 29+00 TO STA. 40+00

F.H.W.A REGION	STATE	PROJECT	
5	OHIO		

183
338

HAM-75-9.75

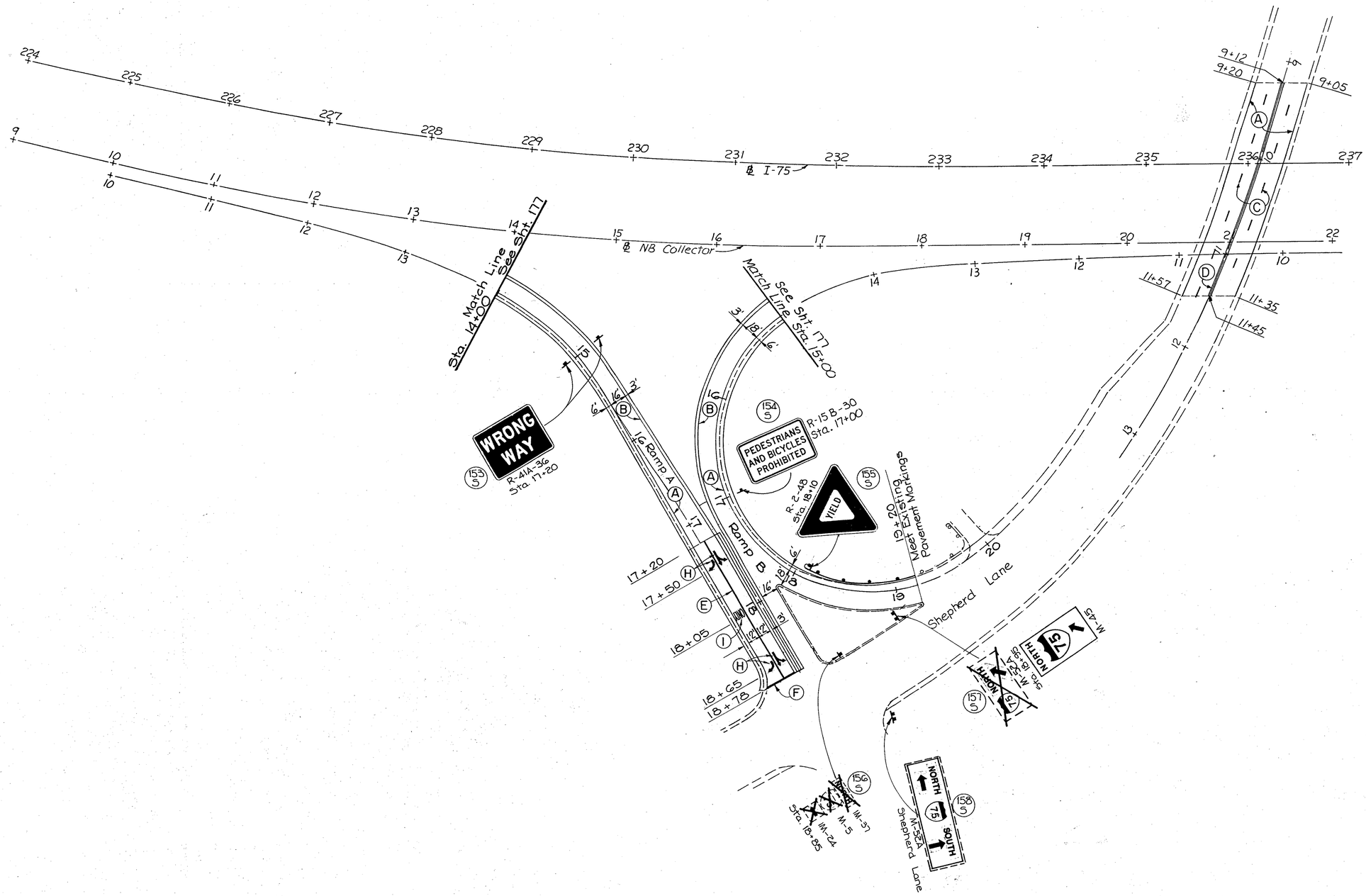

For Pavement Marking Legend See Sht. 168
For Sign Details See Sht. 189 & 190
For Sign Legend See Sht. 168

TRAFFIC CONTROL RAMPS A & B, SHEPHERD LANE

F.H.W.A. REGION	STATE	PROJECT	
5	OHIO		

184
338

HAM-75-9.75

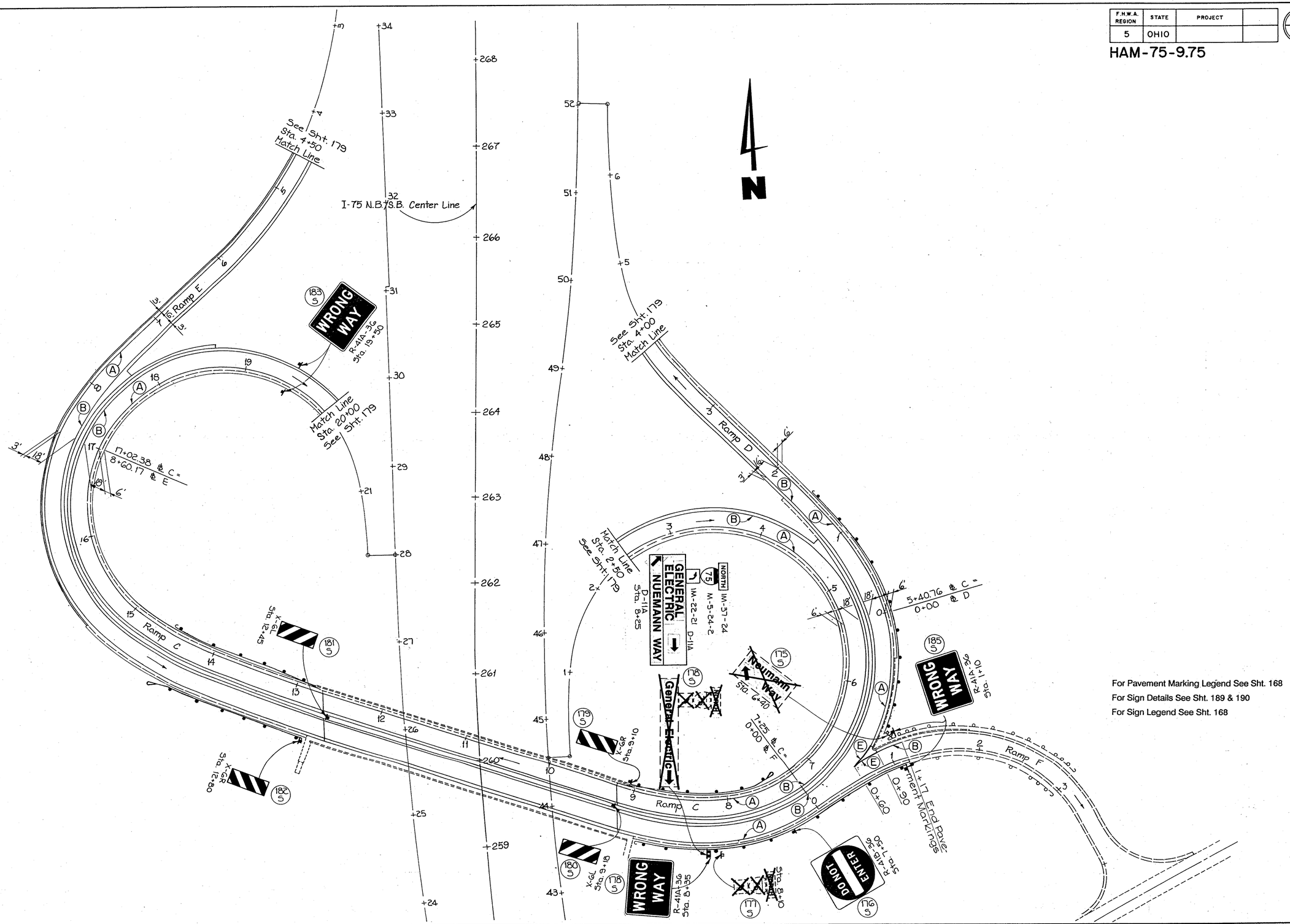

For Pavement Marking Legend See Sht. 168
For Sign Details See Sht. 189 & 190
For Sign Legend See Sht. 168

TRAFFIC CONTROL RAMPS C,D,E & F

MEDIA RESOURCES CORP

F.H.W.A. REGION	STATE	PROJECT	
5	OHIO		

185
338

HAM-75-9.75

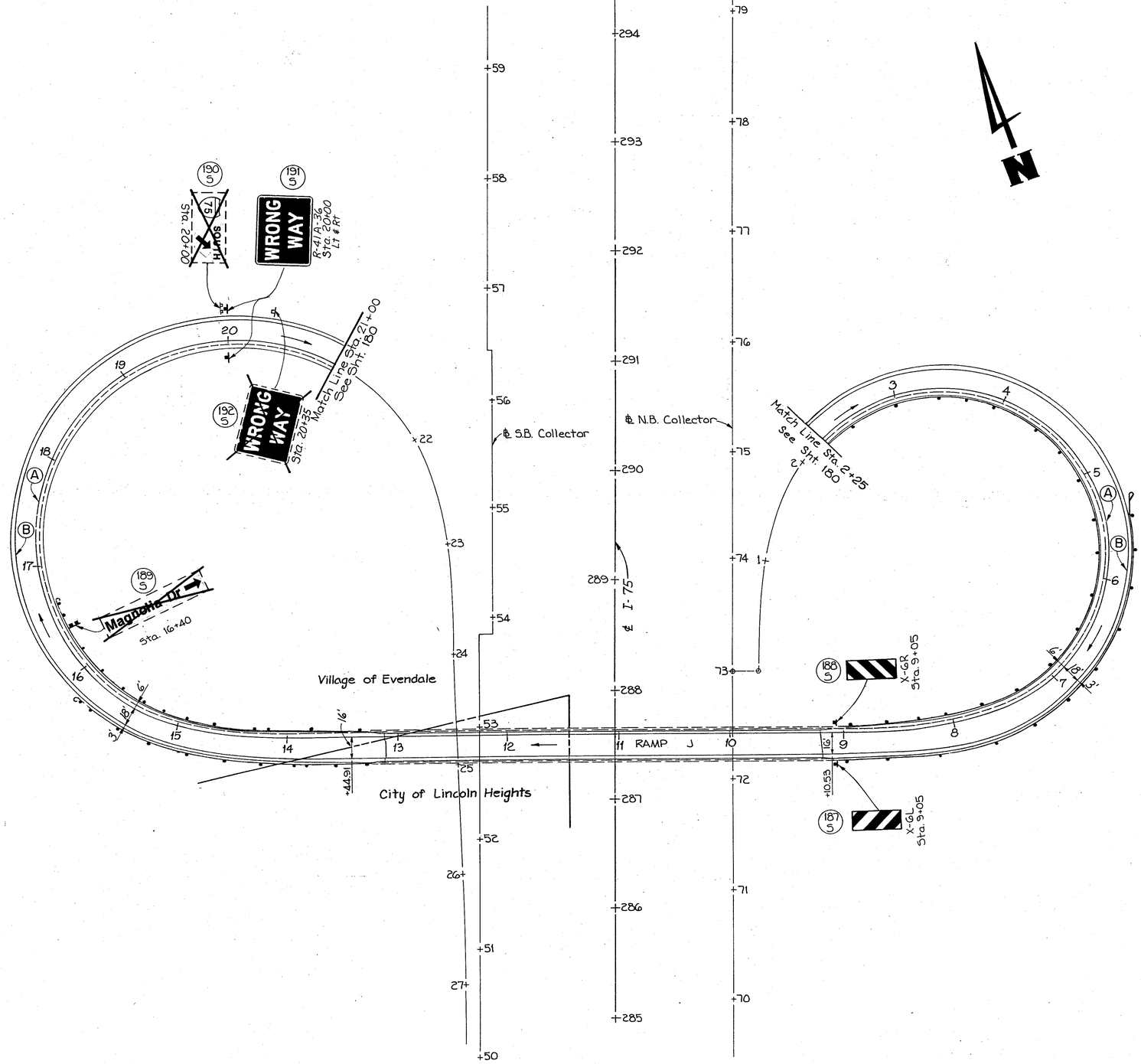

For Pavement Marking Legend See Sht. 168
For Sign Details See Sht. 189 & 190
For Sign Legend See Sht. 168

MEDIA RESOURCES CORP.

TRAFFIC CONTROL RAMP J

F.H.W.A. REGION	STATE	PROJECT	
5	OHIO		

186
338

HAM-75-9.75

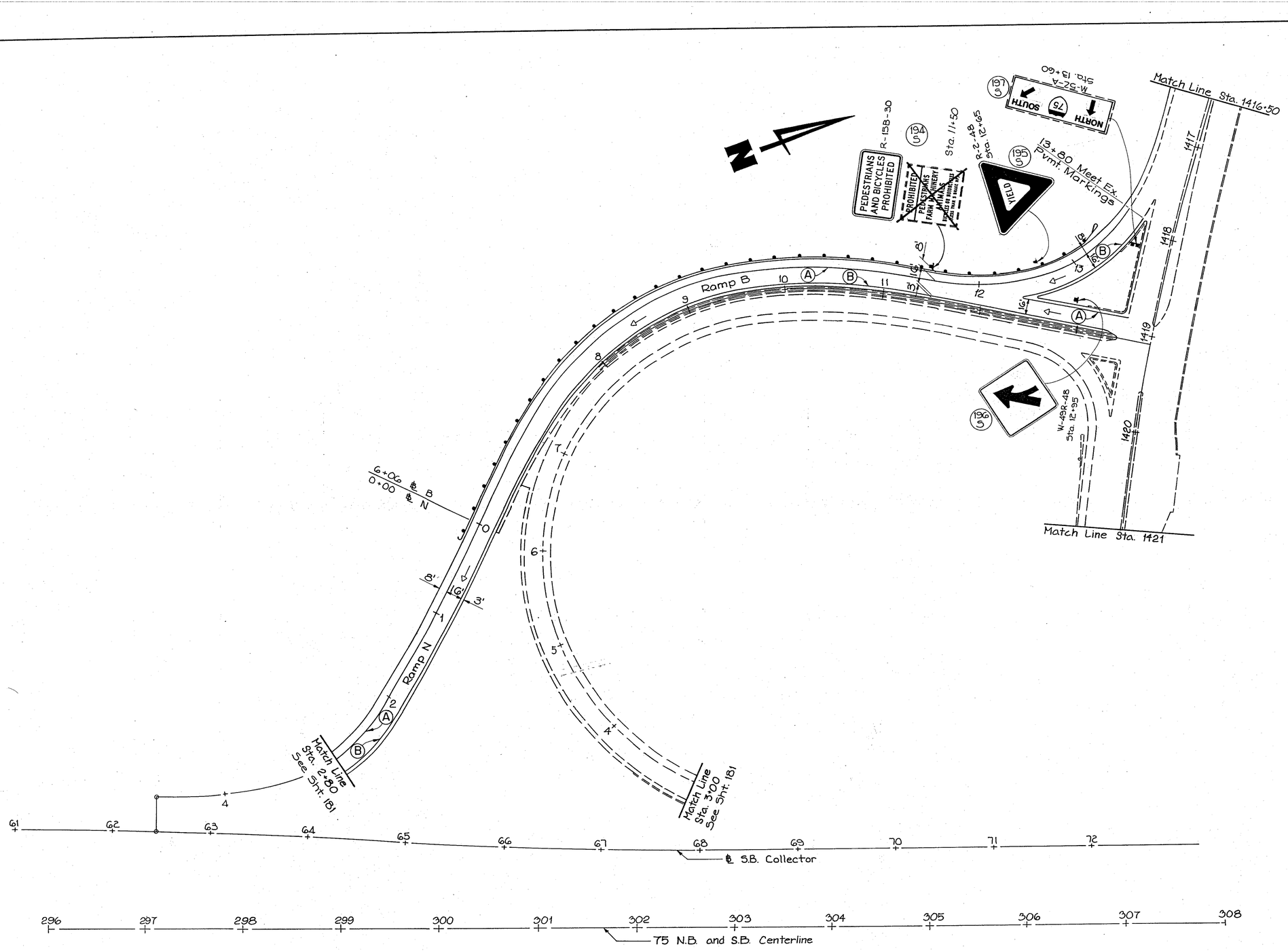

For Pavement Marking Legend See Sht. 168
For Sign Details See Sht. 189 & 190
For Sign Legend See Sht. 168

TRAFFIC CONTROL RAMPS B & N GLENDALE-MILFORD ROAD INTERCHANGE

MEDIA RESOURCES CORP

F.H.W.A REGION	STATE	PROJECT	
5	OHIO		

187/338

HAM-75-9.75

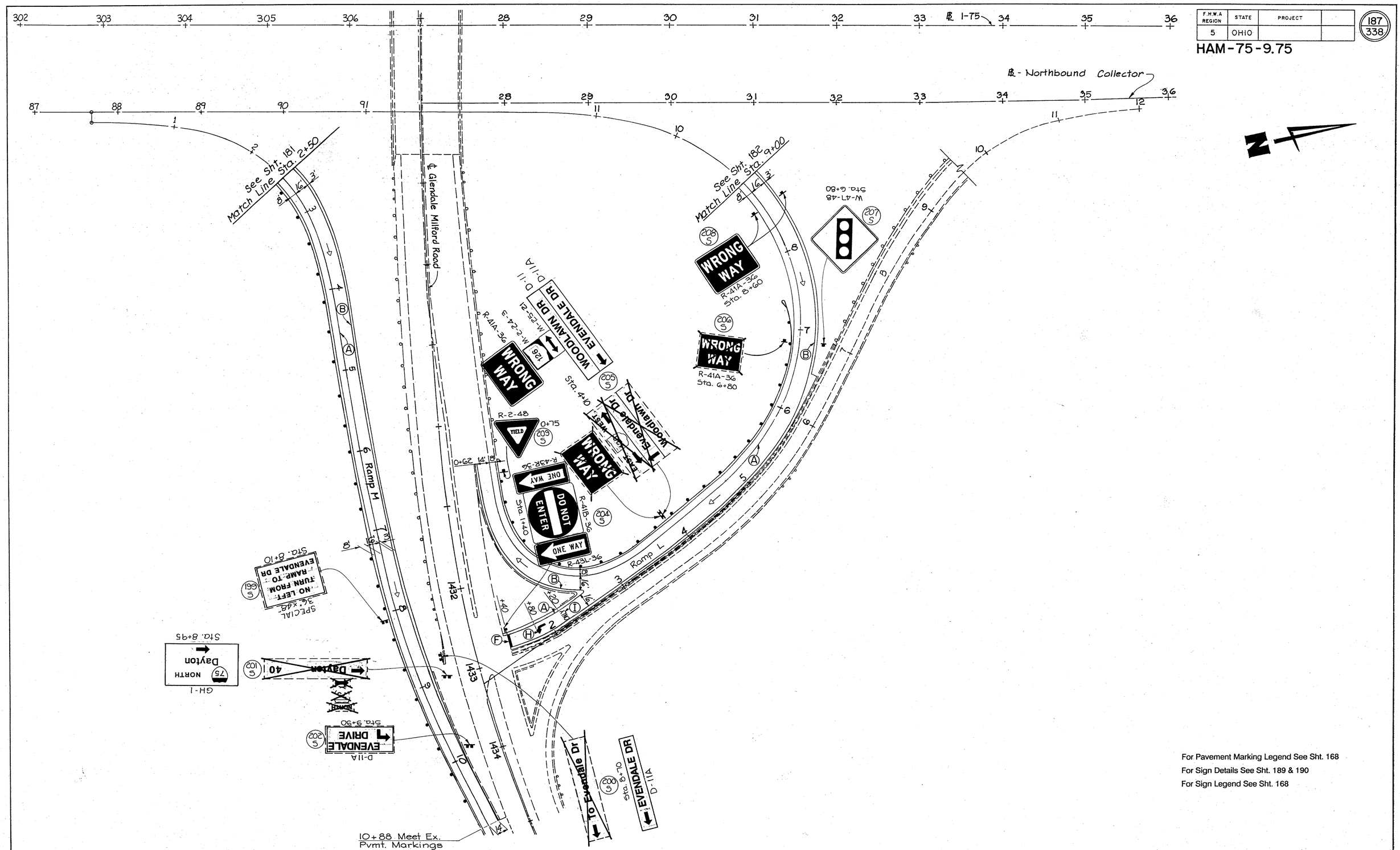

For Pavement Marking Legend See Sht. 168
For Sign Details See Sht. 189 & 190
For Sign Legend See Sht. 168

TRAFFIC CONTROL RAMPS M & L

F.H.W.A. REGION	STATE	PROJECT	
5	OHIO		

188
338

HAM-75-9.75

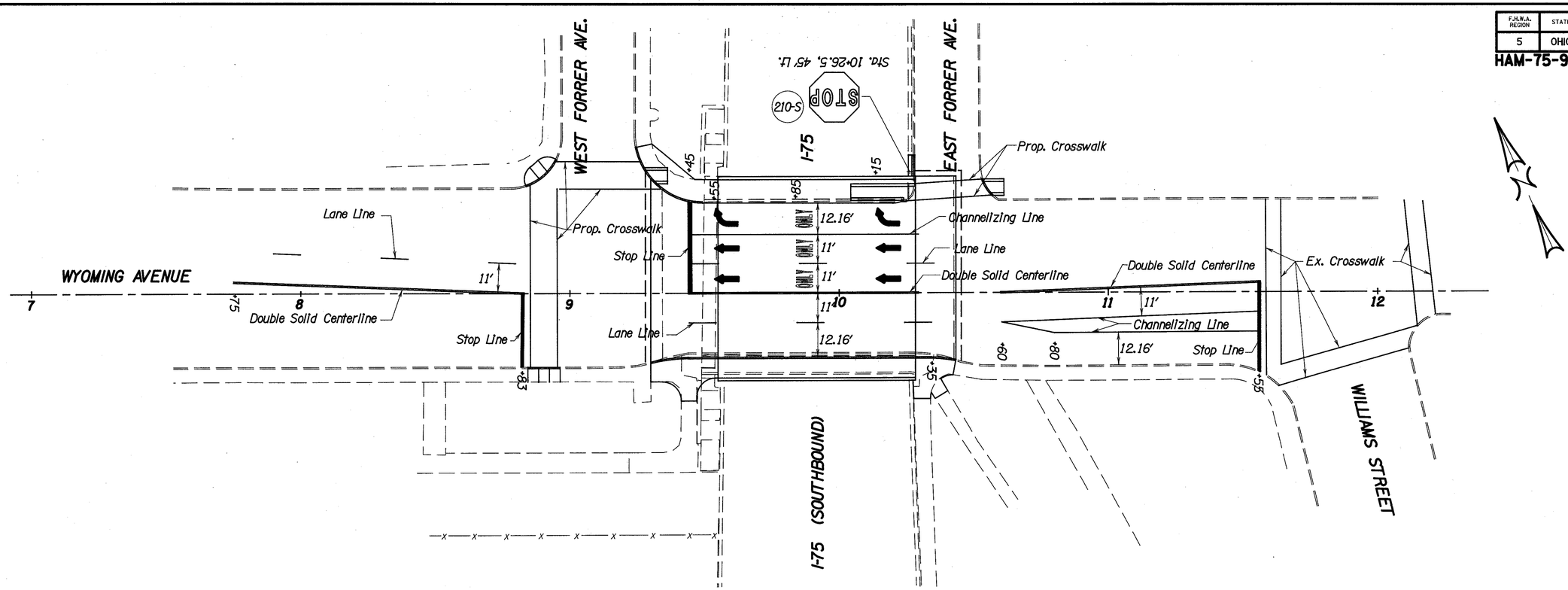

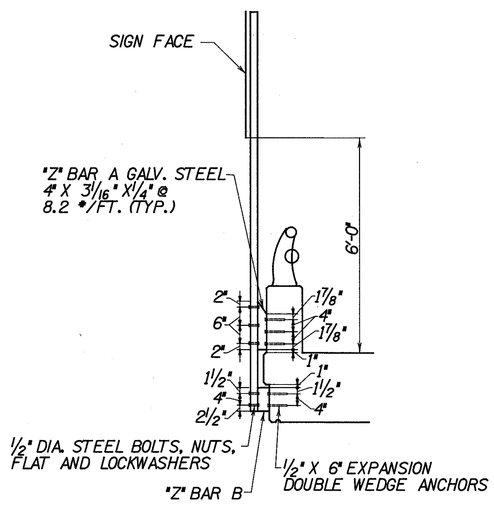

SIGN SUPPORT ASSEMBLY, BRIDGE MOUNTED, TYPE 1, AS PER PLAN

For Pavement Marking Legend See Sht. 168
For Sign Legend See Sht. 168
For Sign Details See Sht. 189 & 190

TRAFFIC CONTROL WYOMING AVE.

F.H.W.A. REGION	STATE	PROJECT	
5	OHIO		

189
338

HAM-75-9.75

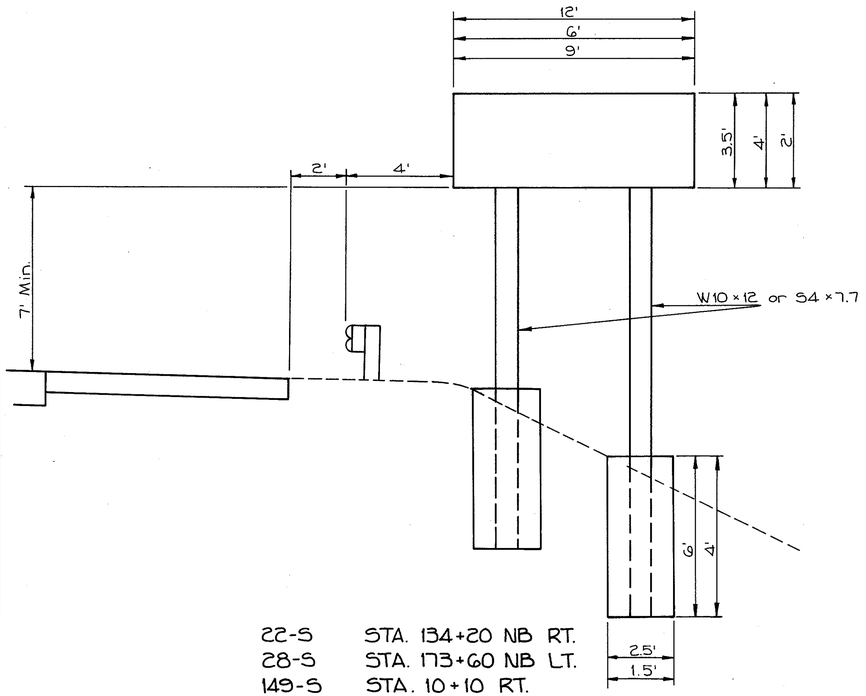

22-S STA. 134+20 NB RT.
28-S STA. 173+60 NB LT.
149-S STA. 10+10 RT.

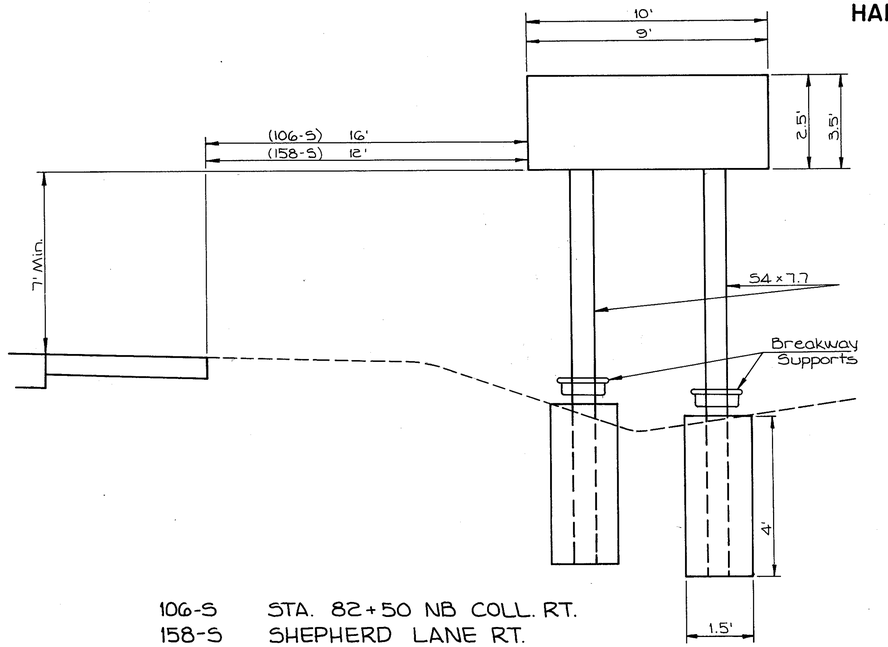

106-S STA. 82+50 NB COLL. RT.
158-S SHEPHERD LANE RT.

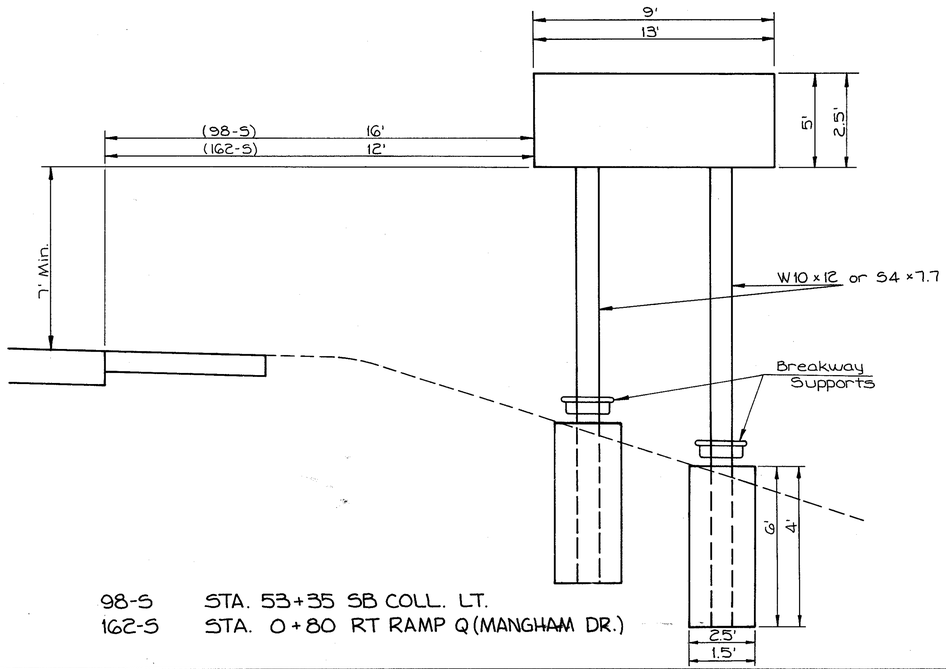

98-S STA. 53+35 SB COLL. LT.
162-S STA. 0+80 RT RAMP Q (MANGHAM DR.)

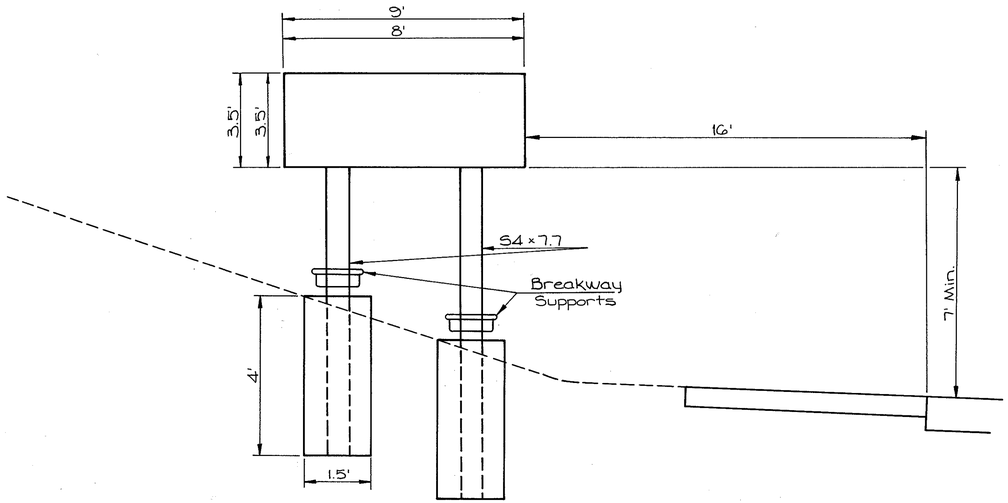

9-S STA. 136+80 SB LT.
43-S STA. 20+25 NB COLL. RT.

MEDIA RESOURCES CORP.

SIGN DETAILS

F.H.W.A. REGION	STATE	PROJECT	
5	OHIO		

190
338

HAM - 75 - 9.75

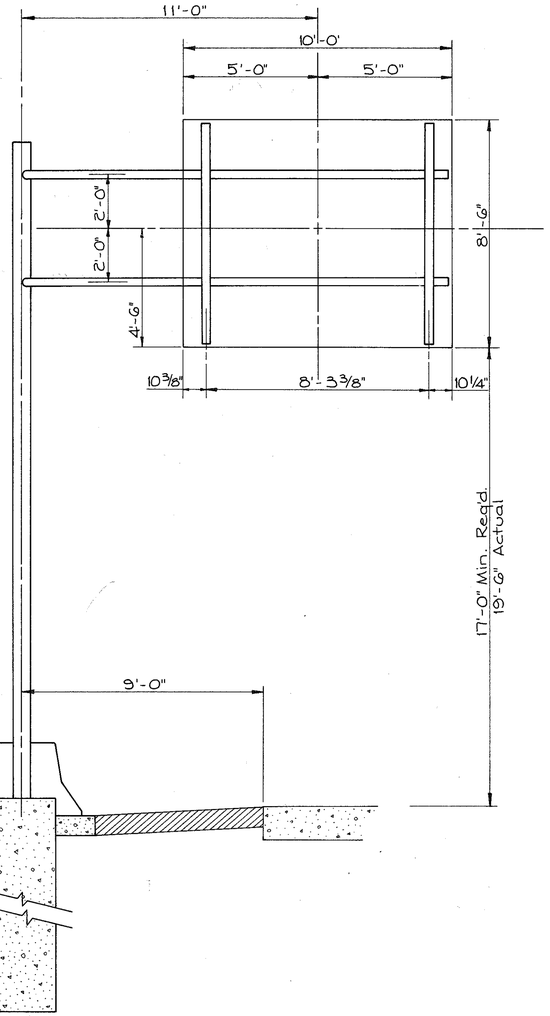

OVERHEAD SIGN SUPPORT NO. 46-S

Sta. 24+50 N.B. Collector
TC-12.30 Design 3
Arm Length: 16'

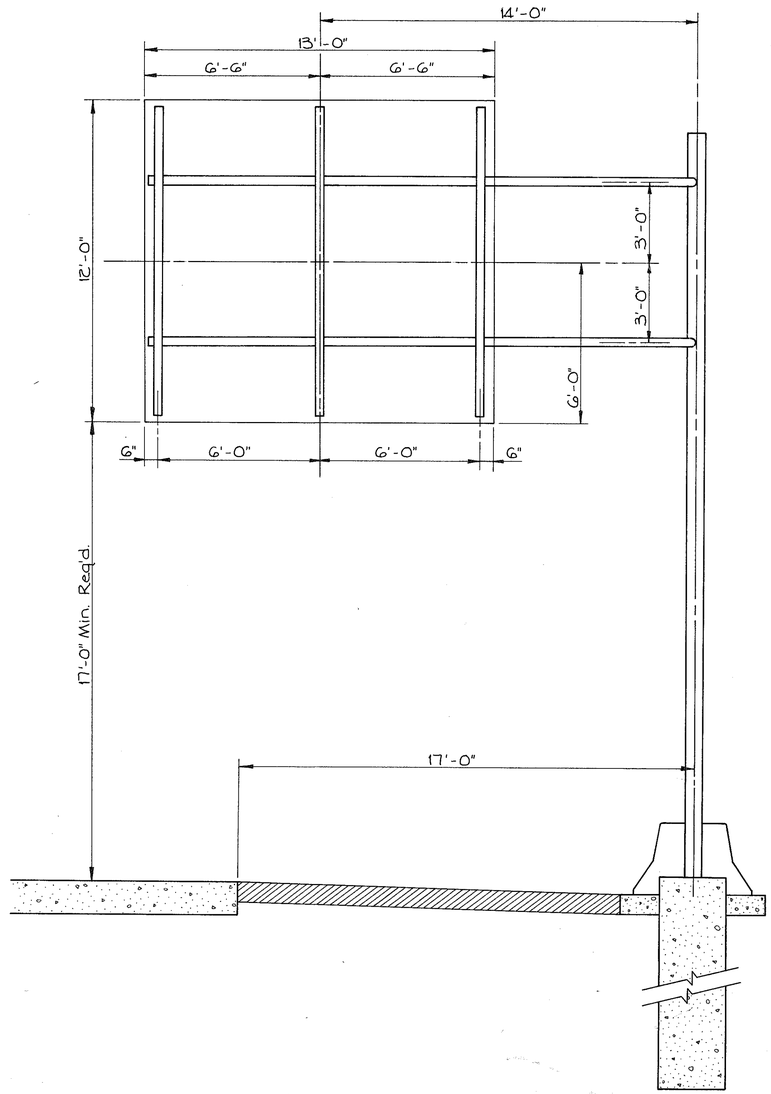

OVERHEAD SIGN SUPPORT NO. 53-S

Sta. 248+50 N.B. Collector
TC-12.30 Design 10 Foundation
Arm Length: 16'

MEDIA RESOURCES CORP.

SIGN DETAILS

SCHEMATIC PLAN

F.H.W.A. REGION	STATE	PROJECT	
5	OHIO		

HAM-75-9.75

191/338

1/39

0 200 400

N

CITY OF CINCINNATI

POWER SERVICE "B"

CITY OF LOCKLAND

VILLAGE OF ARLINGTON HEIGHTS

SOUTHBOUND I-75

MILL CREEK

COOPER AVE.

LOCK STREET

BRIDGE NO. HAM-75-1160 L

BRIDGE NO. HAM-75-1187 L

CONRAIL RAILROAD

BRIDGE NO. HAM-75-1105 L

RAMP F

GALBRAITH ROAD

VILLAGE OF ARLINGTON HEIGHTS

CITY OF CINCINNATI

BRIDGE NO. HAM-126-1389

BRIDGE NO. HAM-75-1102 R

MILL CREEK

VILLAGE OF ARLINGTON HEIGHTS

CITY OF CINCINNATI

RAMP N

POWER SERVICE "C"

CLARK STREET

BRIDGE NO. HAM-75-1152 R

NORTHBOUND I-75

RAMP M

DAVIS STREET

BRIDGE NO. HAM-75-1192 R

BRIDGE NO. HAM-75-1184 R

CITY OF LOCKLAND

VILLAGE OF ARLINGTON HEIGHTS

"B" MATCH LINE "B"

SEE SHEET 2

19/39 20/39 21/39 22/39 23/39 24/39

FOR LEGEND SEE SHT. 3

1/39

LIGHTING SCHEMATIC PLAN

818223
MEDIA RESOURCES CORP.

F.H.W.A. REGION	STATE	PROJECT	
5	OHIO		

192/338

HAM–75–9.75

2/39

SCHEMATIC PLAN

0 200 400

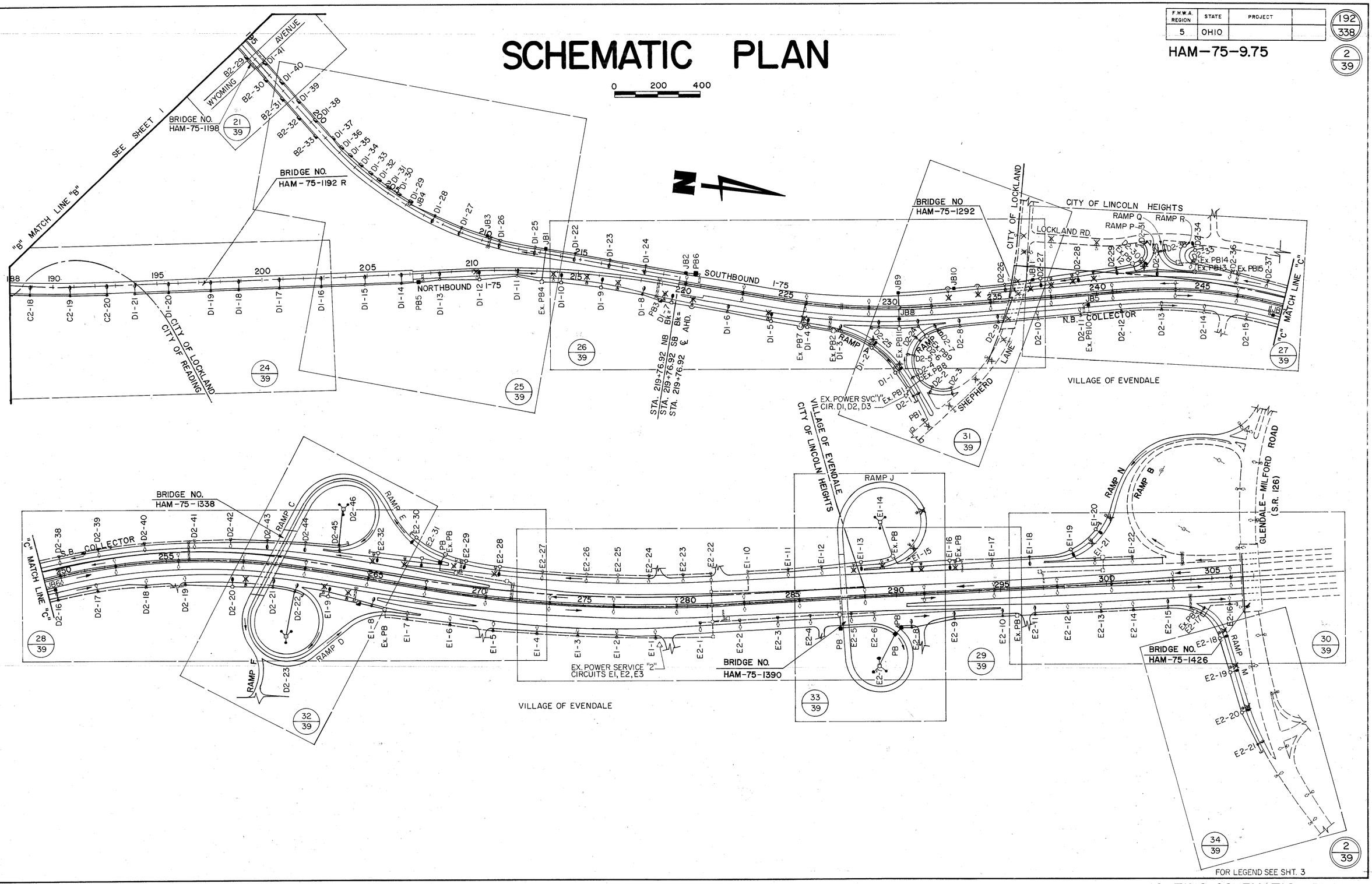

FOR LEGEND SEE SHT. 3

LIGHTING SCHEMATIC PLAN

MEDIA RESOURCES CORP.

GENERAL NOTES

SPECIFICATIONS
These notes are supplemental to Items 625 and 713 of the State of Ohio Department of Transportation Construction and Material Specifications. Reference shall be made to Standard Construction Drawings listed on the Title Sheet of these plans.

ITEM 625 - POWER SERVICE
In addition to the requirements of the Construction and Material Specifications, the Contractor shall be responsible for payment of all charges made by the Power Company for the establishment of electrical service at each point specified in the plans.

Upon completion of the project, the energy account shall be paid current and the account transferred to the maintaining agency specified in the plans.

Payment to the Contractor is incidental to Item 625 - Power Service.

The power supplying agency for this project is:

Cincinnati Gas & Electric
P.O. Box 960
Cincinnati, Ohio 45201-0960
(513) 632-3792

UNDERGROUND UTILITIES
The information shown in these plans concerning type and location of underground utilities, such as gas lines, electrical conduit or cable, waterlines, sewers, drains, etc., is not guaranteed to be accurate or inclusive. The Contractor is responsible for making his own determinations as to the type and location of underground utilities as may be necessary to avoid damage thereto.

The Contractor should exercise extreme caution and is fully responsible for all damage inflicted on underground utilities and underdrains in excavation and trenching operations, replacement of guardrail and the like.

ITEM 625 - POWER SERVICE REMOVED, AS PER PLAN
This item of work shall consist of removing the existing lighting circuits, control centers, conduit, poles, etc. All materials removed shall become the property of the Contractor and disposed of off the project site.

Payment will be made for each Item 202 - Power Service Removed, As Per Plan so removed and shall include all labor, materials and equipment needed to complete the removal.

713.14 LAMPS
High pressure sodium lamps shall be General Electric "Lucalox", Westinghouse "Ceramalux", Sylvania "lumalux", or equal approved by the Engineer.

UNDERDRAINS FOR PULL BOXES
Reference is made to Standard Drawing HL-30.11 for details of draining pull boxes. Underdrains for pull boxes shall be used as directed by the Engineer and shall be provided where the length required for a satisfactory outlet does not exceed approximately 20 feet. An estimate quantity of 520 linear feet of Item 603 - 4" Conduit, Type E is included in the Lighting General Summary for this purpose.

625.07 - 713.11 LUMINAIRES
Style B luminaires shall have single rated 480 volt, 200 watt, integral regulator ballasts for use with high pressure sodium lamps and shall be General Electric M400, Crouse-Hinds OVM, American 25/26 or equal approved by the Engineer.

WALL MOUNTED LUMINAIRE
Wall mounted luminaires shall have 480 volt, 100 watt, integral regulator ballasts for use with high pressure sodium lamps and shall be General Electric Wallighter 175 or equal approved by the Engineer.

installation work shall include conduit, mountings, fittings, and all incidentals necessary to complete the work as specified.

HIGH MAST LUMINAIRES
The luminaire arrays and associated illumination test areas specified in section 713.21 of the Construction and Material Specifications are hereby waived for this project. Instead, the luminaires for tower lighting shall meet the following requirements.

Symmetric, Type V, luminaires for tower lighting may be Holophane "HMST" Test *36383, or General Electric "HM" Test *6289.

In addition, other luminaires will be considered if the designed intensity and uniformity are provided using the designed pole locations and the designed number and type of fixtures per pole.

HIGH MAST LIGHT TOWERS
The manufacturer shall submit a report from an independent testing laboratory to show that the luminaires do not receive more than the specified acceleration load. The testing laboratory's report shall specify in detail the mounting locations of the accelerometers and the test procedures used. In addition to this report ODOT reserves the right to conduct field measurements of those acceleration loads and to accept only those designs in which the tested installations meet the specifications.

The terminal block shown on the Standard Construction Drawings shall be included in the price of the tower.

For Pole B1-11, Sta. 140+85, pg. 19, Holophane high mast light tower will be used to match the existing towers at the intersection of I-75 and S.R. 126. Remaining towers can be any approved brand.

CONDUIT ON STRUCTURE
Expansion fittings for conduit on structures shall be OZ Type AX, Crouse-Hinds Type XJ-4, Appleton Type XJ-4, or equal approved by the Engineer, for Bridge No. HAM-75-1160L.

Each expansion fitting shall have a copper external bonding jumper.

ELECTRICAL SERVICE FOR ILLUMINATED SIGNS
The pay items in the Lighting General Summary include the pull box or junction box adjacent to each lighted sign and the electric service connections leading into the box, including splices or connector kits in the pull box or junction box. Quantities for electrical service from the connection in the pull box or junction box to the sign are included in the Traffic Control General Summary.

PADLOCKS AND KEYS
Padlocks furnished shall be either brass or bronze, equal to Master No. 4BKA or Wilson Bohannan 660A, and shall be keyed in accordance with Specification 631.08, paragraph 3. Payment shall be included in the bid for the item(s) being locked.

ITEM SPECIAL - WIRE TERMINATION AT PILASTERS
This item of work shall consist of preparing an existing bridge pilaster for abandonment. All wiring shall be pulled into an adjacent junction box and the ends taped if the wires are not to be removed as per Item 625 - Conduit Cleaned And Cables Removed, As Per Plan. Conduit and anchor bolts shall be cut flush with the top of the pilaster. Conduit shall then be plugged with concrete flush with the pilaster. All material removed shall become the property of the Contractor and be disposed of off the project site.

Payment will be made at the unit bid price for each Item Special - Wire Termination At Pilasters and shall be full compensation including all labor, materials, and incidentals required to complete the installation in a satisfactory workmanlike manner.

LEGEND

- Existing Light Pole to be Removed
- Existing Luminaire
- Existing 30' Light Pole to be Removed and Replaced with 41.7' Light Pole with 200 WHPS, Type III
- Proposed 41.7' Light Pole with 200 WHPS, Type III
- Proposed High Mast Light Tower (Symmetrical Distribution)
- Proposed Low Mast Light Pole
- Proposed High Mast Light Tower (Asymmetrical Distribution)
- Existing Wall Mounted Luminaire to be Removed and Replaced
- Existing Pull Box
- Existing Pull Box to be Removed and Replaced
- Proposed Pull Box
- Existing Conduit
- Proposed Conduit
- Proposed Duct Cable. Hash marks indicate Number of Conductors. # denotes AWG Size
- Conduit Stub-out and Cap
- Existing Power Service
- Existing Power Service to be Removed and Replaced
- Proposed Power Service

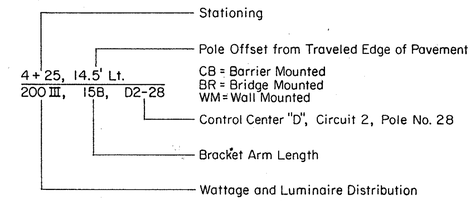

- Existing Junction Box to be Reused
- Proposed Junction Box

CONTROL CENTER DATA						
CONTROL CENTER	CONNECTED LOAD KVA	SERVICE ENTRANCE CONDUCTOR SIZE-AWG	ENCLOSURE TYPE	CIRCUIT LOAD AMPS	CIRCUIT FUSE SIZE AMPS	MAINTAINING AGENCY
B	14.4	4	60 AMPS	B-1 13.9	30	ODOT
				B-2 16.0	30	
C	12.5	4	60 AMPS	C-1 13.3	30	ODOT
				C-2 12.8	30	
D	46.9	2/0	EXISTING 100 AMPS	D-1 27.3	100*	ODOT
				D-2 36.2	100*	
				D-3 34.1	100*	
E	34.9	4 & 2/0	EXISTING 100 AMPS	E-1 20.9	100*	ODOT
				E-2 18.9	100*	
				E-3 33.0	100*	

* EXISTING

FHWA REGION	STATE	PROJECT	CALC. DATE
5	OHIO		CHECK DATE

HAM-75-9.75

193/338

3/39

3/39

GENERAL NOTES

ITEM 625 - CONDUIT CLEANED AND CABLES REMOVED, AS PER PLAN
This item shall consist of locating and cleaning an existing conduit of all existing cables, mud, and debris so that new cables may be installed. Incidental to the cleaning is the installation of bushings and/or couplings on the ends of the existing conduit as required. Bridge junction boxes and their respective drain outlets shall be cleaned of all debris. Drain outlets shall be free of all obstructions. Material removed shall become the property of the Contractor and shall be disposed of off the project site. Disturbed areas shall be property restored.

Payment will be made for each linear foot of Item 625 - Conduit Cleaned And Cables Removed, As Per Plan and shall be full compensation including all labor, materials, and incidentals required to complete the work in a satisfactory workmanlike manner.

ITEM SPECIAL - DISCONNECT EXISTING CIRCUIT
This item of work shall consist of the disconnection of an existing light circuit at a pull box or at a light pole.

Disconnection at a pull box shall involve cutting the existing circuit and removing all splice kits. Any cable that is to be abandoned shall be terminated in a manner such that no cable is left remaining in the pull box. Any cable that is to be reused shall be cut in a manner so that there is sufficient length of cable left for reconnection.

Disconnection at a light pole shall involve the removal of that part of cable that is to be abandoned from the pole. Those ends of the connector kits from which the abandoned cable is removed, shall be stubbed and taped.

Connector kits and cable splice kits shall be paid for separately under each Item 625 - Cable Splice Kit.

Payment will be made at the unit bid price for each Item Special - Disconnect Existing Circuit and shall be full compensation including all labor, materials and incidental required to complete the work in a satisfactory workmanlike manner.

ITEM SPECIAL - MAINTAIN EXISTING LIGHTING
This item shall consist of maintaining existing lighting as further described below: Existing lighting on all existing roadways remaining open to traffic through the project area shall be maintained. Should the Contractor require the removal of lighting from an existing roadway, the Contractor shall then be responsible for adequate temporary lighting of that portion of the existing roadway affected by the removal of the existing lighting.

When temporary lighting is to be installed, the Contractor shall submit four (4) sets of proposed detailed plans to the Engineer for review and approval. These plans shall show location of poles, length of bracket arms, style of luminaires, mounting height, and other pertinent information.

Wood poles with overhead wiring may be used. All materials necessary to complete the temporary lighting shall be furnished by the Contractor and the temporary lighting installations shall be removed and disposed of by the Contractor when no longer needed.

Reconditioned or approved used materials may be furnished for temporary lighting. Temporary overhead construction shall not be less than Grade A for strength requirement as defined by the National Electric Safety Code. Mounting height for temporary luminaires shall not be less than 27 feet and minimum overhead conductor clearance shall be 20 feet.

The State of Ohio will pay for electrical energy and maintenance for undisturbed lighting on existing roadways and for permanent lighting placed in operation. The Contractor will pay for electrical energy, installation, removal, and maintenance of any temporary lighting required.

The lump sum bid price for Item Special - Maintain Existing Lighting shall include payment for all labor, equipment, materials, and incidentals necessary to provide the temporary lighting as specified.

ITEM 625 - LIGHT POLE FOUNDATION REMOVED
This item shall consist of the removal of light pole foundations to a minimum of one foot below grade and backfilling the resulting holes. Cable between removed foundations shall be abandoned.

Payment at the unit price bid each, for Item 625 - Light Pole Foundation Removed shall include all equipment, labor, and materials necessary to complete the work.

ITEM 625 - PULL BOX REMOVED
Pull boxes to be removed may be removed either completely or to not less than one foot below finished grade. Pull boxes are to be abandoned in place in the manner described in 202.09 and backfill in accordance with 202.02. After removing walls and top to their required depth, suitable backfill shall be carefully tamped solidly around pull boxes.

Payment at the unit price bid each, for Item 625 - Pull Box Removed shall include all equipment, labor, and materials necessary to complete the work.

ITEM 625 - LIGHT POLE INDENTIFICATION, AS PER PLAN
This item consists of reidentifing existing light poles per 625.23 and 713.18 of the Construction and Material Specifications.

Payment at the unit price bid each, for Item 625 - Light Pole Identification, As Per Plan shall include all equipment, labor, and materials necessary to complete the work.

ITEM 625 - LIGHT POLE REMOVED
This item shall consist of the removal of an existing light pole including the bracket arm(s) and transformer base (if used). The existing wiring shall be removed from the pole and bracket arm and disposed of. The pole, bracket arm(s) and transformer base will become the property of the Contractor and shall be properly disposed of off the jobsite.

Payment at the unit price bid each, for Item 625 - Light Pole Removed shall include all equipment, labor, and materials necessary to complete the work.

ITEM 625 - LUMINAIRE REMOVED
This item of work shall consist of removing an existing luminaire. Luminaires will become the property of the Contractor and shall be properly disposed of off the jobsite.

Payment at the unit price bid each, for Item 625 - Luminaire Removed shall include all equipment, labor, and materials necessary to complete the work.

ITEM 625 - BRACKET ARM REMOVED
This item of work shall consist of removing an existing bracket arm. Arms will become the property of the Contractor and shall be properly disposed of off the jobsite.

Payment at the unit price bid each, for Item 625 - Bracket Arm Removed shall include all equipment, labor, and materials necessary to complete the work.

ITEM 625 - LUMINAIRE, WALL MOUNTED, REMOVED
This item shall consist of the removal of the retaining wall mounted luminaires including conduit and fittings. Luminaires will become the property of the Contractor and shall be properly disposed of off the jobsite.

Payment at the unit price bid each, for Item 625 - Luminaire, Wall Mounted, Removed shall include all equipment, labor, and materials necessary to complete the work.

ITEM 625 - LIGHT POLE FOUNDATION TYPE D-50 BARRIER
For detail of pole foundation see sheet 35. The locations have been tabulated in the plans.

ITEM 625 - MEDIAN PULL BOX, AS PER PLAN*
Median Pull Box, As Per Plan shall be as shown on Standard Construction Drawing HL-20.13 except it shall be cast into Concrete Barrier, Type D-50, As Per Plan. For barrier detail see sheet 163.

ITEM 625 - LIGHT POLE FOUNDATION, 24" X 10' DEEP, AS PER PLAN
Light poles on slopes 2:1 or greater shall be modified per the detail shown on sheet 35. ~~The locations have been tabulated in the plans.~~

ITEM 625 - PORTABLE POWER UNIT
This item shall consist of a portable power unit for the winch drives of the high mast lighting system. A quantity of one (1) has been tabulated in the General Summary. The portable power unit shall be capable of driving all towers. If two different brands of towers are supplied, the unit need not be able to drive the Holophane tower.

ITEM 625 - LIGHT POLE, DESIGN A12B40, AS PER PLAN
In addition to the requirements of Item 625 - Light Pole, Design A12B40, this item shall include measuring the existing bolt circle and bolt diameter in order to match proposed equipment.

ITEM 625 - LIGHT POLE, DESIGN AT18B41.7, AS PER PLAN
In addition to the requirements of Item 625 - Light Pole, Design AT18B41.7, this item shall be limited to a style III pole per Standard Drawing HL-10.11.

ITEM 625 - PULL BOX, CLEANED, AS PER PLAN
This item of work shall consist of the removal of all detritus material, trash, etc. from the pull box and replacement of any damaged or missing screws.

Payment at the unit price bid each, for Item 625 - Pull Box, Cleaned, As Per Plan shall include all equipment, labor, and materials necessary to complete the work.

LIGHTING GENERAL SUMMARY

F.H.W.A. REGION	STATE	PROJECT	
5	OHIO		

HAM-75-9.75

195/338

5/39

GENERAL NOTES	19	20	21	22	23	24	25	26	27	28	29	30	31	32	33	34	ITEM	ITEM EXT.	GRAND TOTAL	UNIT	DESCRIPTION
								555									202	98200	555	LIN FT	REMOVAL, MISCELLANEOUS: 3" CONDUIT REMOVED
520																	603	00400	520	LIN FT	4" CONDUIT, TYPE E
	1	17	28	7	20	20	23	18	10	14	10	9	7	1		6	625	00500	191	EACH	CONNECTOR KIT, TYPE II
	1	17	28	7	20	20	23	18	10	14	10	9	7	1		6	625	00600	191	EACH	CONNECTOR KIT, TYPE III
		4	8				4	2									625	01000	18	EACH	CONNECTOR KIT, TYPE VII A
					4	2				2		2					625	01004	10	EACH	CONNECTOR KIT, TYPE VII B
	4	6	6	6	4	4	6	18	14	12	12	4	2				625	01500	98	EACH	CABLE SPLICING KIT
								1									625	05200	1	EACH	LIGHT POLE, DESIGN A10B40
				3		12	4	3									625	05300	22	EACH	LIGHT POLE, DESIGN A12B40
							2										625	05300	2	EACH	LIGHT POLE, DESIGN A12B40, AS PER PLAN
									4								625	06100	4	EACH	LIGHT POLE, DESIGN AT8B41.7
														1			625	06200	1	EACH	LIGHT POLE, DESIGN AT10B41.7
			1							1							625	06300	2	EACH	LIGHT POLE, DESIGN AT12B41.7
		4	5	1	9	3		9	4	4			7				625	06400	46	EACH	LIGHT POLE, DESIGN AT15B41.7
					2			5		2	1	4				4	625	06500	18	EACH	LIGHT POLE, DESIGN AT18B41.7
					2												625	06500	2	EACH	LIGHT POLE, DESIGN AT18B41.7, AS PER PLAN
		2	1	3	7	5	3			5	5	2					625	06600	33	EACH	LIGHT POLE, DESIGN AT20B41.7
		11	3														625	06700	14	EACH	LIGHT POLE, DESIGN AT25B41.7
	1																625	10500	1	EACH	LIGHT POLE, MISC: LIGHT POLE, LOW MAST, 50
														2	2		625	13400	4	EACH	LIGHT TOWER, BBBBBB100
	1																625	13400	1	EACH	LIGHT TOWER, BBBBBB100, AS PER PLAN
		17	10	1		1	3	14	8	12	6	6	7	1		1	625	14100	87	EACH	LIGHT POLE FOUNDATION, 24" X 8' DEEP
	1																625	14200	1	EACH	LIGHT POLE FOUNDATION, 24" X 10' DEEP
				3	20	7										3	625	14201	33	EACH	LIGHT POLE FOUNDATION, 24" X 10' DEEP, AS PER PLAN
							4	4									625	14500	8	EACH	LIGHT POLE FOUNDATION MISC: TYPE D-50 BARRIER 8' DEEP AS PER PLAN
	1													2	2		625	15200	5	EACH	LIGHT TOWER FOUNDATION, 36" X 25' DEEP
1																	625	20000	1	EACH	PORTABLE POWER UNIT
	222	380	5042	1200	1074	4290	5284	1300	302	124							625	23200	19218	LIN FT	No. 4 AWG 5000 VOLT DISTRIBUTION CABLE
								1752	90	98	670	154	226				625	23300	2990	LIN FT	No. 2 AWG 5000 VOLT DISTRIBUTION CABLE
	100	2178	1888	798	2374	2210	1528	2038	856	1424	740	728	798	104		480	625	23400	18244	LIN FT	No. 10 AWG POLE AND BRACKET CABLE
	406	2771	1676	380	4221	1401	625	102	204	485		228	248			981	625	24100	13728	LIN FT	1-1/2" DUCT CABLE WITH TWO No. 4 AWG 5000 VOLT CABLES
							171	3228	1053	2039	1543	1160	573	395	387		625	24300	10549	LIN FT	1-1/2" DUCT CABLE WITH TWO No. 2 AWG 5000 VOLT CABLES
		9	552		155												625	25400	716	LIN FT	CONDUIT, 2", 713.04
	34	60			309	38	12		35		305	44					625	25500	837	LIN FT	CONDUIT, 3", 713.04
			1729	839		2025	1661	260	73	122	35	67	533			35	625	25911	7379	LIN FT	CONDUIT CLEANED AND CABLES REMOVED, AS PER PLAN
		17	10	7	20	20	9	18	8	12	6	6	7	1		4	625	26300	145	EACH	LUMINAIRE, STYLE B, TYPE III, 200 WATT HPS, 713.11, 480 VOLT
	1																625	26900	1	EACH	LUMINAIRE, STYLE C, TYPE III, 400 WATT HPS, 713.11, 480 VOLT
	6													12	12		625	27200	30	EACH	LUMINAIRE, SYMMETRIC, 400 WATT HPS, 713.21, 480 VOLT
			18				14										625	27600	32	EACH	LUMINAIRE, MISC: LUMINAIRE, WALL MOUNTED, TYPE IV, 100W HPS, 480 VOLT
										1							625	28000	1	EACH	GLARE SHIELD
	487	2599	1597	340	4193	1296	615	2320	1175	2333	1556	1254	701	375	367	906	625	29002	22114	LIN FT	TRENCH, 24" DEEP
					25	25					167						625	29400	217	LIN FT	TRENCH IN PAVED AREA
			3														625	29900	3	EACH	JUNCTION BOX (Type II)
								1									625	29910	1	EACH	TRANSITION JUNCTION BOX
			1														625	29900	1	EACH	JUNCTION BOX (12"x6"x4")
	2	4	3	3	3	2	1	2		2	3						625	30700	25	EACH	PULL BOX, 713.08, 18"
								1	2	1							625	31500	4	EACH	MEDIAN PULL BOX
		2					3	2	1								625	31501	8	EACH	MEDIAN PULL BOX, AS PER PLAN
	2		3	4	7	1	3	5	1	2	1		2				625	31510	31	EACH	PULL BOX REMOVED
					1		1	4	4	3	2	2	2				625	31600	19	EACH	PULL BOX, MISC: PULL BOX, CLEANED, AS PER PLAN
	3	17	10	4	20	8	7	18	8	12	6	6	7	5	4	4	625	32000	139	EACH	GROUND ROD
		1			1												625	34000	2	EACH	POWER SERVICE
	8	18	10	9	26	22	10	22	8	13	8	6	18		1	4	625	34900	183	EACH	LIGHT POLE REMOVED
	8	18	10	9	26	22	10	22	8	13	8	5	21		1	4	625	35090	185	EACH	LUMINAIRE REMOVED
			18				14										625	35090	32	EACH	LUMINAIRE, WALL MOUNTED, REMOVED
													1				625	98000	1	EACH	LIGHTING, MISC: BRACKET ARM REMOVED
	8	18	10	5	26	9	8	18	8	13	8	6	18		1	4	625	35600	160	EACH	LIGHT POLE FOUNDATION REMOVED
																	SPECIAL	62540000	LUMP		MAINTAIN EXISTING LIGHTING
		1			1												202	75511	2	EACH	POWER SERVICE REMOVED, AS PER PLAN
									9	9	10	6					625	98000	34	EACH	LIGHTING, MISC: LIGHT POLE IDENTIFICATION, AS PER PLAN
						1											SPECIAL	62598000	1	EACH	LIGHTING, MISC: WIRE TERMINATION AT PILASTERS
									1	1	5	3	2			3	SPECIAL	62540020	15	EACH	DISCONNECT EXISTING CIRCUIT

5/39

LTNDESIGN.DGN

LIGHTING ESTIMATED QUANTITIES

F.H.W.A. REGION	STATE	PROJECT	CALC. CTS DATE 7-92
5	OHIO		CHK. CTS DATE 12-92

HAM-75-9.75

196/338

6/39

LINE	REF. NO.	LOCATION STATION TO STATION	SIDE	SHT. NO.	625 CONNECTOR KIT, TYPE II EACH	625 CONNECTOR KIT, TYPE III EACH	625 CABLE SPLICING KIT EACH	625 CONNECTOR KIT, TYPE VII A EACH	625 LIGHT POLE, DESIGN AT15B41.7 EACH	625 LIGHT POLE, DESIGN AT20B41.7 EACH	625 LIGHT POLE, DESIGN AT25B41.7 EACH	625 LIGHT POLE, LOW MAST 50 EACH	625 LIGHT TOWER BBBBBB100, AS PER PLAN EACH	625 LIGHT POLE FOUNDATION, 24" X 8' DEEP EACH	625 LIGHT POLE FOUNDATION, 24" X 10' DEEP EACH	625 LIGHT TOWER FOUNDATION, 36" X 25' DEEP EACH	625 No.4 AWG 5000 VOLT DISTRIBUTION CABLE LIN FT		625 No.10 AWG FOR LED BRACKET CABLE LIN FT	625 1½" DUCT CABLE WITH TWO No.4 AWG 5000 VOLT CABLES LIN FT	625 CONDUIT, 3", 713.04 LIN FT	625 CONDUIT, 2", 713.04 LIN FT	625 LUMINAIRE, STYLE B, TYPE III, 200 WATT HPS, 713.11, 480 VOLT EACH	625 LUMINAIRE, STYLE C, TYPE III, 400 WATT HPS, 713.11, 480 VOLT EACH	625 LUMINAIRE, SYMMETRIC, 400 WATT HPS, 713.21, 480 VOLT EACH		625 POWER SERVICE EACH	202 POWER SERVICE REMOVED, AS PER PLAN EACH	625 TRENCH, 24" DEEP LIN FT	625 MEDIAN PULL BOX, AS PER PLAN EACH	625 PULL BOX 713.08, 18" EACH	625 PULL BOX REMOVED EACH	625 GROUND ROD EACH	625 LUMINAIRE REMOVED EACH	625 LIGHT POLE REMOVED EACH	625 LIGHT POLE FOUNDATION REMOVED EACH	LINE
1																																				1
2	1	139 + 49 SB	LT	19																													1	1	1	2
3	2	140•96 SB	LT	19																													1	1	1	3
4	3	142•46 SB	LT	19																													1	1	1	4
5	4	143•86 SB	LT	19																													1	1	1	5
6	5	7•80 RAMP F	RT	19																													1	1	1	6
7	6	6•19 RAMP F	RT	19																													1	1	1	7
8	7	4•69 RAMP F	RT	19																													1	1	1	8
9	8	3•06 RAMP F	RT	19																													1	1	1	9
10																																				10
11	9	140•85 SB	LT	19									1			1									6								2				11
12	10	140•85 SB TO 144•30 SB	LT	19															406												396						12
13	11	144•30 SB	LT	19			2																										1	1			13
14	12	144•30 SB TO 2•52 RAMP F	LT & RT	19													88				34								34							14
15	13	2•52 RAMP F	RT	19			2																										1	1			15
16	14	2•52RAMP F TO 1•95RAMP F	RT	19													134												57							16
17	15	1•95 RAMP F	RT	19	1	1						1			1				100					1								1				17
18	16-17	NOT USED																																		18
		TOTAL SHEET No. 19			1	1	4					1	1		1	1	222		100	406	34			1	6				487		2	2	3	8	8	8	
21																																				21
22	18	145•47 SB	LT	20																													1	1	1	22
23	19	1•95 RAMP F TO 145•45 SB	RT & LT	20															69										59							23
24	20	145•45 SB	LT	20			2																								1					24
25	21	145•45 SB TO 145•60 SB	LT	20													50				15								15							25
26	22	145•60 SB	LT	20				2																						1						26
27	23	145•60 SB TO 146•60 SB	LT	20													220																			27
28	24	146•60 SB	LT	20				2																						1						28
29	25	146•60 SB TO 147•05 SB	LT	20													110				45								45							29
30	26	147•05 SB	LT	20	1	1			1					1					114					1								1	1	1	1	30
31	27	147•05 SB TO 147•70 SB	LT	20																75									65							31
32	28	147•70 SB	LT	20			2																								1					32
33	29	147•70 SB TO 148•60 SB	LT	20																100									90							33
34	30	148•60 SB	LT	20	1	1			1					1					114					1								1	1	1	1	34
35	31	148•60 SB TO 150•16 SB	LT	20																166									156							35
36	32	150•16 SB	LT	20	1	1			1					1					114					1								1	1	1	1	36
37	33	150•16 SB TO 151•64 SB	LT	20																158									148							37
38	34	151•64 SB	LT	20	1	1			1					1					114					1								1	1	1	1	38
39	35	151•64 SB TO 153•07 SB	LT	20																153									143							39
40	36	153•07 SB	LT	20	1	1				1				1					124					1								1	1	1	1	40
41	37	153•07 SB TO 154•82 SB	LT	20																185									175							41
42	38	154•82 SB	LT	20	1	1				1				1					124					1								1	1	1	1	42
43	39	154•82 SB TO 156•28 SB	LT	20																156									146							43
44	40	156•28 SB	LT	20	1	1					1			1					134					1								1	1	1	1	44
45	41	156•28 SB TO 157•70 SB	LT	20																152									142							45
46	42	157•70 SB	LT	20	1	1					1			1					134					1								1	1	1	1	46
47	43	157•70 SB TO 159•20 SB	LT	20																160									150							47
48	44	159•20 SB	LT	20	1	1					1			1					134					1								1	1	1	1	48
49	45	159•20 SB TO 160•00 SB	LT	20																110									80							49
50	46	160•00 SB	LT	20																											1					50
51	47	160•00 SB	LT	20																		9					1		5							51
52	48	160•40 SB	LT	20																								1								52
53																																				53
54	49	160•00 SB TO 160•83 SB	LT	20																110									83							54
55	50	160•83 SB	LT	20	1	1					1			1					134					1								1	1	1	1	55
56	51	160•83 SB TO 162•15 SB	LT	20																142									132							56
57	52	162•15 SB	LT	20	1	1					1			1					134					1								1	1	1	1	57
58	53	162•15 SB TO 163•52 SB	LT	20																147									137							58
59	54	163•52 SB	LT	20	1	1					1			1					134					1								1	1	1	1	59
60	55	163•52 SB TO 164•93 SB	LT	20																151									141							60
61	56	164•93 SB	LT	20	1	1					1			1					134					1								1	1	1	1	61
62	57	164•93 SB TO 166•33 SB	LT	20																150									140							62
63	58	166•33 SB	LT	20	1	1					1			1					134					1								1	1	1	1	63
64																																				64
65																																				65

LIGHTING ESTIMATED QUANTITIES

F.H.W.A. REGION	STATE	PROJECT	CALC. CTS DATE 7-92
5	OHIO		CHK. CTS DATE 12-92

HAM-75-9.75

197/338

7/39

LINE	REF. NO.	LOCATION STATION TO STATION	SIDE	SHT. NO.	625 CONNECTOR KIT, TYPE II EACH	625 CONNECTOR KIT, TYPE III EACH	625 CONNECTOR KIT, TYPE VII A EACH	625 CABLE SPLICING KIT EACH	625 LIGHT POLE, DESIGN AT12B41.7 EACH	625 LIGHT POLE, DESIGN AT15B41.7 EACH	625 LIGHT POLE, DESIGN AT20B41.7 EACH	625 LIGHT POLE, DESIGN AT25B41.7 EACH		625 LIGHT POLE FOUNDATION, 24" X 8' DEEP EACH		625 No. 4 AWG 5000 VOLT DISTRIBUTION CABLE LIN FT	625 No. 10 AWG POLE AND BRACKET CABLE LIN FT	625 1½" DUCT CABLE WITH TWO No. 4 AWG 5000 VOLT CABLES LIN FT	625 CONDUIT, 2", 713.04 LIN FT	625 CONDUIT, 3", 713.04 LIN FT	625 CONDUIT CLEANED AND CABLES REMOVED, AS PER PLAN LIN FT	625 LUMINAIRE, WALL MOUNTED, TYPE III, 200 WATT HPS, 713.11, 480 VOLT EACH	625 MEDIAN PULL BOX, AS PER PLAN EACH	625 LUMINAIRE, WALL MOUNTED, TYPE IV, 100 WATT HPS, 480 VOLT EACH	625 TRENCH, 24" DEEP LIN FT	625 JUNCTION BOX, TYPE 2 EACH	625 JUNCTION BOX, 12X6X4 EACH	625 PULL BOX 713.08, 18" EACH	625 PULL BOX REMOVED EACH	625 GROUND ROD EACH	625 POWER SERVICE EACH	625 LUMINAIRE REMOVED EACH	625 LIGHT POLE REMOVED EACH	625 LIGHT POLE FOUNDATION REMOVED EACH	625 LUMINAIRE WALL MOUNTED REMOVED EACH	625 POWER SERVICE REMOVED, AS PER PLAN EACH	LINE
1																																				1
2	59	166+33 SB TO 168+03 SB	LT	20														180																			2
3	60	168+03 SB	LT	20	1	1						1		1			134					1							1		1	1	1			3
4	61	168+03 SB TO 169+46 SB	LT	20														153																			4
5	62	169+46 SB	LT	20	1	1						1		1			134					1							1		1	1	1			5
6	63	169+46 SB TO 170+91 SB	LT	20														155																			6
7	64	170+91 SB	LT	20	1	1						1		1			134					1							1		1	1	1			7
8	65	170+91 SB TO 171+80 SB	LT	20														99																			8
9	66	171+80 SB	LT	20				2																						1							9
10	67-69	NOT USED																																			10
	TOTALS SHEET No. 20				17	17	4	6		4	2	11		17		380	2178	2771	9	60		17	2		2599			4		17	1	18	18	18		1	
13																																					13
14	70	171+80 SB TO 172+36 SB	LT	21														66																			14
15	71	172+36 SB	LT	21	1	1						1		1			134					1							1		1	1	1			15
16	72	172+36 SB TO 174+00 SB	LT	21														174																			16
17	73	174+00 SB	LT	21	1	1						1		1			134					1							1		1	1	1			17
18	74	174+00 SB TO 175+65 SB	LT	21														175																			18
19	75	175+65 SB	LT	21	1	1						1		1			134					1							1		1	1	1			19
20	76	175+65 SB TO 175+84 SB	LT	21												58			19																	20
21	77	175+84 SB	LT	21			2																					1									21
22	78	175+84 SB TO 176+79 SB	LT	21												210			95																		22
23	79	176+79 SB	LT	21			2																					1									23
24	80	176+79 SB TO 177+42 SB	LT	21												146			63																		24
25	81	177+42 SB	LT	21	1	1					1			1			124					1							1		1	1	1			25
26	82	177+42 SB TO 179+14 SB	LT	21														182																			26
27	83	179+14 SB	LT	21	1	1				1				1			114					1							1		1	1	1			27
28	84	179+14 SB TO 180+88 SB	LT	21														184																			28
29	85	180+88 SB	LT	21	1	1				1				1			114					1							1		1	1	1			29
30	86	180+88 SB TO 182+50 SB	LT	21														172																			30
31	87	182+50 SB	LT	21	1	1				1				1			114					1							1		1	1	1			31
32	88	182+50 SB TO 184+26 SB	LT	21														186																			32
33	89	184+26 SB	LT	21	1	1				1				1			114					1							1		1	1	1			33
34	90	184+26 SB TO 185+82 SB	LT	21														166																			34
35	91	185+82 SB	LT	21				2																						1	1						35
36	92	185+82 SB TO 185+90 SB	LT	21														18																			36
37	93	185+90 SB	LT	21	1	1				1				1			114					1							1		1	1	1			37
38	94	185+90 SB TO 186+05 SB	LT	21												78			29																		38
39	95	186+05 SB	LT	21			2																					1									39
40	96	186+05 SB TO 189+16 SB	LT	21												642			311																		40
41	97	189+16 SB	LT	21	1	1											38								1										1	41
42	98	189+16 SB TO 189+76 SB	LT	21												140					60															42
43	99	189+76 SB	LT	21	1	1											38								1										1	43
44	100	189+76 SB TO 191+02 SB	LT	21												272					126															44
45	101	191+02 SB	LT	21	1	1											38								1										1	45
46	102	191+02 SB TO 192+08 SB	LT	21												232					106															46
47	103	192+08 SB	LT	21	1	1											38								1										1	47
48																																					48
49	104	185+82 SB	LT & RT	21												170					75															49
50	105	185+82 SB	RT	21				2																						1	1						50
51	106	185+82 SB TO 187+86 SB	RT	21														214																			51
52	107	187+86 SB	RT	21	1	1			1					1			108					1							1		1	1	1			52
53	108	187+86 SB TO 189+15 SB	RT	21														139																			53
54	109	189+15 SB	RT	21				2																						1	1						54
55	110	189+15 SB TO 189+35 SB	RT	21												90			35																		55
56	111	189+35 SB	RT	21			2																					1									56
57	112	189+35 SB TO 190+42 SB	RT	21												234					107															57
58	113	190+42 SB	RT	21	1	1											38								1										1	58
59	114	190+42 SB TO 191+43 SB	RT	21												222					101															59
60	115	191+43 SB	RT	21	1	1											38								1										1	60
61	116	191+43 SB TO 192+03 SB	RT	21												140					60															61
62																																					62
63																																					63
64																																					64
65																																					65

LIGHTING ESTIMATED QUANTITIES

F.H.W.A. REGION	STATE	PROJECT	CALC. CTS DATE 7-92
5	OHIO		CHK. CTS DATE 12-92

HAM-75-9.75

198/338

8/39

LINE	REF. NO.	LOCATION STATION TO STATION	SIDE	SHT. NO.	625 CONNECTOR KIT, TYPE II EACH	625 CONNECTOR KIT, TYPE III EACH	625 CONNECTOR KIT, TYPE VII A EACH	625 CABLE SPLICING KIT EACH	625 LIGHT POLE, DESIGN AT12B41.7 EACH	625 LIGHT POLE, DESIGN, A12B40, AS PER PLAN EACH	625 LIGHT POLE, DESIGN AT15B41.7 EACH	625 LIGHT POLE, DESIGN AT20B41.7 EACH	625 LIGHT POLE, DESIGN AT25B41.7 EACH	625 LIGHT POLE FOUNDATION, 24" X 8' DEEP EACH	625 LIGHT POLE FOUNDATION, 24" X 10' DEEP, AS PER PLAN EACH	625 No.4 AWG 5000 VOLT DISTRIBUTION CABLE LIN FT	625 No.10 AWG POLE AND BRACKET CABLE LIN FT	625 1½" DUCT CABLE WITH TWO No.4 AWG 5000 VOLT CABLES LIN FT		625 CONDUIT, 2", 713.04 LIN FT		625 CONDUIT CLEANED AND CABLES REMOVED, AS PER PLAN LIN FT	625 LUMINAIRE, STYLE B, TYPE III, 200 WATT HPS, T15.11, 480 VOLT EACH	625 LUMINAIRE, WALL MOUNTED, TYPE IV, 100 WATT HPS, 480 VOLT EACH	625 TRENCH, 24" DEEP LIN FT		625 JUNCTION BOX, TYPE 2 LIN FT	625 PULL BOX 713.08, 18" EACH	625 PULL BOX REMOVED EACH	625 GROUND ROD EACH	625 JUNCTION BOX, 12X6X4 EACH	625 LIGHT POLE REMOVED EACH	625 LIGHT POLE FOUNDATION REMOVED EACH	625 LUMINAIRE WALL MOUNTED REMOVED EACH	625 LUMINAIRE REMOVED EACH		LINE
1																																						1
2																																						2
3	117	192+03 SB	RT	21	1	1											38							1										1			3
4	118	192+03 SB TO 192+63 SB	RT	21												140						60														4
5	119	192+63 SB	RT	21	1	1											38							1										1			5
6	120	192+63 SB TO 193+23 SB	RT	21												140						60														6
7	121	193+23 SB	RT	21	1	1											38							1										1			7
8	122	193+23 SB TO 194+43 SB	RT	21												260						120														8
9	123	194+43 SB	RT	21	1	1											38							1										1			9
10	124	194+43 SB TO 195+63 SB	RT	21												260						120														10
11	125	195+63 SB	RT	21	1	1											38							1										1			11
12	126	195+63 SB TO 197+07 SB	RT	21												308						144														12
13	127	197+07 SB	RT	21	1	1											38							1										1			13
14	128	197+07 SB TO 198+27 SB	RT	21,25												260						120														14
15																																						15
16	129	192+97 SB	LT	21	1	1											38							1										1			16
17	130	192+97 SB TO 193+23 SB	LT	21												72						26														17
18	131	193+23 SB	LT	21	1	1											38							1										1			18
19	132	193+23 SB TO 193+83 SB	LT	21												140						60														19
20	133	193+83 SB	LT	21	1	1											38							1										1			20
21	134	193+83 SB TO 195+03 SB	LT	21												260						120														21
22	135	195+03 SB	LT	21	1	1											38							1										1			22
23	136	195+03 SB TO 196+47 SB	LT	21												308						144														23
24	137	196+47 SB	LT	21	1	1											38							1										1			24
25	138	196+47 SB TO 197+67 SB	LT	21												260						120														25
26	139	197+67 SB	LT	21	1	1											38							1										1			26
27	140-144	NOT USED																																				27
TOTALS SHEET No. 21					28	28	8	6	1		5	1	3	10		5042	1888	1676		552		1729	10	18	1597		3	3	3	10	1	10	10	18	10		
30																																						30
31	145	133+75 NB	RT	22	1	1						1			1		124						1							1		1		1			31
32	146	133+75 NB TO 134+80 NB	RT	22														115						105													32
33	147	134+80 NB	RT	22				2																				1									33
34	148	134+80 NB TO 135+30 NB	RT	22												120						50														34
35	149	135+30 NB	RT	22	1	1				1							104						1										1			35
36	150	135+30 NB TO 136+89 NB	RT	22												338						159														36
37	151	136+89 NB	RT	22	1	1				1							104						1										1			37
38	152	136+89 NB TO 138+76 NB	RT	22												394						187														38
39	153	138+76 NB	RT	22	1	1				1							104						1										1			39
40	154	138+76 NB TO 140+40 NB	RT	22												348						164														40
41	155	140+40 NB	RT	22				2																				1									41
42	156	140+40 NB TO 140+83 NB	RT	22														53						43													42
43	157	140+83 NB	RT	22	1	1						1			1		124						1							1							43
44	158	140+83 NB TO 141+60 NB	RT	22														87						77													44
45	159	141+60 NB	RT	22				2																				1									45
46	160	141+60 NB TO 142+75 NB	RT	22														125						115													46
47	161	142+75 NB	RT	22	1	1						1			1		124						1							1							47
48																																						48
49	162	140+65 NB	RT	22																													1	1		1		49
50	163	142+53 NB	RT	22																													1	1		1		50
51	164	141+57 NB	RT	22																											1							51
52																																						52
53	165	2+65 RAMP N	RT	22																											1							53
54	166	2+45 RAMP N	RT	22	1	1					1			1			114						1							1		1	1		1		54
55																																						55
56																																						56
57																																						57
58																																						58
59	167	30+07 GALBRAITH RD.	LT	22																											1							59
60	168	31+96 GALBRAITH RD.	LT	22																													1			1		60
61	169	32+86 GALBRAITH RD.	LT	22																											1							61
62	170	34+18 GALBRAITH RD.	LT	22																													1	1		1		62
63	171	30+07 TO 32+86 GALBRAITH RD.	LT	22																			279															63
64																																						64
65	172-179	NOT USED																																				65
TOTALS SHEET No. 22					7	7		6		3	1	3		1	3	1200	798	380				839	7		340			3	4	4		9	5		9		

LIGHTING ESTIMATED QUANTITIES

F.H.W.A. REGION	STATE	PROJECT	CALC. CTS DATE 7-92
5	OHIO		CHK. CTS DATE 12-92

HAM-75-9.75

199 / 338

9 / 39

LINE	REF. NO.	LOCATION STATION TO STATION	SIDE	SHT. NO.	625 CONNECTOR KIT, TYPE II EACH	625 CONNECTOR KIT, TYPE III EACH	625 CONNECTOR KIT, TYPE VII B EACH	625 CABLE SPLICING KIT EACH	625 LIGHT POLE DESIGN AT18841.7 AS PER PLAN EACH	625 LIGHT POLE, DESIGN AT15841.7 EACH	625 LIGHT POLE, DESIGN AT18841.7 EACH	625 LIGHT POLE, DESIGN AT20841.7 EACH	625 LIGHT POLE FOUNDATION, 24" X 10' DEEP, AS PER PLAN EACH	625 No.4 AWG 5000 VOLT DISTRIBUTION CABLE LIN FT	625 No.10 AWG POLE AND BRACKET CABLE LIN FT	625 1½" DUCT CABLE WITH TWO No.4 AWG 5000 VOLT CABLES LIN FT	625 CONDUIT, 2", 713.04 LIN FT	625 CONDUIT, 3", 713.04 LIN FT	625 LUMINAIRE, STYLE B, TYPE III, 200 WATT HPS, 713.11, 480 VOLT EACH	625 TRENCH, 24" DEEP LIN FT	625 TRENCH IN PAVED AREA LIN FT	625 PULL BOX 713.08, 18" EACH	625 PULL BOX REMOVED EACH	625 GROUND ROD EACH	625 PULL BOX, CLEANED, AS PER PLAN EACH	625 LIGHT POLE REMOVED EACH	625 LIGHT POLE FOUNDATION REMOVED EACH	625 LUMINAIRE REMOVED EACH	625 POWER SERVICE EACH	202 POWER SERVICE REMOVED, AS PER PLAN EACH	LINE
1																																1
2																																2
3	180	142+75 NB TO 144+50 NB	RT	22,23												185				175												3
4	181	144+50 NB	RT	23	1	1						1	1		124				1					1								4
5	182	144+50 NB TO 146+25 NB	RT	23												185				175												5
6	183	146+25 NB	RT	23	1	1						1	1		124				1					1								6
7	184	146+25 NB TO 148+00 NB	RT	23												185				175												7
8	185	148+00 NB	RT	23	1	1						1	1		124				1					1								8
9	186	148+00 NB TO 8+10 RAMP N	RT	23												107		42		72	25											9
10																																10
11	187	2+45 RAMP N TO 4+04 RAMP N	RT	22,23												169				159												11
12	188	4+04 RAMP N	RT	23	1	1				1			1		114				1					1		1	1	1				12
13	189	4+04 RAMP N TO 6+05 RAMP N	RT	23												211				201												13
14	190	6+05 RAMP N	RT	23	1	1				1			1		114				1					1								14
15	191	6+05 RAMP N TO 8+10 RAMP N	RT	23												215				205												15
16	192	8+10 RAMP N	RT	23	1	1	2			1			1		114				1					1								16
17	193	8+10 RAMP N TO 10+10 RAMP N	RT	23												210				200												17
18	194	10+10 RAMP N	RT	23	1	1				1			1		114				1					1								18
19	195	10+10 RAMP N TO 151+20 NB	RT	23												176				166												19
20	196	151+20 NB	RT	23	1	1			1				1		120				1					1								20
21	197	151+20 NB TO 152+90 NB	RT	23												180				170												21
22	198	152+90 NB	RT	23	1	1			1				1		120				1					1								22
23	199	152+90 NB TO 154+60 NB	RT	23												180				170												23
24	200	154+60 NB	RT	23	1	1					1		1		120				1					1								24
25	201	154+60 NB TO 156+30 NB	RT	23												180				170												25
26	202	156+30 NB	RT	23	1	1						1	1		124				1					1								26
27	203	156+30 NB TO 158+00 NB	RT	23												180				170												27
28	204	158+00 NB	RT	23	1	1						1	1		124				1					1		1	1	1				28
29	205	158+00 NB TO 159+75 NB	RT	23												185				175												29
30	206	159+75 NB	RT	23	1	1						1	1		124				1					1								30
31	207	159+75 NB TO 161+30 NB	RT	23												165				155												31
32	208	161+30 NB	RT	23	1	1						1	1		124				1					1								32
33	209	161+30 NB TO 162+05 NB	RT&LT	23										320				65		65												33
34	210	161+30 NB	LT	23																		1										34
35	211	161+30 NB TO 162+05 NB	LT	23														75		75												35
36	212	162+05 NB	LT	23																		1	1									36
37	213	162+05 NB	LT	23													10													1	1	37
38																																38
39	214	162+05 NB TO 163+25 NB	LT	23										580			145	50														39
40	215	163+25 NB	LT	23	1	1				1			1		114				1					1		1	1	1				40
41	216	163+25 NB TO 165+00 NB	LT	23												185				175												41
42	217	165+00 NB	LT	23	1	1	2			1			1		114				1					1								42
43	218	165+00 NB TO 166+75 NB	LT	23												185				175												43
44	219	166+75 NB	LT	23	1	1				1			1		114				1					1								44
45	220	166+75 NB TO 168+50 NB	LT	23												185				175												45
46	221	168+50 NB	LT	23	1	1				1			1		114				1					1		1	1	1				46
47																																47
48	222	165+00 NB	RT&LT	23										174				77		77												48
49	223	165+00 NB	RT	23				2														1										49
50	224	165+00 NB TO 3+58 RAMP M	RT	23												511				501												50
51	225	3+58 RAMP M	RT	23				2																	1							51
52	226	3+58 RAMP M TO 3+80 RAMP M	RT	23												32				22												52
53	227	3+80 RAMP M	RT	23	1	1					1		1		120				1					1								53
54	228	3+80 RAMP M TO 5+40 RAMP M	RT	23												170				160												54
55	229	5+40 RAMP M	RT	23	1	1				1			1		114				1					1								55
56	230	5+40 RAMP M TO 7+70 RAMP M	RT	23												240				230												56
57																																57
58	231	144+08 NB	RT	23																										1	1	1	58
59	232	145+76 NB	RT	23																										1	1	1	59
60	233	147+50 NB	RT	23																										1	1	1	60
61	234	149+19 NB	RT	23																										1	1	1	61
62																																62
63																																63
64																																64
65																																65

PLOT DATE: 12/28
DGN: LE2754.DGN

LIGHTING ESTIMATED QUANTITIES

F.H.W.A. REGION	STATE	PROJECT	CALC. CTS DATE 7-92
5	OHIO		CHK. CTS DATE 12-92

HAM-75-9.75

200/338

10/39

LINE	REF. NO.	LOCATION STATION TO STATION	SIDE	SHT. NO.	625 CONNECTOR KIT, TYPE II EACH	625 CONNECTOR KIT, TYPE III EACH	625 CONNECTOR KIT, TYPE VII B EACH	625 CABLE SPLICING KIT EACH	625 LIGHT POLE DESIGN AT18B41.7 AS PER PLAN EACH	625 LIGHT POLE, DESIGN, A12B40, AS PER PLAN EACH	625 LIGHT POLE, DESIGN AT15B41.7 EACH	625 LIGHT POLE, DESIGN AT18B41.7 EACH	625 LIGHT POLE, DESIGN AT20B41.7 EACH	625 LIGHT POLE FOUNDATION, 24" X 8' DEEP EACH	625 LIGHT POLE FOUNDATION, 24" X 10' DEEP, AS PER PLAN EACH	625 No.4 AWG, 5000 VOLT DISTRIBUTION CABLE LIN FT	625 No.10 AWG POLE AND BRACKET CABLE LIN FT	625 1½" DUCT CABLE WITH TWO No.4 AWG 5000 VOLT CABLES LIN FT	625 CONDUIT, 2", 713.04 LIN FT	625 CONDUIT, 3", 713.04 LIN FT	625 CONDUIT CLEANED AND CABLES REMOVED, AS PER PLAN LIN FT	625 LUMINAIRE STYLE B, TYPE III 200 WATT HPS, 713.11, 480 VOLT EACH	625 TRENCH, 24" DEEP LIN FT	625 TRENCH IN PAVED AREA LIN FT	625 PULL BOX 713.08, 18" EACH	625 PULL BOX REMOVED EACH	625 PULL BOX CLEANED, AS PER PLAN EACH	625 GROUND ROD EACH	625 LIGHT POLE REMOVED EACH	625 LIGHT POLE FOUNDATION REMOVED EACH	625 POWER SERVICE EACH	625 POWER SERVICE REMOVED, AS PER PLAN EACH	625 LUMINAIRE REMOVED EACH	LINE
1																																			1
2																																			2
3	235	5+64 RAMP N	RT	23																										1	1			1	3
4	236	7+23 RAMP N	RT	23																										1	1			1	4
5	237	8+87 RAMP N	RT	23																										1	1			1	5
6	238	9+70 RAMP N	RT	23																								1							6
7	239	10+17 RAMP N	RT	23																								1							7
8	240	149+89 NB	RT	23																										1	1			1	8
9	241	151+00 NB	RT	23																										1	1			1	9
10	242	152+25 NB	RT	23																										1	1			1	10
11	243	153+58 NB	RT	23																										1	1			1	11
12	244	155+00 NB	RT	23																										1	1			1	12
13	245	156+52 NB	RT	23																										1	1			1	13
14	246	159+50 NB	RT	23																										1	1			1	14
15	247	161+17 NB	RT	23																								1							15
16	248	161+17 NB	LT	23																								1							16
17	249	161+33 NB	RT	23																										1	1			1	17
18	250	164+81 NB	LT	23																										1	1			1	18
19	251	166+50 NB	LT	23																										1	1			1	19
20	252	170+35 NB	LT	23																										1	1			1	20
21	253	2+79 RAMP M	RT	23																										1	1			1	21
22	254	4+06 RAMP M	RT	23																										1	1			1	22
23	255	5+20 RAMP M	RT	23																										1	1			1	23
24	256	6+60 RAMP M	RT	23																								1							24
25	257	172+64 NB	RT	23																										1	1			1	25
26	258	172+75 NB	RT	23																								1							26
27																																			27
28	259-264	NOT USED																																	28
		TOTALS SHEET No. 23			20	20	4	4	2		9	2	7		20				1074	2374	4221	155	309		20	4193	25	3	7	1	20	26	26	1	1	26	
31																																			31
32																																			32
33	265	7+70 RAMP M	RT	24	1	1	2				1				1					114				1						1					33
34	266	7+70 RAMP M TO 10+10 RAMP M	RT	24																	250				240										34
35	267	10+10 RAMP M	RT	24	1	1					1				1					114				1						1					35
36	268	10+10 RAMP M TO 12+29 RAMP M	RT	24																	229				219										36
37	269	12+29 RAMP M	RT	24	1	1					1			1						114				1						1	1	1		1	37
38																																			38
39	270	7+70 RAMP M TO 173+70 RAMP M	RT	24																	113		38		78	25									39
40	271	173+70 NB	RT	24	1	1							1		1					124				1						1					40
41	272	173+70 NB TO 175+80 NB	RT	24																	220				210										41
42	273	175+80 NB	RT	24	1	1							1		1					124				1						1					42
43	274	175+80 NB TO 177+90 NB	RT	24																	220				210										43
44	275	177+90 NB	RT	24	1	1							1		1					124				1						1					44
45	276	177+90 NB TO 178+39 NB	RT	24																	59				49										45
46	277	178+39 NB	RT	24				2																			1								46
47	278	178+39 NB TO 179+85 NB	RT	24															312					146											47
48	279	179+85 NB	RT	24	1	1							1		1					124				1						1					48
49	280	179+85 NB TO 181+65 NB	RT	24																	190				180										49
50	281	181+65 NB	RT	24	1	1							1		1					124				1						1					50
51	282	181+65 NB TO 182+75 NB	RT	24																	120				110										51
52	283	182+75 NB	RT	24				2																			1	1							52
53	284	182+75 NB TO 183+53 NB	RT	24															176					78											53
54	285	183+53 NB	RT	24	1	1				1										104				1							1			1	54
55	286	183+53 NB TO 185+32 NB	RT	24															378					179											55
56	287	185+32 NB	RT	24	1	1				1										104				1							1			1	56
57	288	185+32 NB TO 187+12 NB	RT	24															380					180											57
58	289	187+12 NB	RT	24	1	1				1										104				1							1			1	58
59	290	187+12 NB TO 188+88 NB	RT	24															372					176											59
60	291	188+88 NB	RT	24	1	1				1										104				1							1			1	60
61	292	188+88 NB TO 190+80 NB	RT	24															404					192											61
62	293	190+80 NB	RT	24	1	1				1										104				1							1			1	62
63	294	190+80 NB TO 192+57 NB	RT	24															374					177											63
64	295	192+57 NB	RT	24	1	1				1										104				1							1			1	64
65																																			65

PFFS
DATE: 1/28/93
DGN: LE2STR.DGN

LIGHTING ESTIMATED QUANTITIES

F.H.W.A. REGION	STATE	PROJECT	CALC. CTS DATE 7-92
5	OHIO		CHK. CTS DATE 12-92

HAM-75-9.75

201/338

11/39

LINE	REF. NO.	LOCATION (STATION TO STATION)	SIDE	SHT. NO.	625 CONNECTOR KIT, TYPE II (EACH)	625 CONNECTOR KIT, TYPE III (EACH)	625 CONNECTOR KIT, TYPE VIIB (EACH)	625 CABLE SPLICING KIT (EACH)	625 LIGHT POLE, DESIGN A12B40, AS PER PLAN (EACH)	625 LIGHT POLE, DESIGN AT15B41.7 (EACH)	625 LIGHT POLE, DESIGN AT20B41.7 (EACH)	625 LIGHT POLE, DESIGN A120B40 (EACH)	625 LIGHT POLE FOUNDATION, 24" X 8' DEEP (EACH)	625 LIGHT POLE FOUNDATION, 24" X 10' DEEP, AS PER PLAN (EACH)			625 LIGHT POLE FOUNDATION TYPE D-50 BARRIER (EACH)		625 No.4 AWG 5000 VOLT DISTRIBUTION CABLE (LIN FT)	625 No.10 AWG POLE AND BRACKET CABLE (LIN FT)	625 1/2" DUCT CABLE WITH TWO No. 4 AWG 5000 VOLT CABLES (LIN FT)	SPECIAL WIRE TERMINATION AT PILASTERS (EACH)	625 CONDUIT, 3", 713.04 (LIN FT)	625 CONDUIT CLEANED AND CABLES REMOVED, AS PER PLAN (LIN FT)	625 LUMINAIRE, STYLE B, TYPE III, 200 WATT HPS, 713.11, 480 VOLT (EACH)	625 LUMINAIRE, WALL MOUNTED, TYPE IV, 100 WATT HPS, 480 VOLT (EACH)	625 TRENCH, 24" DEEP (LIN FT)	625 TRENCH IN PAVED AREAS (LIN FT)	625 PULL BOX, 713.06, 18" (EACH)	625 MEDIAN PULL BOX, AS PER PLAN (EACH)	625 PULL BOX REMOVED (EACH)	625 GROUND ROD (EACH)	625 LIGHT POLE REMOVED (EACH)	625 LIGHT POLE FOUNDATION REMOVED (EACH)	625 LUMINAIRE, WALL MOUNTED, REMOVED (EACH)	625 LUMINAIRE REMOVED (EACH)	LINE
1																																				1
2																																				2
3	296	7+04 RAMP M	RT	24																													1	1		1	3
4	297	8+78 RAMP M	RT	24																													1	1		1	4
5	298	10+55 RAMP M	RT	24																													1	1		1	5
6	299	174+27 NB	RT	24																													1	1		1	6
7	300	175+91 NB	RT	24																													1	1		1	7
8	301	177+51 NB	RT	24																													1	1		1	8
9	302	179+16 NB	RT	24														1															1			1	9
10	303	180+59 NB	RT	24																													1	1		1	10
11	304	182+00 NB	RT	24																													1	1		1	11
12																																					12
13	305	193+93 NB	RT	24	1	1			1											104					1								1			1	13
14	306	193+93 NB TO 195+57 NB	RT	24															348					164												14
15	307	195+57 NB	RT	24	1	1			1											104					1								1			1	15
16	308	195+57 NB TO 197+57 NB	RT	24															420					200												16
17	309	197+57 NB	RT	24	1	1			1											104					1								1			1	17
18	310	197+57 NB TO 198+85 NB	RT	24															276					128												18
19	311	198+85 NB	RT	24	1	1			1											104					1								1			1	19
20	312	198+85 NB TO 200+88 NB	RT	24															426					203												20
21	313	200+88 NB	RT	24	1	1			1											104					1								1			1	21
22	314	200+88 NB TO 202+90 NB	RT	24															424					202												22
23	315	202+90 NB	RT	24	1	1			1											104					1								1			1	23
24																																					24
25	316-319	NOT USED																																			25
TOTALS SHEET No. 24					20	20	2	4	12	3	5		1	7					4290	2210	1401	1	38	2025	20		1296	25	2		1	8	22	9		22	
28																																					28
29																																					29
30	320	198+27 SB	RT	25	1	1														38						1								1			30
31	321	198+27 SB TO 199+47 SB	RT	25															260					120												31
32	322	199+47 SB	RT	25	1	1														38						1								1			32
33	323	199+47 SB TO 200+67 SB	RT	25															260					120												33
34	324	200+67 SB	RT	25	1	1														38						1								1			34
35																																					35
36	325	197+67 SB TO 198+87 SB	LT	21&25															260					120												36
37	326	198+87 SB	LT	25	1	1														38						1								1			37
38	327	198+87 SB TO 200+07 SB	LT	25															260					120												38
39	328	200+07 SB	LT	25	1	1														38						1								1			39
40	329	200+07 SB TO 201+27 SB	LT	25															260					120												40
41	330	201+27 SB	LT	25	1	1														38						1								1			41
42	331	201+27 SB TO 201+87 SB	LT	25															140					60												42
43	332	201+87 SB	LT	25	1	1														38						1								1			43
44	333	201+87 SB TO 202+47 SB	LT	25															140					60												44
45	334	202+47 SB	LT	25	1	1														38						1								1			45
46	335	202+47 SB TO 203+07 SB	LT	25															140					60												46
47	336	203+07 SB	LT	25	1	1														38						1								1			47
48	337	203+07 SB TO 203+67 SB	LT	25															140					60												48
49	338	203+67 SB	LT	25	1	1														38						1								1			49
50	339	203+67 SB TO 204+27 SB	LT	25															140					60												50
51	340	204+27 SB	LT	25	1	1														38						1								1			51
52	341	204+27 SB TO 204+87 SB	LT	25															140					60												52
53	342	204+87 SB	LT	25	1	1														38						1								1			53
54	343	204+87 SB TO 205+47 SB	LT	25															140					60												54
55	344	205+47 SB	LT	25	1	1														38						1								1			55
56	345	205+47 SB TO 206+07 SB	LT	25															140					60												56
57	346	206+07 SB	LT	25	1	1														38						1								1			57
58	347	206+07 SB	LT	25				2											44				12								1						58
59	348	206+07 SB TO 207+50 SB	LT	25															306																		59
60	349	207+50 SB	LT	25	1	1						1					1			104						1							1	1	1		1	60
61	350	207+50 SB TO 208+92 SB	LT	25															304																		61
62																																					62
63																																					63
64																																					64
65																																					65

LIGHTING ESTIMATED QUANTITIES

F.H.W.A. REGION	STATE	PROJECT	CALC. CTS DATE 7-92
5	OHIO		CHK. CTS DATE 12-92

HAM-75-9.75

202/338

12/39

LINE	REF. NO.	LOCATION STATION TO STATION	SIDE	SHT. NO.	202 3" CONDUIT REMOVED LIN FT	625 CONNECTOR KIT, TYPE II EACH	625 CONNECTOR KIT, TYPE III EACH	625 CABLE SPLICING KIT EACH	625 CONNECTOR KIT, TYPE VII A EACH	625 LIGHT POLE, DESIGN A12840 EACH	625 LIGHT POLE DESIGN A12840, AS PER PLAN EACH	625 LIGHT POLE, DESIGN AT15B41.7 EACH	625 LIGHT POLE, DESIGN AT18B41.7 EACH	625 LIGHT POLE, DESIGN AT20B41.7 EACH	625 LIGHT POLE FOUNDATION, 24" X 8" DEEP EACH	625 LIGHT POLE FOUNDATION, 24" X 10' DEEP, AS PER PLAN EACH	625 LIGHT POLE FOUNDATION, TYPE D-50 BARRIER EACH	625 No.4 AWG 5000 VOLT DISTRIBUTION CABLE LIN FT	625 No.10 AWG POLE AND BRACKET CABLE LIN FT	625 1½" DUCT CABLE WITH TWO No.4 AWG 5000 VOLT CABLES LIN FT	625 1½" DUCT CABLE WITH TWO No.2 AWG 5000 VOLT CABLES LIN FT	625 PULL BOX CLEANED, AS PER PLAN EACH	625 TRANSITION JUNCTION BOX EACH	625 CONDUIT, 3", 713.04 LIN FT	625 CONDUIT CLEANED AND CABLES REMOVED, AS PER PLAN LIN FT	625 LUMINAIRE, STYLE B, TYPE III, 713.11, 400 WATT HPS, 480 VOLT EACH	625 LUMINAIRE, WALL MOUNTED, TYPE IV, 100 WATT HPS, 480 VOLT EACH	625 TRENCH, 24" DEEP LIN FT	625 MEDIAN PULL BOX, AS PER PLAN EACH	625 PULL BOX 713.08, 18" EACH	625 PULL BOX REMOVED EACH	625 GROUND ROD EACH	625 LUMINAIRE, WALL MOUNTED REMOVED EACH	625 LIGHT POLE REMOVED EACH	625 LIGHT POLE FOUNDATION REMOVED EACH	625 LUMINAIRE REMOVED EACH	LINE
1																																					1
2																																					2
3	351	208+92 SB	LT	25		1	1			1							1	104							1				1	1	1	3
4	352	208+92 SB TO 210+30 SB	LT	25														296																4
5	353	210+30 SB	LT	25					2																			1							5
6	354	210+30 SB TO 211+01 SB	LT	25														162																6
7	355	211+01 SB	LT	25		1	1			1							1	104							1				1	1	1	7
8	356	211+01 SB TO 212+73 SB	LT	25														364																8
9	357	212+73 SB	LT	25		1	1			1							1	104							1				1	1	1	9
10	358	212+73 SB TO 213+25 SB	LT	25														124																10
11	359	213+25 SB	LT	25					2																			1							11
12	360	213+25 SB TO 214+67 SB	LT	25														304																12
13	361	213+25 SB TO 213+25 NB	LT&RT	25																	171				131			30							13
14																																					14
15	362	206+50 SB	LT	25																												1				15
16	363	210+30 SB	LT	25																												1				16
17	364	213+25 SB	LT	25																												1				17
18																																					18
19	365	202+90 NB TO 204+90 NB	RT	24,25														420							200										19
20	366	204+90 NB	RT	25		1	1				1								104							1				1		1	20
21	367	204+90 NB TO 206+60 NB	RT	25														360							170										21
22	368	206+60 NB	RT	25		1	1				1								104							1				1		1	22
23	369	206+60 NB TO 207+40 NB	RT	25														180							80										23
24	370	207+40 NB	RT	25				2																						1						24
25	371	207+40 NB TO 208+41 NB	RT	25																111								101								25
26	372	208+41 NB	RT	25		1	1							1	1				124							1				1	1	1	26
27	373	208+41 NB TO 210+30 NB	RT	25																199								189								27
28	374	210+30 NB	RT	25		1	1							1	1				124							1				1					28
29	375	210+30 NB TO 212+22 NB	RT	25																202								192								29
30	376	212+22 NB	RT	25		1	1							1	1				124							1				1	1	1	30
31	377	212+22 NB TO 213+25 NB	RT	25																113								103								31
32	378	213+25 NB	RT	25				2														1														32
33																																					33
34	379	210+19 NB	RT	25																													1	1	1	34
35	380	213+83 NB	RT	25																													1	1	1	35
36																																					36
37	381-384	NOT USED																																			37
	TOTALS SHEET No. 25					23	23	6	4	4	2			3	3		4	5284	1528	625	171	1		12	1661	9	14	615	3	1	3	7	14	10	8	10	
40																																					40
41																																					41
42	385	214+67 SB	LT	26		1	1			1							1		104							1				1	1	1	42
43	386	214+67 SB TO 216+40 SB	LT	26														366																43
44	387	216+40 SB	LT	26		1	1			1							1		104							1				1	1	1	44
45	388	216+40 SB TO 218+12 SB	LT	26														364																45
46	389	218+12 SB	LT	26		1	1			1							1		104							1				1	1	1	46
47	390	218+12 SB TO 220+20	LT	26														436																47
48	391	220+20	LT	26					2														1												48
49	392	220+20 TO 220+77	LT	26														134							55										49
50	393	220+77	LT	26				2																						1						50
51																																					51
52	394	215+00 SB	LT	26																											1					52
53	395	214+67 SB TO 220+22	LT	26	555																															53
54																																					54
55	396	213+25 NB TO 214+22 NB	RT	25,26																	107							97								55
56	397	214+22 NB	RT	26		1	1					1		1					120							1				1					56
57	398	214+22 NB TO 1+22 NB C.	RT	26																	210							200								57
58	399	1+22 NB C.	RT	26		1	1					1		1					120							1				1					58
59	400	1+22 NB C. TO 3+23 NB C.	RT	26																	211							201								59
60	401	3+23 NB C.	RT	26		1	1						1		1				114							1				1		1	1	1	60
61	402	3+23 NB C. TO 3+90 NB C.	RT	26																	77							67								61
62																																					62
63																																					63
64																																					64
65																																					65

LIGHTING ESTIMATED QUANTITIES

F.H.W.A. REGION	STATE	PROJECT	CALC. CTS DATE 7-92
5	OHIO		CHK. CTS DATE 12-92

HAM-75-9.75

203/338

13/39

LINE	REF. NO.	LOCATION STATION TO STATION	SIDE	SHT. NO.	202 3' CONDUIT REMOVED LIN FT	625 CONNECTOR KIT, TYPE II EACH	625 CONNECTOR KIT, TYPE III EACH	625 CABLE SPLICING KIT EACH	625 CONNECTOR KIT, TYPE VIA EACH	625 LIGHT POLE, DESIGN A10B40 EACH	625 LIGHT POLE, DESIGN A12B40 EACH	625 LIGHT POLE, DESIGN AT15B41.7 EACH	625 LIGHT POLE, DESIGN AT18B41.7 EACH		625 LIGHT POLE FOUNDATION, 24" X 8' DEEP EACH	625 LIGHT POLE FOUNDATION TYPE D-50 BARRIER EACH			625 No. 4 AWG 5000 VOLT DISTRIBUTION CABLE LIN FT	625 No. 2 AWG 5000 VOLT DISTRIBUTION CABLE LIN FT	625 No. 10 AWG POLE AND BRACKET CABLE LIN FT	625 1½" DUCT CABLE WITH TWO No.4 AWG 5000 VOLT CABLES LIN FT	625 1½" DUCT CABLE WITH TWO No.2 AWG 5000 VOLT CABLES LIN FT	625 PULL BOX CLEANED, AS PER PLAN EACH	625 CONDUIT CLEANED AND CABLES REMOVED, AS PER PLAN LIN FT	625 LUMINAIRE, STYLE B, TYPE III, 200 WATT HPS, 713.11, 480 VOLT EACH	625 TRANSITION JUNCTION BOX EACH	625 TRENCH, 24" DEEP LIN FT	625 MEDIAN PULL BOX EACH	625 MEDIAN PULL BOX, AS PER PLAN EACH	625 PULL BOX 713.08, 18" EACH	625 PULL BOX REMOVED EACH	625 GROUND ROD EACH	625 LIGHT POLE REMOVED EACH	625 LIGHT POLE FOUNDATION REMOVED EACH	625 LUMINAIRE REMOVED EACH	LINE
1																																				1
2																																				2
3	403	3+90 NB C.	RT	26				2																								1	1				3
4	404	3+90 NB C. TO 4+60 NB C.	RT	26																		80				70										4
5	405	4+60 NB C.	RT	26		1	1					1			1				114					1								1				5
6	406	4+60 NB C. TO 7+47 NB C.	RT	26																		297				287										6
7	407	7+47 NB C.	RT	26		1	1					1			1				114					1								1	1	1	1	7
8	408	7+47 NB C. TO 9+50 NB C.	RT	26																		213				203										8
9	409	9+50 NB C.	RT	26		1	1					1			1				114					1								1				9
10	410	9+50 NB C. TO 11+25 RAMP A	RT	26																		185				175										10
11	411	11+25 RAMP A	RT	26		1	1					1			1				114					1								1				11
12	412	11+25 RAMP A TO 12+42 RAMP A	RT	26																		125														12
13	413	12+42 RAMP A	RT	26				2															1														13
14	414	12+42 RAMP A TO 12+84 RAMP A	RT	26																		52				42										14
15	415	12+84 RAMP A	RT	26		1	1					1			1				114					1								1	1	1	1	15
16	416	12+84 RAMP A TO 14+60 RAMP A	RT	26,31																		186				176										16
17																																				17
18	417	0+44 NB C.	RT	26																														1	1	1	18
19	418	1+91 NB C.	RT	26																														1	1	1	19
20	419	4+17 NB C.	RT	26																														1	1	1	20
21	420	5+74 NB C.	RT	26																														1	1	1	21
22	421	9+37 NB C.	RT	26																														1	1	1	22
23	422	11+06 RAMP A	RT	26																														1	1	1	23
24																																				24
25	423	225+95	RT	26				2															1														25
26	424	225+95 TO 17+35 RAMP A	RT	26,31																		670														26
27																																				27
28	425	2+05 SB C. TO 235+62	LT	26,27																306																28
29	426	235+62	LT	26		1	1			1					1				100					1								1	1		1	29
30	427	235+62 TO 233+20	LT	26																504																30
31	428	233+20	LT	26				2																									1				31
32	429	233+20 TO 230+49	LT	26																562																32
33	430	230+49	LT	26				2																									1				33
34	431	230+49	LT&RT	26																278																34
35	432	230+49	RT	26				2																										1			35
36	433	230+49 TO 15+60 NB C.	LT&RT	26																102																36
37	434	15+60 NB C.	RT	26				2															1														37
38																																				38
39	435	22+29 NB C. TO 11+17 RAMP B	LT&RT	26																		205				195										39
40	436	11+17 RAMP B	LT	26		1	1						1		1				120					1								1	1	1	1	40
41	437	11+17 RAMP B TO 13+02 RAMP B	LT	26																		195				185										41
42	438	13+02 RAMP B	LT	26		1	1					1			1				114					1								1	1	1	1	42
43	439	13+02 RAMP B TO 14+12 RAMP B	LT	26																		120				110										43
44	440	14+12 RAMP B	LT	26		1	1					1			1				114					1								1	1	1	1	44
45	441	14+12 RAMP B TO 14+75 RAMP B	LT	26																		73				63										45
46	442	14+75 RAMP B	LT	26				2															1														46
47																																				47
48	443	15+60 NB C. TO 16+58 NB C.	RT	26																		108				98										48
49	444	16+58 NB C.	RT	26		1	1						1		1				120					1								1	1	1	1	49
50	445	16+58 NB C. TO 14+75 RAMP B	LT&RT	26																		65			35	20										50
51																																				51
52	446	14+75 RAMP B TO 15+14 RAMP B	LT	26																		49				39										52
53	447	15+14 RAMP B	LT	26		1	1					1			1				114					1								1	1	1	1	53
54																																				54
55	448	14+68 NB C.	RT	26		1	1						1		1				120					1								1	1	1	1	55
56	449	14+68 NB C. TO 15+60 NB C.	RT	26																	102					92										56
57																																				57
58	450	236+91	LT	26																															1		1	58
59	451	234+31	LT	26																															1		1	59
60	452	232+93	LT	26																															1		1	60
61	453	230+49	LT	26																																1			61
62	454	230+49	RT	26																																1			62
63	455	22+00 NB C.	RT	26																																1			63
64																																						64
65	456-459	NOT USED																																					65
TOTALS SHEET No. 26					555	18	18	18	2	1	3	9	5		14	4			1300	1752	2038	102	3228	4	219	18	1	2320	1	2	2	5	18	22	18	22	

PFFC DATE: 7/98 DWG: ESTIM.DGN

LIGHTING ESTIMATED QUANTITIES

F.H.W.A. REGION	STATE	PROJECT	CALC. CTS DATE 7-92
5	OHIO		CHK. CTS DATE 12-92

HAM-75-9.75

204/338

14/39

LINE	REF. NO.	LOCATION STATION TO STATION	SIDE	SHT. NO.	625 CONNECTOR KIT, TYPE II EACH	625 CONNECTOR KIT, TYPE III EACH	625 CONNECTOR KIT, TYPE VII B EACH	625 CABLE SPLICING KIT EACH	625 LIGHT POLE, DESIGN AT8B41.7 EACH	625 LIGHT POLE, DESIGN AT15B41.7 EACH	625 LIGHT POLE FOUNDATION, 24" X 8' DEEP EACH	625 No.4 AWG 5000 VOLT DISTRIBUTION CABLE LIN FT	625 No.2 AWG 5000 VOLT DISTRIBUTION CABLE LIN FT	625 No.10 AWG POLE AND BRACKET CABLE LIN FT	625 1½" DUCT CABLE WITH TWO No.4 AWG 5000 VOLT CABLES LIN FT	625 1½" DUCT CABLE WITH TWO No.2 AWG 5000 VOLT CABLES LIN FT	SPECIAL DISCONNECT EXISTING CIRCUIT EACH	625 CONDUIT, 3", 713.04 LIN FT	625 CONDUIT CLEANED AND CABLES REMOVED, AS PER PLAN LIN FT	625 LUMINAIRE, STYLE B, TYPE III, WITH HPS, 713.11, 480 VOLT EACH	625 PULL BOX, CLEANED, AS PER PLAN EACH	625 TRENCH, 24" DEEP LIN FT	625 MEDIAN PULL BOX EACH	625 MEDIAN PULL BOX, AS PER PLAN EACH	625 PULL BOX REMOVED EACH	625 GROUND ROD EACH	625 LUMINAIRE REMOVED EACH	625 LIGHT POLE REMOVED EACH	625 LIGHT POLE FOUNDATION REMOVED EACH	625 LIGHT POLE IDENTIFICATION, AS PER PLAN EACH	LINE
1																																1
2																																2
3	460	2+05 SB C.	LT	27				2																		1							3
4	461	2+05 SB C. TO 2+40 SB C.	LT	27									90					35					35										4
5	462	2+40 SB C.	LT	27	1	1				1	1			114						1							1						5
6	463	2+40 SB C. TO 4+25 SB C.	LT	27												194							184										6
7	464	4+25 SB C.	LT	27	1	1				1	1			114						1							1						7
8	465	4+25 SB C. TO 6+10 SB C.	LT	27												195							185										8
9	466	6+10 SB C.	LT	27	1	1				1	1			114						1							1		1	1	1		9
10	467	6+10 SB C. TO 2+60 RAMP P	LT&RT	27												100							90										10
11	468	2+60 RAMP P	RT	27				2															1										11
12	469	2+60 RAMP P TO 2+10 RAMP P	RT	27											60								50										12
13	470	2+10 RAMP P	RT	27	1	1			1		1			100						1							1						13
14	471	2+10 RAMP P TO 0+76 RAMP P	RT	27											144								134										14
15	472	0+76 RAMP P	RT	27	1	1			1		1			100						1							1		1	1	1		15
16																																16
17	473	2+60 RAMP P TO 8+02 SB C.	RT&LT	27												139				27			102										17
18	474	8+02 SB C.	LT	27	1	1				1	1			114						1							1		1	1	1		18
19	475	8+02 SB C. TO 9+80 SB C.	LT	27												188							178										19
20	476	9+80 SB C.	LT	27				2															1										20
21																																21
22	477	2+35 RAMP R	RT	27	1	1			1		1			100						1							1						22
23	478	2+35 RAMP R TO 1+08 RAMP R	RT	27												137							127										23
24	479	1+08 RAMP R	RT	27	1	1																										1	24
25																																25
26	480	3+40 RAMP Q	RT	27	1	1			1		1			100						1							1		1	1	1		26
27	481	3+40 RAMP Q TO 2+50 RAMP Q	RT	27												100							90										27
28	482	2+50 RAMP Q	RT	27				2															1										28
29																																29
30	483	3+02 SB C.	LT	27																											1	1	1	30
31	484	4+00 SB C.	LT	27																											1	1	1	31
32	485	5+00 SB C.	LT	27																											1	1	1	32
33	486	2+30 RAMP P	RT	27																											1	1	1	33
34																																34
35	487	11+58 SB C.	LT	27																													1	35
36	488	13+31 SB C.	LT	27																													1	36
37	489	22+29 NB C.	RT	27	1	1											1																1	37
38	490	24+31 NB C.	RT	27																													1	38
39	491	26+26 NB C.	RT	27																													1	39
40	492	28+22 NB C.	RT	27																													1	40
41	493	30+25 NB C.	RT	27																													1	41
42	494	32+23 NB C.	RT	27																													1	42
43																																43
44	495	24+65 NB C.	LT	27																											1			44
45	496	24+65 NB C.	LT	27				2																		1							45
46	497	24+65 NB C.	LT&RT	27								112								46													46
47	498	24+65 NB C.	RT	27				2															1										47
48																																48
49	499	248+57	RT	27				2																		1							49
50	500	248+57 TO 249+42	RT	27								190																					50
51																																51
52	501-504	NOT USED																															52
53																																53
		TOTALS SHEET No. 27			10	10		14		4	4		8			302	90	856	204	1053	1	35	73	8		4	1175	2	1	1	8		8	8	8	9	
56																																56
57																																57
58	505	249+42	RT	28				2																		1							58
59	506	249+42 TO 34+27 NB C.	RT&LT	28								124								48			4										59
60	507	34+27 NB C.	RT	28			2																									1	60
61																																61
62	508	250+20	RT	28																									1				62
63																																63
64																																64
65																																65

LIGHTING ESTIMATED QUANTITIES

F.H.W.A. REGION	STATE	PROJECT	CALC. CTS DATE 7-92
5	OHIO		CHK. CTS DATE 12-92

HAM-75-9.75

205/338

15/39

LINE	REF. NO.	LOCATION (STATION TO STATION)	SIDE	SHT. NO.	625 CONNECTOR KIT, TYPE II (EACH)	625 CONNECTOR KIT, TYPE III (EACH)	625 CONNECTOR KIT, TYPE VIIB (EACH)	625 CABLE SPLICING KIT (EACH)	625 LIGHT POLE, DESIGN AT12B41.7 (EACH)	625 LIGHT POLE, DESIGN AT15B41.7 (EACH)	625 LIGHT POLE, DESIGN AT18B41.7 (EACH)	625 LIGHT POLE, DESIGN AT20B41.7 (EACH)	625 LIGHT POLE FOUNDATION, 24" X 8' DEEP (EACH)	625 No.4 AWG 5000 VOLT DISTRIBUTION CABLE (LIN FT)	625 No.2 AWG 5000 VOLT DISTRIBUTION CABLE (LIN FT)	625 No.10 AWG POLE AND BRACKET CABLE (LIN FT)	625 1½" DUCT CABLE WITH TWO No.4 AWG 5000 VOLT CABLES (LIN FT)	625 1½" DUCT CABLE WITH TWO No.2 AWG 5000 VOLT CABLES (LIN FT)	625 PULL BOX, CLEANED, AS PER PLAN (EACH)	SPECIAL DISCONNECT EXISTING CIRCUIT (EACH)	625 CONDUIT CLEANED AND CABLES REMOVED, AS PER PLAN (LIN FT)	625 LUMINAIRE STYLE B, TYPE III, 250 WATT HPS, 7,130 LM, 480 VOLT (EACH)	625 TRENCH, 24" DEEP (LIN FT)	625 PULL BOX 713.08, 18" (EACH)	625 MEDIAN PULL BOX (EACH)	625 PULL BOX REMOVED (EACH)	625 GROUND ROD (EACH)	625 GLARE SHIELD (EACH)	625 LIGHT POLE REMOVED (EACH)	625 LIGHT POLE FOUNDATION REMOVED (EACH)	625 LIGHT POLE IDENTIFICATION, AS PER PLAN (EACH)	625 LUMINAIRE REMOVED (EACH)	LINE
1																																		1
2																																		2
3	509	36+27 NB C.	RT	28																												1		3
4	510	38+62 NB C.	RT	28																												1		4
5	511	40+55 NB C.	RT	28	1	1															1											1		5
6	512	40+55 NB C. TO 42+70 NB C.	RT	28														225					215											6
7	513	42+70 NB C.	RT	28	1	1				1			1			114						1							1					7
8	514	42+70 NB C. TO 44+78 NB C.	RT	28														218					208											8
9	515	44+78 NB C.	RT	28	1	1					1		1			120						1						1	1	1	1		1		9
10																																		10
11	516	43+47 NB C.	RT	28																										1	1		1		11
12	517	15+30 SB C.	LT	28																												1		12
13	518	17+24 SB C.	LT	28																												1		13
14	519	19+46 SB C.	LT	28																												1		14
15	520	21+80 SB C.	LT	28																												1		15
16																																		16
17	521	23+56 SB C.	LT	28	1	1																										1		17
18	522	23+56 SB C. TO 25+29 SB C.	LT	28														183					173											18
19	523	25+29 SB C.	LT	28	1	1						1	1			124						1						1		1	1		1		19
20	524	25+29 SB C. TO 27+14 SB C.	LT	28														195					185											20
21	525	27+14 SB C.	LT	28	1	1					1		1			120						1						1		1	1		1		21
22	526	27+14 SB C. TO 21+00 RAMP C	LT&RT	28														169					159											22
23	527	21+00 RAMP C	RT	28	1	1				1			1			114						1						1		1	1		1		23
24																																		24
25	528	30+75 SB C.	LT	28	1	1						1	1			124						1						1							25
26	529	30+75 SB C. TO 32+75 SB C.	LT	28													210						200											26
27	530	32+75 SB C.	LT	28	1	1						1	1			124						1						1							27
28	531	32+75 SB C. TO 33+65 SB C.	LT	28													100						90											28
29	532	33+65 SB C.	LT	28				2																1											29
30	533	33+65 SB C. TO 6+42 RAMP H	LT&RT	28														119				35	74											30
31	534	6+42 RAMP H	RT	28				2											1																31
32																																		32
33	535	33+65 SB C. TO 3+20 RAMP E	LT&RT	28											98							39												33
34	536	3+20 RAMP E	RT	28				2											1																34
35	537	3+20 RAMP E TO 4+85 RAMP E	RT	28													175						165											35
36																																		36
37	538	3+20 RAMP E TO 2+45 RAMP E	RT	28														85					75											37
38	539	2+45 RAMP E	RT	28	1	1			1				1			108						1						1							38
39	540	2+45 RAMP E TO 36+25 SB C.	RT&LT	28														180					170											39
40	541	36+25 SB C.	LT	28	1	1				1			1			114						1						1							40
41	542	36+25 SB C. TO 38+40 SB C.	LT	28,29														225					215											41
42																																		42
43	543	30+46 SB C.	LT	28																												1	1		1	43
44	544	31+95 SB C.	LT	28																												1	1		1	44
45	545	2+77 RAMP E	RT	28																												1	1		1	45
46	546	36+12 SB C.	LT	28																												1	1		1	46
47																																		47
48	547	44+78 NB C. TO 1+50 RAMP C	RT	28														145					135											48
49	548	1+50 RAMP C	RT	28	1	1				1			1			114						1						1		1	1		1		49
50																																		50
51	549	47+60 NB C.	RT	28	1	1						1	1			124						1						1							51
52	550	47+60 NB C. TO 49+00 NB C.	RT	28														150					140											52
53	551	49+00 NB C.	RT	28				2																1		1									53
54	552	49+00 NB C. TO 49+61 NB C.	RT	28														71					61											54
55	553	49+61 NB C.	RT	28	1	1						1	1			124						1						1		1	1		1		55
56	554	49+61 NB C. TO 50+25 NB C.	RT	28														74					64											56
57	555	50+25 NB C.	RT	28				2											1																57
58																																		58
59	556	47+26 NB C.	RT	28																												1	1		1	59
60	557	48+40 NB C.	RT	28																												1	1		1	60
61																																		61
62	558-564	NOT USED																																62
63																																		63
64																																		64
65																																		65
TOTALS SHEET No. 28					14	14	2	12	1	4	2	5	12	124	98	1424	485	2039	3	1	122	12	2333	2	1	2	12	1	13	13	9	13		

LIGHTING ESTIMATED QUANTITIES

DATE PLOTTED: 7-JAN-93 TIME PLOTTED: 08:43 USER: DAVID.TESTA DGN: C:\DGN\HAM75\HAM75_LIGHTING_ESTIMATED_QUANTITIES.DGN

LIGHTING ESTIMATED QUANTITIES

F.H.W.A. REGION	STATE	PROJECT	CALC. CTS DATE 7-92
5	OHIO		CHK. CTS DATE 12-92

HAM-75-9.75

206/338

16/39

LINE	REF. NO.	LOCATION (STATION TO STATION)	SIDE	SHT. NO.	625 CONNECTOR KIT, TYPE II EACH	625 CONNECTOR KIT, TYPE III EACH	625 CONNECTOR KIT, TYPE VII B EACH	625 CABLE SPLICING KIT EACH	625 LIGHT POLE, DESIGN AT18B41.7 EACH	625 LIGHT POLE, DESIGN AT20B41.7 EACH	625 LIGHT POLE FOUNDATION, 24" X 8' DEEP EACH	625 No.2 AWG 5000 VOLT DISTRIBUTION CABLE LIN FT	625 No.10 AWG POLE AND BRACKET CABLE LIN FT	625 1½" DUCT CABLE WITH TWO No.2 AWG 5000 VOLT CABLES LIN FT	SPECIAL DISCONNECT EXISTING CIRCUIT EACH	625 CONDUIT, 3", 713.04 LIN FT	625 CONDUIT CLEANED AND CABLES REMOVED, AS PER PLAN LIN FT	625 PULL BOX, CLEANED, AS PER PLAN EACH	625 LUMINAIRE, STYLE B, TYPE III, 200 WATT HPS, 713.11, 480 VOLT EACH	625 TRENCH, 24" DEEP LIN FT	625 TRENCH IN PAVED AREA LIN FT	625 PULL BOX 713.08, 18" EACH	625 GROUND ROD EACH	625 PULL BOX REMOVED EACH	625 LIGHT POLE REMOVED EACH	625 LIGHT POLE FOUNDATION REMOVED EACH	625 LIGHT POLE IDENTIFICATION, AS PER PLAN EACH	625 LUMINAIRE REMOVED EACH	LINE
1																													1
2																													2
3	565	38+50 SB C.	LT	29	1	1									1												1		3
4	566	40+60 SB C.	LT	29																							1		4
5	567	41+96 SB C.	LT	29																							1		5
6	568	43+54 SB C.	LT	29																							1		6
7	569	45+16 SB C.	LT	29																							1		7
8	570	46+51 SB C.	LT	29																							1		8
9	571	48+22 SB C.	LT	29																							1		9
10	572	50+03 SB C.	LT	29																							1		10
11																													11
12	573	51+58 SB C.	LT	29	1	1									1												1		12
13	574	51+58 SB C. TO 23+90 RAMP J	LT&RT	29										229						219									13
14	575	23+90 RAMP J	RT	29	1	1			1		1		120						1			1							14
15	576	23+90 RAMP J TO 22+30 RAMP J	RT	29										170						160									15
16	577	22+30 RAMP J	RT	29				2										1											16
17	578	NOT USED																											17
18	579	22+30 RAMP J TO 56+10 SB C.	LT&RT	29										110			35			65									18
19	580	56+10 SB C.	LT	29	1	1				1	1		124						1			1							19
20	581	56+10 SB C. TO 58+10 SB C.	LT	29										210						200									20
21	582	58+10 SB C.	LT	29	1	1				1	1		124						1			1							21
22	583	58+10 SB C. TO 58+40 SB C.	LT	29										40						30									22
23	584	58+40 SB C.	LT	29				2							1														23
24																													24
25	585	60+03 SB C.	LT	29	1	1									1												1		25
26	586	60+03 SB C. TO 61+70 SB C.	LT	29,30										177						167									26
27																													27
28	587	24+32 RAMP J	RT	29																						1	1	1	28
29	588	22+89 RAMP J	RT	29																						1	1	1	29
30	589	21+29 RAMP J	RT	29																						1	1	1	30
31	590	56+71 SB C.	LT	29																						1	1	1	31
32	591	58+30 SB C.	LT	29																						1	1	1	32
33																													33
34	592	72+12 NB C.	LT	29				2										1											34
35	593	72+12 NB C.	LT&RT	29								150				65				15	50								35
36	594	72+12 NB C.	RT	29				2														1							36
37	595	72+12 NB C. TO 1+90 RAMP J	RT	29										288						278									37
38	596	1+90 RAMP J	RT	29				2														1							38
39	597	1+90 RAMP J	LT&RT	29								108				44				17	27								39
40	598	1+90 RAMP J	LT	29				2														1							40
41	599	1+90 RAMP J TO 75+65 NB C.	LT&RT	29										80						70									41
42	600	75+65 NB C.	RT	29	1	1				1	1		124						1			1				1	1	1	42
43	601	75+65 NB C. TO 77+61 NB C.	RT	29								412				196				106	90								43
44	602	77+61 NB C.	RT	29	1	1				1	1		124						1			1				1	1	1	44
45	603	77+61 NB C. TO 79+90 NB C.	RT	29										239						229									45
46	604	79+90 NB C.	RT	29	1	1				1	1		124						1			1				1	1	1	46
47																													47
48	605	75+80 NB C.	RT	29																					1				48
49																													49
50	606	73+72	LT	29	1	1									1														50
51																													51
52	607-609	NOT USED																											52
53																													53
TOTALS SHEET No. 29					10	10		12	1	5	6	670	740	1543	5	305	35	2	6	1556	167	3	6	1	8	8	10	8	
56																													56
57																													57
58	610	61+70 SB C.	LT	30	1	1			1		1		120						1			1				1	1		58
59	611	61+70 SB C. TO 3+40 RAMP N	LT&RT	30										215						205									59
60	612	3+40 RAMP N	RT	30	1	1	2		1		1		120						1			1							60
61	613	3+40 RAMP N TO 1+40 RAMP N	RT	30										210						200									61
62	614	1+40 RAMP N	RT	30	1	1			1		1		120						1			1				1			62
63																													63
64																													64
65																													65

LIGHTING ESTIMATED QUANTITIES

F.H.W.A. REGION	STATE	PROJECT	CALC. CTS DATE 7-92
5	OHIO		CHK. CTS DATE 10-92

HAM-75-9.75

207 / 338

17 / 39

LINE	REF. NO.	LOCATION STATION TO STATION	SIDE	SHT. NO.	625 CONNECTOR KIT, TYPE II EACH	625 CONNECTOR KIT, TYPE III EACH	625 CONNECTOR KIT, TYPE VIB EACH	625 CABLE SPLICING KIT EACH	625 LIGHT POLE, DESIGN AT19B41.7 EACH	625 LIGHT POLE, DESIGN AT20B41.7 EACH	625 LIGHT POLE, DESIGN AT15B41.7 EACH				625 LIGHT POLE FOUNDATION, 24"X 8" DEEP EACH		625 PULL BOX, CLEANED, AS PER PLAN EACH		625 No.2 AWG 5000 VOLT DISTRIBUTION CABLE LIN FT	625 No.10 AWG POLE AND BRACKET CABLE LIN FT	625 1½" DUCT CABLE WITH TWO No.4 AWG 5000 VOLT CABLES LIN FT	625 1½" DUCT CABLE WITH TWO No.2 AWG 5000 VOLT CABLES LIN FT	SPECIAL DISCONNECT EXISTING CIRCUIT EACH		625 CONDUIT, 3", 713.04 LIN FT		625 CONDUIT CLEANED AND CABLES REMOVED, AS PER PLAN LIN FT	625 LUMINAIRE, STYLE B, TYPE III, 200 WATT HPS, 713.11, 480 VOLT EACH	625 TRENCH, 24" DEEP LIN FT	625 GROUND ROD EACH	625 BRACKET ARM REMOVED EACH	625 PULL BOX REMOVED EACH	625 LIGHT POLE REMOVED EACH	625 LIGHT POLE FOUNDATION REMOVED EACH	625 LIGHT POLE, IDENTIFICATION, AS PER PLAN EACH	625 LUMINAIRE REMOVED EACH	LINE
1																																			1
2																																			2
3	615	3•40 RAMP N TO 64•88 SB C.	LT&RT	30																	164			44				110								3
4	616	64•88 SB C.	LT	30	1	1																1											1			4
5																																			5
6	617	2•27 RAMP N	RT	30																													1	1		1	6
7	618	0•86 RAMP N	RT	30																													1	1		1	7
8	619	66•69 SB C.	LT	30																															1		8
9																																					9
10	620	79•90 NB C. TO 80•65 NB C.	RT	29,30																	85							75								10
11	621	80•65 NB C.	RT	30				2									1																			11
12	622	80•65 NB C. TO 81•32 NB C.	RT	30															154							67										12
13	623	81•32 NB C.	RT	30	1	1				1					1					124							1		1			1	1		1	13
14	624	81•32 NB C. TO 82•83 NB C.	RT	30																	161							151								14
15	625	82•83 NB C.	RT	30	1	1																1											1			15
16	626	84•39 NB C.	RT	30																													1			16
17	627	85•93 NB C.	RT	30	1	1																1											1			17
18	628	85•93 NB C. TO 87•57 NB C.	RT	30																	174							164								18
19	629	87•57 NB C.	RT	30	1	1				1					1					124							1		1			1	1		1	19
20	630	87•57 NB C. TO 1•30 RAMP M	RT	30																	151							141								20
21	631	1•30 RAMP M	RT	30				2									1																			21
22	632	1•30 RAMP M TO 1•50 RAMP M	RT	30																			30					20								22
23	633	1•50 RAMP M	RT	30	1	1			1						1					120							1		1			1	1		1	23
24	634	1•50 RAMP M TO 3•38 RAMP M	RT	30,34																			198					188								24
25																																					25
26	635	90•46 NB C.	RT	30																															1		26
27																																					27
28	636-639	NOT USED																																			28
		TOTALS SHEET No. 30			9	9	2	4	4	2					6		2		154	728	228	1160	3		44		67	6	1254	6			6	6	6	6	
31	640	14•46 RAMP A	RT	31																													1	1		1	31
32	641	16•18 RAMP A	RT	31																													1	1		1	32
33	642	14•60 RAMP A	RT	31	1	1					1				1					114							1		1			1	1			33
34	643	14•60 RAMP A TO 16•35 RAMP A	RT	31																	185							175								34
35	644	16•35 RAMP A	RT	31	1	1					1				1					114							1		1							35
36	645	16•35 RAMP A TO 17•35 RAMP A	RT	31																	130							100								36
37	646	17•35 RAMP A	RT	31													1																			37
38	647	17•35 RAMP A TO 17•74 RAMP A	RT	31																			69					39								38
39	648	17•74 RAMP A	RT	31	1	1					1				1					114				1			1		1			1	1		1	39
40	649	15•14 RAMP B TO 16•18 RAMP B	LT	26,31																	114							104								40
41	650	16•18 RAMP B	LT	31	1	1					1				1					114							1		1			1	1		1	41
42	651	16•18 RAMP B TO 17•16 RAMP B	LT	31																	108							98								42
43	652	17•16 RAMP B	LT	31	1	1					1				1					114							1		1			1	1		1	43
44	653	17•18 RAMP B TO 17•16 RAMP B	LT	31																	36							26								44
45	654	19•01 RAMP B	LT	31	1	1					1				1					114				1			1		1			1	1		1	45
46	655	19•01 RAMP B TO 18•06 RAMP B	LT	31																		105						95								46
47	656	18•06 RAMP B	LT	31	1	1					1				1					114							1		1			1	1		1	47
48	657	18•06 RAMP B TO 17•42 RAMP B	LT	31																		74						64								48
49	658	17•42 RAMP B	LT	31				2									1																			49
50	659	17•42 RAMP B TO 17•35 RAMP A	LT&RT	31															226							83										50
51	660	19•99 SHEPHERD LN.	RT	31																													1	1		1	51
52	661	18•58 SHEPHERD LN.	RT	31																												1					52
53	662	17•70 SHEPHERD LN.	RT	31																													1	1		1	53
54	663	13•29 SHEPHERD LN.	RT	31																													1	1		1	54
55	664	11•55 TO 9•24 SHEPHERD LN.	RT	31																						225										1	55
56	665	8•20 SHEPHERD LN.	RT	31																													1	1		1	56
57	666	6•10 SHEPHERD LN.	RT	31																											1					1	57
58	667	18•75 SHEPHERD LN.	LT	31																													1	1		1	58
59	668	18•58 SHEPHERD LN.	LT	31																												1					59
60	669	16•25 SHEPHERD LN.	LT	31																													1	1		1	60
61	670	14•50 SHEPHERD LN.	LT	31																													1	1		1	61
62	671	12•19 SHEPHERD LN.	LT	31																													1	1		1	62
63	672	11•32 TO 9•13 SHEPHERD LN.	LT	31																						225										1	63
64	673	7•39 SHEPHERD LN.	LT	31																													1	1		1	64
65	674	20•91 SHEPHERD LN.	RT	31																													1	1		1	65
66	675	23•09 SHEPHERD LN.	RT	31																													1	1		1	
67	676-699	NOT USED																																			
		TOTALS SHEET No. 31			7	7		2			7				7		2		226	798	248	573	2			533	7	701	7	1	2	18	18		21	

17 / 39

LIGHTING ESTIMATED QUANTITIES

F.H.W.A. REGION	STATE	PROJECT	CALC. CTS DATE 7-92
5	OHIO		CHK. CTS DATE 12-92

HAM-75-9.75

208/338

18/39

LINE	REF. NO.	LOCATION (STATION TO STATION)	SIDE	SHT. NO.	625 CONNECTOR KIT, TYPE II (EACH)	625 CONNECTOR KIT, TYPE III (EACH)	625 LIGHT POLE, DESIGN AT10B41.7 (EACH)	625 LIGHT POLE, DESIGN AT18B41.7 (EACH)	625 LIGHT TOWER BBBBBB100 (EACH)	625 LIGHT POLE FOUNDATION, 24" X 8' DEEP (EACH)	625 LIGHT POLE FOUNDATION, 24" X 10' DEEP, AS PER PLAN (EACH)	625 LIGHT TOWER FOUNDATION, 36" X 25' DEEP (EACH)	625 No.10 AWG POLE AND BRACKET WIRE (LIN FT)	625 1½" DUCT CABLE WITH TWO No.4 AWG 5000 VOLT CABLES (LIN FT)	625 1½" DUCT CABLE WITH TWO No.2 AWG 5000 VOLT CABLES (LIN FT)	SPECIAL DISCONNECT EXISTING CIRCUIT (EACH)	625 CONDUIT CLEANED AND CABLES REMOVED, AS PER PLAN (LIN FT)	625 LUMINAIRE, STYLE B, TYPE III, 200 WATT HPS, 713.11, 480 VOLT (EACH)	625 LUMINAIRE, SYMMETRIC, 400 WATT HPS, 713.21, 480 VOLT (EACH)	625 TRENCH, 24" DEEP (LIN FT)	625 GROUND ROD (EACH)	625 LUMINAIRE REMOVED (EACH)	625 LIGHT POLE REMOVED (EACH)	625 LIGHT POLE FOUNDATION REMOVED (EACH)	LINE
1																									1
2																									2
3	700	1+50 RAMP C TO 261+20	RT	32											220						210					3
4	701	261+20	RT	32					1			1								6		2				4
5																										5
6	702	21+00 RAMP C TO 263+03	RT&LT	32											175						165					6
7	703	263+03	LT	32					1			1								6		2				7
8																										8
9	704	4+85 RAMP E	RT	32	1	1	1			1			104						1			1				9
10	705-709	NOT USED																								10
11																										11
		TOTALS SHEET No. 32			1	1	1		2	1		2	104		395				1	12	375	5				
14																										14
15	710	1+90 RAMP J TO 289+00	RT	33											197						187					15
16	711	289+00	RT	33					1			1								6		2				16
17																										17
18	712	22+30 RAMP J TO 289+40	RT&LT	33											190						180					18
19	713	289+40	LT	33					1			1								6		2				19
20																										20
21	714	19+75 RAMP J	RT	33																			1	1	1	21
22	715-719	NOT USED																								22
23																										23
		TOTALS SHEET No. 33							2			2			387					12	367	4	1	1	1	
26																										26
27	720	3+38 RAMP M	RT	34	1	1		1		1			120						1			1				27
28	721	3+38 RAMP M TO 5+26 RAMP M	RT	34										198							188					28
29	722	5+26 RAMP M	RT	34	1	1		1			1		120						1			1				29
30	723	5+26 RAMP M TO 7+14 RAMP M	RT	34										198							188					30
31	724	7+14 RAMP M	RT	34	1	1		1			1		120						1			1				31
32	725	7+14 RAMP M TO 9+02 RAMP M	RT	34										198							188					32
33	726	9+02 RAMP M	RT	34	1	1		1			1		120				1		1			1	1	1	1	33
34																										34
35	727	7+89 RAMP M	LT	34	1	1											1									35
36	728	7+89 RAMP M TO 10+92 RAMP M	LT&RT	34										387				35			342					36
37	729	10+92 RAMP M	RT	34	1	1											1									37
38																										38
39	730	3+11 RAMP M	RT	34																			1	1	1	39
40	731	5+09 RAMP M	RT	34																			1	1	1	40
41	732	7+09 RAMP M	RT	34																			1	1	1	41
42																										42
43																										43
44																										44
		TOTALS SHEET No. 34			6	6		4		1	3		480	981			3	35	4		906	4	4	4	4	
47																										47
48																										48
49																										49
50																										50
51																										51
52																										52
53																										53
54																										54
55																										55
56																										56
57																										57
58																										58
59																										59
60																										60
61																										61
62																										62
63																										63
64																										64
65																										65

PWPL
DATE: 7/98
DGN: ESTIM.L.DGN

F.H.W.A. REGION	STATE	PROJECT	
5	OHIO		

HAM-75-9.75

209/338

19/39

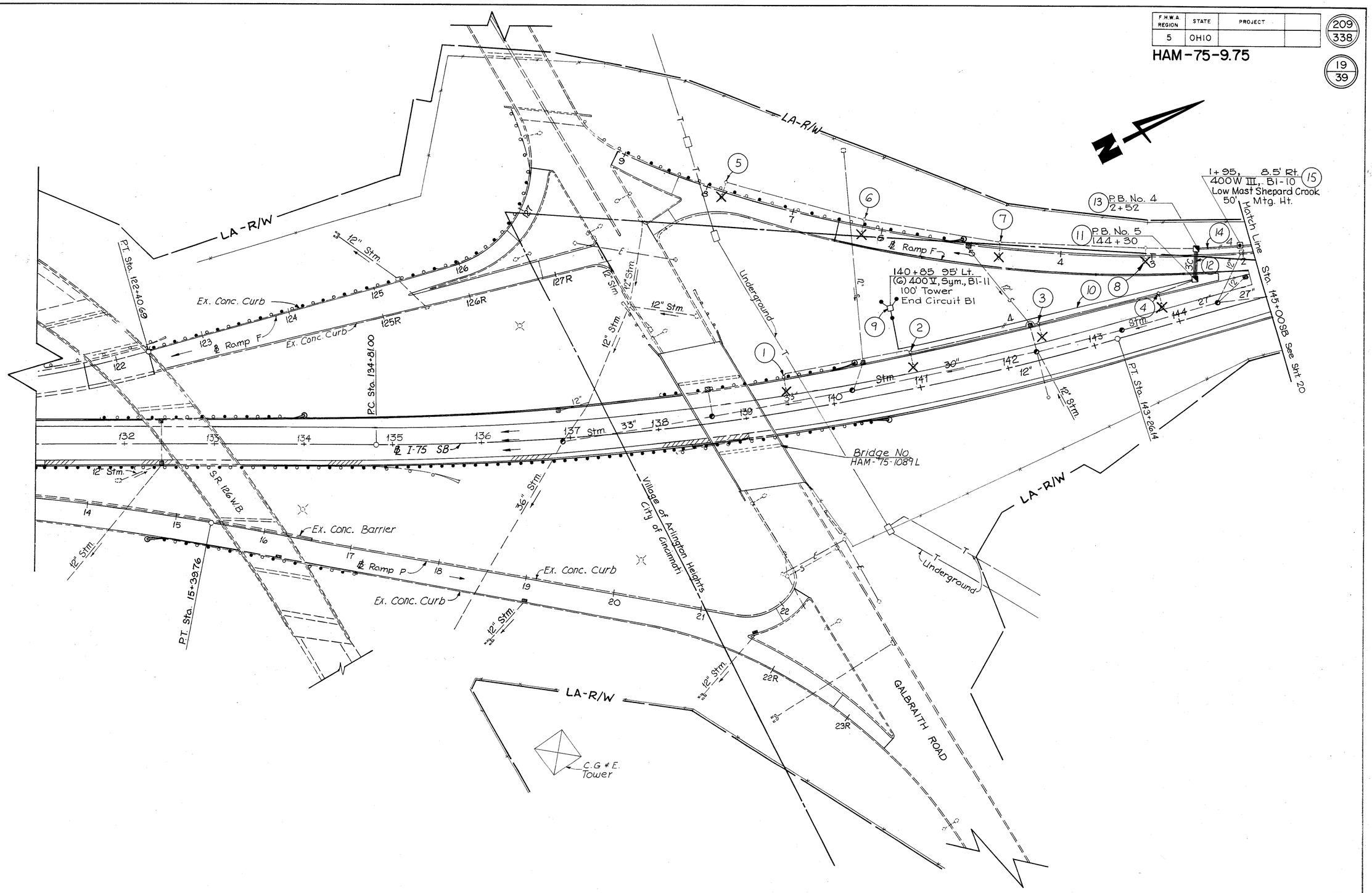

For Cross Sections See Sht. 36
For Legend See Sht. 3

19/39

LIGHTING PLAN STA. 131+00SB TO STA. 145+00SB

MEDIA RESOURCES CORP.

F.H.W.A. REGION	STATE	PROJECT	
5	OHIO		

HAM - 75 - 9.75

210 / 338

20 / 39

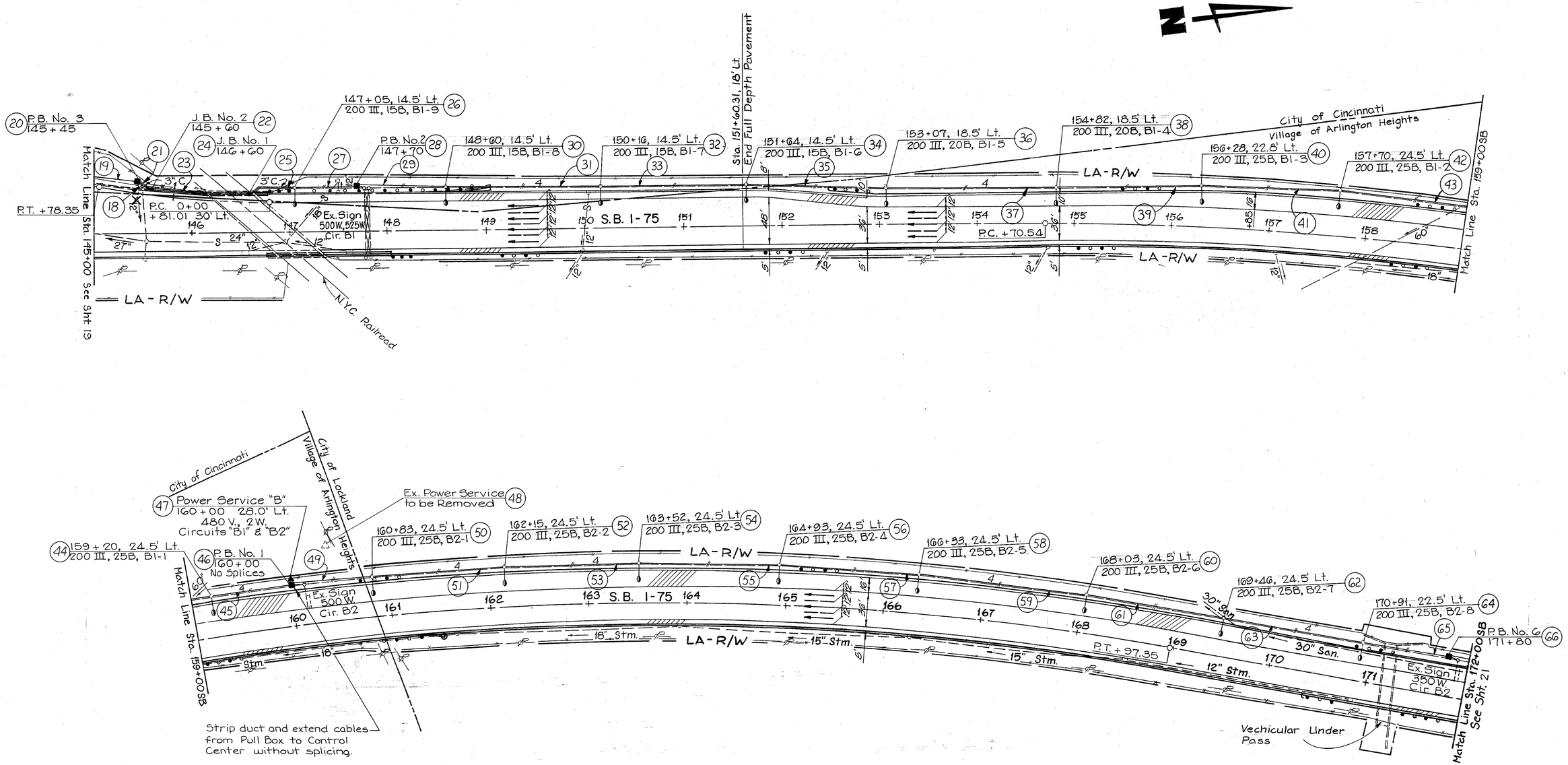

For Legend See Sht. 3

20 / 39

LIGHTING PLAN STA. 145+00SB TO STA. 172+00SB

MEDIA RESOURCES CORP

F.H.W.A. REGION	STATE	PROJECT	
5	OHIO		

HAM-75-9.75

211 / 338

21 / 39

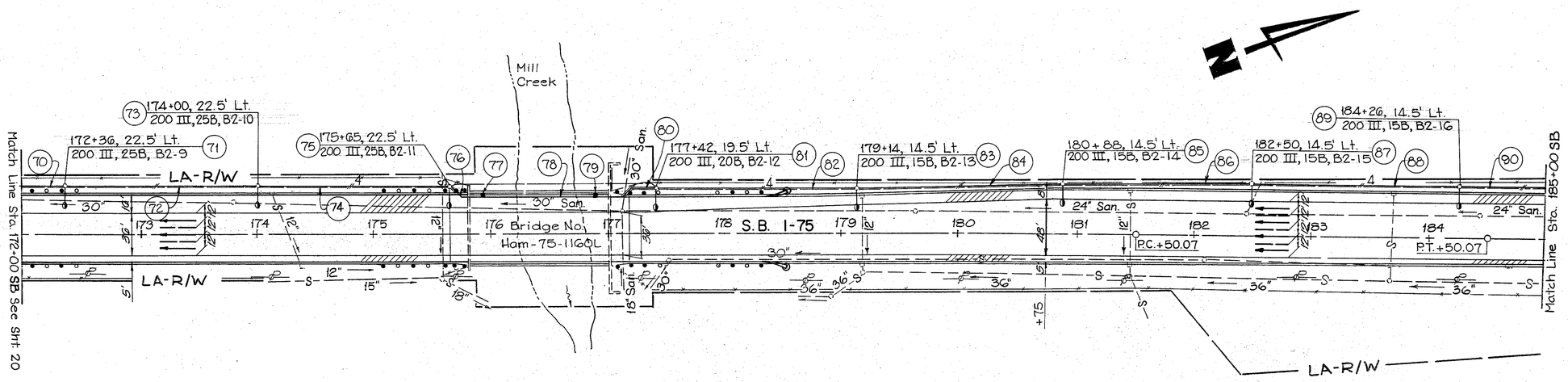

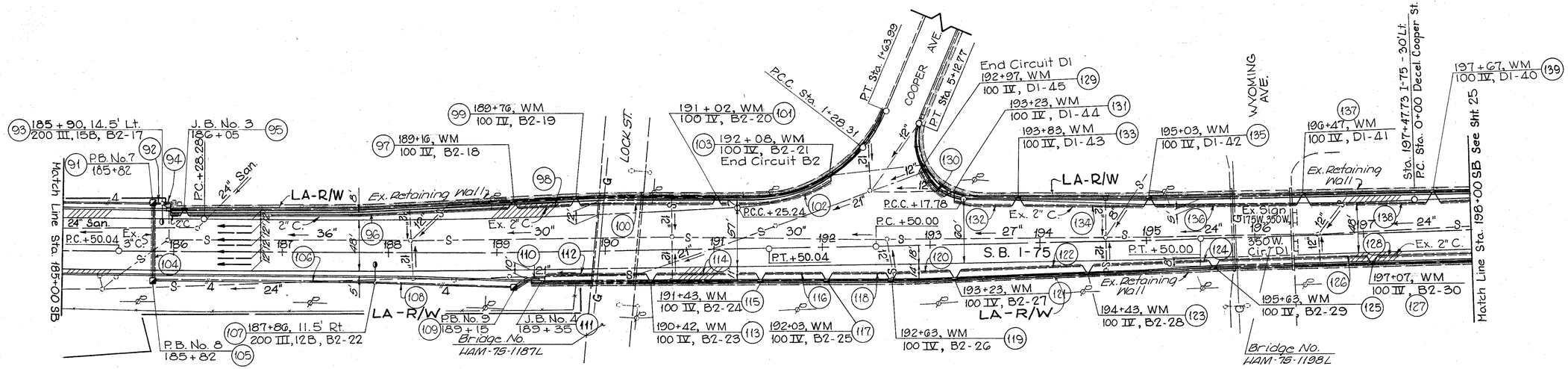

For Legend See Sht. 3

21 / 39

MEDIA RESOURCES CORP

LIGHTING PLAN STA. 172+00SB TO STA. 198+00SB

F.H.W.A. REGION	STATE	PROJECT	
5	OHIO		

212
338

HAM - 75 - 9.75

22
39

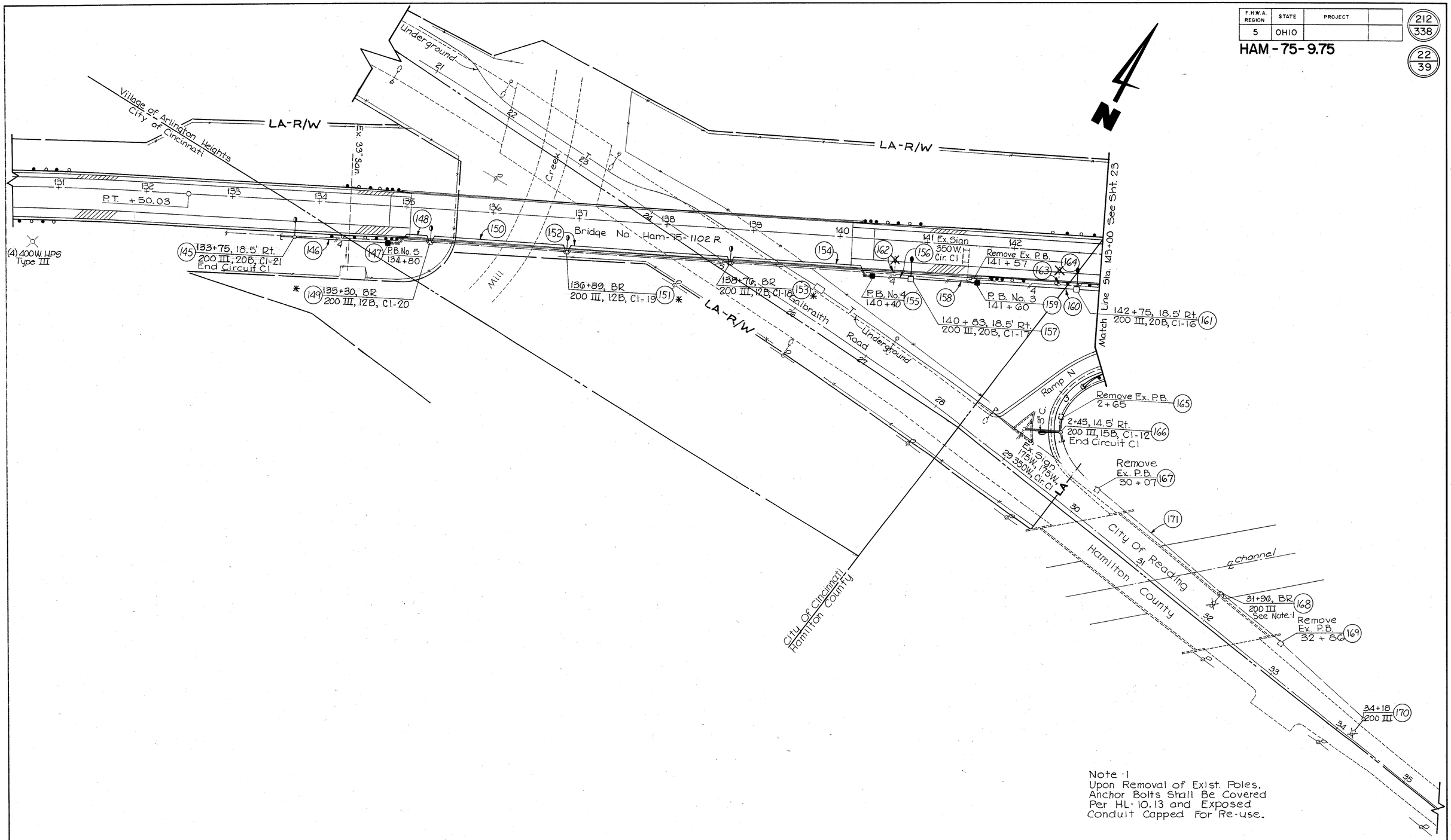

Note -1
Upon Removal of Exist. Poles, Anchor Bolts Shall Be Covered Per HL-10.13 and Exposed Conduit Capped For Re-use.

* Field measure existing foundation and match bolt circle and bolt diameter to existing condition.

For Legend See Sheet 3

22
39

MEDIA RESOURCES CORP.

LIGHTING PLAN STA. 130+50NB TO STA. 143+00 NB

F.H.W.A. REGION	STATE	PROJECT	
5	OHIO		

HAM-75-9.75

213/338

23/39

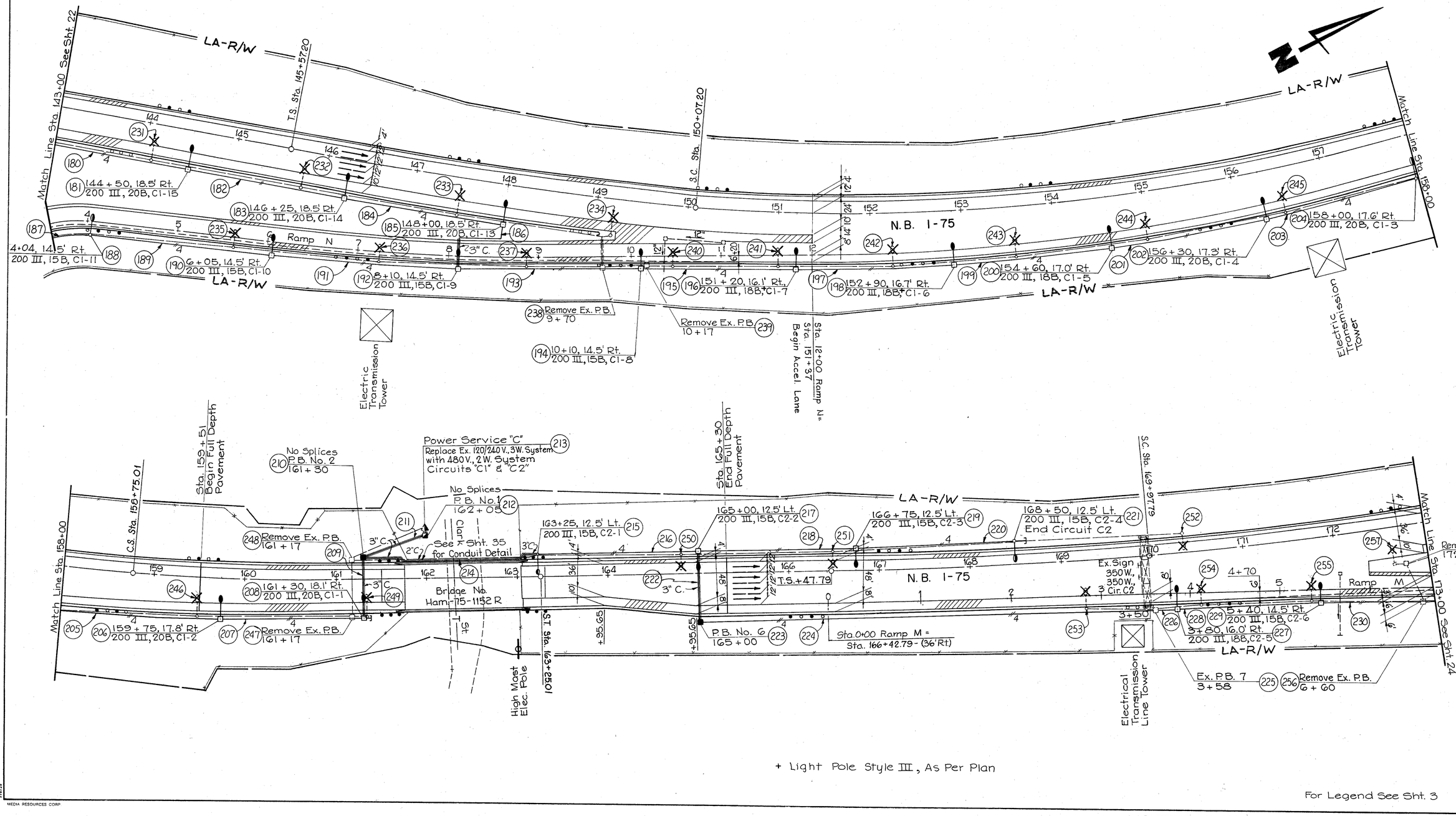

For Legend See Sht. 3

23/39

LIGHTING PLAN STA 143+00 NB TO STA 173+00 NB

MEDIA RESOURCES CORP.

F.H.W.A. REGION	STATE	PROJECT	
5	OHIO		

214/338

24/39

HAM -75-9.75

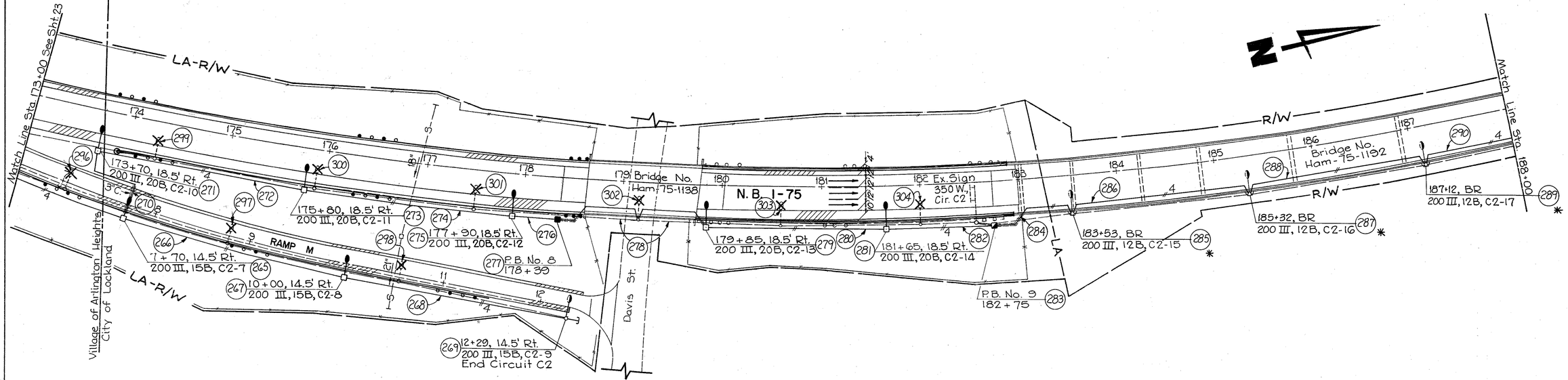

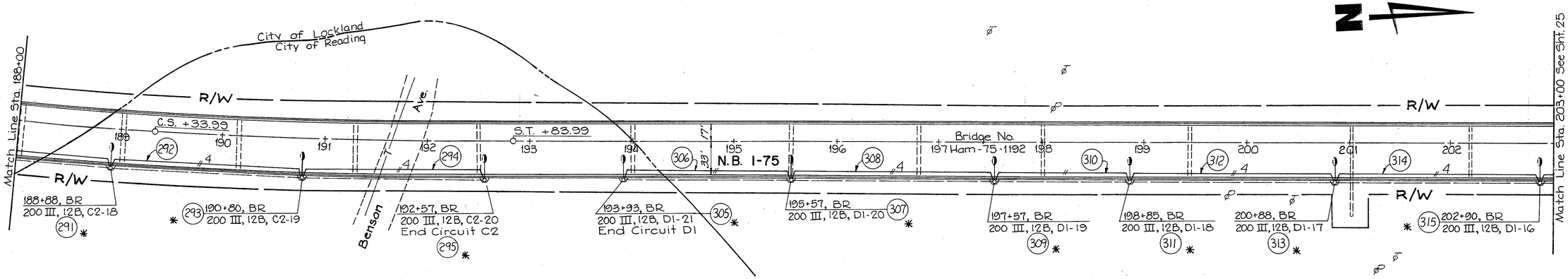

* Field measure existing foundation and match bolt circle and bolt diameter to existing condition.

For Legend See Sht. 3

24/39

LIGHTING PLAN STA. 173+00 NB TO STA. 203+00 NB

MEDIA RESOURCES CORP

F.H.W.A. REGION	STATE	PROJECT	
5	OH10		

HAM-75-9.75

215/338

25/39

See Sht. 21
Match Line Sta. 198+00 SB

320 198+27, WM, 100 IV, B2-31
321
322 199+47, WM, 100 IV, B2-32
323
324 200+67, WM, 100 IV, B2-33, End Circuit B2
PC Sta. 200+70.21
325 198+87, WM, 100 IV, D1-39
326
S. 199
Ex. 2" C.
12"
21"
327 200+07, WM, 100 IV, D1-38
328
329
200
Ex. 2" C.
Sta. 201+00 Begin Taper
330 201+27, WM, 100 IV, D1-37
331
201
S.
12"
201+87, WM, 100 IV, D1-36
332
333
202+47, WM, 100 IV, D1-35
334
203+07, WM, 100 IV, D1-34
336
203+67, WM, 100 IV, D1-33
338
204+27, WM, 100 IV, D1-32
340
204+87, WM, 100 IV, D1-31
342
205+47, WM, 100 IV, D1-30
344
206+07, WM, 100 IV, D1-29
346
Remove Ex. P.B.
206+50
362
J.B. No. 4
206+07
347
207+50, CB
200 III, 12B, D1-28
349
208+92, CB
200 III, 12B, D1-27
351
Remove Ex. P.B.
210+30
363
211+01, CB
200 III, 12B, D1-26
355
212+73, CB
200 III, 12B, D1-25
357
Remove Ex. P.B.
213+25
364
J.B. No. 1
213+25
359
Exist. Retaining Wall
Match Line Sta. 214+00 See Sht. 26
Ex. 3" C.
360
Ex. Sign 350W., 500W., Cir. D1
358
P.T. +35.76
212
213
12"
15"
361
Ex. 3" C.
380
377
212+22, 18.5' Rt.
200 III, 20B, D1-11
376
Ex. P.B. 4
213+25
378
210+30, 18.5' Rt.
200 III, 20B, D1-12
374
208+41, 18.5' Rt.
200 III, 20B, D1-13
372
Bridge No. Ham-75-1192 R
Ex. Retaining Wall
LA-R/W
R/W
L.A.
N.B.
I-75
S.B. I-75
Ex. Sign T.S. +30.38
350W., Cir. D1
373
371
375
379
204+90, BR *
200 III, 12B, D1-15
366
206+60, BR *
200 III, 12B, D1-14
368
P.B. No. 5
207+40
370
365
367
369
Match Line Sta. 203+00 NB See Sht. 24
NB

* Field measure existing foundation and match bolt circle and bolt diameter to existing condition.

For Legend See Sht. 3

25/39

LIGHTING PLAN STA. 203+00NB TO STA. 214+00NB AND STA. 198+00 SB TO STA. 214+00 SB

MEDIA RESOURCES CORP

F.H.W.A. REGION	STATE	PROJECT	
5	OHIO		

HAM-75-9.75

216/338

26/39

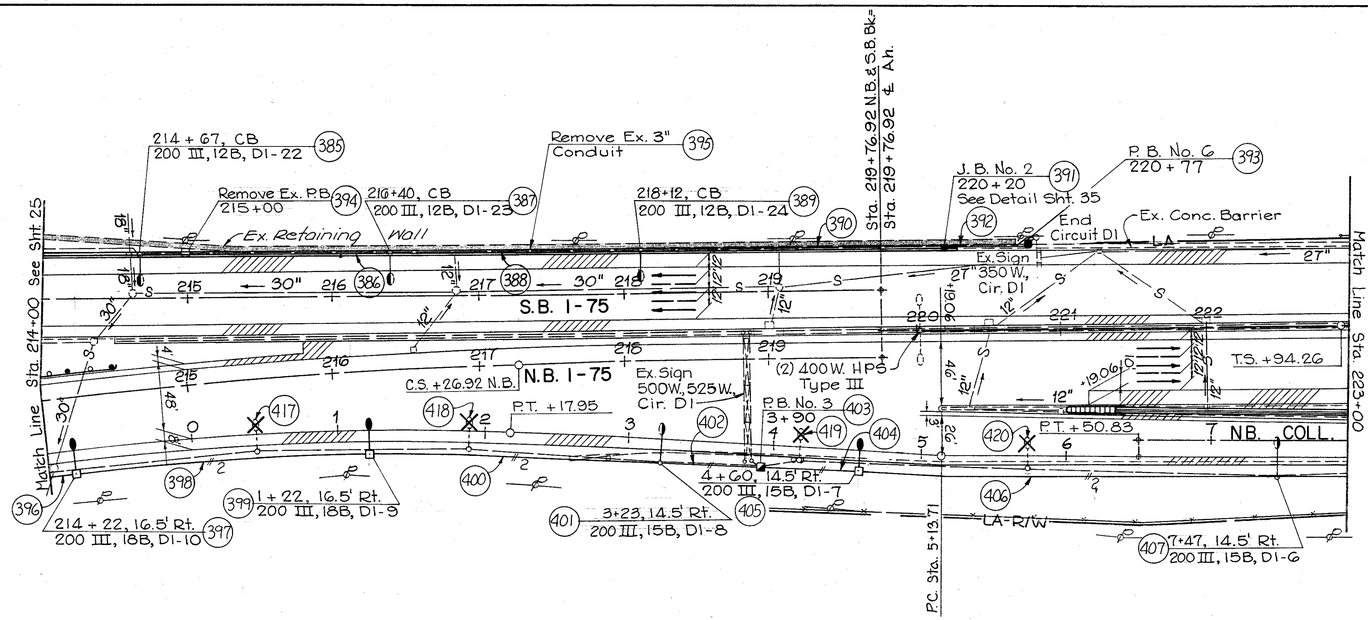

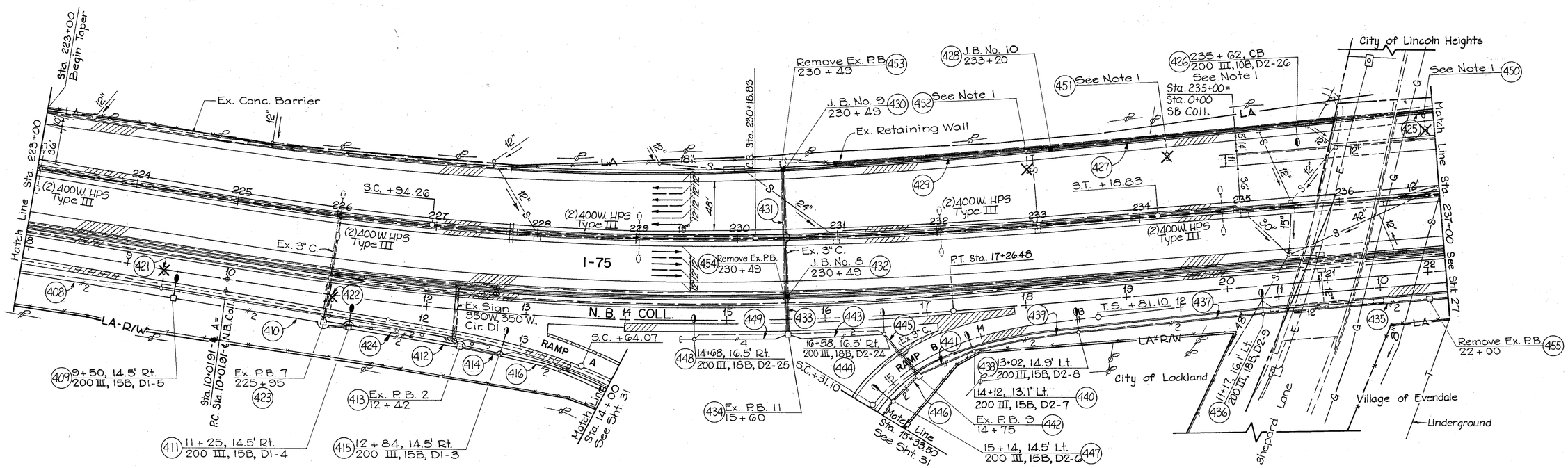

1. Existing Poles are mounted on retaining wall. Upon removal of existing poles, anchor bolts shall be covered per HL-10.13 and exposed conduit capped for re-use.

For Legend see Sheet 3

26/39

LIGHTING PLAN STA. 214+00 TO STA. 237+00

MEDIA RESOURCES CORP

F.H.W.A. REGION	STATE	PROJECT	
5	OHIO		

HAM–75–9.75

217/338

27/39

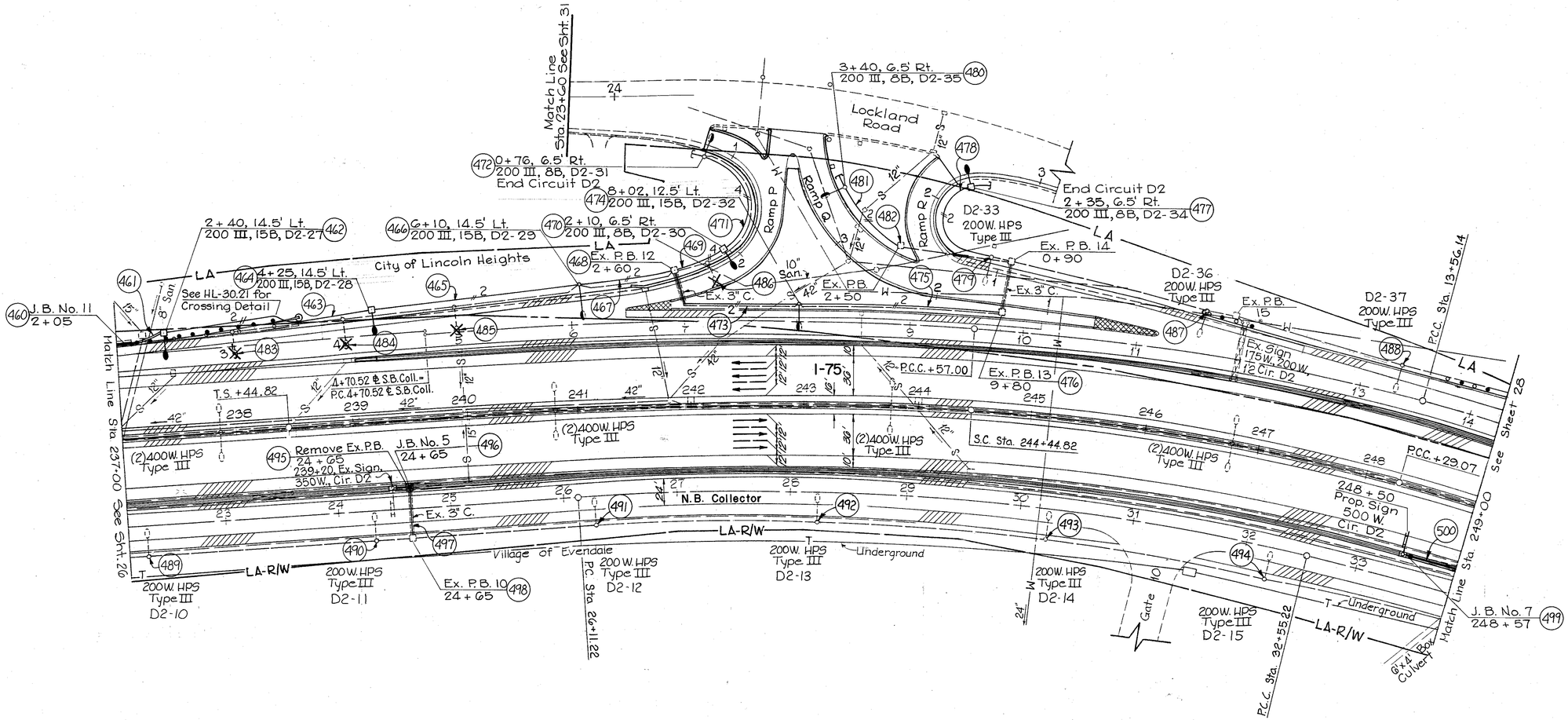

For Legend See Sht. 3

27/39

LIGHTING PLAN STA. 237+00 TO STA. 249+00

F.H.W.A. REGION	STATE	PROJECT	
5	OHIO		

218 / 338

28 / 39

HAM - 75 - 9.75

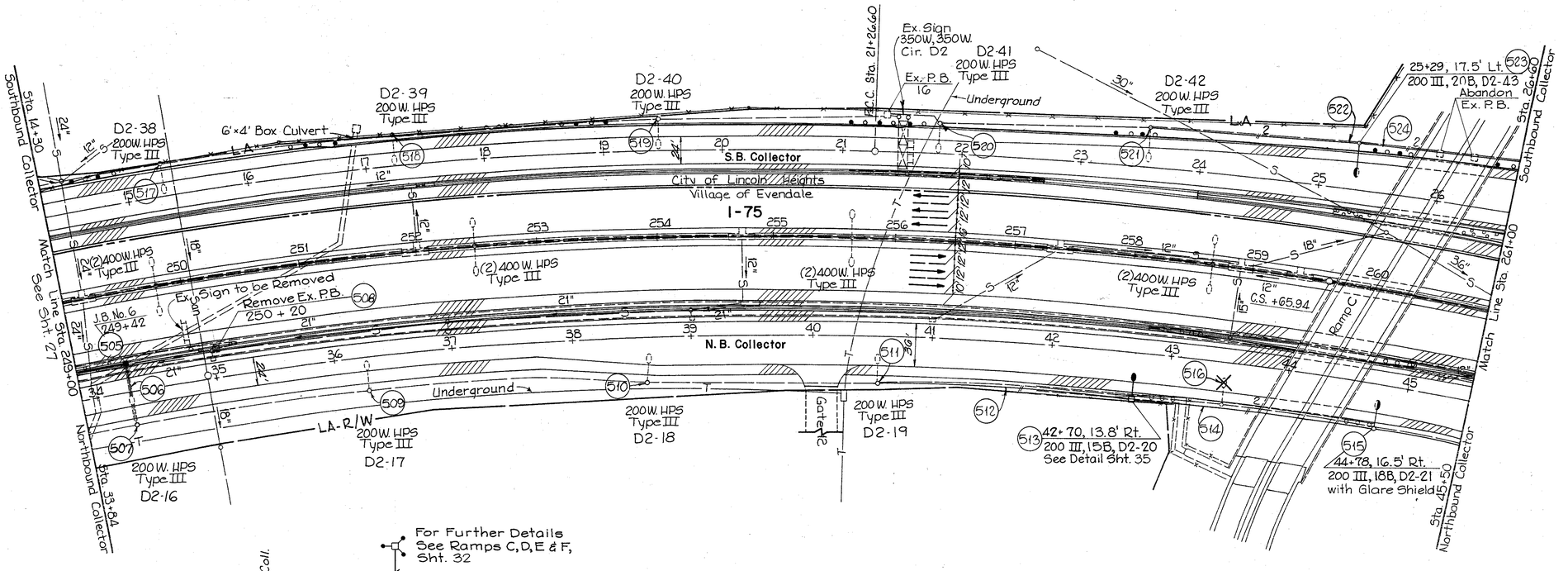

LIGHTING PLAN STA. 249+00 TO STA. 272+59

28 / 39

MEDIA RESOURCES CORP

F.H.W.A. REGION	STATE	PROJECT	
5	OHIO		

219/338

29/39

HAM-75-9.75

E2-27 200 W. HPS Type III
E2-26 200 W. HPS Type III
E2-25 200 W. HPS Type III
E2-24 200 W. HPS Type III
E2-23 200 W. HPS Type III
E2-22 200 W. HPS Type III
Congress Ave.
Chicago Ave.
LA-R/W
Sta. 38+10 Southbound Collector
P.T. Sta. 28+37.88-℄ J = Sta. 49+29.43-℄ S.B. Coll.
Sta. 49+29.43 Southbound Collector
S.B. Collector
P.C.C. 0+00.00-℄ H= 275+27.15-℄ I-75
Ex. PB 6 281+18
E1-10 200 W. HPS Type III
City of Lincoln Heights
Village of Evendale
I-75
See Sht 28 Match Line Sta. 272+59
Match Line Sta. 284+00 Southbound Collector
(2) 400 W. HPS Type III
Ex. Sign 500 W., Cir. E2
P.T. Sta. 1+63.67
Ex. PB 5 281+18
P.T. Sta. 281+17.67
Ex. PB 12
Match Line Sta. 284+00 Northbound Collector
Match Line Sta. 295+55 Southbound Collector
N.B. Collector
P.T. 63+33.99
E1-4 200 W. HPS Type III
E1-3 200 W. HPS Type III
E1-2 200 W. HPS Type III
E1-1 200 W. HPS Type III
E2-1 200 W. HPS Type III
E2-2 200 W. HPS Type III
Ex. PB 4 65+98
Ex. Power Service "2" Circuits E1, E2 & E3
Ex. PB 1 63+36
Northbound Collector Sta. 57+22
Sta. 68+82 Northbound Collector
P.C. Sta. 0+00.00-℄ K = Sta. 281+62.88-℄ I-75
For Further Details See Ramp J, Sht. 33
Neumann Way
Ramp J
Ramp K
Match Line See Sht. 33
City of Lincoln Heights
Village of Evendale
E1-11 200 W. HPS Type III
E1-12 200 W. HPS Type III
P.C. Sta. 26+46.96
23+90, 16.5' Rt. 200 III, 18B, E1-13
Ex. P.B. 7 22+30
56+10, 18.5' Lt. 200 III, 20B, E1-15
58+10, 18.5' Lt. 200 III, 20B, E1-16
E1-17 200 W. HPS Type III
Ex. P.B. 8 58+40
P.T. Sta. 9+66.47-℄ L = Sta. 286+15.00-℄ I-75
P.C. Sta. 8+66.47
T.S. Sta. 0+00.00-℄ J = Sta. 72+99.98-℄ N.B. Coll.
Ex. 3" C.
+84.88
+44.45
Ex. Sign 100 W., 350 W., Cir. E1
Ex. Sign 350 W., 500 W., Cir. E2
Sta. 9+86.79 K Base Line Shift
+34.94 ℄ K = +79.21 ℄ N.B. Coll.
Ex. P.B. 13 72+12 Continue Service to Overhead Signs
E2-3 200 W. HPS Type III
E2-4 200 W. HPS Type III
E2-5 200 W. HPS Type III
End Circuit E2 E2-6 200 W. HPS Type III
Abandon 5 Ex. Cable
P.B. No. 16 1+90
P.B. No. 14 72+12
P.B. No. 15 1+90
Remove Ex. P.B. 75+80
77+61, 18.5' Rt. 200 III, 20B, E2-9
79+90, 18.5' Rt. 200 III, 20B, E2-10
75+65, 6.5' Rt. 200 III, 20B, E2-8
Gate 57A
Gate 51
For Further Details See Ramp J, Sht. 33
Match Line See Sht. 33
Sta. 60+90 Southbound Collector
Sta. 80+40 Northbound Collector

For Legend See Sht. 3

29/39

LIGHTING PLAN STA. 272+59 TO STA. 295+55

MEDIA RESOURCES CORP

F.H.W.A. REGION	STATE	PROJECT	
5	OHIO		

220
338

HAM-75-9.75

30
39

Sta. 6+06 Ramp B =
Sta. 0+00 Ramp N

Ramp B

Ramp N

T.S. +96.92

(2) 1000 W. HPS
Type III, 100'

(2) 1000W. HPS
Type III, 100'

END PROJECT
STA. 305+85
S.L.M. 14.25

Bridge No.
HAM-75-1426

Glendale-Milford Road

SB. Collector
Sta. 72+20 Bk. =
Sta. 27+00 Ah, 12'Lt.

Sta. 60+90 Southbound Collector

Match Line Sta 295+55 See Sht. 29

Sta. 80+40 Northbound Collector

LA-R/W

Sta. 4+70.34 - ℄ N =
Sta. 62+44.45 - ℄ S.B. Coll.

Sta. 68+03.86
Sta. 68+28.86 - ℄ S.B. Coll. =
Sta. 302+94.59 - ℄ I-75

(610) 61+70, 17.0' Lt.
200 III, 18B, E1-18

(611)

(612) 3+40, 16.5' Lt.
200 III, 18B, E1-19

(613)

(614) 1+40, 16.5' Rt.
200 III, 18B, E1-20
End Circuit E1

(615) E1-21
200 W. HPS
Type III

Ex PB 9
65+29

E1-22
End Circuit E1
200W. HPS
Type III

(616) PRC +60.38

(617)

(618)

(619)

S.T. +69.37

S.C. +19.37

S.C. +46.92

3" C.

30" × 19" Stm.

End Circuit E1

P.C. +14.46
Ex. PB 11
296+95

Ex. PB 10
65+35

SB Collector

Ex. Sign
100 W., 350 W.,
169 Cir. C4

PC. 297+00.00-℄ S.B. I-75 =
297+00.00-℄ I-75

Ex. Sign
350 W.
Cir. E1

(2) 400 W. HPS
Type III

PC. 297+00.00-℄ S.B. I-75 =
297+00.00-℄ I-75

(2) 400 W.
HPS
Type III

Ex. 9' × 5'
Box Culvert

I-75

PT. Sta. 68+04.05

PR.C. Sta. 301+91.42

PR.C. Sta. 301+91.42

(2) 400 W. HPS
Type III

Sta. 306+85 I-75 Bk. =
Sta. 27+00 I-75 Ah.

(2) 400 W.
HPS
Type III

NB Collector

Ex. Sign
175W, 175W, 350W
Cir. E2

130' Taper @ 40:1 to ℄

Ex. 3" C.

200W. HPS
Type III
E2-12

200 W. HPS
Type III
E2-13

200 W. HPS
Type III
E2-14

200 W. HPS
Type III
End Circuit E2

E2-16

(620)

(621) Ex. P.B. 17
80+65

(622)

(623) 81+32, 18.5' Rt.
200 III, 20B, E2-11

(624)

(625)

(626)

(627)

(628)

(629) 87+57, 18.5' Rt.
200 III, 20B, E2-15

(630)

(631) Ex. P.B. 18
1+30

(632)

(633) 1+50, 17.5' Rt.
200 III, 18B, E2-17

(634)

(635)

T.S. Sta. 0-00.00 ℄ N.B. Coll. =
Sta. 87+68.07-℄ N.B. Coll. =
Sta. 302+86.20-℄ I-75

S.C. Sta. 2+00.00

2° Ramp M

Match Line
Sta. 2+50
See Sht. 34

NB. Collector
Sta. 91+69 Bk. =
Sta. 27+00 Ah, 12'Lt.

For Legend See Sht. 3

30
39

MEDIA RESOURCES CORP

LIGHTING PLAN STA. 295+55 TO STA. 308+65

F.H.W.A. REGION	STATE	PROJECT	
5	OHIO		

HAM-75-9.75

221/338

31/39

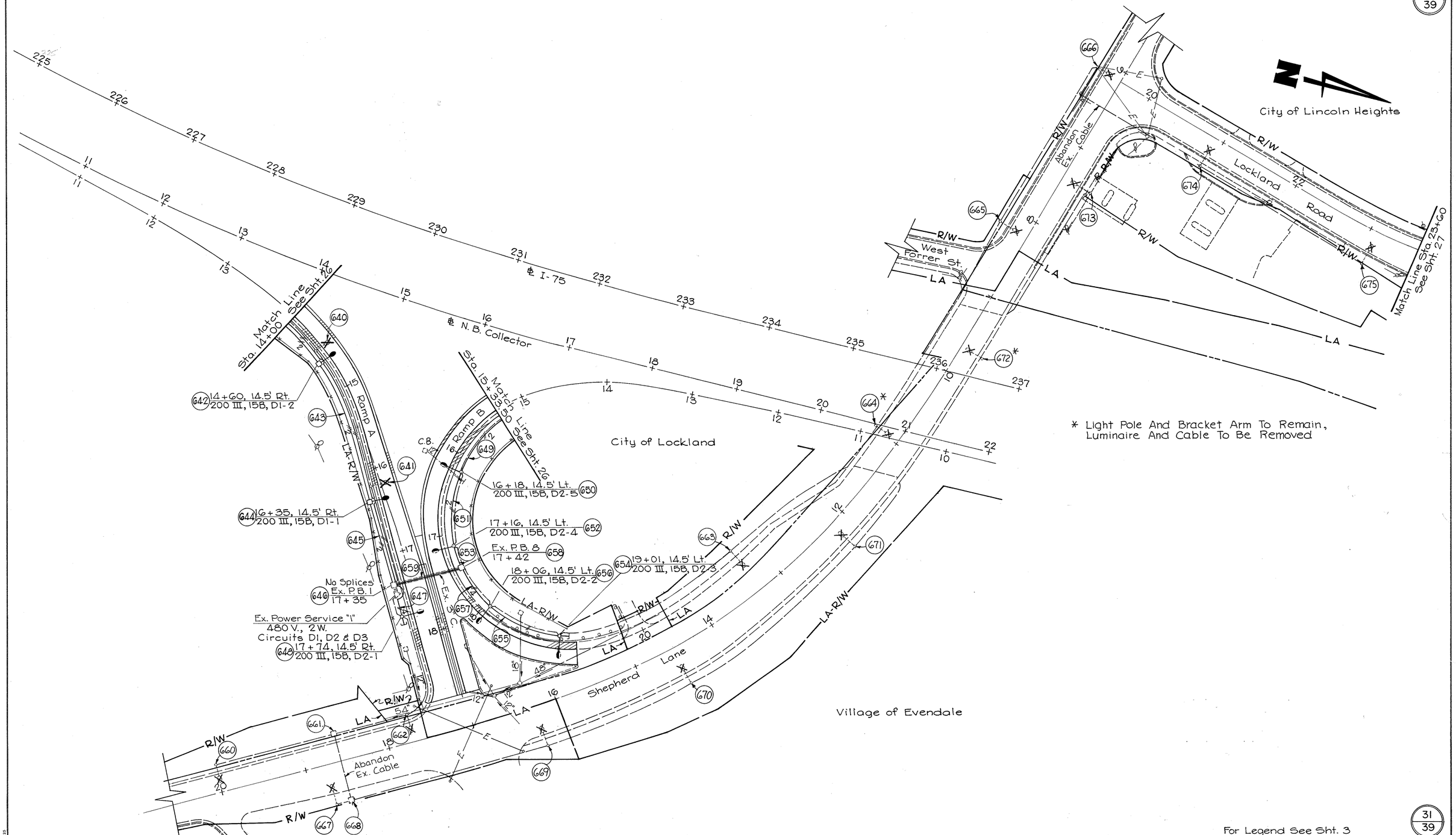

For Legend See Sht. 3

31/39

LIGHTING PLAN RAMPS A & B

MEDIA RESOURCES CORP.

F.H.W.A. REGION	STATE	PROJECT	
5	OHIO		

222/338

HAM-75-9.75

32/39

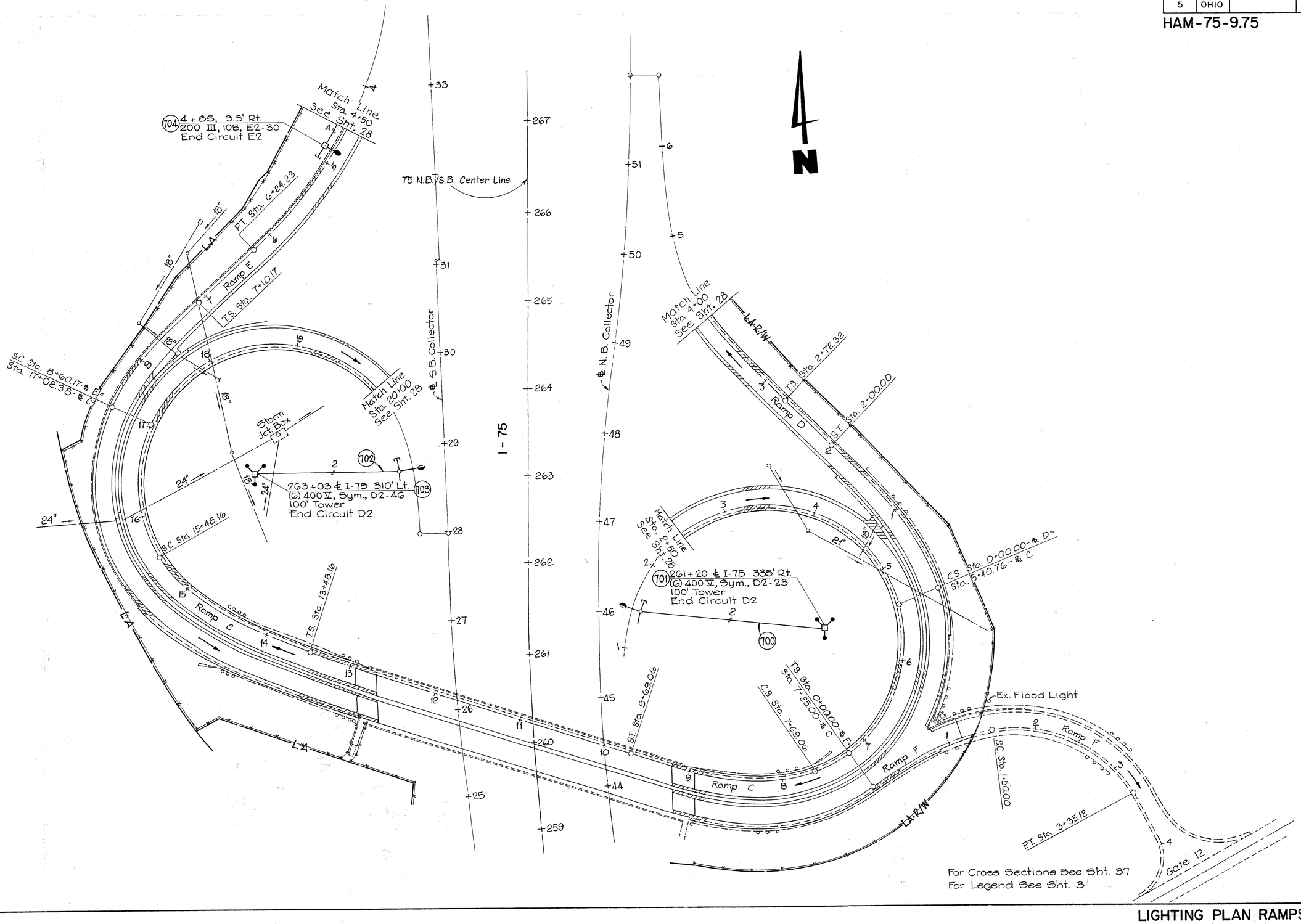

For Cross Sections See Sht. 37
For Legend See Sht. 3

32/39

MEDIA RESOURCES CORP.

LIGHTING PLAN RAMPS C,D,E & F

F.H.W.A. REGION	STATE	PROJECT	
5	OHIO		

HAM-75-9.75

223/338

33/39

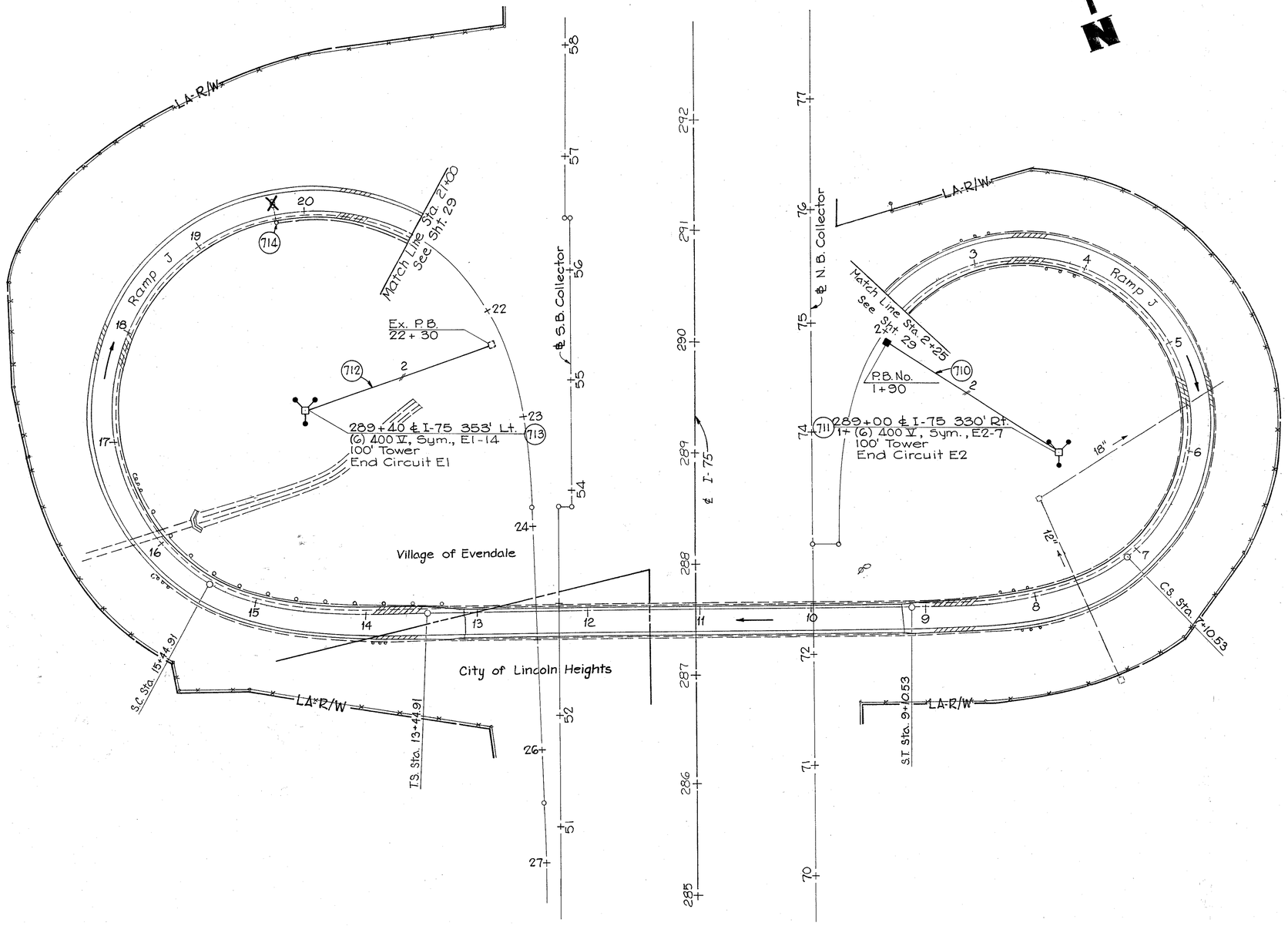

For Cross Sections See Shts. 38 and 39.
For Legend See Sht. 3

33/39

MEDIA RESOURCES CORP.

LIGHTING PLAN RAMP J

F.H.W.A. REGION	STATE	PROJECT	
5	OHIO		

224/338

HAM-75-9.75

34/39

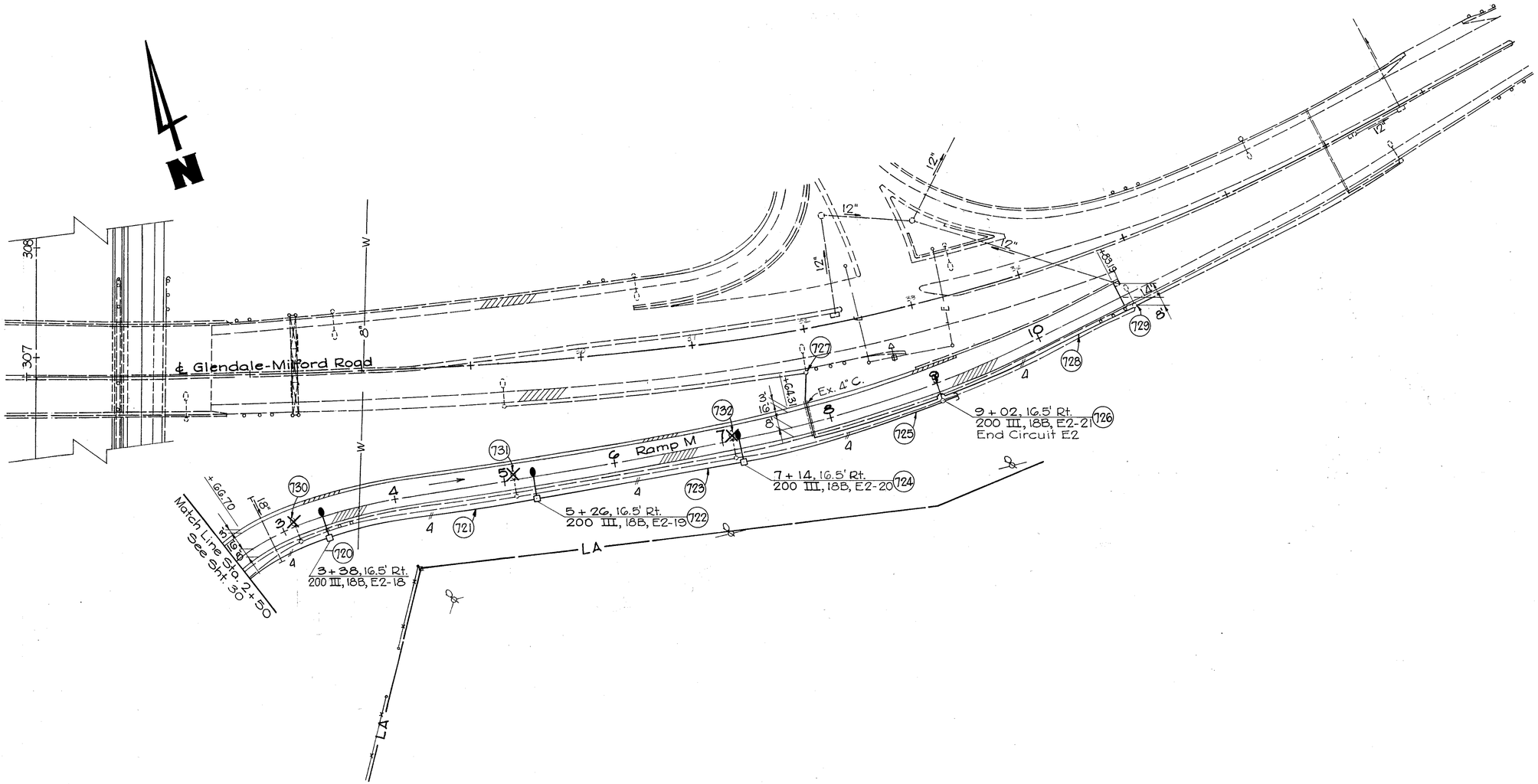
N
308+
307+
W
8"
℄ Glendale-Milford Road
℄ Ramp M
LA
LA
12"
12"
12"
12"
12"
8"
8"
8"
8"
8"
4
4
4

F.H.W.A. REGION	STATE	PROJECT	
5	OHIO		

HAM-75-9.75

225/338

35/39

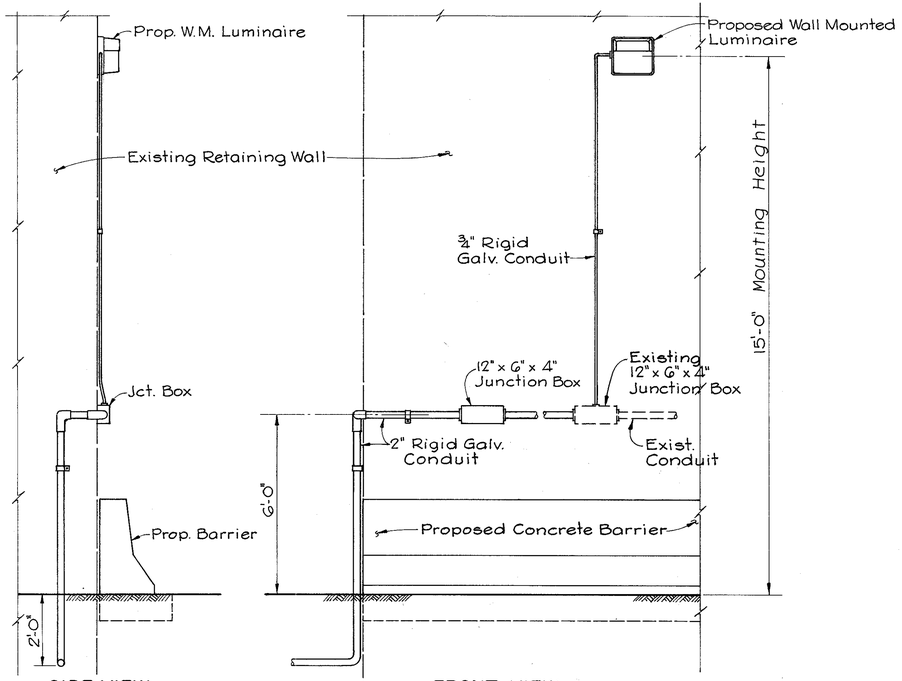

SIDE VIEW

FRONT VIEW

WALL MOUNTED LUMINAIRE

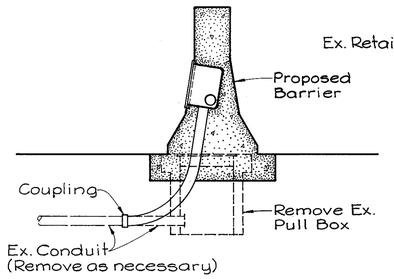

REPLACEMENT OF PULL BOX WITH MEDIAN PULL BOX

See Std. Dwg. HL-20.13 for further details

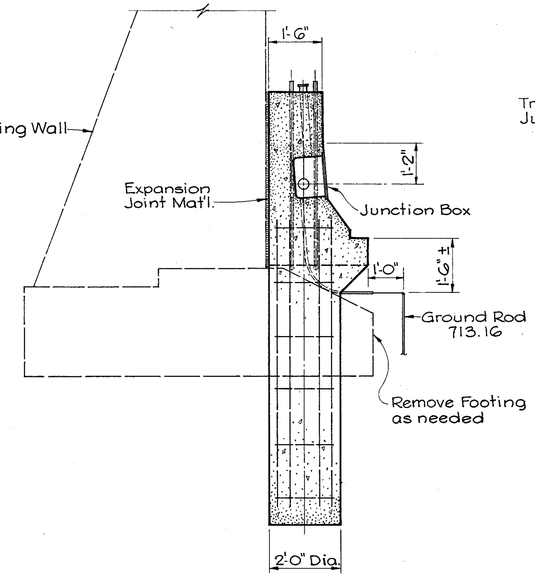

SECTION

TYPE D-50 BARRIER LIGHT POLE FOUNDATION

See Std. Dwg. HL-20.13 for further details.

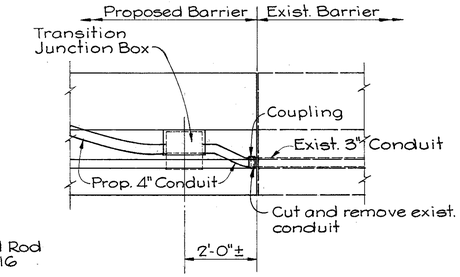

ELEVATION

CONDUIT TRANSITION EXISTING TO PROPOSED TYPE D BARRIER

See Std. Dwg. HL-30.33 for further details

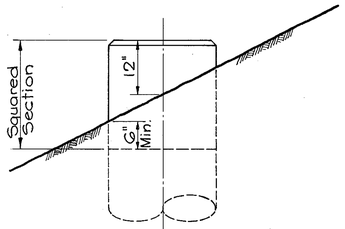

LIGHT POLE FOUNDATION 24"x10' DEEP, AS PER PLAN, ON STEEP SLOPES

(SLOPE 2:1 OR GREATER)

See Std. Dwg. HL-20.11 for further details

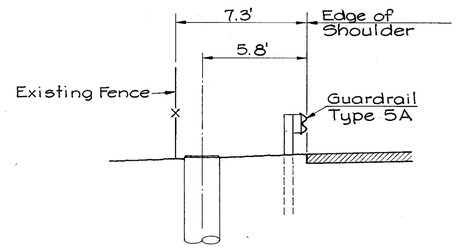

FOUNDATION LOCATION POLE D2-20

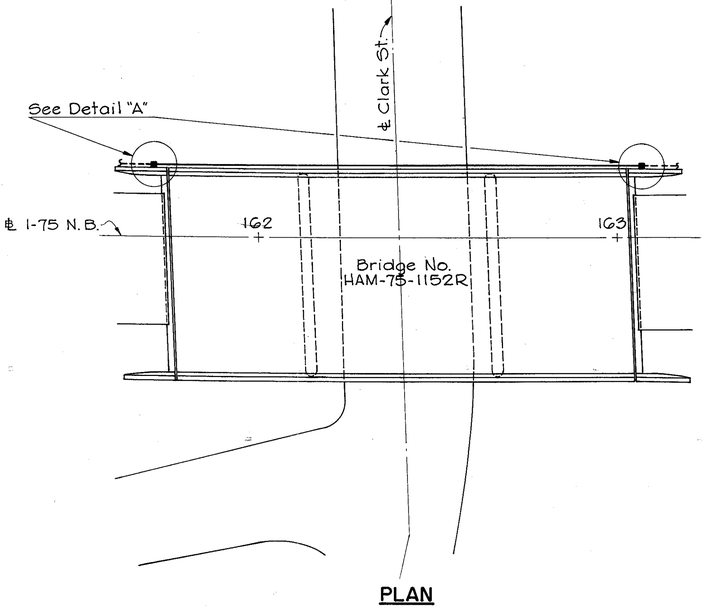

PLAN

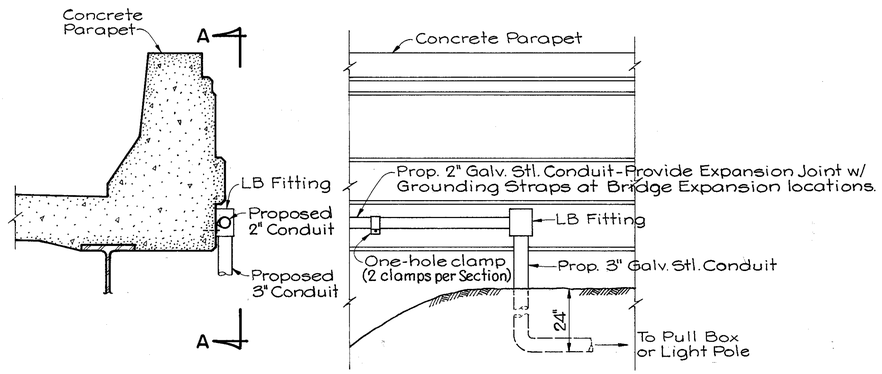

SECTION THRU PARAPET

ELEVATION A-A

DETAIL "A"

DETAILS OF CONDUIT AT BRIDGE NO. HAM-75-1152R

35/39

MEDIA RESOURCES CORP

F.H.W.A. REGION	STATE	PROJECT	
5	OHIO		

HAM-75-9.75

226/338

36/39

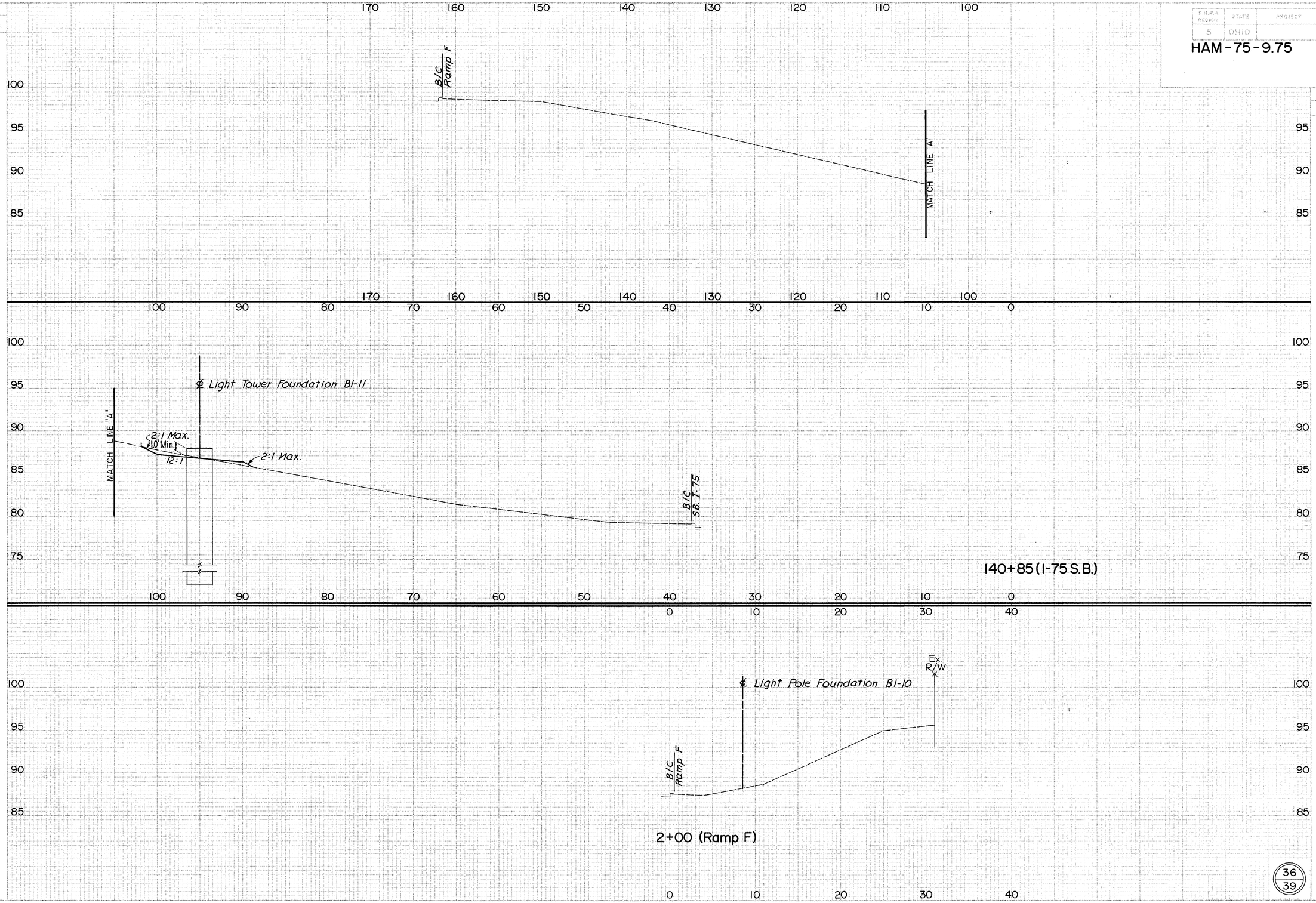

36/39

LIGHTING CROSS SECTIONS

SEEDING

END WIDTH	AV. TOP.

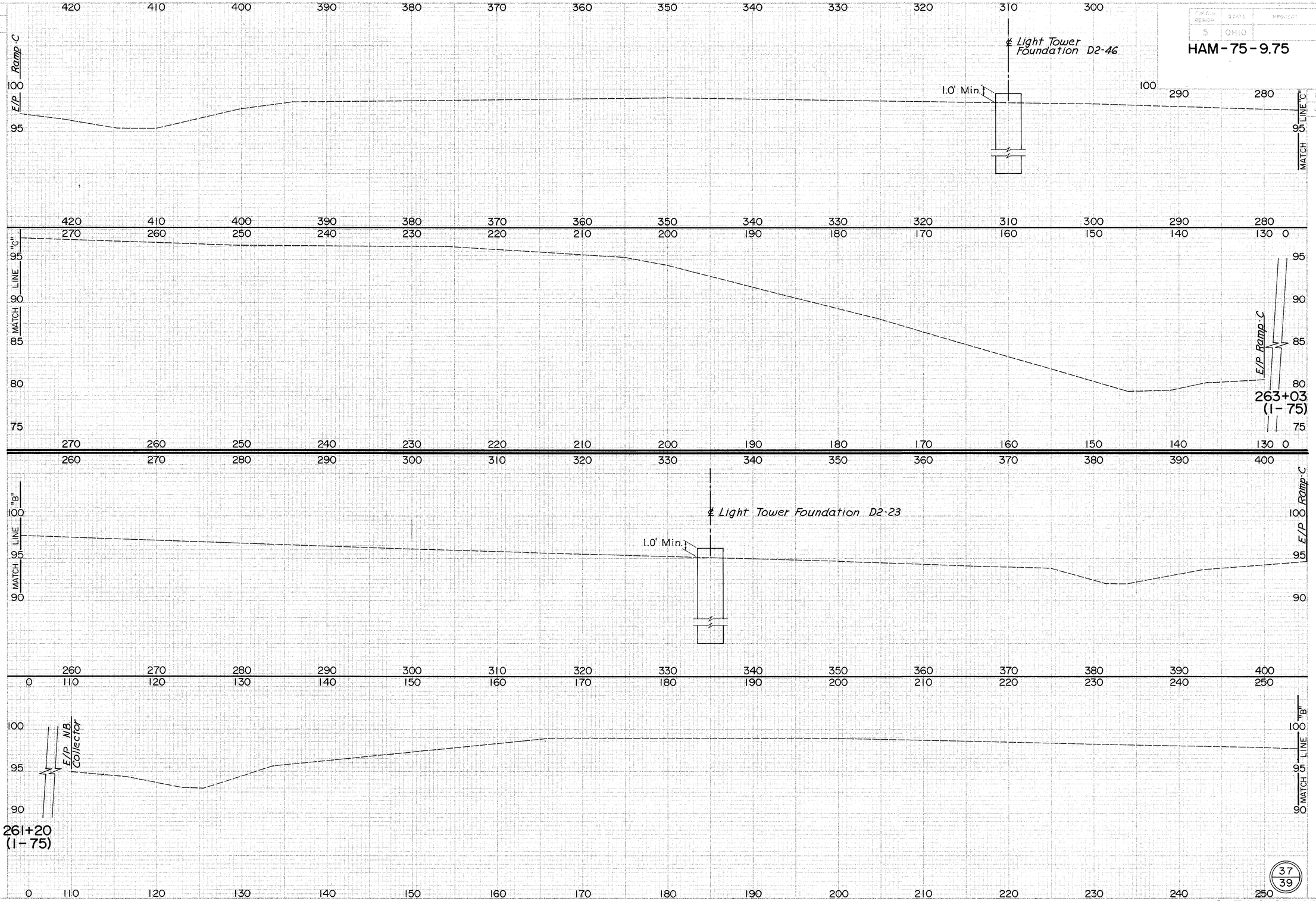

DIST. REGION	STATE	PROJECT	
5	OHIO		

HAM-75-9.75

227
338

37
39

END AREA		VOLUME	
CUT	FILL	CUT	FILL

37
39

LIGHTING CROSS SECTIONS

SEEDING	
ENG. WIDTH	NO. YDS.

F.A.P. REGION	STATE	PROJECT	
5	OHIO		

HAM-75-9.75

228
338

38
39

SEED AREA		VOLUME	
CUT	FILL	CUT	FILL

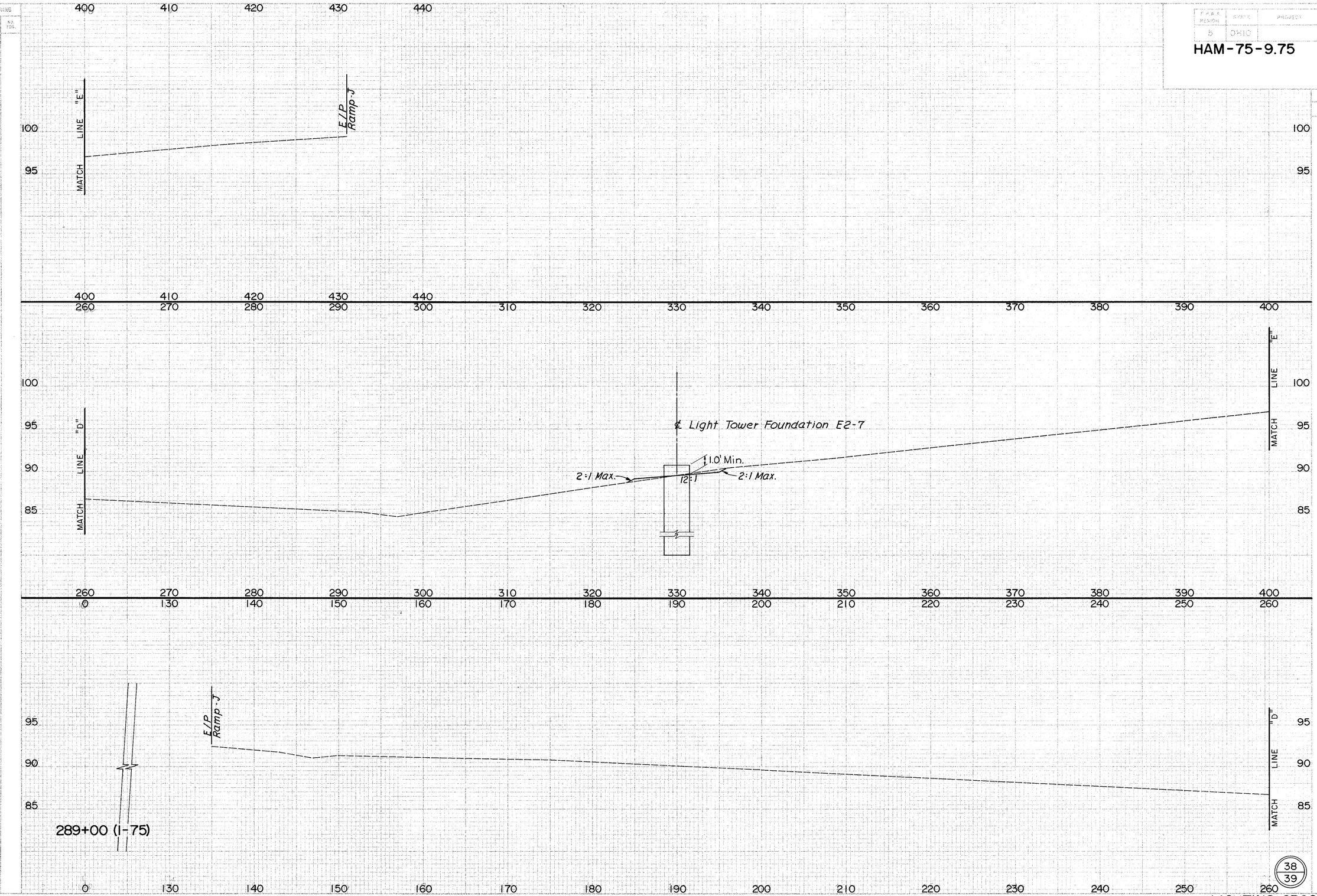

38
39

LIGHTING CROSS SECTIONS

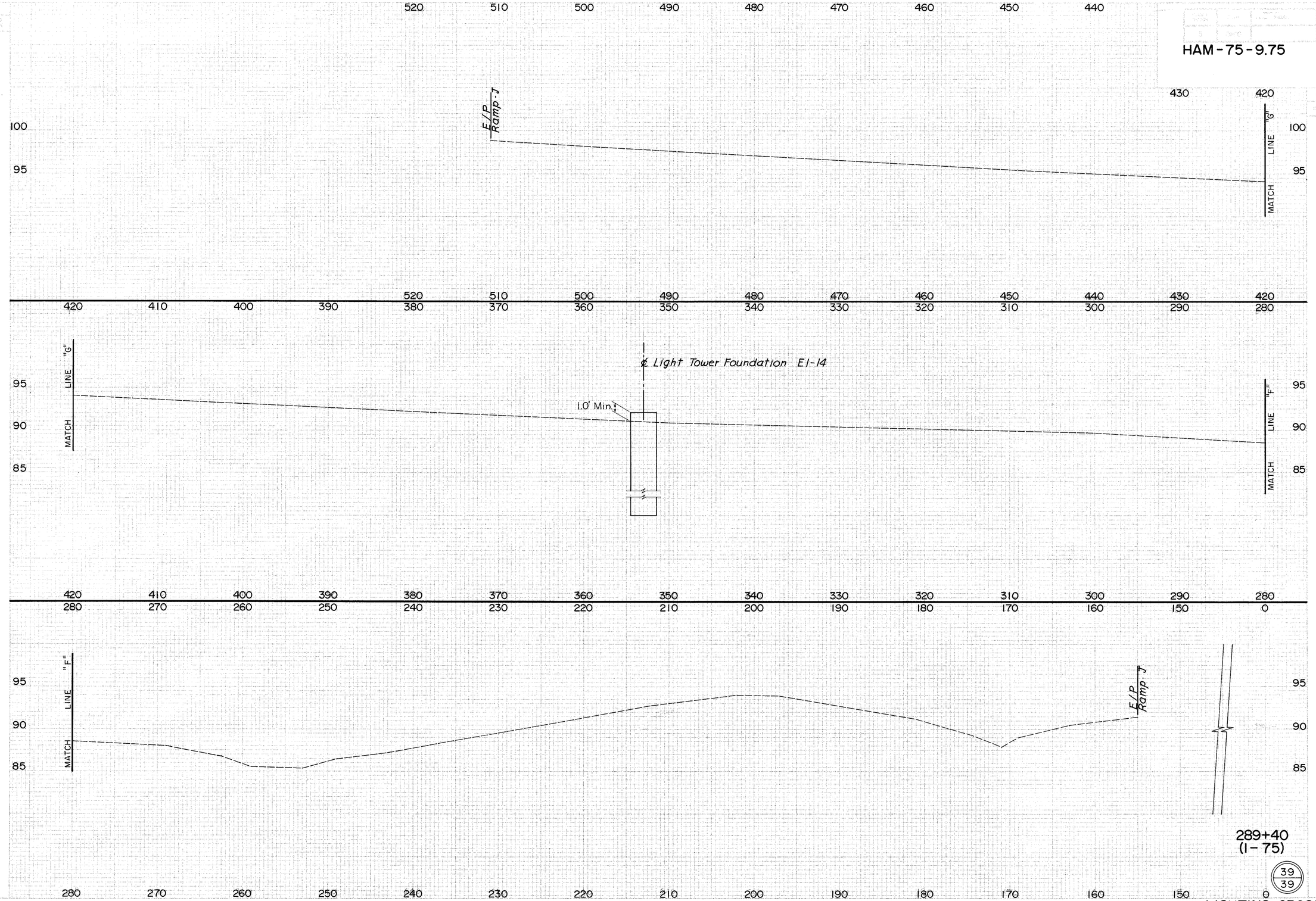

289+40
(I-75)

39
39

LIGHTING CROSS SECTIONS

F.H.W.A. REGION	STATE	PROJECT	CALC. DATE
5	OHIO		CHECK DATE

230
338

HAM-75-9.75

RESTRICTIONS NOTE: The Contractor shall be advised that both connections to the existing water main, Sta. 0+00 and Sta. 2+91.5 shall be restricted to a two(2) hour week night segment between the hours of 12a.m. and 6a.m. This shutdown shall be coordinate with the Village of Lockland Water Department and The Stearns and Foster Company.

Sta. 0+86.5
12"x90° Bend

1+00

Prop. 12" Water Main

2+00

Sta. 2+04.5
12"x90° Bend

Prop. Temporary Waterline Support Structure See Sht.___

WEST FORRER AVE.

EAST FORRER AVE.

I-75 (SOUTHBOUND)

Prop. 12" Water Main

Ex. Water Fountain

Ex. 4"

Ex. Water Valve

Ex. Fire Hydrant

Ex. 6"

Ex. W.V.

Ex. Stm. M.H.

Ex. 12"

Ex. Steps

Ex. 8"

Sterns & Foster Factory

* Remove Pipe and Install Temporary Plug with Temporary Concrete Thrust Restraint, As Required.

* NOTE: Contractor May Install Restrained Joint Type Plug At Existing Joint At No Additional Cost To The State. He Shall Assure That Plug Is Adequately Braced Against Movement Under Pressure.

*108 *106 *104

Ex. M.H.

Ex. Water Valve

Conc. Walk

Ex. Strain Pole

Ex. Gas Meter

Ex. Gas Meter

Ex. Water Valve

Ex. 4"

Ex. 12"

Ex. Stm. M.H.

Ex. San. M.H.

Ex. 2'x2' Drip Basin

Ex. Strain Pole

Ex. 6"

Ex. 2'x2' Drip Basin

Ex. Water Valve

Sta. 9+27, 37.5' Lt.-Sta. 0+00
Cut Into and Make Connection To Exist. Water Main with 12"x90° Bend. Contractor To Provide Temp. Concrete Blocking of Bend

Sta. 10+54.5, 37' Lt. - Sta. 2+91.5
Cut Into and Make Connection to Exist. Water Main with 12"x90 Bend. Contractor To Provide Temp. Concrete Blocking At Bend For Thrust Restrained

** Sta. 9+27, 13' Lt
Install Temporary 12" Plug In Water Main Contractor To Provide Temporary Concrete Blocking, As required, To Brace Water Main.

WYOMING AVENUE

7 8 9 10 12

℄ Survey & Construction

Ex. 6"

Conc. Walk

Ex. Gas Valve

Ex. Water Fountain

Ex. Water Valve

Ex. Steps

** Shut Down Of Main Shall Be Coordinated With Southwest Ohio Water Company Phone No. 513-489-4844

Asph. Walk

Ex. Storm M.H.

Ex. Strain Pole

Ex. 2'x2' Drip Basin

WILLIAMS STREET

Ex. San. M.H.

585
580
575

Sta. 9+27.5, 37.5' Lt.
W.W. Sta. 0+00
Conn. to Ex. W.W. with 12"x12" Tapping Sleeve & Valve & 12" Plug

Sta. 0+86.5
12"x90° Bend

Sta. 1+03.5
12"x45° Bend

Sta. 1+41.5
12"x45° Bend

Ex. Retaining Wall

Sta. 1+89.5
12"x45° Bend

Sta. 2+00.5
12"x45° Bend

Sta. 2+04.5
12"x90° Bend

Sta. 2+91.5
CONNECT TO EXIST. 12" VALVE

Ex. 8" Water Main

Ex. Retaining Wall

NOTE: Restrained Joints Required Sta. 0+00 To Sta. 3+08

Restrained Joints To be Mechanically Locked Type (No Retainer Glands or Locking Gaskets) Sta. 1+03.5 To Sta. 2+00.5. Contractor Shall Pull Restrained Joints To Stops For Exposed Crossing Prior To Attaching U-Bolts. Retainer Gland Type Restrained Joint Permitted For Remainder of Project.

Contractor Shall Test and Disinfect Temporary W.W. Prior To Placing In Service

0 1 2 3

DGN:627WTRL.DGN PLOTTED:4/16/93

TEMPORARY WATER LINE CROSSING

230 - 338 260 Orange

F.H.W.A. REGION	STATE	PROJECT	
5	OHIO		

231
338

HAM - 75 - 9.75

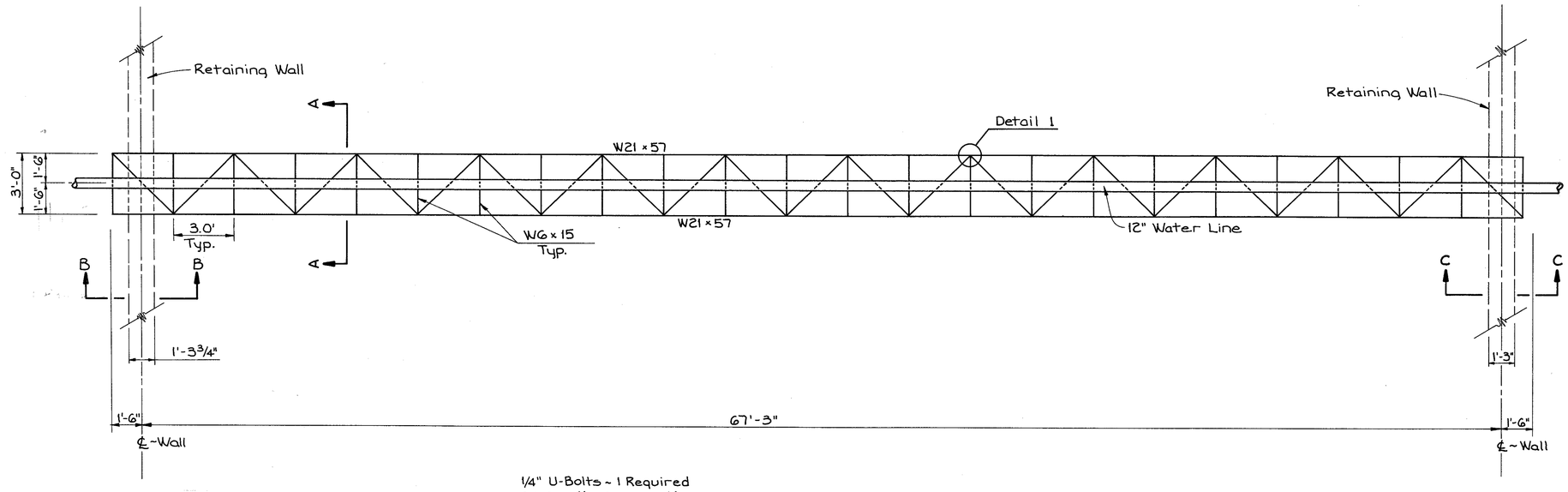

N

1/4" U-Bolts - 1 Required every other cross tie. U-Bolt shall touch W.M. but not be tight against it to provide for longitudinal movement

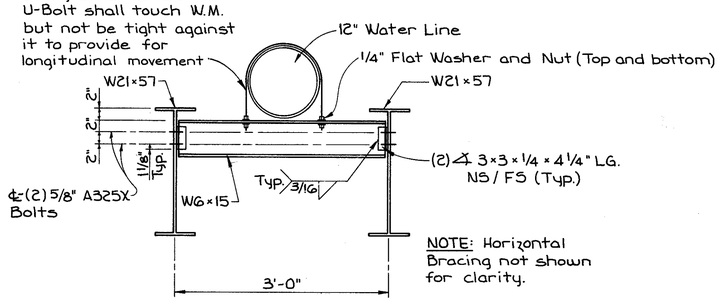

NOTE: Horizontal Bracing not shown for clarity.

SECTION A-A

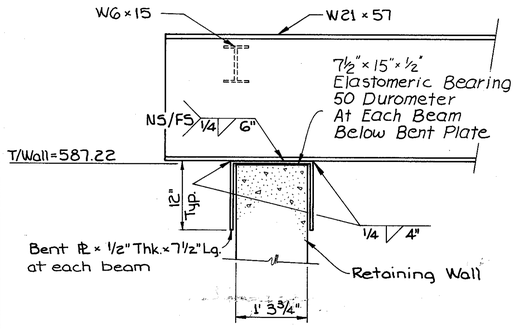

SECTION B-B

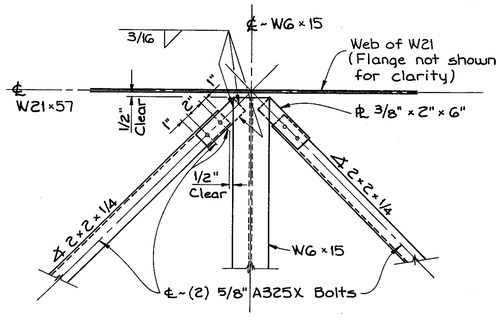

DETAIL 1

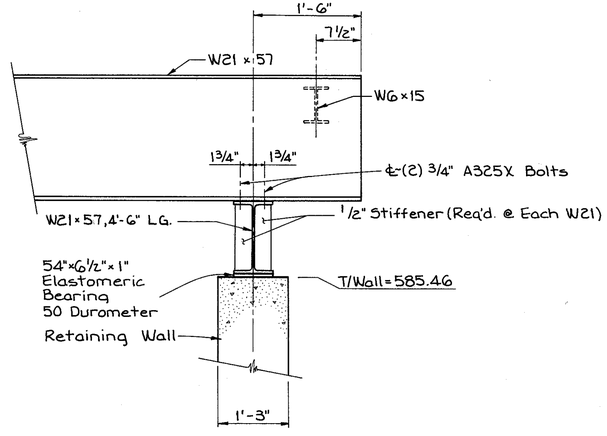

SECTION C-C

WATER MAIN STRUCTURE DETAILS

MEDIA RESOURCES CORP.

F.H.W.A. REGION	STATE	PROJECT	CALC. DATE
5	OHIO		CHECK DATE

232
338

HAM-75-9.75

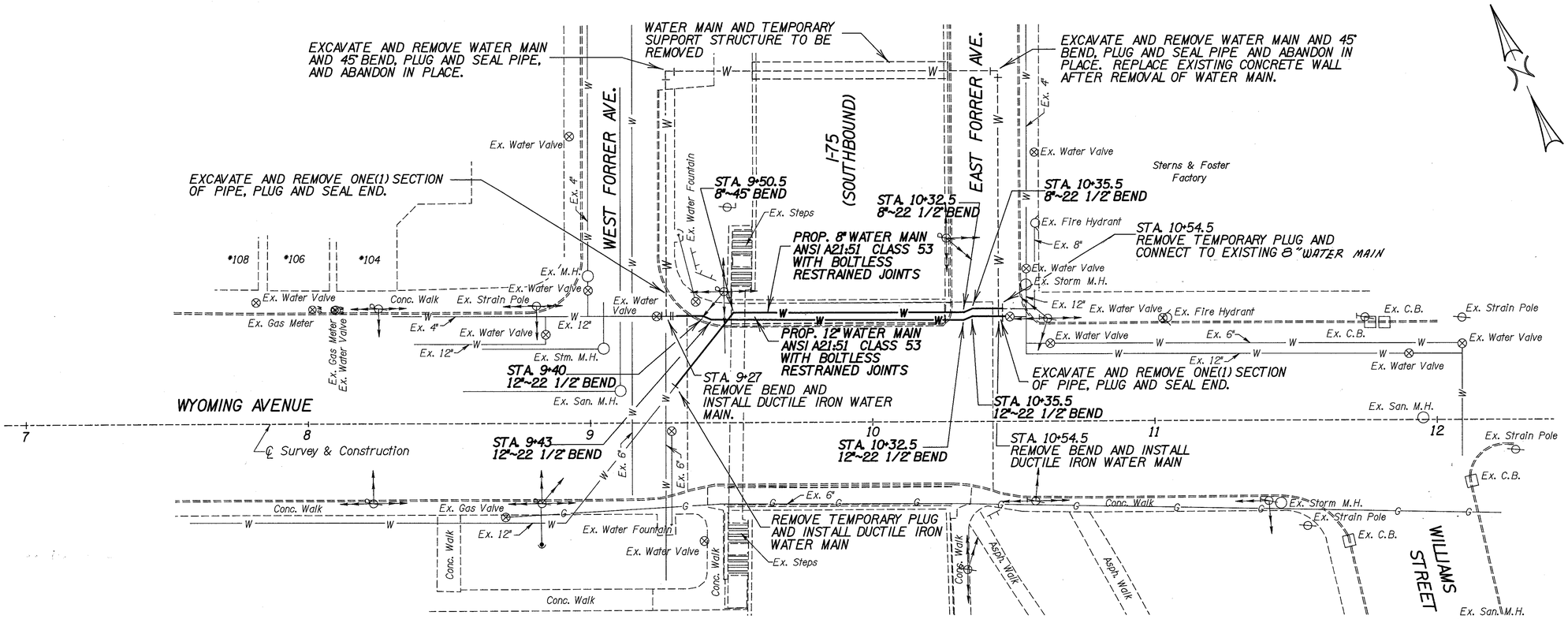

PROPOSED WATER LINE CROSSING

DGN:627CNTR2.DGN PLOTTED:4/08/93

F.H.W.A. REGION	STATE	PROJECT	
5	OHIO		

234
338

HAMILTON COUNTY
HAM-75-9.75

GENERAL NOTES

REFERENCE shall be made to the following:

Standard Drawings: AS-1-81, dated 11-27-81; BR-2-82, dated 11-1-82; DBR-2-73, dated 4-10-73; EXJ-4-87, dated 1-5-89; FSB-1-62, revised 1-15-63; ICD-1-82, revised 8-1-84; CSB-1-46, dated 9-4-46; SD-1-63, dated 11-12-63; VPF-1-90, revised 2-1-92; GR-2.1, dated 5-6-91; GR-2.2, dated 10-30-92; GR-3.1, dated 5-6-91; GR-3.2, dated 5-6-91; HL-30.31, dated 5-1-87; BR-1, dated 5-29-79; GR-3, dated 1-21-85

and to Supplemental Specifications: 852, dated 6-10-87

FOR GENERAL NOTES that apply specifically to Bridge Nos. HAM-75-0992 and HAM-75-1198L see Sheets 8 /105 and 75 /105 respectively.

DESIGN SPECIFICATIONS: The modifications to these structures shall conform to "Standard Specifications for Highway Bridges" Adopted by the American Association of State Highway and Transportation Officials, 1992 and the Ohio "Supplement" to these specifications.

DESIGN DATA:

Concrete Class S - Compressive strength 4500 psi (Superstructure)
Reinforcing Steel - ASTM A615, A616 or A617 - Grade 60 Minimum yield strength 60000 psi
Structural Steel - ASTM A36 -unit stress 20,000 p.s.i.

EXISTING STRUCTURE VERIFICATION: Details and dimensions shown on these plans pertaining to the existing structure have been obtained from plans of the existing structure and/or from field observations and measurements. Consequently, they are indicative of the existing structure and the proposed work but they shall be considered tentative and approximate. The Contractor is referred to CMS Sections 102.05, 105.02 and 513.02.

Contract bid prices shall be based upon a recognition of the uncertainties described above and upon a prebid examination of the existing structure by the Contractor. However, all project work shall be based upon actual details and dimensions which have been verified by the Contractor in the field.

EXISTING BRIDGE PLANS: Existing bridge plans may be inspected at the Bureau of Bridges and Structural Design in Columbus, Ohio or in the District 8 office in Lebanon, Ohio.

EXISTING REINFORCING STEEL: Where concrete is being removed and replaced and the existing reinforcing steel is to be incorporated into the new work the bars shall be trimmed if necessary to provide the required clearance. Also, any existing reinforcing bars which are made unusable by the Contractor's concrete removal operations shall be replaced with new steel at the Contractor's cost. Any existing reinforcing bars deemed by the Engineer to be unusable because of corrosion shall be replaced with new epoxy coated steel and shall be paid for at the unit price bid for Item 509 - Epoxy Coated Reinforcing Steel, Grade 60

ITEM 202 - Wearing Course Removed, as per Plan: This work shall include the cost for removing any waterproofing material between the concrete and the asphalt. Removal of the asphalt and waterproofing shall be a separate operation from deck scarification as required under Item Special - Mirco-Silica modified concrete overlay.

Item 202 - Portions of Structure Removed, As Per Plan:
This work shall include the cost of all materials, labor and equipment necessary to perform the following:

For Bridge Nos. HAM-75-0992 and HAM-75-1198L the portions of structure to be removed are defined in the General Notes, on sheet 8 /105 and sheet 75 /105, that apply specifically to each of the structures.

For Bridge Nos. HAM-75-1089L and 1187L the work shall include the removal and disposal of the existing railing.

For Bridge No. HAM-75-1160L the work shall include the removal and disposal of the existing strip seal, retainer bars and shim plates at Abutment 1 and Pier 2 and the existing deep beam rail including tubular backup and railing posts. The Contractor shall carefully remove the existing deep beam rail, tubular backup and railing posts and stack neatly along the right-of-way for subsequent pick-up by State forces.

For Bridge Nos. HAM-75-1102R, 1152R and 1192R the work shall include the removal and disposal of the existing concrete curbs, portions of the existing concrete parapets, portions of the existing abutment backwalls, the existing curb plates, the existing bulb angle gutters and the aluminum railing for both the superstructure and abutments as shown in the plans. The Contractor shall carefully remove the existing aluminum railing and stack neatly along the right-of-way for subsquent pick-up by State forces.

The Bridge Nos. HAM-75-1292, 1338 and 1390 the work shall include the removal and disposal of portions of the existing backwall, the existing curb plates, sidewalk plates, the existing bulb angle gutters and portions of the existing curbs, sidewalk and median as shown in the plans.

ITEM SPECIAL - Sealing of Concrete Surfaces : Specified concrete surfaces shall be sealed using either a silane or an epoxy sealer. See the proposal for surface preparation requirements, application rates, material requirements and application procedures. The surfaces to be sealed are shown in the plans.

ITEM 513 - Structural steel misc. (Repair steel pier cap):
For Bridge No. HAM-75-1102R the work shall include replacing the existing asphalt-impregnated gaskets, removing existing stitch welds, repairing backing bars and drilling holes in girder web as shown in the plans. All debris shall be removed from the top of the pier caps, bottom flanges of the girders and from inside the steel pier cap at Pier 4. The scratches from collision damage on the bottom flange of the girders, in the vicinity of the pier caps, shall be ground flush and repainted. Also, all surfaces damaged during the repair of the pier caps shall be repainted. All painting shall be as per system EEU.

For Bridge No. HAM-75-1192R the work shall include replacing the existing asphalt-impregnated gaskets, repairing backing bars, repairing and/or installing new welded connections, drilling and tapping 1" dia. holes, sealing existing retrofit holes in the cap web and any other items of work as shown in the plans. Any nicks or gouges in the cap bottom flange, resulting from minor collision damage shall be ground flush and repainted. Also all surfaces damaged during the repair of the pier caps, areas where the paint has failed inside the pier caps and the pier cap bearing shall be painted as per system OZEU. The entire superstructure for this bridge is to be painted and all painting costs associated with the repair of the pier caps shall be included for payment with the price bid for painting the superstructure.

All of the work described above and shown in the plans, except for painting of Bridge No. HAM-75-1192R, shall be included in the lump sum price bid for Item 513 - Structural steel, misc. (Repair steel pier cap).

ITEM 513 - Structural steel, misc. (Retrofit pin and link assembly):
This item shall include all work necessary to retrofit the existing pin and link assemblies as shown in the plans. The work shall include modifying the existing cross frames, installing jacking and connector girder support brackets, installing connector girder bearings, jacking the superstructure, removing the existing pins and hinge plates and field painting the structural steel as described below.

Jacking shall be done as described in the construction phases notes. Detail plans for the jacking procedures, including methods of preventing horizontal movement, shall be prepared by a registered professional engineer and shall bear his signature and seal. The Contractor shall submit 3 copies of the plans and 2 copies of the design calculations to the Director 15 days prior to commencing jacking operations and shall receive approval before starting jacking operations.

Attachments made by welding to any structural member shall be approved by the Director before any such attachments are made. Details of the attachments shall be submitted for approval as part of the jacking procedure plans.

All Steel shall be painted in accordance with system IZEU. Any existing steel damaged by construction operations shall also be painted in accordance with system IZEU except the primer shall be applied in the field.

For Bridge No. HAM-75-1102R, all existing faying surfaces for the connection of the pin and link assembly retrofit, including the jacking bracket and bearing bracket, shall have a prime coat only. It shall be applied per system IZEU except the prime coat shall be applied in the field and the intermediate and finish coat shall not be applied.

For Bridge No. HAM-75-1192R the entire superstructure is being painted per system OZEU. However, the faying surfaces for connection of the pin and link assembly, including the jacking bracket and bearing bracket, shall be masked off and have a prime coat only. It shall be applied per system IZEU except the prime coat shall be applied in the field and the intermediate and finish coat shall not be applied.

All of the work described above and shown in the plans, except for the connector girder bearings, shall be included in the price bid for Item 513 - Each - Structural steel, misc. (Retrofit pin and link assembly).

The connector girder bearings shall be paid for under Item 516 - Each - Bearing, misc. (Connector Girder Bearing)

ITEM SPECIAL - Heat Straightening of Damaged Structural Steel: The north fascia beam for Bridge No. HAM-75-1089L and south fascia beam for Bridge No. HAM-75-1292, as identified in the plans, shall be heat straightened in accordance with Proposal Note . The work shall include making any necessary repairs to the cross frames for both bridges and the bent stiffener plates for Bridge No. HAM-75-1292. All of the above work shall be included in the lump sum price bid for ITEM Special - Heat straightening of DAMAGED STRUCTURAL STEEL.

ITEM 513 - Trimming of Beam Ends, As Per Plan: The ends of beams B1 and B2 shall be trimmed at Abutment 1, for Bridge No. HAM-75-1102R, in order to provide a minimum clear distance of 2 inches from the face of abutment backwall to the end of the beam. Prior to trimming the beam ends, the bottom gusset plates, for the end cross frames between beams B1 & B2 and beams B2 & B3, shall be disconnected and moved approximately 2 inches toward the existing bearing stiffener and rewelded to the beam. The cost for modifying the end cross frames, as described above, shall be included in the lump sum price bid for Item 513 - Trimming of beam ends, as per plan.

ITEM 516 - REFURBISH BEARING DEVICES, AS PER PLAN
This item shall include all work necessary to properly align bridge bearings as well as their cleaning and painting. Included shall be:

1. The required jacking and temporary support
2. Disassembly of the bearings
3. Hand cleaning (grinding if necessary)
4. Painting in accordance with system EEU.
5. Replacement of any damaged sheet lead (711.19). Preformed bearing pads 1/8" thick, meeting the requirements of 711.21 may be substituted for the sheet lead.
6. Installation of any necessary 1/8" thick steel shims of the same size as the bearings to provide a snug fit.
7. Realignment of the upper bearing plate by removing existing welds and rewelding so that the bearing plates are aligned at 60°F.
8. Reassembly of the bearings.
9. Removal of the jacks.

At the option of the contractor, and at no additional cost to the State, new bearings of the same type as the existing may be installed in place of the refurbished bearings. All work shall be to the satisfaction of the Project Engineer. The contractor shall submit his method of jacking the bearings for prior approval. Payment for all the above described labor and materials will be made at the contract price bid for Item 516 - Each - Refurbished Bearing Devices, As Per Plan

LOCKWOOD, JONES & BEALS
CONSULTING ENGINEERS
DAYTON, OHIO

1 /105

GENERAL NOTES

HAM-75-9.75 BRIDGES

DESIGNED	CHECKED	DRAWN	CHECKED	REVIEWED DATE	REVISED
HDJ	DFS	CRB	DFS	MPH 12/92	

f:\6272\6272gn1.dgn Feb. 22, 1993 10:11:08

F.H.W.A. REGION	STATE	PROJECT	
5	OHIO		

235
338

HAMILTON COUNTY
HAM-75-9.75

ITEM 516 - Structural Expansion Joint Including Elastomeric Strip Seal, As Per Plan: This work shall include the cost of all materials, labor and equipment necessary to modify and seal the bridge joints for End Dam Modification, Type A, B, C or D and Interior Expansion Joint Modification, Type A or B as shown in the plans.

Removal of portions of the existing backwalls, parapet, curbs, sidewalk and median including the curb plates, bulb angle gutters and existing strip seal retainer bars and shim plates where applicable is included in the lump sum bid price for Item 202 - Portions of structure removed, as per plan. Reinforcing steel is included for payment with Item 509-Epoxy coated reinforcing steel, grade 60. New concrete for railing is included for payment with Item 517 - Railing faced, as per plan.

End Dam Modification, Type A, shall include new backwall concrete, new steel plates, trimming of existing angles, removal of edge bars and vertical extension plates where applicable, relocating existing abutment armor, the elastomeric strip seal and retainers and any other work as specified in the plans.

End Dam Modification, Type B, shall include the new steel plates, the elastomeric strip seal and retainers and any other work as specified in the plans.

End Dam Modification, Type C and D, shall include new backwall, curb, sidewalk and median concrete, new steel plates, removal of edge bars and vertical extension plates where applicable, relocating relocating existing abutment armor, the elastomeric strip seal and retainers and any other work as specified in the plans.

Interior Expansion Joint Modification, Type A and B, shall include new steel plates, the elastomeric strip seal and retainers and any other work as specified in the plans.

At the option of the Contractor and at no additional cost to the State, new abutment steel end dam components may be used in lieu of relocating existing.

MATERIALS: Structural steel for the strip seal joint shall conform to ASTM A588 or A36 painted as specified. Elastomeric strip seals shall be neoprene meeting the requirements given below. The elastomeric gland and the steel retainers shall be as manufactured by the D.S. Brown Company of North Baltimore, Ohio; the Watson Bowman and Acme Corporation of Getzville, New York, or an approved alternate. Lubricant-Adhesive used to install the preformed strip seals shall be a polyurethane and hydrocarbon solvent mixture as specified by the seal manufacturer. It shall have suitable consistency at the temperature at which the seals are installed and shall be compatable with the seals and the steel retainers.

SIZE: Strip seals shall have a minumum movement rating of 3 inches for all bridges except at abutment 2 for Bridge No. HAM-75-1192R which shall have a minimum movement rating of 4 inches.

TYPE: The steel extrusions or retainers shall be Type SS-E2 or Type E. The elastomeric gland shall be Type E2-300 or S-300E for 3 inch minimum movement rating and Type E2-400 or S-400E for 4 inch minimum movement rating as manufactured by D.S. Brown and Watson Bowman-Acme Corporation respectively or an approved alternate. The elastomeric gland and steel extrusions or retainers shall be furnished by the same manufacturer.

The preformed strip seal gland shall be extruded polychloroprene material meeting the requirements of ASTM D2628. Due to the configuration of the strip seal, the recovery test is not applicable. Physical properties shall meet the requirements specified in table "E" on Standarad Drawing EXJ-4-87, sheet 5 / 5

Each lot of strip seal glands shall be tested by the manufacturer or and accredited laboratory to ensure compliance with these provisions. Two certified copies of the qualification test data indicating that the tested materials comply with these provisions shall be submitted to the testing laboratory.

Each strip seal gland design, shape, width, depth and thickness shall be approved by the director. Material acceptance will be based upon laboratory evaluation of certified test data and the TE-30 field inspection report.

SPLICE OR JOINT IN SEAL GLAND: Seal glands for bridge deck joints shall be furnished in one continuous piece unless a shop fabricated splice, field splice or field butt joint is indicated on the plans or approved by the engineer.

Completed splices shall have no offsets on exterior surfaces, and after installation, there shall be no evidence of bond failure at the splices.

PREPARATIONS FOR INSTALLATION: To avoid the subsequent contamination of prepared surfaces, all surfaces of elastomeric strip seals shall be cleaned with Methyl Ethyl Ketone (MEK) Toluene (T) or other approved solvent using clean disposable cloths. The bonding surfaces of the steel extrusion or retainer (The interior of the anchor grooves) shall be prepared to grade SA 3, ASTM D2200. Preparation shall be accomplished not more than 24 hours prior to adhesive bonding.

INSTALLATION: The strip seal shall be inserted in one piece across the bridge deck when the entire joint has been completed. Immediately prior to application of lubricant - adhesive, bonding surfaces shall be clean, dry and warmer than 45 degrees F, and they shall be maintained at or above this temperature until the adhesive has cured. Lubricant - adhesive shall be applied liberally to both steel and elastomeric bonding surfaces using a stiff brush if necessary to achieve a complete and relatively uniform coating. Then the bulbed edges of the elastomeric seal shall be inserted into the anchor grooves. After installation, excess lubricant - adhesive shall be removed from the exposed seal surfaces.

Seal glands shall be installed with equipment designed or specifically adapted for the installation of elastomeric joint seal glands. This equipment shall not elongate the seal gland or cause structural damage to the completed installation.

PAINTING: The exposed portion of the existing expansion joint shall be painted in accordance with system EEU for all applicable bridges except for Bridge No. HAM-75-1192R which shall be painted in accordance with system OZEU. All new steel shall be painted in in accordance with IZEU. A closed cell backer rod or similar material shall be inserted into the retainer grooves to mask them off during the painting. Steel portions of the joints that are to be encased in concrete or surfaces that are to be in contact with concrete may remain unpainted. Include with concrete end dam modification for payment.

JOINT IN STEEL RETAINERS: The steel retainers shall be furnished in maximum lengths possible to allow for traffic maintenance and shall have watertight, partial penetration butt welds around the outer periphery of the abutting surfaces. Welds which will be in contact with the seal gland and/or joint armor shall be ground smooth.

JOINT IN END DAM ARMOR: Transverse joints in armor shall have complete penetration buttwelds. Welds which will be in contact with steel retainers shall be ground flush.

MEASUREMENT for pay purposes shall be based on the linear feet of sealed joint system, measured horizontally along the joint centerline and between the outer limits of the joint as defined in the plans. Payment will be made per linear foot for Item 516 - Structural expansion joint including elastomeric strip seal, as per plan and shall include all material, labor and equipment and incidentals necessary to complete the work as shown in the plans to the satisfaction of the Engineer.

ITEM 517 - Railing, (concrete parapet with double pipe rail), as per plan: This item shall include all labor, equipment, materials and incidentals necessary to install the new bridge sidewalk railing on Bridge Nos. HAM-75-1089L and HAM-75-1187L as shown in the plans. The dowels shall be installed per SS852 using an epoxy mortar per 705.20. The cost for all reinforcing steel, the drilling of anchor dowel holes and installing the dowels shall be included in the price bid for Item 517 - Railing, (concrete parapet with double pipe rail), as per plan.

Payment for the work described above and shown in the plans will be made at the contract price bid for Item 517 - Lin.Ft.- Railing (concrete parapet with double pipe rail), as per plan.

ITEM 517 - Railing (Deflector parapet type), as per plan: This item shall include all labor, equipment, materials and incidentals necessary to install the new bridge railing on Bridge No. HAM-75-1160L, as shown in the plans. The dowels shall be installed per SS852 using an epoxy mortar per 705.20. The cost for the drilling of anchor dowel holes and installing the dowels shall be included in the price bid for Item 517 - Railing (Deflector parapet type), as per plan.

Payment for the work described above and shown in the plans will be made at the contract price bid for Item 517 - Lin.Ft.- Railing (deflector parapet type), as per plan except reinforcing steel shall be paid for under Item 509.

ITEM 517 - Railing Faced, as per Plan: The Contractor shall carefully remove the existing aluminum railing and stack neatly along the right-of-way for subsequent pick-up by State forces. The concrete safety curb and bulb angle gutter shall be removed. The dowels shall be installed per SS852 using an epoxy mortar per 705.20.

All loose and unsound concrete in the area of the parapet to be faced, shall be removed. All remaining sound concrete shall then be mechanically scarified 1/4" deep. The minimum thickness for the proposed facing shall be 4". All resteel shall be epoxy coated as per 509. Epoxy coated resteel which is damaged due to cutting, bending, etc. shall be repaired as per 509. Concrete cover over all resteel shall be 2". The concrete surfaces to be faced shall be thoroughly drenched with clean water and allowed to dry to a damp condition just before placing the concrete.

The existing deflection joints shall be extended completely through the proposed facing and shall be made by forming or sawcutting the hardened concrete within 3 days after pouring. The 1/4" joints shall be sealed 3/4" deep (min.) with an impregnated precompressed expanding foam sealant tape known as Will-Seal, manufactured by Illbruck/USA, Inc., Minneapolis, Minnesota, or a low density, closed cell crosslinked ehtylene vinyl acetate foam known as Evasote 50, manufactured by E-poxy Industries, Inc., Ravena, New York.

Materials shall be: Concrete as per 511, Class S
Reinforcing Steel as per 509

All of the above work and relevant plan notes shall be included in the price bid for Item 517 - LF- Railing Faced, as per Plan, except removal of existing curbs, portions of existing parapets, portions of abutment backwalls, the existing curb plates, the existing bulb angle gutters and the aluminum railing shall be included in the price bid for Item 202-Portions of Structures Removed, as per Plan, and reinforcing steel shall be paid for under Item 509.

ITEM-SPECIAL - Structure, Misc: Lateral Bracing Gusset Plate Retrofit Upgrade (Intermediate): Refer to notes and details on shts. 66A-660 / 105 for this item of Work.

LOCKWOOD, JONES & BEALS
CONSULTING ENGINEERS
DAYTON, OHIO

2 / 105

GENERAL NOTES

HAM-75-9.75 BRIDGES

DESIGNED	CHECKED	DRAWN	CHECKED	REVIEWED DATE	REVISED
HDJ	DFS	CRB	DFS	MPH 12/92	

f:\6272\6272gn2.dgn Feb. 22, 1993 15:32:51

F.H.W.A. REGION	STATE	PROJECT	
5	OHIO		

236
338

HAMILTON COUNTY
HAM-75-9.75

ITEM - 516 - BEARING DEVICE, MISC. (CONNECTOR GIRDER BEARINGS)

I DESCRIPTION

A. This item shall consist of furnishing all materials, services, labor, tools, equipment and incidentals necessary to fabricate, test and install the bearings in accordance with the plans and this specification.

B. The bearings shall consist of the following parts:
1. Top load plate - top side shop welded to connector girder, as per plan.
2. Sole plate - top side shop welded to top load plate, as per plan. Bottom side faced with stainless steel.
3. PTFE sheet
4. Steel substrate - recessed at top to receive PTFE.
5. Laminated elastomeric bearing pad - vulcanized to bottom of steel substrate.
6. Base plate - with machined recess to receive the laminated elastomeric bearing pad.

II MATERIAL REQUIREMENTS

A. Top load plate, sole plate, steel substrate and base plate shall conform to ASTM A36.

B. The stainless steel sheet surface shall conform to ASTM A167 or A240 type 304. The minimum thickness shall be 0.06". Stainless steel shall have a 20 micro-inch rms finish or better. The surface shall be mechanically polished. The material and finish shall be such that the requirement of IV-B.2 are met.

C. The PTEF surface shall consist of finished unfilled PTFE sheet made from virgin PTFE resin. Material and finish shall be such that the requirements of IV-B.2 are met. Finished unfilled PTFE sheet shall be made from 100 percent virgin PTFE resin and shall conform to the following requirements:
1. Tensile strength D1457 - 2800psi (Minimum)
2. Elongation ASTM D1457 - 200% (Minimum)
3. Specific Gravity - ASTM D1457 - 2.13 (Minimum)
4. Melting Point - ASTM - D1457 - 327 degrees C +/- 10
5. Minimum thickness shall be 1/4inch. Sheet shall be recessed 1/2 it's thickness into steel substrate.
6. PTFE sheet shall be commercially etched on it's bonding side.

D. The laminated elastomeric bearings shall have a durometer hardness grade 50 and shall conform to 711.23 of the CMS.

III FABRICATION

A. Attachment of sheet PTFE to substrate
1. PTFE shall be recessed into and bonded to a steel substrate
a. PTFE shall be recessed by 1/2 its thickness
b. The bonding surface of the steel shall be cleaned of rust, scale, oil and grease by balst cleaning and then wiped clean with a solvent. Blast cleaning shall be performed within a maximum of 4 hours prior to bonding.
c. The adhesive material and the bonding procedures to be used shall be submitted to the Director for approval prior to performance of the bonding operation. The bonding operation shall be performed under controlled conditions and in accordance with these approved procedures.
d. After completion of the bonding operation, the PTFE shall be smooth and free from bubbles.

B. Attachment of sheet stainless steel
1. Stainless steel shall be attached to it's steel subdstrate with an approved epoxy to ensure complete contact, and then seal welded. Seal welds shall be continuous for the entire periphery of the stainless overlay. The entire stainless steel surface shall conform to the requirements of II-B after welding.

C. Attachment of laminated elastomeric bearing pad to steel substrate and base plate
1. Laminated elastomeric bearing pad shall be vulcanized bonded to steel substrate.
2. Laminated elastomeric bearing pad shall be recessed into and bonded to base plate.
a. The bonding surface of the steel base plate shall be cleaned of rust, scale, oil and grease by blast cleaning and then wiped clean with a cleaning solvent. Blast cleaning shall be performed within a maximum of 4 hours prior to bonding.
b. The adhesive material and the bonding procedures to be used shall be submitted to the Director for approval prior to performance of the bonding operation. The bonding operation shall then be performed under controlled conditions and in accordance with these approved procedures.

D. Corrosion Protection
1. All steel surfaces exposed to the atmosphere, except stainless steel surfaces, shall be shop prime coated in accordance with system IZEU.

E. Welding
1. Welding as a means of attachment shall be done in a controlled manner and shall conform to CMS Item 513. Welding to a steel plate which has a bonded PTFE surface may be permitted providing welding procedures are established which restrict the maximum temperature reached by the bond area to less than 300 degrees F as determined by temperature indicating pencils or other suitable means.

F. Tolerances
1. General Flatness Criteria
a. Flatness tolerance shall be defined as:
1. Class A tolerance = 0.0005 x nominal dimension
2. Class B tolerance = 0.001 x nominal dimension
b. Flatness shall be determined by placing a straightedge, longer than the nominal dimension to be measured, in contact with the surface to be measured or as parallel to it as possible. Select a feeler gage having a tolerance of + or - 0.001" and attempt to insert it under the straightedge. (The smallest number of blades shall be used). Flatness is acceptable if the feeler does not pass under the straightedge. The straightedge may be located at any position on the surface and not necessarily at 90 degrees to the edges.
c. Tolerance - Top load plate
1. Plan dimension: -0", +3/16"
2. Flatness of surface in contact with connector girder or sole plate - Class B
3. Thickness: -1/8", +0"

d. Tolerance - Sole plate
1. Plan dimension: -0", +3/16"
2. Flatness of surface in contact with top load plate - Class B
3. Flatness of backing surface for stainless steel - Class A
4. Thickness: -1/8", +0"

e. Tolerance - PTFE sheet
1.) Plan dimension: +/- 0"
2.) Flatness: Class A

f. Tolerance - Steel substrate
1. Plan dimension: -0", +3/16"
2. Flatness of upper side faced with PTFE - Class A
3. Flatness of lower side with vulcanization laminated elastomeric bearing pad - Class B
4. The plan dimensions for the recess to receive the PTFE sheet shall be machined to tolerance of +0.005"
5. Thickness: -1/16", +0"

g. Tolerance - Laminated elastomeric bearing pad
1. Plan dimension: +/- 0"
2. Individual elastomer layer thickness +/- 20% of design value (not to exceed +/- 1/8")
3. Total thickness: -0", +1/8"

h. Tolerance - Base plate
1. Plan dimension: - 0", +3/16"
2. Flatness of recessed surface in contact with laminated elastomeric bearing pad - Class A
3. Flatness of bottom surface in contact with bracket bearing plate - Class B
4. The plan dimensions for the recess to receive the laminated elastomeric bearing pad shall be machined to a tolerance of +0.005"
5. Thickness: -1/8", +0"

I. Tolerance - overall height of bearing:
-1/32", +1/32"

IV TESTING

A. General
1. Tests shall be performed by the manufacturer or by an independent testing laboratory. The testing agent chosen by the Contractor will be subject to approval by the Director. Approval will be based on:
1) The ability of the testing facility to perform the required tests - possession of proper testing equipment and trained personnel.
2) Submittal of a report describing the testing procedure to be used including set-up of testing apparatus, steps to be followed in the testing procedures, readings, conversion of readings to final data and sample calculations showing how final results are obtained from raw data.

2. Sampling - One bearing shall be chosen, selected at random, from each lot of the 14 completed bearings at each hinge line. A minimum of 6 bearings shall be tested.

B. Friction Test shall be performed on bearing sample chosed as described in IV - A.2
1. The test shall be conducted at the maximum working stress for the bearing, with the load applied continuously for 12 hours prior to measuring the friction. Maximum working stress shall be determined by dividing the maximum vertical force (obtained from the plans) by the area of the PTFE sheet.

2. The first movement static and dynamic coefficient of friction shall be determined. A sliding speed of less than 1 inch per minute shall be used. The coefficient of friction shall be measured on the fifth and fiftieth cycles. The coefficient of friction thus determined shall not exceed 0.04.

C. Proof Load Test shall be performed on bearing sample chosen as described in IV - A.2. The bearing may be the one used for the Friction Test described above.

The test bearing shall be loaded to 150 percent of the bearings rated design capacity for a period of one hour. The bearing shall be visually examined both during the test and upon disassembly after the test. Any resultant visual defects, such as extruded or deformed elastomer, PTFE, or cracked steel shall be cause for rejection of the lot.

During the test the stainless steel bearing plate and the PTFE sheet shall maintain continuous and uniform control for the duration of the test. Any observed liftoff shall be cause for rejection of the lot.

D. Adhesion between the PTFE and substrate shall be tested on a test specimen in accordance with ASTM 0429, Method B. The minimum peel strength shall be 25 lbs. per inch. This test is in addition to adhesion determined under IV - B and IV - C.

E. Test results shall be presented in a report showing raw test data, reduced test data, sample calculations and final results along with photographs and conclusions.

F. Certified test data for all stainless steel, A36 steel and PTFE shall be furnished to the Director showing compliance with the requirements of this specification.

G. Bearings not damaged during the testing may be used in the work.

V SHIPPING AND PACKING

A. Bearings shall be wrapped in moisture proof and dust proof material and the exposed surfaces of the stainless steel sheet and PTFE sheet shall be protected from damage against shipping and job-site conditions.

B. Care shall be taken to ensure that bearings at the job-site are stored in a dry sheltered area free from dirt or dust until installation.

VI MEASUREMENT AND PAYMENT

A complete and acceptable bearing system furnished and installed, including top load plate, sole plate, stainless steel sheet, PTFE sheet, laminated elastomeric bearing pad, base plate, testing, welding and painting will be measured on an each basis.

Payment will be made at the unit price bid per each for Item 516 - BEARING DEVICE, MISC. (CONNECTOR GIRDER BEARINGS) for a complete bearing system furnished and installed in accordance with Item 516 and these plans.

ITEM 518 - Structural drainage, misc. (Refurbish drainage system).
This item shall include all labor, equipment, materials and incidentals necessary to replace and /or increase the slope of the existing horizontal conductor pipes at the locations specified in the plans. The work shall include adjusting the length of the existing pipe hangers, adjusting the lengths of the existing 6 inch scupper pipe outlets, providing new clamp plates, pipe supports and any other items of work shown in the plans.
The work shall also include removing all accumulated debris from the existing under ground class E-1 collector pipes using pressure jet and rod, if required.
All new pipe required for the drainage system shall be welded and seamless steel pipe per 707.08 and all connections shall be watertight.
All new and existing steel for drainage system, with the exception of the scuppers, shall be galvanized per 711.02.
All of the above work and relevant plan notes shall be included in the lump price bid for Item 518 - Structure drainage, misc. (Refurbish drainage system)

ITEM 518 - Scupper modification (Type I thru Type 6):
This item shall consist of trimming the top of the existing scuppers to match the micro-silica modified concrete overlay and lengthening the scuppers to 8 inch minimum below the bottom of the existing beams, where applicable, as shown in the plans. The work shall include removing every other existing cross bar, abrasive blasting the bottom of the scupper and filling with deck overlay material as shown in the plans. All disturbed steel surfaces that are exposed shall be painted as per system EEU. All work shall be to the satisfaction of the Engineer and shall be paid for under Item 518 - Each - Scupper modification (Type I thru Type 6).

ITEM 519 - Patching Concrete Structures: This item shall involve patching spalled and/or deteriorated areas at Pier 2 for Bridge No. HAM-75-1160 L and at the abutment seat for Bridge No. HAM-75-1184 R as shown in the plans. Also any other areas as determined by the Project Engineer shall be patched under this item. The Contractor shall provide the Project Engineer with suitable and safe means of access to all areas of potential deterioration so that the areas can be sounded and marked for repair. The completed patches shall have a neat, uniform appearance meeting the satisfaction of the Project Engineer. Payment will be made at the contract unit price bid for Item 519 -sq. ft.- Patching Concrete Structures.

ITEM 606 - Guardrail, barrier design, type 5, as per plan: This item shall include all labor, equipment, materials and incidentals necessary to replace the existing barrier railing with new type 5 barrier railing. The work shall include replacing the existing deep beam rail, installing steel spacer blocks on the existing railing posts, installing new railing posts with steel spacer blocks at the locations shown in the plans and installing new bridge terminal assemblies, type A, as per plan, similar to the existing bridge terminal assemblies, at each end of the bridge.

The new railing posts shall be w6x15 and shall be anchored to the existing median with a Partial Depth Resin-Bonded Anchoring System using 7/8" dia. anchors and a base plate in accordance with Standard Construction Drawing GR-2.2.

Payment for the above described work and relevant plan notes will be made at the contract price bid for Item 606 - Lin.Ft.- Guardrail, Barrier design, type 5, as per plan.

MAINTENANCE OF TRAFFIC:
For maintenance of traffic and sequence of construction, see Roadway General Notes.

LOCKWOOD, JONES & BEALS
CONSULTING ENGINEERS
DAYTON, OHIO

3 / 105

GENERAL NOTES

HAM-75-9.75 BRIDGES

DESIGNED	CHECKED	DRAWN	CHECKED	REVIEWED DATE	REVISED
HDJ	DFS	CRB	DFS	MPH 12/92	

/usr3/bridge/6272gn3.dgn Feb. 23, 1993 09:51:28

F.H.W.A. REGION	STATE	PROJECT	
5	OHIO		

237
338

HAMILTON COUNTY
HAM-75-9.75

ESTIMATED QUANTITIES

ITEM	ITEM EXT.	TOTAL	UNIT	DESCRIPTION
				HAM-75-0992
				For Estimated Quantities, see Sheet 8 /105
				HAM-75-1089L
202	11201	Lump	Lump	Portions of structure removed, as per plan Sheet 1 /105
Special	51267500	577	Sq.Yd.	*Sealing of concrete surfaces
Special	51319000	Lump	Lump	*Heat straightening of damaged structural steel
516	45305	20	Each	Refurbish bearing device, as per plan Sheet 1 /105
517	71501	369	Lin.Ft.	Railing, (concrete parapet with double pipe rail), as per plan Sheets 2 & 18 /105
Special	60739930	340	Lin.Ft.	Vandal protection fence, 12' curved, coated fabric.
				HAM-75-1102R
202	11201	Lump	Lump	Portions of structure removed, as per plan Sheet 1 /105
202	23501	2817	Sq.Yd.	Wearing course removed, as per plan Sheet 1 /105
509	15800	13550	Lb.	Epoxy coated reinforcing steel, grade 60
Special	51267500	967	Sq.Yd.	*Sealing of concrete surfaces
Special	51267502	63	Sq.Yd.	*Sealing of concrete surfaces (epoxy)
513	16600	Lump	Lump	Structural steel, misc. (Repair steel pier cap)
513	16800	7	Each	Structural steel, misc. (Retrofit pin and link assembly)
513	21201	Lump	Lump	Trimming of beam end, as per plan Sheet 1 /105
516	11211	104	Lin.Ft.	Structural expansion joint including elastomeric strip seal, as per plan (End dam modification, Type A) Sheets 2 & 22 /105
516	11211	52	Lin.Ft.	Structural expansion joint including elastomeric strip seal, as per plan (Interior expansion joint modification, Type A) Sheets 2 & 24 /105
516	46900	14	Each	Bearing device, misc. (Connector girder bearing)
517	76201	1069	Lin.Ft.	Railing faced, as per plan (including wingwalls) Sheet 2 /105
518	12800	30	Each	Scupper modification (Type I)
Special	51922006	2817	Sq.Yd.	*Micro-silica modified concrete overlay (1¾ inch thickness)
Special	51922100	47	Cu.Yd.	*Micro-silica modified concrete overlay (Variable thickness)
Special	51922300	Lump	Lump	*Test slab

ESTIMATED QUANTITIES

ITEM	ITEM EXT.	TOTAL	UNIT	DESCRIPTION
				HAM-75-1152R
202	11201	Lump	Lump	Portions of structure removed, as per plan Sheet 1 /105
202	23501	720	Sq.Yd.	Wearing course removed, as per plan Sheet 1 /105
509	15800	4873	Lb.	Epoxy coated reinforcing steel, grade 60
Special	51267500	240	Sq.Yd.	*Sealing of concrete surfaces
Special	51267502	69	Sq.Yd.	*Sealing of concrete surfaces (epoxy)
516	11211	104	Lin.Ft.	Structural expansion joint including elastomeric strip seal, as per plan (End dam modification, Type A) Sheets 2 & 34 /105
516	45305	14	Each	Refurbish bearing device, as per plan Sheet 1 /105
517	76201	313	Lin.Ft.	Railing faced, as per plan (including wingwalls) Sheet 2 /105
518	12800	8	Each	Scupper modification (Type I)
Special	51922006	720	Sq.Yd.	*Micro-silica modified concrete overlay (1¾ inch thickness)
Special	51922100	6	Cu.Yd.	*Micro-silica modified concrete overlay (Variable thickness)
Special	51922300	Lump	Lump	*Test slab
				HAM-75-1160L
202	11201	Lump	Lump	Portions of structure removed, as per plan Sheet 1 /105
202	23501	865	Sq.Yd.	Wearing course removed, as per plan Sheet 1 /105
509	15800	4454	Lb.	Epoxy coated reinforcing steel, grade 60
Special	51267500	227	Sq.Yd.	*Sealing of concrete surfaces
Special	51267502	28	Sq.Yd.	*Sealing of concrete surfaces (epoxy)
516	11211	62	Lin.Ft.	Structural expansion joint including elastomeric strip seal, as per plan (End dam modification, Type B) Sheets 2 & 38 /105
516	11211	62	Lin.Ft.	Structural expansion joint including elastomeric strip seal, as per plan (Interior expansion joint modification, Type B) Sheets 2 & 38 /105
517	73201	265	Lin.Ft.	Railing (Deflector parapet type), as per plan Sheet 2 /105
519	11100	25	Sq.Ft.	Patching concrete structure
Special	51922006	865	Sq.Yd.	*Micro-silica modified concrete overlay (1¾ inch thickness)
Special	51922100	18	Cu.Yd.	*Micro-silica modified concrete overlay (Variable thickness)
Special	51922300	Lump	Lump	*Test slab

ESTIMATED QUANTITIES

ITEM	ITEM EXT.	TOTAL	UNIT	DESCRIPTION
				HAM-75-1184R
202	11201	Lump	Lump	Portions of structure removed, as per plan Sheet 1 /105
202	23501	639	Sq.Yd.	Wearing course removed, as per plan Sheet 1 /105
509	15800	2601	Lb.	Epoxy coated reinforcing steel, grade 60
Special	51267500	239	Sq.Yd.	*Sealing of concrete surfaces Sheet 2 /105
517	76201	230	Lin.Ft.	Railing faced, as per plan
519	11100	55	Sq.Ft.	Patching concrete structure
Special	51922006	639	Sq.Yd.	*Micro-silica modified concrete overlay (1¾ inch thickness)
Special	51922100	6	Cu.Yd.	*Micro-silica modified concrete overlay (Variable thickness)
Special	51922300	Lump	Lump	*Test slab
				HAM-75-1187L
202	11201	Lump	Lump	Portions of structure removed, as per plan Sheet 1 /105
Special	51267500	324	Sq.Yd.	*Sealing of concrete surfaces
517	71501	180	Lin.Ft	Railing, (concrete parapet with double pipe rail), as per plan Sheet 2 \105
Special	60739930	151	Lin.Ft	Vandal protection fence, 12' curved, coated fabric.

* See Proposal Note.

Quantities computed by: MJZ 10-92
Quantities checked by: AvdB 11-92

LOCKWOOD, JONES & BEALS
CONSULTING ENGINEERS
DAYTON, OHIO
4 /105

ESTIMATED QUANTITIES

HAM-75-9.75
BRIDGES

DESIGNED	CHECKED	DRAWN	CHECKED	REVIEWED DATE	REVISED
MJZ	HDJ	MJZ	HDJ	MPH 12/92	

c:\mike\6272eq1.dgn Feb. 22, 1993 14:18:30

F.H.W.A. REGION	STATE	PROJECT	
5	OHIO		

238
338

HAMILTON COUNTY
HAM-75-9.75

ESTIMATED QUANTITIES

ITEM	ITEM EXT.	TOTAL	UNIT	DESCRIPTION
				HAM-75-1192R
202	11201	Lump	Lump	Portions of structure removed, as per plan Sheet 1 / 105
202	23501	13431	Sq.Yd.	Wearing course removed,as per plan Sheet 1 / 105
509	15800	5716	Lb.	Epoxy coated reinforcing steel, grade 60
Special	51267500	4619	Sq.Yd.	* Sealing of concrete surfaces
Special	51267502	58	Sq.Yd.	* Sealing of concrete surfaces (epoxy)
513	16600	Lump	Lump	Structural steel,misc. (Repair steel pier cap)
513	16800	35	Each	Structural steel,misc. (Retrofit pin and link assebly)
Special	51400050	360,155	Sq.Ft.	* Surface preparation of existing steel, system OZEU
Special	51400056	360,155	Sq.Ft.	* Field painting of existing steel, prime coat, system OZEU
Special	51400060	360,155	Sq.Ft.	* Field painting of existing steel, intermediate coat, system OZEU
Special	51400066	360,155	Sq.Ft.	* Field painting of existing steel, finish coat, system OZEU
Special	51400504	50	Hour	* Grinding fins,tears,slivers
516	11211	104	Lin.Ft.	Structural expansion joint including elastomeric strip seal, as per plan. (End Dam Modification Type A) Sheets 2 & 51 / 105
516	15000	10	Each	Structural joint or joint sealer,misc. (Curb plates at interior expansion joints)
516	46900	70	Each	Bearing device misc. (Connector girder bearing)
517	76201	4887	Lin.Ft.	Railing faced,as per plan (including Wingwalls) Sheet 2 / 105
518	12800	51	Each	Scupper modification (Type 2)
518	12800	102	Each	Scupper modification (Type 3)
518	12800	7	Each	Scupper modification (Type 4)
518	63300	Lump	Lump	Structure drainage, misc. (Refurbish drainage system)
Special	51922006	13431	Sq.Yd.	* Micro-silica modified concrete overlay (2¾ inches thick)
Special	51922100	112	Cu.Yd.	* Micro-silica modified concrete overlay (Variable thickness)
Special	51922300	Lump	Lump	* Test slab
SPECIAL	53006400	233	EACH	Structure Misc: Lateral Bracing Gusset Plate Retrofit Upgrade (Intermediate)
				HAM-75-1198L

For Estimated Quantities, see Sheet 76 / 105

ESTIMATED QUANTITIES

ITEM	ITEM EXT.	TOTAL	UNIT	DESCRIPTION
				HAM-75-1292
202	11201	Lump	Lump	Portions of structure removed, as per plan Sheet 1 / 105
202	23501	1288	Sq.Yd.	Wearing course removed,as per plan Sheet 1 / 105
509	15800	770	Lb.	Epoxy coated reinforcing steel, grade 60
Special	51267500	573	Sq.Yd.	* Sealing of concrete surfaces
Special	51267502	54	Sq.Yd.	* Sealing of concrete surfaces (epoxy)
Special	51319000	Lump	Lump	* Heat straightening of damaged structural steel
516	11211	120	Lin.Ft.	Structural expansion joint including elastomeric strip seal, as per plan (End dam modification, Type C) Sheets 2, 92 & 93 / 105
516	45305	14	Each	Refurbish bearing device, as per plan Sheet 1 / 105
518	12800	7	Each	Scupper modification (Type 5)
518	12800	5	Each	Scupper modification (Type 6)
Special	51922006	1288	Sq.Yd.	* Micro-silica modified concrete overlay (1¾ inch thickness)
Special	51922100	27	Cu.Yd.	* Micro-silica modified concrete overlay (Variable thickness)
Special	51922300	Lump	Lump	* Test slab
				HAM-75-1338
202	11201	Lump	Lump	Portions of structure removed, as per plan Sheet 1 / 105
202	23501	1884	Sq.Yd.	Wearing course removed,as per plan Sheet 1 / 105
509	15800	1023	Lb.	Epoxy coated reinforcing steel, grade 60
Special	51267500	1068	Sq.Yd.	* Sealing of concrete surfaces
Special	51267502	76	Sq.Yd.	* Sealing of concrete surfaces (epoxy)
516	11211	120	Lin.Ft.	Structural expansion joint including elastomeric strip seal, as per plan (End dam modification, Type C) Sheets 2, 96 & 97 / 105
516	45305	16	Each	Refurbish bearing device, as per plan Sheet 1 / 105
518	12800	10	Each	Scupper modification (Type 5)
518	12800	13	Each	Scupper modification (Type 6)
Special	51922006	1884	Sq.Yd.	* Micro-silica modified concrete overlay (1¾ inch thickness)
Special	51922100	19	Cu.Yd.	* Micro-silica modified concrete overlay (Variable thickness)
Special	51922300	Lump	Lump	* Test slab
606	15501	354	Lin.Ft.	Guardrail, barrier design, type 5, as per plan Sheet 3 / 105

ESTIMATED QUANTITIES

ITEM	ITEM EXT.	TOTAL	UNIT	DESCRIPTION
				HAM-75-1390
202	11201	Lump	Lump	Portions of structure removed, as per plan Sheet 1 / 105
202	23501	1131	Sq.Yd.	Wearing course removed,as per plan Sheet 1 / 105
509	15800	421	Lb.	Epoxy coated reinforcing steel, grade 60
Special	51267500	709	Sq.Yd.	* Sealing of concrete surfaces
Special	51267502	57	Sq.Yd.	* Sealing of concrete surfaces (epoxy)
516	11211	56	Lin.Ft.	Structural expansion joint including elastomeric strip seal, as per plan (End dam modification, Type D) Sheets 2 & 101 / 105
516	45305	8	Each	Refurbish bearing device, as per plan Sheet 1 / 105
518	12800	12	Each	Scupper modification (Type 6)
Special	51922006	1131	Sq.Yd.	* Micro-silica modified concrete overlay (1¾ inch thickness)
Special	51922100	10	Cu.Yd.	* Micro-silica modified concrete overlay (Variable thickness)
Special	51922300	Lump	Lump	* Test slab

* See Proposal Note

Quantities computed by: MJZ 10-92
Quantities checked by: AvdB 11-92

LOCKWOOD, JONES & BEALS
CONSULTING ENGINEERS
DAYTON, OHIO

5 / 105

ESTIMATED QUANTITIES

HAM-75-9.75
BRIDGES

DESIGNED	CHECKED	DRAWN	CHECKED	REVIEWED DATE	REVISED
MJZ	HDJ	MJZ	HDJ	MPH 12/92	

e:\mike\6272eq2.dgn Feb. 22, 1993 13:41:59

F.H.W.A. REGION	STATE	PROJECT	
5	OHIO		

239
338

HAMILTON COUNTY
HAM-75-9.75

ESTIMATED QUANTITIES SUMMARY

ITEM	ITEM EXT.	TOTAL	UNIT	DESCRIPTION
202	11201	Lump	Lump	Portions of structure removed, as per plan
202	23501	22775	Sq.Yd.	Wearing course removed, as per plan
503	11100	Lump	Lump	Cofferdams, cribs and sheeting
503	21100	98	CuYd.	Unclassified excavation
505	11100	Lump	Lump	Pile driving equipment mobilization
507	21100	220	Lin.Ft.	12" Cast-in-place reinforced concrete piles
509	15800	162940	Lb.	Epoxy coated reinforcing steel, grade 60
510	11100	36	Each	Dowel holes
511	31501	281	CuYd.	Class S concrete, superstructure, as per plan
511	33402	45	CuYd.	Class S concrete, superstructure (diaphragms for concrete I-beam)
511 (Note 1)	33404	201	CuYd.	* Class S concrete, superstructure (using shrinkage compensating cement)
511 (Note 1)	33410	Lump	Lump	* Class S concrete, superstructure (using shrinkage compensating cement) for pre-placement testing
511	40500	27	CuYd.	Class C concrete, pier above footing
511	44000	33	CuYd.	Class C concrete, abutment including footing
511	45700	235	CuYd.	Class C concrete, abutment
511	46500	9	CuYd.	Class C concrete, footing
512	44400	20	Sq.Yd.	Type B waterproofing
Special	51267500	10155	Sq.Yd.	* Sealing of concrete surfaces
Special	51267502	745	Sq.Yd.	* Sealing of concrete surfaces (epoxy)
513	11400	44000	Lb.	* Structural steel, A572-50 AISC category I
513	16600	Lump	Lump	Structural steel, misc. (Repair steel pier cap)
513	16800	42	Each	Structural steel, misc. (Retrofit pin and link assembly)
Special	51319000	Lump	Lump	* Heat straightening of damaged structural steel
513	20000	924	Each	Welded stud shear connector
513	21201	Lump	Lump	Trimming of beam end, as per plan
Special	51400050	360,155	Sq. Ft.	* Surface preparation of existing steel, system OZEU
Special	51400056	360,155	Sq. Ft.	* Field painting of existing steel, prime coat, system OZEU
Special	51400060	360,155	Sq. Ft.	* Field painting of existing steel, intermediate coat, system OZEU
Special	51400066	360,155	Sq. Ft.	* Field painting of existing steel, finish coat, system OZEU
Special	51400504	50	Hour	* Grinding fins, tears, slivers
Special	514QQ610	44000	Lb.	* painting of new steel, system IZEU
515	50000	10	Each	* 45" Prestressed concrete composite I-beam (71' to 73' long)
516	10500	75	Lin. Ft.	Structural steel joint and elastomeric compression seal
516	11211	312	Lin. Ft.	Structural expansion joint including elastomeric strip seal, as per plan. (End Dam Modification Type A)
516	11211	62	Lin. Ft.	Structural expansion joint including elastomeric strip seal, as per plan. (End Dam Modification Type B)
516	11211	240	Lin. Ft.	Structural expansion joint including elastomeric strip seal, as per plan. (End Dam Modification Type C)
516	11211	56	Lin. Ft.	Structural expansion joint including elastomeric strip seal, as per plan. (End Dam Modification Type D)

ESTIMATED QUANTITIES SUMMARY

ITEM	ITEM EXT.	TOTAL	UNIT	DESCRIPTION
516	11211	52	Lin.Ft.	Structural expansion joint including elastomeric strip seal, as per plan (Interior expansion joint modification, Type A)
516	11211	62	Lin.Ft.	Structural expansion joint including elastomeric strip seal, as per plan (Interior expansion joint modification, Type B)
516	13600	249	Sq.Ft.	1" Preformed expansion joint filler
516	15000	10	Each	Structural joint or joint sealer, misc. (Curb plates at interior expansion joints)
516	30500	76	Lin.Ft.	6" PVC waterstop
516	43100	10	Each	Elastomeric bearing with internal laminates only (neoprene) 1½"x9"x20"
516	44000	10	Each	Elastomeric bearing with internal laminates and load plate (neoprene) 1½"x9"x20" with 10"x23" load plate
516	45305	72	Each	Refurbish bearing device, as per plan
516	46200	6	Each	Bearing device, rocker
516	46900	84	Each	Bearing device misc. (Connector girder bearing)
517	71501	693	Lin.Ft.	Railing, (concrete parapet with double pipe rail), as per plan
517 (Note 2)	71510	144	Lin.Ft.	* Railing, (concrete parapet with double pipe rail using shrinkage compensating cement).
517	73201	265	Lin.Ft.	Railing (Deflector parapet type), as per plan
517	75501	104	Lin.Ft.	Railing rebuilt, as per plan
517	76201	230	Lin.Ft.	Railing faced, as per plan
517	76201	6269	Lin.Ft.	Railing faced, as per plan (Including wingwalls)
518	12800	38	Each	Scupper modification (Type 1)
518	12800	51	Each	Scupper modification (Type 2)
518	12800	102	Each	Scupper modification (Type 3)
518	12800	7	Each	Scupper modification (Type 4)
518	12800	17	Each	Scupper modification (Type 5)
518	12800	30	Each	Scupper modification (Type 6)
518	21200	210	Cu. Yd.	Porous backfill with filter fabric
518	41100	46	Lin. Ft.	6" Perforated helical corrugated steel pipe, 707.01
518	41200	13	Lin. Ft.	6" Non-perforated helical corrugated steel pipe, including specials, 707.01
518	63300	Lump	Lump	Structure drainage, misc. (Refurbish drainage system)
519	11101	80	Sq.Ft.	Patching concrete structure
Special	51922006	9344	Sq. Yd.	* Micro-silica modified concrete overlay (1¾ inches thick)
Special	51922006	13431	Sq. Yd.	* Micro-silica modified concrete overlay (2¾ inches thick)
Special	51922100	245	Cu. Yd.	* Micro-silica modified concrete overlay (Variable thickness)
Special	51922300	Lump	Lump	* Test slab
606	15501	354	Lin.Ft.	Guardrail, barrier design, type 5, as per plan
Special	60739920	420	Lin.Ft.	Vandal protection fence, 10' curved, coated fabric.
Special	60739930	628	Lin.Ft.	Vandal protection fence, 12' curved, coated fabric.
852	00100	480	Each	Polyester/vinylester resin bonded anchors
Special	53000400	233	Each	Structure, Misc.: Lateral bracing gusset plate Retrofit Upgrade (intermediate)

This sheet for Information Only

NOTES:

1. These two items constitute one alternate bid item to Class S concrete, superstructure, as per plan, on bridge HAM-75-11.98L
2. Alternate bid item on bridge HAM-75-11.98L

* See Proposal Note

LOCKWOOD, JONES & BEALS
CONSULTING ENGINEERS
DAYTON, OHIO

6 /105

ESTIMATED QUANTITIES SUMMARY
HAM-75-9.75
BRIDGES

DESIGNED	CHECKED	DRAWN	CHECKED	REVIEWED DATE	REVISED
MJZ	HDJ	MJZ	HDJ	MPH 12/92	

\6272sum.dgn Feb. 22, 1993 14:46:17

F.H.W.A. REGION	STATE	PROJECT	
5	OHIO		

240
338

HAMILTON COUNTY
HAM-75-9.75

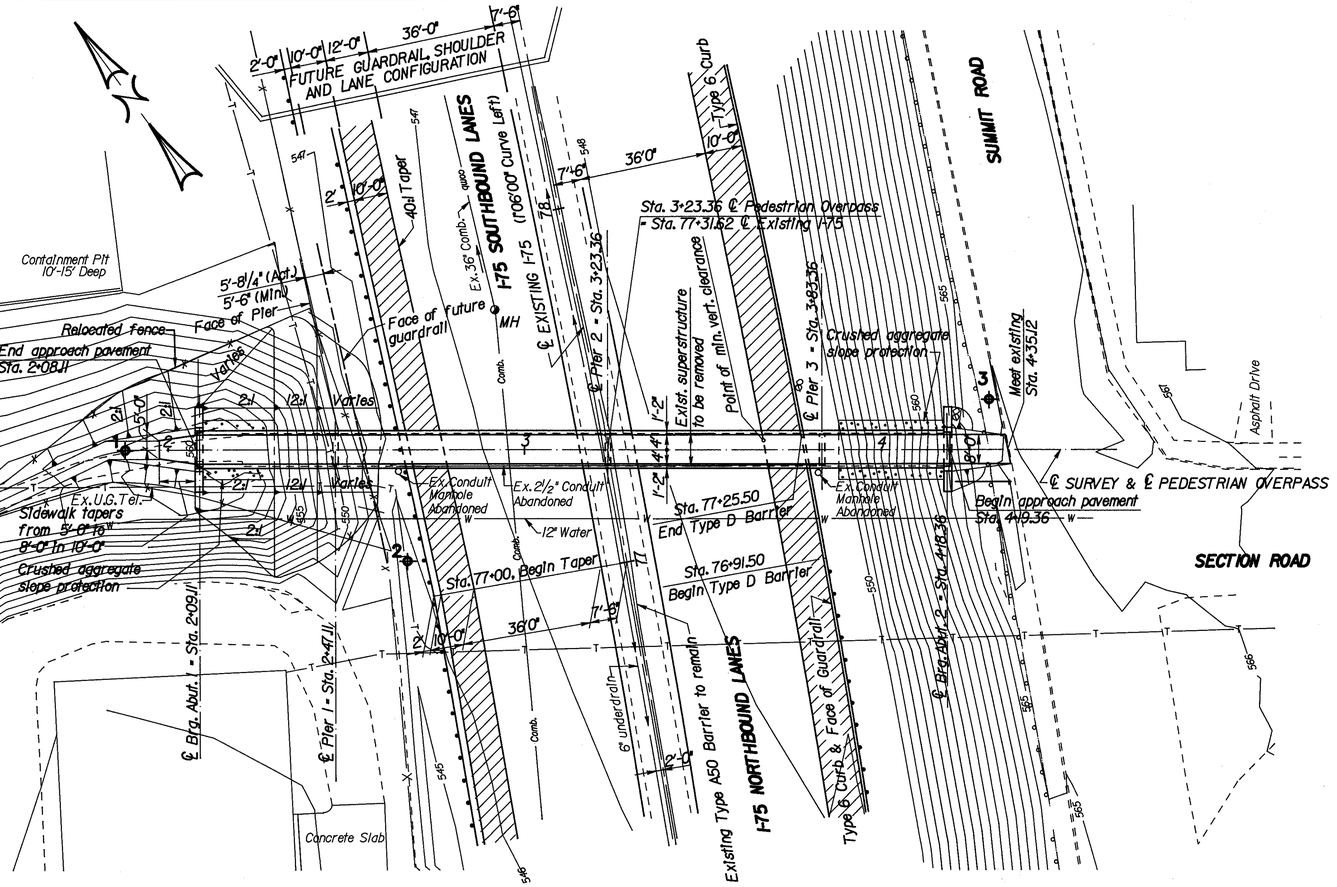

PLAN

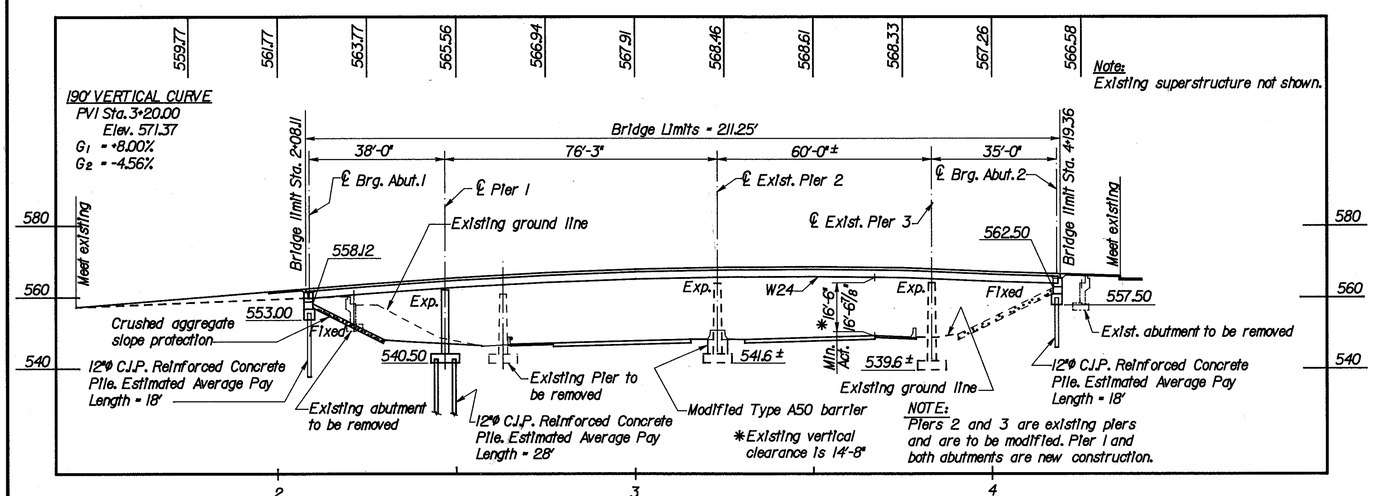

PROFILE

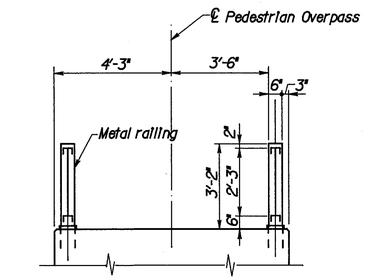

EXISTING TYPICAL SECTION

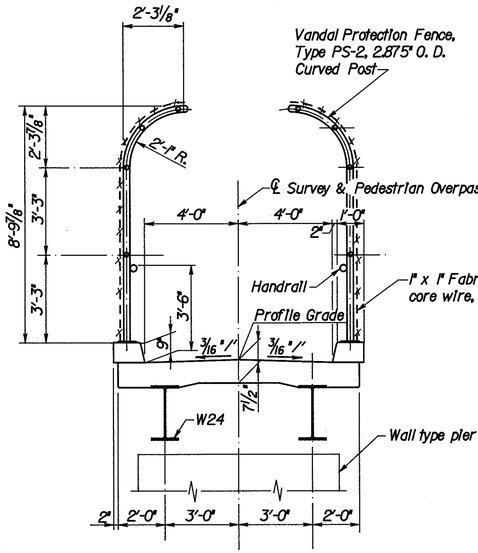

PROPOSED TYPICAL SECTION

EARTHWORK limits shown are approximate. Actual slopes shall conform to ROADWAY PLAN cross-sections.
⊕ Denotes boring location.

EXISTING STRUCTURE

TYPE: Four span reinforced concrete rigid frame
SPANS: 42'-0", 60'-0", 60'-0", 42'-0"
WALKWAY: 7'-0" face to face of railings
LOADING: 85 PSF
ALIGNMENT: Tangent
SKEW: None
DATE BUILT: 1948 (±)
CONDITION: Good, Inadequate underclearance
STRUCTURE FILE NO. 3110354

PROPOSED STRUCTURE

TYPE: Four span continuous composite rolled steel (ASTM A572, painted) beam superstructure with reinforced concrete deck supported by wall type piers and integral abutments.
SPANS: 38'-0", 76'-3", 60'-0", 35'-0" center to center of bearings
WALKWAY: 8'-0" face to face of curbs.
LOADING: 85 PSF
ALIGNMENT: Tangent
SKEW: None
WEARING SURFACE: Monolithic concrete

LOCKWOOD, JONES & BEALS
CONSULTING ENGINEERS
DAYTON, OHIO

7/105

SITE PLAN
BRIDGE NO. HAM-75-0992
I-75
UNDER PEDESTRIAN OVERPASS
HAMILTON COUNTY STA. 2+08.11 TO STA. 4+19.36

PRESENT TOPOGRAPHY		PROPOSED WORK				
SURVEYED	DRAWN	DESIGNED	DRAWN	CHECKED	REVIEWED	DATE
LJB	LJB	EPA	DYA	HDJ	MPH	12/92

f:\6272\0992s1.dgn Feb. 19, 1993 13:53:00

F.H.W.A. REGION	STATE	PROJECT	
5	OHIO		

241
338

HAMILTON COUNTY
HAM-75-9.75

GENERAL NOTES

REFERENCE shall be made to the following:
Standard Drawings: ICD-1-82, revised 8-1-84
RB-1-55, revised 2-2-59
SD-1-69, dated 6-12-69
VPF-1-90, revised 2-1-92

and to Supplemental Specifications: 836, dated 11-12-85
852, dated 6-10-87

DESIGN SPECIFICATIONS: This structure conforms to "Standard Specifications for Highway Bridges" adopted by the American Association of State Highway and Transportation Officials, 1989, the 1990 and 1991 Interim Specifications and the Ohio "Supplement" to these specifications.

DESIGN DATA: Design loading 85 psf
Concrete Class S - Compressive strength 4500 psi (Superstructure)
Concrete Class C - Compressive strength 4000 psi (Substructure).
Reinforcing Steel - ASTM A615, A616 or A617 - Grade 60 Minimum yield strength 60000 psi
Structural Steel - ASTM 572 -Unit stress 27000 psi
Deck Protection Method: Epoxy coated reinforcing steel and sealing of concrete surfaces.

PILE DESIGN LOADS: The design load for the abutment piles is 18.9 tons per pile. The design load for Pier 1 piles is 20.3 tons per pile.

MONOLITHIC WEARING SURFACE is assumed, for design purposes, to be 1".

ABUTMENT PILING: Abutment piling bending stress may approach, reach or exceed yield stress.

ITEM SPECIAL, SEALING OF CONCRETE SURFACES: A concrete sealer shall be applied to the abutments as shown on sheet [9/105], to the piers as shown on sheet [10/105], to the end diaphragm as shown on sheet [13/105] and to the concrete deck fascia and curb as shown on sheet [12/105]. See Proposal Note for surface preparation requirements, application rates, material requirements and application procedures.

UTILITY LINES: All expense involved in relocating the affected utility lines shall be borne by the Owners. The Contractor and Owners are requested to cooperate by arranging their work in such a manner that inconvenience to either will be held to a minimum.

ITEM 202, PORTIONS OF STRUCTURE REMOVED, AS PER PLAN, shall include the superstructure slab, both abutments and Pier 1. The superstructure slab over Piers 2 and 3 shall be removed down to the existing construction joint at the top of the piers as shown on sheets [10/105] & [11/105]. The superstructure shall be removed in the sequence below.
1. Shore spans 1 and 4.
2. Remove spans 2 and 3 simultaneously by saw cutting the slab at the face of the adjacent piers. (Alternately span 2 or 3 may be removed independently, provided the other span is shored)
3. Remove spans 1 and 4.

Detail plans for the shoring and removal shall be prepared by a registered professional engineer and shall bear his signature and seal. The Contractor shall submit 3 copies of the plans and 2 copies of the design calculations to the Director 15 days prior to shoring installation and shall receive approval before starting slab removal operations.

EXISTING STRUCTURE VERIFICATION: Details and dimensions shown on these plans pertaining to the existing structure have been obtained from plans of the existing structure and/or from field observations and measurements. Consequently they are indicative of the existing structure and the proposed work but they shall be considered tentative and approximate. The Contractor is referred to Sections 102.05 and 105.02 of the CMS. Contract bid prices shall be based upon a recognition of the uncertainties described above and upon a prebid inspection of the existing structure by the Contractor. However all project work shall be based upon actual details and dimensions which have been verified by the Contractor in the field. Some reinforcing bars, as detailed, may require field cutting to maintain proper clearance and/or fit.

EXISTING REINFORCING STEEL: Where concrete is being removed and replaced, the existing reinforcing steel which is to remain shall be trimmed to provide the required clearance. Any existing reinforcing bars which are to be incorporated into the new work and which are made unusable by the Contractor's concrete removal operations shall be replaced with new steel at the Contractor's cost. Any existing reinforcing bars deemed by the Engineer to be unusable because of corrosion shall be replaced with new epoxy coated steel and shall be paid for at the unit price bid for Item 509 - Epoxy Coated Reinforcing Steel, Grade 60. 20 pounds of reinforcing steel have been provided for this purpose.

PROPOSED WORK: The major portions of this work include:
1. Removal of existing superstructure slab as defined under Item 202.
2. Removal of both abutments and Pier 1.
3. Construction of abutments, Pier 1 and extension of Piers 2 & 3.
4. Erection of steel beam superstructure.
5. Construction of composite deck slab including end diaphragms.
6. Construction of curbs and fencing on superstructure.

ESTIMATED QUANTITIES

ITEM	ITEM EXTENSION	TOTAL	UNIT	DESCRIPTION	ABUTMENTS	PIERS	SUPER-STRUCTURE	GENERAL	AS BUILT	
202	11201	Lump	Lump	Portions of Structure removed, as per plan Sheet [8/105]				Lump		
503	11100	Lump	Lump	Cofferdams, cribs and sheeting				Lump		
503	21100	98	Cu.Yd.	Unclassified excavation	52	46				
505	11100	Lump	Lump	Pile driving equipment mobilization				Lump		
507	21100	220	Lin. Ft.	12" Cast-in-place reinforced concrete piles	108	112				
509	15800	15372	Lb.	Epoxy coated reinforcing steel, grade 60	2976	2474	9902	20		
510	11100	36	Each	Dowel holes		36				
511	31501	80	Cu.Yd.	Class S concrete, superstructure, as per plan Sheet [8/105]			80			
511	40500	27	Cu.Yd.	Class C concrete, pier above footings		27				
511	44000	33	Cu.Yd.	Class C concrete, abutment including footing	33					
511	46500	9	Cu.Yd.	Class C concrete, footing		9				
Special	51267500	329	Sq.Yd.	* Sealing of concrete surfaces.		109	220			
Special	51267502	29	Sq.Yd.	* Sealing of concrete surfaces (epoxy).	22		7			
513	11400	44000	Lb.	*Structural steel, A572-50 AISC Category I			44000			
513	20000	924	Each	Welded stud shear connector			924			
SPECIAL	5140061O	44000	Lb.	* painting of new steel, System 1ZEU			44000			
516	13600	47	Sq. Ft.	1" Preformed Expansion Joint Filler	47					
516	30500	41	Lin. Ft.	6" PVC Waterstop	41					
516	46200	6	Each	Bearing device, rocker			6			
518	21200	11	Cu.Yd.	Porous backfill with filter fabric	11					
518	41100	46	Lin. Ft.	6" perforated helical corrugated steel pipe, 707.01	46					
518	41200	13	Lin. Ft.	6" non-perforated helical corrugated steel pipe, including specials, 707.01	13					
Special	60739920	420	Lin. Ft.	Vandal protection fence, 10' curved, coated fabric			420			
852	00100	12	Each	Polyester/vinylester resin bonded anchors		12				

* See Proposal Note

Quantities computed by: DFS 12-92
Quantities checked by: AvdB 12-92

CONSTRUCTION JOINT PREPARATION: Prior to concrete placement, abrasively clean joint surface and exposed reinforcement to remove loose and disintegrated concrete and loose rust. Then, the joint surface and exposed reinforcement shall be thoroughly cleaned of all dirt, dust, or other foreign materials by the use of water, air under pressure, or other method that produces results satisfactory to the Engineer. The concrete bonding surface shall be wet without free water as concrete is placed.

CONCRETE REMOVAL above Piers 2 and 3 shall be by means of approved pneumatic hammers employing pointed and blunt chisel tools. Hydraulic hoe-ram type hammers will not be permitted. The weight of the hammer shall not be more than 35 pounds for removal within 18-inches of portions to be preserved. Outside the 18-inch limit, a hammer heavier than 35 pounds, but not to exceed 85 pounds, may be used at the approval of the Engineer. Pneumatic hammers shall not be placed in direct contact with reinforcing steel that is to be retained in the rebuilt structure.

CLASS S CONCRETE, SUPERSTRUCTURE, AS PER PLAN: Concrete shall be cured by method (a), water curing.

LOCKWOOD, JONES & BEALS
CONSULTING ENGINEERS
DAYTON, OHIO
8/105

GENERAL NOTES AND ESTIMATED QUANTITIES
BRIDGE NO. HAM-75-0992
I-75
UNDER PEDESTRIAN OVERPASS

DESIGNED	CHECKED	DRAWN	CHECKED	REVIEWED DATE	REVISED
DFS		DYA	HDJ	MPH 12/92	

f:\6272\0992gn.dgn Feb. 23, 1993 14:00:44

F.H.W.A. REGION	STATE	PROJECT	
5	OHIO		

242
338

HAMILTON COUNTY
HAM-75-9.75

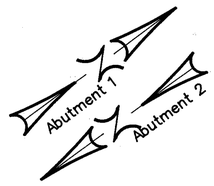

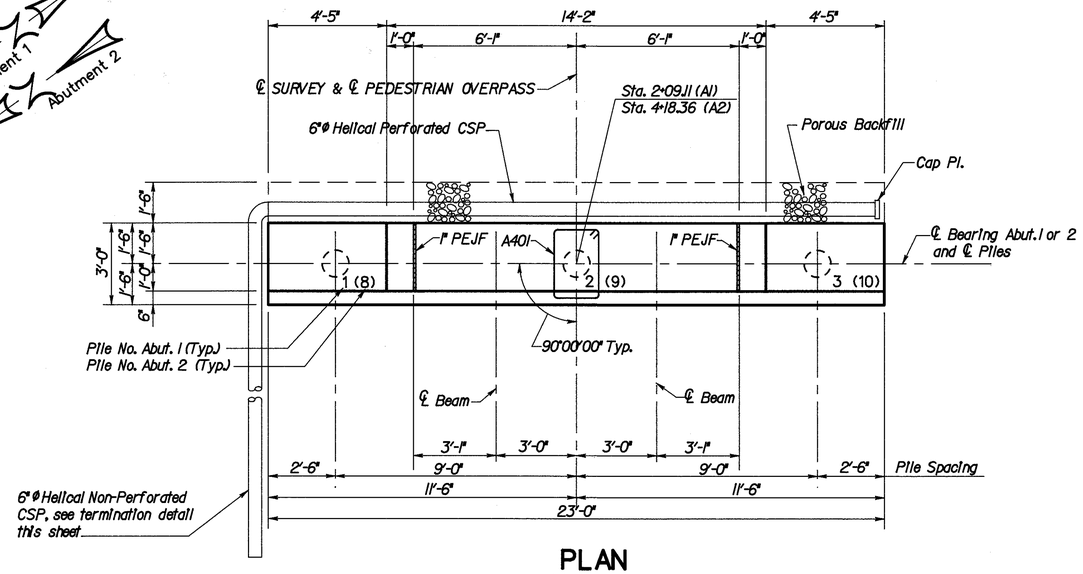

PLAN

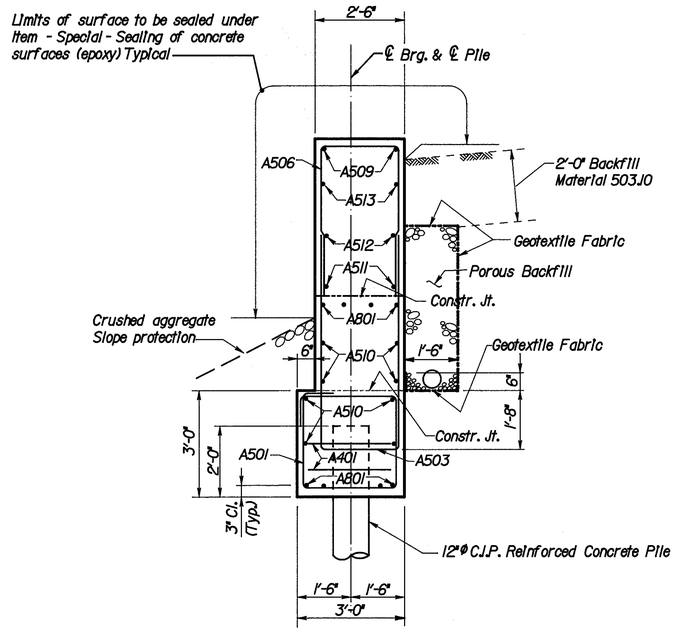

SECTION B-B

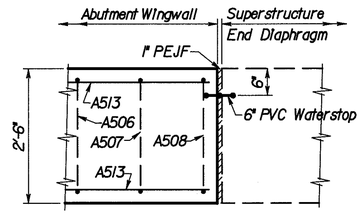

SECTION C-C

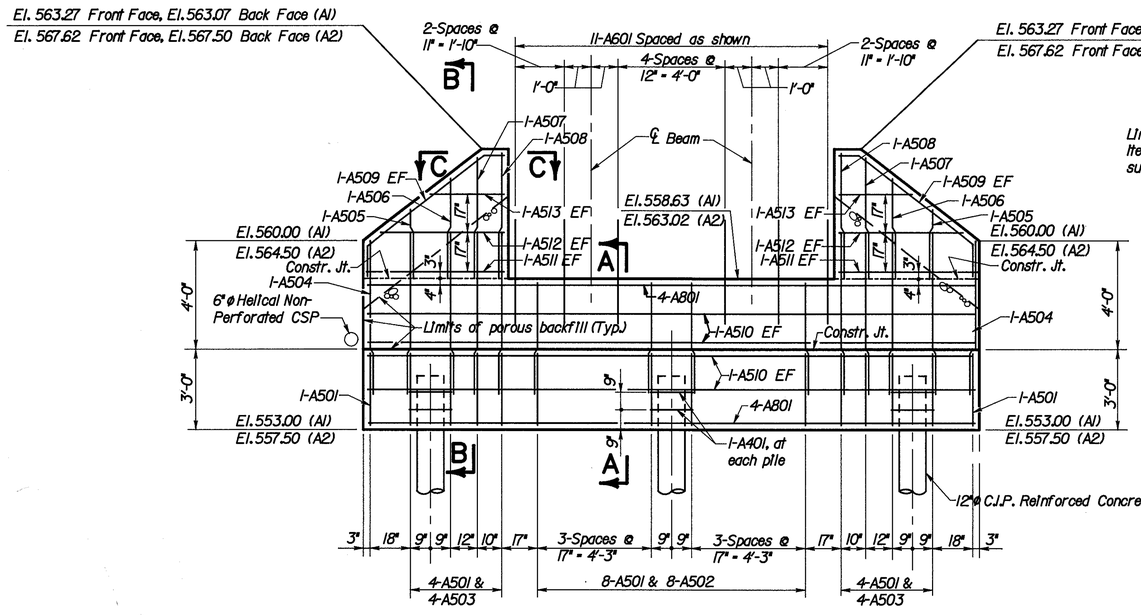

ELEVATION

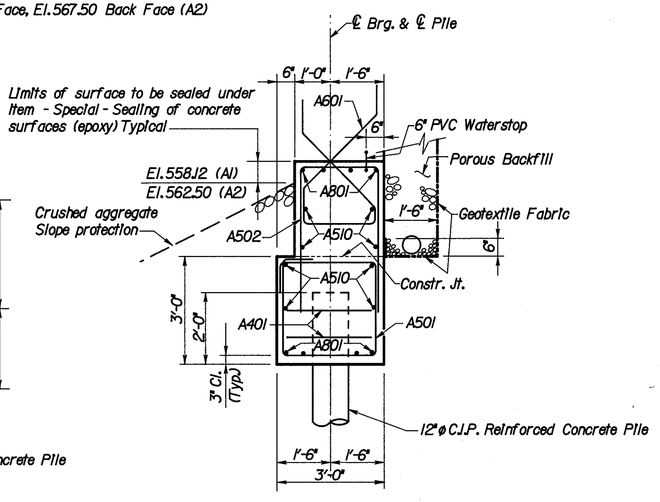

SECTION A-A

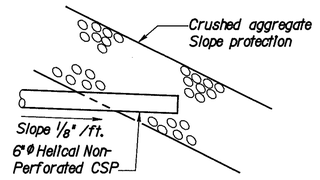

6"ø CSP TERMINATION DETAIL

NOTES

1. For General Notes, see sheet 8 / 105
2. For Reinforcing Steel List, see sheet 16 / 105
3. Porous backfill shall extend upward to the plane of the subgrade within the limits of the sidewalk, to within 2'-0" of ground surface outside the limits of the sidewalk and laterally to the limits shown.
4. For end diaphragm details see sheet 13 / 105

NOTE:
Reinforcing bar marks shown apply for Abutment 1. Reinforcing bar marks for Abutment 2 are the same except that the letter of bar mark designation shall be a "B" in lieu of an "A".

LEGEND

EF = Each Face
PEJF = Preformed Expansion Joint Filler
A1 = Abutment 1
A1 = Abutment 2

LOCKWOOD, JONES & BEALS
CONSULTING ENGINEERS
DAYTON, OHIO
9 / 105

ABUTMENT 1 & 2
BRIDGE NO. HAM-75-0992
I-75
UNDER PEDESTRIAN OVERPASS

DESIGNED	CHECKED	DRAWN	CHECKED	REVIEWED DATE	REVISED
HDJ	DFS	DYA	DFS	MPH 12/92	

f:\6272\0992s1.dgn Feb. 3, 1993 10:34:19

F.H.W.A. REGION	STATE	PROJECT	
5	OHIO		

243
338

HAMILTON COUNTY
HAM-75-9.75

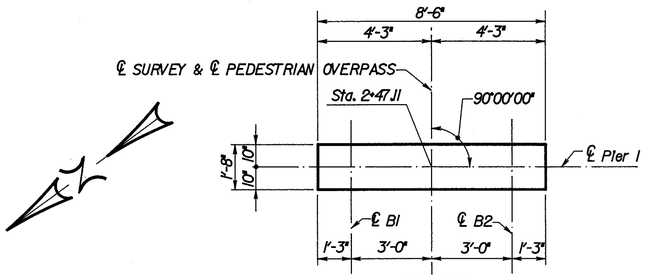

PLAN

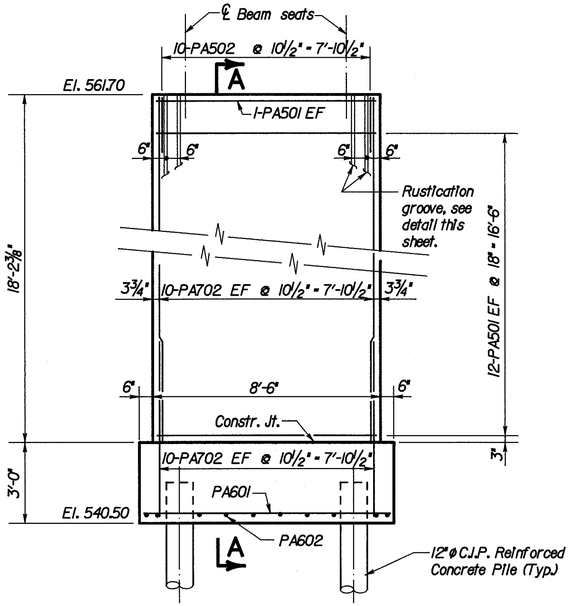

ELEVATION

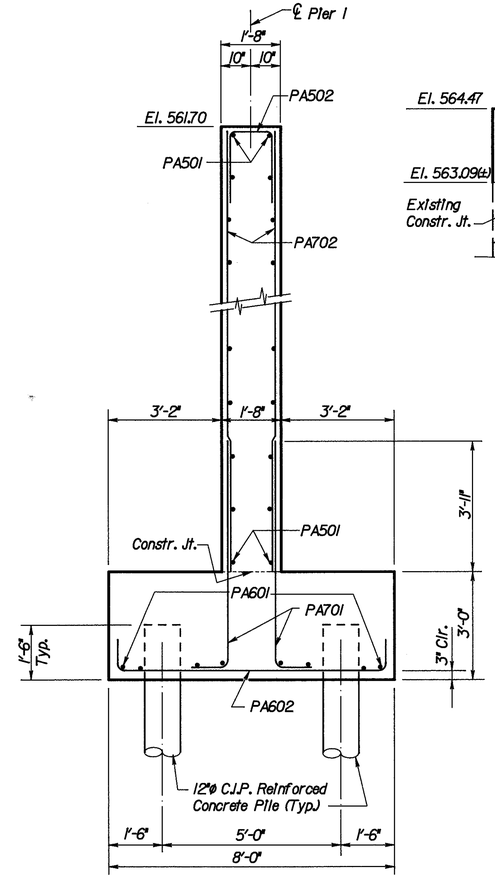

SECTION A-A

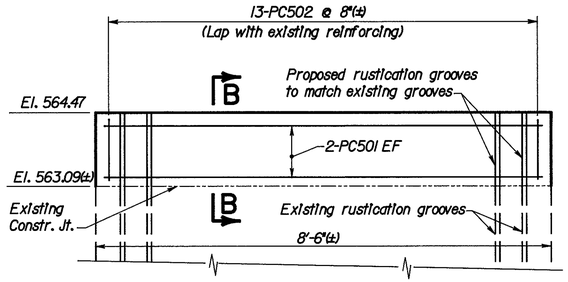

PART - ELEVATION PIER 3

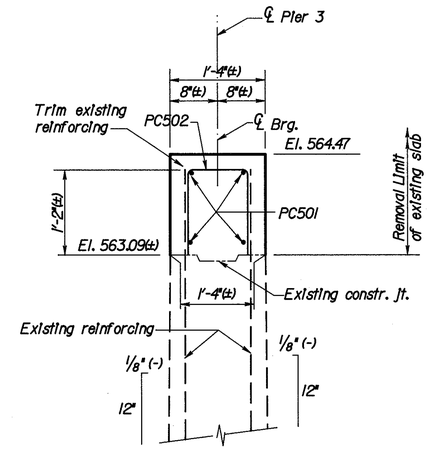

SECTION B-B

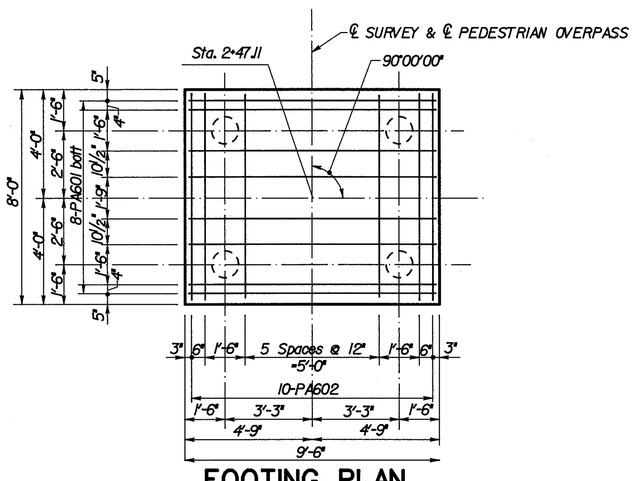

FOOTING PLAN

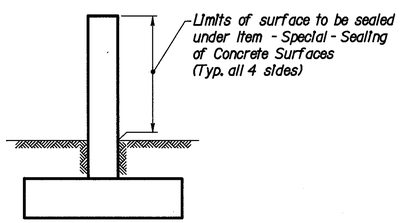

SEALING LIMITS (ALL PIERS)

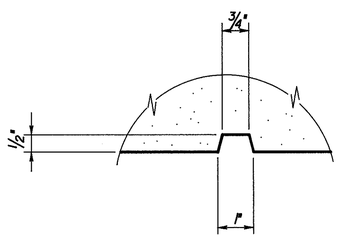

RUSTICATION GROOVE

NOTES

1. For Reinforcing Steel List, see sheet 16/105

LEGEND

EF = Each Face

LOCKWOOD, JONES & BEALS
CONSULTING ENGINEERS
DAYTON, OHIO

10/105

PIERS 1 & 3
BRIDGE NO. HAM-75-0992
I-75
UNDER PEDESTRIAN OVERPASS

DESIGNED	CHECKED	DRAWN	CHECKED	REVIEWED DATE	REVISED
DFS	MJZ	DYA	HDJ	MPH 12/92	

f:\6272\0992p1.dgn Feb. 19, 1993 14:54:32

F.H.W.A. REGION	STATE	PROJECT	
5	OHIO		

244
338

HAMILTON COUNTY
HAM-75-9.75

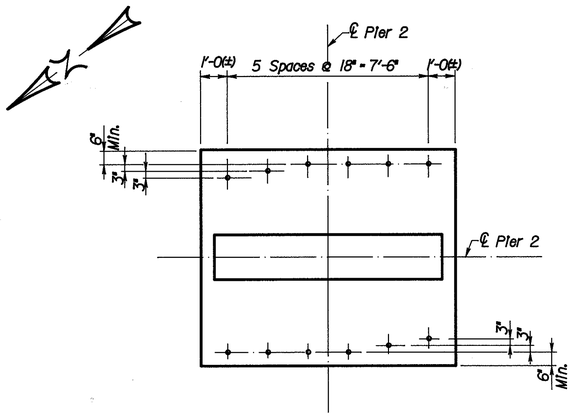

FOOTING PLAN - PIER 2
LOCATION OF DOWEL HOLES

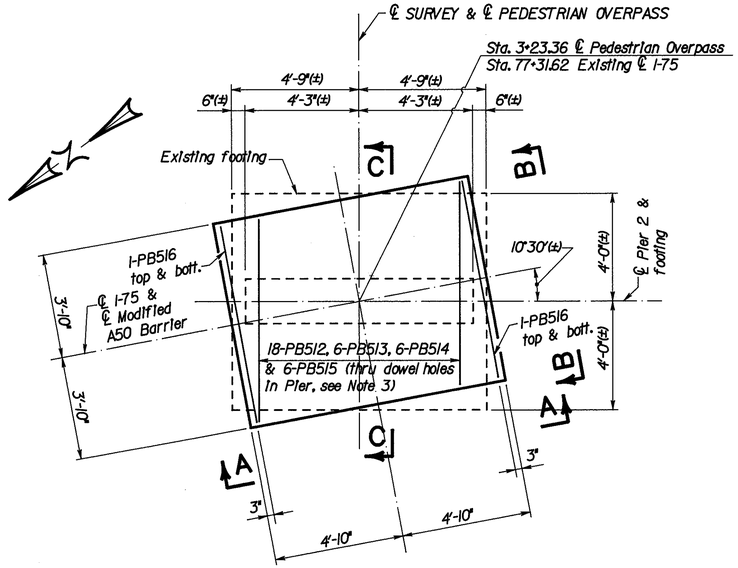

FOOTING PLAN - PIER 2

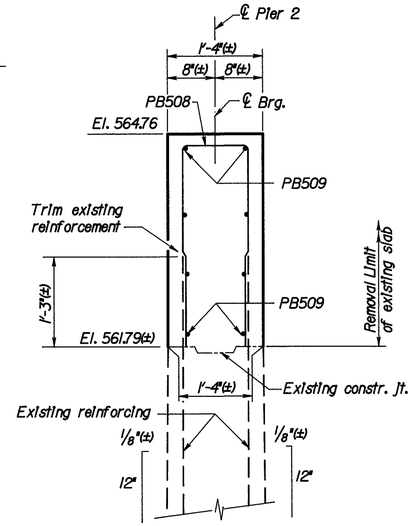

SECTION D-D

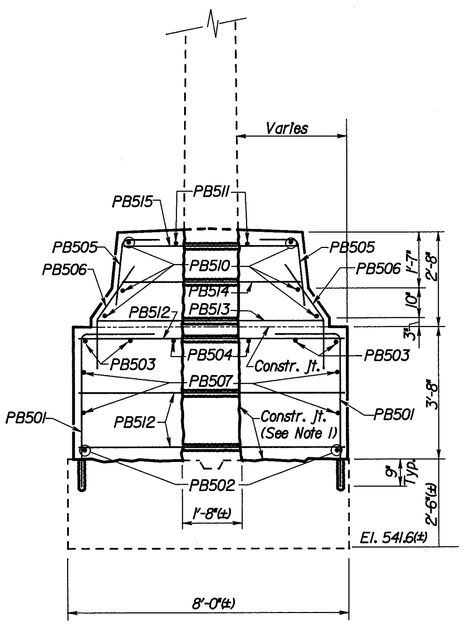

SECTION B-B

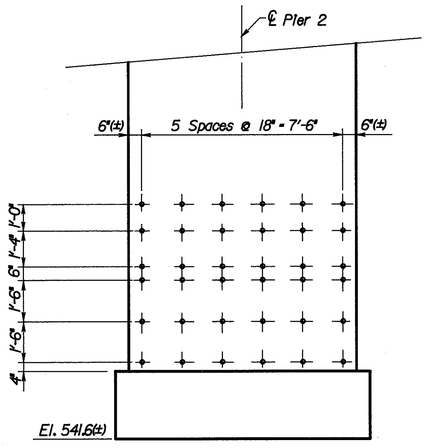

PIER ELEVATION
LOCATION OF DOWEL HOLES THROUGH PIER WALL

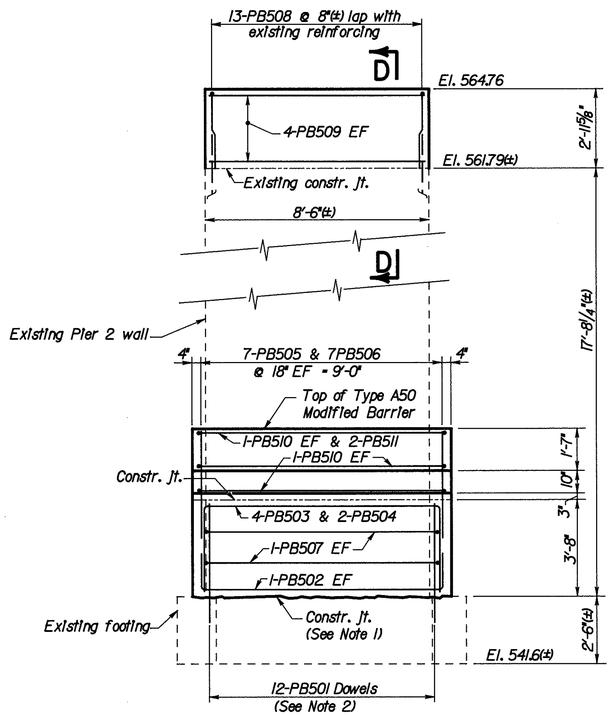

ELEVATION A-A

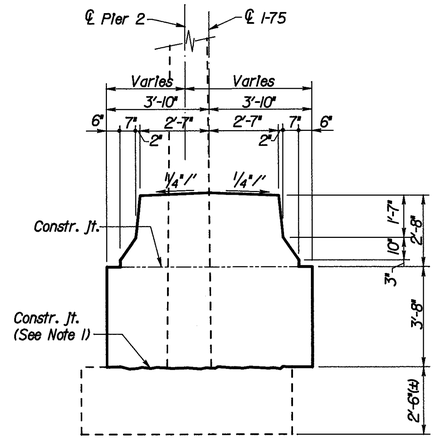

ELEVATION B-B

LEGEND

EF = Each Face

NOTES

1. Construction joints between new and existing construction shall be roughened to a full amplitude of approximately ¼". These surfaces shall be clean and free of laitance before placement of concrete. Include with Item 511, Class C concrete, pier above footings for payment.
2. PB501 dowel installation procedure and materials shall be as defined by Supplemental Specifications 852 and 705.20. Include with Item 852, Polyester/vinylester resin bonded anchors, for payment.
3. PB512 thru PB515 dowel installation procedure and materials shall be as defined in 510 of the CMS.
4. For Reinforcing Steel List, see sheet 16 /105

LOCKWOOD, JONES & BEALS
CONSULTING ENGINEERS
DAYTON, OHIO
11 /105

PIER 2
BRIDGE NO. HAM-75-0992
I-75
UNDER PEDESTRIAN OVERPASS

DESIGNED	CHECKED	DRAWN	CHECKED	REVIEWED DATE	REVISED
DFS	MJZ	DYA	HDJ	MPH 12/92	

f:\6272\0992p2.dgn Feb. 19, 1993 15:08:06

F.H.W.A. REGION	STATE	PROJECT	
5	OHIO		

245
338

HAMILTON COUNTY
HAM-75-9.75

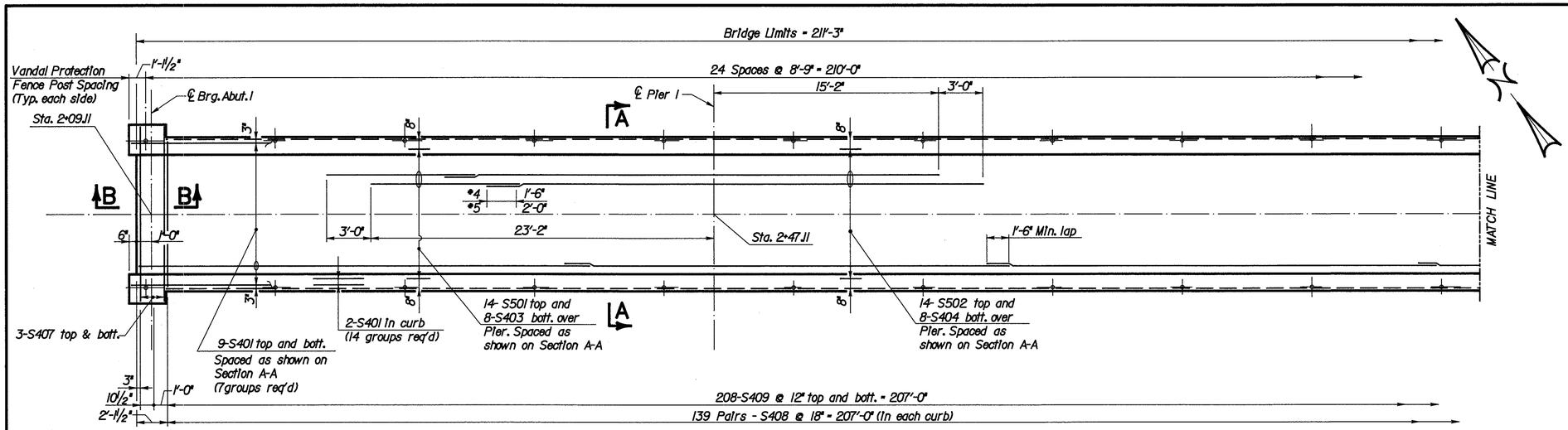

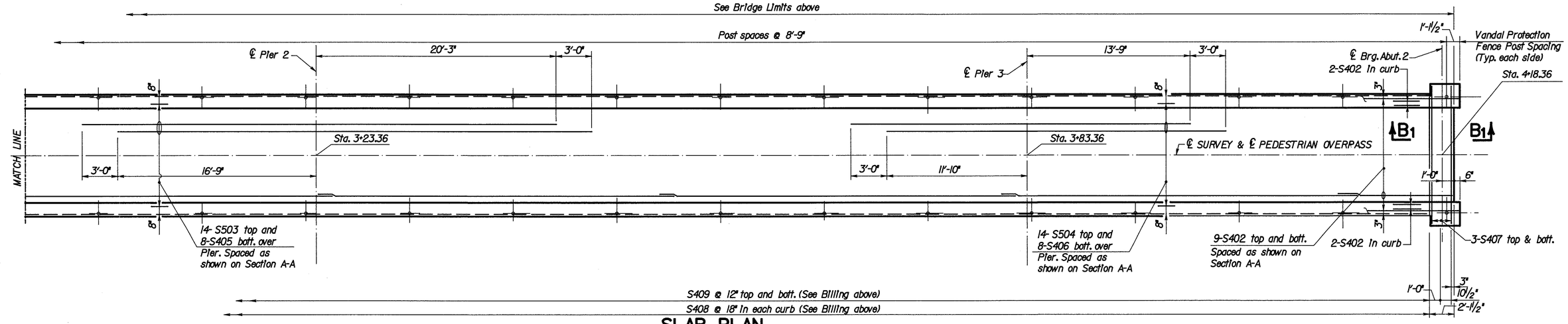

SLAB PLAN

NOTES

1. This is the design dimension. The quantity of deck concrete to be paid for shall be based upon this dimension, even though deviation from it may be necessary because the top flange of the beam may not have the exact camber or conformation required to place it parallel to the finished grade. Deduction shall be made for volume of encased steel plates as per 511.18.
2. A HAUNCH WIDTH of 9" shall be used for computing quantity of concrete. The haunch may be greater than 9" at the Contractor's option.
3. For General Notes, see sheet 8 / 105
4. For Reinforcing Steel List, see sheet 16 / 105
5. For Section B-B, B_1 - B_1 and additional End Diaphragm details, see sheet 13 / 105
6. For Tables of Screed and Finished Pavement Elevations, see sheet 15 / 105
7. For stud shear connector details, see sheet 14 / 105

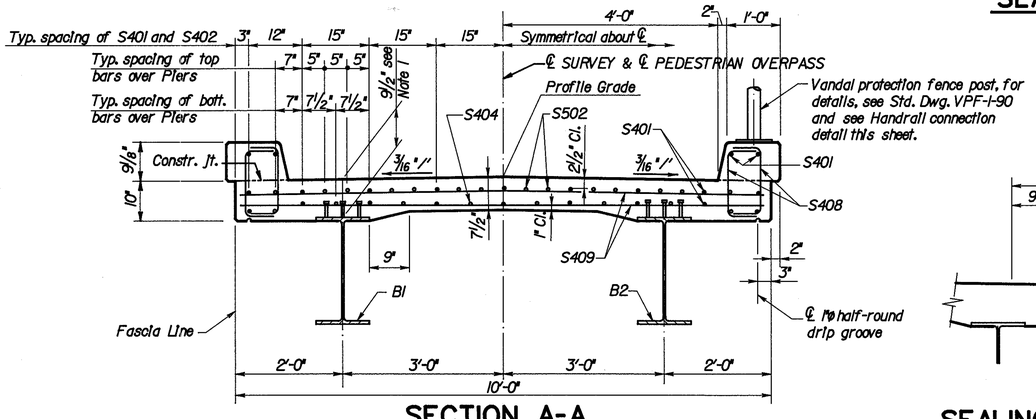

SECTION A-A

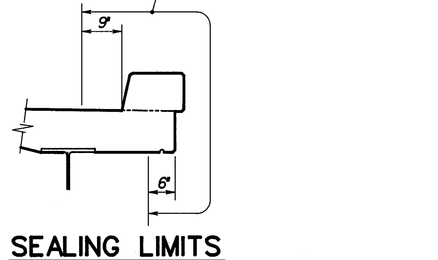

SEALING LIMITS

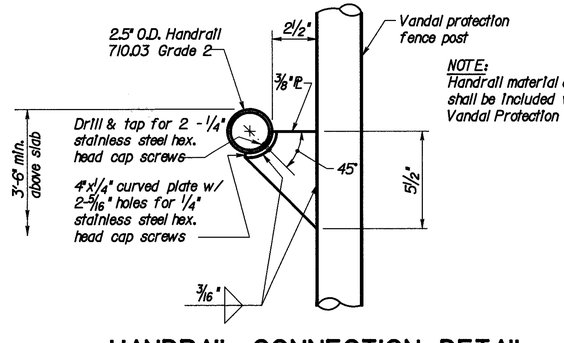

HANDRAIL CONNECTION DETAIL

Typical at each Vandal protection fence post.

LOCKWOOD, JONES & BEALS
CONSULTING ENGINEERS
DAYTON, OHIO

12 / 105

SLAB PLAN
BRIDGE NO. HAM-75-0992
I-75
UNDER PEDESTRIAN OVERPASS

DESIGNED	CHECKED	DRAWN	CHECKED	REVIEWED DATE	REVISED
DFS	MJZ	DYA	DFS	MPH 12/92	

f:\6272\0992sp.dgn Feb. 23, 1993 10:31:03

HAMILTON COUNTY
HAM-75-9.75

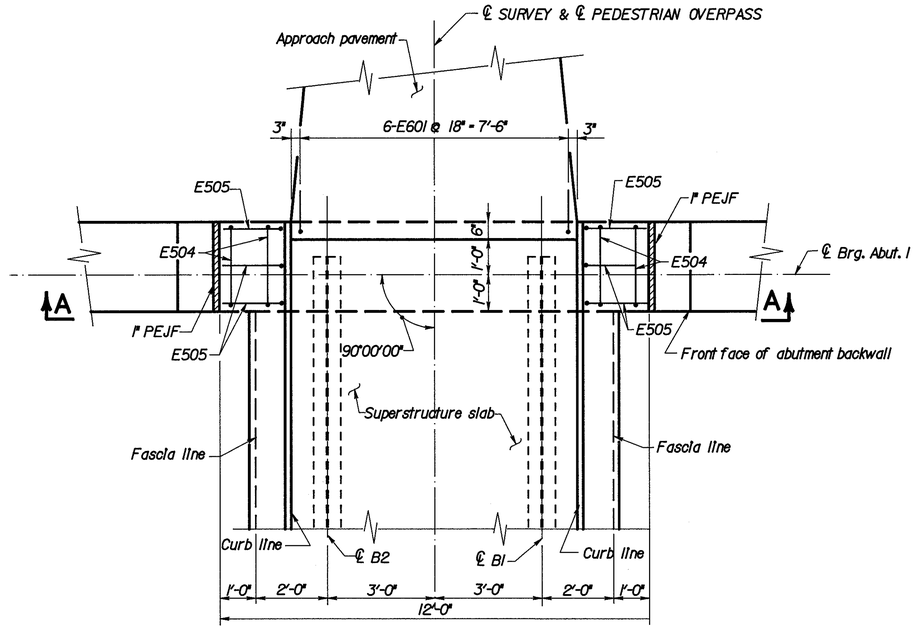

PLAN - END DIAPHRAGM AT ABUTMENT 1

(ABUTMENT 2 SIMILAR)

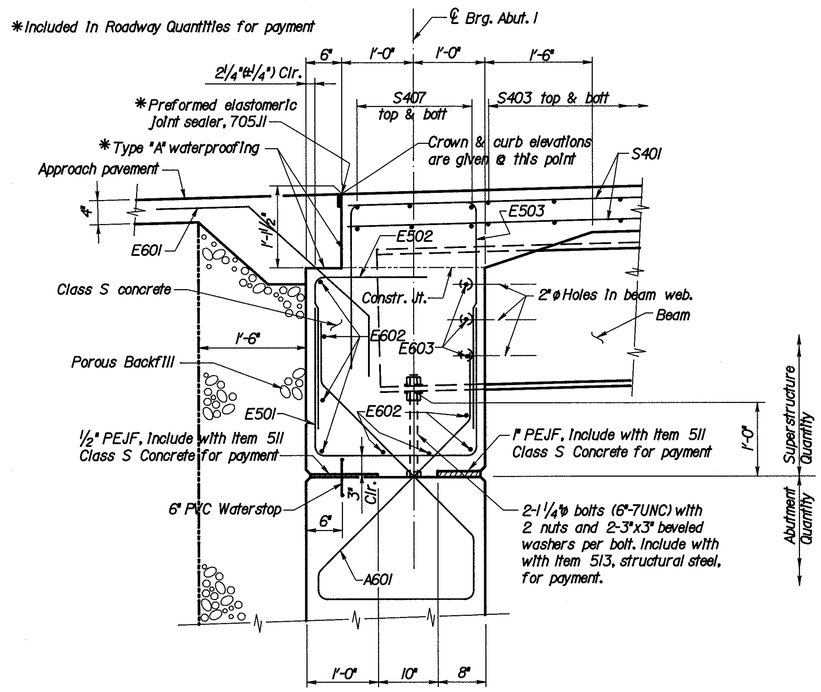

SECTION B-B

(SECTION B_1 - B_1 SIMILAR)

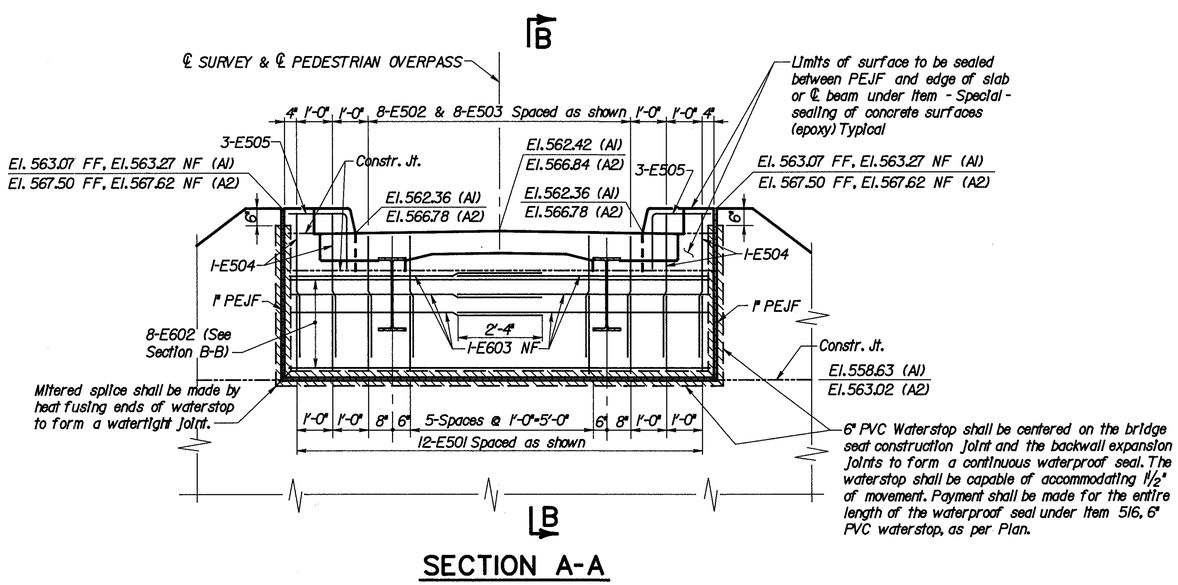

SECTION A-A

NOTES

1. For Reinforcing Steel List, see sheet 16 / 105
2. For bearing details, see sheet 14 / 105
3. For General Notes, see sheet 8 / 105
4. For additional waterstop details, see Standard Drawing ICD-1-82, sheet 4 of 5.

LEGEND

FF = Far Face
NF = Near Face
PEJF = Preformed Expansion Joint Filler
A1 = Abutment 1
A2 = Abutment 2

LOCKWOOD, JONES & BEALS
CONSULTING ENGINEERS
DAYTON, OHIO
13 / 105

END DIAPHRAGM DETAILS AT ABUTMENTS 1 AND 2
BRIDGE NO. HAM-75-0992
I-75
UNDER PEDESTRIAN OVERPASS

DESIGNED	CHECKED	DRAWN	CHECKED	REVIEWED DATE	REVISED
DFS	MJZ	DYA	DFS	MPH 12/92	

f:\6272\0992ed.dgn Feb. 4, 1993 09:48:42

F.H.W.A. REGION	STATE	PROJECT	
5	OHIO		

247
338

HAMILTON COUNTY
HAM-75-9.75

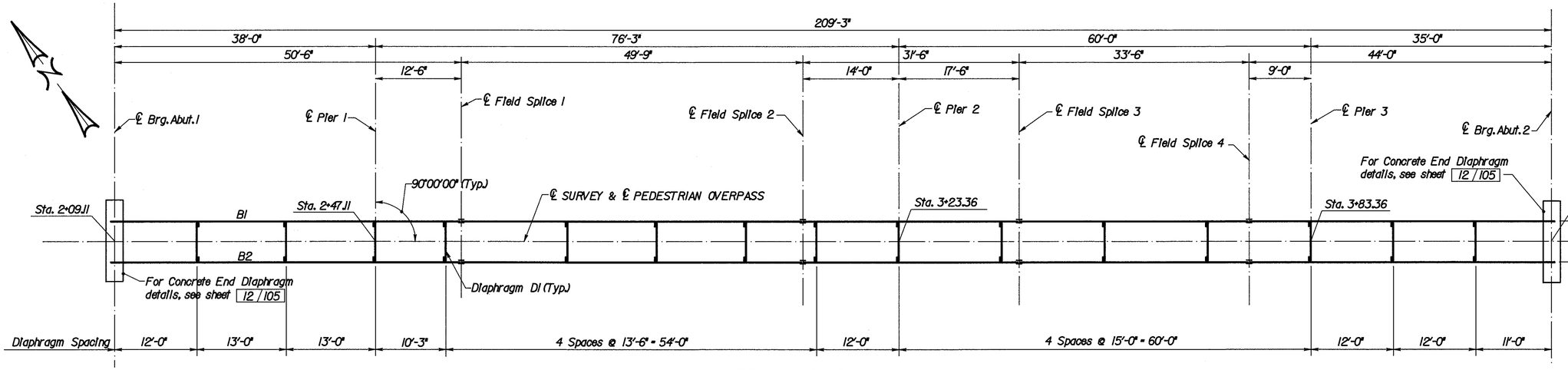

FRAMING PLAN

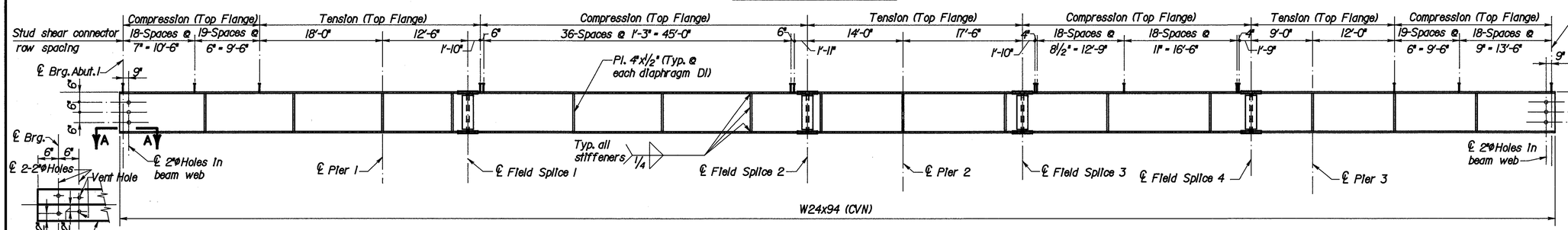

BEAM ELEVATION

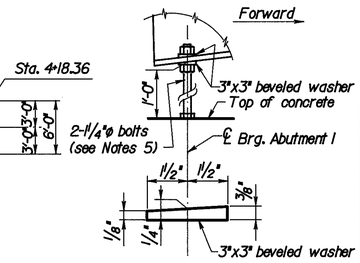

AT ABUTMENT 1

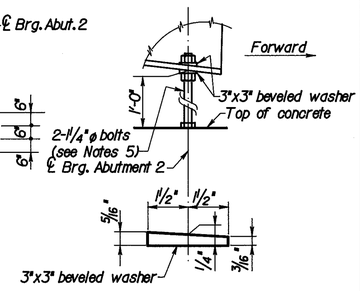

AT ABUTMENT 2

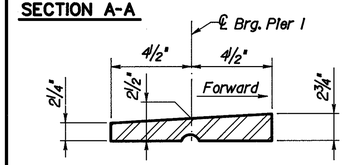

AT PIER 1

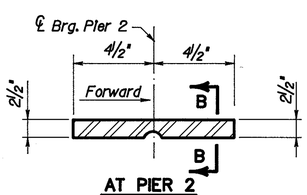

AT PIER 2

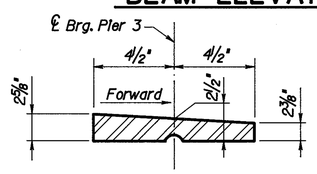

AT PIER 3

TOP LOAD PLATE DETAILS @ PIERS 1, 2 & 3

For additional details of R-75 Rocker see Std. Dwg. RB-1-55.
Include with Item 516 Bearing Device, Rocker, for payment.

SECTION A-A

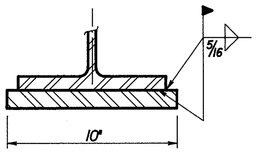

SECTION B-B

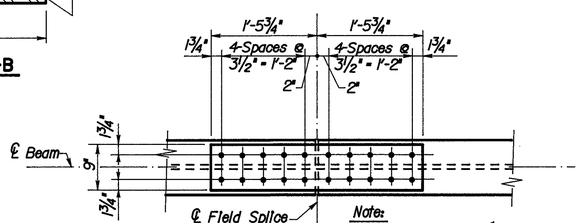

FIELD SPLICE DETAILS

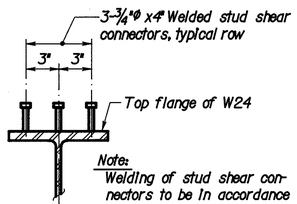

Note: Welding of stud shear connectors to be in accordance with 513.171 of CMS.

STUD SHEAR CONNECTOR LAYOUT

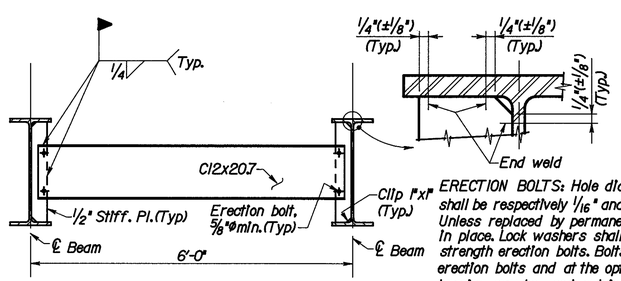

DIAPHRAGM D1

ERECTION BOLTS: Hole diameter in the diaphragms and beam stiffeners shall be respectively 1/16" and ¼" larger than the diameter of the erection bolts. Unless replaced by permanent high strength bolts, erection bolts shall remain in place. Lock washers shall be furnished for other than fully torqued high strength erection bolts. Bolts shall be furnished as part of 513. In lieu of erection bolts and at the option of the Contractor, alternate means of temporary bracing may be used subject to the approval of the Director (501.06).

BEVELED WASHER DETAILS

NOTES

1. Where a shape or plate is designated (CVN) the material shall meet specified minimum notch toughness requirements as specified in 711.01 of CMS.
2. For General Notes, see sheet 8 / 105
3. For Deflection and Camber diagrams, see sheet 15 / 105
4. WELDED ATTACHMENT of supports for concrete deck finishing machine may be made to areas of the beam flanges designated "Compression". Attachments shall not be made to areas designated "Tension". Fillet welds to compression flanges shall be not closer than 1" from edge of flange, be not more than 2" long, and be not smaller than the minimum size required by AASHTO.
5. Support bolts shall be 1¼"ø bolts (6"-7UNC) with 2 nuts and 2- 3"x3" beveled washers per bolt as shown. Include with Item 513, Structural Steel, for payment.

LOCKWOOD, JONES & BEALS
CONSULTING ENGINEERS
DAYTON, OHIO

14 / 105

FRAMING PLAN
BRIDGE NO. HAM-75-0992
I-75
UNDER PEDESTRIAN OVERPASS

DESIGNED	CHECKED	DRAWN	CHECKED	REVIEWED DATE	REVISED
DFS	MJZ	DYA	DFS	MPH 12/92	

f:\6272\0992fp1.dgn Feb. 4, 1993 09:48:59

F.H.W.A. REGION	STATE	PROJECT	
5	OHIO		

248
338

HAMILTON COUNTY
HAM-75-9.75

DEFLECTION AND CAMBER NOTES

1. Working Points (WP) are at bottom of top flange at ℄ Bearing.
2. The Working Line is a straight line between indicated Working Points.
3. The Base Line is a straight line between WP1 and WP5.
4. The tabulated deflection and camber data is measured from the Working Line.

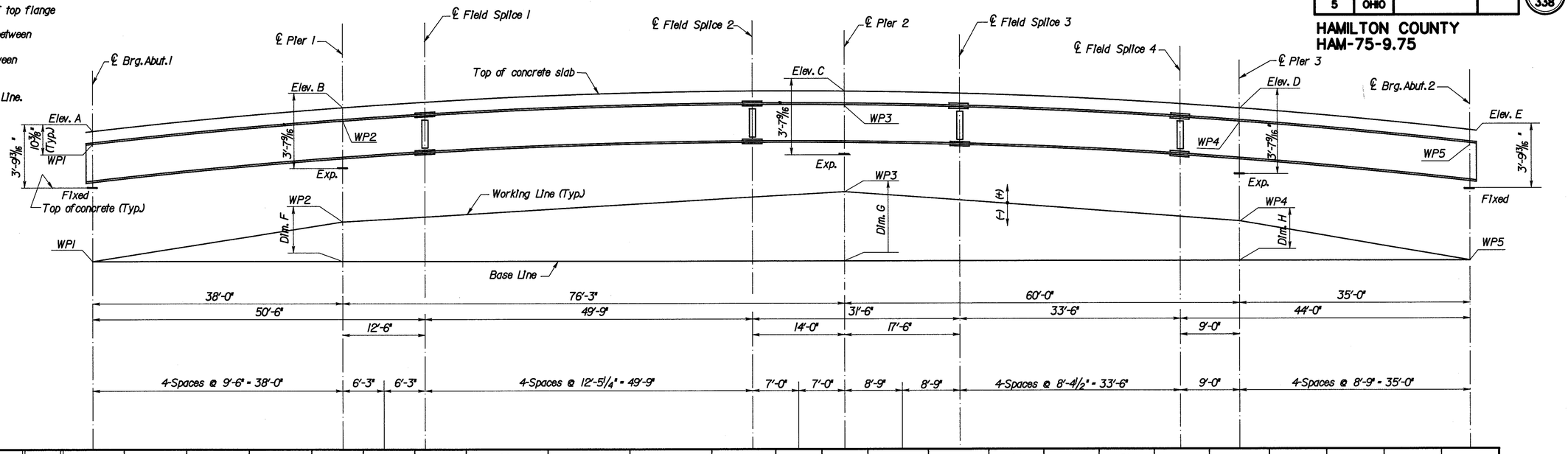

DEFLECTION AND CAMBER

	BEAM	A1	¼	½	¾	P1	—	FS1	¼	½	¾	FS2	—	P2	—	FS3	¼	½	¾	FS4	P3	¼	½	¾	A2
Deflection due to Steel DL	B1 B2	0	0	0	0	0	-1⁄16"	-⅛"	-¼"	-5⁄16"	-¼"	-⅛"	-1⁄16"	0	0	0	-1⁄16"	-1⁄16"	-1⁄16"	0	0	0	0	0	0
Deflection due to Non-Composite Remaining DL	B1 B2	0	1⁄16"	⅛"	⅛"	0	-5⁄16"	-1¹⁄16"	-1⅜"	-1¹¹⁄16"	-1⅜"	-11⁄16"	-5⁄16"	0	1⁄16"	-1⁄16"	-¼"	-5⁄16"	-¼"	-⅛"	0	0	-1⁄16"	-1⁄16"	0
Deflection due to Composite Remaining DL	B1 B2	0	0	0	0	0	-1⁄16"	-⅛"	-¼"	-5⁄16"	-¼"	-⅛"	-1⁄16"	0	0	0	-1⁄16"	-1⁄16"	-1⁄16"	0	0	0	0	0	0
Total DL Deflection	B1 B2	0	1⁄16"	⅛"	⅛"	0	-7⁄16"	-15⁄16"	-1⅞"	-2⁵⁄16"	-1⅞"	-15⁄16"	-7⁄16"	0	1⁄16"	-1⁄16"	-⅜"	-7⁄16"	-⅜"	-⅛"	0	0	-1⁄16"	-1⁄16"	0
Camber required for DL	B1 B2	0	-1⁄16"	-⅛"	-⅛"	0	7⁄16"	15⁄16"	1⅞"	2⁵⁄16"	1⅞"	15⁄16"	7⁄16"	0	-1⁄16"	1⁄16"	⅜"	7⁄16"	⅜"	⅛"	0	0	1⁄16"	1⁄16"	0
Correction for Vertical Curve	B1 B2	0	½"	15⁄16"	13⁄16"	0	1¾"	3³⁄16"	5¹⁄16"	5¾"	5¼"	3³⁄16"	1¹⁵⁄16"	0	1¾"	2¹⁵⁄16"	3½"	3½"	2¹⁵⁄16"	1¹³⁄16"	0	⅞"	1³⁄16"	⅞"	0
Total Camber Required	B1 B2	0	7⁄16"	13⁄16"	11⁄16"	0	2³⁄16"	4⅛"	6¹⁵⁄16"	8¹⁄16"	7⅛"	4⅜"	2⅜"	0	1¹¹⁄16"	3"	3⅞"	3¹⁵⁄16"	3⁵⁄16"	1¹⁵⁄16"	0	⅞"	1¼"	15⁄16"	0

Beam	Elev. A	Elev. B	Elev. C	Elev. D	Elev. E	Dim. F	Dim. G	Dim. H
B1	562.452	565.330	568.394	568.103	566.838	2'-1"	3'-6⁹⁄16"	2'-0"
B2	562.452	565.330	568.394	568.103	566.838	2'-1"	3'-6⁹⁄16"	2'-0"

FINISHED PAVEMENT ELEVATIONS

Station	West Curb Line	Profile Grade	East Curb Line
2+25	563.71	563.77	563.71
+50	565.50	565.56	565.50
+75	566.88	566.94	566.88
3+00	567.85	567.91	567.85
+25	568.40	568.46	568.40
+50	568.54	568.61	568.54
+75	568.27	568.33	568.27
4+00	567.59	567.65	567.59

SCREED ELEVATIONS

Station	North Curb Line	Profile Grade	South Curb Line	Station	North Curb Line	Profile Grade	South Curb Line
℄ Brg. Abut. 1	562.436	562.499	562.436	℄ Pier 2	568.379	568.441	568.379
¼	563.192	563.254	563.192	—	568.480	568.542	568.480
½	563.943	564.005	563.943	FS3	568.545	568.607	568.545
¾	564.654	564.716	564.654	¼	568.571	568.633	568.571
℄ Pier 1	565.315	565.377	565.315	½	568.536	568.598	568.536
—	565.742	565.804	565.742	¾	568.443	568.505	568.443
FS1	566.149	566.211	566.149	FS4	568.294	568.356	568.294
¼	566.876	566.938	566.876	℄ Pier 3	568.088	568.150	568.088
½	567.464	567.526	567.464	¼	567.847	567.909	567.847
¾	567.887	567.949	567.887	½	567.560	567.622	567.560
FS2	568.172	568.234	568.172	¾	567.217	567.279	567.217
—	568.289	568.351	568.289	℄ Brg. Abut. 2	566.823	566.885	566.823

NOTE:
Screed elevation given are at the top of concrete slab before concrete placement and have been adjusted for estimated deflection due to weight of concrete slab, curb and railing.

LOCKWOOD, JONES & BEALS
CONSULTING ENGINEERS
DAYTON, OHIO

15 / 105

DEFLECTION AND CAMBER
BRIDGE NO. HAM-75-0992
I-75
UNDER PEDESTRIAN OVERPASS

DESIGNED	CHECKED	DRAWN	CHECKED	REVIEWED DATE	REVISED
DFS	MJZ	DYA	DFS	MPH 12/92	

f:\6272\0992sd.dgn Feb. 3, 1993 10:58:08

REINFORCING STEEL LIST

ABUTMENT 1

MARK	NO.	LENGTH	WEIGHT	TYPE	A	B	C	D	E	F	G	H	K	O	R
A401	6	9'-1"	36	12	4½"	1'-9"	2'-6½"	1'-9"	2'-6½"		4½"				
A501	18	11'-6½"	217	13	8½"	2'-8"	2'-7"	2'-8"	2'-7"		8½"				
A502	8	10'-3"	86	8			4'-2"	2'-2"	4'-2"						
A503	8	13'-11"	116	8			6'-0"	2'-2"	6'-0"						
A504	2	13'-1"	27	8			5'-7	2'-2"	5'-7						
A505	2	6'-7"	14	8			2'-4"	2'-2"	2'-4"						
A506	2	8'-9"	18	8			3'-5"	2'-2"	3'-5"						
A507	2	10'-1"	21	8			4'-1"	2'-2"	4'-1"						
A508	2	10'-5"	22	8			4'-3"	2'-2"	4'-3"						
A509	4	7'-2	30	20		9"	5'-2"	1'-3"				4'-3"	2'-10⅞"		
A510	8	22'-8"	189	Str.											
A511	4	5'-1"	21	Str.											
A512	4	4'-7"	19	Str.											
A513	4	2'-6"	10	Str.											
A601	11	10'-9"	178	22	See Bending Diagrams										
A801	8	22'-8"	484	Str.											
		TOTAL =	1488												

ABUTMENT 2

MARK	NO.	LENGTH	WEIGHT	TYPE	A	B	C	D	E	F	G	H	K	O	R
B401	6	9'-1"	36	12	4½"	1'-9"	2'-6½"	1'-9"	2'-6½"		4½"				
B501	18	11'-6½"	217	13	8½"	2'-8"	2'-7"	2'-8"	2'-7"		8½"				
B502	8	10'-3"	86	8			4'-2"	2'-2"	4'-2"						
B503	8	13'-11"	116	8			6'-0"	2'-2"	6'-0"						
B504	2	13'-1"	27	8			5'-7	2'-2"	5'-7						
B505	2	6'-7"	14	8			2'-4"	2'-2"	2'-4"						
B506	2	8'-9"	18	8			3'-5"	2'-2"	3'-5"						
B507	2	10'-1"	21	8			4'-1"	2'-2"	4'-1"						
B508	2	10'-5"	22	8			4'-3"	2'-2"	4'-3"						
B509	4	7'-2	30	20		9"	5'-2"	1'-3"				4'-3"	2'-10⅞"		
B510	8	22'-8"	189	Str.											
B511	4	5'-1"	21	Str.											
B512	4	4'-7"	19	Str.											
B513	4	2'-6"	10	Str.											
B601	11	10'-9"	178	22	See Bending Diagrams										
B801	8	22'-8"	484	Str.											
		TOTAL =	1488												

PIER 1

MARK	NO.	LENGTH	WEIGHT	TYPE	A	B	C	D	E	F	G	H	K	O	R
PA501	26	8'-2"	221	Str.											
PA502	10	4'-1"	43	8			1'-6"	1'-4"	1'-6"						
PA601	8	9'-0"	108	Str.											
PA602	10	10'-2"	153	8			1'-6"	7'-6"	1'-6"						
PA701	20	8'-0"	327	10		1'-6"	6'-8"								
PA702	20	18'-0"	736	Str.											
		TOTAL =	1588												

PIER 2

MARK	NO.	LENGTH	WEIGHT	TYPE	A	B	C	D	E	F	G	H	K	O	R
PB501	12	5'-7½"	NOTE 5	10		1'-6"	4'-3"								
PB502	2	12'-1"	25	8			1'-6"	9'-4"	1'-6"						
PB503	4	15'-9"	66	8			3'-4"	9'-4"	3'-4"						
PB504	2	12'-6½"	26	10		3'-4"	9'-4"								
PB505	14	3'-0"	44	9		9"	2'-3"		1"	9"				2'-4"	
PB506	14	3'-2"	46	9		1'-6"	1'-8"		1'-2¾"	10⅜"				2'-10⅜"	
PB507	4	17'-11"	75	8			4'-6"	9'-2"	4'-6"						
PB508	13	5'-11"	80	8			2'-7"	1'-0"	2'-7"						
PB509	8	8'-2"	68	Str.											
PB510	6	16'-11"	106	8			4'-0"	9'-2"	4'-0"						
PB511	2	13'-9"	29	8			2'-4"	9'-4"	2'-4"						
PB512	18	7'-5"	139	Str.											
PB513	6	6'-5"	40	Str.											
PB514	6	5'-2"	32	Str.											
PB515	6	4'-10"	30	Str.											
PB516	4	7'-4"	31	Str.											
		TOTAL =	837												

PIER 3

MARK	NO.	LENGTH	WEIGHT	TYPE	A	B	C	D	E	F	G	H	K	O	R
PC501	4	8'-2	34	Str.											
PC502	13	3'-1"	42	8		1'-2"	1'-0"	1'-2"							
		TOTAL =	76												

SLAB

MARK	NO.	LENGTH	WEIGHT	TYPE	A	B	C	D	E	F	G	H	K	O	R
S401	154	30'-0"	3086	Str.											
S402	18	12'-5"	149	Str.											
S403	8	10'-0"	53	Str.											
S404	8	32'-10"	175	Str.											
S405	8	40'-0"	214	Str.											
S406	8	28'-7"	153	Str.											
S407	12	11'-8"	94	Str.											
S408	556	2'-0"	743	8		6"	1'-3"	6"							
S409	416	9'-8"	2686	Str.											
S501	14	10'-0"	146	Str.											
S502	14	33'-4"	487	Str.											
S503	14	40'-0"	584	Str.											
S504	14	28'-7"	417	Str.											
		TOTAL =	8987												

END DIAPHRAGMS

MARK	NO.	LENGTH	WEIGHT	TYPE	A	B	C	D	E	F	G	H	K	O	R
E501	24	5'-11"	148	8			2'-0"	2'-2"	2'-0"						
E502	16	3'-2½"	54	10		1'-8"	1'-8"								
E503	16	6'-2"	103	8			2'-0"	1'-8"	2'-9"						
E504	8	8'-11"	74	8			3'-6"	2'-2"	3'-6"						
E505	12	3'-0"	38	10			1'-6"	1'-7½"							
E601	12	5'-1"	92	6				1'-5"	2'-3"	1'-5"		1'-0"	1'-0"	4'-3"	
E602	16	11'-8"	280	Str.											
E603	12	7'-0"	126	Str.											
		TOTAL =	915												

F.H.W.A. REGION	STATE	PROJECT	
5	OHIO		

249
338

HAMILTON COUNTY
HAM-75-9.75

BENDING DIAGRAMS

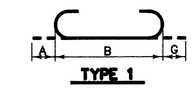

TYPE 1

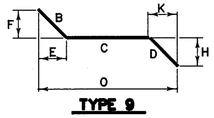

TYPE 9

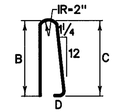

TYPE 16

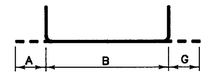

TYPE 2

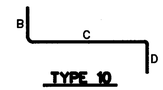

TYPE 10

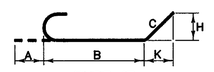

TYPE 17

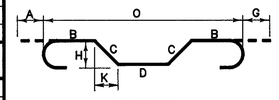

TYPE 3

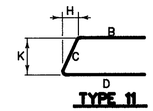

TYPE 11

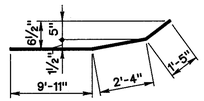

TYPE 18

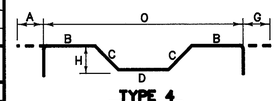

TYPE 4

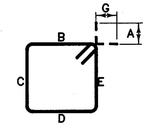

TYPE 12

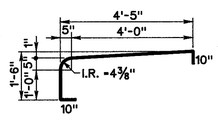

TYPE 19

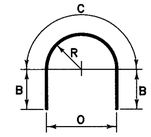

TYPE 5

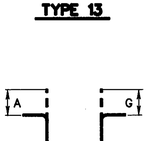

TYPE 13

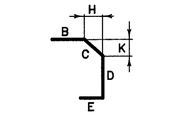

TYPE 20

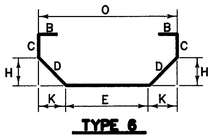

TYPE 6

TYPE 14

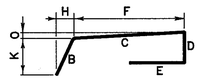

TYPE 21

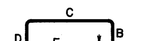

TYPE 7

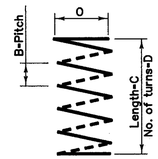

TYPE 15

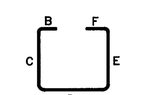

TYPE 8

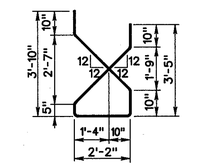

TYPE 22

NOTES

1. All reinforcing steel bars shall be epoxy coated.
2. All dimensions are out to out of bar.
3. Dimensions "A" and "G" are standard bend dimensions. Refer to Section 509.05 of the CMS.
4. Radius dimension "R" is to the outside of the bar.
5. These reinforcing bars are included with Item 852, Polyester/Vinylester resin bonded anchors, for payment.

LOCKWOOD, JONES & BEALS
CONSULTING ENGINEERS
DAYTON, OHIO

16 / 105

REINFORCING STEEL LIST

BRIDGE NO. HAM-75-0992
I-75
UNDER PEDESTRIAN OVERPASS

DESIGNED	CHECKED	DRAWN	CHECKED	REVIEWED DATE	REVISED
		DYA	DFS	MPH 12/92	

f:\6272\0992sh1.dgn Feb. 4, 1993 09:51:19

F.H.W.A. REGION	STATE	PROJECT	
5	OHIO		

250
338

HAMILTON COUNTY
HAM-75-9.75

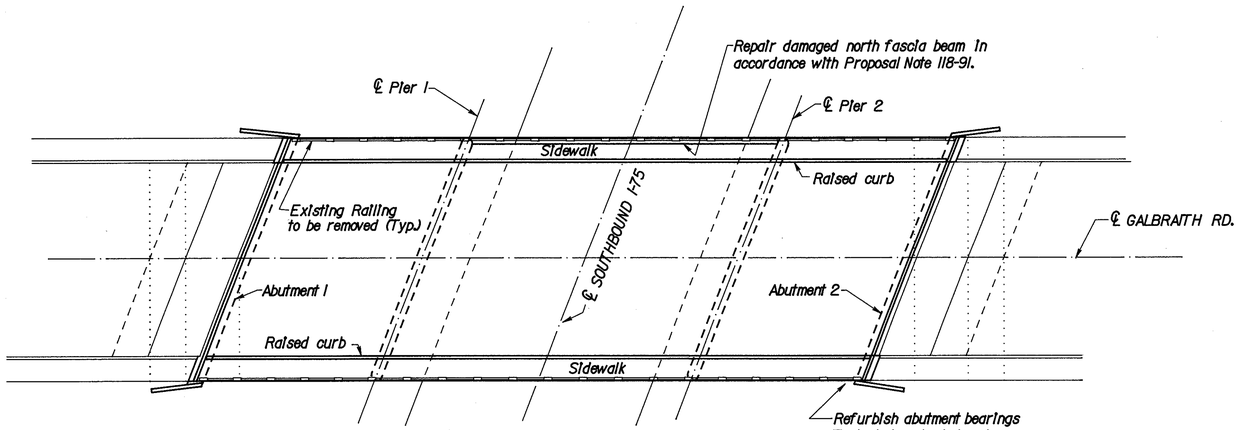

EXISTING PLAN

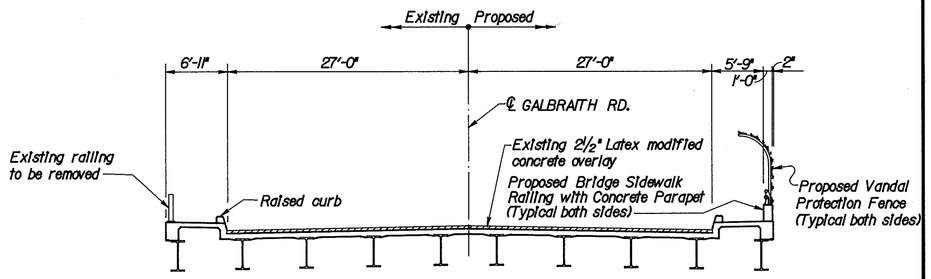

TYPICAL SECTION

PROPOSED WORK

1. Refurbish abutment bearings.
2. Remove existing sidewalk railing.
3. Install new bridge sidewalk railing with concrete parapet and install vandal protection fence.
4. Repair damaged north fascia beam.

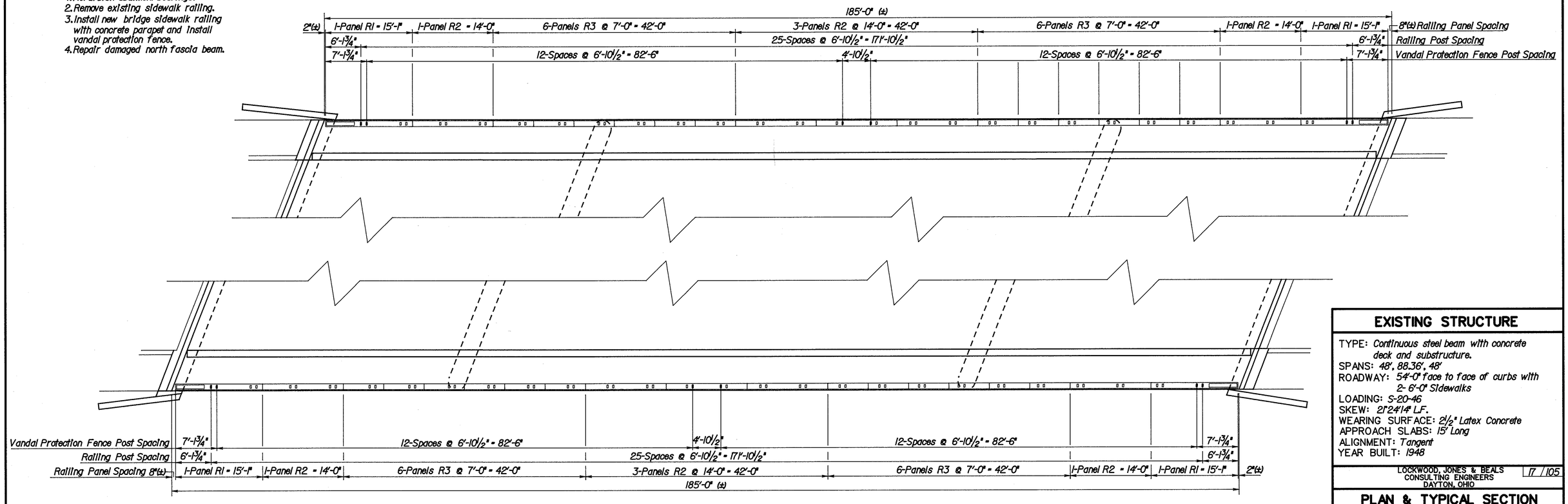

PLAN

Bridge Sidewalk Railing with Concrete Parapet and Vandal Protection Fence Post Spacing

NOTES:

1. For General Notes, see Sheet 1&2/105
2. For Estimated Quantities, see Sheet 3/105
3. For Reinforcing Steel List, see Sheet 103/105

EXISTING STRUCTURE

TYPE: Continuous steel beam with concrete deck and substructure.
SPANS: 48', 88.36', 48'
ROADWAY: 54'-0" face to face of curbs with 2- 6'-0" Sidewalks
LOADING: S-20-46
SKEW: 21°24'14" LF.
WEARING SURFACE: 2½" Latex Concrete
APPROACH SLABS: 15' Long
ALIGNMENT: Tangent
YEAR BUILT: 1948

LOCKWOOD, JONES & BEALS
CONSULTING ENGINEERS
DAYTON, OHIO

17/105

PLAN & TYPICAL SECTION BRIDGE SIDEWALK RAILING AND VANDAL PROTECTION FENCE

BRIDGE NO. HAM-75-1089L
GALBRAITH ROAD OVER I-75 S.B.

DESIGNED	CHECKED	DRAWN	CHECKED	REVIEWED DATE	REVISED
HDJ	MPH	DJJ	MPH	HDJ 12/92	

f:\6272\1089p1.dgn Feb. 23, 1993 10:47:00

F.H.W.A. REGION	STATE	PROJECT	
5	OHIO		

251
338

HAMILTON COUNTY
HAM-75-9.75

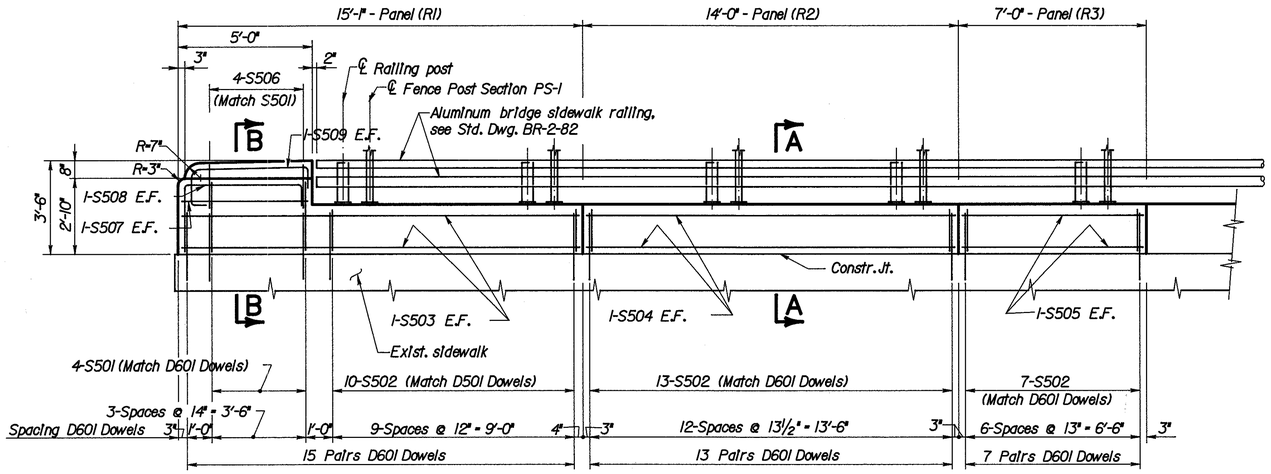

ELEVATION

RAILING PANELS

4-Railing Panels R1 Req'd
10-Railing Panels R2 Req'd
24-Railing Panels R3 Req'd

Note:
1. For additional details, see Std. Dwg. BR-2-82.
2. For Reinforcing Steel List, see Sheet 103 / 105

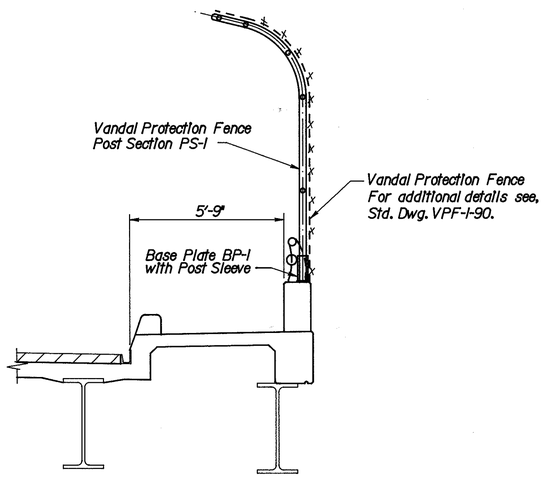

SECTION A-A

Showing Vandal Protection Fence Details

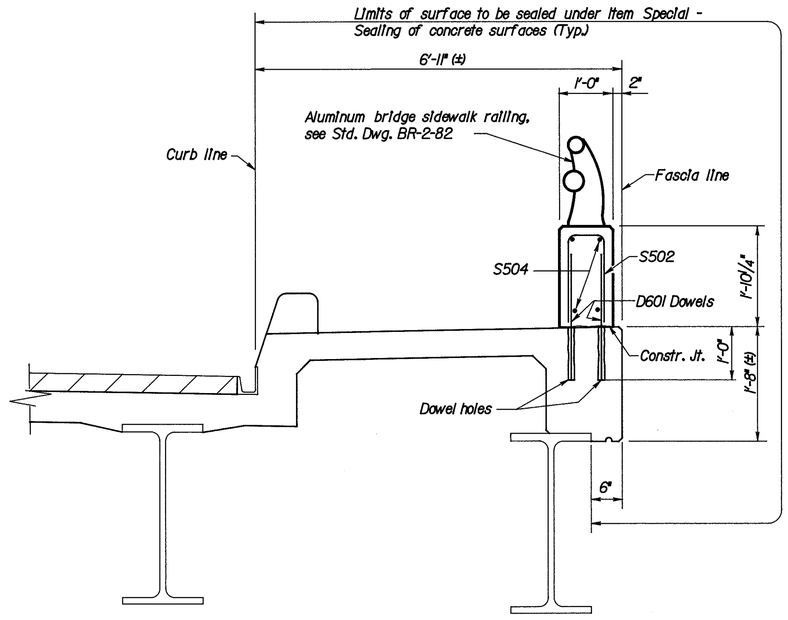

SECTION A-A

Showing Bridge Sidewalk Railing Details

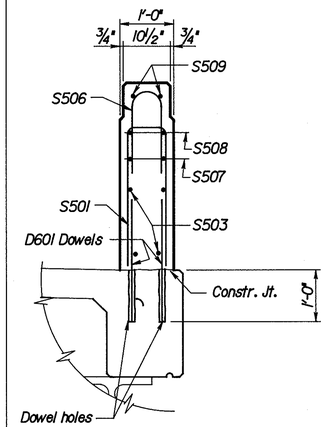

SECTION B-B

NOTE:
Dowels shall be installed in accordance with SS852 and **705.20.** *The cost for drilled holes and furnishing and placing materials shall be included in the price bid for Item 517-Railing, (concrete parapet with double pipe rail), as per plan.*

LEGEND

E.F. - Each Face

LOCKWOOD, JONES & BEALS
CONSULTING ENGINEERS
DAYTON, OHIO

18 / 105

BRIDGE SIDEWALK RAILING AND VANDAL PROTECTION FENCE
BRIDGE NO. HAM-75-1089L
GALBRAITH ROAD OVER I-75 S.B.

DESIGNED	CHECKED	DRAWN	CHECKED	REVIEWED DATE	REVISED
HDJ	MPH	DJJ	MPH	HDJ 12/92	

f:\6272\1089p2.dgn Feb. 3, 1993 14:23:53

F.H.W.A. REGION	STATE	PROJECT	
5	OHIO		

252
338

HAMILTON COUNTY
HAM-75-9.75

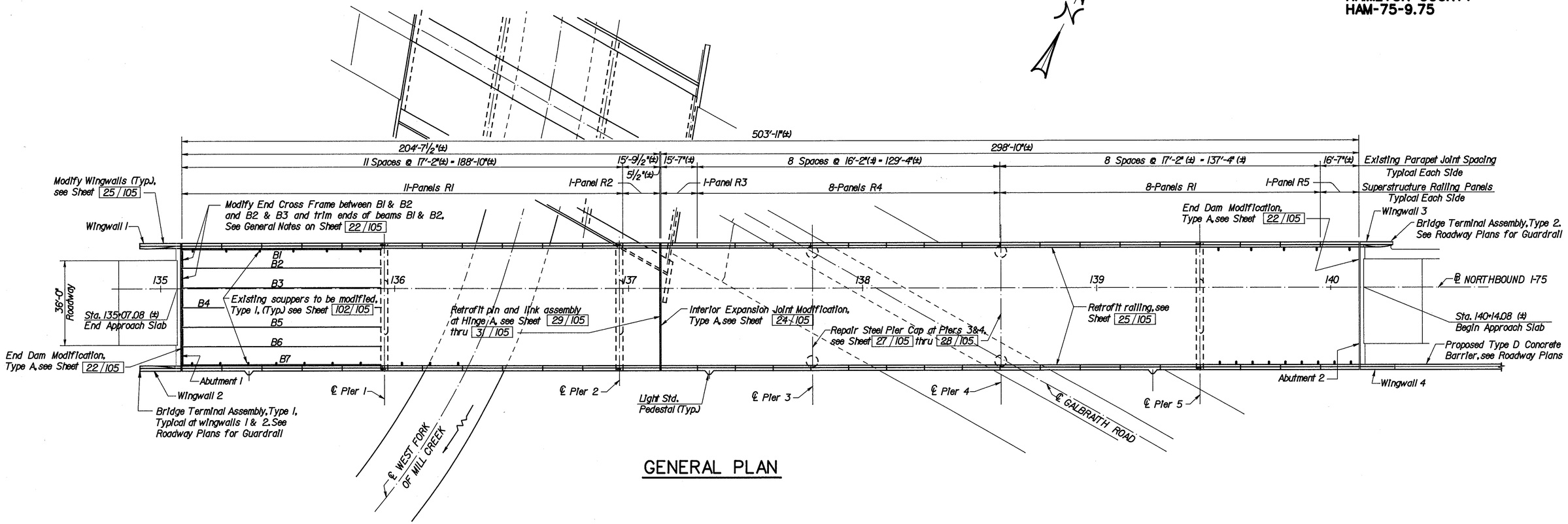

GENERAL PLAN

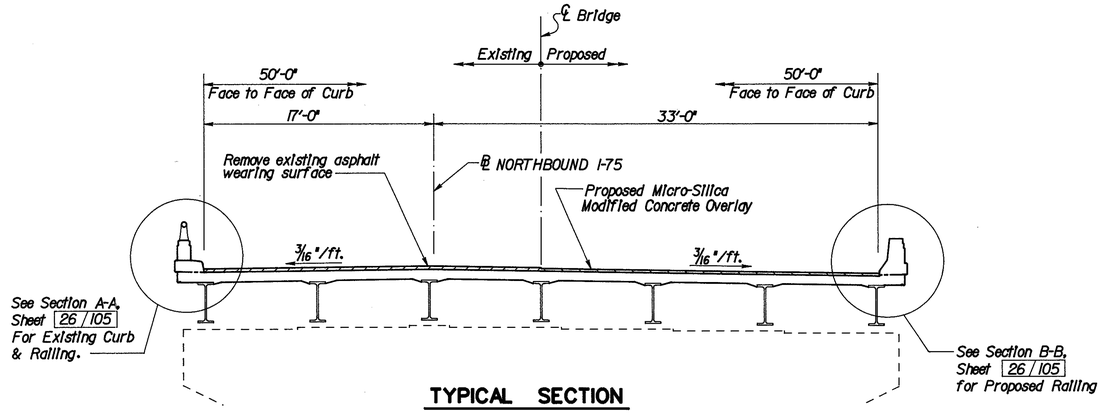

TYPICAL SECTION

PROPOSED WORK

1. Remove existing asphalt overlay and install new micro-silica modified concrete overlay.
2. Seal end and intermediate expansion joints with strip seals. Use End Dam Modification, Type A, at abutments and Interior Expansion Joint Modification, Type A, at interior expansion joint.
3. Retrofit existing parapets with concrete barrier railing.
4. Modify existing scuppers.
5. Retrofit pin and link assemblies.
6. Modify end cross frames and trim end of beams B1 & B2 at Abutment 1 to provide 2" min. clearance.
7. Repair steel pier box girders.

NOTES:

1. For General Notes see Sheet 1/105 thru 3/105
2. For Sections A-A and B-B, see Sheet 26/105
3. For Abutment Modification Plans and Details, see Sheet 20/105 and 21/105
4. For Wingwall Railing Details, see Sheet 25/105
5. For End Dam Modification Type A, see Sheet 22/105
6. For Interior Expansion Joint Modification, Type B, see Sheet 24/105
7. For Scupper and Deflection Joint Details see Sheet 102/105
8. For Estimated Quantities, see Sheet 4/105
9. For Reinforcing Steel List, see Sheet 103/105
10. For Steel Pier Cap Repair Details at Piers 3&4, see Sheets 27/105 and 28/105
11. For Pin and Link Assembly Retrofit at Hinge A see Sheets 29/105 thru 31/105

EXISTING STRUCTURE

TYPE: Continuous rolled steel beams and welded plate girder with reinforced concrete deck and substructure.
SPANS: 86'-0", 100'-6", 82'-6", 80'-6", 85'-0", 68'-0"
ROADWAY: 52'-0" f/f of parapets
LOAD FREQUENCY: CF = 2000 (57), adequate for A.A.S.H.O. alternate loading.
SKEW: 0°00'00"
WEARING SURFACE: Monolithic concrete with 2½" asphalt overlay.
APPROACH SLABS: AS-1-54 (25' long)
ALIGNMENT: Tangent

LOCKWOOD, JONES & BEALS
CONSULTING ENGINEERS
DAYTON, OHIO

19/105

GENERAL PLAN & TYPICAL SECTION

BRIDGE NO. HAM-75-1102R
NORTHBOUND I-75 OVER WEST FORK OF MILLCREEK & GALBRAITH RD.

DESIGNED	CHECKED	DRAWN	CHECKED	REVIEWED DATE	REVISED
DJJ	HDJ	DJJ	HDJ	MPH 12/92	

f:\6272\1102p1.dgn Feb. 4, 1993 11:06:50

F.H.W.A. REGION	STATE	PROJECT	
5	OHIO		

253
338

HAMILTON COUNTY
HAM-75-9.75

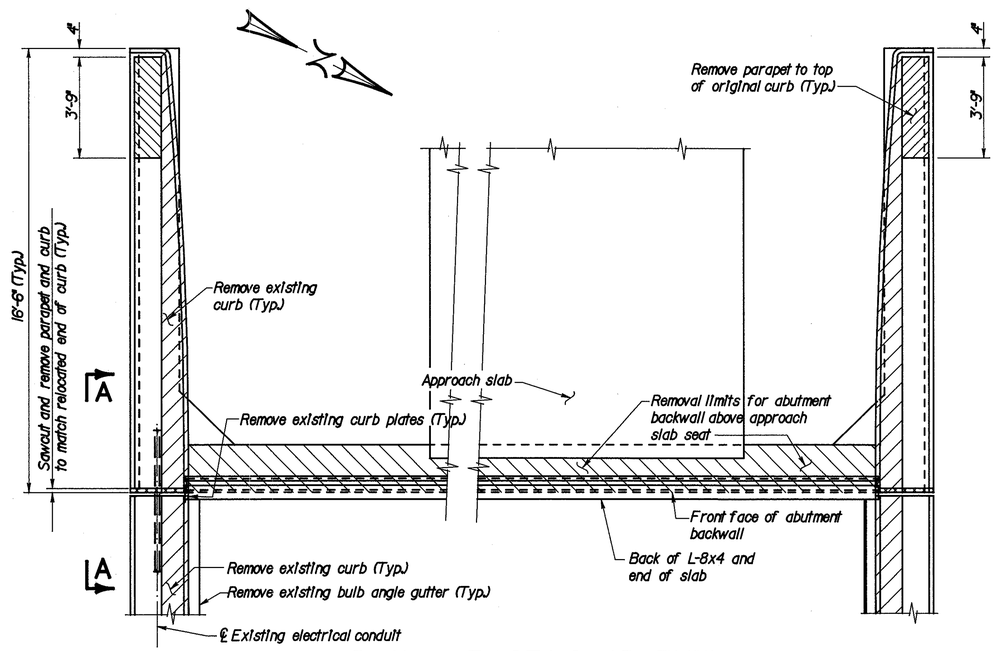

PLAN - EXISTING ABUTMENT

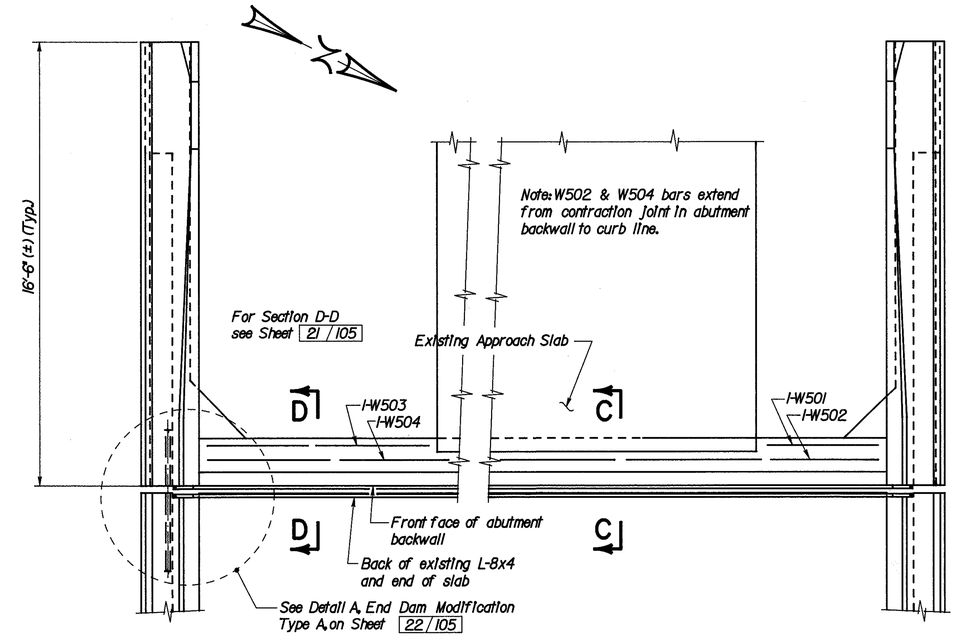

PLAN - MODIFIED ABUTMENT

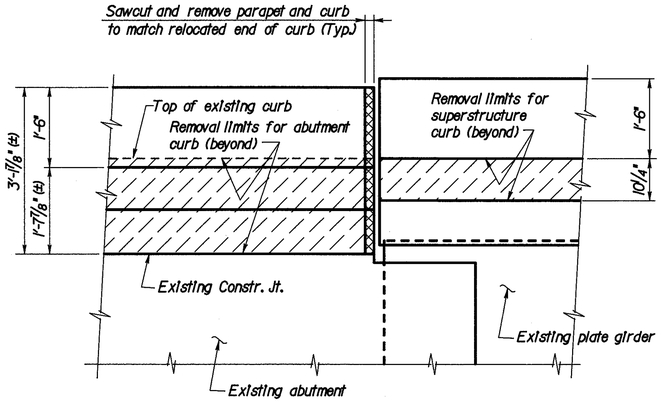

VIEW A-A

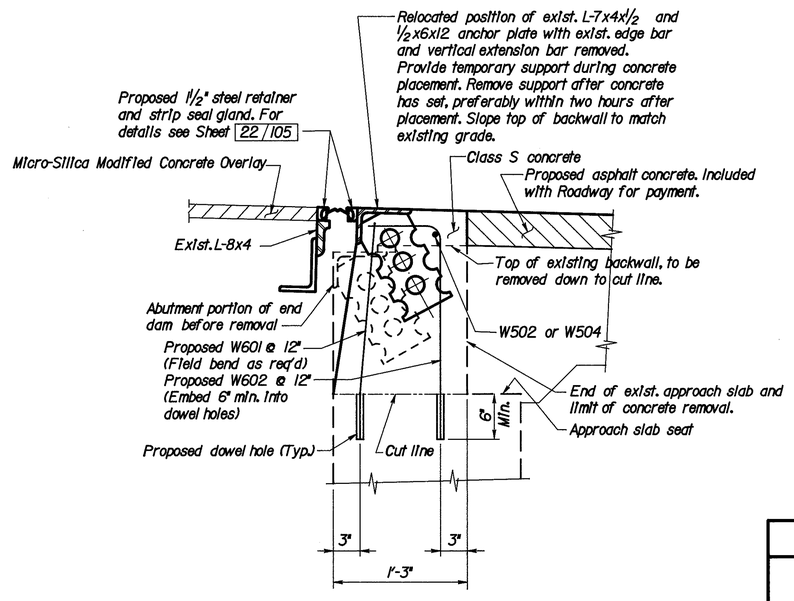

SECTION C-C

LOCKWOOD, JONES & BEALS
CONSULTING ENGINEERS
DAYTON, OHIO

20 / 105

ABUTMENT 1 MODIFICATIONS
PLANS AND DETAILS
BRIDGE NO. HAM-75-1102R
NORTHBOUND I-75 OVER WEST FORK OF MILL CREEK & GALBRAITH ROAD

DESIGNED	CHECKED	DRAWN	CHECKED	REVIEWED DATE	REVISED
GJW	HDJ	GJW	HDJ	MPH 12/92	

f:\6272\1102d1.dgn Feb. 16, 1993 15:48:09

F.H.W.A. REGION	STATE	PROJECT	
5	OHIO		

254
338

HAMILTON COUNTY
HAM-75-9.75

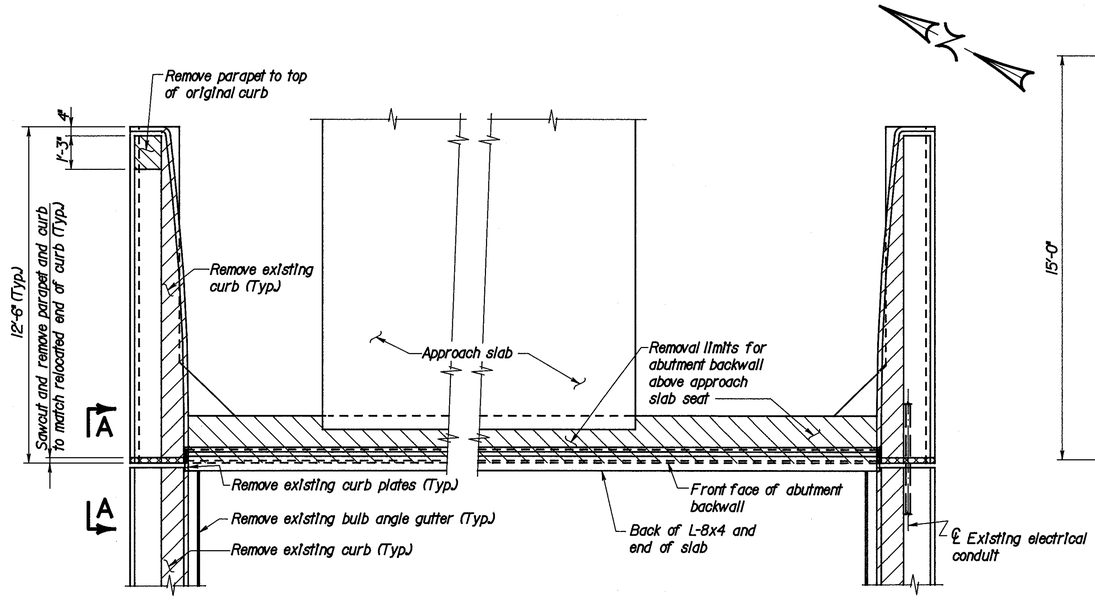

PLAN - EXISTING ABUTMENT

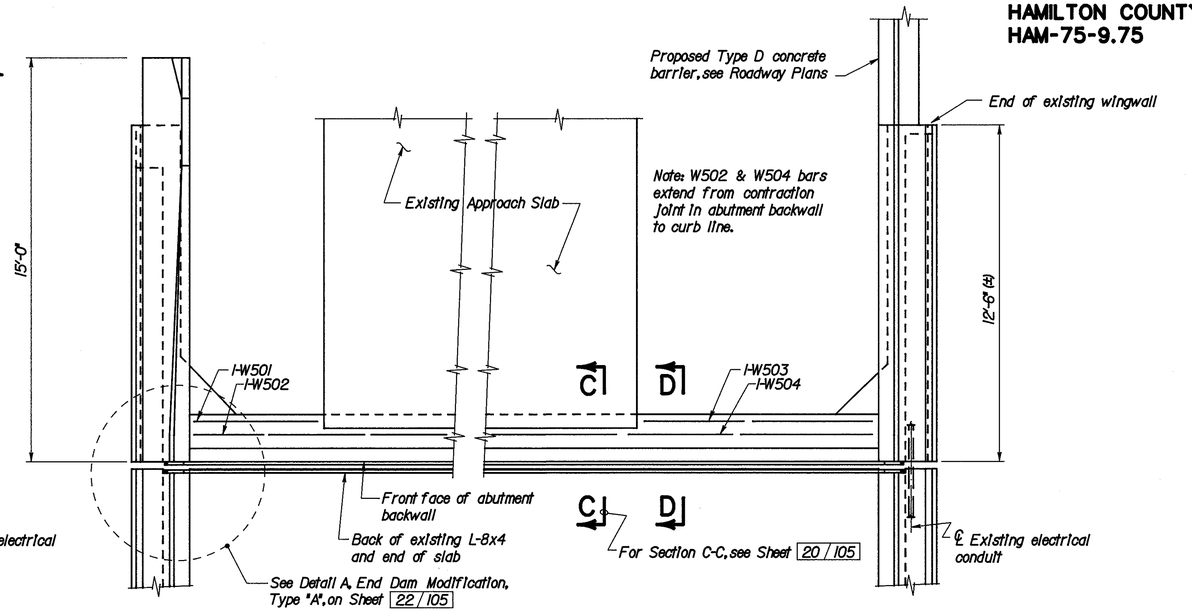

PLAN - MODIFIED ABUTMENT

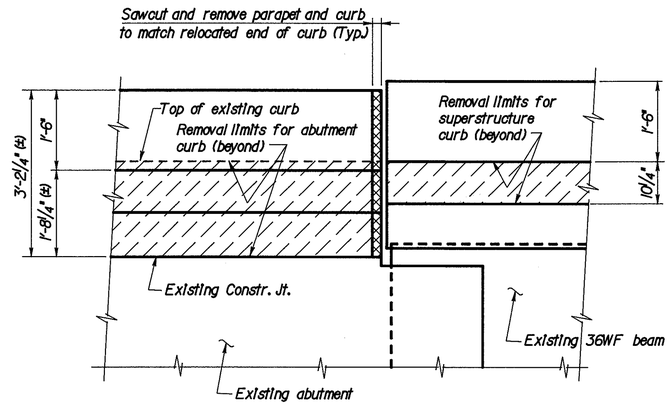

VIEW A-A

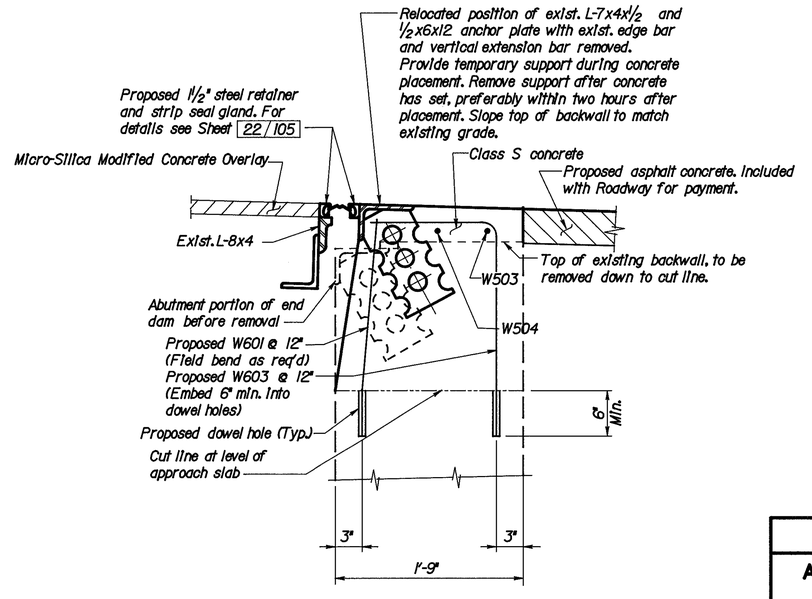

SECTION D-D

LOCKWOOD, JONES & BEALS
CONSULTING ENGINEERS
DAYTON, OHIO

21 / 105

ABUTMENT 2 MODIFICATIONS PLANS AND DETAILS

BRIDGE NO. HAM-75-1102R
NORTHBOUND I-75 OVER WEST FORK OF MILL CREEK & GALBRAITH ROAD

DESIGNED	CHECKED	DRAWN	CHECKED	REVIEWED DATE	REVISED
GJW	HDJ	GJW	HDJ	MPH 12/92	

f:\6272\1102d2.dgn Feb. 16, 1993 15:52:33

F.H.W.A. REGION	STATE	PROJECT	
5	OHIO		

255
338

HAMILTON COUNTY
HAM-75-9.75

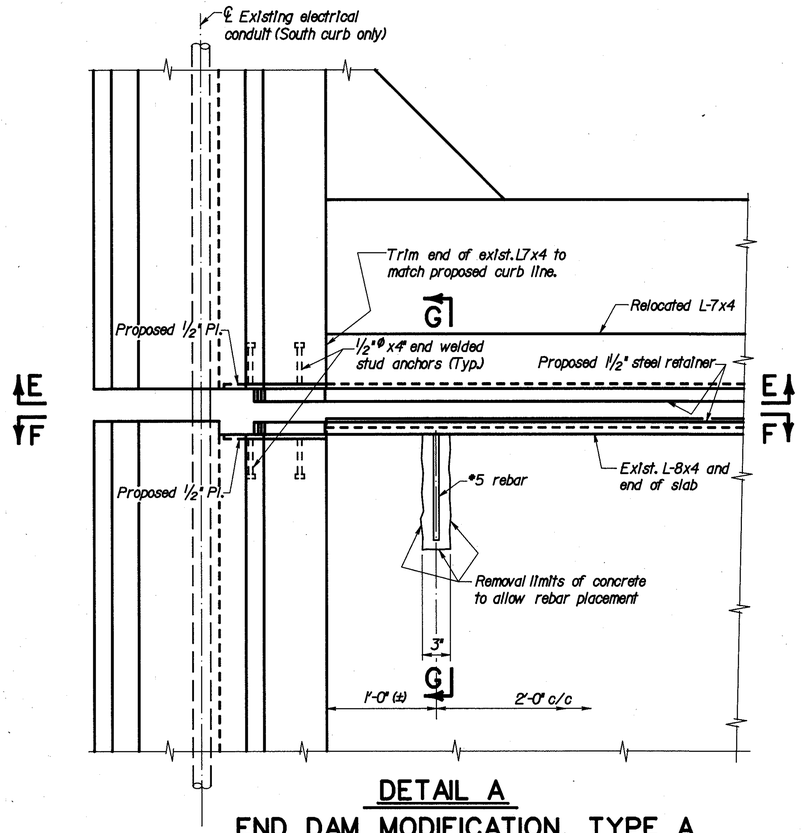

DETAIL A
END DAM MODIFICATION, TYPE A

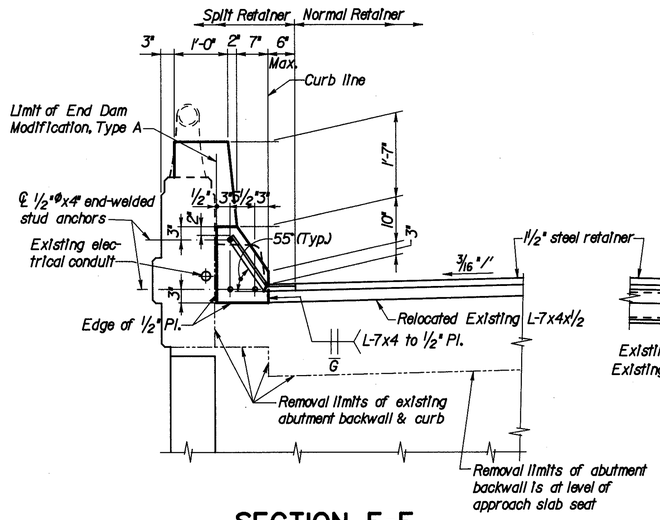

SECTION E-E

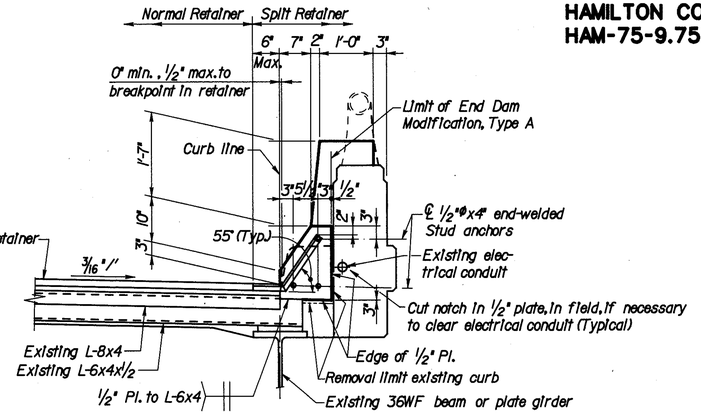

SECTION F-F

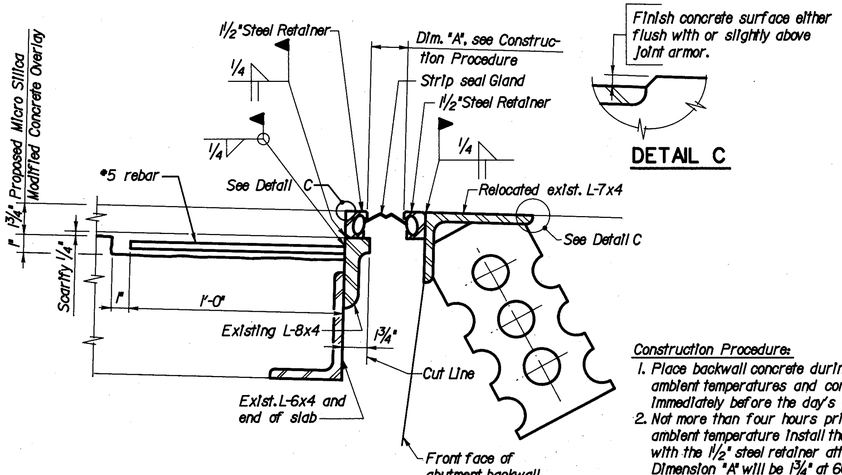

SECTION G-G

DETAIL C

Construction Procedure:

1. Place backwall concrete during stable or rising ambient temperatures and conclude placement immediately before the day's peak ambient temperature.
2. Not more than four hours prior to the day's peak ambient temperature install the backwall L-7x4x1/2 with the 1 1/2" steel retainer attached such that Dimension "A" will be 1 3/4" at 60°F. For each 10°F above 60°F the 1 3/4" dimension shall be decreased by 1/16" and for each 10°F below 60°F the 1 3/4" dimension shall be increased by 1/16".

WOOD, JONES & BEALS
CONSULTING ENGINEERS
DAYTON, OHIO

22/105

END DAM MODIFICATION DETAILS

BRIDGE NO. HAM-75-1102R
NORTHBOUND I-75 OVER WEST FORK OF MILL CREEK & GALBRAITH ROAD

DESIGNED	CHECKED	DRAWN	CHECKED	REVIEWED DATE	REVISED
GJW	HDJ	GJW	HDJ	MPH 12/92	

f:\6272\1102d3.dgn Feb. 19, 1993 11:04:01

F.H.W.A. REGION	STATE	PROJECT	
5	OHIO		

256
338

HAMILTON COUNTY
HAM-75-9.75

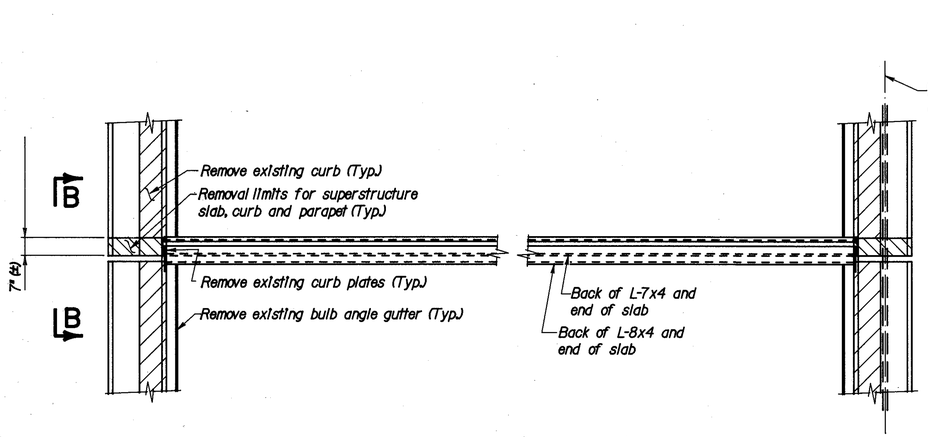

PLAN - EXISTING INTERIOR EXPANSION JOINT

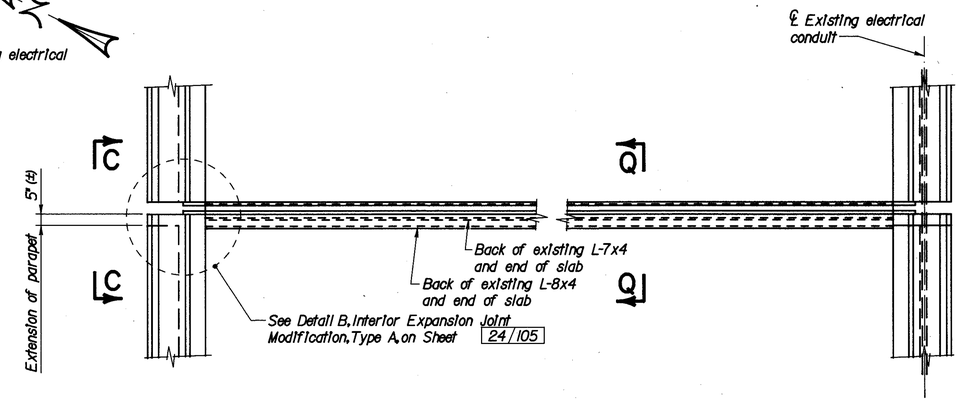

PLAN - MODIFIED INTERIOR EXPANSION JOINT

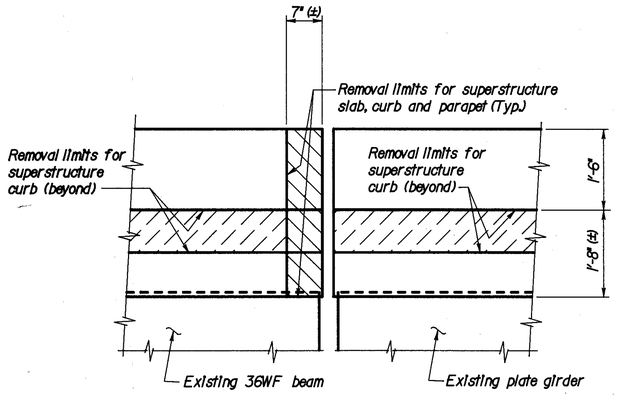

VIEW B-B

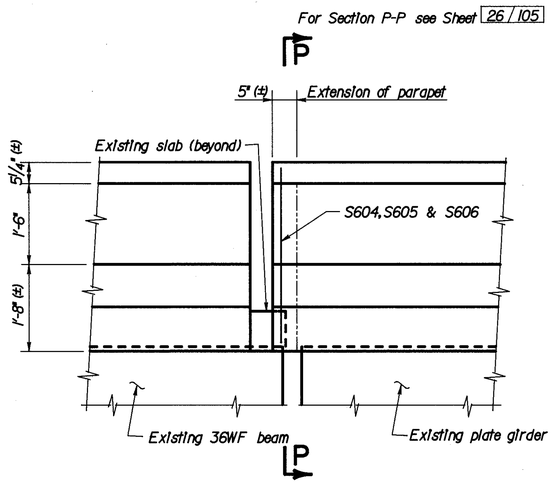

VIEW C-C

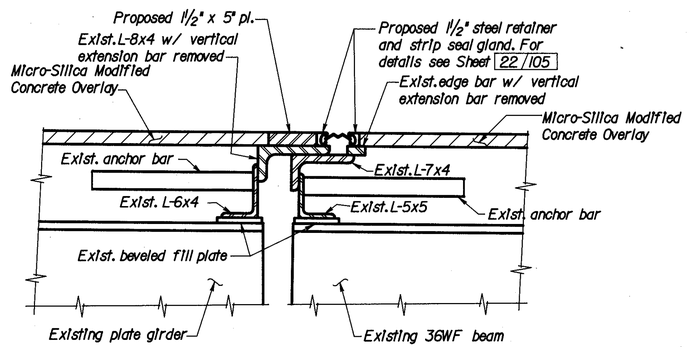

SECTION Q-Q

LOCKWOOD, JONES & BEALS
CONSULTING ENGINEERS
DAYTON, OHIO

23/105

INTERIOR EXPANSION JOINT MODIFICATION PLANS AND DETAILS

BRIDGE NO. HAM-75-1102R
NORTHBOUND I-75 OVER WEST FORK OF MILL CREEK & GALBRAITH ROAD

DESIGNED	CHECKED	DRAWN	CHECKED	REVIEWED DATE	REVISED
GJW	MPH	GJW	MPH	HDJ 12/92	

f:\6272\1102d6.dgn Feb. 4, 1993 11:39:07

F.H.W.A. REGION	STATE	PROJECT	
5	OHIO		

257
338

HAMILTON COUNTY
HAM-75-9.75

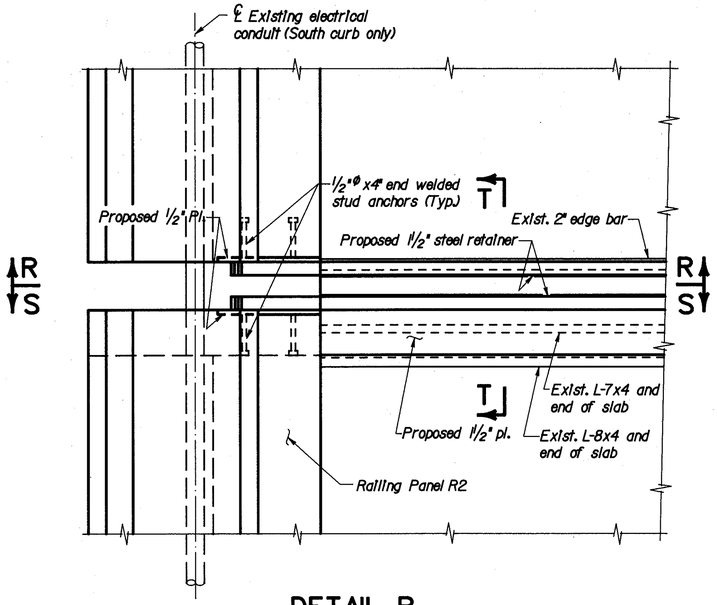

DETAIL B
INTERIOR EXPANSION JOINT MODIFICATION, TYPE A

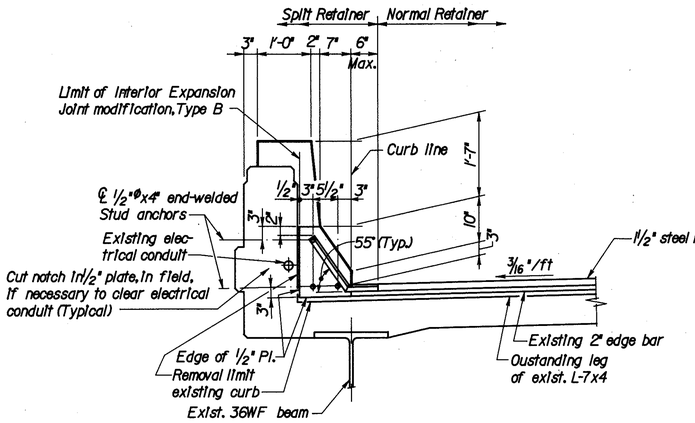

SECTION R-R

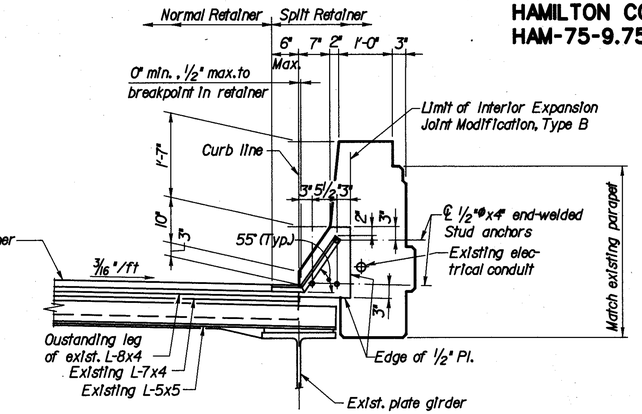

SECTION S-S

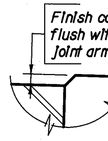

DETAIL C

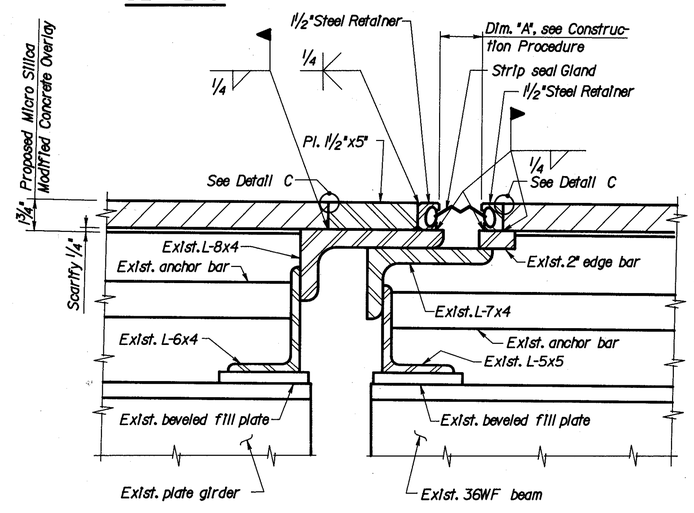

SECTION T-T

CONSTRUCTION PROCEDURE:

1. Pour Railing Panel R2 during stable or rising ambient temperatures and conclude placement immediately before the day's peak ambient temperature.
2. Not more than four hours prior to the peak ambient temperature install the 1 1/2"x5" plate with the 1 1/2" steel retainer attached such that dimension "A" will be 2 1/2" at 60°F. for each 10°F. above 60°F. the 2 1/2" dimension shall be decreased by 1/4" and for each 10°F. below 60°F. the 2 1/2" dimension shall be increased by 1/4".

LOCKWOOD, JONES & BEALS
CONSULTING ENGINEERS
DAYTON, OHIO

24/105

INTERIOR EXPANSION JOINT MODIFICATION DETAILS
BRIDGE NO. HAM-75-1102R
NORTHBOUND I-75 OVER WEST FORK OF MILL CREEK & GALBRAITH ROAD

DESIGNED	CHECKED	DRAWN	CHECKED	REVIEWED DATE	REVISED
GJW	MPH	GJW	MPH	HDJ 12/92	

f:\6272\1102d7.dgn Feb. 4, 1993 11:44:38

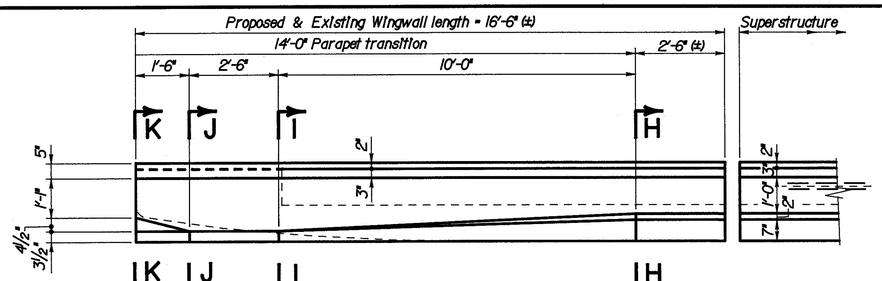

For Bridge Terminal Assembly, Type 1, see Standard Construction Drawing GR-3J

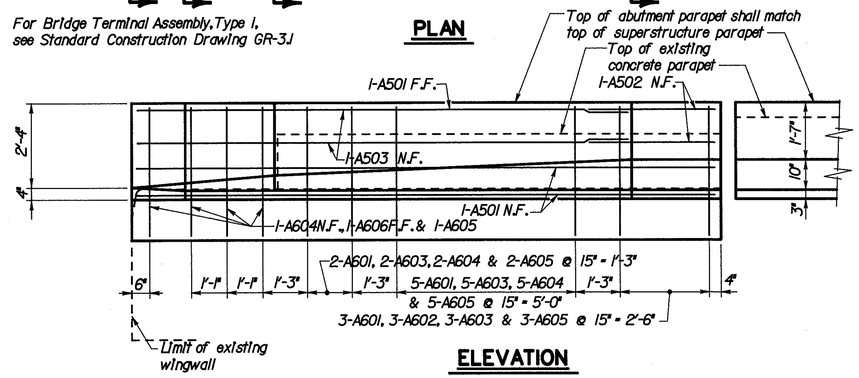

ELEVATION

RAILING DETAILS AT ABUTMENT 1

WINGWALL 1 SHOWN - WINGWALL 2 SIMILAR

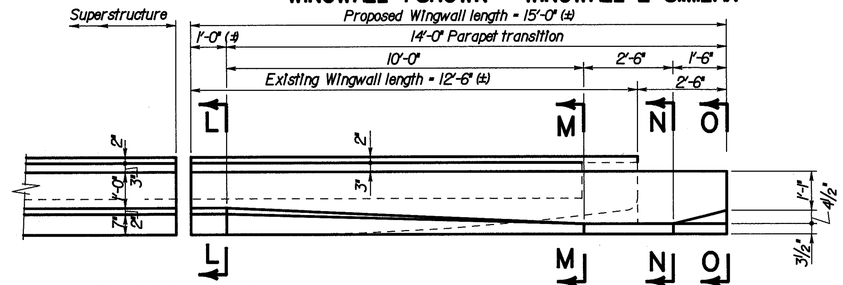

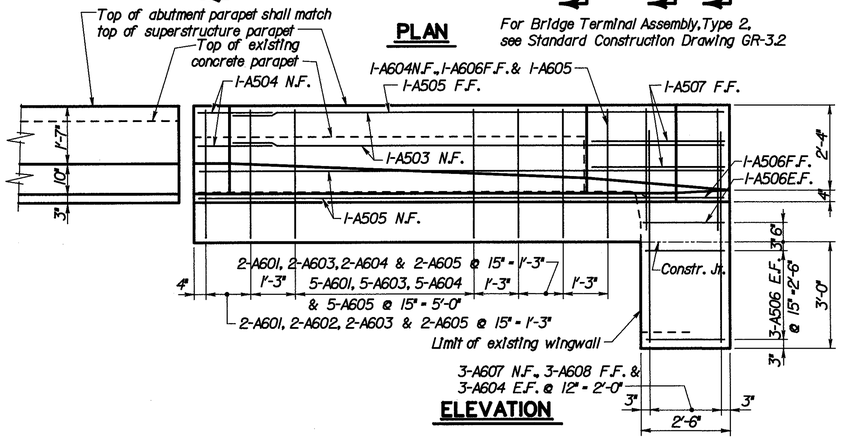

ELEVATION

RAILING DETAILS AT ABUTMENT 2

WINGWALL 3

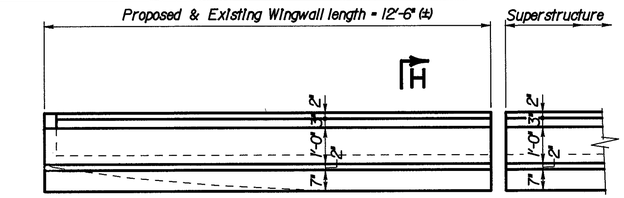

PLAN

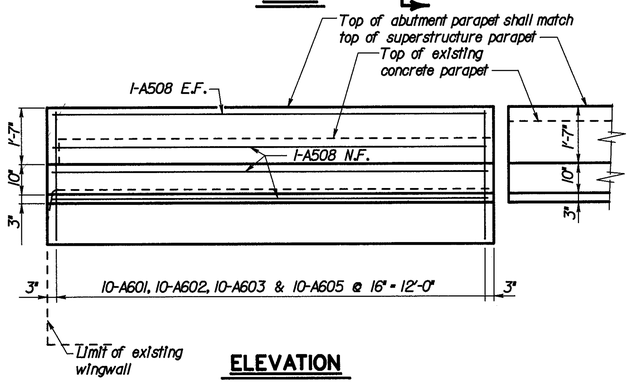

ELEVATION

RAILING DETAILS AT ABUTMENT 2

WINGWALL 4

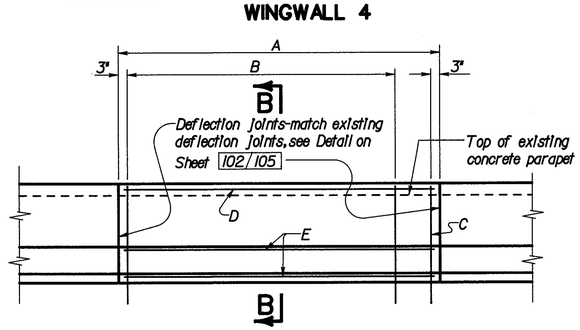

ELEVATION

RAILING PANELS R1, R3, R4 & R5

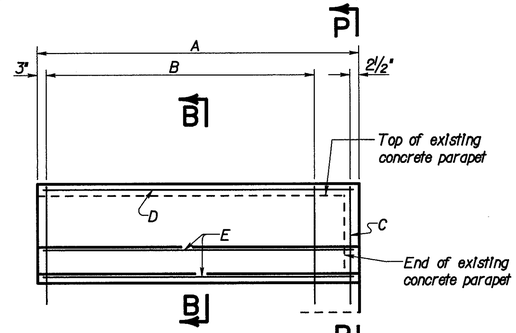

ELEVATION

RAILING PANEL R2

SUPERSTRUCTURE RAILING DETAILS

SUPERSTRUCTURE RAILING PANELS

PANEL MARK	NO. Req'd	A	B	C	D	E
R1	38	17'-2"	14 Each - S601, S602 & S603 @ 14½" = 15'-8½"	1 Each - S601, S602 & S603	2-S501	1-S501
R2	2	15'-9½"	12 Each - S601, S602 & S603 @ 15½" = 14'-2½"	1 Each - S604, S605 & S606	2-S502	1-S502
R3	2	15'-7"	13 Each - S601, S602 & S603 @ 14½" = 14'-6"	1 Each - S601, S602 & S603	2-S503	1-S503
R4	16	16'-2"	13 Each - S601, S602 & S603 @ 15" = 15'-0"	1 Each - S601, S602 & S603	2-S504	1-S504
R5	2	16'-7"	13 Each - S601, S602 & S603 @ 15" = 15'-0"	1 Each - S601, S602 & S603	2-S505	1-S505

NOTES

1. For Sections H-H thru P-P, see sheet 26 / 105
2. For Reinforcing Steel List, see sheet 103 / 105

F.H.W.A. REGION	STATE	PROJECT	
5	OHIO		

258 / 338

HAMILTON COUNTY
HAM-75-9.75

LOCKWOOD, JONES & BEALS
CONSULTING ENGINEERS
DAYTON, OHIO

25 / 105

ABUTMENT & SUPERSTRUCTURE RAILING DETAILS

BRIDGE NO. HAM-75-1102R
NORTHBOUND I-75 OVER WEST FORK OF MILLCREEK & GALBRAITH RD.

DESIGNED	CHECKED	DRAWN	CHECKED	REVIEWED DATE	REVISED
GJW	MPH	GJW	MPH	HDJ 12/92	

f:\6272\1102p2.dgn Feb. 16, 1993 16:08:43

F.H.W.A. REGION	STATE	PROJECT		259 / 338
5	OHIO			

HAMILTON COUNTY
HAM-75-9.75

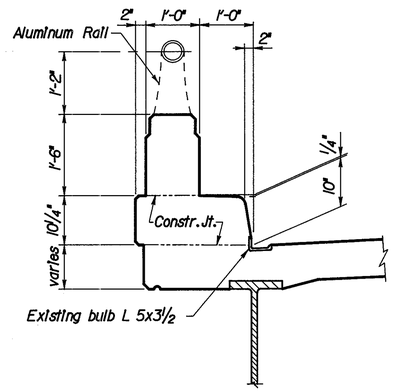

SECTION A-A
EXISTING CURB & RAILING

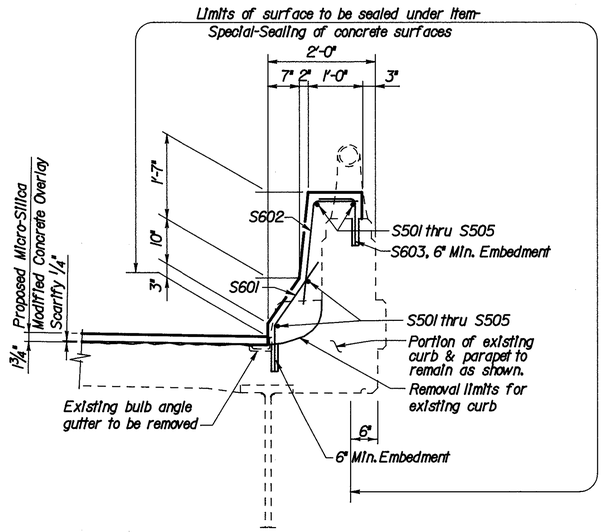

SECTION B-B
PROPOSED RAILING

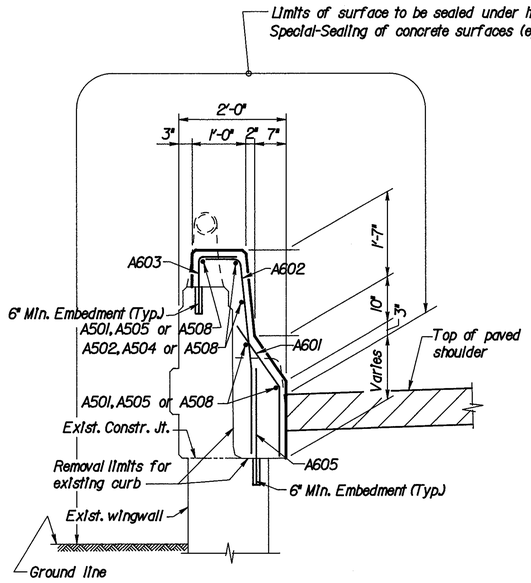

SECTION H-H
SECTION L-L Opp. Hand

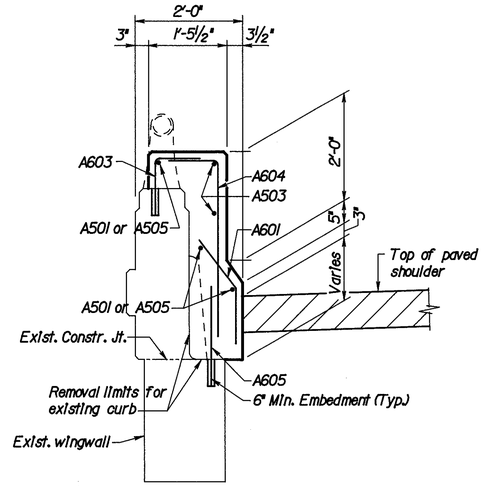

SECTION I-I
SECTION M-M Opp. Hand

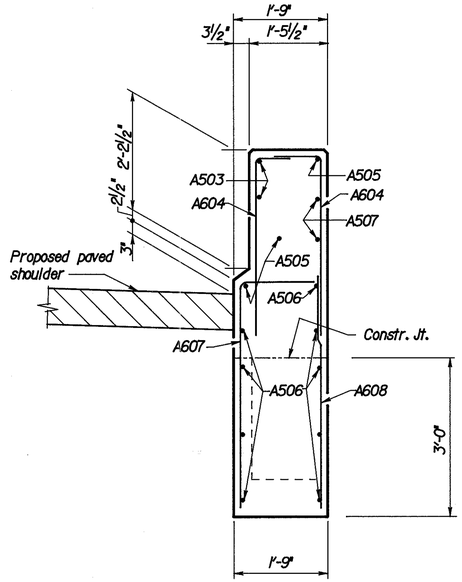

SECTION N-N

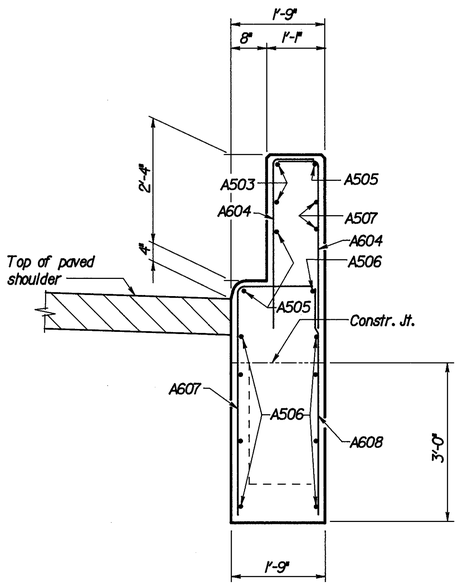

SECTION O-O

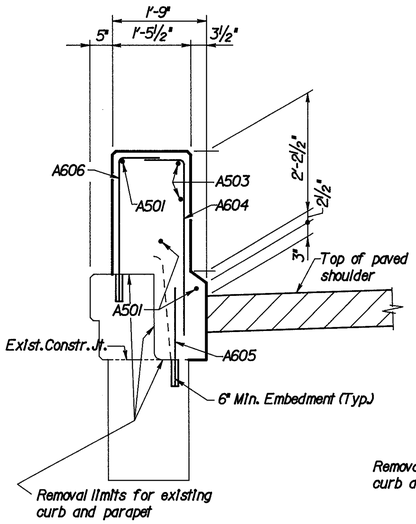

SECTION J-J

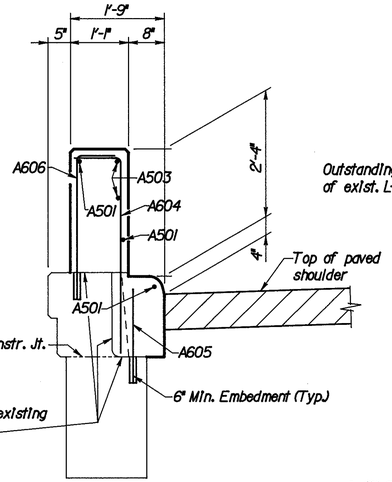

SECTION K-K

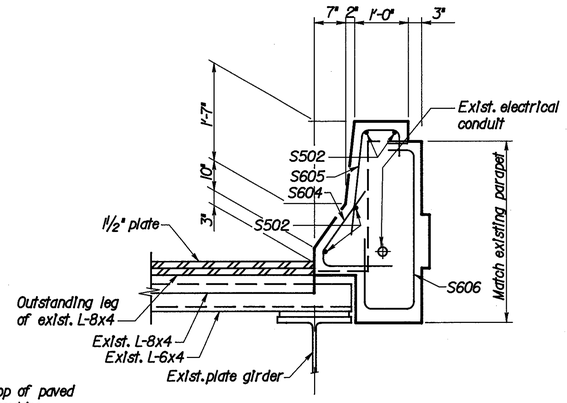

SECTION P-P

LEGEND
E.F. - Each Face
N.F. - Near Face
F.F. - Far Face

LOCKWOOD, JONES & BEALS
CONSULTING ENGINEERS
DAYTON, OHIO

26 / 105

ABUTMENT & SUPERSTRUCTURE RAILING SECTIONS
BRIDGE NO. HAM-75-1102R
NORTHBOUND I-75 OVER WEST FORK OF MILL CREEK & GALBRAITH ROAD

DESIGNED	CHECKED	DRAWN	CHECKED	REVIEWED DATE	REVISED
GJW	HDJ	GJW	HDJ	MPH 12/92	

f:\6272\t102d4.dgn Feb. 16, 1993 16:13:02

F.H.W.A. REGION	STATE	PROJECT	
5	OHIO		

260
338

HAMILTON COUNTY
HAM-75-9.75

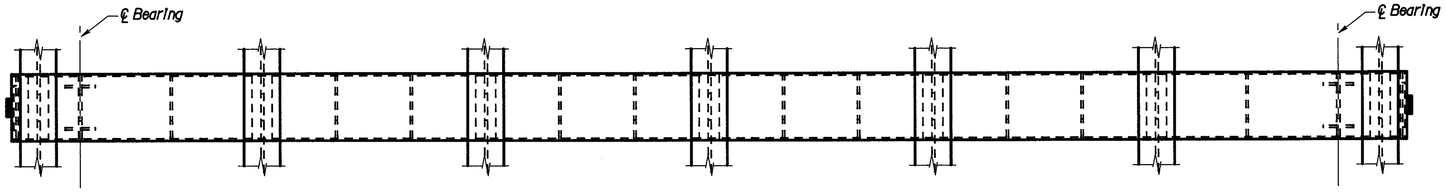

PLAN

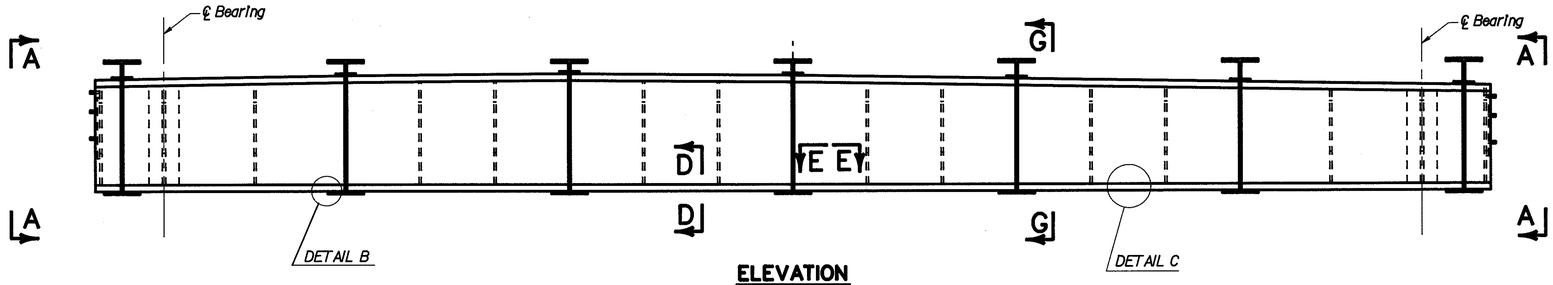

ELEVATION

PIER CAP

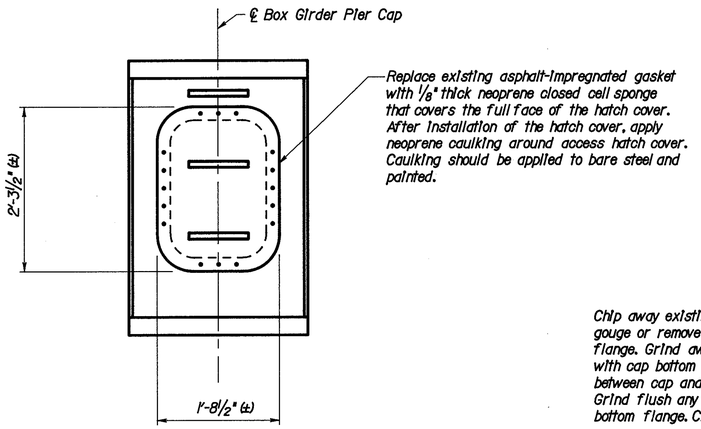

Replace existing asphalt-impregnated gasket with ⅛" thick neoprene closed cell sponge that covers the full face of the hatch cover. After installation of the hatch cover, apply neoprene caulking around access hatch cover. Caulking should be applied to bare steel and painted.

SECTION A-A

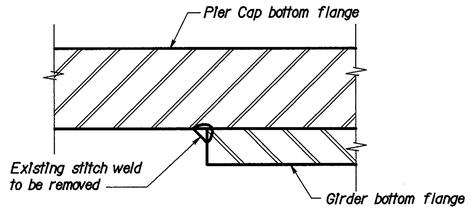

EXISTING DETAIL

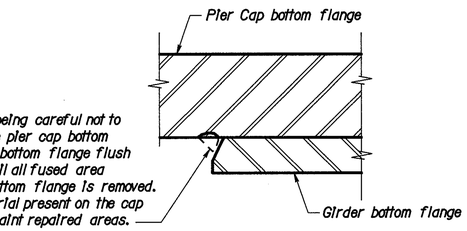

Chip away existing welds being careful not to gouge or remove any of the pier cap bottom flange. Grind away girder bottom flange flush with cap bottom flange until all fused area between cap and girder bottom flange is removed. Grind flush any weld material present on the cap bottom flange. Clean and paint repaired areas.

RETROFIT DETAIL

DETAIL B

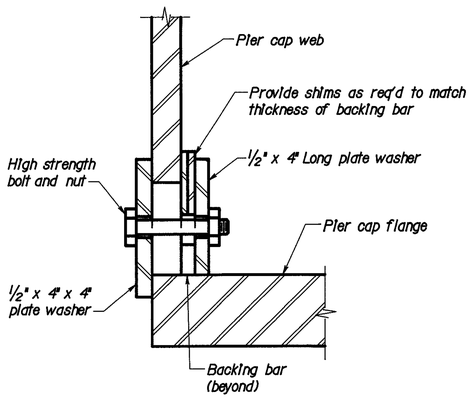

SECTION X-X

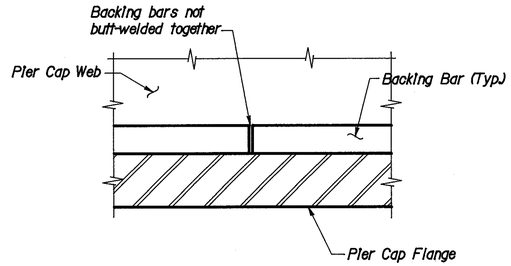

EXISTING DETAIL

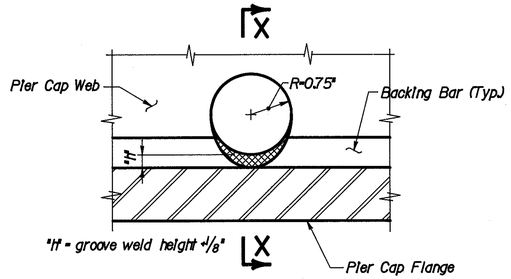

PROCEDURE
1. Drill 1½"ø hole through web and backing bar.
2. Remove crosshatched area by grinding. Final surfaces shall be smooth.
3. Preform magnetic particle and/or dye penetrant tests of the remaining metal in the presence of the Engineer.

RETROFIT DETAIL

DETAIL C

NOTES

1. Remove all debris, bird droppings, and nesting material from top of pier caps and bottom flange of girders.
2. Grind scratches from collision damage on bottom flange of girders in vicinity of pier caps.
3. Remove soil and debris from inside of cap at pier No. 4. Open hatches to allow moisture to evaporate.
4. For Sections D-D, E-E and G-G, see sheet 28/105

LOCKWOOD, JONES & BEALS
CONSULTING ENGINEERS
DAYTON, OHIO

27/105

STEEL PIER CAP REPAIR DETAILS AT PIERS 3 & 4

BRIDGE NO. HAM-75-1102R
NORTHBOUND I-75 OVER WEST FORK OF MILL CREEK & GALBRAITH RD.

DESIGNED	CHECKED	DRAWN	CHECKED	REVIEWED DATE	REVISED
B&N	B&N	MJZ	DFS	HDJ 12/92	

d:\dgn\mike\1102pc1.dgn Feb. 24, 1993 16:28:59

F.H.W.A. REGION	STATE	PROJECT	
5	OHIO		

261
338

HAMILTON COUNTY
HAM-75-9.75

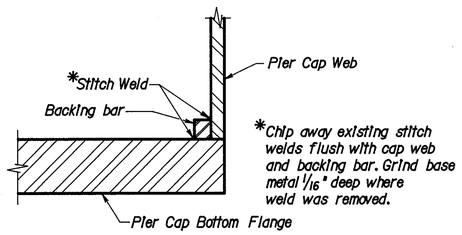

SECTION D-D

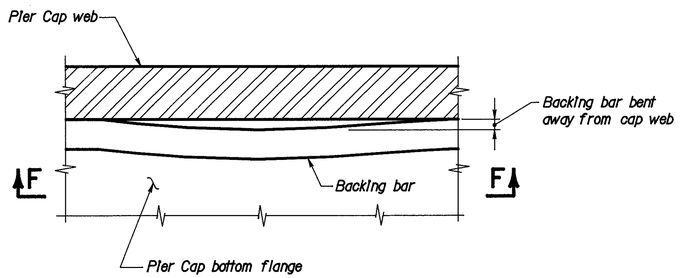

EXISTING DETAIL

SECTION E-E

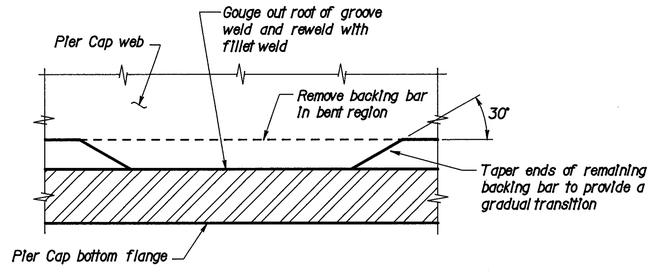

RETROFIT DETAIL

SECTION F-F

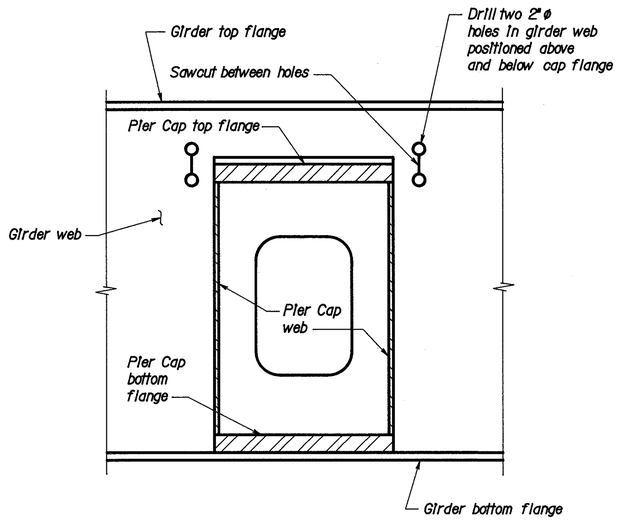

SECTION G-G

TYPICAL AT ALL GIRDER TO PIER CAP CONNECTIONS

LOCKWOOD, JONES & BEALS
CONSULTING ENGINEERS
DAYTON, OHIO

28/105

STEEL PIER CAP REPAIR DETAILS AT PIERS 3 & 4

BRIDGE NO. HAM-75-1102R
NORTHBOUND I-75 OVER WEST FORK OF MILL CREEK & GALBRAITH RD.

DESIGNED	CHECKED	DRAWN	CHECKED	REVIEWED DATE	REVISED
B&N	B&N	MJZ	DFS	HDJ 12/92	

f:\6272\t102pc2.dgn Feb. 24, 1993 11:51:18

F.H.W.A. REGION	STATE	PROJECT	
5	OHIO		

262
338

HAMILTON COUNTY
HAM-75-9.75

HINGE A

PHASE I

(a) Modify the existing crossframes F5 and F6 at girders G4 thru G7.
(b) Remove the exterior diagonals of existing crossframes F7 at girders G4 thru G7.
(c) Install bearing and jacking brackets at girders G4 thru G7.
(d) Install connector girders, including the field bolted exterior web plates for the tube sections at girders G4 thru G7.
(e) Complete the modification of existing crossframes F7 at girders G4 thru G7.
(f) Install the proposed crossframes F5A between girders G4 and G7.
(g) Install jacks at girder G5.
(h) Extend the jacks until they come in firm contact with the bottom flanges of the connector girders at G5.
(i) Increase the load in each jack simultaneously until the pins and hinge plates become disengaged or when the force in each jack is 22k, whichever occurs first.
(j) Remove existing pins and hinge plates at girder G5.
(k) Lower the jacks and install the intermediate 6x$\frac{3}{8}$ stiffeners.
(l) Repeat steps g thru k for girders G6 and G7.

PHASE II

(a) Install jacks at girder G4.
(b) Extend the jacks until they come in firm contact with the bottom flanges of the connector girders at girder G4.
(c) Increase the load in each jack simultaneously until the pins and hinge plates become disengaged or when the force in each jack is 22k, whichever occurs first.
(d) Remove existing pins and hinge plates at girder G4.
(e) Lower the jacks and install the intermediate 6x$\frac{3}{8}$ stiffeners.

PHASE III

(a) Modify the existing crossframes F5 and F6 at girders G1 thru G3.
(b) Remove the exterior diagonals of existing crossframes F7 at girders G1 thru G3.
(c) Install bearing and jacking brackets at girders G1 thru G3.
(d) Install connector girders, including the field bolted exterior web plates for the tube sections at girders G1 thru G3.
(e) Complete the modification of existing crossframes F7 at girders G1 thru G3.
(f) Install the proposed crossframes F5A between girders G1 and G4.
(g) Install jacks at girder G1.
(h) Extend the jacks until they come in firm contact with the bottom flanges of the connector girders at G1.
(i) Increase the load in each jack simultaneously until the pins and hinge plates become disengaged or when the force in each jack is 22k, whichever occurs first.
(j) Remove existing pins and hinge plates at girder G1.
(k) Lower the jacks and install the intermediate 6x$\frac{3}{8}$ stiffeners.
(l) Repeat steps g thru k for girders G2 and G3.
(m) Clean and paint all bare steel surfaces (including pin holes) on Girders G1 thur G7.

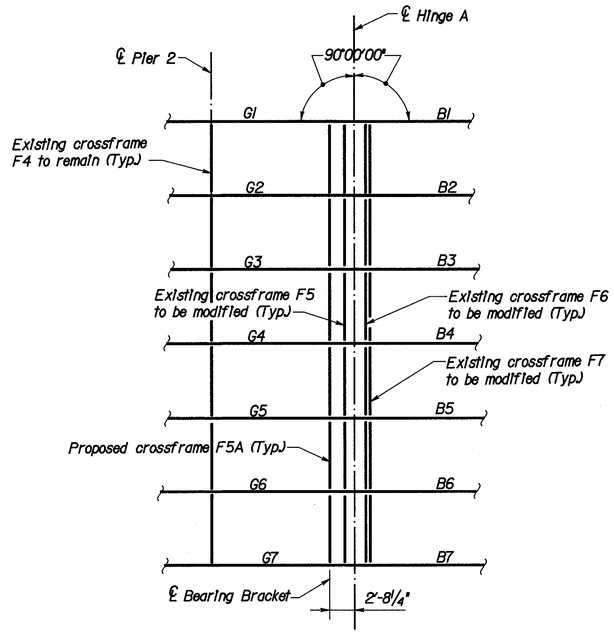

KEY PLAN AT HINGE A

LOCKWOOD, JONES & BEALS
CONSULTING ENGINEERS
DAYTON, OHIO

29/105

PIN & LINK ASSEMBLY RETROFIT
CONSTRUCTION PHASES AND KEY PLAN FOR HINGE A
BRIDGE NO. HAM-75-1102R
NORTHBOUND I-75 OVER WEST FORK OF MILL CREEK & GALBRAITH RD.

DESIGNED	CHECKED	DRAWN	CHECKED	REVIEWED DATE	REVISED
EPA	DFS	DYA	DFS	HDJ 12/92	

d:\1102\1102phas.dgn Feb. 23, 1993 08:15:49

F.H.W.A. REGION	STATE	PROJECT		283 / 338
5	OHIO			

HAMILTON COUNTY
HAM-75-9.75

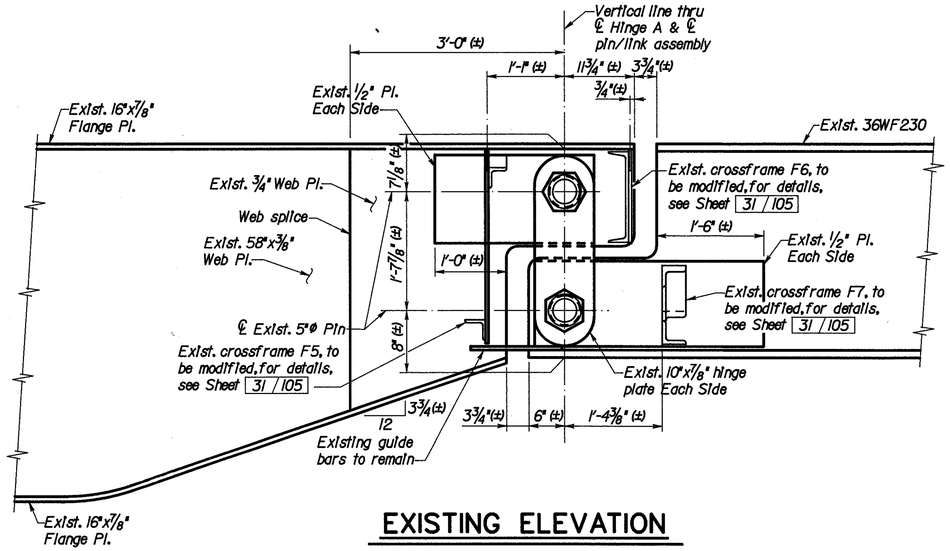

EXISTING ELEVATION

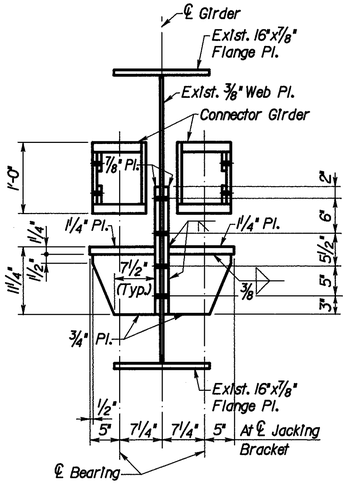

SECTION A-A

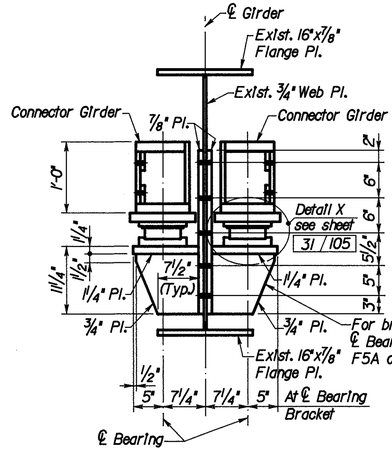

SECTION B-B

Note: Bracket welds same as shown for Section A-A

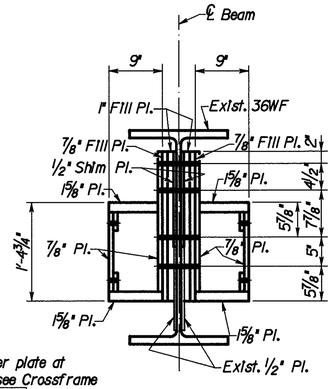

SECTION C-C

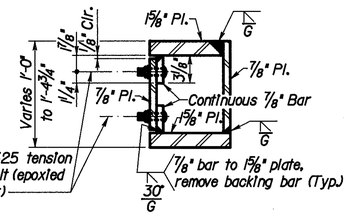

TYPICAL SECTION

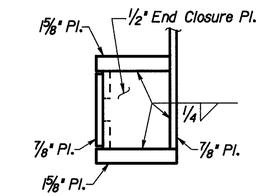

AT END CLOSURE PLATE

CONNECTOR GIRDER DETAILS

Note: All welds to be 100% ultrasonic tested.

ELEVATION

See Section E-E for web plate field bolt spacings.

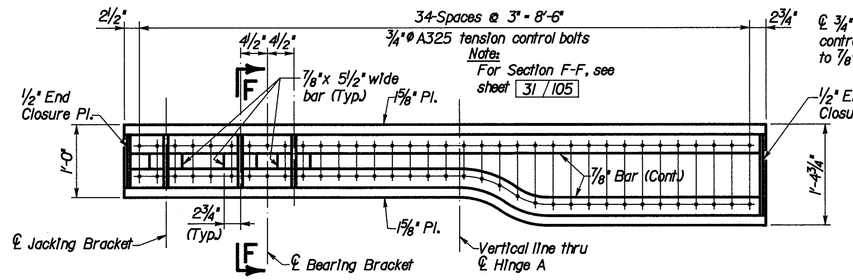

SECTION E-E

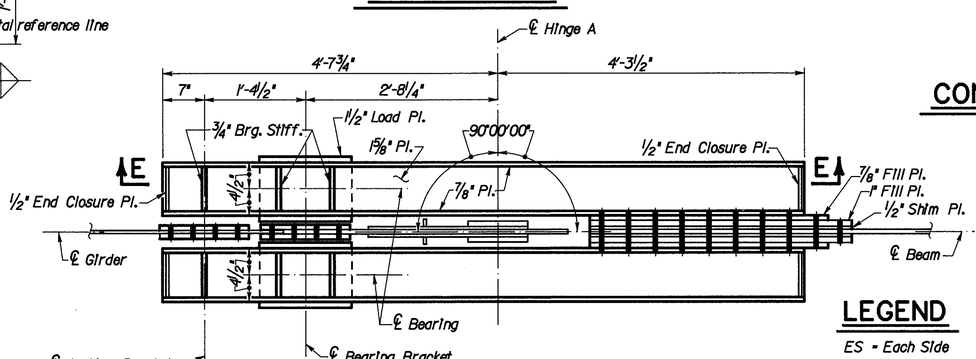

SECTION D-D

LEGEND

ES - Each Side

LOCKWOOD, JONES & BEALS
CONSULTING ENGINEERS
DAYTON, OHIO

30 / 105

PIN & LINK ASSEMBLY RETROFIT
HINGE A
BRIDGE NO. HAM-75-1102R
NORTHBOUND I-75 OVER WEST FORK OF MILL CREEK & GALBRAITH RD.

DESIGNED	CHECKED	DRAWN	CHECKED	REVIEWED DATE	REVISED
EPA	DFS	GJW	DFS	HDJ 12/92	

d:\1102\1102h1.dgn Feb. 18, 1993 08:38:25

F.H.W.A. REGION	STATE	PROJECT	
5	OHIO		

264
338

HAMILTON COUNTY
HAM-75-9.75

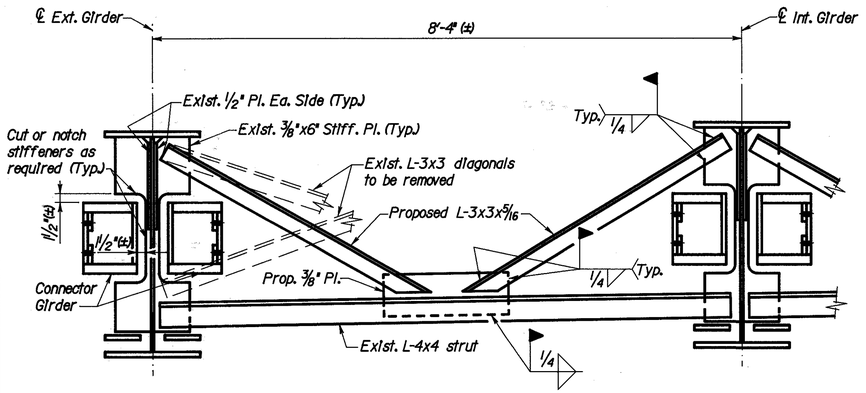

ELEVATION

CROSSFRAME F5 MODIFICATIONS

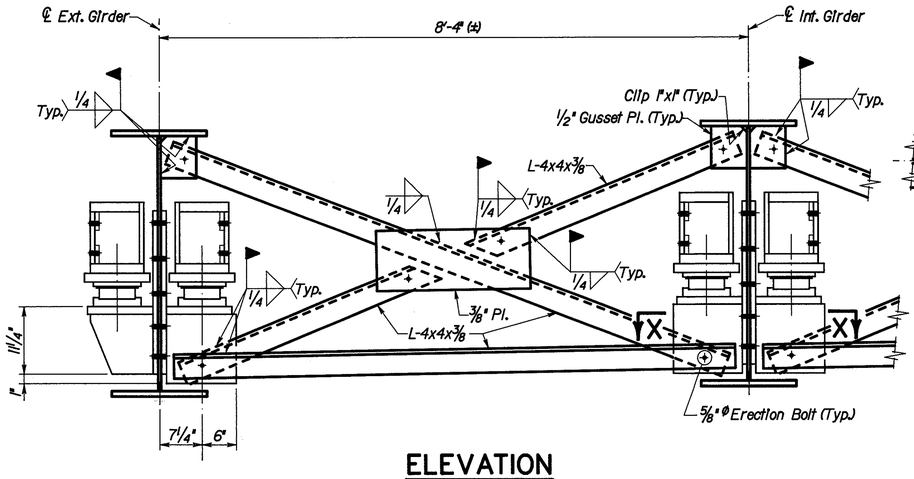

ELEVATION

PROPOSED CROSSFRAME F5A

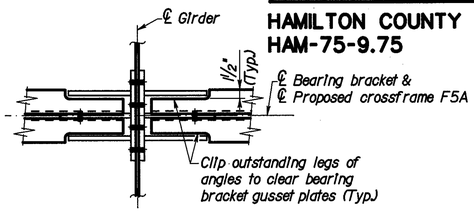

SECTION X-X

ERECTION BOLTS: Hole diameter in the crossframes and girder stiffeners shall be respectively 1/16" and 1/4" larger than the diameter of the erection bolts. Unless replaced by permanent high strength bolts, erection bolts shall remain in place. Lock washers shall be furnished for other than fully torqued high strength erection bolts. Bolts shall be furnished as part of 513.
In lieu of erection bolts and at the option of the Contractor, alternate means of temporary bracing may be used subject to the approval of the Director (501.06).

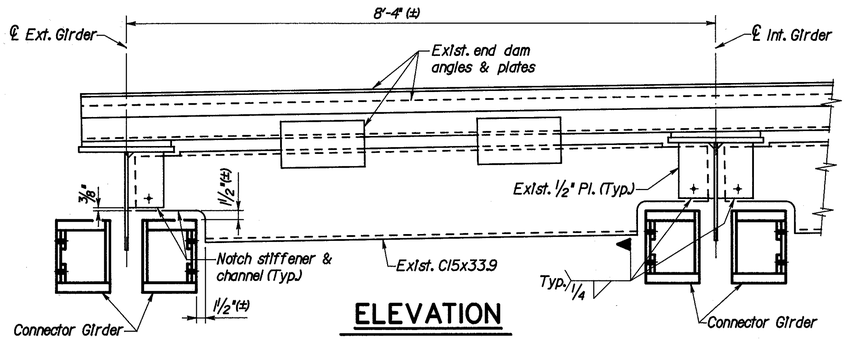

ELEVATION

CROSSFRAME F6 MODIFICATIONS

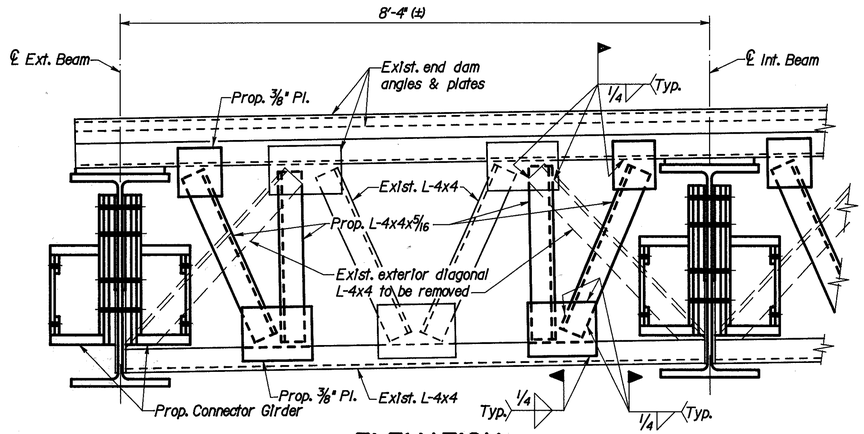

ELEVATION

CROSSFRAME F7 MODIFICATIONS

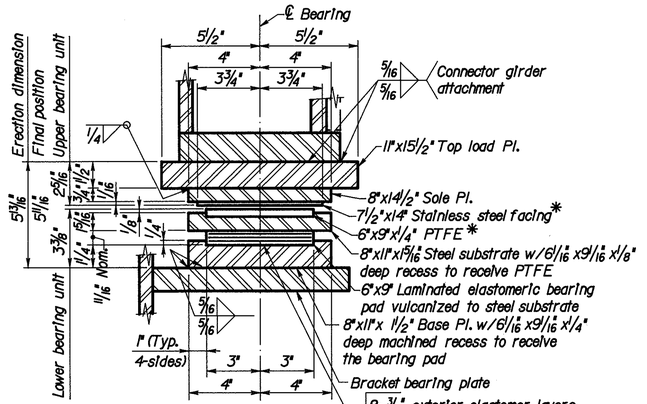

DETAIL X

CONNECTOR GIRDER BEARING

Note:
* = Protect surfaces during shipment.
Dead Load Reaction = 220 k
Live Load Reaction = 291 k
Maximum Design Load = 511 k at each Brg. Pad

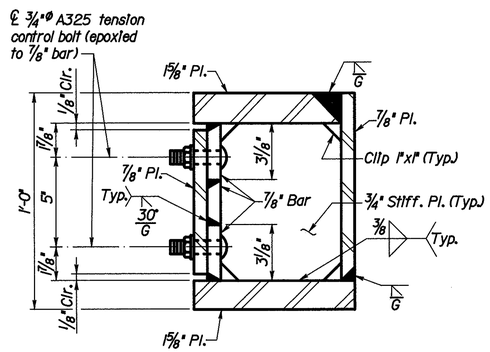

SECTION F-F

LOCKWOOD, JONES & BEALS
CONSULTING ENGINEERS
DAYTON, OHIO

31 / 105

PIN & LINK ASSEMBLY RETROFIT
HINGE A DETAILS
BRIDGE NO. HAM-75-1102R
NORTHBOUND I-75 OVER WEST FORK OF MILL CREEK & GALBRAITH RD.

DESIGNED	CHECKED	DRAWN	CHECKED	REVIEWED DATE	REVISED
EPA	DFS	GJW	DFS	HDJ 12/92	

d:\1102\1102xf.dgn Feb. 18, 1993 08:43:33

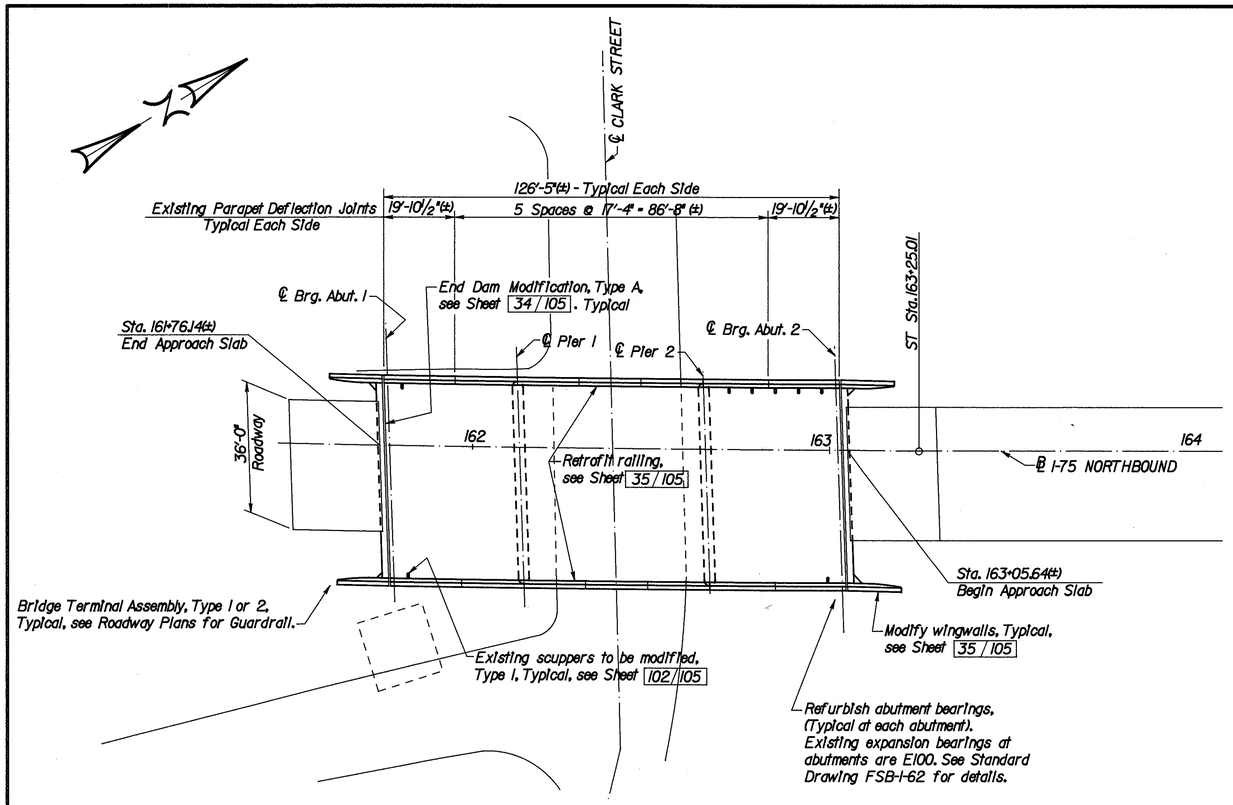

GENERAL PLAN

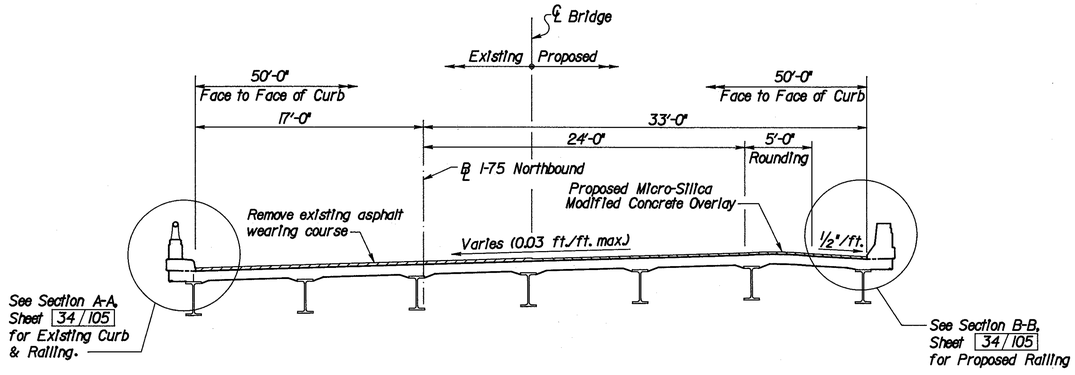

TYPICAL SECTION

NOTES:

1. For General Notes, see Sheet 1/105 thru 3/105
2. For Sections A-A and B-B, see Sheet 34/105
3. For Abutment Modification Plans and Details, see Sheet 33/105
4. For End Dam Modification, Type A, see Sheet 34/105
5. For Abutment & Superstructure Railing Details, see Sheet 35/105
6. For Scupper & Deflection Joint Details, see Sheet 102/105
7. For Reinforcing Steel List, see Sheet 103/105
8. For Estimated Quantities, see Sheet 4/105

F.H.W.A. REGION	STATE	PROJECT	
5	OHIO		

265/338

HAMILTON COUNTY
HAM-75-9.75

PROPOSED WORK

1. Remove existing asphalt overlay and install new Micro-Silica Modified Concrete Overlay
2. Seal expansion joints at abutments with strip seals. Use End Dam Modification, Type A at both abutments.
3. Retrofit existing parapets with concrete barrier railing.
4. Modify existing scuppers.
5. Repair deteriorated end cross frame at north abutment.
6. Refurbish abutment bearings.

EXISTING STRUCTURE

TYPE: Continuous rolled steel beams with reinforced concrete deck and substructure.
SPANS: 36'-6", 52'-0", 36'-6
ROADWAY: 52'-0" f/f of parapets
LOAD FREQUENCY: CF = 2000 (57), adequate for AASHO alternate loading.
SKEW: 1°46'31" R.F.
WEARING SURFACE: 1" Monolithic concrete

APPROACH SLABS: AS-1-54 (25' long)
ALIGNMENT: Spiral: (Ls=450', Dc=2°30')
SUPERELEVATION: Varies

LOCKWOOD, JONES & BEALS
CONSULTING ENGINEERS
DAYTON, OHIO
32/105

GENERAL PLAN & TYPICAL SECTION

BRIDGE NO. HAM-75-1152R
I-75 OVER CLARK STREET

DESIGNED	CHECKED	DRAWN	CHECKED	REVIEWED DATE	REVISED
DJJ	HDJ	DJJ	HDJ	MPH 12/92	

F.H.W.A. REGION	STATE	PROJECT	
5	OHIO		

266
338

HAMILTON COUNTY
HAM-75-9.75

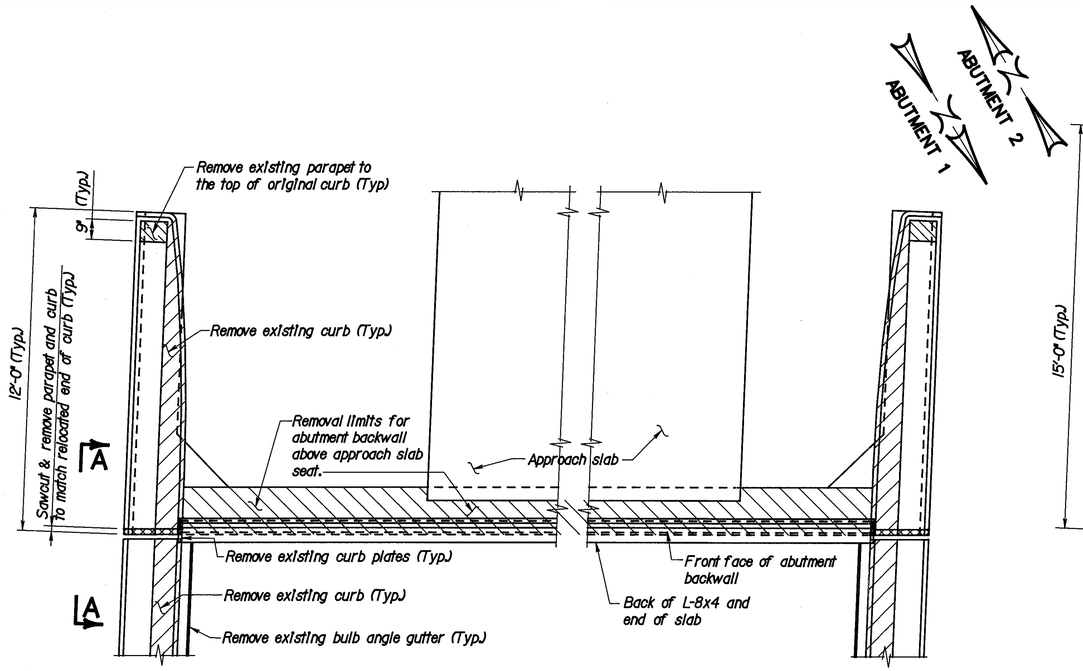

PLAN - EXISTING ABUTMENT

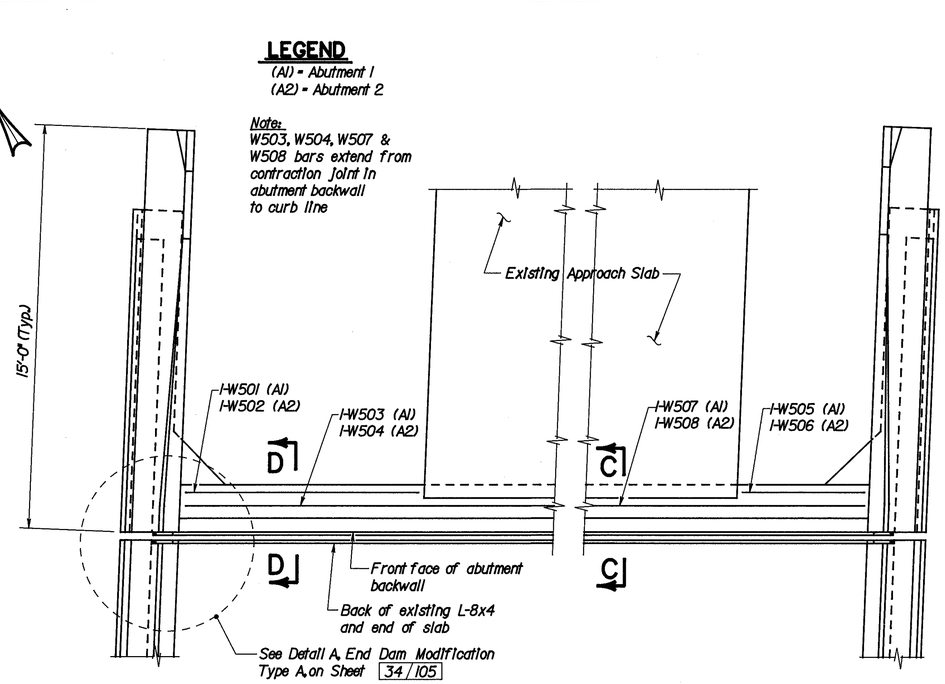

PLAN - MODIFIED ABUTMENT

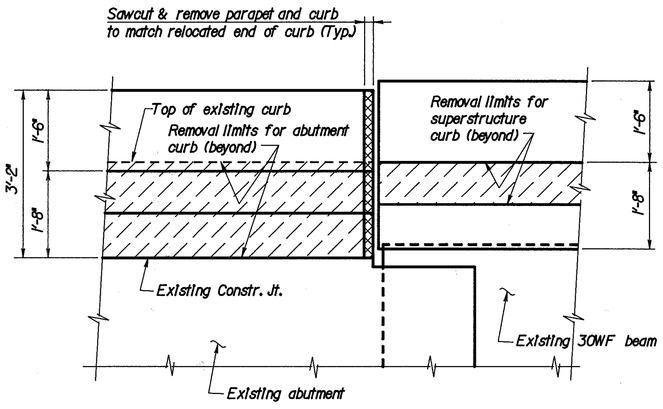

VIEW A-A

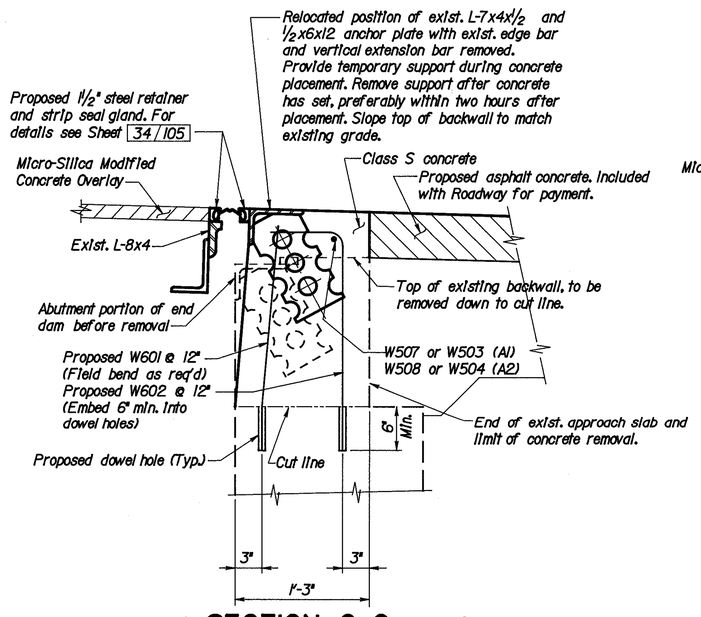

SECTION C-C

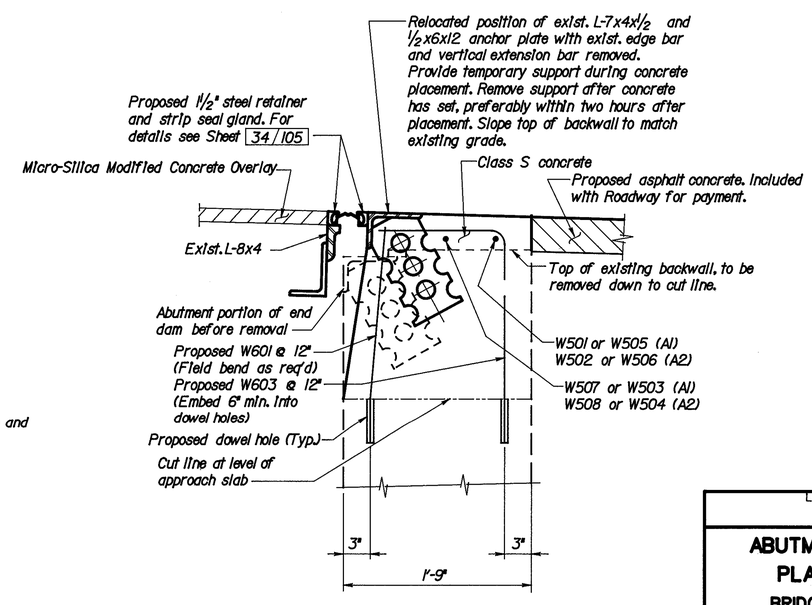

SECTION D-D

LOCKWOOD, JONES & BEALS
CONSULTING ENGINEERS
DAYTON, OHIO

33/105

ABUTMENT MODIFICATIONS PLANS AND DETAILS

BRIDGE NO. HAM-75-1152R

I-75 OVER CLARK STREET

DESIGNED	CHECKED	DRAWN	CHECKED	REVIEWED DATE	REVISED
GJW	HDJ	GJW	HDJ	MPH 12/92	

f:\6272\1152d1.dgn Feb. 16, 1993 16:17:03

F.H.W.A. REGION	STATE	PROJECT		267 / 338
5	OHIO			

HAMILTON COUNTY
HAM-75-9.75

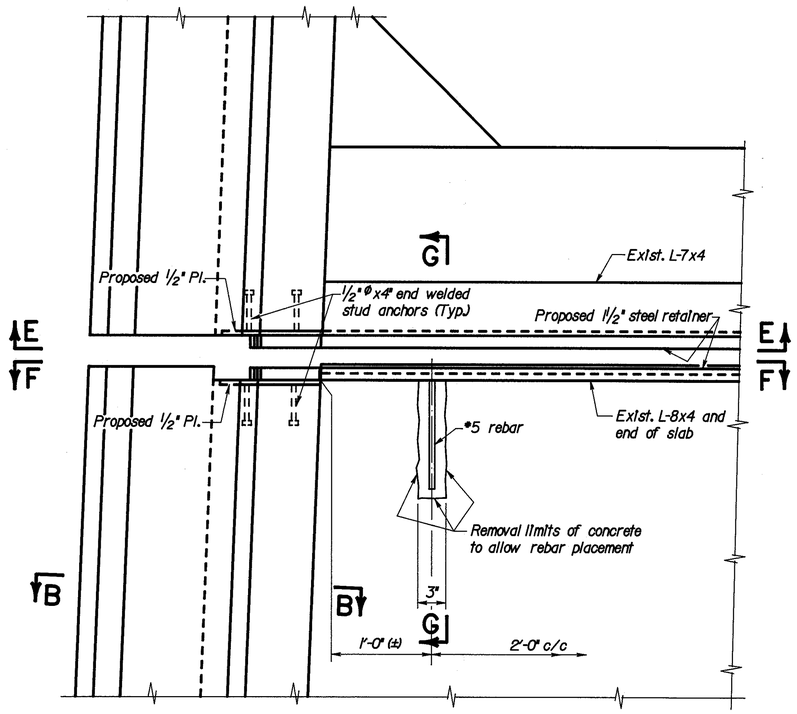

DETAIL A
END DAM MODIFICATION, TYPE A

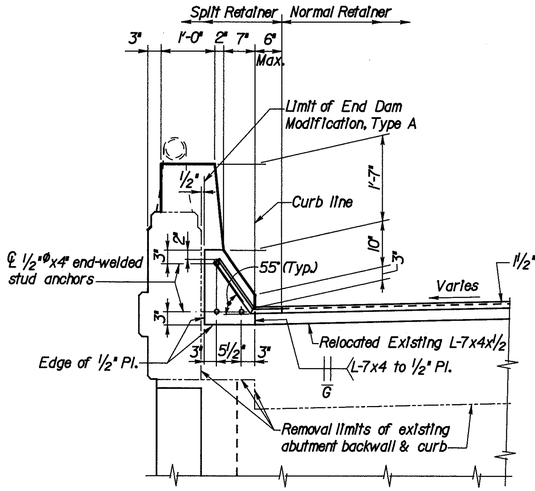

SECTION E-E

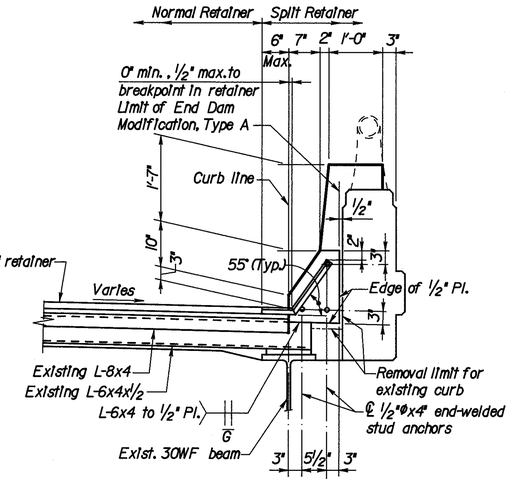

SECTION F-F

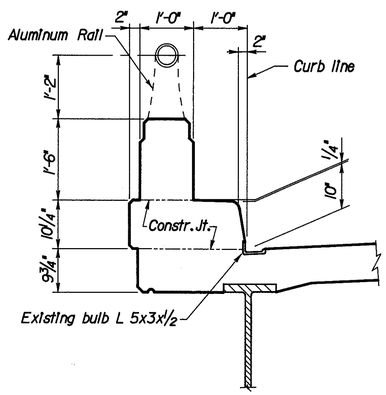

SECTION A-A
EXISTING CURB & RAILING

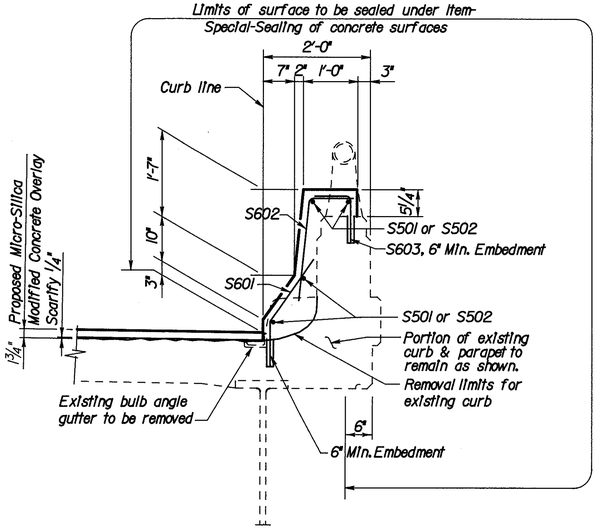

SECTION B-B
PROPOSED RAILING

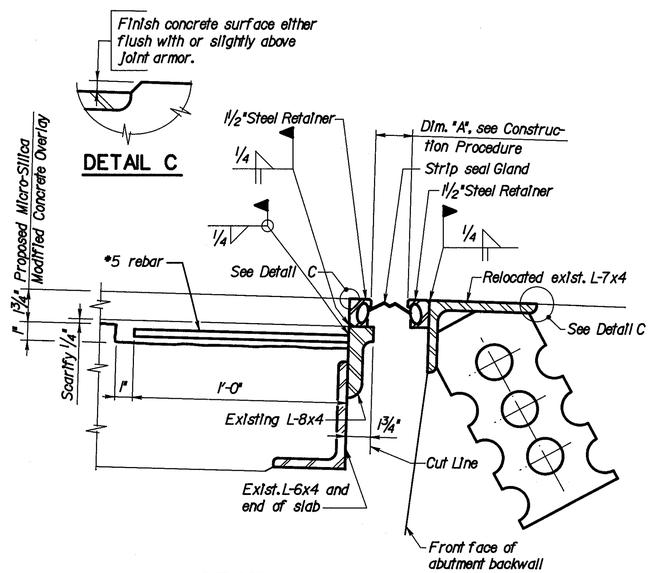

SECTION G-G

Construction Procedure:

1. Place backwall concrete during stable or rising ambient temperatures and conclude placement immediately before the day's peak ambient temperature.
2. Not more than four hours prior to the day's peak ambient temperature install the backwall L-7x4x1/2 with the 1 1/2" steel retainer attached such that Dimension "A" will be 2" at 60°F. For each 10°F above 60°F the 2" dimension shall be decreased by 1/16" and for each 10°F below 60°F the 2" dimension shall be increased by 1/16".

LOCKWOOD, JONES & BEALS
CONSULTING ENGINEERS
DAYTON, OHIO

34 / 105

END DAM MODIFICATION DETAILS

BRIDGE NO. HAM-75-1152R
I-75 OVER CLARK STREET

DESIGNED	CHECKED	DRAWN	CHECKED	REVIEWED DATE	REVISED
GJW	HDJ	GJW	HDJ	MPH 12/92	

f:\6272\1152d2.dgn Feb. 19, 1993 10:57:01

F.H.W.A. REGION	STATE	PROJECT		268 / 338
5	OHIO			

HAMILTON COUNTY
HAM-75-9.75

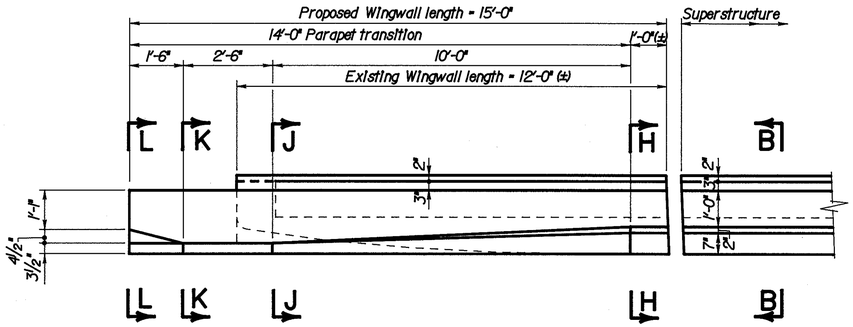

For Bridge Terminal Assembly, Type 1 or 2, see Standard Construction Drawing GR-31 or GR-32.

PLAN

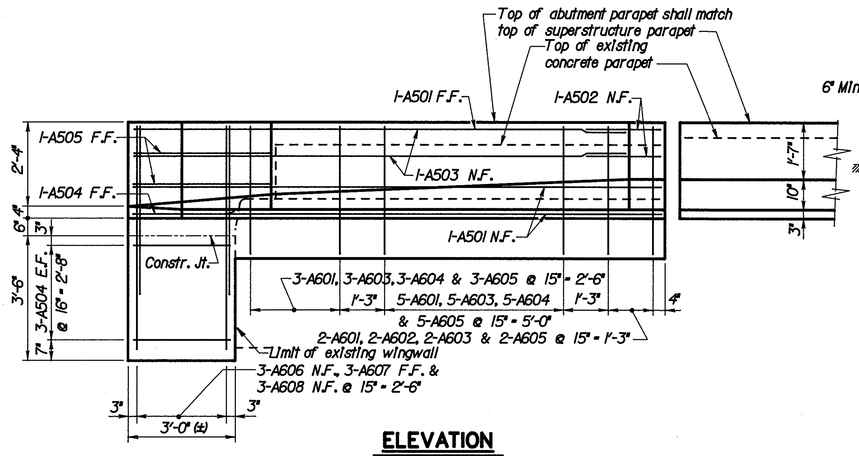

ELEVATION

RAILING DETAILS AT ABUTMENTS

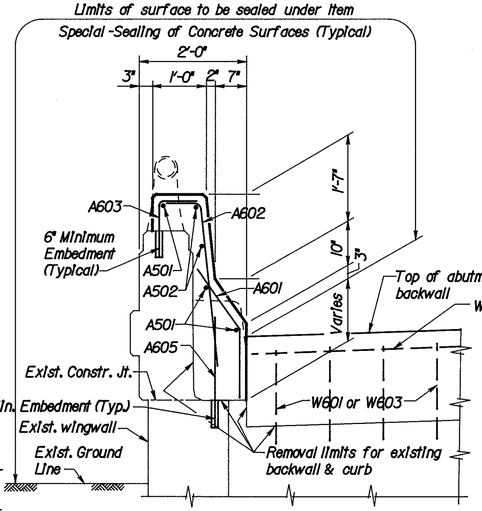

SECTION H-H

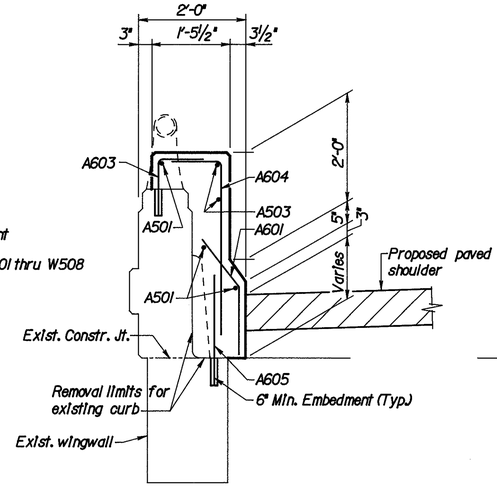

SECTION J-J

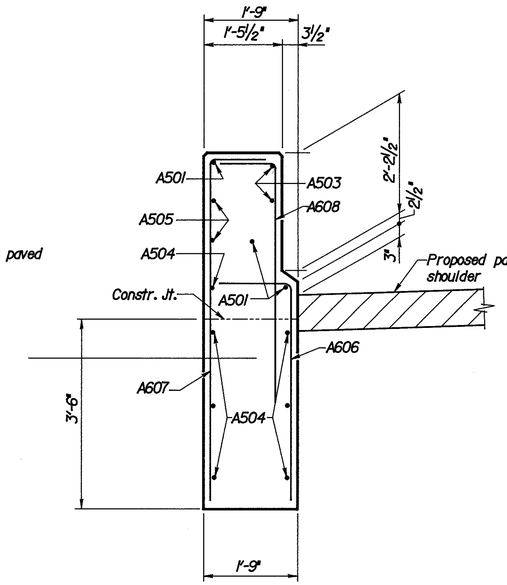

SECTION K-K

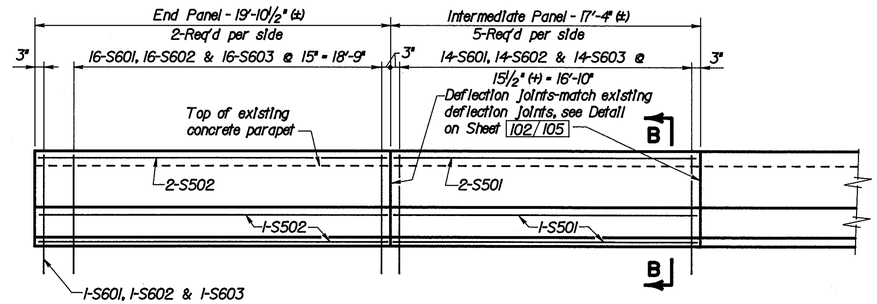

SUPERSTRUCTURE RAILING DETAILS

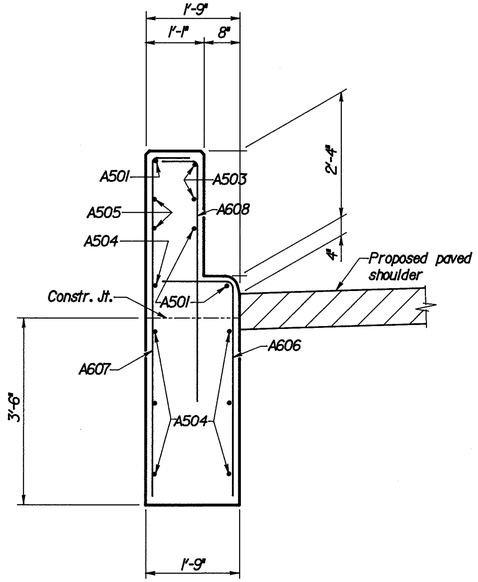

SECTION L-L

NOTES

1. For Section B-B, see sheet 34/105
2. For Reinforcing Steel List, see sheet 103/105

LEGEND

E.F. = Each Face
N.F. = Near Face
F.F. = Far Face

LOCKWOOD, JONES & BEALS
CONSULTING ENGINEERS
DAYTON, OHIO
35/105

ABUTMENT & SUPERSTRUCTURE RAILING DETAILS
BRIDGE NO. HAM-75-1152R
I-75 OVER CLARK STREET

DESIGNED	CHECKED	DRAWN	CHECKED	REVIEWED DATE	REVISED
GJW	HDJ	GJW	HDJ	MPH 12/92	

f:\6272\1152d3.dgn Feb. 16, 1993 16:21:52

F.H.W.A. REGION	STATE	PROJECT	
5	OHIO		

269
338

HAMILTON COUNTY
HAM-75-9.75

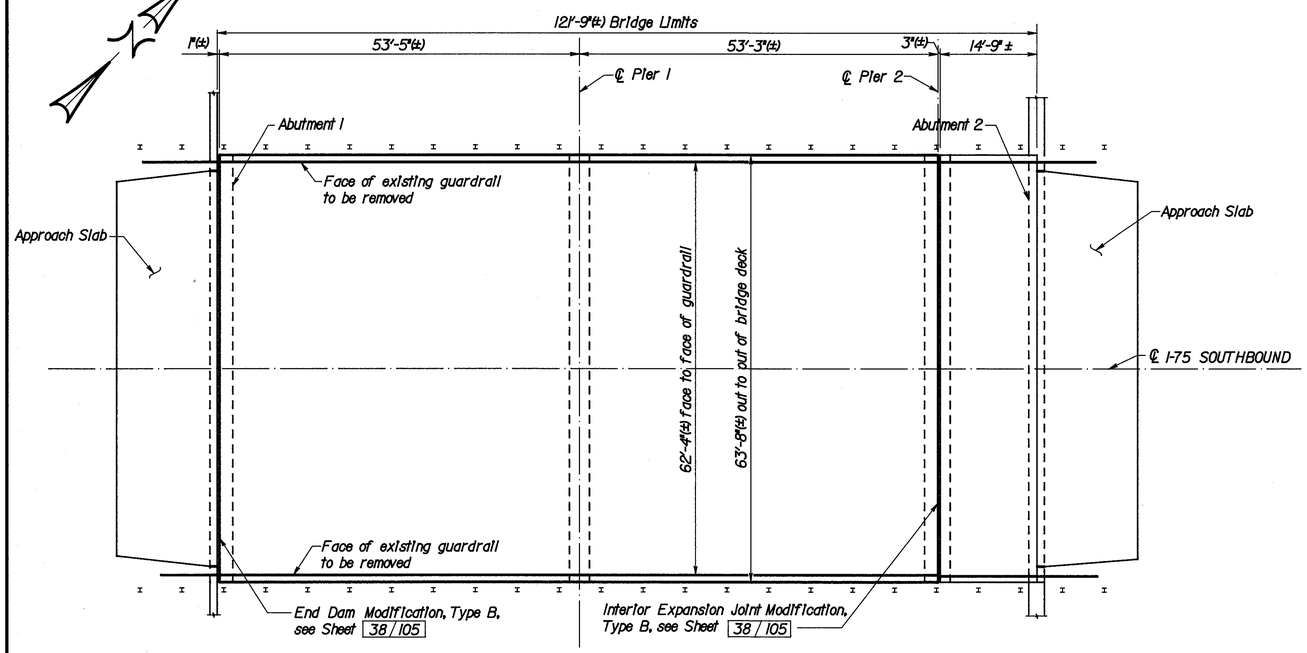

EXISTING PLAN

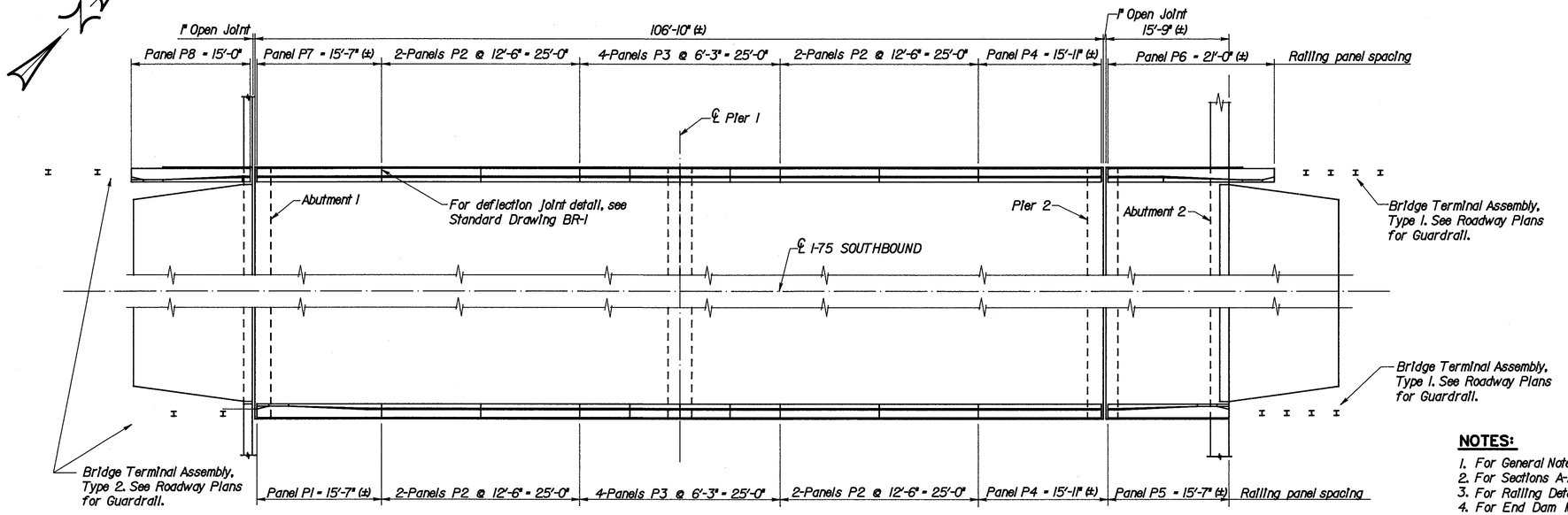

PLAN
PROPOSED RAILING PANEL LAYOUT

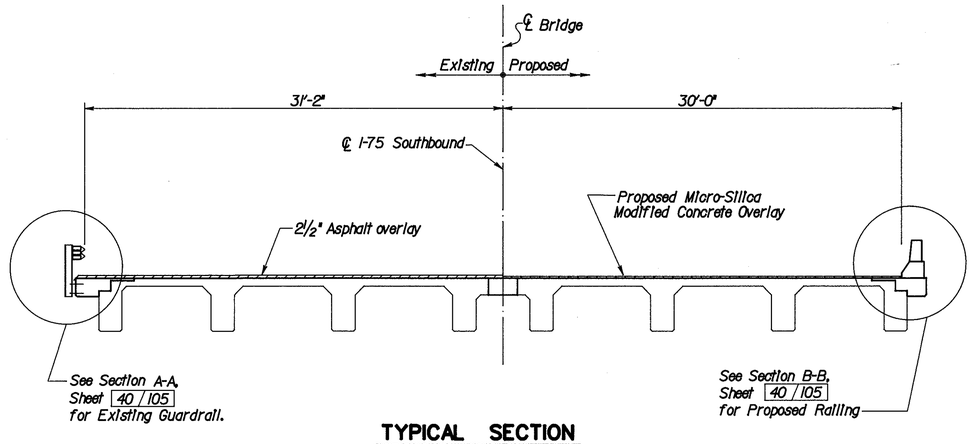

TYPICAL SECTION

PROPOSED WORK

1. Remove existing asphalt overlay and install new Micro-silica Modified Concrete Overlay.
2. Remove existing strip seal expansion joints and install new strip seal expansion joints. Use End Dam Modification, Type B, at Abutment 1 and Interior Expansion Joint Modification, Type b, at Pier 2.
3. Remove existing guardrail and install new concrete barrier railing.
4. Patch Pier 2 per Item 519.

EXISTING STRUCTURE

TYPE: Reinforced concrete T-beams, reinforced concrete slab and reinforced concrete substructure
SPANS: 50'-0", 50'-0", 12'-0" Clear
ROADWAY: 62'-4" face to face of guardrail
LOADING: S-20-40
SKEW: None
WEARING SURFACE: Asphalt Overlay
APPROACH SLABS: 15' long x 56' wide
ALIGNMENT: Tangent
SUPERELEVATION: None

NOTES:

1. For General Notes, see Sheet 1/105 thru 3/105
2. For Sections A-A and B-B, see Sheet 40/105
3. For Railing Details, see Sheet 39/105
4. For End Dam Modification, Type B and Interior Expansion Joint Type B, see Sheet 38/105
5. For patching details for Pier 2, see Sheet 37/105
6. For Reinforcing Steel List, see Sheet 103/105
7. For Estimated Quantities, see Sheet 3/105

LOCKWOOD, JONES & BEALS
CONSULTING ENGINEERS
DAYTON, OHIO
36/105

EXISTING PLAN, TYPICAL SECTION & PROPOSED PARAPET PANEL LAYOUT
BRIDGE NO. HAM-75-1160L
I-75 OVER WEST FORK MILL CREEK

DESIGNED	CHECKED	DRAWN	CHECKED	REVIEWED DATE	REVISED
DJJ	HDJ	DJJ	HDJ	MPH 12/92	

f:\6272\t160lplx.dgn Feb. 5, 1993 12:58:50

F.H.W.A. REGION	STATE	PROJECT	
5	OHIO		

270
338

HAMILTON COUNTY
HAM-75-9.75

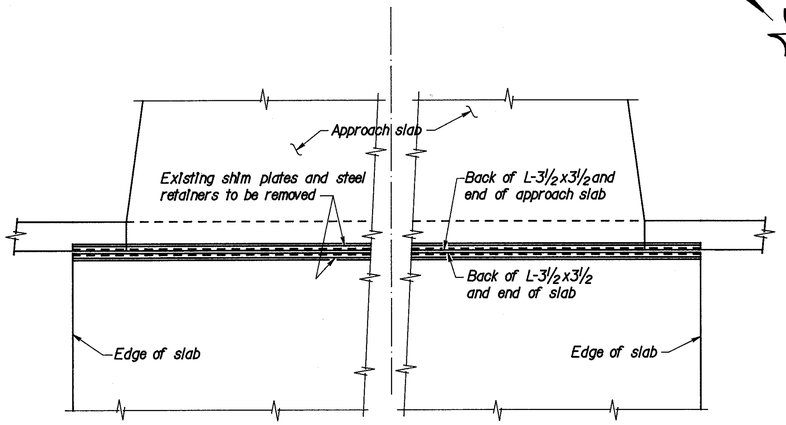

PLAN - EXISTING EXPANSION JOINT AT ABUTMENT 1

(PLAN AT PIER 2 SIMILAR)

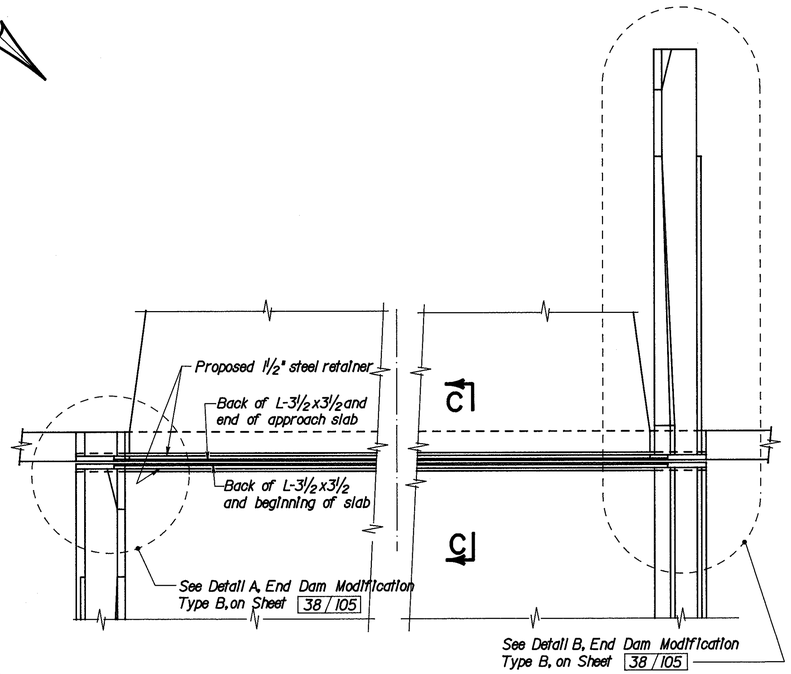

PLAN - MODIFIED EXPANSION JOINT AT ABUTMENT 1

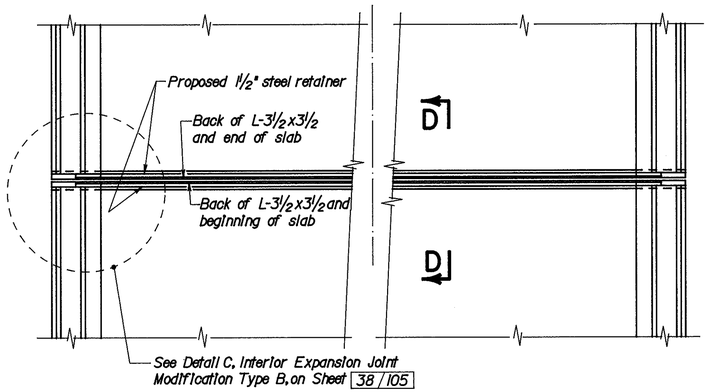

PLAN - MODIFIED EXPANSION JOINT AT PIER 2

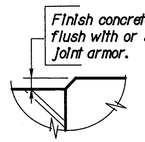

DETAIL D

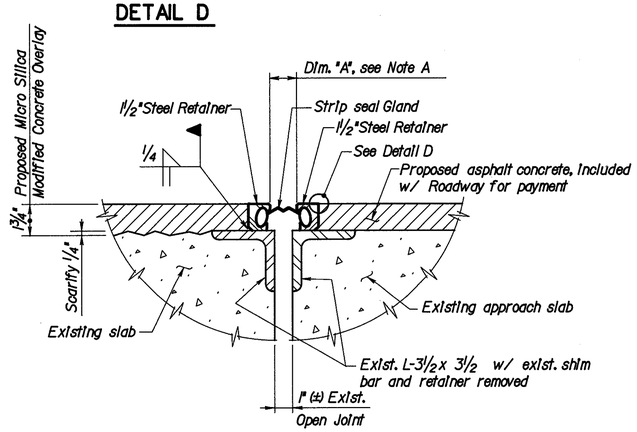

SECTION C-C

(SECTION D-D SIMILAR)

NOTE A:

Dimension "A" shall be a minimum of 2" @ 60°F. For each 10°F above 60°F the 2" dimension shall be decreased by 1/16" and for each 10°F below 60°F the 2" dimension shall be increased by 1/16".

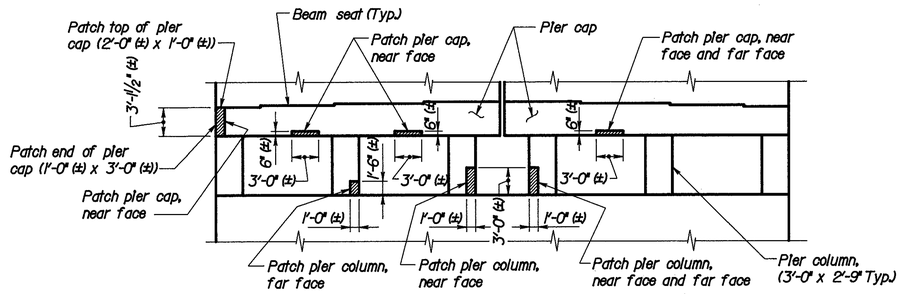

ELEVATION - PIER 2

Looking North

PATCH DETAILS

LOCKWOOD, JONES & BEALS
CONSULTING ENGINEERS
DAYTON, OHIO

37/105

EXPANSION JOINT MODIFICATIONS
PLANS AND SECTIONS
BRIDGE NO. HAM-75-1160L
I-75 OVER WEST FORK MILL CREEK

DESIGNED	CHECKED	DRAWN	CHECKED	REVIEWED DATE	REVISED
GJW	HDJ	GJW	HDJ	MPH 12/92	

f:\6272\1160d3.dgn Feb. 5, 1993 13:04:52

F.H.W.A. REGION	STATE	PROJECT	
5	OHIO		

271
338

HAMILTON COUNTY
HAM-75-9.75

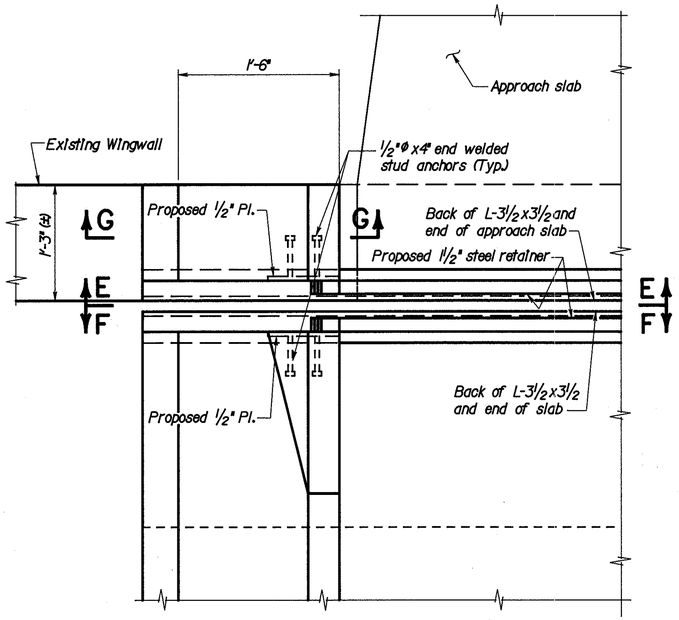

DETAIL A
END DAM MODIFICATION, TYPE B

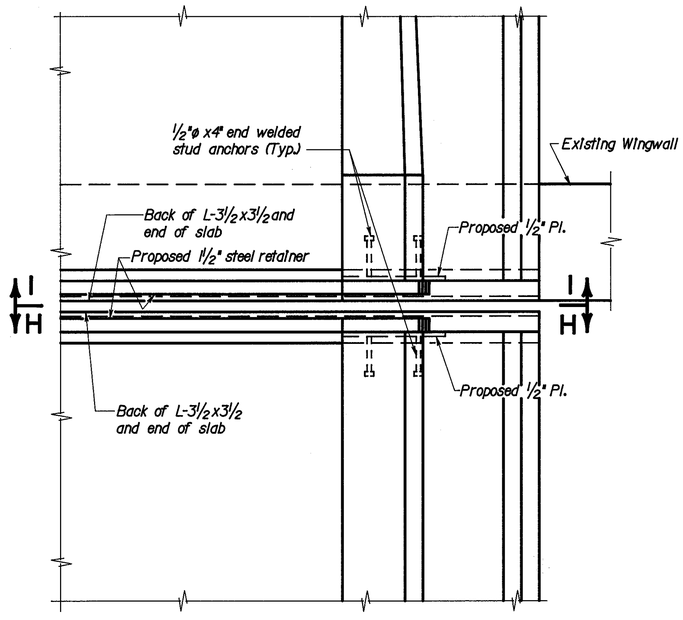

DETAIL B
END DAM MODIFICATION, TYPE B

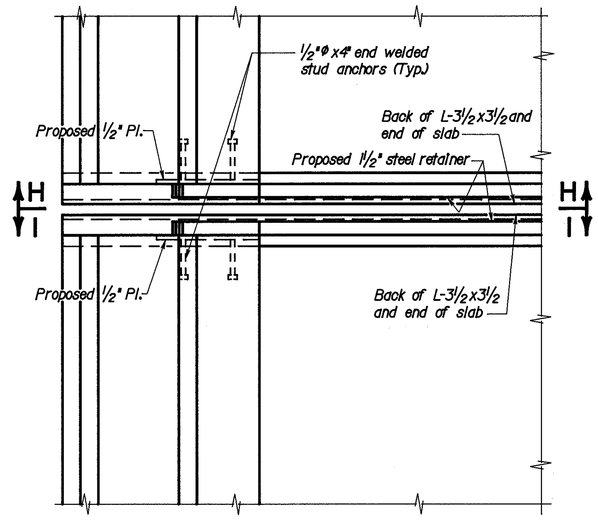

DETAIL C
INTERIOR EXPANSION JOINT MODIFICATION, TYPE B

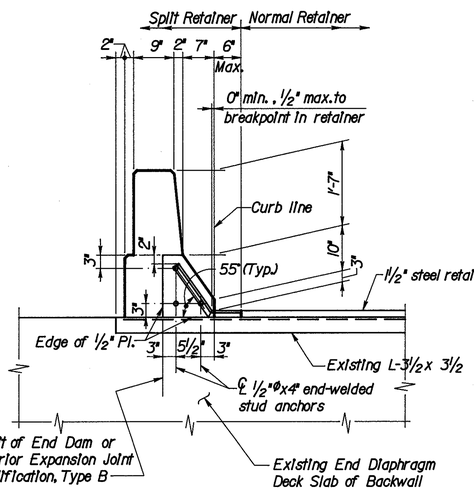

SECTION H-H
(SECTION I-I OPPOSITE HAND)

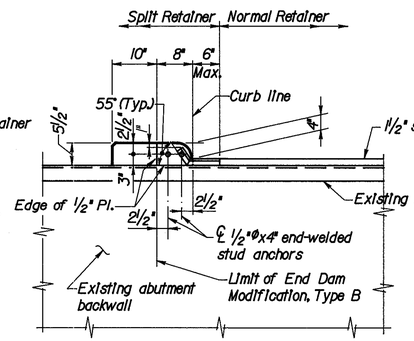

SECTION E-E

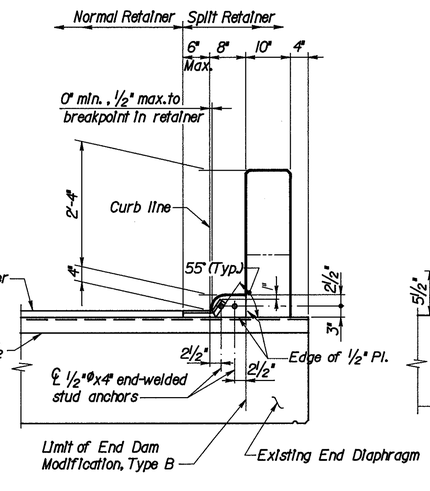

SECTION F-F

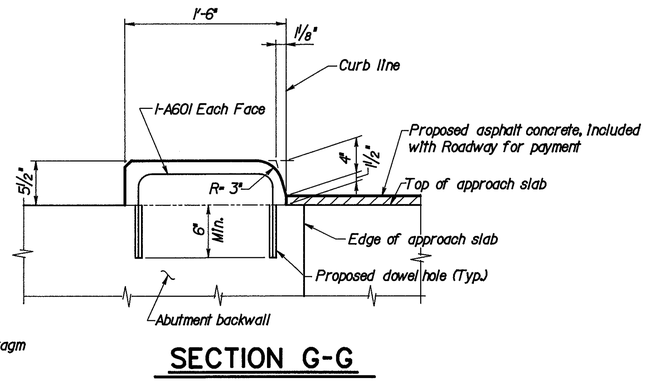

SECTION G-G

LOCKWOOD, JONES & BEALS
CONSULTING ENGINEERS
DAYTON, OHIO

38 / 105

EXPANSION JOINT MODIFICATION DETAILS

BRIDGE NO. HAM-75-1160L
I-75 OVER WEST FORK MILL CREEK

DESIGNED	CHECKED	DRAWN	CHECKED	REVIEWED DATE	REVISED
GJW	HDJ	GJW	HDJ	MPH 12/92	

f:\6272\1160d4.dgn Feb. 5, 1993 13:48:04

F.H.W.A. REGION	STATE	PROJECT	
5	OHIO		

272
338

HAMILTON COUNTY
HAM-75-9.75

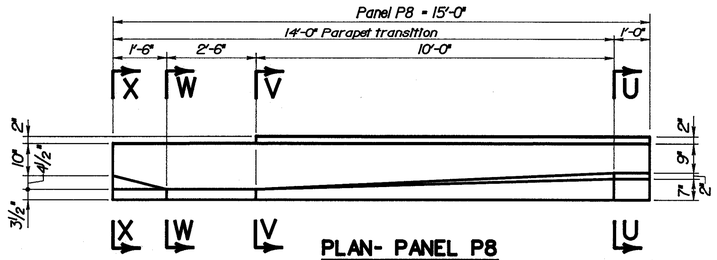

PLAN- PANEL P8

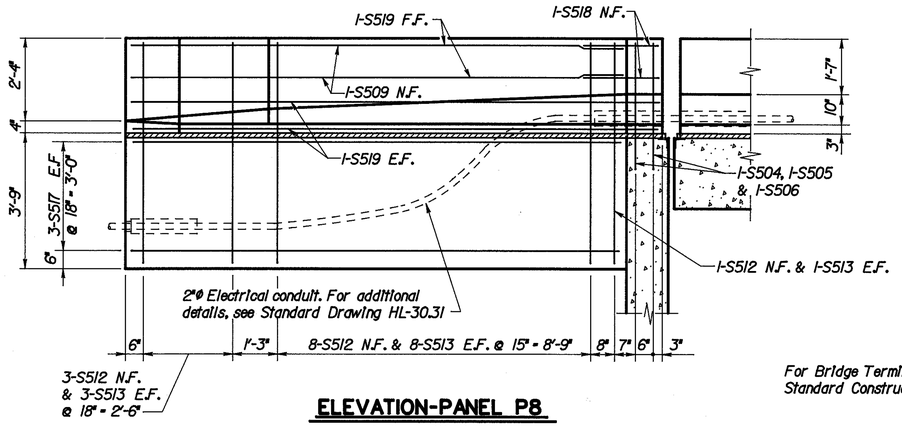

ELEVATION-PANEL P8

1-Panel P8 Req'd

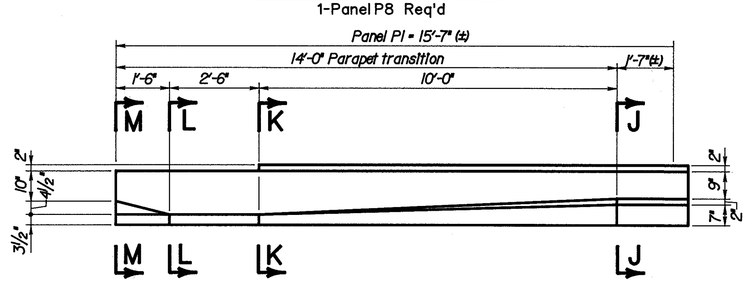

PLAN- PANEL P1 & P5

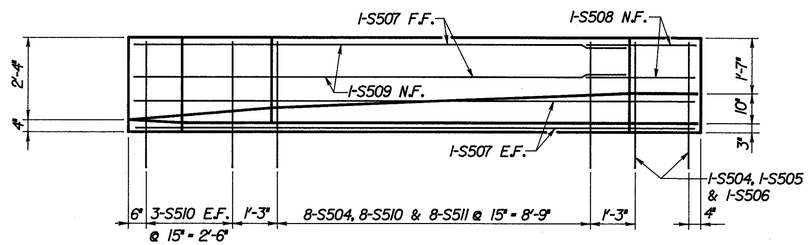

ELEVATION-PANEL P1 & P5

1-Panel P1 Req'd
1-Panel P5 Req'd

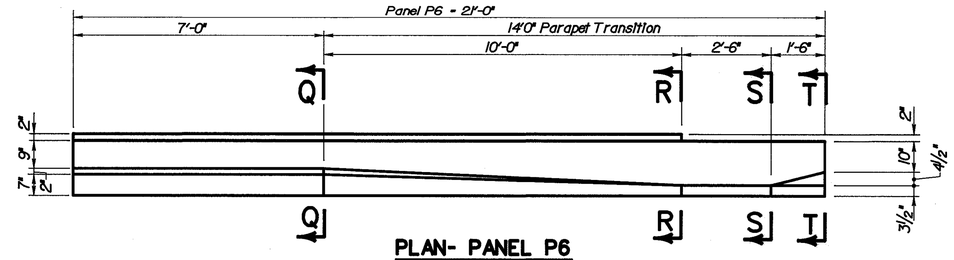

PLAN- PANEL P6

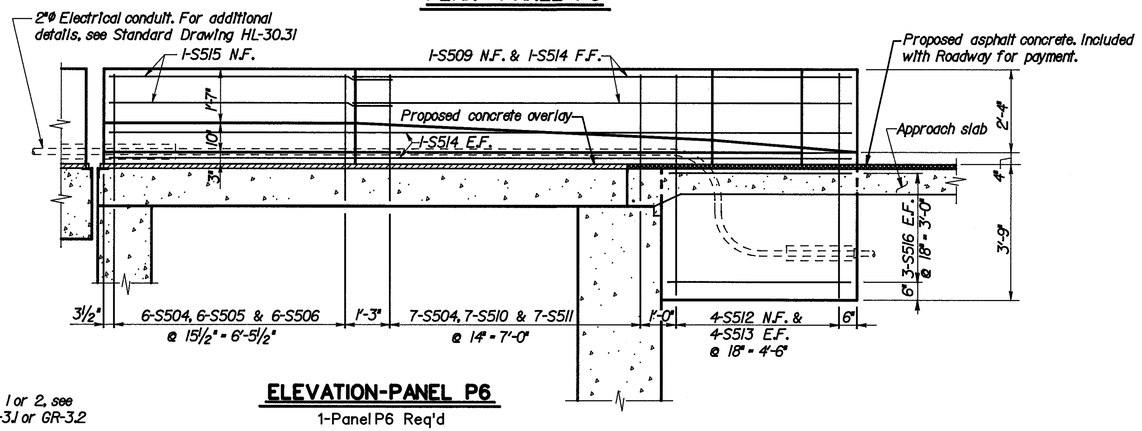

ELEVATION-PANEL P6

1-Panel P6 Req'd

For Bridge Terminal Assembly, Type 1 or 2, see Standard Construction Drawing GR-3.1 or GR-3.2

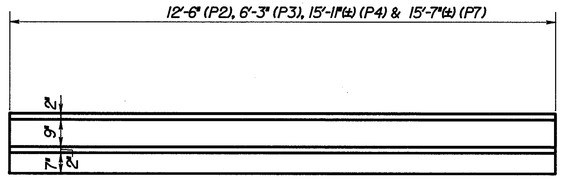

PLAN-PANEL P2, P3, P4 & P7

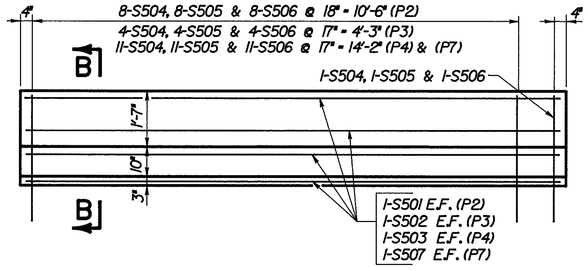

ELEVATION-PANEL P2, P3, P4 & P7

8-Panels P2 Req'd
8-Panels P3 Req'd
2-Panels P4 Req'd
1-Panel P7 Req'd

NOTES:

1. For Sections J-J thru M-M, see Sheet 40 / 105
2. For Sections Q-Q thru T-T, see Sheet 41 / 105
3. For Sections U-U thru X-X, see Sheet 41 / 105
4. For Reinforcing Steel List, see Sheet 103 / 105

LEGEND

E.F. = Each Face
N.F. = Near Face
F.F. = Far Face

LOCKWOOD, JONES & BEALS
CONSULTING ENGINEERS
DAYTON, OHIO
39 / 105

RAILING PANEL DETAILS

BRIDGE NO. HAM-75-1160L
I-75 OVER WEST FORK MILL CREEK

DESIGNED	CHECKED	DRAWN	CHECKED	REVIEWED DATE	REVISED
GJW	HDJ	GJW	HDJ	MPH 12/92	

f:\6272\1160d4b.dgn Feb. 23, 1993 14:32:01

F.H.W.A. REGION	STATE	PROJECT	
5	OHIO		

273
338

HAMILTON COUNTY
HAM-75-9.75

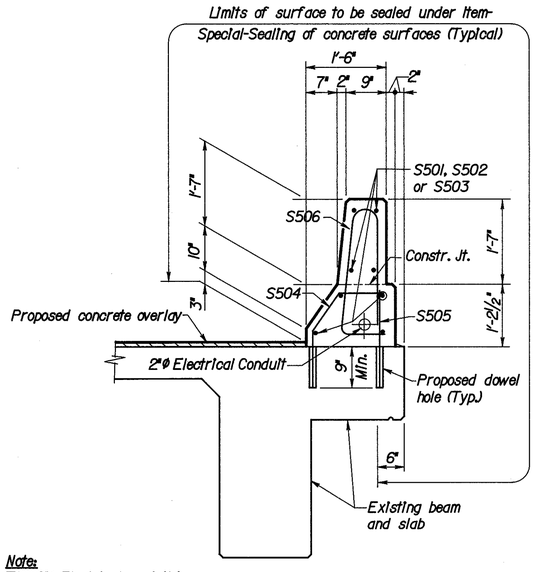

Note:
The 2"ø Electrical conduit is in the west railing only.

SECTION B-B
PROPOSED RAILING

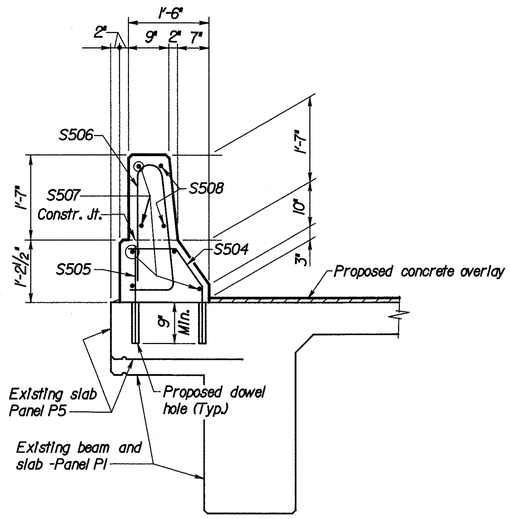

SECTION J-J

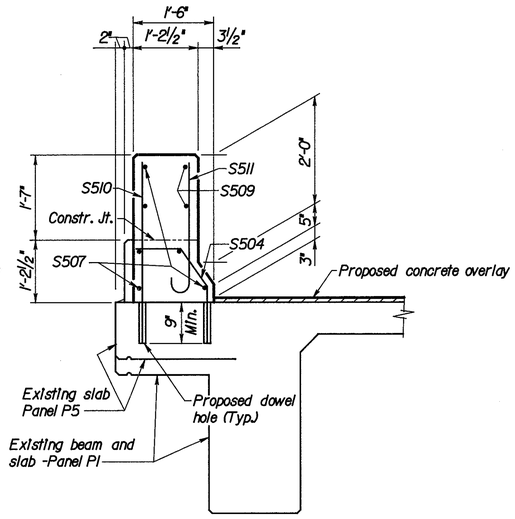

SECTION K-K

NOTE:
Dowels shall be installed in accordance with SS852 and 705.20. The cost for drilling holes and installing the dowels shall be included in the price bid for item 517-Railing (Deflector parapet type), as per plan

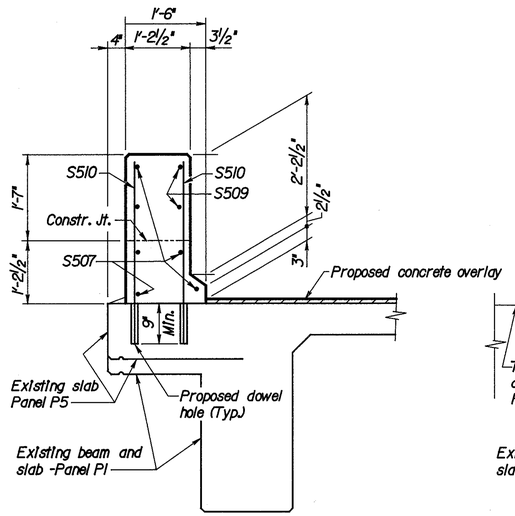

SECTION L-L

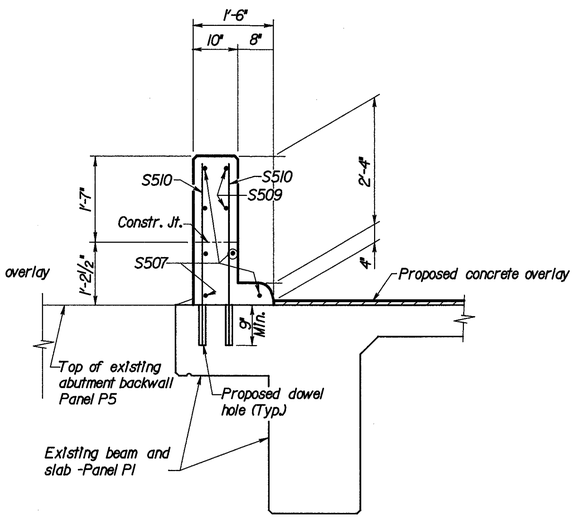

SECTION M-M

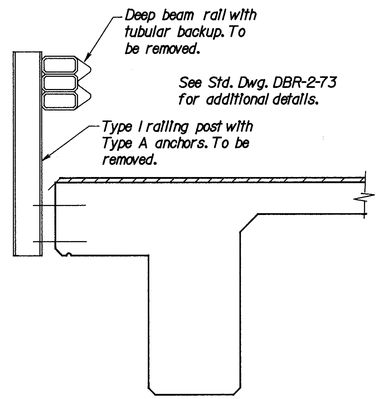

SECTION A-A
EXISTING RAILING

LOCKWOOD, JONES & BEALS
CONSULTING ENGINEERS
DAYTON, OHIO

40 / 105

RAILING PANEL
SECTIONS
BRIDGE NO. HAM-75-1160L
I-75 OVER WEST FORK MILL CREEK,

DESIGNED	CHECKED	DRAWN	CHECKED	REVIEWED DATE	REVISED
GJW	HDJ	GJW	HDJ	MPH 12/92	

f:\6272\1160d2.dgn Feb. 5, 1993 14:42:18

F.H.W.A. REGION	STATE	PROJECT	
5	OHIO		

274
338

HAMILTON COUNTY
HAM-75-9.75

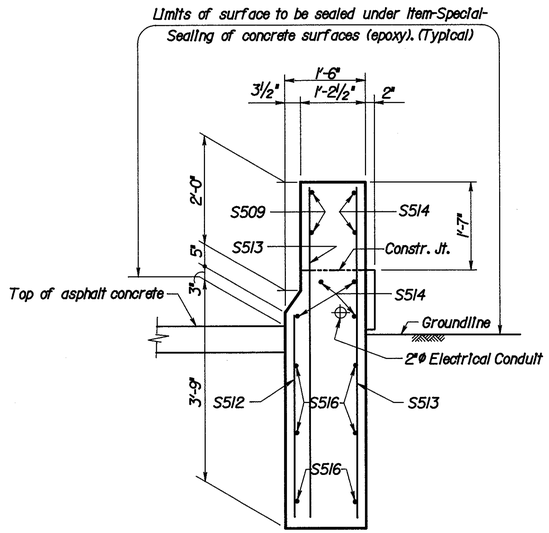

SECTION R-R

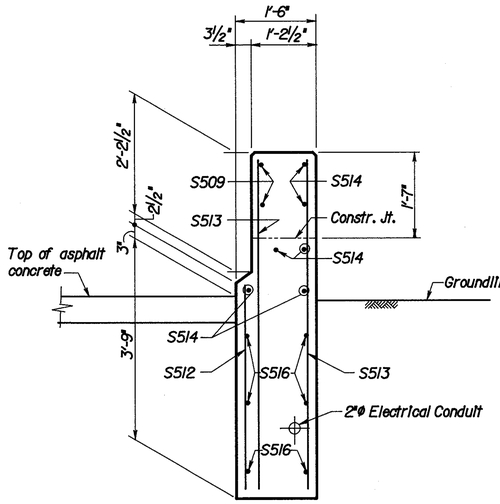

SECTION S-S

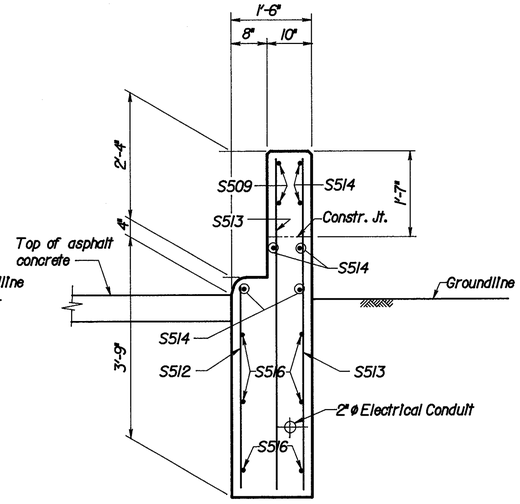

SECTION T-T

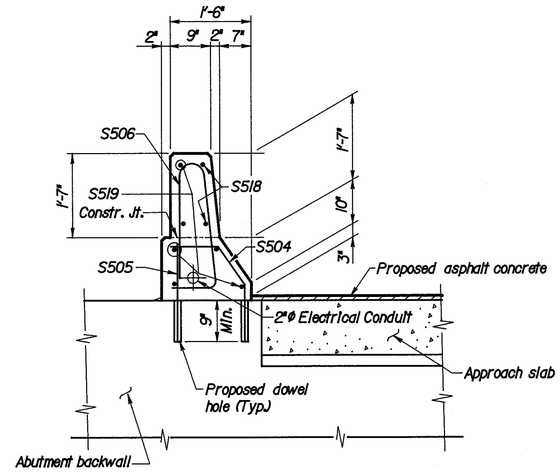

SECTION U-U

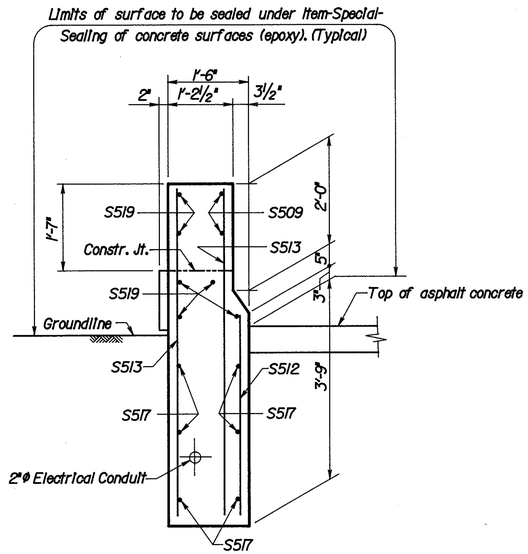

SECTION V-V

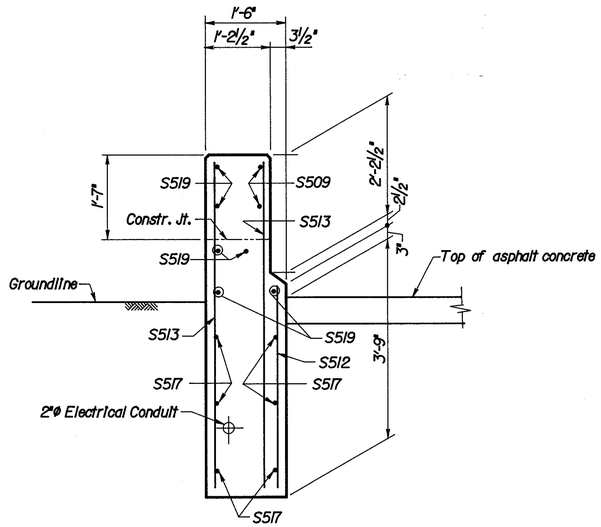

SECTION W-W

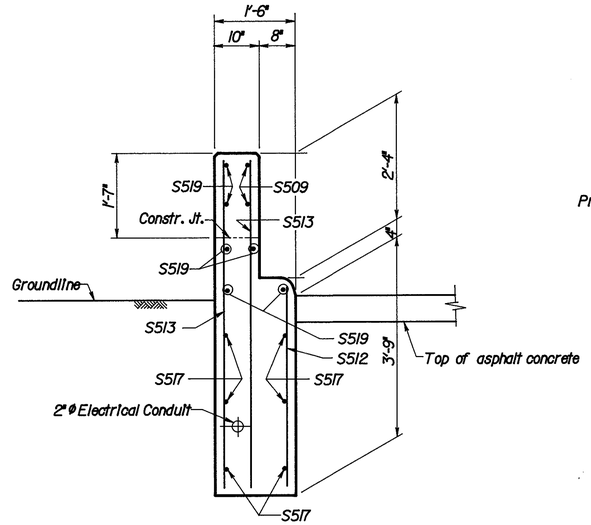

SECTION X-X

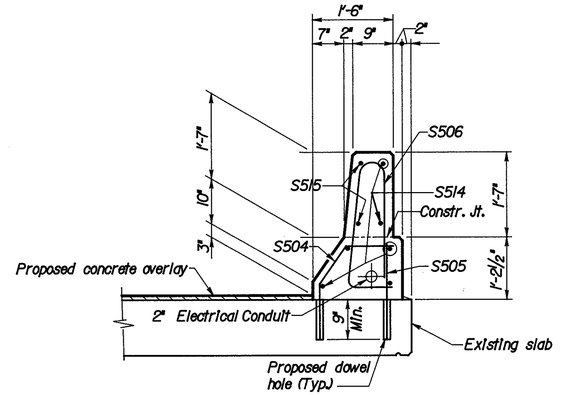

SECTION Q-Q

LOCKWOOD, JONES & BEALS
CONSULTING ENGINEERS
DAYTON, OHIO

41 / 105

RAILING PANEL SECTIONS

BRIDGE NO. HAM-75-1160L
I-75 OVER WEST FORK MILL CREEK

DESIGNED	CHECKED	DRAWN	CHECKED	REVIEWED DATE	REVISED
GJW	HDJ	GJW	HDJ	MPH 12/92	

f:\6272\1160d4c.dgn Feb. 23, 1993 14:37:44

F.H.W.A. REGION	STATE	PROJECT	
5	OHIO		

275
338

HAMILTON COUNTY
HAM-75-9.75

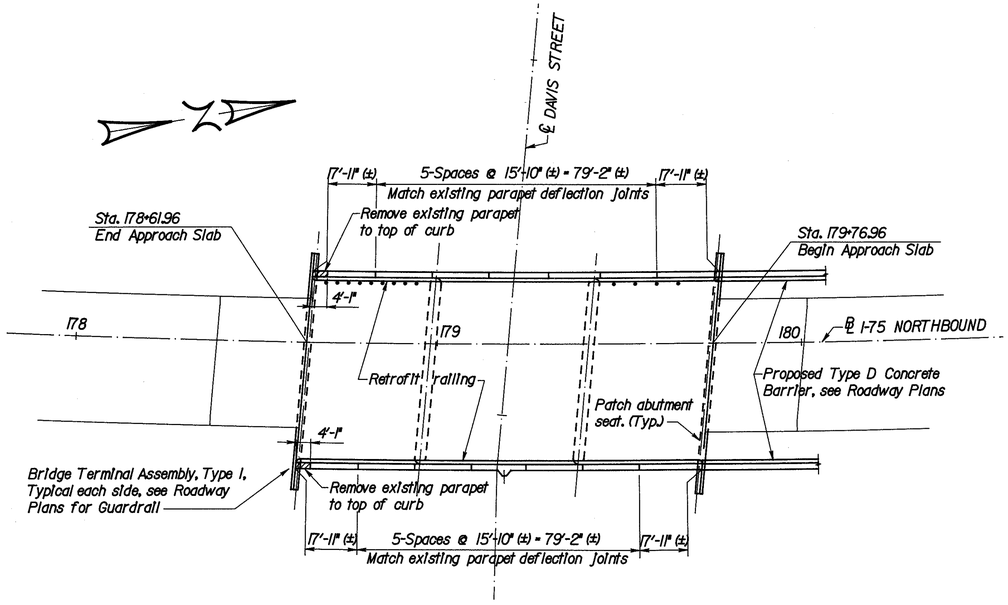

PLAN

NOTES:

1. For General Notes, see Sheet 1 / 105 thru 3 / 105
2. For Sections A-A thru F-F, see Sheet 43 / 105
3. For Abutment Seat Patch Details, see Sheet 43 / 105
4. For Reinforcing Steel List, see Sheet 104 / 105
5. For Estimated Quantities, see Sheet 4 / 105

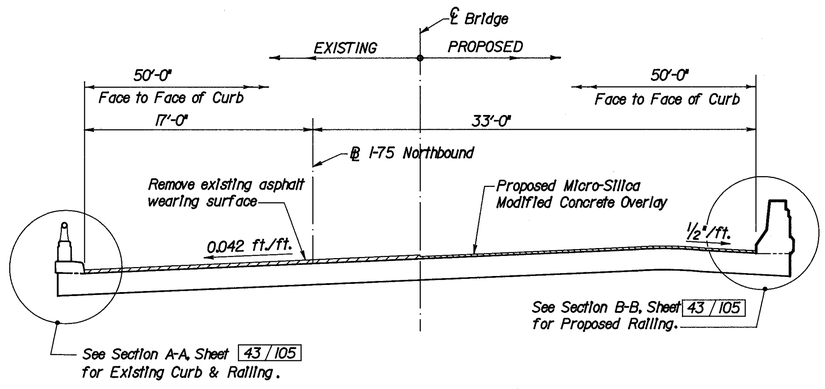

TYPICAL SECTION

PROPOSED WORK

1. Remove existing asphalt overlay and add new Micro-Silica Modified Concrete Overlay.
2. Retrofit existing parapets with concrete barrier railing.
3. Patch abutment seats.

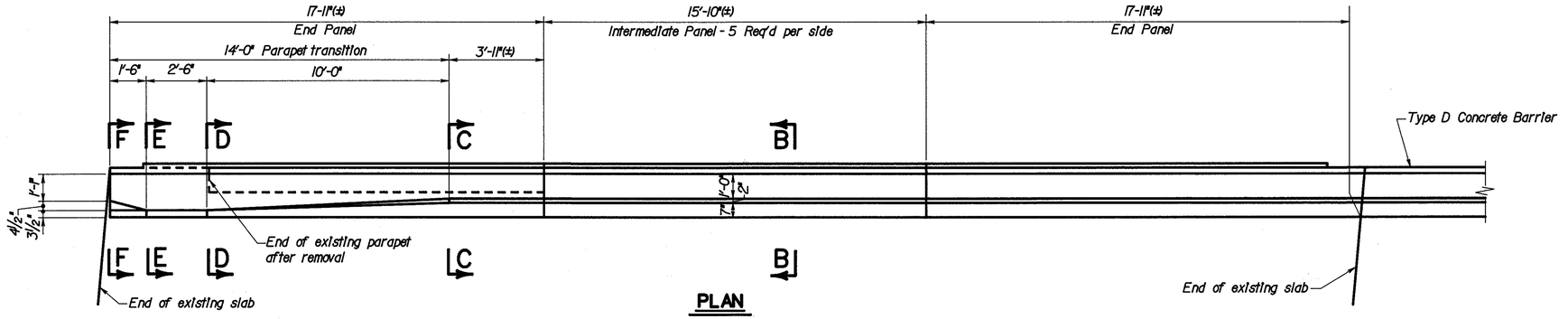

PLAN

For Bridge Terminal Assembly, Type I, see Standard Construction Drawing GR-3J

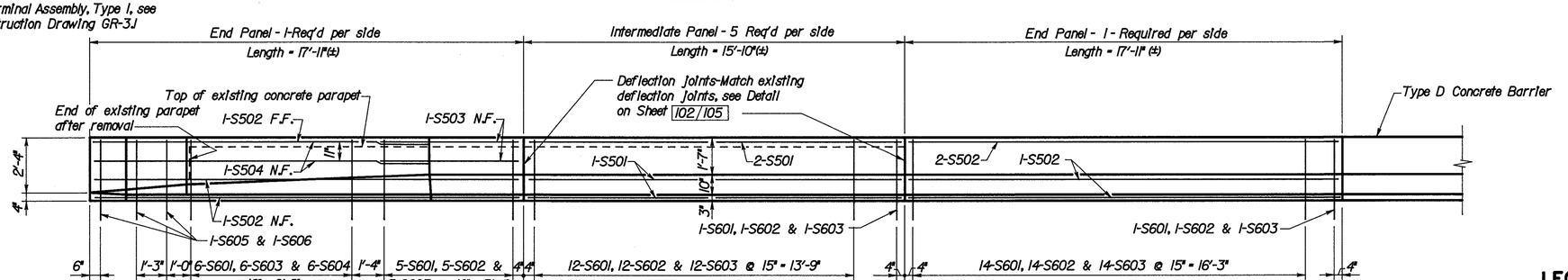

ELEVATION

SUPERSTRUCTURE RAILING DETAILS

LEGEND

N.F. = Near Face
F.F. = Far Face

EXISTING STRUCTURE

TYPE: Continuous reinforced concrete slab bridge, with reinforced concrete substructure.
SPANS: 35'-0", 43'-6", 35'-0
ROADWAY: 52'-0" f/f of parapets
LOAD FREQUENCY: CF = 2000 (57), adequate for AASHO alternate loading.
SKEW: 5°07'24" LF.
WEARING SURFACE: 2½" Asphalt Overlay

APPROACH SLABS: AS-1-54 (25' long)
ALIGNMENT: 1°45' Curve left
SUPERELEVATION: 0.042 ft./ft.

LOCKWOOD, JONES & BEALS
CONSULTING ENGINEERS
DAYTON, OHIO
42 / 105

PLAN, TYPICAL SECTION & SUPERSTRUCTURE RAILING DETAILS
BRIDGE NO. HAM-75-1184R
I-75 OVER DAVIS STREET

DESIGNED	CHECKED	DRAWN	CHECKED	REVIEWED DATE	REVISED
GJW	HDJ	GJW	HDJ	MPH 12/92	

f:\6272\1184d1.dgn Feb. 5, 1993 16:10:08

F.H.W.A. REGION	STATE	PROJECT	
5	OHIO		

276
338

HAMILTON COUNTY
HAM-75-9.75

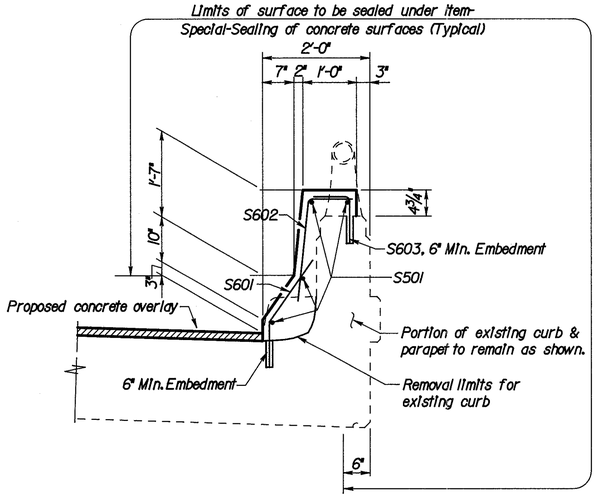

SECTION B-B
PROPOSED RAILING

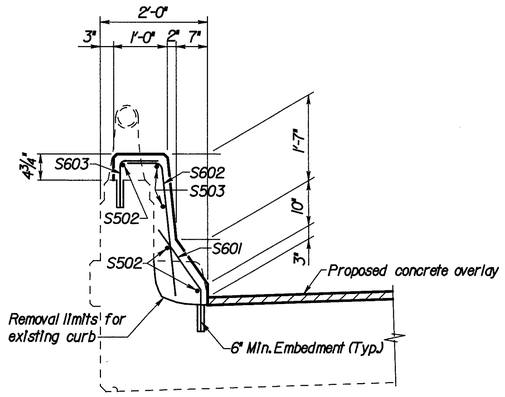

SECTION C-C

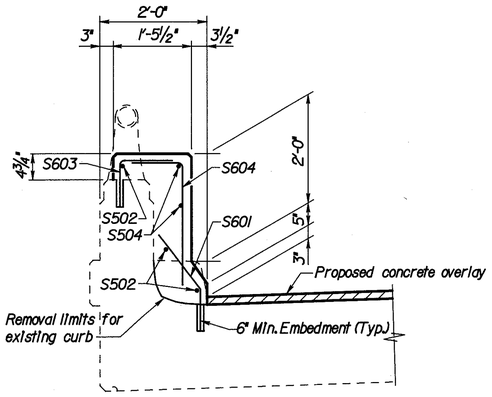

SECTION D-D

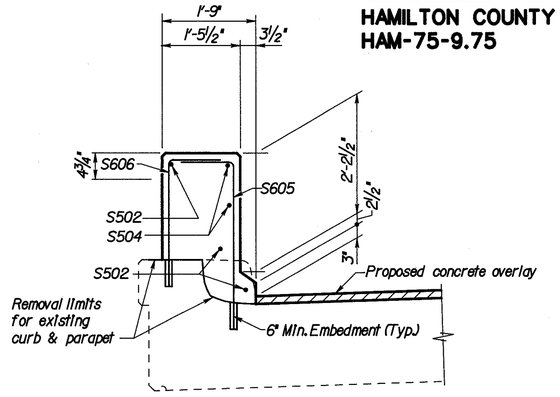

SECTION E-E

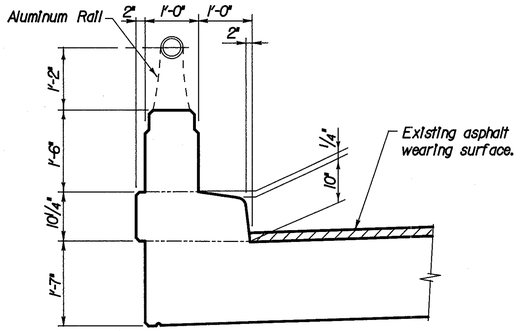

SECTION A-A
EXISTING CURB & RAILING

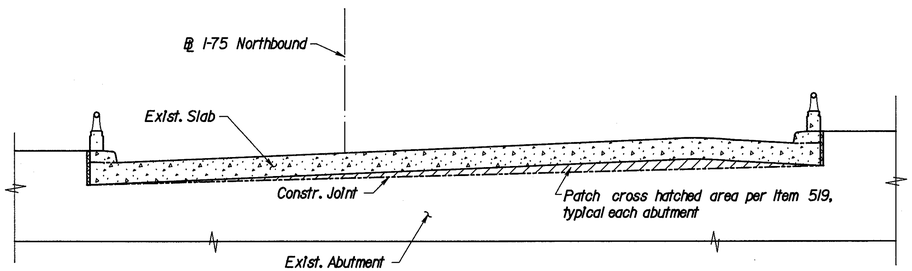

ABUTMENT SEAT PATCH DETAIL

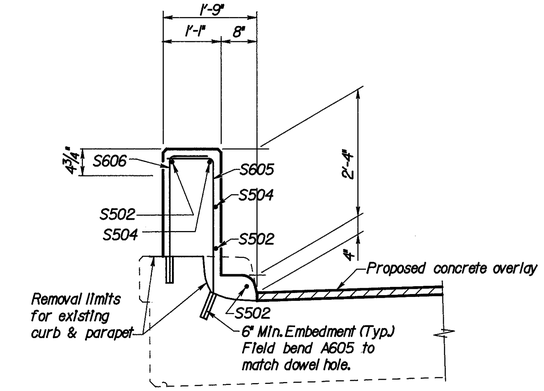

SECTION F-F

LOCKWOOD, JONES & BEALS
CONSULTING ENGINEERS
DAYTON, OHIO

43/105

RAILING SECTIONS
BRIDGE NO. HAM-75-1184R
I-75 OVER DAVIS STREET

DESIGNED	CHECKED	DRAWN	CHECKED	REVIEWED DATE	REVISED
GJW	HDJ	GJW	HDJ	MPH 12/92	

f:\6272\1184misi.dgn Feb. 5, 1993 16:16:25

F.H.W.A. REGION	STATE	PROJECT	
5	OHIO		

277
338

HAMILTON COUNTY
HAM-75-9.75

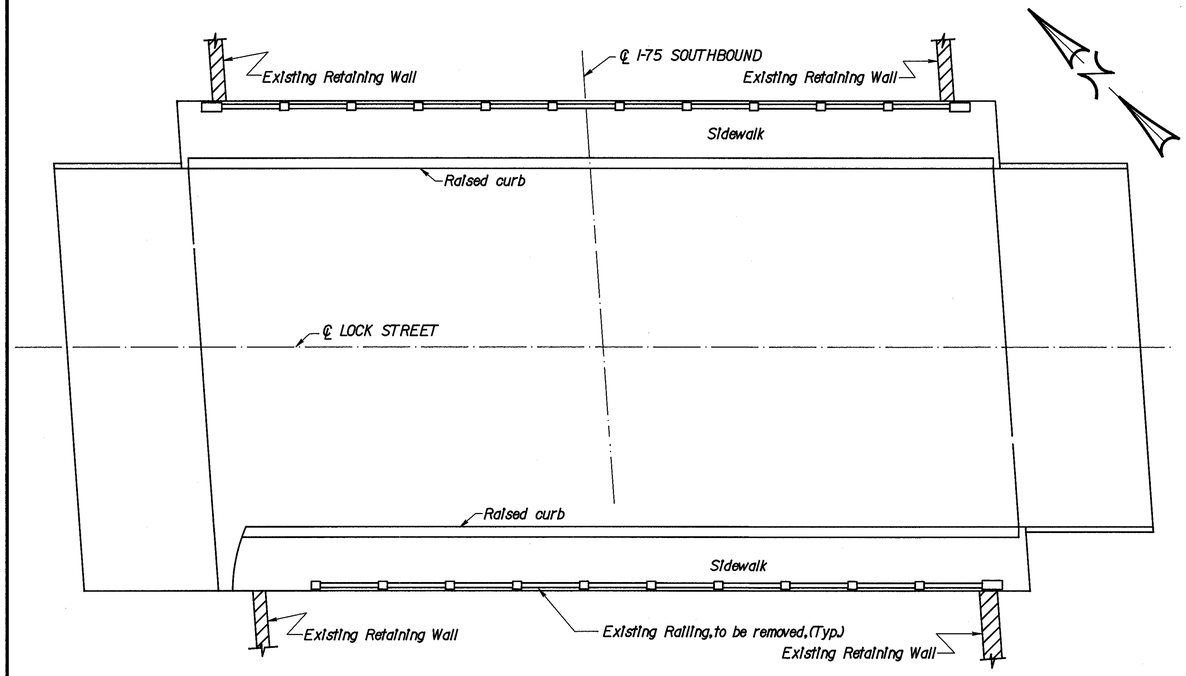

EXISTING PLAN

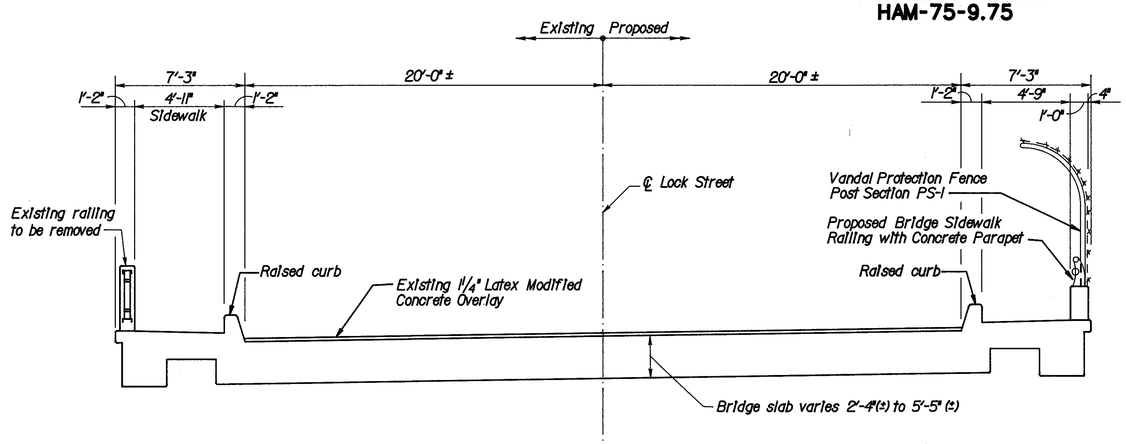

TYPICAL SECTION

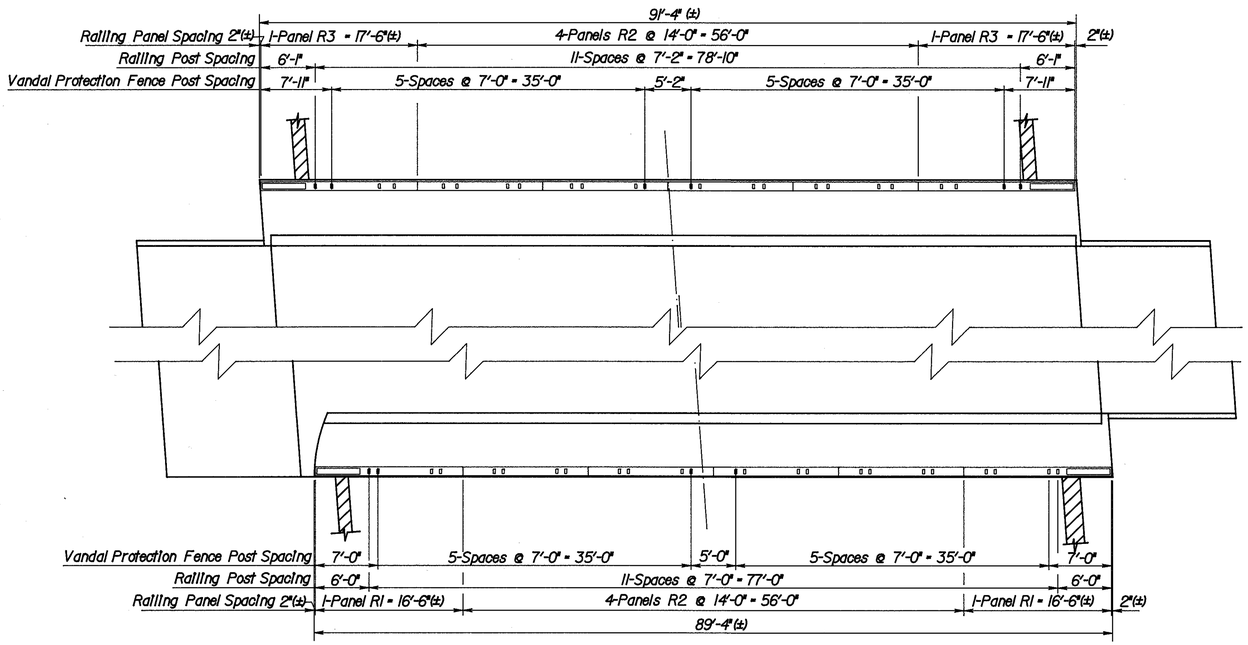

PLAN

Bridge Sidewalk Railing with Concrete Parapet and Vandal Protection Fence Post Spacing

PROPOSED WORK

1. Remove existing sidewalk railing.
2. Install new bridge sidewalk railing with concrete parapet and install vandal protection fence.
3. Seal curb, sidewalk, parapet and fascia to limits shown.

NOTES

1. For General Notes, see Sheet 1 / 105 thru 3 / 105
2. For Estimated Quantities, see Sheet 3 / 105
3. For Reinforcing Steel List, see Sheet 104 / 105

EXISTING STRUCTURE

TYPE: Concrete rigid frame
SPAN: 80'-5½" Clear
ROADWAY: 40'-0" face to face of curbs with 2 - 4'-11" sidewalks.
LOADING: S-20-40
SKEW: 5°-04'-20"
WEARING SURFACE: 1¼" Latex modified concrete.
APPROACH SLABS: 15' Long.

LOCKWOOD, JONES & BEALS
CONSULTING ENGINEERS
DAYTON, OHIO

44 / 105

PLAN & TYPICAL SECTION BRIDGE SIDEWALK RAILING AND VANDAL PROTECTION FENCE

BRIDGE NO. HAM-75-1187L

LOCK STREET OVER SOUTHBOUND I-75

DESIGNED	CHECKED	DRAWN	CHECKED	REVIEWED DATE	REVISED
DJJ	HDJ	DJJ	HDJ	MPH 12/92	

f:\6272\1187p1.dgn Feb. 12, 1993 10:32:27

F.H.W.A. REGION	STATE	PROJECT	
5	OHIO		

278
338

HAMILTON COUNTY
HAM-75-9.75

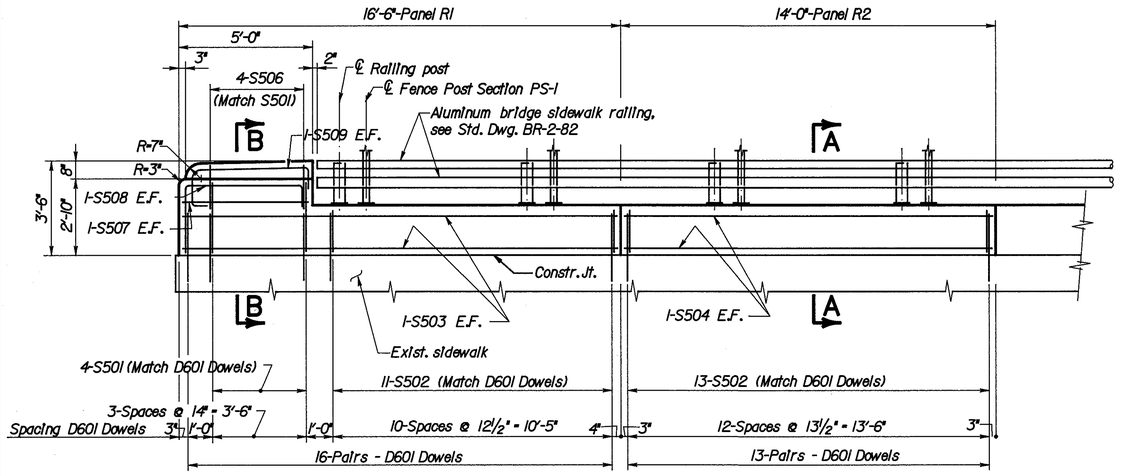

ELEVATION

RAILING PANELS

2-Railing Panels R1 Req'd
8-Railing Panels R2 Req'd

Note:
1. For additional details, see Std. Dwg. BR-2-82.
2. For Reinforcing Steel List, see Sheet 104/105

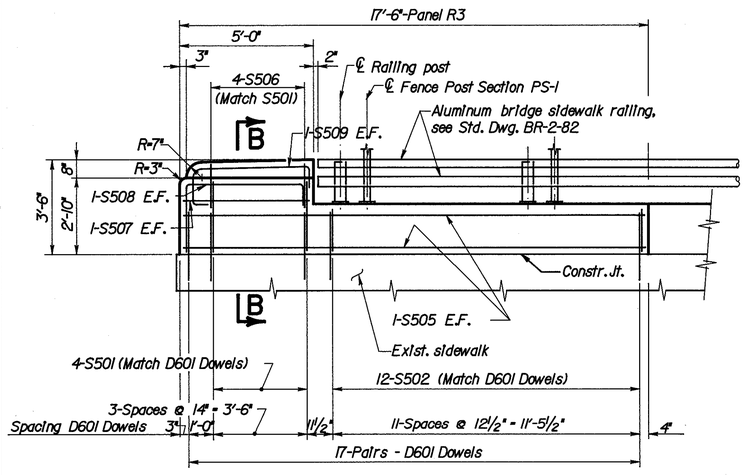

ELEVATION

RAILING PANELS

2-Railing Panels R3 Req'd

LEGEND

E.F. = Each Face

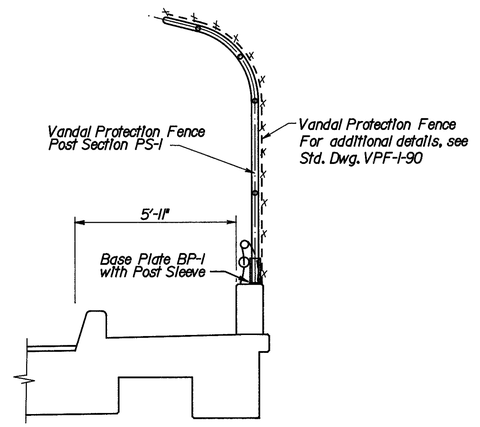

SECTION A-A

Showing Vandal Protection Fence

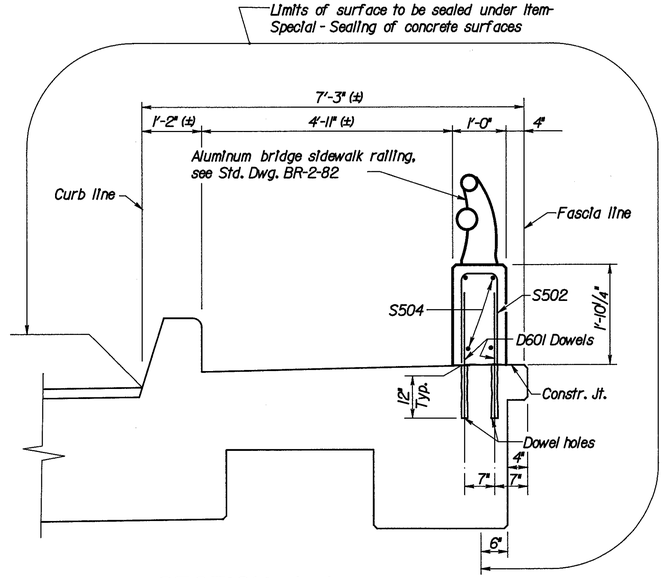

SECTION A-A

Showing Bridge Sidewalk Railing

NOTE:
Dowels shall be installed in accordance with SS852 and 705.20. The cost for drilled holes and furnishing and placing materials shall be included in the price bid for Item 517-Railings, (concrete parapet with double piperail), as per plan.

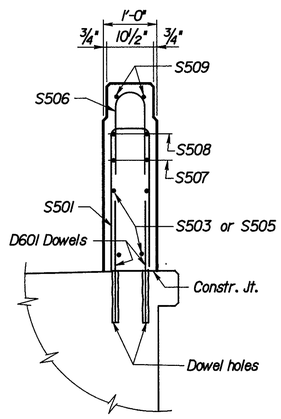

SECTION B-B

LOCKWOOD, JONES & BEALS
CONSULTING ENGINEERS
DAYTON, OHIO
45/105

BRIDGE SIDEWALK RAILING AND VANDAL PROTECTION FENCE
BRIDGE NO. HAM-75-1187L
LOCK STREET OVER SOUTHBOUND I-75

DESIGNED	CHECKED	DRAWN	CHECKED	REVIEWED DATE	REVISED
DJJ	HDJ	DJJ	HDJ	MPH 12/92	

f:\6272\1187p2.dgn Feb. 12, 1993 10:46:36

F.H.W.A. REGION	STATE	PROJECT	
5	OHIO		

279
338

HAMILTON COUNTY
HAM-75-9.75

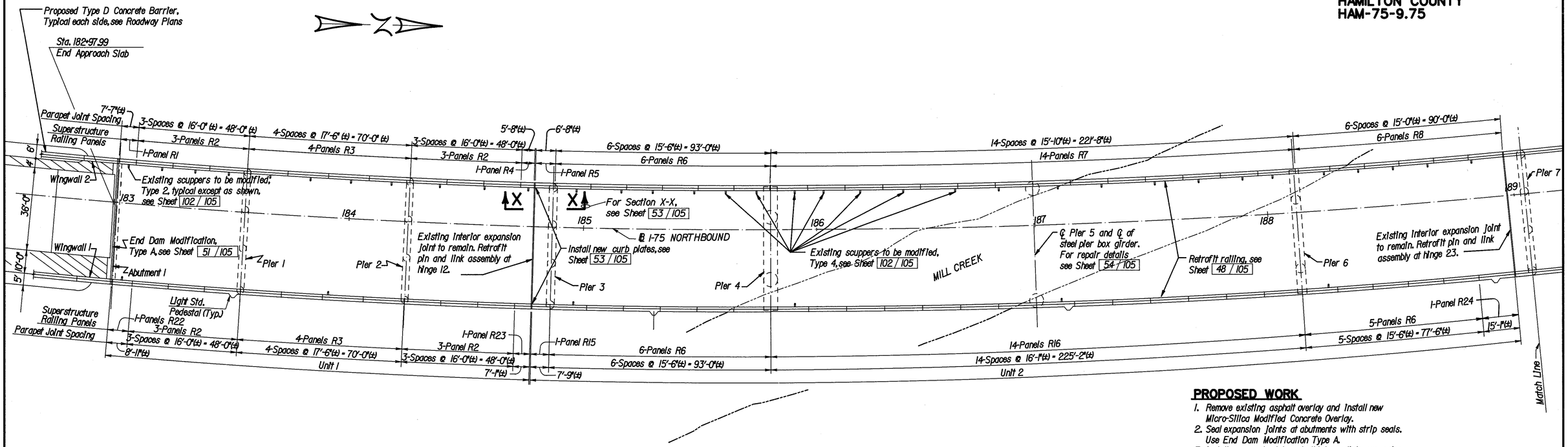

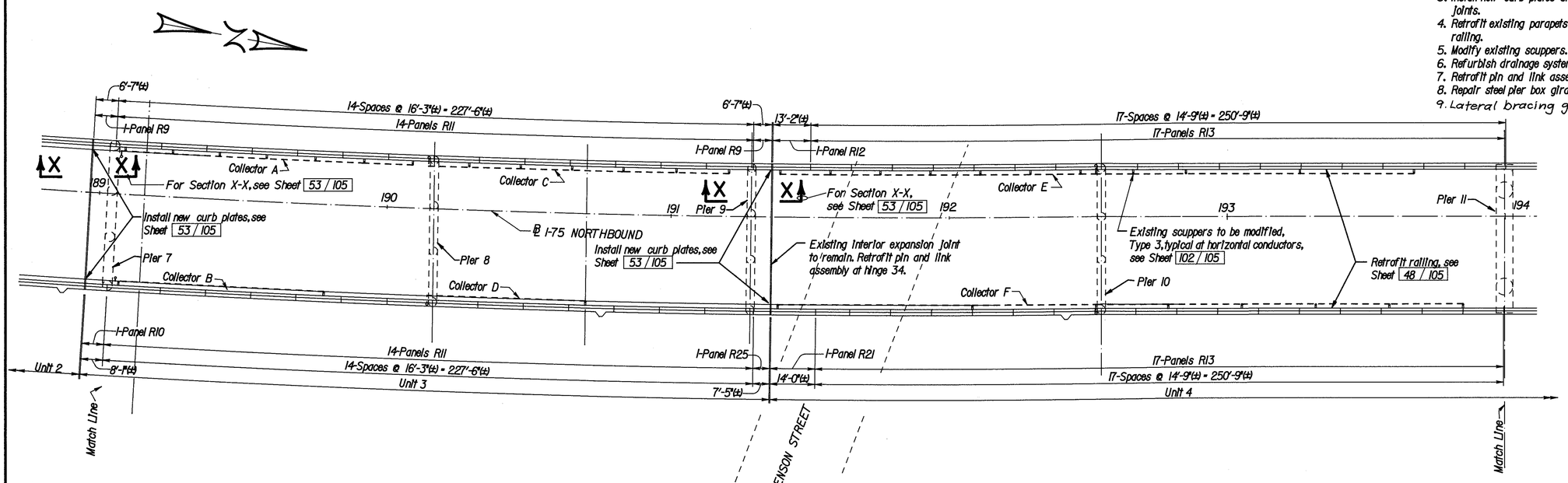

GENERAL PLAN

PROPOSED WORK

1. Remove existing asphalt overlay and install new Micro-Silica Modified Concrete Overlay.
2. Seal expansion joints at abutments with strip seals. Use End Dam Modification Type A.
3. Install new curb plates at all intermediate expansion joints.
4. Retrofit existing parapets with concrete barrier railing.
5. Modify existing scuppers.
6. Refurbish drainage system.
7. Retrofit pin and link assemblies.
8. Repair steel pier box girders.
9. Lateral bracing gusset plate retrofit.

EXISTING STRUCTURE

TYPE: Continuous rolled beam and welded plate girder with reinforced concrete deck and substructure.
SPANS: 55'-6", 70'-0", 61'-6", 93'-0", 111'-3", 111'-3", 99'-0", 113'-6", 113'-6", 126'-0", 145'-9", 156'-0", 124'-0", 120'-0", 145'-9", 156'-0", 118'-0", 89'-0", 105'-0", 129'-0", 100'-0", 70'-0"
ROADWAY: 50'-0" f/f of 1'-0" safety curbs
LOAD FREQUENCY: CF - 2000 (57), adequate for AASHTO alternate loading.
SKEW: 0°00'00"
WEARING SURFACE: 1" Monolithic concrete w/ asphalt overlay
APPROACH SLABS: AS-1-54 (25' long)
ALIGNMENT: 1°45' curve to left, 350'-0" spiral and tangent

LOCKWOOD, JONES & BEALS
CONSULTING ENGINEERS
DAYTON, OHIO
46 / 105

GENERAL PLAN

BRIDGE NO. HAM-75-1192R
NORTHBOUND I-75 OVER MILL CREEK, BENSON ST., N.Y.C.R.R. & SHEPHERD AVE.

DESIGNED	CHECKED	DRAWN	CHECKED	REVIEWED DATE	REVISED
DJJ	HDJ	DJJ	HDJ	MPH 12/92	

f:\6272\1192p11.dgn Feb. 12, 1993 10:59:17

F.H.W.A. REGION	STATE	PROJECT	
5	OHIO		

280 / 338

HAMILTON COUNTY
HAM-75-9.75

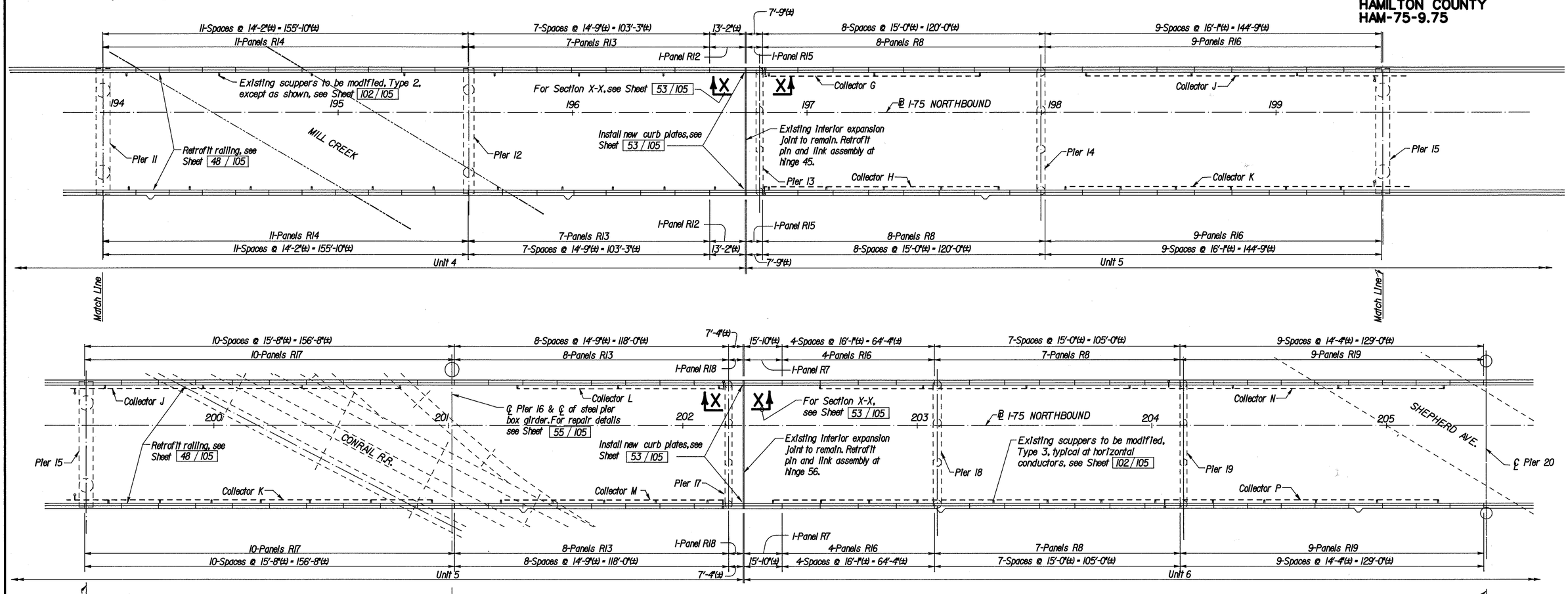

GENERAL PLAN

NOTES:

1. For General Notes see Sheet 1 / 105 thru 3 / 105
2. For Abutment Railing Details, see Sheet 52 / 105
3. For End Dam Modification Type A, see Sheet 51 / 105
4. For Superstructure Railing Details, see Sheet 48 / 105
5. For Interior Expansion Joint curb plate Details, see Sheet 53 / 105
6. For Abutment Modification Plans and Details, see Sheet 49 / 105 and 50 / 105
7. For Scupper and Deflection Joint Details, see Sheet 102 / 105
8. For Pier Steel Box Girder Replar Details, see Sheet 54 / 105 thru 57 / 105
9. For Pin and Link Assembly Retrofit Details, see Sheets 58 / 105 thru 66 / 105
10. For Drainage System Details, see Sheets 67 / 105 thru 73 / 105
11. For Reinforcing Steel List, see Sheet 104 / 105
12. For Estimated Quantities, see Sheet 4 / 105
13. For Gusset Plate Retrofit, See Sheet 66A-66D / 105

LOCKWOOD, JONES & BEALS
CONSULTING ENGINEERS
DAYTON, OHIO

47 / 105

GENERAL PLAN

BRIDGE NO. HAM-75-1192R
NORTHBOUND I-75 OVER MILL CREEK, BENSON ST., N.Y.C.R.R. & SHEPHERD AVE.

DESIGNED	CHECKED	DRAWN	CHECKED	REVIEWED DATE	REVISED
DJJ	HDJ	DJJ	HDJ	MPH 12/92	

f:\6272\1192p12.dgn Feb. 12, 1993 11:10:05

F.H.W.A. REGION	STATE	PROJECT	
5	OHIO		

281
338

HAMILTON COUNTY
HAM-75-9.75

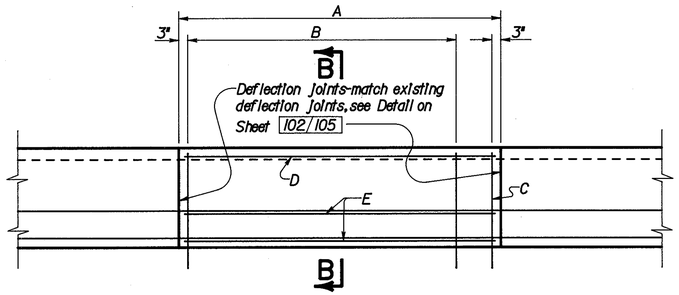

ELEVATION
SUPERSTRUCTURE RAILING PANELS

PANEL MARK	NO. Req'd	A	B	C	D	E
R1	1	7'-7"	6 Each - S601,S602 & S603 @ 14" - 5'-10"	1 Each - S601,S602 & S603	2-S501	1-S501
R2	12	16'-0"	13 Each - S601,S602 & S603 @ 14½" - 14'-6"	1 Each - S601,S602 & S603	2-S502	1-S502
R3	8	17'-6"	14 Each - S601,S602 & S603 @ 14½" - 15'-8½"	1 Each - S601,S602 & S603	2-S503	1-S503
R4	1	5'-8"	4 Each - S601,S602 & S603 @ 16" - 4'-0"	1 Each - S601,S602 & S603	2-S504	1-S504
R5	1	6'-8"	5 Each - S601,S602 & S603 @ 15" - 5'-0"	1 Each - S601,S602 & S603	2-S505	1-S505
R6	17	15'-6"	12 Each - S601,S602 & S603 @ 15" - 13'-9"	1 Each - S601,S602 & S603	2-S506	1-S506
R7	16	15'-10"	12 Each - S601,S602 & S603 @ 15½" - 14'-2½"	1 Each - S601,S602 & S603	2-S507	1-S507
R8	36	15'-0"	12 Each - S601,S602 & S603 @ 14½" - 13'-3½"	1 Each - S601,S602 & S603	2-S508	1-S508
R9	2	6'-7"	5 Each - S601,S602 & S603 @ 15" - 5'-0"	1 Each - S601,S602 & S603	2-S509	1-S509
R10	1	8'-1"	6 Each - S601,S602 & S603 @ 16" - 6'-8"	1 Each - S601,S602 & S603	2-S510	1-S510
R11	28	16'-3"	13 Each - S601,S602 & S603 @ 14½" - 14'-6"	1 Each - S601,S602 & S603	2-S511	1-S511
R12	3	13'-2"	10 Each - S601,S602 & S603 @ 16" - 12'-0"	1 Each - S601,S602 & S603	2-S512	1-S512
R13	64	14'-9"	12 Each - S601,S602 & S603 @ 14½" - 13'-3½"	1 Each - S601,S602 & S603	2-S513	1-S513
R14	22	14'-2"	12 Each - S601,S602 & S603 @ 14" - 12'-10"	1 Each - S601,S602 & S603	2-S514	1-S514
R15	3	7'-9"	6 Each - S601,S602 & S603 @ 15" - 6'-3"	1 Each - S601,S602 & S603	2-S515	1-S515
R16	40	16'-1"	13 Each - S601,S602 & S603 @ 14½" - 14'-6"	1 Each - S601,S602 & S603	2-S516	1-S516
R17	20	15'-8"	12 Each - S601,S602 & S603 @ 15½" - 14'-2½"	1 Each - S601,S602 & S603	2-S517	1-S517
R18	2	7'-4"	6 Each - S601,S602 & S603 @ 14" - 5'-10"	1 Each - S601,S602 & S603	2-S518	1-S518
R19	32	14'-4"	12 Each - S601,S602 & S603 @ 14" - 12'-10"	1 Each - S601,S602 & S603	2-S519	1-S519
R20	8	14'-3"	12 Each - S601,S602 & S603 @ 14" - 12'-10"	1 Each - S601,S602 & S603	2-S520	1-S520
R21	3	14'-0"	12 Each - S601,S602 & S603 @ 14" - 12'-10"	1 Each - S601,S602 & S603	2-S521	1-S521
R22	1	8'-11"	7 Each - S601,S602 & S603 @ 14½" - 7'-3"	1 Each - S601,S602 & S603	2-S522	1-S522
R23	1	7'-1"	6 Each - S601,S602 & S603 @ 14" - 5'-10"	1 Each - S601,S602 & S603	2-S523	1-S523
R24	1	15'-1"	12 Each - S601,S602 & S603 @ 14½" - 13'-3½"	1 Each - S601,S602 & S603	2-S524	1-S524
R25	1	7'-5"	6 Each - S601,S602 & S603 @ 14" - 5'-10"	1 Each - S601,S602 & S603	2-S525	1-S525

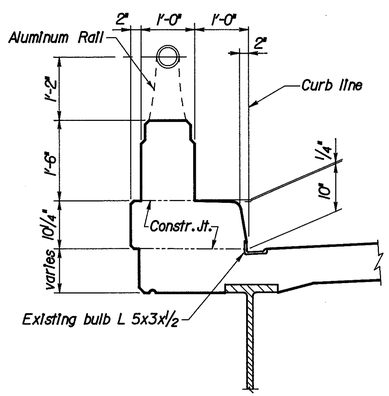

SECTION A-A
EXISTING CURB & RAILING

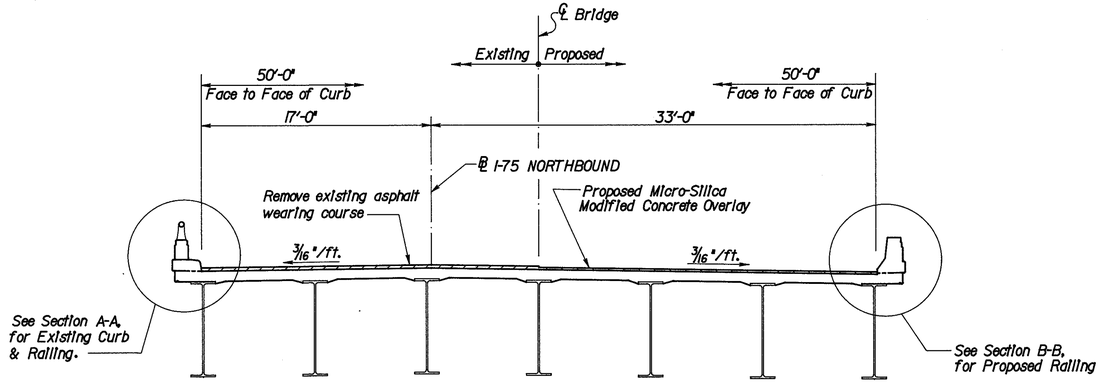

TYPICAL NORMAL SECTION

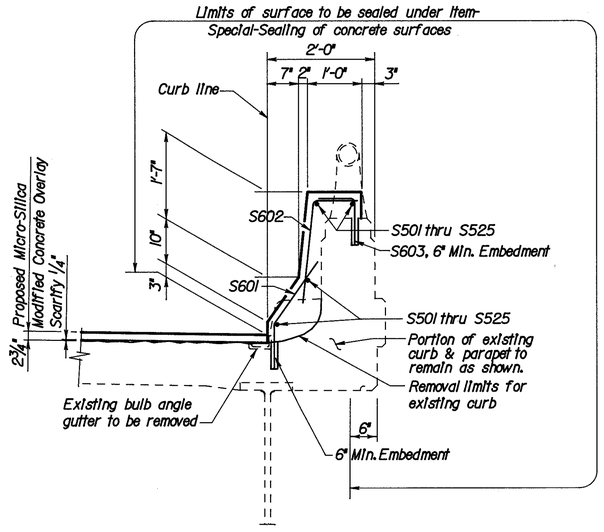

SECTION B-B
PROPOSED RAILING

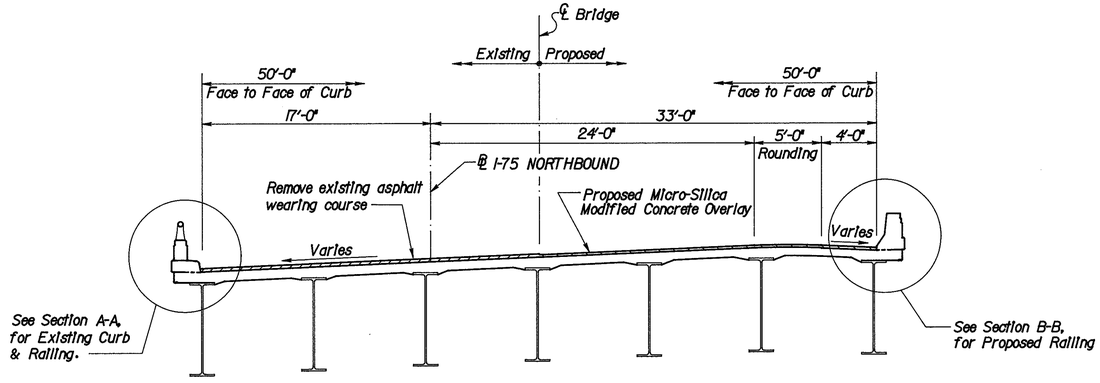

TYPICAL SUPERELEVATED SECTION

LOCKWOOD, JONES & BEALS
CONSULTING ENGINEERS
DAYTON, OHIO

48/105

TYPICAL SECTIONS & SUPER-STRUCTURE RAILING DETAILS

BRIDGE NO. HAM-75-1192R
NORTHBOUND I-75 OVER MILL CREEK, BENSON ST., N.Y.C.R.R. & SHEPHERD AVE.

DESIGNED	CHECKED	DRAWN	CHECKED	REVIEWED DATE	REVISED
DJJ	HDJ	DJJ	HDJ	MPH 12/92	

f:\6272\1192sect.dgn Feb. 12, 1993 13:07:54

F.H.W.A. REGION	STATE	PROJECT	
5	OHIO		

282
338

HAMILTON COUNTY
HAM-75-9.75

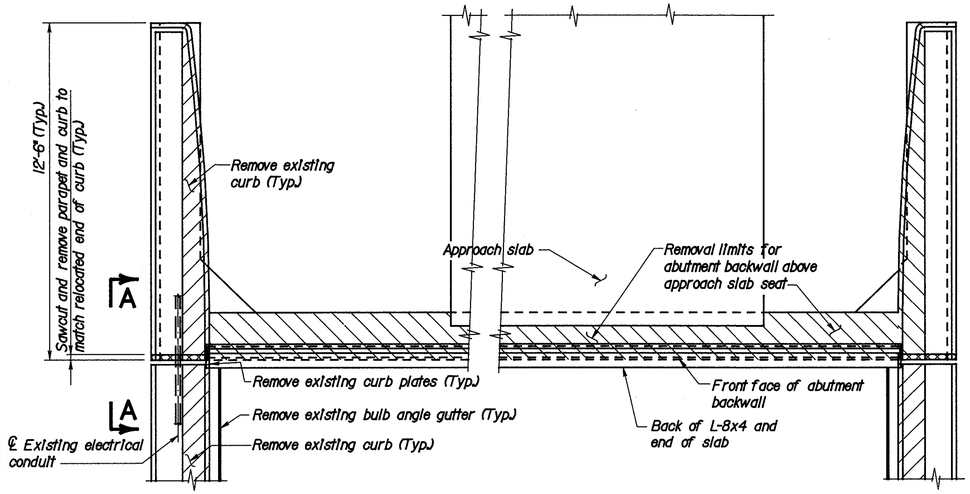

PLAN - EXISTING ABUTMENT

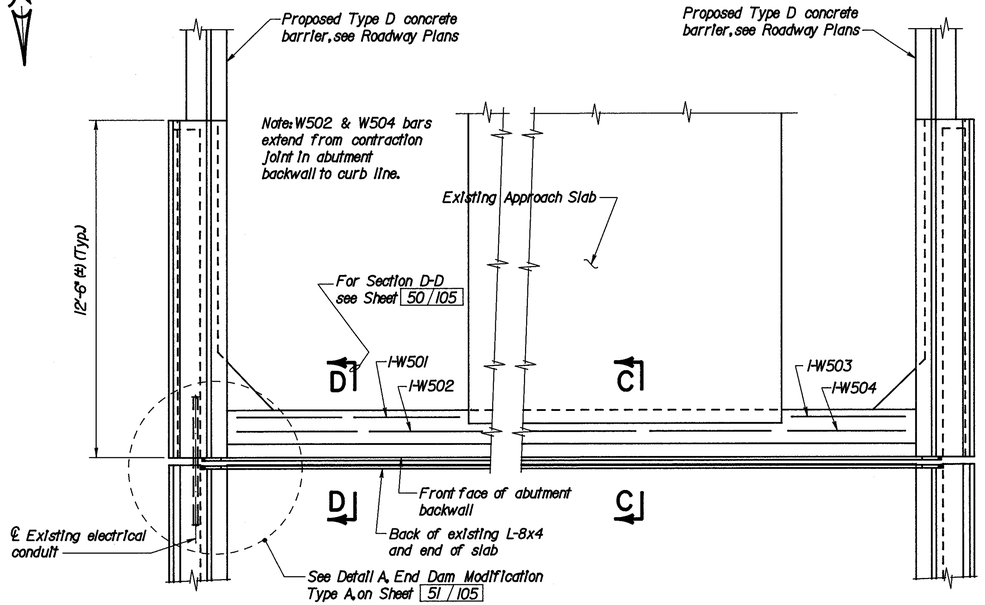

PLAN - MODIFIED ABUTMENT

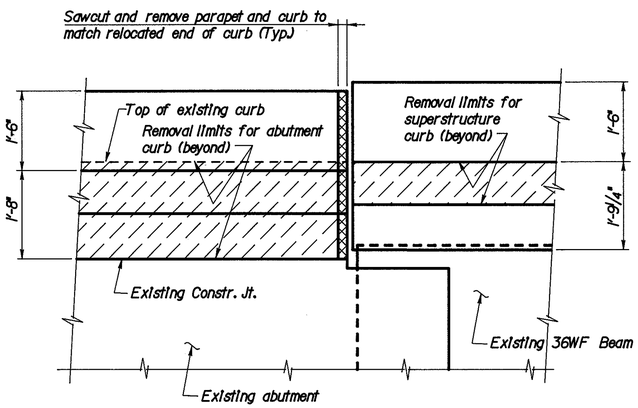

VIEW A-A

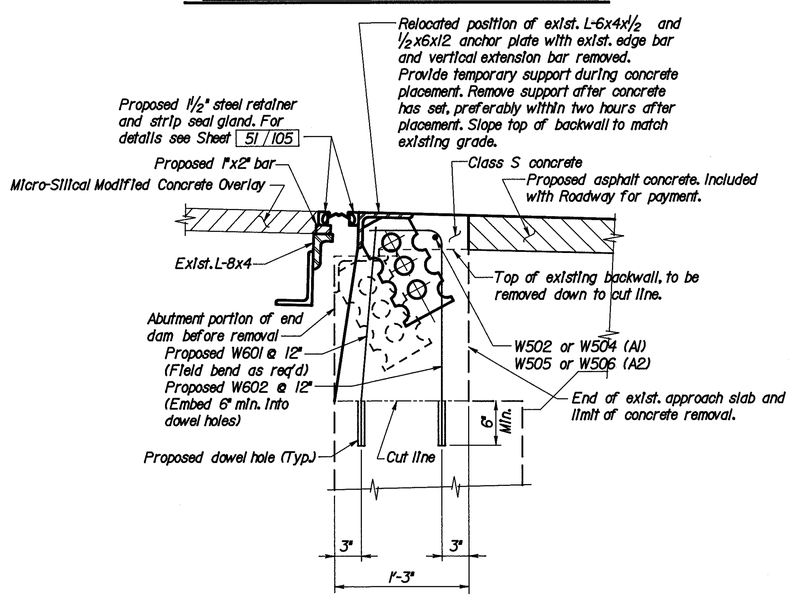

SECTION C-C

LOCKWOOD, JONES & BEALS
CONSULTING ENGINEERS
DAYTON, OHIO

49 / 105

ABUTMENT 1 MODIFICATIONS
PLANS AND DETAILS
BRIDGE NO. HAM-75-1192R
NORTHBOUND I-75 OVER MILL CREEK, BENSON ST., N.Y.C.R.R. & SHEPHERD AVE.

DESIGNED	CHECKED	DRAWN	CHECKED	REVIEWED DATE	REVISED
MJZ	HDJ	MJZ	HDJ	MPH 12/92	

f:\6272\1192d1.dgn Feb. 17, 1993 08:24:47

F.H.W.A. REGION	STATE	PROJECT	
5	OHIO		

283
338

HAMILTON COUNTY
HAM-75-9.75

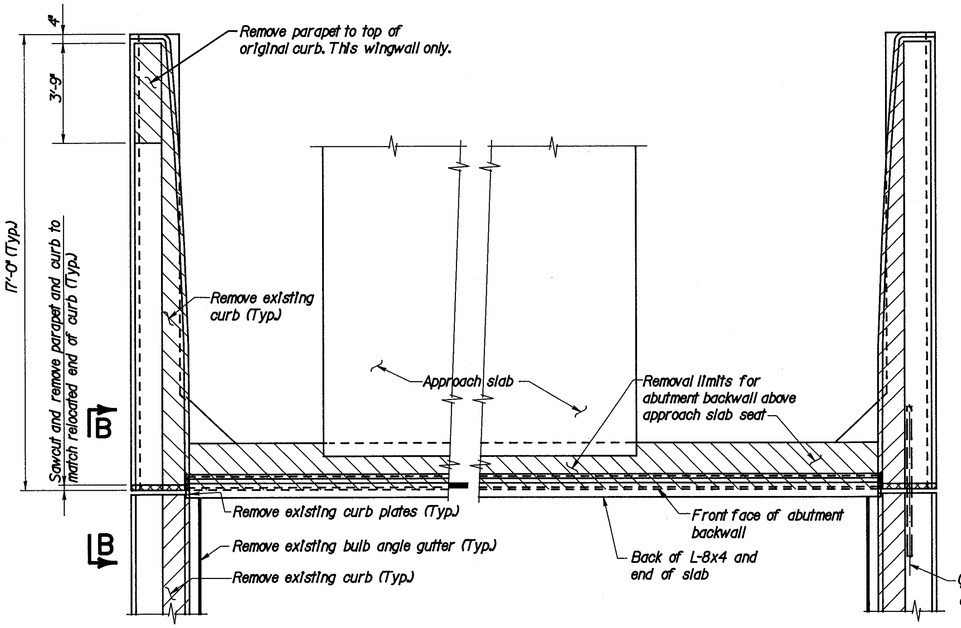

PLAN - EXISTING ABUTMENT

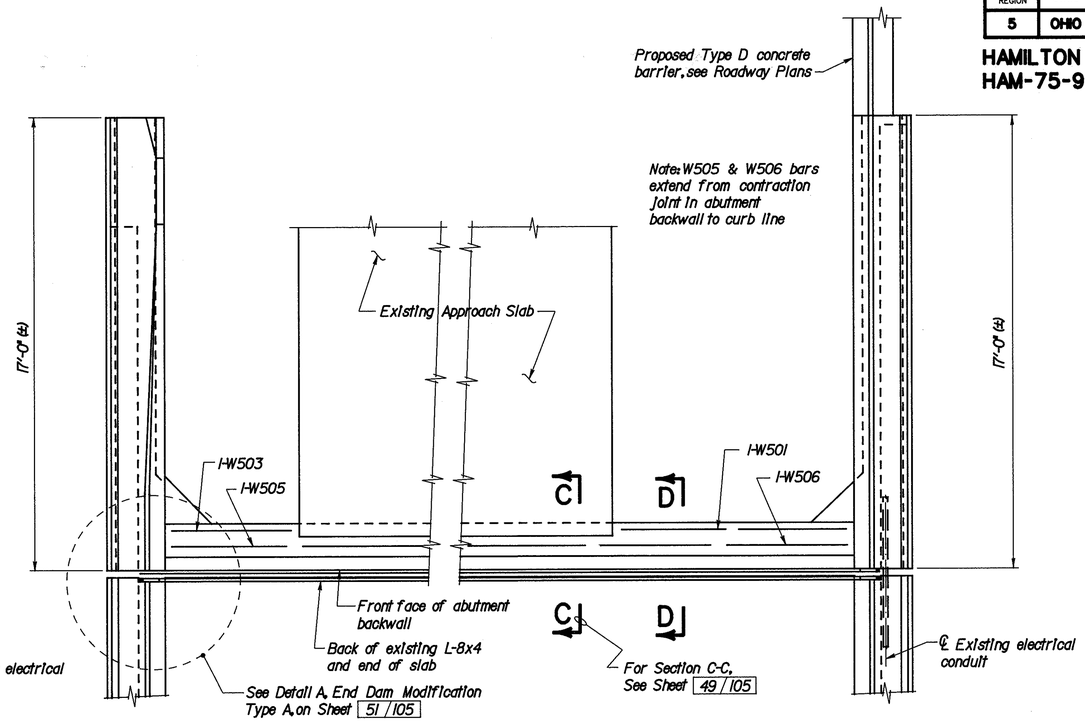

PLAN - MODIFIED ABUTMENT

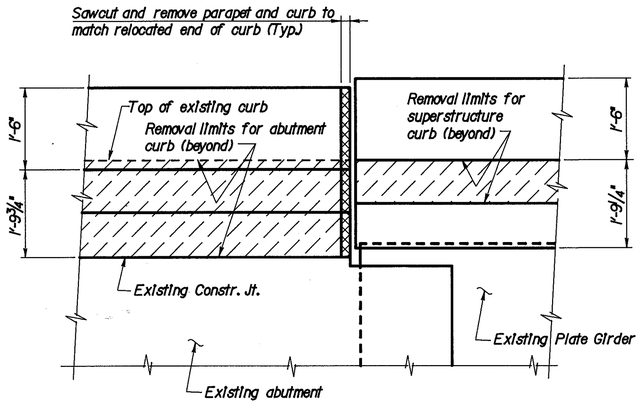

VIEW B-B

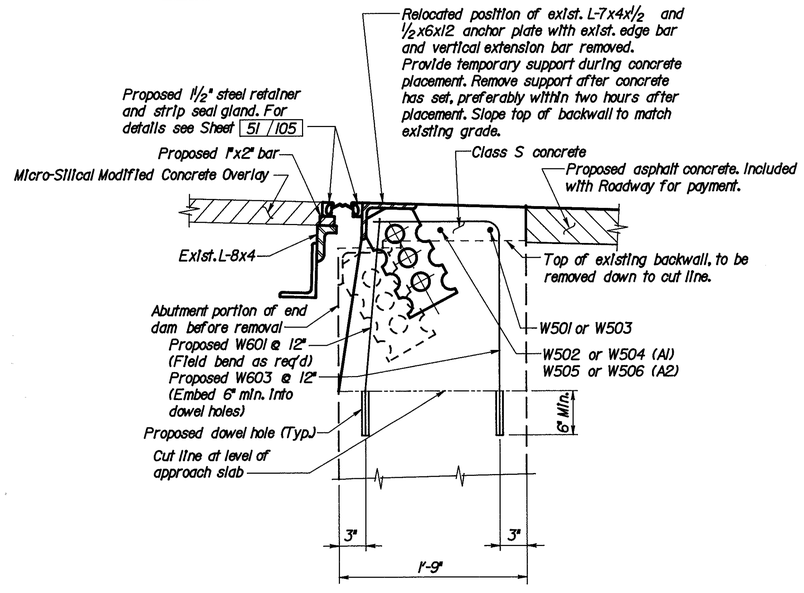

SECTION D-D

LOCKWOOD, JONES & BEALS
CONSULTING ENGINEERS
DAYTON, OHIO
50/105

ABUTMENT 2 MODIFICATIONS
PLANS AND DETAILS
BRIDGE NO. HAM-75-1192R
NORTHBOUND I-75 OVER MILL CREEK, BENSON ST., N.Y.C.R.R. & SHEPHERD AVE.

DESIGNED	CHECKED	DRAWN	CHECKED	REVIEWED DATE	REVISED
MJZ	HDJ	MJZ	HDJ	MPH 12/92	

f:\6272\1192dia.dgn Feb. 17, 1993 08:23:31

F.H.W.A. REGION	STATE	PROJECT	
5	OHIO		

284
338

HAMILTON COUNTY
HAM-75-9.75

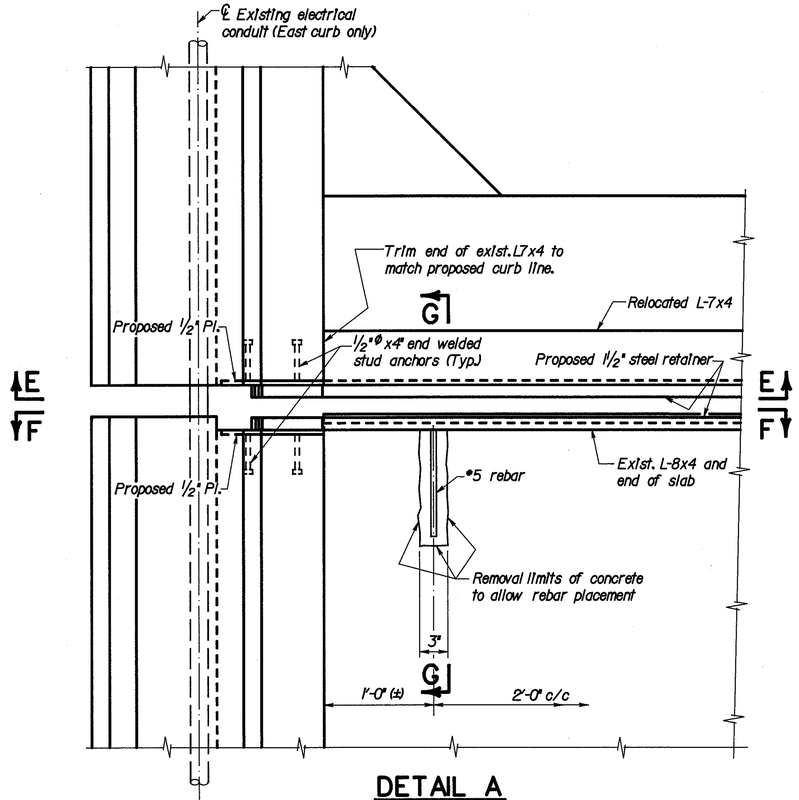

DETAIL A
END DAM MODIFICATION, TYPE A

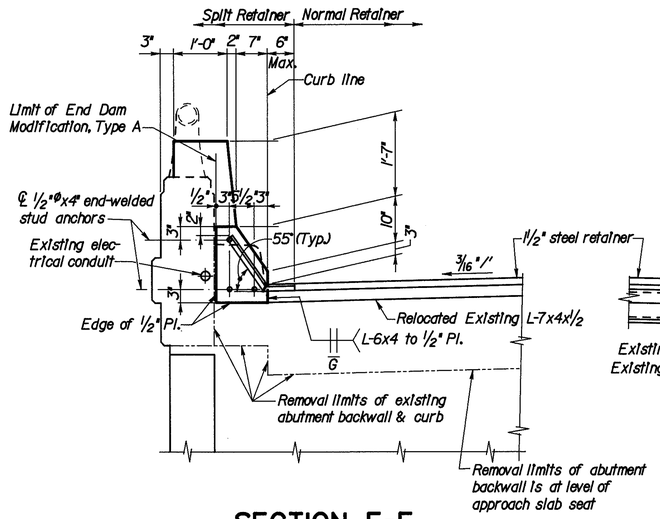

SECTION E-E

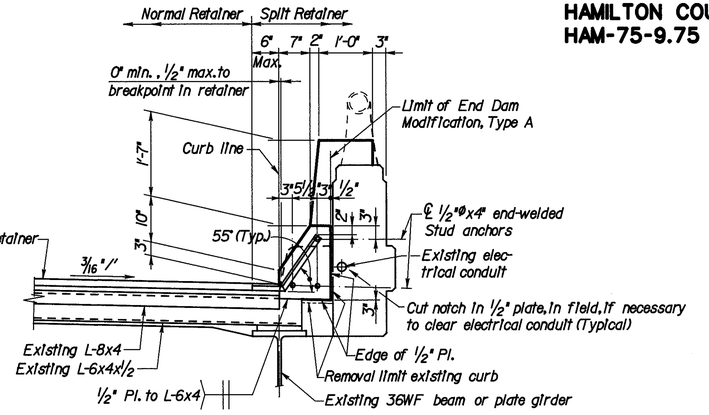

SECTION F-F

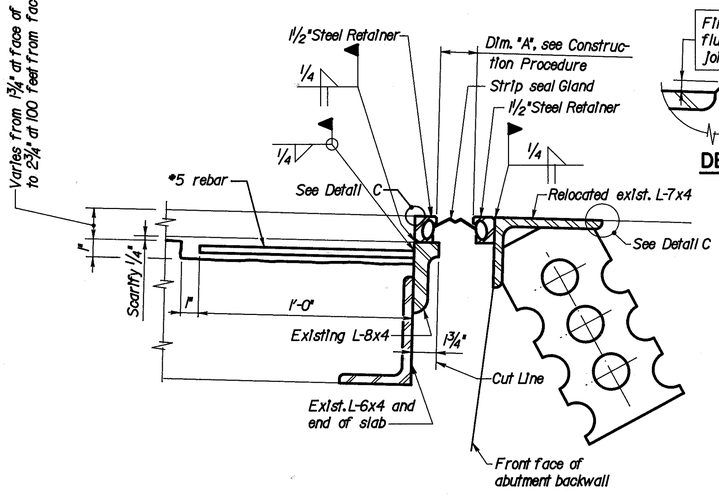

SECTION G-G

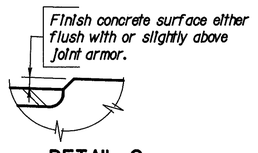

DETAIL C

Construction Procedure:

1. Place backwall concrete during stable or rising ambient temperatures and conclude placement immediately before the day's peak ambient temperature.
2. Not more than four hours prior to the day's peak ambient temperature install the backwall L-7x4x1/2 with the 1 1/2" steel retainer attached. At abutment 1, dimension "A" shall be 1 3/4" at 60° F. for each 10° F. above 60° F. the 1 3/4" dimension shall be decreased by 1/16" and for each 10° F. below 60° F. the 1 3/4" dimension shall be increased by 1/16".
   At abutment 2, dimension "A" shall be 2" at 60° F. for each 10° F. above 60° F. the 2" dimension shall be decreased by 1/4" and for each 10° F. below 60° F. the 2" dimension shall be increased by 1/4".
3. The strip seal shall have a minimum movement rating of 3 inches at abutment 1 and 4 inches at abutment 2.
4. At the time of seal gland installation, dimension "A" shall not be less than 1 1/2". If the joint opening is less, the installation shall be postponed until the temperature drops a sufficient amount to allow the 1 1/2" opening.

LOCKWOOD, JONES & BEALS
CONSULTING ENGINEERS
DAYTON, OHIO

51 / 105

END DAM MODIFICATION DETAILS

BRIDGE NO. HAM-75-1192R
NORTHBOUND I-75 OVER MILL CREEK, BENSON ST., N.Y.C.R.R. & SHEPHERD AVE.

DESIGNED	CHECKED	DRAWN	CHECKED	REVIEWED DATE	REVISED
MJZ	HDJ	MJZ	HDJ	MPH 12/92	

f:\6272\1192d2.dgn Feb. 19, 1993 14:30:19

F.H.W.A. REGION	STATE	PROJECT	
5	OHIO		

285
338

HAMILTON COUNTY
HAM-75-9.75

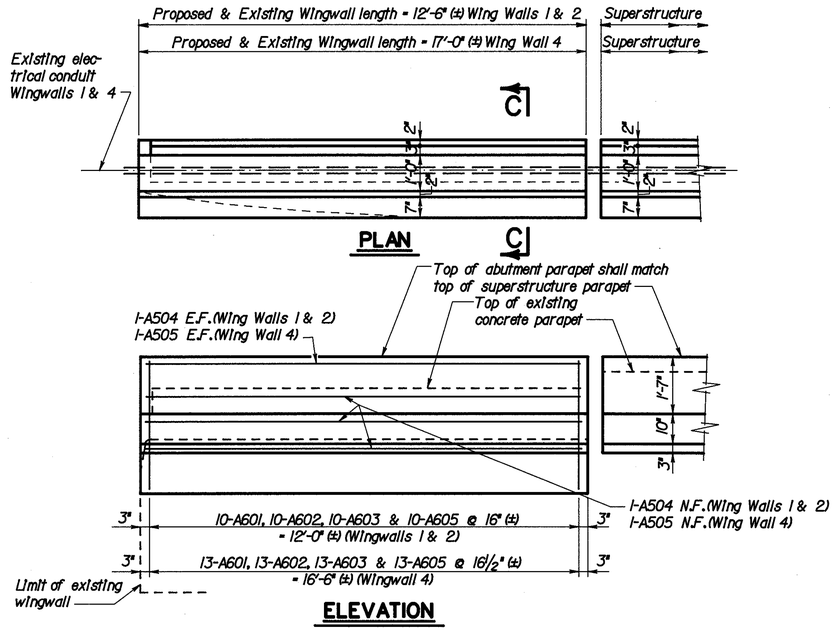

ELEVATION

RAILING DETAILS AT ABUTMENT 1 & 2

WINGWALL 2 SHOWN, WINGWALLS 1 & 4 SIMILAR

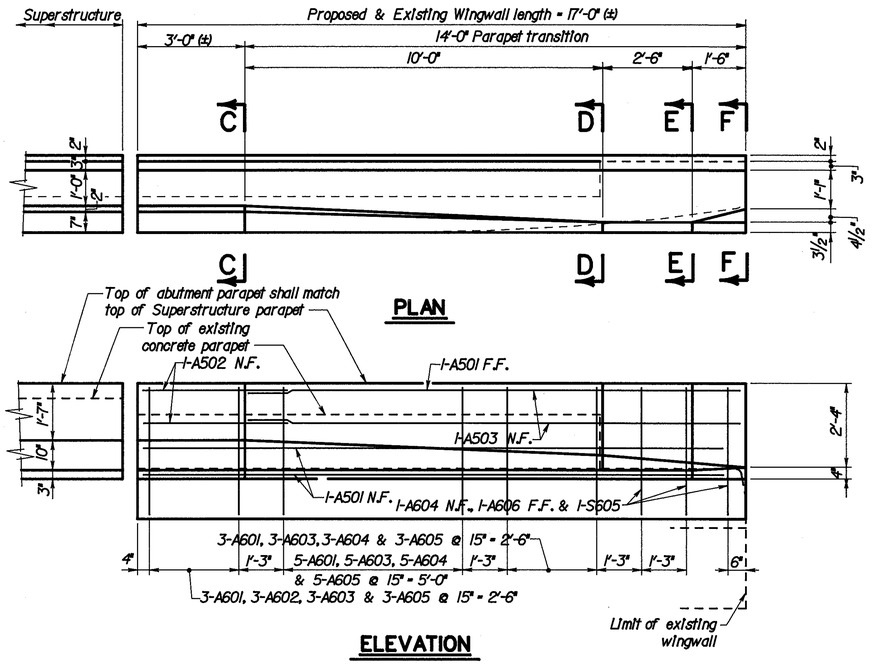

ELEVATION

RAILING DETAILS AT ABUTMENT 2

WINGWALL 3

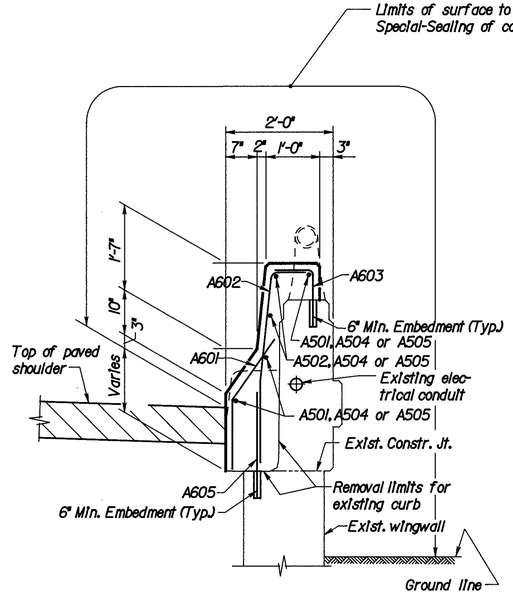

SECTION C-C

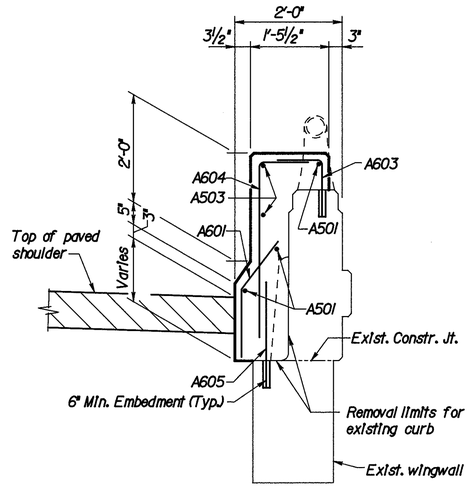

SECTION D-D

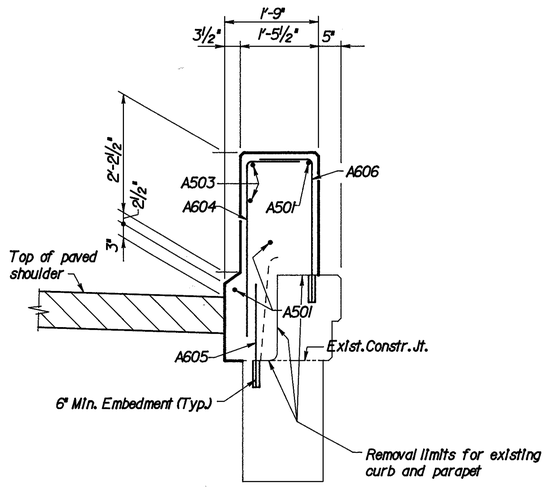

SECTION E-E

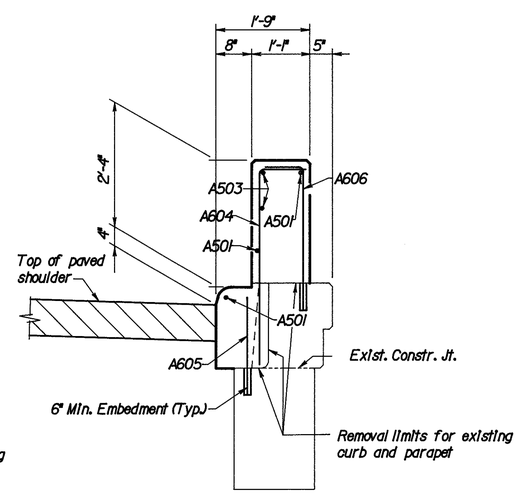

SECTION F-F

LEGEND

E.F. = Each Face
N.F. = Near Face
F.F. = Far Face

NOTES

1. For Reinforcing Steel List, see sheet 104/105

LOCKWOOD, JONES & BEALS
CONSULTING ENGINEERS
DAYTON, OHIO

52/105

ABUTMENT RAILING DETAILS

BRIDGE NO. HAM-75-1192R
NORTHBOUND I-75 OVER MILL CREEK, BENSON ST., N.Y.C.R.R. & SHEPHERD AVE.

DESIGNED	CHECKED	DRAWN	CHECKED	REVIEWED DATE	REVISED
MJZ	HDJ	MJZ	HDJ	MPH 12/92	

f:\62721192d3.dgn Feb. 17, 1993 10:14:36

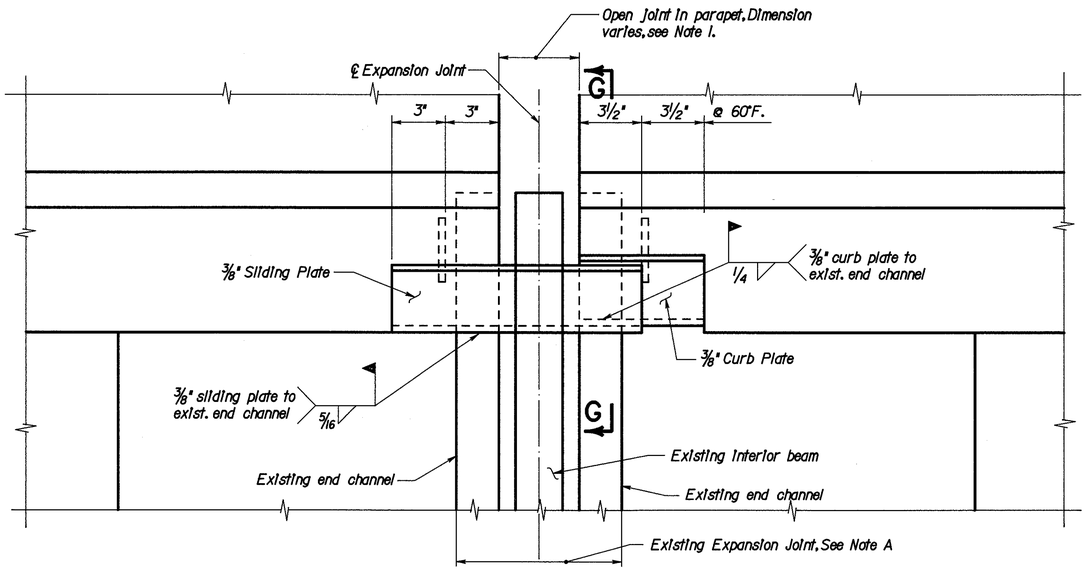

PLAN

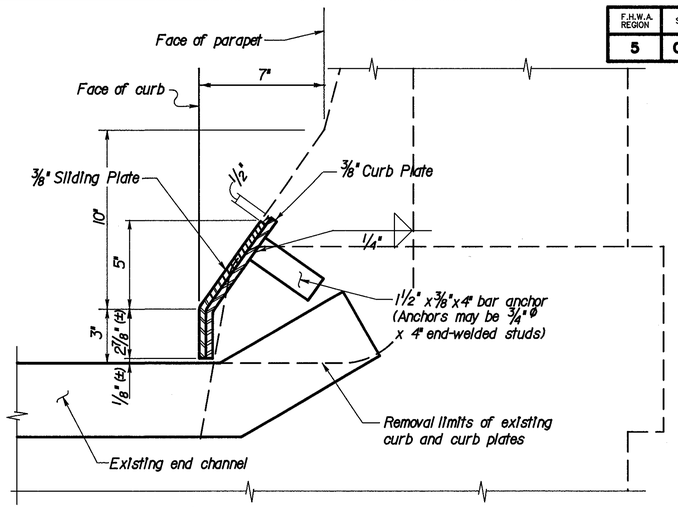

SECTION G-G

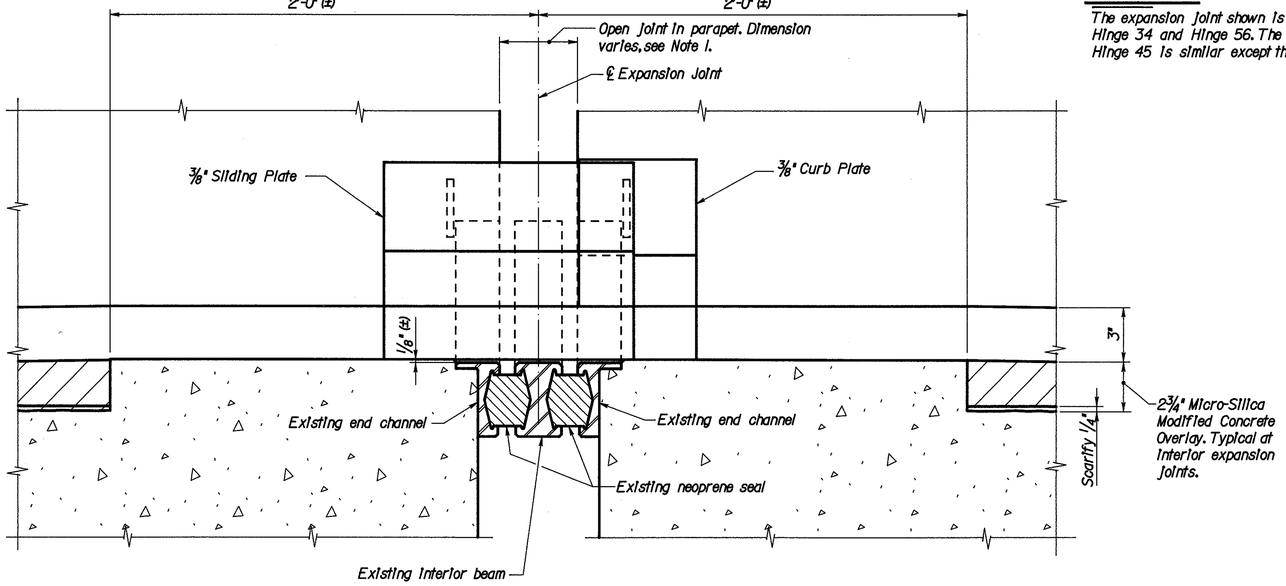

SECTION X-X

CURB PLATE DETAILS

NOTE A

The expansion joint shown is at Hinge 12, Hinge 23, Hinge 34 and Hinge 56. The expansion joint at Hinge 45 is similar except ther are two interior beams

NOTE B

1. The curb plate details apply, each side, at all interior expansion joints. The open joint in the parapet varies at each expansion joint and the dimensions given are for 60° F. Field measure the open joint and make necessary adjustments for temperature to determine the length of the ⅜" sliding plate. In order to determine the theoretical joint opening at 60° F., the actual joint opening shall be measured and the temperature recorded. For each 10° F. above 60° F. the joint opening shall be decreased by the tabulated joint opening adjustment and for each 10° F. below 60° F. the joint opening shall be increased by the tabulated joint opening adjustment.

JOINT OPENING ADJUSTMENT PER 10° F

- @ Hinge 12 - ⅛"
- @ Hinge 25 - 5/16"
- @ Hinge 34 - 5/16"
- @ Hinge 45 - 1/16"
- @ Hinge 56 - ⅜"

2. Due to the vertical movement induced by the pin and link assembly, do not install the curb plates until after the retrofit of all the pin and link assebiles is complete and the links are disconnected in the bay adjacent to the expansion joint at which the curb plates are being installed.

LOCKWOOD, JONES & BEALS
CONSULTING ENGINEERS
DAYTON, OHIO

53 / 105

CURB PLATES AT INTERIOR EXPANSION JOINTS PLANS AND DETAILS

BRIDGE NO. HAM-75-1192R

NORTHBOUND I-75 OVER MILL CREEK, BENSON ST., N.Y.C.R.R. & SHEPHERD AVE.

DESIGNED	CHECKED	DRAWN	CHECKED	REVIEWED DATE	REVISED
GJW	HDJ	GJW	HDJ	MPH 12/92	

f:\6272\1192d4.dgn Feb. 12, 1993 15:24:14

F.H.W.A. REGION	STATE	PROJECT	
5	OHIO		

287
338

HAMILTON COUNTY
HAM-75-9.75

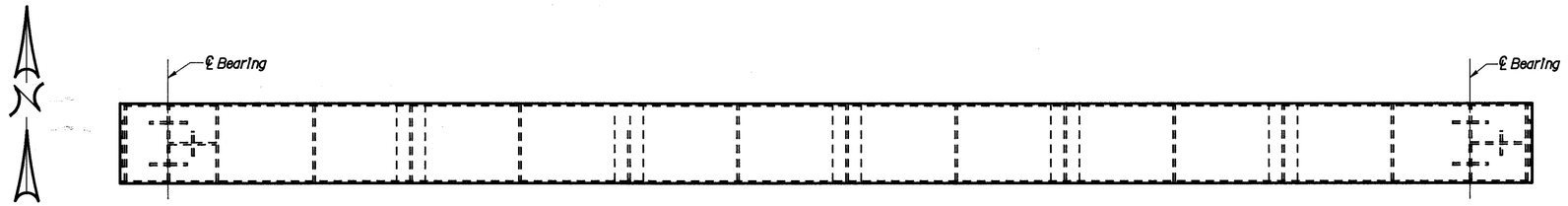

PLAN

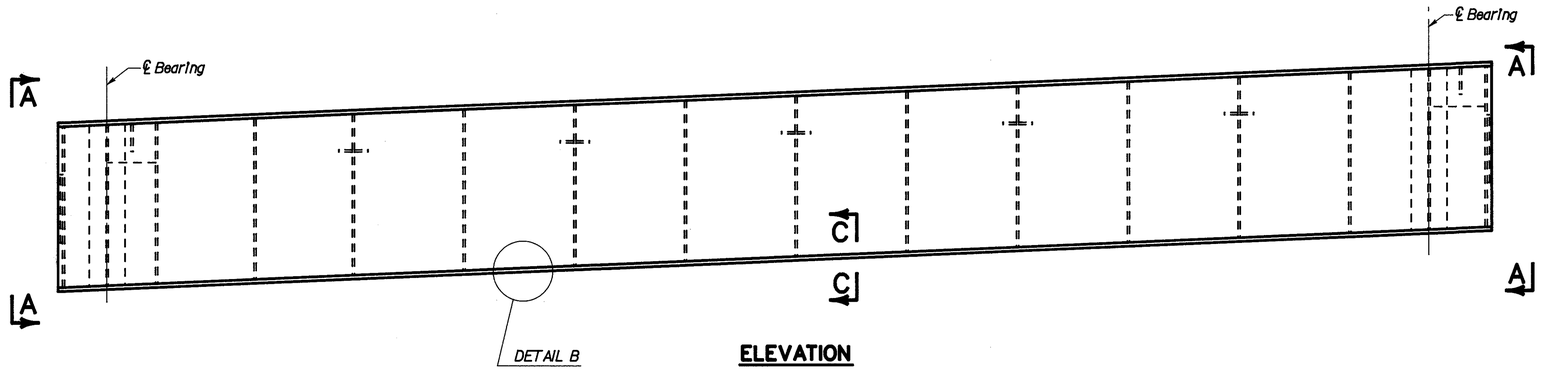

ELEVATION
PIER CAP

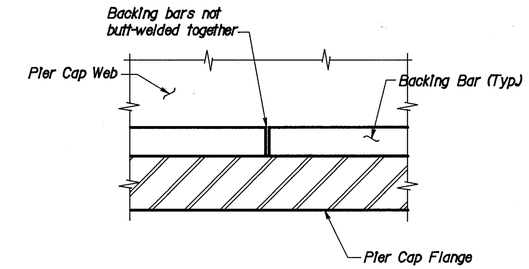

EXISTING DETAIL

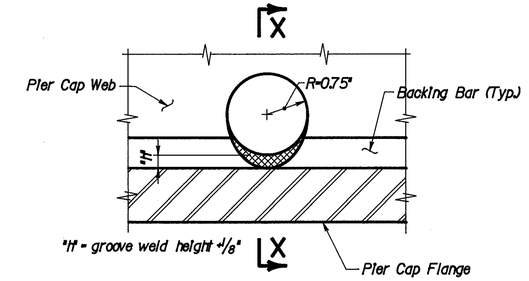

PROCEDURE
1. *Drill 1½" ø hole through web and backing bar.*
2. *Remove crosshatched area by grinding. Final surfaces shall be smooth.*
3. *Preform magnetic particle and/or dye penetrant tests of the remaining metal in the presence of the Engineer.*

RETROFIT DETAIL
DETAIL B

BOTTOM FLANGE SHOWN.
TOP FLANGE SIMILAR.

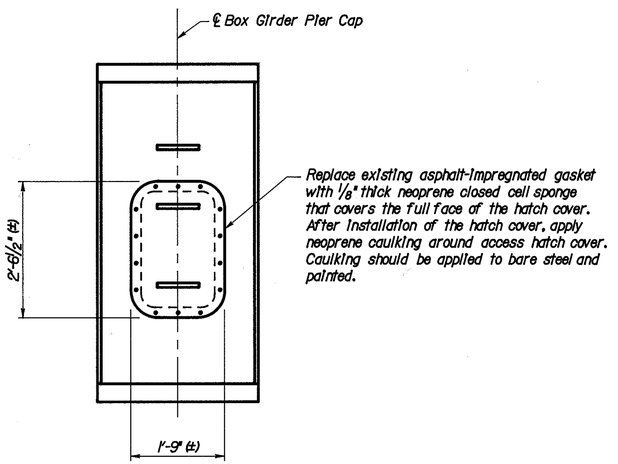

SECTION A-A

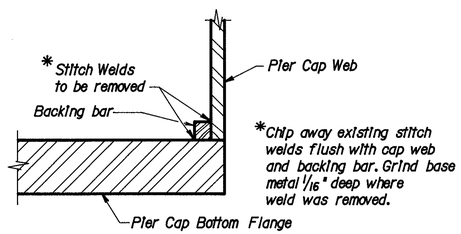

SECTION C-C

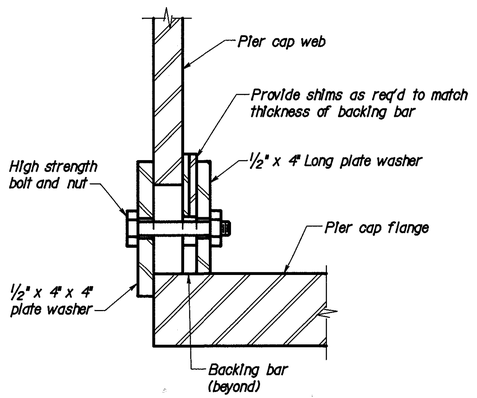

SECTION X-X

NOTES

1. *Clean and paint areas where paint has failed on the inside of the pier cap. Include with Item Special - Field painting of existing steel system OZEU.*

LOCKWOOD, JONES & BEALS
CONSULTING ENGINEERS
DAYTON, OHIO

54/105

STEEL PIER CAP REPAIR AT PIER 5
BRIDGE NO. HAM-75-1192R
NORTHBOUND I-75 OVER MILL CREEK, BENSON ST., N.Y.C.R.R. & SHEPHERD AVENUE.

DESIGNED	CHECKED	DRAWN	CHECKED	REVIEWED DATE	REVISED
B&N	B&N	MJZ	DFS	HDJ 12/92	

d:\dgn\mike\1192pc1.dgn Feb. 24, 1993 16:37:00

F.H.W.A. REGION	STATE	PROJECT	
5	OHIO		

288
338

HAMILTON COUNTY
HAM-75-9.75

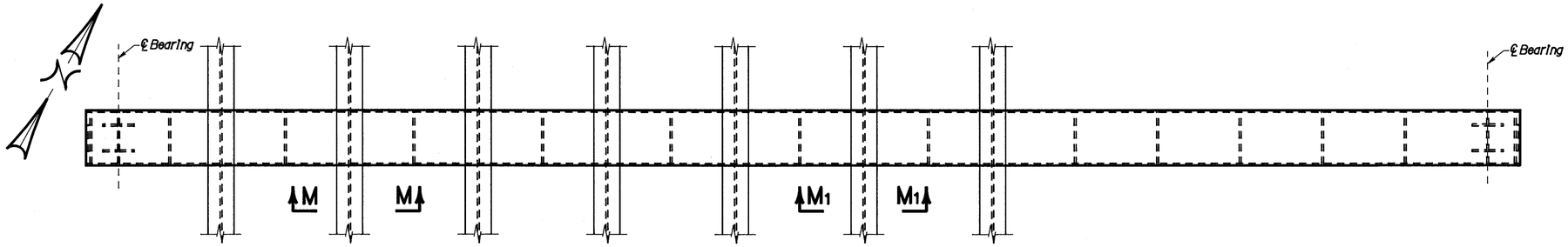

PLAN

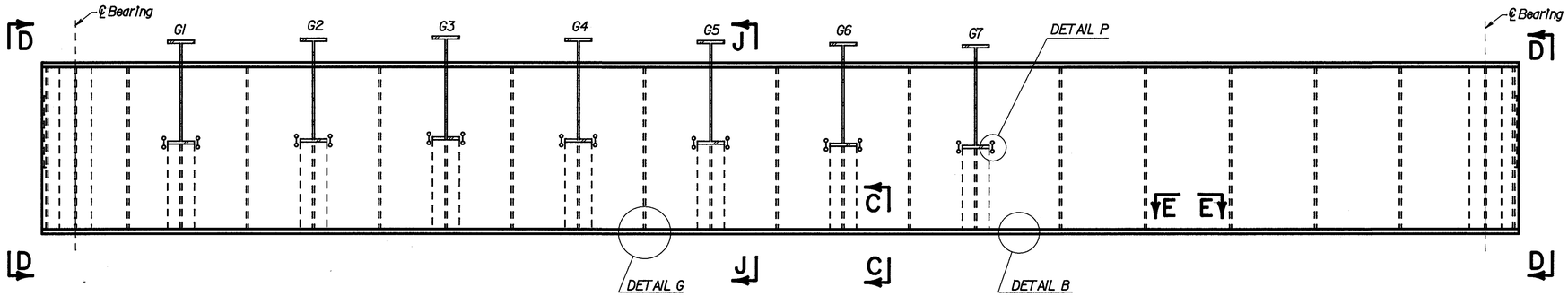

ELEVATION

PIER CAP

NOTES

1. Clean and paint areas where paint has failed on the inside of the pier cap. Include with Item - Special - Field painting of existing steel, system OZEU.
2. For Detail B and Section C-C, see Sheet 54/105
3. For Sections J-J, M-M and M_1-M_1, see Sheet 57/105
4. For Detail P, see Sheet 57/105

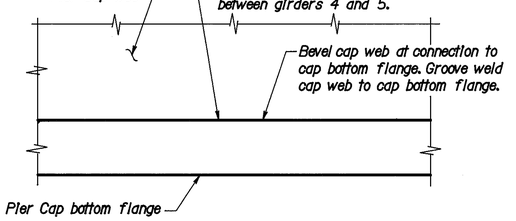

DETAIL G

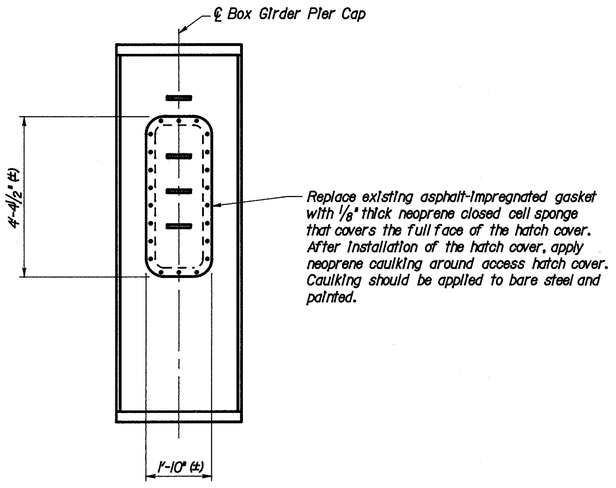

SECTION D-D

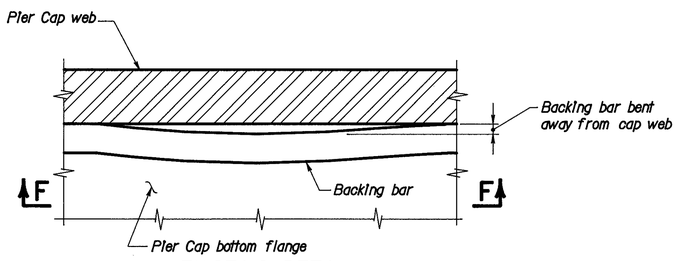

EXISTING DETAIL

SECTION E-E

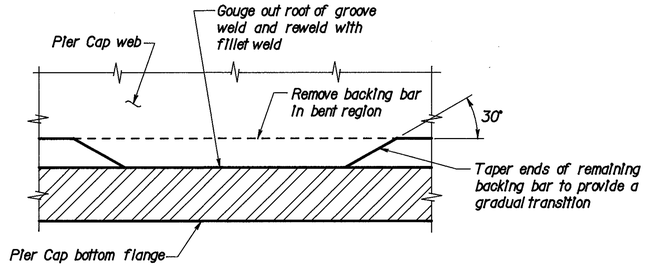

RETROFIT DETAIL

SECTION F-F

LOCKWOOD, JONES & BEALS
CONSULTING ENGINEERS
DAYTON, OHIO

55/105

STEEL PIER CAP REPAIR AT PIER 16

BRIDGE NO. HAM-75-1192R
NORTHBOUND I-75 OVER MILL CREEK, BENSON ST., N.Y.C.R.R. & SHEPHERD AVENUE.

DESIGNED	CHECKED	DRAWN	CHECKED	REVIEWED DATE	REVISED
B&N	B&N	MJZ	DFS	HDJ 12/92	

f:\6272\1192pc2.dgn Feb. 24, 1993 13:20:40

F.H.W.A. REGION	STATE	PROJECT	
5	OHIO		

289
338

HAMILTON COUNTY
HAM-75-9.75

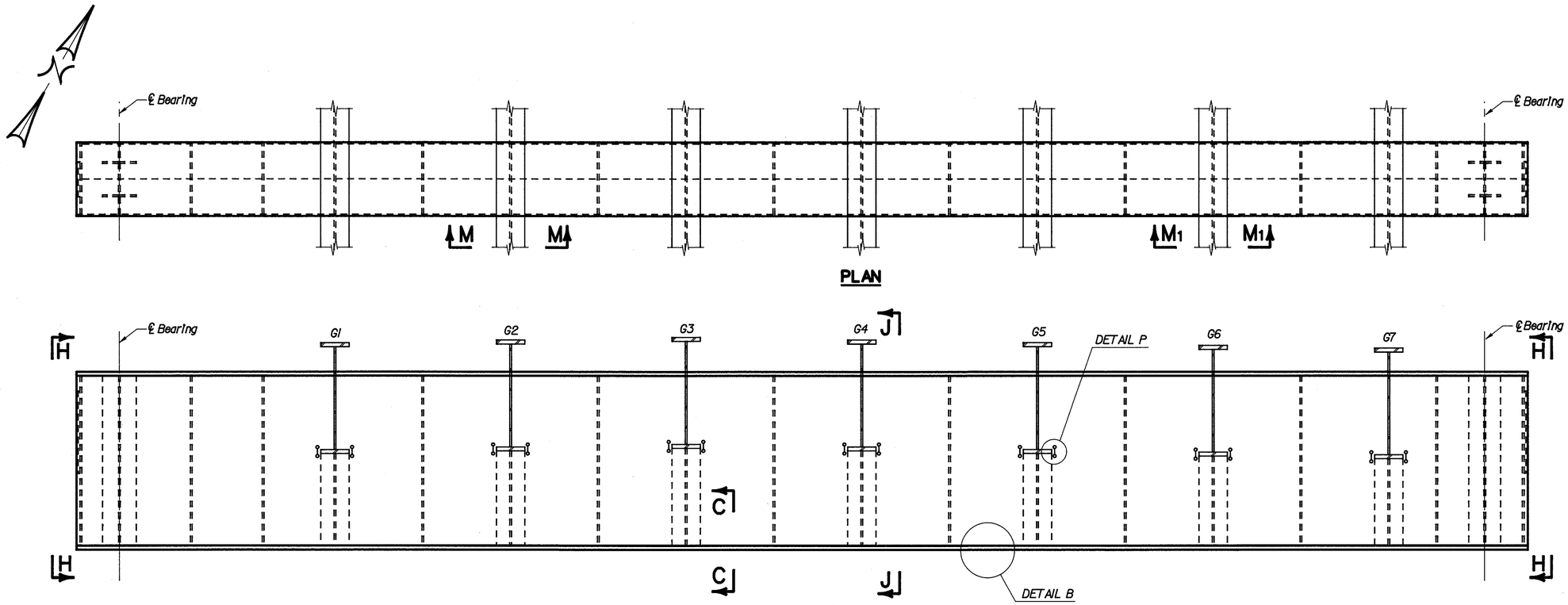

PLAN

ELEVATION

PIER CAP

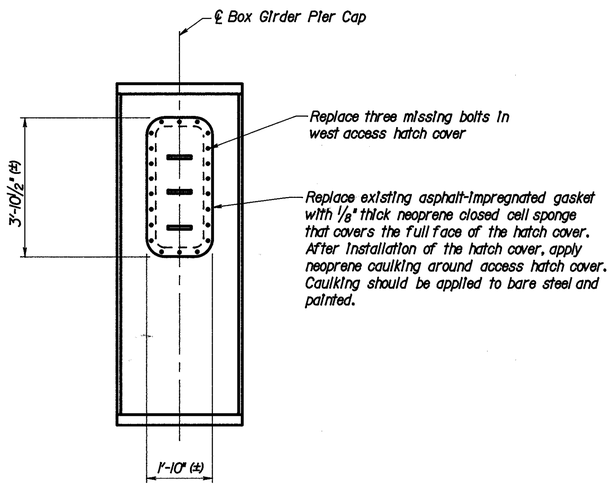

SECTION H-H

NOTES

1. Clean and paint areas where paint has failed on the inside of the pier cap. Include with Item - Special - Field painting of existing steel, system OZEU.
2. Grind flush any nicks or gouges in the cap bottom flange resulting from minor collision damage.
3. Grind weld material flush with pier cap web on the inside of the north web plate just west of girder G4.
4. Remove broken glass from inside pier cap.
5. For Detail B and Section C-C, see Sheet 54/105
6. For Sections J-J, M-M and M1-M1, see Sheet 57/105
7. For Detail P, see Sheet 57/105

LOCKWOOD, JONES & BEALS
CONSULTING ENGINEERS
DAYTON, OHIO

56/105

STEEL PIER CAP REPAIR AT PIER 20

BRIDGE NO. HAM-75-1192R
NORTHBOUND I-75 OVER MILL CREEK, BENSON ST., N.Y.C.R.R. & SHEPHERD AVENUE.

DESIGNED	CHECKED	DRAWN	CHECKED	REVIEWED DATE	REVISED
B&N	B&N	MJZ	DFS	HDJ 12/92	

f:\6272\1192pc3.dgn Feb. 24, 1993 13:29:07

F.H.W.A. REGION	STATE	PROJECT	
5	OHIO		

290
338

HAMILTON COUNTY
HAM-75-9.75

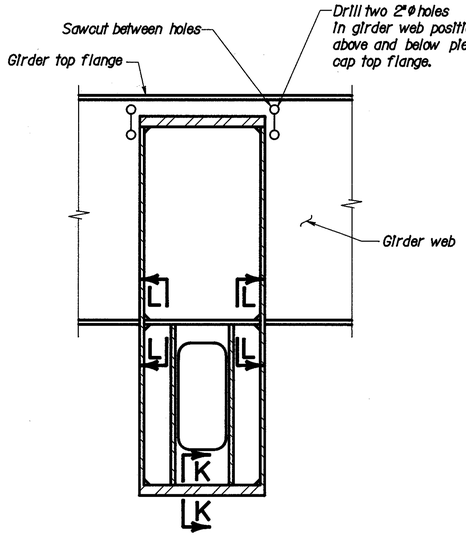

SECTION J-J

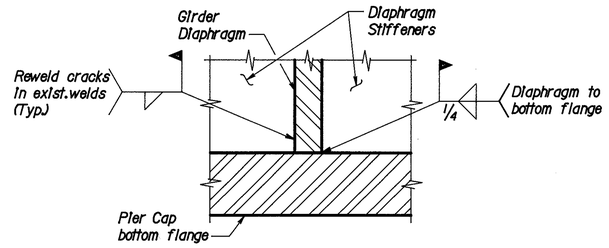

RETROFIT DETAIL WHERE DIAPHRAGM BUTTS AGAINST CAP FLANGE

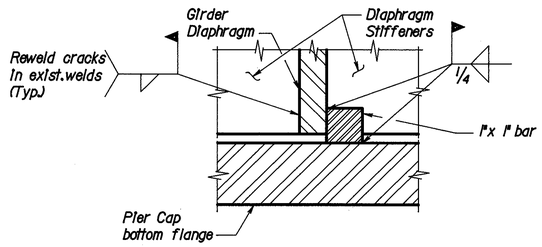

RETROFIT DETAIL WHERE DIAPHRAGM IS NOT BUTTED AGAINST CAP FLANGE

SECTION K-K

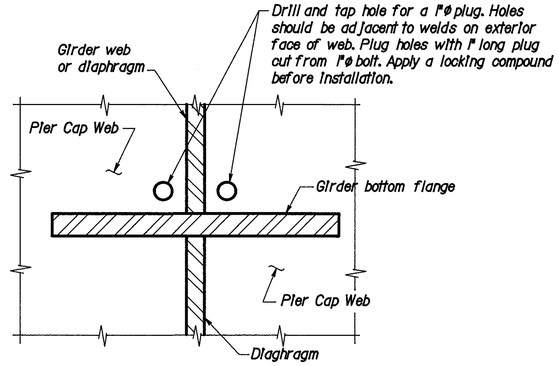

SECTION L-L

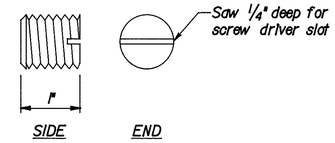

PLUGS FOR HOLES

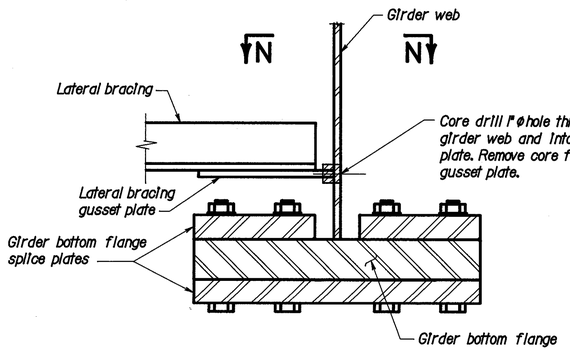

SECTION M-M

SECTION M_1-M_1 OPP. HAND

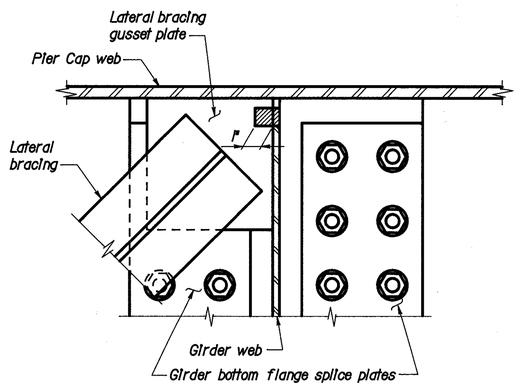

SECTION N-N

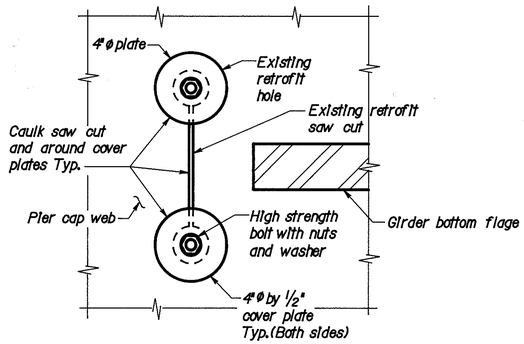

DETAIL P

LOCKWOOD, JONES & BEALS
CONSULTING ENGINEERS
DAYTON, OHIO

57 / 105

STEEL PIER CAP REPAIR DETAILS

BRIDGE NO. HAM-75-1192R
NORTHBOUND I-75 OVER MILL CREEK, BENSON ST., N.Y.C.R.R. & SHEPHERD AVENUE.

DESIGNED	CHECKED	DRAWN	CHECKED	REVIEWED DATE	REVISED
B&N	B&N	MJZ	DFS	HDJ 12/92	

f:\62772\1192pc4.dgn Feb. 24, 1993 11:53:42

F.H.W.A. REGION	STATE	PROJECT	
5	OHIO		

291
338

HAMILTON COUNTY
HAM-75-9.75

HINGE 12

PHASE I

(a) Modify the existing crossframes F3 and F4 at girders G4 thru G7.
(b) Remove the existing crossframes F2 and 6"x1/2" plates at girders G4 thru G7.
(c) Install bearing and jacking brackets at girders G4 thru G7.
(d) Install connector girders, including the field bolted exterior web plates for the tube sections at girders G4 thru G7.
(e) Install the proposed crossframes F2A and F4A between girders G4 and G7.
(f) Install jacks at girder G5.
(g) Extend the jacks until they come in firm contact with the bottom flanges of the connector girders at G5.
(h) Increase the load in each jack simultaneously until the pins and hinge plates become disengaged or when the force in each jack is 19k, whichever occurs first.
(i) Remove existing pins and hinge plates at girder G5.
(j) Lower the jacks and install the intermediate 6x3/8 stiffeners.
(k) Repeat steps f thru j for girders G6 and G7.

PHASE II

(a) Install jacks at girder G4.
(b) Extend the jacks until they come in firm contact with the bottom flanges of the connector girders at girder G4.
(c) Increase the load in each jack simultaneously until the pins and hinge plates become disengaged or when the force in each jack is 19k, whichever occurs first.
(d) Remove existing pins and hinge plates at girder G4.
(e) Lower the jacks and install the intermediate 6x3/8 stiffeners.

PHASE III

(a) Modify the existing crossframes F3 and F4 at girders G1 thru G3.
(b) Remove the existing crossframes F2 and 6"x1/2" plates at girders G1 thru G3.
(c) Install bearing and jacking brackets at girders G1 thru G3.
(d) Install connector girders, including the field bolted exterior web plates for the tube sections at girders G1 thru G3.
(e) Install the proposed crossframes F2A and F4A between girders G1 and G4.
(f) Install jacks at girder G1.
(g) Extend the jacks until they come in firm contact with the bottom flanges of the connector girders at G1.
(h) Increase the load in each jack simultaneously until the pins and hinge plates become disengaged or when the force in each jack is 19k, whichever occurs first.
(i) Remove existing pins and hinge plates at girder G1.
(j) Lower the jacks and install the intermediate 6x3/8 stiffeners.
(k) Repeat steps f thru j for girders G2 and G3.

HINGE 45

PHASE I

(a) Remove the existing crossframe F16 and the 3/8" stiffener plates at girders G4 thru G7.
(b) Remove the exterior diagonals and modify the stiffeners of existing crossframes F19 at griders G4 thru G7.
(c) Install bearing and jacking brackets at girders G4 thru G7.
(d) Install connector girders, including the field bolted exterior web plates for the tube sections at girders G4 thru G7.
(e) Complete the modification of existing crossframes F19 at girders G4 thru G7.
(f) Install the proposed crossframes F16A between girders G4 and G7.
(g) Install jacks at girder G5.
(h) Extend the jacks until they come in firm contact with the bottom flanges of the connector girders at G5.
(i) Increase the load in each jack simultaneously until the pins and hinge plates become disengaged or when the force in each jack is 40k, whichever occurs first.
(j) Remove existing pins and hinge plates at girder G5.
(k) Lower the jacks and install the intermediate 6x3/8 stiffeners.
(l) Repeat steps g thru k for girders G6 and G7.

PHASE II

(a) Install jacks at girder G4.
(b) Extend the jacks until they come in firm contact with the bottom flanges of the connector girders at girder G4.
(c) Increase the load in each jack simultaneously until the pins and hinge plates become disengaged or when the force in each jack is 40k, whichever occurs first.
(d) Remove existing pins and hinge plates at girder G4.
(e) Lower the jacks and install the intermediate 6x3/8 stiffeners.

PHASE III

(a) Remove the existing crossframe F16 and the 3/8" stiffener plates at girders G1 thru G3.
(b) Remove the exterior diagonals and modify the stiffeners of existing crossframes F19 at griders G1 thru G3.
(c) Install bearing and jacking brackets at girders G1 thru G3.
(d) Install connector girders, including the field bolted exterior web plates for the tube sections at girders G1 thru G3.
(e) Complete the modification of existing crossframes F19 at girders G1 thru G3.
(f) Install the proposed crossframes F16A between girders G1 and G4.
(g) Install jacks at girder G1.
(h) Extend the jacks until they come in firm contact with the bottom flanges of the connector girders at G1.
(i) Increase the load in each jack simultaneously until the pins and hinge plates become disengaged or when the force in each jack is 40k, whichever occurs first.
(j) Remove existing pins and hinge plates at girder G1.
(k) Lower the jacks and install the intermediate 6x3/8 stiffeners.
(l) Repeat steps g thru k for girders G2 and G3.

HINGE 23

PHASE I

(a) Modify the existing crossframes F3 and remove crossframes F8 and the 3/8" stiffener plates at girders G4 thru G7.
(b) Remove the exterior diagonals and modify the channel and stiffeners of existing crossframes F11 at girders G4 thru G7.
(c) Install bearing and jacking brackets at girders G4 thru G7.
(d) Install connector girders, including the field bolted exterior web plates for the tube sections at girders G4 thru G7.
(e) Complete the modification of existing crossframes F11 at girders G4 thru G7.
(f) Install the proposed crossframes F8A between girders G4 and G7.
(g) Install jacks at girder G5.
(h) Extend the jacks until they come in firm contact with the bottom flanges of the connector girders at G5.
(i) Increase the load in each jack simultaneously until the pins and hinge plates become disengaged or when the force in each jack is 31k, whichever occurs first.
(j) Remove existing pins and hinge plates at girder G5.
(k) Lower the jacks and install the intermediate 6x3/8 stiffeners.
(l) Repeat steps g thru k for girders G6 and G7.

PHASE II

(a) Install jacks at girder G4.
(b) Extend the jacks until they come in firm contact with the bottom flanges of the connector girders at girder G4.
(c) Increase the load in each jack simultaneously until the pins and hinge plates become disengaged or when the force in each jack is 31k, whichever occurs first.
(d) Remove existing pins and hinge plates at girder G4.
(e) Lower the jacks and install the intermediate 6x3/8 stiffeners.

PHASE III

(a) Modify the existing crossframes F3 and remove crossframes F8 and the 3/8" stiffener plates at girders G1 thru G3.
(b) Remove the exterior diagonals and modify the channel and stiffeners of existing crossframes F11 at girders G1 thru G3.
(c) Install bearing and jacking brackets at girders G1 thru G3.
(d) Install connector girders, including the field bolted exterior web plates for the tube sections at girders G1 thru G3.
(e) Complete the modification of existing crossframes F11 at girders G1 thru G3.
(f) Install the proposed crossframes F8A between girders G1 and G4.
(g) Install jacks at girder G1.
(h) Extend the jacks until they come in firm contact with the bottom flanges of the connector girders at G1.
(i) Increase the load in each jack simultaneously until the pins and hinge plates become disengaged or when the force in each jack is 31k, whichever occurs first.
(j) Remove existing pins and hinge plates at girder G1.
(k) Lower the jacks and install the intermediate 6x3/8 stiffeners.
(l) Repeat steps g thru k for girders G2 and G3.

HINGE 56

PHASE I

(a) Remove the existing crossframes F22 and the 3/8" stiffener plates at girders G4 thru G7.
(b) Remove the exterior diagonals and modify the channel and stiffeners of existing crossframes F23 at girders G4 thru G7.
(c) Install bearing and jacking brackets at girders G4 thru G7.
(d) Install connector girders, including the field bolted exterior web plates for the tube sections at girders G4 thru G7.
(e) Complete the modification of existing crossframes F23 at girders G4 thru G7.
(f) Install the proposed crossframes F22A between girders G4 and G7.
(g) Install jacks at girder G5.
(h) Extend the jacks until they come in firm contact with the bottom flanges of the connector girders at G5.
(i) Increase the load in each jack simultaneously until the pins and hinge plates become disengaged or when the force in each jack is 30k, whichever occurs first.
(j) Remove existing pins and hinge plates at girder G5.
(k) Lower the jacks and install the intermediate 6x3/8 stiffeners.
(l) Repeat steps g thru k for girders G6 and G7.

PHASE II

(a) Install jacks at girder G4.
(b) Extend the jacks until they come in firm contact with the bottom flanges of the connector girders at girder G4.
(c) Increase the load in each jack simultaneously until the pins and hinge plates become disengaged or when the force in each jack is 30k, whichever occurs first.
(d) Remove existing pins and hinge plates at girder G4.
(e) Lower the jacks and install the intermediate 6x3/8 stiffeners.

PHASE III

(a) Remove the existing crossframe F22 and the 3/8" stiffener plates at girders G1 thru G3.
(b) Remove the exterior diagonals and modify the channel and stiffeners of existing crossframes F23 at girders G1 thru G3.
(c) Install bearing and jacking brackets at girders G1 thru G3.
(d) Install connector girders, including the field bolted exterior web plates for the tube sections at girders G1 thru G3.
(e) Complete the modification of existing crossframes F23 at girders G1 thru G3.
(f) Install the proposed crossframes F22A between girders G1 and G4.
(g) Install jacks at girder G1.
(h) Extend the jacks until they come in firm contact with the bottom flanges of the connector girders at G1.
(i) Increase the load in each jack simultaneously until the pins and hinge plates become disengaged or when the force in each jack is 30k, whichever occurs first.
(j) Remove existing pins and hinge plates at girder G1.
(k) Lower the jacks and install the intermediate 6x3/8 stiffeners.
(l) Repeat steps g thru k for girders G2 and G3.

HINGE 34

PHASE I

(a) Modify the existing crossframes F3 and remove crossframes F8 and the 3/8" stiffener plates at girders G4 thru G7.
(b) Remove the exterior diagonals and modify the channel and stiffeners of existing crossframes F14 at girders G4 thru G7.
(c) Install bearing and jacking brackets at girders G4 thru G7.
(d) Install connector girders, including the field bolted exterior web plates for the tube sections at girders G4 thru G7.
(e) Complete the modification of existing crossframes F14 at girders G4 thru G7.
(f) Install the proposed crossframes F8A between girders G4 and G7.
(g) Install jacks at girder G5.
(h) Extend the jacks until they come in firm contact with the bottom flanges of the connector girders at G5.
(i) Increase the load in each jack simultaneously until the pins and hinge plates become disengaged or when the force in each jack is 43k, whichever occurs first.
(j) Remove existing pins and hinge plates at girder G5.
(k) Lower the jacks and install the intermediate 6x3/8 stiffeners.
(l) Repeat steps g thru k for girders G6 and G7.

PHASE II

(a) Install jacks at girder G4.
(b) Extend the jacks until they come in firm contact with the bottom flanges of the connector girders at girder G4.
(c) Increase the load in each jack simultaneously until the pins and hinge plates become disengaged or when the force in each jack is 43k, whichever occurs first.
(d) Remove existing pins and hinge plates at girder G4.
(e) Lower the jacks and install the intermediate 6x3/8 stiffeners.

PHASE III

(a) Modify the existing crossframes F3 and remove crossframes F8 and the 3/8" stiffener plates at girders G1 thru G3.
(b) Remove the exterior diagonals and modify the channel and stiffeners of existing crossframes F14 at girders G1 thru G3.
(c) Install bearing and jacking brackets at girders G1 thru G3.
(d) Install connector girders, including the field bolted exterior web plates for the tube sections at girders G1 thru G3.
(e) Complete the modification of existing crossframes F14 at girders G1 thru G3.
(f) Install the proposed crossframes F8A between girders G1 and G4.
(g) Install jacks at girder G1.
(h) Extend the jacks until they come in firm contact with the bottom flanges of the connector girders at G1.
(i) Increase the load in each jack simultaneously until the pins and hinge plates become disengaged or when the force in each jack is 43k, whichever occurs first.
(j) Remove existing pins and hinge plates at girder G1.
(k) Lower the jacks and install the intermediate 6x3/8 stiffeners.
(l) Repeat steps g thru k for girders G2 and G3.

LOCKWOOD, JONES & BEALS
CONSULTING ENGINEERS
DAYTON, OHIO

58 / 105

PIN & LINK ASSEMBLY RETROFIT CONSTRUCTION PHASES FOR HINGES

BRIDGE NO. HAM-75-1192R
NORTHBOUND I-75 OVER MILL CREEK, BENSON ST., N.Y.C.R.R. & SHEPHERD AVE.

DESIGNED	CHECKED	DRAWN	CHECKED	REVIEWED DATE	REVISED
EPA	DFS	DYA	DFS	HDJ 12/92	

d:\1192\1192phas.dgn Feb. 18, 1993 10:06:38

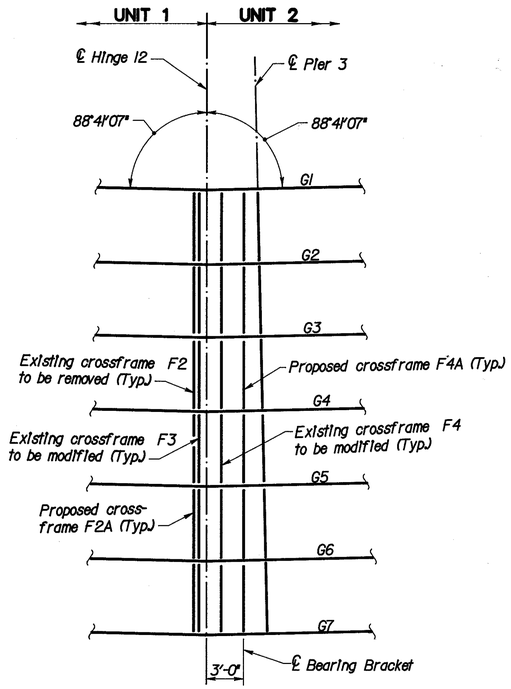

KEY PLAN AT HINGE 12

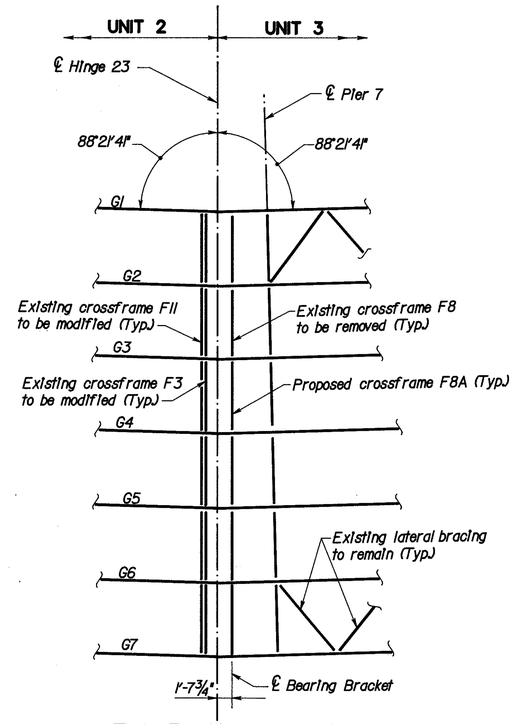

KEY PLAN AT HINGE 23

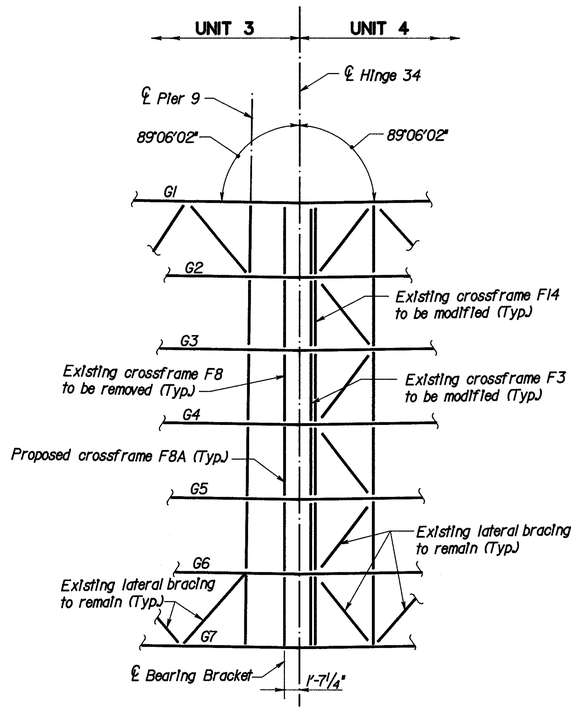

KEY PLAN AT HINGE 34

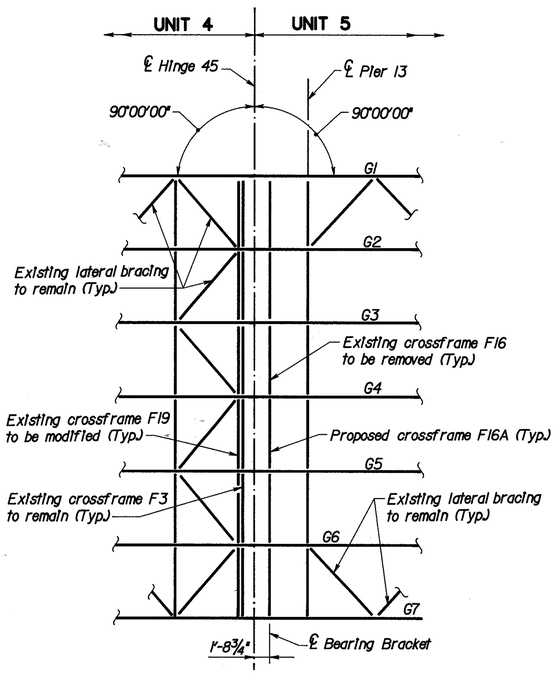

KEY PLAN AT HINGE 45

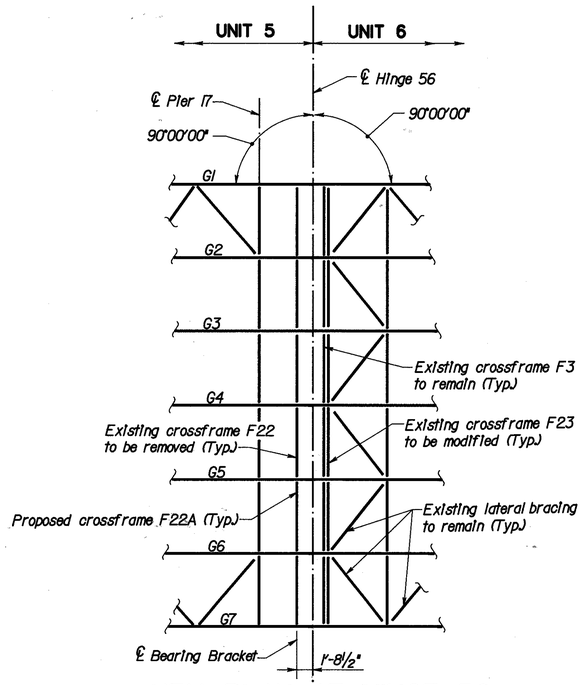

KEY PLAN AT HINGE 56

F.H.W.A. REGION	STATE	PROJECT		292 / 338
5	OHIO			

HAMILTON COUNTY
HAM-75-9.75

NOTES

1. For proposed and modified crossframe details, see Sheets 65/105 & 66/105
2. For hinge details, see Sheets 60/105 thru 64/105

LOCKWOOD, JONES & BEALS
CONSULTING ENGINEERS
DAYTON, OHIO

59/105

PIN & LINK ASSEMBLY RETROFIT
KEY PLANS FOR HINGES
BRIDGE NO. HAM-75-1192R
NORTHBOUND I-75 OVER MILL CREEK, BENSON ST., N.Y.C.R.R. & SHEPHERD AVE.

DESIGNED	CHECKED	DRAWN	CHECKED	REVIEWED DATE	REVISED
EPA	DFS	DYA	DFS	HDJ 12/92	

d:\1192\1192schm.dgn Feb. 23, 1993 08:38:32

F.H.W.A. REGION	STATE	PROJECT	
5	OHIO		

293
338

HAMILTON COUNTY
HAM-75-9.75

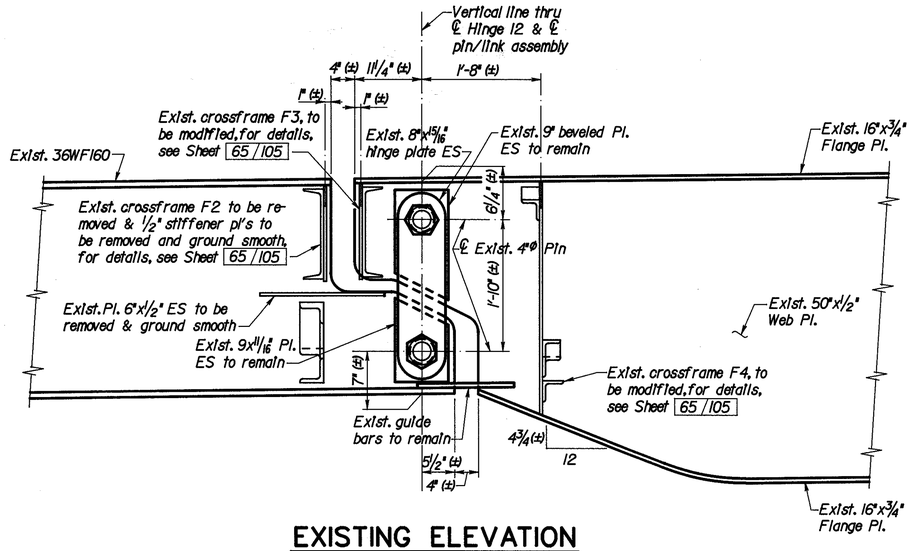

EXISTING ELEVATION

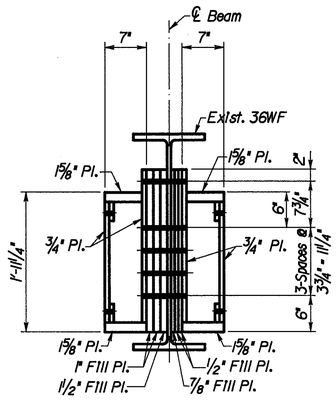

SECTION A-A

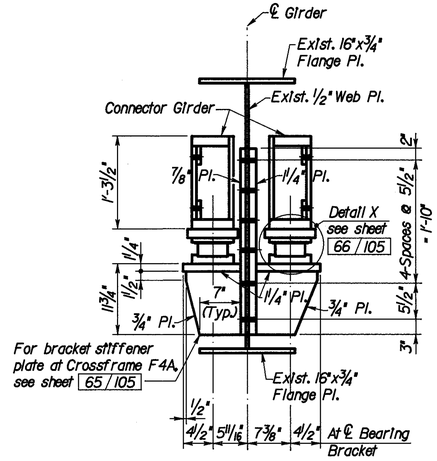

SECTION B-B

Note: Bracket welds same as shown for Section C-C

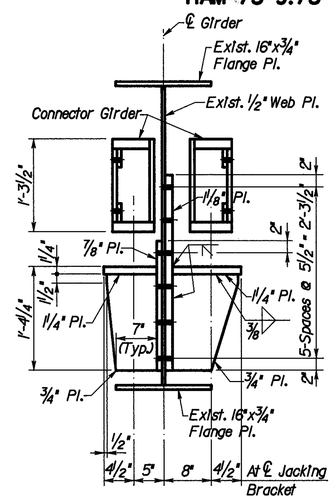

SECTION C-C

LEGEND

ES - Each Side

Note:
All new steel plates shall meet the requirements of ASTM-A36.
All steel plates for connector girders and brackets shall meet Charpy V-notch toughness requirements with a minimum CVN value of 25 ft-lbs @ 10°F.

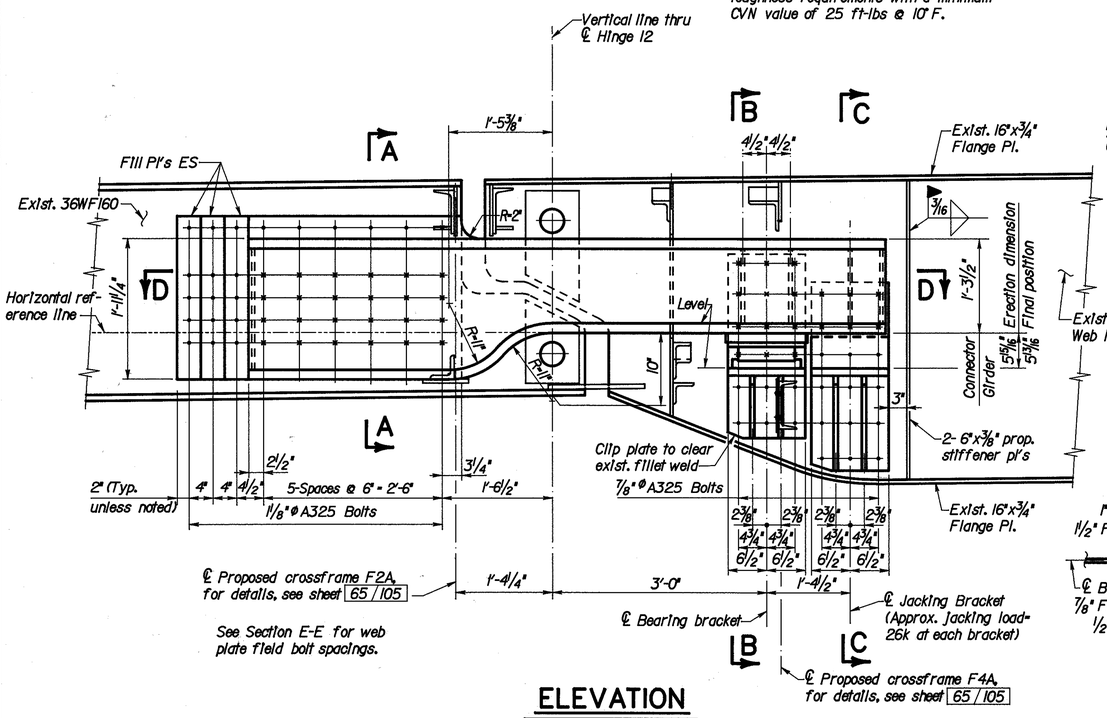

ELEVATION

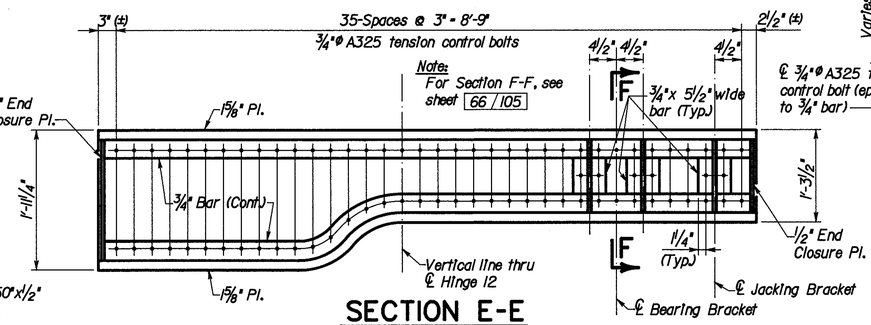

SECTION E-E

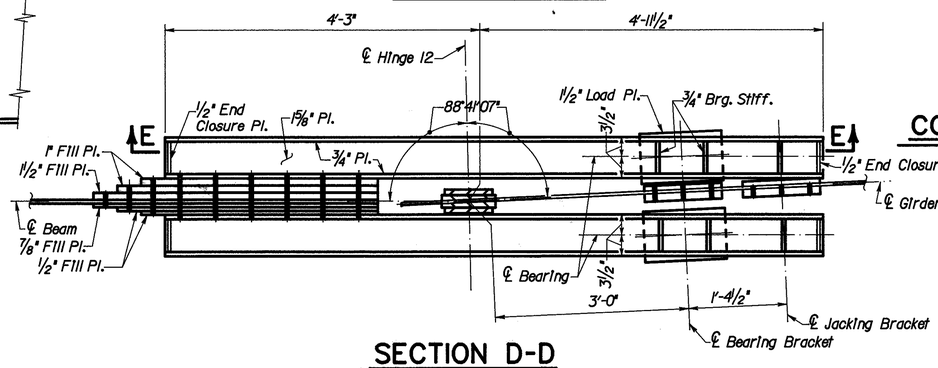

SECTION D-D

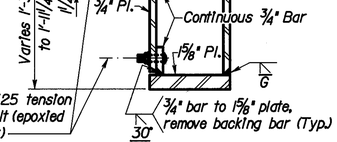

TYPICAL SECTION

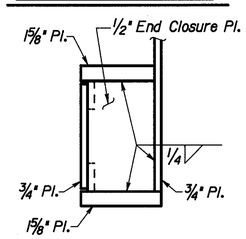

AT END CLOSURE PLATE

CONNECTOR GIRDER DETAILS

Note: All welds to be 100% ultrasonic tested.

LOCKWOOD, JONES & BEALS
CONSULTING ENGINEERS
DAYTON, OHIO

60/105

PIN & LINK ASSEMBLY RETROFIT
HINGE 12
BRIDGE NO. HAM-75-1192R
NORTHBOUND I-75 OVER MILL CREEK, BENSON ST., N.Y.C.R.R. & SHEPHERD AVE.

DESIGNED	CHECKED	DRAWN	CHECKED	REVIEWED DATE	REVISED
EPA	DFS	GJW	DFS	HDJ 12/92	

d:\1192\1192h1.dgn Feb. 18, 1993 09:35:38

F.H.W.A. REGION	STATE	PROJECT	
5	OHIO		

294
338

HAMILTON COUNTY
HAM-75-9.75

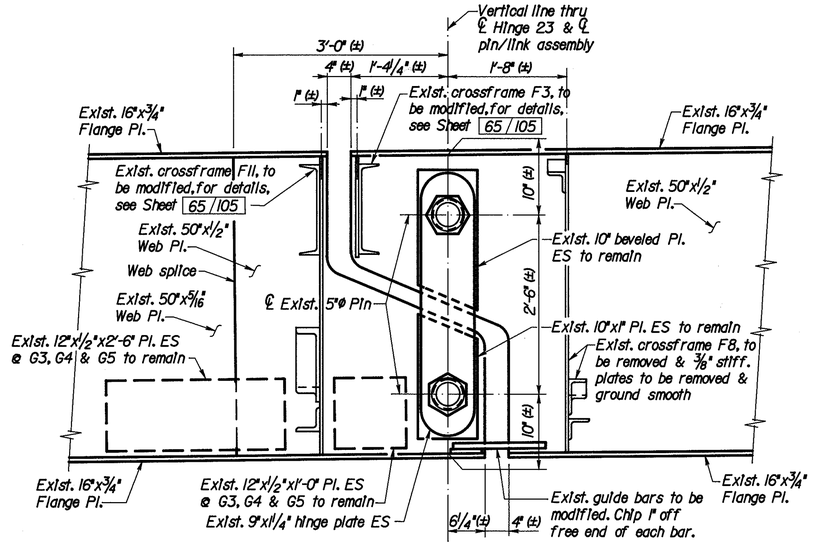

EXISTING ELEVATION

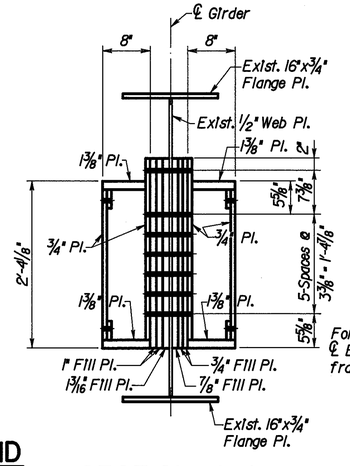

SECTION A-A

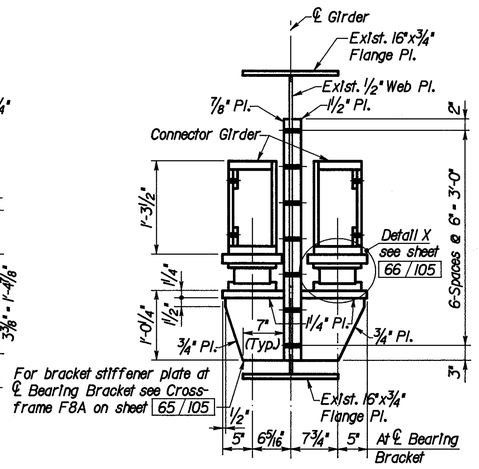

SECTION B-B

Note: Bracket welds same as shown for Section C-C

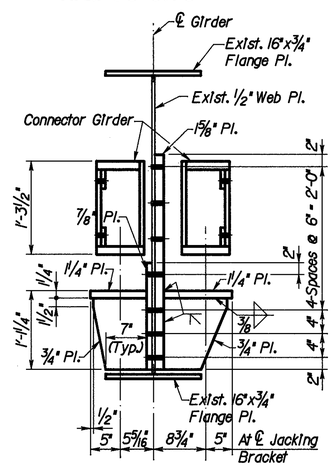

SECTION C-C

Note:
All new steel plates shall meet the requirements of ASTM-A36.
All steel plates for connector girders and brackets shall meet Charpy V-notch toughness requirements with a minimum CVN value of 25 ft-lbs @ 10° F.

LEGEND
ES = Each Side

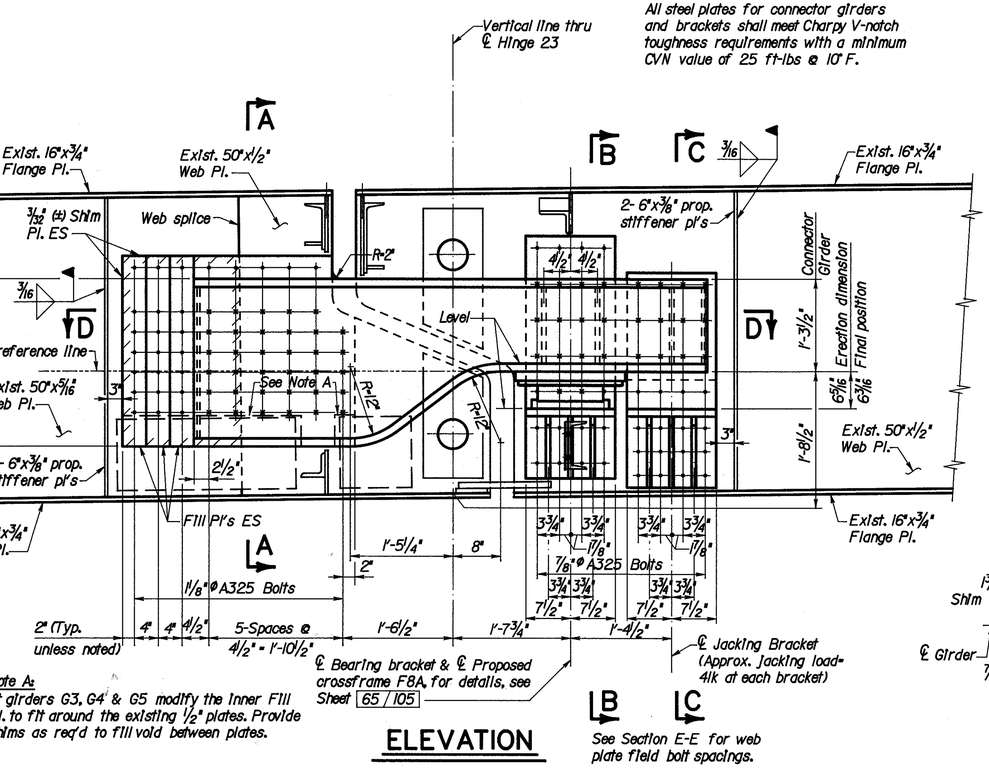

Note A:
At girders G3, G4 & G5 modify the inner Fill Pl. to fit around the existing 1/2" plates. Provide shims as req'd to fill void between plates.

ELEVATION

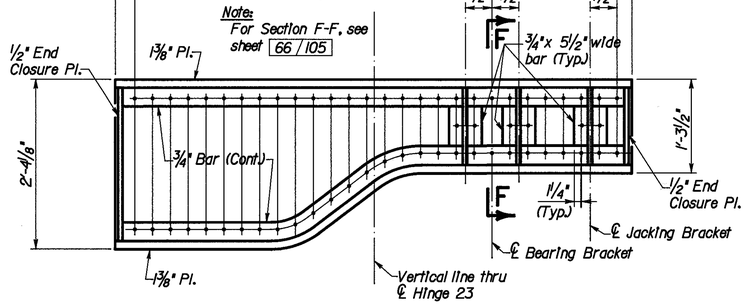

SECTION E-E

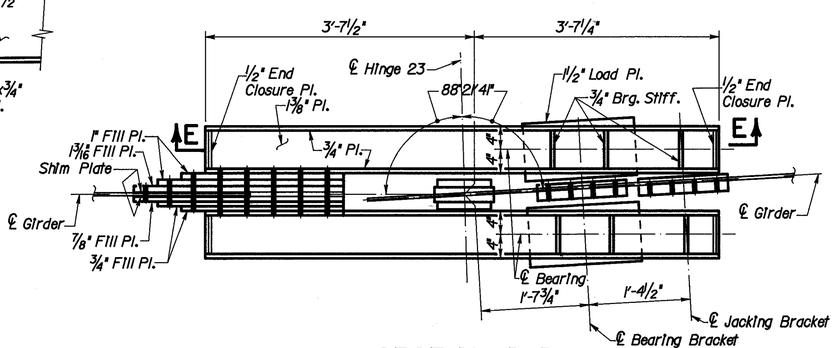

SECTION D-D

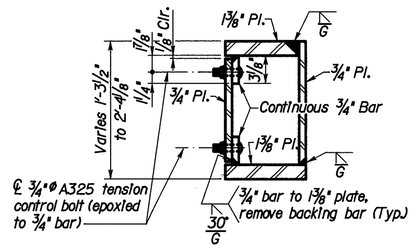

TYPICAL SECTION

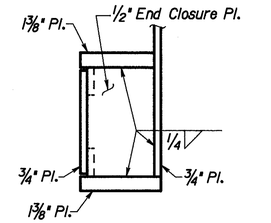

AT END CLOSURE PLATE

CONNECTOR GIRDER DETAILS

Note: All welds to be 100% ultrasonic tested.

LOCKWOOD, JONES & BEALS
CONSULTING ENGINEERS
DAYTON, OHIO

61/105

PIN & LINK ASSEMBLY RETROFIT
HINGE 23
BRIDGE NO. HAM-75-1192R
NORTHBOUND I-75 OVER MILL CREEK, BENSON ST., N.Y.C.R.R. & SHEPHERD AVE.

DESIGNED	CHECKED	DRAWN	CHECKED	REVIEWED DATE	REVISED
EPA	DFS	GJW	DFS	HDJ 12/92	

d:\1192\1192h2.dgn Feb. 18, 1993 09:58:59

F.H.W.A. REGION	STATE	PROJECT	
5	OHIO		

295
338

HAMILTON COUNTY
HAM-75-9.75

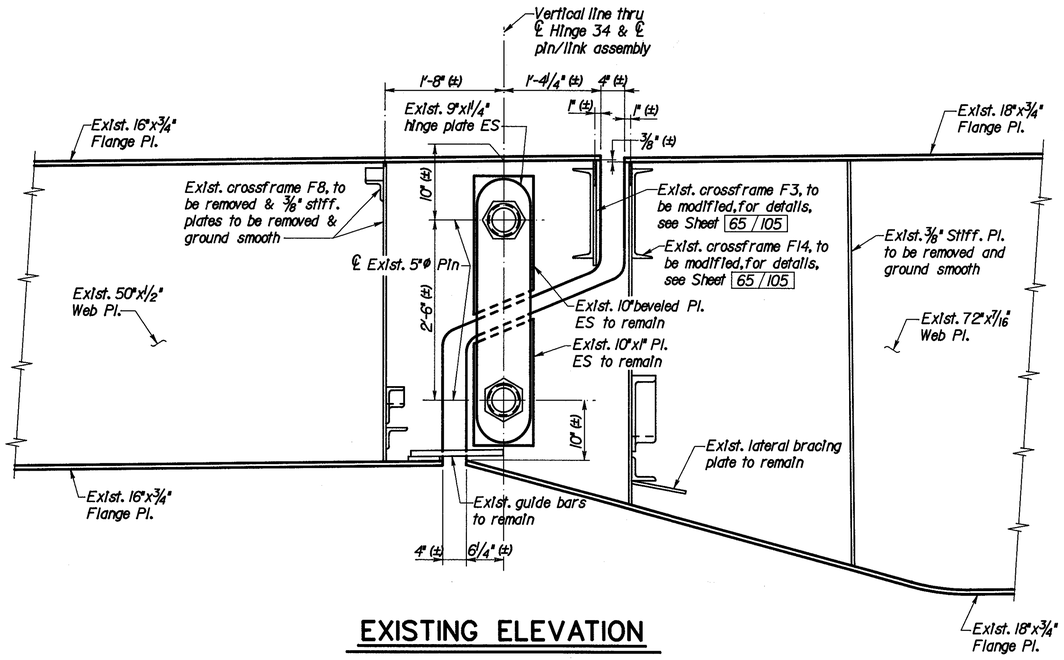

EXISTING ELEVATION

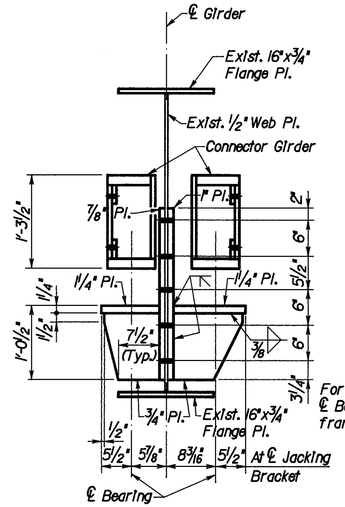

SECTION A-A

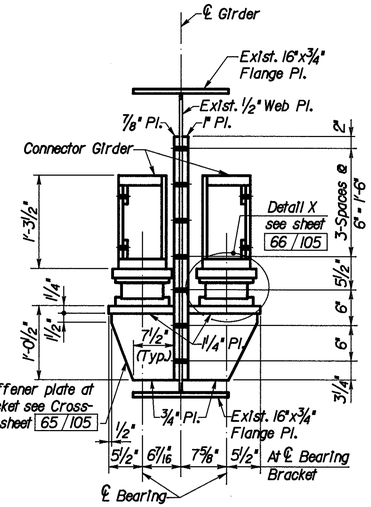

For bracket stiffener plate at ℄ Bearing Bracket see Cross-frame F8A on sheet 65 / 105

SECTION B-B

Note: Bracket welds same as shown for Section A-A

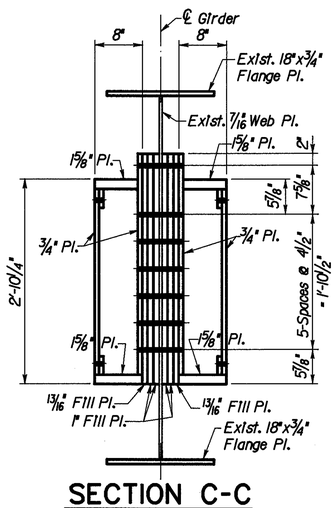

SECTION C-C

Note:
All new steel plates shall meet the requirements of ASTM-A36.
All steel plates for connector girders and brackets shall meet Charpy V-notch toughness requirements with a minimum CVN value of 25 ft-lbs @ 10°F.

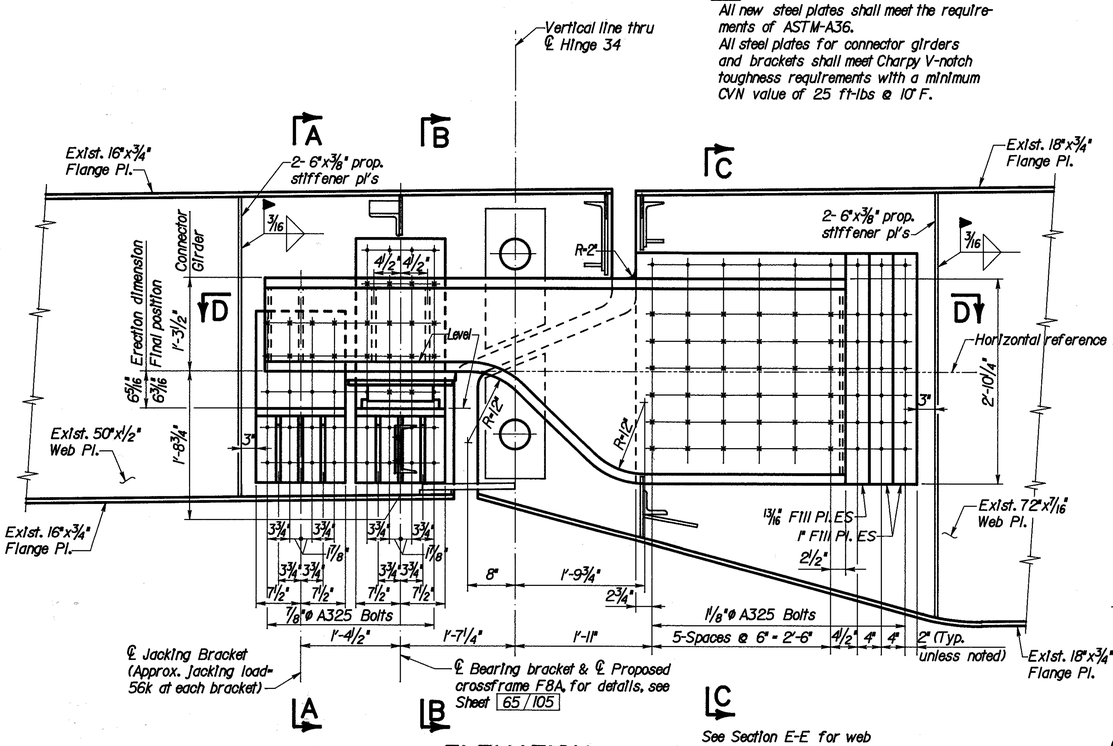

ELEVATION

See Section E-E for web plate field bolt spacings.

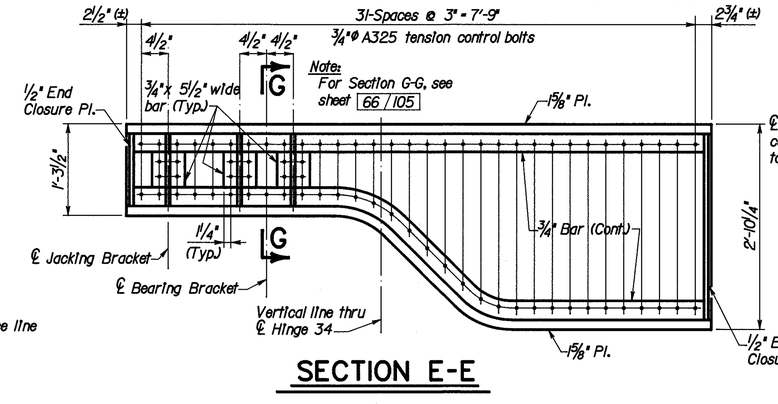

SECTION E-E

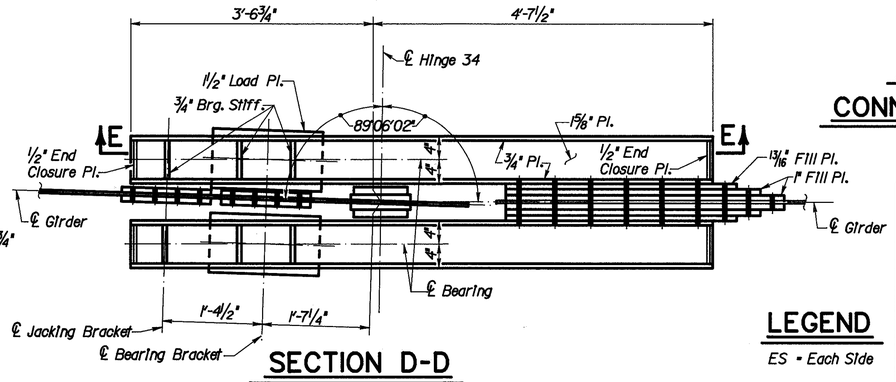

SECTION D-D

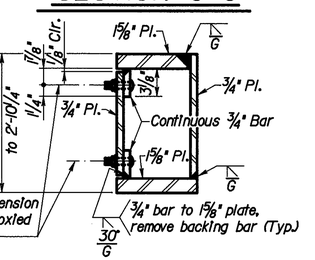

TYPICAL SECTION

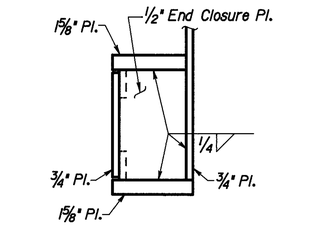

AT END CLOSURE PLATE

CONNECTOR GIRDER DETAILS

Note: All welds to be 100% ultrasonic tested.

LEGEND

ES = Each Side

LOCKWOOD, JONES & BEALS
CONSULTING ENGINEERS
DAYTON, OHIO

62 / 105

PIN & LINK ASSEMBLY RETROFIT
HINGE 34
BRIDGE NO. HAM-75-1192R
NORTHBOUND I-75 OVER MILL CREEK, BENSON ST., N.Y.C.R.R. & SHEPHERD AVE.

DESIGNED	CHECKED	DRAWN	CHECKED	REVIEWED DATE	REVISED
EPA	DFS	GJW	DFS	HDJ 12/92	

d:\1192\1192h3.dgn Feb. 18, 1993 10:10:28

F.H.W.A. REGION	STATE	PROJECT	
5	OHIO		

296
338

HAMILTON COUNTY
HAM-75-9.75

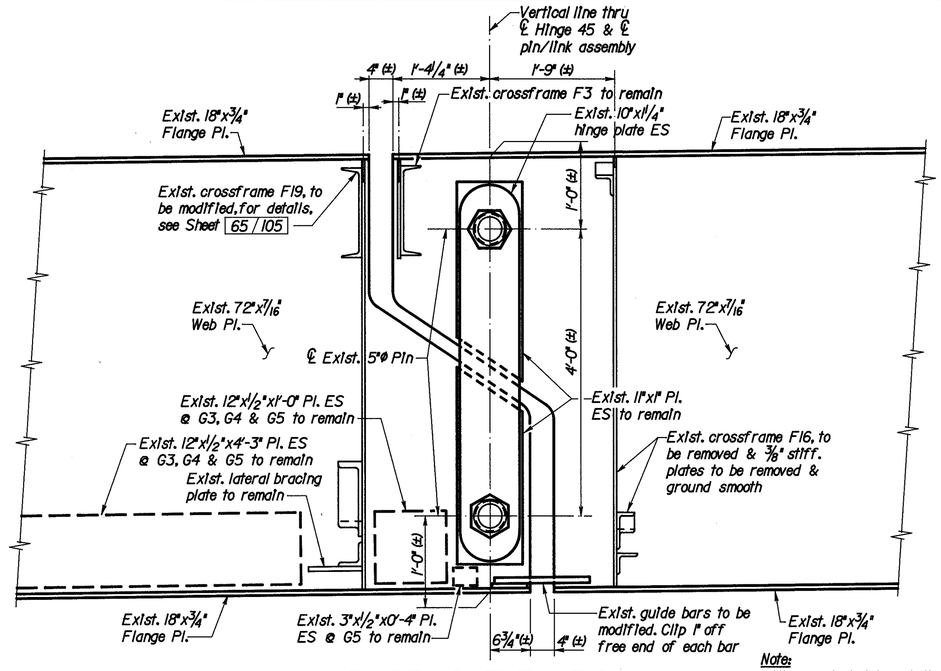

EXISTING ELEVATION

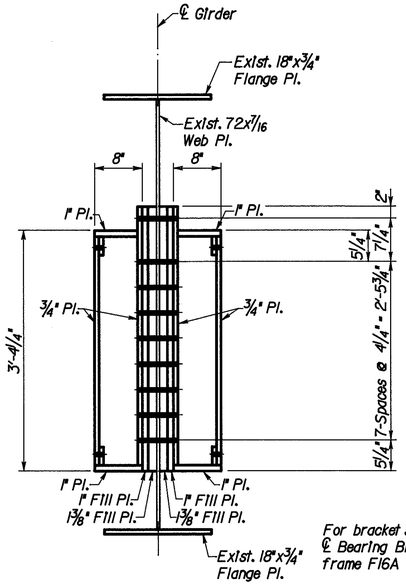

SECTION A-A

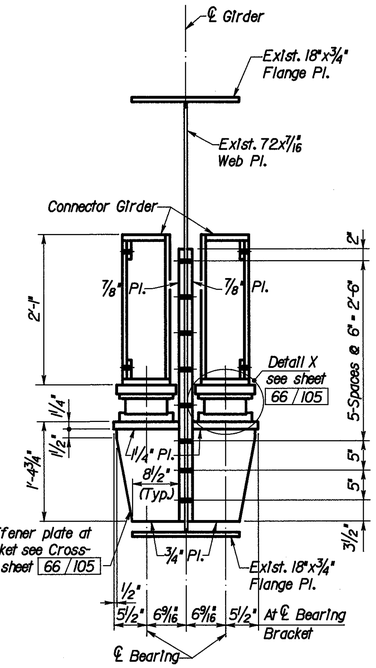

SECTION B-B

Note: Bracket welds same as shown for Section C-C

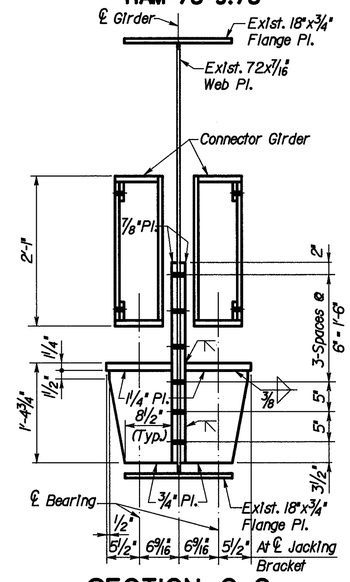

SECTION C-C

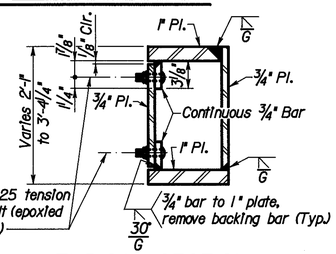

Note: All welds to be 100% ultrasonic tested.

TYPICAL SECTION

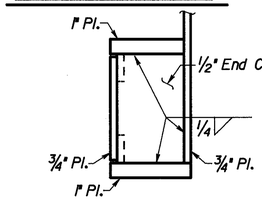

AT END CLOSURE PLATE

CONNECTOR GIRDER DETAILS

Note:
All new steel plates shall meet the requirements of ASTM-A36.
All steel plates for connector girders and brackets shall meet Charpy V-notch toughness requirements with a minimum CVN value of 25 ft-lbs @ 10°F.

Note:
For Section H-H, see sheet 66 / 105

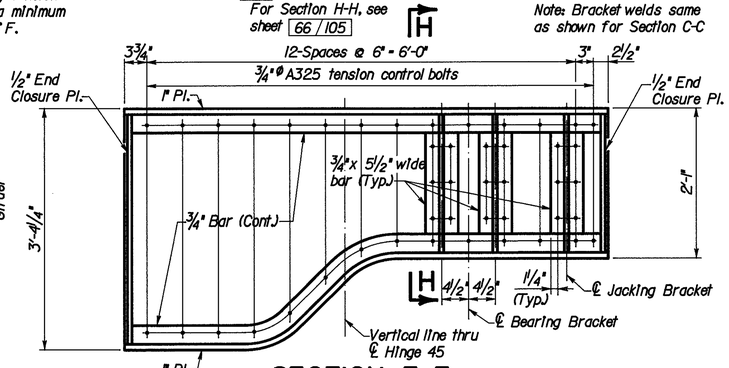

SECTION E-E

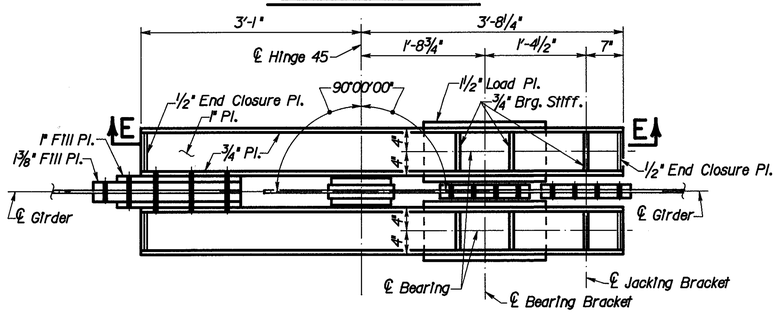

SECTION D-D

Vertical line thru ℄ Hinge 45

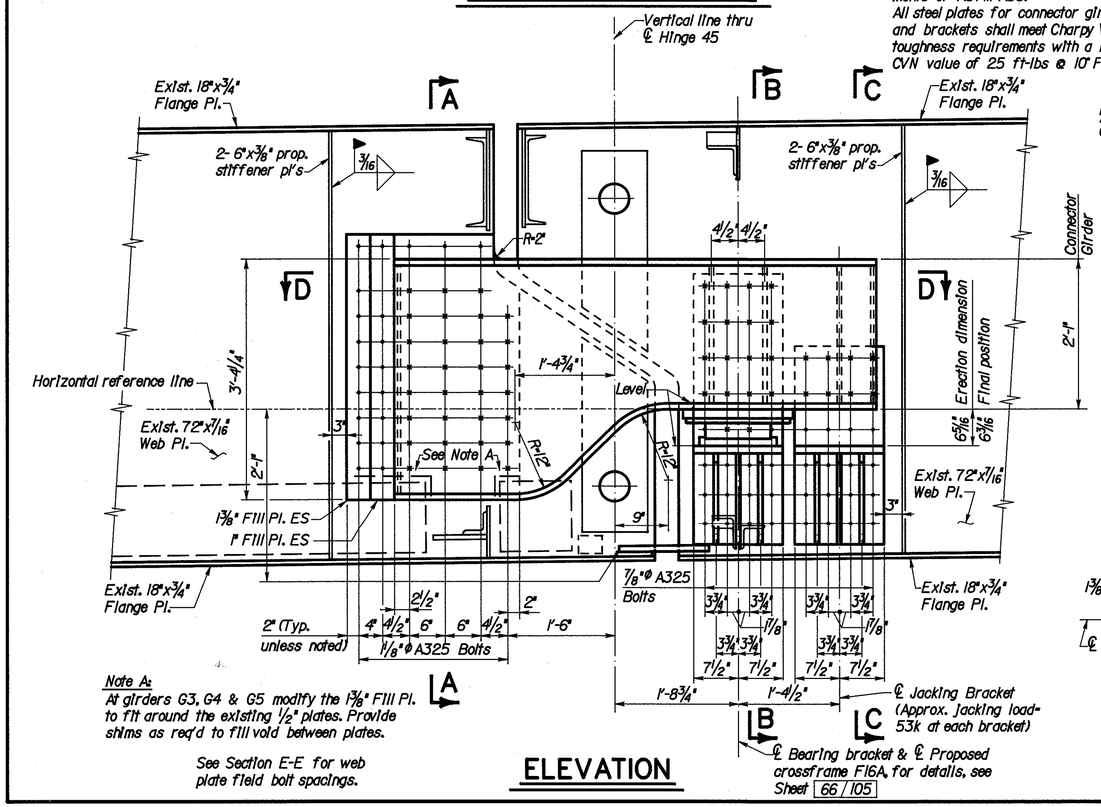

Note A:
At girders G3, G4 & G5 modify the 1 3/8" Fill Pl. to fit around the existing 1/2" plates. Provide shims as req'd to fill void between plates.

See Section E-E for web plate field bolt spacings.

ELEVATION

LEGEND

ES = Each Side

LOCKWOOD, JONES & BEALS
CONSULTING ENGINEERS
DAYTON, OHIO

63 / 105

PIN & LINK ASSEMBLY RETROFIT
HINGE 45
BRIDGE NO. HAM-75-1192R
NORTHBOUND I-75 OVER MILL CREEK, BENSON ST., N.Y.C.R.R. & SHEPHERD AVE.

DESIGNED	CHECKED	DRAWN	CHECKED	REVIEWED DATE	REVISED
EPA	DFS	GJW	DFS	HDJ 12/92	

d:\1192\1192h4.dgn Feb. 18, 1993 10:18:01

F.H.W.A. REGION	STATE	PROJECT		297
5	OHIO			338

HAMILTON COUNTY
HAM-75-9.75

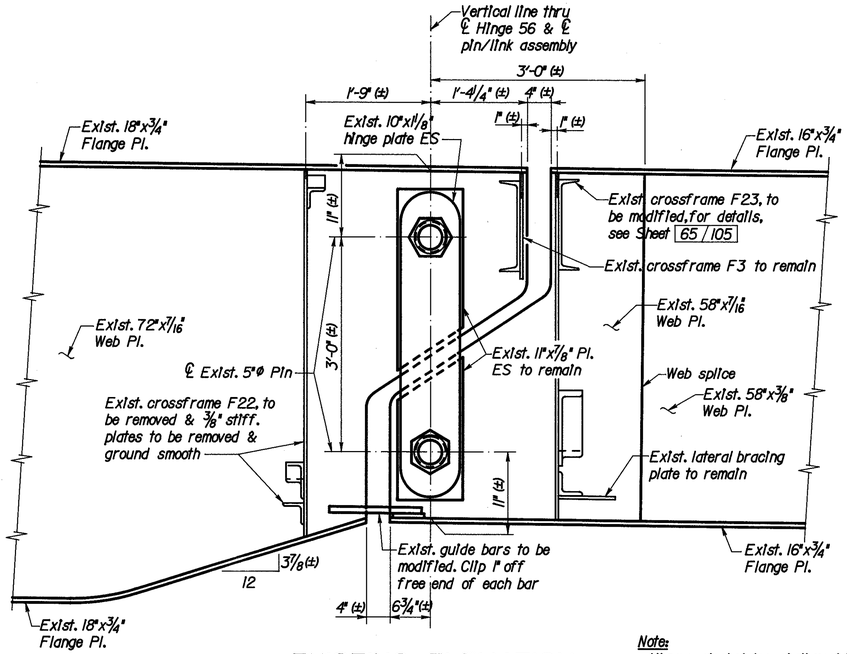

EXISTING ELEVATION

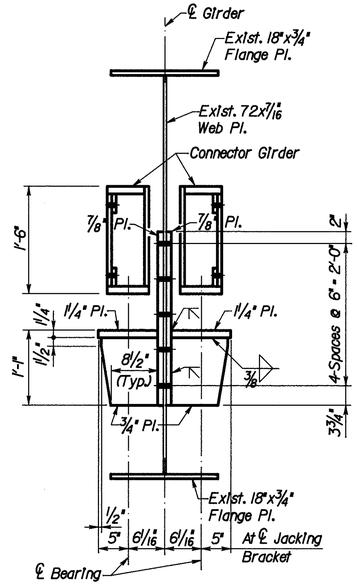

SECTION A-A

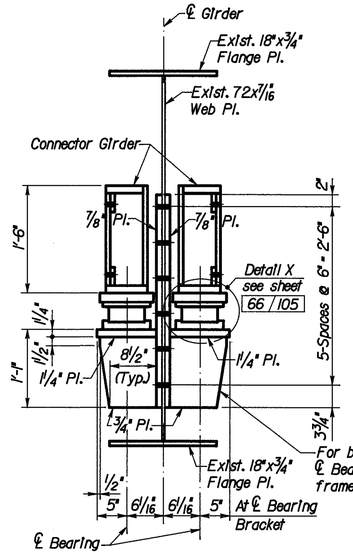

SECTION B-B

Note: Bracket welds same as shown for Section A-A

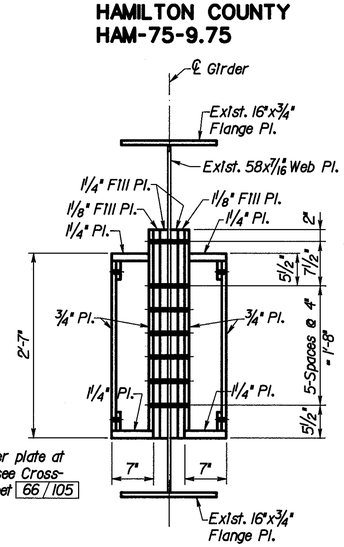

SECTION C-C

Note:
All new steel plates shall meet the requirements of ASTM-A36.
All steel plates for connector girders and brackets shall meet Charpy V-notch toughness requirements with a minimum CVN value of 25 ft-lbs @ 10°F.

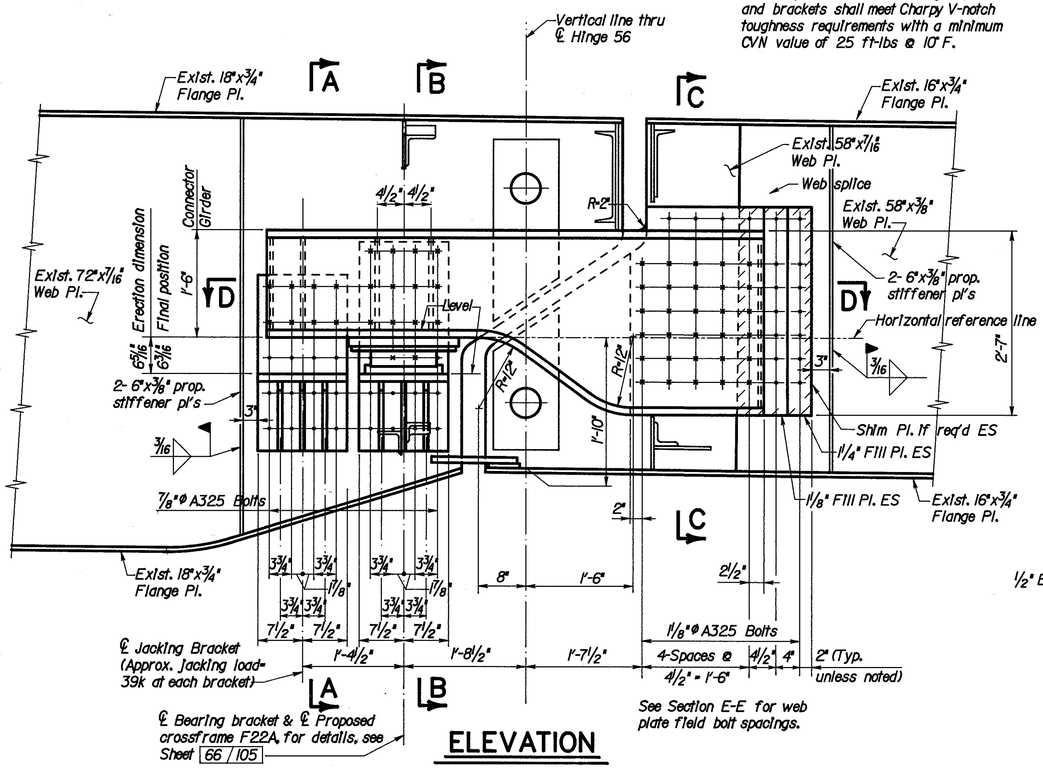

ELEVATION

See Section E-E for web plate field bolt spacings.

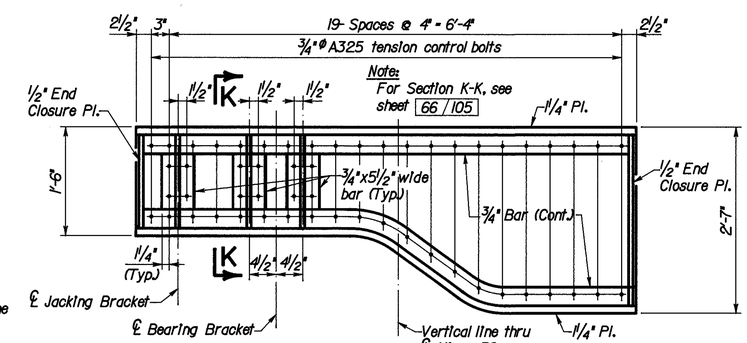

SECTION E-E

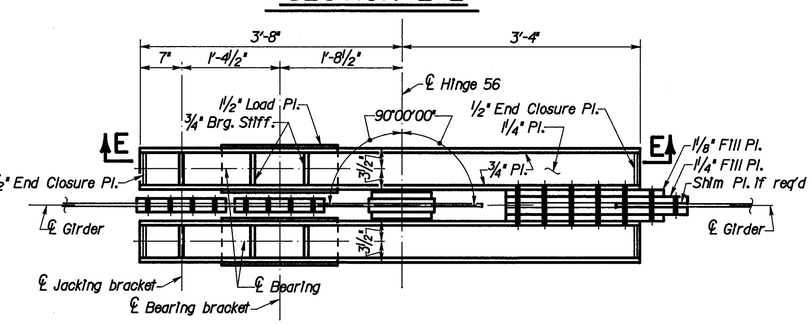

SECTION D-D

Note:
All welds to be 100% ultrasonic tested.

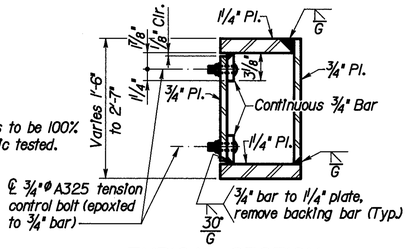

TYPICAL SECTION

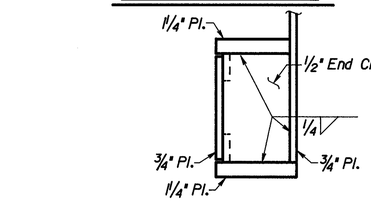

AT END CLOSURE PLATE

CONNECTOR GIRDER DETAILS

LEGEND

ES = Each Side

LOCKWOOD, JONES & BEALS
CONSULTING ENGINEERS
DAYTON, OHIO

64/105

PIN & LINK ASSEMBLY RETROFIT
HINGE 56
BRIDGE NO. HAM-75-1192R
NORTHBOUND I-75 OVER MILL CREEK, BENSON ST., N.Y.C.R.R. & SHEPHERD AVE.

DESIGNED	CHECKED	DRAWN	CHECKED	REVIEWED DATE	REVISED
EPA	DFS	GJW	DFS	HDJ 12/92	

d:\1192\1192h5.dgn Feb. 18, 1993 10:27:50

F.H.W.A. REGION	STATE	PROJECT		298 / 338
5	OHIO			

HAMILTON COUNTY
HAM-75-9.75

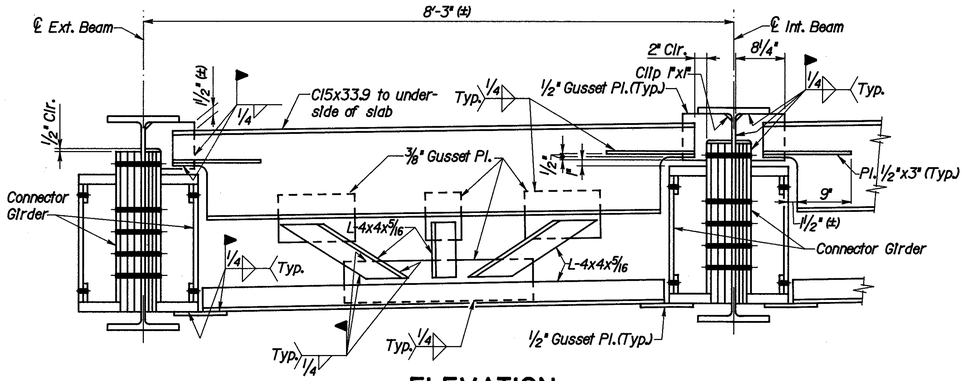

ELEVATION

PROPOSED CROSSFRAME F2A

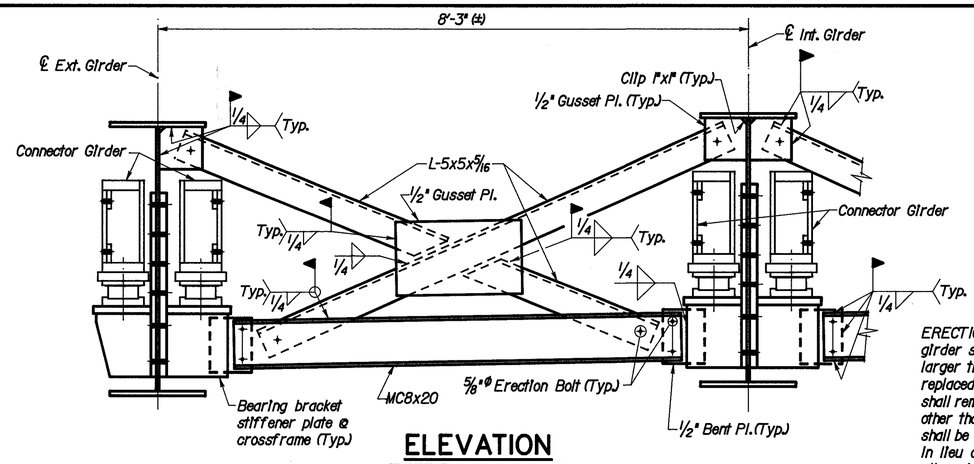

ELEVATION

PROPOSED CROSSFRAME F4A & F8A

ERECTION BOLTS: Hole diameter in the crossframes and girder stiffeners shall be respectively 1/16" and 1/4" larger than the diameter of the erection bolts. Unless replaced by permanent high strength bolts, erection bolts shall remain in place. Lock washers shall be furnished for other than fully torqued high strength erection bolts. Bolts shall be furnished as part of 513.
In lieu of erection bolts and at the option of the Contractor, alternate means of temporary bracing may be used subject to the approval of the Director (501.06).

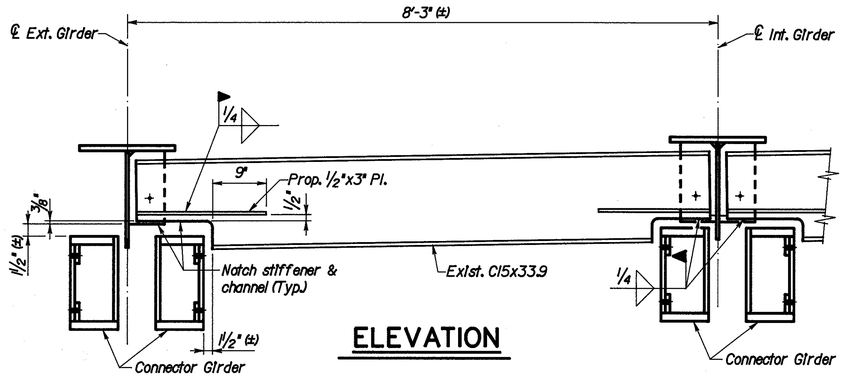

ELEVATION

CROSSFRAME F3 MODIFICATIONS

(Typical at Hinges 12, 23 & 34)

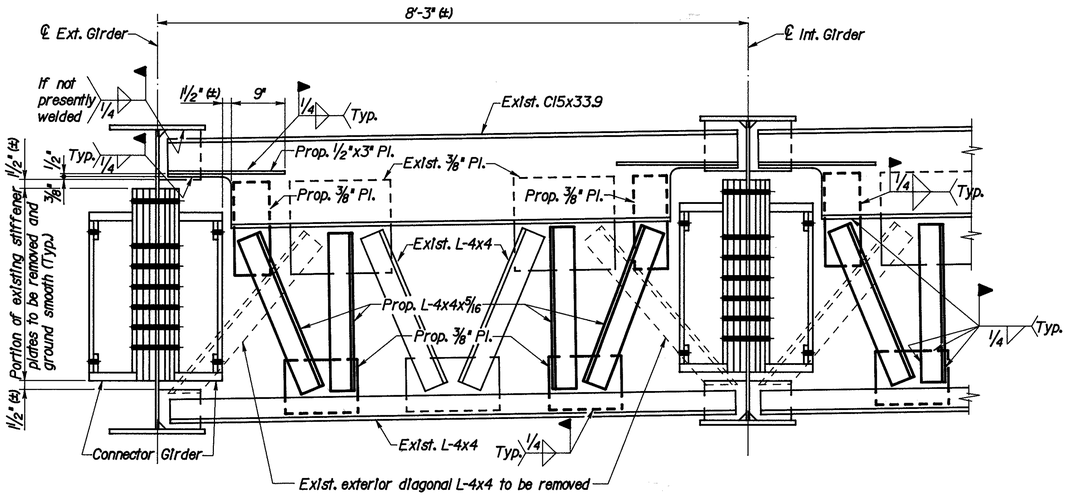

ELEVATION

CROSSFRAME F11 & F14 MODIFICATIONS

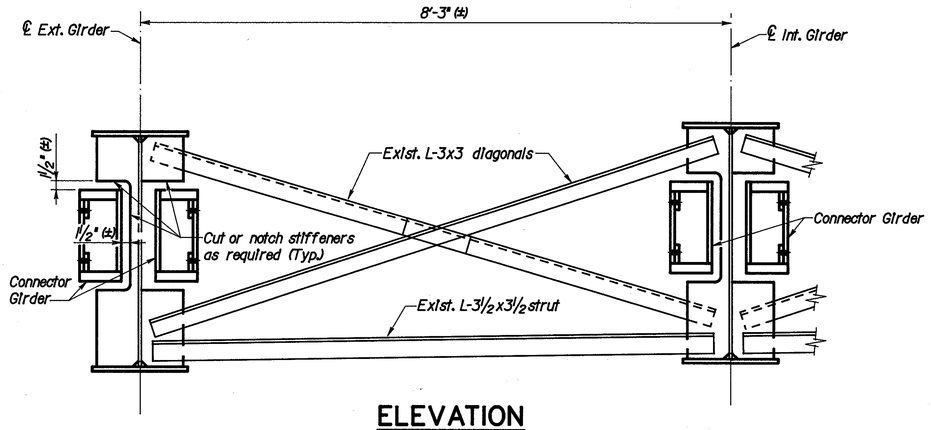

ELEVATION

CROSSFRAME F4 MODIFICATIONS

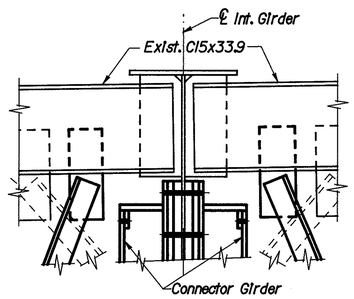

CROSSFRAME F19 MODIFICATIONS

Note:
Details for crossframes F19 & F23 are the same as shown for Crossframes F11 & F14 above, except for end treatment of C15x33.9 as shown.

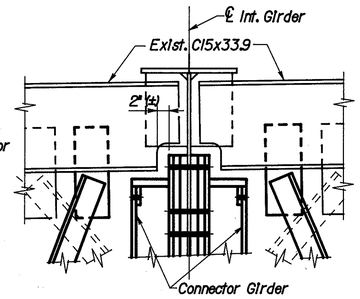

CROSSFRAME F23 MODIFICATIONS

LOCKWOOD, JONES & BEALS
CONSULTING ENGINEERS
DAYTON, OHIO
65 / 105

PIN & LINK ASSEMBLY RETROFIT
HINGE DETAILS
BRIDGE NO. HAM-75-1192R
NORTHBOUND I-75 OVER MILL CREEK, BENSON ST., N.Y.C.R.R. & SHEPHERD AVE.

DESIGNED	CHECKED	DRAWN	CHECKED	REVIEWED DATE	REVISED
EPA	DFS	GJW	DFS	HDJ 12/92	

d:\1192\1192xf1.dgn Feb. 18, 1993 11:17:28

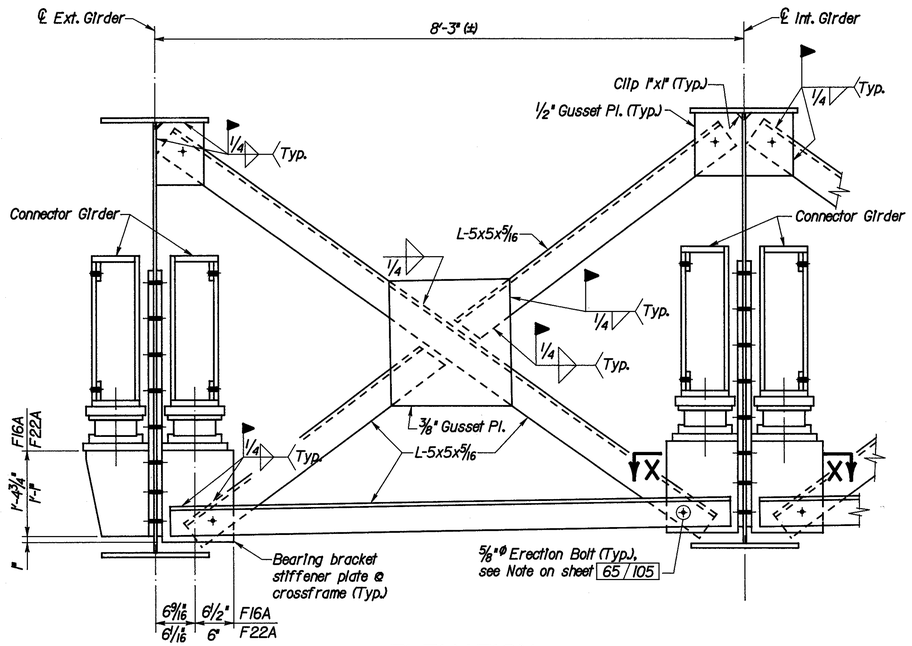

ELEVATION

PROPOSED CROSSFRAME F16A & F22A

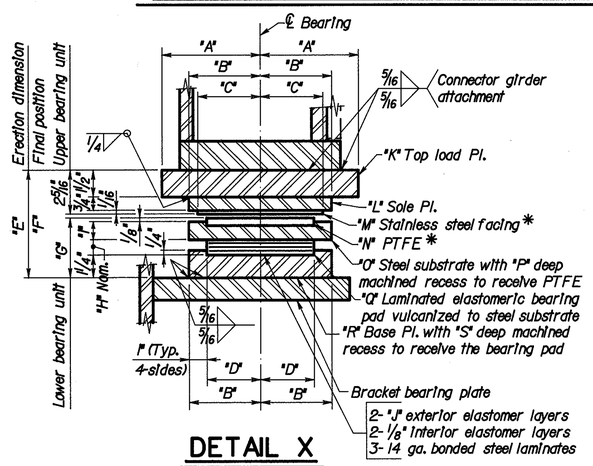

DETAIL X

CONNECTOR GIRDER BEARING

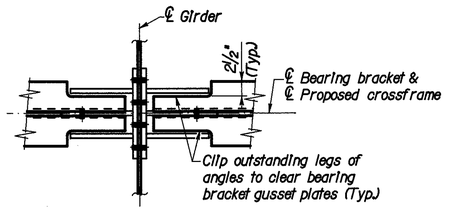

SECTION X-X

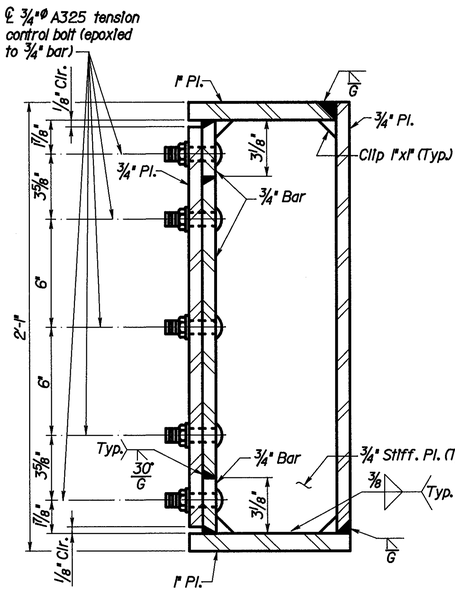

SECTION H-H

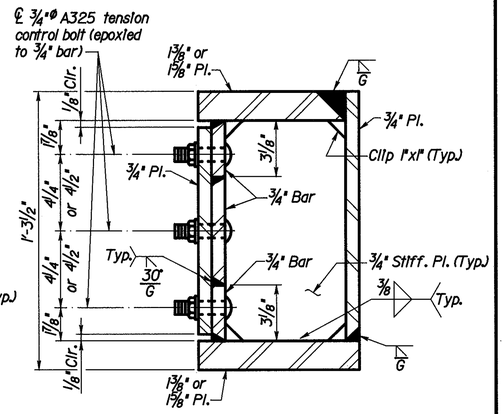

SECTION F-F

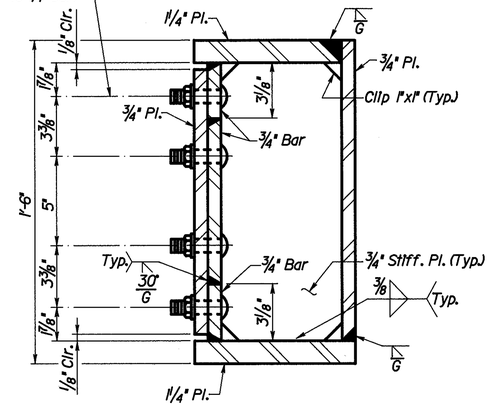

SECTION K-K

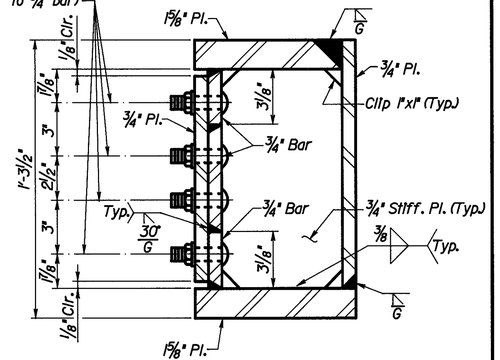

SECTION G-G

Note:
* = Protect surfaces during shipment.
Dead Load Reaction = "T"
Live Load Reaction = "U"
Maximum Design Load = "V" at each Brg. Pad

TABLE OF BEARING DATA

Hinge	Dimensions									Plate, bearing & recess dimensions							Force (Kips)		
	"A"	"B"	"C"	"D"	"E"	"F"	"G"	"H"	"I"	"J"	"K"	"L"	"M"	"N"	"O"	"P"	"Q"	"R"	"S"	"T"	"U"	"V"
12	4 1/4"	3 1/2"	3 1/4"	2 1/2"	5 15/16"	5 5/16"	3 1/2"	11/16"	1 7/16"	3/32"	8 1/2"x13 3/4"	7"x13"	6 1/2"x12 1/2"	5"x9 1/2"x1/4"	7"x11 1/2"x1 7/16"	5 1/16"x9 9/16"x1/8"	5"x9 1/2"	7"x11 1/2"x1 1/2"	5 1/16"x9 9/16"x1/4"	19.8	31.3	51.1
23	4 15/16"	4"	3 3/4"	3"	6 5/16"	6 3/16"	3 7/8"	3/4"	1 3/4"	1/8"	9 7/8"x 18 3/4"	8"x18"	7 1/2"x 17 1/2"	6"x11"x1/4"	8"x13"x1 3/4"	6 1/16"x11 1/16"x1/8"	6"x11"	8"x13"x1 1/2"	6 1/16"x11 1/16"x1/4"	31.8	32.4	64.2
34	5"	4 1/2"	4 1/4"	3 1/2"	6 5/16"	6 3/16"	3 7/8"	3/4"	1 3/4"	1/8"	10"x18 1/2"	9"x17 1/2"	8 1/2"x17"	7"x11"x1/4"	9"x13"x1 3/4"	7 1/16"x11 1/16"x1/8"	7"x11"	9"x13"x1 1/2"	7 1/16"x11 1/16"x1/4"	43.1	31.6	74.7
45	5"	4 1/2"	4 1/4"	3 1/2"	6 5/16"	6 3/16"	3 7/8"	3/4"	1 3/4"	1/8"	10"x20 1/2"	9"x19 1/2"	8 1/2"x19"	7"x11"x1/4"	9"x13"x1 3/4"	7 1/16"x11 1/16"x1/8"	7"x11"	9"x13"x1 1/2"	7 1/16"x11 1/16"x1/4"	40.5	31.5	72.0
56	4 1/2"	4"	3 3/4"	3"	6 5/16"	6 3/16"	3 7/8"	3/4"	1 3/4"	1/8"	9"x19 1/2"	8"x18 1/2"	7 1/2"x18"	6"x11"x1/4"	8"x13"x1 3/4"	6 1/16"x11 1/16"x1/8"	6"x11"	8"x13"x1 1/2"	6 1/16"x11 1/16"x1/4"	30.0	30.0	60.0

F.H.W.A. REGION	STATE	PROJECT	
5	OHIO		

299
338

HAMILTON COUNTY
HAM-75-9.75

LOCKWOOD, JONES & BEALS
CONSULTING ENGINEERS
DAYTON, OHIO

66/105

PIN & LINK ASSEMBLY RETROFIT
HINGE DETAILS
BRIDGE NO. HAM-75-1192R
NORTHBOUND I-75 OVER MILL CREEK,
BENSON ST., N.Y.C.R.R. & SHEPHERD AVE.

DESIGNED	CHECKED	DRAWN	CHECKED	REVIEWED DATE	REVISED
EPA	DFS	GJW	DFS	HDJ 12/92	

d:\1192\1192xf2.dgn Feb. 18, 1993 10:39:14

ITEM SPECIAL -STRUCTURE, MISC.: LATERAL BRACING GUSSET PLATE RETROFIT UPGRADE (INTERMEDIATE)

THIS WORK SHALL CONSIST OF THE FOLLOWING SEQUENCE OF OPERATIONS PERFORMED ON ONE LATERAL BRACING GUSSET PLATE.

1. DRILL THE TWO 3-INCH OR SIX 2-INCH VERTICAL HOLES THROUGH THE GUSSET PLATE REMOVING THE GUSSET PLATE TO WEB AND GUSSET PLATE TO STIFFENER FILLET WELDS AT THE LOCATIONS WITHOUT GOUGING THE WEB OR STIFFNER. SEE RETROFIT DETAILS ON THIS SHEET. IF THE BOLTS ARE FOUND TO INTERFERE WITH THE RETROFIT THE BOLTS MAY BE REMOVED PRIOR TO DRILLING AND REPLACED AFTER THE RETROFIT IS PERFORMED.

2. DRILL THE TWO 3-INCH OR SIX 2-INCH VERTICAL HOLES THROUGH THE GUSSET PLATE REMOVING THE OUTSIDE CORNERS OF THE GUSSET PLATE WITHOUT GOUGING THE WEB.

3. ANY REMAINING FILLET WELDS AND GUSSET PLATE SHALL BE GROUND SO THAT THE RESULTING SURFACES OF THE WEB AND STIFFENER ARE SMOOTH. EXTREME CARE SHALL BE TAKEN TO INSURE THE FULL THICKNESS OF THE WEB IS MAINTAINED AND NO UNDERCUT, GOUGING OR OVERGRINDING OF WEB TAKES PLACE. IF THE HOLES OF STEP 1 AND STEP 2 DID NOT TOUCH THE FACE OF THE ADJACENT SURFACE, THE HOLE SHALL BE GROUND SO THAT A 1-INCH MINIMUM RADIUS RESULTS.

THE ACCEPTED NUMBER OF RETROFITS AS DESCRIBED HEREIN WILL BE PAID FOR AT THE CONTRACT UNIT PRICE PER LOCATION, WHICH PRICE AND PAYMENT SHALL BE FULL COMPENSATION FOR FURNISHING ALL MATERIAL, LABOR, AND EQUIPMENT NECESSARY TO CLEAN, DRILL, CUT AND GRIND THE LATERAL BRACING GUSSET RETROFIT AREA. A SINGLE LOCATION IS CONSIDERED AS SHOWN IN DETAIL I OPTION A OR B. PAYMENT WILL BE MADE AT THE CONTRACT PRICE BID UNDER:

ITEM	UNIT	DESCRIPTION
SPECIAL	EACH	STRUCTURE, MISC.: LATERAL BRACING GUSSET PLATE RETROFIT UPGRADE (INTERMEDIATE)

CUTTING OF VERTICAL LEGS

AT CERTAIN LOCATIONS THE LOWER LATERAL BRACING AND/OR THE HORIZONTAL MEMBER OF THE CROSSFRAME MAY HAVE A SECTION OF ITS VERTICAL LEG CUT IN ORDER TO DRILL THE HOLES AS DEEMED NECESSARY BY THE ENGINEER. IF SO THE CONTRACTOR MAY CUT THE MINIMAL AMOUNT OF THE VERTICAL LEG THAT THE ENGINEER DEEMS NECESSARY TO REMOVE. THE CONTRACTOR SHALL MAKE THE CUT LEAVING A SMOOTH ARC OR GRIND IT SMOOTH AFTER THE CUT. ANY DAMAGE DONE BY THE CONTRACTOR THRU NEGLECT OR CARELESSNESS SHALL BE REPAIRED BY HIM AT NO ADDITIONAL COST TO THE STATE OF OHIO. THE ABOVE WORK SHALL BE INCLUDED IN ITEM SPECIAL STRUCTURE MISC.: LATERAL BRACING GUSSET PLATE RETROFIT UPGRADE (INTERMEDIATE) FOR PAYMENT.

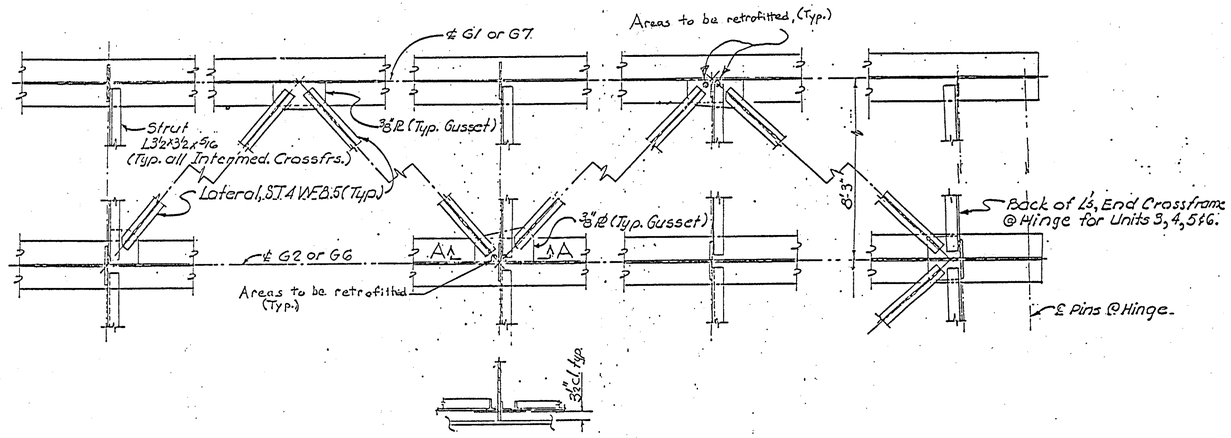

SECTION A-A

TYPICAL DETAILS - LATERAL BRACING BOTTOM FLANGE

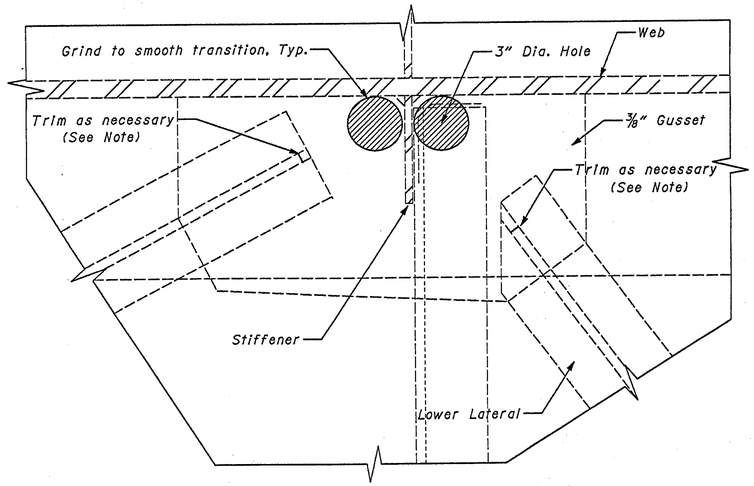

DETAIL I OPTION A

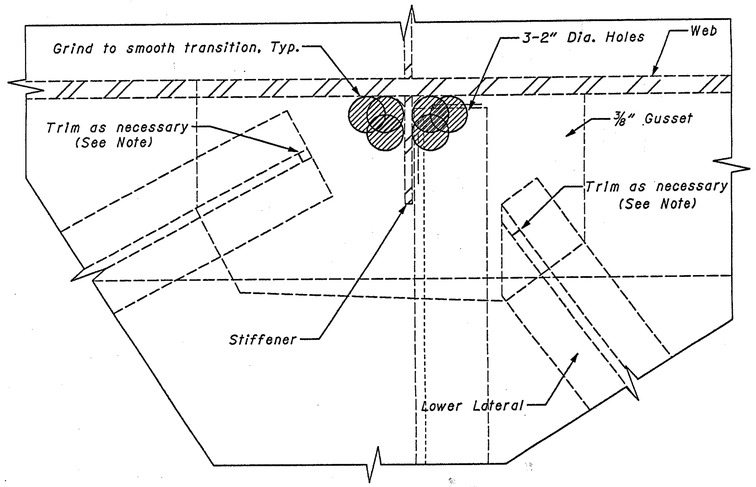

DETAIL I OPTION B

SUB SUMMARY (Quantities carried to Sht. 5/105)

ITEM	ITEM EXTEN.	QTY	UNIT	DESCRIPTION
Special	53000400	233	Each	Structure, Misc.: Lateral Bracing Gusset Plate Retrofit Upgrade (Intermediate)

STATE OF OHIO
DEPARTMENT OF TRANSPORTATION
DISTRICT 8 BRIDGE DEPARTMENT

66A/105

RETROFIT DETAILS
BRIDGE NO. HAM-75-1192R
over Mill Creek, Benson St., and Shepard Ave.

DESIGNED	DRAWN	REVIEWED	CHECKED	DATE	REVISIONS
SDC	SDC	RLE	RLE		

CALC. BY:		HAM-75-9.75	OHIO	299B 338
DATE:		HAMILTON COUNTY	FHWA REGION 5	
CHKD. BY:				
DATE:				

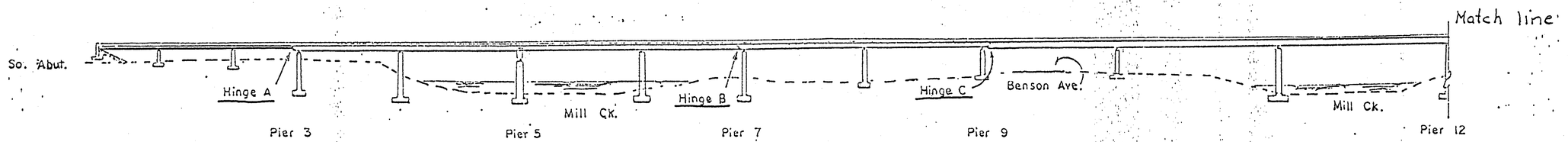

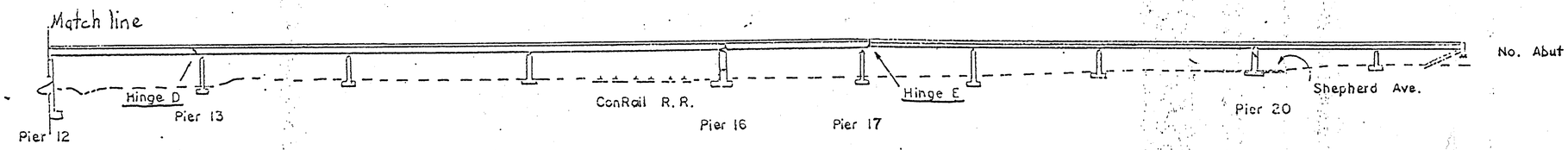

ELEVATION

STATE OF OHIO
DEPARTMENT OF TRANSPORTATION
DISTRICT 8 BRIDGE DEPARTMENT

66B 105

FRAMING PLAN
BRIDGE NO. HAM-75-1192R
over Benson St., Mill Creek, and Shephard Ave.

DESIGNED	DRAWN	REVIEWED	CHECKED	DATE	REVISIONS
SDC	SDC	RLE	RLE		

PLAN
Spans 1 thru 13

CALC. BY:		HAM-75-9.75	OHIO	299C 338
CHKD. BY:		HAMILTON COUNTY	FHWA REGION 5	
DATE:				

TYPE: Continuous Steel Beam
LENGTH: 2417.5' o/o +/-
WIDTH: 54.33' o/o +/-

BEAMS: See Below

CO. Hamilton
RT. IR-75
SECT. 11.78
BR. NO. HAM-75-1192R
IR-75 over Mill Ck., Benson St., ConRail R/R, Shephard Ln.

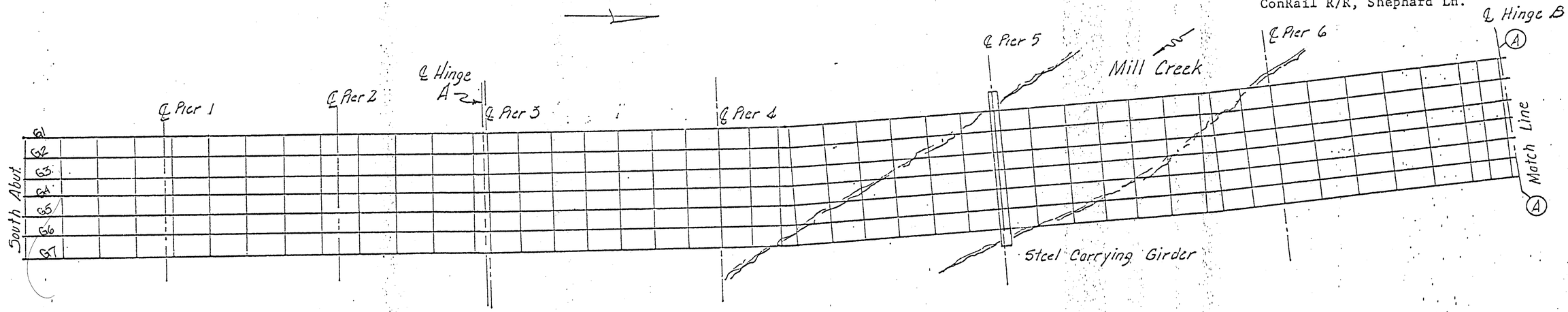

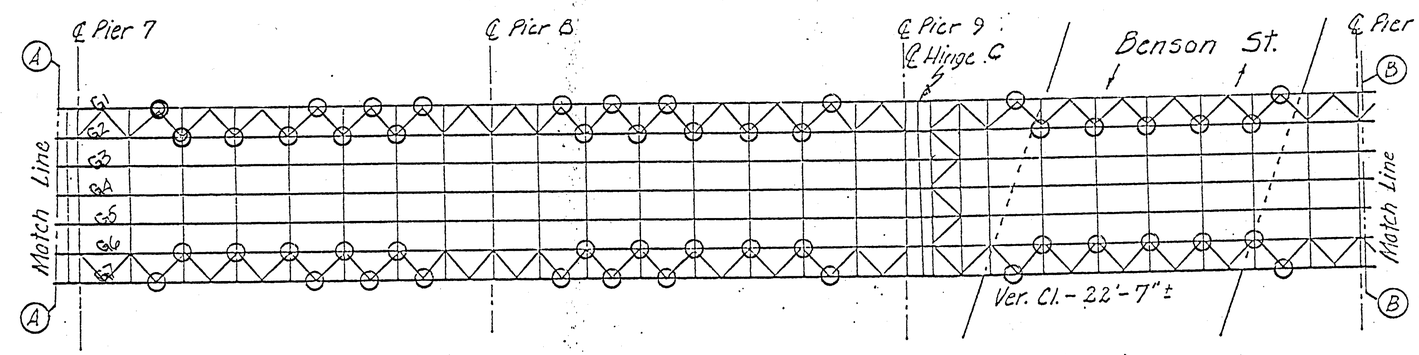

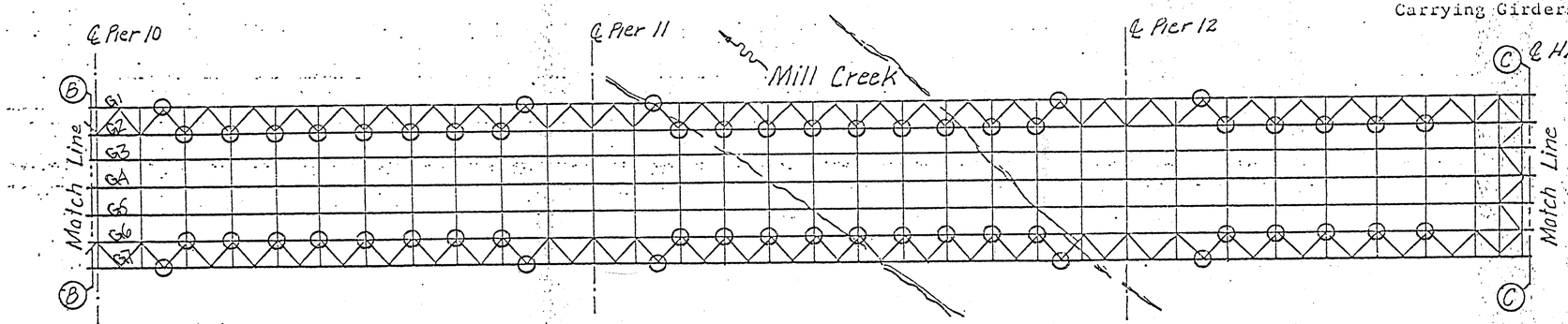

LEGEND
○ Area of Lower Lateral Retrofit Locations

BEAMS: Spans - 1 - 3 = W36x160
Spans - 4 - 9 = Pl. Gir. 50 x 5/16"
Spans - 10 - 17 = Pl. Gir. 72 x 7/16"
Spans - 18 - 22 = Pl. Gir. 58" x 3/8"

Carrying Girders at Piers: Pier 5 = Pl. 72x9/16" x 36x13/4" Box Gir.
Pier 16= Pl. 120x3/4" x 42x31/2" Box Gir.
Pier 20= Pl. 96x5/8" x 42x2¼" Box Gir.

Lower Lateral Bracing = ST 4x8.5 (Typ)

STATE OF OHIO
DEPARTMENT OF TRANSPORTATION
DISTRICT 8 BRIDGE DEPARTMENT

66C 105

FRAMING PLAN
BRIDGE NO. HAM-75-1192R
over Benson St., Mill Creek, and, Shephard Ave.

DESIGNED	DRAWN	REVIEWED	CHECKED	DATE	REVISIONS
SDC	SDC	RLE	RLE		

CALC. BY: DATE:	HAM-75-9.75	OHIO
CHKD. BY: DATE:	HAMILTON COUNTY	FHWA REGION 5

299D 338

PLAN
Spans 14 thru 22

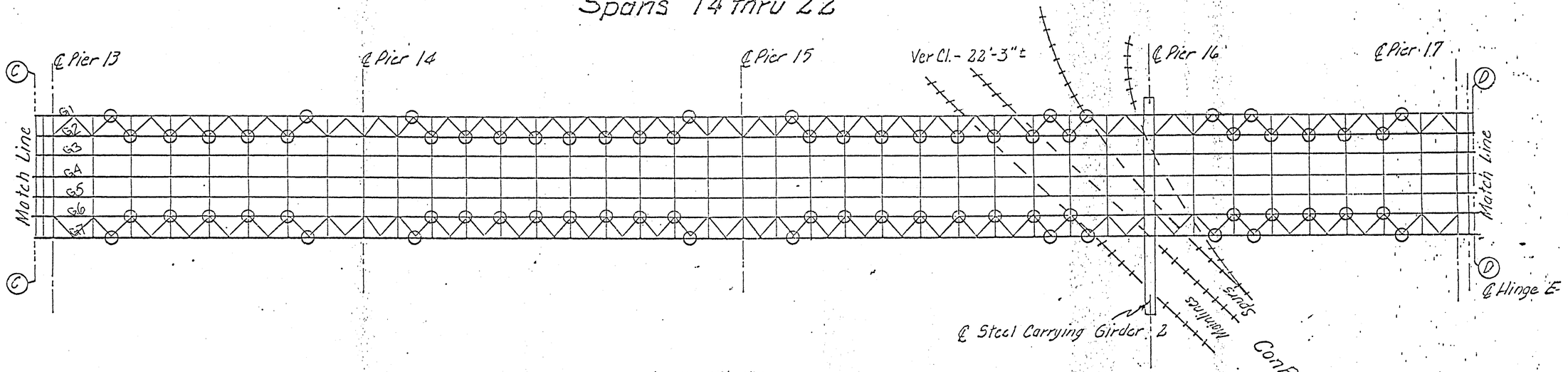

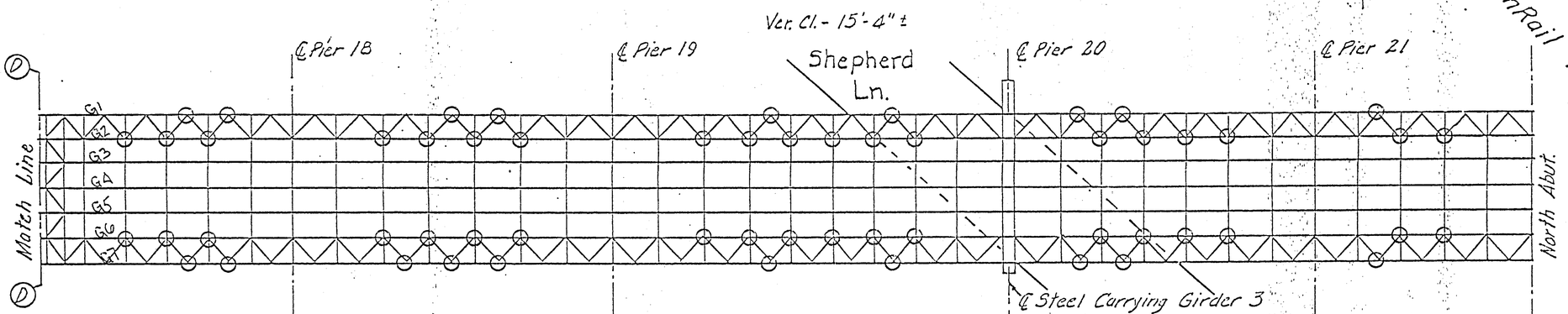

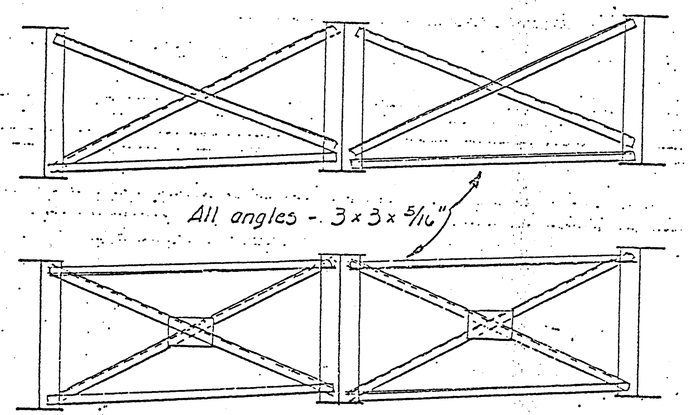

INTEMEDIATE CROSSFRAMES (Typ.)

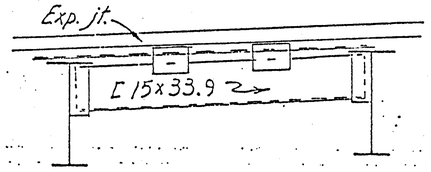

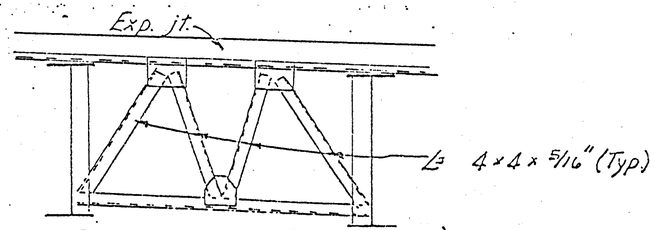

END CROSSFRAMES (Typ.)

LEGEND
○ Area of Lower Lateral Retrofit Locations

STATE OF OHIO
DEPARTMENT OF TRANSPORTATION
DISTRICT 8 BRIDGE DEPARTMENT

FRAMING PLAN 66D 105
BRIDGE NO. HAM-75-1192R
over Benson St., Mill Creek, and Shephard Ave.

DESIGNED	DRAWN	REVIEWED	CHECKED	DATE	REVISIONS
SDC	SDC	RLE	RLE		

F.H.W.A. REGION	STATE	PROJECT	
5	OHIO		

300
338

HAMILTON COUNTY
HAM-75-9.75

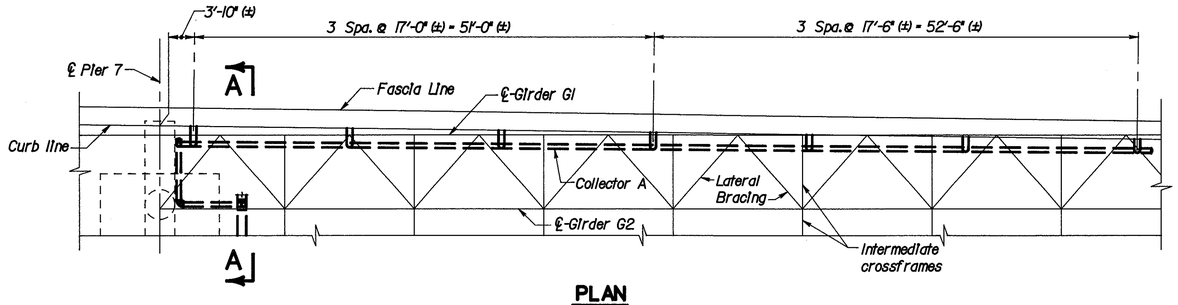

PLAN

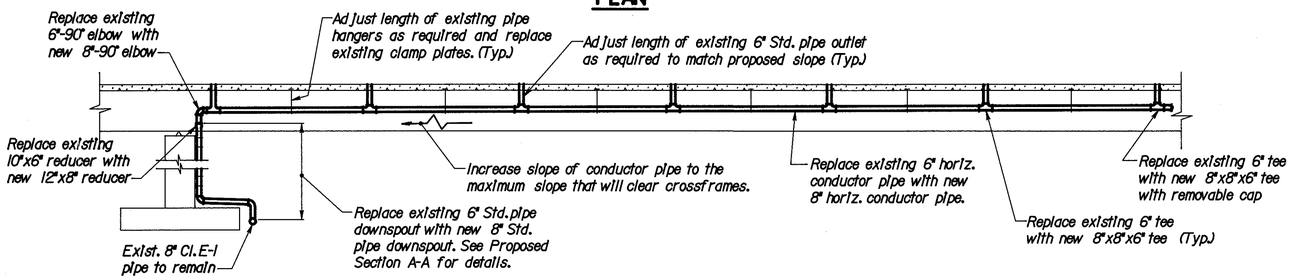

PROFILE

COLLECTOR A

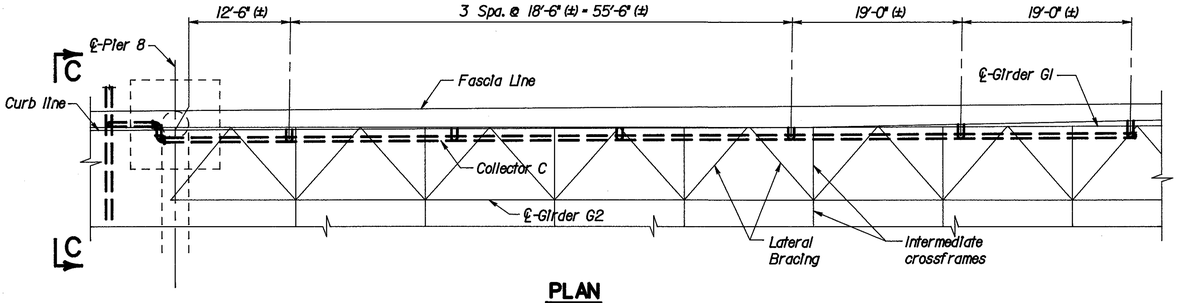

PLAN

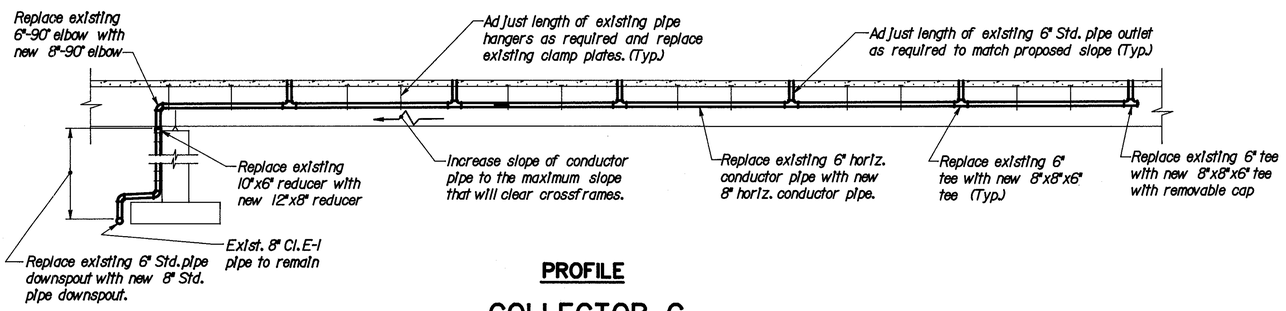

PROFILE

COLLECTOR C

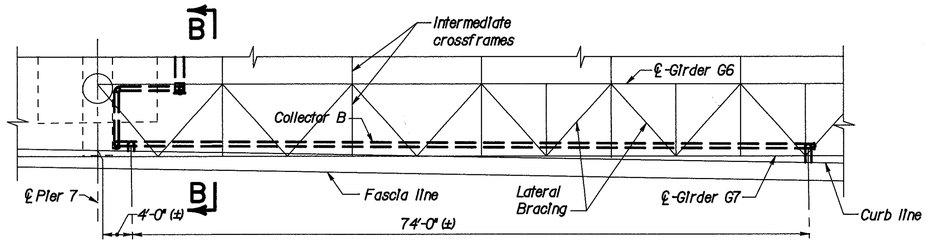

PLAN

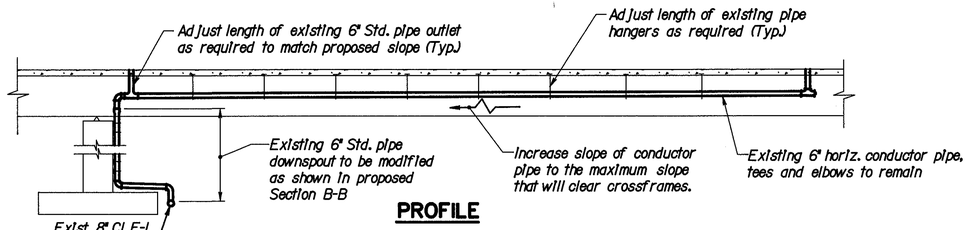

PROFILE

COLLECTOR B

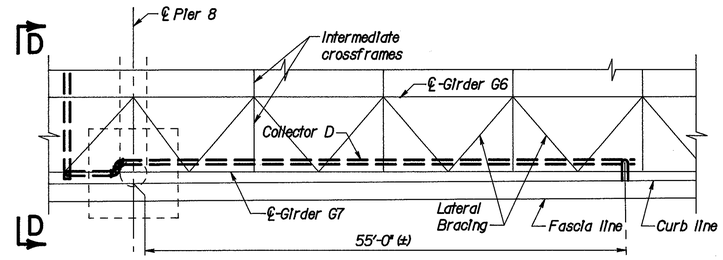

PLAN

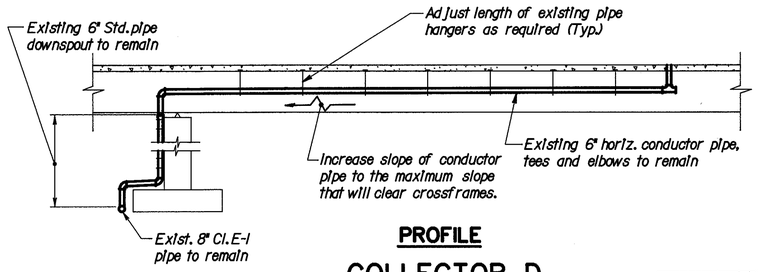

PROFILE

COLLECTOR D

NOTES

1. For Sections A-A, B-B, C-C and D-D, see Sheet 73 / 105
2. For General Notes, see Sheets 1 / 105, 2 / 105 & 3 / 105

LOCKWOOD, JONES & BEALS
CONSULTING ENGINEERS
DAYTON, OHIO

67 / 105

DRAINAGE DETAILS

BRIDGE NO. HAM-75-1192R
NORTHBOUND I-75 OVER MILL CREEK, BENSON ST., N.Y.C.R.R. & SHEPHERD AVE.

DESIGNED	CHECKED	DRAWN	CHECKED	REVIEWED DATE	REVISED
HDJ	MPH	CRB	MPH	HDJ 12/92	

f:\6272\1192c1.dgn Feb. 12, 1993 16:24:51

F.H.W.A. REGION	STATE	PROJECT	
5	OHIO		

301
338

HAMILTON COUNTY
HAM-75-9.75

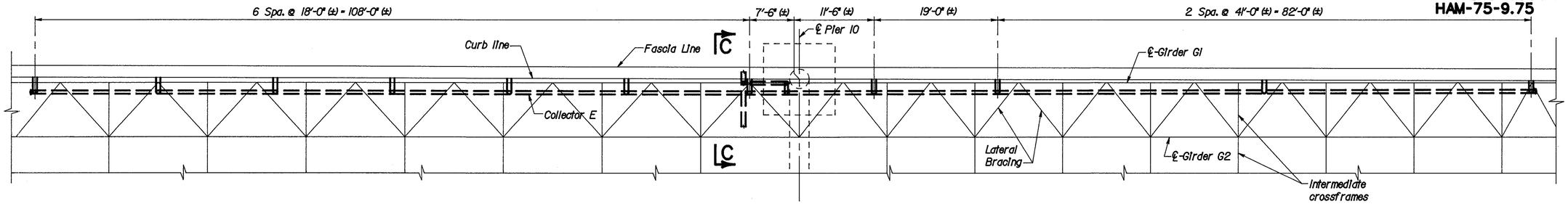

PLAN

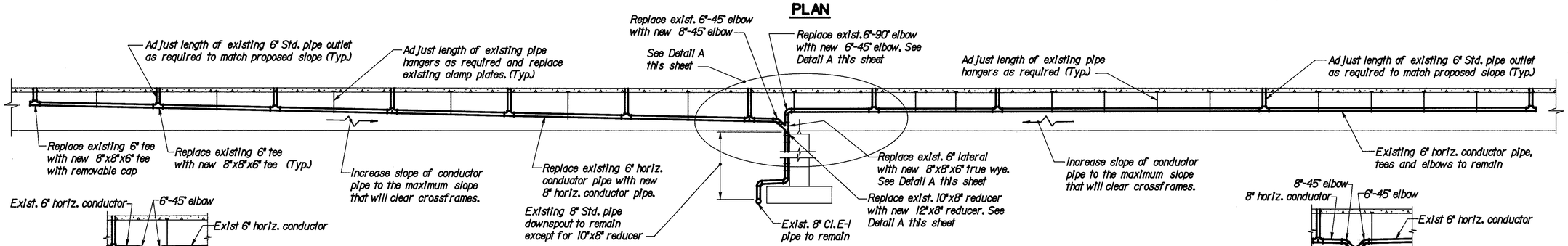

PROFILE
COLLECTOR E

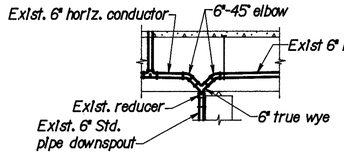

DETAIL B

DETAIL A

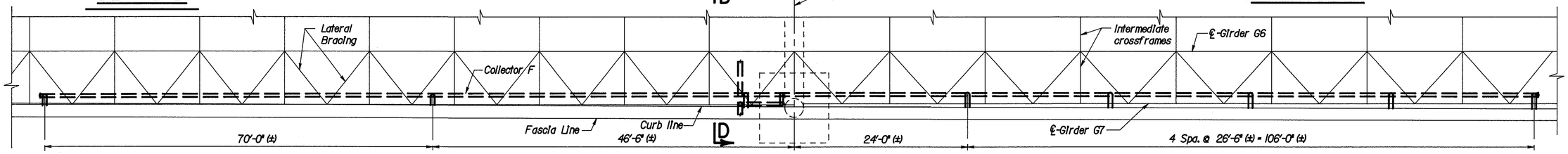

PLAN

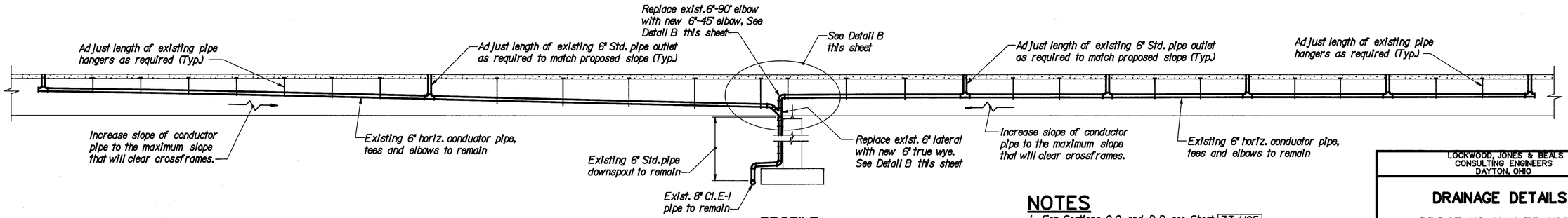

PROFILE
COLLECTOR F

NOTES

1. For Sections C-C and D-D, see Sheet 73 / 105

LOCKWOOD, JONES & BEALS
CONSULTING ENGINEERS
DAYTON, OHIO

68 / 105

DRAINAGE DETAILS

BRIDGE NO. HAM-75-1192R
NORTHBOUND I-75 OVER MILL CREEK, BENSON ST., N.Y.C.R.R. & SHEPHARD AVE.

DESIGNED	CHECKED	DRAWN	CHECKED	REVIEWED DATE	REVISED
HDJ	MPH	CRB	MPH	HDJ 12/92	

f:\6272\1192c2.dgn Feb. 12, 1993 16:27:44

F.H.W.A. REGION	STATE	PROJECT	
5	OHIO		

302
338

HAMILTON COUNTY
HAM-75-9.75

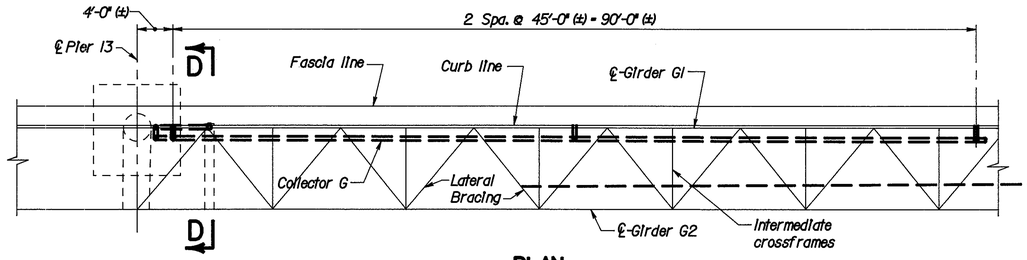

PLAN

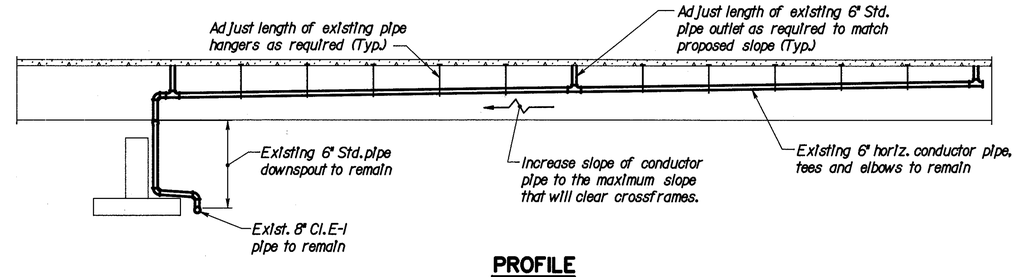

PROFILE

COLLECTOR G

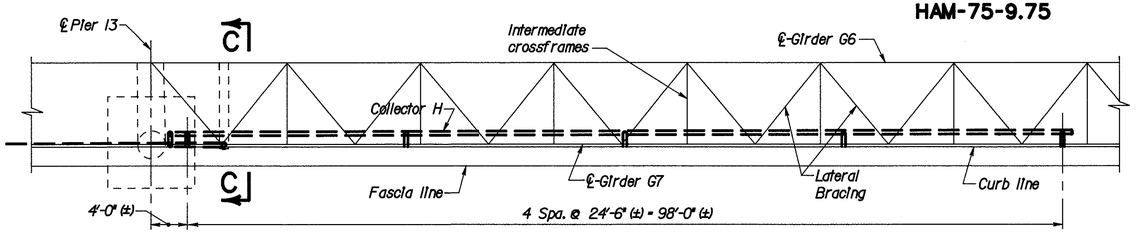

PLAN

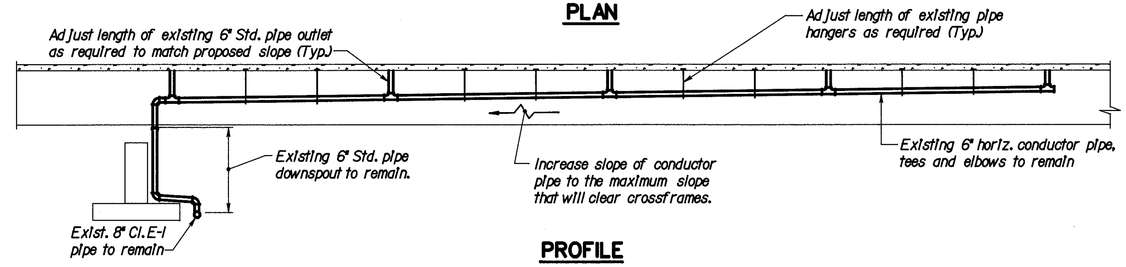

PROFILE

COLLECTOR H

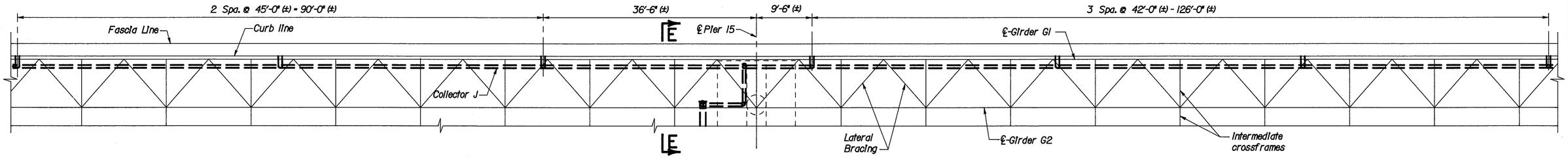

PLAN

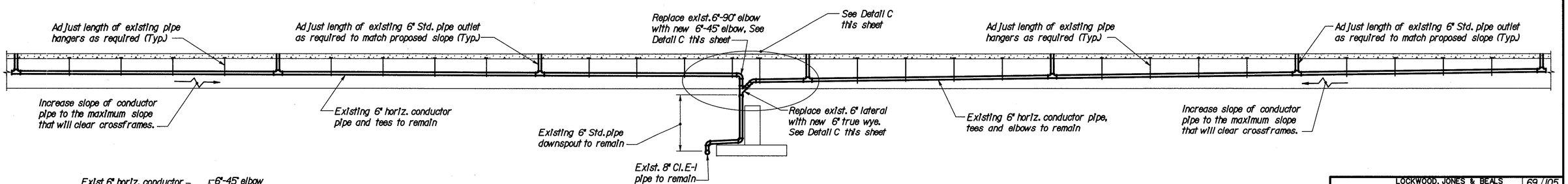

PROFILE

COLLECTOR J

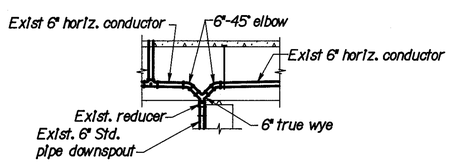

DETAIL C

NOTES

1. For Sections C-C, D-D and E-E, see Sheet 73/105

LOCKWOOD, JONES & BEALS
CONSULTING ENGINEERS
DAYTON, OHIO

69/105

DRAINAGE DETAILS

BRIDGE NO. HAM-75-1192R
NORTHBOUND I-75 OVER MILL CREEK, BENSON ST., N.Y.C.R.R. & SHEPHERD AVE.

DESIGNED	CHECKED	DRAWN	CHECKED	REVIEWED DATE	REVISED
HDJ	MPH	CRB	MPH	HDJ 12/92	

f:\6272\1192c3.dgn Feb. 12, 1993 10:30:15

F.H.W.A. REGION	STATE	PROJECT	
5	OHIO		

303
338

HAMILTON COUNTY
HAM-75-9.75

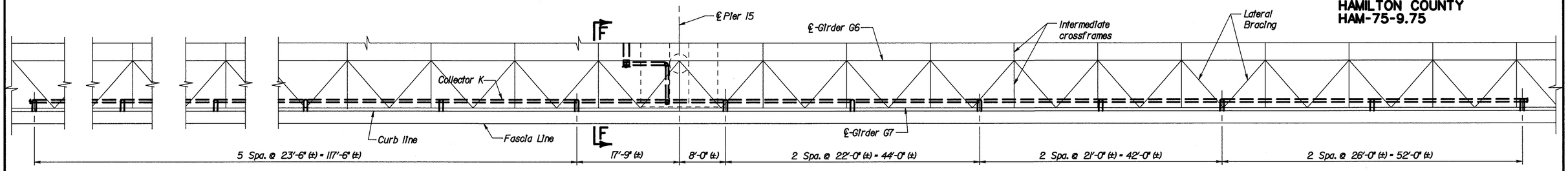

PLAN

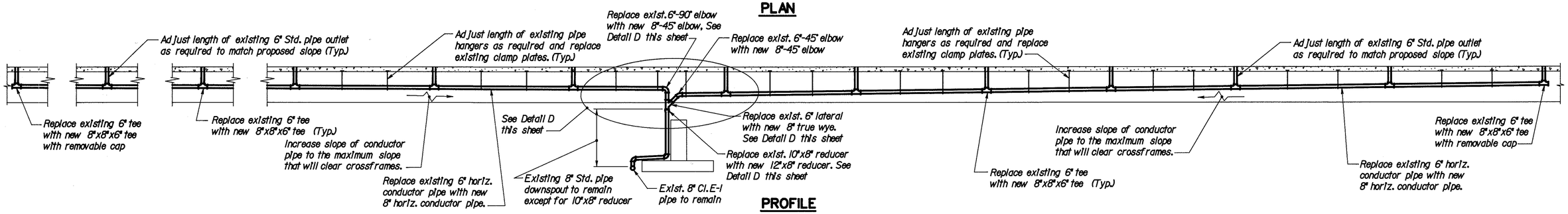

PROFILE
COLLECTOR K

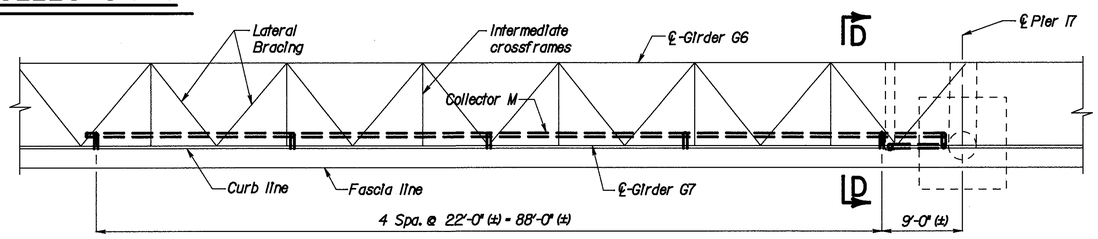

PLAN

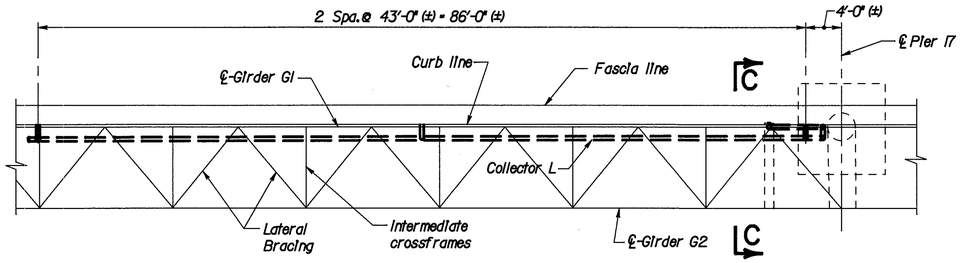

PLAN

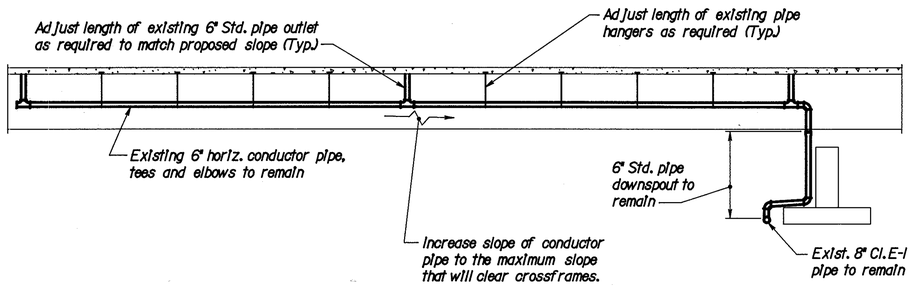

PROFILE
COLLECTOR L

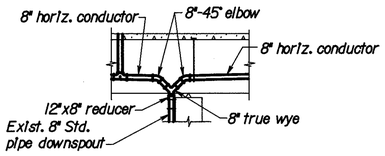

DETAIL D

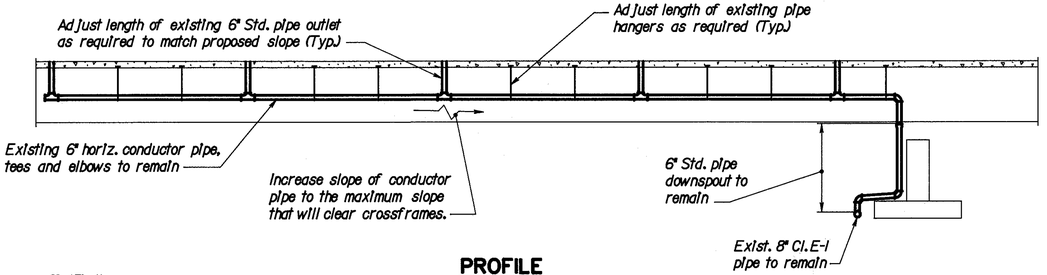

PROFILE
COLLECTOR M

NOTES

1. For Sections C-C, D-D and F-F, see Sheet 73/105

LOCKWOOD, JONES & BEALS
CONSULTING ENGINEERS
DAYTON, OHIO

70/105

DRAINAGE DETAILS

BRIDGE NO. HAM-75-1192R
NORTHBOUND I-75 OVER MILL CREEK, BENSON ST., N.Y.C.R.R. & SHEPHERD AVE.

DESIGNED	CHECKED	DRAWN	CHECKED	REVIEWED DATE	REVISED
HDJ	MPH	CRB	MPH	HDJ 12/92	

f:\6272\1192c4.dgn Feb. 12, 1993 16:32:40

F.H.W.A. REGION	STATE	PROJECT	
5	OHIO		

304
338

HAMILTON COUNTY
HAM-75-9.75

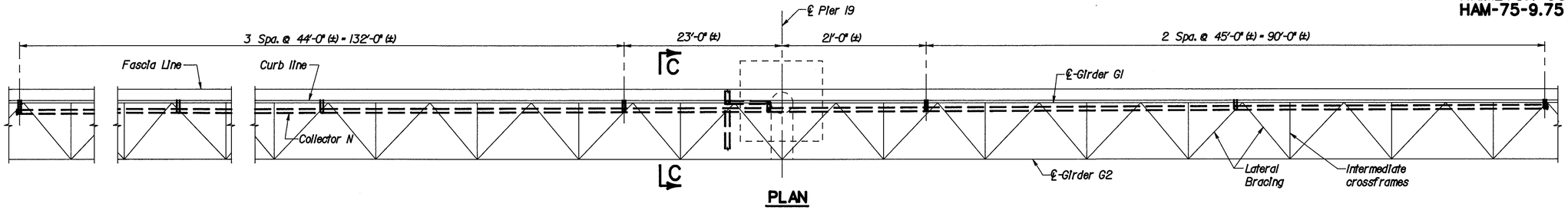

PLAN

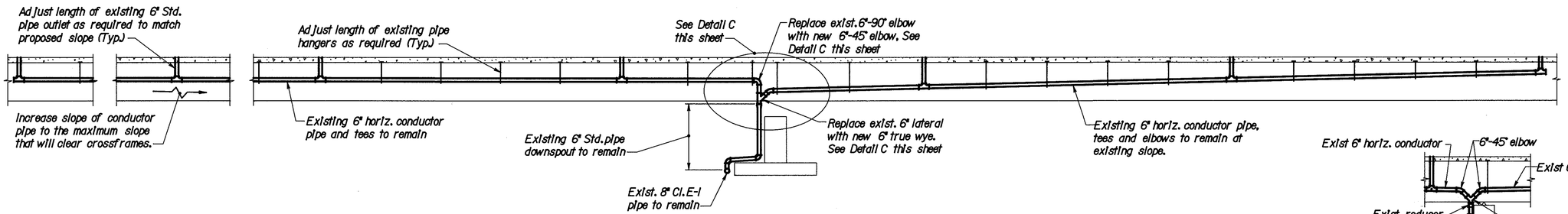

PROFILE
COLLECTOR N

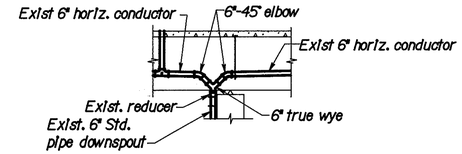

DETAIL C

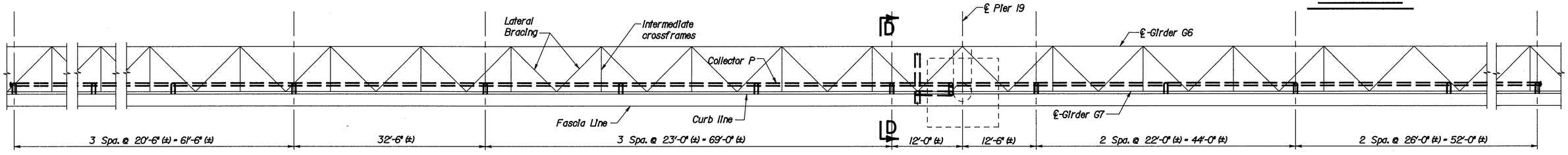

PLAN

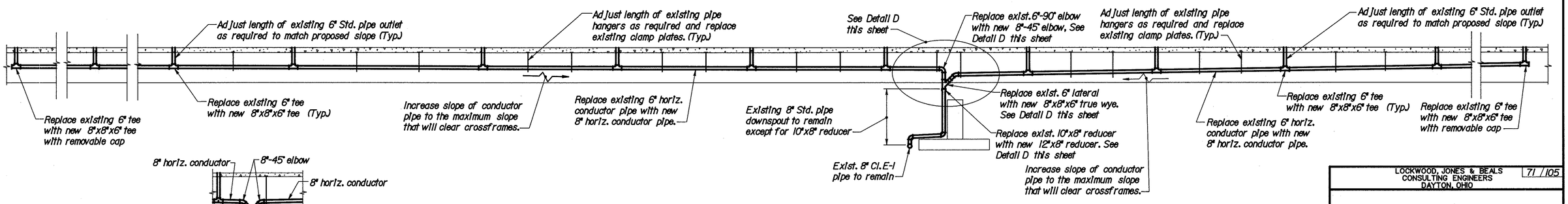

DETAIL D

PROFILE
COLLECTOR P

NOTES

1. For Sections C-C and D-D, see Sheet 73 / 105

LOCKWOOD, JONES & BEALS
CONSULTING ENGINEERS
DAYTON, OHIO

71 / 105

DRAINAGE DETAILS

BRIDGE NO. HAM-75-1192R
NORTHBOUND I-75 OVER MILL CREEK, BENSON ST., N.Y.C.R.R. & SHEPHERD AVE.

DESIGNED	CHECKED	DRAWN	CHECKED	REVIEWED DATE	REVISED
HDJ	MPH	CRB	MPH	HDJ 12/92	

f:\6272\t192c5.dgn Feb. 12, 1993 16:36:49

F.H.W.A. REGION	STATE	PROJECT	
5	OHIO		

HAMILTON COUNTY
HAM-75-9.75

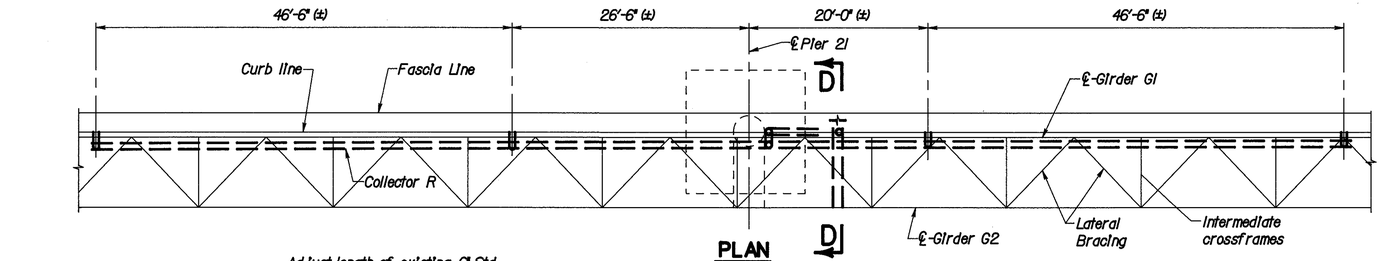

PLAN

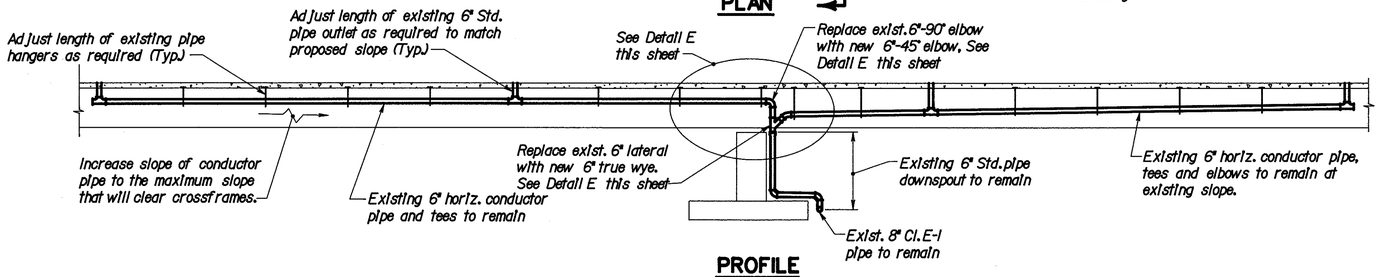

PROFILE

COLLECTOR R

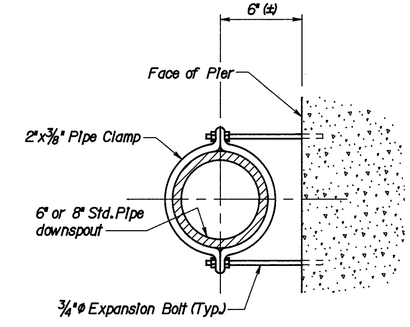

PLAN

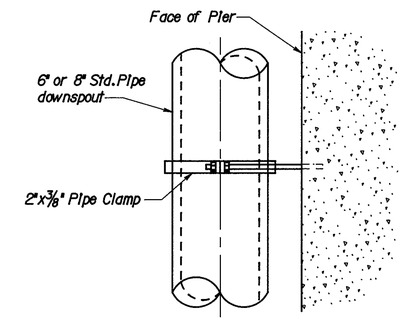

ELEVATION

TYPICAL PIPE SUPPORT

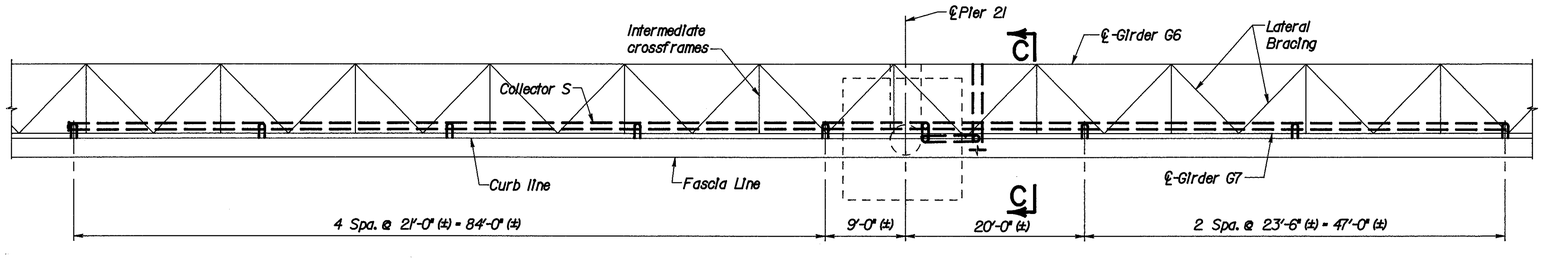

PLAN

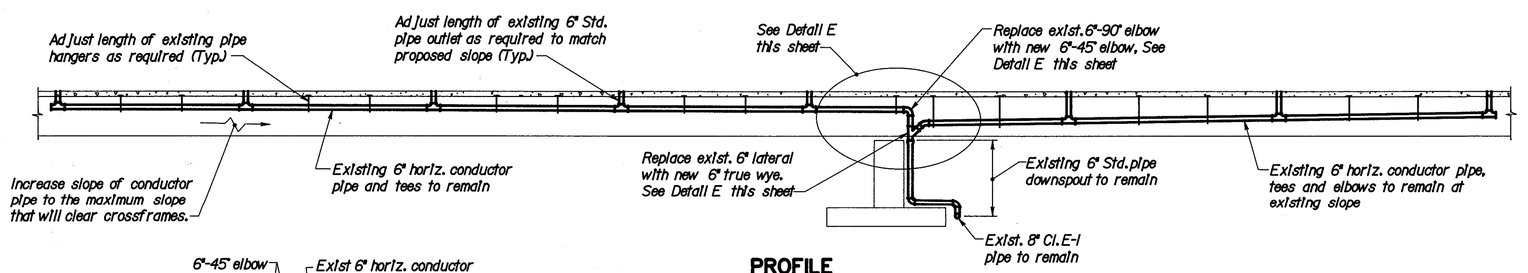

PROFILE

COLLECTOR S

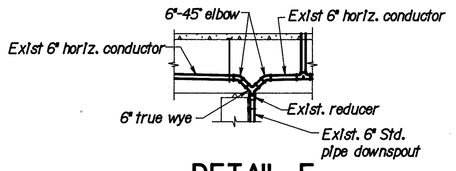

DETAIL E

NOTES

1. For Sections C-C and D-D, see Sheet 73/105

LOCKWOOD, JONES & BEALS
CONSULTING ENGINEERS
DAYTON, OHIO

72/105

DRAINAGE DETAILS

BRIDGE NO. HAM-75-1192R
NORTHBOUND I-75 OVER MILL CREEK, BENSON ST., N.Y.C.R.R. & SHEPHERD AVE.

DESIGNED	CHECKED	DRAWN	CHECKED	REVIEWED DATE	REVISED
HDJ	MPH	CRB	MPH	HDJ 12/92	

F.H.W.A. REGION	STATE	PROJECT	
5	OHIO		

306
338

HAMILTON COUNTY
HAM-75-9.75

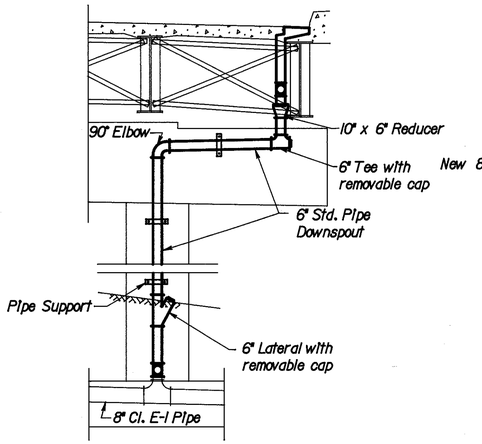

SECTION A-A
EXISTING

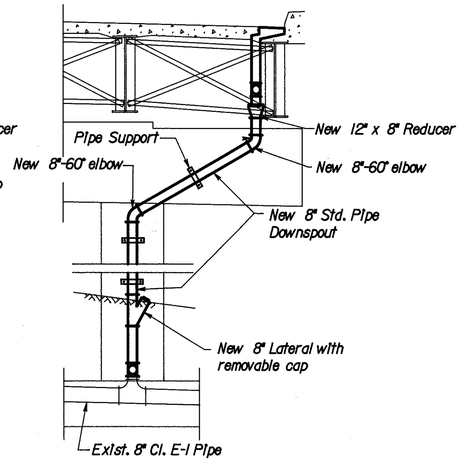

SECTION A-A
PROPOSED

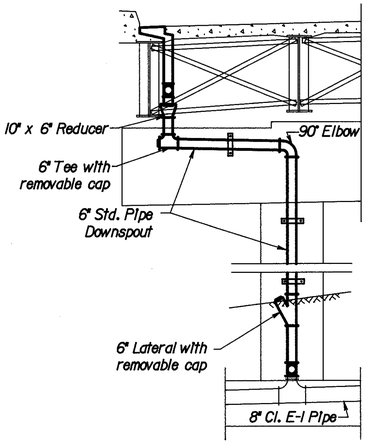

SECTION B-B
EXISTING

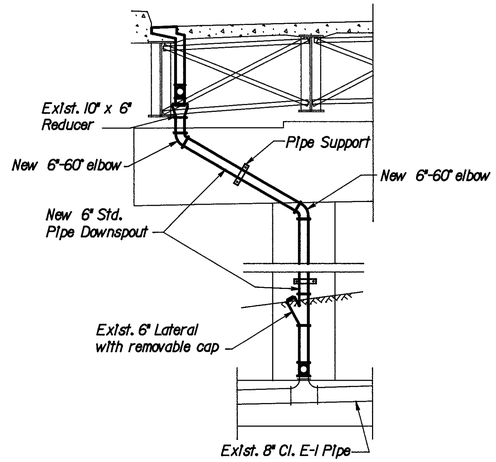

SECTION B-B
PROPOSED

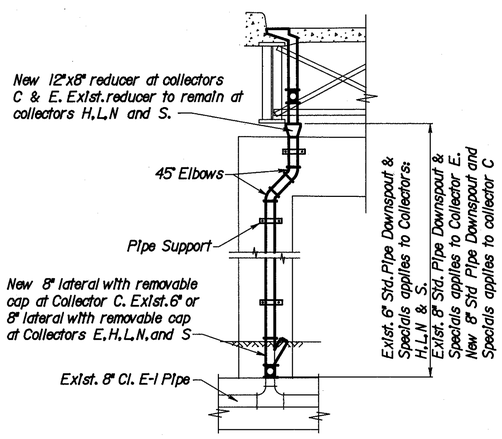

SECTION C-C

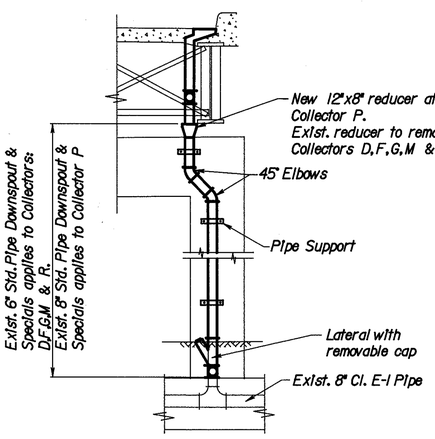

SECTION D-D

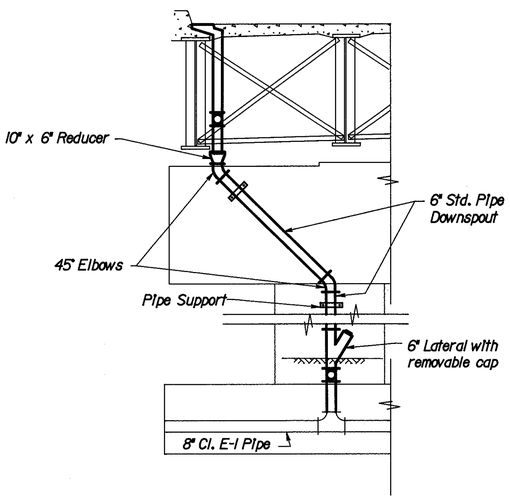

SECTION E-E

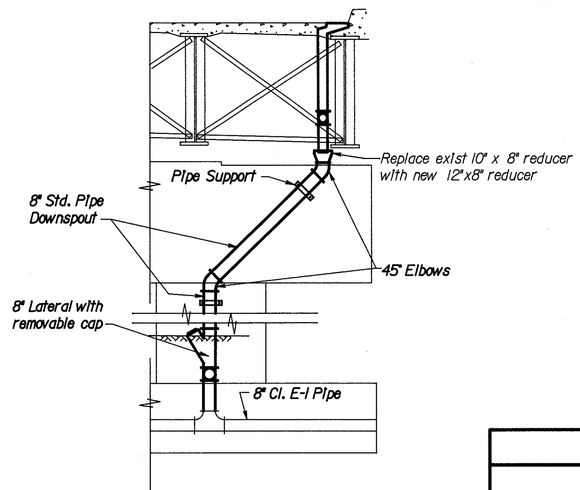

SECTION F-F

LOCKWOOD, JONES & BEALS
CONSULTING ENGINEERS
DAYTON, OHIO

73/105

DRAINAGE DETAILS

BRIDGE NO. HAM-75-1192R
NORTHBOUND I-75 OVER MILL CREEK, BENSON ST., N.Y.C.R.R. & SHEPHERD AVE.

DESIGNED	CHECKED	DRAWN	CHECKED	REVIEWED DATE	REVISED
HDJ	MPH	CRB	MPH	HDJ 12/92	

f:\6272\1192e7.dgn Feb. 15, 1993 12:16:23

F.H.W.A. REGION	STATE	PROJECT	
5	OHIO		

307
338

HAMILTON COUNTY
HAM-75-9.75

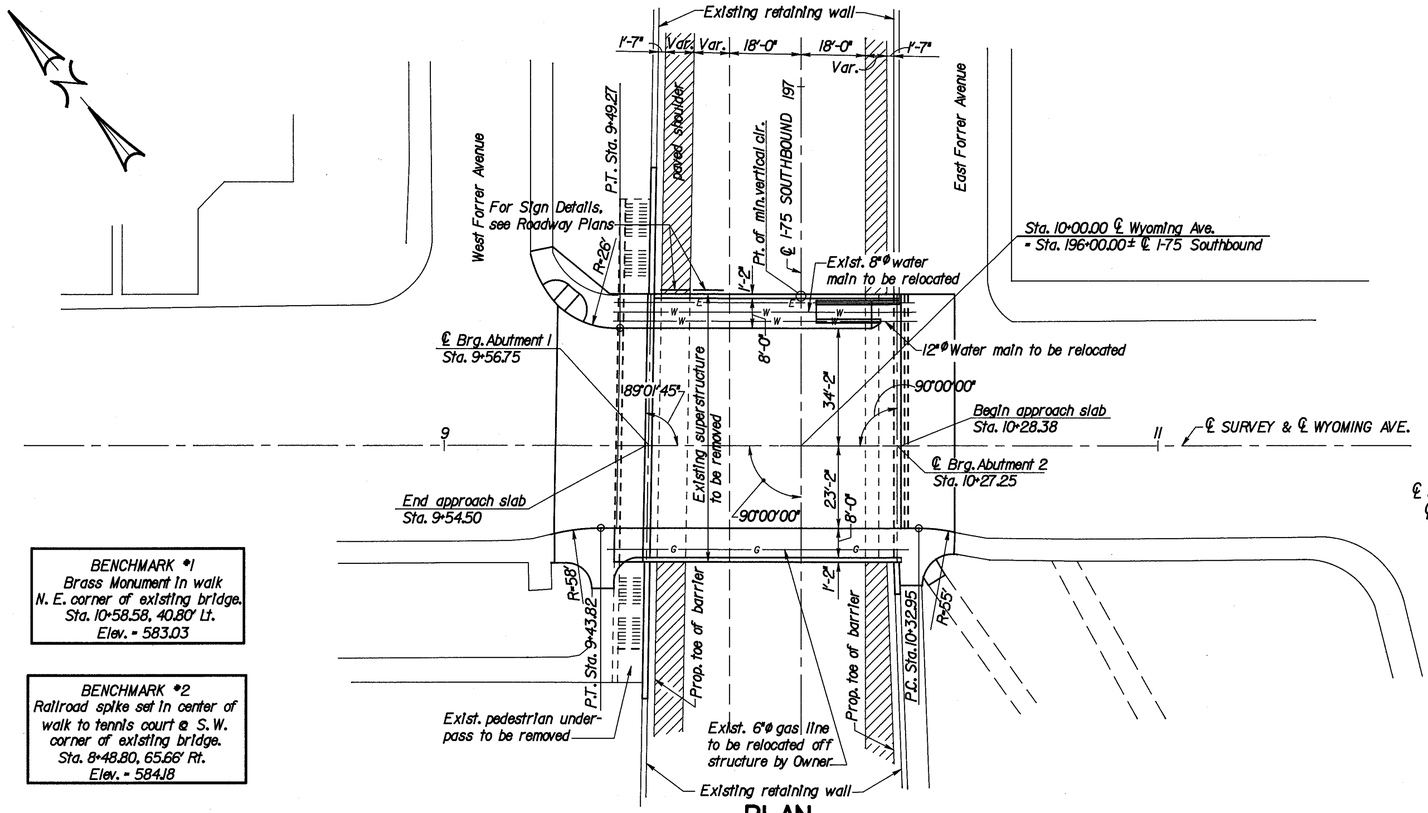

PLAN

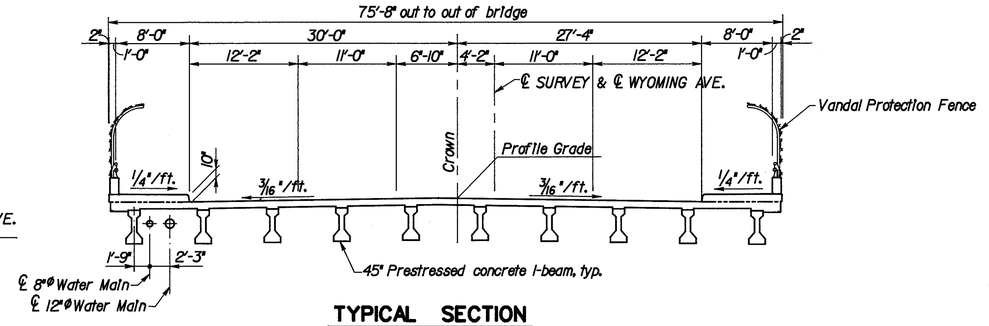

TYPICAL SECTION

BENCHMARK #1
Brass Monument in walk
N. E. corner of existing bridge.
Sta. 10+58.58, 40.80' Lt.
Elev. = 583.03

BENCHMARK #2
Railroad spike set in center of walk to tennis court @ S.W. corner of existing bridge.
Sta. 8+48.80, 65.66' Rt.
Elev. = 584.18

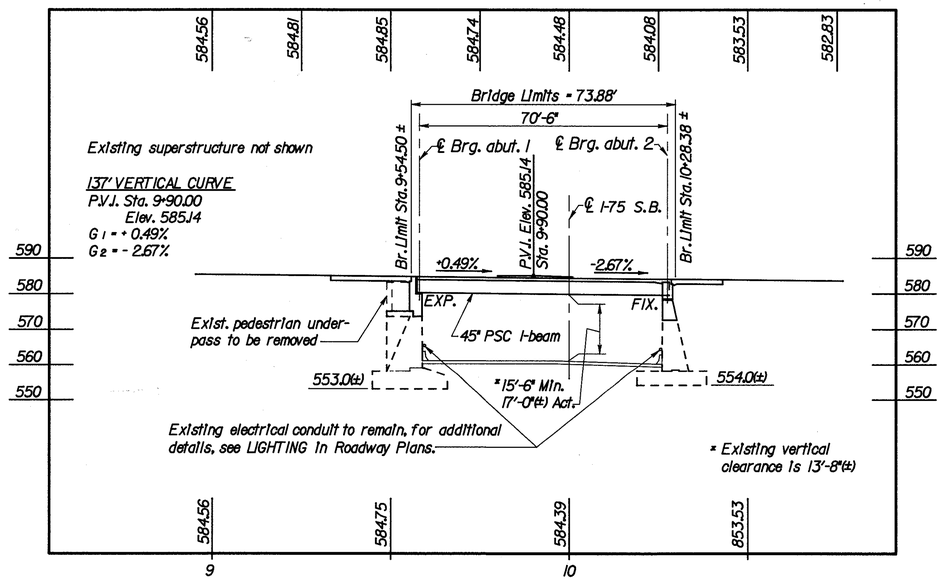

PROFILE

EXISTING STRUCTURE

TYPE: Simple span reinforced concrete beam superstructure with reinforced concrete abutments.
SPAN: 69'-0" ±
ROADWAY: 56' plus two 8'-0" sidewalks
LOADING: S-20-40 & Street railway
ALIGNMENT: Tangent
SKEW: None, (0°58'15" skew at abutment 1 only)
WEARING SURFACE: Monolithic concrete
APPROACH SLABS: 15' long
DATE BUILT: 1943 (±)
CONDITION: Poor, superstructure to be replaced
STRUCTURE FILE NO. 3110680

PROPOSED STRUCTURE

TYPE: Simple span composite prestressed concrete I-beam superstructure on modified existing reinforced concrete abutments.
SPAN: 70'-6"
ROADWAY: 57'-4" face to face of curbs with 8'-0" sidewalks each side.
LOADING: HS20-44 and the alternate military loading.
ALIGNMENT: Tangent
SKEW: None, (0°58'15" skew at abutment 1 only)
WEARING SURFACE: Monolithic concrete
APPROACH SLABS: AS-1-81 (25' long at abutment 1, 15' at abutment 2) modified.

LOCKWOOD, JONES & BEALS
CONSULTING ENGINEERS
DAYTON, OHIO

74/105

SITE PLAN
BRIDGE NO. HAM-75-1198L
I-75 SOUTHBOUND
UNDER WYOMING AVENUE
HAMILTON COUNTY STA. 9+54.50 TO STA. 10+28.38

PRESENT TOPOGRAPHY		PROPOSED WORK			
SURVEYED	DRAWN	DESIGNED	DRAWN	CHECKED	REVIEWED DATE
LJB	DYA	EPA	DYA	DFS	HDJ 12/92

f:\6272\1198s1.dgn Feb. 15, 1993 16:01:54

F.H.W.A. REGION	STATE	PROJECT		308
5	OHIO			338

HAMILTON COUNTY
HAM-75-9.75

GENERAL NOTES

REFERENCE shall be made to the following:
Standard Drawings: AS-1-81, dated 11-27-81 VPF-1-90, revised 2-1-92
BR-2-82, dated 11-1-82
EXJ-3-82, revised 8-1-84

and to Supplemental Specifications: 836, dated 11-12-85 849, dated 12-24-85
852, dated 6-10-87 949, dated 9-26-86

DESIGN SPECIFICATIONS: This structure conforms to "Standard Specifications for Highway Bridges" adopted by the American Association of State Highway and Transportation Officials, 1989, the 1990 and 1991 Interim Specifications and the Ohio "Supplement" to these specifications.

DESIGN DATA: Design loading HS20-44 and the Alternate Military Loading
Concrete Class S - Compressive strength 4500 psi (Superstructure)
Concrete Class C - Compressive strength 4000 psi (Substructure).
Reinforcing Steel - ASTM A615, A616 or A617 - Grade 60
Minimum yield strength 60000 psi
Concrete for Prestressed Beams - Unit stress 2200 psi compression, 444 psi tension
Reinforcing Steel for prestressed beams - ASTM A615, A616 or A617, Grade 60
Prestressing Strand - ASTM A416 1/2"Ø seven wire, uncoated, low relaxation strand.
f's = 270000 psi
Initial Stress = 0.75 f's
Deck Protection Method: Epoxy coated reinforcing steel and sealing of concrete surfaces.

MONOLITHIC WEARING SURFACE is assumed, for design purposes, to be 1".

LAMINATED ELASTOMERIC BEARINGS shall be durometer hardness grade 50 and shall conform to 711.23 of the "Construction and Material Specifications".

ITEM SPECIAL, SEALING OF CONCRETE SURFACES: A concrete sealer shall be applied to the substructure as shown on sheet 82/105, to the end diaphragm as shown on sheet 86/105 and to the concrete deck fascia, parapet and sidewalk as shown on sheet 87/105. See Proposal Note for surface preparation requirements, application rates, material requirements and application procedures.

UTILITY LINES: All expense involved in relocating the affected utility lines shall be borne by the Owners. The Contractor and Owners are requested to cooperate by arranging their work in such a manner that inconvenience to either will be held to a minimum.

REMOVAL OF EXISTING STRUCTURE: When no longer needed to maintain traffic and support utilities the existing structure shall be removed as limited by ITEM 202 description below.

ITEM 202, PORTIONS OF STRUCTURE REMOVED, AS PER PLAN, shall include the superstructure, both approach slabs, portions of existing pedestrian underpass, retaining walls and abutments as defined on sheets 77/105 and 78/105. Removal of backfill material required for the removal of existing abutment backwalls and retaining walls and the subsequent placement and compaction of granular backfill material, to the level of the subgrade, shall be in accordance with 503 of the CMS, and shall be included for payment in the lump sum bid for item 202.

ITEM 511, CLASS S CONCRETE, SUPERSTRUCTURE, AS PER PLAN: Membrane curing per Supplemental Specification 836 will not be permitted. Concrete shall be cured by Method (a), Water Curing.

ITEM 517, RAILING (CONCRETE PARAPET WITH DOUBLE PIPE RAIL), AS PER PLAN: Membrane curing per Supplemental Specification 836 will not be permitted. Concrete shall be cured by Method (a), Water Curing.

ITEM 517, RAILING (CONCRETE PARAPET WITH DOUBLE PIPE RAIL, USING SHRINKAGE COMPENSATING CEMENT) shall conform to the pertinent sections of the Proposal Note for shrinkage compensating cement and to 517 of the CMS. Payment for railing shall conform with 517.07 of the CMS.

EXISTING STRUCTURE VERIFICATION: Details and dimensions shown on these plans pertaining to the existing structure have been obtained from plans of the existing structure and/or from field observations and measurements. Consequently they are indicative of the existing structure and the proposed work but they shall be considered tentative and approximate. The Contractor is referred to Sections 102.05 and 105.02 of the CMS. Contract bid prices shall be based upon a recognition of the uncertainties described above and upon a prebid inspection of the existing structure by the Contractor. However all project work shall be based upon actual details and dimensions which have been verified by the Contractor in the field. Some reinforcing bars, as detailed, may require field cutting to maintain proper clearance and/or fit.

COMPRESSION SEAL for the roadway portion of expansion joint shall be furnished and installed in one continuous piece.

EXISTING REINFORCING STEEL: Where concrete is being removed and replaced, the existing reinforcing steel which is to remain shall be trimmed to provide the required clearance. Any existing reinforcing bars which are to be incorporated into the new work and which are made unusable by the Contractor's concrete removal operations shall be replaced with new steel at the Contractor's cost. Any existing reinforcing bars deemed by the Engineer to be unusable because of corrosion shall be replaced with new epoxy coated steel and shall be paid for at the unit price bid for Item 509 - Epoxy Coated Reinforcing Steel, Grade 60. 200 pounds of reinforcing steel have been provided for this purpose.

PROPOSED WORK: The major portions of this work include:
1. Removal of existing superstructure and approach slabs.
2. Removal of portions of existing substructure, metal railing and wingwalls as defined under Item 202.
3. Construction of wingwalls and abutments up to the beam seat level.
4. Erection of prestressed concrete I-beams.
5. Construction of composite deck slab.
6. Construction of abutment backwalls, sidewalks, fencing and railing on superstructure.
7. Installation of railing on wingwalls.

CONSTRUCTION JOINT PREPARATION: Saw cut the boundaries of proposed concrete removals 1 inch deep. Remove concrete to a rough surface. Where practicable, at least a 1'-0" length of protruding reinforcing steel shall be left in place. Install dowel bars as specified. Prior to concrete placement, abrasively clean joint surface and exposed reinforcement to remove loose and disintegrated concrete and loose rust. Then, the joint surface and exposed reinforcement shall be thoroughly cleaned of all dirt, dust, or other foreign materials by the use of water, air under pressure, or other method that produces results satisfactory to the Engineer. The concrete bonding surface shall be wet without free water as concrete is placed.

CONCRETE REMOVAL shall be by means of approved pneumatic hammers employing pointed and blunt chisel tools. Hydraulic hoe-ram type hammers will not be permitted. The weight of the hammer shall not be more than 35 pounds for removal within 18-inches of portions to be preserved. Outside the 18-inch limit, a hammer heavier than 35 pounds, but not to exceed 85 pounds, may be used at the approval of the Engineer. Pneumatic hammers shall not be placed in direct contact with reinforcing steel that is to be retained in the rebuilt structure.

FOUNDATION BEARING PRESSURE: The maximum bearing pressure, for both the existing and proposed structure dead plus live load, is approximately 2.6 tons /ft.^{2}.

ITEM 517-RAILING REBUILT, AS PER PLAN: The Contractor shall exercise care in removal of existing metal railing within the limits defined on Sheets 77/105 and 78/105. Adequate length of this existing metal railing shall be modified to conform to the profile of the reconstructed abutment - wingwalls, and shall be reinstalled on same as detailed on Sheets 79/105 thru 82/105. All posts and pickets shall be truly vertical. Painting shall be System OZEU, closely matching the existing paint color. Payment shall be at the contract price bid for Item 517-Railing rebuilt, as per plan - which shall include all materials, labor and incidentals necessary for installation.

NEOPRENE SHEETING: This item shall consist of furnishing and installing elasromeric sheeting behind the abutment for the purpose of drainage protection.

Sheeting shall be 3/32 inch thick general purpose, heavy duty neoprene sheet with nylon fabric reinforcement. The nylon reinforced Neoprene sheeting (NRNS) shall be "Fairprene number NN-0003" as manufactured by E.I. Dupont De Nemours and Company, Inc., "Wingprene" as manufactured by Goodyear Tire and Rubber Company, or an approved equal. The sheet shall conform to the following:

Description of Test	ASTM Method	Requirement
Thickness, Inches	D 751	.094+/-.010"
Breaking Strength, grab WXF, lbs. min.	D 751	700 x 700
Heat Aging 70 hours T 212 F., 180 bend without cracking	D 2136	No cracking of coating
Low temperature brittleness 1 hour at -40 F., bend around 1/4" mandrel	D 2136	No cracking of coating

Sheets shall be furnished in one continuous piece unless a shop fabricated splice, vulcanized (with heat and pressure) is approved by the Engineer.

Each lot of NRNS sheeting shall be tested by an independent laboratory to ensure compliance with these provisions. Two certified copies of the qualifications data indicating that the tested materials comply with these provisions shall be submitted to the testing laboratory. Sampling, if requested, shall be in accordance with CMS 106.03. The sample from each lot shall be in one piece, three feet long. Material acceptance will be based on ODOT Testing Laboratory evaluation of certified test data, Laboratory test of sampled material, or the evaluation of both certified test data and tested samples.

LOCKWOOD, JONES & BEALS
CONSULTING ENGINEERS
DAYTON, OHIO

75/105

GENERAL NOTES

BRIDGE NO. HAM-75-1198L
I-75 SOUTHBOUND
UNDER WYOMING AVENUE

DESIGNED	CHECKED	DRAWN	CHECKED	REVIEWED DATE	REVISED
EPA		DYA	DFS	HDJ 12/92	

f:\6272\1198gn.dgn Feb. 22, 1993 14:56:10

F.H.W.A. REGION	STATE	PROJECT	
5	OHIO		

307
338

HAMILTON COUNTY
HAM-75-9.75

ESTIMATED QUANTITIES

ITEM	ITEM EXTENSION	TOTAL	UNIT	DESCRIPTION	ABUTMENTS	SUPER-STRUCTURE	GENERAL	AS BUILT	
202	11201	Lump	Lump	Portions of structure removed, as per plan Sheet 75 / 105			Lump		
503	11100	Lump	Lump	Cofferdams, cribs and sheeting			Lump		
509	15800	62673	Lb.	Epoxy coated reinforcing steel, grade 60	16958	45515	200		
511	31501	201	Cu.Yd.	Class S concrete, superstructure, as per plan Sheet 75 / 105		201			
511	33402	45	Cu.Yd.	Class S concrete, superstructure (diaphragms for concrete I-beams)		45			
511 (Note 1)	33404	201	Cu.Yd.	*Class S concrete, superstructure (using shrinkage compensating cement)		201			
511 (Note 1)	33410	Lump	Lump	*Class S concrete, (using shrinkage compensating cement) for pre-placement testing		Lump			
511	45700	235	Cu.Yd.	Class C concrete, abutment	235				
512	44400	20	Sq.Yd.	Type B waterproofing	20				
Special	51267500	283	Sq.Yd.	*Sealing of concrete surfaces.		283			
Special	51267502	311	Sq.Yd.	*Sealing of concrete surfaces (epoxy).	308	3			
515	50000	10	Each	*45" Prestressed concrete I-beam (71' to 73' long)		10			
516	10500	75	Lin. Ft.	Structural Exp. Joint Incl. elastomeric compression seal			75		
516	13600	202	Sq.Ft.	1" Preformed expansion joint filler	202				
516	30500	35	Lin. Ft.	6" PVC Waterstop	35				
516	43100	10	Each	Elastomeric bearing with internal laminates only (neoprene) 1½"x9"x20"		10			
516	44000	10	Each	Elastomeric bearing with internal laminates and load plate (neoprene) 1½"x9"x20" with 10"x23" load plate		10			
517	71501	144	Lin. Ft.	Railing (concrete parapet with double pipe rail), as per plan Sheet 75 / 105		144			
517 (Note 2)	71510	144	Lin. Ft.	*Railing (concrete parapet with double pipe rail using shrinkage compensating cement).		144			
517	75501	104	Lin. Ft.	Railing rebuilt, as per plan Sheet 75 / 105	104				
518	21200	199	Cu.Yd.	Porous backfill with filter fabric	199				
Special	60739930	137	Lin. Ft.	Vandal protection fence, 12' curved, coated fabric		137			
852	00100	468	Each	Polyester/vinlyester resin bonded anchors	468				

Note 1: Alternate bid items:
These two items constitute one alternate bid item to Class S concrete, superstructure, as per plan.

Note 2: Alternate bid item.

* See proposal note.

Quantities computed by: DFS 6-92
Quantities checked by: AvdB 8-92

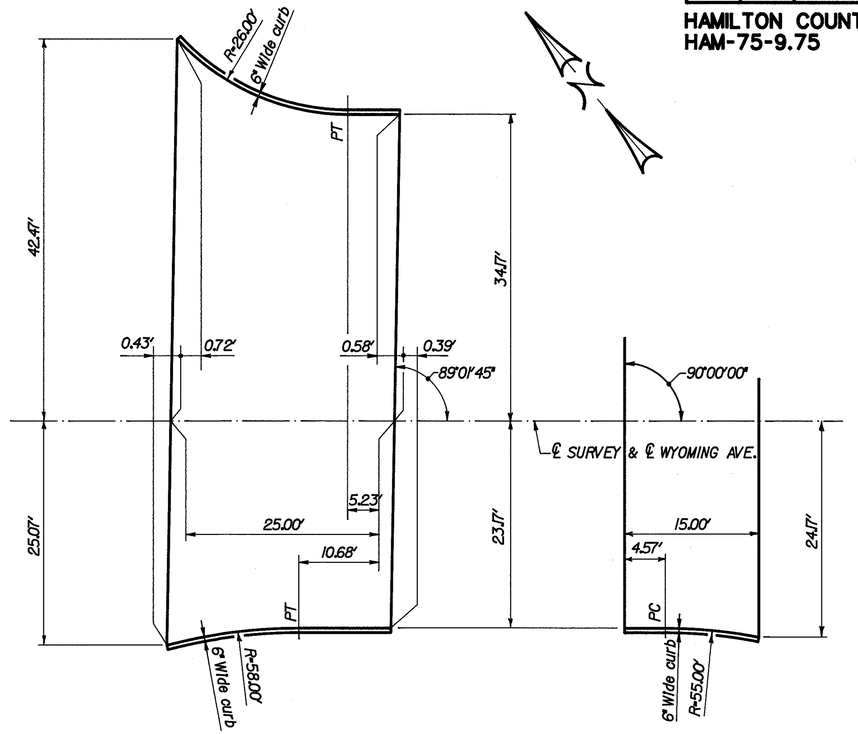

AT ABUTMENT 1 AT ABUTMENT 2

APPROACH SLAB DIMENSIONS

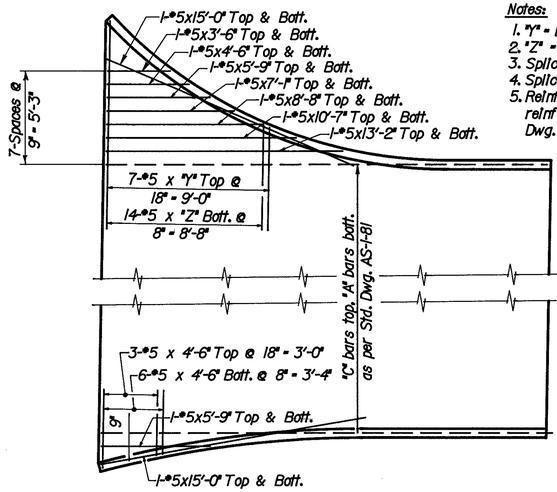

Notes:
1. "Y" = Bar lengths vary 4'-6" to 10'-9", Incr. = 12½"
2. "Z" = Bar lengths vary 4'-9½" to 10'-9", Incr. = 5½"
3. Splice top reinforcement with top "B" bars of AS-1-81.
4. Splice bottom reinforcement with bottom "B" bars of AS-1-81.
5. Reinforcement shown is in addition to typical approach slab reinforcement. For typical approach slab details, see Std. Dwg. AS-1-81.

PART PLAN-ADDITIONAL REINFORCEMENT FOR APPROACH SLAB AT ABUTMENT 1

LOCKWOOD, JONES & BEALS
CONSULTING ENGINEERS
DAYTON, OHIO

76 / 105

ESTIMATED QUANTITIES

BRIDGE NO. HAM-75-1198L
I-75 SOUTHBOUND
UNDER WYOMING AVENUE

DESIGNED	CHECKED	DRAWN	CHECKED	REVIEWED DATE	REVISED
EPA		DYA	DFS	HDJ 12/92	

f:\6272\1198q.dgn Feb. 23, 1993 11:58:35

F.H.W.A. REGION	STATE	PROJECT	
5	OHIO		

310
338

HAMILTON COUNTY
HAM-75-9.75

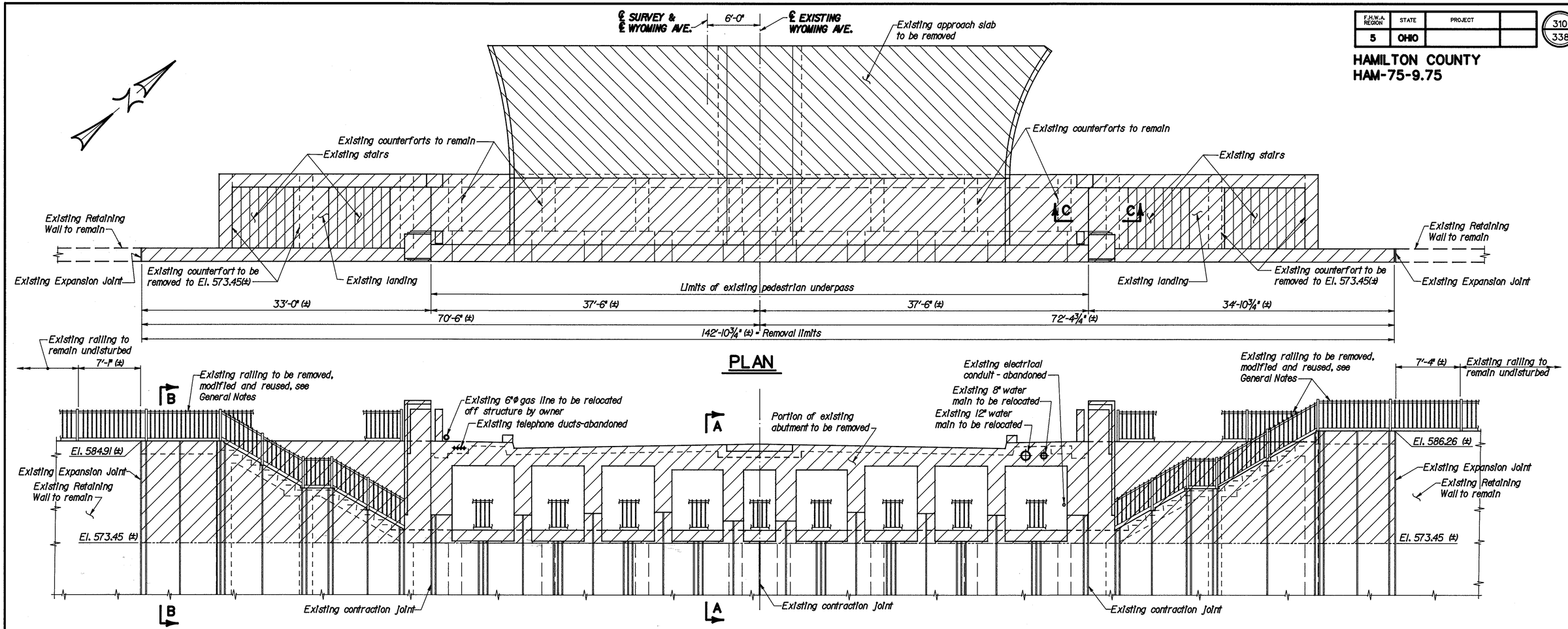

PLAN

ELEVATION

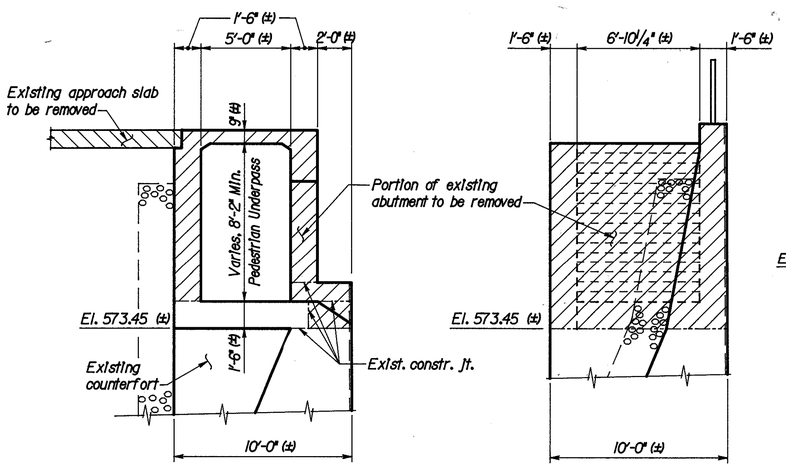

SECTION A-A

SECTION B-B

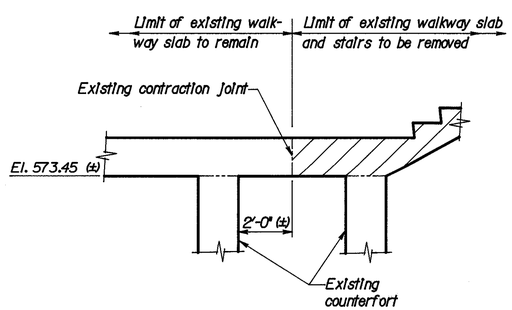

SECTION C-C

NOTES

1. For modifications at Abutment I see sheets 79 / 105 & 80 / 105
2. For General Notes see sheet 75 / 105

LOCKWOOD, JONES & BEALS
CONSULTING ENGINEERS
DAYTON, OHIO
77 / 105

REMOVAL LIMITS AT EXISTING ABUTMENT 1
BRIDGE NO. HAM-75-1198L
I-75 SOUTHBOUND
UNDER WYOMING AVENUE

DESIGNED	CHECKED	DRAWN	CHECKED	REVIEWED DATE	REVISED
		GJW	DFS	HDJ 12/92	

f:\6272\1198ecal.dgn Feb. 17, 1993 10:57:48

F.H.W.A. REGION	STATE	PROJECT	
5	OHIO		

311
338

HAMILTON COUNTY
HAM-75-9.75

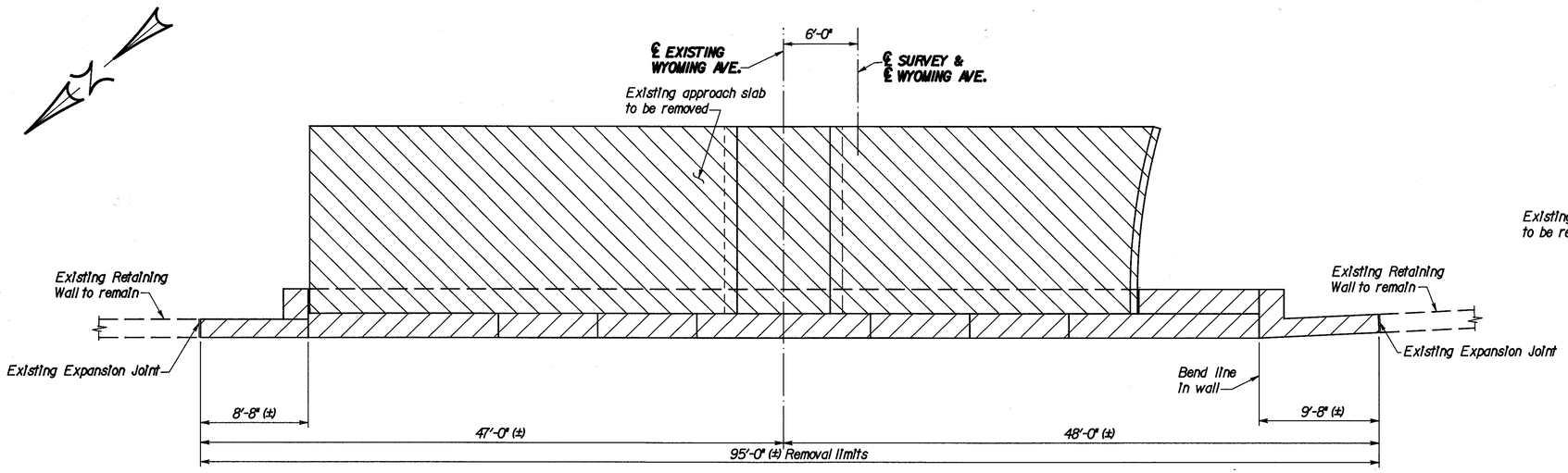

PLAN

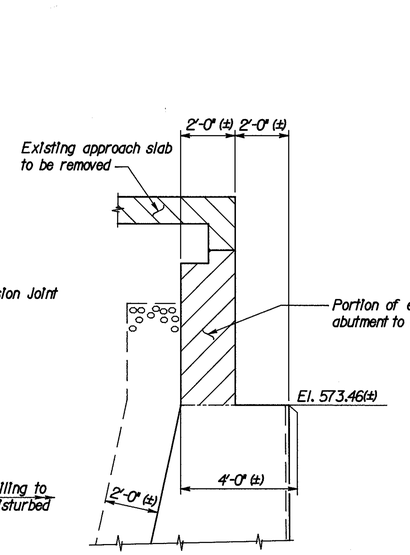

SECTION A-A

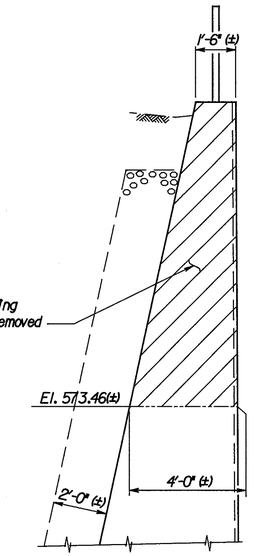

SECTION B-B

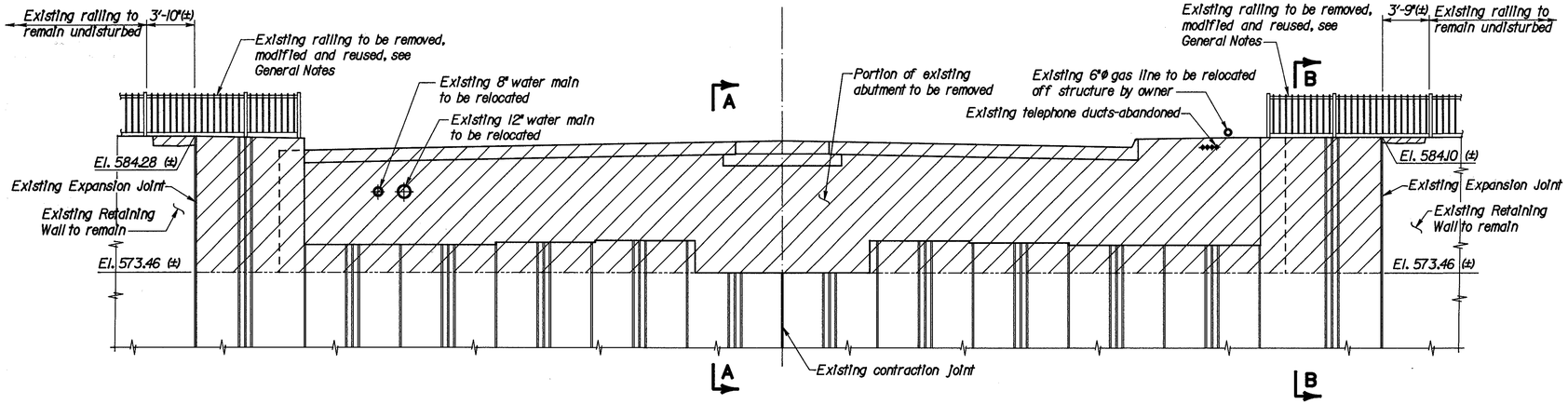

ELEVATION

NOTES

1. For modifications at Abutment 2 see sheet 81 / 105
2. For General Notes see sheet 75 / 105

LOCKWOOD, JONES & BEALS
CONSULTING ENGINEERS
DAYTON, OHIO

78 / 105

REMOVAL LIMITS AT EXISTING ABUTMENT 2

BRIDGE NO. HAM-75-1198L
I-75 SOUTHBOUND
UNDER WYOMING AVENUE

DESIGNED	CHECKED	DRAWN	CHECKED	REVIEWED DATE	REVISED
		GJW	DFS	HDJ 12/92	

f:\6272\1198eca2.dgn Feb. 17, 1993 11:03:21

F.H.W.A. REGION	STATE	PROJECT	
5	OHIO		

312
338

HAMILTON COUNTY
HAM-75-9.75

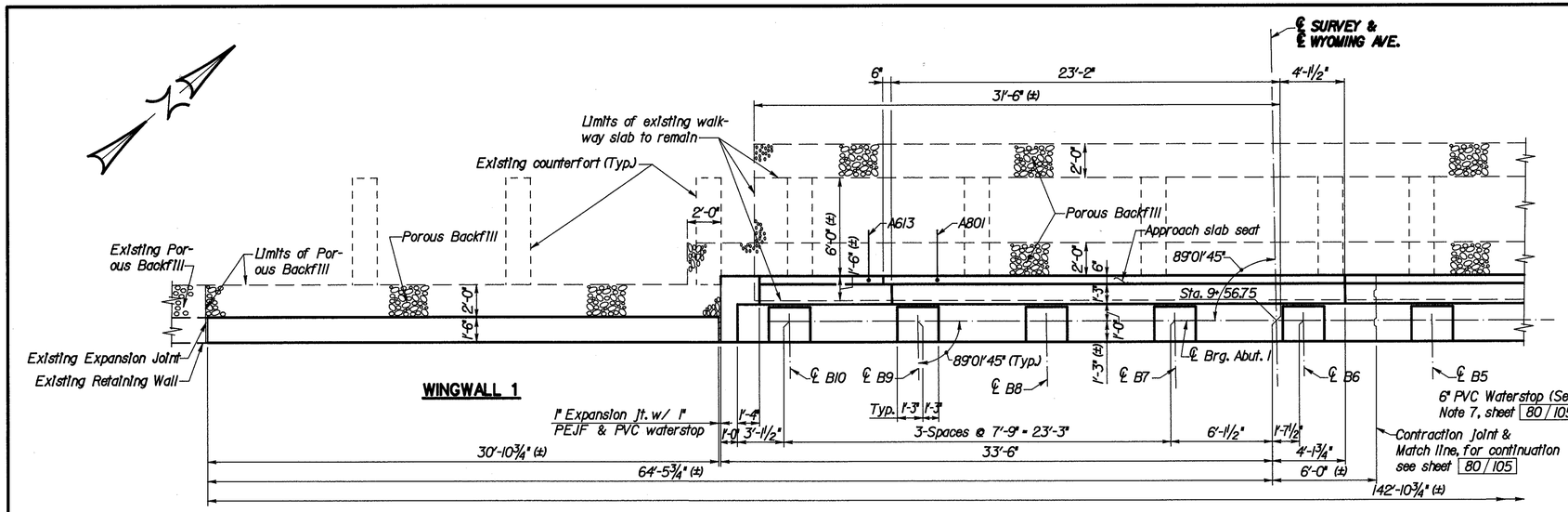

PLAN

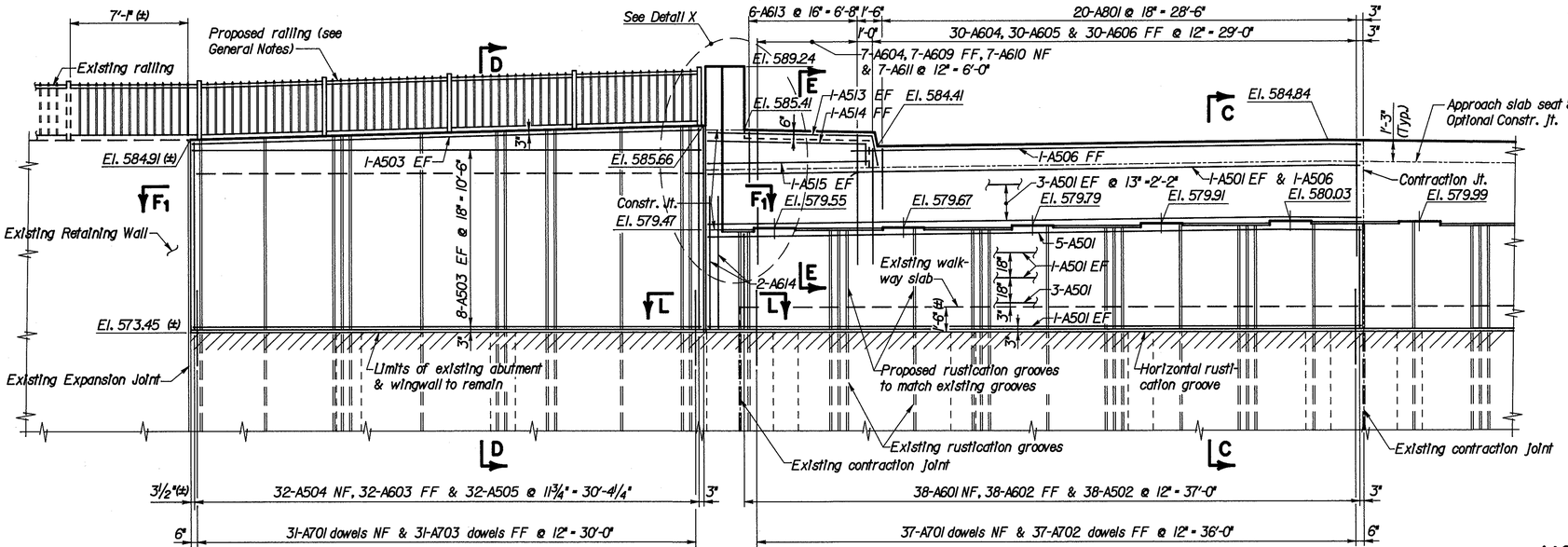

ELEVATION

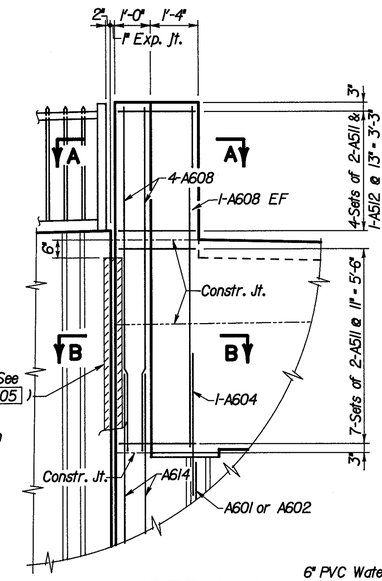

DETAIL X

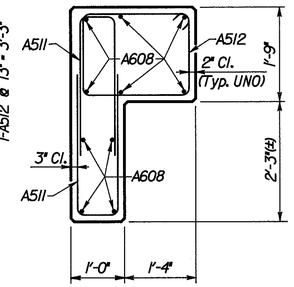

SECTION A-A

(SECTION A1- A1 SIM.)

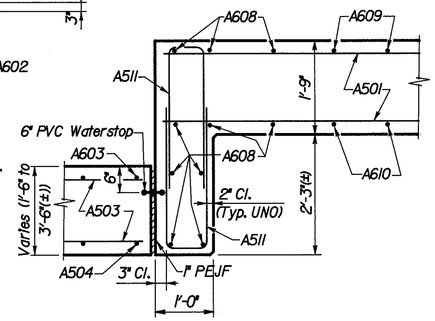

SECTION B-B

(SECTION B1- B1 SIM.)

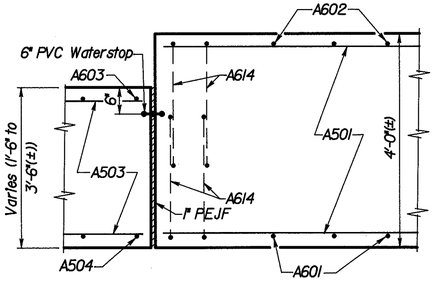

SECTION L-L

(SECTION L1- L1 SIM.)

NOTES

1. For Section F_1 -F_1, see sheet 80/105
2. For Sections C-C, D-D and E-E, see sheet 82/105
3. For additional notes, see sheet 80/105

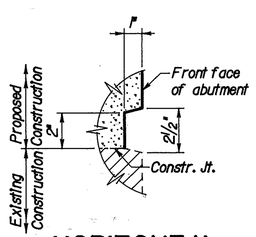

HORIZONTAL RUSTICATION GROOVE

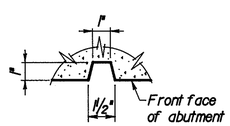

VERTICAL RUSTICATION GROOVE

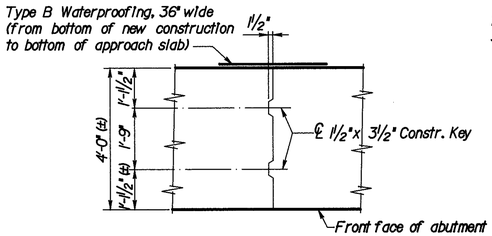

CONTRACTION JOINT DETAIL

LEGEND

EF = Each Face
NF = Near Face
FF = Far Face
PEJF = Preformed Expansion Joint Filler
UNO = Unless Noted Otherwise

LOCKWOOD, JONES & BEALS CONSULTING ENGINEERS DAYTON, OHIO — 79/105

PART PLAN & ELEVATION ABUTMENT 1
BRIDGE NO. HAM-75-1198L
I-75 SOUTHBOUND
UNDER WYOMING AVENUE

DESIGNED	CHECKED	DRAWN	CHECKED	REVIEWED DATE	REVISED
EPA	DFS	GJW	DFS	HDJ 12/92	

f:\6272\1198ais.dgn Feb. 17, 1993 11:38:44

F.H.W.A. REGION	STATE	PROJECT	
5	OHIO		

313
338

HAMILTON COUNTY
HAM-75-9.75

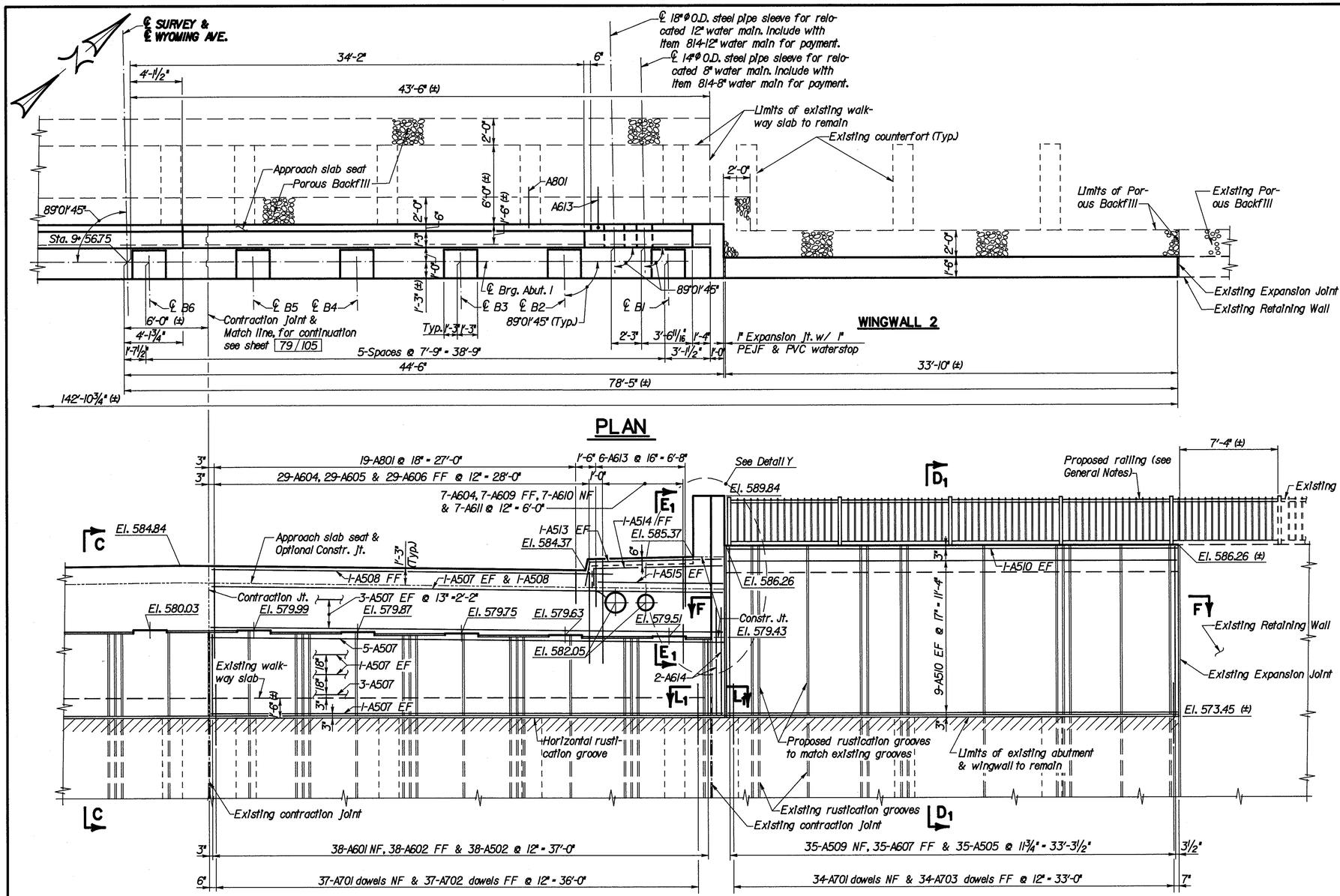

PLAN

ELEVATION

DETAIL Y

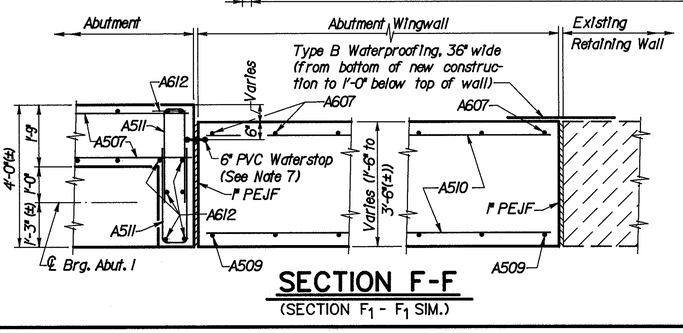

SECTION F-F
(SECTION F_1 - F_1 SIM.)

NOTES

1. Porous backfill shall extend upward to the plane of the subgrade within the limits of the roadway and laterally to the limits shown.
2. For Reinforcing Steel List, see sheet 89 / 105
3. For General Notes, see sheet 75 / 105
4. For Section A_1-A_1, B_1-B_1 & L_1-L_1, see sheet 79 / 105
5. For Section C-C, D_1-D_1 & E_1-E_1, see sheet 82 / 105
6. For contraction joint detail and vertical & horizontal rustication joint details, see sheet 79 / 105
7. Center a 6" PVC Waterstop on backwall expansion joint to form a continuous waterproof seal. Waterstop shall be capable of withstanding 11/2" of movement.

LEGEND

EF - Each Face
NF - Near Face
FF - Far Face
PEJF - Preformed Expansion Joint Filler

LOCKWOOD, JONES & BEALS
CONSULTING ENGINEERS
DAYTON, OHIO

80 / 105

PART PLAN & ELEVATION
ABUTMENT 1
BRIDGE NO. HAM-75-1198L
I-75 SOUTHBOUND
UNDER WYOMING AVENUE

DESIGNED	CHECKED	DRAWN	CHECKED	REVIEWED DATE	REVISED
EPA	DFS	GJW	DFS	HDJ 12/92	

f:\6272\1198atb.dgn Feb. 17, 1993 11:46:58

F.H.W.A. REGION	STATE	PROJECT	
5	OHIO		

314
338

HAMILTON COUNTY
HAM-75-9.75

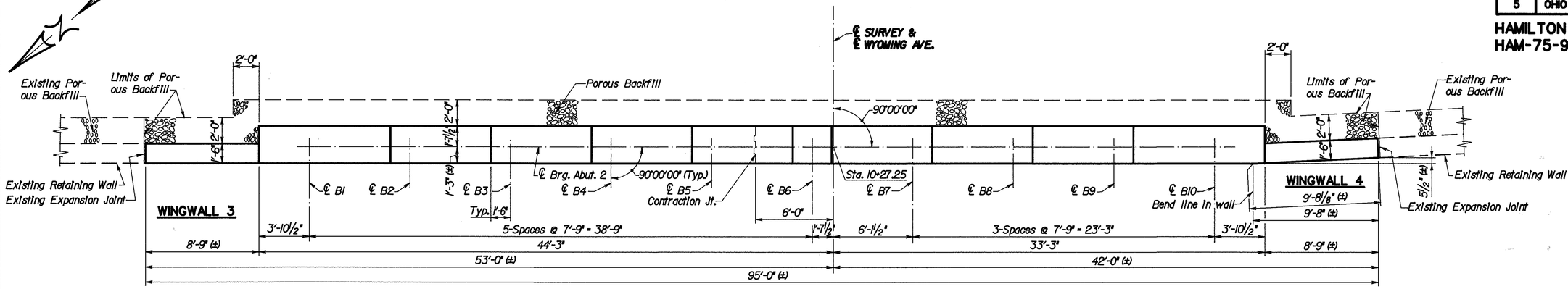

PLAN

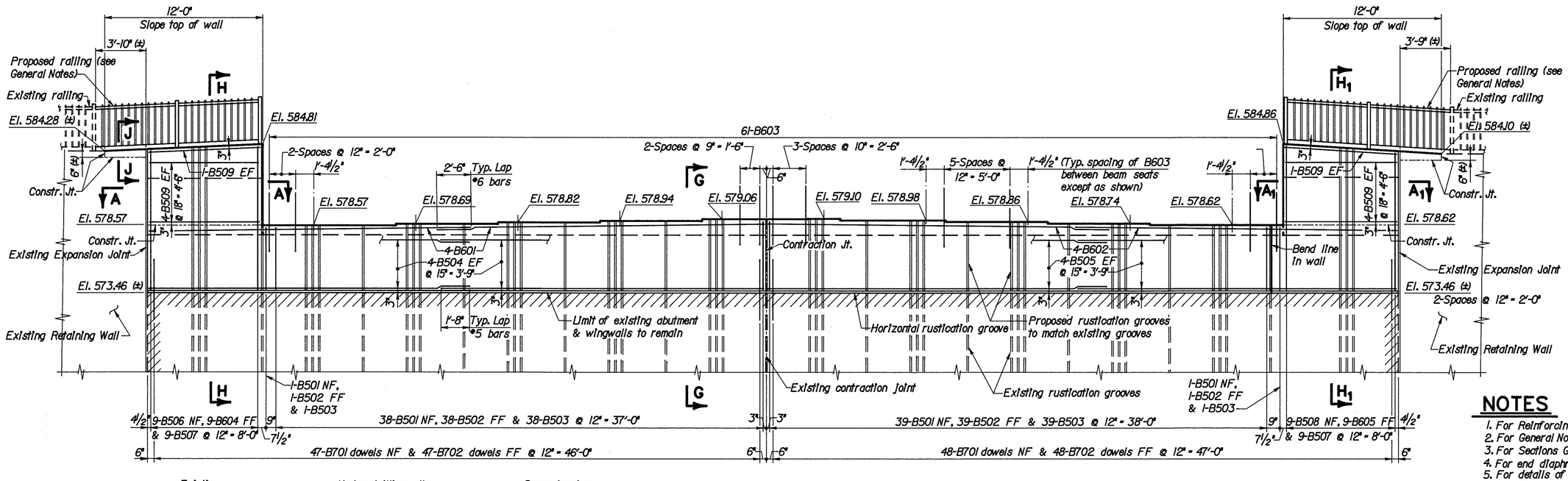

ELEVATION

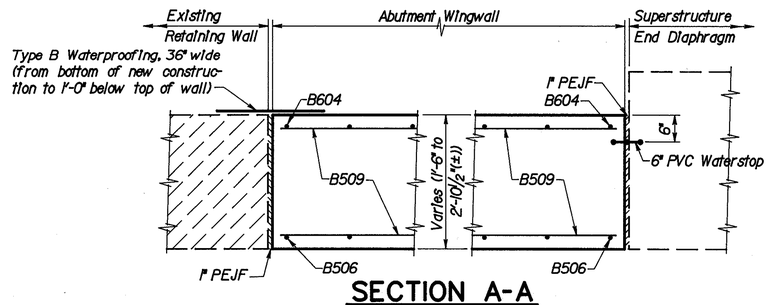

SECTION A-A
(SECTION A_1- A_1 SIM.)

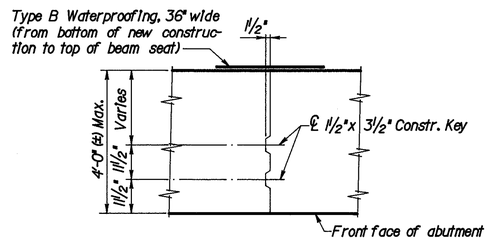

CONTRACTION JOINT DETAIL

NOTES

1. For Reinforcing Steel List, see sheet 89/105
2. For General Notes, see sheet 75/105
3. For Sections G-G, H-H and J-J, see sheet 82/105
4. For end diaphragm details see sheet 86/105
5. For details of vertical and horizontal rustication grooves, see sheet 79/105
6. For additional notes, see sheet 80/105

LEGEND

EF = Each Face
NF = Near Face
FF = Far Face
PEJF = Preformed Expansion Joint Filler

LOCKWOOD, JONES & BEALS
CONSULTING ENGINEERS
DAYTON, OHIO

81/105

ABUTMENT 2

BRIDGE NO. HAM-75-1198L
I-75 SOUTHBOUND
UNDER WYOMING AVENUE

DESIGNED	CHECKED	DRAWN	CHECKED	REVIEWED DATE	REVISED
EPA	DFS	GJW	DFS	HDJ 12/92	

f:\6272\1198a2.dgn Feb. 17, 1993 11:54:21

F.H.W.A. REGION	STATE	PROJECT	
5	OHIO		

315
338

HAMILTON COUNTY
HAM-75-9.75

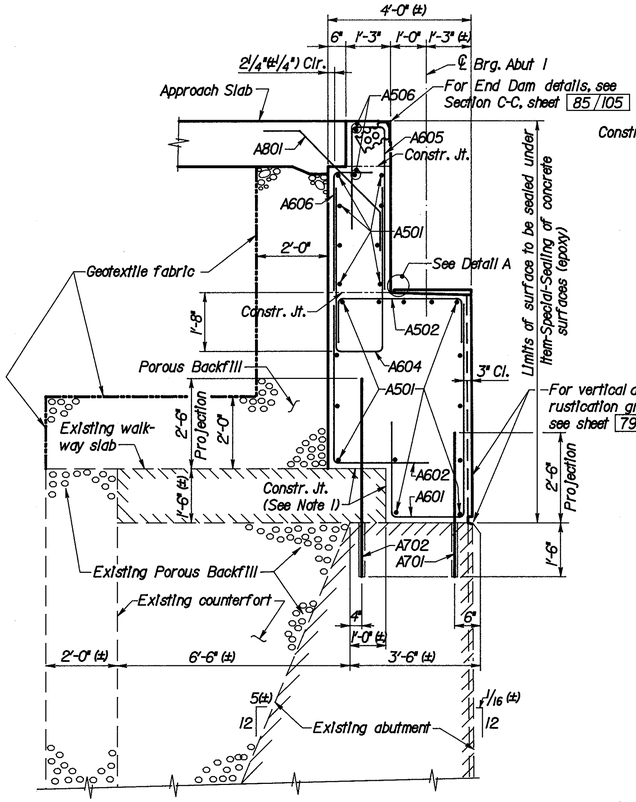

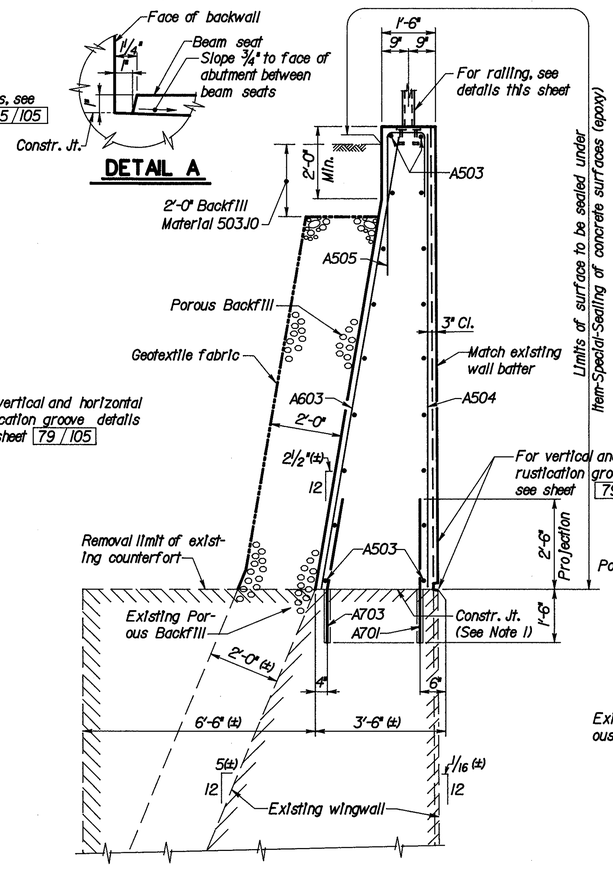

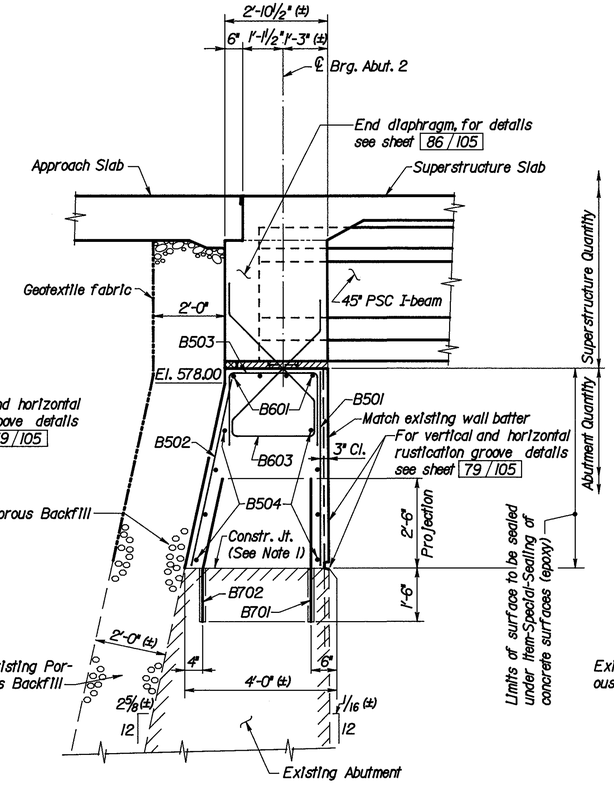

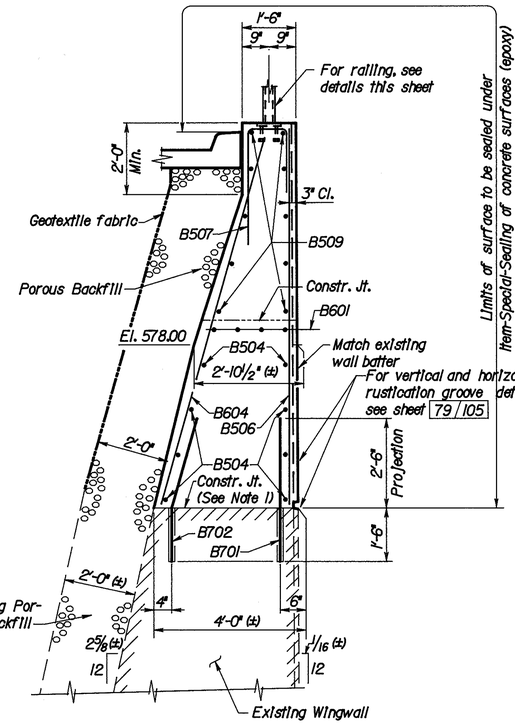

SECTION C-C

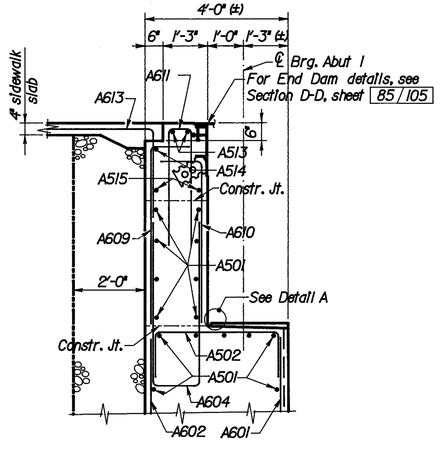

SECTION E-E
(SECTION E_1-E_1 SIMILAR)

SECTION D-D
(SECTION D_1-D_1 SIMILAR)

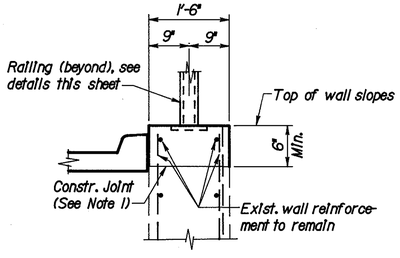

SECTION J-J

SECTION G-G

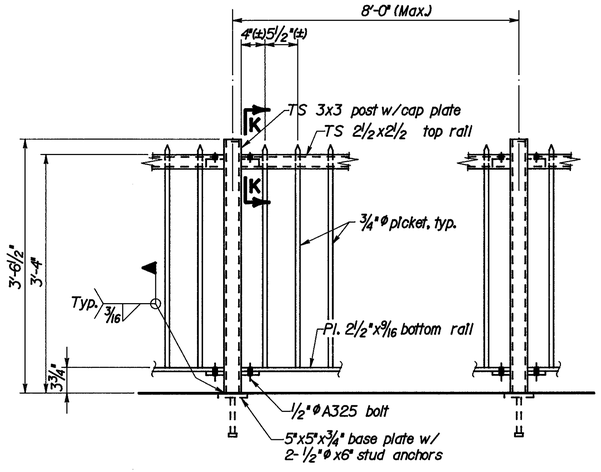

EXISTING AND RECONSTRUCTED RAILING

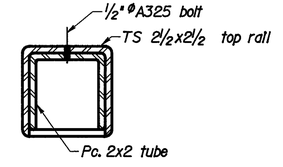

SECTION K-K

NOTES

1. Construction joints between new and existing construction shall be roughened to a full amplitude of approximately 1/4". These surfaces shall be clean and free of laitance before placement of concrete. Include with Item 511, Class C concrete, abutment for payment.
2. Dowel installation procedure and materials shall be as defined by Supplemental Specifications 852 and 705.20. Include with Item 852, Polyester/vinylester resin bonded anchors, for payment.

LOCKWOOD, JONES & BEALS
CONSULTING ENGINEERS
DAYTON, OHIO

82/105

ABUTMENT 1 & 2 DETAILS

BRIDGE NO. HAM-75-1198L
I-75 SOUTHBOUND
UNDER WYOMING AVENUE

DESIGNED	CHECKED	DRAWN	CHECKED	REVIEWED DATE	REVISED
EPA	DFS	GJW	DFS	HDJ 12/92	

f:\6272\1198ad.dgn Feb. 17, 1993 11:58:42

F.H.W.A. REGION	STATE	PROJECT		316 / 338
5	OHIO			

HAMILTON COUNTY
HAM-75-9.75

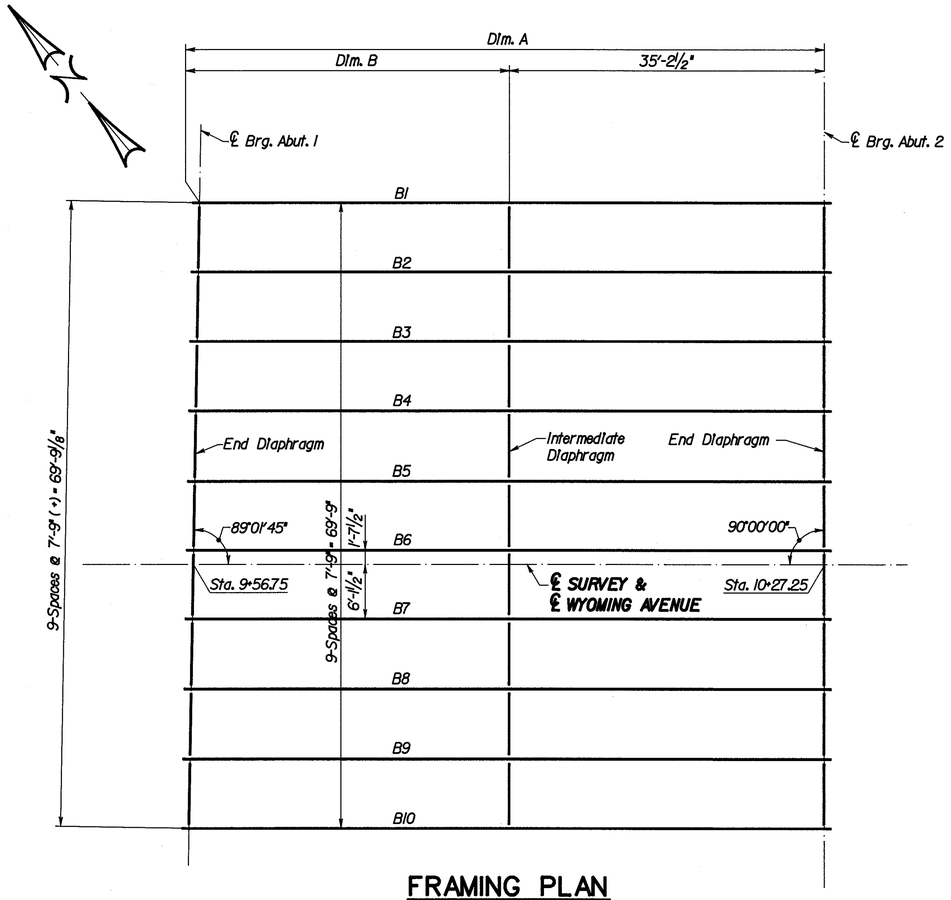

FRAMING PLAN

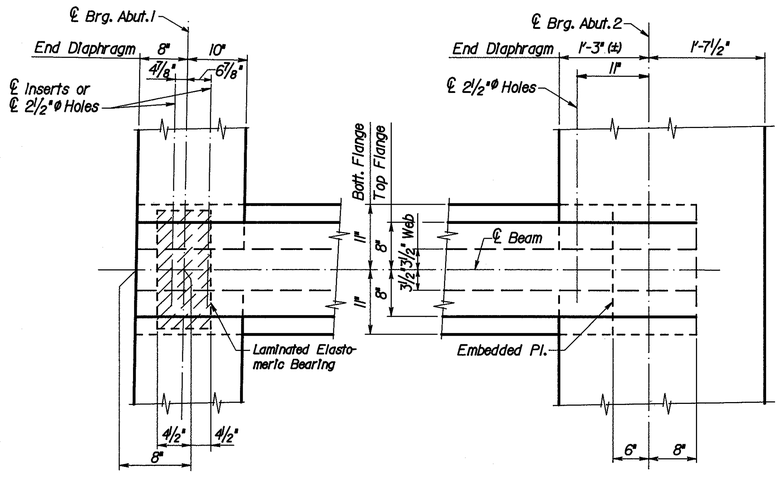

BEAM END DETAILS

BEAM DIMENSIONS

Beam	Dim. "A"	Dim. "B"
B1	69'-9¾"	34'-7¼"
B2	69'-11⅜"	34'-8⅞"
B3	70'-1"	34'-10½"
B4	70'-2½"	35'-0"
B5	70'-4⅛"	35'-1⅝"
B6	70'-5⅝"	35'-3⅛"
B7	70'-7¼"	35'-4¾"
B8	70'-8⅞"	35'-6⅜"
B9	70'-10⅜"	35'-7⅞"
B10	71'-0"	35'-9½"

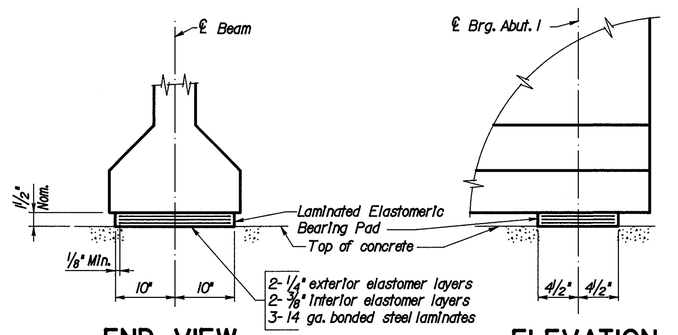

END VIEW ELEVATION

ELASTOMERIC BEARINGS AT ABUT. 1

Live Load Reaction: 44.2^{k}
Dead Load Reaction: 74.1^{k}
Maximum Design Load: 118.3^{k}

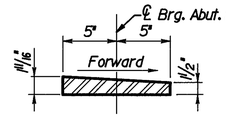

BEVELLED LOAD PLATE DETAIL

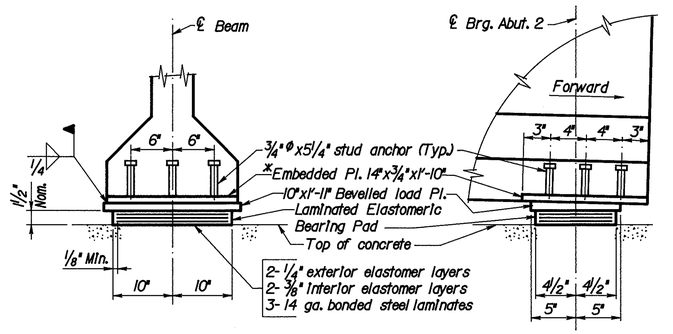

END VIEW *See Note 5 ELEVATION

ELASTOMERIC BEARINGS AT ABUT. 2

Live Load Reaction: 44.2^{k}
Dead Load Reaction: 79.6^{k}
Maximum Design Load: 123.8^{k}

LAMINATED ELASTOMERIC BEARING NOTES

1. Laminated Elastomeric Bearings shall have a durometer hardness grade 50 and shall conform to 711.23 of the CMS.
2. Load Plates: The steel load plates shall conform to the requirements of ASTM A588 and shall be bonded to the elastomer by vulcanization during the molding process. Welding of the load plate to the superstructure shall be controlled so that the plate temperature at the elastomer bonded surface shall not exceed 400° F as determined by the use of pyrometric sticks or other temerature monitoring devices.
3. Bearing Repositioning: If deck concrete is placed at an ambient temperature higher than 80° F or lower than 40° F, and the bearing shear deflection exceeds one-sixth of the bearing height at 60° F +/- 10° F; the beams shall be raised to allow the bearings to return to their undeformed shape at 60° F +/- 10° F.
4. Tolerances:

Individual elastomer layer thickness	+/- 20% of design value (Not to exceed +/- ⅛")
Plan dimensions	-0, + 1/4"
Design thickness	-0, + 1/4"
Edge cover of embedded laminates	-0, + 1/8"

5. Basis of Payment: The unit bid price shall include all materials, labor and incidentals necessary to furnish and install laminated elastomeric bearings either fixed or expansion. Payment will be at the contract price for Item 516, Each, Laminated Elastomeric Bearings with Steel Load Plates as listed under the Estimated Quantities.

NOTES

1. For General Notes, see sheet 75 / 105
2. For Diaphragm details, see sheets 85 / 105 and 86 / 105
3. For End Dam details, see sheet 85 / 105
4. For Beam Reinforcement details, see sheet 84 / 105
5. The embedded plates in I-beams shall conform to the requirements of ASTM A-588, stud anchors shall be in accordance with 513.171 of CMS, included in Item 515, 45' prestressed concrete composite I-beams for payment.

LOCKWOOD, JONES & BEALS
CONSULTING ENGINEERS
DAYTON, OHIO
83 / 105

FRAMING PLAN

BRIDGE NO. HAM-75-1198L
I-75 SOUTHBOUND
UNDER WYOMING AVENUE

DESIGNED	CHECKED	DRAWN	CHECKED	REVIEWED DATE	REVISED
EPA	DFS	GJW	DFS	HDJ 12/92	

f:\6272\1198fp.dgn Feb. 17, 1993 13:01:55

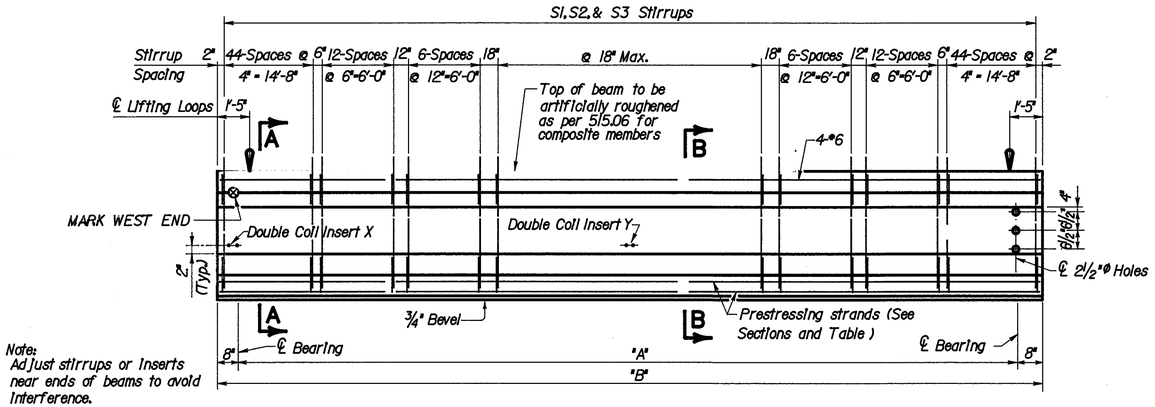

Note:
Adjust stirrups or inserts near ends of beams to avoid interference.

ELEVATION-BEAMS B1 & B10

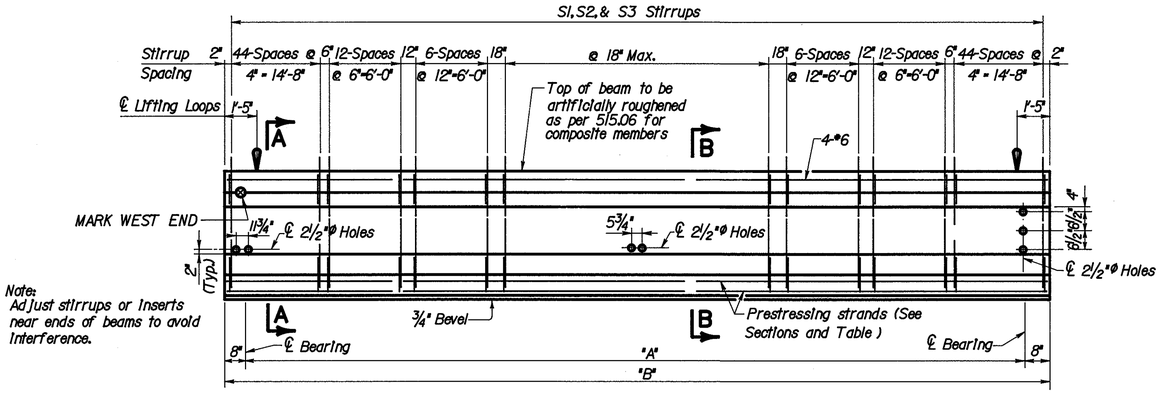

Note:
Adjust stirrups or inserts near ends of beams to avoid interference.

ELEVATION-BEAMS B2 THRU B9

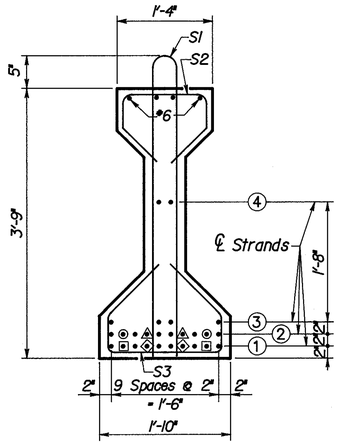

SECTION A - A

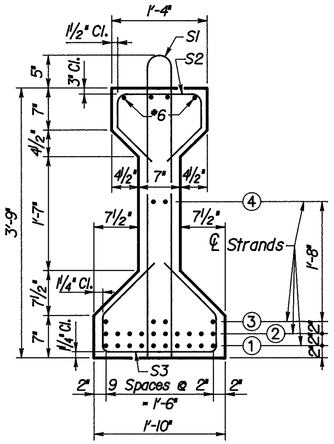

SECTION B - B

LEGEND

- ◉ Debond strand 2'-0" each end
- ◬ Debond strand 4'-0" each end
- ▣ Debond strand 6'-0" each end
- ◈ Debond strand 12'-0" each end

BEAM DIMENSIONS AT ℄ BEAM			
Beam	Dim. "A"	Dim. "B"	Approx. Wt. Each (LBS.)
B1	69'-9¾"	71'-1¾"	41,499
B2	69'-11⅜"	71'-3⅜"	41,578
B3	70'-1"	71'-5"	41,657
B4	70'-2½"	71'-6½"	41,730
B5	70'-4⅛"	71'-8⅛"	41,809
B6	70'-5⅝"	71'-9⅝"	41,882
B7	70'-7¼"	71'-11¼"	41,961
B8	70'-8⅞"	72'-0⅞"	42,040
B9	70'-10⅜"	72'-2⅜"	42,113
B10	71'-0"	72'-4"	42,192

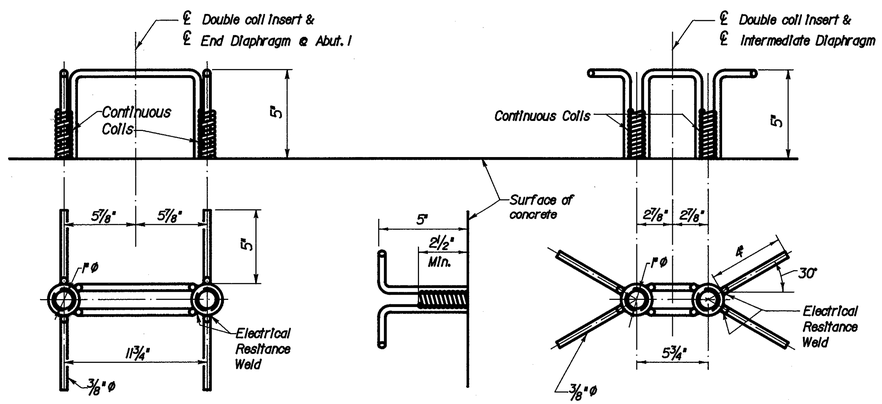

DOUBLE COIL INSERT X

DOUBLE COIL INSERT Y

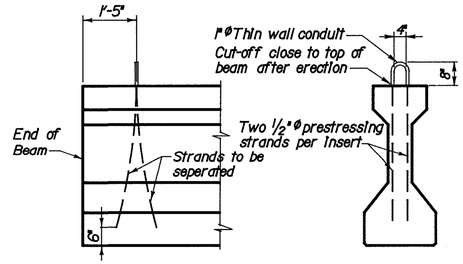

NOTE:
Lifting Inserts of the Contractors design may be used if approved by the Director. Positions of lifting Inserts may be shifted slightly where necessary to clear reinforcing steel.

BEAM LIFTING INSERT DETAILS

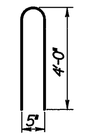

S1 BAR (•5)

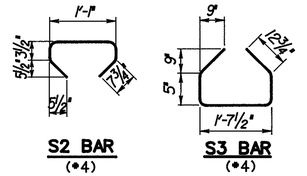

S2 BAR (•4) S3 BAR (•4)

BENDING DIAGRAMS

Note:
All dimensions are out to out of bar.

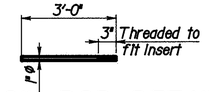

COIL ROD DETAIL

Note:
Bend in field as req'd to place parallel to diaphragm. Include with Item 515 for payment.

NOTES

1. Concrete shall have a minimum compressive strength of 5500 P.S.I. at 28 days.
2. Minimum concrete compressive strength at time of release shall be 4500 P.S.I.
3. All reinforcement fully or partially encased in beams shall be included with Item 515 for payment. S1 bars shall be epoxy coated.

NUMBER OF ½"Ø-7 WIRE STRANDS IN INDICATED ROWS					
ROWS				TOTAL NO.	INITIAL PRESTRESS FORCE / STRAND (LBS)
①	②	③	④		
10	10	4	2	26	31,000

F.H.W.A. REGION	STATE	PROJECT	
5	OHIO		

317
338

HAMILTON COUNTY
HAM-75-9.75

LOCKWOOD, JONES & BEALS
CONSULTING ENGINEERS
DAYTON, OHIO

84/105

PRESTRESSED BEAM DETAILS

BRIDGE NO. HAM-75-1198L
I-75 SOUTHBOUND
UNDER WYOMING AVENUE

DESIGNED	CHECKED	DRAWN	CHECKED	REVIEWED DATE	REVISED
EPA	DFS	GJW	DFS	HDJ 12/92	

f:\6272\t198pc.dgn Feb. 18, 1993 10:47:24

F.H.W.A. REGION	STATE	PROJECT		318
5	OHIO			338

HAMILTON COUNTY
HAM-75-9.75

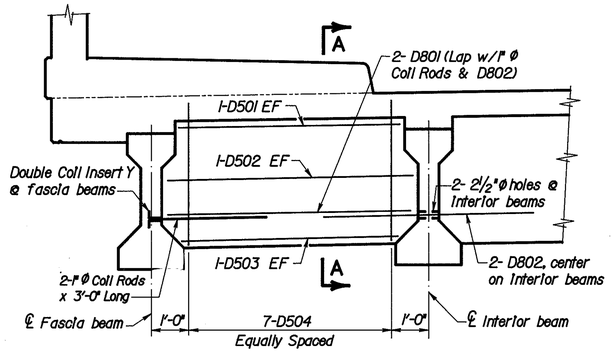

INTERMEDIATE DIAPHRAGM

(See Section G-G)

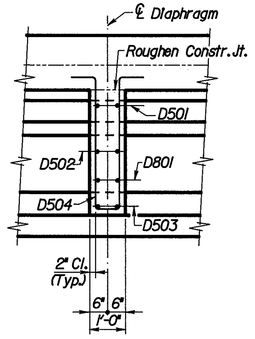

SECTION A-A

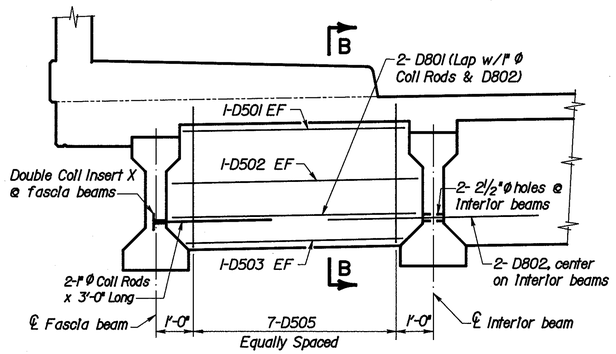

END DIAPHRAGM AT ABUTMENT 1

(See Section G-G)

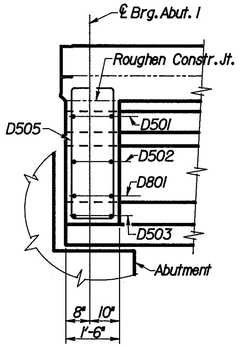

SECTION B-B

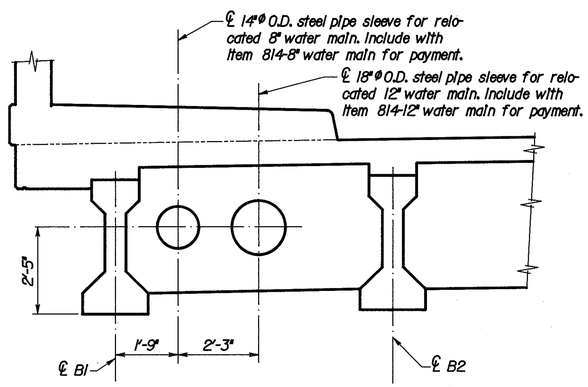

SECTION G-G

Note:
Spread D502, D504 and D505 bars as required.

LEGEND

EF = Each Face

NOTES

1. For Reinforcing Steel List, see Sh. 89 / 105

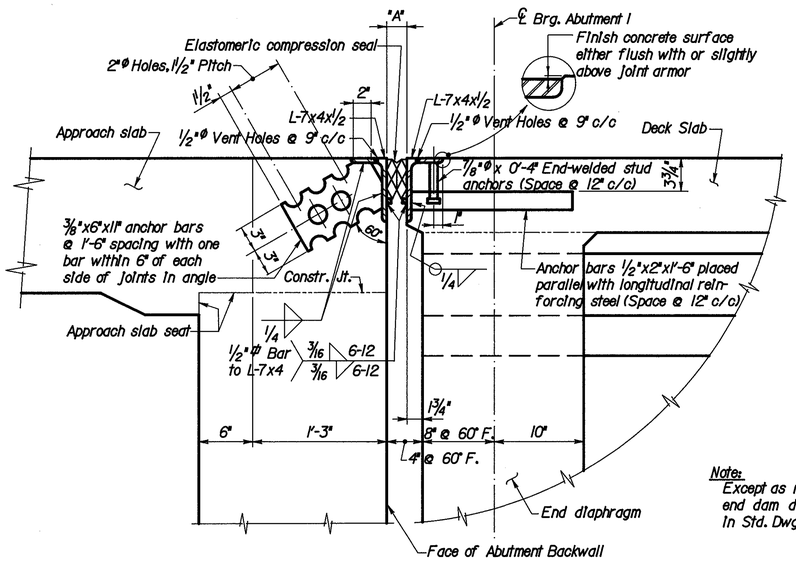

SECTION C-C

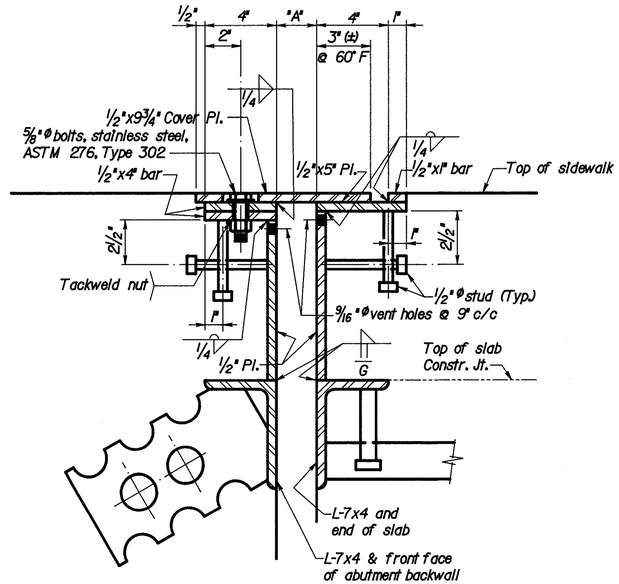

SECTION D-D

Note:
Except as modified in Sections C-C & D-D, end dam details are the same as shown in Std. Dwg. EXJ-3-82.

DIMENSION "A"	
Peak Ambient Temp. °F	Dimension A
90	2 1/16"
80	2 1/8"
70	2 3/16"
60	2 1/4"
50	2 5/16"
40	2 3/8"
30	2 7/16"

LOCKWOOD, JONES & BEALS
CONSULTING ENGINEERS
DAYTON, OHIO
85 / 105

FRAMING DETAILS

BRIDGE NO. HAM-75-1198L
I-75 SOUTHBOUND
UNDER WYOMING AVENUE

DESIGNED	CHECKED	DRAWN	CHECKED	REVIEWED DATE	REVISED
EPA	DFS	GJW	DFS	HDL 12/92	

f:\6272\t1198fd.dgn Feb. 17, 1993 14:25:53

F.H.W.A. REGION	STATE	PROJECT	
5	OHIO		

319
338

HAMILTON COUNTY
HAM-75-9.75

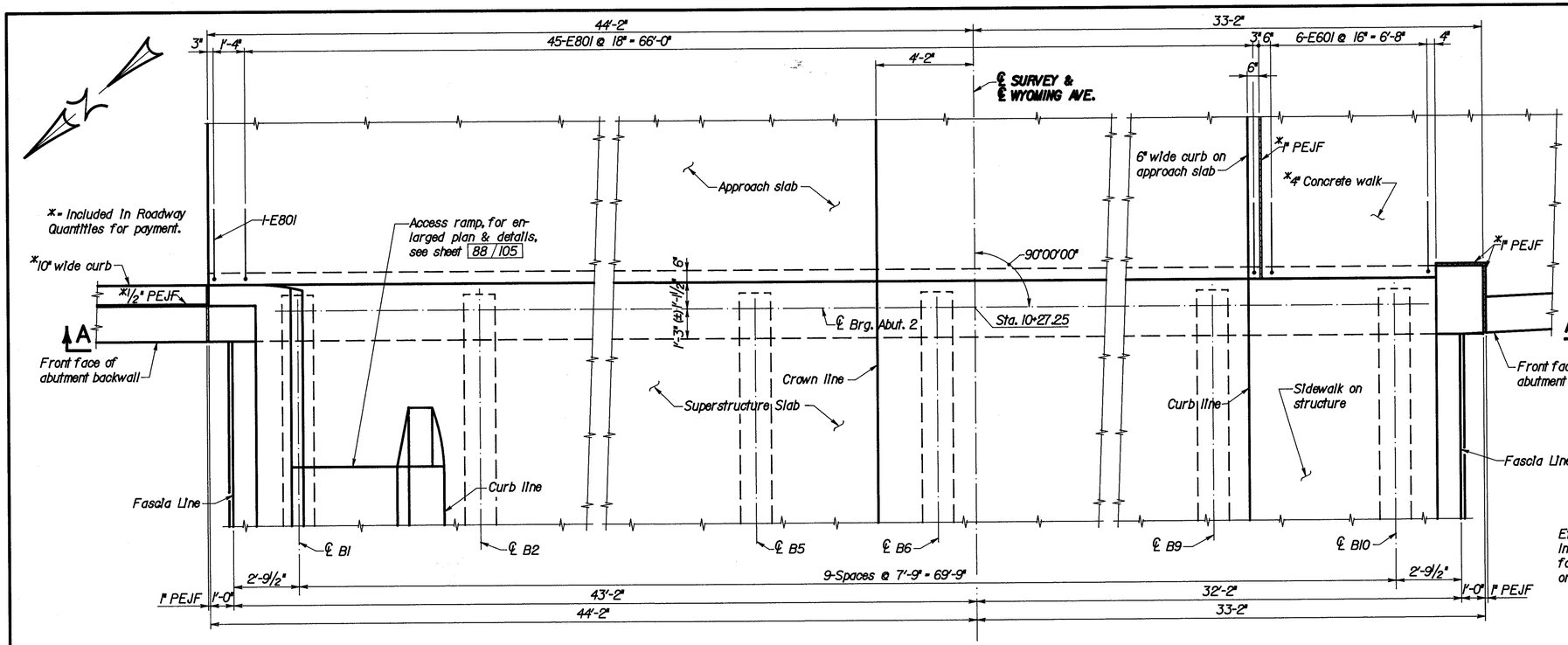

PLAN-END DIAPHRAGM AT ABUTMENT 2

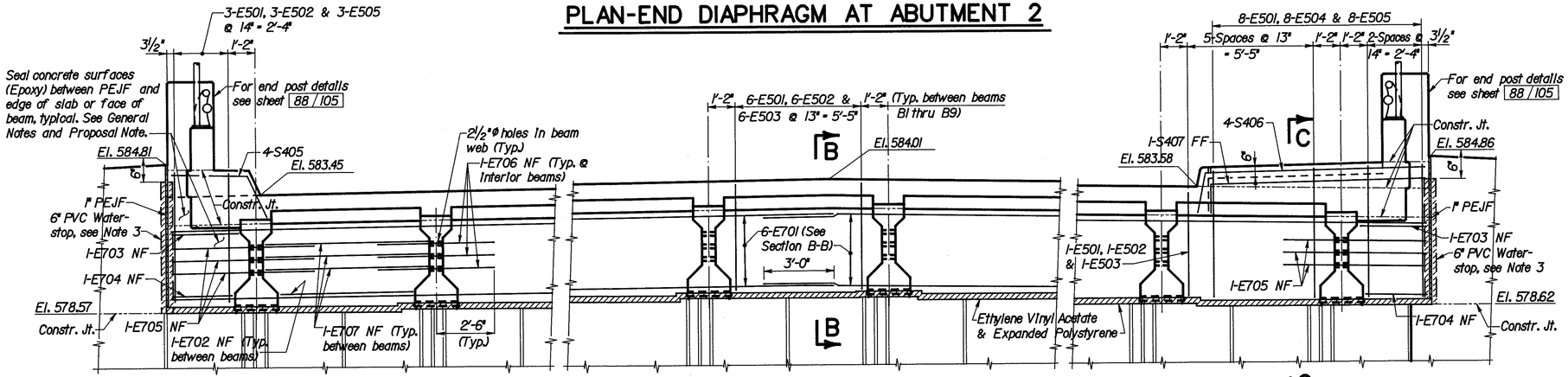

SECTION A-A

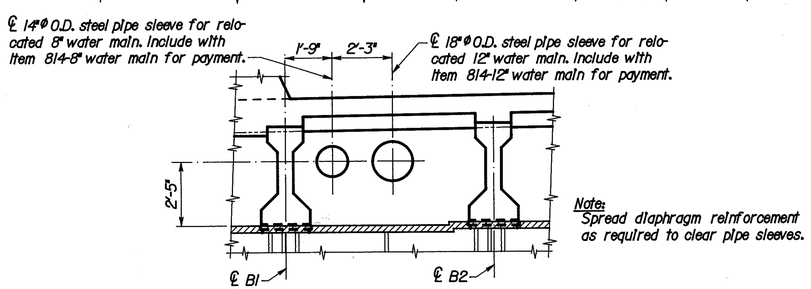

DIAPHRAGM DETAIL AT WATER MAINS

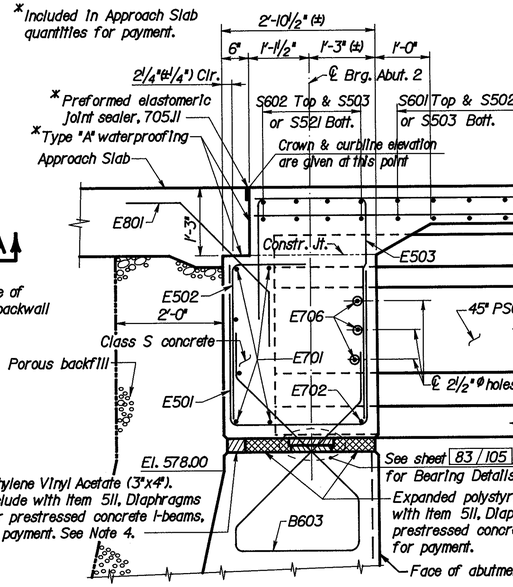

SECTION B-B

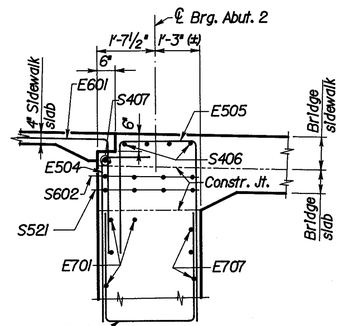

SECTION C-C

NOTES

1. For Reinforcing Steel List, see Sh. 89/105
2. For Laminated Elastomeric Bearing Pad Details, see sheet 83/105
3. Center a 6" PVC Waterstop on backwall expansion joints to form a continuous waterproof seal. Waterstop shall be capable of withstanding 1 1/2" of movement. For additional waterstop details see Std. Dwg. ICD-1-82, sheet 4 of 5.
4. Ethylene Vinyl Acetate (3"x4")
   a- Evazole 50 by Epoxy Industrials Inc.
   b- Thermal-Chem E.V.A. by Thermal-Chem Inc.
   c- Or approved equal
   Install with bonder per manufacturer's recommendations.

LEGEND

EF - Each Face
NF - Near Face
FF - Far Face
PEJF - Preformed Expansion Joint Filler

LOCKWOOD, JONES & BEALS
CONSULTING ENGINEERS
DAYTON, OHIO

86/105

END DIAPHRAGM DETAILS AT ABUTMENT 2

BRIDGE NO. HAM-75-1198L

I-75 SOUTHBOUND

UNDER WYOMING AVENUE

DESIGNED	CHECKED	DRAWN	CHECKED	REVIEWED DATE	REVISED
EPA	DFS	GJW	DFS	HDJ 12/92	

f:\6272\1198ed.dgn Feb. 17, 1993 14:28:14

F.H.W.A. REGION	STATE	PROJECT		320 / 338
5	OHIO			

HAMILTON COUNTY
HAM-75-9.75

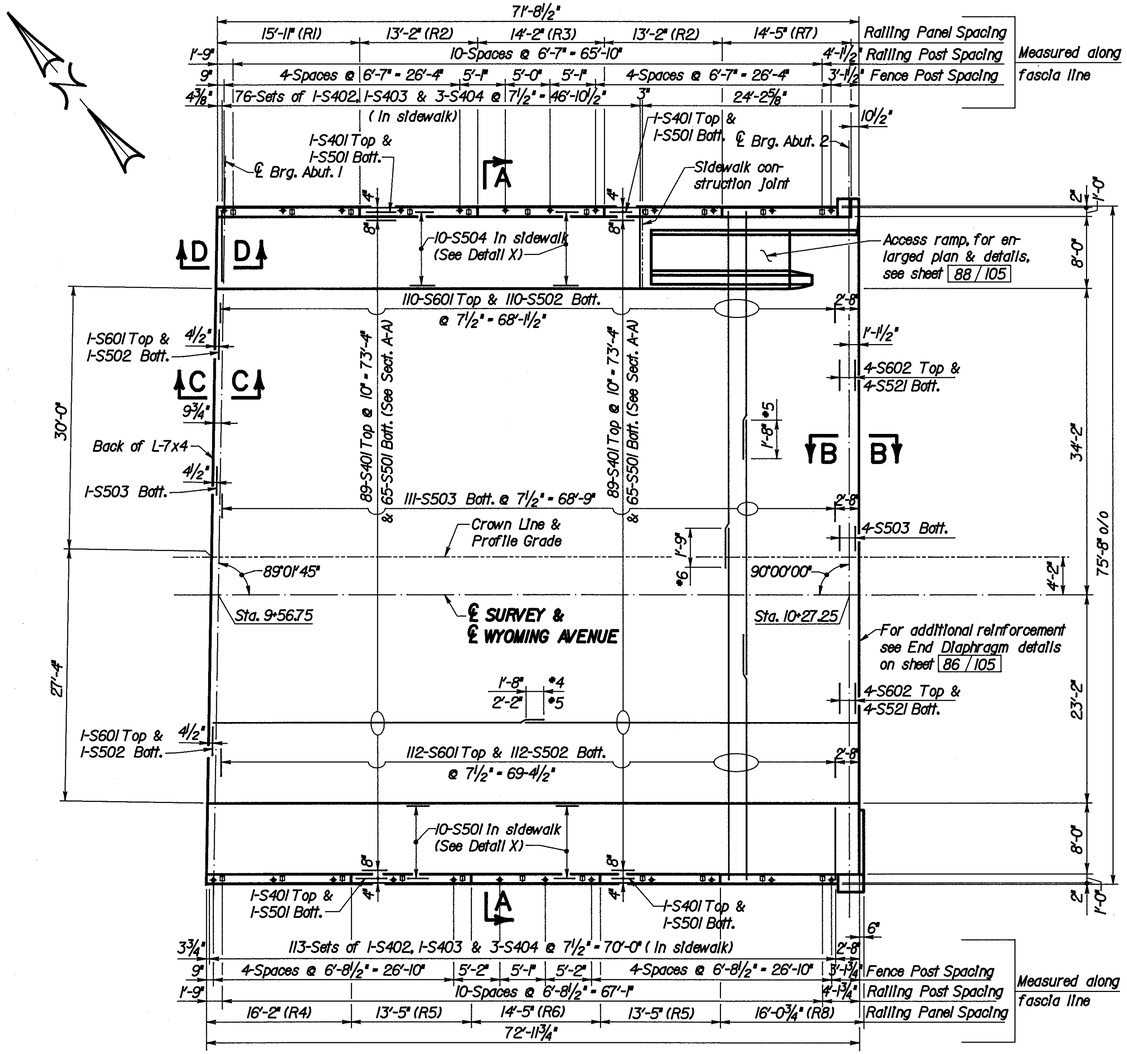

SLAB PLAN

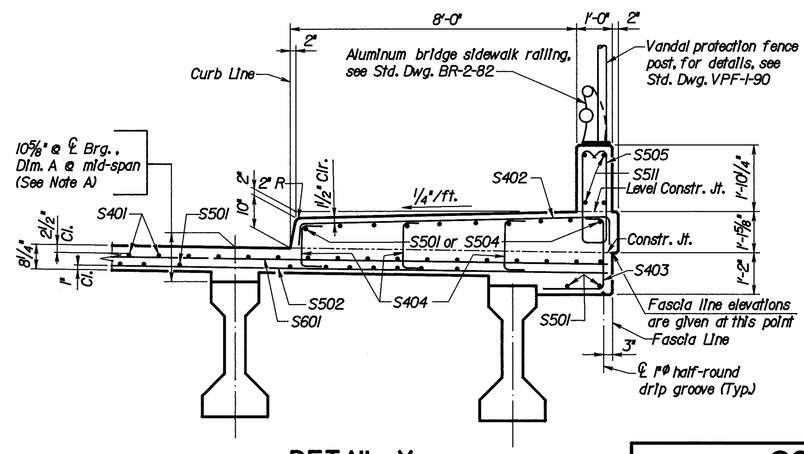

DETAIL X

NOTE A:
Dim. A is a nominal dimension (See table below). The pay quantity of that portion of the deck concrete over the beams shall be based on the average of this dimension and the depth at beam bearings even though deviation from this average may occur because the top of the beam may not have the camber anticipated in the design as tabulated below. The camber of beams shall be measured in the field before the deck is placed. The actual depth at mid-span shall be Dim. A plus or minus the difference between actual and anticipated camber.

Location	Anticipated Camber Prior to Deck Placement	Anticipated Deflection Due to Deck Placement	Anticipated Final Camber	Dim. A
Mid-Span	3"	1"	2"	10¼"

FINISHED PAVEMENT ELEVATIONS

Station	North Fascia Line	Profile Grade	South Fascia Line
9+75	584.127	584.736	584.169
10+00	583.869	584.478	583.911
10+25	583.467	584.076	583.508

SCREED ELEVATIONS

Location	℄ Brg. Abut. 1	¼	½	¾	℄ Brg. Abut. 2
North Fascia Line	584.222	584.194	584.051	583.794	583.423
Profile Grade	584.834	584.807	584.664	584.406	584.033
South Fascia Line	584.268	584.242	584.100	583.841	583.465

Note:
Screed elevations given are at top of concrete slab before concrete placement and have been adjusted for estimated deflection due to weight of concrete slab, sidewalks & railing panels.

NOTES

1. For General Notes, see sheet 75 / 105
2. For Reinforcing Steel List, see sheet 89 / 105
3. For Section B-B, see sheet 86 / 105
4. For Section C-C & D-D, see sheet 85 / 105
5. For Railing Panel details, see sheet 88 / 105
6. Slab concrete shall not be placed until at least 48 hours after placement of diaphragm concrete.

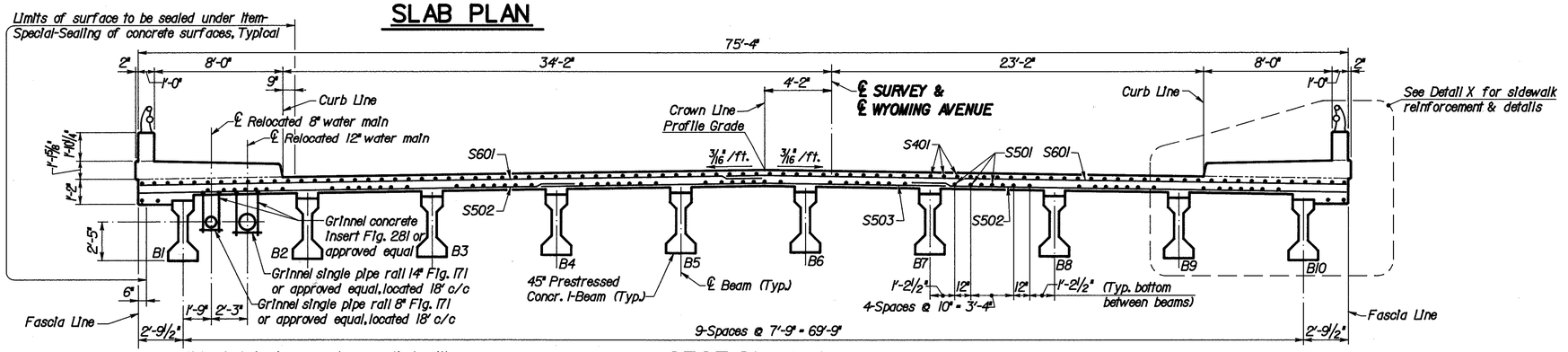

Note: Include pipe supports respectively with item 814 water main for payment.

SECTION A-A

LOCKWOOD, JONES & BEALS
CONSULTING ENGINEERS
DAYTON, OHIO

87 / 105

SLAB PLAN

BRIDGE NO. HAM-75-1198L
I-75 SOUTHBOUND
UNDER WYOMING AVENUE

DESIGNED	CHECKED	DRAWN	CHECKED	REVIEWED DATE	REVISED
EPA	DFS	GJW	DFS	HDJ 12/92	

f:\6272\1198sp.dgn Feb. 17, 1993 14:31:12

F.H.W.A. REGION	STATE	PROJECT	
5	OHIO		

321
338

HAMILTON COUNTY
HAM-75-9.75

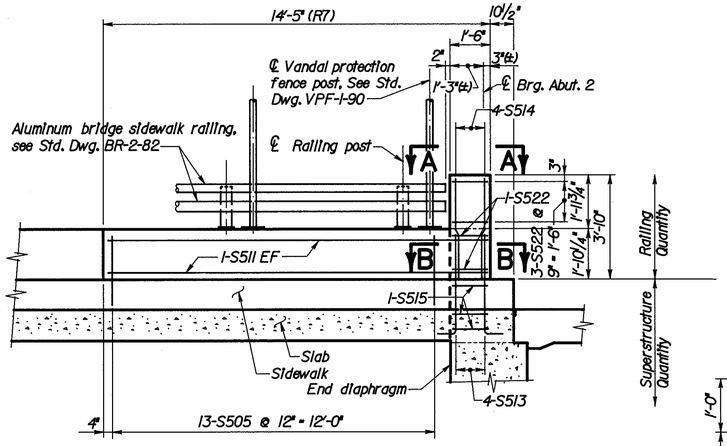

ELEVATION PANEL R7
(1-Required)

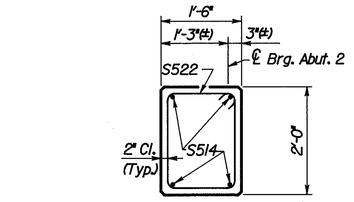

SECTION A-A

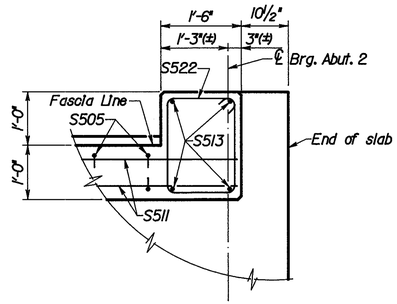

SECTION B-B

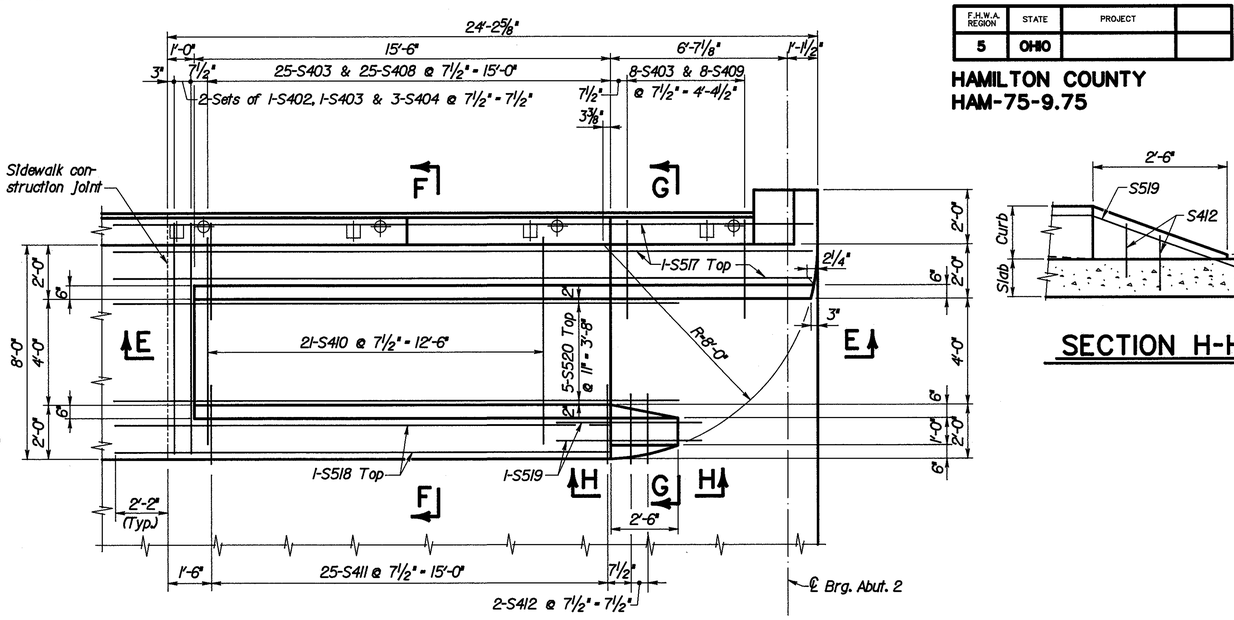

ENLARGED PLAN AT ACCESS RAMP

SECTION H-H

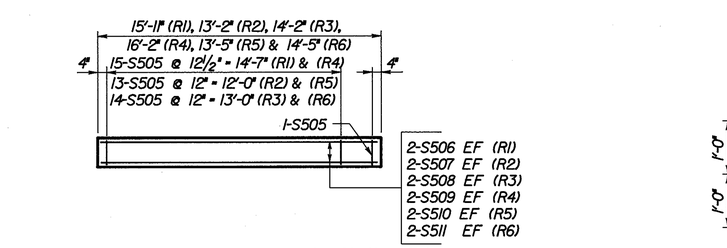

ELEVATION PANEL R8
(1-Required)

PLAN-RAILING PANELS R1 THRU R6

1 -Railing Panel R1 Req'd
2-Railing Panels R2 Req'd
1 -Railing Panel R3 Req'd
1 -Railing Panel R4 Req'd
2-Railing Panels R5 Req'd
1 -Railing Panel R6 Req'd

RAILING PANEL DETAILS

LEGEND
EF = Each Face

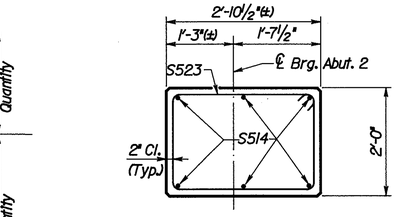

SECTION C-C

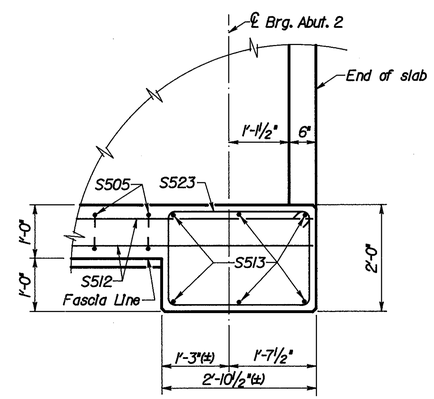

SECTION D-D

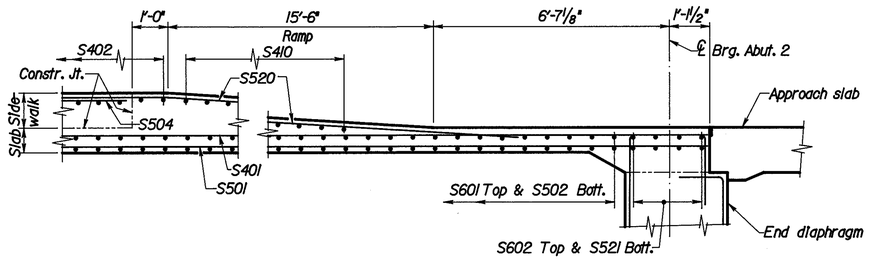

SECTION E-E

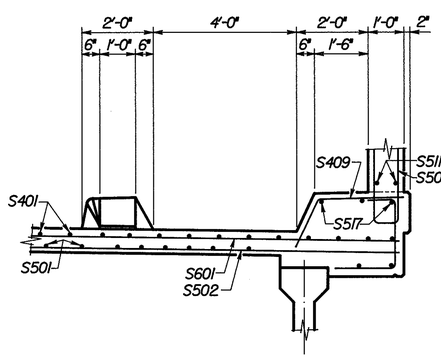

SECTION G-G

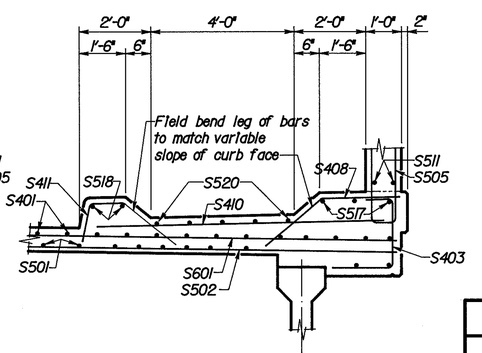

SECTION F-F

LOCKWOOD, JONES & BEALS
CONSULTING ENGINEERS
DAYTON, OHIO

88 / 105

SLAB DETAILS

BRIDGE NO. HAM-75-1198L
I-75 SOUTHBOUND
UNDER WYOMING AVENUE

DESIGNED	CHECKED	DRAWN	CHECKED	REVIEWED DATE	REVISED
EPA	DFS	GJW	DFS	HDJ 12/92	

f:\6272\1198sd.dgn Feb. 17, 1993 15:00:43

REINFORCING STEEL LIST

MARK	NO.	LENGTH	WEIGHT	TYPE	A	B	C	D	E	F	G	H	K	O	R
ABUTMENT 1															
A501	22	39'-2"	899	Str.											
A502	76	6'-4"	502	8		—	1'-6"	3'-7"	1'-6"	—					
A503	18	30'-6"	573	Str.											
A504	32	11'-3"	375	Str.											
A505	67	6'-10"	478	8		—	1'-6"	1'-1"	4'-6"	—					
A506	2	31'-0"	65	Str.											
A507	22	38'-2"	876	Str.											
A508	2	30'-0"	63	Str.											
A509	35	12'-7"	459	Str.											
A510	20	33'-6"	699	Str.											
A511	46	5'-8"	272	8		—	2'-8"	7"	2'-8"	—					
A512	9	7'-8 1/2"	72	12	8 1/2"	1'-5"	1'-11"	1'-5"	1'-11"		8 1/2"				
A513	4	11'-7"	48	9		—	9'-10"	1'-9"	—	—		1'-8 1/2"	4/8"	10'-2 1/8"	
A514	2	10'-7 1/2"	22	10		1'-3"	9'-6"	—							
A515	4	9'-6"	40	Str.											
A601	76	10'-4"	1180	8		—	3'-0"	2'-1"	5'-7"	—					
A602	76	7'-0"	799	10		3'-0"	4'-2"	—							
A603	32	11'-5"	549	Str.											
A604	76	9'-1"	1037	8		—	4'-0"	1'-5"	4'-0"	—					
A605	59	7'-10"	694	8		—	2'-8"	11"	4'-7"	—					
A606	59	4'-7"	406	10		1'-5"	3'-4"	—							
A607	35	12'-9"	670	Str.											
A608	10	9'-7"	144	Str.											
A609	14	6'-3"	131	10		1'-5"	5'-0"	—							
A610	14	5'-10"	123	10		1'-4"	4'-8"	—							
A611	14	8'-0"	168	8		—	3'-10"	8"	3'-10"	—					
A612	10	10'-2"	153	Str.											
A613	12	5'-10"	105	10		3'-0"	3'-0"	—							
A614	8	17'-8"	212	8		—	7'-10"	2'-4"	7'-10"	—					
A701	139	4'-0"	Note 6	Str.											
A702	74	5'-6"	Note 6	Str.											
A703	65	4'-1"	Note 6	9		1'-6"	2'-7"	—	1'-5 5/8"	3 1/8"			—	—	4'-0 5/8"
A801	39	6'-0"	625	6		—	—	1'-5"	3'-2"			1'-0"	1'-0"	5'-2"	
		TOTAL	12439												
ABUTMENT 2															
B501	79	4'-11"	405	Str.											
B502	79	5'-0"	412	Str.											
B503	79	5'-2"	426	8		—	1'-6"	2'-5"	1'-6"	—					
B504	16	24'-2"	403	Str.											
B505	16	24'-8"	412	Str.											
B506	9	10'-7"	99	Str.											
B507	18	6'-10"	128	8		—	2'-0"	1'-1"	4'-0"	—					
B508	9	10'-6"	99	Str.											
B509	20	8'-5"	176	Str.											
B601	8	24'-7"	295	Str.											
B602	8	25'-1"	301	Str.											
B603	61	11'-8 1/2"	1073	22	See Bending Diagrams										
B604	9	10'-10"	146	Str.											
B605	9	10'-8"	144	Str.											
B701	95	4'-0"	Note 6	Str.											
B702	95	4'-1"	Note 6	9		1'-6"	2'-7"	—	1'-5 5/8"	3 1/8"			—	—	4'-0 5/8"
		TOTAL	4519												

MARK	NO.	LENGTH	WEIGHT	TYPE	A	B	C	D	E	F	G	H	K	O	R
INTERMEDIATE DIAPHRAGMS & ABUTMENT 1 END DIAPHRAGMS															
D501	36	6'-1"	228	Str.											
D502	36	6'-10"	257	Str.											
D503	36	5'-10"	219	Str.											
D504	63	8'-10"	580	14	8 1/2"	3'-6"	8"	3'-6"			8 1/2"				
D505	63	8'-10"	580	8		7"	3'-6"	1'-2"	3'-6"	7"					
D801	36	6'-10"	657	Str.											
D802	32	6'-0"	513	Str.											
		TOTAL	3034												
ABUTMENT 2 END DIAPHRAGM															
E501	60	8'-3"	516	8		—	3'-0"	2'-6"	3'-0"	—					
E502	52	4'-10 1/2"	264	10		2'-0"	3'-0"	—							
E503	49	8'-6"	434	8		—	2'-6"	2'-0"	4'-3"	—					
E504	8	6'-5 1/2"	54	10		2'-0"	4'-7"	—							
E505	11	10'-2"	117	8		—	3'-4"	2'-0"	5'-1"	—					
E601	6	5'-10"	53	10		3'-0"	3'-0"	—							
E701	12	40'-0"	981	Str.											
E702	9	5'-7"	103	Str.											
E703	2	2'-9"	11	Str.											
E704	2	2'-6"	10	Str.											
E705	6	6'-2"	76	Str.											
E706	24	5'-0"	245	Str.											
E707	27	6'-10"	377	Str.											
E801	46	5'-1"	624	6		—	—	1'-5"	2'-3"			1'-0"	1'-0"	4'-3"	
		TOTAL	3865												
SLAB															
S401	182	37'-2"	4519	Str.											
S402	191	9'-10"	1255	8		—	8"	8'-8"	8"	—					
S403	224	4'-6"	673	8		—	1'-0"	1'-11"	1'-9"	—					
S404	573	3'-0"	1148	8		—	1'-0"	1'-2"	1'-0"	—					
S405	4	4'-11"	13	11		3'-2"	1'-9"	—				9"	1'-7"		
S406	4	11'-3 1/2"	30	11		9'-6"	1'-9 1/2"	—				4 1/4"	1'-9"		
S407	1	10'-2"	7	10		1'-3"	9'-0"	—							
S408	25	3'-10"	64	Str.											
S409	8	3'-10"	20	11		2'-4"	1'-6"	—				7 5/8"	1'-4 1/4"		
S410	21	8'-0"	112	Str.											
S411	25	3'-4"	56	11		2'-2"	1'-2"	—				2 3/4"	1'-1 3/4"		
S412	2	2'-4 1/4"	3	6		—	—	10 1/4"	8"			9"	5"	1'-6"	
S501	154	37'-5"	6010	Str.											
S502	224	26'-9"	6250	Str.											
S503	116	25'-0"	3025	Str.											
S504	20	24'-8"	515	Str.											
S505	144	6'-4"	951	18	5 1/2"	2'-6"	8"	2'-6"			5 1/2"				
S506	4	15'-7"	Note 5	Str.											
S507	8	12'-10"	Note 5	Str.											
S508	4	13'-10"	Note 5	Str.											
S509	4	15'-10"	Note 5	Str.											
S510	8	13'-1"	Note 5	Str.											
S511	8	14'-1"	Note 5	Str.											
S512	4	15'-8"	Note 5	Str.											
S513	10	4'-2 1/2"	44	2	8 1/2"	3'-6"					—				
S514	10	3'-8"	Note 5	Str.											
S515	3	6'-2 1/2"	19	12	5 1/2"	1'-2"	1'-8"	1'-2"	1'-8"		5 1/2"				
S516	3	8'-11 1/2"	28	12	5 1/2"	2'-6 1/2"	1'-8"	2'-6 1/2"	1'-8"		5 1/2"				
S517	3	26'-2"	82	Str.											
S518	2	18'-8"	39	Str.											
S519	2	5'-11"	12	9		2'-2"	3'-9"	—	2'-0 5/8"	8 3/8"		—	—	5'-9 5/8"	
S520	5	21'-2"	110	9		3'-2"	18'-0"	—	3'-11 5/8"	3 1/8"		—	—	21'-11 5/8"	
S521	8	27'-9"	232	Str.											
S522	5	6'-2 1/2"	Note 5	12	5 1/2"	1'-2"	1'-8"	1'-2"	1'-8"		5 1/2"				
S523	5	8'-11 1/2"	Note 5	12	5 1/2"	2'-6 1/2"	1'-8"	2'-6 1/2"	1'-8"		5 1/2"				
S601	224	38'-5"	12925	Str.											
S602	8	39'-5"	474	Str.											
		TOTAL	38616												

F.H.W.A. REGION	STATE	PROJECT		322 / 338
5	OHIO			

HAMILTON COUNTY
HAM-75-9.75

BENDING DIAGRAMS

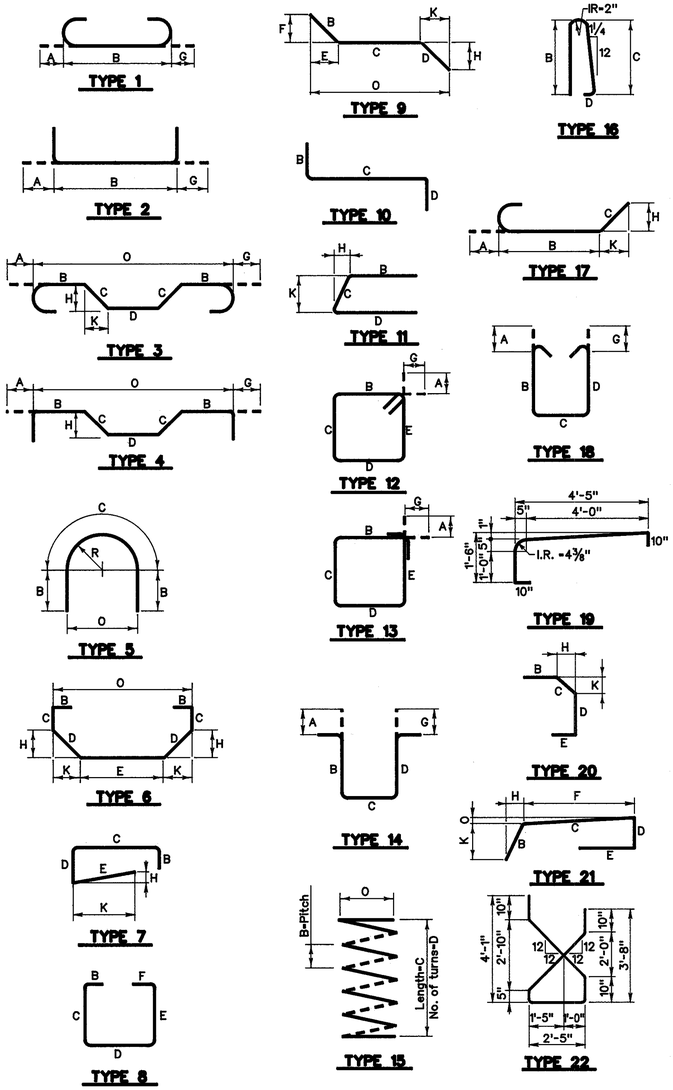

NOTES

1. All reinforcing steel bars shall be epoxy coated.
2. All dimensions are out to out of bar.
3. Dimensions "A" and "G" are standard bend dimensions. Refer to Section 509.05 of the CMS.
4. Radius dimension "R" is to the outside of the bar.
5. These reinforcing bars are fully encased in railing panels and are included with Item 517, Railing for payment.
6. These reinforcing bars are included with Item 852, Polyester/Vinylester resin bonded anchors, for payment.

LOCKWOOD, JONES & BEALS
CONSULTING ENGINEERS
DAYTON, OHIO
89 / 105

REINFORCING STEEL LIST

BRIDGE NO. HAM-75-1198L
I-75 SOUTHBOUND
UNDER WYOMING AVENUE

DESIGNED	CHECKED	DRAWN	CHECKED	REVIEWED DATE	REVISED
		GJW	DFS	HDJ 12/92	

f:\6272\1198sta.dgn Feb. 17, 1993 15:05:04

F.H.W.A. REGION	STATE	PROJECT		323
5	OHIO			338

HAMILTON COUNTY
HAM-75-9.75

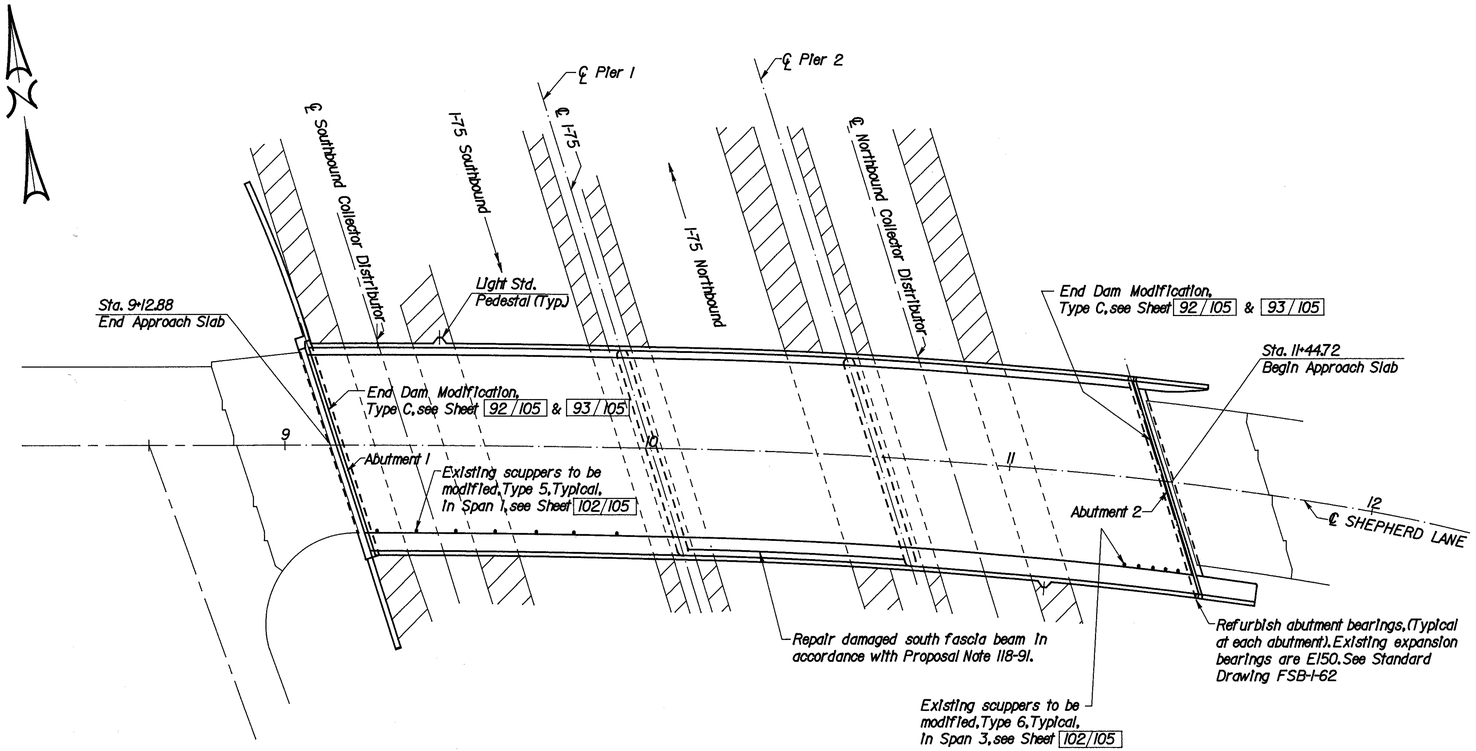

GENERAL PLAN

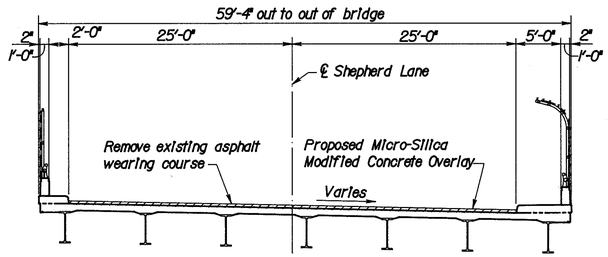

TYPICAL SECTION

PROPOSED WORK

1. Remove existing asphalt overlay and install new Micro-Silica modified concrete overlay.
2. Seal expansion joints at abutments with strip seals, use End Dam Modification, Type C at both abutments
3. Modify existing scuppers.
4. Seal curbs, sidewalks, parapet and fascia to limits shown.
5. Refurbish abutment bearings
6. Repair damaged south fascia beam.

NOTES:

1. For General Notes see Sheet 1/105 thru 3/105
2. For Abutment Modification Plans and Details, see Sheet 91/105
3. For End Dam Modification Type C, see Sheet 92/105 & 93/105
4. For Scupper modification details, see Sheet 102/105
5. For Reinforcing Steel List, see Sheet 105/105
6. For limits of surface to be sealed, see Sheet 92/105 & 93/105
7. For Estimated Quantities, see Sheet 4/105

EXISTING STRUCTURE

TYPE: Continuous welded plate girders with reinforced concrete deck and substructure.
SPANS: 84'-9", 62'-11 11/16", 79'-3 7/16"
ROADWAY: 50'-0" face to face of curbs
LOAD FREQUENCY: CF = 2000 (57)
SKEW: Varies
WEARING SURFACE: 1" Monolithic concrete with Asphalt Overlay
APPROACH SLABS: AS-1-54 (25' long)
ALIGNMENT: 14° Spiral right (Ls = 350')
SUPERELEVATION: Varies

LOCKWOOD, JONES & BEALS
CONSULTING ENGINEERS
DAYTON, OHIO
90/105

GENERAL PLAN & TYPICAL SECTION

BRIDGE NO. HAM-75-1292
SHEPHERD LANE OVER I-75

DESIGNED	CHECKED	DRAWN	CHECKED	REVIEWED DATE	REVISED
DJJ	HDJ	DJJ	HDJ	MPH 12/92	

f:\6272\1292plan.dgn Feb. 19, 1993 15:20:32

F.H.W.A. REGION	STATE	PROJECT	
5	OHIO		

324
338

HAMILTON COUNTY
HAM-75-9.75

* Existing reinforcing steel projecting from the superstructure and abutment curbs and sidewalk shall remain. Contractor shall exercise caution to ensure that the bars are not damaged during the removal operation. Any bars damaged as a result of the Contractor's operation shall be replaced or repaired by the Contractor at his expense. Method of repair or replacement will be at the discretion of the Director.

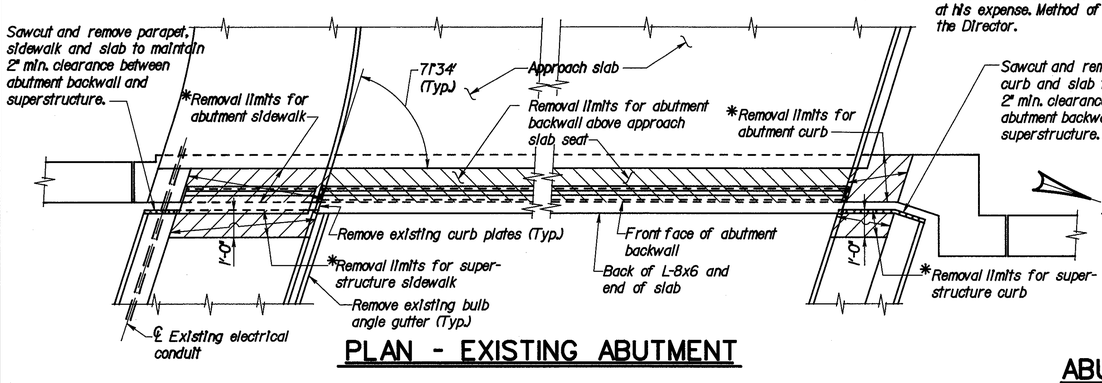

PLAN - EXISTING ABUTMENT

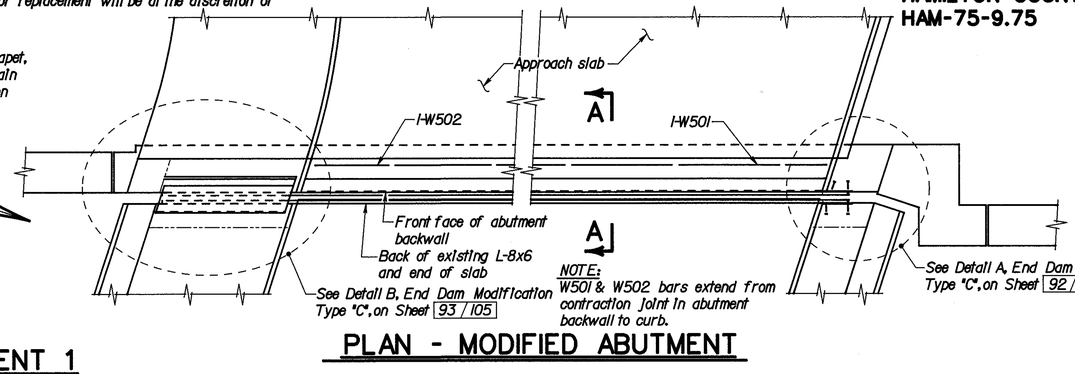

PLAN - MODIFIED ABUTMENT

ABUTMENT 1

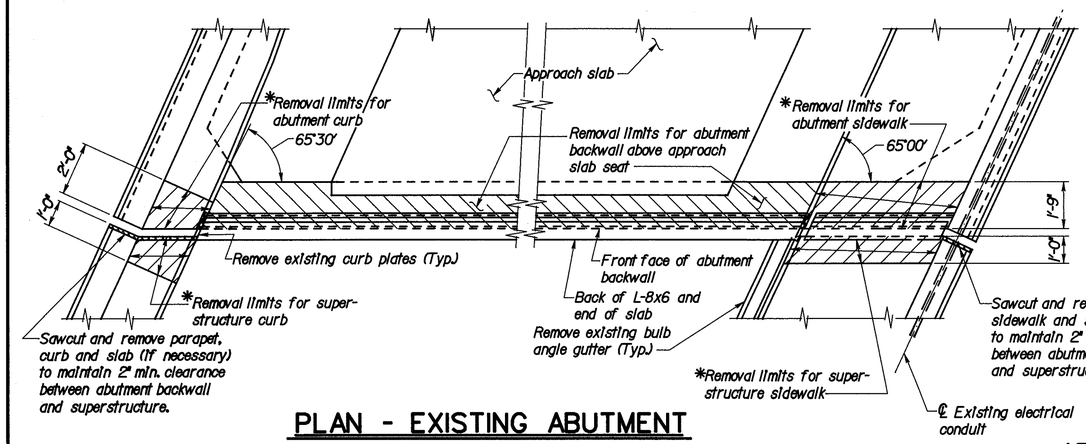

PLAN - EXISTING ABUTMENT

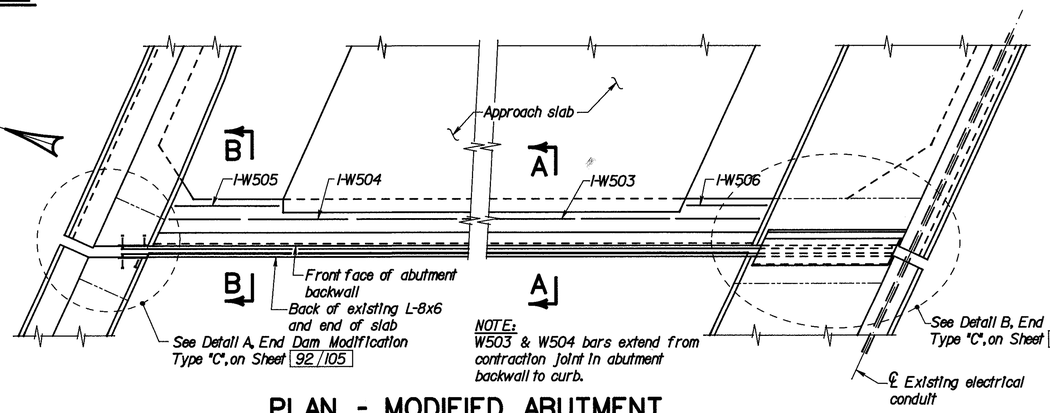

PLAN - MODIFIED ABUTMENT

ABUTMENT 2

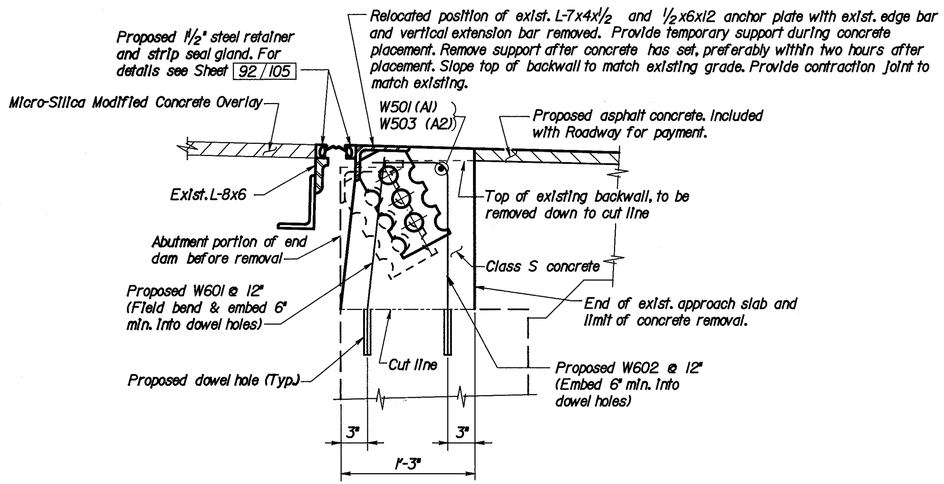

SECTION A-A

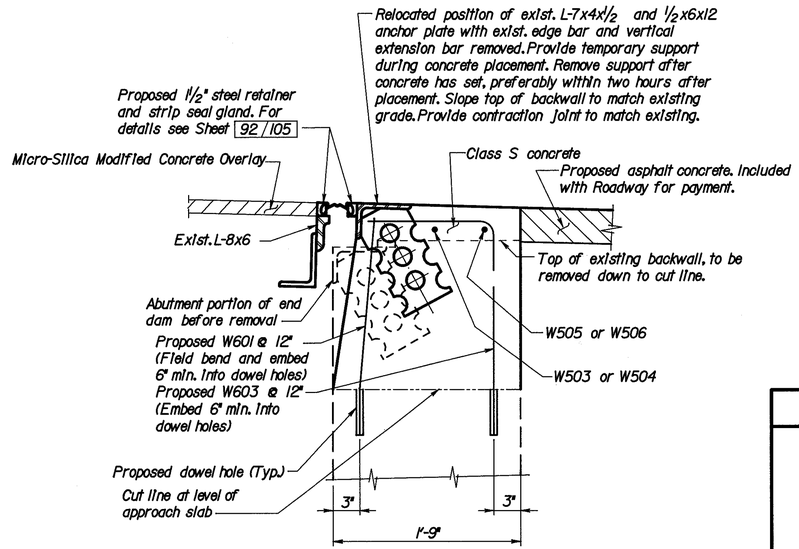

SECTION B-B

LEGEND

A1 = Abutment 1
A2 = Abutment 2

LOCKWOOD, JONES & BEALS
CONSULTING ENGINEERS
DAYTON, OHIO

91 / 105

ABUTMENT MODIFICATIONS PLANS AND DETAILS

BRIDGE NO. HAM-75-1292

SHEPHERD LANE OVER I-75

DESIGNED	CHECKED	DRAWN	CHECKED	REVIEWED DATE	REVISED
GJW	HDJ	GJW	DFS	MPH 12/92	

f:\6272\1292d1.dgn Feb. 17, 1993 08:28:02

F.H.W.A. REGION	STATE	PROJECT	
5	OHIO		

325
338

HAMILTON COUNTY
HAM-75-9.75

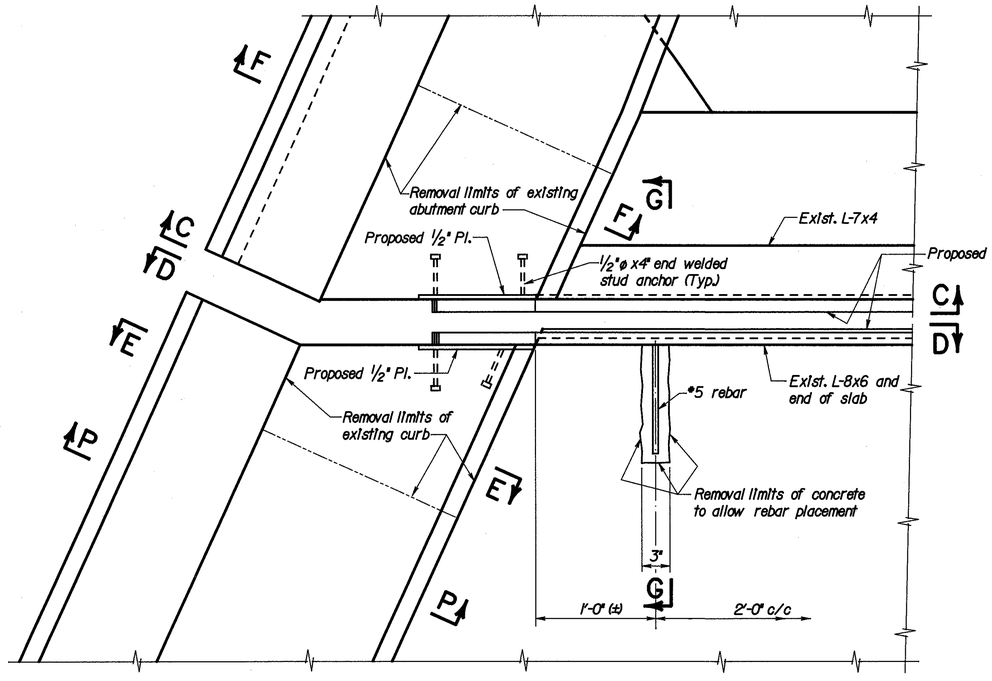

DETAIL A
END DAM MODIFICATION, TYPE C

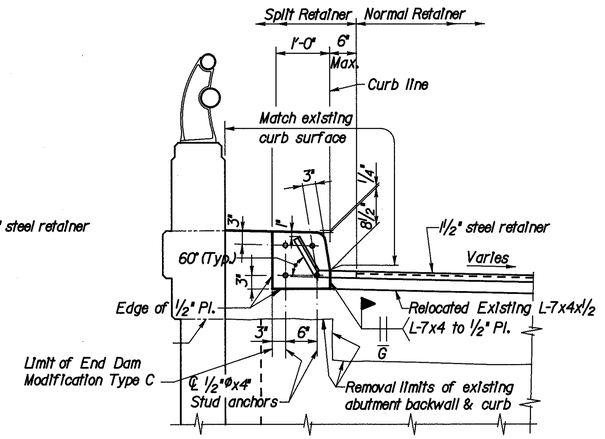

SECTION C-C

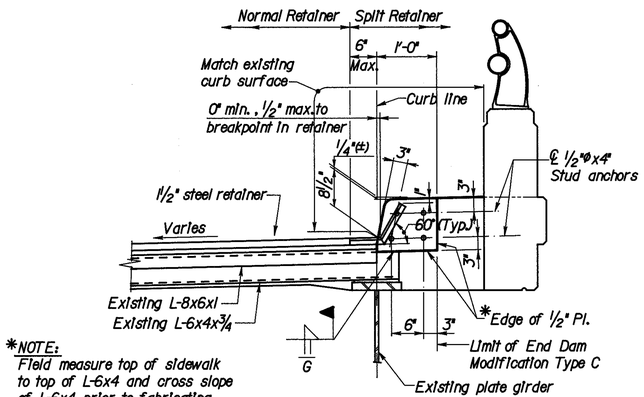

*NOTE:
Field measure top of sidewalk to top of L-6x4 and cross slope of L-6x4 prior to fabricating 1/2" Plate.

SECTION D-D

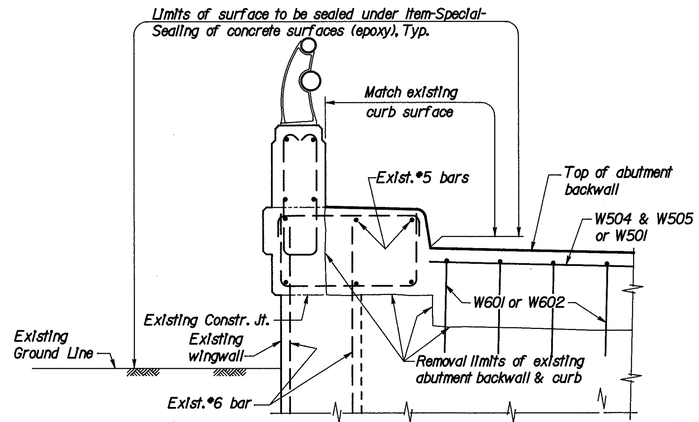

SECTION F-F

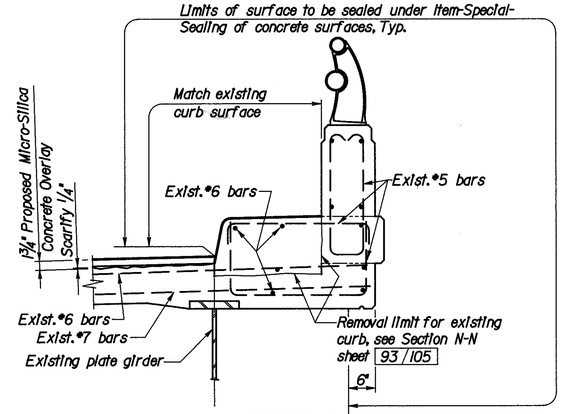

SECTION E-E

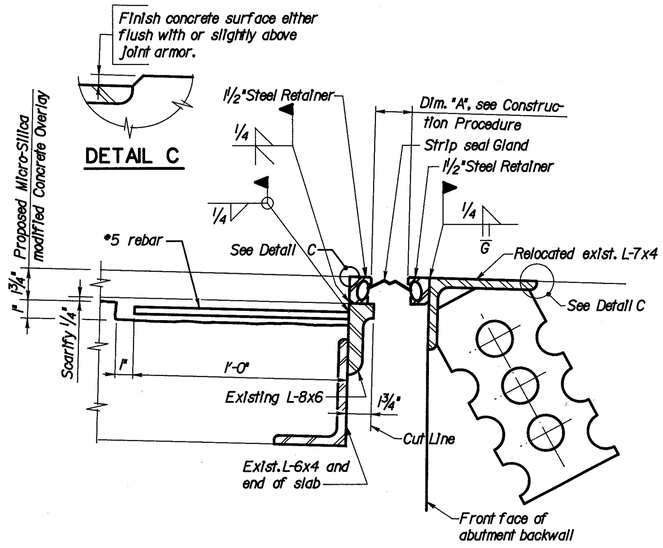

SECTION G-G

Construction Procedure:
1. Place backwall concrete during stable or rising ambient temperatures and conclude placement immediately before the day's peak ambient temperature.
2. Not more than four hours prior to the day's peak ambient temperature install the backwall L-7x4x1/2 with the 1 1/2" steel retainer attached such that Dimension "A" will be 2" at 60°F. For each 10°F above 60°F the 2" dimension shall be decreased by 1/8" and for each 10°F below 60°F the 2" dimension shall be increased by 1/8".

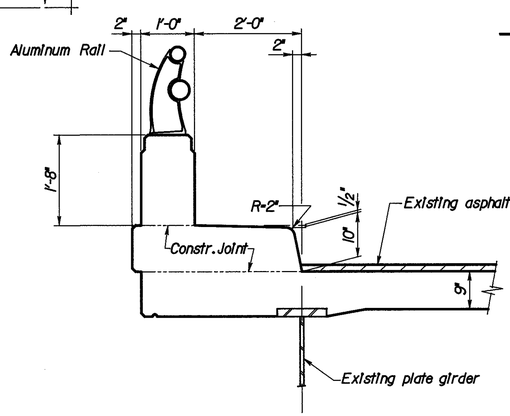

SECTION P-P
EXISTING CURB & RAILING

NOTES

1. For Reinforcing Steel List, see Sheet 105/105

LOCKWOOD, JONES & BEALS
CONSULTING ENGINEERS
DAYTON, OHIO
92/105

END DAM MODIFICATION DETAILS AT NORTH CURB
BRIDGE NO. HAM-75-1292
SHEPHERD LANE OVER I-75

DESIGNED	CHECKED	DRAWN	CHECKED	REVIEWED DATE	REVISED
GJW	HDJ	GJW	DFS	MPH 12/92	

f:\6272\1292ge2.dgn Feb. 17, 1993 08:31:12

HAMILTON COUNTY
HAM-75-9.75

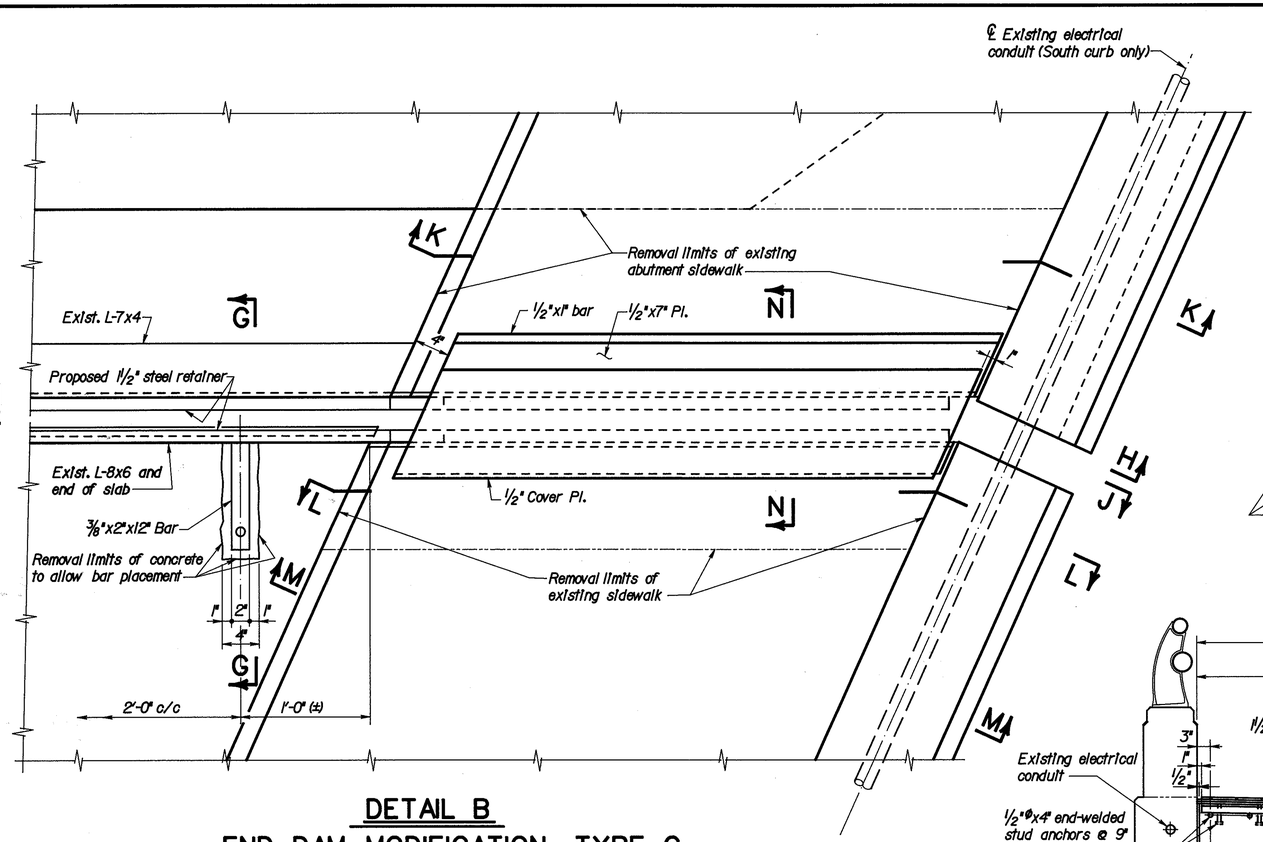

DETAIL B
END DAM MODIFICATION, TYPE C

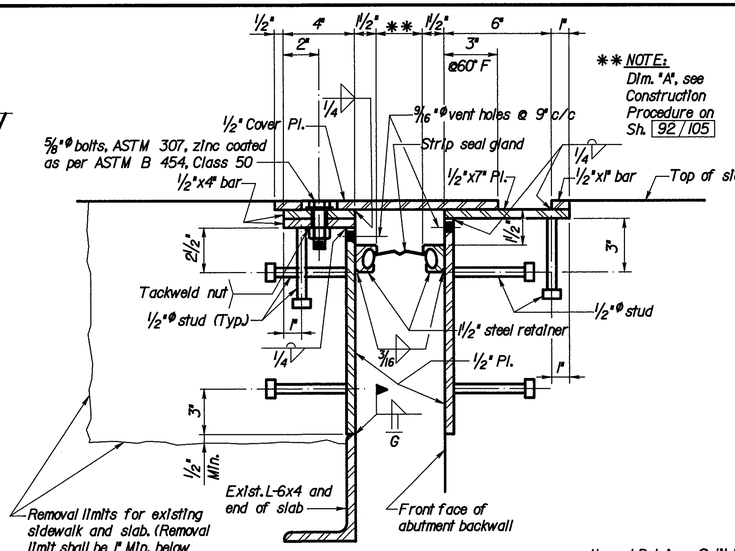

SECTION N-N

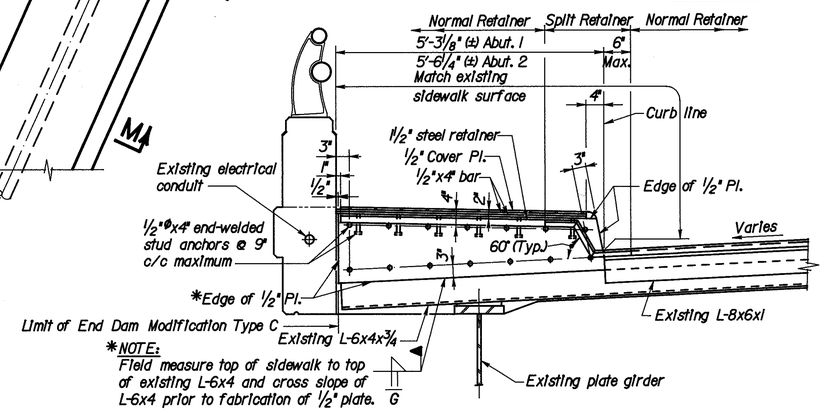

SECTION J-J

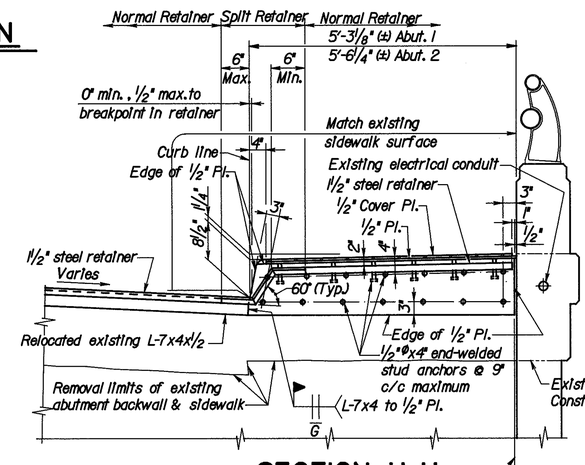

SECTION H-H

Limit of End Dam Modification Type C

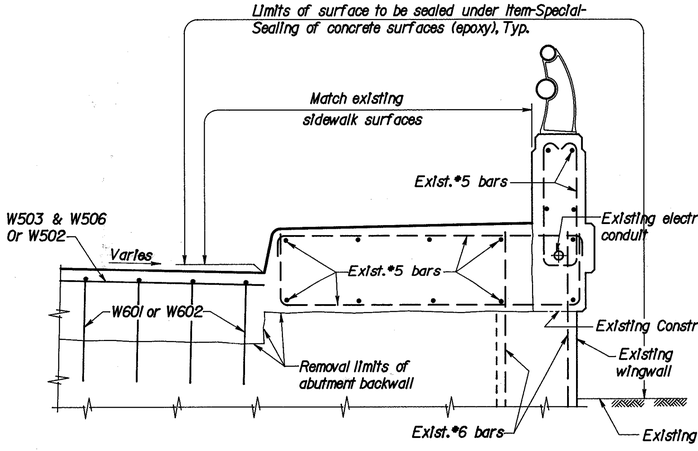

SECTION K-K

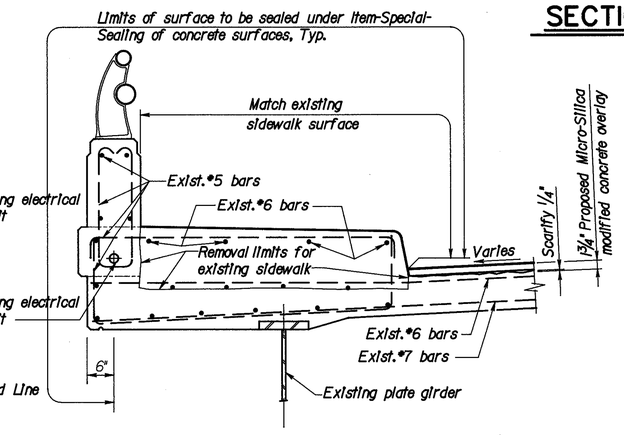

SECTION L-L

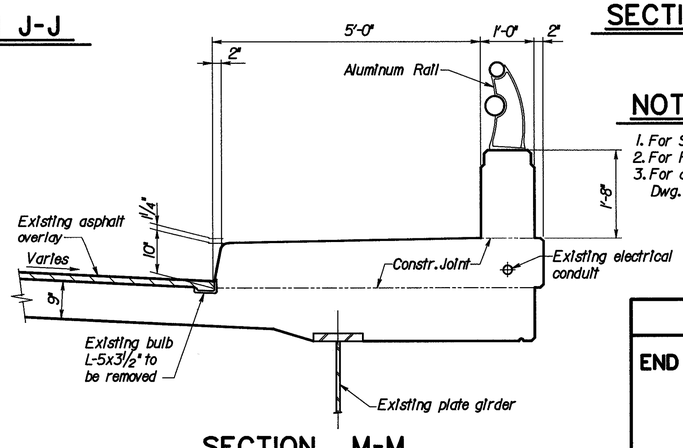

SECTION M-M
EXISTING SIDEWALK & RAILING

NOTES

1. For Section G-G, see sheet 92/105
2. For Reinforcing Steel List, see sheet 105/105
3. For additional sidewalk end dam details see Std. Dwg. EXJ-4-87, sheets 3 & 4 of 5.

LOCKWOOD, JONES & BEALS
CONSULTING ENGINEERS
DAYTON, OHIO
93/105

END DAM MODIFICATION DETAILS AT SOUTH SIDEWALK
BRIDGE NO. HAM-75-1292
SHEPHERD LANE OVER I-75

DESIGNED	CHECKED	DRAWN	CHECKED	REVIEWED DATE	REVISED
GJW	HDJ	GJW	DFS	MPH 12/92	

f:\6272\1292d3.dgn Feb. 17, 1993 08:32:42

F.H.W.A. REGION	STATE	PROJECT	
5	OHIO		

HAMILTON COUNTY
HAM-75-9.75

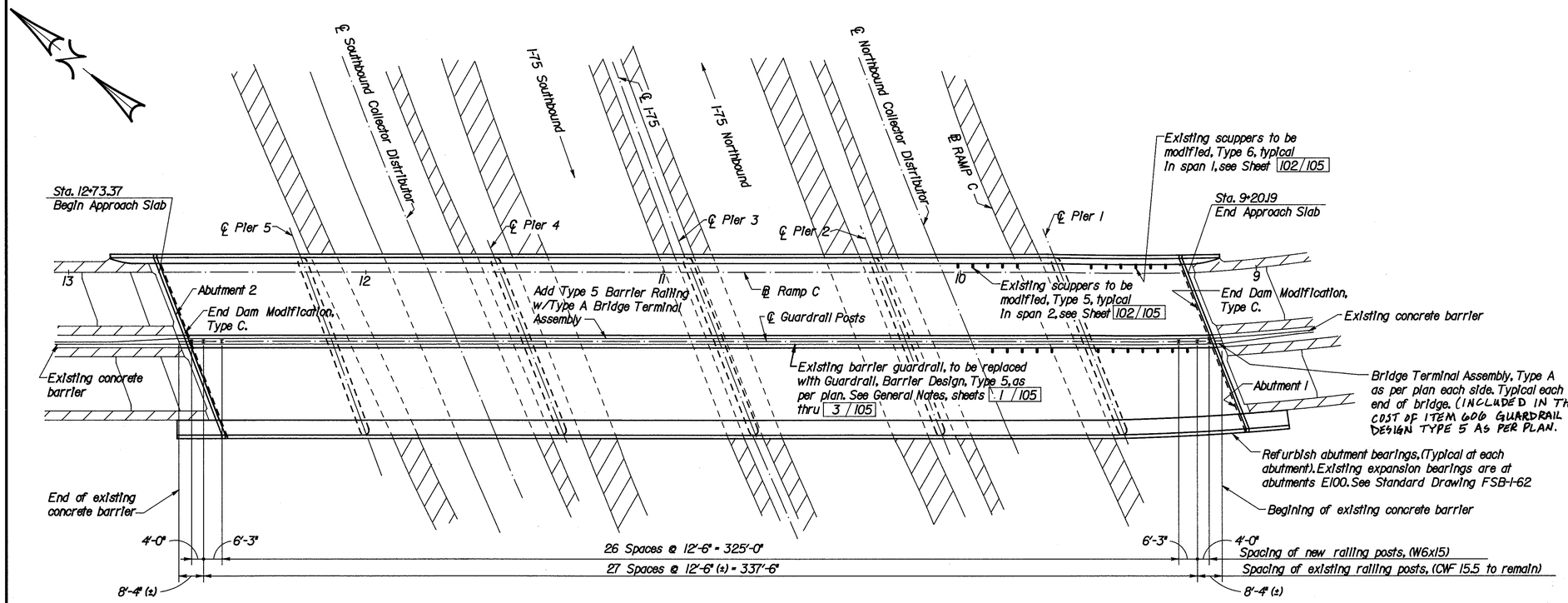

GENERAL PLAN

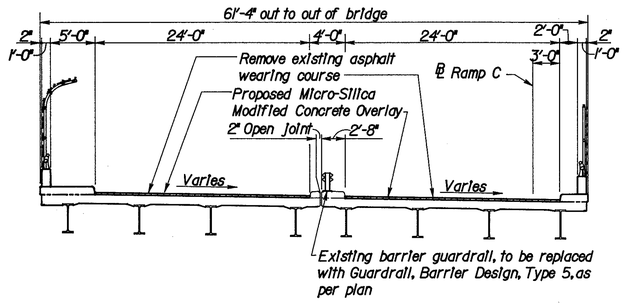

TYPICAL SECTION

PROPOSED WORK

1. Remove existing asphalt overlay and install new Micro-silica modified concrete overlay.
2. Seal expansion joints at abutments with strip seals, use End Dam Modification, Type C at both abutments
3. Modify existing scuppers.
4. Seal curbs, sidewalks, parapet and fascia to limits shown.
5. Refurbish abutment bearings

NOTES:

1. For General Notes see Sheet 1/105 thru 3/105
2. For Abutment Modification Plans and Details, see Sheet 95/105
3. For End Dam Modification Type C, see Sheets 96/105 thru 98/105
4. For Scupper modification details, see Sheet 102/105
5. For limits of surface to be sealed, see Sheets 96/105 thru 98/105
6. For Reinforcing Steel List, see Sheet 105/105
7. For Estimated Quantities, see Sheet 5/105

EXISTING STRUCTURE

TYPE: Continuous rolled steel beam with reinforced concrete deck and substructure.
SPANS: 42'-6", 61'-3", 63'-7, 65'-0", 65'-9", 50'-6"
ROADWAY: 52'-0" f/f of curbs including 4'-0" raised median.
LOAD FREQUENCY: CF = 400 (57)
SKEW: 21°35'00" R.F.
WEARING SURFACE: 1" Monolithic concrete with Asphalt Overlay
APPROACH SLABS: AS-1-54 (25' long)
ALIGNMENT: Spiral (Dc=38°) and tangent.

LOCKWOOD, JONES & BEALS
CONSULTING ENGINEERS
DAYTON, OHIO

94/105

GENERAL PLAN & TYPICAL SECTION

BRIDGE NO. HAM-75-1338
RAMP C OVER I-75

DESIGNED	CHECKED	DRAWN	CHECKED	REVIEWED DATE	REVISED
DJJ	HDJ	DJJ	HDJ	MPH 12/92	

f:\6272\1338pl.dgn Feb. 18, 1993 12:31:17

F.H.W.A. REGION	STATE	PROJECT	
5	OHIO		

328
338

HAMILTON COUNTY
HAM-75-9.75

ABUTMENT 1
ABUTMENT 2

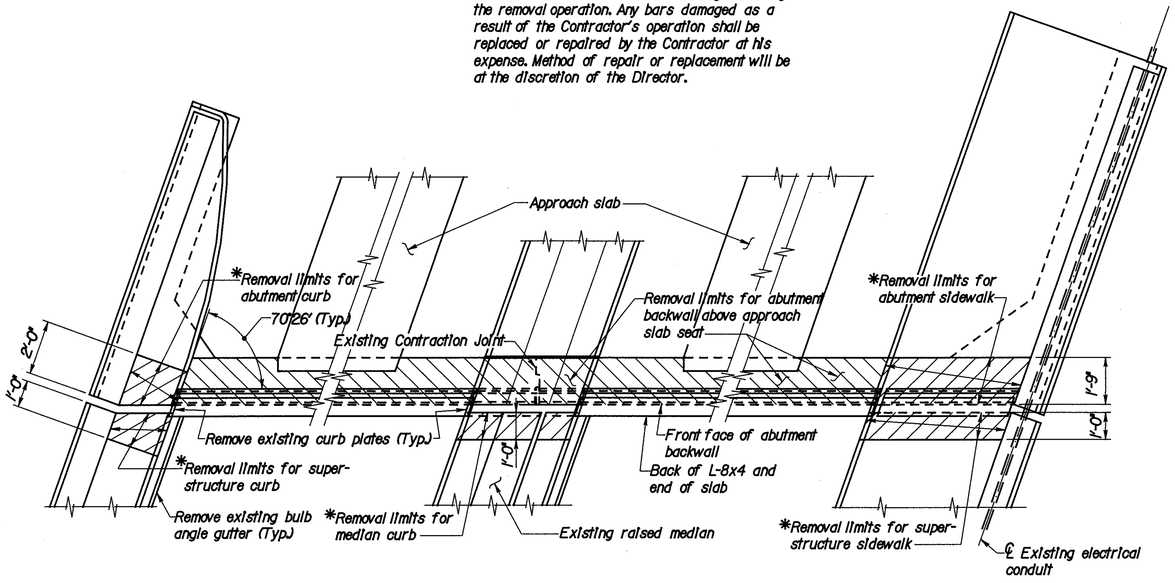

PLAN - EXISTING ABUTMENT

Abutment 1 shown, Abutment 2 similar

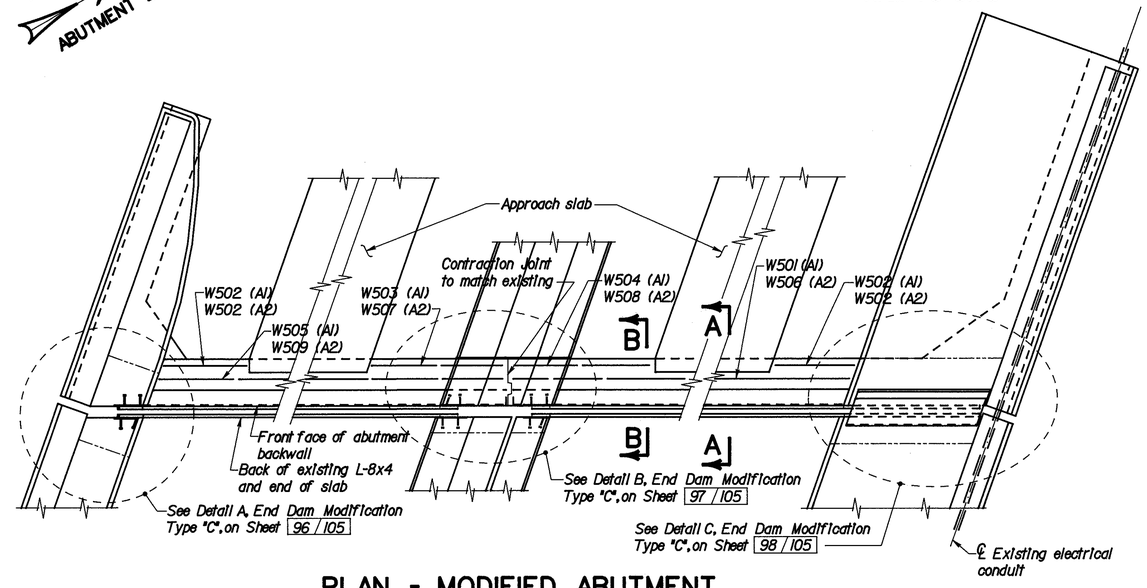

LEGEND

A1 = Abutment 1
A2 = Abutment 2

PLAN - MODIFIED ABUTMENT

Abutment 1 shown, Abutment 2 similar

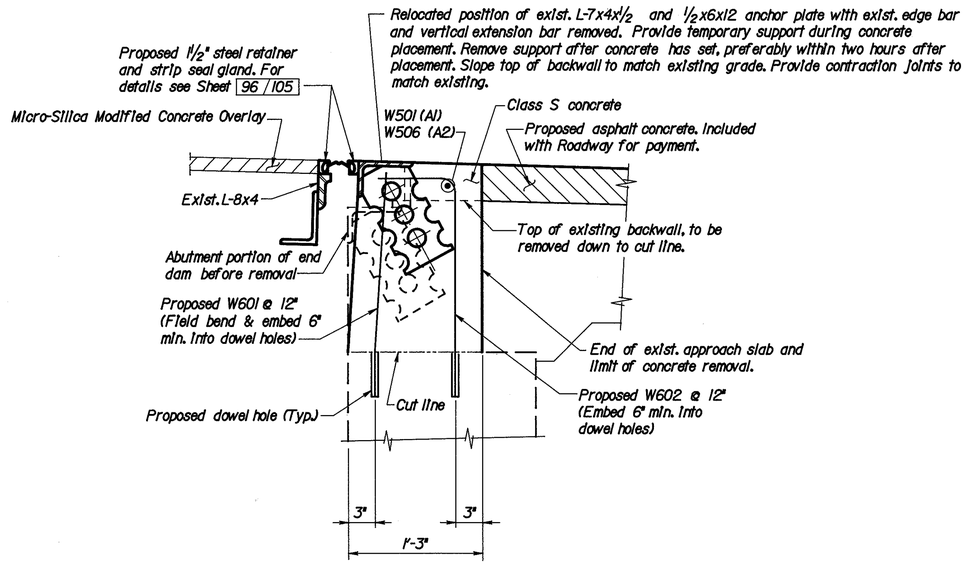

SECTION A-A

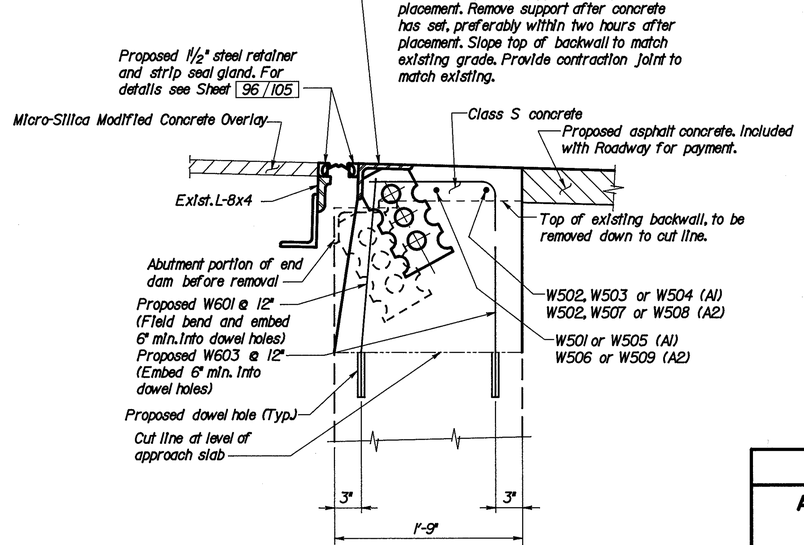

SECTION B-B

LOCKWOOD, JONES & BEALS
CONSULTING ENGINEERS
DAYTON, OHIO
95 / 105

ABUTMENT MODIFICATIONS PLANS AND DETAILS

BRIDGE NO. HAM-75-1338

RAMP C OVER I-75

DESIGNED	CHECKED	DRAWN	CHECKED	REVIEWED DATE	REVISED
GJW	HDJ	GJW	DFS	MPH 12/92	

f:\6272\t338d1.dgn Feb. 17, 1993 08:35:49

F.H.W.A. REGION	STATE	PROJECT	
5	OHIO		

329
338

HAMILTON COUNTY
HAM-75-9.75

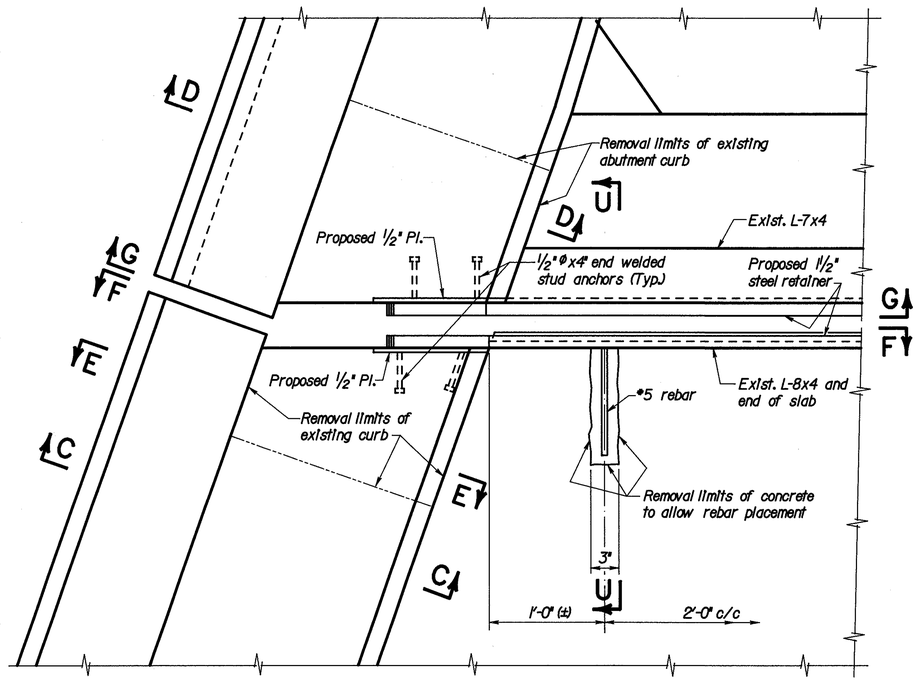

DETAIL A
END DAM MODIFICATION, TYPE C

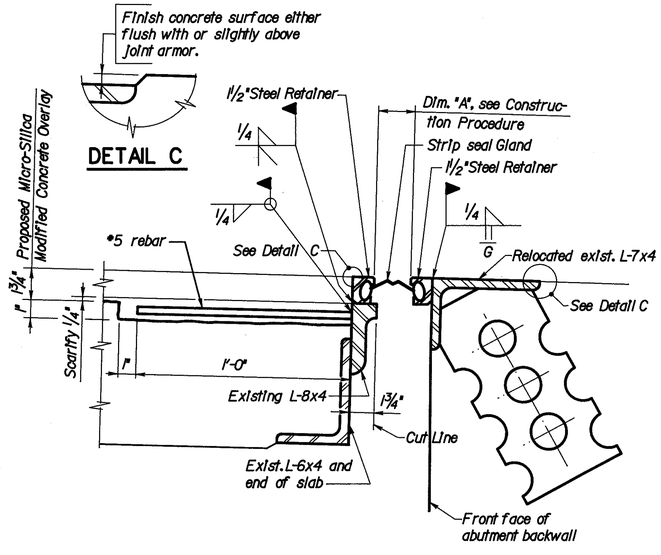

SECTION U-U

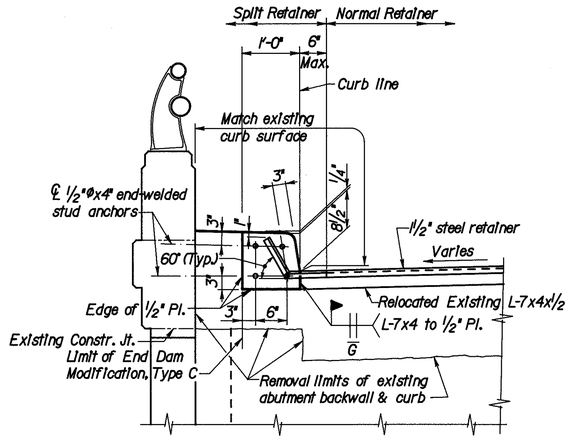

SECTION G-G

*NOTE:
Field measure top of sidewalk to top of existing L-6x4 and cross slope of L-6x4 prior to fabrication of 1/2" plate.

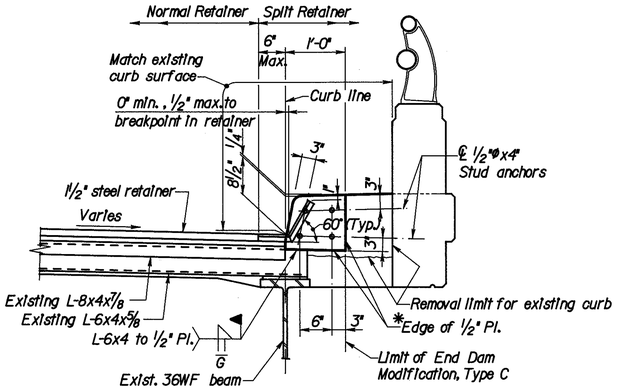

SECTION F-F

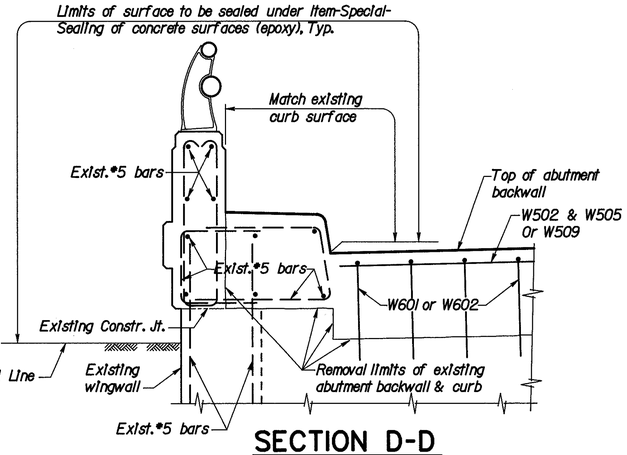

SECTION D-D

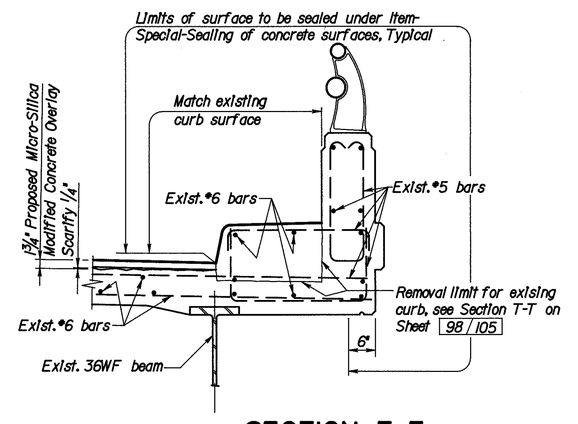

SECTION E-E

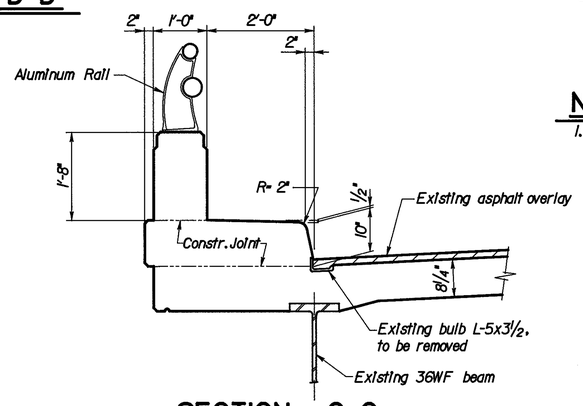

SECTION C-C
EXISTING CURB & RAILING (EAST SIDE)

Construction Procedure:
1. Place backwall concrete during stable or rising ambient temperatures and conclude placement immediately before the day's peak ambient temperature.
2. Not more than four hours prior to the day's peak ambient temperature install the backwall L-7x4x1/2 with the 1 1/2" steel retainer attached such that Dimension "A" will be 2" at 60°F. For each 10°F above 60°F the 2" dimension shall be decreased by 1/8" and for each 10°F below 60°F the 2" dimension shall be increased by 1/8".

NOTES

1. For Reinforcing Steel List, see sheet 105/105

LOCKWOOD, JONES & BEALS
CONSULTING ENGINEERS
DAYTON, OHIO
96/105

END DAM MODIFICATION DETAILS AT EAST CURB

BRIDGE NO. HAM-75-1338
RAMP C OVER I-75

DESIGNED	CHECKED	DRAWN	CHECKED	REVIEWED DATE	REVISED
GJW	HDJ	GJW	DFS	MPH 12/92	

f:\6272\1338d2.dgn Feb. 17, 1993 08:37:57

F.H.W.A. REGION	STATE	PROJECT		330 / 338
5	OHIO			

HAMILTON COUNTY
HAM-75-9.75

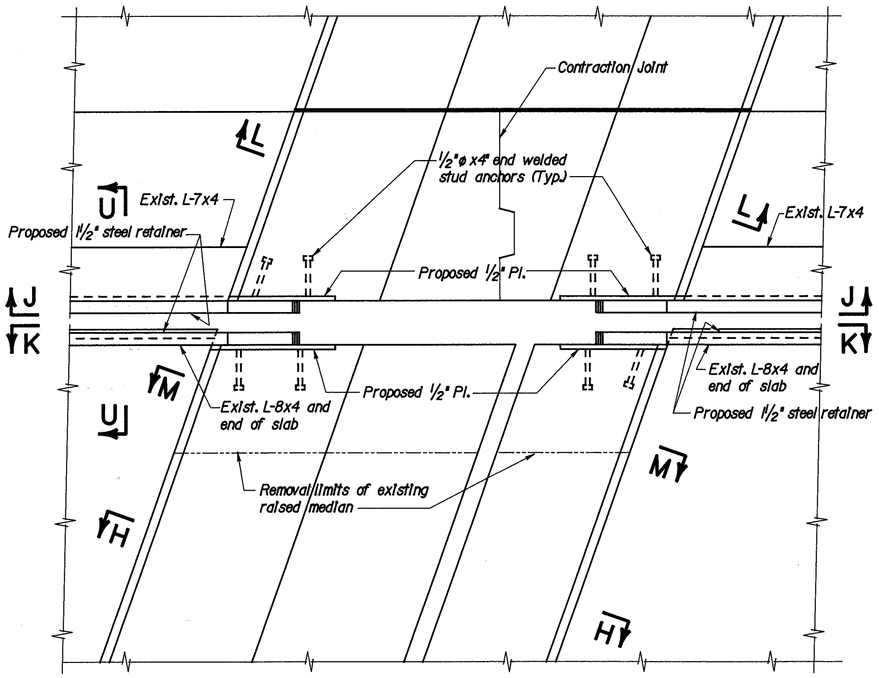

DETAIL B
END DAM MODIFICATION, TYPE C

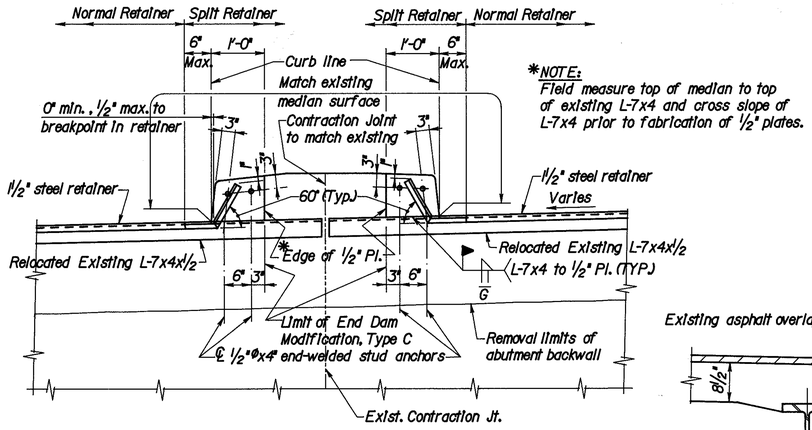

*NOTE:
Field measure top of median to top of existing L-7x4 and cross slope of L-7x4 prior to fabrication of ½" plates.

SECTION J-J

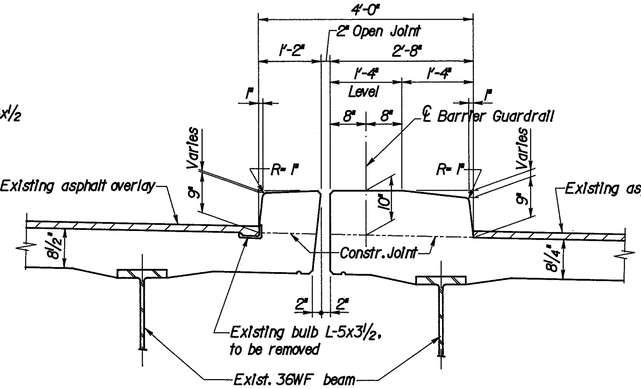

SECTION H-H
EXISTING MEDIAN CURB

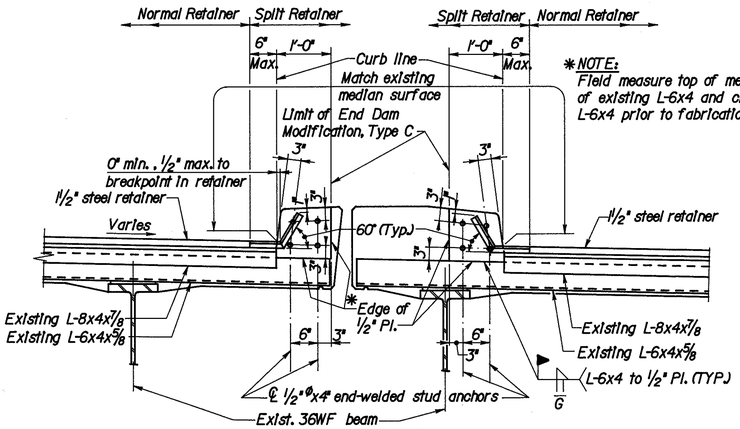

*NOTE:
Field measure top of median to top of existing L-6x4 and cross slope of L-6x4 prior to fabrication of ½" plates.

SECTION K-K

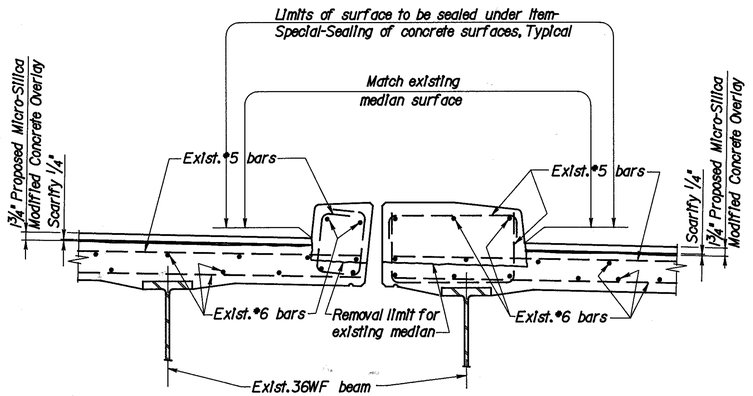

SECTION M-M

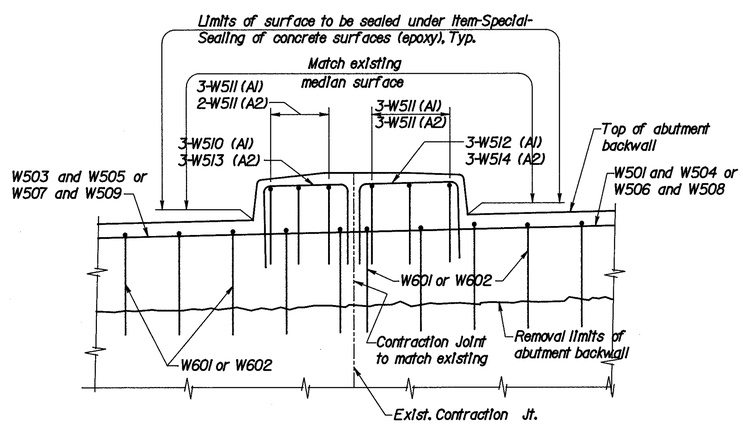

SECTION L-L

NOTES

1. For Section U-U, see sheet 96 / 105
2. For Reinforcing Steel List, see sheet 105 / 105

LOCKWOOD, JONES & BEALS
CONSULTING ENGINEERS
DAYTON, OHIO
97 / 105

END DAM MODIFICATION DETAILS AT MEDIAN CURB
BRIDGE NO. HAM-75-1338
RAMP C OVER I-75

DESIGNED	CHECKED	DRAWN	CHECKED	REVIEWED DATE	REVISED
GJW	HDJ	GJW	DFS	MPH 12/92	

f:\6272\1338d3.dgn Feb. 17, 1993 08:40:02

F.H.W.A. REGION	STATE	PROJECT	
5	OHIO		

331
338

HAMILTON COUNTY
HAM-75-9.75

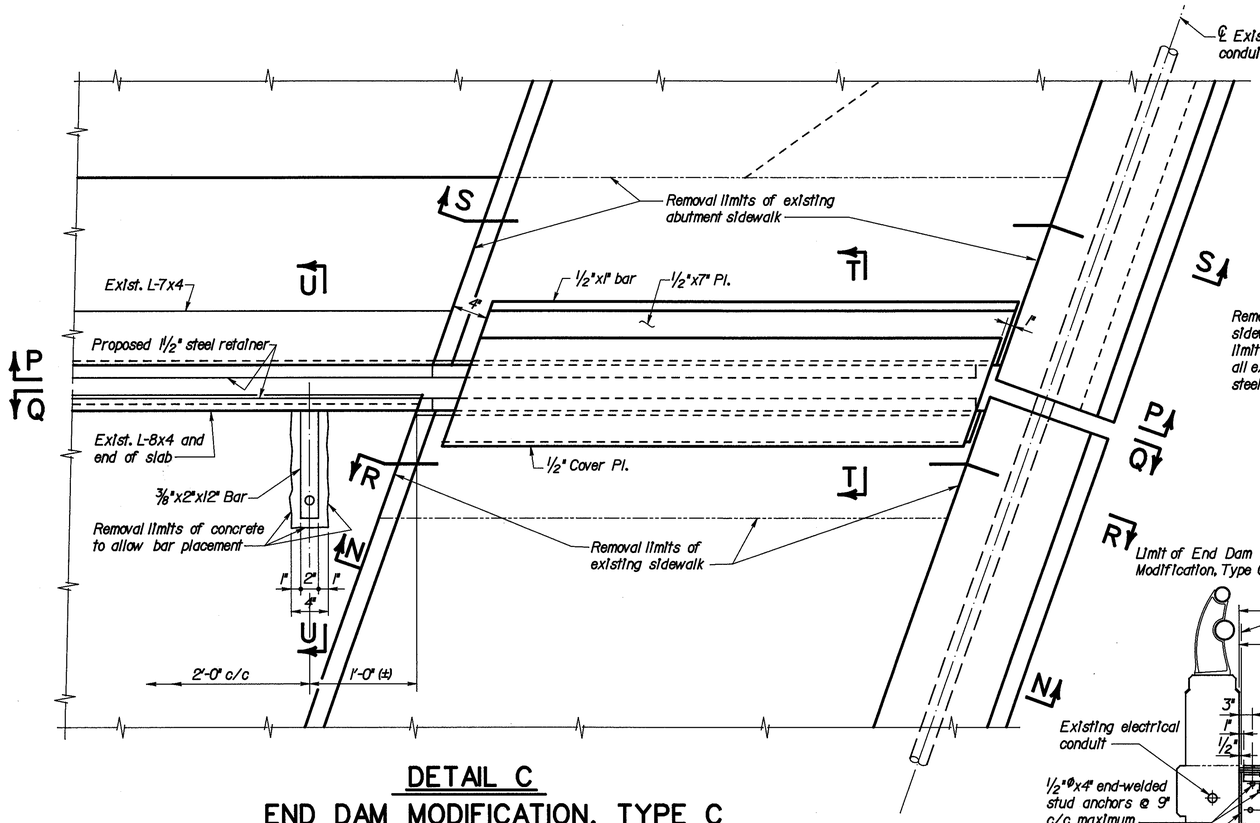

DETAIL C
END DAM MODIFICATION, TYPE C

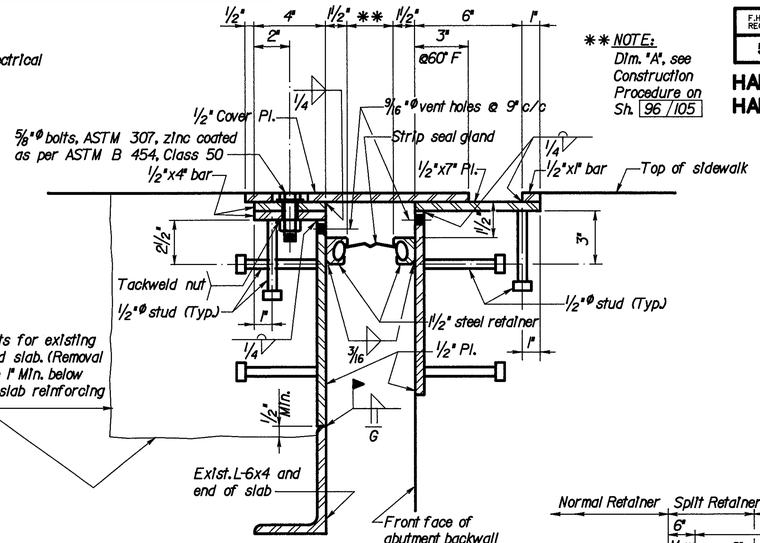

SECTION T-T

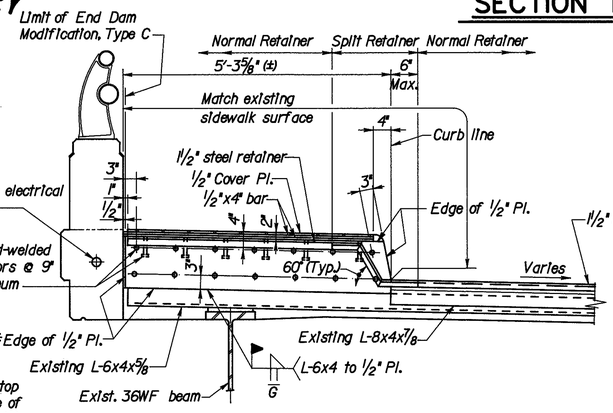

SECTION Q-Q

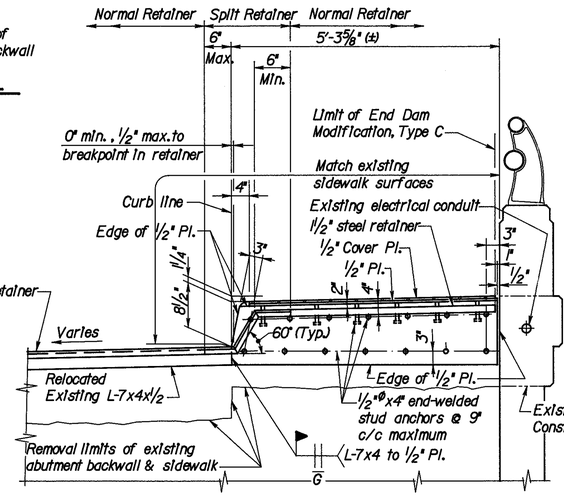

SECTION P-P

*NOTE:
Field measure top of sidewalk to top of existing L-6x4 and cross slope of L-6x4 prior to fabrication of ½" plate.

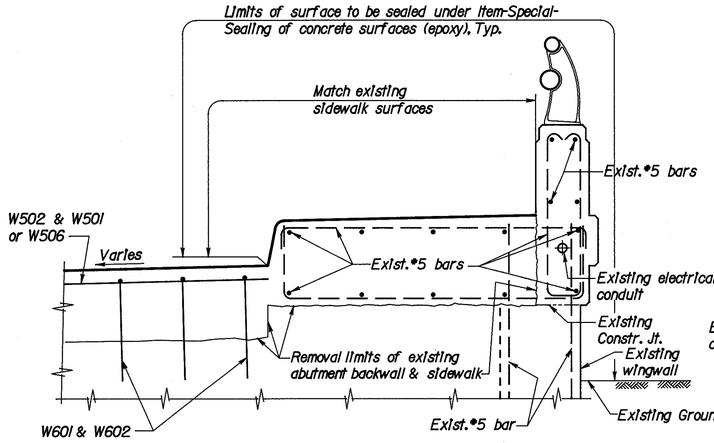

SECTION S-S

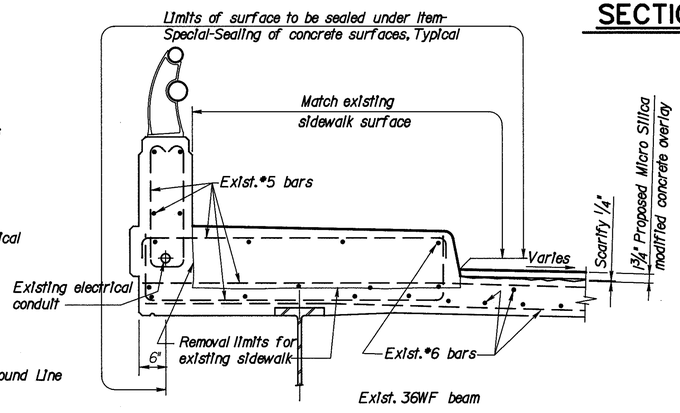

SECTION R-R

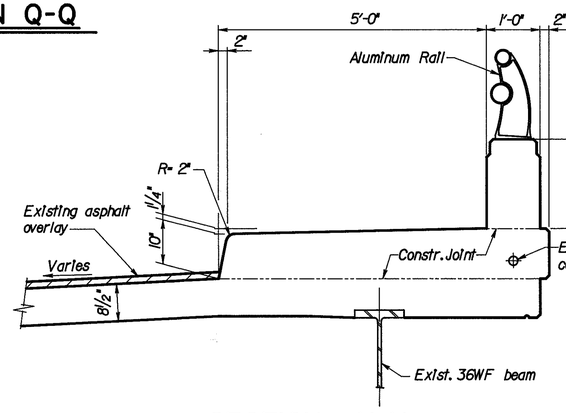

SECTION N-N
EXISTING SIDEWALK & RAILING

NOTES

1. For Section U-U, see sheet 96/105
2. For Reinforcing Steel List, see sheet 105/105
3. For additional sidewalk end dam details see Std. Dwg. EXJ-4-87, sheets 3 & 4 of 5.

LOCKWOOD, JONES & BEALS
CONSULTING ENGINEERS
DAYTON, OHIO
98/105

END DAM MODIFICATION DETAILS AT WEST SIDEWALK
BRIDGE NO. HAM-75-1338
RAMP C OVER I-75

DESIGNED	CHECKED	DRAWN	CHECKED	REVIEWED	DATE	REVISED
GJW	HDJ	GJW	DFS	MPH	12/92	

f:\6272\133864.dgn Feb. 17, 1993 08:42:07

F.H.W.A. REGION	STATE	PROJECT	
5	OHIO		

332
338

HAMILTON COUNTY
HAM-75-9.75

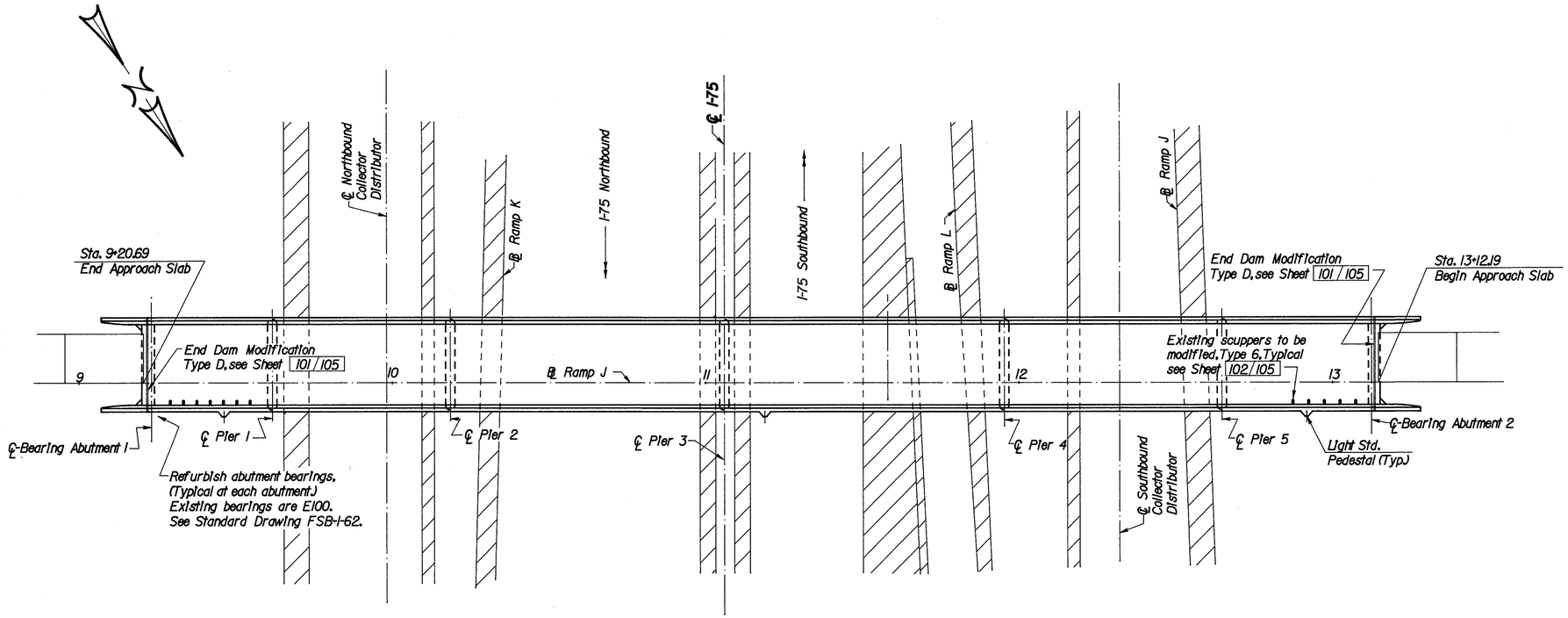

GENERAL PLAN

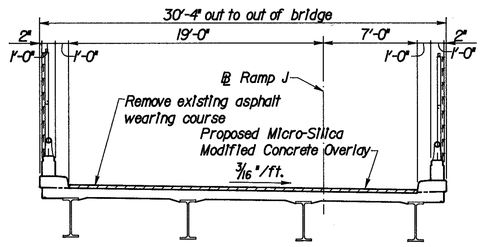

TYPICAL SECTION

PROPOSED WORK

1. Remove existing asphalt overlay and install new Micro-silica modified concrete overlay.
2. Seal expansion joints at abutments with strip seals. Use End Dam Modification Type D at both abutments.
3. Seal curbs, parapet and fascia to limits shown.
4. Modify existing scuppers.
5. Refurbish abutment bearings.

NOTES:

1. For General Notes see Sheet 1/105 thru 3/105
2. For Abutment Modification Plans and Details, see Sheet 100/105
3. For End Dam Modification, Type D, Details, see Sheet 101/105
4. For Scupper Modification Details, see Sheet 102/105
5. For Reinforcing Steel List, see Sheet 105/105
6. For limits of surfaces to be sealed, see Sheet 101/105
7. For Estimated Quantities, see Sheet 4/105

EXISTING STRUCTURE

TYPE: Continuous rolled steel beams with reinforced concrete deck and substructure.
SPANS: 39'-0", 56'-0", 86'-6", 88'-0", 69'-0", 48'-6"
ROADWAY: 26'-0" face to face of curbs
LOAD FREQUENCY: CF - 400 (57)
SKEW: 0°00'00"
WEARING SURFACE: 1" Monolithic concrete with Asphalt Overlay
APPROACH SLABS: AS-1-54 (25' long)
ALIGNMENT: Tangent

LOCKWOOD, JONES & BEALS
CONSULTING ENGINEERS
DAYTON, OHIO

99/105

GENERAL PLAN & TYPICAL SECTION

BRIDGE NO. HAM-75-1390
RAMP J OVER I-75

DESIGNED	CHECKED	DRAWN	CHECKED	REVIEWED DATE	REVISED
DYA	HDJ	DYA	HDJ	MPH 12/92	

f:\6272\1390plan.dgn Feb. 19, 1993 15:50:14

F.H.W.A. REGION	STATE	PROJECT	
5	OHIO		

333
338

HAMILTON COUNTY
HAM-75-9.75

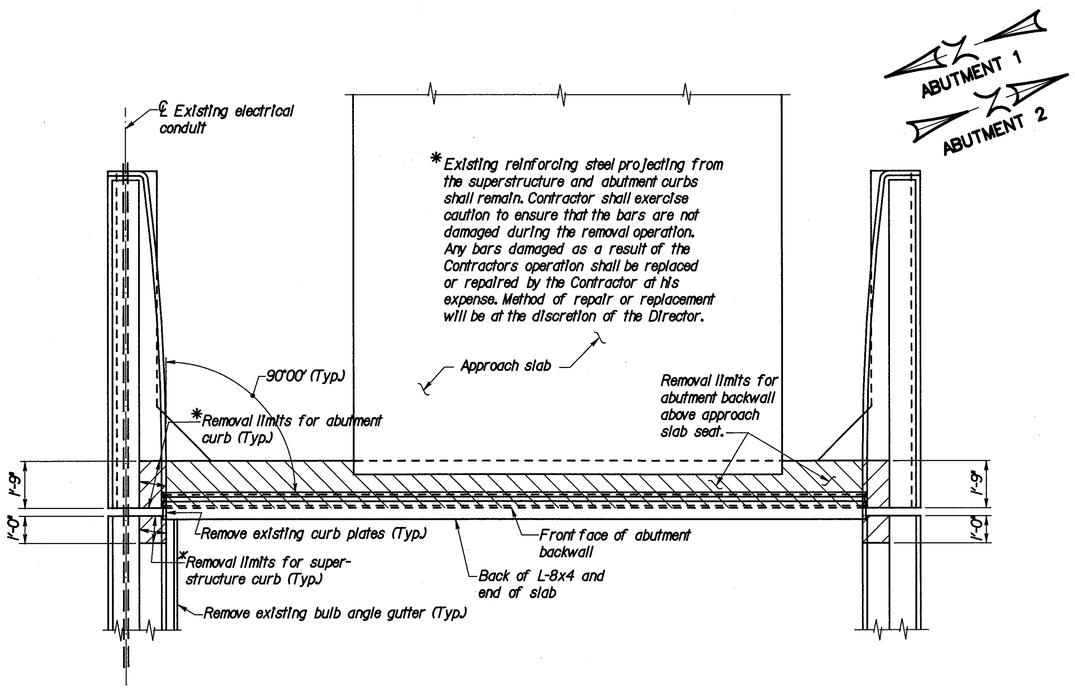

PLAN - EXISTING ABUTMENT

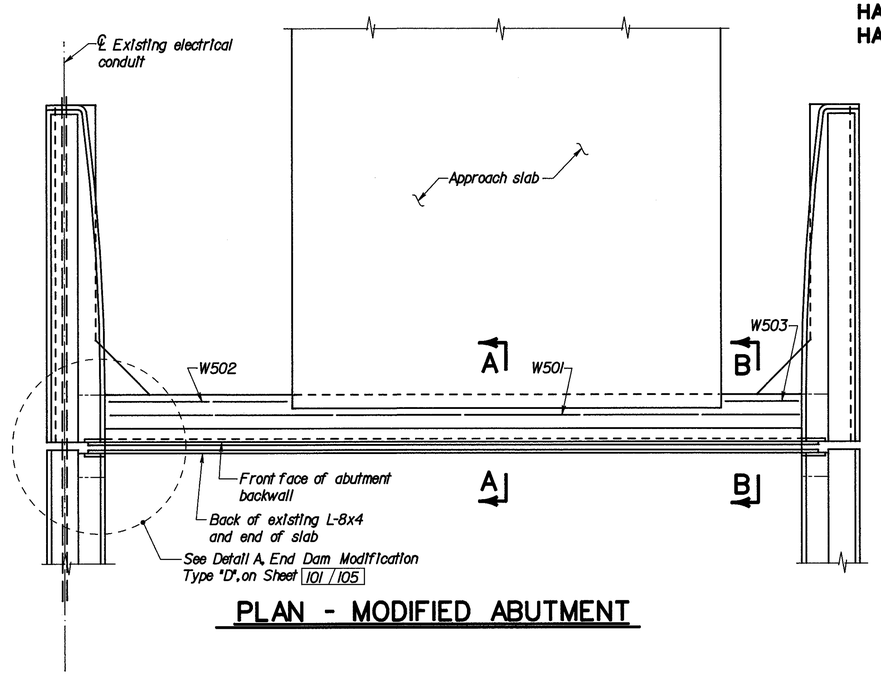

PLAN - MODIFIED ABUTMENT

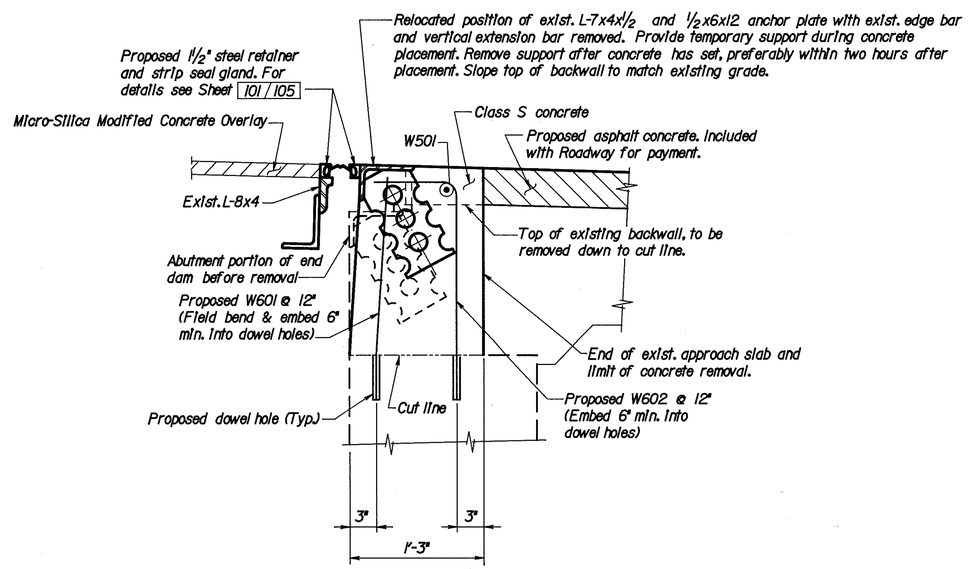

SECTION A-A

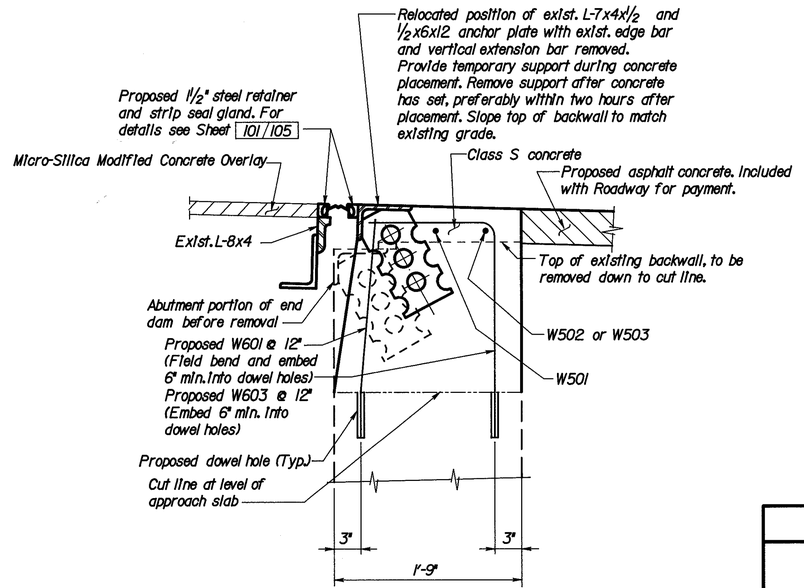

SECTION B-B

LOCKWOOD, JONES & BEALS
CONSULTING ENGINEERS
DAYTON, OHIO
100 / 105

ABUTMENT MODIFICATIONS PLANS AND DETAILS

BRIDGE NO. HAM-75-1390

RAMP J OVER I-75

DESIGNED	CHECKED	DRAWN	CHECKED	REVIEWED DATE	REVISED
GJW	HDJ	GJW	DFS	MPH 12/92	

f:\6272\1390d1.dgn Feb. 17, 1993 08:44:10

F.H.W.A. REGION	STATE	PROJECT	
5	OHIO		

334
338

HAMILTON COUNTY
HAM-75-9.75

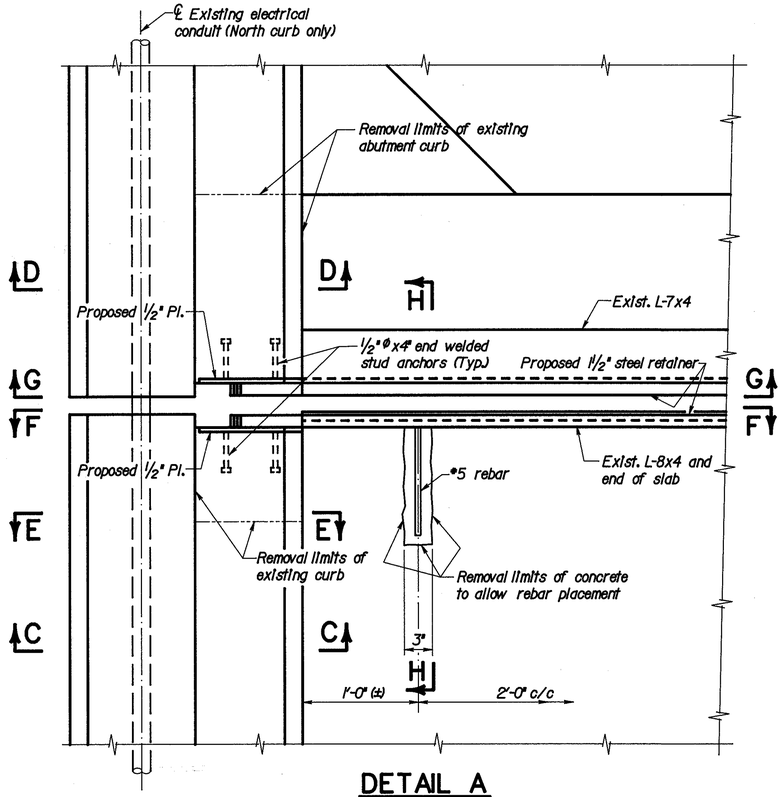

DETAIL A
END DAM MODIFICATION, TYPE D

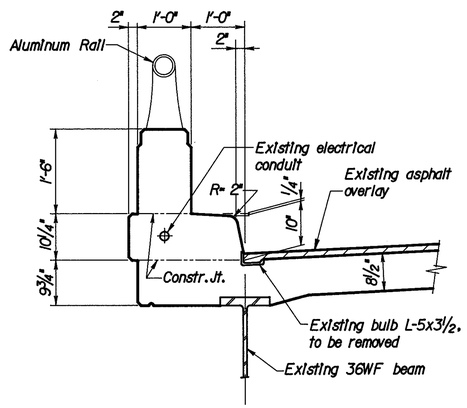

SECTION C-C
EXISTING CURB AND RAILING

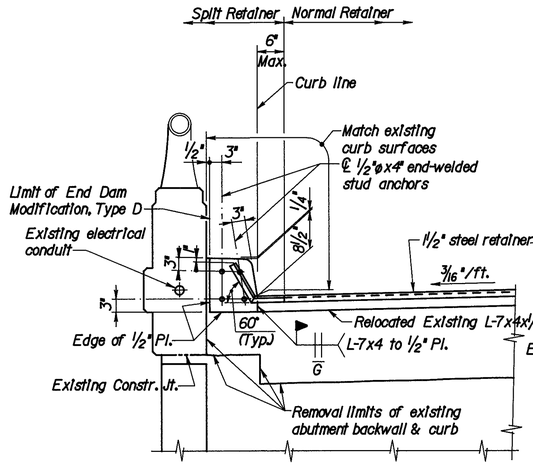

SECTION G-G

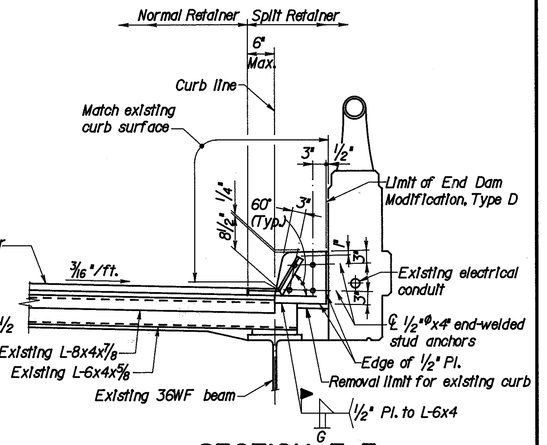

SECTION F-F

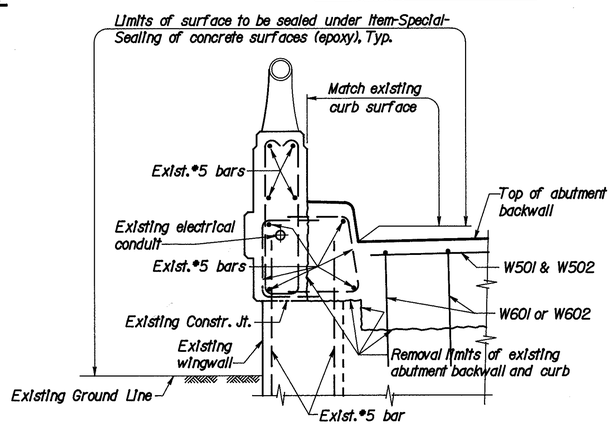

SECTION D-D

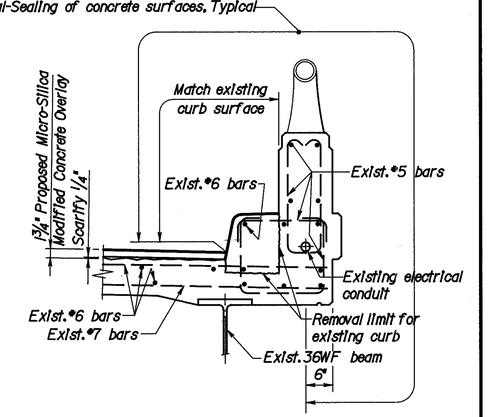

SECTION E-E

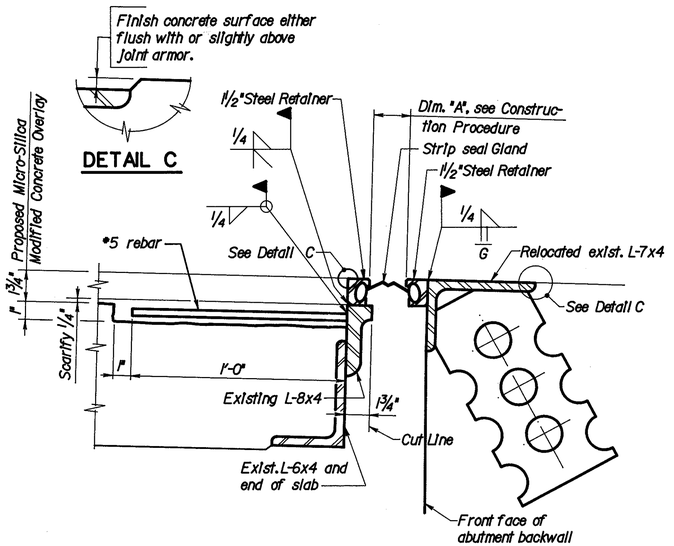

SECTION H-H

Construction Procedure:

1. Place backwall concrete during stable or rising ambient temperatures and conclude placement immediately before the day's peak ambient temperature.
2. Not more than four hours prior to the day's peak ambient temperature install the backwall L-7x4x1/2 with the 1 1/2" steel retainer attached such that Dimension "A" will be 2" at 60°F. For each 10°F above 60°F the 2" dimension shall be decreased by 1/8" and for each 10°F below 60°F the 2" dimension shall be increased by 1/8".

NOTES

1. For Reinforcing Steel List, see sheet 105/105

LOCKWOOD, JONES & BEALS
CONSULTING ENGINEERS
DAYTON, OHIO

101 / 105

END DAM MODIFICATION DETAILS

BRIDGE NO. HAM-75-1390
RAMP J OVER I-75

DESIGNED	CHECKED	DRAWN	CHECKED	REVIEWED DATE	REVISED
GJW	HDJ	GJW	DFS	MPH 12/92	

f:\6272\1390d2.dgn Feb. 17, 1993 08:46:06

F.H.W.A. REGION	STATE	PROJECT	
5	OHIO		

335
338

HAMILTON COUNTY
HAM-75-9.75

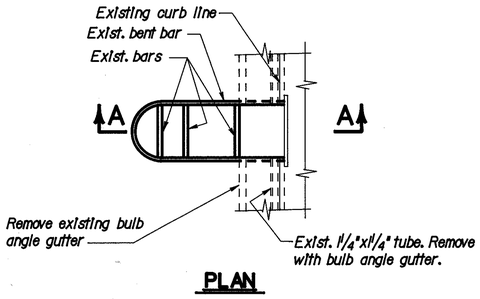

PLAN

EXISTING SCUPPER TREATMENT AT BRIDGE DECK OVERLAYS

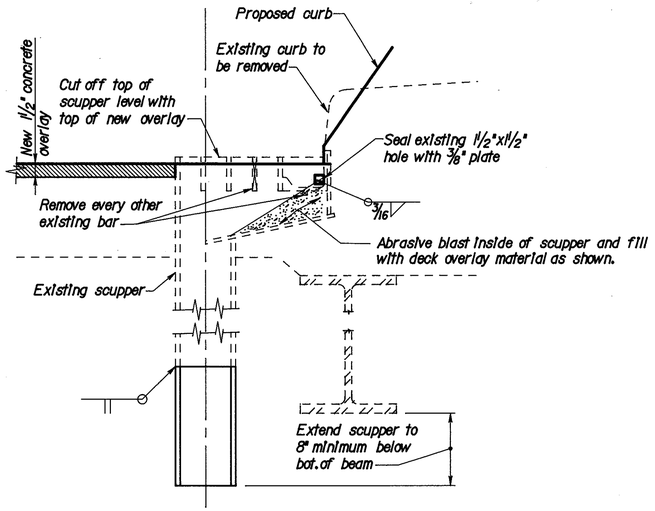

SECTION A-A TYPE 1

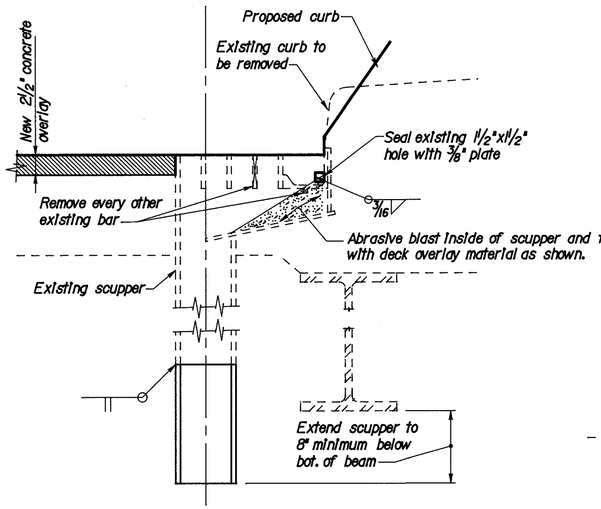

SECTION A-A TYPE 2

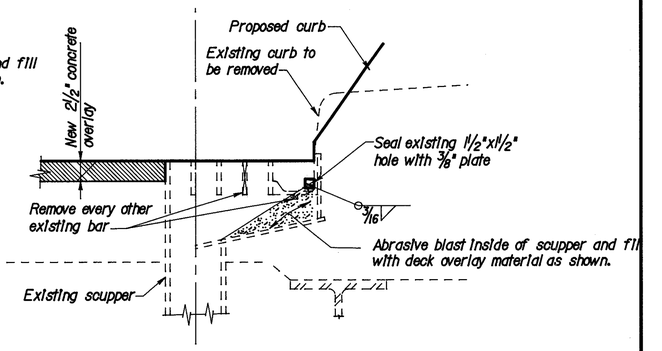

SECTION A-A TYPE 3

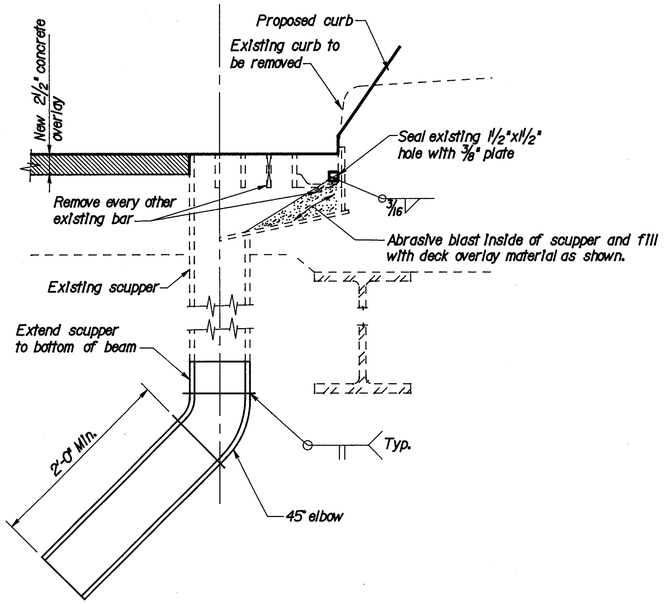

SECTION A-A TYPE 4

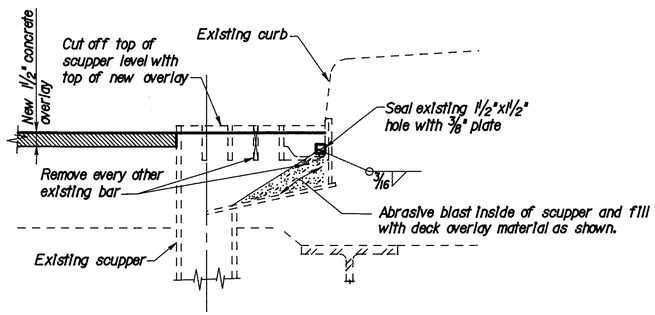

SECTION A-A TYPE 5

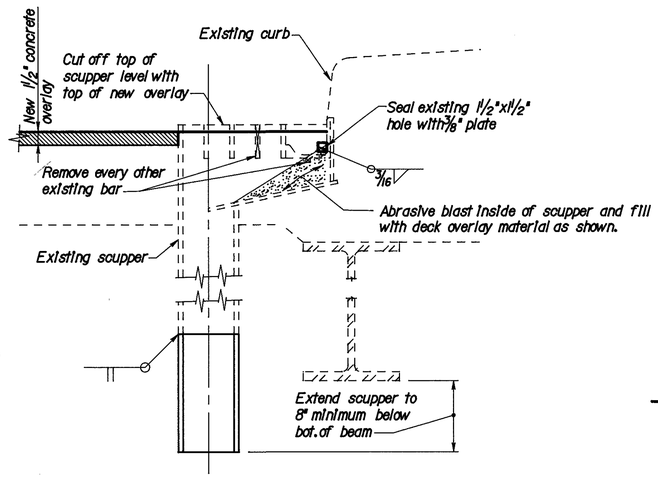

SECTION A-A TYPE 6

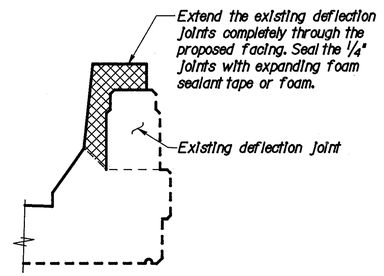

DEFLECTION JOINT DETAIL

LOCKWOOD, JONES & BEALS
CONSULTING ENGINEERS
DAYTON, OHIO

102 / 105

MISCELLANEOUS DETAILS

HAM-75-9.75
BRIDGES

DESIGNED	CHECKED	DRAWN	CHECKED	REVIEWED DATE	REVISED
MJZ	HDJ	MJZ	HDJ	MPH 12/92	

f:\6272\6272misc.dgn Feb. 23, 1993 15:06:04

HAM-75-1089L
GALBRAITH ROAD OVER I-75 SOUTH BOUND

MARK	NO.	LENGTH	WEIGHT	TYPE	A	B	C	D	E	F	G	H	K	O	R
D601	716	2'-8"	Note 3	Str.											
S501	16	5'-9"	Note 3	4		2'-8"	8"	2'-8"							
S502	338	3'-9"	Note 3	4		1'-8"	8"	1'-8"							
S503	16	14'-9"	Note 3	Str.											
S504	40	13'-8"	Note 3	Str.											
S505	96	6'-8"	Note 3	Str.											
S506	16	3'-4 1/4"	Note 3	10		1'-3"	10 1/4"		6 1/2"						3 1/4"
S507	8	4'-8"	Note 3	Str.											
S508	8	8'-1"	Note 3	4		1'-0"	4'-8"	2'-8"							
S509	8	7'-1"	Note 3	9		See Bending Diagram									

HAM-75-1102R
NORTHBOUND I-75 OVER WEST FORK OF MILL CREEK & GALBRAITH RD.

MARK	NO.	LENGTH	WEIGHT	TYPE	A	B	C	D	E	F	G	H	K	O	R
W501	2	4'-8"	10	Str.											
W502	2	28'-10"	60	Str.											
W503	2	8'-8"	18	Str.											
W504	2	20'-6"	43	Str.											
W601	100	2'-1"	313	Str.											
W602	72	2'-6"	270	3		7"	2'-1"								
W603	28	3'-0"	126	3		1'-1"	2'-1"								
A501	6	16'-2"	101	Str.											
A502	4	4'-8"	19	Str.											
A503	6	13'-8"	86	12		See Bending Diagram									
A504	2	3'-2"	7	Str.											
A505	3	14'-8"	46	Str.											
A506	9	2'-2"	20	Str.											
A507	2	3'-8"	8	Str.											
A508	5	12'-2"	63	Str.											
A601	39	2'-4"	137	1			1'-1"	1'-3"					8 5/8"	1'-0 1/4"	
A602	18	3'-10"	104	1			3'-2"	8"					8"	7/8"	
A603	39	1'-5"	83	3		8"	11"								
A604	36	4'-1"	221	3		9"	3'-6"								
A605	48	2'-0"	144	Str.											
A606	9	3'-0"	41	3		8"	2'-6"								
A607	3	5'-4"	24	3		1'-4"	4'-2"								
A608	3	4'-2"	19	Str.											
S501	152	16'-10"	2669	Str.											
S502	8	15'-5 1/2"	129	Str.											
S503	8	15'-3"	127	Str.											
S504	64	15'-10"	1057	Str.											
S505	8	16'-3"	136	Str.											
S601	874	2'-0"	2625	1			9"	1'-3"					8 5/8"	1'-0 1/4"	
S602	874	2'-5"	3172	1			1'-9"	8"					8"	7/8"	
S603	874	1'-3"	1641	3		8"	9"								
S604	2	2'-4"	7	2		1'-0"	3"	1'-3"					8 5/8"	1'-0 1/4"	
S605	2	2'-11"	9	2		8"	8"	1'-9"					1'-8 1/8"	2 1/4"	
S606	2	5'-1"	15	7		1'-2"	11"	2'-10"	8"						
		Total =	13550												

HAM-75-1152R
I-75 OVER CLARK STREET

MARK	NO.	LENGTH	WEIGHT	TYPE	A	B	C	D	E	F	G	H	K	O	R
W501	1	8'-10"	9	Str.											
W502	1	4'-9"	5	Str.											
W503	1	26'-2"	27	Str.											
W504	1	23'-2"	24	Str.											
W505	1	4'-6 1/2"	5	Str.											
W506	1	8'-7"	9	Str.											
W507	1	23'-2"	24	Str.											
W508	1	26'-2"	27	Str.											
W601	102	1'-9"	268	Str.											
W602	74	2'-2"	241	3		7"	1'-9"								
W603	28	2'-8"	112	3		1'-1"	1'-9"								
A501	12	14'-8"	184	Str.											
A502	8	3'-2"	26	Str.											
A503	8	13'-8"	114	12		See Bending Diagram									
A504	28	2'-8"	78	Str.											
A505	8	3'-9"	31	Str.											
A601	40	2'-4"	140	1			1'-1"	1'-3"				8 5/8"	1'-0 1/4"		
A602	8	3'-10"	46	1			3'-2"	8"				8"	7/8"		
A603	40	1'-4"	80	3		8"	10"								
A604	32	3'-8"	176	3		8"	3'-2"								
A605	40	2'-0"	120	Str.											
A606	12	5'-1"	92	3		1'-3"	4'-0"								
A607	12	6'-11"	125	3		9"	6'-4"								
A608	12	5'-9"	104	3		9"	5'-2"								
S501	40	17'-0"	709	Str.											
S502	16	19'-6 1/2"	326	Str.											
S601	208	2'-0"	625	1			9"	1'-3"				8 5/8"	1'-0 1/4"		
S602	208	2'-5"	755	1			1'-9"	8"				8"	7/8"		
S603	208	1'-3"	391	3		8"	9"								
		Total =	4873												

HAM-75-1160L
I-75 OVER WEST FORK OF MILL CREEK

MARK	NO.	LENGTH	WEIGHT	TYPE	A	B	C	D	E	F	G	H	K	O	R
A601	2	2'-4"	7	4		9 1/2"	1'-1"	9 1/2"							
S501	64	12'-2"	812	Str.											
S502	64	5'-11"	395	Str.											
S503	16	15'-7"	260	Str.											
S504	183	2'-9"	525	6			1'-1"	11"	9"			6 1/4"	9"		
S505	160	1'-10"	306	Str.											
S506	160	5'-3"	876	8		See Bending Diagram									
S507	20	15'-3"	318	Str.											
S508	4	3'-9"	16	Str.											
S509	8	13'-8"	114	12		See Bending Diagram									
S510	35	3'-4 1/2"	123	Str.											
S511	23	3'-0 1/2"	73	11	7"	2'-5 1/2"									
S512	16	3'-8"	61	Str.											
S513	32	6'-1"	203	Str.											
S514	6	20'-8"	129	Str.											
S515	2	9'-2"	19	Str.											
S516	6	5'-1"	32	Str.											
S517	6	13'-8"	86	Str.											
S518	2	3'-2"	7	Str.											
S519	6	14'-8"	92	Str.											
		Total =	4454												

F.H.W.A. REGION	STATE	PROJECT		336 / 338
5	OHIO			

HAMILTON COUNTY
HAM-75-9.75

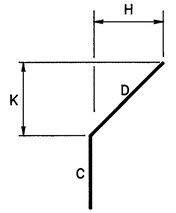

TYPE 1

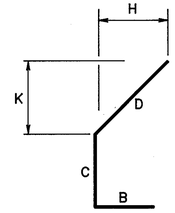

TYPE 2

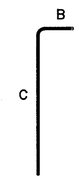

TYPE 3

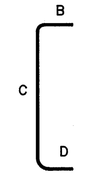

TYPE 4

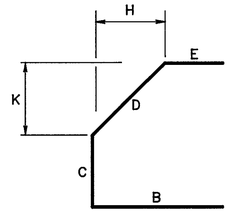

TYPE 5

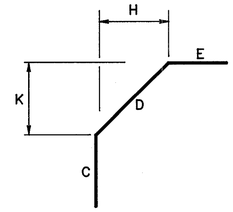

TYPE 6

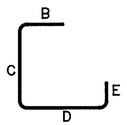

TYPE 7

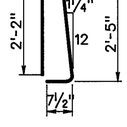

TYPE 8

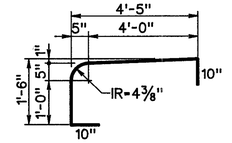

TYPE 9

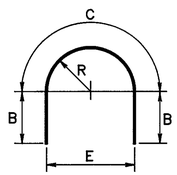

TYPE 10

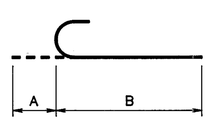

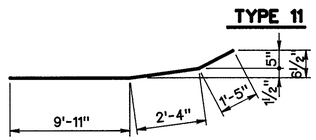

TYPE 11

TYPE 12

BAR BENDING DIAGRAMS

NOTES

1. All dimensions are out to out of bar
2. Radius dimension "R" is to the outside of the bar.
3. All reinforcing bars are included in the price bid for Item 517, Railing, (concrete parapet with double pipe rail), as per plan.

LOCKWOOD, JONES & BEALS
CONSULTING ENGINEERS
DAYTON, OHIO

103/105

REINFORCING STEEL LIST

HAM-75-9.75
BRIDGES

DESIGNED	CHECKED	DRAWN	CHECKED	REVIEWED DATE	REVISED
MJZ	HDJ	MJZ	HDJ	MPH 12/92	

f:\6272\6272st11.dgn Feb. 18, 1993 08:15:19

HAM-75-1184R
I-75 OVER DAVIS STREET

MARK	NO.	LENGTH	WEIGHT	TYPE	A	B	C	D	E	F	G	H	K	O	R
S501	40	15'-6"	647	Str.											
S502	14	17'-7"	257	Str.											
S503	4	6'-1"	25	Str.											
S504	4	13'-8"	57	12	See Bending Diagram										
S601	182	2'-0"	547	1			9"	1'-3"				8⅝"	1'-0¼"		
S602	170	2'-5"	617	1			1'-9"	8"				8"	⅞"		
S603	182	1'-3"	342	3		8"	9"								
S604	12	2'-9"	50	3		8"	2'-3"								
S605	6	3'-8½"	33	3		9"	3'-11½"								
S606	6	2'-10"	26	3		9"	2'-3"								
		Total =	2601												

HAM-75-1187L
LOCK STREET OVER SOUTHBOUND I-75

MARK	NO.	LENGTH	WEIGHT	TYPE	A	B	C	D	E	F	G	H	K	O	R
D601	340	2'-8"	Note 3	Str.											
S501	16	5'-9"	Note 3	4		2'-8"	8"	2'-8"							
S502	150	3'-9"	Note 3	4		1'-8"	8"	1'-8"							
S503	8	16'-2"	Note 3	Str.											
S504	32	13'-8"	Note 3	Str.											
S505	8	17'-2"	Note 3	Str.											
S506	16	3'-4¼"	Note 3	10		1'-3"	10¼"		6½"						3¼"
S507	8	4'-8"	Note 3	Str.											
S508	8	8'-1"	Note 3	4		1'-0"	4'-8"	2'-8"							
S509	8	7'-1"	Note 3	9	See Bending Diagram										

HAM-75-1192R
NORTHBOUND I-75 OVER MILL CREEK, BENSON ST., N.Y.C.R.R. & SHEPHERD AVE.

MARK	NO.	LENGTH	WEIGHT	TYPE	A	B	C	D	E	F	G	H	K	O	R
W501	2	8'-8"	18	Str.											
W502	1	25'-11"	27	Str.											
W503	2	4'-8"	10	Str.											
W504	1	23'-5"	24	Str.											
W505	1	26'-2"	27	Str.											
W506	1	23'-2"	24	Str.											
W601	102	1'-9"	268	Str.											
W602	74	2'-2"	241	3		7"	1'-9"								
W603	28	2'-8"	112	3		1'-1"	1'-9"								
A501	3	16'-8"	52	Str.											
A502	2	5'-2"	11	Str.											
A503	2	13'-8"	29	12	See Bending Diagram										
A504	10	12'-2"	127	Str.											
A505	5	16'-8"	87	Str.											
A601	44	2'-3"	149	1			1'-0"	1'-3"				8⅝"	1'-0¼"		
A602	36	3'-10"	207	1			3'-2"	8"				8"	⅞"		
A603	44	1'-4"	88	3		8"	10"								
A604	11	3'-8"	61	3		8"	3'-2"								
A605	14	2'-0"	42	Str.											
A606	3	3'-3"	15	3		9"	2'-8"								
S501	4	7'-3"	30	Str.											
S502	48	15'-8"	784	Str.											
S503	32	17'-2"	573	Str.											
S504	4	5'-4"	22	Str.											
S505	4	6'-4"	26	Str.											
S506	68	15'-2"	1076	Str.											
S507	64	15'-6"	1035	Str.											
S508	144	14'-8"	2203	Str.											
S509	8	6'-3"	52	Str.											
S510	4	7'-9"	32	Str.											
S511	112	15'-11"	1859	Str.											
S512	12	12'-10"	161	Str.											
S513	256	14'-5"	3849	Str.											
S514	88	13'-10"	1270	Str.											
S515	12	7'-5"	93	Str.											
S516	160	15'-9"	2628	Str.											
S517	80	15'-4"	1279	Str.											
S518	8	7'-0"	58	Str.											
S519	128	14'-0"	1869	Str.											
S520	32	13'-11"	464	Str.											
S521	12	13'-8"	171	Str.											
S522	4	8'-7"	36	Str.											
S523	4	6'-9"	28	Str.											
S524	4	14'-9"	62	Str.											
S525	4	7'-1"	30	Str.											
S601	4214	2'-0"	12659	1			9"	1'-3"				8⅝"	1'-0¼"		
S602	4214	2'-5"	15296	1			1'-9"	8"				8"	⅞"		
S603	4214	1'-3"	7912	3		8"	9"								
		Total =	57176												

F.H.W.A. REGION	STATE	PROJECT	
5	OHIO		

337
338

HAMILTON COUNTY
HAM-75-9.75

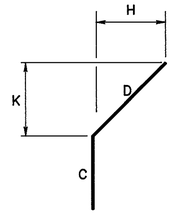

TYPE 1

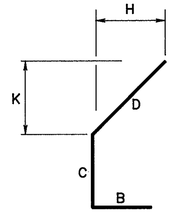

TYPE 2

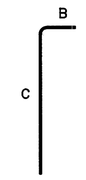

TYPE 3

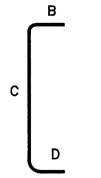

TYPE 4

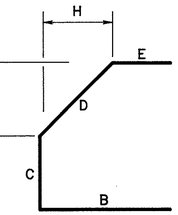

TYPE 5

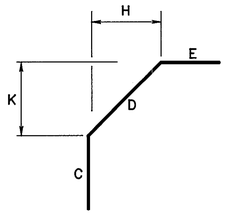

TYPE 6

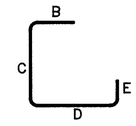

TYPE 7

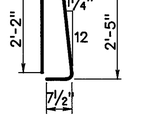

TYPE 8

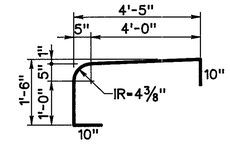

TYPE 9

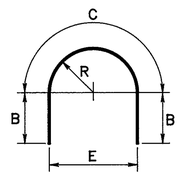

TYPE 10

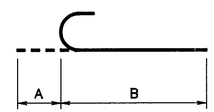

TYPE 11

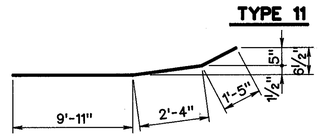

TYPE 12

BAR BENDING DIAGRAMS

NOTES

1. All dimensions are out to out of bar
2. Radius dimension "R" is to the outside of the bar.
3. All reinforcing bars are included in the price bid for Item 517, Railing, (concrete parapet with double pipe rail), as per plan.

LOCKWOOD, JONES & BEALS
CONSULTING ENGINEERS
DAYTON, OHIO

104/105

REINFORCING STEEL LIST

HAM-75-9.75
BRIDGES

DESIGNED	CHECKED	DRAWN	CHECKED	REVIEWED DATE	REVISED
MJZ	HDJ	MJZ	HDJ	MPH 12/92	

f:\6272\6272st12.dgn Feb. 18, 1993 08:31:10

MARK	NO.	LENGTH	WEIGHT	TYPE	A	B	C	D	E	F	G	H	K	O	R
HAM-75-1292 SHEPHERD LANE OVER I-75															
W501	1	26'-3"	27	Str.											
W502	1	25'-0"	26	Str.											
W503	1	24'-9"	26	Str.											
W504	1	29'-4"	31	Str.											
W505	1	3'-2"	3	Str.											
W506	1	2'-8 1/2"	3	Str.											
W601	108	1'-9 1/2"	291	Str.											
W602	101	2'-2 1/2"	335	3			7"	1'-9 1/2"							
W603	7	2'-8 1/2"	28	3			1'-1"	1'-9 1/2"							
		Total =	770												
HAM-75-1338 RAMP C OVER I-75															
W501	1	26'-9"	28	Str.											
W502	4	2'-11"	12	Str.											
W503	1	4'-9"	5	Str.											
W504	1	5'-2"	5	Str.											
W505	1	27'-6"	29	Str.											
W506	1	27'-10"	29	Str.											
W507	1	4'-3"	4	Str.											
W508	1	5'-8"	6	Str.											
W509	1	27'-6"	29	Str.											
W510	3	5'-3"	16	4		2'-0"	1'-6"	2'-0"							
W511	11	4'-10"	55	4		2'-0"	1'-1"	2'-0"							
W512	3	5'-2"	16	4		2'-0"	1'-5"	2'-0"							
W513	3	4'-9"	15	4		2'-0"	1'-0"	2'-0"							
W514	3	5'-8"	18	4		2'-0"	1'-11"	2'-0"							
W601	114	1'-11"	328	Str.											
W602	76	2'-4"	266	3			7"	1'-11"							
W603	38	2'-10"	162	3			1'-1"	1'-11"							
		Total =	1023												
HAM-75-1390 RAMP J OVER I-75															
W501	2	25'-8"	54	Str.											
W502	2	6'-8"	14	Str.											
W503	2	2'-8"	6	Str.											
W601	52	1'-11"	150	Str.											
W602	32	2'-4"	112	3			7"	1'-11"							
W603	20	2'-10"	85	3			1'-1"	1'-11"							
		Total =	421												

F.H.W.A. REGION	STATE	PROJECT		338 / 338
5	OHIO			

HAMILTON COUNTY
HAM-75-9.75

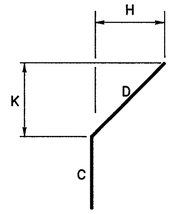

TYPE 1

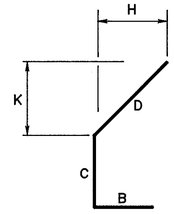

TYPE 2



TYPE 3

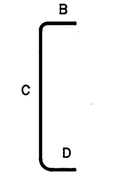

TYPE 4

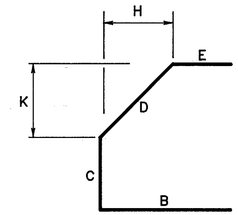

TYPE 5

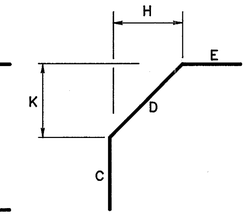

TYPE 6

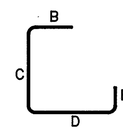

TYPE 7

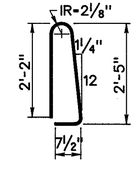

TYPE 8

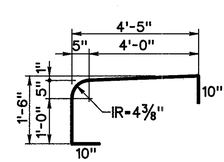

TYPE 9

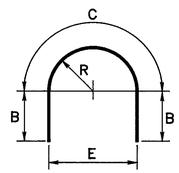

TYPE 10

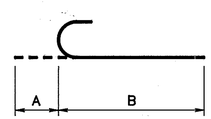

TYPE 11

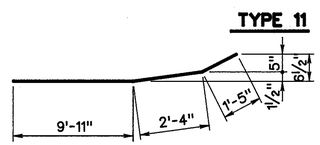

TYPE 12

BAR BENDING DIAGRAMS

NOTES

1. All dimensions are out to out of bar
2. Radius dimension "R" is to the outside of the bar.
3. All reinforcing bars are included in the price bid for Item 517, Railing, (concrete parapet with double pipe rail), as per plan.

LOCKWOOD, JONES & BEALS
CONSULTING ENGINEERS
DAYTON, OHIO

105/105

REINFORCING STEEL LIST

HAM-75-9.75
BRIDGES

DESIGNED	CHECKED	DRAWN	CHECKED	REVIEWED DATE	REVISED
MJZ	HDJ	MJZ	HDJ	MPH 12/92	

f:\6272\6272st13.dgn Feb. 17, 1993 08:26:18

HAM-75-9.75
IM-75-1-(149)
1/3

SOIL STUDY FOR PEDESTRIAN BRIDGE REPLACEMENT PROJECT BRIDGE No. HAM 75-0992 HAMILTON COUNTY, OHIO.

GEOLOGY OF THE SITE

The bridge site is in an alluvial deposit over glacial outwash deposits. The alluvial deposit consists of silt, sand, and gravel deposited by the Mill Creak on its flood plain. The outwash deposit consists of sand and gravel deposited by aggrading streams of melt water pouring from a glacier.

FIELD EXPLORATION

The field exploration was performed with a boring rig mounted on a truck and a boring rig mounted on a track vehicle using hollow-stem augers and applying standard penetration methods (ASTM D-1586) to advance the augers. The field work was performed between October 13 and 15, 1992.

INVESTIGATIONAL FINDINGS

Based on the three borings made at the bridge site, the soil conditions at the existing bridge site are in descending order :

- *In the vicinity of Boring 1, 0.4 feet of concrete pavement.*
- *In the vicinity of Boring 3, one foot of topsoil.*
- *In Boring 1 and below the concrete pavement and in the vicinity of Boring 2, 3.5 to 6.1 feet of undocumented fill composed of dark brown or brown sand with varying amounts of gravel and silt; and brown silt and sand with varying amounts of clay, gravel, and cinders.*
- *In the vicinity of Borings 1 and 2 and below the fill layer, 2 to 10 feet of dark-brown and brown silt or clay with varying amounts of sand and gravel. The brown silty clay encountered in the vicinity of Boring 2 can be classified as an A-6b type of soil in accordance with the ODOT Soil Classification System.*
- *In all borings, 15 to over 41.5 feet of brown sand and brown sand and gravel with varying amounts of silt and cobbles. The brown sand and gravel layer extends to the bottom of Boring 1 (50 feet). The silty sand can be classified as an A-3a type in accordance with the ODOT Soil Classification System. The gravelly sand can be classified as an A-1-b type soil*
- *In both Borings 2 and 3, five to over 6.5 feet of brown silt with varying amounts of fine sand. This layer extends to the bottom of Boring 3 (40 feet).*
- *In the vicinity of Boring 2 and below the brown silt layer, brown sand with varying amounts of silt extending to the bottom of this boring (45 feet).*

Groundwater was only encountered at a depth of 33.5 feet (elevation 513.6 feet) in the west center pier boring , Boring 2. No groundwater was encountered in either abutment boring., Borings 1 and 3.

LEGEND

- ◓ Auger Boring Location – Plan View
- TR Top of Rock
- ⊢ Horizontal Bar on Boring Log Indicates the Depth the Sample Was Taken
- X/Y/Z Figures Beside the Boring Log in Profile Indicates the Number of Blows for Standard Penetration Test.
  - X=Number of Blows for First 6 Inches
  - Y=Number of Blows for Second 6 Inches
  - Z=Number of Blows for Third 6 Inches
- W ——— Indicates Free Water Elevation
- ▽ ——— Indicates Static Water Elevation

PARTICLE SIZE DEFINITIONS

12"	3"	2.0mm	0.42mm	0.074mm	0.005mm
Boulders |	Cobbles |	Gravel |	Coarse Sand |	Fine Sand |	Silt | Clay
		No. 20 sieve	No. 40 sieve	No. 200 seive	

GENERAL INFORMATION

DRIVE SAMPLE/PRESS SAMPLE/CORE BORINGS

Drive sample borings are made by means of mechanically–powered rotary–type drilling machine, employing a 2" O.D., 1–3/8" I.D. split spoon sampling device at 2–1/2 and/or 5–foot depth intervals, driven by means of a 140–pound drop–hammer with a free fall of 30 inches. The number of blows required to drive the sampling device 18 inches is considered the penetration test (ASTM D–1586).

Drive/press sample borings are made by means of mechanically powered–rotary–type drilling machine, employing a 2" O.D., 1–3/8" I.D. split–spoon sampling device, and 3" O.D. thin wall press sampling device (ASTM D–1587). The press sampler is advanced by continous uniform pressure, applied by drilling machine.

Core borings are made by means of mechanically–powered–rotary–type drilling machine, employing a NMX core barrel with industrial diamond cutting head (ASTM D–2113).

The boring log sheets display a graphic plot of the information obtained, including depth and elevation of the sample, the standard penetration test readings in three 6–inch increments, depth and elevation of press samples, field number assigned to sample. Sample description based on laboratory tests utilizing the Casagrande A C classification system and gradation, plasticity and moisture content determinations. Results of strength and consolidation testing, if performed on undisturbed samples will appear graphically on separate enclosures. Rock samples are displayed on the log sheets including depth and elevation of the sample, amount of recovery and visual classification based on type, color, degree of hardness, grain size, deterioration, bedding, acid reaction and other qualifying factors.

At depths where materials are bouldery or gravelly to the extent that the sampler cannot be utilized, a wash sample is procured and visually classified, in order to determine the general characteristics of the material. These samples are not considered sufficiently representative to warrant laboratory testing.

BOWSER MORNER DAYTON,OHIO•TOLEDO,OHIO•LEXINGTON,KY.

Title Sheet

DRAWN BY MARIA	DATE 10–30–92	SOIL STUDY FOR PEDESTRIAN BRIDGE REPLACEMENT PROJECT BRIDGE No. HAM 75–0992 HAMILTON COUNTY, OHIO.
APPROVED BY	DATE	
SCALE GRAPHIC	SHEET 1 OF SHEETS 3	PROJECT NO. 13240

HAM-75-9.75 (2/3)

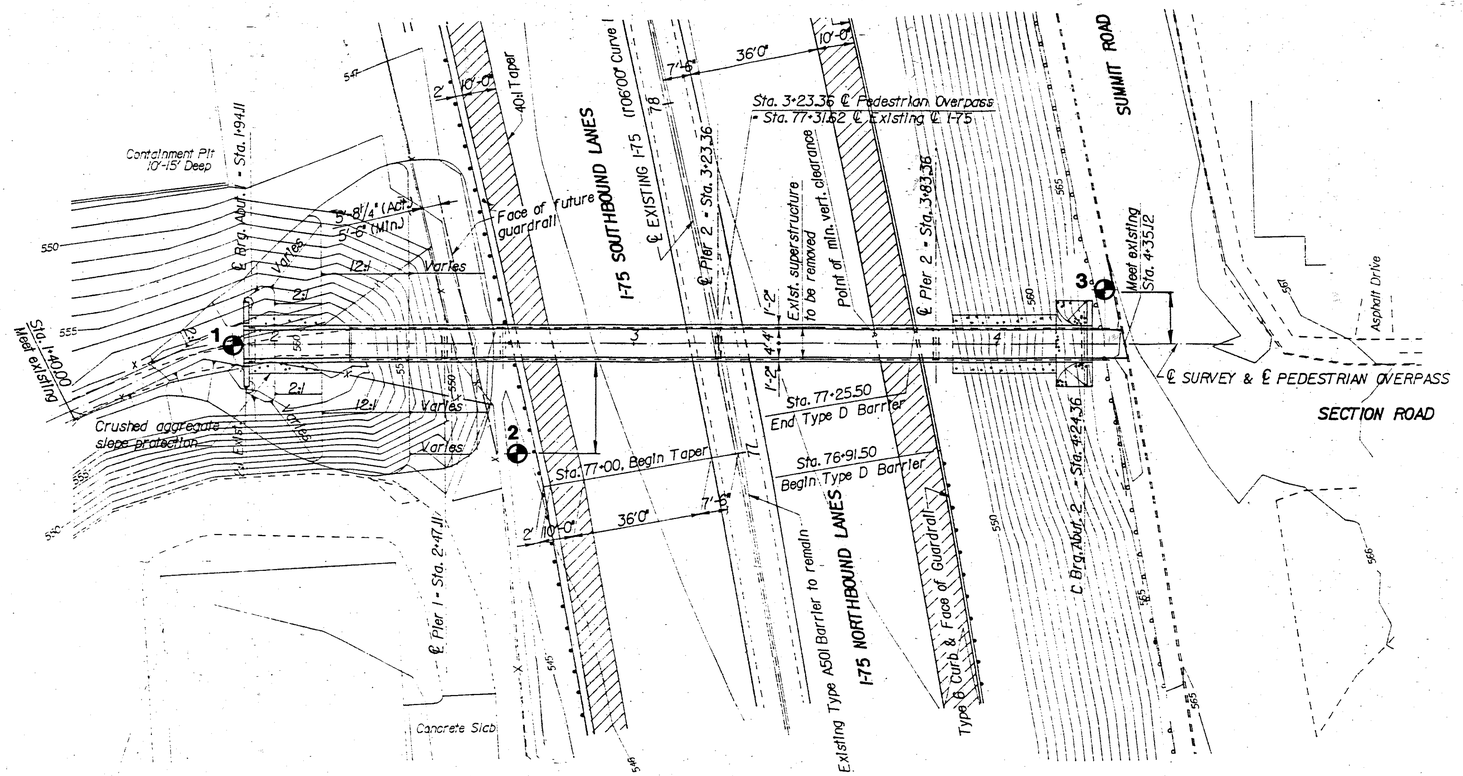

PLAN

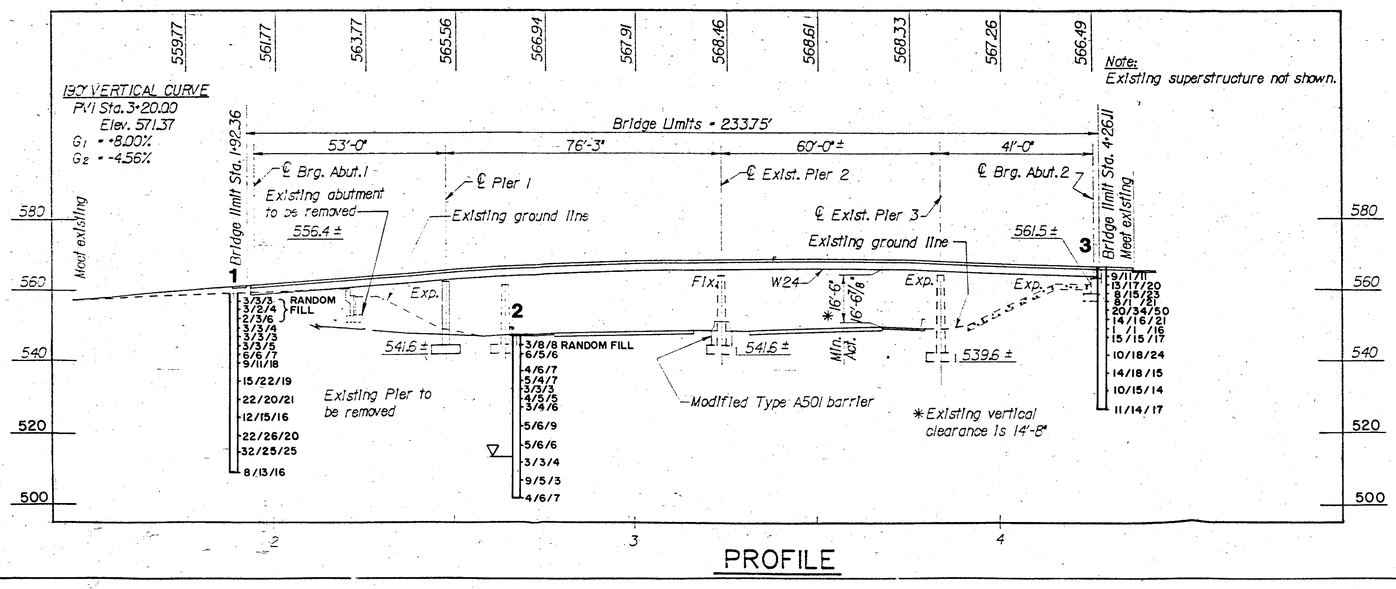

PROFILE

NO	DESCRIPTION OF REVISION	BY / DATE

BOWSER MORNER DAYTON, OHIO • TOLEDO, OHIO • LEXINGTON, KY.

PLAN & PROFILE

DRAWN BY MARIA	DATE 10-30-92	SOIL STUDY FOR PEDESTRIAN BRIDGE REPLACEMENT PROJECT BRIDGE No. HAM 75-0992 HAMILTON COUNTY, OHIO.	
APPROVED BY	DATE		
SCALE GRAPHIC		SHEET 2 OF SHEETS 3	PROJECT NO. 13240

HAM-75-9.75 (3/3)

LOG OF BORING

Date Started 10/14/92 | Sampler Type SS | dia. 1-3/4 | Water Elev None
Date Completed 10/14/92 | Casing Length | dia.
Boring No. 1 (13240) | Station & Offset Station 1+88.5, ℄ | Surface Elev 559.0'

Elev.	Depth	Std. Pen (N)	Rec Ft.	Loss Ft.	Description	Sample No.	Physical Characteristics: % Agg.	% CS	% FS	% Silt	% Clay	LL	PI	WC	ODOT Class
559.0	0				(FILL) Concrete pavement										
558.6															
	2	3/3/3			(FILL) Dark brown sand, trace gravel	1A								7.3	Visual
	4	3/2/4			(FILL) Dark brown sand, trace gravel	2A								4.0	Visual
553.0	6				(FILL)Brown silt and sand, trace gravel,										
552.5		2/3/6			trace clay, trace cinder	3A								15.5	Visual
550.5	8				Brown silt and sand, trace clay										
		3/3/4			Brown sand, little silt, trace gravel	4A								9.1	Visual
	10														
	12	3/3/3			Brown sand, little silt, trace gravel	5A								5.7	Visual
	14	3/3/5			Brown sand, little silt, trace gravel	6A								6.0	Visual
	16														
		6/6/7			Brown sand, little silt, trace gravel	7A	4.7	25.3	63.2	6.8		Non	Plastic	4.6	A-3 (0)
	18														
540.5		9/11/18			Brown sand and gravel, trace cobbles	8A								4.7	Visual
	20														
	22														
535.5															
	24	15/22/19			Brown sand and gravel, trace cobbles	9A								4.2	Visual
	26														
	28														
		22/20/21			Brown sand and gravel, trace cobbles	10A								4.6	Visual
	30														
	32														
	34	12/15/16			Brown sand and gravel, trace cobbles	11A								4.1	Visual
	36														
	38														
		22/26/20			Brown sand and gravel, trace cobbles	12A								3.9	Visual
	40														
	42														
	44	32/25/25			Brown sand and gravel, trace cobbles	13A								4.5	Visual
	46														
	48														
		8/13/16				14A								---	Visual
509.0	50				Bottom of Boring										
	52														

LOG OF BORING

Date Started 10/15/92 | Sampler Type SS | dia. 1-3/4 | Water Elev 513.5'
Date Completed 10/15/92 | Casing Length | dia.
Boring No. 2 (13240) | Station & Offset Station 2+67.5, 31' Rt | Surface Elev 547.0'

Elev.	Depth	Std. Pen (N)	Rec Ft.	Loss Ft.	Description	Sample No.	Physical Characteristics: % Agg.	% CS	% FS	% Silt	% Clay	LL	PI	WC	ODOT Class
547.0	0				(FILL) Brown sand and gravel, trace silt										
		3/8/8				1A								6.3	Visual
	2														
543.5		6/5/6			Dark brown silt and sand, trace organic	2A								12.7	Visual
543.0	4				material										
					Brown silt and sand	1C								---	Visual
	6														
	8														
538.5		4/6/7			Brown silty clay and sand	4A	0.0	11.1	37.0	18.2	33.7	34	19	20.7	A-6b (6)
	10														
536.5						5A								13.5	Visual
	12	5/4/7			Dark brown silt and sand, trace clay										
533.5															
	14	3/3/3			Brown silty sand, trace clay	6A	0.3	12.2	53.3	34.2		Non	Plastic	12.1	A-3a (0)
530.0	16														
		4/5/5			Brown sand	7A								4.8	Visual
	18														
		3/4/6			Brown sand	8A								13.9	Visual
	20														
	22														
	24	5/6/9			Brown sand	9A								4.1	Visual
	26														
	28														
		5/6/6			Brown sand	10A								3.8	Visual
	30														
	32														
514.0															
	34	3/3/4			Brown sand and gravel, some silt, trace cobbles	11A								20.0	Visual
	36														
	38														
508.5		9/5/3			Brown silt, trace fine sand	12A								18.9	Visual
	40														
	42														
503.5															
	44	4/6/7			Brown sand, some silt	13A								10.9	Visual
502.0					Bottom of Boring										
	46														
	48														

LOG OF BORING

Date Started 10/13/92 | Sampler Type SS | dia. 1-3/4 | Water Elev 567.0'
Date Completed 10/13/92 | Casing Length | dia.
Boring No. 3 (13240) | Station & Offset Station 4+30, 15' Lt | Surface Elev 567.0'

Elev.	Depth	Std. Pen (N)	Rec Ft.	Loss Ft.	Description	Sample No.	Physical Characteristics: % Agg.	% CS	% FS	% Silt	% Clay	LL	PI	WC	ODOT Class
567.0	0				Topsoil										
566.0															
	2	9/11/11			Brown sand and silt	1A								3.0	Visual
563.5		13/17/20			Brown gravelly sand, little silt, trace cobbles	2A								5.0	Visual
	4														
	6														
		8/15/23			Brown gravelly sand, little silt, trace cobbles	3A								4.4	Visual
	8														
		8/19/21			Brown gravelly sand, little silt, trace cobbles	4A								5.1	Visual
	10														
	12	20/34/50			Brown gravelly sand, little silt, trace cobbles	5A								3.8	Visual
	14	14/16/21			Brown gravelly sand, little silt, trace cobbles	6A								4.4	Visual
	16														
		19/19/16			Brown gravelly sand, little silt, trace cobbles	7A								5.0	Visual
	18														
		15/15/17			Brown gravelly sand, little silt, trace cobbles	8A								5.2	Visual
	20														
	22														
	24	10/18/24			Brown gravelly sand, little silt, trace cobbles	9A	43.6	32.8	11.7	11.9		Non	Plastic	4.8	A-1-b (0)
	26														
	28														
		14/18/15			Brown gravelly sand, little silt, trace cobbles	10A								6.3	Visual
	30														
	32														
533.5															
	34	10/15/14			Brown silt and fine sand	11A								5.6	Visual
	36														
	38														
		11/14/17			Brown silt and fine sand	12A								8.0	Visual
527.0	40				Bottom of Boring										
	42														
	44														

NO.	DESCRIPTION OF REVISION	BY / DATE

BOWSER MORNER DAYTON, OHIO • TOLEDO, OHIO • LEXINGTON, KY.

BORING LOGS

DRAWN BY MARIA	DATE 10-30-92	SOIL STUDY FOR PEDESTRIAN BRIDGE REPLACEMENT PROJECT BRIDGE No. HAM 75-0992 HAMILTON COUNTY, OHIO.
APPROVED BY	DATE	
SCALE GRAPHIC	SHEET 3 OF SHEETS 3	PROJECT NO. 13240

MRC 843848

23 Oct 92 12:31:36 p