STATE OF OHIO
DEPARTMENT OF TRANSPORTATION

HIG-73-21.04

JACKSON TOWNSHIP

HIGHLAND COUNTY

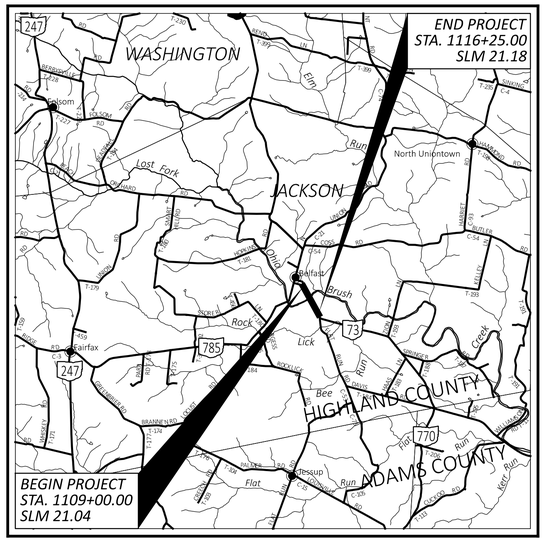

LOCATION MAP

LATITUDE: 39°03'33" LONGITUDE: -83°31'45"

N

PORTION TO BE IMPROVED
INTERSTATE HIGHWAY
FEDERAL ROUTES
STATE ROUTES
COUNTY & TOWNSHIP ROADS
OTHER ROADS

DESIGN DESIGNATION

CURRENT ADT (2027)	1300
DESIGN YEAR ADT (2047)	1400
DESIGN HOURLY VOLUME (2047)	200
DIRECTIONAL DISTRIBUTION	66%
TRUCKS (24 HOUR B&C)	11%
DESIGN SPEED	60 MPH
LEGAL SPEED	55 MPH

DESIGN FUNCTIONAL CLASSIFICATION:
05 MAJOR COLLECTOR (RURAL)

NHS PROJECT ..... NO

DESIGN EXCEPTIONS

NONE REQUIRED

ADA DESIGN WAIVERS

NONE REQUIRED

UNDERGROUND UTILITIES
Contact Two Working Days Before You Dig
OHIO811.org Before You Dig
OHIO811, 8-1-1, or 1-800-362-2764
(Non members must be called directly)

PLAN PREPARED BY:
BG ENGINEERING GROUP, LLC
5960 WILCOX PLACE, SUITE C
DUBLIN, OHIO 43016

INDEX OF SHEETS:

TITLE SHEET	P.1
TYPICAL SECTIONS	P.2 - P.5
GENERAL NOTES	P.6 - P.7
MAINTENANCE OF TRAFFIC	P.8 - P.13
GENERAL SUMMARY	P.14 P.15
ROADWAY SUBSUMMARY	P.16
PROJECT SITE PLAN	P.17
PLAN AND PROFILE	P.18 - P.19
CROSS SECTIONS	P.20 - P.28
SUPERELEVATION TABLES	P.29
TRAFFIC CONTROL	P.30
STRUCTURE OVER 20 FOOT SPAN HIG-00073-21.110 (SFN 3601750)	P.31 - P.57
GEOTECHNICAL PROFILE - BRIDGE	P.58 - P.64

FEDERAL PROJECT NUMBER

E240 (459)

RAILROAD INVOLVEMENT

N/A

PROJECT DESCRIPTION

REPLACEMENT OF THE STRUCTURALLY DEFICIENT BRIDGE (SFN 3601749) WITH A NEW SINGLE SLAB STRUCTURE OVER OHIO BRUSH CREEK. MINIMAL ROADWAY APPROACH WORK AND GUARDRAIL REPLACEMENT TO BE PERFORMED AS REQUIRED.

EARTH DISTURBED AREAS

PROJECT EARTH DISTURBED AREA:	1.28 ACRES
ESTIMATED CONTRACTOR EARTH DISTURBED AREA:	0.18 ACRES
NOTICE OF INTENT EARTH DISTURBED AREA:	1.46 ACRES

2023 SPECIFICATIONS

THE STANDARD SPECIFICATIONS OF THE STATE OF OHIO, DEPARTMENT OF TRANSPORTATION, INCLUDING SUPPLEMENTAL SPECIFICATIONS LISTED IN THE PLANS AND CHANGES LISTED IN THE PROPOSAL SHALL GOVERN THIS IMPROVEMENT.

I HEREBY APPROVE THESE PLANS AND DECLARE THAT THE MAKING OF THIS IMPROVEMENT WILL NOT REQUIRE THE CLOSING TO TRAFFIC OF THE HIGHWAY AND THAT PROVISIONS FOR THE MAINTENANCE AND SAFETY OF TRAFFIC WILL BE AS SET FORTH ON THE PLANS AND ESTIMATES.

Michael G. Dombrowski
District 09 Deputy Director

Pamela Boratyn
Director, Department of Transportation

STANDARD CONSTRUCTION DRAWINGS								SUPPLEMENTAL SPECIFICATIONS		SPECIAL PROVISIONS
BP-3.1	1-19-24	AS-1-15	1-20-23	HL-50.21	7-15-22	TC-65.10	1-17-14	800-2023	7-18-25	WATERWAY
BP-4.1	7-19-13	AS-2-15	7-21-23			TC-65.11	1-17-25	832	7-18-25	PERMIT
		PCB-91	7-17-20	MT-96.11	7-18-25			902	7-19-19	CONDITIONS
DM-1.1	1-17-25	PSID-1-13	7-18-25	MT-96.20	7-18-25			961	4-17-20	DATED 7-23-25
DM-4.3	1-15-16	SICD-1-21	1-19-24	MT-96.26	1-17-25					
DM-4.4	1-15-16	SICD-2-14	1-15-21	MT-97.10	7-18-25					
		TST-2-21	1-17-25	MT-101.70	7-19-24					
				MT-101.75	7-21-23					
MGS-2.1	7-18-25			MT-101.90	7-17-20					
MGS-3.3	7-18-25			MT-105.10	1-17-20					
MGS-4.2	7-18-25									
MGS-4.3	7-18-25			TC-41.20	10-18-13					
MGS-5.3	7-15-16			TC-41.30	4-21-23					
MGS-6.1	1-19-18			TC-42.20	10-18-13					
				TC-52.10	10-18-13					
RM-4.2	7-18-25			TC-61.30	7-19-24					

ENGINEER'S SEAL
BRIDGE & ROADWAY
STATE OF OHIO
RAVINDER GUPTA
E-70880
REGISTERED
PROFESSIONAL ENGINEER

TITLE SHEET

DESIGN AGENCY
BG
www.bgenggroup.com
5960 WILCOX PLACE, SUITE C
DUBLIN, OHIO 43016

DESIGNER: JPK
REVIEWER: RG 09-18-25
PROJECT ID: 119769
SHEET P.1 TOTAL 64

HIG-73-21.04
MODEL: Sheet_SurvFt PAPERSIZE: 34x22 (in.) DATE: 1/9/2026 TIME: 8:42:15 AM USER: GBoyer
P:\Transportation\Workset-2\119769_HIG-73-21.11\400-Engineering\Roadway\Sheets\119769_GT001.dgn

* = 0.08
** = OR RATE OF SUPER IF GREATER

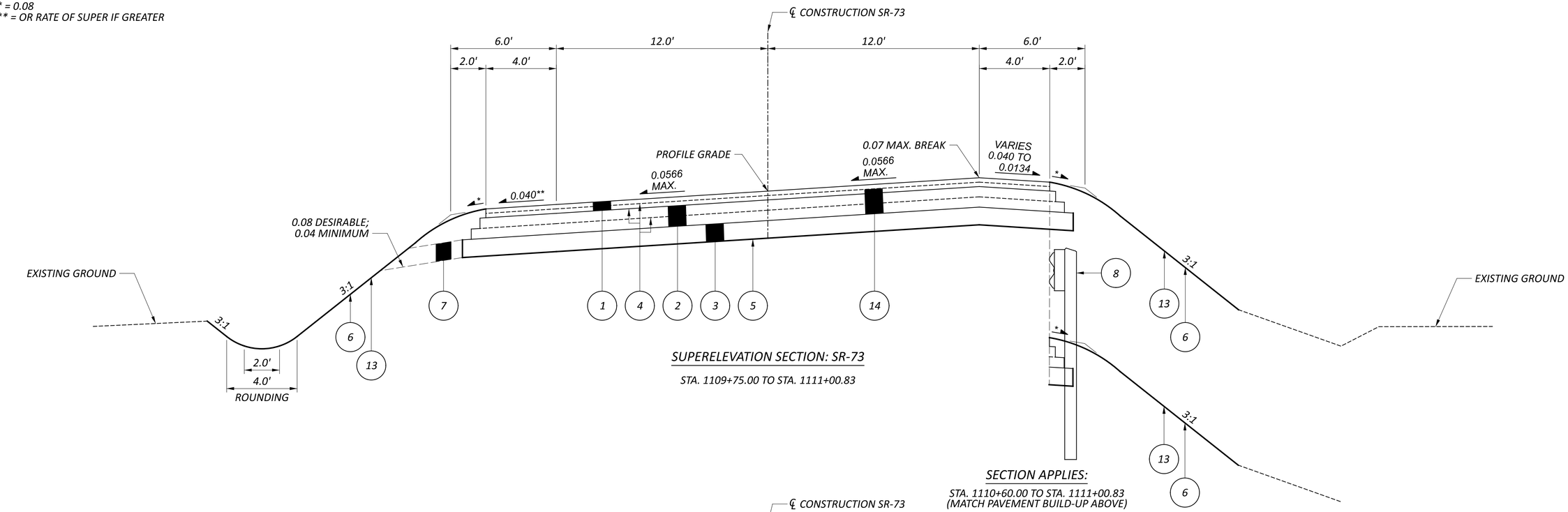

SUPERELEVATION SECTION: SR-73

STA. 1109+75.00 TO STA. 1111+00.83

SECTION APPLIES:

STA. 1110+60.00 TO STA. 1111+00.83
(MATCH PAVEMENT BUILD-UP ABOVE)

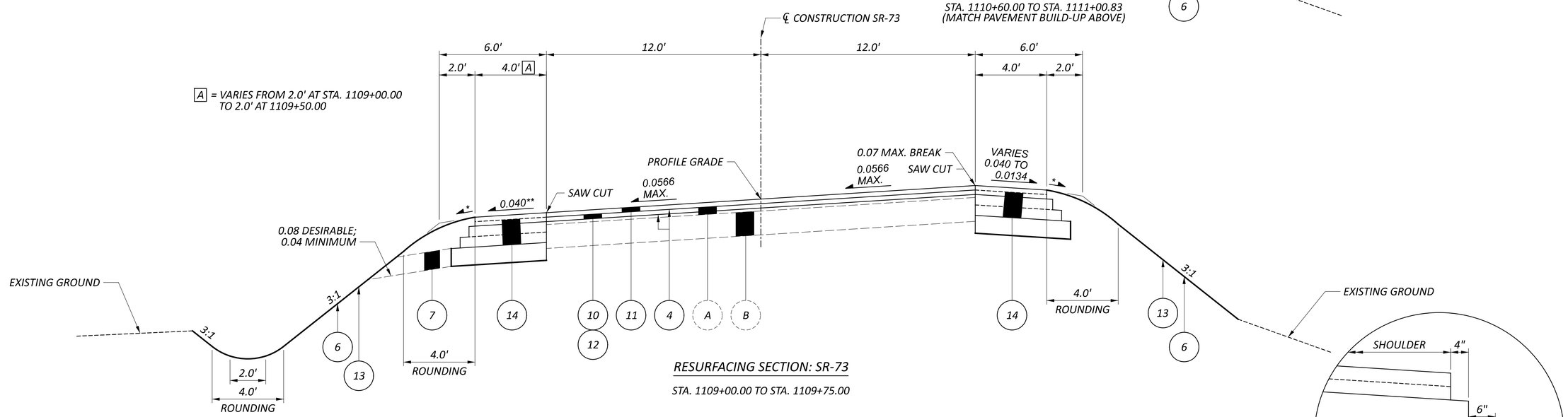

RESURFACING SECTION: SR-73

STA. 1109+00.00 TO STA. 1109+75.00

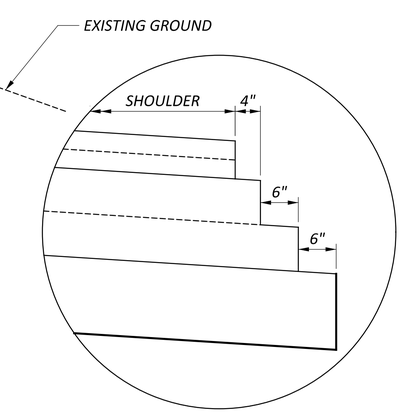

BASE AND SUBBASE STEP DETAIL

LEGEND

1. ITEM 441 - 3" ASPHALT CONCRETE SURFACE COURSE, TYPE 1, (449), PG64-22 (TWO LIFTS)
2. ITEM 301 - 7" ASPHALT CONCRETE BASE (449), PG64-22 (TWO LIFTS; 6" MAXIMUM, 3" MINIMUM)
3. ITEM 304 - 6" AGGREGATE BASE
4. ITEM 407 - TACK COAT
5. ITEM 204 - SUBGRADE COMPACTION
6. ITEM 659 - SEEDING AND MULCHING
7. ITEM 605 - AGGREGATE DRAINS
8. ITEM 606 - GUARDRAIL, TYPE MGS
9. ITEM 526 - REINFORCED CONCRETE APPROACH SLABS WITH QC/QA (T = 15")
10. ITEM 254 - PAVEMENT PLANING, ASPHALT CONCRETE (1.5" MINIMUM)
11. ITEM 441 - 1.5" ASPHALT CONCRETE SURFACE COURSE, TYPE 1, (449), PG64-22
12. ITEM 441 - ASPHALT CONCRETE INTERMEDIATE COURSE, TYPE 1, (449) (VARIES)
13. ITEM 203 – EMBANKMENT
14. ITEM 202 - PAVEMENT REMOVED (ITEM INCLUDES EXISTING ASPHALT & EXISTING CONCRETE PAVEMENTS)

A. 4"± ASPHALT CONCRETE

B. 8"± NON-REINFORCED CONCRETE

TYPICAL SECTIONS

DESIGN AGENCY
BG
www.bgenggroup.com
5960 WILCOX PLACE, SUITE C
DUBLIN, OHIO 43016

DESIGNER
JPK

REVIEWER
RG 09-18-25

PROJECT ID
119769

SHEET P.2 TOTAL 64

HIG-73-21.04

MODEL: GY001 PAPERSIZE: 34x22 (in.) DATE: 1/9/2026 TIME: 8:42:23 AM USER: GBoyer
P:\Transportation\Workset-2\119769_HIG-73-21.11\400-Engineering\Roadway\Sheets\119769_GY001.dgn

* = 0.08

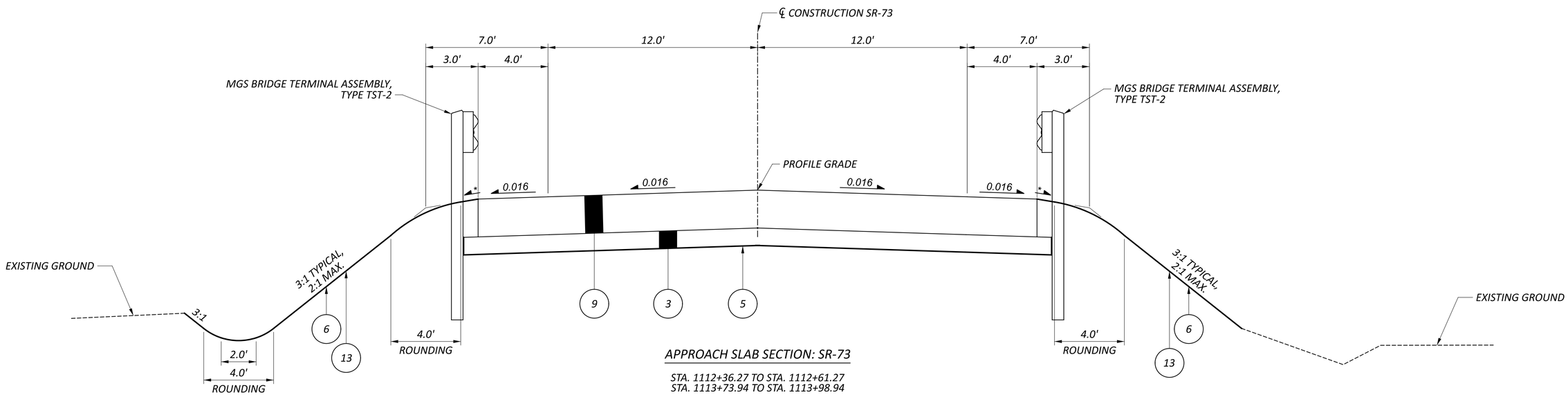

APPROACH SLAB SECTION: SR-73

STA. 1112+36.27 TO STA. 1112+61.27
STA. 1113+73.94 TO STA. 1113+98.94

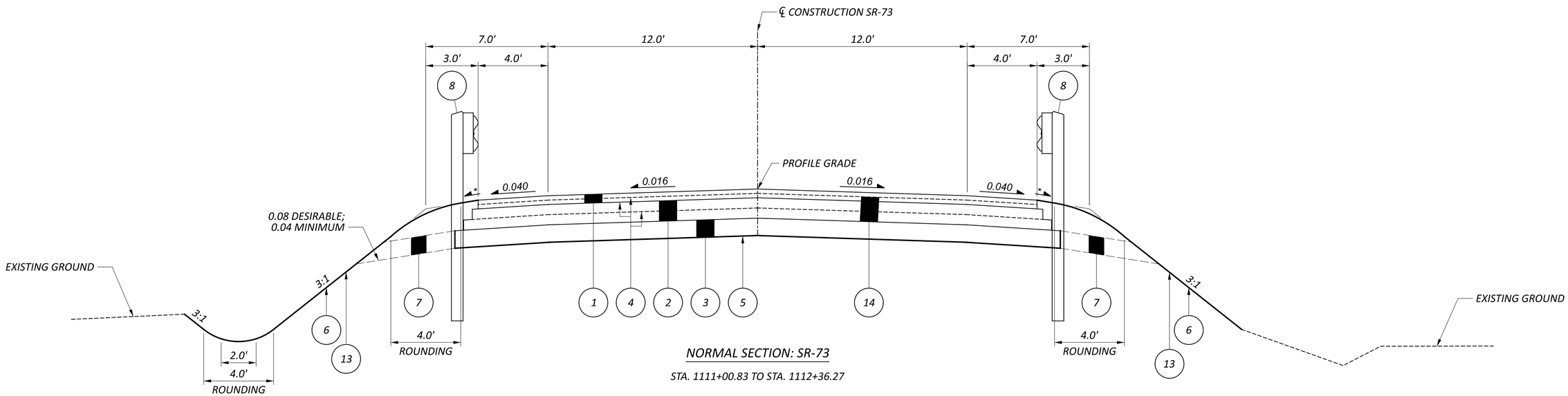

NORMAL SECTION: SR-73

STA. 1111+00.83 TO STA. 1112+36.27

LEGEND

1. ITEM 441 - 3" ASPHALT CONCRETE SURFACE COURSE, TYPE 1, (449), PG64-22 (TWO LIFTS)
2. ITEM 301 - 7" ASPHALT CONCRETE BASE (449), PG64-22 (TWO LIFTS; 6" MAXIMUM, 3" MINIMUM)
3. ITEM 304 - 6" AGGREGATE BASE
4. ITEM 407 - TACK COAT
5. ITEM 204 - SUBGRADE COMPACTION
6. ITEM 659 - SEEDING AND MULCHING
7. ITEM 605 - AGGREGATE DRAINS
8. ITEM 606 - GUARDRAIL, TYPE MGS
9. ITEM 526 - REINFORCED CONCRETE APPROACH SLABS WITH QC/QA (T = 15")
10. ITEM 254 - PAVEMENT PLANING, ASPHALT CONCRETE (1.5" MINIMUM)
11. ITEM 441 - 1.5" ASPHALT CONCRETE SURFACE COURSE, TYPE 1, (449), PG64-22
12. ITEM 441 - ASPHALT CONCRETE INTERMEDIATE COURSE, TYPE 1, (449) (VARIES)
13. ITEM 203 – EMBANKMENT
14. ITEM 202 - PAVEMENT REMOVED (ITEM INCLUDES EXISTING ASPHALT & EXISTING CONCRETE PAVEMENTS)

A. 4"± ASPHALT CONCRETE

B. 8"± NON-REINFORCED CONCRETE

TYPICAL SECTIONS

DESIGN AGENCY
BG
www.bgenggroup.com
5960 WILCOX PLACE, SUITE C
DUBLIN, OHIO 43016

DESIGNER JPK
REVIEWER RG 09-18-25
PROJECT ID 119769
SHEET P.3 TOTAL 64

HIG-73-21.04

MODEL: GY002 PAPERSIZE: 34x22 (in.) DATE: 1/9/2026 TIME: 8:42:24 AM USER: GBoyer
P:\Transportation\Workset-2\119769_HIG-73-21.11\400-Engineering\Roadway\Sheets\119769_GY001.dgn

* = 0.08

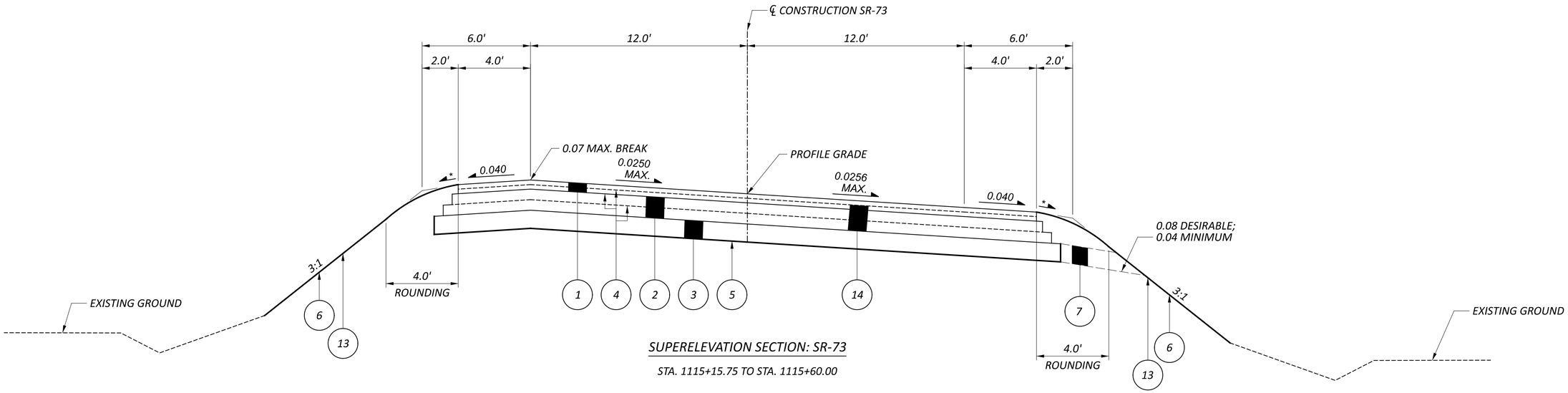

SUPERELEVATION SECTION: SR-73

STA. 1115+15.75 TO STA. 1115+60.00

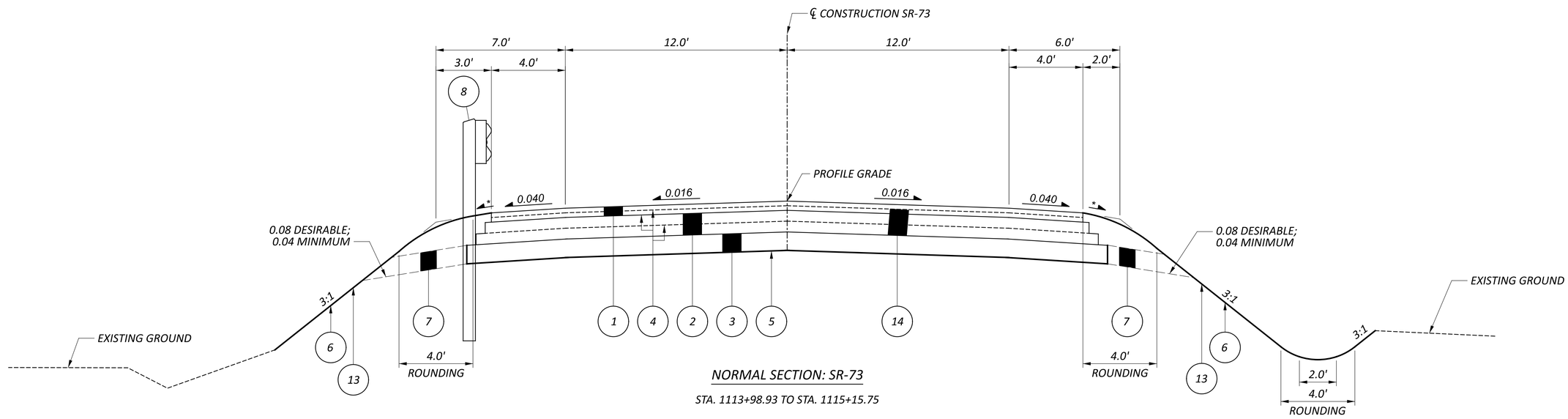

NORMAL SECTION: SR-73

STA. 1113+98.93 TO STA. 1115+15.75

LEGEND

1. ITEM 441 - 3" ASPHALT CONCRETE SURFACE COURSE, TYPE 1, (449), PG64-22 (TWO LIFTS)
2. ITEM 301 - 7" ASPHALT CONCRETE BASE (449), PG64-22 (TWO LIFTS; 6" MAXIMUM, 3" MINIMUM)
3. ITEM 304 - 6" AGGREGATE BASE
4. ITEM 407 - TACK COAT
5. ITEM 204 - SUBGRADE COMPACTION
6. ITEM 659 - SEEDING AND MULCHING
7. ITEM 605 - AGGREGATE DRAINS
8. ITEM 606 - GUARDRAIL, TYPE MGS
9. ITEM 526 - REINFORCED CONCRETE APPROACH SLABS WITH QC/QA (T = 15")
10. ITEM 254 - PAVEMENT PLANING, ASPHALT CONCRETE (1.5" MINIMUM)
11. ITEM 441 - 1.5" ASPHALT CONCRETE SURFACE COURSE, TYPE 1, (449), PG64-22
12. ITEM 441 - ASPHALT CONCRETE INTERMEDIATE COURSE, TYPE 1, (449) (VARIES)
13. ITEM 203 – EMBANKMENT
14. ITEM 202 - PAVEMENT REMOVED (ITEM INCLUDES EXISTING ASPHALT & EXISTING CONCRETE PAVEMENTS)

A. 4"± ASPHALT CONCRETE

B. 8"± NON-REINFORCED CONCRETE

TYPICAL SECTIONS

HIG-73-21.04

MODEL: GY003 PAPERSIZE: 34x22 (in.) DATE: 1/9/2026 TIME: 8:42:24 AM USER: GBoyer
P:\Transportation\Workset-2\119769_HIG-73-21.11\400-Engineering\Roadway\Sheets\119769_GY001.dgn

DESIGN AGENCY
BG
www.bgenggroup.com
5960 WILCOX PLACE, SUITE C
DUBLIN, OHIO 43016

DESIGNER	JPK
REVIEWER	RG 09-18-25
PROJECT ID	119769
SHEET	P.4
TOTAL	64

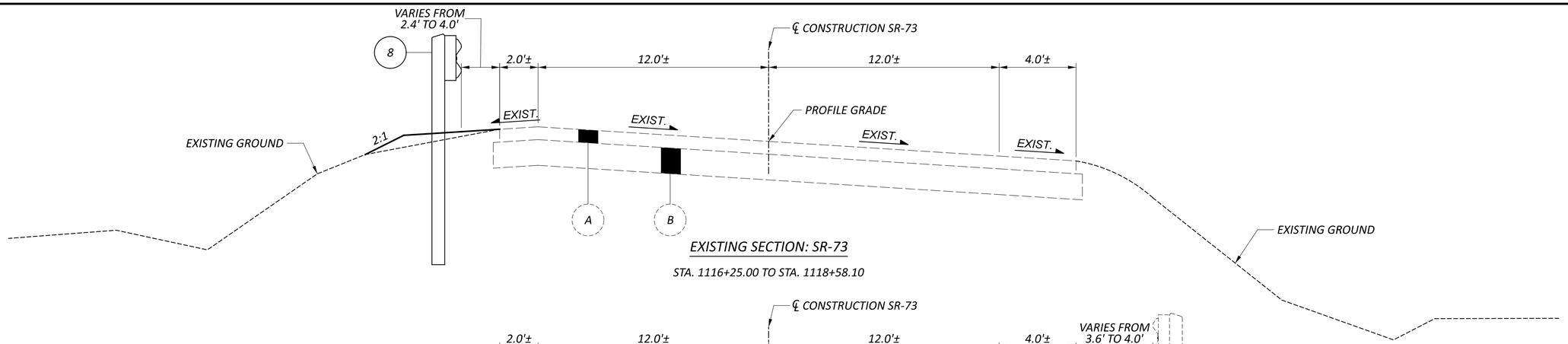

EXISTING SECTION: SR-73

STA. 1116+25.00 TO STA. 1118+58.10

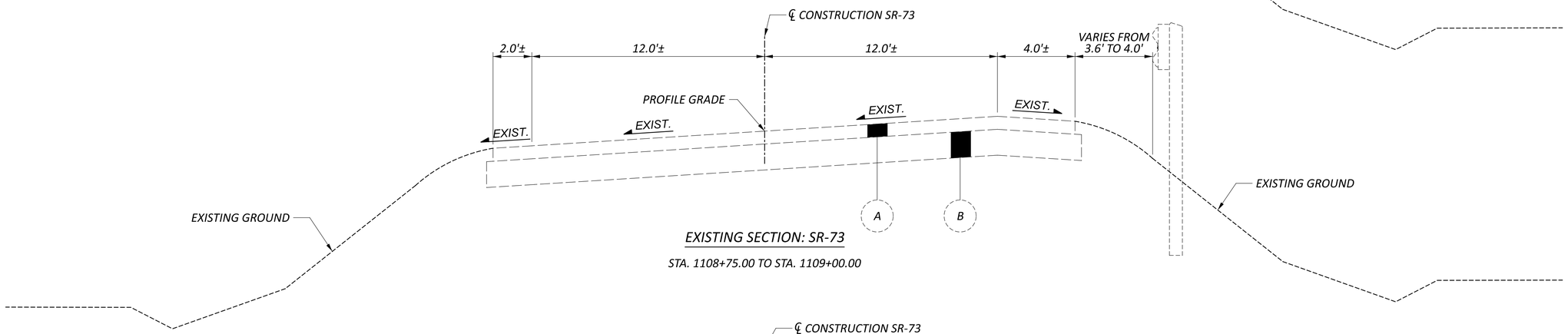

EXISTING SECTION: SR-73

STA. 1108+75.00 TO STA. 1109+00.00

B = VARIES FROM 4.0' AT STA. 1116+00.00
TO 1.6' AT 1116+25.00

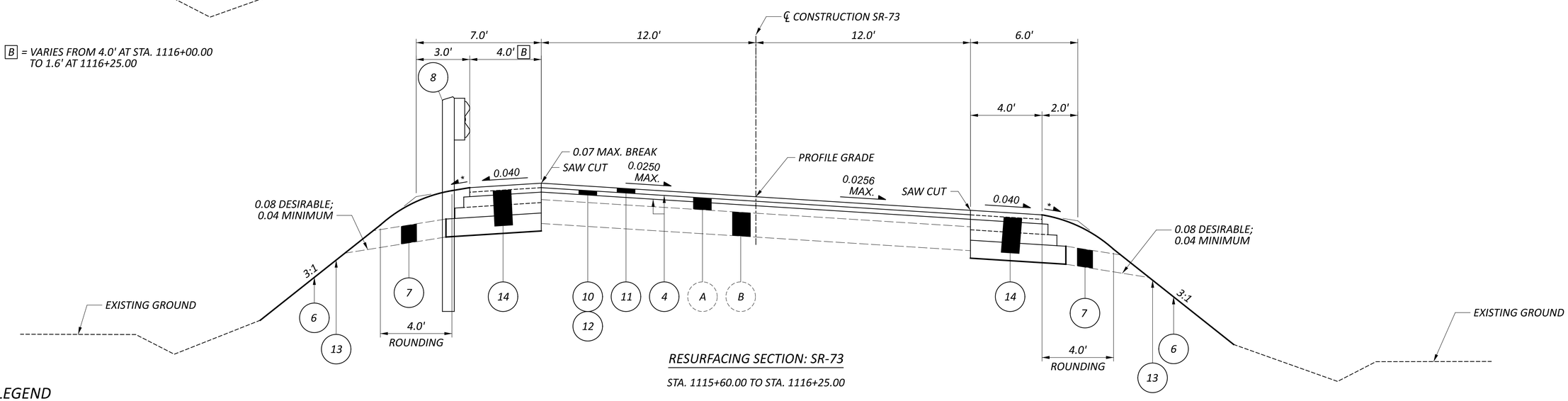

RESURFACING SECTION: SR-73

STA. 1115+60.00 TO STA. 1116+25.00

LEGEND

1. ITEM 441 - 3" ASPHALT CONCRETE SURFACE COURSE, TYPE 1, (449), PG64-22 (TWO LIFTS)
2. ITEM 301 - 7" ASPHALT CONCRETE BASE (449), PG64-22 (TWO LIFTS; 6" MAXIMUM, 3" MINIMUM)
3. ITEM 304 - 6" AGGREGATE BASE
4. ITEM 407 - TACK COAT
5. ITEM 204 - SUBGRADE COMPACTION
6. ITEM 659 - SEEDING AND MULCHING
7. ITEM 605 - AGGREGATE DRAINS
8. ITEM 606 - GUARDRAIL, TYPE MGS
9. ITEM 526 - REINFORCED CONCRETE APPROACH SLABS WITH QC/QA (T = 15")
10. ITEM 254 - PAVEMENT PLANING, ASPHALT CONCRETE (1.5" MINIMUM)
11. ITEM 441 - 1.5" ASPHALT CONCRETE SURFACE COURSE, TYPE 1, (449), PG64-22
12. ITEM 441 - ASPHALT CONCRETE INTERMEDIATE COURSE, TYPE 1, (449) (VARIES)
13. ITEM 203 – EMBANKMENT
14. ITEM 202 - PAVEMENT REMOVED (ITEM INCLUDES EXISTING ASPHALT & EXISTING CONCRETE PAVEMENTS)

A. 4"± ASPHALT CONCRETE

B. 8"± NON-REINFORCED CONCRETE

TYPICAL SECTIONS

HIG-73-21.04

MODEL: GY004 PAPERSIZE: 34x22 (in.) DATE: 1/9/2026 TIME: 8:42:25 AM USER: GBoyer
P:\Transportation\Workset-21119769_HIG-73-21.11\400-Engineering\Roadway\Sheets\119769_GY001.dgn

DESIGN AGENCY
BG
www.bgenggroup.com
5960 WILCOX PLACE, SUITE C
DUBLIN, OHIO 43016

DESIGNER JPK
REVIEWER RG 09-18-25
PROJECT ID 119769
SHEET P.5 TOTAL 64

ROUNDING

THE ROUNDING AT SLOPE BREAKPOINTS SHOWN ON THE TYPICAL SECTIONS APPLIES TO ALL CROSS-SECTIONS, EVEN THOUGH OTHERWISE SHOWN.

UTILITIES

LISTED BELOW ARE ALL UTILITIES LOCATED WITHIN THE PROJECT CONSTRUCTION LIMITS TOGETHER WITH THEIR RESPECTIVE OWNERS:

AMERICAN ELECTRIC POWER (DISTRIBUTION)
38831 STATE ROUTE 7
REEDSVILLE, OHIO 45772
MR. CLARKE SAUNDERS
740-985-3054

AT&T OHIO
7201 FAR HILLS AVENUE
DAYTON, OHIO 45459
MR. ALAN STUTES
937-708-1026

HIGHLAND COUNTY WATER COMPANY
P. O. BOX 940
HILLSBORO, OHIO 45133
MR. DAN CUTLER
937-393-4281, EXT. 101

SURVEYING PARAMETERS

PRIMARY PROJECT CONTROL MONUMENTS GOVERN ALL POSITIONING ON ODOT PROJECTS. SEE THIS SHEET FOR A TABLE CONTAINING PROJECT CONTROL INFORMATION.

USE THE FOLLOWING PROJECT CONTROL, VERTICAL POSITIONING, AND HORIZONTAL POSITIONING PARAMETERS FOR ALL SURVEYING:

PROJECT CONTROL

POSITIONING METHOD:	ODOT LDP
MONUMENT TYPE:	TYPE B, REBAR AND CAP VERTICAL POSITIONING

VERTICAL POSITIONING

ORTHOMETRIC HEIGHT DATUM:	NAVD88
GEOID:	GEOID18

HORIZONTAL POSITIONING

REFERENCE FRAME:	NAVD83 (2011)
ELLIPSOID:	GRS80
MAP PROJECTION	LAMBERT CONFORMAL CONIC
COORDINATE SYSTEM:	OHDOT LDP - HIGHLAND COUNTY SURV. FT
COMBINED SCALE FACTOR:	1.00000000
ORIGIN OF COORDINATE SYSTEM:	(0,0)

USE THE POSITIONING METHODS AND MONUMENT TYPE USED IN THE ORIGINAL SURVEY TO RESTORE ALL MONUMENTS RELATED TO PRIMARY PROJECT CONTROL THAT ARE DAMAGED OR DESTROYED BY CONSTRUCTION ACTIVITIES. RESTORE THE DAMAGED OR DESTROYED MONUMENTS IN ACCORDANCE WITH CMS 623.

UNITS ARE IN U.S. SURVEY FEET.

CLEARING AND GRUBBING

ALTHOUGH THERE ARE NO TREES OR STUMPS SPECIFICALLY MARKED FOR REMOVAL WITHIN THE LIMITS OF THE PROJECT, A LUMP SUM QUANTITY IS INCLUDED IN THE GENERAL SUMMARY FOR ITEM 201, CLEARING AND GRUBBING. ALL PROVISIONS AS SET FORTH IN THE SPECIFICATIONS UNDER THIS ITEM ARE INCLUDED IN THE LUMP SUM PRICE BID FOR ITEM 201, CLEARING AND GRUBBING.

WORK LIMITS

THE WORK LIMITS SHOWN ON THESE PLANS ARE FOR PHYSICAL CONSTRUCTION ONLY. PROVIDE THE INSTALLATION AND OPERATION OF ALL WORK ZONE TRAFFIC CONTROL AND WORK ZONE TRAFFIC CONTROL DEVICES REQUIRED BY THESE PLANS WHETHER INSIDE OR OUTSIDE THESE WORK LIMITS.

SEEDING AND MULCHING

THE FOLLOWING QUANTITIES ARE PROVIDED TO PROMOTE GROWTH AND CARE OF PERMANENT SEEDED AREAS:

659, TOPSOIL	373 CU. YD.
659, SEEDING AND MULCHING	3356 SQ. YD.
659, REPAIR SEEDING AND MULCHING	168 SQ. YD.
659, COMMERCIAL FERTILIZER	0.45 TON
659, LIME	0.69 ACRES
659, WATER	18 M. GAL.

SEEDING AND MULCHING SHALL BE APPLIED TO ALL AREAS OF EXPOSED SOIL BETWEEN THE RIGHT-OF-WAY LINES, AND WITHIN THE CONSTRUCTION LIMITS FOR AREAS OUTSIDE THE RIGHT-OF-WAY LINES COVERED BY WORK AGREEMENT OR SLOPE EASEMENT. QUANTITY CALCULATIONS FOR SEEDING AND MULCHING ARE BASED ON THESE LIMITS.

ITEM 204 - PROOF ROLLING

THE FOLLOWING QUANTITY IS PROVIDED IN THE GENERAL SUMMARY TO ADDRESS LOCATIONS REQUIRING PROOF ROLLING.

ITEM 204 - PROOF ROLLING 2 HOUR

ITEM 605 - AGGREGATE DRAINS

AGGREGATE DRAINS SHALL BE PLACED AT 50 FOOT INTERVALS ON EACH SIDE OF NORMAL CROWNED SECTIONS, STAGGERED SO THAT EACH DRAIN IS 25 FEET FROM THE ADJACENT DRAIN ON THE OPPOSITE SIDE, AND AT 25 FOOT INTERVALS ON THE LOW SIDE ONLY OF SUPERELEVATED SECTIONS. AN AGGREGATE DRAIN SHALL BE PLACED AT THE LOW POINT OF EACH SAG VERTICAL CURVE.

SR-73					
1109+00	LT	6'	1112+00	LT	7'
1109+25	LT	6'	1112+25	RT	7'
1109+50	LT	7'	1112+50	LT	7'
1109+75	LT	8'	1114+00	RT	10'
1110+00	LT	8'	1114+25	LT	5'
1110+25	LT	8'	1114+50	RT	7'
1110+50	LT	7'	1114+75	LT	7'
1110+75	LT	7'	1115+00	RT	7'
1111+00	LT	7'	1115+25	LT	7'
1111+25	LT	7'	1115+50	RT	7'
(L.P.) 1111+37.47	LT	7'	1115+75	RT	7'
1111+50	LT	7'	1116+00	RT	6'
1111+75	RT	6'	1116+25	RT	5'
				TOTAL = 180'	

ITEM 606 - ANCHOR ASSEMBLY, MGS TYPE E (MASH 2016)

THIS ITEM SHALL CONSIST OF FURNISHING AND INSTALLING ANY OF THE GUARDRAIL END TERMINALS FOR TYPE MGS GUARDRAIL AS LISTED ON ROADWAY ENGINEERING'S WEB PAGE UNDER ROADSIDE SAFETY DEVICES FOR APPROVED GUARDRAIL END TREATMENTS. INSTALLATION SHALL BE AT THE LOCATIONS SPECIFIED IN THE PLANS, IN ACCORDANCE WITH THE MANUFACTURER'S SPECIFICATIONS.

THE FACE OF THE TYPE E IMPACT HEAD SHALL BE COVERED WITH A SHEET OF TYPE G REFLECTIVE SHEETING, PER CMS 730.19.

REFER TO THE MANUFACTURER'S INSTRUCTIONS REGARDING THE INSTALLATION OF, AND THE GRADING AROUND THE FOUNDATION TUBES AND GROUND STRUT. THE TOP OF ANY FOUNDATION TUBE SHOULD BE LESS THAN 4 INCHES ABOVE THE GROUND. THE PLACEMENT OF THE FOUNDATION TUBES SHOULD BE AN APPROPRIATE DEPTH BELOW THE LEVEL LINE IN ORDER TO MAINTAIN THE FINISHED GUARDRAIL HEIGHT OF 31 INCHES FROM THE EDGE OF THE SHOULDER.

ON-SITE GRADING IS REQUIRED IF THE TOP OF THE FOUNDATION TUBES OR TOP OF THE GROUND STRUT DOES PROJECT MORE THAN 4 INCHES ABOVE THE GROUND LINE.

PAYMENT FOR THE ABOVE WORK SHALL BE MADE AT THE UNIT PRICE BID FOR ITEM 606, ANCHOR ASSEMBLY, MGS TYPE E, EACH, AND SHALL INCLUDE ALL LABOR, TOOLS, EQUIPMENT AND MATERIALS NECESSARY TO CONSTRUCT A COMPLETE AND FUNCTIONAL ANCHOR ASSEMBLY SYSTEM, INCLUDING ALL RELATED TRANSITIONS, REFLECTIVE SHEETING, HARDWARE, GRADING, EMBANKMENT AND EXCAVATION NOT SEPARATELY SPECIFIED, AS REQUIRED BY THE MANUFACTURER.

POST CONSTRUCTION STORM WATER TREATMENT

THIS PLAN UTILIZES STRUCTURAL BEST MANAGEMENT PRACTICES (BMP'S) FOR POST CONSTRUCTION STORM WATER TREATMENT.

VEGETATED FILTER STRIP

THIS PLAN UTILIZES VEGETATED FILTER STRIP FOR POST CONSTRUCTION STORM WATER TREATMENT. PLACE EITHER ITEM 660 SODDING OR ITEM 659 SEEDING AND MULCHING WITH A 4-INCH LIFT OF TOPSOIL AND ITEM 670, SLOPE EROSION PROTECTION TO ALL DISTURBED AREAS DESIGNATED AS VEGETATED FILTER STRIPS, THE EDGE OF SHOULDER, AND THE FORESLOPE AS SPECIFIED IN THE PLANS.

REVIEW OF DRAINAGE FACILITIES

PRIOR TO THE START OF WORK AND AGAIN BEFORE FINAL ACCEPTANCE, PERFORM AN INSPECTION WITH REPRESENTATIVES OF THE DEPARTMENT, CONTRACTOR AND LOCALS OF ALL EXISTING DRAINAGE FACILITIES THAT ARE TO REMAIN IN SERVICE WHICH MAY BE AFFECTED BY THE WORK. THE CONDITION OF THE EXISTING CONDUITS AND THEIR APPURTENANCES IS DETERMINED FROM FIELD OBSERVATIONS. RECORDS OF THE INSPECTION ARE MAINTAINED BY THE DEPARTMENT.

CONFIRM ALL EXISTING SEWERS INSPECTED INITIALLY BY THE ABOVE-MENTIONED PARTIES ARE MAINTAINED AND LEFT IN A CONDITION COMPARABLE TO THAT DETERMINED BY THE ORIGINAL INSPECTION. THE CONTRACTOR IS RESPONSIBLE TO CORRECT ANY CHANGE IN THE CONDITION RESULTING FROM THEIR OPERATIONS AS DIRECTED AND APPROVED BY THE ENGINEER.

PAYMENT FOR ALL OPERATIONS DESCRIBED ABOVE IS INCLUDED IN THE CONTRACT PRICE FOR THE PERTINENT 611 CONDUIT ITEMS.

FARM DRAINS

PROVIDE UNOBSTRUCTED OUTLETS TO ALL FARM DRAINS ENCOUNTERED DURING CONSTRUCTION. REPLACE EXISTING COLLECTORS WHICH ARE LOCATED BELOW THE ROADWAY DITCH ELEVATIONS, AND WHICH CROSS THE ROADWAY WITHIN THE (CONSTRUCTION) LIMITS WITH ITEM 611, CONDUIT, TYPE B, ONE COMMERCIAL SIZE LARGER THAN THE EXISTING CONDUIT.

OUTLET EXISTING COLLECTORS AND ISOLATED FARM DRAINS, WHICH ARE ENCOUNTERED ABOVE THE ELEVATION OF ROADWAY DITCHES INTO THE ROADWAY.

DITCH USING ITEM 611, TYPE F CONDUIT. THE OPTIMUM OUTLET ELEVATION IS ONE FOOT ABOVE THE FLOWLINE ELEVATION OF THE DITCH. INTERCEPT LATERAL FIELD TILES WHICH CROSS THE ROADWAY WITH ITEM 611, TYPE E CONDUIT, AND CARRY IN A LONGITUDINAL DIRECTION TO AN ADEQUATE OUTLET OR ROADWAY CROSSING.

THE LOCATION, TYPE, SIZE AND GRADE OF REPLACEMENTS IS DETERMINED BY THE ENGINEER AND PAYMENT MADE ON FINAL MEASUREMENTS.

PROVIDE EROSION CONTROL PADS AT THE OUTLET END OF ALL FARM DRAINS PER STANDARD CONSTRUCTION DRAWING DM-1.1, EXCEPT WHEN THEY OUTLET INTO A DRAINAGE STRUCTURE.

PAYMENT FOR THE EROSION CONTROL PADS AND ANY NECESSARY BENDS OR BRANCHES IS INCLUDED FOR PAYMENT IN THE PERTINENT CONDUIT ITEMS.

THE FOLLOWING ESTIMATED QUANTITIES HAVE BEEN INCLUDED IN THE GENERAL SUMMARY FOR THE WORK NOTED BELOW:

611, 6" CONDUIT, TYPE E	30 FT
611, 6" CONDUIT, TYPE F	30 FT

REMOVAL MISC.: CONCRETE GUTTER

REMOVAL OF THE EXISTING CONCRETE GUTTER LOCATED ON THE RIGHT SIDE OF SR-73 SHALL BE PAID FOR UNDER THE SQUARE FOOT ITEM 202, REMOVAL MISC.: CONCRETE GUTTER. PAYMENT FOR ALL LABOR, EQUIPMENT, AND DISPOSAL OF MATERIALS SHALL BE INCLUDED IN THE UNIT CONTRACT PRICE.

CONTROL POINTS - ℄ CONSTRUCTION SR-73

CONTROL POINT	STATION	OFFSET	NORTHING	EASTING	ELEVATION	DESCRIPTION
CP#1	1110+76.39	18.79' LT	295205.153	184004.598	809.45	5/8" REBAR & CAP
CP#2	1118+12.35	18.73' RT	294645.902	184479.348	831.94	5/8" REBAR & CAP
CP#3	1114+99.35	19.07' RT	294878.090	184275.452	816.48	5/8" REBAR & CAP

CENTERLINE REFERENCE - ℄ CONSTRUCTION SR-73

STATION	OFFSET	NORTHING	EASTING	DESCRIPTION
1103+80.00	0.00'	295811.087	183709.097	P.O.T.
1104+91.65	0.00'	295700.632	183725.402	P.C.
1107+77.24	45.68' RT	295418.101	183767.108	P.I.
1110+43.55	0.00'	295215.256	183968.146	P.T.
1115+99.66	0.00'	294820.271	184359.612	P.C.
1118+69.54	30.72' LT	294628.586	184549.589	P.I.
1121+30.14	0.00'	294373.055	184636.408	P.T.
1123+28.61	0.00'	294185.127	184700.259	P.O.T.

GENERAL NOTES

DESIGN AGENCY
BG
www.bgenggroup.com
5960 WILCOX PLACE, SUITE C
DUBLIN, OHIO 43016
DESIGNER JPK
REVIEWER RG 09-18-25
PROJECT ID 119769
SHEET P.6 TOTAL 64

PART-WIDTH CONSTRUCTION

BECAUSE OF THE NECESSITY TO BUILD THIS PROJECT UNDER TRAFFIC AND TO CONSTRUCT THE FULL PAVEMENT WIDTH IN STAGES, EXERCISE CARE TO PREVENT THE CONSTRUCTION OF A BUTT JOINT IN THE BASE COURSES. LAP LONGITUDINAL JOINTS AS SHOWN ON STANDARD CONSTRUCTION DRAWING BP-3.1.

ITEM 203 - EXCAVATION, AS PER PLAN

THIS WORK SHALL CONSIST OF EXCAVATING AND DISPOSING OF MATERIAL WHERE LIMESTONE AND/OR SHALE IS ENCOUNTERED. THE CONTRACTOR SHALL PERFORM THIS WORK IN ACCORDANCE WITH THE CONSTRUCTION AND MATERIAL SPECIFICATIONS. THE ENGINEER WILL MEASURE AND PAY FOR ONLY THE ACTUAL QUANTITY OF CONTINGENCY EXCAVATION AUTHORIZED AND ACCEPTED. NO PAYMENT WILL BE MADE FOR WORK PERFORMED UNDER THIS ITEM UNLESS SPECIFICALLY DIRECTED AND AUTHORIZED BY THE ENGINEER.

A CONTINGENCY QUANTITY OF 25 CU YD SHALL BE CARRIED TO THE GENERAL SUMMARY TO BE USED, AS DIRECTED, BY THE ENGINEER.

ENVIRONMENTAL COMMITMENTS

I. CONTRACTOR SHALL BE ALERT TO POSSIBLE BOATERS AND SHALL ACCOMMODATE SAFE TRAVEL THROUGH THE PROJECT AREA.

II. CONTRACTOR SHALL PLACE APPROPRIATE SIGNAGE/BUOYS/MARKERS 300 FEET UPSTREAM AND 300 FEET DOWNSTREAM OF THE PROJECT AREA TO ALERT PADDLERS/BOATERS OF CONSTRUCTION ACTIVITY AND FOR WAYFINDING PURPOSES.

III. CONTRACTOR SHALL NOTIFY ODNR AT KYLA.MAUNZ@DNR.OHIO.GOV, 14 CALENDAR DAYS PRIOR TO THE START OF CONSTRUCTION ACTIVITIES TO ALLOW ODNR TO POST NOTICE OF THE IMPENDING PROJECT CONSTRUCTION ON THE APPROPRIATE ODNR WEBPAGES AND ASSOCIATED ONLINE BOATING MAPS.

IV. CONTRACTOR SHALL CLOSELY COORDINATE THE CONSTRUCTION SCHEDULE (INCLUDING ACCESS RESTRICTIONS) WITH ODOT AND ODNR PRIOR TO THE START OF CONSTRUCTION ACTIVITIES.

V. IF ON-THE-WATER LAW ENFORCEMENT IS NEEDED DURING ANY PORTION OF THE CONSTRUCTION ACTIVITIES, THE CONTRACTOR SHALL CONTACT THE ODNR DIVISION OF PARKS AND WATERCRAFT LAW ENFORCEMENT SUPERVISOR, LT. JASON GANTT AT JASON.GANTT@DNR.OHIO.GOV OR 513-515-4313.

VI. WHILE IT IS ANTICIPATED THAT THE STREAM WILL NEED TO BE CLOSED TO COMPLETE PORTIONS OF THE PROJECT, UNNECESSARY CLOSING OF THE STREAM DURING CONSTRUCTION OF THIS PROJECT IS PROHIBITED. FURTHERMORE, BOATER TRAFFIC UNDER THE BRIDGE SHALL BE MAINTAINED AT ALL TIMES FROM FRIDAYS AT 6 PM THROUGH MONDAYS AT 6 AM AND ALL FEDERAL HOLIDAYS FROM 12:00 AM TO 11:59 PM. ALL WORK THAT WILL REQUIRE CLOSING THE STREAM TO BOATER ACCESS SHALL BE SCHEDULED OUTSIDE OF THESE HOURS.

OEPA NOTIFICATION OF DEMOLITION AND RENOVATION

ASBESTOS SURVEY FOR THE HIG-73-21.11 PID 119769 BRIDGE SCHEDULED FOR DEMOLITION WORK WAS CONDUCTED BY A CERTIFIED ASBESTOS HAZARD EVALUATION SPECIALIST. THE ASBESTOS SURVEY DID NOT IDENTIFY THE PRESENCE OF ANY ASBESTOS CONTAINING MATERIALS. A COPY OF THE OHIO ENVIRONMENTAL PROTECTION AGENCY (OEPA) NOTIFICATION OF DEMOLITION AND RENOVATION FORM, PARTIALLY COMPLETED BY THE ASBESTOS HAZARD EVALUATION SPECIALIST, HAS BEEN INCLUDED AS A SPECIAL PROVISION. THE CONTRACTOR SHALL COMPLETE AND SIGN THE FORMS AND SUBMIT IT TO THE ADDRESS BELOW OR ONLINE AT EBIZ.EPA.OHIO.GOV.

ASBESTOS PROGRAM
OHIO EPA, DAPC
P.O. BOX 1049
COLUMBUS, OH 43216-1049

THE FORM MUST BE SUBMITTED AT LEAST 10 WORKING DAYS PRIOR TO THE START OF ANY DEMOLITION WORK. THE CONTRACTOR SHALL PROVIDE A COPY OF THE COMPLETED AND SIGNED FORMS TO THE ENGINEER AS WELL AS THE ASBESTOS HAZARD EVALUATION SPECIALIST.

BASIS FOR PAYMENT: THE CONTRACTOR SHALL FURNISH ALL FEES, LABOR, AND MATERIAL NECESSARY TO COMPLETE AND SUBMIT THE OEPA NOTIFICATION FORMS. PAYMENTS FOR THIS WORK SHALL BE INCIDENTAL TO THE ITEM 202 STRUCTURE REMOVAL ITEM IN THE PLAN.

WATERWAY PERMIT

ODOT HAS OBTAINED A WATERWAY PERMIT FOR THIS PROJECT. THE CONDITIONS OF THE WATERWAY PERMIT HAVE BEEN INCLUDED IN THE PROPOSAL AS SPECIAL PROVISIONS. THE CONTRACTOR IS RESPONSIBLE FOR FOLLOWING ALL SPECIAL PROVISIONS OF THE WATERWAY PERMIT THROUGHOUT THE DURATION OF THE CONSTRUCITON CONTRACT.

GENERAL NOTES

ITEM 614, MAINTAINING TRAFFIC

ONE LANE, TWO WAY TRAFFIC SHALL BE MAINTAINED AT ALL TIMES BY USE OF WORK ZONE TRAFFIC SIGNALS AND A COMBINATION OF EXISTING PAVEMENT, THE COMPLETED PAVEMENT, ITEM 615 PAVEMENT FOR MAINTAINING TRAFFIC, AND TEMPORARY SURFACES USING ITEMS 410 AND 614.

LENGTH AND DURATION OF LANE CLOSURES AND RESTRICTIONS SHALL BE AT THE APPROVAL OF THE ENGINEER. IT IS THE INTENT TO MINIMIZE THE IMPACT TO THE TRAVELING PUBLIC. LANE CLOSURES OR RESTRICTIONS OVER SEGMENTS OF THE PROJECT IN WHICH NO WORK IS ANTICIPATED WITHIN A REASONABLE TIME FRAME, AS DETERMINED BY THE ENGINEER, SHALL NOT BE PERMITTED. THE LEVEL OF UTILIZATION OF MAINTENANCE OF TRAFFIC DEVICES SHALL BE COMMENSURATE WITH THE WORK IN PROGRESS.

BEFORE THE WORK BEGINS, THE CONTRACTOR SHALL SUBMIT TO THE ENGINEER THE NAME(S) AND TELEPHONE NUMBER(S) OF A PERSON OR PERSONS WHO CAN BE CONTACTED TWENTY-FOUR (24) HOURS PER DAY BY THE OHIO DEPARTMENT OF TRANSPORTATION AND ALL INTERESTED POLICE AGENCIES. THIS PERSON OR PERSONS SHALL BE RESPONSIBLE FOR PLACING OR REPLACING NECESSARY TRAFFIC CONTROL DEVICES IN ACCORDANCE WITH THE OHIO MANUAL OF UNIFORM TRAFFIC CONTROL DEVICES.

THE FOLLOWING ESTIMATED QUANTITIES HAVE BEEN INCLUDED IN THE GENERAL SUMMARY FOR USE AS DIRECTED BY THE ENGINEER FOR THE MAINTENANCE OF TRAFFIC.

ITEM 410, TRAFFIC COMPACTED SURFACE, TYPE A OR B — 25 CU. YD.
ITEM 410, TRAFFIC COMPACTED SURFACE, TYPE C — 25 CU. YD.
ITEM 616, WATER — 3 M. GAL.

ALL WORK AND TRAFFIC CONTROL DEVICES SHALL BE IN ACCORDANCE WITH CMS 614 AND OTHER APPLICABLE PORTIONS OF THE SPECIFICATIONS, AS WELL AS THE OHIO MANUAL OF UNIFORM TRAFFIC CONTROL DEVICES. PAYMENT FOR ALL LABOR, EQUIPMENT AND MATERIALS SHALL BE INCLUDED IN THE LUMP SUM CONTRACT PRICE FOR ITEM 614, MAINTAINING TRAFFIC, UNLESS SEPARATELY ITEMIZED IN THE PLAN.

THE FOLLOWING IS A SUGGESTED SEQUENCE OF CONSTRUCTION FOR THIS PROJECT:

SEQUENCE OF CONSTRUCTION ON SR-73

IT IS THE INTENT OF THE FOLLOWING SEQUENCE OF CONSTRUCTION TO PROVIDE A WORK AREA FOR THE CONTRACTOR WHILE ALSO MANTAINING TRAFFIC IN THE MANNER WHICH IS SAFE FOR THE TRAVELING PUBLIC. ALL WORK ZONE OR PERMANENT PAVEMENT MARKINGS SHALL BE IN PLACE BEFORE ANY PAVEMENT IS OPEN TO TRAFFIC. CONTRACTOR SHALL ERECT ALL TRAFFIC CONTROL DEVICES AND ENSURE THEY ARE IN GOOD WORKING ORDER PRIOR TO COMMENCING CONSTRUCTION ACTIVITIES ON THE BRIDGE. PRIOR TO ERECTING PORTABLE BARRIER, PAVEMENT FOR MAINTAINING TRAFFIC SHALL BE PLACED AS SHOWN, ON SHEET P.11.

ITEM 614, MAINTAINING TRAFFIC (CONTINUED)

ALL WORK ZONE SIGNING AND STRIPING SHALL BE IN PLACE PRIOR TO ERECTING BARRIER, AS WELL AS THE WORK ZONE TRAFFIC SIGNAL INSTALLATIONS.

THE WORK ZONE TRAFFIC SIGNALS SHALL INITIALLY BE TIMED ACCORDING TO THE SIGNAL PHASING DIAGRAM INCLUDED IN THE PLAN OR AS PROVIDED BY ENGINEER. THE CONTRACTOR SHALL PERIODICALLY MONITOR THE SIGNAL OPERATION TO DETERMINE FAILURE OR INEFFICIENT OPERATION. AT THE BEGINNING OF EACH PHASE, THE ENGINEER SHALL OBSERVE THE INITIAL FUNCTIONING OF THE TIMING PLAN TO ENSURE IT IS WORKING PROPERLY, AND ACCOMPLISHING THE ABOVE STATED INTENT, AS WELL AS AVOIDING UNREASONABLY LONG TRAFFIC QUEUES AT EITHER END. IF NECESSARY, THE TIMING SHALL BE ADJUSTED IF UNREASONABLY LONG TRAFFIC QUEUES ARE OBSERVED ON EITHER SIDE OF THE WORK ZONE. THE ENGINEER AND CONTRACTOR SHALL MAKE PERIODIC OBSERVATIONS (AT LEAST BI-WEEKLY) TO ENSURE THAT THE SIGNALS ARE CONTINUING TO FUNCTION AS PLANNED.

PRE-PHASE

DURING PRE-PHASE, THE EASTBOUND (RIGHT) SHOULDER WILL BE CLOSED AS PER SCD MT-95.45. CONSTRUCT ALL TEMPORARY PAVEMENT FROM STA. 1108+83 TO STA. 1116+52 RT. INSTALL ALL TEMPORARY TRAFFIC SIGNALS AS SHOWN ON SHEET P.11 TO BE USED DURING PHASES 1 AND 2. THE CONTRACTOR IS TO MAINTAIN TWO-WAY TRAFFIC USING THE EXISTING PAVEMENT AS WELL AS MAINTAIN ACCESS TO THE FIELD DRIVEWAYS DURING PHASE 1 CONSTRUCTION.

PHASE 1

DURING PHASE 1, TRAFFIC WILL BE SHIFTED TO THE EXISTING PAVEMENT ON THE EASTBOUND (RIGHT) OF SR-73 AND REDUCED TO A SIGNALIZED ONE LANE, TWO-WAY TRAFFIC TO ALLOW CONSTRUCTION TO BE PERFORMED ON THE WESTBOUND (LEFT) OF SR-73. THROUGHOUT THE WORK AREA, THE LANE SHALL BE 10.0' WITH 1.0' ANCHORED PORTABLE BARRIER OFFSET AND A 2.0' OUTSIDE SHOULDER. THE CONTRACTOR SHALL INSTALL ALL PORTABLE BARRIER, SIGNS, AND PAVEMENT MARKINGS AS SHOWN ON SHEET P.11. FOR THE BRIDGE PART-WIDTH CONSTRUCTION DETAILS, SEE SHEET P.36. THE CONTRACTOR SHALL MAINTAIN ACCESS TO ALL DRIVES WITHIN THE PROJECT LIMITS AT ALL TIMES.

PHASE 2

DURING PHASE 2, TRAFFIC WILL BE SHIFTED TO THE NEWLY CONSTRUCTED PAVEMENT ON THE WESTBOUND (LEFT) OF SR-73, UTILIZING A SIGNALIZED ONE LANE, TWO-WAY TRAFFIC TO ALLOW CONSTRUCTION TO BE PERFORMED ON THE EASTBOUND (RIGHT) OF SR-73. THROUGHOUT THE WORK AREA, THE LANE SHALL BE 10.0' WITH 1.0' UNANCHORED PORTABLE BARRIER OFFSET AND A 2.0' OUTSIDE SHOULDER. THE CONTRACTOR SHALL INSTALL ALL PORTABLE BARRIER, SIGNS, AND PAVEMENT MARKINGS AS SHOWN ON SHEET P.12. FOR THE BRIDGE PART-WIDTH CONSTRUCTION DETAILS, SEE SHEET P.37. THE CONTRACTOR SHALL MAINTAIN ACCESS TO ALL DRIVES WITHIN THE PROJECT LIMITS AT ALL TIMES. PHASE 2 TRAFFIC CONTROL DEVICES SHALL REMAIN IN PLACE UNTIL ALL REMAINING CONSTRUCTION ITEMS ARE IN PLACE.

ITEM 614, MAINTAINING TRAFFIC (CONTINUED)

FOLLOWING COMPLETION OF THE ABOVE DESCRIBED ITEMS, THE CONTRACTOR SHALL REMOVE WORK ZONE TRAFFIC CONTROL DEVICES, USING FLAGGERS TO CONTROL TRAFFIC. ALL SHORT TERM TRAFFIC CONTROL OPERATIONS SHALL CONFORM TO THE CURRENT EDITION OF THE OHIO MANUAL OF UNIFORM TRAFFIC CONTROL DEVICES (OMUTCD) AND SCD MT-97.10. REMOVAL OF PHASE 2 TRAFFIC CONTROL DEVICES SHALL NOT OCCUR UNTIL THE CONTRACTOR IS PREPARED TO COMMENCE FINAL STRIPING OPERATIONS. NO OVERNIGHT LANE CLOSURES SHALL BE PERMITTED FOLLOWING REMOVAL OF PHASE 2 TRAFFIC CONTROL DEVICES.

TRENCH FOR WIDENING

TRENCH EXCAVATION FOR BASE WIDENING SHALL BE ONLY ON ONE SIDE OF THE PAVEMENT AT A TIME. THE OPEN TRENCH SHALL BE ADEQUATELY MAINTAINED AND PROTECTED WITH DRUMS OR BARRICADES AT ALL TIMES. PLACEMENT OF PROPOSED SUB-BASE AND BASE MATERIAL SHALL FOLLOW AS CLOSELY AS POSSIBLE BEHIND EXCAVATION OPERATIONS. THE LENGTH OF WIDENING TRENCH WHICH IS OPEN AT ANY ONE TIME SHALL BE HELD TO A MINIMUM AND SHALL AT ALL TIMES BE SUBJECT TO APPROVAL OF THE ENGINEER.

OVER NIGHT TRENCH CLOSING

THE BASE WIDENING SHALL BE COMPLETED TO A DEPTH OF NO MORE THAN 1½ INCHES BELOW THE EXISTING PAVEMENT BY THE END OF EACH WORK DAY. NO TRENCH SHALL BE LEFT OPEN OVERNIGHT EXCEPT FOR A SHORT LENGTH (25 FEET OR LESS) OF A WORK SECTION AT THE END OF THE TRENCH. IN CASE WORK MUST BE SUSPENDED BECAUSE OF INCLEMENT WEATHER OR OTHER REASONS, THE TRENCH FOR THE UNCOMPLETED BASE WIDENING SHALL BE BACKFILLED AT THE DIRECTION OF THE ENGINEER.

DUST CONTROL

THE CONTRACTOR SHALL FURNISH AND APPLY WATER FOR DUST CONTROL AS DIRECTED BY THE ENGINEER. THE FOLLOWING ESTIMATED QUANTITIES HAVE BEEN INCLUDED FOR DUST CONTROL PURPOSES:
ITEM 616, WATER — 4 M. GAL

ITEM 614, WORK ZONE IMPACT ATTENUATOR FOR 24" WIDE HAZARDS (BIDIRECTIONAL)

THIS ITEM SHALL CONSIST OF FURNISHING AND INSTALLING A NON-GATING IMPACT ATTENUATOR. FURNISH AN IMPACT ATTENUATOR FROM THE OFFICE OF ROADWAY ENGINEERING'S APPROVED LIST FOR WORK ZONE IMPACT ATTENUATORS, FROM THE ROADWAY STANDARDS APPROVED PRODUCTS WEB PAGE.

INSTALLATION SHALL BE AT THE LOCATIONS SPECIFIED IN THE PLANS IN ACCORDANCE WITH THE MANUFACTURER'S SPECIFICATIONS.

THE CONTRACTOR SHALL REPAIR OR REPLACE A DAMAGED UNIT WITHIN 24 HOURS OF A DAMAGING IMPACT.

WHEN BIDIRECTIONAL DESIGNS ARE SPECIFIED, THE CONTRACTOR SHALL SUPPLY APPROPRIATE TRANSITIONS.

WHEN GATING IMPACT ATTENUATORS ARE DESIRED, THE CONTRACTOR SHALL SUBMIT DOCUMENTATION TO THE ENGINEER FOR ACCEPTANCE.

ITEM 614, WORK ZONE IMPACT ATTENUATOR FOR 24" WIDE HAZARDS (BIDIRECTIONAL) (CONTINUED)

THE COST FOR THE ADDITIONAL BARRIER REQUIRED FOR A GATING IMPACT ATTENUATOR SHALL BE INCLUDED IN THE COST OF THE GATING IMPACT ATTENUATOR.

PAYMENT FOR THE ABOVE WORK SHALL BE MADE AT THE UNIT PRICE BID AND SHALL INCLUDE ALL LABOR, TOOLS, EQUIPMENT AND MATERIALS NECESSARY TO CONSTRUCT AND MAINTAIN A COMPLETE AND FUNCTIONAL IMPACT ATTENUATOR SYSTEM, INCLUDING ALL RELATED BACKUPS, TRANSITIONS, LEVELING PADS, HARDWARE AND GRADING, NOT SEPARATELY SPECIFIED, AS REQUIRED BY THE MANUFACTURER.

FULLY-ACTUATED OPERATION OF WORK ZONE TRAFFIC SIGNAL

THE WORK ZONE SIGNAL CONTROL REQUIRED FOR THIS PROJECT AND SHOWN ON SHEETS P.11 - P.12 AND TRAFFIC SCDS MT-96.11, MT-96.20, AND MT-96.26 SHALL BE FULLY TRAFFIC-ACTUATED AND OPERATE IN A MANNER SIMILAR TO THAT DESCRIBED IN SECTION 733.02 OF THE CONSTRUCTION AND MATERIAL SPECIFICATIONS.

THE INITIAL CONTROLLER TIMING SHALL BE AS FOLLOWS:

	PHASE		
	SR-73 EASTBOUND	SR-73 WESTBOUND	FIELD DRIVES
MAX. GREEN	40	40	20
EXTENSION	4	4	4
MIN. GREEN	20	20	10
YELLOW	5	5	5
ALL RED	35	35	25

SIGNALS WILL REST ON RED WHEN NO VEHICLES ARE DETECTED. THE CONTRACTOR SHALL ALSO DESIGN, FURNISH, INSTALL AND MAINTAIN A TRAFFIC DETECTOR ON EACH TRAFFIC APPROACH WHICH WILL RELIABLY DETECT ALL LEGAL TRAFFIC APPROACHING (BUT NOT LEAVING) THE SIGNAL AS IT PASSES OR WAITS IN THE DESIGNATED DETECTOR ZONE SHOWN IN THE PLANS. DETECTOR DESIGNS WHICH DO NOT PROVIDE RELIABLE DETECTION, FREE FROM FALSE CALLS, SHALL BE IMMEDIATELY REPLACED BY THE CONTRACTOR.

DELINEATION OF TEMPORARY AND PERMANENT GUARDRAIL

BARRIER REFLECTORS SHALL BE INSTALLED ON ALL TEMPORARY GUARDRAIL USED FOR TRAFFIC CONTROL; AND, ON ALL PERMANENT GUARDRAIL LOCATED WITHIN 5 FEET OF THE EDGE OF THE ADJACENT TRAVEL LANE. BARRIER REFLECTORS SHALL CONFORM TO C&MS 626 AND THE SPACING SHALL BE APPROXIMATELY 50 FEET.

OBJECT MARKERS SHALL BE INSTALLED ON ALL TEMPORARY AND PERMANENT GUARDRAIL LOCATED WITHIN 5 FEET OF THE EDGE OF THE ADJACENT TRAVEL LANE. GUARDRAIL-MOUNTING OF OBJECT MARKERS SHALL BE MADE BY INSTALLING THE OBJECT MARKERS ON THE EXTENSION BLOCKS RATHER THAN DIRECTLY ONTO THE GUARDRAIL ITSELF. OBJECT MARKERS SHALL CONFORM TO C&MS 614.03 AND THE SPACING SHALL BE APPROXIMATELY 50 FEET WITH A 25 FOOT OFFSET FROM THE BARRIER REFLECTORS.

THE FOLLOWING ESTIMATED QUANTITIES HAVE BEEN INCLUDED IN THE PLANS AND CARRIED TO THE GENERAL SUMMARY:
ITEM 614, BARRIER REFLECTOR, TYPE 1 (BI-DIRECTIONAL) 5 EACH
ITEM 614, BARRIER REFLECTOR, TYPE 3 (BI-DIRECTIONAL) 18 EACH
ITEM 614, OBJECT MARKER, TWO-WAY 23 EACH

MAINTENANCE OF TRAFFIC NOTES

DESIGN AGENCY
BG
www.bgenggroup.com
5960 WILCOX PLACE, SUITE C
DUBLIN, OHIO 43016
DESIGNER JPK
REVIEWER RG 09-18-25
PROJECT ID 119769

HIG-73-21.04
MODEL: MOT GEN NOTES 01 PAPERSIZE: 34x22 (in.) DATE: 1/9/2026 TIME: 8:42:34 AM USER: GBoyer
P:\Transportation\Workset-2\119769_HIG-73-21.11\400-Engineering\MOT\Sheets\119769_MN001.dgn

EARTHWORK FOR MAINTAINING TRAFFIC

THE FOLLOWING QUANTITIES HAVE BEEN INCLUDED IN THE PLAN FOR INFORMATION ONLY.

EXCAVATION FOR MAINTAINING TRAFFIC	*70 CU. YD.*
EMBANKMENT FOR MAINTAINING TRAFFIC	*75 CU. YD.*

WHEN UNDERCUTS ARE NECESSARY FOR MAINLINE PAVEMENT OR EMBANKMENT CONSTRUCTION, EVALUATE THE NEED FOR TEMPORARY ROAD UNDERCUTS IF WITHIN A CLOSE PROXIMITY TO THE MAINLINE UNDERCUTS. A GEOTECHNICAL EVALUATION SHOULD BE CONSIDERED TO DETERMINE IF THE EXISTING SOIL CONDITIONS ARE ADEQUATE TO SUPPORT THE TEMPORARY ROAD. ADDITIONAL SOIL BORINGS ALONG THE TEMPORARY ROAD ARE NOT NORMALLY REQUIRED.

TEMPORARY PAVEMENT SHALL BE REMOVED UPON COMPLETION OF ALL PHASE 2 WORK. REPLACE WITH EMBANKMENT AS PER CMS 615.03. CONTRACTOR SHALL NOT DISTURB THE GRADING OUTSIDE OF THE TEMPORARY PAVEMENT REMOVAL LIMITS.

PAYMENT FOR THE ABOVE WORK SHALL BE INCLUDED IN THE LUMP SUM CONTRACT PRICE FOR ITEM 615, ROADS FOR MAINTAINING TRAFFIC, AS PER PLAN, LUMP SUM.

MAINTENANCE OF TRAFFIC NOTES

DESIGN AGENCY
BG
www.bgenggroup.com
5960 WILCOX PLACE, SUITE C
DUBLIN, OHIO 43016

DESIGNER
JPK

REVIEWER
RG 09-18-25

PROJECT ID
119769

SHEET P.9 TOTAL 64

REF NO.	SHEET NO.	STATION TO STATION			SIDE	614 WORK ZONE IMPACT ATTENUATOR, 24" WIDE HAZARDS, (BIDIRECTIONAL)	614 BARRIER REFLECTOR, TYPE 1 (BI-DIRECTIONAL)	614 OBJECT MARKER, TWO WAY	614 WORK ZONE EDGE LINE, CLASS I, 6" (WHITE)	614 WORK ZONE STOP LINE, CLASS I		615 PAVEMENT FOR MAINTAINING TRAFFIC, CLASS B		622 PORTABLE BARRIER, UNANCHORED	622 PORTABLE BARRIER, ANCHORED
						EACH	EACH	EACH	MILE	FT		SY		FT	FT
		PHASE 1													
A-1	P.11	1108+83	-	1112+49	RT							*67*			
A-2	P.11	1113+87	-	1118+75	RT							*95*			
ELW-1	P.11	1107+48	-	1118+90	LT/RT				*0.22*						
ELW-2	P.11	1106+98	-	1119+40	RT				*0.24*						
PB-1	P.11	1108+40	-	1118+08	LT/RT	*2*	*19*	*19*						*190*	*730*
SL-1	P.11	1106+98			RT					*12*					
SL-2	P.11	1119+40			LT					*12*					
		PHASE 2													
A-1	P.12	1107+42	-	1109+50	LT							*45*			
A-2	P.12	1116+00	-	1117+90	LT							*31*			
ELW-1	P.12	1106+98	-	1119+40	LT				*0.24*						
ELW-2	P.12	1107+48	-	1118+90	LT/RT				*0.22*						
PB-1	P.12	1108+41	-	1114+37	LT/RT	*2*	*13*	*13*						*600*	
PB-2	P.12	1115+06	-	1117+90	LT/RT	*2*	*7*	*7*						*290*	
SL-1	P.12	1106+98			RT					*12*					
SL-2	P.12	1119+40			LT					*12*					
TOTALS CARRIED TO GENERAL SUMMARY						6	39	39	0.92	48		238		1080	730

MOT SUBSUMMARY

HIG-73-21.04

MODEL: Sheet_SurvFt PAPERSIZE: 34x22 (in.) DATE: 1/9/2026 TIME: 8:42:35 AM USER: GBoyer
P:\Transportation\Workset-2\119769_HIG-73-21.11\400-Engineering\MOT\Sheets\119769_MS001.dgn

DESIGN AGENCY
BG
www.bgenggroup.com
5960 MILCOX PLACE, SUITE C
DUBLIN, OHIO 43016

DESIGNER
JEP

REVIEWER
RG 09-18-25

PROJECT ID
119769

SHEET P.10 TOTAL 64

LEGEND

- PAVEMENT FOR MAINTAINING TRAFFIC, CLASS B
- WORK AREA
- XXX XXX REMOVE EXISTING MARKINGS
- DRUMS

NOTES

1. CONTRACTOR SHALL MAINTAIN ACCESS TO DRIVES AT ALL TIMES.
2. FOR SECTIONS A-A & C-C, SEE SHEET P.13
3. FOR SECTION B-B, SEE BRIDGE PLANS.

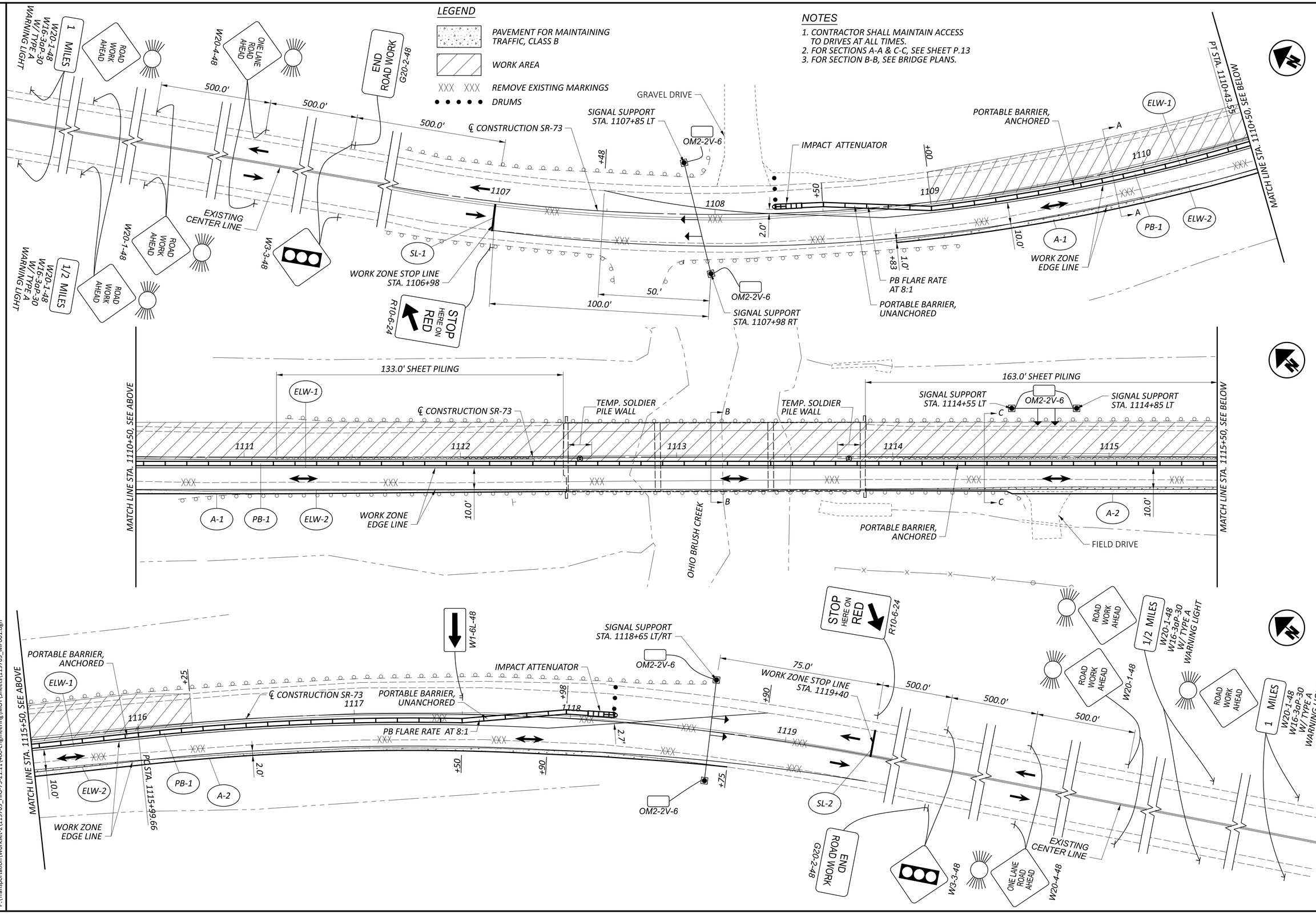

MAINTENANCE OF TRAFFIC - SR-73. PHASE 1

HIG-73-21.04

MODEL: Plan (Sheet) PAPERSIZE: 34x22 (in.) DATE: 1/9/2026 TIME: 8:42:38 AM USER: GBoyer
P:\Transportation\Workset-2\119769_HIG-73-21.11\400-Engineering\MOT\Sheets\119769_MP001.dgn

DESIGN AGENCY
BG
www.bgenggroup.com
5960 WILCOX PLACE, SUITE C
DUBLIN, OHIO 43016

DESIGNER	JPK
REVIEWER	RG 09-18-25
PROJECT ID	119769
SHEET	P.11
TOTAL	64

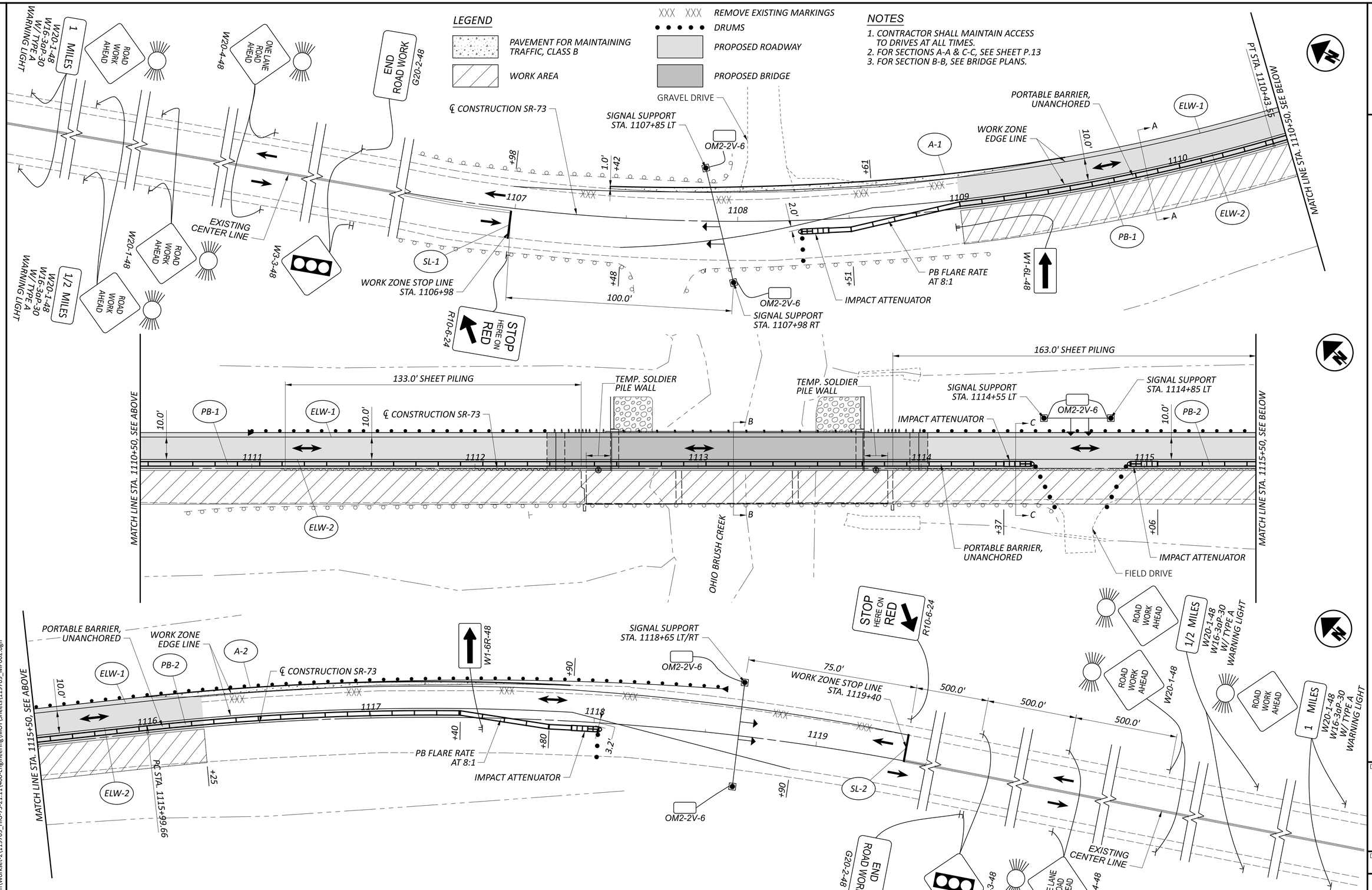

MAINTENANCE OF TRAFFIC - SR-73 PHASE 2

HIG-73-21.04

MODEL: Plan [Sheet] PAPERSIZE: 34x22 (in.) DATE: 1/9/2026 TIME: 8:42:43 AM USER: GBoyer
P:\Transportation\Workset-2\119769_HIG-73-21.11\400-Engineering\MOT\Sheets\119769_MP002.dgn

DESIGN AGENCY
BG
www.bgenggroup.com
5960 WILCOX PLACE, SUITE C
DUBLIN, OHIO 43016

DESIGNER	JPK
REVIEWER	RG 09-18-25
PROJECT ID	119769
SHEET	P.12
TOTAL	64

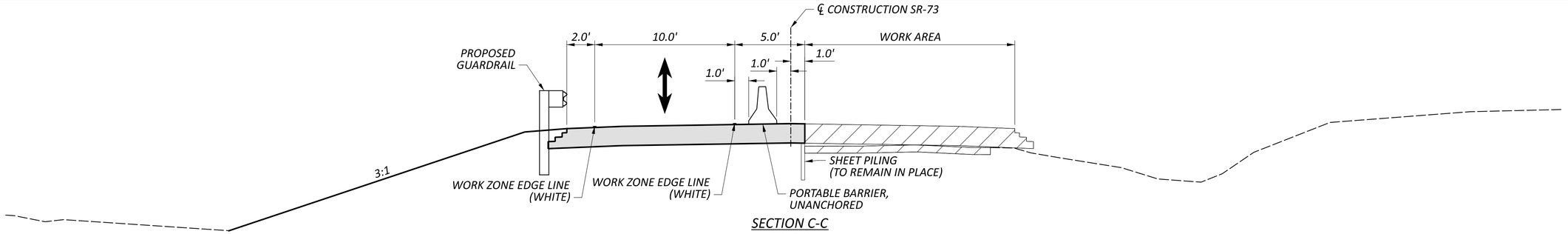

SECTION C-C
PHASE 2

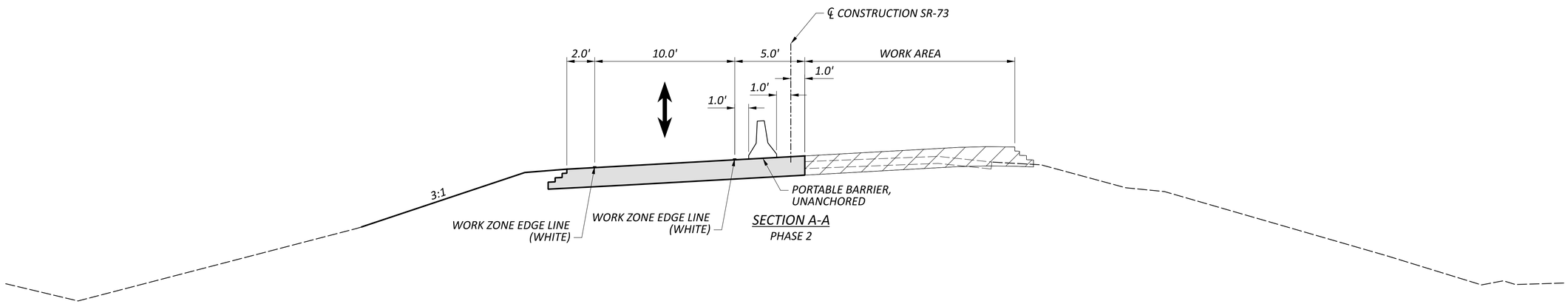

SECTION A-A
PHASE 2

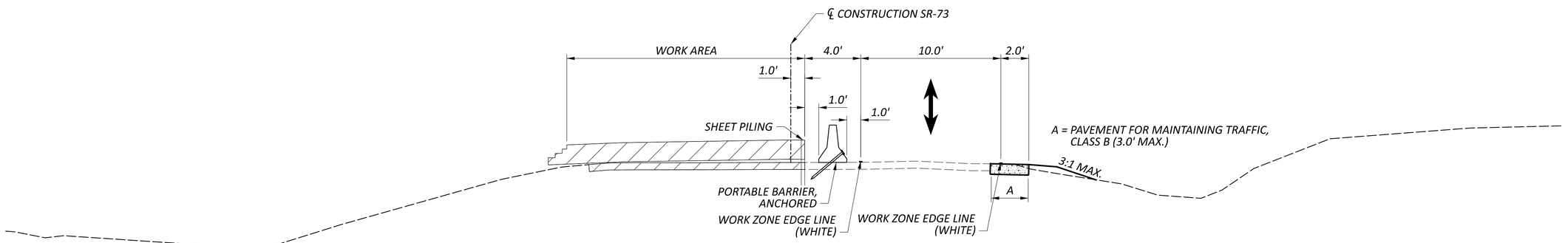

SECTION C-C
PHASE 1

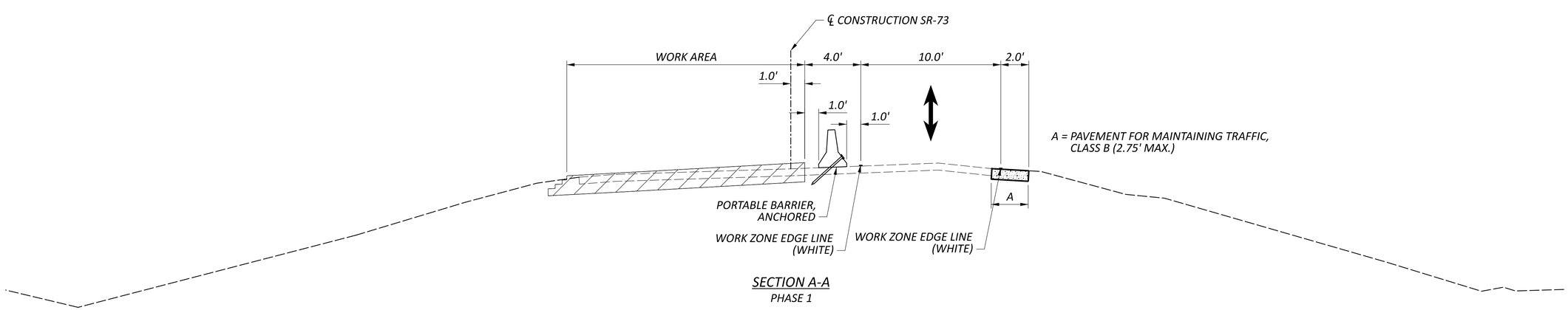

SECTION A-A
PHASE 1

MAINTENANCE OF TRAFFIC - PHASE 1 & 2 SECTIONS

DESIGN AGENCY
BG
www.bgenggroup.com
5960 MILCOX PLACE, SUITE C
DUBLIN, OHIO 43016

DESIGNER
JPK

REVIEWER
RG 09-18-25

PROJECT ID
119769

SHEET P.13 TOTAL 64

HIG-73-21.04

MODEL: MOT - Detail Sheet PAPERSIZE: 34x22 (in.) DATE: 1/9/2026 TIME: 8:42:52 AM USER: GBoyer
P:\Transportation\Workset-2\119769_HIG-73-21.11\400-Engineering\MOT\Sheets\119769_XM001.dgn

SHEET NUMBER													PART.	ITEM	ITEM EXT	GRAND TOTAL	UNIT	DESCRIPTION	SEE SHEET NO.
P.6	P.7	P.16		P.8	P.9	P.10		P.28		P.30	P.35	OFFICE CALCS	01/STR						
																		ROADWAY	
LS													LS	201	11000	LS		CLEARING AND GRUBBING	
												1,512	1,512	202	23000	1,512	SY	PAVEMENT REMOVED	
		25											25	202	35100	25	FT	PIPE REMOVED, 24" DIAMETER AND UNDER	
		866											866	202	38000	866	FT	GUARDRAIL REMOVED	
		280											280	202	98400	280	SF	REMOVAL MISC.: CONCRETE GUTTER	P.6
								345					345	203	10000	345	CY	EXCAVATION	
	25												25	203	10001	25	CY	EXCAVATION, AS PER PLAN	P.7
								1,096					1,096	203	20000	1,096	CY	EMBANKMENT	
		37										1,992	2,029	204	10000	2,029	SY	SUBGRADE COMPACTION	
2													2	204	45000	2	HOUR	PROOF ROLLING	
		675											675	606	15050	675	FT	GUARDRAIL, TYPE MGS	
		3											3	606	26150	3	EACH	ANCHOR ASSEMBLY, MGS TYPE E (MASH 2016)	
		1											1	606	26500	1	EACH	ANCHOR ASSEMBLY, TYPE T	
		4											4	606	34600	4	EACH	MGS BRIDGE TERMINAL ASSEMBLY, TYPE TST-2	
																		EROSION CONTROL	
		213											213	601	32104	213	CY	ROCK CHANNEL PROTECTION, TYPE B WITH GEOTEXTILE FABRIC	
373		78											451	659	00300	451	CY	TOPSOIL	
3,356													3,356	659	10000	3,356	SY	SEEDING AND MULCHING	
168													168	659	14000	168	SY	REPAIR SEEDING AND MULCHING	
0.45													0.45	659	20000	0.45	TON	COMMERCIAL FERTILIZER	
0.69													0.69	659	31000	0.69	ACRE	LIME	
18													18	659	35000	18	MGAL	WATER	
		702											702	670	00500	702	SY	SLOPE EROSION PROTECTION	
													LS	832	15000	LS		STORM WATER POLLUTION PREVENTION PLAN	
													LS	832	15002	LS		STORM WATER POLLUTION PREVENTION INSPECTIONS	
													LS	832	15010	LS		STORM WATER POLLUTION PREVENTION INSPECTION SOFTWARE	
													19,138	832	30000	19,138	EACH	EROSION CONTROL	
		69											69	836	10000	69	SY	SEEDING AND EROSION CONTROL WITH TURF REINFORCING MAT, TYPE 1	
																		DRAINAGE	
180													180	605	31100	180	FT	AGGREGATE DRAINS	
30													30	611	01400	30	FT	6" CONDUIT, TYPE E	
30													30	611	01500	30	FT	6" CONDUIT, TYPE F	
		25											25	611	04900	25	FT	12" CONDUIT, TYPE D	
																		PAVEMENT	
												374	374	254	01000	374	SY	PAVEMENT PLANING, ASPHALT CONCRETE (1.5")	
												330	330	301	56000	330	CY	ASPHALT CONCRETE BASE, PG64-22, (449)	
		9										329	338	304	20000	338	CY	AGGREGATE BASE	
												328	328	407	10000	328	GAL	TACK COAT	
												151	151	441	70000	151	CY	ASPHALT CONCRETE SURFACE COURSE, TYPE 1, (449), PG64-22	
												17	17	441	70200	17	CY	ASPHALT CONCRETE INTERMEDIATE COURSE, TYPE 1, (449)	
																		TRAFFIC CONTROL	
										8			8	621	00100	8	EACH	RPM	
										8			8	621	54000	8	EACH	RAISED PAVEMENT MARKER REMOVED	
										2			2	626	00102	2	EACH	BARRIER REFLECTOR, TYPE 1 (BI-DIRECTIONAL)	
										10			10	626	00112	10	EACH	BARRIER REFLECTOR, TYPE 3 (BI-DIRECTIONAL)	
										12			12	630	03100	12	FT	GROUND MOUNTED SUPPORT, NO. 3 POST	
										1			1	630	08600	1	EACH	SIGN POST REFLECTOR	
										9			9	630	80100	9	SF	SIGN, FLAT SHEET	
										1			1	630	84900	1	EACH	REMOVAL OF GROUND MOUNTED SIGN AND DISPOSAL	
										1			1	630	86002	1	EACH	REMOVAL OF GROUND MOUNTED POST SUPPORT AND DISPOSAL	
										0.28			0.28	642	00104	0.28	MILE	EDGE LINE, 6", TYPE 1	
										0.14			0.14	642	00300	0.14	MILE	CENTER LINE, TYPE 1	
																		STRUCTURE OVER 20 FOOT SPAN (HIG-00073-21.110)	
											LS		LS	202	11003	LS		STRUCTURE REMOVED, OVER 20 FOOT SPAN, AS PER PLAN	P.33
											80		80	202	22900	80	SY	APPROACH SLAB REMOVED	
											571		571	202	23500	571	SY	WEARING COURSE REMOVED	
											LS		LS	503	11101	LS		COFFERDAMS AND EXCAVATION BRACING, AS PER PLAN	P.33
											130		130	503	21100	130	CY	UNCLASSIFIED EXCAVATION	

GENERAL SUMMARY

HIG-73-21.04

MODEL: Sheet_SurvFt PAPERSIZE: 34x22 (in.) DATE: 1/9/2026 TIME: 8:43:02 AM USER: GBoyer
P:\Transportation\Workset-2\119769_HIG-73-21.11\400-Engineering\Roadway\Sheets\119769_GG001.dgn

DESIGN AGENCY
BG
www.bgenggroup.com
5960 WILCOX PLACE, SUITE C
DUBLIN, OHIO 43016

DESIGNER
JEP

REVIEWER
RG 09-18-25

PROJECT ID
119769

SHEET P.14 TOTAL 64

SHEET NUMBER													PART.	ITEM	ITEM EXT	GRAND TOTAL	UNIT	DESCRIPTION	SEE SHEET NO.
P.8	P.9		P.10		P.35								01/STR						
					139								139	503	31121	139	CY	SHALE EXCAVATION, AS PER PLAN	P.33
					50,856								50,856	509	10000	50,856	LB	EPOXY COATED STEEL REINFORCEMENT	
					62								62	511	33419	62	CY	CLASS QC2 CONCRETE WITH QC/QA, SUPERSTRUCTURE, AS PER PLAN	P.42
					2								2	511	33500	2	EACH	SEMI-INTEGRAL DIAPHRAGM GUIDE	
					112								112	511	34446	112	CY	CLASS QC2 CONCRETE WITH QC/QA, BRIDGE DECK	
					87								87	511	44112	87	CY	CLASS QC1 CONCRETE WITH QC/QA, ABUTMENT NOT INCLUDING FOOTING	
					67								67	511	46512	67	CY	CLASS QC1 CONCRETE WITH QC/QA, FOOTING	
					386								386	512	10100	386	SY	SEALING OF CONCRETE SURFACES (EPOXY-URETHANE)	
					27								27	512	33000	27	SY	TYPE 2 WATERPROOFING	
					5								5	515	15020	5	EACH	DRAPED STRAND PRESTRESSED CONCRETE BRIDGE I-BEAM MEMBERS, LEVEL 3, TYPE 4 (111'-8" LONG)	
					12								12	515	20000	12	EACH	INTERMEDIATE DIAPHRAGMS	
					40								40	516	13900	40	SF	2" PREFORMED EXPANSION JOINT FILLER	
					107								107	516	14020	107	FT	SEMI-INTEGRAL ABUTMENT EXPANSION JOINT SEAL	
					10								10	516	44201	10	EACH	ELASTOMERIC BEARING WITH INTERNAL LAMINATES AND LOAD PLATE (NEOPRENE), AS PER PLAN (14"X18"X3.398"),(15"X19"X2")	P.45
					236								236	517	70100	236	FT	RAILING (THREE STEEL TUBE BRIDGE RAILING)	
					75								75	518	21200	75	CY	POROUS BACKFILL WITH GEOTEXTILE FABRIC	
					294								294	SPECIAL	51822300	294	FT	STEEL DRIP STRIP	P.51
					128								128	518	40000	128	FT	6" PERFORATED CORRUGATED PLASTIC PIPE	
					26								26	518	40011	26	FT	6" NON-PERFORATED CORRUGATED PLASTIC PIPE, INCLUDING SPECIALS, AS PER PLAN	P.43
					140								140	524	94604	140	FT	DRILLED SHAFTS, 30" DIAMETER, INTO BEDROCK	
					10								10	524	94702	10	FT	DRILLED SHAFTS, 36" DIAMETER, ABOVE BEDROCK	
					178								178	526	25010	178	SY	REINFORCED CONCRETE APPROACH SLABS WITH QC/QA (T=15")	
					64								64	526	90010	64	FT	TYPE A INSTALLATION	
					189								189	613	41201	189	CY	LOW STRENGTH MORTAR BACKFILL, AS PER PLAN	P.34
					1								1	625	33000	1	EACH	STRUCTURE GROUNDING SYSTEM	
					2								2	894	10000	2	EACH	THERMAL INTEGRITY PROFILING (TIP) TEST	
																		MAINTENANCE OF TRAFFIC	
25													25	410	12000	25	CY	TRAFFIC COMPACTED SURFACE, TYPE A OR B	
25													25	410	13000	25	CY	TRAFFIC COMPACTED SURFACE, TYPE C	
			6										6	614	12384	6	EACH	WORK ZONE IMPACT ATTENUATOR, 24" WIDE HAZARDS, (BIDIRECTIONAL)	
5			39										44	614	13310	44	EACH	BARRIER REFLECTOR, TYPE 1 (BI-DIRECTIONAL)	
18													18	614	13314	18	EACH	BARRIER REFLECTOR, TYPE 3 (BI-DIRECTIONAL)	
23			39										62	614	13360	62	EACH	OBJECT MARKER, TWO WAY	
			0.92										0.92	614	22010	0.92	MILE	WORK ZONE EDGE LINE, CLASS I, 6"	
			48										48	614	26000	48	FT	WORK ZONE STOP LINE, CLASS I	
	LS												LS	615	10001	LS		ROADS FOR MAINTAINING TRAFFIC, AS PER PLAN	P.9
			238										238	615	25000	238	SY	PAVEMENT FOR MAINTAINING TRAFFIC, CLASS B	
7													7	616	10000	7	MGAL	WATER	
			1,080										1,080	622	41100	1,080	FT	PORTABLE BARRIER, UNANCHORED	
			730										730	622	41110	730	FT	PORTABLE BARRIER, ANCHORED	
																		INCIDENTALS	
													LS	614	11000	LS		MAINTAINING TRAFFIC	
													6	619	16000	6	MNTH	FIELD OFFICE, TYPE A	
													LS	623	10000	LS		CONSTRUCTION LAYOUT STAKES AND SURVEYING	
													LS	624	10000	LS		MOBILIZATION	

GENERAL SUMMARY

HIG-73-21.04

MODEL: Sheet_SurvFt PAPERSIZE: 34x22 (in.) DATE: 1/9/2026 TIME: 8:43:02 AM USER: GBoyer
P:\Transportation\Workset-2\119769_HIG-73-21.11\400-Engineering\Roadway\Sheets\119769_GG002.dgn

DESIGN AGENCY
BG
www.bgenggroup.com
5960 WILCOX PLACE, SUITE C
DUBLIN, OHIO 43016

DESIGNER
JEP

REVIEWER
RG 09-18-25

PROJECT ID
119769

SHEET P.15 TOTAL 64

ROADWAY SUBSUMMARY

REF NO.	SHEET NO.	STATION TO STATION	SIDE	202 PIPE REMOVED, 24" DIAMETER AND UNDER (FT)	202 GUARDRAIL REMOVED (FT)	202 REMOVAL MISC.: CONCRETE GUTTER (SF)	204 SUBGRADE COMPACTION (SY)	304 AGGREGATE BASE (8") (CY)	601 ROCK CHANNEL PROTECTION, TYPE B WITH GEOTEXTILE FABRIC (2.5" THICK) (CY)	606 GUARDRAIL, TYPE MGS (FT)	606 ANCHOR ASSEMBLY, MGS TYPE E (EACH)	606 ANCHOR ASSEMBLY, TYPE T (EACH)	606 MGS BRIDGE TERMINAL ASSEMBLY, TYPE TST-2 (EACH)	611 12" CONDUIT, TYPE D (FT)	659 TOPSOIL (4") (CY)	670 SLOPE EROSION PROTECTION (SY)	836 SEEDING AND EROSION CONTROL WITH TURF REINFORCING MAT, TYPE 1 (SY)
D-1	P.19	1114+58 - 1114+83	RT	25										25			
DR-1	P.19	1114+71	RT				36	8									
E-1	P.18	1109+00 - 1111+00	LT												78	702	
E-2	P.19	1112+61 - 1112+85	RT														20
E-3	P.19	1112+62 - 1112+80	LT/RT						95								
E-4	P.19	1112+62 - 1112+84	LT														16
E-5	P.19	1113+52 - 1113+75	RT														17
E-6	P.19	1113+53 - 1113+73	LT/RT						118								
E-7	P.19	1113+55 - 1113+77	LT														16
GR-1	P.18 - P.19	1110+60.76 - 1112+62.65	RT		180					125.0	1		1				
GR-2	P.18 - P.19	1110+98.26 - 1112+62.65	LT		130					87.5	1		1				
GR-3	P.19	1113+72.54 - 1114+58.93	RT		78					50.0		1	1				
GR-4	P.19	1113+72.54 - 1118+58.10	LT		478					412.5	1		1				
R-1	P.19	1113+65 - 1114+00	RT			192											
R-2	P.19	1113+71 - 1114+00	LT			88											
TOTALS CARRIED TO GENERAL SUMMARY				25	866	280	37	9	213	675	3	1	4	25	78	702	69

HIG-73-21.04

MODEL: Sheet_SurvFt PAPERSIZE: 34x22 (in.) DATE: 1/9/2026 TIME: 8:43:03 AM USER: GBoyer
P:\Transportation\Workset-2\119769_HIG-73-21.11\400-Engineering\Roadway\Sheets\119769_GS001.dgn

DESIGN AGENCY
BG
www.bgenggroup.com
5960 WILCOX PLACE, SUITE C
DUBLIN, OHIO 43016

DESIGNER
JEP

REVIEWER
RG 09-18-25

PROJECT ID
119769

SHEET P.16 TOTAL 64

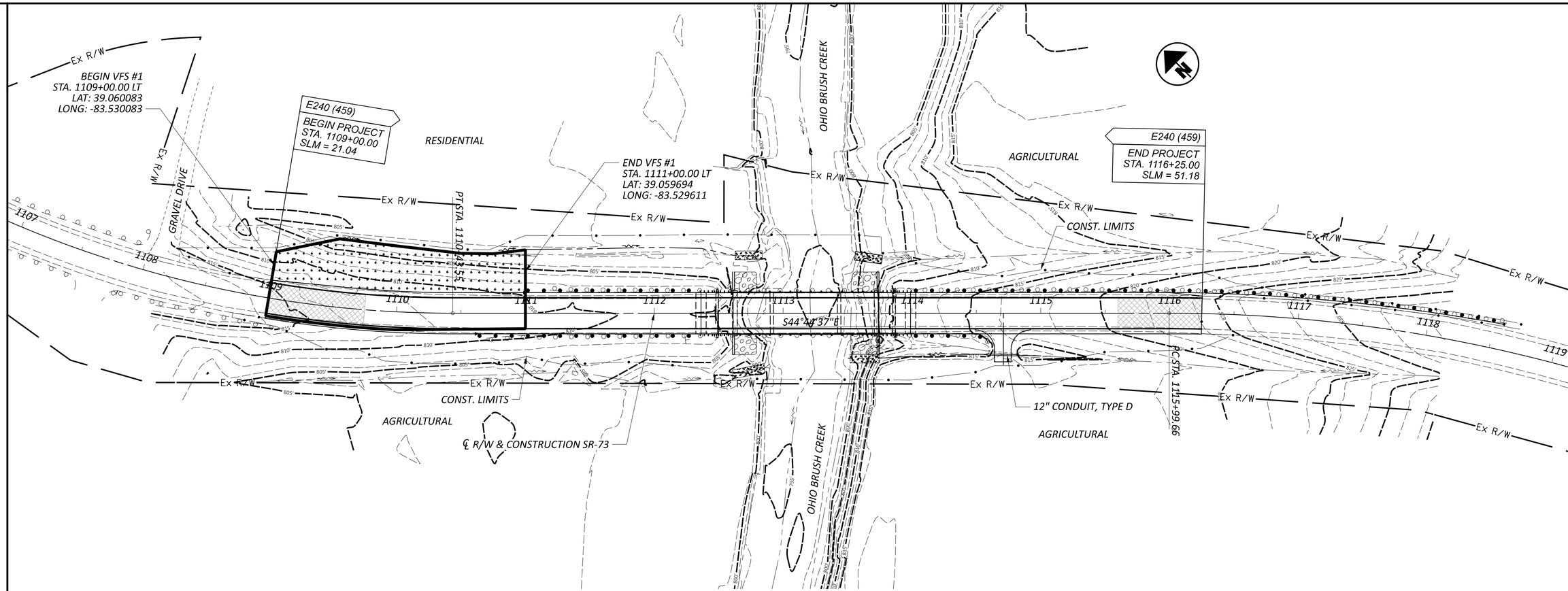

HORIZONTAL SCALE IN FEET
0 20 40 80

USGS MAP NO.: BELFAST
JACKSON TOWNSHIP,OH
DATED 2023
LATITUDE: 39° 03' 33"
LONGITUDE: -83° 31' 45"

PROJECT DATA	SITE (HIG-73-21.11)
TOTAL AREA (RIGHT-OF-WAY)	3.38 AC
PROJECT EARTH DISTURBED AREA	1.28 AC
ESTIMATED CONTRACTOR EARTH DISTURBED AREA	0.18 AC
NOTICE OF INTENT EARTH DISTRUBED AREA	1.46 AC
IMPERVIOUS (PAVED) AREA FOR PRE-CONSTRUCTION SITE	0.49 AC
IMPERVIOUS (PAVED) AREA FOR POST CONSTRUCTION SITE	0.53 AC
RUNOFF COEFFICIENT FOR PRE-CONSTRUCTION SITE	0.78
RUNOFF COEFFICIENT FOR POST CONSTRUCTION SITE	0.78
IMMEDIATE RECEIVING WATERS	OHIO BRUSH CREEK
SUBSEQUENT RECEIVING WATER	OHIO RIVER
POST CONSTRUCTION BMP	VEGETATED FILTER STRIP
SOIL MAP HIGHLAND COUNTY, OHIO (OH071)	FcA, Gn, HbB, HbC2 Pa, W

ITEMS INCLUDED WITH VEGETATIVE FILTER STRIP:

1. ITEM 659, TOPSOIL (ADD 4" TO THE GRASS PORTION OF THE SHOULDER AND FORESLOPE OF THE VEGETATIVE FILTER STRIP).
2. ITEM 670, SLOPE EROSION PROTECTION.

BMP	STATION		AREA TREATED	DITCH WIDTH	FILTER WIDTH	LOCATION	LATITUDE	LONGITUDE
	FROM	TO						
*VEGETATED FILTER STRIP #1	1109+00	1111+00	0.28 AC	N/A	VARIES 22.4' - 33.2'	BEGIN END	39.060083 39.059694	-83.530083 -83.529611
	TOTAL TREATMENT		0.2/ AC	0.28 AC. ≥ 0.26 AC.; OK				

PROJECT DESCRIPTION

REPLACEMENT OF THE STRUCTURALLY DEFICIENT BRIDGE (SFN 3601749) WITH A NEW SINGLE SLAB STRUCTURE OVER OHIO BRUSH CREEK. MINIMAL ROADWAY APPROACH WORK AND GUARDRAIL REPLACEMENT TO BE PERFORMED AS REQUIRED.

ROCK CHANNEL PROTECTION, TYPE B WITH GEOTEXTILE FABRIC (2'-6" THICK, TYP.)

RESURFACING

VEGETATED FILTER STRIP

PROJECT SITE PLAN
SR-73

DESIGN AGENCY
BG
www.bgenggroup.com
5960 WILCOX PLACE, SUITE C
DUBLIN, OHIO 43016

DESIGNER JEP
REVIEWER RG 09-18-25
PROJECT ID 119769
SHEET P.17 TOTAL 64

HIG-73-21.04

MODEL: Sheet_SurvFt PAPERSIZE: 34x22 (in.) DATE: 1/9/2026 TIME: 8:43:05 AM USER: GBoyer
P:\Transportation\Workset-2\119769_HIG-73-21.11\400-Engineering\Drainage\Sheets\119769_DB001.dgn

LEGEND:

- PROPOSED PAVEMENT
- PROPOSED RESURFACING
- VEGETATED FILTER STRIP
- (E) ANCHOR ASSEMBLY, MGS TYPE E

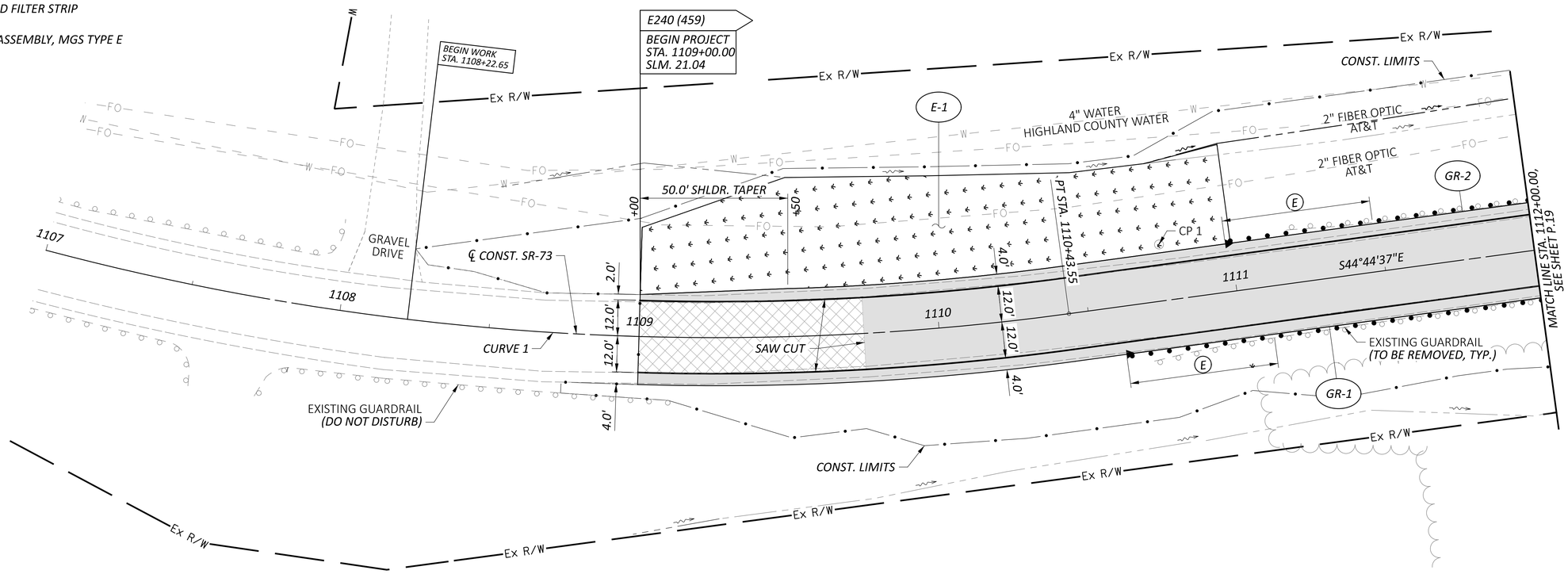

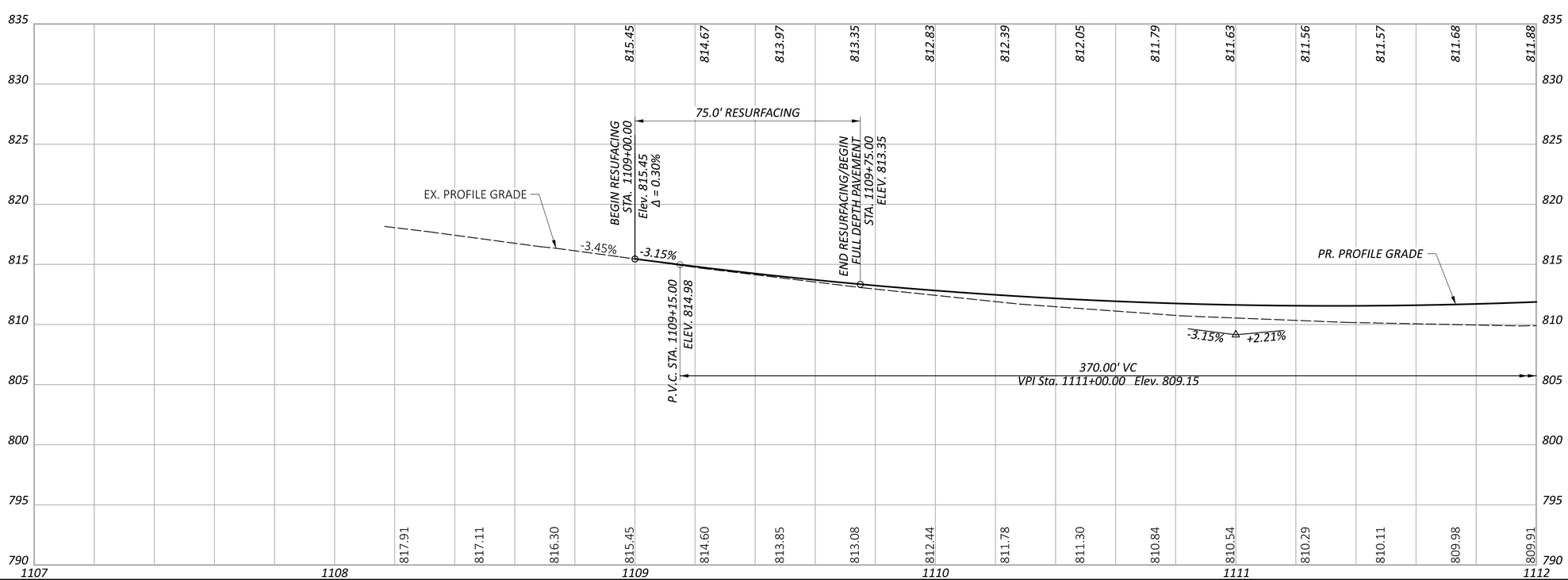

HORIZONTAL SCALE IN FEET
0 10 20 40

PLAN & PROFILE - SR-73
BEGINNING OF PROJECT TO STA. 1112+00.00

DESIGN AGENCY
BG
www.bgenggroup.com
5960 WILCOX PLACE, SUITE C
DUBLIN, OHIO 43016

DESIGNER: JPK
REVIEWER: RG 09-18-25
PROJECT ID: 119769
SHEET: P.18 TOTAL: 64

HIG-73-21.04

MODEL: CLX_1 - Plan 1 [Sheet] PAPERSIZE: 34x22 (in.) DATE: 1/9/2026 TIME: 8:43:11 AM USER: GBoyer
P:\Transportation\Workset-2\119769_HIG-73-21.11\400-Engineering\Roadway\Sheets\119769_GP001.dgn

BM #1
STA. 1119+73.80, 39.17' LT
ELEVATION = 846.29
BENCH TIE SET ON WEST SIDE
OF COMBINED UTILITY POLE

BM #2
STA. 1112+49.46, 68.53' LT
ELEVATION = 804.96
BENCH TIE SET ON WEST SIDE
OF TELECOM UTILITY POLE

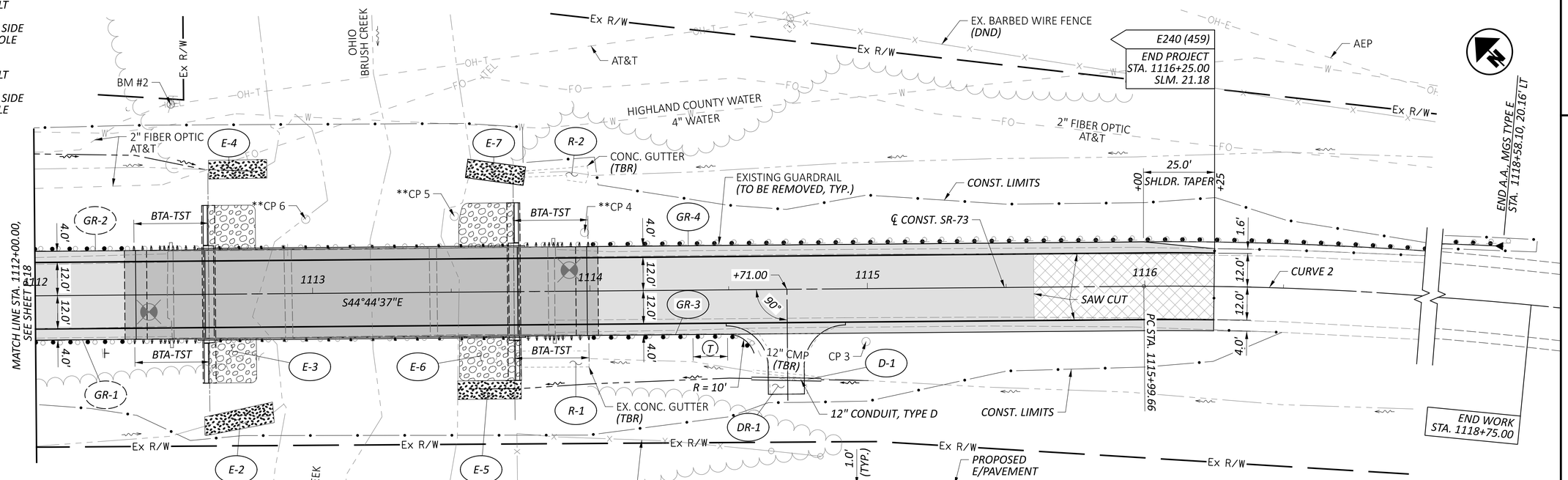

HORIZONTAL SCALE IN FEET 0 10 20 40

LEGEND:

- PROPOSED PAVEMENT
- PROPOSED BRIDGE
- ROCK CHANNEL PROTECTION, TYPE B WITH GEOTEXTILE FABRIC
- SEEDING AND EROSION CONTROL WITH TURF REINFORCING MAT, TYPE 1
- PROPOSED RESURFACING

(E) ANCHOR ASSEMBLY, MGS TYPE E
(T) ANCHOR ASSEMBLY, MGS TYPE T
BTA-TST MGS BRIDGE TERMINAL ASSEMBLY, TYPE TST-2

FIELD DRIVE
STA. 1114+71.00
R1 = 15.0'
R2 = 15.0'
W1 = 6.5'
W2 = 6.5'

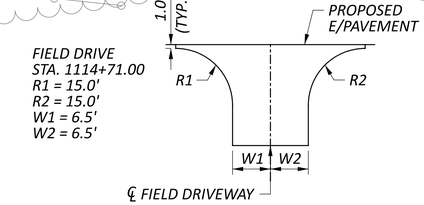

TYPICAL DRIVEWAY DETAIL

CURVE 2 DATA
P.I. = STA. 1118+69.54
Δ = 25°58'40" RT
Dc = 04°53'49"
R = 1,170.00'
T = 269.88'
L = 530.48'
E = 30.72'

** TEMPORARY CONTROL POINT

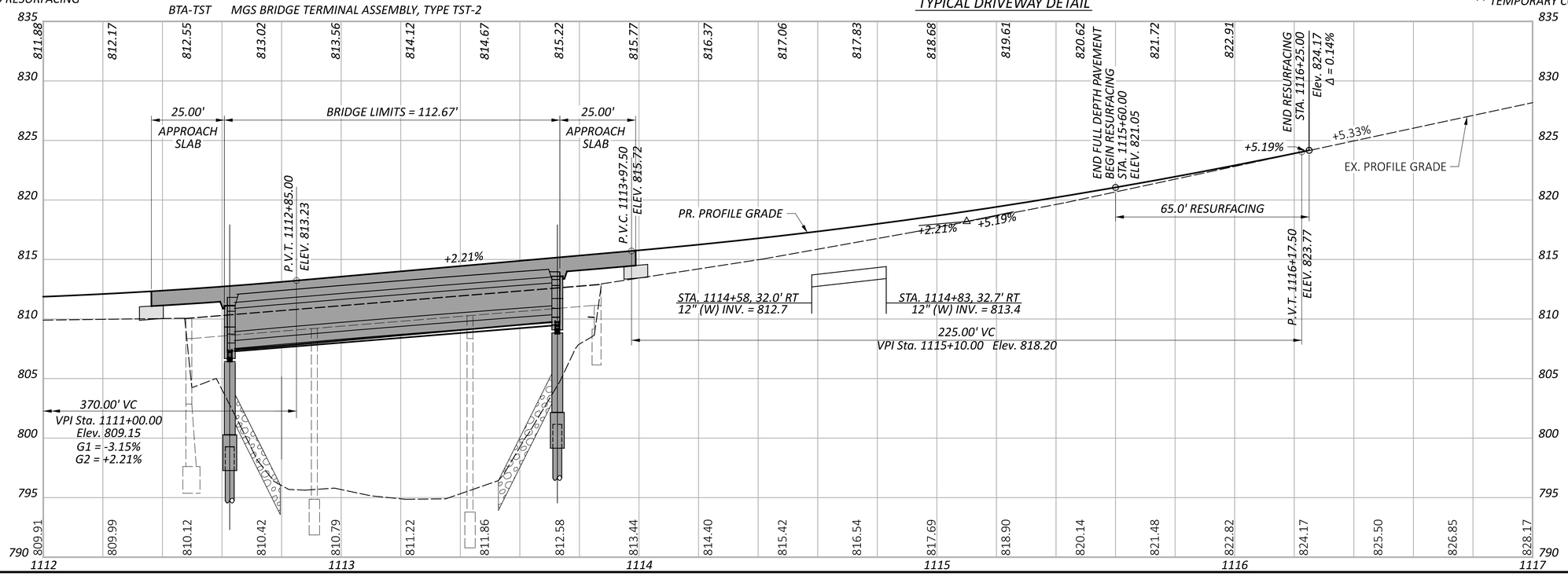

PLAN & PROFILE - SR-73
STA. 1112+00.00 TO END OF PROJECT

DESIGN AGENCY
BG
www.bgenggroup.com
5960 WILCOX PLACE, SUITE C
DUBLIN, OHIO 43016

DESIGNER JPK
REVIEWER RG 09-18-25
PROJECT ID 119769
SHEET P.19 TOTAL 64

HIG-73-21.04

MODEL: CLX_1 - Plan 2 [Sheet] PAPERSIZE: 34x22 (in.) DATE: 1/9/2026 TIME: 8:43:12 AM USER: GBoyer
P:\Transportation\Workset-2\119769_HIG-73-21.11\400-Engineering\Roadway\Sheets\119769_GP001.dgn

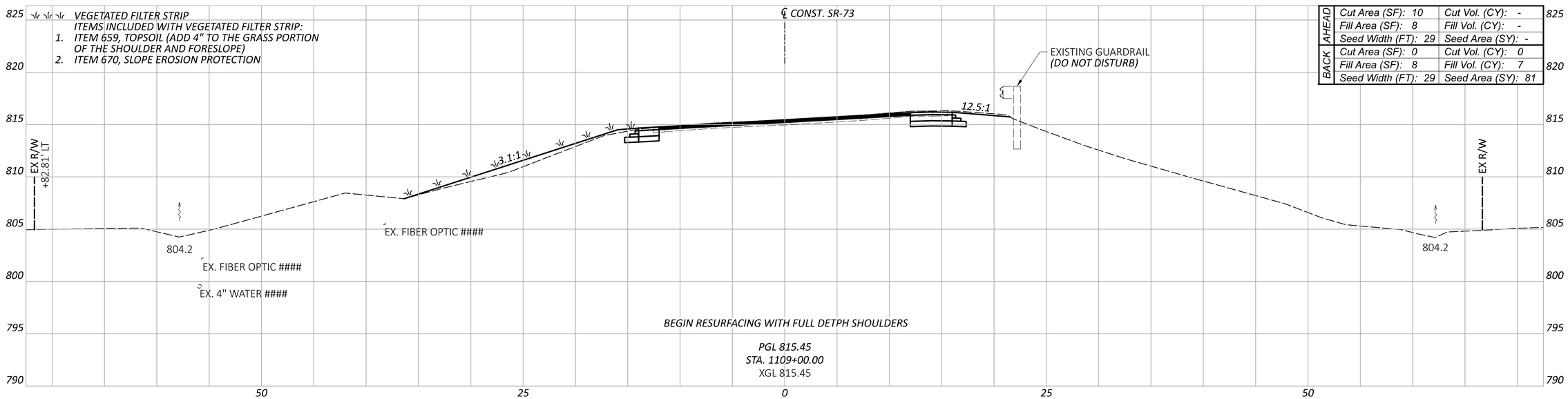

AHEAD	Cut Area (SF): 10	Cut Vol. (CY): -
	Fill Area (SF): 8	Fill Vol. (CY): -
	Seed Width (FT): 29	Seed Area (SY): -
BACK	Cut Area (SF): 0	Cut Vol. (CY): 0
	Fill Area (SF): 8	Fill Vol. (CY): 7
	Seed Width (FT): 29	Seed Area (SY): 81

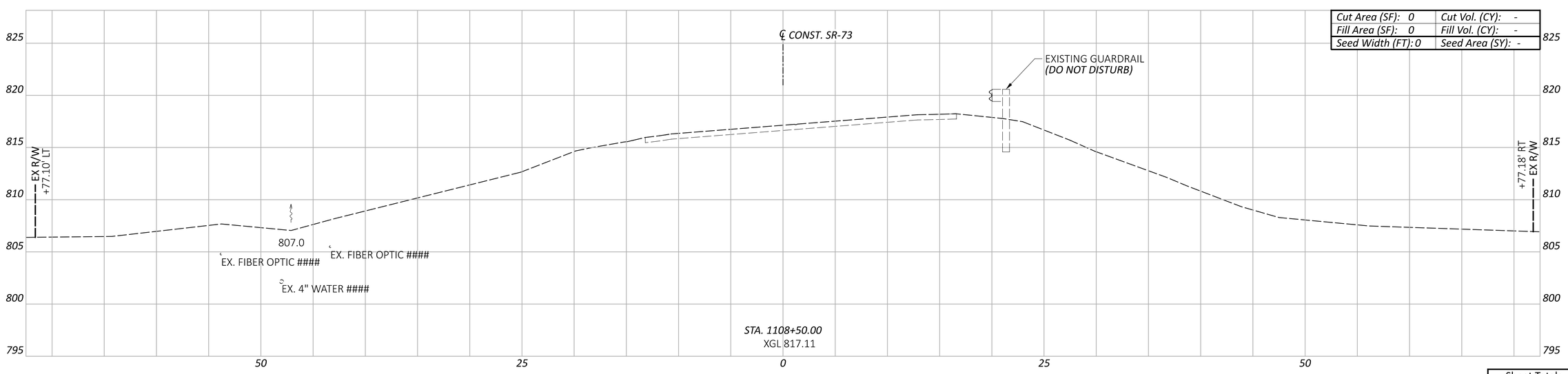

Cut Area (SF): 0	Cut Vol. (CY): -	
Fill Area (SF): 0	Fill Vol. (CY): -	
Seed Width (FT): 0	Seed Area (SY): -	

Sheet Totals		
Seeding	Cut	Fill
81	0	7

CROSS SECTIONS - SR-73
STA. 1108+50.00 TO STA. 1109+00.00

DESIGN AGENCY
BG
www.bgenggroup.com
5960 WILCOX PLACE, SUITE C
DUBLIN, OHIO 43016

DESIGNER
JPK

REVIEWER
RG 09-18-25

PROJECT ID
119769

SHEET P.20 TOTAL 64

HIG-73-21.04

MODEL: CLX_1 - 1108+50.00 [Sheet] PAPERSIZE: 34x22 (in.) DATE: 1/9/2026 TIME: 8:43:15 AM USER: GBoyer
P:\Transportation\Workset-2\119769_HIG-73-21.11\400-Engineering\Roadway\Sheets\119769_XS001.dgn

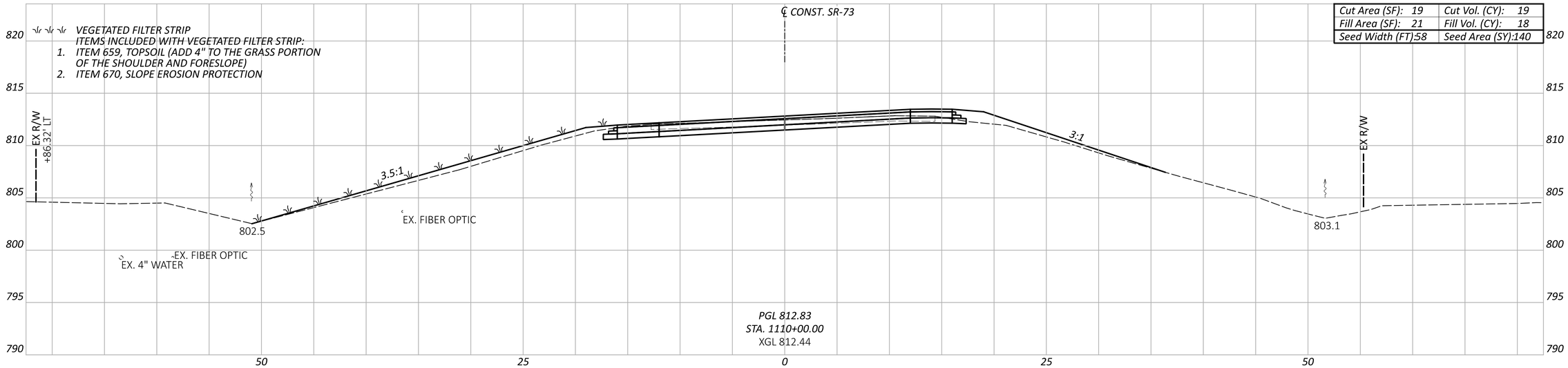

Cut Area (SF): 19	Cut Vol. (CY): 19
Fill Area (SF): 21	Fill Vol. (CY): 18
Seed Width (FT):58	Seed Area (SY):140

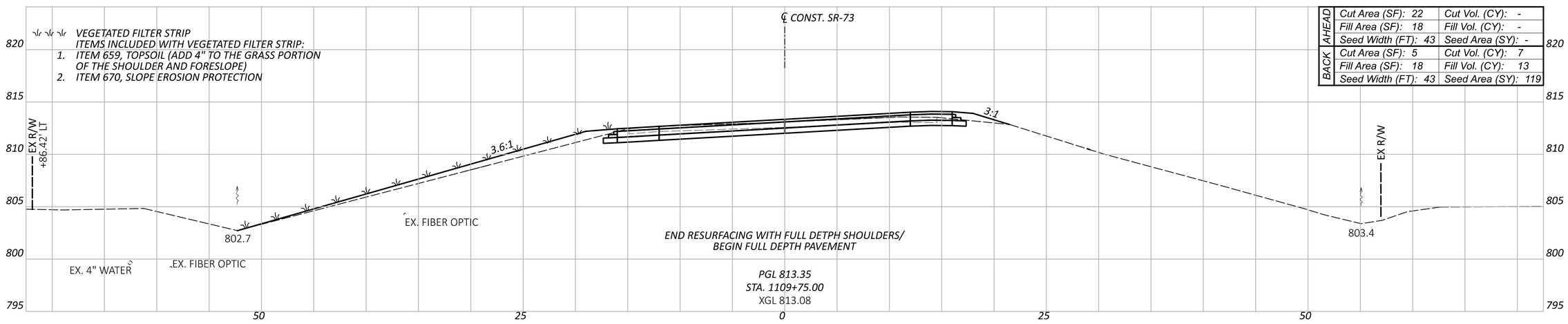

AHEAD	Cut Area (SF): 22	Cut Vol. (CY): -
	Fill Area (SF): 18	Fill Vol. (CY): -
	Seed Width (FT): 43	Seed Area (SY): -
BACK	Cut Area (SF): 5	Cut Vol. (CY): 7
	Fill Area (SF): 18	Fill Vol. (CY): 13
	Seed Width (FT): 43	Seed Area (SY): 119

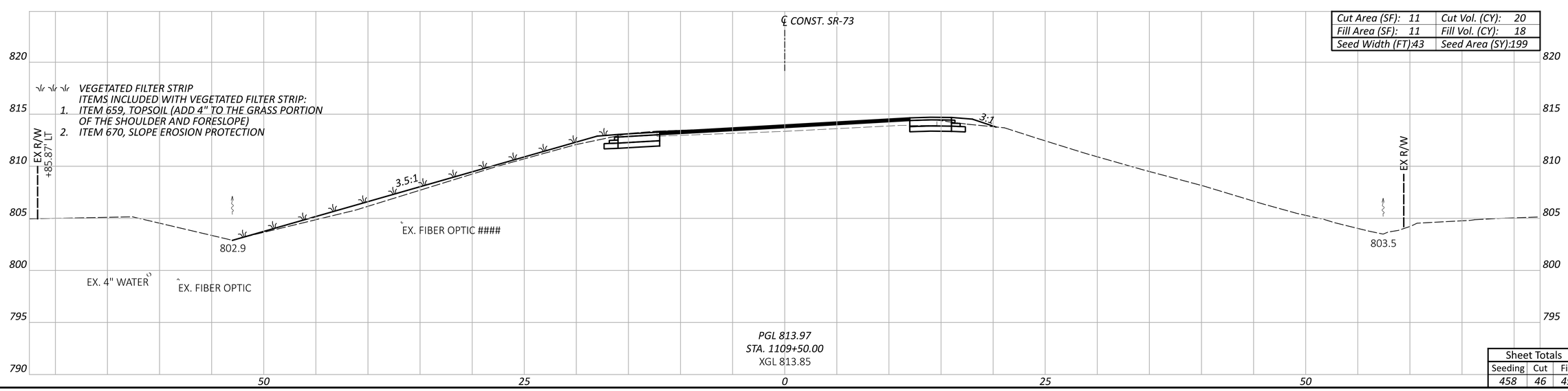

Cut Area (SF): 11	Cut Vol. (CY): 20
Fill Area (SF): 11	Fill Vol. (CY): 18
Seed Width (FT):43	Seed Area (SY):199

Sheet Totals		
Seeding	Cut	Fill
458	46	49

CROSS SECTIONS - SR-73
STA. 1109+50.00 TO STA. 1110+00.00

DESIGN AGENCY
BG
www.bgenggroup.com
5960 WILCOX PLACE, SUITE C
DUBLIN, OHIO 43016

DESIGNER
JPK

REVIEWER
RG 09-18-25

PROJECT ID
119769

SHEET P.21 TOTAL 64

HIG-73-21.04

MODEL: CLX_1 - 1109+50.00 [Sheet] PAPERSIZE: 34x22 (in.) DATE: 1/9/2026 TIME: 8:43:17 AM USER: GBoyer
P:\Transportation\Workset-2\119769_HIG-73-21.11\400-Engineering\Roadway\Sheets\119769_XS001.dgn

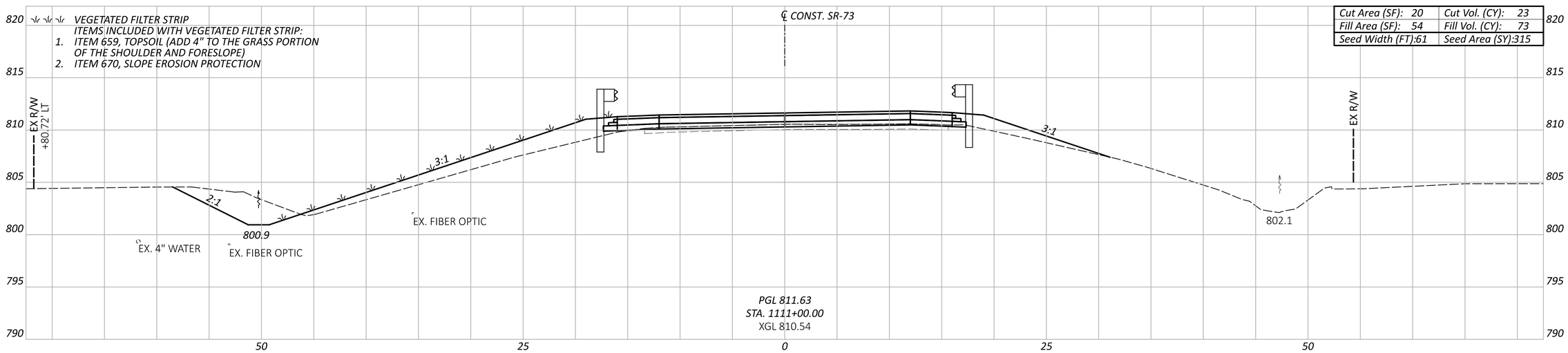

Cut Area (SF): 20	Cut Vol. (CY): 23
Fill Area (SF): 54	Fill Vol. (CY): 73
Seed Width (FT):61	Seed Area (SY):315

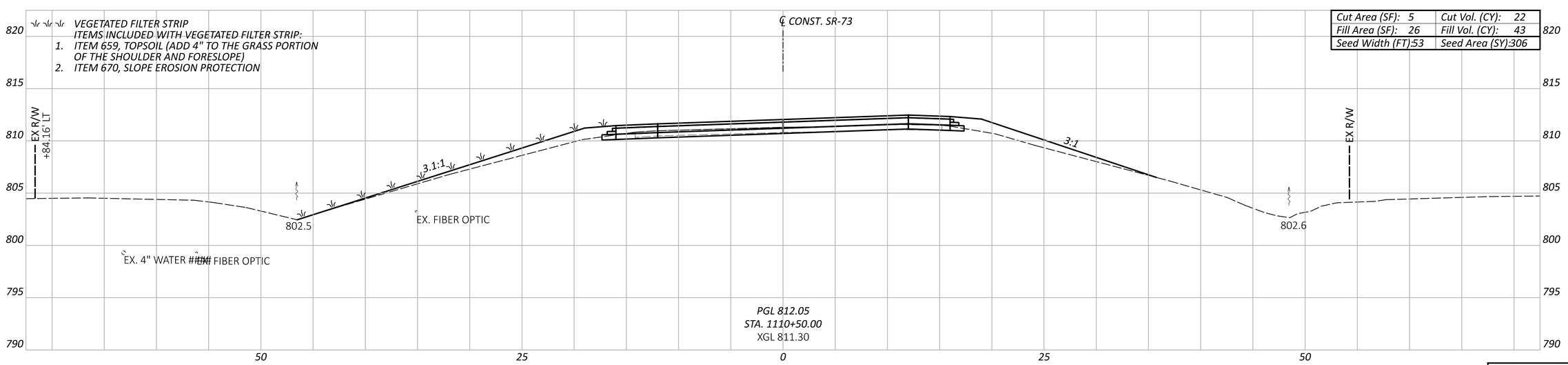

Cut Area (SF): 5	Cut Vol. (CY): 22
Fill Area (SF): 26	Fill Vol. (CY): 43
Seed Width (FT):53	Seed Area (SY):306

Sheet Totals		
Seeding	Cut	Fill
621	45	116

CROSS SECTIONS - SR-73
STA. 1110+50.00 TO STA. 1111+00.00

DESIGN AGENCY
BG
www.bgenggroup.com
5980 WILCOX PLACE, SUITE C
DUBLIN, OHIO 43016

DESIGNER
JPK

REVIEWER
RG 09-18-25

PROJECT ID
119769

SHEET P.22 TOTAL 64

HIG-73-21.04

MODEL: CLX_1 - 1110+50.00 [Sheet] PAPERSIZE: 34x22 (in.) DATE: 1/9/2026 TIME: 8:43:19 AM USER: GBoyer
P:\Transportation\Workset-2\119769_HIG-73-21.11\400-Engineering\Roadway\Sheets\119769_XS001.dgn

Cut Area (SF): 14	Cut Vol. (CY): 30
Fill Area (SF): 119	Fill Vol. (CY): 188
Seed Width (FT):34	Seed Area (SY):353

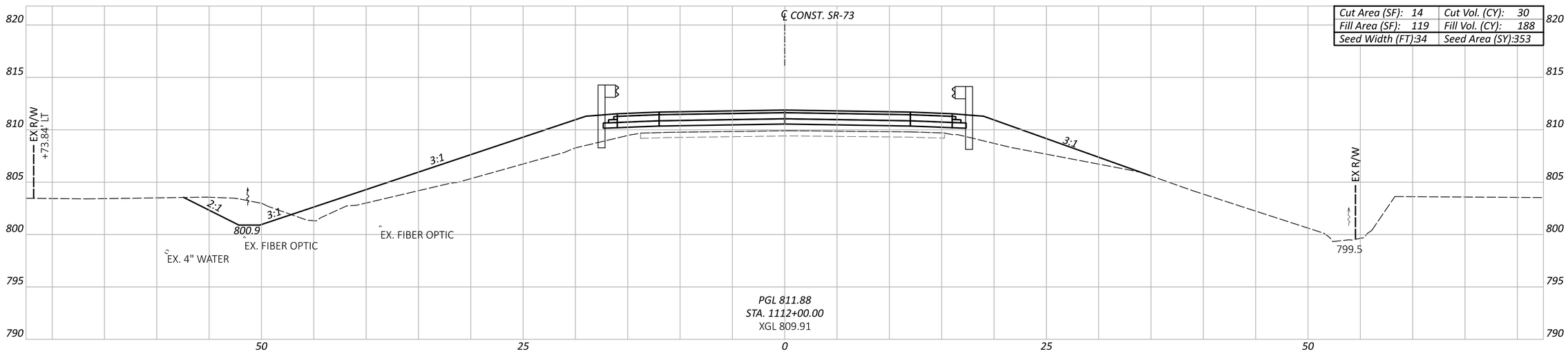

Cut Area (SF): 18	Cut Vol. (CY): 35
Fill Area (SF): 84	Fill Vol. (CY): 128
Seed Width (FT):64	Seed Area (SY):345

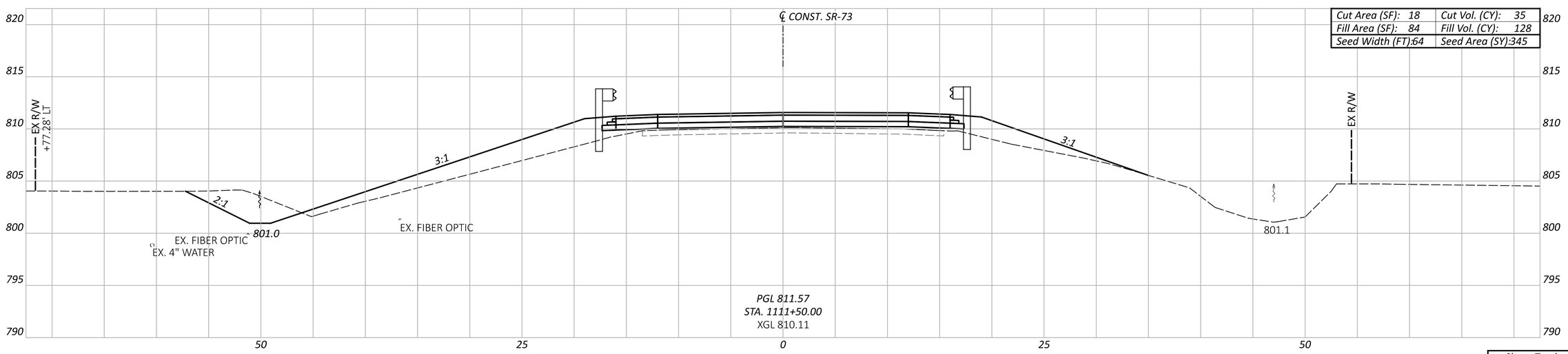

Sheet Totals		
Seeding	Cut	Fill
698	65	316

CROSS SECTIONS - SR-73
STA. 1111+50.00 TO STA. 1112+00.00

DESIGN AGENCY
BG
www.bgenggroup.com
5960 WILCOX PLACE, SUITE C
DUBLIN, OHIO 43016

DESIGNER
JPK

REVIEWER
RG 09-18-25

PROJECT ID
119769

SHEET P.23 TOTAL 64

HIG-73-21.04

MODEL: CLX_1 - 1111+50.00 [Sheet] PAPERSIZE: 34x22 (in.) DATE: 1/9/2026 TIME: 8:43:19 AM USER: GBoyer
P:\Transportation\Workset-2\119769_HIG-73-21.11\400-Engineering\Roadway\Sheets\119769_XS001.dgn

Cut Area (SF): 9	Cut Vol. (CY): 12
Fill Area (SF): 8	Fill Vol. (CY): 73
Seed Width (FT):60	Seed Area (SY):188

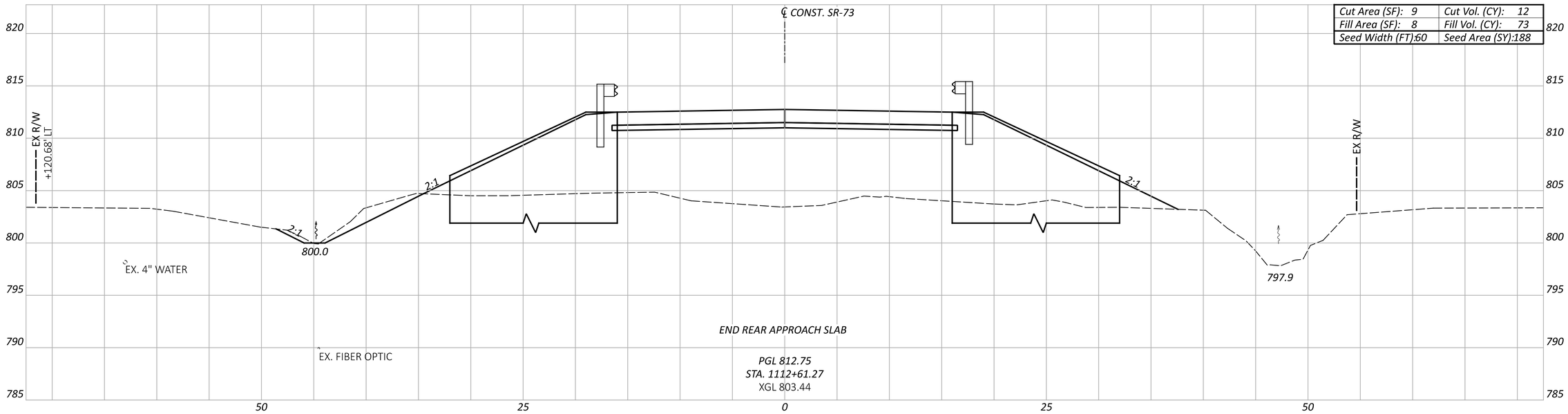

Cut Area (SF): 17	Cut Vol. (CY): 21
Fill Area (SF): 149	Fill Vol. (CY): 180
Seed Width (FT):76	Seed Area (SY):281

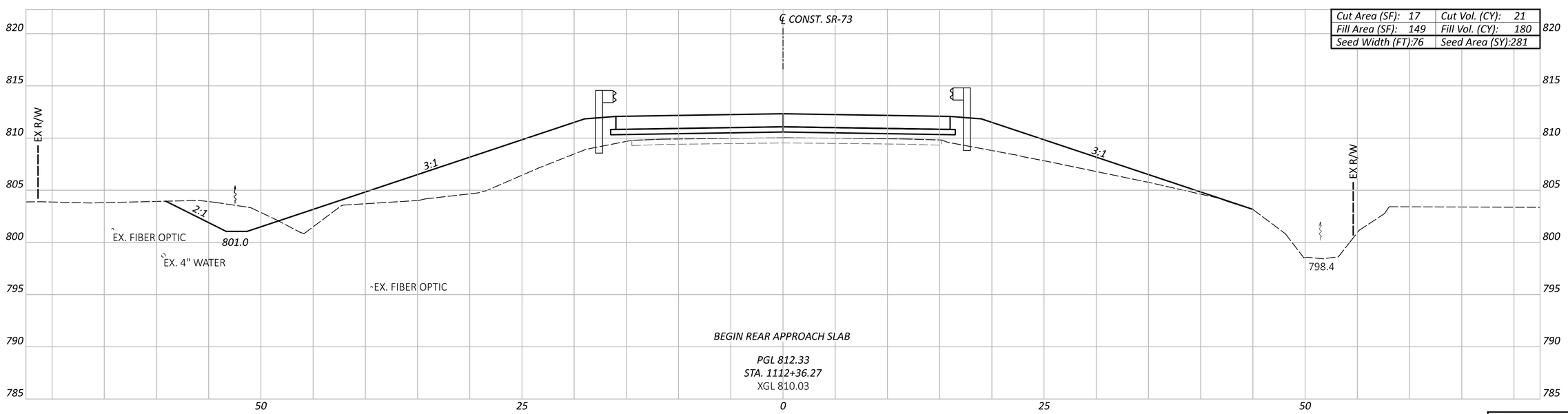

Sheet Totals		
Seeding	Cut	Fill
469	33	253

CROSS SECTIONS - SR-73
STA. 1112+36.27 TO STA. 1112+61.27

DESIGN AGENCY
BG
www.bgenggroup.com
5960 WILCOX PLACE, SUITE C
DUBLIN, OHIO 43016

DESIGNER
JPK

REVIEWER
RG 09-18-25

PROJECT ID
119769

SHEET P.24 TOTAL 64

HIG-73-21.04

MODEL: CLX_1 - 1112+36.27 [Sheet] PAPERSIZE: 34x22 (in.) DATE: 1/9/2026 TIME: 8:43:20 AM USER: GBoyer
P:\Transportation\Workset-2\119769_HIG-73-21.11\400-Engineering\Roadway\Sheets\119769_XS001.dgn

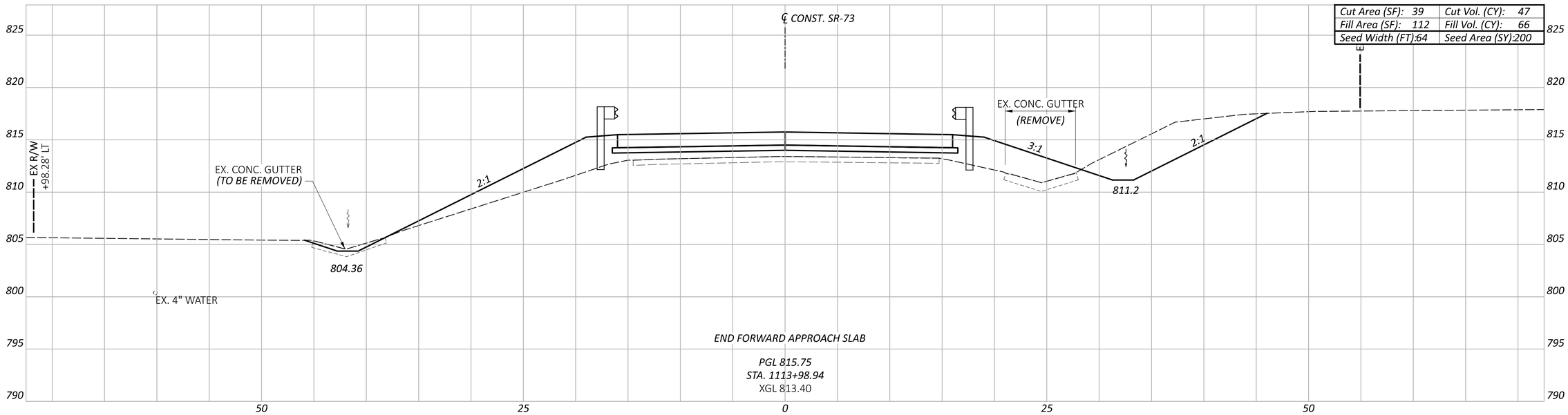

Cut Area (SF): 39	Cut Vol. (CY): 47
Fill Area (SF): 112	Fill Vol. (CY): 66
Seed Width (FT):64	Seed Area (SY):200

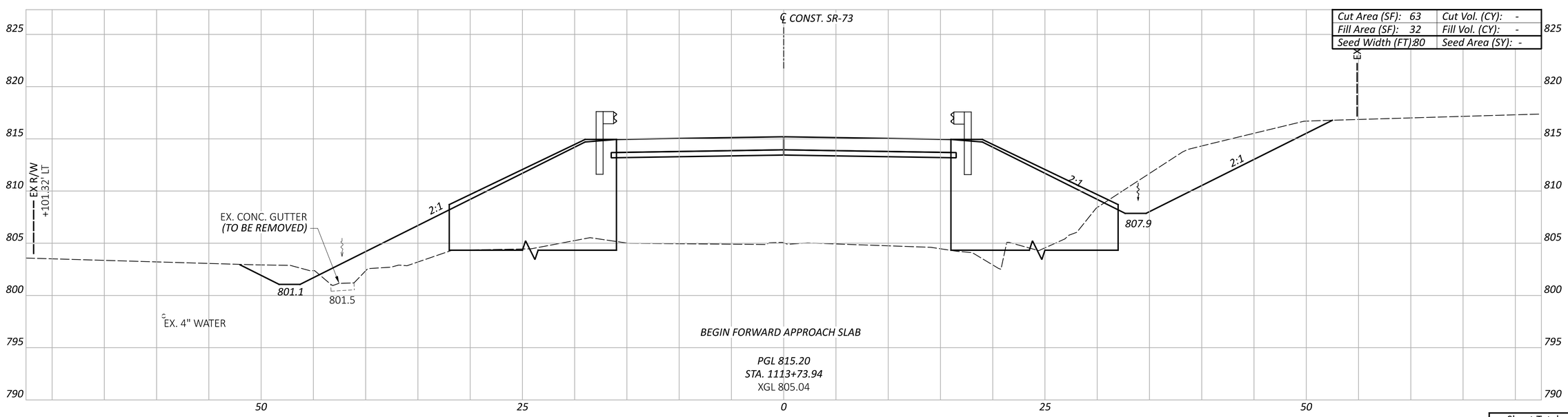

Cut Area (SF): 63	Cut Vol. (CY): -
Fill Area (SF): 32	Fill Vol. (CY): -
Seed Width (FT):80	Seed Area (SY): -

Sheet Totals		
Seeding	Cut	Fill
200	47	66

CROSS SECTIONS - SR-73
STA. 1113+73.94 TO STA. 1113+98.94

DESIGN AGENCY
BG
www.bgenggroup.com
5960 WILCOX PLACE, SUITE C
DUBLIN, OHIO 43016

DESIGNER
JPK

REVIEWER
RG 09-18-25

PROJECT ID
119769

SHEET P.25 TOTAL 64

HIG-73-21.04

MODEL: CLX_1 - 1113+73.94 [Sheet] PAPERSIZE: 34x22 (in.) DATE: 1/9/2026 TIME: 8:43:21 AM USER: GBoyer
P:\Transportation\Workset-2\119769_HIG-73-21.11\400-Engineering\Roadway\Sheets\119769_XS001.dgn

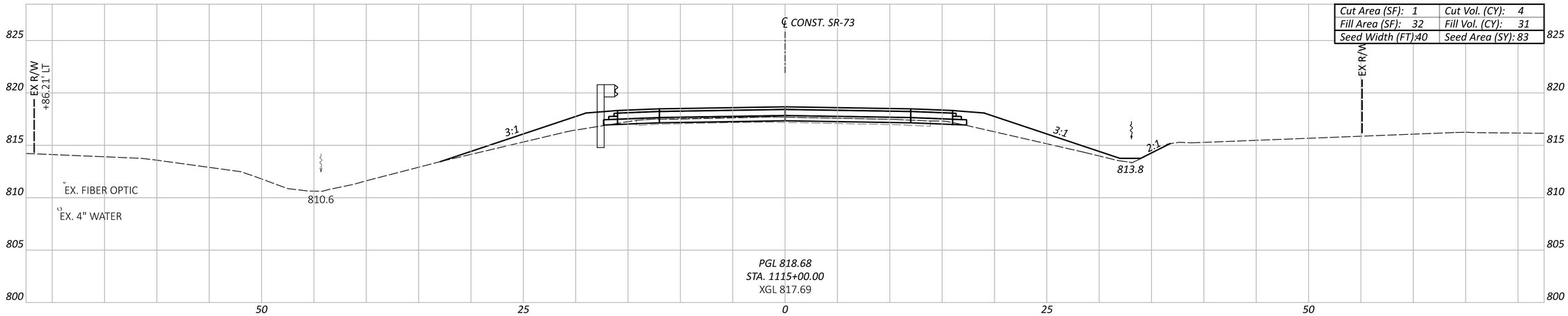

Cut Area (SF): 1	Cut Vol. (CY): 4
Fill Area (SF): 32	Fill Vol. (CY): 31
Seed Width (FT):40	Seed Area (SY): 83

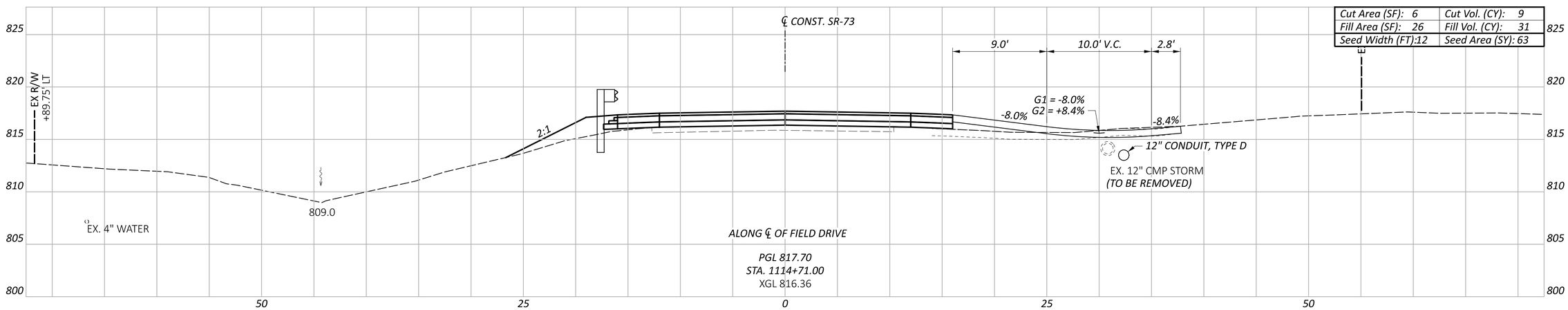

Cut Area (SF): 6	Cut Vol. (CY): 9
Fill Area (SF): 26	Fill Vol. (CY): 31
Seed Width (FT):12	Seed Area (SY): 63

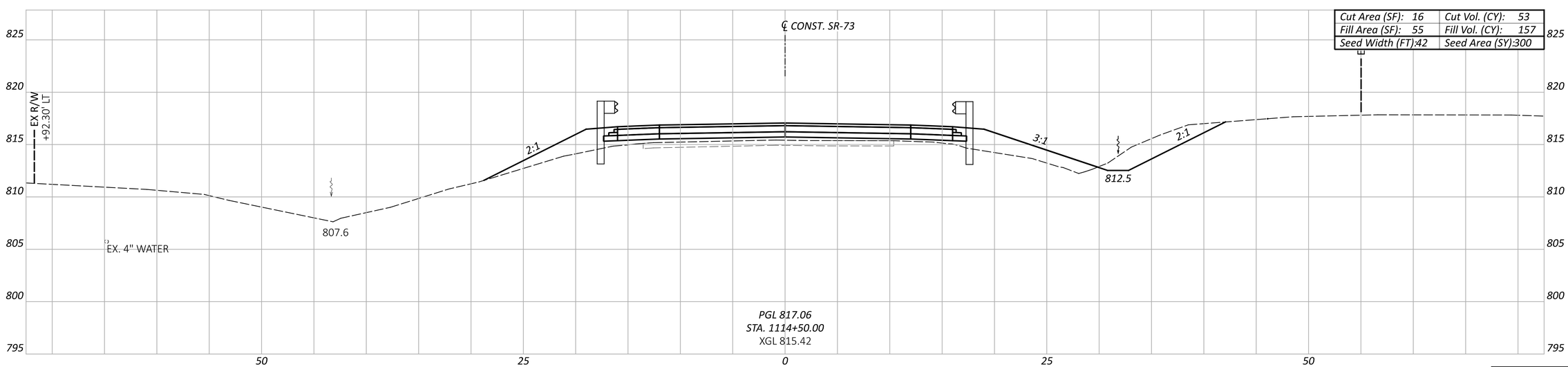

Cut Area (SF): 16	Cut Vol. (CY): 53
Fill Area (SF): 55	Fill Vol. (CY): 157
Seed Width (FT):42	Seed Area (SY):300

Sheet Totals		
Seeding	Cut	Fill
446	66	219

CROSS SECTIONS - SR-73
STA. 1114+50.00 TO STA. 1115+00.00

DESIGN AGENCY
BG
www.bgenggroup.com
5960 WILCOX PLACE, SUITE C
DUBLIN, OHIO 43016

DESIGNER
JPK

REVIEWER
RG 09-18-25

PROJECT ID
119769

SHEET P.26 TOTAL 64

HIG-73-21.04

MODEL: CLX_1 - 1114+50.00 [Sheet] PAPERSIZE: 34x22 (in.) DATE: 1/9/2026 TIME: 8:43:22 AM USER: GBoyer
P:\Transportation\Workset-2\119769_HIG-73-21.11\400-Engineering\Roadway\Sheets\119769_XS001.dgn

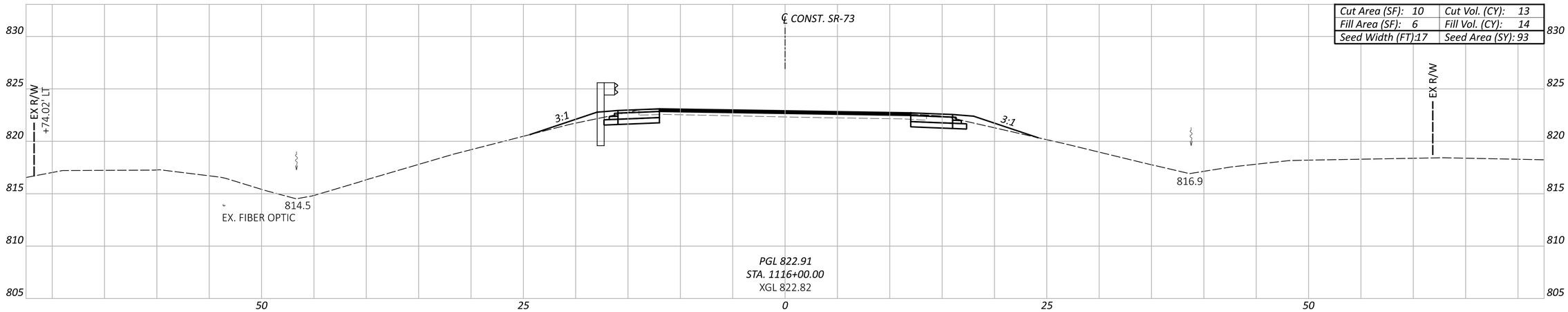

Cut Area (SF): 10	Cut Vol. (CY): 13
Fill Area (SF): 6	Fill Vol. (CY): 14
Seed Width (FT):17	Seed Area (SY): 93

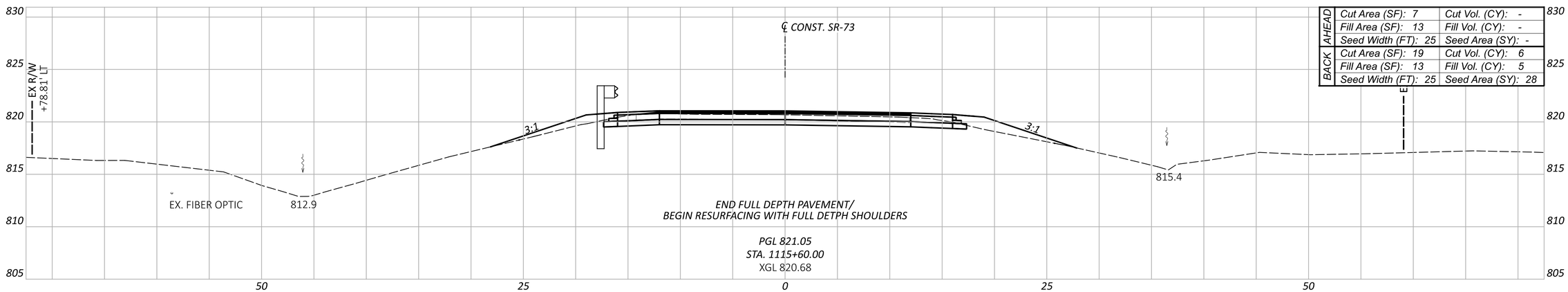

AHEAD	Cut Area (SF): 7	Cut Vol. (CY): -
	Fill Area (SF): 13	Fill Vol. (CY): -
	Seed Width (FT): 25	Seed Area (SY): -
BACK	Cut Area (SF): 19	Cut Vol. (CY): 6
	Fill Area (SF): 13	Fill Vol. (CY): 5
	Seed Width (FT): 25	Seed Area (SY): 28

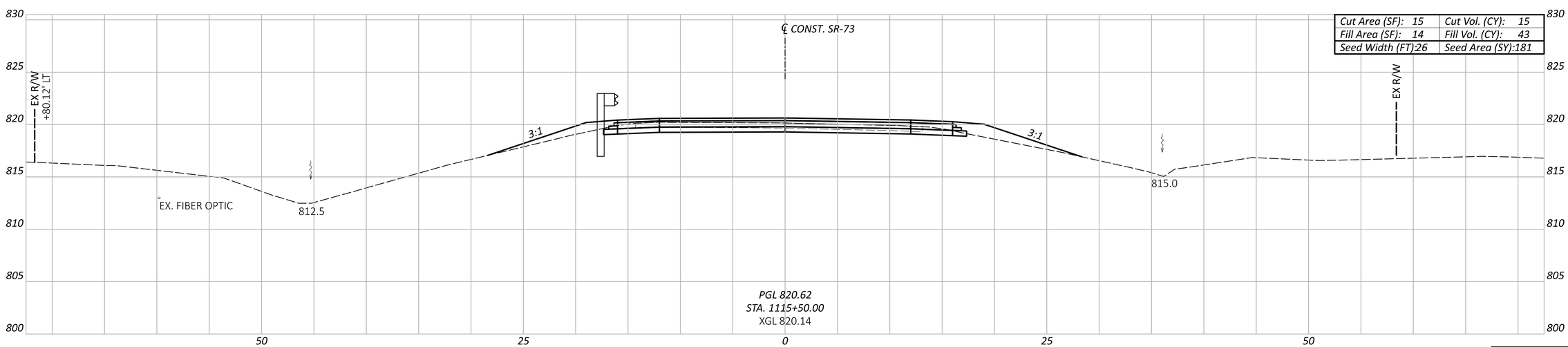

Cut Area (SF): 15	Cut Vol. (CY): 15
Fill Area (SF): 14	Fill Vol. (CY): 43
Seed Width (FT):26	Seed Area (SY):181

Sheet Totals		
Seeding	Cut	Fill
302	34	62

CROSS SECTIONS - SR-73
STA. 1115+50.00 TO STA. 1116+00.00

DESIGN AGENCY
BG
www.bgenggroup.com
5960 WILCOX PLACE, SUITE C
DUBLIN, OHIO 43016

DESIGNER
JPK

REVIEWER
RG 09-18-25

PROJECT ID
119769

SHEET P.27 TOTAL 64

HIG-73-21.04

MODEL: CLX_1 - 1115+50.00 [Sheet] PAPERSIZE: 34x22 (in.) DATE: 1/9/2026 TIME: 8:43:23 AM USER: GBoyer
P:\Transportation\Workset-2\119769_HIG-73-21.11\400-Engineering\Roadway\Sheets\119769_XS001.dgn

CROSS SECTION TOTALS
S/M (SY): 3356*
CUT (CY): 345**
FILL (CY): 1096**

* = TOTALS CARRIED TO THE GENERAL NOTES
** = TOTALS CARRIED TO THE GENERAL SUMMARY

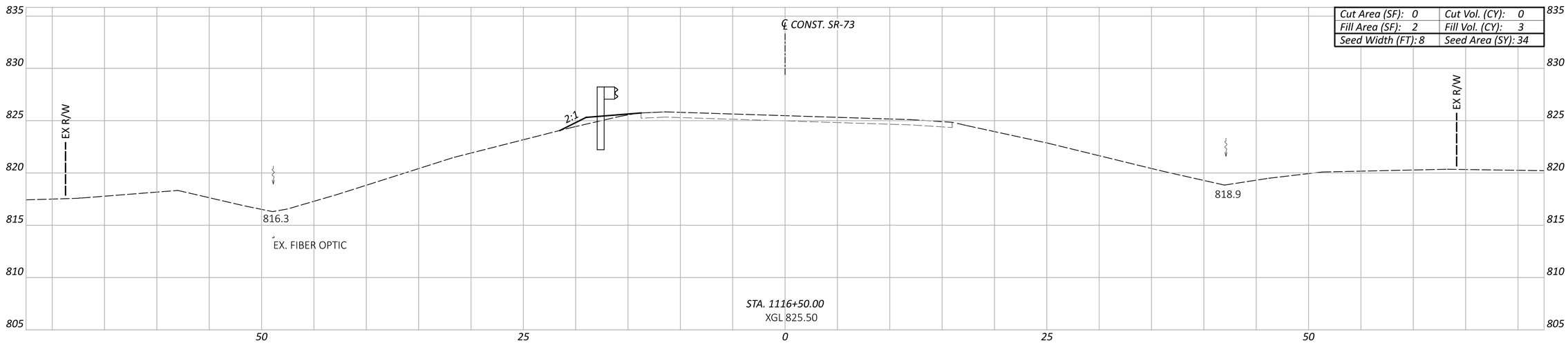

Cut Area (SF): 0	Cut Vol. (CY): 0
Fill Area (SF): 2	Fill Vol. (CY): 3
Seed Width (FT): 8	Seed Area (SY): 34

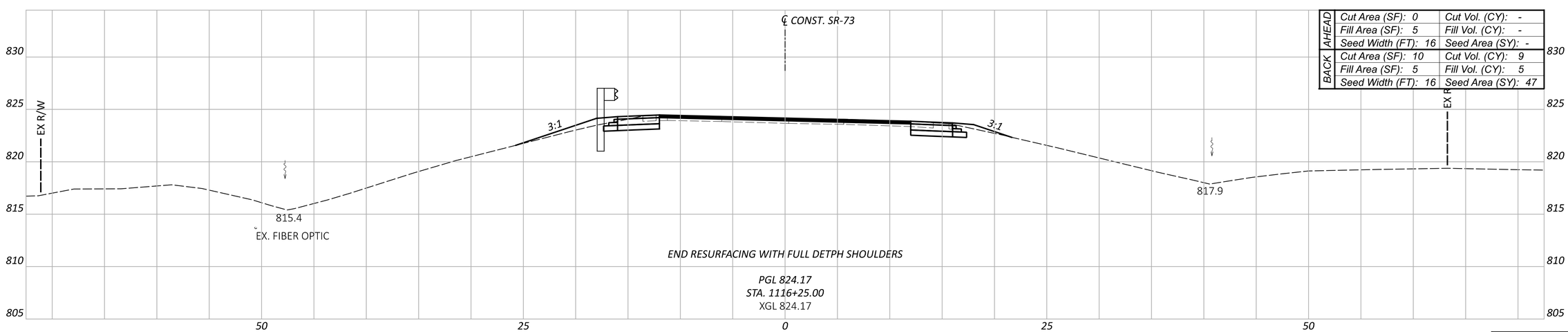

AHEAD	Cut Area (SF): 0	Cut Vol. (CY): -
	Fill Area (SF): 5	Fill Vol. (CY): -
	Seed Width (FT): 16	Seed Area (SY): -
BACK	Cut Area (SF): 10	Cut Vol. (CY): 9
	Fill Area (SF): 5	Fill Vol. (CY): 5
	Seed Width (FT): 16	Seed Area (SY): 47

Sheet Totals		
Seeding	Cut	Fill
81	9	8

CROSS SECTIONS - SR-73
STA. 1116+25.00 TO STA. 1116+50.00

DESIGN AGENCY
BG
www.bgenggroup.com
5960 WILCOX PLACE, SUITE C
DUBLIN, OHIO 43016

DESIGNER
JPK

REVIEWER
RG 09-18-25

PROJECT ID
119769

SHEET P.28 TOTAL 64

HIG-73-21.04

MODEL: CLX_1 - 1116+25.00 [Sheet] PAPERSIZE: 34x22 (in.) DATE: 1/9/2026 TIME: 8:43:24 AM USER: GBoyer
P:\Transportation\Workset-2\119769_HIG-73-21.11\400-Engineering\Roadway\Sheets\119769_XS001.dgn

SUPERELEVATION TABLE

P.I. STA. 1107+77.24 — Dc = 06°35'09"

LEFT SIDE					CENTERLINE CONTROL		RIGHT SIDE					REMARKS
EDGE ELEVATION	TRANSITION RATE	ELEVATION CORRECTION	CROSS SLOPE	WIDTH	STATION	PROFILE GRADE	WIDTH	CROSS SLOPE	ELEVATION CORRECTION	TRANSITION RATE	EDGE ELEVATION	
814.77		-0.68	-0.0566	12.00	1109+00.00	815.45	12.00	0.0566	0.68		816.13	MATCH EX.
813.99		-0.68	-0.0566	12.00	1109+25.00	814.67	12.00	0.0566	0.68		815.35	
813.28		-0.68	-0.0566	12.00	1109+50.00	813.96	12.00	0.0566	0.68		814.64	
812.66		-0.68	-0.0566	12.00	1109+75.00	813.34	12.00	0.0566	0.68		814.02	
812.28		-0.68	-0.0566	12.00	1109+92.71	812.96	12.00	0.0566	0.68		813.64	FS
812.16		-0.65	-0.0539	12.00	1110+00.00	812.81	12.00	0.0539	0.65		813.46	
811.84		-0.53	-0.0445	12.00	1110+25.00	812.37	12.00	0.0445	0.53		812.90	
811.65	222:1	-0.45	-0.0375	12.00	1110+43.55	812.10	12.00	0.0375	0.45		812.55	PT
811.60		-0.42	-0.0351	12.00	1110+50.00	812.02	12.00	0.0351	0.42		812.44	
811.44		-0.31	-0.0257	12.00	1110+75.00	811.75	12.00	0.0257	0.31		812.06	
811.37		-0.20	-0.0163	12.00	1111+00.00	811.57	12.00	0.0163	0.20	222:1	811.77	
811.38		-0.19	-0.0160	12.00	1111+00.83	811.57	12.00	0.0160	0.19		811.76	RC
811.30		-0.19	-0.0160	12.00	1111+25.00	811.49	12.00	0.0069	0.08		811.57	
811.29		-0.19	-0.0160	12.00	1111+43.45	811.48	12.00	0.0000	0.00		811.48	HALF FLAT
811.30		-0.19	-0.0160	12.00	1111+50.00	811.49	12.00	-0.0024	-0.03		811.46	
811.38		-0.19	-0.0160	12.00	1111+75.00	811.57	12.00	-0.0118	-0.14		811.43	
811.45		-0.19	-0.0160	12.00	1111+86.07	811.64	12.00	-0.0160	-0.19		811.45	NC
811.56		-0.19	-0.0160	12.00	1112+00.00	811.75	12.00	-0.0160	-0.19		811.56	

SUPERELEVATION TABLE

P.I. STA. 1118+69.54 — Dc = 04°53'49"

LEFT SIDE					CENTERLINE CONTROL		RIGHT SIDE					REMARKS
EDGE ELEVATION	TRANSITION RATE	ELEVATION CORRECTION	CROSS SLOPE	WIDTH	STATION	PROFILE GRADE	WIDTH	CROSS SLOPE	ELEVATION CORRECTION	TRANSITION RATE	EDGE ELEVATION	
818.27		-0.19	-0.0160	12.00	1115+00.00	818.46	12.00	-0.0160	-0.19		818.27	
818.87		-0.19	-0.0160	12.00	1115+15.75	819.06	12.00	-0.0160	-0.19		818.87	NC
819.28		-0.15	-0.0126	12.00	1115+25.00	819.43	12.00	-0.0160	-0.19		819.24	
820.45		-0.04	-0.0032	12.00	1115+50.00	820.49	12.00	-0.0160	-0.19		820.30	
820.86	222:1	0.00	0.0000	12.00	1115+58.40	820.86	12.00	-0.0160	-0.19		820.67	HALF FLAT
821.70		0.07	0.0062	12.00	1115+75.00	821.63	12.00	-0.0160	-0.19		821.44	
823.03		0.19	0.0155	12.00	1115+99.66	822.84	12.00	-0.0160	-0.19		822.65	PC
823.05		0.19	0.0156	12.00	1116+00.00	822.86	12.00	-0.0160	-0.19		822.67	
823.10		0.19	0.0160	12.00	1116+01.02	822.91	12.00	-0.0160	-0.19	222:1	822.72	RC
824.45		0.28	0.0250	11.24	1116+25.00	824.17	12.00	-0.0256	-0.31		823.86	MATCH EX.

SUPERELEVATION TABLES
P.I. STA. 1107+77.24 AND P.I. STA. 1118+69.54

DESIGN AGENCY
BG
www.bgenggroup.com
5960 WILCOX PLACE, SUITE C
DUBLIN, OHIO 43016

DESIGNER JPK
REVIEWER RG 11-25-24
PROJECT ID 119769
SHEET P.29 TOTAL 64

HIG-73-21.04

MODEL: Sheet_SurvFt PAPERSIZE: 34x22 (in.) DATE: 1/9/2026 TIME: 8:43:32 AM USER: GBoyer
P:\Transportation\Workset-2\119769_HIG-73-21.11\400-Engineering\Roadway\Sheets\119769_GE001.dgn

LEGEND

- PROPOSED SIGN
- EXISTING SIGN (TO BE REMOVED)
- BR — 626 - BARRIER REFLECTOR, TYPE 1 OR 626 - BARRIER REFLECTOR, TYPE 3
- CLDS — 642 - CENTER LINE, TYPE I (DOUBLE, SOLID)
- ELW — 642 - EDGE LINE, 6", TYPE I (WHITE)

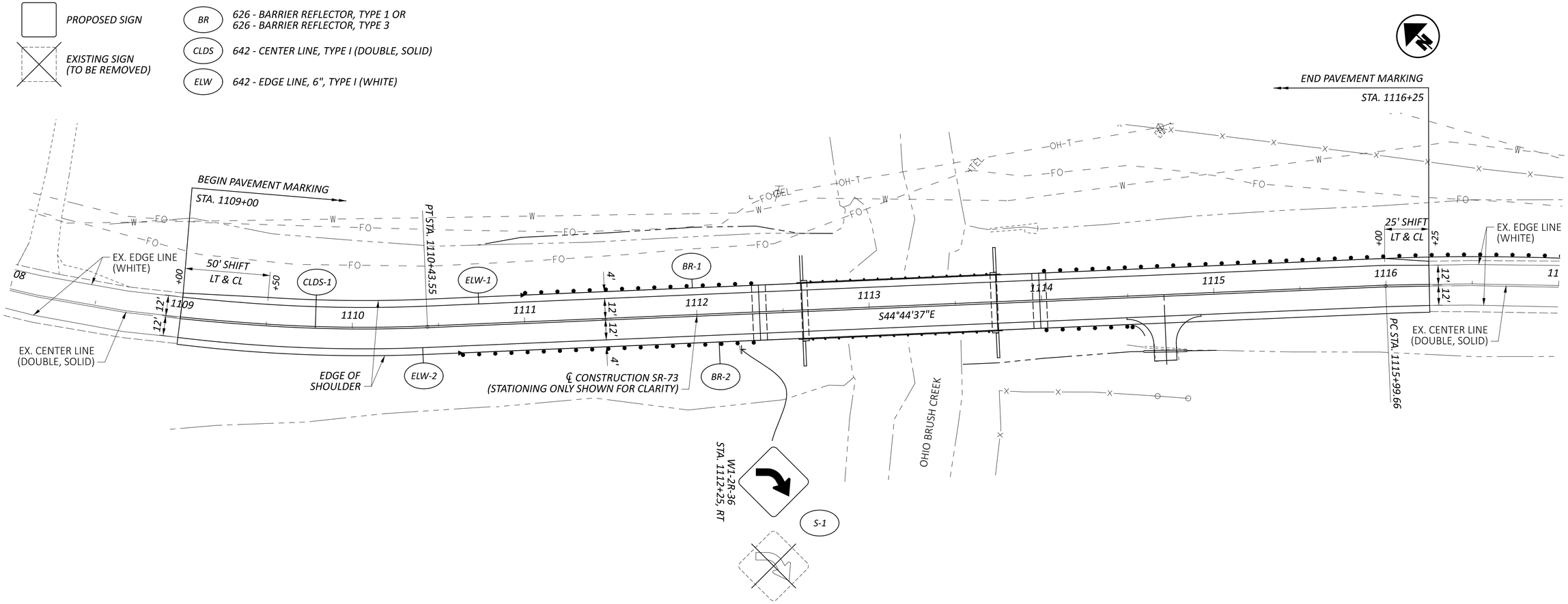

REF NO.	SHEET NO.	STATION TO STATION	SIDE	CODE	SIZE (INCHES)	621 RPM (YELLOW/YELLOW) EACH	621 RAISED PAVEMENT MARKER REMOVED EACH		626 BARRIER REFLECTOR, TYPE 1 (BI-DIRECTIONAL) EACH	626 BARRIER REFLECTOR, TYPE 3 (BI-DIRECTIONAL) EACH		630 GROUND MOUNTED SUPPORT, NO. 3 POST FT	630 SIGN POST REFLECTOR (YELLOW) EACH	630 SIGN, FLAT SHEET SF	630 REMOVAL OF GROUND MOUNTED SIGN AND DISPOSAL EACH	630 REMOVAL OF GROUND MOUNTED POST SUPPORT AND DISPOSAL EACH		642 EDGE LINE, 6", TYPE 1 (WHITE) MILE	642 CENTER LINE, TYPE 1 (DOUBLE, SOLID) MILE			
BR-1	P.30	1110+60 - 1114+59	RT						1	3												
BR-2	P.30	1110+98 - 1118+58	LT						1	7												
CLDS-1	P.30	1109+00 - 1116+25	CL			8	8												0.14			
ELW-1	P.30	1109+00 - 1116+25	LT																			
ELW-2	P.30	1109+00 - 1116+25	RT															0.14				
																		0.14				
S-1	P.30	1112+25.00	RT	W1-2R-36	(36X36)							12	1	9.0	1	1						
TOTALS CARRIED TO GENERAL SUMMARY						8	8		2	10		12	1	9.0	1	1		0.28	0.14			

TRAFFIC CONTROL
STA. 1108+00.00 TO STA. 1117+00.00

DESIGN AGENCY
BG
www.bgenggroup.com
5960 WILCOX PLACE, SUITE C
DUBLIN, OHIO 43016

DESIGNER: JPK
REVIEWER: RG 09-18-25
PROJECT ID: 119769
SHEET: P.30 TOTAL: 64

HIG-73-21.04

MODEL: Plan [Sheet] PAPERSIZE: 34x22 (in.) DATE: 1/9/2026 TIME: 8:43:35 AM USER: GBoyer
P:\Transportation\Workset-2\119769_HIG-73-21.11\400-Engineering\Traffic\Sheets\119769_TP001.dgn

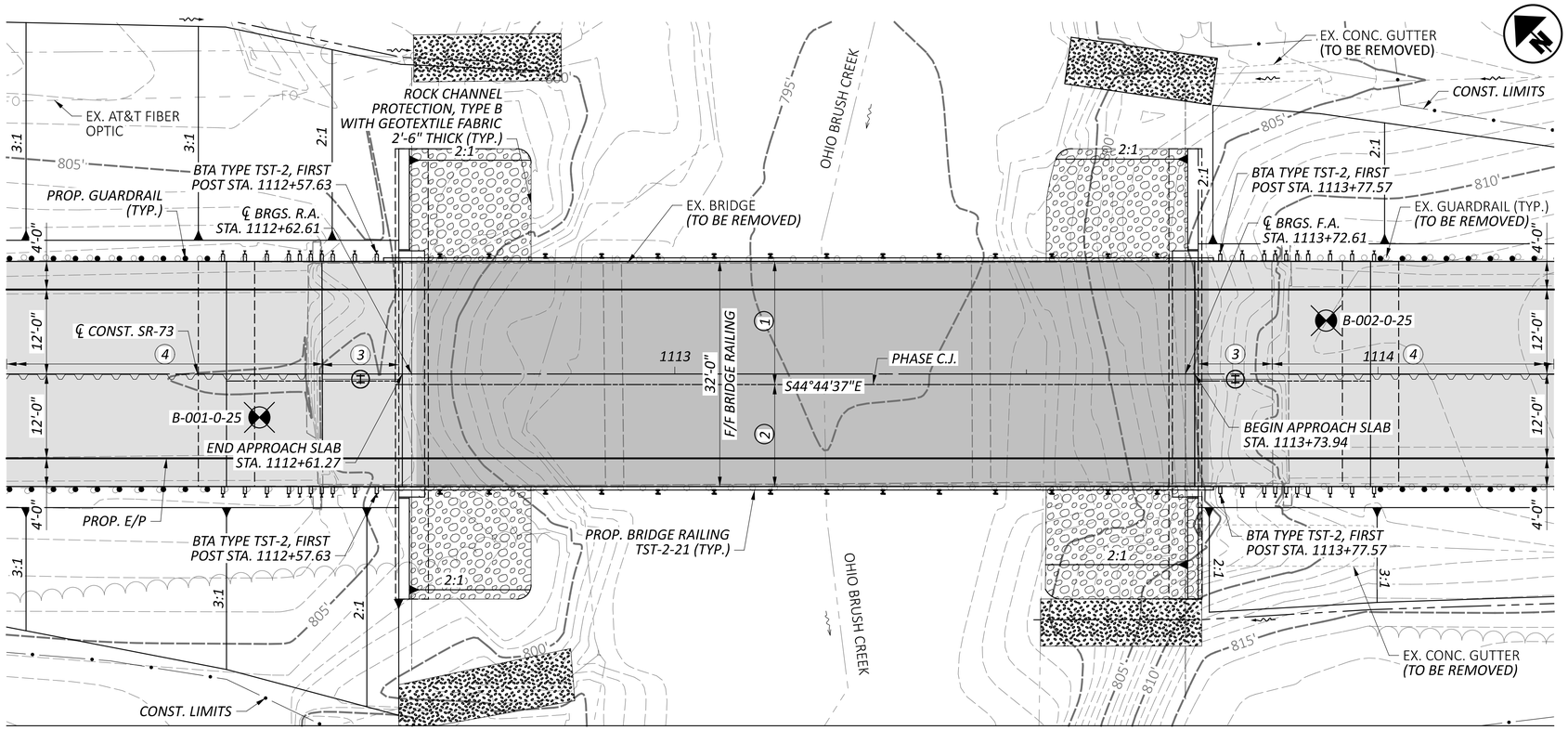

PLAN

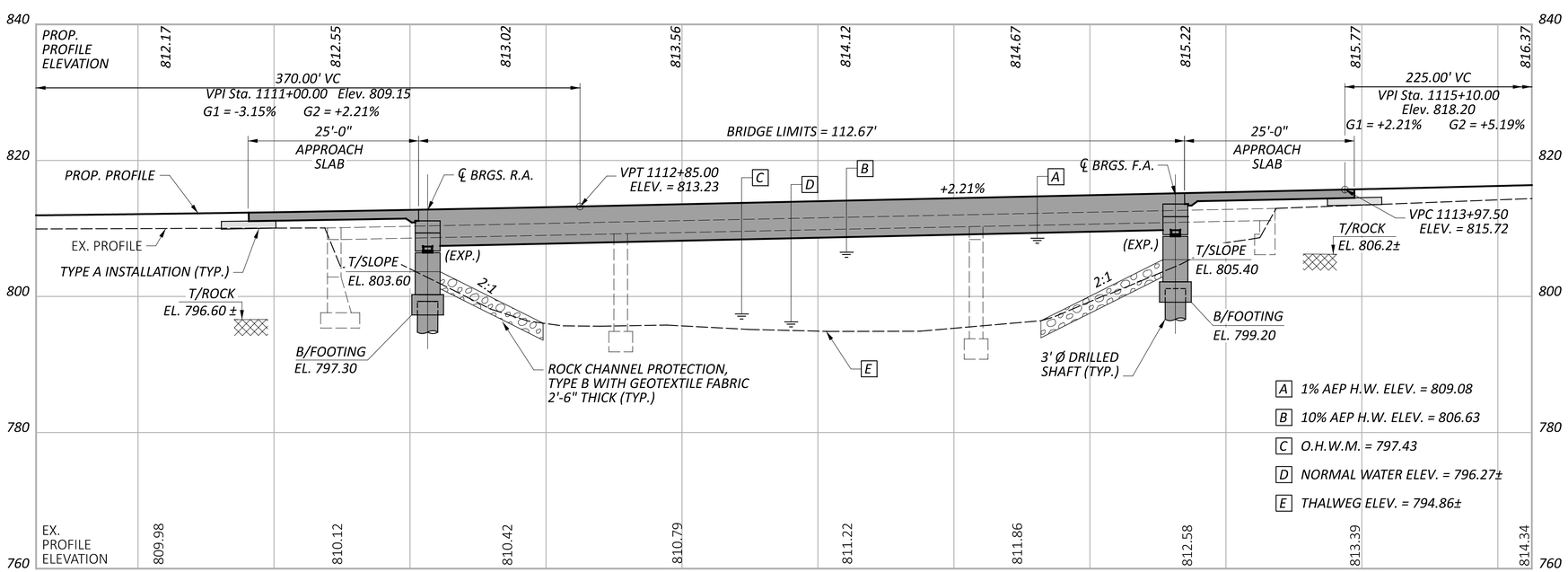

PROFILE ALONG ℄ CONSTRUCTION SR-73

BENCHMARK DATA

BM #1 STA.	1119+73.80,	ELEV.	846.29,	OFFSET	39.17' LT
BM #2 STA.	1112+49.46	ELEV.	804.96,	OFFSET	68.72' LT

FOR ADDITIONAL BENCHMARK INFORMATION. SEE ROADWAY PLAN SHEET P.19.

NOTES

EARTHWORK LIMITS SHOWN ARE APPROXIMATE. ACTUAL SLOPES SHALL CONFORM TO PLAN CROSS SECTIONS.

DESIGN TRAFFIC:

2027 ADT =	1300	2027 ADTT =	143
2047 ADT =	1400	2047 ADTT =	154

DIRECTIONAL DISTRIBUTION = 0.66

LEGEND

- PROPOSED DECK
- PROPOSED PAVEMENT
- PROPOSED ROCK CHANNEL PROTECTION, TYPE B WITH GEOTEXTILE FABRIC 2'-6" THICK
- ITEM 836 - SEEDING AND EROSION CONTROL WITH TURF REINFORCING MAT, TYPE 1
- (1) = 17'-6" PHASE - 1 CONSTRUCTION
- (2) = 14'-6" PHASE - 2 CONSTRUCTION
- (3) = TEMPORARY SHORING WALL
- (4) = TEMPORARY SHEETING
- BORING LOCATION

HYDRAULIC DATA

DRAINAGE AREA = 29.2 SQ. MILES

Q (10%) =	4610 CFS	V (10%) =	5.07 FT/S
Q (1%) =	8350 CFS	V (1%) =	6.83 FT/S

STRUCTURE CLEARS THE 10 YEAR DESIGN HW BY 2.67 FEET AT THE FORWARD ABUTMENT.

EXISTING STRUCTURE

TYPE: CONTINUOUS THREE SPAN CONCRETE SLAB ON REINFORCED CONCRETE SUBSTRUCTURE.

SPANS: 42'-0"± - 52'-6"± - 42'-0"±

ROADWAY: 32'-0"± F/F RAILING

LOADING: CF-130

SKEW: 0°±

WEARING SURFACE: 3.1" BITUMINOUS ASPHALT

APPROACH SLABS: 15'-0" LONG, 10" THICK ± (AS-1-54)

ALIGNMENT: TANGENT

CROWN: 3/16 "/FT

STRUCTURE FILE NUMBER: 3601749

DATE BUILT: 1955

DISPOSITION: TO BE REPLACED

PROPOSED STRUCTURE

TYPE: SINGLE SPAN PRESTRESSED CONCRETE I-BEAM BRIDGE WITH COMPOSITE REINFORCED CONCRETE DECK ON SEMI-INTEGRAL ABUTMENTS ON DRILLED SHAFTS.

SPAN: 110'-0" C/C BEARING

ROADWAY: 32'-0" FACE/FACE BRIDGE RAILING

LOADING: HL93 AND 60 PSF FUTURE WEARING SURFACE

SKEW: 0°

WEARING SURFACE: 1" MONOLITHIC CONCRETE

APPROACH SLABS: 25'-0" LONG, 15" THICK (AS-1-15, AS-2-15)

ALIGNMENT: TANGENT

CROWN: 0.016 FT/FT

DECK AREA: 3605 SF

COORDINATES: LATITUDE 39°03'33.54" N
LONGITUDE 83°31'45.44" W

SITE PLAN
BRIDGE NO. HIG-00073-21.110
SR-73 OVER OHIO BRUSH CREEK

SFN 3601750

DESIGN AGENCY
BG
www.bgenggroup.com
5960 WILCOX PLACE, SUITE C
DUBLIN, OHIO 43016

DESIGNER	CHECKER
CAW	GLA

REVIEWER GTB 03/28/25

PROJECT ID 119769

SUBSET	TOTAL
1	27

SHEET	TOTAL
P.31	64

HIG-73-21.04

MODEL: CLX_1 - Plan 1 PAPERSIZE: 34x22 (in.) DATE: 1/9/2026 TIME: 8:43:51 AM USER: GBoyer
P:\Transportation\Workset-2\119769_HIG-73-21.11\400-Engineering\Structures\SFN_3601750\Sheets\119769_SFN_3601750_SP001.dgn

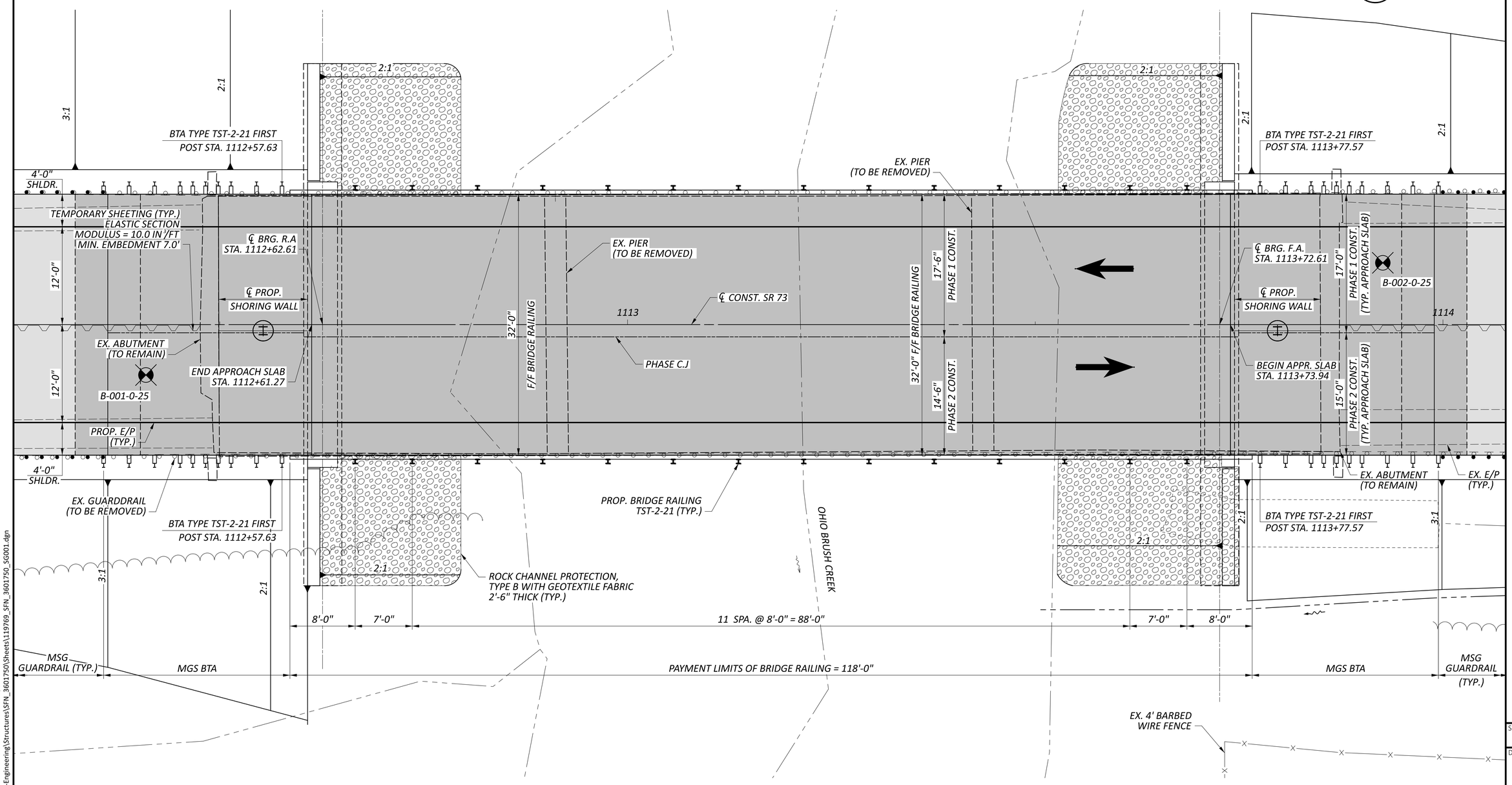

GENERAL PLAN

LEGEND:

- PROPOSED DECK
- PROPOSED PAVEMENT
- ROCK CHANNEL PROTECTION, TYPE B WITH GOETEXTILE FABRIC 2'-6" THICK (TYP.)

NOTES:

1. EARTHWORK LIMITS SHOWN ARE APPROXIMATE. ACTUAL SLOPES SHALL CONFORM TO PLAN CROSS SECTIONS.

GENERAL PLAN
BRIDGE NO. HIG-00073-21.110
SR-73 OVER OHIO BRUSH CREEK

SFN	3601750
DESIGN AGENCY	BG www.bgenggroup.com 5960 WILCOX PLACE, SUITE C DUBLIN, OHIO 43016
DESIGNER	LA
CHECKER	RG
REVIEWER	GTB 03/28/25
PROJECT ID	119769
SUBSET	2
TOTAL	27
SHEET	P.32
TOTAL	64

HIG-73-21.04

MODEL: Sheet PAPERSIZE: 34x22 (in.) DATE: 1/9/2026 TIME: 8:43:58 AM USER: GBoyer
P:\Transportation\Workset-2\119769_HIG-73-21.11\400-Engineering\Structures\SFN_3601750\Sheets\119769_SFN_3601750_SG001.dgn

GENERAL NOTES:

PROPOSED WORK: TOTAL BRIDGE REPLACEMENT

REPLACE EXISTING THREE SPAN CONCRETE SLAB BRIDGE WITH NEW SINGLE SPAN PRESTRESSED CONCRETE BEAM BRIDGE FOUNDED ON SEMI-INTEGRAL ABUTMENTS.

REFERENCE WILL BE MADE TO THE FOLLOWING STANDARD BRIDGE DRAWINGS:

AS-1-15	REVISED	1/20/23
AS-2-15	REVISED	7/21/23
PCB-91	REVISED	7/17/20
PSID-1-13	REVISED	7/18/25
SICD-1-21	REVISED	1/19/24
SICD-2-14	REVISED	1/15/21
TST-2-21	DATE	1/17/25

AND TO THE FOLLOWING SUPPLEMENTAL SPECIFICATIONS:

800	DATED	7/18/25

DESIGN SPECIFICATIONS:

THIS STRUCTURE CONFORMS TO "LRFD BRIDGE DESIGN SPECIFICATIONS" ADOPTED BY THE AMERICAN ASSOCIATION OF STATE HIGHWAY AND TRANSPORTATION OFFICIALS, 9th EDITION, 2020, AND THE ODOT BRIDGE DESIGN MANUAL, 2020.

DESIGN LOADING:

VEHICULAR LIVE LOAD: HL93
FUTURE WEARING SURFACE (FWS) OF 0.060 KSF

OPERATIONAL IMPORTANCE:

A LOAD MODIFIER OF 1.0 HAS BEEN ASSUMED FOR THE DESIGN OF THIS STRUCTURE IN ACCORDANCE WITH THE AASHTO LRFD BRIDGE DESIGN SPECIFICIATIONS, ARTICLE 1.3.5 AND THE ODOT BRIDGE DESIGN MANUAL.

DESIGN DATA:

CONCRETE, QC/QA CLASS QC2 - COMPRESSIVE STRENGTH 4.5 KSI (SUPERSTRUCTURE)
CONCRETE, CLASS QC1 - COMPRESSIVE STRENGTH 4.0 KSI (SUBSTRUCTURE)
CONCRETE, CLASS QC5, WITH ¾" MAX. AGG. SIZE - COMPRESSIVE STRENGTH 4.0 KSI (DRILLED SHAFTS)
EPOXY COATED STEEL REINFORCEMENT - MINIMUM YIELD STRENGTH 60 KSI (ABUTMENTS, DRILLED SHAFTS, DIAPHRAGMS, DECK, APPROACH SLABS)
CONCRETE FOR PRESTRESSSED BEAMS:
- COMPRESSIVE STRENGTH (FINAL): 9 KSI
- COMPRESSIVE STRENGTH (RELEASE): 7 KSI

WELDED WIRE FABRIC:
- YIELD STRENGTH - 70 KSI

PRESTRESSING STRAND:
- AREA = 0.217 SQ IN
- ULTIMATE STRENGTH = 270 KSI
- INITIAL STRESS = 202.5 KSI (LOW RELAXATION STRANDS)

STEEL SHEET PILING - ASTM A572 GRADE 50 - YIELD STRENGTH 50 KSI

ROCK SOCKETED DRILLED SHAFTS:

THE MAXIMUM FACTORED LOAD TO BE SUPPORTED BY EACH DRILLED SHAFT IS 252 KIPS AT THE REAR ABUTMENT AND 255 KIPS AT THE FORWARD ABUTMENT. THIS LOAD IS RESISTED BY TIP RESISTANCE. AT THE REAR ABUTMENT, THE FACTORED TIP RESISTANCE IS 485.97 KIPS. AT THE FORWARD ABUTMENT, THE FACTORED TIP RESISTANCE IS 1343.03 KIPS.

DECK PROTECTION METHOD:

EPOXY COATED STEEL REINFORCEMENT
2½" CONCRETE COVER
STEEL DRIP STRIP

MONOLITHIC WEARING SURFACE:

IS ASSUMED, FOR DESIGN PURPOSES, TO BE 1 INCH THICK

EXISTING BRIDGE PLANS:

FOR INFORMATION SHOWN, EXISTING BRIDGE PLANS MAY BE INSPECTED IN THE OFFICE OF STRUCTURAL ENGINEERING IN COLUMBUS, OHIO OR AT THE DISTRICT 9 OFFICE, 650 EASTERN AVENUE, CHILLICOTHE, OHIO 45601.

MAINTENANCE OF TRAFFIC:

FOR MAINTENANCE OF TRAFFIC PLANS, SEE ROADWAY SHEETS.

UTILITIES:

FOR UTILITY NOTES, SEE ROADWAY SHEETS.

EXISTING STRUCTURE VERIFICATION:

EXISTING STRUCTURE VERIFICATION: DETAILS AND DIMENSIONS SHOWN ON THESE PLANS PERTAINING TO THE EXISTING STRUCTURE HAVE BEEN OBTAINED FROM PLANS OF THE EXISTING STRUCTURE AND FROM FIELD OBSERVATIONS AND MEASUREMENTS. CONSEQUENTLY, THEY ARE INDICATIVE OF THE EXISTING STRUCTURE AND THE PROPOSED WORK BUT THEY SHALL BE CONSIDERED TENTATIVE AND APPROXIMATE. THE CONTRACTOR IS REFERRED TO CMS SECTIONS 102.05, 105.02 AND 513.04.

BASE CONTRACT BID PRICES UPON A RECOGNITION OF THE UNCERTAINTIES DESCRIBED ABOVE AND UPON A PREBID EXAMINATION OF THE EXISTING STRUCTURE. HOWEVER, THE DEPARTMENT WILL PAY FOR ALL PROJECT WORK BASED UPON ACTUAL DETAILS AND DIMENSIONS WHICH HAVE BEEN VERIFIED IN THE FIELD.

DECK PLACEMENT DESIGN ASSUMPTIONS:

THE FOLLOWING ASSUMPTIONS OF CONSTRUCTION MEANS AND METHODS WERE MADE FOR THE ANALYSIS AND DESIGN OF THE SUPERSTRUCTURE. THE CONTRACTOR IS RESPONSIBLE FOR THE DESIGN OF THE FALSEWORK SUPPORT SYSTEM WITHIN THESE PARAMETERS AND WILL ASSUME RESPONSIBILITY FOR SUPERSTRUCTURE ANALYSIS FOR DEVIATION FROM THESE DESIGN ASSUMPTIONS.

AN EIGHT WHEEL FINISHING MACHINE WITH A MAXIMUM WHEEL LOAD OF 2.2 KIPS.

A MINIMUM OUT-TO-OUT WHEEL SPACING AT EACH END OF THE MACHINE OF 103 INCHES.

A MAXIMUM SPACING OF OVERHANG FALSEWORK BRACKETS OF 48 INCHES.

A MAXIMUM DISTANCE FROM THE CENTERLINE OF THE FASCIA GIRDER TO THE FACE OF THE SAFETY HANDRAIL OF 65 INCHES.

ITEM 202 - STRUCTURE REMOVED, OVER 20 FOOT SPAN, AS PER PLAN

REMOVE REAR ABUTMENTS TO EL. 809.50. REMOVE FORWARD ABUTMENT TO EL. 812.40.

ITEM 503 - COFFERDAMS AND EXCAVATION BRACING, AS PER PLAN

THE DESIGN SHOWN ON THE PLANS FOR TEMPORARY SUPPORT OF EXCAVATION IS ONE REPRESENTATIVE DESIGN THAT MAY BE USED TO CONSTRUCT THE PROJECT. THE CONTRACTOR MAY CONSTRUCT THE DESIGN SHOWN ON THE PLANS OR PREPARE AN ALTERNATE DESIGN FOR TEMPORARY SUPPORT OF EXCAVATION. PREPARE AND PROVIDE PLANS IN ACCORDANCE WITH C&MS 501.05. THE DEPARTMENT WILL PAY FOR THE TEMPORARY SUPPORT OF EXCAVATION AT THE CONTRACT LUMP SUM PRICE FOR COFFERDAMS AND EXCAVATION BRACING. THE DEPARTMENT WILL NOT MAKE ADDITIONAL PAYMENT FOR PROVIDING AN ALTERNATE DESIGN. PAYMENT FOR THIS ITEM INCLUDES BOTH THE TEMPORARY SHORING WALL AND THE TEMPORARY SHEET PILING.

ITEM 503 - SHALE EXCAVATION, AS PER PLAN

CONTRACTOR TO EXCAVATE SHALE AND LIMESTONE AS NEEDED AT THE FORWARD ABUTMENT.

ITEM 894 - THERMAL INTEGRITY PROFILER (T.I.P) TEST

PERFORM INTEGRITY TESTING ON ONE OF THE DRILLED SHAFTS AT THE REAR ABUTMENT AND FORWARD ABUTMENT BY THERMAL INTEGRITY PROFILING (TIP). PERFORM TIP TESTING PER ASTM D7949, "STANDARD TEST METHODS FOR THERMAL INTEGRITY PROFILING OF CONCRETE DEEP FOUNDATION, "METHOD B AND PER SUPPLEMENTAL SPECIFICATION 894.

ADHESIVE ANCHOR/DOWEL SYSTEMS

INSTALL ADHESIVE ANCHORS/DOWELS ACCORDING TO THE MANUFACTURE'S INSTALLATION INSTRUCTIONS PUBLISHED IN THE ICC-ES REPORTS LISTED BELOW.

THE HOLES FOR THE ADHESIVE ANCHORS SHALL BE DRILLED WITH A HAMMER DRILL AND CARBIDE BIT PRIOR TO THE INSTALLATION OF THE ANCHORS, CLEAN AND DRY THE HOLES IN A MANNER CONSISTENT WITH THE MANUFACTURE'S REQUIREMENTS FOR DRY CONCRETE.

HTTPS://ICC-ES.ORG/EVALUATION-REPORT-PROGRAM/REPORTS-DIRECTORY/

SELECT FROM ONE OF THE FOLLOWING APPROVED PRODUCTS:

ADHESIVE ANCHOR/DOWEL SYSTEM OPTION 1 – ICC-ES ESR 3187
ADHESIVE ANCHOR/DOWEL SYSTEM OPTION 2 – ICC-ES ESR 3298
ADHESIVE ANCHOR/DOWEL SYSTEM OPTION 3 – ICC-ES ESR 4057
ADHESIVE ANCHOR/DOWEL SYSTEM OPTION 4 – ICC-ES ESR 4094

FACTORED ANCHOR/DOWEL LOADS: SHEAR - 1.7 KIPS

THE CONTRACTOR MAY USE A SUBSTITUTE ADHESIVE ANCHOR/DOWEL SYSTEM THAT MEETS THE ACCEPTANCE CRITERIA OF ICEES AC308 - POST-INSTALLED ADHESIVE ANCHORS IN CONCRETE ELEMENTS. THE SUBSTITUTE ANCHORS SHALL MEET OR EXCEED THE CAPACITY OF THE ADHESIVE ANCHOR/DOWEL SYSTEMS LISTED ABOVE.

ADHESIVE ANCHORS/DOWELS SHALL NOT BE SUBSTITUTED WITH MECHANICAL ANCHORS.

THE CONTRACTOR SHALL SUPPLY DOCUMENTATION SEALED BY AN OHIO REGISTERED PROFESSIONAL ENGINEER ENSURING THAT THE SUBSTITUTE ADHESIVE ANCHOR/DOWEL SYSTEM PROVIDES SUFFICIENT CAPACITY FOR THIS APPLICATION IN ACCORDANCE WITH AASHTO LRFD SECTION 5.13. INSTALL THE ANCHORS ACCORDING TO THE MANUFACTURER'S INSTALLATION INSTRUCTIONS PUBLISHED IN THE ICC-ES REPORT.

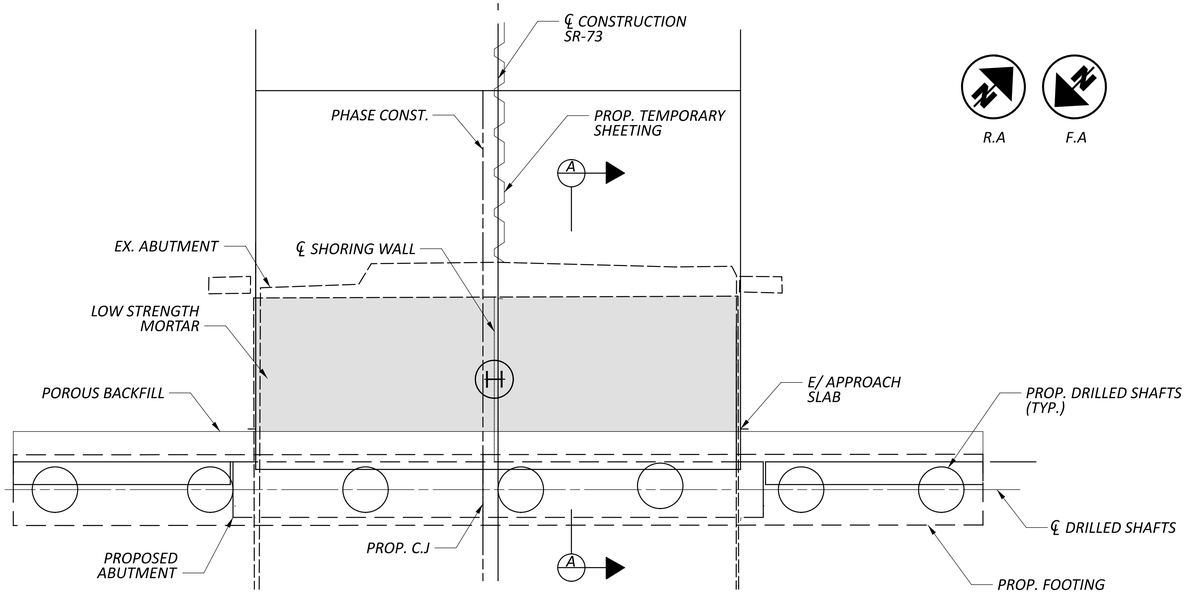

LIMITS OF LOW STRENGTH MORTAR

(REAR ABUTMENT SHOWN)
(FORWARD ABUTMENT SIMILAR)

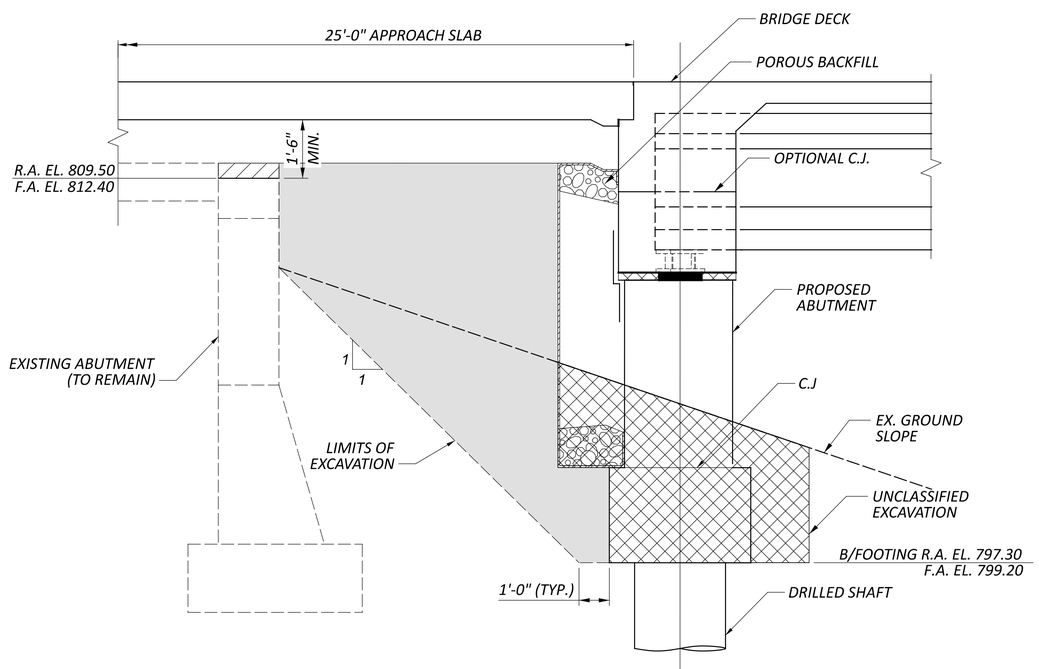

SECTION A-A

LEGEND:

- LIMITS OF LOW STRENGTH MORTAR
- ITEM 202 STRUCTURE REMOVED, OVER 20 FT SPAN, APP
- ITEM 503 UNCLASSIFIED EXCAVATION

LOW STRENGTH MORTAR BACKFILL, AS PER PLAN

THE BACKFILL MATERIAL SHALL BE LOW STRENGTH MORTAR BACKFILL (LSM), TYPE 1 AND SHALL CONFORM TO CMS SECTION 613 AND BE PLACED WITHIN THE LIMITS OF THE APPROACH SLABS BETWEEN THE EXISTING AND PROPOSED ABUTMENTS. IT MAY ALSO BE USED TO CONSTRUCT THE SLOPES IN THE SAME AREA AS LONG AS IT IS COVERED WITH ONE FOOT OF SOIL TO MATCH EXISTING GRADE. THE AREA FOR THE POROUS BACKFILL WITH FILTER FABRIC SHALL BE FORMED PRIOR TO THE PLACEMENT OF THE LSM, TYPE 1 BACKFILL AND THE PLACEMENT OF THE FILTER FABRIC SHALL BE PLACED AFTER THE LSM HAS CURED AND THE FORMS HAVE BEEN REMOVED.

PAYMENT TO PERFORM ALL THE WORK OUTLINED ABOVE SHALL BE INCLUDED IN WITH ITEM 613 - LOW STRENGTH MORTAR BACKFILL, AS PER PLAN AND SHALL INCLUDE ALL LABOR, EQUIPMENT, MATERIALS AND INCIDENTALS NECESSARY TO COMPLETE THE WORK UNLESS SEPARATELY ITEMIZED IN PLANS.

ABBREVIATIONS:

ABUT. - ABUTMENT
ADT - AVERAGE DAILY TRAFFIC
ADTT - AVERAGE DAILY TRUCK TRAFFIC
APPR. - APPROACH
B - BOTTOM
BM - BENCHMARK
BOT. OR BTM. - BOTTOM
BRG. - BEARING
℄ - CENTERLINE
C/C - CENTER TO CENTER
C.J. - CONSTRUCTION JOINT
CLR. - CLEAR
CMS - CONSTRUCTION AND MATERIAL SPECIFICATIONS
CONC. - CONCRETE
CONSTR. - CONSTRUCTION
DIA. - DIAMETER
DIM. - DIMENSION
DWG. - DRAWING
E.F. - EACH FACE
EL. OR ELEV. - ELEVATION
EOP - EDGE OF PAVEMENT
EQ. - EQUAL
EST. - ESTIMATED
EX. - EXISTING
EXP. - EXPANSION
F.A. - FORWARD ABUTMENT
F/F - FACE TO FACE
F.F. - FAR FACE
FT. - FOOT OR FEET
FWD. - FORWARD
IN. - INCH
JT. - JOINT
LEOD - LEFT EDGE OF DECK
LT. - LEFT
MAX. - MAXIMUM
MIN. - MINIMUM
MISC. - MISCELLANEOUS
N - NORTH
N.F - NEAR FACE
NO. - NUMBER
N.P.C.P.P. - NON-PERFORATED CORRUGATED PLASTIC PIPE
OHWM - ORDINARY HIGH WATER MARK
O/O - OUT TO OUT
OPP. - OPPOSITE
P.C.P.P. - PERFORATED CORRUGATED PLASTIC PIPE
P.E.J.F. - PREFORMED EXPANSION JOINT FILLER
PG - PROFILE GRADE
PROP. - PROPOSED
PSF - POUNDS PER SQUARE FOOT
P.V.I. - POINT OF VERTICAL INTERSECTION
Q - FLOW RATE
R.A. - REAR ABUTMENT
RCP - ROCK CHANNEL PROTECTION
REOD - RIGHT EDGE OF DECK
REQD. - REQUIRED
RT. - RIGHT
RTBR - RIGHT TOE BRIDGE RAILING
R/W - RIGHT OF WAY
SER. - SERIES
SHLDR - SHOULDER
SPA. - SPACE OR SPACES
STA. - STATION
STD. - STANDARD
STR - STRAIGHT
T - TOP
T&B - TOP & BOTTOM
TBR - TO BE REMOVED
TEMP. - TEMPORARY
T.O.S. OR T/S - TOP OF SLOPE
TYP. - TYPICAL
U.N.O. - UNLESS NOTED OTHERWISE
VAR. - VARIES
V - VELOCITY
WWR - WELDED WIRE REINFORCEMENT

GENERAL NOTES (2 OF 2)
BRIDGE NO. HIG-00073-21.110
SR-73 OVER OHIO BRUSH CREEK

SFN 3601750
DESIGN AGENCY
BG
www.bgenggroup.com
5960 WILCOX PLACE, SUITE C
DUBLIN, OHIO 43016
DESIGNER GLA | CHECKER RG
REVIEWER GTB 03/28/25
PROJECT ID 119769
SUBSET 4 | TOTAL 27
SHEET P.34 | TOTAL 64

HIG-73-21.04

MODEL: Sheet PAPERSIZE: 34x22 (in.) DATE: 1/9/2026 TIME: 8:44:01 AM USER: GBoyer
P:\Transportation\Workset-2\119769_HIG-73-21.11\400-Engineering\Structures\SFN_3601750\Sheets\119769_SFN_3601750_SN002.dgn

DESIGN: GLA DATE: 6/18/2025
CHECK: RG DATE: 6/20/2025

ESTIMATED QUANTITIES

SFN: 3601750

ITEM	EXTENSION	TOTAL	UNIT	DESCRIPTION	ABUT.	SUPER.	GEN.	REFERENCE SHEET NO.
202	11003	LUMP		STRUCTURE REMOVED, OVER 20 FOOT SPAN, AS PER PLAN			LUMP	3
202	22900	80	SQ YD	APPROACH SLAB REMOVED			80	
202	23500	571	SQ YD	WEARING COURSE REMOVED			571	
503	11101	LUMP		COFFERDAMS AND EXCAVATION BRACING, AS PER PLAN	LUMP			1, 2, 3, 4, 9, 11, 13
503	21100	130	CU YD	UNCLASSIFIED EXCAVATION	130			
503	31121	139	CU YD	SHALE EXCAVATION, AS PER PLAN	139			3
509	10000	50,856	LB	EPOXY COATED STEEL REINFORCEMENT	13,446	37,410		
511	33419	62	CU YD	CLASS QC2 CONCRETE WITH QC/QA, SUPERSTRUCTURE, AS PER PLAN		62		12, 14
511	33500	2	EACH	SEMI-INTEGRAL DIAPHRAGM GUIDE	2			
511	34446	112	CU YD	CLASS QC2 CONCRETE WITH QC/QA, BRIDGE DECK		112		
511	44112	87	CU YD	CLASS QC1 CONCRETE WITH QC/QA, ABUTMENT NOT INCLUDING FOOTING	87			
511	46512	67	CU YD	CLASS QC1 CONCRETE WITH QC/QA, FOOTING	67			
512	10100	386	SQ YD	SEALING OF CONCRETE SURFACES (EPOXY-URETHANE)	129	257		
512	33000	27	SQ YD	TYPE 2 WATERPROOFING	27			
515	15020	5	EACH	DRAPED STRAND PRESTRESSED CONCRETE BRIDGE I - BEAM MEMBERS, LEVEL 3, TYPE 4 (111'-8" LONG)		5		
515	20000	12	EACH	INTERMEDIATE DIAPHRAGMS		12		
516	13900	40	SQ FT	2" PREFORMED EXPANSION JOINT FILLER	40			
516	14020	107	FT	SEMI-INTEGRAL ABUTMENT EXPANSION JOINT SEAL	107			
516	44201	10	EACH	ELASTOMERIC BEARINGS WITH INTERNAL LAMINATES (14"x18"x3.398") AND LOAD PLATE (15"x19"x2") (NEOPRENE), AS PER PLAN	10			15
517	70100	236	FT	RAILING (THREE STEEL TUBE BRIDGE RAILING)		236		
518	21200	75	CU YD	POROUS BACKFILL WITH GEOTEXTILE FABRIC	75			
518	22300	294	FT	SPECIAL - STEEL DRIP STRIP		294		21
518	40000	128	FT	6" PERFORATED CORRUGATED PLASTIC PIPE	128			
518	40011	26	FT	6" NON-PERFORATED CORRUGATED PLASTIC PIPE, INCLUDING SPECIALS, AS PER PLAN	26			13, 16
524	94604	140	FT	DRILLED SHAFTS, 30" DIAMETER, INTO BEDROCK	140			
524	94702	10	FT	DRILLED SHAFTS, 36" DIAMETER, ABOVE BEDROCK	10			
526	25010	178	SQ YD	REINFORCED CONCRETE APPROACH SLABS WITH QC/QA (T = 15")			178	
526	90010	64	FT	TYPE A INSTALLATION			64	
613	41201	189	CU YD	LOW STRENGTH MORTAR BACKFILL, AS PER PLAN	189			4
625	33000	1	EA	STRUCTURE GROUNDING SYSTEM	1			
894	10000	2	EA	THERMAL INTEGRITY PROFILING (TIP) TEST	2			

NOTE: ROCK CHANNEL PROTECTION AND PORTABLE BARRIER QUANTITIES CARRIED WITH ROADWAY PLANS.

ESTIMATED QUANTITIES
BRIDGE NO. HIG-00073-21.110
SR-73 OVER OHIO BRUSH CREEK

SFN 3601750

DESIGN AGENCY
BG
www.bgenggroup.com
5960 WILCOX PLACE, SUITE C
DUBLIN, OHIO 43016

DESIGNER	CHECKER
GLA	RG

REVIEWER
GTB 03/28/25

PROJECT ID
119769

SUBSET	TOTAL
5	27

SHEET	TOTAL
P.35	64

HIG-73-21.04

MODEL: Sheet PAPERSIZE: 34x22 (in.) DATE: 1/9/2026 TIME: 8:44:01 AM USER: GBoyer
P:\Transportation\Workset-2\119769_HIG-73-21.11\400-Engineering\Structures\SFN_3601750\Sheets\119769_SFN_3601750_SQ001.dgn

PHASE 1 - REMOVAL & TRAFFIC:

1. INSTALL PORTABLE CONCRETE BARRIER AS SHOWN.
2. MAINTAIN TRAFFIC ON THE RIGHT SIDE OF BRIDGE AS SHOWN.
3. REMOVE EXISTING SLAB AND APPROACH SLABS TO THE LIMITS SHOWN IN THE PLANS.
4. PLACE TEMPORARY SHEETING AND REMOVE EXISTING PORTIONS OF PIERS AS SHOWN IN THE PLANS.

LEGEND:

- INDICATES AREAS TO BE REMOVED PER ITEM 202 - STRUCTURE REMOVED, OVER 20 FOOT SPAN, AS PER PLAN

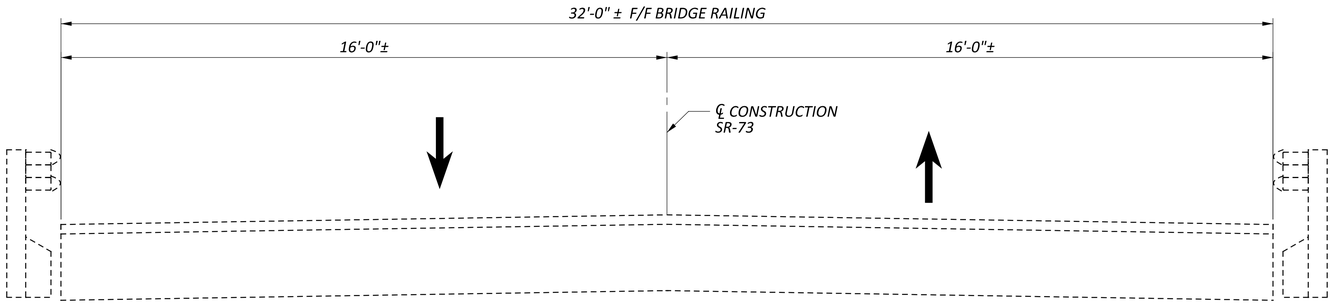

EXISTING TRANSVERSE SECTION

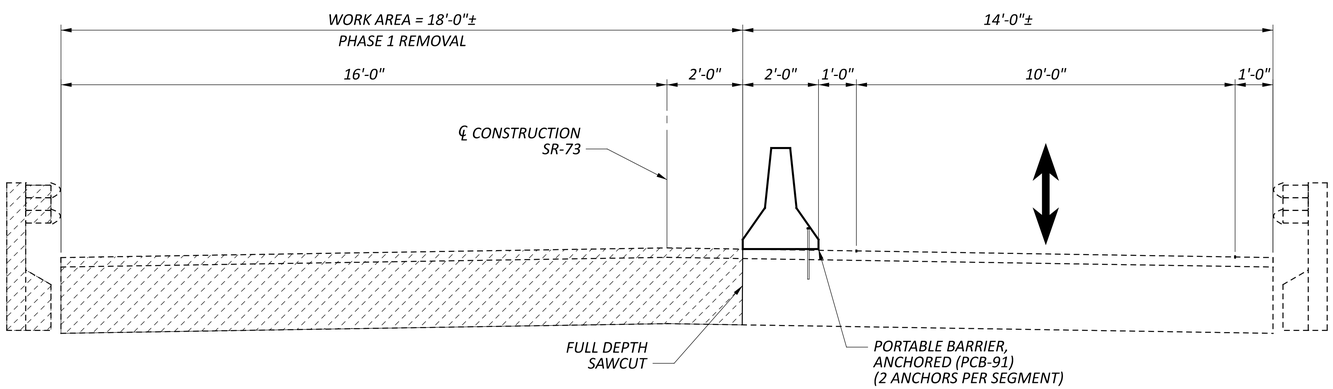

PHASE 1 REMOVAL
(LOOKING UPSTATION)

PHASE CONSTRUCTION DETAILS (1 OF 3)
BRIDGE NO. HIG-00073-21.110
SR-73 OVER OHIO BRUSH CREEK

SFN	3601750
DESIGN AGENCY	BG www.bgenggroup.com 5960 WILCOX PLACE, SUITE C DUBLIN, OHIO 43016
DESIGNER	MS
CHECKER	GLA
REVIEWER	GTB 03/28/25
PROJECT ID	119769
SUBSET	6
TOTAL	27
SHEET	P.36
TOTAL	64

HIG-73-21.04

MODEL: Sheet_SurvFt PAPERSIZE: 34x22 (in.) DATE: 1/9/2026 TIME: 8:44:02 AM USER: GBoyer
P:\Transportation\Workset-2\119769_HIG-73-21.11\40D-Engineering\Structures\SFN_3601750\Sheets\119769_SFN_3601750_SC001.dgn

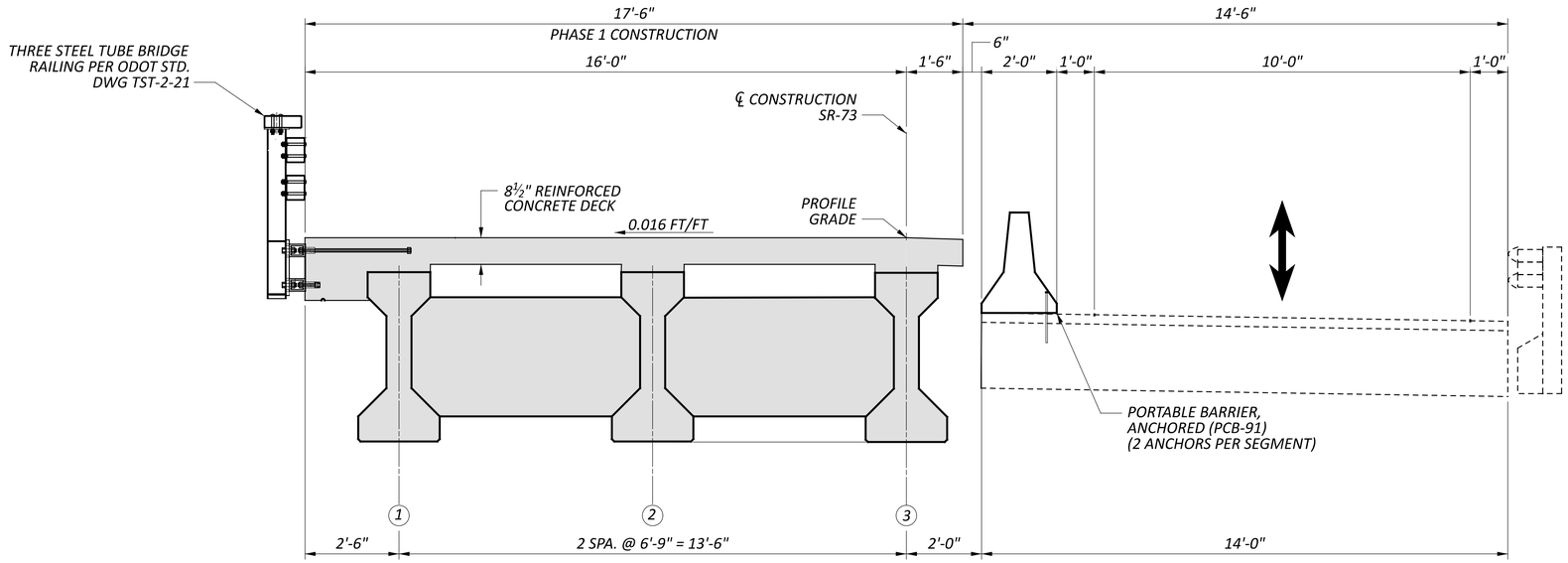

PHASE 1 CONSTRUCTION

(LOOKING UPSTATION)

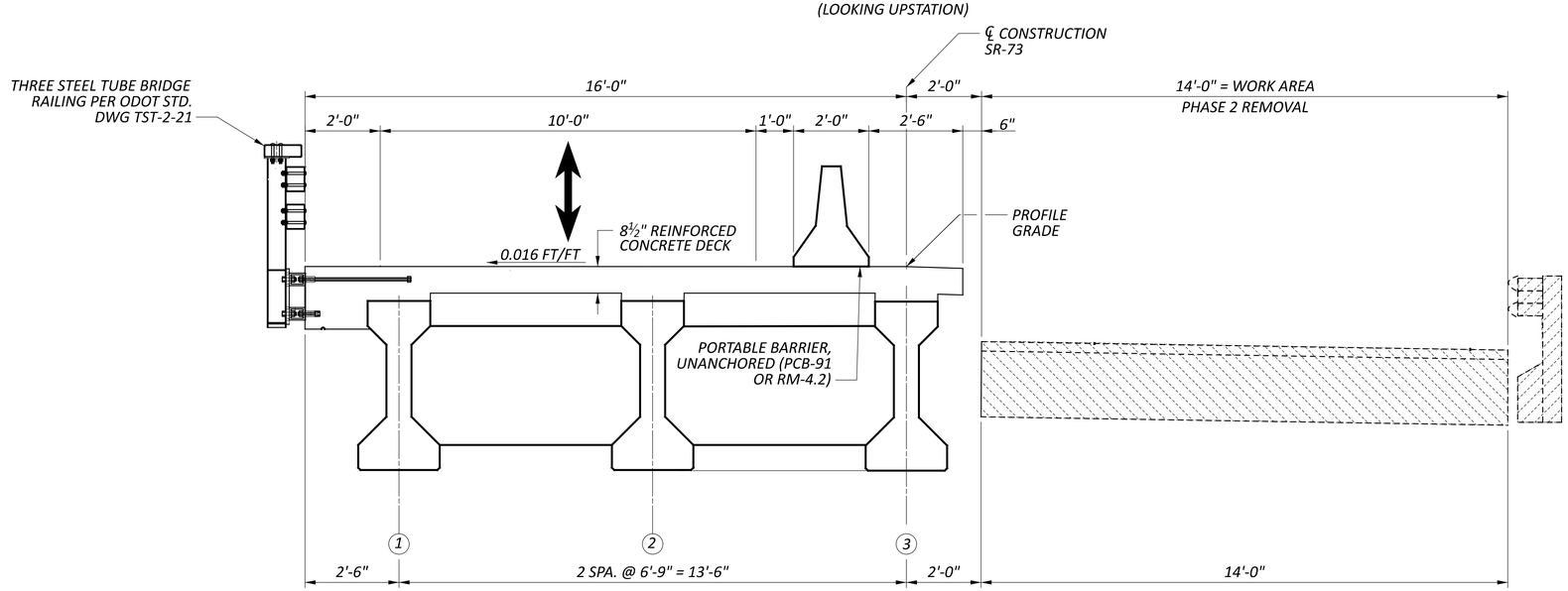

PHASE 2 REMOVAL

(LOOKING UPSTATION)

PHASE 1 - CONSTRUCTION

1. CONSTRUCT NEW PORTIONS OF THE ABUTMENTS TO THE PHASE 1 LIMITS SHOWN IN THE PLANS.
2. INSTALL NEW BEARINGS AND BEAMS AS SHOWN.
3. INSTALL SEMI-INTEGRAL DIAPHRAGMS.
4. CONSTRUCT NEW DECK, RAILING, AND APPROACH SLABS INDICATED AS PHASE I CONSTRUCTION, TO THE LIMITS SHOWN IN THE PLANS.

PHASE 2 - REMOVAL

1. INSTALL PORTABLE BARRIER ON PROPOSED STRUCTURE IN THE LOCATION SHOWN.
2. SHIFT TRAFFIC TO THE LEFT SIDE OF THE STRUCTURE & MAINTAIN ONE-LANE, TWO WAY TRAFFIC.
3. REMOVE RIGHT PORTION OF THE EXISTING SLAB & APPROACH SLAB TO THE LIMITS SHOWN IN THE PLANS.
4. REMOVE EXISTING SUBSTRUCTURE AS SHOWN IN PLANS.

LEGEND:

- INDICATES AREAS TO BE REMOVED PER ITEM 202 - STRUCTURE REMOVED, OVER 20 FOOT SPAN, AS PER PLAN
- INDICATES NEW CONSTRUCTION
- (#) - PROPOSED BEAM DESIGNATION

PHASE CONSTRUCTION DETAILS (2 OF 3)
BRIDGE NO. HIG-00073-21.110
SR-73 OVER OHIO BRUSH CREEK

SFN	3601750
DESIGN AGENCY	BG www.bgenggroup.com 5960 WILCOX PLACE, SUITE C DUBLIN, OHIO 43016
DESIGNER	MS
CHECKER	GLA
REVIEWER	GTB 03/28/25
PROJECT ID	119769
SUBSET	7
TOTAL	27
SHEET	P.37
TOTAL	64

HIG-73-21.04

MODEL: Sheet_SurvFt PAPERSIZE: 34x22 (in.) DATE: 1/9/2026 TIME: 8:44:03 AM USER: GBoyer
P:\Transportation\Workset-2\119769_HIG-73-21.11\400-Engineering\Structures\SFN_3601750\Sheets\119769_SFN_3601750_SC002.dgn

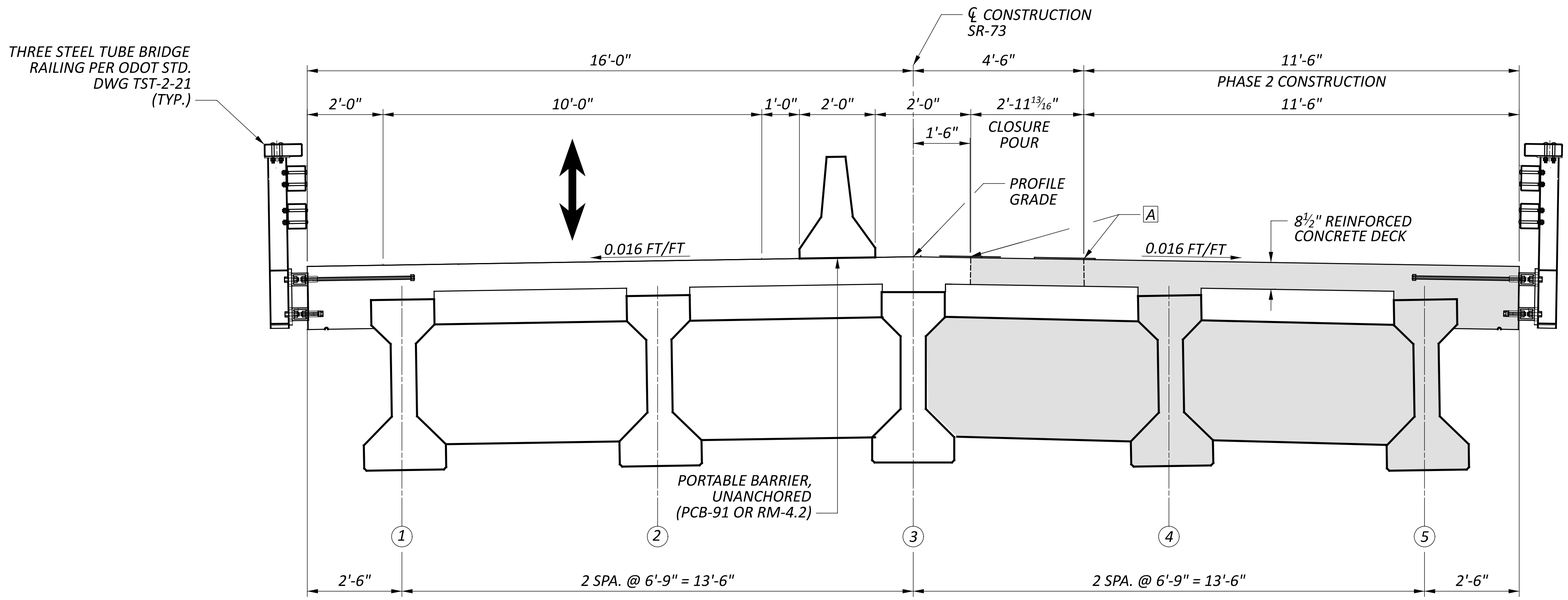

PHASE 2 CONSTRUCTION

(LOOKING UPSTATION)

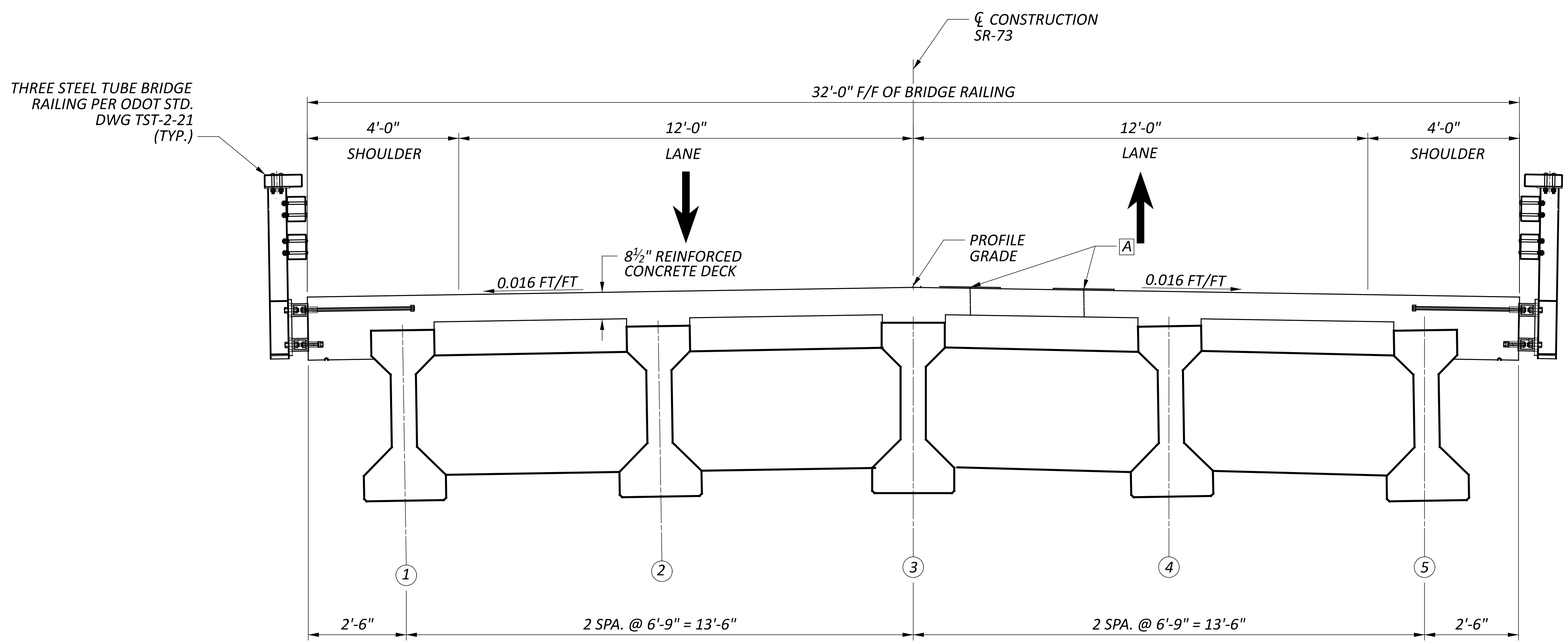

FINAL TRAFFIC

(LOOKING UPSTATION)

PHASE 2 - CONSTRUCTION

1. CONSTRUCT NEW PORTIONS OF THE ABUTMENTS TO THE PHASE 2 LIMITS SHOWN IN THE PLANS.
2. INSTALL NEW BEARINGS AND BEAMS AS SHOWN.
3. INSTALL SEMI-INTEGRAL DIAPHRAGMS.
4. CONSTRUCT NEW DECK, RAILING, AND APPROACH SLABS INDICATED AS PHASE 2 CONSTRUCTION, TO THE LIMITS SHOWN IN THE PLANS.
5. OPEN BRIDGE AND MAINTAIN TRAFFIC AS SHOWN IN THE FINAL TRAFFIC CONFIGURATION.

LEGEND:

- INDICATES NEW CONSTRUCTION
- # - PROPOSED BEAM DESIGNATION
- A - PHASE CONSTRUCTION JOINT WITH 2'-0" HMWM SEALER CENTERED OVER JOINT (TYP.)

PHASE CONSTRUCTION DETAILS (3 OF 3)
BRIDGE NO. HIG-00073-21.110
SR-73 OVER OHIO BRUSH CREEK

SFN	3601750
DESIGN AGENCY	BG www.bgenggroup.com 5960 WILCOX PLACE, SUITE C DUBLIN, OHIO 43016
DESIGNER	MS
CHECKER	GLA
REVIEWER	GTB 03/28/25
PROJECT ID	119769
SUBSET	8
TOTAL	27
SHEET	P.38
TOTAL	64

HIG-73-21.04

MODEL: Sheet PAPERSIZE: 34x22 (in.) DATE: 1/9/2026 TIME: 8:44:04 AM USER: GBoyer
P:\Transportation\Workset-2\119769_HIG-73-21.11\400-Engineering\Structures\SFN_3601750\Sheets\119769_SFN_3601750_SC003.dgn

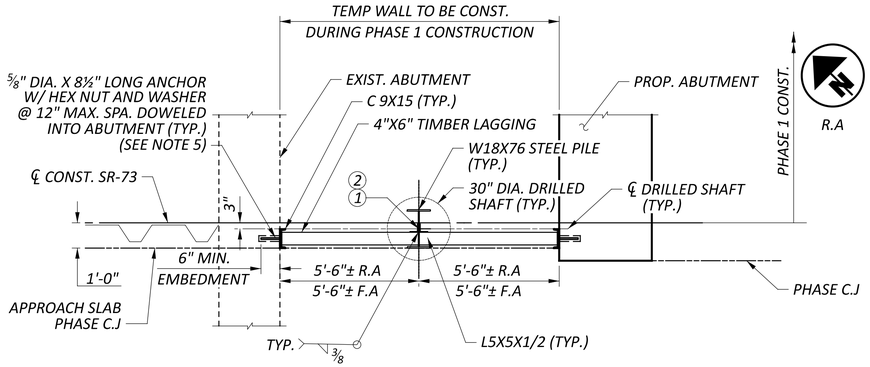

PLAN VIEW A-A

(R.A SHOWN F.A SIMILAR, OPP. HAND)

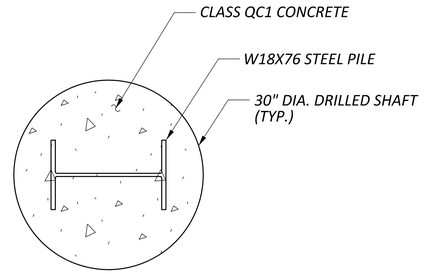

SECTION B-B

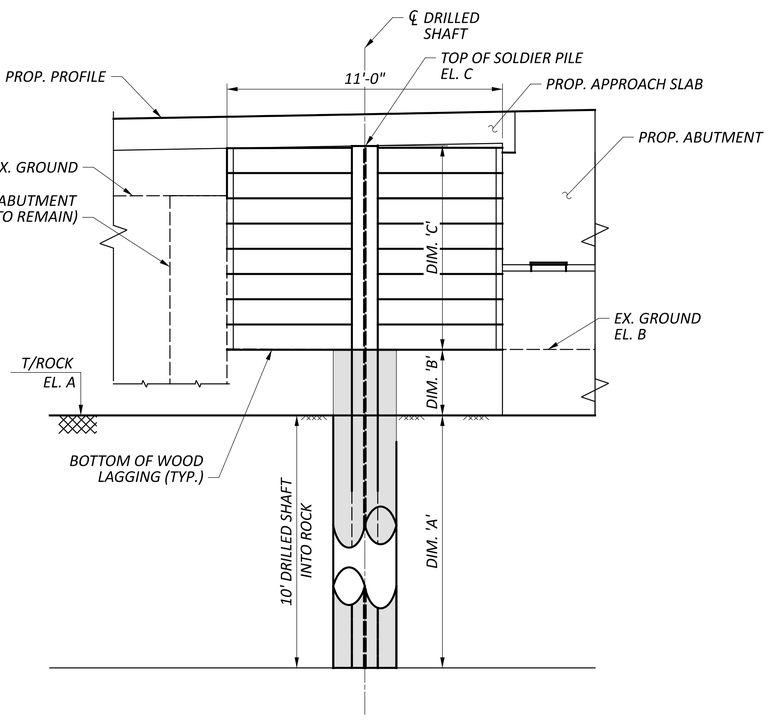

REAR ABUTMENT SECTION

(F.A SIMILAR, OPP. HAND)

NOTES:

1. W STEEL PILE AND STEEL CHANNEL SHALL BE ASTM A709, GRADE 50, YIELD STRENGTH 50 KSI.
2. DRILLED SHAFT CONCRETE SHALL BE CLASS QC1, COMPRESSIVE STRENGTH 4.0 KSI.
3. ALL COSTS ASSOCIATED WITH TEMPORARY SHORING, INCLUDING ALL LABOR, EQUIPMENT, MATERIAL AND INCIDENTALS NECESSARY TO FURNISH, INSTALL, AND REMOVE TEMPORARY SHORING AS SHOWN IN THE PLANS ARE INCLUDED WITH ITEM 503 - COFFERDAMS AND EXCAVATION BRACING, AS PER PLAN FOR PAYMENT.
4. EXCAVATE THE HOLE FOR THE DRILLED SHAFT WITHIN 3 INCHES OF THE PLAN LOCATION. PLACE THE SOLDIER PILE WITHIN THE HOLE SO IT IS VERTICAL AND NOT INCLINED MORE THAN 1 INCH BETWEEN TOP TO BOTTOM. PLACE THE SOLDIER PILE SO THAT THE FLANGES ARE PARALLEL TO THE CENTERLINE OF THE ROW OF DRILLED SHAFTS. DO NOT ALLOW THE ORIENTATION OF THE FLANGES TO VARY BY MORE THAN 10 DEGREES. SUPPORT THE SOLDIER PILE SO THAT IT DOES NOT MOVE DURING CONCRETE PLACEMENT. CHECK THE POSITION, THE VERTICAL ALIGNMENT AND ORIENTATION OF THE SOLDIER PILE IMMEDIATELY AFTER CONCRETE PLACEMENT
5. THE 5/8" THREADED ROD FOR ADHESIVE ANCHORS SHALL BE ASTM F1554, GRADE 36 WITH ASTM A563 NUTS AND ASTM F436 WASHERS. SEE GENERAL NOTES SHEET FOR APPROVED ADDHESIVE ANCHOR/DOWEL SYSTEMS.

LEGEND:

(#) - SOLDIER PILE DESIGNATION

DRILLED SHAFT NUMBER	STATION	OFFSET	EL. A INTERPOLATED TOP OF ROCK	EL. B ESTIMATED GROUND EL.	EL. C TOP OF SOLDIER PILE EL.	DIM. 'A' 30" DRILLED SHAFT INTO THE ROCK (FT.)	DIM. 'B' 30" DRILLED SHAFT ABOVE THE ROCK (FT.)	DIM. 'C' APPROXIMATE WALL HEIGHT (FT.)	LENGTH OF W18X76
1	1112+55.32	0.24' RT.	796.60	805.00	811.20	10.00	8.40	6.20	24.60
2	1113+79.71	0.24' RT.	799.20	807.00	813.90	10.00	7.80	6.90	24.70

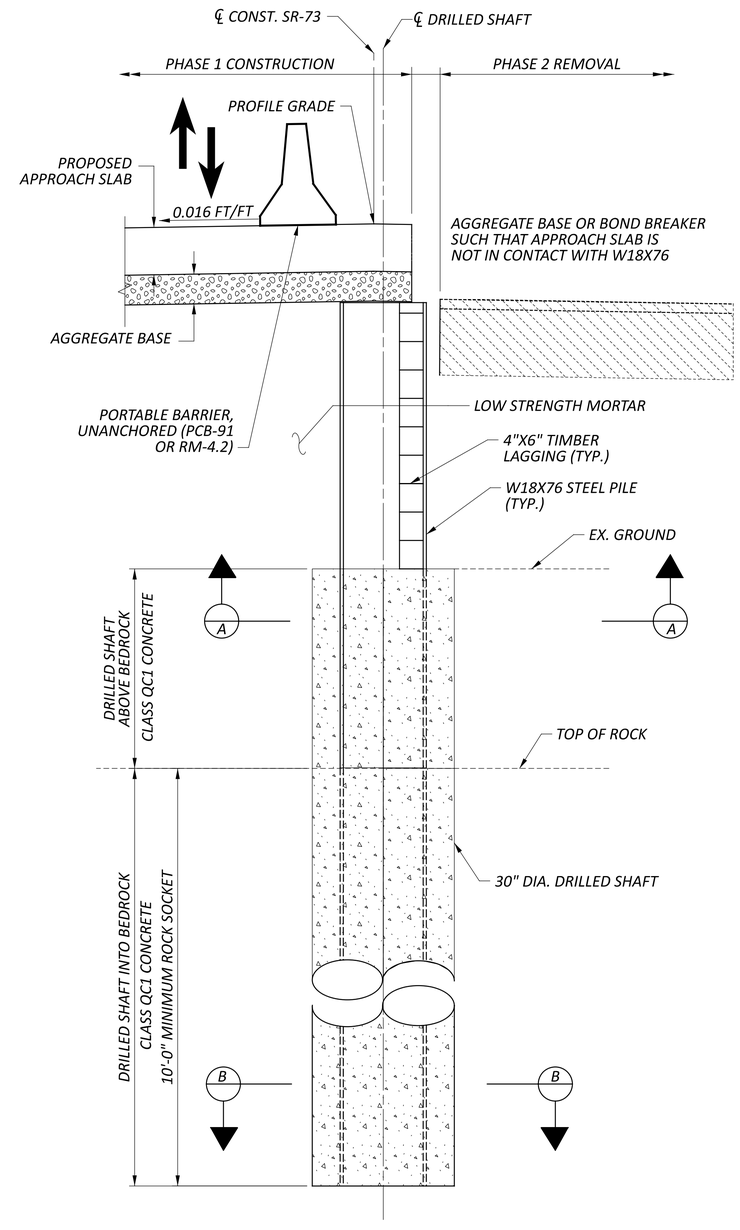

TYPICAL WALL SECTION

(LOOKING UPSTATION)

SHORING WALL DETAILS
BRIDGE NO. HIG-00073-21.110
SR-73 OVER OHIO BRUSH CREEK

SFN 3601750

DESIGN AGENCY
BG
www.bgenggroup.com
5960 WILCOX PLACE, SUITE C
DUBLIN, OHIO 43016

DESIGNER	CHECKER
LA	RG

REVIEWER
GTB 03/20/25

PROJECT ID
119769

SUBSET	TOTAL
9	27

SHEET	TOTAL
P.39	64

HIG-73-21.04

MODEL: Sheet PAPERSIZE: 34x22 (in.) DATE: 1/9/2026 TIME: 8:44:05 AM USER: GBoyer
P:\Transportation\Workset-2\119769_HIG-73-21.11\400-Engineering\Structures\SFN_3601750\Sheets\119769_SFN_3601750_WD001.dgn

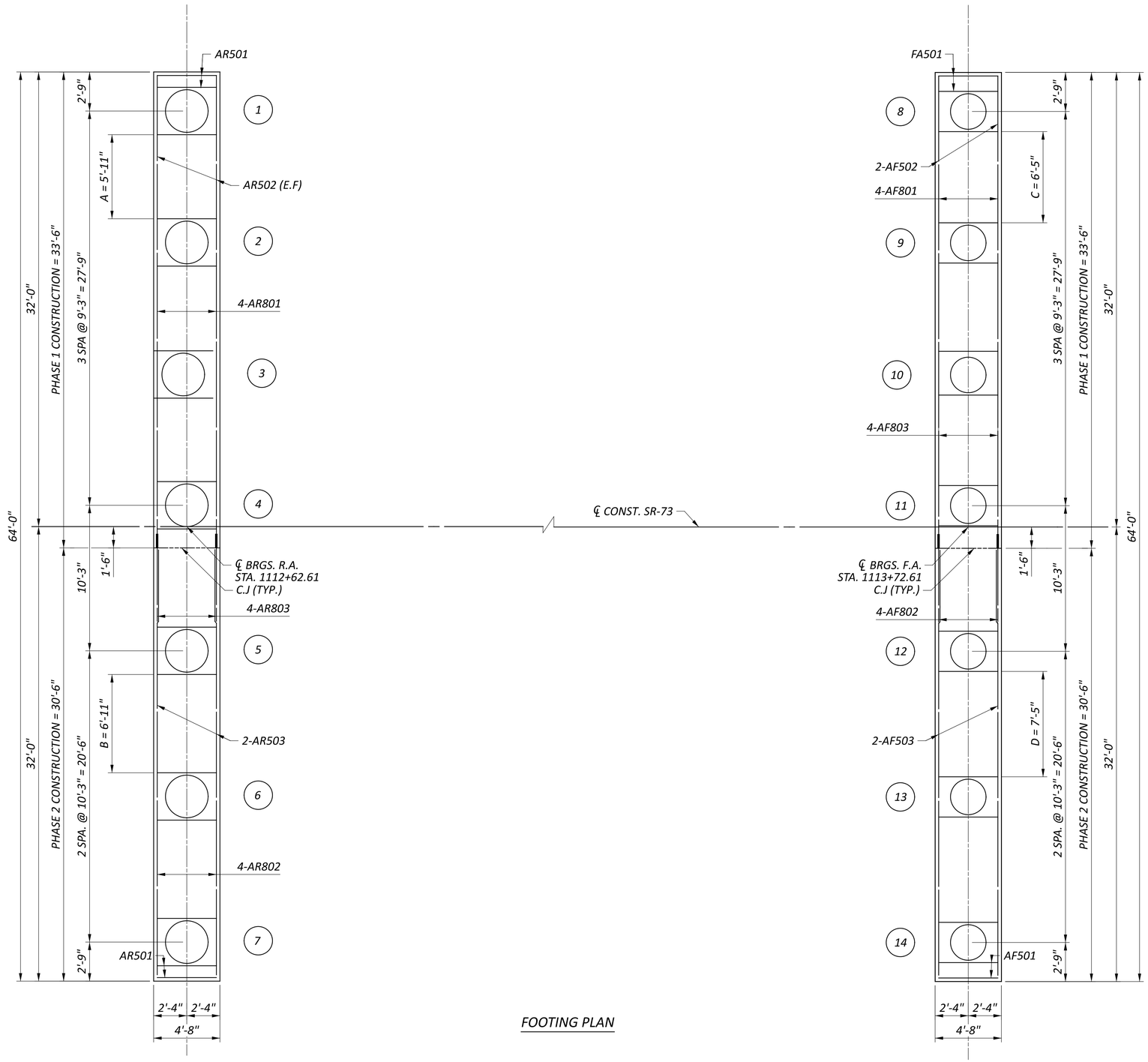

FOOTING PLAN

LEGEND:

(#) PROPOSED DRILLED SHAFT DESIGNATION

A = 7-AR501 @ 12" (-)

B = 8-AR501 @ 12" (-)

C = 8-AF501 @ 12" (-)

D = 9-AF501 @ 12" (-)

NOTES:

1. REFER TO ABUTMENT SHEETS FOR FOOTING SECTIONS.
2. REFER TO GENERAL NOTES FOR DRILLED SHAFT CAPACITIES.

FOOTING PLAN
BRIDGE NO. HIG-00073-21.110
SR-73 OVER OHIO BRUSH CREEK

SFN	3601750
DESIGN AGENCY	BG www.bgenggroup.com 5960 WILCOX PLACE, SUITE C DUBLIN, OHIO 43016
DESIGNER	MS/GA
CHECKER	RG
REVIEWER	GTB 03/28/25
PROJECT ID	119769
SUBSET	10
TOTAL	27
SHEET	P.40
TOTAL	64

HIG-73-21.04

MODEL: Sheet_SurvPt PAPERSIZE: 34x22 (in.) DATE: 1/9/2026 TIME: 8:44:06 AM USER: GBoyer
P:\Transportation\Workset-2\119769_HIG-73-21.11\400-Engineering\Structures\SFN_3601750\Sheets\119769_SFN_3601750_SO001.dgn

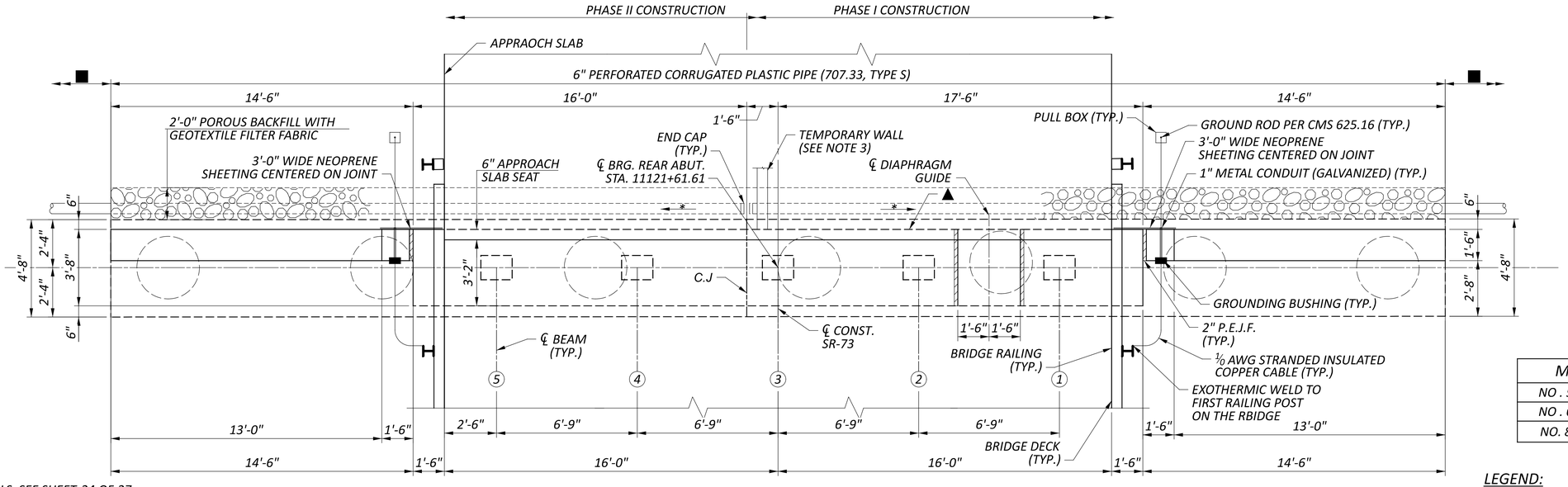

REAR ABUTMENT PLAN

MIN. LAP LENGTH	
NO . 5 BAR	3'-1"
NO . 6 BAR	3'-7"
NO. 8 BAR	5'-4"

NOTES:

1. FOR DIAPHRAGM DETAILS, SEE SHEET 24 OF 27.
2. FOR ADDITIONAL DETAILS NOT SHOWN, SEE STD. DWG. SICD-1-21.
3. TEMPORARY SHORING TO BE LEFT IN PLACE.
4. TYPE 2 WATERPROOFING, 3'-0" WIDE, CENTERED ON THE CONSTRUCTION JOINT SHALL BE PLACED FROM THE LIMITS OF POROUS BACKFILL, TO THE BOTTOM OF THE PROPOSED APPROACH SLAB, AND ALONG THE HORIZONTAL C.J. IN THE WINGWALLS.
5. FOR STRUCTURE GROUNDING DETAILS NOT SHOWN, SEE SCD HL-50.21.

LEGEND:

(#) - BEAM DESIGNATION

[1] - 3-AR602

* MINIMUM SLOPE OF PIPE IS ⅛"/FT.

■ 6" NON-PERFORATED CORRUGATED PLASTIC PIPE (707.33, TYPE S)

▲ SEE NOTE 4.

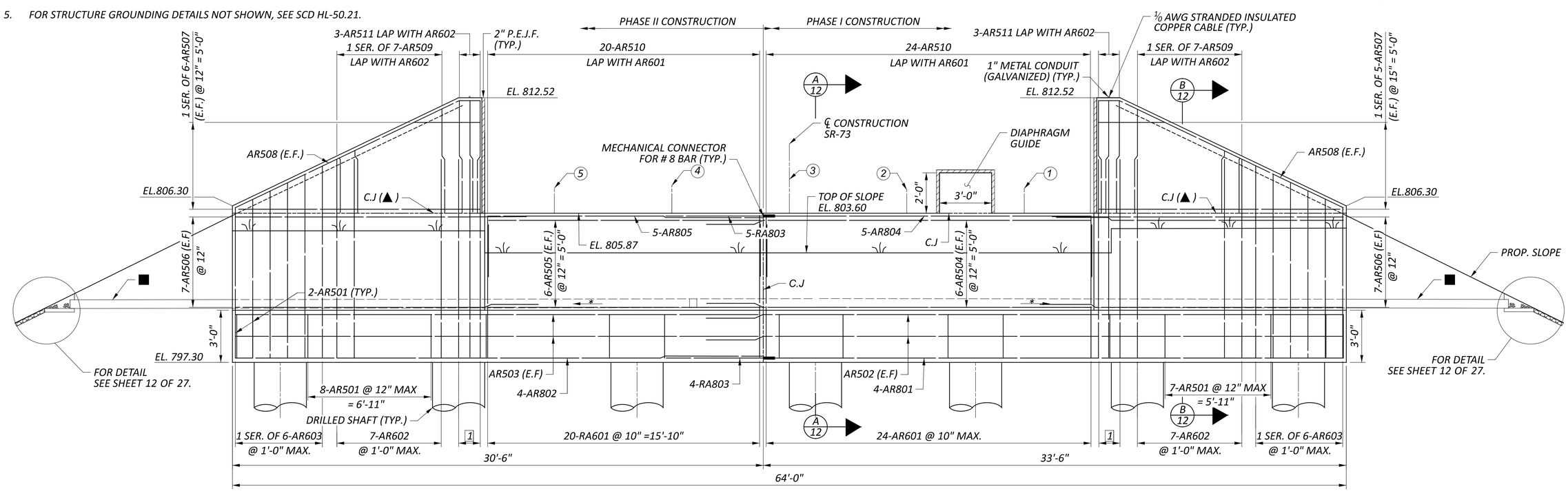

REAR ABUTMENT ELEVATION

REAR ABUTMENT PLAN AND ELEVATION
BRIDGE NO. HIG-00073-21.110
SR-73 OVER OHIO BRUSH CREEK

SFN	3601750
DESIGN AGENCY	BG www.bgenggroup.com 5960 WILCOX PLACE, SUITE C DUBLIN, OHIO 43016
DESIGNER	MS/GA
CHECKER	RG
REVIEWER	GTB 03/28/25
PROJECT ID	119769
SUBSET	11
TOTAL	27
SHEET	P.41
TOTAL	64

HIG-73-21.04

MODEL: Sheet_Survft PAPERSIZE: 34x22 (in.) DATE: 1/9/2026 TIME: 8:44:07 AM USER: GBoyer
P:\Transportation\Workset-2\119769_HIG-73-21.11\400-Engineering\Structures\SFN_3601750\Sheets\119769_SFN_3601750_SR001.dgn

NOTES:

1. FOR ADDITIONAL DETAILS NOT SHOWN SEE STD. DWG SICD-1-21 & PSID-1-13.
2. PRECAST REINFORCED CONCRETE OUTLET, ANIMAL GUARD, AND TIED CONCRETE BLOCK MAT WITH TYPE 1 UNDERLAYMENT, PER ODOT STD. DWG. DM-1.1, SHALL BE INCLUDED FOR PAYMENT WITH ITEM 518 - 6" NON-PERFORATED CORRUGATED PLASTIC PIPE INCLUDING SPECIALS, AS PER PLAN.
3. ABUTMENT DIAPHRAGM CONCRETE AND EXPANDED POLYSTYRENE FILLER OR REMOVABLE FORMS SHALL BE INCLUDED FOR PAYMENT WITH ITEM 511 CLASS QC2 CONCRETE WITH QC/QA, SUPERSTRUCTURE, AS PER PLAN.
4. TYPE 2 WATERPROOFING SHALL BE PLACED FROM THE LIMITS OF ITEM 503, UNCLASSIFIED EXCAVATION, TO THE BOTTOM OF THE PROPOSED APPROACH SLAB BETWEEN THE WINGWALLS AND ALONG THE WINGWALLS OF THE ABUTMENTS.

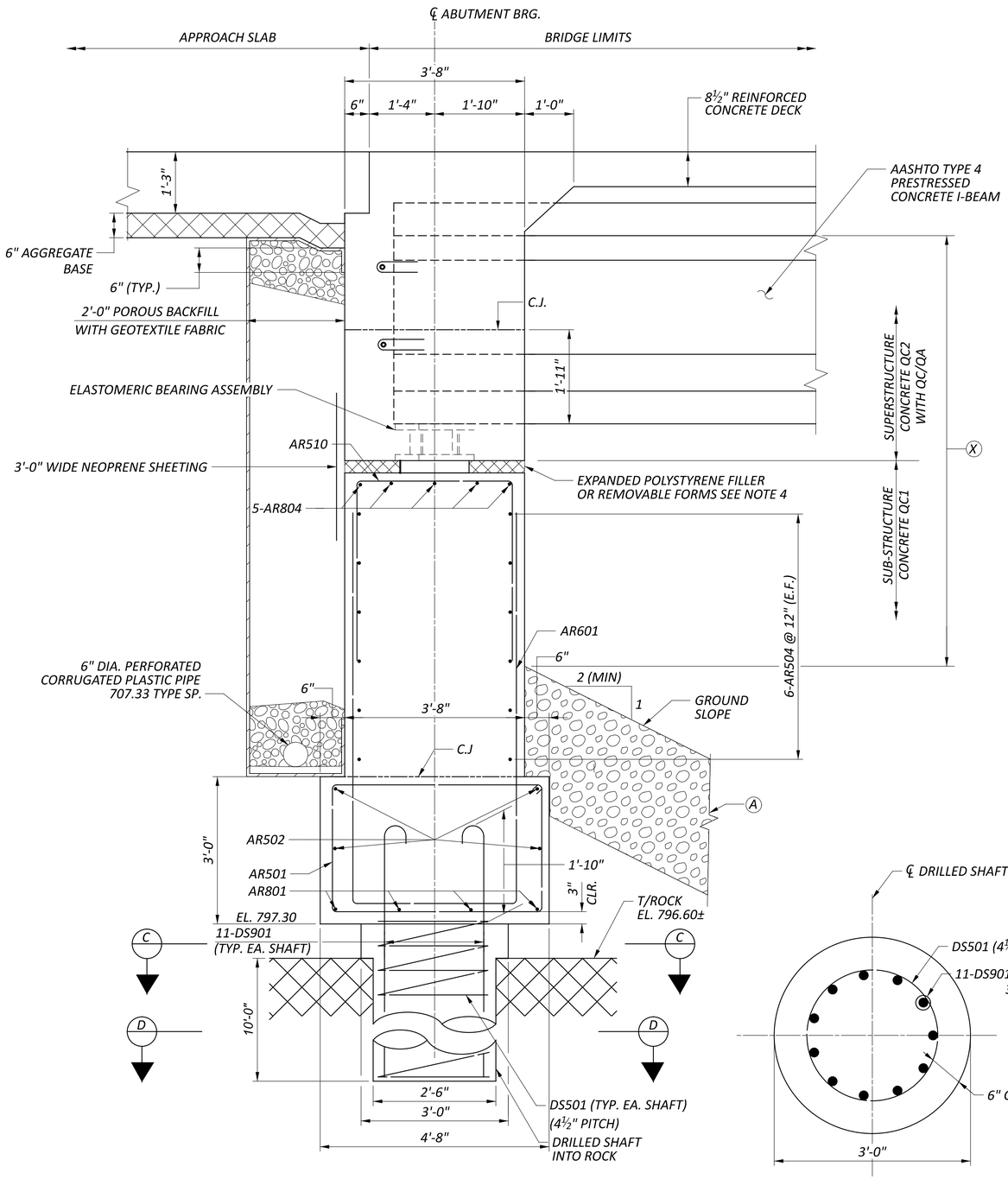

A 11 SECTION

C SECTION

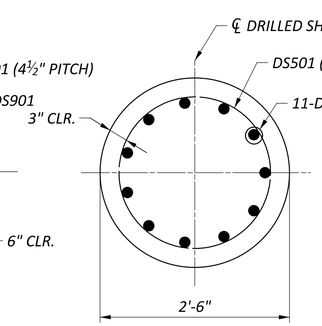

D SECTION

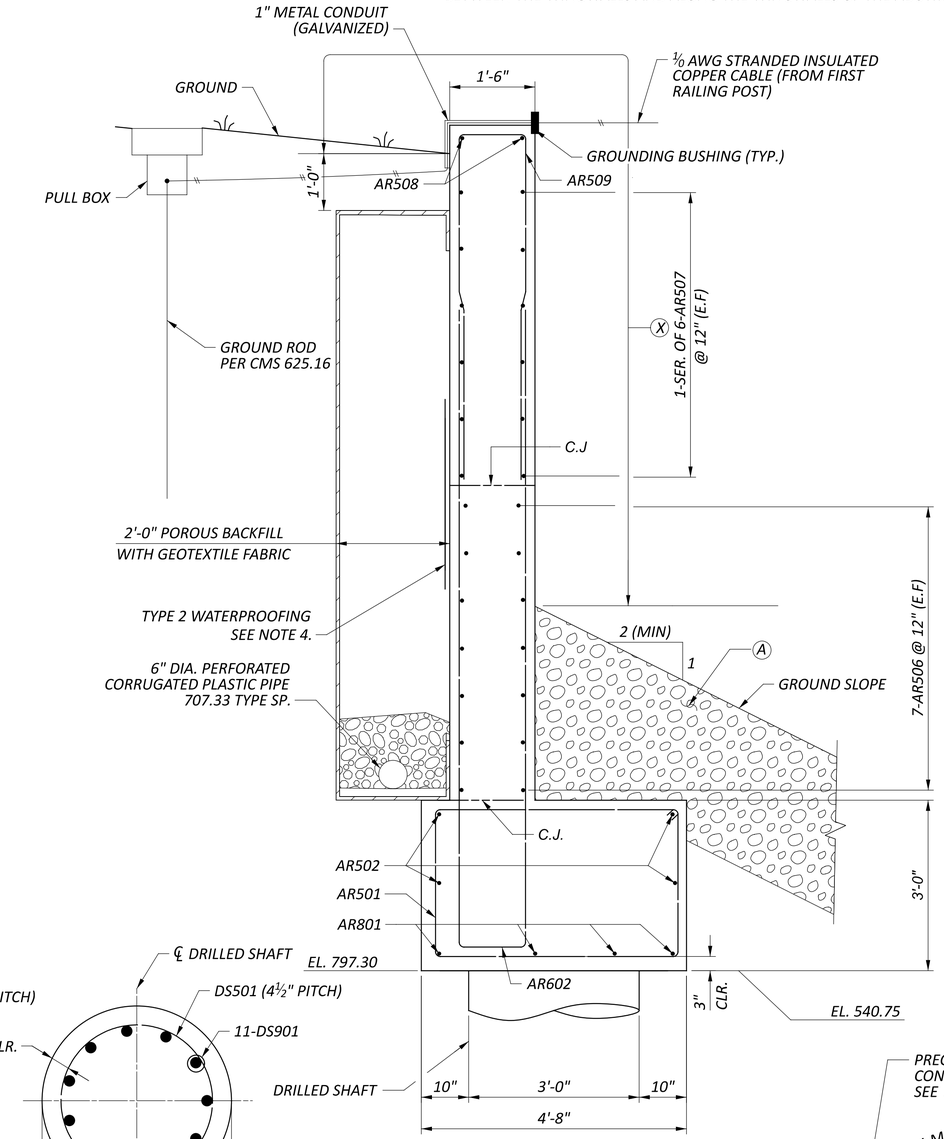

B 11 SECTION

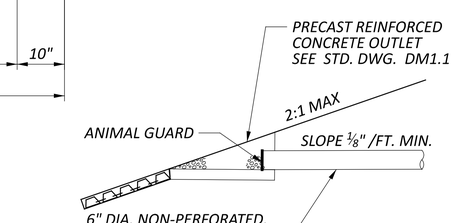

OUTLET DETAIL
(SEE NOTE 2)

Ⓐ - ROCK CHANNEL PROTECTION, TYPE B WITH GEOTEXTILE FABRIC 2'-6" THICK

REAR ABUTMENT DETAILS
BRIDGE NO. HIG-00073-21.110
SR-73 OVER OHIO BRUSH CREEK

SFN	3601750
DESIGN AGENCY	BG www.bgenggroup.com 3960 WILCOX PLACE, SUITE C DUBLIN, OHIO 43016
DESIGNER	MS/GA
CHECKER	RG
REVIEWER	GTB 03/28/25
PROJECT ID	119769
SUBSET	12
TOTAL	27
SHEET	P.42
TOTAL	64

HIG-73-21.04

MODEL: Sheet PAPERSIZE: 34x22 (in.) DATE: 1/9/2026 TIME: 8:44:08 AM USER: GBoyer
P:\Transportation\Workset-2\119769_HIG-73-21.11\400-Engineering\Structures\SFN_3601750\Sheets\119769_SFN_3601750_SR002.dgn

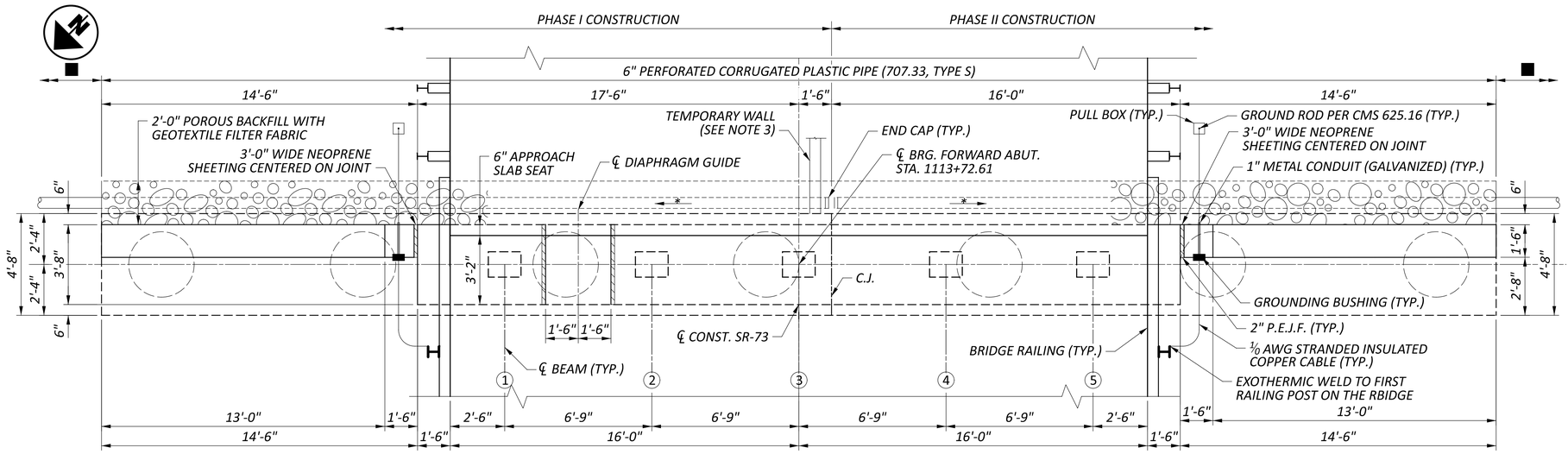

FORWARD ABUTMENT PLAN

NOTES:

1. FOR DIAPHRAGM DETAILS, SEE SHEET 24 OF 27.
2. FOR ADDITIONAL DETAILS NOT SHOWN, SEE STD. DWG. SICD-1-21.
3. TEMPORARY SHORING TO BE LEFT IN PLACE.
4. TYPE 2 WATERPROOFING, 3'-0" WIDE, CENTERED ON THE CONSTRUCTION JOINT SHALL BE PLACED FROM THE LIMITS OF POROUS BACKFILL, TO THE BOTTOM OF THE PROPOSED APPROACH SLAB, AND ALONG THE HORIZONTAL C.J. IN THE WINGWALLS.
5. FOR STRUCTURE GROUNDING DETAILS NOT SHOWN, SEE SCD HL-50.21.

LEGEND:

- (#) - BEAM DESIGNATION
- [1] - 3-AF602
- * - MINIMUM SLOPE OF PIPE IS ⅛"/FT
- ■ - 6" NON-PERFORATED CORRUGATED PLASTIC PIPE (707.33, TYPE S)
- ▲ - SEE NOTE 4

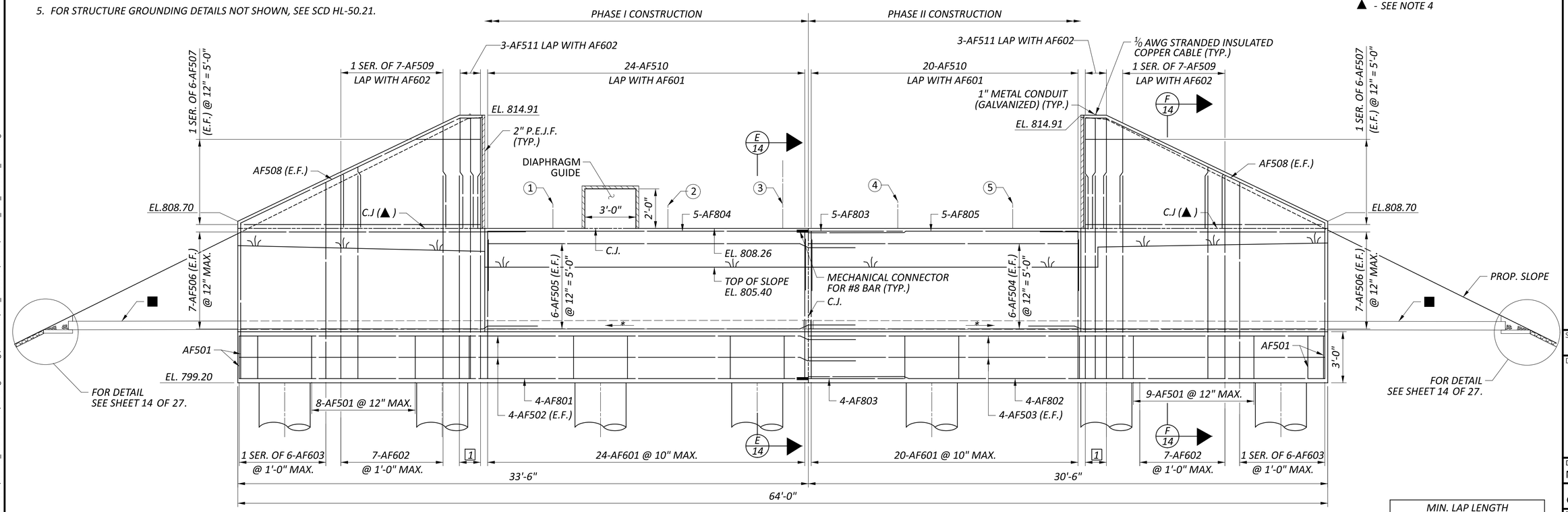

FORWARD ABUTMENT ELEVATION

MIN. LAP LENGTH	
NO. 5 BAR	3'-1"
NO. 6 BAR	3'-7"
NO. 8 BAR	5'-4"

FORWARD ABUTMENT PLAN AND ELEVATION
BRIDGE NO. HIG-00073-21.110
SR-73 OVER OHIO BRUSH CREEK

SFN	3601750
DESIGN AGENCY	BG www.bgenggroup.com 5960 WILCOX PLACE, SUITE C DUBLIN, OHIO 43016
DESIGNER	MS/GA
CHECKER	GLA
REVIEWER	GTB 03/28/25
PROJECT ID	119769
SUBSET	13
TOTAL	27
SHEET	P.43
TOTAL	64

HIG-73-21.04

MODEL: Sheet PAPERSIZE: 34x22 (in.) DATE: 1/9/2026 TIME: 8:44:09 AM USER: GBoyer
P:\Transportation\Workset-2\119769_HIG-73-21.11\400-Engineering\Structures\SFN_3601750\Sheets\119769_SFN_3601750_SF001.dgn

NOTES:

1. FOR ADDITIONAL DETAILS NOT SHOWN SEE STD. DWG SICD-1-21 & PSID-1-13.
2. PRECAST REINFORCED CONCRETE OUTLET, ANIMAL GUARD, AND TIED CONCRETE BLOCK MAT WITH TYPE 1 UNDERLAYMENT, PER ODOT STD. DWG. DM-1.1, SHALL BE INCLUDED FOR PAYMENT WITH ITEM 518 - 6" NON-PERFORATED CORRUGATED PLASTIC PIPE INCLUDING SPECIALS, AS PER PLAN.
3. ABUTMENT DIAPHRAGM CONCRETE AND EXPANDED POLYSTYRENE FILLER OR REMOVABLE FORMS SHALL BE INCLUDED FOR PAYMENT WITH ITEM 511 CLASS QC2 CONCRETE WITH QC/QA, SUPERSTRUCTURE, AS PER PLAN.
4. TYPE 2 WATERPROOFING SHALL BE PLACED FROM THE LIMITS OF ITEM 503, UNCLASSIFIED EXCAVATION, TO THE BOTTOM OF THE PROPOSED APPROACH SLAB BETWEEN THE WINGWALLS AND ALONG THE WINGWALLS OF THE ABUTMENTS.

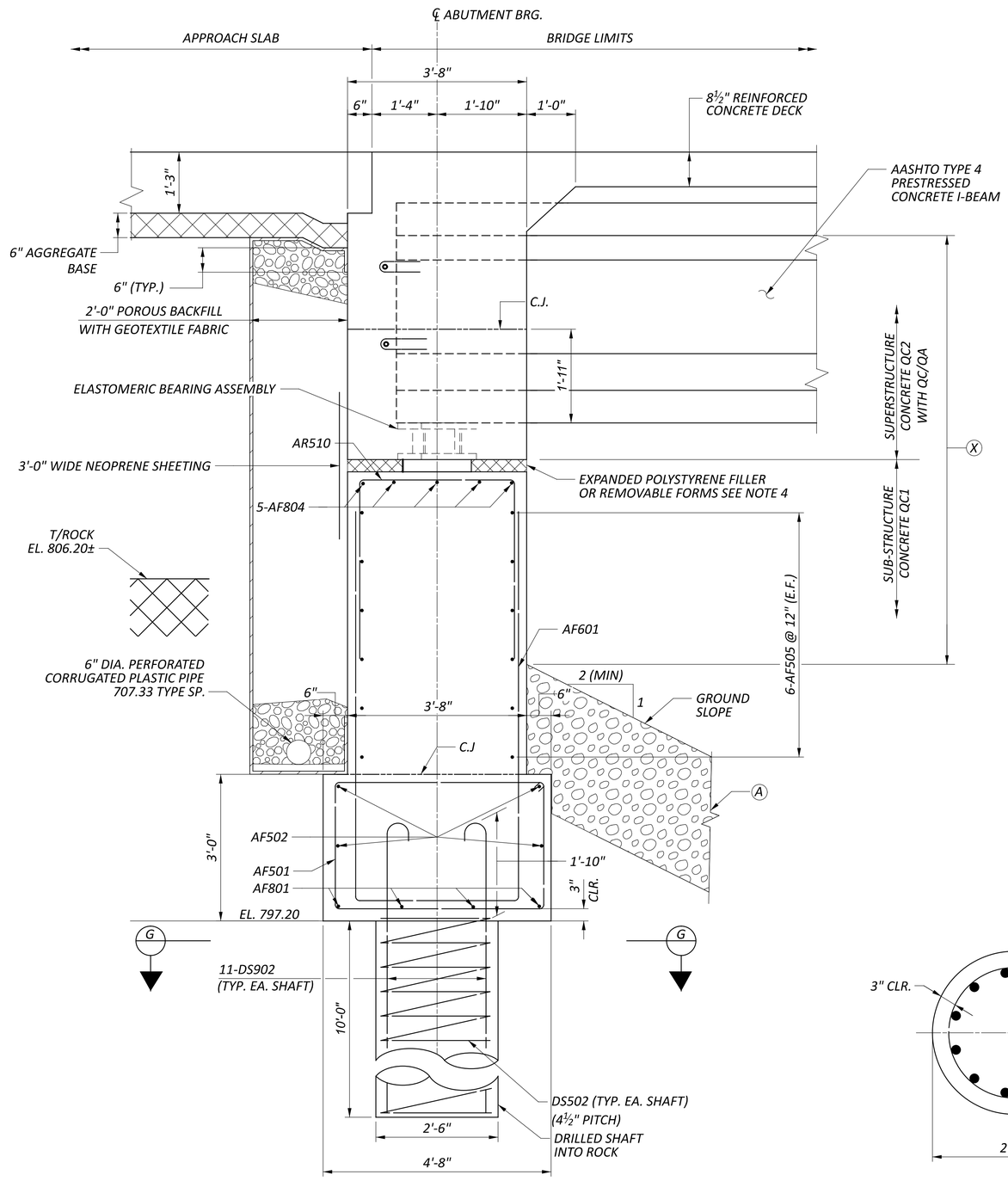

Ⓐ - ROCK CHANNEL PROTECTION, TYPE B WITH GEOTEXTILE FABRIC 2'-6" THICK

E/13 SECTION

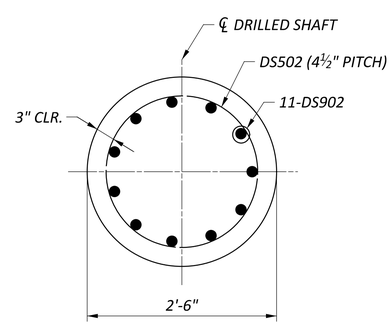

G SECTION

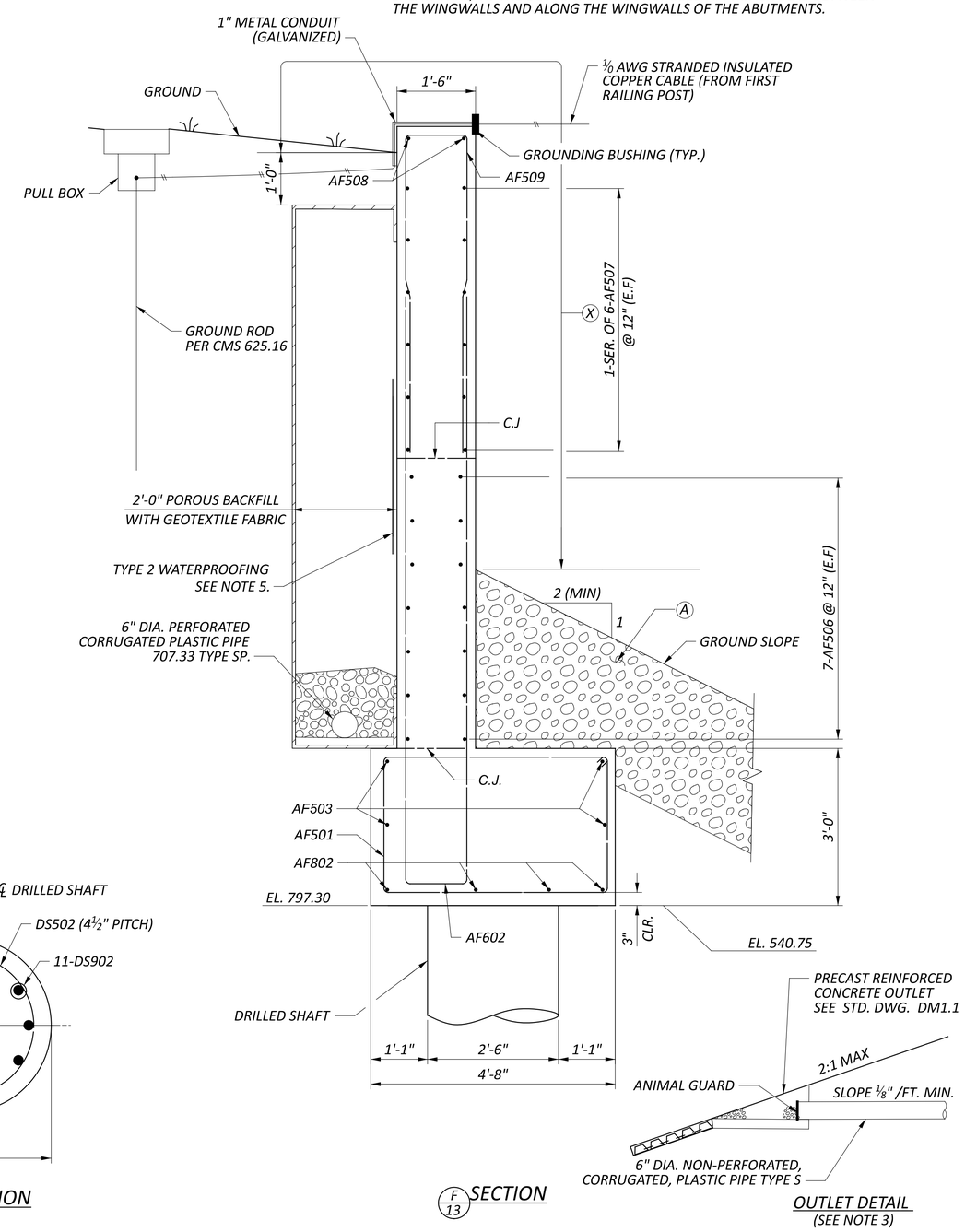

F/13 SECTION

OUTLET DETAIL (SEE NOTE 3)

FORWARD ABUTMENT DETAILS
BRIDGE NO. HIG-00073-21.110
SR-73 OVER OHIO BRUSH CREEK

SFN	3601750
DESIGN AGENCY	BG www.bgenggroup.com 5960 WILCOX PLACE, SUITE C DUBLIN, OHIO 43016
DESIGNER	MS/GA
CHECKER	RG
REVIEWER	GTB 03/28/25
PROJECT ID	119769
SUBSET	14
TOTAL	27
SHEET	P.44
TOTAL	64

HIG-73-21.04

MODEL: Sheet PAPERSIZE: 34x22 (in.) DATE: 1/9/2026 TIME: 8:44:10 AM USER: GBoyer
P:\Transportation\Workset-2\119769_HIG-73-21.11\400-Engineering\Structures\SFN_3601750\Sheets\119769_SFN_3601750_SF002.dgn

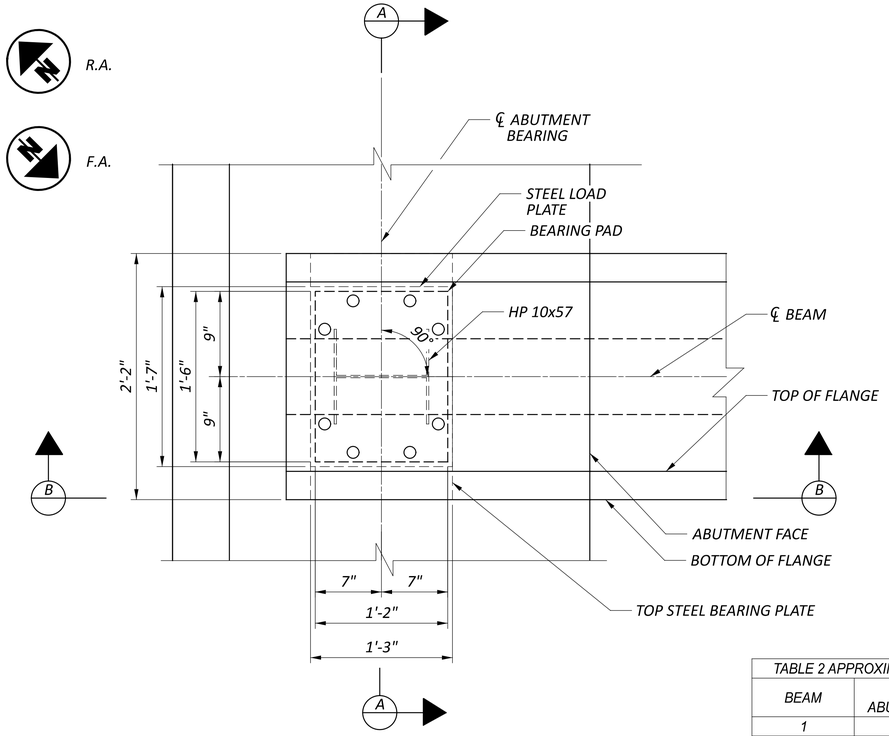

ABUTMENT BEARING PLAN

(REAR ABUTMENT SHOWN; FORWARD ABUTMENT OPPOSITE HAND)

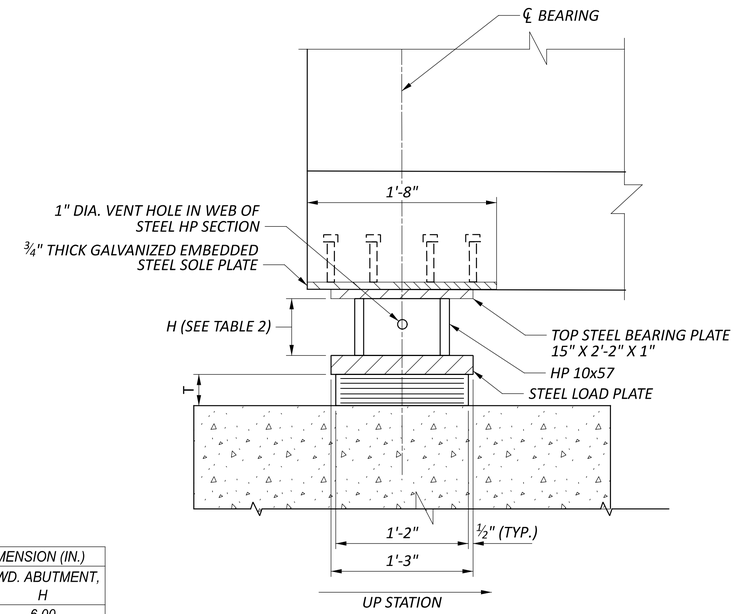

SECTION B-B

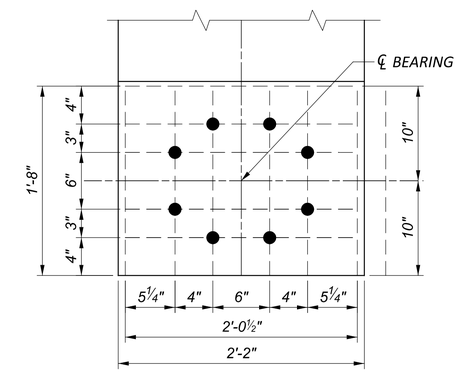

¾" THICK EMBEDDED PLATE DETAIL

TABLE 2 APPROXIMATE H-PILE DIMENSION (IN.)		
BEAM	REAR ABUTMENT, H	FWD. ABUTMENT, H
1	6.00	6.00
2	7.22	7.22
3	8.51	8.51
4	7.22	7.22
5	6.00	6.00

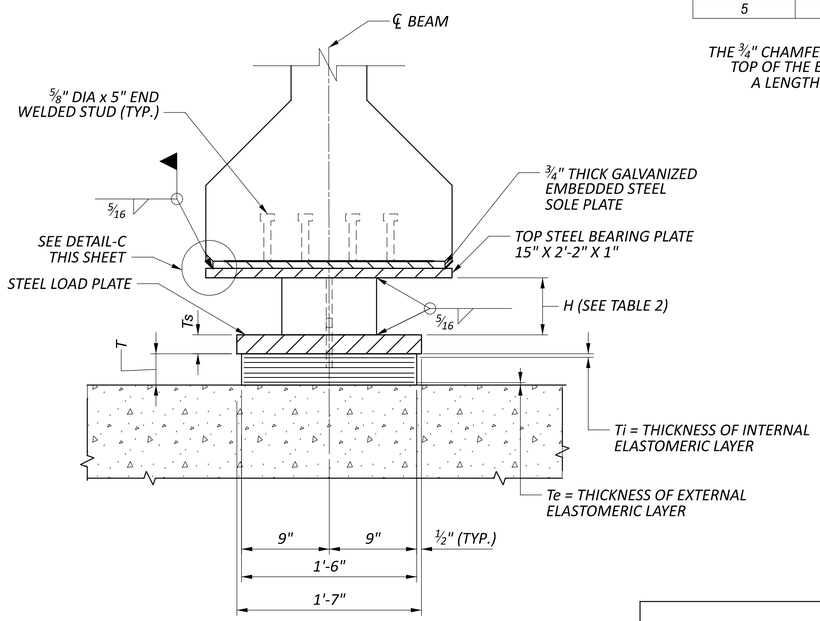

SECTION A-A

THE ¾" CHAMFER SHALL BE MOVED TO THE TOP OF THE EMBEDDED SOLE PLATE FOR A LENGTH OF 1'-8" MEASURED FROM THE END OF BEAM

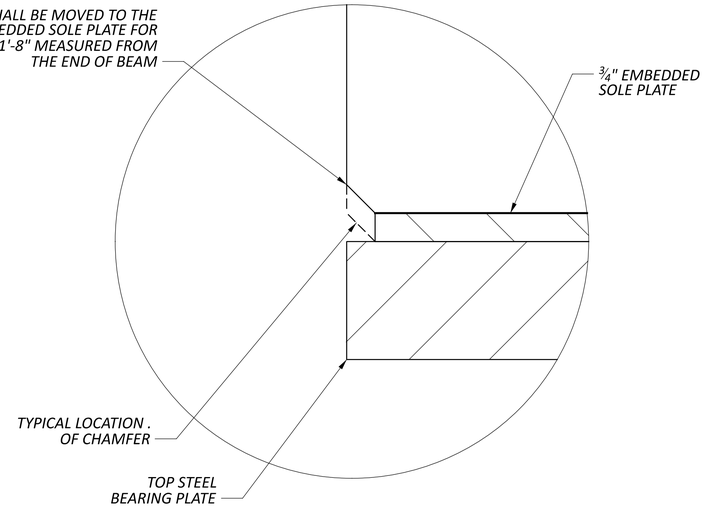

DETAIL-C

NOTES:

1. THE ELASTOMER SHALL HAVE A HARDNESS OF **50 DUROMETER**. THE BEARINGS WERE DESIGNED IN ACCORDANCE WITH DIVISION 1, SECTION 14.7.6 (METHOD A) OF THE AASHTO LRFD BRIDGE DESIGN SPECIFICATIONS. THE LONG TERM COMPRESSION PROOF LOAD TEST (AASHTO STANDARD SPECIFICATION FOR HIGHWAY BRIDGES, DIVISION II, SECTION 18.7.2.6) IS NOT REQUIRED.
2. THE STEEL LOAD PLATE, STEEL BEARING PLATE, AND HP10X42 SHALL BE ASTM A709 GRADE 50 STEEL AND SHALL BE GALVANIZED PER 711.02.
3. THE STEEL LOAD PLATE SHALL BE BONDED BY VULCANIZATION TO THE LAMINATED ELASTOMERIC BEARING DURING THE MOLDING PROCESS. CONTROL WELDING SO THAT THE PLATE TEMPERATURE DOES NOT EXCEED 300°F AS DETERMINED BY THE USE OF PYROMETRIC STICKS OR OTHER TEMPERATURE MONITORING DEVICES.
4. THE HP SHAPE, STEEL LOAD PLATE, AND STEEL BEARING PLATE ARE INCLUDED WITH ITEM 516, ELASTOMERIC BEARING WITH INTERNAL LAMINATES AND LOAD PLATE (NEOPRENE), AS PER PLAN.
5. ALL BEARINGS SHALL BE MARKED PRIOR TO SHIPPING. THE MARKS SHALL INCLUDE THE BEARING LOCATION ON THE BRIDGE, AND A DIRECTION ARROW THAT POINTS UP-STATION. ALL MARKS SHALL BE PERMANENT AND BE VISIBLE AFTER THE BEARING IS INSTALLED.
6. SEE STD. DWGS. SICD-2-14 BEAM SEAT AND PSID-1-13 FOR ADDITIONAL DETAIL NOT SHOWN.
7. TOTAL DESIGN LOAD FOR BEARINGS EQUALS THE SUM OF THE DEAD LOADS AND LIVE LOADS TABULATED IN THE BEARING TABLE. IMPACT IS NOT INCLUDED.

ELASTOMERIC BEARING DATA																
LOCATION	TYPE	NO. REQ'D.	DL (KIP)	LL W/O IMPACT (KIP)	MAX DESIGN LOAD (DL + LL)	L (IN.)	W (IN.)	Ti (IN.)	Te (IN.)	NO. OF Ti's	NO. OF INTERNAL LAMINATES	T (IN.)	STEEL LOAD PLATE			
													X (IN.)	Y (IN.)	Ts (IN.)	Tt (IN.)
R.A.	EXP.	5	155.8	91.6	247.4	14	18	0.45	0.25	6	6	3.398	15	19	2	5.398
F.A.	EXP.	5	155.8	91.6	247.4	14	18	0.45	0.25	6	6	3.398	15	19	2	5.398

BEARING DETAILS (ABUTMENTS)
BRIDGE NO. HIG-00073-21.110
SR-73 OVER OHIO BRUSH CREEK

SFN 3601750
DESIGN AGENCY
BG www.bgenggroup.com 5960 WILCOX PLACE, SUITE C DUBLIN, OHIO 43016
DESIGNER GLA | CHECKER RG
REVIEWER GTB 03/28/25
PROJECT ID 119769
SUBSET 15 | TOTAL 27
SHEET P.45 | TOTAL 64

HIG-73-21.04

MODEL: Sheet PAPERSIZE: 34x22 (in.) DATE: 1/9/2026 TIME: 8:44:11 AM USER: GBoyer
P:\Transportation\Workset-2\119769_HIG-73-21.11\400-Engineering\Structures\SFN_3601750\Sheets\119769_SFN_3601750_SB001.dgn

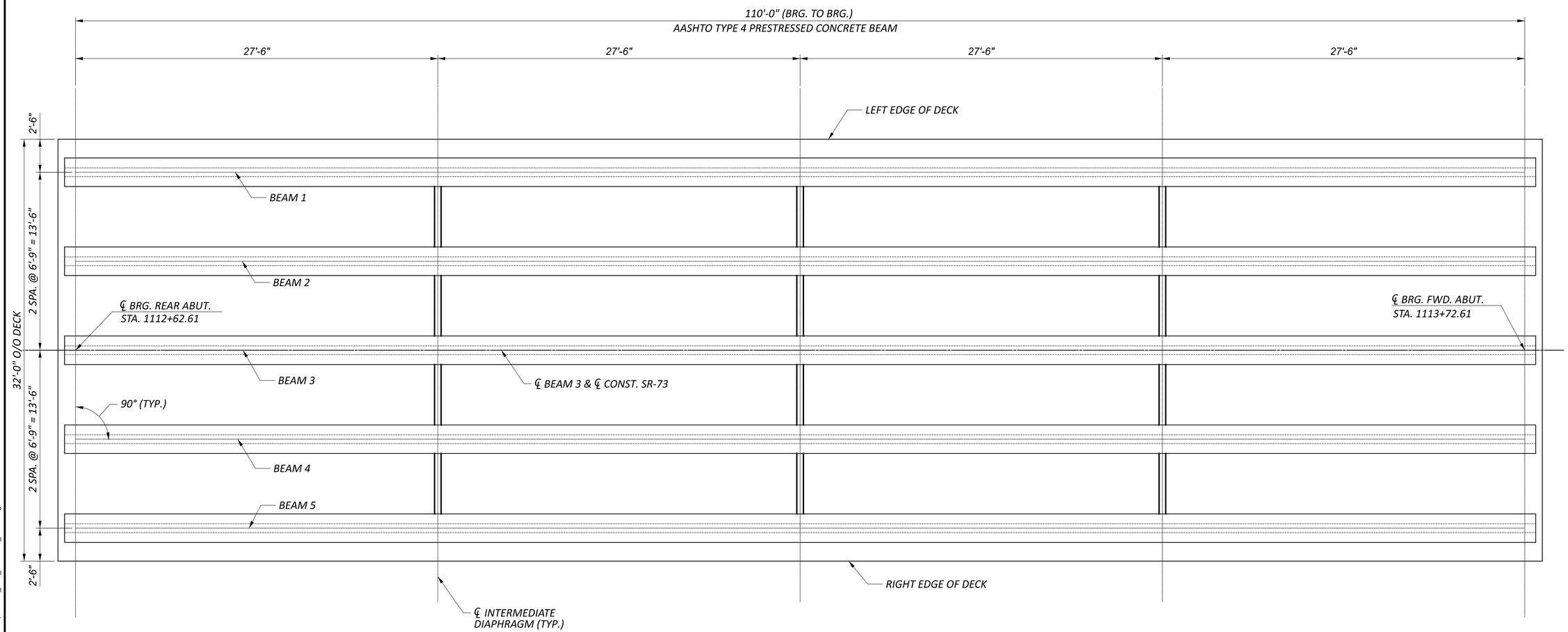

FRAMING PLAN

NOTES:

1. REFER TO STD DWG PSID-1-13 FOR ADDITIONAL DETAILS.

FRAMING PLAN
BRIDGE NO. HIG-00073-21.110
SR-73 OVER OHIO BRUSH CREEK

SFN	3601750
DESIGN AGENCY	BG www.bgenggroup.com 5960 WILCOX PLACE, SUITE C DUBLIN, OHIO 43016
DESIGNER	GLA
CHECKER	RG
REVIEWER	GTB 03/28/25
PROJECT ID	119769
SUBSET	16
TOTAL	27
SHEET	P.46
TOTAL	64

HIG-73-21.04

MODEL: Sheet PAPERSIZE: 34x22 (in.) DATE: 1/9/2026 TIME: 8:44:12 AM USER: GBoyer
P:\Transportation\Workset-2\119769_HIG-73-21.11\400-Engineering\Structures\SFN_3601750\Sheets\119769_SFN_3601750_SS001.dgn

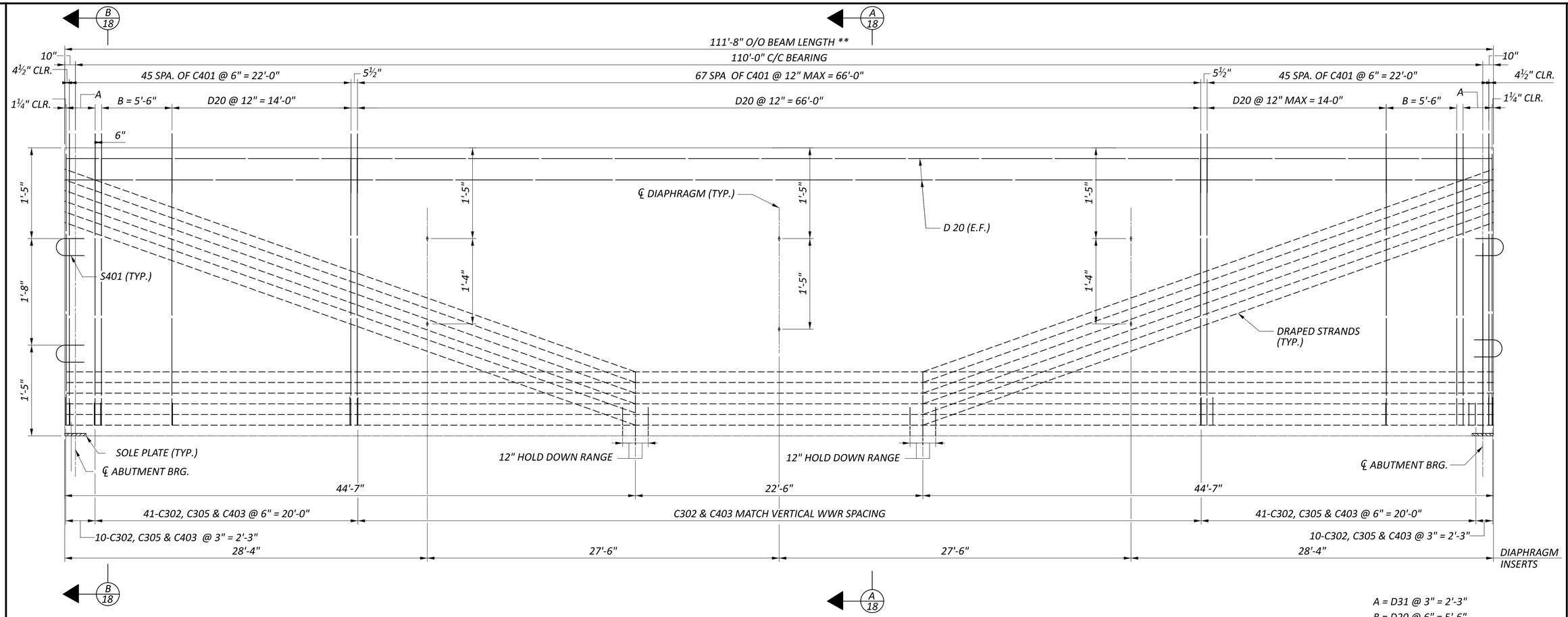

A = D31 @ 3" = 2'-3"
B = D20 @ 6" = 5'-6"

BEAM ELEVATION

NOTES:

1. FOR ADDITIONAL INFORMATION SEE PSID-1-13.
2. FOR BEAM SECTIONS, SEE SHEET 18 OF 27.

NOTE TO FABRICATOR:

1. THE DIMENSIONS MEASURED ALONG THE LENGTH OF THE BEAM, MARKED WITH A **, DO NOT CONTAIN AN ALLOWANCE FOR THE EFFECT OF THE LONGITUDINAL GRADE. INCLUDE THE PROPER ALLOWANCE FOR THESE DIMENSIONS IN THE SHOP DRAWINGS.

BEAM ELEVATION
BRIDGE NO. HIG-00073-21.110
SR-73 OVER OHIO BRUSH CREEK

SFN 3601750

DESIGN AGENCY
BG
www.bgenggroup.com
5960 WILCOX PLACE, SUITE C
DUBLIN, OHIO 43016

DESIGNER	CHECKER
GLA	RG

REVIEWER
GTB 03/28/25

PROJECT ID
119769

SUBSET	TOTAL
17	27

SHEET	TOTAL
P.47	64

HIG-73-21.04

MODEL: Sheet PAPERSIZE: 34x22 (in.) DATE: 1/9/2026 TIME: 8:44:13 AM USER: GBoyer
P:\Transportation\Workset-2\119769_HIG-73-21.11\400-Engineering\Structures\SFN_3601750\Sheets\119769_SFN_3601750_SS002.dgn

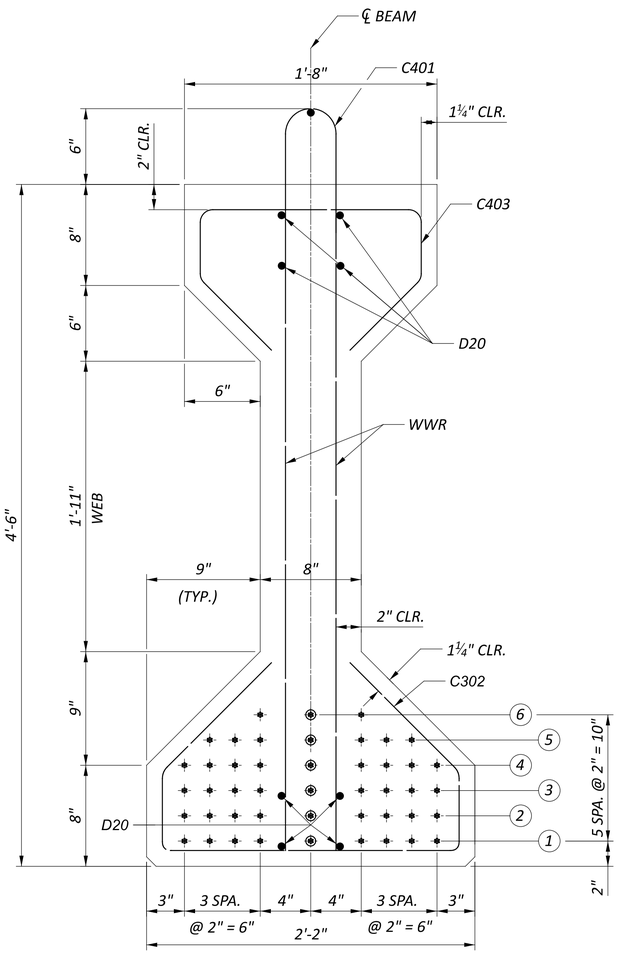

SECTION A-A

(38 STRANDS - STRAIGHT, 6 STRANDS - DRAPED)

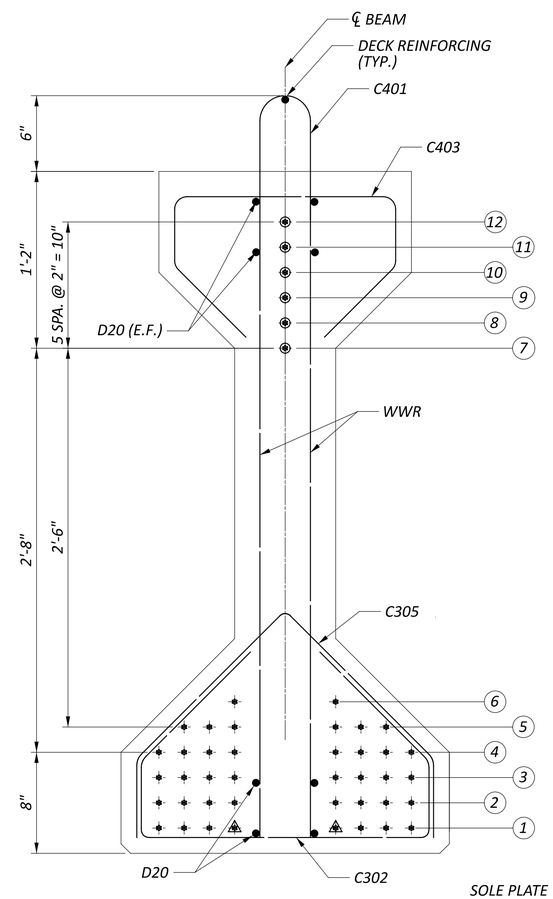

SECTION B-B

(38 STRANDS - STRAIGHT , 6 STRANDS - DRAPED)

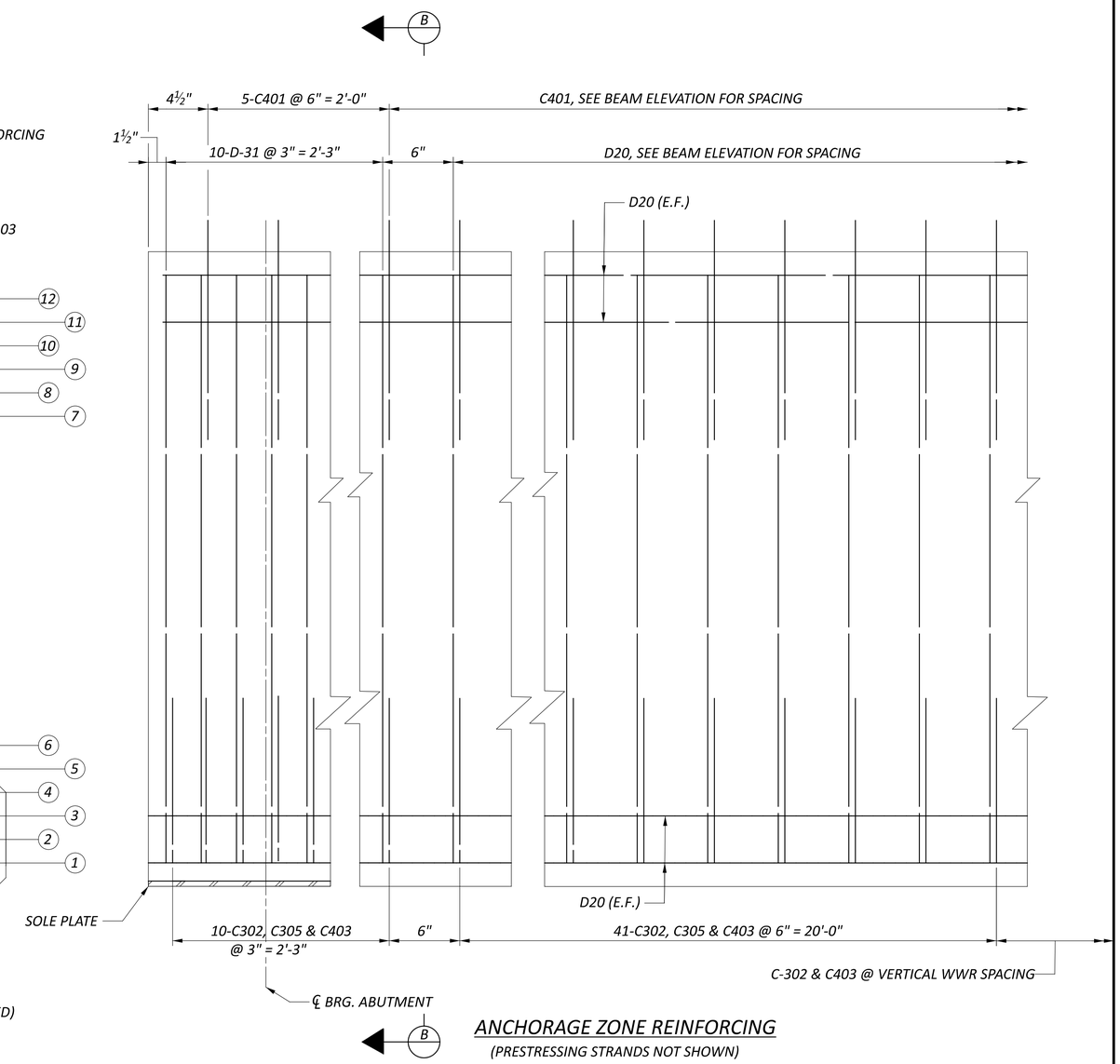

ANCHORAGE ZONE REINFORCING

(PRESTRESSING STRANDS NOT SHOWN)

NUMBER OF STRANDS PER ROW																							
BEAM NUMBER	END OF BEAM ROW NUMBER												MIDSPAN ROW NUMBER						TOTAL STRANDS	C401 BARS REQ'D	C302 BARS REQ'D	C403 BARS REQ'D	C305 BARS REQ'D	CONCRETE STRENGTHS (KSI)	
	1	2	3	4	5	6	7	8	9	10	11	12	1	2	3	4	5	6						f'ci	f'c
●	8	8	8	8	6	2	1	1	1	1	1	1	9	9	9	9	7	3	46	157	169	169	102	7.0	9.0

BEAMS 1-5

LEGEND:

- ✦ - STRAIGHT STRANDS
- ◉ - DRAPED STRANDS
- ⚠ - DEBONDED STRANDS (DEBOND 10'-0" FROM END)

NOTES:

1. FOR BEAM ELEVATION, SEE SHEET 17 OF 27 .

BEAM SECTIONS & DETAILS
BRIDGE NO. HIG-00073-21.110
SR-73 OVER OHIO BRUSH CREEK

SFN 3601750

DESIGN AGENCY
BG
www.bgenggroup.com
5960 WILCOX PLACE, SUITE C
DUBLIN, OHIO 43016

DESIGNER	CHECKER
GLA	RG

REVIEWER
GTB 03/28/25

PROJECT ID
119769

SUBSET	TOTAL
18	27

SHEET	TOTAL
P.48	64

HIG-73-21.04

MODEL: Sheet PAPERSIZE: 34x22 (in.) DATE: 1/9/2026 TIME: 8:44:13 AM USER: GBoyer
P:\Transportation\Workset-2\119769_HIG-73-21.11\400-Engineering\Structures\SFN_3601750\Sheets\119769_SFN_3601750_SS003.dgn

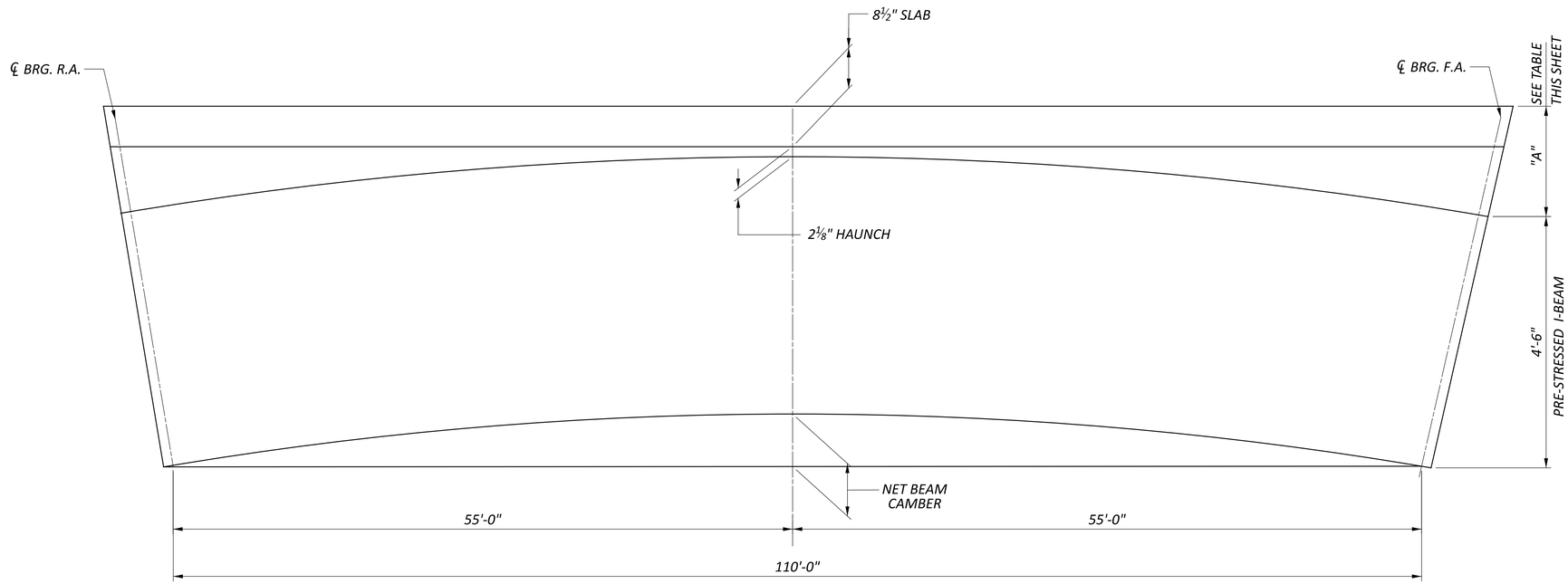

TYPICAL CAMBER AND DECK THICKNESS DIAGRAM

TOPPING THICKNESS "A" (IN)		
LOCATION	℄ BRG. R.A.	℄ BRG. F.A.
BEAM 1 & BEAM 5	14	14
BEAM 2 TO BEAM 4	14	14

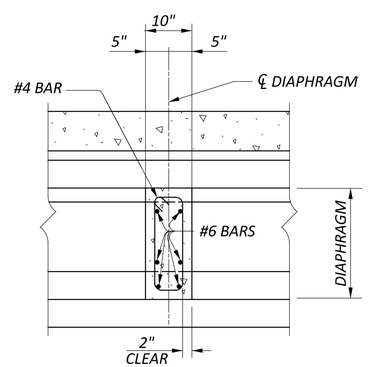

SECTION A-A

CAMBER (IN)		
LOCATION	BEAM 1 & BEAM 5	BEAM 2 TO BEAM 4
ESTIMATED CAMBER AT DAY 0 (D0)	3.155	3.155
ESTIMATED CAMBER AT DAY 30 (D30)	5.00	5.00
DEFLECTION DUE TO NON-COMPOSITE DEAD LOAD	2.036	1.955

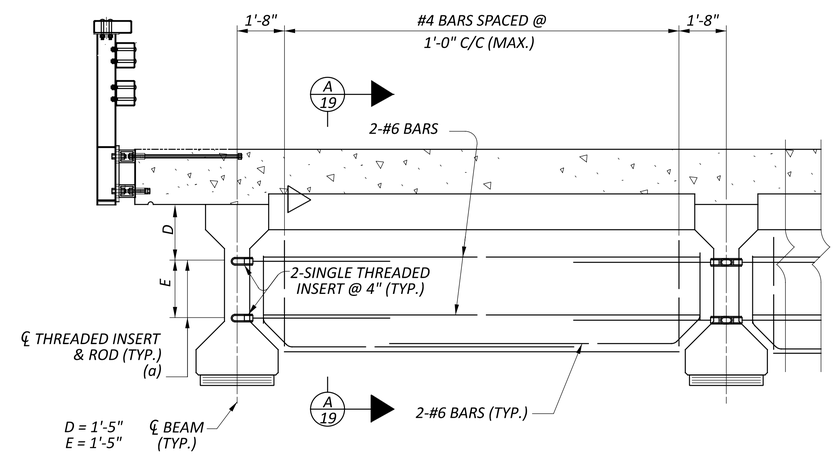

CONCRETE INTERMEDIATE DIAPHRAGM

NOTES:

1. THE BEAM SEAT ELEVATIONS ASSUME ESTIMATED CAMBER D30 WITH A SACRIFICIAL HAUNCH THICKNESS OF 2⅛ INCHES AT CENTER LINE OF BEAM.
2. DO NOT PLACE THE DECK CONCRETE UNTIL ALL INTERMEDIATE DIAPHRAGMS HAVE BEEN PROPERLY INSTALLED. IF CONCRETE DIAPHRAGM ARE USED, COMPLETE THE INSTALLATION OF THE INTERMEDIATE DIAPHRAGMS AT LEAST 48 HOURS BEFORE DECK PLACEMENT BEGINS. CONCRETE SHALL CONFORM TO C&MS 511 WITH A DESIGN STRENGTH OF 4.5 KSI.

CAMBER DIAGRAM
BRIDGE NO. HIG-00073-21.110
SR-73 OVER OHIO BRUSH CREEK

SFN 3601750
DESIGN AGENCY
BG www.bgenggroup.com 5960 WILCOX PLACE, SUITE C DUBLIN, OHIO 43016
DESIGNER GLA | CHECKER RG
REVIEWER GTB 03/28/25
PROJECT ID 119769
SUBSET 19 | TOTAL 27
SHEET P.49 | TOTAL 64

HIG-73-21.04

MODEL: Sheet PAPERSIZE: 34x22 (in.) DATE: 1/9/2026 TIME: 8:44:14 AM USER: GBoyer
P:\Transportation\Workset-2\119769_HIG-73-21.11\400-Engineering\Structures\SFN_3601750\Sheets\119769_SFN_3601750_SS004.dgn

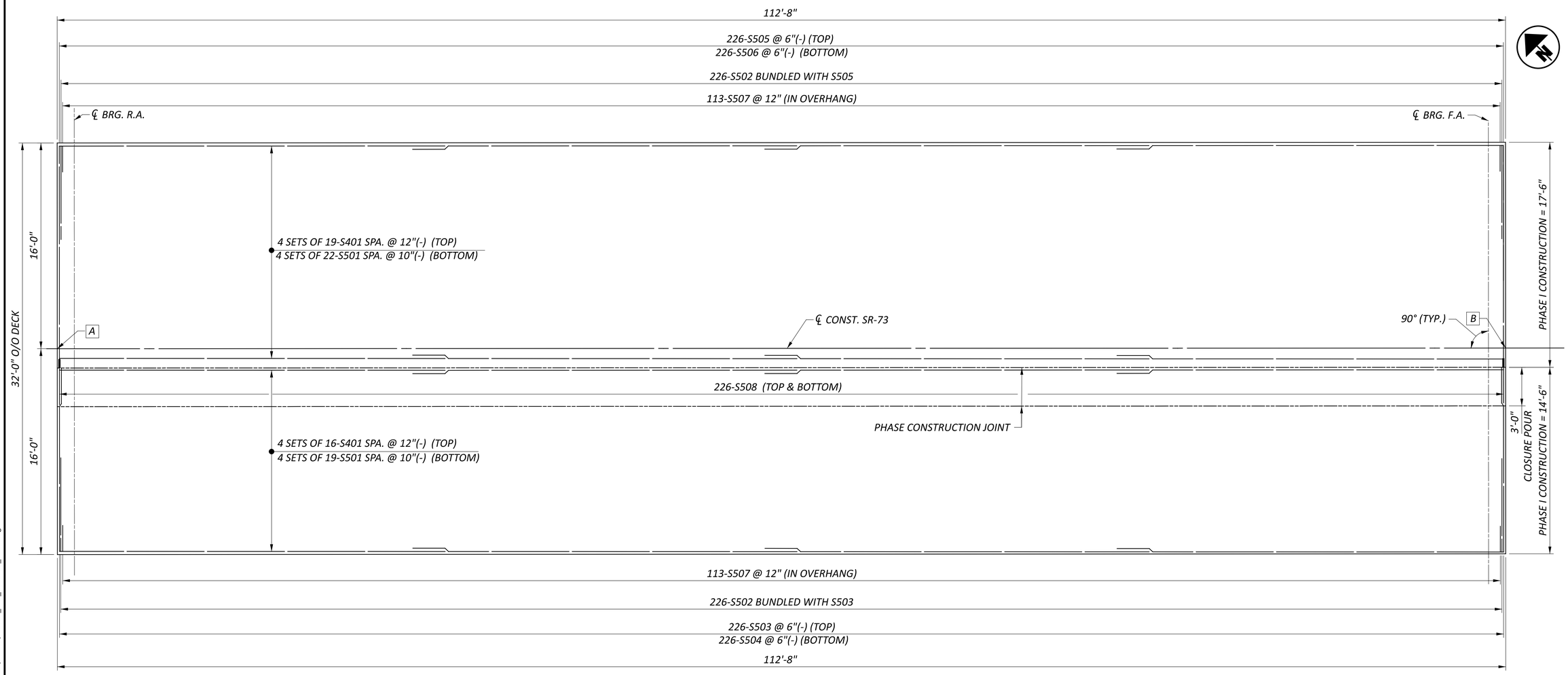

DECK PLAN

MIN. LAP LENGTH	
#4 BARS	1'-11"
#5 BARS	3'-1"

LEGEND:

A = END APPROACH SLAB STA. 1112+61.27

B = BEGIN APPROACH SLAB STA. 1113+73.94

NOTES:

1. DRIP GROOVES SHALL TERMINATE 2'-0" FROM THE ABUTMENT DIAPHRAGMS
2. PLACE THE DIAPHRAGM CONCRETE ENCASING THE STRUCTURAL MEMBER ENDS OF AN INDIVIDUAL PHASE WITH THE DECK CONCRETE OR AT LEAST 48 HOURS BEFORE PLACEMENT OF THE DECK CONCRETE. IF PLACED SEPARATELY, LOCATE A HORIZONTAL CONSTRUCTION JOINT IN THE DIAPHRAGM AS SHOWN ON PSID-1-13, SHEET 7 OF 10 AND PLACE REMAINING DIAPHRAGM CONCRETE WITH THE DECK. PLACE CLOSURE POUR CONCRETE IN THE DIAPHRAGM AND DECK CONCURRENTLY.

DECK PLAN REINFORCING
BRIDGE NO. HIG-00073-21.110
SR-73 OVER OHIO BRUSH CREEK

SFN 3601750

DESIGN AGENCY
BG
www.bgenggroup.com
6960 WILCOX PLACE, SUITE C
DUBLIN, OHIO 43016

DESIGNER	CHECKER
GLA	RG

REVIEWER
GTB 03/28/25

PROJECT ID
119769

SUBSET	TOTAL
20	27

SHEET	TOTAL
P.50	64

HIG-73-21.04

MODEL: Sheet PAPERSIZE: 34x22 (in.) DATE: 1/9/2026 TIME: 8:44:15 AM USER: GBoyer
P:\Transportation\Workset-2\119769_HIG-73-21.11\400-Engineering\Structures\SFN_3601750\Sheets\119769_SFN_3601750_SD001.dgn

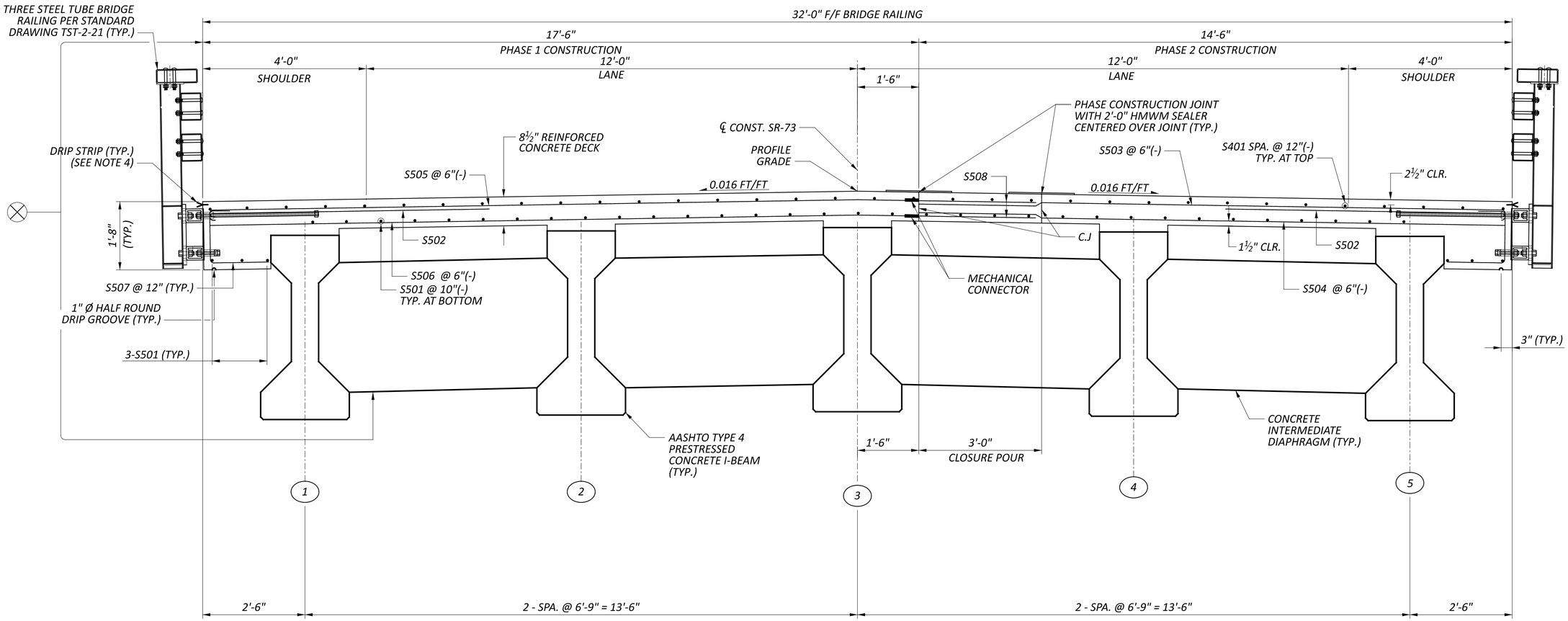

TRANSVERSE SECTION

(LOOKING UPSTATION)

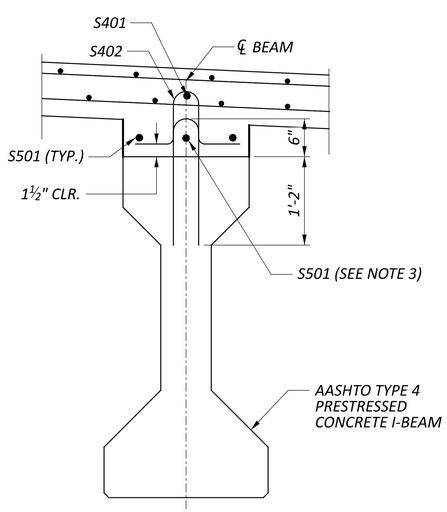

HAUNCH REINFORCING

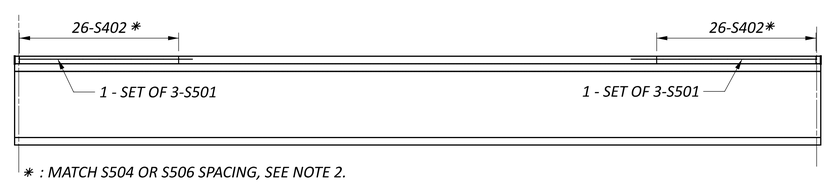

✱ : MATCH S504 OR S506 SPACING, SEE NOTE 2.

DECK HAUNCH REINFORCING

LEGEND:

(#) - PROPOSED BEAM LINE DESIGNATION

(⊗) - SEALING OF CONCRETE SURFACES (EPOXY-URETHANE)

NOTES:

1. DECK SLAB THICKNESS FOR CONCRETE QUANTITY: THE ESTIMATED QUANTITY OF DECK CONCRETE IS MEASURED ACCORDING TO C&MS 511. IN ADDITION TO THE DESIGN SLAB THICKNESS, THE QUANTITY INCLUDES A VARIABLE HAUNCH THICKNESS THAT PROVIDES AN ALLOWANCE FOR: VERTICAL GRADE ADJUSTMENT, BEAM CAMBER, AND ADDITIONAL SACRIFICIAL HAUNCH THICKNESS.
2. #4 SUPPLIMENTAL HAUNCH BAR SPACING SHALL MATCH S401 BAR, BUT LAP SPLICE WITH S401 BAR IS NOT REQUIRED. SUPPLEMENTAL BAR MAY BE TIPPED OVER FROM VERTICAL 4:1 MAX (V:H) TO ACCOMODATE PLACEMENT , TOP OF SUPPLEMENTAL BAR SHALL BE HOOKED OVER A LONGITUDINAL BAR IN THE BOTTOM MAT OF DECK.
3. LONGITUDINAL ANCHORAGE BAR. SEE NOTE (a) ON SHEET 3 OF 10 OF STD. DWG. PSID-1-13 FOR ADDITIONAL INFORMATION.
4. FOR ADDITIONAL DETAILS, SEE ODOT STD. DWG. DS-1-92.

TRANSVERSE SECTION
BRIDGE NO. HIG-00073-21.110
SR-73 OVER OHIO BRUSH CREEK

SFN	3601750
DESIGN AGENCY	BG www.bgenggroup.com 5960 WILCOX PLACE, SUITE C DUBLIN, OHIO 43016
DESIGNER	MS
CHECKER	GLA
REVIEWER	GTB 03/28/25
PROJECT ID	119769
SUBSET	21
TOTAL	27
SHEET	P.51
TOTAL	64

HIG-73-21.04

MODEL: Sheet PAPERSIZE: 34x22 (in.) DATE: 1/9/2026 TIME: 8:44:16 AM USER: GBoyer
P:\Transportation\Workset-2\119769_HIG-73-21.11\400-Engineering\Structures\SFN_3601750\Sheets\119769_SFN_3601750_ST001.dgn

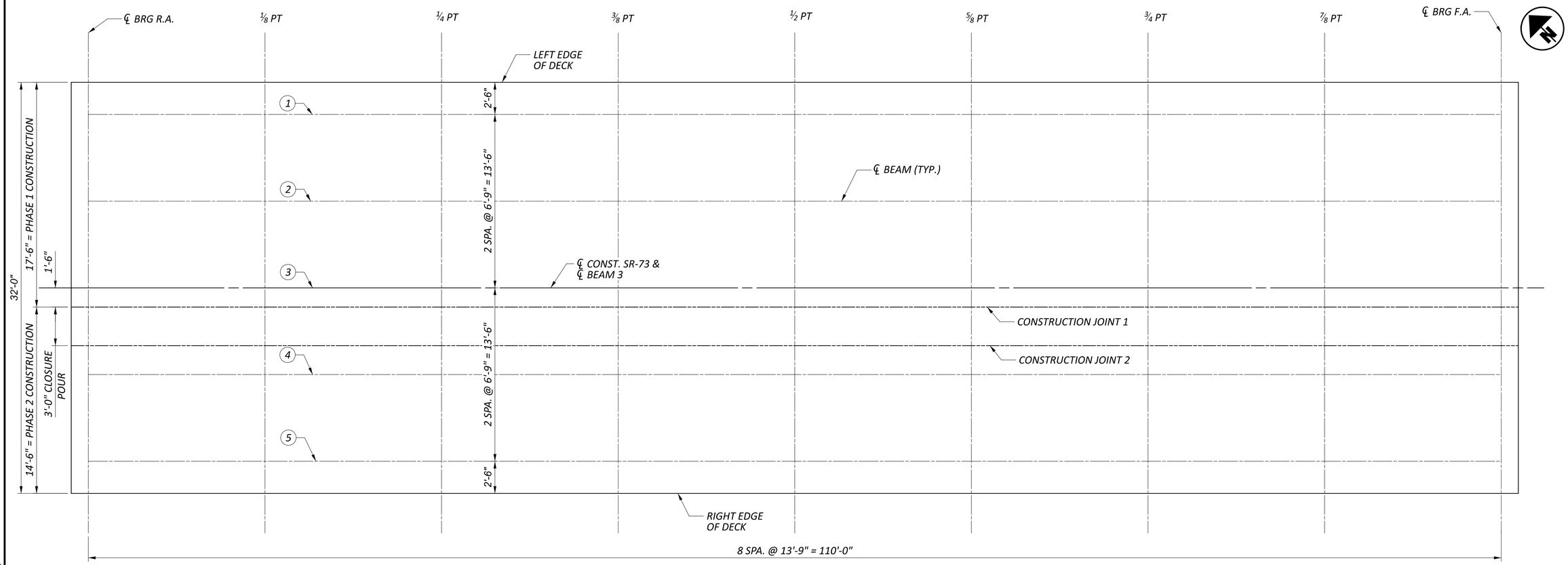

PLAN VIEW

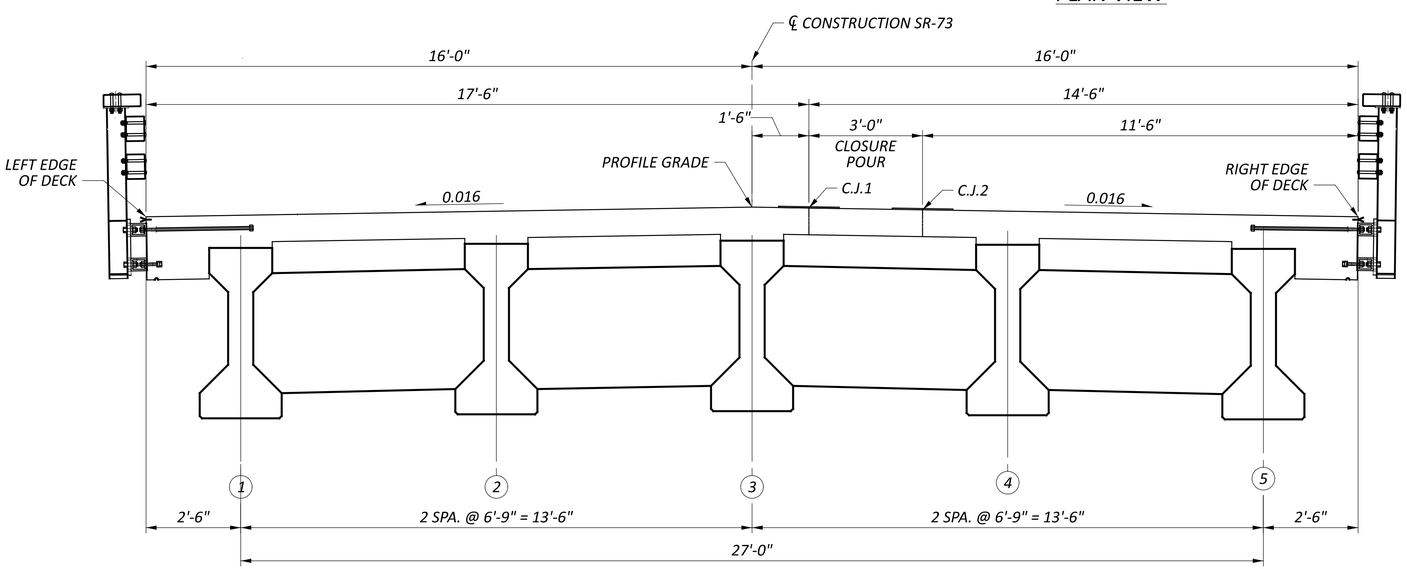

TYPICAL SECTION

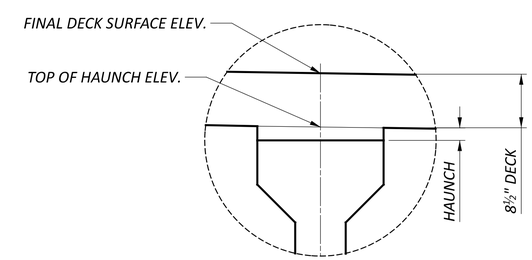

DECK HAUNCH DETAIL

LEGEND:

(#) - BEAM LINE DESIGNATION

DECK KEY PLAN
BRIDGE NO. HIG-00073-21.110
SR-73 OVER OHIO BRUSH CREEK

SFN	3601750
DESIGN AGENCY	BG www.bgenggroup.com 5960 WILCOX PLACE, SUITE C DUBLIN, OHIO 43016
DESIGNER	GLA
CHECKER	RG
REVIEWER	GTB 03/28/25
PROJECT ID	119769
SUBSET	22
TOTAL	27
SHEET	P.52
TOTAL	64

HIG-73-21.04

MODEL: Sheet PAPERSIZE: 34x22 (in.) DATE: 1/9/2026 TIME: 8:44:17 AM USER: GBoyer
P:\Transportation\Workset-2\119769_HIG-73-21.11\400-Engineering\Structures\SFN_3601750\Sheets\119769_SFN_3601750_SS005.dgn

FINISHED DECK ELEVATIONS

LOCATION		CL BRG, RA	1/8 SPAN	1/4 SPAN	3/8 SPAN	1/2 SPAN	5/2 SPAN	3/4 SPAN	7/8 SPAN	CL BRG, FA
LEFT EDGE OF DECK	STATION	1112+62.61	1112+76.36	1112+90.11	1113+03.86	1113+17.61	1113+31.36	1113+45.11	1113+58.86	1113+72.61
	FINAL DECK ELEVATION	812.52	812.79	813.09	813.39	813.70	814.00	814.30	814.61	814.91
BEAM LINE 1	STATION	1112+62.61	1112+76.36	1112+90.11	1113+03.86	1113+17.61	1113+31.36	1113+45.11	1113+58.86	1113+72.61
	FINAL DECK ELEVATION	812.56	812.83	813.13	813.43	813.74	814.04	814.34	814.65	814.95
BEAM LINE 2	STATION	1112+62.61	1112+76.36	1112+90.11	1113+03.86	1113+17.61	1113+31.36	1113+45.11	1113+58.86	1113+72.61
	FINAL DECK ELEVATION	812.67	812.94	813.24	813.54	813.85	814.15	814.45	814.76	815.06
PROFILE GRADE	STATION	1112+62.61	1112+76.36	1112+90.11	1113+03.86	1113+17.61	1113+31.36	1113+45.11	1113+58.86	1113+72.61
	FINAL DECK ELEVATION	812.78	813.05	813.35	813.65	813.95	814.26	814.56	814.86	815.17
BEAM LINE 3	STATION	1112+62.61	1112+76.36	1112+90.11	1113+03.86	1113+17.61	1113+31.36	1113+45.11	1113+58.86	1113+72.61
	FINAL DECK ELEVATION	812.78	813.05	813.35	813.65	813.95	814.26	814.56	814.86	815.17
CONSTRUCTION JOINT 1	STATION	1112+62.61	1112+76.36	1112+90.11	1113+03.86	1113+17.61	1113+31.36	1113+45.11	1113+58.86	1113+72.61
	FINAL DECK ELEVATION	812.75	813.02	813.32	813.63	813.93	814.23	814.54	814.84	815.14
CONSTRUCTION JOINT 2	STATION	1112+62.61	1112+76.36	1112+90.11	1113+03.86	1113+17.61	1113+31.36	1113+45.11	1113+58.86	1113+72.61
	FINAL DECK ELEVATION	812.70	812.98	813.27	813.58	813.88	814.18	814.49	814.79	815.10
BEAM LINE 4	STATION	1112+62.61	1112+76.36	1112+90.11	1113+03.86	1113+17.61	1113+31.36	1113+45.11	1113+58.86	1113+72.61
	FINAL DECK ELEVATION	812.67	812.94	813.24	813.54	813.85	814.15	814.45	814.76	815.06
BEAM LINE 5	STATION	1112+62.61	1112+76.36	1112+90.11	1113+03.86	1113+17.61	1113+31.36	1113+45.11	1113+58.86	1113+72.61
	FINAL DECK ELEVATION	812.56	812.83	813.13	813.43	813.74	814.04	814.34	814.65	814.95
RIGHT EDGE OF DECK	STATION	1112+62.61	1112+76.36	1112+90.11	1113+03.86	1113+17.61	1113+31.36	1113+45.11	1113+58.86	1113+72.61
	FINAL DECK ELEVATION	812.52	812.79	813.09	813.39	813.70	814.00	814.30	814.61	814.91

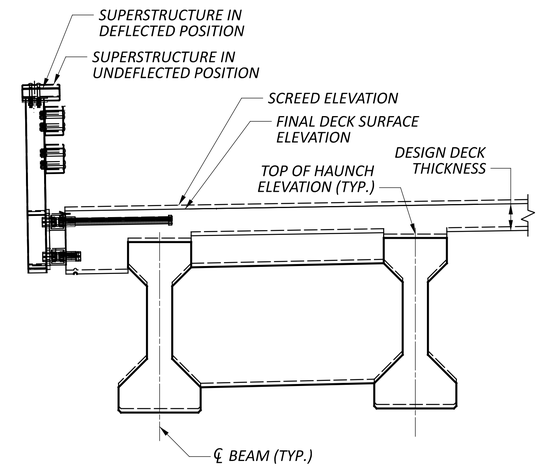

SCREED AND TOP OF HAUNCH DETAIL

SCREED ELEVATIONS

LOCATION		CL BRG, RA	1/8 SPAN	1/4 SPAN	3/8 SPAN	1/2 SPAN	5/8 SPAN	3/4 SPAN	7/8 SPAN	CL BRG, FA
LEFT EDGE OF DECK	STATION	1112+62.61	1112+76.36	1112+90.11	1113+03.86	1113+17.61	1113+31.36	1113+45.11	1113+58.86	1113+72.61
	SCREED ELEVATION	812.52	812.85	813.20	813.54	813.86	814.15	814.42	814.67	814.91
PROFILE GRADE	STATION	1112+62.61	1112+76.36	1112+90.11	1113+03.86	1113+17.61	1113+31.36	1113+45.11	1113+58.86	1113+72.61
	SCREED ELEVATION	812.78	813.11	813.46	813.80	814.12	814.41	814.67	814.93	815.17
CONSTRUCTION JOINT 1	STATION	1112+62.61	1112+76.36	1112+90.11	1113+03.86	1113+17.61	1113+31.36	1113+45.11	1113+58.86	1113+72.61
	SCREED ELEVATION	812.75	813.09	813.44	813.77	814.09	814.38	814.65	814.90	815.14
CONSTRUCTION JOINT 2	STATION	1112+62.61	1112+76.36	1112+90.11	1113+03.86	1113+17.61	1113+31.36	1113+45.11	1113+58.86	1113+72.61
	SCREED ELEVATION	812.70	813.04	813.39	813.73	814.04	814.33	814.60	814.85	815.10
RIGHT EDGE OF DECK	STATION	1112+62.61	1112+76.36	1112+90.11	1113+03.86	1113+17.61	1113+31.36	1113+45.11	1113+58.86	1113+72.61
	SCREED ELEVATION	812.52	812.85	813.20	813.54	813.86	814.15	814.42	814.67	814.91

TOP OF HAUNCH ELEVATIONS

LOCATION		CL BRG, RA	1/8 SPAN	1/4 SPAN	3/8 SPAN	1/2 SPAN	5/8 SPAN	3/4 SPAN	7/8 SPAN	CL BRG, FA
BEAM LINE 1	STATION	1112+62.61	1112+76.36	1112+90.11	1113+03.86	1113+17.61	1113+31.36	1113+45.11	1113+58.86	1113+72.61
	TOP OF HAUNCH ELEV.	811.85	812.19	812.54	812.87	813.19	813.48	813.75	814.00	814.24
BEAM LINE 2	STATION	1112+62.61	1112+76.36	1112+90.11	1113+03.86	1113+17.61	1113+31.36	1113+45.11	1113+58.86	1113+72.61
	TOP OF HAUNCH ELEV.	811.96	812.29	812.63	812.97	813.28	813.58	813.85	814.10	814.35
BEAM LINE 3	STATION	1112+62.61	1112+76.36	1112+90.11	1113+03.86	1113+17.61	1113+31.36	1113+45.11	1113+58.86	1113+72.61
	TOP OF HAUNCH ELEV.	812.07	812.40	812.74	813.08	813.39	813.68	813.96	814.21	814.46
BEAM LINE 4	STATION	1112+62.61	1112+76.36	1112+90.11	1113+03.86	1113+17.61	1113+31.36	1113+45.11	1113+58.86	1113+72.61
	TOP OF HAUNCH ELEV.	811.96	812.29	812.63	812.97	813.28	813.58	813.85	814.10	814.35
BEAM LINE 5	STATION	1112+62.61	1112+76.36	1112+90.11	1113+03.86	1113+17.61	1113+31.36	1113+45.11	1113+58.86	1113+72.61
	TOP OF HAUNCH ELEV.	811.85	812.19	812.54	812.87	813.19	813.48	813.75	814.00	814.24

NOTES:

1. FINAL DECK SURFACE ELEVATIONS SHOWN REPRESENT THE DECK SURFACE LOCATION AFTER ALL ANTICIPATED DEAD LOAD DEFLECTIONS HAVE OCCURRED.
2. SCREED ELEVATIONS SHOWN REPRESENT THE THEORETICAL DECK SURFACE LOCATION PRIOR TO DEFLECTIONS CAUSED BY DECK PLACEMENT AND OTHER ANTICIPATED DEAD LOADS.
3. TOP OF HAUNCH ELEVATIONS SHOWN REPRESENT THE THEORETICAL LOCATION OF THE BOTTOM OF THE DECK ABOVE THE BEAM HAUNCH PRIOR TO DEFLECTIONS CAUSED BY DECK PLACEMENT AND OTHER ANTICIPATED DEAD LOADS.

FINISHED DECK, SCREED, AND TOP OF HAUNCH ELEVATION
BRIDGE NO. HIG-00073-21.110
SR-73 OVER OHIO BRUSH CREEK

SFN 3601750

DESIGN AGENCY
BG
www.bgenggroup.com
5960 WILCOX PLACE, SUITE C
DUBLIN, OHIO 43016

DESIGNER	CHECKER
GLA	RG

REVIEWER GTB 03/28/25

PROJECT ID 119769

SUBSET	TOTAL
23	27

SHEET	TOTAL
P.53	64

HIG-73-21.04

MODEL: Sheet PAPERSIZE: 34x22 (in.) DATE: 1/9/2026 TIME: 8:44:17 AM USER: GBoyer
P:\Transportation\Workset-2\119769_HIG-73-21.11\400-Engineering\Structures\SFN_3601750\Sheets\119769_SFN_3601750_SS006.dgn

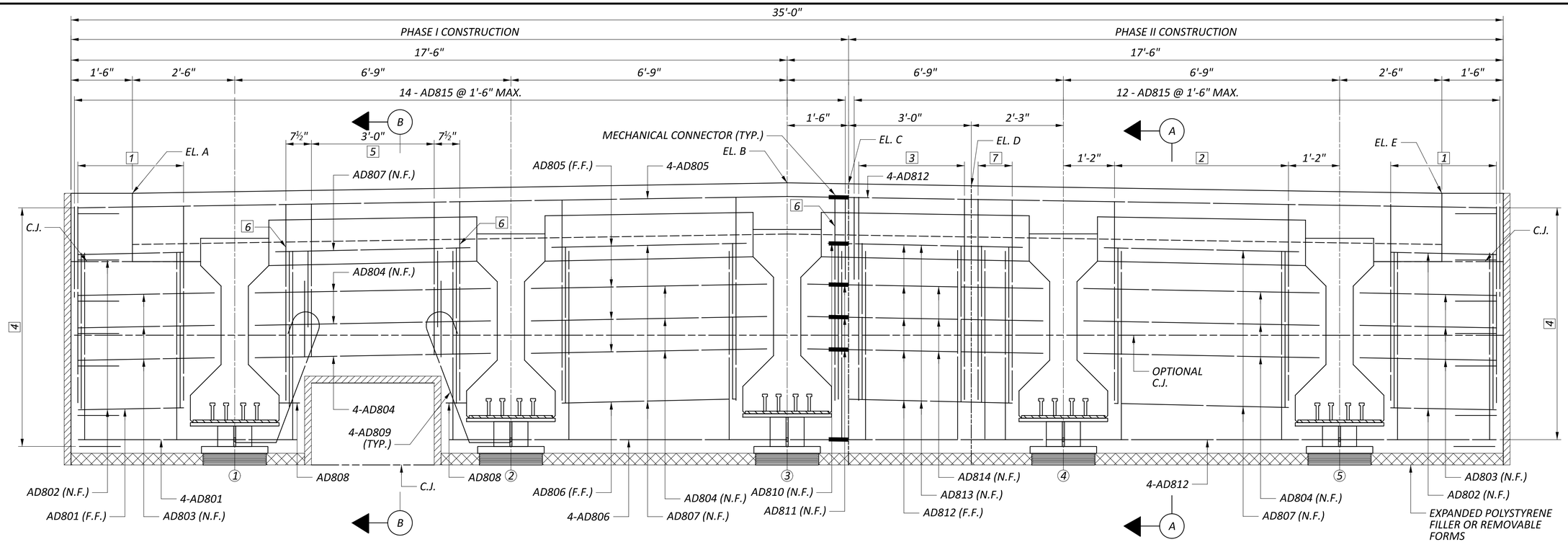

ABUTMENT DIAPHRAGM ELEVATION

FORWARD ABUTMENT DIAPHRAGM SHOWN;
REAR ABUTMENT IS SIMILAR
BUT OPPOSITE HAND

ELEVATIONS @ CL BEARING					
	A	B	C	D	E
R.A.	812.52	812.78	812.75	812.70	812.52
F.A.	814.91	815.17	815.14	815.10	814.91

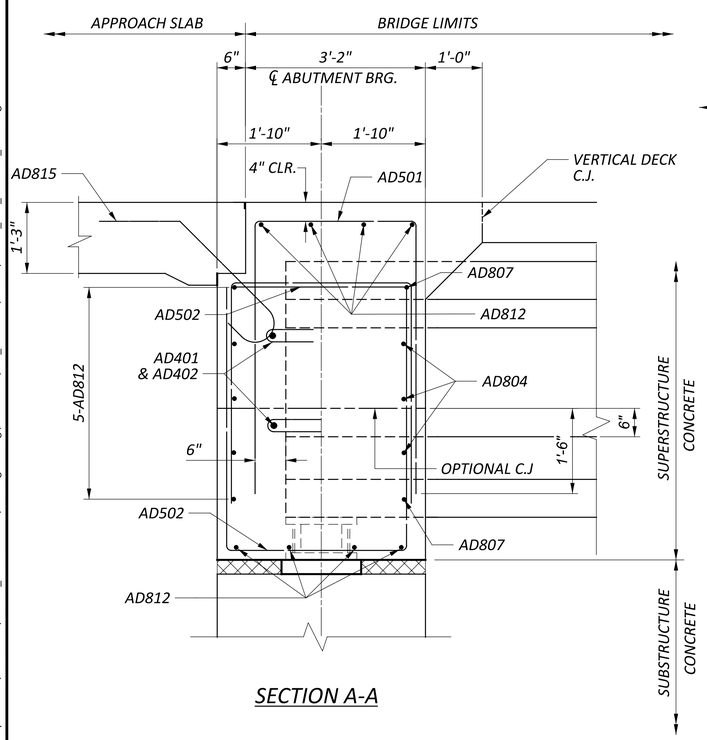

SECTION A-A

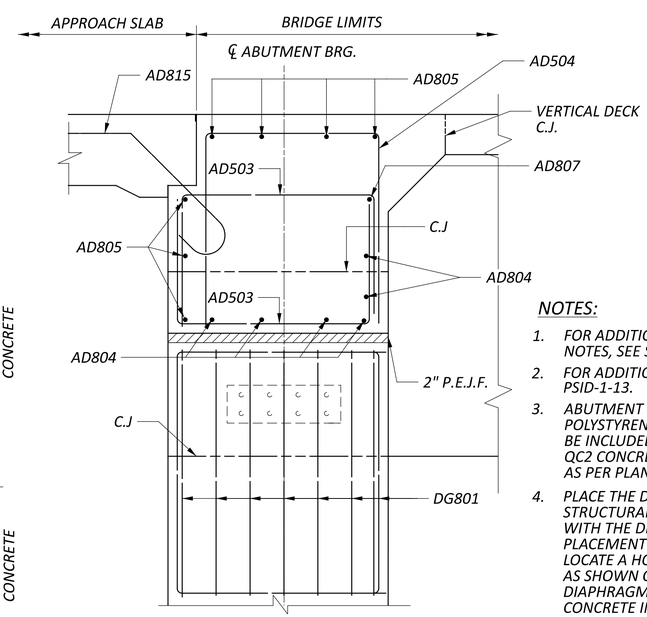

DIAPHRAGM GUIDE SECTION B-B

LEGEND:

1. 3 SETS OF 1-AD501 & 2-AD502
2. 6 SETS OF 1-AD501 & 2-AD502
3. 3 SETS OF 1-AD501 & 2-AD502
4. AD403 BAR LAPPED WITH AD801, AD802, AD803, AD805, AD812
5. 4 SETS OF 1-AD504 & 2-AD503
6. 1 SET OF 1-AD501 & 2-AD502
7. 2 SET OF 1-AD501 & 2-AD502

(#) BEAM LINE DESIGNATION

NOTES:

1. FOR ADDITIONAL DIAPHRAGM GUIDE DETAILS AND NOTES, SEE STANDARD DRAWING SICD-2-14.
2. FOR ADDITIONAL DETAILS, REFER TO STD. DWG. PSID-1-13.
3. ABUTMENT DIAPHRAGM CONCRETE AND EXPANDED POLYSTYRENE FILLER OR REMOVAL FORMS SHALL BE INCLUDED FOR PAYMENT WITH ITEM 511 CLASS QC2 CONCRETE WITH QC/QA, SUPERSTRUCTURE, AS PER PLAN.
4. PLACE THE DIAPHRAGM CONCRETE ENCASING THE STRUCTURAL MEMBER ENDS OF AN INDIVIDUAL PHASE WITH THE DECK CONCRETE OR AT LEAST 48 HOURS BEFORE PLACEMENT OF THE DECK CONCRETE. IF PLACED SEPARATELY, LOCATE A HORIZONTAL CONSTRUCTION JOINT IN THE DIAPHRAGM AS SHOWN ON PSID-1-13, SHEET 7 OF 10 AND PLACE REMAINING DIAPHRAGM CONCRETE WITH THE DECK. PLACE CLOSURE POUR CONCRETE IN THE DIAPHRAGM AND DECK CONCURRENTLY.
5. FOR CONCRETE INTERMEDIATE DIAPHRAGM DETAIL, SEE SHEET 22 OF 27.

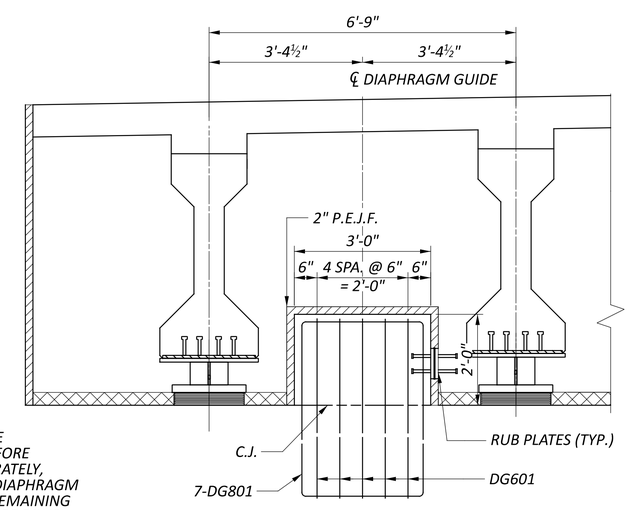

ABUTMENT DIAPHRAGM GUIDE

SEMI-INTEGRAL ABUTMENT DIAPHRAGM
BRIDGE NO. HIG-00073-21.110
SR-73 OVER OHIO BRUSH CREEK

SFN	3601750
DESIGN AGENCY	BG www.bgenggroup.com 5960 WILCOX PLACE, SUITE C DUBLIN, OHIO 43016
DESIGNER	MS
CHECKER	GLA
REVIEWER	GTB 03/28/25
PROJECT ID	119769
SUBSET	24
TOTAL	27
SHEET	P.54
TOTAL	64

HIG-73-21.04

MODEL: Sheet PAPERSIZE: 34x22 (in.) DATE: 1/9/2026 TIME: 8:44:19 AM USER: GBoyer
P:\Transportation\Workset-2\119769_HIG-73-21.11\400-Engineering\Structures\SFN_3601750\Sheets\119769_SFN_3601750_SS007.dgn

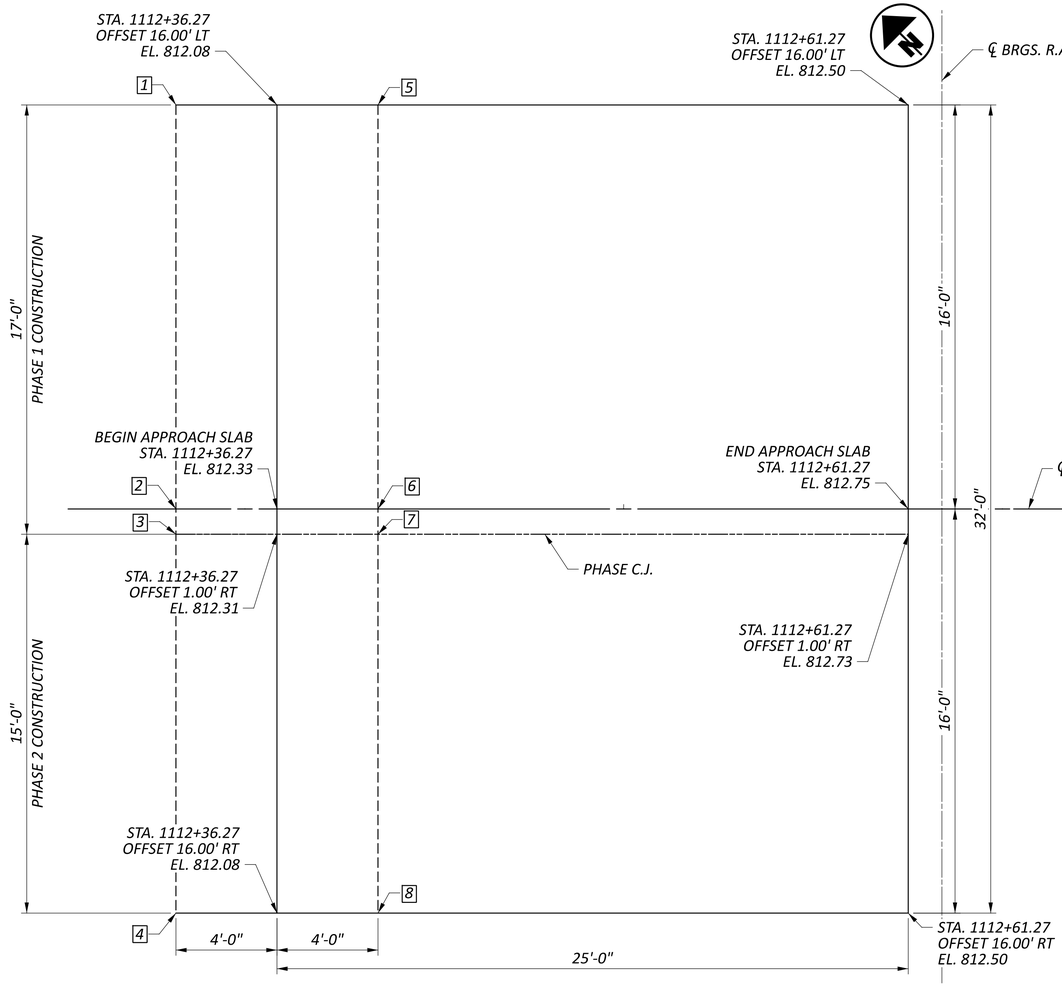

REAR APPROACH SLAB

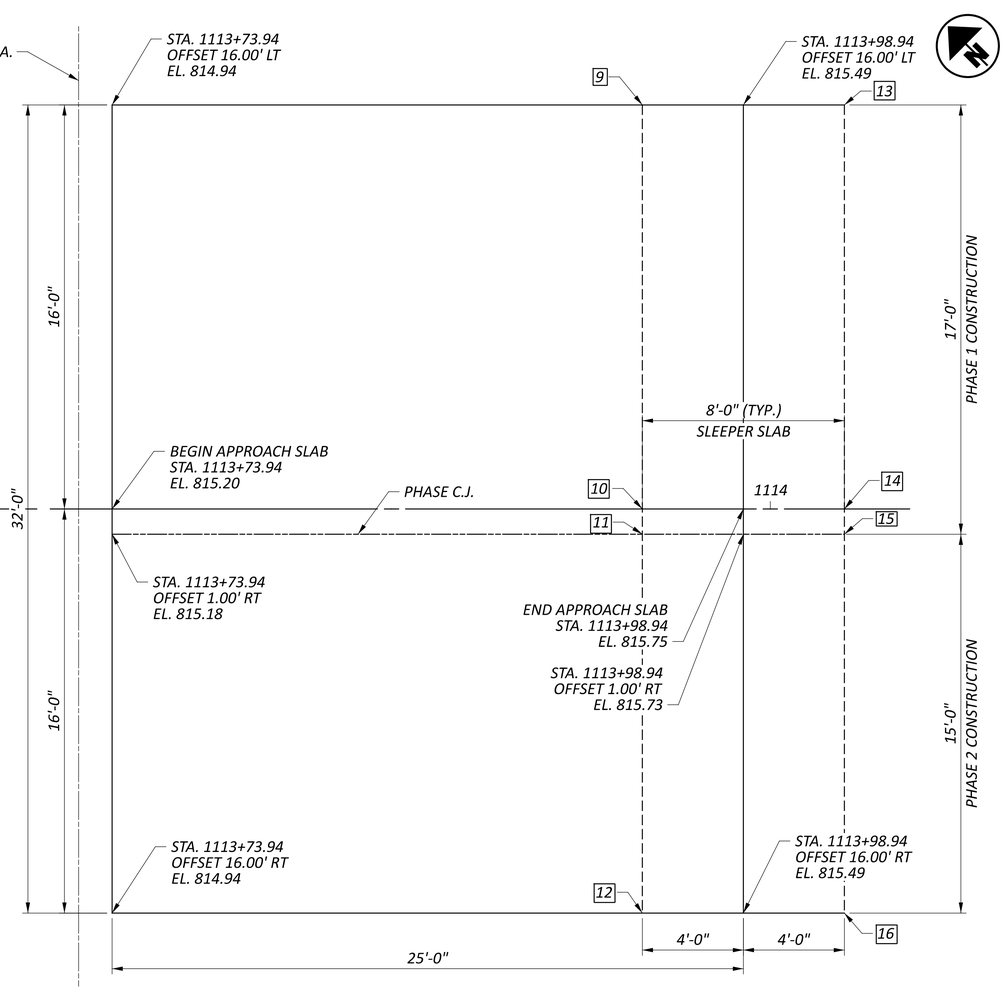

FORWARD APPROACH SLAB

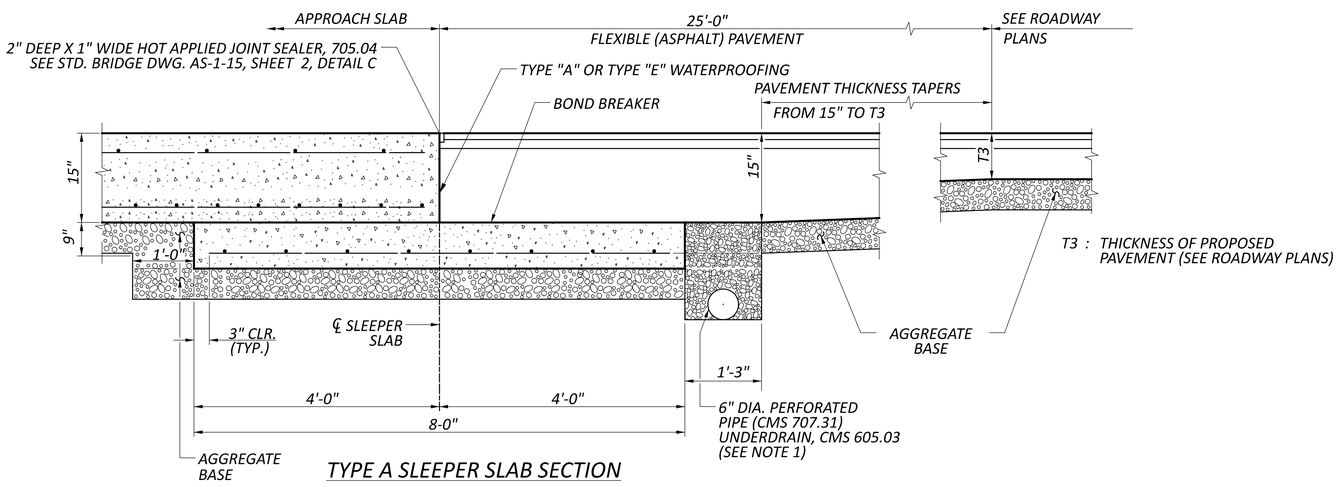

TYPE A SLEEPER SLAB SECTION

SLEEPER SLAB SURFACE ELEVATION							
REAR APPROACH SLAB				FORWARD APPROACH SLAB			
POINT	STATION	OFFSET (FT.)	ELEVATION	POINT	STATION	OFFSET (FT.)	ELEVATION
1	1112+32.27	16.00' LT.	810.77	9	1113+94.94	16.00' LT.	814.15
2	1112+32.27	0.00'	811.02	10	1113+94.94	0.00'	814.41
3	1112+32.27	1.00' RT.	811.01	11	1113+94.94	1.00' RT.	814.39
4	1112+32.27	16.00' RT.	810.77	12	1113+94.94	16.00' RT	814.15
5	1112+40.27	16.00' LT.	810.89	13	1114+02.94	16.00' LT.	814.33
6	1112+40.27	0.00'	811.14	14	1114+02.94	0.00'	814.59
7	1112+40.27	1.00' RT.	811.13	15	1114+02.94	1.00' RT.	814.57
8	1112+40.27	16.00' RT.	810.89	16	1114+02.94	16.00' RT.	814.33

APPROACH SLAB DETAILS
BRIDGE NO. HIG-00073-21.110
SR-73 OVER OHIO BRUSH CREEK

SFN 3601750

DESIGN AGENCY
BG
www.bgenggroup.com
5960 WILCOX PLACE, SUITE C
DUBLIN, OHIO 43016

DESIGNER	CHECKER
CAW	MS

REVIEWER GTB 03/28/25

PROJECT ID 119769

SUBSET	TOTAL
25	27

SHEET	TOTAL
P.55	64

HIG-73-21.04

MODEL: Sheet_SurvFt PAPERSIZE: 34x22 (in.) DATE: 1/9/2026 TIME: 8:44:20 AM USER: GBoyer
P:\Transportation\Workset-2\119769_HIG-73-21.111\400-Engineering\Structures\SFN_3601750\Sheets\119769_SFN_3601750_SM001.dgn

MARK	MAT'RL TYPE	NUMBER			LENGTH	WEIGHT	TYPE	DIMENSIONS						
		REAR	FWD.	TOTAL				A	B	C	D	E	R	INC
REAR ABUTMENT (60 KSI, EPOXY COATED)														
AR501	ECSR	49		49	14'-6"	741	3	4'-4"	2'-7"					
AR502	ECSR	4		4	36'-5"	152	STR							
AR503	ECSR	4		4	30'-4"	127	STR							
AR504	ECSR	12		12	21'-11"	274	STR							
AR505	ECSR	12		12	15'-10"	198	STR							
AR506	ECSR	28		28	17'-5"	509	STR							
AR507	ECSR	4 SER. OF 6		4 SER. OF 6	3'-9" TO 14'-0"	222	STR							2'-0 5/8"
AR508	ECSR	4		4	15'-4"	64	19	1'-2"	12'-10"	6'-1"				
AR509	ECSR	2 SER. OF 7		2 SER. OF 7	7'-1" TO 12'-9"	145	2	3'-1" TO 5'-11"	1'-2"	3'-1" TO 5'-11"				Incr A = 5 5/8" Incr C = 5 5/8"
AR510	ECSR	44		44	9'-7"	440	2	3'-3"	3'-4"	3'-3"				
AR511	ECSR	6		6	13'-9"	86	2	6'-5"	1'-2"	6'-5"				
AR601	ECSR	44		44	19'-2"	1,267	2	8'-1"	3'-4"	8'-1"				
AR602	ECSR	20		20	23'-8"	711	2	11'-5"	1'-2"	11'-5"				
AR603	ECSR	2 SER. OF 6		2 SER. OF 6	20'-4" TO 25'-2"	410	3	8'-7" TO 11'-0"	1'-2"					5 3/4"
AR801 *	ECSR	4		4	33'-4"	356	STR							
AR802	ECSR	4		4	30'-4"	324	STR							
AR803 *	ECSR	9		9	5'-5"	130	STR							
AR804 *	ECSR	5		5	18'-10"	251	STR							
AR805	ECSR	5		5	15'-10"	211	STR							
					SUBTOTAL	6,618								

MARK	MAT'RL TYPE	NUMBER			LENGTH	WEIGHT	TYPE	DIMENSIONS						
		REAR	FWD.	TOTAL				A	B	C	D	E	R	INC
FORWARD ABUTMENT (60 KSI, EPOXY COATED)														
AF501	ECSR		55	55	14'-6"	832	3	4'-4"	2'-7"					
AF502	ECSR		4	4	36'-5"	152	STR							
AF503	ECSR		4	4	30'-4"	127	STR							
AF504	ECSR		12	12	15'-10"	198	STR							
AF505	ECSR		12	12	21'-11"	274	STR							
AF506	ECSR		28	28	17'-5"	509	STR							
AF507	ECSR		4 SER. OF 6	4 SER. OF 6	3'-9" TO 14'-0"	222	STR							2'-0 5/8"
AF508	ECSR		4	4	15'-4"	64	19	1'-2"	12'-10"	6'-1"				
AF509	ECSR		2 SER. OF 7	2 SER. OF 7	7'-1" TO 12'-9"	145	2	3'-1" TO 5'-11"	1'-2"	3'-1" TO 5'-11"				Incr A = 5 5/8" Incr C = 5 5/8"
AF510	ECSR		44	44	9'-7"	440	2	3'-3"	3'-4"	3'-3"				
AF511	ECSR		6	6	13'-9"	86	2	6'-5"	1'-2"	6'-5"				
AF601	ECSR		44	44	20'-2"	1,333	2	8'-7"	3'-4"	8'-7"				
AF602	ECSR		20	20	24'-10"	746	2	12'-0"	1'-2"	12'-0"				
AF603	ECSR		2 SER. OF 6	2 SER. OF 6	21'-4" TO 26'-2"	428	3	9'-1" TO 11'-6"	1'-2"					5 3/4"
AF801 *	ECSR		4	4	33'-4"	356	STR							
AF802	ECSR		4	4	30'-4"	324	STR							
AF803 *	ECSR		9	9	5'-5"	130	STR							
AF804 *	ECSR		5	5	18'-10"	251	STR							
AF805	ECSR		5	5	15'-10"	211	STR							
					SUBTOTAL	6,828								

MARK	MAT'RL TYPE	NUMBER			LENGTH	WEIGHT	TYPE	DIMENSIONS						
		REAR	FWD.	TOTAL				A	B	C	D	E	R	INC
DRILLED SHAFT (60 KSI, EPOXY COATED)														
DS501	ECSR	7		7	175'-11"	1,284	27	5"	2'-0"	10'-8"				
DS502	ECSR		7	7	166'-1"	1,213	27	5"	2'-0"	10'-0"				
DS901	ECSR	77		77	14'-5"	3,774	16	13'-2"						
DS902	ECSR		77	77	13'-9"	3,600	16	12'-6"						
					SUBTOTAL	9,871	** FOR INFORMATIONAL PURPOSES ONLY							

LEGEND:

** = BAR WITH MECHANICAL CONNECTOR*

REINFORCING STEEL LIST (1 OF 2)
BRIDGE NO. HIG-00073-21.110
SR-73 OVER OHIO BRUSH CREEK

SFN 3601750

DESIGN AGENCY
BG
www.bgenggroup.com
5960 WILCOX PLACE, SUITE C
DUBLIN, OHIO 43016

DESIGNER GLA | CHECKER RG
REVIEWER GTB 03/28/25
PROJECT ID 119769
SUBSET 26 | TOTAL 27
SHEET P.56 | TOTAL 64

HIG-73-21.04

MODEL: Sheet PAPERSIZE: 34x22 (in.) DATE: 1/9/2026 TIME: 8:44:21 AM USER: GBoyer
P:\Transportation\Workset-2\119769_HIG-73-21.11\400-Engineering\Structures\SFN_3601750\Sheets\119769_SFN_3601750_SL001.dgn

MARK	MAT'RL TYPE	NUMBER REAR	NUMBER FWD.	NUMBER TOTAL	LENGTH	WEIGHT	TYPE	DIMENSIONS A	B	C	D	E	R	INC
ABUTMENT DIAPHRAGM (60 KSI, EPOXY COATED)														
AD401	ECSR	10	10	20	4'-0"	53	24	5"	1'-8"				1 3/4"	
AD402	ECSR	10	10	20	4'-0"	53	STR							
AD403	ECSR	14	14	28	5'-2"	97	2	1'-0"	3'-4"	1'-0"				
AD501	ECSR	26	26	52	12'-3"	664	2	4'-10"	2'-10"	4'-10"				
AD502	ECSR	52	52	104	11'-7"	1,256	2	4'-3"	3'-4"	4'-3"				
AD503	ECSR	8	8	16	8'-3"	138	2	2'-7"	3'-4"	2'-7"				
AD504	ECSR	4	4	8	9'-3"	77	2	3'-4"	2'-10"	3'-4"				
AD801	ECSR	4	4	8	5'-4"	114	STR							
AD802	ECSR	4	4	8	2'-7"	55	STR							
AD803	ECSR	6	6	12	3'-4"	107	STR							
AD804	ECSR	12	12	24	5'-9"	368	STR							
AD805 *	ECSR	8	8	16	18'-10"	805	STR							
AD806	ECSR	5	5	10	9'-9"	260	STR							
AD807	ECSR	5	5	10	4'-6"	120	STR							
AD808	ECSR	2	2	4	6"	5	STR							
AD809	ECSR	8	8	16	5'-2"	221	18	3'-5"	5"	11"				
AD810 *	ECSR	2	2	4	6"	5	STR							
AD811 *	ECSR	3	3	6	1'-0"	16	STR							
AD812 *	ECSR	13	13	26	15'-10"	1,099	STR							
AD813 *	ECSR	2	2	4	4'-0"	43	STR							
AD814 *	ECSR	3	3	6	4'-9"	76	STR							
AD815	ECSR	26	26	52	4'-9"	659	18	2'-7"	1'-0"	1'-0"				
					SUBTOTAL	6,291								

MARK	MAT'RL TYPE	NUMBER REAR	NUMBER FWD.	NUMBER TOTAL	LENGTH	WEIGHT	TYPE	DIMENSIONS A	B	C	D	E	R	INC
SUPERSTRUCTURE (60 KSI, EPOXY COATED)														
S401	ECSR			160	29'-7"	3,162	STR							
S402	ECSR			260	1'-11"	333	38	5"	7"				2"	
S501	ECSR			194	30'-5"	6,155	STR							
S502	ECSR			452	7'-5"	3,496	16	6'-10"						
S503	ECSR			226	14'-10"	3,496	16	14'-3"						
S504	ECSR			226	14'-3"	3,359	STR							
S505 *	ECSR			226	17'-11"	4,223	16	17'-4"						
S506 *	ECSR			226	17'-4"	4,086	STR							
S507	ECSR			226	5'-7"	1,316	2	1'-5"	1'-4"	3'-1"				
S508 *	ECSR			452	3'-2"	1,493	STR							
					SUBTOTAL	31,119								

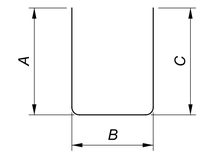

TYPE-2

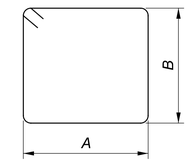

TYPE-3

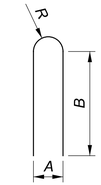

TYPE-24

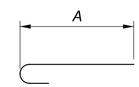

TYPE-16

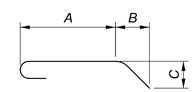

TYPE-18

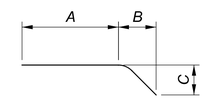

TYPE-19

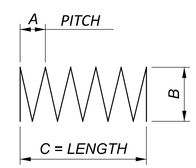

TYPE-27

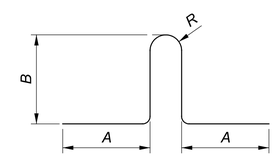

TYPE 38

NOTES:

1. FOR GENERAL NOTES, SEE SHEET 3/27 .

2. THE LETTER PREFIX INDICATES BAR LOCATION. THE BAR SIZE NUMBER IS SPECIFIED ON THE PLANS IN THE BAR MARK COLUMN. THE FIRST DIGIT WHERE THREE DIGITS ARE USED, AND THE TWO DIGITS WHEN FOUR DIGITS ARE USED INDICATES BAR SIZE NUMBER. ALL REINFORCING IS ASSUMED EPOXY COATED UNLESS OTHERWISE INDICATED BY A LETTER SUFFIX. IF A LETTER SUFFIX IS PROVIDED, IT INDICATES BAR OR BAR COATING TYPE. EXAMPLE: S601B

   S: THE LOCATION OF THE BARS IN THE STRUCTURE (SUPERSTRUCTURE)
   6: BAR SIZE DIMENSION NO. 6
   01: SEQUENCE NUMBER
   B: BLACK STEEL

   THE FOLLOWING IS A LIST OF BAR LOCATION PREFIXES:
   S: SUPERSTRUCTURE
   AD: ABUTMENT DIAPHRAGM
   AR: REAR ABUTMENT
   AF: FORWARD ABUTMENT
   DG: DIAPHRAGM GUIDE
   DS: DRILLED SHAFT

   THE FOLLOWING IS A LIST OF BAR LOCATION SUFFIXES:
   ECSR: EPOXY COATED STEEL REINFORCEMENT

3. BAR DIMENSIONS ARE SHOWN OUT-TO-OUT UNLESS OTHERWISE NOTED. "STD." WRITTEN IN PLACE OF A DIMENSION INDICATES A STANDARD BAR BEND AT THE END OF THE BAR. STRAIGHT BARS ARE INDICATED BY "STR."

4. BAR MATERIAL:

   "STL" = GRADE 60 STEEL

LEGEND:

* = BAR WITH MECHANICAL CONNECTOR

REINFORCING STEEL LIST (2 OF 2)
BRIDGE NO. HIG-00073-21.110
SR-73 OVER OHIO BRUSH CREEK

SFN 3601750

DESIGN AGENCY
BG
www.bgenggroup.com
5960 WILCOX PLACE, SUITE C
DUBLIN, OHIO 43016

DESIGNER	CHECKER
GLA	RG

REVIEWER
GTB 03/28/25

PROJECT ID 119769

SUBSET	TOTAL
27	27

SHEET	TOTAL
P.57	64

HIG-73-21.04

MODEL: Sheet PAPERSIZE: 34x22 (in.) DATE: 1/9/2026 TIME: 8:44:22 AM USER: GBoyer
P:\Transportation\Workset-2\119769_HIG-73-21.11\400-Engineering\Structures\SFN_3601750\Sheets\119769_SFN_3601750_SL002.dgn

PROJECT DESCRIPTION

THE PROJECT INVOLVES THE REPLACEMENT OF THE EXISTING STATE ROUTE 73 (HIG-73-21.11) BRIDGE OVER THE OHIO BRUSH CREEK IN JACKSON TOWNSHIP, HIGHLAND COUNTY, OHIO. IT IS UNDERSTOOD THAT THE EXISTING THREE-SPAN, CONTINUOUS CONCRETE SLAB BRIDGE (STRUCTURE FILE NUMBER 3601749) WILL BE REPLACED WITH A SINGLE-SPAN, PRESTRESSED CONCRETE I-BEAM BRIDGE, WITH COMPOSITE REINFORCED CONCRETE DECK ON SEMI-INTEGRAL ABUTMENTS ON DRILLED SHAFTS.

HISTORIC RECORDS

ACCORDING TO ODOT TIMS, NO HISTORIC SOIL TEST BORINGS WERE PERFORMED FOR THIS BRIDGE. HOWEVER, HISTORIC CORE DRIVE ROD SOUNDINGS RECORDS WERE AVAILABLE. ACCORDING TO THE DRIVE ROD SOUNDINGS, THE TOP OF ROCK WAS ENCOUNTERED BETWEEN ELEVATIONS 795.1 TO 808.1 FEET (CORRECTED TO THE DATUM SHIFT FROM NGVD 29 TO NAVD 88). IT IS OUR OPINION THAT THESE HISTORIC CORE DRIVE ROD SOUNDINGS ARE NOT USEFUL FOR THIS PROJECT, AND SHOULD NOT REPLACE THE PROJECT BORINGS. THEREFORE, THE INFORMATION FOR THE CORE DRIVE ROD SOUNDINGS WERE NOT SHOWN ON THE SOIL PROFILE SHEETS.

GEOLOGY

THE PROJECT SITE IS LOCATED WITHIN THE DISSECTED ILLINOIAN TILL PLAIN PHYSIOGRAPHIC REGION THAT IS DESCRIBED AS HILLTOPS OF HIGH-LIME ILLINOIAN-AGE TILL WITH LOESS CAP; SLOPES OF BEDROCK- AND TILL-DERIVED COLLUVIUM UNDERLAIN BY ORDOVICIAN- AND SILURIAN-AGE BEDROCK. THE PROJECT SITE IS COVERED BY HOLOCENE-AGE ALLUVIUM UNDERLAIN BY ILLINOIAN- AGE SAND AND GRAVEL. THE UNDERLYING BEDROCK CONSISTS OF TWO SEDIMENTARY BEDROCK FORMATIONS IDENTIFIED AS THE SILURIAN-AGE DAYTON LIMESTONE, NOLAND FORMATION AND BRASSFIELD UNDIVIDED AND THE ORDOVICIAN-AGE DRAKES FORMATION AND WAYNESVILLE FORMATION UNDIVIDED.

RECONNAISSANCE

FIELD RECONNAISSANCE WAS COMPLETED BY CTL PERSONNEL ON JULY 5, 2024 AND FEBRUARY 13, 2025. STATE ROUTE 73 IS A TWO-LANE, BI-DIRECTIONAL ROAD THAT RUNS GENERALLY NORTHWEST TO SOUTHEAST, AND THE OHIO BRUSH CREEK GENERALLY FLOWS SOUTHWEST TO NORTHEAST BENEATH STATE ROUTE 73. THE TOPOGRAPHY IN THE SURROUNDING AREA CONSISTS OF ROLLING TERRAIN WITH RELATIVELY FLAT TO MODERATELY SLOPING WHILE THE GROUND SURFACE IMMEDIATELY ADJACENT TO THE CREEK SLOPES STEEPLY DOWNWARD ALONG THE BANKS. THE AREA ALONG THE CREEK IS COVERED BY VEGETATION CONSISTING OF WEEDS, SMALL BRUSH AND TREES WITH THE SURROUNDING LAND USAGE CONSISTS OF RURAL RESIDENTIAL, AGRICULTURAL, AND WOODED. AT THE TIME OF THE SITE RECONNAISSANCE, THE ROADWAY ASPHALT PAVEMENT SURFACE WAS OBSERVED TO HAVE MINOR CRACKING WITH SOME VERTICAL DEFORMATIONS; THEREFORE, THE PAVEMENT WAS OBSERVED TO BE IN FAIR CONDITION. DETERIORATION OF THE EXISTING BRIDGE DECK WAS OBSERVED, WHICH INCLUDED EXPOSED STEEL REBAR; THEREFORE, THE EXISTING BRIDGE WAS OBSERVED TO BE IN FAIR TO POOR CONDITION. EROSION ALONG THE SOUTHERN EDGE (FORWARD ABUTMENT) OF THE CREEK TO THE EAST AND WEST OF THE BRIDGE WAS OBSERVED. ADDITIONALLY AT THE FORWARD ABUTMENT, EXPOSED BEDROCK WAS OBSERVED AT THE GROUND SURFACE AND CONSISTED OF WEATHERED BROWN AND GRAY SHALE.

SUBSURFACE EXPLORATION

TWO (2) SOIL TEST BORINGS, IDENTIFIED AS B-001-0-25 AND B-002-0-25, WERE COMPLETED FOR THIS SUBSURFACE EXPLORATION AND WERE DRILLED WITHIN THE EXISTING ROADWAY APPROACH SLAB PAVEMENT. THE TEST BORINGS WERE DRILLED AND SAMPLED TO DEPTHS RANGING FROM 30.0 FEET TO 30.7 FEET BELOW THE EXISTING GROUND SURFACE. THE TEST BORINGS WERE DRILLED ON MARCH 3, 2025 AND MARCH 5, 2025 UTILIZING 3-1/4 INCH I.D. HOLLOW-STEM AUGERS POWERED BY TRACK-MOUNTED ROTARY DRILL RIGS. SPLIT-BARREL (SPOON) DISTURBED SOIL SAMPLES AND STANDARD PENETRATION TEST WERE PERFORMED IN ACCORDANCE WITH AASHTO T206 AT 1.5-FOOT INTERVALS. THE AUTOMATIC HAMMERS WERE CALIBRATED ON NOVEMBER 4, 2022 AND NOVEMBER 8, 2024 AND HAD ENERGY RATIOS OF 81.9 PERCENT AND 80.7 PERCENT, RESPECTIVELY. ROCK CORING WAS PERFORMED IN BOTH TEST BORINGS USING WIRELINE CASING WITH AN NQ2-SIZE, DOUBLE TUBE CORE BARREL WITH A DIAMOND BIT.

EXPLORATION FINDINGS

AT THE GROUND SURFACE, THE TWO (2) TEST BORINGS DRILLED ENCOUNTERED FOUR (4) INCHES OF ASPHALT UNDERLAIN BY EIGHT (8) INCHES OF CONCRETE. BENEATH THE SURFICIAL MATERIALS, THE TEST BORINGS ENCOUNTERED BOTH FINE-GRAINED, COHESIVE SOILS AND COARSE-GRAINED, GRANULAR SOILS BEFORE ENCOUNTERING WEATHERED BEDROCK. THE FINE-GRAINED, COHESIVE SOILS WERE DESCRIBED AS MEDIUM STIFF TO VERY STIFF HARD SANDY SILT (A-4a), SILT (A-4b), SILT AND CLAY (A-6a), SILTY CLAY (A-6b), AND CLAY (A-7-6). THE COARSE-GRAINED, GRANULAR SOILS WERE DESCRIBED AS LOOSE TO VERY DENSE GRAVEL AND/OR STONE FRAGMENTS WITH SAND (A-1-b) AND GRAVEL AND/OR STONE FRAGMENTS WITH SAND, SILT, AND CLAY (A-2-6).

BELOW THE NATIVE SOIL MATERIAL, THE TEST BORINGS ENCOUNTERED LAYERS OF WEATHERED SHALE AND LIMESTONE BEDROCK. THE SHALE WAS DESCRIBED AS GRAY AND RED, HIGHLY WEATHERED, VERY WEAK TO SLIGHTLY STRONG, AND CALCAREOUS. THE LIMESTONE WAS DESCRIBED AS GRAY AND BROWN, HIGHLY TO MODERATELY WEATHERED, AND SLIGHTLY TO MODERATELY STRONG. GROUNDWATER WAS ENCOUNTERED DURING DRILLING WITHIN B-001-0-25 AT A DEPTH OF 11.5 FEET.

LEGEND

DESCRIPTION	ODOT CLASS	CLASSIFIED MECH./VISUAL	
GRAVEL AND/OR STONE FRAGMENTS WITH SAND	A-1-b (0)	2	1
GRAVEL AND/OR STONE FRAGMENTS W/SAND, SILT & CLAY	A-2-6 (2)	1	0
SANDY SILT	A-4a (6)	1	0
SILT	A-4b (8)	1	0
SILT AND CLAY	A-6a (10)	1	0
SILTY CLAY	A-6b (2)	1	1
CLAY	A-7-6 (16)	1	2
	TOTAL	8	4
INTERBEDDED SHALE AND LIMESTONE	VISUAL		
LIMESTONE	VISUAL		
SHALE	VISUAL		
PAVEMENT OR BASE = X = APPROXIMATE THICKNESS	VISUAL		

EXPLORATION LOCATION - PLAN VIEW

DRIVE SAMPLE AND/OR ROCK CORE BORING PLOTTED TO VERTICAL SCALE ONLY. HORIZONTAL BAR INDICATES A CHANGE IN STRATIGRAPHY.

WC — INDICATES WATER CONTENT IN PERCENT.

N_{60} — INDICATES STANDARD PENETRATION RESISTANCE NORMALIZED TO 60% DRILL ROD ENERGY RATIO.

X/Y/Z/D" — NUMBER OF BLOWS FOR STANDARD PENETRATION TEST (SPT):
X = NUMBER OF BLOWS FOR 6 INCHES (UNCORRECTED).
Y = NUMBER OF BLOWS FOR SECOND 6 INCHES (UNCORRECTED).
Z/D" = NUMBER OF BLOWS (UNCORRECTED) FOR D" OF PENETRATION AT REFUSAL.

W — INDICATES FREE WATER ELEVATION.

NP — INDICATES A NON-PLASTIC SAMPLE.

SS — INDICATES A SPLIT SPOON SAMPLE.

TR — INDICATES TOP OF ROCK ELEVATION.

NQ2 — INDICATES ROCK CORE SAMPLE.

Qu — INDICATES UNCONFINED COMPRESSION TEST, ASTM D7012.

RQD — INDICATES ROCK QUALITY DESIGNATION.

Tc — INDICATES CRITICAL SHEAR STRESS.

D_{50} — INDICATES AVERAGE PARTICLE SIZE OF SOIL.

● — INDICATES A PLASTIC MATERIAL WITH A MOISTURE CONTENT EQUAL TO OR GREATER THAN THE LIQUID LIMIT MINUS 3.

SPECIFICATIONS

THIS GEOTECHNICAL EXPLORATION WAS PERFORMED IN ACCORDANCE WITH THE STATE OF OHIO, DEPARTMENT OF TRANSPORTATION, OFFICE OF GEOTECHNICAL ENGINEERING, SPECIFICATIONS FOR GEOTECHNICAL EXPLORATIONS, DATED JANUARY 2025.

AVAILABLE INFORMATION

THE SOIL, BEDROCK, AND GROUNDWATER INFORMATION COLLECTED FOR THIS SUBSURFACE EXPLORATION THAT CAN BE CONVENIENTLY DISPLAYED ON THE GEOTECHNICAL PROFILE SHEETS HAS BEEN PRESENTED. GEOTECHNICAL REPORTS, IF PREPARED, ARE AVAILABLE FOR REVIEW ON THE OFFICE OF CONTRACT SALES WEBSITE.

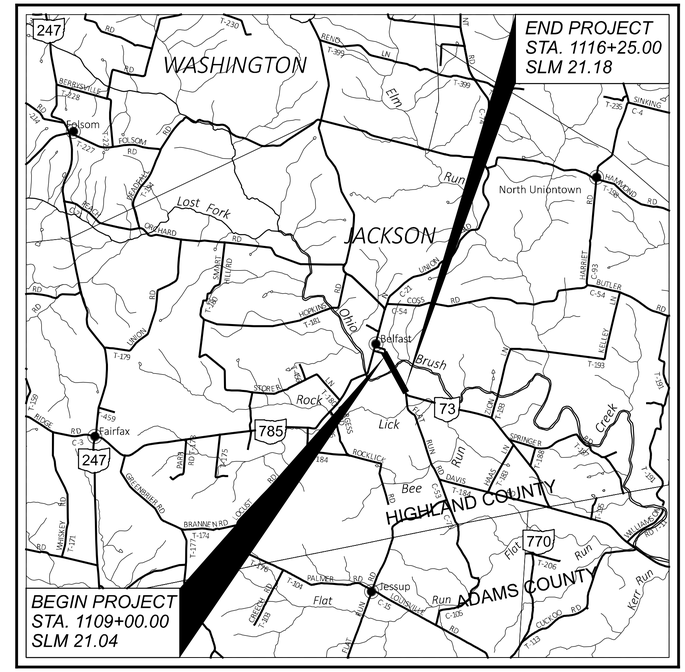

LOCATION MAP

SCALE IN MILES

0 1 2 3 4

PARTICLE SIZE DEFINITIONS

BOULDERS	COBBLES	GRAVEL	COARSE SAND	FINE SAND	SILT	CLAY
	12"	3" (No. 10 SIEVE)	2.0 mm	0.42 mm (No. 40 SIEVE)	0.074 mm (No. 200 SIEVE)	0.005 mm

RECON. - CC 07/05/2024 & 02/13/2025
DRILLING - CTL 03/03/2025 & 03/05/2025
DRAWN - N.K.S 04/24/2025
REVIEWED - SM 04/24/2025

GEOTECHNICAL PROFILE - BRIDGE
BRIDGE NO. HIG-00073-21.11
SR-73 OVER OHIO BRUSH CREEK

DESIGN AGENCY
CTL ENGINEERING INC
2860 FISHER ROAD
COLUMBUS, OHIO 43204
PHONE: (614)276-8123
FAX: (614)276-6377

DESIGNER N.K.S
REVIEWER SM 04-24-25
PROJECT ID 119769
SUBSET 1 TOTAL 7
SHEET P.58 TOTAL 64

HIG-73-21.11

MODEL: Sheet PAPERSIZE: 17x11 (in.) DATE: 24-04-2025 TIME: 18:06:07 USER: hp
D:\Drop Box\CTL 2025\April\Dept 05\CIN\Carey\25050005COL_ODOT\Mod_24.04.25\119769ZC001.dgn

BRIDGE SCOUR ANALYSIS						
SCOUR DATA						
BORING NO.	SAMPLE ID	ELEVATION (FEET)	D_{50} (mm)	T_C (PSF)	D_{50} equi. (mm)	EROSION CATEGORY (EC)
B-001-0-25 (REAR ABUTMENT)	SS-1	808.6 - 807.1	0.0132	0.2787	13.3435	4.199
	SS-4	804.1 - 802.6	0.2059	0.1324	6.3384	3.484
	SS-5	802.6 - 801.1	0.0122	0.2067	9.8952	3.413
	SS-6	801.1 - 799.6	0.0271	0.0634	3.0378	2.754
	SS-7	799.6 - 798.1	0.0174	0.1404	6.7224	2.975
	NQ2-1	796.6 - 794.6	-	116.1751	5561.2782	3.761
	NQ2-2/NQ2-3	794.6 - 779.6	-	10.8577	519.7548	3.761
B-002-0-25 (FORWARD ABUTMENT)	SS-1	811.9 - 810.4	1.3291	0.0278	1.3291	2.348
	SS-2	810.4 - 808.9	2.0312	0.0424	2.0312	2.569
	SS-3	808.9 - 807.4	0.4942	0.0103	0.4942	1.833
	NQ2-1	806.2 - 804.2	-	188.3532	9016.4279	3.973
	NQ2-1 / NQ2-2	804.2 - 794.4	-	63.5441	3041.8443	3.761
	NQ2-2 / NQ2-3	794.4 - 789.9	-	162.0275	7756.2245	3.761
	NQ2-3	789.9 - 782.2	-	47.0564	2252.5819	3.761

BEDROCK TEST SUMMARY				
BORING ID	SAMPLE ELEVATION (FEET)	SAMPLE DEPTH (FEET)	Qu (PSI)	LITHOLOGY
B-001-0-25	795.7 - 795.2	13.9 - 14.4	4,200	LIMESTONE
B-001-0-25	793.8 - 793.4	15.8 - 16.2	550	SHALE
B-002-0-25	791.7 - 791.0	21.2 - 21.9	5,520	LIMESTONE
B-002-0-25	783.8 - 783.2	29.1 - 29.7	1,520	SHALE

GEOTECHNICAL PROFILE - BRIDGE
BRIDGE NO. HIG-00073-21.11
SR-73 OVER OHIO BRUSH CREEK

DESIGN AGENCY
CTL ENGINEERING INC
2860 FISHER ROAD
COLUMBUS, OHIO 43204
PHONE: (614)276-8123
FAX: (614)276-6377

DESIGNER
N.K.S

REVIEWER
SM 04-24-25

PROJECT ID
119769

SUBSET 2 | TOTAL 7

SHEET P.59 | TOTAL 64

HIG-73-21.11

MODEL: Sheet PAPERSIZE: 17x11 (in.) DATE: 24-04-2025 TIME: 18:04:48 USER: hp
D:\Drop Box\CTL 2025\April\Dept 05\CIN\Carey\25050005COL_ODOT\Mod_24.04.25\119769ZC002.dgn

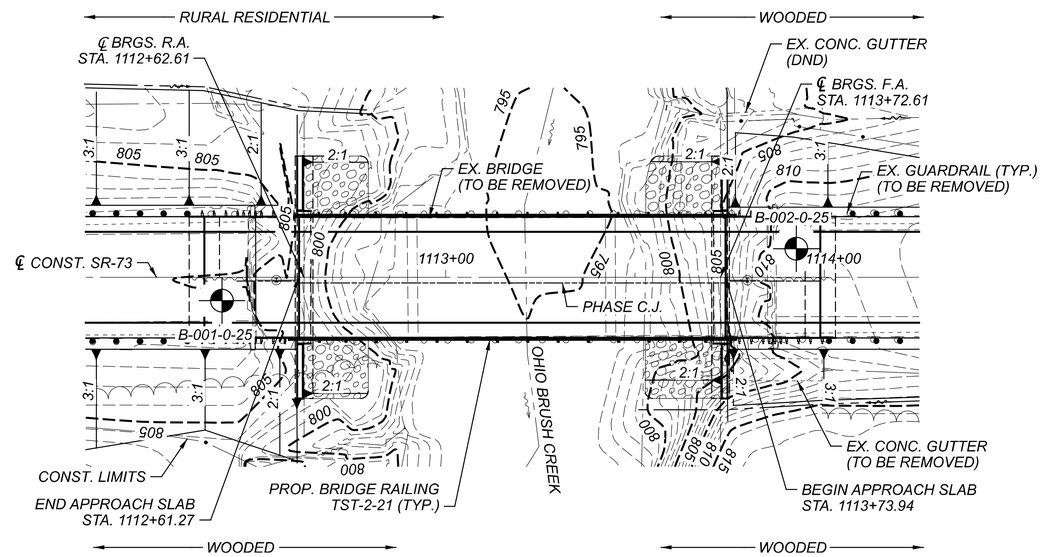

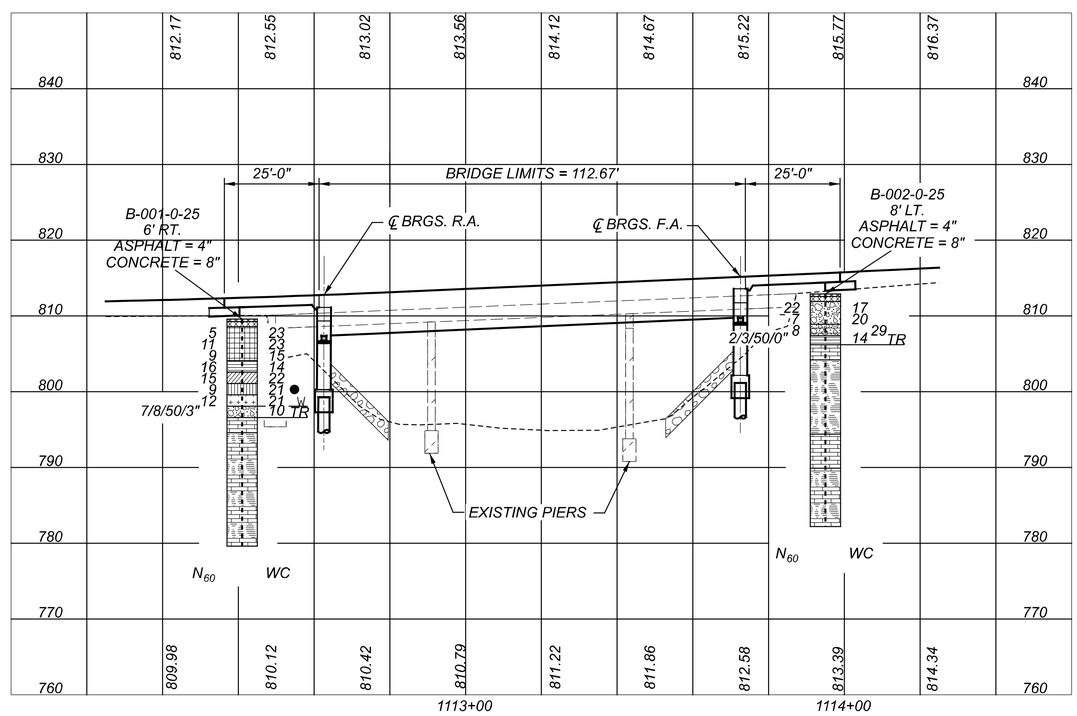

HORIZONTAL SCALE IN FEET
0 10 20 40

GEOTECHNICAL PROFILE - BRIDGE
BRIDGE NO. HIG-00073-21.11
SR-73 OVER OHIO BRUSH CREEK

DESIGN AGENCY
GTL ENGINEERING INC
2860 FISHER ROAD
COLUMBUS, OHIO 43204
PHONE: (614)276-8123
FAX: (614)276-6377

DESIGNER	N.K.S
REVIEWER	SM 04-24-25
PROJECT ID	119769
SUBSET	3
TOTAL	7
SHEET	P.60
TOTAL	64

HIG-73-21.11

MODEL: GLX_1 - Plan 1=1 PAPERSIZE: 17x11 (in.) DATE: 24-04-2025 TIME: 19:07:41 USER: hp
D:\Drop Box\GTL 2025\April\Dept 05\QM\Carey\25050005\CO_ODOT\Wed_24.04.25\119769_SFN_3801750_SP001.dgn

PROJECT: HIG-73-21.11	DRILLING FIRM / OPERATOR: CTL / J.CARTE	DRILL RIG: CME 55 #393	STATION / OFFSET: 1112+41, 6' RT.
TYPE: BRIDGE	SAMPLING FIRM / LOGGER: CTL / J.CARTE	HAMMER: CME AUTOMATIC	ALIGNMENT: SR-73
PID: 119769 SFN: 3601750	DRILLING METHOD: 3.25" HSA / NQ2	CALIBRATION DATE: 11-4-22	ELEVATION: 809.6 (MSL) EOB: 30.0 ft.
START: 3-3-25 END: 3-3-25	SAMPLING METHOD: SPT / NQ2	ENERGY RATIO (%): 79.3	LAT / LONG: 39.059346, -83.529358

EXPLORATION ID B-001-0-25

PAGE 1 OF 1

MATERIAL DESCRIPTION AND NOTES	ELEV.	SPT/RQD	N_{60}	REC (%)	SAMPLE ID	HP (tsf)	GR	CS	FS	SI	CL	LL	PL	PI	WC	ODOT CLASS (GI)	SO4 ppm	HOLE SEALED
ASPHALT (4")	809.3																	
CONCRETE (8")	808.6																	
STIFF, BROWN, **CLAY**, SOME SILT, SOME SAND, TRACE GRAVEL, MOIST @2.5'; MEDIUM STIFF		2 1 3	5	39	SS-1	1.25	7	8	18	28	39	52	18	34	23	A-7-6 (16)	-	
@4.0'; VERY STIFF, DAMP	804.1	3 3 5	11	67	SS-2	0.50	-	-	-	-	-	-	-	-	23	A-7-6 (V)	-	
		9 3 4	9	67	SS-3	2.25	-	-	-	-	-	-	-	-	15	A-7-6 (V)	-	
VERY STIFF, BROWN, **SILTY CLAY**, "AND" SAND, SOME GRAVEL, DAMP	802.6	4 6 6	16	78	SS-4	2.50	22	23	18	16	21	32	16	16	14	A-6b (2)	-	
VERY STIFF, BROWN, **SILT AND CLAY**, LITTLE SAND, TRACE GRAVEL, MOIST	801.1	4 5 6	15	89	SS-5	2.75	5	7	13	40	35	33	18	15	22	A-6a (10)	-	
MEDIUM STIFF, BROWN, **SANDY SILT**, SOME CLAY, MOIST	799.6	4 2 5	9	78	SS-6	0.75	0	2	31	44	23	24	16	8	21	A-4a (6)	-	
VERY STIFF, BROWN, **SILT**, SOME CLAY, LITTLE SAND, MOIST	798.1	3 4 5	12	83	SS-7	2.25	0	1	18	55	26	27	17	10	21	A-4b (8)	-	
VERY DENSE, BROWN, **GRAVEL AND/OR STONE FRAGMENTS WITH SAND**, WET	796.6	7 8 50/3"	-	67	SS-8	-	-	-	-	-	-	-	-	-	10	A-1-b (V)	-	
LIMESTONE, GRAY, MODERATELY WEATHERED, MODERATELY STRONG. @ 13.9' - 14.4' (LIMESTONE); γ = 160.1 pcf, **Qu**= 4,200 psi	794.6	25		83	NQ2-1											CORE		
INTERBEDDED SHALE (80%) AND LIMESTONE (20%), RQD 3%, REC. 31%; **SHALE**, GRAY, HIGHLY WEATHERED, VERY WEAK, CALCAREOUS; **LIMESTONE**, GRAY, HIGHLY WEATHERED, SLIGHTLY STRONG. @ 15.8' - 16.2' (SHALE); γ = 155.1 pcf, **Qu**= 550 psi		4		29	NQ2-2											CORE		
		0		33	NQ2-3											CORE		
	779.6																	

DEPTHS: W 798.1; TR; EOB

NOTES: CAVED AT 11.5'

ABANDONMENT METHODS, MATERIALS, QUANTITIES: PLACED ASPHALT PATCH; BACKFILLED WITH BENTONITE GROUT

STANDARD ODOT LOG W/ SULFATES (8.5 X 11) - OH DOT.GDT - 2-4-25 20:03 - G:\2025\MARCH\28\25050005COL\25050005COL.GPJ

B-001-0-25

Run #:	Depth		Recovery		RQD	
NQ2-1	13.0'	15.0'	20"/24"	83%	6"/24"	25%
NQ2-2	15.0'	25.0'	35"/120"	29%	5"/120"	4%
NQ2-3	25.0'	30.0'	20"/60"	33%	0"/60"	0%

HIG-73-21.11; PID 119769; State Route 73 over the Ohio Brush Creek

CTL ENGINEERING INC

DESIGN AGENCY

CTL ENGINEERING INC
7670 HUNTERSBOOK LANE
COLUMBUS, OHIO 43004
PHONE: (614) 276-8123
FAX: (614) 276-8377

DESIGNER: N.K.S

REVIEWER: SM 04-24-25

PROJECT ID: 119769

SUBSET: 4 TOTAL: 7

SHEET: P.61 TOTAL: 64

GEOTECHNICAL PROFILE - BRIDGE
BRIDGE NO. HIG-00073-21.11 OVER OHIO BRUSH CREEK
BORING LOG & ROCK CORE PHOTO FOR B-001-0-25

MODEL: Sheet PAPERSIZE: 17x11 (in.) DATE: 24-04-2025 TIME: 18:11:57 USER: hp
D:\Drop Box\CTL 2025\April\Dept 05\CIN\Corey\25050005COL_ODOT\Mod_24.04.25\119769ZL002.dgn

PROJECT: HIG-73-21.11	DRILLING FIRM / OPERATOR: CTL / J.CARTE	DRILL RIG: DIEDRICH D-70	STATION / OFFSET: 1113+95, 8' LT.
TYPE: BRIDGE	SAMPLING FIRM / LOGGER: CTL / J.CARTE	HAMMER: DIEDRICH AUTOMATIC	ALIGNMENT: SR-73
PID: 119769 SFN: 3601750	DRILLING METHOD: 3.25" HSA / NQ2	CALIBRATION DATE: 11-8-24	ELEVATION: 812.9 (MSL) EOB: 30.7 ft.
START: 3-5-25 END: 3-5-25	SAMPLING METHOD: SPT / NQ2	ENERGY RATIO (%): 80.7	LAT / LONG: 39.059076, -83.528948

EXPLORATION ID B-002-0-25

PAGE 1 OF 1

MATERIAL DESCRIPTION AND NOTES	ELEV. 812.9	DEPTHS	SPT/ RQD	N_{60}	REC (%)	SAMPLE ID	HP (tsf)	GR	CS	FS	SI	CL	LL	PL	PI	WC	ODOT CLASS (GI)	SO4 ppm	HOLE SEALED
ASPHALT (4")	812.6																		
CONCRETE (8")	811.9																		
MEDIUM DENSE, BROWN, **GRAVEL AND/OR STONE FRAGMENTS WITH SAND**, LITTLE CLAY, TRACE SILT, DAMP @2.5'; LOOSE	808.9	1 2 3 4	5 8 8	22	56	SS-1	3.00	44	25	13	4	14	NP	NP	NP	17	A-1-b (0)	-	
			6 3 2	7	28	SS-2	0.50	50	14	11	9	16	40	39	1	20	A-1-b (0)	-	
LOOSE, BROWN, **GRAVEL AND STONE FRAGMENTS WITH SAND, SILT, AND CLAY**, DAMP	807.4	5	8 4 2	8	67	SS-3	1.00	42	9	14	18	17	38	18	20	29	A-2-6 (2)	-	
MEDIUM STIFF, BROWN, **SILTY CLAY**, LITTLE SAND, LITTLE GRAVEL, DAMP	806.2	6	2 3 50/0"	-	33	SS-4	1.00	-	-	-	-	-	-	-	-	14	A-6b (V)	-	
LIMESTONE, BROWN AND GRAY, MODERATELY WEATHERED, MODERATELY STRONG; RQD 50%, REC 100%.	804.2	TR 7 8	50		50	NQ2-1											CORE		
SHALE, GRAY, HIGHLY WEATHERED, SLIGHTLY STRONG, CALCAREOUS; RQD 31%, REC 93%.	794.4	9 10 11 12 13 14 15 16 17 18	20		93	NQ2-2											CORE		
LIMESTONE, GRAY, HIGHLY WEATHERED, MODERATELY STRONG; RQD 37%, REC 100%. @ 21.2' - 21.9' (LIMESTONE); γ = 163.5 pcf, **Qu** = 5,520 psi	789.9	19 20 21 22 23																	
INTERBEDDED SHALE (85%) AND LIMESTONE (15%), RQD 17%, REC. 100%; **SHALE**, RED, HIGHLY WEATHERED, SLIGHTLY STRONG, CALCAREOUS; **LIMESTONE**, GRAY, HIGHLY WEATHERED, SLIGHTLY STRONG. @ 29.1' - 29.7' (SHALE); γ = 159.6 pcf, **Qu** = 1,520 psi	782.2	24 25 26 27 28 29 30 EOB	30		100	NQ2-3											CORE		

NOTES: NONE

ABANDONMENT METHODS, MATERIALS, QUANTITIES: PLACED ASPHALT PATCH; BACKFILLED WITH BENTONITE GROUT

STANDARD ODOT LOG W/ SULFATES (11 X 17) - OH DOT.GDT - 3-4-25 17:45 - G:\2025\APRIL\03\25050005COL\25050005COL.GPJ

DESIGN AGENCY: CTL ENGINEERING INC. 6670 GRAND VALLEY COLUMBUS, OHIO 43004 PHONE: (614) 276-8123 FAX: (614) 276-8377

DESIGNER: N.K.S

REVIEWER: SM 04-24-25

PROJECT ID: 119769

SUBSET: 5 TOTAL: 7

SHEET: P.62 TOTAL: 64

GEOTECHNICAL PROFILE - BRIDGE
BRIDGE NO. HIG-00073-21.11 OVER OHIO BRUSH CREEK
BORING LOG B-002-0-25

B-002-0-25

Run #:	Depth		Recovery		RQD	
NQ2-1	6.7'	10.7'	24"/48"	50%	24"/48"	50%

HIG-73-21.11; PID 119769; State Route 73 over the Ohio Brush Creek

B-002-0-25

Run #:	Depth		Recovery		RQD	
NQ2-2	10.7'	20.7'	111"/120"	93%	24"/120"	20%

HIG-73-21.11; PID 119769; State Route 73 over the Ohio Brush Creek

GEOTECHNICAL PROFILE - BRIDGE
BRIDGE NO. HIG-00073-21.11 OVER OHIO BRUSH CREEK
ROCK CORE PHOTO FOR B-002-0-25

CTL ENGINEERING INC.
4449 HAMILTON AVE.
COLUMBUS, OHIO 43204
PHONE: (614) 276-8123
FAX: (614) 276-8377

DESIGN AGENCY

DESIGNER N.K.S
REVIEWER SM 04-24-25
PROJECT ID 119769
SUBSET 6 TOTAL 7
SHEET P.63 TOTAL 64

B-002-0-25

Run #:	Depth		Recovery		RQD	
NQ2-3	20.7'	30.7'	120"/120"	100%	36"/120"	30%
HIG-73-21.11; PID 119769; State Route 73 over the Ohio Brush Creek						

GEOTECHNICAL PROFILE - BRIDGE
BRIDGE NO. HIG-00073-21.11 OVER OHIO BRUSH CREEK
ROCK CORE PHOTO FOR B-002-0-25 CONTINUED