MICROFILMED
JAN 25 1999

FHWA REGION	STATE	PROJECT	
5	OHIO		

HOC-56-0568-0625
HOC-180-0236-0422-0557
BRIDGE REPAIR

F.A. NO. BR-36-81

CALCULATIONS

Bridge No.	Item	Pavement	Type D Waterproofing	Porous Backfill	1" Preformed Joint Filler	Drip Strip
HOC-56-0568	301 403 404	(21' x 9 7/12" x 1'6") ÷ 27 = 0.88 CY 26' x 28' x 1 1/4" /12" ÷ 27 = 2.81 CY 26' x 28' x 1" ave./12" ÷ 27 = 2.25 CY	[26' x 28' + 2(32'-6" x (17" + 6" + 12")/12")] ÷ 9 = 102.0 SY	Rear Abut. - (12' + 32'-6") x 1'-6" x 6'-6" ÷ 27 = 16.1 CY Fwd Abut. - (12' + 32'-6") x 1'-6" x 1'-6" ÷ 27 = 3.7 CY	4(1'-6" (Ave) x 1'-6") = 9 SF 2(32'-6" x 6") = 32.5 SF	2 x 8 1/2" /12" x (26 + 4(1)) = 40 SF
HOC-56-0625	301 403 404	2(21' x 9"/12" x 1'6") ÷ 27 = 1.75 CY Same as HOC-56-0568 2.81 CY " " " 2.25 CY	[26' x 28' + 2(28' x (12" + 12")/12")] ÷ 9 = 96.4 SY	2(28' + 12') x 1'-6" x 1'-6" ÷ 27 = 6.7 CY Total 26.5 CY	4(1'-6" x 1'-6") = 9 SF 2(28' x 6") = 28 SF	2 x 8 1/2" /12" x (52 + 8(1)) = 80 SF
HOC-180-0236	301 403 404	2(28' x 9"/12" x 1'6") ÷ 27 = 2.22 CY 22'-0" x 33' x 1 1/2" (Ave)/12" ÷ 27 = 2.52 CY 22'-0" x 33' x 1" /12" ÷ 27 2.24 CY	[22'-0" x 33' + 2(39'-6" x (12" + 12")/12")] ÷ 9 = 102.6 SY		4(1' x 1'-6") = 6 SF 2(39'-6" x 6") = 395 SF	2 x 8 1/2" /12" x (22 + 4(1)) = 34.7 SF
HOC-180-0422	301 403 404	2(21' x 9"/12" x 1'6") ÷ 27 = 1.75 CY 22'-6" x 28' x 1 1/2" (Ave)/12 ÷ 27 = 2.24 CY 22'-6" x 28' x 1"/12 ÷ 27 1.94 CY	[22'-6" x 28' + 2(28' x (12" + 12")/12)] ÷ 9 = 85.6 SY		4(1' x 1'-6") = 6 SF 2(28' x 6") = 28 SF	2 x 8 1/2" /12" x (22'-6" + 4(1)) = 35.3 SF
HOC-180-0557	301 403 404	Same as HOC-180-0422 1.75 CY " " " 2.24 CY " " " 1.94 CY	Same as HOC-180-0422 85.6 SY Total 472.2 SY		4(1' x 1'-6") = 6 SF 2(28' x 6") = 28 SF	2 x 8 1/2" /12" x (22'-6" + 4(1)) = 35.3 SF
Adjust to Grade (All 5 Bridges)	404	5 [2(50' x 1 1/2" (Ave)/12" x 20')] ÷ 27 = 15.43 CY	* (1 1/2" + 1 1/2")/2 + 1 1/4 (0" + 1/2")/2 = 1 1/4"		Total 192 SF	Total 225.3 SF
Totals	301 403 404	0.88 + 3(1.75) ÷ 2.22 = 8.35 CY 2(2.81) + 2.52 + 2(2.24) = 12.62 CY 15.43 + 2(2.25) + 2.24 + 2(1.94) = 26.05 CY				

+ 25% added to allow for irregularities in approach profiles and structure grades
= 10.4 Cy
= 15.8 Cy
= 32.6 Cy

TEMPORARY GUARDRAIL: Quantities shown include two seperate runs of temporary guardrail for two stage construction at each location and lengths of each run are approximately 75 feet in excess of bridge limits. The portion of rail off the bridge shall be supported by temporary drams as per CMS section 606.04. Temporary rail on the bridge shall be attached on posts at 6'-3" centers in the manner shown. For second stage construction the rail posts shall be attached to the interior box beams using anchors cast in the beam. The anchors shall be removed flush with the edge of the beam after the rail posts are removed.

One of the interior beams shall be fabricated with guardrail anchors at 6'-3" centers on the side toward ℄ to be used for temporary guardrail. All costs associated with this work shall be included for payment in the unit price bid for ~~temporary guardrail~~.

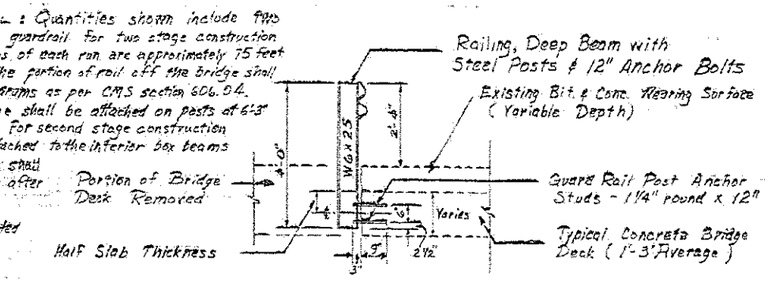

TYPICAL SECTION OF TEMPORARY GUARD RAIL
(To Be Used After Half of the Existing Bridge Deck is Removed)

RAILING ANCHOR STUDS:
Guard rail anchor studs shall be installed in drilled holes using a high strength material such as - Sika SIKA-DUR, HI-MOD, FEL-PRO #132 EPOXY, CELTITE INC. RESIN or approved equal, according to the manufacturer's instructions. Heads are not required and bolts shall be swedged or fully threaded.

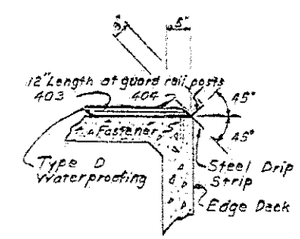

DETAIL OF TYPICAL DRIP STRIP

DRIP STRIP: Prior to applying deck membrane waterproofing a bent drip strip shall be installed along the edges of the deck as shown. The strips shall be fastened at 1'-6" ℄ maximum, with power driven pins or No. 10 galv screws & expansion anchors, subject to the approval of the Engineer. The strips shall be placed the full length of the deck, ending at the face of the abutment or wing walls.
Where splices are required, a 3" (Min) lap shall be used with a fastener thru the lap. Steel for galvanized strips shall be 8" x 0.105" and shall meet the requirements of ASTM A568. Galv shall be in accordance with 711.02. Stainless steel shall be 20 gauge ASTM A167 Type 304 mill finish. Payment shall be at the contract price bid for Item Special Sq.Ft. Steel Drip Strip, which shall include all material, labor, tools, & incidentals necessary to complete Item.

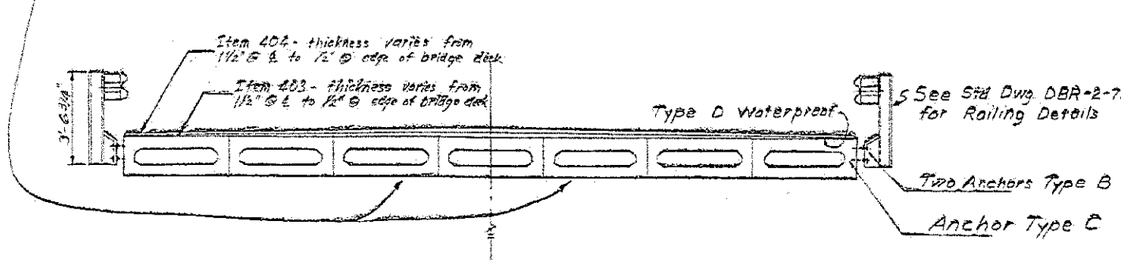

TYPICAL SECTION OF BOX BEAM DECK

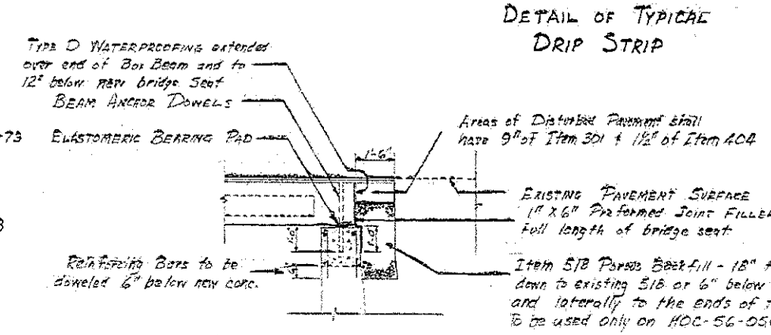

TYPICAL BRIDGE SEAT TREATMENT

BRIDGE SEAT REINFORCING:
Reinforcing steel in the vicinity of the bridge seat shall be accurately placed to avoid interference with the drilling of anchor bar holes.

REINFORCING STEEL SAMPLES:
Refer to CMS Sections 106.03, 700, 709.01 through 709.05 and 709.08. Sufficient additional reinforcing steel shall be provided for sampling. Random samples shall be replaced in the structures by the additional steel, spliced in accordance with 509.06.

DESIGNED	CHECKED
BY: PEH	BY: G.P.S.
DATE: 3/11/81	DATE 4-81

GENERAL NOTES & STRUCTURAL DETAILS

MICROFILMED
JAN 25 1996

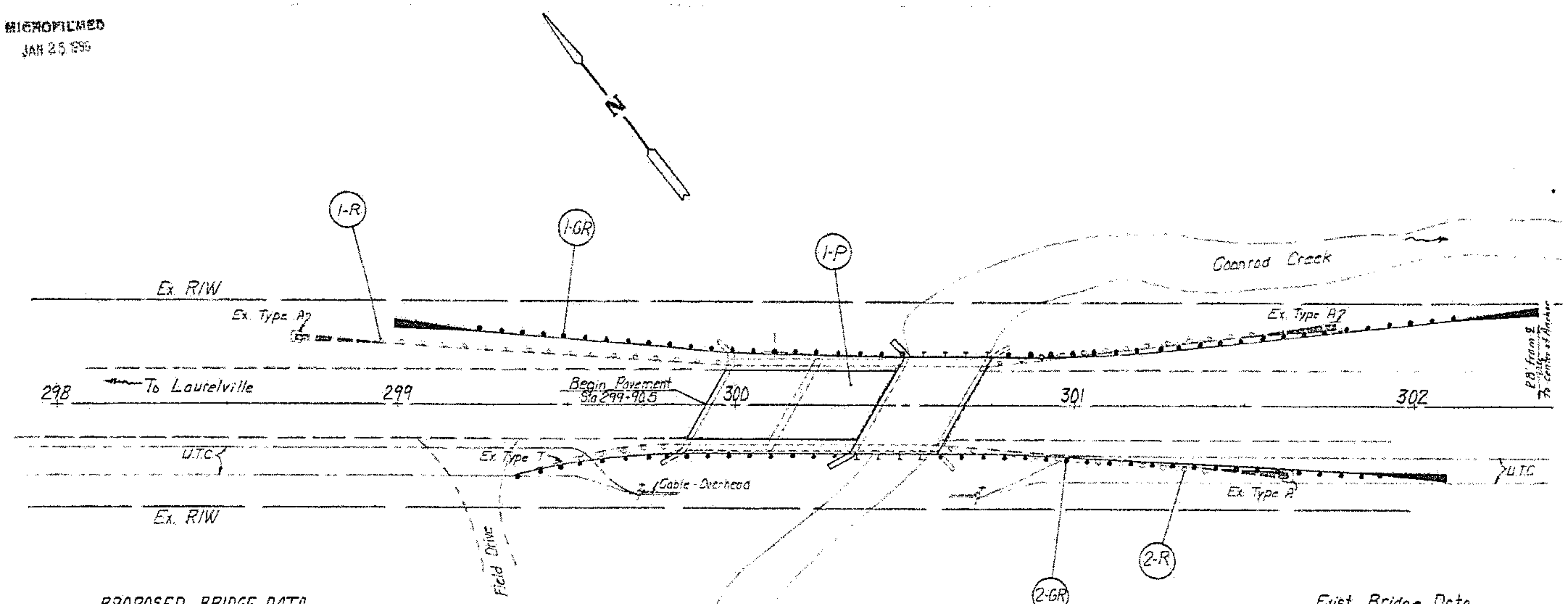

PROPOSED BRIDGE DATA
BRIDGE No. HOC-56-0568
TYPE: CONCRETE BOX BEAM
SPAN: 23'-0" clear
WIDTH: 28'-0" f/f railing
SKEW: 30° L.F.

Exist. Bridge Data
Bridge No. HOC-56-0568
Type: Concrete Slab
Span: 3 @ 23' clear span
Width: 23'-0" curb to curb
Condition: Poor

PAVEMENT CALCULATIONS

Item 404 - 1½" Asphalt Concrete, AC-20
(51.0' × 20.0' × 1.5 ÷ 12) ÷ 27 = 4.72 Cu. Yds.

Item 403 - 1½" Asphalt Concrete, AC-20
Same As Item 404 = 4.72 Cu. Yds.

Item 301 - 7" Bituminous Aggregate Base
(51.0' × 21.0' × 7 ÷ 12) ÷ 27 = 23.14 Cu. Yds.

Item 304 - 6" Aggregate Base
(51.0' × 22.0' × 6 ÷ 12) ÷ 27 = 20.78 Cu. Yds.

Item 203 - Subgrade Compaction
(51.0' × 22) ÷ 9 = 124.7 Sq. Yds.

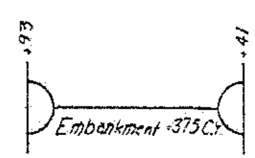

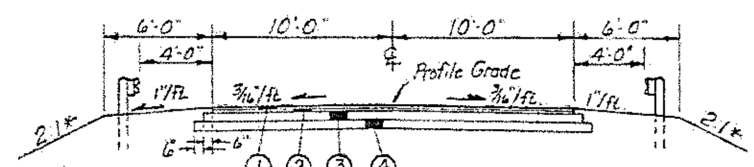

* Unless Otherwise Shown

LEGEND
① Item 404 - 1½" Asphalt Concrete, AC-20
② Item 403 - 1½" Asphalt Concrete, AC-20
③ Item 301 - 7" Bituminous Aggregate Base
④ Item 304 - 6" Aggregate Base

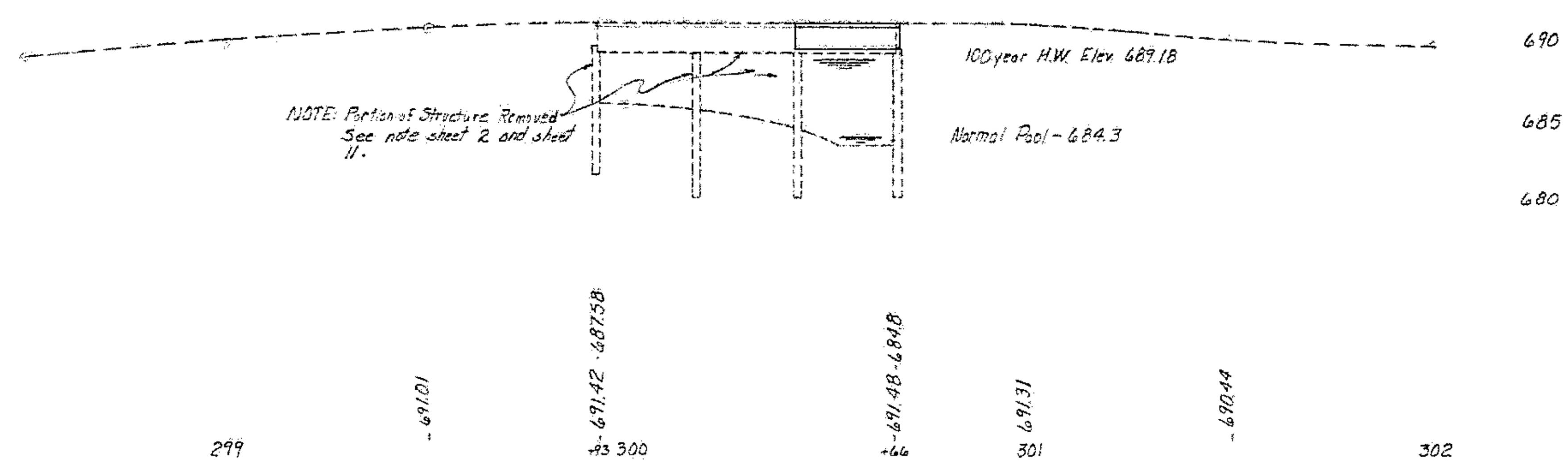

		202 Guardrail Removed (Lin Ft)	606 Guardrail Type 5 (Lin Ft)	606 Anchor Assembly Type A (Each)	606 Bridge Terminal Assembly Type B (Each)	606 Anchor Assembly Type T (Each)	606 Temporary Guardrail (Lin Ft)	403 Asphalt Concrete AC-20 (Cu. Yd.)	404 Asphalt Concrete AC-20 (Cu. Yd.)	301 Bituminous Aggregate Base (Cu. Yd.)	304 Aggregate Base (Cu. Yd.)	203 Subgrade Compaction (Sq. Yd.)
ROADWAY												
1-R 298+70 to 301+77	Lt.	237.5										
2-R 299+36 to 301+63	Rt.	156.5										
1-GR 298+99.41 to 302+14.91	Lt.		261.50	2	2							
2-GR 299+35.17 to 302+10.17	Rt.		271.50	1	2	1						
PAVEMENT 1-P 299+90.5 to 300+41.5	℄							4.72	4.72	23.14	20.78	125
	Lt.						150					
	Rt.						150					
		394	473	3	4	1	300	4.7	4.7	23.1	20.8	125

MICROFILMED
JAN 26 1980

FHWA REGION	STATE	PROJECT	
5	OHIO		

11/24

HOC-56-0568
BRIDGE REPAIR

BR-34-81

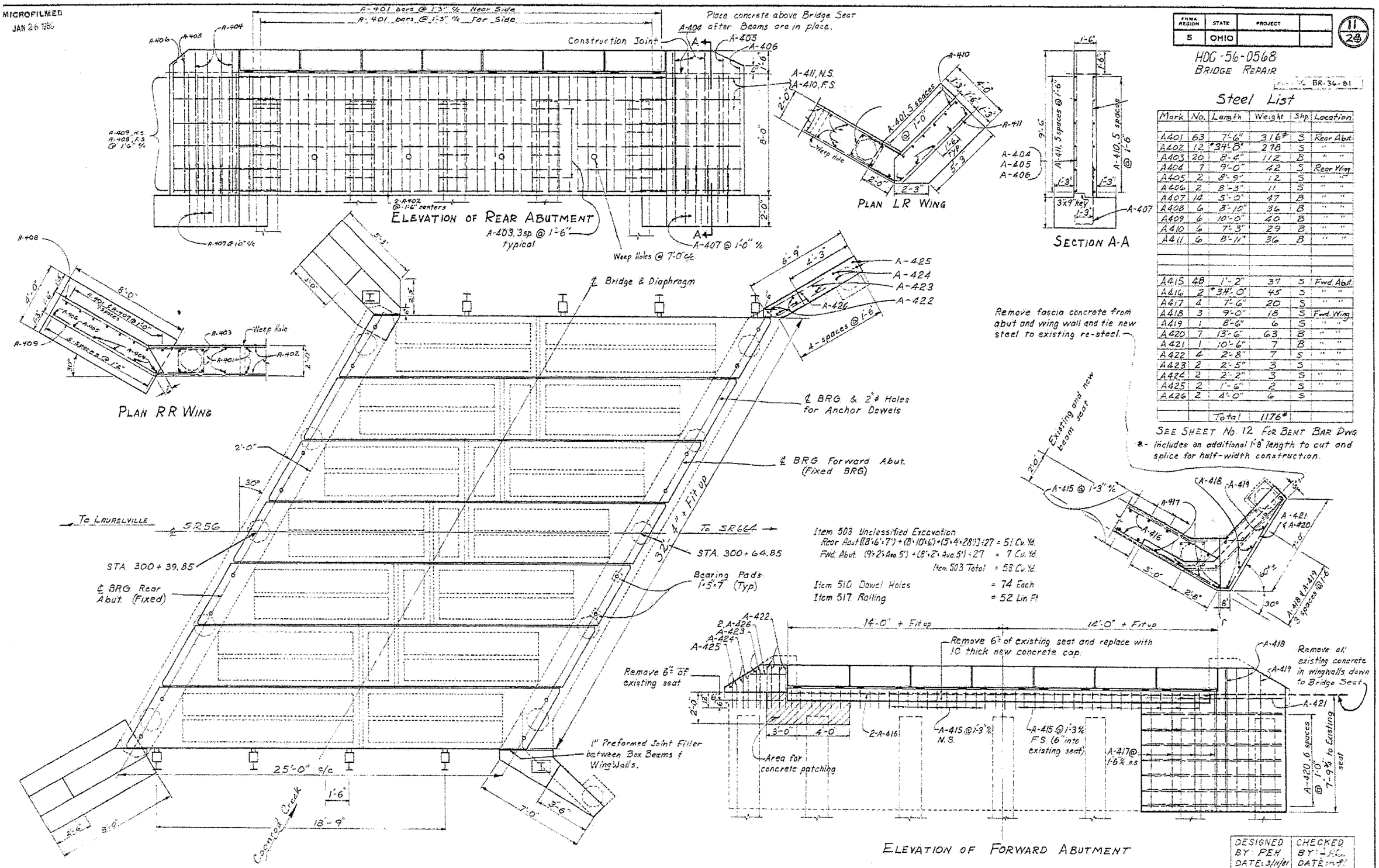

PLAN RR WING

ELEVATION OF REAR ABUTMENT

PLAN LR WING

SECTION A-A

ELEVATION OF FORWARD ABUTMENT

Item 503 Unclassified Excavation
Rear Abut (8'x6'x7') + (8'x10'x6) + (5'x4'x28') ÷ 27 = 51 Cu. Yd.
Fwd. Abut. (9'x2'x Avg. 5') + (8'x2'x Avg. 5') ÷ 27 = 7 Cu. Yd.
Item 503 Total = 58 Cu. Yd.

Item 510 Dowel Holes = 74 Each
Item 517 Railing = 52 Lin. Ft.

Steel List

Mark	No.	Length	Weight	Shp	Location
A401	63	7'-6"	316*	S	Rear Abut.
A402	12	*34'-8"	278	S	" "
A403	20	8'-4"	112	B	" "
A404	7	9'-0"	42	S	Rear Wing
A405	2	8'-9"	12	S	" "
A406	2	8'-3"	11	S	" "
A407	14	5'-0"	47	B	" "
A408	6	8'-10"	36	B	" "
A409	6	10'-0"	40	B	" "
A410	6	7'-3"	29	B	" "
A411	6	8'-11"	36	B	" "
A415	48	1'-2"	37	S	Fwd. Abut.
A416	2	*34'-0"	45	S	" "
A417	4	7'-6"	20	S	" "
A418	3	9'-0"	18	S	Fwd. Wing
A419	1	8'-6"	6	S	" "
A420	7	13'-6"	63	B	" "
A421	1	10'-6"	7	B	" "
A422	4	2'-8"	7	S	" "
A423	2	2'-5"	3	S	" "
A424	2	2'-2"	3	S	" "
A425	2	1'-6"	2	S	" "
A426	2	4'-0"	6	S	
		Total	1176*		

SEE SHEET No. 12 FOR BENT BAR DWG.

*- Includes an additional 1'-8" length to cut and splice for half-width construction.

DESIGNED BY: PEH	CHECKED BY: [illegible]
DATE: 3/11/81	DATE: [illegible]

STRUCTURAL DETAILS HOC-56-0568

MICROFILMED
JAN 25 1980

FHWA REGION	STATE	PROJECT	
5	OHIO		

HOC-56-0568
BRIDGE REPAIR

BR-36-8

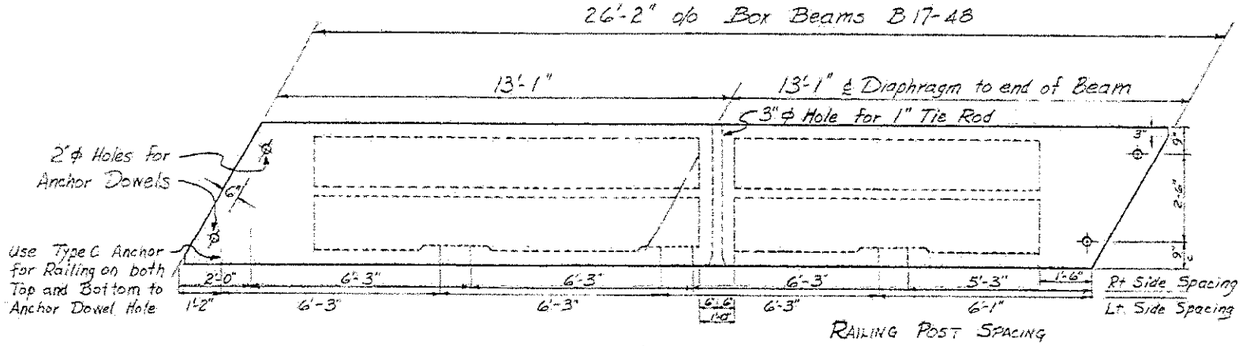

PLAN VIEW (TYPICAL FOR FASCIA BEAMS)

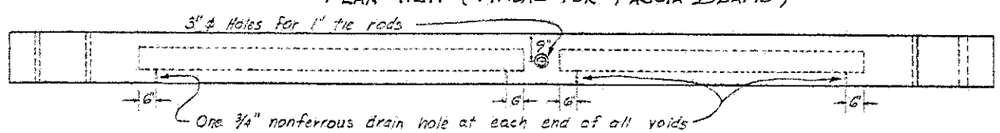

ELEVATION VIEW

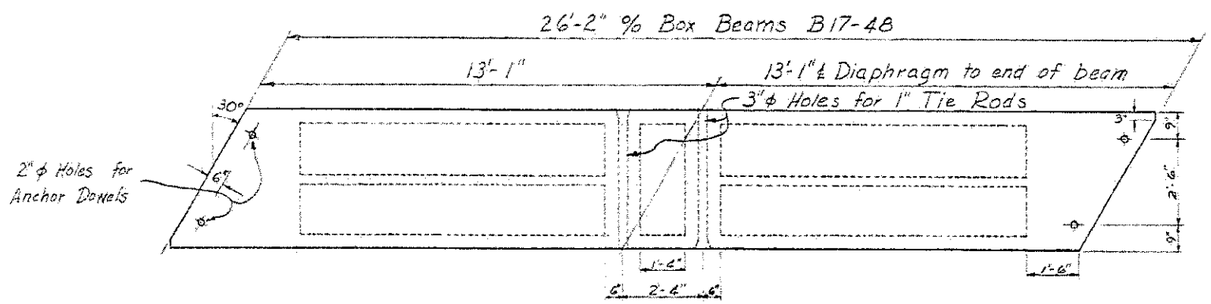

PLAN VIEW (TYPICAL FOR INTERIOR BEAMS)

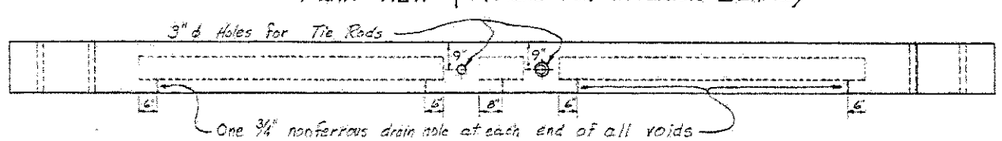

ELEVATION VIEW

Provide 16 - 1/8" x 5" x 7" preformed bearing pads with 2"ϕ holes and 12 - 1/8" x 5" x 5" preformed bearing pads w/o holes to match bearing pads shown. Payment for these shims to be included in the bid price paid for Item 516 1-inch thick elastomeric bearing pads and used as directed by the Engineer.

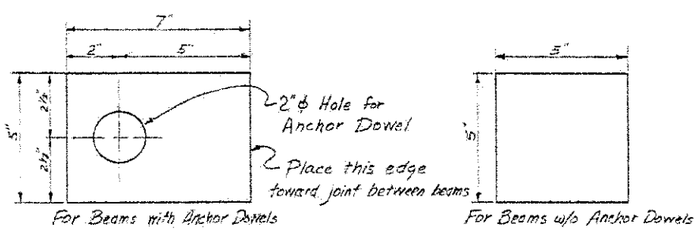

Top View of Typical Elastomeric Bearing Pads

CONCRETE CALCULATIONS

Item 511 - Class C concrete, footings
Rear Abutment - 4.29 CY — 4.29 CY

Item 511 - Class C concrete, abutments above footing
Rear Abutment - 26.54 CY
Forward Abutment 6.70 CY
+ 10% .67 CY *
Total — 33.91 CY

Item 519 - Patching
Forward Abutment 11.5 SF
+ 10% 1.2 SF *
Total — 12.7 SF

* 10% added for variable dimensions

SEE SHEET No. 15 FOR B17-48 BEAM DETAILS & DESIGN NOTES

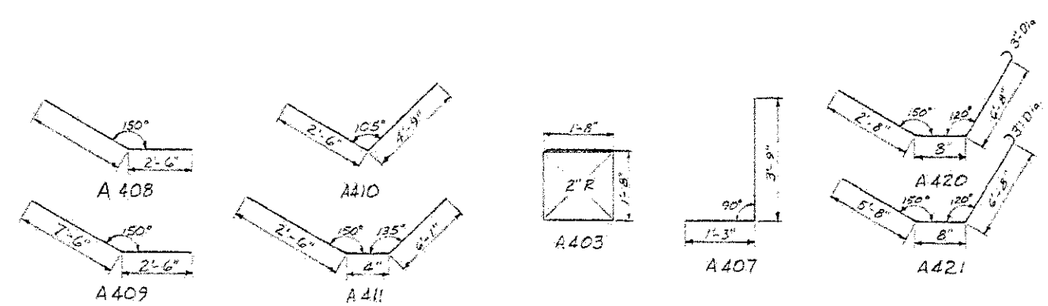

BENT BAR DIAGRAM
SEE SHEET No 11

DESIGNED	CHECKED
BY: PEH	BY: QPC
DATE: 3/11/81	DATE: 4-8

CONCRETE BOX BEAM & STRUCTURAL DETAILS HOC-56-056.