STATE OF OHIO
DEPARTMENT OF TRANSPORTATION

OHIO | FHWA REGION 5 | FEDERAL PROJECT | 1/4

(24)
I-680-9 ~~(23)~~ 237

MAH-680-446

DESIGN DESIGNATION:

CURRENT	ADT (1980)	11,600
DESIGN	ADT (1990)	7400
D H V		2100
T (% B & C TRUCKS)		10 %
D (DIRECTIONAL DISTRIBUTION		60 %
V (DESIGN SPEED)		35 MPH

MAH I-680- 4.68
MAHONING AVENUE OVER
I-680
CITY OF YOUNGSTOWN
MAHONING COUNTY

(24)
I-680-9~~(23)~~237

LIMITED ACCESS

This improvement is especially designed for through traffic and has been declared a limited access highway or freeway by action of the Director in accordance with the provisions of section 5511.02 of the Revised Code of Ohio.

CONVENTIONAL SIGNS

County Line
Township Line
Section Line
Corporation Line or
Fence Line (existing) (proposed)
Center Line 352 353
Trees, Stumps, (to be removed)
Utility Poles: Telephone, Power, Light.

Limited Access (only) LA
Right of Way (only) RW
Limited Access & Right of Way LA & RW
Existing Right of Way
Property Line (in existing fence)
Railroad or
Guardrail (existing) (proposed)

INDEX OF SHEETS

TITLE PAGE 1 Rev. Sh. 1, 8-2-78 SMK
GENERAL NOTES & GENERAL SUMMARY 2
OVERLAY DETAILS 3 Rev. Sh. 2, 9-6-78 SMK
TRAFFIC MAINTENANCE 4

MAH-I-680-0.46B

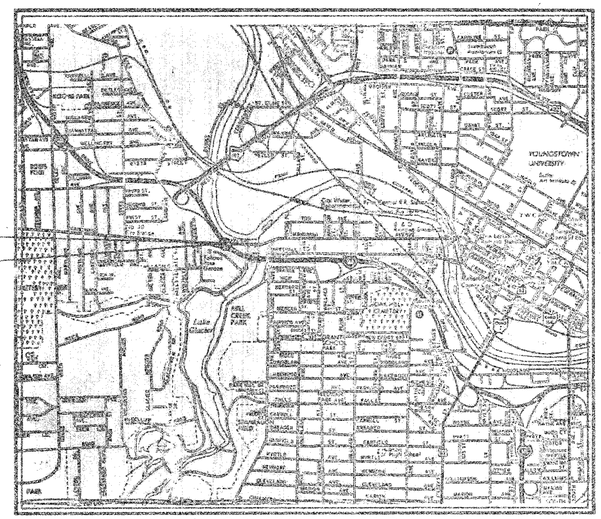

LOCATION MAP

SCALE IN MILES
0 1/4 1/2 3/4 1 2 3

Portion to be improved
State & Federal Routes
Other Roads

SCALES

Plan 0 10 20 40
Profile: Horizontal, Vertical
Cross Section: Horizontal, Vertical

1977 SPECIFICATIONS

The standard specifications of the State of Ohio, Department of Transportation, including changes and supplemental specifications listed in the proposal shall govern this improvement.

The right of way for this improvement will be provided by the State of Ohio.

I hereby approve these plans and declare that the making of this improvement will not require the closing to traffic of the highway.

MICROFILMED
OCT 11 1985

Approved
Date 3-7-78 District Deputy Director of Transportation
Approved Robert B. Pfeifer
Date 3-15-78 Engineer, Bureau of Bridges and Structural Design
Approved R. E. Cathe
Date 4-25-78 Chief Engineer, Planning and Design
Approved David L. Mein
Date 4-25-78 Director, Department of Transportation

LINE DATA

BEGIN WORK Sta. 48 + 27.91
END WORK Sta. 51 + 47.50
LENGTH OF WORK 319.59 Lin. Ft. or 0.060 Miles

TOTAL LENGTH OF PROJECT 0.00 Lin. Ft. or 0.000 Miles

SUPPLEMENTAL SPECIFICATIONS		
845	6/27/77	
850	6/27/77	
953	6/27/77	
1001	1-3-77	

MICROFILMED
OCT 1 1985

SUPPLEMENTAL PRINTS OF STANDARD CONSTRUCTION DRAWINGS					
BP-5	8-11-75				
MC-3	6-1-73				

Plan Prepared By:

SEAL

DEPARTMENT OF TRANSPORTATION
FEDERAL HIGHWAY ADMINISTRATION

APPROVED:

DIVISION ADMINISTRATOR DATE

Project:
Date of Letting 19 , Contract No.

LD0300 Rev. 11-21-73

REV. 8-2-78 SMK

GENERAL NOTES

STATE SAFETY REQUIREMENTS OUTLINED IN THE CONSTRUCTION CODE FOR THIS TYPE OF WORK WILL BE ENFORCED AND THE CONTRACTOR SHALL COMPLY WITH THE PROVISIONS OF BULLETIN I-C3, ISSUED AS A GENERAL ORDER BY THE INDUSTRIAL COMMISSION OF OHIO.

FIELD OFFICE: THE CONTRACTOR SHALL PROVIDE A SUITABLE FIELD OFFICE HAVING A MINIMUM OF 150 SQ. FT. OF FLOOR SPACE AND, IN ADDITION TO THE REQUIREMENTS OF ITEM 619, HE SHALL PROVIDE AND MAINTAIN SANITARY PROVISIONS AS PER 107.06.

ORIGINAL CONTRACT CONSTRUCTION PLANS FOR THIS PROJECT MAY BE EXAMINED IN THE DISTRICT FOUR OFFICE OF THE OHIO DEPARTMENT OF TRANSPORTATION, RAVENNA, OHIO. (MAH-18-17.20, project nos. 291-1960)

VERTICAL EXTENSION OF STRUCTURAL EXPANSION JOINTS, SEALED, AS PER PLAN: THIS ITEM SHALL INCLUDE FURNISHING OF MATERIAL, LABOR, AND EQUIPMENT NECESSARY TO RAISE AND SEAL BRIDGE DECK EXPANSION JOINTS.

STEEL BAR STOCK: BAR STOCK UTILIZED FOR VERTICAL EXTENSION OF EXPANSION JOINTS MAY BE ANY WELDABLE GRADE OF LOW OR MILD CARBON STEEL AVAILABLE COMMERCIALLY. THIS MATERIAL IS TO BE EXCLUDED FROM THE REQUIREMENTS OF 501.07 FOR TEST REPORTS.

LONGITUDINAL JOINTS IN THE L.M.C. OVERLAY ARE PERMITTED BUT ONLY TO THE EXTENT NECESSARY TO ACCOMODATE THE WIDTH OF THE FINISHING MACHINE; TO FACILITATE CHANGES IN ROADWAY CROWN, AND TO PERMIT MAINTENANCE OF VEHICULAR TRAFFIC. EXCEPT AS APPROVED BY THE DIRECTOR, JOINTS SHALL NOT BE USED ADJACENT TO RAISED CURBS, BARRIERS OR EDGES OF DECK.

FULL DEPTH REPAIRS: A QUANTITY OF 2 CU. YDS. HAS BEEN INCLUDED FOR FULL DEPTH REPAIR. THIS ITEM SHALL BE NON-PERFORMED IF FOUND NOT TO BE REQUIRED.

MAINTAINING TRAFFIC: ALL TEMPORARY BARRICADES, SIGNS AND BARRICADE LIGHTING SHALL BE ERECTED AND MAINTAINED IN ACCORDANCE WITH THE "OHIO MANUAL OF UNIFORM TRAFFIC CONTROL DEVICES FOR STREETS AND HIGHWAYS" CURRENT EDITION, LATEST REVISION. FOR TEMPORARY PAVEMENT MARKINGS, SEE NOTE IN PROPOSAL. TRAFFIC MAINTENANCE FOR THIS PROJECT SHALL BE IN ACCORDANCE WITH THIS PLAN IN ADDITION TO THE ABOVE REQUIREMENTS. PAYMENT SHALL BE MADE PER LUMP SUM BID, ITEM 614, MAINTAINING TRAFFIC.

NOTE:
"NO TRAFFIC SHALL BE PERMITTED ON ANY PORTION OF THE DECK WHICH HAS BEEN MACHINE SCARIFIED."

WORK REQUIRED

1. DETOUR EASTBOUND TRAFFIC AND MAINTAIN WESTBOUND TRAFFIC ON ONE LANE OF BRIDGE.
2. PREPARE ONE HALF (ONE LANE) OF DECK FOR OVERLAY BY SCARIFYING DECK AND RAISING EXPANSION JOINTS.
3. OVERLAY PREPARED HALF OF DECK.
4. PLACE ITEM 404 FEATHER AREAS ADJACENT TO OVERLAY.
5. REPEAT STEPS 2, 3, AND 4 FOR OPPOSITE HALF OF DECK.
6. RESTORE NORMAL TRAFFIC FLOW.

MICROFILMED
OCT 11 1985

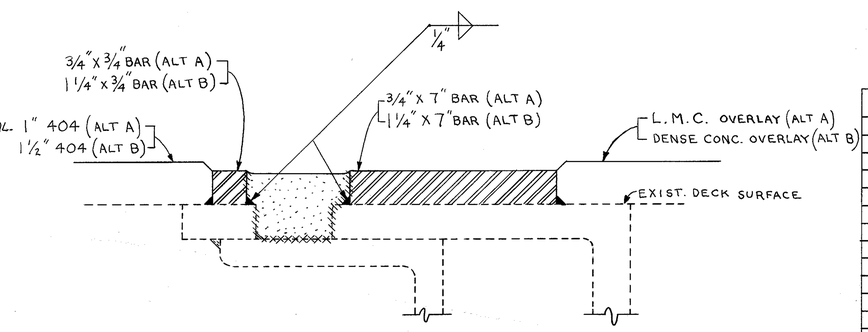

VERTICAL EXTENSION OF STRUCTURAL EXPANSION JOINTS, SEALED, AS PER PLAN

SURFACES INDICATED THUS SHALL BE SANDBLASTED AND WIPED CLEAN. JOINTS SHALL BE FILLED BEFORE RUST FORMS.

BOND TO THIS SURFACE SHALL BE PREVENTED BY USE OF FOIL OR OTHER SUITABLE BOND BREAKER BARRIER SATISFACTORY TO THE ENGINEER. CARE SHALL BE TAKEN SO AS NOT TO DISPLACE BARRIER WHEN PLACING SEALER.

HOT APPLIED JOINT SEALER, 705.01

COST OF CLEANING THE STEEL AND FURNISHING AND PLACING THE JOINT SEALER SHALL BE INCLUDED IN THIS ITEM.

TYPE CODE G706 UNLESS OTHERWISE SHOWN

GENERAL SUMMARY

ITEM	QUAN. DESIGN A	QUAN. DESIGN B	UNIT	DESCRIPTION
404	4	6	CU. YD.	ASPHALT CONCRETE, AC-20
407	19	19	GAL.	TACK COAT 702.02, RC-250 OR 702.04 SS-1, SS-1H, MS-2 OR RS-1
407	1	1	TON	COVER AGGREGATE
516	123	123	LIN. FT.	VERTICAL EXT. OF STR. EXP. JOINTS, SEALED, AS PER PLAN
619	LUMP SUM	LUMP SUM	LUMP	FIELD OFFICE
845	963	——	SQ. YD.	L.M.C.* OVERLAY (1 1/4" THK.)
△ 845	54	——	CU. YD.	L.M.C.* OVERLAY (VARIABLE THK.)
△ 845	2	——	CU. YD.	FULL DEPTH REPAIRS
850	——	963	SQ. YD.	L.W.L.S.D.C.** OVERLAY (1 3/4" THK.)
△ 850	——	54	CU. YD.	L.W.L.S.D.C.** OVERLAY (VARIABLE THK.)
△ 850	——	2	CU. YD.	FULL DEPTH REPAIRS
614	LUMP SUM	LUMP SUM	LUMP	MAINTAINING TRAFFIC

* LATEX MODIFIED CONCRETE
** LOW WATER LOW SLUMP DENSE CONCRETE
△ 100% State cost.

F.H.W.A. REGION	STATE	PROJECT	
5	OHIO		

3/4

MAH-680-0468

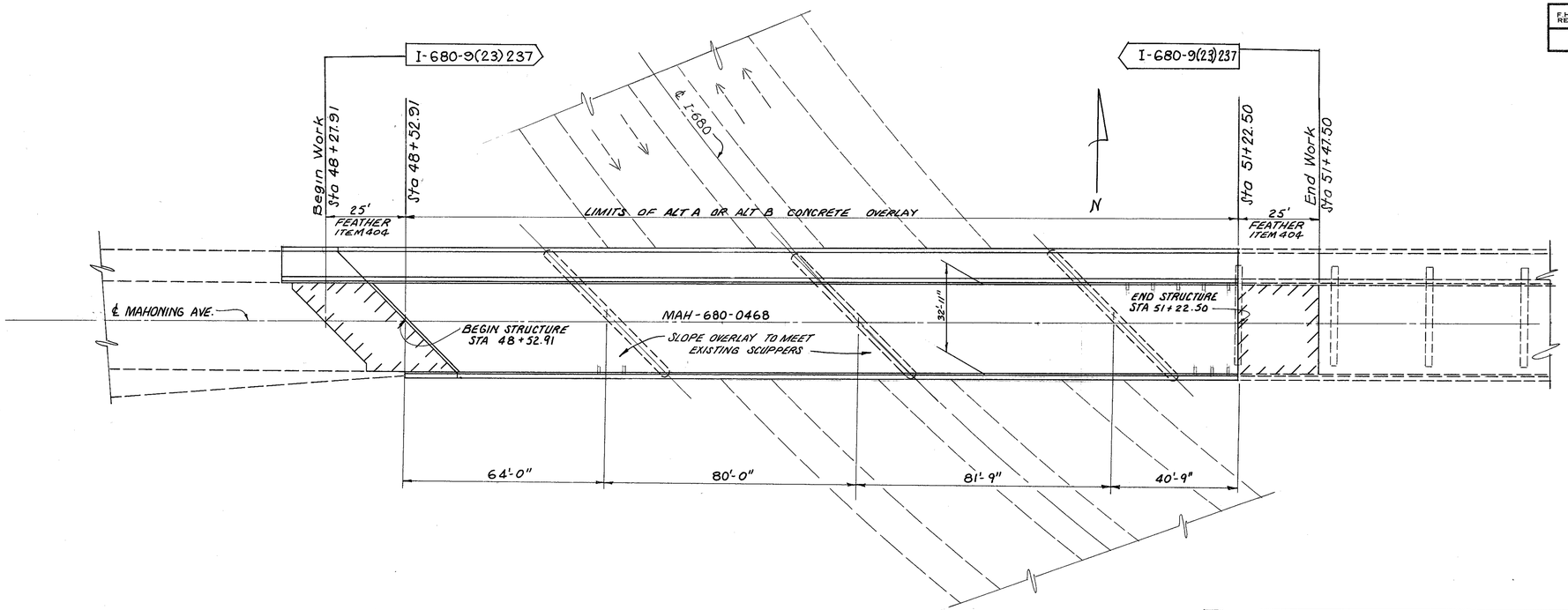

MICROFILMED
OCT 11 1985

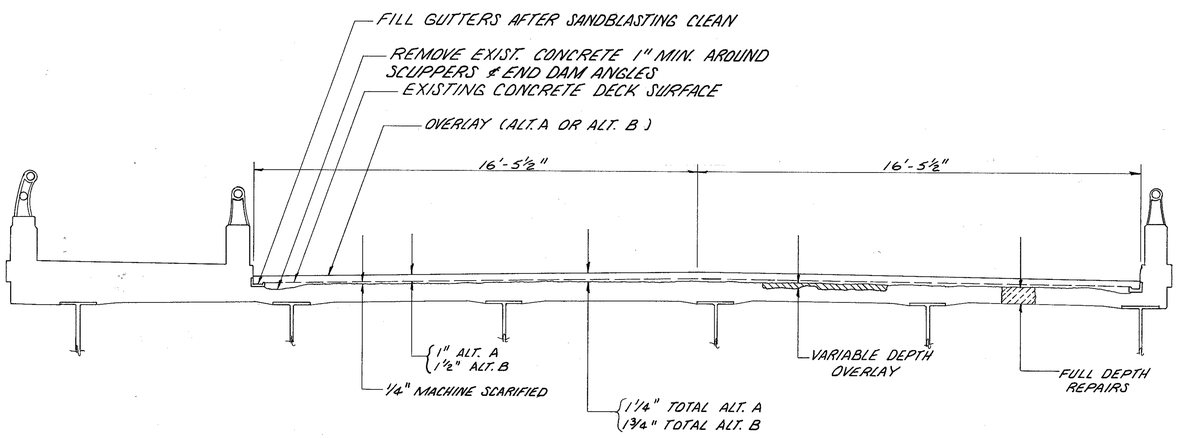

TYPICAL SECTION

ESTIMATED QUANTITIES

ITEM	QUANTITY ALT. A	QUANTITY ALT. B	UNIT	DESCRIPTION
404	4	6	CU. YD.	ASPHALT CONCRETE, AC-20
407	19	19	GAL.	TACK COAT 702.02, RC-250 OR 702.04 SS-1, SS-1H, MS-2, OR RS-1
407	1	1	TONS	COVER AGGREGATE
516	123	123	LIN. FT.	VERTICAL EXT. OF STR. EXP. JOINTS, SEALED, AS PER PLAN
845	963	——	SQ. YD.	L.M.C.* OVERLAY (1¼" THK.)
845	54	——	CU. YD.	L.M.C.* OVERLAY (VARIABLE THK.)
845	2	——	CU. YD.	FULL DEPTH REPAIRS
850	——	963	SQ. YD.	L.W.L.S.D.C.** OVERLAY (1¾" THK.)
850	——	54	CU. YD.	L.W.L.S.D.C.** OVERLAY (VARIABLE THK.)
850	——	2	CU. YD.	FULL DEPTH REPAIRS

* LATEX MODIFIED CONCRETE

** LOW WATER LOW SLUMP DENSE CONCRETE

STATE OF OHIO
DEPARTMENT OF TRANSPORTATION
DISTRICT FOUR
BRIDGE DEPT.

OVERLAY DETAILS
MAH-680-0468
MAHONING AVE. OVER I-680

DESIGNED	DRAWN	TRACED	CHECKED	REVIEWED	DATE	REVISED
MAF		MAF	JF			

F.H.W.A. REGION	STATE	PROJECT	
5	OHIO		

4/4

MAH-I 680-0468

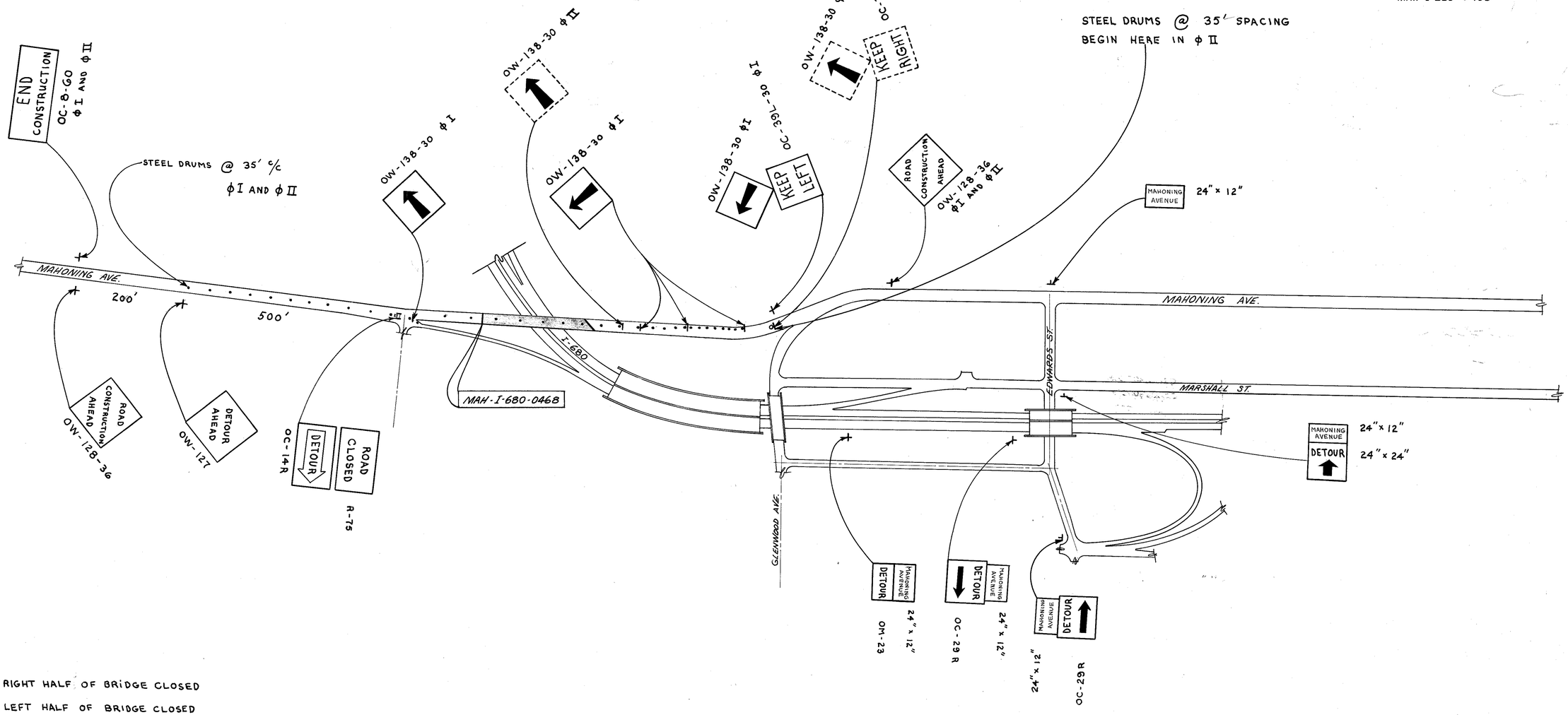

NOTE:

ϕ I - RIGHT HALF OF BRIDGE CLOSED

ϕ II - LEFT HALF OF BRIDGE CLOSED

MAHONING AVENUE DETOUR EASTBOUND WILL BE IN EFFECT DURING BOTH PHASES