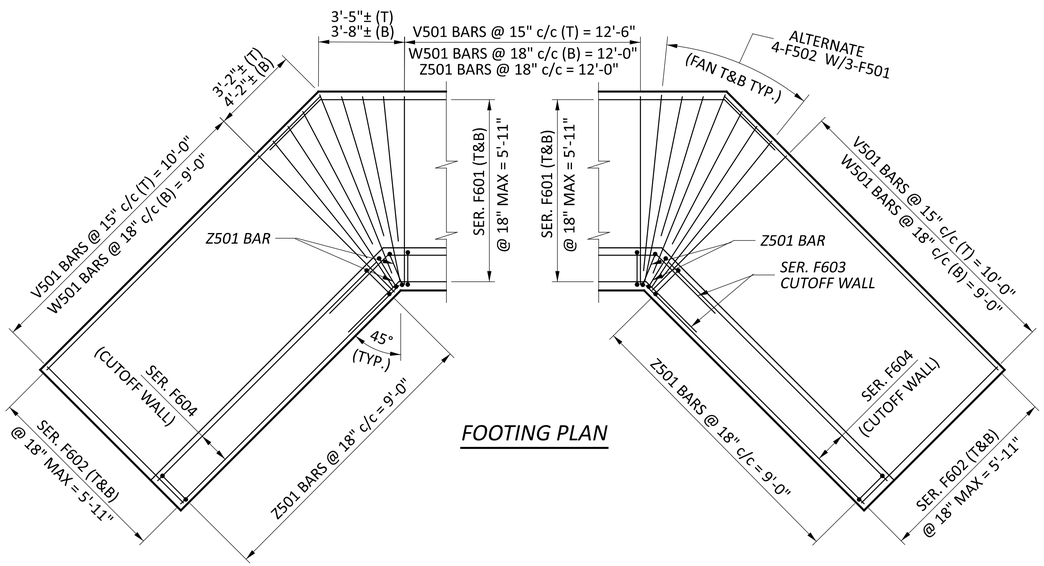

FOOTING PLAN

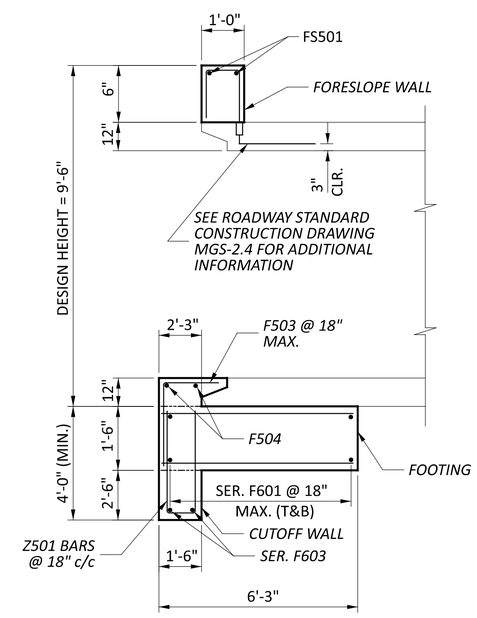

ELEVATION VIEW

(CULVERT INLET BEVEL SHOWN)

NOTES

1. FOR CULVERT LOCATION PLAN, SEE SHEET 11.
2. FOR PRECAST BOX CULVERT DETAILS, SEE SHEET 20.
3. THE BAR SIZE NUMBER IS SPECIFIED ON THE PLANS IN THE BAR MARK COLUMN. THE FIRST DIGIT INDICATES THE BAR SIZE NUMBER. FOR EXAMPLE, WW501 IS A NO.5 BAR. BAR DIMENSIONS SHOWN ARE OUT TO OUT. ALL REINFORCING STEEL SHALL BE EPOXY COATED.
4. THE LAP SPLICE LENGTHS USED IN THESE DETAILS ARE AS FOLLOWS: 2'-5" FOR #5 BARS; 2'-11" FOR #6 BARS.

LEGEND:

C.J.	CONSTRUCTION JOINT	N.F.	NEAR FACE
CLR.	CLEAR	SER.	SERIES
DIA.	DIAMETER	STR.	STRAIGHT
E.F.	EACH FACE	(T)	TOP
F.F.	FAR FACE	(B)	BOTTOM
MAX.	MAXIMUM	T&B	TOP AND BOTTOM
MIN.	MINIMUM	TYP.	TYPICAL
PEJF	PREFORMED EXPANSION JOINT FILLER	INC.	INCREMENT

TYPICAL WINGWALL DETAILS
MUS-208-3.18

DESIGN AGENCY

DESIGNER
DRL

REVIEWER
BRH MM-DD-YY

PROJECT ID
95459

SUBSET 5 | TOTAL 5

SHEET P.25 | TOTAL 73

MUS-208-3.18/4.95/5.29

MODEL: Sheet PAPERSIZE: 34x22 (in.) DATE: 1/16/2025 TIME: 6:49:37 AM USER: bharlow
pw:\\ohiodot-pw.bentley.com:ohiodot-pw-02\Documents\01 Active Projects\District 05\Muskingum\95459\400-Engineering\Drainage\Sheets\95459_DM205.dgn

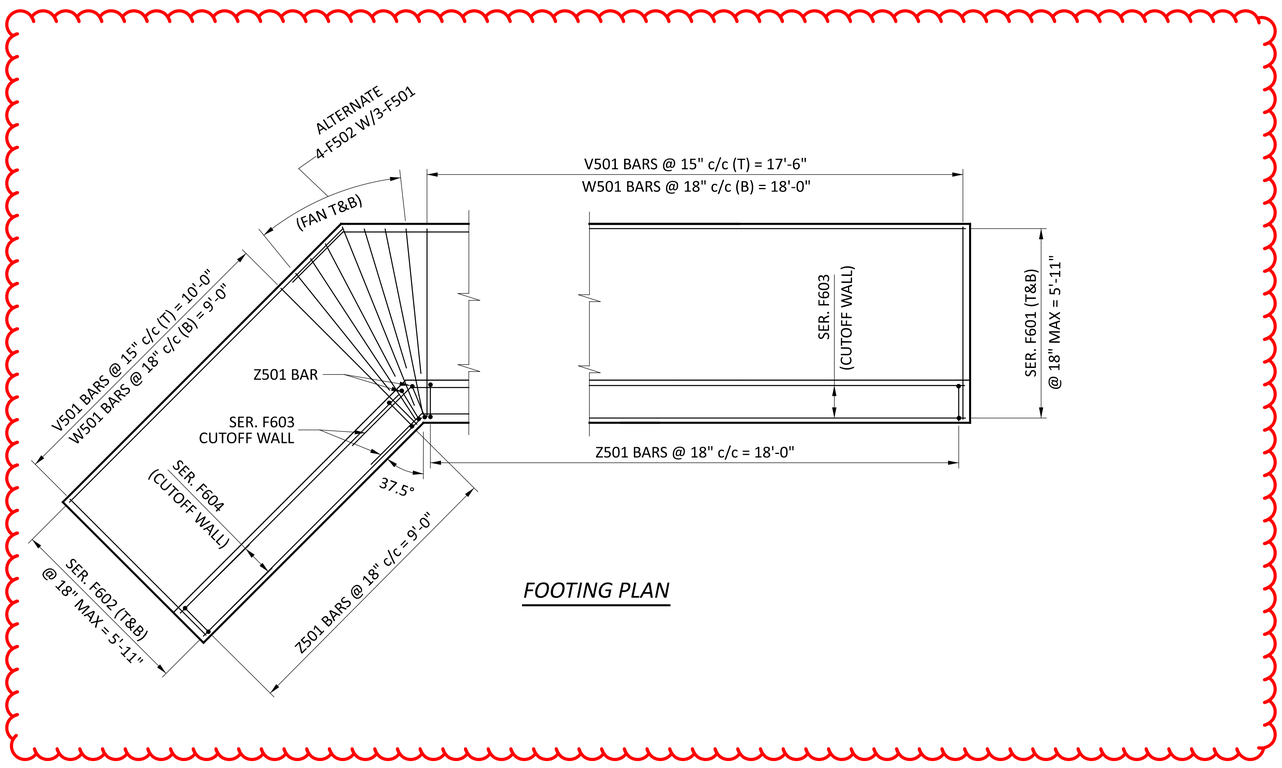

FOOTING PLAN

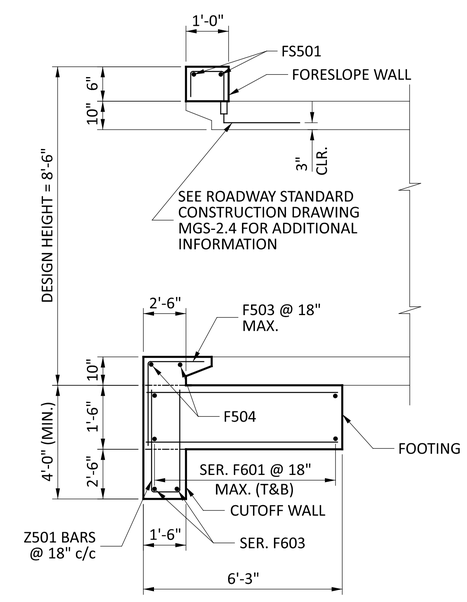

ELEVATION VIEW

(CULVERT INLET BEVEL SHOWN)

NOTES

1. *FOR CULVERT LOCATION PLAN, SEE SHEET 30.*
2. *FOR PRECAST BOX CULVERT DETAILS, SEE SHEET 36.*
3. *THE BAR SIZE NUMBER IS SPECIFIED ON THE PLANS IN THE BAR MARK COLUMN. THE FIRST DIGIT INDICATES THE BAR SIZE NUMBER. FOR EXAMPLE, WW501 IS A NO.5 BAR. BAR DIMENSIONS SHOWN ARE OUT TO OUT. ALL REINFORCING STEEL SHALL BE EPOXY COATED.*
4. *THE LAP SPLICE LENGTHS USED IN THESE DETAILS ARE AS FOLLOWS: 2'-5" FOR #5 BARS; 2'-11" FOR #6 BARS.*

LEGEND:

C.J.	*CONSTRUCTION JOINT*	*N.F.*	*NEAR FACE*
CLR.	*CLEAR*	*SER.*	*SERIES*
DIA.	*DIAMETER*	*STR.*	*STRAIGHT*
E.F.	*EACH FACE*	*(T)*	*TOP*
F.F.	*FAR FACE*	*(B)*	*BOTTOM*
MAX.	*MAXIMUM*	*T&B*	*TOP AND BOTTOM*
MIN.	*MINIMUM*	*TYP.*	*TYPICAL*
PEJF	*PREFORMED EXPANSION JOINT FILLER*	*INC.*	*INCREMENT*

ϑ = ℄ CULVERT SKEW FROM LINE NORMAL TO ROADWAY (ROUNDED TO NEAREST 15° INCREMENT FROM 0° TO 45°)

TYPICAL WINGWALL DETAILS
MUS-208-4.95

DESIGN AGENCY

DESIGNER
DRL

REVIEWER
BRH MM-DD-YY

PROJECT ID
95459

SUBSET	TOTAL
5	5

SHEET	TOTAL
P.41	73

MUS-208-3.18/4.95/5.29

MODEL: Sheet PAPERSIZE: 34x22 (in.) DATE: 1/16/2025 TIME: 6:49:48 AM USER: bharlow
pw:\\ohiodot-pw.bentley.com:ohiodot-pw-02\Documents\01 Active Projects\District 05\Muskingum\95459\400-Engineering\Drainage\Sheets\95459_DM210.dgn

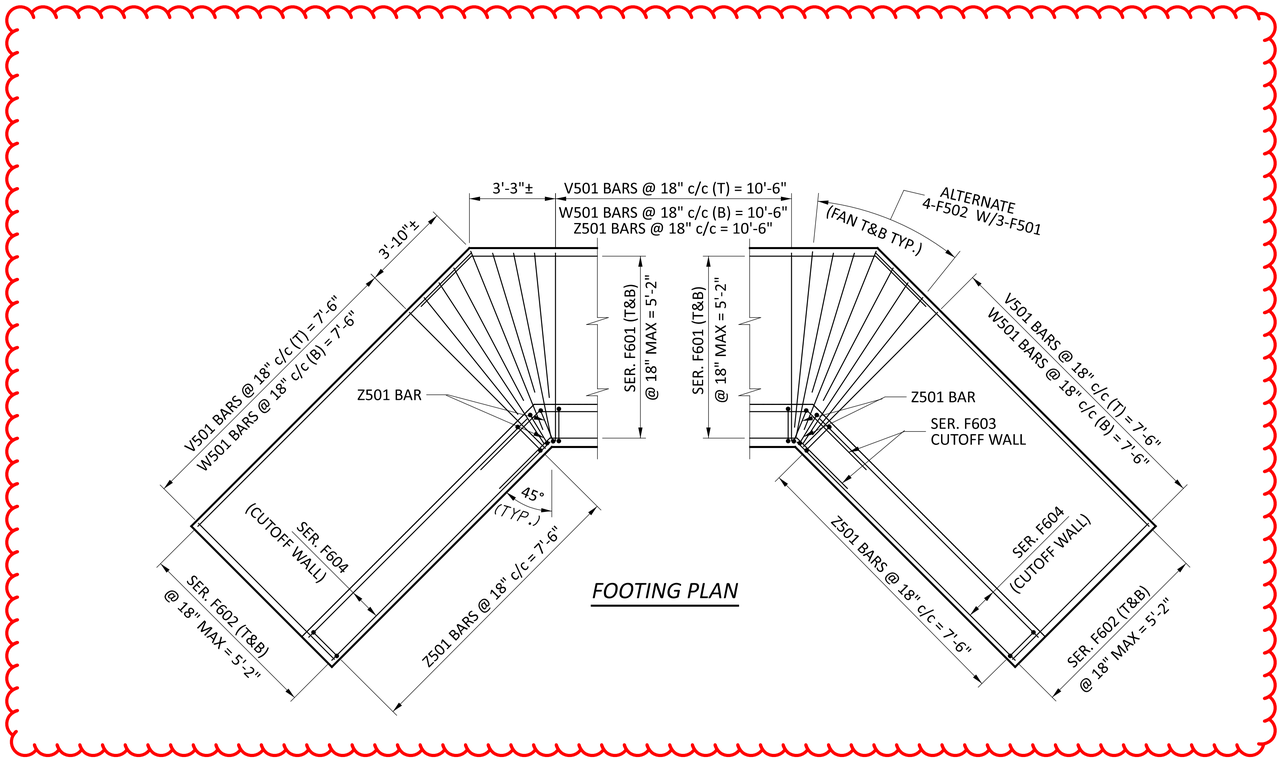

FOOTING PLAN

NOTES

1. FOR CULVERT LOCATION PLAN, SEE SHEET 46.
2. FOR PRECAST BOX CULVERT DETAILS, SEE SHEET 53.
3. THE BAR SIZE NUMBER IS SPECIFIED ON THE PLANS IN THE BAR MARK COLUMN. THE FIRST DIGIT INDICATES THE BAR SIZE NUMBER. FOR EXAMPLE, WW501 IS A NO.5 BAR. BAR DIMENSIONS SHOWN ARE OUT TO OUT. ALL REINFORCING STEEL SHALL BE EPOXY COATED.
4. THE LAP SPLICE LENGTHS USED IN THESE DETAILS ARE AS FOLLOWS: 2'-5" FOR #5 BARS; 2'-11" FOR #6 BARS.

LEGEND:

C.J.	CONSTRUCTION JOINT	N.F.	NEAR FACE
CLR.	CLEAR	SER.	SERIES
DIA.	DIAMETER	STR.	STRAIGHT
E.F.	EACH FACE	(T)	TOP
F.F.	FAR FACE	(B)	BOTTOM
MAX.	MAXIMUM	T&B	TOP AND BOTTOM
MIN.	MINIMUM	TYP.	TYPICAL
PEJF	PREFORMED EXPANSION JOINT FILLER	INC.	INCREMENT

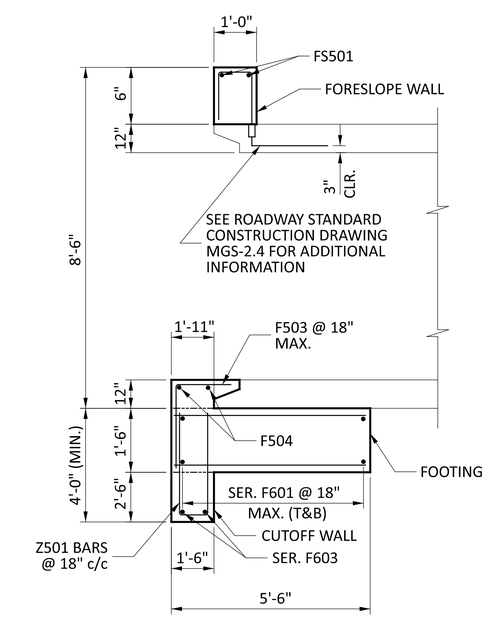

ELEVATION VIEW

(CULVERT INLET BEVEL SHOWN)

TYPICAL WINGWALL DETAILS
MUS-208-5.29

DESIGN AGENCY

DESIGNER DRL
REVIEWER BRH MM-DD-YY
PROJECT ID 95459
SUBSET 5 TOTAL 5
SHEET P.58 TOTAL 73

MUS-208-3.18/4.95/5.29

MODEL: Sheet PAPERSIZE: 34x22 (in.) DATE: 1/16/2025 TIME: 6:49:54 AM USER: bharlow
pw:\\ohiodot-pw.bentley.com:ohiodot-pw-02\Documents\01 Active Projects\District 05\Muskingum\95459\400-Engineering\Drainage\Sheets\95459_DM215.dgn