STATE OF OHIO
DEPARTMENT OF TRANSPORTATION

MUS-208-0.00
PART 1

FOR PART 2, SEE MUS-208-3.18/4.95/5.29

VILLAGE OF DRESDEN
ADAMS, JEFFERSON, MADISON, AND SALEM TOWNSHIPS
MUSKINGUM COUNTY

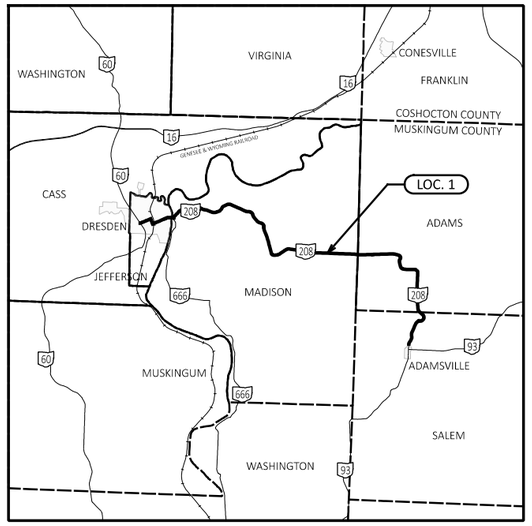

LOCATION MAP

LATITUDE: N 40° 06' 26" LONGITUDE: W 81° 56' 04"

PORTION TO BE IMPROVED

DESIGN DESIGNATION	SLM 0.00-1.03	SLM 1.03-11.05
FUNCTIONAL CLASSIFICATION	PA	RMC
OPENING YEAR ADT (2025)	3,000	850
DESIGN YEAR ADT (2037)	3,000	850
DESIGN HOURLY VOLUME (2037)	400	100
DIRECTIONAL DISTRIBUTION	60%	52%
TRUCKS (24 HOUR B&C)	8%	11%
DESIGN SPEED	35 MPH	55 MPH
LEGAL SPEED	35 MPH	55 MPH
NHS PROJECT	NO	NO

RMC = RURAL MINOR COLLECTOR

DESIGN EXCEPTIONS
NONE REQUIRED

ADA DESIGN WAIVER
RMP0013493 DATE APPROVED: 7/2/2024

UNDERGROUND UTILITIES

OHIO811.org
Before You Dig

PLAN PREPARED BY:
OHIO DEPARTMENT OF TRANSPORTATION
DISTRICT 5 ENGINEERING

INDEX OF SHEETS

TITLE SHEET	1
TYPICAL SECTIONS	2
GENERAL NOTES	3-6
MAINTENANCE OF TRAFFIC	7-10
PAVEMENT DATA	11-12
SHOULDER DATA	13
EXTRA AREA DATA	14
BRIDGE TREATMENT DATA	15-16,16A,16B
DRAINAGE DATA	17
CURB RAMP DATA	18
GUARDRAIL DATA	19-20
CULVERT / UTILITY DATA	21
PLAN SHEETS (SLM 0.00-11.05)	22-48
CROSS SECTIONS (SLM 0.66-0.76)	49-52
PAVEMENT MARKING DATA	53-54
RAISED PAVEMENT MARKING DATA	55
SIGN DATA	56
GENERAL SUMMARY	57-59
RIGHT-OF-WAY (CENTERLINE PLAT)	

ENGINEER'S SEAL

STATE OF OHIO
JASON SCOTT LUTZ
E-77397
REGISTERED
PROFESSIONAL ENGINEER

STANDARD CONSTRUCTION DRAWINGS

						SUPPLEMENTAL SPECIFICATIONS		SPECIAL PROVISIONS
BP-3.1	1/19/24	MGS-5.2	7/15/16	TC-41.20	10/18/13	800	7/19/24	FDR W/ EMULSION (PART 1) DATE: 7/26/24
BP-3.2	1/18/19	MGS-5.3	7/15/16	TC-41.30	4/21/23	832	7/19/24	
BP-4.1	7/19/13	RM-1.1	1/20/23	TC-42.20	10/18/13	851	1/21/22	SUBGRADE EXPLORATION (PART 1) DATE: 4/30/24
BP-5.1	7/15/22			TC-52.10	10/18/13	902	7/19/19	
BP-7.1	7/19/24	MT-97.10	4/19/19	TC-52.20	1/15/21	940	4/17/15	
		MT-97.11	1/20/17	TC-61.30	7/19/24	961	4/17/20	WATERWAY PERMITS CONDITIONS (PART 1) DATE: 8/29/24
DM-1.1	7/17/20	MT-99.20	4/19/19	TC-65.10	1/17/14			
DM-4.4	1/15/16	MT-101.60	4/21/23	TC-65.11	1/19/24			
		MT-101.90	7/17/20	TC-71.10	4/21/23			WATERWAY PERMITS CONDITIONS (PART 2) DATE: 10/7/2024
MGS-1.1	7/16/21	MT-105.10	1/17/20	TC-74.10	7/21/23			
MGS-2.1	1/19/18							
MGS-2.3	1/20/23							
MGS-4.1	1/20/17							
MGS-4.2	7/19/13							
MGS-4.5	1/18/13							

FEDERAL PROJECT NUMBER
NON-FEDERAL

RAILROAD INVOLVEMENT
OHIO CENTRAL RAILROAD CO.

PROJECT DESCRIPTION
RESURFACING AND RELATED WORK ON S.R. 208 IN MUSKINGUM COUNTY AND WITHIN THE VILLAGE OF DRESDEN INCLUDING FULL DEPTH RECLAMATION OF S.R. 208 FROM SLM 3.32 TO 11.05 AND REPLACEMENT OF EXISTING GUARDRAIL ALONG ROUTE.

PROJECT EARTH DISTURBED AREA = 0.25 ACRES
ESTIMATED CONTRACTOR EARTH DISTURBED AREA = 0.25 ACRES
NOTICE OF INTENT EARTH DISTURBED AREA = NOI NOT REQUIRED

LOCATION	PLAN SPLIT	COUNTY	ROUTE	BEGIN SLM	END SLM	LENGTH MILES	CITY/ VILLAGE
1	1	MUS	208	0.00	11.05	11.05	DRESDEN

2023 SPECIFICATIONS

THE STANDARD SPECIFICATIONS OF THE STATE OF OHIO, DEPARTMENT OF TRANSPORTATION, INCLUDING CHANGES AND SUPPLEMENTAL SPECIFICATIONS LISTED IN THE PROPOSAL SHALL GOVERN THIS IMPROVEMENT.

I HEREBY APPROVE THESE PLANS AND DECLARE THAT THE MAKING OF THIS IMPROVEMENT WILL NOT REQUIRE THE CLOSING TO TRAFFIC OF THE HIGHWAY AND THAT THAT PROVISIONS FOR THE MAINTENANCE AND SAFETY OF TRAFFIC WILL BE AS SET FORTH ON THE PLANS AND ESTIMATES.

DISTRICT DEPUTY DIRECTOR
Jason L. Sturgeon, P.E.
05

DIRECTOR, DEPARTMENT OF TRANSPORTATION
Pamela Boratyn

TITLE SHEET

DESIGN AGENCY

DESIGNER RMA
REVIEWER JSL 05/15/24
PROJECT ID 95459
SHEET 1 TOTAL 59

MUS-208-00.00
MODEL: Sheet PAPERSIZE: 17x11 (in.) DATE: 1/16/2025 TIME: 11:21:04 AM USER: jlutz1
pw:\\ohiodot-pw.bentley.com:ohiodot-pw-02\Documents\01 Active Projects\District 05\Muskingum\95459\400-Engineering\Roadway\Sheets\95459_GT101.dgn

BRIDGE TREATMENTS

MUS-208-0087 - BUTT JOINT AT APPROACH SLABS, PATCH AND SEAL BRIDGE DECK, EXPANSION JOINT REPAIR (SEE SHEETS 16A-16B)

MUS-208-0318/0495/0529 -STRUCTURE REPLACEMENT (SEE PART 2 PLANS)

MUS-208-0663 - MILL/FILL SURFACE COURSE ONLY, SAW AND SEAL BRIDGE JOINTS

MUS-208-0780 - MILL/FILL SURFACE AND INTERMEDIATE COURSES, REPLACE WATERPROOFING, SAW AND SEAL BRIDGE JOINTS

MUS-208-1041 - BUTT JOINT AT BRIDGE DECK, SEAL BRIDGE DECK

ITEM 409, SAWING AND SEALING ASPHALT CONCRETE PAVEMENT JOINTS

THIS ITEM SHALL BE USED AT BRIDGE DECK END TRANSVERSE JOINTS RECEIVING AN ASPHALT OVERLAY AND CONSTRUCTED PER CMS 409.03. THE SAW CUT LINE SHOULD MATCH THE BRIDGE DECK END AND MAY BE SKEWED. THE CONTRACTOR SHALL PRE-MARK THE SAW CUT LINE AND OBTAIN APPROVAL FROM THE ENGINEER BEFORE PROCEEDING WITH THE SAW CUT.

ITEM 516, 2" DEEP JOINT SEALER, AS PER PLAN (B)

REMOVE ALL FOREIGN MATERIAL AND DEBRIS FROM THE EXISTING JOINT BETWEEN THE APPROACH SLAB AND DECK OR BACKWALL. ANY SPALLS ADJACENT TO THE JOINT LESS THAN OR EQUAL TO 3" SHALL BE CLEANED AND SEALED WITH THIS ITEM. FOR SPALLS GREATER THAN 3" USE ITEMS 202 AND 511 AS DESCRIBED ON THIS SHEET.

AFTER REMOVAL, PERFORM A NEW SAWCUT TO ESTABLISH A ½" WIDE BY 2¼" DEEP JOINT ALONG THIS INTERFACE. ONCE THE JOINT HAS BEEN OPENED OR CREATED, AIRBLAST THOROUGHLY PRIOR TO PLACEMENT OF HOT APPLIED JOINT SEALER PER 705.04, AS DIRECTED BY THE ENGINEER.

DO NOT DISTURB EXPANSION JOINT INSIDE JOINT ARMOR.

PAYMENT FOR ALL LABOR, EQUIPMENT, AND MATERIALS SHALL BE INCLUDED IN THE UNIT PRICE BID FOR ITEM 516, 2" DEEP JOINT SEALER, AS PER PLAN (B)

ITEM SPECIAL, PATCHING CONCRETE BRIDGE DECKS, TYPE B

THIS ITEM SHALL CONFORM TO PROPOSAL NOTE 512 ALONG WITH THE FOLLOWING REQUIREMENTS:

ALL BRIDGE DECK PATCHING SHALL USE COMMERCIAL GRADE QUIKRETE FAST SET DOT MIX EXTENDED OR APPROVED EQUAL. THE MATERIAL SHALL BE PLACED AT A MINIMUM DEPTH OF FOUR (4) INCHES AND CURED PER MANUFACTURER RECOMMENDATIONS.

ALL LOCATIONS AND DIMENSIONS WILL BE DETERMINED BY THE ENGINEER. THE INTENT OF THE WORK IS TO CORRECT HEAVILY DETERIORATED SURFACE ZONES (I.E. FAILED CONCRETE/ASPHALT PATCHES, MAP-CRACKED DETERIORATED AREAS, SPALLED/OPEN POTHOLES, ETC.) AND NOT TO CORRECT ALL UNSOUND AREAS OF THE BRIDGE DECK/OVERLAY.

TRAFFIC WILL NOT BE PERMITED ON THE FINISHED CONCRETE SURFACE UNTIL AFTER TWO TEST BEAMS HAVE ATTAINED AN AVERAGE MODULUS OF RUPTURE OF 400 PSI.

PAYMENT FOR ALL OF THE ABOVE DESCRIBED LABOR, EQUIPMENT, AND MATERIALS WILL BE MADE AT THE CONTRACT PRICE BID FOR ITEM SPECIAL, PATCHING CONCRETE BRIDGE DECKS, TYPE B.

BRIDGE TREATMENT DATA

LOCATION	COUNTY, ROUTE, BRIDGE NO.	LENGTH (BRIDGE LIMITS)	WIDTH	AREA	APPROACH SLAB LENGTH	APPROACH SLAB WIDTH	APPROACH SLAB AREA (INCLUDES BOTH APPROACH SLABS)	DETAIL	MAINLINE DEDUCTIONS (CARRIED TO PAVEMENT DATA TABLE)	SHOULDER DEDUCTIONS (CARRIED TO SHOULDER DATA TABLE)	202 REMOVAL MISC.: STRUCTURAL JOINT OR JOINT SEALER	254 PAVEMENT PLANING, ASPHALT CONCRETE, 1.25"	254 PAVEMENT PLANING, ASPHALT CONCRETE, 4.25"	407 NON-TRACKING TACK COAT @ 0.08 GAL./S.Y.	407 NON-TRACKING TACK COAT @ 0.05 GAL./S.Y.	409 SAWING AND SEALING ASPHALT CONCRETE PAVEMENT JOINTS	441 THICKNESS	441 ASPHALT CONCRETE INTERMEDIATE COURSE, TYPE 2, (446), AS PER PLAN, PG64-22	441 THICKNESS	441 ASPHALT CONCRETE SURFACE COURSE, TYPE 1, (446), AS PER PLAN, PG70-22M	512 TYPE 3 WATERPROOFING	512 **SEALING CONCRETE BRIDGE DECKS WITH HMWM RESIN	516 2" DEEP JOINT SEALER, AS PER PLAN (A)	516 2" DEEP JOINT SEALER, AS PER PLAN (B)	STRUCTURAL JOINT OR JOINT SEALER, MISC.: 4" EMSEAL	SPECIAL PATCHING CONCRETE BRIDGE DECKS, TYPE B
		LIN. FT.	LIN. FT.	SQ. YD.	LIN. FT.	LIN. FT.	SQ. YD.		SQ. YD.	SQ. YD.	FT.	SQ. YD.	SQ. YD.	GAL.	GAL.	FT.	INCHES	CU. YD.	INCHES	CU. YD.	SQ. YD.	SQ. YD.	FT.	FT.	FT.	SQ. YD.
1	MUS-208-0087	818.5	28.0	2,546.4	25.0	28.0	155.6	1			65.0											2,702.0	98.0	62.0	65.0	10.0
	MUS-208-0271	14.0	65.0	101.1	BOX CULVERT (BURIED)							3" ASPHALT CONCRETE ON 6" CONCRETE BASE														
	MUS-208-0318	14.0	48.0	74.7	BOX CULVERT (BURIED)							9" ASPHALT CONCRETE ON AGGREGATE BASE (SEE PART 2 PLANS)														
	MUS-208-0495	10.0	46.0	51.1	BOX CULVERT (BURIED)							9" ASPHALT CONCRETE ON AGGREGATE BASE (SEE PART 2 PLANS)														
	MUS-208-0529	12.0	42.0	56.0	BOX CULVERT (BURIED)							9" ASPHALT CONCRETE ON AGGREGATE BASE (SEE PART 2 PLANS)														
	MUS-208-0554	12.0	44.0	58.7	BOX CULVERT (BURIED)							9" ASPHALT CONCRETE ON AGGREGATE BASE														
	MUS-208-0598	14.0	66.0	102.7	BOX CULVERT (BURIED)							10" ASPHALT CONCRETE ON AGGREGATE BASE														
	MUS-208-0663	52.0	36.0	208.0	20.0	36.0	160.0	2	214.7			368.0		29.4		72.0			1.25	12.8						
	MUS-208-0780	26.0	28.0	80.9	15.0	18.0	60.0	3	130.7				140.9	11.3	7.0	56.0	3.00	11.7	1.25	4.9	93.3					
	MUS-208-1041	54.0	30.0	180.0	25.0	30.0	166.7	4	242.7				166.7	13.3	8.3		3.00	13.9	1.25	5.8		180.0	60.0			
	SUB-TOTALS								588.1					54.0	15.3											
LOCATION 1 TOTALS (CARRIED TO GENERAL SUMMARY)											65.0	368.0	307.6	69.3		128.0		25.6		23.5	93.3	2,882.0	158.0	62.0	65.0	10.0

**SEAL OVER EXISTING PAVEMENT MARKINGS

BRIDGE TREATMENT DATA

DESIGN AGENCY

DESIGNER RMA

REVIEWER JSL 05/15/24

PROJECT ID 95459

SHEET 15 TOTAL 59

MUS-208-00.00

MODEL: Sheet PAPERSIZE: 17x11 (in.) DATE: 1/16/2025 TIME: 10:56:10 AM USER: jlutz1
pw:\\ohiodot-pw.bentley.com:ohiodot-pw-02\Documents\01 Active Projects\District 05\Muskingum\95459\400-Engineering\Roadway\Sheets\95459_GO105.dgn

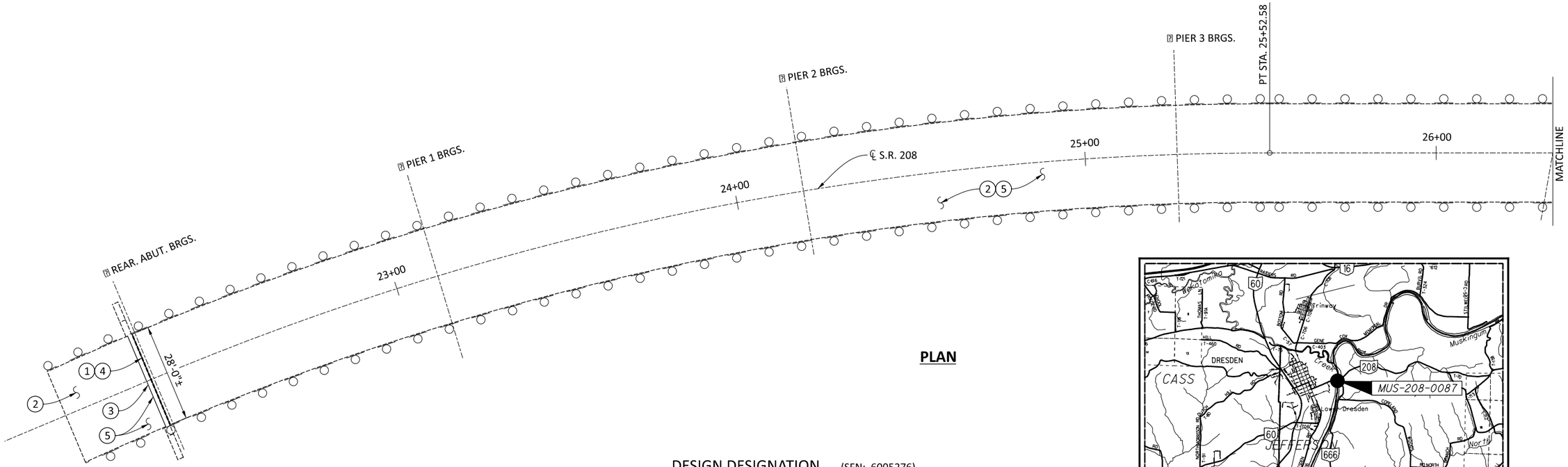

PLAN

1 — ITEM 202 - REMOVAL MISC.: STRUCTURAL JOINT OR JOINT SEALER

2 — ITEM 512 - SEALING CONCRETE BRIDGE DECKS WITH HMWM RESIN

3 — ITEM 516 - 2" DEEP JOINT SEALER, AS PER PLAN (B)

4 — ITEM 516 - STRUCTURAL JOINT OR JOINT SEALER, MISC.: 4" EMSEAL

5 — ITEM 519 - PATCHING CONCRETE BRIDGE DECK, TYPE B

DESIGN DESIGNATION (SFN: 6005276)

CURRENT ADT (2013)	2700
DESIGN YEAR ADT (2033)	3700
DESIGN HOURLY VOLUME (2033)	407
DIRECTIONAL DISTRIBUTION	55%
TRUCKS (24 HOUR B&C)	110
DESIGN SPEED	35 MPH
LEGAL SPEED	35 MPH

DESIGN FUNCTIONAL CLASSIFICATION: MINOR COLLECTOR

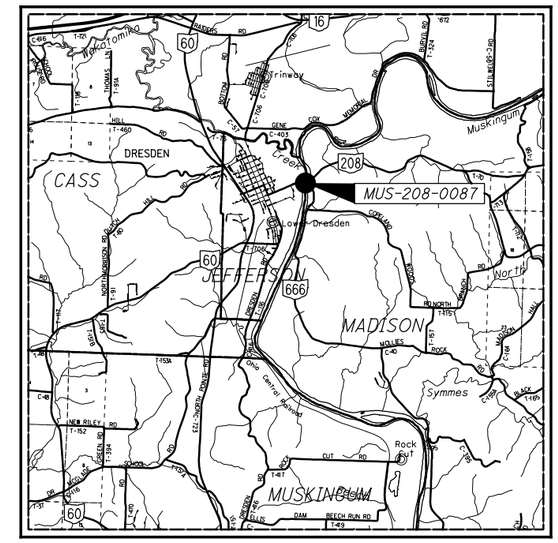

LOCATION MAP FOR MUS-208-0087

LATITUDE: 40°07'15" LONGITUDE: 82°00'07"

SCALE IN MILES

0 1 2 3 4

N

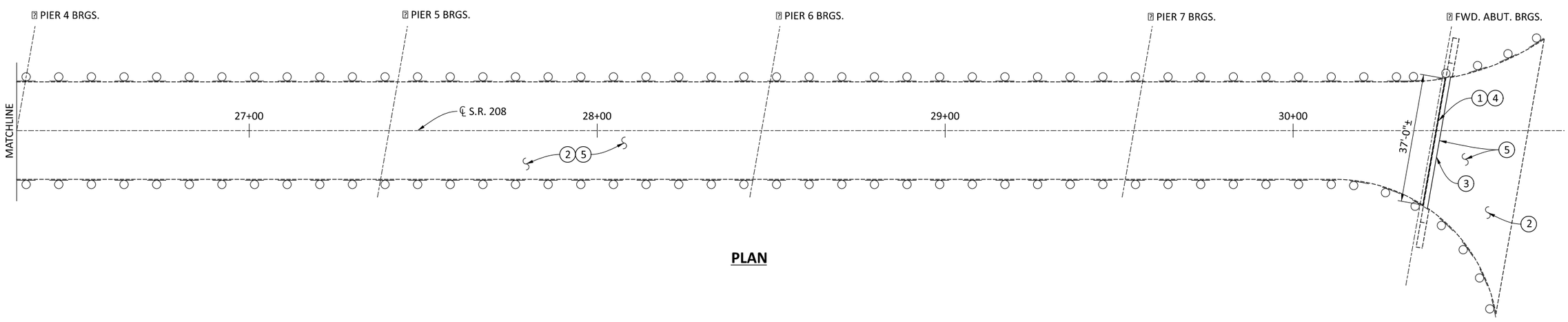

PLAN

BRIDGE NO.: MUS-208-0087 (PLAN VIEW)

DESIGN AGENCY

DESIGNER TAG

REVIEWER JSL 01/15/25

PROJECT ID 95459

SHEET 16A TOTAL 59

MUS-208-00.00

MODEL: Sheet PAPERSIZE: 17x11 (in.) DATE: 1/16/2025 TIME: 11:01:11 AM USER: jlutz1
pw:\\ohiodot-pw.bentley.com:ohiodot-pw-02\Documents\01 Active Projects\District 05\Muskingum\95459\400-Engineering\Roadway\Sheets\95459_SM102.dgn

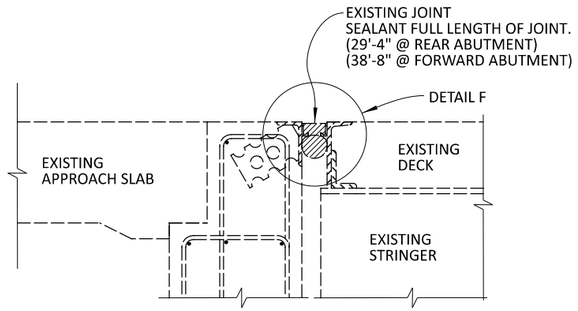

EXISTING SECTION ALONG | S.R. 208

@ REAR AND FORWARD ABUTMENTS

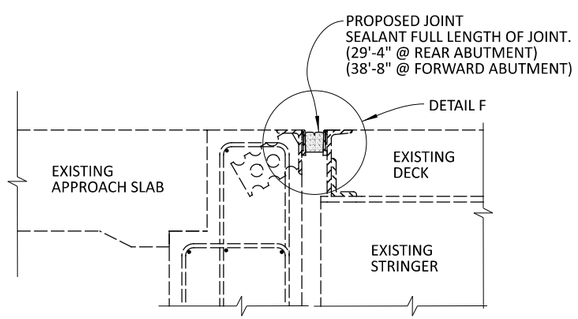

PROPOSED SECTION ALONG | S.R. 208

@ REAR AND FORWARD ABUTMENTS

ITEM 202 - REMOVAL MISC.: STRUCTURAL JOINT OR JOINT SEALER

ITEM 202 - REMOVAL MISC.: STRUCTURAL JOINT OR JOINT SEALER SHALL INCLUDE THE REMOVAL OF THE EXISTING DELASTIC JOINT SEALER AND PORTIONS OF THE EXISTING STEEL RETAINER AS SHOWN IN THE PLANS.

PAYMENT: MEASUREMENT OF THE EXPANSION JOINT FOR PAYMENT PURPOSES SHALL BE ALONG THE CENTERLINE OF THE JOINT OPENING. PAYMENT SHALL BE PER FOOT OF ITEM 202 - REMOVAL MISC.: STRUCTURAL JOINT OR JOINT SEALER.

ITEM 516 - STRUCTURAL JOINT OR JOINT SEALER, MISC.: 4" EMSEAL

ITEM 516 - STRUCTURAL JOINT OR JOINT SEALER, MISC.: EMSEAL: FURNISH MATERIAL CONFORMING TO 705.11. THE SEAL CONFIGURATION SHOULD BE SIMILAR TO THE DETAILS SHOWN HERIN. ACCEPTED MANUFACTURES ARE: EMSEAL JOINT SYSTEM LTD. (MODEL 4" BEJS) OR AN APPROAVED EQUIVALENT. INSTALL THE SEAL ACCORDING TO THE MANUFACTURE'S SPECIFICATIONS AND UNDER THE SUPERVISION OF THE MANUFACTURER'S DESIGNATED REPRESENTATIVE. FURNISH SEALS IN ONE CONTINUOUS PIECE UNLESS APPROVED BY THE ENGINEER.

PAYMENT: MEASUREMENT OF THE EXPANSION JOINT FOR PAYMENT PURPOSES SHALL BE ALONG THE CENTERLINE OF THE JOINT OPENING. PAYMENT SHALL BE PER FOOT OF ITEM 516 - STRUCTURAL JOINT OR JOINT SEALER, MISC.: 4" EMSEAL AS PROVIDED BY EMSEAL JOINT SYSTEM LTD. AT 25 BRIDLE LANE, WESTBOROUGH, MA 01581 (800) 526-8365 OR AN APPROVED EQUAL.

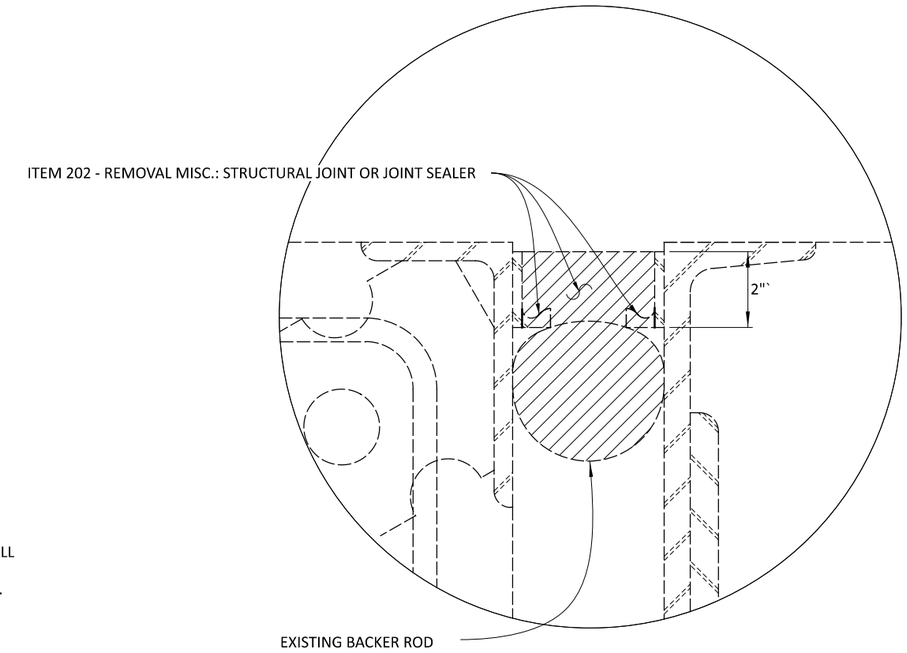

EXISTING DETAIL F

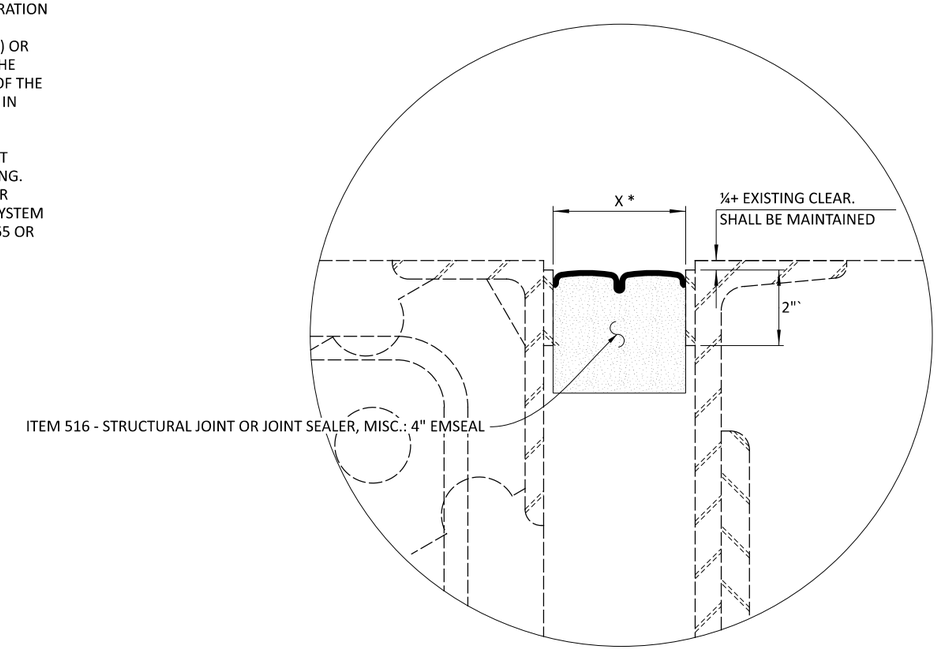

PROPOSED DETAIL F

BRIDGE NO.: MUS-208-0087 (EXPANSION JOINT DETAILS)

DESIGN AGENCY

DESIGNER
TAG

REVIEWER
JSL 01/15/25

PROJECT ID
95459

SHEET 16B TOTAL 59

MUS-208-00.00

MODEL: Sheet PAPERSIZE: 17x11 (in.) DATE: 1/16/2025 TIME: 10:34:01 AM USER: jlutz1
pw:\\ohiodot-pw.bentley.com:ohiodot-pw-02\Documents\01 Active Projects\District 05\Muskingum\95459\400-Engineering\Roadway\Sheets\95459_SM103.dgn

LOCATION 1 TOTALS										PLAN SPLIT		ITEM	ITEM EXT.	GRAND TOTAL	UNIT	DESCRIPTION	SEE SHEET
3	5	11	12	13	14	15	20	55	56	01/NFA/04 ODOT	03/SAF/21 TRI-VALLEY						
																DRAINAGE	
	15									15		611	98631	15	EACH	CATCH BASIN ADJUSTED TO GRADE, AS PER PLAN	5
	3									3		611	98635	3	EACH	CATCH BASIN RECONSTRUCTED TO GRADE, AS PER PLAN	5
	9									9		611	99654	9	EACH	MANHOLE ADJUSTED TO GRADE	
	5									5		638	10800	5	EACH	VALVE BOX ADJUSTED TO GRADE	
																PAVEMENT	
50										50		253	01000	50	CY	PAVEMENT REPAIR (A)	
500										500		253	01000	500	CY	PAVEMENT REPAIR (B)	
						368				368		254	01000	368	SY	PAVEMENT PLANING, ASPHALT CONCRETE, 1.25"	
	550	44,835		878						46,263		254	01000	46,263	SY	PAVEMENT PLANING, ASPHALT CONCRETE, 3.00"	
	360	94,646		939		308				96,253		254	01000	96,253	SY	PAVEMENT PLANING, ASPHALT CONCRETE, 4.25"	
			26,827							26,827		304	20000	26,827	CY	AGGREGATE BASE	
		18,134		237	465	70				18,906		407	20000	18,906	GAL	NON-TRACKING TACK COAT	
				376						376		408	10001	376	GAL	PRIME COAT, AS PER PLAN	4
						128				128		409	30000	128	FT	SAWING AND SEALING ASPHALT CONCRETE PAVEMENT JOINTS	
	34	4,280		33		24				4,371		441	10101	4,371	CY	ASPHALT CONCRETE SURFACE COURSE, TYPE 1, (446), AS PER PLAN, PG70-22M	4
	24	9,278		236		26				9,564		441	10201	9,564	CY	ASPHALT CONCRETE INTERMEDIATE COURSE, TYPE 2, (446), AS PER PLAN, PG64-22	4
		564		31						595		441	50101	595	CY	ASPHALT CONCRETE SURFACE COURSE, TYPE 1, (448), AS PER PLAN, PG70-22M	4
		789		43						832		441	50301	832	CY	ASPHALT CONCRETE INTERMEDIATE COURSE, TYPE 2, (448), AS PER PLAN, PG64-22	4
					203					203		441	70000	203	CY	ASPHALT CONCRETE SURFACE COURSE, TYPE 1, (449), PG64-22	
						94				94		512	33010	94	SY	TYPE 3 WATERPROOFING	
						158				158		516	31011	158	FT	2" DEEP JOINT SEALER, AS PER PLAN (A)	4
				2,785						2,785		617	10101	2,785	CY	COMPACTED AGGREGATE, AS PER PLAN	4
			98,814							98,814		SPECIAL	69098300	98,814	SY	FULL DEPTH RECLAIMED BASE COURSE	4
										LS		SPECIAL	69098400		LS	MIXTURE DESIGN FOR FULL DEPTH RECLAIMED BASE COURSE	4
										LS		SPECIAL	69098400		LS	JUST-IN-TIME TRAINING	4
			330							330		SPECIAL	69098800	330	TON	ADDITIONAL ADDITIVES (CEMENT, FLY ASH, LIME)	4
			245							245		SPECIAL	69098800	245	TON	CORRECTIVE AGGREGATE FOR FDR (FINE, COARSE OR RAP)	4
			230,566							230,566		SPECIAL	69098900	230,566	GAL	EMULSIFIED ASPHALT	4
																TRAFFIC CONTROL	
								1,219		1,219		621	00100	1,219	EACH	RPM	
								1,219		1,219		621	54000	1,219	EACH	RAISED PAVEMENT MARKER REMOVED	
							241			241		626	00110	241	EACH	BARRIER REFLECTOR, TYPE 2 (BIDIRECTIONAL)	
									62.5	62.5		630	03100	62.5	FT	GROUND MOUNTED SUPPORT, NO. 3 POST	
									13.0	13.0		630	80100	13.0	SF	SIGN, FLAT SHEET	
									2	2		630	84900	2	EACH	REMOVAL OF GROUND MOUNTED SIGN AND DISPOSAL	
									5	5		630	86002	5	EACH	REMOVAL OF GROUND MOUNTED POST SUPPORT AND DISPOSAL	
									7	7		630	86320	7	EACH	REMOVAL OF STRUCTURE MOUNTED SIGN AND REERECTION	

GENERAL SUMMARY

DESIGN AGENCY

DESIGNER RMA

REVIEWER JSL 05/15/24

PROJECT ID 95459

SHEET 58 TOTAL 59

CTY-RTE-SECTION

MODEL: Sheet PAPERSIZE: 17x11 (in.) DATE: 1/14/2025 TIME: 3:14:24 PM USER: jlutz1
pw:\\ohiodot-pw.bentley.com:ohiodot-pw-02\Documents\01 Active Projects\District 05\Muskingum\95459\400-Engineering\Roadway\Sheets\95459_GG002.dgn

LOCATION 1 TOTALS											PLAN SPLIT		ITEM	ITEM EXT.	GRAND TOTAL	UNIT	DESCRIPTION	SEE SHEET
5	7	8	9	10		15			53	54	01/NFA/04 ODOT	03/SAF/21 TRI-VALLEY						
																	TRAFFIC CONTROL (CONT'D)	
									21.18		21.18		644	00104	21.18	MILE	EDGE LINE, 6"	
									10.91		10.91		644	00300	10.91	MILE	CENTER LINE	
										100	100		644	00400	100	FT	CHANNELIZING LINE, 8"	
										612	612		644	00500	612	FT	STOP LINE	
										1,974	1,974		644	00620	1,974	FT	CROSSWALK LINE, 12"	
										232	232		644	00700	232	FT	TRANSVERSE/DIAGONAL LINE	
										2	2		644	01000	2	EACH	RAILROAD SYMBOL MARKING	
										2	2		644	01110	2	EACH	SCHOOL SYMBOL MARKING, 96"	
										4	4		644	01300	4	EACH	LANE ARROW, 72"	
										1	1		644	01400	1	EACH	WORD ON PAVEMENT, 72"	
									0.35		0.35		646	10010	0.35	MILE	EDGE LINE, 6"	
									0.17		0.17		646	10200	0.17	MILE	CENTER LINE	
																	TRAFFIC SIGNALS	
3											3		632	26501	3	EACH	DETECTOR LOOP, AS PER PLAN	5
																	STRUCTURE REPAIR (MUS-208-0087)	
						65					65		202	98200	65	FT	REMOVAL MISC.: STRUCTURAL JOINT OR JOINT SEALER	16B
						2,702					2,702		512	10300	2,702	SY	SEALING CONCRETE BRIDGE DECKS WITH HMWM RESIN	
						65					65		516	14600	65	FT	STRUCTURAL JOINT OR JOINT SEALER, MISC.: 4" EMSEAL	16B
						62					62		516	31011	62	FT	2" DEEP JOINT SEALER, AS PER PLAN (B)	16
						10					10		SPECIAL	51912510	10	SY	PATCHING CONCRETE BRIDGE DECK, TYPE B	16
																	STRUCTURE REPAIR (MUS-208-1041)	
						180					180		512	10300	180	SY	SEALING CONCRETE BRIDGE DECKS WITH HMWM RESIN	
																	MAINTENANCE OF TRAFFIC	
			25								25		410	13000	25	CY	TRAFFIC COMPACTED SURFACE, TYPE C	
			25								25		614	11110	25	HOUR	LAW ENFORCEMENT OFFICER WITH PATROL CAR FOR ASSISTANCE	
	50										50		614	12460	50	EACH	WORK ZONE MARKING SIGN	
				LS							LS		614	12421		LS	DETOUR SIGNING, AS PER PLAN	10
	6										6		614	13000	6	CY	ASPHALT CONCRETE FOR MAINTAINING TRAFFIC	
		18									18		614	18601	18	SNMT	PORTABLE CHANGEABLE MESSAGE SIGN, AS PER PLAN	8
		21.07									21.07		614	21100	21.07	MILE	WORK ZONE CENTER LINE, CLASS I, 642 PAINT	
		11.05									11.05		614	21550	11.05	MILE	WORK ZONE CENTER LINE, CLASS III, 642 PAINT	
		100									100		614	23200	100	FT	WORK ZONE CHANNELIZING LINE, CLASS I, 8", 642 PAINT	
		100									100		614	23680	100	FT	WORK ZONE CHANNELIZING LINE, CLASS III, 8", 642 PAINT	
		110									110		614	26200	110	FT	WORK ZONE STOP LINE, CLASS I, 642 PAINT	
		110									110		614	26610	110	FT	WORK ZONE STOP LINE, CLASS III, 642 PAINT	
																	INCIDENTALS	
											LS	LS	614	11000		LS	MAINTAINING TRAFFIC	
											17.96	0.04	619	16020	18	MNTH	FIELD OFFICE, TYPE C	
											LS	LS	623	10001		LS	CONSTRUCTION LAYOUT STAKES AND SURVEYING, AS PER PLAN	6
											LS	LS	624	10000		LS	MOBILIZATION	

GENERAL SUMMARY

CTY-RTE-SECTION

MODEL: Sheet PAPERSIZE: 17x11 (in.) DATE: 1/16/2025 TIME: 11:16:06 AM USER: jlutz1
pw:\\ohiodot-pw.bentley.com:ohiodot-pw-02\Documents\01 Active Projects\District 05\Muskingum\95459\400-Engineering\Roadway\Sheets\95459_GG003.dgn

DESIGN AGENCY

DESIGNER
RMA

REVIEWER
JSL 05/15/24

PROJECT ID
95459

SHEET 59 TOTAL 59