PROJECT NO. 770-2001-072 (US30 CRAWFORD/WYANDOT COUNTIES)

O.D.O.T.

NEW REST STOP BUILDINGS WYANDOT COUNTY

PREPARED FOR:

OHIO DEPARTMENT OF TRANSPORTATION

BOB TAFT, GOVERNOR

DEPARTMENT OF ADMINISTRATIVE SERVICES
C.SCOTT JOHNSON, DIRECTOR

GENERAL SERVICES DIVISION
RICHARD M. HICKMAN, DEPUTY DIRECTOR

OFFICE OF STATE ARCHITECT
ROGER B. BOOKER A.I.A., STATE ARCHITECT

PREPARED BY: BODNER & KERIK ARCHITECTS INC.
432 COLUMBUS AVENUE
SANDUSKY, OHIO 44870-2726
PH: (419)625-2081 FAX: (419)625-7581

VICINITY MAP

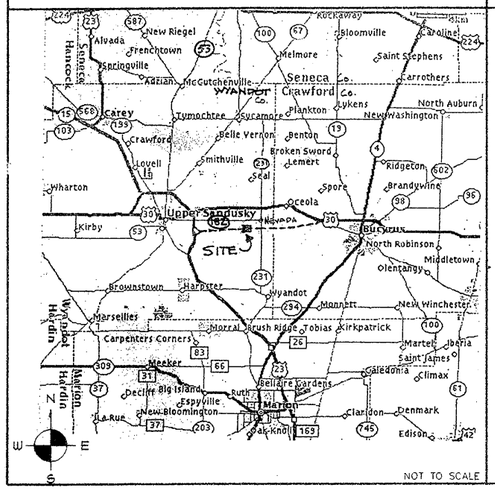

SITE 1 | U.S. 30 EASTBOUND WYANDOT COUNTY

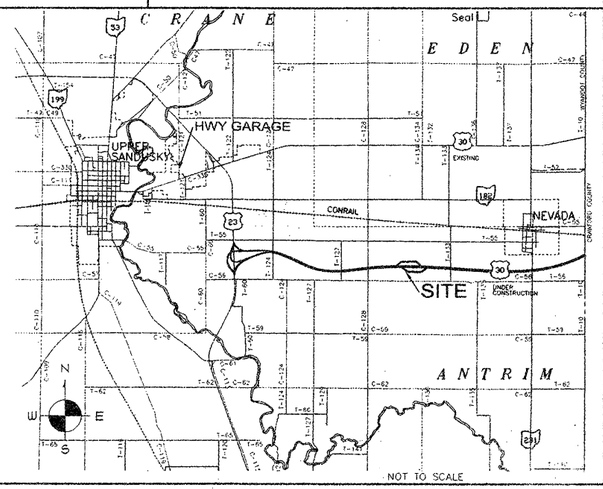

SITE 2 | U.S. 30 WESTBOUND WYANDOT COUNTY

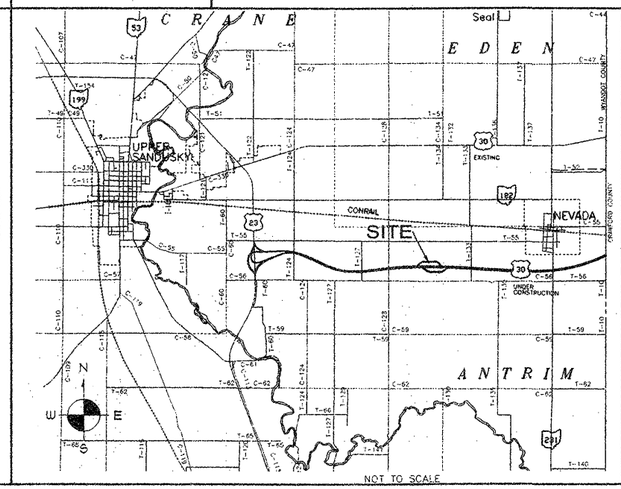

#1

GENERAL NOTES

1. BEFORE BEGINNING CONSTRUCTION WORK, GENERAL CONTRACTOR SHALL VERIFY LAYOUT DIMENSIONS & REPORT ANY DISCREPANCIES.
2. BEFORE DIGGING OR EXCAVATING, CONTRACTOR IS RESPONSIBLE FOR NOTIFYING THE APPROPRIATE UTILITIES, AGENCIES, OWNER, ETC. ALLOWING MINIMUM TWO (2) WORKING DAYS NOTICE.
3. IN NO CASE ARE DRAWINGS TO BE SCALED. SIZES, LOCATIONS AND DETAILING SHALL BE AS REQUIRED BY THE INTENT OF THE DRAWINGS. CONTRACTORS ARE RESPONSIBLE TO VERIFY AND COORDINATE.
4. ALL CONTRACTORS SHALL COORDINATE THEIR WORK WITH OTHER TRADES AFFECTED BY THEIR WORK. THIS SHALL INCLUDE LOCATION, SIZE AND DETAILING OF PIPING, DUCTWORK, ELECTRICAL ITEMS, ETC.
5. ALL WOOD BLOCKING, NAILERS, FRAMING, ETC., IN CONTACT WITH MASONRY, CONCRETE, ETC., OR EXPOSED TO MOISTURE, CONDENSATION OR EXTERIOR CONDITIONS SHALL BE PRESERVATIVE-TREATED.
6. ALL WOOD BLOCKING, FRAMING, SHEATHING, PANELING, TRIM, ETC. SHALL BE FIRERETARDANT-TREATED (NON-COMB.) AS REQUIRED BY O.B.C. (SECTION 603).
7. THE CONTRACTORS SHALL INSURE THE INTEGRITY OF FIRE AND/OR SOUND CLASSIFICATIONS OF ALL PARTITIONS WHERE SHOWN AND/OR REQUIRED BY CODE.
8. ALL INTERIOR SURFACE FINISHES ARE TO MEET THE FIRE RATING REQUIREMENTS OF O.B.C. (TABLE 803.5).
9. ACCESS DOORS IN CEILING, WALL ETC. REQUIRED FOR ACCESS TO VALVES, DAMPERS, CONTROLS ETC. SHALL BE SUPPLIED AND INSTALLED BY THE CONTRACTOR, AND SHALL COMPLY WITH THE RATING OF THE CEILING / WALL.
10. ALL INTERIOR PARTITIONS, SOFFITS, ETC. SHALL BE ADEQUATELY BRACED TO THE UNDERSIDE OF THE STRUCTURE WHERE SHOWN OR REQUIRED. PARTITIONS, SOFFITS, ETC. SHALL BE BUILT TIGHT TO UNDERSIDE OF THE STRUCTURE.
11. CEILING HEIGHTS ARE FROM TOP OF SLAB / FIN FLR. TO FINISHED CEILING UNLESS NOTED OTHERWISE. IN SPACES HAVING NO CEILING SUSPENDED BELOW THE STRUCTURE, CLEAR HEIGHTS INDICATED OR AS REQUIRED BY CODE MUST BE MAINTAINED BELOW ALL DUCTS, PIPING, ETC. UNLESS NOTED OTHERWISE.
12. CONTRACTOR SHALL PROVIDE LINTELS OF SUITABLE SIZE FOR MASONRY OPENINGS, INCLUDING DUCTWORK, PIPING, ETC.. SEE DRAWING SHEET 9.
13. SITE CONTOURS AND/OR ELEVATIONS ARE CONTROLS ONLY. PAVED AREAS AND GRADING IS TO BE SMOOTH, CONTINUOUS AND CONFORM TO FIELD CONDITIONS TO ASSURE POSITIVE DRAINAGE.
14. PROVIDE FIRESTOPPING/DRAFTSTOPPING IN CONCEALED WALL SPACES AND IN CONNECTIONS BETWEEN HORIZONTAL AND VERTICAL SPACES AS REQ'D BY O.B.C. (CHAPTER 7).
15. PROVIDE AND INSTALL FIRE EXTINGUISHERS PER FLOOR PLAN. EXACT TYPE, AMOUNT, AND LOCATION OF EXTINGUISHERS TO BE COORDINATED W/ GOVERNING REGUL. AGENCY. DISTANCE BETWEEN EXTINGUISHERS NOT TO EXCEED 75'-0".
16. CONTRACTOR TO INSTALL GYPSUM BOARD / GYP. BD. CONTROL JOINTS PER MFG RECOMMENDATIONS AND IN COMPLIANCE W/ ASTM C840 AND GA 216. COORDINATE W/ ARCHITECT PRIOR TO START OF WORK.

ABBREVIATION LEGEND

A.F.F.	Above Finish Floor	LAM.	Laminated
ACP.	Acoustical Ceiling Panel	LAV.	Lavatory
ADJ.	Adjustable	LT.	Light
A/C	Air Conditioning	LGF.	Light Gauge Framing
ALT.	Alternate	L.P.	Light Pole/Low Point
ALUM.	Aluminum		
ANUN.	Annunciator	MH.	Manhole
		MANUF/MFR.	Manufacturer
B.C.	Bottom of Curb	MAS.	Masonry Block
B.M.	Bench Mark	M.O.	Masonry Opening
BLK/B	Block	MAT.	Material
BD.	Board	MAX.	Maximum
BOT.	Bottom	MECH.	Mechanical
BLDG.	Building	MEMB.	Membrane
		M.	Men
CPT.	Carpet	MET. / MTL.	Metal
C.B.	Catch Basin	M.T.	Metal Threshold-set in full bed of sealant
CLG.	Ceiling		
CEM.PLAST.	Cement Plaster	MIN.	Minimum
C.T.	Ceramic Tile	MISC.	Miscellaneous
CL.	Clear	M.R.	Moisture Resistant
CLOS.	Closet	M.S.	Mop Sink
C.W.	Cold Water	MTD.	Mounted
COL.	Column		
COMP.	Compressible	NOM.	Nominal
CONC.	Concrete	NON.COMB.	Non-Combustible
C.H.	Concrete Hardener	N.I.C.	Not in Contract
C.M.U.	Concrete Masonry Unit	N.T.S.	Not to Scale
CONSTR.	Construction	NO. / #	Number
CONT.	Continuous		
CONTR.	Contractor	O.C.	On Center
C.J.	Control Joint	OPNG.	Opening
C.	Cove	OPP.	Opposite
C.S.	Cast Stone	O.H.	Opposite Hand
		O.R.D.	Overflow Roof Drain
DN.	Down		
D.N.S.	Do Not Scale	PTD. / P.	Painted
D.S.	Downspout	PR.	Pair
D.T.	Drain Tile	PNL.	Panel
DET.	Detail	P-LAM.	Plastic Laminate
DIA.	Diameter	PL.	Plate/Property Line
DIM.	Dimension	PREP.	Preparation
DO.	Ditto	P.T.	Pressure Treated/Paving Tile
DR.	Door	PROT.BD.	Protection Board
DWG.	Drawing		
		Q.T.	Quarry Tile
E.A.	Each		
E.W.C.	Electric Water Cooler	R.	Radius/Resilient/Riser
ELEC.	Electrical	R.W.C.	Rain Water Collector
E.P.	Electrical Panel	R.C.H.	Recessed Cabinet Heater
ELEV/EL	Elevation	REINF.	Reinforcing
ENCL.	Enclosure	REQ'D.	Required
EQ.	Equal	R.A.	Return Air
EQUIP.	Equipment	RD.	Roof Drain
E.F.	Exhaust Fan	RM.	Room
EXIST./EX	Existing	RV	Roof Ventilator
E.J.	Expansion Joint		
E.C.	Exposed Construction	SAN.	Sanitary
EXP.	Exposed/Expansion	S.C.	Sealing Compound/Special Coating
EXT.	Exterior	SECT.	Section
		S.R.C.H.	Semi-Recessed Cabinet Heater
FIN.	Finished	SHT.	Sheet
F.F.	Finished Floor	SIM.	Similar
F.A.	Fire Alarm	S.T.C.	Sound Transmission Characteristics
F.E.	Fire Extinguisher	SQ.	Square
FP.	Fireproof	ST.STL.	Stainless Steel
F.S.F.	Flexible Sheet Flashing	STL.	Steel
F.R.T.	Fire Retardant Treated	STOR.	Storage
F.D.	Floor Drain	STRUCT.	Structural
FLUOR.	Fluorescent	S.A.	Supply Air
		SUSP.	Suspended
GALV.	Galvanized		
GA.	Gauge	T.	Tread
GEN.	General	TEL.	Telephone
G.C.	General Contractor	T.C.	Top of Course/Top of Curb
GL.	Glass/Glazing	THOLD.	Threshold
GR.	Grade	TC.	Top of Curb
G.F.I.	Ground Fault Interrupter	T.S.	Top of Slab/Top of Steel/Tube Steel
G.B.	Gypsum Board		
GYP.BD.	Gypsum Board	T/C	Top w/ Catch Basin
		T.W.	Top of Wall
H.R.	Hand Rail	TO	Top of
H.C. E.W.C.	Handicap E.W.C.	TYP.	Typical
H.C.	Handicap		
HDW.	Hardware	U.N.O.	Unless Noted Otherwise
HTR.	Heater		
HT.	Height	VERT.	Vertical
H.P.	High Point	VEST.	Vestibule
H. / Hold.	Holding	V.C.T.	Vinyl Composition Tile
H.M.	Hollow Metal		Vinyl/Vertical
H. / HOR.	Horizontal		
H.B.	Hose Bib	W.	Women
H.W.	Hot Water	W.R.	Water Resistant
HR.	Hour	W.P.	Waterproofing or work point
INSUL.	Insulation		
		W/	With
J.C.	Janitor Closet	W/O	Without
JT.	Joint	WD.	Wood
		YD.	Yard Drain

CODE DATA

APPLICABLE CODE: O.B.C. 2002

USE GROUP:
REST STOP: B (BUSINESS)
MAINTENANCE BLDG.: S-2 (STORAGE)

CONSTRUCTION TYPE: IIB
SEE SECTION 603 (FIRE RETARDANT WD. REQD)

ALLOWABLE AREA (PER TABLE 503):
REST STOP: 23,000 S.F.
MAINTENANCE SHED: 26,000 S.F.

ACTUAL AREA:
REST STOP: 4,424 S.F.
MAINTENANCE SHED: 1,156 S.F.

ALLOWABLE HEIGHT (PER TABLE 503): 2 STORIES / 30 FEET

ACTUAL HEIGHT: 1 STORY / 28'-4"

OCCUPANCY LOAD (PER TABLE 1008.1.2):
REST STOP: 100 PEOPLE
MAINTENANCE SHED: 2 PEOPLE
TOTAL OCCUPANCY = 102 PEOPLE

EXITS REQUIRED:
REST STOP: 3
MAINTENANCE SHED: 1

EXITS PROVIDED:
REST STOP: 3
MAINTENANCE SHED: 1

FIRE SEPARATION:
- STORAGE AREA IS BEING SEPARATED FROM ADJACENT SPACES WITH 1 HR. RATED FIRE BARRIER CONSTRUCTION

DESIGN LOADS: SEE STRUCTURAL SHEETS

MATERIAL / SYMBOL LEGEND

GYPSUM BOARD
BATT INSULATION
RIGID INSULATION
FACE BRICK
CONCRETE BLOCK
CONCRETE
METAL
PLYWOOD
ROUGH WOOD
FINISH WOOD
ACOUSTIC TILE

SECTION IDENTIFICATION / SHEET NUMBER — SECTION INDICATOR
DETAIL IDENTIFICATION / SHEET NUMBER — DETAIL INDICATOR
ELEVATION IDENTIFICATION / SHEET NUMBER — ELEVATION INDICATOR
ROOM 100 — ROOM NAME / NUMBER
WALL TYPE INDICATOR
CENTER LINE
DOOR IDENTIFICATION
WORK POINT / ELEVATION
REVISION INDICATOR
ACCESSORY INDICATOR

DRAWING INDEX

BUILDING DRAWINGS

T-1.1 TITLE SHEET
T-1.2 DRAWING INDEX & CODE DATA

A-1.1 FLOOR PLANS & DETAILS
A-2.1 ROOF PLAN & REFLECTED CEILING PLAN
A-3.1 WALL & DOOR TYPES, SCHEDULES, & DETAILS
A-4.1 EXTERIOR ELEVATIONS
A-5.1 BUILDING SECTIONS
A-5.2 BUILDING SECTIONS
A-6.1 PARTIAL PLANS & INTERIOR ELEVATIONS
A-7.1 WALL SECTIONS & DETAILS
A-7.2 WALL SECTIONS & DETAILS
A-8.1 PLAN DETAILS

S-1 FOUNDATION PLAN
S-2 STRUCTURAL NOTES/DETAILS
S-3 ROOF FRAMING PLAN
S-4 MEZZANINE/CEILING FRAMING PLAN
S-5 FOUNDATION DETAILS
S-6 STRUCTURAL STEEL DETAILS

PE-1 PLUMBING PLAN, EASTBOUND
PE-2 PLUMBING DETAILS, EASTBOUND
PE-3 PLUMBING ISOMETRICS, EASTBOUND
PW-1 PLUMBING PLAN, WESTBOUND
PW-2 PLUMBING DETAILS, WESTBOUND
PW-3 PLUMBING ISOMETRICS, WESTBOUND

ME-1 MECHANICAL PLAN, EASTBOUND
ME-2 MECHANICAL SCHEDULES, EASTBOUND
ME-3 MECHANICAL DETAILS, EASTBOUND
MW-1 MECHANICAL PLAN, WESTBOUND
MW-2 MECHANICAL SCHEDULES, WESTBOUND
MW-3 MECHANICALDETAILS, WESTBOUND

EE-1 POWER PLAN, EASTBOUND
EE-2 LIGHTING PLAN, EASTBOUND
EE-3 ELECTRICAL DIAGRAMS & SCHEDULES, EASTBOUND
EE-4 ELECTRICAL PANEL SCHEDULES, EASTBOUND
EE-5 ELECTRICAL DIAGRAMS & SCHEDULES, EASTBOUND
EE-6 ELECTRICAL DETAILS, EASTBOUND
EW-1 POWER PLAN, WESTBOUND
EW-2 LIGHTING PLAN, WESTBOUND
EW-3 ELECTRICAL DIAGRAMS & SCHEDULES, WESTBOUND
EW-4 ELECTRICAL PANEL SCHEDULES, WESTBOUND
EW-5 ELECTRICAL DIAGRAMS & SCHEDULES, WESTBOUND
EW-6 ELECTRICAL DETAILS, WESTBOUND

SITE DRAWINGS

SL-1 EAST BOUND DIMENSIONING PLAN
SL-2 WEST BOUND DIMENSIONING PLAN
SL-3 EAST BOUND PLANTING PLAN
SL-4 WEST BOUND PLANTING PLAN
SL-5 EAST BOUND PLAZA PLANTING PLAN
SL-6 WEST BOUND PLAZA PLANTING PLAN
SL-7 PLANTING QUANTITIES & DETAILS
SL-8 SITE CONSTRUCTION DETAILS
SL-9 SITE CONSTRUCTION DETAILS

SP-1 OVERALL TOPOGRAPHIC PLAN
SP-2 OVERALL UTILITY PLAN
SP-3 50 SCALE TOPOGRAPHIC PLAN (SITE 1)
SP-4 50 SCALE SANITARY/WATERLINE PLAN (SITE 1)
SP-5 50 SCALE STORM SEWER PLAN (SITE 1)
SP-6 20 SCALE GRADING/EROSION PLAN (SITE 1)
SP-7 50 SCALE TOPOGRAPHIC PLAN (SITE 2)
SP-8 50 SCALE SANITARY/WATERLINE PLAN (SITE 2)
SP-9 50 SCALE STORM SEWER PLAN (SITE 2)
SP-10 20 SCALE GRADING/EROSION PLAN (SITE 2)
SP-11 UTILITY NODES/STRUCTURES
SP-12 GENERAL NOTES/DETAILS
SP-13 EROSION NOTES

EE-S ELECTRICAL SITE PLAN, EASTBOUND
EW-S ELECTRICAL SITE PLAN, WESTBOUND

SW-1 WATER TREATMENT PLANT (WTP) LEGEND & NOTES
SW-2 WTP- PLAN & SECTIONS
SW-3 WTP- WATER WELLS & EQUIPMENT DETAILS
SW-4 WTP- FILTER AND DETENTION TANK DETAILS
SW-5 WTP- PLANT FLOW SCHEMATIC DIAGRAM
SW-6 WTP- CLEARWELL, TRENCH & PIPING DETAILS
SW-7 WTP- LEGEND INSTRUMENTATION & CONTROL
SW-E1 WTP- ELECTRICAL SITE PLAN, FLOOR PLAN & DETAILS

MECHANICAL - ELECTRICAL ENGINEERS
STEVE REMPEL
SRA, INC
7646 SLATE RIDGE BLVD.
REYNOLDSBURG, OHIO 43068
PHONE: (614) 755-2582
FAX: (614) 751-8461

STRUCTURAL ENGINEERS
BOB BAUMANN
LANTZ JONES & NEBRASKA, INC.
1166 DUBLIN RD. SUITE 200
COLUMBUS, OHIO 43215
PHONE: (614) 481-9800
FAX: (614) 481-9353

LANDSCAPE ARCHITECT
JOSEPH LOOBY, ASLA
R.D. ZANDE & ASSOC. INC.
1237 DUBLIN ROAD
COLUMBUS, OHIO 43215
PHONE: (614) 486-4383
FAX: (614) 486-4387

CIVIL ENGINEER
DAVID SANEHOLTZ, P.E.
POGGEMEYER DESIGN GROUP
1168 NORTH MAIN ST.
BOWLING GREEN, OHIO 43402
PHONE: (419) 352-7537
FAX: (419) 353-0187

CONSULTING ARCHITECTS / ENGINEERS
ARCHITECT: BODNER & KERIK ARCHITECTS, INC.
STRUCTURAL: LANTZ JONES & NEBRASKA, INC.
MECHANICAL/ELECTRICAL: SRA, INC.
CIVIL ENGINEERING: POGGEMEYER DESIGN GROUP, INC.
LANDSCAPE ARCHITECT: R.D. ZANDE & ASSOCIATES, INC.

REVISIONS

NO.	DATE	DESCRIPTION
	12-6-02	BID SET

STATE OF OHIO — THOMAS J. BODNER 6884 — REGISTERED ARCHITECT

PROJECT NUMBER 0225

FOR:
OHIO DEPT. OF TRANSPORTATION

DRAWING DESCRIPTION:
DRAWING INDEX, GENERAL NOTES, CODE DATA

NEW REST STOP BUILDINGS

NO. 770-2001-072
US 30 WYANDOT/CRAWFORD | SITE 1 EASTBOUND | SITE 2 WESTBOUND

PREPARED FOR
STATE OF OHIO
DEPARTMENT OF ADMINISTRATIVE SERVICES
GENERAL SERVICES DIVISION

PREPARED BY
DEPARTMENT OF ADMINISTRATIVE SERVICES

PLOT DATE: DEC 10, 2002 | DATE: OCT. 7, 2002 | SHEET: T-1.2

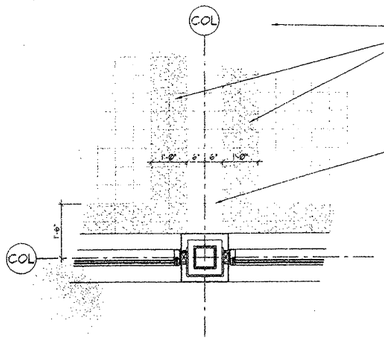

5 A-11 DETAIL
SCALE: 1/2" = 1'-0"

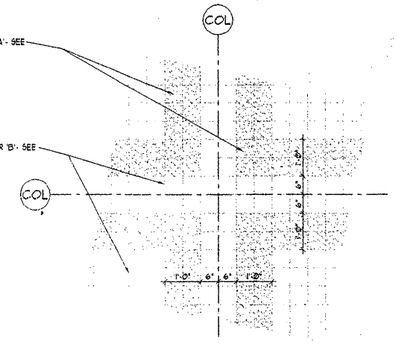

6 A-11 DETAIL
SCALE: 1/2" = 1'-0"

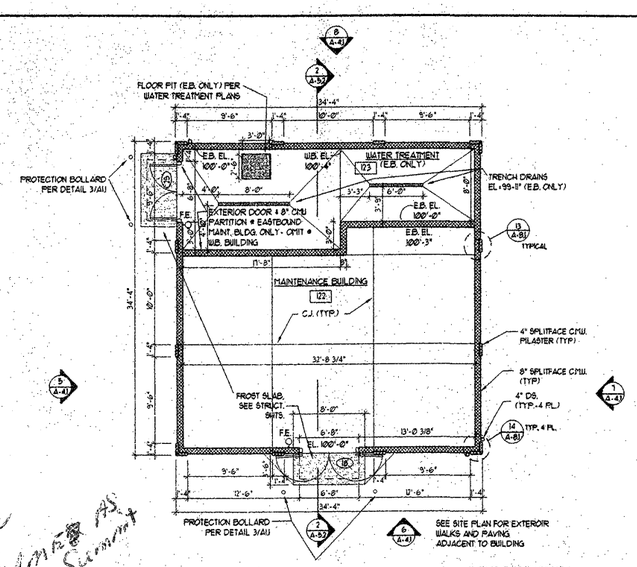

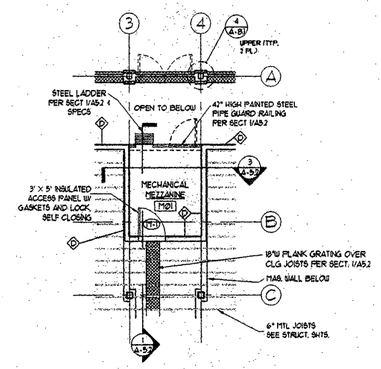

1 A-11 MEZZANINE PLAN
SCALE: 1/8" = 1'-0"

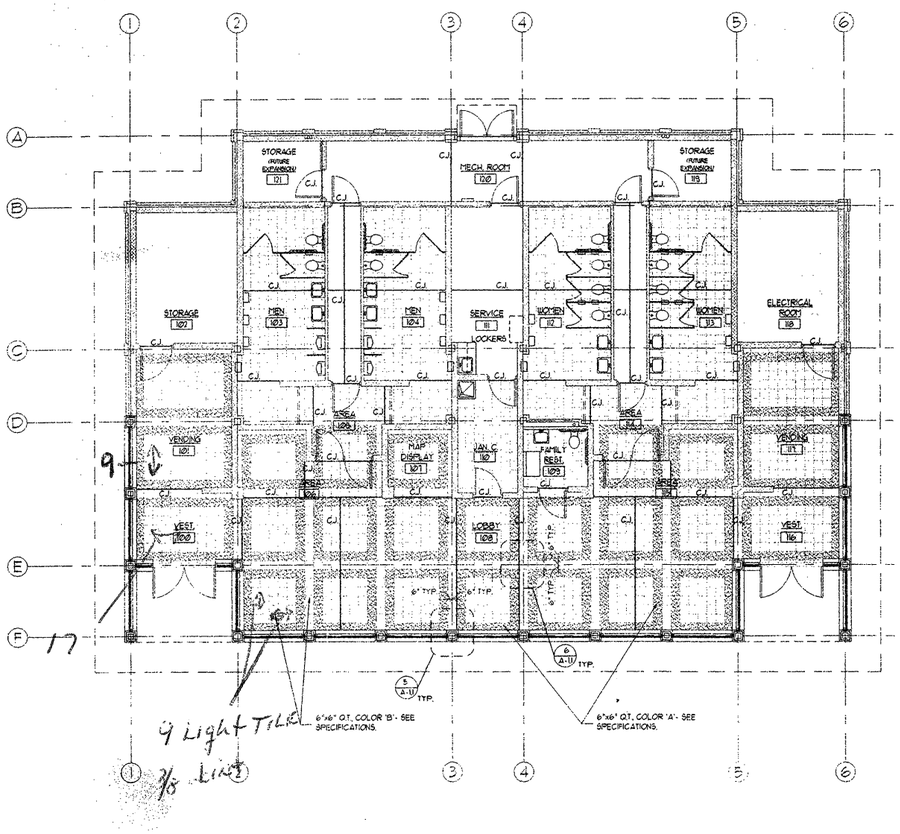

FLOOR TILE PLAN
SCALE: 1/8" = 1'-0"

HVAC Same as Wayne & Summit

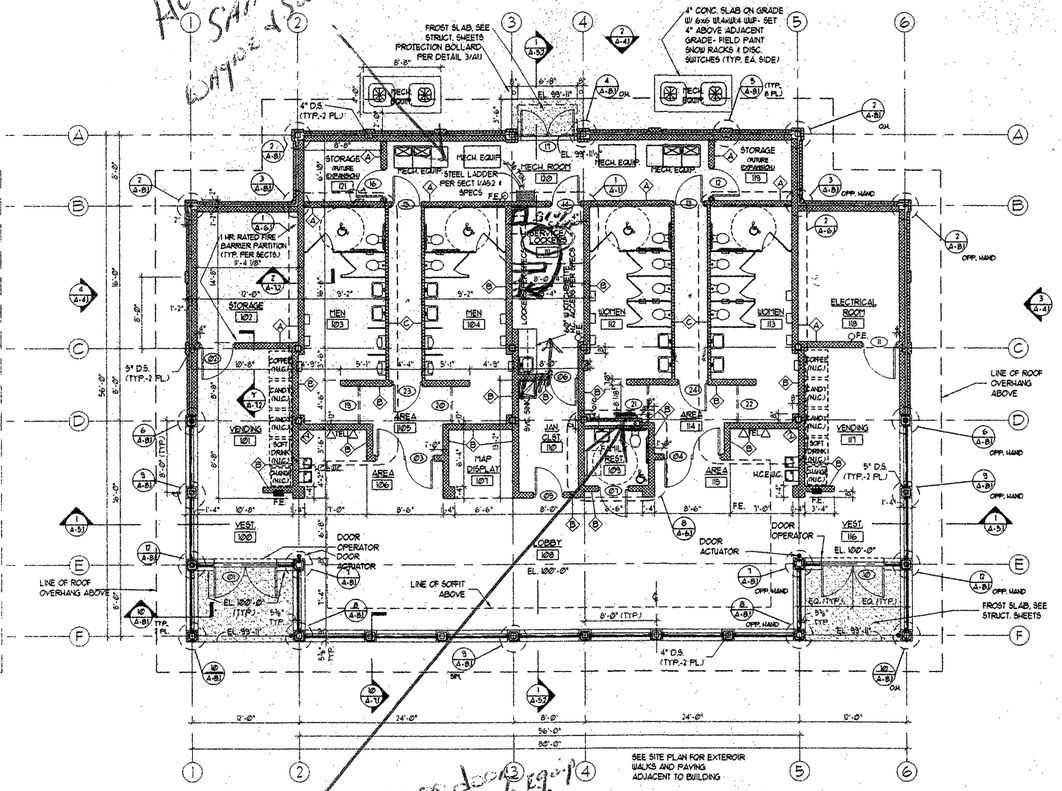

TYPICAL FLOOR PLAN
SCALE: 1/8" = 1'-0"

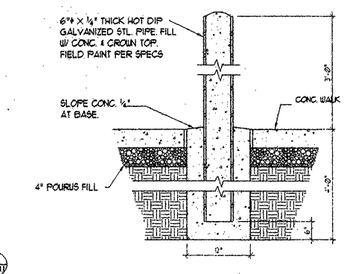

2 A-11 BOLLARD DETAIL
SCALE: NONE

SCALE 1/8" = 1'-0"
0 4' 8' 16' 24'

AUTOMATIC DOOR ACTUATOR LEGEND:

- A.D.A. AUTOMATIC ACTUATOR TO OPEN DOOR PS 01 & 10, SEE ELEC. SHTS.

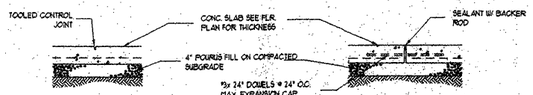

3 A-11 C.J. DETAIL
SCALE: 3/4" = 1'-0"

4 A-11 EXP. JOINT DETAIL
SCALE: 3/4" = 1'-0"

CONSULTING ARCHITECTS / ENGINEERS

ARCHITECT: BODNER & KERIK ARCHITECTS, INC.
STRUCTURAL: LANTZ JONES & NEBRASKA, INC.
MECHANICAL/ELECTRICAL: SRA, INC.
CIVIL ENGINEERING: POGGEMEYER DESIGN GROUP, INC.
LANDSCAPE ARCHITECT: R.D. ZANDE & ASSOCIATES, INC.

REVISIONS

NO.	DATE	DESCRIPTION
	10-16-02	LADDER REV.
	12-6-02	BID SET

STATE OF OHIO — THOMAS J. BODNER 6884 — REGISTERED ARCHITECT

PROJECT NUMBER 0226

FOR:
OHIO DEPT. OF TRANSPORTATION

DRAWING DESCRIPTION:
FLOOR PLANS

NEW REST STOP BUILDINGS

NO. 770-2001-072
US 30 WYANDOT/CRAWFORD | SITE 1 EASTBOUND | SITE 2 WESTBOUND

PREPARED FOR
STATE OF OHIO
DEPARTMENT OF ADMINISTRATIVE SERVICES
GENERAL SERVICES DIVISION

PREPARED BY
DEPARTMENT OF ADMINISTRATIVE SERVICES

PLOT DATE	DATE	SHEET
DEC. 10, 2002	OCT. 7, 2002	A-1.1

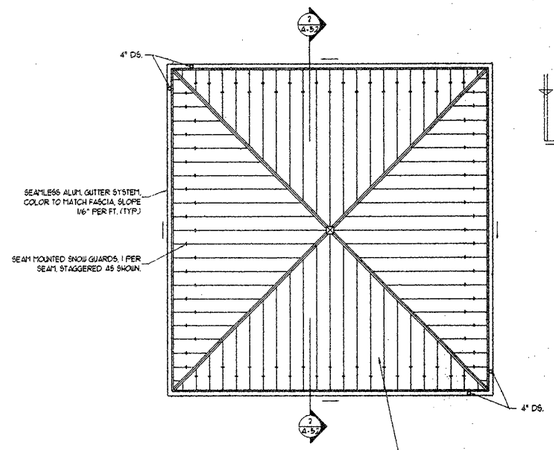

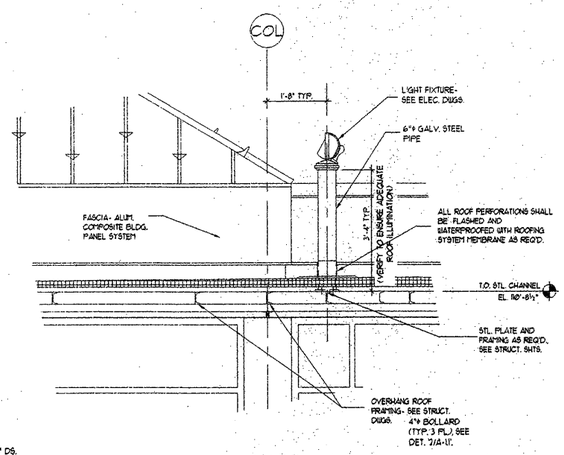

1 / A-2.1 DETAIL
SCALE: 1/2" = 1'-0"

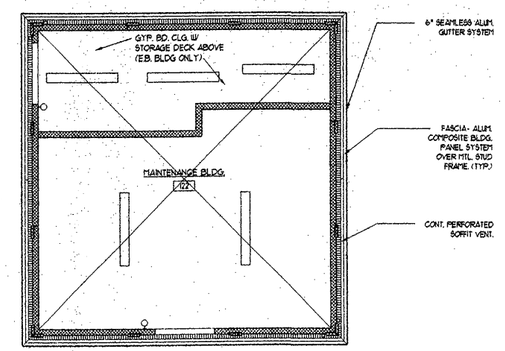

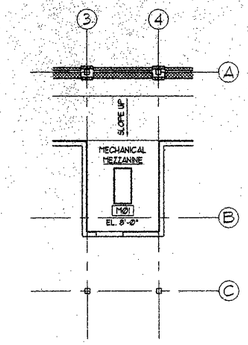

PARTIAL REFLECTED CEILING PLAN
SCALE: 1/8" = 1'-0"

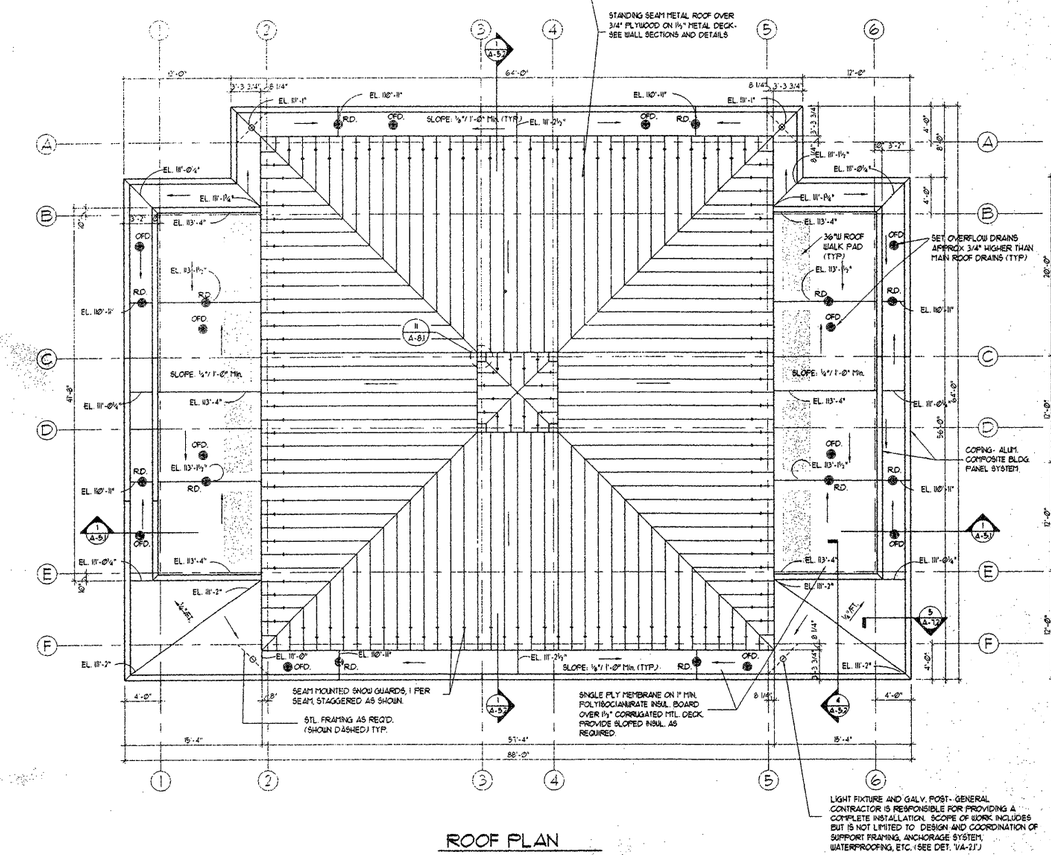

ROOF PLAN
SCALE: 1/8" = 1'-0"

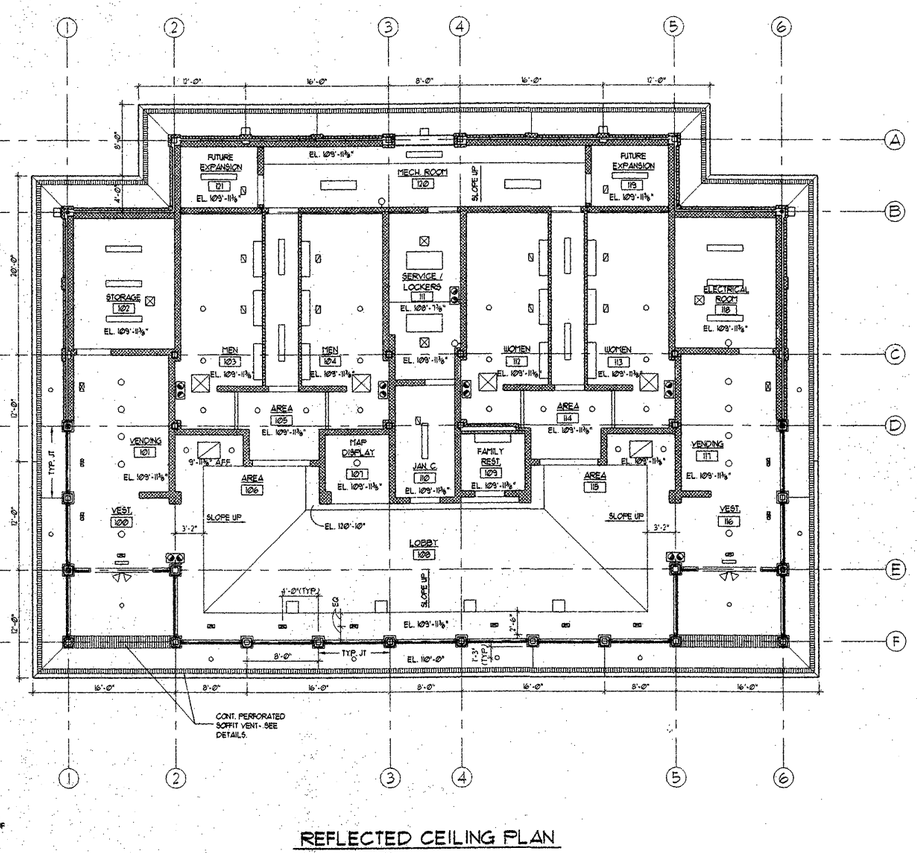

REFLECTED CEILING PLAN
SCALE: 1/8" = 1'-0"

LEGEND:

- 2x4 FLUOR. FIXTURE
- 4' FLUOR. FIXTURE
- WALL MOUNTED METAL HALIDE FIXTURE
- RECESSED LIGHT FIXTURE
- EMERGENCY LIGHTING
- EXIT SIGN
- WEATHERPROOF EMERGENCY LIGHTING
- SUPPLY AIR GRILL
- RETURN AIR GRILL

NOTE: SEE ELECTRICAL SHEETS AND SPECIFICATIONS FOR ADDITIONAL INFORMATION.

SCALE 1/8" = 1'-0"
0 4' 8' 16' 24'

CONSULTING ARCHITECTS / ENGINEERS

ARCHITECT: BODNER & KERIK ARCHITECTS, INC.
STRUCTURAL: LANTZ JONES & NEBRASKA, INC.
MECHANICAL/ELECTRICAL: SRA, INC.
CIVIL ENGINEERING: POGGEMEYER DESIGN GROUP, INC.
LANDSCAPE ARCHITECT: R.D. ZANDE & ASSOCIATES, INC.

REVISIONS

NO.	DATE	DESCRIPTION
	12-6-02	BID SET

STATE OF OHIO — THOMAS J. BODNER 6884 — REGISTERED ARCHITECT

PROJECT NUMBER 0226

FOR:
OHIO DEPT. OF TRANSPORTATION

DRAWING DESCRIPTION:
REFLECTED CEILING AND ROOF PLANS

NEW REST STOP BUILDINGS

NO. 770-2001-072
US 30 WYANDOT/CRAWFORD

SITE 1 EASTBOUND | SITE 2 WESTBOUND

PREPARED FOR
STATE OF OHIO
DEPARTMENT OF ADMINISTRATIVE SERVICES
GENERAL SERVICES DIVISION

PREPARED BY
DEPARTMENT OF ADMINISTRATIVE SERVICES

PLOT DATE	DATE	SHEET
DEC 10, 2002	OCT. 7, 2002	A-2.1

DOOR SCHEDULE

NO.	DOOR SIZE W x H x T	DOOR TYPE	DOOR MAT'L	DOOR FRAME	HARDWARE HEAD	HARDWARE JAMB	HARDWARE SILL	HARDWARE FUNCTION	HARDWARE CLOSER	HARDWARE LABEL	REMARKS
01	PR 3'-6" x 7'-0" x 1¾"	C	ALUM/GL	ALUM	*	*	2/A-3.1	LOCKSET	CLOSER	-	* SEE NOTE 10, 11, & 14. PROVIDE HOLD OPEN.
02	3'-6" x 7'-0" x 1¾"	A	HM	HM *	7/A-3.1	6/A-3.1	2/A-3.1	LOCKSET	-	1 HR.	* SEE NOTE 12, 14, & 15.
03	PR 3'-0" x 7'-0" x 1¾"	B	HM	HM *	7/A-3.1	6/A-3.1	3/A-3.1	LOCKSET	CLOSER	-	* SEE NOTE 13. PROVIDE HOLD OPEN.
04	PR 3'-0" x 7'-0" x 1¾"	B	HM	HM *	7/A-3.1	6/A-3.1	3/A-3.1	LOCKSET	CLOSER	-	* SEE NOTE 13. PROVIDE HOLD OPEN.
05	3'-0" x 7'-0" x 1¾"	A	HM	HM *	7/A-3.1	6/A-3.1	3/A-3.1	LOCKSET	CLOSER	-	* SEE NOTE 12, 14, & 15. PROVIDE HOLD OPEN.
06	3'-0" x 7'-0" x 1¾"	B	HM	HM *	7/A-3.1	6/A-3.1	2/A-3.1	LOCKSET	-	-	* SEE NOTE 12.
07	3'-0" x 7'-0" x 1¾"	A	HM	HM *	7/A-3.1	6/A-3.1	3/A-3.1	PRIVACY	CLOSER	-	* SEE NOTE 13 & 15. PROVIDE HOLD OPEN.
08	-	-	-	-	-	-	-	-	-	-	
09	-	-	-	-	-	-	-	-	-	-	
10	PR 3'-6" x 7'-0" x 1¾"	C	ALUM/GL	ALUM	*	*	2/A-3.1	LOCKSET	CLOSER	-	* SEE NOTE 10, 11, & 14. PROVIDE HOLD OPEN.
11	3'-6" x 7'-0" x 1¾"	A	HM	HM *	7/A-3.1	6/A-3.1	2/A-3.1	LOCKSET	-	-	* SEE NOTE 12, 14, & 15.
12	3'-0" x 7'-0" x 1¾"	A	HM	HM	7/A-3.1	6/A-3.1	3/A-3.1	LOCKSET	-	-	SEE NOTE 15.
13	3'-0" x 7'-0" x 1¾"	D	HM	HM	7/A-3.1	6/A-3.1	3/A-3.1	LOCKSET	-	-	
14	3'-0" x 7'-0" x 1¾"	B	HM	HM *	7/A-3.1	6/A-3.1	3/A-3.1	LOCKSET	-	-	* SEE NOTE 12 & 15.
15	3'-0" x 7'-0" x 1¾"	D	HM	HM	7/A-3.1	6/A-3.1	3/A-3.1	LOCKSET	-	-	
16	3'-0" x 7'-0" x 1¾"	A	HM	HM	7/A-3.1	6/A-3.1	3/A-3.1	LOCKSET	-	-	* SEE NOTE 15.
17	PR 3'-0" x 7'-0" x 1¾"	A	HM	HM *	5/A-3.1	4/A-3.1	1/A-3.1	LOCKSET	CLOSER	-	* SEE NOTE 12. PROVIDE HOLD OPEN.
18	PR 3'-0" x 7'-0" x 1¾"	G	HM	HM	11/A-3.1	10/A-3.1	12/A-3.1	LOCKSET	-	-	PROVIDE HOLD OPEN.
19	4'-3" x 10'-0" OVHD. GRILLE	E	MFR.	MFR.	9/A-3.1	8/A-3.1	-	MFR.	MFR.	-	SEE SPECIFICATIONS
20	4'-3" x 10'-0" OVHD. GRILLE	E	MFR.	MFR.	9/A-3.1	8/A-3.1	-	MFR.	MFR.	-	SEE SPECIFICATIONS
21	4'-3" x 10'-0" OVHD. GRILLE	E	MFR.	MFR.	9/A-3.1	8/A-3.1	-	MFR.	MFR.	-	SEE SPECIFICATIONS
22	4'-3" x 10'-0" OVHD. GRILLE	E	MFR.	MFR.	9/A-3.1	8/A-3.1	-	MFR.	MFR.	-	SEE SPECIFICATIONS
23	3'-0" x 7'-0" x 1¾"	F	HM	HM	7/A-3.1	6/A-3.1	2/A-3.1	LOCKSET	MFR.	-	SEE NOTES 14 & 15
24	3'-0" x 7'-0" x 1¾"	F	HM	HM	7/A-3.1	6/A-3.1	2/A-3.1	LOCKSET	MFR.	-	SEE NOTES 14 & 15
25	PR 3'-0" x 7'-0" x 1¾"	A	HM	HM	11/A-3.1	10/A-3.1	12/A-3.1	LOCKSET	CLOSER	-	* SEE NOTE 12. PROVIDE HOLD OPEN.
M-1	3 X 5 ACCESS PANEL										SEE SPECIFICATIONS

DOOR NOTES:

1. CONTRACTOR TO COORDINATE FUNCTION & KEYING WITH OWNER.
2. ALL HARDWARE AND ACCESSORIES SHALL MEET THE REQUIREMENTS OF THE A.D.A.A.G. PROVIDE LEVER TYPE HANDLES.
3. ALL HARDWARE SHALL PROVIDE FREE ACCESS IN THE EGRESS DIRECTION AT ALL TIMES.
4. ALL DOORS, FRAMES, HARDWARE AND ACCESSORIES SHALL BE INSTALLED PER MFR'S SPECIFICATIONS.
5. ALL DOOR FRAMES TO HAVE 3 SILENCERS EACH.
6. ALL EXTERIOR DOORS TO BE INSULATED AND PROVIDED WITH WEATHERSTRIPPING, U.N.O.
7. PROVIDE METAL FLOOR TRANSITION STRIPS AS REQ'D U.N.O., SEE FINISH SCHEDULE.
8. HM DOORS AND/OR FRAMES TO BE PAINTED.
9. ALL FIRE DOOR ASSEMBLIES (DOOR & FRAME) SHALL HAVE LABEL ATTACHED.
10. SEE WINDOW ELEVATIONS FOR ADDITIONAL INFORMATION & COORDINATION.
11. HANDICAP ELECTRIC DOOR OPENER, ENTER & EXIT.
12. PROVIDE KICK PLATE ON PUSH SIDE ONLY.
13. PROVIDE KICK PLATE ON BOTH SIDES.
14. THRESHOLD TO MATCH FINISH FLOOR ELEVATION AFTER TILES HAVE BEEN SET IN PLACE. THRESHOLD SHALL COMPLY WITH THE A.D.A.A.G.
15. PROVIDE 1" CLEAR UNDERCUT, COORDINATE WITH MECHANICAL SHEETS.

ROOM FINISH SCHEDULE

NO.	DESIGNATION	FLOOR	BASE	WALLS REAR	WALLS RIGHT	WALLS FRONT	WALLS LEFT	CEILING	CLG. HGT.	REMARKS
100	VESTIBULE	Q.T.	GL.BL.	-	WW.	WW.	WW.	G.B./P.	9'-11⅜"	
101	VENDING	Q.T.	"	GL.BL.	GL.BL.	WW.	GL.BL.	G.B./P.	9'-11⅜"	
102	STORAGE	CONC./C.H.	"	GL.BL.	GL.BL.	GL.BL.	GL.BL.	G.B./P.	9'-11⅜"	
103	MEN	Q.T.	" *	GL.BL.	GL.BL.	GL.BL.	GL.BL.	G.B./P.	9'-11⅜"	* SEE NOTE 5.
104	MEN	Q.T.	" *	GL.BL.	GL.BL.	GL.BL.	GL.BL.	G.B./P.	9'-11⅜"	* SEE NOTE 5.
105	AREA	Q.T.	" *	GL.BL.	GL.BL.	GL.BL.	GL.BL.	G.B./P.	9'-11⅜"	* SEE NOTE 5.
106	AREA	Q.T.	"	GL.BL.	GL.BL.	-	GL.BL.	G.B./P.	VARIES	
107	MAP DISPLAY	Q.T.	"	GL.BL.	GL.BL.	-	GL.BL.	G.B./P.	9'-11⅜"	
108	LOBBY	Q.T.	"	GL.BL.	WW.	WW.	WW.	G.B./P.	VARIES	
109	FAMILY RESTROOM	Q.T.	" *	GL.BL.	GL.BL.	GL.BL.	GL.BL.	G.B./P.	9'-11⅜"	* SEE NOTE 5.
110	JANITOR'S CLOSET	Q.T.	"	GL.BL.	GL.BL.	GL.BL.	GL.BL.	G.B./P.	9'-11⅜"	
111	SERVICE/LOCKERS	CONC./C.H.	"	GL.BL.	GL.BL.	GL.BL.	GL.BL.	G.B./P.	VARIES	
112	WOMEN	Q.T.	" *	GL.BL.	GL.BL.	GL.BL.	GL.BL.	G.B./P.	9'-11⅜"	* SEE NOTE 5.
113	WOMEN	Q.T.	" *	GL.BL.	GL.BL.	GL.BL.	GL.BL.	G.B./P.	9'-11⅜"	* SEE NOTE 5.
114	AREA	Q.T.	" *	GL.BL.	GL.BL.	GL.BL.	GL.BL.	G.B./P.	9'-11⅜"	* SEE NOTE 5.
115	AREA	Q.T.	"	GL.BL.	GL.BL.	-	GL.BL.	G.B./P.	VARIES	
116	VESTIBULE	Q.T.	"	-	WW.	WW.	WW.	G.B./P.	9'-11⅜"	
117	VENDING	Q.T.	"	GL.BL.	GL.BL.	WW.	GL.BL.	G.B./P.	9'-11⅜"	
118	~~STORAGE~~ CLOSET	CONC./C.H.	"	GL.BL.	GL.BL.	GL.BL.	GL.BL.	G.B./P.	9'-11⅜"	
119	STOR. (FUTURE EXP.)	CONC./C.H.	"	GL.BL.	GL.BL.	GL.BL.	GL.BL.	G.B./P.	9'-11⅜"	
120	MECHANICAL ROOM	CONC./C.H.	"	GL.BL.	GL.BL.	GL.BL.	GL.BL.	G.B./P.	VARIES	
121	STOR. (FUTURE EXP.)	CONC./C.H.	"	GL.BL.	GL.BL.	GL.BL.	GL.BL.	G.B./P.	9'-11⅜"	
122	MAINTENANCE BLDG.	CONC./C.H.	C.MU.	C.MU.	C.MU.	C.MU.	C.MU.	EXPOSED/P.	VARIES	
123	WATER TREATMENT	CONC./P	C.MU./P	C.MU./P	C.MU./P	C.MU./P	C.MU./P	G.B./P	11'-4	
M01	MECH. MEZZANINE	CONC./T.C.W.	C.MU./P	M.R.G.B./P	M.R.G.B./P	M.R.G.B./P	M.R.G.B./P	G.B./P	8'-0"	

FINISH NOTES:

1. PROVIDE VINYL OR METAL FLOOR TRANSITION STRIPS AS REQ'D. U.N.O. (SEE SPECS OF FLOOR MATERIALS)
2. INTERIOR EXPOSED CONC. FLOORS WITH SAW CUT CONTROL JOINTS TO BE FILLED W/ LATEX JOINT FILLER.
3. INSTALL PER MFR. RECOMMENDATIONS. PROVIDE FOR PERIMETER EXPANSION AS REQUIRED.
4. ALL GLAZED BLOCK BASE TO BE STRAIGHT, U.N.O.
5. PROVIDE 8" COVED GLAZED BLOCK BASE IN ALL RESTROOMS.
6. SEE REFLECTED CEILING PLAN FOR ADDITIONAL FINISHES AND HEIGHTS.

ROOM FINISH & DOOR SCHEDULE LEGEND

C.H.	CONCRETE HARDENER	P.	PAINT / PAINTED
C.M.U.	CONCRETE MASONRY UNIT	P.T.	PAVING TILE - 12"x12" PORCELAIN - SLIP RESIST.
C.T.	CERAMIC TILE		
C.W.D.	CLAD WOOD	Q.T.	QUARRY TILE
CONC.	CONCRETE	S.C.	SPECIAL COATING
F.M.	FLOOR MAT	T.C.W.	TRAFFIC COATING (WATERPROOFING)
G.B.	GYPSUM BOARD	STN.	STAIN
GL.BL.	GLAZED BLOCK	V.C.T.	VINYL COMPOSITE TILE
M.R.G.B.	MOISTURE RESISTANT GYP. BD.	VAR.	VARNISH
N.I.C.	NOT IN CONTRACT	WW.	WINDOW WALL
		WD.	WOOD

WALL TYPE LEGEND

WALL TYPE		UL#	SOUND RATING	DESCRIPTION	REMARKS
A	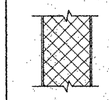			7⅛" GLAZED BOTH SIDE.	ALIGN ON RESTROOM AND VENDING AREA SIDE.
B	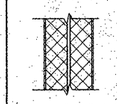			3¾" ONE SIDE GLAZED C.M.U. BACK TO BACK (7⅝" TOTAL THK) GLAZED SIDES OUT.	ALIGN ON BOTH SIDES.
C	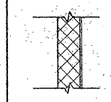			3⅝" GLAZED ON ONE SIDE.	ALIGN ON RESTROOM SIDE.
D	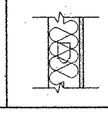			⅝" GYP. BD. ON ONE SIDE OF 6" METAL STUDS (20 GA.) @ 16" O.C. W/ 6" BATT INSUL. W/VAPOR BARRIER.	

WALL TYPE NOTES:

1. SEAL INTERSECTION OF WALLS, FLOORS, CLGS, DECK ETC. & WALL PENETRATIONS W/ APPROVED FIRE OR SOUND SEALANT. ETC. TYPICAL WHERE FIRE RATING & SOUND SEAL IS REQ'D.
2. SEE REFLECTED CLG. PLANS FOR LOCATIONS & DESIGNATIONS OF REQ'D FIRE RATED WALLS, ALL OTHER WALLS, ALTHOUGH NOT REQUIRED TO BE FIRE RATED, MUST BE INSULATED & SEALED IN ORDER TO COMPLY WITH ACOUSTICAL/SOUND REQUIREMENTS.
3. ALL METAL STUDS AND ACCESSORIES TO BE GALVANIZED (GALV.). PROVIDE LATERAL BRACING AS REQ'D.
4. PROVIDE BLOCKING IN METAL STUD WALLS AS REQUIRED FOR EQUIPMENT, ETC.

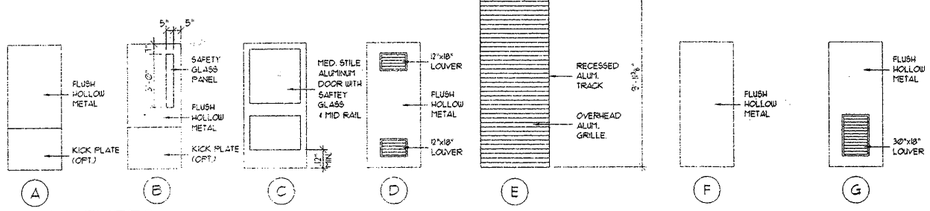

DOOR TYPES

SCALE: NONE

all inside hollow metal door frames should use head beams of finished ceiling

MAKE DOOR REMOVABLE TO ACCESS CEIL. DOWN FROM ATTIC AREA

USE OF 6" BEAM ELIMINATES DEEP FURRING

Header cut inside from mezzanine

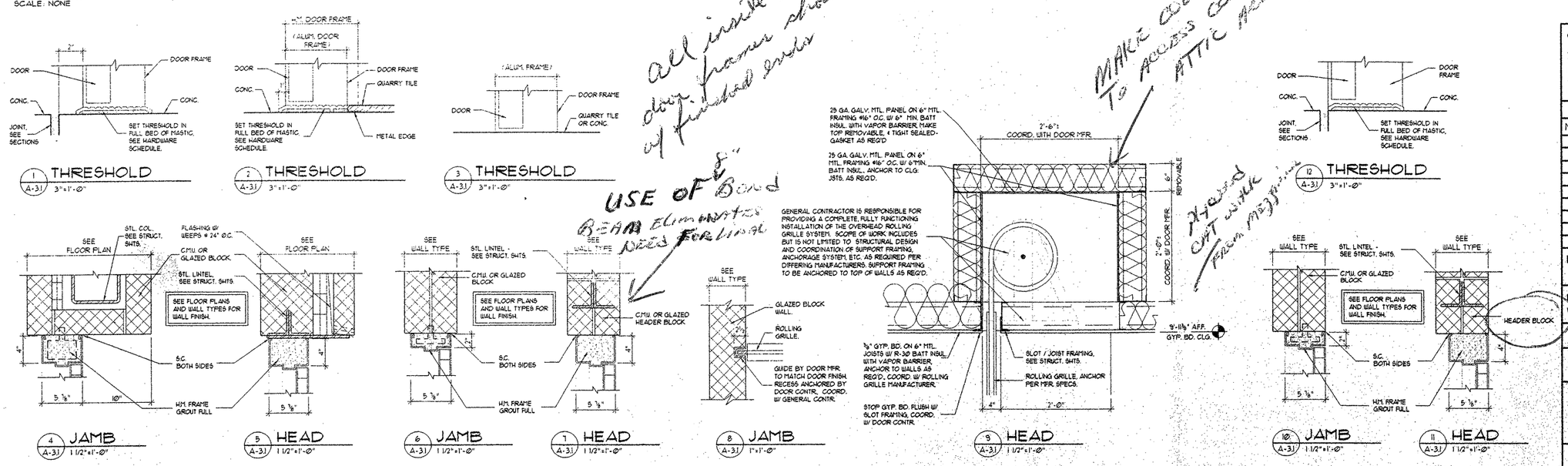

CONSULTING ARCHITECTS / ENGINEERS

ARCHITECT: BODNER & KERIK ARCHITECTS, INC.
STRUCTURAL: LANTZ JONES & NEBRASKA, INC.
MECHANICAL/ELECTRICAL: SRA, INC.
CIVIL ENGINEERING: POGGEMEYER DESIGN GROUP, INC.
LANDSCAPE ARCHITECT: R.D. ZANDE & ASSOCIATES, INC.

REVISIONS

NO.	DATE	DESCRIPTION
	12-6-02	BID SET

STATE OF OHIO — THOMAS J. BODNER 6884 — REGISTERED ARCHITECT

PROJECT NUMBER 0226

FOR: OHIO DEPT. OF TRANSPORTATION

DRAWING DESCRIPTION: WALL & DOOR TYPES, SCHEDULES & DETAILS

NEW REST STOP BUILDINGS

NO. 770-2001-072 US 30 WYANDOT/CRAWFORD | SITE 1 EASTBOUND | SITE 2 WESTBOUND

PREPARED FOR STATE OF OHIO DEPARTMENT OF ADMINISTRATIVE SERVICES GENERAL SERVICES DIVISION

PREPARED BY DEPARTMENT OF ADMINISTRATIVE SERVICES

PLOT DATE DEC 10, 2002 | DATE OCT. 7, 2002 | SHEET A-3.1

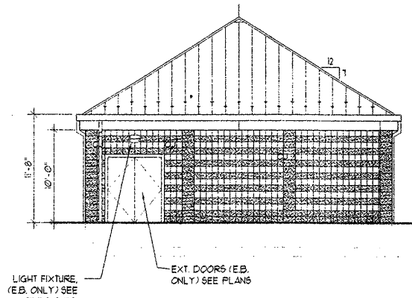

5 A-4.1 LEFT SIDE ELEVATION
SCALE: 1/8" = 1'-0"

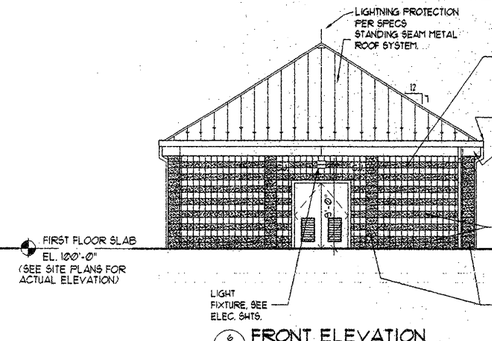

6 A-4.1 FRONT ELEVATION
SCALE: 1/8" = 1'-0"

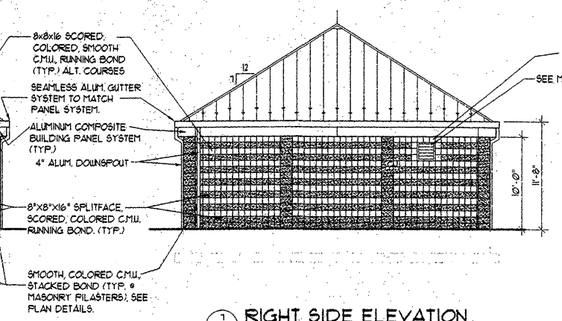

1 A-4.1 RIGHT SIDE ELEVATION
SCALE: 1/8" = 1'-0"

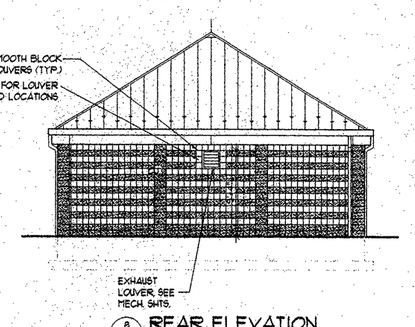

8 A-4.1 REAR ELEVATION
SCALE: 1/8" = 1'-0"

MAINTENANCE BUILDING

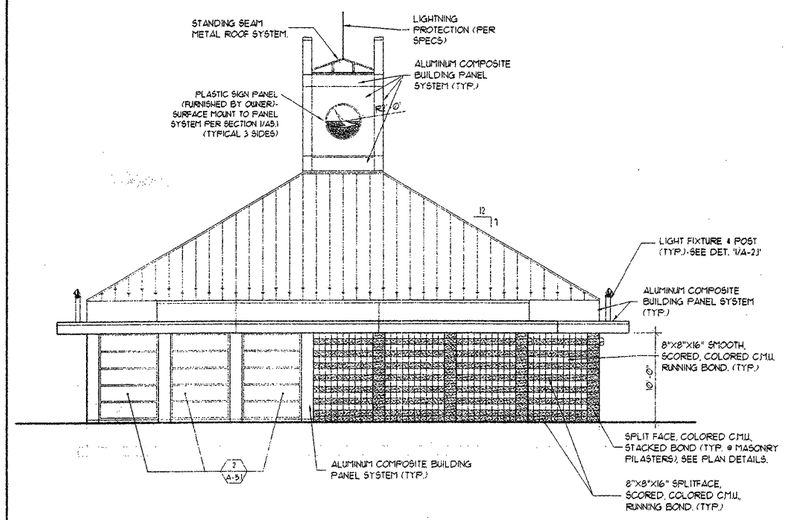

3 A-4.1 RIGHT SIDE ELEVATION
SCALE: 1/8" = 1'-0"

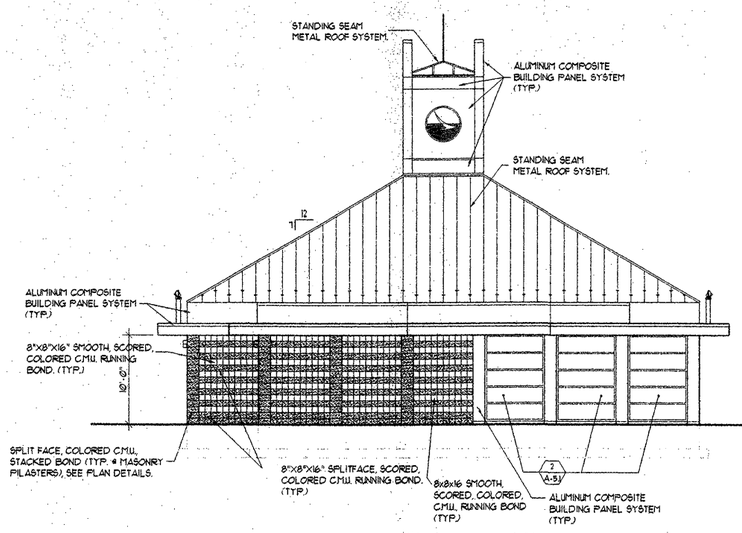

4 A-4.1 LEFT SIDE ELEVATION
SCALE: 1/8" = 1'-0"

NOTES:
1. ALL SMOOTH C.M.U. TO BE COLOR 'A', SEE SPECIFICATIONS.
2. ALL SPLITFACE C.M.U. TO BE COLOR 'B', SEE SPECIFICATIONS.
3. PROVIDE SMOOTH BLOCK (COLOR 'A') AROUND LOUVERS AND SURFACE MOUNTED ELEC. PANELS. (TYP.)

1/8" = 1'-0"
0 4' 8' 16' 24'

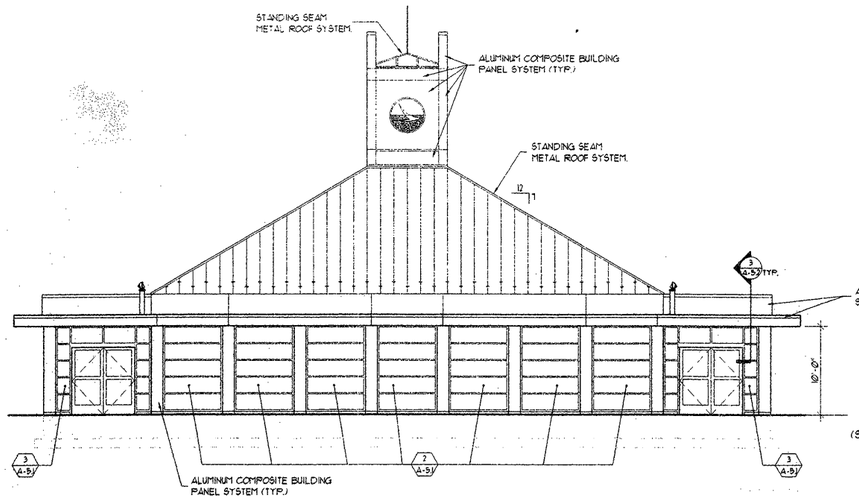

1 A-4.1 FRONT ELEVATION
SCALE: 1/8" = 1'-0"

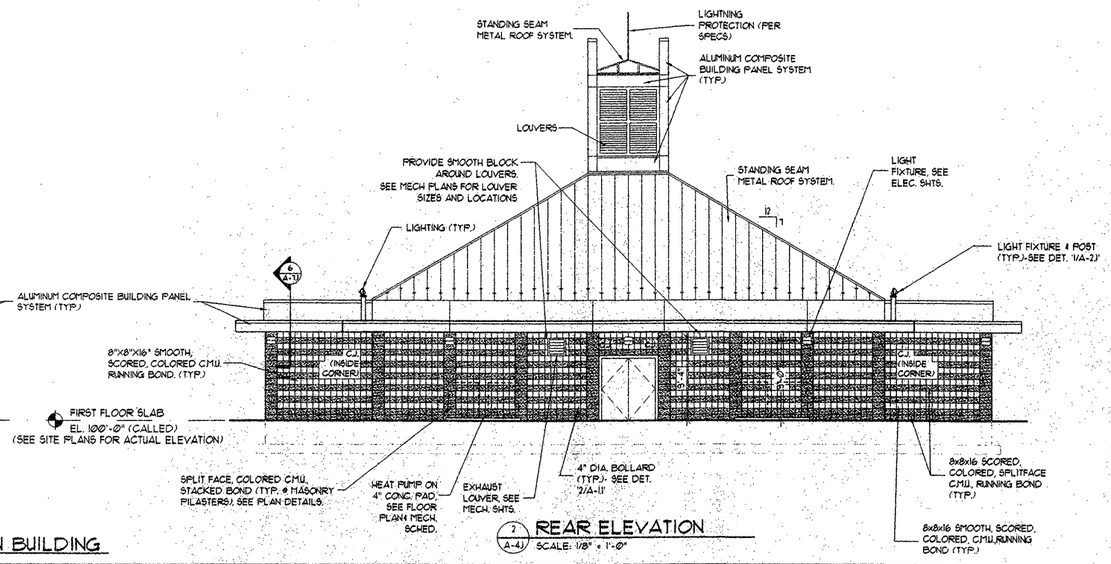

2 A-4.1 REAR ELEVATION
SCALE: 1/8" = 1'-0"

MAIN BUILDING

CONSULTING ARCHITECTS / ENGINEERS

ARCHITECT: BODNER & KERIK ARCHITECTS, INC.
STRUCTURAL: LANTZ JONES & NEBRASKA, INC.
MECHANICAL/ELECTRICAL: SRA, INC.
CIVIL ENGINEERING: POGGEMEYER DESIGN GROUP, INC.
LANDSCAPE ARCHITECT: R.D. ZANDE & ASSOCIATES, INC.

REVISIONS

NO.	DATE	DESCRIPTION
	12-6-02	BID SET

STATE OF OHIO — THOMAS J. BODNER 6884 — REGISTERED ARCHITECT

PROJECT NUMBER 0226

FOR:
OHIO DEPT. OF TRANSPORTATION

DRAWING DESCRIPTION:
EXTERIOR ELEVATIONS

NEW REST STOP BUILDINGS

NO. 770-2001-072 | SITE 1 EASTBOUND | SITE 2 WESTBOUND
US 30 WYANDOT/CRAWFORD

PREPARED FOR
STATE OF OHIO
DEPARTMENT OF ADMINISTRATIVE SERVICES
GENERAL SERVICES DIVISION

PREPARED BY
DEPARTMENT OF ADMINISTRATIVE SERVICES

PLOT DATE	DATE	SHEET
DEC. 10, 2002	OCT. 7, 2002	A-4.1

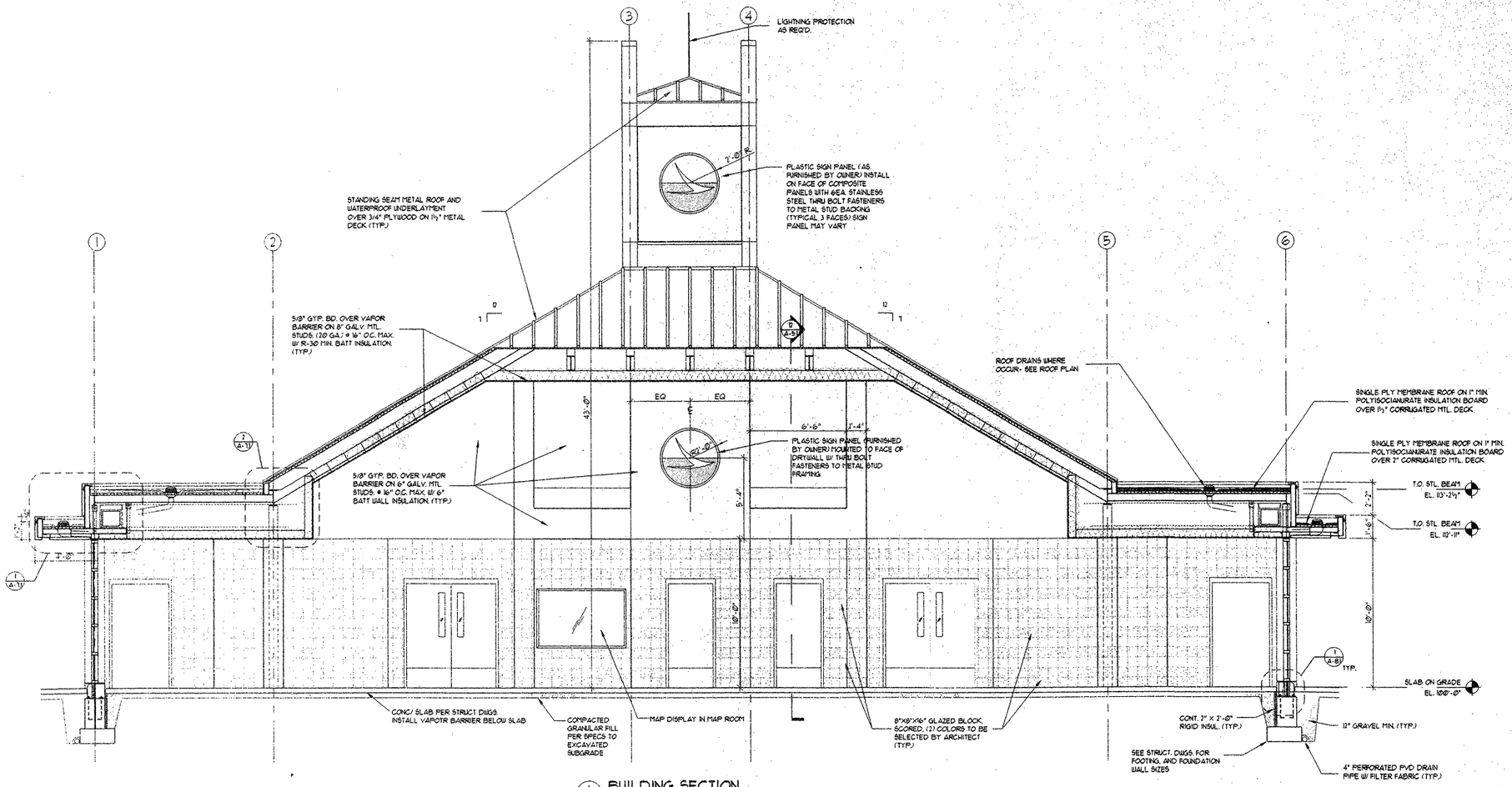

1 A-5.1 BUILDING SECTION
SCALE: 1/4" = 1'-0"

1/4" = 1'-0" 0 2' 4' 8' 12'

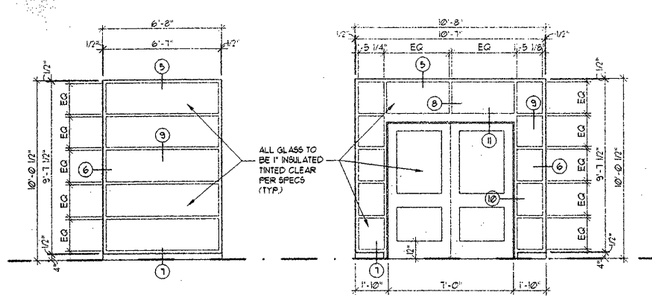

2 A-5.1 ELEVATION
SCALE: 1/4" = 1'-0"

3 A-5.1 ELEVATION
SCALE: 1/4" = 1'-0"

WINDOW NOTES:

1. REGARDLESS OF GLASS TYPE SHOWN ON DWGS, GLASS TYPES SHALL COMPLY WITH GOVERNING CODES, ETC. ALL GLASS TO BE TEMPERED.
2. THESE WINDOW DETAILS ARE BASED ON "VISTAWALL ARCHITECTURAL PRODUCTS" SERIES "HP-175" AND ARE FOR INTENT ONLY. SEE SPECS FOR ADD'L MANUF.
3. ROUGH OPENINGS SHALL BE FIELD VERIFIED AND COORDINATED ALUM. COMPOSITE BLDG. PANELS. ACTUAL WINDOW UNIT DIMENSIONS SHALL BE DETERMINED BY WINDOW MANUFACTURER / INSTALLER. SEE SPECIFICATIONS.
4. WINDOW MANUFACTURER / INSTALLER SHALL PROVIDE FRAME EXTENSIONS AND CLOSURES WHERE REQ'D. TO MEET THE INTENT ON THE CONTRACT DOCUMENTS.
5. WINDOW MANUFACTURER / INSTALLER SHALL PROVIDE ALL ANCHORS AS REQUIRED TO SECURELY FASTEN WINDOW UNITS. ALL ANCHORS SHALL BE CORROSION RESISTANT

4 A-5.1 NOT USED

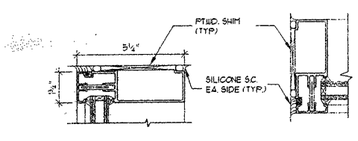

5 A-5.1 DETAIL
SCALE: 3" = 1'-0"

6 A-5.1 DETAIL
SCALE: 3" = 1'-0"

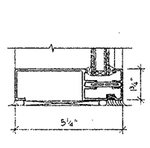

7 A-5.1 DETAIL
SCALE: 3" = 1'-0"

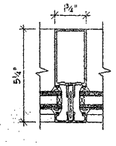

8 A-5.1 DETAIL
SCALE: 3" = 1'-0"

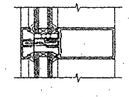

9 A-5.1 DETAIL
SCALE: 3" = 1'-0"

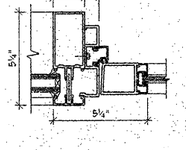

10 A-5.1 DETAIL
SCALE: 3" = 1'-0"

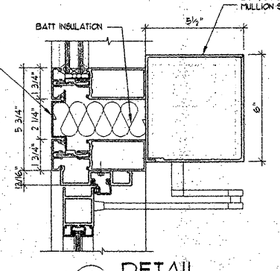

11 A-5.1 DETAIL
SCALE: 3" = 1'-0"

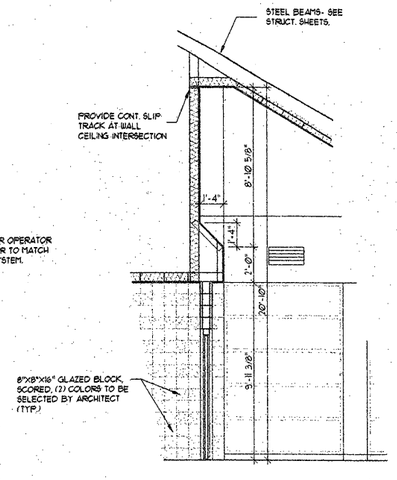

12 A-5.1 PARTIAL SECTION
SCALE: 1/4" = 1'-0"

CONSULTING ARCHITECTS / ENGINEERS

ARCHITECT: BODNER & KERIK ARCHITECTS, INC.
STRUCTURAL: LANTZ JONES & NEBRASKA, INC.
MECHANICAL/ELECTRICAL: SRA, INC.
CIVIL ENGINEERING: POGGEMEYER DESIGN GROUP, INC.
LANDSCAPE ARCHITECT: R.D. ZANDE & ASSOCIATES, INC.

REVISIONS

NO.	DATE	DESCRIPTION
	12-6-02	BID SET

STATE OF OHIO — THOMAS J. BODNER 6884 — REGISTERED ARCHITECT

PROJECT NUMBER 0226

FOR: OHIO DEPT. OF TRANSPORTATION

DRAWING DESCRIPTION: BUILDING SECTIONS/DETAILS

NEW REST STOP BUILDINGS

NO. 770-2001-072 — US 30 WYANDOT/CRAWFORD | SITE 1 EASTBOUND | SITE 2 WESTBOUND

PREPARED FOR
STATE OF OHIO
DEPARTMENT OF ADMINISTRATIVE SERVICES
GENERAL SERVICES DIVISION

PREPARED BY
DEPARTMENT OF ADMINISTRATIVE SERVICES

PLOT DATE	DATE	SHEET
DEC 10, 2002	OCT. 7, 2002	A-5.1

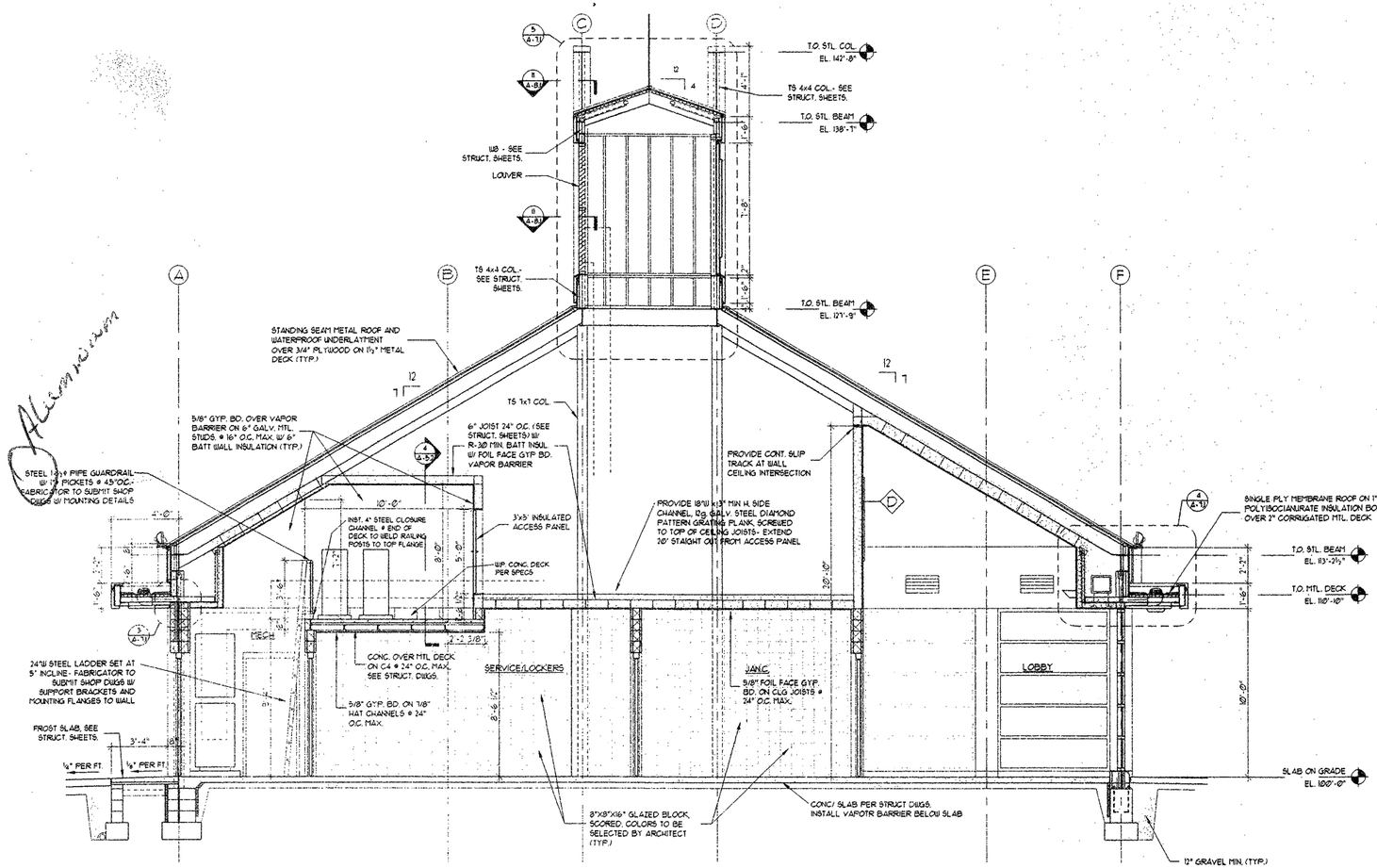

1 A-5.2 BUILDING SECTION
SCALE: 1/4" = 1'-0"

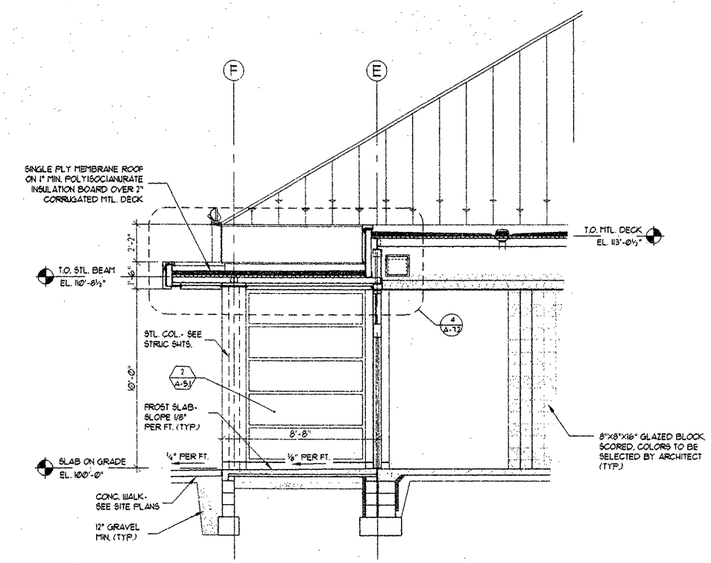

3 A-5.2 PARTIAL SECTION
SCALE: 1/4" = 1'-0"

1/4" = 1'-0"
0 2' 4' 8' 12'

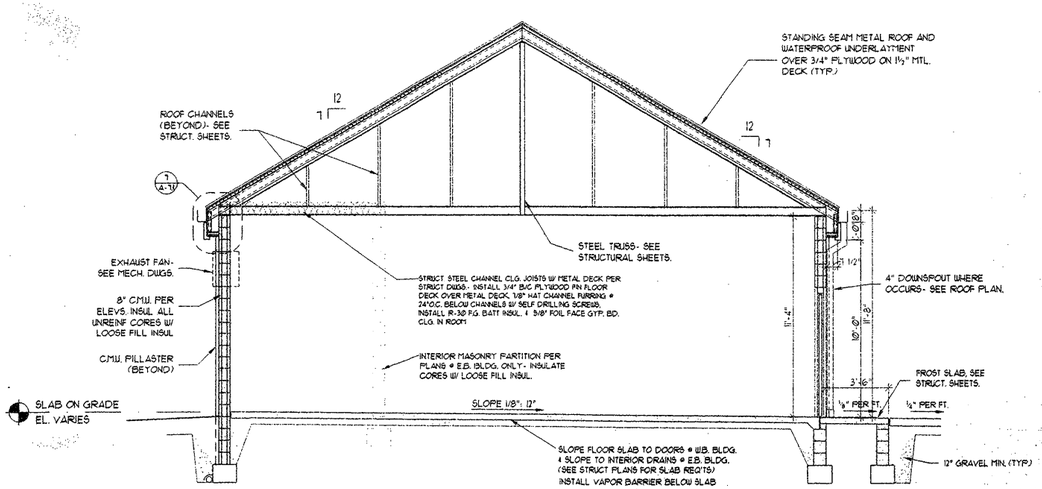

2 A-5.2 BUILDING SECTION
SCALE: 1/4" = 1'-0"

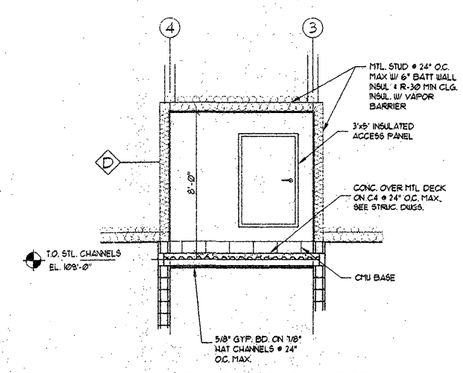

4 A-5.2 PARTIAL BLDG. SECTION
SCALE: 1/4" = 1'-0"

CONSULTING ARCHITECTS / ENGINEERS

ARCHITECT: BODNER & KERIK ARCHITECTS, INC.
STRUCTURAL: LANTZ JONES & NEBRASKA, INC.
MECHANICAL/ELECTRICAL: SRA, INC.
CIVIL ENGINEERING: POGGEMEYER DESIGN GROUP, INC.
LANDSCAPE ARCHITECT: R.D. ZANDE & ASSOCIATES, INC.

REVISIONS

NO.	DATE	DESCRIPTION
	10-16-02	LADDER REV.
	12-6-02	BID. SET

STATE OF OHIO — THOMAS J. BODNER 6884 — REGISTERED ARCHITECT

PROJECT NUMBER 0226

FOR:
OHIO DEPT. OF TRANSPORTATION

DRAWING DESCRIPTION:
BUILDING SECTIONS

NEW REST STOP BUILDINGS

NO. 770-2001-072
US 30 WYANDOT/CRAWFORD

SITE 1	SITE 2
EASTBOUND	WESTBOUND

PREPARED FOR
STATE OF OHIO
DEPARTMENT OF ADMINISTRATIVE SERVICES
GENERAL SERVICES DIVISION

PREPARED BY
DEPARTMENT OF ADMINISTRATIVE SERVICES

PLOT DATE	DATE	SHEET
DEC 10, 2002	OCT. 7, 2002	A-5.2

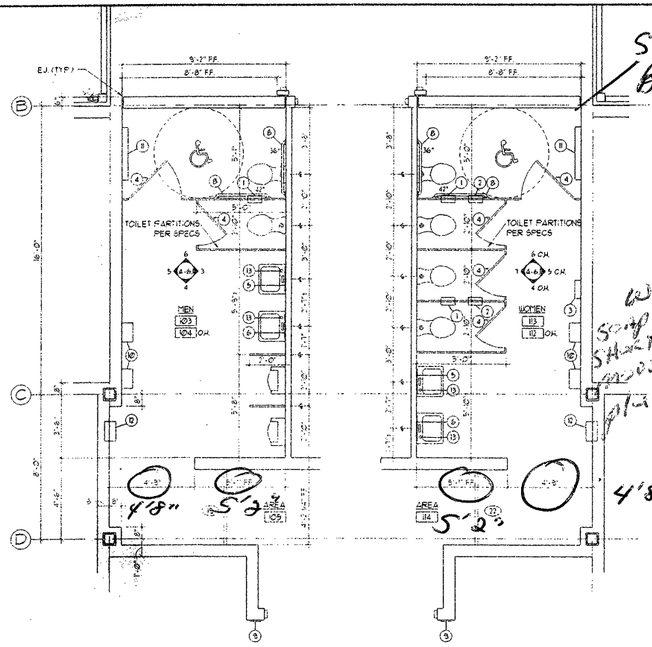

1 A-6.1 PARTIAL TOILET PLANS
SCALE: 1/4" = 1'-0"

2 A-6.1 PARTIAL TOILET PLANS
SCALE: 1/4" = 1'-0"

STARTED w/ 4" Block HERE

SEE SPECIFICATIONS FOR FIXTURE REQUIREMENTS
INCLUDING REQUIREMENTS FOR AUTOMATIC FLUSH VALVES & SENSORS

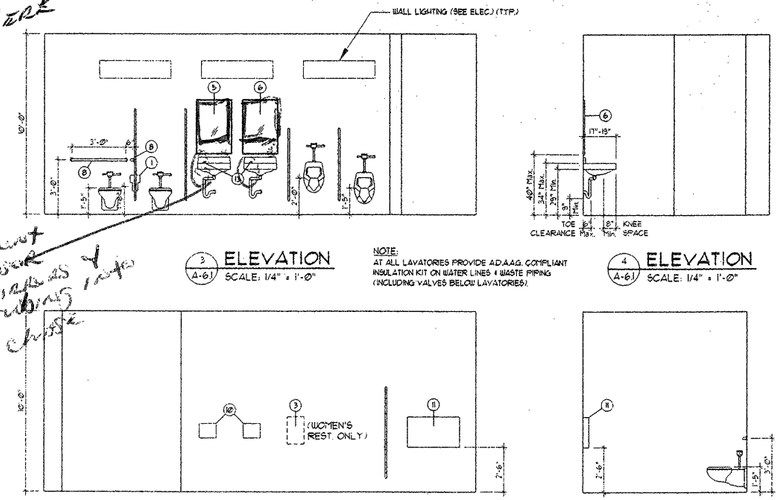

3 A-6.1 ELEVATION
SCALE: 1/4" = 1'-0"

NOTE:
AT ALL LAVATORIES PROVIDE AD.A.A.G. COMPLIANT INSULATION KIT ON WATER LINES & WASTE PIPING (INCLUDING VALVES BELOW LAVATORIES).

4 A-6.1 ELEVATION
SCALE: 1/4" = 1'-0"

5 A-6.1 ELEVATION
SCALE: 1/4" = 1'-0"

6 A-6.1 ELEVATION
SCALE: 1/4" = 1'-0"

Wall mount soap dispenser
Shorten arms & move all tubing into plumbing chase

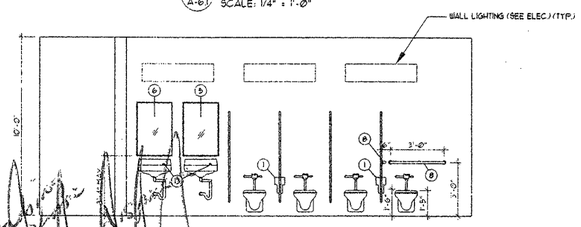

7 A-6.1 ELEVATION
SCALE: 1/4" = 1'-0"

(13) mount in wall above sink

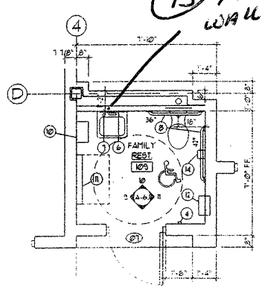

8 A-6.1 RESTROOM PLAN
SCALE: 1/4" = 1'-0"

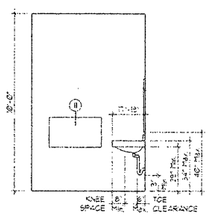

9 A-6.1 ELEVATION
SCALE: 1/4" = 1'-0"

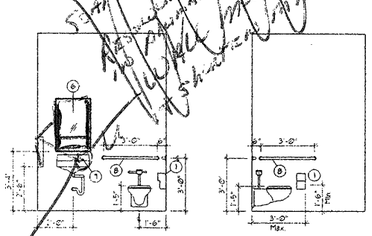

10 A-6.1 ELEVATION
SCALE: 1/4" = 1'-0"

11 A-6.1 ELEVATION
SCALE: 1/4" = 1'-0"

Move soap dispenser to side wall

R.R. ACCESSORY SCHEDULE

NO.	DESCRIPTION	MFG. NO.	REMARKS
1	TOILET TISSUE DISPENSER	B-386	2 COMPARTMENT
2	SANITARY NAPKIN DISPOSAL	B-4354	2 COMPARTMENT
3	SANITARY NAPKIN DISPENSER	B-3500	
4	CLOTHES HOOK	B-233	
5	FRAMED MIRROR	B-293	TEMPERED GLASS (24x36)
6	FRAMED MIRROR	B-290	TEMPERED GLASS (24x36)
7	SOAP DISPENSER	B-822 (OR) 8221	LAVATORY MOUNTED
8	STAINLESS STEEL GRAB BARS	B-6806	42" & 36" LONG
9	HANDICAP ACCESSIBILITY SIGN		SEE DETAIL '12/A 6.1'
10	HAND DRYER		SEE ELECTRICAL SHEETS.
11	CHANGING TABLE	B-2200	
12	PAPER WASTE BIN	B-3644	
13	SOAP DISPENSING SYSTEM	B-830-12/830-159/830-141	SEE NOTE '4.'
14	TOILET TISSUE DISPENSER	B-2888	

NOTES:

1. MODEL #'S ARE BASED ON BOBRICK(B) AND ARE FOR INTENT ONLY. SEE SPECS FOR OTHER MANUF.
2. ALL DETAILS, DIMENSIONS, SPECIFICATIONS, HARDWARE, ACCESSORIES, ETC., WHERE REQ'D SHALL COMPLY W/ THE REQUIREMENTS OF THE O.B.C. ACCESSIBILITY GUIDELINES (A.D.A.).
3. PROVIDE ALL BLOCKING AS REQ'D. FOR ACCESSORIES SUCH AS GRAB BARS, ETC.
4. PROVIDE & INSTALL FULLY FUNCTIONAL SOAP DISPENSER SYSTEM WITH ALL REQUIRED ACCESSORIES TO INCLUDE BUT NOT LIMITED TO: SOAP DISPENSING SYSTEM, S.S. LOCKING CABINET, PUMP KIT, AND CONNECTOR KIT FOR EACH SOAP DISPENSER. PROVIDE ONE SOAP SYSTEM FOR EVERY 4 SOAP DISPENSERS. THE CABINET IS TO BE LOCATED IN THE CHASE.

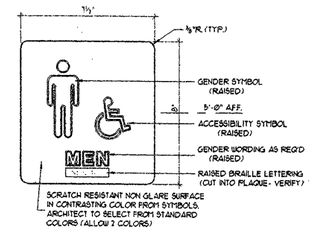

12 A-6.1 ACCESSIBILITY SIGN
SCALE: N.T.S.

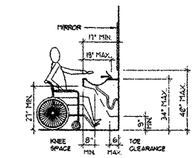

LAVATORY CLEARANCES

AT HANDICAP ACCESSIBLE LAVATORIES PROVIDE AD.A.A.G. COMPLIANT INSULATION ON WATER LINES & WASTE PIPING (INCLUDING VALVES BELOW LAVATORIES).

FIG. 3.4.203.1
SCALE: 1/4" = 1'-0"

1/4" = 1'-0" 0 2' 4' 8' 12'

CONSULTING ARCHITECTS / ENGINEERS

ARCHITECT: BODNER & KERIK ARCHITECTS, INC.
STRUCTURAL: LANTZ JONES & NEBRASKA, INC.
MECHANICAL/ELECTRICAL: SRA, INC.
CIVIL ENGINEERING: POGGEMEYER DESIGN GROUP, INC.
LANDSCAPE ARCHITECT: R.D. ZANDE & ASSOCIATES, INC.

REVISIONS

NO.	DATE	DESCRIPTION
	12-6-02	BID SET

STATE OF OHIO
THOMAS J. BODNER
6884
REGISTERED ARCHITECT

PROJECT NUMBER
0226

FOR:
OHIO DEPT. OF TRANSPORTATION

DRAWING DESCRIPTION:
R.R. PLAN DETAILS & INTERIOR ELEVATIONS

NEW REST STOP BUILDINGS

NO. 770-2001-072
US 30 WYANDOT/CRAWFORD | SITE 1 EASTBOUND | SITE 2 WESTBOUND

PREPARED FOR
STATE OF OHIO
DEPARTMENT OF ADMINISTRATIVE SERVICES
GENERAL SERVICES DIVISION

PREPARED BY
DEPARTMENT OF ADMINISTRATIVE SERVICES

PLOT DATE DEC. 10, 2002 | DATE OCT. 7, 2002 | SHEET A-6.1

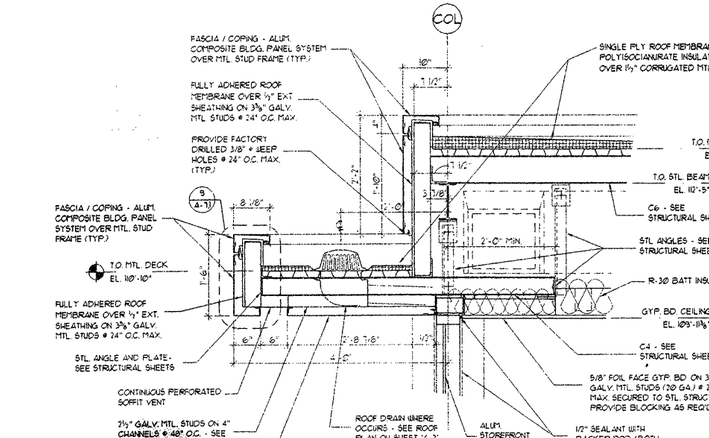

1 A-7.1 SECTION DETAIL
SCALE: ¾" = 1'-0"

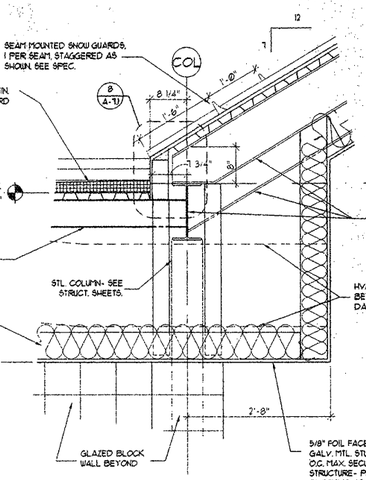

2 A-7.1 SECTION DETAIL
SCALE: ¾" = 1'-0"

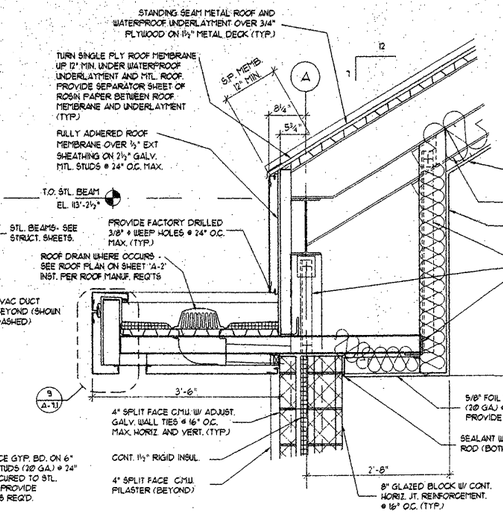

3 A-7.1 SECTION DETAIL
SCALE: ¾" = 1'-0"

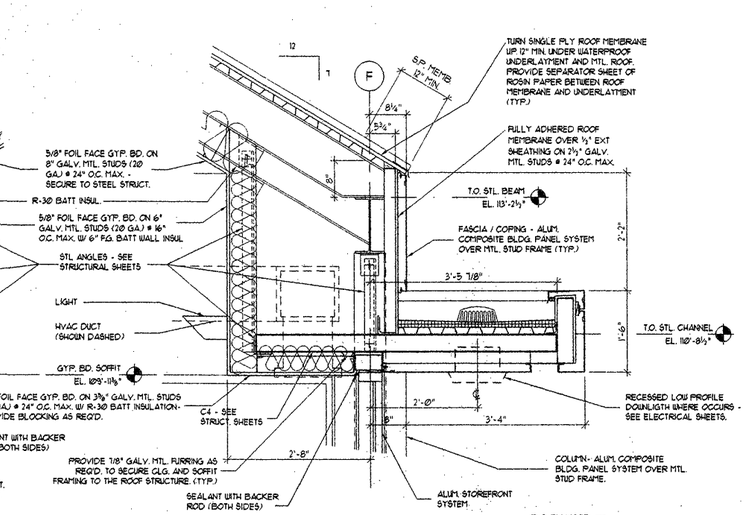

4 A-7.1 SECTION DETAIL
SCALE: ¾" = 1'-0"

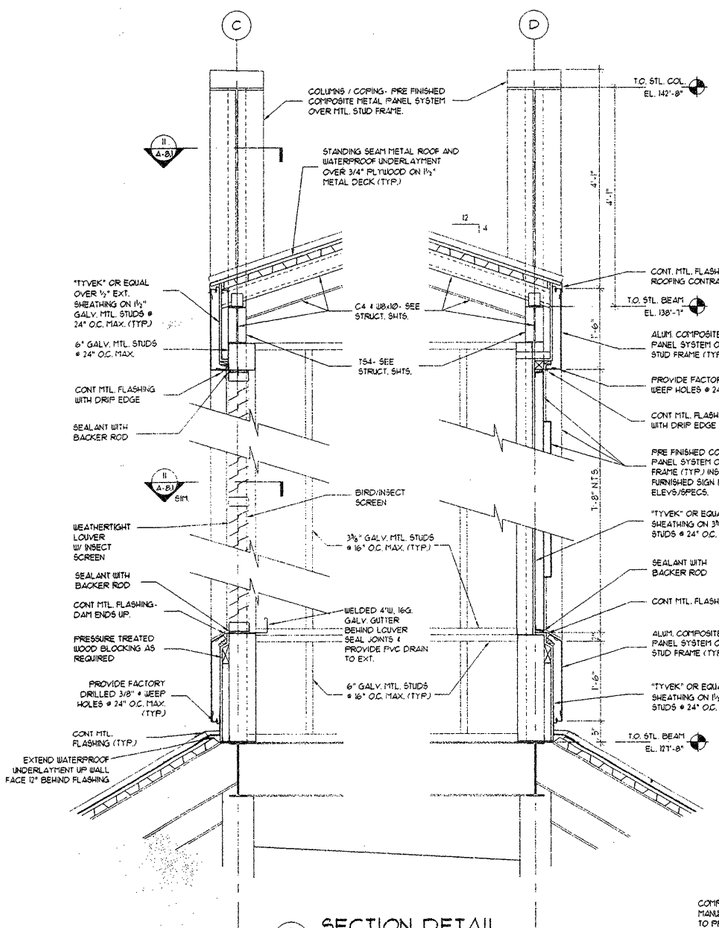

5 A-7.1 SECTION DETAIL
SCALE: ¾" = 1'-0"

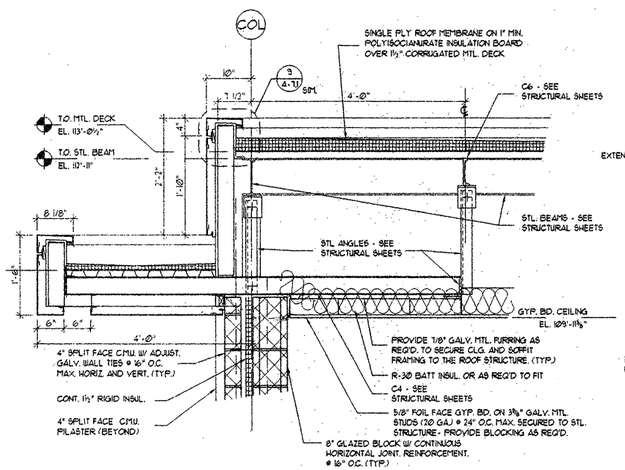

6 A-7.1 SECTION DETAIL
SCALE: ¾" = 1'-0"

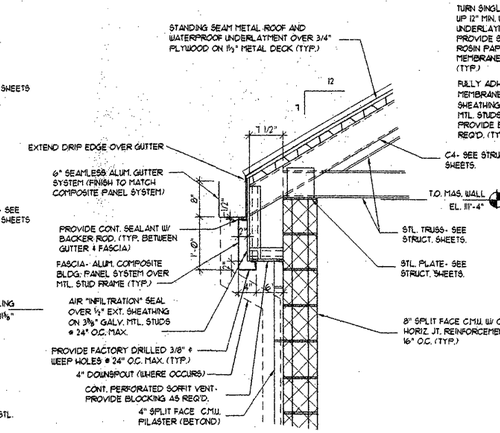

7 A-7.1 SECTION DETAIL
SCALE: ¾" = 1'-0"

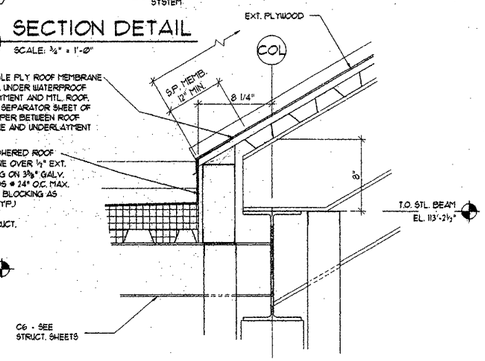

8 A-7.1 SECTION DETAIL
SCALE: 1½" = 1'-0"

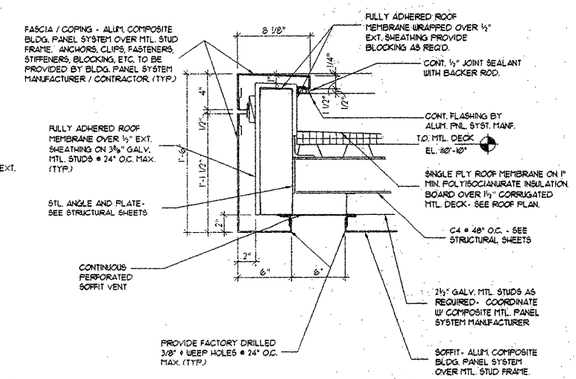

COMPOSITE PANEL SYSTEM MANUFACTURER/FABRICATOR/CONTRACTOR TO PROVIDE ANCHORS, CLIPS, FASTENERS, STIFFENERS, BLOCKING, ETC. AS REQUIRED FOR COMPLETE INSTALLATION.

9 A-7.1 SECTION DETAIL
SCALE: 1½" = 1'-0"

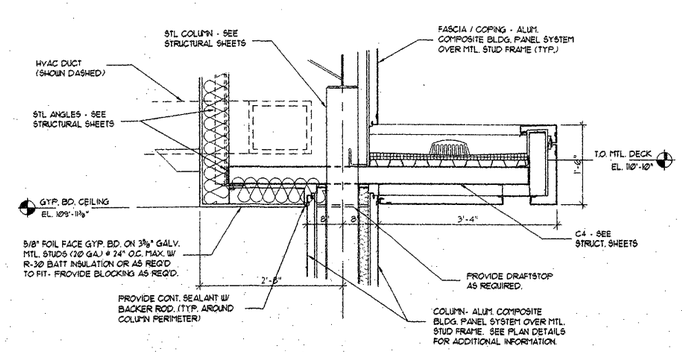

10 A-7.1 SECTION DETAIL
SCALE: ¾" = 1'-0"

3/4" = 1'-0"
0 8" 16" 32" 48"

CONSULTING ARCHITECTS / ENGINEERS

ARCHITECT: BODNER & KERIK ARCHITECTS, INC.
STRUCTURAL: LANTZ JONES & NEBRASKA, INC.
MECHANICAL/ELECTRICAL: SRA, INC.
CIVIL ENGINEERING: POGGEMEYER DESIGN GROUP, INC.
LANDSCAPE ARCHITECT: R.D. ZANDE & ASSOCIATES, INC.

REVISIONS

NO.	DATE	DESCRIPTION
	12-6-02	BID SET

STATE OF OHIO
THOMAS J BODNER
6884
REGISTERED ARCHITECT

PROJECT NUMBER
0226

FOR:
OHIO DEPT. OF TRANSPORTATION

DRAWING DESCRIPTION:
SECTION DETAILS

NEW REST STOP BUILDINGS

NO. 770-2001-072
US 30 WYANDOT/CRAWFORD

SITE 1 EASTBOUND | SITE 2 WESTBOUND

PREPARED FOR
STATE OF OHIO
DEPARTMENT OF ADMINISTRATIVE SERVICES
GENERAL SERVICES DIVISION.

PREPARED BY
DEPARTMENT OF ADMINISTRATIVE SERVICES

PLOT DATE DEC. 10, 2002 | DATE OCT. 7, 2002 | SHEET A-7.1

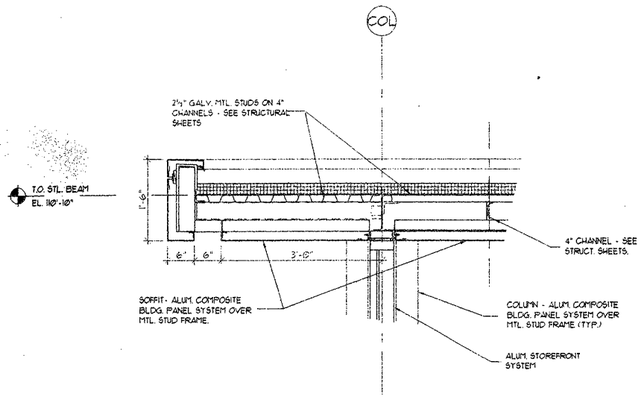

5 / A-7.2 SECTION DETAIL
SCALE: ¾" = 1'-0"

12,3 / A-7.2 NOT USED
SCALE: NONE

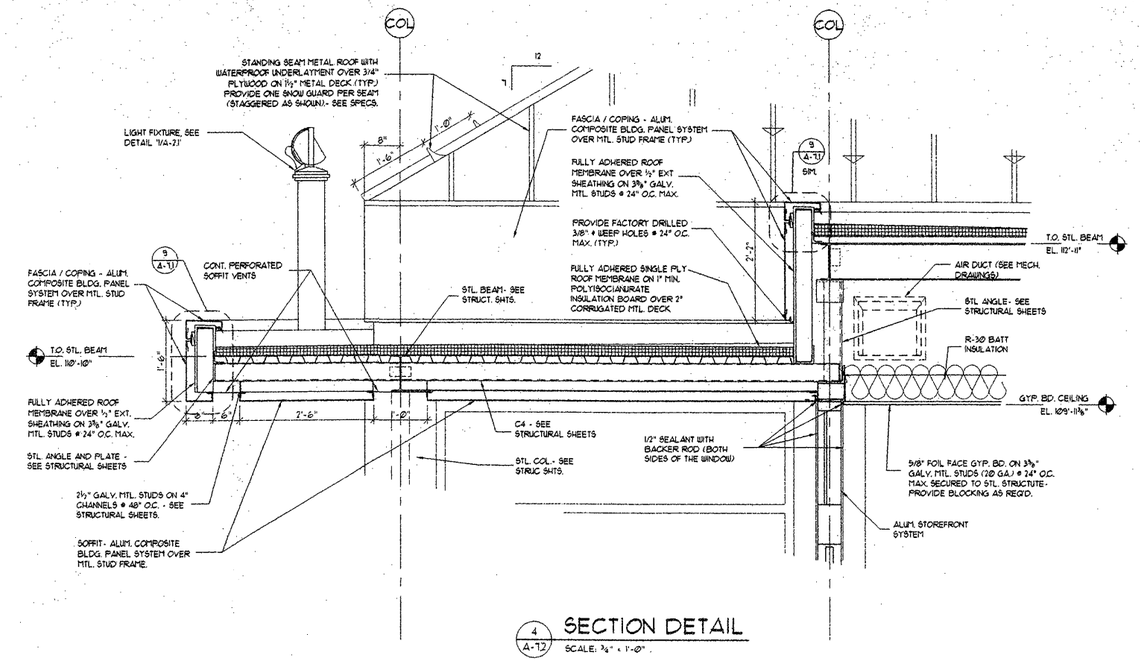

4 / A-7.2 SECTION DETAIL
SCALE: ¾" = 1'-0"

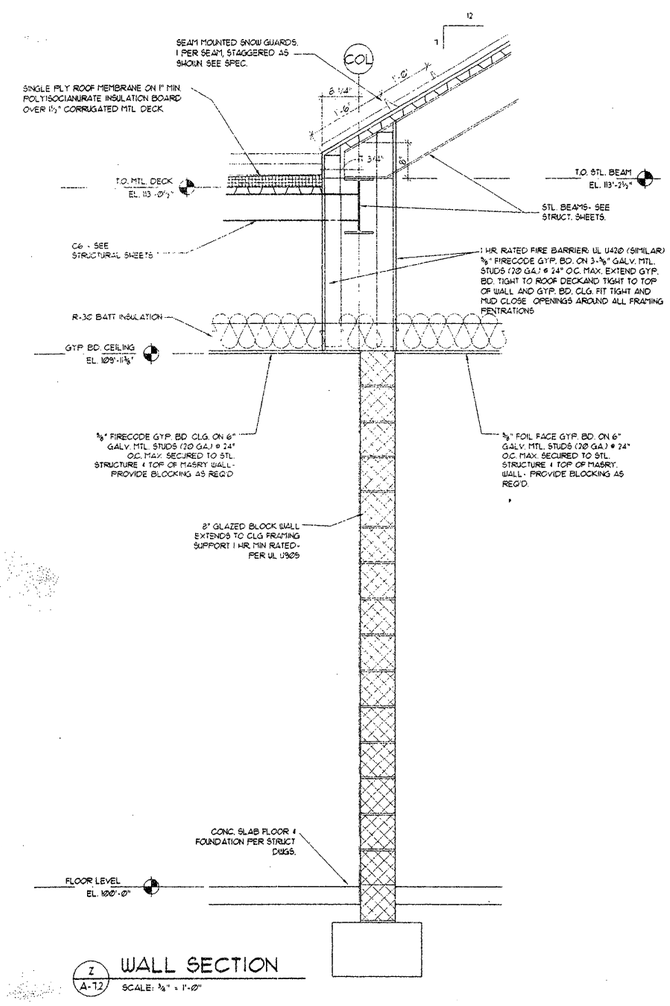

Z / A-7.2 WALL SECTION
SCALE: ¾" = 1'-0"

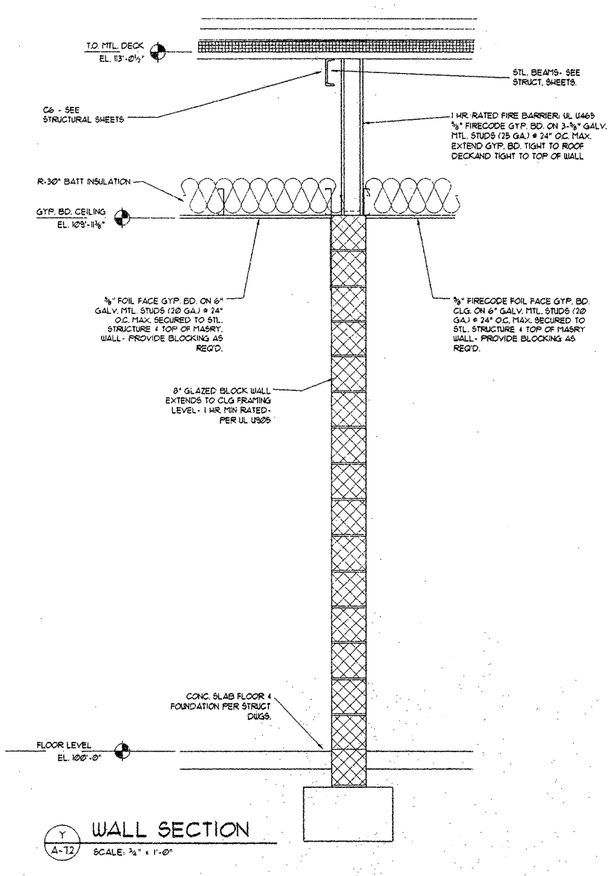

Y / A-7.2 WALL SECTION
SCALE: ¾" = 1'-0"

3/4" = 1'-0"
0 8" 16" 32" 48"

CONSULTING ARCHITECTS / ENGINEERS

ARCHITECT: BODNER & KERIK ARCHITECTS, INC.
STRUCTURAL: LANTZ JONES & NEBRASKA, INC.
MECHANICAL/ELECTRICAL: SRA, INC.
CIVIL ENGINEERING: POGGEMEYER DESIGN GROUP, INC.
LANDSCAPE ARCHITECT: R.D. ZANDE & ASSOCIATES, INC.

REVISIONS

NO.	DATE	DESCRIPTION
	12-6-02	BID SET

STATE OF OHIO
THOMAS J. BODNER
6884
REGISTERED ARCHITECT

PROJECT NUMBER
0226

FOR:
OHIO DEPT. OF TRANSPORTATION

DRAWING DESCRIPTION:
SECTION DETAILS

NEW REST STOP BUILDINGS

NO. 770-2001-072
US 30 WYANDOT/CRAWFORD

SITE 1 EASTBOUND | SITE 2 WESTBOUND

PREPARED FOR
STATE OF OHIO
DEPARTMENT OF ADMINISTRATIVE SERVICES
GENERAL SERVICES DIVISION

PREPARED BY
DEPARTMENT OF ADMINISTRATIVE SERVICES

PLOT DATE	DATE	SHEET
DEC. 10, 2002	OCT 7, 2002	A-7.2

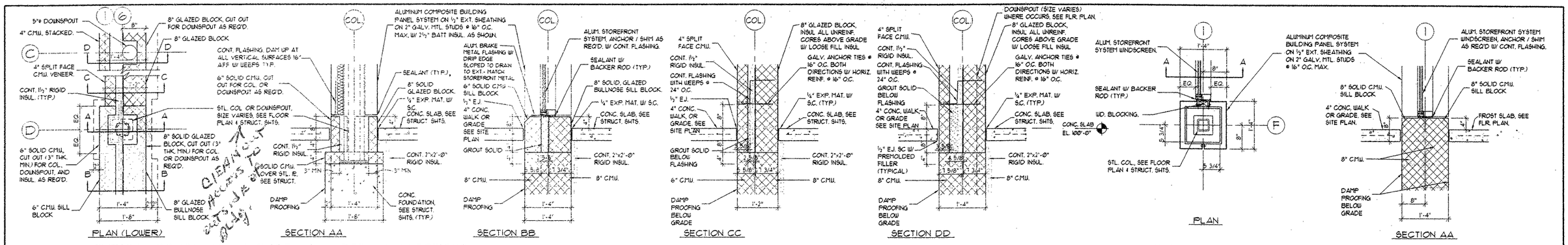

1 A-8.1 TYPICAL COLUMN / WALL BASE & SILL DETAILS / SECTIONS
SCALE: 3/4" = 1'-0"

10 A-8.1 PLAN DETAIL / SECTION
SCALE: 3/4" = 1'-0"

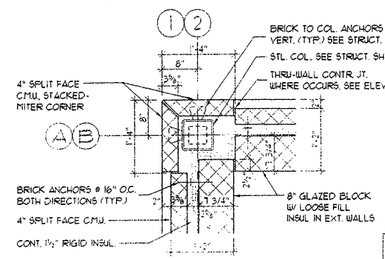

2 A-8.1 PLAN DETAIL
SCALE: 3/4" = 1'-0"

NOTE:
SEE FLOOR PLANS, SECTIONS, AND ELEVATIONS FOR ADDITIONAL INFORMATION.

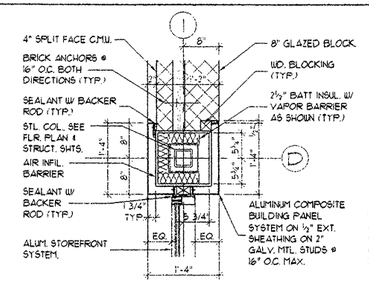

6 A-8.1 PLAN DETAIL
SCALE: 3/4" = 1'-0"

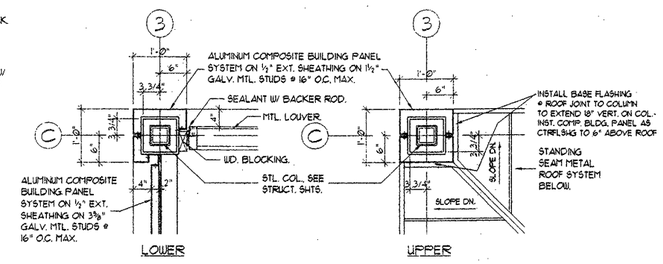

11 A-8.1 PLAN DETAIL (ABOVE ROOF)
SCALE: 3/4" = 1'-0"

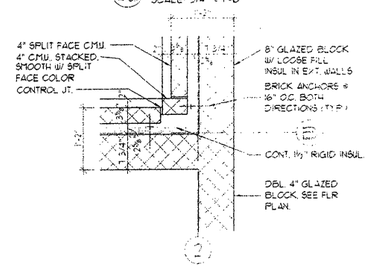

3 A-8.1 PLAN DETAIL
SCALE: 3/4" = 1'-0"

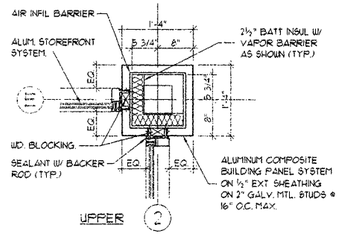

7 A-8.1 PLAN DETAIL
SCALE: 3/4" = 1'-0"

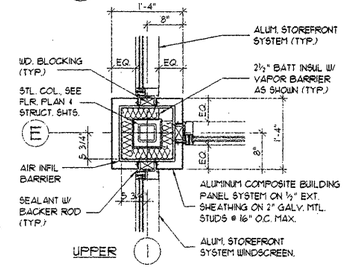

12 A-8.1 PLAN DETAIL
SCALE: 3/4" = 1'-0"

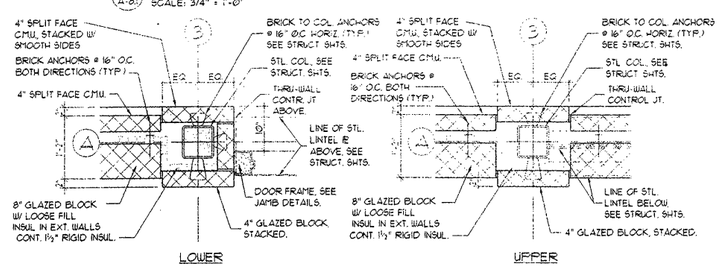

4 A-8.1 PLAN DETAIL
SCALE: 3/4" = 1'-0"

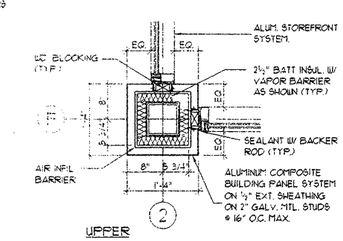

8 A-8.1 PLAN DETAIL
SCALE: 3/4" = 1'-0"

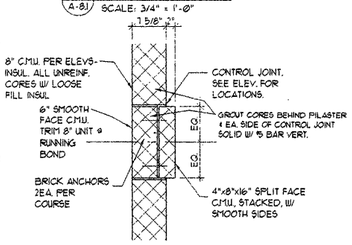

13 A-8.1 PLAN DETAIL
SCALE: 3/4" = 1'-0"

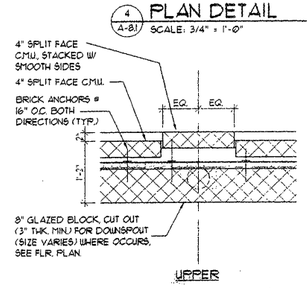

5 A-8.1 PLAN DETAIL
SCALE: 3/4" = 1'-0"

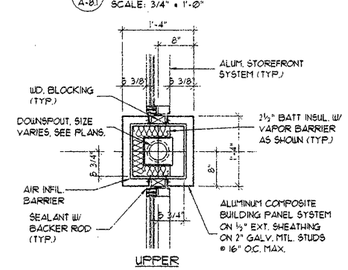

9 A-8.1 PLAN DETAIL
SCALE: 3/4" = 1'-0"

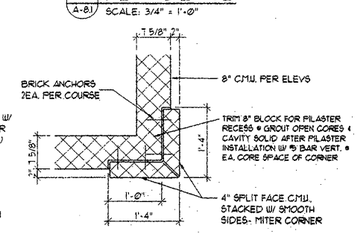

14 A-8.1 PLAN DETAIL
SCALE: 3/4" = 1'-0"

CONSULTING ARCHITECTS / ENGINEERS

ARCHITECT: BODNER & KERIK ARCHITECTS, INC.
STRUCTURAL: LANTZ JONES & NEBRASKA, INC.
MECHANICAL/ELECTRICAL: SRA, INC.
CIVIL ENGINEERING: POGGEMEYER DESIGN GROUP, INC.
LANDSCAPE ARCHITECT: R.D. ZANDE & ASSOCIATES, INC.

REVISIONS

NO.	DATE	DESCRIPTION
	12-6-02	BID SET

STATE OF OHIO — THOMAS J. BODNER 6884 — REGISTERED ARCHITECT

PROJECT NUMBER 0226

FOR:
OHIO DEPT. OF TRANSPORTATION

DRAWING DESCRIPTION:
PLAN DETAILS AND SECTIONS

NEW REST STOP BUILDINGS

NO. 770-2001-072
US 30 WYANDOT/CRAWFORD

SITE 1 EASTBOUND | SITE 2 WESTBOUND

PREPARED FOR
STATE OF OHIO
DEPARTMENT OF ADMINISTRATIVE SERVICES
GENERAL SERVICES DIVISION

PREPARED BY
DEPARTMENT OF ADMINISTRATIVE SERVICES

PLOT DATE DEC. 10, 2002 | DATE OCT. 7, 2002 | SHEET **A-8.1**

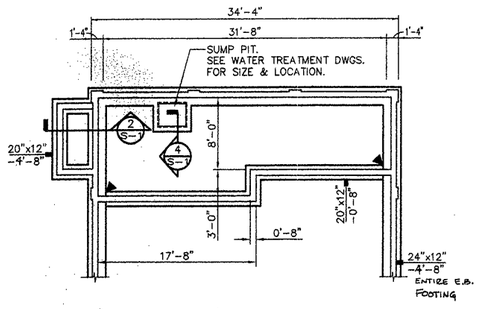

3 / S-1 PARTIAL FOUNDATION PLAN

SCALE: 1/8" = 1'-0"

1. SEE FOUNDATION PLAN ON SHEET S-1 FOR PLAN NOTES.
2. SEE WEST BOUND MAINTENANCE BUILDING FOUNDATION PLAN FOR ADDITIONAL INFORMATION.

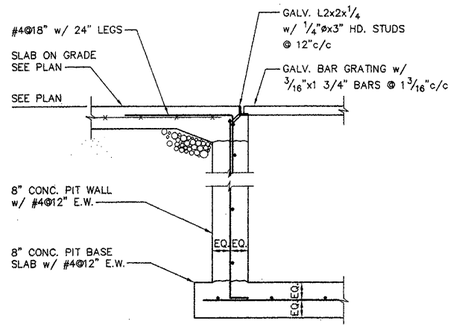

4 / S-1 SECTION

3/4" = 1'-0"

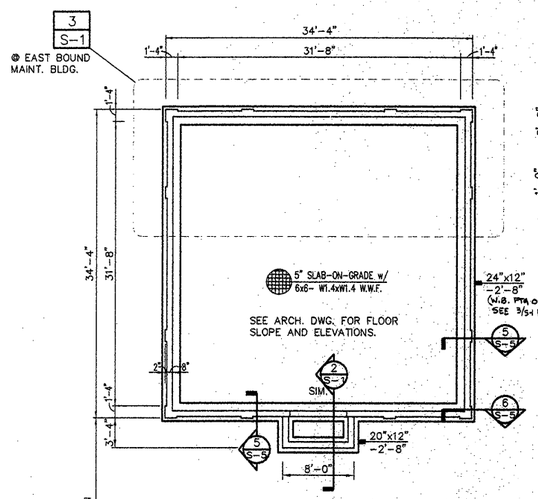

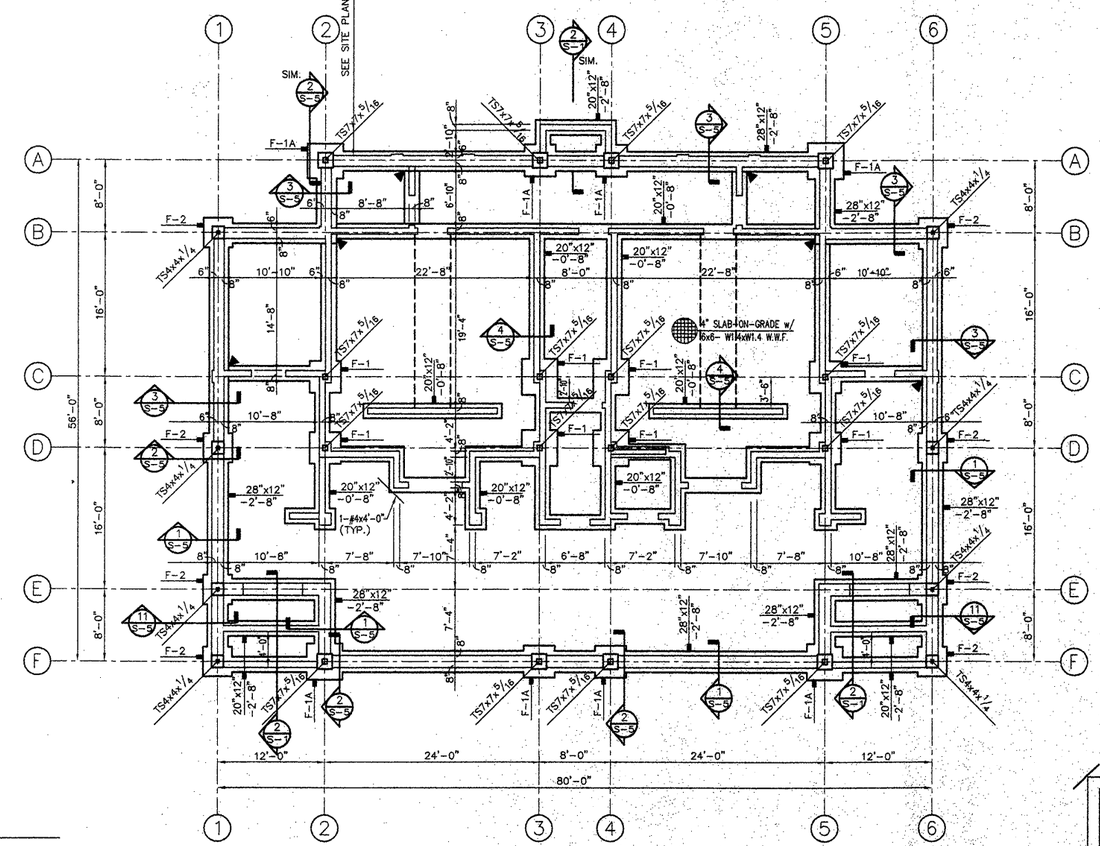

FOUNDATION PLAN

SCALE: 1/8" = 1'-0"

1. BUILDINGS INDICATED ARE TYPICAL OF TWO BUILDINGS REQUIRED. SEE SITE DRAWINGS FOR BUILDING LOCATIONS.
2. VERIFY LOCATIONS OF COLUMNS, WALLS, OPENINGS, ETC. WITH ARCHITECTURAL DRAWINGS BEFORE PLACING FOUNDATIONS.
3. 4" SLAB ON GRADE WITH 6 X 6-W1.4 X W1.4 WWF. TYPICAL EXCEPT AS NOTED.
4. TOP OF SLAB ELEVATION 100'-0" EXCEPT AS NOTED. REFERENCE ELEVATION 100'-0" EQUALS SITE ELEVATION AS DETERMINED BY THE CIVIL ENGINEER.
5. DESIGN SOIL BEARING PRESSURE 2200 PSF. ANY SOFT SPOTS OR VARIATIONS IN SUBSURFACE CONDITIONS SHALL BE REPORTED IMMEDIATELY TO THE ENGINEER. THE DESIGN BEARING CAPACITY SHALL BE FIELD VERIFIED BY AN INDEPENDENT TESTING AGENCY SPECIALIZING IN SOILS INVESTIGATIONS.
6. 28"x12" / -2'-8" – INDICATES FOOTING WIDTH AND THICKNESS (ABOVE THE LINE) INDICATES DISTANCE BELOW REFERENCE ELEVATION TO TOP OF FOOTING (BELOW THE LINE).
7. ▼ – INDICATES STEP IN FOOTING ON PLAN. SEE SECTION 1/S-1.
8. – – – – – – INDICATES THICKENED SLAB ON PLAN. SEE SECTION 4/S-2 FOR JOINT DETAILS.
9. SEE ARCHITECTURAL DRAWINGS FOR SLAB-ON-GRADE CONTROL JOINTS.
10. ALL EXTERIOR FOOTINGS TO EXTEND MINIMUM OF 3'-4" BELOW FINISHED GRADE.
11. DO NOT BACKFILL AGAINST THE FOUNDATION WALLS UNTIL BOTH LEVELS OF THE FLOOR SLAB ARE IN PLACE OR PROVIDE TEMPORARY SUPPORT. WHERE FILL IS ON BOTH SIDES OF A WALL, INSTALL THE FILL UNIFORMLY ON BOTH SIDES OF THE WALL.
12. REFERENCE: GENERAL STRUCTURAL NOTES – S-2; FOOTING SCHEDULE – S-1; TYPICAL COLUMN BASE DETAIL – 3/S-2.

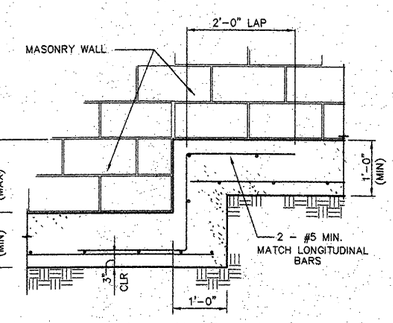

1 / S-1 SECTION

3/4" = 1'-0"

FOOTING SCHEDULE

MARK	FOOTING SIZE L	FOOTING SIZE W	FOOTING SIZE T	FOOTING REINFORCEMENT LONG	FOOTING REINFORCEMENT TRANS	FOOTING REINFORCEMENT DWL's	PEDESTAL SIZE L	PEDESTAL SIZE W	PEDESTAL REINF. VERT.	PEDESTAL REINF. TIES	REMARKS
F-1 / F-1A	4'-6"	4'-6"	1'-0"	5-#5	5-#5	4-#5	1'-8"	1'-8"	4-#6	#3@10	PEDESTAL @ F-1A
F-2	3'-4"	3'-4"	1'-0"	4-#5	4-#5	4-#5	1'-4"	1'-4"	4-#6	#3@10	
WALL	-	1'-8"	1'-0"	2-#5	-	-	-	-	-	-	INTERIOR WALLS
WALL	-	2'-4"	1'-0"	2-#5	-	SEE PLAN	-	-	-	-	EXTERIOR WALLS

1.) PROVIDE CORNER BARS AT ALL FOOTING INTERSECTIONS.
2.) PROVIDE 3 ADDITIONAL TIES AT 3" o.c. AT TOP OF PEDESTALS.

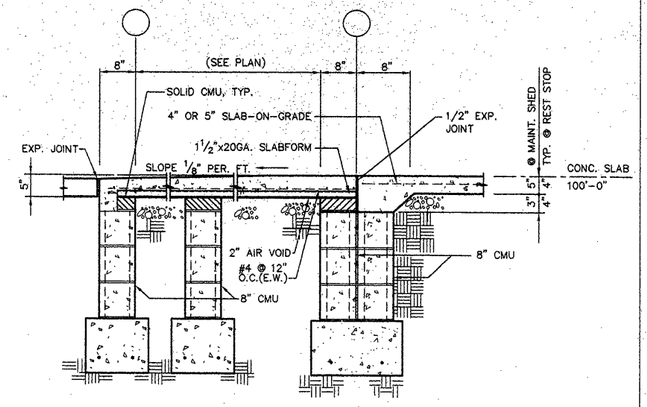

2 / S-1 SECTION

3/4" = 1'-0"

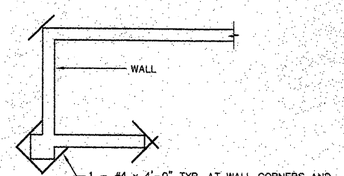

1 - #4 x 4'-0" TYP. AT WALL CORNERS AND WALL OPENINGS. PLACE AT SLAB MID-DEPTH.

TYPICAL SLAB REINFORCING DETAIL

1/4" = 1'-0"

SCALE 1/8" = 1'-0" 0 4' 8' 16' 24'

CONSULTING ARCHITECTS / ENGINEERS

ARCHITECT: BODNER & KERIK ARCHITECTS, INC.
STRUCTURAL: LANTZ JONES & NEBRASKA, INC.
MECHANICAL/ELECTRICAL: SRA, INC.
CIVIL ENGINEERING: POGGEMEYER DESIGN GROUP, INC.
LANDSCAPE ARCHITECT: R.D. ZANDE & ASSOCIATES, INC.

REVISIONS

NO.	DATE	DESCRIPTION
	10-09-02	PERMIT SUBMISSION
	11-30-02	BID SET

THIS DOCUMENT WAS ORIGINALLY ISSUED BY ROBERT A. BAUMANN ON 10-9-02
THIS DOCUMENT IS NOT CONSIDERED A SEALED DOCUMENT.

PROJECT NUMBER 0226

FOR: OHIO DEPT. OF TRANSPORTATION

DRAWING DESCRIPTION: FOUNDATION PLAN

NEW REST STOP BUILDINGS

NO. 770-2001-072
US 30 WYANDOT/CRAWFORD

SITE 1 EASTBOUND | SITE 2 WESTBOUND

PREPARED FOR
STATE OF OHIO
DEPARTMENT OF ADMINISTRATIVE SERVICES
GENERAL SERVICES DIVISION

PREPARED BY
DEPARTMENT OF ADMINISTRATIVE SERVICES

PLOT DATE NOV. 30, 2002 | DATE OCT. 09, 2002 | SHEET S-1

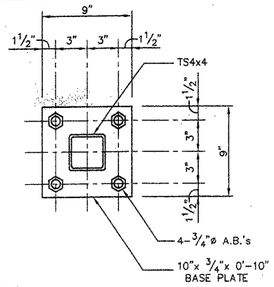

1 SECTION
S-2 1 1/2" = 1'-0"

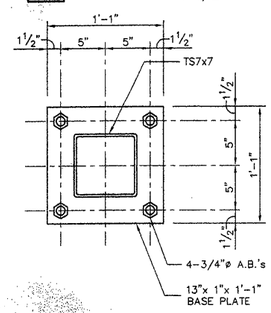

2 SECTION
S-2 1 1/2" = 1'-0"

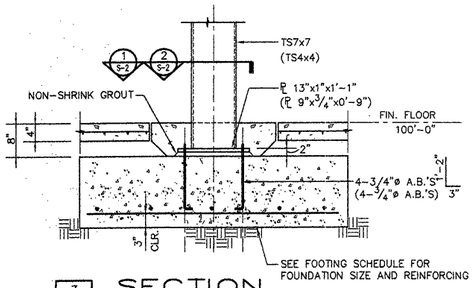

3 SECTION
S-2 3/4" = 1'-0"

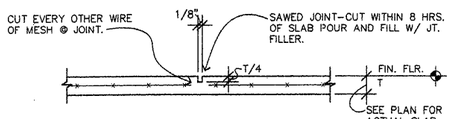

1. PROVIDE TOOLED JOINTS IN FRESH CONCRETE EACH SIDE OF WALLS WHERE SLABS POUR THRU DOORWAYS.
2. PROVIDE A #4 BAR x 3'-0" AT MID-DEPTH OF THE SLAB PERPENDICULAR TO JOINTS THAT TERMINATE AT A PERPENDICULAR JOINT.

SAWED CONTROL JOINT

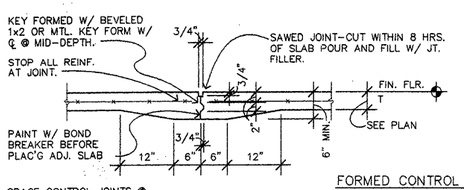

FORMED CONTROL JOINT

SPACE CONTROL JOINTS @ APPROXIMATELY 15' TO 20' O.C. (EA. WAY)

SEE ARCHITECTURAL DRAWINGS FOR CONTROL JOINT LOCATIONS.

4 SECTION
S-2 3/4" = 1'-0"

GENERAL STRUCTURAL NOTES

1. THE GENERAL STRUCTURAL NOTES ARE INTENDED TO AUGMENT THE DRAWINGS AND SPECIFICATIONS. SHOULD CONFLICTS EXIST BETWEEN THE DRAWINGS AND SPECIFICATIONS AND THE GENERAL STRUCTURAL NOTES, THE STRICTEST PROVISION SHALL GOVERN.
2. GOVERNING CODE: OHIO BUILDING CODE – 2002 EDITION.
3. SEE STRUCTURAL PLANS FOR DESIGN SOIL BEARING PRESSURE AND LIVE LOADS. LIVE LOADS REDUCED IN ACCORDANCE WITH THE GOVERNING CODE.
4. ROOF SNOW LOAD:
   GROUND SNOW LOAD (Pg) – 25 PSF
   SNOW EXPOSURE FACTOR (Ce) – 0.9
   IMPORTANCE FACTOR (I) – 1.0
   THERMAL FACTOR (Ct) – 1.0
   FLAT ROOF SNOW LOAD (Pf) – 16 PSF
5. WIND LOAD:
   DESIGN WIND SPEED – 90 MPH
   IMPORTANCE FACTOR (I) – 1.0
   EXPOSURE CATEGORY – EXPOSURE C
   INTERNAL PRESSURE COEFFICIENT – (G Cpi) – ±0.18
6. SEISMIC LOAD:
   SEISMIC USE GROUP – CATEGORY I
   SPECTRAL RESPONSE ACCELERATION AT SHORT PERIODS – (SDS) – 0.20
   SPECTRAL RESPONSE ACCELERATION AT ONE SECOND INTERVAL (SD1) – 0.09
   SITE CLASS – C
   BASIC SEISMIC FORCE RESISTING SYSTEM – ORDINARY STEEL MOMENT FRAMES
   DESIGN BASE SHEAR – 6 KIPS
   DESIGN BY EQUIVALENT LATERAL FORCE PROCEDURE
7. MECHANICAL FRAMING LOADS, OPENINGS, AND STRUCTURE IN ANY WAY RELATED TO MECHANICAL REQUIREMENTS ARE SHOWN FOR BIDDING PURPOSES ONLY. CONTRACTOR SHALL OBTAIN APPROVAL OF MECHANICAL AND OTHER TRADES BEFORE PROCEEDING WITH SUCH PORTION OF THE WORK. EXCESS COST RELATED TO VARIATION IN MECHANICAL REQUIREMENTS TO BE BORNE BY MECHANICAL CONTRACTOR. COORDINATE SIZE AND LOCATION OF ALL OPENINGS WITH THE MECHANICAL DRAWINGS.
8. THE STRUCTURE IS DESIGNED TO BE SELF-SUPPORTING AND STABLE AFTER THE BUILDING IS FULLY COMPLETED. IT IS SOLELY THE CONTRACTOR'S RESPONSIBILITY TO DETERMINE ERECTION PROCEDURE AND SEQUENCE AND TO INSURE THE SAFETY OF THE BUILDING AND ITS COMPONENT PARTS DURING ERECTION. THIS INCLUDES THE ADDITION OF WHATEVER TEMPORARY BRACING, GUYS, OR TIE-DOWNS WHICH MIGHT BE NECESSARY. SUCH MATERIAL SHALL REMAIN THE CONTRACTOR'S PROPERTY AFTER COMPLETION OF THE PROJECT.
9. IT IS SOLELY THE CONTRACTOR'S RESPONSIBILITY TO FOLLOW ALL APPLICABLE SAFETY CODES AND REGULATIONS DURING ALL PHASES OF CONSTRUCTION.
10. THE CONTRACTOR IS RESPONSIBLE FOR VERIFYING ALL DIMENSIONS AND CONDITIONS RELATING TO EXISTING CONSTRUCTION AND EXISTING SERVICE ON THE SITE.
11. THE CONTRACTOR SHALL VERIFY ALL DIMENSIONS AND LOCATIONS OF COLUMNS, WALLS, OPENINGS ETC. WITH THE ARCHITECTURAL DRAWINGS PRIOR TO PROCEEDING WITH THE WORK.

REINFORCED CONCRETE

1. SPECIFICATIONS AND STANDARDS:
   UNLESS SPECIFICALLY SHOWN OTHERWISE, ALL CONCRETE WORK, DETAILING, FABRICATION AND PLACING OF BARS AND CONCRETE SHALL BE GOVERNED BY THE LATEST REVISIONS OF:
   A. ACI 117, ACI 301, ACI 315, AND ACI 318.
   B. CRSI RECOMMENDED PRACTICE FOR PLACING REINFORCING BARS.
   C. ACI 306 AND ACI 305 FOR WINTER AND HOT WEATHER CONCRETING, RESPECTIVELY.
   THE CONTRACTOR SHALL AT ALL TIMES HAVE A COPY OF THE RELEVANT SPECIFICATIONS QUOTED ABOVE ON THE SITE AND THE SUPERVISORY PERSONNEL SHALL BE THOROUGHLY FAMILIAR WITH THE CONTENTS THEREOF.
2. CONTINGENCIES:
   A. PROVIDE LEAN CONCRETE UNDER FOUNDATIONS FOR EARTH FILL DUE TO ACCIDENTAL OVEREXCAVATION OR SOFT SPOTS.
3. CONCRETE REQUIREMENTS AND LOCATION IN JOB:

CLASS	LOCATION	F'C	SPECIAL REQUIREMENTS
I.	FOOTINGS, PIERS, AND ALL INTERIOR CONCRETE NOT OTHERWISE NOTED.	3000 PSI	
II.	EXTERIOR CONCRETE	4000 PSI	5% ±1% AIR CONTENT
III.	INTERIOR SLABS-ON-GRADE	3500 PSI	
IV.	MASONRY GROUT	3000 PSI	7" SLUMP 3/8" MAX. AGG.
V.	EARTH FILL	1500 PSI	NO TESTS

   SUBMIT CONCRETE MIXES FOR APPROVAL IN ACCORDANCE WITH ACI 301 BEFORE PLACING ANY CONCRETE.
4. REINFORCING REQUIREMENTS:
   A. BARS: ASTM A615, A616, A617 – GRADE 60.
   B. WELDED WIRE FABRIC: ASTM A185.
5. FOOTINGS:
   A. DOWELS IN FOOTINGS TO MATCH VERTICAL WALL OR PIER REINFORCING. DOWELS NOT REQUIRED AT REINFORCED MASONRY UNLESS SPECIFICALLY INDICATED ON PLAN OR SECTION.
   B. BEND ALL BARS 24 DIAMETERS AROUND CORNERS OF WALL AND FOOTINGS. BARS AT THE INSIDE FACE OF THE CORNER SHALL BE CONTINUED ACROSS TO THE OUTSIDE AND THEN BENT.
6. MISCELLANEOUS:
   A. IF NO OTHER REINFORCING IS SHOWN IN A SLAB ON GRADE, PROVIDE 6X6-W1.4 X W1.4 WWF AT MID-THICKNESS OF SLAB.
   B. LAP WELDED WIRE FABRIC 1 SPACE + 2" AT ALL EDGES AND ENDS OF SHEET.
   C. DO NOT BACKFILL AGAINST FOUNDATION WALLS UNTIL BOTH ADJACENT FLOOR SLABS ARE IN PLACE OR WHERE FILL IS ON BOTH SIDES OF A WALL, BRING THE FILL UP UNIFORMLY.
   D. CONSTRUCTION JOINTS PERMITTED ONLY WHERE SHOWN OR AS APPROVED BY THE STRUCTURAL ENGINEER.
   E. PROVIDE ONE #4X3'-0" DIAGONAL REINFORCING BAR AT MID-DEPTH OF SLAB AT ALL RE-ENTRANT CORNERS OF SLABS ON GRADE.

MASONRY

1. MASONRY MATERIALS:
   A. HOLLOW AND SOLID LOAD BEARING CONCRETE MASONRY UNITS – ASTM C90 – TYPE 1 – NORMAL WEIGHT. MINIMUM COMPRESSIVE STRENGTH (F'M) 1500 PSI.
   B. CONCRETE BRICK – ASTM C55 GRADE N1.
2. MORTAR:
   A. LOAD BEARING WALLS – ASTM C270 TYPE S.
   B. NON-LOAD BEARING WALLS – ASTM C270 TYPE N.
   C. ALL MASONRY BELOW GRADE – ASTM C270 TYPE S.
3. COARSE MASONRY GROUT: SEE CONCRETE REQUIREMENTS IN REINFORCED CONCRETE GENERAL NOTES.
4. MASONRY REINFORCEMENT:
   A. HORIZONTAL JOINT REINFORCEMENT: 9 GA DEFORMED WIRE, LADDER TYPE REINFORCEMENT.
      1. IN EVERY SECOND BLOCK COURSE, FULL HEIGHT, AND WHERE SHOWN ON DRAWINGS.
      2. IN FIRST BED JOINT ABOVE AND BELOW OPENINGS EXTENDING 24" BEYOND OPENING.
      3. LAP REINFORCEMENT A FULL WIDTH AT CORNERS AND INTERSECTIONS.
5. BEARING POINTS:
   A. PROVIDE 3 COURSES X 24" WIDE SOLID OR GROUTED SOLID MASONRY AT BEAM BEARING POINTS.
   B. PROVIDE 2 COURSES X 16" WIDE SOLID OR GROUTED SOLID MASONRY AT JOIST AND LINTEL BEARING POINTS.
6. REINFORCED MASONRY:
   A. INSTALL REINFORCING BARS IN SIZES SHOWN ON DRAWINGS ACCURATELY IN LOCATIONS SHOWN. LAP SPLICE REINFORCING 48 BAR DIAMETERS UNLESS NOTED.
   B. GROUT BLOCK WITH COARSE MASONRY GROUT VIBRATED IN PLACE TO FILL ALL VOIDS AND INTERSTICES. FOLLOW RECOMMENDATIONS OF NCMATEK NO. 3-2.

STRUCTURAL STEEL

1. SPECIFICATIONS AND STANDARDS:
   UNLESS SPECIFICALLY SHOWN OTHERWISE, DESIGN, FABRICATION AND ERECTION SHALL BE GOVERNED BY THE LATEST REVISIONS OF:
   A. AISC SPECIFICATION FOR THE DESIGN, FABRICATION, AND ERECTION OF STRUCTURAL STEEL FOR BUILDINGS. ASD-9th EDITION
   B. AISC CODE OF STANDARD PRACTICE.
   C. AWS STANDARD WELDING SYMBOLS.
   D. STRUCTURAL WELDING CODE AWS D1.1-2000 OF THE AMERICAN WELDING SOCIETY. WELDING SHALL BE PERFORMED ONLY BY OPERATORS QUALIFIED, BY THE AWS STANDARD QUALIFICATION PROCEDURE, TO PERFORM THE PARTICULAR TYPE OF WORK REQUIRED.
   E. SPECIFICATIONS FOR STRUCTURAL JOINTS USING ASTM A325 OR A490 BOLTS.
2. TESTING:
   A. WELDS: NON-DESTRUCTIVE TESTING SHALL BE PERFORMED BY AN INDEPENDENT TESTING LABORATORY ON ALL CRITICAL WELDS AND ON 25% OF NONCRITICAL WELDS. INADEQUATE WELDS SHALL BE STRENGTHENED OR CUT OUT AND REPLACED AS DIRECTED. CRITICAL WELDS SHALL BE DEFINED AS ALL FULL PENETRATION WELDS, ALL WELDS IN MOMENT CONNECTIONS AND AS NOTED AS CRITICAL WELDS ON THE STRUCTURAL DETAILS.
   B. STRUCTURAL STEEL: PROVIDE MILL REPORTS FOR PROPERLY IDENTIFIED MATERIALS ON REQUEST.
   C. A325 AND A490 BOLTS: PROVIDE BOLT INSPECTION AS DETAILED IN PARAGRAPH 9 OF SPECIFICATIONS FOR STRUCTURAL JOINTS USING A325 OR A490 BOLTS.
3. MATERIALS:
   A. "W" SHAPES: ASTM A992 Fy = 50 KSI.
   B. CHANNELS: ASTM A36.
   C. ANGLES, PLATES AND BARS: ASTM A36.
   D. RECTANGULAR HOLLOW STRUCTURAL SECTIONS: ASTM A500 GR B, Fy = 46 KSI.
   E. WELDING ELECTRODES: AWS A5.1 OR A5.5 SERIES E70.
   F. BOLTS: ASTM A307, A325.
   G. ANCHOR BOLTS: ASTM F1554 GR.36.
   H. PAINT AND PROTECTION:
      1. PRIME COAT, TOUCH UP AFTER ERECTION.
      2. MEMBERS TO BE ENCASED IN CONCRETE: NO PAINT.
      3. MEMBERS EXPOSED TO WEATHER IN FINISHED STRUCTURE: GALVANIZED AFTER FABRICATION.
   K. LINTELS:
      1. UNLESS SHOWN OTHERWISE, PROVIDE 1 ANGLE FOR EACH 4" WALL THICKNESS AS FOLLOWS:

ANGLE SIZE	MASONRY OPENING
L 3 1/2 X 3 1/2 X 1/4	NOT MORE THAN 3'-6"
L 4 X 3 1/2 X 1/4 LLV	3'-7" TO 5'-0"
L 5 X 3 1/2 X 5/16 LLV	5'-1" TO 8'-0"
L 6 X 3 1/2 X 5/16 LLV	8'-1" TO 10'-0"

      MINIMUM BEARING EACH SIDE OF MASONRY OPENING 8" UNLESS OTHERWISE SPECIFIED. ALL EXTERIOR LINTELS TO BE GALVANIZED.
4. CONNECTION REQUIREMENTS:
   A. DESIGN CONNECTIONS FOR VERTICAL REACTIONS SHOWN ON DRAWINGS OR FOR FULL CAPACITY OF MEMBER WHERE NO REACTION IS SHOWN.
   B. DESIGN MOMENT BEAM CONNECTIONS FOR VALUES SHOWN OR FOR FULL MOMENT CAPACITY OF MEMBER.
   C. CONNECTIONS SHOWN AND DETAILED ON THE DRAWINGS MAY BE REDESIGNED BY THE STRUCTURAL STEEL CONTRACTOR FOR EQUAL FORCES PROVIDED THE SAME ARRANGEMENT OF MEMBERS IS USED AND THE OVERALL SIZE OF THE CONNECTION DOES NOT EXCEED THAT OF THE CONNECTION DETAILED.
   D. OBTAIN APPROVAL FROM STRUCTURAL ENGINEER FOR TYPES OF CONNECTIONS BEFORE FABRICATION.
   E. ALL BOLTED CONNECTIONS TO BE SHEAR/BEARING TYPE WITH BOLTS IN THE SNUG TIGHT CONDITION UNLESS NOTED OTHERWISE.
5. MISCELLANEOUS REQUIREMENTS:
   A. PROVIDE HOLES FOR OTHERS. IF SECTION IS WEAKENED BY MORE THAN 15% BY AN OPENING NOT SHOWN ON THE DRAWINGS, OBTAIN PRIOR APPROVAL.
   B. STEEL SUPPORTING OR CONNECTING TO MECHANICAL OR OTHER EQUIPMENT IS SHOWN FOR BIDDING PURPOSES ONLY. CONTRACTOR SHALL RECONCILE EXACT SIZE AND LOCATION WITH MECHANICAL AND OTHER REQUIREMENTS BEFORE PROCEEDING WITH THE WORK. CONTRACTOR SHALL COORDINATE EXACT SIZE AND LOCATION FOR ALL STEEL ANGLE FRAMES WITH OPENINGS SHOWN ON THE MECHANICAL AND ARCHITECTURAL DRAWINGS.
   C. GROUT UNDER BEARING PLATES TO BE NON-SHRINKING TYPE MEETING ALL THE REQUIREMENTS OF CRD-C621, CORPS OF ENGINEERS SPECIFICATION FOR NON-SHRINK GROUT OR MEETING ALL REQUIREMENTS OF ASTM C1107 FOR FLUID CONSISTENCY, 30 MINUTE WORKING TIME AND TEMPERATURE RANGE FROM 45°F. TO 90°F.
   D. STEEL BELOW GRADE TO BE PROTECTED BY A MINIMUM OF 3" OF CONCRETE OR 4" OF MASONRY.
   E. PROVIDE 1/4" THICK SETTING PLATES FOR ALL BEAMS BEARING ON MASONRY OR CONCRETE WHICH DO NOT REQUIRE A BEARING PLATE. ANCHOR THE SETTING PLATE TO THE WALL W/TWO – 1/2" X 16" + HOOK A36 ANCHOR BOLTS.
   F. PROVIDE HEAVY WASHER AT ALL ANCHOR BOLTS.
   G. PROVIDE ANGLE SUPPORTS FOR ALL METAL DECK RIBS AT COLUMNS WHEN COLUMN SIZE PREVENTS RIB FROM CONTINUING TO BEAM WHICH IS SUPPORTING DECK AT COLUMN LINE.

STEEL DECK

1. SPECIFICATIONS AND STANDARDS:
   A. UNLESS SPECIFICALLY SHOWN OTHERWISE, DESIGN FABRICATION AND ERECTION OF STEEL DECK SHALL BE GOVERNED BY THE LATEST EDITION OF THE AMERICAN IRON AND STEEL INSTITUTE, SPECIFICATION FOR THE DESIGN OF COLD-FORMED STEEL STRUCTURAL MEMBERS.
   B. ALL PROPERTIES OF THE STRUCTURAL STEEL DECK SHALL BE COMPUTED IN ACCORDANCE WITH THE REFERENCE STANDARD. THE PROPERTIES SHALL BE PUBLISHED IN THE MANUFACTURER'S CATALOG.
   C. AWS STANDARD WELDING SYMBOLS.
   D. AWS D1.3 SPECIFICATIONS FOR WELDING SHEET STEEL IN STRUCTURES.
   E. WELDING SHALL BE PERFORMED ONLY BY OPERATORS QUALIFIED, BY THE AWS STANDARD QUALIFICATION PROCEDURE, TO PERFORM THE PARTICULAR TYPE OF WORK REQUIRED.
2. MATERIALS:
   A. PAINTED STEEL DECK: ASTM A611. THE STEEL USED SHALL HAVE A MINIMUM YIELD POINT OF 33 KSI.
   B. GALVANIZED STEEL DECK: ASTM A653 STRUCTURAL QUALITY GRADE 33 WITH COATING DESIGNATION G60.
   C. WELDING ELECTRODES: AWS A5.1, A5.5 OR A5.18 SERIES E60.
3. ERECTION AND CONNECTIONS:
   A. STEEL DECK UNITS AND ACCESSORIES SHALL BE AS SHOWN ON THE MANUFACTURER'S ERECTION DRAWINGS.
   B. MINIMUM BEARING OF THE DECK SHALL BE 2 INCHES UNLESS OTHERWISE SHOWN.
   C. ANCHOR STEEL DECK TO STEEL SUPPORTING MEMBERS WITH 5/8" PUDDLE WELDS AT A MAXIMUM AVERAGE SPACING OF 12 INCHES UNLESS SHOWN OTHERWISE. WELDED SHEAR STUDS MAY REPLACE PUDDLE WELDS FOR DECKS WITH COMPOSITE CONCRETE SLABS.
   D. SIDELAPS SHALL BE FASTENED BY MEANS OF A #10 SCREW AT MIDSPAN BETWEEN SUPPORTS UNLESS SHOWN OTHERWISE.
4. OPENINGS IN STEEL DECK.
   A. OPENINGS CUT IN THE STEEL DECK SHALL BE REINFORCED OR SHALL BE SUPPORTED ON STEEL ANGLE FRAMES. COORDINATE SIZES AND LOCATIONS WITH THE MECHANICAL AND ARCHITECTURAL DRAWINGS.
   B. OPENINGS IN STEEL DECK EQUAL TO OR LESS THAN 12" X 12" SHALL BE REINFORCED WITH A 24" X 24" – 16 GAGE PLATE SCREWED OR WELDED TO THE DECK RIBS ON ALL SIDES OF THE OPENING.
   C. OPENINGS IN ROOF DECK GREATER THAN 12" X 12" SHALL BE SUPPORTED ON STEEL ANGLE FRAMES.

LIGHTGAGE METAL FRAMING

1. SPECIFICATIONS AND STANDARDS:
   A. ALL STRUCTURAL PROPERTIES OF LIGHTGAGE METAL FRAMING SHALL BE COMPUTED IN ACCORDANCE WITH AISI "SPECIFICATIONS FOR THE DESIGN OF COLD FORMED STEEL STRUCTURAL MEMBERS" AND SHALL BE PUBLISHED IN THE MANUFACTURERS CATALOG.
   B. WELDING SHALL BE PERFORMED ONLY BY QUALIFIED OPERATORS USING PROPER EQUIPMENT FOR THE PARTICULAR TYPE OF WORK REQUIRED.
   C. AWS STANDARD WELDING SYMBOL.
   D. AWS D1.3 SPECIFICATION FOR WELDING SHEET STEEL IN STRUCTURES.
2. MATERIALS:
   A. STRUCTURAL FRAMING MEMBERS 16 GAGE AND HEAVIER: GALVANIZED, ASTM A653, GRADE D, Fy = 50,000 PSI.
   B. STRUCTURAL FRAMING MEMBERS 18 GAGE AND LIGHTER: GALVANIZED, ASTM A653, GRADE A, Fy = 33,000 PSI.
   C. ALL FRAMING MEMBERS TO BE "C" SHAPED WITH A MINIMUM FLANGE WIDTH OF 1 5/8" UNLESS OTHERWISE NOTED.
   D. ALL TRACK AND BRIDGING MATERIALS, Fy = 33,000 PSI MIN.
   E. ALL FRAMING MEMBERS SHALL BE GALVANIZED.
   F. WELDING ELECTRODES: AWS A5.1, A5.5 OR A5.18 SERIES E60.
3. CONNECTIONS:
   A. CUT ALL FRAMING COMPONENTS TO FIT SQUARELY AGAINST ABUTTING MEMBERS AND HOLD FIRMLY IN POSITION UNTIL PROPERLY FASTENED.
   B. ALL PANELS SHALL BE SQUARE AND BRACED AGAINST RACKING.
   C. WIRE TYING OF STRUCTURAL FRAMING COMPONENTS IS NOT PERMITTED.
   D. LIGHTGAGE METAL FRAMING CONNECTIONS TO BE FASTENED TOGETHER WITH A MINIMUM OF 2-#8 SCREWS OR AS SHOWN ON THE PLANS.
4. ERECTION:
   A. ATTACH TRACK SECURELY TO THE FLOOR AND OVERHEAD STRUCTURE.
   B. SEAT STUDS SQUARELY TO THE FLOOR AND OVERHEAD TRACK AND ATTACH SECURELY.
   C. SPLICES IN STRUCTURAL FRAMING MEMBERS ARE NOT PERMITTED WITHOUT APPROVAL OF THE STRUCTURAL ENGINEER.
   D. DO NOT ALLOW AXIAL LOADS TO STUDS UNTIL ALL BRIDGING, CONNECTIONS, AND ATTACHMENT OF COLLATERAL MATERIALS ARE COMPLETE.
   E. ATTACH V-BAR BRIDGING TO BOTH FLANGES OF WALL STUDS TO PREVENT STUD ROTATION. BRIDGING ROWS SHALL BE SPACED AT 4'-0" c/c OR IN ACCORDANCE WITH THE MANUFACTURER'S RECOMMENDATIONS.
   F. ATTACH V-BAR BRIDGING TO BOTH FLANGES OF JOISTS TO PREVENT JOIST ROTATION. ATTACH SOLID BRIDGING BETWEEN JOISTS AFTER EVERY 10'-0" LENGTH OF V-BAR BRIDGING. BRIDGING ROWS SHALL BE SPACED IN ACCORDANCE WITH THE FOLLOWING PROVISIONS. SOLID BLOCKING OR BANDING IS REQUIRED AT JOIST BEARING AT ALL SUPPORTS.
      SPANS 0" TO 7'-0" – NO BRIDGING.
      SPANS 7'-1" TO 14'-0" – ONE ROW AT MIDSPAN.
      SPANS 14'-1" TO 20'-0" – TWO ROWS AT THIRD POINTS.
      SPANS 20'-1" TO 26'-0" – THREE ROWS AT QUARTER POINTS.
   G. PROVISIONS SHALL BE MADE FOR STRUCTURE VERTICAL MOVEMENT AT PARTITIONS AND CURTAINWALL INFILL AND WHERE INDICATED USING VERTICAL SLIDE TRACK AND VERTICAL SLIDE CLIPS. PROVIDE V-BAR BRIDGING TO BOTH FLANGES OF WALL STUDS WITHIN 6" OF THE SLIDE TRACK LOCATIONS.

SCALE
3/4" = 1'-0"
0 1 2 3

CONSULTING ARCHITECTS / ENGINEERS

ARCHITECT: BODNER & KERIK ARCHITECTS, INC.
STRUCTURAL: LANTZ JONES & NEBRASKA, INC.
MECHANICAL/ELECTRICAL: SRA, INC.
CIVIL ENGINEERING: POGGEMEYER DESIGN GROUP, INC.
LANDSCAPE ARCHITECT: R.D. ZANDE & ASSOCIATES, INC.

REVISIONS

NO.	DATE	DESCRIPTION
	10-09-02	PERMIT SUBMISSION
	11-30-02	BID SET

THIS DOCUMENT WAS ORIGINALLY ISSUED BY ROBERT A. BAUMANN ON 10-9-02 THIS DOCUMENT IS NOT CONSIDERED A SEALED DOCUMENT.

PROJECT NUMBER
0226

FOR:
OHIO DEPT. OF TRANSPORTATION

DRAWING DESCRIPTION:
STRUCTURAL NOTES

NEW REST STOP BUILDINGS

NO. 770-2001-072
US 30 WYANDOT/CRAWFORD

SITE 1 EASTBOUND | SITE 2 WESTBOUND

PREPARED FOR
STATE OF OHIO
DEPARTMENT OF ADMINISTRATIVE SERVICES
GENERAL SERVICES DIVISION

PREPARED BY
DEPARTMENT OF ADMINISTRATIVE SERVICES

PLOT DATE	DATE	SHEET
NOV. 30, 2002	OCT. 09, 2002	S-2

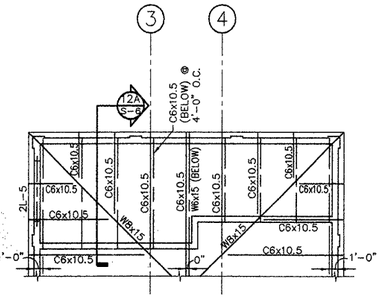

3 / S-3 PARTIAL FRAMING PLAN

SCALE: 1/8" = 1'-0"

1. SEE ROOF FRAMING PLAN ON SHEET S-3 FOR PLAN NOTES.
2. SEE WEST BOUND MAINTENANCE BUILDING FOUNDATION PLAN FOR ADDITIONAL INFORMATION.
2. DESIGN LIVE LOADS: STORAGE OVER WATER TREATMENT ROOM – 125 PSF.

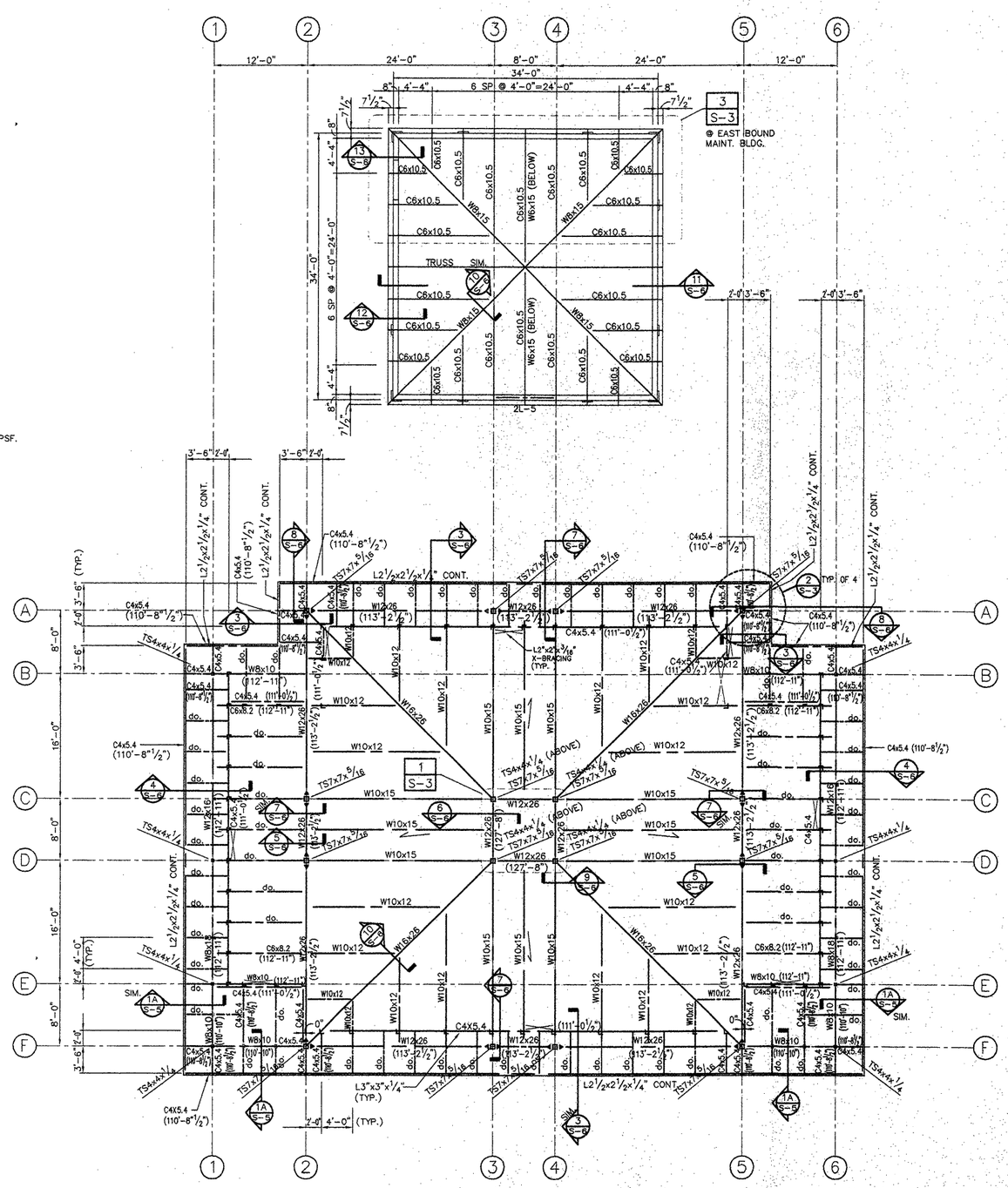

ROOF FRAMING PLAN

SCALE: 1/8" = 1'-0"

1. DESIGN LIVE LOADS: ROOF SNOW LOAD BASED ON 25 PSF GROUND SNOW LOAD.
   ROOF LIVE LOAD (SLOPED ROOF) – 25 PSF.
   ROOF LIVE LOAD (FLAT ROOF) – 40 PSF.
2. ( ) –INDICATES TOP OF STEEL ELEVATION. SEE ARCHITECTURAL DRAWINGS FOR INDICATIONS OF SLOPING STEEL FRAMING @ HIP ROOFS.
3. ROOF CONSTRUCTION: 1 1/2" X 20 GAGE GALVANIZED WIDE RIB METAL DECK.
4. ►--- –INDICATES MOMENT CONNECTION. SEE SECTION 8/S-6.
5. ►--- –INDICATES MOMENT CONNECTION AT CANTILEVERED BEAM.
6. BEAMS ARE UNIFORMLY SPACED BETWEEN COLUMNS OR INTERSECTING GIRDERS UNLESS NOTED OTHERWISE.
7. REFERENCES: GENERAL STRUCTURAL NOTES – S-2.

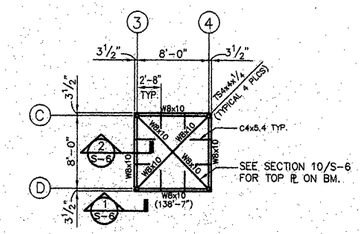

1 / S-3 PARTIAL FRAMING PLAN

SCALE: 1/8" = 1'-0"

NOTE:

1. SEE ROOF FRAMING PLAN ON SHEET S-3 FOR PLAN NOTES.

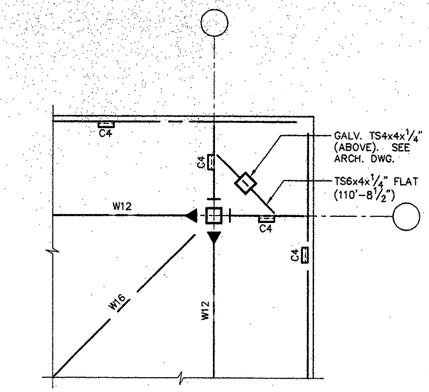

2 / S-3 SECTION

3/8" = 1'-0"

TYPICAL OF 4 @ LIGHT FIXTURE.
SEE ARCH. DWG. 1/A-1.2.

SCALE 1/8" = 1'-0" (0, 4', 8', 16', 24')

CONSULTING ARCHITECTS / ENGINEERS

ARCHITECT: BODNER & KERIK ARCHITECTS, INC.
STRUCTURAL: LANTZ JONES & NEBRASKA, INC.
MECHANICAL/ELECTRICAL: SRA, INC.
CIVIL ENGINEERING: POGGEMEYER DESIGN GROUP, INC.
LANDSCAPE ARCHITECT: R.D. ZANDE & ASSOCIATES, INC.

REVISIONS

NO.	DATE	DESCRIPTION
	10-09-02	PERMIT SUBMISSION
	11-30-02	BID SET

THIS DOCUMENT WAS ORIGINALLY ISSUED BY ROBERT A. BAUMANN ON 10-9-02
THIS DOCUMENT IS NOT CONSIDERED A SEALED DOCUMENT.

PROJECT NUMBER 0226

FOR: OHIO DEPT. OF TRANSPORTATION

DRAWING DESCRIPTION: ROOF FRAMING PLAN

NEW REST STOP BUILDINGS

NO. 770-2001-072 US 30 WYANDOT/CRAWFORD | SITE 1 EASTBOUND | SITE 2 WESTBOUND

PREPARED FOR
STATE OF OHIO
DEPARTMENT OF ADMINISTRATIVE SERVICES
GENERAL SERVICES DIVISION

PREPARED BY
DEPARTMENT OF ADMINISTRATIVE SERVICES

PLOT DATE	DATE	SHEET
NOV. 30, 2002	OCT. 09, 2002	S-3

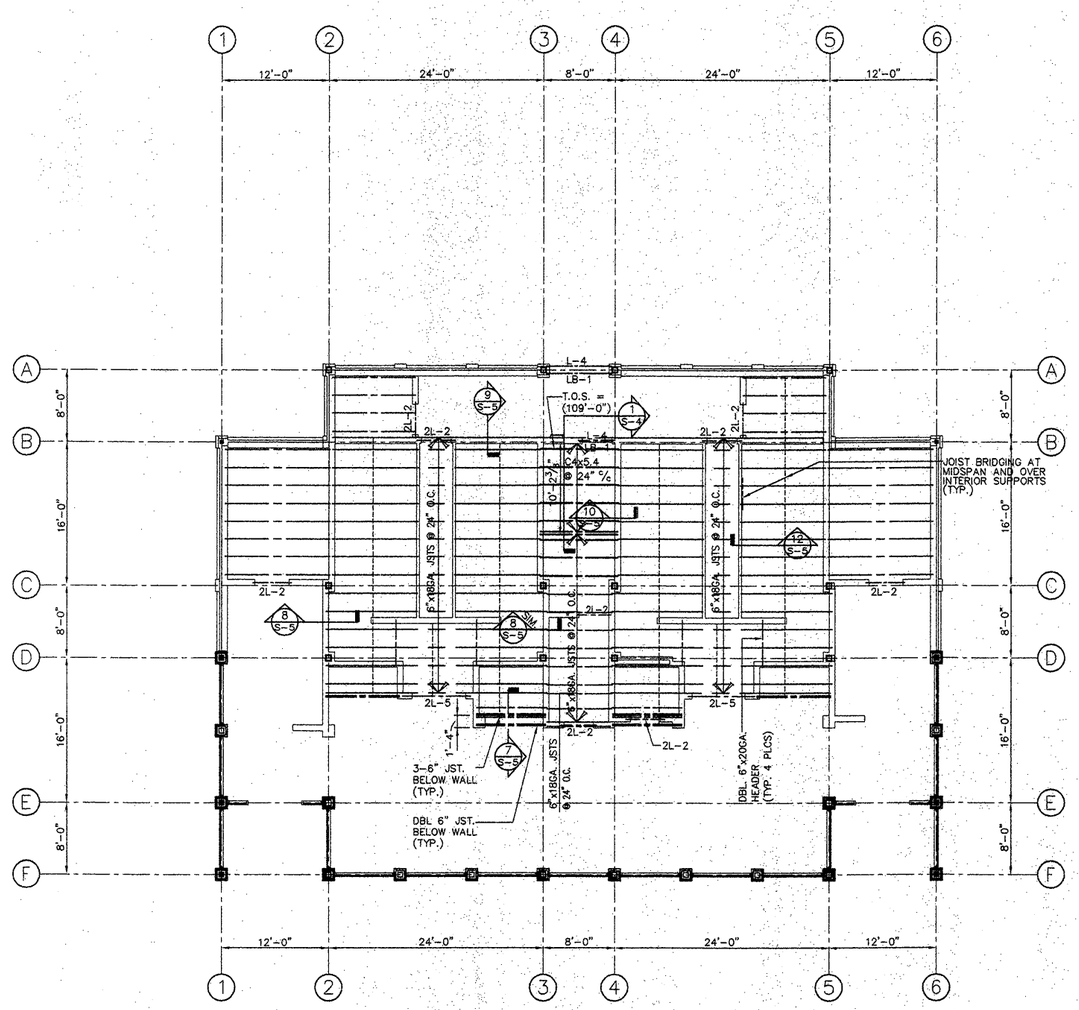

MECHANICAL MEZZANINE/ CEILING FRAMING PLAN

SCALE: 1/8" = 1'-0"

1. DESIGN LIVE LOADS: MECHANICAL ROOM - 125 PSF; CEILING JOISTS - 20 PSF.
2. MECHANICAL MEZZANINE FINISHED FLOOR ELEVATION 109'-4" EXCEPT AS NOTED.
3. ( ) -INDICATES TOP OF STEEL ELEVATION.
4. FLOOR CONSTRUCTION: 4" CONCRETE SLAB ON 0.6" X 24 GAGE METAL DECK FORM WITH 6 X 6 - W1.4 X W1.4 WWF. FLOOR CONSTRUCTION LOCATED BETWEEN LINES 3 AND 4 AND FROM LINE B TO 10'-2 3/8" AWAY FROM LINE B.
5. FINISH FLOOR SURFACE SHALL BE LEVEL. PROVIDE SUFFICIENT CONCRETE TO ACCOUNT FOR BEAM DEFLECTIONS DUE TO FRESHLY CAST CONCRETE.
6. PROVIDE FORMS FOR ALL EDGES OF CONCRETE SLABS ON STEEL DECK. VERIFY IF FORM IS TO BE TEMPORARY, OR SHALL BE PERMANENT.
7. BEAMS ARE UNIFORMLY SPACED BETWEEN COLUMNS OR INTERSECTING GIRDERS UNLESS NOTED OTHERWISE.
8. REFERENCES: GENERAL STRUCTURAL NOTES - S-2.

STEEL LINTEL SCHEDULE

MARK	SIZE	SECT.	BR'G.	REMARKS
L-1	L3 1/2"x3 "x1/4"	L	4"	(LLH)
L-2	L3 1/2"x3 1/2"x1/4"	L	4"	
L-3	L4"x3 1/2"x5/16"	L	6"	(LLV)
L-4	L5"x3 1/2"x5/16"	L	6"	(LLV)
L-5	L6"x3 1/2"x5/16"	L	6"	(LLV)
LB-1	W8x18	I	8"	BOT. PLATE 1/4x13
GALVANIZE ALL EXTERIOR LINTELS.				

FOR LINTELS NOT SHOWN OR NOTED ON DRAWINGS USE THE FOLLOWING:

SPAN LIMITS	SIZE	BEARING
0'-0" TO 1'-0"	1/4" PLATE	4"
1'-1" TO 3'-6"	L3 1/2"x3 1/2"x1/4"	4"
3'-7" TO 5'-0"	L4"x3 1/2"x1/4" LLV.	6"
5'-1" TO 8'-0"	L5"x3 1/2"x5/16" LLV.	6"
8'-1" TO 10'-0"	L6"x3 1/2"x5/16" LLV.	8"

PROVIDE ONE (1) ANGLE FOR EACH 4" OF MASONRY WALL THICKNESS

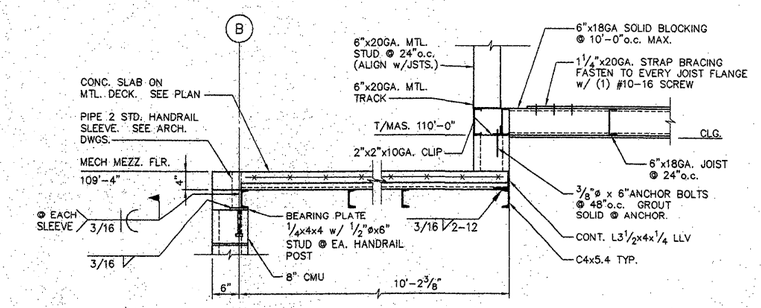

1 / S-4 SECTION 3/4" = 1'-0"

SCALE 1/8" = 1'-0" (0, 4', 8', 16', 24')

CONSULTING ARCHITECTS / ENGINEERS

ARCHITECT: BODNER & KERIK ARCHITECTS, INC.
STRUCTURAL: LANTZ JONES & NEBRASKA, INC.
MECHANICAL/ELECTRICAL: SRA, INC.
CIVIL ENGINEERING: POGGEMEYER DESIGN GROUP, INC.
LANDSCAPE ARCHITECT: R.D. ZANDE & ASSOCIATES, INC.

REVISIONS

NO.	DATE	DESCRIPTION
	10-09-02	PERMIT SUBMISSION
	11-30-02	BID SET

THIS DOCUMENT WAS ORIGINALLY ISSUED BY ROBERT A. BAUMANN ON 10-9-02
THIS DOCUMENT IS NOT CONSIDERED A SEALED DOCUMENT.

PROJECT NUMBER 0226

FOR: OHIO DEPT. OF TRANSPORTATION

DRAWING DESCRIPTION: MECHANICAL MEZZANINE/CEILING FRAMING PLAN

NEW REST STOP BUILDINGS

NO. 770-2001-072 US 30 WYANDOT/CRAWFORD | SITE 1 EASTBOUND | SITE 2 WESTBOUND

PREPARED FOR
STATE OF OHIO
DEPARTMENT OF ADMINISTRATIVE SERVICES
GENERAL SERVICES DIVISION

PREPARED BY
DEPARTMENT OF ADMINISTRATIVE SERVICES

PLOT DATE NOV. 30, 2002 | DATE OCT. 09, 2002 | SHEET S-4

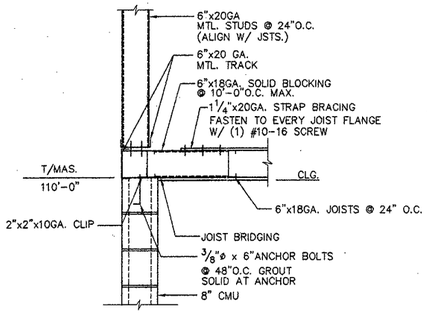

9 S-5 SECTION 3/4" = 1'-0"

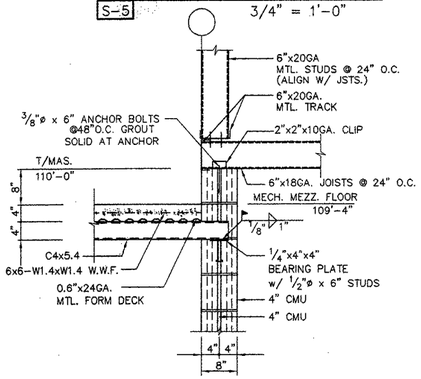

10 S-5 SECTION 3/4" = 1'-0"

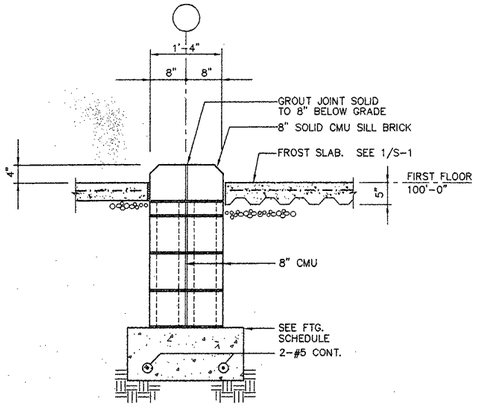

11 S-5 SECTION 3/4" = 1'-0"

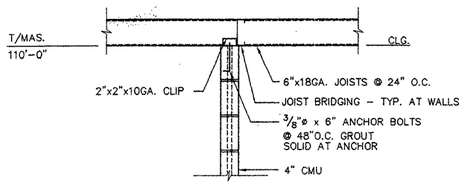

12 S-5 SECTION 3/4" = 1'-0"

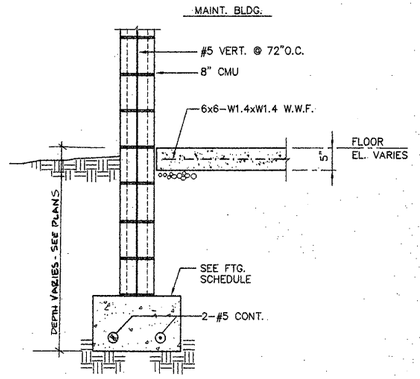

5 S-5 SECTION 3/4" = 1'-0"

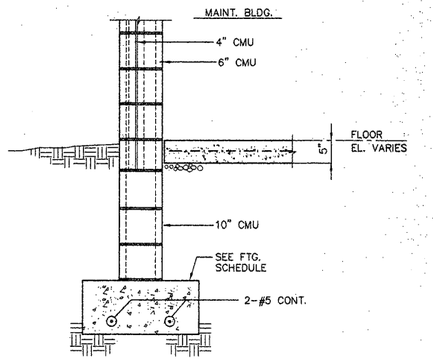

6 S-5 SECTION 3/4" = 1'-0"

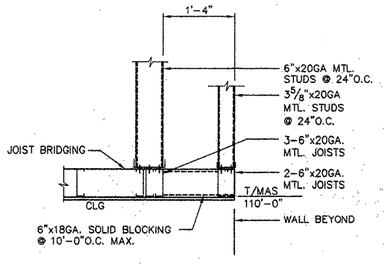

7 S-5 SECTION 3/4" = 1'-0"

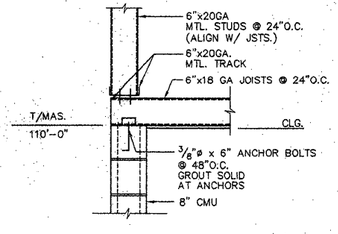

8 S-5 SECTION 3/4" = 1'-0"

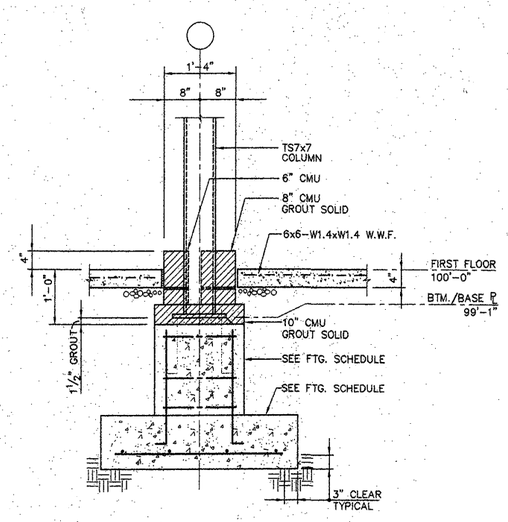

2 S-5 SECTION 3/4" = 1'-0"

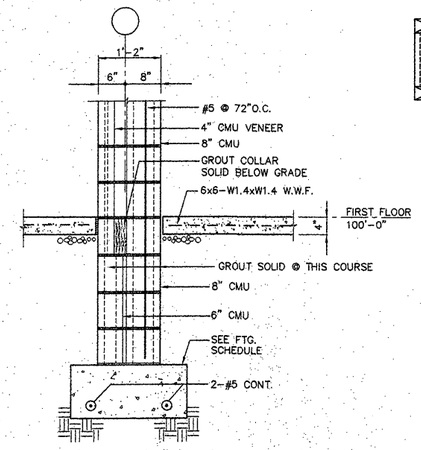

3 S-5 SECTION 3/4" = 1'-0"

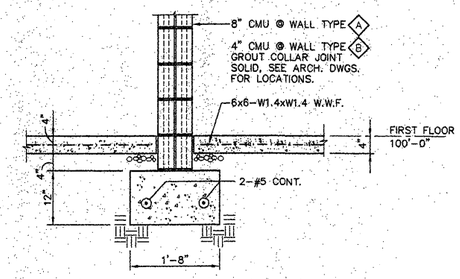

4 S-5 SECTION 3/4" = 1'-0"

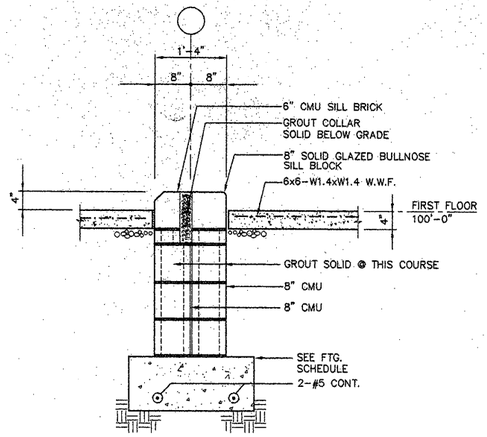

1 S-5 SECTION 3/4" = 1'-0"

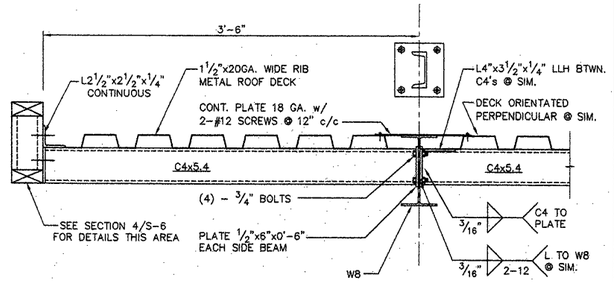

1A S-5 SECTION 1 1/2" = 1'-0"

SCALE 3/4" = 1'-0" 0 1 2 3

CONSULTING ARCHITECTS / ENGINEERS

ARCHITECT: BODNER & KERIK ARCHITECTS, INC.
STRUCTURAL: LANTZ JONES & NEBRASKA, INC.
MECHANICAL/ELECTRICAL: SRA, INC.
CIVIL ENGINEERING: POGGEMEYER DESIGN GROUP, INC.
LANDSCAPE ARCHITECT: R.D. ZANDE & ASSOCIATES, INC.

REVISIONS

NO.	DATE	DESCRIPTION
	10-09-02	PERMIT SUBMISSION
	11-30-02	BID SET

THIS DOCUMENT WAS ORIGINALLY ISSUED BY ROBERT A. BAUMANN ON 10-9-02 THIS DOCUMENT IS NOT CONSIDERED A SEALED DOCUMENT.

PROJECT NUMBER 0226

FOR:
OHIO DEPT. OF TRANSPORTATION

DRAWING DESCRIPTION:
FOUNDATION DETAILS

NEW REST STOP BUILDINGS

NO. 770-2001-072
US 30 WYANDOT/CRAWFORD

SITE 1 EASTBOUND | SITE 2 WESTBOUND

PREPARED FOR
STATE OF OHIO
DEPARTMENT OF ADMINISTRATIVE SERVICES
GENERAL SERVICES DIVISION

PREPARED BY
DEPARTMENT OF ADMINISTRATIVE SERVICES

PLOT DATE NOV. 30, 2002 | DATE OCT. 09, 2002 | SHEET S-5

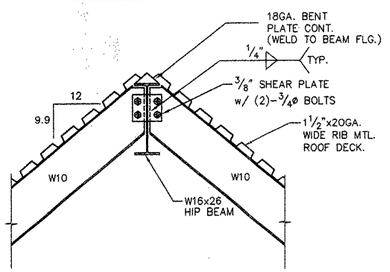

10 S-6 SECTION
3/4" = 1'-0"

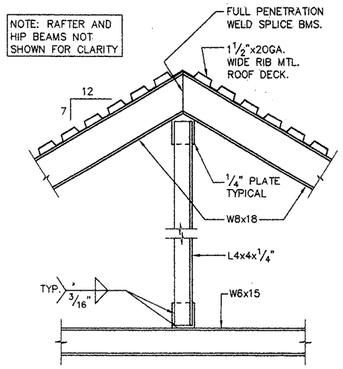

10A S-6 SECTION
3/4" = 1'-0"

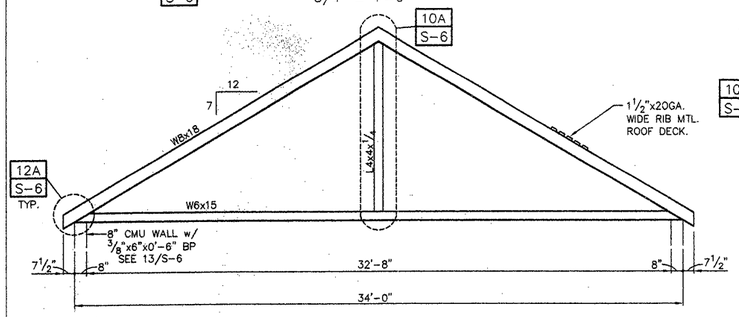

11 S-6 SECTION
1/4" = 1'-0"

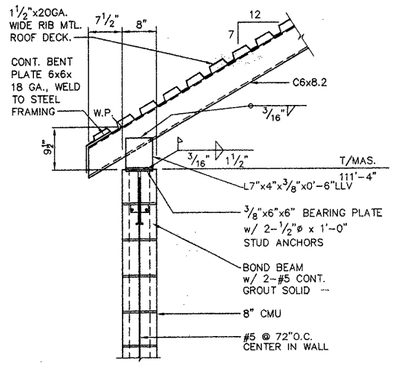

12 S-6 SECTION
3/4" = 1'-0"

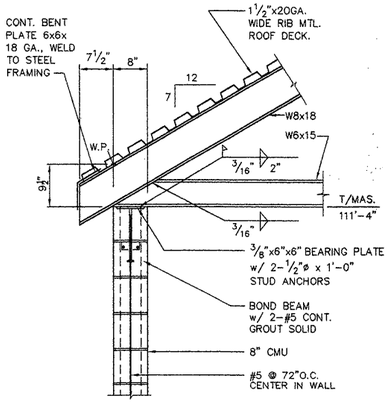

12A S-6 SECTION
3/4" = 1'-0"

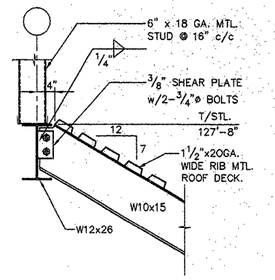

6 S-6 SECTION
3/4" = 1'-0"

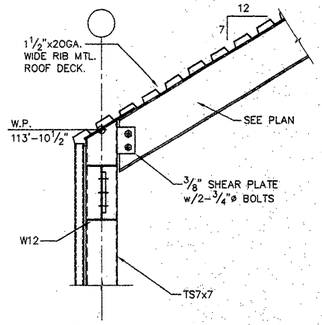

7 S-6 SECTION
3/4" = 1'-0"

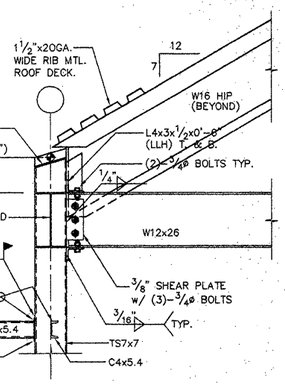

8 S-6 SECTION
3/4" = 1'-0"

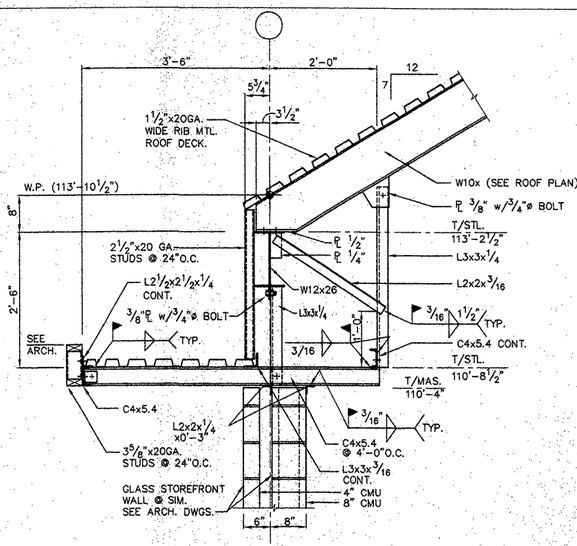

3 S-6 SECTION
3/4" = 1'-0"

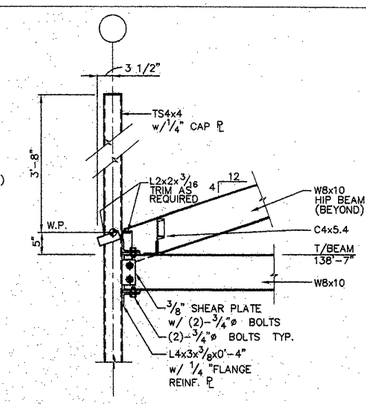

1 S-6 SECTION
3/4" = 1'-0"

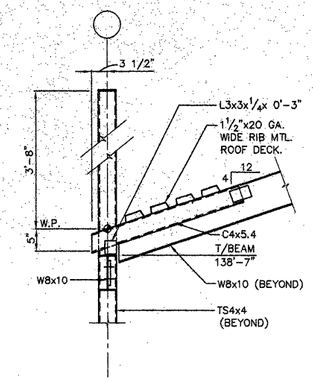

2 S-6 SECTION
3/4" = 1'-0"

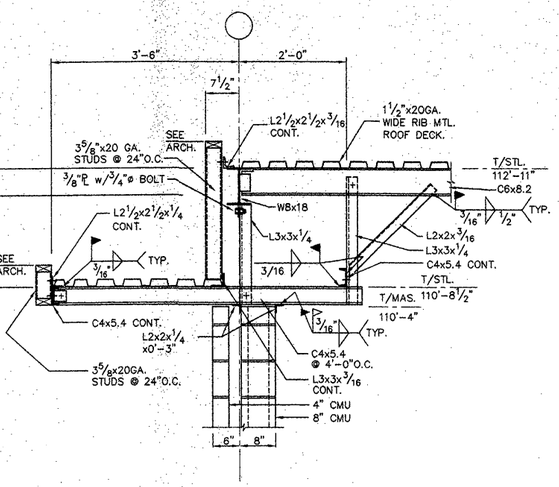

4 S-6 SECTION
3/4" = 1'-0"

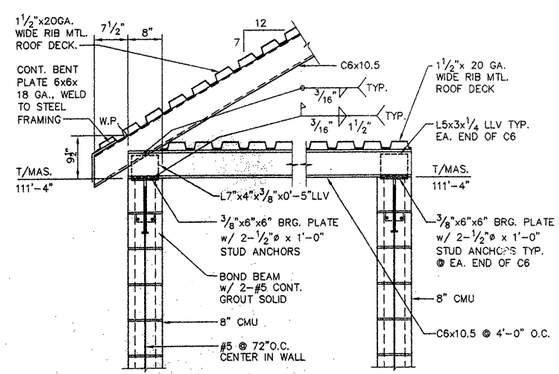

12B S-6 SECTION
3/4" = 1'-0"

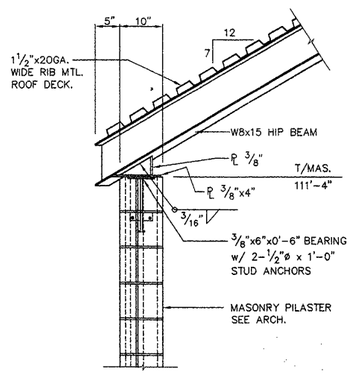

13 S-6 SECTION
3/4" = 1'-0"

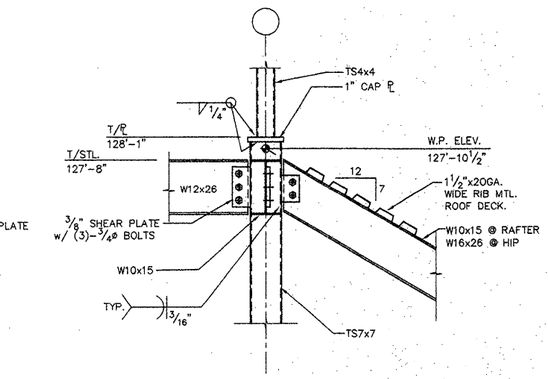

9 S-6 SECTION
3/4" = 1'-0"

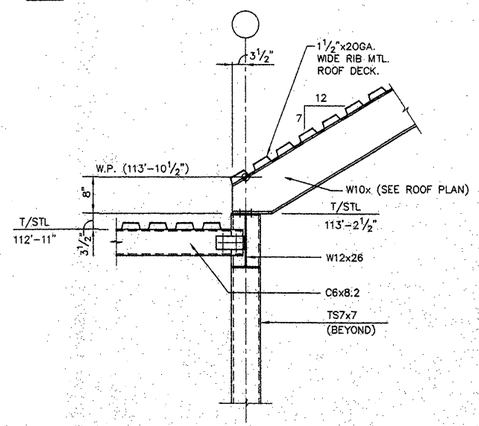

5 S-6 SECTION
3/4" = 1'-0"

SCALE 3/4" = 1'-0"
0 1 2 3

CONSULTING ARCHITECTS / ENGINEERS

ARCHITECT: BODNER & KERIK ARCHITECTS, INC.
STRUCTURAL: LANTZ JONES & NEBRASKA, INC.
MECHANICAL/ELECTRICAL: SRA, INC.
CIVIL ENGINEERING: POGGEMEYER DESIGN GROUP, INC.
LANDSCAPE ARCHITECT: R.D. ZANDE & ASSOCIATES, INC.

REVISIONS

NO.	DATE	DESCRIPTION
	10-09-02	PERMIT SUBMISSION
	11-30-02	BID SET

THIS DOCUMENT WAS ORIGINALLY ISSUED BY ROBERT A. BAUMANN ON 10-9-02
THIS DOCUMENT IS NOT CONSIDERED A SEALED DOCUMENT.

PROJECT NUMBER 0226

FOR:
OHIO DEPT. OF TRANSPORTATION

DRAWING DESCRIPTION:
STRUCTURAL STEEL DETAILS

NEW REST STOP BUILDINGS

NO. 770-2001-072
US 30 WYANDOT/CRAWFORD | SITE 1 EASTBOUND | SITE 2 WESTBOUND

PREPARED FOR
STATE OF OHIO
DEPARTMENT OF ADMINISTRATIVE SERVICES
GENERAL SERVICES DIVISION
PREPARED BY
DEPARTMENT OF ADMINISTRATIVE SERVICES

PLOT DATE NOV. 30, 2002 | DATE OCT. 09, 2002 | SHEET S-6

Move to Attic (same as Summit) AB wings & physical cat works in ATTIC

CODED NOTES:

1. FAN COIL UNITS, FCU-1 & 2, MOUNTED ON THE FLOOR.
2. FAN COIL UNITS, FCU-3 & 4, MOUNTED ON THE FLOOR.
3. FURNISH AND INSTALL 2" THICK FIBER GLASS PIPE INSULATION WITH AP-T JACKET ON PIPING FROM ROOF DRAINS IN ATTIC SPACE. PIPING IS HEAT TRACED BY THE ELECTRICAL CONTRACTOR. HVAC CONTRACTOR TO FURNISH AND INSTALL ALL OTHER MATERIALS FOR PIPING, ALONG WITH HEAT TRACE LABELING ON PIPE.
4. WC-2, 1" DCW LINE DOWN IN WALL TO WATER CLOSET, 3" SAN & 2" VENT MAIN.
5. OVERFLOW NOZZLE THRU SIDEWALL HIGH. REFER TO DETAIL 'E' ON SHEET PE-2.
6. REFER TO THE CIVIL SITE DRAWING, SHEET C-7, FOR THE CONTINUATION OF LINE 5'-0" OUTSIDE OF BLDG.
7. 1/2" DCW DN W/VALVE FOR COFFEE MACHINE. PROVIDE ROUGH-IN BACKFLOW PREVENTER & FINAL HOOK-UP. COORDINATE WITH VENDING MACHINE SUPPLIER FOR WATER HOOK-UP AND FLOOR DRAIN.
8. 1" DCW RISER UP TO THE MEZZ. LEVEL. REFER TO DETAIL 'G' & DETAIL 'H' ON SHEET PE-2.
9. 3" OVERFLOW DRAIN PIPE TO SOFFIT & TERMINATE WITH PERFORATED COVER PLATE (JR. SMITH 9005). 3" OFD @ HIGHER ELEVATION THEN 3" RD.
10. REFER TO THE CIVIL SITE DRAWING, SHEET C-7, FOR THE CONTINUATION OF MAIN DOMESTIC WATER LINE 5'-0" OUTSIDE OF BLDG.
11. WEST BOUND 2" WATER METER FOR OWNER'S USE. COORDINATE ENTRANCE IN MECH. ROOM WITH CIVIL DRAWINGS. REFER TO DETAILS 'K' & 'J' ON SHEET PE-2.
12. SINK: PROVIDE 1/2" DHW & DCW, 1 1/2" SAN, & 1 1/2" VENT LINE. FURNISH & INSTALL 1/2HP, 120V, 1Ø DISPOSAL FOR SINKS.
13. LAV: PROVIDE 1/2" DHW & DCW, 1 1/2" SAN & 1 1/2" VENT LINE. (TYP)
14. EWC: PROVIDE 1/2" DCW, 1 1/2" SAN & 1 1/2" VENT LINE. (TYP)
15. UR: PROVIDE 3/4" DCW, 2" SAN & 1 1/2" VENT LINE. (TYP)
16. WC: 1" DCW LINE DOWN IN WALL TO WATER CLOSET, 4" SAN, & 2" VENT(TYP.)
17. 3" SANITARY LINE DOWN FROM ABOVE. SEE STACK 'A' ON SHEET PN-2.
18. SS: PROVIDE 1/2" DHW & DCW, 3" SAN, & 1 1/2" VENT. (TYP.)
19. WC-1: 1" DCW LINE DOWN IN WALL TO WATER CLOSET, 4" SAN & 2" VENT(TYP.)
20. WRAP 1" DCW WITH 1/2" THICK INSULATION WRAP & RUN EXPOSED TIGHT TO WALL IN THE VERTICAL.

PLUMBING GENERAL NOTES:

1. ALL SHUT-OFF VALVES SHALL BE BALL VALVES. (NO GATE VALVES WILL BE PERMITTED).
2. PLUMBING CONTRACTOR TO COORDINATE WITH ELECTRICAL CONTRACTOR FOR ROUTING OF PIPING TO MAINTAIN 36" WORKSPACE IN FRONT OF PANELS & NO DUCTS DIRECTLY ABOVE PANELS.
3. ALL INTERIOR STORM LEADERS, DOWNSPOUTS, ETC... SHALL BE CAST IRON NO HUB. PVC WILL NOT BE APPROVED FOR ABOVE GROUND STORM PIPING MATERIAL.
4. PC TO PROVIDE SEPARATE DCW & DHW HEADERS FOR EACH BANK OF PLUMBING FIXTURES IN TOILET ROOMS FOR COMPLETE ISOLATION FROM ONE TO THE OTHER FOR SERVICE AND MAINTENANCE.
5. REFER TO THE SPECIFICATIONS FOR MODEL NUMBERS AND MANUFACTURER'S.

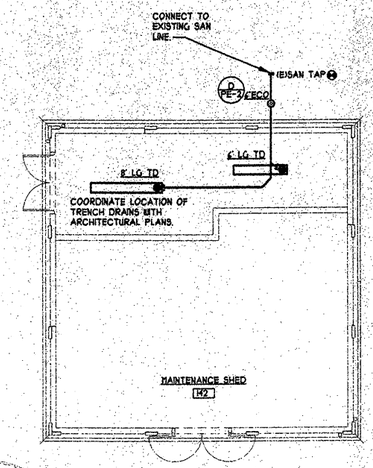

Move to Attic

Add 1" water supply to Plant Hydrant (Soft Plaster)

All water lines in ground should be PVC sch 80 or soft plaster (no copper in abrasive material)

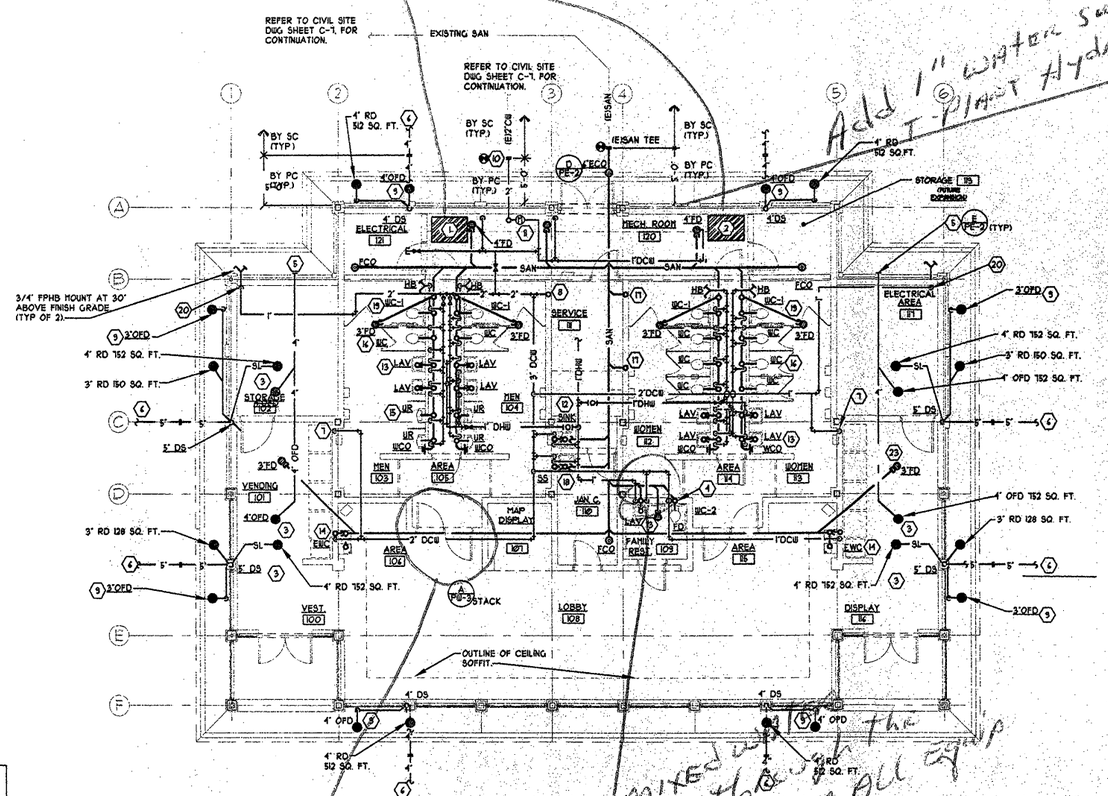

Door should swing the other way (same as women's side)

Mixed with the only the way we keep all equip in access area

PLUMBING PLAN, EAST BOUND

SCALE 1/8" = 1'-0"

GENERAL NOTES:

1. STORM DRAINS TO BE EXTENDED 5'-0" OUTSIDE OF BUILDING BY THE CIVIL/SITE CONTRACTOR TO THE MAIN STORM SYSTEM ON AN INDIVIDUAL SITE BASIS.
2. WATER PROVIDE BY THE CIVIL CONTRACTOR, REFER TO SITE PLAN 'C-1' FOR WATER MAIN CONTINUATION. REFER TO DETAILS 'J' & 'K' FOR WATER SERVICE ENTRATENCE INTO BLDG AND METER, ON SHEET PE-2.
3. SEE DETAIL 'H' ON SHEET PE-2 FOR MEZZANINE PLUMBING PLAN AND SANITARY SCHEMATICS.
4. ELECTRICAL CONTRACTOR TO FURNISH & INSTALL ICE MELT SYSTEM IN DOWNSPOUTS & GUTTERS (SEE ELECTRICAL DRAWINGS).
5. ELECTRICAL CONTRACTOR TO FURNISH & INSTALL HEAT TRACING ON ROOF DRAIN PIPING. REFER TO ELECTRICAL DRAWINGS.
6. PLUMBING CONTRACTOR TO REMOVE ALL UNUSED WATER VALVES LOCATED AROUND THE PERIMETER OF EXISTING BLDG. COORDINATE ALL WORK WITH THE CIVIL SITE CONTRACTOR BEFORE STARTING.

PLUMBING LEGEND

SYMBOL	DESCRIPTION
DCW	DOMESTIC COLD WATER
DHW	DOMESTIC HOT WATER (110°F)
SAN	SANITARY SEWER (BELOW GRADE)
V	SANITARY VENT PIPING
ECO	EXTERIOR CLEANOUT
FD	FLOOR DRAIN W/TRAP PRIMER
FCO	FLOOR CLEANOUT
HCO	HORIZONTAL CLEANOUT
WCO	WALL CLEANOUT
	CAP ON END OF PIPE
	SHUT-OFF VALVE
	CHECK VALVE
	SHUT-OFF VALVE IN RISER
	RISER DOWN (ELBOW)
	RISER UP (ELBOW)
	BRANCH-TOP CONNECTION
	BRANCH-BOTTOM CONNECTION
	TEE
	ELBOW
FPHB	FROSTPROOF HOSE BIBB
TP	TRAP PRIMER
WC-1 & 2	WATER CLOSET, ADA
WC	WATER CLOSET
UR	URINAL
LAV	LAVATORY
SS	SERVICE SINK
EWC	ELECTRIC WATER COOLER
PC	PLUMBING CONTRACTOR
SC	CIVIL SITE CONTRACTOR
HB	HOSE BIBB (INTERIOR)
SL	SLOPE LINE
ST	STORM LINE
DS	DOWN SPOUT
OFD	OVERFLOW DRAIN
RD	ROOFDRAIN
EC	ELECTRICAL CONTRACTOR
GC	GENERAL CONTRACTOR

COLD WATER FIXTURE UNITS (FU) LOAD SCHEDULE

FIXTURE	COLD WATER FIXTURE UNITS
	QUANTITY x CW F.U. =
LAVATORY	9 X .5 = 4.5
WATER CLOSET	13 X 10 = 130
URINAL	4 X 5 = 20
KITCHEN SINK	2 X 1 = 2
EWC	4 X .25 = 1
MOP SINK	1 X 2.25 = 2.25
CW F.U. LOAD EQUALS	160 CW F.U. @ 2" DCW PIPE
TOTAL BLDG LOAD	160 DCW F.U. @ 80 GPM, 2" DCW PIPE

EAST BOUND PLUMBING DCW REQUIREMENTS

- 2" BUILDING DCW LINE: BASED ON 160 MAX. BLDG TOTAL CW FU'S @ 80 GPM MAX.
- 55 PSI MINIMUM INCOMING PRESSURE (INCLUDES METER)
  75 PSI MAX. DCW SYSTEM PRESSURE ALLOWED OTHERWISE PROVIDE PRV.
- BASED ON COPPER TUBE PIPING, ONLY.

1/8" = 1'-0" (0, 4', 8', 16', 24')

CONSULTING ARCHITECTS / ENGINEERS

ARCHITECT: BODNER & KERIK ARCHITECTS, INC.
STRUCTURAL: LANTZ JONES & NEBRASKA, INC.
MECHANICAL/ELECTRICAL: SRA, INC.
CIVIL ENGINEERING: POGGEMEYER DESIGN GROUP, INC.
LANDSCAPE ARCHITECT: R.D. ZANDE & ASSOCIATES, INC.

REVISIONS

NO.	DATE	DESCRIPTION
1	12-6-02	BID SET

STATE OF OHIO — JOHN E. SANDERS — E-58219 — REGISTERED PROFESSIONAL ENGINEER

PROJECT NUMBER 0226

FOR: OHIO DEPT. OF TRANSPORTATION

DRAWING DESCRIPTION: **PLUMBING EASTBOUND PLAN**

NEW REST STOP BUILDINGS

NO. 770-2001-072 US 30 WYANDOT/CRAWFORD | SITE 1 EASTBOUND

PREPARED FOR
STATE OF OHIO
DEPARTMENT OF ADMINISTRATIVE SERVICES
GENERAL SERVICES DIVISION

PREPARED BY
DEPARTMENT OF ADMINISTRATIVE SERVICES

PERMIT SUBMISSION	DATE	SHEET
10-09-02	10-09-02	PE-1

L:\DRAWINGS\SA\REST AREA\WYANDOT\Dwgs\EAST\2004-PE1.dwg, 12/13/2002 08:19:09 AM, Eric Burwell

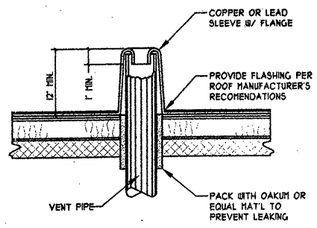

A VENT PIPE DETAIL
N.T.S.

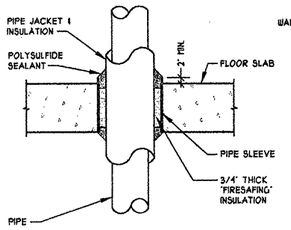

B PIPE PENETRATION DETAIL
N.T.S.

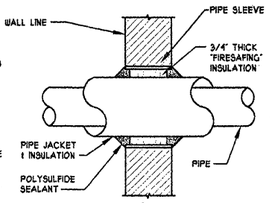

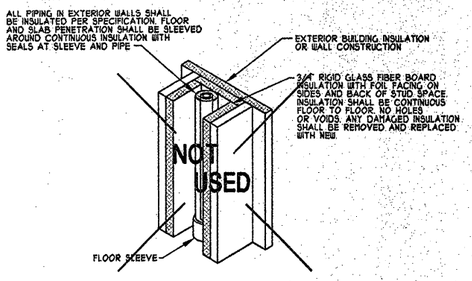

C PIPE IN EXTERIOR WALL INSULATION DETAIL
N.T.S.

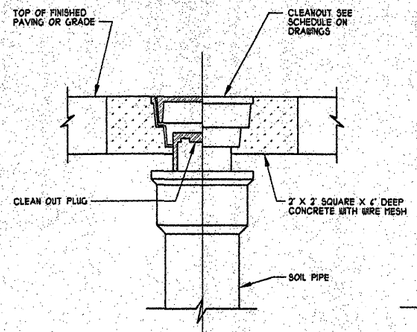

D EXTERIOR CLEANOUT DETAIL
N.T.S.

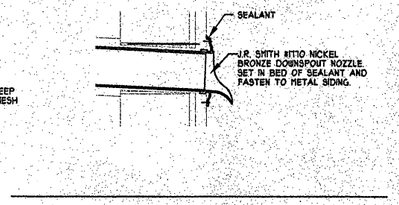

E OVERFLOW SCUPPER DETAIL
N.T.S.

MAINTENANCE SHED 142

1/8" = 1'-0"

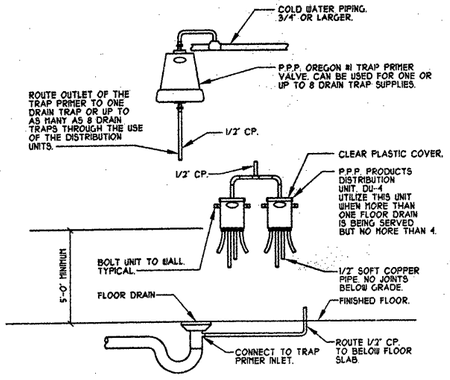

NOTE: CONTRACTOR IS RESPONSIBLE FOR PROVIDING THE TRAP PRIMER VALVE. DISTRIBUTION UNITS, AND ALL INTERCONNECTING COPPER PIPE. PLUS THE PLUMBING CONTRACTOR SHALL ALSO MAKE ALL FINAL CONNECTIONS.

F TRAP PRIMER DEVICE AND PIPING DETAIL
N.T.S.

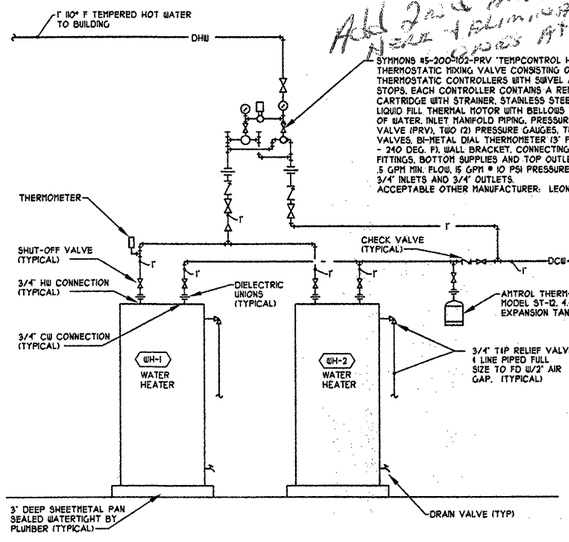

G ELECTRIC WATER HEATERS PIPING DIAGRAM
N.T.S.

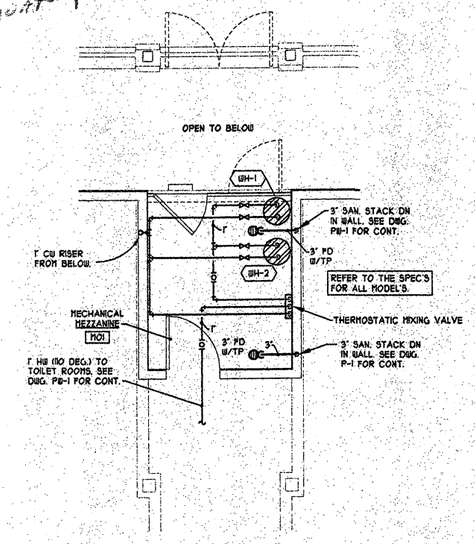

H PARTIAL MEZZ. PLUMBING PLAN
N.T.S.

CLEANOUT SCHEDULE

ITEM	DESCRIPTION	MFGR'S MODEL #	ACCESSORIES
FCO	CLEANOUT CONCRETE	JOSAM 56100 SERIES	ADJUSTABLE CAST IRON WITH THREADED BRONZE PLUG, SATIN TOP BRASS RIM AND BRASS SCORIATED COVERPLATE.
WCO	CLEANOUT WALL	JOSAM 58110 SERIES	CAST IRON PLUG AND STAINLESS STEEL COVERPLATE.
HCO	CLEANOUT EXTERIOR	JOSAM 58110 SERIES	CAST IRON PLUG AND STAINLESS STEEL COVERPLATE.
ECO	CLEANOUT EXTERIOR	J.R.SMITH-1250 SERIES	16" x 16" x 10" DEEP CONCRETE COLLAR FLUSH WITH GRADE.

ACCEPTABLE MANUFACTURER'S: JOSAM, J.R. SMITH, ZURN, WADE, MIFAB

PLUMBING SCHEDULES

REFER TO THE SPECIFICATIONS FOR MANUFACTURER'S AND MODEL NUMBER'S AND ALL ACCESSORIES.

TRENCH DRAINS SHALL BE EQUIVALENT TO ZURN MODEL Z-812 12" WITH CAST IRON GRATE.

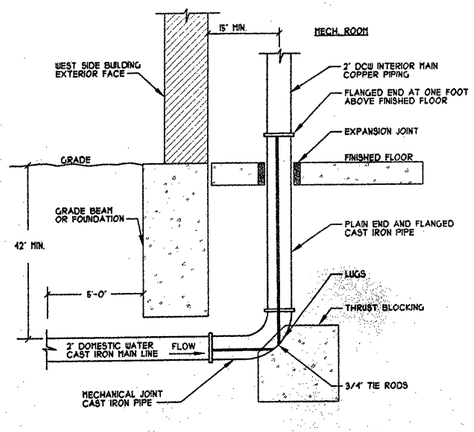

J WATER SERVICE ENTRANCE DETAIL
N.T.S.

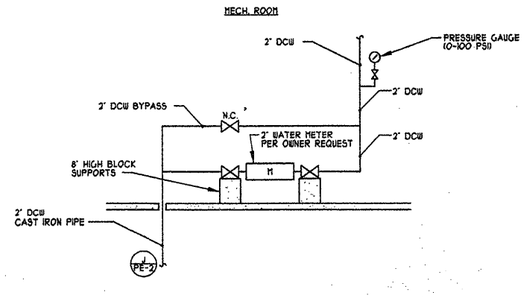

K WATER METER PIPING DETAIL
N.T.S.

NO SCALE

CONSULTING ARCHITECTS / ENGINEERS

ARCHITECT: BODNER & KERIK ARCHITECTS, INC.
STRUCTURAL: LANTZ JONES & NEBRASKA, INC.
MECHANICAL/ELECTRICAL: SRA, INC.
CIVIL ENGINEERING: POGGEMEYER DESIGN GROUP, INC.
LANDSCAPE ARCHITECT: R.D. ZANDE & ASSOCIATES, INC.

REVISIONS

NO.	DATE	DESCRIPTION
1	12-6-02	BID SET

STATE OF OHIO — JOHN E. SANDERS — E-58219 — REGISTERED PROFESSIONAL ENGINEER

PROJECT NUMBER 0226

FOR: OHIO DEPT. OF TRANSPORTATION

DRAWING DESCRIPTION: **PLUMBING EASTBOUND DETAILS**

NEW REST STOP BUILDINGS

NO. 770-2001-072 | SITE 1
US 30 WYANDOT/CRAWFORD | EASTBOUND

PREPARED FOR
STATE OF OHIO
DEPARTMENT OF ADMINISTRATIVE SERVICES
GENERAL SERVICES DIVISION

PREPARED BY
DEPARTMENT OF ADMINISTRATIVE SERVICES

PERMIT SUBMISSION	DATE	SHEET
10-09-02	10-09-02	PE-2

L:\DRAWINGS\SAO\REST AREAS\WYANDOT\Dwgs\EAST\2004-PE2.dwg, 12/13/2002 09:18:53 AM, Eric Burnell

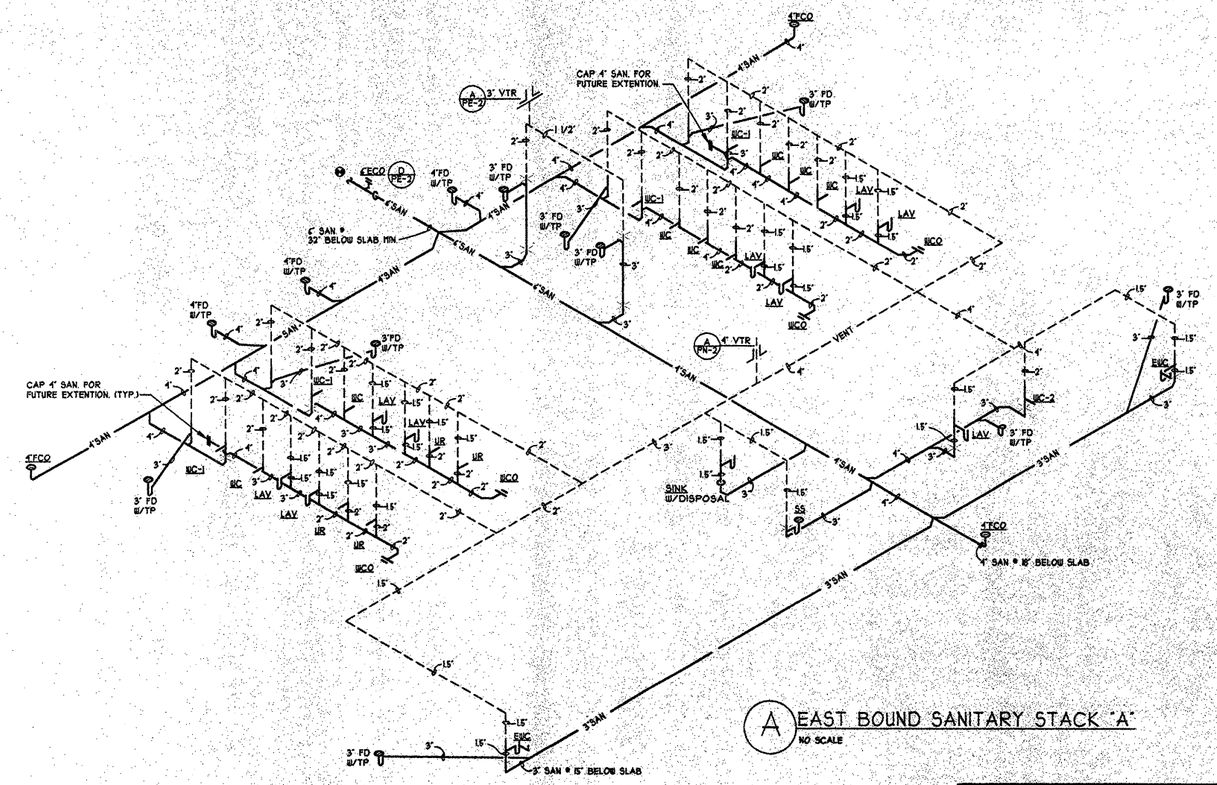

A EAST BOUND SANITARY STACK "A"
NO SCALE

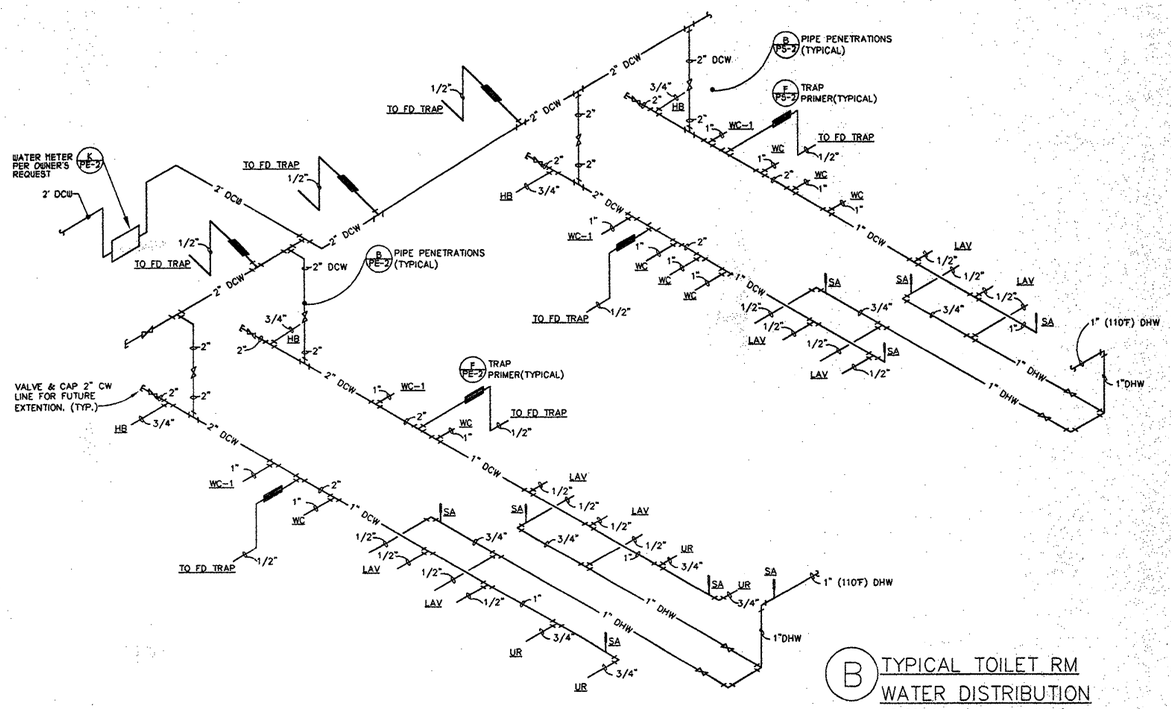

B TYPICAL TOILET RM WATER DISTRIBUTION
NO SCALE EAST BOUND

NO SCALE

CONSULTING ARCHITECTS / ENGINEERS

ARCHITECT: BODNER & KERIK ARCHITECTS, INC.
STRUCTURAL: LANTZ JONES & NEBRASKA, INC.
MECHANICAL/ELECTRICAL: SRA, INC.
CIVIL ENGINEERING: POGGEMEYER DESIGN GROUP, INC.
LANDSCAPE ARCHITECT: R.D. ZANDE & ASSOCIATES, INC.

REVISIONS

NO.	DATE	DESCRIPTION
1	12-6-02	BID SET

STATE OF OHIO
JOHN E. SANDERS
E-58219
REGISTERED PROFESSIONAL ENGINEER

PROJECT NUMBER
0226

FOR:
OHIO DEPT. OF TRANSPORTATION

DRAWING DESCRIPTION:
PLUMBING EASTBOUND STACKS & RISERS

NEW REST STOP BUILDINGS

NO. 770-2001-072 | SITE 1
US 30 WYANDOT/CRAWFORD | EASTBOUND

PREPARED FOR
STATE OF OHIO
DEPARTMENT OF ADMINISTRATIVE SERVICES
GENERAL SERVICES DIVISION

PREPARED BY
DEPARTMENT OF ADMINISTRATIVE SERVICES

PERMIT SUBMISSION	DATE	SHEET
10-09-02	10-09-02	PE-3

L:\DRAWINGS\SA\OREST AREAS\WYANDOT\Dwgs\EAST2004-PE3.dwg, 12/13/2002 08:18:43 AM, Eric Burnell

CODED NOTES:

1. FAN COIL UNITS, FCU-1 & 2, MOUNTED ON THE FLOOR.
2. FAN COIL UNITS, FCU-3 & 4, MOUNTED ON THE FLOOR.
3. FURNISH AND INSTALL 2" THICK FIBER GLASS PIPE INSULATION WITH AP-T JACKET ON PIPING FROM ROOF DRAINS IN ATTIC SPACE. PIPING IS HEAT TRACED BY THE ELECTRICAL CONTRACTOR. HVAC CONTRACTOR TO FURNISH AND INSTALL ALL OTHER MATERIALS FOR PIPING, ALONG WITH HEAT TRACE LABELING ON PIPE.
4. WC-2, 1" DCW LINE DOWN IN WALL TO WATER CLOSET, 3" SAN & 2" VENT MAIN.
5. OVERFLOW NOZZLE THRU SIDEWALL HIGH. REFER TO DETAIL 'E' ON SHEET PW-2.
6. REFER TO THE CIVIL SITE DRAWING, SHEET C-7, FOR THE CONTINUATION OF LINE 5'-0" OUTSIDE OF BLDG.
7. 1/2" DCW ON W/VALVE FOR COFFEE MACHINE. PROVIDE ROUGH-IN BACKFLOW PREVENTER & FINAL HOOK-UP. COORDINATE WITH VENDING MACHINE SUPPLIER FOR WATER HOOK-UP AND FLOOR DRAIN.
8. 1" DCW RISER UP TO THE MEZZ. LEVEL. REFER TO DETAIL 'G' & DETAIL 'H' ON SHEET PW-2.
9. 3" OVERFLOW DRAIN PIPE TO SOFFIT & TERMINATE WITH PERFORATED COVER PLATE (JR. SMITH 9005). 3" OFD @ HIGHER ELEVATION THEN 3" RD.
10. REFER TO THE CIVIL SITE DRAWING, SHEET C-7, FOR THE CONTINUATION OF MAIN DOMESTIC WATER LINE 5'-0" OUTSIDE OF BLDG.
11. WEST BOUND 2" WATER METER FOR OWNER'S USE. COORDINATE ENTRANCE IN MECH. ROOM WITH CIVIL DRAWINGS. REFER TO DETAILS 'K' & 'J' ON SHEET PW-2.
12. SINK: PROVIDE 1/2" DHW & DCW, 1 1/2" SAN. & 1 1/2" VENT LINE. FURNISH & INSTALL 1/2HP, 120V, 1Ø DISPOSAL FOR SINKS.
13. LAV: PROVIDE 1/2" DHW & DCW, 1 1/2" SAN & 1 1/2" VENT LINE. (TYP)
14. EWC: PROVIDE 1/2" DCW, 1 1/2" SAN & 1 1/2" VENT LINE. (TYP)
15. UR: PROVIDE 3/4" DCW, 2" SAN & 1 1/2" VENT LINE. (TYP)
16. WC: 1" DCW LINE DOWN IN WALL TO WATER CLOSET. 4" SAN. & 2" VENT(TYP.)
17. 3" SANITARY LINE DOWN FROM ABOVE. SEE STACK 'A' ON SHEET PN-2.
18. SS: PROVIDE 1/2" DHW & DCW, 3" SAN. & 1 1/2" VENT. (TYP.)
19. WC-1: 1" DCW LINE DOWN IN WALL TO WATER CLOSET. 4" SAN & 2" VENT(TYP.)
20. WRAP 1" DCW WITH 1/2" THICK INSULATION WRAP & RUN EXPOSED TIGHT TO WALL IN THE VERTICAL.

PLUMBING GENERAL NOTES:

1. ALL SHUT-OFF VALVES SHALL BE BALL VALVES. (NO GATE VALVES WILL BE PERMITTED)
2. PLUMBING CONTRACTOR TO COORDINATE WITH ELECTRICAL CONTRACTOR FOR ROUTING OF PIPING TO MAINTAIN 36" WORKSPACE IN FRONT OF PANELS & NO DUCTS DIRECTLY ABOVE PANELS.
3. ALL INTERIOR STORM LEADERS, DOWNSPOUTS, ETC... SHALL BE CAST IRON NO HUB. PVC WILL NOT BE APPROVED FOR ABOVE GROUND STORM PIPING MATERIAL.
4. PC TO PROVIDE SEPARATE DCW & DHW HEADERS FOR EACH BANK OF PLUMBING FIXTURES IN TOILET ROOMS FOR COMPLETE ISOLATION FROM ONE TO THE OTHER FOR SERVICE AND MAINTENANCE.
5. REFER TO THE SPECIFICATIONS FOR MODEL NUMBERS AND MANUFACTURER'S.

GENERAL NOTES:

1. STORM DRAINS TO BE EXTENDED 5'-0" OUTSIDE OF BUILDING BY THE CIVIL/SITE CONTRACTOR TO THE MAIN STORM SYSTEM ON AN INDIVIDUAL SITE BASIS.
2. WATER PROVIDE BY THE CIVIL CONTRACTOR. REFER TO SITE PLAN 'C-7' FOR WATER MAIN CONTINUATION. REFER TO DETAILS 'J' & 'K' FOR WATER SERVICE ENTRATENCE INTO BLDG AND METER, ON SHEET PW-2.
3. SEE DETAIL 'H' ON SHEET PW-2 FOR MEZZANINE PLUMBING PLAN AND SANITARY SCHEMATICS.
4. ELECTRICAL CONTRACTOR TO FURNISH & INSTALL ICE MELT SYSTEM IN DOWNSPOUTS & GUTTERS (SEE ELECTRICAL DRAWINGS).
5. ELECTRICAL CONTRACTOR TO FURNISH & INSTALL HEAT TRACING ON ROOF DRAIN PIPING. REFER TO ELECTRICAL DRAWINGS.
6. PLUMBING CONTRACTOR TO REMOVE ALL UNUSED WATER VALVES LOCATED AROUND THE PERIMETER OF EXISTING BLDG. COORDINATE ALL WORK WITH THE CIVIL SITE CONTRACTOR BEFORE STARTING.

PLUMBING LEGEND

SYMBOL	DESCRIPTION
DCW	DOMESTIC COLD WATER
DHW	DOMESTIC HOT WATER (110°F)
SAN	SANITARY SEWER (BELOW GRADE)
V	SANITARY VENT PIPING
ECO	EXTERIOR CLEANOUT
FD	FLOOR DRAIN W/TRAP PRIMER
FCO	FLOOR CLEANOUT
HCO	HORIZONTAL CLEANOUT
WCO	WALL CLEANOUT
	CAP ON END OF PIPE
	SHUT-OFF VALVE
	CHECK VALVE
	SHUT-OFF VALVE IN RISER
	RISER DOWN (ELBOW)
	RISER UP (ELBOW)
	BRANCH-TOP CONNECTION
	BRANCH-BOTTOM CONNECTION
	TEE
	ELBOW
FPHB	FROSTPROOF HOSE BIBB
TP	TRAP PRIMER
WC-1 & 2	WATER CLOSET, ADA
WC	WATER CLOSET
UR	URINAL
LAV	LAVATORY
SS	SERVICE SINK
EWC	ELECTRIC WATER COOLER
PC	PLUMBING CONTRACTOR
SC	CIVIL SITE CONTRACTOR
HB	HOSE BIBB (INTERIOR)
SL	SLOPE LINE
ST	STORM LINE
DS	DOWN SPOUT
OFD	OVERFLOW DRAIN
RD	ROOFDRAIN
EC	ELECTRICAL CONTRACTOR
GC	GENERAL CONTRACTOR

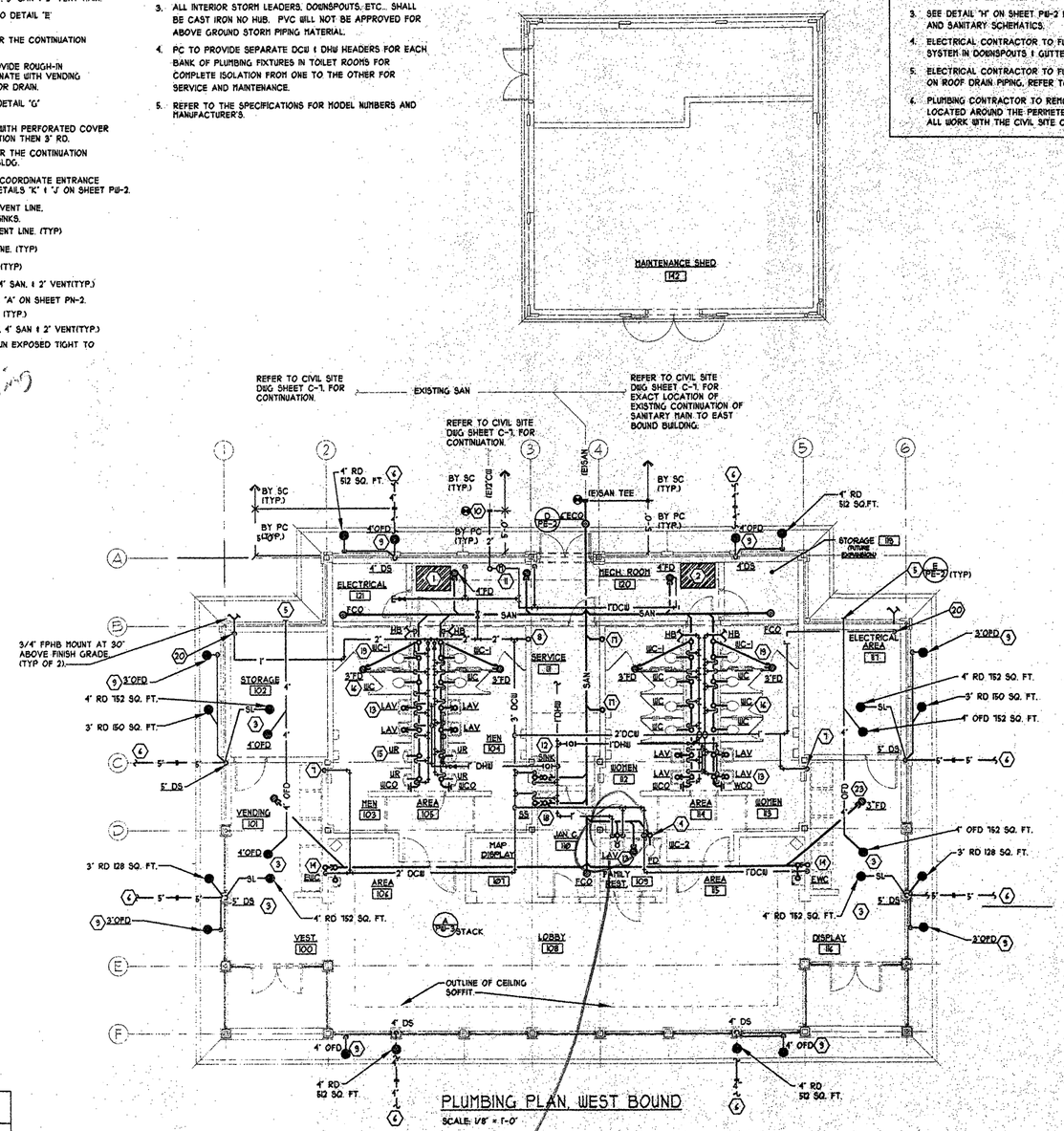

PLUMBING PLAN, WEST BOUND

SCALE: 1/8" = 1'-0"

ONLY MIXED WATER to LAVATORIES IN REST RM (KEEP EVERYTHING ELSE IN plumbing CHASE)

MIX behind WALL INSIDE ACCESS PANEL ONLY 1 supply LINE through WALL to faucett

COLD WATER FIXTURE UNITS (FU) LOAD SCHEDULE

FIXTURE	COLD WATER FIXTURE UNITS
	QUANTITY x CW F.U. =
LAVATORY	9 X .5 = 4.5
WATER CLOSET	13 X 10 = 130
URINAL	4 X 5 = 20
KITCHEN SINK	2 X 1 = 2
EWC	4 X .25 = 1
MOP SINK	1 X 2.25 = 2.25
CW F.U. LOAD EQUALS	160CW F.U. @ 2" DCW PIPE
TOTAL BLDG LOAD	160 DCW F.U. @ 80 GPM, 2" DCW PIPE

WEST BOUND PLUMBING DCW REQUIREMENTS

- 2" BUILDING DCW LINE BASED ON 160 MAX. BLDG TOTAL CW FU'S @ 80 GPM MAX.
- 55 PSI MINIMUM INCOMING PRESSURE (INCLUDES METER)
- 15 PSI MAX. DCW SYSTEM PRESSURE ALLOWED OTHERWISE PROVIDE PRV.
-
- BASED ON COPPER TUBE PIPING, ONLY.

179'-8 8/8"-0"

NO SCALE

0 4'8" 8'0" 16'0" 7'5" 24'

CONSULTING ARCHITECTS / ENGINEERS

ARCHITECT: BODNER & KERIK ARCHITECTS, INC.
STRUCTURAL: LANTZ JONES & NEBRASKA, INC.
MECHANICAL/ELECTRICAL: SRA, INC.
CIVIL ENGINEERING: POGGEMEYER DESIGN GROUP, INC.
LANDSCAPE ARCHITECT: R.D. ZANDE & ASSOCIATES, INC.

REVISIONS

NO.	DATE	DESCRIPTION
1	12-6-02	BID SET

STATE OF OHIO — JOHN E. SANDERS — E-58219 — REGISTERED PROFESSIONAL ENGINEER

PROJECT NUMBER 0226

FOR: 3" OFD
OHIO DEPT. OF TRANSPORTATION

DRAWING DESCRIPTION:
PLUMBING WEST BOUND PLAN

NEW REST STOP BUILDINGS

NO. 770-2001-072 | SITE 1 EASTBOUND | SITE 2 WESTBOUND
US 30 WYANDOT/CRAWFORD

PREPARED FOR:
STATE OF OHIO
DEPARTMENT OF ADMINISTRATIVE SERVICES
GENERAL SERVICES DIVISION

PREPARED BY
DEPARTMENT OF ADMINISTRATIVE SERVICES

PERMIT SUBMISSION	DATE	SHEET
10-09-02	10-09-02	PW-1

L:\DRAWINGS\SAO\REST AREAS\WYANDOT\Dwgs\WEST\2004-PW1.dwg, 12/13/2002 08:26:30 AM, Eric Burwell

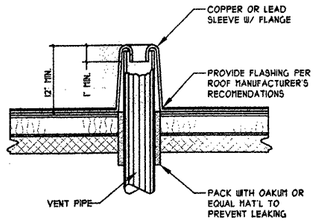

A VENT PIPE DETAIL
N.T.S.

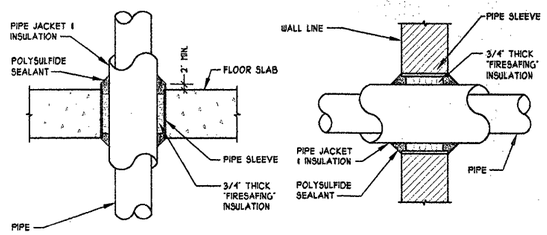

B PIPE PENETRATION DETAIL
N.T.S.

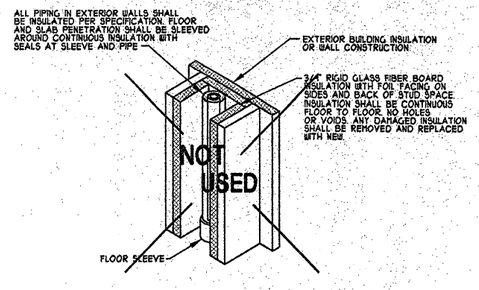

C PIPE IN EXTERIOR WALL INSULATION DETAIL
N.T.S.

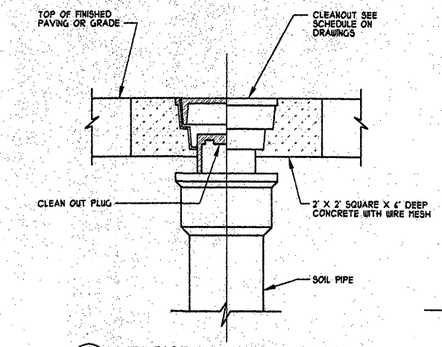

D EXTERIOR CLEANOUT DETAIL
N.T.S.

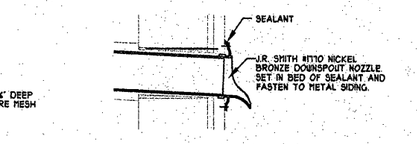

E OVERFLOW SCUPPER DETAIL
N.T.S.

MAINTENANCE SHED 142
1/8" = 1'-0"

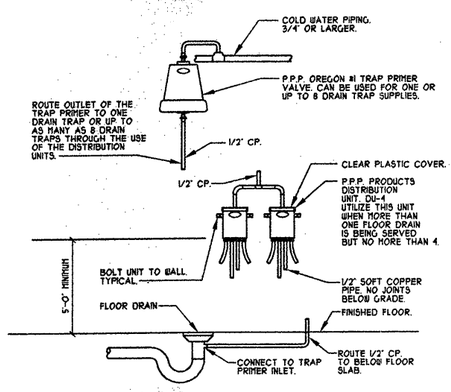

NOTE: CONTRACTOR IS RESPONSIBLE FOR PROVIDING THE TRAP PRIMER VALVE, DISTRIBUTION UNITS, AND ALL INTERCONNECTING COPPER PIPE. PLUS THE PLUMBING CONTRACTOR SHALL ALSO MAKE ALL FINAL CONNECTIONS.

F TRAP PRIMER DEVICE AND PIPING DETAIL
N.T.S.

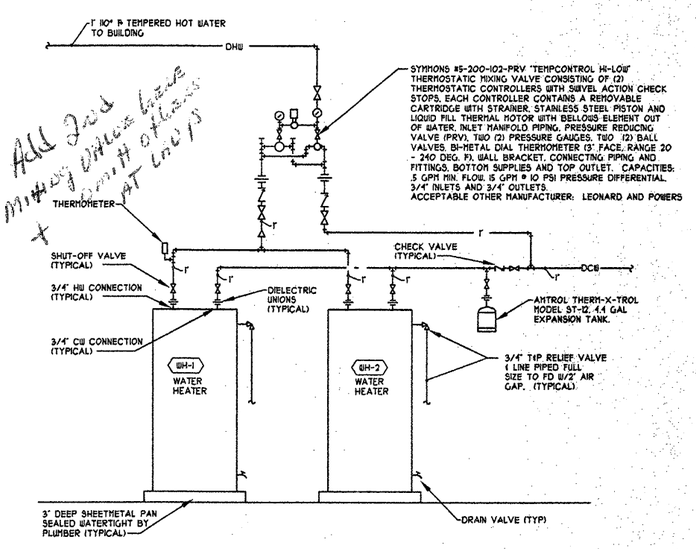

All Tees mitering where + with offsets at ends

G ELECTRIC WATER HEATERS PIPING DIAGRAM
N.T.S.

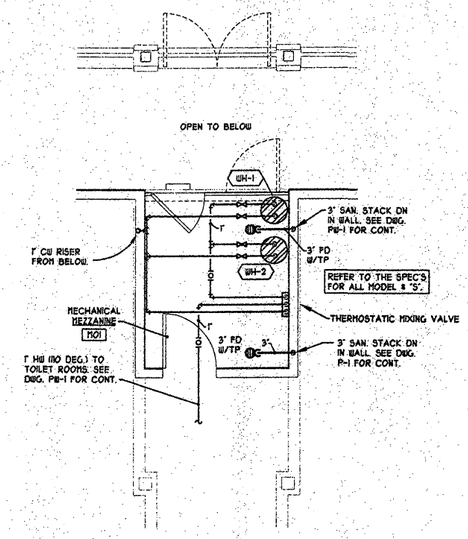

H PARTIAL MEZZ. PLUMBING PLAN
N.T.S.

CLEANOUT SCHEDULE

ITEM	DESCRIPTION	MFGR'S MODEL #	ACCESSORIES
FCO	CLEANOUT CONCRETE	JOSAM 58200 SERIES	ADJUSTABLE CAST IRON WITH THREADED BRONZE PLUG, SATIN TOP BRASS RIM AND BRASS SCORIATED COVERPLATE.
WCO	CLEANOUT WALL	JOSAM 58180 SERIES	CAST IRON PLUG AND STAINLESS STEEL COVERPLATE.
HCO	CLEANOUT EXTERIOR	JOSAM 58180 SERIES	CAST IRON PLUG AND STAINLESS STEEL COVERPLATE.
ECO	CLEANOUT EXTERIOR	JRSMITH-C250 SERIES	18" x 18" x 10" DEEP CONCRETE COLLAR FLUSH WITH GRADE.

ACCEPTABLE MANUFACTURER'S: JOSAM, J.R. SMITH ZURN, WADE, MIFAB

PLUMBING SCHEDULES

REFER TO THE SPECIFICATIONS FOR MANUFACTURER'S AND MODEL NUMBER'S AND ALL ACCESSORIES.

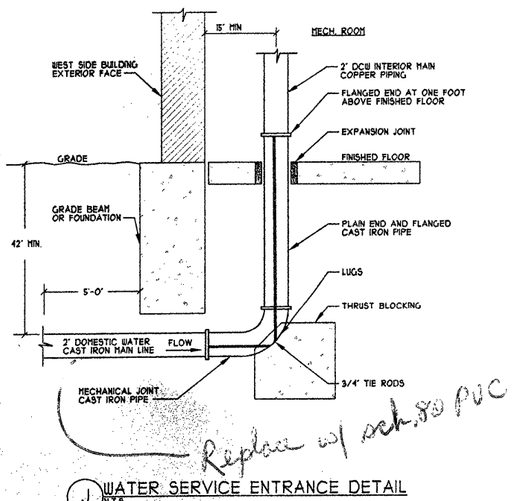

Replace w/ sch. 80 PVC

J WATER SERVICE ENTRANCE DETAIL
N.T.S.

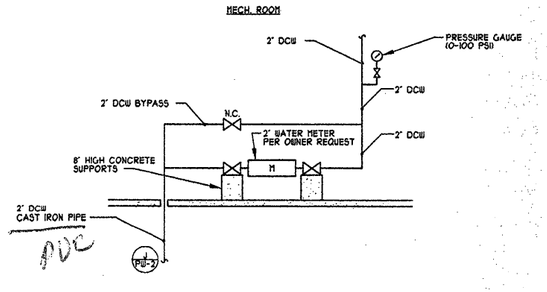

PVC

K WATER METER PIPING DETAIL
N.T.S.

NO SCALE

CONSULTING ARCHITECTS / ENGINEERS

ARCHITECT: BODNER & KERIK ARCHITECTS, INC.
STRUCTURAL: LANTZ JONES & NEBRASKA, INC.
MECHANICAL/ELECTRICAL: SRA, INC.
CIVIL ENGINEERING: POGGEMEYER DESIGN GROUP, INC.
LANDSCAPE ARCHITECT: R.D. ZANDE & ASSOCIATES, INC.

REVISIONS

NO.	DATE	DESCRIPTION
1	12-6-02	BID SET

STATE OF OHIO JOHN E. SANDERS E-58219 REGISTERED PROFESSIONAL ENGINEER

PROJECT NUMBER 0226

FOR: OHIO DEPT. OF TRANSPORTATION

DRAWING DESCRIPTION: **PLUMBING WEST BOUND DETAILS**

NEW REST STOP BUILDINGS

NO. 770-2001-072
US 30 WYANDOT/CRAWFORD

SITE 2 WESTBOUND

PREPARED FOR
STATE OF OHIO
DEPARTMENT OF ADMINISTRATIVE SERVICES
GENERAL SERVICES DIVISION
PREPARED BY
DEPARTMENT OF ADMINISTRATIVE SERVICES

PERMIT SUBMISSION	DATE	SHEET
10-09-02	10-09-02	PW-2

L:\DRAWINGS\SA\REST AREAS\WYANDOT\Dwgs\WEST\2004-PW2.dwg, 12/13/2002 09:26:18 AM, Eric Burwell

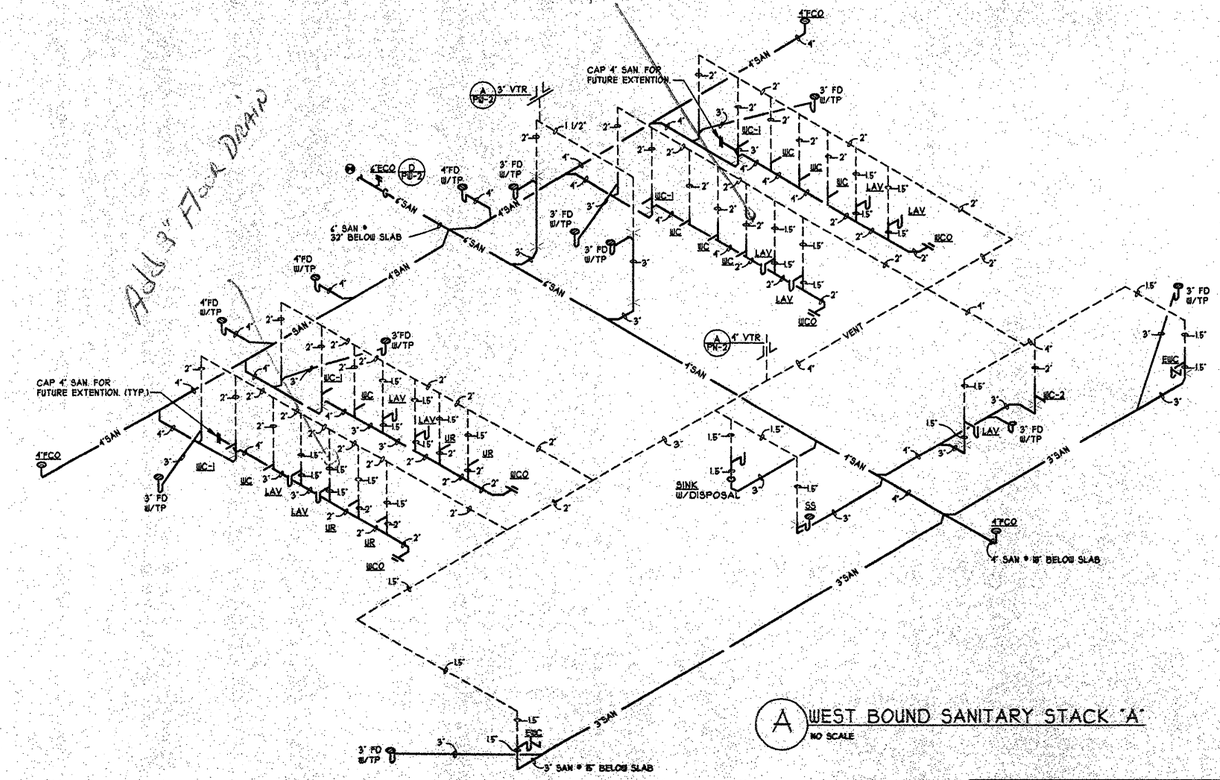

A WEST BOUND SANITARY STACK "A"
NO SCALE

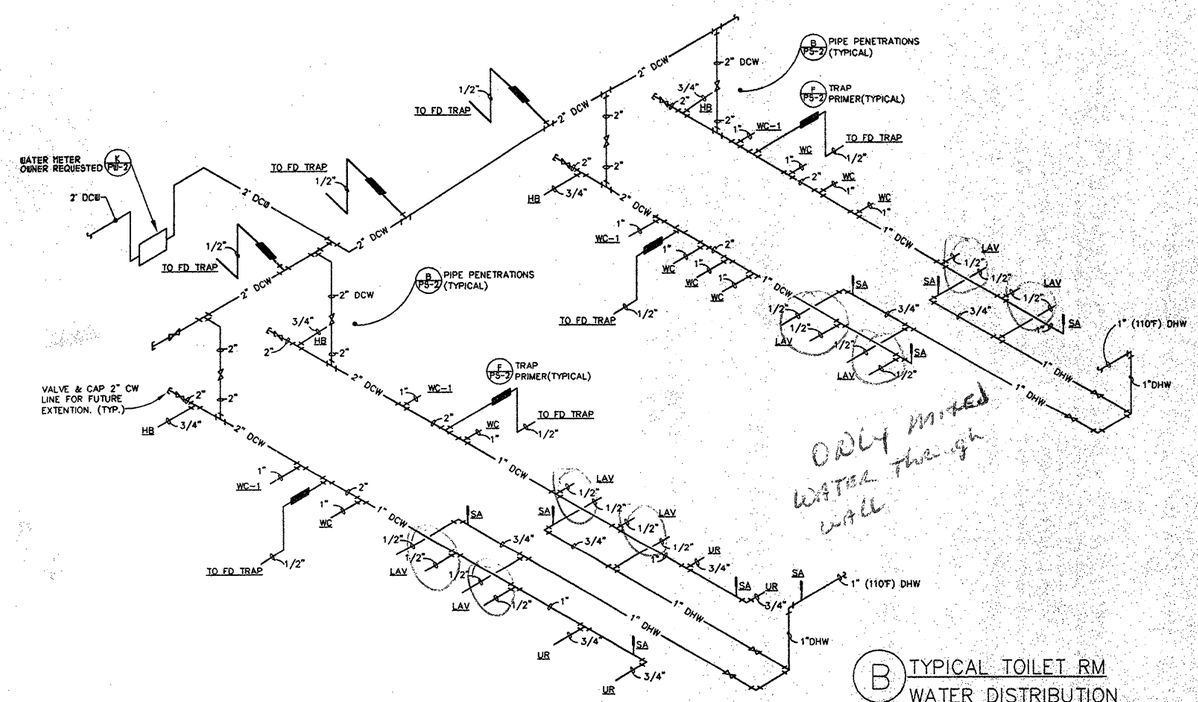

ONLY MIXED WATER through WALL

ALL WATER TO LAVATORIES MIXED AT MEZZANINE

B TYPICAL TOILET RM WATER DISTRIBUTION
NO SCALE WEST BOUND

NO SCALE

CONSULTING ARCHITECTS / ENGINEERS

ARCHITECT: BODNER & KERIK ARCHITECTS, INC.
STRUCTURAL: LANTZ JONES & NEBRASKA, INC.
MECHANICAL/ELECTRICAL: SRA, INC.
CIVIL ENGINEERING: POGGEMEYER DESIGN GROUP, INC.
LANDSCAPE ARCHITECT: R.D. ZANDE & ASSOCIATES, INC.

REVISIONS

NO.	DATE	DESCRIPTION
1	12-6-02	BID SET

STATE OF OHIO
JOHN E. SANDERS
E-58219
REGISTERED PROFESSIONAL ENGINEER

PROJECT NUMBER 0226

FOR: OHIO DEPT. OF TRANSPORTATION

DRAWING DESCRIPTION: **PLUMBING WEST BOUND STACKS & RISERS**

NEW REST STOP BUILDINGS

NO. 770-2001-072
US 30 WYANDOT/CRAWFORD

SITE 2
WESTBOUND

PREPARED FOR
STATE OF OHIO
DEPARTMENT OF ADMINISTRATIVE SERVICES
GENERAL SERVICES DIVISION
PREPARED BY
DEPARTMENT OF ADMINISTRATIVE SERVICES

PERMIT SUBMISSION	DATE	SHEET
10-09-02	10-09-02	PW-3

L:\DRAWINGS\SAO\REST AREAS\WYANDOT\Dwgs\WEST02004 PW3.dwg, 12/13/2002 00:25:49 AM, Eric Burwell

MECHANICAL LEGEND

SYMBOL	DESCRIPTION
SA	SUPPLY AIR
SR	SUPPLY REGISTER
EA	EXHAUST AIR
ER	EXHAUST REGISTER
CD	CEILING DIFFUSER
OA	OUTSIDE AIR
RA	RETURN AIR
RG	RETURN GRILLE
FCU	FAN COIL UNIT
HP	HEAT PUMP
ERV	ENERGY RECOVERY UNIT
OAL	OUTSIDE AIR LOUVER
AD	ACCESS DOOR
FD	FIRE DAMPER
MC	MECHANICAL CONTRACTOR
GC	GENERAL CONTRACTOR
EC	ELECTRICAL CONTRACTOR
PC	PLUMBING CONTRACTOR
T	THERMOSTAT (ELECTRIC)
TOD	TOP OF DUCT
BOD	BOTTOM OF DUCT
	FLEXIBLE DUCT (4'-0" MAX. LENGTH)
S	REMOTE TEMPERATURE SENSOR
	FLEXIBLE DUCT CONNECTOR
	DUCT W/ INTERNAL LINING
	MANUAL VOLUME DAMPER
FD	FIRE DAMPER
	ELBOW W/ DBL THICKNESS TURNING VANES
	FRESH/RETURN/EXHAUST AIR DUCT
	SUPPLY AIR DUCT

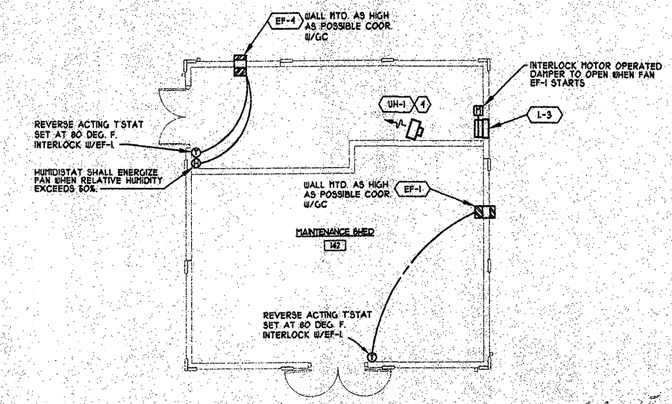

MAINTENANCE SHED

SCALE: 1/8" = 1'-0"

Move to Attic SAME AS WAYNE + Summit

KEEP duct work high enough to access coil doors from Attic

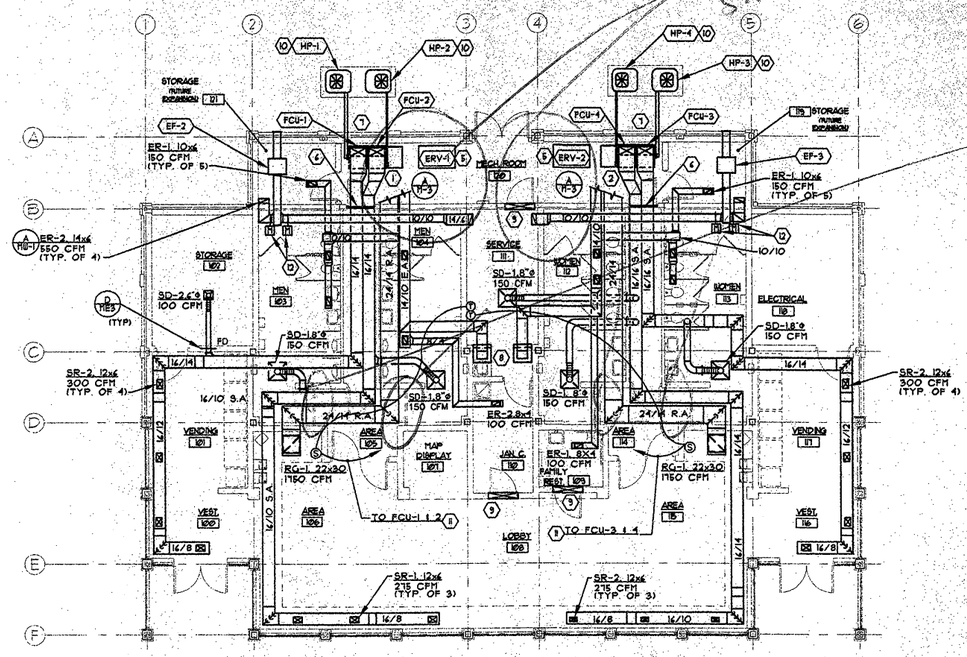

MECHANICAL PLAN

SCALE 1/8" = 1'-0"

GENERAL NOTES:

1. MECHANICAL CONTRACTOR SHALL SAFE WASTE CONDENSATE DRAIN LINES FROM FCU'S UNITS DRAIN PANS TO THE FLOOR DRAIN WITH A 2" AIR GAP (MINIMUM).
2. MECHANICAL CONTRACTOR TO COORDINATE WITH ELECTRICAL CONTRACTOR FOR ROUTING OF DUCTWORK TO MAINTAIN 36" WORKSPACE IN FRONT OF PANELS & NO DUCTS DIRECTLY ABOVE PANELS.

SEQUENCE OF OPERATION
FANS EF-2 AND 3

THE FAN SHALL START FROM EITHER OF TWO KEY SWITCHES THE KEY SWITCHES TO BE MOMENTARY WITH SPRING RETURN ONE IN EACH OF THE TWO RESTROOMS SERVED BY A FAN WHEN A SWITCH IS OPERATED THE DAMPER SERVING THAT AREA SHALL OPEN AND THE FAN SHALL START. A TIMER SHALL KEEP THE FAN OPERATING ANFD THE DAMPER OPEN FOR 30 MIN (ADJUSTABLE) WHEN THE ALLOTTED TIME EXPIRES THE FAN SHALL STOP AND THE DAMPER SHALL SPRING BACK TO ITS NORMALLY CLOSED POSITION.

IF, WHILE THE FAN IS STILL RUNNING, THE OTHER KEY SWITCH IS OPERATED THE FIRST DAMPER SHALL CLOSE AND THE OTHER DAMPER SHALL OPEN. THE FAN SHALL CONTINUE TO OPERATE. THE TIMER SHALL BE RESET TO RUN FOR 30 MINUTES. WHEN THE TIME EXPIRES THE FAN AND DAMPER SHALL SHUT DOWN AS DESCRIBED ABOVE.

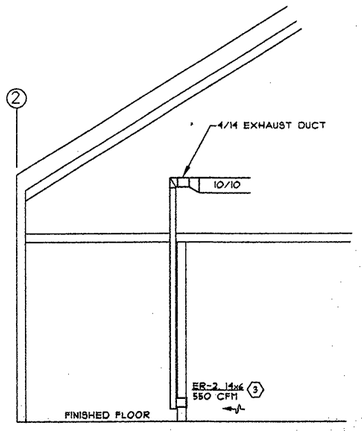

A DETAIL OF SPECIAL EXHUAST

SCALE 1/4" = 1'-0"

CODED NOTES:

1. SIDE BY SIDE MOUNTED FAN COIL UNITS. FCU-1 & FCU-2.
2. SIDE BY SIDE MOUNTED FAN COIL UNITS. FCU-3 & FCU-4.
3. TRANSITION 10x10 EXHAUST DUCTWORK TO 14/4 AND EXTEND DOWN TIGHT TO WALL AND DOWN TO FLOOR. PROVIDE GRILLE 4" A.F.F., AND PAINT DUCTWORK SAME COLOR AS WALLS IN FUTURE ROOMS. DUCTWORK TO HAVE NO SHARP EDGES. EXTEND 14/4 DUCT THRU WALL TO SIDE WALL GRILLE. ER-2.
4. FURNISH AND INSTALL UNIT HEATER, QMARK MODEL MUH-10-2, 240 V/1Ø, WITH INTEGRAL THERMOSTAT AND DISCONNECT. SET AND LOCK THERMOSTAT AT 50°.
5. ENERGY RECOVERY UNIT MOUNTED 6'-0" A.F.F.. REFER TO DETAIL "A" & "B" ON SHEET M-3.
6. TWO TRANSFER LOUVERS BY GENERAL CONTRACTOR. ONE HIGH AND ONE LOW IN DOOR. USE GRILLE ER-1. FOR TRANSFER AIR.
7. MECHANICAL CONTRACTOR TO EXTEND REFRIGERANT LINE SET FROM THE HEATPUMP UNIT TO THE DX COOLING COIL AT FCU UNIT. SIZE SHALL BE AS RECOMMENDED BY THE MANUFACTURER.
8. 24" x 42" EXHAUST LOUVERS IN cupola. BLANK OFF LOUVER, L-1, TO A 24" x 18" OPENING W/BIRD SCREEN AND BACKDRAFT DAMPER. PROVIDE FOUR LOUVERS, L-1; ONLY BLANK-OFF TWO OF THEM.
9. GENERAL CONTRACTOR TO UNDER CUT DOOR, 1" MIN. ABOVE FLOORING.
10. MECHANICAL CONTRACTOR SHALL FURNISH AND INSTALL CONCRETE PAD. PAD SHALL BE 8'-4"L x 3'-6"W x 4" HIGH. MOUNT HEATPUMP UNITS LEVEL IN ALL DIRECTIONS & MAINTAIN 24" CLEARANCE FROM WALL AND 32" AROUND THE REMAINING SIDES. PROVIDE PROPER SNOW LEVEL HEIGHT FOR HEATPUMP UNITS.
11. MOUNT REMOTE SENSOR AT 42" ABOVE FINISHED FLOOR. SENSOR TO BE WIRED BACK TO PROGRAMMABLE THERMOSTAT IN SERVICE AREA.
12. M.O.D RUSKIN MODEL CD50 WITH 120 VOLT OPERATOR RUSKIN MODEL ABAR 120 SPRING EXHAUST LOUVER W/ BACKDRAFT DAMPER BY GREENHECK.

1/8" = 1'-0" 0 4' 8' 16' 24'

CONSULTING ARCHITECTS / ENGINEERS

ARCHITECT: BODNER & KERIK ARCHITECTS, INC.
STRUCTURAL: LANTZ JONES & NEBRASKA, INC.
MECHANICAL/ELECTRICAL: SRA, INC.
CIVIL ENGINEERING: POGGEMEYER DESIGN GROUP, INC.
LANDSCAPE ARCHITECT: R.D. ZANDE & ASSOCIATES, INC.

REVISIONS

NO.	DATE	DESCRIPTION
1	12-6-02	BID SET

STATE OF OHIO — JOHN E. SANDERS — E-58219 — REGISTERED PROFESSIONAL ENGINEER

PROJECT NUMBER 0226

FOR: OHIO DEPT. OF TRANSPORTATION

DRAWING DESCRIPTION: **MECHANICAL EASTBOUND PLAN**

NEW REST STOP BUILDINGS

NO. 770-2001-072 US 30 WYANDOT/CRAWFORD | SITE 1 EASTBOUND

PREPARED FOR: STATE OF OHIO, DEPARTMENT OF ADMINISTRATIVE SERVICES, GENERAL SERVICES DIVISION

PREPARED BY: DEPARTMENT OF ADMINISTRATIVE SERVICES

PERMIT SUBMISSION	DATE	SHEET
10-09-02	10-09-02	ME-1

SPLIT HEAT PUMP PACKAGE SCHEDULE

TAG	MANUFACTURER & MODEL NUMBER	CFM	ESP (IN.)	OUTDOOR AIR	HEAT-PUMP HEATING HIGH (MBH)	HEAT-PUMP HEATING LOW (MBH)	HSPF	MOTOR HP & VOLTAGE	AUX. HTR. ELECTRIC (O AMPS FUSE	DX COOLING COIL DATA TOTAL (MBH)	DX COOLING COIL DATA SENSIBLE (MBH)	DX COOLING COIL DATA E.A.T (DB/WB)	HEAT PUMP UNIT TAG	HEAT PUMP UNIT MODEL No.	HEAT PUMP UNIT NOM. TONNAGE	HEAT PUMP UNIT AMBIENT AIR TEMP.	HEAT PUMP UNIT SEER	HEAT PUMP UNIT VOLTAGE	REMARKS
FCU-1	CARRIER FK4BNB005	1325	.6	425	@ -7 °F 20.1	@ 7 °F 24.4	8.3	1/2 HP 230V/1PH	8.0 KW 230V/1Ø 34.2 AMPS MIN.	47.5	27	75/66.9	HP-1	CARRIER 38YRA048	4	95	12.5	208/230V. 1 PH	SEE BELOW
FCU-2	CARRIER FK4BNB005	1325	.6	425	@ -7 °F 20.1	@ 7 °F 24.4	8.3	1/2 HP 230V/1PH	8.0 KW 230V/1Ø 34.2 AMPS MIN.	47.5	27	75/66.9	HP-2	CARRIER 38YRA048	4	95	12.5	208/230V. 1 PH	SEE BELOW
FCU-3	CARRIER FK4BNB005	1325	.6	425	@ -7 °F 20.1	@ 7 °F 24.4	8.3	1/2 HP 230V/1PH	8.0 KW 230V/1Ø 34.2 AMPS MIN.	47.5	27	75/66.9	HP-3	CARRIER 38YRA048	4	95	12.5	208/230V. 1 PH	SEE BELOW
FCU-4	CARRIER FK4BNB005	1325	.6	425	@ -7 °F 20.1	@ 7 °F 24.4	8.3	1/2 HP 230V/1PH	8.0 KW 230V/1Ø 34.2 AMPS MIN.	47.5	27	75/66.9	HP-4	CARRIER 38YRA048	4	95	12.5	208/230V. 1 PH	SEE BELOW

FURNISH WITH THE FOLLOWING:

1. PROGRAMMABLE 2 STAGE HT/COOL T'STAT W/REMOTE SENSORS
2. THROWAWAY FILTERS (2 SETS)
3. RETURN AIR DUCT FLANGE
4. 230V/1Ø, SINGLE POINT WIRING KIT
5. REFRIGERANT ACC. AND LINE SIZE KIT SUCTION LINE TO BE INSULATED
6. ENERGY EFFICIENT FAN & FAN MOTOR
7. SOUND HOOD
8. DISCHARGE MUFFLER
9. SCROLL COMPRESSOR (10 YEAR LIMITED WARRANTY)
10. DEFROST CONTROL BOARD
11. EXTERNAL SERVICE VALVES
12. EVAPORATOR FREEZE THERMOSTAT
13. ISOLATION RELAY
14. CRANK CASE HEATER
15. OUTDOOR THERMOSTAT
16. FILTER DRIER-BI-FLOW
17. SNOW RACK (8" HIGH MOUNTING RACK)
18. AUX. HEATER SHALL HAVE INTERNAL CIRCUIT PROTECTION.
19. AUX. HEATER PART NUMBER CARRIER KFCEH1001C08, 8.0 KW.

SIMILAR MANUFACTURER: TRANE, YORK, MCQUAY

ENERGY RECOVERY VENTILATOR SCHEDULE

TAG	MANUFACTURER & MODEL NUMBER	SUPPLY FAN CFM	SUPPLY FAN TOTAL ESP	SUPPLY FAN HP & VOLTAGE	EXHAUST FAN CFM	EXHAUST FAN TOTAL ESP	EXHAUST FAN HP & VOLTAGE	SUMMER DESIGN O.A.T. DB/WB	SUMMER DESIGN E.A.T. (°F)	WINTER DESIGN O.A.T. DB/WB	WINTER DESIGN E.A.T. (°F)	SUPPLY CONDITIONS CFM	SUPPLY CONDITIONS O.A.T. DB/WB	SUPPLY CONDITIONS E.A.T. (°F)	SUPPLY CONDITIONS Spec. Humd. gr/lb Summer/Winter	SUPPLY CONDITIONS Enthalpy Btu/lb Summer/Winter	PRE HEATER KW	PRE HEATER VOLTAGE	WEIGHT (LBS.)	REMARKS
ERV-1	GREENHECK ERV-25HH-A	850	.5	1/2 HP 230V, 1 PH	850	.5	1/2 HP 230V, 1 PH	93/77	75/50%	5/3.1	72/20%	850	73.8/66.9	54.1/41.3	78/18	31.4/15.8	5.0	230V, 1 PH	300	SEE BELOW
ERV-2	GREENHECK ERV-25HH-A	850	.5	1/2 HP 230V, 1 PH	850	.5	1/2 HP 230V, 1 PH	93/77	75/50%	5/3.1	72/20%	850	73.8/66.9	54.1/41.3	78/18	31.4/15.8	5.0	230V, 1 PH	300	SEE BELOW

FURNISH WITH THE FOLLOWING:

1. ENERGY RECOVERY CASSETTE WITH A DESICCANT WHEEL
2. TWO BLOWER & MOTOR ASSEMBLIES
3. INTERNAL RUBBER MOUNTED ISOLATORS
4. INTERNAL (1") FOIL FACED INSULATION
5. SINGLE POINT WIRING
6. INTERNAL CONTROL CENTER WITH DOOR INTERLOCKING DISCONNECTS
7. MOTOR STARTERS
8. 24 VAC CONTROL TRANSFORMER
9. ENTHALPY SENSOR WITH AUTOMATIC WINTER OVERRIDE
10. EXHAUST AIR INTAKE DAMPER, MOTORIZED, LOW LEAKAGE
11. REMOTE POWER W/TIME CLOCK, HOA SWITCH, ECON SW, ETC...
12. OUTDOOR AIR FILTER, 2" PLEATED (30% EFFICIENT)
13. ROTATION SENSOR
14. OUTDOOR AIR INTAKE DAMPER, MOTORIZED, LOW LEAKAGE, 24V CONTROL.
15. FURNISH AND INSTALL WITH A 5.0 KW DUCT PRE-HEATER, 230V/1Ø
16. SOLID STATE SPEED CONTROL
17. DIRTY FILTER SENSOR
18. 35.625 MIN. CIRCUIT AMPS, & 40 MAX. OVER CURRENT PROTECTION.

SIMILAR MANUFACTURERS: SEMCO

FAN SCHEDULE

TAG	MANUFACTURER & MODEL NUMBER	AREA SERVED	SERVICE	CFM	ESP	MOTOR HP & VOLTAGE	FAN RPM	FAN TYPE	MAX. SOUND LEVEL	WEIGHT (LBS)	REMARKS
EF-1	GREENHECK SEI-10-440-D5	MAINTENANCE SHED	EXHAUST VENTILATION	640	.20"	1/12 HP 120V, 1 PH 110 WATTS	1550	WALL MOUNTED	5.9 SONES	30	SEE NOTES 1, 2, & 3
EF-2 EF-3	GREENHECK BCF-104	TOILET RMS FOR MOPPING	EXHAUST	60	.10	1/4 HP 120V, 1 PH	1851	INLINE FAN	5.9 SONES	30	SEE NOTES 1 & 2 PROVIDE ROOF CAP AND SEAL WATER TIGHT PROVIDE WITH H.O.O., 120V, 1Ø, INTERLOCKED WITH APPROPRIATE EXHAUST FAN. KEY SWITCH TO ACTIVATE FAN. REFER TO ELECTRICAL DWG'S.
EF-4	GREENHECK SEI-10-440-D5	WATER TREATMENT	EXHAUST VENTILATION	640	.20"	1/12 HP 120V, 1 PH 110 WATTS	1550	WALL MOUNTED	5.9 SONES	30	SEE NOTES 1, 2, & 3

NOTES: PROVIDE WITH THE FOLLOWING ITEMS-

1. DISCONNECT SWITCH
2. AUTOMATIC BACKDRAFT DAMPER
3. FOR EF-1: PROVIDE WALL COLLAR (16/16 WALL OPEN'G) & WEATHER HOOD & DAMPER GUARD & INTERLOCK W/REVERSE T'STAT & MOTORSIDE GUARD

EXHAUST/VENTILATION AIR DISCHARGE LOUVERS

L-1 SHALL BE RUSKIN TYPE ELF6315DX(14" DEEP) DRAINABLE BLADE STATIONARY LOUVER. PROVIDE COMPLETE WITH EXTRUDED ALUMINUM FRAME W/CAULKING SLOTS, EXTRUDED ALUMINUM BLADES, BIRDSCREEN, BAKED ACRYLIC ENAMEL FINISH W/FINAL COLOR AS SELECTED BY THE ARCHITECT FROM STANDARD COLOR CHART, FRONT FLANGE FRAME & AMCA CERTIFIED FOR BOTH SOUND & AIR. SIZE AND CFM AS INDICATED ON DRAWING. LOUVER SIZE IS 36" WIDE x 42" LONG. TYPICAL OF FOUR IN EACH capacity

NOTE: REFER TO SPECIFICATION FOR ADDITIONAL MANUFACTURERS.

FRESH AIR INTAKE LOUVERS

L-2 SHALL BE RUSKIN TYPE ELF3675DX (4" DEEP) DRAINABLE BLADE STATIONARY LOUVER. PROVIDE COMPLETE WITH EXTRUDED ALUMINUM FRAME W/CAULKING SLOTS, EXTRUDED ALUMINUM BLADES, BIRDSCREEN, BAKED ACRYLIC ENAMEL FINISH W/FINAL COLOR AS SELECTED BY THE ARCHITECT FROM STANDARD COLOR CHART, FRONT FLANGE FRAME & AMCA CERTIFIED FOR BOTH SOUND & AIR. SIZE AND CFM AS INDICATED ON DRAWING. LOUVER SIZE 24" WIDE x 18"HIGH. TYPICAL OF TWO OUTSIDE AIR LOUVERS.

L-3 SHALL BE RUSKIN TYPE ELF3475DX (4" DEEP) DRAINABLE BLADE STATIONARY LOUVER. PROVIDE COMPLETE WITH EXTRUDED ALUMINUM FRAME W/CAULKING SLOTS, EXTRUDED ALUMINUM BLADES, BIRDSCREEN, BAKED ACRYLIC ENAMEL FINISH W/FINAL COLOR AS SELECTED BY THE ARCHITECT FROM STANDARD COLOR CHART, FRONT FLANGE FRAME & AMCA CERTIFIED FOR BOTH SOUND & AIR. SIZE AND CFM AS INDICATED ON DRAWING. LOUVER SIZE 24" WIDE x 12"HIGH.

GRILLE, REGISTER AND DIFFUSER SCHEDULE

TAG	MANUFACTURER & MODEL NUMBER	CFM	AIR PATTERN	NECK SIZE	DAMPER	FRAME STYLE	DEVICE SIZE	MAXIMUM NC LEVEL	FINISH	MATERIAL	REMARKS
SD-1	PRICE ASPD	AS NOTED	AS SHOWN	8"Ø	OPPOSED BLADE	TYPE 31 SURFACE MOUNTED	24x24	35	WHITE	ALUMINUM	
SD-2	PRICE ASPD	AS NOTED	AS SHOWN	10"Ø	OPPOSED BLADE	TYPE 31 SURFACE MOUNTED	24x24	35	WHITE	ALUMINUM	
SR-1	PRICE 420DAL	AS NOTED	DOUBLE DEFLECTION	12X6	OPPOSED BLADE	TYPE F SURFACE MOUNTED	14x8	35	WHITE	ALUMINUM	
SR-2	PRICE 635	AS NOTED	DOUBLE DEFLECTION	10X4	NONE	TYPE F SURFACE MOUNTED	12X6	35	WHITE	ALUMINUM	
RG-1	PRICE 635D	AS NOTED	LOUVERED RETURN GRILLE	22X22	OPPOSED BLADE	TYPE F SURFACE MOUNTED	24x24	35	WHITE	ALUMINUM	
ER-1	PRICE 635D	AS NOTED	LOUVERED EXHAUST GRILLE	10X4	NONE	TYPE F SURFACE MOUNTED	12x8	35	WHITE	ALUMINUM	
ER-2	PRICE N5GA	550	EXHAUST	14X6	NONE	TYPE A W/WALL SLEEVE	16X8	35	WHITE	ALUMINUM	

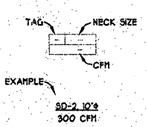

NOTE: REFER TO SPECIFICATION FOR ADDITIONAL MANUFACTURERS.

DUCTWORK SCHEDULE

DUCT SYSTEM	SMACNA PRESSURE CLASS	SMACNA SEAL CLASS	DUCT MATERIAL	INSULATION
SUPPLY AIR DUCTWORK	2"	A	GALVANIZED STEEL	1-1/2" DUCT WRAP
RETURN AIR DUCTWORK	1"	B	GALVANIZED STEEL	1" DUCT LINING
OUTSIDE AIR DUCTWORK	1"	A	GALVANIZED STEEL	1-1/2" DUCT WRAP
EXHAUST AIR DUCTWORK	1"	C	GALVANIZED STEEL	NONE
MOPPING EXHAUST AIR DUCTWORK	1"	C	ALUMINUM	NONE

NOTE: ALL DUCTWORK SIZES ARE AIRWAY DIMENSIONS

NO SCALE

CONSULTING ARCHITECTS / ENGINEERS

ARCHITECT: BODNER & KERIK ARCHITECTS, INC.
STRUCTURAL: LANTZ JONES & NEBRASKA, INC.
MECHANICAL/ELECTRICAL: SRA, INC.
CIVIL ENGINEERING: POGGEMEYER DESIGN GROUP, INC.
LANDSCAPE ARCHITECT: R.D. ZANDE & ASSOCIATES, INC.

REVISIONS

NO.	DATE	DESCRIPTION
1	12-6-02	BID SET

STATE OF OHIO JOHN E. SANDERS E-58219 REGISTERED PROFESSIONAL ENGINEER

PROJECT NUMBER 0226

FOR: OHIO DEPT. OF TRANSPORTATION

DRAWING DESCRIPTION: **MECHANICAL SCHEDULES EASTBOUND**

NEW REST STOP BUILDINGS

NO. 770-2001-072 US 30 WYANDOT/CRAWFORD | SITE 1 EASTBOUND

PREPARED FOR
STATE OF OHIO
DEPARTMENT OF ADMINISTRATIVE SERVICES
GENERAL SERVICES DIVISION

PREPARED BY
DEPARTMENT OF ADMINISTRATIVE SERVICES

PERMIT SUBMISSION	DATE	SHEET
10-09-02	10-09-02	ME-2

L:\DRAWINGS\SA\OREST AREAS\WY\ANDOT\Dwgs\EAST\2004-ME2.dwg, 12/13/2002 03:19:32 AM, Eric Burwell

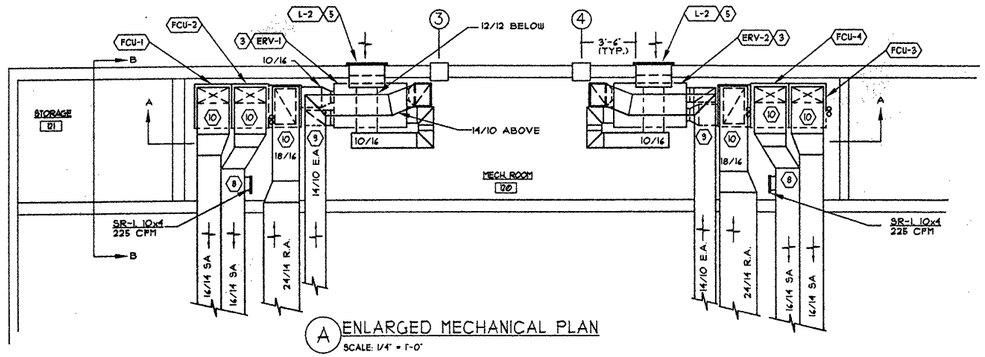

A ENLARGED MECHANICAL PLAN
SCALE: 1/4" = 1'-0"

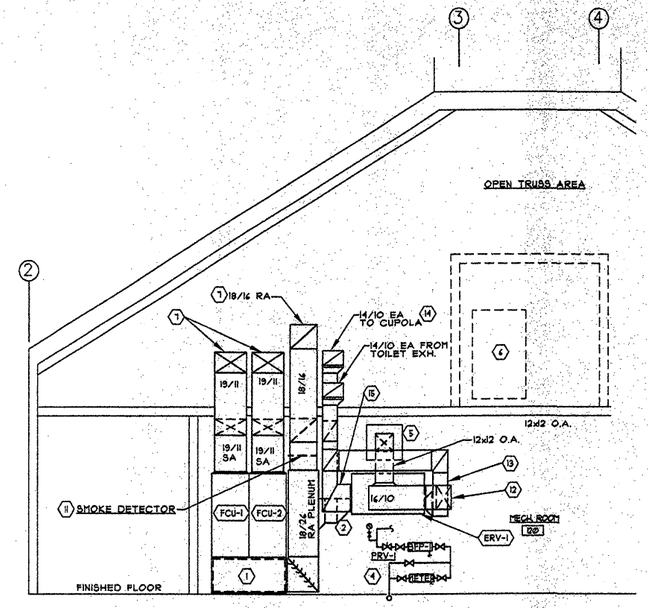

B SECTION CUT "A"
SCALE: 1/4" = 1'-0"

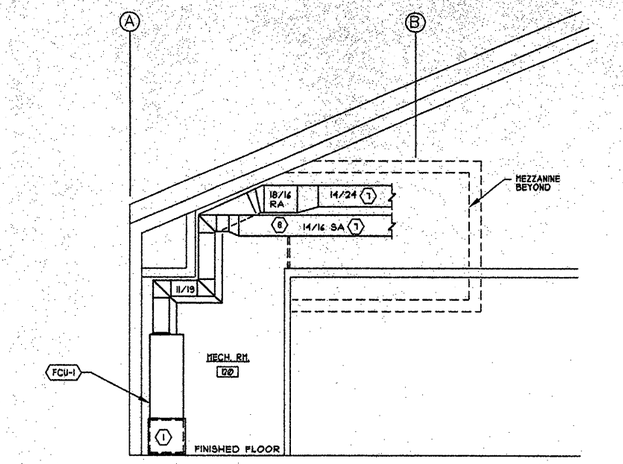

C SECTION CUT "B"
SCALE: 1/4" = 1'-0"

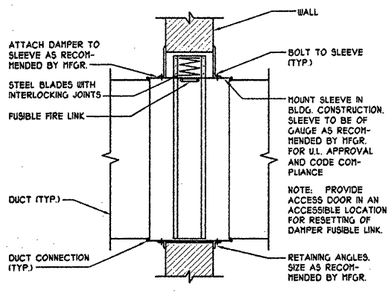

D VERTICAL FIRE DAMPER DETAIL
N.T.S.

Look At this
If like WAYNE + Summit
Equip won't work Here.
(Moved to Attic Area)
If possible

CODED NOTES:

1. FURNISH AND INSTALL STEEL SUPPORT FOR BOTH UNITS WITH ONE BOTTOM RETURN AIR PLENUM. PROVIDE WITH 1" LINED INSULATION FOR NOISE. SUPPORT SHALL BE 24" HIGH STEEL ANGLE FRAME BY MECH. CONTRACTOR. FURNISH CONNECTION FROM RETURN AIR DUCT TO PLENUM W/FLEXIBLE CONNECTOR.
2. TRANSITION FROM THE OUTDOOR AIR DISCHARGE UNIT OPENING TO A 10" x 14" DUCT AND EXTEND TO MAIN RETURN AIR DUCT.
3. ENERGY RECOVERY MANUFACTURER SHALL PROVIDE A PREHEAT COIL FOR FROST PROTECTION. REFER TO SCHEDULE ON SHEET M-2.
4. MECHANICAL CONTRACTOR SHALL COORDINATE WITH THE PLUMBING CONTRACTOR BEFORE STARTING TO MAINTAIN CLEARANCE FOR WATER METER ASSEMBLY.
5. FURNISH AND INSTALL 24"x 24" OUTSIDE AIR LOUVER WITH PLENUM BOX. EXTEND 12/12 OUTSIDE AIR DUCT FROM PLENUM BOX. BLANK OFF WITH SHEET METAL UNUSED AREA. TYPICAL OF TWO INTAKE LOUVERS. L-2.
6. MECHANICAL MEZZANINE SHOWN FOR REFERENCE ONLY. ALL DUCTWORK SHALL BE ROUTED AROUND THIS ENCLOSURE. MAINTAIN CLEARANCE FOR LADDER.
7. REFER TO SPECIFICATIONS FOR DUCTWORK INSULATION IN ATTIC SPACE/OPEN TRUSS AREA. ALL DUCT SHALL BE INSULATED.
8. RUN 16/14 SUPPLY AIR DUCTS SIDE BY SIDE NEXT TO EACH OTHER.
9. RUN 14/10 EXHAUST DISCHARGE AIR FROM ENERGY RECOVERY UNIT ON TOP OF 14/10 EXHAUST DUCTWORK TO THE ENERGY RECOVERY UNIT.
10. RUN DUCTWORK BELOW LOWER CEILING AND AFTER CEILING HEIGHT CHANGE RISE DUCTWORK UP AS HIGH A POSSIBLE, AS SHOWN.
11. MECHANICAL CONTRACTOR SHALL PROVIDE, INSTALL AND WIRE SMOKE DETECTOR IN R.A. DUCT. TO DE-ENERGIZE FCU'S & ERV'S WHEN SMOKE DETECTOR IS ACTIVATED. MECHANICAL CONTRACTOR TO PROVIDE, INSTALL AND WIRE REMOTE TEST SWITCH IN ELECTRICAL ROOM.
12. EXTEND 16/10 O.A. INTAKE OPENING SIZE UP AND PROVIDE PREHEAT COIL. CONNECT 12/12 O.A. DUCT FROM 16/10 DUCTWORK, TO THE O.A. LOUVER.
13. TRANSITION DISCHARGE OF EXHAUST AIR OPENING SIZE TO A 10/14 EXHAUST DUCT AND RUN ABOVE THE 16/10 O.A. DUCT.
14. RUN THE 14/10 DISCHARGE EXHAUST AIR DUCTWORK ABOVE THE 14/10 EXHAUST DUCT FROM THE TOILET ROOMS AS SHOWN.
15. TRANSITION DISCHARGE OF EXHAUST AIR OPENING SIZE TO A 10/14 EXHAUST DUCT AND RUN BELOW THE OTHER 14/10 EXHAUST DUCTWORK, AS SHOWN.

AS NOTED

CONSULTING ARCHITECTS / ENGINEERS
ARCHITECT: BODNER & KERIK ARCHITECTS, INC.
STRUCTURAL: LANTZ JONES & NEBRASKA, INC.
MECHANICAL/ELECTRICAL: SRA, INC.
CIVIL ENGINEERING: POGGEMEYER DESIGN GROUP, INC.
LANDSCAPE ARCHITECT: R.D. ZANDE & ASSOCIATES, INC.

REVISIONS

NO.	DATE	DESCRIPTION
1	12-6-02	BID SET

STATE OF OHIO
JOHN E. SANDERS
E-56219
REGISTERED PROFESSIONAL ENGINEER

PROJECT NUMBER
0226

FOR:
OHIO DEPT. OF TRANSPORTATION

DRAWING DESCRIPTION:
MECHANICAL EAST DETAILS & SECTION CUTS

NEW REST STOP BUILDINGS

NO. 770-2001-072
US 30 WYANDOT/CRAWFORD

SITE 1
EASTBOUND

PREPARED FOR
STATE OF OHIO
DEPARTMENT OF ADMINISTRATIVE SERVICES
GENERAL SERVICES DIVISION

PREPARED BY
DEPARTMENT OF ADMINISTRATIVE SERVICES

PERMIT SUBMISSION	DATE	SHEET
10-09-02	10-09-02	ME-3

L:\DRAWINGS\SAO\REST AREAS\WYANDOT\Dwgs\EAST\2004-ME3.dwg, 12/13/2002 08:19:23 AM, Eric Burwell

MECHANICAL LEGEND

SYMBOL	DESCRIPTION
SA	SUPPLY AIR
SR	SUPPLY REGISTER
EA	EXHAUST AIR
ER	EXHAUST REGISTER
CD	CEILING DIFFUSER
OA	OUTSIDE AIR
RA	RETURN AIR
RG	RETURN GRILLE
FCU	FAN COIL UNIT
HP	HEAT PUMP
ERV	ENERGY RECOVERY UNIT
OAL	OUTSIDE AIR LOUVER
AD	ACCESS DOOR
FD	FIRE DAMPER
MC	MECHANICAL CONTRACTOR
GC	GENERAL CONTRACTOR
EC	ELECTRICAL CONTRACTOR
PC	PLUMBING CONTRACTOR
T	THERMOSTAT (ELECTRIC)
TOD	TOP OF DUCT
BOD	BOTTOM OF DUCT
	FLEXIBLE DUCT (4'-0" MAX. LENGTH)
S	REMOTE TEMPERATURE SENSOR
	FLEXIBLE DUCT CONNECTOR
	DUCT W/ INTERNAL LINING
	MANUAL VOLUME DAMPER
FD	FIRE DAMPER
	ELBOW W/ DBL THICKNESS TURNING VANES
	FRESH/RETURN/EXHAUST AIR DUCT
	SUPPLY AIR DUCT

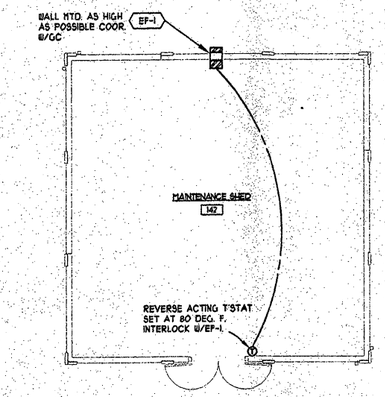

MAINTENANCE SHED

SCALE: 1/8" = 1'-0"

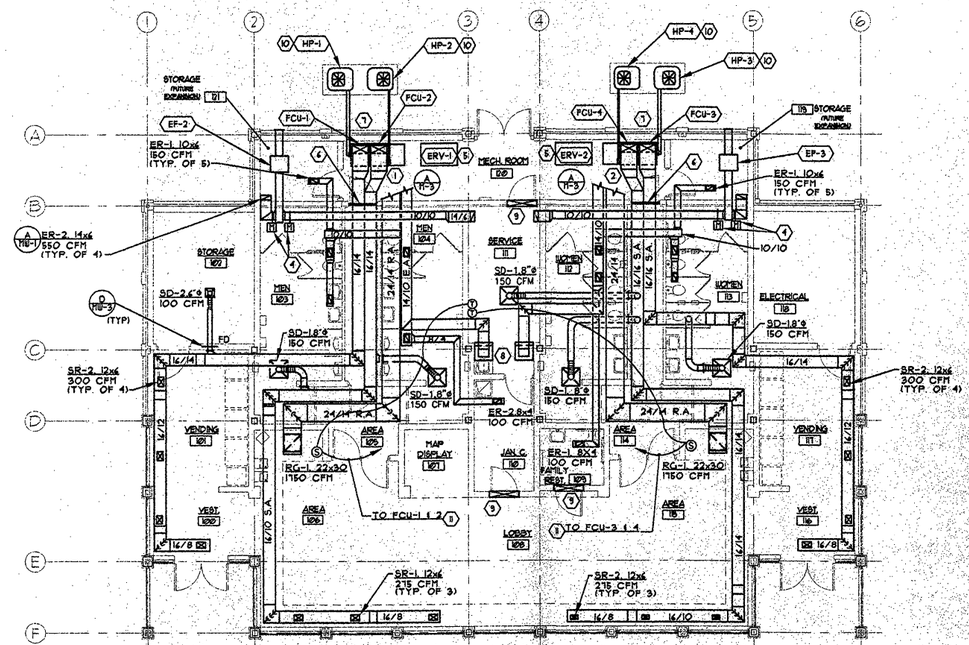

MECHANICAL PLAN

SCALE: 1/8" = 1'-0"

SEQUENCE OF OPERATION FANS EF-2 AND 3

THE FAN SHALL START FROM EITHER OF TWO KEY SWITCHES. THE KEY SWITCHES TO BE MOMENTARY WITH SPRING RETURN ONE IN EACH OF THE TWO RESTROOMS SERVED BY A FAN. WHEN A SWITCH IS OPERATED THE DAMPER SERVING THAT AREA SHALL OPEN AND THE FAN SHALL START. A TIMER SHALL KEEP THE FAN OPERATING AND THE DAMPER OPEN FOR 30 MIN. (ADJUSTABLE) WHEN THE ALLOTTED TIME EXPIRES THE FAN SHALL STOP AND THE DAMPER SHALL SPRING BACK TO ITS NORMALLY CLOSED POSITION.

IF, WHILE THE FAN IS STILL RUNNING, THE OTHER KEY SWITCH IS OPERATED THE FIRST DAMPER SHALL CLOSE AND THE OTHER DAMPER SHALL OPEN. THE FAN SHALL CONTINUE TO OPERATE. THE TIMER SHALL BE RESET TO RUN FOR 30 MINUTES. WHEN THE TIME EXPIRES THE FAN AND DAMPER SHALL SHUT DOWN AS DESCRIBED ABOVE.

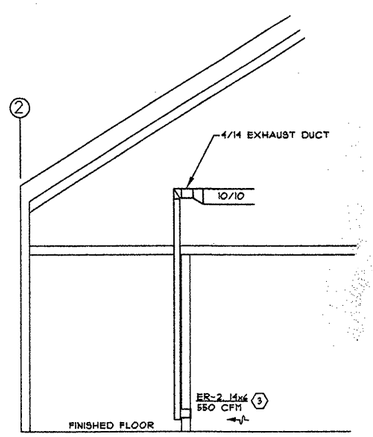

A DETAIL OF SPECIAL EXHAUST

SCALE: 1/4" = 1'-0"

CODED NOTES:

1. SIDE BY SIDE MOUNTED FAN COIL UNITS. FCU-1 & FCU-2.
2. SIDE BY SIDE MOUNTED FAN COIL UNITS. FCU-3 & FCU-4.
3. TRANSITION 10x10 EXHAUST DUCTWORK TO 14/6 AND EXTEND DOWN TIGHT TO WALL AND DOWN TO FLOOR. PROVIDE GRILLE 4" A.F.F. AND PAINT DUCTWORK SAME COLOR AS WALLS IN FUTURE ROOMS. DUCTWORK TO HAVE NO SHARP EDGES. EXTEND 14/6 DUCT THRU WALL TO SIDE WALL GRILLE. ER-2.
4. M.O.D RUSKIN MODEL CD50 WITH 120 VOLT OPERATOR RUSKIN MODEL ABAR 120 SPRING EXHAUST LOUVER W/ BACKDRAFT DAMPER BY GREENHECK.
5. ENERGY RECOVERY UNIT MOUNTED 6'-0" A.F.F.. REFER TO DETAIL "A" & "B" ON SHEET M-3.
6. TWO TRANSFER LOUVERS BY GENERAL CONTRACTOR. ONE HIGH AND ONE LOW IN DOOR. USE GRILLE ER-1. FOR TRANSFER AIR.
7. MECHANICAL CONTRACTOR TO EXTEND REFRIGERANT LINE SET FROM THE HEATPUMP UNIT TO THE DX COOLING COIL AT FCU UNIT. SIZE SHALL BE AS RECOMMENDED BY THE MANUFACTURER.
8. 26" x 42" EXHAUST LOUVERS IN CUPOLA. BLANK OFF LOUVER. L-L TO A 24" x 18" OPENING W/BIRD SCREEN AND BACKDRAFT DAMPER. PROVIDE FOUR LOUVERS. L-L ONLY BLANK-OFF TWO OF THEM.
9. GENERAL CONTRACTOR TO UNDER CUT DOOR 1" MIN. ABOVE FLOORING.
10. MECHANICAL CONTRACTOR SHALL FURNISH AND INSTALL CONCRETE PAD. PAD SHALL BE 8'-4"L x 3'-6"W x 4" HIGH. MOUNT HEATPUMP UNITS LEVEL IN ALL DIRECTIONS & MAINTAIN 24" CLEARANCE FROM WALL AND 32" AROUND THE REMAINING SIDES. PROVIDE PROPER SNOW LEVEL HEIGHT FOR HEATPUMP UNITS.
8. MOUNT REMOTE SENSOR AT 42" ABOVE FINISHED FLOOR. SENSOR TO BE WIRED BACK TO PROGRAMMABLE THERMOSTAT IN SERVICE AREA.

GENERAL NOTES:

1. MECHANICAL CONTRACTOR SHALL SAVE WASTE CONDENSATE DRAIN LINES FROM FCU'S UNITS DRAIN PANS TO THE FLOOR DRAIN WITH A 2" AIR GAP (MINIMUM).
2. MECHANICAL CONTRACTOR TO COORDINATE WITH ELECTRICAL CONTRACTOR FOR ROUTING OF DUCTWORK TO MAINTAIN 36" WORKSPACE IN FRONT OF PANELS & NO DUCTS DIRECTLY ABOVE PANELS.

1/8" = 1'-0" 0 4' 8' 16' 24'

CONSULTING ARCHITECTS / ENGINEERS

ARCHITECT: BODNER & KERIK ARCHITECTS, INC.
STRUCTURAL: LANTZ JONES & NEBRASKA, INC.
MECHANICAL/ELECTRICAL: SRA, INC.
CIVIL ENGINEERING: POGGEMEYER DESIGN GROUP, INC.
LANDSCAPE ARCHITECT: R.D. ZANDE & ASSOCIATES, INC.

REVISIONS

NO.	DATE	DESCRIPTION
1	12-6-02	BID SET

STATE OF OHIO JOHN E. SANDERS E-58219 REGISTERED PROFESSIONAL ENGINEER

PROJECT NUMBER 0226

FOR: OHIO DEPT. OF TRANSPORTATION

DRAWING DESCRIPTION: **MECHANICAL WESTBOUND PLAN**

NEW REST STOP BUILDINGS

NO. 770-2001-072
US 30 WYANDOT/CRAWFORD

SITE 2 WESTBOUND

PREPARED FOR
STATE OF OHIO
DEPARTMENT OF ADMINISTRATIVE SERVICES
GENERAL SERVICES DIVISION

PREPARED BY
DEPARTMENT OF ADMINISTRATIVE SERVICES

PERMIT SUBMISSION	DATE	SHEET
10-09-02	10-09-02	MW-1

L:\DRAWINGS\SA\REST AREAS\WYANDOT\Dwgs\WEST\2004-MW1.dwg, 12/13/2002 08:27:11 AM, Eric Burwell

SPLIT HEAT PUMP PACKAGE SCHEDULE

TAG	MANUFACTURER & MODEL NUMBER	CFM	ESP (IN.)	OUTDOOR AIR	HEAT-PUMP HEATING HIGH (MBH)	HEAT-PUMP HEATING LOW (MBH)	HSPF	MOTOR HP & VOLTAGE	AUX. HTR. ELECTRIC 60 AMPS FUSE	DX COOLING COIL DATA TOTAL (MBH)	DX COOLING COIL DATA SENSIBLE (MBH)	DX COOLING COIL DATA E.A.T. (DB/WB)	HEAT PUMP UNIT TAG	HEAT PUMP UNIT MODEL No.	HEAT PUMP UNIT NOM. TONNAGE	HEAT PUMP UNIT AMBIENT AIR TEMP.	HEAT PUMP UNIT SEER	HEAT PUMP UNIT VOLTAGE	REMARKS
FCU-1	CARRIER FK4BNB005	1325	.6	425	@ -7 °F 20.1	@ 7 °F 24.4	8.3	1/2 HP 230V/1PH	8.0 KW 230V/1Ø 34.2 AMPS MIN.	47.5	27	75/66.9	HP-1	CARRIER 38TRA048	4	95	12.5	208/230V. 1 PH	SEE BELOW
FCU-2	CARRIER FK4BNB005	1325	.6	425	@ -7 °F 20.1	@ 7 °F 24.4	8.3	1/2 HP 230V/1PH	8.0 KW 230V/1Ø 34.2 AMPS MIN.	47.5	27	75/66.9	HP-2	CARRIER 38TRA048	4	95	12.5	208/230V. 1 PH	SEE BELOW
FCU-3	CARRIER FK4BNB005	1325	.6	425	@ -7 °F 20.1	@ 7 °F 24.4	8.3	1/2 HP 230V/1PH	8.0 KW 230V/1Ø 34.2 AMPS MIN.	47.5	27	75/66.9	HP-3	CARRIER 38TRA048	4	95	12.5	208/230V. 1 PH	SEE BELOW
FCU-4	CARRIER FK4BNB005	1325	.6	425	@ -7 °F 20.1	@ 7 °F 24.4	8.3	1/2 HP 230V/1PH	8.0 KW 230V/1Ø 34.2 AMPS MIN.	47.5	27	75/66.9	HP-4	CARRIER 38TRA048	4	95	12.5	208/230V. 1 PH	SEE BELOW

FURNISH WITH THE FOLLOWING:

1. PROGRAMMABLE 2 STAGE HT/COOL T'STAT W/REMOTE SENSORS
2. THROWAWAY FILTERS (2 SETS)
3. RETURN AIR DUCT FLANGE
4. 230V/1Ø, SINGLE POINT WIRING KIT
5. REFRIGERANT ACC. AND LINE SIZE KIT SUCTION LINE TO BE INSULATED
6. ENERGY EFFICIENT FAN & FAN MOTOR
7. SOUND HOOD
8. DISCHARGE MUFFLER
9. SCROLL COMPRESSOR (10 YEAR LIMITED WARRANTY)
10. DEFROST CONTROL BOARD
11. EXTERNAL SERVICE VALVES
12. EVAPORATOR FREEZE THERMOSTAT
13. ISOLATION RELAY
14. CRANK CASE HEATER
15. OUTDOOR THERMOSTAT
16. FILTER DRIER-BI-FLOW
17. SNOW RACK (18" HIGH MOUNTING RACK)
18. AUX. HEATER SHALL HAVE INTERNAL CIRCUIT PROTECTION.
19. AUX. HEATER PART NUMBER CARRIER KFCEH0001C08. 8.0 KW.

SIMILAR MANUFACTURER: TRANE, YORK, MCQUAY

ENERGY RECOVERY VENTILATOR SCHEDULE

TAG	MANUFACTURER & MODEL NUMBER	SUPPLY FAN CFM	SUPPLY FAN TSG ESP	SUPPLY FAN HP & VOLTAGE	EXHAUST FAN CFM	EXHAUST FAN TSG ESP	EXHAUST FAN HP & VOLTAGE	SUMMER DESIGN O.A.T. DB/WB	SUMMER DESIGN E.A.T. (°F)	WINTER DESIGN O.A.T. DB/WB	WINTER DESIGN E.A.T. (°F)	SUPPLY CONDITIONS CFM	SUPPLY CONDITIONS O.A.T. DB/WB	SUPPLY CONDITIONS E.A.T. (°F)	SUPPLY CONDITIONS Spec. Hand. gr/lb Summer/Winter	SUPPLY CONDITIONS Enthalpy Btu/lb Summer/Winter	PRE HEATER KW	PRE HEATER VOLTAGE	WEIGHT (LBS.)	REMARKS
ERV-1	GREENHECK ERV-251H-A	850	.5	1/2 HP 230V, 1 PH	850	.5	1/2 HP 230V, 1 PH	93/77	75/50%	5/3.1	72/20%	850	19.8/66.9	54.1/41.3	78/18	31.4/15.8	5.0	230V, 1 PH	300	SEE BELOW
ERV-2	GREENHECK ERV-251H-A	850	.5	1/2 HP 230V, 1 PH	850	.5	1/2 HP 230V, 1 PH	93/77	75/50%	5/3.1	72/20%	850	19.8/66.9	54.1/41.3	78/18	31.4/15.8	5.0	230V, 1 PH	300	SEE BELOW

FURNISH WITH THE FOLLOWING:

1. ENERGY RECOVERY CASSETTE WITH A DESICCANT WHEEL
2. TWO BLOWER & MOTOR ASSEMBLIES
3. INTERNAL RUBBER MOUNTED ISOLATORS
4. INTERNAL (1") FOIL FACED INSULATION
5. SINGLE POINT WIRING
6. INTERNAL CONTROL CENTER WITH DOOR INTERLOCKING DISCONNECTS
7. MOTOR STARTERS
8. 24 VAC CONTROL TRANSFORMER
9. ENTHALPY SENSOR WITH AUTOMATIC WINTER OVERRIDE
10. EXHAUST AIR INTAKE DAMPER, MOTORIZED, LOW LEAKAGE
11. REMOTE POWER W/TIME CLOCK, HOA SWITCH, ECON SW. ETC...
12. OUTDOOR AIR FILTER, 2" PLEATED (30% EFFICIENT)
13. ROTATION SENSOR
14. OUTDOOR AIR INTAKE DAMPER, MOTORIZED, LOW LEAKAGE, 24V CONTROL.
15. FURNISH AND INSTALL WITH A 5.0 KW DUCT PRE-HEATER, 230V/1Ø
16. SOLID STATE SPEED CONTROL
17. DIRTY FILTER SENSOR
18. 39.625 MIN. CIRCUIT AMPS, & 40 MAX. OVER CURRENT PROTECTION.

SIMILAR MANUFACTURERS: SEMCO

FAN SCHEDULE

TAG	MANUFACTURER & MODEL NUMBER	AREA SERVED	SERVICE	CFM	ESP	MOTOR HP & VOLTAGE	FAN RPM	FAN TYPE	MAX. SOUND LEVEL	WEIGHT (LBS)	REMARKS
EF-1	GREENHECK SEI-10-440-D5	MAINTENANCE SHED	EXHAUST VENTILATION	440	.20"	1/12 HP 120V, 1 PH 110 WATTS	1550	WALL MOUNTED	5.9 SONES	30	SEE NOTES 1, 2, & 3
EF-2 EF-3	GREENHECK BCF-104	TOILET RMS FOR HOPPING	EXHAUST	410	.10	1/4 HP 120V, 1 PH	1857	INLINE FAN	5.9 SONES	30	SEE NOTES 1 & 2 PROVIDE ROOF CAP AND SEAL WATER TIGHT PROVIDE WITH M.O.D., 120V, 1Ø, INTERLOCKED WITH APPROPRIATE EXHAUST FAN. KEY SWITCH TO ACTIVATE FAN. REFER TO ELECTRICAL DWG'S.

NOTES: PROVIDE WITH THE FOLLOWING ITEMS-

1. DISCONNECT SWITCH
2. AUTOMATIC BACKDRAFT DAMPER
3. FOR EF-1: PROVIDE WALL COLLAR (16/14 WALL OPENG) & WEATHER HOOD & DAMPER GUARD & INTERLOCK W/REVERSE T'STAT & MOTORSIDE GUARD

GRILLE, REGISTER AND DIFFUSER SCHEDULE

TAG	MANUFACTURER & MODEL NUMBER	CFM	AIR PATTERN	NECK SIZE	DAMPER	FRAME STYLE	DEVICE SIZE	MAXIMUM NC LEVEL	FINISH	MATERIAL	REMARKS
SD-1	PRICE ASPD	AS NOTED	AS SHOWN	8"Ø	OPPOSED BLADE	TYPE 31 SURFACE MOUNTED	24x24	35	WHITE	ALUMINUM	
SD-2	PRICE ASPD	AS NOTED	AS SHOWN	10"Ø	OPPOSED BLADE	TYPE 31 SURFACE MOUNTED	24x24	35	WHITE	ALUMINUM	
SR-1	PRICE 420DAL	AS NOTED	DOUBLE DEFLECTION	12X6	OPPOSED BLADE	TYPE F SURFACE MOUNTED	14x8	35	WHITE	ALUMINUM	
SR-2	PRICE 435	AS NOTED	DOUBLE DEFLECTION	10X4	NONE	TYPE F SURFACE MOUNTED	12X6	35	WHITE	ALUMINUM	
RG-1	PRICE 635D	AS NOTED	LOUVERED RETURN GRILLE	22X22	OPPOSED BLADE	TYPE F SURFACE MOUNTED	24x24	35	WHITE	ALUMINUM	
ER-1	PRICE 635D	AS NOTED	LOUVERED EXHAUST GRILLE	10X6	NONE	TYPE F SURFACE MOUNTED	12x8	35	WHITE	ALUMINUM	
ER-2	PRICE NSGA	550	EXHAUST	14X6	NONE	TYPE A W/WALL SLEEVE	16X8	35	WHITE	ALUMINUM	

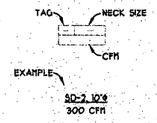

NOTE: REFER TO SPECIFICATION FOR ADDITIONAL MANUFACTURERS.

EXHAUST/VENTILATION AIR DISCHARGE LOUVERS

L-1 SHALL BE RUSKIN TYPE ELF6375OXD(4" DEEP) DRAINABLE BLADE STATIONARY LOUVER. PROVIDE COMPLETE WITH EXTRUDED ALUMINUM FRAME W/CAULKING SLOTS, EXTRUDED ALUMINUM BLADES, BIRDSCREEN, BAKED ACRYLIC ENAMEL FINISH W/FINAL COLOR AS SELECTED BY THE ARCHITECT FROM STANDARD COLOR CHART. FRONT FLANGE FRAME & AMCA CERTIFIED FOR BOTH SOUND & AIR. SIZE AND CFM AS INDICATED ON DRAWING. LOUVER SIZE IS 36" WIDE x 42" LONG. TYPICAL OF FOUR IN EACH CUPOLA.

NOTE: REFER TO SPECIFICATION FOR ADDITIONAL MANUFACTURERS.

FRESH AIR INTAKE LOUVERS

L-2 SHALL BE RUSKIN TYPE ELF936150X (4" DEEP) DRAINABLE BLADE STATIONARY LOUVER. PROVIDE COMPLETE WITH EXTRUDED ALUMINUM FRAME W/CAULKING SLOTS, EXTRUDED ALUMINUM BLADES, BIRDSCREEN, BAKED ACRYLIC ENAMEL FINISH W/FINAL COLOR AS SELECTED BY THE ARCHITECT FROM STANDARD COLOR CHART. FRONT FLANGE FRAME & AMCA CERTIFIED FOR BOTH SOUND & AIR. SIZE AND CFM AS INDICATED ON DRAWING. LOUVER SIZE 24" WIDE x 18"HIGH. TYPICAL OF TWO OUTSIDE AIR LOUVERS.

DUCTWORK SCHEDULE

DUCT SYSTEM	SMACNA PRESSURE CLASS	SMACNA SEAL CLASS	DUCT MATERIAL	INSULATION
SUPPLY AIR DUCTWORK	2"	A	GALVANIZED STEEL	1-1/2" DUCT WRAP
RETURN AIR DUCTWORK	1"	B	GALVANIZED STEEL	1" DUCT LINING
OUTSIDE AIR DUCTWORK	1"	A	GALVANIZED STEEL	1-1/2" DUCT WRAP
EXHAUST AIR DUCTWORK	1"	C	GALVANIZED STEEL	NONE
HOPPING EXHAUST AIR DUCTWORK	1"	C	ALUMINUM	NONE

NOTE: ALL DUCTWORK SIZES ARE AIRWAY DIMENSIONS

NO SCALE

CONSULTING ARCHITECTS / ENGINEERS

ARCHITECT: BODNER & KERIK ARCHITECTS, INC.
STRUCTURAL: LANTZ JONES & NEBRASKA, INC.
MECHANICAL/ELECTRICAL: SRA, INC.
CIVIL ENGINEERING: POGGEMEYER DESIGN GROUP, INC.
LANDSCAPE ARCHITECT: R.D. ZANDE & ASSOCIATES, INC.

REVISIONS

NO.	DATE	DESCRIPTION
1	12-6-02	BID SET

STATE OF OHIO
JOHN E. SANDERS
E-58219
REGISTERED PROFESSIONAL ENGINEER

PROJECT NUMBER 0226

FOR:
OHIO DEPT. OF TRANSPORTATION

DRAWING DESCRIPTION:
MECHANICAL SCHEDULES WEST BOUND

NEW REST STOP BUILDINGS

NO. 770-2001-072
US 30 WYANDOT/CRAWFORD

SITE 2
WESTBOUND

PREPARED FOR
STATE OF OHIO
DEPARTMENT OF ADMINISTRATIVE SERVICES
GENERAL SERVICES DIVISION

PREPARED BY
DEPARTMENT OF ADMINISTRATIVE SERVICES

PERMIT SUBMISSION	DATE	SHEET
10-09-02	10-09-02	MW-2

L:\DRAWINGS\SA\OREST AREAS\WYANDOT\Dwgs\WEST\2004-MW2.dwg, 12/13/2002 08:27:02 AM, Eric Burwell

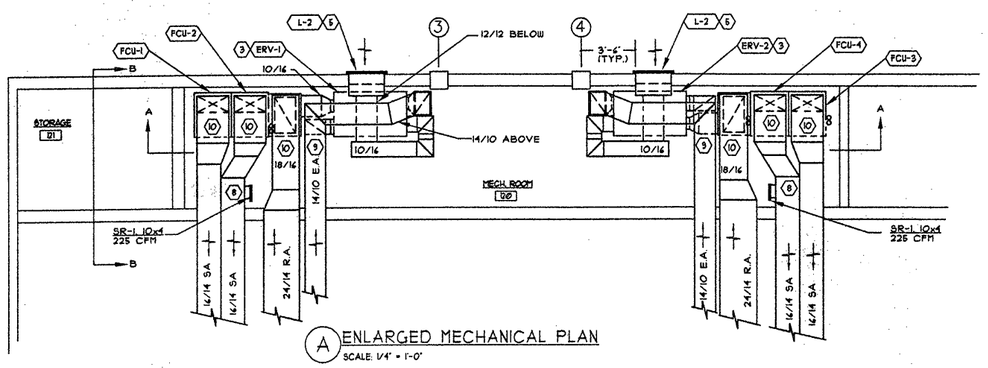

A ENLARGED MECHANICAL PLAN
SCALE: 1/4" = 1'-0"

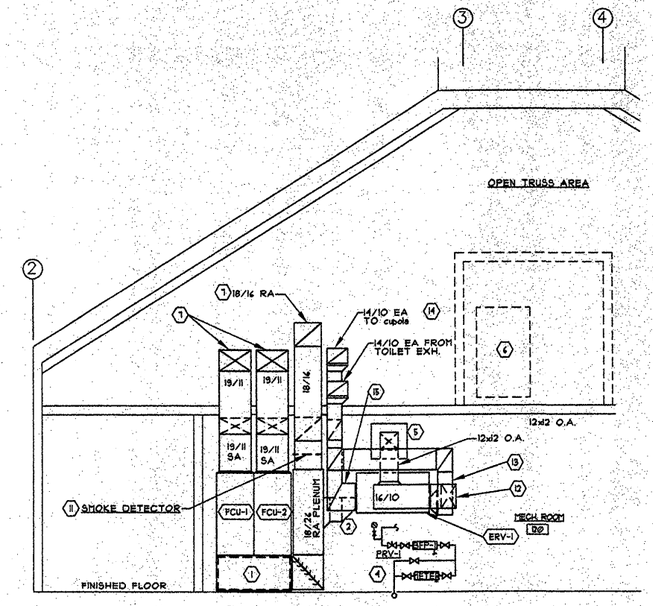

B SECTION CUT "A"
SCALE: 1/4" = 1'-0"

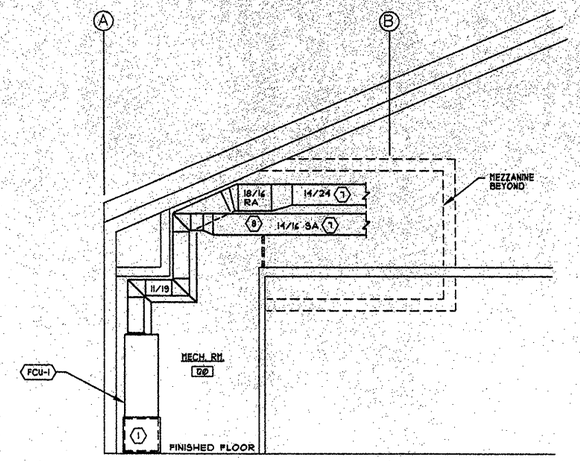

C SECTION CUT "B"
SCALE: 1/4" = 1'-0"

All of this should be in Attic AREA. If not 4'x6'8" doors will need to be installed in back wall to access ERU units. (units must be accessable from both sides)

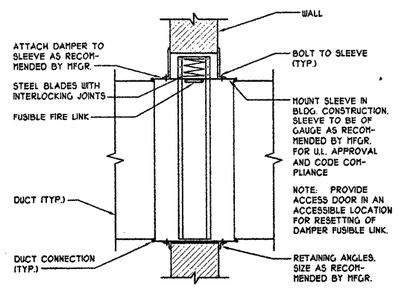

D VERTICAL FIRE DAMPER DETAIL
N.T.S.

CODED NOTES:

1. FURNISH AND INSTALL STEEL SUPPORT FOR BOTH UNITS WITH ONE BOTTOM RETURN AIR PLENUM. PROVIDE WITH 1" LINED INSULATION FOR NOISE. SUPPORT SHALL BE 24" HIGH STEEL ANGLE FRAME BY MECH. CONTRACTOR. FURNISH CONNECTION FROM RETURN AIR DUCT TO PLENUM W/FLEXIBLE CONNECTOR.
2. TRANSITION FROM THE OUTDOOR AIR DISCHARGE UNIT OPENING TO A 10" x 14" DUCT AND EXTEND TO MAIN RETURN AIR DUCT.
3. ENERGY RECOVERY MANUFACTURER SHALL PROVIDE A PREHEAT COIL FOR FROST PROTECTION. REFER TO SCHEDULE ON SHEET M-2.
4. MECHANICAL CONTRACTOR SHALL COORDINATE WITH THE PLUMBING CONTRACTOR BEFORE STARTING TO MAINTAIN CLEARANCE FOR WATER METER ASSEMBLY.
5. FURNISH AND INSTALL 24"x 24" OUTSIDE AIR LOUVER WITH PLENUM BOX. EXTEND 12/12 OUTSIDE AIR DUCT FROM PLENUM BOX. BLANK OFF WITH SHEET METAL UNUSED AREA. TYPICAL OF TWO INTAKE LOUVERS: L-2.
6. MECHANICAL MEZZANINE SHOWN FOR REFERENCE ONLY. ALL DUCTWORK SHALL BE ROUTED AROUND THIS ENCLOSURE. MAINTAIN CLEARANCE FOR LADDER.
7. REFER TO SPECIFICATIONS FOR DUCTWORK INSULATION IN ATTIC SPACE/OPEN TRUSS AREA. ALL DUCT SHALL BE INSULATED.
8. RUN 16/14 SUPPLY AIR DUCTS SIDE BY SIDE NEXT TO EACH OTHER.
9. RUN 14/10 EXHAUST DISCHARGE AIR FROM ENERGY RECOVERY UNIT ON TOP OF 14/10 EXHAUST DUCTWORK TO THE ENERGY RECOVERY UNIT.
10. RUN DUCTWORK BELOW LOWER CEILING AND AFTER CEILING HEIGHT CHANGE RISE DUCTWORK UP AS HIGH A POSSIBLE. AS SHOWN.
11. MECHANICAL CONTRACTOR SHALL PROVIDE, INSTALL AND WIRE SMOKE DETECTOR IN R.A. DUCT TO DE-ENERGIZE FCU'S & ERV'S WHEN SMOKE DETECTOR IS ACTIVATED. MECHANICAL CONTRACTOR TO PROVIDE, INSTALL AND WIRE REMOTE TEST SWITCH IN ELECTRICAL ROOM.
12. EXTEND 14/10 O.A. INTAKE OPENING SIZE UP AND PROVIDE PREHEAT COIL. CONNECT 12/12 O.A. DUCT FROM 14/10 DUCTWORK, TO THE O.A. LOUVER.
13. TRANSITION DISCHARGE OF EXHAUST AIR OPENING SIZE TO A 10/14 EXHAUST DUCT AND RUN ABOVE THE 16/10 O.A. DUCT.
14. RUN THE 14/10 DISCHARGE EXHAUST AIR DUCTWORK ABOVE THE 14/10 EXHAUST DUCT FROM THE TOILET ROOMS AS SHOWN.
15. TRANSITION DISCHARGE OF EXHAUST AIR OPENING SIZE TO A 10/14 EXHAUST DUCT AND RUN BELOW THE OTHER 14/10 EXHAUST DUCTWORK, AS SHOWN.

AS NOTED

CONSULTING ARCHITECTS / ENGINEERS
ARCHITECT: BODNER & KERIK ARCHITECTS, INC.
STRUCTURAL: LANTZ JONES & NEBRASKA, INC.
MECHANICAL/ELECTRICAL: SRA, INC.
CIVIL ENGINEERING: POGGEMEYER DESIGN GROUP, INC.
LANDSCAPE ARCHITECT: R.D. ZANDE & ASSOCIATES, INC.

REVISIONS

NO.	DATE	DESCRIPTION
1	12-6-02	BID SET

STATE OF OHIO — JOHN E. SANDERS — E-58219 — REGISTERED PROFESSIONAL ENGINEER

PROJECT NUMBER 0226

FOR: OHIO DEPT. OF TRANSPORTATION

DRAWING DESCRIPTION: **MECHANICAL WEST DETAILS & SECTION CUTS**

NEW REST STOP BUILDINGS

NO. 770-2001-072
US 30 WYANDOT/CRAWFORD

SITE 2
WESTBOUND

PREPARED FOR
STATE OF OHIO
DEPARTMENT OF ADMINISTRATIVE SERVICES
GENERAL SERVICES DIVISION

PREPARED BY
DEPARTMENT OF ADMINISTRATIVE SERVICES

PERMIT SUBMISSION	DATE	SHEET
10-09-02	10-09-02	MW-3

L:\DRAWINGS\SA\OREST AREAS\WYANDOT\Dwgs\WEST\2004-M\W3.dwg, 12/13/2002 08:26:46 AM, Eric Burnell

ALL PRIMARY ELEC conduit needs to be a minimum of 12" above floor in mechanical EVERY THING IN Mechanical Room

NOTE: 120V / 24V WIRING

LOW VOLTAGE WIRING IS THE RESPONSIBILITY OF THE INDIVIDUAL CONTRACTORS. THE SCOPE FOR RESPONSIBILITIES IS AS FOLLOWS:

: 120 V WIRING, PROVIDED AND INSTALLED BY THE ELECTRICAL CONTRACTOR.

:24V WIRING PROVIDED AND INSTALLED BY THE RESPONSIBLE CONTRACTOR.

: CONDUIT FOR 24V WIRING PROVIDED AND INSTALLED BY THE ELECTRICAL CONTRACTOR.

:FINAL CONNECTIONS TO 120V AND 24V BY ELECTRICAL CONTRACTOR.

GENERAL NOTES

1. COORDINATE LOCATION OF PANELS WITH OTHER WORK TO INSURE WORK SPACE IN FRONT OF PANELS AND SPACE ABOVE PANELS ARE PROVIDED PER NEC .
2. FLOOR MOUNTED EQUIPMENT SHALL HAVE 3 1/2" HIGH CONCRETE PAD. PAD SHALL EXTEND 2" BEYOND EQUIPMENT ON ALL SIDES EXCEPT SIDE(S) THAT MAY BE MOUNTED AGAINST A WALL(S). EQUIPMENT SPACED FROM WALLS SHALL HAVE PAD THAT EXTENDS TO WALLS. PAD SHALL HAVE 1" CHAMFER EDGE.
3. WALL MOUNTED EQUIPMENT SHALL BE MOUNTED TO UNISTRUT SECURED TO WALL.
4. MI CABLE SNOW MELTING SYSTEM LAYOUT SHALL BE SUBMITTED FOR APPROVAL. PROVIDE SNOW MELTING WORK ONLY AFTER WRITTEN APPROVAL IS RECEIVED. COORDINATE LAYOUT WITH OTHER WORK AND MANUFACTURER'S RECOMMENDATIONS. LAYOUT SHALL INCLUDE MI CABLING, CONDUIT, WIRING, BOXES, CIRCUIT BREAKERS, PANELBOARDS, CONTACTORS, CONTROLLERS AND OTHER ITEMS FOR A PROPER OPERATIONAL SYSTEM FROM HDP TO MI CABLES. SENSOR/CONTROLLER SHALL BE MOUNTED ABOVE ROOF ON END OF CONDUIT. COORDINATE LOCATION OF SENSOR/CONTROLLER WITH ARCHITECT PRIOR TO LAYOUT SUBMITTAL.
5. UNDERGROUND CONDUITS SHALL BE PROVIDED PER DETAILS 'E', 'F', 'G' AND 'H' ON DRAWING EE-4.
6. REFER TO DECA DRAWING SH-E1 FOR PANELBOARD PP-4 AND CIRCUITS FOR MAINTENANCE SHED.

CODED NOTES

1 LOCATE FLUSH MOUNTED JUNCTION BOX WITH SINGLE GANG BLANK COVER FOR SNOW MELTING SYSTEM AT 18" A.F.F. CENTERED ON COLUMN.

2 LOCATE FLUSH MOUNTED BOX WITH SINGLE GANG DUPLEX RECEPTACLE COVER AT 18" AFF CENTERED ON COLUMN.

3 LOCATE RECEPTACLE FOR BUILT-IN MICROWAVE OVEN ABOVE KITCHENETTE COUNTER. RECEPTACLE FOR REFRIGERATOR BELOW KITCHENETTE COUNTER, AND GFI RECEPTACLE ABOVE KITCHENETTE COUNTER. COORDINATE LOCATIONS WITH APPROVED KITCHENETTE SHOP DRAWINGS.

4 PROVIDE JUNCTION BOXES AND/OR RECEPTACLES AND ELECTRICAL WORK FOR AUTOMATIC SOLENOID OPERATED VALVES. PROVIDE ELECTRICAL WORK PER MANUFACTURER'S INSTRUCTIONS. CONCEALED LOW VOLTAGE WIRING SHALL BE INSTALLED IN RACEWAYS. EXPOSED LOW VOLTAGE WIRING SHALL BE INSTALLED IN SPLIT PLASTIC TUBING FASTENED AT 1'-0" INTERVALS. REFER TO DETAILS 'A', 'B', 'C', AND 'D' ON DRAWING EE-4.

5 TO LIGHT FIXTURE IN MECHANICAL MEZZANINE MOI.

6 TO ATTIC LIGHT SWITCH IN MECHANICAL MEZZANINE MOI.

7 AREA SHALL HAVE A MI CABLE SNOW MELTING SYSTEM. REFER TO GENERAL NOTES THIS DRAWING AND DRAWING EE-5, EE-3, AND EE-4. SNOW MELT SYSTEM ALTERNATE E-2.

8 GUTTER (FLAT ROOF) AND DOWN SPOUT FREEZE PROTECTION CABLE SHALL RUN BETWEEN ROOF DRAINS. CABLE SHALL HALF CIRCLE ROOF DRAINS AND CONTINUE TO NEXT ROOF DRAIN. CABLE SHALL RUN THROUGH ROOF DRAIN AND IN ROOF DRAIN PIPING TO DOWNSPOUT. CABLE SHALL RUN IN DOWNSPOUT THE FULL LENGTH OF THE DOWNSPOUT.

9 GUTTER FREEZE PROTECTION SENSOR WITH 3 CONDUCTOR #18 JACKETED CABLE TO GUTTER FREEZE PROTECTION CONTROLLER.

10 UP CAST JUNCTION BOX FOR POWER CONNECTION.

11 GUTTER FREEZE PROTECTION CONTROLLER.

12 ROOF DRAIN PIPING AND OVERFLOW ROOF DRAIN PIPING FREEZE PROTECTION SHALL BE PROVIDED. PROVIDE HEAT TAPE AND CONTROLLER AT EACH LOCATION. CONNECT TO PP2-24. PIPE INSULATION AND WARNING LABELS SHALL BE PROVIDED BY PLUMBING CONTRACTOR. REFER TO DRAWING PE-1 FOR EXTENT OF PIPING.

13 ROOF DRAIN PIPING AND OVERFLOW ROOF DRAIN PIPING SHALL BE PROVIDED FREEZE PROTECTION. PROVIDE HEAT TAPE AND CONTROLLER AT EACH LOCATION. CONNECT TO PP2-24. PIPE INSULATION AND WARNING LABELS SHALL BE PROVIDED BY PLUMBING CONTRACTOR. REFER TO DRAWING PE-1 FOR EXTENT OF PIPING.

14 CONNECT DISPOSAL INSTALLED AND FURNISHED BY PLUMBING CONTRACTOR.

15 KIOSK PROVIDED BY GENERAL CONTRACTOR. PROVIDE TWO FLUSH FLOOR BOXES WITH BRASS COVERS WITH SCREW TYPE ROUND REMOVABLE INSERTS TO ACCESS DEVICES. PROVIDE ONE BOX WITH DUPLEX RECEPTACLE. PROVIDE OTHER BOX WITH PROVISIONS FOR ONE TELEPHONE, ONE DATA AND ONE CABLE JACK. PROVIDE ONE 1" CONDUIT TO TERMINAL BOARD TBI. VERIFY LOCATION WITH OWNER'S REPRESENTATIVE PRIOR TO ROUGH-IN.

16 KEY OPERATED SWITCH FOR CLEANING EXHAUST FAN. REFER TO DETAIL 'A' THIS DRAWING.

17 CONNECT ELECTRICAL DAMPER OPERATOR FURNISHED AND INSTALLED BY MECHANICAL CONTRACTOR. PROVIDE TOGGLE SWITCH AS DISCONNECT AT UNIT. REFER TO DETAIL 'A' THIS DRAWING.

18 THERMOSTAT FURNISHED, INSTALLED AND CONNECTED BY MECHANICAL CONTRACTOR.

19 TELEPHONE/DATA BACKBOARD TBI. REFER TO DRAWING EE-5.

20 INSTALL AND CONNECT HUMIDISTAT FURNISHED BY MECHANICAL CONTRACTOR.

21 CONNECT MOTORIZED DAMPER FURNISHED AND INSTALLED BY MECHANICAL CONTRACTOR. MOTORIZED DAMPER SHALL OPEN UPON EF-4 STARTING AND CLOSE UPON EF-4 STOPPING. PROVIDE CONTROL DEVICES AS REQUIRED. COORDINATE REQUIREMENTS WITH MECHANICAL CONTRACTOR.

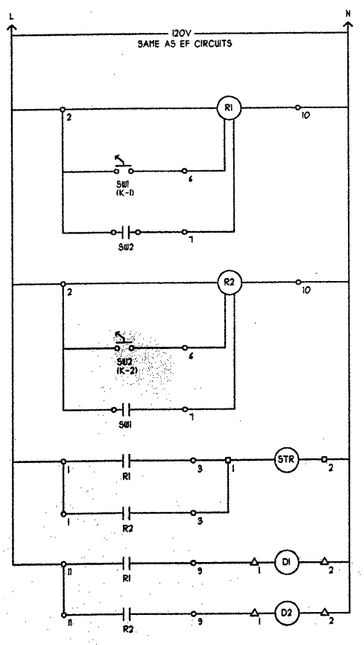

A RESTROOM CLEANING EXHAUST FAN CONTROL DIAGRAM

SCALE: NTS

NOTES

SW1: MOMENTARY KEY SWITCH, ALLEN-BRADLEY 2 POSITION CYLINDER LOCK OPERATOR #800T-H48B OR APPROVED EQUAL MOUNTED IN FLUSH MOUNTED ENCLOSURE WITH STAINLESS STEEL FACE PLATE WITH LEGEND PLATE 'FAN'.

SW2: MOMENTARY KEY SWITCH, ALLEN-BRADLEY 2 POSITION CYLINDER LOCK OPERATOR #800T-H48B OR APPROVED EQUAL MOUNTED IN FLUSH MOUNTED ENCLOSURE WITH STAINLESS STEEL FACE PLATE WITH LEGEND PLATE 'FAN'.

R1: ADJUSTABLE 0-30 MINUTE TIMING RELAY WITH MOMENTARY START INPUT AND MOMENTARY RESET INPUT, ALLEN-BRADLEY # 700-HRS2TA1 OR APPROVED EQUAL MOUNTED IN NEMA 1 ENLOSURE ADJACENT TO FAN STARTER.

R2: ADJUSTABLE 0-30 MINUTE TIMING RELAY WITH MOMENTARY START INPUT AND MOMENTARY RESET INPUT, ALLEN-BRADLEY # 700-HRS2TA1 OR APPROVED EQUAL MOUNTED IN NEMA 1 ENLOSURE ADJACENT TO FAN STARTER.

STR: STARTER FOR FAN UNIT. INSTALL IN ELECTRICAL ROOM.

DI: MOTORIZED DAMPER UNIT FOR FAN UNIT.

D2: MOTORIZED DAMPER UNIT FOR FAN UNIT.

O: R1/R2 TERMINAL

□: STR TERMINAL

△: DI/D2 TERMINAL

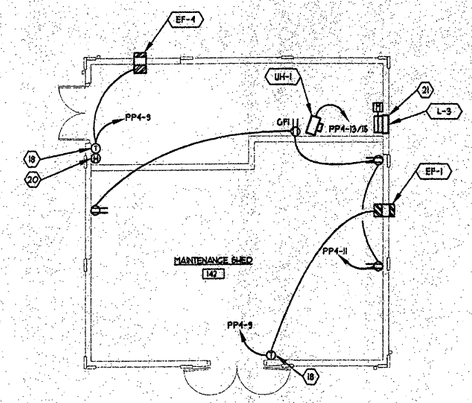

MAINTENANCE SHED 142

1/8" = 1'-0"

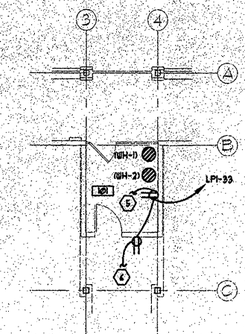

MECHANICAL MEZZANINE MOI

1/8" = 1'-0"

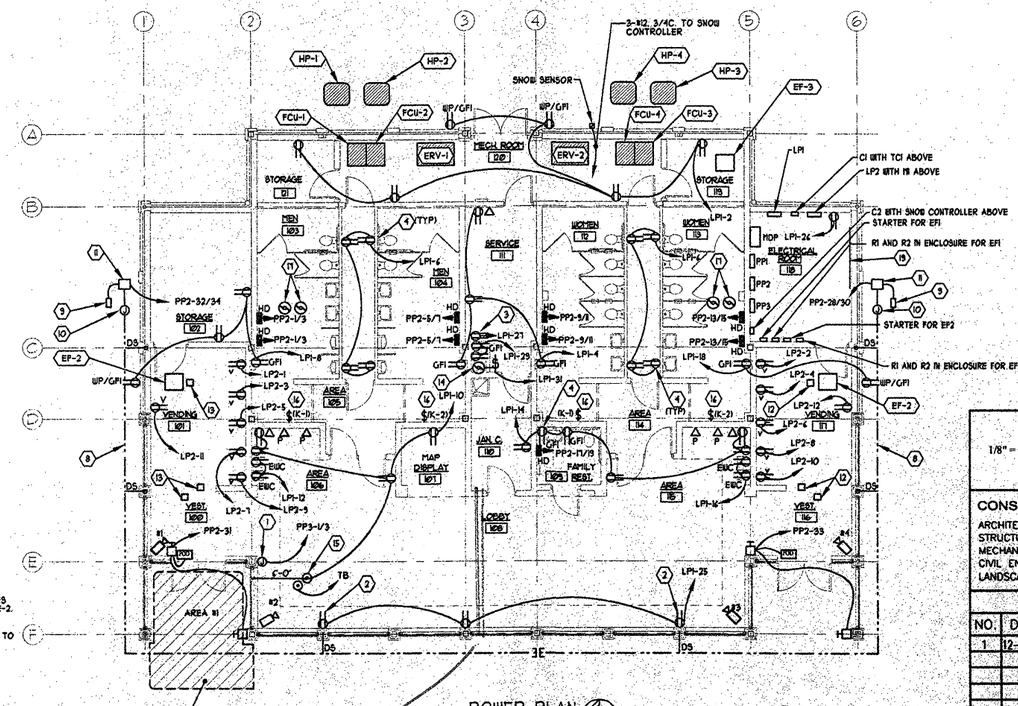

POWER PLAN

1/8" = 1'-0"

Need Conduit from Light ballasts to Lobby Lights + one for Light sensor

1/8" = 1'-0" 0 4' 8' 16' 24'

CONSULTING ARCHITECTS / ENGINEERS

ARCHITECT: BODNER & KERIK ARCHITECTS, INC.
STRUCTURAL: LANTZ JONES & NEBRASKA, INC.
MECHANICAL/ELECTRICAL: SRA, INC.
CIVIL ENGINEERING: POGGEMEYER DESIGN GROUP, INC.
LANDSCAPE ARCHITECT: R.D. ZANDE & ASSOCIATES, INC.

REVISIONS

NO.	DATE	DESCRIPTION
1	12-6-02	BID SET

STATE OF OHIO JOHN E. SANDERS E-58219 REGISTERED PROFESSIONAL ENGINEER

PROJECT NUMBER 0226

FOR: OHIO DEPT. OF TRANSPORTATION

DRAWING DESCRIPTION: POWER PLAN - EAST

NEW REST STOP BUILDINGS

NO. 770-2001-072 | SITE 1
US 30 WYANDOT/CRAWFORD | EASTBOUND

PREPARED FOR
STATE OF OHIO
DEPARTMENT OF ADMINISTRATIVE SERVICES
GENERAL SERVICES DIVISION

PREPARED BY
DEPARTMENT OF ADMINISTRATIVE SERVICES

PERMIT SUBMISSION	DATE	SHEET
10-09-02	10-09-02	EE-1

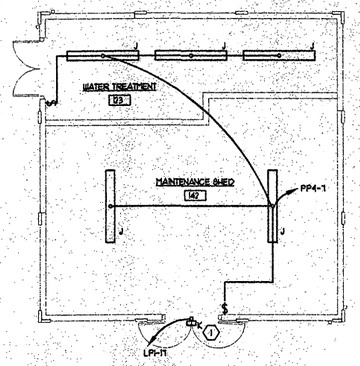

MAINTENANCE SHED 142

1/8" = 1'-0"

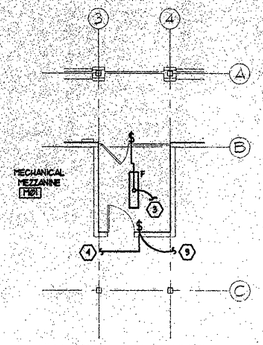

MECHANICAL MEZZANINE MOI

1/8" = 1'-0"

GENERAL NOTES

1. LIGHT FIXTURES SHALL BE INSTALLED EQUALLY SPACED, SYMMETRICALLY AND CENTERED WITHIN RESPECTIVE SPACES.
2. COORDINATE LOCATION OF LIGHT FIXTURES WITH ARCHITECTURAL DRAWINGS.
3. LIGHT FIXTURES SHALL BE INSTALLED THE SAME IN SIMILAR PLACES.
4. REFER TO DECA DRAWING SW-E1 FOR PANEL BOARD PP-4 AND CIRCUIT FOR MAINTENANCE SHED. LIGHT FIXTURE TYPE K IS FED BY CIRCUIT LPI-11 VIA CI.

CODED NOTES

1. CI CONTROLLED.
2. REMOTE BALLAST FOR THE TYPE "A" FIXTURES MOUNTED TO PAINTED FIRE RETARDENT 3/4" PLYWOOD BACKBOARD. PROVIDE 1" AIR SPACE BETWEEN BALLAST AND BACKBOARD. PROVIDE ISOLATION MOUNTING TO INSURE MINIMUM NOISE.
3. FROM RECEPTACLE IN MECHANICAL MEZZANINE MOI.
4. PROVIDE FOUR TYPE "H" FIXTURES AND ONE TYPE "EHS" FIXTURE IN ATTIC LOCATED AS REQUIRED.
5. FIXTURE SPACING IS DEPENDENT ON MANUFACTURER. PRIOR TO ROUGH-IN SUBMIT PROPOSED SPACING DIMENSIONS AND PHOTOMETRIC DATA FOR APPROVAL. ROUGH-IN ONLY AFTER WRITTEN APPROVAL IS RECEIVED.
6. COORDINATE FIXTURE LOCATION WITH EQUIPMENT INSTALLATION.
7. REFER TO ROOF PLAN DRAWING A-12 FOR LOCATION OF TYPE "H" FIXTURE. FIXTURE PROVIDED BY ELECTRICAL CONTRACTOR. MOUNTING STRUCTURE PROVIDED BY GENERAL CONTRACTOR.
8. LIGHT FIXTURE KEY SWITCH AND FAN KEY SWITCH SHALL BE PROVIDED IN A TWO GANG BOX WITH A TWO GANG COVERPLATE. REFER TO DRAWING EW-1 FOR FAN KEY SWITCH.
9. FROM RECEPTACLE IN ATTIC. REFER TO DRAWING EE-1

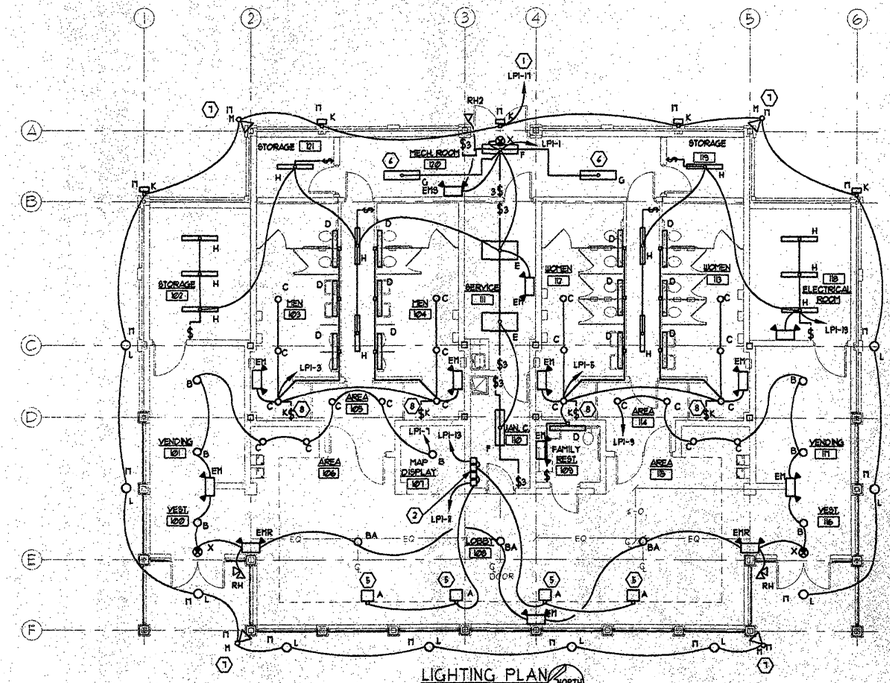

LIGHTING PLAN

1/8" = 1'-0"

1/8" = 1'-0" 0 4' 8' 16' 24'

CONSULTING ARCHITECTS / ENGINEERS

ARCHITECT: BODNER & KERIK ARCHITECTS, INC.
STRUCTURAL: LANTZ JONES & NEBRASKA, INC.
MECHANICAL/ELECTRICAL: SRA, INC.
CIVIL ENGINEERING: POGGEMEYER DESIGN GROUP, INC.
LANDSCAPE ARCHITECT: R.D. ZANDE & ASSOCIATES, INC.

REVISIONS

NO.	DATE	DESCRIPTION
1	12-6-02	BID SET

STATE OF OHIO JOHN E. SANDERS E-58219 REGISTERED PROFESSIONAL ENGINEER

PROJECT NUMBER 0226

FOR: OHIO DEPT. OF TRANSPORTATION

DRAWING DESCRIPTION: **LIGHTING PLAN - EAST**

NEW REST STOP BUILDINGS

NO. 770-2001-072 US 30 WYANDOT/CRAWFORD | SITE 1 EASTBOUND

PREPARED FOR
STATE OF OHIO
DEPARTMENT OF ADMINISTRATIVE SERVICES
GENERAL SERVICES DIVISION

PREPARED BY
DEPARTMENT OF ADMINISTRATIVE SERVICES

PERMIT SUBMISSION	DATE	SHEET
10-09-02	10-09-02	EE-2

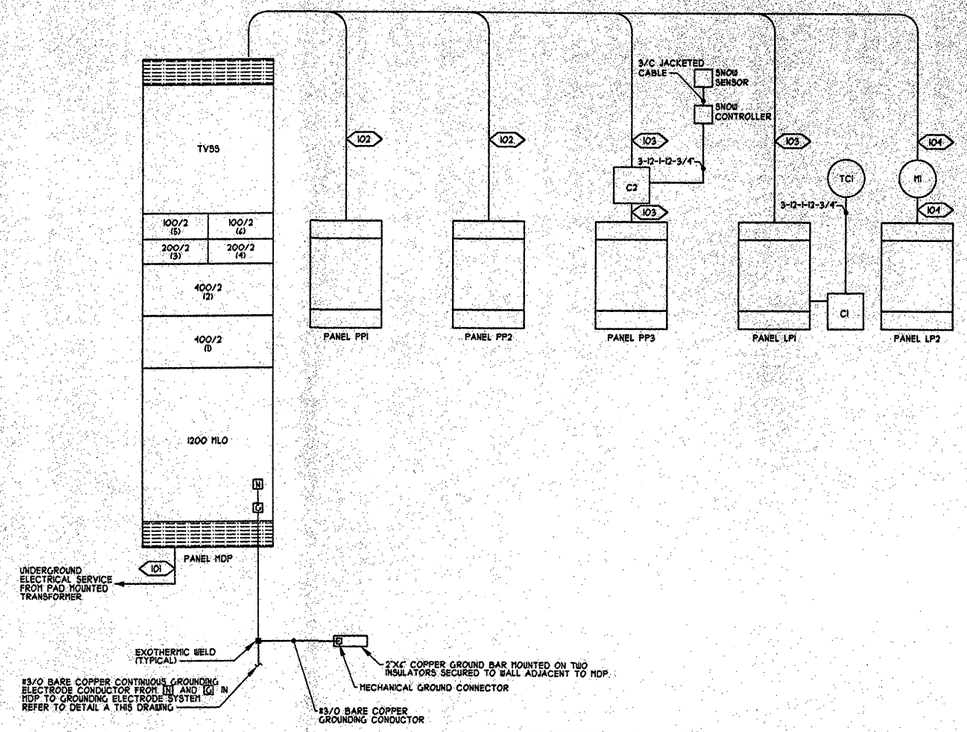

POWER DISTRIBUTION DIAGRAM

SYSTEM VOLTAGE: 240/120V, 1Ø, 3W

NOTES:

1. MDP: 22,000 AIC FULLY RATED, COPPER BUS WITH SILVER PLATED CONNECTIONS, SERVICE ENTRANCE LABEL.
2. C2: 120V ELECTRICALLY HELD CONTACTOR, 200A-2P, NEMA 1 ENCLOSURE, PROVIDE HAND-OFF-AUTO SELECTOR SWITCH, THREE POSITION MAINTAINED, TWO POLE, STANDARD BLACK KNOB, H-O-A LEGEND PLATE. PROVIDE SELECTOR SWITCH MOUNTED IN A NEMA 1 ENCLOSURE ADJACENT TO CONTACTOR C2.
3. PP3 AND C2: SNOW MELT SYSTEM ALTERNATE E2.

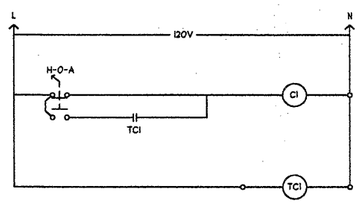

EXTERIOR LIGHTING CONTROL DIAGRAM

NOTES:

1. HAND-OFF-AUTO SELECTOR SWITCH, THREE POSITION MAINTAINED, TWO POLE, STANDARD BLACK KNOB, H-O-A LEGEND PLATE. PROVIDE SELECTOR SWITCH MOUNTED IN A NEMA 1 ENCLOSURE ADJACENT TO CONTACTOR C1.
2. CONTACTOR C1: 120V ELECTRICALLY HELD CONTACTOR, 60A-1P, NEMA 1 ENCLOSURE.
3. TIME CLOCK TC1, 120V ELECTRONIC 365 DAY PROGRAMMABLE, SOLID STATE MEMORY WITH MINIMUM OF 24 HOUR PROGRAM AND TIME KEEPING, PROTECTION WITHOUT ANOTHER SOURCE OF POWER/ MAXIMUM OF 125 DAY BACK-UP OF PROGRAM AND TIME KEEPING WITH 9V BATTERY, AUTOMATIC DAYLITE SAVINGS TIME AND LEAP YEAR ADJUSTMENT, SPDT CONTACT RATED 10A AT 120V EACH OF 2 CHANNELS. LOCKABLE METAL ENCLOSURE. MOUNT TIME CLOCK TC1 ADJACENT TO CONTACTOR C1.
4. C1 CONTROLS CIRCUITS A-34, A-36, A-38 AND A-17.

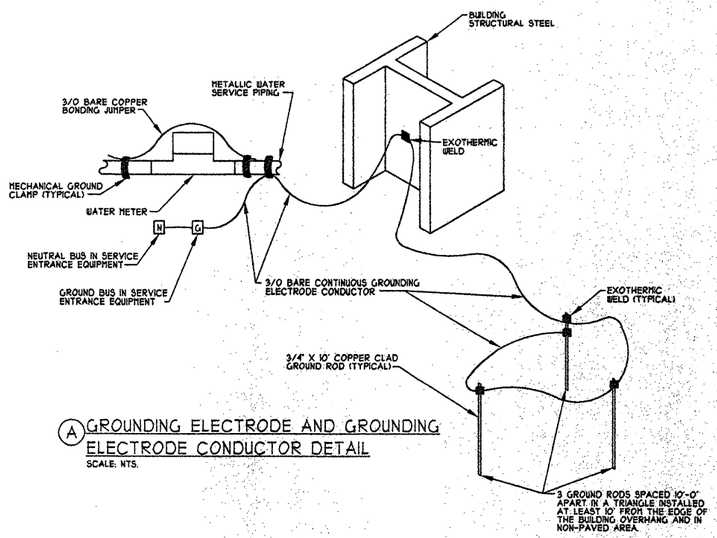

(A) GROUNDING ELECTRODE AND GROUNDING ELECTRODE CONDUCTOR DETAIL

SCALE: NTS.

BUILDING LOAD CALCULATION

PANEL	MOTORS	RECEPTACLES	LIGHTING	HEATING	COOLING	MISC.
PANEL LP1	1121	18150	12542	0	0	0
PANEL LP2	0	8160	0	0	0	0
PANEL PP1	0	0	0	12580	30944	0
PANEL PP2	3334	0	0	0	0	28014
PANEL PP3	0	0	0	38100	0	0
TOTAL CONNECTED	4461	27510	12542	80680	*	28014
DEMAND FACTORS	1.21	1st 10k + .50	1.00	1.0	1.00	1.00
TOTAL DEMAND	4428	18155	12542	80680	*	28014

* COOLING LOAD NOT USED FOR TOTALS. HEATING LOAD IS GREATER.

TOTAL CONNECTED LOAD = 183421 / 240 = 764 AMPS

TOTAL DEMAND LOAD = 115039 / 240 = 130 AMPS
X 1.25
163 MOCP

1200 AMP SERVICE

FEEDER SCHEDULE

NO.	SETS	CONDUCTORS/RACEWAY
101	3	3-600-4"
102	1	3-500-1-3-3 1/2"
103	1	3-3/0-1-6-2"
104	1	3-2-1-8-2"
-	-	-
-	-	-

FEEDER SCHEDULE KEY

SIZE OF POWER CONDUCTOR — SIZE OF GROUND CONDUCTOR — SIZE OF CONDUIT

3 - 8 - 1 - 10 - 3/4"

QUANTITY OF POWER CONDUCTOR — QUANTITY OF GROUND CONDUCTOR

THUS: RUN 3 #8, 1 #10 GRD. IN 3/4" CONDUIT

MECHANICAL EQUIPMENT WIRING SCHEDULE

MARK	NAME	VOLTS	PHASE	AMPS	KVA	CIRCUIT NO.	OCP	CONDUCTORS/RACEWAY	NOTES
EF-1	EXHAUST FAN	120	1	1.5	.2	PP4-9	20	2-12-1-12-3/4"	2,4
EF-2	EXHAUST FAN	120	1	5.6	.7	PP2-31	20	2-12-1-12-3/4"	2,5,6
EF-3	EXHAUST FAN	120	1	5.6	.7	PP2-31	20	2-12-1-12-3/4"	2,5,6
EF-4	EXHAUST FAN	120	1	5.6	.7	PP4-9	20	2-12-1-12-3/4"	2,4,7
ERV-1	ENERGY RECOVERY VENT	230	1	28.4	6.8	PP1-17/19	40	2-8-1-10-3/4"	3
ERV-2	ENERGY RECOVERY VENT	230	1	28.4	6.8	PP1-21/23	40	2-8-1-10-3/4"	3
FCU-1	FAN COIL UNIT	230	1	34.2	8.1	PP1-2/4	50	2-6-1-10-3/4"	3
FCU-2	FAN COIL UNIT	230	1	34.2	8.1	PP1-6/8	50	2-6-1-10-3/4"	3
FCU-3	FAN COIL UNIT	230	1	34.2	8.1	PP1-10/12	50	2-6-1-10-3/4"	3
FCU-4	FAN COIL UNIT	230	1	34.2	8.1	PP1-14/16	50	2-6-1-10-3/4"	3
HP-1	HEAT PUMP	230	1	25.3	6.1	PP1-1/3	50	2-6-1-10-3/4"	3
HP-2	HEAT PUMP	230	1	25.3	6.1	PP1-5/7	50	2-6-1-10-3/4"	3
HP-3	HEAT PUMP	230	1	25.3	6.1	PP1-9/11	50	2-6-1-10-3/4"	3
HP-4	HEAT PUMP	230	1	25.3	6.1	PP1-13/15	50	2-6-1-10-3/4"	3
UH-1	UNIT HEATER	240	1	42.0	10.0	PP4-13/15	60	2-6-1-10-3/4"	3
WH-1	WATER HEATER	240	1	22.5	5.5	PP2-36/38	30	2-10-1-10-3/4"	3
WH-2	WATER HEATER	240	1	22.9	5.5	PP2-40/42	30	2-10-1-10-3/4"	3

NOTES:

1. VOLTAGE IS RATED VOLTAGE OF EQUIPMENT, AMPERE AND KVA CALCULATION BASED UPON ACTUAL SYSTEM VOLTAGE.
2. UNIT DISCONNECT PROVIDED WITH EQUIPMENT. ELECTRICAL CONTRACTOR SHALL PROVIDE CONNECTION TO DISCONNECT.
3. ELECTRICAL CONTRACTOR SHALL PROVIDE UNIT DISCONNECT AT EQUIPMENT. ELECTRICAL CONTRACTOR SHALL PROVIDE CONNECTION TO DISCONNECT AND PROVIDE FLEXIBLE CONDUIT AND WIRING CONNECTION TO EQUIPMENT.
4. CONTROLLED BY THERMOSTAT FURNISHED BY MECHANICAL CONTRACTOR. ELECTRICAL CONTRACTOR SHALL INSTALL AND CONNECT THERMOSTAT.
5. ELECTRICAL CONTRACTOR SHALL PROVIDE MOTOR STARTER WITH THERMAL OVERLOAD. MOUNT STARTER IN ELECTRICAL ROOM.
6. STARTER CONTROLLED BY KEY SWITCH. REFER TO DRAWING EE-1.
7. CONTROLLED BY HUMIDISTAT FURNISHED BY MECHANICAL CONTRACTOR. ELECTRICAL CONTRACTOR SHALL INSTALL AND CONNECT THERMOSTAT.

NO SCALE

CONSULTING ARCHITECTS / ENGINEERS

ARCHITECT: BODNER & KERIK ARCHITECTS, INC.
STRUCTURAL: LANTZ JONES & NEBRASKA, INC.
MECHANICAL/ELECTRICAL: SRA, INC.
CIVIL ENGINEERING: POGGEMEYER DESIGN GROUP, INC.
LANDSCAPE ARCHITECT: R.D. ZANDE & ASSOCIATES, INC.

REVISIONS

NO.	DATE	DESCRIPTION
1	12-6-02	BID SET

STATE OF OHIO — JOHN E. SANDERS — E-58229 — REGISTERED PROFESSIONAL ENGINEER

PROJECT NUMBER 0226

FOR: OHIO DEPT. OF TRANSPORTATION

DRAWING DESCRIPTION: **ELECTRICAL DIAGRAMS & SCHEDULES - EAST**

NEW REST STOP BUILDINGS

NO. 770-2001-072 US 30 WYANDOT/CRAWFORD | SITE 1 EASTBOUND

PREPARED FOR
STATE OF OHIO
DEPARTMENT OF ADMINISTRATIVE SERVICES
GENERAL SERVICES DIVISION

PREPARED BY
DEPARTMENT OF ADMINISTRATIVE SERVICES

PERMIT SUBMISSION	DATE	SHEET
10-09-02	10-09-02	EE-3

PANEL "PP1"

SERVICE:
PHASE TO PHASE VOLTAGE: 240
PHASE TO GROUND VOLTAGE: 120
WIRE: 3
PANEL MAINS: 400A MAIN LUGS ONLY
MOUNTING: SURFACE

AIC: 22,000
H INDICATES 'HACR' TYPE BREAKER
L INDICATES LOCKED ON BREAKER
G INDICATES GFI CIRCUIT BREAKER
BKR./SIZE INDICATES AMPS/POLE(S)

LOAD WATTS	WIRE SIZE	LOAD DESCRIPTION		BRKR SIZE	CIRCUIT NUMBER		BRKR SIZE	LOAD DESCRIPTION	WIRE SIZE	LOAD WATTS
3031	#10	HP-1	H	50/2	1	2	50/2	H FCU-1	#6	4334
3031	#10				3	4			#6	4334
3031	#10	HP-2	H	50/2	5	6	50/2	H FCU-2	#6	4334
3031	#10				7	8			#6	4334
3031	#10	HP-3	H	50/2	9	10	50/2	H FCU-3	#6	4334
3031	#10				11	12			#6	4334
3031	#10	HP-4	H	50/2	13	14	50/2	H FCU-4	#6	4334
3031	#10				15	16			#6	4334
3403	#10	ERV-1	H	30/2	17	18	20/1	SPARE	-	0
3403	#10				19	20	20/1	SPARE	-	0
3403	#10	ERV-2	H	30/2	21	22	20/1	SPARE	-	0
3403	#10				23	24	20/1	SPARE	-	0
0	-	SPARE		20/1	25	26	20/1	SPARE	-	0
0	-	SPARE		20/1	27	28	20/1	SPARE	-	0
0	-	SPARE		20/1	29	30	-	SPACE	-	0
0	-	SPARE		20/1	31	32	-	SPACE	-	0
0	-	SPARE		20/1	33	34	-	SPACE	-	0
0	-	SPARE		20/1	35	36	-	SPACE	-	0
0	-	SPARE		20/1	37	38	-	SPACE	-	0
0	-	SPARE		20/1	39	40	-	SPACE	-	0
0	-	SPARE		20/1	41	42	-	SPACE	-	0

HVAC WATTS	12580
MOTOR WATTS	0
RECEPTACLE WATTS	0
MISC. WATTS	0
TOTAL CONNECTED WATTS	12580
TOTAL CONNECTED AMPS (BALANCED)	302.5

G1: 5 MA TRIP LEVEL
G2: 30 MA TRIP LEVEL

PANEL "PP2"

SERVICE:
PHASE TO PHASE VOLTAGE: 240
PHASE TO GROUND VOLTAGE: 120
WIRE: 3
PANEL MAINS: 400A MAIN LUGS ONLY
MOUNTING: SURFACE

AIC: 22,000
H INDICATES 'HACR' TYPE BREAKER
L INDICATES LOCKED ON BREAKER
G INDICATES GFI CIRCUIT BREAKER
BKR./SIZE INDICATES AMPS/POLE(S)

LOAD WATTS	WIRE SIZE	LOAD DESCRIPTION		BRKR SIZE	CIRCUIT NUMBER		BRKR SIZE	LOAD DESCRIPTION	WIRE SIZE	LOAD WATTS
2504	#10	HAND DRYERS MEN	G1	30/2	1	2	20/1	SPARE	-	0
2504	#10				3	4	20/1	SPARE	-	0
2504	#10	HAND DRYERS MEN	G1	30/2	5	6	20/1	SPARE	-	0
2504	#10				7	8	20/1	SPARE	-	0
2504	#10	HAND DRYERS WOMEN	G1	30/2	9	10	20/1	SPARE	-	0
2504	#10				11	12	20/1	SPARE	-	0
2504	#10	HAND DRYERS WOMEN	G1	30/2	13	14	20/1	SPARE	-	0
2504	#10				15	16	20/1	SPARE	-	0
1253	#10	HAND DRYERS FAMILY	G1	30/2	17	18	20/1	SPARE	-	0
1253	#10				19	20	20/1	SPARE	-	0
0	-	SPARE		20/1	21	22	20/1	SPARE	-	0
0	-	SPARE		20/1	23	24	20/1	L ROOF DRAIN FRZ. PROTECT	#12	450
0	-	SPARE		20/1	25	26	20/1		#12	450
0	-	SPARE		20/1	27	28	30/2	G1 GUTTER FRZ. PROTECTION L. G2	#10	840
0	-	SPARE		20/1	29	30			#10	840
0	-	SPARE		20/1	31	32	30/2	G1 GUTTER FRZ. PROTECTION	#10	840
0	-	SPARE		20/1	33	34			#10	840
1000	#12	POWER OPER. DOOR		20/1	35	36	30/2	WH-1	#10	2160
1000	#12	POWER OPER. DOOR		20/1	37	38			#10	2160
0	-	SPARE		20/1	39	40	30/2	WH-2	#10	2160
1334	#12	EF-2, 3		20/1	41	42			#10	2160

HVAC WATTS	0
MOTOR WATTS	3334
RECEPTACLE WATTS	0
MISC. WATTS	2804
WATER HEATER WATTS	11000
TOTAL CONNECTED WATTS	42348
TOTAL CONNECTED AMPS (BALANCED)	176.5

G1: 5 MA TRIP LEVEL
G2: 30 MA TRIP LEVEL

PANEL "LP1"

SERVICE:
PHASE TO PHASE VOLTAGE: 240
PHASE TO GROUND VOLTAGE: 120
WIRE: 3
PANEL MAINS: 200A MAIN LUGS ONLY
MOUNTING: SURFACE

AIC: 22,000
H INDICATES 'HACR' TYPE BREAKER
L INDICATES LOCKED ON BREAKER
G INDICATES GFI CIRCUIT BREAKER
BKR./SIZE INDICATES AMPS/POLE(S)

LOAD WATTS	WIRE SIZE	LOAD DESCRIPTION	BRKR SIZE	CIRCUIT NUMBER		BRKR SIZE	LOAD DESCRIPTION	WIRE SIZE	LOAD WATTS
1550	#12	MECH/SERV/STORAGE/JAN LTG	20/1	1	2	20/1	MECHANICAL/STOR/EXT REC	#12	1080
752	#12	MEN LTG	20/1	3	4	20/1	SERVICE/MEN/WOMEN REC	#12	720
822	#12	WOMEN/FAMILY LTG	20/1	5	6	20/1	WATER VALVES	#12	100
840	#12	VENDING, MAP, LOBBY LTG	20/1	7	8	20/1	STOR/MEN/EXT REC	#12	720
735	#12	VENDING, DISPLAY, LOBBY LTG	20/1	9	10	20/1	LOBBY REC	#12	900
960	#12	LOBBY LTG	20/1	11	12	20/1	EUC	#12	1400
960	#12	LOBBY LTG	20/1	13	14	20/1	LOBBY/FAMILY/JAN REC	#12	1080
0	-	SPARE	20/1	15	16	20/1	EUC	#12	1400
1733	#10	EXTERIOR, CUPOLA LTG	30/1	17	18	20/1	WOMEN/EXT REC	#12	360
420	#12	STORAGE, ELECTRICAL LTG	20/1	19	20	20/1	SPARE	-	0
1715	#12	CCTV CABINET REC	20/1	21	22	20/1	TBI REC	#12	360
1715	#12	CCTV CABINET REC	20/1	23	24	20/1	TBI REC	#12	360
540	#12	LOBBY REC	20/1	25	26	20/1	ELECTRICAL REC	#12	180
1200	#12	MICROWAVE	20/1	27	28	20/1	SPARE	-	0
1000	#12	KITCHENETTE/REFRIG	20/1	29	30	20/1	SPARE	-	0
1127	#12	DISPOSAL	20/1	31	32	20/1	SPARE	-	0
460	#12	MEZZ/ATTIC REC & LTG	20/1	33	34	30/1	SITE LTG	#8	1215
0	-	SPARE	20/1	35	36	30/1	SITE LTG	#8	1835
0	-	SPARE	20/1	37	38	30/1	SITE LTG	#8	650
0	-	SPARE	20/1	39	40	20/1	SERVICE TRAILER REC	#8	1500
0	-	SPARE	20/1	41	42	20/1	SERVICE TRAILER REC	#8	1500

HVAC WATTS	0
MOTOR WATTS	1127
RECEPTACLE WATTS	18150
LIGHTING WATTS	12962
TOTAL CONNECTED WATTS	32239
TOTAL CONNECTED AMPS (BALANCED)	134.9

PANEL "PP3"

SERVICE:
PHASE TO PHASE VOLTAGE: 240
PHASE TO GROUND VOLTAGE: 120
WIRE: 3
PANEL MAINS: 200A MAIN LUGS ONLY
MOUNTING: SURFACE

AIC: 22,000
H INDICATES 'HACR' TYPE BREAKER
L INDICATES LOCKED ON BREAKER
G INDICATES GFI CIRCUIT BREAKER
BKR./SIZE INDICATES AMPS/POLE(S)

LOAD WATTS	WIRE SIZE	LOAD DESCRIPTION		BRKR SIZE	CIRCUIT NUMBER		BRKR SIZE	LOAD DESCRIPTION	WIRE SIZE	LOAD WATTS
3150	#6	AREA #1 SNOW MELT	L	50/2	1	2	50/2	L AREA #4 SNOW MELT	#6	3150
3150	#6				3	4			#6	3150
2400	#8	AREA #2 SNOW MELT	L	40/2	5	6	40/2	L AREA #5 SNOW MELT	#8	2400
2400	#8				7	8			#8	2400
3150	#6	AREA #3 SNOW MELT	L	40/2	9	10	50/2	L AREA #6 SNOW MELT	#6	3150
3150	#6				11	12			#6	3150
0	-	SPARE		40/2	13	14	-	SPACE	-	0
0	-				15	16	-	SPACE	-	0
0	-	SPARE		50/2	17	18	-	SPACE	-	0
0	-				19	20	-	SPACE	-	0
0	-	SPACE		-	21	22	-	SPACE	-	0
0	-	SPACE		-	23	24	-	SPACE	-	0
0	-	SPACE		-	25	26	-	SPACE	-	0
0	-	SPACE		-	27	28	-	SPACE	-	0
0	-	SPACE		-	29	30	-	SPACE	-	0

HVAC WATTS	0
MOTOR WATTS	0
RECEPTACLE WATTS	0
LIGHTING WATTS	0
SNOW MELT HEATER WATTS	38100
TOTAL CONNECTED WATTS	38100
TOTAL CONNECTED AMPS (BALANCED)	158.8

SNOW MELT SYSTEM ALTERNATE E2.

PANEL "LP2"

SERVICE:
PHASE TO PHASE VOLTAGE: 240
PHASE TO GROUND VOLTAGE: 120
WIRE: 3
PANEL MAINS: 100A MAIN LUG ONLY
MOUNTING: SURFACE

AIC: 22,000
H INDICATES 'HACR' TYPE BREAKER
L INDICATES LOCKED ON BREAKER
G INDICATES GFI CIRCUIT BREAKER
BKR./SIZE INDICATES AMPS/POLE(S)

LOAD WATTS	WIRE SIZE	LOAD DESCRIPTION	BRKR SIZE	CIRCUIT NUMBER		BRKR SIZE	LOAD DESCRIPTION	WIRE SIZE	LOAD WATTS
960	#12	VENDING	20/1	1	2	20/1	VENDING	#12	960
960	#12	VENDING	20/1	3	4	20/1	VENDING	#12	960
960	#12	VENDING	20/1	5	6	20/1	VENDING	#12	960
960	#12	VENDING	20/1	7	8	20/1	VENDING	#12	960
360	#12	VENDING	20/1	9	10	20/1	VENDING	#12	360
180	#12	VENDING	20/1	11	12	20/1	VENDING	#12	180
0	-	SPARE	20/1	13	14	20/1	SPARE	-	0
0	-	SPARE	20/1	15	16	20/1	SPARE	-	0
0	-	SPARE	20/1	17	18	20/1	SPARE	-	0
0	-	SPARE	20/1	19	20	20/1	SPARE	-	0

HVAC WATTS	0
MOTOR WATTS WATTS	0
RECEPTACLE WATTS	8160
LIGHTING WATTS	0
TOTAL CONNECTED WATTS	8160
TOTAL CONNECTED AMPS (BALANCED)	34.5

NO SCALE

CONSULTING ARCHITECTS / ENGINEERS
ARCHITECT: BODNER & KERIK ARCHITECTS, INC.
STRUCTURAL: LANTZ JONES & NEBRASKA, INC.
MECHANICAL/ELECTRICAL: SRA, INC.
CIVIL ENGINEERING: POGGEMEYER DESIGN GROUP, INC.
LANDSCAPE ARCHITECT: R.D. ZANDE & ASSOCIATES, INC.

REVISIONS

NO.	DATE	DESCRIPTION
1	12-6-02	BID SET

STATE OF OHIO
JOHN E. SANDERS
E-58219
REGISTERED PROFESSIONAL ENGINEER

PROJECT NUMBER
0226

FOR:
OHIO DEPT. OF TRANSPORTATION

DRAWING DESCRIPTION:
ELECTRICAL SCHEDULES - EAST

NEW REST STOP BUILDINGS

NO. 770-2001-072
US 30 WYANDOT/CRAWFORD

SITE 1
EASTBOUND

PREPARED FOR
STATE OF OHIO
DEPARTMENT OF ADMINISTRATIVE SERVICES
GENERAL SERVICES DIVISION

PREPARED BY
DEPARTMENT OF ADMINISTRATIVE SERVICES

PRIMARY SUBMISSION	DATE	SHEET
10-09-02	10-09-02	EE-4

L:\DRAWINGS\AO\REST AREAS\WYANDOT\Dwgs\EAST\2004-EE4.dwg, 12/13/2002 08:22:05 AM, Eric Burwell

LIGHTING FIXTURE SCHEDULE

TYPE	MTG	DESCRIPTION	LAMPS	WATTS	VOLTS	CATALOG NO.	CATALOG NO.	CATALOG NO.	CATALOG NO.	CATALOG NO.
A	11'-0" AFF	WALL MOUNTED ADJUSTABLE INDIRECT METAL HALIDE WITH REMOTE BALLAST.	1-400W	460	120	BINONA #PI-LSM-400-LSI-SGW	INSIGHT #TM383-RCB-1-1-FINISH	FORUM #QUA-400MH-1-AS	ELLIPTIPAR #MIL-M400Z-02-A-V0-0	ORGATECH/OMEGALUX XC400MH-1-Y-C-A-S-0 (WEDGE ENCLOSURE)
B	CLG REC	8" DIA. COMPACT FLUORESCENT DOWNLIGHT WITH CLEAR ALZAK REFLECTOR CONE.	2-42W CF42/TRT	90	120	INDY #1OR-421-SAC	LITHONIA #AF-2/42TRT-8AR-120	PORTFOLIO #PD8-H82332E-SHC	PRESCOLITE #CFTD832HEB-STFD8021H-B24	OMEGA LIGHTING #OM82H42PLT-CS-120/277
BW	CLG REC	8" DIA. COMPACT FLUORESCENT WALL WASHER WITH CONCAVE LENS AND CLEAR ALZAK REFLECTOR.	1-42W CF42/TRT	45	120	INDY #3IR-421-SAC	LITHONIA #DFW-1/42TRT-1ASL-120	PORTFOLIO #C1942E-1193LI	COLUMBIA LIGHTING #CFTW832EB-ST42-B24	OMEGA LIGHTING #OM8H42PLTWW-CS-120/277
BA	CLG REC	8" DIA. COMPACT FLUORESCENT DOWNLIGHT WITH CLEAR ALZAK REFLECTOR CONE AND SLOPE CEILING HOUSING	2-42W CF42/TRT	90	120	INDY #1OR-421-SAC w/ SLOPE CEILING HOUSING	LITHONIA #AF-2/42TRT-8AR-120 w/ SLOPE CEILING HOUSING	PORTFOLIO #S242E-92SOLI w/ SLOPE CEILING HOUSING	PRESCOLITE #CFTD832HEB-STFD8021H-B24 w/ SLOPE CEILING HOUSING	OMEGA LIGHTING #OM82H42PLT-CS-120/277 w/ SLOPE CEILING HOUSING
C	CLG REC	11" DIA. RECESSED COMPACT FLUORESCENT DOWNLIGHT WITH REGRESSED CONCAVE PRISMATIC LENS & WHITE TRIM.	1-42W CF42/TRT	45	120	INDY #6OR-421E-PPL	LITHONIA #LGFV-42TRT-1RW CHL-120	SPECTRUM #SPTVF-H2-1-W5-1120PG	PRESCOLITE #CFT832EB-WTF804-SL-B24	CAPRI LIGHTING #C1185-FV226/32/42W-V84F
D	11'-6" AFF	1' X 4' WALL MOUNTED FLUORESCENT VANDAL RESISTANT FIXTURE WITH WHITE POLYCARBONATE LENS & PERIMETER PAINT.	2-32W F32/T8	64	120	C.D.LIGHTING #VWA-4-232-120-EB	KENALL #MLHAB-48-R-X-CP-232-EBI-120	FAIL-SAFE #F5-RW-PP-14-A	HORLITE #LPL2000-232-120	LEGION LIGHTING #W-232-UBP-EBO-WL
E	CLG SURF	2' X 4' SURFACE MOUNTED MODULAR FLUORESCENT WITH FLAT STEEL DOOR, .125" ACRYLIC PRISMATIC LENS & TWO CIRCUIT WIRING.	4-32W F32/T8	128	120	HUBBELL #5SD4CAO2B5	LITHONIA #2M-432-A12125-120-GEB	METALUX #2MC-432-A125-120-EB81	COLUMBIA LIGHTING #SM24-432-FSA12.125-4EB8120	DAYBRITE LIGHTING #2SM432-FS12-120-1/4EB
F	CLG SURF	8' X 4' SURFACE MOUNTED FLUORESCENT WITH WRAPAROUND ACRYLIC PRISMATIC LENS.	2-32W F32/T8	64	120	HUBBELL #U232B	LITHONIA #SB-232-120-GEB	METALUX #W-232A-120-EB81	COLUMBIA LIGHTING #AUW4-232-EB8120	DAYBRITE LIGHTING #OWN232-120-1/2EB
G	BOTTOM @ 12'0"	1' X 4' CHAIN SUSPENDED INDUSTRIAL FLUORESCENT FIXTURE WITH APERTURED REFLECTOR.	2-32W F32/T8	64	120	HUBBELL #IGM2RPPIOB	LITHONIA #LA-232-120-GEB	METALUX #IA-232-120-EB81	COLUMBIA LIGHTING #C5R4-232-EB8120	DAYBRITE LIGHTING #IFD232-PP-120-1/2EB
H	AS REQ'D	4 FT. OPEN STRIP FLUORESCENT.	2-32W F32/T8	64	120	HUBBELL #C232B	LITHONIA #C-232-120-GEB	METALUX #SS-232-120-EB81	COLUMBIA LIGHTING #C54-232-EB8120	DAYBRITE LIGHTING #T232-120-1/2EB
J	CLG SURF	8 FT. TANDEM INDUSTRIAL FLUORESCENT FIXTURE WITH FIBER GLASS HOUSING, ACRYLIC LENS & 0° LOW TEMP BALLAST.	4-32W F32/T8	128	120	HUBBELL #EWL084IR-SPDR-BI	LITHONIA #TVRI-432-120-CW-1/4-TUBI	METALUX #STVT2-232-120-EB81-DR-Z	COLUMBIA LIGHTING #LUM4-232-EB8120	DAYBRITE LIGHTING #TDBWE232-120-1/4LT
K	9'-0" AFF	METAL HALIDE WALLPACK WITH POLYCARBONATE HOUSING.	1-100W M100	125	120	HUBBELL #PVL-100H-128-L	LITHONIA #TWA-100M-120-LPI	LUMARK #MWP-100H-MT	SPAULDING-WHITEWAY #MRK-M100-120	DAYBRITE LIGHTING #WLS100MMT-LP
L	CLG REC	RECESSED OUTDOOR METAL HALIDE LOW PROFILE DOWNLIGHT WITH FRESNEL LENS AND DIE CAST TRIM	1-100W M100	125	120	STERNER #SRR-555-100MH-120-BM-DW	KENALL #MRTMPSR/CC-C-XX-100M-1-120	USAL #SD91-100MH-120-XXX	REBELLE LIGHTING #2D21-100H	GARDCO LIGHTING #220-F-100MH-120-BRP
M	ARCH DETAIL	METAL HALIDE ADJUSTABLE SPOT LIGHT	1-70W M70/PAR30/SP	100	120	STERNER #VE8D-L70MH-C-YK-BM	HYDREL #4430-P30701M-120-SSB345-FINISH	BK #SE-42-XXX-S-B-PC70-120	A.A.L. #OSR-7074-120	GARDCO LIGHTING #DSPT-J-PAR38-70MH-120-BLP
X	ABOVE DOOR	LED EXIT SIGN WITH DIE CAST ALUMINUM HOUSING, STENCIL FACE, RED LETTERS, EMERGENCY BATTERY AND SELF DIAGNOSTICS.	LED	10	120	HUBBELL #CWPRAL9D	LITHONIA #LE-S-W-1-R-ELN-SD	SURE-LITES #CX1110RW	DUAL LITE #LCSRWE-1	DAYBRITE LIGHTING #ERSSLI2/21R
EM	CLG REC	RECESSED EMERGENCY LIGHTING UNIT WITH TWIN HEADS, AND MAINTENANCE FREE LONG LIFE LEAD BATTERY AND SELF DIAGNOSTICS.	2-8W PAR36	25	120	HUBBELL #CL-6-25-2PBRD	LITHONIA #ELR4-SD	SURE-LITES #RLM-2-SD	DUAL LITE #TB-15-1	DAYBRITE LIGHTING #ERGLWU-P56C
EMR	CLG REC	RECESSED EMERGENCY LIGHTING UNIT WITH TWIN HEADS, AND MAINTENANCE FREE LONG LIFE LEAD BATTERY, REMOTE CAPACITY AND SELF DIAGNOSTICS.	2-8W PAR36	25	120	HUBBELL #CL-6-36-2PBI-D	LITHONIA #ELR4-SD	SURE-LITES #RLM-2-SD/29-88	DUAL LITE #TB-30-1	DAYBRITE LIGHTING #ERGL256-PS8C
EMS	WALL	SURFACE MOUNTED EMERGENCY LIGHTING UNIT WITH TWIN HEADS, MAINTENANCE FREE LONG LIFE LEAD BATTERY, REMOTE CAPACITY & SELF DIAGNOSTICS.	2-12W PAR36	25	120	HUBBELL #PE6-25-2RSI-D w/REMOTE CAPACITY FOR (2) HEADS	LITHONIA #ELR4-SD	SURE-LITES #CC-6-WH-SD	DUAL LITE #LM401	HC PHILBEN #CTX4L24W-CSWC PROVIDE REMOTE CAPACITY MODELS WHERE SHOWN
RH	CLG SURF	TWIN WEATHERPROOF EMERGENCY LIGHTING REMOTE HEADS.	2-12W	14.4	6	HUBBELL (2) #2P6-1-6-B-MPWP2	LITHONIA #2ELA-T-NX-HOWI2	SURE-LITES #KT-6-DWRH	DUAL LITE #REMPOW12	DAYBRITE LIGHTING (2) #PMH-MP2TW-WP
RH2	CLG SURF	SINGLE WEATHERPROOF EMERGENCY LIGHTING REMOTE HEAD.	1-12W	7.2	6	HUBBELL #2P6-1-6-B-MPWP2	LITHONIA #ELA-T-NX-HOWI2	SURE-LITES #KT-6-WRH	DUAL LITE #REMPOW12	DAYBRITE LIGHTING #PMH-MP2TW-WP

NOTES:
1. ALL FLUORESCENT BALLASTS SHALL BE ELECTRONIC.
2. ALL FLUORESCENT LAMPS SHALL BE 3500°K COLOR TEMPERATURE.

ABBREVIATIONS

A	AMPERE
AC	ALTERNATING CURRENT
AFF	ABOVE FINISHED FLOOR
AFG	ABOVE FINISHED GRADE
AIC	AMPERE INTERRUPTING CAPACITY
AMP	AMPERE
ARCH	ARCHITECTURAL
BKR	BREAKER
CB	CIRCUIT BREAKER
CCTV	CLOSED CIRCUIT TELEVISION
CKT	CIRCUIT
CLG	CEILING
CTRL	CONTROL
D	DEPTH
DC	DIRECT CURRENT
DWG	DRAWING
EC	ELECTRICAL CONTRACTOR
EWC	ELECTRIC WATER COOLER
FT	FEET, FOOT
G	GROUND
GC	GENERAL CONTRACTOR
GRD	GROUND
H	HEIGHT
HTR	HEATER
HVAC	HEATING, VENTILATION, AIR CONDITIONING
JB	JUNCTION BOX
KVA	KILO-VOLT-AMPERE
KV	KILO-VOLT
KW	KILO-WATT
LTG	LIGHTING
LTS	LIGHTS
MCB	MAIN CIRCUIT BREAKER
MECH	MECHANICAL
MIN	MINIMUM
MLO	MAIN LUG ONLY
MTD	MOUNTED
MTG	MOUNTING
N	NEUTRAL
NO.	NUMBER
OC	ON CENTER
PEC	PHOTO ELECTRIC CONTROL
PNL	PANEL
PWR	POWER
REC	RECEPTACLE
RES	RECESSED
REQ'D	REQUIRED
STR	STARTER
SURF	SURFACE
TB	TERMINAL BOARD
TC	TIME CLOCK
TELE	TELEPHONE
TV	TELEVISION
TYP	TYPICAL
UOI	UNLESS OTHERWISE INDICATED
UON	UNLESS OTHERWISE NOTED
V	VOLT
V	VENDING
VA	VOLT-AMPERE
W	WIDTH

SYMBOL LEGEND

SYMBOL	MTG	DESCRIPTION
		WIRING IN CONDUIT.
A-1		CIRCUIT CONDUIT HOMERUN TO PANEL. LETTER INDICATES PANEL DESIGNATION. NUMBERS INDICATE CIRCUIT NUMBERS.
$	48" AFF	SWITCH, SINGLE POLE, 20 AMP, 120V. K = KEY OPERATED.
$3	48" AFF	SWITCH, THREE-WAY, 20AMP, 120V. K= KEY OPERATED.
$M	48" AFF	MANUAL MOTOR STARTING SWITCH, SPST, 120 WITH THERMAL OVERLOAD AND PILOT LIGHT.
	18" AFF UON	DUPLEX RECEPTACLE, GROUNDING TYPE. 20 AMP, 125 VOLT, 3 WIRE. WP = WEATHERPROOF F = FLOOR MOUNTED GFI = GROUND FAULT INTERRUPTER
	18" AFF UON	DOUBLE DUPLEX RECEPTACLE, GROUNDING TYPE. 20 AMP, 125 VOLT, 3 WIRE.
	18" AFF UON	TELEPHONE OUTLET, 4" SQUARE, FLUSH MOUNTED BOX WITH SINGLE GANG BLANK COVER PLATE. P = PUBLIC PHONE @ 48" AFF F = FLOOR MOUNTED
TV	18" AFF UON	CABLE OUTLET, 4" SQUARE, FLUSH MOUNTED BOX WITH SINGLE GANG BLANK COVER PLATE. F = FLOOR MOUNTED
	AS NOTED	JUNCTION BOX, MOUNTING HEIGHT AND SIZE AS REQUIRED OR AS INDICATED.
HD	3'T	PROVIDE WHITE RECESSED ELECTRIC HAND DRYER, TOUCHLESS AUTOMATIC OPERATION. WORLD DRYER MODEL # XRA54-914A. 230V-10A-2300W. MOUNTING HEIGHT IS FROM FINISHED FLOOR TO BOTTOM OF DRYER. MAINTAIN 2'-0" BETWEEN DRYERS.
POK		POWER OPERATED DOOR-VERIFY POWER AND CONNECTION REQUIREMENTS.
		PUSH PLATE SWITCH FOR POWER OPERATED DOOR. FURNISHED BY G.C. INSTALLED AND WIRED BY EC.
	ABOVE CEILING U.O.N.	OUTLET BOX FOR FUTURE CLOSED CIRCUIT TELEVISION CAMERA.
1		REFER TO NOTE.

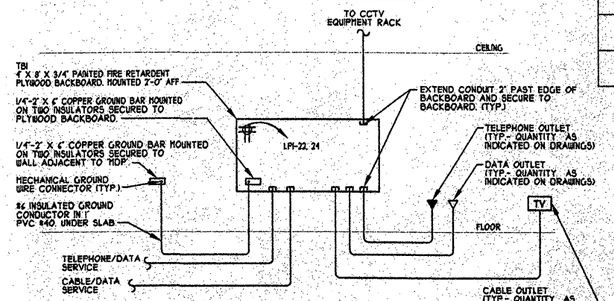

A TELEPHONE/DATA SYSTEM DIAGRAM
NTS

NOTES:
1. CONDUIT TO TELEPHONE, DATA, AND CABLE OUTLET: 3/4" WITH #12 PULL WIRE.
2. TELEPHONE/DATA SERVICE CONDUIT: 4" PVC #40 WITH PULL WIRE. COORDINATE SERVICE WITH UTILITY. PROVIDE CONDUIT AND PULL WIRE PER UTILITY REQUIREMENTS.
3. CABLE/DATA SERVICE CONDUIT: 2" PVC #40 WITH PULL WIRE. COORDINATE SERVICE WITH UTILITY. PROVIDE CONDUIT AND PULL WIRE PER UTILITY REQUIREMENTS.

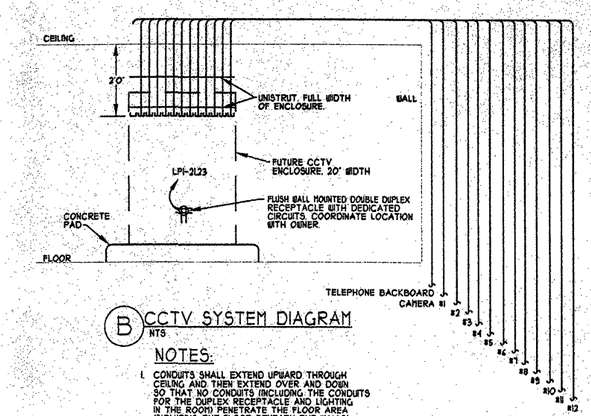

B CCTV SYSTEM DIAGRAM
NTS

NOTES:
1. CONDUITS SHALL EXTEND UPWARD THROUGH CEILING AND THEN EXTEND OVER AND DOWN SO THAT NO CONDUITS (INCLUDING THE CONDUITS FOR THE DUPLEX RECEPTACLE AND LIGHTING IN THE ROOM) PENETRATE THE FLOOR AREA (INCLUDING THE FLOOR BENEATH THE WALLS) OF THE ROOM THE CCTV CABINET IS LOCATED IN.
2. CONDUIT TO TELEPHONE BACKBOARD: 1-3/4" WITH #12 PULL WIRE.
3. CONDUITS FOR CAMERAS #1-#4: 2-3/4" WITH #12 PULL WIRE. TERMINATE CONDUITS TO 4" SQ. DEEP BOXES WITH BLANK COVER PLATES. BOXES SHALL BE LOCATED IN CONCEALED SPACE. PROVIDE ACCESS HEANS TO ALL BOXES.
4. CONDUITS FOR CAMERAS #9-#12: 2-1" WITH #12 PULL WIRE. CAP CONDUIT BELOW GRADE AND MARK LOCATION.
5. CONDUIT FOR CAMERA #12: 2-1" WITH #12 PULL WIRE. CAP CONDUITS STUBBED UP INSIDE MAINTENANCE SHED.

NO SCALE

CONSULTING ARCHITECTS / ENGINEERS
ARCHITECT: BODNER & KERIK ARCHITECTS, INC.
STRUCTURAL: LANTZ JONES & NEBRASKA, INC.
MECHANICAL/ELECTRICAL: SRA, INC.
CIVIL ENGINEERING: POGGEMEYER DESIGN GROUP, INC.
LANDSCAPE ARCHITECT: R.D. ZANDE & ASSOCIATES, INC.

REVISIONS

NO.	DATE	DESCRIPTION
1	12-6-02	BID SET

STATE OF OHIO — JOHN E. SANDERS — E-58219 — REGISTERED PROFESSIONAL ENGINEER

PROJECT NUMBER 0226

FOR: OHIO DEPT. OF TRANSPORTATION

DRAWING DESCRIPTION: **ELECTRICAL DIAGRAMS & SCHEDULES - EAST**

NEW REST STOP BUILDINGS

NO. 770-2001-072 US 30 WYANDOT/CRAWFORD | SITE 1 EASTBOUND

PREPARED FOR: STATE OF OHIO, DEPARTMENT OF ADMINISTRATIVE SERVICES, GENERAL SERVICES DIVISION
PREPARED BY: DEPARTMENT OF ADMINISTRATIVE SERVICES

PERMIT SUBMISSION	DATE	SHEET
10-09-02	10-09-02	EE-5

L:\DRAWINGS\SA\REST AREAS\WYANDOT\Dwgs\EAST\2004 EE5.dwg, 12/13/2002 08:21:12 AM, Eric Burwell

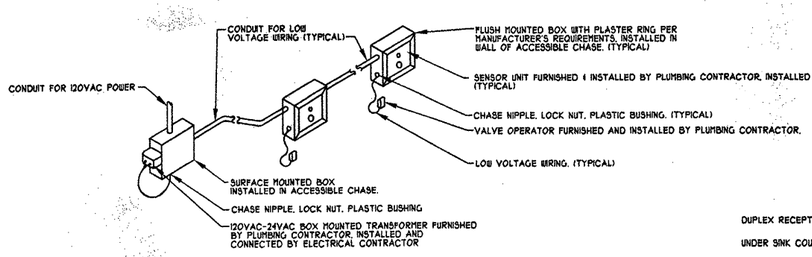

A SENSOR INSTALLATION FOR BACK SPUD BOWLS OR ACCESSIBLE CHASE
SCALE: NTS

NOTES

1. QUANTITY OF SENSORS AND VALVE OPERATORS PER DRAWINGS.
2. QUANTITY OF TRANSFORMERS PER MANUFACTURER'S REQUIREMENT.
3. INSTALL EXPOSED LOW VOLTAGE WIRING IN SPLIT PLASTIC TUBING FASTENED AT 1'-0" INTERVALS.

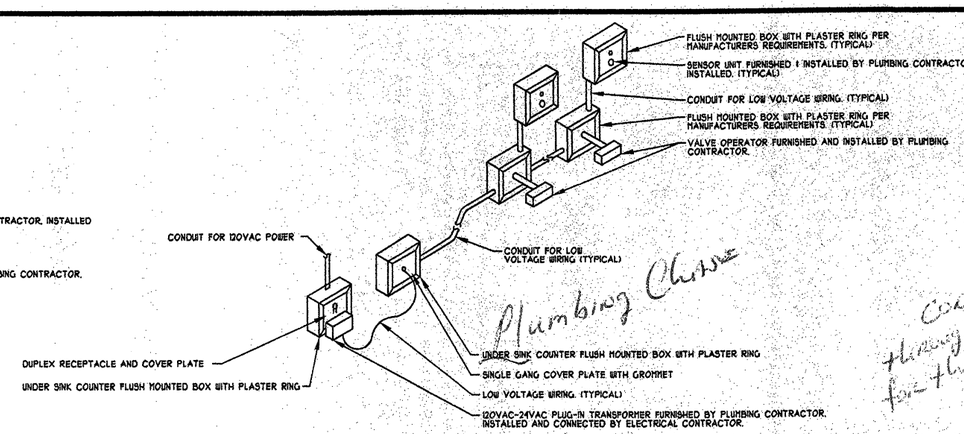

B SENSOR INSTALLATION FOR TOP SPUD BOWLS OR NO ACCESSIBLE CHASE
SCALE: NTS

NOTES

1. QUANTITY OF SENSORS AND VALVE OPERATORS PER DRAWINGS.
2. QUANTITY OF TRANSFORMERS PER MANUFACTURER'S REQUIREMENT.
3. INSTALL EXPOSED LOW VOLTAGE WIRING IN SPLIT PLASTIC TUBING FASTENED AT 1'-0" INTERVALS.

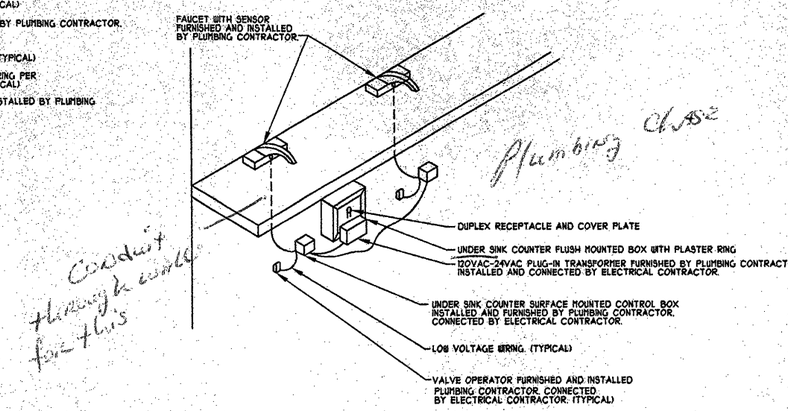

C SENSOR INSTALLATION FOR FAUCET WITH NO ACCESSIBLE CHASE
SCALE: NTS

NOTES

1. QUANTITY OF SENSORS AND VALVE OPERATORS PER DRAWINGS.
2. QUANTITY OF TRANSFORMERS PER MANUFACTURER'S REQUIREMENT.
3. INSTALL EXPOSED LOW VOLTAGE WIRING IN SPLIT PLASTIC TUBING FASTENED AT 1'-0" INTERVALS.

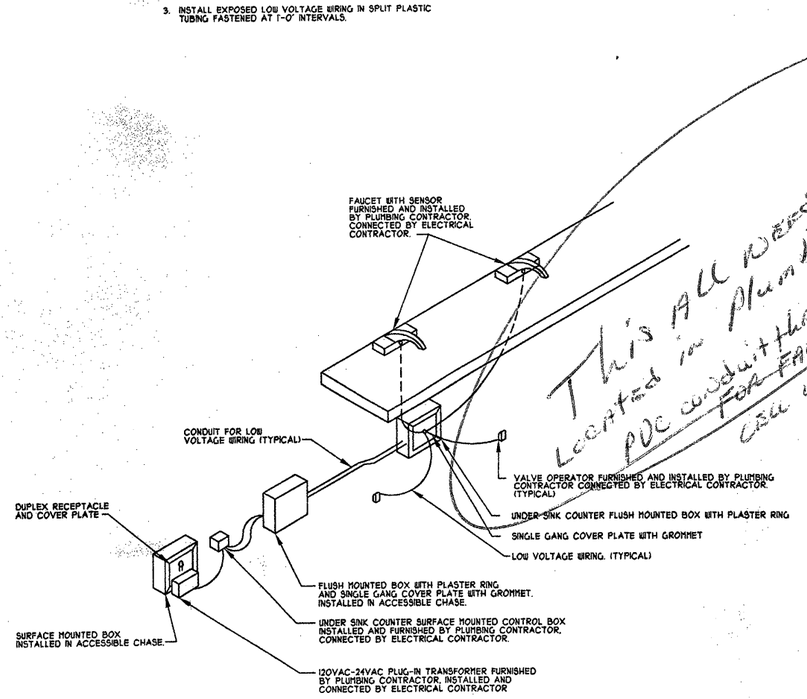

D SENSOR INSTALLATION FOR FAUCET WITH ACCESSIBLE CHASE
SCALE: NTS

NOTES

1. QUANTITY OF SENSORS AND VALVE OPERATORS PER DRAWINGS.
2. QUANTITY OF TRANSFORMERS PER MANUFACTURER'S REQUIREMENT.
3. INSTALL EXPOSED LOW VOLTAGE WIRING IN SPLIT PLASTIC TUBING FASTENED AT 1'-0" INTERVALS.

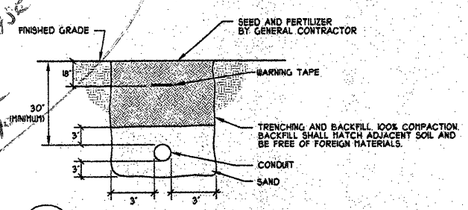

E ELECTRICAL TRENCH "A" DETAIL
N.T.S. (TYPICAL UNDER GRADE)

NOTES

1. CONDUIT FOR UTILITY SHALL BE PROVIDED AT DEPTH EXCEEDING 30" MINIMUM AS REQUIRED PER UTILITY.

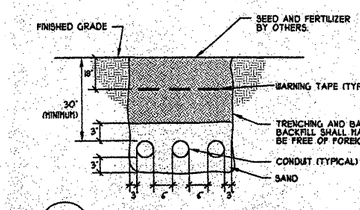

F ELECTRICAL TRENCH "B" DETAIL
N.T.S. (TYPICAL UNDER GRADE)

NOTES

1. NUMBER OF CONDUITS VARIES.
2. MINIMUM 3" ENVELOPE AROUND EACH CONDUIT.
3. MINIMUM 6" SEPARATION BETWEEN CONDUITS.
4. CONDUITS FOR UTILITY SHALL BE PROVIDED AT DEPTH EXCEEDING 30" MINIMUM AS REQUIRED PER UTILITY.

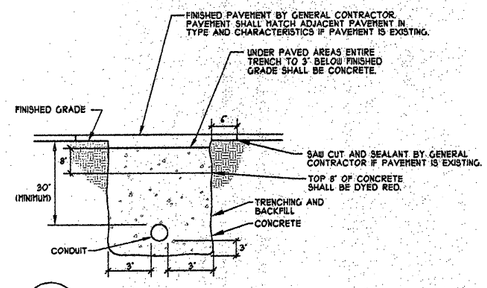

G ELECTRICAL TRENCH "C" DETAIL
N.T.S. (TYPICAL UNDER PAVEMENT)

NOTES

1. CONDUIT FOR UTILITY SHALL BE PROVIDED AT DEPTH EXCEEDING 30" MINIMUM AS REQUIRED PER UTILITY.

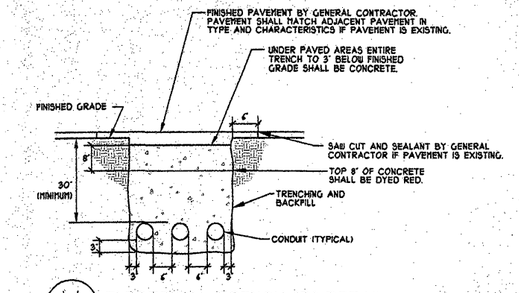

H ELECTRICAL TRENCH "D" DETAIL
N.T.S. (TYPICAL UNDER PAVEMENT)

NOTES

1. NUMBER OF CONDUITS VARIES.
2. MINIMUM 3" ENVELOPE AROUND EACH CONDUIT.
3. MINIMUM 6" SEPARATION BETWEEN CONDUITS.
4. CONDUITS FOR UTILITY SHALL BE PROVIDED AT DEPTH EXCEEDING 30" MINIMUM AS REQUIRED PER UTILITY.

NO SCALE

CONSULTING ARCHITECTS / ENGINEERS
ARCHITECT: BODNER & KERIK ARCHITECTS, INC.
STRUCTURAL: LANTZ JONES & NEBRASKA, INC.
MECHANICAL/ELECTRICAL: SRA, INC.
CIVIL ENGINEERING: POGGEMEYER DESIGN GROUP, INC.
LANDSCAPE ARCHITECT: R.D. ZANDE & ASSOCIATES, INC.

REVISIONS

NO.	DATE	DESCRIPTION
1	12-6-02	BID SET

STATE OF OHIO JOHN E. SANDERS E-58219 REGISTERED PROFESSIONAL ENGINEER

PROJECT NUMBER 0226

FOR: OHIO DEPT. OF TRANSPORTATION

DRAWING DESCRIPTION: **ELECTRICAL DETAILS - EAST**

NEW REST STOP BUILDINGS

NO. 770-2001-072 US 30 WYANDOT/CRAWFORD | SITE 1 EASTBOUND

PREPARED FOR
STATE OF OHIO
DEPARTMENT OF ADMINISTRATIVE SERVICES
GENERAL SERVICES DIVISION

PREPARED BY
DEPARTMENT OF ADMINISTRATIVE SERVICES

PERMIT SUBMISSION	DATE	SHEET
10-09-02	10-09-02	EE-6

L:\DRAWINGS\SA\REST AREAS\WYANDOT\Dwgs\BAST12004 EE6.dwg, 12/13/2002 08:20:51 AM, Eric Burwell

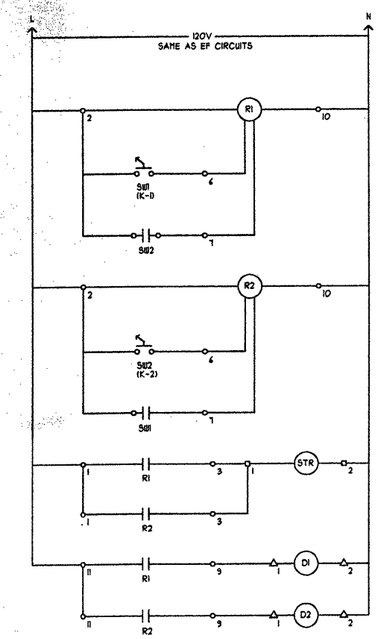

A RESTROOM CLEANING EXHAUST FAN CONTROL DIAGRAM

SCALE: NTS

NOTES

SW1: MOMENTARY KEY SWITCH, ALLEN-BRADLEY 2 POSITION CYLINDER LOCK OPERATOR #800T-H4B OR APPROVED EQUAL MOUNTED IN FLUSH MOUNTED ENCLOSURE WITH STAINLESS STEEL FACE PLATE WITH LEGEND PLATE 'FAN'.

SW2: MOMENTARY KEY SWITCH, ALLEN-BRADLEY 2 POSITION CYLINDER LOCK OPERATOR #800T-H4B OR APPROVED EQUAL MOUNTED IN FLUSH MOUNTED ENCLOSURE WITH STAINLESS STEEL FACE PLATE WITH LEGEND PLATE 'FAN'.

R1: ADJUSTABLE 0-30 MINUTE TIMING RELAY WITH MOMENTARY START INPUT AND MOMENTARY RESET INPUT, ALLEN-BRADLEY # 100-HRS2TAT OR APPROVED EQUAL MOUNTED IN NEMA 1 ENCLOSURE ADJACENT TO FAN STARTER.

R2: ADJUSTABLE 0-30 MINUTE TIMING RELAY WITH MOMENTARY START INPUT AND MOMENTARY RESET INPUT, ALLEN-BRADLEY # 100-HRS2TAT OR APPROVED EQUAL MOUNTED IN NEMA 1 ENCLOSURE ADJACENT TO FAN STARTER.

STR: STARTER FOR FAN UNIT. INSTALL IN ELECTRICAL ROOM.

D1: MOTORIZED DAMPER UNIT FOR FAN UNIT.

D2: MOTORIZED DAMPER UNIT FOR FAN UNIT.

○: R1/R2 TERMINAL

□: STR TERMINAL

△: D1/D2 TERMINAL

NOTE: 120V / 24V WIRING

LOW VOLTAGE WIRING IS THE RESPONSIBILITY OF THE INDIVIDUAL CONTRACTORS. THE SCOPE FOR RESPONSIBILITIES IS AS FOLLOWS:

: 120 V WIRING, PROVIDED AND INSTALLED BY THE ELECTRICAL CONTRACTOR.

:24V WIRING PROVIDED AND INSTALLED BY THE RESPONSIBLE CONTRACTOR.

: CONDUIT FOR 24V WIRING PROVIDED AND INSTALLED BY THE ELECTRICAL CONTRACTOR.

:FINAL CONNECTIONS TO 120V AND 24V BY ELECTRICAL CONTRACTOR.

GENERAL NOTES

1. COORDINATE LOCATION OF PANELS WITH OTHER WORK TO INSURE WORK SPACE IN FRONT OF PANELS AND SPACE ABOVE PANELS ARE PROVIDED PER NEC .
2. FLOOR MOUNTED EQUIPMENT SHALL HAVE 3 1/2" HIGH CONCRETE PAD. PAD SHALL EXTEND 2" BEYOND EQUIPMENT ON ALL SIDES EXCEPT SIDE(S) THAT MAY BE MOUNTED AGAINST A WALL(S). EQUIPMENT SPACED FROM WALLS SHALL HAVE PAD THAT EXTENDS TO WALLS. PAD SHALL HAVE 1" CHAMFER EDGE.
3. WALL MOUNTED EQUIPMENT SHALL BE MOUNTED TO UNISTRUT SECURED TO WALL.
4. MI CABLE SNOW MELTING SYSTEM LAYOUT SHALL BE SUBMITTED FOR APPROVAL. PROVIDE SNOW MELTING WORK ONLY AFTER WRITTEN APPROVAL IS RECEIVED. COORDINATE LAYOUT WITH OTHER WORK AND MANUFACTURER'S RECOMMENDATIONS. LAYOUT SHALL INCLUDE MI CABLING, CONDUIT, WIRING, BOXES, CIRCUIT BREAKERS, PANELBOARDS, CONTACTORS, CONTROLLERS AND OTHER ITEMS FOR A PROPER OPERATIONAL SYSTEM FROM HDP TO MI CABLES. SENSOR/CONTROLLER SHALL BE MOUNTED ABOVE ROOF ON END OF CONDUIT. COORDINATE LOCATION OF SENSOR/CONTROLLER WITH ARCHITECT PRIOR TO LAYOUT SUBMITTAL.
5. UNDERGROUND CONDUITS SHALL BE PROVIDED PER DETAILS 'E', 'F', 'G' AND 'H' ON DRAWING EW-4.

⬡ CODED NOTES

1. LOCATE FLUSH MOUNTED JUNCTION BOX WITH SINGLE GANG BLANK COVER FOR SNOW MELTING SYSTEM AT 18" A.F.F. CENTERED ON COLUMN.
2. LOCATE FLUSH MOUNTED BOX WITH SINGLE GANG DUPLEX RECEPTACLE COVER AT 18" AFF CENTERED ON COLUMN.
3. LOCATE RECEPTACLE FOR BUILT-IN MICROWAVE OVEN ABOVE KITCHENETTE COUNTER, RECEPTACLE FOR REFRIGERATOR BELOW KITCHENETTE COUNTER, AND GFI RECEPTACLE ABOVE KITCHENETTE COUNTER. COORDINATE LOCATIONS WITH APPROVED KITCHENETTE SHOP DRAWINGS.
4. PROVIDE JUNCTION BOXES AND/OR RECEPTACLES AND ELECTRICAL WORK FOR AUTOMATIC SOLENOID OPERATED VALVES. PROVIDE ELECTRICAL WORK PER MANUFACTURER'S INSTRUCTIONS. CONCEALED LOW VOLTAGE WIRING SHALL BE INSTALLED IN RACEWAYS. EXPOSED LOW VOLTAGE WIRING SHALL BE INSTALLED IN SPLIT PLASTIC TUBING FASTENED AT 1'-0" INTERVALS. REFER TO DETAILS 'A', 'B', 'C', AND 'D' ON DRAWING EW-4.
5. TO LIGHT FIXTURE IN MECHANICAL MEZZANINE MOI.
6. TO ATTIC LIGHT SWITCH IN MECHANICAL MEZZANINE MOI.
7. AREA SHALL HAVE A MI CABLE SNOW MELTING SYSTEM. REFER TO GENERAL NOTES, THIS DRAWING AND DRAWING EW-5, EW-3 AND EW-4. SNOW MELT SYSTEM ALTERNATE #2.
8. GUTTER (FLAT ROOF) AND DOWN SPOUT FREEZE PROTECTION. CABLE SHALL RUN BETWEEN ROOF DRAINS. CABLE SHALL HALF CIRCLE ROOF DRAINS AND CONTINUE TO NEXT ROOF DRAIN. CABLE SHALL RUN THROUGH ROOF DRAIN AND IN ROOF DRAIN PIPING TO DOWNSPOUT. CABLE SHALL RUN IN DOWNSPOUT THE FULL LENGTH OF THE DOWNSPOUT.
9. GUTTER FREEZE PROTECTION SENSOR WITH 3 CONDUCTOR #18 JACKETED CABLE TO GUTTER FREEZE PROTECTION CONTROLLER.
10. WP CAST JUNCTION BOX FOR POWER CONNECTION.
11. GUTTER FREEZE PROTECTION CONTROLLER.
12. ROOF DRAIN PIPING AND OVERFLOW ROOF DRAIN PIPING FREEZE PROTECTION SHALL BE PROVIDED. PROVIDE HEAT TAPE AND CONTROLLER AT EACH LOCATION. CONNECT TO PP2-24. PIPE INSULATION AND WARNING LABELS SHALL BE PROVIDED BY PLUMBING CONTRACTOR. REFER TO DRAWING PW-1 FOR EXTENT OF PIPING.
13. ROOF DRAIN PIPING AND OVERFLOW ROOF DRAIN PIPING SHALL BE PROVIDED FREEZE PROTECTION. PROVIDE HEAT TAPE AND CONTROLLER AT EACH LOCATION. CONNECT TO PP2-26. PIPE INSULATION AND WARNING LABELS SHALL BE PROVIDED BY PLUMBING CONTRACTOR. REFER TO DRAWING PW-1 FOR EXTENT OF PIPING.
14. CONNECT DISPOSAL INSTALLED AND FURNISHED BY PLUMBING CONTRACTOR.
15. KIOSK PROVIDED BY GENERAL CONTRACTOR. PROVIDE TWO FLUSH FLOOR BOXES WITH BRASS COVERS WITH SCREW TYPE ROUND REMOVABLE INSERTS TO ACCESS DEVICES. PROVIDE ONE BOX WITH DUPLEX RECEPTACLE. PROVIDE OTHER BOX WITH PROVISIONS FOR ONE TELEPHONE, ONE DATA AND ONE CABLE JACK. PROVIDE ONE 1" CONDUIT TO TERMINAL BOARD TBI. VERIFY LOCATION WITH OWNER'S REPRESENTATIVE PRIOR TO ROUGH-IN.
16. KEY OPERATED SWITCH FOR CLEANING EXHAUST FAN. REFER TO DETAIL 'A' THIS DRAWING.
17. CONNECT ELECTRICAL DAMPER OPERATOR FURNISHED AND INSTALLED BY MECHANICAL CONTRACTOR. PROVIDE TOGGLE SWITCH AS DISCONNECT AT UNIT. REFER TO DETAIL 'A' THIS DRAWING.
18. THERMOSTAT FURNISHED, INSTALLED AND CONNECTED BY MECHANICAL CONTRACTOR.
19. TELEPHONE/DATA BACKBOARD TBI. REFER TO DRAWING EW-5.

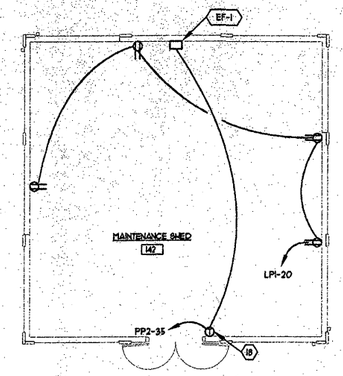

MAINTENANCE SHED 142

1/8" = 1'-0"

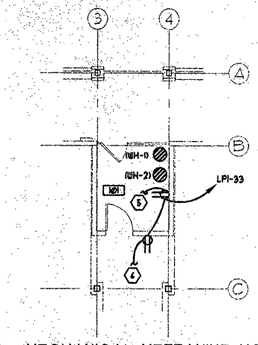

MECHANICAL MEZZANINE MOI

1/8" = 1'-0"

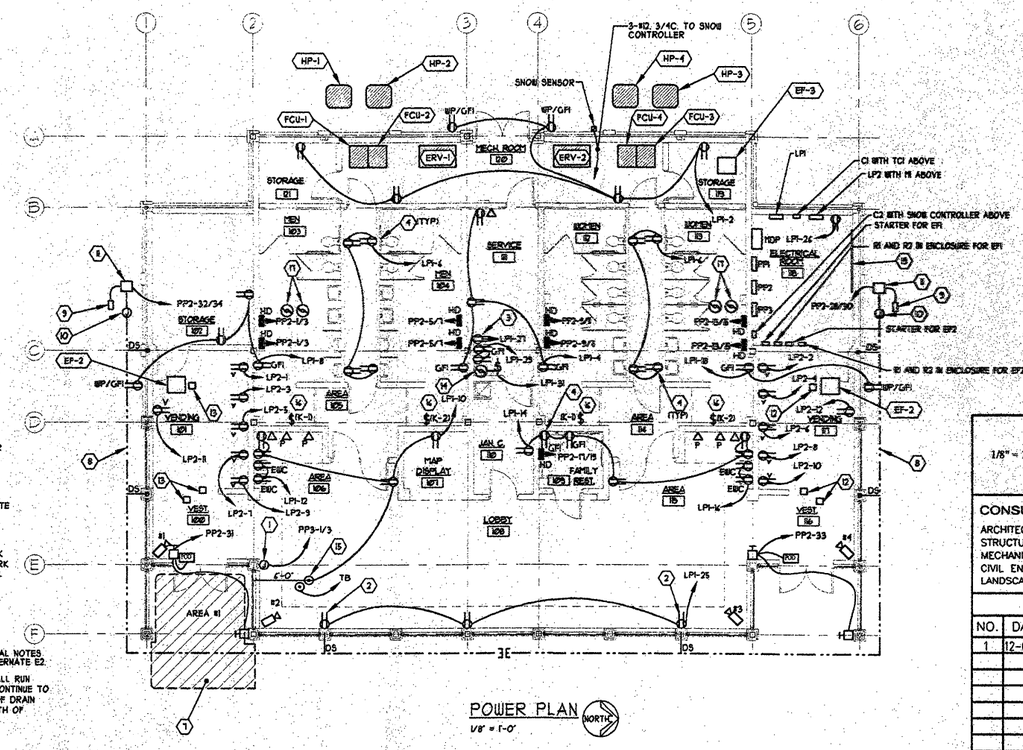

POWER PLAN

1/8" = 1'-0"

1/8" = 1'-0" 0 4' 8' 16' 24'

CONSULTING ARCHITECTS / ENGINEERS

ARCHITECT: BODNER & KERIK ARCHITECTS, INC.
STRUCTURAL: LANTZ JONES & NEBRASKA, INC.
MECHANICAL/ELECTRICAL: SRA, INC.
CIVIL ENGINEERING: POGGEMEYER DESIGN GROUP, INC.
LANDSCAPE ARCHITECT: R.D. ZANDE & ASSOCIATES, INC.

REVISIONS

NO.	DATE	DESCRIPTION
1	12-6-02	BID SET

STATE OF OHIO — JOHN E. SANDERS — E-58219 — REGISTERED PROFESSIONAL ENGINEER

PROJECT NUMBER 0226

FOR: OHIO DEPT. OF TRANSPORTATION

DRAWING DESCRIPTION: **POWER PLAN - WEST**

NEW REST STOP BUILDINGS

NO. 770-2001-072
US 30 WYANDOT/CRAWFORD

SITE 2 WESTBOUND

PREPARED FOR
STATE OF OHIO
DEPARTMENT OF ADMINISTRATIVE SERVICES
GENERAL SERVICES DIVISION

PREPARED BY
DEPARTMENT OF ADMINISTRATIVE SERVICES

PERMIT SUBMISSION	DATE	SHEET
10-09-02	10-09-02	EW-1

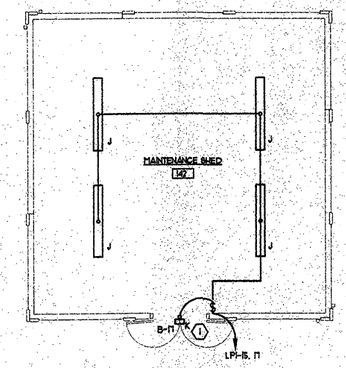

MAINTENANCE SHED 142

1/8" = 1'-0"

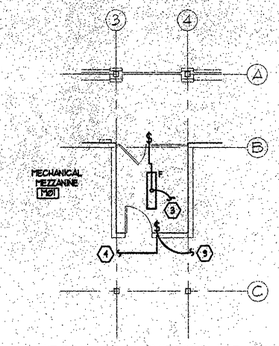

MECHANICAL MEZZANINE MOI

1/8" = 1'-0"

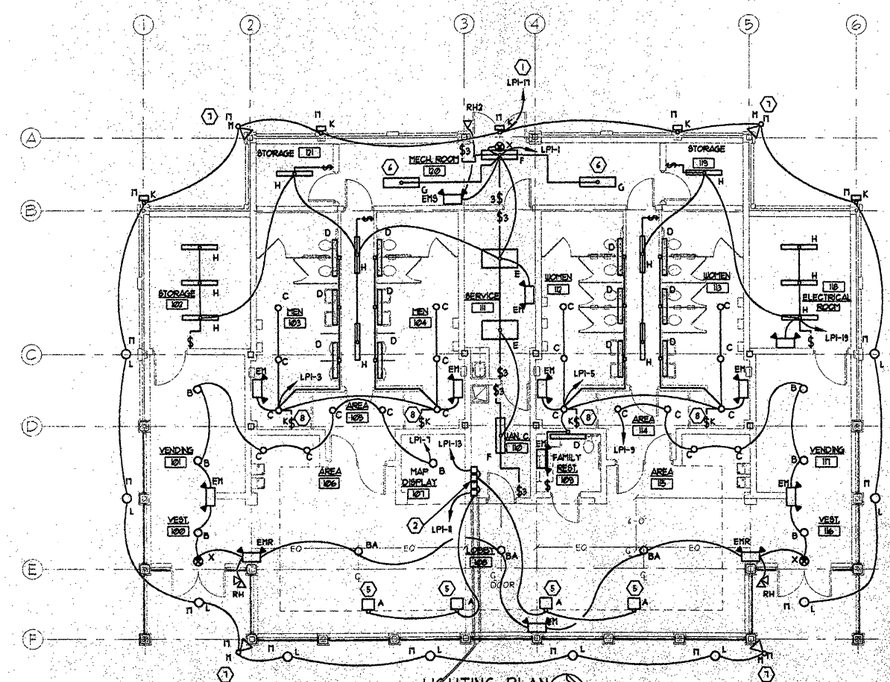

LIGHTING PLAN

1/8" = 1'-0"

GENERAL NOTES

1. LIGHT FIXTURES SHALL BE INSTALLED EQUALLY SPACED, SYMMETRICALLY AND CENTERED WITHIN RESPECTIVE SPACES.
2. COORDINATE LOCATION OF LIGHT FIXTURES WITH ARCHITECTURAL DRAWINGS.
3. LIGHT FIXTURES SHALL BE INSTALLED THE SAME IN SIMILAR PLACES.

CODED NOTES

1. CI CONTROLLED.
2. REMOTE BALLAST FOR THE TYPE "A" FIXTURES MOUNTED TO PAINTED FIRE RETARDENT 3/4" PLYWOOD BACKBOARD. PROVIDE 1" AIR SPACE BETWEEN BALLAST AND BACKBOARD. PROVIDE ISOLATION MOUNTING TO INSURE MINIMUM NOISE.
3. FROM RECEPTACLE IN MECHANICAL MEZZANINE MOI.
4. PROVIDE FOUR TYPE "H" FIXTURES AND ONE TYPE "EHS" FIXTURE IN ATTIC LOCATED AS REQUIRED.
5. FIXTURE SPACING IS DEPENDENT ON MANUFACTURER. PRIOR TO ROUGH-IN SUBMIT PROPOSED SPACING DIMENSIONS AND PHOTOMETRIC DATA FOR APPROVAL. ROUGH-IN ONLY AFTER WRITTEN APPROVAL IS RECEIVED.
6. COORDINATE FIXTURE LOCATION WITH EQUIPMENT INSTALLATION.
7. REFER TO ROOF PLAN DRAWING A-12 FOR LOCATION OF TYPE "H" FIXTURE. FIXTURE PROVIDED BY ELECTRICAL CONTRACTOR. MOUNTING STRUCTURE PROVIDED BY GENERAL CONTRACTOR.
8. LIGHT FIXTURE KEY SWITCH AND FAN KEY SWITCH SHALL BE PROVIDED IN A TWO GANG BOX WITH A TWO GANG COVERPLATE. REFER TO DRAWING EW-1 FOR FAN KEY SWITCH.
9. FROM RECEPTACLE IN ATTIC. REFER TO DRAWING EW-1.

1/8" = 1'-0" 0 4' 8' 16' 24'

CONSULTING ARCHITECTS / ENGINEERS

ARCHITECT: BODNER & KERIK ARCHITECTS, INC.
STRUCTURAL: LANTZ JONES & NEBRASKA, INC.
MECHANICAL/ELECTRICAL: SRA, INC.
CIVIL ENGINEERING: POGGEMEYER DESIGN GROUP, INC.
LANDSCAPE ARCHITECT: R.D. ZANDE & ASSOCIATES, INC.

REVISIONS

NO.	DATE	DESCRIPTION
1	12-6-02	BID SET

STATE OF OHIO JOHN E. SANDERS E-38218 REGISTERED PROFESSIONAL ENGINEER

PROJECT NUMBER 0226

FOR: OHIO DEPT. OF TRANSPORTATION

DRAWING DESCRIPTION: **LIGHTING PLAN - WEST**

NEW REST STOP BUILDINGS

NO. 770-2001-072
US 30 WYANDOT/CRAWFORD

SITE 2
WESTBOUND

PREPARED FOR
STATE OF OHIO
DEPARTMENT OF ADMINISTRATIVE SERVICES
GENERAL SERVICES DIVISION

PREPARED BY
DEPARTMENT OF ADMINISTRATIVE SERVICES

PERMIT SUBMISSION	DATE	SHEET
10-09-02	10-09-02	EW-2

Conduit under the floor for Lobby Lights & Sensor

L:\DRAWINGS\AOREST AREAS\WYANDOT\Dwgs\WEST\2004-EW2.dwg, 12/13/2002 08:27:53 AM, Eric Burwell

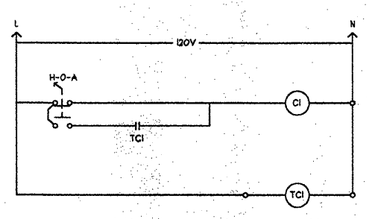

EXTERIOR LIGHTING CONTROL DIAGRAM

NOTES:

1. HAND-OFF-AUTO SELECTOR SWITCH: THREE POSITION MAINTAINED, TWO POLE, STANDARD BLACK KNOB, H-O-A LEGEND PLATE. PROVIDE SELECTOR SWITCH MOUNTED IN A NEMA 1 ENCLOSURE ADJACENT TO CONTACTOR C1.
2. CONTACTOR C1: 120V ELECTRICALLY HELD CONTACTOR, 60A-4P, NEMA 1 ENCLOSURE.
3. TIME CLOCK, TC1: 120V ELECTRONIC 365 DAY PROGRAMMABLE, SOLID STATE MEMORY WITH MINIMUM OF 24 HOUR PROGRAM AND TIME KEEPING PROTECTION WITHOUT ANOTHER SOURCE OF POWER. MAXIMUM OF 125 DAY BACK-UP OF PROGRAM AND TIME KEEPING WITH 3V BATTERY. AUTOMATIC DAYLITE SAVINGS TIME AND LEAP YEAR ADJUSTMENT. SPDT CONTACT RATED 10A AT 120V EACH OF 2 CHANNELS. LOCKABLE METAL ENCLOSURE. MOUNT TIME CLOCK TC1 ADJACENT TO CONTACTOR C1.
4. C1 CONTROLS CIRCUITS A-34, A-36, A-38 AND A-17.

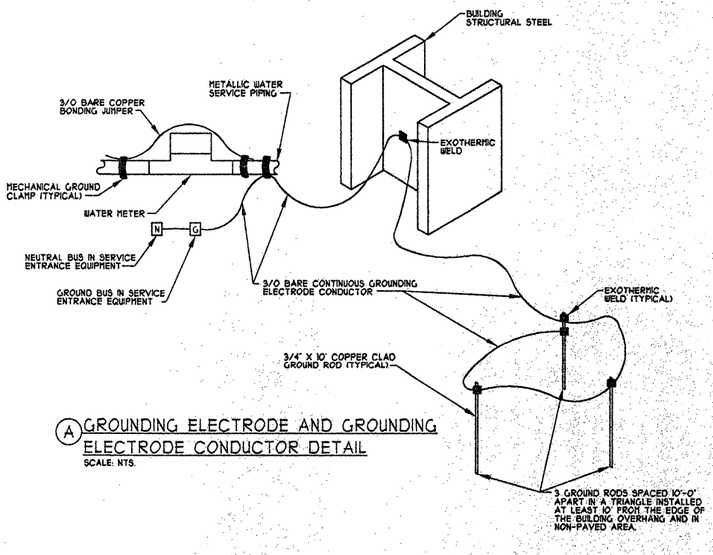

(A) GROUNDING ELECTRODE AND GROUNDING ELECTRODE CONDUCTOR DETAIL

SCALE: NTS.

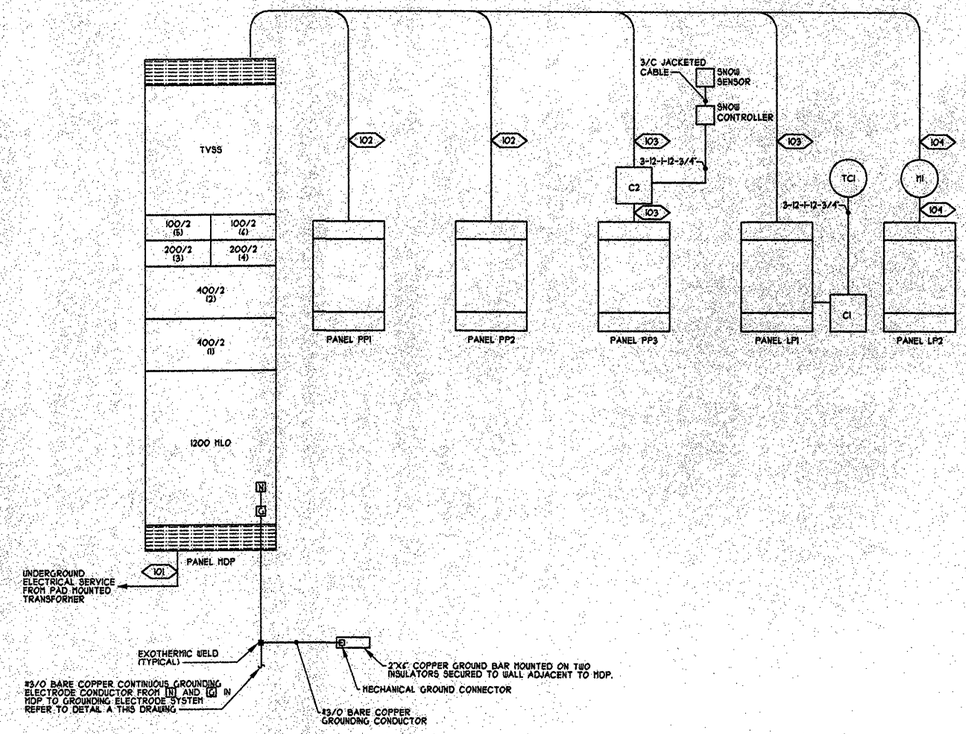

POWER DISTRIBUTION DIAGRAM

SYSTEM VOLTAGE: 240/120V, 1Ø, 3W

NOTES:

1. MDP: 22,000 AIC FULLY RATED, COPPER BUS WITH SILVER PLATED CONNECTIONS. SERVICE ENTRANCE LABEL.
2. C2: 120V ELECTRICALLY HELD CONTACTOR, 200A-2P, NEMA 1 ENCLOSURE.
3. PP3 AND C2: SNOW MELT SYSTEM ALTERNATE E2.

BUILDING LOAD CALCULATION

PANEL	MOTORS	RECEPTACLES	LIGHTING	HEATING	COOLING	MISC.
PANEL LP1	1121	19410	13437	0	0	0
PANEL LP2	0	8160	0	0	0	0
PANEL PP1	0	0	0	12580	30244	0
PANEL PP2	3504	0	0	0	0	28014
PANEL PP3	0	0	0	38100	0	0
TOTAL CONNECTED	4631	28230	13437	50680	*	28014
DEMAND FACTORS	.67	1st 10K + .50	1.00	1.0	1.00	1.00
TOTAL DEMAND	4758	1515	13437	50680	*	28014

* COOLING LOAD NOT USED FOR TOTALS. HEATING LOAD IS GREATER.

TOTAL CONNECTED LOAD = 165192 / 240 = 712 AMPS

TOTAL DEMAND LOAD = 112244 / 240 = 735 AMPS
Σ 1.25
918 MOCP

1200 AMP SERVICE

FEEDER SCHEDULE

NO.	SETS	CONDUCTORS/RACEWAY
101	3	3-600-4"
102	1	3-500-1-3-3 1/2"
103	1	3-3/0-1-6-2"
104	1	3-2-1-8-2"
-	-	-
-	-	-

FEEDER SCHEDULE KEY

SIZE OF POWER CONDUCTOR — SIZE OF GROUND CONDUCTOR — SIZE OF CONDUIT

3 - 8 - 1 - 10 - 3/4"

QUANTITY OF POWER CONDUCTOR — QUANTITY OF GROUND CONDUCTOR

THUS, RUN 3 #8, 1 #10 GRD. IN 3/4" CONDUIT

MECHANICAL EQUIPMENT WIRING SCHEDULE

MARK	NAME	VOLTS	PHASE	AMPS	KVA	CIRCUIT NO.	OCP	CONDUCTORS/RACEWAY	NOTES
EF-1	EXHAUST FAN	120	1	1.5	.2	PP2-35	20	2-12-1-12-3/4"	2,4
EF-2	EXHAUST FAN	120	1	5.6	.7	PP2-37	20	2-12-1-12-3/4"	2,5,6
EF-3	EXHAUST FAN	120	1	5.6	.7	PP2-37	20	2-12-1-12-3/4"	2,5,6
ERV-1	ENERGY RECOVERY VENT	230	1	28.4	6.8	PP1-17/19	40	2-8-1-10-3/4"	3
ERV-2	ENERGY RECOVERY VENT	230	1	28.4	6.8	PP1-21/23	40	2-8-1-10-3/4"	3
FCU-1	FAN COIL UNIT	230	1	34.2	8.1	PP1-2/4	50	2-6-1-10-3/4"	3
FCU-2	FAN COIL UNIT	230	1	34.2	8.1	PP1-6/8	50	2-6-1-10-3/4"	3
FCU-3	FAN COIL UNIT	230	1	34.2	8.1	PP1-10/12	50	2-6-1-10-3/4"	3
FCU-4	FAN COIL UNIT	230	1	34.2	8.1	PP1-14/16	50	2-6-1-10-3/4"	3
HP-1	HEAT PUMP	230	1	25.3	6.1	PP1-1/3	50	2-6-1-10-3/4"	3
HP-2	HEAT PUMP	230	1	25.3	6.1	PP1-5/7	50	2-6-1-10-3/4"	3
HP-3	HEAT PUMP	230	1	25.3	6.1	PP1-9/11	50	2-6-1-10-3/4"	3
HP-4	HEAT PUMP	230	1	25.3	6.1	PP1-13/15	50	2-6-1-10-3/4"	3
EH-1	WATER HEATER	240	1	22.9	5.5	PP2-34/36	30	2-10-1-10-3/4"	3
EH-2	WATER HEATER	240	1	22.9	5.5	PP2-40/42	30	2-10-1-10-3/4"	3

NOTES:

1. VOLTAGE IS RATED VOLTAGE OF EQUIPMENT. AMPERE AND KVA CALCULATION BASED UPON ACTUAL SYSTEM VOLTAGE.
2. UNIT DISCONNECT PROVIDED WITH EQUIPMENT. ELECTRICAL CONTRACTOR SHALL PROVIDE CONNECTION TO DISCONNECT.
3. ELECTRICAL CONTRACTOR SHALL PROVIDE UNIT DISCONNECT AT EQUIPMENT. ELECTRICAL CONTRACTOR SHALL PROVIDE CONNECTION TO DISCONNECT AND PROVIDE FLEXIBLE CONDUIT AND WIRING CONNECTION TO EQUIPMENT.
4. CONTROLLED BY THERMOSTAT FURNISHED BY MECHANICAL CONTRACTOR. ELECTRICAL CONTRACTOR SHALL INSTALL AND CONNECT THERMOSTAT.
5. ELECTRICAL CONTRACTOR SHALL PROVIDE MOTOR STARTER WITH THERMAL OVERLOAD. MOUNT STARTER IN ELECTRICAL ROOM.
6. STARTER CONTROLLED BY KEY SWITCH. REFER TO DRAWING E0-1.

NO SCALE

CONSULTING ARCHITECTS / ENGINEERS

ARCHITECT: BODNER & KERIK ARCHITECTS, INC.
STRUCTURAL: LANTZ JONES & NEBRASKA, INC.
MECHANICAL/ELECTRICAL: SRA, INC.
CIVIL ENGINEERING: POGGEMEYER DESIGN GROUP, INC.
LANDSCAPE ARCHITECT: R.D. ZANDE & ASSOCIATES, INC.

REVISIONS

NO.	DATE	DESCRIPTION
1	12-6-02	BID SET

STATE OF OHIO — JOHN E. SANDERS — E-58219 — REGISTERED PROFESSIONAL ENGINEER

PROJECT NUMBER 0226

FOR:
OHIO DEPT. OF TRANSPORTATION

DRAWING DESCRIPTION:
ELECTRICAL DIAGRAMS & SCHEDULES - WEST

NEW REST STOP BUILDINGS

NO. 770-2001-072
US 30 WYANDOT/CRAWFORD

SITE 2
WESTBOUND

PREPARED FOR
STATE OF OHIO
DEPARTMENT OF ADMINISTRATIVE SERVICES
GENERAL SERVICES DIVISION

PREPARED BY
DEPARTMENT OF ADMINISTRATIVE SERVICES

PERMIT SUBMISSION	DATE	SHEET
10-09-02	10-09-02	EW-3

PANEL "PP1"

SERVICE:
PHASE TO PHASE VOLTAGE: 240
PHASE TO GROUND VOLTAGE: 120
WIRE: 3
PANEL MAINS: 400A MAIN LUGS ONLY
MOUNTING: SURFACE

AIC: 22,000
H INDICATES 'HACR' TYPE BREAKER
L INDICATES LOCKED ON BREAKER
G INDICATES G/FI CIRCUIT BREAKER
BKR./SIZE INDICATES AMPS/POLE(S)

LOAD WATTS	WIRE SIZE	LOAD DESCRIPTION		BRKR SIZE	CIRCUIT NUMBER		BRKR SIZE	LOAD DESCRIPTION	WIRE SIZE	LOAD WATTS
3031	#10	HP-1	H	50/2	1	2	50/2	H FCU-1	#6	4334
3031	#10				3	4			#6	4334
3031	#10	HP-2	H	50/2	5	6	50/2	H FCU-2	#6	4334
3031	#10				7	8			#6	4334
3031	#10	HP-3	H	50/2	9	10	50/2	H FCU-3	#6	4334
3031	#10				11	12			#6	4334
3031	#10	HP-4	H	50/2	13	14	50/2	H FCU-4	#6	4334
3031	#10				15	16			#6	4334
3403	#10	ERV-1	H	30/2	17	18	20/1	SPARE	-	0
3403	#10				19	20	20/1	SPARE	-	0
3403	#10	ERV-2	H	30/2	21	22	20/1	SPARE	-	0
3403	#10				23	24	20/1	SPARE	-	0
0	-	SPARE		20/1	25	26	20/1	SPARE	-	0
0	-	SPARE		20/1	27	28	20/1	SPARE	-	0
0	-	SPARE		20/1	29	30	-	SPACE	-	0
0	-	SPARE		20/1	31	32	-	SPACE	-	0
0	-	SPARE		20/1	33	34	-	SPACE	-	0
0	-	SPARE		20/1	35	36	-	SPACE	-	0
0	-	SPARE		20/1	37	38	-	SPACE	-	0
0	-	SPARE		20/1	39	40	-	SPACE	-	0
0	-	SPARE		20/1	41	42	-	SPACE	-	0

HVAC WATTS	12580
MOTOR WATTS	0
RECEPTACLE WATTS	0
MISC. WATTS	0
TOTAL CONNECTED WATTS	12580
TOTAL CONNECTED AMPS (BALANCED)	302.5

G1: 5 MA TRIP LEVEL
G2: 30 MA TRIP LEVEL

PANEL "PP2"

SERVICE:
PHASE TO PHASE VOLTAGE: 240
PHASE TO GROUND VOLTAGE: 120
WIRE: 3
PANEL MAINS: 400A MAIN LUGS ONLY
MOUNTING: SURFACE

AIC: 22,000
H INDICATES 'HACR' TYPE BREAKER
L INDICATES LOCKED ON BREAKER
G INDICATES G/FI CIRCUIT BREAKER
BKR./SIZE INDICATES AMPS/POLE(S)

LOAD WATTS	WIRE SIZE	LOAD DESCRIPTION		BRKR SIZE	CIRCUIT NUMBER		BRKR SIZE	LOAD DESCRIPTION	WIRE SIZE	LOAD WATTS
2506	#10	HAND DRYERS MEN	G1	30/2	1	2	20/1	SPARE	-	0
2506	#10				3	4	20/1	SPARE	-	0
2506	#10	HAND DRYERS MEN	G1	30/2	5	6	20/1	SPARE	-	0
2506	#10				7	8	20/1	SPARE	-	0
2506	#10	HAND DRYERS WOMEN	G1	30/2	9	10	20/1	SPARE	-	0
2506	#10				11	12	20/1	SPARE	-	0
2506	#10	HAND DRYERS WOMEN	G1	30/2	13	14	20/1	SPARE	-	0
2506	#10				15	16	20/1	SPARE	-	0
1253	#10	HAND DRYERS FAMILY	G1	30/2	17	18	20/1	SPARE	-	0
1253	#10				19	20	20/1	SPARE	-	0
0	-	SPARE		20/1	21	22	20/1	SPARE	-	0
0	-	SPARE		20/1	23	24	20/1	L ROOF DRAIN FRZ. PROTECT.	#12	450
0	-	SPARE		20/1	25	26	20/1	L ROOF DRAIN FRZ. PROTECT.	#12	450
0	-	SPARE		20/1	27	28	30/2	L G2 GUTTER FRZ. PROTECTION	#10	1140
0	-	SPARE		20/1	29	30			#10	1140
0	-	SPARE		20/1	31	32	30/2	L G2 GUTTER FRZ. PROTECTION	#10	1140
0	-	SPARE		20/1	33	34			#10	1140
1000	#12	POWER OPER. DOOR		20/1	35	36	30/2	WH-1	#10	2150
1000	#12	POWER OPER. DOOR		20/1	37	38			#10	2150
110	#12	EF-1		20/1	39	40	30/2	WH-2	#10	2150
1334	#12	EF-2, 3		20/1	41	42			#10	2150

HVAC WATTS	0
MOTOR WATTS	3504
RECEPTACLE WATTS	0
MISC. WATTS	28014
WATER HEATER WATTS	11000
TOTAL CONNECTED WATTS	42518
TOTAL CONNECTED AMPS (BALANCED)	177.2

G1: 5 MA TRIP LEVEL
G2: 30 MA TRIP LEVEL

PANEL "LP1"

SERVICE:
PHASE TO PHASE VOLTAGE: 240
PHASE TO GROUND VOLTAGE: 120
WIRE: 3
PANEL MAINS: 200A MAIN LUGS ONLY
MOUNTING: SURFACE

AIC: 22,000
H INDICATES 'HACR' TYPE BREAKER
L INDICATES LOCKED ON BREAKER
G INDICATES G/FI CIRCUIT BREAKER
BKR./SIZE INDICATES AMPS/POLE(S)

LOAD WATTS	WIRE SIZE	LOAD DESCRIPTION	BRKR SIZE	CIRCUIT NUMBER		BRKR SIZE	LOAD DESCRIPTION	WIRE SIZE	LOAD WATTS
1550	#12	MECH/SERV/STORAGE/JAN LTG	20/1	1	2	20/1	MECHANICAL/STOR/EXT REC	#12	1080
752	#12	MEN LTG	20/1	3	4	20/1	SERVICE/MEN/WOMEN REC	#12	720
872	#12	WOMEN/FAMILY LTG	20/1	5	6	20/1	WATER VALVES	#12	100
840	#12	VENDING, MAP, LOBBY LTG	20/1	7	8	20/1	STOR/MEN/EXT REC	#12	720
735	#12	VENDING, DISPLAY, LOBBY LTG	20/1	9	10	20/1	LOBBY REC	#12	900
960	#12	LOBBY LTG	20/1	11	12	20/1	EWC	#12	1400
960	#12	LOBBY LTG	20/1	13	14	20/1	LOBBY/FAMILY/JAN REC	#12	1080
560	#10	MAINTENANCE SHED LTG	20/1	15	16	20/1	EWC	#12	1400
1848	#10	EXTERIOR, CUPOLA LTG	30/1	17	18	20/1	WOMEN/EXT REC	#12	360
420	#12	STORAGE, ELECTRICAL LTG	20/1	19	20	20/1	MAINTENANCE SHED REC	#10	720
1715	#12	CCTV CABINET REC	20/1	21	22	20/1	TBI REC	#12	360
1715	#12	CCTV CABINET REC	20/1	23	24	20/1	TBI REC	#12	360
540	#12	LOBBY REC	20/1	25	26	20/1	ELECTRICAL REC	#12	180
1200	#12	MICROWAVE	20/1	27	28	20/1	SPARE	-	0
1000	#12	KITCHENETTE/REFRIG.	20/1	29	30	20/1	SPARE	-	0
1121	#12	DISPOSAL	20/1	31	32	20/1	SPARE	-	0
460	#12	MEZZ/ATTIC REC & LTG	20/1	33	34	30/1	SITE LTG	#8	1215
0	-	SPARE	20/1	35	36	30/1	SITE LTG	#8	1835
0	-	SPARE	20/1	37	38	30/1	SITE LTG	#8	620
0	-	SPARE	20/1	39	40	20/1	SERVICE TRAILER REC	#8	1900
0	-	SPARE	20/1	41	42	20/1	SERVICE TRAILER REC	#8	1900

HVAC WATTS	0
MOTOR WATTS	1121
RECEPTACLE WATTS	15470
LIGHTING WATTS	13631
TOTAL CONNECTED WATTS	34234
TOTAL CONNECTED AMPS (BALANCED)	142.1

PANEL "PP3"

SERVICE:
PHASE TO PHASE VOLTAGE: 240
PHASE TO GROUND VOLTAGE: 120
WIRE: 3
PANEL MAINS: 200A MAIN LUGS ONLY
MOUNTING: SURFACE

AIC: 22,000
H INDICATES 'HACR' TYPE BREAKER
L INDICATES LOCKED ON BREAKER
G INDICATES G/FI CIRCUIT BREAKER
BKR./SIZE INDICATES AMPS/POLE(S)

LOAD WATTS	WIRE SIZE	LOAD DESCRIPTION		BRKR SIZE	CIRCUIT NUMBER		BRKR SIZE	LOAD DESCRIPTION	WIRE SIZE	LOAD WATTS
3150	#6	AREA #1 SNOW MELT	L	50/2	1	2	50/2	L AREA #4 SNOW MELT	#6	3150
3150	#6				3	4			#6	3150
2600	#8	AREA #2 SNOW MELT	L	40/2	5	6	40/2	L AREA #5 SNOW MELT	#8	2600
2600	#8				7	8			#8	2600
2600	#8	AREA #3 SNOW MELT	L	40/2	9	10	50/2	L AREA #6 SNOW MELT	#6	3150
2600	#8				11	12			#6	3150
0	-	SPARE		40/2	13	14	-	SPACE	-	0
0	-				15	16	-	SPACE	-	0
0	-	SPARE		50/2	17	18	-	SPACE	-	0
0	-				19	20	-	SPACE	-	0
0	-	SPACE		-	21	22	-	SPACE	-	0
0	-	SPACE		-	23	24	-	SPACE	-	0
0	-	SPACE		-	25	26	-	SPACE	-	0
0	-	SPACE		-	27	28	-	SPACE	-	0
0	-	SPACE		-	29	30	-	SPACE	-	0

HVAC WATTS	0
MOTOR WATTS	0
RECEPTACLE WATTS	0
LIGHTING WATTS	0
SNOW MELT HEATER WATTS	38100
TOTAL CONNECTED WATTS	38100
TOTAL CONNECTED AMPS (BALANCED)	158.8

SNOW MELT SYSTEM ALTERNATE E2

PANEL "LP2"

SERVICE:
PHASE TO PHASE VOLTAGE: 240
PHASE TO GROUND VOLTAGE: 120
WIRE: 3
PANEL MAINS: 100A MAIN LUG ONLY
MOUNTING: SURFACE

AIC: 22,000
H INDICATES 'HACR' TYPE BREAKER
L INDICATES LOCKED ON BREAKER
G INDICATES G/FI CIRCUIT BREAKER
BKR./SIZE INDICATES AMPS/POLE(S)

LOAD WATTS	WIRE SIZE	LOAD DESCRIPTION	BRKR SIZE	CIRCUIT NUMBER		BRKR SIZE	LOAD DESCRIPTION	WIRE SIZE	LOAD WATTS
960	#12	VENDING	20/1	1	2	20/1	VENDING	#12	960
960	#12	VENDING	20/1	3	4	20/1	VENDING	#12	960
960	#12	VENDING	20/1	5	6	20/1	VENDING	#12	960
960	#12	VENDING	20/1	7	8	20/1	VENDING	#12	960
360	#12	VENDING	20/1	9	10	20/1	VENDING	#12	360
180	#12	VENDING	20/1	11	12	20/1	VENDING	#12	180
0	-	SPARE	20/1	13	14	20/1	SPARE	-	0
0	-	SPARE	20/1	15	16	20/1	SPARE	-	0
0	-	SPARE	20/1	17	18	20/1	SPARE	-	0
0	-	SPARE	20/1	19	20	20/1	SPARE	-	0

HVAC WATTS	0
MOTOR WATTS WATTS	0
RECEPTACLE WATTS	8760
LIGHTING WATTS	0
TOTAL CONNECTED WATTS	8760
TOTAL CONNECTED AMPS (BALANCED)	36.5

NO SCALE

CONSULTING ARCHITECTS / ENGINEERS
ARCHITECT: BODNER & KERIK ARCHITECTS, INC.
STRUCTURAL: LANTZ JONES & NEBRASKA, INC.
MECHANICAL/ELECTRICAL: SRA, INC.
CIVIL ENGINEERING: POGGEMEYER DESIGN GROUP, INC.
LANDSCAPE ARCHITECT: R.D. ZANDE & ASSOCIATES, INC.

REVISIONS

NO.	DATE	DESCRIPTION
1	12-6-02	BID SET

STATE OF OHIO
JOHN E. SANDERS
E-58219
REGISTERED PROFESSIONAL ENGINEER

PROJECT NUMBER
0226

FOR:
OHIO DEPT. OF TRANSPORTATION

DRAWING DESCRIPTION:
ELECTRICAL SCHEDULES - WEST

NEW REST STOP BUILDINGS

NO. 770-2001-072
US 30 WYANDOT/CRAWFORD

SITE 2
WESTBOUND

PREPARED FOR
STATE OF OHIO
DEPARTMENT OF ADMINISTRATIVE SERVICES
GENERAL SERVICES DIVISION

PREPARED BY
DEPARTMENT OF ADMINISTRATIVE SERVICES

PERMIT SUBMISSION	DATE	SHEET
10-09-02	10-09-02	EW-4

LIGHTING FIXTURE SCHEDULE

TYPE	MTG	DESCRIPTION	LAMPS	WATTS	VOLTS	CATALOG NO.	CATALOG NO.	CATALOG NO.	CATALOG NO.	CATALOG NO.
A	11'-0" AFF	WALL MOUNTED ADJUSTABLE INDIRECT METAL HALIDE WITH REMOTE BALLAST.	1-400W	460	120	UNONA #PI-L5M-400-L5I-SGW	INSIGHT #TM983-RCB-I-I-FINISH	FORUM #QUA-400MH-I-AS	ELLIPTIPAR #MH-M400Z-02-A-V0-0	ORGATECH/OMEGALUX XZ400MH-I-Y-C-A-S-0 (WEDGE ENCLOSURE)
B	CLG REC	8" DIA. COMPACT FLUORESCENT DOWNLIGHT WITH CLEAR ALZAK REFLECTOR CONE.	2-42W CF42/TRT	90	120	INDY #110R-421-5AC	LITHONIA #AF-2/42TRT-8AR-120	PORTFOLIO #PD8-H42232E-8HC	PRESCOLITE #CFTD832HEB-STFD802H-B24	OMEGA LIGHTING #OM82H42PLT-CS-120/277
BW	CLG REC	8" DIA. COMPACT FLUORESCENT WALL WASHER WITH CONCAVE LENS AND CLEAR ALZAK REFLECTOR.	1-42W CF42/TRT	45	120	INDY #31R-421-5AC	LITHONIA #DFW-1/42TRT-7ASL-120	PORTFOLIO #C1942E-7193LI.	COLUMBIA LIGHTING #CFTW832EB-ST42-B24	OMEGA LIGHTING #OM81H42PLTLBW-CS-120/277
BA	CLG REC	8" DIA. COMPACT FLUORESCENT DOWNLIGHT WITH CLEAR ALZAK REFLECTOR CONE AND SLOPE CEILING HOUSING.	2-42W CF42/TRT	90	120	INDY #110R-421-5AC w/ SLOPE CEILING HOUSING	LITHONIA #AF-2/42TRT-8AR-120 w/ SLOPE CEILING HOUSING	PORTFOLIO #C3242E-9250LI w/ SLOPE CEILING HOUSING	PRESCOLITE #CFTD832HEB-STFD802H-B24 w/ SLOPE CEILING HOUSING	OMEGA LIGHTING #OM82H42PLT-CS-120/277 w/ SLOPE CEILING HOUSING
C	CLG REC	1' DIA. RECESSED COMPACT FLUORESCENT DOWNLIGHT WITH REGRESSED CONCAVE PRISMATIC LENS & WHITE TRIM.	1-42W CF42/TRT	45	120	INDY #GOR-421E-PPL	LITHONIA #LGFV-42TRT-TRW CHL-120	SPECTRUM #SPTVP-142-1-W5-1120PG	PRESCOLITE #CFT832EB-WTF806-SL-B24	CAPRI LIGHTING #CM85-FV226/32/42U-V86F
D	7'-6" AFF	7' X 4' WALL MOUNTED FLUORESCENT VANDAL RESISTANT FIXTURE WITH WHITE POLYCARBONATE LENS & PERIMETER PAINT.	2-32W F32/T8	64	120	C.D.LIGHTING #VWA-4-232-120-EB	KENALL #HLHA8-48-R-X-CP-232-EBI-120	FAIL-SAFE #FS-RB-PP-64-A	MORLITE #LPL2000-232-120	LEGION LIGHTING #16-232-UBP-EBO-WL
E	CLG SURF	2' X4' SURFACE MOUNTED MODULAR FLUORESCENT WITH FLAT STEEL DOOR. .125" ACRYLIC PRISMATIC LENS & TWO CIRCUIT WIRING.	4-32W F32/T8	128	120	HUBBELL #5S04CA02B5	LITHONIA #2M-432-A12125-120-GEB	METALUX #2HC-432-A125-120-EB81	COLUMBIA LIGHTING #SM24-432-FSA12125-4EB8120	DAYBRITE LIGHTING #2SM432-FS12-120-1/4EB
F	CLG SURF	8' X 4' SURFACE MOUNTED FLUORESCENT WITH WRAPAROUND ACRYLIC PRISMATIC LENS.	2-32W F32/T8	64	120	HUBBELL #U232B	LITHONIA #SB-232-120-GEB	METALUX #U-232A-120-EB81	COLUMBIA LIGHTING #AWN4-232-EB8120	DAYBRITE LIGHTING #OWN232-120-1/2EB
G	BOTTOM @ 12'0"	1' X 4' CHAIN SUSPENDED INDUSTRIAL FLUORESCENT FIXTURE WITH APERTURED REFLECTOR.	2-32W F32/T8	64	120	HUBBELL #GM2RPP10B	LITHONIA #LA-232-120-GEB	METALUX #IA-232-120-EB81	COLUMBIA LIGHTING #CSR4-232-EB8120	DAYBRITE LIGHTING. #IFO232-PP-120-1/2EB
H	AS REQ'D	4 FT. OPEN STRIP FLUORESCENT.	2-32W F32/T8	64	120	HUBBELL #C232B	LITHONIA #C-232-120-GEB	METALUX #SS-232-120-EB81	COLUMBIA LIGHTING #CS4-232-EB8120	DAYBRITE LIGHTING #T232-120-1/2EB
J	CLG SURF	8 FT. TANDEM INDUSTRIAL FLUORESCENT FIXTURE WITH FIBER GLASS HOUSING. ACRYLIC LENS & 0° LOW TEMP BALLAST.	4-32W F32/T8	128	120	HUBBELL #EWL084R-SPDR-BI	LITHONIA #TVRH-432-120-CG-1/4-TUBI	METALUX #BTVT2-432-120-EB81-DR-Z	COLUMBIA LIGHTING #LUM4-232-EB8120	DAYBRITE LIGHTING #TDGWE232-120-1/4LT
K	9'-0" AFF	METAL HALIDE WALLPACK WITH POLYCARBONATE HOUSING.	1-100W M100	125	120	HUBBELL #PVL-100H-128-L	LITHONIA #TWA-100M-120-LPI	LUMARK #MHWP-100H-MT	SPAULDING-WHITEWAY #MRK-M100-120	DAYBRITE LIGHTING #WL5100MMT-LP
L	CLG REC	RECESSED OUTDOOR METAL HALIDE LOW PROFILE DOWNLIGHT WITH FRESNEL LENS AND DIE CAST TRIM	1-100W M100	125	120	STERNER #SRR-555-100MH-120-GH-DW	KENALL #MRTRP5R/CC-C-XX-100M-I-120	USAL #SOM-100MH-120-XXX	REBELLE LIGHTING #2021M-100H	GARDCO LIGHTING #220-F-100MH-120-BRP
M	ARCH DETAIL	METAL HALIDE ADJUSTABLE SPOT LIGHT	1-70W M70/PAR30 /SP	100	120	STERNER #VE8D-L70MH-C-YK-WM	HYDREL #4430-P30M70H-120-SSB349-FINISH	BK #SE-42-XXX-9-B-PC70-120	A.A.L. #05R-1076-120	GARDCO LIGHTING #DSP1-J-PAR38-70MH-120-BLP
X	ABOVE DOOR	LED EXIT SIGN WITH DIE CAST ALUMINUM HOUSING, STENCIL FACE, RED LETTERS. EMERGENCY BATTERY AND SELF DIAGNOSTICS.	LED	10	120	HUBBELL #CUPRAL9D	LITHONIA #LE-S-W-I-R-ELN-SD	SURE-LITES #CX7170RW	DUAL LITE #LCSRWE-I	DAYBRITE LIGHTING #ERSSL22/21R
EM	CLG REC	RECESSED EMERGENCY LIGHTING UNIT WITH TWIN HEADS, AND MAINTENANCE FREE LONG LIFE LEAD BATTERY AND SELF DIAGNOSTICS.	2-8W PAR36	25	120	HUBBELL #CL-6-25-2P8ID	LITHONIA #ELR4-SD	SURE-LITES #RLM-2-SD	DUAL LITE #TB-15-I	DAYBRITE LIGHTING #ER4L18W-PSWC
EMR	CLG REC	RECESSED EMERGENCY LIGHTING UNIT WITH TWIN HEADS, AND MAINTENANCE FREE LONG LIFE LEAD BATTERY. REMOTE CAPACITY AND SELF DIAGNOSTICS.	2-8W PAR36	25	120	HUBBELL #CL-6-36-2P8I-D	LITHONIA #ELR4-SD	SURE-LITES #RLM-2-SD/29-88	DUAL LITE #TB-30-I	DAYBRITE LIGHTING #ER4L25W-PSWC
EMS	WALL	SURFACE MOUNTED EMERGENCY LIGHTING UNIT WITH TWIN HEADS, MAINTENANCE FREE LONG LIFE LEAD BATTERY. REMOTE CAPACITY & SELF DIAGNOSTICS.	2-7.2W PAR36	25	120	HUBBELL #PEL-25-2R9I-D w/REMOTE CAPACITY FOR (2) HEADS	LITHONIA #ELR4-SD	SURE-LITES #CC-4-WH-SD	DUAL LITE #LM140I	MC PHILBEN #CTXXL24W-C58C PROVIDE REMOTE CAPACITY MODELS WHERE SHOWN
RH	CLG SURF	TWIN WEATHERPROOF EMERGENCY LIGHTING REMOTE HEADS.	2-7.2W	14.4	6	HUBBELL (2) #2PL-1-6-B-MPWP2	LITHONIA #2ELA-T-NX-NO812	SURE-LITES #CT-6-DWWH	DUAL LITE #REMPO412	DAYBRITE LIGHTING (2) #PRH-MP2TW-WP
RH2	CLG SURF	SINGLE WEATHERPROOF EMERGENCY LIGHTING REMOTE HEAD.	1-7.2W	7.2	6	HUBBELL #2PL-1-6-B-MPWP2	LITHONIA #ELA-T-NX-NO812	SURE-LITES #CT-6-DWWH	DUAL LITE #REMPO0412	DAYBRITE LIGHTING #PRH-MP2TW-WP

NOTES:
1 ALL FLUORESCENT BALLASTS SHALL BE ELECTRONIC.
2 ALL FLUORESCENT LAMPS SHALL BE 3500°K COLOR TEMPERATURE.

ABBREVIATIONS

A	AMPERE
AC	ALTERNATING CURRENT
AFF	ABOVE FINISHED FLOOR
AFG	ABOVE FINISHED GRADE
AIC	AMPERE INTERRUPTING CAPACITY
AMP	AMPERE
ARCH	ARCHITECTURAL
BKR	BREAKER
CB	CIRCUIT BREAKER
CCTV	CLOSED CIRCUIT TELEVISION
CKT	CIRCUIT
CLG	CEILING
CTRL	CONTROL
D	DEPTH
DC	DIRECT CURRENT
DWG	DRAWING
EC	ELECTRICAL CONTRACTOR
EWC	ELECTRIC WATER COOLER
FT	FEET, FOOT
G	GROUND
GC	GENERAL CONTRACTOR
GRD	GROUND
H	HEIGHT
HTR	HEATER
HVAC	HEATING, VENTILATION, AIR CONDITIONING
JB	JUNCTION BOX
KVA	KILO-VOLT-AMPERE
KV	KILO-VOLT
KW	KILO-WATT
LTG	LIGHTING
LTS	LIGHTS
MCB	MAIN CIRCUIT BREAKER
MECH	MECHANICAL
MIN	MINIMUM
MLO	MAIN LUG ONLY
MTD	MOUNTED
MTG	MOUNTING
N	NEUTRAL
NO.	NUMBER
OC	ON CENTER
PEC	PHOTO ELECTRIC CONTROL
PNL	PANEL
PWR	POWER
REC	RECEPTACLE
RES	RECESSED
REQ'D	REQUIRED
STR	STARTER
SURF	SURFACE
TB	TERMINAL BOARD
TC	TIME CLOCK
TELE	TELEPHONE
TV	TELEVISION
TYP	TYPICAL
UOI	UNLESS OTHERWISE INDICATED
UON	UNLESS OTHERWISE NOTED
V	VOLT
V	VENDING
VA	VOLT-AMPERE
W	WIDTH

SYMBOL LEGEND

SYMBOL	MTG	DESCRIPTION
		WIRING IN CONDUIT.
A-1		CIRCUIT CONDUIT HOMERUN TO PANEL. LETTER INDICATES PANEL DESIGNATION. NUMBERS INDICATE CIRCUIT NUMBERS.
$	48" AFF	SWITCH, SINGLE POLE, 20 AMP, 120V K = KEY OPERATED.
$3	48" AFF	SWITCH, THREE-WAY, 20AMP, 120V K= KEY OPERATED.
$M	48" AFF	MANUAL MOTOR STARTING SWITCH, SPST, 120 WITH THERMAL OVERLOAD AND PILOT LIGHT.
	18" AFF UON	DUPLEX RECEPTACLE, GROUNDING TYPE, 20 AMP, 125 VOLT, 3 WIRE. WP = WEATHERPROOF F = FLOOR MOUNTED GFI = GROUND FAULT INTERRUPTER
	18" AFF UON	DOUBLE DUPLEX RECEPTACLE, GROUNDING TYPE, 20 AMP, 125 VOLT, 3 WIRE.
▷	18" AFF UON	TELEPHONE OUTLET, 4" SQUARE, FLUSH MOUNTED BOX WITH SINGLE GANG BLANK COVER PLATE. P = PUBLIC PHONE @ 48" AFF F = FLOOR MOUNTED
TV	18" AFF UON	CABLE OUTLET, 4" SQUARE, FLUSH MOUNTED BOX WITH SINGLE GANG BLANK COVER PLATE F = FLOOR MOUNTED
J	AS NOTED	JUNCTION BOX. MOUNTING HEIGHT AND SIZE AS REQUIRED OR AS INDICATED.
HD	3T	PROVIDE WHITE RECESSED ELECTRIC HAND DRYER, TOUCHLESS AUTOMATIC OPERATION. WORLD DRYER MODEL # XRA54-914A. 230V-10A-2300W. MOUNTING HEIGHT IS FROM FINISHED FLOOR TO BOTTOM OF DRYER. MAINTAIN 2'-0" BETWEEN DRYERS.
PCS		POWER OPERATED DOOR-VERIFY POWER AND CONNECTION REQUIREMENTS.
H		PUSH PLATE SWITCH FOR POWER OPERATED DOOR. FURNISHED BY GC. INSTALLED AND WIRED BY EC.
CT	ABOVE CEILING U.O.N.	OUTLET BOX FOR FUTURE CLOSED CIRCUIT TELEVISION CAMERA.
1		REFER TO NOTE.

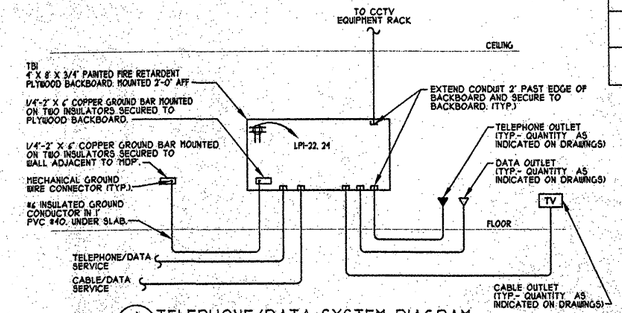

A TELEPHONE/DATA SYSTEM DIAGRAM
NTS

NOTES:

1. CONDUIT TO TELEPHONE, DATA, AND CABLE OUTLET; 3/4" WITH #12 PULL WIRE.
2. TELEPHONE/DATA SERVICE CONDUIT; 4" PVC #40 WITH PULL WIRE. COORDINATE SERVICE WITH UTILITY. PROVIDE CONDUIT AND PULL WIRE PER UTILITY REQUIREMENTS.
3. CABLE/DATA SERVICE CONDUIT. 2" PVC #40 WITH PULL WIRE. COORDINATE SERVICE WITH UTILITY. PROVIDE CONDUIT AND PULL WIRE PER UTILITY REQUIREMENTS.

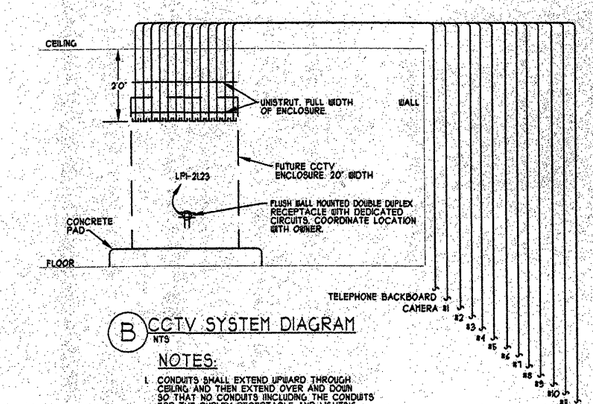

B CCTV SYSTEM DIAGRAM
NTS

NOTES:

1. CONDUITS SHALL EXTEND UPWARD THROUGH CEILING AND THEN EXTEND OVER AND DOWN SO THAT NO CONDUITS INCLUDING THE CONDUITS FOR THE DUPLEX RECEPTACLE AND LIGHTING IN THE ROOM PENETRATE THE FLOOR AREA (INCLUDING THE FLOOR BENEATH THE WALLS) OF THE ROOM THE CCTV CABINET IS LOCATED IN.
2. CONDUIT TO TELEPHONE BACKBOARD. 1-3/4" WITH #12 PULL WIRE.
3. CONDUITS FOR CAMERAS #1-#4. 2-3/4" WITH #12 PULL WIRE. TERMINATE CONDUITS TO 4" SQ. DEEP BOXES WITH BLANK COVER PLATES. BOXES SHALL BE LOCATED IN CONCEALED SPACE. PROVIDE ACCESS MEANS TO ALL BOXES.
4. CONDUITS FOR CAMERAS #9-#12. 2-1" WITH #12 PULL WIRE. CAP CONDUIT BELOW GRADE AND MARK LOCATION.
5. CONDUIT FOR CAMERA #12. 2-1" WITH #12 PULL WIRE CAP CONDUITS STUBBED UP INSIDE MAINTENANCE SHED.

NO SCALE

CONSULTING ARCHITECTS / ENGINEERS

ARCHITECT: BODNER & KERIK ARCHITECTS, INC.
STRUCTURAL: LANTZ JONES & NEBRASKA, INC.
MECHANICAL/ELECTRICAL: SRA, INC.
CIVIL ENGINEERING: POGGEMEYER DESIGN GROUP, INC.
LANDSCAPE ARCHITECT: R.D. ZANDE & ASSOCIATES, INC.

REVISIONS

NO.	DATE	DESCRIPTION
1	12-6-02	BID SET

STATE OF OHIO — JOHN E. SANDERS — E-58219 — REGISTERED PROFESSIONAL ENGINEER

PROJECT NUMBER 0226

FOR:
OHIO DEPT. OF TRANSPORTATION

DRAWING DESCRIPTION:
ELECTRICAL DIAGRAMS & SCHEDULES - WEST

NEW REST STOP BUILDINGS

NO. 770-2001-072
US 30 WYANDOT/CRAWFORD

SITE 2
WESTBOUND

PREPARED FOR
STATE OF OHIO
DEPARTMENT OF ADMINISTRATIVE SERVICES
GENERAL SERVICES DIVISION

PREPARED BY
DEPARTMENT OF ADMINISTRATIVE SERVICES

PERMIT SUBMISSION 10-09-02 | DATE 10-09-02 | SHEET EW-5

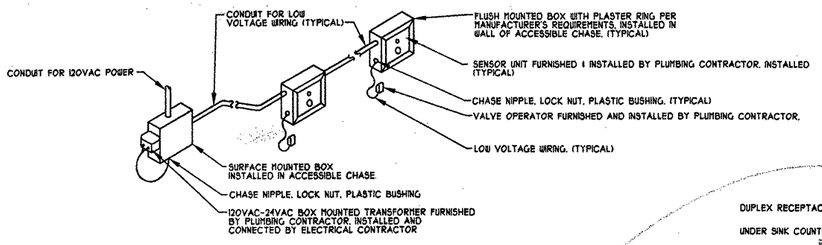

A SENSOR INSTALLATION FOR BACK SPUD BOWLS OR ACCESSIBLE CHASE

SCALE: NTS

NOTES

1. QUANTITY OF SENSORS AND VALVE OPERATORS PER DRAWINGS.
2. QUANTITY OF TRANSFORMERS PER MANUFACTURER'S REQUIREMENT.
3. INSTALL EXPOSED LOW VOLTAGE WIRING IN SPLIT PLASTIC TUBING FASTENED AT 1'-0" INTERVALS.

Move All This into Plumbing Chase

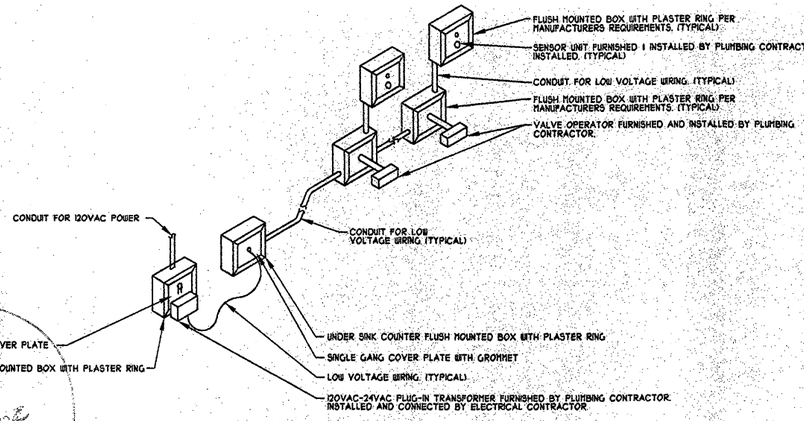

B SENSOR INSTALLATION FOR TOP SPUD BOWLS OR NO ACCESSIBLE CHASE

SCALE: NTS

NOTES

1. QUANTITY OF SENSORS AND VALVE OPERATORS PER DRAWINGS.
2. QUANTITY OF TRANSFORMERS PER MANUFACTURER'S REQUIREMENT.
3. INSTALL EXPOSED LOW VOLTAGE WIRING IN SPLIT PLASTIC TUBING FASTENED AT 1'-0" INTERVALS.

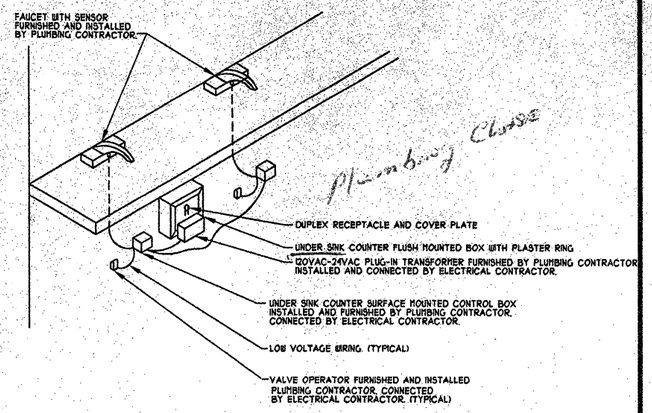

C SENSOR INSTALLATION FOR FAUCET WITH NO ACCESSIBLE CHASE

SCALE: NTS

NOTES

1. QUANTITY OF SENSORS AND VALVE OPERATORS PER DRAWINGS.
2. QUANTITY OF TRANSFORMERS PER MANUFACTURER'S REQUIREMENT.
3. INSTALL EXPOSED LOW VOLTAGE WIRING IN SPLIT PLASTIC TUBING FASTENED AT 1'-0" INTERVALS.

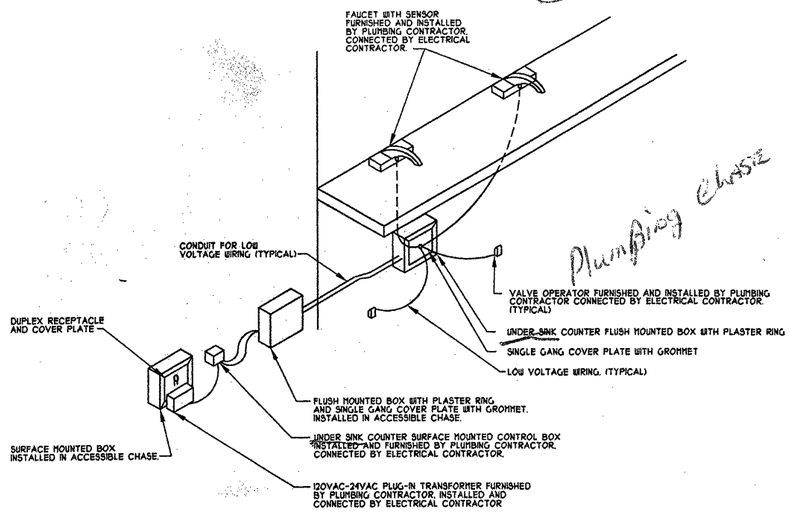

D SENSOR INSTALLATION FOR FAUCET WITH ACCESSIBLE CHASE

SCALE: NTS

NOTES

1. QUANTITY OF SENSORS AND VALVE OPERATORS PER DRAWINGS.
2. QUANTITY OF TRANSFORMERS PER MANUFACTURER'S REQUIREMENT.
3. INSTALL EXPOSED LOW VOLTAGE WIRING IN SPLIT PLASTIC TUBING FASTENED AT 1'-0" INTERVALS.

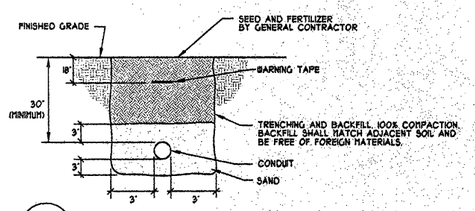

E ELECTRICAL TRENCH "A" DETAIL

N.T.S. (TYPICAL UNDER GRADE)

NOTES

1. CONDUIT FOR UTILITY SHALL BE PROVIDED AT DEPTH EXCEEDING 30" MINIMUM AS REQUIRED PER UTILITY.

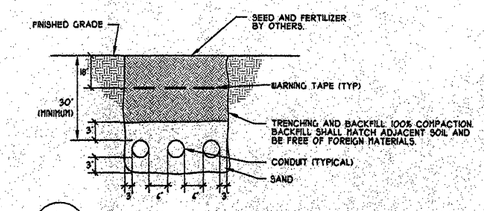

F ELECTRICAL TRENCH "B" DETAIL

N.T.S. (TYPICAL UNDER GRADE)

NOTES

1. NUMBER OF CONDUITS VARIES.
2. MINIMUM 3" ENVELOPE AROUND EACH CONDUIT.
3. MINIMUM 6" SEPARATION BETWEEN CONDUITS.
4. CONDUITS FOR UTILITY SHALL BE PROVIDED AT DEPTH EXCEEDING 30" MINIMUM AS REQUIRED PER UTILITY.

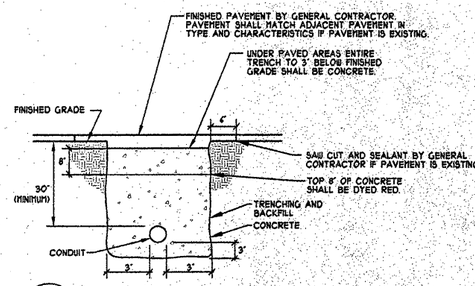

G ELECTRICAL TRENCH "C" DETAIL

N.T.S. (TYPICAL UNDER PAVEMENT)

NOTES

1. CONDUIT FOR UTILITY SHALL BE PROVIDED AT DEPTH EXCEEDING 30" MINIMUM AS REQUIRED PER UTILITY.

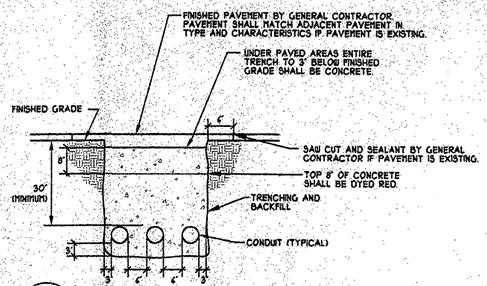

H ELECTRICAL TRENCH "D" DETAIL

N.T.S. (TYPICAL UNDER PAVEMENT)

NOTES

1. NUMBER OF CONDUITS VARIES.
2. MINIMUM 3" ENVELOPE AROUND EACH CONDUIT.
3. MINIMUM 6" SEPARATION BETWEEN CONDUITS.
4. CONDUITS FOR UTILITY SHALL BE PROVIDED AT DEPTH EXCEEDING 30" MINIMUM AS REQUIRED PER UTILITY.

NO SCALE

CONSULTING ARCHITECTS / ENGINEERS

ARCHITECT: BODNER & KERIK ARCHITECTS, INC.
STRUCTURAL: LANTZ JONES & NEBRASKA, INC.
MECHANICAL/ELECTRICAL: SRA, INC.
CIVIL ENGINEERING: POGGEMEYER DESIGN GROUP, INC.
LANDSCAPE ARCHITECT: R.D. ZANDE & ASSOCIATES, INC.

REVISIONS

NO.	DATE	DESCRIPTION
1	12-6-02	BID SET

STATE OF OHIO — JOHN E. SANDERS — E-58219 — REGISTERED PROFESSIONAL ENGINEER

PROJECT NUMBER 0226

FOR: OHIO DEPT. OF TRANSPORTATION

DRAWING DESCRIPTION: **ELECTRICAL DETAILS - WEST**

NEW REST STOP BUILDINGS

NO. 770-2001-072
US 30 WYANDOT/CRAWFORD

SITE 2 WESTBOUND

PREPARED FOR
STATE OF OHIO
DEPARTMENT OF ADMINISTRATIVE SERVICES
GENERAL SERVICES DIVISION

PREPARED BY
DEPARTMENT OF ADMINISTRATIVE SERVICES

PERMIT SUBMISSION	DATE	SHEET
10-09-02	10-09-02	EW-6

L:\DRAWINGS\SAO\REST AREAS\WYANDOT\Dwgs\WEST\2004-EW6.dwg, 12/13/2002 08:27:21 AM, Eric Burwell

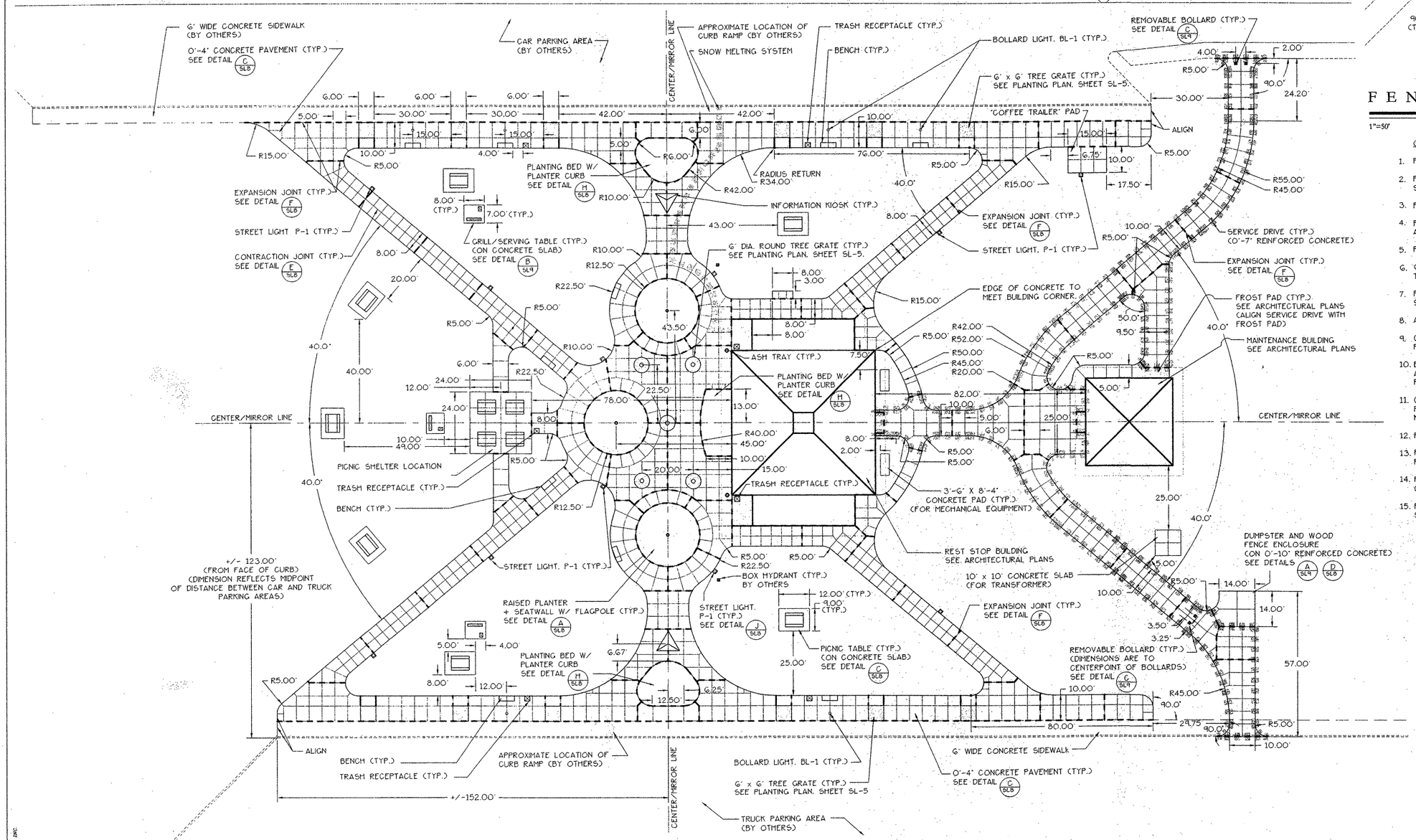

EASTBOUND LAYOUT PLAN

SCALE: 1" = 20'

0' 10' 20' 40' 60'

NORTH

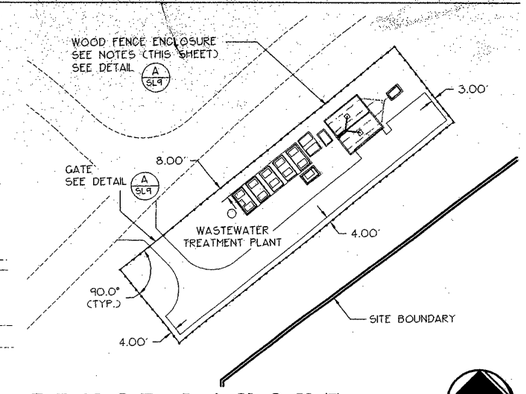

FENCE LAYOUT

1"=50'

0' 25' 50'

NORTH

GENERAL NOTES

1. FOR SITE FURNISHING MODELS SEE SPECIFICATIONS, SECTION 02870. ALL SITE/STREET FURNISHINGS ARE TO BE AN ALTERNATE BID
2. FOR CONCRETE PAVEMENT INFORMATION SEE SPECIFICATIONS, SECTION 02751 AND SHEET SL-8 FOR DETAIL.
3. FOR FLAGPOLE INFORMATION SEE SPECIFICATIONS, SECTION 10350.
4. FOR LIGHTING INFORMATION, SEE SPECIFICATIONS, SECTION 16500, AND FIXTURE SCHEDULE, SHEET SL-8.
5. PARKING AREAS ARE NOT IN THIS CONTRACT.
6. 6' CONCRETE SIDEWALKS, ADJACENT TO PARKING AREAS, ARE NOT IN THIS CONTRACT.
7. PLANTER CURBS TO OCCUR AROUND PLANTING BEDS. SEE SHEET SL-8 FOR DETAIL.
8. ALL SHOWN RADII ARE TANGENT TO ADJACENT LINE/ARC SEGMENTS.
9. CONTRACTION JOINTS SPACED EVENLY AS SHOWN, PLACED PERPENDICULAR OR RADIAL TO PAVEMENT EDGES, AS SHOWN.
10. EXPANSION JOINTS TO OCCUR WHERE PAVEMENT ABUTS BUILDING AND OTHER CONCRETE STRUCTURES, AND AS SHOWN WITHIN PAVEMENT.
11. CENTER/MIRROR LINE IS PARALLEL TO FACE OF CURB (TRUCK PARKING SIDE). DIMENSIONS ARE SYMMETRICAL, UNLESS OTHERWISE NOTED.
12. FOR SNOW MELTING SYSTEM INFORMATION, SEE ELECTRICAL PLANS ALTERNATE BID PRICE
13. FOR PICNIC SHELTER INFORMATION (TO BE CENTERED ON 24' x 24' PAD) SEE SPECIFICATIONS, SECTION 02875 - ALTERNATE BID PRICE
14. FOR INFORMATION KIOSK INFORMATION, SEE SPECIFICATIONS, SECTION 02875 - ALTERNATE BID PRICE
15. FOR WOOD FENCE ENCLOSURE INFORMATION, SEE SPECIFICATIONS, SECTION 02820

CONSULTING ARCHITECTS / ENGINEERS

ARCHITECT: **BODNER & KERIK ARCHITECTS, INC.**
STRUCTURAL: **LANTZ JONES & NEBRASKA, INC.**
MECHANICAL/ELECTRICAL: **SRA, INC.**
CIVIL ENGINEERING: **POGGEMEYER DESIGN GROUP, INC.**
LANDSCAPE ARCHITECT: **R.D. ZANDE & ASSOCIATES, INC.**

REVISIONS

NO.	DATE	DESCRIPTION
	12.6.02	BID SET

STATE OF OHIO — JOSEPH E. LOOBY 856 — REGISTERED LANDSCAPE ARCHITECT

PROJECT NUMBER 0226

FOR: OHIO DEPT. OF TRANSPORTATION

DRAWING DESCRIPTION: DIMENSIONING PLAN (SITE 1)

NEW REST STOP BUILDINGS

NO. 770-2001-072 US 30 WYANDOT/CRAWFORD | SITE 1 EASTBOUND | SITE 2 WESTBOUND

PREPARED FOR STATE OF OHIO
DEPARTMENT OF ADMINISTRATIVE SERVICES
GENERAL SERVICES DIVISION
PREPARED BY DEPARTMENT OF ADMINISTRATIVE SERVICES

PLOT DATE DEC. 5, 2002 | DATE SEPT. 20, 2002 | SHEET SL-1

P:\6536\Larch\Dwg\6536-ialy1.dwg, eastbound, 12/06/02 10:44:20 AM, saur2

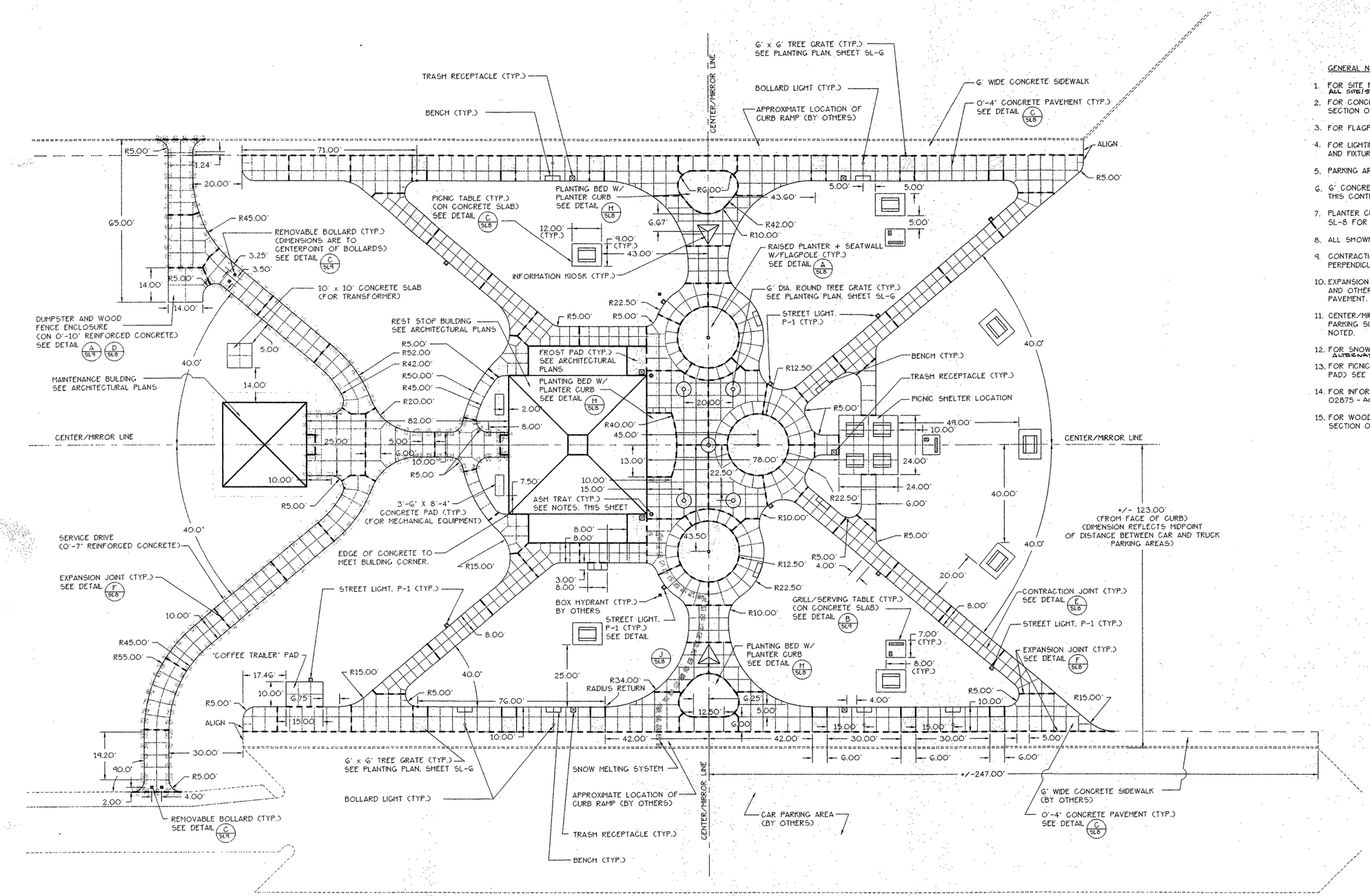

WESTBOUND LAYOUT PLAN

SCALE: 1" = 20'

GENERAL NOTES

1. FOR SITE FURNISHING MODELS SEE SPECIFICATIONS, SECTION 02870. ALL SITE/STREET FURNISHINGS ARE TO BE AN ALTERNATE BID.
2. FOR CONCRETE PAVEMENT INFORMATION SEE SPECIFICATIONS, SECTION 02751 AND SHEET SL-8 FOR DETAIL.
3. FOR FLAGPOLE INFORMATION SEE SPECIFICATIONS, SECTION 10350.
4. FOR LIGHTING INFORMATION, SEE SPECIFICATIONS, SECTION 16500, AND FIXTURE SCHEDULE, SHEET SL-8.
5. PARKING AREAS ARE NOT IN THIS CONTRACT.
6. 6' CONCRETE SIDEWALKS, ADJACENT TO PARKING AREAS, ARE NOT IN THIS CONTRACT.
7. PLANTER CURBS TO OCCUR AROUND PLANTING BEDS. SEE SHEET SL-8 FOR DETAIL.
8. ALL SHOWN RADII ARE TANGENT TO ADJACENT LINE/ARC SEGMENTS.
9. CONTRACTION JOINTS SPACED EVENLY AS SHOWN, PLACED PERPENDICULAR OR RADIAL TO PAVEMENT EDGES, AS SHOWN.
10. EXPANSION JOINTS TO OCCUR WHERE PAVEMENT ABUTS BUILDING AND OTHER CONCRETE STRUCTURES, AND AS SHOWN WITHIN PAVEMENT.
11. CENTER/MIRROR LINE IS PARALLEL TO FACE OF CURB (TRUCK PARKING SIDE). DIMENSIONS ARE SYMMETRICAL, UNLESS OTHERWISE NOTED.
12. FOR SNOW MELTING SYSTEM INFORMATION, SEE ELECTRICAL PLANS ALTERNATE BID PRICE
13. FOR PICNIC SHELTER INFORMATION (TO BE CENTERED ON 24' x 24' PAD) SEE SPECIFICATIONS, SECTION 02875 - ALTERNATE BID PRICE
14. FOR INFORMATION KIOSK INFORMATION, SEE SPECIFICATIONS, SECTION 02875 - ALTERNATE BID PRICE
15. FOR WOOD FENCE ENCLOSURE INFORMATION, SEE SPECIFICATIONS, SECTION 02820

CONSULTING ARCHITECTS / ENGINEERS
ARCHITECT: **BOONER & KERIK ARCHITECTS, INC.**
STRUCTURAL: **LANTZ JONES & NEBRASKA, INC.**
MECHANICAL/ELECTRICAL: **SRA, INC.**
CIVIL ENGINEERING: **POGGEMEYER DESIGN GROUP, INC.**
LANDSCAPE ARCHITECT: **R.D. ZANDE & ASSOCIATES, INC.**

REVISIONS

NO.	DATE	DESCRIPTION
	12.6.02	BID SET

STATE OF OHIO JOSEPH E. LOOBY 856 REGISTERED LANDSCAPE ARCHITECT

PROJECT NUMBER 0226

FOR: OHIO DEPT. OF TRANSPORTATION

DRAWING DESCRIPTION: DIMENSION PLAN (SITE 2)

NEW REST STOP BUILDINGS

NO. 770-2001-072 US 30 WYANDOT/CRAWFORD | SITE 1 EASTBOUND | SITE 2 WESTBOUND

PREPARED FOR STATE OF OHIO DEPARTMENT OF ADMINISTRATIVE SERVICES GENERAL SERVICES DIVISION

PREPARED BY DEPARTMENT OF ADMINISTRATIVE SERVICES

PLOT DATE DEC. 5, 2002 | DATE SEPT. 20, 2002 | SHEET SL-2

P:\6636\Larch\Dwg\6636-lay4.dwg, westbound, 12/06/02 10:42:09 AM, saur2

Wyandot Rest Stop Area Planting Table - East Bound
(QUANTITIES SHOWN ARE FOR THIS SHEET ONLY)

Broadleaf Deciduous

Quantity	Symbol	Code Name	Scientific Name	Common Name	Planting Size
9		AcruOG	Acer rubrum 'October Glory'	October Glory Red Maple	2 1/2"-Cal
33		FrpeC	Fraxinus pennsylvanica 'Cimmaron'	Cimmaron Green Ash	2 1/2"-Cal
11		FramAA	Fraxinus americana 'Autumn Applause'	Autumn Applause White Ash	2 1/2"-Cal
7		List	Liquidambar styraciflua	American sweetgum	2 1/2"-Cal
15		MaPr	Malus 'Prairifire'	Prairie Fire Crabapple	2 1/2"-Cal
13		Quru	Quercus rubra	Northern red oak	3"-Cal
9		SyrelS	Syringa reticulata 'Ivory Silk'	Ivory Silk Tree Lilac	2 1/2"-Cal
8		Zese	Zelkova serrata	Japanese zelkova	2 1/2"-Cal

Conifer Evergreen

Quantity	Symbol	Code Name	Scientific Name	Common Name	Planting Size
49		Piab	Picea abies	Norway spruce	8' - 10'
90		Pini	Pinus nigra	Austrian pine	8' - 10'
31		Pist	Pinus strobus	Eastern white pine	8' - 10'

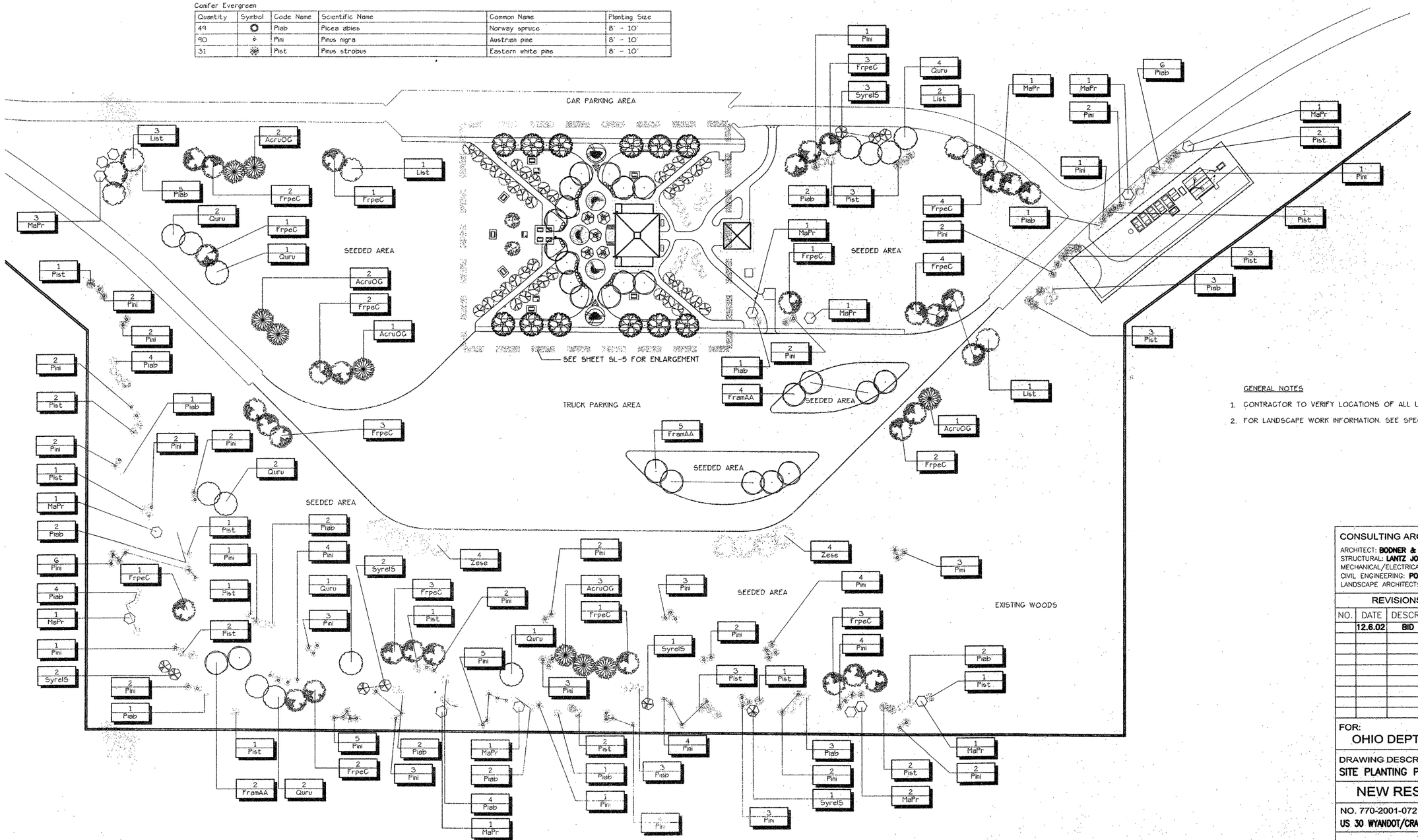

GENERAL NOTES

1. CONTRACTOR TO VERIFY LOCATIONS OF ALL UTILITIES PRIOR TO INSTALLING PLANTS.
2. FOR LANDSCAPE WORK INFORMATION. SEE SPECIFICATIONS. SECTION 02900.

SITE PLANTING PLAN - EASTBOUND

SCALE: 1" = 60'

0' 30' 60' 120' 180'

CONSULTING ARCHITECTS / ENGINEERS

ARCHITECT: **BODNER & KERIK ARCHITECTS, INC.**
STRUCTURAL: **LANTZ JONES & NEBRASKA, INC.**
MECHANICAL/ELECTRICAL: **SRA, INC.**
CIVIL ENGINEERING: **POGGEMEYER DESIGN GROUP, INC.**
LANDSCAPE ARCHITECT: **R.D. ZANDE & ASSOCIATES, INC.**

REVISIONS

NO.	DATE	DESCRIPTION
	12.6.02	BID SET

STATE OF OHIO
JOSEPH E. LOOBY
856
REGISTERED LANDSCAPE ARCHITECT

PROJECT NUMBER
0226

FOR:
OHIO DEPT. OF TRANSPORTATION

DRAWING DESCRIPTION:
SITE PLANTING PLAN (SITE 1)

NEW REST STOP BUILDINGS

NO. 770-2001-072
US 30 WYANDOT/CRAWFORD

SITE 1 EASTBOUND | SITE 2 WESTBOUND

PREPARED FOR
STATE OF OHIO
DEPARTMENT OF ADMINISTRATIVE SERVICES
GENERAL SERVICES DIVISION

PREPARED BY
DEPARTMENT OF ADMINISTRATIVE SERVICES

PLOT DATE DEC. 5, 2002 | OCT. 4, 2002 SEPT. 20, 2002 | SHEET SL-3

P:\6536\Larch\Dwg\6536-lap\-1.dwg, #1, 12/06/02 10:40:27 AM, saur2

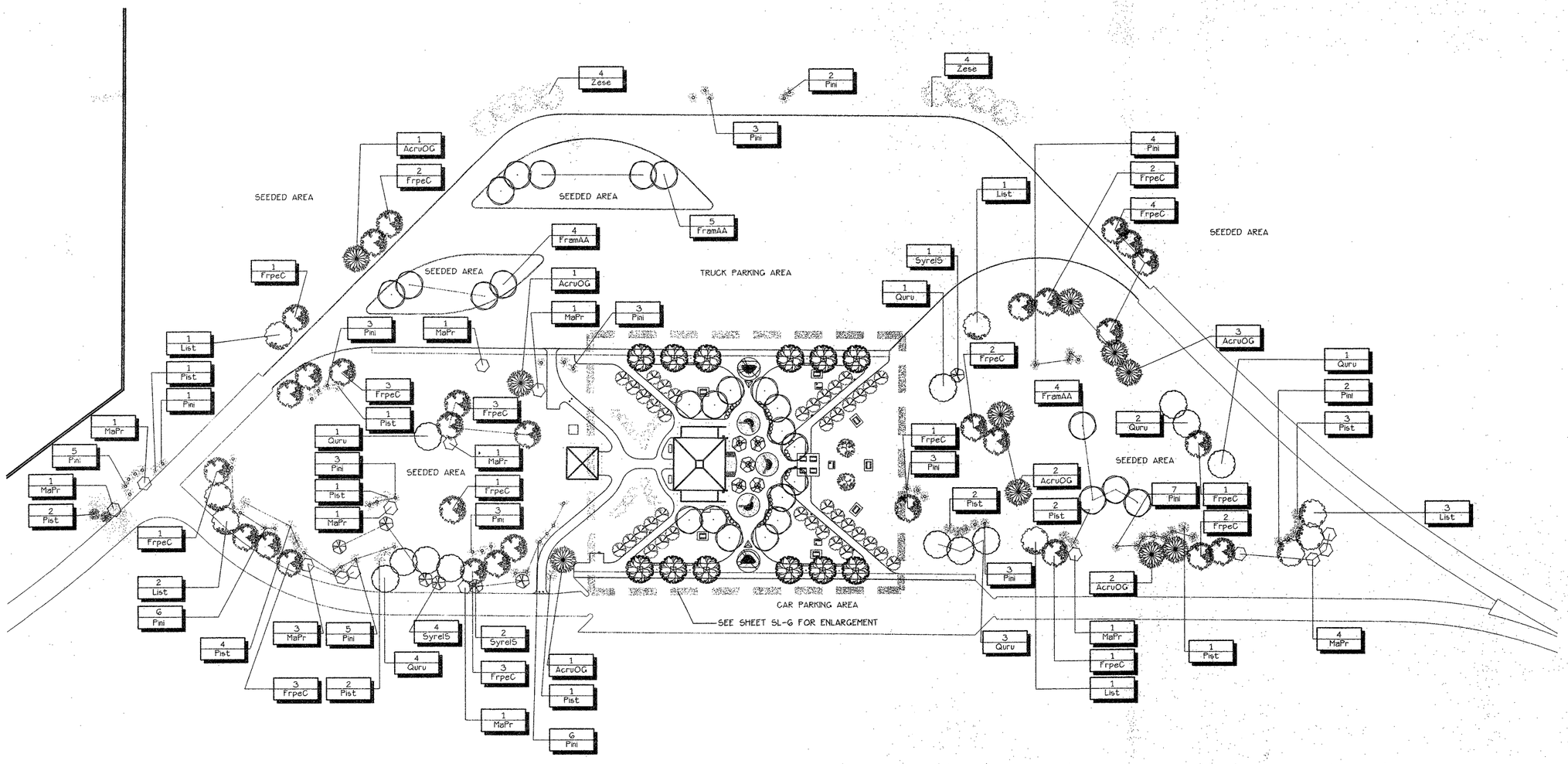

GENERAL NOTES

1. CONTRACTOR TO VERIFY LOCATIONS OF ALL UTILITIES PRIOR TO INSTALLING PLANTS.
2. FOR LANDSCAPE WORK INFORMATION, SEE SPECIFICATIONS, SECTION 02900.

Wyandot Rest Stop Area Planting Table - West Bound
(QUANTITIES SHOWN ARE FOR THIS SHEET ONLY)

Broadleaf Deciduous

Quantity	Symbol	Code Name	Scientific Name	Common Name	Planting Size
10		AcruOG	Acer rubrum 'October Glory'	October Glory Red Maple	2 1/2"-Cal
13		FramAA	Fraxinus americana 'Autumn Applause'	Autumn Applause White Ash	2 1/2"-Cal
30		FrpeC	Fraxinus pennsylvanica 'Cimmaron'	Cimmaron Green Ash	2 1/2"-Cal
8		List	Liquidambar styraciflua	American sweetgum	2 1/2"-Cal
15		MaPr	Malus 'Prairifire'	Prairie Fire Crabapple	2 1/2"-Cal
12		Quru	Quercus rubra	Northern red oak	3"-Cal
7		Syrel5	Syringa reticulata 'Ivory Silk'	Ivory Silk Tree Lilac	2 1/2"-Cal
8		Zese	Zelkova serrata	Japanese zelkova	2 1/2"-Cal

Conifer Evergreen

Quantity	Symbol	Code Name	Scientific Name	Common Name	Planting Size
59		Pini	Pinus nigra	Austrian pine	8' - 10' HGT.
20		Pist	Pinus strobus	Eastern white pine	8' - 10' HGT.

SITE PLANTING PLAN - WESTBOUND

SCALE: 1" = 60'

0' 30' 60' 120' 180'

P:\6836\Larch\Dwg\6836-lapl-3.dwg, #1, 12/06/02 10:38:27 AM, saur2

CONSULTING ARCHITECTS / ENGINEERS

ARCHITECT: **BODNER & KERIK ARCHITECTS, INC.**
STRUCTURAL: **LANTZ JONES & NEBRASKA, INC.**
MECHANICAL/ELECTRICAL: **SRA, INC.**
CIVIL ENGINEERING: **POGGEMEYER DESIGN GROUP, INC.**
LANDSCAPE ARCHITECT: **R.D. ZANDE & ASSOCIATES, INC.**

REVISIONS

NO.	DATE	DESCRIPTION
	12.6.02	BID SET

STATE OF OHIO
JOSEPH E. LOOBY
856
REGISTERED LANDSCAPE ARCHITECT

PROJECT NUMBER
0226

FOR:
OHIO DEPT. OF TRANSPORTATION

DRAWING DESCRIPTION:
SITE PLANTING PLAN (SITE 2)

NEW REST STOP BUILDINGS

NO. 770-2001-072
US 30 WYANDOT/CRAWFORD

SITE 1 EASTBOUND | SITE 2 WESTBOUND

PREPARED FOR
STATE OF OHIO
DEPARTMENT OF ADMINISTRATIVE SERVICES
GENERAL SERVICES DIVISION

PREPARED BY
DEPARTMENT OF ADMINISTRATIVE SERVICES

PLOT DATE DEC. 5, 2002 | DATE SEPT. 20, 2002 | SHEET SL-4

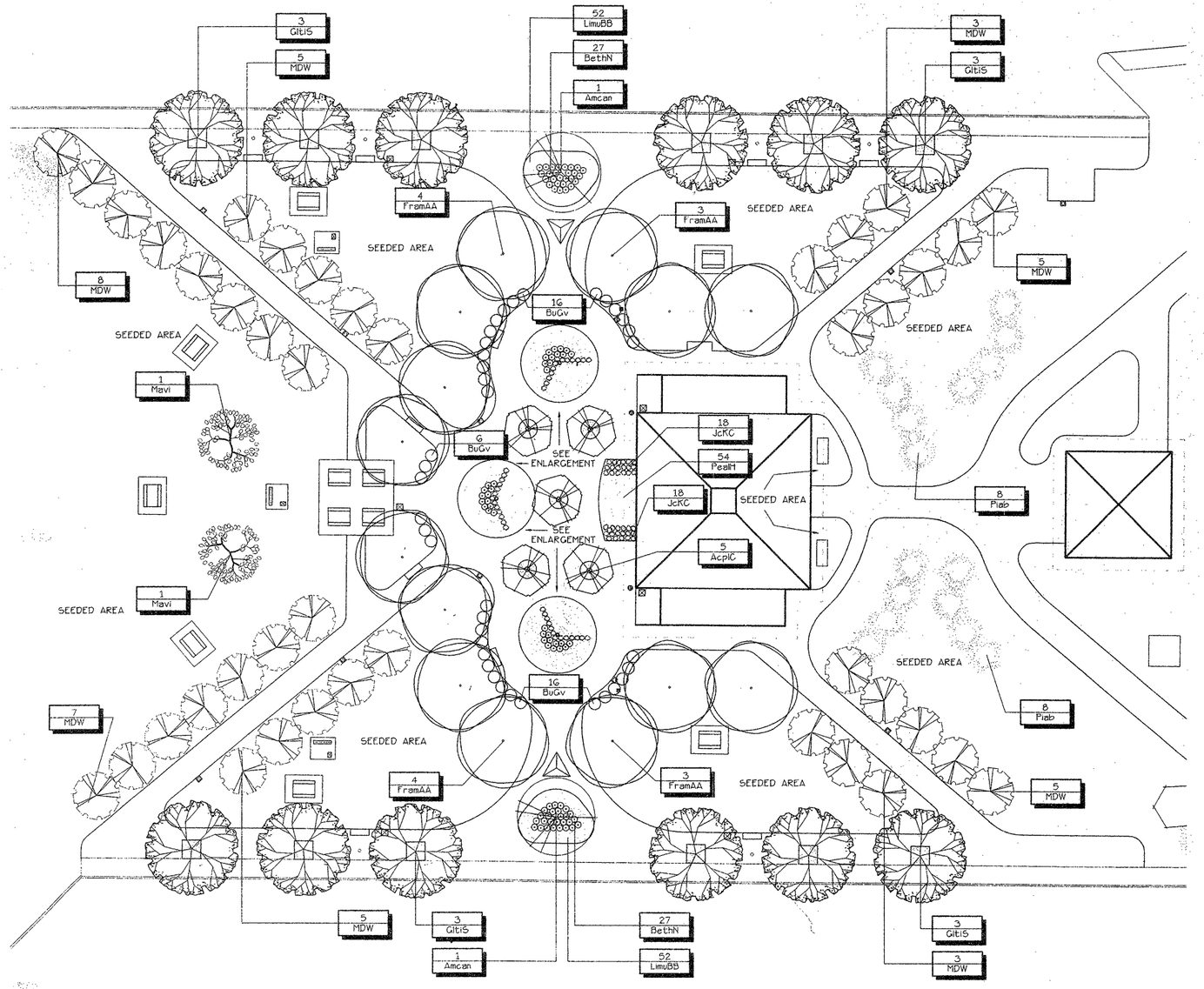

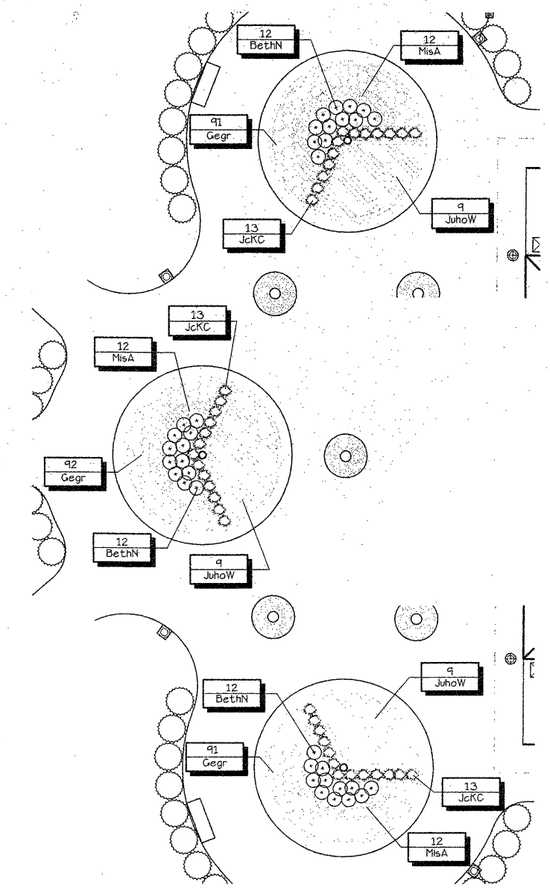

ENLARGEMENT

SCALE: 1" = 10'

0' 5' 10' 20' 30'

PLAZA PLANTING PLAN - EASTBOUND

SCALE: 1" = 20'

0' 10' 20' 40' 60'

Wyandot Rest Stop Area Planting Table - East Bound Building
(QUANTITIES SHOWN ARE FOR THIS SHEET ONLY)

Annual

Quantity	Symbol	Code Name	Scientific Name	Common Name	Planting Size
274		Gegr	Geranium grandiflorum	Cranesbill	1-Gal

Broadleaf Deciduous

Quantity	Symbol	Code Name	Scientific Name	Common Name	Planting Size
5		AcplC	Acer platanoides 'Columnare'	Norway Maple	2 1/2"-Cal
2		Amcan	Amelanchier canadensis	Shadblow serviceberry	6' HGT.
14		FramAA	Fraxinus americana 'Autumn Applause'	Autumn Applause White Ash	2 1/2"-Cal
2		GltiS	Gleditsia triacanthos inermis 'Skycole'	Skyline Honeylocust	2 1/2"-Cal
2		Mavi	Magnolia virginiana	Saucer magnolia	6' HGT.
41		MDW	Malus 'Donald Wyman'	'Donald Wyman' Crabapple	2 1/2"-Cal

Conifer Evergreen

Quantity	Symbol	Code Name	Scientific Name	Common Name	Planting Size
16		Piab	Picea abies	Norway spruce	8' - 10' HGT.

Grass

Quantity	Symbol	Code Name	Scientific Name	Common Name	Planting Size
104		LimuBB	Liriope muscari 'Big Blue'	Big Blue Lily turf	1-Gal
36		MisA	Miscanthus sinensis 'Adagio'	'Adagio' Maiden Grass	2-Gal
54		PealH	Pennisetum alopecuroides 'Hamelin'	Dwarf Fountain Grass	2-Gal

Shrub

Quantity	Symbol	Code Name	Scientific Name	Common Name	Planting Size
90		BethN	Berberis thunbergii atro. 'Nana'	Crimson Pygmy Barberry	3-Gal
38		BuGv	Buxus x 'Green Velvet'	Green Velvet Boxwood	3-Gal
75		JcKC	Juniperus chinensis 'Kallays Compacta'	'Kallays Compacta' Juniper	24" B & B
27		JuhoW	Juniperus horizontalis 'Wiltonii'	Blue Rug Juniper	18" B & B

GENERAL NOTES

1. CONTRACTOR TO VERIFY LOCATIONS OF ALL UTILITIES PRIOR TO INSTALLING PLANTS.
2. FOR LANDSCAPE WORK INFORMATION, SEE SPECIFICATIONS, SECTION 02900.

CONSULTING ARCHITECTS / ENGINEERS

ARCHITECT: **BODNER & KERIK ARCHITECTS, INC.**
STRUCTURAL: **LANTZ JONES & NEBRASKA, INC.**
MECHANICAL/ELECTRICAL: **SRA, INC.**
CIVIL ENGINEERING: **POGGEMEYER DESIGN GROUP, INC.**
LANDSCAPE ARCHITECT: **R.D. ZANDE & ASSOCIATES, INC.**

REVISIONS

NO.	DATE	DESCRIPTION
	12.6.02	BID SET

STATE OF OHIO
JOSEPH E. LOOBY
856
REGISTERED LANDSCAPE ARCHITECT

PROJECT NUMBER 0226

FOR:
OHIO DEPT. OF TRANSPORTATION

DRAWING DESCRIPTION:
PLAZA PLANTING PLAN (SITE 1)

NEW REST STOP BUILDINGS

NO. 770-2001-072
US 30 WYANDOT/CRAWFORD

SITE 1 EASTBOUND | SITE 2 WESTBOUND

PREPARED FOR
STATE OF OHIO
DEPARTMENT OF ADMINISTRATIVE SERVICES
GENERAL SERVICES DIVISION

PREPARED BY
DEPARTMENT OF ADMINISTRATIVE SERVICES

PLOT DATE DEC. 5, 2002 | DATE SEPT. 20, 2002 | SHEET SL-5

P:\66361\Larch\Dwg\6636-lapl-2.dwg, #1, 12/06/02 10:35:02 AM, saur2

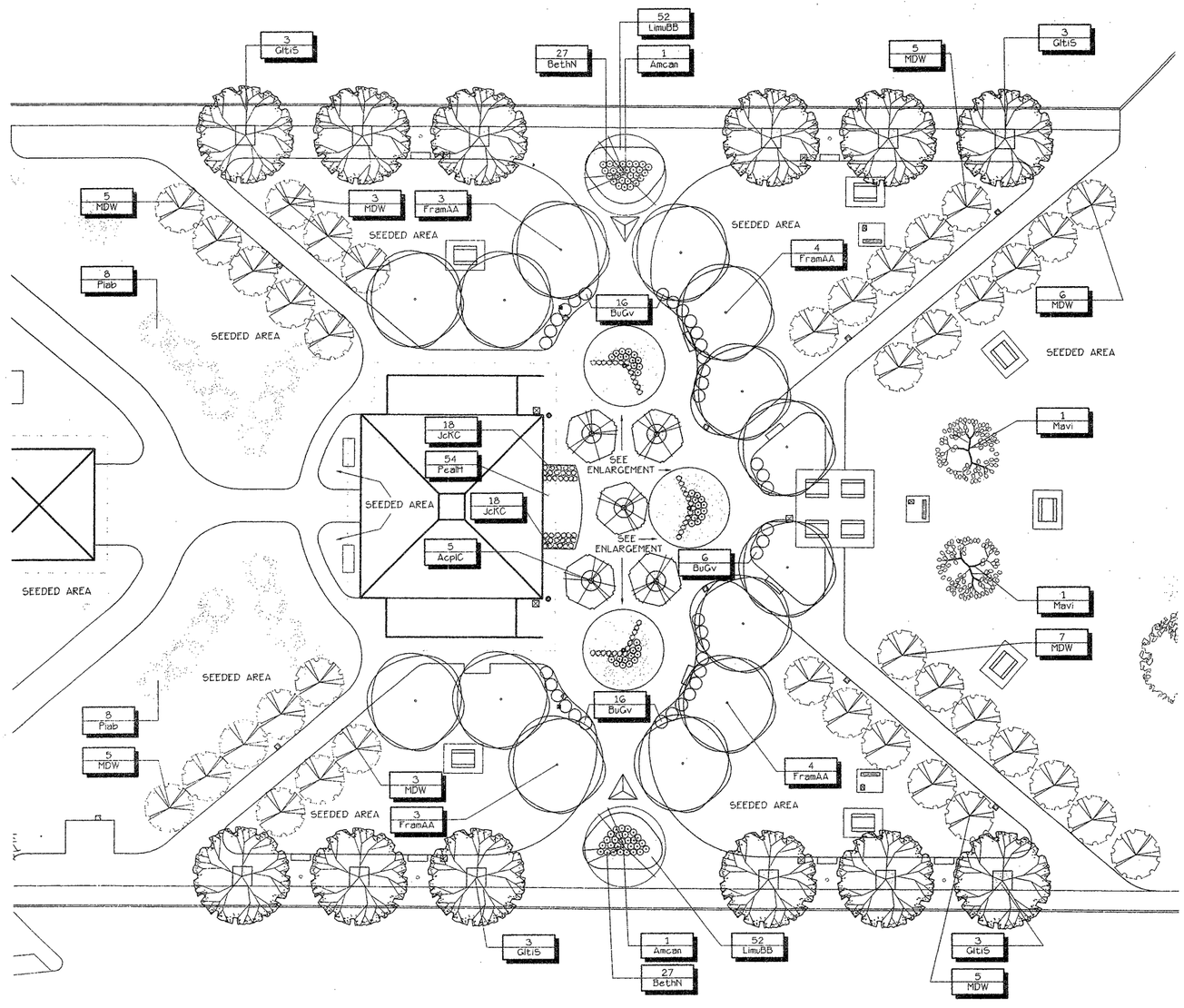

PLAZA PLANTING PLAN - WESTBOUND

SCALE: 1" = 20'

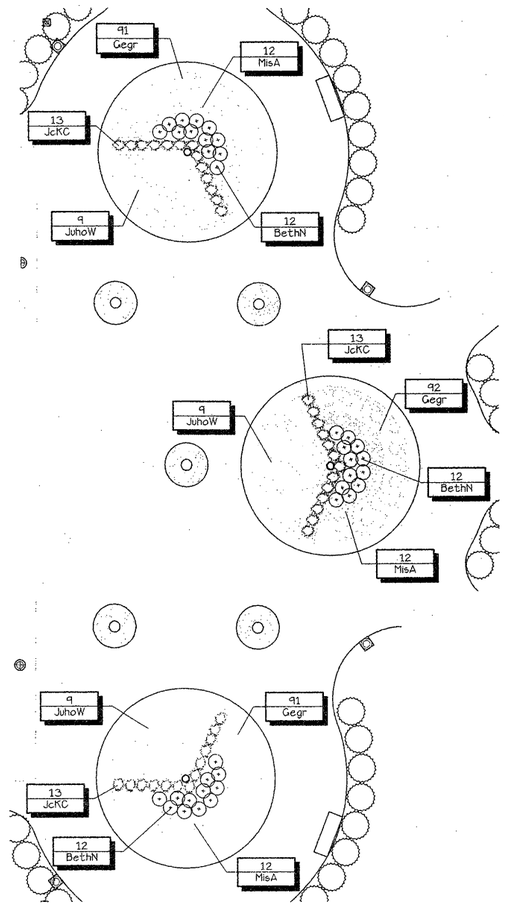

ENLARGEMENT

SCALE: 1" = 10'

0' 5' 10' 20' 30'

Wyandot Rest Stop Area Planting Table - West Bound Building
(QUANTITIES SHOWN ARE FOR THIS SHEET ONLY)

Annual

Quantity	Symbol	Code Name	Scientific Name	Common Name	Planting Size
274		Gegr	Geranium grandiflorum	Cranesbill	1-Gal

Broadleaf Deciduous

Quantity	Symbol	Code Name	Scientific Name	Common Name	Planting Size
5		AcplC	Acer platanoides 'Columnare'	Norway Maple	2 1/2"-Cal
2		Amcan	Amelanchier canadensis	Shadblow serviceberry	6'
14		FramAA	Fraxinus americana 'Autumn Applause'	Autumn Applause White Ash	2 1/2"-Cal
12		GltiS	Gleditsia triacanthos inermis 'Skycole'	Skyline Honeylocust	2.5"
2		Mavi	Magnolia virginiana	Saucer magnolia	6'
39		MDW	Malus 'Donald Wyman'	'Donald Wyman' Crabapple	2 1/2"-Cal

Conifer Evergreen

Quantity	Symbol	Code Name	Scientific Name	Common Name	Planting Size
16		Piab	Picea abies	Norway spruce	8' - 10'

Grass

Quantity	Symbol	Code Name	Scientific Name	Common Name	Planting Size
104		LimuBB	Liriope muscari 'Big Blue'	Big Blue Lily turf	1-Gal
36		MisA	Miscanthus sinensis 'Adagio'	'Adagio' Maiden Grass	2-Gal
54		PealH	Pennisetum alopecuroides 'Hamelin'	Dwarf Fountain Grass	2-Gal

Shrub

Quantity	Symbol	Code Name	Scientific Name	Common Name	Planting Size
90		BethN	Berberis thunbergii atro. 'Nana'	Crimson Pygmy Barberry	3-Gal
38		BuGv	Buxus x 'Green Velvet'	Green Velvet Boxwood	3-Gal
75		JcKC	Juniperus chinensis 'Kallays Compacta'	'Kallays Compacta' Juniper	B & B
27		JuhoW	Juniperus horizontalis 'Wiltonii'	Blue Rug Juniper	18"

GENERAL NOTES

1. CONTRACTOR TO VERIFY LOCATIONS OF ALL UTILITIES PRIOR TO INSTALLING PLANTS.
2. FOR LANDSCAPE WORK INFORMATION, SEE SPECIFICATIONS, SECTION 02900.

0' 10' 20' 40' 60'

CONSULTING ARCHITECTS / ENGINEERS

ARCHITECT: **BOONER & KERIK ARCHITECTS, INC.**
STRUCTURAL: **LANTZ JONES & NEBRASKA, INC.**
MECHANICAL/ELECTRICAL: **SRA, INC.**
CIVIL ENGINEERING: **POGGEMEYER DESIGN GROUP, INC.**
LANDSCAPE ARCHITECT: **R.D. ZANDE & ASSOCIATES, INC.**

REVISIONS

NO.	DATE	DESCRIPTION
	12.6.02	BID SET

STATE OF OHIO
JOSEPH E. LOOBY
856
REGISTERED LANDSCAPE ARCHITECT

PROJECT NUMBER
0226

FOR:
OHIO DEPT. OF TRANSPORTATION

DRAWING DESCRIPTION:
PLAZA PLANTING PLAN (SITE 2)

NEW REST STOP BUILDINGS

NO. 770-2001-072
US 30 WYANDOT/CRAWFORD

SITE 1 EASTBOUND | SITE 2 WESTBOUND

PREPARED FOR
STATE OF OHIO
DEPARTMENT OF ADMINISTRATIVE SERVICES
GENERAL SERVICES DIVISION

PREPARED BY
DEPARTMENT OF ADMINISTRATIVE SERVICES

PLOT DATE DEC. 5, 2002 | DATE SEPT. 20, 2002 | SHEET SL-6

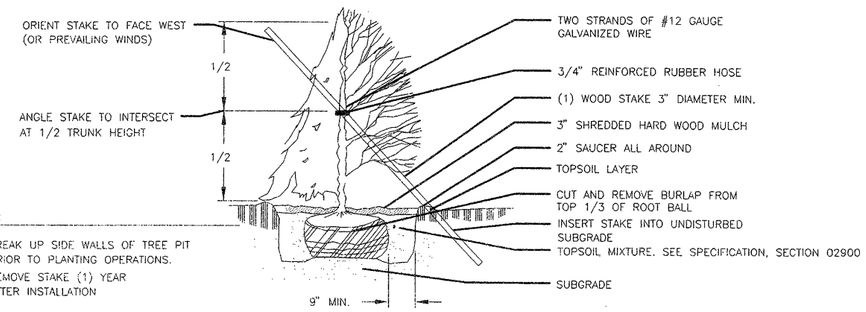

NOTES:

1. BREAK UP SIDE WALLS OF TREE PIT PRIOR TO PLANTING OPERATIONS.
2. REMOVE STAKE (1) YEAR AFTER INSTALLATION

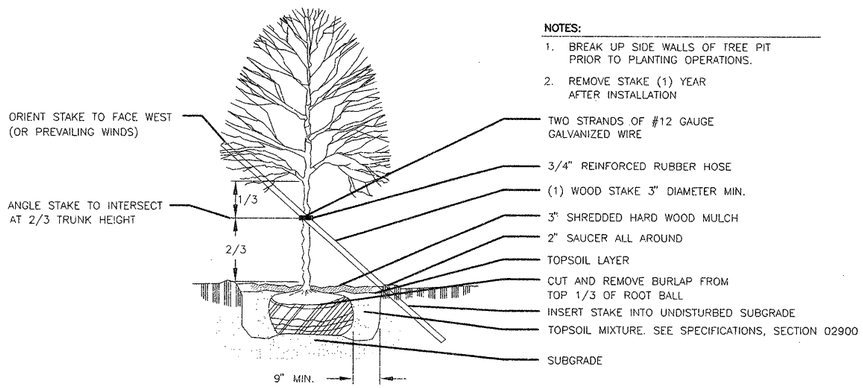

NOTES:

1. BREAK UP SIDE WALLS OF TREE PIT PRIOR TO PLANTING OPERATIONS.
2. REMOVE STAKE (1) YEAR AFTER INSTALLATION

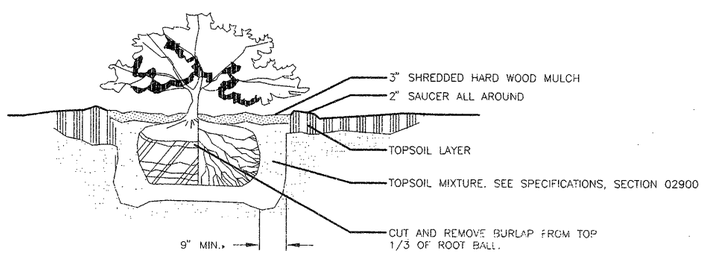

Wyandot Rest Stop Area Planting Table - SITE TOTALS
(QUANTITIES SHOWN ARE FOR ENTIRE PROJECT)

Broadleaf Deciduous

Quantity	Symbol	Code Name	Scientific Name	Common Name	Planting Size
10		AcplC	Acer platanoides 'Columnare'	Norway Maple	2 1/2"-Cal
19		AcruOG	Acer rubrum 'October Glory'	October Glory Red Maple	2 1/2"-Cal
4		Amcan	Amelanchier canadensis	Shadblow serviceberry	6' HGT.
52		FramAA	Fraxinus americana 'Autumn Applause'	Autumn Applause White Ash	2 1/2"-Cal
63		FrpeC	Fraxinus pennsylvanica 'Cimmaron'	Cimmaron Green Ash	2 1/2"-Cal
24		GltiS	Gleditsia triacanthos inermis 'Skycole'	Skyline Honeylocust	2 1/2"-Cal
15		List	Liquidambar styraciflua	American sweetgum	2 1/2"-Cal
30		MaPr	Malus 'Prairifire'	Prairie Fire Crabapple	2 1/2"-Cal
4		Mavi	Magnolia virginiana	Saucer magnolia	6' HGT.
80		MDW	Malus 'Donald Wyman'	'Donald Wyman' Crabapple	2 1/2"-Cal
25		Quru	Quercus rubra	Northern red oak	3"-Cal
16		SyreIS	Syringa reticulata 'Ivory Silk'	Ivory Silk Tree Lilac	2 1/2"-Cal
16		Zese	Zelkova serrata	Japanese zelkova	2 1/2"-Cal

Conifer Evergreen

Quantity	Symbol	Code Name	Scientific Name	Common Name	Planting Size
81		Piab	Picea abies	Norway spruce	8' - 10' HGT.
149		Pini	Pinus nigra	Austrian pine	8' - 10' HGT.
51		Pist	Pinus strobus	Eastern white pine	8' - 10' HGT.

Grass

Quantity	Symbol	Code Name	Scientific Name	Common Name	Planting Size
208		LimuBB	Liriope muscari 'Big Blue'	Big Blue Lily turf	1-Gal
72		MisA	Miscanthus sinensis 'Adagio'	'Adagio' Maiden Grass	2-Gal
108		PealH	Pennisetum alopecuroides 'Hamelin'	Dwarf Fountain Grass	2-Gal

Shrub

Quantity	Symbol	Code Name	Scientific Name	Common Name	Planting Size
180		BethN	Berberis thunbergii atro. 'Nana'	Crimson Pygmy Barberry	3-Gal
76		BuGv	Buxus x 'Green Velvet'	Green Velvet Boxwood	3-Gal
150		JcKC	Juniperus chinensis 'Kallays Compacta'	'Kallays Compacta' Juniper	24" B & B
54		JuhoW	Juniperus horizontalis 'Wiltonii'	Blue Rug Juniper	18" B & B

Annual

Quantity	Symbol	Code Name	Scientific Name	Common Name	Planting Size
548		Gegr	Geranium grandiflorum	Cranesbill	1-Gal

GENERAL NOTES

1. CONTRACTOR TO VERIFY LOCATIONS OF ALL UTILITIES PRIOR TO INSTALLING PLANTS.
2. FOR LANDSCAPE WORK INFORMATION, SEE SPECIFICATIONS, SECTION 02900.

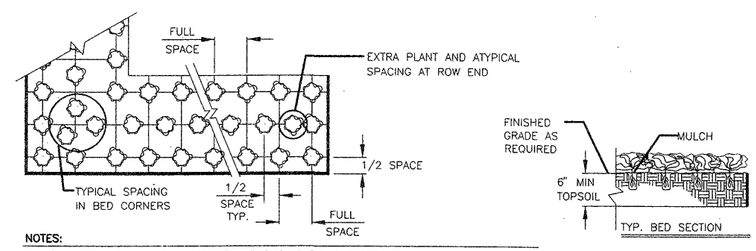

NOTES:

1. PLACE PLANTS IN PREPARED BED AS SHOWN OR AS SPECIFIED.
2. SPACING AS SPECIFIED PER PLANTING TABLE.

PROJECT QUANTITIES AND PLANT DETAILS

SCALE: 1/2" = 1'-0"

P:\6636\Larch\Dwg\6636-lapl-DTLS.dwg, #1, 12/06/02 10:29:03 AM, saur2

CONSULTING ARCHITECTS / ENGINEERS

ARCHITECT: **BODNER & KERIK ARCHITECTS, INC.**
STRUCTURAL: **LANTZ JONES & NEBRASKA, INC.**
MECHANICAL/ELECTRICAL: **SRA, INC.**
CIVIL ENGINEERING: **POGGEMEYER DESIGN GROUP, INC.**
LANDSCAPE ARCHITECT: **R.D. ZANDE & ASSOCIATES, INC.**

REVISIONS

NO.	DATE	DESCRIPTION
	12.6.02	BID SET

STATE OF OHIO
JOSEPH E. LOOBY
856
REGISTERED LANDSCAPE ARCHITECT

PROJECT NUMBER
0226

FOR:
OHIO DEPT. OF TRANSPORTATION

DRAWING DESCRIPTION:
PLANTING QUANT. AND DETAILS (SITES 1 &2)

NEW REST STOP BUILDINGS

NO. 770-2001-072
US 30 WYANDOT/CRAWFORD

SITE 1 EASTBOUND | SITE 2 WESTBOUND

PREPARED FOR
STATE OF OHIO
DEPARTMENT OF ADMINISTRATIVE SERVICES
GENERAL SERVICES DIVISION

PREPARED BY
DEPARTMENT OF ADMINISTRATIVE SERVICES

PLOT DATE DEC. 5, 2002 | DATE SEPT. 20, 2002 | SHEET SL-7

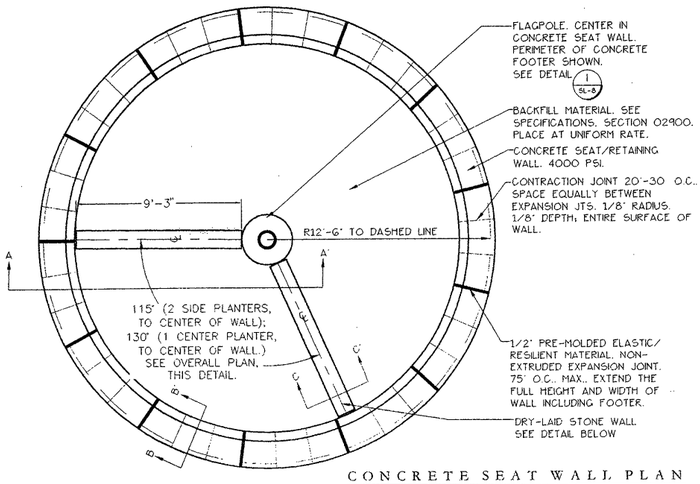

CONCRETE SEAT WALL PLAN

SCALE 1/4"=1'-0"

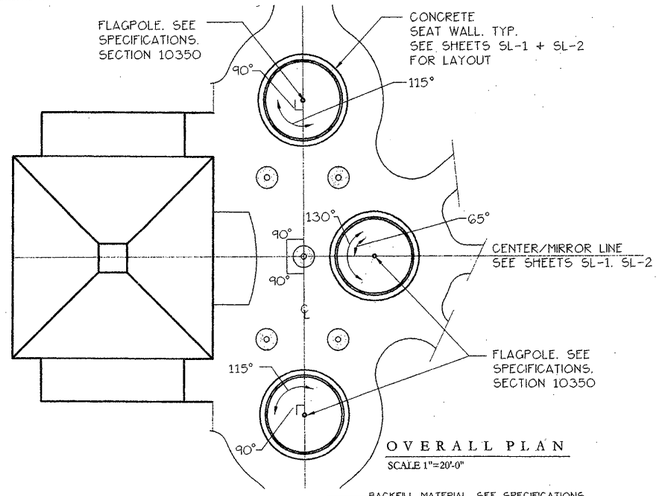

OVERALL PLAN

SCALE 1"=20'-0"

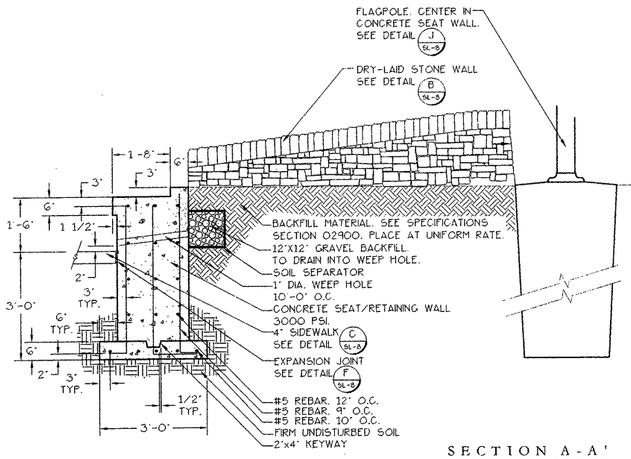

SECTION A-A'

SCALE 1/2"=1'-0"

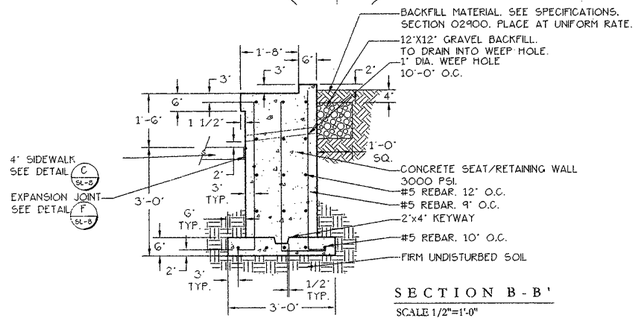

SECTION B-B'

SCALE 1/2"=1'-0"

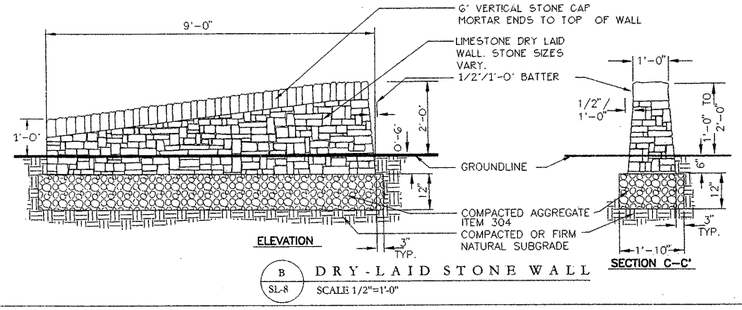

B/SL-8 DRY-LAID STONE WALL

SCALE 1/2"=1'-0"

A/SL-8 CONCRETE SEAT WALL

FIXTURE SCHEDULE

NOTE: FIXTURE NUMBER. LETTER PREFIX INDICATES TYPE OF MOUNTING AS FOLLOWS: P-POST: BL-BOLLARD

FIXTURE NUMBER	DESCRIPTION	MANUFACTURER	CATALOG NUMBER	LAMPS	REMARKS
P-1	FIXTURE ON 12' POLE (SEE NOTE 4)	LUMEC	175 MH/CAND2-PCC/RR5/120/R80-12+TBC1/BKTX	1-150W M.H.	PROVIDE CONCRETE BASE. SEE DETAIL
EQUAL	EQUAL	ARCHITECTURAL AREA LIGHTING	SL PL30-24CGR5/175MH/120/PR4-4R12 BLK		
EQUAL	EQUAL	BIEBER	FRF/20/K2/2/N/5/1/BK/BD/P4RA12A BK		
BL-1	BOLLARD LIGHT	KIM	VRB1/70MH120/BL-P	1-70W M.H. COATED E-17	PROVIDE CONCRETE BASE. SEE NOTE 3
EQUAL	EQUAL	GARDCO	BRM820/42/70MH/120/BLP		
EQUAL	EQUAL	HAACO	CL8/2/A/AO/70H/E/70W MH		

NOTES:

1. 1 FLAGPOLE PER SITE TO HAVE TWO UPLIGHTS MOUNTED TO POLE. SEE SPECIFICATIONS. SECTION 10350 'FLAGPOLES' AND DIVISION 16. SECTION 'LIGHTING FIXTURES'.
2. PROVIDE THREE TYPE 'T' FIXTURES FOR INFORMATION KIOSK. CENTER FIXTURE ON PANEL AND MOUNT AS HIGH AS POSSIBLE. COORDINATE MOUNTING WITH ASSOCIATE AND KIOSK MANUFACTURER. KIOSK PROVIDED BY OTHERS. PROVIDE 9 1/4' X 5 1/2' VANDAL RESISTANT BRICK SHAPED LIGHT WITH CLEAR PRISMATIC LENS. COMPACT FLUORESCENT ELECTRONIC BALLAST. MINIMUM -5 STARTING TEMPERATURE. COLOR PER ASSOCIATE.
3. BASE PER MANUFACTURES SPECIFICATIONS. CONTRACTOR TO PROVIDE ASSOCIATE WITH SHOP DRAWINGS FOR APPROVAL PRIOR TO INSTALLATION.
4. ONE POLE PER SITE TO HAVE PROVISION FOR TWO WP GFI 120V 20A DUPLEX RECEPTACLES AT 24' ABOVE BASE. PROVISIONS SHALL MEET NEC 406.8-(B)-(2)-(A) REQUIREMENTS. PROVISIONS APPLY TO POLE LOCATED ADJACENT TO 'COFFEE TRAILER' PAD (SEE SHEETS SL-1 AND SL-2 FOR LOCATIONS.)

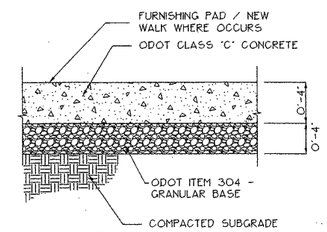

C/SL-8 4" SIDEWALK & SITE FURNISHING PAD

NTS

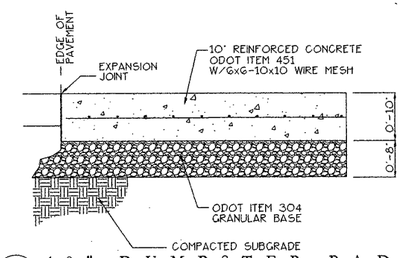

D/SL-8 10" DUMPSTER PAD

NTS

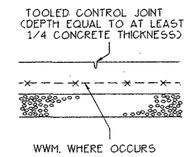

NOTE
SEE SPECIFICATIONS. SECTION 02751

E/SL-8 CONTRACTION JOINT

NTS

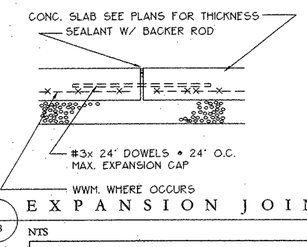

F/SL-8 EXPANSION JOINT

NTS

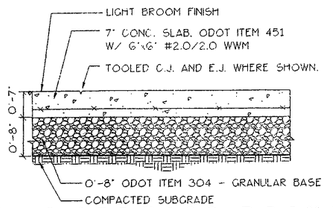

G/SL-8 7" SERVICE DRIVE

NTS

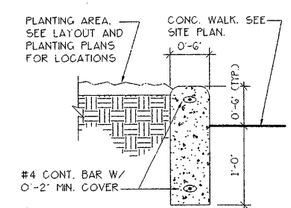

H/SL-8 PLANTER CURB

NTS

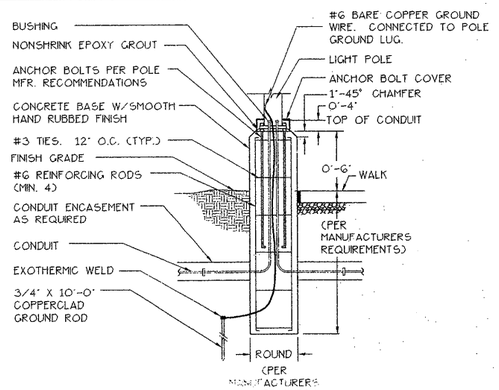

I/SL-8 LIGHT POLE BASE

NTS

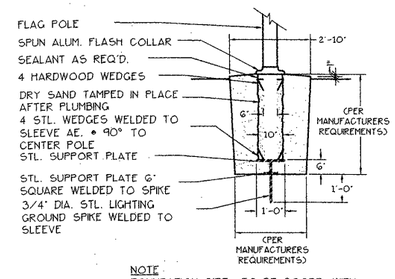

NOTE
FOUNDATION SIZE TO BE COORD. WITH ACTUAL PRODUCT SPECIFICATIONS.

J/SL-8 FLAG POLE FOUNDATION

NTS

CONSTRUCTION DETAILS

CONSULTING ARCHITECTS / ENGINEERS

ARCHITECT: **BOONER & KERIK ARCHITECTS, INC.**
STRUCTURAL: **LANTZ JONES & NEBRASKA, INC.**
MECHANICAL/ELECTRICAL: **SRA, INC.**
CIVIL ENGINEERING: **POGGEMEYER DESIGN GROUP, INC.**
LANDSCAPE ARCHITECT: **R.D. ZANDE & ASSOCIATES, INC.**

REVISIONS

NO.	DATE	DESCRIPTION
	12.6.02	BID SET

STATE OF OHIO — JOSEPH E. LOOBY 856 — REGISTERED LANDSCAPE ARCHITECT

PROJECT NUMBER 0226

FOR:
OHIO DEPT. OF TRANSPORTATION

DRAWING DESCRIPTION:
CONSTRUCTION DETAILS

NEW REST STOP BUILDINGS

NO. 770-2001-072
US 30 WYANDOT/CRAWFORD | SITE 1 EASTBOUND | SITE 2 WESTBOUND

PREPARED FOR
STATE OF OHIO
DEPARTMENT OF ADMINISTRATIVE SERVICES
GENERAL SERVICES DIVISION

PREPARED BY
DEPARTMENT OF ADMINISTRATIVE SERVICES

PLOT DATE DEC. 5, 2002 | DATE SEPT. 20, 2002 | SHEET SL-8

NOTES

1. CONCRETE: ALL CONCRETE SHALL BE CLASS C. THE PROVISIONS OF 511.12 ARE MODIFIED TO THE EXTENT THAT THE CONCRETE SHALL BE PROTECTED DURING THE CURING PROCESSED A MANNER SUCH THAT IT WILL NOT FREEZE.
2. WOOD: ALL WOOD MEMBERS SHALL BE CEDAR, REDWOOD, OR CCA PRESSURE TREATED PINE.
3. HARDWARE: ALL HARDWARE, WITH THE EXCEPTION OF THE BOLT HOOK AND STRAP HINGES SHALL BE HOT DIPPED GALVANIZED.
4. GATES: EACH GATE SHALL BE EQUIPPED WITH A GALVANIZED PLUNGER BAR, LATCH, AND STOP ALONG WITH AN APPROVED PADLOCK AND DOUBLE LOCKING BOLT. FIVE PIN TUMBLER. LAMINATED STEEL CASE. BRASS CYLINDER AND BE RUSTPROOF. TWO KEYS SHALL BE FURNISHED WITH EACH LOCK. ANGLE IRON SHALL BE HOT DIPPED GALVANIZED AFTER FABRICATION.
5. POST PLACEMENT: WHERE A FENCE CORNER IS SOMETHING OTHER THAN 90 DEGREES, TWO POSTS WILL BE PLACED SIDE BY SIDE, AS SHOWN IN THE DETAIL BELOW. A COMMON CONCRETE FOOTER SHALL BE CONSTRUCTED FOR BOTH POSTS.

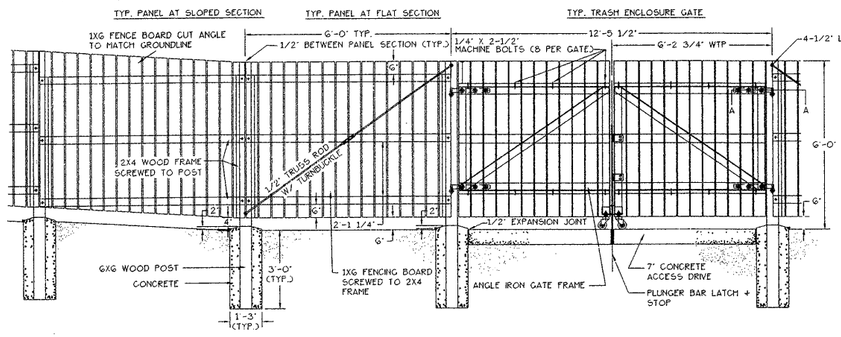

DUMPSTER ENCLOSURE SECTION

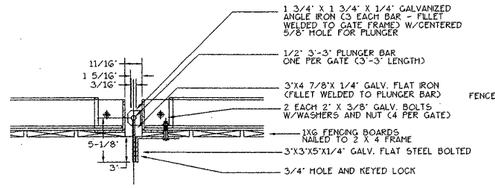

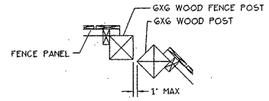

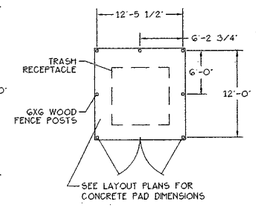

TYP. TRASH ENCLOSURE PLAN

SCALE: NOT TO SCALE

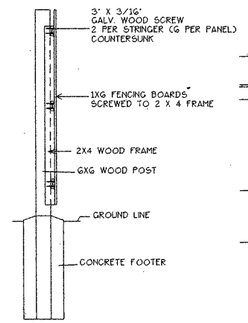

WOOD PANEL FRAME

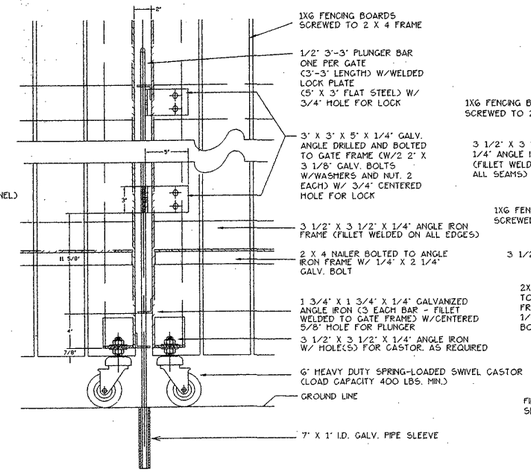

GATE, WHEEL + LATCH

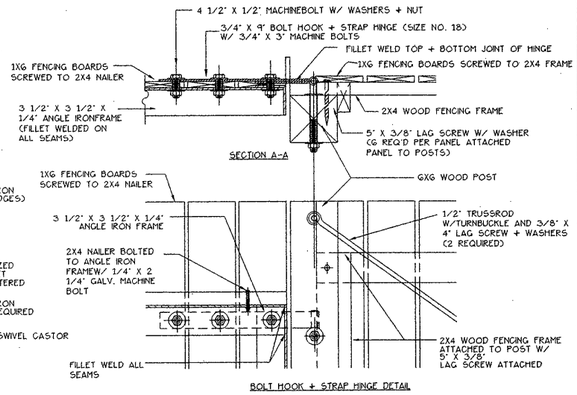

BOLT HOOK + STRAP HINGE

A SL-9 WOOD FENCE ENCLOSURE FOR DUMPSTER AND WASTEWATER TREATMENT PLANT

NTS

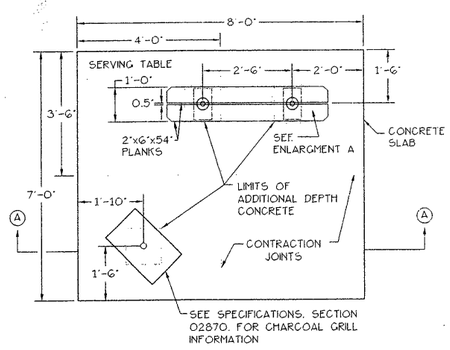

PLAN VIEW

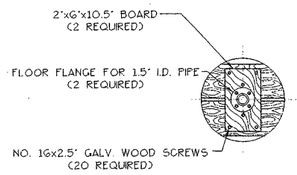

ENLARGEMENT A

(UNDERSIDE OF TABLE TOP)
SCALE: 1" = 1'

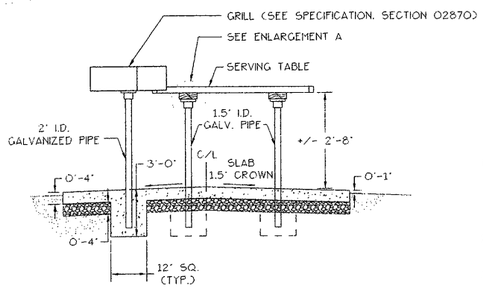

SECTION A-A

NOTES

1. MATERIALS: LUMBER SHALL BE S4S STANDARD, KD, NO. 1 COMMON OR BETTER. SOUTHERN YELLOW PINE OR DOUGLAS FIR. 711.2G IT SHALL BE TREATED WITH CCA (CHROMATED COPPER ARSENATE) CONFORMING TO AASHTO M 133, TYPES A, B OR C (SEE 712.0G)
2. PIPE AND PIPE FITTING SHALL MEET THE REQUIREMENTS OF 707.08 AND 711.02.
3. SCREWS SHALL MEET THE REQUREMENTS OF 711.09.

B SL-9 CHARCOAL GRILL & SERVING TABLE

SCALE: 1/2" = 1'

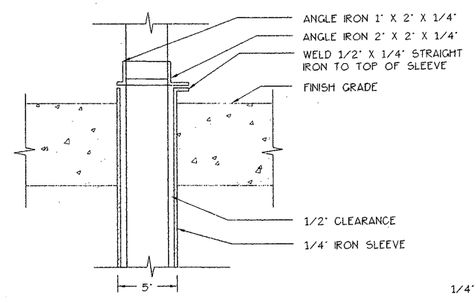

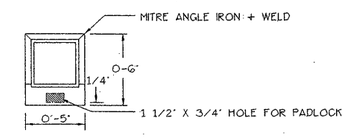

PLAN VIEW

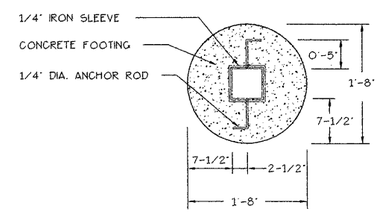

SECTION B-B

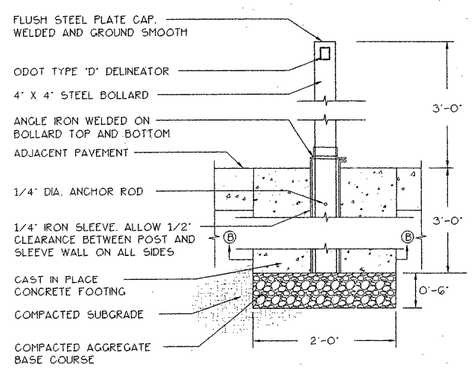

NOTES

1. IRON SLEEVE, ANGLE IRONS + ANCHOR RODS SHALL BE HOT-DIPPED GALVANIZED FOLLOWING FABRICATION.
2. PRIME AND FINISH COATS AS PER SPECIFICATIONS. PAINT TO MATCH BENCH COLOR. BOLLARDS TO BE INSTALLED AS SHOWN AND DIMENSIONED ON PLAN.

C SL-9 REMOVABLE STEEL BOLLARD

SCALE: 1/2" = 1'

CONSTRUCTION DETAILS

P:\6536\Larch\Dwg\6536-lad2.dwg, details, 12/06/02 10:22:56 AM, saur2

CONSULTING ARCHITECTS / ENGINEERS

ARCHITECT: **BODNER & KERIK ARCHITECTS, INC.**
STRUCTURAL: **LANTZ JONES & NEBRASKA, INC.**
MECHANICAL/ELECTRICAL: **SRA, INC.**
CIVIL ENGINEERING: **POGGEMEYER DESIGN GROUP, INC.**
LANDSCAPE ARCHITECT: **R.D. ZANDE & ASSOCIATES, INC.**

REVISIONS

NO.	DATE	DESCRIPTION
	12.6.02	BID SET

STATE OF OHIO — JOSEPH E. LOOBY 856 — REGISTERED LANDSCAPE ARCHITECT

PROJECT NUMBER 0226

FOR: OHIO DEPT. OF TRANSPORTATION

DRAWING DESCRIPTION: CONSTRUCTION DETAILS

NEW REST STOP BUILDINGS

NO. 770-2001-072 US 30 WYANDOT/CRAWFORD | SITE 1 EASTBOUND | SITE 2 WESTBOUND

PREPARED FOR STATE OF OHIO
DEPARTMENT OF ADMINISTRATIVE SERVICES
GENERAL SERVICES DIVISION

PREPARED BY DEPARTMENT OF ADMINISTRATIVE SERVICES

PLOT DATE	DATE	SHEET
DEC. 5, 2002	SEPT. 20, 2002	SL-9

GRAPHIC SCALE

0 120 240 360

(IN FEET)
1 inch = 120 ft.

TOPOGRAPHIC PLANS ARE GENERATED IN AUTOCAD SOFTWARE FROM CONVERTED MICROSTATION SOFTWARE ELECTRONIC FILES PROVIDED BY ODOT REPRESENTATIVES. PROVIDED FILES WERE CONVERTED FROM METRIC UNITS TO ENGLISH UNITS. INFORMATION SHOWN REPRESENTS EXISTING CONDITIONS WITH PROPOSED IMPROVEMENTS AS DESIGNED AND ASSUMED CONSTRUCTED BY THE CONTRACTOR RETAINED FOR THE US 30 IMPROVEMENTS. ONE KNOWN EXCEPTION TO THIS EXISTS ON THE EAST END OF THE WESTBOUND REST AREAS WHERE PROPOSED CONTOURS WERE INCONSISTENT. CONTRACTOR SHALL MAKE HIMSELF FAMILIAR WITH THE SITES AND THE CONDITIONS AS THEY EXIST AT THE TIME OF BID AND START OF CONSTRUCTION.

CONTRACTOR SHALL ESTABLISH SITE BASELINES AS DEPICTED. CONTRACTOR SHALL VERIFY BASELINE BY CHECKING LOCATION OF EXISTING IMPROVEMENTS UNTIL HE IS CONFIDENT THAT SITE CAN BE LAYED OUT AND CONSTRUCTED. CONTRACTOR SHALL ESTABLISH AND MAINTAIN BASELINES. CONTRACTOR SHALL PROVIDE PERMANENT REFERENCES TO ALLOW REESTABLISHMENT OF BASELINE DURING AND AFTER CONSTRUCTION.

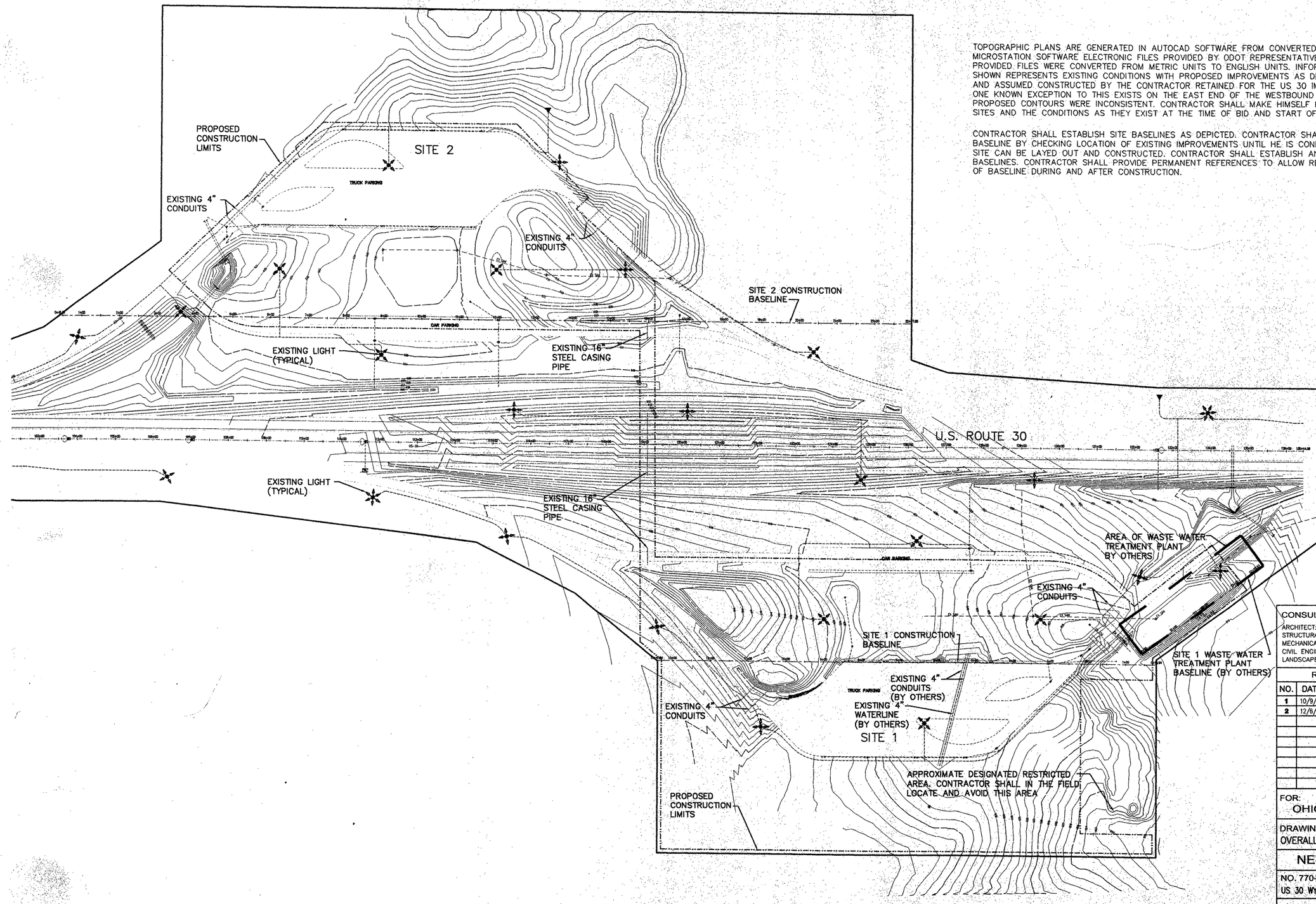

LEGEND

- MANHOLE
- CATCH BASIN
- CURB INLET
- FIRE HYDRANT
- VALVE (WATER OR GAS)
- CLEANOUT
- SANITARY SCHEDULE
- STORM SCHEDULE
- WATERLINE SCHEDULE
- EXISTING STORM SCHEDULE
- PROPOSED ELEVATION
- EXISTING ELEVATION
- UNDERGROUND
- ELECTRIC TRANSFORMER/PAD
- EXISTING CONTOUR
- PROPOSED CONTOUR

UNDERGROUND UTILITIES
TWO WORKING DAYS
BEFORE YOU DIG
Call 1-800-362-2764 (Toll Free)
OHIO UTILITIES PROTECTION SERVICE
NON-MEMBERS
MUST BE CALLED DIRECTLY

CONSULTING ARCHITECTS / ENGINEERS
ARCHITECT: BODNER & KERIK ARCHITECTS, INC.
STRUCTURAL: LANTZ JONES & NEBRASKA, INC.
MECHANICAL/ELECTRICAL: SRA, INC.
CIVIL ENGINEERING: POGGEMEYER DESIGN GROUP, INC.
LANDSCAPE ARCHITECT: R.D. ZANDE & ASSOCIATES, INC.

REVISIONS

NO.	DATE	DESCRIPTION
1	10/9/02	PERMIT SUBMISSION
2	12/6/02	BID SET

STATE OF OHIO
DAVID E. SANEHOLTZ
E-45072
REGISTERED
PROFESSIONAL ENGINEER

PROJECT NUMBER
0226/5150-006

FOR:
OHIO DEPT. OF TRANSPORTATION

DRAWING DESCRIPTION:
OVERALL TOPOGRAPHIC PLAN

NEW REST STOP BUILDINGS

NO. 770-2001-072
US 30 WYANDOT/CRAWFORD

SITE 1 EASTBOUND | SITE 2 WESTBOUND

PREPARED FOR
STATE OF OHIO
DEPARTMENT OF ADMINISTRATIVE SERVICES
GENERAL SERVICES DIVISION
PREPARED BY:
DEPARTMENT OF ADMINISTRATIVE SERVICES

PLOT DATE OCT 10, 2002 | DATE OCT 10, 2002 | SHEET SP-1

I:\5150\006\site\revsite\5150006revisions.dwg 12/06/02 01:58:58 PM EST

LEGEND

- MANHOLE
- CATCH BASIN
- CURB INLET
- FIRE HYDRANT
- VALVE (WATER OR GAS)
- CLEANOUT
- SANITARY SCHEDULE
- STORM SCHEDULE
- WATERLINE SCHEDULE
- EXISTING STORM SCHEDULE
- PROPOSED ELEVATION
- EXISTING ELEVATION
- UNDERGROUND
- ELECTRIC TRANSFORMER/PAD
- EXISTING CONTOUR
- PROPOSED CONTOUR

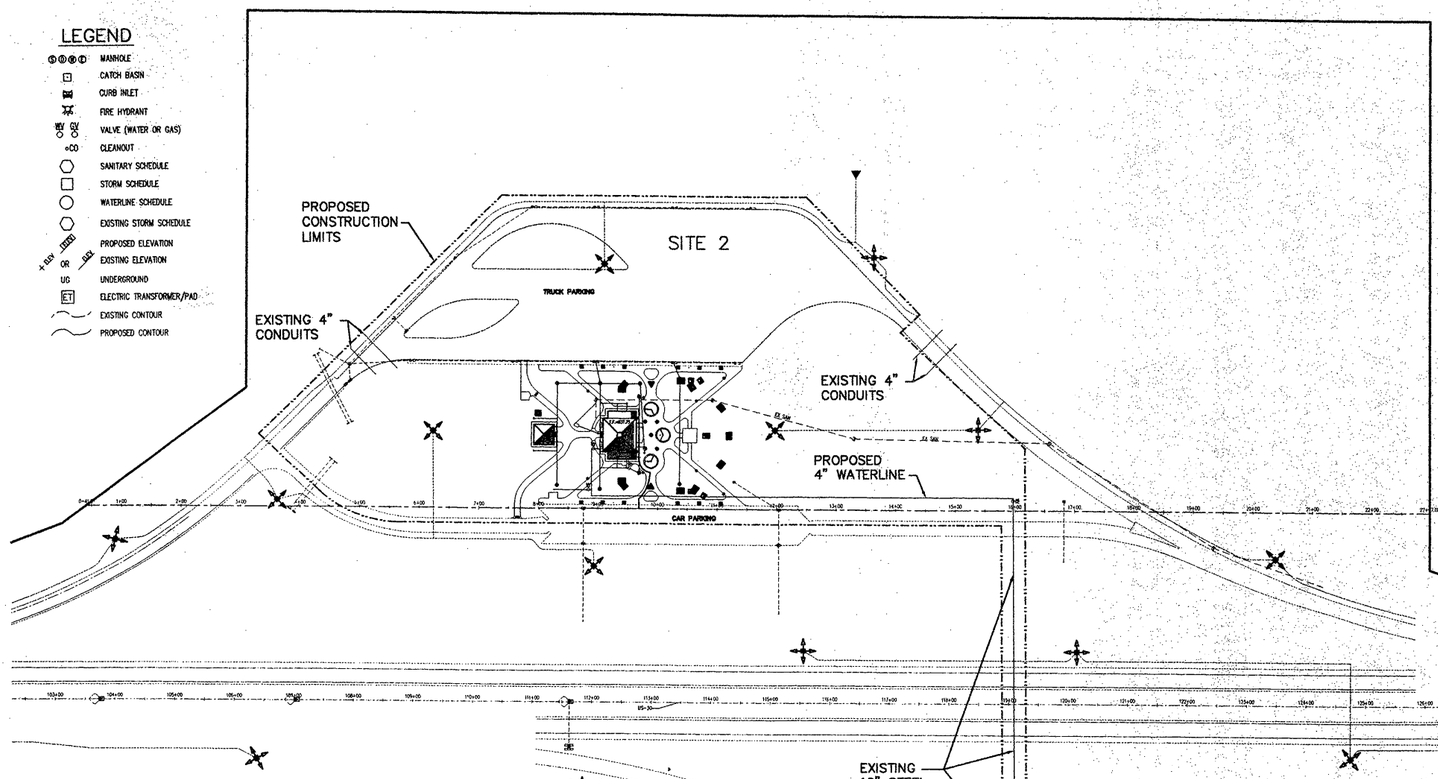

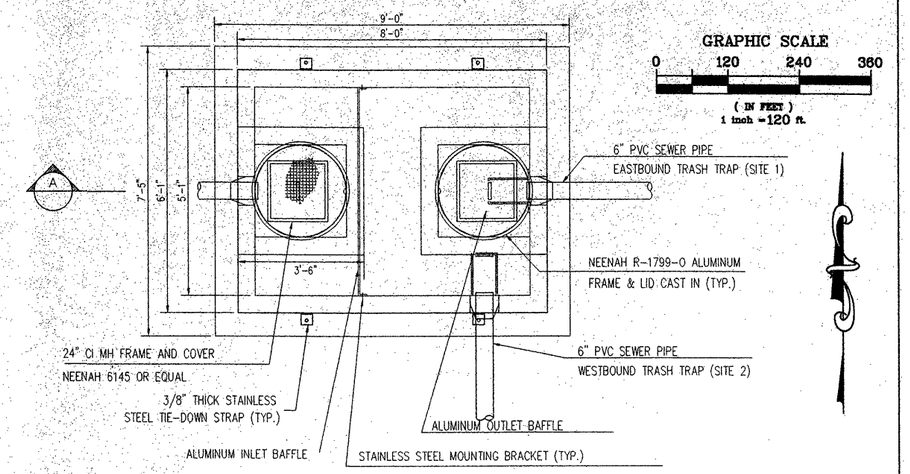

PROPOSED TRASH TRAP PLAN VIEW

(TYPICAL OF TWO SITES)

NOTE:
SITE 2 TRASHTRAP OUTLET SEWER FRAME AND LID SHALL BE OFFSET RIGHT.

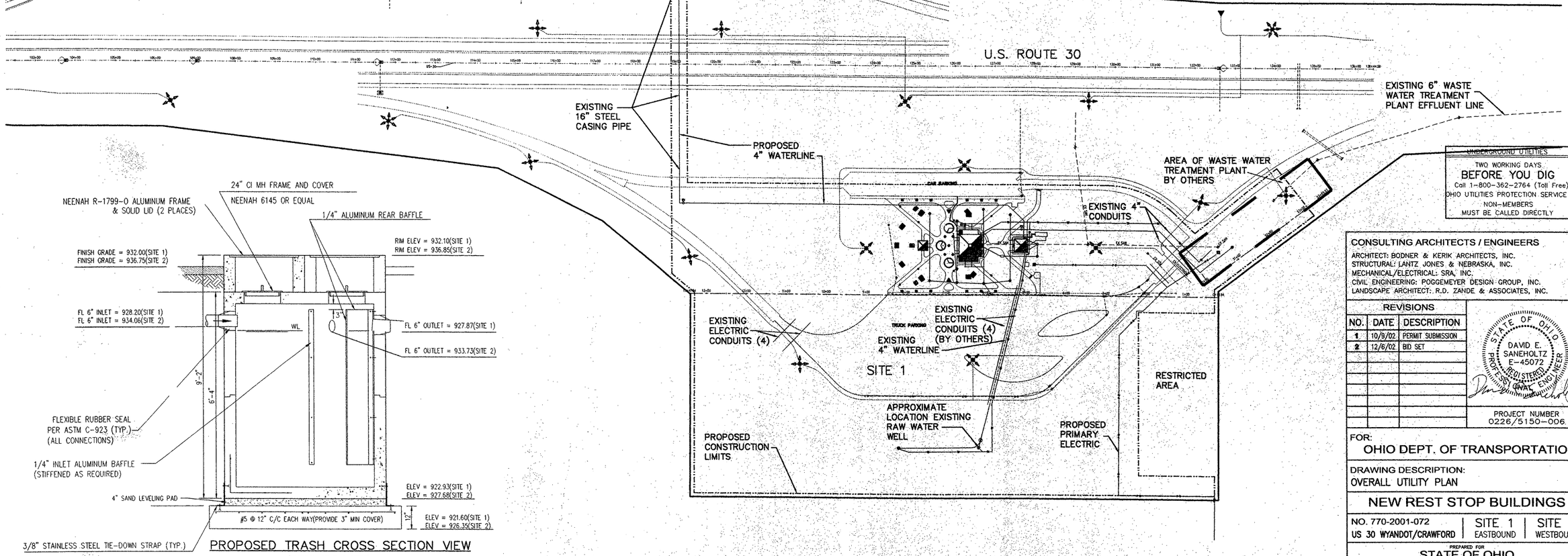

PROPOSED TRASH CROSS SECTION VIEW

(TYPICAL OF TWO SITES)
(SEE SHEETS SP-4 AND SP-8 FOR LOCATIONS)

UNDERGROUND UTILITIES
TWO WORKING DAYS
BEFORE YOU DIG
Call 1-800-362-2764 (Toll Free)
OHIO UTILITIES PROTECTION SERVICE
NON-MEMBERS
MUST BE CALLED DIRECTLY

CONSULTING ARCHITECTS / ENGINEERS
ARCHITECT: BODNER & KERIK ARCHITECTS, INC.
STRUCTURAL: LANTZ JONES & NEBRASKA, INC.
MECHANICAL/ELECTRICAL: SRA, INC.
CIVIL ENGINEERING: POGGEMEYER DESIGN GROUP, INC.
LANDSCAPE ARCHITECT: R.D. ZANDE & ASSOCIATES, INC.

REVISIONS

NO.	DATE	DESCRIPTION
1	10/9/02	PERMIT SUBMISSION
2	12/6/02	BID SET

STATE OF OHIO
DAVID E. SANEHOLTZ
E-45072
REGISTERED PROFESSIONAL ENGINEER

PROJECT NUMBER
0226/5150-006

FOR:
OHIO DEPT. OF TRANSPORTATION

DRAWING DESCRIPTION:
OVERALL UTILITY PLAN

NEW REST STOP BUILDINGS

NO. 770-2001-072
US 30 WYANDOT/CRAWFORD

SITE 1 EASTBOUND | SITE 2 WESTBOUND

PREPARED FOR
STATE OF OHIO
DEPARTMENT OF ADMINISTRATIVE SERVICES
GENERAL SERVICES DIVISION

PREPARED BY
DEPARTMENT OF ADMINISTRATIVE SERVICES

PLOT DATE OCT 10, 2002 | DATE OCT 10, 2002 | SHEET SP-2

I:\5150\006\site\revsite\5150006revisions.dwg 12/06/02 01:58:58 PM EST

CAR PARKING

TRUCK PARKING

EBRA-HM1
ELEV=934.95

EBRA-B1
ELEV=932.25

EBRA-B2
ELEV=931.28

EBRA-P3
ELEV=933.50

EBRA-B3
ELEV=914.04

EBRA-B4
ELEV=914.72

EBRA-P1
ELEV=917.14

EX SAN

EX STM

EX ELECTRICAL

306'~4" RAW WATERLINE
AT 5' MIN COVER,
INSTALLED BY OTHERS.

13+41.84 13+00 12+00 11+00 10+00 9+00 8+00 7+00 6+00 5+00 4+00 3+00 2+00 1+00 0+13.94

50+00 51+00 52+00

GRAPHIC SCALE

0 50 100 150

(IN FEET)
1 inch = 50 ft.

TOPOGRAPHIC PLANS ARE GENERATED IN AUTOCAD SOFTWARE FROM CONVERTED MICROSTATION SOFTWARE ELECTRONIC FILES PROVIDED BY ODOT REPRESENTATIVES. PROVIDED FILES WERE CONVERTED FROM METRIC UNITS TO ENGLISH UNITS. INFORMATION SHOWN REPRESENTS EXISTING CONDITIONS WITH PROPOSED IMPROVEMENTS AS DESIGNED AND ASSUMED CONSTRUCTED BY THE CONTRACTOR RETAINED FOR THE US 30 IMPROVEMENTS. ONE KNOWN EXCEPTION TO THIS EXISTS ON THE EAST END OF THE WESTBOUND REST AREAS WHERE PROPOSED CONTOURS WERE INCONSISTENT. CONTRACTOR SHALL MAKE HIMSELF FAMILIAR WITH THE SITES AND THE CONDITIONS AS THEY EXIST AT THE TIME OF BID AND START OF CONSTRUCTION.

UNDERGROUND UTILITIES
TWO WORKING DAYS
BEFORE YOU DIG
Call 1-800-362-2764 (Toll Free)
OHIO UTILITIES PROTECTION SERVICE
NON-MEMBERS
MUST BE CALLED DIRECTLY

CONSULTING ARCHITECTS / ENGINEERS

ARCHITECT: BODNER & KERIK ARCHITECTS, INC.
STRUCTURAL: LANTZ JONES & NEBRASKA, INC.
MECHANICAL/ELECTRICAL: SRA, INC.
CIVIL ENGINEERING: POGGEMEYER DESIGN GROUP, INC.
LANDSCAPE ARCHITECT: R.D. ZANDE & ASSOCIATES, INC.

REVISIONS

NO.	DATE	DESCRIPTION
1	10/9/02	PERMIT SUBMISSION
2	12/6/02	BID SET

STATE OF OHIO
DAVID E. SANEHOLTZ
E-45072
REGISTERED
PROFESSIONAL ENGINEER

PROJECT NUMBER
0226/5150-006

FOR:
OHIO DEPT. OF TRANSPORTATION

DRAWING DESCRIPTION:
50 SCALE TOPOGRAPHIC PLAN (SITE 1)

NEW REST STOP BUILDINGS

NO. 770-2001-072
US 30 WYANDOT/CRAWFORD

SITE 1 EASTBOUND | SITE 2 WESTBOUND

PREPARED FOR
STATE OF OHIO
DEPARTMENT OF ADMINISTRATIVE SERVICES
GENERAL SERVICES DIVISION

PREPARED BY
DEPARTMENT OF ADMINISTRATIVE SERVICES

PLOT DATE OCT 10, 2002 | DATE OCT 10, 2002 | SHEET SP-3

I:\5150\006\site\evsite\5150006revisions.dwg 12/06/02 01:58:58 PM EST

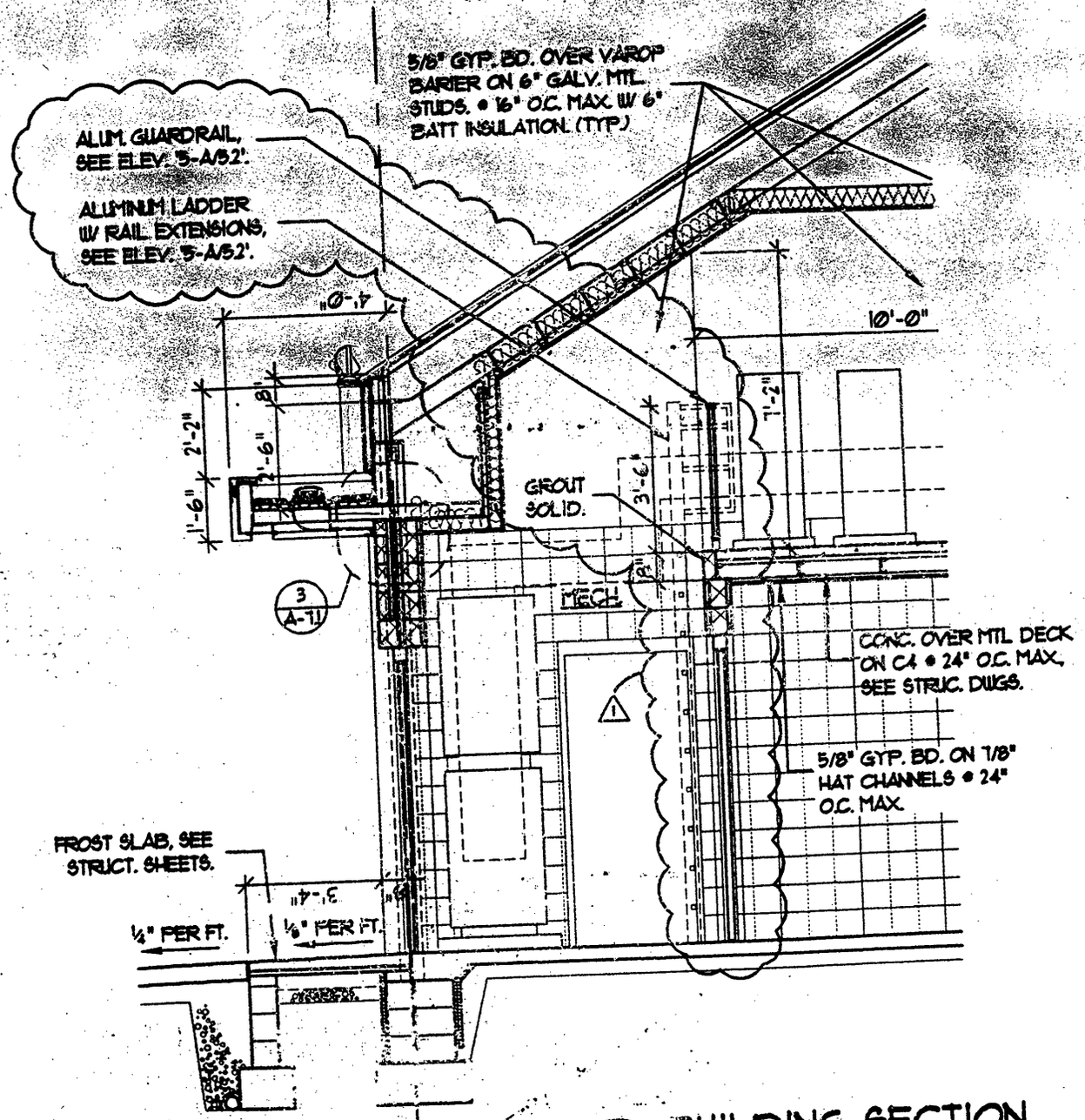

1 A-52 BUILDING SECTION
SCALE: 1/4" = 1'-0"

TITLE		
REST STOP BUILDING REPLACEMENTS COUNTY AND WAYNE CO.	ADDENDUM 2	TITLE
	DATE	

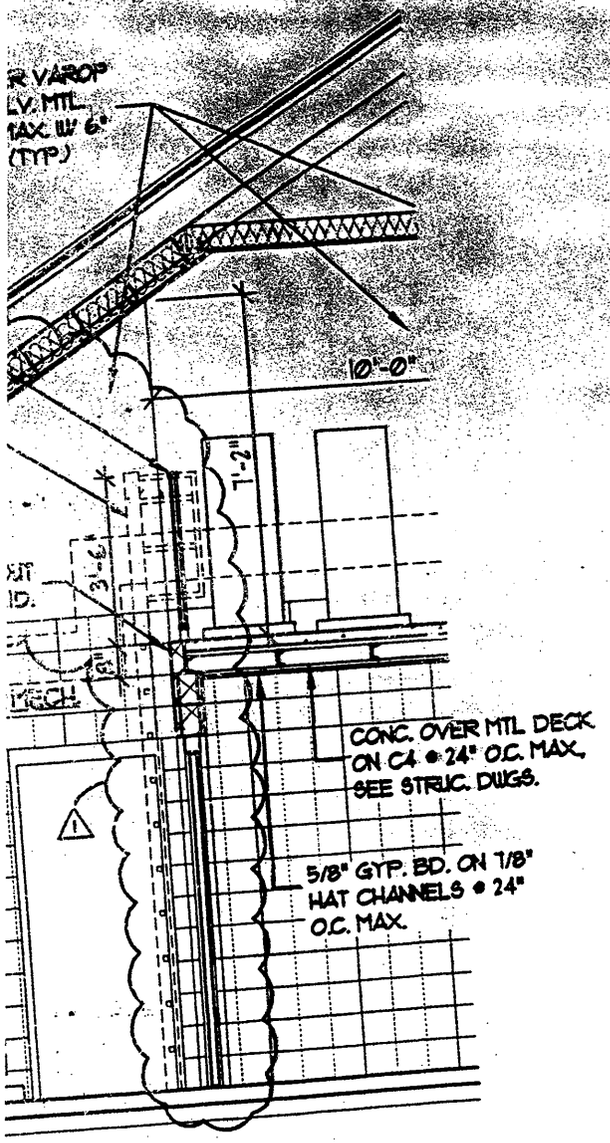

1 / A-52 BUILDING SECTION
SCALE: 1/4" = 1'-0"

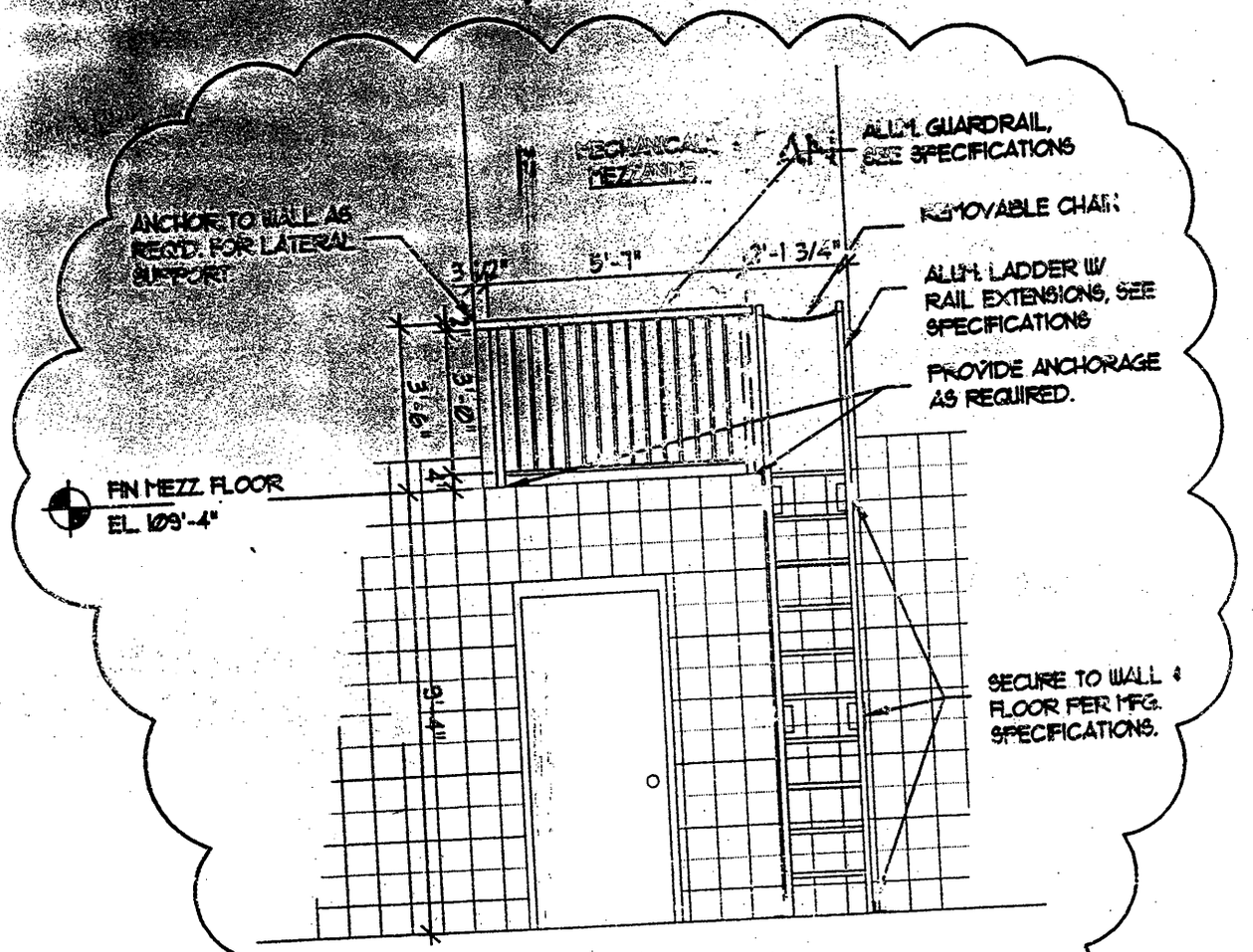

5 / A-52 INTERIOR ELEVATION
SCALE: 1/8" = 1'-0"

	ADDENDUM #2	TITLE REST STOP BUILDING REPLACEMENT SUMMIT AND WAYNE CO.	AD

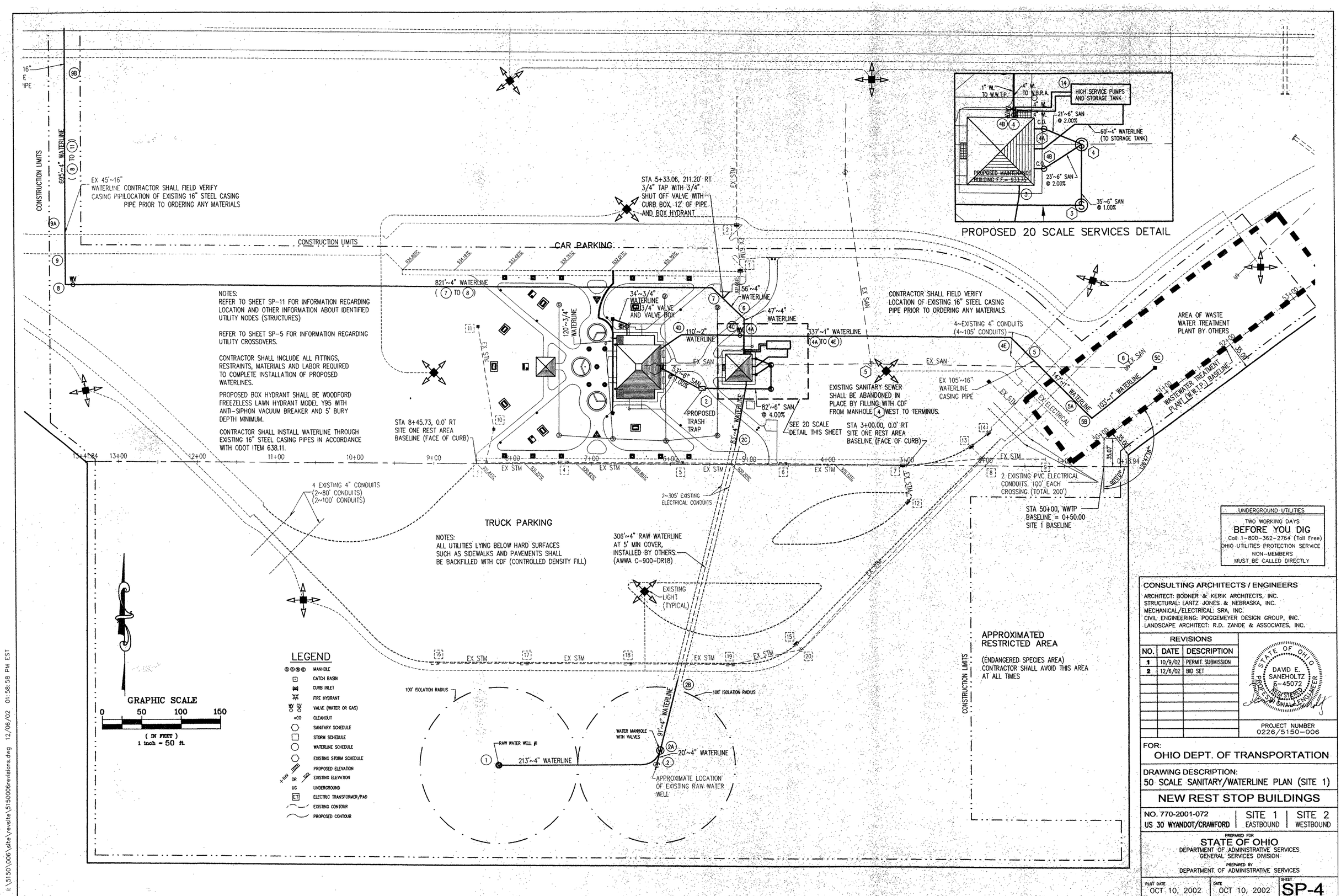

UNDERGROUND UTILITIES
TWO WORKING DAYS
BEFORE YOU DIG
Call 1-800-362-2764 (Toll Free)
OHIO UTILITIES PROTECTION SERVICE
NON-MEMBERS
MUST BE CALLED DIRECTLY

CONSULTING ARCHITECTS / ENGINEERS
ARCHITECT: BODNER & KERIK ARCHITECTS, INC.
STRUCTURAL: LANTZ JONES & NEBRASKA, INC.
MECHANICAL/ELECTRICAL: SRA, INC.
CIVIL ENGINEERING: POGGEMEYER DESIGN GROUP, INC.
LANDSCAPE ARCHITECT: R.D. ZANDE & ASSOCIATES, INC.

REVISIONS

NO.	DATE	DESCRIPTION
1	10/9/02	PERMIT SUBMISSION
2	12/6/02	BID SET

STATE OF OHIO DAVID E. SANEHOLTZ E-45072 REGISTERED PROFESSIONAL ENGINEER

PROJECT NUMBER 0226/5150-006

FOR:
OHIO DEPT. OF TRANSPORTATION

DRAWING DESCRIPTION:
50 SCALE SANITARY/WATERLINE PLAN (SITE 1)

NEW REST STOP BUILDINGS

NO. 770-2001-072 US 30 WYANDOT/CRAWFORD	SITE 1 EASTBOUND	SITE 2 WESTBOUND

PREPARED FOR
STATE OF OHIO
DEPARTMENT OF ADMINISTRATIVE SERVICES
GENERAL SERVICES DIVISION
PREPARED BY
DEPARTMENT OF ADMINISTRATIVE SERVICES

PLOT DATE	DATE	SHEET
OCT 10, 2002	OCT 10, 2002	SP-4

I:\5150\006\site\revsite\5150006revisions.dwg 12/06/02 01:58:58 PM EST

SITE 1 CROSSOVER LEGEND

- (1A) PROPOSED 4" WATERLINE = 928.67
  EXISTING ELECTRIC = UNKNOWN
- (1B) PROPOSED 4" WATERLINE = 927.60
  PROPOSED 8" STORM SEWER = 924.99
- (1C) PROPOSED 2" WATERLINE = 927.80
  PROPOSED 8" STORM SEWER = 925.04
- (1D) PROPOSED 2" WATERLINE = 920.17
  EXISTING 6" SANITARY SEWER = 916.80±
- (1E) PROPOSED 2" WATERLINE = 918.67
  EXISTING 6" SANITARY SEWER = 913.75±
- (1F) PROPOSED 2" WATERLINE = 927.30
  PROPOSED 12" STORM SEWER = 924.58
- (1G) PROPOSED 2" WATERLINE = 928.40
  PROPOSED 12" STORM SEWER = 925.90
- (1H) PROPOSED 6" SANITARY SEWER = 928.70
  PROPOSED 12" STORM SEWER = 925.85
- (1I) PROPOSED 6" SANITARY SEWER = 926.99
  PROPOSED 12" STORM SEWER = 924.43
- (1J) PROPOSED 6" SANITARY SEWER = 925.39
  PROPOSED 4" RAW WATERLINE = 927.67

ELEVATIONS GIVEN ARE PIPE FLOWLINES (INVERTS)

NOTES:
REFER TO SHEET SP-11 FOR INFORMATION REGARDING LOCATION AND OTHER INFORMATION ABOUT IDENTIFIED UTILITY NODES (STRUCTURES)

REFER TO THIS SHEET FOR INFORMATION REGARDING UTILITY CROSSOVERS.

CONTRACTOR TO PROVIDE 6" STORM LATERALS WITH FITTINGS TO DOWNSPOUTS AT BUILDINGS. 6" SERVICE SLOPES SHALL BE 2.00% MINIMUM

ALL UTILITIES LYING BELOW HARD SURFACES SUCH AS SIDEWALKS AND PAVEMENTS SHALL BE BACKFILLED WITH CDF (CONTROLLED DENSITY FILL)

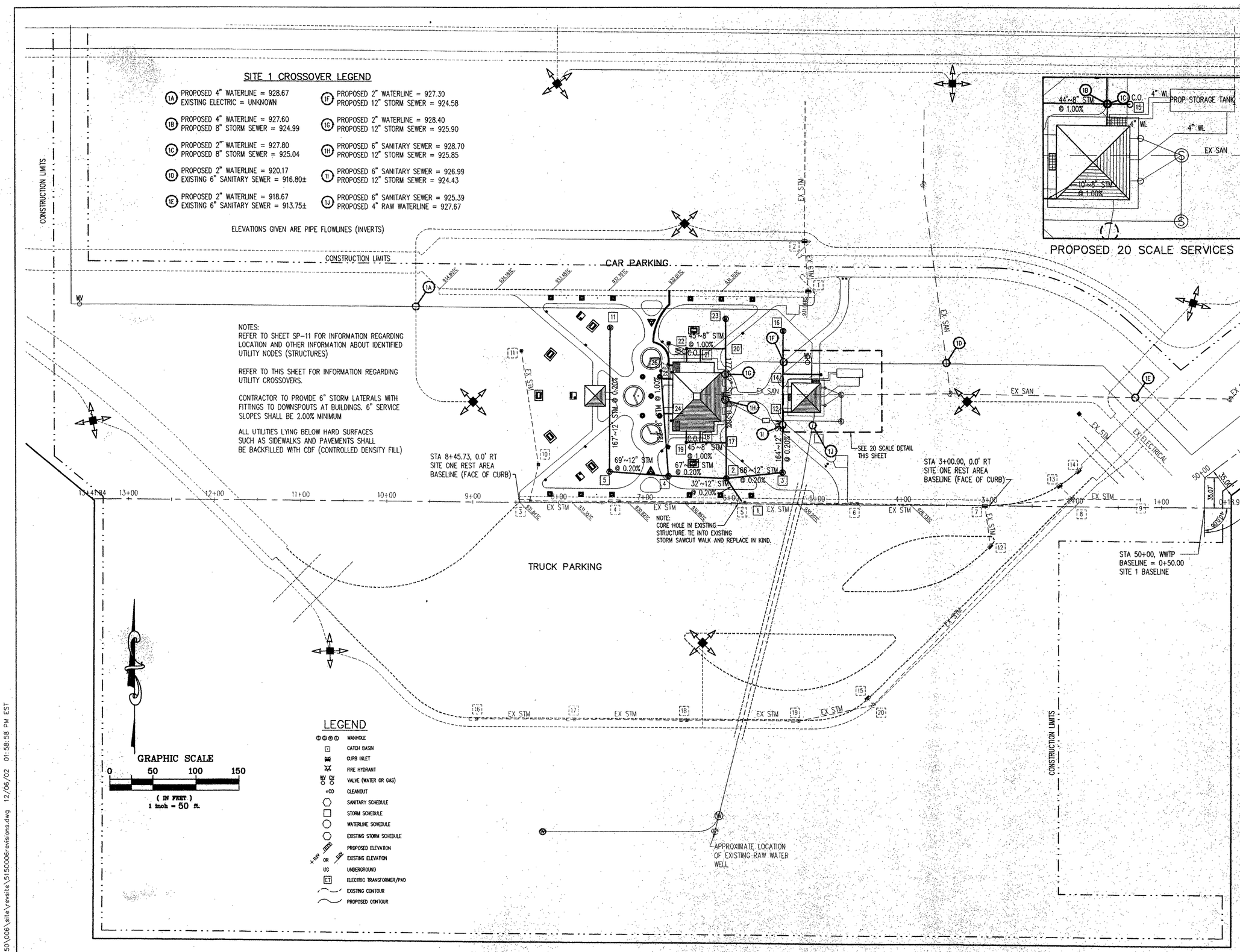

PROPOSED 20 SCALE SERVICES DETAIL

LEGEND

- MANHOLE
- CATCH BASIN
- CURB INLET
- FIRE HYDRANT
- VALVE (WATER OR GAS)
- CLEANOUT
- SANITARY SCHEDULE
- STORM SCHEDULE
- WATERLINE SCHEDULE
- EXISTING STORM SCHEDULE
- PROPOSED ELEVATION
- OR EXISTING ELEVATION
- UG UNDERGROUND
- ET ELECTRIC TRANSFORMER/PAD
- EXISTING CONTOUR
- PROPOSED CONTOUR

GRAPHIC SCALE
0 50 100 150
(IN FEET)
1 inch = 50 ft.

UNDERGROUND UTILITIES
TWO WORKING DAYS
BEFORE YOU DIG
Call 1-800-362-2764 (Toll Free)
OHIO UTILITIES PROTECTION SERVICE
NON-MEMBERS
MUST BE CALLED DIRECTLY

CONSULTING ARCHITECTS / ENGINEERS

ARCHITECT: BODNER & KERIK ARCHITECTS, INC.
STRUCTURAL: LANTZ JONES & NEBRASKA, INC.
MECHANICAL/ELECTRICAL: SRA, INC.
CIVIL ENGINEERING: POGGEMEYER DESIGN GROUP, INC.
LANDSCAPE ARCHITECT: R.D. ZANDE & ASSOCIATES, INC.

REVISIONS

NO.	DATE	DESCRIPTION
1	10/9/02	PERMIT SUBMISSION
2	12/6/02	BID SET

STATE OF OHIO
DAVID E. SANEHOLTZ
E-45072
REGISTERED
PROFESSIONAL ENGINEER

PROJECT NUMBER
0226/5150-006

FOR:
OHIO DEPT. OF TRANSPORTATION

DRAWING DESCRIPTION:
50 SCALE STORM SEWER PLAN (SITE 1)

NEW REST STOP BUILDINGS

NO. 770-2001-072
US 30 WYANDOT/CRAWFORD

SITE 1 EASTBOUND | SITE 2 WESTBOUND

PREPARED FOR
STATE OF OHIO
DEPARTMENT OF ADMINISTRATIVE SERVICES
GENERAL SERVICES DIVISION

PREPARED BY
DEPARTMENT OF ADMINISTRATIVE SERVICES

PLOT DATE OCT 10, 2002 | DATE OCT 10, 2002 | SHEET SP-5

I:\5150\006\site\revsite\5150006revisions.dwg 12/06/02 01:58:58 PM EST

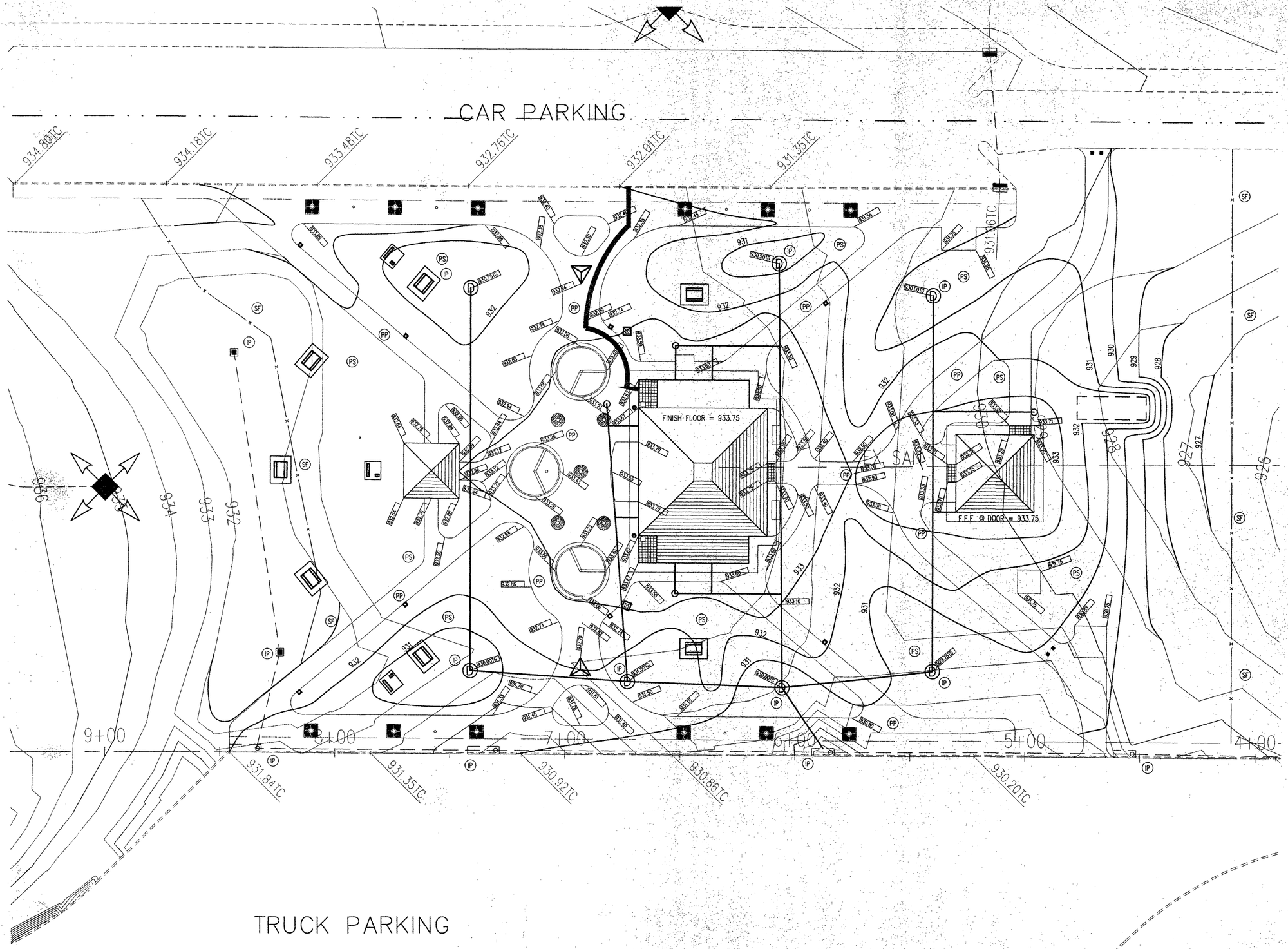

GRAPHIC SCALE

0 20 40 60

(IN FEET)
1 inch = 20 ft.

GRADING LEGEND

678	EXISTING CONTOUR
678.0	EXISTING ELEVATION
678.00	PROPOSED ELEVATION TC=TOP OF CURB G=GUTTER FF=FINISH FLOOR TG=TOP OF GRATE
(678.0)	MINIMUM FINISHED GROUND (PAD) ELEVATION
0.50%	PROPOSED PAVEMENT CENTERLINE SLOPE
	PROPOSED DRAINAGE FLOW
LP	GRADE LOW POINT
HP	GRADE HIGH POINT
BP	GRADE BREAK POINT

SOIL EROSION CONTROL LEGEND

- (IP) INLET PROTECTION
- (PS) PERMANENT SEEDING & MULCHING
- (PP) PERMANENT PAVEMENT
- (SF) SILT FENCE

UNDERGROUND UTILITIES

TWO WORKING DAYS
BEFORE YOU DIG
Call 1-800-362-2764 (Toll Free)
OHIO UTILITIES PROTECTION SERVICE
NON-MEMBERS
MUST BE CALLED DIRECTLY

CONSULTING ARCHITECTS / ENGINEERS

ARCHITECT: BODNER & KERIK ARCHITECTS, INC.
STRUCTURAL: LANTZ JONES & NEBRASKA, INC.
MECHANICAL/ELECTRICAL: SRA, INC.
CIVIL ENGINEERING: POGGEMEYER DESIGN GROUP, INC.
LANDSCAPE ARCHITECT: R.D. ZANDE & ASSOCIATES, INC.

REVISIONS

NO.	DATE	DESCRIPTION
1	10/9/02	PERMIT SUBMISSION
2	12/6/02	BID SET

STATE OF OHIO
DAVID E. SANEHOLTZ
E-45072
REGISTERED
PROFESSIONAL ENGINEER

PROJECT NUMBER
0226/5150-006

FOR:
OHIO DEPT. OF TRANSPORTATION

DRAWING DESCRIPTION:
20 SCALE GRADING PLAN (SITE 1)

NEW REST STOP BUILDINGS

NO. 770-2001-072
US 30 WYANDOT/CRAWFORD

SITE 1 EASTBOUND | SITE 2 WESTBOUND

PREPARED FOR
STATE OF OHIO
DEPARTMENT OF ADMINISTRATIVE SERVICES
GENERAL SERVICES DIVISION

PREPARED BY
DEPARTMENT OF ADMINISTRATIVE SERVICES

PLOT DATE OCT 10, 2002 | DATE OCT 10, 2002 | SHEET SP-6

i:\5150\006\site\revsite\515006revisions.dwg 12/06/02 01:58:58 PM EST

TOPOGRAPHIC PLANS ARE GENERATED IN AUTOCAD SOFTWARE FROM CONVERTED MICROSTATION SOFTWARE ELECTRONIC FILES PROVIDED BY ODOT REPRESENTATIVES. PROVIDED FILES WERE CONVERTED FROM METRIC UNITS TO ENGLISH UNITS. INFORMATION SHOWN REPRESENTS EXISTING CONDITIONS WITH PROPOSED IMPROVEMENTS AS DESIGNED AND ASSUMED CONSTRUCTED BY THE CONTRACTOR RETAINED FOR THE US 30 IMPROVEMENTS. ONE KNOWN EXCEPTION TO THIS EXISTS ON THE EAST END OF THE WESTBOUND REST AREAS WHERE PROPOSED CONTOURS WERE INCONSISTENT. CONTRACTOR SHALL MAKE HIMSELF FAMILIAR WITH THE SITES AND THE CONDITIONS AS THEY EXIST AT THE TIME OF BID AND START OF CONSTRUCTION.

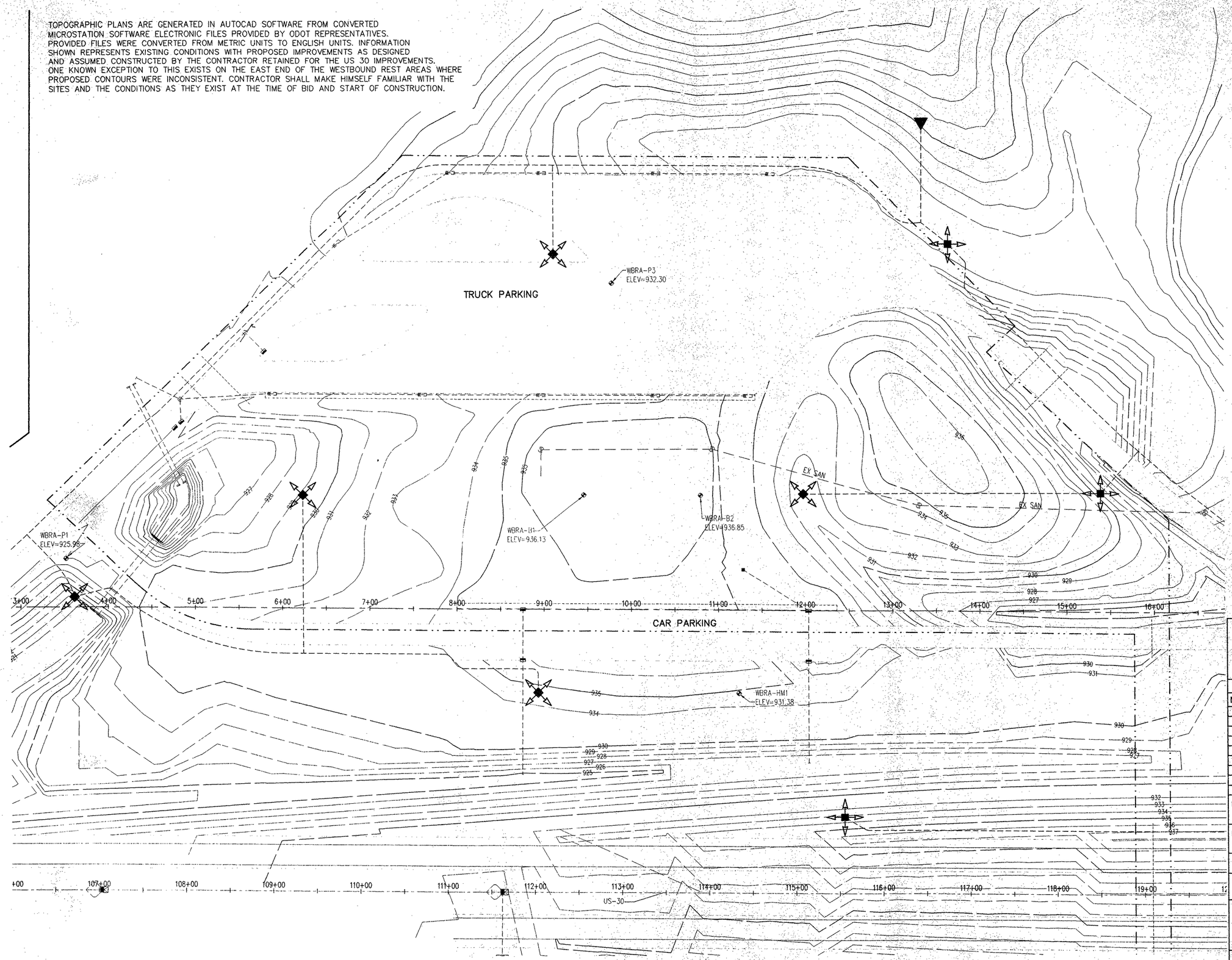

LEGEND

- MANHOLE
- CATCH BASIN
- CURB INLET
- FIRE HYDRANT
- VALVE (WATER OR GAS)
- CLEANOUT
- SANITARY SCHEDULE
- STORM SCHEDULE
- WATERLINE SCHEDULE
- EXISTING STORM SCHEDULE
- PROPOSED ELEVATION
- OR EXISTING ELEVATION
- UG UNDERGROUND
- ET ELECTRIC TRANSFORMER/PAD
- EXISTING CONTOUR
- PROPOSED CONTOUR

GRAPHIC SCALE

0 50 100 150

(IN FEET)
1 inch = 50 ft.

UNDERGROUND UTILITIES
TWO WORKING DAYS
BEFORE YOU DIG
Call 1-800-362-2764 (Toll Free)
OHIO UTILITIES PROTECTION SERVICE
NON-MEMBERS
MUST BE CALLED DIRECTLY

CONSULTING ARCHITECTS / ENGINEERS

ARCHITECT: BODNER & KERIK ARCHITECTS, INC.
STRUCTURAL: LANTZ JONES & NEBRASKA, INC.
MECHANICAL/ELECTRICAL: SRA, INC.
CIVIL ENGINEERING: POGGEMEYER DESIGN GROUP, INC.
LANDSCAPE ARCHITECT: R.D. ZANDE & ASSOCIATES, INC.

REVISIONS

NO.	DATE	DESCRIPTION
1	10/9/02	PERMIT SUBMISSION
2	12/6/02	BID SET

STATE OF OHIO
DAVID E. SANEHOLTZ
E-45072
REGISTERED
PROFESSIONAL ENGINEER

PROJECT NUMBER
0226/5150-006

FOR:
OHIO DEPT. OF TRANSPORTATION

DRAWING DESCRIPTION:
50 SCALE TOPOGRAPHIC PLAN (SITE 2)

NEW REST STOP BUILDINGS

NO. 770-2001-072
US 30 WYANDOT/CRAWFORD

SITE 1	SITE 2
EASTBOUND	WESTBOUND

PREPARED FOR
STATE OF OHIO
DEPARTMENT OF ADMINISTRATIVE SERVICES
GENERAL SERVICES DIVISION

PREPARED BY
DEPARTMENT OF ADMINISTRATIVE SERVICES

PLOT DATE	DATE	SHEET
OCT 10, 2002	OCT 10, 2002	SP-7

I:\5150\006\site\revsite\5150006revisions.dwg 12/06/02 01:58:58 PM EST

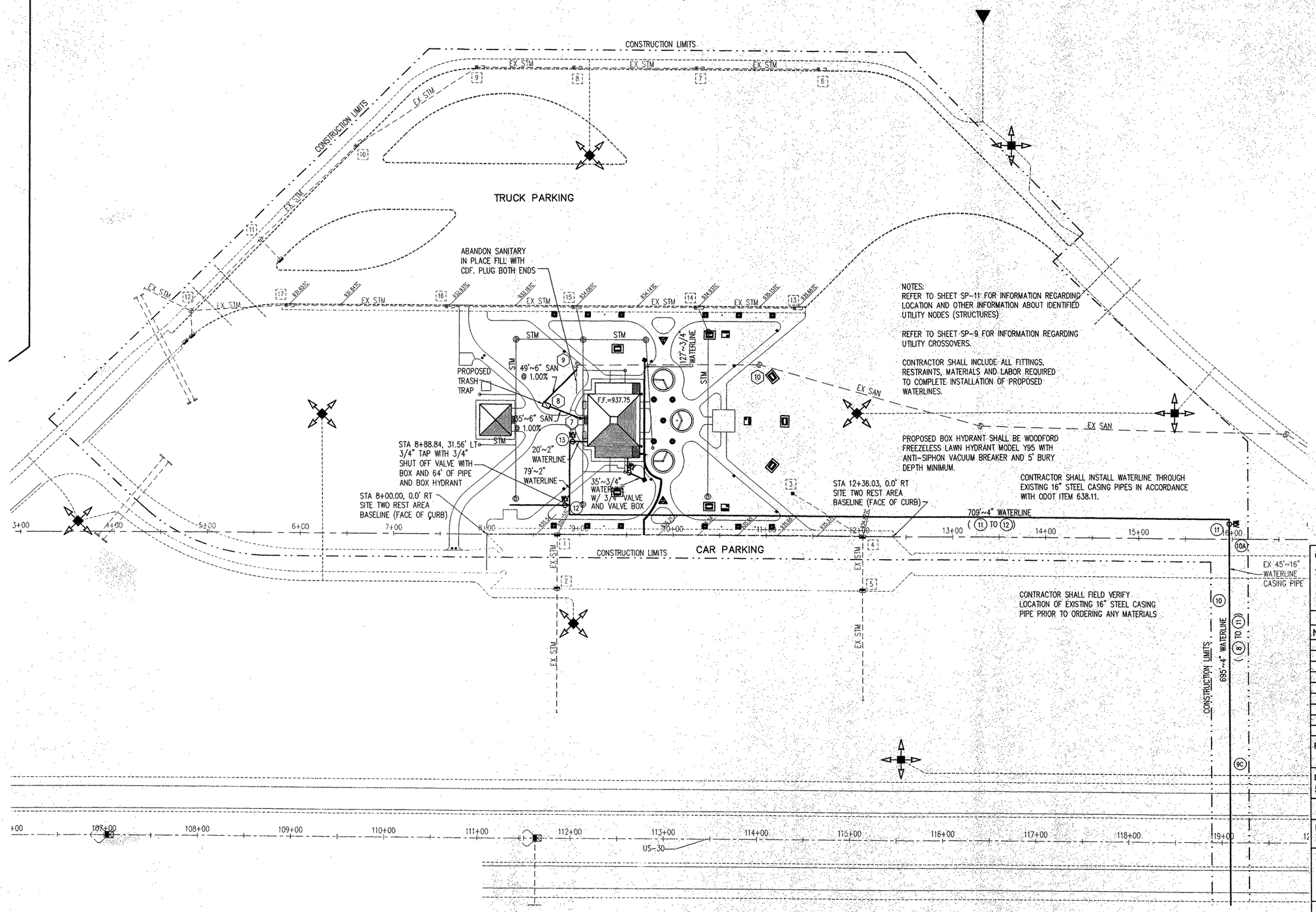

NOTES:
REFER TO SHEET SP-11 FOR INFORMATION REGARDING LOCATION AND OTHER INFORMATION ABOUT IDENTIFIED UTILITY NODES (STRUCTURES)

REFER TO SHEET SP-9 FOR INFORMATION REGARDING UTILITY CROSSOVERS.

CONTRACTOR SHALL INCLUDE ALL FITTINGS, RESTRAINTS, MATERIALS AND LABOR REQUIRED TO COMPLETE INSTALLATION OF PROPOSED WATERLINES.

LEGEND

- MANHOLE
- CATCH BASIN
- CURB INLET
- FIRE HYDRANT
- WV GV VALVE (WATER OR GAS)
- CO CLEANOUT
- SANITARY SCHEDULE
- STORM SCHEDULE
- WATERLINE SCHEDULE
- EXISTING STORM SCHEDULE
- PROPOSED ELEVATION
- EXISTING ELEVATION
- UG UNDERGROUND
- ET ELECTRIC TRANSFORMER/PAD
- EXISTING CONTOUR
- PROPOSED CONTOUR

GRAPHIC SCALE

0 50 100 150

(IN FEET)
1 inch = 50 ft.

UNDERGROUND UTILITIES
TWO WORKING DAYS
BEFORE YOU DIG
Call 1-800-362-2764 (Toll Free)
OHIO UTILITIES PROTECTION SERVICE
NON-MEMBERS
MUST BE CALLED DIRECTLY

CONSULTING ARCHITECTS / ENGINEERS
ARCHITECT: BODNER & KERIK ARCHITECTS, INC.
STRUCTURAL: LANTZ JONES & NEBRASKA, INC.
MECHANICAL/ELECTRICAL: SRA, INC.
CIVIL ENGINEERING: POGGEMEYER DESIGN GROUP, INC.
LANDSCAPE ARCHITECT: R.D. ZANDE & ASSOCIATES, INC.

REVISIONS

NO.	DATE	DESCRIPTION
1	10/9/02	PERMIT SUBMISSION
2	12/6/02	BID SET

STATE OF OHIO
DAVID E. SANEHOLTZ
E-45072
REGISTERED PROFESSIONAL ENGINEER

PROJECT NUMBER
0226/5150-006

FOR:
OHIO DEPT. OF TRANSPORTATION

DRAWING DESCRIPTION:
50 SCALE SANITARY/WATERLINE PLAN (SITE 2)

NEW REST STOP BUILDINGS

NO. 770-2001-072
US 30 WYANDOT/CRAWFORD

SITE 1	SITE 2
EASTBOUND	WESTBOUND

PREPARED FOR
STATE OF OHIO
DEPARTMENT OF ADMINISTRATIVE SERVICES
GENERAL SERVICES DIVISION

PREPARED BY
DEPARTMENT OF ADMINISTRATIVE SERVICES

PLOT DATE	DATE	SHEET
OCT 10, 2002	OCT 10, 2002	SP-8

I:\5150\006\site\revsite\5150006revisions.dwg 12/06/02 01:58:58 PM EST

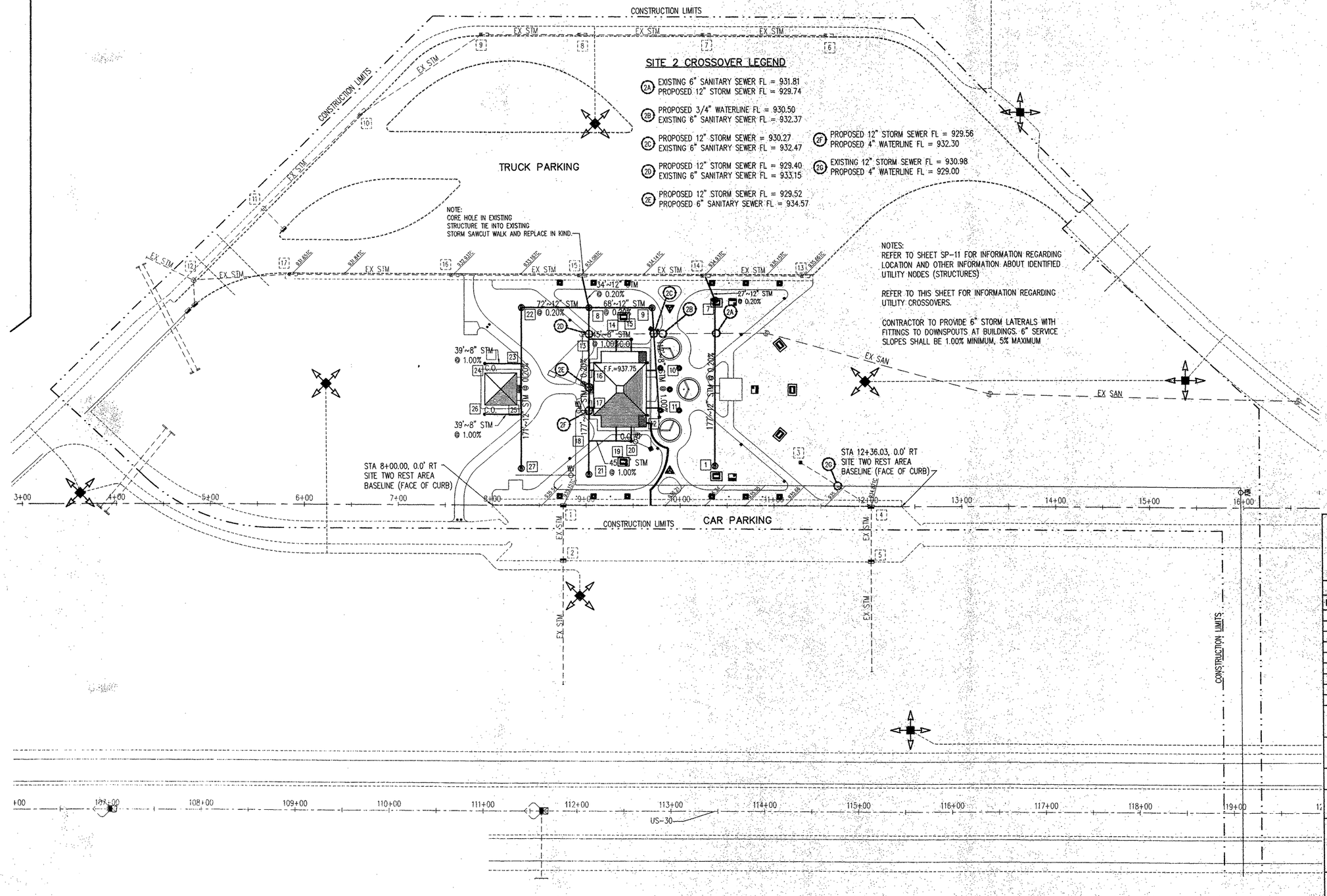

SITE 2 CROSSOVER LEGEND

- (2A) EXISTING 6" SANITARY SEWER FL = 931.81
  PROPOSED 12" STORM SEWER FL = 929.74
- (2B) PROPOSED 3/4" WATERLINE FL = 930.50
  EXISTING 6" SANITARY SEWER FL = 932.37
- (2C) PROPOSED 12" STORM SEWER = 930.27
  EXISTING 6" SANITARY SEWER FL = 932.47
- (2D) PROPOSED 12" STORM SEWER FL = 929.40
  EXISTING 6" SANITARY SEWER FL = 933.15
- (2E) PROPOSED 12" STORM SEWER FL = 929.52
  PROPOSED 6" SANITARY SEWER FL = 934.57
- (2F) PROPOSED 12" STORM SEWER FL = 929.56
  PROPOSED 4" WATERLINE FL = 932.30
- (2G) EXISTING 12" STORM SEWER FL = 930.98
  PROPOSED 4" WATERLINE FL = 929.00

NOTES:
REFER TO SHEET SP-11 FOR INFORMATION REGARDING LOCATION AND OTHER INFORMATION ABOUT IDENTIFIED UTILITY NODES (STRUCTURES)

REFER TO THIS SHEET FOR INFORMATION REGARDING UTILITY CROSSOVERS.

CONTRACTOR TO PROVIDE 6" STORM LATERALS WITH FITTINGS TO DOWNSPOUTS AT BUILDINGS. 6" SERVICE SLOPES SHALL BE 1.00% MINIMUM, 5% MAXIMUM

LEGEND

- MANHOLE
- CATCH BASIN
- CURB INLET
- FIRE HYDRANT
- WV CV — VALVE (WATER OR GAS)
- CO — CLEANOUT
- SANITARY SCHEDULE
- STORM SCHEDULE
- WATERLINE SCHEDULE
- EXISTING STORM SCHEDULE
- 4-SUM 1000 — PROPOSED ELEVATION
- OR 1000 — EXISTING ELEVATION
- UG — UNDERGROUND
- ET — ELECTRIC TRANSFORMER/PAD
- EXISTING CONTOUR
- PROPOSED CONTOUR

GRAPHIC SCALE

0 50 100 150

(IN FEET)
1 inch = 50 ft.

UNDERGROUND UTILITIES
TWO WORKING DAYS
BEFORE YOU DIG
Call 1-800-362-2764 (Toll Free)
OHIO UTILITIES PROTECTION SERVICE
NON-MEMBERS
MUST BE CALLED DIRECTLY

CONSULTING ARCHITECTS / ENGINEERS

ARCHITECT: BODNER & KERIK ARCHITECTS, INC.
STRUCTURAL: LANTZ JONES & NEBRASKA, INC.
MECHANICAL/ELECTRICAL: SRA, INC.
CIVIL ENGINEERING: POGGEMEYER DESIGN GROUP, INC.
LANDSCAPE ARCHITECT: R.D. ZANDE & ASSOCIATES, INC.

REVISIONS

NO.	DATE	DESCRIPTION
1	10/9/02	PERMIT SUBMISSION
2	12/6/02	BID SET

STATE OF OHIO
DAVID E. SANEHOLTZ
E-45072
REGISTERED PROFESSIONAL ENGINEER

PROJECT NUMBER
0226/5150-006

FOR:
OHIO DEPT. OF TRANSPORTATION

DRAWING DESCRIPTION:
50 SCALE STORM SEWER PLAN (SITE 2)

NEW REST STOP BUILDINGS

NO. 770-2001-072
US 30 WYANDOT/CRAWFORD

SITE 1 EASTBOUND | SITE 2 WESTBOUND

PREPARED FOR
STATE OF OHIO
DEPARTMENT OF ADMINISTRATIVE SERVICES
GENERAL SERVICES DIVISION

PREPARED BY
DEPARTMENT OF ADMINISTRATIVE SERVICES

PLOT DATE OCT 10, 2002 | DATE OCT 10, 2002 | SHEET SP-9

I:\5150\006\site\revsite\5150006revisions.dwg 12/06/02 01:58:58 PM EST

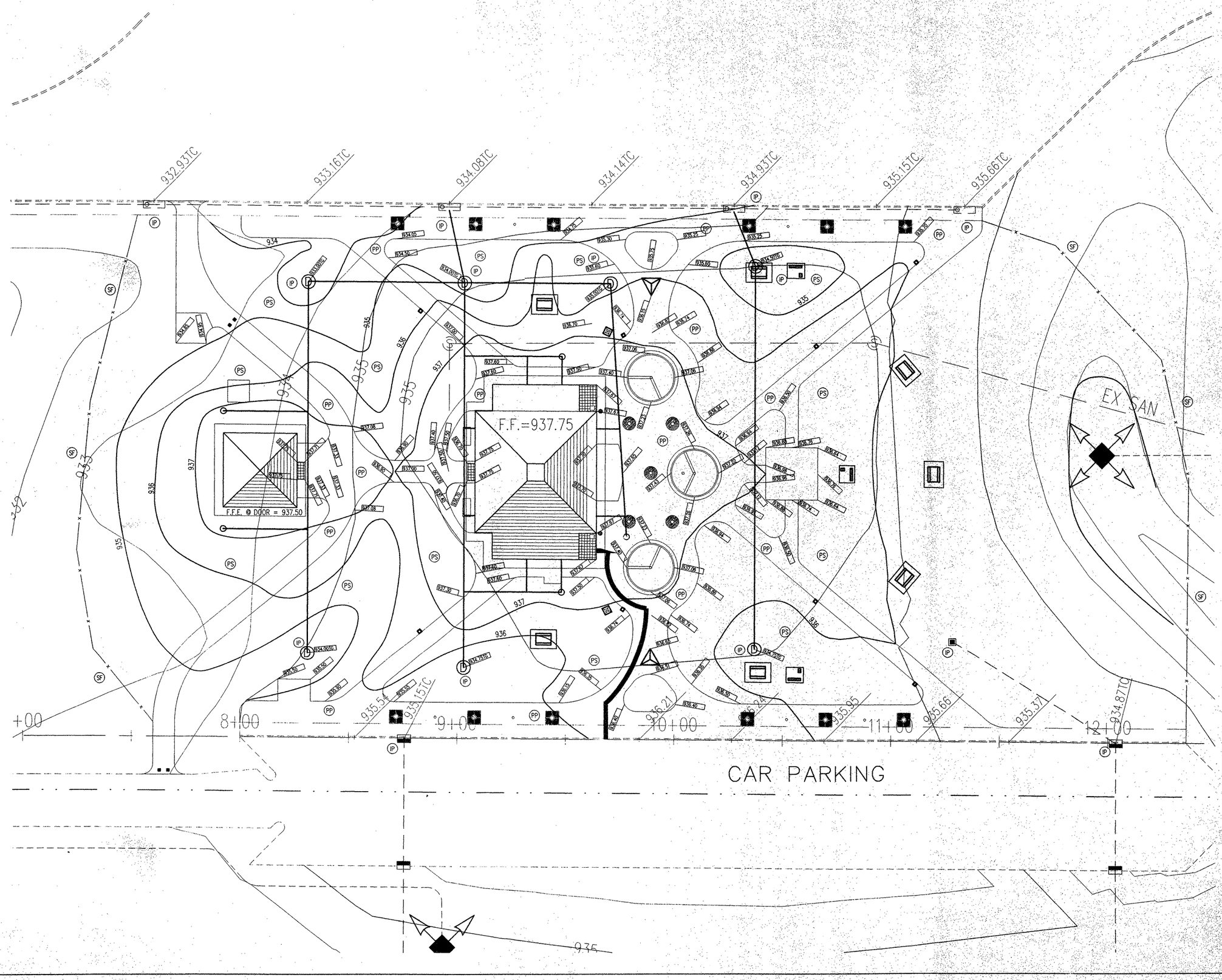

GRAPHIC SCALE

0 20 40 60

(IN FEET)
1 inch = 20 ft.

GRADING LEGEND

678	EXISTING CONTOUR
678.0	EXISTING ELEVATION
678.00	PROPOSED ELEVATION
	TC=TOP OF CURB G=GUTTER FF=FINISH FLOOR TG=TOP OF GRATE
(678.0)	MINIMUM FINISHED GROUND (PAD) ELEVATION
0.50%	PROPOSED PAVEMENT CENTERLINE SLOPE
	PROPOSED DRAINAGE FLOW
LP	GRADE LOW POINT
HP	GRADE HIGH POINT
BP	GRADE BREAK POINT

SOIL EROSION CONTROL LEGEND

- (IP) INLET PROTECTION
- (PS) PERMANENT SEEDING & MULCHING
- (PP) PERMANENT PAVEMENT
- (SF) SILT FENCE

UNDERGROUND UTILITIES

TWO WORKING DAYS
BEFORE YOU DIG
Call 1-800-362-2764 (Toll Free)
OHIO UTILITIES PROTECTION SERVICE
NON-MEMBERS
MUST BE CALLED DIRECTLY

CONSULTING ARCHITECTS / ENGINEERS

ARCHITECT: BODNER & KERIK ARCHITECTS, INC.
STRUCTURAL: LANTZ JONES & NEBRASKA, INC.
MECHANICAL/ELECTRICAL: SRA, INC.
CIVIL ENGINEERING: POGGEMEYER DESIGN GROUP, INC.
LANDSCAPE ARCHITECT: R.D. ZANDE & ASSOCIATES, INC.

REVISIONS

NO.	DATE	DESCRIPTION
1	10/9/02	PERMIT SUBMISSION
2	12/6/02	BID SET

STATE OF OHIO
DAVID E. SANEHOLTZ
E-45072
REGISTERED
PROFESSIONAL ENGINEER

PROJECT NUMBER
0226/5150-006

FOR:
OHIO DEPT. OF TRANSPORTATION

DRAWING DESCRIPTION:
20 SCALE GRADING PLAN (SITE 2)

NEW REST STOP BUILDINGS

NO. 770-2001-072
US 30 WYANDOT/CRAWFORD

SITE 1 EASTBOUND | SITE 2 WESTBOUND

PREPARED FOR:
STATE OF OHIO
DEPARTMENT OF ADMINISTRATIVE SERVICES
GENERAL SERVICES DIVISION

PREPARED BY:
DEPARTMENT OF ADMINISTRATIVE SERVICES

PLOT DATE: OCT 10, 2002
DATE: OCT 10, 2002
SHEET: SP-10

I:\5150\006\site\revsite\5150006revisions.dwg 12/06/02 01:58:58 PM EST

EXISTING SITE 2 STORM STRUCTURES

1. Sta. 8+75.68, 0.0' RT
No. 3 CB
Grate = 934.65
FL 12" S = 930.73

2. Sta. 8+75.67, 58.75' RT
No. 3 CB
Grate = 935.04
FL 12" N&S = 928.82

3. Sta. 111+28.24, 45.92' LT
CB 2-2B
Grate = 934.80
FL 12" SE = 932.31

4. Sta. 12+03.68, 0.0' RT
No. 3 CB
Grate = 934.32
FL 12" NW & S = 929.80

5. Sta. 12+03.68, 58.75' RT
No. 3 CB
Grate = 934.71
FL 12" N&S = 928.35

6. Sta. 11+58.17, 497.11' LT
Ex CI
Grate = 936.34
FL 12" W = 932.96

7. Sta. 10+26.97, 497.08' LT
Ex CI
Grate = 935.46
FL 12" E&W = 931.65

8. Sta. 8+95.77, 497.05' LT
Ex CI
Grate = 934.76
FL 12" E&W = 930.34

9. Sta. 7+91.14, 497.03' LT
Ex CI
Grate = 934.50
FL 12" E = 929.29
FL 15" SW = 929.06

10. Sta. 6+62.11, 415.14' LT
Ex CI
Grate = 933.88
FL 15" NE & SW = 926.15

11. Sta. 5+56.34, 314.19' LT
Ex MH-3
Rim = 932.80
FL 15" NE & SW = 923.52

12. Sta. 4+81.85, 237.48' LT
Ex MH-3
Rim = 931.72
FL 15" NE = 920.17
FL 15" SE = 923.25
FL 18" W = 919.94

13. Sta. 11+33.29, 246.18' LT
Ex CI
Grate = 935.16
FL 12" W = 930.63

14. Sta. 10+27.02, 246.16' LT
Ex CI
Grate = 934.43
FL 12" E&W = 929.61
PROP FL 12" SE = 929.61
CORE NEW OPENING

15. Sta. 8+95.82, 246.13' LT
Ex CI
Grate = 933.58
FL 12" E&W = 928.28
PROP FL 12" S = 929.28
(CORE NEW OPENING)

16. Sta. 7+59.70, 246.10' LT
Ex CI
Grate = 932.43
FL 12" E = 926.92
FL 18" W = 926.43

17. Sta. 5+87.77, 246.07' LT
Ex CI
Grate = 931.15
FL 18" E&W = 924.73

PROPOSED SITE 2 STORM STRUCTURES

1. Sta 10+43.74, 41.89' LT
Storm MH-3 w/
Neenah R-2502-B Frame and Type D Grate
Rim = 934.75
FL 12" NW & NE = 930.04

2. NOT USED

3. NOT USED

4. NOT USED

5. NOT USED

6. NOT USED

7. Sta 10+43.74, 204.30' LT
Top = 934.50
Storm MH-3 w/
Neenah R-2502-B Frame & Type D Grate
FL 12" NW & SW = 929.70

8. Sta 9+02.96, 709.58' LT
Storm MH-3 w/
Neenah R-2502-B Frame & Type D Grate
Rim = 933.85
FL 12" NW, E, W, & S = 929.35

9. Sta 9+70.15, 209.58' LT
Top - 935.00
Storm MH-3 w/
Neenah R-2502-B Frame & Type D Grate
FL 12" W = 929.49
FL 8" SE = 930.00

10. Sta 9+74.46, 143.09' LT
8" x 6' Tee
FL 8" NW & SE = 920.66, FL 6" W = 930.74

11. Sta 9+77.21, 103.09' LT
8" x 6" Tee
RL 8" NW & SE = 931.06, FL 6" W = 931.14

12. Sta 9+78.17, 88.52' LT
8" Cleanout
Top = 937.75
FL 8" NW = 931.22

13. Sta 9+02.96, 176.09' LT
12" x 8" Tee
FL 12" N&S = 929.41
FL 8" E = 929.58

14. Sta 9+31.96, 176.09' LT
8" x 6" Tee
FL 8" E&W = 929.87
FL 6" S = 929.95

15. Sta 9+47.96, 176.09' LT
6" Cleanout
Top = 937.10
FL 8" W = 930.03
FL 6" S = 930.11

16. Sta 9+02.96, 143.09' LT
12" x 6" Tee
FL 12" N&S = 929.48
FL 6" E = 929.73

17. Sta 9+02.96, 103.09' LT
12" x 6" Tee
FL 12" N&S = 929.56
FL 6" E = 929.81

18. Sta 9+02.96, 68.09' LT
12" x 8" Tee
FL 12" N&S = 929.63
FL 8" E = 929.80

19. Sta 9+31.96, 68.09' LT
8" x 6" Tee
FL 8" E&W = 930.04
FL 6" N = 930.12

20. Sta 9+47.96, 68.09' LT
Top = 937.10
6" Cleanout
FL 8" W = 930.25
FL 6" N = 930.33

21. Sta 9+02.96, 32.56' LT
Top = 934.75
Storm MH-3 w/
Neenah R-2502-B Frame & Type D Grate
FL 12" N = 929.70

22. Sta 8+30.96, 209.57' LT
Top = 933.00
Storm MH-3 w/
Neenah R-2502-B Frame & Type D Grate
FL 12" S&E = 929.49

23. Sta 8+30.96, 150.09' LT
12" x 8" Tee
FL 12" N&S = 929.61
FL 8" W = 929.78

24. Sta 7+91.96, 150.09' LT
6" Cleanout
Top = 937.10
FL 8" E = 930.17
FL 6" S = 930.25

25. Sta 8+30.96, 96.09' LT
12" x 8" Tee
FL 12" N&S = 929.72
FL 8" W = 929.82

26. Sta 7+91.96, 96.09' LT
Top = 937.10
6" Cleanout
FL 8" E = 930.21
FL 6" N = 930.29

27. Sta 8+30.96, 38.76' LT
Storm MH-3 w/
Neenah R-2502-B Frame & Type D Grate
Rim = 934.00
FL 12" N = 929.85

EXISTING SITE 1 STORM STRUCTURES

1. Sta. 5+11.34, 246.40' RT
No. 3CB
Grate = 930.56
PL 12" N = 926.90

2. Sta. 5+16.01, 304.86' RT
No. 3 CB
Grate = 930.20
FL 15" N - 926.36
FL 12" S = 926.60

3. Sta. 6+80.39, 0.0' RT
Ex CI
Grate = 928.41
FL 15" NE = 924.76
FL 18" E = 924.53

4. Sta. 7+35.39, 0.0' RT
Ex CI
Grate = 931.13
FL 18" E&W = 923.52

5. Sta. 5+87.79, 0.0' RT
Ex CI
Grate = 930.70
FL 18" W = 922.13
FL 21" E = 921.88

6. Sta. 4+56.49, 0.0' RT
Ex CI
Grate = 929.32
FL 21" E&W = 920.66

7. Sta. 3+04.96, 0.0' RT
Ex CI
Grate = 927.22
FL 12" SE = 919.97
FL 21" E = 919.22

8. Sta. 2+02.97, 8.81' RT
Ex MH-3
Rim = 927.48
FL 21" W = 918.27
FL 24" E = 918.00
FL 15" SW = 918.76
FL 12" NW = 919.00

9. Sta. 1+24.25, 8.95' RT
Ex HW
FL 24" W = 917.38

10. Sta. 8+23.95, 43.46' RT
Ex CB
Grate = 930.86
FL 12" NW = 926.00
FL 15" SW = 925.75

11. Sta. 8+44.18, 174.02' RT
Ex CB
Grate = 930.86
FL 12" SE = 928.86

12. Sta. 2+98.40, 47.34' LT
Ex CI
Grate = 928.08
FL 12" NW = 921.52

13. Sta. 2+18.16, 23.78' RT
Ex CI
Grate = 926.00
FL 12" SE = 922.59

14. Sta. 1+96.20, 40.98' RT
Ex CI
Grate = 926.33
FL 12" SW = 920.72

15. Sta. 4+39.98, 225.74' LT
Ex CI
Grate = 930.47
FL 12" SE = 923.88

16. Sta. 8+98.10, 250.92' LT
Ex CI
Grate = 932.44
FL 12" E = 928.50

17. Sta. 7+84.59, 250.92' LT
Ex CI
Grate = 932.24
FL 12" E&W = 927.12

18. Sta. 6+53.39, 250.92' LT
Ex CI
Grate = 931.98
FL 12" W = 925.55
FL 15" E = 925.28

19. Sta. 5+23.25, 250.92' LT
Ex CI
Grate = 931.12
FL 15" E&W = 923.74

20. Sta. 4+33.24, 233.21' LT
Ex MH-3
Rim = 930.43
FL 12" NW = 922.89
FL 15" NE = 922.63

PROPOSED SITE 1 STORM STRUCTURES

1. Ex CI
Grate = 930.70
FL Ex 21" E = 921.88
FL Ex 18" W = 922.13
FL 12" NW = 924.10

2. Sta 6+07.31, 35.56' RT
Stm MH-3 w/
Neenah R-2502-B Frame & Type D Grate
Rim = 930
FL 12" N, E, & SE = 924.18
FL 12" N & W = 925.68

3. Sta 5+40.31, 36.56' RT
Stm MH-3 w/
Neenah R-2502-B Frame & Type D Grate
Rim = 929.75
FL 12" N & W = 924.32

4. Sta 6+74.51,36.56' RT
Stm MH-3 w/
Neenah R-2502-B Frame & Type D Grate
Rim = 931.0
FL 12" E & W = 925.82
FL 8" N = 926.15

5. Sta 7+41.31, 36.03' RT
Storm MH-3 w/
Neenah R-2502-B Frame & Type D Grate
Rim = 930.00
FL 12" NE & E = 925.97

6. NOT USED

7. NOT USED

8. NOT USED

9. NOT USED

10. NOT USED

11. Sta 7+50.33, 213.61' RT
Storm MH-3 w/
Neenah R-2502-B Frame & Type D Grate
Rim = 930.75
FL 12" SE = 926.34

12. Sta 5+40.30, 96.03' RT
12" x 8" Tee
FL 12" N&S = 924.44
FL 8" E = 924.61

13. Sta 4+96.30, 96.02' RT
Top = 933.10
6" Cleanout
FL 8" W = 925.05
FL 6" N = 925.13

14. Sta 5+40.29, 150.03' RT
12" x 8" Tee
FL 12" N&S = 924.55
FL 8" E = 924.72

15. Sta 4+96.29, 150.02' RT
Top = 933.10
6" Cleanout
FL 8" W = 925.16
FL 6" S = 925.24

16. Sta 5+40.28, 200' RT
Storm MH-3 w/
Neenah R-2502-B Frame & Type D Grate
Rim = 930.00
FL 12" S = 924.65

17. Sta 6+07.30, 70.00' RT
12" x 8" Tee
FL 12" N&S = 925.75
FL 8" W = 925.92

18. Sta 6+36.30, 70.00' RT
8" x 6' Tee
FL 8" E&W = 926.21
FL 6" N = 926.29

19. Sta 6+52.30, 70.00' RT
Top = 933.10
6" Cleanout
FL 8" E = 926.37
FL 6" N = 926.45

20. Sta 6+07.28, 178.00' RT
12" x 8" Tee
FL 12" N&S = 925.97
FL 8" W = 926.14

21. Sta 6+36.28, 178' RT
8" x 6" Tee
FL 8" E&W = 926.43
FL 6" S = 926.51

22. Sta 6+52.28, 178.00' RT
Top = 933.10
6" Cleanout
FL 8" E = 926.59
FL 6" S = 926.67

23. Sta 6+07.27, 213.57' RT
Storm MH-3 w/
Neenah R-2502-B Frame & Type D Grate
Rim = 930.50
FL 12" S = 926.04

24. Sta 6+78.90, 103.00' RT
12" x 6" Tee
FL 12" NW & SE = 926.81
FL 6" E = 927.06

25. Sta 6+81.54, 143.00' RT
12" x 6" Tee
FL 12" NW & SE = 927.21
FL 6" E = 927.46

26. Sta 6+82.50, 157.63' RT
Top = 933.75
8" Cleanout
FL 12" SE = 927.37

EASTBOUND/WESTBOUND SANITARY LEGEND

(1) Sta. 6+10.29, 121.08' RT
Prop San Cleanout
FL 6" NE = 928.75

(2) Sta. 5+59.72, 96.29' RT
Prop Trash Trap
Top =932.00
FL 6" NW = 928.20
FL 6" SE = 927.87

(3) Sta. 4+72.30, 91.25' RT
Prop San MH-3
FL 6" W = 917.50
FL 6" N&W = 924.27

(4) Sta. 4+72.29, 126.71' RT
Prop San MH-3/Drop MH
Prop 6" San S = 923.92
FL Ex 6" E = 917.64

(4A) Sta. 4+91.29, 114.52' RT
Prop San Cleanout
FL 6" SE=924.34

(4B) Sta. 4+91.29, 134.40' RT
Prop San Cleanout
FL 6" NE=924.40

(5) Sta. 3+45.63, 128.00' RT
Ex San MH-3
Rim = 924.30
FL Ex 6" E, W, & N = 916.39

(6) Sta. 0+20.63, 125.19' RT
Ex San MH-3
Rim = 923.51
FL Ex 6" W & NE = 912.88

(7) Sta. 8+99.96, 125.09' LT
Prop San Cleanout
Top = 937.8

(8) Sta. 8+63.54, 139.00' LT
Proposed Trash Trap
FL 6" NE = 933.73
FL 6" NW & SE = 934.06

(9) Sta. 8+96.02, 181.77' LT
Ex San MH-3
Rim = 935.62
FL 6" S&E = 933.23
PLACE 45° BEND 5' OUTSIDE EX MH

(10) Sta. 10+91.86, 183.23' LT
Ex San MH-3
Rim = 936.44
FL 6" SE&W = 933.16

EASTBOUND/WESTBOUND WATER LEGEND

(1) STA. 8+19.61, 385.70' LT (SITE 1)
PROPOSED RAW WATER WELL

(2) STA. 6+16.94, 381.40' LT (SITE 1)
PROPOSED RAW WATER WELL

(2A) STA. 6+12.29, 362.51' LT (SITE 1)
PROPOSED WATER MANHOLE

(2B) STA. 5+90.34, 273.27' LT (SITE 1)
PROPOSED 4" RAW WATERLINE AT EXISTING 4" RAW WATERLINE

(2C) STA. 5+17.28, 23.83' RT (SITE 1)
PROPOSED 4" RAW WATERLINE TO MAINTENANCE BUILDING CONNECTION TO EXISTING 4" RAW WATERLINE

(3) STA. 5+03.80, 101.02' RT (SITE 1)
4" WATERLINE TO MAINTENANCE BUILDING

(4) STA. 5+06.54, 143.00 RT (SITE 1)
4" GATE VALVE AND VALVE BOX ASSEMBLY COMPLETE

(4A) STA. 5+06.91, 163.13' RT (SITE 1)
PROPOSED 1" 90° BEND

(4B) STA. 5+06.91, 145.00' RT (SITE 1)
PROPOSED 1" GATE VALVE AND VALVE BOX ASSEMBLY COMPLETE

(4C) STA. 5+06.53, 164.00' RT (SITE 1)
PROPOSED 4" X 2" TEE WITH 2" GATE VALVE AND VALVE BOX ASSEMBLY COMPLETE

(4D) STA. 5+86.13, 164.00' RT (SITE 1)
PROPOSED 45° BEND TO BUILDING

(4E) STA. 1+69.11, 164.00' RT (SITE 1)
PROPOSED 45° BEND

(5) STA. 1+56.85, 151.80' RT (SITE 1)
1" WATERLINE @ EXISTING 16" CASING PIPE

(5A) STA. 0+82.30, 77.92' RT (SITE 1)
1" WATERLINE @ EXISTING 16" CASING PIPE

(5B) STA. 0+65.29, 61.06' RT (SITE 1)
PROPOSED 90° BEND

(5C) SEE WASTE WATER TREATMENT PLAN

(6) STA. 5+13.28, 192.44' RT (SITE 1)
4" WATERLINE - 45 DEGREE BEND

(7) STA. 5+47.16, 224.56' RT (SITE 1)
4" WATERLINE = 45 DEGREE BEND

(8) STA. 13+67.56, 224.74' RT (SITE 1)
90 DEGREE BEND W/4" GATE VALVE AND VALVE BOX ASSEMBLY COMPLETE

(9) STA. 13+67.56, 254.17' RT (SITE 1)
4" WATERLINE @ EXISTING 16" CASING PIPE

(9A) STA. 13+67.56, 299.17' RT (SITE 1)
4" WATERLINE AT EXISTING 16" CASING PIPE

(9B) STA. 13+67.56, 489.50' RT (SITE 1)
4" WATERLINE AT EXISTING 16" CASING PIPE

(9C) STA. 15+96.89, 243.21' LT (SITE 2)
4" WATERLINE AT EXISTING 16" CASING PIPE

(10) STA. 15+97.45, 52.15' RT (SITE 2)
4" WATERLINE @ EXISTING 16" CASING PIPE

(10A) STA. 15+96.89, 7.87' LT (SITE 2)
4" WATERLINE @ EXISTING 16" CASING PIPE

(11) STA. 15+96.89, 21.56' LT (SITE 2)
90 DEGREE BEND W/4" GATE VALVE AND VALVE BOX ASSEMBLY COMPLETE

(12) STA 8+88.84, 121.56' LT (SITE 2)
4" WATERLINE - 90 DEGREE BEND

(13) STA 8+88.84 99.97' LT (SITE 2)
4" WATERLINE TO BUILDING

(14) STA 4+77.62, 151.93' RT (SITE 1)
MID POINT WEST END STORAGE TANK

UNDERGROUND UTILITIES
TWO WORKING DAYS
BEFORE YOU DIG
Call 1-800-362-2764 (Toll Free)
OHIO UTILITIES PROTECTION SERVICE
NON-MEMBERS
MUST BE CALLED DIRECTLY

CONSULTING ARCHITECTS / ENGINEERS
ARCHITECT: BODNER & KERIK ARCHITECTS, INC.
STRUCTURAL: LANTZ JONES & NEBRASKA, INC.
MECHANICAL/ELECTRICAL: SRA, INC.
CIVIL ENGINEERING: POGGEMEYER DESIGN GROUP, INC.
LANDSCAPE ARCHITECT: R.D. ZANDE & ASSOCIATES, INC.

REVISIONS

NO.	DATE	DESCRIPTION
1	10/9/02	PERMIT SUBMISSION
2	12/6/02	BID SET

STATE OF OHIO
DAVID E. SANEHOLTZ
E-45072
REGISTERED PROFESSIONAL ENGINEER

PROJECT NUMBER
0226/5150-006

FOR:
OHIO DEPT. OF TRANSPORTATION

DRAWING DESCRIPTION:
NODES/STRUCTURES

NEW REST STOP BUILDINGS

NO. 770-2001-072
US 30 WYANDOT/CRAWFORD
SITE 1 EASTBOUND
SITE 2 WESTBOUND

PREPARED FOR
STATE OF OHIO
DEPARTMENT OF ADMINISTRATIVE SERVICES
GENERAL SERVICES DIVISION
PREPARED BY
DEPARTMENT OF ADMINISTRATIVE SERVICES

PLOT DATE OCT 10, 2002
DATE OCT 10, 2002
SHEET SP-11

I:\5150\006\SITE\LEGENDS.DWG 11-27-02 3:23:43 pm EST

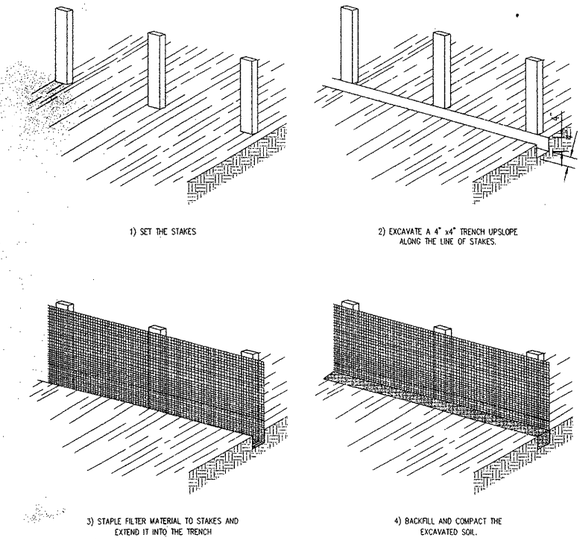

CONSTRUCTION OF A FILTER BARRIER

SCALE: NONE

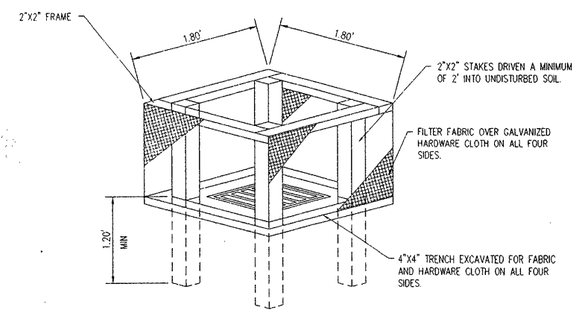

CATCH BASIN PROTECTION DETAIL

SCALE: NONE

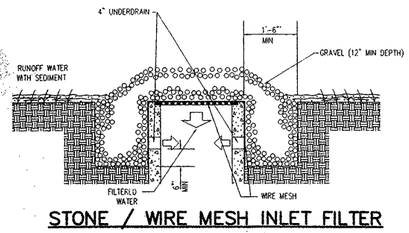

STONE / WIRE MESH INLET FILTER

SCALE: NONE

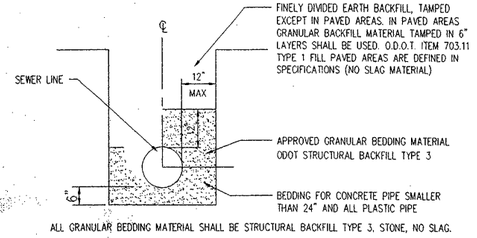

ALL GRANULAR BEDDING MATERIAL SHALL BE STRUCTURAL BACKFILL TYPE 3, STONE, NO SLAG.

ALL GRANULAR BACKFILL MATERIAL WITHIN THE PAVEMENT LIMITS SHALL BE O.D.O.T. #703.11 TYPE 1 FILL (NO SLAG MATERIAL)

WATERLINE/SEWER TRENCH DETAIL

NO SCALE

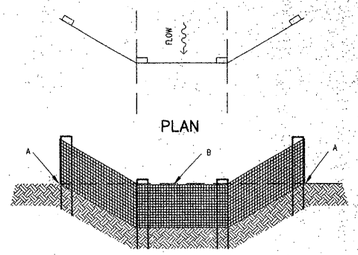

ELEVATION

POINTS A SHOULD BE HIGHER THAN POINT B

PROPER PLACEMENT OF A FILTER BARRIER IN A DRAINAGE WAY

SCALE: NONE

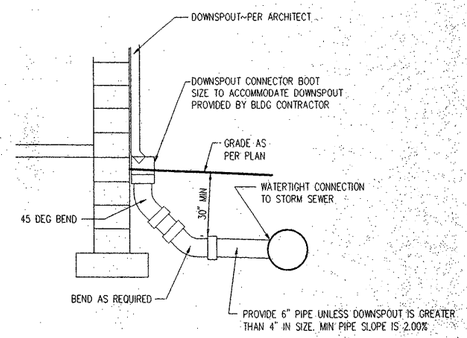

NOTES:

1) FOR ALL DEPTHS OF COVER THE PIPE SHALL BE PVC SDR 35.

2) THE DOWNSPOUT COLLECTOR DRAIN SHALL BE INSTALLED BEFORE THE DOWNSPOUTS ARE INSTALLED ON THE BUILDING. SITEWORK CONTRACTOR SHALL BE RESPONSIBLE FOR ALL WORK TO POINT OF DOWNSPOUT CONNECTOR OR 1" BELOW GROUND SURFACE. SITE CONTRACTOR SHALL PROVIDE TEMPORARY PLUG. PLUG SHALL BE REMOVED AND CONNECTOR INSTALLED BY BUILDING CONTRACTOR. COORDINATE SIZE AND LOCATION WITH BUILDING CONTRACTOR.

TYPICAL DOWNSPOUT CONNECTOR

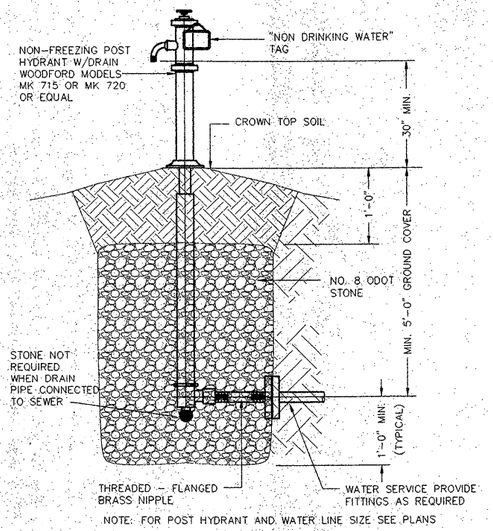

NOTE: FOR POST HYDRANT AND WATER LINE SIZE SEE PLANS

POST HYDRANT DETAIL

NTS

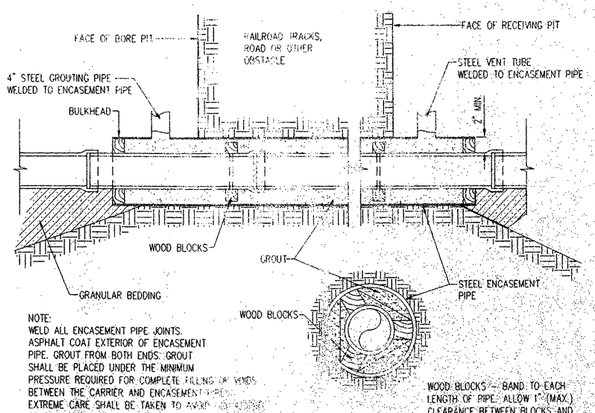

NOTE:
WELD ALL ENCASEMENT PIPE JOINTS.
ASPHALT COAT EXTERIOR OF ENCASEMENT PIPE. GROUT FROM BOTH ENDS. GROUT SHALL BE PLACED UNDER THE MINIMUM PRESSURE REQUIRED FOR COMPLETE FILLING OF VOIDS BETWEEN THE CARRIER AND ENCASEMENT PIPES. EXTREME CARE SHALL BE TAKEN TO AVOID DISTORTING OR DAMAGING THE CARRIER PIPE DUE TO EXCESSIVE PRESSURE WHEN GROUTING THE VOIDS.

WOOD BLOCKS - BAND TO EACH LENGTH OF PIPE. ALLOW 1" (MAX.) CLEARANCE BETWEEN BLOCKS AND CASING PIPE.

EXISTING 16" CASING PIPE DETAIL

SCALE: NONE

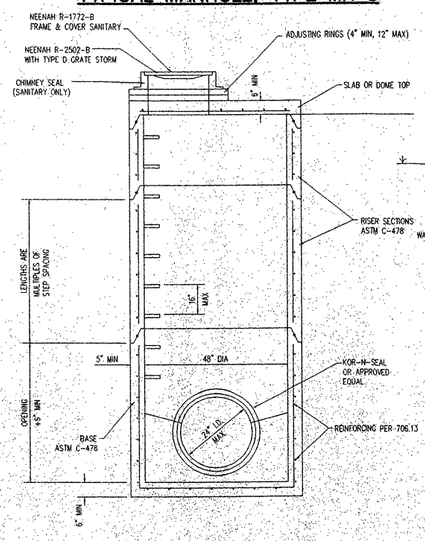

- JOINTS BETWEEN SLAB TOP, RISER SECTIONS AND BASE SHALL BE "O" RING TYPE, ASTM C-443.
- STEPS - M.A. INDUSTRIES INC., MODEL PS2-PF.
- CASTING SHALL HAVE THE APPROPRIATE DESCRIPTIVE WORDS CASE INTO THE COVER.

TYPICAL MANHOLE, TYPE MH 3

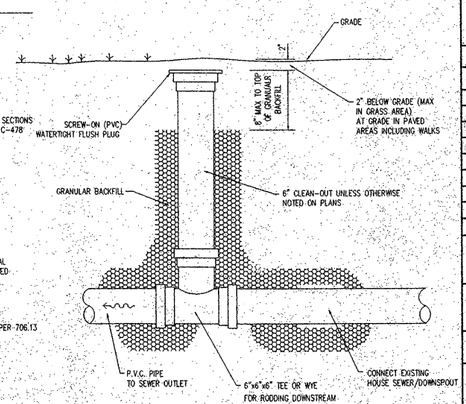

TYPICAL SEWER CLEAN-OUT

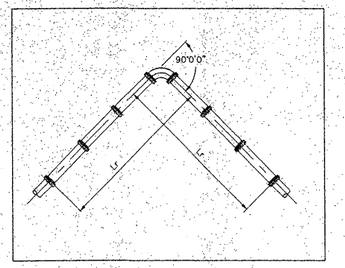

FIGURE 1. HORIZONTAL BEND

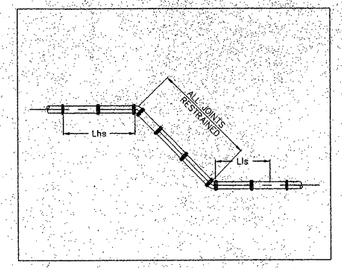

FIGURE 2. VERTICAL DOWN BEND AND OFFSET BEND

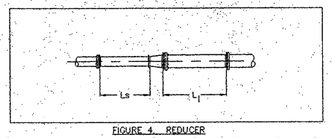

FIGURE 4. REDUCER

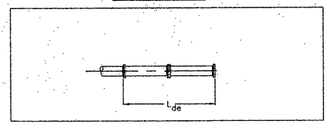

FIGURE 5. DEAD END

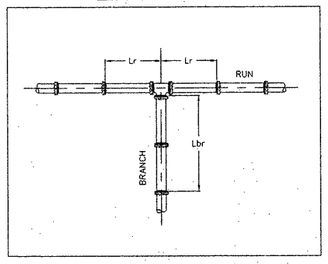

FIGURE 3. TEE

MECHANICAL RESTRAINTS

150 PSI
GROUND COVER = 4'

MINIMUM LENGTH OF PIPE RESTRAINED (FEET)

SIZE	HORIZONTAL BENDS 90°	HORIZONTAL BENDS 45°	HORIZONTAL BENDS 22.5°	VERTICAL BENDS 45°		VERTICAL BENDS 22.5°		DEAD END
	Lr	Lr	Lr	Lhs	Lls	Lhs	Lls	Lde
4"	20	8	4	18	6	9	3	44
8"	26	11	5	24	8	11	4	58

PVC PIPE

SIZE	HORIZONTAL BENDS 90°	HORIZONTAL BENDS 45°	HORIZONTAL BENDS 22.5°	VERTICAL BENDS 45°		VERTICAL BENDS 22.5°		DEAD END
	Lr	Lr	Lr	Lhs	Lls	Lhs	Lls	Lde
4"	21	9	4	12	5	6	3	28
8"	27	11	5	15	8	7	4	37

DUCTILE IRON

SIZE	HORIZONTAL BENDS 90°	HORIZONTAL BENDS 45°	HORIZONTAL BENDS 22.5°	VERTICAL BENDS 45°		VERTICAL BENDS 22.5°		DEAD END
	Lr	Lr	Lr	Lhs	Lls	Lhs	Lls	Lde
4"	36	15	7	28	11	14	5	68
8"	48	20	10	37	15	18	7	89

DUCTILE IRON W/ POLYETHYLENE WRAP

REDUCTION SIZE — LARGE SIZE

	6"	8"	10"	12"	14"	16"	20"	24"
4"	32	70	117	172	235	287	370	
	24	41	60	81	91	116	146	
6"		79	102	137	154	171	213	
		31	43	61	71	106	126	

Ls / Ll

REDUCERS
PVC PIPE
MINIMUM LENGTH OF PIPE RESTRAINED (L_l)(FEET)

BRANCH SIZE — LARGE SIZE / RUN SIZE

	4"	6"	8"	10"	12"	14"	16"	20"	24"
4"	*	*	*	*	*	*	*	*	
6"	8	*	*	*	*	*	*	*	

Lbr

TEES
PVC PIPE
MINIMUM LENGTH OF PIPE RESTRAINED (FEET) (Lbr)

REDUCTION SIZE — LARGE SIZE

	4"	6"	8"	10"	12"	14"	16"	20"	24"
4"		35	45	75	115	155	246	366	
		26	27	28	46	47	74	99	
6"			55	82	106	174	194	294	
			26	28	36	49	58	84	

Ls / Ll

REDUCERS
DUCTILE IRON PIPE
MINIMUM LENGTH OF PIPE RESTRAINED (L_l)(FEET)

BRANCH SIZE — RUN SIZE

	4"	6"	8"	10"	12"	14"	16"	20"	24"
4"	9	3	*	*	*	*	*	*	
6"	22	18	13	6	3	*	*	*	

Lbr

TEES
DUCTILE IRON PIPE
MINIMUM LENGTH OF PIPE RESTRAINED (FEET) (Lbr)

REDUCTION SIZE — LARGE SIZE

	4"	6"	10"	12"	14"	16"	20"	24"
4"		69	106	195	265	355	399	493
		28	36	56	135	135	136	136
6"			155	193	294	341	413	537
			36	43	134	136	156	203

Ls / Ll

REDUCERS
DUCTILE IRON W/ POLYETHYLENE WRAP
MINIMUM LENGTH OF PIPE RESTRAINED (L_l)(FEET)

L_s : IF A SPECIFIED LENGTH OF PIPE, L_s,(FEET), ON THE SMALL SIDE OF THE REDUCER IS FREE OF BENDS, VALVES, TEES OR OTHER FITTINGS, RESTRAINTS ARE NOT NECESSARY FOR THE REDUCER; OTHERWISE THE LARGER SIDE OF THE REDUCER SHALL BE RESTRAINED THE MINIMUM LENGTH (L_l)(FEET).

BRANCH SIZE — RUN SIZE

	4"	6"	8"	10"	12"	14"	16"	20"	24"
4"	21	7	*	*	*	*	*	*	
8"	53	42	31	19	7	*	*	*	

Lbr

TEES
DUCTILE IRON PIPE W/ POLYETHYLENE WRAP
MINIMUM LENGTH OF PIPE RESTRAINED (FEET) (Lbr)

CONSULTING ARCHITECTS / ENGINEERS

ARCHITECT: BODNER & KERIK ARCHITECTS, INC.
STRUCTURAL: LANTZ JONES & NEBRASKA, INC.
MECHANICAL/ELECTRICAL: SRA, INC.
CIVIL ENGINEERING: POGGEMEYER DESIGN GROUP, INC.
LANDSCAPE ARCHITECT: R.D. ZANDE & ASSOCIATES, INC.

REVISIONS

NO.	DATE	DESCRIPTION
1	10/9/02	PERMIT SUBMISSION
2	12/6/02	BID SET

STATE OF OHIO — DAVID E. SANEHOLTZ E-45072 — PROFESSIONAL ENGINEER — REGISTERED

PROJECT NUMBER 0226/5150-006

FOR: OHIO DEPT. OF TRANSPORTATION

DRAWING DESCRIPTION: DETAILS

NEW REST STOP BUILDINGS

NO. 770-2001-072 US 30 WYANDOT/CRAWFORD | SITE 1 EASTBOUND | SITE 2 WESTBOUND

UNDERGROUND UTILITIES
TWO WORKING DAYS
BEFORE YOU DIG
Call 1-800-362-2764 (Toll Free)
OHIO UTILITIES PROTECTION SERVICE
NON-MEMBERS
MUST BE CALLED DIRECTLY

PREPARED FOR
STATE OF OHIO
DEPARTMENT OF ADMINISTRATIVE SERVICES
GENERAL SERVICES DIVISION

PREPARED BY
DEPARTMENT OF ADMINISTRATIVE SERVICES

PLOT DATE OCT 10, 2002 | DATE OCT 10, 2002 | SHEET SP-12

I:\5150\006\SITE\DETAILS.DWG 10-9-02 9:03:26 am EST

GENERAL:

ALL STORM WATER POLLUTION PREVENTION PROVISIONS PROVIDED WITH THESE CONSTRUCTION DRAWINGS REFLECT THE OHIO EPA REQUIREMENTS FOR CONSTRUCTION STORM WATER MANAGEMENT AND EROSION AND SEDIMENT CONTROL. TO ENSURE COMPLIANCE, THIS PLAN WAS PREPARED IN ACCORDANCE WITH THE OHIO EPA'S NPDES GENERAL PERMIT FOR STORM WATER DISCHARGES ASSOCIATED WITH CONSTRUCTION ACTIVITY (NO. OHR10000). THIS PLAN PROVIDES FOR CONSTRUCTION STORM WATER MANAGEMENT AND EROSION AND SEDIMENT CONTROL FOR THE EXTENT OF CONSTRUCTION AS DEFINED IN PROJECT DESCRIPTION BELOW AND ARE SUPPLEMENTAL TO PROVISIONS PROVIDED UNDER THE ASSUMED NPDES PERMIT OBTAINED FOR CONSTRUCTION OF U.S. 30 (WYA/CRA-30-28.009/0.000) OF WHICH SAID REST STOPS ARE PART THERETO

THE CONTRACTOR SHALL OR SHALL CAUSE THE INSTALLATION AND MAINTENANCE TO OCCUR IN CONFORMANCE WITH THE REQUIREMENTS OF THIS PLAN AND ALL REGULATIONS ENFORCED BY THE OHIO EPA AND ITS AGENTS. THE CONTRACTOR HEREBY ACKNOWLEDGES THAT HE HAS REVIEWED THE PLAN AND UNDERSTANDS THE REQUIREMENTS OF THE ASSUMED NPDES PERMIT FOR THE U.S. 30 PROJECT. FURTHER, THE CONTRACTOR UNDERSTANDS HIS RESPONSIBILITY TO INSTALL AND MAINTAIN THE APPROPRIATE MEASURES TO MINIMIZE POLLUTION AND THAT FAILURE TO DO SO COULD RESULT IN STOP WORK ORDERS, FINES, AND IMPRISONMENT. PRIOR TO STARTING ANY WORK AT THE SITE, THE CONTRACTOR SHALL SUBMIT HIS CONSTRUCTION SCHEDULE AND THE RELATED EROSION METHODS FOR REVIEW BY THE ENGINEER.

PROJECT DESCRIPTION

THE PROJECT CONSISTS OF THE DEVELOPMENT OF EASTBOUND AND WESTBOUND REST STOPS ALONG U.S. 30 INCLUDING BUILDINGS, IMMEDIATE SITE WORK, WATER AND WASTEWATER PROVISIONS. THE SITE IS LOCATED ON THE NORTH AND SOUTH SIDES OF RELOCATED U.S. 30 APPROXIMATELY 3600' EAST OF COUNTY ROAD 128 WYANDOT COUNTY. THE CONSTRUCTION PROJECT WILL DISTURB ROUGHLY 4 ACRES OF RESHAPED LAND.

SOIL DISTURBING ACTIVITIES WILL INCLUDE: CLEARING AND GRUBBING; INSTALLING STABILIZED PERIMETER AND OTHER EROSION/SEDIMENT CONTROLS; SITE GRADING; EXCAVATION FOR THE STORM SEWER, UTILITIES, AND BUILDING FOUNDATIONS; AND PREPARATION FOR FINAL PLANING AND SEEDING.

PROJECT DRAINAGE

DRAINAGE FROM THE SITE PRIOR TO AND AFTER CONSTRUCTION FLOWS TO VARIOUS EXISTING ON SITE STORM SEWERS. THE COEFFICIENT OF RUNOFF FOR THE PARCEL PRIOR TO DEVELOPMENT IS ESTIMATED TO BE 0.2. THE COEFFICIENT OF RUNOFF FOR THE PARCEL AFTER DEVELOPMENT IS ESTIMATED TO BE 0.4.

PROJECT SOILS AND DISCHARGE

SITE SOILS CONSIST OF SIX (6) TO TWELVE (12) INCHES OF TOPSOIL OVER MEDIUM STIFF TO STIFF CLAY. ANTICIPATED QUALITY OF DISCHARGE FROM THE SITE DURING CONSTRUCTION SHOULD NOT BE SIGNIFICANTLY DIFFERENT FROM THAT EXPERIENCED FROM AGRICULTURAL ACTIVITIES SUCH AS PLOWING, DISCING, AND OTHER FIELD PREPARATION ACTIVITIES.

CONSTRUCTION SEQUENCE OF MAJOR TASKS AND EROSION CONTROL MEASURES.

THE ORDER OF ACTIVITIES WILL BE AS FOLLOWS:

1. INSTALL SILT FENCE WHERE INDICATED AND WHERE REQUIRED.
2. CLEAR AND GRUB SITE.
3. STRIP AND STOCKPILE TOPSOIL.
4. INSTALL UNDERGROUND UTILITIES. CONSTRUCT INLET PROTECTION AROUND ALL STORM SEWER INLETS.
5. EXCAVATE AND CONSTRUCTION FOUNDATION/PAVEMENTS.
6. COMPLETE GRADING AND INSTALL PERMANENT SEEDING AND PLANTINGS.
7. MAINTAIN ALL VEGETATIVE MATERIAL UNTIL 70% OF AREA IS COVERED WITH A GOOD GROWTH OF VEGETATION.
8. REMOVE ALL TEMPORARY EROSION DEVICES.
9. RESEED AREAS DISTURBED BY REMOVAL ACTIVITIES.

EROSION AND SEDIMENT CONTROLS

STABILIZATION PRACTICES

THE CONTRACTOR SHALL INITIATE APPROPRIATE VEGETATIVE PRACTICES ON ALL DISTURBED AREAS (INCLUDING TOPSOIL STOCKPILES) WITHIN SEVEN (7) DAYS IF THEY ARE TO REMAIN DORMANT (UNDISTURBED) FOR MORE THAN 45 DAYS. FOR AREAS WITHIN FIFTY (50) FEET OF ANY STREAM, SOIL STABILIZATION PRACTICES SHALL BE INITIATED WITHIN TWO (2) DAYS ON ALL INACTIVE, DISTURBED AREAS. PERMANENT OR TEMPORARY SOIL STABILIZATION SHALL BE APPLIED TO DISTURBED AREAS WITHIN SEVEN (7) DAYS AFTER FINAL GRADE IS REACHED ON ANY PORTION OF THE SITE. WHEN SEASONAL CONDITIONS PROHIBIT THE APPLICATION OF TEMPORARY OR PERMANENT SEEDING, NON-VEGETATIVE SOIL STABILIZATION PRACTICES SUCH AS MULCHING AND MATTING WILL BE USED.

SEEDING:
THE TEMPORARY SEED MIX SHALL BE 100% ANNUAL RYEGRASS (LOLIUM MULTIFLORUM) APPLIED AT THE RATE OF TWO (2) POUNDS PER 1,000 SQUARE FEET. PRIOR TO SEEDING, TEN (10) POUNDS OF 12-12-12 FERTILIZER SHALL BE APPLIED TO EACH 1,000 SQUARE FEET TO BE STABILIZED. AFTER SEEDING, EACH AREA SHALL BE MULCHED WITH STRAW AT A RATE OF TWO (2) TONS PER ACRE.

THE PERMANENT SEED MIX SHALL CONSIST OF 40% KENTUCKY BLUEGRASS (POA PRATENSIS), 40% CREEPING RED FESCUE (FESTUCA RUBRA), AND 20% ANNUAL RYEGRASS (LOLIUM MULTIFLORUM). THIS MIX SHALL BE APPLIED AT THE RATE OF THREE (3) POUNDS PER 1,000 SQUARE FEET. PRIOR TO SEEDING, TWENTY (20) POUNDS OF 12-12-12 FERTILIZER SHALL BE APPLIED TO EACH 1,000 SQUARE FEET TO BE STABILIZED. AFTER SEEDING, EACH AREA SHALL BE MULCHED WITH STRAW AT A RATE OF TWO (2) TONS PER ACRE.

SODDING:
THE SOD SHALL BE WELL-ROOTED KENTUCKY BLUEGRASS (POA PRATENSIS) OR CANADIAN BLUEGRASS (POA COMPRESSA) CONTAINING A GROWTH OF NOT MORE THAN THIRTY (30) PERCENT OF OTHER GRASSES AND CLOVERS, AND FREE FROM ALL NOXIOUS WEEDS SUCH AS WILD MUSTARD, THISTLES, QUACK GRASS, AND JOHNSON GRASS; AND REASONABLY FREE FROM DANDELIONS AND CRAB GRASS.

STRUCTURAL PRACTICES

INLET FILTERS:
INLET FILTERS SHALL BE ERECTED AT ALL STORM SEWER STRUCTURES THAT ACCEPT RUNOFF. FILTER SHALL BE IN PLACE WITHIN 48 HOURS FROM THE TIME THE STRUCTURE WAS CONSTRUCTED.

SILT FENCE:
SILT FENCE WILL BE CONSTRUCTED WHERE SURFACE RUNOFF DRAINS OFF-SITE TO PREVENT THE TRANSPORTATION OF SEDIMENT. SILT FENCE WILL ALSO BE CONSTRUCTED IN THE DRAINAGE SWALES TO PROVIDE PONDING TO TRAP THE SEDIMENT.

STORM WATER MANAGEMENT

STORM WATER DRAINAGE FOR THE PAVED AND LANDSCAPED AREAS WILL BE PROVIDED BY CURB AND GUTTER, STORM SEWERS, AND CATCH BASINS.

INSPECTIONS/MAINTENANCE PROCEDURES

THE CONTRACTOR SHALL PROVIDE "QUALIFIED" PERSONNEL TO PERFORM INSPECTIONS OF THE EROSION DEVICES AT LEAST ONCE EVERY SEVEN (7) CALENDAR DAYS AND WITHIN 24 HOURS AFTER ANY STORM EVENT GREATER THAN 0.5 INCHES OF RAIN PER 24 HOUR PERIODS. AN INSPECTION REPORT WILL BE COMPLETED, SIGNED AND DATED AFTER EACH INSPECTION. A COPY OF THE REPORT WILL BE KEPT WITH THE CONSTRUCTION SITE SUPERINTENDENT. ALL CONTROLS WILL BE MAINTAINED AND INSPECTED AS LONG AS A PORTION OF THE SITE REMAINS DISTURBED.

ALL TEMPORARY AND PERMANENT CONTROL MEASURES WILL BE MAINTAINED IN GOOD WORKING ORDER TO ASSURE CONTINUED PERFORMANCE OF THEIR INTENDED FUNCTION. IF A REPAIR IS NECESSARY, IT WILL BE INITIATED WITHIN 24 HOURS OF REPORT.

THE FOLLOWING INSPECTION AND MAINTENANCE PRACTICES WILL BE USED TO MAINTAIN EROSION AND SEDIMENT CONTROLS:

- BUILT-UP SEDIMENT WILL BE REMOVED FROM THE SILT FENCE WHEN IT HAS REACHED ONE-THIRD THE HEIGHT OF THE FENCE.
- THE SILT FENCE WILL BE INSPECTED FOR DEPTH OF SEDIMENT, TEARS, TO INSURE THAT THE FABRIC IS SECURELY ATTACHED TO THE FENCE POSTS, AND TO INSURE THAT THE FENCE POSTS ARE FIRMLY IN THE GROUND.
- TEMPORARY AND PERMANENT SEEDING AND PLANTING AND SODDING WILL BE INSPECTED FOR BARE SPOTS, WASHOUTS, AND HEALTHY GROWTH.
- DITCHES AND SWALES WILL BE INSPECTED FOR EROSION, OBSTRUCTIONS, AND HEALTHY VEGETATION GROWTH.

ALL MATERIALS, WASTE MATERIALS, WASTE CONTROLS, AND SANITARY CONTROLS WILL BE INSPECTED AS WELL TO ENSURE NO SPILLS, LEAKS OR DISCHARGES NEED ADDRESSED.

OTHER CONTROLS

WASTE MATERIALS

ALL WASTE GENERATED FROM THESE CONSTRUCTION ACTIVITIES WILL BE HANDLED AND DISPOSED OF IN ACCORDANCE WITH ALL APPLICABLE LOCAL, STATE AND FEDERAL REGULATIONS.

HAZARDOUS WASTE

ALL HAZARDOUS MATERIALS SHALL BE HANDLED AND STORED ON-SITE IN ACCORDANCE WITH MANUFACTURER'S SPECIFICATIONS AND LOCAL, STATE AND FEDERAL REGULATIONS. ALL INCOMPATIBLE MATERIALS WILL BE KEPT ISOLATED FROM ONE ANOTHER AND STORED IN A SECURE, WELL VENTILATED AREA WITH SUFFICIENT CONTAINMENT WHEN NOT IN USE.

ALL HAZARDOUS WASTE GENERATED FROM THE CONSTRUCTION ACTIVITY WILL BE PROPERLY IDENTIFIED AND PACKAGED FOR DISPOSAL IN ACCORDANCE WITH APPLICABLE EPA AND DOT REGULATIONS. ABSOLUTELY NO HAZARDOUS MATERIALS OR WASTES WILL BE DISPOSED OF IN THE SOLID WASTE DUMPSTERS. HAZARDOUS WASTES WILL BE PROPERLY MANIFESTED AND DISPOSED THROUGH AN APPROVED PERMITTED WASTE HANDLING FACILITY. THE GENERAL CONTRACTOR WILL BE RESPONSIBLE FOR SEEING THAT THESE PRACTICES ARE STRICTLY FOLLOWED.

SANITARY WASTE

ALL SANITARY WASTE WILL BE COLLECTED FROM THE PORTABLE UNITS A MINIMUM OF THREE (3) TIMES PER WEEK BY A LICENSED SANITARY WASTE MANAGEMENT CONTRACTOR.

NON-STORM WATER DISCHARGES

IT IS EXPECTED THAT THE FOLLOWING NON-STORM WATER DISCHARGES WILL OCCUR FROM THE SITE DURING THE CONSTRUCTION PERIOD:

- WATER FROM WATER LINE, FIRE HYDRANT AND SPRINKLER SYSTEM FLUSHING, AND NEW WELLS
- PAVEMENT WASH WATERS (WHERE NO SPILLS OR LEAKS OF OILS, FUELS OF HAZARDOUS MATERIALS HAS OCCURRED)
- UNCONTAMINATED GROUNDWATER (FROM DEWATERING EXCAVATION)

THESE NON-STORM WATER DISCHARGES WILL BE DIRECTED TO THE NEAREST STORMWATER CATCH BASIN TO PREVENT SITE SEDIMENT RUNOFF WHENEVER POSSIBLE. DISCHARGES WITH SEDIMENT LOADS WILL BE DISCHARGED TO THE SEDIMENT BASIN. ALL OTHER NON-STORMWATER DISCHARGES WILL BE DIRECTED INTO THE SANITARY SEWER SYSTEM.

INVENTORY FOR POLLUTION PREVENTION PLAN

THE MATERIALS OR SUBSTANCES LISTED BELOW ARE EXPECTED TO BE PRESENT ONSITE DURING CONSTRUCTION:

- CONCRETE	- FERTILIZERS
- DETERGENTS	- PETROLEUM BASED PRODUCTS
- CLEANING SOLVENTS	- WOOD
- MASONRY BLOCK	- TAR
- WIRE	

MATERIAL MANAGEMENT PRACTICES

THE FOLLOWING ARE THE MATERIAL MANAGEMENT PRACTICES THAT WILL BE USED TO REDUCE THE RISK OF SPILLS OR OTHER ACCIDENTAL EXPOSURE OF MATERIALS AND SUBSTANCES TO STORM WATER RUNOFF.

GOOD HOUSEKEEPING

THE FOLLOWING GOOD HOUSEKEEPING PRACTICES WILL BE FOLLOWED ONSITE DURING THE CONSTRUCTION PROJECT.

- AN EFFORT WILL BE MADE TO STORE ONLY ENOUGH PRODUCT REQUIRED TO DO THE JOB.
- ALL MATERIALS STORED ONSITE WILL BE STORED IN A NEAT, ORDERLY MANNER IN THEIR APPROPRIATE CONTAINERS AND, IF POSSIBLE, UNDER A ROOF OR OTHER ENCLOSURE.
- PRODUCTS WILL BE KEPT IN THEIR ORIGINAL CONTAINERS WITH THE ORIGINAL MANUFACTURERS' LABEL.
- SUBSTANCES WILL NOT BE MIXED WITH ONE ANOTHER UNLESS RECOMMENDED BY THE MANUFACTURER.
- WHENEVER POSSIBLE, ALL OF A PRODUCT WILL BE USED UP BEFORE DISPOSING OF THE CONTAINER.
- MANUFACTURERS' RECOMMENDATIONS FOR PROPER USE AND DISPOSAL WILL BE FOLLOWED.
- THE SITE SUPERINTENDENT WILL INSPECT DAILY TO ENSURE PROPER USE AND DISPOSAL OF MATERIALS ONSITE.

HAZARDOUS PRODUCTS

THESE PRACTICES ARE USED TO REDUCE THE RISKS ASSOCIATED WITH HAZARDOUS MATERIALS.

- PRODUCTS WILL BE KEPT IN ORIGINAL CONTAINERS UNLESS THEY ARE NOT RESEALABLE.
- ORIGINAL LABELS AND MATERIAL SAFETY DATA WILL BE RETAINED; THEY CONTAIN IMPORTANT PRODUCT INFORMATION.
- IF SURPLUS PRODUCT MUST BE DISPOSED OF, MANUFACTURERS' OR LOCAL AND STATE RECOMMENDED METHODS FOR PROPER DISPOSAL WILL BE FOLLOWED.

PRODUCT SPECIFIC PRACTICES

THE FOLLOWING PRODUCT SPECIFIC PRACTICES WILL BE FOLLOWED ON-SITE DURING THE CONSTRUCTION PROJECT:

PETROLEUM PRODUCTS

ALL ON-SITE VEHICLES WILL BE MONITORED FOR LEAKS AND RECEIVE REGULAR PREVENTIVE MAINTENANCE TO REDUCE THE CHANCE OF OIL, GASOLINE OR ANTI-FREEZE LEAKAGE. PETROLEUM PRODUCTS WILL BE STORED IN TIGHTLY SEALED CONTAINERS WHICH ARE CLEARLY LABELED. ANY ASPHALT SUBSTANCES USED ON-SITE WILL BE APPLIED ACCORDING TO THE MANUFACTURER'S RECOMMENDATIONS.

VEHICLE OIL CHANGING ON-SITE WILL BE PROHIBITED UNLESS THE OIL IS CAPTURED AND PROPERLY DISPOSED. ABSOLUTELY NO OIL, ANTI-FREEZE, FUEL OR USED FILTERS WILL BE DISCARDED ON-SITE.

CONCRETE TRUCKS

CONCRETE TRUCKS WILL BE PERMITTED TO WASH OUT OR DISCHARGE SURPLUS CONCRETE ON THE SITE IN DESIGNATED AREAS ONLY.

FERTILIZERS

FERTILIZERS USED WILL BE APPLIED ONLY IN THE MINIMUM AMOUNTS RECOMMENDED BY THE MANUFACTURER. ONCE APPLIED, FERTILIZER WILL BE WORKED INTO THE SOIL TO LIMIT EXPOSURE TO STORM WATER. STORAGE WILL BE IN A COVERED SHED. THE CONTENTS OF ANY PARTIALLY USED BAGS OF FERTILIZER WILL BE TRANSFERRED TO A SEALABLE PLASTIC BIN TO AVOID SPILLS.

PAINTS

ALL CONTAINERS WILL BE TIGHTLY SEALED AND STORED WHEN NOT REQUIRED FOR USE. EXCESS PAINT WILL NOT BE DISCHARGED TO THE STORM SEWER SYSTEM, BUT WILL BE PROPERLY DISPOSED OF ACCORDING TO MANUFACTURERS' INSTRUCTIONS OR STATE AND LOCAL REGULATIONS.

SPILL CONTROL PRACTICES

IN ADDITION TO THE GOOD HOUSEKEEPING AND MATERIAL MANAGEMENT PRACTICES DISCUSSED IN THE PREVIOUS SECTIONS OF THIS PLAN, THE FOLLOWING PRACTICES WILL BE FOLLOWED FOR SPILL PREVENTION AND CLEANUP:

- MANUFACTURERS' RECOMMENDED METHODS FOR SPILL CLEANUP WILL BE CLEARLY POSTED AND SITE PERSONNEL WILL BE MADE AWARE OF THE PROCEDURES AND THE LOCATION OF THE INFORMATION AND CLEANUP SUPPLIES.
- MATERIALS AND EQUIPMENT NECESSARY FOR SPILL CLEANUP WILL BE KEPT IN THE MATERIAL STORAGE AREA ONSITE. EQUIPMENT AND MATERIALS WILL INCLUDE BUT NOT BE LIMITED TO BROOMS, DUST PANS, MOPS, RAGS, GLOVES, GOGGLES, KITTY LITTER, SAND, SAWDUST, AND PLASTIC AND METAL TRASH CONTAINERS SPECIFICALLY FOR THIS PURPOSE.
- ALL SPILLS WILL BE CLEANED UP IMMEDIATELY AFTER DISCOVERY.
- THE SPILL AREA WILL BE KEPT WELL VENTILATED AND PERSONNEL WILL WEAR APPROPRIATE PROTECTIVE CLOTHING TO PREVENT INJURY FROM CONTACT WITH A HAZARDOUS SUBSTANCE.
- SPILLS OF TOXIC OR HAZARDOUS MATERIAL WILL BE REPORTED TO THE APPROPRIATE STATE OR LOCAL GOVERNMENT AGENCY, REGARDLESS OF THE SIZE.
- THE SPILL PREVENTION PLAN WILL BE ADJUSTED TO INCLUDE MEASURES TO PREVENT THIS TYPE OF SPILL FROM RECURRING AND HOW TO CLEAN UP THE SPILL IF THERE IS ANOTHER ONE. A DESCRIPTION OF THE SPILL, WHAT CAUSED IT, AND THE CLEANUP MEASURES WILL ALSO BE INCLUDED.
- THE SITE SUPERINTENDENT RESPONSIBLE FOR THE DAY-TO-DAY SITE OPERATIONS WILL BE THE SPILL PREVENTION AND CLEANUP COORDINATOR.

PLAN AVAILABILITY/RECORDS RETENTION

A COPY OF THE NOTICE OF INTENT (NOI) AND LETTER AUTHORIZING DISCHARGES UNDER THE GENERAL PERMIT FOR CONSTRUCTION ACTIVITIES ASSOCIATED WITH THIS PROJECT SHALL BE POSTED AT THE SITE IN A PROMINENT PLACE FOR PUBLIC VIEWING.

A COPY OF THESE PLANS, ALONG WITH ALL RECORDS, REPORTS AND SUPPORTING DOCUMENTATION, WILL BE KEPT ON-SITE AT ALL TIMES THROUGHOUT THE CONSTRUCTION PROJECT AND WILL BE TURNED OVER TO THE OWNER AT THE COMPLETION OF THE PROJECT. THE OWNER WILL MAINTAIN THE RECORDS FOR AT LEAST THREE YEARS AFTER THE CONSTRUCTION PROJECT HAS BEEN COMPLETED.

THESE PLANS, RECORDS, REPORTS, AND SUPPORTING DOCUMENTATION WILL BE AVAILABLE UPON REQUEST TO THE DIRECTOR OF THE OHIO EPA, OR ANY AUTHORIZED REPRESENTATIVE, AND PORTIONS NOT CLASSIFIED AS CONFIDENTIAL TO ANY OTHER INTERESTED PARTY AS REQUIRED UNDER SECTION 308 (B) OF THE FEDERAL WATER POLLUTION CONTROL ACT.

RECORDS WILL INCLUDE:

- THE DATES WHEN SUBSTANTIAL GRADING ACTIVITIES OCCUR IN A PARTICULAR AREA;
- THE DATES WHEN CONSTRUCTION ACTIVITIES CEASE IN AN AREA, TEMPORARILY OR PERMANENTLY;
- THE DATES WHEN AN AREA IS STABILIZED

PLAN CHANGES

THE GENERAL CONTRACTOR SHALL NOTIFY THE OWNER OF CHANGES IN DESIGN, CONSTRUCTION, OPERATION, MAINTENANCE OR ANY DEFICIENCIES DETECTED IN THE PLAN THAT WILL HAVE A SIGNIFICANT EFFECT ON THE POTENTIAL FOR DISCHARGING POLLUTANTS IN STORM WATER AT THE SITE. THE OWNER SHALL MODIFY THIS STORM WATER POLLUTION PREVENTION PLAN TO CORRECT THE DEFICIENCIES OR REFLECT THE CHANGES AND NEW CONDITIONS.

THE OWNER SHALL ALSO MODIFY THE PLAN WITHIN SEVEN (7) DAYS AFTER A RELEASE OF A REPORTABLE QUANTITY OF A HAZARDOUS SUBSTANCE OR OIL.

THE OWNER SHALL ALSO MODIFY THE PLANS AS REQUIRED BY THE OHIO EPA STORM WATER DIVISION IMMEDIATELY AFTER NOTIFICATION OF THE REQUIRED CHANGES. THE OWNER SHALL CERTIFY TO THE DIRECTOR OF THE OHIO EPA THAT THE REQUIRED CHANGES HAVE BEEN MADE.

ALL MODIFICATIONS OF THE PLAN SHALL BE CERTIFIED BY THE OWNER AND THE GENERAL CONTRACTOR.

NOTICE OF TERMINATION

A WRITTEN OFFICIAL NOTICE OF TERMINATION WILL BE SUBMITTED BY THE OWNER TO THE OHIO EPA WITHIN FORTY-FIVE (45) DAYS AFTER FINAL SITE STABILIZATION HAS BEEN ACHIEVED IN ACCORDANCE WITH THE GENERAL CONSTRUCTION STORM WATER PERMIT TO COMMUNICATE THAT THIS CONSTRUCTION ACTIVITY HAS CEASED AND THE AREA HAS BEEN STABILIZED.

OFF-SITE SEDIMENT TRACKING

THE TRACKING OF SEDIMENT OFF-SITE SHALL BE MINIMIZED BY INSTALLING GRAVEL CONSTRUCTION ENTRANCES AND CONDUCTING SCHEDULED SWEEPING/GOOD HOUSEKEEPING ACTIVITIES.

OWNERS CERTIFICATION

I CERTIFY UNDER PENALTY OF LAW THAT THIS DOCUMENT AND ALL ATTACHMENTS WERE PREPARED UNDER MY DIRECTION OR SUPERVISION IN ACCORDANCE WITH A SYSTEM DESIGNED TO ASSURE THAT QUALIFIED PERSONNEL PROPERLY GATHERED AND EVALUATED THE INFORMATION SUBMITTED. BASED ON MY INQUIRY OF THE PERSON OR PERSONS WHO MANAGE THE SYSTEM, OR THOSE PERSONS DIRECTLY RESPONSIBLE FOR GATHERING THE INFORMATION, THE INFORMATION IS, TO THE BEST OF MY KNOWLEDGE AND BELIEF, TRUE, ACCURATE, AND COMPLETE. I AM AWARE THAT THERE ARE SIGNIFICANT PENALTIES FOR SUBMITTING FALSE INFORMATION, INCLUDING THE POSSIBILITY OF FINE AND IMPRISONMENT FOR KNOWING VIOLATIONS.

SIGNED THIS _____ DAY OF _____, 1998.

BY: _____

TITLE: _____

UNDERGROUND UTILITIES
TWO WORKING DAYS
BEFORE YOU DIG
Call 1-800-362-2764 (Toll Free)
OHIO UTILITIES PROTECTION SERVICE
NON-MEMBERS
MUST BE CALLED DIRECTLY

CONSULTING ARCHITECTS / ENGINEERS
ARCHITECT: BODNER & KERIK ARCHITECTS, INC.
STRUCTURAL: LANTZ JONES & NEBRASKA, INC.
MECHANICAL/ELECTRICAL: SRA, INC.
CIVIL ENGINEERING: POGGEMEYER DESIGN GROUP, INC.
LANDSCAPE ARCHITECT: R.D. ZANDE & ASSOCIATES, INC.

REVISIONS

NO.	DATE	DESCRIPTION
1	10/9/02	PERMIT SUBMISSION
2	12/6/02	BID SET

STATE OF OHIO
DAVID E. SANEHOLTZ
E-45072
REGISTERED
PROFESSIONAL ENGINEER

PROJECT NUMBER
0226/5150-006

FOR:
OHIO DEPT. OF TRANSPORTATION

DRAWING DESCRIPTION:
SOIL EROSION CONTROL NOTES

NEW REST STOP BUILDINGS

NO. 770-2001-072
US 30 WYANDOT/CRAWFORD

SITE 1 EASTBOUND | SITE 2 WESTBOUND

PREPARED FOR
STATE OF OHIO
DEPARTMENT OF ADMINISTRATIVE SERVICES
GENERAL SERVICES DIVISION
PREPARED BY
DEPARTMENT OF ADMINISTRATIVE SERVICES

PLOT DATE: OCT 10, 2002
DATE: OCT 10, 2002
SHEET: SP-13

I:\5150\006\SITE\EROSION.DWG 10-9-02 9:04:29 am EST

SYMBOLS

- UNDER GROUND CONDUIT
- LIGHT FIXTURE
- PAD MOUNTED TRANSFORMER
- KIOSK
- SNOW MELTING
- PROVISION FOR CAMERA

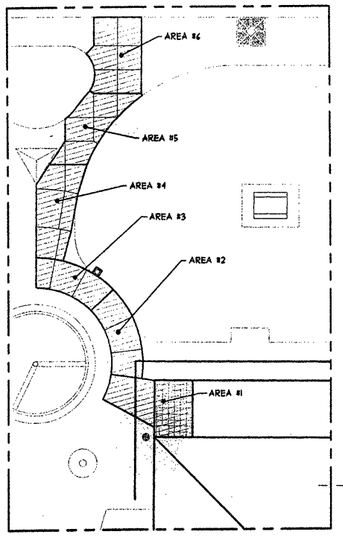

ENLARGED PLAN

SCALE: 1" = 15'

NOTES

1. SNOW MELT SYSTEM ALTERNATE E2.

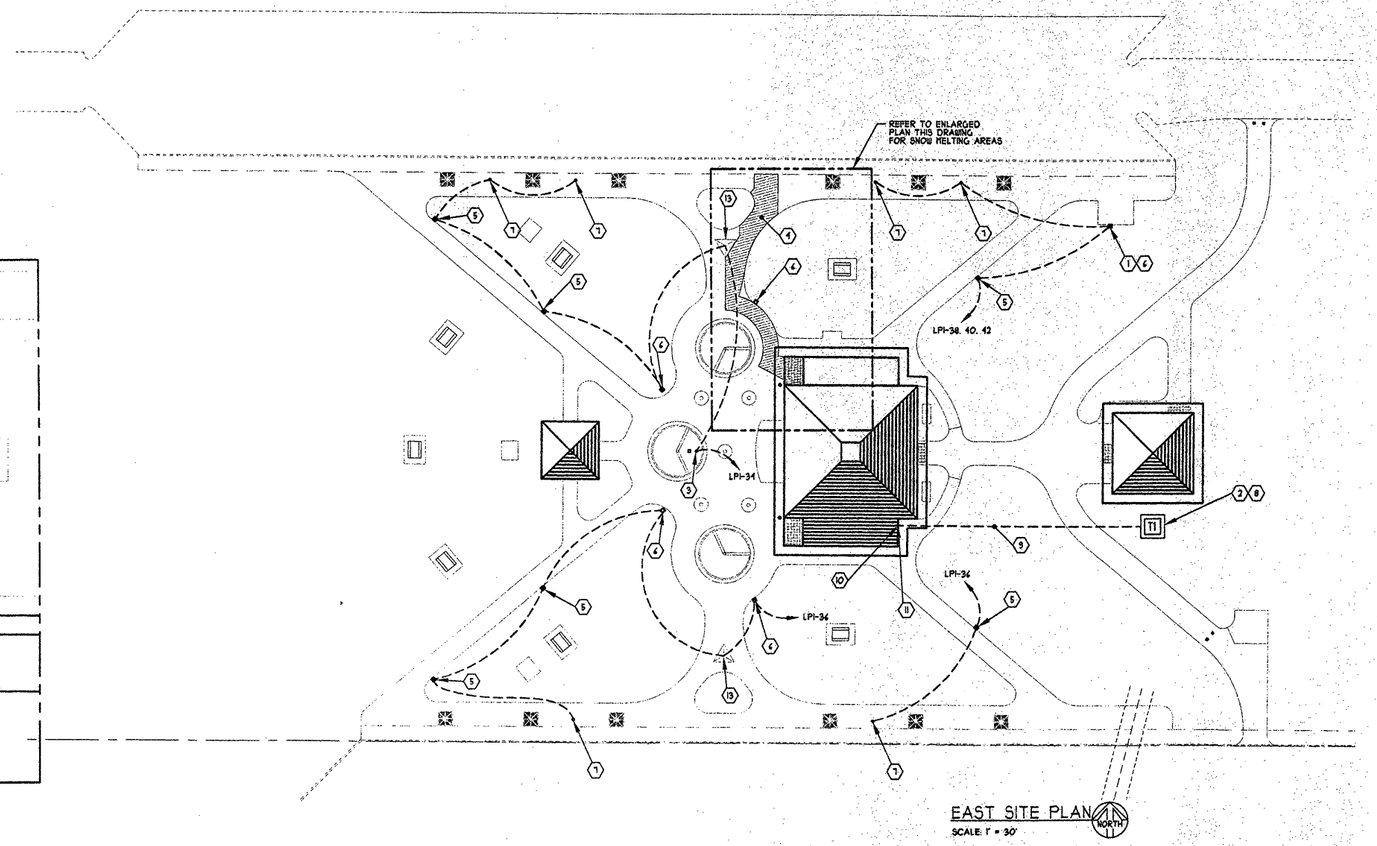

EAST SITE PLAN

SCALE: 1" = 30'

GENERAL NOTES

1. COORDINATE AND PROVIDE UTILITY SERVICES PROVISIONS PER UTILITY REQUIREMENTS.
2. EMPTY CONDUITS SHALL HAVE #12 PULL WIRE.
3. CONDUITS PROVIDED FOR UTILITIES SHALL HAVE LONG SWEEP ELBOWS AND NO MORE THAN 270° TOTAL BEND/OFFSETS. PROVIDE JUNCTION BOXES/MANHOLES AS REQUIRED PER UTILITY COMPANY.
4. CONDUIT ROUTING SHALL MAXIMIZE DISTANCE FROM PLANNED TREES AND PLANTINGS. CONDUIT ROUTING SHALL BE SUBMITTED FOR APPROVAL TO THE ARCHITECT.
5. UNDERGROUND CONDUITS SHALL BE PROVIDED PER DETAILS 'E', 'F', 'G', AND 'H' ON DRAWING EE-4.
6. UNDERGROUND CONDUIT ELBOWS, BENDS, AND OFFSETS SHALL BE GALVANIZED RIGID METALLIC CONDUIT.
7. HI CABLE SNOW MELTING SYSTEM LAYOUT SHALL BE SUBMITTED FOR APPROVAL. PROVIDE SNOW MELTING WORK ONLY AFTER WRITTEN APPROVAL IS RECEIVED. COORDINATE LAYOUT WITH OTHER WORK AND MANUFACTURER'S RECOMMENDATIONS. LAYOUT SHALL INCLUDE HI CABLING, CONDUIT, WIRING, BOXES, CIRCUIT BREAKERS, PANELBOARDS, CONTACTORS, CONTROLLERS AND OTHER ITEMS FOR A PROPER OPERATIONAL SYSTEM FROM HDP TO HI CABLES. SENSOR/CONTROLLER SHALL BE MOUNTED ABOVE ROOF ON END OF CONDUIT. COORDINATE LOCATION OF SENSOR/CONTROLLER WITH ARCHITECT PRIOR TO LAYOUT SUBMITTAL.

CODED NOTES

1. PROVIDE TWO WP/GFI DUPLEX RECEPTACLES FLUSH MOUNTED IN POLE AT 24" ABOVE POLE BASE. PROVIDE LOCKABLE COVERS MEETING NEC 406.8-(B)-(1) REQUIREMENTS. REFER TO DRAWING XXXXXXX.
2. UTILITY PROVIDED NEW SINGLE PHASE PAD MOUNTED TRANSFORMER. GENERAL CONTRACTOR SHALL PROVIDE CONCRETE PAD PER UTILITY REQUIREMENTS. PROVIDE GROUNDING PER UTILITY REQUIREMENTS PROVIDE CONDUIT AND WIRE FROM TRANSFORMER TO SERVICE ENTRANCE EQUIPMENT. PROVIDE METER TRIM MOUNTING STRUCTURE AND METERING CONDUIT WITH PULL WIRE PER UTILITY REQUIREMENTS. MOUNT UTILITY FURNISHED METER TRIM PER UTILITY REQUIREMENTS. PROVIDE GROUNDING OF METER TRIM PER UTILITY REQUIREMENTS. PROVIDE 10' x 3/4" COPPER CLAD GROUND ROD, #3/0 BARE COPPER GROUND WIRE EXOTHERMICALLY WELDED TO GROUND ROD, AND MECHANICAL GROUND CONNECTION TO METER TRIM.
3. FLAGPOLE WITH TWO LIGHT FIXTURES PROVIDED BY GENERAL CONTRACTOR. MOUNT AND CONNECT LIGHT FIXTURES. PROVIDE 10'X3/4" COPPER CLAD GROUND ROD, #3/0 BARE COPPER GROUND WIRE EXOTHERMICALLY WELDED TO GROUND ROD, AND MECHANICAL GROUND CONNECTION TO FLAGPOLE. REFER TO SITE LIGHTING DRAWINGS.
4. AREA SHALL HAVE A SNOW MELT SYSTEM. VERIFY EXACT PATH WITH ARCHITECT. AREA OF WALK SHALL BE AS INDICATED. SNOW MELT SYSTEM ALTERNATE E2.
5. PROVIDE FIXTURE AND POLE. REFER TO SITE LIGHTING DRAWINGS.
6. PROVIDE FIXTURE AND POLE. REFER TO SITE LIGHTING DRAWINGS.
7. PROVIDE FIXTURE. REFER TO SITE LIGHTING DRAWINGS.
8. PROVIDE TWO 4" PVC #40 TO AND FROM PAD MOUNTED TRANSFORMER PER ELECTRIC UTILITY COMPANY REQUIREMENTS. ELECTRIC UTILITY COMPANY SHALL PROVIDE NEW PRIMARY CABLES FOR UTILITY COMPANY PROVIDED NEW SINGLE PHASE PAD MOUNTED TRANSFORMER. CONDUITS SHALL BE EXTENDED TO LOCATIONS AS REQUIRED BY UTILITY COMPANY. COORDINATE REQUIREMENTS WITH UTILITY COMPANY.
9. PROVIDE SIX (3 SPARES) 4" PVC FROM TRANSFORMER SECONDARY COMPARTMENT TO SERVICE ENTRANCE EQUIPMENT. REFER TO DRAWING EE-3.
10. PROVIDE ONE 4" PVC FROM TERMINAL BOARD TBI PER TELEPHONE UTILITY COMPANY REQUIREMENTS. CONDUIT SHALL EXTEND TO LOCATION AS REQUIRED BY TELEPHONE UTILITY COMPANY. COORDINATE REQUIREMENTS WITH TELEPHONE UTILITY COMPANY.
11. PROVIDE ONE 2" PVC FROM TERMINAL BOARD TBI PER CABLE UTILITY COMPANY REQUIREMENTS. CONDUIT SHALL EXTEND TO LOCATION AS REQUIRED BY CABLE UTILITY COMPANY. COORDINATE REQUIREMENTS WITH CABLE UTILITY COMPANY.
12. PROVISION FOR CAMERAS. CAP CONDUITS. IDENTIFY CONDUITS AND DIMENSION LOCATION OF END OF CONDUIT. REFER TO DETAIL 'B' DRAWING EE-5.
13. PROVIDE FIXTURES FOR KIOSK . REFER TO SITE LIGHTING DRAWINGS.

1" = 30' 0 15' 30' 75'

CONSULTING ARCHITECTS / ENGINEERS

ARCHITECT: BODNER & KERIK ARCHITECTS, INC.
STRUCTURAL: LANTZ JONES & NEBRASKA, INC.
MECHANICAL/ELECTRICAL: SRA, INC.
CIVIL ENGINEERING: POGGEMEYER DESIGN GROUP, INC.
LANDSCAPE ARCHITECT: R.D. ZANDE & ASSOCIATES, INC.

REVISIONS

NO.	DATE	DESCRIPTION
1	12-6-02	BID SET

STATE OF OHIO — JOHN E. SANDERS — E-58219 — REGISTERED PROFESSIONAL ENGINEER

PROJECT NUMBER 0226

FOR: OHIO DEPT. OF TRANSPORTATION

DRAWING DESCRIPTION: **ELECTRICAL SITE PLAN - EAST**

NEW REST STOP BUILDINGS

NO. 770-2001-072 | US 30 WYANDOT/CRAWFORD | SITE 1 | EASTBOUND

PREPARED FOR
STATE OF OHIO
DEPARTMENT OF ADMINISTRATIVE SERVICES
GENERAL SERVICES DIVISION

PREPARED BY
DEPARTMENT OF ADMINISTRATIVE SERVICES

PERMIT SUBMISSION	DATE	SHEET
10-09-02	10-09-02	EE-S

L:\DRAWINGS\SAO\REST AREAS\WYANDOT\Dwgs\EAST\2004EST1.dwg, 12/13/2002 08:20:20 AM, Eric Burwell

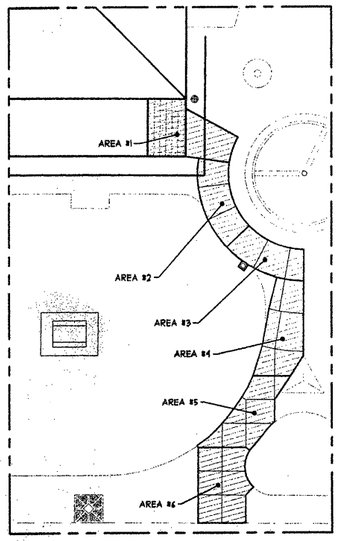

ENLARGED PLAN

SCALE: 1" = 15'

NOTES

1. SNOW MELT SYSTEM ALTERNATE E2.

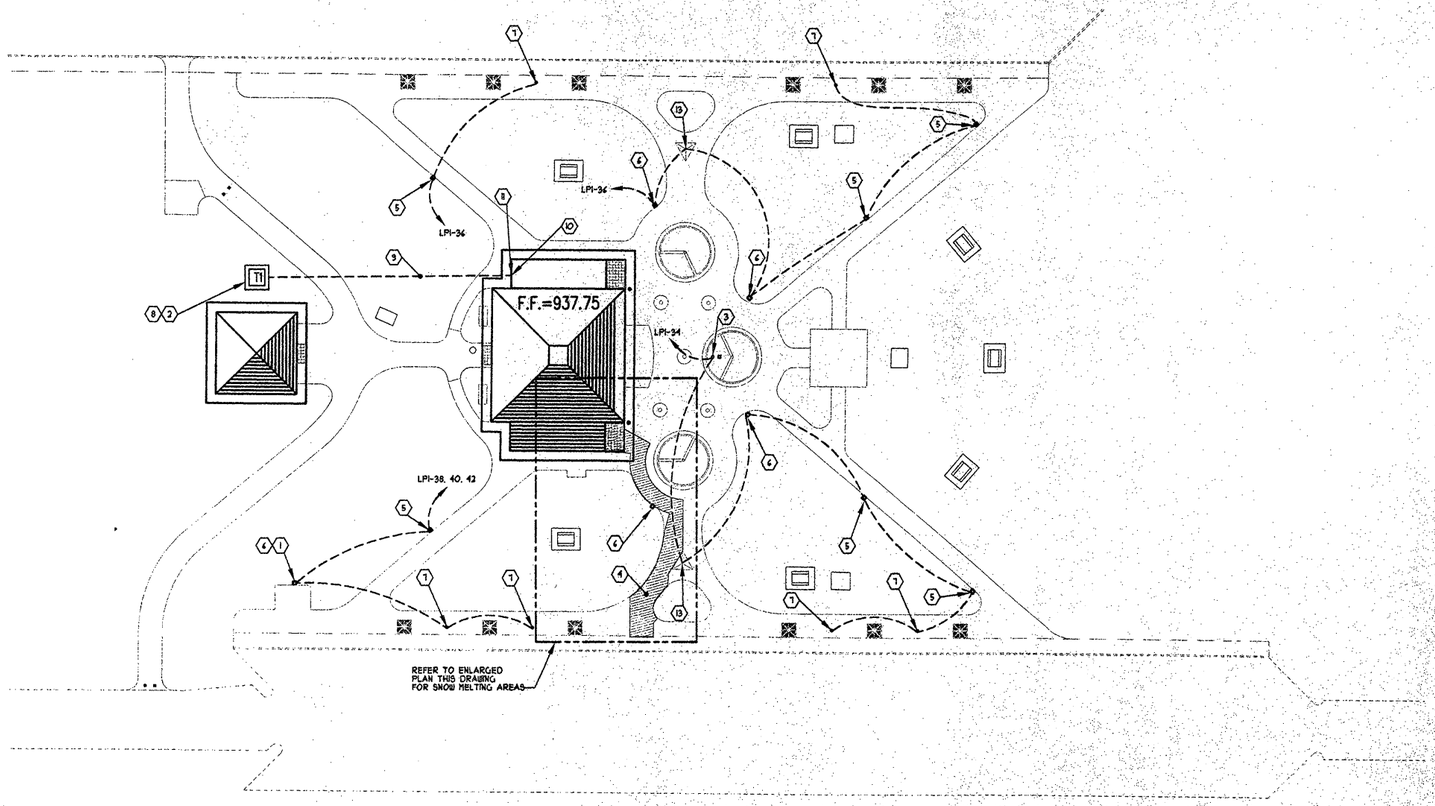

WEST SITE PLAN

SCALE: 1" = 30'

NORTH

SYMBOLS

- UNDER GROUND CONDUIT
- LIGHT FIXTURE.
- PAD MOUNTED TRANSFORMER
- KIOSK
- SNOW MELTING
- PROVISION FOR CAMERA

GENERAL NOTES

1. COORDINATE AND PROVIDE UTILITY SERVICES PROVISIONS PER UTILITY REQUIREMENTS.
2. EMPTY CONDUITS SHALL HAVE #12 PULL WIRE.
3. CONDUITS PROVIDED FOR UTILITIES SHALL HAVE LONG SWEEP ELBOWS AND NO MORE THAN 270° TOTAL BEND/OFFSETS. PROVIDE JUNCTION BOXES/MANHOLES AS REQUIRED PER UTILITY COMPANY.
4. CONDUIT ROUTING SHALL MAXIMIZE DISTANCE FROM PLANNED TREES AND PLANTINGS. CONDUIT ROUTING SHALL BE SUBMITTED FOR APPROVAL TO THE ARCHITECT.
5. UNDERGROUND CONDUITS SHALL BE PROVIDED PER DETAILS 'E', 'F', 'G', AND 'H' ON DRAWING EW-6.
6. UNDERGROUND CONDUIT, ELBOWS, BENDS, AND OFFSETS SHALL BE GALVANIZED RIGID METALLIC CONDUIT.
7. MI CABLE SNOW MELTING SYSTEM LAYOUT SHALL BE SUBMITTED FOR APPROVAL. PROVIDE SNOW MELTING WORK ONLY AFTER WRITTEN APPROVAL IS RECEIVED. COORDINATE LAYOUT WITH OTHER WORK AND MANUFACTURER'S RECOMMENDATIONS. LAYOUT SHALL INCLUDE MI CABLING, CONDUIT, WIRING, BOXES, CIRCUIT BREAKERS, PANELBOARDS, CONTACTORS, CONTROLLERS, AND OTHER ITEMS FOR A PROPER OPERATIONAL SYSTEM FROM HDP TO MI CABLES. SENSOR/CONTROLLER SHALL BE MOUNTED ABOVE ROOF ON END OF CONDUIT. COORDINATE LOCATION OF SENSOR/CONTROLLER WITH ARCHITECT PRIOR TO LAYOUT SUBMITTAL.

CODED NOTES

1. PROVIDE TWO WP/GFI DUPLEX RECEPTACLES FLUSH MOUNTED IN POLE AT 24" ABOVE POLE BASE. PROVIDE LOCKABLE COVERS MEETING NEC 406.8-(B)-(1) REQUIREMENTS. REFER TO DRAWING XXXXXXXX.
2. UTILITY PROVIDED NEW SINGLE PHASE PAD MOUNTED TRANSFORMER. GENERAL CONTRACTOR SHALL PROVIDE CONCRETE PAD PER UTILITY REQUIREMENTS. PROVIDE GROUNDING PER UTILITY REQUIREMENTS. PROVIDE CONDUIT AND WIRE FROM TRANSFORMER TO SERVICE ENTRANCE EQUIPMENT. PROVIDE METER TRAY MOUNTING STRUCTURE AND METERING CONDUIT WITH PULL WIRE PER UTILITY REQUIREMENTS. MOUNT UTILITY FURNISHED METER TRAY PER UTILITY REQUIREMENTS. PROVIDE GROUNDING OF METER TRAY PER UTILITY REQUIREMENTS. PROVIDE 10' x 3/4" COPPER CLAD GROUND ROD, #3/0 BARE COPPER GROUND WIRE EXOTHERMICALLY WELDED TO GROUND ROD, AND MECHANICAL GROUND CONNECTION TO METER TRAY.
3. FLAGPOLE WITH TWO LIGHT FIXTURES PROVIDED BY GENERAL CONTRACTOR. MOUNT AND CONNECT LIGHT FIXTURES. PROVIDE 10'X3/4" COPPER CLAD GROUND ROD, #3/0 BARE COPPER GROUND WIRE EXOTHERMICALLY WELDED TO GROUND ROD, AND MECHANICAL GROUND CONNECTION TO FLAGPOLE. REFER TO SITE LIGHTING DRAWINGS.
4. AREA SHALL HAVE A SNOW MELT SYSTEM. VERIFY EXACT PATH WITH ARCHITECT. AREA OF WALK SHALL BE AS INDICATED. SNOW MELT SYSTEM ALTERNATE E2.
5. PROVIDE FIXTURE AND POLE. REFER TO SITE LIGHTING DRAWINGS.
6. PROVIDE FIXTURE AND POLE. REFER TO SITE LIGHTING DRAWINGS.
7. PROVIDE FIXTURE. REFER TO SITE LIGHTING DRAWINGS.
8. PROVIDE TWO 4" PVC #40 TO AND FROM PAD MOUNTED TRANSFORMER PER ELECTRIC UTILITY COMPANY REQUIREMENTS. ELECTRIC UTILITY COMPANY SHALL PROVIDE NEW PRIMARY CABLES FOR UTILITY COMPANY PROVIDED NEW SINGLE PHASE PAD MOUNTED TRANSFORMER. CONDUITS SHALL BE EXTENDED TO LOCATIONS AS REQUIRED BY UTILITY COMPANY. COORDINATE REQUIREMENTS WITH UTILITY COMPANY.
9. PROVIDE SIX (3 SPARES) 4" PVC FROM TRANSFORMER SECONDARY COMPARTMENT TO SERVICE ENTRANCE EQUIPMENT. REFER TO DRAWING EW-3.
10. PROVIDE ONE 4" PVC FROM TERMINAL BOARD TBI PER TELEPHONE UTILITY COMPANY REQUIREMENTS. CONDUIT SHALL EXTEND TO LOCATION AS REQUIRED BY TELEPHONE UTILITY COMPANY. COORDINATE REQUIREMENTS WITH TELEPHONE UTILITY COMPANY.
11. PROVIDE ONE 2" PVC FROM TERMINAL BOARD TBI PER CABLE UTILITY COMPANY REQUIREMENTS. CONDUIT SHALL EXTEND TO LOCATION AS REQUIRED BY CABLE UTILITY COMPANY. COORDINATE REQUIREMENTS WITH CABLE UTILITY COMPANY.
12. PROVISION FOR CAMERAS. CAP CONDUITS. IDENTIFY CONDUITS AND DIMENSION LOCATION OF END OF CONDUIT. REFER TO DETAIL 'B' DRAWING EW-5.
13. PROVIDE FIXTURES FOR KIOSK. REFER TO SITE LIGHTING DRAWINGS.
14. TRANSFORMER AND CONCRETE PAD NOT INCLUDED IN SCOPE OF WORK. TRANSFORMER AND CONCRETE PAD ARE PART OF SCOPE OF WORK FOR WASTE WATER TREATMENT PLANT AND WATER TREATMENT PLANT.

1" = 30'

0 15' 30' 75'

CONSULTING ARCHITECTS / ENGINEERS

ARCHITECT: BODNER & KERIK ARCHITECTS, INC.
STRUCTURAL: LANTZ JONES & NEBRASKA, INC.
MECHANICAL/ELECTRICAL: SRA, INC.
CIVIL ENGINEERING: POGGEMEYER DESIGN GROUP, INC.
LANDSCAPE ARCHITECT: R.D. ZANDE & ASSOCIATES, INC.

REVISIONS

NO.	DATE	DESCRIPTION
1	12-6-02	BID SET

STATE OF OHIO
JOHN E. SANDERS
E-58219
REGISTERED PROFESSIONAL ENGINEER

PROJECT NUMBER
0225

FOR:
OHIO DEPT. OF TRANSPORTATION

DRAWING DESCRIPTION:
ELECTRICAL SITE PLAN - WEST

NEW REST STOP BUILDINGS

NO. 770-2001-072
US 30 WYANDOT/CRAWFORD

SITE 2
WESTBOUND

PREPARED FOR
STATE OF OHIO
DEPARTMENT OF ADMINISTRATIVE SERVICES
GENERAL SERVICES DIVISION

PREPARED BY
DEPARTMENT OF ADMINISTRATIVE SERVICES

PERMIT SUBMISSION	DATE	SHEET
10-09-02	10-09-02	EW-S

L:\DRAWINGS\SA\OREST AREAS\WYANDOT\Dwgs\WEST\2004WST1.dwg, 12/13/2002 08:25:32 AM, Eric Burnell

BUILDING LEGEND

- EXISTING STRUCTURE
- EXISTING STRUCTURE OR EQUIPMENT TO BE REMOVED
- NEW STRUCTURE CONCRETE
- EXISTING STRUCTURE OR EQUIPMENT TO BE ABANDONED IN PLACE

PIPING LEGEND

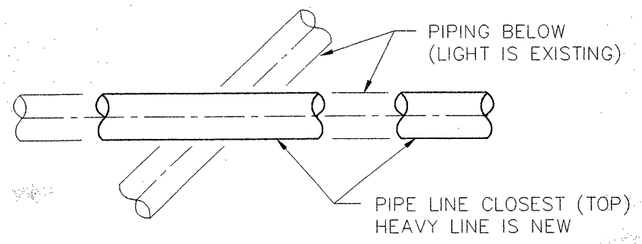

NEW PIPING AND EQUIPMENT UNDER CONTRACT
LABEL "NEW" UNLESS OTHERWISE NOTED.

——————— PIPING ABOVE GRADE (SOLID)

– – – – – – – PIPING BELOW GRADE (HIDDEN)

TOPOGRAPHY LEGEND

- County Line
- Township Line
- Section Line
- Corporation Line — or
- Fence Line(existing) 352 (proposed) 353
- Center Line
- Trees, Stumps, (to be removed)
- Limited Access (only) LA
- Right of Way (only) RW
- Limited Access & Right of Way LA&RW
- Existing Right of Way
- Property Line (in existing fence)
- Railroad or
- Guardrail (existing) (proposed)
- Existing Storm Sewer 10" Storm
- Existing Sanitary Sewer 8" Sanitary
- Existing Water Line 6" W 6"
- Existing Gas Line 4" G 4"
- Existing Manhole M.H.
- Existing Catch Basin C.B.
- Existing Inlet C.B.
- Mailbox M.B.
- Fire Hydrant
- Water or Gas Valve W G
- Water or Gas Meter W.M. G.M.
- Power Pole w/ Guy Wire
- Telephone Pole
- Light Pole

VALVE SYMBOL LEGEND

- GATE VALVE (G–)
- BALL VALVE (B–)
- CHECK VALVE (C–)
- PLUG VALVE (P–)
- BUTTERFLY VALVE (WAFER TYPE) (BF–)
- BUTTERFLY VALVE (FLANGE TYPE) (BF–)
- DIAPHRAGM VALVE (D–)
- GLOBE VALVE (GL–)
- CONTROL VALVE (PRV–)
- MJ CONNECTION
- FLANGE CONNECTION
- BELL & SPIGOT CONNECTION
- PINCH VALVE (Pc–)

NOTE 1.) VALVE DESIGNATION AND TYPE APPLIES TO SCALE DRAWINGS ONLY. SCHEMATIC DIAGRAMS DO NOT REPRESENT ALL TYPES.

2.) PROVIDE GEARED AND HANDWHEEL ACTUATOR FOR VALVES 6" AND LARGER UNLESS OTHERWISE NOTED. PROVIDE CHAIN WHEEL ON VALVES HIGHER THAN SIX (6) FEET.

PIPING ABBREVIATIONS

MATERIAL

BSP	BLACK STEEL PIPE
CMP	CORRUGATED METAL PIPE
CPP	CONCRETE PRESSURE PIPE (PRESTRESSED)
CPVC	CHLORINATED POLYVINYL CHLORIDE PIPE
Cu	COPPER TUBING OR PIPING
DI	DUCTILE IRON PIPE
GS	GALVANIZED STEEL PIPE
CP	CONCRETE PIPE (PLAIN)
PVC	POLYVINYL CHLORIDE PIPE
ST	STEEL PIPE
S.ST	STAINLESS STEEL PIPE
PE	POLYETHYLENE
FRP	FIBERGLASS REINFORCED POLYESTER

SERVICE

NG	NATURAL GAS
CW	CITY WATER
HW	HOT CITY WATER
NPW	PLANT WATER (NON–DRINKABLE)
PW	POTABLE WATER
CA	COMPRESSED AIR
SS	SANITARY SEWER
RW	RAW WATER
DW	DIGESTED WATER
SL	SLUDGE
PE	PLANT EFFLUENT

VALVE SCHEDULE OPERATOR DESIGNATION

OL	LEVER AND WEIGHT OR SPRING	C	CHAIN
FB	FLOOR BOX	L	LEVER
TW	TEE WRENCH	VB	VALVE BOX
G	GEAR	BG	BEVEL GEAR
HW	HANDWHEEL	EB	EXTENDED BONNET
MO	MOTOR OPERATED	PN	PNEUMATIC OPERATED

VALVES INSIDE BUILDINGS SHALL BE OF FLANGE TYPE
VALVES UNDERGROUND INSTALLATION SHALL BE MECHANICAL JOINT UNLESS NOTED OTHERWISE

PROJECT GENERAL NOTE:

1.) CONTRACTOR SHALL VERIFY ALL DIMENSIONS, ELEVATIONS, TYPE OF CONNECTIONS, MATERIALS, MECHANICAL AND ELECTRICAL INTERFACING PRIOR TO CONSTRUCTION.

2.) ALL PIPING SHALL BE SUPPORTED PER SPECIFICATIONS. GENERAL CONTRACTOR SHALL DETAIL, FABRICATE AND INSTALL PIPE SUPPORTS .

3.) DUCTILE IRON PIPE (PRESSURE LINE) BELOW SLABS SHALL HAVE RETAINER GLANDS UNLESS OTHERWISE NOTED.

4.) CONTRACTOR TO COORDINATE AND APPLY STANDARD MISCELLANEOUS DETAILS AS REQUIRED.

5.) ALL PIPE INSTALLATIONS THRU EXISTING & PRE–CAST STRUCTURES SHALL BE DONE BY USING A LINK–SEAL ASSEMBLY OR EQUAL. IN SURFACES EXPOSED TO WATER CONTRACTOR TO GROUT SMOOTH W/ NONE–SHRINK GROUT CAVITY AT L–SEAL.

6.) PROPOSED WORK UNDER THIS CONTRACT IS LABELED "NEW" UNLESS NOTED OTHERWISE. WHERE THERE IS A COMBINATION OF PROPOSED AND EXISTING CONDITIONS WORK IS LABEL "NEW" AND EXISTING NOT LABEL . IN PROPOSED BUILDING ALL EQUIPMENT IS "NEW" AND PROPOSED WORK IS NOT LABEL "NEW" .

7.) ALL MATERIALS IN CONTACT WITH POTABLE WATER SHALL MEET THE REQUIREMENTS OF NSF STANDARD 60 AND 61.

8.) PVC PIPE SPECIFICATIONS.

PIPE SPECS:	ASTM D2680
JOINT SPECS:	ASTM D3212
INSTALLATION SPECS:	ASTM D2680

UNDERGROUND UTILITIES

TWO WORKING DAYS
BEFORE YOU DIG
Call 800–362–2764 (Toll Free)
OHIO UTILITIES PROTECTION SERVICE
NON–MEMBERS
MUST BE CALLED DIRECTLY

CONSULTING ARCHITECTS / ENGINEERS
ARCHITECT: BODNER & KERIK ARCHITECTS, INC.
STRUCTURAL: LANTZ JONES & NEBRASKA, INC.
MECHANICAL/ELECTRICAL: SRA, INC.
CIVIL ENGINEERING: POGGEMEYER DESIGN GROUP, INC.
LANDSCAPE ARCHITECT: R.D. ZANDE & ASSOCIATES, INC.

REVISIONS

NO.	DATE	DESCRIPTION
1	10/9/02	PERMIT SUBMISSION
2	12/6/02	BID SET

STATE OF OHIO — THOMAS J. BORCK 58083 — REGISTERED PROFESSIONAL ENGINEER

PROJECT NUMBER: 0226/5150–007

FOR: OHIO DEPT. OF TRANSPORTATION

DRAWING DESCRIPTION: WTP – LEGEND & NOTES

NEW REST STOP BUILDINGS

NO. 770-2001-072 US 30 WYANDOT/CRAWFORD | SITE 1 EASTBOUND | SITE 2 WESTBOUND

PREPARED FOR: STATE OF OHIO, DEPARTMENT OF ADMINISTRATIVE SERVICES, GENERAL SERVICES DIVISION

PREPARED BY: DEPARTMENT OF ADMINISTRATIVE SERVICES

PLOT DATE: DEC. 06, 2002 | DATE: DEC. 06, 2002 | SHEET: SW-1

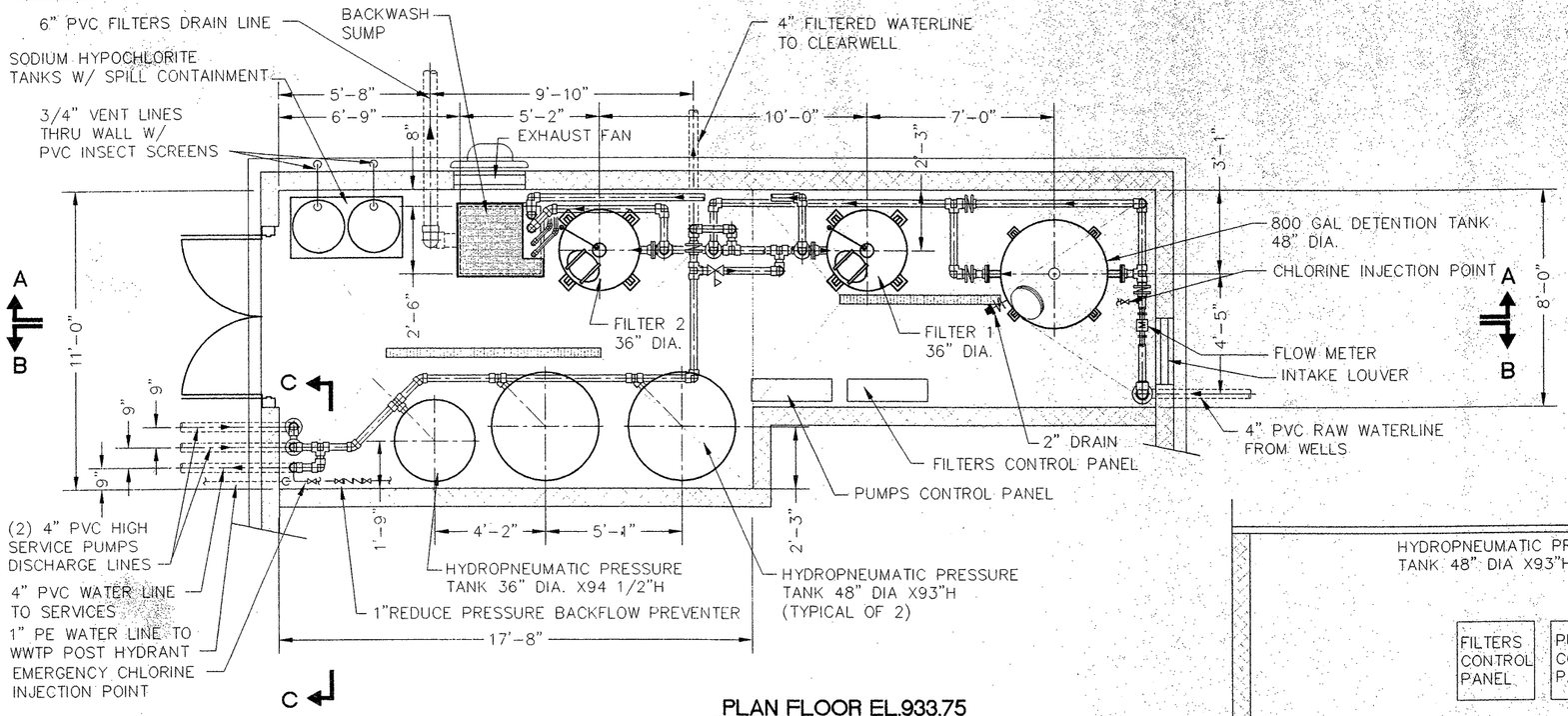

PLAN FLOOR EL.933.75

SCALE 3/8" = 1'-0"

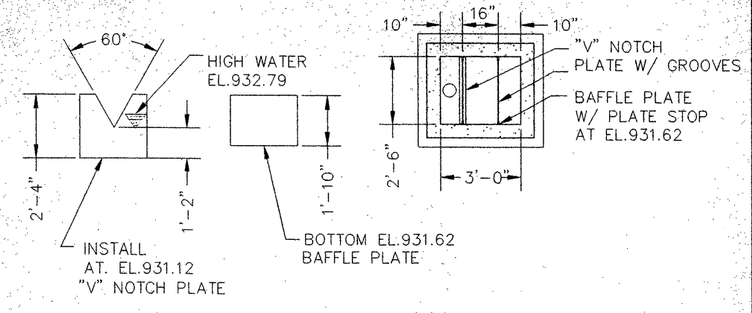

BACKWASH SUMP DETAILS

SCALE 3/8" = 1'-0"

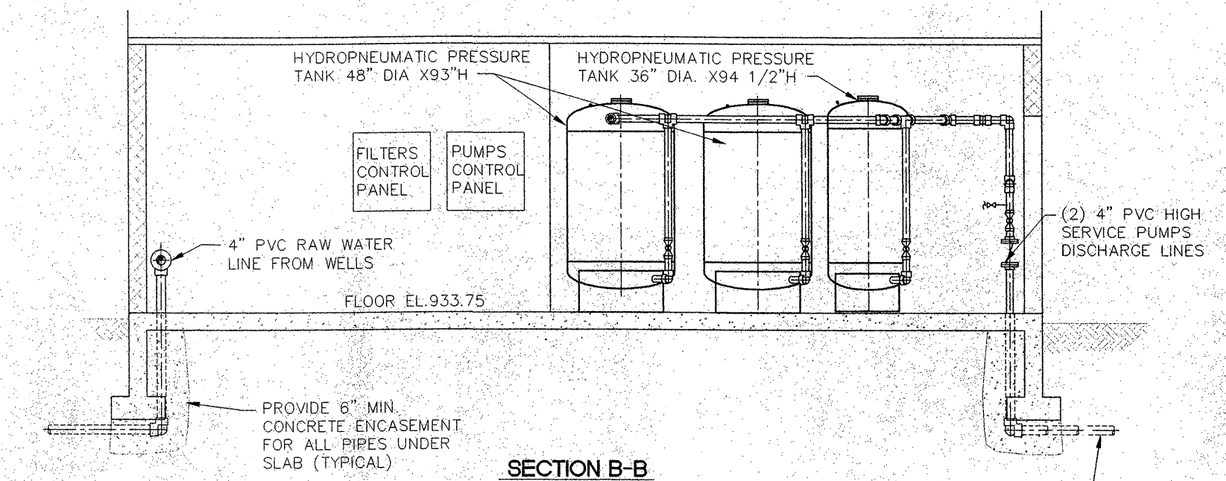

SECTION B-B

SCALE 3/8" = 1'-0"

NOTE: SEE MECHANICAL DRAWINGS FOR EXHAUST FAN AND INTAKE LOUVER SIZES AND REQUIREMENTS.

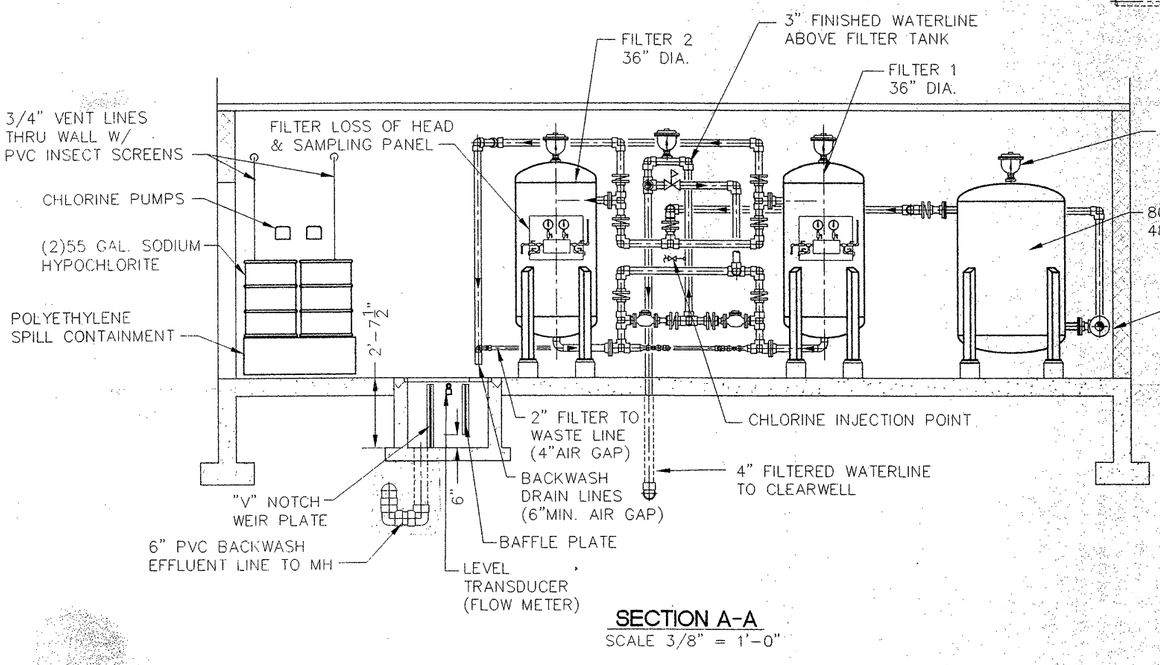

SECTION A-A

SCALE 3/8" = 1'-0"

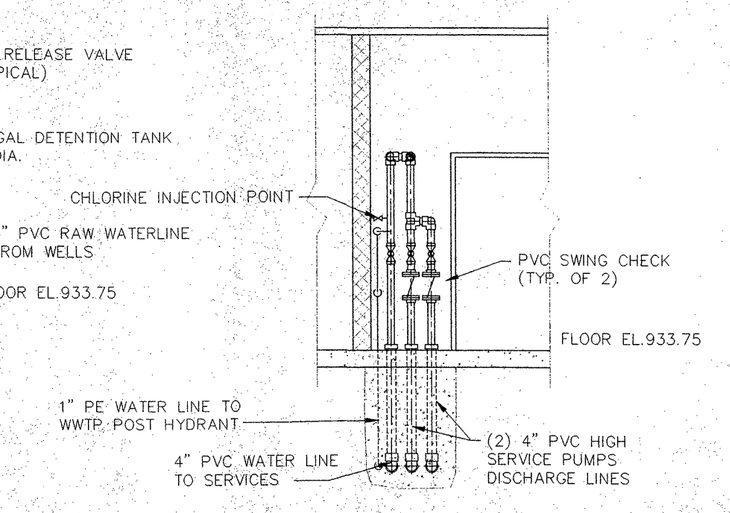

SECTION C-C

SCALE 3/8" = 1'-0"

CONSULTING ARCHITECTS / ENGINEERS

ARCHITECT: **BOONER & KERIK ARCHITECTS, INC.**
STRUCTURAL: **LANTZ JONES & NEBRASKA, INC.**
MECHANICAL/ELECTRICAL: **SRA, INC.**
CIVIL ENGINEERING: **POGGEMEYER DESIGN GROUP, INC.**
LANDSCAPE ARCHITECT: **R.D. ZANDE & ASSOCIATES, INC.**

REVISIONS

NO.	DATE	DESCRIPTION
1	10/09/02	PERMIT TO SUBMISSION
2	12/06/02	BID SET

STATE OF OHIO — THOMAS J. BORCK 58083 — REGISTERED PROFESSIONAL ENGINEER

PROJECT NUMBER 0226/5051-007

FOR: OHIO DEPT. OF TRANSPORTATION

DRAWING DESCRIPTION: WATER TREATMENT PLANT – PLAN & SECTIONS

NEW REST STOP BUILDINGS

NO. 770-2001-072 US. 30 WYANDOT/CRAWFORD | SITE 1 EASTBOUND | SITE 2 WESTBOUND

PREPARED FOR STATE OF OHIO DEPARTMENT OF ADMINISTRATIVE SERVICES GENERAL SERVICES DIVISION

PREPARED BY DEPARTMENT OF ADMINISTRATIVE SERVICES

PLOT DATE DEC. 06, 2002 | DATE DEC. 06, 2002 | SHEET SW-2

I:\5150\007\ENV\5150075W2.DWG 12-5-02 12:51:14 pm EST

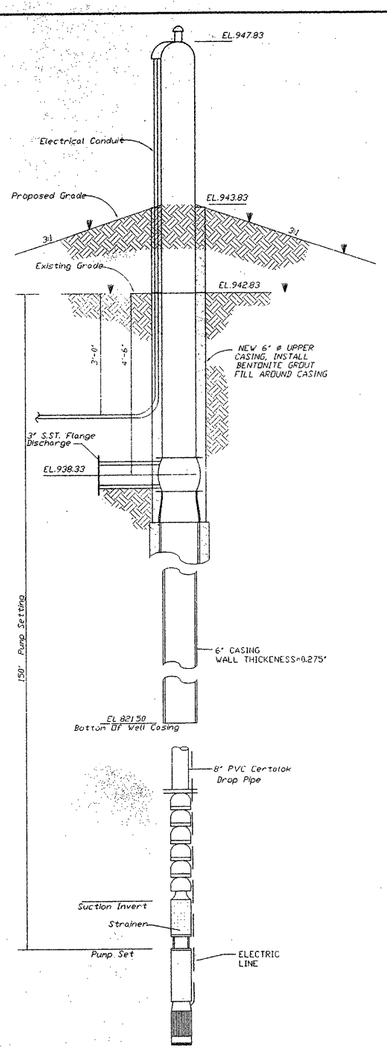

WELL -#1
no scale

40 GPM @ 190' TDH
40 GPM

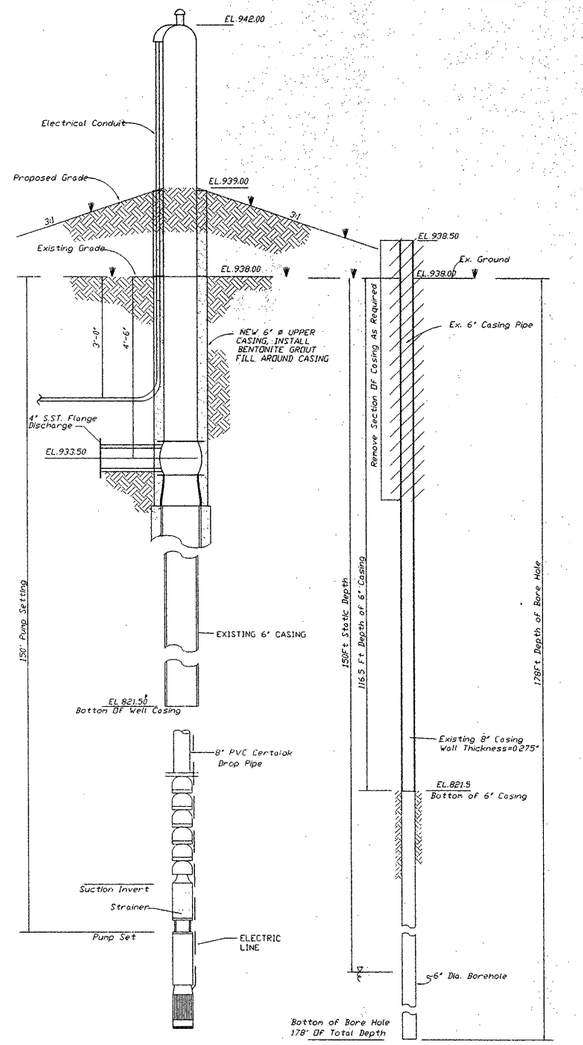

WELL -#2
no scale

3 GPM @ 190' TDH
40 GPM

#2
WELL BORE DETAIL
no scale

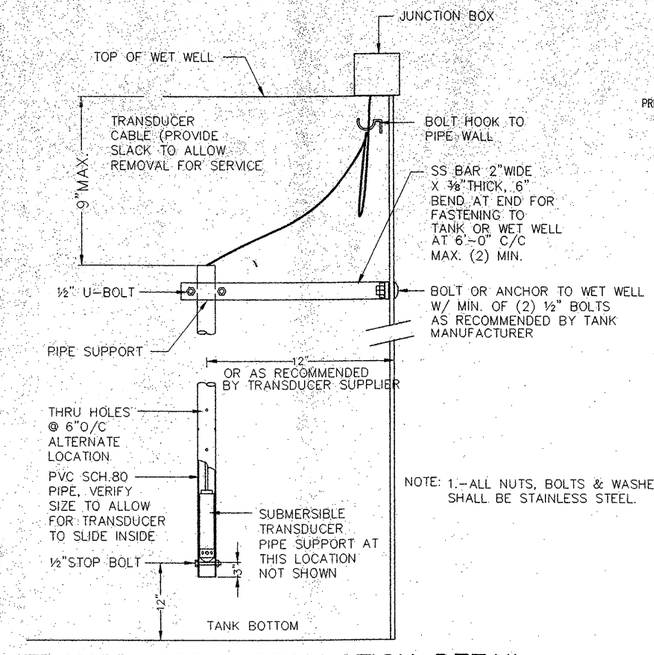

NOTE: 1.-ALL NUTS, BOLTS & WASHERS SHALL BE STAINLESS STEEL.

TRANSDUCER INSTALLATION DETAIL

NTS

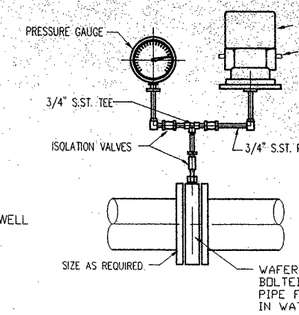

NOTES:
1. VERTICAL INSTALLATIONS TO BE SUPPORTED FROM EITHER THE PROCESS LINE OR FLOOR AS REQUIRED BY SPACE LIMITATIONS.
2. PRESSURE GAUGE, PRESSURE SWITCH AND INDICATING TRANSMITTER SHALL BE SUITABLE TO WITHSTAND A 30 IN. HG VACUUM.
3. S.ST. PIPING AND FITTING SHALL BE BY SWAGELOK COMPANY OR EQUAL.

PRESSURE SENSOR ASSEMBLY

SCALE: NONE

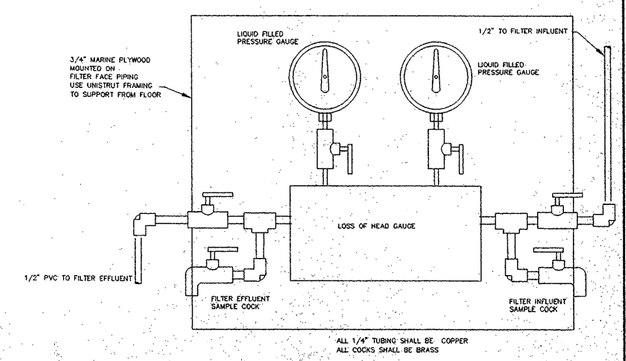

FILTER LOSS OF HEAD & SAMPLING PANEL

NTS

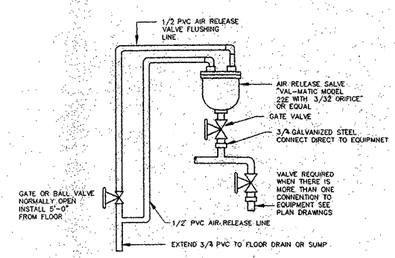

WATER AIR RELEASE VALVE DETAIL

NTS

MODEL 203 (BY HALLIDAY OR EQUAL)
(INSIDE MOUNTING GATE)

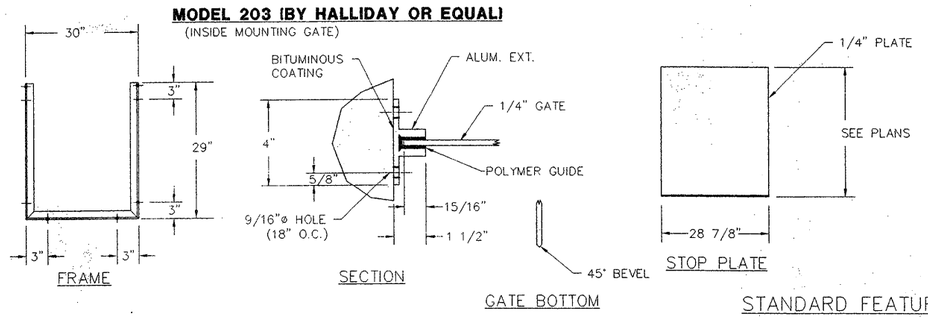

STOP PLATE AND GROOVE DETAILS

N.T.S.

STANDARD FEATURES:

1.- ONE-PIECE 6061-T6 EXTRUDED ALUMINUM FRAME
2.- ONE-PIECE POLYMER GUIDE
3.- 1/4" THICK 6061-T6 ALUMINUM GATE
4.- REINFORCED TO DEFLECT NO MORE THAN 1/360th OF SPAN

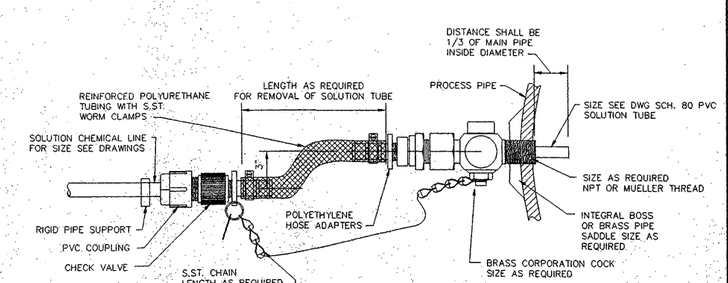

CHEMICAL SOLUTION INJECTION CORPORATION STOP

NOT TO SCALE

CONSULTING ARCHITECTS / ENGINEERS
ARCHITECT: **BOONER & KERIK ARCHITECTS, INC.**
STRUCTURAL: **LANTZ JONES & NEBRASKA, INC.**
MECHANICAL/ELECTRICAL: **SRA, INC.**
CIVIL ENGINEERING: **POGGEMEYER DESIGN GROUP, INC.**
LANDSCAPE ARCHITECT: **R.D. ZANDE & ASSOCIATES, INC.**

REVISIONS

NO.	DATE	DESCRIPTION
1	10/09/02	PERMIT SUBMISSION
2	12/06/02	BID SET

STATE OF OHIO THOMAS J. BORCK 58083 REGISTERED PROFESSIONAL ENGINEER

PROJECT NUMBER
0226/5051-007

FOR:
OHIO DEPT. OF TRANSPORTATION

DRAWING DESCRIPTION:
WTP-WATER WELLS & EQUIPMENT DETAILS

NEW REST STOP BUILDINGS

NO. 770-2001-072	SITE 1	SITE 2
US 30 WYANDOT/CRAWFORD	EASTBOUND	WESTBOUND

PREPARED FOR
STATE OF OHIO
DEPARTMENT OF ADMINISTRATIVE SERVICES
GENERAL SERVICES DIVISION
PREPARED BY
DEPARTMENT OF ADMINISTRATIVE SERVICES

PLOT DATE	DATE	SHEET
DEC. 06, 2002	DEC. 06, 2002	SW-3

I:\5150\007\ENV\515007SW3.DWG 12-5-02 1:26:36 pm EST

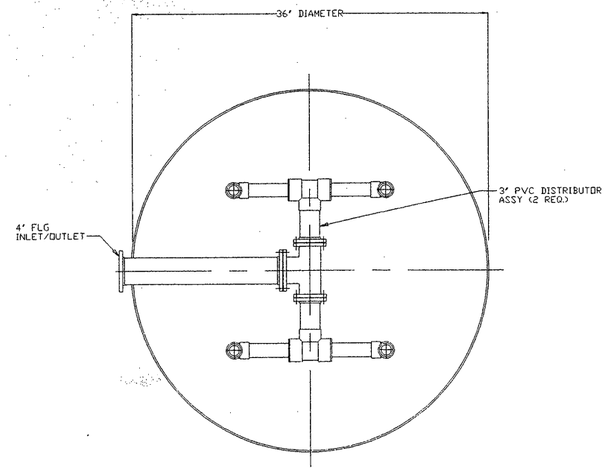

SECTIONAL PLAN A-A

UPPER DISTRIBUTOR
FOR REFERENCE ONLY, CONFIGURATION AND SIZE PER FILTER MANUFACTURER

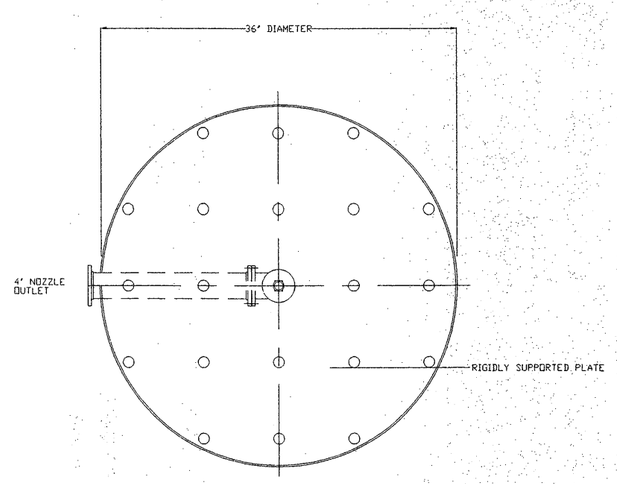

SECTIONAL PLAN B-B

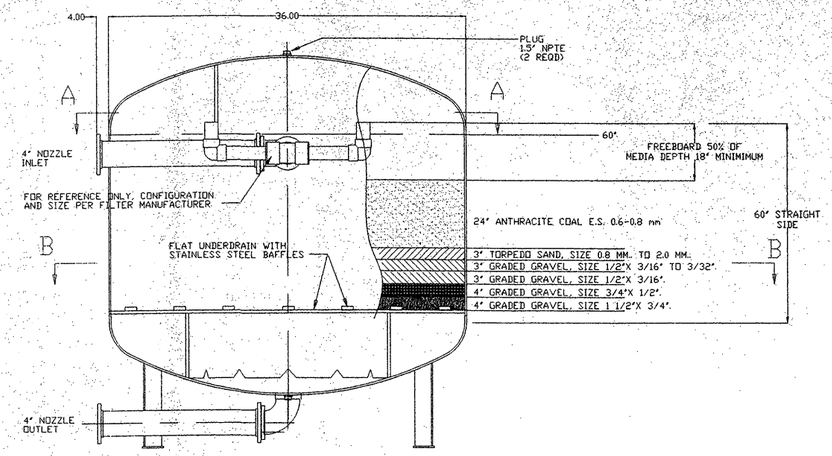

SECTION

PRESSURE FILTER

NOT TO SCALE

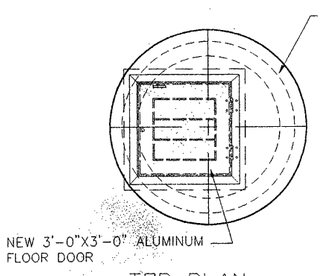

TOP PLAN

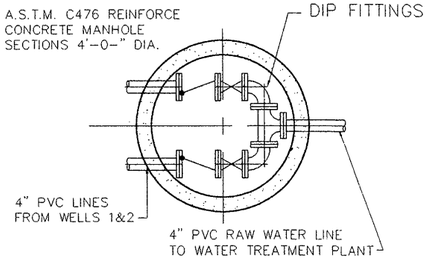

BOTTOM PLAN

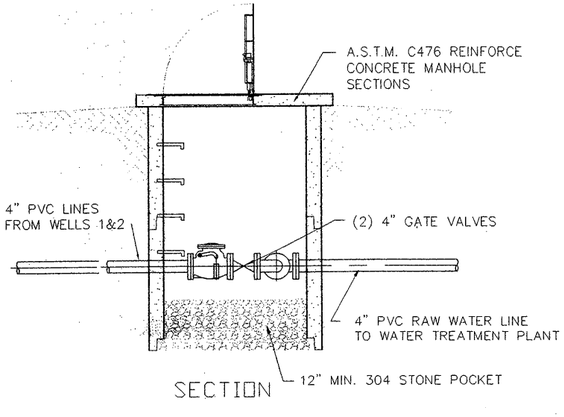

SECTION

VALVE PIT A-A

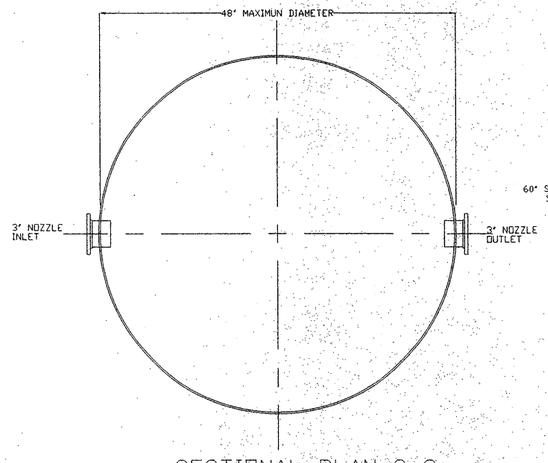

SECTIONAL PLAN C-C

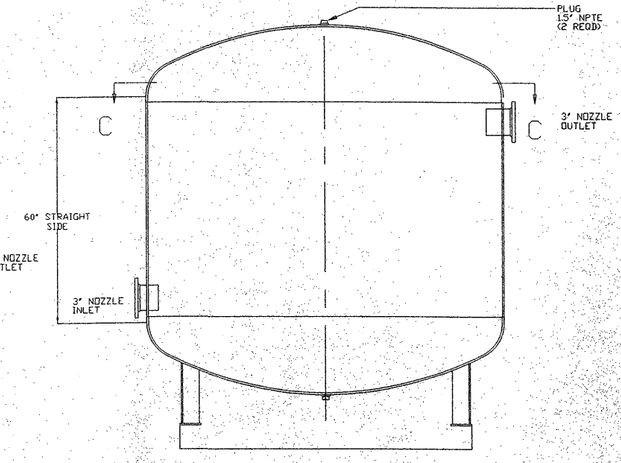

SECTION

DETENTION PRESSURE TANK

NOT TO SCALE

NOTE: THIS DRAWING IS FOR REFERENCE ONLY. FOR FINAL DESIGN DRAWINGS REFER TO MANUFACTURER APPROVED CONSTRUCTION DRAWINGS. SEE SPECIFICATIONS FOR ADDITIONAL INFORMATION.

CONSULTING ARCHITECTS / ENGINEERS

ARCHITECT: **BODNER & KERIK ARCHITECTS, INC.**
STRUCTURAL: **LANTZ JONES & NEBRASKA, INC.**
MECHANICAL/ELECTRICAL: **SRA, INC.**
CIVIL ENGINEERING: **POGGEMEYER DESIGN GROUP, INC.**
LANDSCAPE ARCHITECT: **R.D. ZANDE & ASSOCIATES, INC.**

REVISIONS

NO.	DATE	DESCRIPTION
1	10/09/02	PERMIT SUBMISSION
2	12/06/02	BID SET

STATE OF OHIO — THOMAS J. BOROK 58083 — REGISTERED PROFESSIONAL ENGINEER

PROJECT NUMBER 0226/5150-007

FOR: OHIO DEPT. OF TRANSPORTATION

DRAWING DESCRIPTION: WTP – FILTER AND DETENTION TANK DETAILS

NEW REST STOP BUILDINGS

NO. 770-2001-072 US 30 WYANDOT/CRAWFORD | SITE 1 EASTBOUND | SITE 2 WESTBOUND

PREPARED FOR
STATE OF OHIO
DEPARTMENT OF ADMINISTRATIVE SERVICES
GENERAL SERVICES DIVISION

PREPARED BY
DEPARTMENT OF ADMINISTRATIVE SERVICES

PLOT DATE DEC. 06, 2002 | DATE DEC. 06, 2002 | SHEET SW-4

I:\5150\007\ENV\5150075w4.DWG 12-5-02 1:27:59 pm EST

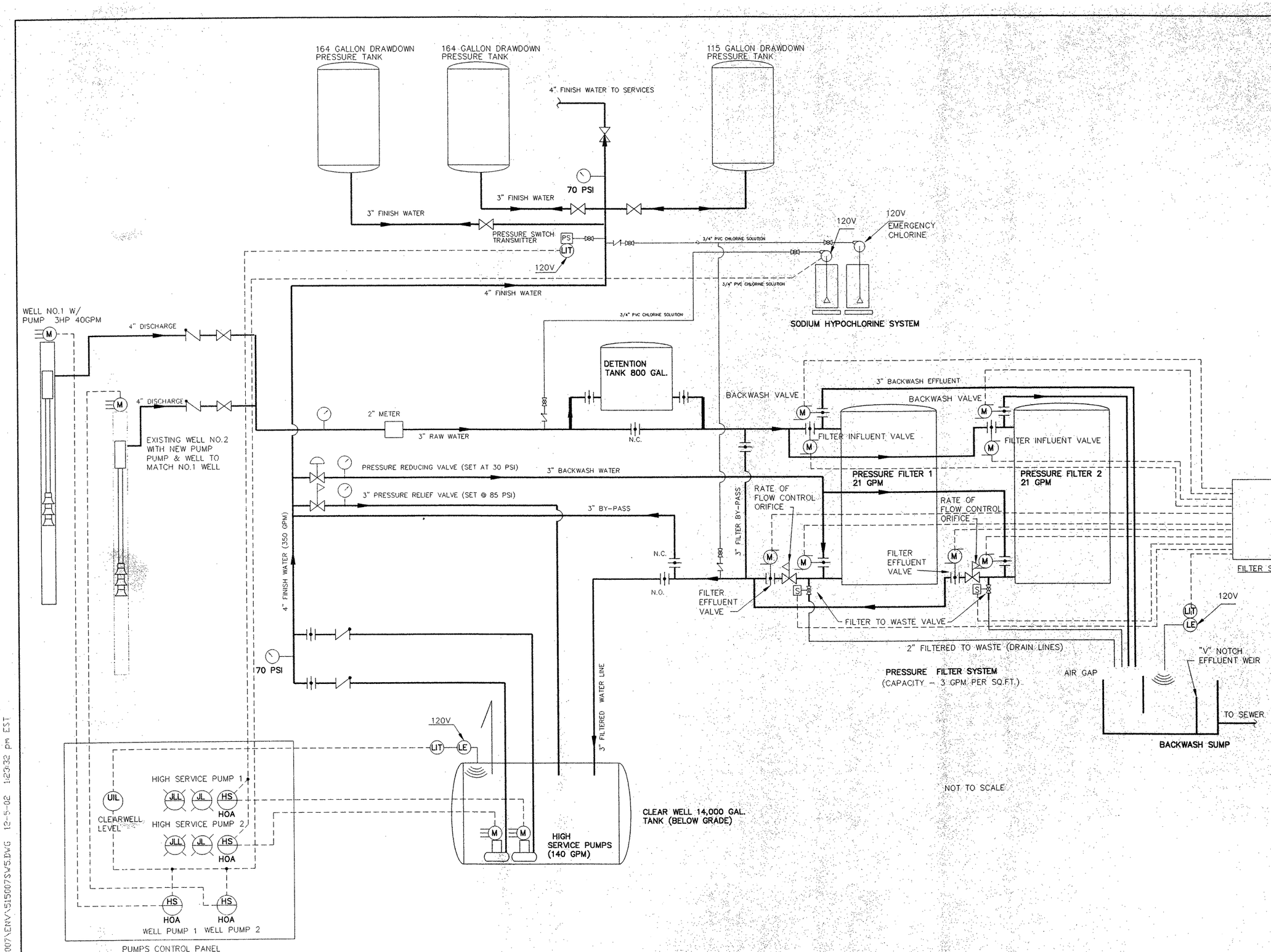

CONSULTING ARCHITECTS / ENGINEERS

ARCHITECT: **BOONER & KERIK ARCHITECTS, INC.**
STRUCTURAL: **LANTZ JONES & NEBRASKA, INC.**
MECHANICAL/ELECTRICAL: **SRA, INC.**
CIVIL ENGINEERING: **POGGEMEYER DESIGN GROUP, INC.**
LANDSCAPE ARCHITECT: **R.D. ZANDE & ASSOCIATES, INC.**

REVISIONS

NO.	DATE	DESCRIPTION
1	10/09/02	PERMIT SUBMISSION
2	12/06/02	BID SET

STATE OF OHIO — THOMAS J. BORCK 58083 — REGISTERED PROFESSIONAL ENGINEER

PROJECT NUMBER **0226/5150-007**

FOR: **OHIO DEPT. OF TRANSPORTATION**

DRAWING DESCRIPTION: **WTP – PLANT FLOW SCHEMATIC DIAGRAM**

NEW REST STOP BUILDINGS

NO. 770-2001-072 — US 30 WYANDOT/CRAWFORD | SITE 1 EASTBOUND | SITE 2 WESTBOUND

PREPARED FOR
STATE OF OHIO
DEPARTMENT OF ADMINISTRATIVE SERVICES
GENERAL SERVICES DIVISION

PREPARED BY
DEPARTMENT OF ADMINISTRATIVE SERVICES

PLOT DATE	DATE	SHEET
DEC. 06, 2002	DEC. 06, 2002	SW-5

I:\5150\007\ENV\515007SW5.DWG 12-5-02 1:23:32 pm EST

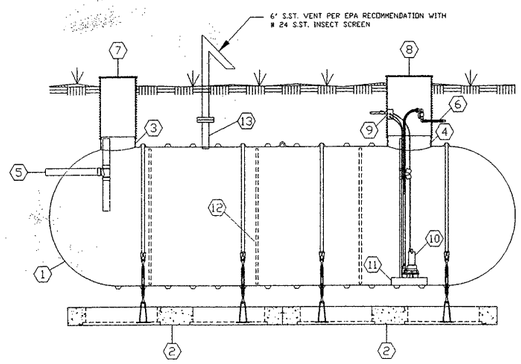

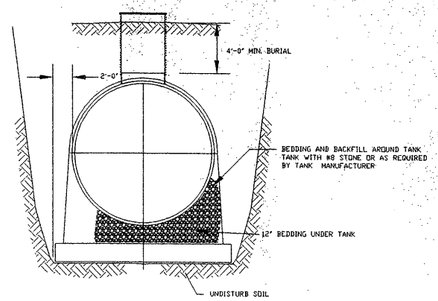

NO.	DESCRIPTION
1	SINGLE WALL FRP TANK, 14,000 GAL, 10'-0" DIA. X 27'-0" LONG
2	PRECAST DEADMAN SYSTEM W/ HOLD DOWN STRAP AND TURNBUCKLE ASSY.
3	24" FRP OPENING
4	36" FRP OPENING
5	(2) 4" SCH. 40 PVC INLET PIPING W/ SANITARY TEE
6	(2) 4" EFFLUENT DISCHARGE
7	24" RIBBED PVC RISER W/ AIR TIGHT FRP LID
8	36" RIBBED PVC RISER W/ AIR TIGHT FRP LID
9	PVC SPLICE BOX W/ CORD GRIP
10	(2) BASE MOUNT EFFLUENT PUMP W/ LEVEL CONTROL FLOAT ASSEMBLY
11	(2) 24" X 24" FRP PUMP PLATFORM
12	(3) BAFFLE PLATES (PROVIDE FLOW THRU SIDES)
13	6" FLANGE VENT TO 2'-0" BELOW GRADE

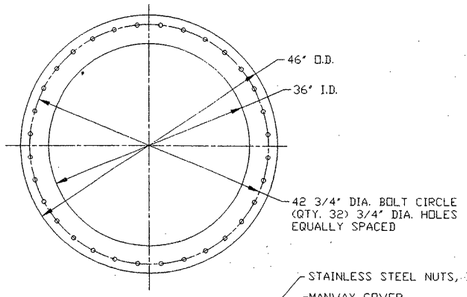

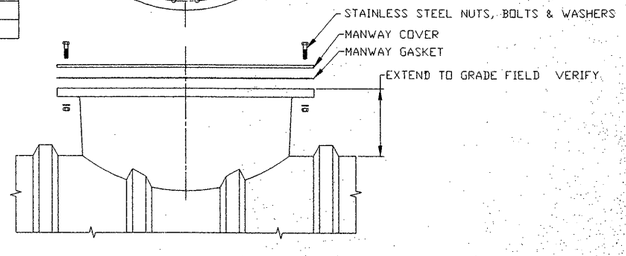

STANDARD BLOCKING

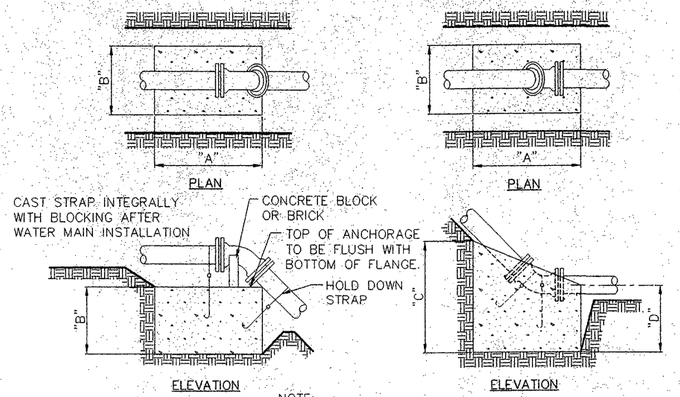

NOTE:

6" TO 8"	1-1/4"x1-1/8" STRAP
10" TO 12"	2-1/4"x1-1/4 STRAP
14" TO 16"	2-3/8"x1-1/2" STRAP
18" TO 20"	2-1/2"x1-3/4" STRAP

STANDARD BLOCKING

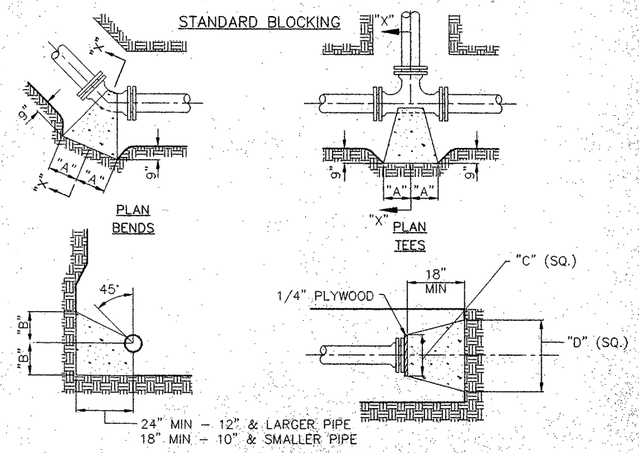

VERTICAL BENDS

SOIL TYPE	SIZE	TYPE A A	TYPE A B	TYPE A C	TYPE B A	TYPE B B	TYPE B C	TYPE B D
2000 PSF SOIL	6"	36"	30"	24"	24"	24"	24"	16"
	8"	42"	36"	24"	30"	24"	30"	18"
	10"	48"	42"	30"	36"	30"	33"	18"
	12"	54"	48"	36"	36"	36"	36"	21"
	14"	54"	48"	60"	42"	42"	42"	24"
	16"	60"	54"	60"	48"	48"	44"	24"
	20"	72"	60"	72"	60"	54"	54"	30"
	24"							

TYPE	SIZE	1/4 BENDS A	1/4 BENDS B	1/8 BENDS A	1/8 BENDS B	1/16 BENDS A	1/16 BENDS B	TEES A	TEES B	PLUGS C	PLUGS D
2000 PSF SOIL	6"	16"	10"	9"	10"	6"	8"	10"	12"	10"	21"
	8"	22"	13"	12"	13"	8"	10"	13"	16"	12"	29"
	10"	26"	17"	14"	17"	10"	13"	16"	20"	14"	36"
	12"	29"	21"	16"	21"	11"	16"	18"	24"	16"	41"
	14"	35"	24"	19"	24"	12"	20"	22"	27"	18"	48"
	16"	38"	27"	21"	27"	12"	24"	24"	30"	20"	54"
	20"	46"	36"	25"	36"	15"	30"	30"	39"	24"	68"
	24"										

NOTE
BASED ON 100 P.S.I. STATIC PRESSURE PLUS A.W.W.A. WATER HAMMER.

ALL BEARING SURFACES TO BE CARRIED TO UNDISTURBED GROUND.

ALL PIPE SURFACES COMING IN CONTACT WITH CONCRETE SHALL BE WRAPPED WITH 6MIL POLYETHELENE.

CONCRETE FOR BLOCKING SHALL BE CAST IN PLACE AND SHALL CONFORM TO O.D.O.T. ITEM 499, CLASS "C" AS PER THE O.D.O.T. CONSTRUCTION AND MATERIAL SPECIFICATIONS.

DEADMAN DATA (FOR REF.)

TANK SIZE	QTY	"L"	"A"	"B"	"C"	APPROX. WEIGHT EACH
10'-15,000	4	14'	42"	12"	48"	2,450 LBS

PRECAST DEADMEN

- DEADMEN SHALL BE ENGINEERED AND DESIGNED BY TANK MANUFACTURER.
- DETAILS SHOWN ARE FOR REFERENCE ONLY

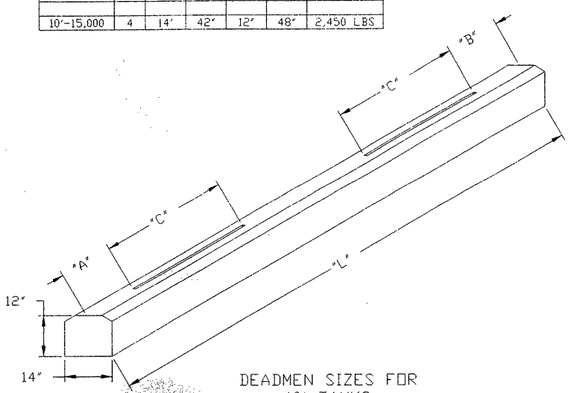

DEADMEN SIZES FOR 10' TANKS

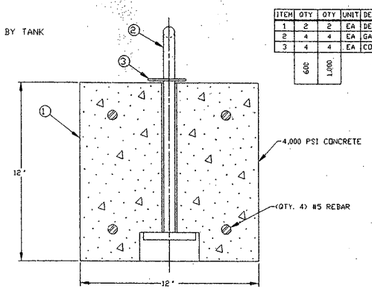

ITEM	QTY	QTY	UNIT	DESCRIPTION
1	2	2	EA	DEADMAN, 12"x12"x12'
2	4	4	EA	GALVANIZED ANCHOR POINT.
3	4	4	EA	COTTER PIN
	600	1,000		

SCALE: 1/2

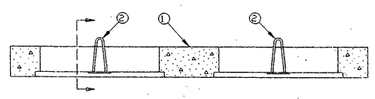

DEADMEN ANCHOR POINT ASSEMBLY 4' TANKS

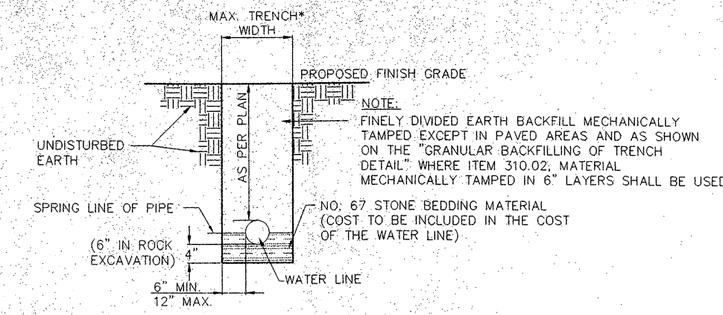

NOTE:
FINELY DIVIDED EARTH BACKFILL MECHANICALLY TAMPED EXCEPT IN PAVED AREAS AND AS SHOWN ON THE "GRANULAR BACKFILLING OF TRENCH DETAIL". WHERE ITEM 310.02, MATERIAL MECHANICALLY TAMPED IN 6" LAYERS SHALL BE USED.

NO. 67 STONE BEDDING MATERIAL (COST TO BE INCLUDED IN THE COST OF THE WATER LINE)

P.V.C. WATER LINE TRENCH DETAIL

* FOR PAY LIMITS ONLY, MAXIMUM TRENCH WIDTH SHALL BE THE SAME AS THE TRENCH WIDTH AT THE TOP OF THE PIPE.

LEGEND

- COMPACTED EARTH BACKFILL
- UNDISTURBED EARTH
- ITEM 310.02 GRANULAR BACKFILL
- NO. 67 STONE

CONSULTING ARCHITECTS / ENGINEERS

ARCHITECT: **BODNER & KERIK ARCHITECTS, INC.**
STRUCTURAL: **LANTZ JONES & NEBRASKA, INC.**
MECHANICAL/ELECTRICAL: **SRA, INC.**
CIVIL ENGINEERING: **POGGEMEYER DESIGN GROUP, INC.**
LANDSCAPE ARCHITECT: **R.D. ZANDE & ASSOCIATES, INC.**

REVISIONS

NO.	DATE	DESCRIPTION
1	10/09/02	PERMIT SUBMISSION
2	12/06/02	BID SET

STATE OF OHIO — THOMAS J. BORCK 58083 — REGISTERED PROFESSIONAL ENGINEER

PROJECT NUMBER **0226/5051-007**

FOR:
OHIO DEPT. OF TRANSPORTATION

DRAWING DESCRIPTION:
WTP–CLEARWELL, TRENCH & PIPING DETAILS

NEW REST STOP BUILDINGS

NO. 770-2001-072 US 30 WYANDOT/CRAWFORD | SITE 1 EASTBOUND | SITE 2 WESTBOUND

PREPARED FOR
STATE OF OHIO
DEPARTMENT OF ADMINISTRATIVE SERVICES
GENERAL SERVICES DIVISION

PREPARED BY
DEPARTMENT OF ADMINISTRATIVE SERVICES

PLOT DATE DEC. 06, 2002 | DATE DEC. 06, 2002 | SHEET SW-6

t:\5150\007\ENV\5150075W6.DWG 12-6-02 1:31:25 pm EST

GENERAL INSTRUMENT OR FUNCTION SYMBOLS

	PRIMARY LOCATION (b)NORMALLY ACCESSIBLE TO OPERATOR	FIELD MOUNT	AUXILIARY LOCATION (b)NORMALLY ACCESSIBLE TO OPERATOR
DISCRETE INSTRUMENTS	IP1(a)		
SHARED DISPLAY, SHARED CONTROL			
COMPUTER FUNCTION			
PROGRAMMABLE LOGIC CONTROL			

(a) ABBREVIATIONS SUCH AS IP1 (INSTRUMENT PANEL #1), IC2 (INSTRUMENT CONSOLE #2), CC3 (COMPUTER CONSOLE #3), ETC., ARE USED WHEN NECESSARY TO SPECIFY INSTRUMENT OR FUNCTION LOCATION

(b) NORMALLY INACCESSIBLE OR BEHIND-THE-PANEL DEVICES OR FUNCTIONS ARE DEPICTED BY USING THE SAME SYMBOLS BUT WITH DASHED HORIZONTAL BARS, I.E.

SINGLE INSTRUMENT OR OTHER COMPONENT HAVING MULTIPLE FUNCTIONS

(XXX) SOFTWARE OR LOGIC RESIDENT IN SCADA SYSTEM AT REMOTE TERMINAL UNIT (RTU) XXX. SEE ASSOCIATED LOGIC DIAGRAMS.

HARDWARE LOGIC INTERLOCK

R 2 RELAY INTERFACE (QUANTITY 2 SHOWN)

(XXX) DESIGNATIONS OF CONTROL FUNCTIONS ASSOCIATED INSTRUMENT OR OTHER COMPONENTS.

OCA – OPEN/CLOSE/AUTO
RSL – RAISE/STOP/LOWER
HOA – HAND/OFF/AUTO
AM – AUTO/MANUAL
LR – LOCAL/REMOTE
SD – SHUTDOWN
DEV – DEVIATION
HOR – HAND/OFF/REMOTE
MOA – MANUAL/OFF/AUTO
RL – RAISE/LOWER
LOS – LOCKOUT STOP
OSC – OPEN/STOP/CLOSED
SS – STOP/START
SEL – SELECT
SP – SET POINT
OO – ON/OFF
POT – POTENTIOMETER
AHC – AUTO/HOLD/CLOSE

FY * INSTRUMENT PANEL MOUNTED WITH COMPUTING OR CONVERTING FUNCTION

CONVERT %/% E – VOLTAGE, I – CURRENT, P – PNEUMATIC, A – ANALOG, B – BINARY; H – HYDRAULIC, O – ELECTROMAGNETIC, SONIC, R – RESISTANCE (ELECT.), D – DIGITAL

COMPUTE * SUMMING Σ, SUBTRACTOR –, MUTIPLYING X, DIVIDING ÷, ROOT EXTRACTION √, PROPORTIONAL P, DERIVITIVE R, AVERAGING Σ/n, RATIO 1:1, DIFFERENCE Δ, HIGH SELECTING >, LOW SELECTING <, INTEGRAL ∫

FUTURE INSTRUMENT OR DEVICE

SAMPLE LOOP DIAGRAM ISA EXPANDED FORMAT

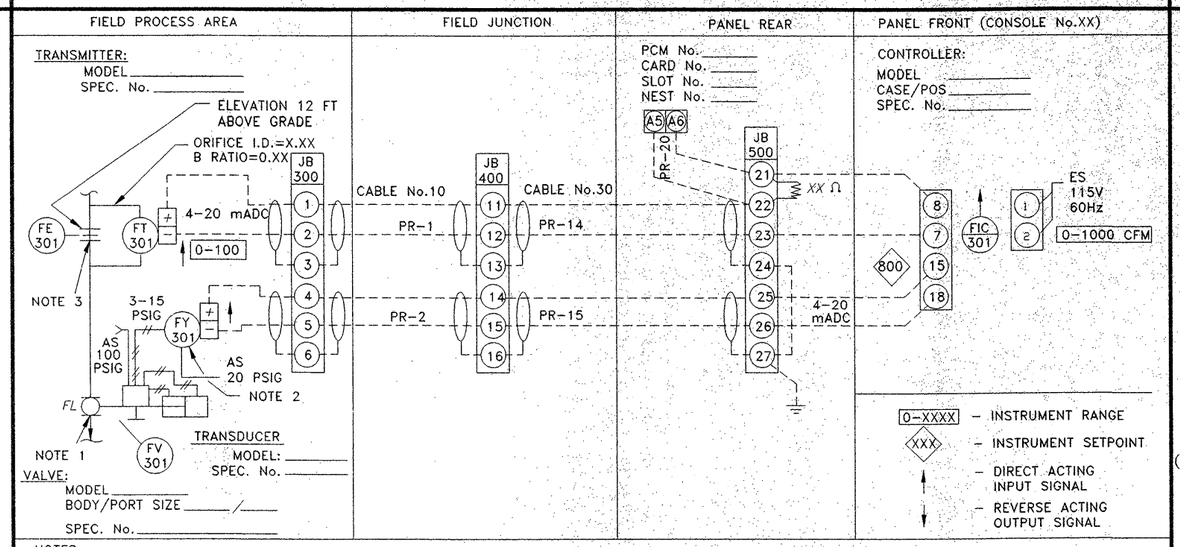

NOTES:

1. FV-301 FULLY OPEN AT 3 PSIG AND FULLY CLOSED AT 15 PSIG.
2. STAND MOUNT PER INSTRUMENT STANDARD XXXX NEAR, BUT NOT ON THE CONTROL VALVE.
3. FE-301 REQUIRES 10 PIPE DIAMETERS UPSTREAM AND 5 PIPE DIAMETERS DOWNSTREAM OF STRAIGHT PIPE.

IDENTIFICATION LETTERS

	FIRST-LETTER	SUCCEEDING-LETTERS		
	MEASURED OR INITIATING VARIABLE	READOUT OR PASSIVE FUNCTION	OUTPUT FUNCTION	MODIFIER
A	ANALYSIS	ALARM		
B	BURNER, COMBUSTION			
C	CONDUCTIVITY		CONTROL	CLOSED
D	DENSITY			
E	VOLTAGE	SENSOR (PRIMARY ELEMENT)		
F	FLOW RATE			
G	GAGE	GLASS, VIEWING DEVICE		
H	HAND			HIGH
I	CURRENT (ELECTRICAL)	INDICATE		
J	POWER			
K	TIME, TIME SCHEDULE		CONTROL STATION	
L	LEVEL	LIGHT	LIGHT	LOW
M	MOTOR			MIDDLE, INTERMEDIATE
N	TORQUE	ISOLATE	ISOLATOR	
O		ORIFICE, RESTRICTION		OPEN
P	PRESSURE, VACUUM	POINT (TEST) CONNECTION		
Q	QUANTITY			
R	RADIATION	RECORD		
S	SPEED, FREQUENCY		SWITCH	
T	TEMPERATURE		TRANSMIT	
U	MULTIVARIABLE	MULTIFUNCTION	MULTIFUNCTION	MULTIFUNCTION
V	VIBRATION, MECHANICAL ANALYSIS		VALVE, DAMPER, LOUVER	
W	WEIGHT, FORCE	WELL		
X	ACCESS/INTRUSION			
Y	EVENT, STATE OR PRESENCE		COMPUTE, RELAY, CONVERT	
Z	POSITION, DIMENSION		DRIVER, ACTUATOR, FINAL CONTROL ELEMENT	

TAG NUMBERS

TYPICAL: FORMAT
TIC-1 – INSTRUMENT IDENTIFICATION OR TAG NUMBER
TIC – FUNCTIONAL IDENTIFICATION
T – *FIRST-LETTER*
IC – SUCCEEDING-LETTER(S)
1 – *LOOP NUMBER*

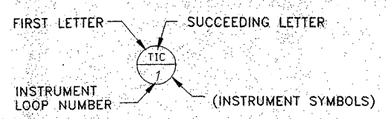

EXPANDED: FORMAT
10-PAH-1A – TAG NUMBER
10 – RTU OR SITE NUMBER
A – OPTIONAL SUFFIX

INSTRUMENT LINE SYMBOLS

INSTRUMENT OR CONNECTION TO PROCESS (1)
PNEUMATIC SIGNAL (2)
ELECTRIC SIGNAL
HYDRAULIC SIGNAL
CAPILLARY TUBE
ELECTROMAGNETIC OR SONIC SIGNAL (3) (GUIDED)
ELECTROMAGNETIC OR SONIC SIGNAL (3) (NOT GUIDED)
INTERNAL SYSTEM LINK (SOFTWARE OR DATA LINK)
MECHANICAL LINK
PNEUMATIC BINARY SIGNAL
ELECTRIC BINARY SIGNAL OR

(1) THE FOLLOWING ABBREVIATIONS ARE USED TO DENOTE THE TYPES OF POWER SUPPLY. THEY MAY ALSO BE USED TO DENOTE PURGE FLUID SUPPLY

AS – AIR SUPPLY
IA – INSTRUMENT AIR
PA – PLANT AIR
ES – ELECTRIC SUPPLY
GS – GAS SUPPLY
HS – HYDRAULIC SUPPLY
NS – NITROGEN SUPPLY
SS – STEAM SUPPLY
WS – WATER SUPPLY
T – TELEPHONE

(2) THE PNEUMATIC SIGNAL SYMBOLS APPLIES TO A SIGNAL, NOT A SUPPLY SOURCE, USING ANY GAS AS A MEDIUM. IF A GAS OTHER THAN AIR IS USED, THE GAS IS IDENTIFIED BY A NOTE ON THE SIGNAL.

(3) ELECTROMAGNETIC PHENOMENA INCLUDE HEAT, RADIO WAVES, NUCLEAR RADIATION, AND LIGHT.

M THREE PHASE MOTOR

M SINGLE PHASE MOTOR

DIGITAL DATA INPUT POINT
DIGITAL DATA OUTPUT POINT
ANALOG DATA OUTPUT POINT
ANALOG DATA INPUT POINT

CONSULTING ARCHITECTS / ENGINEERS
ARCHITECT: BODNER & KERIK ARCHITECTS, INC.
STRUCTURAL: LANTZ JONES & NEBRASKA, INC.
MECHANICAL/ELECTRICAL: SRA, INC.
CIVIL ENGINEERING: POGGEMEYER DESIGN GROUP, INC.
LANDSCAPE ARCHITECT: R.D. ZANDE & ASSOCIATES, INC.

REVISIONS

NO.	DATE	DESCRIPTION
1	10/09/02	PERMIT SUBMISSION
2	12/06/02	BID SET

STATE OF OHIO THOMAS J. BORCK 58083 REGISTERED PROFESSIONAL ENGINEER

PROJECT NUMBER 0226/5150-007

FOR: OHIO DEPT. OF TRANSPORTATION

DRAWING DESCRIPTION: WTP – LEGEND INSTRUMENTATION & CONTROL

NEW REST STOP BUILDINGS

NO. 770-2001-072 US 30 WYANDOT/CRAWFORD | SITE 1 EASTBOUND | SITE 2 WESTBOUND

PREPARED FOR STATE OF OHIO DEPARTMENT OF ADMINISTRATIVE SERVICES GENERAL SERVICES DIVISION

PREPARED BY DEPARTMENT OF ADMINISTRATIVE SERVICES

PLOT DATE DEC. 06, 2002 | DATE DEC. 06, 2002 | SHEET SW-7

I:\5150\007\ENV\5150073W7.DWG 12-5-02 1:33:50 pm EST

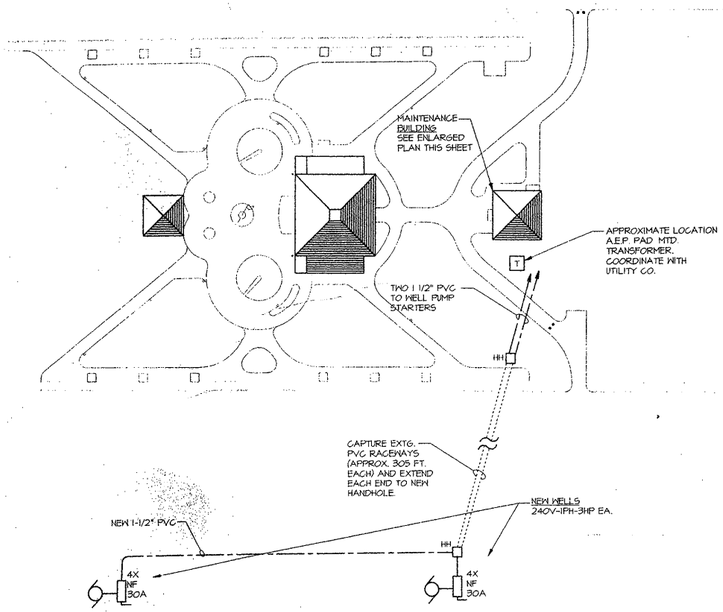

PARTIAL ELECTRICAL SITE #1 PLAN

SCALE: 1" = 50'-0"

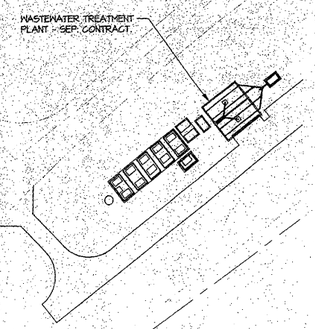

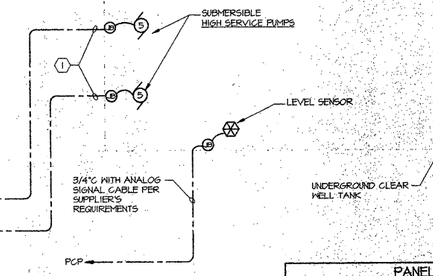

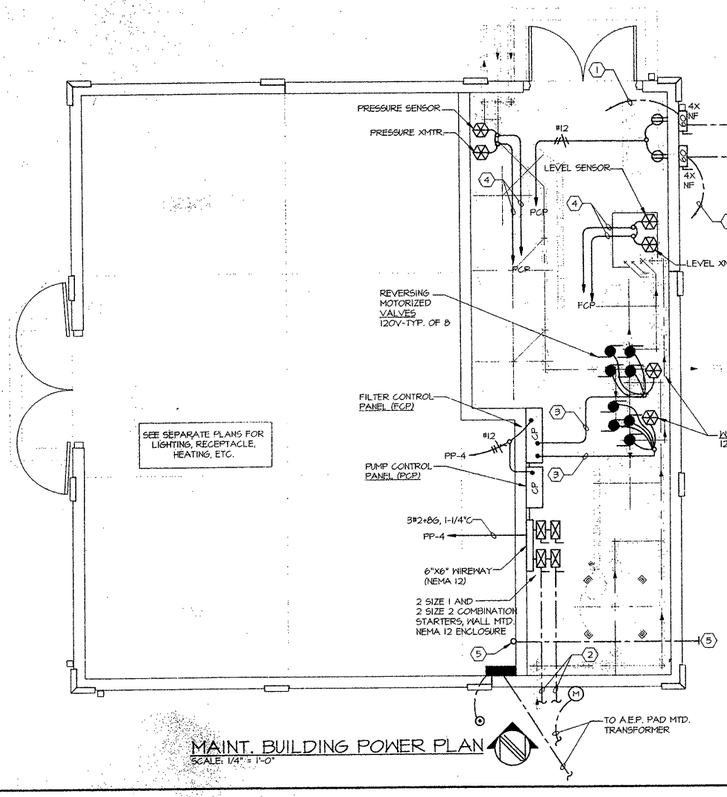

MAINT. BUILDING POWER PLAN

SCALE: 1/4" = 1'-0"

PLAN NOTES

1. 2#8+#10G-3/4"C (HIGH SERVICE PUMP).
2. 2#4+#8G-1 1/2"PVC (WELL PUMP).
3. 15#14-3/4"C
4. 3#12-3/4"C (POWER) + TW. SHIELD PAIR, 3/4"C FOR SIGNAL.
5. STUB AND CAP 1 1/2"PVC, 6" A.F.F. AND BEYOND FOUNDATION WALL FOR EXTENSION BY OTHERS.

PANELBOARD SCHEDULE

PANEL: PP-4 MOUNTING: SURFACE
MAINS: 225 AMP-MAIN CIRCUIT BREAKER
SERVICE: 120/240 VOLTS 1 PHASE 3 WIRE 5 NEUTRAL

LOAD	VA	AMPS	A	B	AMPS	VA	LOAD
SPARE		20	1	2	20	1500	FILTER C.P.
SPARE		20	3	4	20	1500	PUMP C.P.
SPARE		20	5	6	100	21000	PUMPS
LIGHTS	625	20	7	8			
EF1 & EF4	1500	20	9	10			SPACE
	720	20	11	12			SPACE
EUH-1	10000	60	13	14			SPACE
			15	16			SPACE
SPACE			17	18			SPACE
SPACE			19	20			SPACE
SPACE			21	22			SPACE
SPACE			23	24			SPACE
			25	26			
			27	28			
			29	30			
			31	32			
			33	34			
			35	36			
			37	38			
			39	40			
			41	42			
SUM	12845					24000	

TOTAL LOAD: 36845 VA 154 AMPS

ELECTRICAL LEGEND (THIS SHEET ONLY)

ABBREVIATIONS:

A12	ALPHANUMERIC LABEL INDICATES PANEL AND CIRCUIT TO WHICH ITEM IS CONNECTED (I.E. PANEL A, CIRCUIT 12)
AFF	ABOVE FINISHED FLOOR
AFG	ABOVE FINISHED GRADE
CCT	CIRCUIT
C.P.	COVER PLATE
E.C.	ELECTRICAL (SUB) CONTRACTOR
EXTG.	EXISTING
F.B.O.	FURNISHED BY OTHERS, INSTALLED AND/OR WIRED BY ELECTRICAL CONTRACTOR
G.C.	GENERAL (SUB) CONTRACTOR
HP	HORSEPOWER
L.D.	LOCATE AS DIRECTED
MAX	MAXIMUM
M.C.	MECHANICAL (H/VAC, PLBG, FP, OR TC) (SUB) CONTRACTOR
MH	MOUNTING HEIGHT TO BOTTOM OF DEVICE, BOX, OR FIXTURE, UNO
MIN	MINIMUM
OREQ	OR EQUAL
PAF	PAINTED AFTER FABRICATION
R/M	REMOVE
R/L	RELOCATE/RELOCATED
TWLK	TWIST/TURN TO LOCK TYPE RECEPT/PLUG
UNO	UNLESS NOTED OTHERWISE
W/	COMPLETE WITH
WG	WITH WIRE GUARD
WP	WEATHERPROOF DEVICE, ENCLOSURE OR COVER PLATE.
XP	EXPLOSION-PROOF DEVICE OR ENCLOSURE, RATED FOR CLASS 1,DIV 2, UNO

- (2) INDICATES NOTE-SEE TABULATION ON SAME SHEET
- $ LOCAL SWITCH-1 POLE-20A-120/277V-W/C.P.- M.H. 44" HUBBELL #C5B120 OREQ.
- DUPLEX RECEPT.-20A-120V-NEMA 5-20R W/C.P.-M.H. 16" HUBBELL #5352 OREQ.
- DUPLEX GFI RECEPT.-20A-125V-NEMA 5-20R W/C.P.-M.H. 16" HUBBELL #GF5352 OREQ.
- WP DUPLEX GFI RECEPT.-TO MATCH ABOVE- W/W.P. "IN USE" CLEAR PLASTIC SPRING FLAP C.P.-M.H. 24" HUBBELL #GF5352/WP826MP OREQ.
- WIRE TICKS INDICATE BRANCH CIRCUIT PHASE, NEUTRAL, & GROUND WIRES, RESPECTIVELY
- (J) JUNCTION BOX-REQUIRED WHERE SHOWN
- CONDUIT-CONCEALED IN CEILING, WALL OR FLOOR OF NEW CONSTRUCTION. CONCEALED WHEREEVER POSSIBLE IN EXISTING CONSTRUCTION (3/4" MIN.)
- HOMERUN TO PANEL OR LOCATION NOTED
- INDICATES LOCAL SWITCHING OR CONTROL FUNCTION
- RECEPT. PANEL-CIRCUIT BREAKER TYPE-120/240V-1 PHASE-3 WIRE-MH 6'0" TO TOP.
- 30 FUSED SAFETY SWITCH-AMP SIZE AS NOTED-VOLTAGE AS REQD-NEMA 1 ENCLOSURE U.N.O.-MH 6'0" TO TOP UNO (NF=NON-FUSED; 3R=NEMA 3R ENCL; GK=NEMA 12 GASKETED ENCL; 4X=NEMA 4X STAINLESS STEEL ENCL)
- DISCONNECT SWITCH-HP RATED-TOGGLE TYPE-20 AMP-3 POLE-600 VOLT-NEMA 1 ENCLOSURE U.N.O.-LOCATE ADJACENT TO EQUIPMENT SERVED. (WP=WEATHERPROOF ENCLOSURE) SQUARE D CLASS 2510 SERIES OREQ
- COMBINATION FUSED SWITCH & MAGNETIC STARTER W/FUSED C.P.T. + PILOT DEVICE AS REQUIRED-NEMA 1 ENCLOSURE UNO-FURNISHED AND INSTALLED BY E.C. - MH 6'0" TO TOP UNO (NF=NON-FUSED; 3R=NEMA 3R ENCL; GK=NEMA 12 GASKETED ENCL; 4X=NEMA 4X STAINLESS STEEL ENCL)
- PRE-WIRED CONTROL PANEL WITH MAGNETIC STARTERS, CONTACTORS, ETC., PROVIDED WITH EQUIPMENT. WITH OR WITHOUT DISCONNECT AS SHOWN. POWER FEED WIRING BY E.C.
- (5) MOTOR-SIZE AND FUNCTION AS NOTED - 3 PHASE
- PUSHBUTTON CONTROL STATION PROVIDED WITH EQUIPMENT AND INSTALLED BY E.C. PER SUPPLIERS WIRING DIAGRAMS.
- GROUND ROD-COPPERWELD-3/4" x 10 FT.-TOP AT 6" BELOW GRADE-COMPLETE WITH CADWELD CONNECTION TO BUILDING STEEL OR EQUIPMENT.
- PROCESS CONTROL OR INSTRUMENTATION DEVICE, FURNISHED AND INSTALLED BY OTHERS. ALL WIRING AND ELECTRICAL CONNECTIONS BY E.C. PER SUPPLIER'S APPROVED WIRING DIAGRAMS.
- CONNECT TO EQUIPMENT NOTED-PROVIDE BONDING PLATE OR ATTACHMENT LUG AS REQUIRED
- HH HANDHOLE FLUSH WITH GRADE, NON-METALLIC, MIN. 12"X12"X12" QUAZITE "PC" SERIES OR EQUAL.

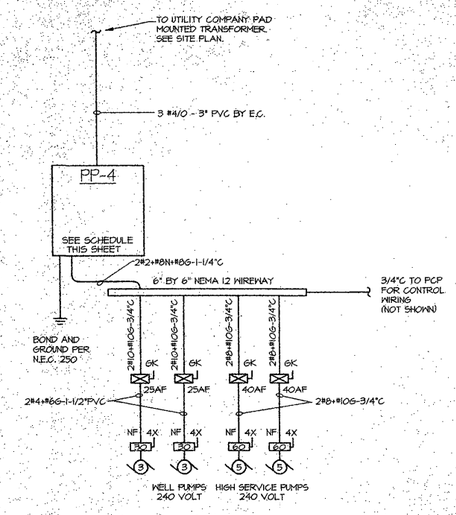

SINGLE LINE DIAGRAM - MAINT. BLDG & WATER PLANT

NO SCALE 120/240 VOLT - 1 PH - 3W

DESIGN ENGINEERS & CONSULTING ASSOCIATES, INC.
415 CONANT STREET MAUMEE, OH 43537
TEL: (419)891-0022 FAX: (419)891-0026
engineering@decagroup.com

CONSULTING ARCHITECTS / ENGINEERS

ARCHITECT: BODNER & KERIK ARCHITECTS, INC.
STRUCTURAL: LANTZ JONES & NEBRASKA, INC.
MECHANICAL/ELECTRICAL: SRA, INC.
CIVIL ENGINEERING: POGGEMEYER DESIGN GROUP, INC.
LANDSCAPE ARCHITECT: R.D. ZANDE & ASSOCIATES, INC.

REVISIONS

NO.	DATE	DESCRIPTION
	12/06/02	BID SET

12/6/02
STATE OF OHIO MARTIN M. BRAUN 45522 REGISTERED PROFESSIONAL ENGINEER

PROJECT NUMBER 0226/5051-007

FOR: OHIO DEPT. OF TRANSPORTATION

DRAWING DESCRIPTION: ELECTRICAL SITE PLAN AND MAINT. BLDG. PLAN

NEW REST STOP BUILDINGS

NO. 770-2001-072 US 30 WYANDOT/CRAWFORD | SITE 1 EASTBOUND | SITE 2 WESTBOUND

PREPARED FOR
STATE OF OHIO
DEPARTMENT OF ADMINISTRATIVE SERVICES
GENERAL SERVICES DIVISION
PREPARED BY
DEPARTMENT OF ADMINISTRATIVE SERVICES

PLOT DATE	DATE	SHEET
OCT. 9, 2002	SEPT. 24, 2002	SW-E1

S:\02\02241\Dwg\02245WE1.dwg, 12/06/02 10:18:53 AM, MNB