STATE OF OHIO
DEPARTMENT OF TRANSPORTATION

MAH-680-4.58
PART 1

CITY OF YOUNGSTOWN
MAHONING COUNTY

FOR PART 2 SEE MAH-680-4.58

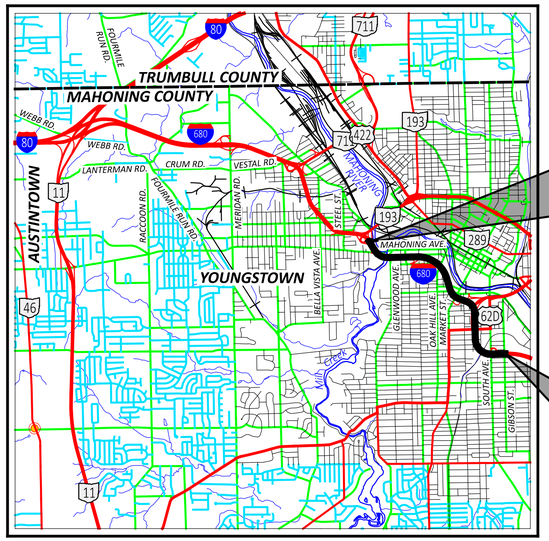

BEGIN PROJECT
STA. 950+65.76
S.L.M 4.58

END PROJECT
STA. 1097+25.00
S.L.M 7.37

LOCATION MAP

LATITUDE: 41°07'35" N LONGITUDE: 80°44'50" W

PORTION TO BE IMPROVED
INTERSTATE HIGHWAY
FEDERAL ROUTES
STATE ROUTES
COUNTY & TOWNSHIP ROADS
OTHER ROADS

DESIGN DESIGNATION

SEE SHEET P.2

DESIGN EXCEPTIONS

SEE SHEET P.2

ADA DESIGN WAIVERS

NONE REQUIRED

UNDERGROUND UTILITIES
Contact Two Working Days Before You Dig
OHIO811.org Before You Dig
OHIO811, 8-1-1, or 1-800-362-2764
(Non members must be called directly)

INDEX OF SHEETS:

TITLE SHEET	P.1	CROSS SECTIONS (SIDE ROADS, RAMPS, ETC.)	P.289 - P.292
DESIGN DESIGNATION DATA	P.2	SUPERELEVATION TABLES	P.293 - P.307
SCHEMATIC PLAN	P.3 - P.7	INTERSECTION, RAMP, AND TERMINAL DETAILS	P.308 - P.370
TYPICAL SECTIONS	P.8 - P.44	BARRIER DETAILS	P.371 - P.376, P.376A
GENERAL NOTES	P.45 - P.51	STORM SEWER PROFILES	P.377 - P.394
MAINTENANCE OF TRAFFIC	P.52 - P.155, 74A	UNDERDRAIN DETAILS	P.395 - P.417
GENERAL SUMMARY	P.156 - P.161, P161A	DRAINAGE DETAILS	P.418 - P.419
SUBSUMMARIES	P.162 - P.196, (P.182 NOT USED)	TRAFFIC CONTROL	P.420 - P.466
PROJECT SITE PLAN	P.197 - P.200	LIGHTING	P.467 - P.485
PLAN AND PROFILE (MAINLINE)	P.201 - P.229	STRUCTURES (OVER 20 FOOT SPAN)	P.486 - P.550, (P.541 NOT USED)
PLAN AND PROFILE (SIDE ROADS, RAMPS, ETC.)	P.230 - P.263	FENCE PLANS	P.551 - P.573
CROSS SECTIONS (MAINLINE)	P.264 - P.288	GEOTECHNICAL PROFILE	P.574 - P.655

FEDERAL PROJECT NUMBER

E250327

RAILROAD INVOLVEMENT

NONE

PROJECT DESCRIPTION

THE PROJECT CONSISTS OF FULL DEPTH PAVEMENT REPLACEMENT OF MAHONING I.R. 680 FROM THE S.R. 193 INTERCHANGE (SLM-4.58) TO SOUTH OF THE SOUTH AVENUE INTERCHANGE (SLM-7.37), ALL INTERCHANGE RAMPS WITHIN THE CORRIDOR WILL BE RECONSTRUCTED, INCLUDING RAMPS TO AND FROM S.R. 193 AND U.S. 62/S.R. 7. INCLUDES BRIDGE WORK TO MAH-680-4.886 (SFN 5006872). THIS PROJECT ALSO INCLUDES THE REMOVAL OF THE MAHONING AVENUE ENTRANCE RAMP TO I.R. 680 SOUTHBOUND.

ADDITIONAL WORK INCLUDES GUARDRAIL AND CONCRETE BARRIER REPLACEMENT, ROADWAY DRAINAGE IMPROVEMENTS, SIDEWALK, CURB RAMPS, SIGNING, LIGHTING AND PAVEMENT MARKINGS.

EARTH DISTURBED AREAS

PROJECT EARTH DISTURBED AREA:	*204.55 ACRES*
ESTIMATED CONTRACTOR EARTH DISTURBED AREA:	*1.00 ACRES*
NOTICE OF INTENT EARTH DISTURBED AREA:	*205.55 ACRES*

NOTE: EARTH DISTURBED AREAS (EDA) REFLECT THE OVERALL TOTAL OF PROJECTS MAH-680.00 (PID 113321) AND MAH-680-4.58 (PID 121474). BMP DESIGN REFLECTED IN EACH CONSTRUCTION PLAN IS BASED ON THE EDA OF THE COMBINED PROJECTS.

LIMITED ACCESS

THIS IMPROVEMENT IS ESPECIALLY DESIGNED FOR THROUGH TRAFFIC AND HAS BEEN DECLARED A LIMITED ACCESS HIGHWAY OR FREEWAY BY ACTION OF THE DIRECTOR IN ACCORDANCE WITH THE PROVISIONS OF SECTION 5511.02 OF THE OHIO REVISED CODE.

2023 SPECIFICATIONS

THE STANDARD SPECIFICATIONS OF THE STATE OF OHIO, DEPARTMENT OF TRANSPORTATION, INCLUDING SUPPLEMENTAL SPECIFICATIONS LISTED IN THE PLANS AND CHANGES LISTED IN THE PROPOSAL SHALL GOVERN THIS IMPROVEMENT.

I HEREBY APPROVE THESE PLANS AND DECLARE THAT THE MAKING OF THIS IMPROVEMENT WILL NOT REQUIRE THE CLOSING TO TRAFFIC OF THE HIGHWAY EXCEPT FOR THE SIDE ROADS AS DESCRIBED ON SHEET P.52 AND THAT PROVISIONS FOR THE MAINTENANCE AND SAFETY OF TRAFFIC WILL BE AS SET FORTH ON THE PLANS AND ESTIMATES.

Arthur G. Noirot Jr., P.E.
District 04 Deputy Director

Pamela Boratyn
Director, Department of Transportation

STANDARD CONSTRUCTION DRAWINGS

BP-2.1	1/21/22	I-2	7/19/24	GSD-1-19	7/19/24	ITS-14.50	7/18/25	MT-105.10	1/17/20	800-2023	7/18/25
BP-2.2	1/15/21	I-3D	7/19/24	HW-2.1	7/15/22			MT-110.10	7/19/13	807	1/17/25
BP-3.1	1/19/24			HW-2.2	7/20/18	MT-95.30	7/18/25			809	7/18/25
BP-4.1	7/19/13	MGS-1.1	1/17/25	SBR-1-20	7/19/24	MT-95.31	7/18/25	TC-12.31	4/15/22	825	7/19/24
BP-5.1	1/17/25	MGS-2.1	1/17/25	SBR-2-20	7/19/24	MT-95.32	7/18/25	TC-15.116	1/19/24	831	4/21/23
BP-6.1	7/19/13	MGS-3.1	1/19/18	VPF-1-24	1/17/25	MT-95.40	7/18/25	TC-21.11	7/16/21	832	7/18/25
BP-7.1	1/17/25	MGS-3.2	1/18/13			MT-95.45	7/21/23	TC-21.21	1/20/23	836	1/19/24
BP-9.1	1/18/19	MGS-4.2	1/17/25	HL-10.11	7/21/23	MT-95.70	7/21/23	TC-21.50	1/17/25	850	7/21/23
		MGS-4.3	1/18/13	HL-10.12	7/21/23	MT-95.71	7/21/23	TC-22.20	1/17/14	902	7/19/19
CB-2-2A, 2B, 2C	7/19/24	MGS-5.2	7/15/16	HL-10.13	1/20/23	MT-95.72	7/19/24	TC-41.10	7/19/13	905	1/17/25
CB-3	7/19/24	MGS-5.3	7/15/16	HL-10.31	7/15/22	MT-95.73	7/19/24	TC-41.20	10/18/13	909	7/18/25
CB-3A	7/19/24	MGS-6.1	1/19/18	HL-20.11	7/21/23	MT-97.10	7/18/25	TC-41.30	4/21/23		
CB-4	7/19/24			HL-20.13	1/17/25	MT-98.10	1/17/20	TC-41.40	10/18/13		
CB-4A, 5A, 8A	7/19/24	MH-3	7/19/24	HL-20.14	4/17/20	MT-98.29	1/17/20	TC-41.50	10/18/13		
CB-6	7/19/24			HL-20.21	1/17/25	MT-98.30	7/18/25	TC-42.10	10/18/13		
CB-8	7/19/24	RM-1.1	1/20/23	HL-30.11	7/21/23	MT-99.20	4/19/19	TC-42.20	10/18/13		
		RM-3.1	7/20/18	HL-30.21	4/17/20	MT-99.30	1/17/20	TC-51.11	1/15/16		
DM-1.1	1/17/25	RM-4.3	1/17/25	HL-30.22	1/17/25	MT-101.60	1/17/25	TC-51.12	1/15/16		
DM-1.2	1/17/25	RM-4.4	1/17/25	HL-30.31	1/17/25	MT-101.70	7/19/24	TC-52.10	10/18/13		
DM-3.1	1/18/13	RM-4.5	1/17/25	HL-30.41	1/17/25	MT-101.75	7/21/23	TC-52.20	1/15/21		
DM-4.3	1/15/16	RM-4.6	7/19/24	HL-40.20	1/17/25	MT-101.80	1/17/20	TC-61.10	4/21/23		
DM-4.4	1/15/16			HL-60.11	7/21/17	MT-101.90	7/17/20	TC-65.11	1/17/25		
F-1.1	7/19/13	A-1-20	7/19/24	HL-60.21	7/20/18	MT-102.10	7/21/23	TC-71.10	4/21/23		
F-3.1	7/19/13	AS-1-15	1/20/23	HL-60.31	7/19/24	MT-102.30	10/16/15	TC-72.20	1/17/25		
F-3.3	7/19/13	AS-2-15	7/21/23	ITS-14.10	1/17/25	MT-103.10	7/18/25	TC-73.20	1/17/25		
F-3.4	7/19/13	EXJ-4-87	1/19/24	ITS-14.11	7/18/25	MT-104.10	1/19/24	TC-74.10	7/21/23		

SUPPLEMENTAL SPECIFICATIONS

800-2023	*7/18/25*
807	*1/17/25*
809	*7/18/25*
825	*7/19/24*
831	*4/21/23*
832	*7/18/25*
836	*1/19/24*
850	*7/21/23*
902	*7/19/19*
905	*1/17/25*
909	*7/18/25*

SPECIAL PROVISIONS

ASBESTOS REPORT	
(SFN 5003350)	*5/6/25*
ASBESTOS REPORT	
(SFN 5006864)	*5/6/25*
ASBESTOS REPORT	
(SFN 5006872)	*1/19/25*

ENGINEER'S SEAL
LIGHTING
2LMN
STATE OF OHIO · EMILIE M. WORLEY · E-71927 · REGISTERED PROFESSIONAL ENGINEER
Emilie Worley
Digitally signed by Emilie Worley DN: C=US, E=emilie.worley@2lmn.com, CN=Emilie Worley Date: 2025.09.15 17:50:50-04'00'

ENGINEER'S SEAL
TRAFFIC CONTROL
THOMAS FOK AND ASSOCIATES, INC.
STATE OF OHIO · STEPHEN D. LETTIERI · E-64079 · REGISTERED PROFESSIONAL ENGINEER
Stephen D. Lettieri
Digitally signed by Stephen D Lettieri Date: 2025.09.15 14:14:10-07'00'

ENGINEER'S SEAL
BRIDGE
MAH-00680-04.886
ms consultants, inc.
STATE OF OHIO · WILLIAM EARL RUGGLES · E-69834 · REGISTERED PROFESSIONAL ENGINEER
William E. Ruggles
Digitally signed by William E. Ruggles Date: 2025.09.15 16:14:39-04'00'

ENGINEER'S SEAL
ms consultants, inc.
STATE OF OHIO · CHARLES NASH · PE-91557 · REGISTERED PROFESSIONAL ENGINEER
Digitally signed by Charles M. Nash Date: 2025.09.15 16:31:56-04'00'

PLAN PREPARED BY:
ms consultants, inc.
ENGINEERS, ARCHITECTS & PLANNERS
333 E. FEDERAL STREET
YOUNGSTOWN, OHIO 44503
PHONE (330) 744-5321

TF ASSOCIATES

2LMN

For Reference
Preliminary Plans - Not for Construction

TITLE SHEET

DESIGN AGENCY
ms consultants, inc.

DESIGNER MSN
REVIEWER CMN 08/29/25
PROJECT ID 121474
SHEET P.1 TOTAL 655

MAH-680-4.58

MODEL: Sheet PAPERSIZE: 34x22 (in.) DATE: 9/15/2025 TIME: 8:47:53 AM PLTDRV: OHDOT_PDF_E+.pltcfg PENTBL: OHDOT_PenC.tbl USER: DHall@msconsultants.com WORKSPACE: OHDOTCEv02 WORKSET: 121474 PRODUCT: OpenRoadsDesigner 24.00.00.205
pw:\\ohiodot-pw.bentley.com:ohiodot-pw-02\Documents\01 Active Projects\District 04\Mahoning\121474\402-Engineering_MSConsultants\Roadway\Sheets\121474_GT001.dgn

DESIGN DESIGNATION - S.R. 193 TO U.S. 62/S.R. 7 (NB and SB)

CURRENT ADT (2026)	48,500
DESIGN YEAR ADT (2046)	48,500
DESIGN HOURLY VOLUME (2046)	4,800
DIRECTIONAL DISTRIBUTION	50.0 %
TRUCKS (24 HOUR B&C)	6 %
DESIGN SPEED	50 mph
LEGAL SPEED	50 mph
DESIGN FUNCTIONAL CLASSIFICATION:	
URBAN - 01 - INTERSTATE	
NHS PROJECT	YES

DESIGN DESIGNATION - U.S. 62/S.R. 7 TO SOUTH AVENUE (NB and SB)

CURRENT ADT (2026)	45,500
DESIGN YEAR ADT (2046)	46,000
DESIGN HOURLY VOLUME (2046)	4,600
DIRECTIONAL DISTRIBUTION	53.2 %
TRUCKS (24 HOUR B&C)	6 %
DESIGN SPEED	50 mph
LEGAL SPEED	50 mph
DESIGN FUNCTIONAL CLASSIFICATION:	
URBAN - 01 - INTERSTATE	
NHS PROJECT	YES

DESIGN DESIGNATION - SOUTH AVENUE TO END OF PROJECT (NB and SB)

CURRENT ADT (2026)	45,500
DESIGN YEAR ADT (2046)	46,000
DESIGN HOURLY VOLUME (2046)	4,600
DIRECTIONAL DISTRIBUTION	53.2 %
TRUCKS (24 HOUR B&C)	6 %
DESIGN SPEED	65 mph
LEGAL SPEED	60 mph
DESIGN FUNCTIONAL CLASSIFICATION:	
URBAN - 01 - INTERSTATE	
NHS PROJECT	YES

DESIGN EXCEPTIONS

DE #	DESIGN FEATURE	APPROVAL DATE	SHEETS
1 & 2	N/A TO PID 121474. THOSE ARE FOR PID 113321.		
3	I-680 HORIZONTAL STOPPING SIGHT DISTANCE, 50 MPH DESIGN SPEED (7 LOCATIONS) 1. SB MEDIAN BARRIER, CURVE #26 PI STA. 962+39.68 2. NB BRIDGE PARAPET, CURVE #26 PI STA. 962+39.68 3. SB MEDIAN BARRIER, CURVE #32 PI STA. 1028+30.49 4. NB MEDIAN BARRIER/PIER, CURVE #35, PI STA. 1043+70.99 5. SB BARRIER/ABUTMENT, CURVE #35, PI STA. 1043+70.99 6. SB MEDIAN BARRIER, CURVE #38, PI STA. 1076+41.59 7. NB BRIDGE PARAPET, CURVE #38, PI STA. 1076+41.59 I-680 VERTICAL STOPPING SIGHT DISTANCE, 50 MPH DESIGN SPEED (1 LOCATION) 1. CREST VERTICAL CURVE OVER DELASON AVENUE	2/8/2024	P.202, P.204, P.214, P.216, P.218, P.222, P.224, P.225, P.226
4	I-680 HORIZONTAL CURVE RADIUS, 50 MPH DESIGN SPEED (1 LOCATION) 1. MAINLINE CURVE #35, PI STA. 1043+70.99	2/8/2024	P.5
5	I-680 SUPERELEVATION RATE, 50 MPH DESIGN SPEED (4 LOCATIONS) 1. MAH-680-4.886 BRIDGE OVER MILL CREEK, CURVE #26, PI STA. 962+39.68 2. MAH-680-5.601 BRIDGE OVER OAK HILL AVENUE, CURVE #29, PI STA. 1003+44.66 3. MAH-680-6.377 BRIDGE OVER US62/SR 7 SB RAMP, CURVE #35, PI STA. 1043+70.99 4. MAH-680-6.933 BRIDGE OVER E. DELASON AVE. AND MAH-680-6.983 BRIDGE OVER YOUNGSTOWN SOUTHEASTERN RAILROAD, CURVE #38 PI STA. 1076+41.39 5. VARIOUS RAMP LOCATIONS. RAMP PAVEMENT REPLACEMENT IS TO MEET EXISTING ELEVATIONS. RAMPS WERE CONSTRUCTED WITH AN SE RATE UP TO 0.083	2/8/2024	P.3, P.4, P.5, P.6, P.202, P.222, P.224
6	I-680 VERTICAL CLEARANCE (1 LOCATION) 1. DEFICIENT VERTICAL CLEARANCE UNDER MAH-680-5.815, RIDGE AVENUE	2/8/2024	P.215
7	I-680 SHOULDER WIDTH WITHIN THE 6-LANE SECTION 1. MEDIAN SHOULDER WIDTH RAMP SHOULDER WIDTH INCLUDES S.R. 193 RAMP C, S.R. 193 RAMP C-3, S.R 193 RAMP B, SALT SPRINGS RAMP D, HIGH ST. RAMP F, HIGH ST. RAMP H, MARSHALL ST. RAMP J, MARKET ST. RAMP L, MARKET ST. RAMP M, WOODLAND AVE. RAMP N, WOODLAND AVE. RAMP CA, U.S. 62 RAMP BY, U.S. 62 RAMP NB, U.S. 62 RAMP SB, WILLIAMSON AVE. RAMP BV, U.S. 62 RAMP BX, SOUTH AVE. RAMP A, SOUTH AVE. RAMP B, SOUTH AVE. RAMP C AND SOUTH AVE RAMP D	2/8/2024	P.25

DESIGN EXCEPTIONS

DE #	DESIGN FEATURE	APPROVAL DATE	SHEETS
8	RAMPS HORIZONTAL STOPPING SIGHT DISTANCE (3 LOCATIONS) 1. SR 193 DIRECTIONAL RAMP C3 AT MERGE FROM SR 193 2. SR 193 DIRECTIONAL RAMP C3 AT MERGE FROM SILLMAN STREET 3. SB DIRECTIONAL RAMP FROM US 62/SR 7 AT INSIDE BARRIER AT BRIDGES	2/8/2024	P.201
9	RAMPS HORIZONTAL CURVE RADIUS (3 LOCATIONS) 1. SR 193 RAMP B3 (30 MPH DS SERVICE RAMP) 2. SR 193 SYSTEM RAMP C3 (35 MPH DS SYSTEM RAMP) 3. SOUTH AVENUE RAMP D (30 MPH DS SERVICE RAMP)	2/8/2024	P.201, P.230
10	RAMPS SHOULDER WIDTH (20 LOCATIONS) 1. MARSHALL STREET RAMP G UNDER GLENWWOD BRIDGE 2. SOUTH AVENUE RAMP B UNDER SOUTH AVENUE BRIDGE 3. 6 SR 193 RAMP C 4. 6 SR 193 RAMP C3 5. 6 SR 193 RAMP B3 6. 6 SR 193 RAMP D 7. GLENWOOD AVE. / HIGH STREET RAMP F 8. GLENWOOD AVE. / HIGH STREET RAMP H 9. MARSHALL STREET RAMP J 10. MARKET STREET RAMP L 11. MARKET STREET RAMP M 12. WOODLAND AVENUE RAMP N 13. RAMP CA 14. RAMP BY 15. US 62 RAMP SB 16. US 62 RAMP BV 17. US 62 RAMP BX 18. SOUTH AVENUE RAMP A 19. SOUTH AVENUE RAMP C 20. SOUTH AVENUE RAMP D	2/8/2024	P.204 P.226 P.201 P.201 P.201, P.202, P.230 P.202, P.230 P.208, P.234 P.208, P.210, P.234 P.208, P.210 P.214, P.216 P.216, P.235 P.216, P.236 P.218, P.236 P.218, P.220, P.237 P.220, P.222 P.216, P.218 P.224, P.226 P.226 P.226, P.228, P.238
11	RAMPS SUPERELEVATION RATE (2 LOCATIONS) (1 LOCATION IN PID 121474) 1 - 2 MAH-711-0360R AND MAH-50094-0.175 EXISTING BRIDGES	2/8/2024	P.237

Preliminary Plans - For Reference Only

MAH-680-4.58
MODEL: Sheet PAPERSIZE: 34x22 (in.) DATE: 9/15/2025 TIME: 8:48:35 AM PLTDRV: OHDOT_PDF_E+.pltcfg PENTBL: OHDOT_Pen.tbl USER: DHall@msconsultants.com WORKSPACE: WORKSET: No WorkSet PRODUCT: OpenRoadsDesigner 24.00.00.205
pw:\\ohiodot-pw.bentley.com:ohiodot-pw-02\Documents\01 Active Projects\District 04\Mahoning\121474\402-Engineering_MSConsultants\Roadway\Sheets\121474_GT002.dgn

DESIGN AGENCY
ms consultants, inc.
DESIGNER MSN
REVIEWER CMN 08/29/25
PROJECT ID 121474
SHEET P.2 TOTAL 655

Preliminary Plans - For Reference Only

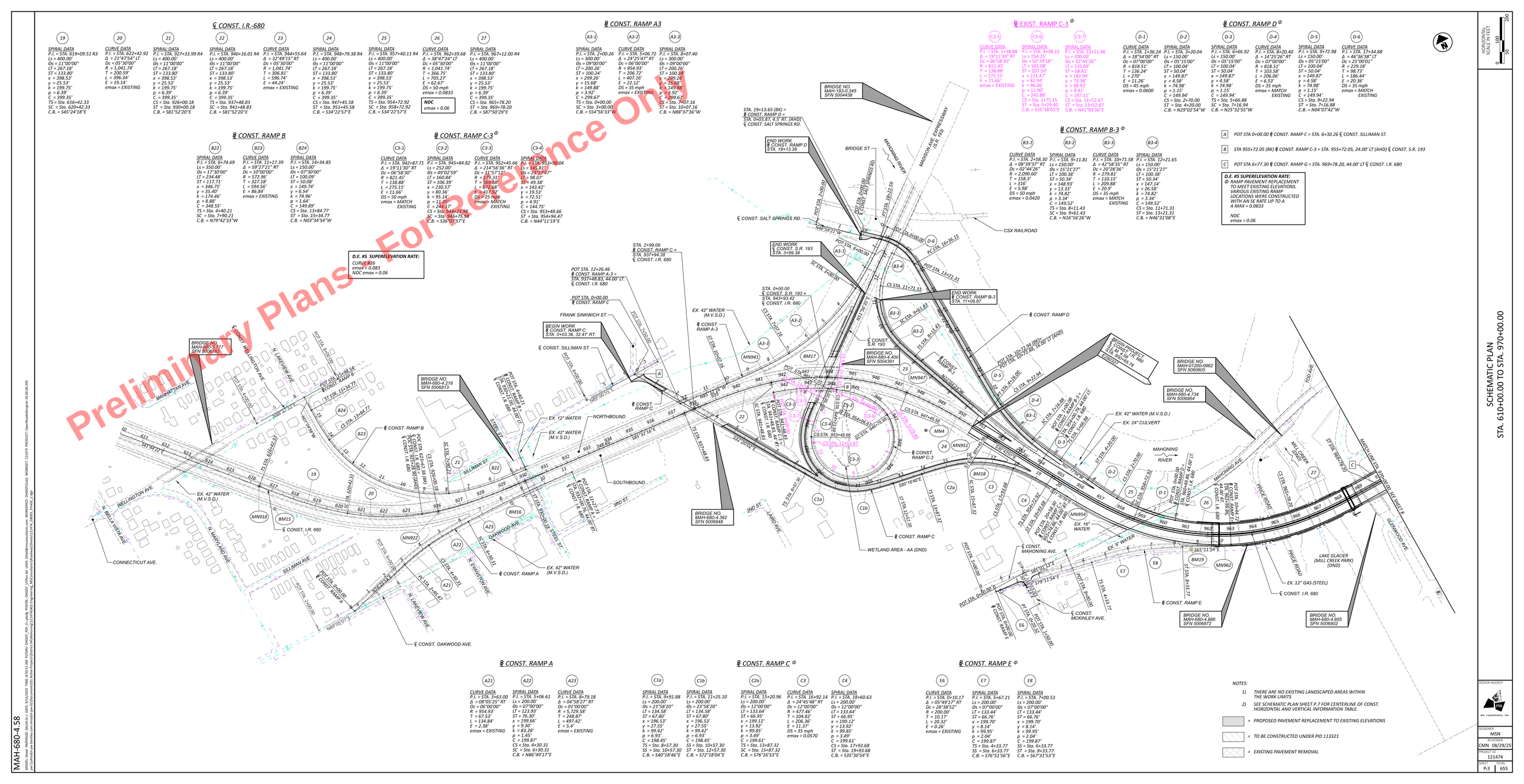

Preliminary Plans - For Reference Only

℄ CONST. I.R. 680

28 — SPIRAL DATA
P.I. = STA. 988+75.60 R4
Ls = 300.00'
Θs = 04°07'30"
LT = 200.05'
ST = 100.05'
x = 299.84'
y = 7.20'
k = 149.97'
p = 1.80'
C = 299.93'
TS = Sta. 986+75.54
SC = Sta. 989+75.54
C.B. = N89°52'05"E

29 — CURVE DATA
P.I. = STA. 1003+44.66
Δ = 66°37'13" RT
Dc = 02°45'00"
R = 2,083.48'
T = 1,369.12'
L = 2,422.55'
E = 409.58'
DS = 50 mph
emax = 0.042 ✱

NDC
emax = 0.06

30 — SPIRAL DATA
P.I. = STA. 1014+98.14 R4
Ls = 300.00'
Θs = 04°07'30"
LT = 200.05'
ST = 100.05'
x = 299.84'
y = 7.20'
k = 149.97'
p = 1.80'
C = 299.93'
SC= Sta. 1013+98.09
CS = Sta. 1016+98.09
C.B. = S18°00'42"E

✱ = CROSS SLOPE TRANSITIONS TO/FROM 0.065 TO MEET THE CROSS SLOPE OF EXISTING BRIDGE MAH-680-5.601

D.E. #5 SUPERELEVATION RATE:
Φ RAMP PAVEMENT REPLACEMENT TO MEET EXISTING ELEVATIONS. VARIOUS EXISTING RAMP LOCATIONS WERE CONSTRUCTED WITH AN SE RATE UP TO A
A MAX = 0.083

NDC
emax = 0.06

℄ CONST. RAMP F Φ

F5 — CURVE DATA
P.I. = STA. 6+84.36
Δ = 10°14'09" RT
Dc = 04°00'00"
R = 1,422.40'
T = 128.29'
L = 255.9'
E = 5.73'
DS = 50 mph
emax = 0.0520

F6 — SPIRAL DATA
P.I. = STA. 9+41.41
Ls = 200.00'
Θs = 37°00'02"
LT = 129.44'
ST = 76.92'
x = 190.87'
y = 46.29'
k = 86.38'
p = 8.34'
C = 196.40'
CS = Sta. 8+11.97
SC = Sta. 10+11.97
C.B. = S67°38'18"E

F7 — CURVE DATA
P.I. = STA. 11+77.96
Δ = 87°25'39" RT
Dc = 33°00'02"
R = 173.62'
T = 165.99'
L = 264.93'
E = 66.58'
DS = 25 mph
emax = MATCH EXISTING

F8 — SPIRAL DATA
P.I. = STA. 13+58.95
Ls = 235.35'
Θs = 36°50'01"
LT = 160.35'
ST = 82.05'
x = 224.77'
y = 51.45'
k = 115.90'
p = 13.08'
C = 230.58'
CS= Sta. 12+76.90
ST = Sta. 15+12.25
C.B. = S69°05'50"W

℄ CONST. RAMP H Φ

H3 — SPIRAL DATA
P.I. = STA. 3+80.60
Ls = 200.00'
Θs = 13°28'23"
LT = 133.72'
ST = 67.02'
x = 198.90'
y = 15.61'
k = 99.82'
p = 3.91'
C = 199.51'
TS = Sta. 2+46.88
SS = Sta. 4+46.88
C.B. = N75°20'13"E

H4 — SPIRAL DATA
P.I. = STA. 5+13.90
Ls = 200.00'
Θs = 13°28'23"
LT = 133.72'
ST = 67.02'
x = 198.90'
y = 15.61'
k = 99.82'
p = 3.91'
C = 199.51'
SS = Sta. 4+46.88
SS = Sta. 6+46.88
C.B. = N57°22'07"E

H5 — SPIRAL DATA
P.I. = STA. 7+80.35
Ls = 200.00'
Θs = 08°00'00"
LT = 133.47'
ST = 66.79'
x = 199.61'
y = 9.30'
k = 99.94'
p = 2.33'
C = 199.83'
SS = Sta. 6+46.88
SC = Sta. 8+46.88
C.B. = N55°32'45"E

H6 — CURVE DATA
P.I. = STA. 9+89.77
Δ = 22°33'59" RT
Dc = 08°00'00"
R = 716.20'
T = 142.89'
L = 282.08'
E = 14.12'
DS = 35 mph
emax = MATCH EXISTING

H7 — CURVE DATA
P.I. = STA. 14+90.51
Δ = 34°35'41" RT
Dc = 04°56'06"
R = 1,161.00'
T = 361.55'
L = 701'
E = 54.99'
DS = 50 mph
emax = 0.0560

℄ CONST. RAMP J Φ

J5 — CURVE DATA
P.I. = STA. 6+81.77
Δ = 10°32'12" LT
Dc = 01°30'00"
R = 3,819.72'
T = 352.21'
L = 702.44'
E = 16.20'
DS = 50 mph
emax = 0.0280

J6 — CURVE DATA
P.I. = STA. 13+64.55
Δ = 26°08'27" LT
Dc = 04°00'00"
R = 1,432.39'
T = 332.55'
L = 653.52'
E = 38.10'
DS = 35 mph
emax = MATCH EXISTING

A POT STA 0+08.11 ℄ CONST. RAMP G = STA. 7+27.14, 18.0' LT ℄ CONST. MARSHALL ST.

B POT STA 16+85.52 ℄ CONST. RAMP J = STA. 19+48.65, 16.0' LT ℄ CONST. MARSHALL ST.

C POT STA 10+32.00 (BK) ℄ CONST. RAMP J = STA. 10+32.00, 16.0' RT (AHD) CONST. RAMP J

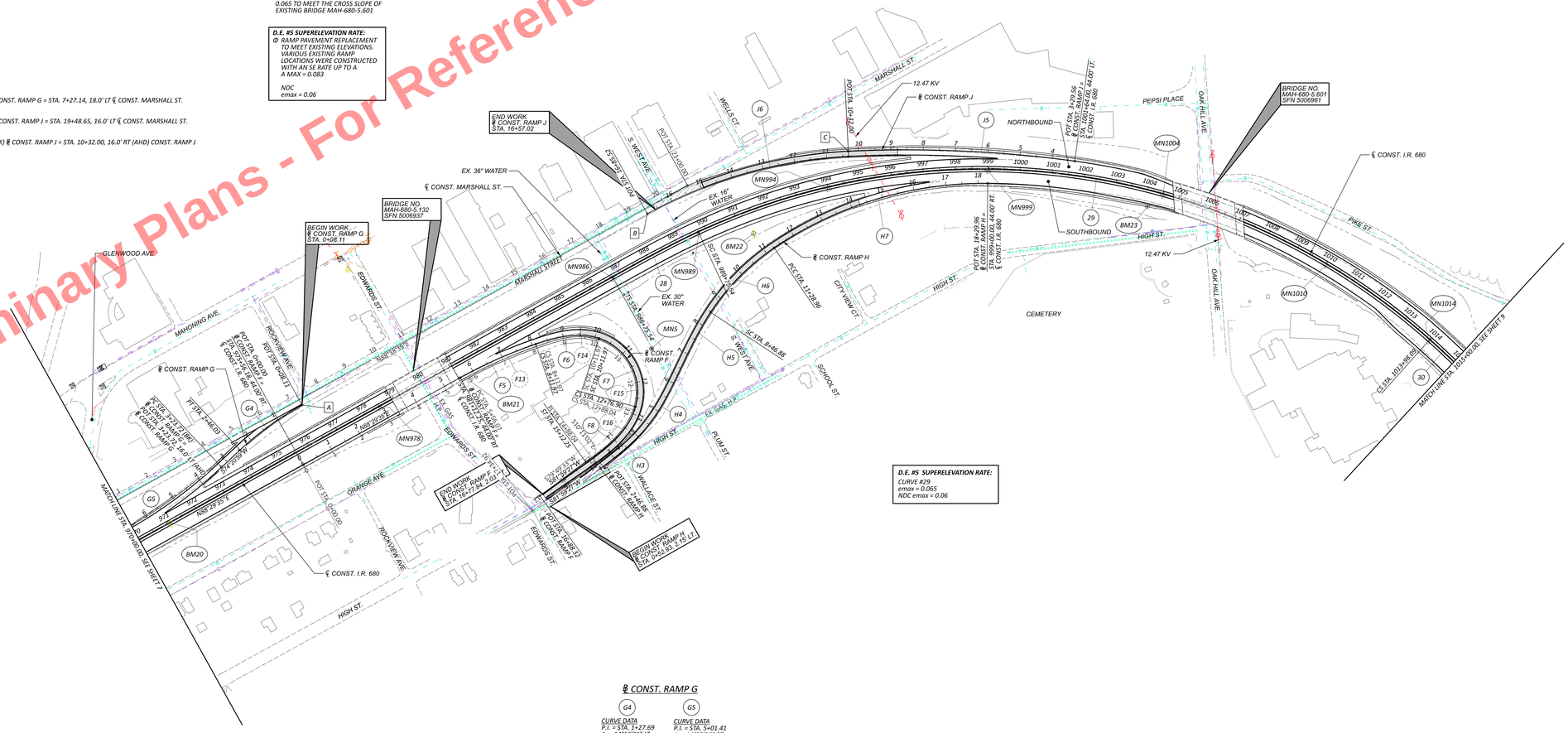

℄ CONST. RAMP G

G4 — CURVE DATA
P.I. = STA. 1+27.69
Δ = 14°16'31" LT
Dc = 06°00'00"
R = 954.93'
T = 119.58'
L = 237.92'
E = 7.46'
DS = 25 mph
emax = 0.0300

G5 — CURVE DATA
P.I. = STA. 5+01.41
Δ = 14°08'36" RT
Dc = 04°00'00"
R = 1,432.39'
T = 177.69'
L = 353.58'
E = 10.98'
DS = 50 mph
emax = 0.0520

D.E. #5 SUPERELEVATION RATE:
CURVE #29
emax = 0.065
NDC emax = 0.06

NOTES:
1) THERE ARE NO EXISTING LANDSCAPED AREAS WITHIN THE WORK LIMITS
2) SEE SCHEMATIC PLAN SHEET P.7 FOR CENTERLINE OF CONST. HORIZONTAL AND VERTICAL INFORMATION TABLE.
3) THERE ARE NO DELINEATED WETLANDS WITHIN THE WORK LIMITS.

= PROPOSED PAVEMENT REPLACEMENT TO EXISTING ELEVATIONS

= PROPOSED PAVEMENT REPLACEMENT TO EXISTING ELEVATIONS

HORIZONTAL SCALE IN FEET 0 100 200

SCHEMATIC PLAN
STA. 970+00.00 TO STA. 1015+00.00

DESIGN AGENCY: ms consultants, inc.
DESIGNED: MSN
REVIEWED: CMN 08/29/25
PROJECT ID: 121474
SHEET P-4 TOTAL 655

MAH-680-4.58

MODEL: Sheet PAVEMENT; 660.44 in | DATE: 9/15/2025 TIME: 8:51:08 AM PLTSTYL: ONDOT_CPM_11.ctb PLTBL: ONDOT_LTR.tbl USER: DMail@msconsultants.com WORKSPACE: C:\WORKSPACE\ ONDOT\ENG WORKSET: 121474 PRODUCT: OpenRoadsDesigner 24.00.00.205

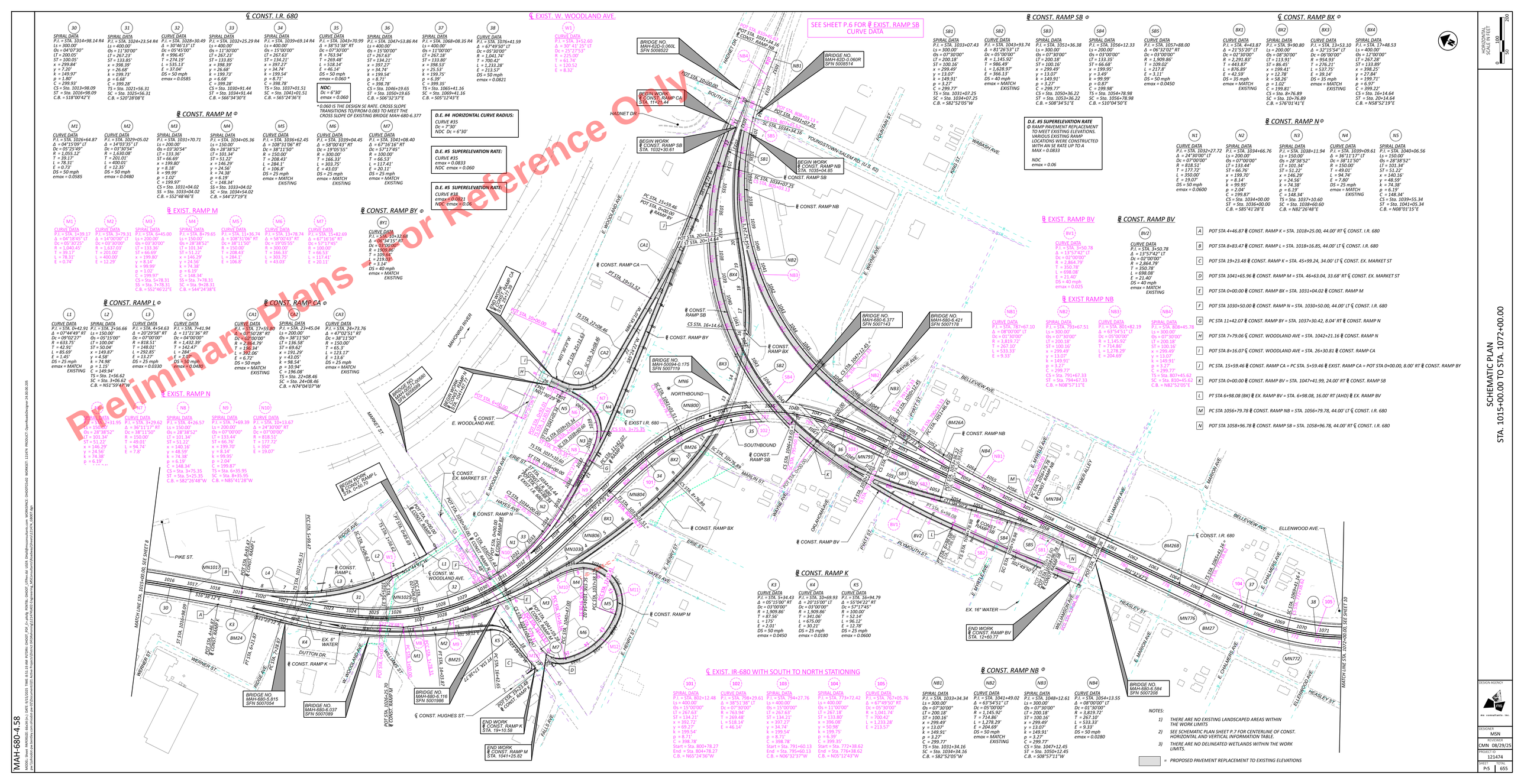

Preliminary Plans - For Reference Only

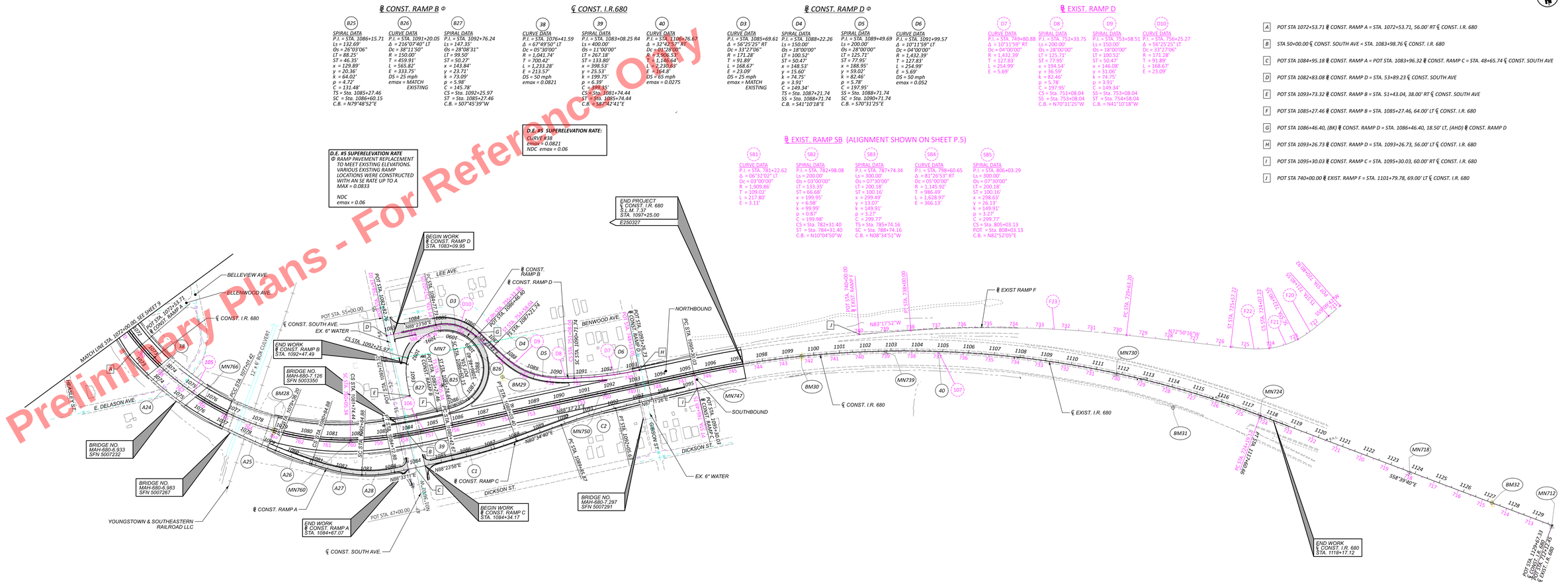

HORIZONTAL SCALE IN FEET: 0, 100, 200

SCHEMATIC PLAN
STA. 1072+00.00 TO 1129+67.33

NOTES:

1) THERE ARE NO EXISTING LANDSCAPED AREAS WITHIN THE WORK LIMITS
2) SEE SCHEMATIC PLAN SHEET P.7 FOR CENTERLINE OF CONST. HORIZONTAL AND VERTICAL INFORMATION TABLE.
3) THERE ARE NO DELINEATED WETLANDS WITHIN THE WORK LIMITS.

= PROPOSED PAVEMENT REPLACEMENT TO EXISTING ELEVATIONS

DESIGN AGENCY: STV inc. engineering consultants

DESIGNER: MSN
REVIEWER: CMN 08/29/25
PROJECT ID: 121474
SHEET: P6 TOTAL: 655

MAH-680-4.58

MODEL: Dwn PAHTRIDS: 66A34 | DATE: 9/15/2025 TIME: 8:51:19 AM PATRN: ONDOT_PW_11.pltcfg PENTBL: ONDOT_CPM.ctb USER: DNall@thesoundcollective.com WORKSPACE: C:\NJDOT\ENG\ WORKSET: 121474 PRODUCT: OpenRoads Designer 24.00.00.105
ACTIVE: C:\NJDOT\ENG\121474\Roadway\Design\121474_SCHEMATIC_PLAN.dgn
REFERENCES: C:\NJDOT\ENG\121474\Roadway\Design\121474_SCHEMATIC_PLAN.dgn

CENTERLINE OF CONST. HORIZONTAL AND VERTICAL INFORMATION TABLE

PROJECT ADJUSTMENT FACTOR (METRIC GRID TO U.S. FEET GROUND) = 3.2811663838347

REF.	STATION	ALIGNMENT	DISTANCE FROM C/L OF CONST.		STATE PLANE GRID COORDINATES (METERS)		STATE PLANE GROUND COORDINATES (U.S. FEET)		ELEVATION (FEET)	DESCRIPTION	ITEM 623 MONUMENT ASSEMBLY ADJUSTED TO GRADE	ITEM 623 REFERENCE MONUMENT, TYPE A
			LEFT	RIGHT	NORTHING (Y)	EASTING (X)	NORTHING (Y)	EASTING (X)				
BM 15	617+38.68	I.R. 680		68.26	161471.738	752313.550	529815.640	2468465.930	946.89	CUT "X" ON NW BOLT OF SIGN BASE "EXIT 4A STAMBAUGH AUD." SB		
BM 16	8+34.59	RAMP A		12.62	161334.330	752594.612	529364.780	2469388.140	919.81	CUT "X" ON NW BOLT OF SW SIGN SUPPORT BASE "680 SOUTH/ NEW CASTLE EXIT ONLY", SB		
BM 17	942+85.82	RAMP C-3		17.57	161284.467	753005.267	529201.170	2470735.570	876.49	CUT "X" ON NW BOLT OF SIGN BASE "NEW CASTLE EXIT ONLY" SB		
BM 18	951+87.42	I.R. 680		0.40	161110.477	753199.464	528630.280	2471372.760	877.89	CUT "X" ON S BOLT OF S SIGN SUPPORT BASE "CONN. AVE ½ MILE" NB		
BM 19	961+36.64	I.R. 680		70.30	160864.857	753361.302	527824.360	2471903.780	887.94	CUT "X" ON NW BOLT OF LIGHT POLE BASE "3 GW 5"		
BM 20	971+07.51	I.R. 680		0.42	160829.741	753658.395	527709.140	2472878.590	896.08	CUT "X" ON SW BOLT OF LIGHT POLE BASE "1 GW 4"		
BM 21	981+39.34	I.R. 680		63.74	160818.724	753973.262	527672.990	2473911.720	901.78	CUT "X" ON NE BOLT OF SE SIGN SUPPORT BASE "MAHONING AVE EXIT ONLY/ MARKET ST" SB		
BM 22	991+34.55	I.R. 680		70.97	160817.124	754273.170	527667.740	2474895.770	882.32	CUT "X" ON NW BOLT OF HIGH MAST LIGHT POLE BASE "1 GW 12"		
BM 23	1004+11.91	I.R. 680		50.75	160667.863	754614.006	527177.990	2476014.110	866.67	CUT "X" ON NW BOLT OF SIGN POST BASE "MARKET ST NEXT RIGHT" SB		
BM 24	6+20.39	RAMP K		17.92	160253.224	754826.223	525817.490	2476710.430	921.72	CUT "X" ON N BOLT OF SW SIGN SUPPORT BASE "EXITS 6B &6A, MARKET ST" SB		
BM 25	1029+40.74	RAMP M		15.46	159995.474	754959.301	524971.770	2477147.080	936.06	CUT "X" ON NW BOLT OF SE SIGN SUPPORT BASE "MARKET STREET DOWNTOWN/PITTSBURGH" SB		
BM 26	1040+27.91	I.R. 680		49.85	159860.086	755270.011	524527.540	2478166.570	940.57	CUT "X" ON NW BOLT ON SIGN SUPPORT BASE "SOUTH AVE ¾ MILE" SB		
BM26A	1052+45.05	RAMP NB	18.11		159546.444	755429.670	523498.430	2478690.440	951.38	CUT "X" ON SW BOLT OF TRUSS SIGN SUPPORT BASE NORTH BOUND "EXIT 6"		
BM26B	1063+11.11	I.R. 680	65.09		159222.395	755431.828	522435.170	2478697.520	968.40	CUT "X" ON NORTH BOLT OF CANTILEVER SIGN BASE. "EXIT 6"		
BM 27	1065+85.55	I.R. 680		62.56	159137.690	755395.207	522157.240	2478577.360	975.85	CUT "X" N BOLT OF SIGN SUPPORT BASE "SOUTH AVE NEXT RIGHT" SB		
BM 28	1078+71.22	I.R. 680		0.41	158814.799	755594.127	521097.780	2479230.050	979.25	CUT "X" ON NW BOLT OF LIGHT POLE BASE "D 14 A"		
BM 29	1087+74.87	RAMP B		74.42	158826.423	755871.839	521135.920	2480141.270	970.85	CUT "X" ON S BOLT OF HIGH MAST LIGHT POLE BASE "3 GA 3" NB		
BM 30	1099+51.98	I.R. 680	0.57		158784.971	756223.035	520999.910	2481293.600	987.99	CUT "X" ON NW BOLT OF LIGHT POLE BASE "1 GA 3"		
BM 31	1114+25.91	I.R. 680		76.25	158643.747	756642.733	520536.530	2482670.700	967.14			
BM 32	1127+18.63	I.R. 680		0.22	158463.387	756991.706	519944.740	2483815.740	955.75			
MN4	948+94.16	I.R. 680		114.85	161166.239	753123.622	528813.245	2471123.913	891.35	PROPOSED REFERENCE MONUMENT, TYPE A TO BE SET		1
MN5	11+33.98	RAMP K	81.44		160765.335	754137.596	527497.813	2474450.930	926.68	PROPOSED REFERENCE MONUMENT, TYPE A TO BE SET		1
MN6	1041+37.27	I.R. 680	198.77		159903.224	755342.039	524669.084	2478402.908	952.78	PROPOSED REFERENCE MONUMENT, TYPE A TO BE SET		1
MN7	1085+72.85	RAMP B	93.65		158829.869	755800.166	521147.226	2479906.097	974.94	PROPOSED REFERENCE MONUMENT, TYPE A TO BE SET		1
MN918	616+41.83	I.R. 680	0.00		161507.711	752309.189	529933.671	2468451.620		EXISTING CENTERLINE CONTROL POINT		
MN922	925+99.82	I.R. 680		4.95	161367.411	752503.026	529473.325	2469087.632		EXISTING MONUMENT BOX FOUND		
MN941	941+46.47	I.R. 680		5.41	161315.269	752970.850	529302.239	2470622.641		EXISTING MONUMENT BOX FOUND		
MN947	947+42.28	I.R. 680		4.06	161221.868	753122.735	528995.774	2471121.001		EXISTING MONUMENT BOX FOUND		
MN951	951+42.18	I.R. 680		5.00	161121.613	753191.216	528666.819	2471345.698		EXISTING MONUMENT BOX FOUND	1	
MN954	954+83.42	I.R. 680		5.00	161032.202	753244.340	528373.448	2471520.006		EXISTING MONUMENT BOX FOUND	1	
MN962	961+99.92	I.R. 680		4.73	160871.191	753388.831	527845.145	2471994.107		EXISTING MONUMENT BOX FOUND	1	
MN978	978+50.88	I.R. 680		5.00	160834.306	753884.908	527724.118	2473621.817		EXISTING MONUMENT BOX FOUND	1	
MN986	986+75.25	I.R. 680		5.00	160840.913	754136.065	527745.798	2474445.904		EXISTING MONUMENT BOX FOUND	1	
MN989	989+75.12	I.R. 680		5.13	160841.094	754227.322	527746.390	2474745.335		EXISTING MONUMENT BOX FOUND	1	
MN994	994+01.11	I.R. 680		5.42	160821.979	754355.176	527683.670	2475164.844		EXISTING MONUMENT BOX FOUND	1	
MN999	999+00.50	I.R. 680		5.17	160767.313	754496.417	527504.303	2475628.280		EXISTING MONUMENT BOX FOUND	1	
MN1004	1004+50.64	I.R. 680		4.97	160670.234	754632.023	527185.770	2476073.225		EXISTING MONUMENT BOX FOUND	1	
MN1010	1010+01.47	I.R. 680		4.91	160540.918	754737.677	526761.462	2476419.896		EXISTING MONUMENT BOX FOUND	1	
MN1014	1013+98.65	I.R. 680		4.94	160432.730	754790.920	526406.482	2476594.592		EXISTING MONUMENT BOX FOUND	1	
MN1017	1016+98.51	I.R. 680		4.99	160345.932	754819.110	526121.683	2476687.091		EXISTING MONUMENT BOX FOUND	1	
MN1025	1025+55.49	I.R. 680		5.56	160098.103	754901.455	525308.513	2476957.278		EXISTING MONUMENT BOX FOUND	1	
MN1030	1030+92.18	I.R. 680		4.99	159980.417	755013.444	524922.365	2477324.732		EXISTING MONUMENT BOX FOUND	1	
MN806	1034+91.21	I.R. 680		5.00	159932.047	755125.119	524763.656	2477691.156		EXISTING MONUMENT BOX FOUND	1	
MN804	1037+00.75	I.R. 680		4.32	159910.827	755185.351	524694.029	2477888.788		EXISTING MONUMENT BOX FOUND	1	
MN800	1041+01.13	I.R. 680		4.47	159860.360	755295.656	524528.440	2478250.716		EXISTING MONUMENT BOX FOUND	1	
MN791	1050+19.95	I.R. 680		5.00	159615.182	755399.854	523723.968	2478592.608		EXISTING MONUMENT BOX FOUND	1	
MN784	1057+79.20	I.R. 680		5.08	159383.868	755406.074	522964.990	2478613.017		EXISTING MONUMENT BOX FOUND	1	
MN776	1065+41.57	I.R. 680		5.00	159151.606	755412.369	522202.899	2478633.672		EXISTING MONUMENT BOX FOUND	1	
MN772	1069+41.46	I.R. 680		5.26	159030.130	755423.401	521804.317	2478669.868		EXISTING MONUMENT BOX FOUND	1	
MN766	1075+79.32	I.R. 680		5.34	158863.710	755519.858	521258.266	2478986.359		EXISTING MONUMENT BOX FOUND	1	
MN760	1081+74.05	I.R. 680		5.08	158785.005	755681.403	521000.021	2479516.418		EXISTING MONUMENT BOX FOUND	1	
MN750	1091+78.82	I.R. 680		5.00	158784.554	755987.571	520998.542	2480521.006		EXISTING MONUMENT BOX FOUND	1	
MN747	1095+28.02	I.R. 680		5.03	158787.103	756093.968	521006.904	2480870.110		EXISTING MONUMENT BOX FOUND	1	
MN739	1102+78.58	I.R. 680		5.24	158770.739	756321.474	520953.210	2481616.597		EXISTING MONUMENT BOX FOUND		
MN730	1111+78.96	I.R. 680		4.88	158694.534	756584.088	520703.171	2482478.275		EXISTING MONUMENT BOX FOUND		
MN724	1117+60.66	I.R. 680		5.00	158613.991	756741.586	520438.895	2482995.055		EXISTING MONUMENT BOX FOUND		
MN718	1123+78.78	I.R. 680		4.99	158516.014	756902.488	520117.416	2483522.999		EXISTING MONUMENT BOX FOUND		
MN712	1129+67.33	I.R. 680		5.00	158422.721	757055.689	519811.306	2484025.679		EXISTING MONUMENT BOX FOUND		
										TOTALS CARRIED TO THE GENERAL SUMMARY	25	4

Preliminary Plans - For Reference Only

SCHEMATIC PLAN
CENTERLINE OF CONST. HORIZONTAL AND VERTICAL INFORMATION TABLE

DESIGN AGENCY
ms consultants, inc.
DESIGNER: MSN
REVIEWER: CMN 08/29/25
PROJECT ID: 121474
SHEET: P-7 TOTAL: 655

MAH-680-4.58

MODEL: Sheet PARTIDS: 660.54 (in.) DATE: 9/15/2025 TIME: 8:51:44 AM USER: rhall
FILE NAME: P:\Projects\Mahoning\121474\ROADS\Engineering_MS\Consultants\Roadway\Sheets\121474_680R_PHASE_2.dgn

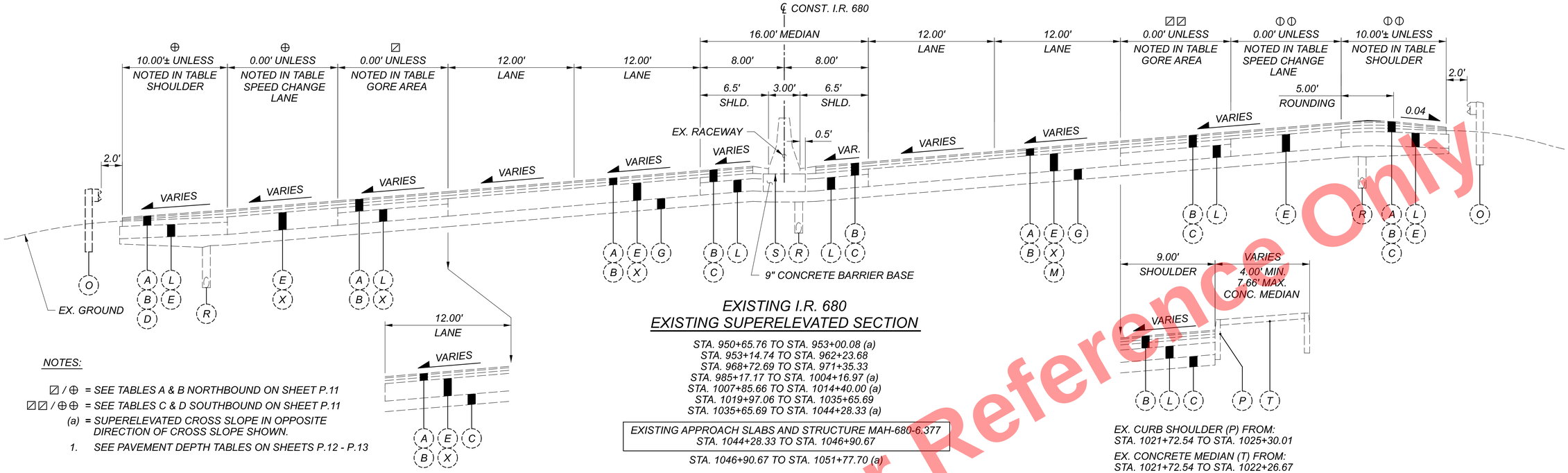

NOTES:

◪ / ⊕ = SEE TABLES A & B NORTHBOUND ON SHEET P.11

◪◪ / ⊕⊕ = SEE TABLES C & D SOUTHBOUND ON SHEET P.11

(a) = SUPERELEVATED CROSS SLOPE IN OPPOSITE DIRECTION OF CROSS SLOPE SHOWN.

1. SEE PAVEMENT DEPTH TABLES ON SHEETS P.12 - P.13

EXISTING I.R. 680
EXISTING SUPERELEVATED SECTION

STA. 950+65.76 TO STA. 953+00.08 (a)
STA. 953+14.74 TO STA. 962+23.68
STA. 968+72.69 TO STA. 971+35.33
STA. 985+17.17 TO STA. 1004+16.97 (a)
STA. 1007+85.66 TO STA. 1014+40.00 (a)
STA. 1019+97.06 TO STA. 1035+65.69
STA. 1035+65.69 TO STA. 1044+28.33 (a)

EXISTING APPROACH SLABS AND STRUCTURE MAH-680-6.377
STA. 1044+28.33 TO STA. 1046+90.67

STA. 1046+90.67 TO STA. 1051+77.70 (a)

EX. CURB SHOULDER (P) FROM:
STA. 1021+72.54 TO STA. 1025+30.01

EX. CONCRETE MEDIAN (T) FROM:
STA. 1021+72.54 TO STA. 1022+26.67

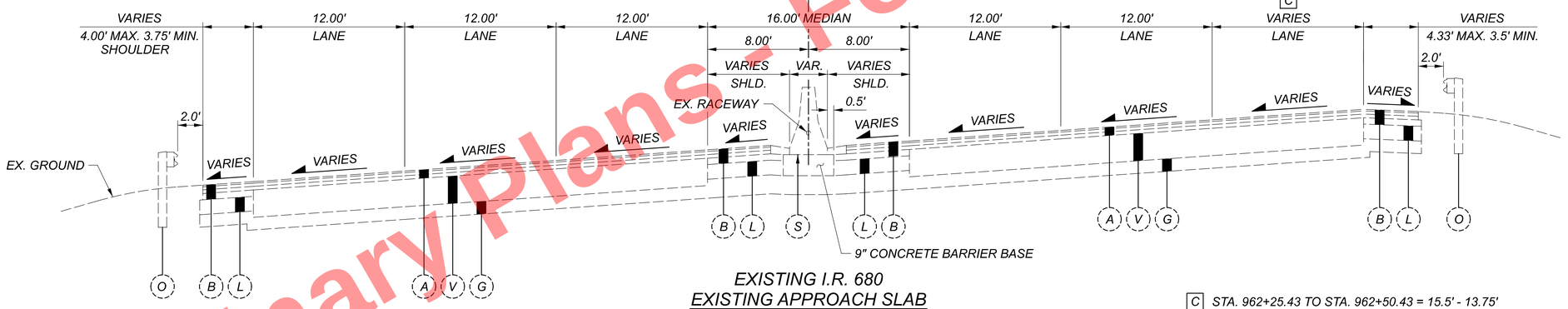

EXISTING I.R. 680
EXISTING APPROACH SLAB

STA. 962+23.68 TO STA. 962+48.68

EXISTING STRUCTURE MAH-680-4.886
STA. 962+48.68 TO STA. 968+47.69

STA. 968+47.69 TO STA. 968+72.69

C STA. 962+25.43 TO STA. 962+50.43 = 15.5' - 13.75'
STA. 968+46.48 TO STA. 968+71.48 = 12.00'

EXISTING LEGEND

(A) EXISTING ASPHALT (3"± TO 5"±)
(B) EXISTING ASPHALT (6"± TO 8"±)
(C) EXISTING ASPHALT (9"± TO 11"±)
(D) EXISTING ASPHALT (12"± TO 14"±)
(E) EXISTING REINFORCED PORTLAND CEMENT CONCRETE (9"± TO 10"±)
(F) EXISTING SUBBASE (3"± TO 5"±)
(G) EXISTING SUBBASE (6"± TO 8"±)
(H) EXISTING SUBBASE (9"± TO 11"±)
(I) EXISTING SUBBASE (12"±)
(J) EXISTING POROUS BASE (6"± VARIABLE DEPTH)
(K) AGGREGATE BASE (6"±)
(L) AGGREGATE BASE (7"± MAX - 4"± MIN.)
(M) EXISTING REINFORCED PORTLAND CEMENT CONCRETE (7"± TO 8"±)
(N) EXISTING APPROACH SLAB
(O) EXISTING GUARDRAIL
(P) EXISTING CURB
(Q) EXISTING CURB AND GUTTER
(R) EXISTING UNDERDRAIN
(S) EXISTING CONCRETE MEDIAN BARRIER
(T) EXISTING PORTLAND CEMENT CONCRETE MEDIAN (4"±)
(U) EXISTING 5" CONCRETE WALK
(V) EXISTING 13" REINFORCED CONCRETE APPROACH SLAB
(W) EXISTING CABLE MEDIAN BARRIER
(X) EXISTING REINFORCED PORTLAND CEMENT CONCRETE (11"± TO 12"±)
(Y) EXISTING COMBINATION CURB AND GUTTER
(Z) EXISTING SINGLE FACE CONCRETE BARRIER
(AA) EXISTING REINFORCED PORTLAND CEMENT CONCRETE (5"± TO 6"±)
(BB) EXISTING ASPHALT (15"± TO 16"±)
(CC) EXISTING REINFORCED PORTLAND CEMENT CONCRETE (13"± TO 14"±)
(DD) EXISTING REINFORCED PORTLAND CEMENT CONCRETE (15"±)
(EE) EXISTING REINFORCED PORTLAND CEMENT CONCRETE (16"± TO 17"±)
(FF) EXISTING ASPHALT (1"± TO 3"±)
(GG) EXISTING CONCRETE BASE (10")

Preliminary Plans - For Reference Only

EXISTING TYPICAL SECTIONS - I.R. 680

MAH-680-4.58

MODEL: Sheet PAPERSIZE: 34x22 (in.) DATE: 9/15/2025 TIME: 2:20:54 PM PLTDRV: OHDOT_PDF_E+.pltcfg PENTBL: OHDOT_Pen.tbl USER: DHall@msconsultants.com WORKSPACE: OHDOTCEv02 WORKSET: 121474 PRODUCT: OpenRoadsDesigner 24.00.00.205
pw:\ohiodot-pw.bentley.com:ohiodot-pw-02\Documents\01 Active Projects\District 04\Mahoning\121474\402-Engineering_MSConsultants\RoadwayTSheets\121474_GY004.dgn

DESIGN AGENCY
ms consultants, inc.
DESIGNER DWH
REVIEWER CMN 08/29/25
PROJECT ID 121474
SHEET P.8 TOTAL 655

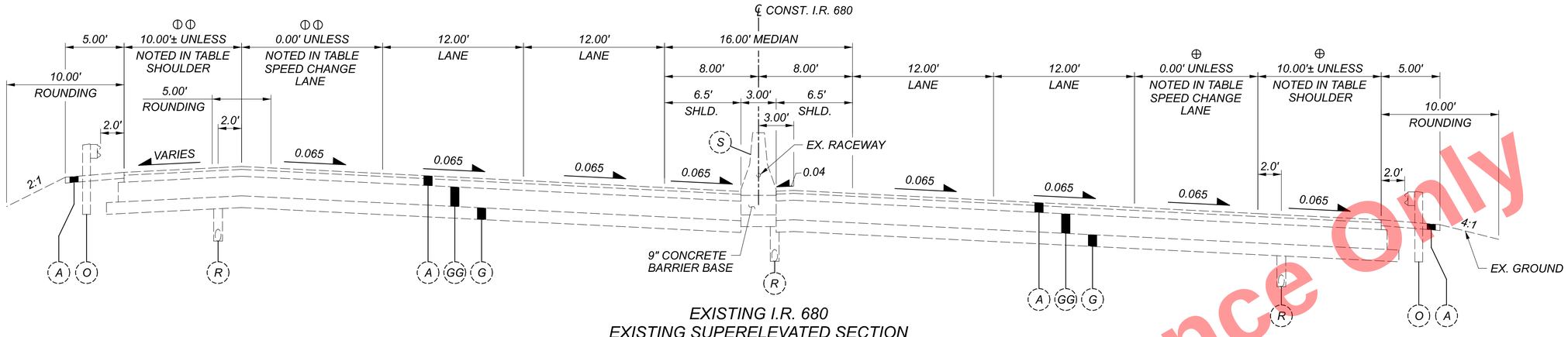

EXISTING I.R. 680
EXISTING SUPERELEVATED SECTION

STA. 1004+16.97 TO STA. 1004+83.46

EXISTING APPROACH SLABS AND STRUCTURE MAH-680-5.601
STA. 1004+83.46 TO STA. 1007+13.96

STA. 1007+13.96 TO STA. 1007+85.66

NOTES:
1. FOR EXISTING LEGEND SEE SHEET P.8
2. SEE PAVEMENT DEPTH TABLES ON SHEETS P.12 - P.13

⊡ / ⊕ = SEE TABLES A & B NORTHBOUND ON SHEET P.11

⊡⊡ / ⊕⊕ = SEE TABLES C & D SOUTHBOUND ON SHEET P.11

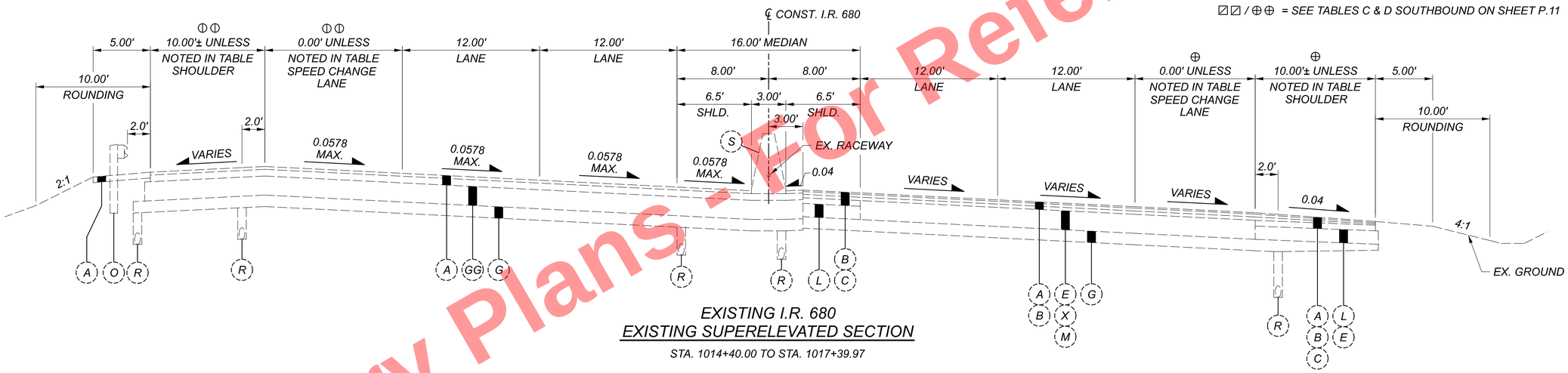

EXISTING I.R. 680
EXISTING SUPERELEVATED SECTION

STA. 1014+40.00 TO STA. 1017+39.97

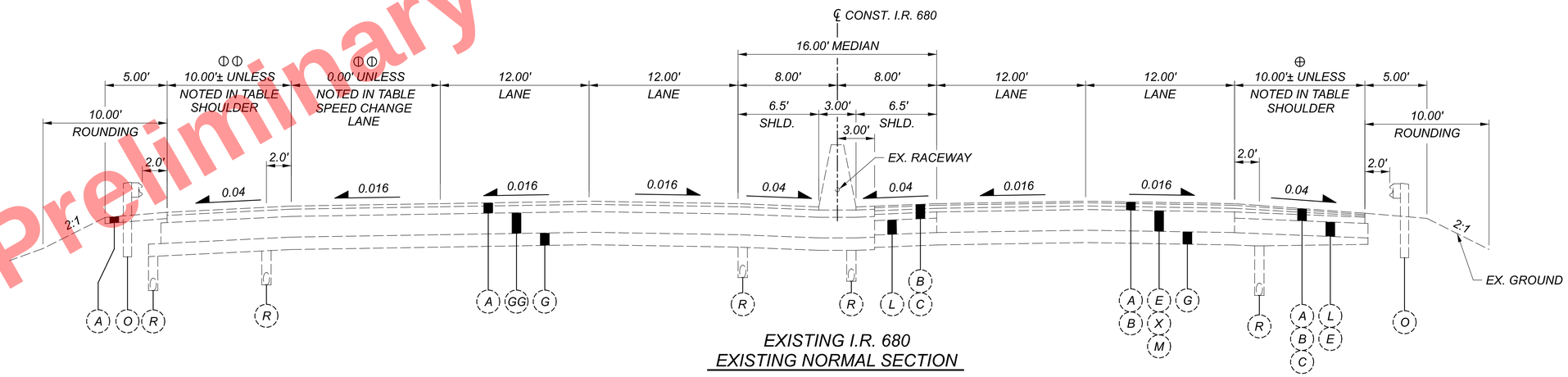

EXISTING I.R. 680
EXISTING NORMAL SECTION

STA. 1017+39.97 TO STA. 1019+50.00

Preliminary Plans - Not For Reference Only

EXISTING TYPICAL SECTIONS - I.R. 680

MAH-680-4.58

MODEL: Sheet PAPERSIZE: 34x22 (in.) DATE: 9/15/2025 TIME: 2:21:00 PM PLTDRV: OHDOT_PDF_E+.pltcfg PENTBL: OHDOT_Pen.tbl USER: DHall@msconsultants.com WORKSPACE: OHDOTCEv02 WORKSET: 121474 PRODUCT: OpenRoadsDesigner 24.00.00.205
pw:\\ohiodot-pw.bentley.com:ohiodot-pw-02\Documents\01 Active Projects\District 04\Mahoning\121474\402-Engineering_MSConsultants\Roadway\Sheets\121474_GY004A.dgn

DESIGN AGENCY
ms consultants, inc.

DESIGNER	DWH
REVIEWER	CMN 08/29/25
PROJECT ID	121474
SHEET	P.9
TOTAL	655

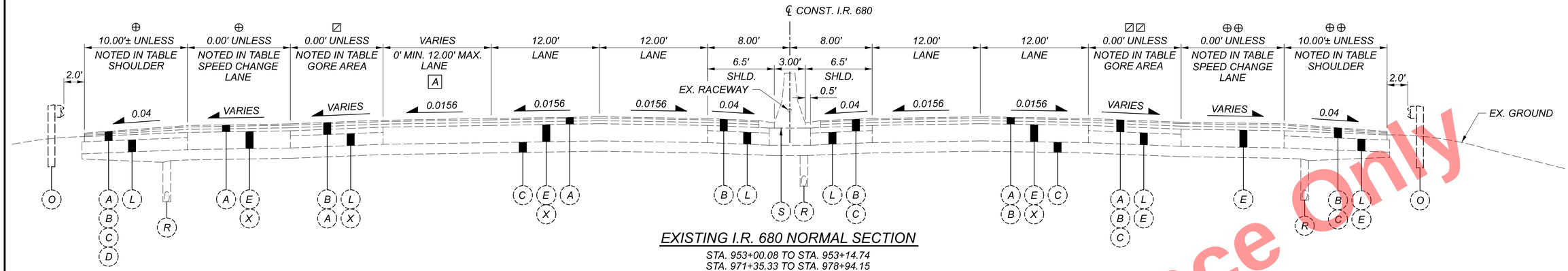

EXISTING I.R. 680 NORMAL SECTION

STA. 953+00.08 TO STA. 953+14.74
STA. 971+35.33 TO STA. 978+94.15

EXISTING APPROACH SLABS AND STRUCTURE MAH-680-5.132
STA. 978+94.15 TO STA. 981+06.79

STA. 981+06.96 TO STA. 985+17.17
STA. 1019+50.00 TO STA. 1019+97.06
STA. 1051+77.70 TO STA. 1058+96.78 SOUTHBOUND
STA. 1051+77.70 TO STA. 1056+79.78 NORTHBOUND

A 12.00' LANE ONLY FROM:
STA. 954+00.79 TO STA. 954+73.06
STA. 969+77.01 TO STA. 969+78.20

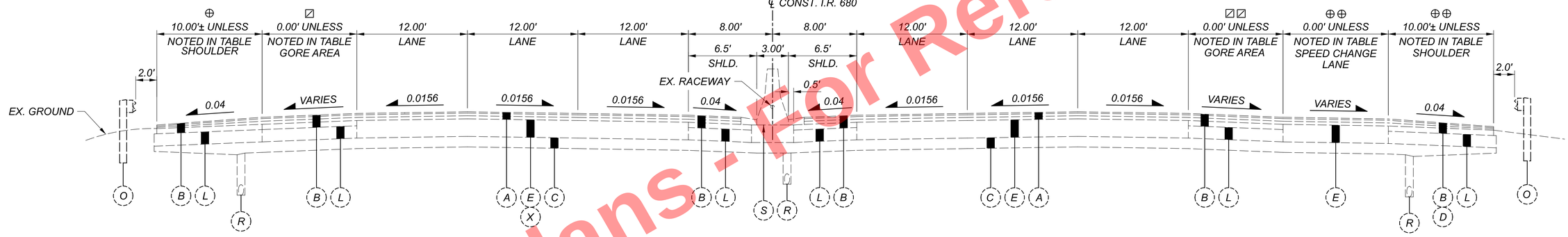

EXISTING I.R. 680 NORMAL SECTION

STA. 1058+96.78 TO STA. 1063+93.63 SOUTHBOUND
STA. 1056+79.78 TO STA. 1063+93.63 NORTHBOUND
STA. 1088+48.91 TO STA. 1092+72.92

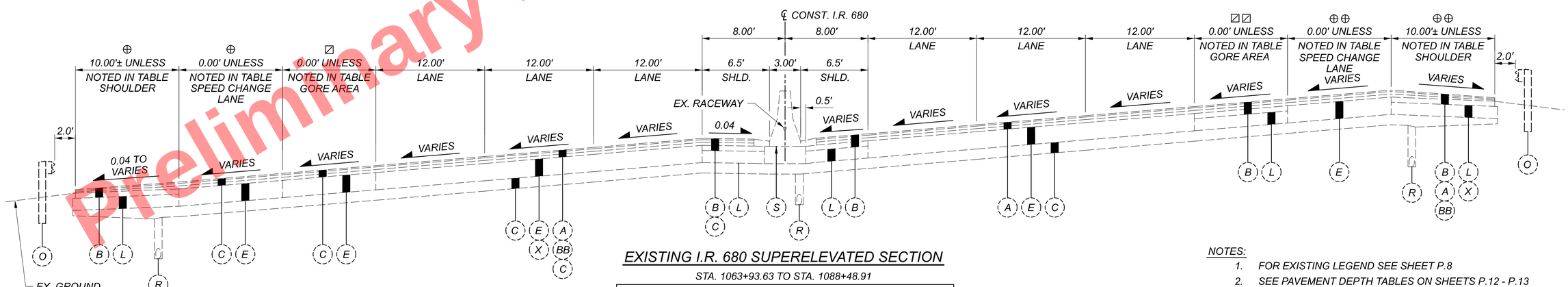

EXISTING I.R. 680 SUPERELEVATED SECTION

STA. 1063+93.63 TO STA. 1088+48.91

EXISTING APPROACH SLABS AND STRUCTURE MAH-680-0687 L&R
STA. 1073+61.10 TO STA. 1075+47.05

EXISTING APPROACH SLABS AND STRUCTURE MAH-680-0693 L&R
STA. 1076+82.34 TO STA. 1078+73.94

STA. 1092+72.92 TO STA. 1097+25.00

NOTES:
1. FOR EXISTING LEGEND SEE SHEET P.8
2. SEE PAVEMENT DEPTH TABLES ON SHEETS P.12 - P.13

◪ / ⊕ = SEE TABLES A & B NORTHBOUND ON SHEET P.11
◪◪ / ⊕⊕ = SEE TABLES C & D SOUTHBOUND ON SHEET P.11

Preliminary Plans - For Reference Only

EXISTING TYPICAL SECTIONS - I.R. 680

DESIGN AGENCY
ms consultants, inc.

DESIGNER DWH
REVIEWER CMN 08/29/25
PROJECT ID 121474
SHEET P.10 TOTAL 655

MAH-680-4.58

MODEL: Sheet PAPERSIZE: 34x22 (in.) DATE: 9/15/2025 TIME: 2:21:05 PM PLTDRV: OHDOT_PDF_E+.pltcfg PENTBL: OHDOT_Pen.tbl USER: DHall@msconsultants.com WORKSPACE: OHDOTCEv02 WORKSET: 121474 PRODUCT: OpenRoadsDesigner 24.00.00.205
pw:\\ohiodot-pw.bentley.com:ohiodot-pw-02\Documents\01 Active Projects\District 04\Mahoning\121474\402-Engineering_MSConsultants\Roadway\Sheets\121474_GY005.dgn
DHall@msconsultants.com

⊠ TABLE A NORTHBOUND (GORE AREA)		
SHEET NUMBER	STATION TO STATION	GORE AREA WIDTH
P.8	950+65.77- 952+38.19	23.00' TO 0'
P.8	953+23.38 - 954+73.06	27.00' TO 6.00'
P.8	954+73.06 - 955+71.95	6.00' TO 0'
P.8, P.10	970+02.29 - 972+53.51	0' TO 26.5'
P.8	996+54.17 - 999+42.58	26.00' TO 0'
P.8, P.10	1019+60.61 - 1021+89.49	0' TO 24.00'
P.8	1032+19.81 - 1034+07.08	0' to 19.58'
P.8, P.10	1051+03.50 - 1053+76.85	30.66' TO 0'
P.10	1083+19.81 - 1086+61.97	0' TO 23.00'
P.10	1090+47.45 - 1092+62.21	21.5' TO 0'

⊕ TABLE B NORTHBOUND				
SHEET NUMBER	STATION TO STATION	SPEED CHANGE LANE TYPE	SPEED CHANGE LANE WIDTH	SHOULDER WIDTH
P.8	1001+64.00 - 1004+71.91	DECELERATION	VARIES: 12.00' TO 2.00'	10.00'
P.8, P.10	1009+79.13 - 1019+16.82	ACCELERATION	VARIES: 0' TO 12.00'	10.00'
P.8	1023+66.75 - 1030+05.43	ACCELERATION	VARIES: 0' TO 10.00'	VARIES: 11.00' TO 9.00'
P.10	1077+27.97 - 1084+76.90	ACCELERATION	VARIES: 0' TO 13.5'	VARIES: 9.00' TO 11.00'
P.10	1093+26.73 - 1097+25.00	DECELERATION	12.00'	10.00'

⊠⊠ TABLE C SOUTHBOUND (GORE AREA)		
SHEET NUMBER	STATION TO STATION	GORE AREA WIDTH
P.8	952+61.43 - 954+41.30	28.00' TO 0'
P.8	960+80.30 - 962+50.51	22.00' TO 0'
P.10	982+15.07 - 984+19.43	0' TO 27.5'
P.8	995+22.74 - 998+17.57	22.5' TO 0'
P.8, P.10	1019+67.87 - 1021+72.54	0' TO 16.5'
P.8	1028+77.99 - 1030+79.45	0' TO 22.00'
P.10	1055+83.32 - 1059+57.11	23.5' TO 0'
P.10	1077+56.84 - 1079+64.13	0' TO 23.00'
P.10	1090+17.50 - 1093+16.66	23.00' to 0'

⊕⊕ TABLE D SOUTHBOUND				
SHEET NUMBER	STATION TO STATION	SPEED CHANGE LANE TYPE	SPEED CHANGE LANE WIDTH	SHOULDER WIDTH
P.8	955+74.84 - 961+20.50	ACCELERATION	VARIES: 14.00' TO 0'	VARIES: 8.00' TO 10.00'
P.8, P.10	962+99.86 - 975+56.18	ACCELERATION & DECELERATION	12.00'	VARIES: 4.5' TO 11.00'
P.8	999+00.00 - 1005+22.53	ACCELERATION	VARIES: 14.00' TO 0'	VARIES: 7.00' TO 10.00'
P.8	1013+10.31 - 1018+25.00	DECELERATION	VARIES: 0' TO 12.00'	11.00'
P.10	1070+89.10 - 1072+53.71	DECELERATION	VARIES: 0' TO 12.00'	10.00'
P.10	1095+30.03 - 1097+25.00	ACCELERATION	12.00'	10.00'

Preliminary Plans - For Reference Only

EXISTING TYPICAL SECTIONS - I.R. 680 NB AND SB TABLES

DESIGN AGENCY
ms consultants, inc.

DESIGNER
DWH

REVIEWER
CMN 08/29/25

PROJECT ID
121474

SHEET P.11 TOTAL 655

MAH-680-4.58

MODEL: Sheet PAPERSIZE: 34x22 (in.) DATE: 9/15/2025 TIME: 2:21:10 PM PLTDRV: OHDOT_PDF_E+.pltcfg PENTBL: OHDOT_Pen.tbl USER: DHall@msconsultants.com WORKSPACE: OHDOTCEv02 WORKSET: 121474 PRODUCT: OpenRoadsDesigner 24.00.00.205
pw:\\ohiodot-pw.bentley.com:ohiodot-pw-02\Documents\01 Active Projects\District 04\Mahoning\121474\402-Engineering_MSConsultants\Roadway\Sheets\121474_GY006.dgn

I.R. 680 MAINLINE EXISTING PAVEMENT TABLE - NORTHBOUND

SHEET	LEFT SHOULDER				LANE(S)				RIGHT SHOULDER			
	STATION		EXISTING LEGEND CALLOUT	EXISTING LEGEND CALLOUT	STATION		EXISTING LEGEND CALLOUT	EXISTING LEGEND CALLOUT	STATION		EXISTING LEGEND CALLOUT	EXISTING LEGEND CALLOUT
	FROM	TO			FROM	TO			FROM	TO		
P.8					950+65.76	953+00.08	A - EX. ASPHALT (3"± to 5"±)	E - EX. REINF. PCC (9"± to 10"±)	950+65.76	953+00.08	B - EX. ASPHALT (6"± to 8"±)	
					950+65.76	953+00.08	B - EX. ASPHALT (6"± to 8"±)	X - EX. REINF. PCC (11"± to 12"±)				
P.10	953+00.08	953+14.74			953+00.08	953+14.74	A - EX. ASPHALT (3"± to 5"±)	E - EX. REINF. PCC (9"± to 10"±)	953+00.08	953+14.74	B - EX. ASPHALT (6"± to 8"±)	
P.8	953+14.74	962+25.43	B - EX. ASPHALT (6"± to 8"±)		953+14.74	957+00±	A - EX. ASPHALT (3"± to 5"±)	E - EX. REINF. PCC (9"± to 10"±)	953+14.74	957+00±	B - EX. ASPHALT (6"± to 8"±)	
	968+71.48	969+78.20			957+00±	962+25.43	B - EX. ASPHALT (6"± to 8"±)	X - EX. REINF. PCC (11"± to 12"±)	957+00±	962+25.43	C - EX. ASPHALT (9"± to 11"±)	
					968+71.48	971+35.33	A - EX. ASPHALT (3"± to 5"±)		968+71.48	971+35.33	B - EX. ASPHALT (6"± to 8"±)	
P.10	972+53.51	975+50±	B - EX. ASPHALT (6"± to 8"±)		971+35.33	975+50±	A - EX. ASPHALT (3"± to 5"±)	X - EX. REINF. PCC (11"± to 12"±)	971+35.33	978+94.15	B - EX. ASPHALT (6"± to 8"±)	
	975+50±	978+94.15	D - EX. ASPHALT (12"± to 14"±)		975+50±	978+94.15		E - EX. REINF. PCC (9"± to 10"±)				
P.10	981+06.96	985+17.17	A - EX. ASPHALT (3"± to 5"±)	E - EX. REINF. PCC (9"± to 10"±)	981+06.96	985+17.17	A - EX. ASPHALT (3"± to 5"±)	E - EX. REINF. PCC (9"± to 10"±)	981+06.96	985+17.17	B - EX. ASPHALT (6"± to 8"±)	
P.8	985+17.17	990+00±	A - EX. ASPHALT (3"± to 5"±)	E - EX. REINF. PCC (9"± to 10"±)	985+17.17	994+00±	A - EX. ASPHALT (3"± to 5"±)	E - EX. REINF. PCC (9"± to 10"±)	985+17.17	1004+16.97	B - EX. ASPHALT (6"± to 8"±)	
	990+00±	996+54.59	B - EX. ASPHALT (6"± to 8"±)		994+00±	1004+16.97		X - EX. REINF. PCC (11"± to 12"±)	1007+85.66	1014+40.00	B - EX. ASPHALT (6"± to 8"±)	
	1001+64.00	1004+16.97	A - EX. ASPHALT (3"± to 5"±)		1007+85.66	1014+40.00		E - EX. REINF. PCC (9"± to 10"±)				
	1007+85.66	1014+40.00	B - EX. ASPHALT (6"± to 8"±)					X - EX. REINF. PCC (11"± to 12"±)				
	1019+97.06	1021+89.49										
P.9	1004+16.97	1004+83.46	A - EX. ASPHALT (3"± to 5"±)	GG - EX. CONC. BASE (10")	1004+16.97	1004+83.46	A - EX. ASPHALT (3"± to 5"±)	GG - EX. CONC. BASE (10")	1004+16.97	1004+83.46	A - EX. ASPHALT (3"± to 5"±)	GG - EX. CONC. BASE (10")
	1007+13.96	1007+85.66			1007+13.96	1007+85.66			1007+13.96	1007+85.66		
	1014+40.00	1019+50.00			1014+40.00	1019+50.00			1014+40.00	1019+50.00		
P.10	1019+50.00	1019+97.06	B - EX. ASPHALT (6"± to 8"±)		1019+50.00	1019+97.06	A - EX. ASPHALT (3"± to 5"±)	X - EX. REINF. PCC (11"± to 12"±)	1019+50.00	1019+97.06	B - EX. ASPHALT (6"± to 8"±)	
P.8	1021+89.49	1030+50.00	D - EX. ASPHALT (12"± to 14"±)		1019+97.06	1035+65.69	A - EX. ASPHALT (3"± to 5"±)	X - EX. REINF. PCC (11"± to 12"±)	1019+97.06	1035+65.69	B - EX. ASPHALT (6"± to 8"±)	
	1034+07.08	1035+65.69	B - EX. ASPHALT (6"± to 8"±)									
P.8	1035+65.69	1044+28.33	B - EX. ASPHALT (6"± to 8"±)		1035+65.69	1044+28.33	B - EX. ASPHALT (6"± to 8"±)	X - EX. REINF. PCC (11"± to 12"±)	1035+65.69	1044+28.33	B - EX. ASPHALT (6"± to 8"±)	
P.8	1046+90.67	1051+77.70	D - EX. ASPHALT (12"± to 14"±)		1046+90.67	1051+77.70	A - EX. ASPHALT (3"± to 5"±)	E - EX. REINF. PCC (9"± to 10"±)	1046+90.67	1051+77.70	B - EX. ASPHALT (6"± to 8"±)	
P.10	1051+77.70	1056+79.78			1051+77.70	1056+79.78	A - EX. ASPHALT (3"± to 5"±)	E - EX. REINF. PCC (9"± to 10"±)	1051+77.70	1056+79.78	B - EX. ASPHALT (6"± to 8"±)	
P.10	1056+79.78	1063+93.63	B - EX. ASPHALT (6"± to 8"±)		1056+79.78	1061+00±	A - EX. ASPHALT (3"± to 5"±)	E - EX. REINF. PCC (9"± to 10"±)	1056+79.78	1063+93.63	B - EX. ASPHALT (6"± to 8"±)	
					1061+00±	1063+93.63		X - EX. REINF. PCC (11"± to 12"±)				
P.10	1063+93.63	1088+48.91	B - EX. ASPHALT (6"± to 8"±)		1063+93.63	1072+08.93	A - EX. ASPHALT (3"± to 5"±)	X - EX. REINF. PCC (11"± to 12"±)	1063+93.63	1076+82.34	B - EX. ASPHALT (6"± to 8"±)	
					1072+08.93	1073+61.10	BB - EX. ASPHALT (15"± to 16"±)		1078+73.94	1088+48.91	C - EX. ASPHALT (9"± to 11"±)	
					1075+47.05	1076+82.34	A - EX. ASPHALT (3"± to 5"±)	X - EX. REINF. PCC (11"± to 12"±)				
					1078+73.94	1088+48.91	C - EX. ASPHALT (9"± to 11"±)	E - EX. REINF. PCC (9"± to 10"±)				
P.10	1088+48.91	1092+72.92	B - EX. ASPHALT (6"± to 8"±)		1088+48.91	1092+72.92	A - EX. ASPHALT (3"± to 5"±)	E - EX. REINF. PCC (9"± to 10"±)	1088+48.91	1092+72.92	B - EX. ASPHALT (6"± to 8"±)	
P.10	1092+72.92	1097+25.00	B - EX. ASPHALT (6"± to 8"±)		1093+26.73	1097+25.00	A - EX. ASPHALT (3"± to 5"±)	E - EX. REINF. PCC (9"± to 10"±)	1093+26.73	1097+25.00	B - EX. ASPHALT (6"± to 8"±)	

Preliminary Plans - For Reference Only

EXISTING LEGEND

- (A) EXISTING ASPHALT (3"± TO 5"±)
- (B) EXISTING ASPHALT (6"± TO 8"±)
- (C) EXISTING ASPHALT (9"± TO 11"±)
- (D) EXISTING ASPHALT (12"± TO 14"±)
- (E) EXISTING REINFORCED PORTLAND CEMENT CONCRETE (9"± TO 10"±)
- (M) EXISTING REINFORCED PORTLAND CEMENT CONCRETE (7"± TO 8"±)
- (X) EXISTING REINFORCED PORTLAND CEMENT CONCRETE (11"± TO 12"±)
- (BB) EXISTING ASPHALT (15"± TO 16"±)
- (DD) EXISTING REINFORCED PORTLAND CEMENT CONCRETE (15"±)
- (EE) EXISTING REINFORCED PORTLAND CEMENT CONCRETE (16"± TO 17"±)
- (FF) EXISTING ASPHALT (1"± TO 3"±)
- (GG) EXISTING CONCRETE BASE (10")

EXISTING TYPICAL SECTIONS - I.R. 680 NB PAVEMENT TABLE

DESIGN AGENCY
ms consultants, inc.

DESIGNER DWH
REVIEWER CMN 08/29/25
PROJECT ID 121474
SHEET P.12 TOTAL 655

MAH-680-4.58

MODEL: Sheet PAPERSIZE: 34x22 (in.) DATE: 9/15/2025 TIME: 2:21:16 PM PLTDRV: OHDOT_PDF_E+.pltcfg PENTBL: OHDOT_Pen.tbl USER: DHall@msconsultants.com WORKSPACE: OHDOTCEv02 WORKSET: 121474 PRODUCT: OpenRoadsDesigner 24.00.00.205
pw:\\ohiodot-pw.bentley.com:ohiodot-pw-02\Documents\01 Active Projects\District 04\Mahoning\121474\M402-Engineering_MSConsultants\Roadway\Sheets\121474_GY017.dgn

I.R. 680 MAINLINE EXISTING PAVEMENT TABLE - SOUTHBOUND

SHEET	LEFT SHOULDER				LANE(S)				RIGHT SHOULDER			
	STATION		EXISTING LEGEND CALLOUT	EXISTING LEGEND CALLOUT	STATION		EXISTING LEGEND CALLOUT	EXISTING LEGEND CALLOUT	STATION		EXISTING LEGEND CALLOUT	EXISTING LEGEND CALLOUT
	FROM	TO			FROM	TO			FROM	TO		
P.8	950+65.77	953+00.08	C - EX. ASPHALT (9"± to 11"±)		950+65.77	953+00.08	B - EX. ASPHALT (6"± to 8"±)	E - EX. REINF. PCC (9"± to 10"±)	950+65.77	953+00.08	B - EX. ASPHALT (6"± to 8"±)	E - EX. REINF. PCC (9"± to 10"±)
P.10	953+00.08	953+14.74	B - EX. ASPHALT (6"± to 8"±)		953+00.08	953+14.74	A - EX. ASPHALT (3"± to 5"±)	E - EX. REINF. PCC (9"± to 10"±)				
P.8	953+14.74	962+25.43	B - EX. ASPHALT (6"± to 8"±)		953+14.74	962+25.43	A - EX. ASPHALT (3"± to 5"±)	E - EX. REINF. PCC (9"± to 10"±)	955+74.86	960+80.30	B - EX. ASPHALT (6"± to 8"±)	
	968+71.48	971+35.33			968+71.48	971+35.33			968+71.48	971+35.33		
P.10	971+35.33	978+94.15	C - EX. ASPHALT (9"± to 11"±)		971+35.33	978+94.15	B - EX. ASPHALT (6"± to 8"±)	X - EX. REINF. PCC (11"± to 12"±)	971+35.33	975+56.18	B - EX. ASPHALT (6"± to 8"±)	
P.10	981+06.96	985+17.17	B - EX. ASPHALT (6"± to 8"±)		981+06.96	985+17.17	A - EX. ASPHALT (3"± to 5"±)	E - EX. REINF. PCC (9"± to 10"±)	984+19.43	985+17.17	B - EX. ASPHALT (6"± to 8"±)	
P.8	985+17.17	1018+56.74	B - EX. ASPHALT (6"± to 8"±)		985+17.17	1004+00±	A - EX. ASPHALT (3"± to 5"±)	E - EX. REINF. PCC (9"± to 10"±)	985+17.17	995+22.74	B - EX. ASPHALT (6"± to 8"±)	
					1004+00±	1004+83.46		M - EX. REINF. PCC (7"± to 8"±)	999+00.00	1004+83.46		
					1007+13.96	1018+56.74		E - EX. REINF. PCC (9"± to 10"±)	1007+13.96	1018+56.74		
P.10	1018+56.74	1019+97.06	B - EX. ASPHALT (6"± to 8"±)		1018+56.74	1019+97.06	A - EX. ASPHALT (3"± to 5"±)	E - EX. REINF. PCC (9"± to 10"±)				
P.8	1019+97.06	1035+65.69	B - EX. ASPHALT (6"± to 8"±)		1019+97.06	1035+65.69	A - EX. ASPHALT (3"± to 5"±)	E - EX. REINF. PCC (9"± to 10"±)	1021+72.54	1026+25.70	B - EX. ASPHALT (6"± to 8"±)	
									1030+79.45	1035+65.69	A - EX. ASPHALT (3"± to 5"±)	
P.8	1035+65.69	1044+28.33	B - EX. ASPHALT (6"± to 8"±)		1035+65.69	1044+28.33	B - EX. ASPHALT (6"± to 8"±)	X - EX. REINF. PCC (11"± to 12"±)	1035+65.69	1044+28.33	B - EX. ASPHALT (6"± to 8"±)	
P.8	1046+90.67	1051+77.70	B - EX. ASPHALT (6"± to 8"±)		1046+90.67	1051+77.70	A - EX. ASPHALT (3"± to 5"±)	X - EX. REINF. PCC (11"± to 12"±)	1046+90.67	1051+77.70	B - EX. ASPHALT (6"± to 8"±)	
P.8, P.10	1051+77.70	1058+96.78	B - EX. ASPHALT (6"± to 8"±)		1051+77.70	1058+96.78	A - EX. ASPHALT (3"± to 5"±)	X - EX. REINF. PCC (11"± to 12"±)	1051+77.70	1055+83.32	B - EX. ASPHALT (6"± to 8"±)	
P.10	1058+96.78	1063+93.63	B - EX. ASPHALT (6"± to 8"±)		1058+96.78	1063+93.63	A - EX. ASPHALT (3"± to 5"±)	E - EX. REINF. PCC (9"± to 10"±)	1058+96.78	1063+93.63	D - EX. ASPHALT (12"± to 14"±)	
P.10	1063+93.63	1088+48.91	B - EX. ASPHALT (6"± to 8"±)		1063+93.63	1088+48.91	A - EX. ASPHALT (3"± to 5"±)	E - EX. REINF. PCC (9"± to 10"±)	1063+93.63	1072+53.71	A - EX. ASPHALT (3"± to 5"±)	X - EX. REINF. PCC (11"± to 12"±)
									1079+64.13	1088+48.91	BB - EX. ASPHALT (15"± to 16"±)	
P.10	1088+48.91	1092+72.92	B - EX. ASPHALT (6"± to 8"±)		1088+48.91	1092+72.92	A - EX. ASPHALT (3"± to 5"±)	E - EX. REINF. PCC (9"± to 10"±)	1088+48.91	1092+72.92	B - EX. ASPHALT (6"± to 8"±)	
P.10	1092+72.92	1097+25.00	B - EX. ASPHALT (6"± to 8"±)		1092+72.92	1097+25.00	A - EX. ASPHALT (3"± to 5"±)	E - EX. REINF. PCC (9"± to 10"±)	1095+30.03	1097+25.00	B - EX. ASPHALT (6"± to 8"±)	

Preliminary Plans - For Reference Only

EXISTING LEGEND

- (A) EXISTING ASPHALT (3"± TO 5"±)
- (B) EXISTING ASPHALT (6"± TO 8"±)
- (C) EXISTING ASPHALT (9"± TO 11"±)
- (D) EXISTING ASPHALT (12"± TO 14"±)
- (E) EXISTING REINFORCED PORTLAND CEMENT CONCRETE (9"± TO 10"±)
- (M) EXISTING REINFORCED PORTLAND CEMENT CONCRETE (7"± TO 8"±)
- (X) EXISTING REINFORCED PORTLAND CEMENT CONCRETE (11"± TO 12"±)
- (BB) EXISTING ASPHALT (15"± TO 16"±)
- (DD) EXISTING REINFORCED PORTLAND CEMENT CONCRETE (15"±)
- (EE) EXISTING REINFORCED PORTLAND CEMENT CONCRETE (16"± TO 17"±)
- (FF) EXISTING ASPHALT (1"± TO 3"±)

EXISTING TYPICAL SECTIONS - I.R. 680 SB PAVEMENT TABLE

DESIGN AGENCY
ms consultants. inc.

DESIGNER DWH
REVIEWER CMN 08/29/25
PROJECT ID 121474
SHEET P.13 TOTAL 655

MAH-680-4.58

MODEL: Sheet PAPERSIZE: 34x22 (in.) DATE: 9/15/2025 TIME: 2:21:21 PM PLTDRV: OHDOT_PDF_E+.pltcfg PENTBL: OHDOT_Pen.tbl USER: DHall@msconsultants.com WORKSPACE: OHDOTCEv02 WORKSET: 121474 PRODUCT: OpenRoadsDesigner 24.00.00.205
pw:\\ohiodot-pw.bentley.com:ohiodot-pw-02\Documents\01 Active Projects\District 04\Mahoning\121474\402-Engineering_MSConsultants\Roadway\Sheets\121474_GY018.dgn

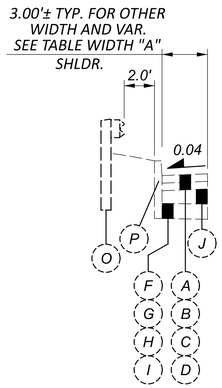

PARTIAL SECTION LEFT

SILLIMAN ST.
RAMP C (SILLIMAN ST. TO I.R. 680 S.B.) - STA. 0+23.23 TO STA. 0+80.74
RAMP C (SILLIMAN ST. TO I.R. 680 S.B.) - STA. 1+30.74 TO STA. 1+41.93
RAMP C (SILLIMAN ST. TO I.R. 680 S.B.) - STA. 4+44.09 TO STA. 4+78.99±
U.S. 62/S.R. 7 S.B.
RAMP CA (U.S. 62/S.R. 7 W.B. TO WOODLAND AVE.) - STA. 23+07.26 TO STA. 24+80.38

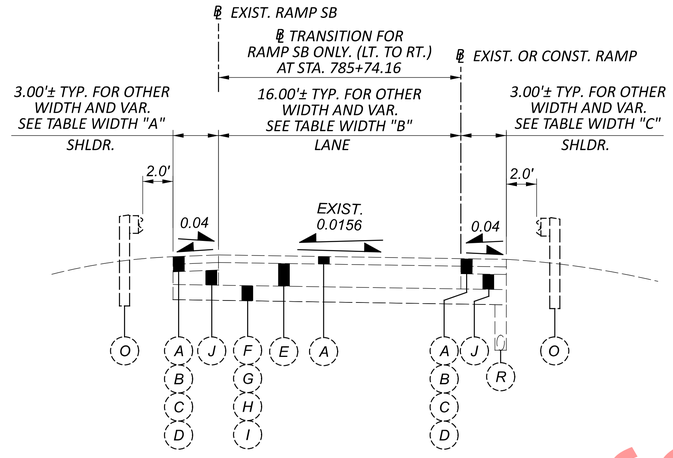

EXISTING NORMAL RAMP SECTION

SILLIMAN ST.
RAMP C [1/3] (SILLIMAN ST. TO I.R. 680 S.B.) - STA. 0+23.18 TO STA. 1+41.93
RAMP C [2/3] (SILLIMAN ST. TO I.R. 680 S.B.) - STA. 4+44.09± TO STA. 6+57.54
SALT SPRINGS RD.
RAMP D [2/3] (I.R. 680 N.B. TO SALT SPRINGS RD.) - STA. 10+72.88 TO STA. 16+52.52
HIGH ST.
RAMP F [1/3] (I.R. 680 S.B. TO HIGH ST.) - STA. 0+00.00 TO STA. 3+37.70
MARKET ST.
RAMP L [1/2] (MARKET ST. TO I.R. 680 N.B.) - STA. 0+00.00 TO STA. 2+26.41
WOODLAND AVE.
RAMP N [3/4] (WOODLAND AVE. TO I.R. 680 N.B.) - STA. 5+25.35 TO STA. 6+89.25 ✱
RAMP BY [1/1] (WOODLAND AVE. TO I.R. 680 N.B.) - STA. 0+00.00 TO STA. 11+42.07
RAMP CA [1/2] (U.S. 62/S.R. 7 S.B. TO WOODLAND AVE.) - STA. 14+35.73 TO STA. 24+80.38
U.S. 62/S.R. 7
RAMP SB [2/3] (U.S. 62/S.R. 7 W.B. TO I.R. 680 S.B.) - STA. 785+02.51 TO STA. 786+80.83 ✱

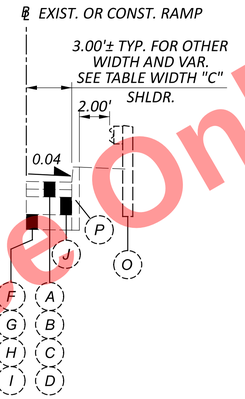

PARTIAL SECTION RIGHT

SILLIMAN ST.
RAMP C (SILLIMAN ST. TO I.R. 680 S.B.) - STA. 0+58.13 TO STA. 0+81.61

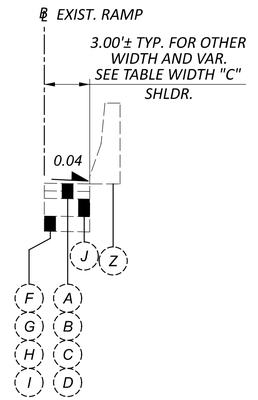

PARTIAL SECTION RIGHT

WOODLAND AVE.
RAMP N (WOODLAND AVE. TO I.R. 680 N.B.) - STA. 9+13.29 TO STA. 10+22.69 ✱

NOTES:

1. *FOR EXISTING LEGEND, SEE SHEET P.8*
2. *FOR WIDTH TABLES SEE SHEETS P.22 - P.23*
3. *FOR PAVEMENT DEPTH TABLES SEE SHEETS P.20 - P.21*
4. *THE BASELINE LOCATION VARIES WITHIN THE PAVEMENT STRUCTURE. WIDTHS SHOWN REPRESENT THE PAVEMENT WIDTHS AND NOT NECESSARILY THE OFFSETS FROM THE BASELINE.*

✱ = STATION LIMITS FOLLOW BL EXIST. RAMP. SEE THE SCHEMATIC PLAN.

Preliminary Plans - Not for Reference Only

EXISTING TYPICAL SECTIONS - RAMPS

MODEL: Sheet PAPERSIZE: 34x22 (in.) DATE: 9/15/2025 TIME: 2:21:26 PM PLTDRV: OHDOT_PDF_E+.pltcfg PENTBL: OHDOT_Pen.tbl USER: DHall@msconsultants.com WORKSPACE: OHDOTCEv02 WORKSET: 121474 PRODUCT: OpenRoadsDesigner 24.00.00.205
pw:\\ohiodot-pw.bentley.com:ohiodot-pw-02\Documents\01 Active Projects\District 04\Mahoning\121474\M02-Engineering_MSConsultants\Roadway\Sheets\121474_GY204.dgn

DESIGN AGENCY
ms consultants. inc.

DESIGNER DWH
REVIEWER CMN 08/29/25
PROJECT ID 121474
SHEET P.14 TOTAL 655

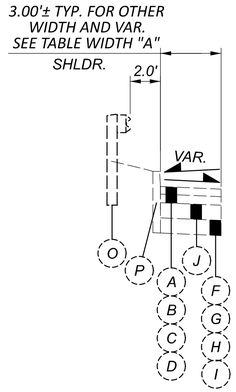

PARTIAL SECTION LEFT

MAHONING AVE.
RAMP E (MAHONING AVE. TO I.R. 680 S.B.) - STA. 2+40.48 TO STA. 3+12.12
HIGH ST.
RAMP F (I.R. 680 S.B. TO HIGH ST.) - STA. 13+54.25 TO STA. 14+65.75
MARKET ST.
RAMP K (I.R. 680 S.B. TO MARKET ST.) - STA. 7+94.02 TO STA. 11+32.22
RAMP K (I.R. 680 S.B. TO MARKET ST.) - STA. 12+19.62 TO STA. 16+42.65
RAMP L (MARKET ST. TO I.R. 680 N.B.) - STA. 2+26.41 TO STA. 3+18.81
RAMP M (I.R. 680 S.B. TO MARKET ST.) - STA. 9+16.83 TO STA. 10+02.87 ✱
RAMP M (I.R. 680 S.B. TO MARKET ST.) - STA. 15+24.25 TO STA. 15+36.63 ✱
RAMP M (I.R. 680 S.B. TO MARKET ST.) - STA. 15+54.67 TO 15+66.88 ✱
WOODLAND AVE.
RAMP N (WOODLAND AVE. TO I.R. 680 N.B.) - STA. 1+70.44 TO STA. 3+73.66 ✱
SOUTH AVE.
RAMP A (I.R. 680 S.B. TO SOUTH AVE.) - STA. 1081+55.46 TO STA. 1084+12.88
RAMP D (I.R. 680 N.B. TO SOUTH AVE.) - STA. 754+30.69 TO STA. 754+91.19 ✱

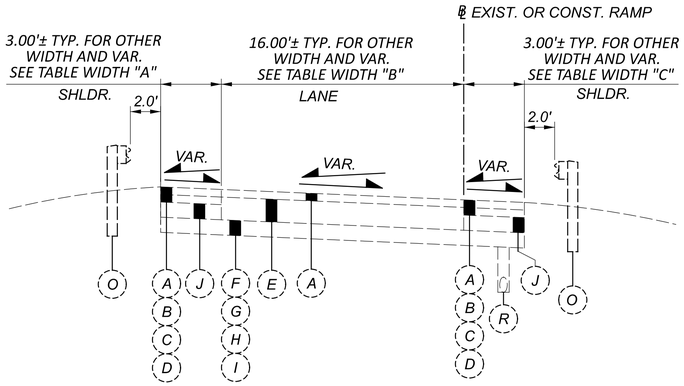

EXISTING SUPERELEVATED RAMP SECTION

S.R. 193
RAMP B-3 [1/1] (I.R. 680 N.B. TO S.R. 193) - STA. 1+00.00 TO STA. 11+42.35
SILLIMAN ST.
RAMP C [3/3] (SILLIMAN ST. TO I.R. 680 S.B.) - STA. 6+57.54 TO STA. 20+58.30
SALT SPRINGS
RAMP D [1/3] (I.R. 680 N.B. TO SALT SPRINGS RD.) - STA. 0+00.00 TO 10+72.88
MAHONING AVE.
RAMP E [1/1] (MAHONING AVE. TO I.R. 680 S.B.) - STA. 2+10.86 TO STA. 10+44.72
HIGH ST.
RAMP F [2/3] (I.R. 680 S.B. TO HIGH ST.) - STA. 5+50.83 TO STA. 14+65.75
RAMP H [2/2] (HIGH ST. TO I.R. 680 S.B.) - STA. 3+90.74 TO STA. 18+29.96
MARSHALL ST.
RAMP G [2/2] (MARSHALL ST. TO I.R. 680 N.B.) - STA. 3+23.72 TO STA. 6+77.30
RAMP J [1/2] (I.R. 680 N.B. TO MARSHALL ST.) - STA. 3+29.56 TO STA. 10+32.00
MARKET ST.
RAMP K [1/1] (I.R. 680 S.B. TO MARKET ST.) - STA. 4+46.87 TO STA. 16+42.65
RAMP L [2/2] (MARKET ST. TO I.R. 680 N.B.) - STA. 2+26.41 TO STA. 8+83.47
RAMP M [1/1] (I.R. 680 S.B. TO MARKET ST.) - STA. 0+00.00 TO 15+73.68 ✱
WOODLAND AVE.
RAMP N [2/4] (WOODLAND AVE. TO I.R. 680 N.B.) - STA. 1+70.44 TO STA. 5+25.35 ✱
RAMP N [4/4] (WOODLAND AVE. TO I.R. 680 N.B.) - STA. 6+89.25 TO STA. 12+29.00 ✱
WILLIAMSON AVE.
RAMP BV [1/1] (U.S. 62/S.R. 7 S.B. TO WILLIAMSON AVE.) - STA. 0+00.00 TO STA. 12+80.30
U.S. 62/S.R. 7
RAMP NB [1/1] (I.R. 680 N.B. TO U.S. 62/S.R. 7 N.B.) - STA. 785+00.00 TO STA. 806+83.75 ✱
SOUTH AVE.
RAMP A [1/1] (I.R. 680 S.B. TO SOUTH AVE.) - STA. 1080+01.69 TO STA. 1084+44.99
RAMP C [1/1] (SOUTH AVE. TO I.R. 680 S.B.) - STA. 1084+66.40 TO STA. 1090+19.73
RAMP D [1/3] (I.R. 680 N.B. TO SOUTH AVE.) - STA. 748+53.05 TO STA. 754+91.19 ✱

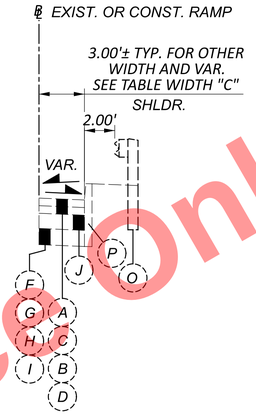

PARTIAL SECTION RIGHT

HIGH ST.
RAMP H (HIGH ST. TO I.R. 680 S.B.) - STA. 2+46.88 TO STA. 3+90.79
MARKET ST.
RAMP K (I.R. 680 S.B. TO MARKET ST.) - STA. 10+22.14 TO STA. 16+42.65
RAMP L (MARKET ST. TO I.R. 680 N.B.) - STA. 5+66.18 TO STA. 6+10.87
RAMP M (I.R. 680 S.B. TO MARKET ST.) - STA. 4+47.42 TO STA. 4+86.18 ✱
RAMP M (I.R. 680 S.B. TO MARKET ST.) - STA. 15+16.79 TO STA. 15+73.68 ✱
WOODLAND AVE.
RAMP N (WOODLAND AVE. TO I.R. 680 N.B.) - STA. 1+70.44 TO STA. 3+61.46 ✱
SOUTH AVE.
RAMP A (I.R. 680 S.B. TO SOUTH AVE.) - STA. 1082+26.13 TO STA. 1084+44.99
RAMP C (SOUTH AVE. TO I.R. 680 S.B.) - STA. 1088+70.89 TO STA. 1090+15.04

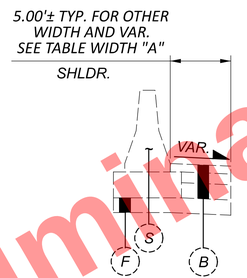

PARTIAL SECTION LEFT

S.R. 193/SILLIMAN ST.
RAMP C (S.R. 193 TO I.R. 680 S.B.) - STA. 9+26.93± TO STA. 12+89.24

Preliminary Plans - For Reference Only

NOTES:

1. *FOR EXISTING LEGEND, SEE SHEET P.8*
2. *FOR WIDTH TABLES SEE SHEETS P.22 - P.23*
3. *FOR PAVEMENT DEPTH TABLES SEE SHEETS P.20 - P.21*
4. *THE BASELINE LOCATION VARIES WITHIN THE PAVEMENT STRUCTURE. WIDTHS SHOWN REPRESENT THE PAVEMENT WIDTHS AND NOT NECESSARILY THE OFFSETS FROM THE BASELINE.*

✱ = STATION LIMITS FOLLOW BL EXIST. RAMP. SEE THE SCHEMATIC PLAN.

EXISTING TYPICAL SECTIONS - RAMPS

DESIGN AGENCY
ms consultants, inc.

DESIGNER DWH
REVIEWER CMN 08/29/25
PROJECT ID 121474
SHEET P.15 TOTAL 655

MAH-680-4.58

MODEL: Sheet PAPERSIZE: 34x22 (in.) DATE: 9/15/2025 TIME: 2:21:31 PM PLTDRV: OHDOT_PDF_E+.pltcfg PENTBL: OHDOT_Pen.tbl USER: DHall@msconsultants.com WORKSPACE: OHDOTCEv02 WORKSET: 121474 PRODUCT: OpenRoadsDesigner 24.00.00.205
pw:\\ohiodot-pw.bentley.com:ohiodot-pw-02\Documents\01 Active Projects\District 04\Mahoning\121474\402-Engineering_MSConsultants\Roadway\Sheets\121474_GY203.dgn

NOTES:

1. FOR EXISTING LEGEND, SEE SHEET P.8
2. FOR WIDTH TABLES SEE SHEETS P.22 - P.23
3. FOR PAVEMENT DEPTH TABLES SEE SHEETS P.20 - P.21
4. THE BASELINE LOCATION VARIES WITHIN THE PAVEMENT STRUCTURE. WIDTHS SHOWN REPRESENT THE PAVEMENT WIDTHS AND NOT NECESSARILY THE OFFSETS FROM THE BASELINE.

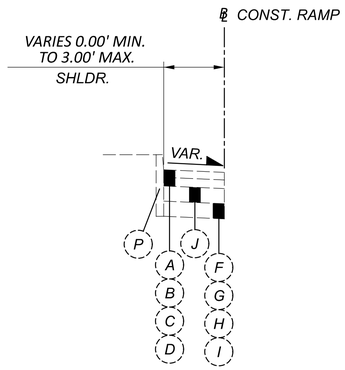

PARTIAL SECTION LEFT

MARSHALL ST.
RAMP J (I.R. 680 N.B. TO MARSHALL ST.) - STA. 11+65.96 TO STA. 16+85.52
SOUTH AVE.
RAMP B (SOUTH AVE. TO I.R. 680 N.B.) - STA. 1091+59.79 TO STA. 1092+47.49

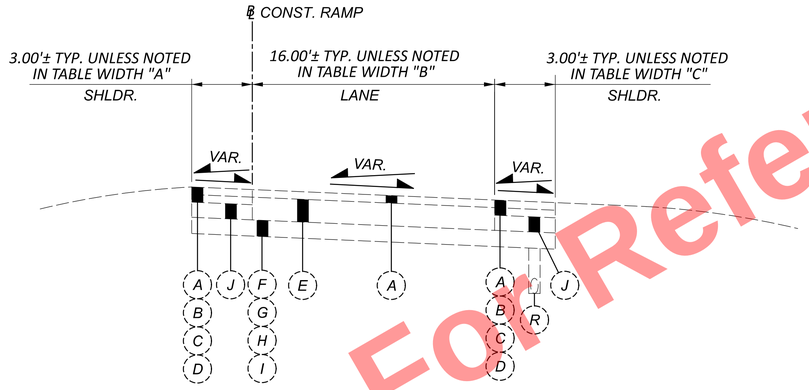

EXISTING SUPERELEVATED RAMP SECTION

MARSHALL ST.
RAMP G [1/2] (MARSHALL ST. TO I.R. 680 N.B. - STA. 0+08.11 TO STA. 3+23.72
RAMP J [2/2] (I.R. 680 N.B. TO MARSHALL ST.) - STA. 10+32.00 TO STA. 16+40.00
U.S. 62/S.R. 7
RAMP BX [1/1] (I.R. 680 S.B. TO U.S. 62/S.R. 7 N.B.) - STA. 3+43.59 TO STA. 19+98.94
SOUTH AVE.
RAMP B [1/3] (SOUTH AVE. TO I.R. 680 N.B.) - STA. 1085+19.36 TO STA. 1088+80.55
RAMP B [3/3] (SOUTH AVE. TO I.R. 680 N.B.) - STA. 1091+38.39 TO STA. 1092+47.49

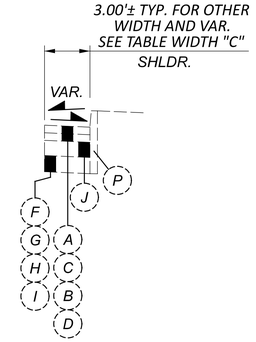

PARTIAL SECTION RIGHT

MARSHALL ST.
RAMP G (MARSHALL ST. TO I.R. 680 N.B. - STA. 2+45.59 TO STA. 3+23.72
RAMP J (I.R. 680 N.B. TO MARSHALL ST.) - STA. 14+01.37 TO STA. 14+92.73±
U.S. 62/S.R. 7
RAMP BX (I.R. 680 S.B. TO U.S. 62/S.R. 7 N.B.) - STA. 3+43.59 TO STA. 4+41.14
SOUTH AVE.
RAMP B (SOUTH AVE. TO I.R. 680 N.B.) - STA. 1091+38.39 TO STA. 1092+47.49

Preliminary Plans - For Reference Only

EXISTING TYPICAL SECTIONS - RAMPS

DESIGN AGENCY
ms consultants, inc.

DESIGNER
DWH

REVIEWER
CMN 08/29/25

PROJECT ID
121474

SHEET P.16 | TOTAL 655

MAH-680-4.58

MODEL: Sheet PAPERSIZE: 34x22 (in.) DATE: 9/15/2025 TIME: 2:21:37 PM PLTDRV: OHDOT_PDF_E+.pltcfg PENTBL: OHDOT_Pen.tbl USER: DHall@msconsultants.com WORKSPACE: OHDOTCEv02 WORKSET: 121474 PRODUCT: OpenRoadsDesigner 24.00.00.205
pw:\\ohiodot-pw.bentley.com:ohiodot-pw-02\Documents\01 Active Projects\District 04\Mahoning\121474\M02-Engineering_MSConsultants\Roadway\Sheets\121474_GY202.dgn

NOTES:

1. FOR EXISTING LEGEND, SEE SHEET P.8
2. FOR WIDTH TABLES SEE SHEETS P.22 - P.23
3. FOR PAVEMENT DEPTH TABLES SEE SHEETS P.20 - P.21
4. THE BASELINE LOCATION VARIES WITHIN THE PAVEMENT STRUCTURE. WIDTHS SHOWN REPRESENT THE PAVEMENT WIDTHS AND NOT NECESSARILY THE OFFSETS FROM THE BASELINE.

∗ = STATION LIMITS FOLLOW BL EXIST. RAMP. SEE THE SCHEMATIC PLAN.

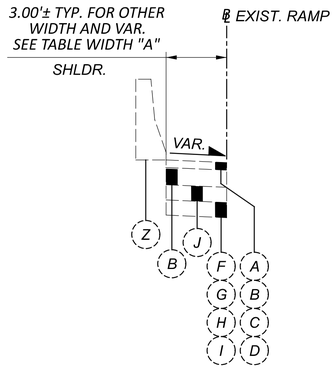

PARTIAL SECTION LEFT

U.S. 62/S.R. 7

RAMP SB (U.S. 62/S.R. 7 W.B. TO I.R. 680 S.B.) - STA. 791+40.74 TO STA. 796+50.88 ∗

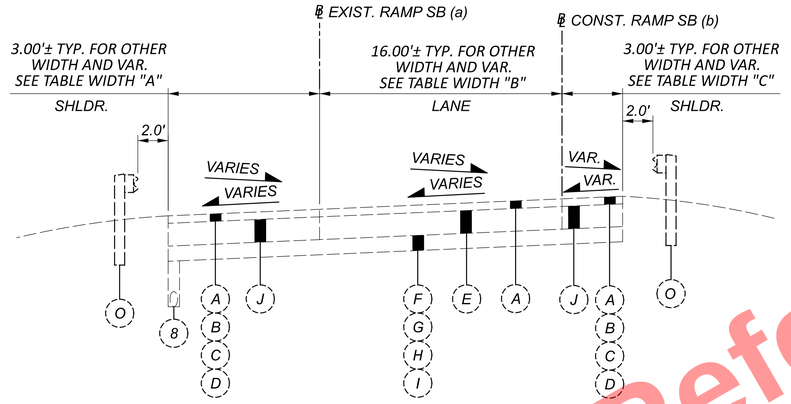

EXISTING SUPERELEVATED RAMP SECTION

U.S. 62/S.R. 7

RAMP SB [1/3] (U.S. 62/S.R. 7 W.B. TO I.R. 680 S.B.) - STA. 783+24.21 TO STA. 785+02.51 (a) ∗
RAMP SB [3/3] (U.S. 62/S.R. 7 W.B. TO I.R. 680 S.B.) - STA. 786+80.83 TO STA. 804+84.15 (b) ∗

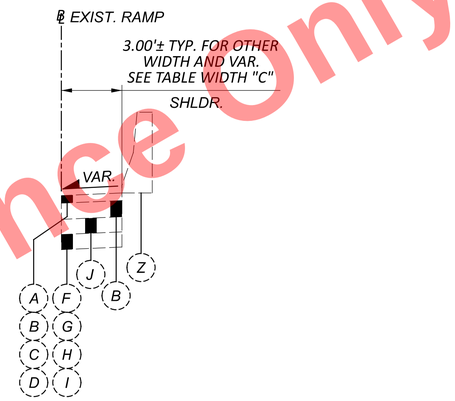

PARTIAL SECTION RIGHT

U.S. 62/S.R. 7

RAMP SB (U.S. 62/S.R. 7 W.B. TO I.R. 680 S.B.) - STA. 791+85.77 TO STA. 797+15.18 ∗

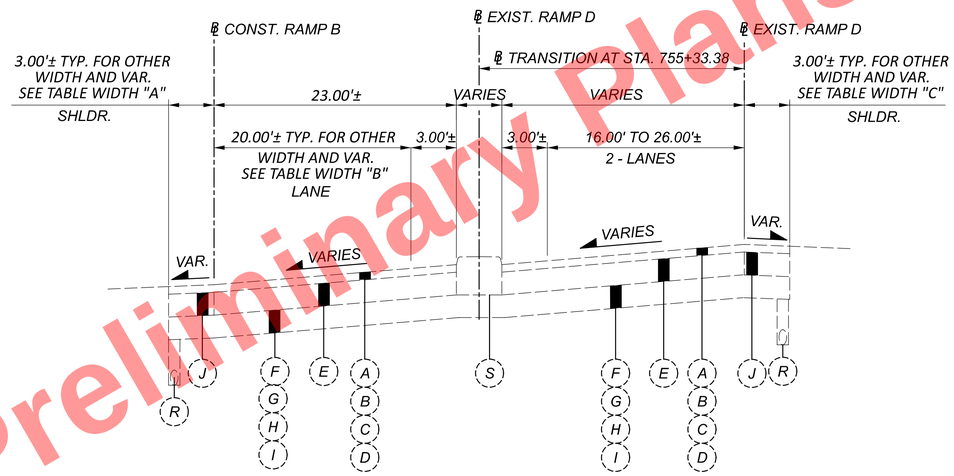

EXISTING SUPERELEVATED TWO WAY RAMP

SOUTH AVE.

RAMP B [2/3] (SOUTH AVE TO I.R. 680 N.B.) - STA. 1088+80.55 TO STA. 1091+38.31
RAMP D [2/3] (I.R. 680 N.B. TO SOUTH AVE)- STA. 754+91.19 TO STA. 757+85.40 ∗

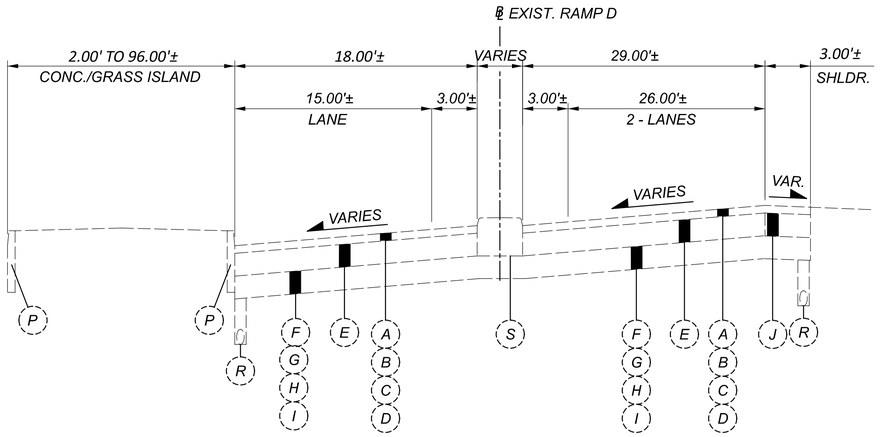

EXISTING SUPERELEVATED TWO WAY RAMP

SOUTH AVE.

RAMP D [3/3] (I.R. 680 N.B. TO SOUTH AVE)- STA. 757+85.40 TO STA. 758+69.95 ∗

Preliminary Plans - For Reference Only

EXISTING TYPICAL SECTIONS - RAMPS

DESIGN AGENCY
ms consultants, inc.

DESIGNER DWH
REVIEWER CMN 08/29/25
PROJECT ID 121474
SHEET P.17 TOTAL 655

MAH-680-4.58

MODEL: Sheet PAPERSIZE: 34x22 (in.) DATE: 9/15/2025 TIME: 2:21:42 PM PLTDRV: OHDOT_PDF_E+.pltcfg PENTBL: OHDOT_Pen.tbl USER: DHall@msconsultants.com WORKSPACE: OHDOTCEv02 WORKSET: 121474 PRODUCT: OpenRoadsDesigner 24.00.00.205
pw:\\ohiodot-pw.bentley.com:ohiodot-pw-02\Documents\01 Active Projects\District 04\Mahoning\121474\M02-Engineering_MSConsultants\Roadway\Sheets\121474_GY205.dgn

NOTES:

1. FOR EXISTING LEGEND, SEE SHEET P.8
2. FOR WIDTH TABLES SEE SHEETS P.22 - P.23
3. FOR PAVEMENT DEPTH TABLES SEE SHEETS P.20 - P.21
4. THE BASELINE LOCATION VARIES WITHIN THE PAVEMENT STRUCTURE. WIDTHS SHOWN REPRESENT THE PAVEMENT WIDTHS AND NOT NECESSARILY THE OFFSETS FROM THE BASELINE.

✱ = STATION LIMITS FOLLOW BL EXIST. RAMP. SEE THE SCHEMATIC PLAN.

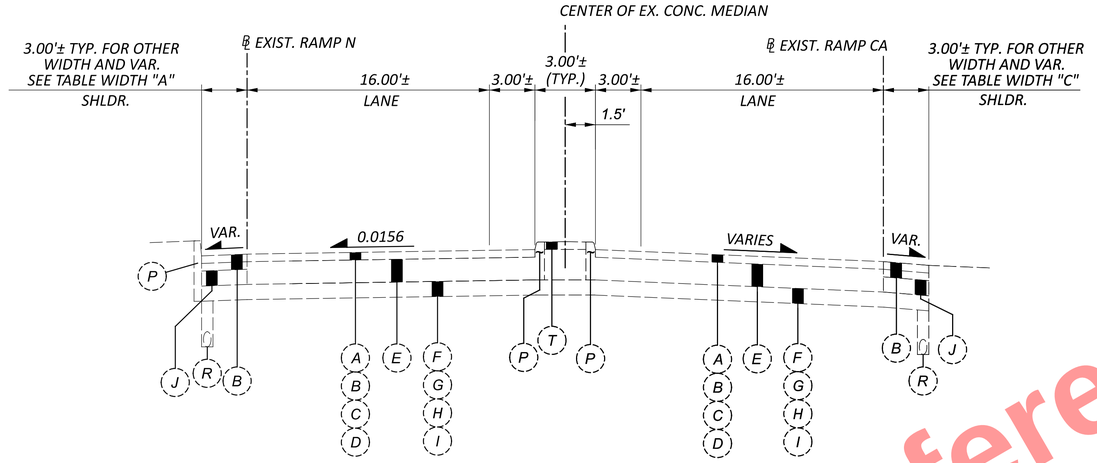

EXISTING SUPERELEVATED TWO WAY RAMP

WOODLAND AVE.

RAMP N [1/4] (WOODLAND AVE. TO I.R. 680 N.B.) - STA. 0+92.01 TO STA. 1+70.44 ✱
RAMP CA [2/2] (U.S. 62/S.R. 7 W.B. TO WOODLAND AVE) - STA. 24+80.38 TO STA. 25+77.19

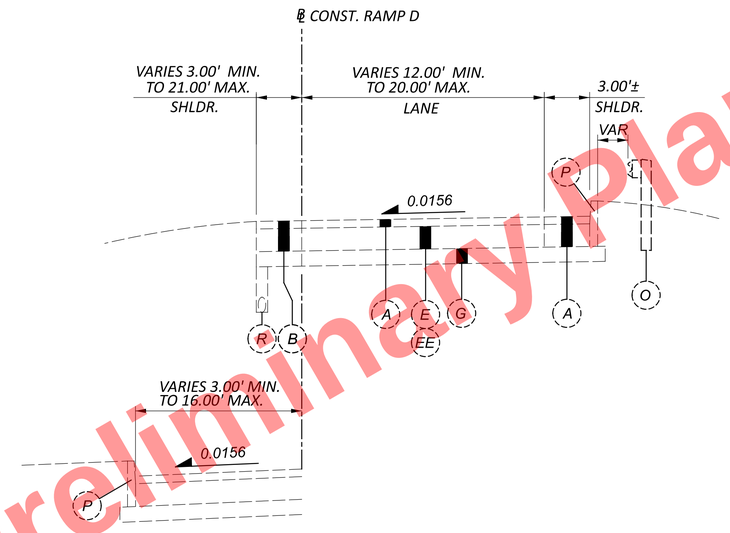

PARTIAL SECTION LEFT

SALT SPRINGS ROAD

STA. 18+40.19± TO STA. 18+80.76±

EXISTING NORMAL RAMP SECTION

SALT SPRINGS ROAD

RAMP D [3/3] (I.R. 680 N.B. TO SALT SPRINGS ROAD) - STA. 16+52.52 TO STA. 19+10.74

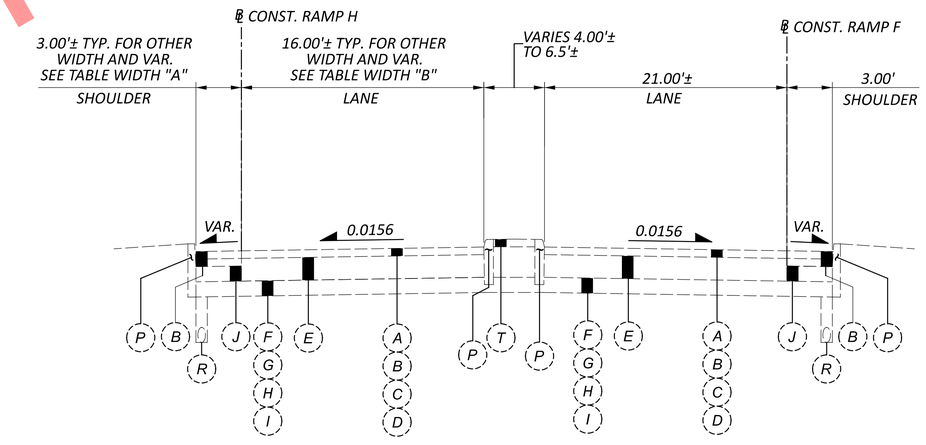

EXISTING NORMAL RAMP SECTION

HIGH ST.

RAMP H [1/2] (HIGH ST. TO I.R. 680 S.B.) - STA. 2+60.71 TO STA. 3+90.74 (LOOKING BACK STATION)
RAMP F [3/3] (I.R. 680 S.B. TO HIGH ST.) - STA. 14+65.75 TO STA. 16+74.52

Preliminary Plans - For Reference Only

EXISTING TYPICAL SECTIONS - RAMPS

MAH-680-4.58

MODEL: Sheet PAPERSIZE: 34x22 (in.) DATE: 9/15/2025 TIME: 2:21:48 PM PLTDRV: OHDOT_PDF_E+.pltcfg PENTBL: OHDOT_Pen.tbl USER: DHall@msconsultants.com WORKSPACE: OHDOTCEv02 WORKSET: 121474 PRODUCT: OpenRoadsDesigner 24.00.00.205
pw:\\ohiodot-pw.bentley.com:ohiodot-pw-02\Documents\01 Active Projects\District 04\Mahoning\121474\402-Engineering_MSConsultants\Roadway\Sheets\121474_GY206.dgn

DESIGN AGENCY
ms consultants. inc.

DESIGNER DWH
REVIEWER CMN 08/29/25
PROJECT ID 121474
SHEET P.18 TOTAL 655

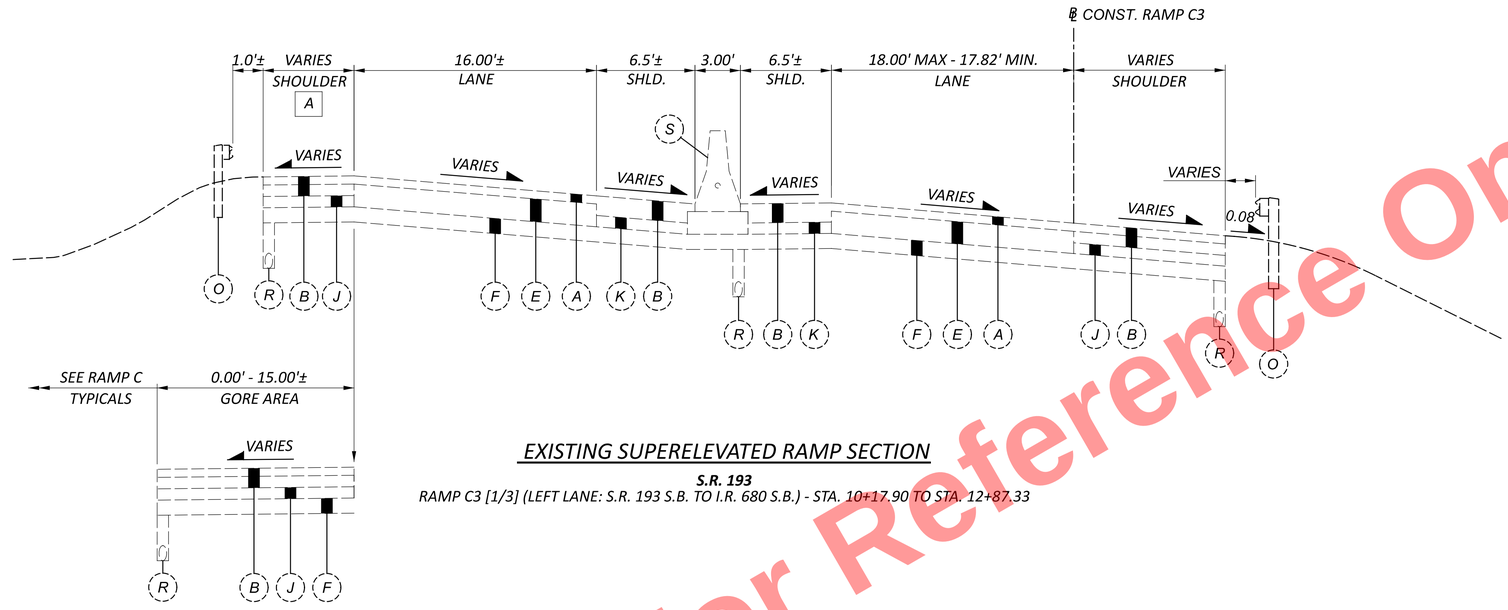

A STA. 10+56.64 TO STA. 12+87.33 = 5.00'± TO 8.33'

EXISTING SUPERELEVATED RAMP SECTION

S.R. 193

RAMP C3 [1/3] (LEFT LANE: S.R. 193 S.B. TO I.R. 680 S.B.) - STA. 10+17.90 TO STA. 12+87.33

STA. 10+17.90 TO STA. 10+56.64

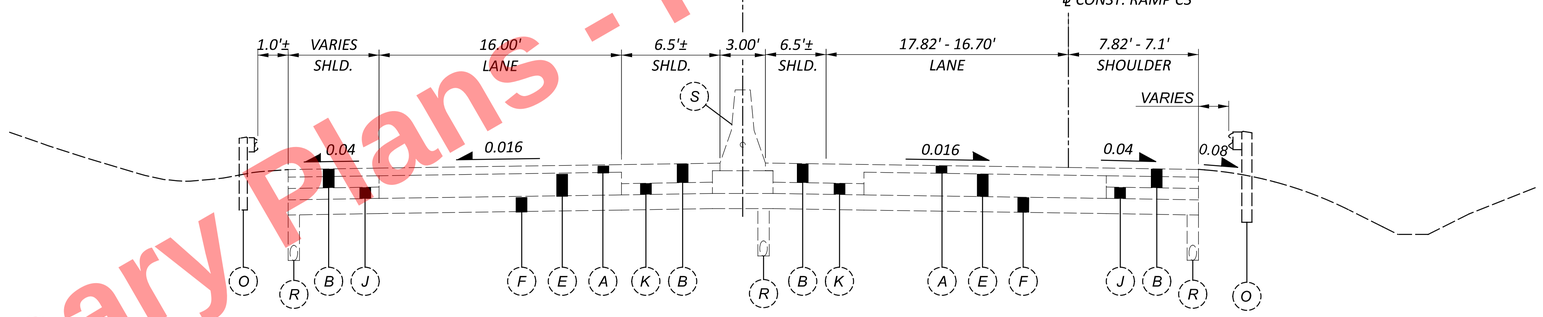

A STA. 12+87.33 TO STA. 13+09.88 = 8.33' TO 9.48'
STA. 0+96.26 TO STA. 1+71.01 = 8.00' TO 10.00'
STA. 1+71.01 TO STA. 3+23.61 = 10.00'

EXISTING NORMAL RAMP SECTION

S.R. 193

RAMP C3 [2/3] (LEFT LANE: S.R. 193 S.B. TO I.R. 680 S.B.) - STA. 12+87.33 TO STA. 13+21.73 (SKEWED)

STRUCTURE MAH-680-4.400
AND APPROACH SLAB
STA. 13+21.73 TO STA. 0+96.26

S.R. 193 [3/3] (LEFT LANE: S.R. 193 S.B. TO I.R. 680 S.B., RIGHT LANE: I.R. 680 S.B. TO S.R. 193 N.B.) - STA. 0+96.26 (SKEWED) TO STA. 3+99.38

NOTES:

1. FOR EXISTING LEGEND, SEE SHEET P.8
2. FOR WIDTH TABLES SEE SHEETS P.21 - P.22
3. FOR PAVEMENT DEPTH TABLES SEE SHEETS P.19 - P.20
4. THE BASELINE LOCATION VARIES WITHIN THE PAVEMENT STRUCTURE. WIDTHS SHOWN REPRESENT THE PAVEMENT WIDTHS AND NOT NECESSARILY THE OFFSETS FROM THE BASELINE.

Preliminary Plans - For Reference Only

EXISTING TYPICAL SECTIONS - RAMPS

DESIGN AGENCY
ms consultants, inc.

DESIGNER DWH
REVIEWER CMN 08/29/25
PROJECT ID 121474
SHEET P.19 TOTAL 655

MAH-680-4.58

MODEL: Sheet PAPERSIZE: 34x22 (in.) DATE: 9/15/2025 TIME: 2:21:53 PM PLTDRV: OHDOT_PDF_E+.pltcfg PENTBL: OHDOT_Pen.tbl USER: DHall@msconsultants.com WORKSPACE: OHDOTCEv02 WORKSET: 121474 PRODUCT: OpenRoadsDesigner 24.00.00.205
pw:\\ohiodot-pw.bentley.com:ohiodot-pw-02\Documents\01 Active Projects\District 04\Mahoning\121474\M02-Engineering_MSConsultants\Roadway\Sheets\121474_GY207.dgn

EXISTING RAMP PAVEMENT DEPTH TABLE

RAMP	LEFT SHOULDER				RAMP LANE(S)				RIGHT SHOULDER			
	STATION		EXISTING LEGEND CALLOUT	EXISTING LEGEND CALLOUT	STATION		EXISTING LEGEND CALLOUT	EXISTING LEGEND CALLOUT	STATION		EXISTING LEGEND CALLOUT	EXISTING LEGEND CALLOUT
	FROM	TO			FROM	TO			FROM	TO		
SILLIMAN ST. RAMP C	0+83.69	1+18.84	FF - EX. ASPHALT (1"± to 3"±)		0+23.23	1+41.93	A - EX. ASPHALT (3"± to 5"±)	E - EX. REINF. PCC (9"± to 10"±)	0+80.61	1+18.17	FF - EX. ASPHALT (1"± to 3"±)	
	1+18.84	1+52.80	A - EX. ASPHALT (3"± to 5"±)	E - EX. REINF. PCC (9"± to 10"±)	4+44.09	12+00±		X - EX. REINF. PCC (11"± to 12"±)	1+18.17	1+41.25	A - EX. ASPHALT (3"± to 5"±)	E - EX. REINF. PCC (9"± to 10"±)
	4+53.88	5+50±			12+00±	20+58.30	A - EX. ASPHALT (3"± to 5"±)	E - EX. REINF. PCC (9"± to 10"±)	4+41.64	5+50±	A - EX. ASPHALT (3"± to 5"±)	X - EX. REINF. PCC (11"± to 12"±)
	5+50±	8+75.30	FF - EX. ASPHALT (1"± to 3"±)						5+50±	20+58.30		E - EX. REINF. PCC (9"± to 10"±)
	8+83.41	13+00±	B - EX. ASPHALT (6"± to 8"±)									
	13+00±	17+54.32	A - EX. ASPHALT (3"± to 5"±)	E - EX. REINF. PCC (9"± to 10"±)								
S.R. 193 RAMP C-3, MEDIAN TO LT. SHLDR	10+56.52	13+14.34	B - EX. ASPHALT (6"± to 8"±)		10+56.52	13+19.52	A - EX. ASPHALT (3"± to 5"±)	E - EX. REINF. PCC (9"± to 10"±)	10+56.52	13+19.52	B - EX. ASPHALT (6"± to 8"±)	
S.R. 193 MEDIAN TO LT. SHLDR	0+87.00	3+23.53	B - EX. ASPHALT (6"± to 8"±)		0+93.07	3+99.77	A - EX. ASPHALT (3"± to 5"±)	E - EX. REINF. PCC (9"± to 10"±)	0+93.07	3+99.77	B - EX. ASPHALT (6"± to 8"±)	
S.R. 193 RAMP B-3	5+63.61	10+00±	FF - EX. ASPHALT (1"± to 3"±)		1+00.00	11+12.30	A - EX. ASPHALT (3"± to 5"±)	E - EX. REINF. PCC (9"± to 10"±)	1+76.82	10+00±	FF - EX. ASPHALT (1"± to 3"±)	
	10+00±	11+19.15	A - EX. ASPHALT (3"± to 5"±)	E - EX. REINF. PCC (9"± to 10"±)					10+00±	11+19.15	A - EX. ASPHALT (3"± to 5"±)	E - EX. REINF. PCC (9"± to 10"±)
SALT SPRINGS RD. RAMP D	7+02.90	13+00±	FF - EX. ASPHALT (1"± to 3"±)	E - EX. REINF. PCC (9"± to 10"±)	0+00.00	9+00±	B - EX. ASPHALT (6"± to 8"±)	X - EX. REINF. PCC (11"± to 12"±)	0+00.00	10+00±	B - EX. ASPHALT (6"± to 8"±)	
	13+00±	17+02.66	B - EX. ASPHALT (6"± to 8"±)		9+00±	16+00±	A - EX. ASPHALT (3"± to 5"±)	E - EX. REINF. PCC (9"± to 10"±)	10+00±	17+01.71	A - EX. ASPHALT (3"± to 5"±)	
					16+00±	19+10.74		EE - EX. REINF. PCC (16"± to 17"±)				
MAHONING AVE. RAMP E	2+11.32	8+16.72	FF - EX. ASPHALT (1"± to 3"±)		0+12.81	2+10.86		E - EX. REINF. PCC (9"± to 10"±)	2+09.49	10+44.72	FF - EX. ASPHALT (1"± to 3"±)	
					2+10.86	6+00±	D - EX. ASPHALT (12"± to 14"±)					
					6+00±	10+44.72	A - EX. ASPHALT (3"± to 5"±)	E - EX. REINF. PCC (9"± to 10"±)				
MARSHALL ST. RAMP G	0+08.11	4+06.43	FF - EX. ASPHALT (1"± to 3"±)	E - EX. REINF. PCC (9"± to 10"±)	0+08.11	4+00±	FF - EX. ASPHALT (1"± to 3"±)	E - EX. REINF. PCC (9"± to 10"±)	2+37.54	6+77.30	B - EX. ASPHALT (6"± to 8"±)	
					4+00±	6+77.30	A - EX. ASPHALT (3"± to 5"±)					
HIGH ST. RAMP F	8+56.86	16+76.98	A - EX. ASPHALT (3"± to 5"±)	E - EX. REINF. PCC (9"± to 10"±)	0+00.00	8+56±	B - EX. ASPHALT (6"± to 8"±)	X - EX. REINF. PCC (11"± to 12"±)	0+00.00	8+56±	B - EX. ASPHALT (6"± to 8"±)	
					8+56±	17+04.31	A - EX. ASPHALT (3"± to 5"±)	E - EX. REINF. PCC (9"± to 10"±)	8+56±	16+77.55	A - EX. ASPHALT (3"± to 5"±)	E - EX. REINF. PCC (9"± to 10"±)
HIGH ST. RAMP H	2+46.88	14+62.97	FF - EX. ASPHALT (1"± to 3"±)	E - EX. REINF. PCC (9"± to 10"±)	2+46.88	7+00±	FF - EX. ASPHALT (1"± to 3"±)	X - EX. REINF. PCC (11"± to 12"±)	2+58.43	18+29.96	FF - EX. ASPHALT (1"± to 3"±)	E - EX. REINF. PCC (9"± to 10"±)
					7+00±	18+29.96		E - EX. REINF. PCC (9"± to 10"±)				
MARSHALL ST. RAMP J	8+52.31	16+40.00	A - EX. ASPHALT (3"± to 5"±)		3+29.56	16+40.00	A - EX. ASPHALT (3"± to 5"±)	E - EX. REINF. PCC (9"± to 10"±)	3+29.56	5+50±	A - EX. ASPHALT (3"± to 5"±)	
									5+50±	14+94.54		E - EX. REINF. PCC (9"± to 10"±)
MARKET ST. RAMP K	7+94.28	14+00±	B - EX. ASPHALT (6"± to 8"±)		4+46.87	6+00±	A - EX. ASPHALT (3"± to 5"±)	E - EX. REINF. PCC (9"± to 10"±)	4+46.87	6+00±	B - EX. ASPHALT (6"± to 8"±)	
	14+00±	16+79.66	A - EX. ASPHALT (3"± to 5"±)	E - EX. REINF. PCC (9"± to 10"±)	6+00±	19+10.58	FF - EX. ASPHALT (1"± to 3"±)	E - EX. REINF. PCC (9"± to 10"±)	6+00±	16+78.60	D - EX. ASPHALT (12"± to 14"±)	
MARKET ST. RAMP L	2+27.44	6+10.48	FF - EX. ASPHALT (1"± to 3"±)	B - EX. ASPHALT (6"± to 8"±)	0+00.00	2+27.12		E - EX. REINF. PCC (9"± to 10"±)	0+00.00	2+27.12		E - EX. REINF. PCC (9"± to 10"±)
					2+27.12	8+83.47	A - EX. ASPHALT (3"± to 5"±)		2+27.12	8+83.47	A - EX. ASPHALT (3"± to 5"±)	
MARKET ST. RAMP M	5+73.49	8+82.00	B - EX. ASPHALT (6"± to 8"±)		0+00.00	6+00±	B - EX. ASPHALT (6"± to 8"±)	E - EX. REINF. PCC (9"± to 10"±)	0+00.00	6+00±	B - EX. ASPHALT (6"± to 8"±)	
	9+17.73	15+54.67	A - EX. ASPHALT (3"± to 5"±)		6+00±	16+33.57	A - EX. ASPHALT (3"± to 5"±)		6+00±	15+66.36	A - EX. ASPHALT (3"± to 5"±)	E - EX. REINF. PCC (9"± to 10"±)
WOODLAND AVE. RAMP N	0+55.34	3+73.66	A - EX. ASPHALT (3"± to 5"±)		0+12.60	0+55.34		X - EX. REINF. PCC (11"± to 12"±)	0+12.60	0+55.34		X - EX. REINF. PCC (11"± to 12"±)
	5+05.67	8+42.58			0+55.34	4+50±	DD - EX. ASPHALT (1"± to 3"±)	E - EX. REINF. PCC (9"± to 10"±)	0+55.34	7+50±	DD - EX. ASPHALT (1"± to 3"±)	
					4+50±	7+50±	B - EX. ASPHALT (6"± to 8"±)		7+50±	12+29.00	D - EX. ASPHALT (12"± to 14"±)	
					7+50±	12+29.00	A - EX. ASPHALT (3"± to 5"±)	X - EX. REINF. PCC (11"± to 12"±)				
U.S. 62/S.R. 7 RAMP BY	0+00.00	11+42.07	B - EX. ASPHALT (6"± to 8"±)		0+00.00	11+42.07	C - EX. ASPHALT (9"± to 11"±)		3+80.52	9+99.05	C - EX. ASPHALT (9"± to 11"±)	

Preliminary Plans - For Reference Only

EXISTING TYPICAL SECTION LEGEND

- (A) EXISTING ASPHALT (3"± TO 5"±)
- (B) EXISTING ASPHALT (6"± TO 8"±)
- (C) EXISTING ASPHALT (9"± TO 11"±)
- (D) EXISTING ASPHALT (12"± TO 14"±)
- (E) EXISTING REINFORCED PORTLAND CEMENT CONCRETE (9"± TO 10"±)
- (M) EXISTING REINFORCED PORTLAND CEMENT CONCRETE (7"± TO 8"±)
- (X) EXISTING REINFORCED PORTLAND CEMENT CONCRETE (11"± TO 12"±)
- (AA) EXISTING REINFORCED PORTLAND CEMENT CONCRETE (5"± TO 6"±)
- (BB) EXISTING ASPHALT (15"± TO 16"±)
- (CC) EXISTING REINFORCED PORTLAND CEMENT CONCRETE (13"± TO 14"±)
- (DD) EXISTING REINFORCED PORTLAND CEMENT CONCRETE (15"±)
- (EE) EXISTING REINFORCED PORTLAND CEMENT CONCRETE (16"± TO 17"±)
- (FF) EXISTING ASPHALT (1"± TO 3"±)

MAH-680-4.58
MODEL: Sheet PAPERSIZE: 34x22 (in.) DATE: 9/15/2025 TIME: 2:21:59 PM PLTDRV: OHDOT_PDF_E+.pltcfg PENTBL: OHDOT_Pen.tbl USER: DHall@msconsultants.com WORKSPACE: OHDOTCEv02 WORKSET: 121474 PRODUCT: OpenRoadsDesigner 24.00.00.205
pw:\\ohiodot-pw.bentley.com:ohiodot-pw-02\Documents\01 Active Projects\District 04\Mahoning\121474\402-Engineering_MSConsultants\Roadway\Sheets\121474_GY020.dgn

DESIGN AGENCY
ms consultants, inc.
DESIGNER DWH
REVIEWER CMN 08/29/25
PROJECT ID 121474
SHEET P.20 TOTAL 655

EXISTING RAMP PAVEMENT DEPTH TABLE

RAMP	LEFT SHOULDER				RAMP LANE(S)				RIGHT SHOULDER			
	STATION		EXISTING LEGEND CALLOUT	EXISTING LEGEND CALLOUT	STATION		EXISTING LEGEND CALLOUT	EXISTING LEGEND CALLOUT	STATION		EXISTING LEGEND CALLOUT	EXISTING LEGEND CALLOUT
	FROM	TO			FROM	TO			FROM	TO		
WOODLAND AVE. RAMP CA	19+36.73	25+77.39	B - EX. ASPHALT (6"± to 8"±)		11+21.44	17+00±	D - EX. ASPHALT (12"± to 14"±)		11+21.44	14+00±	D - EX. ASPHALT (12"± to 14"±)	
					17+00±	25+77.39	C - EX. ASPHALT (9"± to 11"±)		14+00±	210+00±	B - EX. ASPHALT (6"± to 8"±)	
					25+77.39	26+20.52		X - EX. REINF. PCC (11"± to 12"±)	20+00±	25+77.39	C - EX. ASPHALT (9"± to 11"±)	
U.S. 62/S.R. 7 RAMP BX	3+10.03	4+50±	B - EX. ASPHALT (6"± to 8"±)		3+10.03	11+28.02	DD - EX. ASPHALT (1"± to 3"±)	E - EX. REINF. PCC (9"± to 10"±)	3+43.57	10+00±	DD - EX. ASPHALT (1"± to 3"±)	
	4+50±	11+27.13	D - EX. ASPHALT (12"± to 14"±)		16+27.12	18+00±	A - EX. ASPHALT (3"± to 5"±)		10+00±	11+44.38		E - EX. REINF. PCC (9"± to 10"±)
	16+27.81	18+00±	A - EX. ASPHALT (3"± to 5"±)	E - EX. REINF. PCC (9"± to 10"±)	18+00±	20+41.17	D - EX. ASPHALT (12"± to 14"±)		16+04.78	18+00±	A - EX. ASPHALT (3"± to 5"±)	E - EX. REINF. PCC (9"± to 10"±)
	18+00±	20+41.17	D - EX. ASPHALT (12"± to 14"±)						18+00±	19+98.87	D - EX. ASPHALT (12"± to 14"±)	
U.S. 62/S.R. 7 RAMP S.B.	1032+30.70	1047+50±	D - EX. ASPHALT (12"± to 14"±)		1032+30.70	1047+50±	D - EX. ASPHALT (12"± to 14"±)		1035+36.47	1047+41.99	B - EX. ASPHALT (6"± to 8"±)	
	1047+50±	1058+96.78	B - EX. ASPHALT (6"± to 8"±)		1047+50±	1058+96.78	FF - EX. ASPHALT (1"± to 3"±)	E - EX. REINF. PCC (9"± to 10"±)	1050+60.34	1055+00±	A - EX. ASPHALT (3"± to 5"±)	E - EX. REINF. PCC (9"± to 10"±)
									1055+00±	1058+96.78	D - EX. ASPHALT (12"± to 14"±)	
WILLIAMSON AVE. RAMP BV	3+12.48	12+61.13	C - EX. ASPHALT (9"± to 11"±)		0+00.00	10+00±	C - EX. ASPHALT (9"± to 11"±)		0+00.00	12+61.13	C - EX. ASPHALT (9"± to 11"±)	
					10+00±	12+61.13	D - EX. ASPHALT (12"± to 14"±)					
					12+61.13	12+83.39		E - EX. REINF. PCC (9"± to 10"±)				
U.S. 62/S.R. 7 RAMP N.B.	1035+04.85	1037+00±	C - EX. ASPHALT (9"± to 11"±)		1035+04.85	1037+00±	C - EX. ASPHALT (9"± to 11"±)		1039+70.04	1051+08.84	B - EX. ASPHALT (6"± to 8"±)	
	1037+00±	1045+00±	D - EX. ASPHALT (12"± to 14"±)		1037+00±	1045+00±	D - EX. ASPHALT (12"± to 14"±)					
	1045+00±	1056+79.78	C - EX. ASPHALT (9"± to 11"±)		1045+00±	1056+79.78	A - EX. ASPHALT (3"± to 5"±)	E - EX. REINF. PCC (9"± to 10"±)				
SOUTH AVE. RAMP A	1080+02.61	1084+46.87	DD - EX. ASPHALT (1"± to 3"±)		1072+53.71	1080+00±	FF - EX. ASPHALT (1"± to 3"±)	E - EX. REINF. PCC (9"± to 10"±)	1072+53.71	1084+49.65	B - EX. ASPHALT (6"± to 8"±)	
					1080+00±	1084+67.07	A - EX. ASPHALT (3"± to 5"±)					
SOUTH AVE. RAMP B	1085+19.36	1091+59.76	B - EX. ASPHALT (6"± to 8"±)		1085+19.36	1090+74.85	B - EX. ASPHALT (6"± to 8"±)	E - EX. REINF. PCC (9"± to 10"±)	1086+52.98	1088+36.12	B - EX. ASPHALT (6"± to 8"±)	
					1090+74.85	1093+61.76	BB - EX. ASPHALT (15"± to 16"±)					
SOUTH AVE. RAMP C	1084+58.76	1090+18.38	B - EX. ASPHALT (6"± to 8"±)		1084+34.17	1090+00±	B - EX. ASPHALT (6"± to 8"±)	E - EX. REINF. PCC (9"± to 10"±)	1084+42.60	1095+30.03	A - EX. ASPHALT (3"± to 5"±)	
					1090+00±	1095+30.03	A - EX. ASPHALT (3"± to 5"±)					
SOUTH AVE. RAMP D	751+30.33	754+28.54	B - EX. ASPHALT (6"± to 8"±)		748+53.05	758+72.76	A - EX. ASPHALT (3"± to 5"±)	E - EX. REINF. PCC (9"± to 10"±)	748+53.05	750+50±	C - EX. ASPHALT (9"± to 11"±)	
									750+50±	758+47.41	D - EX. ASPHALT (12"± to 14"±)	

Preliminary Plans - For Reference Only

EXISTING TYPICAL SECTION LEGEND

- (A) EXISTING ASPHALT (3"± TO 5"±)
- (B) EXISTING ASPHALT (6"± TO 8"±)
- (C) EXISTING ASPHALT (9"± TO 11"±)
- (D) EXISTING ASPHALT (12"± TO 14"±)
- (E) EXISTING REINFORCED PORTLAND CEMENT CONCRETE (9"± TO 10"±)
- (M) EXISTING REINFORCED PORTLAND CEMENT CONCRETE (7"± TO 8"±)
- (X) EXISTING REINFORCED PORTLAND CEMENT CONCRETE (11"± TO 12"±)
- (AA) EXISTING REINFORCED PORTLAND CEMENT CONCRETE (5"± TO 6"±)
- (BB) EXISTING ASPHALT (15"± TO 16"±)
- (CC) EXISTING REINFORCED PORTLAND CEMENT CONCRETE (13"± TO 14"±)
- (DD) EXISTING REINFORCED PORTLAND CEMENT CONCRETE (15"±)
- (EE) EXISTING REINFORCED PORTLAND CEMENT CONCRETE (16"± TO 17"±)
- (FF) EXISTING ASPHALT (1"± TO 3"±)

DESIGN AGENCY
ms consultants. inc.
DESIGNER DWH
REVIEWER CMN 08/29/25
PROJECT ID 121474
SHEET P.21 TOTAL 655

MAH-680-4.58
MODEL: Sheet PAPERSIZE: 34x22 (in.) DATE: 9/15/2025 TIME: 2:22:04 PM PLTDRV: OHDOT_PDF_E+.pltcfg PENTBL: OHDOT_Pen.tbl USER: DHall@msconsultants.com WORKSPACE: OHDOTCEv02 WORKSET: 121474 PRODUCT: OpenRoadsDesigner 24.00.00.205
pw:\\ohiodot-pw.bentley.com:ohiodot-pw-02\Documents\01 Active Projects\District 04\Mahoning\121474\M02-Engineering_MSConsultants\Roadway\Sheets\121474_GY021.dgn

EXISTING I.R. 680 RAMP WIDTH TABLE

RAMP ALIGNMENT	WIDTH "A"					WIDTH "B"					WIDTH "C"				
	STATION		WIDTH (FT.)		COMMENTS	STATION		WIDTH (FT.)		COMMENTS	STATION		WIDTH (FT.)		COMMENTS
	FROM	TO	FROM	TO		FROM	TO	FROM	TO		FROM	TO	FROM	TO	
SILLIMAN ST. RAMP C	0+23.23	1+18.84	0.00'			19+07.50±	20+58.30	16.00'	12.00'		0+81.61	1+18.17	0.00'		
	1+18.84	1+41.93	3.00'±	4.00'±							1+18.17	1+41.93	8.00'±		
	4+44.09	8+75.00±	6.00'±								4+44.09	7+56.00±	6.00'±		
	8+75.00±	9+26.93±	15.00'±	0.00'	GORE - SEE RAMP C-3						7+56.00±	9+26.93±	3.00'±		
	10+97.06±	12+89.24	5.00'±	20.00'±							10+50.00±	11+00.00±	3.00'±	5.00'±	
	17+54.15	20+58.30	0.00'								11+00.00±	19+50.00±	5.00'±		
											19+50.00±	20+58.30	5.00'±	8.00'±	
S.R. 193 RAMP B-3	1+00.00	5+56.82±	0.00'		GORE - SEE I.R. 680	1+00.00	2+61.31±	12.00'	16.00'		1+00.00	1+77.45±	0.00'		GORE - RAMP D
	10+79.54±	11+22.09±	3.00'±	5.00'±							1+77.45±	9+84.90±	6.00'±		
	11+22.09±	11+42.35±	0.00'		GORE - RAMP C-3						9+84.90±	11+42.35	6.00'±	10.00'±	
SALT SPRINGS RD. RAMP D	0+00.00	4+58.65±	0.00'			0+00.00	4+59.58±	12.00'	16.00'		0+00.00	16+52.52±	6.00'±		
	4+58.65±	7+03.44±	0.00'	25.00'±	GORE - RAMP B-3										
	8+05.64±	15+19.92±	5.00'±												
	15+19.92±	15+39.36±	5.00'±	4.00'±											
	15+39.36	16+52.52	4.00'±												
MAHONING AVE. RAMP E	2+10.86±	2+40.48±	13.00'±	4.00'±	GORE - MAHONING AVE.	9+75.00±	10+44.74	16.00'	12.00'		2+10.86±	2+59.69	7.00'±	10.00'±	
	2+40.48±	3+12.12±									2+59.69±	7+61.41	10.00'±		
	8+12.72±	10+44.72	0.00'		GORE - SEE I.R. 680						7+61.42±	9+83.37	10.00'±	3.00'±	
MARSHALL ST. RAMP G	0+08.11	1+61.12±	0.00' MIN.	5.5' MAX.		0+08.11	1+61.12±	4.08'±	16.00'		0+08.11	1+61.12±	0.00'		
	1+61.12±	4+06.10±	4.00'±			5+70.82±	6+77.30	16.00'	12.00'		1+61.12±	2+45.59±	0.00'	13.83'	GORE - MARSHALL ST.
	4+06.10±	6+77.30	0.00'		GORE - SEE I.R. 680						2+45.59±	3+23.72	4.00'±		
											3+23.72	6+77.30	4.00' MIN.	11.00' MAX.	
MARSHALL ST. RAMP J	3+29.56	8+50.00±	0.00'		GORE - SEE I.R. 680	3+29.56	5+25.35±	12.00'	16.00'		3+29.56	5+00.00	10.00'±	8.00'±	
											5+00.00	11+41.28±	8.00'±		
											11+41.28±	12+13.79±	8.00'±		
											12+13.79±	12+21.04±	8.00'±		
											12+21.04±	14+01.37	4.00'±		
											14+92.73±	15+95.55±	11.00'	0.00'	GORE - MARSHALL ST.
											15+95.55±	16+85.52	0.00'		
HIGH ST. RAMP F	0+00.00	3+37.90	0.00'		ADJ. TO I.R. 680 S.B.	0+00.00	3+37.90	12.00'			0+00.00	3+37.90	10.00'±		
	5+50.83	6+62.55±	0.00'		ADJ. TO I.R. 680 S.B.	5+50.83	5+56.07±	12.00'			5+50.83	6+50.00±	10.00'±		
	6+62.55±	8+56.65±	0.00'		GORE - SEE I.R. 680	5+56.07±	6+62.55±	12.00'	16.00'		6+50.00±	8+50.00±	10.00'±	3.00'±	
	8+56.65±	8+93.93±	3.00'±	8.00'±											
	8+93.93±	9+79.37±	8.00'±												
	9+79.37±	10+84.64±	8.00'±	4.00'±											
	10+84.64±	13+54.25±	4.00'±												
HIGH ST. RAMP H	0+62.19±	3+90.74	1.5'±			0+00.00	0+57.00±	0.00'		ADJ. TO HIGH ST.	0+00.00	2+56.75±	0.00'		ADJ. TO HIGH ST.
	14+62.21±	18+29.96	0.00'		ADJ. TO I.R. 680 S.B.	0+57.00±	2+56.75±	0.00'	16.00'		17+37.02±	18+29.96	3.00'	8.00'	
						16+81.36±	18+29.96	16.00'	12.00'						
MARKET ST. RAMP K	4+46.87	7+99.63	0.00'		ADJ. TO I.R. 680 S.B.	4+46.87	6+21.87±	12.00'	16.00'		4+46.87	6+21.87	8.00'		
	16+42.65±	17+0.15±	3.00'	0.00'		17+27.63	18+79.28±	16.00'	7.82'±		6+21.87	7+28.87	8.00'	7.00'±	
	17+0.15±	19+23.48	0.00'		ADJ. TO MARKET ST.						7+28.87	15+75.00	7.00'±		
											15+75.00	16+42.65	7.00'±	3.00'±	
											16+42.65	17+0.15±	3.00'±	0.00'	
											17+0.15±	19+23.48	0.00		
MARKET ST. RAMP L	0+00.00	2+28.62	0.00'		ADJ. TO WOODLAND AVE.	0+00.00	2+28.62	0.00'	14.50'±		0+00.00	0+85.69	1.50'±		
	6+11.00	8+83.47	0.00'		ADJ. TO I.R. 680 N.B.	2+28.62	3+06.62	14.50±	16.00'±		0+85.69	2+26.27±	1.50'±	3.00'	
						5+99.47	8+83.47	16.00'±	12.00±		5+00.00±	5+25.00±	3.00'	5.00'±	
											5+25.00±	7+98.00±	5.00'±		
											7+98.00±	8+83.47	5.00'±	8.00'	
MARKET ST. RAMP M	0+0.00	5+42.01±	0.00'		ADJ. TO I.R. 680 S.B.	0+00.00	1+00.00	0.00'	12.00'		0+00.00	1+00.00	10.00'	8.00'	
	7+78.21±	9+15.59±	0.00'		ADJ. TO RAMP BX	1+00.00	1+78.31±	12.00'			1+00.00	1+78.31	8.00'		
	15+16.16±	15+65.03±	3.00'	2.00'		1+78.31±	5+78.31±	12.00'	18.00'		1+78.31	5+78.31	8.00'	7.00'	
						5+78.31±	7+78.31	18.00'			5+78.31	9+10.00±	7.00'		
						7+78.31	9+28.31	18.00'±	20.00'±		9+10.00±	9+28.31	7.00'	3.00'	
						9+28.31	16+33.57±	20.00'±			10+16.16	16+33.57±	3.00'	2.00'	
WOODLAND AVE. RAMP N	0+00.00	0+54.00	0.00'		ADJ. TO WOODLAND AVE.	0+29.77±	0+80.01	59.08'±	14.00'±		0+80.01	2+80.61±	1.50'±	3.00'±	
	0+54.00	1+70.44±	1.00'±			0+80.01	2+80.61	14.00'±			4+50.00	7+40.00±	3.00'±	5.83'±	
	1+70.44±	3+80.61±	2.00'±			2+80.61	4+19.70±	14.00'±	15.00'±		7+40.00±	8+72.63±	10.67'±	12.20'±	
	3+80.61±	5+5.52±	0.00'		ADJ. TO RAMP BY	4+19.70±	5+5.52±	15.00'±	8.00'±		8+72.63±	9+37.95±	12.20'±	10.20'±	
	8+23.95	11+73.95	0.00'		ADJ. TO I.R. 680 N.B.	5+5.52±	5+25.35±	17.24'±	16.00'±		9+37.95±	11+17.44±	10.20'±		
						6+35.95	8+35.95	16.00'±	15.00'±		11+17.44±	11+73.95	10.20'±	8.00'	
						8+35.95	11+73.95	15.00'±	12.00'±						

Preliminary Plans - For Reference Only

EXISTING TYPICAL SECTIONS - RAMP WIDTH TABLE

DESIGN AGENCY
ms consultants, inc.

DESIGNER DWH
REVIEWER CMN 08/29/25
PROJECT ID 121474
SHEET P.22 TOTAL 655

MAH-680-4.58

MODEL: Sheet PAPERSIZE: 34x22 (in.) DATE: 9/15/2025 TIME: 2:22:09 PM PLTDRV: OHDOT_PDF_E+.pltcfg PENTBL: OHDOT_Pen.tbl USER: DHall@msconsultants.com WORKSPACE: OHDOTCEv02 WORKSET: 121474 PRODUCT: OpenRoadsDesigner 24.00.00.205
pw:\ohiodot-pw.bentley.com:ohiodot-pw-02\Documents\01 Active Projects\District 04\Mahoning\121474\402-Engineering_MSConsultants\RoadwayTSheets\121474_GY023.dgn

EXISTING I.R. 680 RAMP WIDTH TABLE

RAMP ALIGNMENT	WIDTH "A"					WIDTH "B"					WIDTH "C"				
	STATION		WIDTH (FT.)		COMMENTS	STATION		WIDTH (FT.)		COMMENTS	STATION		WIDTH (FT.)		COMMENTS
	FROM	TO	FROM	TO		FROM	TO	FROM	TO		FROM	TO	FROM	TO	
U.S. 62/S.R. 7 RAMP BY	0+00.00	3+55.78±	4.00'±			0+00.00	1+82.07	15.00'±			0+00.00	1+82.07	0.00'		ADJ. TO RAMP CA
	3+55.78±	4+55.78±	4.00'±	3.00'±		1+82.07	5+62.80±	15.00'±	15.50'±		1+82.07	3+80.52	0.00'	17.42'	GORE - RAMP CA
	10+23.04	11+42.07	3.00'±	2.00'±		5+62.80±	7+81.00±	15.50'±	14.00'±		9+99.05±	10+52.96±	17.29'±	0.00'	GORE - RAMP N
						7+81.00±	10+23.04	14.00'±	11.00'±		10+52.96±	11+42.07	0.00'		ADJ. TO RAMP N
						10+23.04	11+42.07	11.00'±	11.50'±						
WOODLAND AVE. RAMP CA	10+00.00	14+35.73±	0.00'		ADJ. TO RAMP S.B.	10+00.00	13+22.02	10.32'±	30.34'±		10+00.00	15+59.46	8.00'±		
	15+59.46	19+13.31	0.00'		ADJ. TO RAMP BY	13+22.02	15+59.46	30.34'±	27.73'±		15+59.46	19+51.52	8.00'±	3.00'±	
	24+79.00	25+31.63±	10.00'	3.00'		15+59.46	17+40.70	13.00'±	14.50'		25+77.39±	26+30.81	0.00'		
						17+40.70	19+51.52	14.50'	16.00'						
U.S. 62/S.R. 7 RAMP BX						1+98.93	3+42.14	0.00'	18.75'		1+98.93	3+10.00±	0.00'		
											3+10.00±	3+42.14	0.00'	19.00'±	GORE - RAMP M
U.S. 62/S.R. 7 RAMP S.B.	780+13.60	784+31.40	8.00'±	6.00'±		780+13.60	782+31.40	15.00'±			780+13.60	783+25.17±	0.00'		ADJ. TO I.R. S.B.
	784+31.40	788+50.04±	6.00'			782+31.40	784+31.40	15.00'±	16.00'		787+05.74±	789+78.69±	3.00'	6.00±	
	788+50.04±	789+79.49±	14.00'±	0.00'	GORE - RAMP BV	786+93.16±	788+74.16	16.00'	17.28'		789+78.69±	790+61.39±	6.00±		
	789+79.49±	791+68.39	0.00'		ADJ. TO RAMP BV	788+74.16	789+79.49±	17.28'	16.00'		790+61.39±	792+20.05±	6.00±	5.00'±	
	791+68.39	803+73.91	11.00'±			789+79.49±	791+68.39	16.00'	12.00'		792+20.05±	792+31.34±	5.00'±	4.00'±	
	803+73.91	804+84.16	24.78'±	0.00'	GORE - RAMP CA	791+68.39	808+03.13	24.00'±			792+31.34±	792+59.34±	4.00'±		
	804+84.16	808+03.13	0.00'		ADJ. TO RAMP CA						792+59.34±	792+72.05±	4.00'±	5.00'±	
											792+72.05±	794+07.32±	5.00'±	4.00'±	
											794+07.32±	804+46.51±	4.00'±		
											804+46.51±	804+47.04±	4.00'±	5.00'±	
											804+47.04±	805+60.55±	5.00'±	6.00'±	
											805+60.55±	808+03.13	6.00'±		
WILLIAMSON AVE. RAMP BV	0+00.00	3+26.57±	0.00'		ADJ. TO RAMP S.B.	0+00.00	3+20.22±	12.00'	18.00'		0+00.00	0+27.35±	11.00'		
						3+20.22±	4+42.74±	18.00'	16.00'		0+27.35±	0+30.17±	11.00'	10.00'	
						4+42.74±	9+68.87±	16.00'			0+30.17±	3+20.22±	10.00'	3.00'±	
						9+68.87±	12+60.77±	16.00'	44.00'±						
						12+60.77±	12+80.30±	44.00'±	112.00'±						
U.S. 62/S.R. 7 RAMP N.B.	785+00.00	790+70.94	0.00'		ADJ. TO I.R. 680 N.B.	785+00.00	788+01.43±	12.00'	24.00'		785+00.00	787+57.18	12.00'±	10.00'±	
	790+70.94	802+09.74±	4.00'			788+01.43±	806+80.53±	24.00'			787+57.18	791+67.33	10.00'±		
	802+09.74±	806+57.56±	17.00'±	0.00'	GORE - RAMP BX	802+50.64±	803+59.73±	13.00'±		LANE - RAMP BX	791+67.33	792+54.01±	10.00'±	11.00'±	
	802+50.00	806+83.75±	4.00'		SHOULDER - RAMP BX	803+59.73±	804+25.07±	13.00'±	12.00'±	LANE - RAMP BX	792+54.01±	803+60.83±	11.00'±		
						804+25.07±	806+57.56±	12.00'±		LANE - RAMP BX	803+60.83±	804+01.14±	11.00'±	12.00'±	
						806+57.56±	806+83.75±	12.00'±	9.74'±	LANE - RAMP BX	804+01.14±	806+72.40±	12.00'±	10.00'±	
SOUTH AVE. RAMP A	1072+53.71	1073+59.45±	10.00'	8.00'		1072+53.71	1077+83.23±	12.00'±			1072+53.71	1080+04.24±	0.00'		ADJ.TO I.R. 680 S.B.
	1073+59.45±	1080+92.40±	8.00'			1077+83.23±	1079+36.20±	12.00'	16.00'		1080+04.24±	1084+46.73±	2.00'±		
	1080+92.40±	1081+88.79±	6.00'	11.00'		1084+12.13±	1084+67.07	16.00'	104+68'±		1084+46.73±	1084+67.07	1.00'±		
	1081+88.79±	1082+26.13±	11.00'	9.00'											
	1082+26.13±	1083+95.17±	5.00'												
	1083+95.17±	1084+48.22±	5.00'	2.00'											
	1084+48.22±	1084+67.07	1.00'												
SOUTH AVE. RAMP B	1085+27.46	1086+22.52	6.00'±	2.00'±		1085+27.46	1086+52.93	15.09'±	20.00'±		1085+19.36	1086+52.93	0.00'		ADJ. TO I.R. 680 N.B.
	1086+22.52	1090+53.30	2.00'±			1086+52.93	1084+78.05	20.00'±			1091+38.39	1092+47.49	0.00'		
	1090+53.30	1090+72.59	2.00'±	6.00'±		1084+78.05	1091+38.39	20.00'±	39.73	RAMP B & D COMB.					
	1090+72.59	1091+59.79	6.00'±	1.00'±		1091+38.39	1092+47.49	20.00'±	18.39'±						
	1091+59.79	1092+47.49	1.00'±												
SOUTH AVE. RAMP C	1084+34.15	1084+38.61	1.00'±			1084+34.16	1085+42.67	93.14'±	19.00'		1084+34.28	1084+58.80	1.00'±		
	1084+38.61	1084+46.91	5.00'±			1085+42.67	1088+03.40	19.00'			1084+58.80	1090+18.78	2.00'		
	1084+46.91	1085+26.30	5.00'±	1.00'±		1088+03.40	1089+85.87	19.00'	17.00'		1090+18.78	1095+30.03	0.00		ADJ. TO I.R. 680 S.B.
	1085+26.30	1085+43.80	1.00'±	2.00'±		1089+85.87	1092+05.63	17.00'	16.00'						
	1085+43.80	1088+49.22	2.00'±			1092+05.63	1095+30.03	16.00'	14.48'±						
	1088+49.22	1089+73.11	2.00'±	3.00'±											
	1089+73.11	1091+21.33	3.00'±	8.00'±											
	1091+21.33	1092+25.50	8.00'±	15.00'±											
	1092+25.50	1093+65.95	15.00'±												
	1093+65.95	1094+91.66	13.00'±												
	1094+91.66	1095+30.03	13.00'±	14.00'±											
SOUTH AVE. RAMP D	748+53.05	751+29.92	0.00'		ADJ. TO I.R. 680 N.B.	748+53.05	751+29.92±	12.00'	16.00'		748+53.05	748+89.74±	11.00'±	12.00'±	
	751+29.92	754+91.16	2.00'±			757+02.05	757+81.78	0.00'	16.00'±		748+89.74±	748+93.33±	12.00'±	8.00'±	
	754+91.16	755+33.38	11.00'±	2.00'±	GORE - RAMP B	758+39.83±	758+69.41±	54.44'±	104.22'±		748+93.33±	751+08.04	8.00'±		
	755+33.38	757+86.75	0.00'		ADJ. TO RAMP B						751+08.04	754+57.87	8.00'±	2.00'±	
	757+86.75	758+66.30±	1.00'								754+57.87	755+25.00	2.00'±	6.00'±	
											755+25.00	755+99.03±	6.00'±		
											755+99.03±	757+11.98±	6.00'±	3.00'±	
											758+15.64	758+47.41±	3.00'±	1.00'±	
											758+47.41±	758+70.94±	1.00'±		

Preliminary Plans For Reference Only

EXISTING TYPICAL SECTIONS - RAMP WIDTH TABLE

DESIGN AGENCY
ms consultants, inc.

DESIGNER DWH
REVIEWER CMN 08/29/25
PROJECT ID 121474
SHEET P.23 TOTAL 655

MAH-680-4.58

MODEL: Sheet PAPERSIZE: 34x22 (in.) DATE: 9/15/2025 TIME: 2:22:14 PM PLTDRV: OHDOT_PDF_E+.pltcfg PENTBL: OHDOT_Pen.tbl USER: DHall@msconsultants.com WORKSPACE: OHDOTCEv02 WORKSET: 121474 PRODUCT: OpenRoadsDesigner 24.00.00.205
pw:\\ohiodot-pw.bentley.com:ohiodot-pw-02\Documents\01 Active Projects\District 04\Mahoning\121474\402-Engineering_MSConsultants\Roadway\Sheets\121474_GY024.dgn

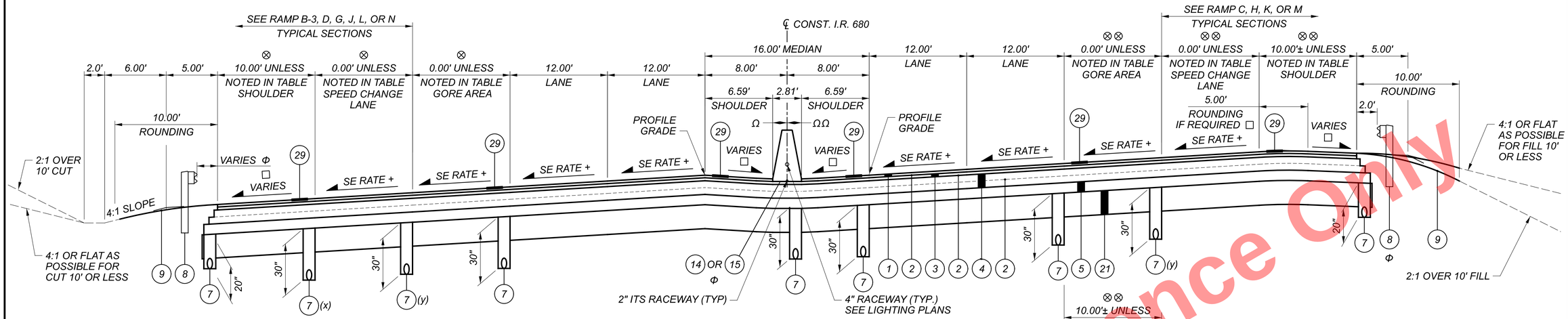

+ SEE TABLE BELOW

MAX. SE RATE	STATION RANGE
0.06	(a)
0.083	(b)
0.065	(c)

PROPOSED I.R. 680 SUPERELEVATED SECTION

STA. 950+65.76 TO STA. 951+81.76, SB AND STA 952+18.96, NB (a)
STA. 954+08.92 TO STA. 962+18.68 (a)
STA. 968+77.69 TO STA. 971+10.50, SB AND STA. 970+95.00, NB (a)
STA. 986+04.95 TO STA. 1004+86.44 (c)

EXISTING APPROACH SLABS AND STRUCTURE MAH-680-5.601
STA. 1004+86.44 TO STA. 1007+10.05

STA. 1007+10.05 TO STA. 1017+68.68 (c)

STA. 1020+92.94 TO STA. 1035+54.81 (a)
STA. 1036+39.97 TO STA. 1044+34.82 SOUTHBOUND (b)
STA. 1036+39.97 TO STA. 1044+22.02 NORTHBOUND (b)

EXISTING APPROACH SLABS AND STRUCTURE MAH-680-6.377
STA. 1044+34.82 TO STA. 1046+77.92

STA. 1047+03.96 TO STA. 1050+06.40 SOUTHBOUND (b)
STA. 1046+77.92 TO STA. 1049+17.94 NORTHBOUND (b)

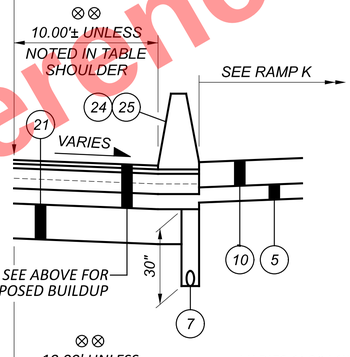

PARTIAL SECTION RIGHT

STA. 1021+72.61 TO 1023+55.00

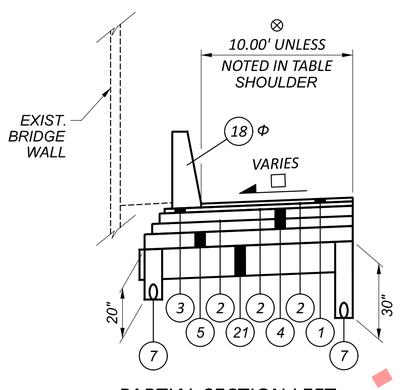

PARTIAL SECTION LEFT

STA. 968+77.60 TO STA. 969+63.13 (a)

NOTES:

1. PROPOSED DITCHES SHALL NOT BE ROUNDED WITHIN THE EXTENT OF VEGETATED BIOFILTERS. SEE PROJECT SITE PLAN FOR LOCATIONS.

⊗ = SEE NORTHBOUND TABLES ON SHEET P.29
⊗⊗ = SEE SOUTHBOUND TABLES ON SHEET P.30
□ = SEE SHOULDER DETAILS, SHEET P.27
Ω = SEE BARRIER TRANSITION TABLE ON SHEET P.28
ΩΩ = SEE BARRIER TRANSITION TABLE ON SHEET P.28
Φ = SEE PLAN SHEETS FOR PROP. GUARDRAIL & CONCRETE BARRIER LOCATION AND OFFSET
(x) UNDERDRAIN ONLY UTILIZED IN SPEED CHANGE LANE LOCATIONS. SEE THE UNDERDRAIN DETAILS.
(y) UNDERDRAIN ONLY UTILIZED IN GORE LOCATIONS. SEE THE UNDERDRAIN DETAILS.
* SEE RAMP TERMINAL DETAIL SHEET P. 335

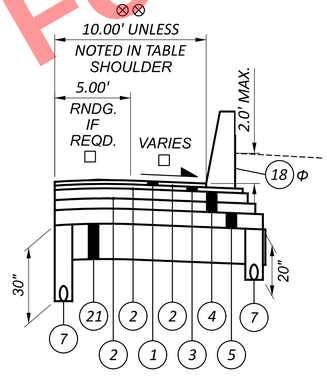

PARTIAL SECTION RIGHT

STA. 1041+21.44 TO STA. 1043+09.44 (b)

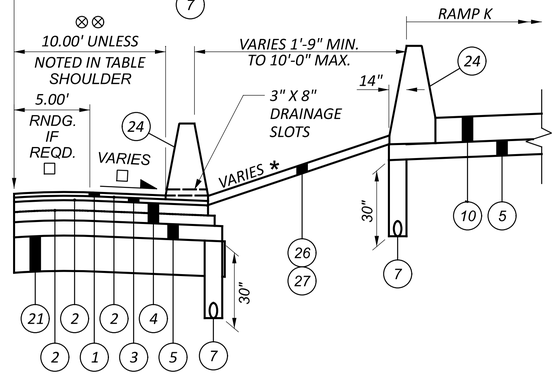

PARTIAL SECTION RIGHT

STA. 1023+55.00 TO 1025+70.00

PROPOSED LEGEND

1. ITEM 442 - 1.5" ASPHALT CONCRETE SURFACE COURSE, 12.5mm, TYPE A (447)
2. ITEM 407 - NON-TRACKING TACK COAT (RATE PER CMS TABLE 407.06-1)
3. ITEM 442 - 1.75" ASPHALT CONCRETE INTERMEDIATE COURSE, 12.5mm, TYPE A (446)
4. ITEM 302 - 8" ASPHALT CONCRETE BASE, PG64-22, (449) (2 EQUAL LIFTS)
5. ITEM 304 - 6" AGGREGATE BASE
6. ITEM 204 - SUBGRADE COMPACTION
7. ITEM 605 - 6" SHALLOW PIPE UNDERDRAIN, WITH GEOTEXTILE FABRIC
8. ITEM 606 - GUARDRAIL, TYPE MGS
9. ITEM 659 - SEEDING AND MULCHING, CLASS 1
10. ITEM 452 - 10" NON-REINFORCED CONCRETE PAVEMENT, CLASS QC 1P
11. ITEM 526 - REINFORCED CONCRETE APPROACH SLABS QC/QA (T=17")
12. ITEM 302 - 6" ASPHALT CONCRETE BASE, PG64-22, (449)
13. 42" PARAPET (ON APPROACH SLAB)
14. ITEM 622 - CONCRETE BARRIER, SINGLE SLOPE, TYPE B1
15. ITEM 622 - CONCRETE BARRIER, SINGLE SLOPE, TYPE C1
16. ITEM 609 - COMBINATION CURB AND GUTTER, TYPE 2
17. ITEM 609 - CONCRETE MEDIAN
18. ITEM 622 - CONCRETE BARRIER, SINGLE SLOPE, TYPE D
19. ITEM 608 - 4" CONCRETE WALK
20. ITEM 609 - CURB, TYPE 6
21. ITEM 206 - CEMENT STABILIZED SUBGRADE, 14 INCHES DEEP
22. ITEM 605 - 6" BASE PIPE UNDERDRAIN, WITH GEOTEXTILE FABRIC
23. ITEM 442 - 1.5" ASPHALT CONCRETE SURFACE COURSE, 12.5mm, TYPE A (449)
24. ITEM 622 - CONCRETE BARRIER, SINGLE SLOPE, TYPE C
25. ITEM 622 - CONCRETE BARRIER, END ANCHORAGE, REINFORCED, TYPE C, AS PER PLAN
26. ITEM 441 - ASPHALT CONCRETE INTERMEDIATE COURSE, TYPE 1, (449), (UNDER GUARDRAIL), AS PER PLAN (T = 3")
27. ITEM 209 - LINEAR GRADING, AS PER PLAN
28. LONGITUDINAL JOINT (SEE STD. DWG. BP-2.1)
29. ITEM 618 - RUMBLE STRIPS, (ASPHALT CONCRETE) - SEE SCD BP-9.1 OR ITEM 618 - RUMBLE STRIPS, (CONCRETE) - SEE SCD BP-9.1
30. ITEM 407 - TACK COAT, 702.13
31. ITEM 254 - PAVEMENT PLANING, ASPHALT CONCRETE

Preliminary Plans - For Reference Only

MAH-680-4.58

PROPOSED TYPICAL SECTIONS - I.R. 680

DESIGN AGENCY
ms consultants, inc.

DESIGNER DWH
REVIEWER CMN 08/29/25
PROJECT ID 121474
SHEET P.24 TOTAL 655

MODEL: Sheet PAPERSIZE: 34x22 (in.) DATE: 9/15/2025 TIME: 2:22:19 PM PLTDRV: OHDOT_PDF_E+.pltcfg PENTBL: OHDOT_Pen.tbl USER: DHall@msconsultants.com WORKSPACE: OHDOTCEv02 WORKSET: 121474 PRODUCT: OpenRoadsDesigner 24.00.00.205
pw:\\ohiodot-pw.bentley.com:ohiodot-pw-02\Documents\01 Active Projects\District 04\Mahoning\121474\402-Engineering_MSConsultants\Roadway\Sheets\121474_GY011.dgn

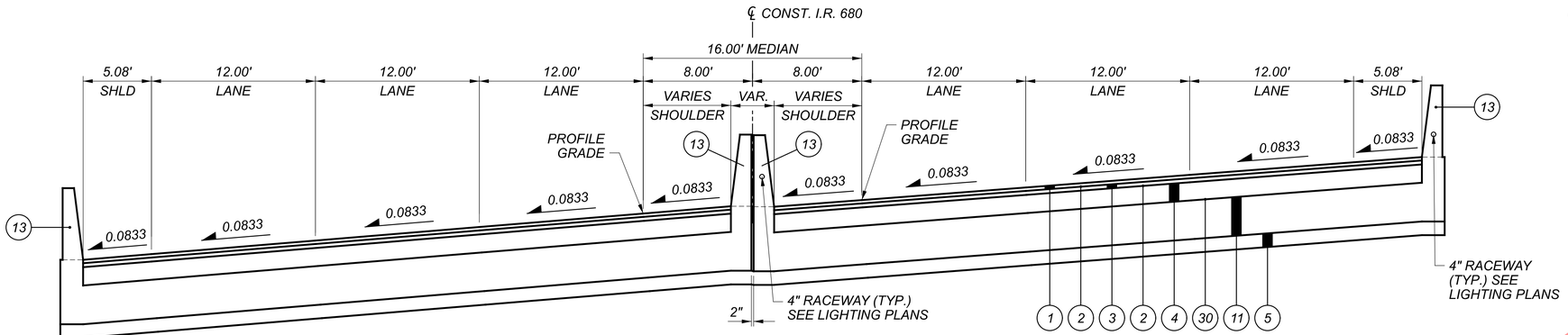

NOTES:

1. FOR PROPOSED LEGEND SEE SHEET P.23
2. PROPOSED DITCHES SHALL NOT BE ROUNDED WITHIN THE EXTENT OF VEGETATED BIOFILTERS. SEE PROJECT SITE PLAN FOR LOCATIONS.

⊗ = SEE NORTHBOUND TABLES ON SHEET P.29
⊗⊗ = SEE SOUTHBOUND TABLES ON SHEET P.30
Ω = SEE BARRIER TRANSITION TABLE ON SHEET P.28
ΩΩ = SEE BARRIER TRANSITION TABLE ON SHEET P.28
Φ = SEE PLAN SHEETS FOR PROP. GUARDRAIL & CONCRETE BARRIER LOCATION AND OFFSET
(x) UNDERDRAIN ONLY UTILIZED IN SPEED CHANGE LANE LOCATIONS. SEE THE UNDERDRAIN DETAILS.
(y) UNDERDRAIN ONLY UTILIZED IN GORE LOCATIONS. SEE THE UNDERDRAIN DETAILS.

PROPOSED I.R. 680
PROPOSED APPROACH SLAB

STA. 962+18.68 TO STA. 962+48.68

PROPOSED STRUCTURE MAH-680-4.886
STA. 962+48.68 TO STA. 968+47.69

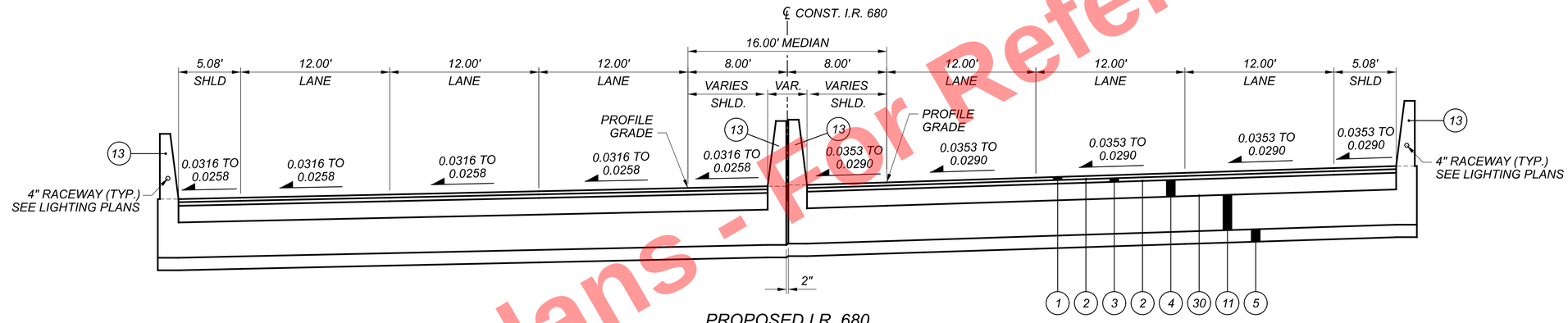

PROPOSED I.R. 680
PROPOSED APPROACH SLAB

STA. 968+47.69 TO STA. 968+77.69

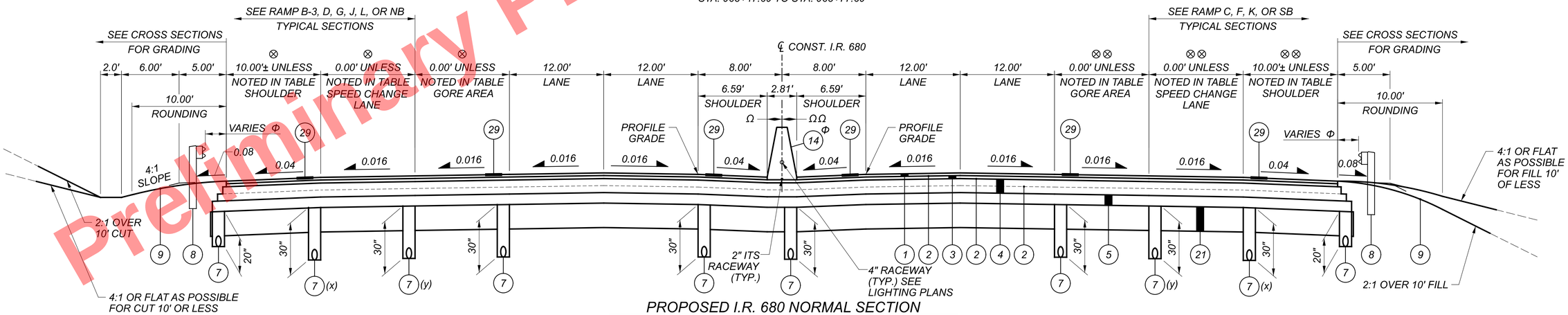

PROPOSED I.R. 680 NORMAL SECTION

STA. 951+81.76, SB AND STA. 952+18.96, NB TO STA. 954+08.92
STA. 971+10.50, SB AND STA. 970+95.00, NB TO STA. 978+94.17

EXISTING APPROACH SLABS AND STRUCTURE MAH-680-5.132
STA. 978+94.17 TO STA. 981+06.80

STA. 981+06.80 TO STA. 986+04.95
STA. 1017+68.68 TO STA. 1020+92.94
STA. 1035+54.81 TO STA. 1036+39.97
STA. 1050+06.40 TO STA. 1058+96.78 SOUTHBOUND
STA. 1049+17.94 TO STA. 1056+79.78 NORTHBOUND

Preliminary Plans - For Reference Only

MAH-680-4.58

MODEL: Sheet PAPERSIZE: 34x22 (in.) DATE: 9/15/2025 TIME: 2:22:29 PM PLTDRV: OHDOT_PDF_E+.pltcfg PENTBL: OHDOT_Pen.tbl USER: DHall@msconsultants.com WORKSPACE: OHDOTCEv02 WORKSET: 121474 PRODUCT: OpenRoadsDesigner 24.00.00.205
pw:\\ohiodot-pw.bentley.com:ohiodot-pw-02\Documents\01 Active Projects\District 04\Mahoning\121474\M402-Engineering_MSConsultants\Roadway\Sheets\121474_GY012.dgn

PROPOSED TYPICAL SECTIONS - I.R. 680

DESIGN AGENCY
ms consultants. inc.

DESIGNER DWH
REVIEWER CMN 08/29/25
PROJECT ID 121474
SHEET P.25 TOTAL 655

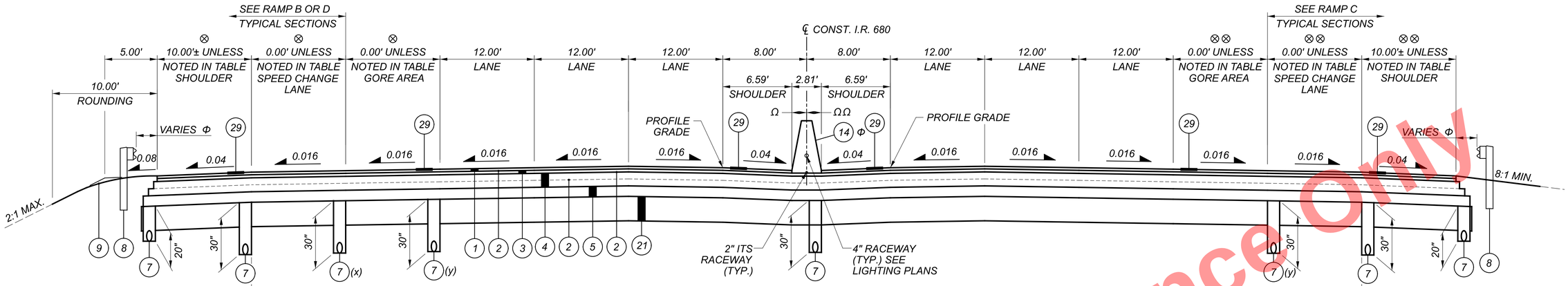

PROPOSED I.R. 680 NORMAL SECTION

STA. 1058+96.78 TO STA. 1064+60.15 SOUTHBOUND
STA. 1056+79.78 TO STA. 1064+60.15 NORTHBOUND
STA. 1086+55.45 TO STA. 1093+05.13

DESIGN EXCEPTION
MEDIAN SHOULDER WIDTH
NDC = 10.0'

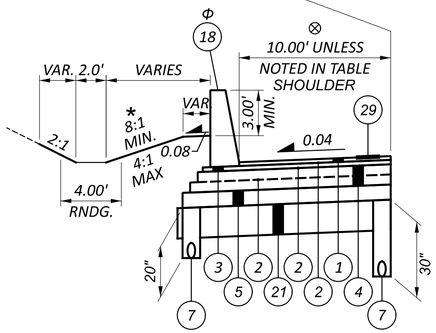

PARTIAL SECTION LEFT

STA. 1060+10.00 TO STA. 1060+79.00

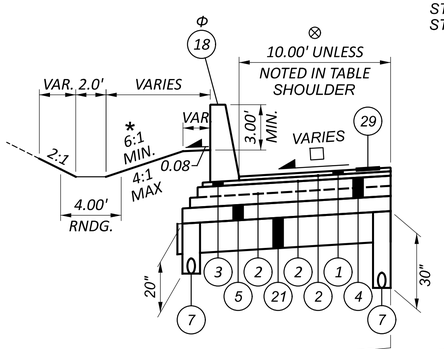

PARTIAL SECTION LEFT

STA. 1083+06.92 TO STA. 1083+56.00
STA. 1093+00.27 TO STA. 1094+28.37

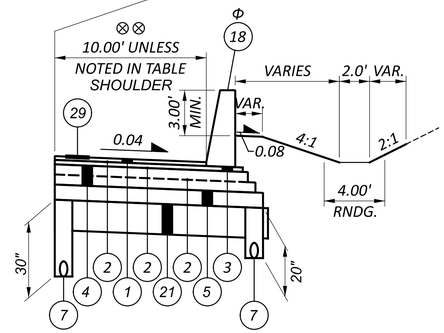

PARTIAL SECTION RIGHT

STA. 1059+99.59 TO STA. 1060+68.59

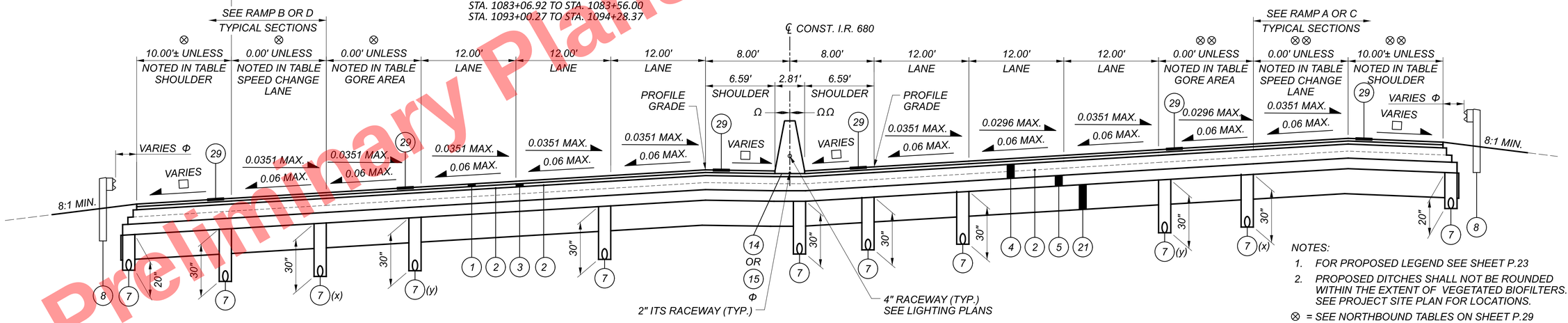

PROPOSED I.R. 680 SUPERELEVATED SECTION

STA. 1064+60.15 TO STA. 1073+61.10

EXISTING APPROACH SLABS AND STRUCTURE MAH-680-6.933
STA. 1073+61.10 TO STA. 1075+47.05

STA. 1075+47.05 TO STA. 1076+82.34

EXISTING APPROACH SLABS AND STRUCTURE MAH-680-6.983
STA. 1076+82.34 TO STA. 1078+73.94

STA. 1078+73.94 TO STA. 1086+55.45
STA. 1093+05.13 TO STA. 1097+25.00

NOTES:

1. FOR PROPOSED LEGEND SEE SHEET P.23
2. PROPOSED DITCHES SHALL NOT BE ROUNDED WITHIN THE EXTENT OF VEGETATED BIOFILTERS. SEE PROJECT SITE PLAN FOR LOCATIONS.

⊗ = SEE NORTHBOUND TABLES ON SHEET P.29
⊗⊗ = SEE SOUTHBOUND TABLES ON SHEET P.30
□ = SEE SHOULDER DETAILS, SHEET P.27
Ω = SEE BARRIER TRANSITION TABLE ON SHEET P.28
ΩΩ = SEE BARRIER TRANSITION TABLE ON SHEET P.28
Φ = SEE PLAN SHEETS FOR PROP. GUARDRAIL & CONCRETE BARRIER LOCATION AND OFFSET
* = OR AS SHOWN ON CROSS SECTIONS
(x) UNDERDRAIN ONLY UTILIZED IN SPEED CHANGE LANE LOCATION. SEE THE UNDERDRAIN DETAILS.
(Y) UNDERDRAIN ONLY UTILIZED IN GORE LOCATION. SEE THE UNDERDRAIN DETAILS.

Preliminary Plans - For Reference Only

PROPOSED TYPICAL SECTIONS - I.R. 680

DESIGN AGENCY
ms consultants, inc.

DESIGNER DWH
REVIEWER CMN 08/29/25
PROJECT ID 121474
SHEET P.26 TOTAL 655

MAH-680-4.58

MODEL: Sheet PAPERSIZE: 34x22 (in.) DATE: 9/15/2025 TIME: 2:22:35 PM PLTDRV: OHDOT_PDF_E+.pltcfg PENTBL: OHDOT_Pen.tbl USER: DHall@msconsultants.com WORKSPACE: OHDOTCEv02 WORKSET: 121474 PRODUCT: OpenRoadsDesigner 24.00.00.205
pw:\\ohiodot-pw.bentley.com:ohiodot-pw-02\Documents\01 Active Projects\District 04\Mahoning\121474\402-Engineering_MSConsultants\Roadway\Sheets\121474_GY013.dgn

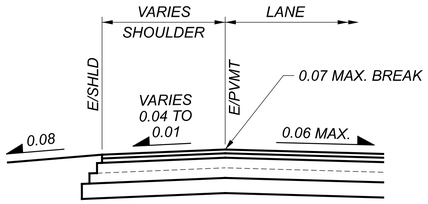

LANE SUPERELEVATION 0.06 MAX.

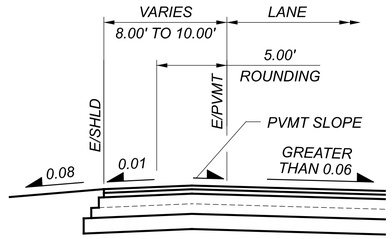

LANE SUPERELEVATION
GREATER THAN 0.06 MAX.

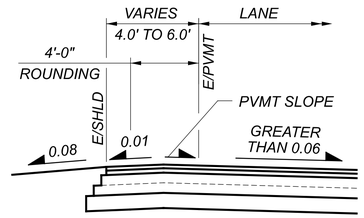

LANE SUPERELEVATION
GREATER THAN 0.06 MAX.

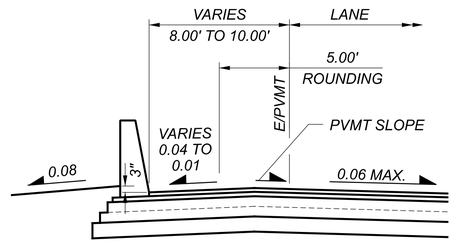

LANE SUPERELEVATION 0.06 MAX.
WITH BARRIER

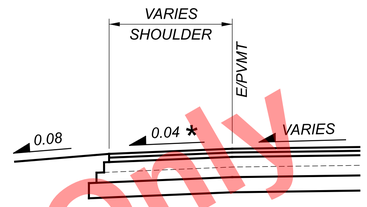

* OR RATE OF SUPERELEVATION IF GREATER THAN 0.04

PROPOSED
HIGH SIDE SHOULDER DETAILS

(RIGHT SIDE OPPOSITE HAND)

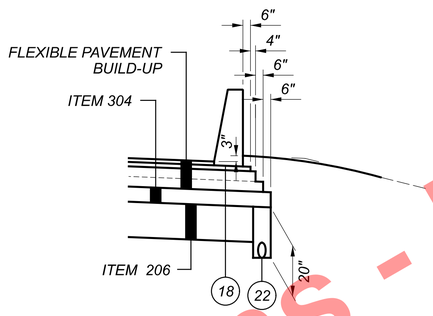

PARTIAL SECTION

ITEM 622 - CONCRETE BARRIER, SINGLE SLOPE, TYPE D
FLEXIBLE PAVEMENT
SEE PLAN FOR LOCATIONS

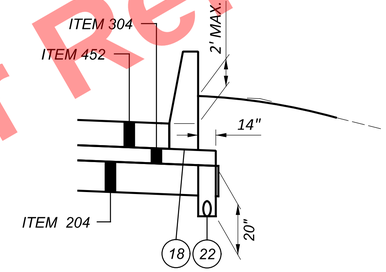

PARTIAL SECTION

ITEM 622 - CONCRETE BARRIER, SINGLE SLOPE, TYPE D
RIGID PAVEMENT
SEE PLAN FOR LOCATION

PROPOSED
LOW SIDE SHOULDER DETAILS

(RIGHT SIDE OPPOSITE HAND)

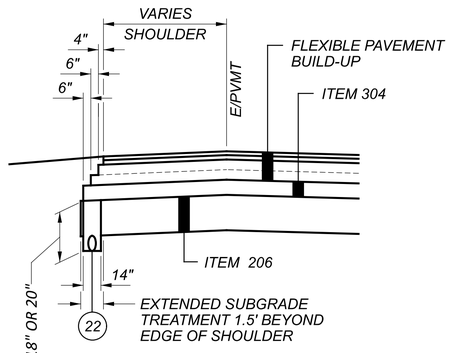

FLEXIBLE PAVEMENT
EDGE COURSE DESIGN

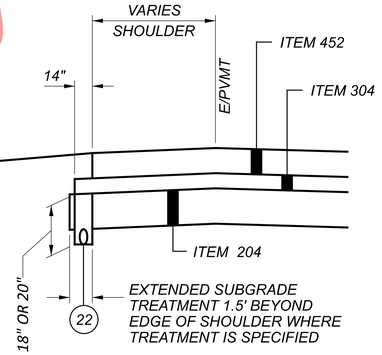

RIGID PAVEMENT
EDGE COURSE DESIGN

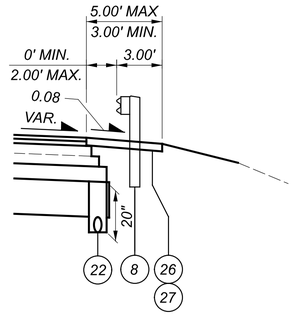

PARTIAL SECTION - GUARDRAIL

ITEM 606 - GUARDRAIL, TYPE MGS
SEE PLAN FOR LOCATION

NOTE: PAVING UNDER GUARDRAIL TO BE PROVIDED EVEN IF NOT SHOWN IN THE TYPICAL SECTIONS

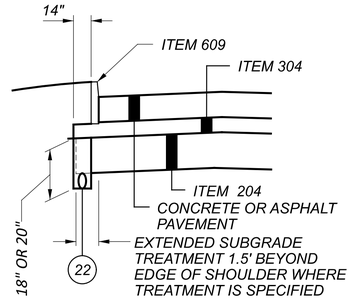

PAVEMENT EDGE COURSE DESIGN
CURB OR CURB AND GUTTER

Preliminary Plans - For Reference Only

PROPOSED TYPICAL SECTIONS - SHOULDER DETAILS

MAH-680-4.58

MODEL: Sheet PAPERSIZE: 34x22 (in.) DATE: 9/15/2025 TIME: 2:22:41 PM PLTDRV: OHDOT_PDF_E+.pltcfg PENTBL: OHDOT_Pen.tbl USER: DHall@msconsultants.com WORKSPACE: OHDOTCEv02 WORKSET: 121474 PRODUCT: OpenRoadsDesigner 24.00.00.205
pw:\\ohiodot-pw.bentley.com:ohiodot-pw-02\Documents\01 Active Projects\District 04\Mahoning\121474\402-Engineering_MSConsultants\Roadway\Sheets\121474_GY026.dgn

DESIGN AGENCY
ms consultants. inc.

DESIGNER
DWH

REVIEWER
CMN 08/29/25

PROJECT ID
121474

SHEET P.27 | TOTAL 655

Preliminary Plans - For Reference Only

BARRIER TRANSITION AT BRIDGE PIERS FROM CENTERLINE

STATION		WIDTH (FT.)		Ω (LT.)	STATION		WIDTH (FT.)		Ω (LT.)
FROM	TO	FROM	TO	Ω Ω (RT.)	FROM	TO	FROM	TO	Ω Ω (RT.)
958+11.99	958+51.99	1.41′	2.25′		1047+17.98	1047+57.92	1.41′	2.82′	
958+51.99	958+83.83	2.25′	2.73′	Ω	1047+57.92	1048+02.74	2.82′	2.95′	Ω
958+83.83	959+16.42	2.73′	2.21′		1048+02.74	1048+42.79	2.95′	1.40′	
959+16.42	959+56.42	2.21′	1.41′		1047+17.97	1047+57.91	1.41′	2.99′	
958+12.16	958+52.16	1.41′	3.55′		1047+57.91	1048+02.85	2.99′	2.86′	Ω Ω
958+52.16	958+83.83	3.55′	3.08′	Ω Ω	1048+02.85	1048+42.79	2.86′	1.40′	
958+83.83	959+16.24	3.08′	3.59′		1059+69.96	1059+89.93	1.41′	2.15′	
959+16.24	959+56.24	3.59′	1.41′		1059+89.93	1060+09.94	2.15′	2.67′	Ω
968+77.60	969+00.94	2.03′	2.90′		1060+09.94	1060+70.58	2.67′	3.23′	
969+00.94	969+64.87	2.90′		Ω & Ω Ω	1060+70.58	1060+90.57	3.23′	2.15′	
969+64.87	970+04.87	2.90′	1.41′		1060+90.57	1061+10.54	2.15′	1.41′	
1020+88.69	1021+03.69	1.41′	1.97′	Ω & Ω Ω	1059+69.96	1059+89.88	1.41′	2.15′	
1021+03.69	1021+28.70	1.97′	2.66′		1059+89.88	1060+09.87	2.15′	3.14′	
1021+28.70	1021+75.73	2.66′	2.64′	Ω	1060+09.87	1060+70.56	3.14′	2.58′	Ω Ω
1021+75.73	1022+00.74	2.64′	1.97′		1060+70.56	1060+90.57	2.58′	2.15′	
1022+00.74	1022+15.71	1.97′	1.41′		1060+90.57	1061+10.54	2.15′	1.41′	
1021+03.69	1021+28.64	1.97′	3.15′		1083+14.30	1083+19.32	1.40′	1.31′	
1021+28.64	1021+75.79	3.15′	3.17′	Ω Ω	1083+19.32	1083+59.22	1.31′	2.09′	
1021+75.79	1022+00.78	3.17′	1.97′		1083+59.22	1084+43.54	2.09′	2.15′	Ω
1022+00.78	1022+15.74	1.97′	1.41′		1084+43.54	1084+83.46	2.15′	1.32′	
1029+41.42	1029+56.42	1.41′	1.97′		1084+83.46	1084+88.46	1.32′	1.41′	
1029+56.42	1029+81.42	1.97′	2.66′		1083+14.25	1083+19.27	1.40′	1.50′	
1029+81.42	1030+29.72	2.66′	3.08′	Ω	1083+19.27	1083+59.22	1.50′	3.72′	
1030+29.72	1030+78.05	3.08′	2.77′		1083+59.22	1084+43.45	3.72′	3.66′	Ω Ω
1030+78.05	1031+02.96	2.77′	1.97′		1084+43.45	1084+83.51	3.66′	1.49′	
1031+02.96	1031+17.97	1.97′	1.41′		1084+83.51	1084+88.51	1.49′	1.41′	
1029+41.38	1029+56.38	1.41′	1.97′		1092+60.56	1093+00.59	1.41′	3.67′	
1029+56.38	1029+81.37	1.97′	3.15′		1093+00.59	1093+54.59	3.67′	3.68′	Ω
1029+81.37	1030+29.72	3.15′	2.73′	Ω Ω	1093+54.59	1093+94.62	3.68′	1.41′	
1030+29.72	1030+77.99	2.73′	3.04′		1092+60.62	1093+00.59	1.41′	2.14′	
1030+77.99	1031+02.98	3.04′	1.97′		1093+00.59	1093+54.59	2.14′	2.13′	Ω Ω
1031+02.98	1031+17.99	1.97′	1.41′		1093+54.59	1093+94.57	2.13′	1.41′	
1042+13.39	1042+38.44	1.41′	1.65′						
1042+38.44	1042+78.44	1.65′	3.54′						
1042+78.44	1043+22.40	3.54′	4.18′	Ω					
1043+22.40	1043+62.40	4.18′	1.89′						
1043+62.40	1043+87.53	1.89′	1.41′						
1042+13.39	1042+38.35	1.41′	1.61′						
1042+38.35	1042+78.35	1.61′	2.27′						
1042+78.35	1043+22.66	2.27′	1.62′	Ω Ω					
1043+22.66	1043+62.66	1.62′	0.91′						
1043+62.66	1043+87.53	0.91′	1.41′						

PROPOSED TYPICAL SECTIONS - I.R. 680

DESIGN AGENCY
ms consultants, inc.

DESIGNER
DWH

REVIEWER
CMN 08/29/25

PROJECT ID
121474

SHEET P.28 | TOTAL 655

MAH-680-4.58

MODEL: Sheet PAPERSIZE: 34x22 (in.) DATE: 9/15/2025 TIME: 2:22:46 PM PLTDRV: OHDOT_PDF_E+.pltcfg PENTBL: OHDOT_Pen.tbl USER: DHall@msconsultants.com WORKSPACE: OHDOTCEv02 WORKSET: 121474 PRODUCT: OpenRoadsDesigner 24.00.00.205
pw:\\ohiodot-pw.bentley.com:ohiodot-pw-02\Documents\01 Active Projects\District 04\Mahoning\121474\402-Engineering_MSConsultants\Roadway\Sheets\121474_GY016.dgn

I.R. 680 NORTHBOUND RAMP & GORE AREA TABLES

SHEET NUMBER	WIDTH "A" (GORE AREA)					WIDTH "B" (SPEED CHANGE LANE)					WIDTH "C" (SHOULDER)				
	STATION		WIDTH (FT.)		COMMENTS	STATION		WIDTH (FT.)		SPEED CHANGE LANE TYPE	STATION		WIDTH (FT.)		COMMENTS
	FROM	TO	FROM	TO		FROM	TO	FROM	TO		FROM	TO	FROM	TO	
P.24, P.25	950+65.78	952+41.83	23.0'	2.0'	S.R. 193, RAMP B-3 (LEFTSIDE)	954+00.79	956+55.98	12.0'		DECELERATION S.R. 193, RAMP B-3 (LEFTSIDE)	951+25.00	951+65.00	6.59'	5.59'	TRANSITION AT BARRIER (RIGHTSIDE)
	952+41.83	952+71.03	2.0'	0.0'							951+65.00	951+75.00	5.59'		
											951+75.00	952+15.00	5.59'	6.59'	
P.24, P.25	953+59.55	956+55.98	23.0'	2.0'	SALTSPRINGS RD., RAMP D (LEFTSIDE)	956+55.98	962+18.68	12.0'		DECELERATION SALTSPRINGS RD., RAMP D (LEFTSIDE)	960+49.86	961+06.70	8.0'		DECEL. SALTSPRINGS RAMP D/TRANSITION AT BRIDGE (LEFTSIDE)
	956+55.98	956+77.42	2.0'	0.0'							961+06.70	961+27.12	8.0'	5.08'	
											961+27.12	962+18.68	5.08'		
P.24											958+11.99	958+51.99	6.59'	4.45'	TRANSITION AT BARRIER (RIGHTSIDE)
											958+51.99	959+16.42	4.45'	4.41'	
											959+16.42	959+95.00	4.41'	5.59'	
											959+95.00	960+05.00	5.59'		
											960+05.00	960+45.00	5.59'	6.59'	
P.24, P.25	970+85.77	971+09.90	0.0'	2.0'	MARSHALL ST., RAMP G (LEFTSIDE)	968+77.60	969+78.20	12.0'		ACCELERATION MARSHALL RD., RAMP G (LT)	968+77.69	969+02.83	3.5'	6.0'	ACCEL. MARSHALL ST., RAMP G (LT)
	971+09.90	972+56.56	2.0'	23.0'							969+02.83	969+78.20	6.0'		
P.24											998+55.00	989+95.00	6.59'	5.59'	TRANSITION AT BARRIER (RIGHTSIDE)
											989+95.00	989+05.00	5.59'		
											989+05.00	999+45.00	5.59'	6.59'	
P.24	996+65.56	999+28.63	23.0'	2.0'	MARSHALL ST., RAMP J (LEFTSIDE)	1001+64.00	1003+77.72	12.0'		DECELERATION MARSHALL RD., RAMP J (LT)	1001+64.00	1003+77.72	8.0'		DECEL./TRANS. AT BRIDGE MARSHALL ST. RAMP J (LT)
	999+28.63	999+71.79	2.0'	0.0'		1003+77.72	1004+71.49	12.0'	0.7'		1003+77.72	1004+67.83	8.0'	9.7'	
P.24, P.25	1020+24.39	1020+48.52	0.0'	2.0'	MARKET ST., RAMP L (LEFTSIDE)	1007+50.82	1013+50.82	0.0'	12.0'	ACCELERATION MARKET ST. RAMP L (LEFTSIDE)	1007+50.82	1008+50.82	10.0'	8.0'	ACCEL. MARKET ST., RAMP L (LEFTSIDE)
	1020+48.52	1021+95.36	2.0'	23.0'		1013+50.82	1019+16.82	12.0'			1008+50.82	1019+16.82	8.0'		
P.25											1019+70.00	1020+10.00	6.59'	5.59'	TRANSITION AT BARRIER (RIGHTSIDE)
											1020+10.00	1020+20.00	5.59'		
											1020+20.00	1020+60.00	5.59'	6.59'	
P.24, P.25											1020+88.69	1021+03.69	6.59'	6.03'	TRANSITION AT BARRIER (RIGHTSIDE)
											1021+03.69	1021+28.70	6.03'	5.34'	
											1021+28.70	1021+75.73	5.34'	5.36'	
											1021+75.73	1022+00.74	5.36'	6.03'	
											1022+00.74	1022+15.71	6.03'	6.59'	
P.24	1032+36.13	1032+67.14	0.0'	2.0'	WOODLAND AVE., RAMP N (LEFTSIDE)	1022+65.93	1027+45.93	0.0'	12.0'	ACCEL. WOODLAND AVE., RAMP N (LT)	1022+65.93	1023+66.07	10.0'	8.0'	ACCELERATION RAMP N (LT)
	1032+67.14	1034+24.57	2.0'	23.0'		1027+45.93	1030+50.00	12.0'			1023+66.07	1030+50.00	8.0'		
P.24											1028+95.00	1029+35.00	6.59'	5.59'	TRANSITION AT BARRIER (RIGHTSIDE)
											1029+35.00	1029+45.00	5.59'		
											1029+45.00	1029+81.31	5.59'	4.92'	
											1029+81.31	1030+78.05	5.34'	5.23'	
											1030+78.05	1031+02.96	5.23'	6.07'	
											1031+02.96	1031+17.96	6.07'	6.64'	
P.24, P.25											1031+17.97	1042+13.39	6.64'		TRANSITION AT BARRIER (RIGHTSIDE)
											1042+38.44	1042+78.44	6.64'	5.09'	
											1042+78.44	1043+22.40	5.09'	5.09'	
											1043+22.40	1043+62.40	5.09'	6.59'	
P.24											1046+88.39	1047+17.98	6.55'	6.61'	TRANSITION AT BARRIER (RIGHTSIDE)
											1047+17.98	1047+57.92	6.61'	5.18'	
											1047+57.92	1048+02.74	5.18'	5.05'	
											1048+02.74	1048+42.79	5.05'	6.60'	
P.25	1051+54.95	1053+52.02	24.0'	2.0'	U.S. 62/S.R. 7, RAMP NB (LEFTSIDE)						1051+89.00	1052+29.00	6.59'	5.59'	TRANSITION AT BARRIER (RIGHTSIDE)
	1053+52.02	1053+76.29	2.0'	0.0'							1052+29.00	1052+39.00	5.59'		
											1052+39.00	1052+79.00	5.59'	6.59'	
P.26											1059+69.96	1059+89.93	6.59'	5.85'	TRANSITION AT BARRIER (RIGHTSIDE)
											1059+89.93	1060+09.94	5.85'	5.33'	
											1060+09.94	1060+70.58	5.33'	4.77'	
											1060+70.58	1060+90.57	4.77'	5.85'	
											1060+90.57	1061+10.54	5.85'	6.59'	
P.26											1075+65.00	1076+05.00	6.59'	5.59'	TRANSITION AT BARRIER (RIGHTSIDE)
											1076+05.00	1076+15.00	5.59'		
											1076+15.00	1076+55.00	5.59'	6.59'	
P.26	1082+26.87	1083+05.59	0.0'	2.0'	SOUTH AVE., RAMP B (LEFTSIDE)	1075+61.94	1076+75.68	1.4'	4.2'	ACCELERATION SOUTH AVE., RAMP B (LEFTSIDE)	1075+65.35	1076+74.87	9.7'	5.5'	ACCELERATION SOUTH AVE., RAMP B (LEFTSIDE)
	1083+05.59	1085+27.48	2.0'			1078+77.26	1082+26.87	9.3'	18.0'		1078+77.58	1079+15.28	4.79'	4.79'	
											1079+15.28	1079+99.98	4.79'	8.0'	
	1085+27.48	1086+63.26	2.0'	23.0'		1082+26.87	1085+27.48	18.0'			1079+99.98	1083+41.92	8.0'		
											1083+41.92	1083+57.45	8.0'	5.0'	
											1083+57.45	1084+50.00	5.0'		
											1084+50.00	1085+27.46	5.0'	6.0'	
P.26											1083+14.30	1083+19.32	6.60'	6.69'	TRANSITION AT BARRIER (RIGHTSIDE)
											1083+19.32	1083+59.22	6.69'	5.91'	
											1083+59.22	1084+43.54	5.91'	5.85'	
											1084+43.54	1084+83.46	5.85'	6.68'	
											1084+83.46	1084+88.46	6.68'	6.59'	
P.26	1090+48.50	1091+95.34	23.0'	2.0'	SOUTH AVE., RAMP D (LT)	1093+26.73	1097+25.00	12.0'		DECEL. SOUTH AVE., RAMP D (LT)	1093+26.73	1097+25.00	10.0'		DECEL. SOUTH AVE., RAMP D (LT)
	1091+95.34	1092+19.13	2.0'	0.0'											
P.26											1092+60.56	1093+00.59	6.59'	4.33'	TRANSITION AT BARRIER (RIGHTSIDE)
											1093+00.48	1093+54.59	4.33'		
											1093+54.59	1093+94.62	4.33'	5.59'	
											1093+95.00	1094+35.00	5.59'	6.59'	

Preliminary Plans - For Reference Only

PROPOSED TYPICAL SECTIONS - I.R. 680 NB TABLES

DESIGN AGENCY
ms consultants, inc.

DESIGNER DWH
REVIEWER CMN 08/29/25
PROJECT ID 121474
SHEET P.29 TOTAL 655

MAH-680-4.58

MODEL: Sheet PAPERSIZE: 34x22 (in.) DATE: 9/15/2025 TIME: 2:22:52 PM PLTDRV: OHDOT_PDF_E+.pltcfg PENTBL: OHDOT_Pen.tbl USER: DHall@msconsultants.com WORKSPACE: OHDOTCEv02 WORKSET: 121474 PRODUCT: OpenRoadsDesigner 24.00.00.205
pw:\\ohiodot-pw.bentley.com:ohiodot-pw-02\Documents\01 Active Projects\District 04\Mahoning\121474\402-Engineering_MSConsultants\Roadway\Sheets\121474_GY014.dgn

I.R. 680 SOUTHBOUND RAMP & GORE AREA TABLES

SHEET NUMBER	WIDTH (GORE AREA)					WIDTH (SPEED CHANGE LANE)					WIDTH (SHOULDER)				
	STATION		WIDTH (FT.)		COMMENTS	STATION		WIDTH (FT.)		SPEED CHANGE LANE TYPE	STATION		WIDTH (FT.)		COMMENTS
	FROM	TO	FROM	TO		FROM	TO	FROM	TO		FROM	TO	FROM	TO	
P.24											951+25.00	951+45.48	6.59'	5.59'	TRANSITION AT BARRIER (LEFTSIDE)
											951+65.00	951+75.00	5.59'		
											951+75.00	952+15.00	5.59'	6.59'	
P.24, P.26	952+72.95	953+81.31	23.0'	2.0'	SILLIMAN ST., RAMP C (RIGHTSIDE)	955+74.86	962+18.68	12.0'		ACCEL. SILLIMAN ST., RAMP C (RT)	955+74.86	961+01.59	8.0'		ACCELERATION SILLIMAN RAMP C (RT)
	953+81.31	954+04.70	2.0'	0.0'							961+01.59	962+18.68	8.0'	5.08'	
P.24											958+12.16	958+52.16	6.59'	4.45'	TRANSITION AT BARRIER (LEFTSIDE)
											958+52.16	959+16.24	4.45'	4.41'	
											959+16.24	959+95.00	4.41'	5.59'	
											959+95.00	690+05.00	5.59'		
											690+05.00	960+45.00	5.59'	6.59'	
P.24											968+77.60	969+00.94	5.96'	5.09'	TRANSITION AT BARRIER (LEFTSIDE)
											969+00.94	969+64.87	5.09'	5.10'	
											969+64.87	970+04.87	5.10'	6.59'	
P.24, P.26	982+19.82	982+43.95	0.0'	2.0'	HIGH ST. RAMP F (RIGHTSIDE)	968+77.67	975+56.18	12.0'		DECELERATION HIGH ST. RAMP F (RT)	968+77.69	969+00.46	5.08'		TRANSITION AT BRIDGE/DECELERATION HIGH ST. RAMP F (RT)
	982+43.95	983+90.41	2.0'	23.0'							969+00.46	969+75.11	5.08'	8.0'	
											969+75.11	975+56.18	8.0'		
P.24											998+55.00	998+95.00	6.59'	5.59'	TRANSITION AT BARRIER (LEFTSIDE)
											998+95.00	999+05.00	5.59'		
											999+05.00	999+45.00	5.59'	6.59'	
P.24	995+08.21	997+15.64	23.0'	2.0'	HIGH ST. RAMP H (RIGHTSIDE)	999+00.00	1003+00.56	12.0'		ACCELERATION HIGH ST. RAMP H (RIGHTSIDE)	999+00.00	1003+38.04	8.0'		ACCELERATION HIGH ST. RAMP H/TRANSITION AT BRIDGE (RT)
	997+15.64	997+49.50	2.0'	0.0'		1003+00.56	1004+95.54	12.0'	7.1'		1003+38.04	1004+62.56	8.0'	3.0'	
											1003+62.56	1004+99.80	3.0'	4.11'	
						1007+30.62	1007+80.47	1.3'	0.0'		1007+35.39	1007+80.47	9.4'	10.0'	
P.24, P.26	1019+49.06	1019+76.90	0.0'	2.0'	MARKET ST. RAMP K (RIGHTSIDE)	1012+07.00	1013+07.00	0.0'	12.0'	DECELERATION MARKET ST. RAMP K (RT)	1012+07.00	1013+07.00	10.0'	8.0'	DECELERATION MARKET ST. RAMP K (RT)
	1019+76.90	1021+75.00	2.0'	18.8'		1013+07.00	1018+25.00	12.0'			1013+07.00	1018+25.00	8.0'		
P.24											1019+70.00	1020+10.00	6.59'	5.59'	TRANSITION AT BARRIER (LEFTSIDE)
											1020+10.00	1020+20.00	5.59'		
											1020+20.00	1020+60.00	5.59'	6.59'	
P.24	1021+75.00	1025+29.92	18.8'	26.8'	CONCRETE MEDIAN						1020+88.69	1021+03.69	6.59'	6.03'	TRANSITION AT BARRIER (LEFTSIDE)
	1025+29.92	1025+69.96	26.8'	24.9'							1021+03.69	1021+28.64	6.03'	4.85'	
											1021+28.64	1021+75.79	4.85'	4.83'	
											1021+75.79	1022+00.78	4.83'	6.03'	
											1021+00.78	1022+15.74	6.03'	6.59'	
P.24, P.26	1028+44.89	1028+78.35	0.0'	2.0'	MARKET ST., RAMP M (RIGHTSIDE)	1025+24.58	1026+25.70	0.0'	12.0'	DECEL. MARKET ST., RAMP M	1025+69.96	1026+25.71	9.1'	8.0'	DECEL. MARKET ST., RAMP M
	1028+78.35	1030+90.93	2.0'	23.0'											
P.24											1029+95.00	1029+34.42	6.59'	5.59'	TRANSITION AT BARRIER (LEFTSIDE)
											1029+34.42	1029+44.42	5.59'		
											1029+44.42	1029+81.48	5.59'	4.86'	
											1029+81.48	1030+77.97	4.86'	4.96'	
											1030+77.97	1031+02.98	4.96'	6.03'	
											1031+02.98	1031+17.99	6.03'	6.59'	
P.24											1042+13.39	1042+38.35	6.59'	6.84'	TRANSITION AT BARRIER (LEFTSIDE)
											1042+38.35	1042+78.35	6.84'	5.73'	
											1042+78.35	1043+22.66	5.73'	6.38'	
											1043+22.66	1043+62.66	6.38'	7.09'	
											1043+62.66	1043+87.53	7.09'	6.59'	
P.24											1047+17.97	1047+57.91	6.64'	5.01'	TRANSITION AT BARRIER (LEFTSIDE)
											1047+57.91	1048+02.85	5.01'	5.14'	
											1048+02.85	1048+42.79	5.14'	6.60'	
P.26	1055+72.37	1057+44.88	23.0'	2.0'	U.S. 62/S.R. 7, RAMP SB (RIGHTSIDE)						1051+89.00	1052+29.00	6.59'	5.59'	TRANSITION AT BARRIER (LEFTSIDE)
	1057+44.88	1057+72.72	2.0'	0.0'							1052+29.00	1052+39.00	5.59'		
	1057+44.88	1057+72.72	2.0'	0.0'							1052+39.00	1052+79.00	5.59'	6.59'	
P.26											1059+69.96	1059+89.88	6.59'	5.85'	TRANSITION AT BARRIER (LEFTSIDE)
											1059+89.88	1060+09.87	5.85'	4.86'	
											1060+09.87	1060+70.56	4.86'	5.42'	
											1060+70.56	1060+90.57	5.42'	5.85'	
											1060+90.57	1061+10.54	5.85'	6.59'	
P.26	1078+71.44	1079+53.71	9.3'	23.0'	SOUTH AVE., RAMP A (RIGHTSIDE)	1071+53.71	1072+53.71	0.0'	12.0'	DECEL. SOUTH AVE., RAMP A (RIGHTSIDE)	1071+53.71	1072+53.71	10.0'	8.0'	DECEL. SOUTH AVE., RAMP A (RIGHTSIDE)
P.26											1075+65.00	1076+05.00	6.59'	5.59'	TRANSITION AT BARRIER (LEFTSIDE)
											1076+05.00	1076+15.00	5.59'		
											1076+15.00	1076+55.00	5.59'	6.59'	
P.26											1083+14.25	1083+19.27	6.60'	6.50'	TRANSITION AT BARRIER (LEFTSIDE)
											1083+19.27	1083+59.22	6.50'	4.28'	
											1083+59.22	1084+43.45	4.28'	4.34'	
											1084+43.45	1084+83.51	4.34'	6.51'	
											1084+83.51	1084+88.51	6.51'	6.59'	
P.26	1090+16.81	1094+85.44	23.0'	2.0'	SOUTH AVE., RAMP C (RIGHTSIDE)	1095+30.03	1097+25.63	16.0'	12.0'	ACCEL. SOUTH AVE., RAMP C (RIGHTSIDE)	1095+30.03	1096+25.63	8.0'		ACCEL. SOUTH AVE., RAMP C (RIGHTSIDE)
	1094+85.44	1095+65.43	2.0'	0.0'							1096+25.63	1097+25.63	8.0'	10.0'	
P.26											1092+60.62	1093+00.59	6.59'	5.86'	TRANSITION AT BARRIER (LEFTSIDE)
											1093+00.59	1093+54.59	5.86'	5.87'	
											1093+54.59	1093+95.00	5.87'	5.59'	
											1093+95.00	1094+35.00	5.59'	6.59'	

Preliminary Plans - For Reference Only

PROPOSED TYPICAL SECTIONS - I.R. 680 SB TABLES

MAH-680-4.58
MODEL: Sheet PAPERSIZE: 34x22 (in.) DATE: 9/15/2025 TIME: 2:22:57 PM PLTDRV: OHDOT_PDF_E+.pltcfg PENTBL: OHDOT_Pen.tbl USER: DHall@msconsultants.com WORKSPACE: OHDOTCEv02 WORKSET: 121474 PRODUCT: OpenRoadsDesigner 24.00.00.205
pw:\\ohiodot-pw.bentley.com:ohiodot-pw-02\Documents\01 Active Projects\District 04\Mahoning\121474402-Engineering_MSConsultants\RoadwaySheets\121474_GY015.dgn

DESIGN AGENCY
ms consultants. inc.

DESIGNER DWH
REVIEWER CMN 08/29/25
PROJECT ID 121474
SHEET P.30 TOTAL 655

DESIGN EXCEPTION #10
MARSHALL STREET RAMP G
RIGHT SHOULDER WIDTH = 5'-1"
UNDER GLENWOOD AVENUE BRIGE
NDC = 6'

DESIGN EXCEPTION #10
SOUTH AVENUE RAMP B
RIGHT SHOULDER WIDTH = 5.0'
UNDER SOUTH AVENUE BRIDGE
NDC = 6'

DESIGN EXCEPTION #10
SR 193 RAMP C
RIGHT SHOULDER WIDTH = 4'
NDC = 6'

DESIGN EXCEPTION #10
SR 193 RAMP B3
RIGHT SHOULDER WIDTH = 4'
NDC = 6'

DESIGN EXCEPTION #10
SR RAMP D
RIGHT SHOULDER WIDTH
= 3' MIN., NDC = 6'

DESIGN EXCEPTION #10
GLENWOOD / HIGH RAMP F
RIGHT SHOULDER WIDTH = 4'
NDC = 6'

DESIGN EXCEPTION #10
GLENWOOD / HIGH RAMP H
RIGHT SHOULDER WIDTH = 3'
NDC = 6'

DESIGN EXCEPTION #10
MARSHALL ST. RAMP J
RIGHT SHOULDER WIDTH = 3.5'
NDC = 6'

DESIGN EXCEPTION #10
MARKET ST. RAMP L
RIGHT SHOULDER WIDTH = 0'
AT CURB, NDC = 2' AT CURB

DESIGN EXCEPTION #10
MARKET ST. RAMP M
RIGHT SHOULDER WIDTH = 3'
NDC = 6'

DESIGN EXCEPTION #10
WOODLAND AVE. RAMP N
RIGHT SHOULDER WIDTH = 3'
NDC = 6'

DESIGN EXCEPTION #10
WOODLAND AVE. RAMP CA
RIGHT SHOULDER WIDTH = 3'
NDC = 6'

DESIGN EXCEPTION #10
RAMP BY
RIGHT SHOULDER WIDTH = 3'
NDC = 6'

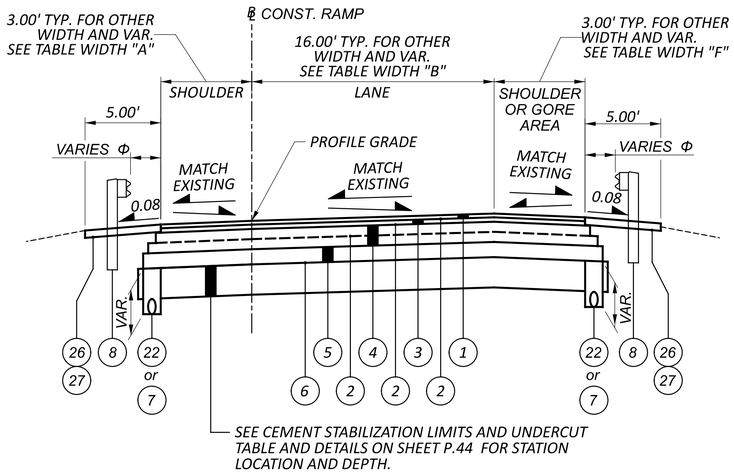

SEE CEMENT STABILIZATION LIMITS AND UNDERCUT TABLE AND DETAILS ON SHEET P.44 FOR STATION LOCATION AND DEPTH.

PROPOSED PAVEMENT REPLACEMENT TO EXISTING ELEVATIONS - RAMP SECTION

SALT SPRINGS RD.
RAMP D [3/3] (I.R. 680 N.B. TO SALT SPRINGS RD.) - STA. 10+72.88 (AHD) TO STA. 19+13.38
MARSHALL ST.
RAMP J [3/4] (I.R. 680 N.B. TO MARSHALL ST.) - STA. 10+32.00 (AHD) TO STA. 14+92.60
U.S. 62/S.R. 7
RAMP BX [2/4] (I.R. 680 S.B. TO U.S. 62/S.R. 7 E.B.) - STA. 3+52.38 TO STA. 11+23.38

EXISTING APPROACH SLABS AND STRUCTURE
STA. 11+23.38 TO STA. 16+27.12

RAMP BX [3/4/] (I.R. 680 S.B. TO MARKET ST.) - STA. 16+27.12 TO STA. 19+98.81
WOODLAND AVE.
RAMP N [2/3] (WOODLAND AVE. TO I.R. 680 N.B.) - STA. 1034+10.73 TO STA. 1040+65.20
U.S. 62/S.R. 7
RAMP NB [2/4] (I.R. 680 N.B. TO U.S. 62/S.R. 7 E.B.) - STA. 1039+70.00 TO STA. 1051+57.13
RAMP SB [2/6] (U.S. 62/S.R. 7 W.B. TO I.R. 680 S.B.) - STA. 1035+36.77 TO STA. 1047+41.99
RAMP SB [4/6] (U.S. 62/S.R. 7 W.B. TO I.R. 680 S.B.) - STA. 1050+60.85 TO STA. 1053+36.22 (BK)
SOUTH AVE.
RAMP B [2/4] (SOUTH AVE. TO I.R. 680 N.B. TO SOUTH AVE.) - STA. 1086+56.75 TO STA. 1088+79.88
RAMP B [4/4] (SOUTH AVE. TO I.R. 680 N.B. TO SOUTH AVE.) - STA. 1091+40.31 TO STA. 1092+47.49
RAMP D [2/3] (I.R. 680 N.B. TO SOUTH AVE.) - STA. 1086+88.57 TO STA. 1090+50.50

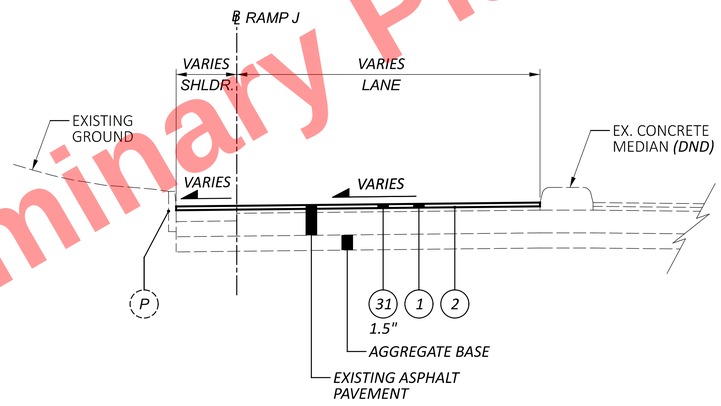

PROPOSED PLANING AND RESURFACING RAMP SECTION

MARSHALL ST.
RAMP J [4/4] (I.R. 680 N.B. TO MARSHALL ST.) - STA. 14+92.60 TO STA. 16+57.02
HIGH ST.
RAMP H [1/4] (HIGH ST. TO I.R. 680 S.B.) - STA. 0+52.93 TO STA. 2+56.75

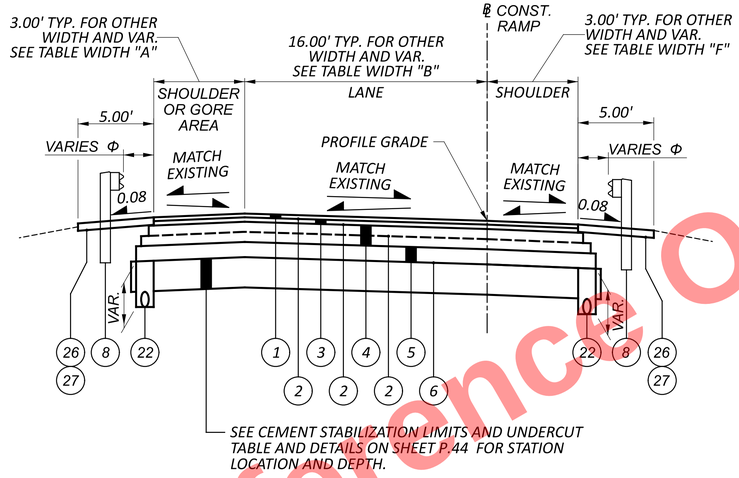

SEE CEMENT STABILIZATION LIMITS AND UNDERCUT TABLE AND DETAILS ON SHEET P.44 FOR STATION LOCATION AND DEPTH.

PROPOSED PAVEMENT REPLACEMENT TO EXISTING ELEVATIONS - RAMP SECTION

S.R. 193
RAMP B-3 [2/2] (I.R. 680 N.B. TO S.R. 193 N.B.) - STA. 4+33.81 TO STA. 11+09.85
SILLIMAN ST.
RAMP C [3/4] (SILLIMAN ST. TO I.R. 680 S.B.) - STA. 8+74.12 TO STA. 17+59.12
SALT SPRINGS RD.
RAMP D [2/3] (I.R. 680 N.B. TO SALT SPRINGS RD.) - STA. 6+71.20 TO STA. 10+72.94 (BK)
HIGH ST.
RAMP F [3/4] (I.R. 680 S.B. TO HIGH ST.) - STA. 8+32.21 TO STA. 13+54.27
RAMP H [3/4] (HIGH ST. TO I.R. 680 S.B.) - STA. 3+90.17 TO STA. 14+49.53
MARSHALL ST.
RAMP J [2/4] (I.R. 680 N.B. TO MARSHALL ST.) - STA. 8+39.62 TO STA. 10+32.00 (BK)
MARKET ST.
RAMP L [2/3] (MARKET ST. TO I.R. 680 N.B.) - STA. 2+27.09 TO STA. 6+06.97
RAMP M [3/3] (I.R. 680 S.B. TO MARKET ST.) - STA. 1034+52.75 TO STA. 1041+25.82
U.S. 62/S.R. 7
RAMP BY [2/2] (U.S. 62/S.R. 7 WB TO I.R. 680 N.B.) - STA. 2+14.54 TO STA. 12+72.57
RAMP SB [5/6] (U.S. 62/S.R. 7 W.B. TO I.R. 680 S.B.) - STA. 1053+36.22 (AHD) TO STA. 1055+73.99
RAMP BV [2/2] (U.S. 62/S.R. 7 W.B. TO WILLIAMSON AVE.) - STA. 3+26.35 TO STA. 12+60.77
WOODLAND AVE.
RAMP CA [2/5] (U.S. 62/S.R. 7 W.B. TO WOODLAND AVE.) - STA. 14+35.73 TO STA. 15+59.46
RAMP CA [4/5] (U.S. 62/S.R. 7 W.B. TO WOODLAND AVE.) - STA. 17+73.01 TO STA. 25+77.39
SOUTH AVE.
RAMP A [4/4] (I.R. 680 S.B. TO SOUTH AVE.) - STA. 1079+92.09 TO STA. 1084+67.07
RAMP C [1/2] (SOUTH AVE. TO I.R. 680 S.B.) - STA. 1084+34.17 TO STA. 1090+18.45

DESIGN EXCEPTION #10
US 62 RAMP SB
RIGHT SHOULDER WIDTH = 3'
(ONE LANE SECTION), NDC = 6'

DESIGN EXCEPTION #10
US 62 RAMP BV
RIGHT SHOULDER WIDTH = 3'
NDC = 6'

DESIGN EXCEPTION #10
US 62 RAMP BX
RIGHT SHOULDER WIDTH = 5'
NDC = 6'

DESIGN EXCEPTION #10
SOUTH AVE. RAMP A
RIGHT SHOULDER WIDTH = 5'
NDC = 6'

DESIGN EXCEPTION #10
SOUTH AVE. RAMP C
RIGHT SHOULDER WIDTH = 3'
NDC = 6'

DESIGN EXCEPTION #10
SOUTH AVE. RAMP D
RIGHT SHOULDER WIDTH = 3'
NDC = 6'

NOTES:

1. *FOR PROPOSED LEGEND, SEE SHEET P.24*
2. *FOR WIDTH TABLE, SEE SHEETS P.42 - P.43*
3. *THE BASELINE LOCATION VARIES WITHIN THE PAVEMENT STRUCTURE. WIDTHS SHOWN REPRESENT THE PAVEMENT WIDTHS AND NOT NECESSARILY THE OFFSETS FROM THE BASELINE.*

ψ *SEE UNDERCUT TABLE AND DETAILS ON SHEET P.44 FOR STATION LOCATION AND DEPTH.*

Φ *SEE PLAN SHEETS FOR PROP. GUARDRAIL & CONCRETE BARRIER LOCATION AND OFFSET*

[X/X] *RAMP STATION TO STATION ORDER*

Preliminary Plans - For Reference Only

PROPOSED TYPICAL SECTIONS - RAMPS

DESIGN AGENCY
ms consultants, inc.

DESIGNER DWH
REVIEWER CMN 08/29/25
PROJECT ID 121474
SHEET P.31 TOTAL 655

MAH-680-4.58

MODEL: Sheet PAPERSIZE: 34x22 (in.) DATE: 9/15/2025 TIME: 2:23:04 PM PLTDRV: OHDOT_PDF_E+.pltcfg PENTBL: OHDOT_Pen.tbl USER: DHall@msconsultants.com WORKSPACE: OHDOTCEv02 WORKSET: 121474 PRODUCT: OpenRoadsDesigner 24.00.00.205
pw:\\ohiodot-pw.bentley.com:ohiodot-pw-02\Documents\01 Active Projects\District 04\Mahoning\121474\402-Engineering_MSConsultants\RoadwaySheets\121474_GY208.dgn

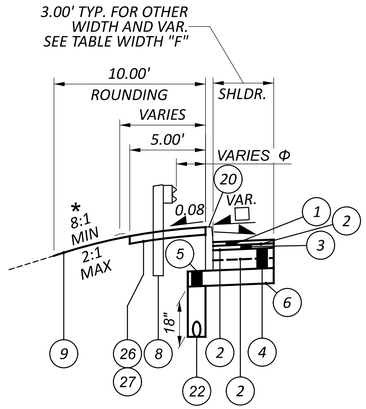

PROPOSED PAVEMENT REPLACEMENT TO EXISTING ELEVATIONS
PARTIAL SECTION LEFT

SILLIMAN ST.
RAMP C (SILLIMAN ST. TO I.R. 680 S.B.) - STA. 0+36.14 TO STA. 0+80.74
RAMP C (SILLIMAN ST. TO I.R. 680 S.B.) - STA. 1+30.74 TO STA. 1+55.23
RAMP C (SILLIMAN ST. TO I.R. 680 S.B.) - STA. 4+58.28 TO STA. 4+78.99
SALT SPRINGS RD.
RAMP D (I.R. 680 N.B. TO SALT SPRINGS RD.) - STA. 18+40.19 TO STA. 19+13.38
MARSHALL ST.
RAMP J (I.R. 680 N.B. TO MARSHALL ST.) - STA. 11+65.98 TO STA. 14+92.60
MARKET ST.
RAMP M (I.R. 680 S.B. TO MARKET ST.) - STA. 1034+52.75 TO STA. 1035+28.78
RAMP M (I.R. 680 S.B. TO MARKET ST.) - STA. 1040+50.16 TO STA. 1040+91.38
WOODLAND AVE.
RAMP N (WOODLAND AVE. TO I.R. 680 N.B.) - STA. 1033+35.78 TO STA. 1033+54.06
RAMP N (WOODLAND AVE. TO I.R. 680 N.B.) - STA. 1038+74.49 TO STA. 1040+65.20
RAMP CA (U.S. 62/S.R. 7 W.B. TO WOODLAND AVE.) - STA. 23+07.25 TO STA. 24+80.45
SOUTH AVE.
RAMP A (I.R. 680 S.B. TO SOUTH AVE.) - STA. 1081+54.93 TO STA. 1081+62.02
RAMP A (I.R. 680 S.B. TO SOUTH AVE.) - STA. 1081+65.08 TO STA. 1084+66.90
RAMP B (SOUTH AVE. TO I.R. 680 N.B. TO SOUTH AVE.) - STA. 1091+59.79 TO STA. 1092+51.99
RAMP C (SOUTH AVE. TO I.R. 680 S.B.) - STA. 1084+34.28 TO STA. 1084+58.77
RAMP C (SOUTH AVE. TO I.R. 680 S.B.) - STA. 1088+70.89 TO STA. 1090+18.45

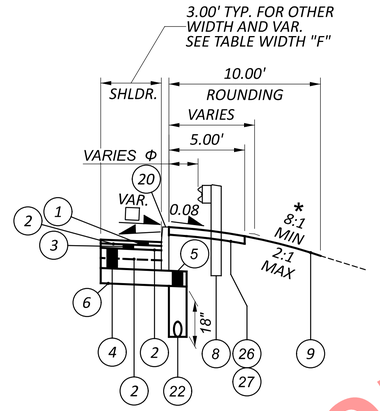

PROPOSED PAVEMENT REPLACEMENT TO EXISTING ELEVATIONS
PARTIAL SECTION RIGHT

SILLIMAN ST.
RAMP C (SILLIMAN ST. TO I.R. 680 S.B.) - STA. 0+06.62 TO STA. 0+80.74
RAMP C (SILLIMAN ST. TO I.R. 680 S.B.) - STA. 1+18.37 TO STA. 1+35.47
RAMP C (SILLIMAN ST. TO I.R. 680 S.B.) - STA. 4+37.38 TO STA. 4+51.57
SALT SPRINGS RD.
RAMP D (I.R. 680 N.B. TO SALT SPRINGS RD.) - STA. 16+53.39 TO STA.19+13.38
MARSHALL ST.
RAMP J (I.R. 680 N.B. TO MARSHALL ST.) - STA. 14+01.37 TO STA. 14+92.60
MARKET ST.
RAMP M (I.R. 680 S.B. TO MARKET ST.) - STA. 1029+95.56 TO STA. 1030+13.62
RAMP M (I.R. 680 S.B. TO MARKET ST.) - STA. 1032+38.00 TO STA. 1034+33.29
RAMP M (I.R. 680 S.B. TO MARKET ST.) - STA. 1040+42.75 TO STA. 1041+25.76
U.S. 62/S.R. 7
RAMP BV [2/2] (U.S. 62/S.R. 7 W.B. TO WILLIAMSON AVE.) - STA. 12+31.87 TO STA. 12+60.48
WOODLAND AVE.
RAMP N (WOODLAND AVE. TO I.R. 680 N.B.) - STA. 1038+62.31 TO STA. 1040+65.23
SOUTH AVE.
RAMP A (I.R. 680 S.B. TO SOUTH AVE.) - STA. 1082+26.13 TO STA. 1084+67.32
RAMP B (SOUTH AVE. TO I.R. 680 N.B. TO SOUTH AVE.) - STA. 1088+35.92 TO STA. 1088+79.88
RAMP B (SOUTH AVE. TO I.R. 680 N.B. TO SOUTH AVE.) - STA. 1091+38.20 TO STA. 1092+49.55
RAMP C (SOUTH AVE. TO I.R. 680 S.B.) - STA. 1084+34.02 TO STA. 1084+41.54
RAMP D (I.R. 680 N.B. TO SOUTH AVE.) - STA. 1086+88.57 TO STA. 1087+54.78

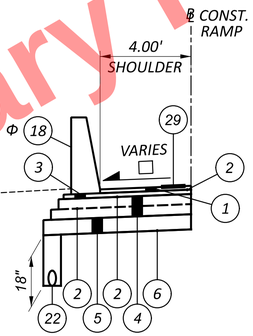

PROPOSED PAVEMENT REPLACEMENT TO EXISTING ELEVATIONS
PARTIAL SECTION LEFT

U.S. 62/S.R. 7
RAMP SB (U.S. 62/S.R. 7 W.B. TO I.R. 680 S.B.) - STA. 1041+95.21 TO STA. 1047+49.21

6.00' TYP. FOR OTHER

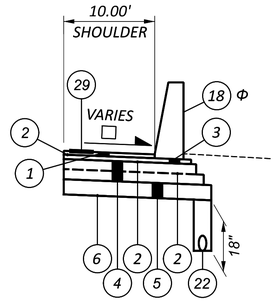

PROPOSED PAVEMENT REPLACEMENT TO EXISTING ELEVATIONS
PARTIAL SECTION RIGHT

U.S. 62/S.R. 7
RAMP SB (U.S. 62/S.R. 7 W.B. TO I.R. 680 S.B.) - STA. 1042+59.38 TO STA. 1047+67.38

NOTES:

1. *FOR PROPOSED LEGEND, SEE SHEET P.24*
2. *FOR WIDTH TABLE, SEE SHEETS P.42 - P.43*
3. *THE BASELINE LOCATION VARIES WITHIN THE PAVEMENT STRUCTURE. WIDTHS SHOWN REPRESENT THE PAVEMENT WIDTHS AND NOT NECESSARILY THE OFFSETS FROM THE BASELINE.*
4. *SEE UNDERCUT TABLE AND DETAILS ON SHEET P.44 FOR STATION LOCATION AND DEPTH.*

Φ SEE PLAN SHEETS FOR PROP. GUARDRAIL & CONCRETE BARRIER LOCATION AND OFFSET

[X/X] RAMP STATION TO STATION ORDER

Preliminary Plans - For Reference Only

PROPOSED TYPICAL SECTIONS - RAMPS

DESIGN AGENCY
ms consultants, inc.

DESIGNER DWH
REVIEWER CMN 08/29/25
PROJECT ID 121474
SHEET P.32 TOTAL 655

MAH-680-4.58

MODEL: Sheet PAPERSIZE: 34x22 (in.) DATE: 9/15/2025 TIME: 2:23:09 PM PLTDRV: OHDOT_PDF_E+.pltcfg PENTBL: OHDOT_Pen.tbl USER: DHall@msconsultants.com WORKSPACE: OHDOTCEv02 WORKSET: 121474 PRODUCT: OpenRoadsDesigner 24.00.00.205
pw:\\ohiodot-pw.bentley.com:ohiodot-pw-02\Documents\01 Active Projects\District 04\Mahoning\121474\402-Engineering_MSConsultants\Roadway\Sheets\121474_GY208A.dgn

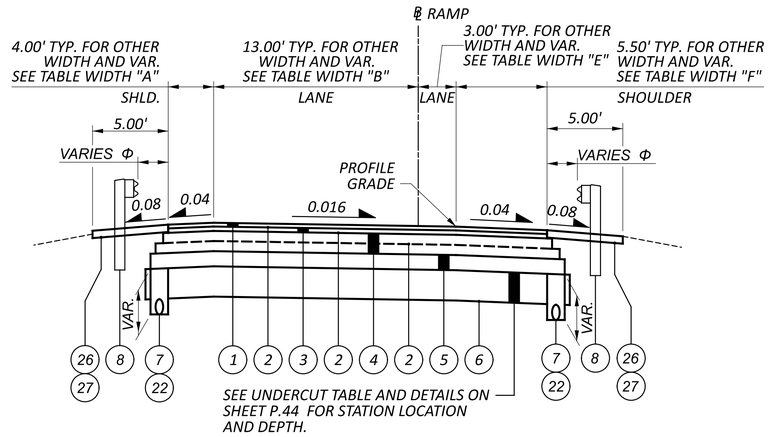

PROPOSED PAVEMENT REPLACEMENT TO EXISTING ELEVATIONS RAMP SECTION

SILLIMAN ST.

RAMP C [1/4] (SILLIMAN ST. TO I.R. 680 S.B.) - STA. 0+23.23 TO STA. 1+41.93

EXISTING APPROACH SLABS AND STRUCTURE STA. 1+41.93 TO STA. 4+44.09

RAMP C [2/4] (SILLIMAN ST. TO I.R. 680 S.B.) - STA. 4+44.09 TO STA. 8+74.12

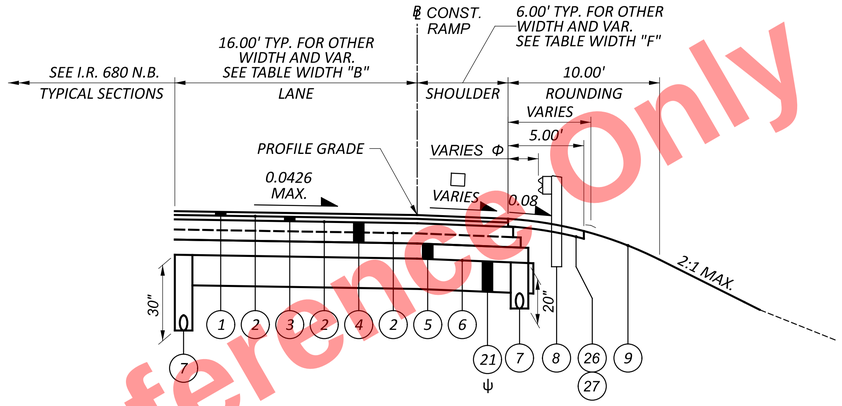

PROPOSED SUPERELEVATED RAMP SECTION

S.R. 193

RAMP B-3 [1/2] (I.R. 680 N.B. TO S.R. 193 N.B.) - STA. 1+00.00 TO STA. 4+33.81

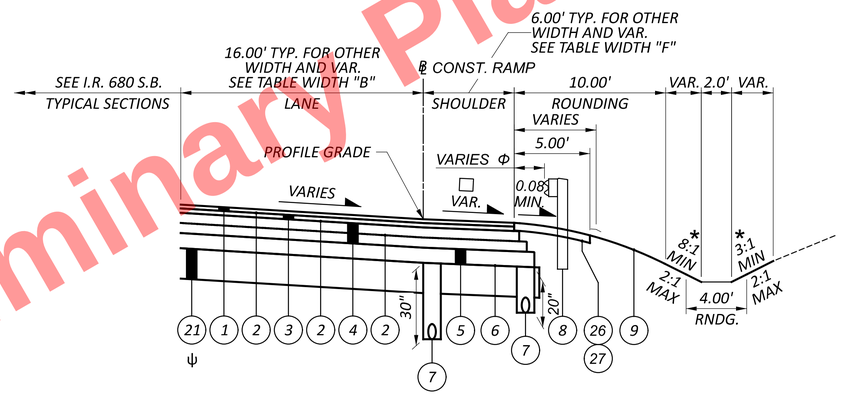

PROPOSED SUPERELEVATED RAMP SECTION

SILLIMAN ST.

RAMP C [4/4] (SILLIMAN ST. TO I.R. 680 S.B.) - STA. 17+59.12 TO STA. 20+58.30

NOTES:

1. *FOR PROPOSED LEGEND, SEE SHEET P.24*
2. *FOR WIDTH TABLE, SEE SHEETS P.42 - P.43*
3. *PROPOSED DITCHES SHALL NOT BE ROUNDED WITHIN THE EXTENT OF VEGETATED BIOFILTERS. SEE PROJECT SITE PLAN FOR LOCATIONS.*
4. *SEE SUPERELEVATION TABLES FOR TRANSITION STATIONS AND RATES*

Ψ *SEE CEMENT STABILIZATION LIMITS AT RAMPS ON SHEET P.44*

☐ *SEE SHOULDER DETAILS, SHEET P.27*

* *OR AS SHOWN ON CROSS SECTIONS*

Φ *SEE PLAN SHEETS FOR PROP. GUARDRAIL & CONCRETE BARRIER LOCATION AND OFFSET*

[X/X] RAMP STATION TO STATION ORDER

Preliminary Plans - For Reference Only

PROPOSED TYPICAL SECTIONS - RAMPS

DESIGN AGENCY
ms consultants, inc.

DESIGNER DWH
REVIEWER CMN 08/29/25
PROJECT ID 121474
SHEET P.33 TOTAL 655

MAH-680-4.58

MODEL: Sheet PAPERSIZE: 34x22 (in.) DATE: 9/15/2025 TIME: 2:23:15 PM PLTDRV: OHDOT_PDF_E+.pltcfg PENTBL: OHDOT_Pen.tbl USER: DHall@msconsultants.com WORKSPACE: OHDOTCEv02 WORKSET: 121474 PRODUCT: OpenRoadsDesigner 24.00.00.205
pw:\\ohiodot-pw.bentley.com:ohiodot-pw-02\Documents\01 Active Projects\District 04\Mahoning\121474\402-Engineering_MSConsultants\Roadway\Sheets\121474_GY302.dgn

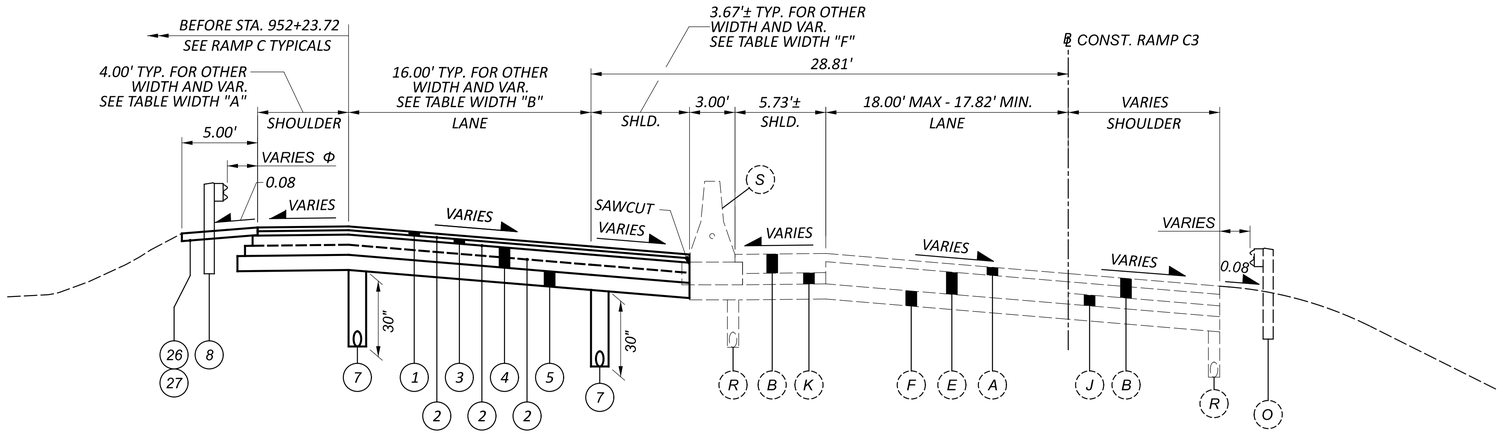

PROPOSED PAVEMENT REPLACEMENT TO EXISTING ELEVATIONS - RAMP SECTION

S.R. 193

RAMP C3 [1/5] (LEFT LANE: S.R. 193 S.B. TO I.R. 680 S.B.) - STA. 951+81.56 TO STA. 954+59.34

NOTES:

1. FOR PROPOSED LEGEND, SEE SHEET P.24

☐ SEE SHOULDER DETAILS, SHEET P.27

[X/X] RAMP STATION TO STATION ORDER

Φ SEE PLAN SHEETS FOR PROP. GUARDRAIL & CONCRETE BARRIER LOCATION AND OFFSET

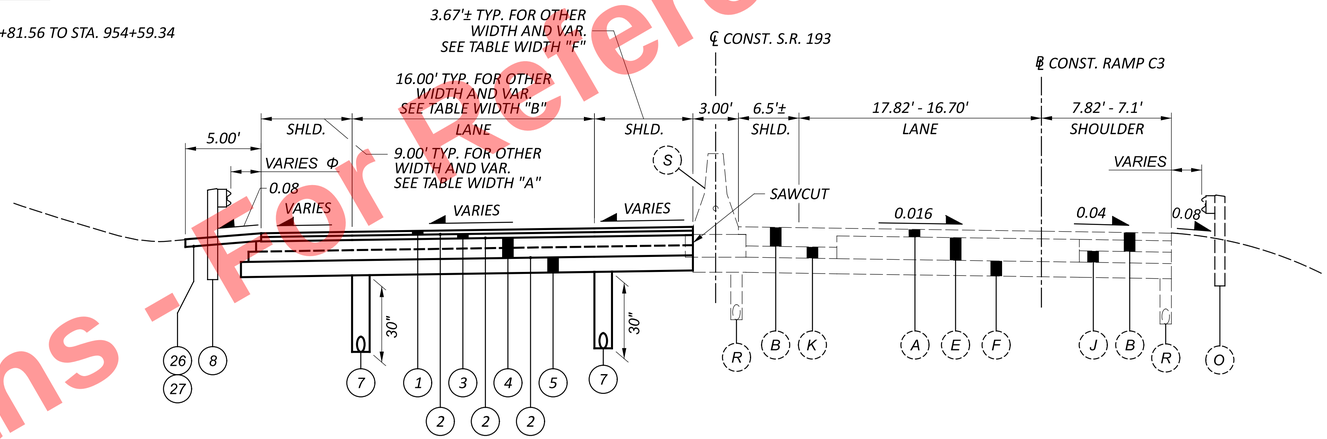

PROPOSED PAVEMENT REPLACEMENT TO EXISTING ELEVATIONS - RAMP SECTION

S.R. 193

RAMP C3 [2/5] (LEFT LANE: S.R. 193 S.B. TO I.R. 680 S.B.)
STA. 954+59.34 TO STA. 954+66.83 (SKEWED)
S.R. 193 [5/5] (LEFT LANE: S.R. 193 S.B. TO I.R. 680 S.B., RIGHT LANE: I.R. 680 S.B. TO S.R. 193 N.B.)
STA. 1+23.19 (SKEWED) TO STA. 3+99.38

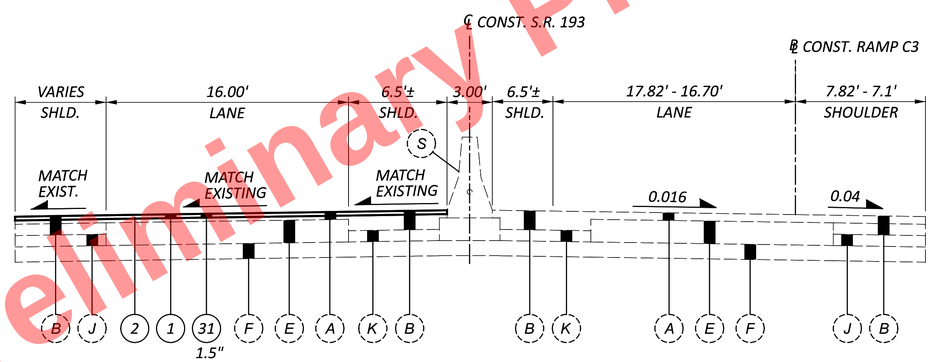

PROPOSED PLANING AND RESURFACING OVER APPROACH SLAB

S.R. 193

RAMP C3 [3/5] (LEFT LANE: S.R. 193 S.B. TO I.R. 680 S.B.) - STA. 954+66.83 TO STA. 954+93.45 (SKEWED)

STRUCTURE MAH-680-4.400
STA. 954+93.45 TO STA. 0+96.26

S.R. 193 [4/5] (LEFT LANE: S.R. 193 S.B. TO I.R. 680 S.B., RIGHT LANE: I.R. 680 S.B. TO S.R. 193 N.B.) - STA. 0+96.26 (SKEWED) TO STA. 1+23.19

Preliminary Plans - For Reference Only

PROPOSED TYPICAL SECTIONS - RAMPS

MAH-680-4.58

MODEL: Sheet PAPERSIZE: 34x22 (in.) DATE: 9/15/2025 TIME: 2:23:20 PM PLTDRV: OHDOT_PDF_E+.pltcfg PENTBL: OHDOT_Pen.tbl USER: DHall@msconsultants.com WORKSPACE: OHDOTCEv02 WORKSET: 121474 PRODUCT: OpenRoadsDesigner 24.00.00.205
pw:\\ohiodot-pw.bentley.com:ohiodot-pw-02\Documents\01 Active Projects\District 04\Mahoning\121474\402-Engineering_MSConsultants\Roadway\Sheets\121474_GY303.dgn

DESIGN AGENCY
ms consultants, inc.

DESIGNER DWH
REVIEWER CMN 08/29/25
PROJECT ID 121474
SHEET P.34 TOTAL 655

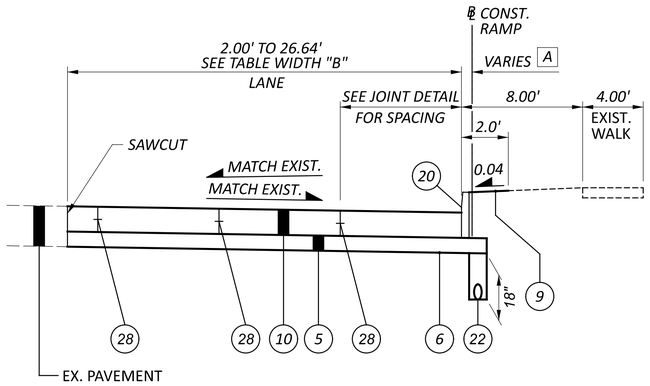

PROPOSED PAVEMENT REPLACEMENT TO EXISTING ELEVATIONS - RAMP SECTION

MARKET ST.
RAMP L [1/3] (MARKET ST. TO I.R. 680 N.B.) - STA. 0+50.70 TO STA. 2+27.09

A *STA. 0+50.70 TO STA. 0+85.69 = 0.50' TO 0.00'*

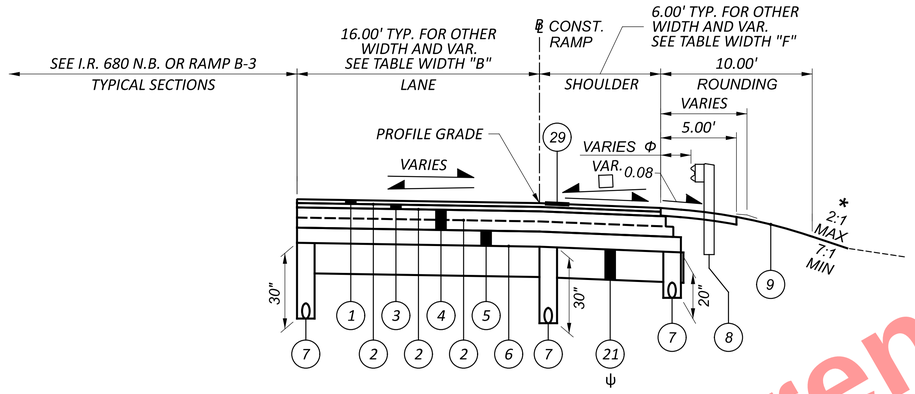

PROPOSED SUPERELEVATED RAMP SECTION

SALT SPRINGS RD.
RAMP D [1/3] (I.R. 680 N.B. TO SALT SPRINGS RD.) - STA. 0+00.00 TO STA. 6+71.20
MARSHALL ST.
RAMP G [3/3] (MARSHALL ST. TO I.R. 680 N.B.) - STA. 4+00.87 TO STA. 6+77.30
RAMP J [1/4] (I.R. 680 N.B. TO MARSHALL ST.) - STA. 3+29.56 TO STA. 8+39.62
MARKET ST.
RAMP L [3/3] (MARKET ST. TO I.R. 680 N.B.) - STA. 6+06.97 TO STA. 8+83.47

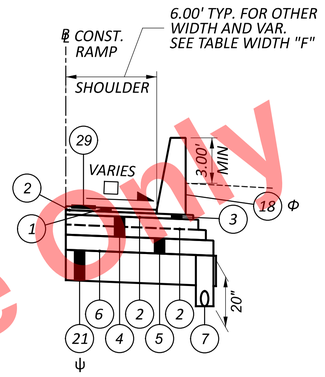

PARTIAL SECTION RIGHT

MARKET ST.
RAMP L (MARKET ST. TO I.R. 680 N.B.) - STA. 6+06.97 TO STA. 8+83.47

NOTES:

1. *FOR PROPOSED LEGEND, SEE SHEET P.24*
2. *FOR WIDTH TABLE, SEE SHEETS P.42 - P.43*
3. *PROPOSED DITCHES SHALL NOT BE ROUNDED WITHIN THE EXTENT OF VEGETATED BIOFILTERS. SEE PROJECT SITE PLAN FOR LOCATIONS.*
4. *SEE SUPERELEVATION TABLES FOR TRANSITION STATIONS AND RATES*

ψ *SEE CEMENT STABILIZATION LIMITS AT RAMPS ON SHEET P.44*
☐ *SEE SHOULDER DETAILS, SHEET P.27*
* *OR AS SHOWN ON CROSS SECTIONS*
Φ *SEE PLAN SHEETS FOR PROP. GUARDRAIL & CONCRETE BARRIER LOCATION AND OFFSET*
[X/X] RAMP STATION TO STATION ORDER

Preliminary Plans - For Reference Only

PROPOSED TYPICAL SECTIONS - RAMPS

DESIGN AGENCY
ms consultants, inc.
DESIGNER DWH
REVIEWER CMN 08/29/25
PROJECT ID 121474
SHEET P.35 TOTAL 655

MAH-680-4.58

MODEL: Sheet PAPERSIZE: 34x22 (in.) DATE: 9/15/2025 TIME: 2:23:26 PM PLTDRV: OHDOT_PDF_E+.pltcfg PENTBL: OHDOT_Pen.tbl USER: DHall@msconsultants.com WORKSPACE: OHDOTCE.v02 WORKSET: 121474 PRODUCT: OpenRoadsDesigner 24.00.00.205
pw:\\ohiodot-pw.bentley.com:ohiodot-pw-02\Documents\01 Active Projects\District 04\Mahoning\121474\402-Engineering_MSConsultants\Roadway\Sheets\121474_GY304.dgn

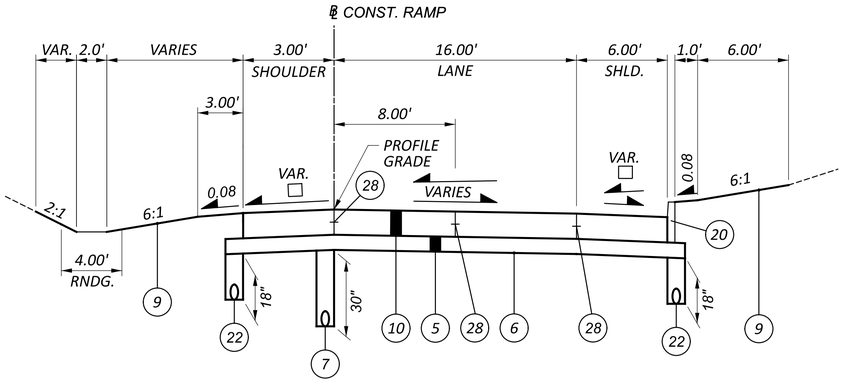

PROPOSED SUPERELEVATED RAMP SECTION

MARSHALL ST.

RAMP G [1/3] (MARSHALL ST. TO I.R. 680 N.B.) - STA. 2+37.70 TO STA. 3+23.72

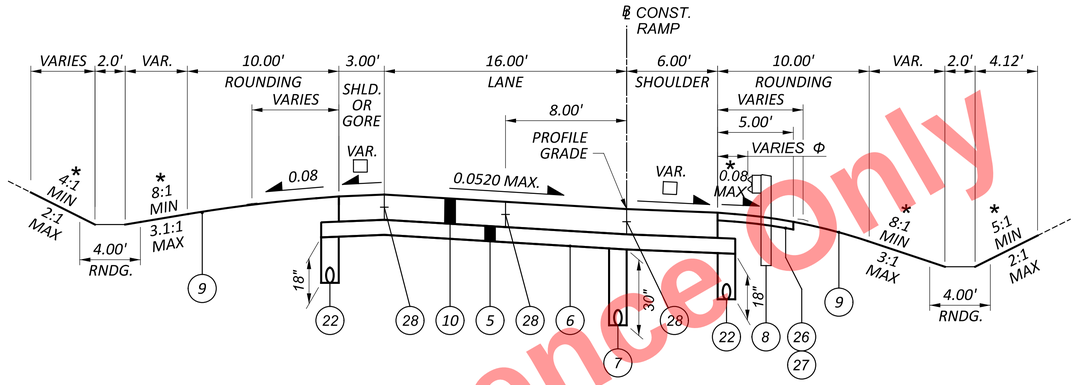

PROPOSED SUPERELEVATED RAMP SECTION

MARSHALL ST.

RAMP G [2/3] (MARSHALL ST. TO I.R. 680 N.B.) - STA. 3+23.72 TO STA. 4+00.87

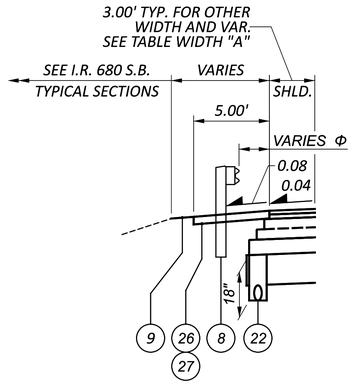

PARTIAL SECTION LEFT

MARKET ST.

RAMP M (I.R. 680 S.B. TO MARKET ST.) - STA. 1031+13.54 TO STA. 1032+50.00

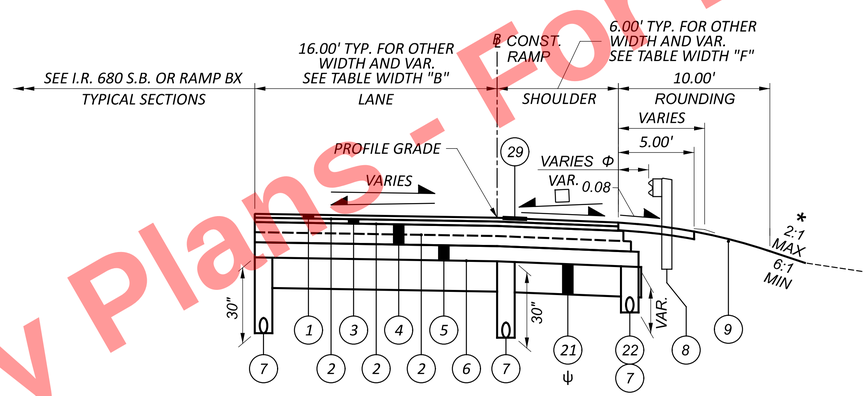

PROPOSED SUPERELEVATED RAMP SECTION

HIGH ST.

RAMP F [1/4] (I.R. 680 S.B. TO HIGH ST.) - STA. 0+00.00 TO STA. 3+37.90

EXISTING APPROACH SLABS AND STRUCTURE
STA. 3+37.90 TO STA. 5+50.79

RAMP F [2/4] (I.R. 680 S.B. TO HIGH ST.) - STA. 5+50.79 TO STA. 8+32.21
RAMP H [4/4] (HIGH ST. TO I.R. 680 S.B.) - STA. 14+49.53 TO STA. 18+29.96

MARKET ST.

RAMP M [1/3] (I.R. 680 S.B. TO MARKET ST.) - STA. 1026+25.70 TO STA. 1031+13.54

SOUTH AVE.

RAMP A [1/4] (I.R. 680 S.B. TO SOUTH AVE.) - STA. 1072+53.71 TO STA. 1073+59.44

EXISTING APPROACH SLABS AND STRUCTURE
STA. 1073+59.44 TO STA. 1075+45.32

RAMP A [2/4] (I.R. 680 S.B. TO SOUTH AVE.) - STA. 1075+45.32 TO STA. 1077+12.75

EXISTING APPROACH SLABS AND STRUCTURE
STA. 1077+12.75 TO STA. 1079+04.63

RAMP A [3/4] (I.R. 680 S.B. TO SOUTH AVE.) - STA. 1079+04.63 TO STA. 1079+92.09
RAMP C [2/2] (SOUTH AVE. TO I.R. 680 S.B.) - STA. 1090+18.45 TO STA. 1095+30.03

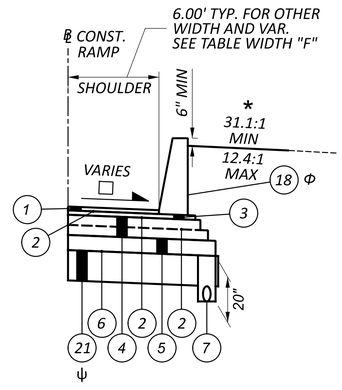

PARTIAL SECTION RIGHT

SOUTH AVE.

RAMP C (SOUTH AVE. TO I.R. 680 S.B.) - STA. 1091+55.63 TO STA. 1095+05.00

NOTES:

1. *FOR PROPOSED LEGEND, SEE SHEET P.24*
2. *FOR WIDTH TABLE, SEE SHEETS P.42 - P.43*
3. *PROPOSED DITCHES SHALL NOT BE ROUNDED WITHIN THE EXTENT OF VEGETATED BIOFILTERS. SEE PROJECT SITE PLAN FOR LOCATIONS.*
4. *SEE SUPERELEVATION TABLES FOR TRANSITION STATIONS AND RATES*

ψ *SEE CEMENT STABILIZATION LIMITS AT RAMPS ON SHEET P.44*

☐ *SEE SHOULDER DETAILS, SHEET P.27*

* *OR AS SHOWN ON CROSS SECTIONS*

[X/X] RAMP STATION TO STATION ORDER

Preliminary Plans - For Reference Only

PROPOSED TYPICAL SECTIONS - RAMPS

DESIGN AGENCY
ms consultants, inc.

DESIGNER DWH
REVIEWER CMN 08/29/25
PROJECT ID 121474
SHEET P.36 TOTAL 655

MAH-680-4.58

MODEL: Sheet PAPERSIZE: 34x22 (in.) DATE: 9/15/2025 TIME: 2:23:31 PM PLTDRV: OHDOT_PDF_E+.pltcfg PENTBL: OHDOT_Pen.tbl USER: DHall@msconsultants.com WORKSPACE: OHDOTCEv02 WORKSET: 121474 PRODUCT: OpenRoadsDesigner 24.00.00.205
pw:\\ohiodot-pw.bentley.com:ohiodot-pw-02\Documents\01 Active Projects\District 04\Mahoning\121474\402-Engineering_MSConsultants\Roadway\Sheets\121474_GY305.dgn

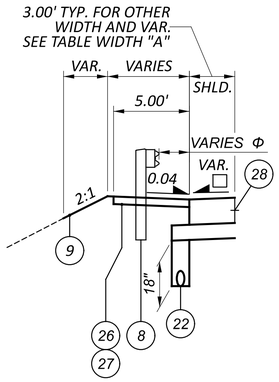

PARTIAL SECTION LEFT

MARKET ST.
RAMP K (I.R. 680 S.B. TO MARKET ST.)
STA. 12+06.33 TO STA. 16+54.12

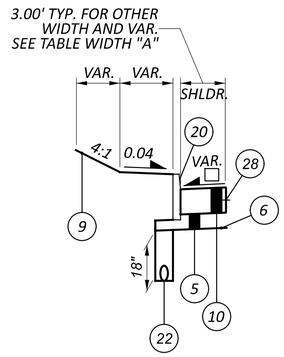

PARTIAL SECTION LEFT

MARKET ST.
RAMP K (I.R. 680 S.B. TO MARKET ST.)
STA. 16+54.12 TO STA. 16+95.50

NOTES:

1. FOR PROPOSED LEGEND, SEE SHEET P.24
2. FOR WIDTH TABLE, SEE SHEETS P.42 - P.43
3. PROPOSED DITCHES SHALL NOT BE ROUNDED WITHIN THE EXTENT OF VEGETATED BIOFILTERS. SEE PROJECT SITE PLAN FOR LOCATIONS.
4. SEE SUPERELEVATION TABLES FOR TRANSITION STATIONS AND RATES

□ SEE SHOULDER DETAILS, SHEET P.27

* OR AS SHOWN ON CROSS SECTIONS

[X/X] RAMP STATION TO STATION ORDER

Φ SEE PLAN SHEETS FOR GUARDRAIL LOCATION AND OFFSET

ψ SEE CEMENT STABILIZATION LIMITS AT RAMPS ON SHEET P.44

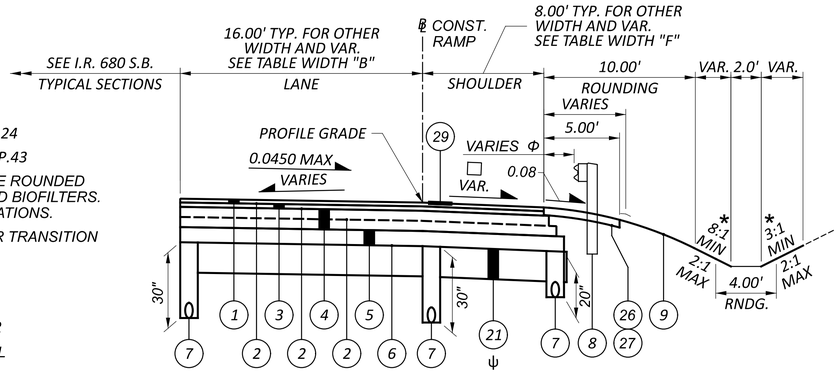

PROPOSED SUPERELEVATED RAMP SECTION

MARKET ST.
RAMP K [1/5] (I.R. 680 S.B. TO MARKET ST.) - STA. 4+46.87 TO STA. 7+94.46

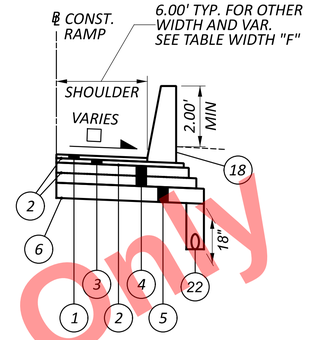

PARTIAL SECTION RIGHT

MARKET ST.
RAMP K (I.R. 680 S.B. TO MARKET ST.) - STA. 7+05.11 TO STA. 7+92.81

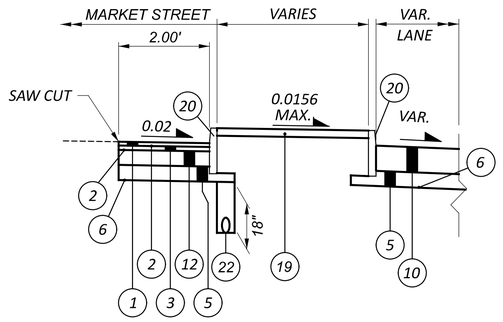

PARTIAL SECTION LEFT

MARKET ST.
RAMP K (I.R. 680 S.B. TO MARKET ST.) - STA. 16+95.50 TO STA. 17+24.84

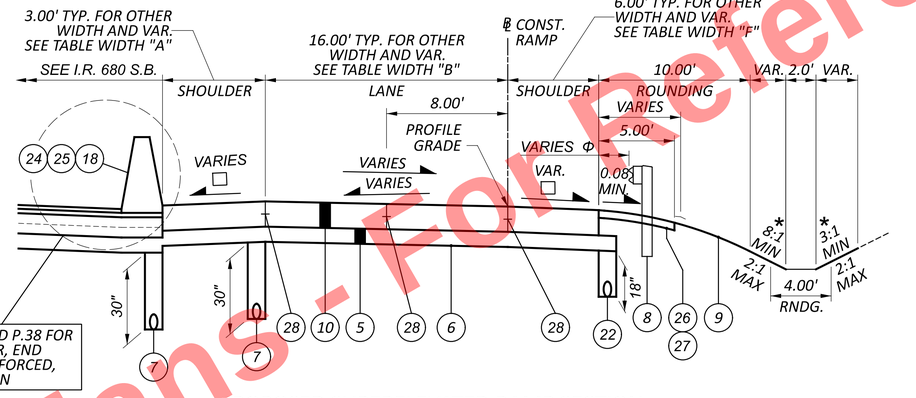

PROPOSED SUPERELEVATED RAMP SECTION

MARKET ST.
RAMP K [2/5] (I.R. 680 S.B. TO MARKET ST.) - STA. 7+94.46 TO STA. 14+08.47
RAMP K [4/5] (I.R. 680 S.B. TO MARKET ST.) - STA. 15+15.44 TO STA. 17+85.22

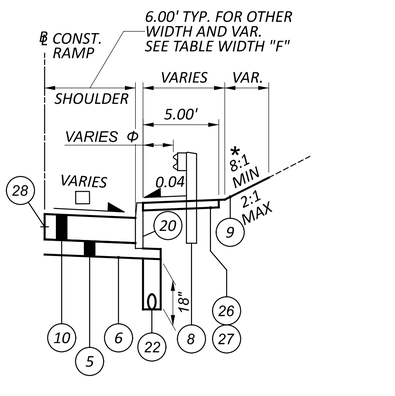

PARTIAL SECTION RIGHT

MARKET ST.
RAMP K (I.R. 680 S.B. TO MARKET ST.) - STA. 7+92.81 TO STA. 14+08.47
RAMP K (I.R. 680 S.B. TO MARKET ST.) - STA. 15+88.65 TO STA. 16+42.65

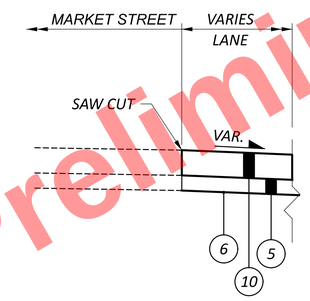

PARTIAL SECTION LEFT

MARKET ST.
RAMP K (I.R. 680 S.B. TO MARKET ST.) - STA. 17+24.84 TO STA. 17+85.22

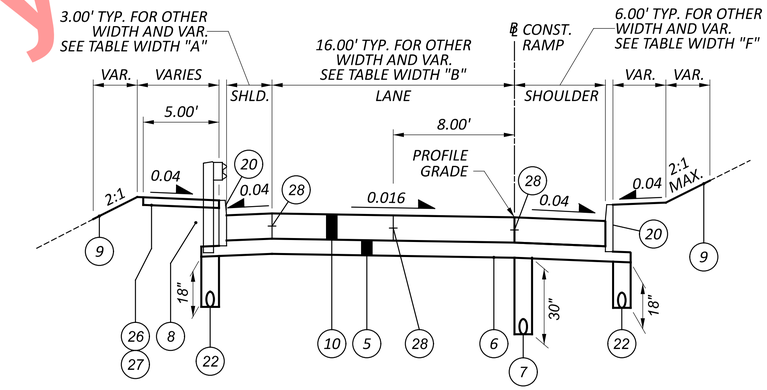

PROPOSED NORMAL RAMP SECTION

MARKET ST.
RAMP K [3/5] (I.R. 680 S.B. TO MARKET ST.) - STA. 14+08.47 TO STA. 15+15.44

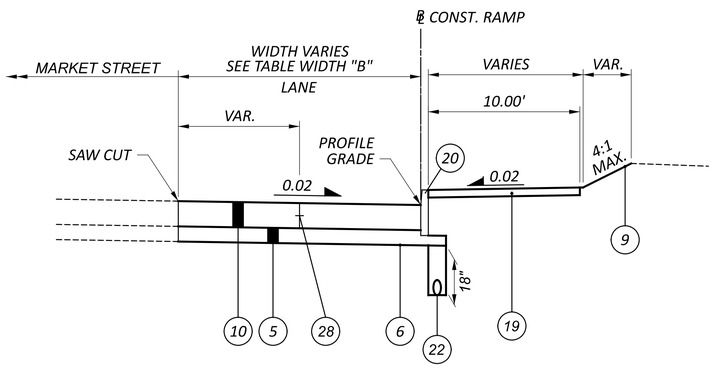

PROPOSED NORMAL RAMP SECTION

MARKET ST.
RAMP K [5/5] (I.R. 680 S.B. TO MARKET ST.) - STA. 17+85.22 TO STA. 19+10.58

Preliminary Plans - For Reference Only

PROPOSED TYPICAL SECTIONS - RAMPS

MAH-680-4.58

MODEL: Sheet PAPERSIZE: 34x22 (in.) DATE: 9/15/2025 TIME: 2:23:37 PM PLTDRV: OHDOT_PDF_E+.pltcfg PENTBL: OHDOT_Pen.tbl USER: DHall@msconsultants.com WORKSPACE: OHDOTCEv02 WORKSET: 121474 PRODUCT: OpenRoadsDesigner 24.00.00.205
pw:\\ohiodot-pw.bentley.com:ohiodot-pw-02\Documents\01 Active Projects\District 04\Mahoning\121474\402-Engineering_MSConsultants\Roadway\Sheets\121474_GY305B.dgn

DESIGN AGENCY
ms consultants. inc.

DESIGNER DWH
REVIEWER CMN 08/29/25
PROJECT ID 121474
SHEET P.37 TOTAL 655

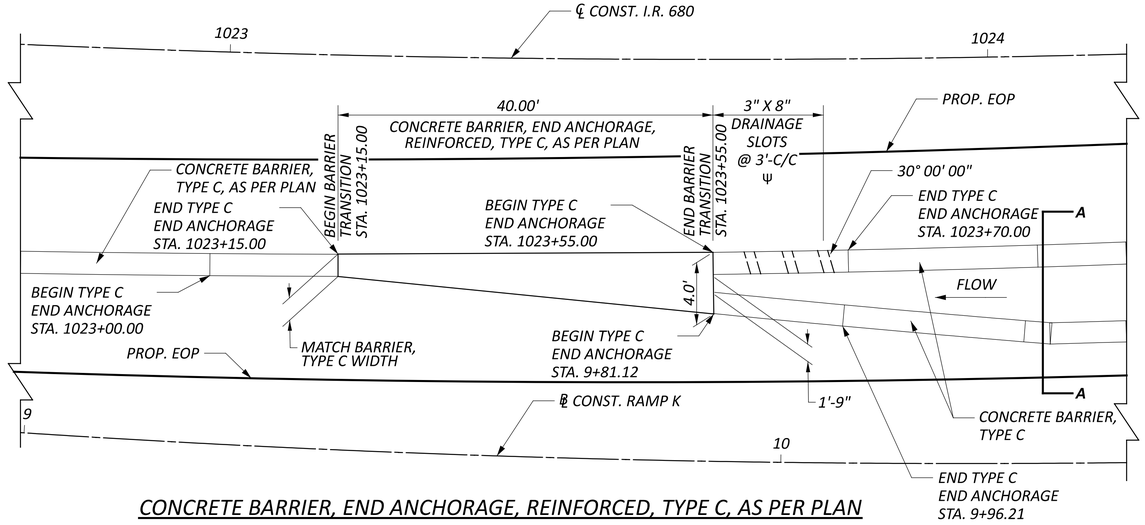

CONCRETE BARRIER, END ANCHORAGE, REINFORCED, TYPE C, AS PER PLAN

N.T.S.

MARKET ST.
RAMP K (I.R. 680 S.B. TO MARKET ST.) - STA. 9+39.50 TO STA. 9+81.12
I.R. 680
STA. 1023+15.00 TO STA. 1023+55.00

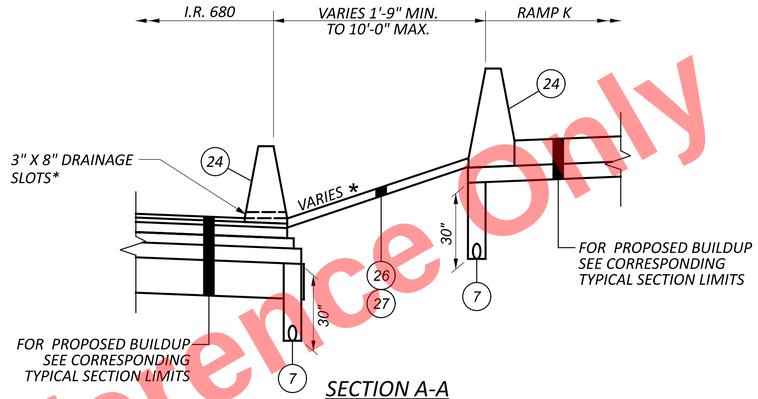

SECTION A-A

N.T.S.

**COST OF THE DRAINAGE SLOTS IS CONSIDERED INCIDENTAL TO THE COST OF THE COST BID FOR SINGLE SLOPE BARRIER, TYPE C*

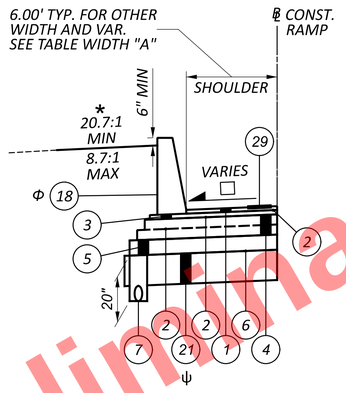

PARTIAL SECTION LEFT

MARKET ST.
RAMP N (WOODLAND AVE. TO I.R. 680 N.B.) - STA. 1030+72.82 TO STA. 1033+35.78
SOUTH AVE.
RAMP D (I.R. 680 N.B. TO SOUTH AVE.) - STA. 1093+00.07 TO STA. 1093+26.73

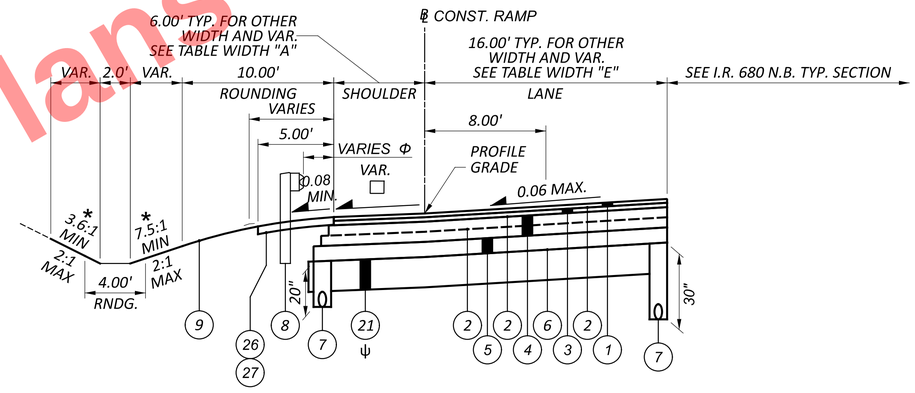

PROPOSED SUPERELEVATED RAMP SECTION

WOODLAND AVE.
RAMP N [1/3] (WOODLAND AVE. TO I.R. 680 N.B.) - STA. 1030+50.00 TO STA. 1034+10.73
SOUTH AVE.
RAMP B [1/4] (SOUTH AVE. TO I.R. 680 N.B.) - STA. 1085+27.46 TO STA. 1086+56.75
RAMP D [3/3] (I.R. 680 N.B. TO SOUTH AVE.) - STA. 1090+50.50 TO STA. 1093+26.73

NOTES:

1. *FOR PROPOSED LEGEND, SEE SHEET P.24*
2. *FOR WIDTH TABLE, SEE SHEETS P.42 - P.43*
3. *PROPOSED DITCHES SHALL NOT BE ROUNDED WITHIN THE EXTENT OF VEGETATED BIOFILTERS. SEE PROJECT SITE PLAN FOR LOCATIONS.*
4. *SEE SUPERELEVATION TABLES FOR TRANSITION STATIONS AND RATES*

ψ *SEE CEMENT STABILIZATION LIMITS AT RAMPS ON SHEET P.44*

☐ *SEE SHOULDER DETAILS, SHEET P.27*

* *SEE RAMP TERMINAL DETAIL SHEET P.335*

Φ *SEE PLAN SHEETS FOR PROP. GUARDRAIL & CONCRETE BARRIER LOCATION AND OFFSET*

[X/X] *RAMP STATION TO STATION ORDER*

ψ *CONTRACTOR SHALL FIELD ADJUST BOTTOM HORIZONTAL REBAR AT LOCATION OF DRAINAGE SLOTS TO ACCOMMODATE 3" HIGH WINDOWS.*

Preliminary Plans - For Reference Only

DESIGN AGENCY
ms consultants, inc.

DESIGNER DWH
REVIEWER CMN 08/29/25
PROJECT ID 121474
SHEET P.38 TOTAL 655

MODEL: Sheet PAPERSIZE: 34x22 (in.) DATE: 9/15/2025 TIME: 2:23:43 PM PLTDRV: OHDOT_PDF_E+.pltcfg PENTBL: OHDOT_Pen.tbl USER: DHall@msconsultants.com WORKSPACE: OHDOTCEv02 WORKSET: 121474 PRODUCT: OpenRoadsDesigner 24.00.00.205
pw:\\ohiodot-pw.bentley.com:ohiodot-pw-02\Documents\01 Active Projects\District 04\Mahoning\121474\402-Engineering_MSConsultants\Roadway\Sheets\121474_GY306.dgn

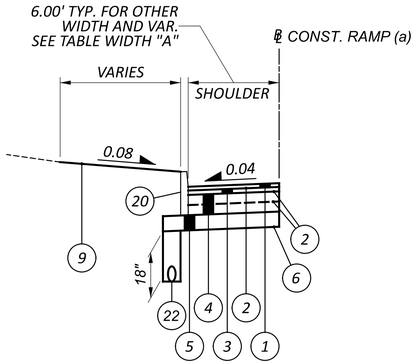

PROPOSED PAVEMENT REPLACEMENT TO EXISTING ELEVATIONS PARTIAL SECTION LEFT

WOODLAND AVE.
RAMP N (WOODLAND AVE. TO I.R. 680 N.B.) - STA. 1040+65.20 TO STA. 1041+67.25
SOUTH AVE.
RAMP D (I.R. 680 N.B. TO SOUTH AVE.) - STA. 1083+11.72 TO STA. 1083+32.15

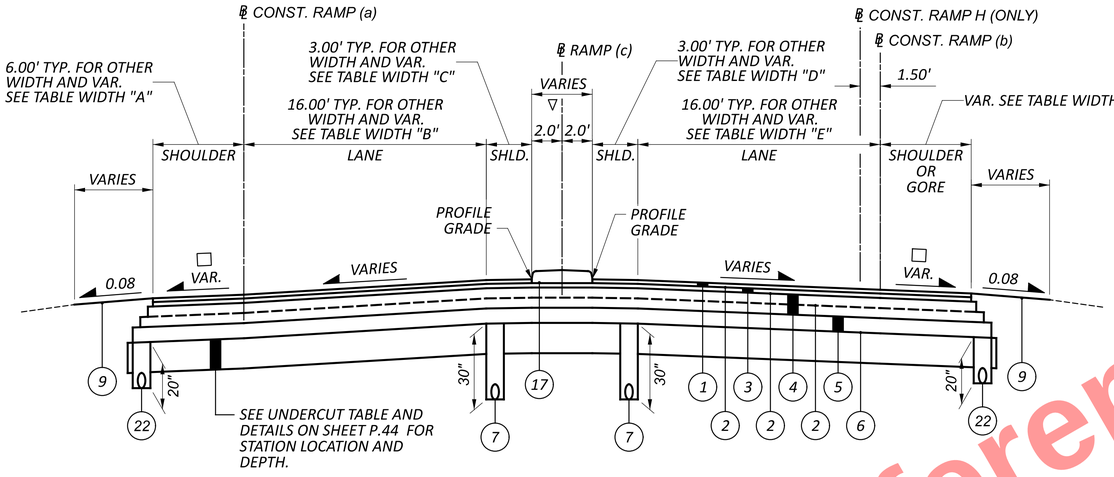

PROPOSED PAVEMENT REPLACEMENT TO EXISTING ELEVATIONS - RAMP SECTION

HIGH STREET
RAMP F [4/4] (I.R. 680 S.B. TO HIGH ST.) - STA. 13+54.27 TO STA. 16+77.84 (a)
RAMP H [2/4] (HIGH ST. TO I.R. 680 S.B.) - STA. 2+56.75 TO STA. 3+90.17 (b)
WOODLAND AVE.
RAMP N [3/3] (WOODLAND AVE. TO I.R. 680 N.B.) - STA. 1040+65.20 TO STA. 1041+35.63 (a)
RAMP CA [5/5] (U.S. 62/S.R. 7 W.B. TO WOODLAND AVE.) - STA. 24+80.45 TO STA. 25+77.39 (b)
SOUTH AVE.
RAMP B [3/4] (SOUTH TO I.R. 680 N.B.) - STA. 1088+79.88 TO STA. 1091+40.31 (b)
RAMP D [1/3] (I.R. 680 N.B. TO SOUTH AVE.) - STA. 1083+09.95 TO STA. 1086+88.57 (c & a)

▽ = *SEE PLAN SHEETS AND RAMP DETAILS FOR CONCRET MEDIAN LOCATIONS AND WIDTH*

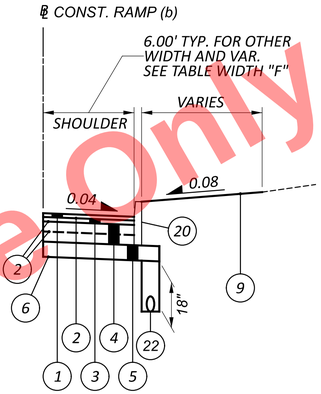

PROPOSED PAVEMENT REPLACEMENT TO EXISTING ELEVATIONS PARTIAL SECTION RIGHT

HIGH STREET
RAMP F (I.R. 680 S.B. TO HIGH ST.) - STA. 14+88.40 TO STA. 16+77.84
RAMP H (HIGH ST. TO I.R. 680 S.B.) - STA. 2+65.58 TO STA. 3+88.08

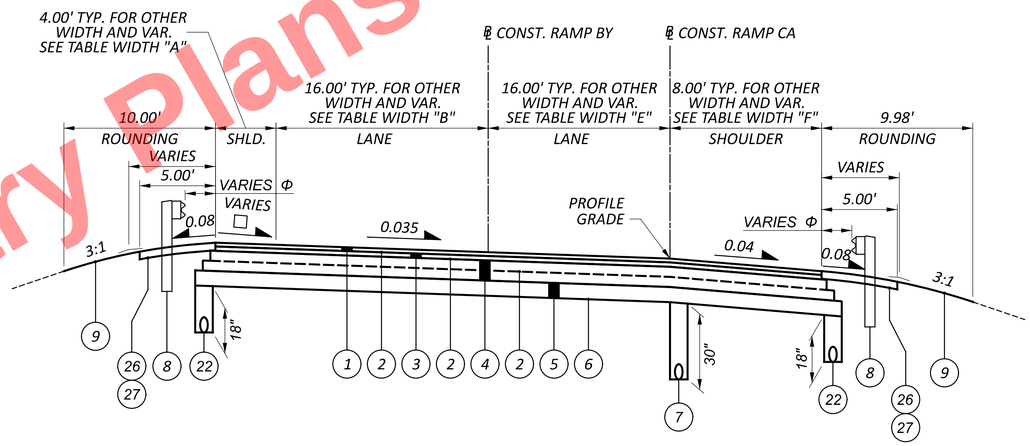

PROPOSED PAVEMENT REPLACEMENT TO EXISTING ELEVATIONS - RAMP SECTION

WOODLAND AVE.
RAMP CA [3/5] (U.S. 62/S.R. 7 W.B. TO WOODLAND AVE.) - STA. 15+59.46 TO STA. 17+73.01
U.S. 62/S.R. 7
RAMP BY [1/2] (U.S. 62/S.R. 7 WB TO I.R. 680 N.B.) - STA. 0+00.00 TO STA. 2+14.54

NOTES:

1. *FOR PROPOSED LEGEND, SEE SHEET P.24*
2. *FOR WIDTH TABLE, SEE SHEETS P.42 - P.43*

☐ *SEE SHOULDER DETAILS, SHEET P.27*

[X/X] RAMP STATION TO STATION ORDER

Preliminary Plans - For Reference Only

PROPOSED TYPICAL SECTIONS - RAMPS

DESIGN AGENCY
ms consultants, inc.

DESIGNER	DWH
REVIEWER	CMN 08/29/25
PROJECT ID	121474
SHEET	P.39
TOTAL	655

MAH-680-4.58

MODEL: Sheet PAPERSIZE: 34x22 (in.) DATE: 9/15/2025 TIME: 2:23:48 PM PLTDRV: OHDOT_PDF_E+.pltcfg PENTBL: OHDOT_Pen.tbl USER: DHall@msconsultants.com WORKSPACE: OHDOTCEv02 WORKSET: 121474 PRODUCT: OpenRoadsDesigner 24.00.00.205
pw:\\ohiodot-pw.bentley.com:ohiodot-pw-02\Documents\01 Active Projects\District 04\Mahoning\121474\402-Engineering_MSConsultants\Roadway\Sheets\121474_GY306A.dgn

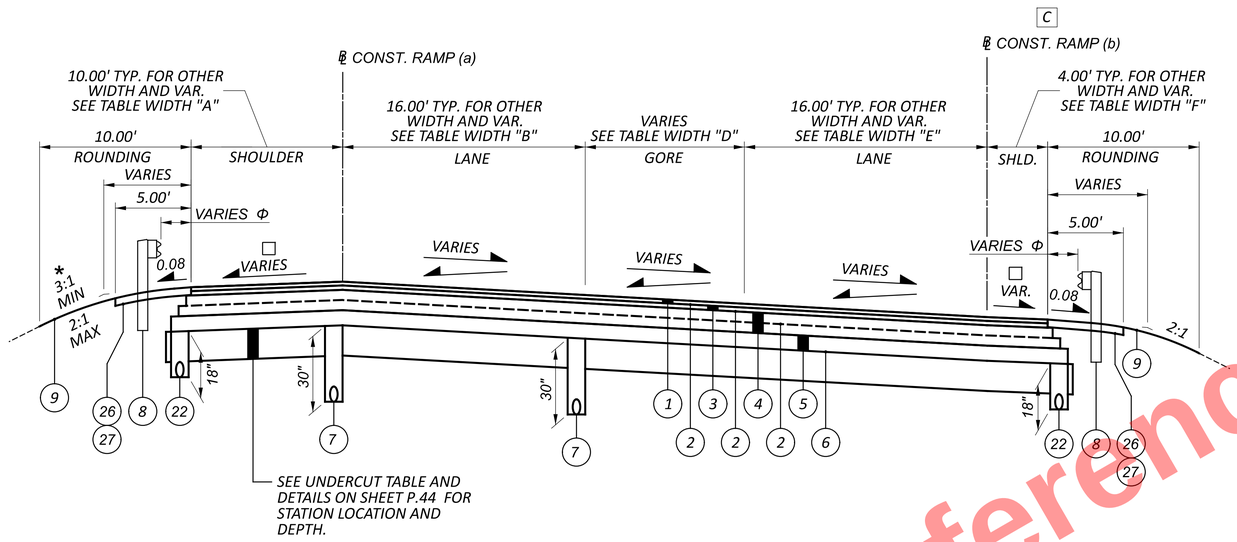

PROPOSED PAVEMENT REPLACEMENT TO EXISTING ELEVATIONS - RAMP SECTION

C *AFTER RAMP NB STA. 1039+28.55, 49.09' RT. RAMP BX TAKES OVER AT STA. 20+41.17*

MARKET ST.
RAMP BX [1/4] (I.R. 680 S.B. TO U.S. 62/S.R. 7 E.B.) - STA. 0+09.40 TO STA. 3+52.38 (a)
RAMP M [2/3] (I.R. 680 S.B. TO MARKET ST.) - STA. 1031+13.54 TO STA. 1034+52.75 (b)
U.S. 62/S.R. 7
RAMP BX [4/4] (I.R. 680 S.B. TO MARKET ST.) - STA. 19+98.81 TO STA. 20+41.17 (a)
RAMP NB [1/4] (I.R. 680 N.B. TO MARKET ST.) - STA. 1035+04.38 TO STA. 1039+70.00 (b)
U.S. 62/S.R. 7
RAMP SB [3/6] (U.S. 62/S.R. 7 W.B. TO I.R. 680 S.B.) - STA. 1047+41.99 TO STA. 1050+60.85
RAMP BV [1/2] (U.S. 62/S.R. 7 W.B. TO WILLIAMSON AVE.) - STA. 0+00.00 TO STA. 3+26.35

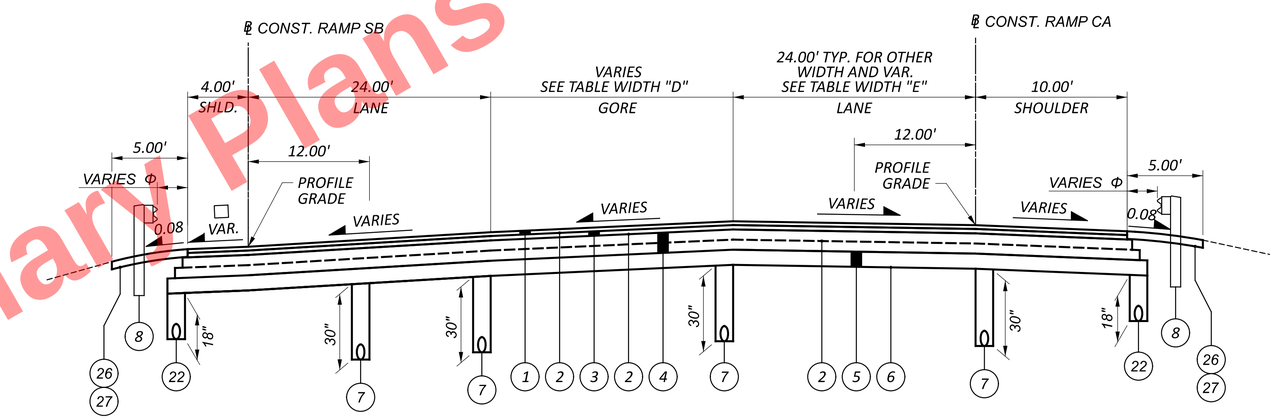

PROPOSED PAVEMENT REPLACEMENT TO EXISTING ELEVATIONS - RAMP SECTION

WOODLAND AVE.
RAMP SB [1/6] (U.S. 62/S.R. 7 W.B. TO I.R. 680 S.B.) - STA. 1032+30.61 TO STA. 1035+36.77
RAMP CA [1/5] (U.S. 62/S.R. 7 W.B. TO WOODLAND AVE.) - STA. 11+21.44 TO STA. 14+35.73

NOTES:

1. *FOR PROPOSED LEGEND, SEE SHEET P.24*
2. *FOR WIDTH TABLE, SEE SHEETS P.42 - P.43*

☐ *SEE SHOULDER DETAILS, SHEET P.27*

[X/X] RAMP STATION TO STATION ORDER

Preliminary Plans - For Reference Only

PROPOSED TYPICAL SECTIONS - RAMPS

DESIGN AGENCY
ms consultants, inc.

DESIGNER DWH
REVIEWER CMN 08/29/25
PROJECT ID 121474
SHEET P.40 TOTAL 655

MAH-680-4.58

MODEL: Sheet PAPERSIZE: 34x22 (in.) DATE: 9/15/2025 TIME: 2:23:54 PM PLTDRV: OHDOT_PDF_E+.pltcfg PENTBL: OHDOT_Pen.tbl USER: DHall@msconsultants.com WORKSPACE: OHDOTCEv02 WORKSET: 121474 PRODUCT: OpenRoadsDesigner 24.00.00.205
pw:\\ohiodot-pw.bentley.com:ohiodot-pw-02\Documents\01 Active Projects\District 04\Mahoning\121474\402-Engineering_MSConsultants\Roadway\Sheets\121474_GY306B.dgn

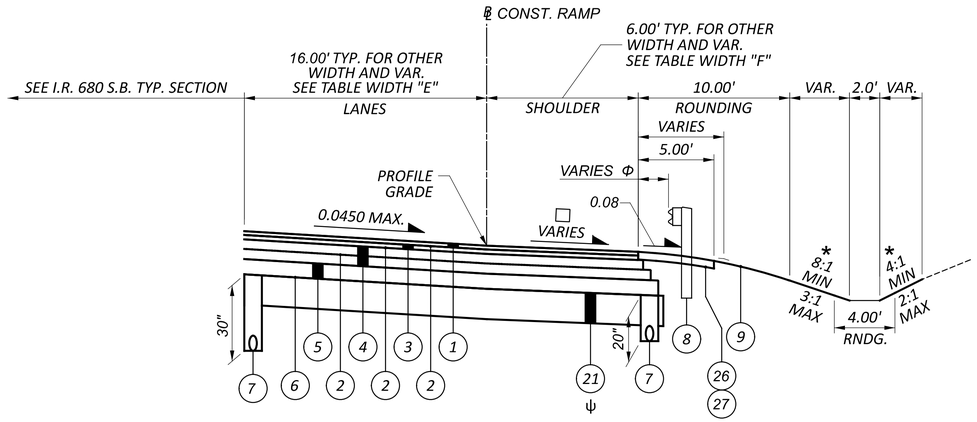

PROPOSED SUPERELEVATED RAMP SECTION

U.S. 62/S.R 7

RAMP SB [6/6] (U.S. 62/S.R. 7 W.B. TO I.R. 680 S.B.) - STA. 1055+73.99 TO STA. 1058+96.78

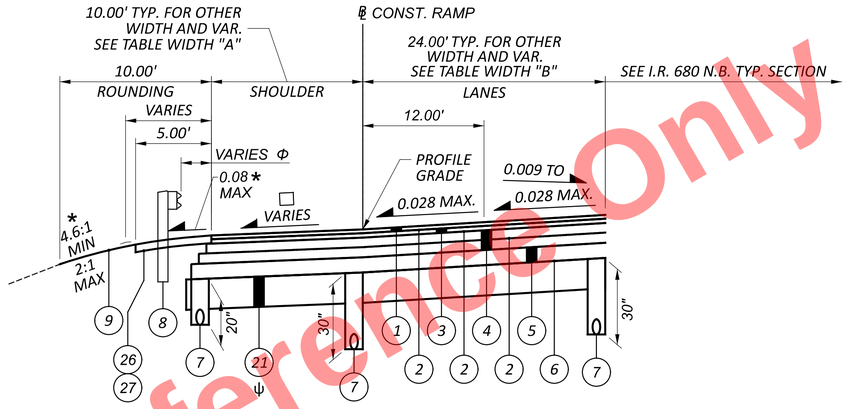

PROPOSED SUPERELEVATED RAMP SECTION

U.S. 62/S.R 7

RAMP NB [3/4] (I.R. 680 N.B. TO U.S. 62/S.R. 7 E.B.) - STA. 1051+57.13 TO STA. 1053+77.87

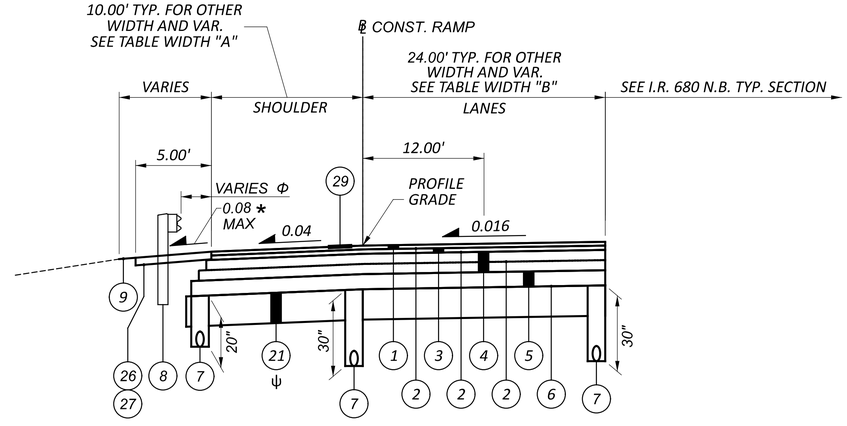

PROPOSED NORMAL RAMP SECTION

U.S. 62/S.R. 7

RAMP NB [4/4] (I.R. 680 N.B. TO U.S. 62/S.R. 7 E.B.) - STA. 1053+77.87 TO STA. 1056+79.78

NOTES:

1. FOR PROPOSED LEGEND, SEE SHEET P.24
2. FOR WIDTH TABLE, SEE SHEETS P.42 - P.43
3. PROPOSED DITCHES SHALL NOT BE ROUNDED WITHIN THE EXTENT OF VEGETATED BIOFILTERS. SEE PROJECT SITE PLAN FOR LOCATIONS.
4. SEE SUPERELEVATION TABLES FOR TRANSITION STATIONS AND RATES

ψ SEE CEMENT STABILIZATION LIMITS AT RAMPS ON SHEET P.44

☐ SEE SHOULDER DETAILS, SHEET P.27

* OR AS SHOWN ON CROSS SECTIONS

Φ SEE PLAN SHEETS FOR PROP. GUARDRAIL & CONCRETE BARRIER LOCATION AND OFFSET

[X/X] RAMP STATION TO STATION ORDER

Preliminary Plans - For Reference Only

PROPOSED TYPICAL SECTIONS - RAMPS

DESIGN AGENCY
ms consultants, inc.

DESIGNER DWH
REVIEWER CMN 08/29/25
PROJECT ID 121474
SHEET P.41 TOTAL 655

MAH-680-4.58

MODEL: Sheet PAPERSIZE: 34x22 (in.) DATE: 9/15/2025 TIME: 2:24:00 PM PLTDRV: OHDOT_PDF_E+.pltcfg PENTBL: OHDOT_Pen.tbl USER: DHall@msconsultants.com WORKSPACE: OHDOTCE.v02 WORKSET: 121474 PRODUCT: OpenRoadsDesigner 24.00.00.205
pw:\\ohiodot-pw.bentley.com:ohiodot-pw-02\Documents\01 Active Projects\District 04\Mahoning\121474\402-Engineering_MSConsultants\Roadway\Sheets\121474_GY307.dgn

PROPOSED I.R. 680 RAMP WIDTH TABLE

RAMP ALIGNMENT	WIDTH "A" (SHOULDER/GORE)				WIDTH "B" (LANE)				WIDTH "C" (SHOULDER)				WIDTH "D" (SHOULDER/GORE)				WIDTH "E" (LANE)				WIDTH "F" (SHOULDER/GORE)			
	STATION		WIDTH (FT.)		STATION		WIDTH (FT.)		STATION		WIDTH (FT.)		STATION		WIDTH (FT.)		STATION		WIDTH (FT.)		STATION		WIDTH (FT.)	
	FROM	TO	FROM	TO	FROM	TO	FROM	TO	FROM	TO	FROM	TO	FROM	TO	FROM	TO	FROM	TO	FROM	TO	FROM	TO	FROM	TO
SILLIMAN RAMP C	0+36.75	0+51.73	0.00′	2.00′	7+24.50	8+26.50	13.00′	16.00′									7+24.50	8+26.50	3.00′	0.00′	0+90.87	1+18.37	0.00′	5.50′
	0+51.73	0+90.87	2.00′		9+21.08	12+92.19	31.63′	16.00′													6+87.00	7+24.50	5.50′	4.00′
	0+90.87	1+03.37	2.00′	4.50′	18+88.65	20+58.30	16.00′	12.00′													7+24.50	15+66.00	4.00′	
	1+03.37	1+55.23	4.50′																		15+66.00	16+16.00	4.00′	6.00′
	4+58.28	7+24.26	5.00′																		19+43.68	19+93.68	6.00′	8.00′
	7+24.26	7+92.22	5.00′	3.00′																	19+93.68	20+58.30	8.00′	
	7+92.22	8+74.12	3.00′																					
	9+21.08	10+75.00	4.42′	4.00′																				
	10+75.00	12+85.55	4.00′	18.20′																				
	12+85.55	12+97.02	18.20′	3.00′																				
SALT SPRINGS RAMP D	6+71.20	10+72.94 (BK)	4.00′		16+36.15	18+22.59	16.00′	13.00′													0+00.00	6+71.20	8.00′	
	10+72.88 (AH)	16+36.15	4.00′		18+22.59	19+13.38	13.00′														6+71.20	7+06.20	8.00′	6.00′
	16+36.15	16+61.15	4.00′	3.00′																	7+06.20	10+72.94 (BK)	6.00′	
	18+62.22	19+13.38	3.00′	21.00′																	10+72.88 AH	16+36.15	6.00′	
																					16+36.15	17+11.15	6.00′	3.00′
																					14+47.59	18+22.59	3.00′	0.00′
																					18+22.59	19+13.38	0.00′	
S.R. 193 RAMP B3	4+33.81	9+61.43	4.00′		1+00.00	2+28.85	12.00′	16.00′													1+00.00	1+41.40	0.00′	
	9+61.43	10+11.43	4.00′	3.00′	9+61.43	10+36.43	16.00′	14.00′													1+41.40	4+33.81	8.00′	
	10+70.19	11+20.19	3.00′	7.70′	10+36.43	11+09.85	14.00′														4+33.81	4+83.81	8.00′	4.00′
																					4+83.81	10+11.90	4.00′	
																					10+11.90	10+61.90	4.00′	9.50′
																					10+61.90	11+09.85		
S.R. 193 RAMP C-3	952+93.79	953+13.45	4.00′	5.00′	1+22.13	1+47.13	9.00′	10.00′													0+96.26	3+99.38	4.40′	
	953+13.45	953+65.90	5.00′		1+47.13	2+73.53	10.00′																	
	953+65.90	954+68.91	5.00′	9.28′	2+73.53	3+23.53	10.00′	11.00′																
	954+68.91	954+81.79	9.28′	8.85′																				
HIGH ST. RAMP F	8+32.21	8+97.21	3.00′	7.50′	0+00.00	3+37.90	12.00′														0+00.00	3+37.90	8.00′	
	8+97.21	9+61.97	7.50′		5+50.79	5+56.07	12.00′														5+50.79	8+32.22	8.00′	
	9+61.97	10+36.97	7.50′	3.00′	5+56.07	6+62.54	12.00′	16.00′													8+32.22	9+32.22	8.00′	4.00′
	13+54.27	13+79.27	3.00′	2.00′	8+11.97	10+11.97	16.00′	18.00′													9+32.22	14+63.40	4.00′	
	13+79.27	15+12.25	2.00′		10+11.97	12+76.90	18.00′														14+63.40	14+88.40	4.00′	5.00′
	15+12.25	15+55.57	2.00′	2.72′	12+76.90	15+12.25	18.00′	16.00′													14+88.40	15+36.52	5.00′	
	15+55.57	16+71.31	2.72′	2.00′	15+12.25	16+26.84	16.00′	14.10′													15+36.52	16+76.52	5.00′	1.25′
	16+71.31	16+77.84	2.00′		16+26.84	16+77.84	14.10′	12.33′																
MARSHALL RAMP G					4+00.87	5+70.82	16.00′																	
					5+70.82	6+77.30	16.00′	12.00′																
HIGH ST. RAMP H					16+83.52	18+29.96	16.00′	12.00′					2+56.75	3+65.17	2.00′						13+74.53	14+26.87	3.00′	6.00′
													3+65.17	3+90.17	2.00′	3.00′					14+26.87	17+79.96	6.00′	
																					17+79.96	18+29.96	6.00′	8.00′
MARSHALL RAMP J					3+29.56	5+25.35	12.00′	16.00′													3+29.56	8+39.62	8.00′	
																					8+39.62	8+89.62	8.00′	7.00′
																					8+89.62	12+12.16	7.00′	
																					12+12.16	12+37.16	7.00′	3.5′
																					12+37.16	14+01.37	3.50	
																					14+01.37	14+92.60	3.50′	6.87′
MARKET RAMP K	7+94.09	9+39.56	6.37′	10.84′	4+46.87	5+69.98	12.00′	16.00′													7+28.87	7+78.87	8.00′	6.00′
	9+39.56	9+79.56	10.84′	7.13′	17+24.84	19+10.58	20.74′	2.80′													7+78.87	16+00.00	6.00′	
	9+79.56	10+18.99	7.13′	3.00′																	16+00.00	17+00.15	6.00′	0.00′
	16+42.65	16+95.50	3.00′	0.00′																				
MARKET RAMP L	1+78.41	2+27.09	2.00′	9.15′	0+50.70	1+78.41	2.00′	19.11′													0+50.70	3+31.23	0.00′	
					1+78.41	3+19.94	19.11′	16.00′													3+31.23	3+61.23	0.00′	6.00′
					7+76.99	8+83.47	16.00′	12.00′													3+61.23	8+33.47	6.00′	
																					8+33.47	8+83.47	6.00′	8.00′
MARKET RAMP N	1030+50.00	1031+00.00	8.00′	6.00′	1036+00.00	1037+10.60	8.00′										1030+50.00	1032+28.06	12.00′	16.00′	1034+10.73	1036+00.00	4.00′	
	1031+00.00	1034+95.95	6.00′		1037+10.60	1038+60.60	8.00′	16.00′													1036+00.00	1038+20.27	0.00′	
	1034+95.95	1035+70.95	6.00′	3.00′	1039+55.34	1040+65.20	16.00′	14.54′													1038+20.27	1038+62.31	0.00′	15.37′
	1037+99.49	1038+74.49	3.00′	0.00′	1040+65.20	1041+05.34	17.50	17.00′													1040+65.20	1041+67.77	0.00′	
	1038+74.49	1041+67.77	0.00′		1041+05.34	1041+43.94	17.00′																	
					1041+43.94	1041+67.25	17.00′	22.25′																
WOODLAND RAMP CA	11+21.44	12+94.57	0.00′		11+21.44	12+94.57	12.50′	24.00′									24+80.45	24+81.63	19.00′		14+35.73	15+59.46	10.00′	
	12+94.57	14+35.73	0.00′	26.00′	12+94.57	15+59.46	24.00′										24+81.63	25+31.63	19.00′	17.00′	15+59.46	19+00.00	10.00′	3.00′
	14+35.73	15+59.46	4.00′		15+59.46	17+73.01	8.00′	16.00′									25+31.63	25+77.39	17.00′		24+81.63	25+31.63	3.00′	4.00′
	15+59.46	17+73.01	0.00′																		25+31.63	25+77.39	4.00′	
	17+73.01	19+36.23	0.00′	17.00′																				

Preliminary Plans - For Reference Only

PROPOSED TYPICAL SECTIONS - RAMP WIDTH TABLE

MAH-680-4.58

DESIGN AGENCY
ms consultants, inc.

DESIGNER
DWH

REVIEWER
CMN 08/29/25

PROJECT ID
121474

SHEET P.42 | TOTAL 655

MODEL: Sheet PAPERSIZE: 34x22 (in.) DATE: 9/15/2025 TIME: 2:24:06 PM PLTDRV: OHDOT_PDF_E+.pltcfg PENTBL: OHDOT_Pen.tbl USER: DHall@msconsultants.com WORKSPACE: OHDOTCEv02 WORKSET: 121474 PRODUCT: OpenRoadsDesigner 24.00.00.205
pw:\\ohiodot-pw.bentley.com:ohiodot-pw-02\Documents\01 Active Projects\District 04\Mahoning\121474\402-Engineering_MSConsultants\Roadway\Sheets\121474_GY313.dgn

PROPOSED I.R. 680 RAMP WIDTH TABLE

RAMP ALIGNMENT	WIDTH "A" (SHOULDER/GORE)				WIDTH "B" (LANE)				WIDTH "C" (LANE)				WIDTH "D" (SHOULDER/GORE)				WIDTH "E" (LANE)				WIDTH "F" (SHOULDER/GORE)			
	STATION		WIDTH (FT.)		STATION		WIDTH (FT.)		STATION		WIDTH (FT.)		STATION		WIDTH (FT.)		STATION		WIDTH (FT.)		STATION		WIDTH (FT.)	
	FROM	TO	FROM	TO	FROM	TO	FROM	TO	FROM	TO	FROM	TO	FROM	TO	FROM	TO	FROM	TO	FROM	TO	FROM	TO	FROM	TO
U.S. 62/S.R. 7 RAMP BY	0+00.00	3+06.29	4.00'		8+23.04	9+23.04	16.00'	14.00'													0+00.00	3+79.61	0.00'	
	3+06.29	4+06.29	4.00'	3.00'	9+23.04	10+23.04	14.00'														8+23.04	9+23.04	3.00'	2.00'
	10+23.04	12+72.57	3.00'	4.00'	10+23.04	12+72.57	14.00'	8.00'													9+23.04	10+23.04	2.00'	0.00'
																					10+23.04	12+72.57	0.00'	
MARKET AVE. RAMP M	1040+50.16	1040+91.38	3.00'	2.19'	1026+25.70	1028+54.91	12.00'	16.00'									1031+13.54	1034+23.58	18.00'	38.40'	1026+25.70	1031+13.54	8.00'	
					1028+54.91	1031+04.03	16.00'	18.00'									1034+23.58	1034+52.75	20.00'		1031+13.54	1031+61.36	8.00'	
					1031+04.03	1031+13.54	18.00'														1031+61.36	1031+86.36	8.00'	7.00'
					1034+52.75	1040+91.38	20.00'														1031+86.36	1034+18.00	7.00'	
																					1034+18.00	1035+18.00	7.00'	3.00'
																					1040+42.75	1040+82.15	3.00'	2.00
U.S. 62/S.R. 7 RAMP BX	0+09.40	11+28.02	4.00'		0+09.40	3+22.25	0.00'														3+46.51	4+41.14	2.50'	
	16+27.12	19+64.64	4.00'		3+22.25	3+42.14	18.40'	18.00'													6+75.00	7+25.00	3.00'	5.00'
	19+64.64	20+14.64	4.00'	5.00'	3+42.14	4+42.14	18.00'	16.00'													7+25.00	11+45.92	5.00'	
					19+34.55	20+09.54	16.00'	13.00'													15+95.43	16+02.73	5.00'	
					20+09.54	20+41.17	13.00'														16+02.73	16+77.73	5.00'	3.00'
																					18+47.75	18+97.75	3.00'	1.00'
																					18+97.75	19+98.81	1.00'	
U.S. 62/S.R. 7 RAMP BV					10+21.53	11+81.53	16.00'	24.00'									0+00.00	1+77.49	12.00'	16.00'	0+00.00	2+94.71	10.00'	3.00'
					11+81.53	12+60.77	24.00'	33.83'													2+94.71	3+26.35	3.00'	
																					7+15.00	7+65.00	3.00'	4.00'
																					7+65.00	12+31.87	4.00'	
																					12+31.87	12+60.48	4.00'	12.99'
U.S. 62/S.R. 7 RAMP SB	1035+36.77	1055+73.99	4.00'		1032+30.61	1047+41.99	24.00'						1034+07.25	1035+38.55	0.00'	26.22'	1057+72.67	1058+96.78	16.00'	12.00'	1035+36.77	1047+41.99	10.00'	
					1047+41.99	1049+16.62	12.00'	16.00'					1049+16.62	1050+60.85	0.00'	18.88'					1050+60.85	1051+35.85	6.00'	3.00'
																					1053+35.00	1053+60.00	3.00'	4.00'
																					1053+60.00	1054+33.99	4.00'	
																					1054+33.99	1055+73.99	4.00'	6.00'
																					1057+96.78	1058+96.78	6.00'	10.00'
U.S. 62/S.R. 7 RAMP NB	1039+70.00	1051+57.13	10.00'		1035+04.85	1051+57.13	24.00'						1035+74.95	1039+70.00	0.00'	13.86'					1039+70.00	1051+57.13	4.00'	
					1053+77.87	1056+79.78	24.00'	12.00'																
SOUTH AVE. RAMP A	1081+04.93	1081+54.93	3.00'	1.00'	1072+53.71	1073+59.44	12.00'														1071+53.71	1072+53.71	10.00'	8.00'
	1081+54.93	1084+41.91	0.00'		1075+45.32	1077+12.75	12.00'														1072+53.71	1079+92.09	8.00'	
					1081+54.93	1084+12.35	17.00'														1079+92.09	1080+42.09	8.00'	6.00'
																					1082+26.13	1082+51.13	6.00'	5.00'
																					1082+51.13	1084+12.35	5.00'	
																					1084+12.35	1084+49.73	5.00'	2.59'
SOUTH AVE. RAMP B	1085+27.46	1086+56.75	6.00'		1086+56.75	1087+27.46	17.22'	18.00'									1085+27.46	1086+56.75	16.00'	17.22'	1088+35.92	1092+47.49	0.00'	
	1086+56.75	1087+27.46	6.00'	3.00'	1087+27.46	1088+35.92	18.00'																	
	1088+04.39	1088+78.39	3.00'	5.00'	1088+35.92	1088+79.88	21.00'	21.34'																
	1088+78.39	1091+34.79	5.00'		1088+79.88	1089+17.15	21.34'	21.61'																
	1091+34.97	1092+47.49	5.00'	0.00'	1089+17.15	1091+40.31	21.61'	20.00'																
					1091+40.31	1092+47.49	20.00'																	
SOUTH AVE. RAMP C	1084+58.77	1085+08.77	1.88'	3.00'	1084+59.07	1085+42.67	24.21'	16.00'													1084+59.07	1084+77.50	2.00'	3.00'
																					1089+43.45	1090+18.45	3.00'	6.00'
																					1091+55.63	1092+05.63	6.00'	8.00'
SOUTH AVE. RAMP D	1084+39.87	1084+89.87	6.00'	3.00'	1083+60.02	1084+66.93	25.00'										1092+20.63	1093+26.73	16.00'	12.00'				
	1084+89.87	1086+88.57	3.00'		1084+66.93	1086+42.68	25.00'	17.00'																
	1089+50.50	1090+50.50	3.00'	8.00'	1086+42.68	1086+88.57	17.00'																	
	1090+50.50	1092+26.73	8.00'		1086+88.57	1087+54.78	17.00'																	
	1092+26.73	1093+26.73	8.00'	10.00'																				

Preliminary Plans - Not For Reference Only

PROPOSED TYPICAL SECTIONS - RAMP WIDTH TABLE

DESIGN AGENCY
ms consultants, inc.

DESIGNER
DWH

REVIEWER
CMN 08/29/25

PROJECT ID
121474

SHEET P.43 | TOTAL 655

MAH-680-4.58

MODEL: Sheet PAPERSIZE: 34x22 (in.) DATE: 9/15/2025 TIME: 2:24:11 PM PLTDRV: OHDOT_PDF_E+.pltcfg PENTBL: OHDOT_Pen.tbl USER: DHall@msconsultants.com WORKSPACE: OHDOTCEv02 WORKSET: I21474 PRODUCT: OpenRoadsDesigner 24.00.00.205
pw:\\ohiodot-pw.bentley.com:ohiodot-pw-02\Documents\01 Active Projects\District 04\Mahoning\121474\402-Engineering_MSConsultants\Roadway\Sheets\121474_GY314.dgn

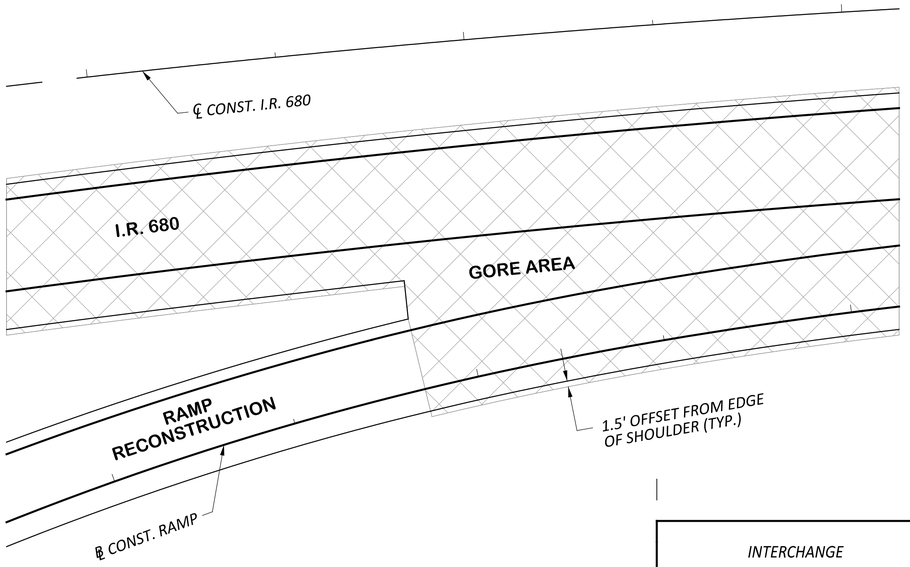

CEMENT STABILIZED SUBGRADE AT RAMPS AND GORE AREA DETAIL

TYPICAL OF ALL ENTRANCE AND EXIT RAMPS ON I.R. 680 NORTHBOUND AND SOUTHBOUND REGARDLESS OF RAMP UNDERCUT REQUIREMENTS SHOWN IN THE ADJACENT TABLE

= ITEM 206 - CEMENT STABILIZED SUBGRADE, 14 INCHES DEEP

I.R. 680 - PROPOSED RAMP UNDERCUT TABLE

INTERCHANGE	RAMP NAME	UNDERCUT (INCHES)	STATION RANGE	UNSUITABLE/ UNSTABLE	LENGTH (FT)	AVG. WIDTH (FT)	ITEM 204 - EXCAVATION OF SUBGRADE (CY)	ITEM 204 - GRANULAR MATERIAL, TYPE B (CY)	ITEM 204 - GEOTEXTILE FABRIC (SY)
SB I-680 ON RAMP FROM SILLIMAN ST.	RAMP C	24	0+00 TO 1+42	UNSTABLE	142	28	295	295	442
SB I-680 OFF RAMP TO HIGH	RAMP F	22	8+32.21 TO 10+68	UNSUITABLE	235.79	28	449	449	734
SB I-680 ON RAMP FROM HIGH	RAMP H	12	7+21 TO 10+96	UNSTABLE	375	25	348	348	1042
SB I-680 OFF RAMP TO MARKET	RAMP M	12	1033+15 TO 1036+62	N/A	348	29	374	374	1122
		32	1036+62 TO 1039+24	UNSUITABLE	259	29	742	742	835
SB I-680 OFF RAMP TO NB 62	RAMP BX	32	8+76 TO 11+23.38	UNSTABLE	274.38	28	759	759	854
NB I-680 ON RAMP FROM WOODLAND	RAMP N	26	1037+61 TO 1039+56	UNSUITABLE	195	25	392	392	542
SB 62 RAMP TO SB I-680	RAMP SB	12	1037+93 TO 1041+80	N/A	387	41	588	588	1763
		34	1053+58 TO 1055+74	UNSTABLE	216	27	612	612	648
SB 62 OFF RAMP TO WILLIAMSON	RAMP BV	24	10+17 TO 12+60	UNSTABLE	243	34	612	612	918
NB I-680 OFF RAMP TO NB 62	RAMP NB	24	1044+94 TO 1048+41	UNSTABLE	347	41	1054	1054	1581
SB I-680 OFF RAMP TO SOUTH AVE	RAMP A	36	1081+86 TO 1083+96	UNSTABLE	300	26	867	867	867
NB I-680 ON RAMP FROM SOUTH AVE	RAMP B	18	1086+56.75 TO 1087+72	ROCK	115.25	27	173	173	346
NB I-680 OFF RAMP TO SOUTH AVE	RAMP D	7	1088+68 TO 1090+50.50	ROCK	182.5	25	99	99	507
SB I-680 ON RAMP FROM SOUTH AVE	RAMP C	9	1083+87 TO 1086+37	ROCK	250	25	174	174	695
		30	1088+34 TO 1090+18.45	ROCK	184.45	25	427	427	513
					TOTALS		***7965***	***7965***	***13409***

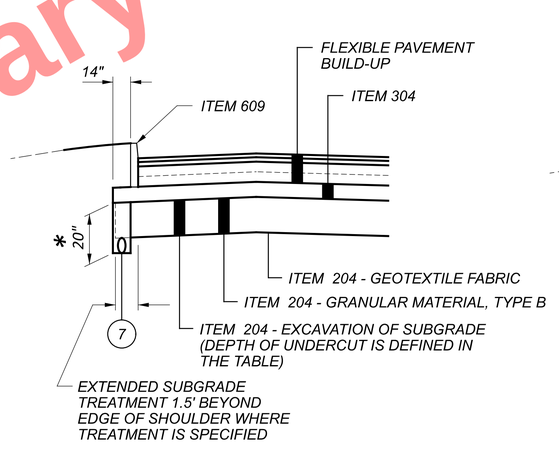

UNDERCUT EDGE COURSE DESIGN WITH CURB

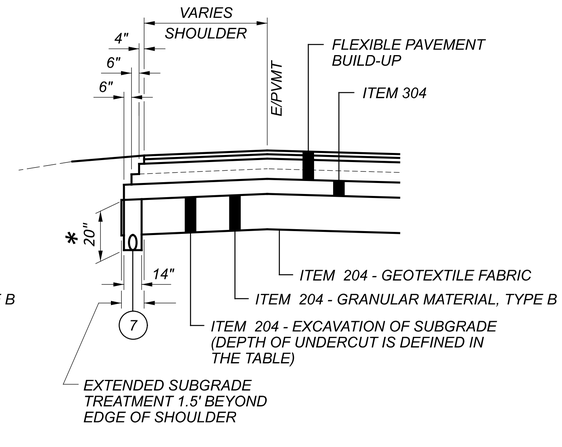

UNDERCUT EDGE COURSE DESIGN

NOTE:

* *WHEN THE UNDERCUT IS GREATER THAN 14" THE UNDERDRAIN SHALL BE PLACED 6" LOWER THAN THE UNDERCUT DEPTH SHOWN IN THE TABLE ABOVE.*

Preliminary Plans - For Reference Only

PROPOSED TYPICAL SECTIONS - CEMENT STABILIZATION LIMITS AT RAMPS & UNDERCUT TABLE

DESIGN AGENCY
ms consultants, inc.

DESIGNER DWH
REVIEWER CMN 08/29/25
PROJECT ID 121474
SHEET P.44 TOTAL 655

MAH-680-4.58

MODEL: Sheet PAPERSIZE: 34x22 (in.) DATE: 9/15/2025 TIME: 2:24:16 PM PLTDRV: OHDOT_PDF_E+.pltcfg PENTBL: OHDOT_Pen.tbl USER: DHall@msconsultants.com WORKSPACE: OHDOTCEv02 WORKSET: 121474 PRODUCT: OpenRoadsDesigner 24.00.00.205
pw:\\ohiodot-pw.bentley.com:ohiodot-pw-02\Documents\01 Active Projects\District 04\Mahoning\121474\402-Engineering_MSConsultants\Roadway\Sheets\121474_GY027.dgn

GENERAL

ROUNDING

THE ROUNDING AT SLOPE BREAKPOINTS SHOWN ON THE TYPICAL SECTIONS APPLIES TO ALL CROSS SECTIONS EVEN THOUGH OTHERWISE SHOWN.

UTILITIES

THE UNDERGROUND UTILITIES ON THIS PLAN HAVE BEEN LOCATED BY USING A SUBSURFACE UTILITY ENGINEERING COMPANY [SUE]. IF THERE ARE ANY DISCREPANCIES BETWEEN FIELD MARKINGS AND WHAT THE PLAN INDICATES, PLEASE CONTACT MATTHEW STEELE, DISTRICT UTILITY COORDINATOR 330-786-4832, PRIOR TO ANY SUBSURFACE WORK BEING INITIATED.

ENBRIDGE GAS OHIO (FORMERLY DOMINION ENERGY OHIO)
320 SPRINGSIDE DR., SUITE 320
AKRON, OHIO 44333
ATTN: UMBERTO POLIZZI
umberto.polizzi@dominionenergy.com
PH: 330-812-7355 (cell)

CITY OF YOUNGSTOWN - WATER
160 NORTH WEST AVENUE
YOUNGSTOWN, OHIO 44502
ATTN: GIOVAN GILBERT
ggilbert@youngstownohio.gov
ATTN: JORDAN KARIM
jkarim@youngstownohio.gov
PH: 330-742-1362

SANITARY ENGINEERING DEPARTMENT OF MAHONING COUNTY
761 INDUSTRIAL ROAD
YOUNGSTOWN, OHIO 44509
ATTN: JOSEPH P. MUCCIO, SUPERVISOR, CONSTUCTION & DESIGN
jmuccio@mahoningcountyoh.gov
PH: 330-793-5514 EXT. 8209
FAX: 330-792-5270

OHIO EDISON (DISTRIBUTION)
76 S. MAIN STREET
AKRON, OHIO 44308
ATTN: TIMOTHY MARKULIN
tmarkulin@firstenergycorp.com
PH: 330-810-5299

OHIO EDISON (TRANSMISSION)
76 S. MAIN STREET
AKRON, OHIO 44308
ATTN: MARY WALTON
mwalton@firstenergycorp.com
PH: 330-384-4928

AT&T
50 W. BOWERY STREET
AKRON, OHIO 44313
ATTN: TORRICE ROBINSON
tr3463@att.com
CELL: 330-743-5117

ARMSTRONG GROUP OF COMPANIES
9328 WOODWORTH ROAD
NORTH LIMA, OHIO 44452
ATTN: ROB WOLTHERS
rwolthers@agoc.com
PH: 330-953-0705

ODOT D-4 TRAFFIC OFFICE
2088 SOUTH ARLINGTON ROAD
AKRON, OHIO 44306
ATTN: DAVID KONEVAL
PH: 330-786-3146

MAHONING VALLEY SANITARY DISTRICT
1181 OHLTOWN-MCDONALD ROAD
MINERAL RIDGE, OH 44440
ATTN: KEDAR BHIDE
kedar.bhide@meanderwater.oh.gov
PH: 330-652-3614, EXT. 120

CHARTER COMMUNICATIONS
(SPECTRUM/TIME WARNER)
4352 YOUNGSTOWN RD. SE
WARREN, OHIO 44484
ATTN: FRANK DILLON
frank.dillon@charter.com
PH: 330-369-7164
CELL: 440-653-6528
ATTN: JASON SPRAGUE
jason.sprague@charter.com
PH: 440-261-4607
CELL: 440-361-0024

MCI (VERIZON) (ZAYO)
120 RAVINE ST.
AKRON, OHIO 44303
ATTN: ALLAN GUEST
allan.guest@verizon.com
PH: 330-622-5967
CELL: 330-329-5495
ATTN: DANIEL ARZ
daniel.arz@verizon.com

INVOLTA LLC (SOUTH SHORE)
1343 BELMONT AVENUE
YOUNGSTOWN, OH 44504
ATTN: AARON SLOTNESS & RICH SCHRADER
PH: 330-259-4920
aslotness@arkdna.com
rschrader@arkdna.com

LUMEN COMMUNICATIONS
1025 ELDORADO BLVD.
BROOM, CO 80021
ATTN: HALEY WOODS
REF. NO. P-520683 OH
relocation@lumen.com

THE LOCATION OF THE UNDERGROUND UTILITIES SHOWN ON THE PLANS ARE AS OBTAINED FROM THE OWNERS AS REQUIRED BY SECTION 153.64 O.R.C.

IT IS THE CONTRACTOR'S RESPONSIBILITY TO MAINTAIN THE LATERAL AND SUBJACENT SUPPORT OF DOMINION'S PIPELINE(S), IN COMPLIANCE TO 29 CFR, PART 1926, SUBPART P, (SAFE EXCAVATION & SHORING). ONE-FOOT MINIMUM VERTICAL AND HORIZONTAL CLEARANCE MUST BE MAINTAINED BETWEEN DOMINION EAST OHIO'S (DEO) EXISTING PIPELINE(S) AND ALL OTHER IMPROVEMENTS. EXTREME CARE SHOULD BE TAKEN NOT TO HARM ANY DEO FACILITY (PIPELINES, ETC.) OR APPURTENANCE (PIPE COATING, TRACER WIRE, CATHODIC PROTECTION TEST STATION WIRES & DEVICES, VALVE BOXES, ETC.). DEO FACILITIES MUST BE PROTECTED WITH A TARP DURING BRIDGE CONSTRUCTION.

THE CONTRACTOR WILL BE RESPONSIBLE AND LIABLE FOR ENSURING THAT ALL DEO EXISTING FACILITIES, ABOVE AND BELOW GROUND, REMAIN UNDAMAGED, ACCESSIBLE AND IN WORKING ORDER. THE CROSSING OF DEO'S PIPELINE WITH ANOTHER STEEL FACILITY MAY CREATE A POTENTIAL CORROSION ISSUE FOR THE PROPOSED FACILITY AND THE EXISTING DEO FACILITY. PLEASE CONTACT DOMINION'S CORROSION DEPARTMENT: DAVE CUTLIP (330-323-0064), RICK MCDONALD (330-575-0335), OR AL HUMRICHOUSER (330-323-3119).

SURVEYING PARAMETERS

PRIMARY PROJECT CONTROL MONUMENTS GOVERN ALL POSITIONING ON ODOT PROJECTS. SEE SHEET P.7 OF THE PLANS FOR A TABLE CONTAINING PROJECT CONTROL INFORMATION.

USE THE FOLLOWING PROJECT CONTROL, VERTICAL POSITIONING, AND HORIZONTAL POSITIONING PARAMETERS FOR ALL SURVEYING.

PROJECT CONTROL

POSITIONING METHOD: STATIC AND VRS DERIVED GNSS OBSERVATIONS AND DIFFERENTIAL LEVELING
MONUMENT TYPE: TYPE A, ALUMINUM DISKS SET IN TOP OF 8" CONCRETE MONUMENTS

VERTICAL POSITIONING

ORTHOMETRIC HEIGHT DATUM: NAVD88
GEOID: GEOID18

HORIZONTAL POSITIONING

REFERENCE FRAME: NAD83 (2011)
ELLIPSOID: GRS80
MAP PROJECTION: LAMBERT CONFORMAL CONIC
COORDINATE SYSTEM: OHIO STATE PLANE, NORTH ZONE (3401)
COMBINED SCALE FACTOR: 0.999898500
ORIGIN OF COORDINATE SYSTEMS: 0,0

USE THE POSITIONING METHODS AND MONUMENT TYPE USED IN THE ORIGINAL SURVEY TO RESTORE ALL MONUMENTS RELATED TO PRIMARY PROJECT CONTROL THAT ARE DAMAGED OR DESTROYED BY CONSTRUCTION ACTIVITIES. RESTORE THE DAMAGED OR DESTROYED MONUMENTS IN ACCORDANCE WITH CMS 623.

UNITS ARE IN U.S. SURVEY FEET.

ITEM SPECIAL - SURVEY CONTROL VERIFICATION

THE CONTRACTOR SHALL PERFORM THIS WORK TO VERIFY THE PROVIDED SURVEY CONTROL. THE CONTRACTOR WILL PERFORM THE VERIFICATION USING ONE OF THE TWO METHODS BELOW DEPENDENT UPON THE CONTRACTOR'S CHOSEN MEANS OF SURVEY CONTROL TO BE USED ON THE PROJECT. THE WORK SHALL BE PERFORMED UNDER THE DIRECT SUPERVISION OF AN OHIO LICENSED SURVEYOR.

1) IF USING GPS DEVICES TO ESTABLISH AND OR PROVIDE SUPPLEMENTAL HORIZONTAL AND VERTICAL SURVEY CONTROL
   a. LOCATE VERTICAL CONTROL POINTS PROVIDED IN THE PLANS AND PERFORM A DIFFERENTIAL LEVEL CIRCUIT.
   b. PERFORM A SITE CALIBRATION UTILIZING THE AVAILABLE HORIZONTAL AND VERTICAL CONTROL POINTS PROVIDED IN THE PLAN.
   c. PROVIDE A REPORT, SIGNED BY AN OHIO LICENSED SURVEYOR, TO THE PROJECT ENGINEER COMPARING THE OBSERVED DATA TO THE PLAN DATA ALONG WITH A NARRATIVE DETAILING ANY DISCREPANCIES FOUND.
2) IF USING CONVENTIONAL SURVEY INSTRUMENTATION TO ESTABLISH AND OR PROVIDE SUPPLEMENTAL HORIZONTAL AND VERTICAL SURVEY CONTROL
   a. LOCATE VERTICAL CONTROL POINTS PROVIDED IN THE PLANS AND PERFORM A DIFFERENTIAL LEVEL CIRCUIT.
   b. LOCATE AND OBSERVE ANGLE AND DISTANCE TO ALL AVAILABLE HORIZONTAL CONTROL POINTS PROVIDE IN THE PLAN.
   c. PROVIDE A REPORT, SIGNED BY AN OHIO LICENSED SURVEYOR, TO THE PROJECT ENGINEER COMPARING THE OBSERVED DATA TO THE PLAN DATA ALONG WITH A NARRATIVE DETAILING ANY DISCREPANCIES FOUND.

ALL MATERIALS, LABOR, EQUIPMENT, TOOLS, AND INCIDENTALS NECESSARY TO COMPLETE THIS WORK SHALL BE INCLUDED IN THE LUMP SUM PRICE FOR ITEM 623 - PRECONSTRUCTION SURVEY MONUMENT VERIFICATION AND REPORT

WORK LIMITS

THE WORK LIMITS SHOWN ON THESE PLANS ARE FOR PHYSICAL CONSTRUCTION ONLY. PROVIDE THE INSTALLATION AND OPERATION OF ALL WORK ZONE TRAFFIC CONTROL AND WORK ZONE TRAFFIC CONTROL DEVICES REQUIRED BY THESE PLANS WHETHER INSIDE OR OUTSIDE THESE WORK LIMITS.

PROTECTION OF RIGHT-OF-WAY LANDSCAPING

PRIOR TO BEGINNING WORK, THE CONTRACTOR, THE PROJECT ENGINEER, AND A REPRESENTATIVE OF THE MAINTAINING AGENCY WILL REVIEW AND RECORD ALL LANDSCAPING ITEMS WITHIN THE RIGHT-OF-WAY (BOTH WITHIN AND OUTSIDE THE CONSTRUCTION LIMITS). A RECORD OF THIS REVIEW WILL BE KEPT IN THE PROJECT ENGINEER'S FILES. PRIOR TO FINAL ACCEPTANCE, A FINAL REVIEW OF LANDSCAPING ITEMS WILL BE MADE.

CONSTRICT ALL ACTIVITIES, EQUIPMENT STORAGE, AND STAGING TO WITHIN THE CONSTRUCTION LIMITS. UNLESS OTHERWISE IDENTIFIED IN THE PLANS OR PROPOSAL, THE CONSTRUCTION LIMITS ARE IDENTIFIED AS 30 FEET FROM THE EDGE OF PAVEMENT.

SUBMIT A WRITTEN REQUEST TO THE PROJECT ENGINEER TO USE ANY AREA OUTSIDE THESE LIMITS. THE DOCUMENT SUBMITTED MUST CLEARLY IDENTIFY THE AREA AND EXPLAIN THE PROPOSED USE AND RESTORATION OF THE AREA. USE OF THESE AREAS FOR DISPOSAL OF WASTE MATERIAL AND CONSTRUCTION DEBRIS, EXCAVATION OF BORROW MATERIAL AND PLACEMENT OF PORTABLE PLANTS IS PROHIBITED. THE REQUEST MUST BE APPROVED, IN WRITING, BEFORE THE CONTRACTOR HAS PERMISSION TO USE THE AREA.

ANY ITEMS DAMAGED BEYOND THE CONSTRUCTION LIMITS, AS DEFINED ABOVE, WILL BE REPLACED IN KIND OR AS APPROVED BY THE PROJECT ENGINEER.

CLEARING AND GRUBBING, AS PER PLAN

ALTHOUGH THERE ARE NO TREES OR STUMPS SPECIFICALLY MARKED FOR REMOVAL WITHIN THE LIMITS OF THE PROJECT, A LUMP SUM QUANTITY IS INCLUDED IN THE GENERAL SUMMARY FOR ITEM 201, CLEARING AND GRUBBING, AS PER PLAN. BEYOND THE CLEARING AND GRUBBING REQUIRED WITHIN THE HIGHWAY CONSTRUCTION GRADING LIMITS, THE CLEARING AND GRUBBING IS ALSO TO BE PERFORMED ALONG A 15' SWATH TO ACCOMPLISH THE REPLACEMENT OF THE FENCE AS DEPICTED IN THE DETAIL BELOW.

THE CONTRACTOR IS ADVISED TO VISIT THE SITE PRIOR TO BIDDING TO ASSESS THE FULL EXTENTS OF TREE/BRUSH REMOVALS REQUIRED FOR THE PROJECT. ALL PROVISIONS AS SET FORTH IN THE SPECIFICATIONS UNDER THIS ITEM ARE INCLUDED IN THE LUMP SUM PRICE BID FOR ITEM 201, CLEARING AND GRUBBING, AS PER PLAN.

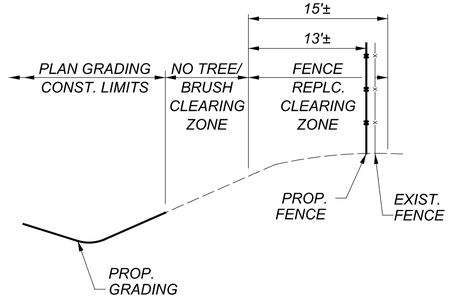

Preliminary Plans - For Reference Only

DESIGN AGENCY
ms consultants. inc.
DESIGNER DWH
REVIEWER WBH 10/04/24
PROJECT ID 121474
SHEET P.45 TOTAL 655

MODEL: Sheet PAPERSIZE: 34x22 (in.) DATE: 9/15/2025 TIME: 8:57:36 AM PLTDRV: OHDOT_PDF_E+.pltcfg PENTBL: OHDOT_Pen.tbl USER: DHall@msconsultants.com WORKSPACE: OHDOTCEv02 WORKSET: 121474 PRODUCT: OpenRoadsDesigner 24.00.00.205
pw:\\ohiodot-pw.bentley.com:ohiodot-pw-02\Documents\01 Active Projects\District 04\Mahoning\121474\M402-Engineering_MSConsultants\Roadway\Sheets\121474_GN001.dgn

BENCHING OF FOUNDATION SLOPES

ALTHOUGH CROSS SECTIONS INDICATE SPECIFIC DIMENSIONS FOR PROPOSED BENCHING OF THE EMBANKMENT FOUNDATIONS IN CERTAIN AREAS, NO WAIVER OF THE SPECIFICATIONS IS INTENDED. BENCH ALL OTHER SLOPED EMBANKMENT AREAS AS SET FORTH IN 203.05 OF THE CONSTRUCTION AND MATERIAL SPECIFICATIONS (C&MS). NO ADDITIONAL PAYMENT WILL BE MADE FOR BENCHING REQUIRED UNDER THE PROVISIONS OF 203.05.

ITEM 619 FIELD OFFICE, TYPE C, AS PER PLAN

THIS WORK CONSISTS OF PROVIDING, MAINTAINING, AND SUBSEQUENTLY REMOVING A FIELD OFFICE FOR THE EXCLUSIVE USE OF THE DEPARTMENT FOR THE DURATION OF THE CONTRACT AT A LOCATION APPROVED BY THE ENGINEER.

FURNISH A COMPLETELY FUNCTIONAL FIELD OFFICE OF THE TYPE SPECIFIED IN THE CONTRACT PRIOR TO BEGINNING WORK.

THE FIELD OFFICE WILL BE A SUITE TYPE OFFICE (NO TRAILER OR MODULAR OFFICE) WITH A MINIMUM OF 2,500 SQUARE FEET AND AT GROUND LEVEL WITH A MINIMUM CEILING HEIGHT OF EIGHT (8) FEET. PROVIDE TWO (2) OUTSIDE DOORS, LOCKABLE VANDAL PROOF CYLINDER TYPE DEAD BOLTS AND LOCKABLE WINDOWS. THE FLOOR SPACE WILL BE DIVIDED INTO A RESTROOM, ONE GENERAL OFFICE AREA (MINIMUM 400 SQUARE FEET), NOT LESS THAN THREE INDIVIDUAL OFFICES (MINIMUM 300 SQUARE FEET EACH), AND ONE CONFERENCE ROOM (MINIMUM 500 SQUARE FEET), AS DEEMED NECESSARY BY THE ENGINEER.

FURNISH EACH FIELD OFFICE WITH A MEANS FOR MAINTAINING ROOM TEMPERATURE BETWEEN 68°F AND 80°F.

FURNISH ELECTRIC SERVICE FOR EACH FIELD OFFICE.

FURNISH NEAT, SANITARY, ENCLOSED TOILET ACCOMMODATIONS CONNECTED TO AN EXISTING SANITARY SEWER LINE FOR THE USE OF THE OCCUPANTS OF THE FIELD OFFICE, MEETING APPLICABLE STATE AND LOCAL CODES AND ORDINANCES. FURNISH ASSOCIATED LAVATORY AND SANITARY SUPPLIES. POTABLE HOT AND COLD RUNNING WATER WILL BE PROVIDED IN THE RESTROOM FOR SANITARY PURPOSES.

FURNISH TRASH COLLECTION SERVICE / DUMPSTER.
FURNISH PROFESSIONAL, BONDED AND INSURED JANITORIAL SERVICE WITH A WEEKLY CLEANING OF THE ENTIRE OFFICE TO INCLUDE THE RESTROOM FACILITIES FOR THE DURATION OF THE PROJECT.

FURNISH BOTTLED DRINKING WATER SERVICE WITH A HOT AND COLD DISPENSER AND ASSOCIATED SUPPLIES.

PROVIDE A LOCKABLE WOOD OR METAL STORAGE BOX OF SUFFICIENT SIZE TO STORE A NUCLEAR DENSITY GAUGE AND AN ELECTRICAL CONNECTION FOR THE GAUGE. THE STORAGE BOX MUST BE AT LEAST 15 FEET FROM ANY OCCUPIED WORK AREA.

PROVIDE A BROADBAND INTERNET CONNECTION CAPABLE OF MINIMUM DOWNLOAD SPEEDS GREATER THAN 100 MBPS, UPLOAD SPEEDS GREATER THAN 30 MBPS, AND THE NETWORK LATENCY LESS THAN 50 MILLISECONDS. WHEN MULTIPLE BROADBAND SERVICES ARE AVAILABLE, THE FOLLOWING IS THE PREFERRED ORDER: CABLE, DSL, CELLULAR, AND WIRELESS RADIO. SATELLITE COMMUNICATION IS NOT COMPATIBLE WITH ODOT VPN CONNECTION AND WILL NOT BE ACCEPTED. SUPPLY ALL WIRING, ROUTERS, MODEMS (CAPABLE TO BE CONFIGURED IN BRIDGE MODE), SOFTWARE, AND INCIDENTALS NECESSARY TO CONNECT SIX (6) PERSONAL COMPUTERS, WEBCAM, TELEVISION AND MULTI-FUNCTION COPIER AT SEPARATE LOCATIONS, DESIGNATED BY THE PROJECT ENGINEER, THROUGHOUT THE OFFICE, TO THE SYSTEM.

PROVIDE THE FOLLOWING OFFICE FURNITURE AND EQUIPMENT:
1. ONE (1) TELEPHONE LINE WITH VOICEMAIL CAPABILITY AND ONE (1) PHONE WITH SPEAKER PHONE FOR CONFERENCE ROOM
2. ONE (1) CONFERENCE ROOM WEBCAM WITH SPEAKER FOR THE CONFERENCE ROOM WITH THE FOLLOWING SPECIFICATIONS:
   a. RESOLUTION: 1080p
   b. FRAME RATE: 30fps
   c. AUDIO: 8-mic
   d. PAN/TILT/ZOOM: AUTO, DIGITAL
   e. FIELD OF VIEW: 360 degrees
   f. COMPATIBLE WITH MICROSOFT TEAMS
   g. ALL ACCESSORIES NECESSARY TO OPERATE

3. ONE MULTI -FUNCTION COLOR COPIER THAT IS SET UP FOR SCANNING, PRINTING, AND COPYING WITH THE FOLLOWING SPECIFICATIONS:
   a. COLOR PRINT/COPY/SCAN
   b. COPY/PRINT SPEED: 30 PPM (LETTER), 15 PPM (LEGAL), 15 PPM (LEDGER), OR HIGHER
   c. DUPLEX PRINTING
   d. AUTOMATIC DOCUMENT FEEDER WITH 50 SHEET DUPLEXING DOCUMENT FEEDER
   e. COPIER MEMORY: 1 GB
   f. INSTALLED HDD: 40 GB
   g. DATA ENCRYPTION AND HDD ERASE SUPPORT INCLUDED WITH MACHINE
   h. INTERNAL STAPLER
   i. PAPER CAPACITY: 250 SHEET X 2 TRAYS, 50 SHEET BYPASS TRAY
   j. NETWORK INTERFACE: ETHERNET PORT 10/100 BASE-TX, 1000 BASE-TX
   k. COLOR SCANNING WITH THE FOLLOWING REQUIREMENTS:
      i. RESOLUTION: UP TO 600 X 600 DPI
      ii. SCAN AREA UP TO 11-1/2" X 17-1/2"
      iii. SCANNING PROTOCOL SUPPORT - TCP/IP, SMTP, SMB, FTP, POP3, NCP
      iv. FILE SCAN TYPES SUPPORTED: SINGLE PAGE TIFF, JPEG, PDF, MULTI -PAGE TIFF, PDF, AND OCR PDF
      v. SCANNING SUPPORT FOR SCAN-TO-EMAIL, HDD, SMB (FOLDER), URL, AND TWAIN
   l. NETWORK PROTOCOL SUPPORT FOR TCP/IP
   m. SUPPORT KERBEROS AUTHENTICATION
   n. SUPPORT TLS 1.2
   o. SUPPORT SNMPv3
   p. SUPPORTS AT LEAST THE BELOW WEB ENCRYPTION CIPHERS:
      i. AES256-GCM-SHA384
      ii. AES256-SHA256
      iii. AES256-SHA
      iv. AES128-GCM-SHA256
      v. AES128-SHA256
      vi. AES128-SHA
   q. SUPPORTS FIPS 140 COMPLIANCE LIBRARY
   r. CLIENT AND SERVER PRINT DRIVER SUPPORT FOR PCL PRINT DRIVERS
   s. SERVER OPERATING SYSTEM SUPPORT FOR WINDOWS SERVER 2016 AND LATER (32 BIT/64BIT)
   t. CLIENT PRINT DRIVER SUPPORT FOR WINDOWS 10 AND LATER (BOTH PCL/ (32 BIT/64 BIT))
   u. MINIMUM PRINT/COPY RESOLUTION OF 600 X 600 DPI
   v. PREFERRED PRINT UNIT: ONE OF THE FOLLOWING MFC MACHINES/SERIES:
      i. M776dn - #T3U55A
      ii. Flow M776z - #3WT91A
      iii. Flow M776zs - #T3U56A
   w. PROVIDE THE COPIER WITH ALL NECESSARY TONER, PAPER, AND MISCELLANEOUS SUPPLIES NECESSARY FOR ITS PROPER FUNCTION, AND A SERVICE CONTRACT WITH RESPONSE TIME OF 24 HOURS OR LESS FOR MAINTENANCE AND SUPPLIES OF THE COPY MACHINE.

4. EIGHT (8) DESK AND CHAIR SETS.
5. TEN (10) STACKABLE/FOLDABLE CHAIRS (CONFERENCE ROOM).
6. FOUR (4) WORKTABLES, 30" X 60"
7. FOUR (4) WORKTABLES, 30" X 72"
8. TWO (2), 4-DRAWER, LOCKABLE, LEGAL SIZE METAL FILING CABINETS.
9. THREE (3), 2-DRAWER, LOCKABLE, LEGAL SIZE METAL FILING CABINETS.
10. TWO (2) PORTABLE, TYPE 2-A:10-B:C, FIVE POUND SIZE FIRE EXTINGUISHERS.
11. THREE (3) PLAN RACKS, EACH CAPABLE OF HANDLING THE BREAKDOWN OF 22 X 34 INCH SIZED PLANS INTO TEN SECTIONS.
12. TWENTY (20) ALL-WEATHER PARKING SPACES.
13. EIGHT (8) 24-OUART WASTE BASKETS WITH APPROPRIATELY SIZED TRASH BAGS.

14. ONE (1) NEW LED TELEVISION (WALL MOUNTED IN CONFERENCE ROOM) WITH THE FOLLOWING SPECIFICATIONS:
   a. DIAGONAL SCREEN SIZE - 55"
   b. NATIVE RESOLUTION 4K(2160p)
   c. HDMI PORTS 3
   d. VIDEO INTERFACES - COMPOSITE, HDMI, USB
   e. ALL ACCESSORIES NECESSARY TO OPERATE
   f. ALL HARDWARE NECESSARY TO HANG TELEVISION ON THE WALL

EXPENSES FOR THE OPERATION OF THE FIELD OFFICE TO INCLUDE BUT NOT BE LIMITED TO ELECTRICAL SERVICE, HEATING/COOLING, RUNNING SERVICE, SEWER SERVICE, TELEPHONE SERVICE, JANITORIAL SERVICE, BOTTLED WATER SERVICE, HIGH SPEED ONLINE SERVICE, ETC. WILL BE THE RESPONSIBILITY OF THE CONTRACTOR. THE CONTRACTOR WILL ALSO PROVIDE ALL NECESSARY SUPPLIES AND MAINTENANCE FOR ALL EQUIPMENT THAT THE CONTRACTOR IS REQUIRED TO FURNISH.

THE CONTRACTOR WILL RETAIN RESPONSIBILITY FOR RISK OF LOSS OR DAMAGE TO SAID FIELD OFFICE, FURNISHINGS, AND EQUIPMENT WHILE THE OFFICE IS IN USE FOR THIS CONTRACT.

THE FIELD OFFICE WILL BE APPROVED IN ADVANCE BY THE ENGINEER AND FULLY OPERATIONAL WITHIN 30 DAYS AFTER THE SIGNING AND EXECUTION OF THE CONTRACT OR PRIOR TO THE START OF ANY CONSTRUCTION WORK, WHICHEVER COMES FIRST.

THE DEPARTMENT WILL MEASURE FIELD OFFICE, TYPE C, AS PER PLAN BY THE NUMBER OF MONTHS THE OFFICE IS MAINTAINED. A PARTIAL MONTH AT THE END OF THE PROJECT WILL BE PAID AS A FULL MONTH.

THE DEPARTMENT WILL PAY FOR ACCEPTED QUANTITIES AT THE CONTRACT PRICE FOLLOWS:

ITEM	UNIT	DESCRIPTION
619	24 MONTH	FIELD OFFICE, TYPE C, AS PER PLAN

CONNECTION BETWEEN EXISTING AND PROPOSED GUARDRAIL

WHEN IT IS NECESSARY TO SPLICE PROPOSED GUARDRAIL TO EXISTING GUARDRAIL, ONLY THE EXISTING GUARDRAIL SHALL BE CUT, DRILLED, OR PUNCHED. THE CONNECTION SHALL BE MADE USING A W-BEAM, BEAM SPLICE AS SHOWN IN AASHTO M 180-12, EXCEPT THE BEAM WASHERS ARE NOT TO BE USED. PAYMENT SHALL BE INCLUDED IN THE CONTRACT PRICE FOR THE RESPECTIVE GUARDRAIL ITEMS.

ITEM SPECIAL - AS-BUILT CONSTRUCTION PLANS

PRIOR TO FINAL ACCEPTANCE OF THE WORK, THE CONTRACTOR SHALL FURNISH THE DEPARTMENT FORMAL AS-BUILT CONSTRUCTION PLANS. THE FORMAL AS-BUILT CONSTRUCTION PLANS SHALL INCLUDE ALL RED-LINED CHANGES. RED-LINE CHANGE SHALL BE DENOTED UTILIZING CLOUDING IN MICROSTATION (OR OTHER CAD SOFTWARE) OR CLOUDING IN PDF EDITING SOFTWARE. THE AS-BUILT CONSTRUCTION PLANS SHALL HAVE A SIGNED VERIFICATION ON THE TITLE SHEET FROM THE CONTRACTOR INDICATING THAT ALL RED-LINED AND FIELD CHANGES HAVE BEEN INCORPORATED INTO AS-BUILT CONSTRUCTION PLANS.

THE CONTRACTOR'S VERIFICATION STATEMENT INDICATES ALL KNOWN FIELD MODIFICATIONS MADE HAVE BEEN INCLUDED IN THE FORMAL AS-BUILT CONSTRUCTION PLANS. THE CONTRACTOR'S VERIFICATION STATEMENT SHALL BE SIGNED BY THE CONTRACTOR'S PROJECT MANAGER (OR ACCEPTABLE REPRESENTATIVE).

IN ADDITION TO THE INFORMATION SHOWN ON THE CONSTRUCTION PLANS, THE AS-BUILT CONSTRUCTION PLANS SHALL SHOW THE FOLLOWING:

1. ALL DEVIATIONS FROM THE ORIGINAL APPROVED CONSTRUCTION PLANS WHICH RESULT IN A CHANGE OF LOCATION, MATERIAL, TYPE OR SIZE OF WORK.
2. ANY UTILITIES, PIPES, WELLHEADS, ABANDONED PAVEMENTS, FOUNDATIONS OR OTHER MAJOR OBSTRUCTIONS DISCOVERED AND REMAINING IN PLACE WHICH ARE NOT SHOWN, OR DO NOT CONFORM TO LOCATIONS OR DEPTHS SHOWN IN THE PLANS. UNDERGROUND FEATURES SHALL BE SHOWN AND LABELED ON THE AS-BUILT CONSTRUCTION PLANS IN TERMS OF STATION, OFFSET AND ELEVATION.
3. THE FINAL OPTION AND SPECIFICATION NUMBER SELECTED FOR THOSE ITEMS WHICH ALLOW SEVERAL MATERIAL OPTIONS UNDER THE SPECIFICATION (E.G., CONDUIT).
4. CHANGES TO THE PAY ITEMS AND FINAL QUANTITIES AS PAID SHALL BE SHOWN ON THE GENERAL SUMMARY AND SUBSUMMARIES.
5. ADDITIONAL PLAN SHEETS MAY BE NEEDED IF NECESSARY TO SHOW WORK NOT INCLUDED IN THE CONSTRUCTION PLANS. IF ADDITIONAL PLAN SHEETS ARE NEEDED, THEY ARE REQUIRED TO BE PREPARED IN CONFORMANCE WITH THE LOCATION AND DESIGN MANUAL, VOLUME 3, SECTION 1200 - PLAN PREPARATION.

NOTATION SHALL ALSO BE MADE OF LOCATIONS AND THE EXTENT OF USE OF MATERIALS, OTHER THAN SOIL, FOR EMBANKMENT CONSTRUCTION (ROCK, BROKEN CONCRETE WITHOUT REINFORCING STEEL, ETC.).

THE PLAN INDEX SHALL SHOW THE PLAN SHEETS WHICH HAVE CHANGES APPEARING ON THEM.

TWO COPIES OF THE AS-BUILT CONSTRUCTION PLANS SHALL BE DELIVERED TO THE PROJECT ENGINEER FOR APPROVAL UPON COMPLETION OF THE PHYSICAL WORK BUT PRIOR TO THE REQUEST FOR FINAL PAYMENT. AFTER THE DEPARTMENT HAS APPROVED THE AS-BUILT CONSTRUCTION PLANS, THE ASSOCIATED ELECTRONIC FILES SHALL BE DELIVERED TO THE DISTRICT CAPITAL PROGRAMS ADMINISTRATOR. ACCEPTANCE OF THESE PLANS AND DELIVERY OF THE ASSOCIATED ELECTRONIC FILES IS REQUIRED PRIOR TO THE WORK BEING ACCEPTED AND THE FINAL ESTIMATE APPROVED.

PAYMENT FOR ALL THE ABOVE SHALL BE LUMP SUM UPON PROPER EXECUTION OF ALL WORK OF THIS ITEM AS DETERMINED BY THE PROJECT ENGINEER.

Preliminary Plans - For Reference Only

MAH-680-4.58
MODEL: Sheet PAPERSIZE: 34x22 (in.) DATE: 9/15/2025 TIME: 8:57:41 AM PLTDRV: OHDOT_PDF_E+.pltcfg PENTBL: OHDOT_Pen.tbl USER: DHall@msconsultants.com WORKSPACE: OHDOTCEv02 WORKSET: 121474 PRODUCT: OpenRoadsDesigner 24.00.00.205
pw:\\ohiodot-pw.bentley.com:ohiodot-pw-02\Documents\01 Active Projects\District 04\Mahoning\121474\402-Engineering_MSConsultants\Roadway\Sheets\121474_GN002.dgn
_GN002.dgn

DESIGN AGENCY
ms consultants. inc.

DESIGNER DWH
REVIEWER CMN 08/29/25
PROJECT ID 121474
SHEET P.46 TOTAL 655

PAVEMENT

ITEM 251 - PARTIAL DEPTH PAVEMENT REPAIR (442)

A QUANTITY OF THIS ITEM SHALL BE PROVIDED FOR USE AS DIRECTED BY THE ENGINEER. THE ITEM SHALL CONSIST OF REPAIRING EXISTING LOCATIONS EXHIBITING SURFACE DETERIORATION AND PLACING ITEM 442 ASPHALT CONCRETE, TYPE 2. IT IS NOT THE INTENT TO REPAIR EVERY DETERIORATED AREA WITHIN THE PROJECT. PAVEMENT REPAIRS WILL BE MARKED IN THE FIELD BY THE PROJECT ENGINEER ACCORDING TO CMS 251.02. MINIMUM WIDTH IS 2'. UNLESS OTHERWISE DIRECTED BY THE ENGINEER, THIS ITEM SHALL BE PERFORMED AFTER THE COMPLETION OF MAINLINE PAVEMENT PLANING AND PRIOR TO THE PLACEMENT OF ASPHALT ON THE MILLED SURFACE. PAYMENT SHALL BE BASED ON THE ACTUAL NUMBER OF SQUARE YARDS OF PAVEMENT REPAIR.

THE FOLLOWING ESTIMATED QUANTITY HAS BEEN CARRIED TO THE GENERAL SUMMARY:

ITEM 251 - PARTIAL DEPTH PAVEMENT REPAIR (442), 281 SQ. YD

ITEM 253 - PAVEMENT REPAIR

A QUANTITY OF THIS ITEM SHALL BE PROVIDED FOR USE AS DIRECTED BY THE ENGINEER. THIS ITEM SHALL CONSIST OF CUTTING AND REMOVING DETERIORATED PAVEMENT FULL DEPTH AND PLACING 8" 301 ASPHALT CONCRETE BASE, PG64-22. THE MAXIMUM COMPACTED DEPTH OF ANY ONE LAYER SHALL BE 6 INCHES.
UNLESS OTHERWISE DIRECTED BY THE ENGINEER, THIS ITEM SHALL BE PERFORMED AFTER THE COMPLETION OF MAINLINE PAVEMENT PLANING AND PRIOR TO THE PLACEMENT OF ASPHALT ON THE MILLED SURFACE.

IT IS NOT THE INTENT TO REPAIR EVERY DETERIORATED AREA WITHIN THE PROJECT. THE ENGINEER SHALL DETERMINE WHICH AREAS ARE TO BE REPAIRED. PAYMENT SHALL BE BASED ON THE ACTUAL NUMBER OF SQUARE YARDS OF PAVEMENT REMOVED AND REPLACED TO THE LIMITS DESIGNATED BY THE ENGINEER.

THE FOLLOWING ESTIMATED QUANTITY HAS BEEN CARRIED TO THE GENERAL SUMMARY:

ITEM 253 - PAVEMENT REPAIR, 281 SQ YD

ITEM 203 – EXCAVATION (FOR PAVEMENT REPAIR)

THIS ITEM OF WORK SHALL CONSIST OF REMOVING AND DISPOSING OF ALL UNSUITABLE MATERIAL BY EXCAVATING THE EXISTING SUBGRADE AND SUBBASE TO AN AVERAGE DEPTH OF 6 INCHES OR AS DIRECTED BY THE ENGINEER. EXACT LIMITS OF REMOVAL SHALL BE DETERMINED BY THE ENGINEER. ALL EQUIPMENT, LABOR, TOOLS, AND INCIDENTALS NECESSARY TO COMPLETE THIS ITEM SHALL BE INCLUDED IN THE UNIT PRICE BID FOR ITEM 203 EXCAVATION (FOR PAVEMENT REPAIR).

THE FOLLOWING ESTIMATED QUANTITY HAS BEEN CARRIED TO THE GENERAL SUMMARY:

ITEM 203, EXCAVATION (FOR PAVEMENT REPAIR), 47 CU YD

ITEM 304 – AGGREGATE BASE (FOR PAVEMENT REPAIR)

THE FOLLOWING ESTIMATED QUANTITY HAS BEEN PROVIDED AND SHALL BE USED AS DIRECTED BY THE ENGINEER TO BACKFILL AREAS WHICH WERE EXCAVATED UNDER ITEM 203 EXCAVATION (FOR PAVEMENT REPAIR).

THE FOLLOWING ESTIMATED QUANTITY HAS BEEN CARRIED TO THE GENERAL SUMMARY:

ITEM 304, AGGREGATE BASE (FOR PAVEMENT REPAIR), 47 CU YD

PAVEMENT REPAIR DETAILS

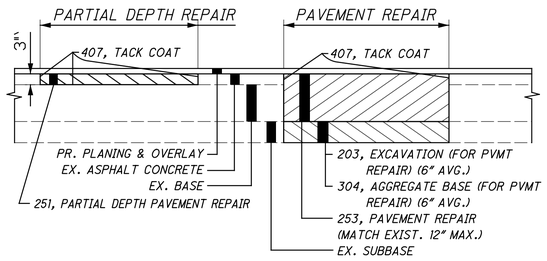

PAVEMENT RESTORATION FOR PIPE INSTALLATIONS AND/OR REMOVALS AND DRAINAGE STRUCTURE INSTALLATIONS

THE FOLLOWING QUANTITIES HAVE BEEN PROVIDED FOR PAVEMENT RESTORATION FOLLOWING INSTALLATION AND/OR REMOVAL OF PIPES AND FOR INSTALLATION OF ITEM 611, DRAINAGE STRUCTURES:

ITEM 202 - PAVEMENT REMOVED	27 SY
ITEM 302 - ASPHALT CONCRETE BASE, PG64-22, (449) (6" DEPTH)	5 CY
ITEM 304 - AGGREGATE BASE (6" DEPTH)	5 CY
ITEM 442 - ASPHALT CONCRETE SURFACE COURSE, 12.5mm, TYPE A, (449) (1.5" DEPTH)	2 CY
ITEM 442 - ASPHALT CONCRETE INTERMEDIATE COURSE, 12.5mm, TYPE A, (449) (1.75" DEPTH)	2 CY
ITEM 407 - NON-TRACKING TACK COAT (0.06 GAL/SY)	2 GAL

RESTORATION FOR PIPE INCLUDES THE TRENCH WIDTH PLUS TWO FEET ON EACH SIDE OF THE TRENCH. RESTORATION FOR DRAINAGE STRUCTURES INCLUDES A WIDTH OF TWO FEET AROUND THE PERIMETER OF THE STRUCTURE.

PROVIDE ANY MATERIALS USED OUTSIDE THE LIMITS STATED ABOVE AT NO ADDITIONAL COST.

ROADWAY

FENCE LENGTHS

THE LENGTHS OF FENCE SHOWN IN THE PLANS ARE HORIZONTAL DIMENSIONS. MEASUREMENTS OF THE FINAL QUANTITIES WILL BE IN ACCORDANCE WITH ITEM 607.

FENCE DITCH CROSSINGS

DITCH CROSSINGS BY THE PROPOSED FENCE SHALL BE ACCOMPLISHED UTILIZING ONE OF THE FENCE CROSSING TYPES INDICATED IN SCD F-3.4. A CONTINGENCY QUANTITY OF ITEM 601 - ROCK CHANNEL PROTECTION, TYPE B, WITH FILTER IS INDICATED BELOW AND CARRIED TO THE GENERAL SUMMARY WHERE CROSSING TYPE 2 AND CROSSING TYPE 3 ARE REQUIRED.

ITEM 601 - ROCK CHANNEL PROTECTION, TYPE B, WITH FILTER 25 CY

ITEM 606 - ANCHOR ASSEMBLY, MGS TYPE B

THIS ITEM SHALL CONSIST OF FURNISHING AND INSTALLING ANY OF THE GUARDRAIL END TERMINALS FOR TYPE MGS GUARDRAIL AS LISTED ON ROADWAY ENGINEERING'S WEB PAGE UNDER ROADSIDE SAFETY DEVICES FOR APPROVED GUARDRAIL END TREATMENTS. INSTALLATION SHALL BE AT THE LOCATIONS SPECIFIED IN THE PLANS, IN ACCORDANCE WITH THE MANUFACTURER'S SPECIFICATIONS.

REFER TO THE MANUFACTURER'S INSTRUCTIONS REGARDING THE INSTALLATION OF, AND THE GRADING AROUND, THE FOUNDATION TUBES AND GROUND STRUT. THE TOP OF ANY FOUNDATION TUBE SHOULD BE LESS THAN 4 INCHES ABOVE THE GROUND. THE PLACEMENT OF THE FOUNDATION TUBES SHOULD BE AN APPROPRIATE DEPTH BELOW THE LEVEL LINE IN ORDER TO MAINTAIN THE FINISHED GUARDRAIL HEIGHT OF 31 INCHES FROM THE EDGE OF THE SHOULDER.

ON-SITE GRADING IS REQUIRED IF THE TOP OF THE FOUNDATION TUBES OR TOP OF THE GROUND STRUT DOES PROJECT MORE THAN 4 INCHES ABOVE THE GROUND LINE.

THE FACE OF THE TYPE B IMPACT HEAD SHALL BE COVERED WITH REBOUNDABLE RETROREFLECTIVE SHEETING, PER CMS 730.191.

PAYMENT FOR THE ABOVE WORK SHALL BE MADE AT THE UNIT PRICE BID FOR ITEM 606, ANCHOR ASSEMBLY, MGS TYPE B, EACH, AND SHALL INCLUDE ALL LABOR, TOOLS, EQUIPMENT AND MATERIALS NECESSARY TO CONSTRUCT A COMPLETE AND FUNCTIONAL ANCHOR ASSEMBLY SYSTEM, INCLUDING REFLECTIVE SHEETING AND ALL RELATED HARDWARE, GRADING, EMBANKMENT AND EXCAVATION NOT SEPARATELY SPECIFIED, AS REQUIRED BY THE MANUFACTURER.

ITEM 606 - ANCHOR ASSEMBLY, MGS TYPE E, MASH 2016

THIS ITEM SHALL CONSIST OF FURNISHING AND INSTALLING ANY OF THE GUARDRAIL END TERMINALS FOR TYPE MGS GUARDRAIL AS LISTED ON ROADWAY ENGINEERING'S WEB PAGE UNDER ROADSIDE SAFETY DEVICES FOR APPROVED GUARDRAIL END TREATMENTS. INSTALLATION SHALL BE AT THE LOCATIONS SPECIFIED IN THE PLANS, IN ACCORDANCE WITH THE MANUFACTURER'S SPECIFICATIONS.

THE FACE OF THE TYPE E IMPACT HEAD SHALL BE COVERED WITH REBOUNDABLE RETROREFLECTIVE SHEETING, PER CMS 730.191.

REFER TO THE MANUFACTURER'S INSTRUCTIONS REGARDING THE INSTALLATION OF, AND THE GRADING AROUND THE FOUNDATION TUBES AND GROUND STRUT. THE TOP OF ANY FOUNDATION TUBE SHOULD BE LESS THAN 4 INCHES ABOVE THE GROUND. THE PLACEMENT OF THE FOUNDATION TUBES SHOULD BE AN APPROPRIATE DEPTH BELOW THE LEVEL LINE IN ORDER TO MAINTAIN THE FINISHED GUARDRAIL HEIGHT OF 31 INCHES FROM THE EDGE OF THE SHOULDER.

ON-SITE GRADING IS REQUIRED IF THE TOP OF THE FOUNDATION TUBES OR TOP OF THE GROUND STRUT DOES PROJECT MORE THAN 4 INCHES ABOVE THE GROUND LINE.

PAYMENT FOR THE ABOVE WORK SHALL BE MADE AT THE UNIT PRICE BID FOR ITEM 606, ANCHOR ASSEMBLY, MGS TYPE E, EACH, AND SHALL INCLUDE ALL LABOR, TOOLS, EQUIPMENT AND MATERIALS NECESSARY TO CONSTRUCT A COMPLETE AND FUNCTIONAL ANCHOR ASSEMBLY SYSTEM, INCLUDING ALL RELATED TRANSITIONS, REFLECTIVE SHEETING, HARDWARE, GRADING, EMBANKMENT AND EXCAVATION NOT SEPARATELY SPECIFIED, AS REQUIRED BY THE MANUFACTURER.

ITEM 204 - PROOF ROLLING

THE FOLLOWING QUANTITY IS PROVIDED IN THE GENERAL SUMMARY TO ADDRESS LOCATIONS REQUIRING PROOF ROLLING.

ITEM 204 - PROOF ROLLING 36 HOUR

MAHONING AVENUE RAMP E REMOVAL

THIS WORK SHALL PERTAIN TO THE REMOVAL OF MAHONING AVENUE ENTRANCE RAMP E FROM THE RECONSTRUCTED MCKINLEY AVENUE INTERSECTION TO THE CONVERGENCE WITH THE PROPOSED I-680 LANES AT THE BRIDGE OVER MILL CREEK. IN ADDITION TO THE REMOVAL ITEMS QUANTIFIED SEPARATELY IN THE PLAN, THE WORK SHALL INCLUDE THE ITEMS LISTED BELOW, INCLUDING ALL EQUIPMENT, LABOR AND MATERIALS NECESSARY. SEE THE PAVEMENT REMOVED GENERAL NOTE FOR A DESCRIPTION OF THAT WORK. SINCE MAHONING AVENUE RAMP E IS BEING REMOVED IN ITS ENTIRETY, ONCE THE EXISTING PAVEMENT HAVE BEEN REMOVED THE CONTRACTOR SHALL BACKFILL OF THE PAVEMENT REMOVAL CAVITY TO AN ELEVATION AND GRADE TO PROMOTE POSITIVE DRAINAGE WITH ITEM 203 - EMBANKMENT, COMPACTION PER ITEM 203, AND ITEM 659 - SEEDING AND MULCHING.

THE CONTRACTOR SHALL BE ALERTED TO THE EXISTING UTILITIES PRESENT AT THE MAHONING AVENUE/MCKINLEY AVENUE INTERSECTION AND THAT CARE SHALL BE USED WHEN WORKING IN THE VICINITY OF THESE UTILITIES, INCLUDING THE EXISTING 12" GAS LINE INDICATED IN THE PLANS.

IN ADDITION TO PAVEMENT REMOVAL, INDIVIDUAL REMOVAL ITEMS, AND MCKINLEY AVENUE INTERSECTION CONSTRUCTION QUANTITIES PROVIDED ELSEWHERE IN THE PLAN, THE FOLLOWING ESTIMATED QUANTITIES HAVE BEEN CARRIED TO THE GENERAL SUMMARY FOR COMPLETION OF THE MAHONING AVENUE RAMP E REMOVAL AS DESCRIBED ABOVE:

ITEM 203 - EMBANKMENT	560 CY
ITEM 659 - SEEDING AND MULCHING	1670 SY

ITEM 607 - FENCE, TYPE CLT, AS PER PLAN

THE NEW FENCE BETWEEN ℄ CONST. I.R. 680 STA. 1046+51.48, 284.3' LT AND 1046+93.44, 243.4' LT IS TO BE MOUNTED TO THE TOP OF AN EXISTING RETAINING WALL. 6'-0" HIGH STANDARD CHAIN LINK FABRIC SHALL BE USED. THE ATTACHMENT TO THE WALL SHALL FOLLOW THE DETAILS AND MATERIALS AS REQUIRED FOR THE POST SECTION PS-2 AS SHOWN IN SCD VPF-1-24.

PAYMENT FOR PROVIDING ALL MATERIALS, EQUIPMENT AND LABOR TO INSTALL THE FENCE PER THE STANDARD DETAILS AND AS DESCRIBED ABOVE SHALL BE INCLUDED IN THE UNIT PRICE BID FOR ITEM 607 - FENCE, TYPE CLT, AS PER PLAN

Preliminary Plans - For Reference Only

MAH-680-4.58
MODEL: Sheet PAPERSIZE: 34x22 (in.) DATE: 9/15/2025 TIME: 8:57:47 AM PLTDRV: OHDOT_PDF_E+.pltcfg PENTBL: OHDOT_Pen.tbl USER: DHall@msconsultants.com WORKSPACE: OHDOTCEv02 WORKSET: 121474 PRODUCT: OpenRoadsDesigner 24.00.00.205
pw:\\ohiodot-pw.bentley.com:ohiodot-pw-02\Documents\01 Active Projects\District 04\Mahoning\121474\402-Engineering_MSConsultants\Roadway\Sheets\121474_GN003.dgn
_GN003.dgn

DESIGN AGENCY
ms consultants, inc.

DESIGNER DWH
REVIEWER CMN 08/29/25
PROJECT ID 121474
SHEET P.47 TOTAL 655

Preliminary Plans - For Reference Only

ITEM 831 - LONGITUDINAL CHANNELIZING DEVICE

THIS ITEM SHALL CONFORM TO SUPPELMENTAL SPECIFICATION 831 AND AS DESCRIBED BELOW. THE LONGITUDINAL CHANNELIZING DEVICE SHALL BE PROVIDED AS CALLED FOR IN THE PLANS. A LONGITUDINAL CHANNELIZER CONSISTS OF A COMBINATION OF VERTICAL COMPONENTS AND LONGITUDINAL BASE COMPONENTS, FIT TOGETHER TO CREATE A CONTINUOUS CHANNELIZING DEVICE. USE OF TUBULAR MARKERS, AS IDENTIFIED IN THE OMUTCD, FIGURE 6F-7, SHALL NOT QUALIFY FOR USE AS A LONGITUDINAL CHANNELIZER.

THE VERTICAL COMPONENT SHALL BE EQUIPPED WITH TWO 3-INCH WIDE RETROREFLECTIVE BANDS, PLACED A MAXIMUM OF 2 INCHES FROM THE TOP, WITH A MAXIMUM OF 6 INCHES BETWEEN THE BANDS. THE LONGITUDINAL BASE COMPONENTSSHALL BE EQUIPPED WITH REFLECTORS.

LONGITUDINAL CHANNELIZERS SHALL COMPLY WITH THE DETAIL SHOWN BELOW.

FURNISH LONGITUDINAL CHANNELIZERS FROM THE APPROVED LIST FOUND ON THE OFFICE OF MATERIALS MANAGEMENT WEBSITE. FOR INSTALLATION PROCEDURES, FOLLOW THE MANUFACTURER'S INSTRUCTIONS.

PAYMENT FOR PROVIDING, INSTALLING, MAINTAINING AND REMOVING LONGITUDINAL CHANNELIZERS WILL BE MADE AT THE UNIT PRICE PER FOOT FOR ITEM 831, LONGITUDINAL CHANNELIZING DEVICE.

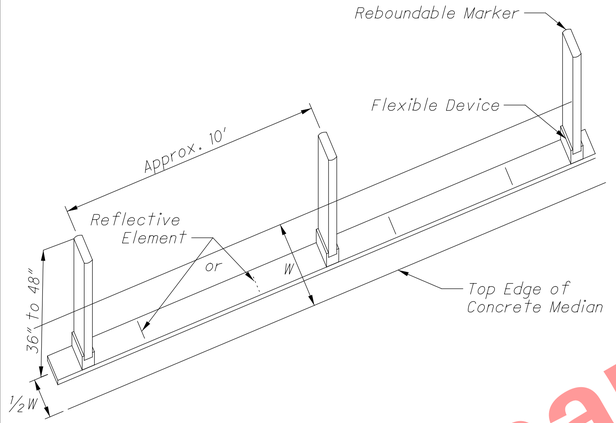

LONGITUDINAL CHANNELIZING DEVICE

MONUMENT ASSEMBLIES

CONSTRUCT MONUMENT ASSEMBLIES IN ACCORDANCE WITH THE DETAILS SHOWN ON THE STANDARD CONSTRUCTION DRAWINGS AND AT THE LOCATIONS SHOWN ON SHEET NO. 7.

ITEM SPECIAL - VERTICAL CLEARANCE

AFTER ALL CONSTRUCTION HAS BEEN COMPLETED, A REGISTERED SURVEYOR WILL TAKE VERTICAL CLEARANCE MEASUREMENTS AT LOCATIONS INDICATED ON THE APPROVED ODOT FORM (AVAILABLE IN THE DISTRICT 4 STRUCTURES AND PAVEMENT OFFICE). THE FINAL MEASUREMENTS SHALL BE RECORDED ON THE FORM AND SUBMITTED TO THE PROJECT ENGINEER AND THE DISTRICT 4 STRUCTURES AND PAVEMENT ENGINEER. THE RECORD SHALL BEAR THE SEAL OF THE LICENSED SURVEYOR WHO HAS TAKEN THE MEASUREMENTS. THIS WORK SHALL BE PERFORMED AT THE FOLLOWING STRUCTURES:

MAH-680-5.815, SFN 5007054
MAH-680-6.037, SFN 5007089
MAH-680-6.116, SFN 5001986
MAH-50094-0.175, SFN 5007119
MAH-680-6.584, SFN 5007208
MAH-680-7.126, SFN 5003350

THE FOLLOWING QUANTITY HAS BEEN CARRIED TO THE GENERAL SUMMARY:

SPECIAL - VERTICAL CLEARANCE, 6 EACH

ITEM 606 - IMPACT ATTENUATOR, TYPE 2 (UNIDIRECTIONAL OR BIDIRECTIONAL)

THIS ITEM SHALL CONSIST OF FURNISHING AND INSTALLING ANY OF THE TYPE 2 IMPACT ATTENUATORS AS LISTED ON THE OFFICE OF ROADWAY ENGINEERING'S WEB PAGE (REFER TO THE POSTED SHOP DRAWINGS FOR THE MOST CURRENT APPROVED PRODUCT MODELS). WHEN BI-DIRECTIONAL DESIGNS ARE SPECIFIED, THE CONTRACTOR SHALL SUPPLY APPROPRIATE TRANSITIONS.

PAYMENT FOR THE ABOVE WORK SHALL BE MADE AT THE UNIT PRICE BID FOR ITEM 606, IMPACT ATTENUATOR, TYPE 2 [(SPEED (IN MPH), HAZARD WIDTH (IN INCHES)), (UNIDIRECTIONAL OR BIDIRECTIONAL)], EACH, AND SHALL INCLUDE ALL LABOR, TOOLS, EQUIPMENT AND MATERIALS NECESSARY TO CONSTRUCT A COMPLETE AND FUNCTIONAL IMPACT ATTENUATOR SYSTEM, INCLUDING ALL RELATED BACKUPS/BACKSTOPS, TRANSITIONS, HARDWARE AND GRADING, NOT SEPARATELY SPECIFIED, AS REQUIRED BY THE MANUFACTURER. INSTALLATION SHALL BE AT THE LOCATIONS SPECIFIED IN THE PLANS, IN ACCORDANCE WITH THE MANUFACTURER'S SPECIFICATIONS.

ITEM 204 - SUBGRADE COMPACTION AND PROOF ROLLING

CONSTRUCT THE SUBGRADE AS FOLLOWS AND IN THE FOLLOWING SEQUENCE:

1. SHAPE THE SUBGRADE TO WITHIN 0.2 FEET OF THE PLAN SUBGRADE ELEVATION.

2. EXCAVATE AND REPLACE UNSUITABLE SUBGRADE BEFORE PROOF ROLLING. THE EXCAVATION LIMITS ARE SHOWN AND LABELED ON THE CROSS SECTIONS AS UNSUITABLE SUBGRADE. UNSUITABLE SUBGRADE INCLUDES UNSUITABLE SOIL (A-4B, A-2-5, A-5, A-7-5, AND SOIL WITH A LIQUID LIMIT GREATER THAN 65) AND ANY COAL, SHALE, OR ROCK WHICH NEEDS TO BE REMOVED ACCORDING TO SECTION 204.05 OF THE CONSTRUCTION AND MATERIAL SPECIFICATIONS (C&MS).

   IF THERE IS UNSUITABLE SUBGRADE IN A SHALLOW FILL LOCATION, EXCAVATE AND REPLACE THE UNSUITABLE SUBGRADE BEFORE CONSTRUCTING THE SHALLOW FILL AND SHAPING THE SUBGRADE.

3. COMPACT THE SUBGRADE ACCORDING TO C&MS 204.03.

4. APPROXIMATE LIMITS FOR EXCAVATION OF UNSTABLE SUBGRADE ARE SHOWN AND LABELED ON THE CROSS SECTIONS AS UNSTABLE SUBGRADE. THE ENGINEER WILL IDENTIFY THE ACTUAL LIMITS OF EXCAVATION FOR UNSTABLE SUBGRADE BASED ON THE PROOF ROLLING RESULTS AND VISUAL OBSERVATIONS.

   PROOF ROLL THE COMPACTED SUBGRADE ACCORDING TO C&MS 204.06.

5. EXCAVATE UNSTABLE SUBGRADE AS DIRECTED BY THE ENGINEER AND STABILIZE BY REPLACING WITH THE SPECIFIED MATERIALS ACCORDING TO C&MS 204.07. EXCAVATIONS WILL EXTEND 18 INCHES BEYOND THE EDGE OF THE SURFACE OF THE PAVEMENT, PAVED SHOULDERS, OR PAVED MEDIANS.

6. PROOF ROLL THE STABILIZED AREAS ACCORDING TO C&MS 204.06 TO VERIFY STABILITY.

7. FINE GRADE THE SUBGRADE TO THE SPECIFIED GRADE.

THE QUANTITIES FOR EXCAVATING THE UNSUITABLE SUBGRADE AND UNSTABLE SUBGRADE ARE BOTH PAID UNDER ITEM 204, EXCAVATION OF SUBGRADE.

PERMANENT BARRIER REPLACEMENT

THE CONTRACTOR SHALL REPLACE THE SECTION OF MEDIAN BARRIER THAT WAS REMOVED FOR THE SOUTHERN CROSSOVER USED IN PHASES 2A AND 2B. THE CONTRACTOR SHALL MATCH EXISTING SHOULDER PAVEMENT ELEVATIONS WHEN REPLACING THE MEDIAN BARRIER. COST OF THE AGGREGATE BASE TO BE INCLUDED IN THE COST OF REPLACING THE MEDIAN BARRIER. THIS WORK SHALL BE PERFORMED DURING PHASE 2C.

THE FOLLOWING ITEMS AND QUANTITIES HAVE BEEN CARRIED TO THE GENERAL SUMMARY TO SATISFY THIS WORK:

ITEM 622 - BARRIER, MISC.: NEW BARRIER MATCHING EXISTING SHAPE	350 FT
ITEM 202 - CONCRETE BARRIER REMOVED	350 FT
ITEM 442 - ASPHALT CONCRETE INTERMEDIATE COURSE, 12.5MM, TYPE A (449)	10 CY

THE FOLLOWING ESTIMATED QUANTITIES HAVE BEEN CARRIED TO THE GENERAL SUMMARY TO RE-INSTALL THE LIGHTING IN THIS SECTION:

ITEM 625 - NO. 10 AWG POLE AND BRACKET CABLE	168 FT
ITEM 625 - LIGHT POLE REMOVED FOR REUSE	2 EACH
ITEM 625 - LIGHT POLE (INSTALLATION ONLY), AS PER PLAN	2 EACH
ITEM 625 - MEDIAN LIGHT POLE FOUNDATION, 10' DEEP	2 EACH
ITEM 625 - LUMINAIRE, INSTALLATION ONLY, AS PER PLAN	2 EACH
ITEM 625 - DISCONNECT CIRCUIT	1 EACH

ITEM 622 - BARRIER, MISC.: NEW BARRIER MATCHING EXISTING SHAPE

THIS ITEM SHALL BE CONSTRUCTED ACCORDING TO THE DETAIL BELOW. THE PURPOSE IS TO MATCH THE SHAPE OF THE EXISTING MEDIAN BARRIER ON I-680. IN THE EVENT THAT EXISTING DIMENSIONS VARY FROM THOSE IN THE PLANS THE BARRIER SHALL BE CONSTRUCTED TO MATCH EXISTING DIMENSIONS.

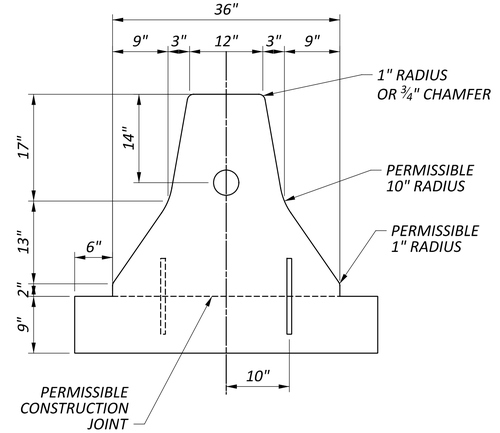

FOR QUANTITIES ASSOCIATED WITH THIS ITEM OF WORK, SEE "PERMANENT BARRIER REPLACEMENT" NOTE ABOVE.

GENERAL NOTES

DESIGN AGENCY
ms consultants, inc.

DESIGNER DWH
REVIEWER CMN 08/29/25
PROJECT ID 121474
SHEET P.48 TOTAL 655

MAH-680-4.58

MODEL: Sheet PAPERSIZE: 34x22 (in.) DATE: 9/15/2025 TIME: 8:57:52 AM PLTDRV: OHDOT_PDF_E+.pltcfg PENTBL: OHDOT_Pen.tbl USER: DHall@msconsultants.com WORKSPACE: OHDOTCEv02 WORKSET: 121474 PRODUCT: OpenRoadsDesigner 24.00.00.205
pw:\\ohiodot-pw.bentley.com:ohiodot-pw-02\Documents\01 Active Projects\District 04\Mahoning\121474\402-Engineering_MSConsultants\Roadway\Sheets\121474_GN003A.dgn

RAMP PAVEMENT REPLACEMENT

WITH THE EXCEPTION OF MAHONING AVENUE RAMP E, WHICH IS BEING REMOVED, MARSHALL STREET RAMP G AND MARKET STREET RAMP K WORK ON ALL RAMPS SHALL INCLUDE FULL DEPTH ASPHALT PAVEMENT REPLACEMENT. NO CROSS SECTIONS ARE PROVIDED FOR THESE REPLACEMENT RAMPS WITH THE INTENT THAT THE PROPOSED PAVEMENT ELEVATIONS SHALL MATCH THE EXISTING PAVEMENT ELEVATIONS FOR THE EXTENT PRACTICAL EXCEPT WHERE THE RAMP IS REQUIRED TO TRANSITION TO MEET THE PROPOSED I.R. 680 HORIZONTAL AND VERTICAL ALIGNMENTS. SEE THE RAMP CONSTRUCTION DETAIL SHEETS FOR THESE ELEVATIONS AS WELL AS THE RAMP TERMINAL DETAIL SHEETS, RAMP PROFILE SHEETS, AND THE INTERSECTION DETAIL SHEETS.

FOR THE PURPOSE OF ESTIMATING QUANTITIES, IT IS ASSUMED AN AVERAGE EXCAVATION DEPTH OF APPROX. 4 INCHES IS REQUIRED FOR EACH RAMP DUE TO A THICKER PROPOSED PAVEMENT DEPTH AND EXCAVATION FOR THE AGGREGATE BASE. ADDITIONALLY, A TOTAL ESTIMATED SEEDING AND MULCHING WIDTH OF 10' BEYOND THE EDGES OF SHOULDER/GUARDRAIL HAS BEEN UTILIZED.

THE FOLLOWING QUANTITIES, LISTED BY INDIVIDUAL RAMP, HAVE BEEN CARRIED TO THE GENERAL SUMMARY TO ACCOUNT FOR THE WORK DESCRIBED ABOVE:

RAMP NAME	ITEM 203 - EXCAVATION (CY)	ITEM 659 - SEEDING AND MULCHING (SY)
RAMP C - SILLIMAN ST	446	3188
RAMP D - SALT SPRINGS RD	349	3115
RAMP B3 - SR 193	191	1407
RAMP C3 - SR 193	91	588
SR193	101	689
RAMP F - HIGH ST	268	1878
RAMP G - MARSHALL ST	SEE CROSS SECTIONS	SEE CROSS SECTIONS
RAMP H - HIGH ST	320	2652
RAMP J - MARSHALL ST	235	1817
RAMP K - MARKET ST	SEE CROSS SECTIONS	SEE CROSS SECTIONS
RAMP L - MARKET ST	108	845
RAMP M - MARKET ST	373	2294
RAMP N - WOODLAND AVE	198	1519
RAMP CA - WOODLAND AVE/RAMP BY - US 62/SR 7	368	1810
RAMP BY - US 62/SR 7	163	1468
RAMP CA - WOODLAND AVE	169	1303
RAMP BX - US 62/SR 7	323	2698
RAMP SB - US 62/SR 7	985	5213
RAMP NB - US 62/SR 7	860	3694
RAMP BV - WILLIAMSON AVE	267	2078
RAMP A - SOUTH AVE	140	1056
RAMP B - SOUTH AVE	205	889
RAMP C - SOUTH AVE	476	1300
RAMP D - SOUTH AVE	484	1646
TOTALS	7140	43147

PAVING UNDER GUARDRAIL

THIS OPERATION SHALL INCLUDE PREPARATION OF THE GRADED SHOULDER USING ITEM 209, LINEAR GRADING, AS PER PLAN AND PAVING UNDER THE GUARDRAIL USING ***ITEM 441 ASPHALT CONCRETE INTERMEDIATE COURSE, TYPE 1, (449), UNDER GUARDRAIL, AS PER PLAN.***

ITEM 209, LINEAR GRADING, AS PER PLAN *SHALL CONSIST OF EXCAVATING TOPSOIL, AND PLACING GRANULAR MATERIAL. IN ADDITION, THIS ITEM OF WORK SHALL INCLUDE ANY NECESSARY EXCAVATION/EMBANKMENT WORK AT RAMP GUARDRAIL LOCATIONS TO WIDEN THE GRADED SHOULDER SUCH THAT THE SLOPE BREAK POINT OCCURS AT OR BEHIND THE FACE OF RAIL AS SHOWN IN THE GUARDRAIL POST LENGTH AND POSITION DETAIL, SHEET P.2 IN SCD MGS-1.1.*

ALL COLLECTED DEBRIS AND TOPSOIL, INCLUDING RHIZOMES, ROOTS AND OTHER VEGETATIVE PLANT MATERIAL SHALL BE REMOVED AND DISPOSED OF AS SPECIFIED IN 105.17.

THE REMOVED MATERIAL SHALL BE REPLACED WITH COMPACTABLE GRANULAR MATERIAL CONFORMING TO 703.16 PLACED TO GRADE AS DETAILED ON THE TYPICAL SECTION OR AS APPROVED BY THE ENGINEER.

ALL EQUIPMENT, MATERIALS AND LABOR REQUIRED TO PERFORM THE WORK OUTLINED ABOVE SHALL BE INCLUDED FOR PAYMENT UNDER ITEM 209, LINEAR GRADING, AS PER PLAN.
PAVING UNDER GUARDRAIL SHALL CONSIST OF PLACING ITEM 441 TO THE DEPTH SPECIFIED USING ONE OF THE FOLLOWING METHODS:

METHOD A:
1. *SET GUARDRAIL POSTS*
2. *PLACE ITEM 441*

METHOD B:
1. *PLACE ITEM 441*
2. *BORE ASPHALT AT POST LOCATIONS (MAY BE OMITTED IF STEEL POSTS ARE USED)*
3. *SET GUARDRAIL POSTS*
4. *PATCH AROUND POSTS. THE MATERIALS USED FOR PATCHING SHALL BE AN ASPHALT CONCRETE*

APPROVED BY THE ENGINEER. PATCHED AREAS SHALL BE COMPACTED USING EITHER HAND OR MECHANICAL METHODS. FINISHED SURFACES SHALL BE SMOOTH AND SLOPED TO DRAIN AWAY FROM THE POSTS.

ALL EQUIPMENT, MATERIALS AND LABOR REQUIRED TO PERFORM THE WORK OUTLINED ABOVE, WITH THE EXCEPTION OF SETTING GUARDRAIL POSTS, SHALL BE INCLUDED FOR PAYMENT UNDER ITEM 441, ASPHALT CONCRETE, INTERMEDIATE COURSE, TYPE 1(449), UNDER GUARDRAIL, AS PER PLAN.

ITEM 622 - CONCRETE BARRIER, END ANCHORAGE REINFORCED TYPE D, AS PER PLAN

A BARRIER TRANSITION PIECE IS REQUIRED WHERE THE CONCRETE BARRIER, TYPE D SPLITS FROM THE CONCRETE BARRIER TYPE C RUNNING ALONG THE MAINLINE EDGE OF SHOULDER ALONG MARKET ST. RAMP K, PRIOR TO PASSING UNDER BRIDGE NO. MAH-680-6.037. THE CONSTRUCTION OF THE BARRIER TRANSITION PIECE SHALL HAVE A SINGLE SLOPE FACE ON THE RAMP K SIDE OF THE BARRIER AND TRANSITION FROM THE TIE IN WITH THE FACE OF THE CONCRETE BARRIER, TYPE C TO THE SAME SHAPE AND HEIGHT MATCHING THE CONCRETE BARRIER, END ANCHORAGE REINFORCED TYPE D IN A LENGTH OF 13'-4" (8:1 TAPER RELATIVE TO THE CONCRETE BARRIER, TYPE C ALIGNMENT TO A 20" WIDTH, MATCHING THE CONCRETE BARRIER, TYPE D WIDTH).

THE TRANSITION PIECE SHALL CONSTRUCTED AS PART OF, AND BE REINFORCED PER, THE END ANCHORAGE DETAIL SHOWN IN SCD RM-4.5. THE COST OF ALL LABOR, EQUIPMENT AND MATERIALS REQUIRED TO CONSTRUCT THE TRANSITION PIECE SHALL BE INCLUDED IN THE UNIT PRICE BID FOR ITEM 622 - CONCRETE BARRIER, END ANCHORAGE REINFORCED TYPE D, AS PER PLAN.

PAVEMENT REMOVED

THE ORIGINAL I-680 MAINLINE TRAVEL LANES, GORE AREAS AND RAMPS WERE CONSTRUCTED OF FULL DEPTH PORTLAND CEMENT CONCRETE AS SHOWN IN THE TYPICAL SECTIONS AND GEOTECHNICAL REPORT. THE ADJOINING SHOULDERS WERE ORIGINALLY CONSTRUCTED OF A LESSER THICKNESS COMPOSITION OF ASPHALT CONCRETE. THE I-680 PAVEMENT AND SHOULDERS HAVE SUBSEQUENTLY BEEN OVERLAID WITH ASPHALT CONCRETE OF VARYING THICKNESS OVER THE ORIGINAL CONSTRUCTION. THEREFORE, A COMPOSITE PAVEMENT SECTION NOW EXISTS FOR THE MAINLINE LANES, GORE AREAS AND RAMPS.

THE INTENT OF THE PLANS IS TO HAVE THE COMPOSITE PAVEMENT AREAS REMOVED PER ITEM 202 PAVEMENT REMOVED, INCLUDING ALL ADJOINING SHOULDER AREAS. ALTHOUGH THE MAJORITY OF THE SHOULDERS ARE A FULL DEPTH ASPHALT COMPOSITION, THE CONTRACTOR IS ADVISED THAT CERTAIN SHOULDER AREAS MAY BE FULL DEPTH CONCRETE OR COMPOSITE PAVEMENT AS A RESULT OF PAST MAINTENANCE ACTIVITIES OR FOR MAINTENANCE OF TRAFFIC PURPOSES. ANY CONCRETE OR COMPOSITE SHOULDER PAVEMENT ENCOUNTERED ALONG THE MAINLINE OR RAMP SHALL BE REMOVED AND PAID FOR UNDER ITEM 202 PAVEMENT REMOVED.

DRAINAGE

REVIEW OF DRAINAGE FACILITIES

PRIOR TO THE START OF WORK AND AGAIN BEFORE FINAL ACCEPTANCE, PERFORM AN INSPECTION WITH REPRESENTATIVES OF THE DEPARTMENT, CONTRACTOR AND LOCALS OF ALL EXISTING DRAINAGE FACILITIES THAT ARE TO REMAIN IN SERVICE WHICH MAY BE AFFECTED BY THE WORK. THE CONDITION OF THE EXISTING CONDUITS AND THEIR APPURTENANCES IS DETERMINED FROM FIELD OBSERVATIONS. RECORDS OF THE INSPECTION ARE MAINTAINED BY THE DEPARTMENT.

CONFIRM ALL EXISTING SEWERS INSPECTED INITIALLY BY THE ABOVE-MENTIONED PARTIES ARE MAINTAINED AND LEFT IN A CONDITION COMPARABLE TO THAT DETERMINED BY THE ORIGINAL INSPECTION. THE CONTRACTOR IS RESPONSIBLE TO CORRECT ANY CHANGE IN THE CONDITION RESULTING FROM THEIR OPERATIONS AS DIRECTED AND APPROVED BY THE ENGINEER.

PAYMENT FOR ALL OPERATIONS DESCRIBED ABOVE IS INCLUDED IN THE CONTRACT PRICE FOR THE PERTINENT 611 CONDUIT ITEMS.

ITEM SPECIAL - FILL AND PLUG EXISTING CONDUIT

THIS ITEM CONSISTS OF THE CONSTRUCTION OF BULKHEADS IN AN EXISTING 12-INCH & 15-INCH DIAMETER CONDUIT AND FILLING THE AREA SEALED OFF WITH ITEM 613, SAND OR OTHER MATERIAL APPROVED BY THE ENGINEER.

LOCATE THE BULKHEADS AT THE LIMITS OF THE AREA TO BE FILLED, AS INDICATED ON THE PLANS. THE BULKHEADS CONSIST OF BRICK OR CONCRETE MASONRY WITH A MINIMUM THICKNESS OF 12 INCHES.

PUMP THE FILL MATERIAL INTO PLACE OR BY OTHER MEANS APPROVED BY THE ENGINEER, SO THAT AFTER SETTLEMENT, AT LEAST 90 PERCENT OF THE CROSS-SECTIONAL AREA OF THE CONDUIT, FOR ITS ENTIRE LENGTH IS FILLED. THE LENGTH OF FILLED AND PLUGGED CONDUIT TO BE PAID FOR IS THE ACTUAL NUMBER OF FEET (MEASURED ALONG THE CENTERLINE OF EACH CONDUIT FROM OUTER FACE TO OUTER FACE OF BULKHEADS) FILLED AND PLUGGED AS DESCRIBED ABOVE.

IN LIEU OF FILLING AND PLUGGING THE EXISTING CONDUIT, THE PIPE MAY BE CRUSHED AND BACKFILLED PER 203, OR IT MAY BE REMOVED. THE LENGTH, MEASURED AS PROVIDED ABOVE, WILL BE PAID FOR AT THE CONTRACT PRICE PER FOOT FOR, ITEM SPECIAL, FILL AND PLUG EXISTING CONDUIT.

EXISTING SUBSURFACE DRAINAGE

PROVIDE UNOBSTRUCTED OUTLETS FOR ALL EXISTING UNDERDRAINS OR AGGREGATE DRAINS ENCOUNTERED DURING CONSTRUCTION.

PROVIDE AN OUTLET PER STANDARD CONSTRUCTION DRAWING DM-1.1 FOR ALL UNDERDRAINS THAT OUTLET TO A SLOPE. UNDERDRAINS THAT CAN BE CONNECTED TO THE NEW OR EXISTING UNDERDRAINS AT THE END OF THE PROJECT LIMITS AS WELL AS ALL NECESSARY BENDS OR BRANCHES REQUIRED FOR CONNECTION ARE INCLUDED IN THE BASIS OF PAYMENT FOR UNCLASSIFIED PIPE UNDERDRAINS.

THE FOLLOWING ESTIMATED QUANTITIES HAVE BEEN INCLUDED IN THE GENERAL SUMMARY FOR THE WORK NOTED ABOVE:

ITEM 601, TIED CONCRETE BLOCK MAT WITH TYPE 1 UNDERLAYMENT	8 SQ. YD.
ITEM 611, 6" CONDUIT, TYPE F	300 FT.
ITEM 611, PRECAST REINFORCED CONCRETE OUTLET	4 EACH
ITEM 605, 6" UNCLASSIFIED PIPE UNDERDRAINS	25 FT.

ITEM 611 INLET, NO. 3 FOR SINGLE SLOPE BARRIER, TYPE C1, AS PER PLAN

THE PROPOSED MEDIAN INLETS, NO. 3C, IN THE PLAN SET SHALL BE REPLACED BY THE AS PER PLAN INLET AS DETAILED IN THE PLAN SET ON PAGES P.418 - P.419. ALL LABOR, MATERIALS, AND EQUIPMENT NECESSARY TO PERFORM THIS WORK, INCLUDING ANY PAVEMENT REPLACEMENT AND REPAIR INCIDENTAL TO THE INSTALLATION OF THE AS PER PLAN BARRIER INLET SHALL BE INCLUDED IN THE UNIT PRICE EACH FOR ITEM 611 INLET, NO. 3C, AS PER PLAN.

Preliminary Plans - For Reference Only

GENERAL NOTES

DESIGN AGENCY
ms consultants, inc.

DESIGNER DWH
REVIEWER CMN 08/29/25
PROJECT ID 121474
SHEET P.49 TOTAL 655

MAH-680-4.58

MODEL: Sheet PAPERSIZE: 34x22 (in.) DATE: 9/15/2025 TIME: 8:57:57 AM PLTDRV: OHDOT_PDF_E+.pltcfg PENTBL: OHDOT_Pen.tbl USER: DHall@msconsultants.com WORKSPACE: OHDOTCEv02 WORKSET: 121474 PRODUCT: OpenRoadsDesigner 24.00.00.205
pw:\\ohiodot-pw.bentley.com:ohiodot-pw-02\Documents\01 Active Projects\District 04\Mahoning\121474\402-Engineering_MSConsultants\Roadway\Sheets\121474_GN004.dgn

DRAINAGE (CONTINUED)

DRAINAGE DISCHARGE CONTINUANCE

FURNISH A DRAINAGE DISCHARGE CONTINUANCE FOR ANY DRAINAGE DISCHARGE DISTURBED BY THE WORK AND NOT SHOWN IN THE PLANS. THE LOCATION, TYPE (CONDUIT OR SWALE), SIZE AND GRADE OF THE DRAINAGE DISCHARGE CONTINUANCE WILL BE AGREED TO BY THE ENGINEER.

FURNISH AN INSPECTION WELL AT THE RIGHT OF WAY LINE IN PER STANDARD CONSTRUCTION DRAWING DM-3.1 FOR EACH DRAINAGE DISCHARGE THAT OUTLETS THROUGH A CURB OPENING OR INTO A STORM SEWER OR DRAINAGE STRUCTURE. THE COST IS INCLUDED IN ITEM 611, INSPECTION WELL.

FURNISH A WELL GRADED TRANSITION BETWEEN THE DITCH AND THE SWALE WHEN OUTLETTING A SWALE TO A DITCH. THE COST FOR THE GRADED TRANSITION IS INCLUDED IN ITEM 203, EMBANKMENT, AS PER PLAN.

FURNISH AN EROSION CONTROL PAD AS SHOWN IN STANDARD CONSTRUCTION DRAWING DM-1.1 WHEN OUTLETTING A CONDUIT TO A DITCH. THE COST FOR THE EROSION CONTROL PAD IS INCLUDED IN ITEM 611, CONDUIT, MISC TYPE F FOR DRAINAGE DISCHARGE CONTINUANCE.

FURNISH A DRILLED HOLE OR A CURB SECTION WHEN OUTLETTING A CONDUIT THROUGH A CURB OPENING. THE COST OF DRILLING OR FURNISHING THE CURB SECTION WITH HOLE IS INCLUDED IN ITEM 611, CONDUIT, MISC TYPE C FOR DRAINAGE DISCHARGE CONTINUANCE.

FURNISH A DRILLED CORE HOLE WHEN OUTLETTING INTO A STORM SEWER OR DRAINAGE STRUCTURE. THE COST OF THE DRILLED CORE HOLE IS INCLUDED IN ITEM 611, CONDUIT, MISC TYPE C FOR DRAINAGE DISCHARGE CONTINUANCE.

DOCUMENTATION

PROVIDE WRITTEN DOCUMENTATION TO THE ENGINEER AND TO THE DISTRICT R/W PERMIT OFFICE. THE DOCUMENTATION INCLUDES THE CONSTRUCTION PROJECT NUMBER, PID, COUNTY, ROUTE, SECTION, LATITUDE AND LONGITUDE OF THE DRAINAGE DISCHARGE AT THE R/W, THE NAME OF PROPERTY OWNER WITH ADDRESS, THE DATE THE DRAINAGE DISCHARGE WAS LOCATED, THE DATE THE DRAINAGE DISCHARGE CONTINUANCE WAS FURNISHED, A DETAILED DESCRIPTION OF THE WORK AND PICTURES OF THE DRAINAGE DISCHARGE CONTINUANCE (IN PDF OR JPEG FORMAT). THE DOCUMENTATION IS INCLUDED IN ITEM 611, CONDUIT, MISC TYPE C FOR DRAINAGE DISCHARGE CONTINUANCE OR ITEM 203, EMBANKMENT, AS PER PLAN

DRAINAGE DISCHARGE CONTINUANCE REMOVAL

THE ENGINEER MAY REQUIRE THE NEWLY INSTALLED DRAINAGE DISCHARGE CONTINUANCE TO BE REMOVED.

REMOVE THE NEWLY INSTALLED CONDUIT AND ANY EXISTING CONDUIT TO THE RIGHT OF WAY LINE. FOR CONDUIT THAT OUTLETS THROUGH THE CURB, RESTORE THE CURB BY FILLING THE HOLE WITH CLASS QC 1 CONCRETE OR REPLACE THE CURB SECTION. FOR CONDUIT THAT OUTLETS TO A STORM SEWER OR DRAINAGE STRUCTURE LEAVE 6 INCHES PROTRUDING OUTSIDE OF THE CONDUIT. PLUG THE PROTRUDING CONDUIT WITH EITHER A MANUFACTURED CAP OR CLASS QC 1 CONCRETE. FOR CONDUIT THAT OUTLETS TO THE DITCH REMOVE THE EROSION CONTROL PAD. RESTORE ALL AREAS AS REQUIRED. PLUG THE EXISTING CONDUIT REGARDLESS OF SIZE AT THE RIGHT OF WAY LINE WITH CLASS QC 1 CONCRETE AND RESTORE ALL AREAS AS REQUIRED. ALL COSTS ARE INCLUDED IN ITEM 202, REMOVAL MISC.: CONDUIT.

DRAINAGE DISCHARGE CONTINUANCE (CONTINUED)

DAM THE SWALE THAT OUTLETS TO THE DITCH AT THE R/W AS DIRECTED BY THE ENGINEER. ALL COSTS ARE INCLUDED IN ITEM 203, EMBANKMENT AS PER PLAN.

REMOVE THE INSPECTION WELL AND RESTORE ALL AREAS AS REQUIRED. THE COST IS INCLUDED IN ITEM 202, REMOVAL MISC.: INSPECTION WELL.

CONDUIT MATERIAL TYPES

THE FOLLOWING CONDUIT MATERIAL TYPES ARE PERMITTED: 707.33, 707.41 NONPERFORATED, 707.42, 707.43, 707.45, 707.46, 707.47 AND 707.51.

PAY ITEMS

EACH OF THE PAY ITEMS LISTED BELOW FOR CONDUIT MISCELLANEOUS TYPES B, C, E AND F FOR DRAINAGE DISCHARGE CONTINUANCE INCLUDE CONDUIT SIZES 2 INCH TO 10 INCH. THERE IS NO COST DIFFERENTIATION FOR SIZE IN THESE PAY ITEMS.

THE FOLLOWING ESTIMATED QUANTITIES HAVE BEEN INCLUDED IN THE GENERAL SUMMARY FOR USE AS DIRECTED BY THE ENGINEER IN MAKING THE ABOVE DRAINAGE DISCHARGE CONTINUANCE:

ITEM 611, INSPECTION WELL	2 EACH
ITEM 611, CONDUIT, MISC.: TYPE C FOR DRAINAGE DISCHARGE CONTINUANCE	10 FT.
ITEM 611, CONDUIT, MISC.: TYPE F FOR DRAINAGE DISCHARGE CONTINUANCE	5 FT.
ITEM 202, REMOVAL MISC.: CONDUIT	15 FT.
ITEM 202, REMOVAL MISC.: INSPECTION WELL	2 EACH
ITEM 203, EMBANKMENT, AS PER PLAN	19 CU.YD.

PIPE CONNECTIONS TO CORRUGATED METAL STRUCTURES

PROVIDE CONNECTIONS OF PROPOSED LONGITUDINAL DRAINAGE TO CORRUGATED METAL STRUCTURES BY MEANS OF A SHOP FABRICATED OR FIELD WELDED STUB ON THE STRUCTURE. FURNISH A STUB MEETING THE REQUIREMENTS OF 707 WITH A MINIMUM LENGTH OF 2 FEET AND A MINIMUM WALL THICKNESS OF 0.064 INCHES.

THE LOCATION AND ELEVATION OF THE STUB ARE TO BE CONSIDERED APPROXIMATE AND MAY BE ADJUSTED BY THE ENGINEER TO AVOID CUTTING THROUGH JOINTS IN THE STRUCTURE.

THOROUGHLY CLEAN AND REGALVANIZE OR OTHERWISE SUITABLY REPAIR THE FIELD WELDED JOINT, IF USED. MEET WELDING REQUIREMENTS OF 513.21.

PROVIDE A MASONRY COLLAR PER STANDARD CONSTRUCTION DRAWING DM-1.1, TO CONNECT THE LONGITUDINAL DRAINAGE TO THE STUB, WHEN PIPE OTHER THAN CORRUGATED METAL IS USED FOR THE LONGITUDINAL DRAINAGE.

PAYMENT FOR CUTTING INTO THE STRUCTURE AND PROVIDING THE CONNECTION DESCRIBED, IS INCLUDED IN THE CONTRACT PRICE FOR ITEM 611 OR 522.

ITEM 202 - MANHOLE ABANDONED, AS PER PLAN

THE CONTRACTOR SHALL ABANDON EXISTING MANHOLES WHERE INDICATED ON THE PLANS. STRUCTURES SHALL BE REMOVED TO A MINIMUM DEPTH OF 2 FEET BELOW THE FINISHED SUBGRADE. DO NOT DAMAGE PIPES THAT ARE TO REMAIN. CONNECT EXISTING PIPES WITH NEW PIPE THROUGH THE STRUCTURES. AFTER CONNECTING THE EXISTING PIPES AND REMOVING THE WALLS TO THE REQUIRED DEPTH, BACKFILL THE REMAINING CAVITIES ACCORDING TO 202.2. CAREFULLY HAND TAMP BACKFILL UNDER AND AROUND THE CONNECTING PIPE ACCORDING TO 202.2

CROSSINGS AND CONNECTIONS TO EXISTING PIPES AND UTILITIES

WHERE PLANS PROVIDE FOR A PROPOSED CONDUIT TO BE CONNECTED TO, OR CROSS OVER OR UNDER AN EXISTING SEWER OR UNDERGROUND UTILITY, LOCATE THE EXISTING PIPES OR UTILITIES BOTH AS TO LINE AND GRADE BEFORE STARTING TO LAY THE PROPOSED CONDUIT.

IF IT IS DETERMINED THAT THE ELEVATION OF THE EXISTING CONDUIT, OR EXISTING APPURTENANCE TO BE CONNECTED, DIFFERS FROM THE PLAN ELEVATION OR RESULTS IN A CHANGE IN THE PLAN CONDUIT SLOPE, NOTIFY THE ENGINEER BEFORE STARTING CONSTRUCTION OF ANY PORTION OF THE PROPOSED CONDUIT WHICH WILL BE AFFECTED BY THE VARIANCE IN THE EXISTING ELEVATIONS.

IF IT IS DETERMINED THAT THE PROPOSED CONDUIT WILL INTERSECT AN EXISTING SEWER OR UNDERGROUND UTILITY IF CONSTRUCTED AS SHOWN ON THE PLAN, NOTIFY THE ENGINEER BEFORE STARTING CONSTRUCTION OF ANY PORTION OF THE PROPOSED CONDUIT WHICH WOULD BE AFFECTED BY THE INTERFERENCE WITH AN EXISTING FACILITY.

PAYMENT FOR ALL THE OPERATIONS DESCRIBED ABOVE IS INCLUDED IN THE CONTRACT PRICE FOR THE PERTINENT 611 CONDUIT ITEM.

TEMPORARY DRAINAGE ITEMS

TEMPORARY DRAINAGE ITEMS LABELED ON THE MAINTENANCE OF TRAFFIC PLAN ARE ITEMIZED ON THE MOT PLANS AND CARRIED TO THE GENERAL SUMMARY.

ITEM 611 - 12" CONDUIT, TYPE F, AS PER PLAN, 707.33

INCLUDED WITH THIS ITEM IS THE TEE/CLEANOUT THAT IS SHOWN ON THE PIPE PROFILE. THE TEE/CLEANOUT WILL BE THE SAME MATERIAL AS THE CONDUIT AND INCLUDE A CAP THAT IS FLUSH WITH THE GROUNDLINE.

ITEM 611 - 18" CONDUIT, TYPE F, AS PER PLAN, 707.33

INCLUDED WITH THIS ITEM IS THE TEE/CLEANOUT THAT IS SHOWN ON THE PIPE PROFILE. THE TEE/CLEANOUT WILL BE THE SAME MATERIAL AS THE CONDUIT AND INCLUDE A CAP THAT IS FLUSH WITH THE GROUNDLINE.

ITEM 620 - DELINEATOR, POST GROUND MOUNTED, AS PER PLAN

A GROUND POST MOUNTED DELINEATOR SHALL BE PLACED AT THE OUTLET OF THE UNDERDRAINS WHERE THE OUTLET IS NOT TO A DRAINAGE STRUCTURE (MANHOLE, CATCH BASIN, INLET, ETC.). THE COLOR OF THE REFLECTIVE SHEETING SHALL BE BLUE.

ITEM 202 - INLET ABANDONED, AS PER PLAN

THE CONTRACTOR SHALL ABANDON EXISTING INLETS WHERE INDICATED IN THE PLANS. THE CONTRACTOR SHALL REMOVE AND DISPOSE OF THE EXISTING INLET GRATE. THE CONTRACTOR SHALL REMOVE THE UPPER INLET BOX PORTION AND THE EXISTING BARRIER TO CONSTRUCTION JOINT LIMITS. THE CONTRACTOR SHALL SEAL THE EXISTING PIPE TO BE ABANDONED PER ITEM 202. THE CONTRACTOR SHALL BACKFILL THE CAVITY WITH LOW STRENGTH MORTAR (LSM) BACKFILL PER ITEM 613, AND REPLACE THE UPPER BOX PORTION OF THE INLET WITH QC1P CONCRETE. THE CONTRACTOR SHALL REPLACE THE REMOVED BARRIER WITH PROPOSED BARRIER.

ITEM 611 - CONDUIT, MISC.: 33" TYPE C

THE CONTRACTOR SHALL INSTALL 33" TYPE C STORM PIPE CONFORMING TO 706.02 - REINFORCED CONCRETE CIRCULAR PIPE

ITEM 611 - MANHOLE No. 3, BOLTED DOWN, AS PER PLAN

WHEN SPECIFIED, BOLTED DOWN MANHOLE COVERS SHALL BE PROVIDED AND THEIR COSTS SHALL BE INCLUDED IN THE PERTINENT 611 ITEM DESIGNATED, "BOLTED DOWN".

MATERIALS FURNISHED SHALL BE:

FOUR (4) EQUALLY SPACED HALF-INCH (1/2") STAINLESS STEEL HEX CAP SCREWS CONFORMING TO ASTM F-593, ALLOY GROUP 1

COUNTERSINKS, HOLES, THREADING, AND PLACEMENT SHALL BE DONE IN ACCORDANCE WITH THE CASTING MANUFACTURERS RECOMMENDATIONS AND METHODS.

ENSURE THE MANHOLE FRAME AND COVER ARE POSITIONED AS SHOWN IN THE PLANS AND THE LID IS PLACED OUTSIDE OF THE TRAVEL LANES.

EROSION CONTROL

SEEDING AND MULCHING

THE FOLLOWING QUANTITIES ARE PROVIDED TO PROMOTE GROWTH AND CARE OF PERMANENT SEEDED AREAS:

ITEM 659, SOIL ANALYSIS TEST	6	EACH
ITEM 659, TOPSOIL	54,401	CY
ITEM 659, SEEDING AND MULCHING	490,100	SY
ITEM 659, REPAIR SEEDING AND MULCHING	24,505	SY
ITEM 659, INTER-SEEDING	24,505	SY
ITEM 659, COMMERCIAL FERTILIZER	68.35	TONS
ITEM 659, LIME	101.26	ACRES
ITEM 659, WATER	2713	MGAL
ITEM 659, MOWING	1102.73	MSF

APPLY SEEDING AND MULCHING TO ALL AREAS OF EXPOSED SOIL BETWEEN THE RIGHT-OF-WAY LINES AND WITHIN THE CONSTRUCTION LIMITS FOR AREAS OUTSIDE THE RIGHT-OF-WAY LINES COVERED BY WORK AGREEMENT OR SLOPE EASEMENT. QUANTITY CALCULATIONS FOR SEEDING AND MULCHING ARE BASED ON THESE LIMITS.

WATER QUALITY

POST CONSTRUCTION STORM WATER TREATMENT

THIS PLAN UTILIZES STRUCTURAL BEST MANAGEMENT PRACTICES (BMP's) FOR POST CONSTRUCTION STORM WATER TREATMENT.

VEGETATED BIOFILTER

THIS PLAN UTILIZES VEGETATED BIOFILTER(S) FOR POST CONSTRUCTION STORM WATER TREATMENT. PLACE ITEM 660 SODDING AS SHOWN IN THE PLANS TO ANY DISTURBED AREA ON THE SHOULDER AND FORESLOPE DRAINING TO A VEGETATED BIOFILTER. THE DITCH FOR EACH VEGETATED BIOFILTER IS TRAPEZOIDAL, AS SHOWN IN THE PLAN CROSS SECTIONS. PROVIDE ITEM 670 AS SPECIFIED IN THE PLANS.

Preliminary Plans - For Reference Only

GENERAL NOTES

DESIGN AGENCY
ms consultants, inc.

DESIGNER DWH
REVIEWER CMN 08/29/25
PROJECT ID 121474
SHEET P.50 TOTAL 655

MAH-680-4.58

MODEL: Sheet PAPERSIZE: 34x22 (in.) DATE: 9/15/2025 TIME: 8:58:02 AM PLTDRV: OHDOT_PDF_E+.pltcfg PENTBL: OHDOT_Pen.tbl USER: DHall@msconsultants.com WORKSPACE: OHDOTCEv02 WORKSET: 121474 PRODUCT: OpenRoadsDesigner 24.00.00.205
pw:\\ohiodot-pw.bentley.com:ohiodot-pw-02\Documents\01 Active Projects\District 04\Mahoning\121474\402-Engineering_MSConsultants\Roadway\Sheets\121474_GN005.dgn

ENVIRONMENTAL COMMITMENTS

ECOLOGICAL

1) THE PROJECT IS LOCATED WITHIN THE KNOWN HABITAT RANGES OF FEDERALLY LISTED AND PROTECTED INDIANA BAT AND NORTHERN LONG-EARED BAT. THE CONTRACTOR SHALL NOT REMOVE TREES UNDER THIS PROJECT FROM APRIL 1 THROUGH SEPTEMBER 30. ALL NECESSARY TREE REMOVAL SHALL OCCUR FROM OCTOBER 1 THROUGH MARCH 31. THE CONTRACTOR SHALL DEMARCATE CLEARING LIMITS TO AVOID ANY UNAUTHORIZED TREE CLEARING. THIS REQUIREMENT IS NECESSARY TO AVOID AND MINIMIZE IMPACTS TO THESE SPECIES AS REQUIRED BY THE ENDANGERED SPECIES ACT. FOR THE PURPOSE OF THIS NOTE, A TREE IS DEFINED AS A LIVE, DYING, OR DEAD OR WOODY PLANT, WITH A TRUCK THREE INCHES OR GREATER IN DIAMETER AT A HEIGHT OF 4.5 FEET ABOVE GROUND SURFACE, AND WITH A MINIMUM HEIGHT OF 13 FEET.

2) THE CONTRACTOR SHALL NOT PLACE ANY TEMPORARY OR PERMANENT FILL WITHIN THE JURISDICTIONAL BOUNDARIES OF MILL CREEK/LAKE GLACIER. IF DEBRIS ENTERS THE WATERWAY DURING CONSTRUCTION, THE CONTRACTOR SHALL REMOVE THE DEBRIS IMMEDIATELY UTILIZING EQUIPMENT STAGED OUTSIDE THE JURISDICTIONAL BOUNDARY.

SECTION 4(f)

1) IF REQUIRED, THE CLOSURE OF PRICE ROAD WILL BE NO MORE THAN A FEW HOURS ON ANY GIVEN DAY AND ACCESS TO MILL CREEK PARK AND ITS AMENITIES SHALL BE MAINTAINED AT ALL TIMES DURING CONSTRUCTION ACTIVITIES VIA FLAGGING OPERATIONS AND/OR A SIGNED DETOUR ROUTE.

2) THE CONTRACTOR SHALL INSTALL TEMPORARY CONSTRUCTION FENCING ALONG PROPOSED CONSTRUCTION LIMITS PRIOR TO THE START OF CONSTRUCTION ACTIVITIES TO PROTECT THE SECTION 4(f) PROPERTY AND THE PUBLIC.

3) APPROPRIATE SIGNAGE SHALL BE INSTALLED TO ALERT USERS OF MILL CREEK PARK OF CONSTRUCTION ACTIVITIES, ACCESS RESTRICTIONS OR CLOSURES, AND TO DIRECT USERS TO SECONDARY ACCESS POINTS VIA THE APPROVED DETOUR ROUTES.

4) THE CONTRACTOR SHALL NOT STORE OR STAGE CONSTRUCTION EQUIPMENT OR MATERIALS WITHIN THE MILL CREEK PARK BOUNDARY, OUTSIDE OF PROPOSED CONSTRUCTION LIMITS, EXCEPT FOR AREA(S) APPROVED BY THE OFFICIAL WITH JURISDICTION SPECIFICALLY FOR STORAGE AND STAGING OF EQUIPMENT PER CMS 107.10.

5) THE CONTRACTOR SHALL BE REQUIRED TO CLOSELY COORDINATE THE CONSTRUCTION SCHEDULE WITH ODOT AND MILL CREEK PARK PRIOR TO THE START OF CONSTRUCTION ACTIVITIES.

6) THE CONTRACTOR SHALL ONLY RESTRICT PUBLIC ACCESS TO MILL CREEK PARK FOR NO MORE THAN 30 DAYS TO COMPLETE CONSTRUCTION ACTIVITIES THAT COULD COMPROMISE PUBLIC SAFETY. ACCESS TO MILL CREEK PARK SHALL REMAIN OPEN TO THE PUBLIC AT ALL OTHER TIMES THROUGHOUT CONSTRUCTION.

PERMITS - STORM WATER PERMITS

1) ODOT WILL SUBMIT A NOTICE OF INTENT FOR THE NPDES CONSTRUCTION GENERAL PERMIT FOR STORM WATER PRIOR TO CONSTRUCTION AND ALL STORM WATER SPECIAL PROVISIONS WILL BE NOTED UNDER SPECIAL PROVISIONS IN THE PLANS AND ADHERED TO DURING CONSTRUCTION.

PETROLEUM CONTAMINATED SOILS (PCS)

ENVIRONMENTAL STUDIES INDICATED THAT PETROLEUM CONTAMINATED SOIL (PCS) WILL BE ENCOUNTERED DURING EXCAVATIONS WITHIN THE PROJECT LIMITS FROM STA. 957+00 TO STA. 957+50, 1380 MAHONING AVENUE. ENVIRONMENTAL STUDIES ARE AVAILABLE AT ODOT DISTRICT 4, 2088 SOUTH ARLINGTON ROAD, AKRON, OHIO 44306. THE CONTRACTOR MUST DETERMINE APPROPRIATE PERSONAL PROTECTIVE EQUIPMENT FOR THOSE WHO CONDUCT WORK WITHIN THE LIMITS OF THE PCS.

ALL EXCAVATED PCS THAT CANNOT BE REUSED AS PROJECT FILL PER CMS 203.03(J)., SHALL BE MANAGED AND DISPOSED OF AT A LICENSED LANDFILL. THE ENGINEER MAY PERMIT THE CONTRACTOR TO DIRECT LOAD THE EXCAVATED PCS INTO TRUCKS FOR TRANSPORT AND DISPOSAL. AS AN ALTERNATE, THE ENGINEER MAY PERMIT THE CONTRACTOR TO TEMPORARILY STOCKPILE THE EXCAVATED PCS ON AN IMPERMEABLE MEMBRANE, IN AN AREA PROVIDE BY THE CONTRACTOR AND APPROVED BY THE ENGINEER. THE STOCKPILE SHOULD BE SURROUNDED BY STRAW BALES TO REDUCE RUNOFF. THE CONTRACTOR WILL PROVIDE COMPLETED LOG FORMS AND MANIFESTS FOR TRANSPORT AND DISPOSAL TO THE ENGINEER FOR SIGNATURE. THE CONTRACTOR IS RESPONSIBLE FOR ANY ADDITIONAL TESTING THAT THE LANDFILL MAY REQUIRE FOR DISPOSAL.

IF EXCAVATIONS WITHIN THE PCS REQUIRE DEWATERING FOR CONSTRUCTION PURPOSES, THE CONTRACTOR SHALL DEWATER, CONTAINERIZE AND DISPOSE OF WATERS BY METHOD APPROVED BY THE ENGINEER. THE CONTRACTOR SHALL OBTAIN ALL THE NECESSARY PERMITS NEEDED TO STORE, TRANSPORT AND DISPOSE OF WATER IN ACCORDANCE WITH APPLICABLE LOCAL, STATE AND FEDERAL REGULATIONS. THE CONTRACTOR IS RESPONSIBLE FOR ANY ADDITIONAL TESTING REQUIRED FOR DISPOSAL. ALL EXCAVATED AREAS SHALL BE BACKFILLED WITH SUITABLE MATERIAL IN ACCORDANCE WITH PROJECT PLANS, APPLICABLE ODOT SPECIFICATIONS OR AS DIRECTED BY THE ENGINEER. THE CONTRACTOR SHALL FURNISH ALL THE LABOR, EQUIPMENT AND MATERIALS NECESSARY TO PROPERLY MANAGE, STORE (IF NECESSARY), TEST FOR DISPOSAL, TRANSPORT AND DISPOSE OF REGULATED MATERIALS, INCLUDING ANY REQUIRED PERMITS OR FEES WITHIN THE IDENTIFIED LIMITS. PAYMENT FOR THIS WORK SHALL BE MADE AT THE CONTRACT PRICE BID. THE FOLLOWING ESTIMATED QUANTITY HAS BEEN INCLUDED IN THE GENERAL SUMMARY.

690E65016	WORK INVOLVING PCS	210 TON
690E65022	WORK INVOLVING NON-REGULATED WATER	100 GAL
690E65024	WORK INVOLVING REGULATED WATER	100 GAL

WETLAND AVOIDANCE

NO EXCAVATION, GRADING, OR FILLING OPERATIONS SHALL BE PERFORMED IN WETLAND AA DELINEATED BEYOND THE PROJECT CONSTRUCTION LIMITS AND DEPICTED IN THE PROJECT PLANS AND/OR THE ECOLOGICAL RESOURCES MAPPING AVAILABLE FOR VIEWING AT THE ODOT DISTRICT 4 OFFICE LOCATED AT 2088 SOUTH ARLINGTON ROAD, AKRON, OHIO. UNDER NO CIRCUMSTANCES SHALL THE CONTRACTOR STORE EQUIPMENT (LIFT, BACKHOE, EARTH MOVING EQUIPMENT, ETC.) AND/OR MATERIALS IN ANY WETLANDS, ETC. ODOT CONSTRUCTION AND MATERIALS SPECIFICATIONS SECTION 107.10 (PROTECTION OF PROPERTY) PROHIBIT THE CONTRACTOR FROM CREATING STAGING AREAS NEAR STREAMS AND/OR WETLANDS.

Preliminary Plans - For Reference Only

GENERAL NOTES

DESIGN AGENCY
ms consultants, inc.

DESIGNER DWH
REVIEWER CMN 08/29/25
PROJECT ID 121474
SHEET P.51 TOTAL 655

MAH-680-4.58

MODEL: Sheet PAPERSIZE: 34x22 (in.) DATE: 9/15/2025 TIME: 8:58:08 AM PLTDRV: OHDOT_PDF_E+.pltcfg PENTBL: OHDOT_Pen.tbl USER: DHall@msconsultants.com WORKSPACE: OHDOTCEv02 WORKSET: 121474 PRODUCT: OpenRoadsDesigner 24.00.00.205
pw:\\ohiodot-pw.bentley.com:ohiodot-pw-02\Documents\01 Active Projects\District 04\Mahoning\121474\402-Engineering_MSConsultants\Roadway\Sheets\121474_GN006.dgn

ITEM 614 - MAINTAINING TRAFFIC

THIS ITEM SHALL CONSIST OF MAINTENANCE OF TRAFFIC ON EXISTING ROADWAYS AND RAMPS IN ACCORDANCE WITH THE OHIO MANUAL OF UNIFORM TRAFFIC CONTROL DEVICES FOR STREETS AND HIGHWAYS, CURRENT EDITION, LATEST REVISION, THE SPECIFICATIONS AND THE FOLLOWING:

1. A MINIMUM OF ONE ELEVEN FOOT LANE IN EACH DIRECTION SHALL BE MAINTAINED ON THE EXISTING, TEMPORARY OR COMPLETED PAVEMENT DURING CONSTRUCTION OF THE WORK.

2. THE CONTRACTOR SHALL INFORM THE DISTRICT OFFICE (330) 786-2208, EIGHTEEN (18) DAYS PRIOR TO THE BEGINNING OF WORK.

3. LANE RESTRICTIONS OR LANE REDUCTIONS SHALL NOT BE PERMITTED AFTER NORMAL WORKING HOURS. NORMAL WORKING HOURS SHALL BE THOSE HOURS DURING WHICH THE CONTRACTOR HAS A FULL COMPLEMENT OF EMPLOYEES AND EQUIPMENT ACTIVELY REMOVING AND/OR PLACING PAVEMENT MATERIALS.

4. TRUCK MOUNTED ATTENUATORS (TMA'S) SHALL BE USED AS SHOWN IN THE STANDARD CONSTRUCTION DRAWINGS.

5. UNDER NO CIRCUMSTANCES SHALL THE CONTRACTOR BE PERMITTED TO HAVE SUCCESSIVE WORK ZONES UNLESS THE DISTANCE BETWEEN THE DRUMS, BARRICADES OR CONES EXCEEDS TWO (2) MILES RURAL OR ONE [1] MILE URBAN.

6. FOR ROUTES NOT ON THE PERMITTED LANE CLOSURE CHART, ONLY DURING OFF-PEAK PERIODS (ie ANY PERIOD OTHER THAN 6-8AM AND 3-6PM) SHALL THE CONTRACTOR INSTALL AND SUBSEQUENTLY RESET ALL TRAFFIC CONTROL NECESSARY FOR THE WORK ZONE FOR EACH CONSTRUCTION PHASE.

7. A QUANTITY OF 500 CU. YDS. OF ITEM 614 ASPHALT CONCRETE FOR MAINTAINING TRAFFIC SHALL BE PROVIDED FOR USE IN MAINTAINING PAVEMENT, SHOULDERS AND OTHER LOCATIONS AS DIRECTED BY THE ENGINEER.

8. PRIOR TO OPENING TO TRAFFIC EACH LANE SHALL BE IN A SAFE, PASSABLE CONDITION. ALL TRANSVERSE JOINTS SHALL EXTEND ACROSS THE FULL LANE AND SHOULDER WIDTH AND EACH LANE SHALL BE FREE FROM UNEVEN LONGITUDINAL JOINTS. THE CONTRACTOR SHALL PROVIDE ASPHALT WEDGES FOR TRANSVERSE JOINTS WHEREVER THERE ARE PAVEMENT ELEVATION DIFFERENCES.

9. THE CONTRACTOR SHALL INSTALL, MAINTAIN AND SUBSEQUENTLY REMOVE WORK ZONE MARKING SIGNS AND THEIR SUPPORTS WITHIN THE WORK LIMITS. THESE SIGNS INCLUDE "NO EDGE LINES", "DO NOT PASS" AND "PASS WITH CARE". ALL OTHER SIGNS WILL BE INCIDENTAL TO THE LUMP SUM PAY ITEM 614 MAINTAINING TRAFFIC UNLESS SEPARATELY ITEMIZED IN THE PLANS. A QUANTITY OF ITEM 614 WORK ZONE MARKING SIGNS HAS BEEN INCLUDED IN THE PLANS AS PER CMS 614.04.

10. THE CONTRACTOR SHALL SET A WORK ZONE AT THE REQUEST OF THE ENGINEER TO ALLOW THE LAYOUT OF THE PARTIAL/FULL DEPTH PAVEMENT REPAIR AREAS. THIS WORK IS INCIDENTAL TO ITEM 614 MAINTAINING TRAFFIC.

11. TO ENSURE THAT WEIGHTED CHANNELIZERS WILL NOT BE BLOWN OVER OR DESPLACED BY WIND AND MOVING TRAFFIC, ALL WEIGHTED CHANNELIZERS UTILIZED ON INTERSTATES AND FREEWAYS SHALL BE FROM MANUFACTURERS ON THE OHIO DEPARTMENT OF TRANSPORTATION, OFFICE OF MATERIAL MANAGEMENT'S QUALIFIED PRODUCTS LIST (QPL) WHICH UTILIZE A MINIMUM OF A 30 POUND BALLAST.

TIME LIMITATIONS AND DISINCENTIVES

INTERIM CONSTRUCTION DATES AND THE ASSOCIATED DISINCENTIVE VALUE FOR EACH MAJOR CONSTRUCTION PHASE AND TEMPORARY TRAFFIC PATTERNS ARE LISTED HEREIN.

MAINTAINING TRAFFIC (SB TRAFFIC CROSSOVER)
DURING PHASE 1A - STEP 2, I-680 SB TRAFFIC MAY BE CROSSED OVER ON TO THE EXISTING NB PAVEMENT AND ALL SB RAMPS CLOSED WITHIN THE LIMITS ESTABLISHED BY THIS PHASE. THE CONTRACTOR SHALL BE ASSESSED A DISINCENTIVE OF $27,400 PER CALENDAR DAY FOR EACH DAY SB TRAFFIC REMAINS IN THE CROSSOVER CONDITION BEYOND OCTOBER 31, 2026.

MAINTAINING TRAFFIC (NB CLOSURE)
I-680 NB AND ALL NB RAMPS WITHIN THE LIMITS OF THE CLOSURE ESTABLISHED IN PHASES 1A - STEP 2 AND 1B - STEP 1 MAY BE CLOSED. THE CONTRACTOR SHALL BE ASSESSED A DISINCENTIVE OF $29,000 PER CALENDAR DAY FOR EACH DAY I-680 NB AND THE ASSOCIATED RAMPS REMAIN CLOSED BEYOND JUNE 18, 2027.

ROAD OR RAMP CLOSURE	CLOSURE PERMITTED DURING PHASE	CLOSURE DISINCENTIVE ($ PER CALENDAR DAY) OUTSIDE OF PERMITTED PHASE
MARSHALL ST. TO I-680 NB (RAMP G)	PHASES 1A-1B	$2,000
E. WOODLAND AVE. TO I-680 NB (RAMP N)	PHASES 1A-1B	$5,000
U.S. 62/S.R. 7 TO I-680 NB (RAMP BY)	PHASES 1A-1B	$3,000
SILLIMAN ST. TO I-680 SB (RAMP C)	PHASE 1A	$400
S.R. 193 TO I-680 SB (RAMP C)	PHASE 1A	$10,000
EDWARDS ST. TO I-680 SB (RAMP H)	PHASE 1A	$1,000
I-680 SB TO U.S. 62 EB/S.R. 7 NB (RAMP BX)	PHASE 1A	$3,000
I-680 SB RAMP TO EDWARDS ST. (RAMP F)	PHASE 1A	$8,000
I-680 SB RAMP TO MARKET ST. (RAMP K)	PHASE 1A	$5,000
I-680 NB TO U.S. 62/S.R. 7 (RAMP NB)	PHASE 2A	$9,000
I-680 NB TO SOUTH AVE. (RAMP D)	PHASE 2A	$7,000
SOUTH AVE. TO I-680 NB (RAMP B)	PHASE 2A	$1,000
POWERSDALE AVE. TO I-680 NB (RAMP F)	PHASE 2A	$200
I-680 SB TO SOUTH AVE (RAMP A)	PHASE 2B	$8,000
SOUTH AVE. TO I-680 SB (RAMP C)	PHASE 2B	$1,700
U.S. 62/S.R. 7 TO I-680 SB (RAMP SB)	PHASE 2B	$24,000

DETOUR NOTIFICATION

THE CONTRACTOR SHALL ADVISE THE ODOT PROJECT ENGINEER AND THE CITY OF YOUNGSTOWN EIGHTEEN (18) DAYS IN ADVANCE OF WHEN THE DETOUR ROUTE SHOULD BE IN EFFECT. ALL WORK ZONE DEVICES REQUIRED SHALL BE FURNISHED, ERECTED, MAINTAINED, AND SUBSEQUENTLY REMOVED BY THE CONTRACTOR. PAYMENT FOR ALL WORK ASSOCIATED WITH THE DETOUR SHALL BE INCLUDED UNDER THE LUMP SUM BID FOR ITEM 614, DETOUR SIGNING.

LANES OPEN DURING HOLIDAYS OR SPECIAL EVENTS

DURING MAINTENANCE OF TRAFFIC PHASE 1A THROUGH PHASE 2C, TRAFFIC SHALL BE PERMITTED TO REMAIN IN THE CONDITIONS PROPOSED BY THE DETOUR PLANS AND THE MAINTENANCE OF TRAFFIC PLANS DURING HOLIDAYS AND SPECIAL EVENTS. IF WORK IS PERFORMED DURING A HOLIDAY OR SPECIAL EVENT PERIOD, THE CONTRACTOR SHALL ENSURE THAT CONSTRUCTION VEHICLE TRAFFIC DOES NOT IMPEDE THE FLOW OF VEHICULAR TRAFFIC DURING THE HOLIDAY OR SPECIAL EVENT PERIODS AS LISTED BELOW:

NEW YEAR'S (OBSERVED)
MEMORIAL DAY
FOUTH OF JULY (OBSERVED)
GEN./REG. ELECTION DAY (NOV)
THANKSGIVING
CHRISTMAS (OBSERVED)
LABOR DAY

DURING ALL PRE-PHASE WORK AND PHASE 3 WORK, THE PERIOD OF TIME THAT THE LANES ARE TO BE OPEN DEPENDS ON THE DAY OF THE WEEK ON WHICH THE HOLIDAY OR SPECIAL EVENT FALLS. THE FOLLOWING SCHEDULE SHALL BE USED TO DETERMINE THIS PERIOD:

DAY OF HOLIDAY OR SPECIAL EVENT	TIME ALL LANED MUST BE OPEN TO TRAFFIC
SUNDAY	12:00N FRI. THROUGH 6:00AM MON.
MONDAY	12:00N FRI. THROUGH 6:00AM TUE.
TUESDAY	12:00N MON. THROUGH 6:00AM WED.
TUESDAY (GEN./REG. ELECTION)	5:00AM TUE. THROUGH 12:00AM WED.
WEDNESDAY	12:00N TUE. THROUGH 6:00AM THUR.
THURSDAY	12:00N WED. THROUGH 6:00AM FRI.
THURSDAY (THANKSGIVING ONLY)	6:00AM WED. THROUGH 6:00AM MON.
FRIDAY	12:00N THUR. THROUGH 6:00AM MON.
SATURDAY	12:00N FRI. THROUGH 6:00AM MON.

DURING THE SAME PERIODS, MAINTAIN PEDESTRIAN ACCESS IF PEDESTRIAN ACCESS WAS PRESENT PRIOR TO CONSTRUCTION.

SHOULD THE CONTRACTOR FAIL TO MEET ANY OF THESE REQUIREMENTS, THE CONTRACTOR SHALL BE ASSESSED A DISINCENTIVE PER THE LANE VALUE CONTRACT (PN 127).

NOTICE OF CLOSURE SIGN

NOTICE OF CLOSURE SIGNS (W20-H13) SHALL BE ERECTED BY THE CONTRACTOR PRIOR TO THE SCHEDULED ROAD OR RAMP CLOSURE IN ACCORDANCE WITH THE NOTICE OF CLOSURE TIME TABLE BELOW.

THE SIGNS SHALL BE ERECTED ON THE RIGHT-HAND SIDE OF THE ROAD/RAMP FACING TRAFFIC. THEY SHALL BE PLACED SO AS NOT TO INTERFERE WITH THE VISIBILITY OF ANY OTHER TRAFFIC CONTROL SIGNS. ON ROADWAYS, THEY SHOULD BE ERECTED AT OR NEAR THE POINT OF CLOSURE. THE SIGNS MAY BE ERECTED ANYWHERE ON RAMPS AS LONG AS THEY ARE VISIBLE TO THE MOTORISTS USING THE RAMP. ON ENTRANCE RAMPS, THE SIGN SHALL BE ERECTED WELL IN ADVANCE OF THE MERGE AREA TO AVOID DISTRACTING MOTORISTS.

NOTICE OF CLOSURE SIGN TIME TABLE		
ITEM	DURATION OF CLOSURE	SIGN DISPLAYED TO PUBLIC
RAMP & ROAD CLOSURES	≥ 2 WEEKS	14 CALENDAR DAYS PRIOR TO CLOSURE
	> 12 HOURS & < 2 WEEKS	7 CALENDAR DAYS PRIOR TO CLOSURE
	≤ 12 HOURS	2 BUSINESS DAYS PRIOR TO CLOSURE

THE SIGN SHALL DISPLAY THE DATE OF THE CLOSURE IN MMM-DD FORMAT AND THE NUMBER OF DAYS OF THE CLOSURE. THE LAST LINE OF THE W20-H13 SIGN LISTS A PHONE NUMBER WHICH A MOTORIST MAY CALL FOR ADDITIONAL INFORMATION. THIS IS TO BE A SPECIFIC OFFICE WITHIN THE DISTRICT (330-786-2208) RATHER THAN THE GENERAL SWITCHBOARD NUMBER.

LANE CLOSURE/REDUCTION REQUIRED

LENGTH OF LANE CLOSURES AND RESTRICTIONS SHALL BE AT THE APPROVAL OF THE ENGINEER. IT IS THE INTENT TO MINIMIZE THE IMPACT TO THE TRAVELING PUBLIC. LANE CLOSURES OR RESTRICTIONS OVER SEGMENTS OF THE PROJECT IN WHICH NO WORK IS ANTICIPATED WITHIN A REASONABLE TIME FRAME, AS DETERMINED BY THE ENGINEER, SHALL NOT BE PERMITTED. THE LEVEL OF UTILIZATION OF MAINTENANCE OF TRAFFIC DEVICES SHALL BE COMMENSURATE WITH THE WORK IN PROGRESS.

DURATION OF LANE CLOSURES AND RESTRICTIONS SHALL BE AS PER THE PERMITTED LANE CLOSURE CHART. THE PERMITTED LANE CLOSURE CHART USED FOR THIS PROJECT SHALL BE THE MOST CURRENT CHART AVAILABLE ON THE DATE THIS PROJECT SELLS.

THE CHART CAN BE FOUND AT:
https://www.transportation.ohio.gov/working/data-tools/resources/permitted-lane-closure

SHOULD THE CONTRACTOR FAIL TO MEET ANY OF THE REQUIREMENTS IN THE CHART, THE CONTRACTOR SHALL BE ASSESSED DISINCENTIVES IN THE AMOUNT OF $2,500 PER HOUR OR PORTION THEREOF THAT THE LANE REDUCTION REMAINS BEYOND THE SPECIFIED LIMIT.

PERMITTED LANE CLOSURE SCHEDULE (PLCS)

LANE CLOSURE(S) SHALL CONFORM TO THE PLCS. PUBLISHED PLCS INFORMATION CAN BE FOUND ON THE ODOT WEBSITE.

THE MONTHLY PUBLISHED SCHEDULES REQUIRED TO BE USED, FOR EACH PLCS SEGMENT WITHIN THE PROJECT AREA, ARE THOSE THAT COMPRISE THE CONSECUTIVE 12-MONTH PERIOD BEGINNING 15 MONTHS PRIOR TO THE MONTH AND YEAR OF SALE AND ENDING 4 MONTHS PRIOR TO THE MONTH AND YEAR OF SALE. THESE SAME 12 MONTHS APPLY FOR THE LIFE OF THE PROJECT AND SHALL BE APPLIED TO EACH RESPECTIVE MONTH OF CONSTRUCTION (MONTH OF LANE CLOSURE(S) SHALL MATCH MONTH OF PLCS USED). LANE CLOSURE(S) IN PLACE FOR MULTIPLE MONTHS SHALL ALWAYS COMPLY WITH THE CURRENT RESPECTIVE MONTH.

(FOR EXAMPLE: IF THE SALE DATE FOR THE PROJECT WAS MARCH OF 2021, THE MONTHLY PUBLISHED SCHEDULES FOR EACH APPLICABLE PLCS SEGMENT WOULD BE DECEMBER 2019 TO NOVEMBER 2020. IF THIS WAS A THREE-YEAR PROJECT, YEAR THREE WOULD STILL BE USING THE DECEMBER 2019 TO NOVEMBER 2020 MONTHLY SCHEDULES. IF THE PROJECT DESIRED TO CLOSE TWO LANES IN JUNE 2021, REFERENCE WOULD BE MADE TO THE JUNE 2020 SCHEDULE(S) FOR THE RESPECTIVE PLCS SEGMENT(S). IF THE SAME TWO LANES WERE DESIRED TO BE CLOSED AGAIN IN JULY 2021, REFERENCE WOULD BE MADE TO THE JULY 2020 SCHEDULE(S) FOR THE RESPECTIVE PLCS SEGMENT(S).)

MORE RESTRICTIVE CHANGES TO THE ALLOWABLE LANE CLOSURE HOURS ARE AT THE DISCRETION OF THE ENGINEER IN ORDER TO COMPLY WITH THE TRAFFIC MANAGEMENT IN WORK ZONES POLICY (21-008(P)) AND STANDARD PROCEDURE (123-001(SP)).

LESS RESTRICTIVE CHANGES TO THE ALLOWABLE LANE CLOSURE HOURS ARE SUBJECT TO THE TRAFFIC MANAGEMENT IN WORK ZONES POLICY (21-008(P)) AND STANDARD PROCEDURE (123-001(SP)) AND SHALL NOT BE IMPLEMENTED UNTIL, AND UNLESS, APPROVED BY THE PROPER ODOT AUTHORITY. EXISTING MOT EXCEPTIONS THAT HAVE ALREADY BEEN APPROVED IN ACCORDANCE TO THE TRAFFIC MANAGEMENT IN WORK ZONES POLICY AND STANDARD PROCEDURE ARE DETAILED IN THE APPROVED MAINTENANCE OF TRAFFIC (MOT) POLICY EXCEPTION(S) PLAN NOTE.

ALLOWABLE LANE CLOSURE HOURS FOR FACILITIES NOT COVERED BY THE PLCS, IF ANY, SHALL BE AS SPECIFIED ELSEWHERE IN THE PLANS.

Preliminary Plans - For Reference Only

MAINTENANCE OF TRAFFIC GENERAL NOTES

DESIGN AGENCY
ms consultants, inc.
DESIGNER KJF
REVIEWER KWR 06/02/25
PROJECT ID 121474
SHEET P.52 TOTAL 655

MAH-680-4.58

MODEL: Sheet PAPERSIZE: 34x22 (in.) DATE: 9/15/2025 TIME: 8:59:43 AM PLTDRV: OHDOT_PDF_E+.pltcfg PENTBL: OHDOT_Pen.tbl USER: DHall@msconsultants.com WORKSPACE: OHDOTCEv02 WORKSET: 121474 PRODUCT: OpenRoadsDesigner 24.00.00.205
pw:\\ohiodot-pw.bentley.com:ohiodot-pw-02\Documents\01 Active Projects\District 04\Mahoning\121474\402-Engineering_MSConsultants\MOT\Sheets\121474_MN001.dgn

SEQUENCE OF CONSTRUCTION

PHASE 1 (SHEETS P.80-P.114)

PHASE 1A - STEP 1

1. SHIFT I-680 NB & SB LANES AS SHOWN IN THE PLANS TO REMOVE THE EXISTING MEDIAN BARRIER AND INSTALL TEMPORARY PAVEMENT FOR THE CROSSOVERS AT THE NORTH AND SOUTH ENDS OF PHASE 1A.

PHASE 1A - STEP 2

SOUTHBOUND RAMPS CLOSED:
- SILLIMAN ST. TO I-680 SB (RAMP C)
- S.R. 193 TO I-680 SB (RAMP C)
- MAHONING AVE. TO I-680 SB (RAMP E)
- I-680 SB TO GLENWOOD/MAHONING AVE. (RAMP F)
- GLENWOOD/MAHONING AVE. TO I-680 SB (RAMP H)
- I-680 SB TO MARKET ST. SB (RAMP K)
- I-680 SB TO MARKET ST. NB (RAMP M)
- I-680 SB TO U.S. 62 EB /S.R. 7 NB (RAMP BX)

NORTHBOUND RAMPS CLOSED:
- I-680 NB TO S.R. 193 (RAMP B-3)
- I-680 NB TO SALT SPRINGS RD. (RAMP D)
- MARSHALL ST. TO I-680 NB (RAMP G)
- I-680 NB TO GLENWOOD/MAHONING AVE. (RAMP J)
- MARKET ST. TO I-680 NB (RAMP L)
- WOODLAND AVE. TO I-680 NB (RAMP N)
- U.S. 62 WB/S.R. 7 SB TO I-680 NB (RAMP BY)

1. CLOSE AND DETOUR NORTHBOUND I-680 USING U.S. 62, U.S. 422, AND S.R. 193.

2. CROSS THE TWO SOUTHBOUND LANES OF I-680 OVER TO THE NORTHBOUND LANES JUST SOUTH OF THE S.R. 193 INTERCHANGE.

3. CONSTRUCT THE I-680 SB LANES AND PROPOSED MEDIAN BARRIER. CONSTRUCT ALL SB EXIT AND ENTRANCE RAMPS. CONSTRUCT ALL PROPOSED PAVEMENT TO FINAL SURFACE ELEVATIONS USING EITHER THE PROPOSED SURFACE COURSE (STA. 950+66 - STA. 1004+XX) OR ITEM 615, PAVEMENT FOR MAINTAINING TRAFFIC, AS PER PLAN B (STA. 1007+XX - STA. 1047+XX).

PHASE 1B - STEP 1

NORTHBOUND RAMPS CLOSED:
- I-680 NB TO S.R. 193 (RAMP B-3)
- I-680 NB TO SALT SPRINGS RD. (RAMP D)
- MARSHALL ST. TO I-680 NB (RAMP G)
- I-680 NB TO GLENWOOD/MAHONING AVE. (RAMP J)
- MARKET ST. TO I-680 NB (RAMP L)
- WOODLAND AVE. TO I-680 NB (RAMP N)
- U.S. 62 WB/S.R. 7 SB TO WOODLAND AVE. (RAMP CA)
- U.S. 62 WB/S.R. 7 SB TO I-680 NB (RAMP BY)

1. MAINTAIN I-680 NB CLOSURE AND DETOUR FROM PHASE 1A.

2. MAINTAIN I-680 SB TRAFFIC ON THE RECENTLY CONSTRUCTED SB LANES.

3. CONSTRUCT I-680 NB BETWEEN S.R. 193 AND U.S. 62 INCLUDING ALL NB EXIT AND ENTRANCE RAMPS. RAMP CA CONSTRUCTION WILL BEGIN AT STA. 14+00 IN ORDER TO MAINTAIN 2 LANES ON RAMP SB. CONSTRUCT ALL PROPOSED PAVEMENT TO FINAL SURFACE ELEVATIONS USING EITHER THE PROPOSED SURFACE COURSE (STA. 950+66 - STA. 1032+26) OR ITEM 615, PAVEMENT FOR MAINTAINING TRAFFIC, AS PER PLAN B (STA. 1032+26 - STA. 1047+XX).. LEAVE A GAP IN THE PROPOSED BARRIER BETWEEN STA. 1034+50 AND STA. 1037+50 FOR FUTURE CROSSOVER USE.

WINTER SHUTDOWN SEASON 1

DURING THE WINTER MONTHS AFTER THE FIRST CONSTRUCTION SEASON, KEEP ALL TRAFFIC IN THE PHASE 1B - STEP 1 CONFIGURATION. CONTINUE WORK ON MAH-680-04.886 STRUCTURE.

PHASE 1B - STEP 1

1. TRAFFIC SHALL BE MAINTAINED ON I-680 AS SHOWN IN PHASE 1B - STEP 1.

2. ONCE THE WORK TO I-680 NB IS COMPLETE AND READY TO OPEN, REDUCE U.S. 62 WB/S.R. 7 SB TO ONE LANE IN ORDER TO CONSTRUCT THE REMAINING PORTION OF RAMP CA THAT WAS NOT BUILT IN PHASE 1B - STEP 1. ONCE WORK IS COMPLETE IN THIS AREA, OPEN UP TO TRAFFIC AND MOVE TO PHASE 2A - STEP 1.

PHASE 2 (SHEETS P.115-P.155)

PHASE 2A - STEP 1

1. SHIFT I-680 NB & SB LANES AS SHOWN IN THE PLANS TO REMOVE THE EXISTING MEDIAN BARRIER AND INSTALL TEMPORARY PAVEMENT FOR THE CROSSOVERS AT THE NORTH AND SOUTH END OF PHASE 2.

PHASE 2A - STEP 2

NORTHBOUND RAMPS CLOSED:
- I-680 NB TO U.S. 62/S.R. 7 (RAMP NB)
- SOUTH AVE. TO I-680 NB (RAMP B)
- I-680 NB TO SOUTH AVE. (RAMP D)
- POWERSDALE AVE. TO I-680 NB (RAMP F)

1. CROSS ONE NB I-680 LANE OVER TO THE SB I-680 PAVEMENT WHILE MAINTAINING THE OTHER NB I-680 LANE ON THE NB I-680 PAVEMENT.

2. CONSTRUCT THE OUTSIDE LANE(S) OF THE I-680 NB AND ALL NB ENTRANCE/EXIT RAMPS BETWEEN U.S. 62 AND THE END OF THE PROJECT. CONSTRUCT ALL PROPOSED PAVEMENT UP THROUGH THE INTERMEDIATE COURSE.

PHASE 2B

SOUTHBOUND RAMPS CLOSED:
- U.S. 62 WB/S.R. 7 SB TO I-680 SB (RAMP SB)
- I-680 SB TO SOUTH AVE. (RAMP A)
- SOUTH AVE. TO I-680 SB (RAMP C)

1. CROSS ONE SB I-680 LANE OVER TO THE NB I-680 PAVEMENT WHILE MAINTAINING THE OTHER SB I-680 LANE ON THE SB I-680 PAVEMENT.

2. CONSTRUCT THE OUTSIDE LANE(S) OF THE I-680 SB PAVEMENT BETWEEN U.S. 62 AND THE END OF THE PROJECT. CONSTRUCT ALL PROPOSED PAVEMENT UP THROUGH THE INTERMEDIATE COURSE.

PHASE 2C

1. SHIFT I-680 NB AND I-680 SB LANES TO THE OUTSIDE AND CONSTRUCT THE INSIDE LANES AND MEDIAN BARRIER FOR I-680. CONSTRUCT ALL PROPOSED PAVEMENT UP THROUGH THE INTERMEDIATE COURSE.

2. REBUILD THE MEDIAN BARRIER AT THE CROSSOVER LOCATIONS.

PHASE 3 (NO SHEETS PROVIDED)

CONSTRUCT THE FINAL SURFACE COURSE, INCLUDING MILL AND OVERLAY FOR ALL THE RAMPS, FOR THE ENTIRE PROJECT AND INSTALL ALL FINAL PAVEMENT MARKINGS AND TRAFFIC CONTROL DEVICES UTILIZING ALLOWABLE LANE CLOSURES IN ACCORDANCE WITH THE PERMITTED LANE CLOSURE SCHEDULE (PLCS).

DRUM REQUIREMENTS

IN ADDITION TO THE REQUIREMENTS OF THE PLANS, SPECIFICATION AND PROPOSAL, DRUMS FURNISHED BY THE CONTRACTOR SHALL BE NEW AND UNUSED AT THE TIME OF ARRIVAL ON THE PROJECT. ANY DRUMS BROUGHT ON THE PROJECT, WHICH HAVE PREVIOUSLY BEEN USED ELSEWHERE, WILL NOT BE ACCEPTED.

PAYMENT FOR DRUMS SHALL BE INCLUDED IN THE LUMP SUM PRICE BID FOR MAINTAINING TRAFFIC UNLESS SEPARATELY ITEMIZED.

METHOD OF PAYMENT

ALL WORK AND TRAFFIC CONTROL DEVICES SHALL BE IN ACCORDANCE WITH C&MS 614 AND OTHER APPLICABLE PORTIONS OF THE SPECIFICATIONS, AS WELL AS THE OHIO MANUAL OF UNIFORM TRAFFIC CONTROL DEVICES. PAYMENT FOR ALL LABOR, EQUIPMENT AND MATERIALS SHALL BE INCLUDED IN THE LUMP SUM CONTRACT PRICE FOR ITEM 614, MAINTAINING TRAFFIC, UNLESS SEPARATELY ITEMIZED IN THE PLAN.

DUST CONTROL

THE CONTRACTOR SHALL FURNISH AND APPLY WATER FOR DUST CONTROL AS DIRECTED BY THE ENGINEER. THE FOLLOWING ESTIMATED QUANTITIES HAVE BEEN INCLUDED FOR DUST CONTROL PURPOSES:

ITEM 616 - WATER	160 M. GAL.

Preliminary Plans - For Reference Only

MAINTENANCE OF TRAFFIC GENERAL NOTES

DESIGN AGENCY
ms consultants, inc.

DESIGNER KJF
REVIEWER KWR 06/02/25
PROJECT ID 121474
SHEET P.53 TOTAL 655

MAH-680-4.58

MODEL: Sheet PAPERSIZE: 34x22 (in.) DATE: 9/15/2025 TIME: 8:59:49 AM PLTDRV: OHDOT_PDF_E+.pltcfg PENTBL: OHDOT_Pen.tbl USER: DHall@msconsultants.com WORKSPACE: OHDOTCEv02 WORKSET: 121474 PRODUCT: OpenRoadsDesigner 24.00.00.205
pw:\\ohiodot-pw.bentley.com:ohiodot-pw-02\Documents\01 Active Projects\District 04\Mahoning\121474\402-Engineering_MSConsultants\MOT\Sheets\121474_MN002.dgn

ITEM 622, PORTABLE BARRIER, 50", AS PER PLAN, A

THIS WORK SHALL CONSIST OF FURNISHING, MAINTAINING, AND SUBSEQUENTLY REMOVING A 50-INCH PORTABLE BARRIER AT THE LOCATIONS SHOWN ON THE PLANS. FOR DETAILS, SEE SCD RM-4.1.

PORTABLE STEEL BARRIER IS AN APPROVED ALTERNATIVE TO PORTABLE CONCRETE BARRIER. FOR INFORMATION ON APPROVED VENDORS, SEE THE APPROVED PRODUCTS LIST MAINTAINED BY THE OFFICE OF ROADWAY ENGINEERING.

PORTABLE BARRIER, 32 INCHES HIGH WITH AN 18-INCH MINIMUM HEIGHT GLARE SCREEN MAY BE USED AT THE OPTION OF THE CONTRACTOR. THE GLARE SCREEN SHALL BE CONSTRUCTED USING ONE OF THE SCREENS PROVIDED ON THE APPROVED LIST, AVAILABLE ON THE OFFICE OF ROADWAY ENGINEERING WEBSITE.

PADDLE OR INTERMITTENT TYPE GLARE SCREENS SHALL BE DESIGNED USING A 20 DEGREE CUT-OFF ANGLE BASED ON TANGENT ALIGNMENT. THAT SPACING SHALL BE USED THROUGHOUT THE BARRIER LENGTH WITHOUT REGARD TO BARRIER CURVATURE.

THE GLARE SCREEN SYSTEM SHALL BE SECURELY FASTENED TO THE 32-INCH PORTABLE BARRIER USING THE HARDWARE AND PROCEDURES SPECIFIED BY THE MANUFACTURER.

FOR DIRECTIONS ON HOW TO INSTALL THE GLARE SCREEN AND THE BARRIER, SEE THE MANUFACTURERS INSTRUCTIONS.

PAYMENT SHALL INCLUDE ALL LABOR, MATERIAL, AND EQUIPMENT NECESSARY TO PERFORM THE WORK AND SHALL BE PAID FOR AT THE CONTRACT PRICE PER FOOT FOR ITEM 622, PORTABLE BARRIER, 50", AS PER PLAN, A.

ITEM 622, PORTABLE BARRIER, 50", AS PER PLAN, B

THIS WORK SHALL CONSIST OF FURNISHING AND MAINTAINING A 50-INCH PORTABLE BARRIER AT THE LOCATIONS SHOWN ON THE PLANS. THE PORTABLE BARRIER SHALL REMAIN IN PLACE AT THE COMPLETION OF THE PROJECT AND BECOME THE PROPERTY OF ODOT. FOR DETAILS, SEE SCD RM-4.1.

PORTABLE STEEL BARRIER IS AN APPROVED ALTERNATIVE TO PORTABLE CONCRETE BARRIER. FOR INFORMATION ON APPROVED VENDORS, SEE THE APPROVED PRODUCTS LIST MAINTAINED BY THE OFFICE OF ROADWAY ENGINEERING.

PORTABLE BARRIER, 32 INCHES HIGH WITH AN 18-INCH MINIMUM HEIGHT GLARE SCREEN MAY BE USED AT THE OPTION OF THE CONTRACTOR. THE GLARE SCREEN SHALL BE CONSTRUCTED USING ONE OF THE SCREENS PROVIDED ON THE APPROVED LIST, AVAILABLE ON THE OFFICE OF ROADWAY ENGINEERING WEBSITE.

PADDLE OR INTERMITTENT TYPE GLARE SCREENS SHALL BE DESIGNED USING A 20 DEGREE CUT-OFF ANGLE BASED ON TANGENT ALIGNMENT. THAT SPACING SHALL BE USED THROUGHOUT THE BARRIER LENGTH WITHOUT REGARD TO BARRIER CURVATURE.

THE GLARE SCREEN SYSTEM SHALL BE SECURELY FASTENED TO THE 32-INCH PORTABLE BARRIER USING THE HARDWARE AND PROCEDURES SPECIFIED BY THE MANUFACTURER.

FOR DIRECTIONS ON HOW TO INSTALL THE GLARE SCREEN AND THE BARRIER, SEE THE MANUFACTURERS INSTRUCTIONS.

PAYMENT SHALL INCLUDE ALL LABOR, MATERIAL, AND EQUIPMENT NECESSARY TO PERFORM THE WORK AND SHALL BE PAID FOR AT THE CONTRACT PRICE PER FOOT FOR ITEM 622, PORTABLE BARRIER, 50", AS PER PLAN, B.

ITEM 614, WORK ZONE ARROW, CLASS 1, 648, AS PER PLAN

THIS ITEM OF WORK SHALL CONSIST OF INSTALLING A WORK ZONE PAVEMENT MARKING ARROW IN ACCORDANCE WITH C&MS 614, EXCEPT THAT THE ARROW SHALL BE A WRONG WAY ARROW IN ACCORDANCE WITH TC-73.20.

THIS ITEM SHALL BE PAID AT THE CONTRACT UNIT BID PRICE FOR EACH WORK ZONE ARROW, CLASS 1, AS PER PLAN, COMPLETE AND IN PLACE.

ITEM 614, REPLACEMENT SIGN

FLATSHEET SIGNS FURNISHED BY THE CONTRACTOR IN ACCORDANCE WITH THE REQUIREMENTS OF THE PLANS, SPECIFICATIONS AND PROPOSAL WHICH BECOME DAMAGED BY TRAFFIC FOR REASONS BEYOND THE CONTROL OF THE CONTRACTOR SHALL BE REPLACED IN KIND WHEN ORDERED BY THE ENGINEER. REPLACEMENT SIGNS SHALL BE NEW. OTHER MATERIALS MAY BE IN USED, BUT GOOD, CONDITION SUBJECT TO APPROVAL BY THE ENGINEER.

PAYMENT FOR THE NEW SIGNS SHALL BE MADE AT THE CONTRACT PRICE PER EACH FOR ITEM 614, REPLACEMENT SIGN, AND SHALL INCLUDE THE COST OF REMOVING AND DISPOSING OF DAMAGED SIGNS, HARDWARE AND SUPPORTS, AND PROVIDING THE NECESSARY REPLACEMENT HARDWARE, SUPPORTS, ETC.

THE FOLLOWING ESTIMATED QUANTITY HAS BEEN PROVIDED IN THE GENERAL SUMMARY:

ITEM 614 - REPLACEMENT SIGN 50 EACH

ITEM 614, REPLACEMENT DRUM

DRUMS FURNISHED BY THE CONTRACTOR IN ACCORDANCE WITH THE REQUIREMENTS OF THE PLANS, SPECIFICATIONS AND PROPOSAL WHICH BECOME DAMAGED BY TRAFFIC FOR REASONS BEYOND THE CONTROL OF THE CONTRACTOR SHALL BE REPLACED IN KIND WHEN ORDERED BY THE ENGINEER. REPLACEMENT DRUMS SHALL BE NEW.

PAYMENT FOR THE NEW DRUMS SHALL BE MADE AT THE CONTRACT PRICE PER EACH FOR ITEM 614, REPLACEMENT DRUM, AND SHALL INCLUDE THE COST OF REMOVING AND DISPOSING OF THE DAMAGED DRUM, AND PROVIDING AND MAINTAINING THE REPLACEMENT DRUM IN ACCORDANCE WITH THE CONTRACT REQUIREMENTS FOR THE ORIGINAL DRUM.

THE FOLLOWING ESTIMATED QUANTITY HAS BEEN PROVIDED IN THE GENERAL SUMMARY:

ITEM 614, REPLACEMENT DRUM 100 EACH

ITEM 625, LUMINAIRE, INSTALLATION ONLY, AS PER PLAN

THIS ITEM OF WORK SHALL CONSIST OF INSTALLING AN EXISTING LUMINAIRE REMOVED FROM A PREVIOUS LOCATION ON THE PROJECT.

THE LUMINAIRE SHALL BE CLEANED AND REPAIRS TO ENSURE THAT IT IS IN GOOD SERVICEABLE CONDITION MADE.

PAYMENT WILL BE MADE AT THE UNIT PRICE BID UNDER ITEM 625, "LUMINAIRE, INSTALLATION ONLY, AS PER PLAN" FOR EACH LUMINAIRE INSTALLED AND SHALL BE FULL COMPENSATION FOR ALL MATERIAL, LABOR, EQUIPMENT AND INCIDENTALS NECESSARY TO COMPLETE THIS ITEM IN A WORKMANLIKE MANNER.

ITEM 625, LIGHT POLE (INSTALLATION ONLY), AS PER PLAN

THIS ITEM OF WORK SHALL CONSIST OF INSTALLING AN EXISTING LIGHT POLE REMOVED FROM A PREVIOUS LOCATION ON THE PROJECT.

THE LIGHT POLE SHALL BE CLEANED AND REPAIRS NEEDED FOR THE POLE TO BE IN GOOD SERVICEABLE CONDITION MADE. THE EXISTING POLE NUMBER DECAL SHALL BE REMOVED IF IT IS IN POOR CONDITION OR THE POLE NUMBER HAS CHANGED. A POLE NUMBER DECAL SHALL BE SUPPLIED AND APPLIED IF THE EXISTING DECAL IS REMOVED OR MISSING.

NEW ANCHOR BOLTS SHALL BE FURNISHED AS PART OF THIS ITEM.

PAYMENT WILL BE MADE AT THE UNIT PRICE BID UNDER ITEM 625, "LIGHT POLE (INSTALLATION ONLY), AS PER PLAN" FOR EACH POLE INSTALLED AND SHALL BE FULL COMPENSATION FOR ALL MATERIAL, LABOR, EQUIPMENT AND INCIDENTALS NECESSARY TO COMPLETE THIS ITEM IN A WORKMANLIKE MANNER.

APPROVED MAINTENANCE OF TRAFFIC (MOT) POLICY EXCEPTIONS

PORTIONS OF THE MOT PLANS AS DESCRIBED BELOW HAVE APPROVED MOT EXCEPTIONS PER TRAFFIC MANAGEMENT IN WORK ZONES POLICY (21-008(P)) AND STANDARD PROCEDURE (123-001(SP)).

APPROVED MOT EXCEPTION(S) INCLUDE:

1. SR 193 TO I-680 SB SYSTEM RAMP CLOSURE.
2. US 62 TO I-680 NB SYSTEM RAMP CLOSURE.
3. I-680 NB TO US 62 SYSTEM RAMP CLOSURE.
4. FULL NB I-680 CLOSURE.

A MAINTENANCE OF TRAFFIC MEETING SHALL BE HELD A MINIMUM OF 30 CALENDAR DAYS PRIOR TO IMPLEMENTATION OF EACH APPROVED MOT EXCEPTION. THIS MEETING SHALL INCLUDE THE DISTRICT WORK ZONE TRAFFIC MANAGER AND REPRESENTATIVES FROM THE CITY OF YOUNGSTOWN, AS WELL AS THE CONTRACTOR, WORKSITE TRAFFIC SUPERVISOR (WTS) AND ANY SUBCONTRACTORS INVOLVED WITH TEMPORARY TRAFFIC CONTROL.

IN ADDITION TO ANY NOTIFICATIONS REQUIRED IN OTHER NOTES, THE CONTRACTOR SHALL NOTIFY THE PROJECT ENGINEER AT LEAST 14 CALENDAR DAYS IN ADVANCE OF IMPLEMENTATION OF THE APPROVED MOT EXCEPTIONS REFERENCED ABOVE SO THAT THE PROJECT ENGINEER CAN SEND EMAIL NOTIFICATION TO THE OFFICE OF ROADWAY ENGINEERING, STATEWIDE TMC, DWZTM AND SPECIAL HAULING PERMITS AT LEAST 2 BUSINESS DAYS IN ADVANCE OF THE IMPLEMENTATION OF THE APPROVED MOT EXCEPTIONS REFERENCED ABOVE. REFERENCE "EXCEPTION REQUEST APPROVAL DATED 11/21/2022 FOR PID 113321" IN THE NOTIFICATION AND OTHER CORRESPONDENCE.

ANY CHANGES TO THE MOT THAT IMPACT THE PREVIOUSLY APPROVED MOT EXCEPTIONS LISTED ABOVE SHALL BE APPROVED IN WRITING BY THE MOT EXCEPTION COMMITTEE (MOTEC). IN THE EVENT THAT SUCH CHANGES ARE PROPOSED, THE REQUEST SHALL BE COORDINATED THROUGH THE DISTRICT WORK ZONE TRAFFIC MANAGER (DWZTM) A MINIMUM OF 30 CALENDAR DAYS PRIOR TO THE DESIRED IMPLEMENTATION DATE. IF THE DISTRICT AGREES WITH THE PROPOSED CHANGES THE DWZTM SHALL SEEK APPROVAL FROM THE MOTEC. IN THE EVENT THE PROPOSED CHANGES ARE APPROVED IN WRITING, THE CLOSURES ARE STILL SUBJECT TO NOTIFICATION REQUIREMENTS WITHIN THIS NOTE PRIOR TO IMPLEMENTATION.

TEMPORARY DRAINAGE ITEMS

TEMPORARY DRAINAGE ITEMS LABELED ON THE MAINTENANCE OF TRAFFIC PLAN ARE ITEMIZED ON THE MOT DRAINAGE SUBSUMMARY AND CARRIED TO THE GENERAL SUMMARY.

ITEM 202 - INLET ABANDONED, AS PER PLAN

BEFORE CONTRACTOR BEGINS WORK ON EXISTING INLET, CONTRACTOR SHALL VERIFY EXISTING WINDOW OPENING, GRATE ELEVATION, INLET AND OUTLET PIPE ELEVATIONS AND INVERTS. THIS INFORMATION WILL BE USED FOR THE ORDERING OF THE REPLACEMENT STRUCTURE AT THE END OF THE MOT CROSS OVER PHASE 2B.
ABANDON THE EXISTING INLET PER 202.12. AT THE CONCLUSION OF THE MOT PHASE 2B THE INLET SHALL BE REPLACED AND REBUILT.

Preliminary Plans - Plans For Reference Only

MAINTENANCE OF TRAFFIC GENERAL NOTES

DESIGN AGENCY
ms consultants, inc.

DESIGNER KJF
REVIEWER KWR 06/02/25
PROJECT ID 121474
SHEET P.54 TOTAL 655

MAH-680-4.58

MODEL: Sheet PAPERSIZE: 34x22 (in.) DATE: 9/15/2025 TIME: 8:59:54 AM PLTDRV: OHDOT_PDF_E+.pltcfg PENTBL: OHDOT_Pen.tbl USER: DHall@msconsultants.com WORKSPACE: OHDOTCEv02 WORKSET: 121474 PRODUCT: OpenRoadsDesigner 24.00.00.205
pw:\\ohiodot-pw.bentley.com:ohiodot-pw-02\Documents\01 Active Projects\District 04\Mahoning\121474\402-Engineering_MSConsultants\MOT\Sheets\121474_MN003.dgn

MODEL: Sheet PAPERSIZE: 34x22 (in.) DATE: 9/15/2025 TIME: 8:59:59 AM PLTDRV: OHDOT_PDF_E+.pltcfg PENTBL: OHDOT_Pen.tbl USER: DHall@msconsultants.com WORKSPACE: OHDOTCEv02 WORKSET: 121474 PRODUCT: OpenRoadsDesigner 24.00.00.205
pw:\\ohiodot-pw.bentley.com:ohiodot-pw-02\Documents\01 Active Projects\District 04\Mahoning\121474\402-Engineering_MSConsultants\MOT\Sheets\121474_MN004.dgn

Preliminary Plans - For Reference Only

MAINTENANCE OF TRAFFIC GENERAL NOTES

WORK ZONE SPEED ZONES (WZSZs)

THE FOLLOWING WORK ZONE SPEED ZONE (WZSZ) SPEED LIMIT REVISION(S) HAVE BEEN APPROVED FOR USE ON THIS PROJECT WHEN WORK ZONE CONDITIONS AND FACTORS ARE MET AS DESCRIBED BELOW:

WZSZ REVISION NUMBER	COUNTY-ROUTE-SECTION(S)	DIRECTION
WZ-26241	MAH-680-7.14 - MAH-680-8.18	NB
WZ-26241	MAH-680-7.14 - MAH-680-7.99	SB

POTENTIAL WZSZ LOCATIONS SHALL HAVE AN ORIGINAL (PRE-CONSTRUCTION) POSTED SPEED LIMIT OF 55 MPH OR GREATER, A QUALIFYING WORK ZONE CONDITION OF AT LEAST 0.5 MILE IN LENGTH, AN EXPECTED WORK DURATION OF AT LEAST THREE HOURS, AND A WORK ZONE CONDITION IN PLACE THAT REDUCES THE EXISTING FUNCTIONALITY OF THE TRAVEL LANES OR SHOULDERS (I.E., LANE CLOSURE, LANE SHIFT, CROSSOVER, CONTRAFLOW AND/OR SHOULDER CLOSURE). THE LENGTH OF THE WORK ZONE CONDITION IS MEASURED FROM THE BEGINNING OF THE TAPER FOR THE SUBJECT WORK ZONE CONDITION IMPACTING THE TRAVEL LANES AND/OR SHOULDER TO THE END OF THE DOWNSTREAM TAPER, WHERE DRIVERS ARE RETURNED TO TYPICAL ALIGNMENT. AN EXPECTED WORK DURATION OF AT LEAST THREE HOURS IS REQUIRED TO BALANCE THE ADDITIONAL EXPOSURE CREATED BY INSTALLING AND REMOVING WZSZ SIGNING WITH THE TIME NEEDED TO COMPLETE THE WORK.

IF THE WORK ZONE MEETS THESE MINIMUM CRITERIA, IT SHALL BE ANALYZED FURTHER USING TABLE 1 BELOW TO DETERMINE IF AND WHEN IT QUALIFIES FOR A SPEED LIMIT REDUCTION. DEPENDING ON THE ORIGINAL POSTED SPEED LIMIT, THE TYPE OF TEMPORARY TRAFFIC CONTROL USED, AND WHETHER OR NOT WORKERS ARE PRESENT, A WARRANTED WZSZ WILL VARY IN THE APPROVED SPEED LIMIT TO BE POSTED OVER TIME.

C&MS ITEM 614, PARAGRAPH 614.02(B), INDICATES THAT TWO DIRECTIONS OF A DIVIDED HIGHWAY ARE CONSIDERED SEPARATE HIGHWAY SECTIONS. THEREFORE, IF THE WORK ON A MULTI-LANE DIVIDED HIGHWAY IS LIMITED TO ONLY ONE DIRECTION, A SPEED LIMIT REDUCTION IN THE DIRECTION OF THE WORK DOES NOT AUTOMATICALLY CONSTITUTE A SPEED LIMIT REDUCTION IN THE OPPOSITE DIRECTION. EACH DIRECTION SHALL BE ANALYZED INDEPENDENTLY FROM EACH OTHER.

ALL WZSZS FLUCTUATE BETWEEN TWO APPROVED REDUCED SPEED LIMITS OR BETWEEN AN APPROVED REDUCED SPEED LIMIT AND THE ORIGINAL POSTED SPEED LIMIT. ONLY ONE OF TWO SIGNING STRATEGIES SHALL BE USED TO IMPLEMENT A WZSZ.

WZSZS USING DSL SIGN ASSEMBLIES SHALL BE IN ACCORDANCE WITH THIS NOTE, APPROVED LIST, SUPPLEMENTAL SPECIFICATIONS (SS) 808 AND 908, AND TRAFFIC SCD MT-104.10.

ONLY ONE WARRANTED SPEED LIMIT APPLIES AT ANY ONE TIME; SPEED LIMIT REDUCTIONS ARE NOT CUMULATIVE. WZSZS SHALL NOT BE USED FOR MOVING/MOBILE ACTIVITIES, AS DEFINED IN OMUTCD PART 6.

WHEN LOOKING UP THE WARRANTED WORK ZONE SPEED LIMITS, ALWAYS USE THE ORIGINAL, PRE-CONSTRUCTION, POSTED SPEED LIMIT. DO NOT USE A PRIOR OR CURRENT WORK ZONE SPEED LIMIT AS A LOOK UP VALUE IN THE TABLE. POSITIVE PROTECTION IS GENERALLY REGARDED AS PORTABLE BARRIER OR OTHER RIGID BARRIER IN USE ALONG THE WORK AREA WITHIN THE SUBJECT WARRANTED WORK ZONE CONDITION. WITHOUT POSITIVE PROTECTION IS GENERALLY REGARDED AS USING DRUMS, CONES, SHADOW VEHICLE, ETC., ALONG THE WORK AREA WITHIN THE SUBJECT WARRANTED WORK ZONE CONDITION. WORKERS ARE CONSIDERED AS BEING PRESENT WHEN ON-SITE, WORKING WITHIN THE SUBJECT WARRANTED WORK ZONE CONDITION. WHEN THE WORK ZONE CONDITION REDUCING THE EXISTING FUNCTIONALITY OF THE TRAVEL LANES OR SHOULDERS IS REMOVED, THE SPEED LIMIT DISPLAYED SHALL RETURN TO THE ORIGINAL POSTED SPEED LIMIT.

TABLE 1: WARRANTED WORK ZONE SPEED LIMITS (MPH) FOR WORK ZONES ON HIGH-SPEED (55 MPH OR GREATER) MULTI-LANE HIGHWAYS

ORIGINAL POSTED SPEED LIMIT	WITH POSITIVE PROTECTION		WITHOUT POSITIVE PROTECTION	
	WORKERS PRESENT	WORKERS NOT PRESENT	WORKERS PRESENT	WORKERS NOT PRESENT
70	60	65	55	65
65	55	60	50	60
60	55	60	50	60
55	50	55	45	55

THE FOLLOWING ESTIMATED QUANTITY HAS BEEN CARRIED TO THE GENERAL SUMMARY:

ITEM 808 - DIGITAL SPEED LIMIT (DSL) SIGN ASSEMBLY (ASSUMING 6 DSL SIGN ASSEMBLIES FOR 6 MONTHS) 36 SNMT

WORK ZONE INCREASED PENALTIES SIGN (R11-H5a)

R11-H5A-48 SIGNS SHALL BE FURNISHED, ERECTED, AND MAINTAINED IN GOOD CONDITION AND/OR REPLACED AS NECESSARY AND SUBSEQUENTLY REMOVED BY THE CONTRACTOR. SIGNS SHALL BE MOUNTED AT THE APPROPRIATE OFFSETS AND ELEVATIONS AS PRESCRIBED BY THE OHIO MANUAL OF UNIFORM TRAFFIC CONTROL DEVICES. THEY SHALL BE MAINTAINED ON SUPPORTS MEETING CURRENT SAFETY CRITERIA.

THE SIGNS MAY BE ERECTED OR UNCOVERED NO MORE THAN FOUR HOURS BEFORE THE ACTUAL START OF WORK. THE SIGNS SHALL BE REMOVED OR COVERED NO LATER THAN FOUR HOURS FOLLOWING RESTORATION OF ALL LANES TO TRAFFIC WITH NO RESTRICTIONS, OR SOONER AS DIRECTED BY THE ENGINEER. TEMPORARY SIGN COVERING AND UNCOVERING DUE TO TEMPORARY LANE RESTORATIONS SHALL BE GUIDED BY THE FOUR-HOUR LIMITATIONS STATED ABOVE. SUCH LANE RESTORATIONS SHOULD BE EXPECTED TO REMAIN IN EFFECT FOR 30 OR MORE CONSECUTIVE CALENDAR DAYS, SUCH AS DURING WINTER SHUT-DOWNS.

THE SIGNS ON THE MAINLINE SHALL BE DUAL MOUNTED UNLESS NOT PHYSICALLY POSSIBLE. THE FIRST SIGN SHALL BE PLACED BETWEEN THE ROAD WORK AHEAD (W20-1) SIGN AND THE NEXT SIGN IN THE SEQUENCE. SIGNS SHALL BE ERECTED ON EACH ENTRANCE RAMP AND EVERY 2 MILES THROUGH THE CONSTRUCTION WORK LIMITS. SIGNS ON THE MAINLINE SHALL BE R11-H5A-48. SIGNS USED ON THE RAMPS SHALL BE R11-H5A-24. R11-H5A-24 SIGNS MAY BE USED IN THE MEDIAN IN LIEU OF R11-H5A-48 SIGNS IF IT IS NOT PHYSICALLY POSSIBLE TO PROVIDE R11-H5A-48 SIGNS IN THE MEDIAN.

THE R11-H5A-48 SIGNS SHALL BE MOUNTED ON 2 NO. 3 POSTS WHEN LOCATED WITHIN CLEAR ZONES.

THE CONTRACTOR MAY USE SIGNS AND SUPPORTS IN USED, BUT GOOD, CONDITION PROVIDED THE SIGNS MEET CURRENT ODOT SPECIFICATIONS.

WORK ZONE INCREASED PENALTIES SIGNS AND SUPPORTS WILL BE MEASURED AS THE NUMBER OF SIGN INSTALLATIONS, INCLUDING THE SIGN AND NECESSARY SUPPORTS. IF A SIGN AND SUPPORT COMBINATION IS REMOVED AND REERECTED AT ANOTHER LOCATION AS DIRECTED BY THE ENGINEER, IT SHALL BE CONSIDERED ANOTHER UNIT.

PAYMENT FOR ACCEPTED QUANTITIES, COMPLETE, IN PLACE WILL BE MADE AT THE CONTRACT UNIT PRICE. PAYMENT SHALL BE FULL COMPENSATION FOR ALL MATERIALS, LABOR, INCIDENTALS AND EQUIPMENT FOR FURNISHING, ERECTING, MAINTAINING, COVERING DURING SUSPENSION OF WORK, AND REMOVAL OF THE SIGN AND SUPPORT.

ITEM 614 - WORK ZONE INCREASED PENALTIES SIGN 75 EACH

FLOODLIGHTING

FLOODLIGHTING OF THE WORK SITE FOR OPERATIONS CONDUCTED DURING NIGHTTIME PERIODS SHALL BE ACCOMPLISHED SO THAT THE LIGHTS DO NOT CAUSE GLARE TO THE DRIVERS ON THE ROADWAY. TO ENSURE THE ADEQUACY OF THE FLOODLIGHT PLACEMENT, THE CONTRACTOR AND THE ENGINEER SHALL DRIVE THROUGH THE WORK SITE EACH NIGHT WHEN THE LIGHTING IS IN PLACE AND OPERATIVE PRIOR TO COMMENCING ANY WORK. IF GLARE IS DETECTED, THE LIGHT PLACEMENT AND SHIELDING SHALL BE ADJUSTED TO THE SATISFACTION OF THE ENGINEER BEFORE WORK PROCEEDS.

PAYMENT FOR ALL LABOR, EQUIPMENT AND MATERIALS SHALL BE INCLUDED IN THE LUMP SUM CONTRACT PRICE FOR ITEM 614, MAINTAINING TRAFFIC.

ITEM 614, WORK ZONE CROSSOVER LIGHTING SYSTEM

THIS WORK SHALL CONSIST OF FURNISHING, ERECTING, OPERATING, MAINTAINING AND REMOVING A WORK ZONE LIGHTING SYSTEM FOR A SINGLE CROSSOVER, OR OVERLAPPING A PAIR OF CROSSOVERS. THE SYSTEM SHALL BE AS SHOWN ON TRAFFIC SCD MT 100.00. THE CONTRACTOR SHALL ARRANGE FOR AND PAY FOR POWER. ALL MATERIALS AND CONSTRUCTION SHALL COMPLY WITH APPLICABLE PORTIONS OF 625 AND 725 EXCEPT: THE PERFORMANCE TEST OF 625.19F, AND CERTIFIED DRAWING REQUIREMENT OF 625.06, ARE WAIVED AND USED MATERIALS IN GOOD CONDITION ARE ACCEPTABLE.

POLES WHICH ARE NOT PROTECTED BY GUARDRAIL OR PORTABLE BARRIER SHALL BE LOCATED OUTSIDE THE CLEAR ZONE, AND SHOULD BE LOCATED AT LEAST 30 FEET (PREFERABLY 40 FEET) FROM THE EDGE OF PAVEMENT WHEN POSSIBLE. ADDITIONAL POLE LINES, CABLES AND APPURTENANCES NECESSARY TO FURNISH POWER TO THE LIGHTING SYSTEM SHALL BE INCLUDED IN THIS ITEM. SERVICE POLES SHALL BE POSITIONED WITH THE SAME CONSTRAINTS AS THE LIGHTING POLES AS A MINIMUM.

PAYMENT WILL BE MADE AT THE UNIT PRICE PER EACH FOR ITEM 614, WORK ZONE CROSSOVER LIGHTING SYSTEM THROUGHOUT ALL PHASES OF WORK WHEN THE CROSSOVER ROADWAYS ARE USED.

THE FOLLOWING ESTIMATED QUANTIES HAVE BEEN CARRIED TO THE GENERAL SUMMARY FOR USE AT THE SOUTHERN CROSSOVER IN PHASE 1A:

ITEM 614 - WORK ZONE CROSSOVER LIGHTING SYSTEM 1 EACH

DESIGN AGENCY
ms consultants, inc.

DESIGNER KJF

REVIEWER KWR 06/02/25

PROJECT ID 121474

SHEET P.55 | TOTAL 655

ITEM 614, WORK ZONE IMPACT ATTENUATOR FOR 24" WIDE HAZARDS (UNIDIRECTIONAL)

THIS ITEM SHALL CONSIST OF FURNISHING AND INSTALLING A NON-GATING IMPACT ATTENUATOR. FURNISH AN IMPACT ATTENUATOR FROM THE OFFICE OF ROADWAY ENGINEERING'S APPROVED LIST FOR WORK ZONE IMPACT ATTENUATORS, FROM THE ROADWAY STANDARDS APPROVED PRODUCTS WEB PAGE.

INSTALLATION SHALL BE AT THE LOCATIONS SPECIFIED IN THE PLANS IN ACCORDANCE WITH THE MANUFACTURER'S SPECIFICATIONS.

THE CONTRACTOR SHALL REPAIR OR REPLACE A DAMAGED UNIT WITHIN 24 HOURS OF A DAMAGING IMPACT.

WHEN BIDIRECTIONAL DESIGNS ARE SPECIFIED, THE CONTRACTOR SHALL SUPPLY APPROPRIATE TRANSITIONS.

WHEN GATING IMPACT ATTENUATORS ARE DESIRED, THE CONTRACTOR SHALL SUBMIT DOCUMENTATION TO THE ENGINEER FOR ACCEPTANCE.

THE COST FOR THE ADDITIONAL BARRIER REQUIRED FOR A GATING IMPACT ATTENUATOR SHALL BE INCLUDED IN THE COST OF THE GATING IMPACT ATTENUATOR.

PAYMENT FOR THE ABOVE WORK SHALL BE MADE AT THE UNIT PRICE BID AND SHALL INCLUDE ALL LABOR, TOOLS, EQUIPMENT AND MATERIALS NECESSARY TO CONSTRUCT AND MAINTAIN A COMPLETE AND FUNCTIONAL IMPACT ATTENUATOR SYSTEM, INCLUDING ALL RELATED BACKUPS, TRANSITIONS, LEVELING PADS, HARDWARE AND GRADING, NOT SEPARATELY SPECIFIED, AS REQUIRED BY THE MANUFACTURER.

ITEM 614, PORTABLE CHANGEABLE MESSAGE SIGNS, AS PER PLAN

THE CONTRACTOR SHALL FURNISH, INSTALL, MAINTAIN AND REMOVE, WHEN NO LONGER NEEDED, A CHANGEABLE MESSAGE SIGN. THE SIGN SHALL BE OF A TYPE SHOWN ON A LIST OF APPROVED PCMS UNITS AVAILABLE ON THE OFFICE OF MATERIALS MANAGEMENT WEB PAGE. THE LIST CONTAINS CLASS A AND B UNITS WITH MINIMUM LEGIBILITY DISTANCES OF 800 FEET AND 650 FEET, RESPECTIVELY.

EACH SIGN SHALL BE TRAILER-MOUNTED AND EQUIPPED WITH A FUNCTIONAL DIMMING MECHANISM, TO DIM THE SIGN DURING DARKNESS, AND A TAMPER AND VANDAL PROOF ENCLOSURE. EACH SIGN SHALL BE PROVIDED WITH APPROPRIATE TRAINING AND OPERATION INSTRUCTIONS TO ENABLE ON-SITE PERSONNEL TO OPERATE AND TROUBLESHOOT THE UNIT. THE SIGN SHALL ALSO BE CAPABLE OF BEING POWERED BY AN ELECTRICAL SERVICE DROP FROM A LOCAL UTILITY COMPANY. THE PCMS SHALL BE DELINEATED IN ACCORDANCE WITH C&MS 614.03.

PLACEMENT, OPERATION, MAINTENANCE AND ALL ACTIVATION OF THE SIGNS BY THE CONTRACTOR SHALL BE AS DIRECTED BY THE ENGINEER. THE PCMS SHALL BE LOCATED IN A HIGHLY VISIBLE POSITION YET PROTECTED FROM TRAFFIC. THE CONTRACTOR SHALL, AT THE DIRECTION OF THE ENGINEER, RELOCATE THE PCMS TO IMPROVE VISIBILITY OR ACCOMMODATE CHANGED CONDITIONS. WHEN NOT IN USE, THE PCMS SHALL BE TURNED OFF. ADDITIONALLY, WHEN NOT IN USE FOR EXTENDED PERIODS OF TIME, THE PCMS SHALL BE TURNED AWAY FROM ALL TRAFFIC.

THE ENGINEER SHALL BE PROVIDED ACCESS TO EACH SIGN UNIT AND SHALL BE PROVIDED WITH APPROPRIATE TRAINING AND OPERATION INSTRUCTIONS TO ENABLE ODOT PERSONNEL TO OPERATE AND TROUBLESHOOT THE UNIT, AND TO REVISE SIGN MESSAGES, IF NECESSARY.

ALL MESSAGES TO BE DISPLAYED ON THE SIGN WILL BE PROVIDED BY THE ENGINEER. THE SIGN SHALL HAVE THE CAPABILITY TO STORE UP TO 99 MESSAGES. MESSAGE MEMORY OR PRE-PROGRAMMED DISPLAYS SHALL NOT BE LOST AS A RESULT OF POWER FAILURES TO THE ON-BOARD COMPUTER. THE SIGN LEGEND SHALL BE CAPABLE OF BEING CHANGED IN THE FIELD. THREE-LINE PRESENTATION FORMATS WITH UP TO SIX MESSAGE PHASES SHALL BE SUPPORTED. PCMS FORMAT SHALL PERMIT THE COMPLETE MESSAGE FOR EACH PHASE TO BE READ AT LEAST TWICE.

THE PCMS SHALL CONTAIN AN ACCURATE CLOCK AND PROGRAMMING LOGIC WHICH WILL ALLOW THE SIGN TO BE ACTIVATED, DEACTIVATED OR MESSAGES CHANGED AUTOMATICALLY AT DIFFERENT TIMES OF THE DAY FOR DIFFERENT DAYS OF THE WEEK.

THE PCMS SHALL CONTAIN A CELLULAR TELEPHONE DATA LINK WHICH WILL (IN ACTIVE CELLULAR PHONE AREAS) ALLOW REMOTE SIGN ACTIVATION, MESSAGE CHANGES, MESSAGE ADDITIONS AND REVISIONS TO TIME OF DAY PROGRAMS. THE SYSTEM SHALL ALSO PERMIT VERIFICATION OF CURRENT AND PROGRAMMED MESSAGES. ONE REMOTE DATA INPUT DEVICE (LAPTOP COMPUTER PLUS MODEM OR EQUIVALENT) SHALL BE FURNISHED FOR USE BY THE DISTRICT TRAFFIC ENGINEER, OR EQUIVALENT, AND SHALL BE INSURED AGAINST THEFT. THE PCMS UNIT SHALL BE MAINTAINED IN GOOD WORKING ORDER BY THE CONTRACTOR IN ACCORDANCE WITH THE PROVISIONS OF C&MS 614.07. THE CONTRACTOR SHALL, PRIOR TO ACTIVATING THE UNIT, MAKE ARRANGEMENTS, WITH AN AUTHORIZED SERVICE AGENT FOR THE PCMS, TO ASSURE PROMPT SERVICE IN THE EVENT OF FAILURE. ANY FAILURE SHALL NOT RESULT IN THE SIGN BEING OUT OF SERVICE FOR MORE THAN 12 HOURS, INCLUDING WEEKENDS. FAILURE TO COMPLY MAY RESULT IN AN ORDER TO STOP WORK AND OPEN ALL TRAFFIC LANES AND/OR IN THE DEPARTMENT TAKING APPROPRIATE ACTION TO SAFELY CONTROL TRAFFIC. THE ENTIRE COST TO CONTROL TRAFFIC, ACCRUED BY THE DEPARTMENT DUE TO THE CONTRACTOR'S NONCOMPLIANCE, WILL BE DEDUCTED FROM MONEYS DUE, OR TO BECOME DUE THE CONTRACTOR ON HIS CONTRACT.

THE CONTRACTOR SHALL BE RESPONSIBLE FOR 24-HOUR-PER-DAY OPERATION AND MAINTENANCE OF THESE SIGNS ON THE PROJECT FOR THE DURATION OF THE PHASES WHEN THE PLAN REQUIRES THEIR USE.

PAYMENT FOR THE ABOVE DESCRIBED ITEM SHALL BE AT THE CONTRACT UNIT PRICE. PAYMENT SHALL INCLUDE ALL LABOR, MATERIALS, EQUIPMENT, FUELS, LUBRICATING OILS, SOFTWARE, HARDWARE AND INCIDENTALS TO PERFORM THE ABOVE DESCRIBED WORK.

THE FOLLOWING QUANTITIES HAVE BEEN INCLUDED IN THE PLANS AND CARRIED TO THE GENERAL SUMMARY:

ITEM 614 - PORTABLE CHANGEABLE MESSAGE SIGNS, AS PER PLAN *72 SIGN MONTH*
(ASSUMING 4 PCMS SIGNS FOR 18 MONTHS)

ITEM 614, WORK ZONE RAISED PAVEMENT MARKER, AS PER PLAN

WORK ZONE RAISED PAVEMENT MARKERS, AS PER PLAN, AND THEIR INSTALLATION SHALL CONFORM TO C&MS 614 OR C&MS 621 AS SPECIFIED HEREIN.

- RAISED PAVEMENT MARKERS IN USE DURING THE SNOW-PLOWING SEASON SHALL CONFORM TO 621.

- RAISED PAVEMENT MARKERS IN USE DURING THE NON-SNOW-PLOW SEASON SHALL CONFORM TO EITHER 614 OR TO 621.

THE SNOW-PLOWING SEASON SHALL RUN FROM OCTOBER 15 THROUGH APRIL 1.

IF PROJECT DELAYS, NOT THE FAULT OF ODOT, CAUSE THE WORK TO EXTEND INTO THE SNOW-PLOWING SEASON, THE CONTRACTOR SHALL BE RESPONSIBLE FOR REPLACING WORK ZONE RAISED PAVEMENT MARKERS (WZRPMS) CONFORMING TO C&MS 614, WITH RAISED PAVEMENT MARKERS CONFORMING TO 621, AS DETERMINED BY THE ENGINEER, AT THE CONTRACTOR'S EXPENSE.

THIS ITEM SHALL INCLUDE PURCHASE, INSTALLATION AND REMOVAL OF ITEM 614 WORK ZONE RAISED PAVEMENT MARKER, AS PER PLAN, INCLUDING FILLING OF ANY DEPRESSIONS CREATED IN THE PAVEMENT AS PER C&MS 621.08.

RESURFACING OF THE TRANSITION AREAS SHALL BE PERFORMED AT THE TIME THAT THE SURFACE COURSE IS BEING APPLIED TO THE ENTIRE PROJECT. PRIOR TO APPLICATION OF THE SURFACE COURSE ON THE PROJECT, THE EXISTING PAVEMENT WITHIN THE TRANSITION AREA SHALL BE REMOVED TO A DEPTH NECESSARY TO REACH THE LEVEL OF THE INTERMEDIATE COURSE OF THE PAVEMENT, AS DETERMINED BY THE ENGINEER.

THE FOLLOWING BID ITEMS HAVE BEEN QUANTIFIED IN THE MAINTENANCE OF TRAFFIC SUBSUMMARY:

ITEM 614 - WORK ZONE RAISED PAVEMENT MARKER, AS PER PLAN

PAYMENT FOR RESURFACING WITHIN THE TRANSITION AREA SHALL BE PAID FOR UNDER THE APPROPRIATE BID ITEMS FOR THE WORK REQUIRED, AS PROVIDED FOR IN THE PLANS.

Preliminary Plans - Not For Reference Only

MAINTENANCE OF TRAFFIC GENERAL NOTES

DESIGN AGENCY
ms consultants. inc.

DESIGNER KJF
REVIEWER KWR 06/02/25
PROJECT ID 121474
SHEET P.56 TOTAL 655

MAH-680-4.58

MODEL: Sheet PAPERSIZE: 34x22 (in.) DATE: 9/15/2025 TIME: 9:00:04 AM PLTDRV: OHDOT_PDF_E+.pltcfg PENTBL: OHDOT_Pen.tbl USER: DHall@msconsultants.com WORKSPACE: OHDOTCEv02 WORKSET: 121474 PRODUCT: OpenRoadsDesigner 24.00.00.205
pw:\\ohiodot-pw.bentley.com:ohiodot-pw-02\Documents\01 Active Projects\District 04\Mahoning\121474\402-Engineering_MSConsultants\MOT\Sheets\121474_MN005.dgn

Preliminary Plans - For Reference Only

DELINEATION OF PORTABLE AND PERMANENT BARRIER

BARRIER REFLECTORS AND OBJECT MARKERS SHALL BE INSTALLED ON ALL PORTABLE BARRIER (PB) USED FOR TRAFFIC CONTROL; AND, ON PERMANENT CONCRETE BARRIER (INCLUDING BRIDGE PARAPETS) LOCATED WITHIN 5 FEET OF THE EDGE OF THE ADJACENT TRAVEL LANE.

BARRIER REFLECTORS SHALL CONFORM TO C&MS 626, EXCEPT THAT THE BARRIER REFLECTOR SPACING SHALL BE AT APPROXIMATELY 10-FOOT INTERVALS. OBJECT MARKERS AND THEIR INSTALLATION SHALL CONFORM TO C&MS 614.03 AND SCD MT-101.70. WHEN THE PB CONTAINS GLARE SCREEN, ONE SET OF THREE VERTICAL STRIPES OF SHEETING SHALL BE CONSIDERED EQUIVALENT TO AN OBJECT MARKER, ONE-WAY. OBJECT MARKER SPACING SHALL BE AT APPROXIMATELY 25-FOOT INTERVALS.

INCREASED BARRIER DELINEATION, AS SPECIFIED HEREIN, SHALL BE INSTALLED ON ALL PB AND PERMANENT CONCRETE BARRIER LOCATED WITHIN 5 FEET OF THE EDGE OF THE TRAVELED LANE UNDER EITHER OF THE FOLLOWING CONDITIONS: ALONG TAPERS AND TRANSITION AREAS; OR ALONG CURVES (OUTSIDE ONLY) WITH DEGREE OF CURVATURE GREATER THAN OR EQUAL TO 3 DEGREES.

THE INCREASED BARRIER DELINEATION SHALL CONSIST OF EITHER DELINEATION PANELS OR THE TRIPLE STACKING OF WORK ZONE BARRIER REFLECTORS.

DELINEATION PANELS SHALL CONSIST OF PANELS OF DELINEATION, APPROXIMATELY 34 INCHES LONG AND 6 INCHES WIDE AND SHALL BE "CRIMPED." PANELS SHALL BE INSTALLED AND SPACED PER TRAFFIC SCD MT-101.70.

TRIPLE-STACKED BARRIER REFLECTORS SHALL CONSIST OF ALIGNING THREE BARRIER REFLECTORS VERTICALLY, AT LOCATIONS WHERE A SINGLE BARRIER REFLECTOR WOULD BE OTHERWISE ATTACHED. THERE SHALL BE NO OPEN SPACE BETWEEN THE ADJACENT BARRIER REFLECTORS. THE TRIPLE-STACKED BARRIER REFLECTORS SHALL CONFORM TO C&MS 626, EXCEPT THAT BARRIER REFLECTOR SPACING SHALL BE AT APPROXIMATELY 10-FOOT INTERVALS AND ALIGNED PER TRAFFIC SCD MT-101.70.

THE FOLLOWING ESTIMATED QUANTITIES HAVE BEEN INCLUDED IN THE PLANS FOR USE ON PERMANENT BARRIER AND CARRIED TO THE GENERAL SUMMARY:

ITEM 614 - BARRIER REFLECTOR, TYPE 1, ONE-WAY	1,123 EACH
ITEM 614 - OBJECT MARKER, ONE-WAY	451 EACH
ITEM 614 - INCREASED BARRIER DELINEATION	1,933 FT

THE FOLLOWING BID ITEMS HAVE BEEN INCLUDED WITH THE MAINTENANCE OF TRAFFIC SUBSUMMARY FOR USE ON TEMPORARY BARRIER:

ITEM 614 - BARRIER REFLECTOR, TYPE 1, ONE-WAY
ITEM 614 - OBJECT MARKER, ONE-WAY
ITEM 614 - INCREASED BARRIER DELINEATION

PAYMENT SHALL BE FULL COMPENSATION FOR ALL MATERIAL, LABOR, INCIDENTALS AND EQUIPMENT NECESSARY FOR FURNISHING, INSTALLING, MAINTAINING AND REMOVING EACH OF THE ABOVE ITEMS.

ALONG RUNS OF INCREASED BARRIER DELINEATION WHERE THIS ITEM IS PROVIDED, THE QUANTITY SHALL BE MEASURED AS THE ENTIRE LENGTH OF THE RUN OF INCREASED BARRIER DELINEATION, INCLUDING THE SPACES BETWEEN THE INDIVIDUAL DELINEATION PANELS OR STACKS OF BARRIER REFLECTORS.

DELINEATION OF TEMPORARY AND PERMANENT GUARDRAIL

BARRIER REFLECTORS SHALL BE INSTALLED ON ALL TEMPORARY GUARDRAIL USED FOR TRAFFIC CONTROL; AND, ON ALL PERMANENT GUARDRAIL LOCATED WITHIN 5 FEET OF THE EDGE OF THE ADJACENT TRAVEL LANE. BARRIER REFLECTORS SHALL CONFORM TO C&MS 626 AND THE BARRIER REFLECTOR SPACING SHALL BE AT APPROXIMATELY 10-FOOT INTERVALS.

OBJECT MARKERS SHALL BE INSTALLED ON ALL TEMPORARY AND PERMANENT GUARDRAIL LOCATED WITHIN 5 FEET OF THE EDGE OF THE ADJACENT TRAVEL LANE. GUARDRAIL-MOUNTING OF OBJECT MARKERS SHALL BE MADE BY INSTALLING THE OBJECT MARKERS ON THE EXTENSION BLOCKS RATHER THAN DIRECTLY ONTO THE GUARDRAIL ITSELF. OBJECT MARKERS SHALL CONFORM TO C&MS 614.03 AND THE OBJECT MARKER SPACING SHALL BE AT APPROXIMATELY 25-FOOT INTERVALS.

THE FOLLOWING ESTIMATED QUANTITIES HAVE BEEN INCLUDED IN THE PLANS AND CARRIED TO THE GENERAL SUMMARY:

ITEM 614 - BARRIER REFLECTOR, TYPE 2, ONE-WAY	292 EACH
ITEM 614 - OBJECT MARKER, ONE-WAY	119 EACH

PAYMENT SHALL BE FULL COMPENSATION FOR ALL MATERIAL, LABOR, INCIDENTALS AND EQUIPMENT NECESSARY FOR FURNISHING, INSTALLING, MAINTAINING AND REMOVING THE ABOVE ITEMS.

WORK ZONE DELINEATION FOR CROSSOVERS OR LANE SHIFTS

THE SPACING OF RAISED PAVEMENT MARKERS PROVIDED FOR WORK ZONE DELINATION AS INDICATED PER SCD MT-99.30 SHALL BE MODIFIED FOR THIS PROJECT. WITHIN THE LIMITS OF ALL TRANSITION AREA DELINEATION, RAISED PAVEMENT MARKER SPACING SHALL BE AT 10-FOOT INTERVALS. INCREASED QUANTITIES FOR ITEM 614, WORK ZONE RAISED PAVEMENT MARKER AND ITEM 614, WORK ZONE RAISED PAVEMENT MARKER, AS PER PLAN HAVE BEEN PROVIDED IN THE MAINTENANCE OF TRAFFIC SUBSUMMARY.

ITEM 614, LAW ENFORCEMENT OFFICER (WITH PATROL CAR) FOR ASSISTANCE DURING CONSTRUCTION OPERATIONS

USE OF LAW ENFORCEMENT OFFICERS (LEOS) BY CONTRACTORS OTHER THAN THE USES SPECIFIED BELOW WILL NOT BE PERMITTED AT PROJECT COST. LEOS SHOULD NOT BE USED WHERE THE OMUTCD INTENDS THAT FLAGGERS BE USED.

IN ADDITION TO THE REQUIREMENTS OF C&MS 614 AND THE OMUTCD, A UNIFORMED LEO WITH AN OFFICIAL PATROL CAR (CAR WITH TOP-MOUNTED EMERGENCY FLASHING LIGHTS AND COMPLETE MARKINGS OF THE APPROPRIATE LAW ENFORCEMENT AGENCY) SHALL BE PROVIDED FOR THE FOLLOWING TRAFFIC CONTROL TASKS:

- DURING THE ENTIRE ADVANCE PREPARATION AND CLOSURE SEQUENCE WHERE COMPLETE BLOCKAGE OF TRAFFIC IS REQUIRED.
- FOR LANE CLOSURES: DURING INITIAL SET-UP PERIODS, TEAR DOWN PERIODS, SUBSTANTIAL SHIFTS OF A CLOSURE POINT OR WHEN NEW LANE CLOSURE ARRANGEMENTS ARE INITIATED FOR LONG-TERM LANE CLOSURES/SHIFTS (FOR THE FIRST AND LAST DAY OF MAJOR CHANGES IN TRAFFIC CONTROL SETUP).

LEOS SHOULD NOT FORGO THEIR TRAFFIC CONTROL RESPONSIBILITIES TO APPREHEND MOTORISTS FOR ROUTINE TRAFFIC VIOLATIONS. HOWEVER, IF A MOTORIST'S ACTIONS ARE CONSIDERED TO BE RECKLESS, THEN PURSUIT OF THE MOTORIST IS APPROPRIATE.

IN GENERAL, LEOS SHOULD BE POSITIONED IN ADVANCE OF AND ON THE SAME SIDE AS THE LANE RESTRICTION OR AT THE POINT OF ROAD CLOSURE, AND TO MANUALLY CONTROL TRAFFIC MOVEMENTS THROUGH SIGNALIZED INTERSECTIONS IN WORK ZONES.

THE LEOS WORK AT THE DIRECTION OF THE ENGINEER. THE CONTRACTOR IS RESPONSIBLE FOR SECURING THE SERVICES OF THE LEOS WITH THE APPROPRIATE AGENCIES AND COMMUNICATING THE INTENTIONS OF THE PLANS WITH RESPECT TO DUTIES OF THE LEOS. THE ENGINEER SHALL HAVE FINAL CONTROL OVER THE LEOS' DUTIES AND PLACEMENT, AND WILL RESOLVE ANY ISSUES THAT MAY ARISE BETWEEN THE TWO PARTIES.

THE LEO SHALL REPORT IN TO THE CONTRACTOR PRIOR TO THE START OF THE SHIFT, IN ORDER TO RECEIVE INSTRUCTIONS REGARDING SPECIFIC WORK ASSIGNMENTS DURING HIS/HER SHIFT. THE LEO IS EXPECTED TO STAY AT THE PROJECT SITE FOR THE ENTIRE DURATION OF HIS/HER SHIFT. THE LEO SHALL REPORT TO THE CONTRACTOR AT THE END OF HIS/HER SHIFT. ONCE THE LEO HAS COMPLETED THE DUTIES DESCRIBED ABOVE AND STILL HAS TIME REMAINING ON HIS/HER SHIFT, THE LEO MAY BE ASKED TO PATROL THROUGH THE WORK ZONE (WITH FLASHING LIGHTS OFF) OR BE PLACED AT A LOCATION TO DETER MOTORISTS FROM SPEEDING. SHOULD IT BE NECESSARY TO LEAVE THE PROJECT SITE, THE LEO SHALL NOTIFY THE ENGINEER. THE CONTRACTOR SHALL PROVIDE THE LEO WITH A TWO-WAY COMMUNICATION DEVICE THAT SHALL BE RETURNED TO THE CONTRACTOR AT THE END OF HIS/HER SHIFT.

LEOS (WITH PATROL CAR) REQUIRED BY THE TRAFFIC MAINTENANCE TASKS ABOVE SHALL BE PAID FOR ON A UNIT PRICE (HOURLY) BASIS UNDER ITEM 614, LAW ENFORCEMENT OFFICER (WITH PATROL CAR) FOR ASSISTANCE. THE FOLLOWING ESTIMATED QUANTITIES HAVE BEEN CARRIED TO THE GENERAL SUMMARY.

ITEM 614 - LAW ENFORCEMENT OFFICER WITH PATROL CAR FOR ASSISTANCE	550 HOURS

THE HOURS PAID SHALL INCLUDE ANY MINIMUM SHOW-UP TIME REQUIRED BY THE LAW ENFORCEMENT AGENCY INVOLVED.

ANY ADDITIONAL COSTS (ADMINISTRATIVE OR OTHERWISE) INCURRED BY THE CONTRACTOR TO OBTAIN THE SERVICES OF AN LEO ARE INCLUDED WITH THE BID UNIT PRICE FOR ITEM 614, LAW ENFORCEMENT OFFICER WITH PATROL CAR FOR ASSISTANCE.

ITEM 615 - PAVEMENT FOR MAINTAINING TRAFFIC, CLASS A, AS PER PLAN

IN ADDITION TO THE REQUIREMENTS OF 615:

THE ALIGNMENT AND PAVEMENT TYPICAL SECTION SHALL BE AS DETAILED IN THE PLANS. THE EXISTING PAVEMENT/SHOULDER SHALL BE SAWCUT AS PER 203.04(E).

THE FOLLOWING ESTIMATED QUANTITIES HAVE BEEN INCLUDED IN THE GENERAL SUMMARY TO BE USED IN CONSTRUCTING THE PAVEMENT FOR MAINTAINING TRAFFIC, CLASS A, AS PER PLAN:

ITEM 615 - ROADS FOR MAINTAINING TRAFFIC	LUMP

THE FOLLOWING BID ITEMS HAVE BEEN INCLUDED WITH THE MAINTENANCE OF TRAFFIC SUBSUMMARY :

ITEM 615 - PAVEMENT FOR MAINTAINING TRAFFIC, CLASS A, AS PER PLAN

UPON COMPLETION OF THE PROJECT, THE CONTRACTOR SHALL REMOVE THE PAVEMENT FOR MAINTAINING TRAFFIC INCLUDING ANY TEMPORARY DRAINAGE FACILITIES. THE AFFECTED EXISTING EARTH MEDIAN AND PAVED SHOULDERS SHALL BE RESTORED TO THEIR ORIGINAL CONDITION AS DIRECTED BY THE ENGINEER AND AS PER 615.08.

PAVEMENT FOR MAINTAINING TRAFFIC SHALL NOT BE OPENED TO TRAFFIC UNTIL ALL WORK ZONE TRAFFIC CONTROL DEVICES, SIGNS, PAVEMENT MARKINGS AND PORTABLE CONCRETE BARRIERS HAVE BEEN ERECTED AND APPROVED BY THE ENGINEER.

ALTHOUGH ESTIMATES FOR TEMPORARY EXCAVATION, EMBANKMENT AND TEMPORARY DRAINAGE FACILITIES MAY BE SHOWN ON THE PLAN DETAILS, THESE ITEMS SHALL BE CONSIDERED INCIDENTAL TO, AND INCLUDED WITH PAYMENT FOR ITEM 615 ROADS FOR MAINTAINING TRAFFIC.

MAINTENANCE OF TRAFFIC GENERAL NOTES

DESIGN AGENCY
ms consultants, inc.

DESIGNER KJF
REVIEWER KWR 06/02/25
PROJECT ID 121474
SHEET P.57 TOTAL 655

MAH-680-4.58

MODEL: Sheet PAPERSIZE: 34x22 (in.) DATE: 9/15/2025 TIME: 9:00:10 AM PLTDRV: OHDOT_PDF_E+.pltcfg PENTBL: OHDOT_Pen.tbl USER: DHall@msconsultants.com WORKSPACE: OHDOTCEv02 WORKSET: 121474 PRODUCT: OpenRoadsDesigner 24.00.00.205
pw:\\ohiodot-pw.bentley.com:ohiodot-pw-02\Documents\01 Active Projects\District 04\Mahoning\121474\402-Engineering_MSConsultants\MOT\Sheets\121474_MN006.dgn

Preliminary Plans - For Reference Only

ITEM 615 - PAVEMENT FOR MAINTAINING TRAFFIC, CLASS B, APP, TYPE 1
ITEM 615 - PAVEMENT FOR MAINTAINING TRAFFIC, CLASS B, APP, TYPE 2
ITEM 615 - PAVEMENT FOR MAINTAINING TRAFFIC, CLASS B, APP, TYPE 3
ITEM 615 - PAVEMENT FOR MAINTAINING TRAFFIC, CLASS B, APP, TYPE 4

THIS ITEM SHALL BE UTILIZED FOR THE PAVEMENT REPAIRS NEEDED DURING THIS CONSTRUCTION PROCESS. ALL AREAS TO BE REPAIRED SHALL BE LOCATED BY THE ENGINEER. IT IS LIKELY THAT REPAIRS WILL BE NEEDED PRIOR TO EACH PHASE SWITCH. GREAT CARE SHALL BE TAKEN TO MAINTAIN THE EXISTING PAVEMENT CROSS SLOPE AS WELL AS ALL LONGITUDINAL SLOPES. THE TYPE OF REPAIR SHALL BE DETERMINED BY THE PROJECT ENGINEER. PAYMENT FOR ALL LABOR, EQUIPMENT AND MATERIALS REQUIRED FOR MAINTENANCE OF TRAFFIC FOR PAVEMENT REPAIRS SHALL BE INCLUDED IN THE LUMP SUM CONTRACT PRICE FOR ITEM 614, MAINTAINING TRAFFIC.

TYPE 1 IS TO BE USED TO MILL & FILL AN AREA OF VARYING LENGTH AND HAVE AN AVERAGE WIDTH OF NOT LESS THAN 2 FEET.

TYPE 2 IS TO BE USED FOR FIXING THE LONGITUDINAL JOINT ISSUES OF VARYING LENGTH AND HAVE A CONSISTENT WIDTH OF 2 FEET.

TYPE 3 IS TO BE USED FOR DEEPER REPAIRS (POTHOLES) OF VARYING LENGTH AND WILL HAVE AN AVERAGE WIDTH OF NOT LESS THAN 4 FEET.

TYPE 4 IS TO BE USED FOR COMPOSITE PAVEMENT REPAIRS OF VARYING LENGTH AND WILL HAVE AN AVERAGE WIDTH OF NOT LESS THAN 3 FEET.

ALL COSTS ASSOCIATED WITH REMOVING AND REPLACING PAVEMENT AND TACK COAT FOR THE REPAIRS SHALL BE INCIDENTAL TO ITEM 615 PAVEMENT FOR MAINTAINING TRAFFIC, CLASS B, AS PER PLAN.

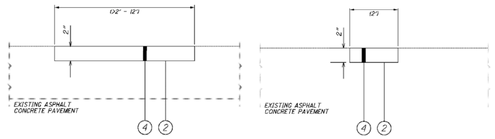

TYPE 1 DETAIL
PARTIAL DEPTH PAVEMENT REPAIR, AS PER PLAN TYPE 1

TYPE 2 DETAIL
PARTIAL DEPTH PAVEMENT REPAIR, AS PER PLAN TYPE 2

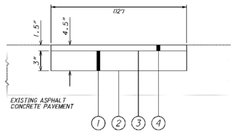

TYPE 3 DETAIL
PARTIAL DEPTH PAVEMENT REPAIR, AS PER PLAN TYPE 3

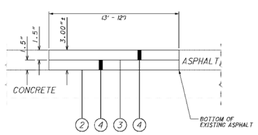

TYPE 4 DETAIL
PARTIAL DEPTH PAVEMENT REPAIR, AS PER PLAN TYPE 4

LEGEND:

1. ITEM 301 - ASPHALT CONCRETE BASE, PG64-22
2. ITEM 407 - TACK COAT @0.07S PER SY. YD.
3. ITEM 407- TACK COAT FOR INTERMEDIATE @ 0.05 PER SY. YD.
4. ITEM 441 -TYPE 1(AS DESCRIBED IN CMS 615.05)

ITEM 615 - PAVEMENT FOR MAINTAINING TRAFFIC, CLASS B, AS PER PLAN, TYPE 1: 1,000 SY
ITEM 615 - PAVEMENT FOR MAINTAINING TRAFFIC, CLASS B, AS PER PLAN, TYPE 2: 1,000 SY
ITEM 615 - PAVEMENT FOR MAINTAINING TRAFFIC, CLASS B, AS PER PLAN, TYPE 3: 1,000 SY
ITEM 615 - PAVEMENT FOR MAINTAINING TRAFFIC, CLASS B, AS PER PLAN, TYPE 4: 1,000 SY

ITEM 614 - MAINTAINING TRAFFIC MISC.: BRIDGE DECK AND PAVEMENT PATCHING

THIS WORK WILL BE AS DIRECTED BY THE ENGINEER AND WILL INCLUDE ALL ASSOCIATED MOT COSTS WITH THE ACTIVITY. THE COST FOR EACH ITEM SHALL BE $1.00. THE FIXED AMOUNT SHOWN IN THE PROPOSAL IS INCLUDED (AS ANY OTHER BID ITEMS) IN THE TOTAL BID AMOUNT. THIS FIXED AMOUNT IS THE DEPARTMENT'S ESTIMATE OF THE TOTAL COST OF BRIDGE DECK AND PAVEMENT PATCHING WORK REQUIRED TO BE PERFORMED WITHIN THE WORK LIMITS AS DIRECTED BY THE ENGINEER. C&MS TABLE 104.02-2 DOES NOT APPLY TO REDUCTIONS IN THIS CONTRACT ITEM. FORCE ACCOUNT RECORDS SHALL BE KEPT TO TRACK AND ULTIMATELY DETERMINE THE AMOUNT OF THE PAY ITEM USED. THE WORK ITEM SHALL INCLUDE ALL WORK, AS DIRECTED BY THE ENGINEER, NEEDED TO RE-ESTABLISH A REASONABLY SAFE AND PASSABLE CONDITION OF THE DECK AND/OR PAVEMENT FOR THE DURATION OF THE REQUIRED UPCOMING MOT PHASES. THE CONTRACTOR SHALL MEET WITH THE ENGINEER TO ESTABLISH THE WORK AFTER EXECUTION OF THE CONTRACT. THE CONTRACTOR'S PROPOSED PHASING AND PHASING DURATIONS WILL ASSIST THE ENGINEER IN DETERMINING THE EXTENT OF THE WORK. THIS WORK IS ONLY INTENDED TO ESTABLISH A SAFE AND DRIVABLE CONDITION FOR THE DURATION OF THE PROJECT. THIS DOES NOT RELIEVE THE CONTRACTOR OF THE RESPONSIBILITIES OF 614.02B.

ITEM 614 - MAINTAINING TRAFFIC, MISC.: BRIDGE DECK AND PAVEMENT PATCHING 50,000 EACH

ITEM 614 - MAINTAINING TRAFFIC MISC.: SAFETY REPAIRS

FOR IMPACT ATTENUATORS OR GUARDRAIL THAT IS DAMAGED BY THE MOTORING PUBLIC, THE CONTRACTOR SHALL FOLLOW THE PROCESS OUTLINED IN 107.15. IF NO ACCIDENT REPORT IS AVAILABLE, THE CONTRACTOR SHALL PROVIDE THE DOCUMENTATION FROM THE VARIOUS POSSIBLE RESPONDING AGENCIES THAT THERE IS NO ACCIDENT REPORT. FOR ACCIDENTS THAT HAVE A REPORT BUT THE OWNER OR INSURANCE COMPANY IS NON-RESPONSIVE, COPIES OF THE COMMUNICATION SHALL BE SUBMITTED TO THE PROJECT PER 107.15B. FOR BOTH CONDITIONS LISTED ABOVE, THE ENGINEER SHALL DETERMINE WHAT ITEMS CAN BE REPAIRED AND WHAT ITEMS NEED COMPLETELY REPLACED.

THE WORK WILL BE AS DIRECTED BY THE ENGINEER AND WILL INCLUDE ALL ASSOCIATED MOT COSTS WITH THE ACTIVITY. THE COST FOR EACH ITEM SHALL BE $1.00. THE FIXED AMOUNT SHOWN IN THE PROPOSAL IS INCLUDED (AS ANY OTHER BID ITEMS) IN THE TOTAL BID AMOUNT. THIS FIXED AMOUNT IS THE DEPARTMENT'S ESTIMATE OF THE TOTAL COST OF REPAIRING SAFETY ITEMS REQUIRED TO BE PERFORMED WITHIN THE WORK LIMITS AS DIRECTED BY THE ENGINEER. C&MS TABLE 104.02-2 DOES NOT APPLY TO REDUCTIONS IN THIS CONTRACT ITEM. FORCE ACCOUNT RECORDS SHALL BE KEPT TO TRACK AND ULTIMATELY DETERMINE THE AMOUNT OF THE PAY ITEM USED. THE WORK ITEM SHALL INCLUDE ALL WORK, AS DIRECTED BY THE ENGINEER, NEEDED TO REPAIR OR REPLACE DAMAGED SAFETY ITEMS.

ITEM 614 - MAINTAINING TRAFFIC, MISC.: SAFETY REPAIRS 50,000 EACH

MAINTENANCE OF TRAFFIC GENERAL NOTES

DESIGN AGENCY
ms consultants, inc.

DESIGNER KJF
REVIEWER KWR 06/02/25
PROJECT ID 121474
SHEET P.58 TOTAL 655

MAH-680-4.58

MODEL: Sheet PAPERSIZE: 34x22 (in.) DATE: 9/15/2025 TIME: 9:00:16 AM PLTDRV: OHDOT_PDF_E+.pltcfg PENTBL: OHDOT_Pen.tbl USER: DHall@msconsultants.com WORKSPACE: OHDOTCEv02 WORKSET: 121474 PRODUCT: OpenRoadsDesigner 24.00.00.205
pw:\\ohiodot-pw.bentley.com:ohiodot-pw-02\Documents\01 Active Projects\District 04\Mahoning\121474\402-Engineering_MSConsultants\MOT\Sheets\121474_MN007.dgn

MODEL: Sheet PAPERSIZE: 34x22 (in.) DATE: 9/15/2025 TIME: 9:00:21 AM PLTDRV: OHDOT_PDF_E+.pltcfg PENTBL: OHDOT_Pen.tbl USER: DHall@msconsultants.com WORKSPACE: OHDOTCEv02 WORKSET: 121474 PRODUCT: OpenRoadsDesigner 24.00.00.205
pw:\\ohiodot-pw.bentley.com:ohiodot-pw-02\Documents\01 Active Projects\District 04\Mahoning\121474\402-Engineering_MSConsultants\MOT\Sheets\121474_MN008.dgn

WORKSITE TRAFFIC SUPERVISOR

SUBJECT TO APPROVAL OF THE ENGINEER, THE CONTRACTOR SHALL EMPLOY AND IDENTIFY (SOMEONE OTHER THAN THE SUPERINTENDENT) A PREQUALIFIED WORKSITE TRAFFIC SUPERVISOR (WTS) BEFORE STARTING WORK IN THE FIELD. THE WTS SHALL BE TRAINED IN ACCORDANCE WITH CMS 614.03, SHALL HAVE SUCCESSFULLY COMPLETED ODOT ADMINISTERED WTS TESTING (AND RE-TESTING WHEN APPLICABLE) AND BE LISTED ON THE ODOT PREQUALIFIED WTS ROSTER. PREQUALIFICATION EXPIRES EVERY 5 YEARS. RE-TESTING SHALL BE SUCCESSFULLY REPEATED EVERY 5 YEARS TO REMAIN PREQUALIFIED.

THE NAME OF THE PREQUALIFIED WTS AND RELATED 24-HOUR CONTACT INFORMATION SHALL BE PROVIDED TO THE ENGINEER AT THE PRECONSTRUCTION CONFERENCE. IF THE DESIGNATED WTS WILL NOT BE AVAILABLE FULL TIME (24/7), THE CONTRACTOR MAY DESIGNATE AN ALTERNATE (SECONDARY) WTS TO BE AVAILABLE WHEN THE PRIMARY IS OFF DUTY; HOWEVER, THE PRIMARY WTS SHALL REMAIN THE POINT OF CONTACT AT ALL TIMES. ANY ALTERNATE (SECONDARY) WTS IS SUBJECT TO THE SAME TRAINING, PREQUALIFICATION AND OTHER REQUIREMENTS OUTLINED WITHIN THIS PLAN NOTE. AT ALL TIMES THE ENGINEER, OR ENGINEER'S REPRESENTATIVES, MUST BE INFORMED OF WHO THE PRIMARY WTS (AND SECONDARY WTS, IF APPLICABLE) IS AT THE CURRENT TIME.

THE WTS POSITION HAS THE PRIMARY RESPONSIBILITY OF IMPLEMENTING THE TRAFFIC MANAGEMENT PLAN (TMP), MONITORING THE SAFETY AND MOBILITY OF THE ENTIRE WORK ZONE, AND CORRECTING TEMPORARY TRAFFIC CONTROL (TTC) DEFICIENCIES FOR THE ENTIRE WORK ZONE. THE WTS, AND ALTERNATE WTS WHEN ON DUTY, SHALL HAVE SUFFICIENT AUTHORITY TO EFFECTIVELY CARRY OUT THE IDENTIFIED WTS RESPONSIBILITIES AND DUTIES. THE DUTIES OF THE WTS ARE AS FOLLOWS:

1. BE AVAILABLE ON A 24-HOUR PER DAY BASIS.

2. BE ON SITE FOR ALL EMERGENCY TTC NEEDS WITHIN ONE HOUR OF NOTIFICATION BY POLICE OR PROJECT STAFF, AND EFFECT CORRECTIVE MEASURES IMMEDIATELY ON EXISTING WORK ZONE TTC DEVICES.

3. ATTEND PRECONSTRUCTION MEETING AND ALL PROJECT MEETINGS WHERE TTC MANAGEMENT IS DISCUSSED.

4. BE AVAILABLE ON SITE FOR OTHER MEETINGS OR DISCUSSIONS WITH THE ENGINEER UPON REQUEST.

5. BE AWARE OF ALL EXISTING AND PROPOSED TTC OPERATIONS OF THE CONTRACTOR, SUBCONTRACTORS AND SUPPLIERS, AND ENSURE COORDINATION OCCURS BETWEEN THEM TO ELIMINATE CONFLICTING TEMPORARY AND/OR PERMANENT TRAFFIC CONTROL.

6. COORDINATE PROJECT ACTIVITIES WITH ALL LAW ENFORCEMENT OFFICERS (LEOS). THE WTS SHALL ALSO BE THE MAIN CONTACT PERSON WITH THE LEOS WHILE LEOS ARE ON THE PROJECT.

7. COORDINATE AND FACILITATE MEETINGS WITH ODOT PERSONNEL, LEOS AND OTHER APPLICABLE ENTITIES BEFORE EACH PLAN PHASE SWITCH TO DISCUSS THE WORK ZONE TTC FOR IMPLEMENTING THE PHASE SWITCH. SUBMIT A WRITTEN DETAIL OF MOT OPERATIONS AND SCHEDULE OF EVENTS TO IMPLEMENT THE SWITCH BETWEEN PHASE PLANS TO THE ENGINEER 5 CALENDAR DAYS PRIOR TO THIS MEETING.

8. BE PRESENT, ON SITE FOR, AND INVOLVED WITH, EACH TTC SET UP/TAKE DOWN AND EACH PHASE CHANGE IN ACCORDANCE WITH CMS 614.03.

9. ON A CONTINUAL BASIS ENSURE THAT THE TTC ZONE AND ALL RELATED DEVICES ARE INSTALLED, MAINTAINED AND REMOVED IN COMPLIANCE WITH THE CONTRACT DOCUMENTS.

10. ON A CONTINUAL BASIS FACILITATE CORRECTIVE ACTION(S) NECESSARY TO BRING DEFICIENT TTC ZONES AND ALL RELATED DEVICES INTO COMPLIANCE WITH CONTRACT DOCUMENTS IN THE TIMEFRAME DETERMINED BY THE ENGINEER.

11. INSPECT, EVALUATE, PROPOSE NECESSARY MODIFICATIONS TO, AND DOCUMENT THE EFFECTIVENESS OF, THE TTC DEVICES AND TRAFFIC OPERATIONS ON A DAILY BASIS (7 DAYS A WEEK). IN ADDITION, PERFORM ONE WEEKLY NIGHT INSPECTION OF THE WORK ZONE SETUP FOR DAYTIME WORK OPERATIONS; AND ONE DAYTIME INSPECTION PER WEEK FOR NIGHTTIME PROJECTS. THIS SHALL INCLUDE (BUT NOT BE LIMITED TO) DOCUMENTATION ON THE FOLLOWING PROJECT EVENTS:

- *A. INITIAL TTC SETUP (DAY AND NIGHT REVIEW).*
- *B. DAILY TTC SETUP AND REMOVAL.*
- *C. WHEN CONSTRUCTION STAGING CAUSES A CHANGE IN THE TTC SETUP.*
- *D. CRASH OCCURRENCES WITHIN THE CONSTRUCTION AREA AND WITHIN THE INFLUENCE AREA(S) APPROACHING THE WORK ZONE.*
- *E. REMOVAL OF TTC DEVICES AT THE END OF A PHASE OR PROJECT.*
- *F. ALL OTHER EMERGENCY TTC NEEDS.*

12. COMPLETE THE DEPARTMENT APPROVED (CA-D-8) WITHIN GOFORMZ AFTER EACH INSPECTION AS REQUIRED IN # 11 AND SUBMIT IT TO THE ENGINEER BY THE END OF THE WORKDAY IN WHICH THE INSPECTION OCCURRED. THE CA-D-8 INCLUDES A CHECKLIST OF ALL TTC MAINTENANCE ITEMS TO BE REVIEWED. CONTACT GOFORMZ.HELP@DOT.OHIO.GOV TO OBTAIN A USER ACCOUNT. ANY DEFICIENCIES OBSERVED SHALL BE NOTED ON THE CA-D-8, ALONG WITH RECOMMENDED OR COMPLETED CORRECTIVE ACTIONS AND THE DATES BY WHICH SUCH CORRECTIONS WERE, OR WILL BE, COMPLETED. A COPY OF THE CURRENT CA-D-8 DOCUMENT CAN BE FOUND ON THE OFFICE OF CONSTRUCTION ADMINISTRATION'S INSPECTION FORMS WEBSITE.

13. HAVE COPIES OF THE ODOT TEMPORARY TRAFFIC CONTROL MANUAL AND CONTRACT DOCUMENTS AVAILABLE AT ALL TIMES ON THE PROJECT.

THE DEPARTMENT WILL DEDUCT:

A. THE PRORATED DAILY AMOUNT OF ITEM 614 MAINTAINING TRAFFIC FOR ANY DAY IN WHICH THE WTS FAILS TO PERFORM THE DUTIES SET FORTH ABOVE. THE PRORATED DAILY AMOUNT WILL BE EQUAL TO THE ORIGINAL BID AMOUNT FOR ITEM 614 MAINTAINING TRAFFIC DIVIDED BY THE DIFFERENCE BETWEEN THE ORIGINAL COMPLETION DATE AND THE FIRST DAY OF WORK, IN CALENDAR DAYS.

B. 1% OF THE ORIGINAL BID AMOUNT FOR ITEM 614 MAINTAINING TRAFFIC FOR ANY DAY THAT A FAILURE TO PERFORM WTS DUTIES REOCCURS OR A TTC ISSUE IS IDENTIFIED IN THE FIELD AND IS NOT CORRECTED IN THE GIVEN TIMEFRAME PER THE ENGINEER. DEDUCTION B SHALL NOT APPLY TO SITUATIONS COVERED BY DEDUCTION C.

C. 1% OF THE ORIGINAL BID AMOUNT FOR ITEM 614 MAINTAINING TRAFFIC FOR ANY DAY THAT A LANE OR RAMP IS BLOCKED (FULLY OR PARTIALLY) WITHOUT TTC, AS DETERMINED BY THE ENGINEER. THIS DEDUCTION SHALL BE IN ADDITION TO ANY OTHER DISINCENTIVES ESTABLISHED FOR UNAUTHORIZED LANE USE.

FOR DAYS IN WHICH MORE THAN ONE DEDUCTION LISTED ABOVE OCCUR, THE HIGHEST DEDUCTION AMOUNT WILL APPLY.

IF THREE OR MORE TOTAL DAYS RESULT IN ISSUES DESCRIBED IN DEDUCTION B OR C ABOVE, THE PRIMARY WTS (AND ANY ALTERNATE WTS, IF APPLICABLE) SHALL BE IMMEDIATELY REMOVED FROM THE WORK IN ACCORDANCE WITH C&MS 108.05. UPON REMOVAL THE ENGINEER SHALL NOTIFY ODOT CENTRAL OFFICE (WTSPREQUALIFICATION@DOT.OHIO.GOV) TO REGISTER A REMOVAL AT THE PROJECT LEVEL AGAINST THE STATEWIDE PREQUALIFICATION FOR THE PRIMARY WTS (AND ALTERNATE WTS, IF APPLICABLE). ACCUMULATION OF THREE PROJECT LEVEL REMOVALS (FROM ANY PROJECTS STATEWIDE) SHALL CAUSE STATEWIDE DISQUALIFICATION FOR ANY FORMERLY PREQUALIFIED WTS. A WTS (AND ALTERNATE WTS, IF APPLICABLE) MAY BE IMMEDIATELY AND CONCURRENTLY REMOVED FROM THE WORK AT THE PROJECT LEVEL IN ACCORDANCE WITH C&MS 108.05 AND DISQUALIFIED STATEWIDE FROM THE ODOT PREQUALIFIED WTS ROSTER (REGARDLESS OF THE NUMBER OF PROJECT LEVEL REMOVALS), AS WELL AS BEING SUBJECT TO OTHER POTENTIAL CONSEQUENCES, IN CASES OF FALSIFIED, DISHONEST OR OTHERWISE UNETHICAL ACTIVITY OR DOCUMENTATION.

PAYMENT FOR THE ABOVE REQUIREMENTS, RESPONSIBILITIES AND DUTIES SHALL BE INCLUDED IN THE LUMP SUM PRICE BID FOR ITEM 614, MAINTAINING TRAFFIC.

Preliminary Plans - For Reference Only

DESIGN AGENCY
ms consultants. inc.

DESIGNER
KJF

REVIEWER
KWR 06/02/25

PROJECT ID
121474

SHEET P.59 | TOTAL 655

Preliminary Plans - For Reference Only

TRAFFIC INCIDENT MANAGEMENT (TIM) DURING MOT

OHIO TIM IS OHIO'S TRAFFIC INCIDENT MANAGEMENT PROGRAM WHICH IS COMMITTED TO MAINTAINING THE SAFE AND EFFECTIVE FLOW OF TRAFFIC DURING EMERGENCIES AS TO PREVENT FURTHER DAMAGE, INJURY OR UNDUE DELAY OF THE MOTORING PUBLIC. IN ADDITION TO COMPLYING WITH THE PROVISION OF OMUTCD CHAPTER 6I, CONTROL OF TRAFFIC THROUGH TRAFFIC INCIDENT MANAGEMENT AREAS, THE CONTRACTOR SHALL ACTIVELY PARTICIPATE IN TIM PLANNING AND IMPLEMENTATION AS OUTLINED BELOW.

1. SUPERINTENDENT SHALL IDENTIFY THE INDIVIDUAL PERSONS ON THE PROJECT WHO WILL, OR MAY NEED TO, PERFORM THE DUTIES HEREIN. AT A MINIMUM, INCLUDE THE SUPERINTENDENT, FOREMEN AND SUPERVISORS (OR EQUIVALENT) AS WELL AS THE WORKSITE TRAFFIC SUPERVISOR (WTS; IF APPLICABLE TO THE PROJECT). THESE INDIVIDUALLY IDENTIFIED PERSONS SHALL COLLECTIVELY BE KNOWN AS CONTRACTOR TRAFFIC INCIDENT MANAGEMENT (TIM) CONTACTS. NOTIFY THE PROJECT ENGINEER OF THE CONTRACTOR TIM CONTACTS (ALONG WITH CONTACT INFORMATION FOR EACH) AT OR BEFORE THE PRECONSTRUCTION MEETING.

2. SUPERINTENDENT SHALL NOTIFY THE ENGINEER IMMEDIATELY IF ANY CONTRACTOR TIM CONTACT IS ADDED, REMOVED OR THE CONTACT INFORMATION CHANGES OVER THE COURSE OF THE PROJECT.

3. PRIOR THE FIRST DAY OF WORK IN THE FIELD, EACH CONTRACTOR TIM CONTACT ON THE PROJECT SHALL HAVE ATTENDED AND SUCCESSFULLY COMPLETED OHIO TIM TRAINING PROVIDED BY THE DEPARTMENT OR DESIGNEE. TRAINING INFORMATION CAN BE FOUND ONLINE.

4. SUPERINTENDENT, AT A MINIMUM, SHALL ATTEND AND ACTIVELY PARTICIPATE IN A DEPARTMENT SCHEDULED TIM MEETING BEFORE CONSTRUCTION WORK BEGINS AND BEFORE EACH PHASE CHANGE. THESE MEETINGS WILL RESULT IN A DEPARTMENT ISSUED PROJECT SPECIFIC TRAFFIC INCIDENT MANAGEMENT PLAN (TIMP). AT THE TIM MEETINGS THE ATTENDING CONTRACTOR TIM CONTACTS SHALL:

- *A. COLLABORATE WITH ODOT AND SAFETY FORCES;*
- *B. SHARE PROJECT SPECIFIC DETAILS THAT IMPACT TIM RESPONDERS; AND*
- *C. RECOMMEND WAYS TO INCORPORATE NECESSARY EMERGENCY ACCESS AND OTHER TIM ELEMENTS FOR TIM RESPONDERS GIVEN PROJECT SPECIFIC WORK BEING COMPLETED AND PROJECT SPECIFIC PHASING.*

5. CONTRACTOR TIM CONTACTS SHALL IMPLEMENT COMPONENTS OF THE RESULTING TIMP (SUCH AS APPROVED EMERGENCY INGRESS/EGRESS POINTS, ETC), AS DIRECTED BY THE ENGINEER IN ACCORDANCE WITH 109.05.

6. CONTRACTOR TIM CONTACTS SHALL PERFORM, AT A MINIMUM, THE FOLLOWING FUNCTIONS WHEN AN INCIDENT/CRASH OCCURS:

A. IF OBSERVED OR PRESENT WHEN OCCURS, CALL 911 AND THEN NOTIFY THE TRAFFIC MANAGEMENT CENTER (TMC) TO PROVIDE THE FOLLOWING:

I. LOCATION, INCLUDING MILEPOST NUMBER AND DIRECTION OF TRAVEL
II. NUMBER AND TYPE OF VEHICLES INVOLVED, IF KNOWN
III. ESTIMATED EXTENT OF DAMAGE OR INJURY, IF KNOWN
IV. ESTIMATED NUMBER OF PATIENTS INVOLVED, IF KNOWN
V. ANY POTENTIAL HAZARDOUS CONDITIONS, IF KNOWN
VI. THE PLACARD NUMBER ON ANY HAZARDOUS MATERIALS PLACARD FROM A SAFE DISTANCE, IF APPLICABLE AND VISIBLE

B. FOLLOWING AN INCIDENT/CRASH:

I. INITIATE TRAFFIC MANAGEMENT/PROVIDE TEMPORARY TRAFFIC CONTROL AS INDICATED IN THE TIMP, AS DIRECTED BY THE ENGINEER IN ACCORDANCE WITH 109.05.
II. RECOMMEND ROADWAY REPAIR NEEDS.
III. PROVIDE REPAIR RESOURCES AND INITIATE REPAIRS, AS DIRECTED BY THE ENGINEER IN ACCORDANCE WITH 109.05.
IV. ATTEND AND PARTICIPATE IN AN AFTER ACTION REVIEW (AAR).

ALL COSTS, UNLESS OTHERWISE SPECIFIED, RESULTING FROM THE ABOVE REQUIREMENTS SHALL BE CONSIDERED TO BE INCLUDED IN THE LUMP SUM PRICE FOR ITEM 614, MAINTAINING TRAFFIC. FAILURE TO PERFORM THE REQUIREMENTS OF THIS PLAN NOTE WILL RESULT IN A DAILY FINE OF 2% OF ITEM 614, MAINTAINING TRAFFIC AND MAY RESULT IN ONE OR MORE CONTRACTOR TIM CONTACTS BEING REMOVED FROM THE LIST OF OHIO TIM TRAINED INDIVIDUALS (AT THE SOLE DISCRETION OF THE OHIO TIM EXECUTIVE COMMITTEE). IN THE EVENT AN INDIVIDUAL IS REMOVED FROM THE OHIO TIM TRAINED LIST, THE INDIVIDUAL WILL BE REMOVED FROM CONTRACTOR TIM CONTACT RESPONSIBILITIES ON ALL PROJECTS.

NOTIFICATION OF TRAFFIC RESTRICTIONS

THROUGHOUT THE DURATION OF THE PROJECT, THE CONTRACTOR SHALL NOTIFY THE PROJECT ENGINEER IN WRITING OF ALL TRAFFIC RESTRICTIONS AND UPCOMING MAINTENANCE OF TRAFFIC CHANGES. THE CONTRACTOR SHALL ENSURE THE WRITTEN NOTIFICATION IS SUBMITTED IN A TIMELY MANNER TO ALLOW THE PROJECT ENGINEER TO MEET THE REQUIRED TIME FRAMES SET FORTH IN THE TABLE BELOW TO INFORM THE SPECIAL HAULING PERMITS SECTION (HAULING.PERMITS@DOT.OHIO.GOV) AND THE DISTRICT PUBLIC INFORMATION OFFICE (PIO). THIS NOTIFICATION SHALL BE RECEIVED BY THE PROJECT ENGINEER PRIOR TO THE PHYSICAL SETUP OF ANY APPLICABLE SIGNS OR MESSAGE BOARDS.

INFORMATION SHOULD INCLUDE, BUT IS NOT LIMITED TO, ALL CONSTRUCTION ACTIVITIES THAT IMPACT OR INTERFERE WITH TRAFFIC AND SHALL LIST THE SPECIFIC LOCATION, TYPE OF WORK, ROAD STATUS, DATE AND TIME OF RESTRICTION, DURATION OF RESTRICTION, NUMBER OF LANES MAINTAINED, NUMBER OF LANES CLOSED, MINIMUM VERTICAL CLEARANCE, MINIMUM WIDTH OF DRIVABLE PAVEMENT, DETOUR ROUTES, IF APPLICABLE, AND ANY OTHER INFORMATION REQUESTED BY THE PROJECT ENGINEER.

NOTIFICATION OF TRAFFIC RESTRICTIONS TIME TABLE

ITEM	*DURATION OF CLOSURE*	*NOTICE DUE TO PERMITS & PIO*
RAMP & ROAD CLOSURES	*≥ 2 WEEKS*	*21 CALENDAR DAYS PRIOR TO CLOSURE*
	> 12 HOURS & < 2 WEEKS	*14 CALENDAR DAYS PRIOR TO CLOSURE*
	≤ 12 HOURS	*4 BUSINESS DAYS PRIOR TO CLOSURE*
LANE CLOSURES & RESTRICTIONS	*≥ 2 WEEKS*	*14 CALENDAR DAYS PRIOR TO CLOSURE*
	< 2 WEEKS	*5 BUSINESS DAYS PRIOR TO CLOSURE*
START OF CONSTRUCTION & TRAFFIC PATTERN CHANGES	*N/A*	*14 CALENDAR DAYS PRIOR TO IMPLEMENTATION*

ADVANCED NOTICE TO PAVE

THE CONTRACTOR SHALL SUBMIT FOR APPROVAL TO THE DISTRICT CONSTRUCTION ENGINEER A DETAILED SCHEDULE 15 DAYS PRIOR TO THE PLACEMENT OF THE OVERLAY COURSES, ON HOW THEY PROPOSE TO PROSECUTE THE PAVING OPERATIONS. THE DETAILS SHALL SHOW THE ORDER OF PERFORMANCE OF EACH STAGE (START TO FINISH) OF THE WORK INCLUDING THE MAINTENANCE OF TRAFFIC THAT WILL BE USED.

MAINTENANCE OF TRAFFIC GENERAL NOTES

DESIGN AGENCY
ms consultants, inc.

DESIGNER KJF
REVIEWER KWR 06/02/25
PROJECT ID 121474
SHEET P.60 TOTAL 655

MAH-680-4.58

MODEL: Sheet PAPERSIZE: 34x22 (in.) DATE: 9/15/2025 TIME: 9:00:26 AM PLTDRV: OHDOT_PDF_E+.pltcfg PENTBL: OHDOT_Pen.tbl USER: DHall@msconsultants.com WORKSPACE: OHDOTCEv02 WORKSET: 121474 PRODUCT: OpenRoadsDesigner 24.00.00.205
pw:\\ohiodot-pw.bentley.com:ohiodot-pw-02\Documents\01 Active Projects\District 04\Mahoning\121474\402-Engineering_MSConsultants\MOT\Sheets\121474_MN009.dgn

SHEET NO.	STATION TO STATION					614 INCREASED BARRIER DELINEATION FT	614 WORK ZONE IMPACT ATTENUATOR, 24" WIDE HAZARDS, (UNIDIRECTIONAL) EACH	614 WORK ZONE RAISED PAVEMENT MARKER, AS PER PLAN, ONE-WAY, WHITE EACH	614 WORK ZONE RAISED PAVEMENT MARKER, AS PER PLAN, ONE-WAY, YELLOW EACH	614 BARRIER REFLECTOR, TYPE 1, ONE-WAY EACH	614 OBJECT MARKER, ONE WAY EACH	614 OBJECT MARKER, TWO WAY EACH	614 WORK ZONE LANE LINE, CLASS I, 6", 807 PAINT FT/MI	614 WORK ZONE LANE LINE, CLASS I, 6", 648 FT/MI	614 WORK ZONE EDGE LINE, CLASS I, 6", 807 PAINT, WHITE FT/MI	614 WORK ZONE EDGE LINE, CLASS I, 6", 807 PAINT, YELLOW FT/MI	614 WORK ZONE EDGE LINE, CLASS I, 6", 648, WHITE FT/MI	614 WORK ZONE EDGE LINE, CLASS I, 6", 648, YELLOW FT/MI	614 WORK ZONE CHANNELIZING LINE, CLASS I, 12", 807 PAINT FT	614 WORK ZONE CHANNELIZING LINE, CLASS I, 12", 648 FT	614 WORK ZONE DOTTED LINE, CLASS I, 6", 807 PAINT FT	614 WORK ZONE DOTTED LINE, CLASS I, 6", 648 FT	614 WORK ZONE TRANSVERSE/DIAGONAL LINE, CLASS I, 648 FT	614 WORK ZONE STOP LINE, CLASS I, 648 FT	614 WORK ZONE CROSSWALK LINE, CLASS I, 12" FT	614 WORK ZONE ARROW, CLASS I, 648 EACH	614 WORK ZONE ARROW, CLASS I, 648, AS PER PLAN EACH	615 PAVEMENT FOR MAINTAINING TRAFFIC, CLASS A, AS PER PLAN SY	622 PORTABLE BARRIER, 50", AS PER PLAN, A FT	622 PORTABLE BARRIER, 50", AS PER PLAN, B FT	622 PORTABLE BARRIER, UNANCHORED FT	630 SIGN, TEMPORARY OVERLAY SF	630 COVERING OF SIGN SF	630 REMOVAL OF TEMPORARY OVERLAY SIGN AND DISPOSAL EACH
PHASE 1A STEP 1																																			
I-680																																			
P.88	933+75	RT	TO	936+95	RT			30	30																										
	933+75	RT	TO	939+75	RT																600														
	933+75	RT	TO	951+80	RT			120											1805																
	936+95	RT	TO	942+97	RT			60							602																				
	936+96	RT	TO	951+80	RT				100							1484																				
	939+30	LT	TO	939+90	LT			6																												
	939+30	LT	TO	942+30	LT			30	30																											
	939+75	RT	TO	946+03	RT			30											628																
	939+30	LT	TO	948+30	LT			90											900																
	942+30	LT	TO	949+44	LT			60							714																				
	942+30	LT	TO	951+80	LT				60							950																				
	944+26	RT	TO	950+85	RT	607	1			5	26																							659		
	945+30	R/L	TO	951+11	R/L																											711				
	945+30	LT	TO	951+80	LT					65	26																							650		
	946+03	RT	TO	951+80	RT			40							577																				
	948+30	LT	TO	951+80	LT			3						350																						
	949+44	LT	TO	951+80	LT														236																	
P.89	951+80	LT	TO	951+94	LT														14																	
	951+80	LT	TO	951+94	LT		1	1																									14			
	951+80	RT	TO	952+67	RT										87																					
	951+80	LT	TO	953+60	LT			2						180																						
	951+80	RT	TO	954+60	RT				28							280																				
	951+80	RT	TO	957+59	RT			58											579																	
	951+80	LT	TO	959+60	LT			60								780																				
	951+94	LT	TO	953+60	LT			1						166																						
	952+67	RT	TO	954+60	RT			19											193																	
	952+68	LT	TO	953+25	LT										57																					
	953+25	LT	TO	955+72	LT			21											247																	
	953+60	LT	TO	962+61	LT			180											1802																	
	954+60	RT	TO	957+60	RT			30	30																											
	955+72	LT	TO	959+40	LT			37													368															
	959+40	LT	TO	962+60	LT			32																												
	959+60	LT	TO	962+60	LT				30																											
P.90	1037+72	RT	TO	1040+72	RT			30	30																											
	1037+72	RT	TO	1051+50	RT			107											1378																	
	1040+72	RT	TO	1051+50	RT			77	77						1078	1078																				
	1041+62	LT	TO	1044+62	LT			30	30																											
	1041+62	LT	TO	1050+62	LT			90											900																	
	1044+62	LT	TO	1051+05	LT			60							643																					
	1044+62	LT	TO	1051+50	LT				60							688																				
	1047+62	LT	TO	1051+50	LT					39	16																							388		
	1047+82	R/L	TO	1051+50	R/L																											548				
	1048+22	RT	TO	1051+50	RT	198	1			13	13																							328		
	1050+62	LT	TO	1051+50	LT			1						88																						
	1051+05	LT	TO	1051+50	LT														45																	
	RAMP NB																																			
	1050+69	RT	TO	1051+51	RT														82																	
P.91	I-680																																			
	1051+50	LT	TO	1052+50	LT		1			10	4																							100		
	1051+50	R/L	TO	1052+62	R/L																											99				
	1051+50	RT	TO	1052+82	RT					13	5																							132		
	1051+50	LT	TO	1054+00	LT			2						250																						
	1051+50	RT	TO	1055+82	RT			43	43						432	432																				
	1051+50	RT	TO	1058+82	RT			73											732																	
TOTALS IN FEET														1034		4190	5692																		
TOTALS IN MILES														0.20		0.79	1.08																		
TOTALS CARRIED TO SHEET P.74						805	4	1423	548	145	90		0.20		0.79	1.08			9541		968								1358			2271				

Preliminary Plans - For Reference Only

MAINTENANCE OF TRAFFIC
SUBSUMMARY

DESIGN AGENCY
ms consultants. inc.

DESIGNER CLM
REVIEWER KWR 06/02/25
PROJECT ID 121474
SHEET P.61 TOTAL 655

MAH-680-4.58

MODEL: Sheet PAPERSIZE: 34x22 (in.) DATE: 9/15/2025 TIME: 9:01:14 AM PLTDRV: OHDOT_PDF_E+.pltcfg PENTBL: OHDOT_Pen.tbl USER: DHall@msconsultants.com WORKSPACE: OHDOTCEv02 WORKSET: 121474 PRODUCT: OpenRoadsDesigner 24.00.00.205
pw:\\ohiodot-pw.bentley.com:ohiodot-pw-02\Documents\01 Active Projects\District 04\Mahoning\121474\02-Engineering_MSConsultants\MOT\Sheets\121474_MS001.dgn

SHEET NO.	STATION TO STATION	614 INCREASED BARRIER DELINEATION FT	614 WORK ZONE IMPACT ATTENUATOR, 24" WIDE HAZARDS, (UNIDIRECTIONAL) EACH	614 WORK ZONE RAISED PAVEMENT MARKER, AS PER PLAN, ONE-WAY, WHITE EACH	614 WORK ZONE RAISED PAVEMENT MARKER, AS PER PLAN, ONE-WAY, YELLOW EACH	614 BARRIER REFLECTOR, TYPE 1, ONE-WAY EACH	614 OBJECT MARKER, ONE WAY EACH	614 OBJECT MARKER, TWO WAY EACH	614 WORK ZONE LANE LINE, CLASS I, 6", 807 PAINT FT/MI	614 WORK ZONE LANE LINE, CLASS I, 6", 648 FT/MI	614 WORK ZONE EDGE LINE, CLASS I, 6", 807 PAINT, WHITE FT/MI	614 WORK ZONE EDGE LINE, CLASS I, 6", 807 PAINT, YELLOW FT/MI	614 WORK ZONE EDGE LINE, CLASS I, 6", 648, WHITE FT/MI	614 WORK ZONE EDGE LINE, CLASS I, 6", 648, YELLOW FT/MI	614 WORK ZONE CHANNELIZING LINE, CLASS I, 12", 807 PAINT FT	614 WORK ZONE CHANNELIZING LINE, CLASS I, 12", 648 FT	614 WORK ZONE DOTTED LINE, CLASS I, 6", 807 PAINT FT	614 WORK ZONE DOTTED LINE, CLASS I, 6", 648 FT	614 WORK ZONE TRANSVERSE/DIAGONAL LINE, CLASS I, 648 FT	614 WORK ZONE STOP LINE, CLASS I, 648 FT	614 WORK ZONE CROSSWALK LINE, CLASS I, 12" FT	614 WORK ZONE ARROW, CLASS I, 648 EACH	614 WORK ZONE ARROW, CLASS I, 648, AS PER PLAN EACH	615 PAVEMENT FOR MAINTAINING TRAFFIC, CLASS A, AS PER PLAN SY	622 PORTABLE BARRIER, 50", AS PER PLAN, A FT	622 PORTABLE BARRIER, 50", AS PER PLAN, B FT	622 PORTABLE BARRIER, UNANCHORED FT	630 SIGN, TEMPORARY OVERLAY SF	630 COVERING OF SIGN SF	630 REMOVAL OF TEMPORARY OVERLAY SIGN AND DISPOSAL EACH
PHASE 1A STEP 1																														
	I-680																													
P.91	1051+50 LT TO 1060+00 LT				60							850																		
	1051+50 LT TO 1064+50 LT			90											1300															
	1054+00 LT TO 1064+50 LT														1050															
	1054+05 LT TO 1060+00 LT			60							595																			
	1055+82 RT TO 1058+82 RT			30	30																									
	1060+00 LT TO 1063+00 LT			30	30																									
	RAMP NB																													
	1051+51 RT TO 1054+86 RT			9											335															
PHASE 1A STEP 2																														
	I-680																													
P.92	933+75 RT TO 942+30 RT			7					855																					
	933+75 RT TO 943+01 RT			8					926																					
	936+75 RT TO 942+97 RT										622																			
	937+49 RT																												12	1
	942+30 RT TO 945+29 RT			30											299															
	943+01 RT TO 944+62 RT														161															
	943+01 RT TO 945+29 RT			46											456															
	948+21 RT TO 955+50 LT		1			73	29																					729		
	950+66 LT TO 953+66 LT			30											300															
	950+66 LT TO 955+50 LT			30	30						484	484																		
	953+66 LT TO 955+50 LT			2					184																					
	I-680 SB CROSS-OVER																													
	0+00 RT TO 5+47 RT			110	55						547	547			547															
	S.R.193																													
	3+78 LT																												12	1
	I-680																													
P.93	955+50 LT TO 978+00 LT			19		225	90		2250		2250	2250																	2250	
	968+93 RT																												12	1
	973+40 LT TO 975+10 LT		1			17	7																						170	
	RAMP G																													
	2+64 RT																												20	
	I-680																													
P.94	978+00 LT TO 1000+50 LT			19		225	90		2250		2250	2250																	2250	
	981+34 RT																												24	2
	EDWARDS ST.																												40	
	I-680																													
P.95	1000+50 LT TO 1023+00 LT			19		225	90		2250		2250	2250																	2250	
	1004+11 RT																												12	1
	1019+97 RT																												24	2
	I-680																													
P.96	1023+00 LT TO 1044+82 LT			18					2182																					
	1023+00 LT TO 1045+50 LT	448		7	7	180	90				2250	2250																	2250	
	1023+74 LT TO 1024+56 LT		1			8	3																						82	
	1029+24 RT																												12	1
	1029+55 LT TO 1029+97 LT		1			4	2																						42	
	1042+63 LT TO 1043+40 LT		1			8	3																						77	
	1044+82 LT TO 1045+50 LT			7											68															
	RAMP L																													
	2+19 RT																												16	
	MARKET ST.																												18	2
	I-680																													
P.97	1045+50 LT TO 1047+81 LT	231		46	23		9				231	231			231														231	
	1047+73 LT TO 1055+40 LT	68	2			70	31																						767	
	1052+06 R/L		1																											
TOTALS IN FEET									10897		11479	11112																		
TOTALS IN MILES									2.06		2.17	2.10																		
TOTALS CARRIED TO SHEET P.74		747	8	617	235	1035	444		2.06		2.17	2.10			4747														11098	126	76	11

Preliminary Plans - For Reference Only

MAINTENANCE OF TRAFFIC
SUBSUMMARY

DESIGN AGENCY
ms consultants, inc.

DESIGNER CLM

REVIEWER KWR 06/02/25

PROJECT ID 121474

SHEET P.62 TOTAL 655

MAH-680-4.58

MODEL: Sheet PAPERSIZE: 34x22 (in.) DATE: 9/15/2025 TIME: 9:01:18 AM PLTDRV: OHDOT_PDF_E+.pltcfg PENTBL: OHDOT_Pen.tbl USER: DHall@msconsultants.com WORKSPACE: OHDOTCEv02 WORKSET: 121474 PRODUCT: OpenRoadsDesigner 24.00.00.205
pw:\\ohiodot-pw.bentley.com:ohiodot-pw-02\Documents\01 Active Projects\District 04\Mahoning\121474\02-Engineering_MSConsultants\MOT\Sheets\121474_MS002.dgn

SHEET NO.	STATION TO STATION	614 INCREASED BARRIER DELINEATION FT	614 WORK ZONE IMPACT ATTENUATOR, 24" WIDE HAZARDS, (UNIDIRECTIONAL) EACH	614 WORK ZONE RAISED PAVEMENT MARKER, AS PER PLAN, ONE-WAY, WHITE EACH	614 WORK ZONE RAISED PAVEMENT MARKER, AS PER PLAN, ONE-WAY, YELLOW EACH	614 BARRIER REFLECTOR, TYPE 1, ONE-WAY EACH	614 OBJECT MARKER, ONE WAY EACH	614 OBJECT MARKER, TWO WAY EACH	614 WORK ZONE LANE LINE, CLASS I, 6", 807 PAINT FT/MI	614 WORK ZONE LANE LINE, CLASS I, 6", 648 FT/MI	614 WORK ZONE EDGE LINE, CLASS I, 6", 807 PAINT, WHITE FT/MI	614 WORK ZONE EDGE LINE, CLASS I, 6", 807 PAINT, YELLOW FT/MI	614 WORK ZONE EDGE LINE, CLASS I, 6", 648, WHITE FT/MI	614 WORK ZONE EDGE LINE, CLASS I, 6", 648, YELLOW FT/MI	614 WORK ZONE CHANNELIZING LINE, CLASS I, 12", 807 PAINT FT	614 WORK ZONE CHANNELIZING LINE, CLASS I, 12", 648 FT	614 WORK ZONE DOTTED LINE, CLASS I, 6", 807 PAINT FT	614 WORK ZONE DOTTED LINE, CLASS I, 6", 648 FT	614 WORK ZONE TRANSVERSE/DIAGONAL LINE, CLASS I, 648 FT	614 WORK ZONE STOP LINE, CLASS I, 648 FT	614 WORK ZONE CROSSWALK LINE, CLASS I, 12" FT	614 WORK ZONE ARROW, CLASS I, 648 EACH	614 WORK ZONE ARROW, CLASS I, 648, AS PER PLAN EACH	615 PAVEMENT FOR MAINTAINING TRAFFIC, CLASS A, AS PER PLAN SY	622 PORTABLE BARRIER, 50", AS PER PLAN, A FT	622 PORTABLE BARRIER, 50", AS PER PLAN, B FT	622 PORTABLE BARRIER, UNANCHORED FT	630 SIGN, TEMPORARY OVERLAY SF	630 COVERING OF SIGN SF	630 REMOVAL OF TEMPORARY OVERLAY SIGN AND DISPOSAL EACH
PHASE 1A STEP 2																															
	I-680																														
	1052+47 LT																												69		3
	1052+62 RT TO 1055+62 RT			30	30											300														
	1052+62 RT TO 1055+82 RT			32									320																		
	1055+82 RT TO 1058+82 RT			3					300																						
P.97	1056+80 LT TO 1059+17 LT			2						237																					
	1056+80 LT TO 1065+80 LT														900																
	1059+80 LT TO 1065+80 LT																		600												
	I-680 SB CROSSOVER																														
	0+00 LT TO 4+84 LT			97	48						484	484				484															
	RAMP NB																														
	1051+04 RT TO 1056+80 LT			5						576					576																
	S.R. 193																														
P.98	5+50 LT TO 6+00 LT											50																	12		
	TO											1034						600													
	WOODLAND AVE.																												18	6	2
	RAMP SB																														
	1031+76 RT TO 1034+27 RT																251														
	RAMP CA																														
	11+03 LT TO 17+41 LT																638														
	12+97 R/L																												9		1
P.99	18+34 RL																												9		1
	RAMP NB																												12		1
	1028+35 RT TO 1031+35 RT			60	30												300														
	1031+35 R/L																										225				
	1031+35 R/L TO 1041+05 R/L			194	97								970	970			970														
	1034+80 RT TO 1039+71 RT	1				49	20																					491			
	1035+05 LT TO 1041+05 LT																										735				
	1041+05 LT TO 1044+05 LT			60	30												300														
PHASE 1B STEP 1																															
	I-680																														
	939+30 L/R TO 955+50 RT			23						2756			836	836																	
	945+29 RT TO 955+50 RT													1021																	
	946+10 R/L TO 950+66 R/L					46		18																							
	950+66 RT TO 952+73 RT												207																		
	952+73 RT TO 954+05 RT																132														
	954+05 RT TO 955+50 RT			1						145																					
	RAMP C																														
	0+52 LT TO 8+58 LT														806																
	0+81 RT TO 20+33 R/L												25																		
P.107	8+58 LT TO 9+18 RT																60														
	10+22 LT TO 17+59 LT														737																
	17+59 LT TO 18+89 LT																130														
	RAMP C-3																														
	951+07 LT TO 956+39 LT														532																
	951+89 LT TO 952+41 LT																52														
	952+41 LT TO 956+39 LT												398																		
	S.R. 193																														
	0+00 LT TO 3+36 LT												336																		
	0+00 LT TO 3+99 LT														399																
	3+36 LT TO 4+96 LT																160														
	I-680																														
	955+50 RT TO 975+56 RT												2006																		
P.108	955+50 RT TO 978+00 RT			38						4500				2250																	
	RAMP F																														
	0+00 RT TO 2+44 RT												244																		
TOTALS IN FEET									300	8214	484	1568	5342	9027																	
TOTALS IN MILES									0.06	1.56	0.09	0.30	1.01	1.71																	
TOTALS CARRIED TO SHEET P.74		1	545	235	95	20	18	0.06	1.56	0.09	0.30	1.01	1.71	784	2993	600	600						960		456	491	129	6	8		

Preliminary Plans - For Reference Only

MAINTENANCE OF TRAFFIC
SUBSUMMARY

DESIGN AGENCY
ms consultants. inc.

DESIGNER CLM

REVIEWER KWR 06/02/25

PROJECT ID 121474

SHEET P.63 TOTAL 655

MAH-680-4.58

MODEL: Sheet PAPERSIZE: 34x22 (in.) DATE: 9/15/2025 TIME: 9:01:23 AM PLTDRV: OHDOT_PDF_E+.pltcfg PENTBL: OHDOT_Pen.tbl USER: DHall@msconsultants.com WORKSPACE: OHDOTCEv02 WORKSET: 121474 PRODUCT: OpenRoadsDesigner 24.00.00.205
pw:\\ohiodot-pw.bentley.com:ohiodot-pw-02\Documents\01 Active Projects\District 04\Mahoning\121474\02-Engineering_MSConsultants\MOT\Sheets\121474_MS003.dgn

SHEET NO.	STATION TO STATION	614 INCREASED BARRIER DELINEATION FT	614 WORK ZONE IMPACT ATTENUATOR, 24" WIDE HAZARDS, (UNIDIRECTIONAL) EACH	614 WORK ZONE RAISED PAVEMENT MARKER, AS PER PLAN, ONE-WAY, WHITE EACH	614 WORK ZONE RAISED PAVEMENT MARKER, AS PER PLAN, ONE-WAY, YELLOW EACH	614 BARRIER REFLECTOR, TYPE 1, ONE-WAY EACH	614 OBJECT MARKER, ONE WAY EACH	614 OBJECT MARKER, TWO WAY EACH	614 WORK ZONE LANE LINE, CLASS I, 6", 807 PAINT FT/MI	614 WORK ZONE LANE LINE, CLASS I, 6", 648 FT/MI	614 WORK ZONE EDGE LINE, CLASS I, 6", 807 PAINT, WHITE FT/MI	614 WORK ZONE EDGE LINE, CLASS I, 6", 807 PAINT, YELLOW FT/MI	614 WORK ZONE EDGE LINE, CLASS I, 6", 648, WHITE FT/MI	614 WORK ZONE EDGE LINE, CLASS I, 6", 648, YELLOW FT/MI	614 WORK ZONE CHANNELIZING LINE, CLASS I, 12", 807 PAINT FT	614 WORK ZONE CHANNELIZING LINE, CLASS I, 12", 648 FT	614 WORK ZONE DOTTED LINE, CLASS I, 6", 807 PAINT FT	614 WORK ZONE DOTTED LINE, CLASS I, 6", 648 FT	614 WORK ZONE TRANSVERSE/DIAGONAL LINE, CLASS I, 648 FT	614 WORK ZONE STOP LINE, CLASS I, 648 FT	614 WORK ZONE CROSSWALK LINE, CLASS I, 12" FT	614 WORK ZONE ARROW, CLASS I, 648 EACH	614 WORK ZONE ARROW, CLASS I, 648, AS PER PLAN EACH	615 PAVEMENT FOR MAINTAINING TRAFFIC, CLASS A, AS PER PLAN SY	622 PORTABLE BARRIER, 50", AS PER PLAN, A FT	622 PORTABLE BARRIER, 50", AS PER PLAN, B FT	622 PORTABLE BARRIER, UNANCHORED FT	630 SIGN, TEMPORARY OVERLAY SF	630 COVERING OF SIGN SF	630 REMOVAL OF TEMPORARY OVERLAY SIGN AND DISPOSAL EACH
PHASE 1B STEP 1																														
	I-680																													
P.109	978+00 RT TO 1000+50 RT			19						2250				2250																
	978+00 RT TO 982+20 RT			4						420																				
	982+20 RT TO 983+90 RT															170														
	983+90 RT TO 995+08 RT											1118																		
	995+08 RT TO 997+50 RT															242														
	997+50 RT TO 1000+50 RT																		300											
	999+00 RT TO 1000+50 RT												150																	
	RAMP F																													
	2+44 BL TO 16+76 BL												1432																	
	6+63 LT TO 8+32 LT															169														
	8+32 LT TO 16+76 LT													844																
	RAMP H																													
	0+63 LT TO 14+50 LT													1387																
	2+57 BL TO 18+30 BL												1573																	
	I-680																													
P.110	1000+50 RT TO 1023+00 RT			19						2250				2250																
	1000+50 RT TO 1018+25 RT												1775																	
	1000+50 RT TO 1007+81 RT																		731											
	1012+07 RT TO 1019+49 RT																		742											
	1019+49 RT TO 1021+75 RT															226														
	1021+75 RT TO 1023+00 RT												125																	
	RAMP K																													
	4+47 BL TO 9+25 BL												478																	
	5+70 LT TO 8+00 LT															230														
	8+00 LT TO 9+25 LT													125																
	I-680																													
P.111	1023+00 RT TO 1045+50 RT			19						2250				2250																
	1023+00 RT TO 1026+26 RT												326																	
	1025+30 RT TO 1028+45 RT																		315											
	1028+45 RT TO 1030+91 RT															246														
	1030+91 RT TO 1045+50 RT												1459																	
	RAMP K																													
	9+25 LT TO 17+00 LT													775																
	9+25 BL TO 18+74 BL												949										16		2					
	RAMP M																													
	1026+26 BL TO 1040+92 BL												1466																	
	1028+54 LT TO 1031+14 LT															260														
	1034+24 LT TO 1034+54 LT															30														
	1034+54 LT TO 1040+81 LT													627									29		1					
	RAMP BX																													
	0+09 BL TO 14+00 BL													1391																
	3+22 RT TO 3+52 RT															30														
	3+52 RT TO 14+00 RT												1048																	
	I-680																													
P.112	1045+50 RT TO 1052+62 RT												712	712																
	1045+50 RT TO 1055+62 RT			9						1012																				
	1048+68 CL TO 1052+10 CL																											342		
TOTALS IN FEET										8182		1118	11493	12611																
TOTALS IN MILES										1.55		0.21	2.18	2.39																
TOTALS CARRIED TO SHEET P.74				70						1.55		0.21	2.18	2.39		1603		2088		45			3		342					

Preliminary Plans - For Reference Only

MAINTENANCE OF TRAFFIC
SUBSUMMARY

DESIGN AGENCY
ms consultants. inc.

DESIGNER
CLM

REVIEWER
KWR 06/02/25

PROJECT ID
121474

SHEET P.64 | TOTAL 655

MAH-680-4.58

MODEL: Sheet PAPERSIZE: 34x22 (in.) DATE: 9/15/2025 TIME: 9:01:27 AM PLTDRV: OHDOT_PDF_E+.pltcfg PENTBL: OHDOT_Pen.tbl USER: DHall@msconsultants.com WORKSPACE: OHDOTCEv02 WORKSET: 121474 PRODUCT: OpenRoadsDesigner 24.00.00.205
pw:\\ohiodot-pw.bentley.com:ohiodot-pw-02\Documents\01 Active Projects\District 04\Mahoning\121474\02-Engineering_MSConsultants\MOT\Sheets\121474_MS004.dgn

SHEET NO.	STATION TO STATION	614 INCREASED BARRIER DELINEATION FT	614 WORK ZONE IMPACT ATTENUATOR, 24" WIDE HAZARDS, (UNIDIRECTIONAL) EACH	614 WORK ZONE RAISED PAVEMENT MARKER, AS PER PLAN, ONE-WAY, WHITE EACH	614 WORK ZONE RAISED PAVEMENT MARKER, AS PER PLAN, ONE-WAY, YELLOW EACH	614 BARRIER REFLECTOR, TYPE 1, ONE-WAY EACH	614 OBJECT MARKER, ONE WAY EACH	614 OBJECT MARKER, TWO WAY EACH	614 WORK ZONE LANE LINE, CLASS I, 6", 807 PAINT FT/MI	614 WORK ZONE LANE LINE, CLASS I, 6", 648 FT/MI	614 WORK ZONE EDGE LINE, CLASS I, 6", 807 PAINT, WHITE FT/MI	614 WORK ZONE EDGE LINE, CLASS I, 6", 807 PAINT, YELLOW FT/MI	614 WORK ZONE EDGE LINE, CLASS I, 6", 648, WHITE FT/MI	614 WORK ZONE EDGE LINE, CLASS I, 6", 648, YELLOW FT/MI	614 WORK ZONE CHANNELIZING LINE, CLASS I, 12", 807 PAINT FT	614 WORK ZONE CHANNELIZING LINE, CLASS I, 12", 648 FT	614 WORK ZONE DOTTED LINE, CLASS I, 6", 807 PAINT FT	614 WORK ZONE DOTTED LINE, CLASS I, 6", 648 FT	614 WORK ZONE TRANSVERSE/DIAGONAL LINE, CLASS I, 648 FT	614 WORK ZONE STOP LINE, CLASS I, 648 FT	614 WORK ZONE CROSSWALK LINE, CLASS I, 12" FT	614 WORK ZONE ARROW, CLASS I, 648 EACH	614 WORK ZONE ARROW, CLASS I, 648, AS PER PLAN EACH	615 PAVEMENT FOR MAINTAINING TRAFFIC, CLASS A, AS PER PLAN SY	622 PORTABLE BARRIER, 50", AS PER PLAN, A FT	622 PORTABLE BARRIER, 50", AS PER PLAN, B FT	622 PORTABLE BARRIER, UNANCHORED FT	630 SIGN, TEMPORARY OVERLAY SF	630 COVERING OF SIGN SF	630 REMOVAL OF TEMPORARY OVERLAY SIGN AND DISPOSAL EACH
PHASE 1B STEP 1																														
	RAMP BX																													
	14+00 RT TO 19+99 RT												599	599																
	RAMP NB																													
	1029+35 RT TO 1044+05 RT			13						1470																				
	1031+35 BL TO 1041+05 BL												970																	
	1034+96 RT TO 1039+70 RT													474																
P.113	1036+35 RT TO 1039+70 RT															335														
	RAMP SB																													
	1027+15 RT TO 1034+26 RT												711																	
	1027+23 RT																												12		1
	1031+08 RT TO 1035+38 RT	376	1			6	18																					430		
	1034+05 RT																												12		1
	RAMP BY																													
	2+77 L/R																												9		1
	U.S. 62 / S.R. 7 / RAMP SB																													
	1018+56 RT TO 1024+81 RT										625																			
P.114	1024+81 RT TO 1035+93 RT										1112																			
	1029+22 RT TO 1035+93 RT	354	1			19	27																					671		
TOTALS IN FEET										1470	1737		2280	1073																
TOTALS IN MILES										0.28	0.33		0.43	0.20																
TOTALS CARRIED TO SHEET P.74		730	2	13		25	45			0.28	0.33		0.43	0.20		335	625											1101	33		3

Preliminary Plans - For Reference Only

MAINTENANCE OF TRAFFIC
SUBSUMMARY

DESIGN AGENCY
ms consultants. inc.

DESIGNER KJF

REVIEWER KWR 06/02/25

PROJECT ID 121474

SHEET P.65 TOTAL 655

MAH-680-4.58

MODEL: Sheet PAPERSIZE: 34x22 (in.) DATE: 9/15/2025 TIME: 9:01:31 AM PLTDRV: OHDOT_PDF_E+.pltcfg PENTBL: OHDOT_Pen.tbl USER: DHall@msconsultants.com WORKSPACE: OHDOTCEv02 WORKSET: 121474 PRODUCT: OpenRoadsDesigner 24.00.00.205
pw:\\ohiodot-pw.bentley.com:ohiodot-pw-02\Documents\01 Active Projects\District 04\Mahoning\121474\402-Engineering_MSConsultants\MOT\Sheets\121474_MS005.dgn

SHEET NO.	STATION TO STATION	614 INCREASED BARRIER DELINEATION FT	614 WORK ZONE IMPACT ATTENUATOR, 24" WIDE HAZARDS, (UNIDIRECTIONAL) EACH	614 WORK ZONE RAISED PAVEMENT MARKER, AS PER PLAN, ONE-WAY, WHITE EACH	614 WORK ZONE RAISED PAVEMENT MARKER, AS PER PLAN, ONE-WAY, YELLOW EACH	614 BARRIER REFLECTOR, TYPE 1, ONE-WAY EACH	614 OBJECT MARKER, ONE WAY EACH	614 OBJECT MARKER, TWO WAY EACH	614 WORK ZONE LANE LINE, CLASS I, 6", 807 PAINT FT/MI	614 WORK ZONE LANE LINE, CLASS I, 6", 648 FT/MI	614 WORK ZONE EDGE LINE, CLASS I, 6", 807 PAINT, WHITE FT/MI	614 WORK ZONE EDGE LINE, CLASS I, 6", 807 PAINT, YELLOW FT/MI	614 WORK ZONE EDGE LINE, CLASS I, 6", 648, WHITE FT/MI	614 WORK ZONE EDGE LINE, CLASS I, 6", 648, YELLOW FT/MI	614 WORK ZONE CHANNELIZING LINE, CLASS I, 12", 807 PAINT FT	614 WORK ZONE CHANNELIZING LINE, CLASS I, 12", 648 FT	614 WORK ZONE DOTTED LINE, CLASS I, 6", 807 PAINT FT	614 WORK ZONE DOTTED LINE, CLASS I, 6", 648 FT	614 WORK ZONE TRANSVERSE/DIAGONAL LINE, CLASS I, 648 FT	614 WORK ZONE STOP LINE, CLASS I, 648 FT	614 WORK ZONE CROSSWALK LINE, CLASS I, 12" FT	614 WORK ZONE ARROW, CLASS I, 648 EACH	614 WORK ZONE ARROW, CLASS I, 648, AS PER PLAN EACH	615 PAVEMENT FOR MAINTAINING TRAFFIC, CLASS A, AS PER PLAN SY	622 PORTABLE BARRIER, 50", AS PER PLAN, A FT	622 PORTABLE BARRIER, 50", AS PER PLAN, B FT	622 PORTABLE BARRIER, UNANCHORED FT	630 SIGN, TEMPORARY OVERLAY SF	630 COVERING OF SIGN SF	630 REMOVAL OF TEMPORARY OVERLAY SIGN AND DISPOSAL EACH
PHASE 2A STEP 1																														
	I-680																													
P.119	950+66 LT TO 952+71 LT															205														
	950+66 LT TO 963+80 LT			11						1314				1314																
	952+71 LT TO 963+80 LT			9						1109																				
	953+60 LT TO 956+78 LT															318														
	956+78 LT TO 960+50 LT																		372											
	960+50 LT TO 963+80 LT												330																	
	RAMP B-3																													
	1+41 BL TO 11+10 BL												969																	
	2+29 LT TO 4+34 LT															205														
	4+34 LT TO 11+18 LT													684																
	RAMP D																													
	0+00 BL TO 18+23 RT												1823																	
	3+56 LT TO 6+71 LT															315														
	6+71 LT TO 18+56 BL													1185																
P.120	I-680																													
	963+80 LT TO 969+78 LT												598																	
	963+80 LT TO 970+86 LT			6						706																				
	963+80 LT TO 986+60 LT			19						2280				2280																
	970+86 LT TO 972+57 LT															171														
	972+57 LT TO 986+60 LT												1403																	
	RAMP G																													
	0+08 BL TO 4+01 LT													393																
	1+64 RT TO 2+38 RT														148															
	2+38 RT TO 6+77 RT												439																	
	4+01 LT TO 5+71 LT															170														
P.121	I-680																													
	986+60 LT TO 996+66 LT												1006																	
	986+60 LT TO 1009+40 LT			19						2280				2280																
	996+66 LT TO 999+72 LT															306														
	999+72 LT TO 1004+78 LT																		506											
	1001+64 LT TO 1009+40 LT												776																	
	1007+51 LT TO 1009+40 LT																		189											
	RAMP J																													
	3+30 BL TO 14+92 RT												1162																	
	5+25 LT TO 8+40 LT															315														
	8+40 LT TO 16+86 BL													846																
	14+92 RT TO 16+86 RT															194														
	14+93 RT TO 16+86 RT															193														
P.122	I-680																													
	1009+40 LT TO 1019+17 LT															977														
	1009+40 LT TO 1020+24 LT																		1084											
	1009+40 LT TO 1032+20 LT			19						2280				2280																
	1020+24 LT TO 1021+95 LT															171														
	1021+95 LT TO 1030+50 LT												855																	
	1022+16 LT TO 1032+20 LT																		1004											
	RAMP L																													
	1+67 LT TO 2+24 LT															57														
	2+24 LT TO 6+07 LT													383																
	3+18 BL TO 8+83 BL												565																	
	6+07 LT TO 7+77 LT															170														
	RAMP N																													
	1030+50 BL TO 1032+13 BL												163																	
TOTALS IN FEET										9969			10089	11645																
TOTALS IN MILES										1.89			1.91	2.21																
TOTALS CARRIED TO SHEET P.74				83						1.89			1.91	2.21	148	3767		3155											

Preliminary Plans - For Reference Only

MAINTENANCE OF TRAFFIC SUBSUMMARY

DESIGN AGENCY
ms consultants. inc.

DESIGNER KJF

REVIEWER KWR 06/02/25

PROJECT ID 121474

SHEET P.66 TOTAL 655

MAH-680-4.58

MODEL: Sheet PAPERSIZE: 34x22 (in.) DATE: 9/15/2025 TIME: 9:01:35 AM PLTDRV: OHDOT_PDF_E+.pltcfg PENTBL: OHDOT_Pen.tbl USER: DHall@msconsultants.com WORKSPACE: OHDOTCEv02 WORKSET: 121474 PRODUCT: OpenRoadsDesigner 24.00.00.205
pw:\\ohiodot-pw.bentley.com:ohiodot-pw-02\Documents\01 Active Projects\District 04\Mahoning\121474\02-Engineering_MSConsultants\MOT\Sheets\121474_MS006.dgn

SHEET NO.	STATION TO STATION					614 INCREASED BARRIER DELINEATION FT	614 WORK ZONE IMPACT ATTENUATOR, 24" WIDE HAZARDS, (UNIDIRECTIONAL) EACH	614 WORK ZONE RAISED PAVEMENT MARKER, AS PER PLAN, ONE-WAY, WHITE EACH	614 WORK ZONE RAISED PAVEMENT MARKER, AS PER PLAN, ONE-WAY, YELLOW EACH	614 BARRIER REFLECTOR, TYPE 1, ONE-WAY EACH	614 OBJECT MARKER, ONE WAY EACH	614 OBJECT MARKER, TWO WAY EACH	614 WORK ZONE LANE LINE, CLASS I, 6", 807 PAINT FT/MI	614 WORK ZONE LANE LINE, CLASS I, 6", 648 FT/MI	614 WORK ZONE EDGE LINE, CLASS I, 6", 807 PAINT, WHITE FT/MI	614 WORK ZONE EDGE LINE, CLASS I, 6", 807 PAINT, YELLOW FT/MI	614 WORK ZONE EDGE LINE, CLASS I, 6", 648, WHITE FT/MI	614 WORK ZONE EDGE LINE, CLASS I, 6", 648, YELLOW FT/MI	614 WORK ZONE CHANNELIZING LINE, CLASS I, 12", 807 PAINT FT	614 WORK ZONE CHANNELIZING LINE, CLASS I, 12", 648 FT	614 WORK ZONE DOTTED LINE, CLASS I, 6", 807 PAINT FT	614 WORK ZONE DOTTED LINE, CLASS I, 6", 648 FT	614 WORK ZONE TRANSVERSE/DIAGONAL LINE, CLASS I, 648 FT	614 WORK ZONE STOP LINE, CLASS I, 648 FT	614 WORK ZONE CROSSWALK LINE, CLASS I, 12" FT	614 WORK ZONE ARROW, CLASS I, 648 EACH	614 WORK ZONE ARROW, CLASS I, 648, AS PER PLAN EACH	615 PAVEMENT FOR MAINTAINING TRAFFIC, CLASS A, AS PER PLAN SY	622 PORTABLE BARRIER, 50", AS PER PLAN, A FT	622 PORTABLE BARRIER, 50", AS PER PLAN, B FT	622 PORTABLE BARRIER, UNANCHORED FT	630 SIGN, TEMPORARY OVERLAY SF	630 COVERING OF SIGN SF	630 REMOVAL OF TEMPORARY OVERLAY SIGN AND DISPOSAL EACH
PHASE 2A STEP 1																																			
	I-680																																		
	1032+20	LT	TO	1032+36	LT																	16													
	1032+20	LT	TO	1055+00	LT			19						2280																					
	1032+20	LT	TO	1048+67	LT													1647																	
	1032+36	LT	TO	1034+25	LT															189															
	1034+25	LT	TO	1051+05	LT												1680																		
	1051+05	LT	TO	1055+00	LT															395															
	RAMP N																																		
	1032+13	BL	TO	1041+67	BL												954																		
	1032+28	RT	TO	1034+11	RT																														
	1034+11	RT	TO	1036+00	RT													189																	
P.123	1038+14	RT	TO	1038+61	RT															47															
	1038+61	RT	TO	1041+67	RT													306																	
	RAMP BY																																		
	4+00	BL	TO	9+99	LT												599																		
	4+00	LT	TO	12+73	LT													873																	
	9+99	LT	TO	10+56	LT															57															
	RAMP CA																																		
	19+50	B/L	TO	25+74	B/L												624	624																	
	24+02	LT	TO																											1					
	25+64	LT	TO																											1					
	RAMP NB																																		
	1051+09	RT	TO	1053+79	RT															270															
	I-680																																		
P.124	1055+00	LT	TO	1058+75	LT															375															
	1055+00	LT	TO	1065+80	LT			9						1080																					
	RAMP BY																																		
	0+00	RT	TO	4+00	RT													400																	
	2+15	BL	TO	3+80	BL															165															
	3+80	BL	TO	4+00	BL												20																		
	RAMP CA																																		
	11+21	BL	TO	19+50	BL												829																		
	11+22	LT	TO	17+73	LT			5						651																					
	12+95	LT	TO	14+66	LT															171															
P.125	14+66	LT	TO	15+59	LT													93																	
	17+73	LT	TO	19+37	LT															164															
	19+37	LT	TO	19+50														13																	
	RAMP SB																																		
	1031+07	RT	TO	1035+93	RT			4						486																					
	1034+00	RT	TO	1035+71	RT															171															
	U.S. 62/S.R. 7																																		
	SEE PLAN	LT	TO	SEE PLAN	LT			10						1253																					
TOTALS IN FEET														5750			4706	4145																	
TOTALS IN MILES														1.09			0.89	0.79																	
TOTALS CARRIED TO SHEET P.74								47						1.09			0.89	0.79		2004		16		16			2								

Preliminary Plans - For Reference Only

MAINTENANCE OF TRAFFIC
SUBSUMMARY

DESIGN AGENCY
ms consultants. inc.

DESIGNER
KJF

REVIEWER
KWR 06/02/25

PROJECT ID
121474

SHEET P.67 TOTAL 655

MAH-680-4.58

MODEL: Sheet PAPERSIZE: 34x22 (in.) DATE: 9/15/2025 TIME: 9:01:40 AM PLTDRV: OHDOT_PDF_E+.pltcfg PENTBL: OHDOT_Pen.tbl USER: DHall@msconsultants.com WORKSPACE: OHDOTCEv02 WORKSET: 121474 PRODUCT: OpenRoadsDesigner 24.00.00.205
pw:\\ohiodot-pw.bentley.com:ohiodot-pw-02\Documents\01 Active Projects\District 04\Mahoning\121474\402-Engineering_MSConsultants\MOT\Sheets\121474_MS007.dgn

SHEET NO.	STATION TO STATION					614 INCREASED BARRIER DELINEATION FT	614 WORK ZONE IMPACT ATTENUATOR, 24" WIDE HAZARDS, (UNIDIRECTIONAL) EACH	614 WORK ZONE RAISED PAVEMENT MARKER, AS PER PLAN, ONE-WAY, WHITE EACH	614 WORK ZONE RAISED PAVEMENT MARKER, AS PER PLAN, ONE-WAY, YELLOW EACH	614 BARRIER REFLECTOR, TYPE 1, ONE-WAY EACH	614 OBJECT MARKER, ONE WAY EACH	614 OBJECT MARKER, TWO WAY EACH	614 WORK ZONE LANE LINE, CLASS I, 6", 807 PAINT FT/MI	614 WORK ZONE LANE LINE, CLASS I, 6", 648 FT/MI	614 WORK ZONE EDGE LINE, CLASS I, 6", 807 PAINT, WHITE FT/MI	614 WORK ZONE EDGE LINE, CLASS I, 6", 807 PAINT, YELLOW FT/MI	614 WORK ZONE EDGE LINE, CLASS I, 6", 648, WHITE FT/MI	614 WORK ZONE EDGE LINE, CLASS I, 6", 648, YELLOW FT/MI	614 WORK ZONE CHANNELIZING LINE, CLASS I, 12", 807 PAINT FT	614 WORK ZONE CHANNELIZING LINE, CLASS I, 12", 648 FT	614 WORK ZONE DOTTED LINE, CLASS I, 6", 807 PAINT FT	614 WORK ZONE DOTTED LINE, CLASS I, 6", 648 FT	614 WORK ZONE TRANSVERSE/DIAGONAL LINE, CLASS I, 648 FT	614 WORK ZONE STOP LINE, CLASS I, 648 FT	614 WORK ZONE CROSSWALK LINE, CLASS I, 12" FT	614 WORK ZONE ARROW, CLASS I, 648 EACH	614 WORK ZONE ARROW, CLASS I, 648, AS PER PLAN EACH	615 PAVEMENT FOR MAINTAINING TRAFFIC, CLASS A, AS PER PLAN SY	622 PORTABLE BARRIER, 50", AS PER PLAN, A FT	622 PORTABLE BARRIER, 50", AS PER PLAN, B FT	622 PORTABLE BARRIER, UNANCHORED FT	630 SIGN, TEMPORARY OVERLAY SF	630 COVERING OF SIGN SF	630 REMOVAL OF TEMPORARY OVERLAY SIGN AND DISPOSAL EACH
	I-680																																		
	1100+25	RT	TO	1109+85	RT			384	96										1920																
	1100+25	RT	TO	1117+50	RT														1725																
	1103+25	RT	TO	1117+50	RT											1425																			
	1103+25	RT	TO	1113+15	RT										990																				
	1107+85	LT	TO	1117+45	LT			384	96										1920																
	1109+85	RT	TO	1116+39	RT			11					1308																						
	1110+85	LT	TO	1117+50	LT										665	665																			
	1113+72	RT	TO	1117+50	RT	111	1			27	15																							378		
	1114+45	LT	TO	1117+50	LT	300				1	12																							305		
	1116+39	RT	TO	1117+50	RT			33	11										222																
P.126	1117+45	LT	TO	1117+50	LT								10																						
	1117+50	LT	TO	1125+43	LT										793																				
	1117+50	LT	TO	1122+30	LT			8					960																						
	1117+50	LT	TO	1128+90	LT											1140																			
	1117+50	LT	TO	1118+30	LT		1			8	3																							80		
	1117+50	RT	TO	1119+39	RT	189					8																							189		
	1117+50	RT	TO	1122+99	RT											549																			
	1117+50	RT	TO	1125+99	RT			255	85										1698																
	1117+50	RT	TO	1118+38	RT														88																
	1118+38	RT	TO	1122+99	RT										461																				
	1122+30	LT	TO	SEE PLAN	LT			288	96										1920																
	1125+43	LT	TO	SEE PLAN	LT																747														
	PHASE 2A STEP 2																																		
	I-680																																		
	1015+54	RT	TO	1033+50	RT				45							1796																			
	1015+56	RT	TO	1021+54	RT																598														
P.127	1029+32	LT	TO	1033+50	LT			84	42										418																
	1029+40	RT	TO																														9		1
	1032+00	RT	TO	1033+50	RT			45							150																				
	1032+23	RT	TO	1033+50	RT		1			13	5																								
	I-680																																		
	1033+50	LT	TO	1038+00	LT			90	8										450																
	1033+50	RT	TO	1056+00	RT	1393			35	287	9	81				2250																			
	1033+50	RT	TO	1055+84	RT			35							2234																				
	1034+50	CL	TO	1035+78	RT		1			13	6																							128		
	1038+00	LT	TO	1056+00	LT				130							1800																			
P.128	1038+01	RT	TO	1056+00	RT										1799	1799																			
	1041+49	LT	TO	1056+00	LT			130							1451																				
	1048+49	LT	TO	1056+00	LT	171				58	30																							751		
	1048+69	LT	TO	1056+00	LT																											325				
	1048+69	RT	TO	1055+84	RT																											475				
	1055+84	RT	TO	1056+00	RT														16																
	CROSSOVER 3																																		
	0+00	L/C	TO	3+70	RT			37	37							370			370																
	I-680																																		
	1056+00	L/R	TO	1078+50	L/R	1309				544	90	90			4500	6750																1000	2250	2250		
	1056+00	RT	TO	1059+57	RT								357																						
	1059+44	RT	TO	1077+80	RT										1836																				
P.129	1059+44	RT	TO	1073+54	RT																											776				
	1059+57	RT	TO	1078+50	RT			16					1893																						
	1063+11	LT																															12		1
	1072+69	RT	TO	1075+61	RT			2					292																						
	1075+31	RT	TO	1076+89	RT																											74				
	1075+61	RT	TO	1078+50	RT														289																
	TOTALS IN FEET												4820		14879	18544																			
	TOTALS IN MILES												0.91		2.82	3.51																			
	TOTALS CARRIED TO SHEET P.74					3473	4	1802	681	951	178	171	0.91		2.82	3.51			11036		1345									2650	4627		4081	21		2

Preliminary Plans - For Reference Only

MAINTENANCE OF TRAFFIC
SUBSUMMARY

DESIGN AGENCY
ms consultants. inc.

DESIGNER KJF

REVIEWER KWR 06/02/25

PROJECT ID 121474

SHEET P.68 TOTAL 655

MAH-680-4.58

MODEL: Sheet PAPERSIZE: 34x22 (in.) DATE: 9/15/2025 TIME: 9:01:44 AM PLTDRV: OHDOT_PDF_E+.pltcfg PENTBL: OHDOT_Pen.tbl USER: DHall@msconsultants.com WORKSPACE: OHDOTCEv02 WORKSET: 121474 PRODUCT: OpenRoadsDesigner 24.00.00.205
pw:\\ohiodot-pw.bentley.com:ohiodot-pw-02\Documents\01 Active Projects\District 04\Mahoning\121474\02-Engineering_MSConsultants\MOT\Sheets\121474_MS008.dgn

SHEET NO.	STATION TO STATION					614 INCREASED BARRIER DELINEATION FT	614 WORK ZONE IMPACT ATTENUATOR, 24" WIDE HAZARDS, (UNIDIRECTIONAL) EACH	614 WORK ZONE RAISED PAVEMENT MARKER, AS PER PLAN, ONE-WAY, WHITE EACH	614 WORK ZONE RAISED PAVEMENT MARKER, AS PER PLAN, ONE-WAY, YELLOW EACH	614 BARRIER REFLECTOR, TYPE 1, ONE-WAY EACH	614 OBJECT MARKER, ONE WAY EACH	614 OBJECT MARKER, TWO WAY EACH	614 WORK ZONE LANE LINE, CLASS I, 6", 807 PAINT FT/MI	614 WORK ZONE LANE LINE, CLASS I, 6", 648 FT/MI	614 WORK ZONE EDGE LINE, CLASS I, 6", 807 PAINT, WHITE FT/MI	614 WORK ZONE EDGE LINE, CLASS I, 6", 807 PAINT, YELLOW FT/MI	614 WORK ZONE EDGE LINE, CLASS I, 6", 648, WHITE FT/MI	614 WORK ZONE EDGE LINE, CLASS I, 6", 648, YELLOW FT/MI	614 WORK ZONE CHANNELIZING LINE, CLASS I, 12", 807 PAINT FT	614 WORK ZONE CHANNELIZING LINE, CLASS I, 12", 648 FT	614 WORK ZONE DOTTED LINE, CLASS I, 6", 807 PAINT FT	614 WORK ZONE DOTTED LINE, CLASS I, 6", 648 FT	614 WORK ZONE TRANSVERSE/DIAGONAL LINE, CLASS I, 648 FT	614 WORK ZONE STOP LINE, CLASS I, 648 FT	614 WORK ZONE CROSSWALK LINE, CLASS I, 12" FT	614 WORK ZONE ARROW, CLASS I, 648 EACH	614 WORK ZONE ARROW, CLASS I, 648, AS PER PLAN EACH	615 PAVEMENT FOR MAINTAINING TRAFFIC, CLASS A, AS PER PLAN SY	622 PORTABLE BARRIER, 50", AS PER PLAN, A FT	622 PORTABLE BARRIER, 50", AS PER PLAN, B FT	622 PORTABLE BARRIER, UNANCHORED FT	630 SIGN, TEMPORARY OVERLAY SF	630 COVERING OF SIGN SF	630 REMOVAL OF TEMPORARY OVERLAY SIGN AND DISPOSAL EACH
PHASE 2A STEP 2																																			
P.130	I-680																																		
	1078+50	L/R	TO	1101+00	L/R	724		19		603	90	90	2250		4500	6750														2250		2250			
	1078+50	LT	TO	1097+25	LT																									833					
	1078+50	RT	TO	1079+64	RT														114																
	1079+64	RT	TO	1090+17	RT												1053													596					
	1083+41	RT	TO																															20	
	1090+17	RT	TO	1093+17	RT														300																
	1093+17	RT	TO	1101+00	RT			7					783																						
	1093+81	LT																																24		2
	1096+46	RT	TO	1101+00	RT										454																				
	RAMP B																																		
	1093+17	RT																																9		1
	RAMP D																																		
	1083+20	RT																																9		1
P.131	I-680																																		
	1101+00	LT	TO	1102+49	LT					15	6																							149		
	1101+00	LT	TO	1123+50	LT			196	30						2250																				
	1101+00	LT	TO	1115+00	LT			136								1400																			
	1101+00	RT	TO	1114+00	RT			30	30						1300	1300																			
	1101+00	RT	TO	1118+20	RT	365				308		69																		1720					
	1101+00	RT	TO	1122+20	RT											2120																			
	1101+00	RT	TO	1115+20	RT			12					1420																						
	1101+00	RT	TO	1110+51	RT			8					951																						
	1101+00	RT	TO	1112+60	RT										1160																				
	1106+89	LT																																12		1
	1110+51	RT	TO	1118+20	RT														769																
	1111+87	LT																																12		1
	1114+67	CL	TO	1118+17	CL		1																									112				
	1115+00	LT	TO	1123+50	LT			85											850				58												
	1115+20	RT	TO	1123+50	RT			166	70										830																
	1118+20	RT	TO	1121+45	RT										325																				
	1120+27	LT	TO	1123+50	LT																323														
	CROSSOVER 4																																		
	0+00	LT	TO	1+00	LT			10							100																				
	0+00	BL	TO	4+02	LT			40								402																			
	0+67	LT	TO	1+59	LT	25	1			7	4																						92		
	1+00	LT	TO	4+02	LT			30											302																
	RAMP F																																		
	721+27	LT																																9		1
P.132	I-680																																		
	1123+50	LT	TO	SEE PLAN	LT										1370																				
	1123+50	LT	TO	SEE PLAN	LT																927														
	1123+50	LT	TO	1128+00	LT			45											450																
	1123+50	RT	TO	1124+20	RT			14											70																
		LT	TO		LT														443																
	SEE PLAN	LT	TO	SEE PLAN	LT														449																
		LT	TO		LT										720						720														
TOTALS IN FEET													5404		12179	11972	1053																		
TOTALS IN MILES													1.02		2.31	2.27	0.20																		
TOTALS CARRIED TO SHEET P.74						1114	2	798	130	933	100	159	1.02		2.31	2.27	0.20		4577		1970		58					1541	3970		2491	75	20	7		

Preliminary Plans - For Reference Only

MAINTENANCE OF TRAFFIC
SUBSUMMARY

DESIGN AGENCY
ms consultants. inc.

DESIGNER
KJF

REVIEWER
KWR 06/02/25

PROJECT ID
121474

SHEET P.69 TOTAL 655

MAH-680-4.58

MODEL: Sheet PAPERSIZE: 34x22 (in.) DATE: 9/15/2025 TIME: 9:01:48 AM PLTDRV: OHDOT_PDF_E+.pltcfg PENTBL: OHDOT_Pen.tbl USER: DHall@msconsultants.com WORKSPACE: OHDOTCEv02 WORKSET: 121474 PRODUCT: OpenRoadsDesigner 24.00.00.205
pw:\\ohiodot-pw.bentley.com:ohiodot-pw-02\Documents\01 Active Projects\District 04\Mahoning\121474\02-Engineering_MSConsultants\MOT\Sheets\121474_MS009.dgn

SHEET NO.	STATION TO STATION					614 INCREASED BARRIER DELINEATION FT	614 WORK ZONE IMPACT ATTENUATOR, 24" WIDE HAZARDS, (UNIDIRECTIONAL) EACH	614 WORK ZONE RAISED PAVEMENT MARKER, AS PER PLAN, ONE-WAY, WHITE EACH	614 WORK ZONE RAISED PAVEMENT MARKER, AS PER PLAN, ONE-WAY, YELLOW EACH	614 BARRIER REFLECTOR, TYPE 1, ONE-WAY EACH	614 OBJECT MARKER, ONE WAY EACH	614 OBJECT MARKER, TWO WAY EACH	614 WORK ZONE LANE LINE, CLASS I, 6", 807 PAINT FT/MI	614 WORK ZONE LANE LINE, CLASS I, 6", 648 FT/MI	614 WORK ZONE EDGE LINE, CLASS I, 6", 807 PAINT, WHITE FT/MI	614 WORK ZONE EDGE LINE, CLASS I, 6", 807 PAINT, YELLOW FT/MI	614 WORK ZONE EDGE LINE, CLASS I, 6", 648, WHITE FT/MI	614 WORK ZONE EDGE LINE, CLASS I, 6", 648, YELLOW FT/MI	614 WORK ZONE CHANNELIZING LINE, CLASS I, 12", 807 PAINT FT	614 WORK ZONE CHANNELIZING LINE, CLASS I, 12", 648 FT	614 WORK ZONE DOTTED LINE, CLASS I, 6", 807 PAINT FT	614 WORK ZONE DOTTED LINE, CLASS I, 6", 648 FT	614 WORK ZONE TRANSVERSE/DIAGONAL LINE, CLASS I, 648 FT	614 WORK ZONE STOP LINE, CLASS I, 648 FT	614 WORK ZONE CROSSWALK LINE, CLASS I, 12" FT	614 WORK ZONE ARROW, CLASS I, 648 EACH	614 WORK ZONE ARROW, CLASS I, 648, AS PER PLAN EACH	615 PAVEMENT FOR MAINTAINING TRAFFIC, CLASS A, AS PER PLAN SY	622 PORTABLE BARRIER, 50", AS PER PLAN, A FT	622 PORTABLE BARRIER, 50", AS PER PLAN, B FT	622 PORTABLE BARRIER, UNANCHORED FT	630 SIGN, TEMPORARY OVERLAY SF	630 COVERING OF SIGN SF	630 REMOVAL OF TEMPORARY OVERLAY SIGN AND DISPOSAL EACH
PHASE 2B																																			
	I-680																																		
P.140	1015+54	RT	TO	1033+50	RT				30							1796																			
	1015+54	RT	TO	1023+00	RT			6					746																						
	1023+00	RT	TO	1033+50	RT			105											1050																
	1029+32	LT	TO	1033+50	LT			3					418																						
	1032+00	RT	TO	1033+50	RT			30							150																				
	1033+01	LT	TO	1033+50	LT				5							49																			
	I-680																																		
P.141	1033+50	LT	TO	1034+01	LT			1					51																						
	1033+50	LT	TO	1056+00	LT			155	75						2250	2250																			
	1033+50	RT	TO	1036+46	RT			30											296				65												
	1034+01	LT	TO	1051+55	LT			70							1754																				
	1034+81	LT	TO	1056+00	LT	1640				48		85																			2119				
	1036+46	RT	TO	1056+00	RT				125							1954																			
	1037+02	RT	TO	1037+50	CL		1			5	2																						48		
	1038+01	LT	TO	1056+00	LT			30	30						1799	1799																			
	1040+33	RT	TO																														12		1
	1046+90	RT	TO	1056+00	RT		1			91	36																						910		
	1048+68	RT	TO	1056+00	RT																										325				
	1051+57	LT	TO	1056+00															443																
	1052+57	LT	TO																														9		1
	1054+48	LT	TO	1056+00	LT										152																				
	CROSSOVER 5																																		
	0+00	BL	TO	4+53	BL				45							453																			
	0+00	RT	TO	2+95	RT			29											295																
	2+95	RT	TO	4+53	RT			16							158																				
	RAMP NB																																		
	1050+97	BL	TO	1054+49	BL										352																				
	1050+97	RT	TO	1051+57	RT			1					60			60																			
	1051+57	RT	TO	1052+90	RT														133																
	I-680																																		
P.142	1056+00	R/L	TO	1078+50	R/L	2618				413	90	90			6750	6750																2250		2250		
	1056+00	LT	TO	1063+11	LT														711																
	1056+00	RT	TO	1073+61	RT																										783				
	1063+11	LT	TO	1078+50	LT			13					1539																						
	1075+45	RT	TO	1076+83	RT																										61				
	1076+00	RT	TO																														12		1
	I-680																																		
P.143	1078+50	LT	TO	1085+27	LT										677																				
	1078+50	R/L	TO	1101+00	R/L	724		84	66	378		90	2250		4500	6750																2250				
	1078+50	RT	TO	1097+45	RT	724				117	76																						1895		
	1078+73	LT	TO	1098+50	RT																										879				
	1078+92	LT	TO	1083+04	LT																			412											
	1083+04	LT	TO	1086+63	LT														359																
	1086+63	LT	TO	1090+49	LT										386																				
	1090+49	LT	TO	1091+49	LT														100																
	1091+49	LT	TO	1101+00	LT																			951											
	1091+96	LT	TO	1100+87	LT										891																				
	1099+80	RT	TO																														54		1
TOTALS IN FEET													5064		19819	21861																		
TOTALS IN MILES													0.96		3.75	4.14																		
TOTALS CARRIED TO SHEET P.74						5706	2	573	376	1052	204	265	0.96		3.75	4.14			3387		1363		65					2048	6619		5103	87		4

Preliminary Plans - For Reference Only

MAINTENANCE OF TRAFFIC
SUBSUMMARY

DESIGN AGENCY
ms consultants. inc.

DESIGNER
KJF

REVIEWER
KWR 06/02/25

PROJECT ID
121474

SHEET P.70 TOTAL 655

MAH-680-4.58

MODEL: Sheet PAPERSIZE: 34x22 (in.) DATE: 9/15/2025 TIME: 9:01:52 AM PLTDRV: OHDOT_PDF_E+.pltcfg PENTBL: OHDOT_Pen.tbl USER: DHall@msconsultants.com WORKSPACE: OHDOTCEv02 WORKSET: 121474 PRODUCT: OpenRoadsDesigner 24.00.00.205
pw:\\ohiodot-pw.bentley.com:ohiodot-pw-02\Documents\01 Active Projects\District 04\Mahoning\121474\02-Engineering_MSConsultants\MOT\Sheets\121474_MS010.dgn

SHEET NO.	STATION TO STATION					614 INCREASED BARRIER DELINEATION FT	614 WORK ZONE IMPACT ATTENUATOR, 24" WIDE HAZARDS, (UNIDIRECTIONAL) EACH	614 WORK ZONE RAISED PAVEMENT MARKER, AS PER PLAN, ONE-WAY, WHITE EACH	614 WORK ZONE RAISED PAVEMENT MARKER, AS PER PLAN, ONE-WAY, YELLOW EACH	614 BARRIER REFLECTOR, TYPE 1, ONE-WAY EACH	614 OBJECT MARKER, ONE WAY EACH	614 OBJECT MARKER, TWO WAY EACH	614 WORK ZONE LANE LINE, CLASS I, 6", 807 PAINT FT/MI	614 WORK ZONE LANE LINE, CLASS I, 6", 648 FT/MI	614 WORK ZONE EDGE LINE, CLASS I, 6", 807 PAINT, WHITE FT/MI	614 WORK ZONE EDGE LINE, CLASS I, 6", 807 PAINT, YELLOW FT/MI	614 WORK ZONE EDGE LINE, CLASS I, 6", 648, WHITE FT/MI	614 WORK ZONE EDGE LINE, CLASS I, 6", 648, YELLOW FT/MI	614 WORK ZONE CHANNELIZING LINE, CLASS I, 12", 807 PAINT FT	614 WORK ZONE CHANNELIZING LINE, CLASS I, 12", 648 FT	614 WORK ZONE DOTTED LINE, CLASS I, 6", 807 PAINT FT	614 WORK ZONE DOTTED LINE, CLASS I, 6", 648 FT	614 WORK ZONE TRANSVERSE/DIAGONAL LINE, CLASS I, 648 FT	614 WORK ZONE STOP LINE, CLASS I, 648 FT	614 WORK ZONE CROSSWALK LINE, CLASS I, 12" FT	614 WORK ZONE ARROW, CLASS I, 648 EACH	614 WORK ZONE ARROW, CLASS I, 648, AS PER PLAN EACH	615 PAVEMENT FOR MAINTAINING TRAFFIC, CLASS A, AS PER PLAN SY	622 PORTABLE BARRIER, 50", AS PER PLAN, A FT	622 PORTABLE BARRIER, 50", AS PER PLAN, B FT	622 PORTABLE BARRIER, UNANCHORED FT	630 SIGN, TEMPORARY OVERLAY SF	630 COVERING OF SIGN SF	630 REMOVAL OF TEMPORARY OVERLAY SIGN AND DISPOSAL EACH
	PHASE 2B																																			
	RAMP B																																			
	1085+27	BL	TO	1092+48	BL										721																					
	1086+08	RT	TO	1086+57	RT														49																	
	1086+57	RT	TO	1089+17	RT											260																				
	1091+40	RT	TO	1092+48	RT											108																				
	RAMP D																																			
	1083+23	RT	TO	1083+92	RT										69																					
	1083+43	LT	TO	1091+96	BL										853																					
	1083+43	LT	TO	1084+67	LT														124					24												
P.143	1083+43	LT	TO	1090+51	RT											708																				
	1083+43	RT	TO	1089+17	RT											574																				
	1083+55	LT	TO																										2							
	1084+05	LT	TO																										2							
	1084+55	LT	TO																										2							
	1085+50	LT	TO																											1						
	1090+51	RT	TO	1091+50	RT														99																	
	RAMP C																																			
	1084+50	RT	TO																															18		2
	I-680																																			
	1101+00	LT	TO	1101+97	LT																															
	1101+00	LT	TO	1119+00	LT			15					1800																							
	1101+00	LT	TO	1123+50	LT											2250																				
	1101+00	LT	TO	1121+32	LT		1			377	12	69																						2032			
	1101+00	LT	TO	1114+34	LT				30							1334																				
	1101+00	LT	TO	1114+67	LT			33							1367																					
	1101+00	RT	TO	1114+67	RT				79							1367																				
	1101+00	RT	TO	1107+85	RT			69							685																					
	1101+97	LT	TO	1104+56	LT														259																	
	1104+56	LT	TO	1123+50	LT										1894																					
	1114+67	RT	TO	1121+84	RT			72											717																	
P.144	1118+17	CL					1																													
	1119+00	LT	TO	1123+50	LT			90	45										450																	
	CROSSOVER 6																																			
	0+00	BL	TO	4+51	BL				75							451																				
	0+33	RT	TO	4+51	RT			42											418																	
	I-680																																			
	1123+50	LT	TO	1125+32	LT										182																					
	1123+50	LT	TO	1129+20	LT			57											570																	
	1123+50	LT	TO		LT											1337																				
	1128+94	LT	TO		LT			3					384																							
	1129+20	LT	TO	SEE PLAN	LT			13					1531																							
		LT	TO		LT																															
	SEE PLAN	LT	TO		LT														261																	
		LT	TO		LT														443																	
	RAMP CA																																			
	10+02	LT	TO	14+42		45	1			40	18																							440		
P.145	13+00	L/R																																	12		1
	11+12	LT	TO	14+42				45	33							330																				
	15+59	BL	TO	17+73																									214							
	TOTALS IN FEET												3715		5771	8719																				
	TOTALS IN MILES												0.70		1.09	1.65																				
	TOTALS CARRIED TO SHEET P.74					45	3	382	319	417	30	69	0.70		1.09	1.65			3390		1031			24		6	1		2032		440	30		3		

Preliminary Plans - For Reference Only

MAINTENANCE OF TRAFFIC
SUBSUMMARY

DESIGN AGENCY
ms consultants. inc.

DESIGNER
KJF

REVIEWER
KWR 06/02/25

PROJECT ID
121474

SHEET P.71 | TOTAL 655

MAH-680-4.58

MODEL: Sheet PAPERSIZE: 34x22 (in.) DATE: 9/15/2025 TIME: 9:01:56 AM PLTDRV: OHDOT_PDF_E+.pltcfg PENTBL: OHDOT_Pen.tbl USER: DHall@msconsultants.com WORKSPACE: OHDOTCEv02 WORKSET: 121474 PRODUCT: OpenRoadsDesigner 24.00.00.205
pw:\\ohiodot-pw.bentley.com:ohiodot-pw-02\Documents\01 Active Projects\District 04\Mahoning\121474\02-Engineering_MSConsultants\MOT\Sheets\121474_MS011.dgn

SHEET NO.	STATION TO STATION	614 INCREASED BARRIER DELINEATION	614 WORK ZONE IMPACT ATTENUATOR, 24" WIDE HAZARDS, (UNIDIRECTIONAL)	614 WORK ZONE RAISED PAVEMENT MARKER, AS PER PLAN, ONE-WAY, WHITE	614 WORK ZONE RAISED PAVEMENT MARKER, AS PER PLAN, ONE-WAY, YELLOW	614 BARRIER REFLECTOR, TYPE 1, ONE-WAY	614 OBJECT MARKER, ONE WAY	614 OBJECT MARKER, TWO WAY	614 WORK ZONE LANE LINE, CLASS I, 6", 807 PAINT	614 WORK ZONE LANE LINE, CLASS I, 6", 648	614 WORK ZONE EDGE LINE, CLASS I, 6", 807 PAINT, WHITE	614 WORK ZONE EDGE LINE, CLASS I, 6", 807 PAINT, YELLOW	614 WORK ZONE EDGE LINE, CLASS I, 6", 648, WHITE	614 WORK ZONE EDGE LINE, CLASS I, 6", 648, YELLOW	614 WORK ZONE CHANNELIZING LINE, CLASS I, 12", 807 PAINT	614 WORK ZONE CHANNELIZING LINE, CLASS I, 12", 648	614 WORK ZONE DOTTED LINE, CLASS I, 6", 807 PAINT	614 WORK ZONE DOTTED LINE, CLASS I, 6", 648	614 WORK ZONE TRANSVERSE/DIAGONAL LINE, CLASS I, 648	614 WORK ZONE STOP LINE, CLASS I, 648	614 WORK ZONE CROSSWALK LINE, CLASS I, 12"	614 WORK ZONE ARROW, CLASS I, 648	614 WORK ZONE ARROW, CLASS I, 648, AS PER PLAN	615 PAVEMENT FOR MAINTAINING TRAFFIC, CLASS A, AS PER PLAN	622 PORTABLE BARRIER, 50", AS PER PLAN, A	622 PORTABLE BARRIER, 50", AS PER PLAN, B	622 PORTABLE BARRIER, UNANCHORED	630 SIGN, TEMPORARY OVERLAY	630 COVERING OF SIGN	630 REMOVAL OF TEMPORARY OVERLAY SIGN AND DISPOSAL
		FT	EACH	EACH	EACH	EACH	EACH	EACH	FT/MI	FT/MI	FT/MI	FT/MI	FT/MI	FT/MI	FT	FT	FT	FT	FT	FT	FT	EACH	EACH	SY	FT	FT	FT	SF	SF	EACH
PHASE 2B																															
P.145	RAMP BY																														
	SEE PLAN LT TO 2+85 LT				40							402																			
	U.S. 62/S.R. 7																														
	SEE PLAN LT TO SEE PLAN LT			61							512																				
	SEE PLAN LT TO SEE PLAN LT				61							1214																			
	SEE PLAN LT TO SEE PLAN LT																	600													
	SEE PLAN LT TO SEE PLAN LT																												12		1
PHASE 2C																															
P.150	I-680																														
	1022+98 RT TO 1029+00 RT			5					602																						
	1029+00 RT TO 1048+80 RT				78							1980																			
	1029+00 RT TO 1035+00 RT																	600													
	1034+01 RT TO 1037+70 RT	139	1			23	15																						369		
	1034+01 LT TO 1034+25 LT															24															
	1034+25 LT TO 1048+50 LT			70							1425																				
	1034+30 LT TO 1048+50 LT				70							1420																			
	1034+30 LT TO 1038+37 LT	61	1			35	16																						407		
	1039+00 RT TO 1048+80 RT			78							980																				
	1046+85 RT TO 1048+80 RT	54	1			14	8																						195		
	RAMP SB																														
	1041+50 BL TO 1048+79 BL											729																			
	1041+50 RT TO 1048+81 RT			6					731																						
	1041+50 RT TO 1047+42 RT										592																				
	RAMP BV																														
	0+00 BL TO 1+44 BL										144																				
P.151	I-680																														
	1048+80 RT TO 1071+60 RT	140				214	91					2280																	2280		
	1048+80 RT TO 1055+72 RT										692																				
	1052+44																													9		1
	1055+72 RT TO 1062+50 RT															678															
	1057+33 RT TO 1071+60 RT										1427																				
	1062+50 RT TO 1071+60 RT			8					910																						
	RAMP SB																														
	1048+79 BL TO 1055+74 LT											695																			
	1048+81 RT TO 1049+17 RT								36																						
	1049+17 RT TO 1050+61 RT															144															
	1050+61 RT TO 1057+33 BL										672																				
	1055+74 LT TO 1056+83 LT															109															
	RAMP BV																														
	1+44 BL TO 12+61 RT										1117																				
	1+77 LT TO 3+27 LT															150															
	3+27 LT TO 12+61 LT											934																			
	10+50 LT TO																								1						
	11+20 LT TO 12+61 LT															141															
	11+31 LT TO																						2								
	11+97 LT TO																						2								
	12+63 LT TO																						2								
TOTALS IN FEET									2279		7561	9654																			
TOTALS IN MILES									0.43		1.43	1.83																			
TOTALS CARRIED TO SHEET P.74		394	3	228	249	286	130		0.43		1.43	1.83			1246		1200					6	1				3251	21		2

Preliminary Plans - For Reference Only

MAINTENANCE OF TRAFFIC
SUBSUMMARY

DESIGN AGENCY
ms consultants. inc.

DESIGNER KJF

REVIEWER KWR 06/02/25

PROJECT ID 121474

SHEET P.72 TOTAL 655

MAH-680-4.58

MODEL: Sheet PAPERSIZE: 34x22 (in.) DATE: 9/15/2025 TIME: 9:02:01 AM PLTDRV: OHDOT_PDF_E+.pltcfg PENTBL: OHDOT_Pen.tbl USER: DHall@msconsultants.com WORKSPACE: OHDOTCEv02 WORKSET: 121474 PRODUCT: OpenRoadsDesigner 24.00.00.205
pw:\\ohiodot-pw.bentley.com:ohiodot-pw-02\Documents\01 Active Projects\District 04\Mahoning\121474\02-Engineering_MSConsultants\MOT\Sheets\121474_MS012.dgn

SHEET NO.	STATION TO STATION					614 INCREASED BARRIER DELINEATION (FT)	614 WORK ZONE IMPACT ATTENUATOR, 24" WIDE HAZARDS, (UNIDIRECTIONAL) (EACH)	614 WORK ZONE RAISED PAVEMENT MARKER, AS PER PLAN, ONE-WAY, WHITE (EACH)	614 WORK ZONE RAISED PAVEMENT MARKER, AS PER PLAN, ONE-WAY, YELLOW (EACH)	614 BARRIER REFLECTOR, TYPE 1, ONE-WAY (EACH)	614 OBJECT MARKER, ONE WAY (EACH)	614 OBJECT MARKER, TWO WAY (EACH)	614 WORK ZONE LANE LINE, CLASS I, 6", 807 PAINT (FT/MI)	614 WORK ZONE LANE LINE, CLASS I, 6", 648 (FT/MI)	614 WORK ZONE EDGE LINE, CLASS I, 6", 807 PAINT, WHITE (FT/MI)	614 WORK ZONE EDGE LINE, CLASS I, 6", 807 PAINT, YELLOW (FT/MI)	614 WORK ZONE EDGE LINE, CLASS I, 6", 648, WHITE (FT/MI)	614 WORK ZONE EDGE LINE, CLASS I, 6", 648, YELLOW (FT/MI)	614 WORK ZONE CHANNELIZING LINE, CLASS I, 12", 807 PAINT (FT)	614 WORK ZONE CHANNELIZING LINE, CLASS I, 12", 648 (FT)	614 WORK ZONE DOTTED LINE, CLASS I, 6", 807 PAINT (FT)	614 WORK ZONE DOTTED LINE, CLASS I, 6", 648 (FT)	614 WORK ZONE TRANSVERSE/DIAGONAL LINE, CLASS I, 648 (FT)	614 WORK ZONE STOP LINE, CLASS I, 648 (FT)	614 WORK ZONE CROSSWALK LINE, CLASS I, 12" (FT)	614 WORK ZONE ARROW, CLASS I, 648 (EACH)	614 WORK ZONE ARROW, CLASS I, 648, AS PER PLAN (EACH)	615 PAVEMENT FOR MAINTAINING TRAFFIC, CLASS A, AS PER PLAN (SY)	622 PORTABLE BARRIER, 50", AS PER PLAN, A (FT)	622 PORTABLE BARRIER, 50", AS PER PLAN, B (FT)	622 PORTABLE BARRIER, UNANCHORED (FT)	630 SIGN, TEMPORARY OVERLAY (SF)	630 COVERING OF SIGN (SF)	630 REMOVAL OF TEMPORARY OVERLAY SIGN AND DISPOSAL (EACH)
PHASE 2C																																			
	I-680																																		
	1071+60	RT	TO	1094+40	RT			19		228	91		2280			2280																	2280			
	1071+60	RT	TO	1078+38	RT										678																					
	1072+13	RT	TO	1076+53	RT															440																
	1076+53	RT	TO	1079+54	RT													301																		
	1079+54	RT	TO	1090+17	RT										1063																					
	1090+17	RT	TO	1094+40	RT													423																		
	RAMP A																																			
	1078+38	BL	TO	1084+35	RT										597									21												
P.152	1078+84	LT	TO	1079+92	LT													108																		
	1079+92	LT	TO	1084+38	LT											446																				
	1082+00	LT	TO																											1						
	1084+25	LT	TO																											1						
	1084+39	R/L	TO	1084+45	R/L																			58												
	RAMP C																																			
	1084+34	R/L	TO	1084+42	R/L																			145												
	1084+60	LT	TO	1090+18	LT											558																				
	1084+60	RT	TO	1094+40	BL										980																					
	1090+18	LT	TO	1092+86	LT													268																		
	I-680																																			
	1094+40	RT	TO	1117+20	RT	587				169	91																							2280		
	1094+40	RT	TO	1105+85	RT											1145																				
	1094+40	RT	TO	1094+43	RT								3																								
	1094+40	RT	TO	1106+30	RT													1190																		
	1094+43	RT	TO	1106+30	RT			356	119									1187																		
	1094+43	RT	TO	1103+30	RT										887																					
P.153	1097+50	LT	TO	1109+35	LT			237	119									1185																		
	1100+50	LT	TO	1104+55	LT													405																		
	1100+50	LT	TO	1117+20	LT	585				109	67					1670		1670																1670		
	1104+55	LT	TO	1117+20	LT										1265																					
	1106+30	RT	TO	1107+85	RT			3					310																							
	1109+35	LT	TO	1117+20	LT			13					1570																							
	RAMP F																																			
	739+21	LT	TO	SEE PLAN	LT													210																		
	1117+20	LT	TO	1125+81	LT										861																					
	1117+20	LT	TO	1126+55	LT			8					935																							
	1117+20	LT	TO	SEE PLAN	LT											1675																				
P.154	1117+20	LT	TO	1119+45	LT		1			23	9																							225		
	1117+20	RT	TO	1118+21	RT					10	4																							101		
	1118+21	RT	TO	1122+19	RT			3					398																							
	1126+15	LT	TO	SEE PLAN	LT															780																
	U.S. 62/S.R. 7																																			
	SEE PLAN	LT	TO	SEE PLAN	LT			2					299																							
		LT	TO		LT			9					1102																							
	RAMP SB																																			
P.155	1031+07	RT	TO	1041+50	RT			9					1043																							
	1032+31	BL	TO	1041+50	BL											919																				
	1035+68	RT	TO	1041+50	RT										582																					
	RAMP CA																																			
	10+00	LT	TO	17+73	LT			6					773																							
TOTALS IN FEET													8713		6913	8693																			
TOTALS IN MILES													1.65		1.31	1.65																			
TOTALS CARRIED TO SHEET P.74						1172	1	665	238	539	262		1.65		1.31	1.65			6947		1220			21	203		2					6556			

Preliminary Plans - For Reference Only

MAINTENANCE OF TRAFFIC
SUBSUMMARY

DESIGN AGENCY
ms consultants. inc.

DESIGNER
KJF

REVIEWER
KWR 06/02/25

PROJECT ID
121474

SHEET P.73 | TOTAL 655

MAH-680-4.58

MODEL: Sheet PAPERSIZE: 34x22 (in.) DATE: 9/15/2025 TIME: 9:02:05 AM PLTDRV: OHDOT_PDF_E+.pltcfg PENTBL: OHDOT_Pen.tbl USER: DHall@msconsultants.com WORKSPACE: OHDOTCEv02 WORKSET: 121474 PRODUCT: OpenRoadsDesigner 24.00.00.205
pw:\\ohiodot-pw.bentley.com:ohiodot-pw-02\Documents\01 Active Projects\District 04\Mahoning\121474\02-Engineering_MSConsultants\MOT\Sheets\121474_MS013.dgn

SHEET NO.	STATION TO STATION	614 INCREASED BARRIER DELINEATION FT	614 WORK ZONE IMPACT ATTENUATOR, 24" WIDE HAZARDS, (UNIDIRECTIONAL) EACH	614 WORK ZONE RAISED PAVEMENT MARKER, AS PER PLAN, ONE-WAY, WHITE EACH	614 WORK ZONE RAISED PAVEMENT MARKER, AS PER PLAN, ONE-WAY, YELLOW EACH	614 BARRIER REFLECTOR, TYPE 1, ONE-WAY EACH	614 OBJECT MARKER, ONE WAY EACH	614 OBJECT MARKER, TWO WAY EACH	614 WORK ZONE LANE LINE, CLASS I, 6", 807 PAINT FT/MI	614 WORK ZONE LANE LINE, CLASS I, 6", 648 FT/MI	614 WORK ZONE EDGE LINE, CLASS I, 6", 807 PAINT, WHITE FT/MI	614 WORK ZONE EDGE LINE, CLASS I, 6", 807 PAINT, YELLOW FT/MI	614 WORK ZONE EDGE LINE, CLASS I, 6", 648, WHITE FT/MI	614 WORK ZONE EDGE LINE, CLASS I, 6", 648, YELLOW FT/MI	614 WORK ZONE CHANNELIZING LINE, CLASS I, 12", 807 PAINT FT	614 WORK ZONE CHANNELIZING LINE, CLASS I, 12", 648 FT	614 WORK ZONE DOTTED LINE, CLASS I, 6", 807 PAINT FT	614 WORK ZONE DOTTED LINE, CLASS I, 6", 648 FT	614 WORK ZONE TRANSVERSE/DIAGONAL LINE, CLASS I, 648 FT	614 WORK ZONE STOP LINE, CLASS I, 648 FT	614 WORK ZONE CROSSWALK LINE, CLASS I, 12" FT	614 WORK ZONE ARROW, CLASS I, 648 EACH	614 WORK ZONE ARROW, CLASS I, 648, AS PER PLAN EACH	615 PAVEMENT FOR MAINTAINING TRAFFIC, CLASS A, AS PER PLAN SY	622 PORTABLE BARRIER, 50", AS PER PLAN, A FT	622 PORTABLE BARRIER, 50", AS PER PLAN, B FT	622 PORTABLE BARRIER, UNANCHORED FT	630 SIGN, TEMPORARY OVERLAY SF	630 COVERING OF SIGN SF	630 REMOVAL OF TEMPORARY OVERLAY SIGN AND DISPOSAL EACH
	TOTALS FROM SHEET P.61	805	4	1423	548	145	90		0.20		0.79	1.08			9541		968								1358			2271			
	TOTALS FROM SHEET P.62	747	8	617	235	1035	444		2.06		2.17	2.10			4747													11098	126	76	11
	TOTALS FROM SHEET P.63		1	545	235	95	20	18	0.06	1.56	0.09	0.30	1.01	1.71	784	2993	600	600							960		456	491	129	6	8
	TOTALS FROM SHEET P.64			70						1.55		0.21	2.18	2.39		1603		2088		45			3		342					
	TOTALS FROM SHEET P.65	730	2	13		25	45			0.28	0.33		0.43	0.20		335	625										1101	33		3
	TOTALS FROM SHEET P.66			83						1.89			1.91	2.21	148	3767		3155												
	TOTALS FROM SHEET P.67			47						1.09			0.89	0.79		2004		16		16			2							
	TOTALS FROM SHEET P.68	3473	4	1802	681	951	178	171	0.91		2.82	3.51			11036		1345								2650	4627		4081	21		2
	TOTALS FROM SHEET P.69	1114	2	798	130	933	100	159	1.02		2.31	2.27	0.20		4577		1970		58						1541	3970		2491	75	20	7
	TOTALS FROM SHEET P.70	5706	2	573	376	1052	204	265	0.96		3.75	4.14			3387		1363		65						2048	6619		5103	87		4
	TOTALS FROM SHEET P.71	45	3	382	319	417	30	69	0.70		1.09	1.65			3390		1031			24		6	1			2032		440	30		3
	TOTALS FROM SHEET P.72	394	3	228	249	286	130		0.43		1.43	1.83			1246		1200					6	1					3251	21		2
	TOTALS FROM SHEET P.73	1172	1	665	238	539	262		1.65		1.31	1.65			6947		1220			21	203		2					6556			
	TOTALS CARRIED TO GENERAL SUMMARY	14186	30	7246	3011	5478	1503	682	7.99	6.37	16.09	18.74	6.62	7.30	45803	10702	10322	5859	123	106	203	12	9	8557	17590	456	36883	522	102	40

Preliminary Plans - For Reference Only

MAINTENANCE OF TRAFFIC SUBSUMMARY

DESIGN AGENCY
ms consultants. inc.

DESIGNER KJF

REVIEWER KWR 06/02/25

PROJECT ID 121474

SHEET P.74 TOTAL 655

MAH-680-4.58

MODEL: Sheet PAPERSIZE: 34x22 (in.) DATE: 9/15/2025 TIME: 9:02:09 AM PLTDRV: OHDOT_PDF_E+.pltcfg PENTBL: OHDOT_Pen.tbl USER: DHall@msconsultants.com WORKSPACE: OHDOTCEv02 WORKSET: 121474 PRODUCT: OpenRoadsDesigner 24.00.00.205
pw:\\ohiodot-pw.bentley.com:ohiodot-pw-02\Documents\01 Active Projects\District 04\Mahoning\121474\402-Engineering_MSConsultants\MOT\Sheets\121474_MS014.dgn

REF NO.	SHEET NO.	STATION TO STATION						202 INLET ABANDONED EACH	202 INLET ABANDONED, AS PER PLAN EACH		611 INLET, NO. 3 FOR SINGLE SLOPE BARRIER, TYPE C1 EACH
		I.R. 680									
DR138	P.101	948+00.94	LT		948+00.94	RT		1			
DR139	P.101	948+91.50	LT		948+91.50	RT		1			
DR140	P.101	950+01.28	LT		950+01.28	RT		1			
DR141	P.135, P.148	1116+92.28	LT		1116+92.28	RT			1		
DM101	P.135, P.148	1116+91.79	LT		1116+91.79	RT					1
TOTALS CARRIED TO GENERAL SUMMARY								3	1		1

Preliminary Plans - For Reference Only

MOT DRAINAGE SUBSUMMARY

MAH-680-4.58

MODEL: MOT DRAINAGE 1 PAPERSIZE: 34x22 (in.) DATE: 9/15/2025 TIME: 9:02:13 AM PLTDRV: OHDOT_PDF_E+.pltcfg PENTBL: OHDOT_Pen.tbl USER: DHall@msconsultants.com WORKSPACE: OHDOTCEv02 WORKSET: 121474 PRODUCT: OpenRoadsDesigner 24.00.00.205
pw:\\ohiodot-pw.bentley.com:ohiodot-pw-02\Documents\01 Active Projects\District 04\Mahoning\121474\402-Engineering_MSConsultants\Drainage\Sheets\121474_DS004.dgn

DESIGN AGENCY

ms consultants, inc.

DESIGNER

REVIEWER
DNO 5/20/25

PROJECT ID
121474

SHEET P.74A | TOTAL 655

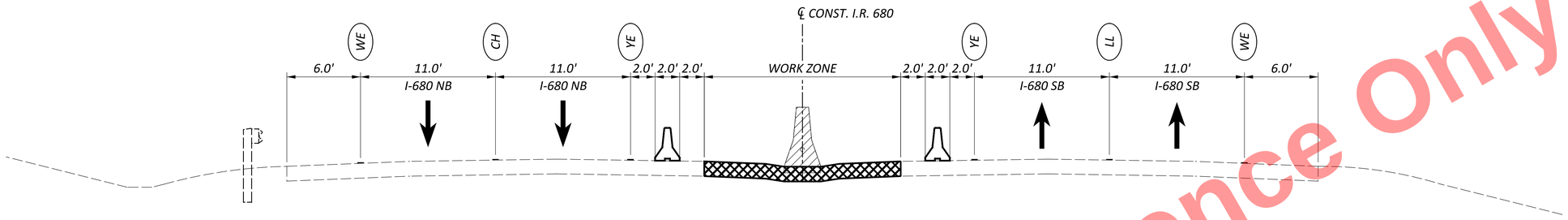

SECTION 1N-1N
PHASE 1A STEP 1 - MEDIAN CROSSOVER CONSTRUCTION
STA. 947+00

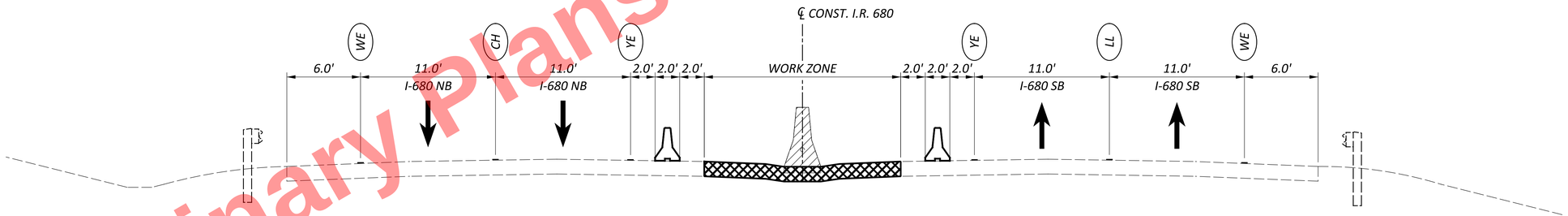

SECTION 1S-1S
PHASE 1A STEP 1 - MEDIAN CROSSOVER CONSTRUCTION
STA. 1049+50

LEGEND

- *PORTABLE BARRIER, 32"*
- *PORTABLE BARRIER, 50"/ 32" W/ 18" GLARE SCREEN*
- *TEMPORARY PAVEMENT*
- *TEMPORARY PAVEMENT PLACED IN A PREVIOUS PHASE*
- *WORK ZONE*
- *XX* — *WORK ZONE PAVEMENT MARKINGS (ALL OTHERS EXISTING TO REMAIN)*

Preliminary Plans - For Reference Only

MAINTENANCE OF TRAFFIC TYPICAL SECTIONS - PHASE 1
S.R. 193 TO U.S. 62/S.R. 7

DESIGN AGENCY
ms consultants, inc.

DESIGNER KJF
REVIEWER KWR 01/06/25
PROJECT ID 121474
SHEET P.75 TOTAL 655

MAH-680-4.58

MODEL: Sheet PAPERSIZE: 34x22 (in.) DATE: 9/15/2025 TIME: 9:03:45 AM PLTDRV: OHDOT_PDF_E+.pltcfg PENTBL: OHDOT_Pen.tbl USER: DHall@msconsultants.com WORKSPACE: OHDOTCEv02 WORKSET: 121474 PRODUCT: OpenRoadsDesigner 24.00.00.205
pw:\\ohiodot-pw.bentley.com:ohiodot-pw-02\Documents\01 Active Projects\District 04\Mahoning\121474\402-Engineering_MSConsultants\MOT\Sheets\121474_MY101.dgn

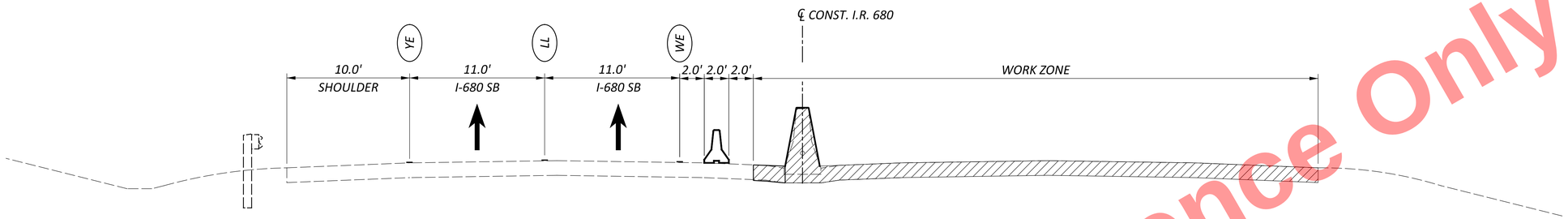

SECTION 1A-1A
PHASE 1A STEP 2 - I-680 SOUTHBOUND CONSTRUCTION
STA. 988+00

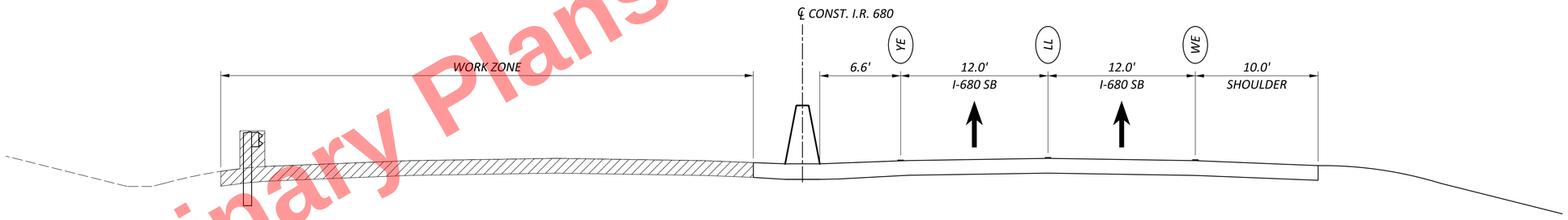

SECTION 1B-1B
PHASE 1B - I-680 NORTHBOUND CONSTRUCTION
STA. 988+00

LEGEND

- PORTABLE BARRIER, 32"
- PORTABLE BARRIER, 50"/ 32" W/ 18" GLARE SCREEN
- TEMPORARY PAVEMENT
- TEMPORARY PAVEMENT PLACED IN A PREVIOUS PHASE
- WORK ZONE
- XX — WORK ZONE PAVEMENT MARKINGS (ALL OTHERS EXISTING TO REMAIN)

Preliminary Plans - For Reference Only

MAINTENANCE OF TRAFFIC TYPICAL SECTIONS - PHASE 1
S.R. 193 TO U.S. 62/S.R. 7

DESIGN AGENCY
ms consultants. inc.

DESIGNER KJF
REVIEWER KWR 01/06/25
PROJECT ID 121474
SHEET P.76 TOTAL 655

MAH-680-4.58

MODEL: Sheet PAPERSIZE: 34x22 (in.) DATE: 9/15/2025 TIME: 9:03:51 AM PLTDRV: OHDOT_PDF_E+.pltcfg PENTBL: OHDOT_Pen.tbl USER: DHall@msconsultants.com WORKSPACE: OHDOTCEv02 WORKSET: 121474 PRODUCT: OpenRoadsDesigner 24.00.00.205
pw:\\ohiodot-pw.bentley.com:ohiodot-pw-02\Documents\01 Active Projects\District 04\Mahoning\121474\402-Engineering_MSConsultants\MOT\Sheets\121474_MY102.dgn

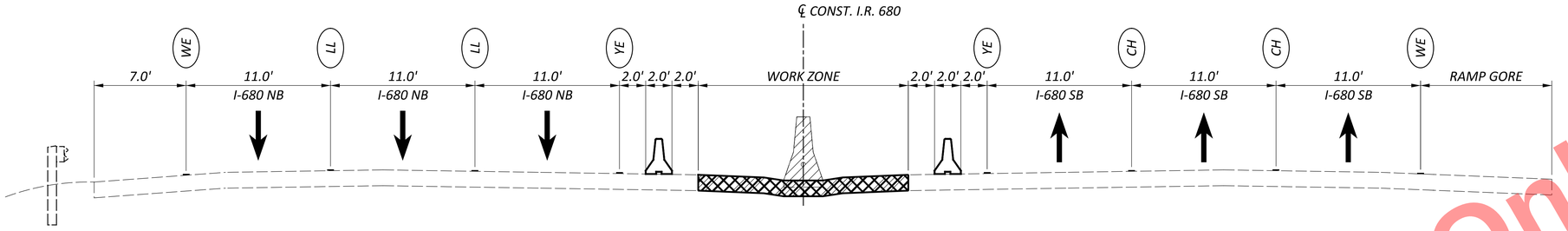

SECTION 2A1-2A1
PHASE 2A STEP 1 - MEDIAN CROSSOVER CONSTRUCTION
STA. 1117+75

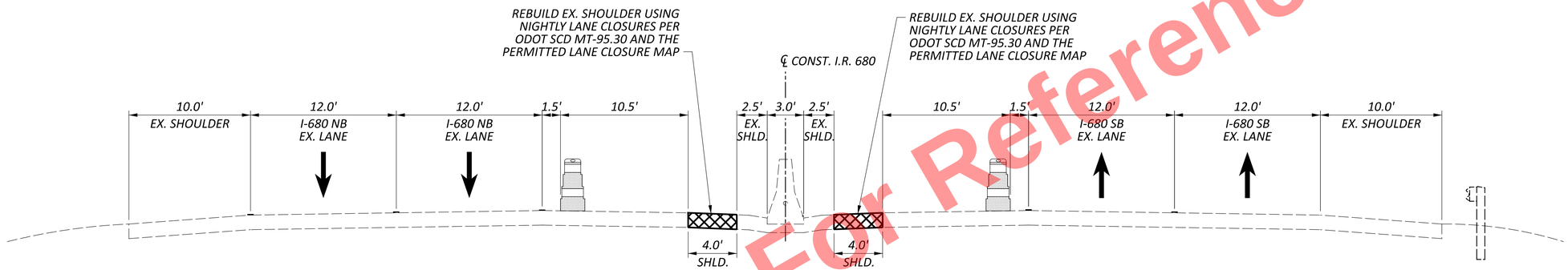

PHASE 2A PRE-STEP 2 - 1
STA. 1065+00

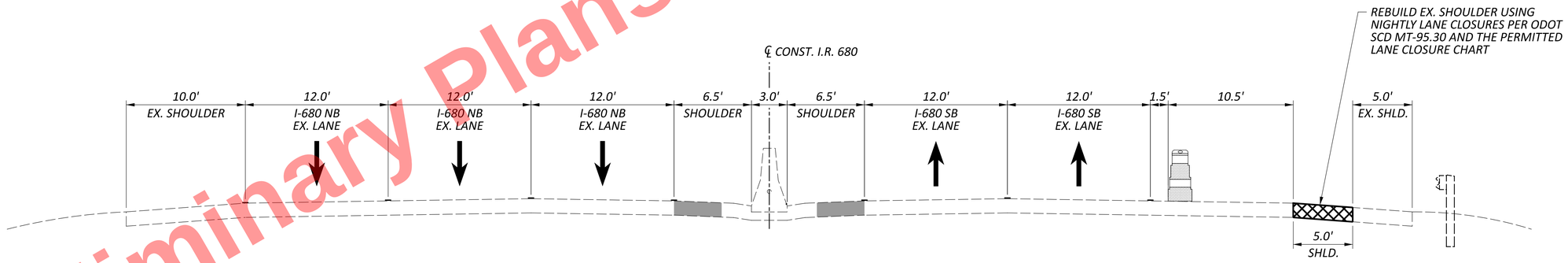

PHASE 2A PRE-STEP 2 - 2
STA. 1065+00

LEGEND

- PORTABLE BARRIER, 32"
- PORTABLE BARRIER, 50"/ 32" W/ 18" GLARE SCREEN
- TEMPORARY PAVEMENT
- TEMPORARY PAVEMENT PLACED IN A PREVIOUS PHASE
- WORK ZONE
- XX — WORK ZONE PAVEMENT MARKINGS (ALL OTHERS EXISTING TO REMAIN)

Preliminary Plans - For Reference Only

MAINTENANCE OF TRAFFIC TYPICAL SECTIONS - PHASE 2
U.S. 62/S.R. 7 TO END PROJECT

DESIGN AGENCY
ms consultants, inc.

DESIGNER KJF
REVIEWER KWR 01/02/25
PROJECT ID 121474
SHEET P.77 TOTAL 655

MAH-680-4.58

MODEL: Sheet PAPERSIZE: 34x22 (in.) DATE: 9/15/2025 TIME: 9:03:58 AM PLTDRV: OHDOT_PDF_E+.pltcfg PENTBL: OHDOT_Pen.tbl USER: DHall@msconsultants.com WORKSPACE: OHDOTCEv02 WORKSET: 121474 PRODUCT: OpenRoadsDesigner 24.00.00.205
pw:\\ohiodot-pw.bentley.com:ohiodot-pw-02\Documents\01 Active Projects\District 04\Mahoning\121474\02-Engineering_MSConsultants\MOT\Sheets\121474_MY001.dgn

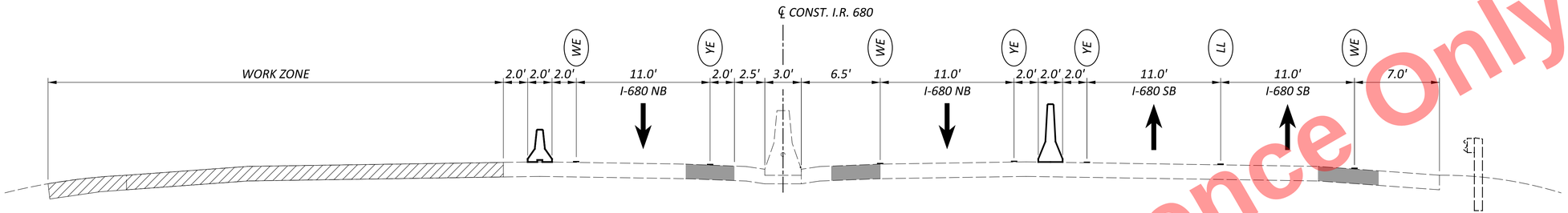

SECTION 2A2-2A2
PHASE 2A STEP 2 - I-680 NB OUTSIDE PAVEMENT CONSTRUCTION
STA. 1065+00

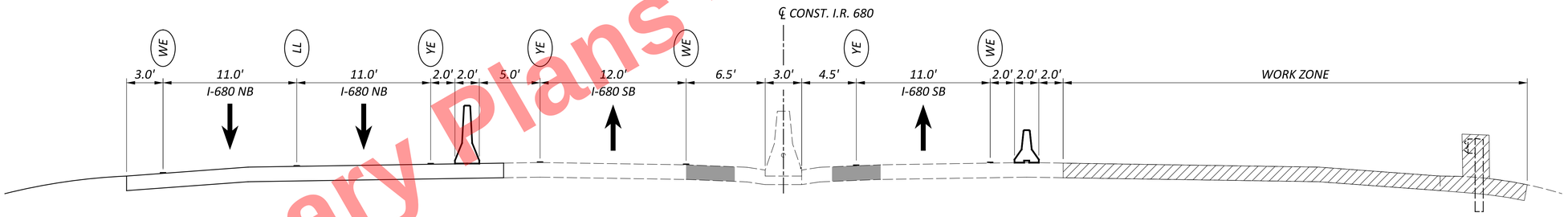

SECTION 2B-2B
PHASE 2B - I-680 SB OUTSIDE PAVEMENT CONSTRUCTION
STA. 1065+00

Preliminary Plans - For Reference Only

LEGEND

- *PORTABLE BARRIER, 32"*
- *PORTABLE BARRIER, 50"/ 32" W/ 18" GLARE SCREEN*
- *TEMPORARY PAVEMENT*
- *TEMPORARY PAVEMENT PLACED IN A PREVIOUS PHASE*
- *WORK ZONE*
- *XX* — *WORK ZONE PAVEMENT MARKINGS (ALL OTHERS EXISTING TO REMAIN)*

MAINTENANCE OF TRAFFIC TYPICAL SECTIONS - PHASE 2
U.S. 62/S.R. 7 TO END PROJECT

DESIGN AGENCY
ms consultants. inc.

DESIGNER KJF
REVIEWER KWR 01/02/25
PROJECT ID 121474
SHEET P.78 TOTAL 655

MAH-680-4.58

MODEL: Sheet PAPERSIZE: 34x22 (in.) DATE: 9/15/2025 TIME: 9:04:03 AM PLTDRV: OHDOT_PDF_E+.pltcfg PENTBL: OHDOT_Pen.tbl USER: DHall@msconsultants.com WORKSPACE: OHDOTCEv02 WORKSET: 121474 PRODUCT: OpenRoadsDesigner 24.00.00.205
pw:\\ohiodot-pw.bentley.com:ohiodot-pw-02\Documents\01 Active Projects\District 04\Mahoning\121474\402-Engineering_MSConsultants\MOT\Sheets\121474_MY002.dgn

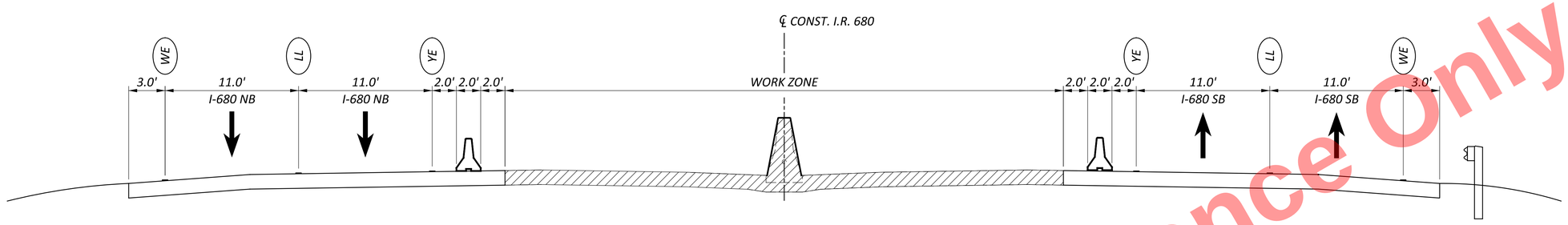

SECTION 2C-2C
PHASE 2C - I-680 MEDIAN CONSTRUCTION
STA. 1065+00

Preliminary Plans - For Reference Only

LEGEND

- PORTABLE BARRIER, 32"
- PORTABLE BARRIER, 50"/ 32" W/ 18" GLARE SCREEN
- TEMPORARY PAVEMENT
- TEMPORARY PAVEMENT PLACED IN A PREVIOUS PHASE
- WORK ZONE
- XX — WORK ZONE PAVEMENT MARKINGS (ALL OTHERS EXISTING TO REMAIN)

MAINTENANCE OF TRAFFIC TYPICAL SECTIONS - PHASE 2
U.S. 62/S.R. 7 TO END PROJECT

DESIGN AGENCY
ms consultants. inc.

DESIGNER KJF
REVIEWER KWR 01/02/25
PROJECT ID 121474
SHEET P.79 TOTAL 655

MAH-680-4.58

MODEL: Sheet PAPERSIZE: 34x22 (in.) DATE: 9/15/2025 TIME: 9:04:08 AM PLTDRV: OHDOT_PDF_E+.pltcfg PENTBL: OHDOT_Pen.tbl USER: DHall@msconsultants.com WORKSPACE: OHDOTCEv02 WORKSET: 121474 PRODUCT: OpenRoadsDesigner 24.00.00.205
pw:\\ohiodot-pw.bentley.com:ohiodot-pw-02\Documents\01 Active Projects\District 04\Mahoning\121474\402-Engineering_MSConsultants\MOT\Sheets\121474_MY003.dgn

LEGEND

- WORK ZONE SIGN W/ SUPPORT
- PORTABLE CHANGEABLE MESSAGE SIGN
- DETOUR DIRECTIONAL ARROW
- SIGNALIZED INTERSECTION
- TYPE 3 BARRICADES W/ SIGN
- OVERHEAD SIGN SUPPORT

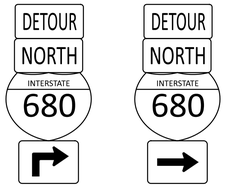

M4-8-24
M3-1-24
M1-1-30-3
M5-1R-21

(1)

M4-8-24
M3-1-24
M1-1-30-3
M6-1R-21

(2)

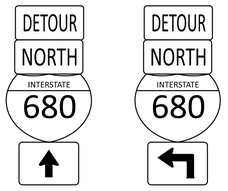

M4-8-24
M3-1-24
M1-1-30-3
M6-3-21

(3)

M4-8-24
M3-1-24
M1-1-30-3
M5-1L-21

(4)

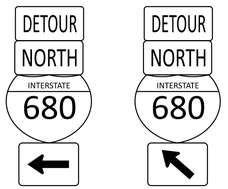

M4-8-24
M3-1-24
M1-1-30-3
M6-1L-21

(5)

M4-8-24
M3-1-24
M1-1-30-3
M6-2L-21

(6)



M4-8-30
M3-1-36
M1-1-36-3
M5-H6A-36

(7)

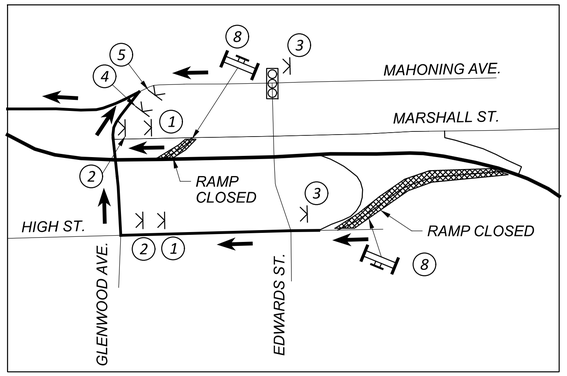

DETAIL A

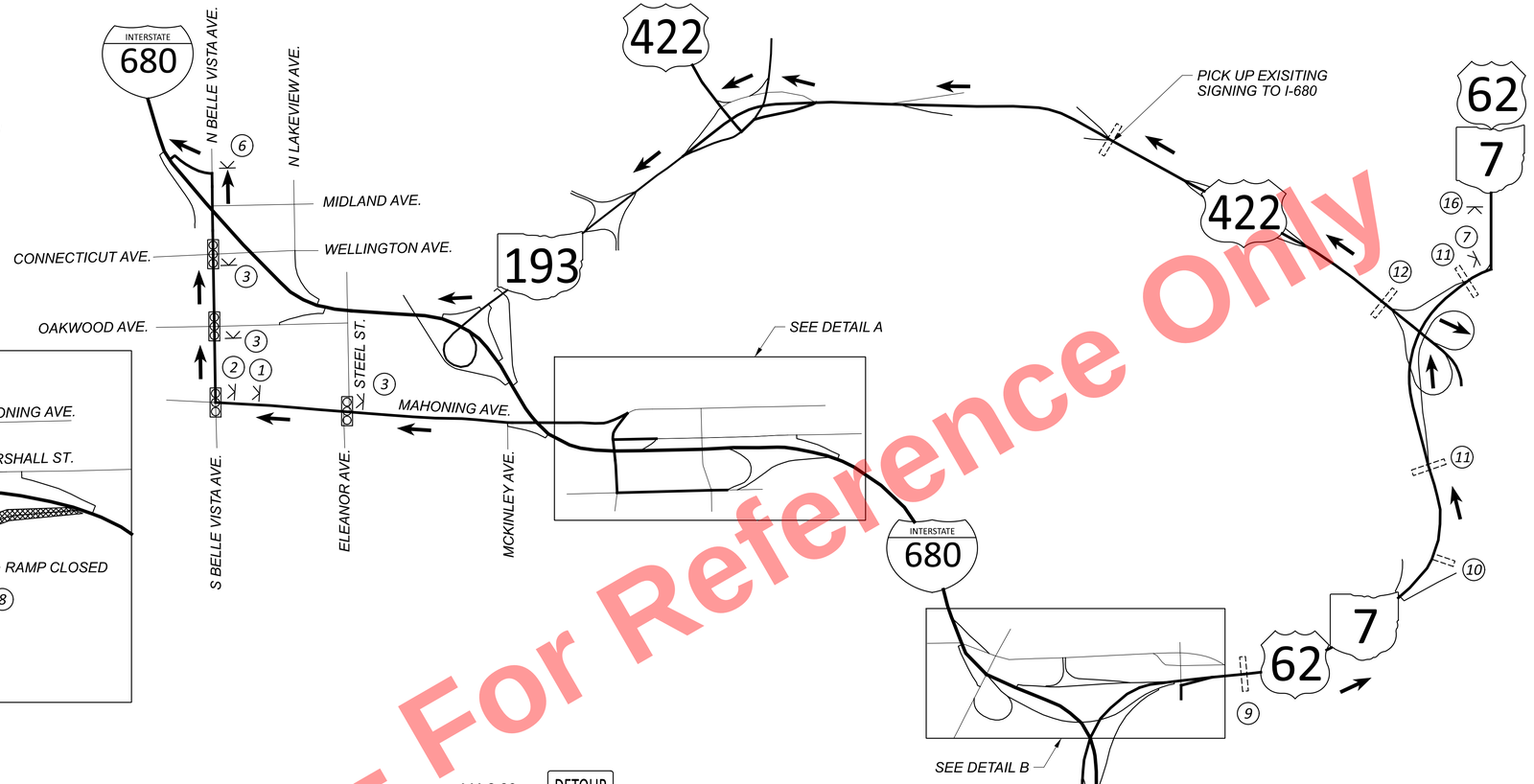

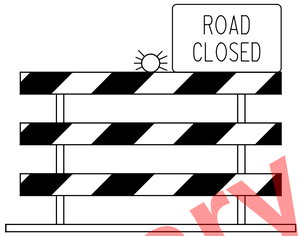

R11-2-48

10' TYPE 3 BARRICADE
(PLACED ACROSS ENTIRE RAMP)

(8)

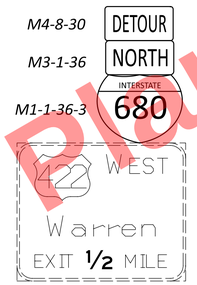

M4-8-30
M3-1-36
M1-1-36-3

(9)

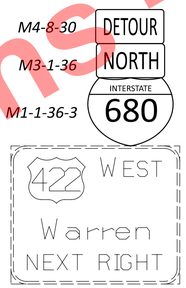

M4-8-30
M3-1-36
M1-1-36-3

(10)

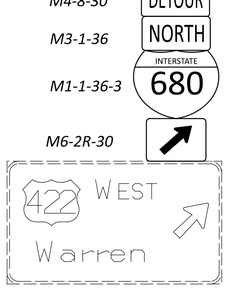

M4-8-30
M3-1-36
M1-1-36-3
M6-2R-30

(11)

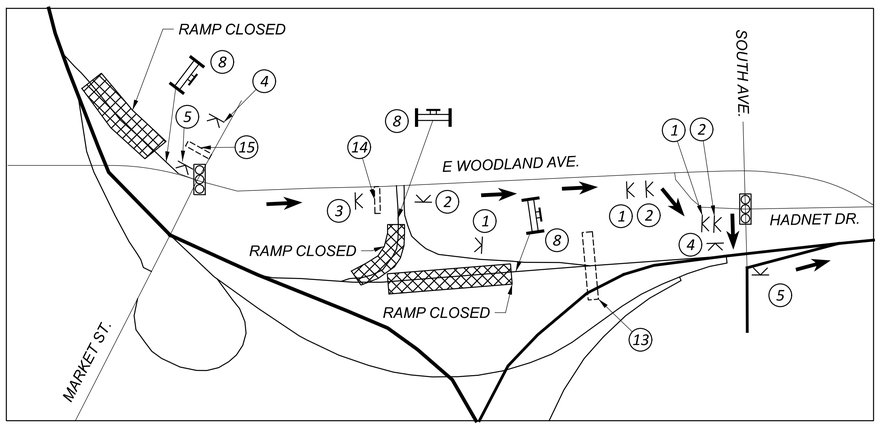

DETAIL B

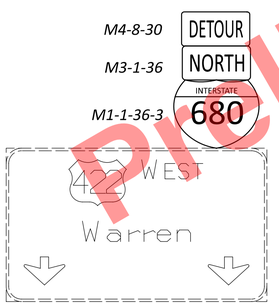

M4-8-30
M3-1-36
M1-1-36-3

(12)

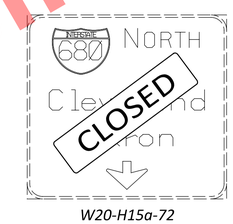

W20-H15a-72

(13)



W20-H15a-72

(14)



W20-H15a-72

(15)



W20-H15a-72

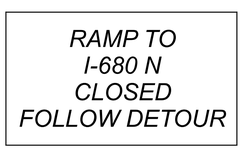

SPECIAL
48" X 48"
(BLACK/ORANGE)

(16)

NOTES:

1. THIS DETOUR SHALL BE IN EFFECT DURING PHASE 1 WHEN CONSTRUCTING I-680 NB BETWEEN S.R. 193 AND U.S. 62/S.R. 7.

2. TEMPORARY OVERLAYS ON GUIDE SIGNS ARE SHOWN FOR INFORMATION PURPOSES ONLY. SEE MOT PHASE 1 PLAN SHEETS FOR OVERLAY DETAILS.

Preliminary Plans - For Reference Only

MAINTENANCE OF TRAFFIC - DETOUR PLAN
PHASE 1 - DOWNTOWN RAMPS TO I.R. 680 NB

DESIGN AGENCY
ms consultants, inc.

DESIGNER KJF
REVIEWER KWR 07/12/24
PROJECT ID 121474
SHEET P.80 TOTAL 655

MAH-680-4.58

MODEL: Sheet PAPERSIZE: 34x22 (in.) DATE: 9/15/2025 TIME: 1:51:10 PM PLTDRV: OHDOT_PDF_E+.pltcfg PENTBL: OHDOT_Pen.tbl USER: DHall@msconsultants.com WORKSPACE: OHDOTCEv02 WORKSET: 121474 PRODUCT: OpenRoadsDesigner 24.00.00.205
pw:\\ohiodot-pw.bentley.com:ohiodot-pw-02\Documents\01 Active Projects\District 04\Mahoning\121474\02-Engineering_MSConsultants\MOT\Sheets\121474_MD401.dgn

LEGEND

- K — WORK ZONE SIGN W/ SUPPORT
- PORTABLE CHANGEABLE MESSAGE SIGN
- OVERHEAD SIGN SUPPORT
- SIGNALIZED INTERSECTION
- TYPE 3 BARRICADES W/ SIGN
- DETOUR DIRECTIONAL ARROW

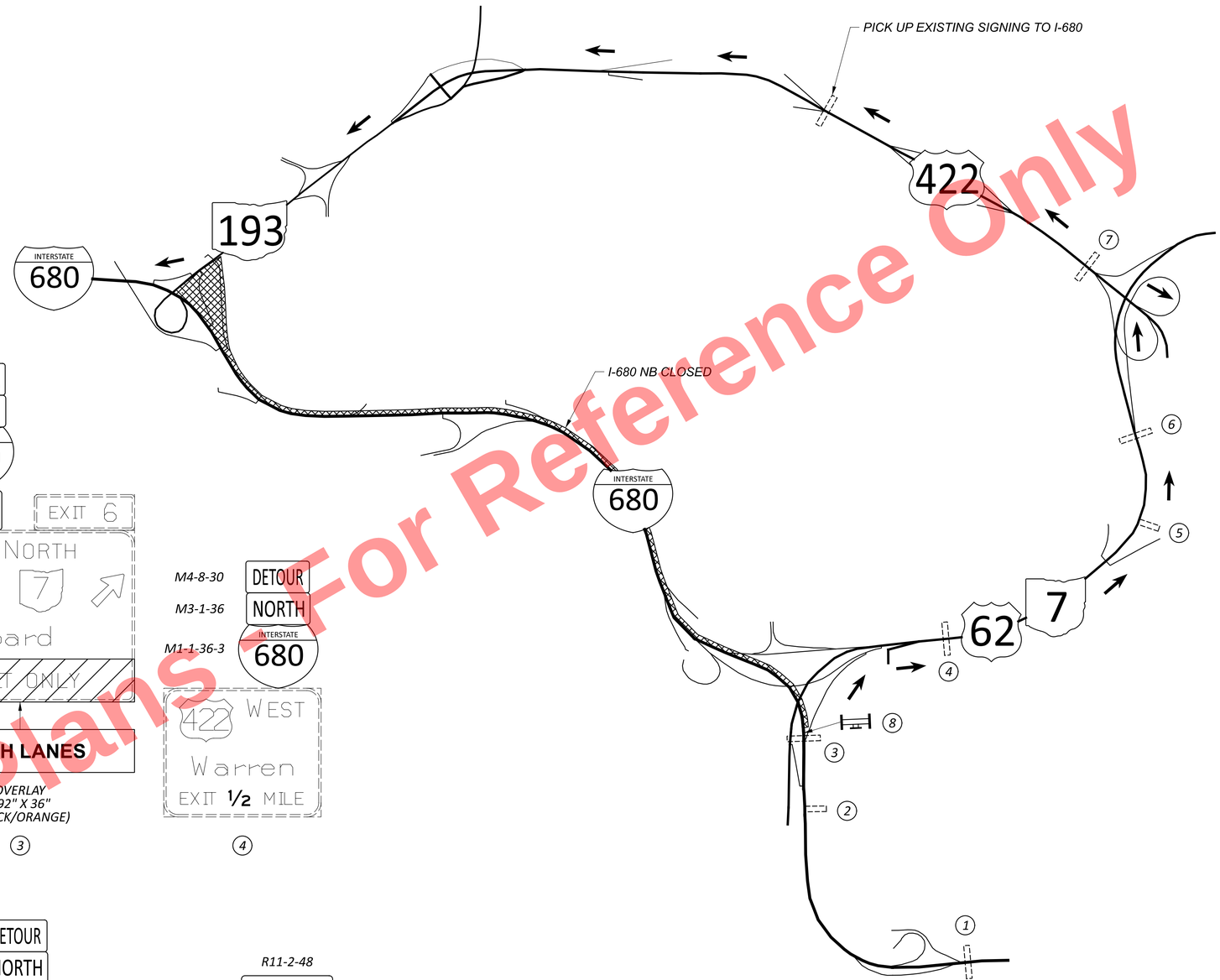

M4-8-30 DETOUR
M3-1-36 NORTH
M1-1-36-3 INTERSTATE 680
M6-2R-30
EXIT 6
EAST NORTH
62 7
Hubbard
EXIT ONLY

BOTH LANES

OVERLAY 192" X 36" (BLACK/ORANGE)

③

M4-8-30 DETOUR
M3-1-36 NORTH
M1-1-36-3 INTERSTATE 680
EXIT 6
EAST NORTH
62 7
Hubbard
EXIT ¾ MILE

①

M4-8-30 DETOUR
M3-1-36 NORTH
M1-1-36-3 INTERSTATE 680
EXIT 6
EAST NORTH
62 7
Hubbard
EXIT ONLY

②

M4-8-30 DETOUR
M3-1-36 NORTH
M1-1-36-3 INTERSTATE 680
422 WEST
Warren
EXIT ½ MILE

④

M4-8-30 DETOUR
M3-1-36 NORTH
M1-1-36-3 INTERSTATE 680
422 WEST
Warren
NEXT RIGHT

⑤

M4-8-30 DETOUR
M3-1-36 NORTH
M1-1-36-3 INTERSTATE 680
M6-2R-30
422 WEST
Warren

⑥

M4-8-30 DETOUR
M3-1-36 NORTH
M1-1-36-3 INTERSTATE 680
422 WEST
Warren

⑦

R11-2-48 ROAD CLOSED

10' TYPE 3 BARRICADE (PLACED ACROSS ENTIRE ROADWAY)

⑧

NOTES:

1. THIS DETOUR SHALL BE IN EFFECT DURING PHASE 1 WHEN CONSTRUCTING I-680 NB BETWEEN S.R. 193 AND U.S.62/S.R. 7.

2. TEMPORARY OVERLAYS ON GUIDE SIGNS ARE SHOWN FOR INFORMATION PURPOSES ONLY. SEE MOT PHASE 1 PLAN SHEETS FOR OVERLAY DETAILS.

For Reference Only
Preliminary Plans - For

MAINTENANCE OF TRAFFIC - DETOUR PLAN
PHASE 1 - I.R. 680 NB FULL CLOSURE

DESIGN AGENCY
ms consultants. inc.

DESIGNER KJF
REVIEWER KWR 07/12/24
PROJECT ID 121474
SHEET P.81 TOTAL 655

MAH-680-4.58

MODEL: Sheet PAPERSIZE: 34x22 (in.) DATE: 9/15/2025 TIME: 1:51:15 PM PLTDRV: OHDOT_PDF_E+.pltcfg PENTBL: OHDOT_Pen.tbl USER: DHall@msconsultants.com WORKSPACE: OHDOTCEv02 WORKSET: 121474 PRODUCT: OpenRoadsDesigner 24.00.00.205
pw:\\ohiodot-pw.bentley.com:ohiodot-pw-02\Documents\01 Active Projects\District 04\Mahoning\121474\402-Engineering_MSConsultants\MOT\Sheets\121474_MD402.dgn

LEGEND

- SIGNALIZED INTERSECTION
- DETOUR DIRECTIONAL ARROW
- K — WORK ZONE SIGN W/ SUPPORT
- WORK ZONE
- OVERHEAD SIGN SUPPORT
- TYPE 3 BARRICADES W/ SIGN

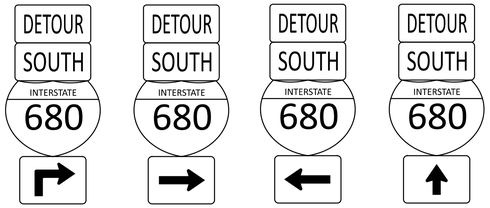

M4-8-24
M3-3-24
M1-1-24-3
M5-1R-21
(1)

M4-8-24
M3-3-24
M1-1-24-3
M6-1R-21
(2)

M4-8-24
M3-3-24
M1-1-24-3
M6-1L-21
(3)

M4-8-24
M3-3-24
M1-1-24-3
M6-3-21
(4)

R11-2-48

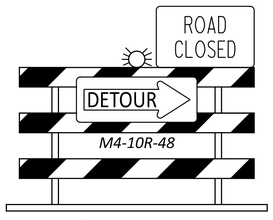

10' TYPE 3 BARRICADE
(PLACED ACROSS ENTIRE RAMP)
(5)

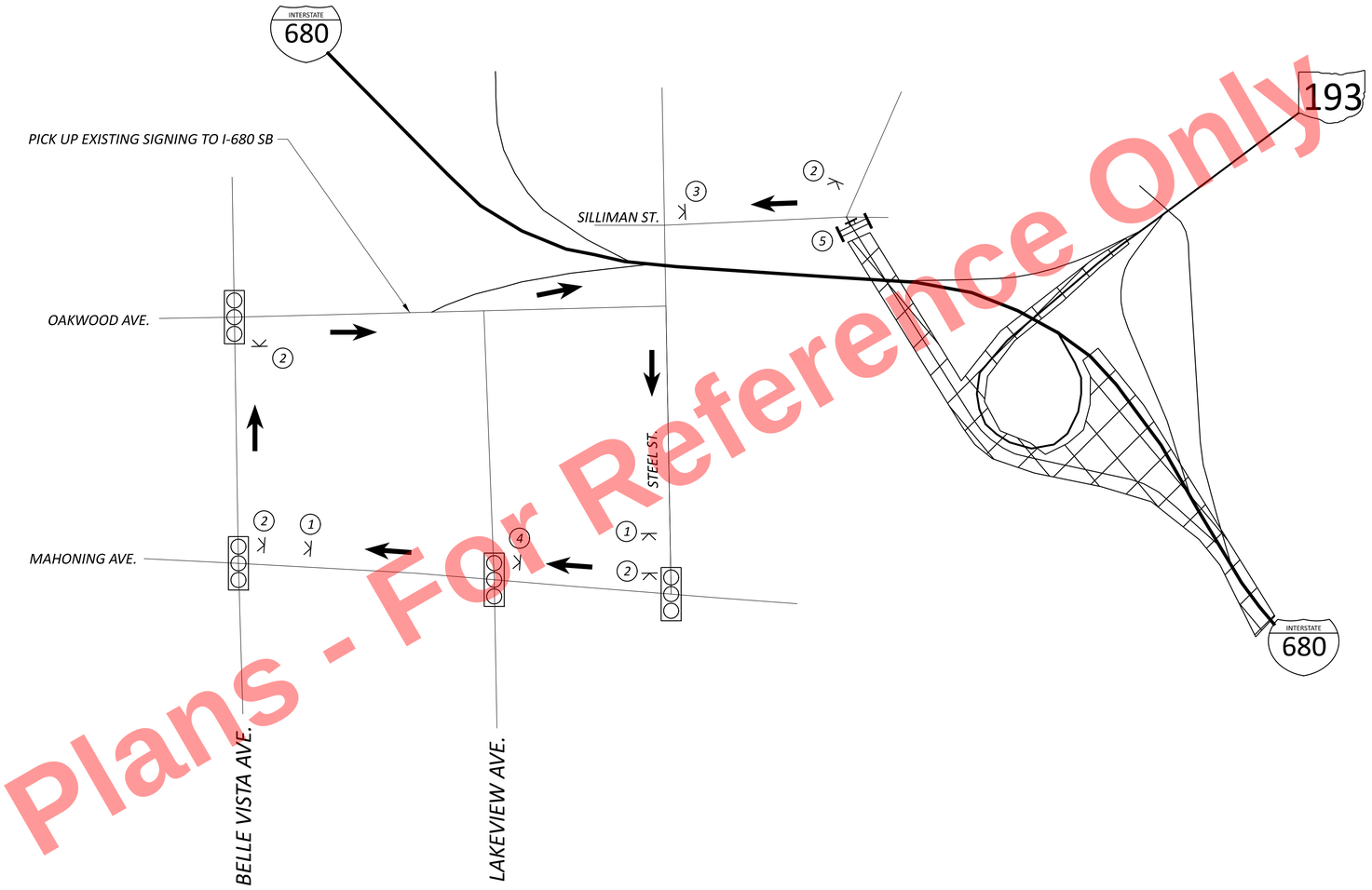

Preliminary Plans - For Reference Only

MAINTENANCE OF TRAFFIC - DETOUR PLAN
PHASE 1A - SILLIMAN ST. RAMP TO I-680 SB

DESIGN AGENCY
ms consultants, inc.

DESIGNER
KJF

REVIEWER
SMR 08/20/24

PROJECT ID
121474

SHEET P.82 | TOTAL 655

MAH-680-4.58

MODEL: Sheet PAPERSIZE: 34x22 (in.) DATE: 9/15/2025 TIME: 1:51:22 PM PLTDRV: OHDOT_PDF_E+.pltcfg PENTBL: OHDOT_Pen.tbl USER: DHall@msconsultants.com WORKSPACE: OHDOTCEv02 WORKSET: 121474 PRODUCT: OpenRoadsDesigner 24.00.00.205
pw:\\ohiodot-pw.bentley.com:ohiodot-pw-02\Documents\01 Active Projects\District 04\Mahoning\121474\402.Engineering_MSConsultants\MOT\Sheets\121474_MD403.dgn

LEGEND

- SIGNALIZED INTERSECTION
- WORK ZONE
- DETOUR DIRECTIONAL ARROW
- OVERHEAD SIGN SUPPORT
- K — WORK ZONE SIGN W/ SUPPORT
- TYPE 3 BARRICADES W/ SIGN

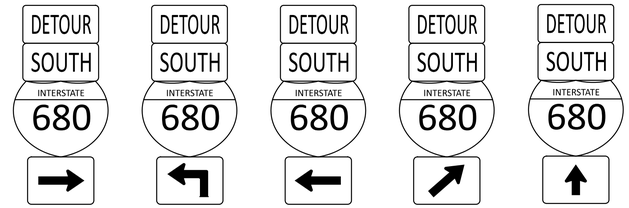

M4-8-24
M3-3-24
M1-1-24-3
M6-1R-21

1

M4-8-24
M3-3-24
M1-1-24-3
M5-1L-21

2

M4-8-24
M3-3-24
M1-1-24-3
M6-1L-21

3

M4-8-24
M3-3-24
M1-1-24-3
M6-2R-21

4

M4-8-24
M3-3-24
M1-1-24-3
M6-3-21

5



M4-8-30
M3-3-36
M1-1-36-3

6

RAMP TO
I-680 S
CLOSED
FOLLOW DETOUR

SPECIAL
48" X 48"
(BLACK/ORANGE)

7

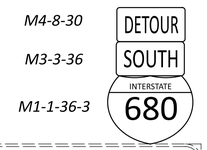

M4-8-30
M3-3-36
M1-1-36-3



W20-H15-96

8





W20-H15-96

9



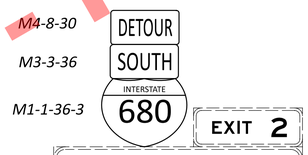

10

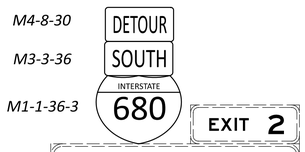

11

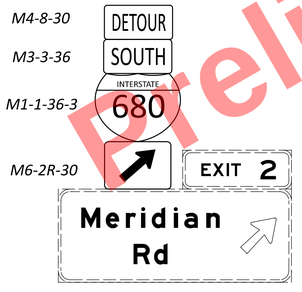

12



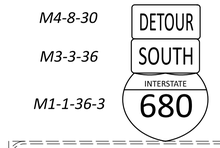

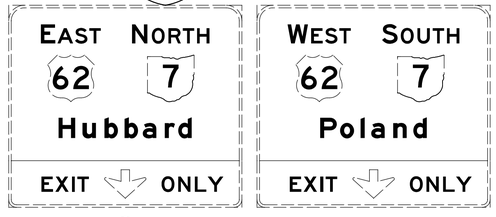

13

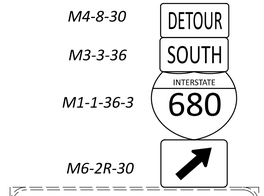



14

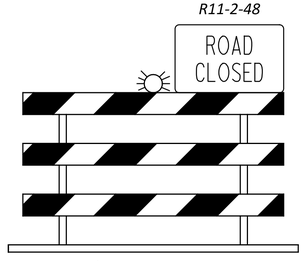

10' TYPE 3 BARRICADE
(PLACED ACROSS ENTIRE RAMP)

15

DETAIL

NOTES:

1. TEMPORARY OVERLAYS ON GUIDE SIGNS ARE SHOWN FOR INFORMATION PURPOSES ONLY. SEE MOT PHASE 1A PLAN SHEETS FOR OVERLAY DETAILS.

For Reference Only
Preliminary Plans - For

MAINTENANCE OF TRAFFIC - DETOUR PLAN
PHASE 1A - S.R. 193 RAMP TO I-680 SB

DESIGN AGENCY
ms consultants, inc.

DESIGNER KJF
REVIEWER SMR 08/20/24
PROJECT ID 121474
SHEET P.83 TOTAL 655

MAH-680-4.58

MODEL: Sheet PAPERSIZE: 34x22 (in.) DATE: 9/15/2025 TIME: 1:51:29 PM PLTDRV: OHDOT_PDF_E+.pltcfg PENTBL: OHDOT_Pen.tbl USER: DHall@msconsultants.com WORKSPACE: OHDOTCEv02 WORKSET: 121474 PRODUCT: OpenRoadsDesigner 24.00.00.205
pw:\\ohiodot-pw.bentley.com:ohiodot-pw-02\Documents\01 Active Projects\District 04\Mahoning\121474\402-Engineering_MSConsultants\MOT\Sheets\121474_MD404.dgn

LEGEND

- SIGNALIZED INTERSECTION
- DETOUR DIRECTIONAL ARROW
- K — WORK ZONE SIGN W/ SUPPORT
- WORK ZONE
- OVERHEAD SIGN SUPPORT
- TYPE 3 BARRICADES W/ SIGN

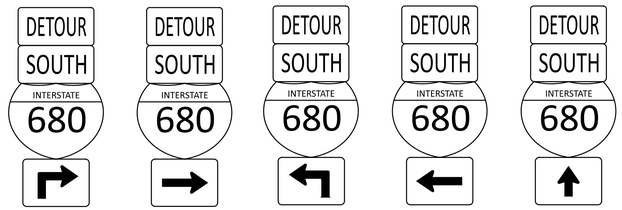

M4-8-24
M3-3-24
M1-1-24-3
M5-1R-21
(1)

M4-8-24
M3-3-24
M1-1-24-3
M6-1R-21
(2)

M4-8-24
M3-3-24
M1-1-24-3
M5-1L-21
(3)

M4-8-24
M3-3-24
M1-1-24-3
M6-1L-21
(4)

M4-8-24
M3-3-24
M1-1-24-3
M6-3-21
(5)

R11-2-48

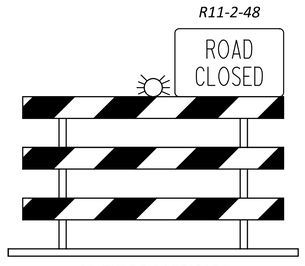

10' TYPE 3 BARRICADE
(PLACED ACROSS ENTIRE RAMP)
(6)

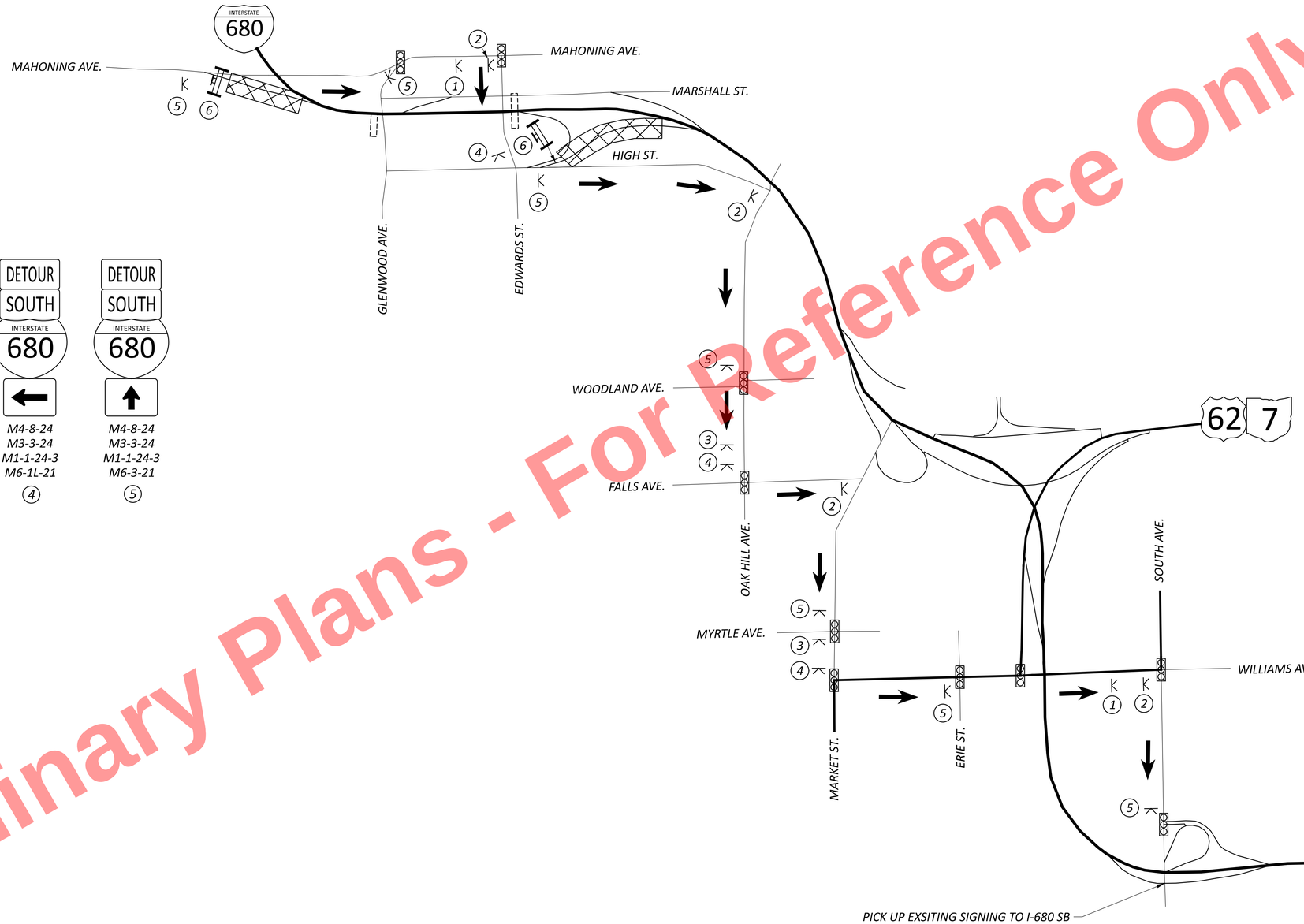

Preliminary Plans - For Reference Only

MAH-680-4.58

MODEL: Sheet PAPERSIZE: 34x22 (in.) DATE: 9/15/2025 TIME: 1:51:35 PM PLTDRV: OHDOT_PDF_E+.pltcfg PENTBL: OHDOT_Pen.tbl USER: DHall@msconsultants.com WORKSPACE: OHDOTEv02 WORKSET: 121474 PRODUCT: OpenRoadsDesigner 24.00.00.205
pw:\\ohiodot-pw.bentley.com:ohiodot-pw-02\Documents\01 Active Projects\District 04\Mahoning\121474\402-Engineering_MSConsultants\MOT\Sheets\121474_MD405.dgn

MAINTENANCE OF TRAFFIC - DETOUR PLAN
PHASE 1A - MAHONING AVE. AND EDWARDS ST. RAMP TO I-680 SB

DESIGN AGENCY
ms consultants. inc.

DESIGNER	KJF
REVIEWER	SMR 08/20/24
PROJECT ID	121474
SHEET	P.84
TOTAL	655

MODEL: Sheet PAPERSIZE: 34x22 (in.) DATE: 9/15/2025 TIME: 1:51:40 PM PLTDRV: OHDOT_PDF_E+.pltcfg PENTBL: OHDOT_Pen.tbl USER: DHall@msconsultants.com WORKSPACE: OHDOTEv02 WORKSET: 121474 PRODUCT: OpenRoadsDesigner 24.00.00.205
pw:\\ohiodot-pw.bentley.com:ohiodot-pw-02\Documents\01 Active Projects\District 04\Mahoning\121474\402.Engineering_MSConsultants\MOT\Sheets\121474_MD406.dgn

MAH-680-4.58

LEGEND

- SIGNALIZED INTERSECTION
- DETOUR DIRECTIONAL ARROW
- K — WORK ZONE SIGN W/ SUPPORT
- WORK ZONE
- OVERHEAD SIGN SUPPORT
- TYPE 3 BARRICADES W/ SIGN

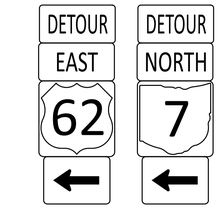

M4-8-24 M3-2-24 M1-4-24-2 M6-1L-21 | M4-8-24 M3-1-24 M1-5-24-2 M6-1L-21

1

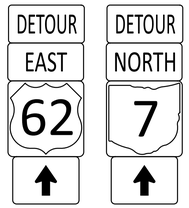

M4-8-24 M3-2-24 M1-4-24-2 M6-3-21 | M4-8-24 M3-1-24 M1-5-24-2 M6-3-21

2

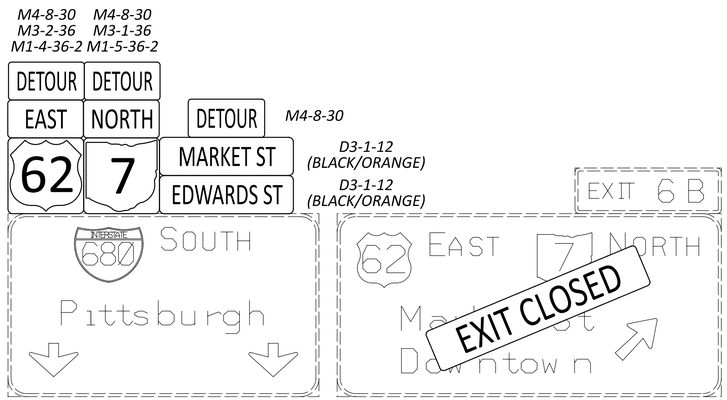

3 W20-H15-96

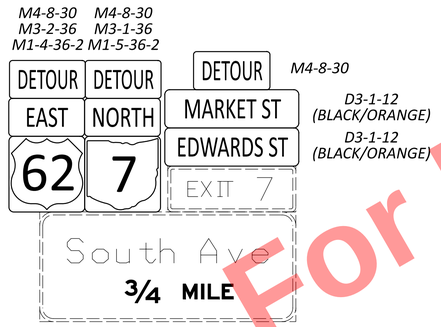

4

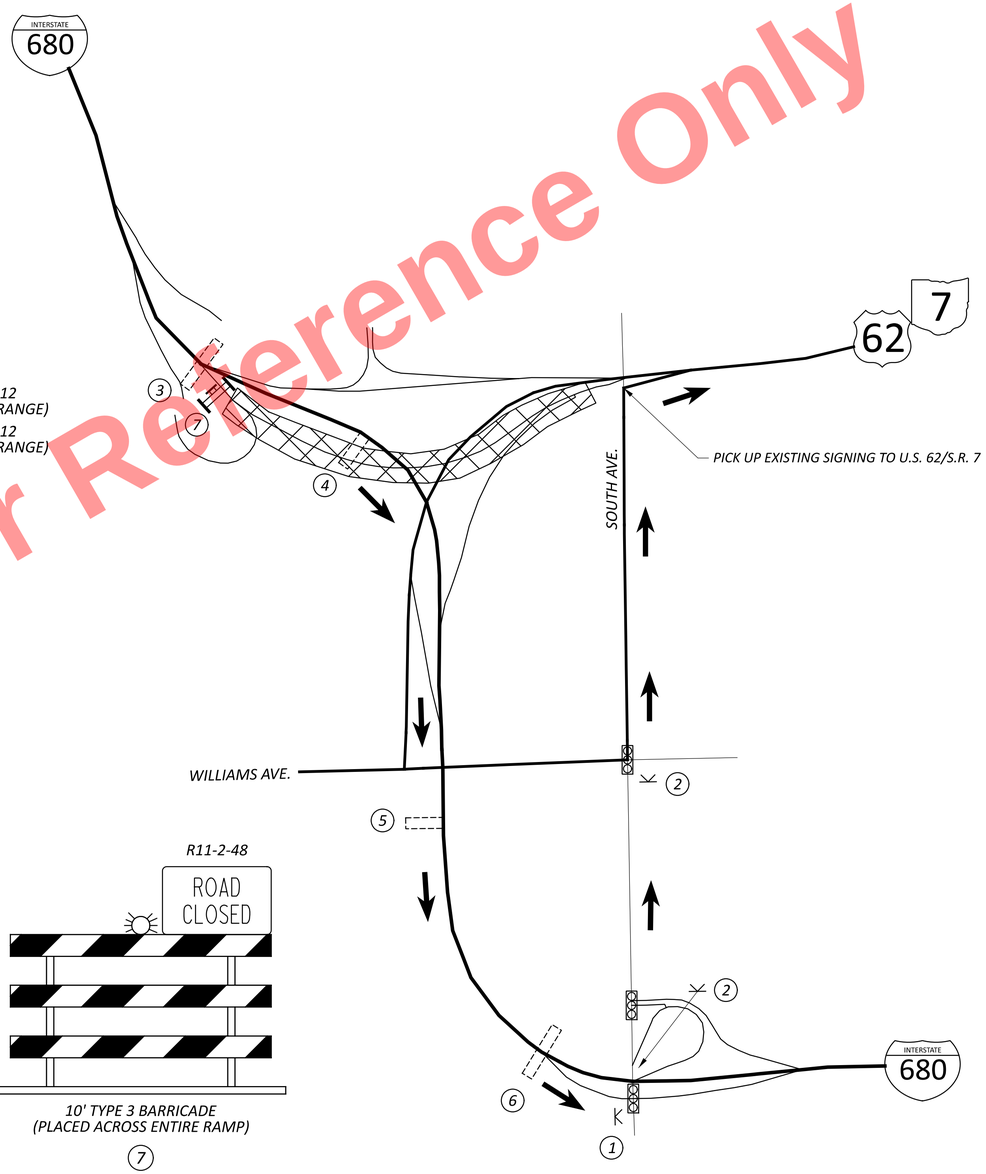

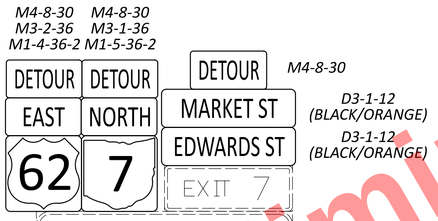

5

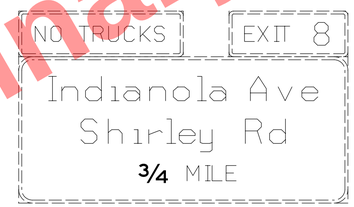

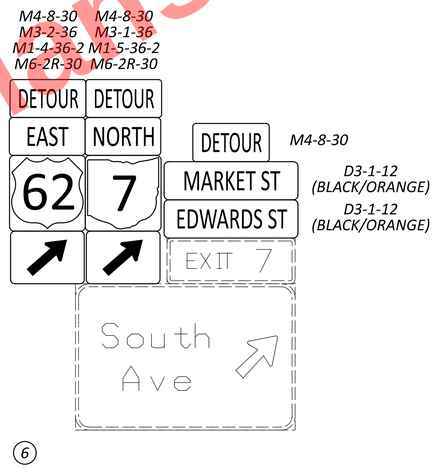

6

R11-2-48

10' TYPE 3 BARRICADE (PLACED ACROSS ENTIRE RAMP)

7

NOTES:

1. TEMPORARY OVERLAYS ON GUIDE SIGNS ARE SHOWN FOR INFORMATION PURPOSES ONLY. SEE MOT PHASE 1A PLAN SHEETS FOR OVERLAY DETAILS.

Preliminary Plans - For Reference Only

MAINTENANCE OF TRAFFIC - DETOUR PLAN
PHASE 1A - I-680 SB RAMP TO U.S. 62 EB/S.R. 7 NB

DESIGN AGENCY
ms consultants, inc.

DESIGNER KJF

REVIEWER SMR 08/20/24

PROJECT ID 121474

SHEET P.85 | TOTAL 655

D3-1-12 (BLACK/ORANGE)

EDWARDS ST
DETOUR

M4-9L-30 (1)

D3-1-12 (BLACK/ORANGE)

EDWARDS ST
DETOUR

M4-H9BL-30 (2)

D3-1-12 (BLACK/ORANGE)

EDWARDS ST
DETOUR

M4-9R-30 (3)

D3-1-12 (BLACK/ORANGE)

EDWARDS ST
DETOUR

M4-H9T-30 (4)

D3-1-12 (BLACK/ORANGE)

EDWARDS ST
DETOUR

M4-H9T-48 (5)

EXIT 5
Glenwood Ave
EXIT CLOSED
EXIT ONLY

W20-H15-96 (6)

EXIT 6 A-B
62 7
Market St
Downtown
EXIT CLOSED
3/4 MILE

W20-H15-96 (7)

EXIT 5
Glenwood Ave
EXIT CLOSED
EXIT ONLY

W20-H15-96 (7)

M4-8-30 M4-8-30
M3-2-36 M3-1-36
M1-4-36-2 M1-5-36-2

DETOUR DETOUR
EAST NORTH
62 7

DETOUR — M4-8-30
MARKET ST — D3-1-12 (BLACK/ORANGE)
EDWARDS ST — D3-1-12 (BLACK/ORANGE)

EXIT 6B
INTERSTATE 680 SOUTH
Pittsburgh
62 EAST 7 NORTH
Market St
Downtown
EXIT CLOSED

W20-H15-96 (8)

M4-8-30 M4-8-30
M3-2-36 M3-1-36
M1-4-36-2 M1-5-36-2

DETOUR DETOUR
EAST NORTH
62 7

DETOUR — M4-8-30
MARKET ST — D3-1-12 (BLACK/ORANGE)
EDWARDS ST — D3-1-12 (BLACK/ORANGE)

EXIT 7
South Ave
3/4 MILE

(9)

M4-8-30 M4-8-30
M3-2-36 M3-1-36
M1-4-36-2 M1-5-36-2
M6-2R-30 M6-2R-30

DETOUR DETOUR
EAST NORTH
62 7

DETOUR — M4-8-30
MARKET ST — D3-1-12 (BLACK/ORANGE)
EDWARDS ST — D3-1-12 (BLACK/ORANGE)

EXIT 7
South Ave
NEXT RIGHT

(10)

NO TRUCKS
EXIT 8
Indianola Ave
Shirley Rd
3/4 MILE

(11)

R11-2-48
ROAD CLOSED

10' TYPE 3 BARRICADE
(PLACED ACROSS ENTIRE RAMP)

(12)

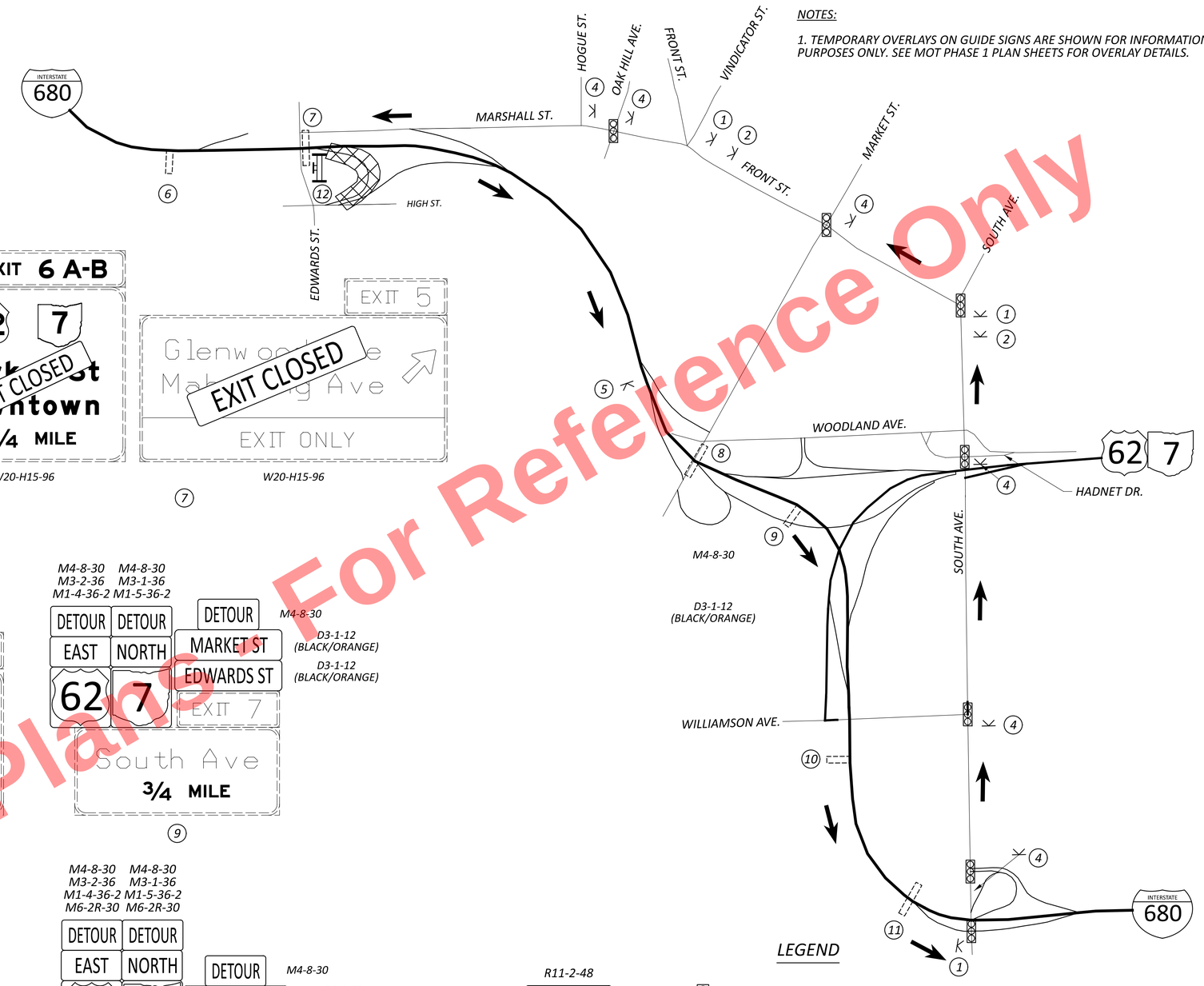

NOTES:

1. TEMPORARY OVERLAYS ON GUIDE SIGNS ARE SHOWN FOR INFORMATION PURPOSES ONLY. SEE MOT PHASE 1 PLAN SHEETS FOR OVERLAY DETAILS.

LEGEND

- SIGNALIZED INTERSECTION
- DETOUR DIRECTIONAL ARROW
- K — WORK ZONE SIGN W/ SUPPORT
- WORK ZONE
- OVERHEAD SIGN SUPPORT
- TYPE 3 BARRICADES W/ SIGN

For Reference Only
Preliminary Plans

MAINTENANCE OF TRAFFIC - DETOUR PLAN
PHASE 1A - I-680 SB RAMP TO EDWARDS ST.

DESIGN AGENCY
ms consultants, inc.

DESIGNER KJF
REVIEWER SMR 08/20/24
PROJECT ID 121474
SHEET P.86 TOTAL 655

MAH-680-4.58

MODEL: Sheet PAPERSIZE: 34x22 (in.) DATE: 9/15/2025 TIME: 1:51:45 PM PLTDRV: OHDOT_PDF_E+.pltcfg PENTBL: OHDOT_Pen.tbl USER: DHall@msconsultants.com WORKSPACE: OHDOTCEv02 WORKSET: 121474 PRODUCT: OpenRoadsDesigner 24.00.00.205
pw:\\ohiodot-pw.bentley.com:ohiodot-pw-02\Documents\01 Active Projects\District 04\Mahoning\121474\402-Engineering_MSConsultants\MOT\Sheets\121474_MD407.dgn

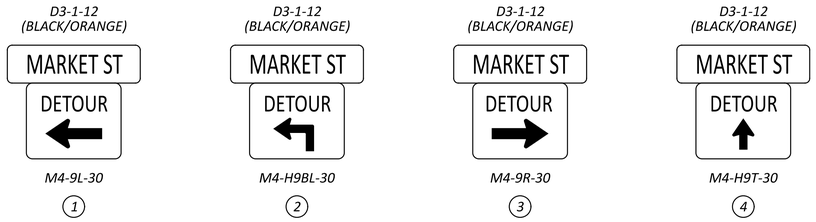

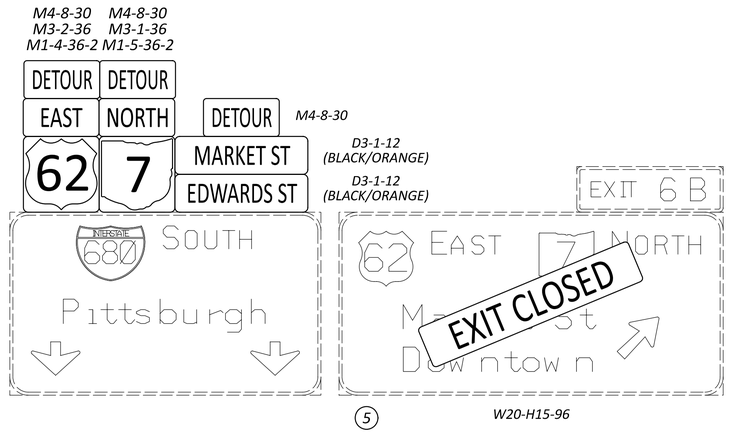

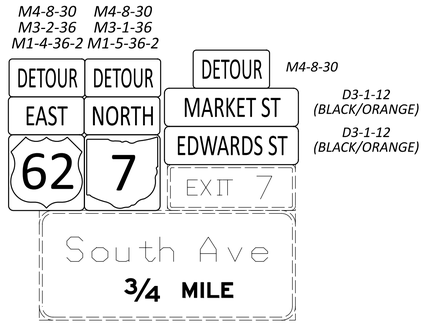

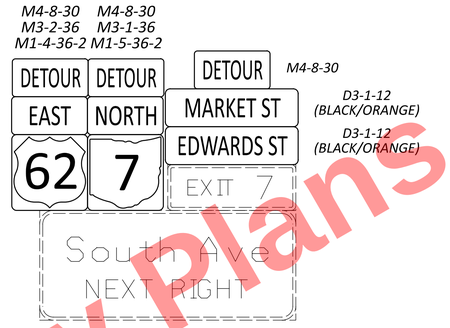

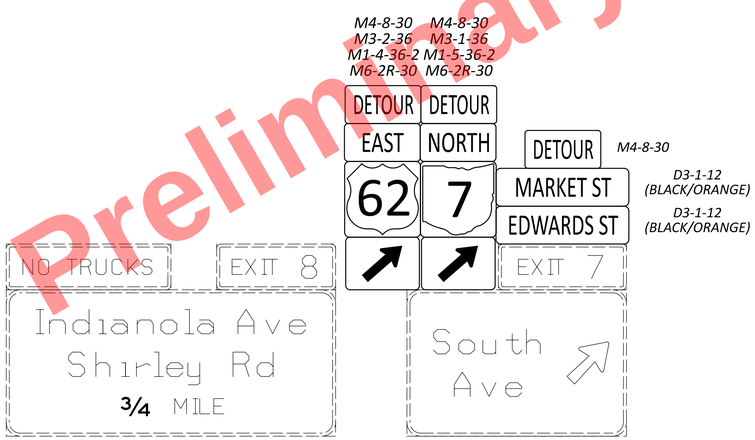

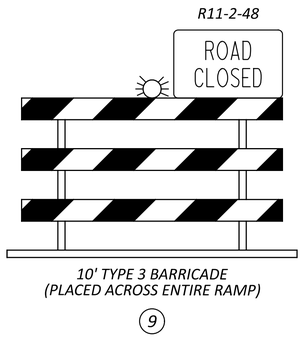

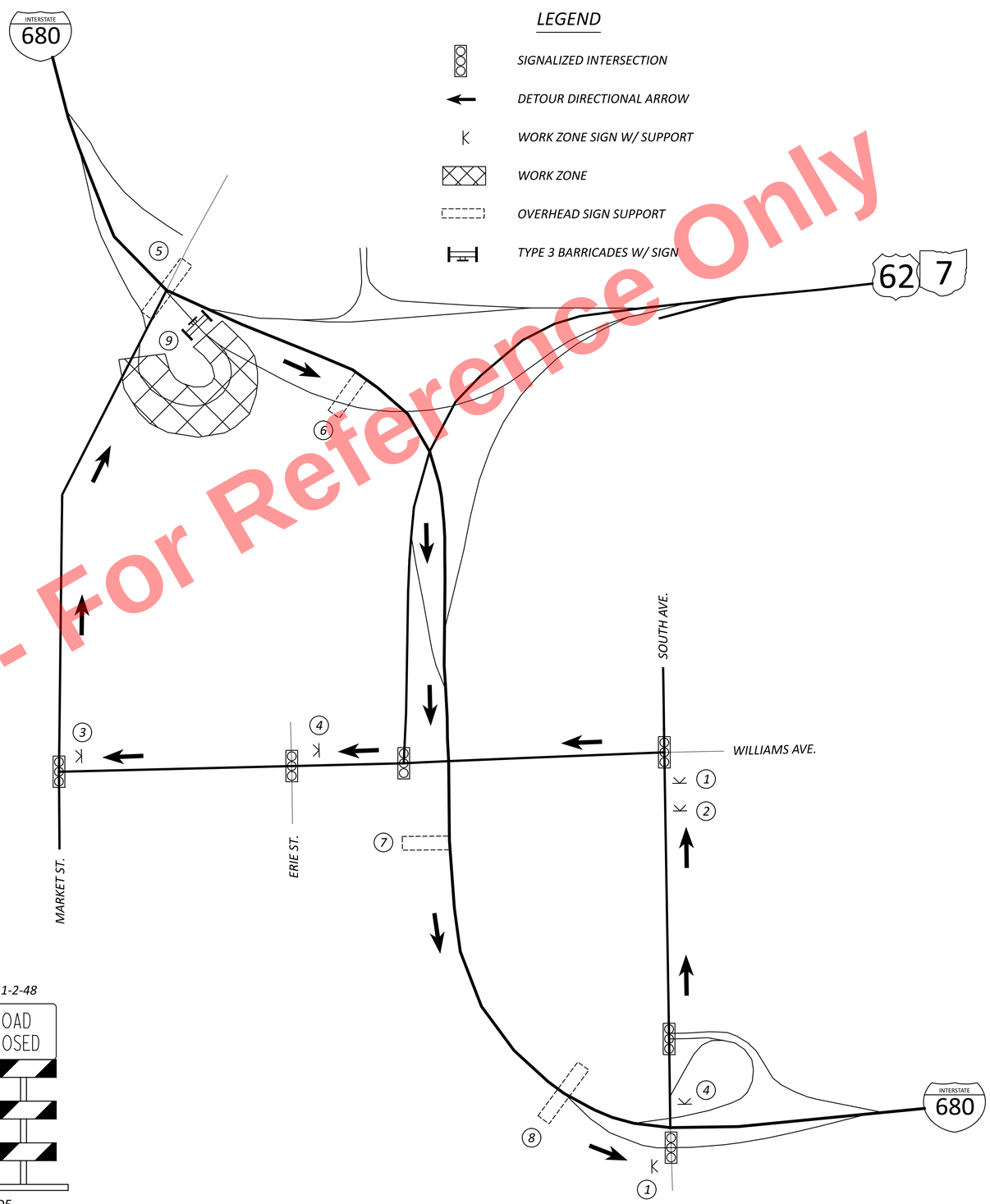

NOTES:

1. TEMPORARY OVERLAYS ON GUIDE SIGNS ARE SHOWN FOR INFORMATION PURPOSES ONLY. SEE MOT PHASE 1A PLAN SHEETS FOR OVERLAY DETAILS.

Preliminary Plans - For Reference Only

MAINTENANCE OF TRAFFIC - DETOUR PLAN
PHASE 1A - I-680 SB RAMP TO MARKET ST.

DESIGN AGENCY
ms consultants, inc.

DESIGNER KJF
REVIEWER SMR 08/20/24
PROJECT ID 121474
SHEET P.87 TOTAL 655

MAH-680-4.58

MODEL: Sheet PAPERSIZE: 34x22 (in.) DATE: 9/15/2025 TIME: 1:51:50 PM PLTDRV: OHDOT_PDF_E+.pltcfg PENTBL: OHDOT_Pen.tbl USER: DHall@msconsultants.com WORKSPACE: OHDOTCEv02 WORKSET: 121474 PRODUCT: OpenRoadsDesigner 24.00.00.205
pw:\\ohiodot-pw.bentley.com:ohiodot-pw-02\Documents\01 Active Projects\District 04\Mahoning\121474\402-Engineering_MSConsultants\MOT\Sheets\121474_MD408.dgn
MD408.dgn

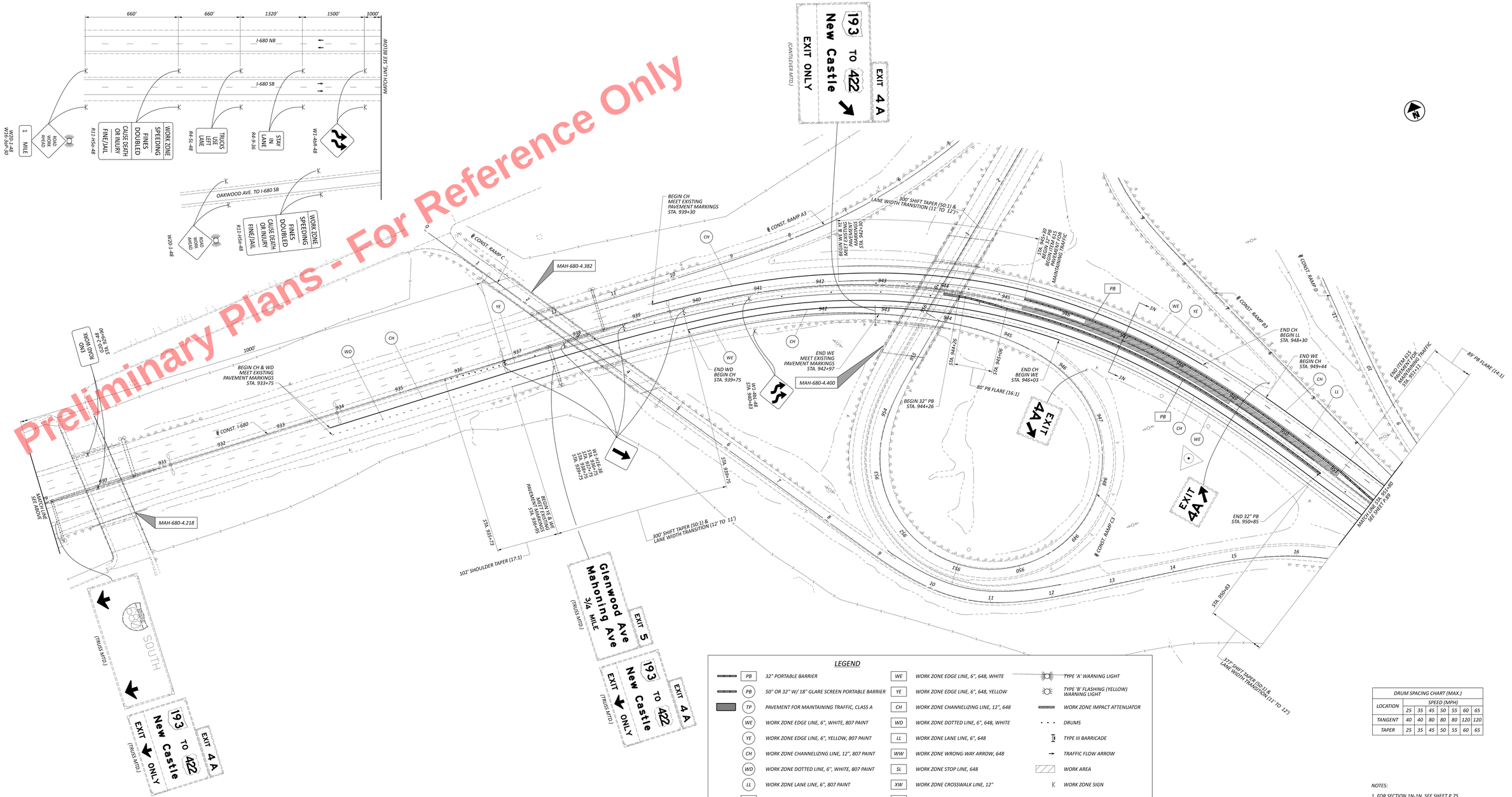

LEGEND

PB	32" PORTABLE BARRIER	WE	WORK ZONE EDGE LINE, 6", 648, WHITE		TYPE 'A' WARNING LIGHT
PB	50" OR 32" W/ 18" GLARE SCREEN PORTABLE BARRIER	YE	WORK ZONE EDGE LINE, 6", 648, YELLOW		TYPE 'B' FLASHING (YELLOW) WARNING LIGHT
TP	PAVEMENT FOR MAINTAINING TRAFFIC, CLASS A	CH	WORK ZONE CHANNELIZING LINE, 12", 648		WORK ZONE IMPACT ATTENUATOR
WE	WORK ZONE EDGE LINE, 6", WHITE, 807 PAINT	WD	WORK ZONE DOTTED LINE, 6", 648, WHITE		DRUMS
YE	WORK ZONE EDGE LINE, 6", YELLOW, 807 PAINT	LL	WORK ZONE LANE LINE, 6", 648		TYPE III BARRICADE
CH	WORK ZONE CHANNELIZING LINE, 12", 807 PAINT	WW	WORK ZONE WRONG-WAY ARROW, 648		TRAFFIC FLOW ARROW
WD	WORK ZONE DOTTED LINE, 6", WHITE, 807 PAINT	SL	WORK ZONE STOP LINE, 648		WORK AREA
LL	WORK ZONE LANE LINE, 6", 807 PAINT	XW	WORK ZONE CROSSWALK LINE, 12"	K	WORK ZONE SIGN
A	WORK ZONE ARROW, 648	TW	WORK ZONE TRANSVERSE LINE, 648, WHITE		

DRUM SPACING CHART (MAX.)							
LOCATION	SPEED (MPH)						
	25	35	45	50	55	60	65
TANGENT	40	40	80	80	80	120	120
TAPER	25	35	45	50	55	60	65

NOTES:
1. FOR SECTION 1N-1N, SEE SHEET P.75

HORIZONTAL SCALE IN FEET
0 20 40 80

MAINTENANCE OF TRAFFIC - PHASE 1A STEP 1
MEDIAN CROSSOVER CONSTRUCTION
I-680 STA. 929+00 TO STA. 951+80

DESIGN AGENCY
mc consultants, inc.

DESIGNER: CLM
REVIEWER: KWR 06/02/25
PROJECT#: 121474
SHEET: P.88 TOTAL: 655

MAH-680-4.58

MODEL: CLV_MOD - 121474_MPDSP_PHYPROJECT: 680-MH-1 DATE: 9/25/2025 TIME: 1:55:58 PM PLTSTAMP: DWGOUT_PDF_F-sheet_PLTSTBL: DWGOUT_Pen-Std - Color_CTB-mail@mcconsultants.com WORKSPACE: C:\MOT\DGN WORKSET: 121474 PRODUCT: OpenRoadsDesigner 24.00.00.205
ALL RIGHTS RESERVED. COPYRIGHT © 2025 MC CONSULTANTS, INC. THIS DRAWING IS THE PROPERTY OF MC CONSULTANTS, INC. AND IS NOT TO BE USED FOR ANY PURPOSE OTHER THAN THAT FOR WHICH IT IS SPECIFICALLY PREPARED AND DELIVERED, AND IS NOT TO BE LOANED, COPIED OR REPRODUCED WITHOUT THE WRITTEN CONSENT OF MC CONSULTANTS, INC.

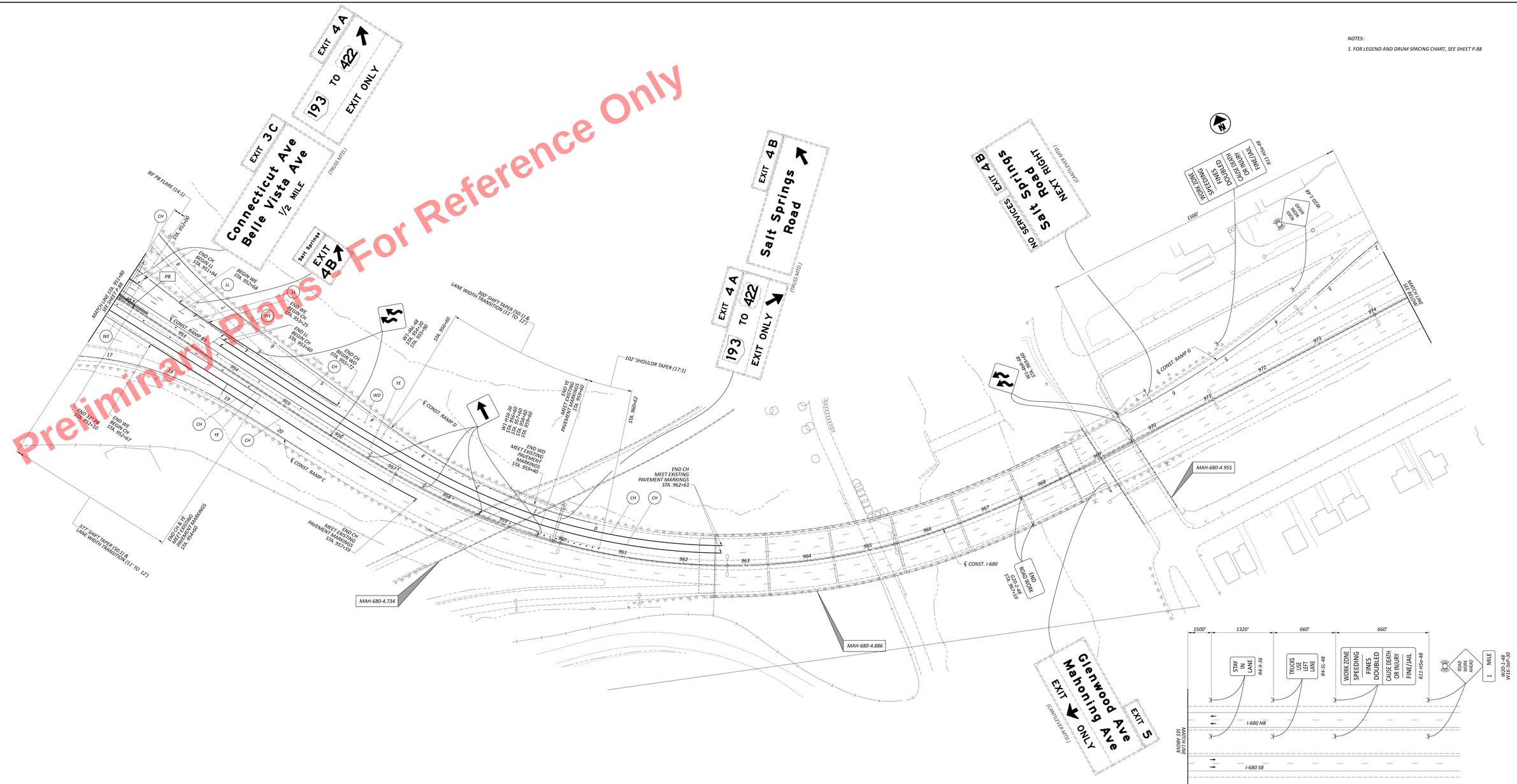

Preliminary Plans - For Reference Only

NOTES:

1. FOR LEGEND AND DRUM SPACING CHART, SEE SHEET P.88

HORIZONTAL SCALE IN FEET
0 20 40 80

MAINTENANCE OF TRAFFIC - PHASE 1A STEP 1
MEDIAN CROSSOVER CONSTRUCTION
I-680 STA. 951+80 TO STA. 974+60

DESIGN AGENCY
mc consultants, inc.

DESIGNED CLM
REVISED KWR 06/02/25
PROJECT ID 121474
SHEET P.89 TOTAL 655

MAH-680-4.58

MODEL: CU7_MB3 - 121474_MP3D3 PAPERSIZE: ISO A1 (H) DATE: 9/25/2025 TIME: 1:32:11 PM PCSTATE: CMDOT_PW_E + ddot_PCMTBL: CMDOT_Pen.tbl USER: dhall@mcconsultants.com WORKSPACE: CMDOTCAD2 WORKSET: 121474 PRODUCT: OpenRoadsDesigner 24.00.00.205
FILE: C:\Projects\121474\Design\Roadway\Plan Sheets\MAH-680-4.58.dgn

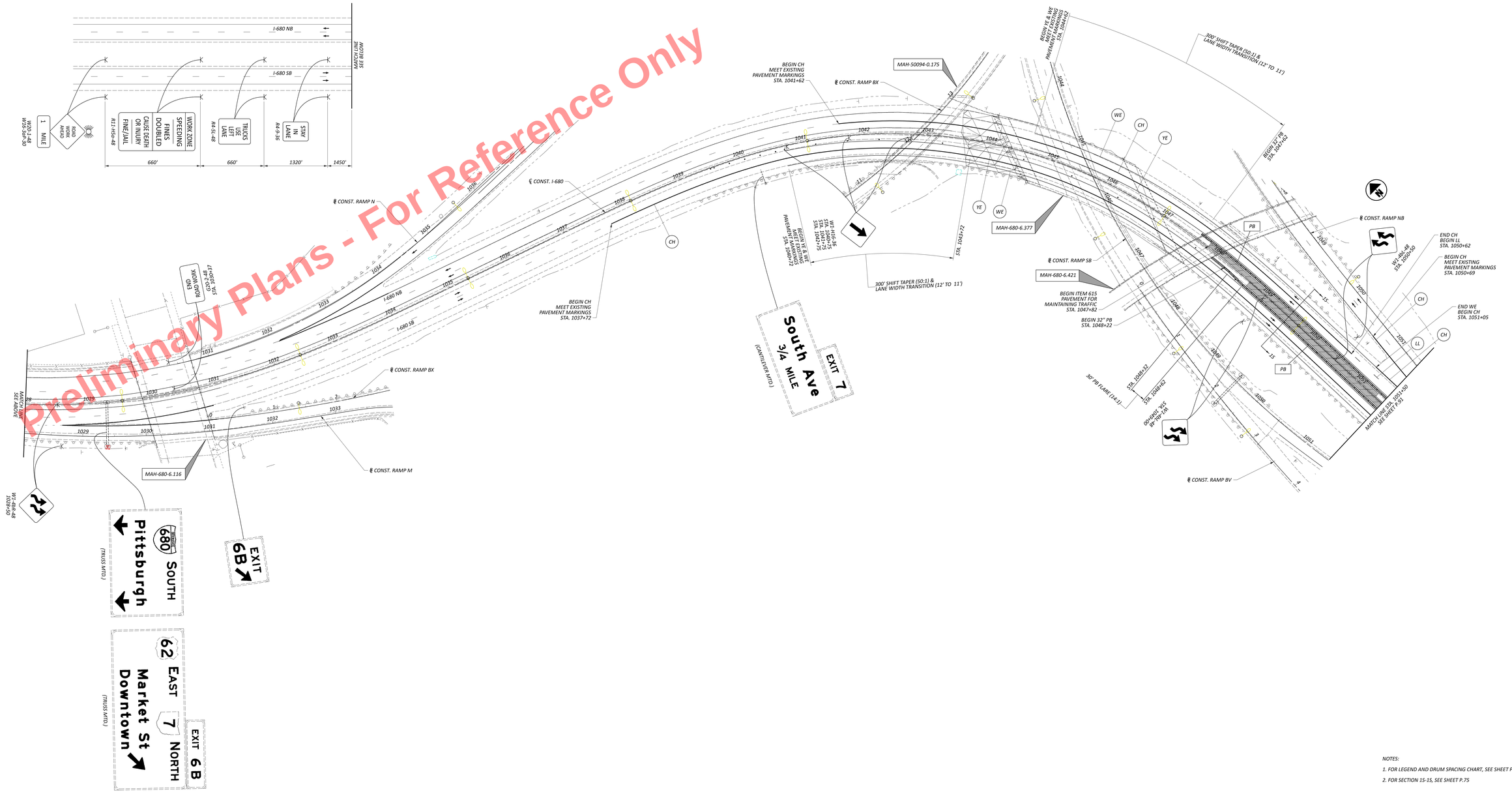

Preliminary Plans - For Reference Only

NOTES:

1. FOR LEGEND AND DRUM SPACING CHART, SEE SHEET P.88
2. FOR SECTION 1S-1S, SEE SHEET P.75

HORIZONTAL SCALE IN FEET
0 20 40 80

MAINTENANCE OF TRAFFIC - PHASE 1A STEP 1
MEDIAN CROSSOVER CONSTRUCTION
I-680 STA. 1028+00 TO STA. 1051+50

DESIGN AGENCY
ms consultants, inc.

DESIGNER: RMO
REVIEWER: SMR 08/30/24
PROJECT ID: 121474
SHEET: P.90
TOTAL: 655

MAH-680-4.58

MODEL: 121474_SMR00_PHYSHEET_65x24.DGN | DATE: 8/15/2025 TIME: 1:53:20 PM | USER: DWOOT | PW: F:\Active | PENTEL: DWOOT_LTPlus.tbl | GEN: DistillPrinterInstall.exe | WORKSPACE: DWOOTCIVIL3 | WORKSET: 121474 | PRODUCT: OpenRoadDesigner 24.00.00.295
ACTIVE FILE: [MAH]_PHYSHEET_65x24.DGN | REFERENCES: [MAH]\Roadway\Alignments\121474_MAH_Alignments.dgn | [MAH]\Roadway\Alignments\121474_MAH_Alignments_Ramps.dgn | [MAH]\Roadway\Alignments\121474_MAH_Alignments_Ramps_Profiles.dgn

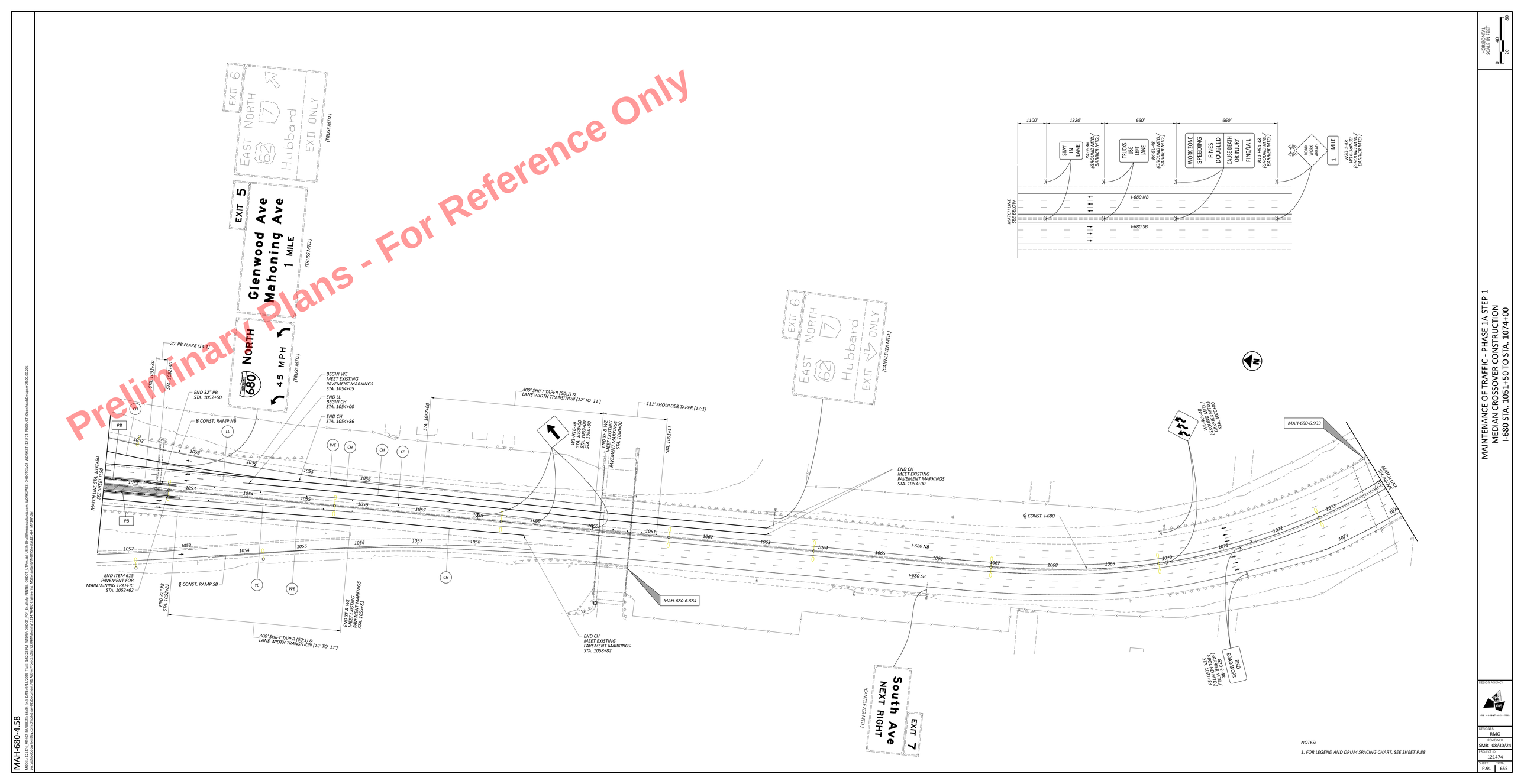

Preliminary Plans - For Reference Only

NOTES:

1. FOR LEGEND AND DRUM SPACING CHART, SEE SHEET P.88

HORIZONTAL
SCALE IN FEET
0 20 40 80

MAINTENANCE OF TRAFFIC - PHASE 1A STEP 1
MEDIAN CROSSOVER CONSTRUCTION
I-680 STA. 1051+50 TO STA. 1074+00

DESIGN AGENCY
mc consultants, inc.

DESIGNER
RMO
REVIEWER
SMR 08/30/24
PROJECT ID
121474
SHEET
P.91
TOTAL
655

MAH-680-4.58

MODEL: 121474_SUMMIT_PAVEMENT_MARKINGS_48x24.fm3 | DATE: 8/15/2025 TIME: 1:53:28 PM | USER: GWOFF | PW: F:\Proj\ PENTEL GWOFF_LITHIUM USER DisablePromptMode | WORKSPACE: GWOFFDEVGIS WORKSET: 121474 PRODUCT: OpenRoadsDesigner 24.00.00.205

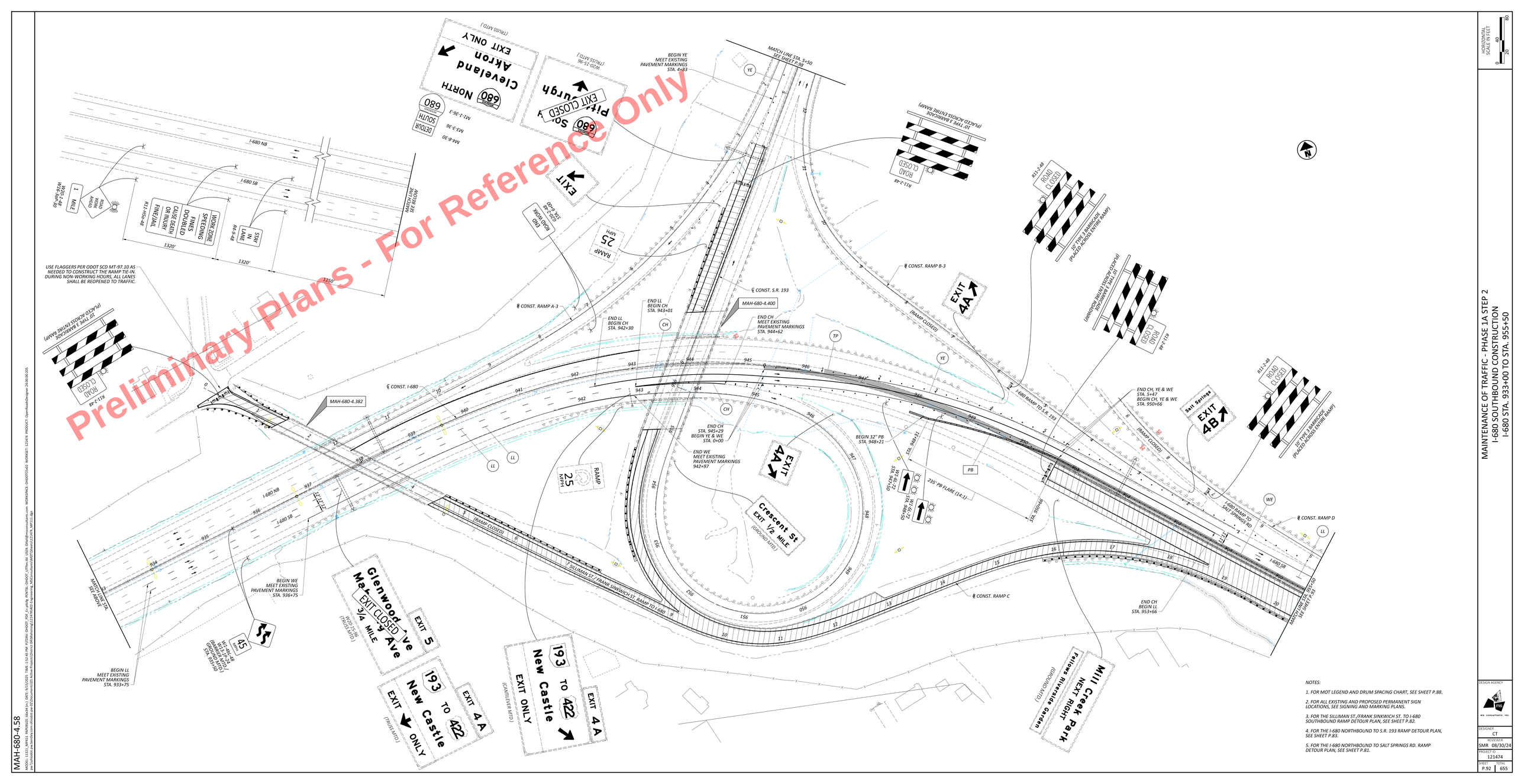
Preliminary Plans - For Reference Only
MAINTENANCE OF TRAFFIC - PHASE 1A STEP 2
I-680 SOUTHBOUND CONSTRUCTION
I-680 STA. 933+00 TO STA. 955+50
HORIZONTAL SCALE IN FEET
0 20 40 80
NOTES:
1. FOR MOT LEGEND AND DRUM SPACING CHART, SEE SHEET P.88.
2. FOR ALL EXISTING AND PROPOSED PERMANENT SIGN LOCATIONS, SEE SIGNING AND MARKING PLANS.
3. FOR THE SILLIMAN ST./FRANK SINKWICH ST. TO I-680 SOUTHBOUND RAMP DETOUR PLAN, SEE SHEET P.82.
4. FOR THE I-680 NORTHBOUND TO S.R. 193 RAMP DETOUR PLAN, SEE SHEET P.83.
5. FOR THE I-680 NORTHBOUND TO SALT SPRINGS RD. RAMP DETOUR PLAN, SEE SHEET P.81.
MAH-680-4.58
DESIGN AGENCY
DESIGNER CT
REVISED SMR 08/30/24
PROJECT ID 121474
SHEET P.92
TOTAL 655

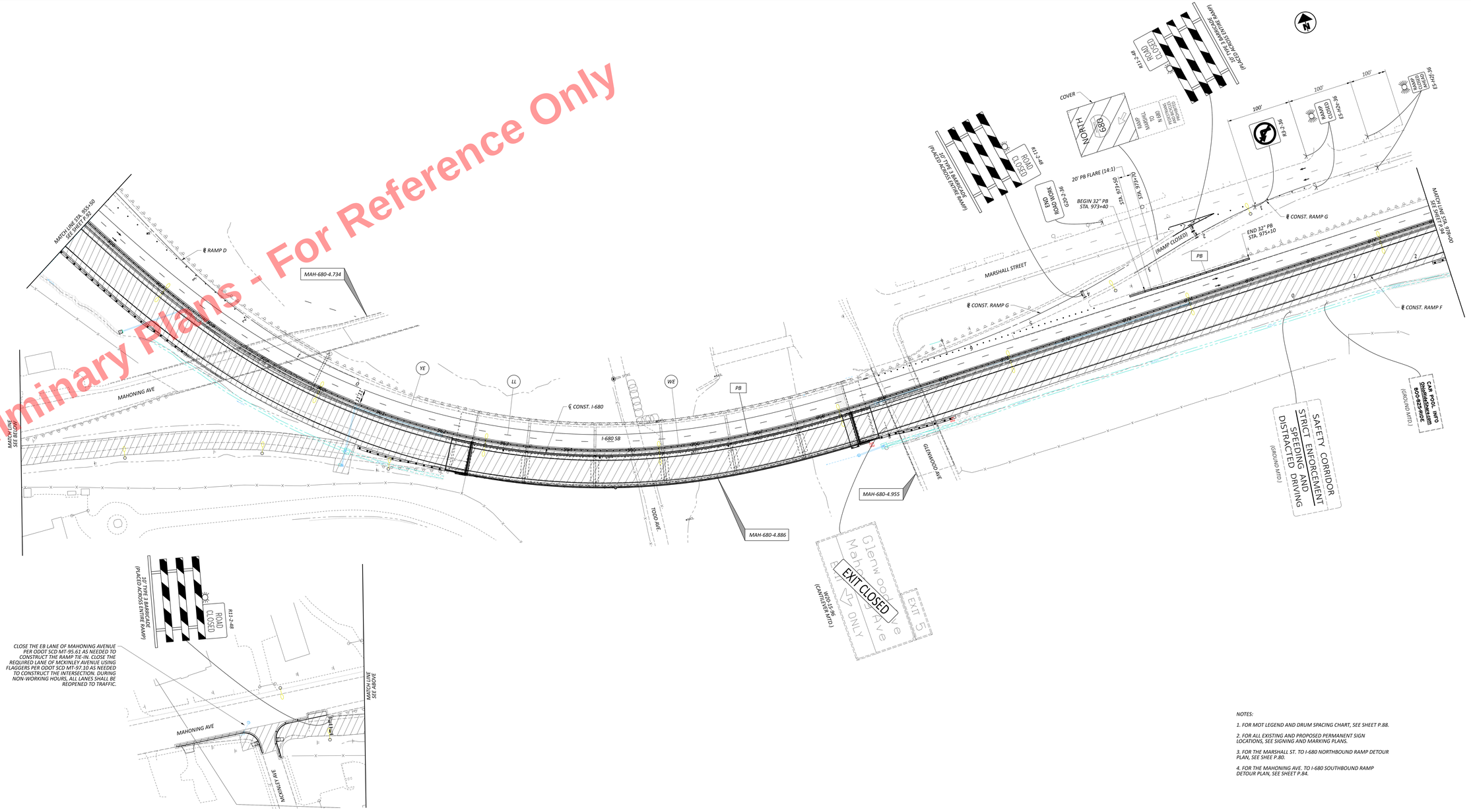

Preliminary Plans - For Reference Only

NOTES:

1. FOR MOT LEGEND AND DRUM SPACING CHART, SEE SHEET P.88.
2. FOR ALL EXISTING AND PROPOSED PERMANENT SIGN LOCATIONS, SEE SIGNING AND MARKING PLANS.
3. FOR THE MARSHALL ST. TO I-680 NORTHBOUND RAMP DETOUR PLAN, SEE SHEE P.80.
4. FOR THE MAHONING AVE. TO I-680 SOUTHBOUND RAMP DETOUR PLAN, SEE SHEET P.84.

HORIZONTAL SCALE IN FEET
0 20 40 80

MAINTENANCE OF TRAFFIC - PHASE 1A STEP 2
I-680 SOUTHBOUND CONSTRUCTION
I-680 STA. 955+50 TO STA 978+00

DESIGN AGENCY
mk consultants, inc.
DESIGNER: CT
REVIEWER: SMR 08/30/24
PROJECT ID: 121474
SHEET: P.93 TOTAL: 655

MAH-680-4.58

MODEL: 1161_MK613_MAH680_664.dgn | DATE: 9/17/2025 TIME: 1:53:55 PM | USER: VICTORY, CHRISTOPHER J | PLOTTED BY: VICTORY, CHRISTOPHER J | PLOTTER: Default.ctb | STYLE: Shaded | www.bentley.com | WORKSPACE: OHDOTCAD2 | WORKSET: 121474 | PRODUCT: OpenRoadsDesigner 24.00.00.205

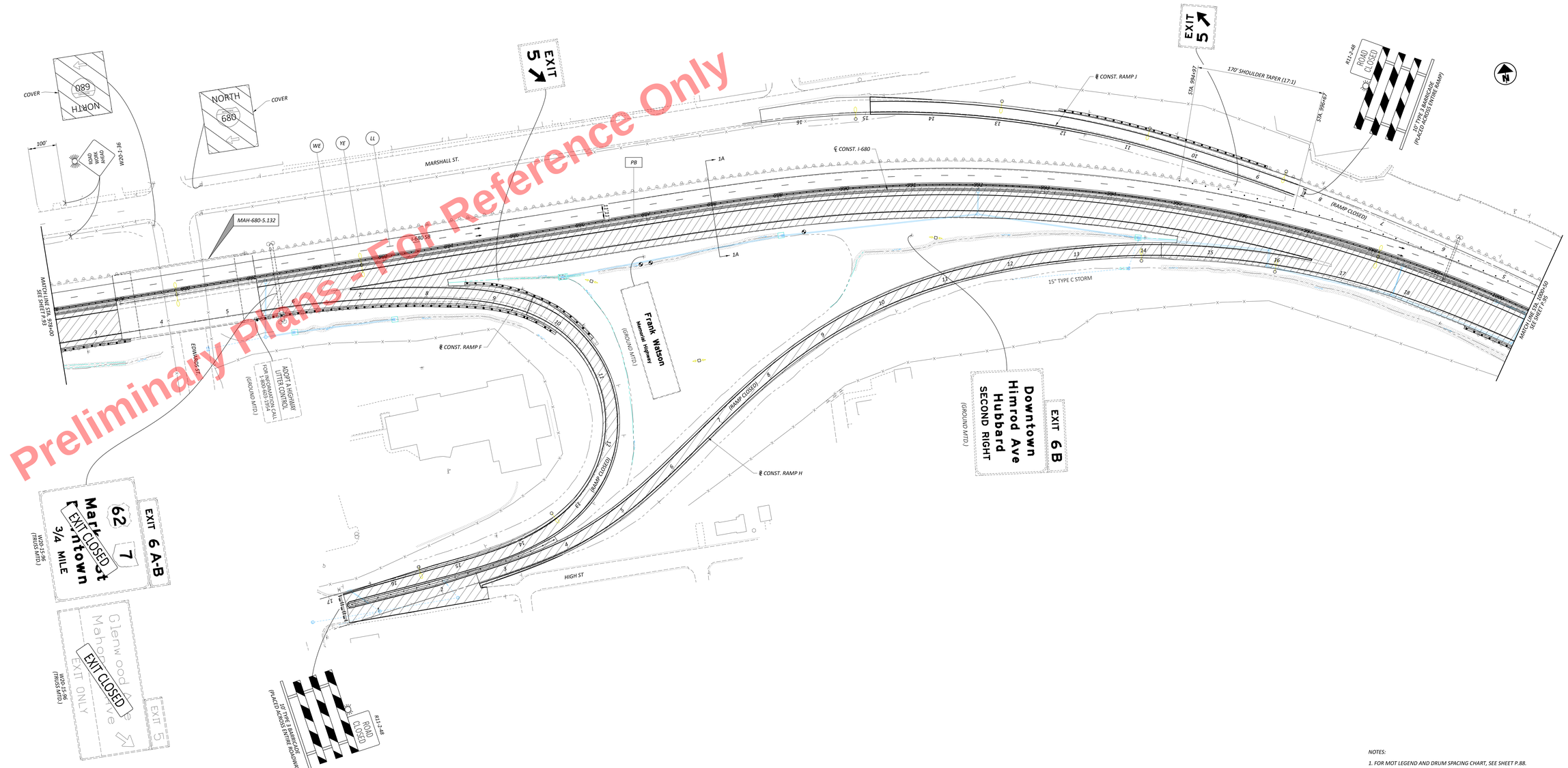

MAH-680-4.58

MODEL: 1121_MH13 PAPERSIZE: 66x34 (in) DATE: 10/17/2025 TIME: 1:53:15 PM PLOTBY: CHRISTI_ORIOT_CT PW:\\Christi_ORIOT_CT.ctb STATE: Shared ProjectCenterLine.com WORKPACKET: CHRISTI_ORIOT_CT WORKSET: 121474 PRODUCT: CivilRoadDesigner 24.00.00.205

MAINTENANCE OF TRAFFIC - PHASE 1A STEP 2
I-680 SOUTHBOUND CONSTRUCTION
I-680 STA. 978+00 TO STA. 1000+50

HORIZONTAL SCALE IN FEET
0 20 40 80

DESIGN AGENCY
ms consultants, inc.

DESIGNED: CT
REVIEWED: SMR 08/30/24
PROJECT ID: 121474
SHEET: P.94
TOTAL: 655

Preliminary Plans - For Reference Only

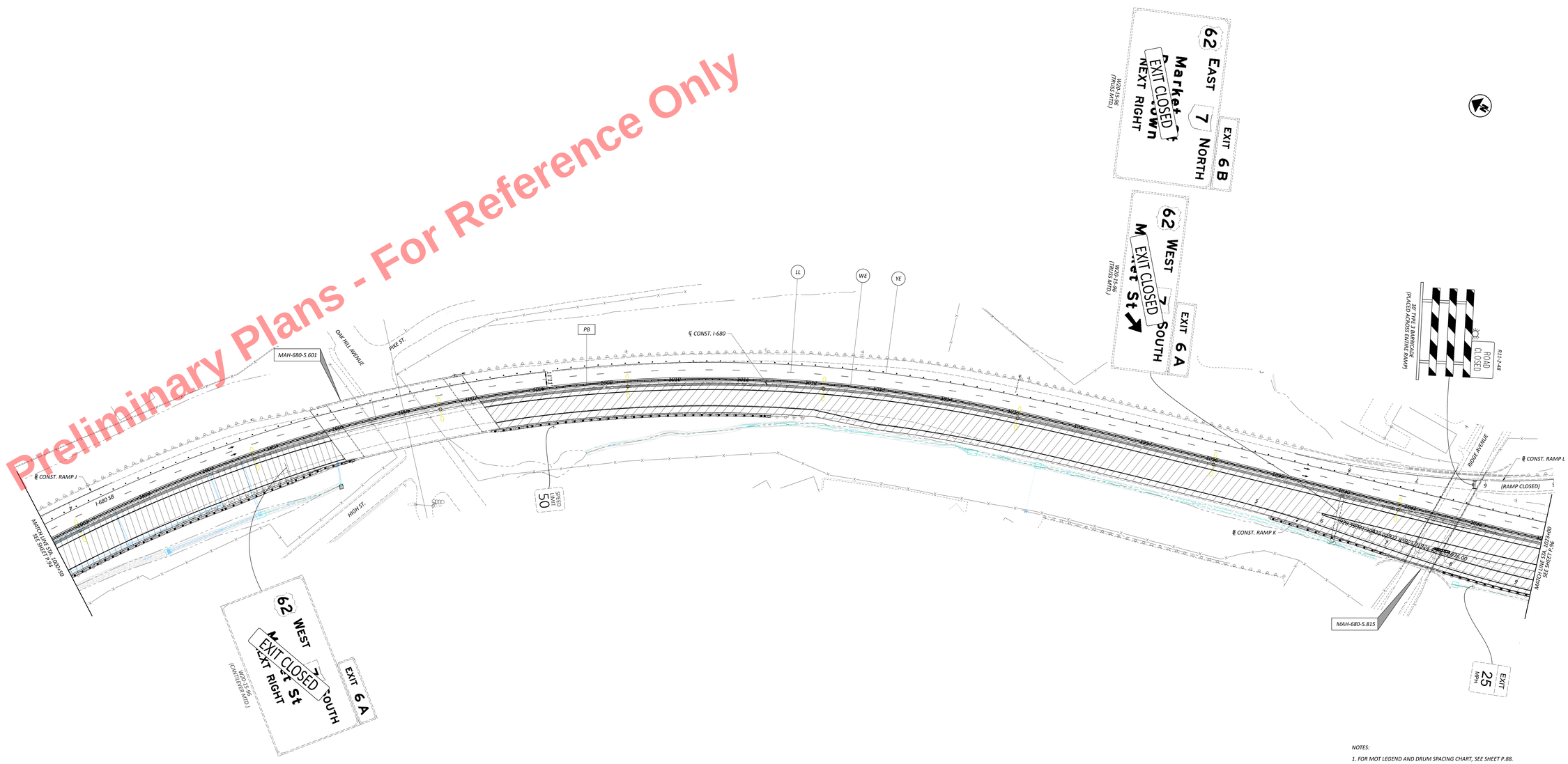

NOTES:

1. FOR MOT LEGEND AND DRUM SPACING CHART, SEE SHEET P.88.

2. FOR ALL EXISTING AND PROPOSED PERMANENT SIGN LOCATIONS, SEE SIGNING AND MARKING PLANS.

3. FOR THE I-680 SOUTHBOUND TO MARKET ST. RAMP DETOUR PLAN, SEE SHEET P.87.

4. FOR THE MARKET ST./W. WOODLAND AVE. TO I-680 NORTHBOUND RAMP DETOUR PLAN, SEE SHEET P.80.

HORIZONTAL SCALE IN FEET
0 20 40 80

MAINTENANCE OF TRAFFIC - PHASE 1A STEP 2
I-680 SOUTHBOUND CONSTRUCTION
I-680 STA. 1000+50 TO STA. 1023+00

DESIGN AGENCY
ms consultants, inc.

DESIGNER: CT
REVIEWER: SMR 08/30/24
PROJECT ID: 121474
SHEET: P.95
TOTAL: 655

MAH-680-4.58

MODEL: 1161_KAKA19_MAINSEQ_664.dgn | DATE: 9/17/2025 TIME: 3:53:56 PM | PLOTBY: CHRISTY_CHRISTY.CHRISTY@DOT.OHIO.GOV | PlotStyle: ODOT_CPM_2_plotcfg | PENTBL

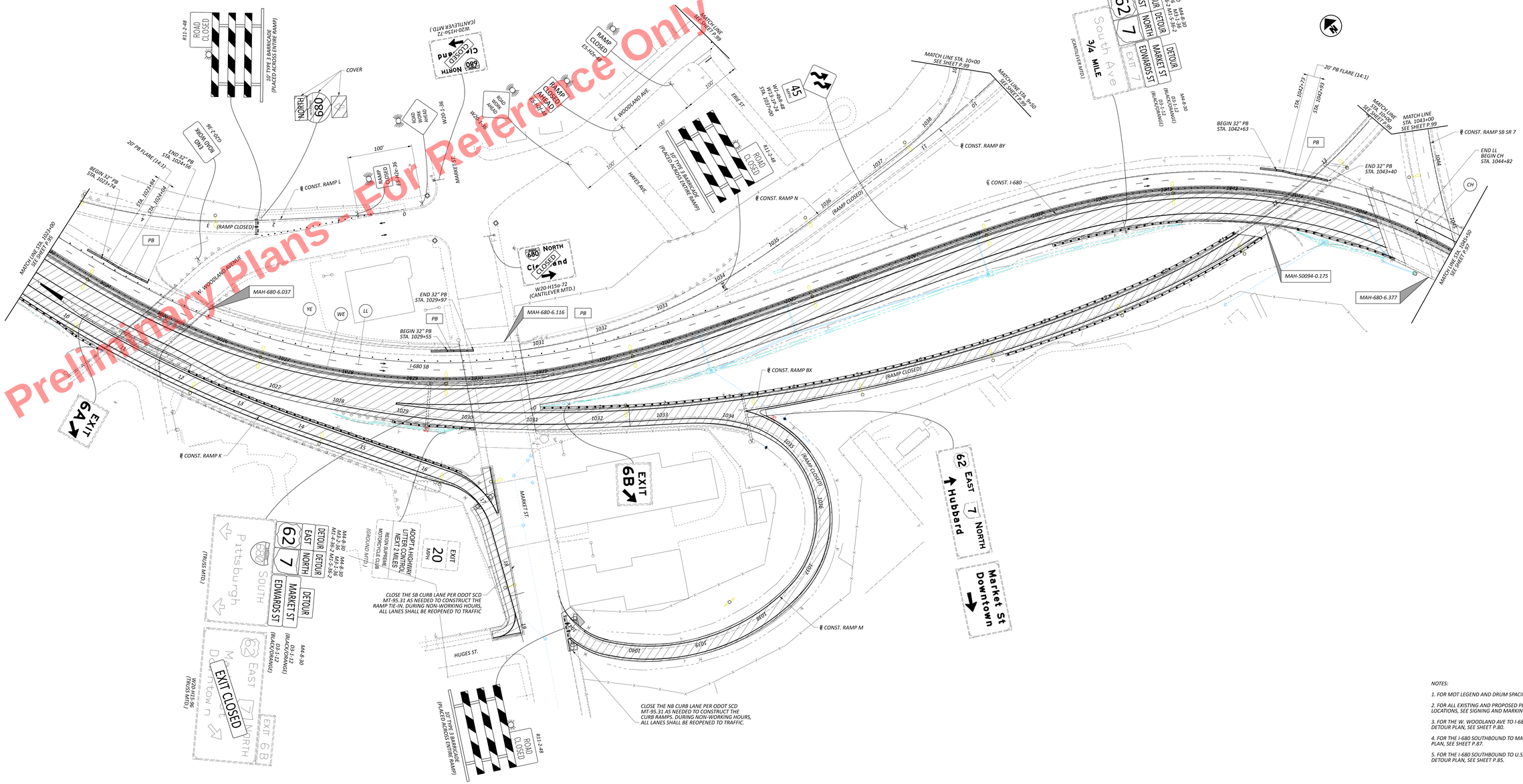
MAINTENANCE OF TRAFFIC - PHASE 1A STEP 2
I-680 SOUTHBOUND CONSTRUCTION
I-680 STA. 1023+00 TO STA. 1045+50
HORIZONTAL SCALE IN FEET
0 20 40 80
Preliminary Plans - For Reference Only
MAH-680-4.58
DESIGN AGENCY
ms consultants, inc.
DESIGNER CT
REVIEWER SMR 08/30/24
PROJECT ID 121474
SHEET P.96 TOTAL 655
NOTES:
1. FOR MOT LEGEND AND DRUM SPACING CHART, SEE SHEET P.88.
2. FOR ALL EXISTING AND PROPOSED PERMANENT SIGN LOCATIONS, SEE SIGNING AND MARKING PLANS.
3. FOR THE W. WOODLAND AVE TO I-680 NORTHBOUND RAMP DETOUR PLAN, SEE SHEET P.80.
4. FOR THE I-680 SOUTHBOUND TO MARKET ST. RAMPS DETOUR PLAN, SEE SHEET P.87.
5. FOR THE I-680 SOUTHBOUND TO U.S. 62/ S.R. 7 EASTBOUND DETOUR PLAN, SEE SHEET P.85.
CLOSE THE SB CURB LANE PER ODOT SCD MT-95.31 AS NEEDED TO CONSTRUCT THE RAMP TIE-IN. DURING NON-WORKING HOURS, ALL LANES SHALL BE REOPENED TO TRAFFIC
CLOSE THE NB CURB LANE PER ODOT SCD MT-95.31 AS NEEDED TO CONSTRUCT THE CURB RAMPS. DURING NON-WORKING HOURS, ALL LANES SHALL BE REOPENED TO TRAFFIC.
MAH-680-6.037
MAH-680-6.116
MAH-50094-0.175
MAH-680-6.377
EXIT 6A
EXIT 6B
EXIT CLOSED
ROAD CLOSED
RAMP CLOSED AHEAD
RAMP CLOSED EXCEPT BUS
(RAMP CLOSED)
10' TYPE 3 BARRICADE (PLACED ACROSS ENTIRE RAMP)
W20-H15a-72 (CANTILEVER MTD.)
W20-H15-72 (TRUSS MTD.)
ADOPT A HIGHWAY LITTER CONTROL NEXT 2 MILES
MOTOR SUPREME MOTORCYCLE CLUB
Pittsburgh
Market St Downtown
Hubbard
South Ave 3/4 MILE
E. WOODLAND AVE.
HUGES ST.
HAYES AVE.
MARKET ST.
EBIE ST.
W. WOODLAND AVENUE
I-680 SB
I-680 NB
CONST. RAMP K
CONST. RAMP L
CONST. RAMP M
CONST. RAMP N
CONST. RAMP BX
CONST. RAMP BY
CONST. I-680
CONST. RAMP SB SR 7
20' PB FLARE (14:1)
END 32" PB STA. 1024+56
BEGIN 32" PB STA. 1023+74
END 32" PB STA. 1029+97
BEGIN 32" PB STA. 1029+55
BEGIN 32" PB STA. 1042+63
END 32" PB STA. 1043+40
END LL BEGIN CH STA. 1044+82
MATCH LINE STA. 1023+00 SEE SHEET P.95
MATCH LINE STA. 10+00 SEE SHEET P.95
MATCH LINE STA. 9+50 SEE SHEET P.95
MATCH LINE STA. 1042+50 SEE SHEET P.99
MATCH LINE STA. 1043+00 SEE SHEET P.99
MATCH LINE STA. 1045+50 SEE SHEET P.95
MAH-680-4.58
MODEL: 1161_MAH15_MAH680_MAH4.0mi | DATE: 8/21/2024 | TIME: 3:19:38 PM | USER: DHOOT | PRINTED: DHOOT | STYLE: ctb | FILE: I:\Roadway\Projects\121474\Final Plans\MOT\MAH-680-4.58_MOT.dgn | WORKSPACE: OHDOTD&D | WORKSET: 121474 | PRODUCT: OpenRoadsDesigner 24.00.00.205

Preliminary Plans - For Reference Only

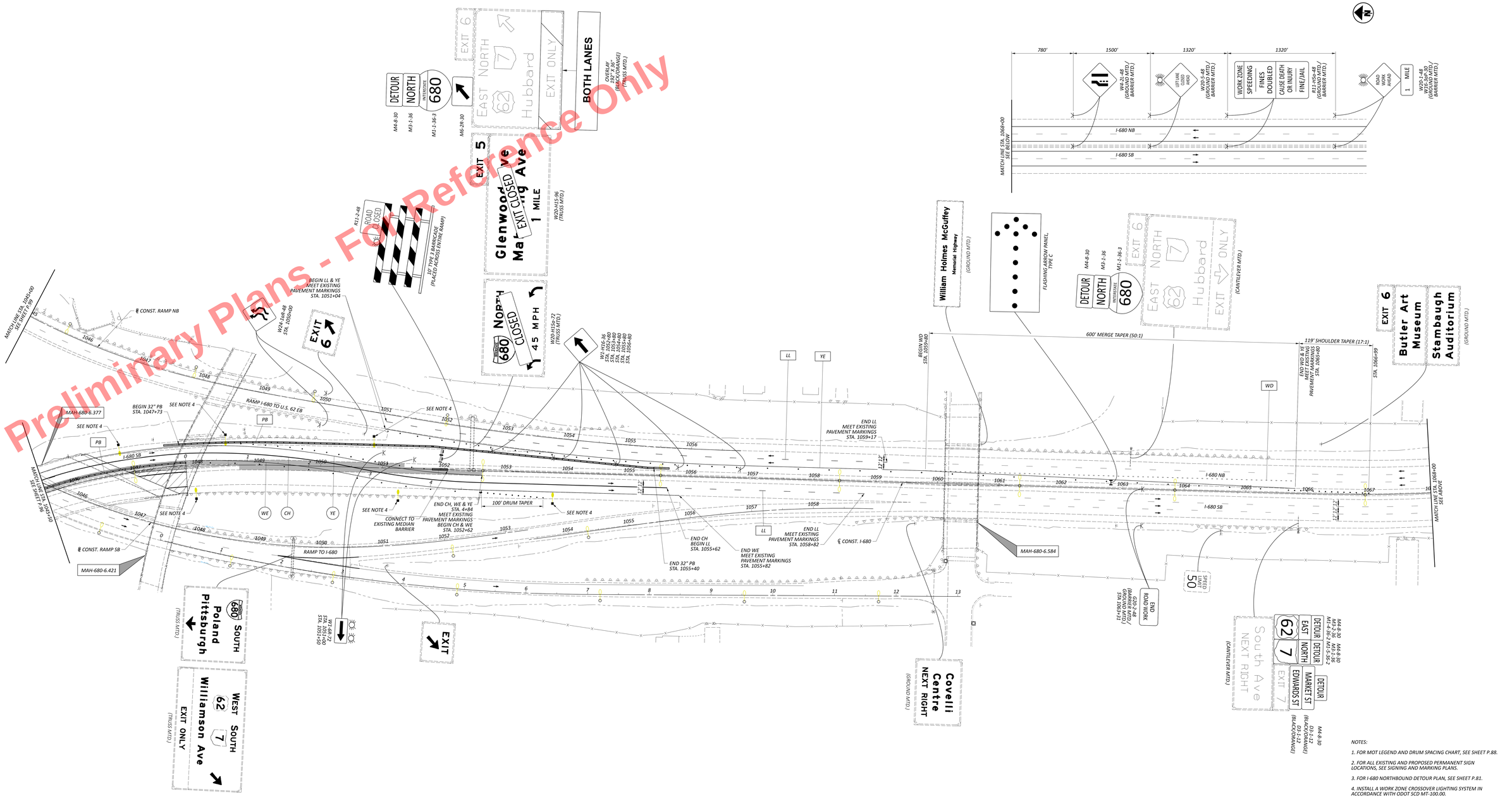

NOTES:

1. FOR MOT LEGEND AND DRUM SPACING CHART, SEE SHEET P.88.
2. FOR ALL EXISTING AND PROPOSED PERMANENT SIGN LOCATIONS, SEE SIGNING AND MARKING PLANS.
3. FOR I-680 NORTHBOUND DETOUR PLAN, SEE SHEET P.81.
4. INSTALL A WORK ZONE CROSSOVER LIGHTING SYSTEM IN ACCORDANCE WITH ODOT SCD MT-100.00.

HORIZONTAL SCALE IN FEET 0 20 40 80

MAINTENANCE OF TRAFFIC - PHASE 1A STEP 2
I-680 SOUTHBOUND CONSTRUCTION
I-680 STA. 1045+50 TO STA. 1068+00

DESIGN AGENCY: mc consultants, inc.

DESIGNER: CT

REVIEWER: SMR 08/30/24

PROJECT ID: 121474

SHEET P.97 TOTAL 655

MAH-680-4.58

Preliminary Plans - For Reference Only

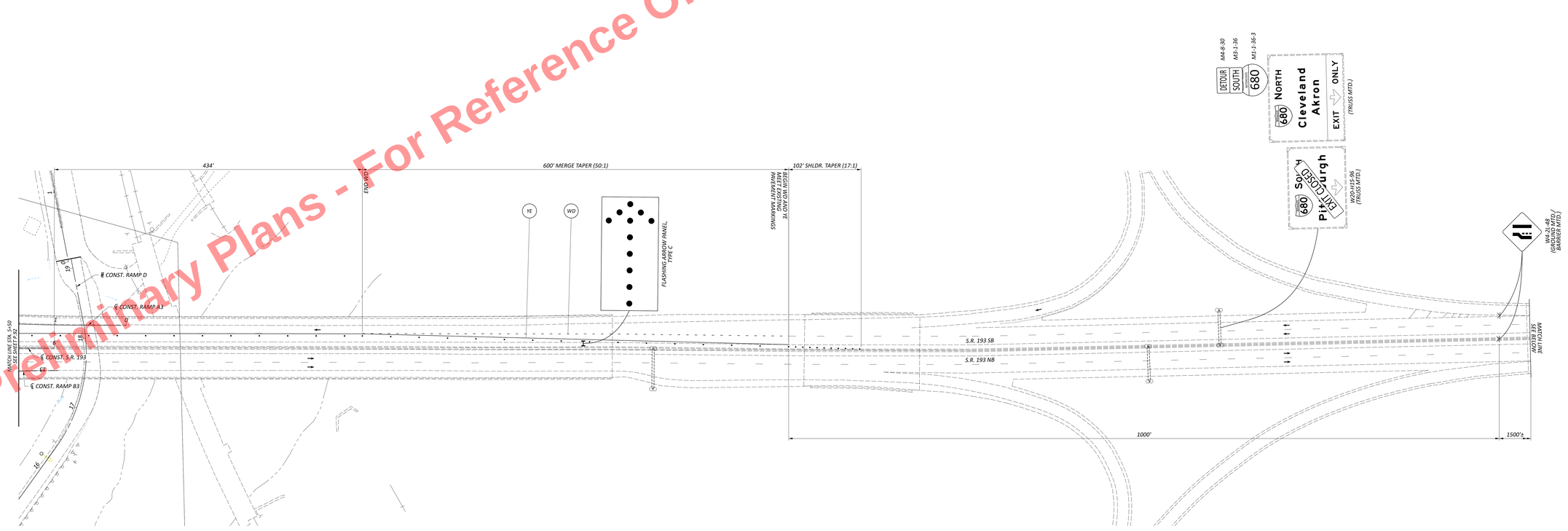

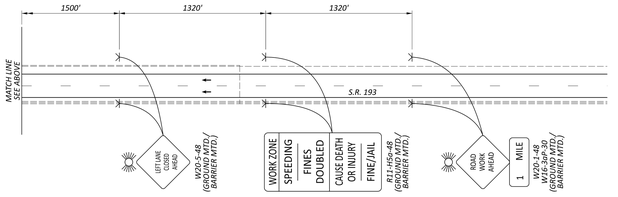

NOTES:

1. FOR MOT LEGEND AND DRUM SPACING CHART, SEE SHEET P.88.

2. FOR ALL EXISTING AND PROPOSED PERMANENT SIGN LOCATIONS, SEE SIGNING AND MARKING PLANS.

3. FOR THE S.R. 193 TO I-680 SOUTHBOUND DETOUR PLAN, SEE SHEET P.83

HORIZONTAL SCALE IN FEET
0 20 40 80

MAINTENANCE OF TRAFFIC - PHASE 1A STEP 2
I-680 SOUTHBOUND CONSTRUCTION
S.R. 193 LEAD IN

DESIGN AGENCY
ms consultants, inc.

DESIGNED CLM
REVIEWED KWR 06/02/25
PROJECT ID 121474
SHEET P.98 TOTAL 655

MAH-680-4.58

MODEL: C:\MS - Files 2 PW\PROJECTS - 050-44 (+) | DATE: 9/15/2025 TIME: 1:54:03 PM | STORY: CHOOT_PSE_1+.dgn|dg_ENTITEL: CHOOT_UTIlity.itel USER: DAnz@MSconsultant.com WORKSPACE: CHOOTCIVIL WORKSET: 121474 PRODUCT: OpenRoadDesigner 24.00.00.105
ALL RIGHTS RESERVED. COPYRIGHT © 2025 BY MS CONSULTANTS, INC. THE INFORMATION CONTAINED IN THIS DRAWING IS THE SOLE PROPERTY OF MS CONSULTANTS, INC. ANY REPRODUCTION IN PART OR AS A WHOLE WITHOUT THE WRITTEN PERMISSION OF MS CONSULTANTS, INC. IS PROHIBITED.

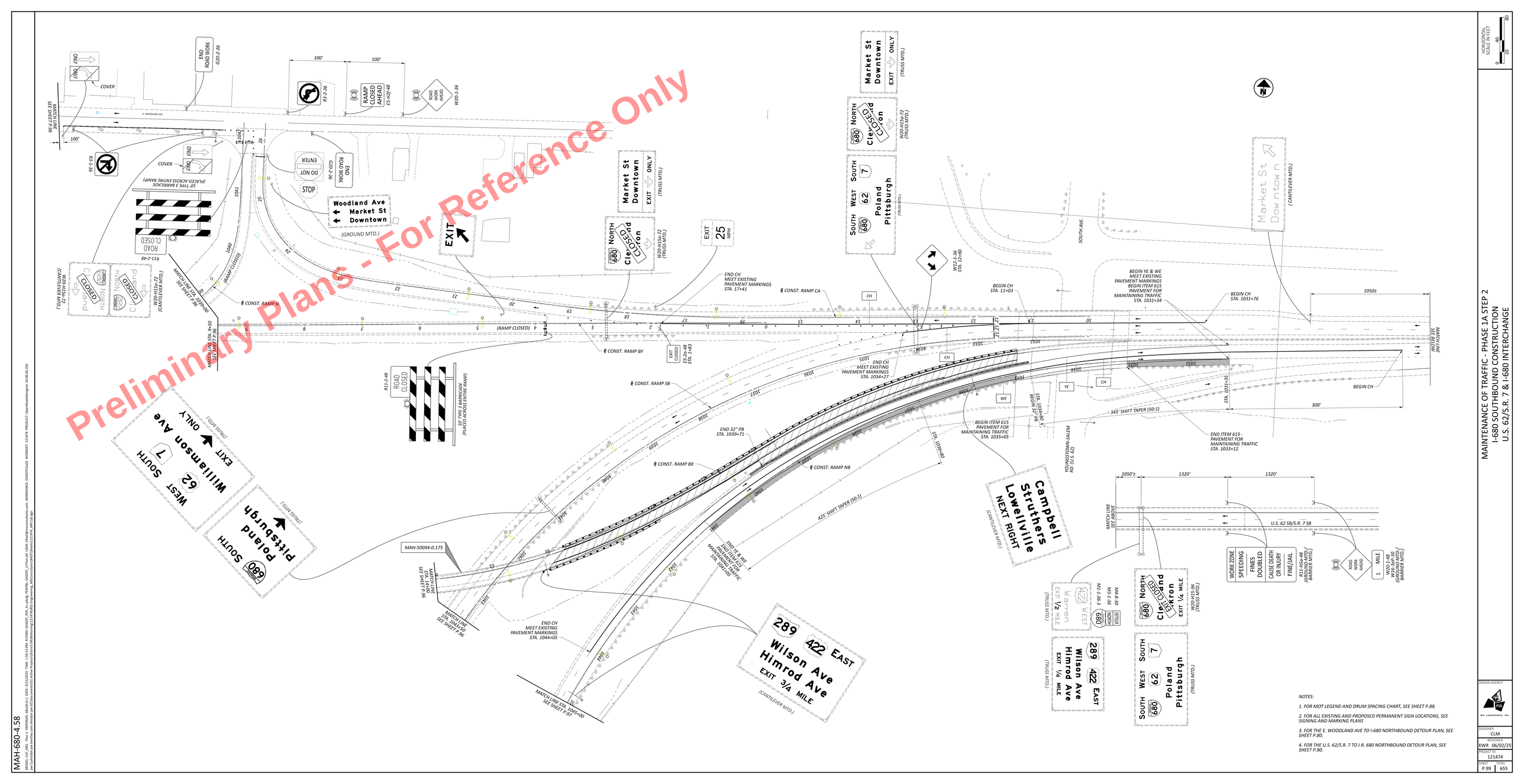
Preliminary Plans - For Reference Only
MAINTENANCE OF TRAFFIC - PHASE 1A STEP 2
I-680 SOUTHBOUND CONSTRUCTION
U.S. 62/S.R. 7 & I-680 INTERCHANGE
HORIZONTAL SCALE IN FEET
0 20 40 80
Woodland Ave
Market St
Downtown
(GROUND MTD.)
Market St Downtown
EXIT ONLY
(TRUSS MTD.)
NORTH 680 Cleveland Akron
CLOSED
W20-H15a-72
(TRUSS MTD.)
SOUTH WEST 7 62 680 Poland Pittsburgh
(TRUSS MTD.)
Market St Downtown
(CANTILEVER MTD.)
EXIT 25 MPH
END ROAD WORK G20-2-36
RAMP CLOSED AHEAD E5-H2f-48
ROAD WORK AHEAD W20-1-36
R3-2-36
DO NOT ENTER
ROAD WORK G20-2-36
STOP
ONLY
COVER
10' TYPE 3 BARRICADE (PLACED ACROSS ENTIRE RAMP)
ROAD CLOSED
R11-2-48
(RAMP CLOSED)
MATCH LINE STA. 9+50 SEE SHEET P.96
MATCH LINE SEE SHEET P.96
MATCH LINE SEE SHEET P.98
MATCH LINE STA. 1045+00 SEE SHEET P.97
MATCH LINE STA. 1044+00 SEE SHEET P.97
MAH-50094-0.175
CONST. RAMP N
CONST. RAMP BY
CONST. RAMP SB
CONST. RAMP BX
CONST. RAMP NB
CONST. RAMP CA
END CH MEET EXISTING PAVEMENT MARKINGS STA. 17+41
END CH MEET EXISTING PAVEMENT MARKINGS STA. 1034+27
END CH MEET EXISTING PAVEMENT MARKINGS STA. 1044+05
END 32" PB STA. 1039+71
END YE & WE MEET EXISTING PAVEMENT MARKINGS STA. 1045+00
EXIT CLOSED E5-2a-48 STA. 1+83
BEGIN CH STA. 11+03
BEGIN YE & WE MEET EXISTING PAVEMENT MARKINGS BEGIN ITEM 615 PAVEMENT FOR MAINTAINING TRAFFIC STA. 1031+34
BEGIN CH STA. 1031+76
BEGIN ITEM 615 PAVEMENT FOR MAINTAINING TRAFFIC STA. 1035+05
END ITEM 615 - PAVEMENT FOR MAINTAINING TRAFFIC STA. 1033+12
STA. 1034+80 BEGIN 32" PB
STA. 1031+35
1050±
300'
345' SHIFT TAPER (50:1)
425' SHIFT TAPER (50:1)
1050's
1320'
1320'
U.S. 62 SB/S.R. 7 SB
YOUNGSTOWN-SALEM RD. (U.S. 62)
SOUTH AVE.
Campbell Struthers Lowellville
NEXT RIGHT
(CANTILEVER MTD.)
289 422 EAST Wilson Ave Himrod Ave
EXIT 3/4 MILE
(CANTILEVER MTD.)
WEST 62 7 Williamson Ave ONLY
EXIT
(TRUSS MTD.)
SOUTH 680 Poland Pittsburgh
(TRUSS MTD.)
422 WEST Warren
EXIT 1/2 MILE
(TRUSS MTD.)
289 422 EAST Wilson Ave Himrod Ave
EXIT 1/4 MILE
(TRUSS MTD.)
NORTH 680 Cleveland Akron
EXIT 1/4 MILE
W20-H15-72
(TRUSS MTD.)
SOUTH WEST 7 62 680 Poland Pittsburgh
(TRUSS MTD.)
M4-1-36
M4-8-36
M4-9-36
WORK ZONE SPEEDING FINES DOUBLED
CAUSE DEATH OR INJURY FINE/JAIL
R11-H5-48 (GROUND MTD.) BARRIER MTD.)
ROAD WORK AHEAD
1 MILE
W20-1-48 W20-H5-48 (GROUND MTD.) BARRIER MTD.)
NOTES:
1. FOR MOT LEGEND AND DRUM SPACING CHART, SEE SHEET P.88.
2. FOR ALL EXISTING AND PROPOSED PERMANENT SIGN LOCATIONS, SEE SIGNING AND MARKING PLANS
3. FOR THE E. WOODLAND AVE TO I-680 NORTHBOUND DETOUR PLAN, SEE SHEET P.80.
4. FOR THE U.S. 62/S.R. 7 TO I.R. 680 NORTHBOUND DETOUR PLAN, SEE SHEET P.80.
DESIGN AGENCY
ms consultants, inc.
DESIGNED CLM
REVIEWED KWR 06/02/25
PROJECT ID 121474
SHEET P.99 TOTAL 655
MAH-680-4.58
MODEL: CLP_I680_ - Plan 1 PAVEMENT_ITEM 615 PAVEMENT_ITEM 615 DATE: 9/15/2025 TIME: 1:54:13 PM FILENAME: CLP_I680_ITEM 615 PAVEMENT_ITEM 615.dgn USER: CMeek@msconsultants.com WORKSPACE: C:\MDOT\CMeek WORKSET: 121474 PRODUCT: OpenRoadDesigner 24.00.00.105

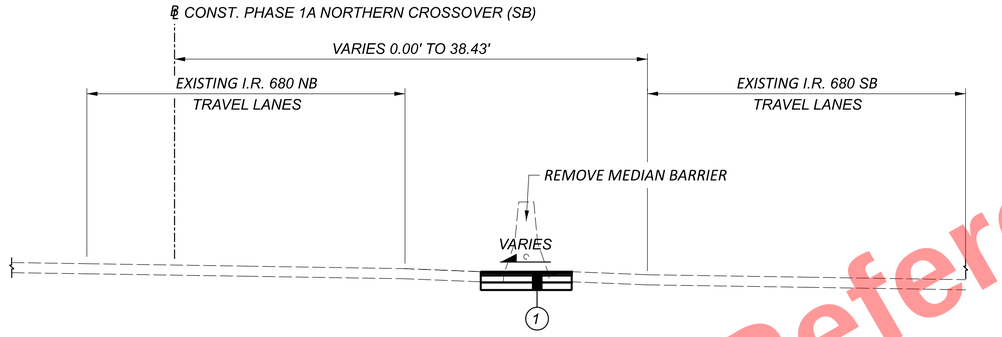

NORTHERN CROSSOVER (SB) - WIDENING MEDIAN PAVEMENT
STA. 0+00.00 TO STA. 5+42.67

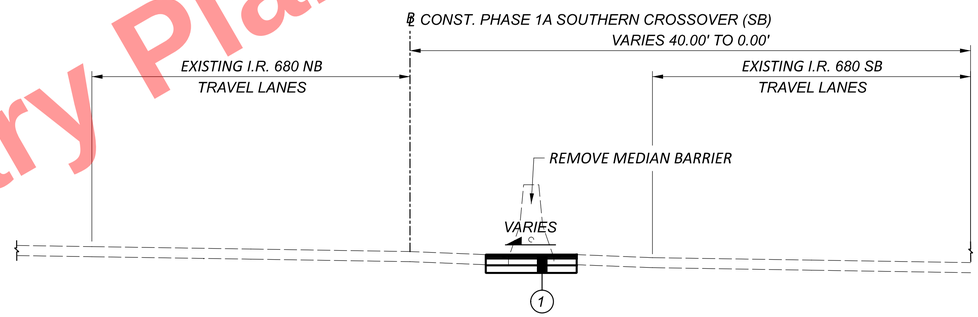

SOUTHERN CROSSOVER (SB) - WIDENING MEDIAN PAVEMENT
STA. 0+00.00 TO STA. 4+83.14

Preliminary Plans - For Reference Only

LEGEND

(1) ITEM 615 - PAVEMENT FOR MAINTAINING TRAFFIC, CLASS A

MAINTENANCE OF TRAFFIC - PHASE 1A
NORTHERN AND SOUTHERN CROSSOVER (SB)

DESIGN AGENCY
ms consultants, inc.

DESIGNER GG
REVIEWER KWR 12/23/24
PROJECT ID 121474
SHEET P.100 TOTAL 655

MAH-680-4.58

MODEL: Sheet PAPERSIZE: 34x22 (in.) DATE: 9/15/2025 TIME: 1:54:21 PM PLTDRV: OHDOT_PDF_E+.pltcfg PENTBL: OHDOT_Pen.tbl USER: DHall@msconsultants.com WORKSPACE: OHDOTCEv02 WORKSET: 121474 PRODUCT: OpenRoadsDesigner 24.00.00.205
pw:\\ohiodot-pw.bentley.com:ohiodot-pw-02\Documents\01 Active Projects\District 04\Mahoning\121474\402-Engineering_MSConsultants\MOT\Sheets\121474_MY111.dgn



Preliminary Plans - For Reference Only

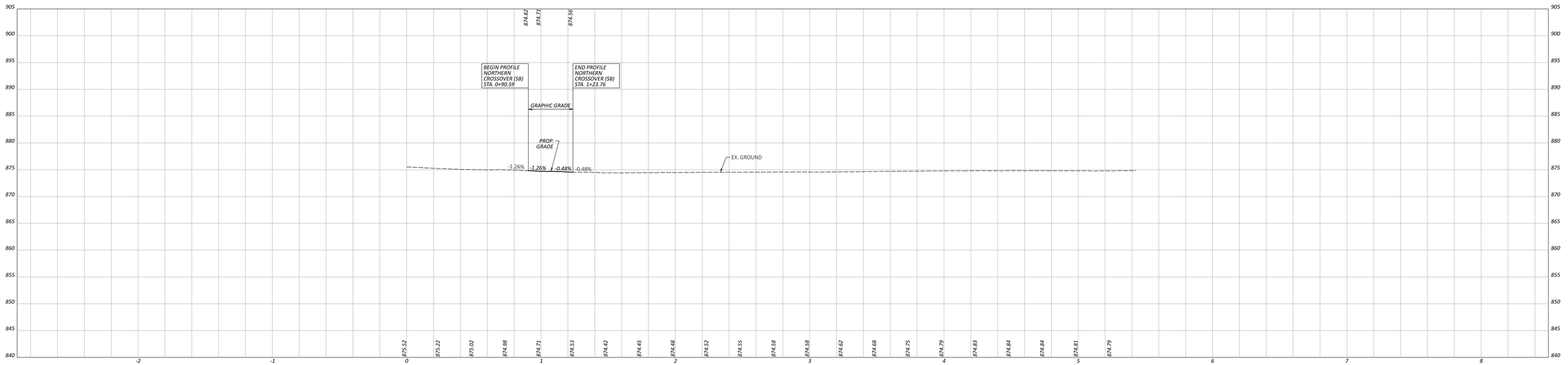

HORIZONTAL SCALE IN FEET
0 10 20 40

MAINTENANCE OF TRAFFIC - PHASE 1A
NORTHERN CROSSOVER (SB)

DESIGN AGENCY
mo consultants, inc.

DESIGNER: GG
REVIEWER: KWR 12/23/24
PROJECT ID: 121474
SHEET: P.101
TOTAL: 655

MAH-680-4.58

MODEL: 121474_SHEET(1) [Sheet] MAH680_4b4c8.dgn | DATE: 9/15/2025 TIME: 1:54:14 PM PSTDRV: CMSDP_PSP_V_p.shtg PSTYTBL: CMSDP_CTPlot.ctb USER: DMuell@mcconsultants.com WORKSPACE: CMSDSTD(x64) WORKSET: 121474 PRODUCT: OpenRoadsDesigner 24.00.00.205
ACCESS: Restricted Distribution - Contains Proprietary and/or Confidential Information Protected by 23 CFR 1200 and/or 1201

Preliminary Plans - For Reference Only

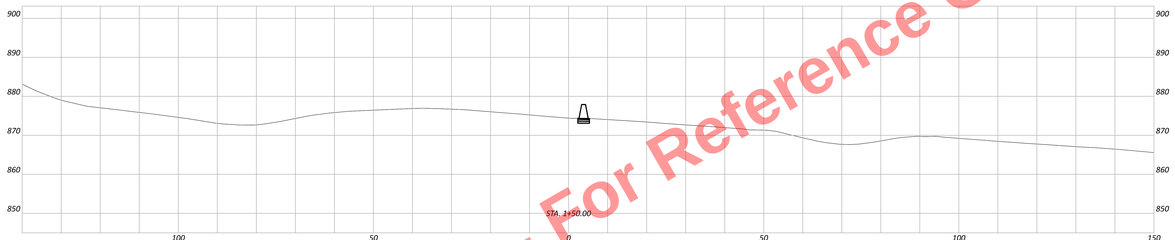

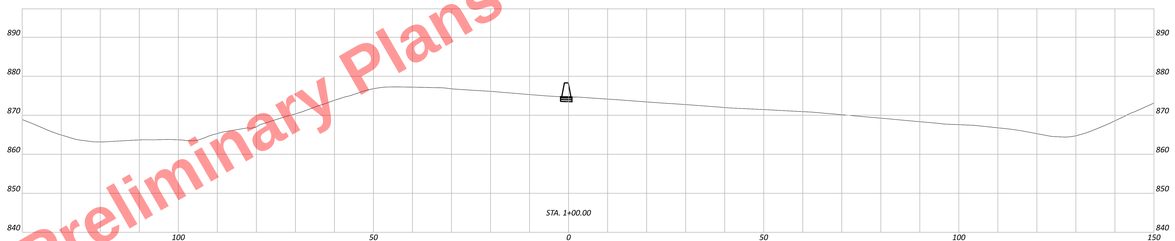

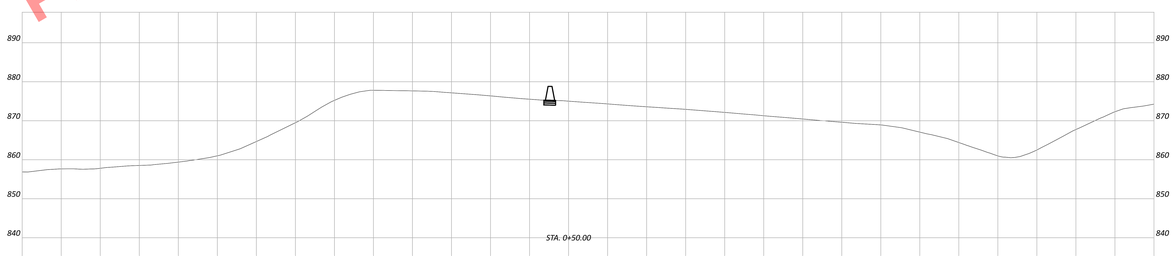

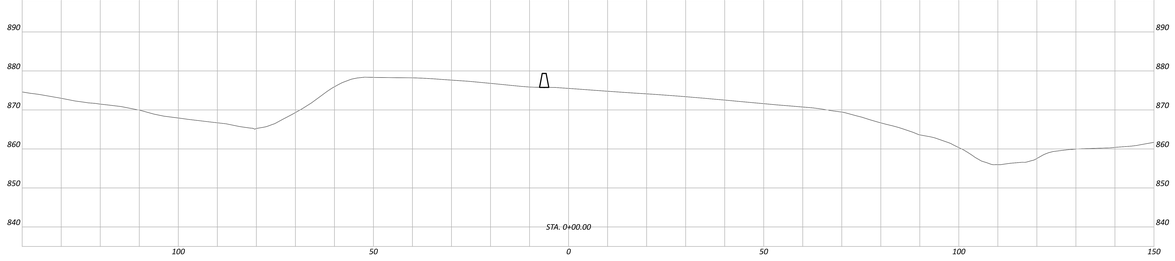

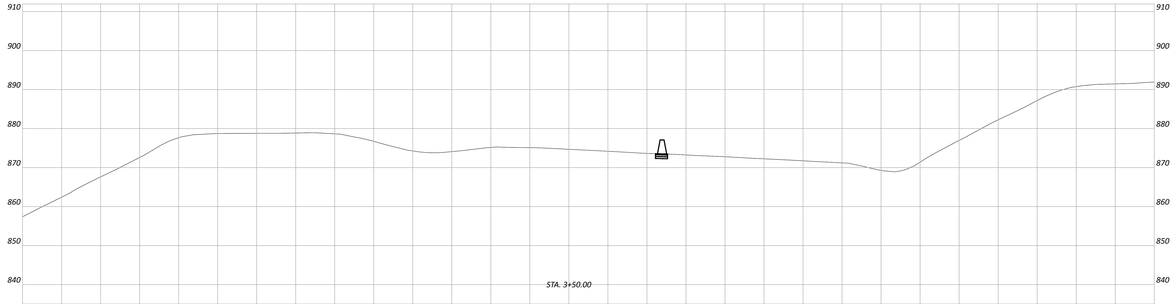

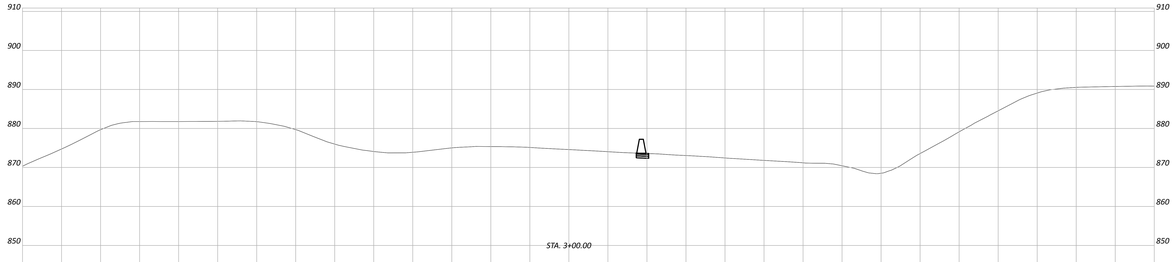

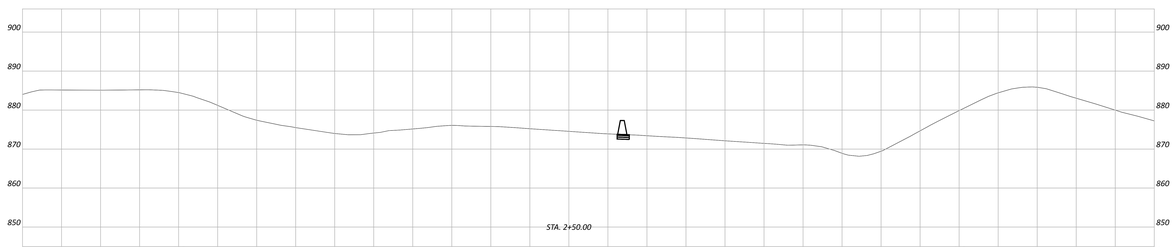

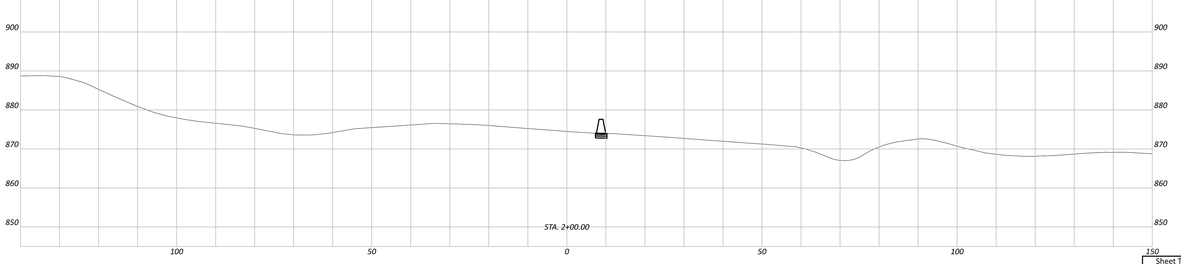

MAINTENANCE OF TRAFFIC - PHASE 1A
NORTHERN CROSSOVER (SB)

DESIGN AGENCY
ms consultants, inc.

DESIGNER
GG

REVIEWER
KWR 12/23/24

PROJECT ID
121474

Sheet Totals				
Seeding	Cut	Fill	SHEET	TOTAL
			P.102	655

MAH-680-4.58

MODEL: SB111 - 0+00.00 [Sheet] PAPERSIZE: 66x34 (in.) DATE: 9/15/2025 TIME: 1:54:47 PM PLTDRV: CHDOT_PDF_4+.pltcfg PENTBL: CHDOT_LTPen.tbl USER: OHeal@msconsultants.com WORKSPACE: OHDOTCLv02 WORKSET: 121474 PRODUCT: OpenRoadsDesigner 24.00.00.205
pw:\\ohdot-pw.bentley.com:ohdot-pw-02\Documents\01 Active Projects\District 04\Mahoning\121474\02 Engineering_MSConsultants\MOT\Sheets\121474_RM111.dgn

Preliminary Plans - For Reference Only



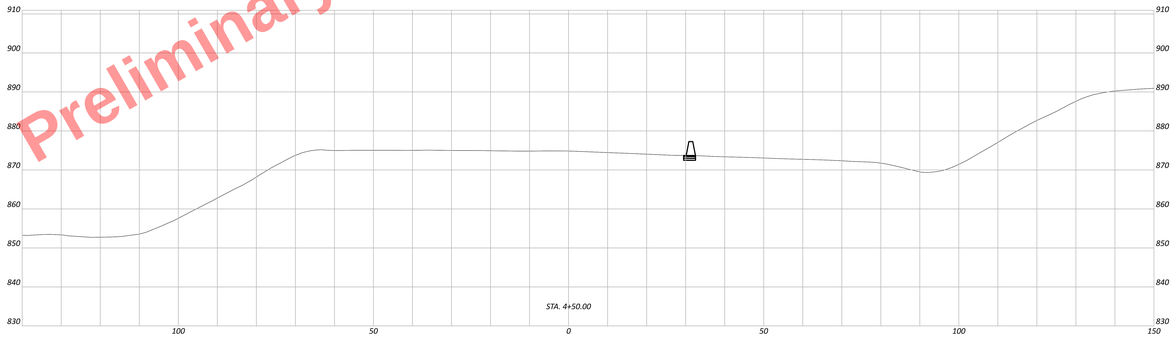

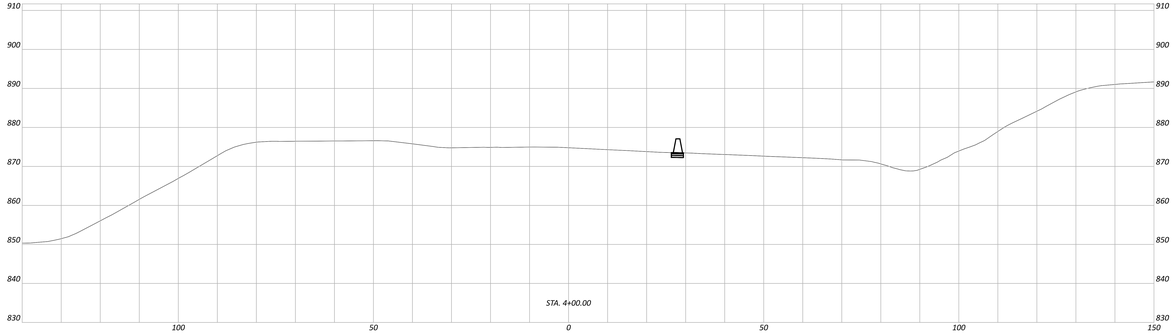

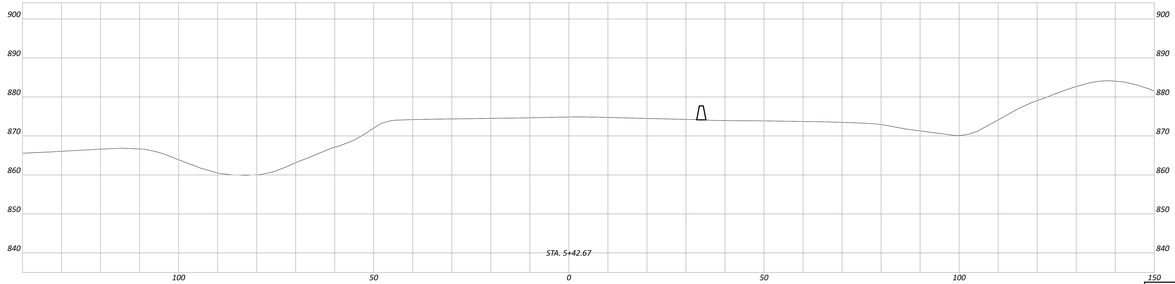

MAINTENANCE OF TRAFFIC - PHASE 1A
NORTHERN CROSSOVER (SB)

DESIGN AGENCY
ms consultants, inc.

DESIGNER
GG

REVIEWER
KWR 12/23/24

PROJECT ID
121474

Sheet Totals				
Seeding	Cut	Fill	SHEET	TOTAL
			P.103	655

MAH-680-4.58

MODEL: 8K111 - 4+00.00 [Sheet] PAPERSIZE: 66x34 (in.) DATE: 9/15/2025 TIME: 1:54:53 PM PTDRV: ONDOT_POF_4+.pltcfg PRINTBL: ONDOT_UTThm.tbl USER: DNaik@msconsultants.com WORKSPACE: ONDOTCLv02 WORKSET: 121474 PRODUCT: OpenRoadsDesigner 24.00.00.205
pw:\\pwdoc.pw.bentley.com:pwdoc-pw-02\Documents\01 Active Projects\District 04\Mahoning\121474\02-Engineering_MSConsultants\MOT\Sheets\121474_R3M11.dgn

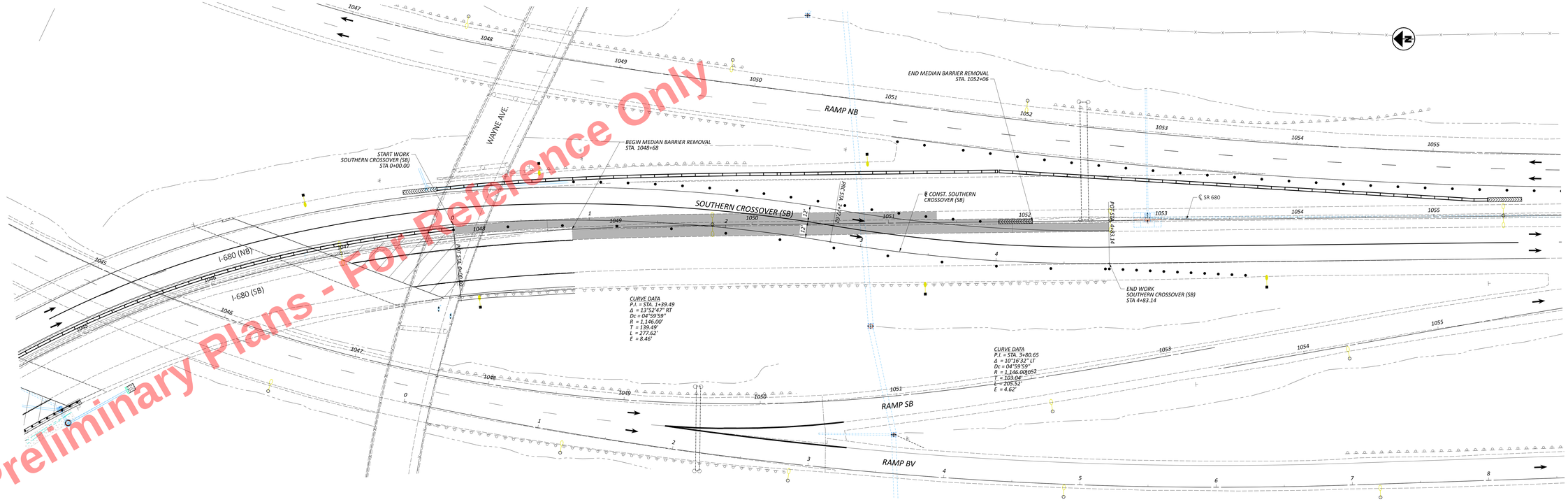

Preliminary Plans - For Reference Only

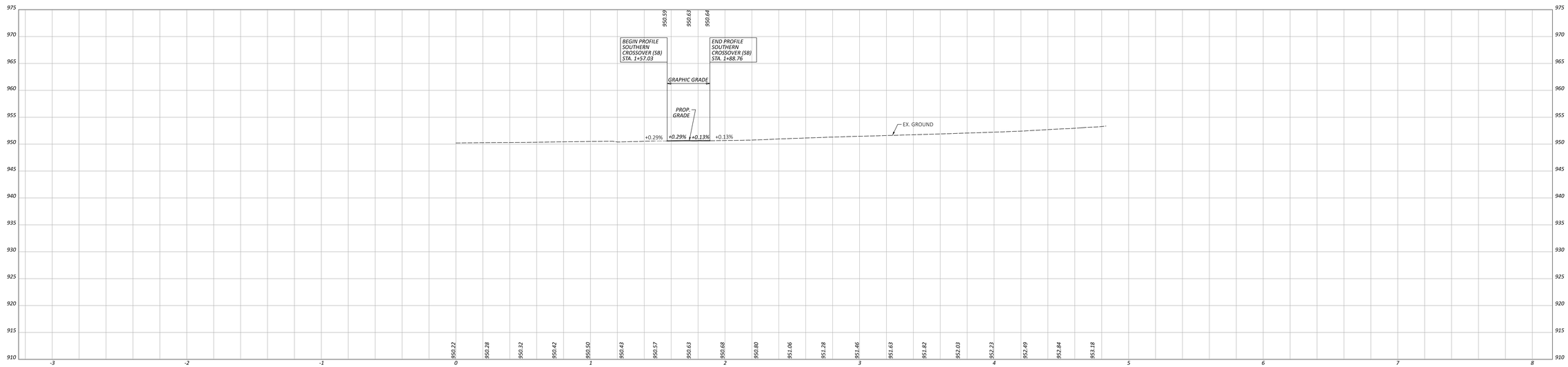

MAH-680-4.58

BOOST_MH12_[Sheet] (Sheet) PLOTDATE: 06/04/25 DATE: 6/5/2025 TIME: 1:55:07 PM USER: CHHOT PSF: Y xref$ PENTBL: CHHOT_CTB.ctb SAVE: chhot@mccormrankin.com WORKSPACE: CHHOTCIVIL WORKSET: 121474 PRODUCT: OpenRoadsDesigner 24.00.00.205
M:\Projects\Boost\Maintenance and Protection of Traffic\Drawings\121474.dgn

HORIZONTAL
SCALE IN FEET
0 10 20 40

MAINTENANCE OF TRAFFIC - PHASE 1A
SOUTHERN CROSSOVER (SB)

DESIGN AGENCY
mc consultants, inc.

DESIGNER
GG

REVIEWER
KWR 06/02/25

PROJECT ID
121474

SHEET P.104 TOTAL 655

Preliminary Plans - For Reference Only

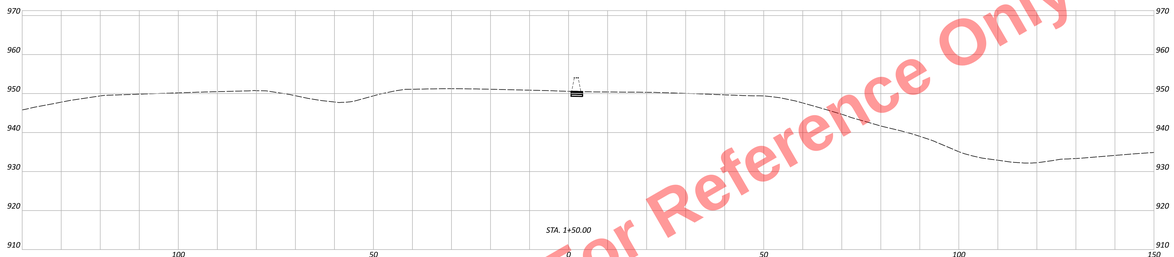

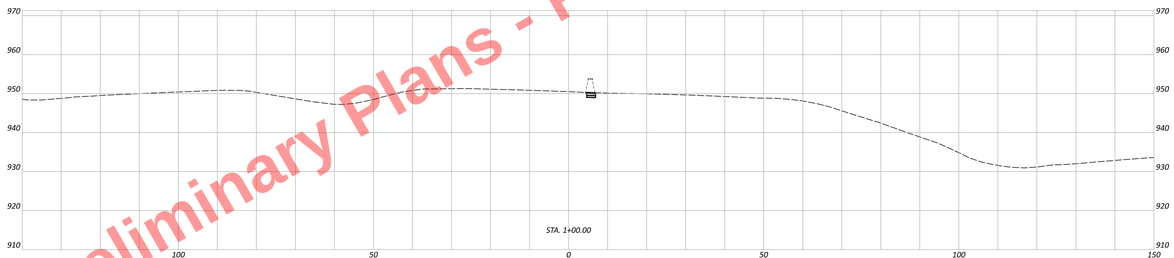

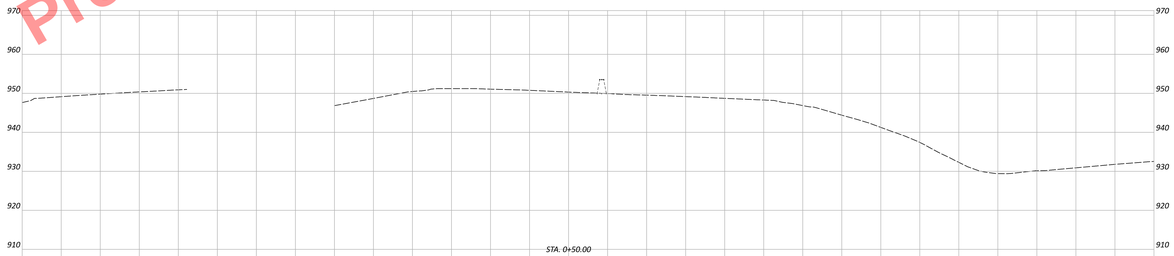

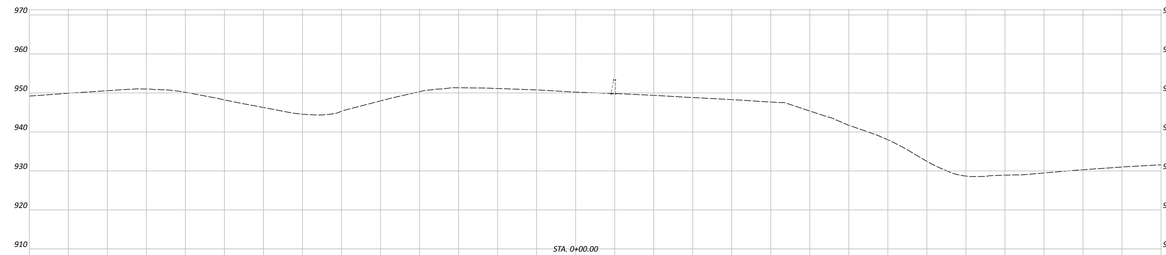

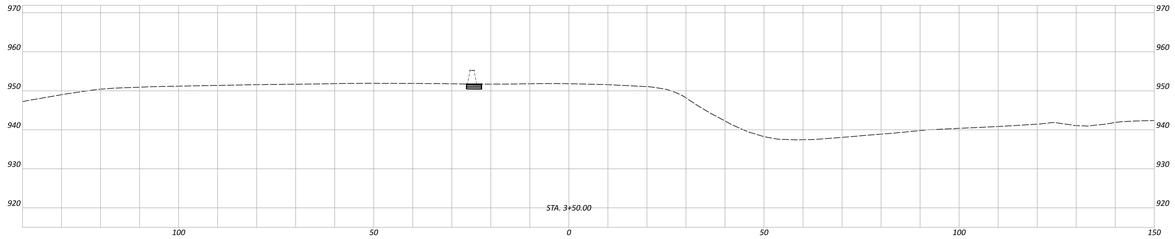

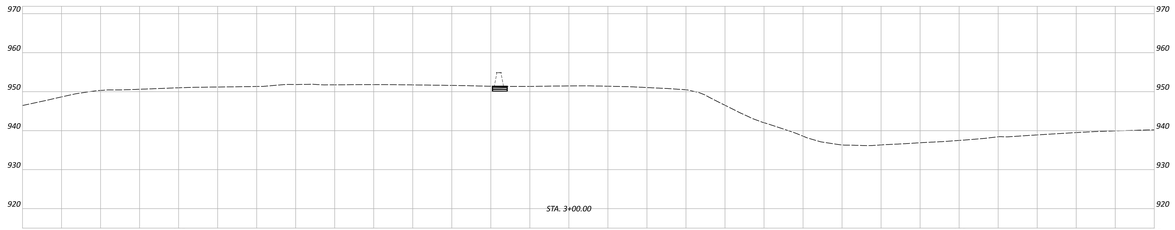

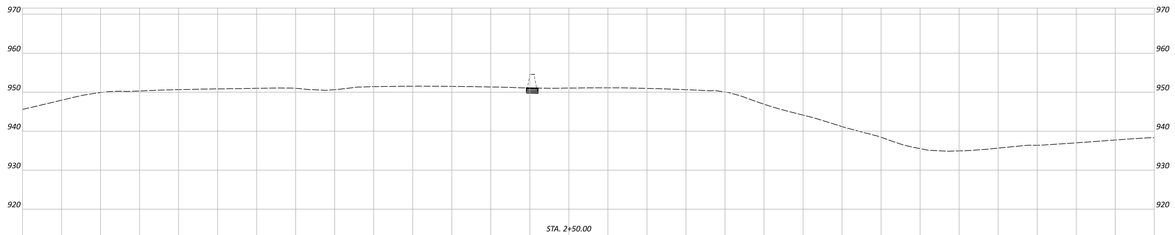

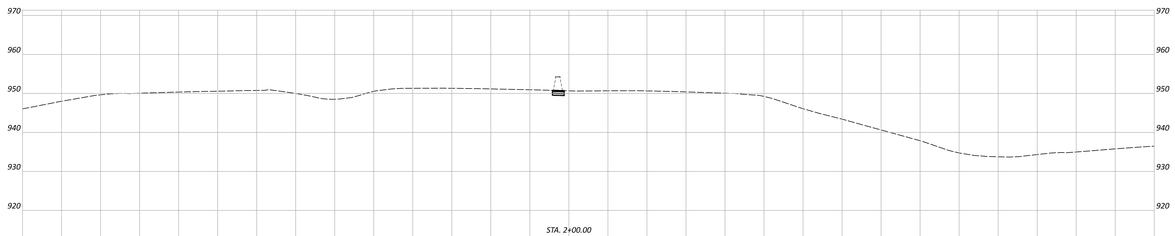

MAINTENANCE OF TRAFFIC - PHASE 1A
SOUTHERN CROSSOVER (SB)

DESIGN AGENCY
ms consultants, inc.

DESIGNER: GG
REVIEWER: KWR 12/23/24
PROJECT ID: 121474

Sheet Totals				SHEET	TOTAL
Seeding	Cut	Fill		P.105	655

MAH-680-4.58

MODEL: BK13 - X=00.00 [Sheet] MAH680R_60x36.dwt 1:40ft 3/15/2025 TIME: 1:53:27 PM PLTDRV: CMYKPT_PDF_P.ctb PLTSTBL: CMYKPT_Pen.tbl USER: DMeiffren@msconsultants.com WORKSPACE: CMYKPT.CVX3 WORKSET: 121474 PRODUCT: OpenRoadsDesigner 24.00.00.205
ALL RIGHTS RESERVED. COPYRIGHT © 2024 BENTLEY SYSTEMS, INCORPORATED AND ITS LICENSORS. Unauthorized use of this software, including reverse engineering, is prohibited.

Preliminary Plans - For Reference Only

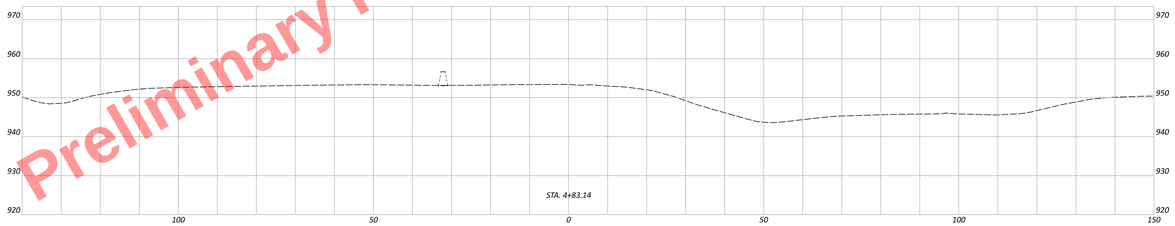

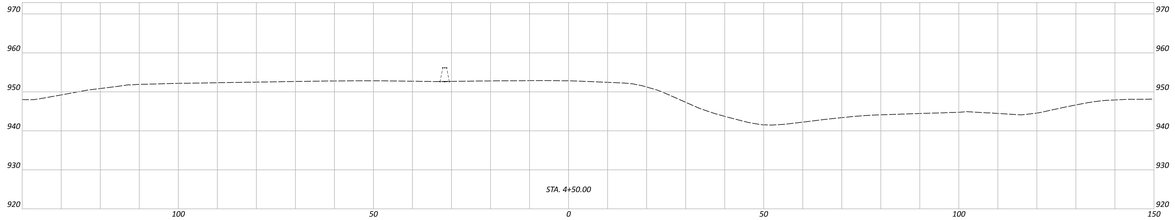

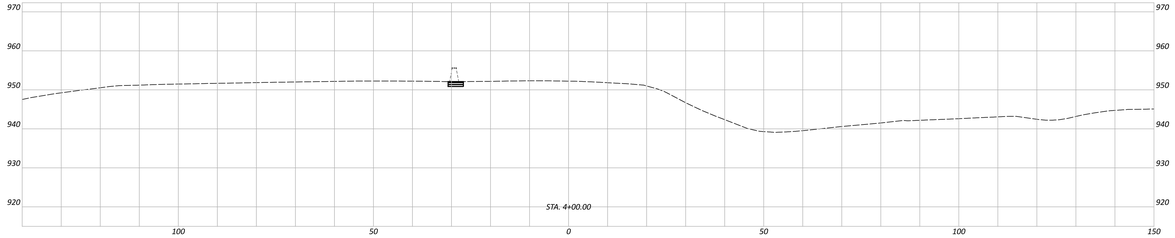

MAH-680-4.58

MODEL: 8K113 - 4+00.00 (Sheet) PAPERSIZE: 66x34 (in.) DATE: 9/15/2025 TIME: 1:55:30 PM PTDRV: OHIOOT_PDF_4.+.pltcfg PRINTBL: OHIOOT_Pen.tbl USER: DHall@mcconsultants.com WORKSPACE: OHIOOTCEv02 WORKSET: 121474 PRODUCT: OpenRoadsDesigner 24.00.00.205
pw:\\ukadds-pw.bentley.com:ohiodot-pw-02\Documents\01 Active Projects\District 04\Mahoning\121474\Roadway\Sheets\MAT\Sheets\121474_XM112.dgn

MAINTENANCE OF TRAFFIC - PHASE 1A
SOUTHERN CROSSOVER (SB)

DESIGN AGENCY
mc consultants, inc.

DESIGNER
GG

REVIEWER
KWR 12/23/24

PROJECT ID
121474

Sheet Totals				
Seeding	Cut	Fill	SHEET	TOTAL
			P.106	655

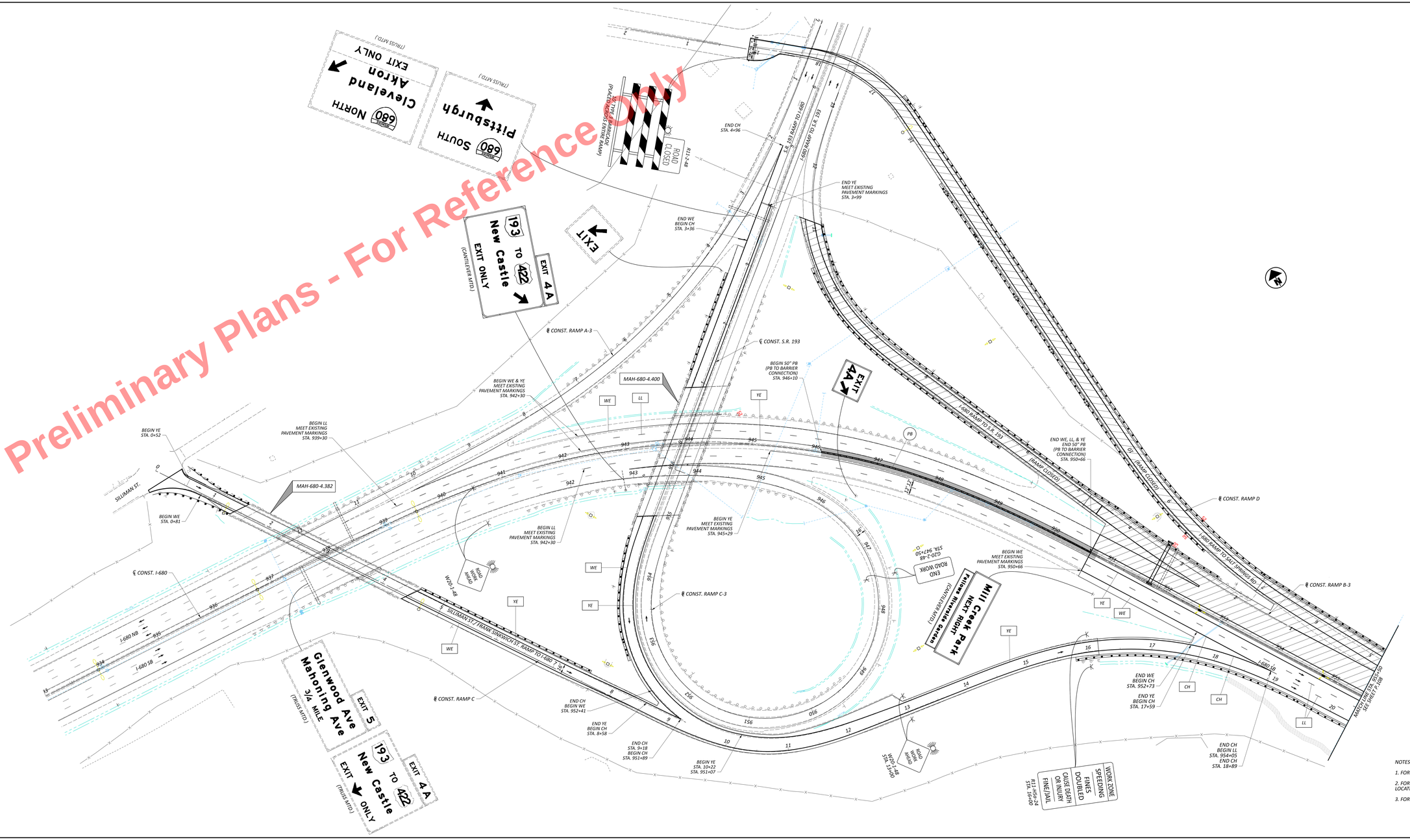

NOTES:

1. FOR MOT LEGEND AND DRUM SPACING CHART, SEE SHEET P.88.
2. FOR ALL EXISTING AND PROPOSED PERMANENT SIGN LOCATIONS, SEE SIGNING AND MARKING PLANS
3. FOR THE I-680 NORTHBOUND DETOUR PLAN, SEE SHEET P.81.

HORIZONTAL SCALE IN FEET
0 20 40 80

MAINTENANCE OF TRAFFIC - PHASE 1B STEP 1
I-680 NORTHBOUND CONSTRUCTION
I-680 STA. 933+00 TO STA. 955+50

DESIGN AGENCY
mb consultants, inc.
DESIGNER RMO
REVIEWER SMR 08/30/24
PROJECT ID 121474
SHEET P.107 TOTAL 655

MAH-680-4.58

MODEL: 11321_SHEET1 PAYFREQ: 60x24 (in) DATE: 8/15/2025 TIME: 3:56:50 PM USER: GROOT_CPP_F styleg PENTBL: GROOT_CPP_F.tbl TBLSCALE: 100% DrawByPermanent.com WORKSPACE: GROOTCIVIL3 WORKSET: 121474 PRODUCT: OpenRoadsDesigner 24.00.00.295
ALL RIGHTS RESERVED. COPYRIGHT (C) 2024 BENTLEY SYSTEMS, INCORPORATED. PROPRIETARY AND CONFIDENTIAL INFORMATION. NOT FOR DISTRIBUTION.

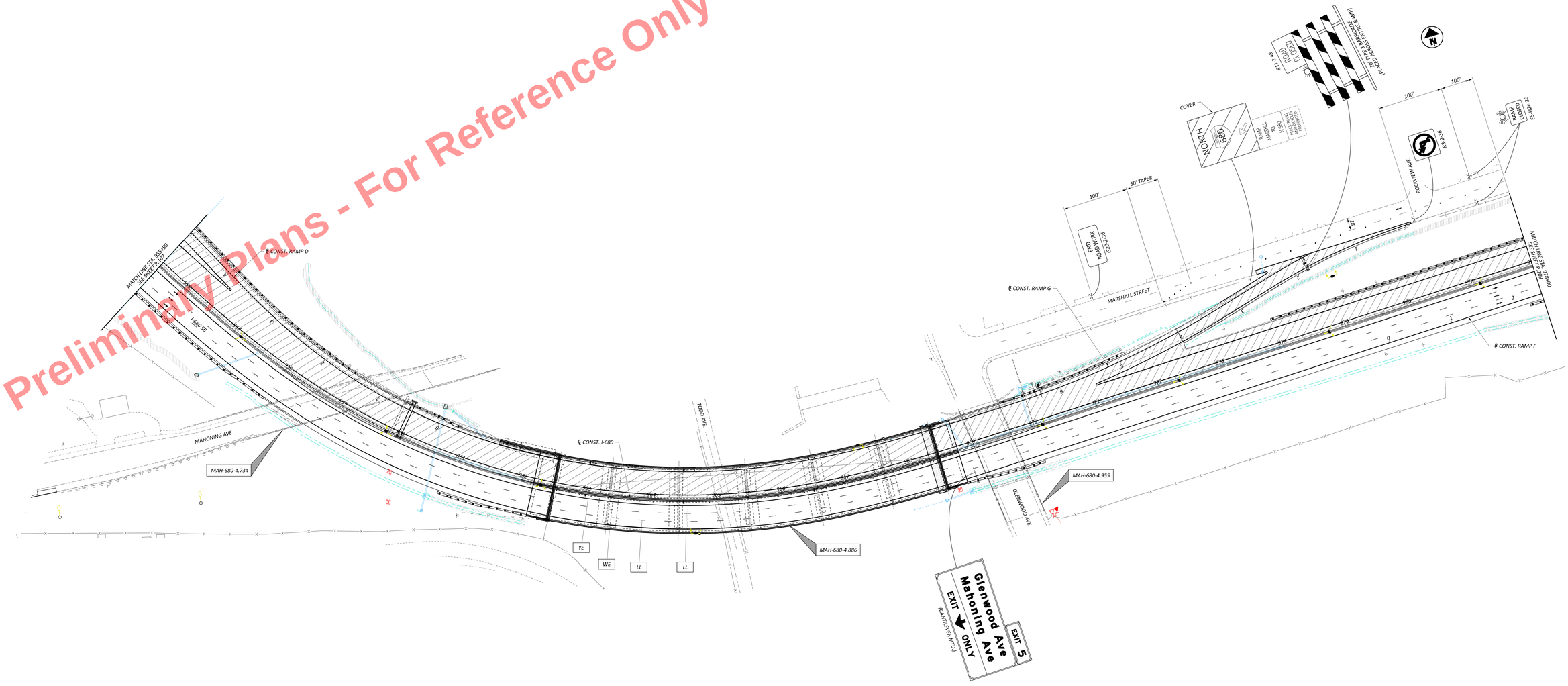

Preliminary Plans - For Reference Only

NOTES:

1. FOR MOT LEGEND AND DRUM SPACING CHART, SEE SHEET P.88.
2. FOR ALL EXISTING AND PROPOSED PERMANENT SIGN LOCATIONS, SEE SIGNING AND MARKING PLANS
3. FOR THE MARSHALL ST. TO I-680 MARSHALL ST. RAMP DETOUR PLANS, SEE SHEET P.80

HORIZONTAL SCALE IN FEET
0 20 40 80

MAINTENANCE OF TRAFFIC - PHASE 1B STEP 1
I-680 NORTHBOUND CONSTRUCTION
I-680 STA. 955+50 TO STA. 978+00

DESIGN AGENCY
mb consultants, inc.

DESIGNER: RMO
REVIEWER: SMR 08/30/24
PROJECT ID: 121474
SHEET: P.108
TOTAL: 655

MAH-680-4.58

MODEL: 11321_SMR22_PAYRIDE1.dgn,k1 | DATE: 8/15/2025 TIME: 1:56:48 PM | USER: DWOFF_CPF | eFeng PENTEL DWOFF_CPF | eFeng PENTEL DWOFF_CPF | eFeng PENTEL DWOFF_OTPro.ctb | USER: DistillPress@mb.com | WORKSPACE: DWOFFCIVIL WORKSET: 121474 PRODUCT: OpenRoadDesigner 24.00.00.205

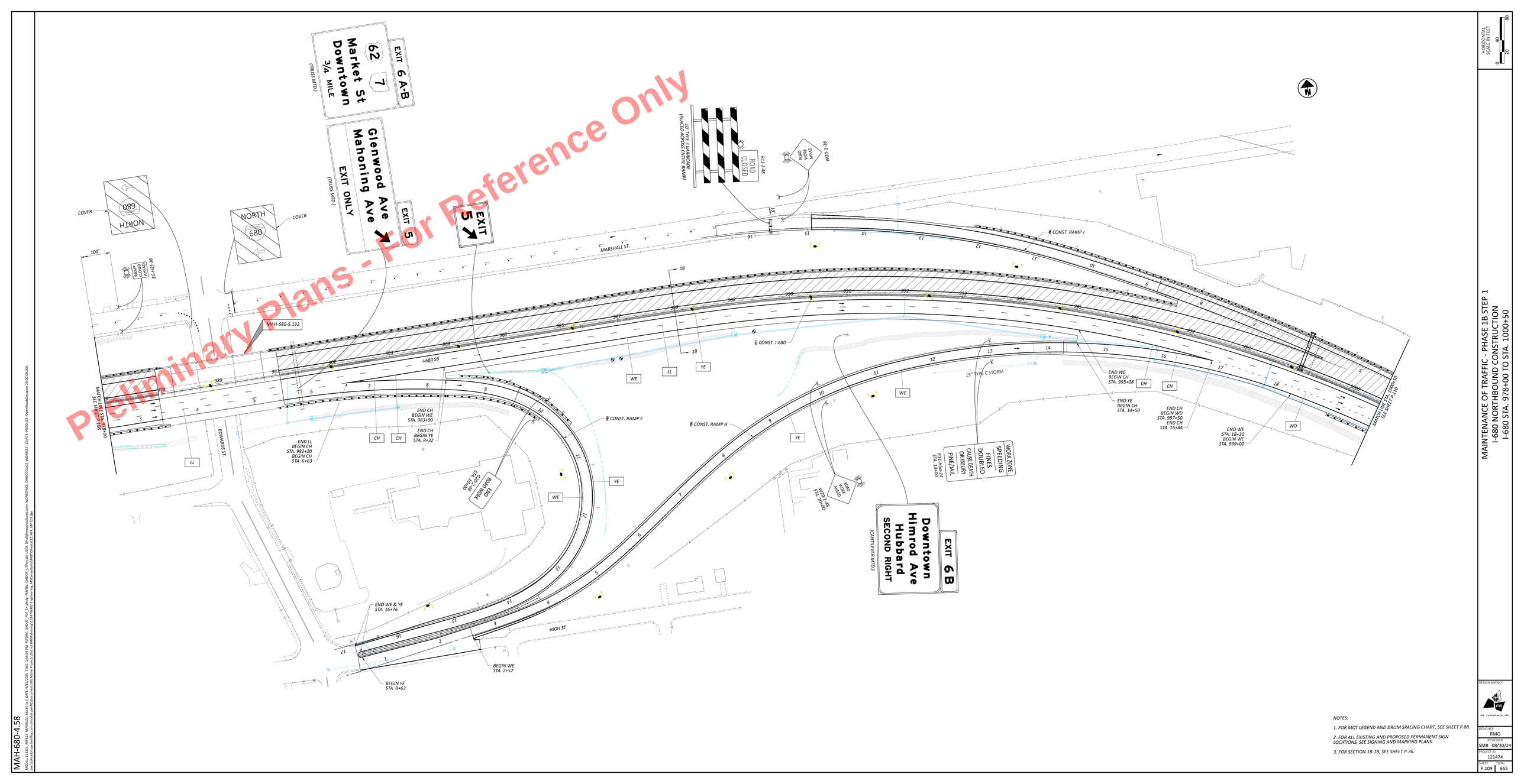

NOTES:

1. FOR MOT LEGEND AND DRUM SPACING CHART, SEE SHEET P.88.
2. FOR ALL EXISTING AND PROPOSED PERMANENT SIGN LOCATIONS, SEE SIGNING AND MARKING PLANS.
3. FOR SECTION 1B-1B, SEE SHEET P.76.

MAINTENANCE OF TRAFFIC - PHASE 1B STEP 1
I-680 NORTHBOUND CONSTRUCTION
I-680 STA. 978+00 TO STA. 1000+50

DESIGN AGENCY
mk consultants, inc.
DESIGNER: RMO
REVIEWER: SMR 08/30/24
PROJECT ID: 121474
SHEET: P.109
TOTAL: 655

MAH-680-4.58

BIDDING DOCUMENTS - NOT FOR CONSTRUCTION
MODEL: 11311_SHEET1 PAPERSIZE: 48x24 in DATE: 8/15/2025 TIME: 1:54:03 PM USER: GROOT_PW PLOTSTYLE: GROOT_CTB.ctb LOG: DistillPrecompile.log WORKSPACE: GROOTCIVIL WORKSET: 121474 PRODUCT: OpenRoadDesigner 24.00.00.295

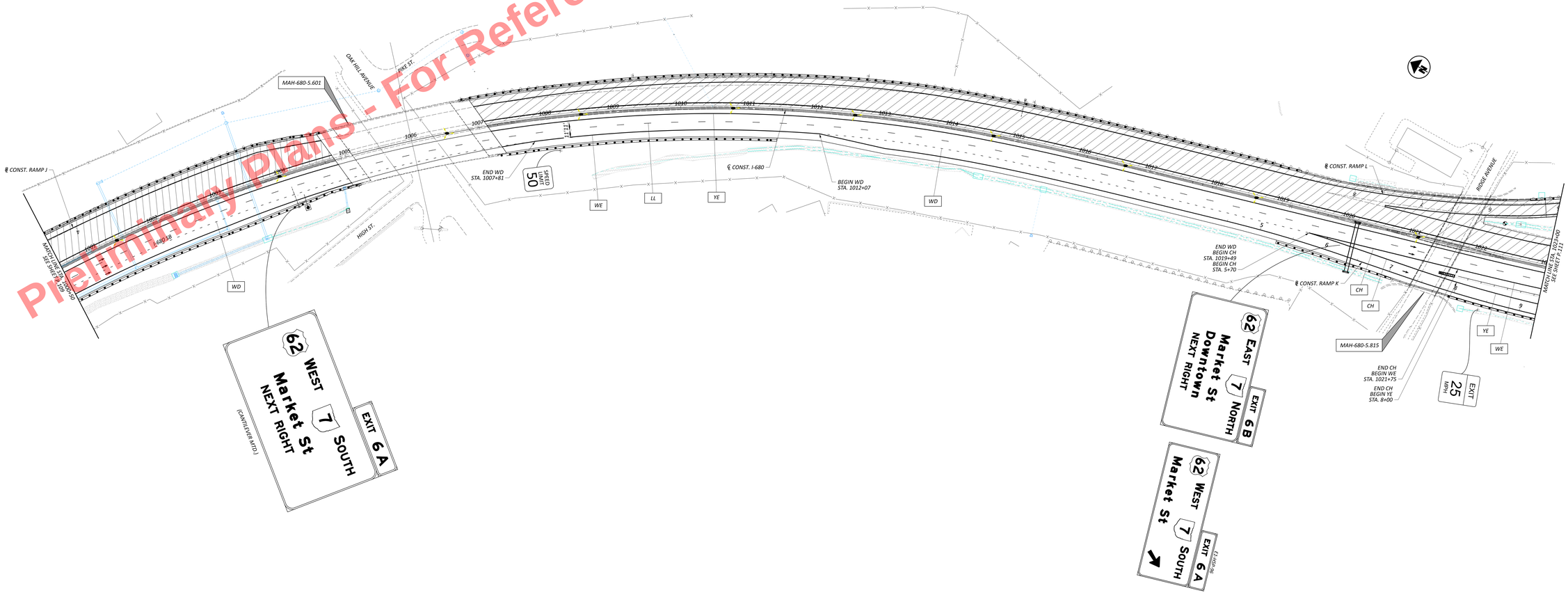

Preliminary Plans - For Reference Only

NOTES:

1. FOR MOT LEGEND AND DRUM SPACING CHART, SEE SHEET P.88.
2. FOR ALL EXISTING AND PROPOSED PERMANENT SIGN LOCATIONS, SEE SIGNING AND MARKING PLANS.
3. FOR THE MARKET ST./W. WOODLAND AVE. TO I-680 NORTHBOUND RAMP DETOUR PLAN, SEE SHEET P.80.

HORIZONTAL SCALE IN FEET
0 20 40 80

MAINTENANCE OF TRAFFIC - PHASE 1B STEP 1
I-680 NORTHBOUND CONSTRUCTION
I-680 STA. 1000+50 TO STA. 1023+00

DESIGN AGENCY
ms consultants, inc.

DESIGNER: RMO
REVIEWER: SMR 08/30/24
PROJECT ID: 121474
SHEET: P.110 TOTAL: 655

MAH-680-4.58

MODEL: 121121_GMP424_PHYFIRSDET_65x24.DGN | DATE: 8/15/2025 TIME: 1:57:13 PM | USER: DWOOT | PW: K:\ahdg_PHYFIL\DWOOT_CPW_K\ahdg_PHYFIL\DWOOT_CPW_K-ahdg_PHYFIL.DWOOT_CPW_K.dgn | PHYFIL: DWOOT_CPW_K-ahdg_PHYFIL.DWOOT_CPW_K.dgn | PLOTSCALE: 1.0000 | WORKSPACE: CWOOTCVS01 WORKSET: 121474 PRODUCT: OpenRoadsDesigner 24.00.00.205

Preliminary Plans - For Reference Only

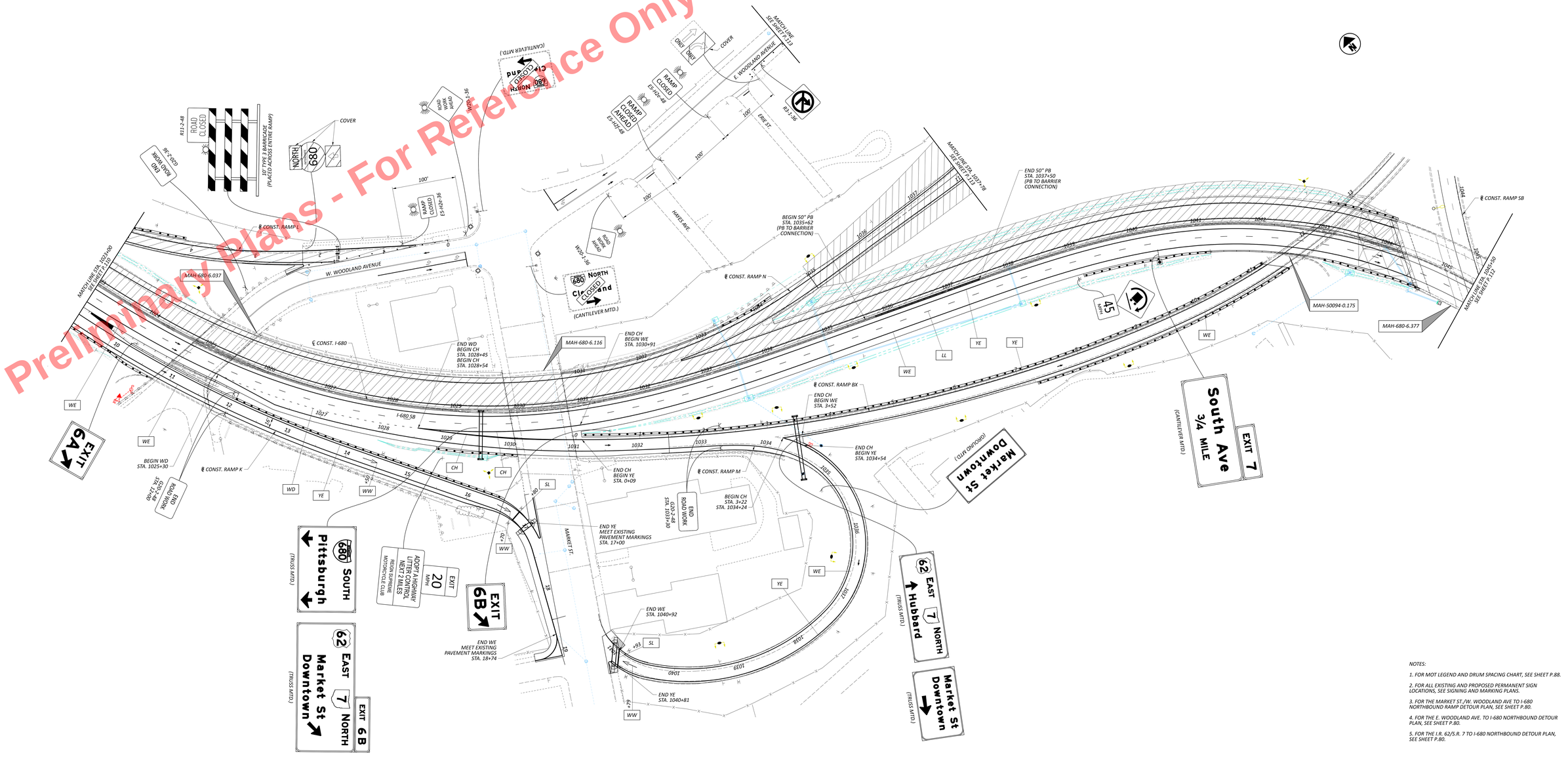

NOTES:

1. FOR MOT LEGEND AND DRUM SPACING CHART, SEE SHEET P.88.

2. FOR ALL EXISTING AND PROPOSED PERMANENT SIGN LOCATIONS, SEE SIGNING AND MARKING PLANS.

3. FOR THE MARKET ST./W. WOODLAND AVE TO I-680 NORTHBOUND RAMP DETOUR PLAN, SEE SHEET P.80.

4. FOR THE E. WOODLAND AVE. TO I-680 NORTHBOUND DETOUR PLAN, SEE SHEET P.80.

5. FOR THE I.R. 62/S.R. 7 TO I-680 NORTHBOUND DETOUR PLAN, SEE SHEET P.80.

HORIZONTAL SCALE IN FEET 0 20 40 80

MAINTENANCE OF TRAFFIC - PHASE 1B STEP 1
I-680 NORTHBOUND CONSTRUCTION
I-680 STA. 1023+00 TO STA. 1045+50

DESIGN AGENCY: mc consultants, inc.

DESIGNER: RMO

REVIEWER: SMR 08/30/24

PROJECT ID: 121474

SHEET: P.111 TOTAL: 655

MAH-680-4.58

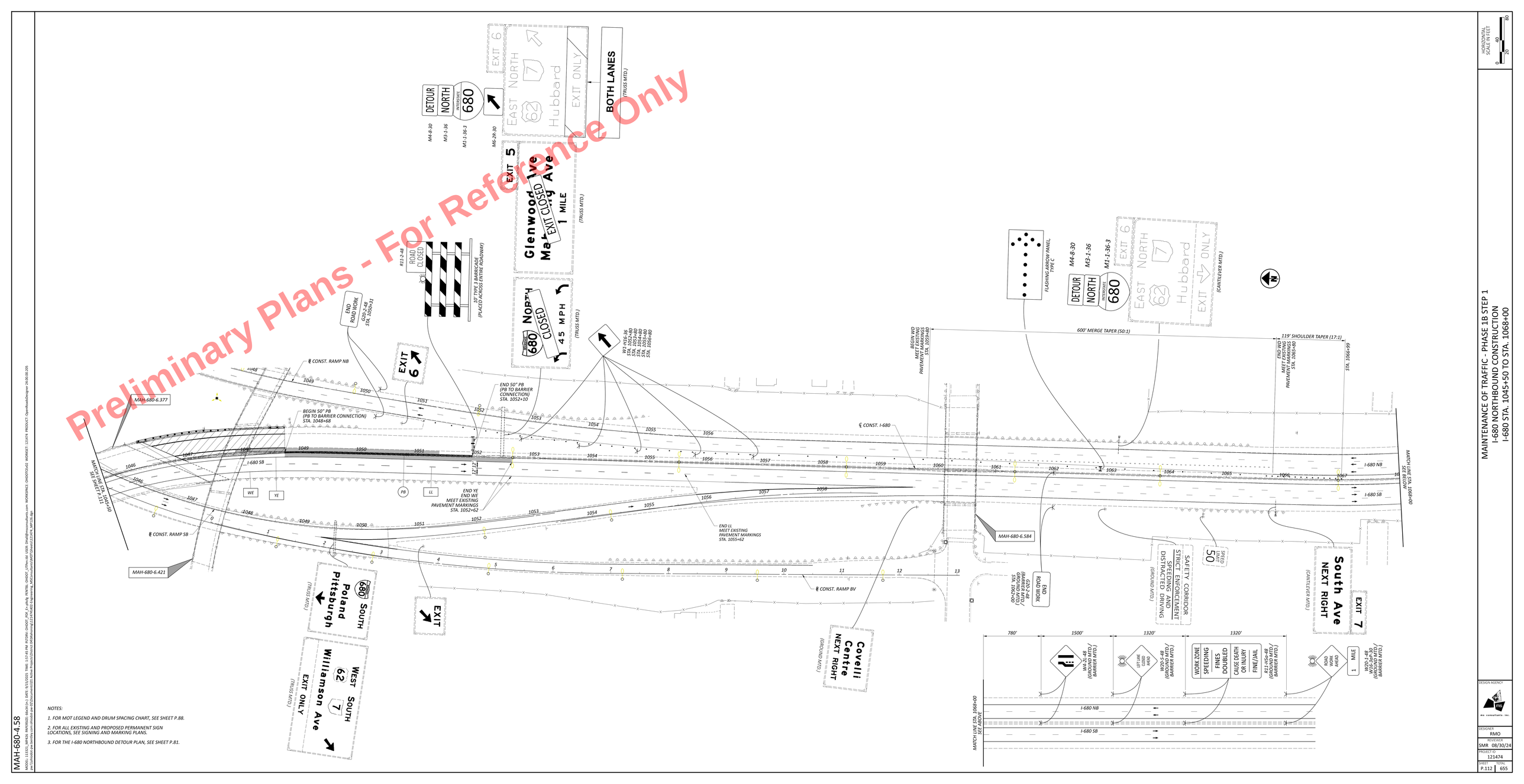

NOTES:

1. FOR MOT LEGEND AND DRUM SPACING CHART, SEE SHEET P.88.
2. FOR ALL EXISTING AND PROPOSED PERMANENT SIGN LOCATIONS, SEE SIGNING AND MARKING PLANS.
3. FOR THE I-680 NORTHBOUND DETOUR PLAN, SEE SHEET P.81.

MAH-680-4.58

MODEL: 11321_SAP400_PAVEMENT_48x24.DGN | DATE: 8/15/2025 TIME: 1:57:45 PM | USER: DWOOT_CPP_F-alhig | PWTBL: DWOOT_CPP_F-alhig | STYLE: DWOOT_CPP_F-alhig | PWTBL: DWOOT_CPP_F-alhig | XREFS

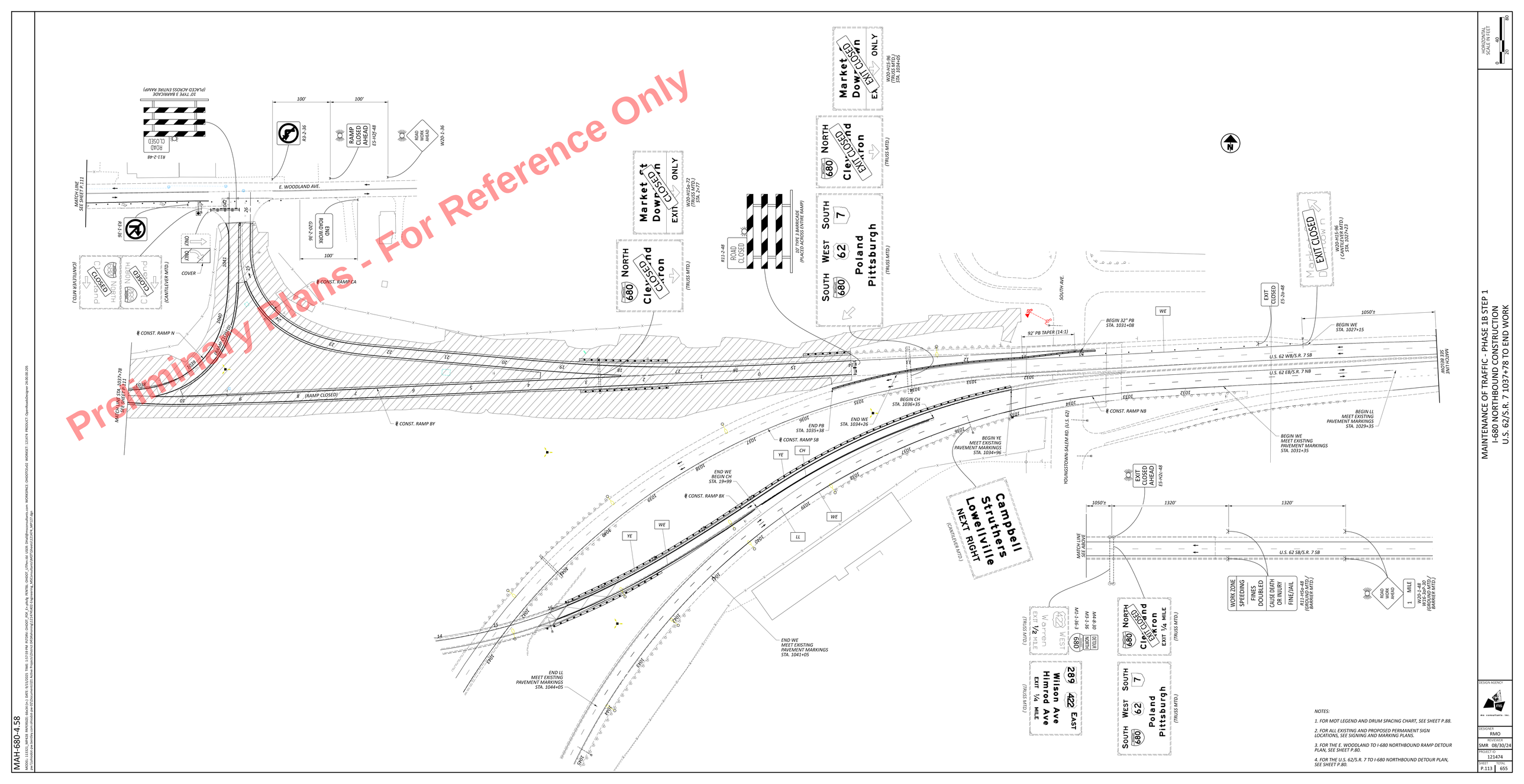

NOTES:

1. FOR MOT LEGEND AND DRUM SPACING CHART, SEE SHEET P.88.
2. FOR ALL EXISTING AND PROPOSED PERMANENT SIGN LOCATIONS, SEE SIGNING AND MARKING PLANS.
3. FOR THE E. WOODLAND TO I-680 NORTHBOUND RAMP DETOUR PLAN, SEE SHEET P.80.
4. FOR THE U.S. 62/S.R. 7 TO I-680 NORTHBOUND DETOUR PLAN, SEE SHEET P.80.

MAINTENANCE OF TRAFFIC - PHASE 1B STEP 1
I-680 NORTHBOUND CONSTRUCTION
U.S. 62/S.R. 7 1037+78 TO END WORK

HORIZONTAL SCALE IN FEET 0 20 40 80

DESIGN AGENCY: mc consultants, inc.

DESIGNER: RMO
REVIEWER: SMR 08/30/24
PROJECT ID: 121474
SHEET P.113 TOTAL 655

MAH-680-4.58

Preliminary Plans - For Reference Only

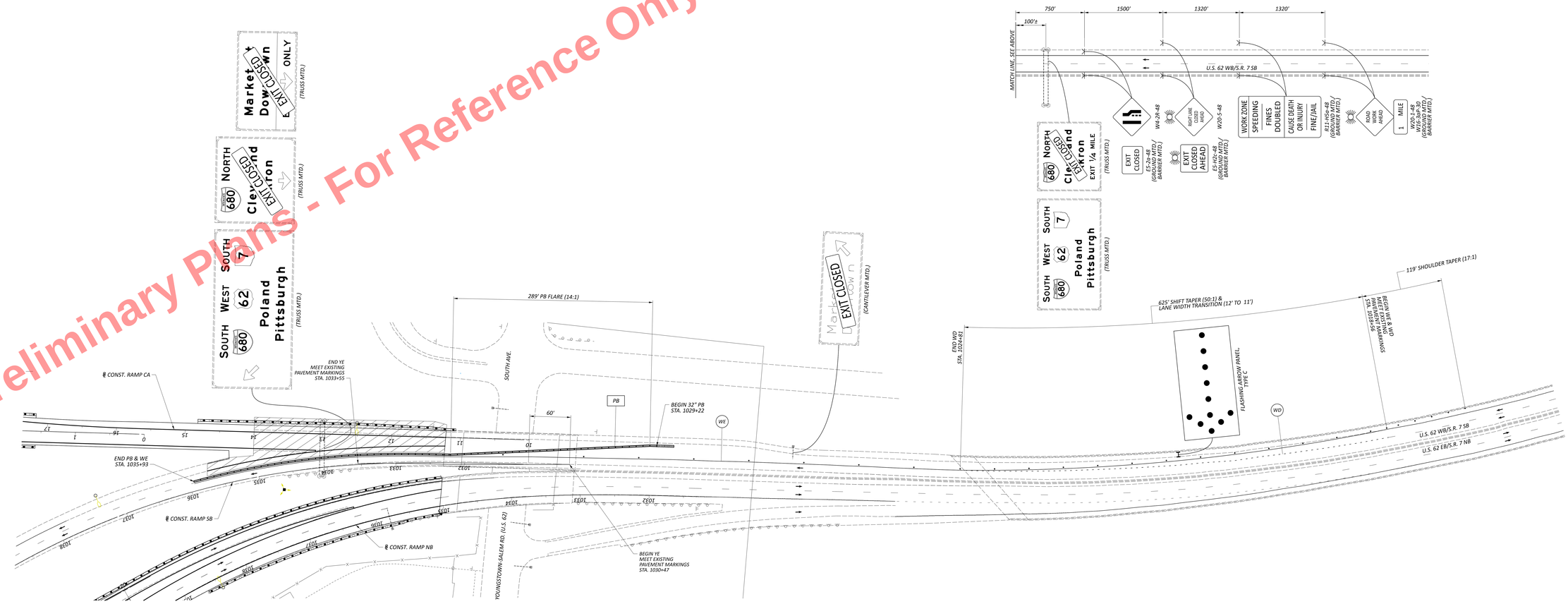

MAH-680-4.58

MODEL: 121474_GMFIDD_PAVEMENT_DESIGN.DGN | DATE: 8/15/2025 | TIME: 1:58:07 PM | USER: DWOOT_CPM | P-setup_PAVING_DWOOT_CPM.cel | LEVELS: Default | REFERENCES: 121474_GMFIDD_PAVEMENT_DESIGN.dgn, 121474_GMFIDD_PAVEMENT_DESIGN_Seed.dgn, 121474_GMFIDD_PAVEMENT_DESIGN_Seed3D.dgn, 121474_GMFIDD_PAVEMENT_DESIGN_Seed3D_Ramp.dgn | WORKSPACE: DWOOTCVG3 WORKSET: 121474 PRODUCT: OpenRoadsDesigner 24.00.00.295
ACTIVE PLANNING ALIGNMENT: 680 NB

HORIZONTAL SCALE IN FEET
0 20 40 80

MAINTENANCE OF TRAFFIC - PHASE 1B STEP 2
I-680 NORTHBOUND CONSTRUCTION
U.S. 62/S.R. 7 14+77 TO END WORK

DESIGN AGENCY
mb consultants, inc.

DESIGNER: RMO
REVIEWER: SMR 08/30/24
PROJECT ID: 121474
SHEET: P.114 TOTAL: 655

LEGEND

- DETOUR DIRECTIONAL ARROW
- K — WORK ZONE SIGN W/ SUPPORT
- WORK ZONE
- OVERHEAD SIGN SUPPORT

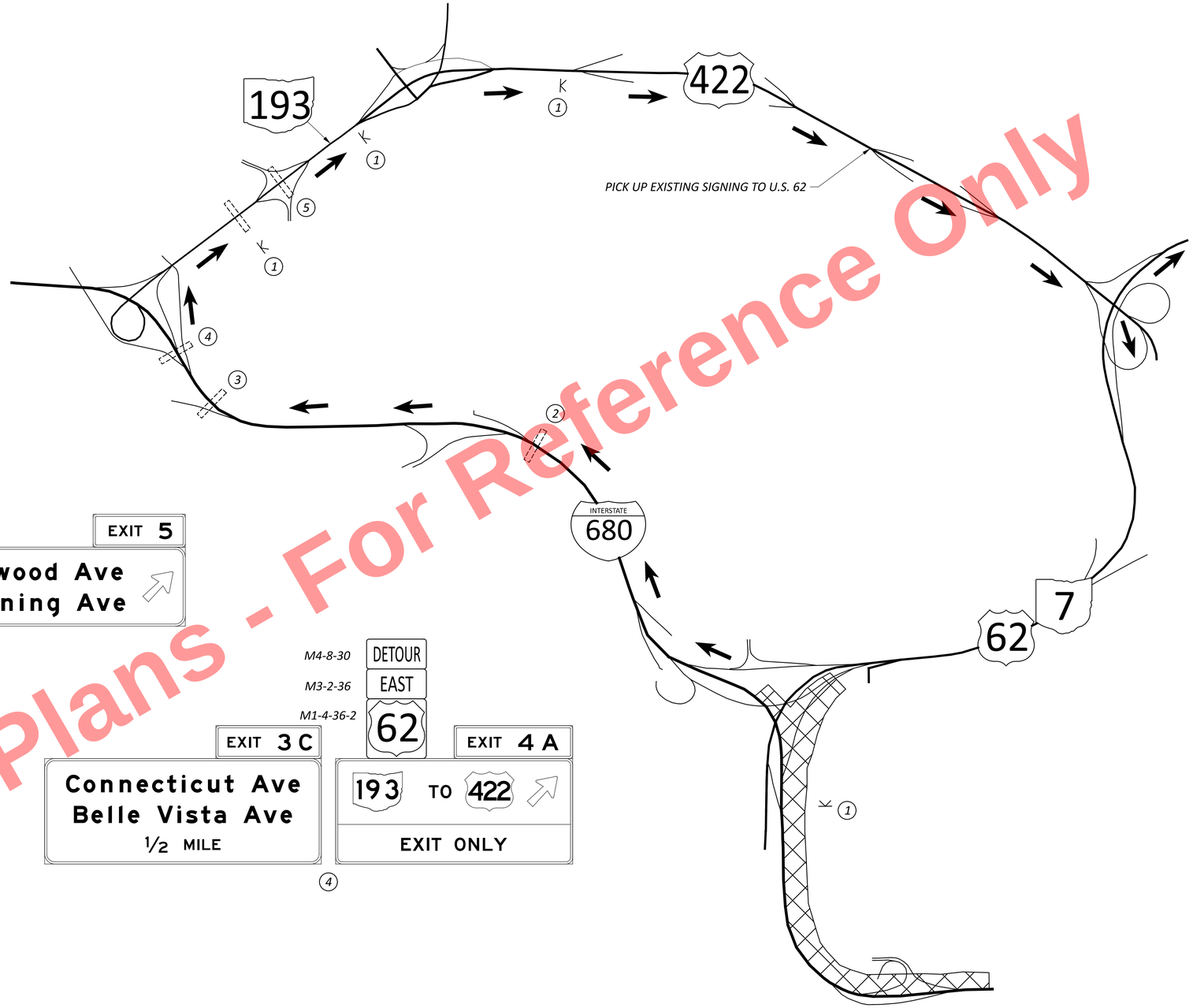

DETOUR
EAST
62
M4-8-30
M3-2-36
M1-4-36-2
1

M4-8-30 DETOUR
M3-2-36 EAST
M1-4-36-2 62

EXITS 4 B-A
193 TO 422
Salt Springs Road
3/4 MILE

EXIT 5
Glenwood Ave
Mahoning Ave
2

M4-8-30 DETOUR
M3-2-36 EAST
M1-4-36-2 62
M6-2aR-30

EXIT 4 A
193 TO 422
EXIT ONLY

EXIT 4 B
Salt Springs Road
3

M4-8-30 DETOUR
M3-2-36 EAST
M1-4-36-2 62

EXIT 3 C
Connecticut Ave
Belle Vista Ave
1/2 MILE

EXIT 4 A
193 TO 422
EXIT ONLY
4

M4-8-30 DETOUR
M3-2-36 EAST
M1-4-36-2 62

422 EAST
Campbell
New Castle

WEST 422 NORTH 193 EAST 289
M L King Jr Blvd
NEXT RIGHT
5

Preliminary Plans - For Reference Only

MAINTENANCE OF TRAFFIC - DETOUR PLAN
PHASE 2A - I-680 NB RAMP TO U.S. 62 EB

DESIGN AGENCY
ms consultants, inc.

DESIGNER KJF
REVIEWER KWR 08/29/24
PROJECT ID 121474
SHEET P.115 TOTAL 655

MAH-680-4.58

MODEL: Sheet PAPERSIZE: 34x22 (in.) DATE: 9/15/2025 TIME: 1:59:26 PM PLTDRV: OHDOT_PDF_E+.pltcfg PENTBL: OHDOT_Pen.tbl USER: DHall@msconsultants.com WORKSPACE: OHDOTCEv02 WORKSET: 121474 PRODUCT: OpenRoadsDesigner 24.00.00.205
pw:\\ohiodot-pw.bentley.com:ohiodot-pw-02\Documents\01 Active Projects\District 04\Mahoning\121474\402-Engineering_MSConsultants\MOT\Sheets\121474_MD203.dgn

LEGEND

- DETOUR DIRECTIONAL ARROW
- WORK ZONE SIGN W/ SUPPORT
- WORK ZONE
- OVERHEAD SIGN SUPPORT

D3-1-12 (BLACK/ORANGE)

SOUTH AVE
DETOUR

M4-H9T-48

(1)

D3-1-12 (BLACK/ORANGE)

SOUTH AVE
DETOUR

M4-9L-30

(2)

D3-1-12 (BLACK/ORANGE)

SOUTH AVE
DETOUR

M4-H9BL-30

(3)

D3-1-12 (BLACK/ORANGE)

SOUTH AVE
DETOUR

M4-8-24
M6-2L-21

(4)

M4-8-30
D3-1-12 (BLACK/ORANGE)

DETOUR
SOUTH AVE

EXIT 5

Glenwood Ave
Mahoning Ave
½ MILE

(5)

M4-8-30
D3-1-12 (BLACK/ORANGE)
M6-2R-30

DETOUR
SOUTH AVE

EXIT 5

Glenwood Ave
Mahoning Ave

(6)

M4-8-30
D3-1-12 (BLACK/ORANGE)

DETOUR
SOUTH AVE

INTERSTATE 680 SOUTH
Pittsburgh

(7)

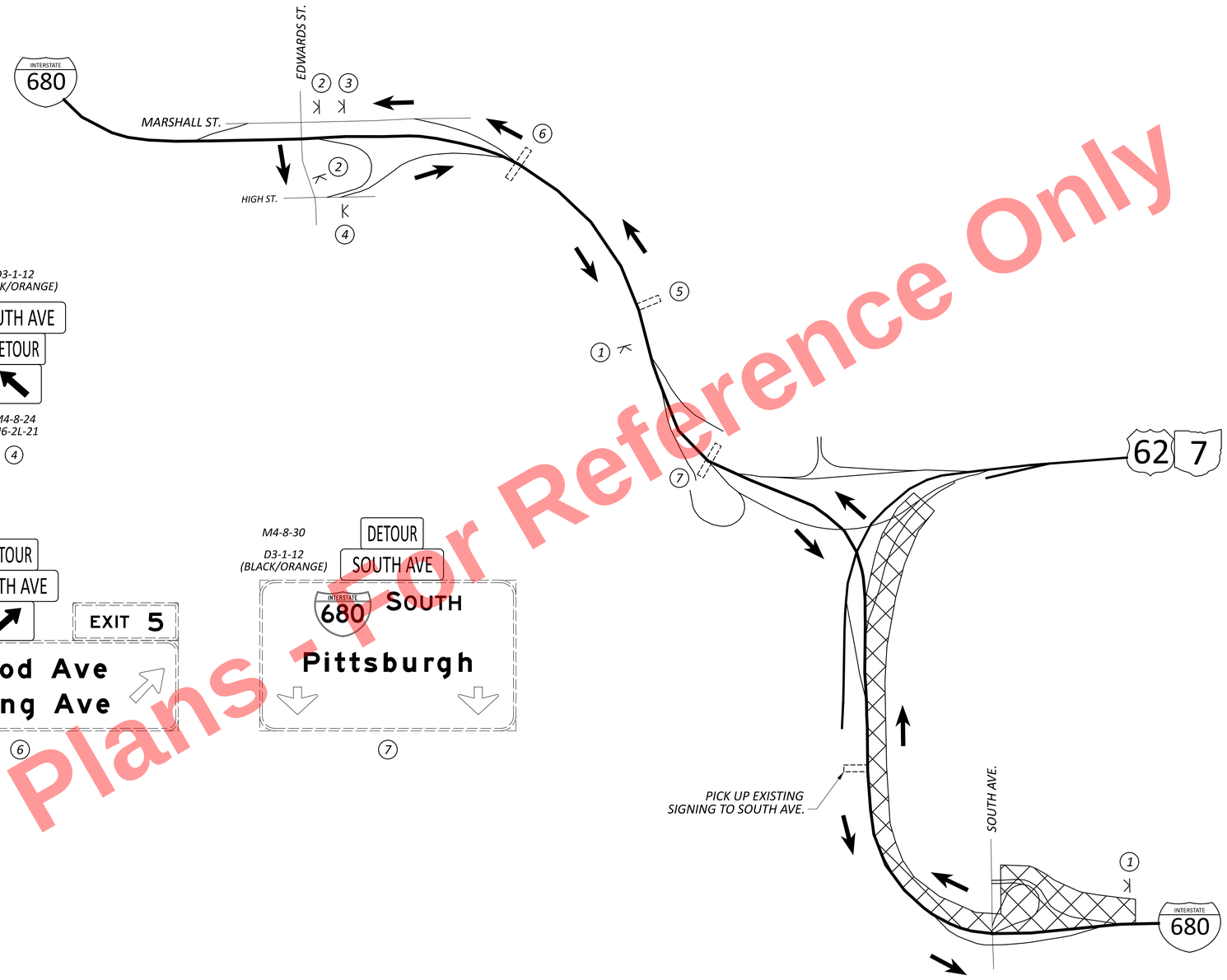

Preliminary Plans - For Reference Only

MAINTENANCE OF TRAFFIC - DETOUR PLAN
PHASE 2A - I-680 NB RAMP TO SOUTH AVE.

DESIGN AGENCY
ms consultants, inc.

DESIGNER
KJF

REVIEWER
KWR 08/29/24

PROJECT ID
121474

SHEET P.116 | TOTAL 655

MAH-680-4.58

MODEL: Sheet PAPERSIZE: 34x22 (in.) DATE: 9/15/2025 TIME: 1:59:31 PM PLTDRV: OHDOT_PDF_E+.pltcfg PENTBL: OHDOT_Pen.tbl USER: DHall@msconsultants.com WORKSPACE: OHDOTCEv02 WORKSET: 121474 PRODUCT: OpenRoadsDesigner 24.00.00.205
pw:\\ohiodot-pw.bentley.com:ohiodot-pw-02\Documents\01 Active Projects\District 04\Mahoning\121474\402 Engineering_MSConsultants\MOT\Sheets\121474_MD201.dgn

LEGEND

- SIGNALIZED INTERSECTION
- DETOUR DIRECTIONAL ARROW
- WORK ZONE SIGN W/ SUPPORT
- WORK ZONE
- TYPE 3 BARRICADES W/ SIGN

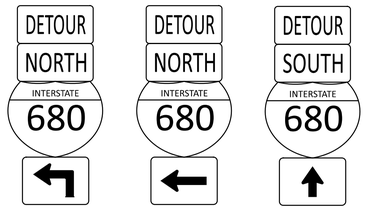

M4-8-24
M3-1-24
M1-1-24-3
M5-1L-21

(1)

M4-8-24
M3-1-24
M1-1-24-3
M6-1L-21

(2)

M4-8-24
M3-3-24
M1-1-24-3
M6-3-21

(3)

R11-2-48

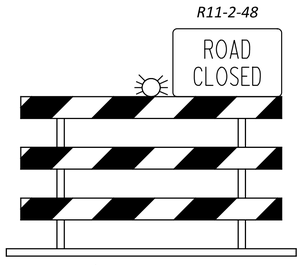

10' TYPE 3 BARRICADE
(PLACED ACROSS ENTIRE RAMP)

(4)

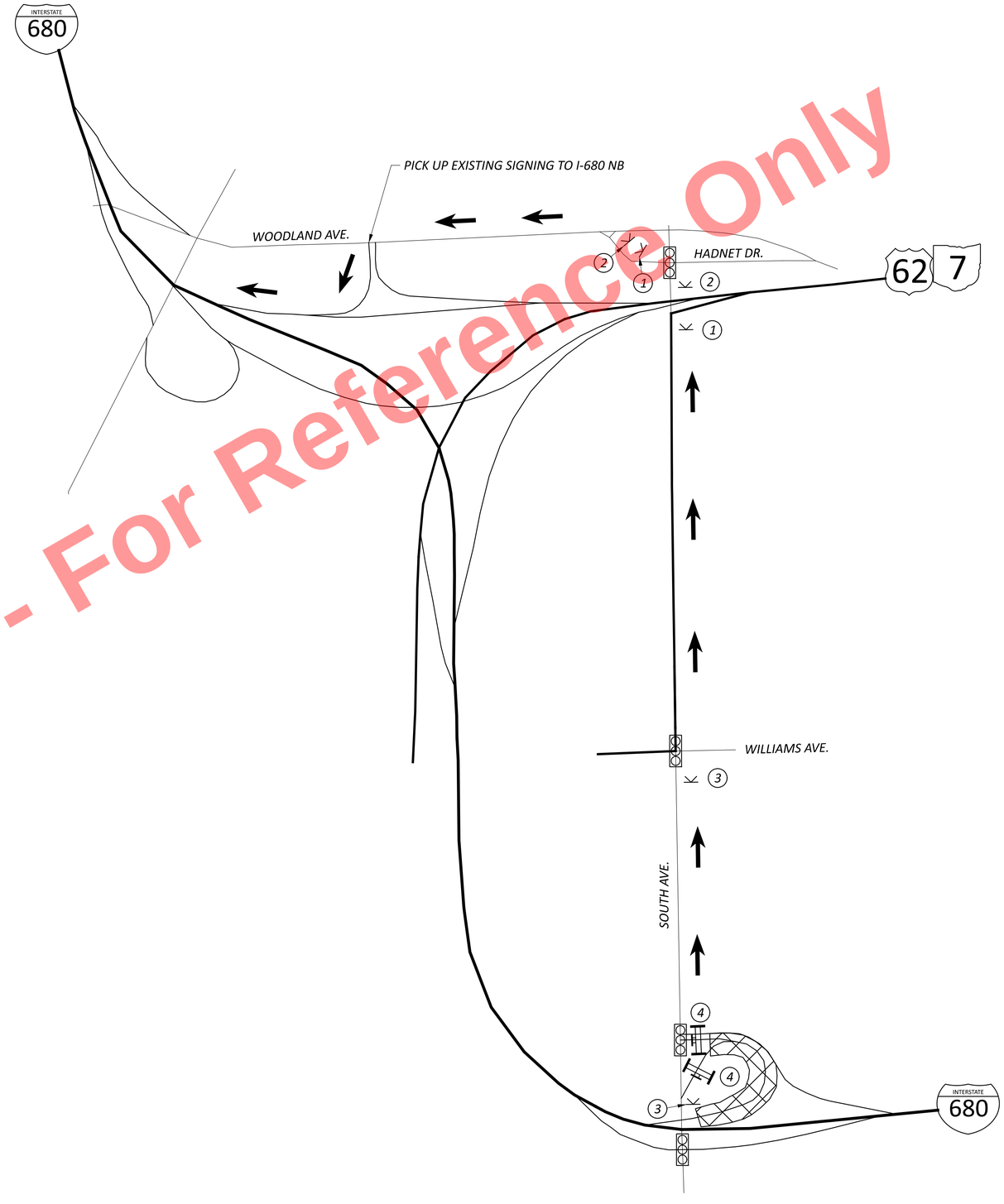

Preliminary Plans - For Reference Only

MAINTENANCE OF TRAFFIC - DETOUR PLAN
PHASE 2A - SOUTH AVE. RAMP TO I-680 NB

DESIGN AGENCY
ms consultants, inc.

DESIGNER
KJF

REVIEWER
KWR 08/29/24

PROJECT ID
121474

SHEET P.117 | TOTAL 655

MAH-680-4.58

MODEL: Sheet PAPERSIZE: 34x22 (in.) DATE: 9/15/2025 TIME: 1:59:38 PM PLTDRV: OHDOT_PDF_E+.pltcfg PENTBL: OHDOT_Pen.tbl USER: DHall@msconsultants.com WORKSPACE: OHDOTEv02 WORKSET: 121474 PRODUCT: OpenRoadsDesigner 24.00.00.205
pw:\\ohiodot-pw.bentley.com:ohiodot-pw-02\Documents\01 Active Projects\District 04\Mahoning\121474\402-Engineering_MSConsultants\MOT\Sheets\121474_MD202.dgn

LEGEND

- SIGNALIZED INTERSECTION
- DETOUR DIRECTIONAL ARROW
- K — WORK ZONE SIGN W/ SUPPORT
- WORK ZONE
- TYPE 3 BARRICADES W/ SIGN



M4-8-24
M3-1-24
M1-1-24-3
M6-3-21
(1)

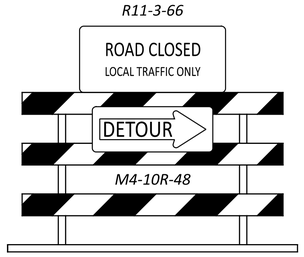

10' TYPE 3 BARRICADE
(PLACED ON SHOULDER)
(2)

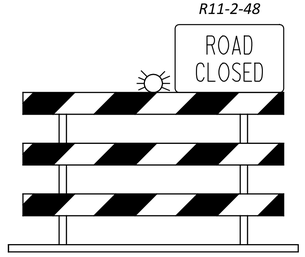

10' TYPE 3 BARRICADE
(PLACED ACROSS ENTIRE RAMP)
(3)

Preliminary Plans - For Reference Only

MAINTENANCE OF TRAFFIC - DETOUR PLAN
PHASE 2A - POWERSDALE AVE. RAMP TO I-680 NB

DESIGN AGENCY
ms consultants, inc.

DESIGNER
KJF

REVIEWER
KWR 01/02/25

PROJECT ID
121474

SHEET P.118 | TOTAL 655

MAH-680-4.58

MODEL: Sheet PAPERSIZE: 34x22 (in.) DATE: 9/15/2025 TIME: 1:59:43 PM PLTDRV: OHDOT_PDF_Ex.pltcfg PENTBL: OHDOT_Pen.tbl USER: DHall@msconsultants.com WORKSPACE: OHDOTCEv02 WORKSET: 121474 PRODUCT: OpenRoadsDesigner 24.00.00.205
pw:\\ohiodot-pw.bentley.com:ohiodot-pw-02\Documents\01 Active Projects\District 04\Mahoning\121474\402 Engineering_MSConsultants\MOT\Sheets\121474_MD207.dgn

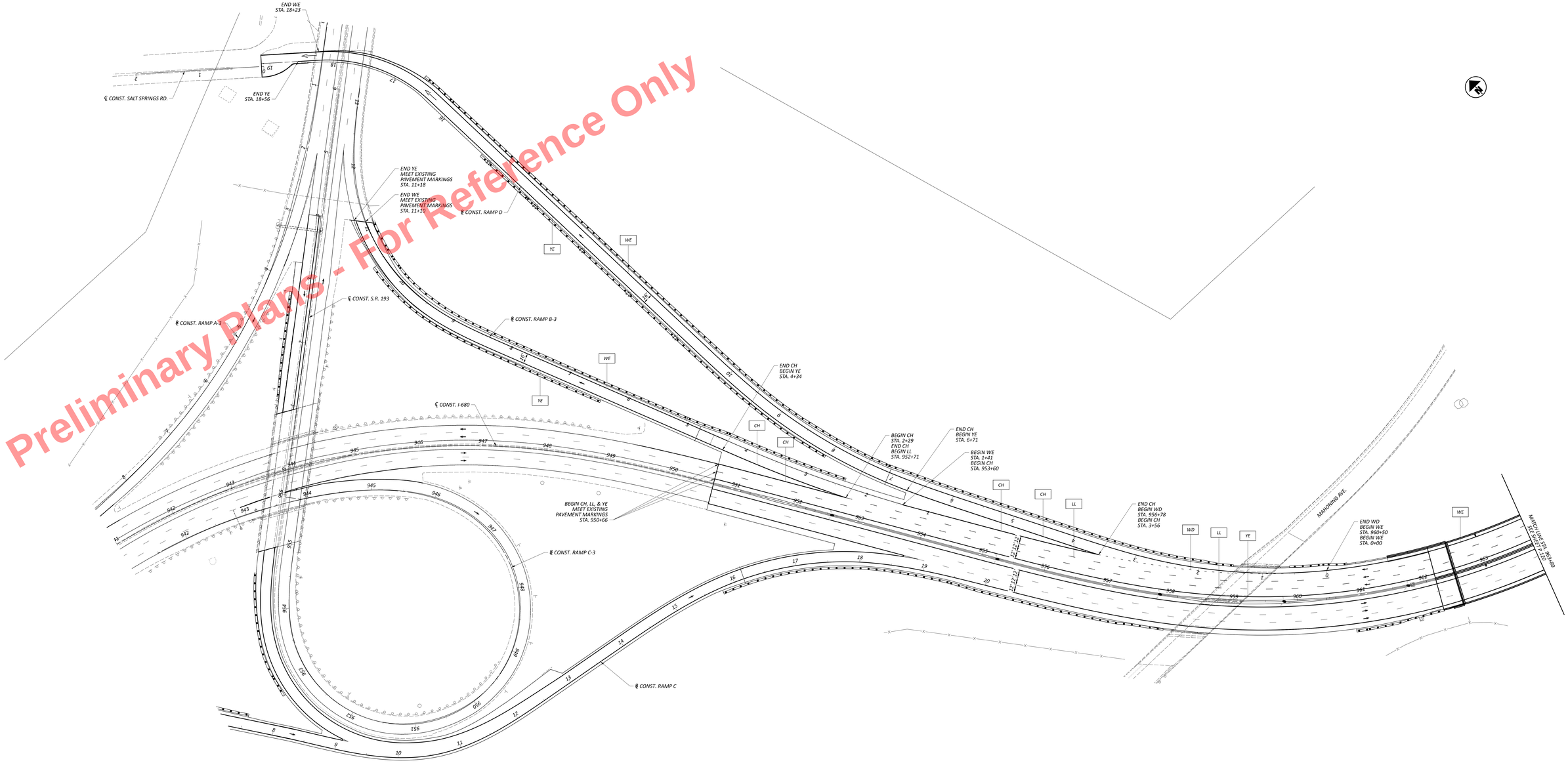

Preliminary Plans - For Reference Only

NOTES:

1. FOR MOT LEGEND AND DRUM SPACING CHART, SEE SHEET P.88.

2. FOR ADDITIONAL EXISTING AND PROPOSED PERMANENT SIGN LOCATIONS, SEE SIGNING AND MARKING PLANS.

HORIZONTAL SCALE IN FEET
0 20 40 80

MAINTENANCE OF TRAFFIC - PHASE 2A STEP 1
PAVEMENT MARKING RESTORATION
I-680 STA. 941+00 TO STA. 963+80

DESIGN AGENCY
ms consultants, inc.

DESIGNED KJF
REVIEWED KWR 06/02/25
PROJECT ID 121474
SHEET P.119 TOTAL 655

MAH-680-4.58

MODEL: MOT Phase 2A Step 1 - 121474_2A_1 PAPERSIZE: 66x44 (in.) DATE: 10/2/2025 TIME: 1:59:53 PM USERNAME: CHADWICK, JOSH PW_F:\dwg_FINISHED_CHADWICK_JOSH.rsb DGN: Default@msconsultants.com WORKSPACE: CHADWICK_JOSH WORKSET: 121474 PRODUCT: OpenRoadsDesigner 24.00.00.205

Preliminary Plans - For Reference Only

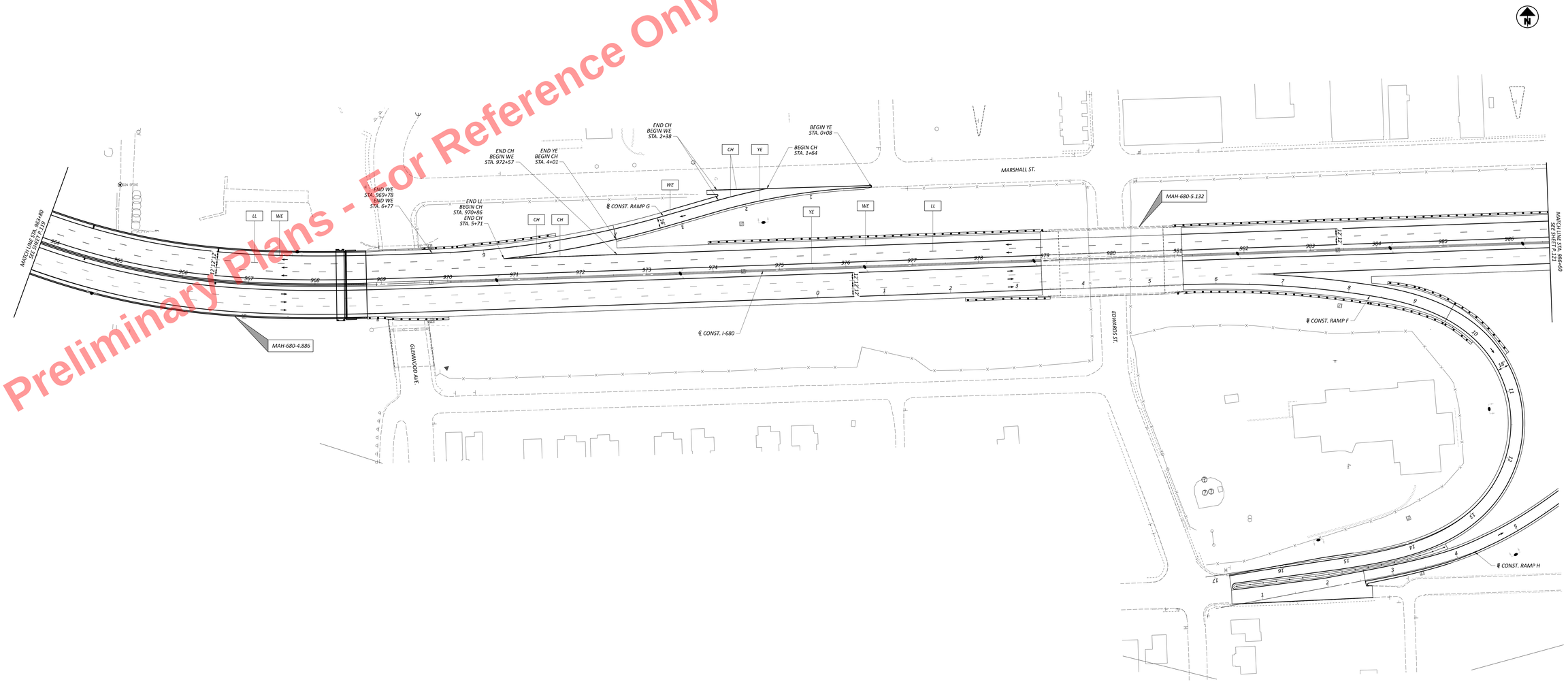

NOTES:

1. FOR MOT LEGEND AND DRUM SPACING CHART, SEE SHEET P.88.

2. FOR ADDITIONAL EXISTING AND PROPOSED PERMANENT SIGN LOCATIONS, SEE SIGNING AND MARKING PLANS.

HORIZONTAL SCALE IN FEET
0 20 40 80

MAINTENANCE OF TRAFFIC - PHASE 2A STEP 1
PAVEMENT MARKING RESTORATION
I-680 STA. 963+80 TO STA. 986+60

DESIGN AGENCY
ms consultants, inc.

DESIGNER
KJF

REVIEWER
KWR 06/02/25

PROJECT ID
121474

SHEET P.120 TOTAL 655

MAH-680-4.58

MODEL: MOT Phase 2A Step 1 - 121474_2A_2_PAVEMENT 66x44.dgn | DATE: 9/15/2025 TIME: 2:00:11 PM PLOTDRV: OHDOT_PDF_E-sheet.pltcfg PENTBL: OHDOT_LITPen.tbl USER: DHall@msconsultants.com WORKSPACE: OHDOTEV02 WORKSET: 121474 PRODUCT: OpenRoadsDesigner 24.00.00.205
pw:\\ohdot-pw.bentley.com:ohdot-pw-02\Documents\01 Active Projects\District 04\MAH-680-4.58\121474\02 Engineering\MOT\Sheets\121474_MP002.dgn



Preliminary Plans - For Reference Only

NOTES:

1. FOR MOT LEGEND AND DRUM SPACING CHART, SEE SHEET P.88.

2. FOR ADDITIONAL EXISTING AND PROPOSED PERMANENT SIGN LOCATIONS, SEE SIGNING AND MARKING PLANS.

HORIZONTAL SCALE IN FEET
0 20 40 80

MAINTENANCE OF TRAFFIC - PHASE 2A STEP 1
PAVEMENT MARKING RESTORATION
I-680 STA. 986+60 TO STA. 1009+40

DESIGN AGENCY
mc consultants, inc.

DESIGNER
KJF

REVIEWER
KWR 06/02/25

PROJECT ID
121474

SHEET P.121 TOTAL 655

MAH-680-4.58

MODEL: MOT Phase 2A Step 1 - 121474_2A_3 PAPERSIZE: 6x4x4 (in.) DATE: 6/15/2025 TIME: 2:00:22 PM PLTDRV: OHDOT_PDF_E.pltcfg PLTSTB: OHDOT_LTPlan.tbl USER: DHall@mcconsultants.com WORKSPACE: OHDOTEv02 WORKSET: 121474 PRODUCT: OpenRoadsDesigner 24.00.00.205
pw:\\ohdot-pw.bentley.com:ohdot-pw-02\Documents\01 Active Projects\District 04\Marshall\121474\02 Engineering\MSC\Consultants\MOT\Sheets\121474_MP001.dgn

Preliminary Plans - For Reference Only



NOTES:

1. FOR MOT LEGEND AND DRUM SPACING CHART, SEE SHEET P.88.

2. FOR ADDITIONAL EXISTING AND PROPOSED PERMANENT SIGN LOCATIONS, SEE SIGNING AND MARKING PLANS.

HORIZONTAL SCALE IN FEET
0 20 40 80

MAINTENANCE OF TRAFFIC - PHASE 2A STEP 1
PAVEMENT MARKING RESTORATION
I-680 STA. 1009+40 TO STA. 1032+20

DESIGN AGENCY
TYLIN
TY LIN
ms consultants, inc.

DESIGNER: KJF
REVIEWER: KWR 06/02/25
PROJECT #: 121474
SHEET: P.122
TOTAL: 655

MAH-680-4.58

MODEL: MOT Phase 2A Step 1 - 121474_2A_4 PAPERSIZE: 66x44 (in.) DATE: 10/22/2025 TIME: 2:00:13 PM PLOTBY: CHRISTOPHER J. FLORES (cflores@msconsultants.com) WORKSPACE: C:\MOT\Phase 2A\ WORKSET: 121474 PRODUCT: OpenRoadDesigner 24.00.00.205
PLOTSCALE: 1.0000 '/ 1.0000 Units FILE: C:\MOT\Phase 2A\Step 1\121474_2A_4.dgn

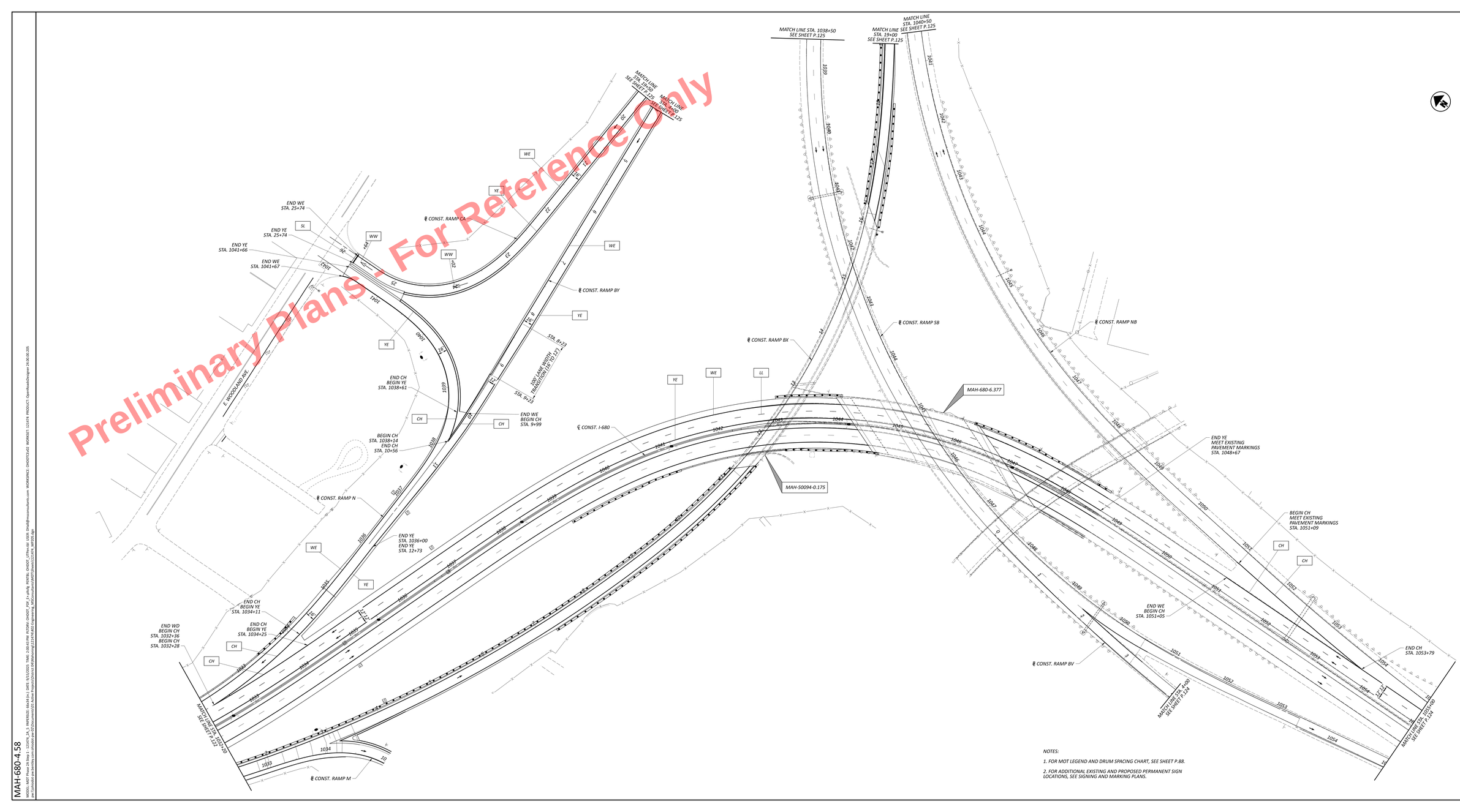

Preliminary Plans - For Reference Only

HORIZONTAL SCALE IN FEET
0 20 40 80

MAINTENANCE OF TRAFFIC - PHASE 2A STEP 1
PAVEMENT MARKING RESTORATION
I-680 STA. 1032+20 TO STA. 1055+00

DESIGN AGENCY
ms consultants, inc.

DESIGNER: KJF
REVISED BY: KWR 06/02/25
PROJECT ID: 121474
SHEET: P.123 TOTAL: 655

MAH-680-4.58

MODEL: MOT Phase 2A Step 1 - 121474_2A_S1 PAPERSIZE: 66x44 (in.) DATE: 10/1/2025 TIME: 2:08:43 PM XYZ/DEV: ON/OFF: ON PSF_F1.shstg PSF/TBL: ON/OFF: OFF/Default.tbl PLOTSCALE: 1.0000 USER: Khalid@msconsultants.com WORKSPACE: ON/OFF/D:\43 Projects\121474\Design\Roadway\MOT\Phase 2A\ WORKSET: 121474 PRODUCT: CivilRoadDesigner 24.00.00.205

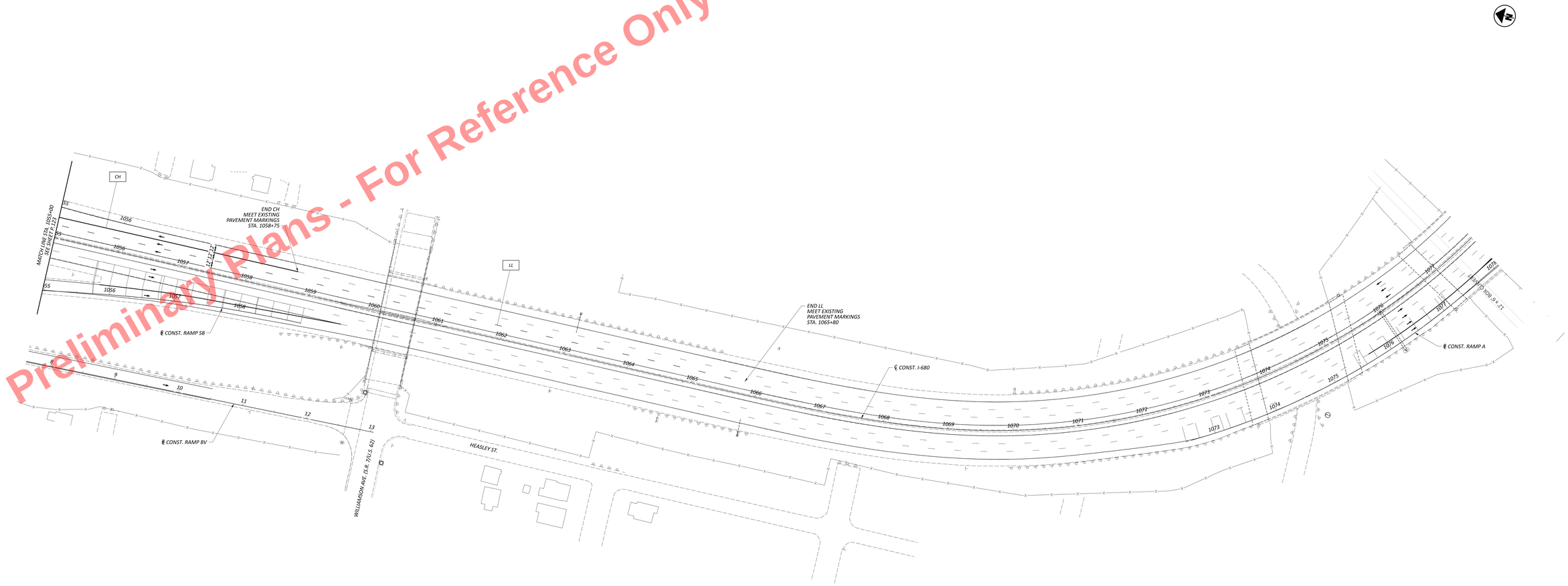
CH
LL
MATCH LINE STA. 1055+00
SEE SHEET P.123
END CH
MEET EXISTING
PAVEMENT MARKINGS
STA. 1058+75
END LL
MEET EXISTING
PAVEMENT MARKINGS
STA. 1065+80
℄ CONST. RAMP SB
℄ CONST. RAMP BV
℄ CONST. I-680
℄ CONST. RAMP A
HEASLEY ST.
WILLIAMSON AVE. (S.R. 71/U.S. 62)
22'-12'-22'
12" SOLID YLW
12" SOLID WHT
4" SOLID WHT
4" SKIP WHT
4" SOLID YLW
4" SKIP YLW
12" SOLID WHT
12" SOLID YLW

Preliminary Plans - For Reference Only

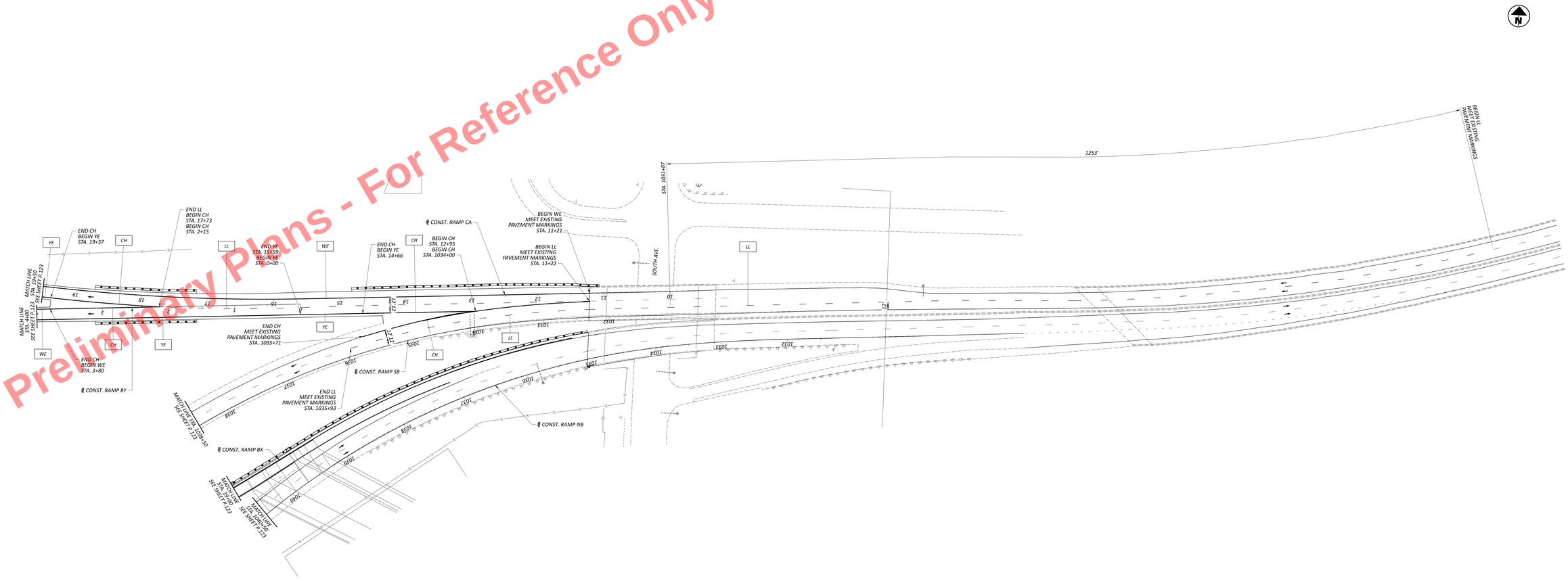

NOTES:

1. FOR MOT LEGEND AND DRUM SPACING CHART, SEE SHEET P.88.

2. FOR ADDITIONAL EXISTING AND PROPOSED PERMANENT SIGN LOCATIONS, SEE SIGNING AND MARKING PLANS.

HORIZONTAL SCALE IN FEET
0 20 40 80

MAINTENANCE OF TRAFFIC - PHASE 2A STEP 1
PAVEMENT MARKING RESTORATION
U.S. 62/S.R. 7 BEGIN WORK TO RAMP BY STA. 4+00

DESIGN AGENCY
mk consultants, inc.

DESIGNER KJF
REVIEWER KWR 06/02/25
PROJECT ID 121474
SHEET P.125 TOTAL 655

MAH-680-4.58

MODEL: MOT Phase 2A Step 1 - 121474_SHEET_PAPERSIZE: 66x34.4 in | DATE: 9/15/2025 TIME: 2:55:03 PM |XYDIM | DWGREF_PDF_1 = dfHdr |PENTBL: DWGREF_CTB=Std_USER: Dhall@maxxonsultants.com WORKSPACE: DWGREFTEXT: WORKSET: 121474 PRODUCT: OpenRoadsDesigner 24.00.00.205
ALL RIGHTS RESERVED. COPYRIGHT © 2025 MK CONSULTANTS, INC. ALL RIGHTS RESERVED. THIS DRAWING IS THE PROPERTY OF MK CONSULTANTS, INC. AND IS NOT TO BE REPRODUCED, COPIED, OR USED IN ANY WAY WITHOUT THE EXPRESS WRITTEN PERMISSION OF MK CONSULTANTS, INC.

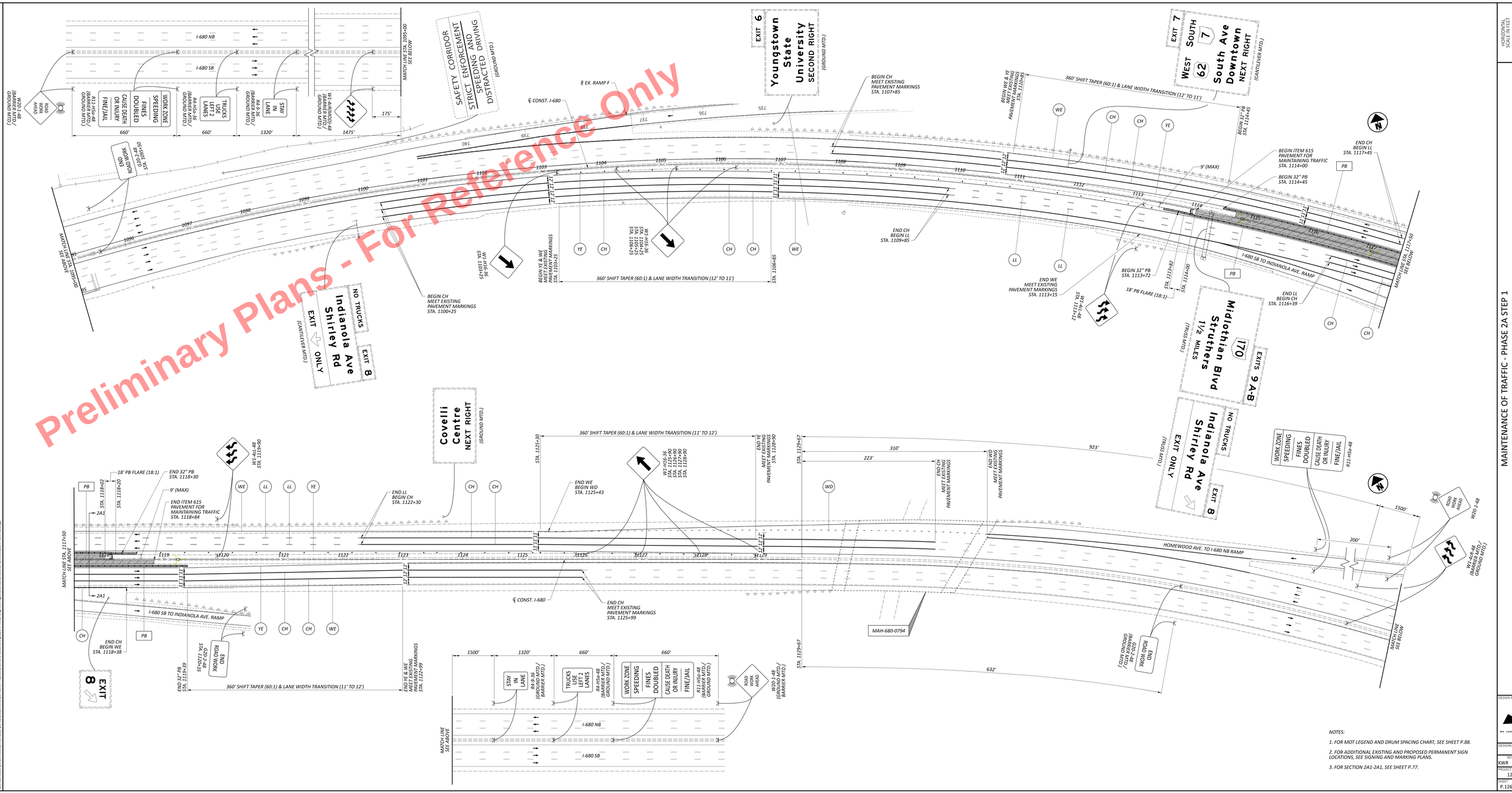

NOTES:

1. FOR MOT LEGEND AND DRUM SPACING CHART, SEE SHEET P.88.
2. FOR ADDITIONAL EXISTING AND PROPOSED PERMANENT SIGN LOCATIONS, SEE SIGNING AND MARKING PLANS.
3. FOR SECTION 2A1-2A1, SEE SHEET P.77.

MAINTENANCE OF TRAFFIC - PHASE 2A STEP 1
MEDIAN CROSSOVER CONSTRUCTION
I-680 STA. 1095+00 TO END WORK

HORIZONTAL SCALE IN FEET
0 20 40 80

DESIGN AGENCY
mo consultants, inc.
DESIGNER KJF
REVIEWER KWR 06/02/25
PROJECT ID 121474
SHEET P.126 TOTAL 655

MAH-680-4.58

MODEL: 121474_MPDW_PAPERSIZE: 48x24 in | DATE: 8/15/2025 TIME: 2:35:15 PM | USER: GWOFF_PW | PWPEN: GWOFF_CTPlot.ctb | USER: DistillerHeadless | WORKSPACE: GWOFF.DGN | WORKSET: 121474 PRODUCT: OpenRoadDesigner 24.00.00.295
ACCEPTANCE OF THESE PLANS CONSTITUTES AGREEMENT WITH THE FOLLOWING: THESE PLANS ARE THE PROPERTY OF THE OHIO DEPARTMENT OF TRANSPORTATION AND ARE NOT TO BE USED FOR ANY PURPOSE OTHER THAN THE CONSTRUCTION OF THIS PROJECT.

MAH-680-4.58

MODEL: 121474_MPOS0_PAVEMENT_MARKING_PLAN.dgn | DATE: 9/25/2025 TIME: 2:55:27 PM | USER: GWOOT_PW | PLOTTED: GWOOT_PW | PLOTTER: GWOOT_CPrint.tbl | SCALE: Shall Plot to Scale | WORKSPACE: D:\DOT\CAD\ | WORKSET: 121474 | PRODUCT: OpenRoadDesigner 24.00.00.205

NOTES:

1. FOR MOT LEGEND AND DRUM SPACING CHART, SEE SHEET P.88.

2. FOR ADDITIONAL EXISTING AND PROPOSED PERMANENT SIGN LOCATIONS, SEE SIGNING AND MARKING PLANS

HORIZONTAL SCALE IN FEET
0 20 40 80

MAINTENANCE OF TRAFFIC - PHASE 2A STEP 2
I-680 NORTHBOUND CONSTRUCTION
I-680 STA. 1011+00 TO STA. 1033+50

DESIGN AGENCY
mb consultants, inc.

DESIGNER: KJF
REVIEWER: KWR 06/02/25
PROJECT ID: 121474
SHEET: P.127 TOTAL: 655

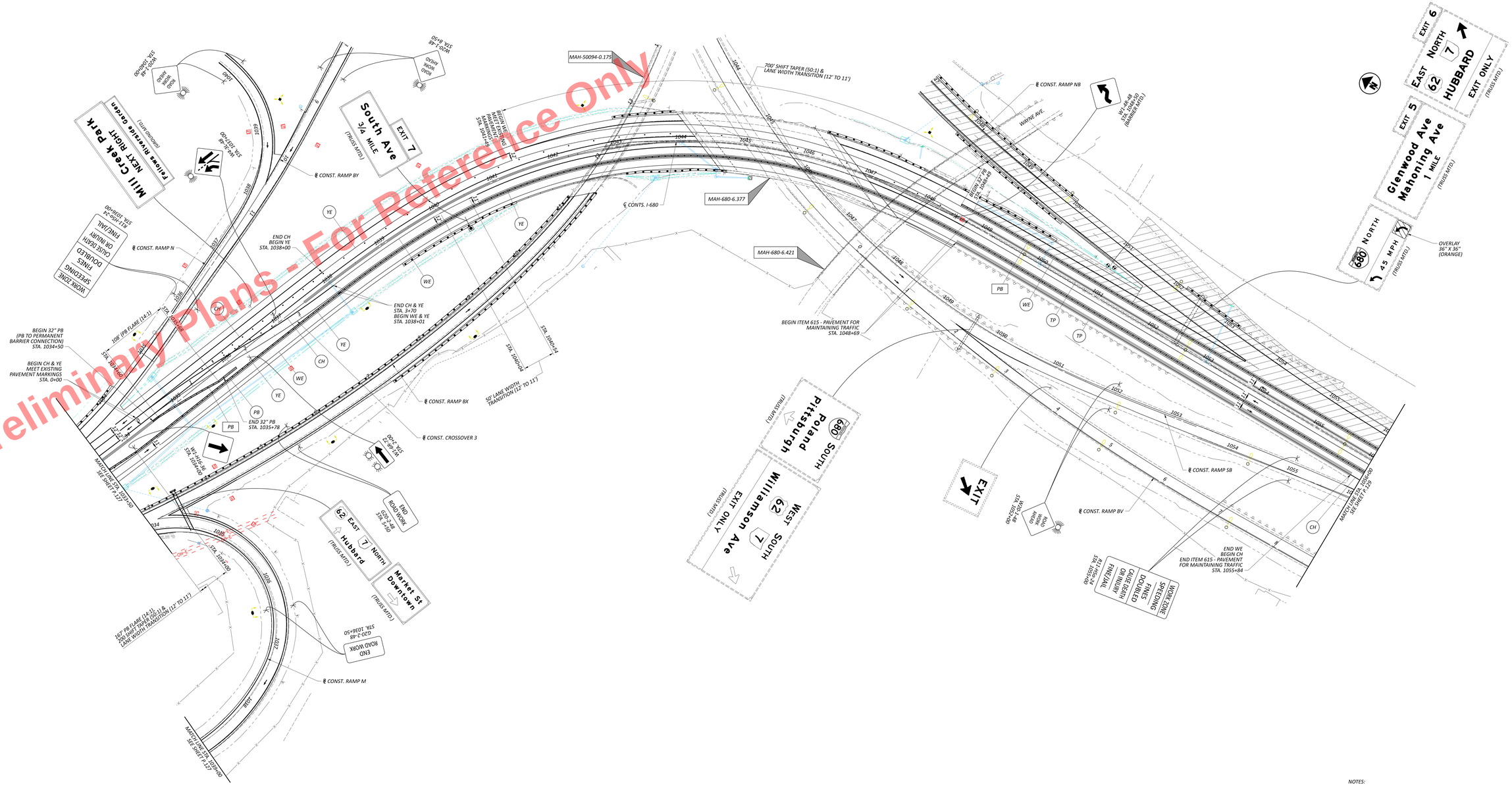

NOTES:

1. FOR MOT LEGEND AND DRUM SPACING CHART, SEE SHEET P.88.

2. FOR ADDITIONAL EXISTING AND PROPOSED PERMANENT SIGN LOCATIONS, SEE SIGNING AND MARKING PLANS.

HORIZONTAL SCALE IN FEET
0 20 40 80

MAINTENANCE OF TRAFFIC - PHASE 2A STEP 2
I-680 NORTHBOUND CONSTRUCTION
I-680 STA. 1033+50 TO STA. 1056+00

DESIGN AGENCY
mk consultants, inc.
DESIGNER KJF
REVIEWER KWR 06/02/25
PROJECT ID 121474
SHEET P.128 TOTAL 655

MAH-680-4.58

MODEL: 121474_MPOSD PAPERSIZE: 48x24 (in.) DATE: 6/25/2025 TIME: 2:35:44 PM USER: DWOOT PW: # plotSig PENTBL: DWOOT_CTPstyle.ctb DrawingName:path.dwg WORKSPACE: DWOOTCIVIL3D WORKSET: 121474 PRODUCT: OpenRoadsDesigner 24.00.00.205



Preliminary Plans - For Reference Only

NOTES:

1. FOR MOT LEGEND AND DRUM SPACING CHART, SEE SHEET P.88.
2. FOR ADDITIONAL EXISTING AND PROPOSED PERMANENT SIGN LOCATIONS, SEE SIGNING AND MARKING PLANS.

HORIZONTAL SCALE IN FEET 0 20 40 80

MAINTENANCE OF TRAFFIC - PHASE 2A STEP 2
I-680 NORTHBOUND CONSTRUCTION
I-680 STA. 1056+00 TO STA. 1078+50

DESIGN AGENCY
ms consultants, inc.

DESIGNED KJF
REVIEWED KWR 06/02/25
PROJECT ID 121474
SHEET P.129 TOTAL 655

MAH-680-4.58

MODEL: 121474_MOTDD SHEETSET: 60x24 (H) DATE: 9/15/2025 TIME: 2:35:56 PM USER: DWOFF DWG: P:\Proj\MAH\680\121474\Design\Roadway\MOT\121474_MOT.dgn

Preliminary Plans - For Reference Only

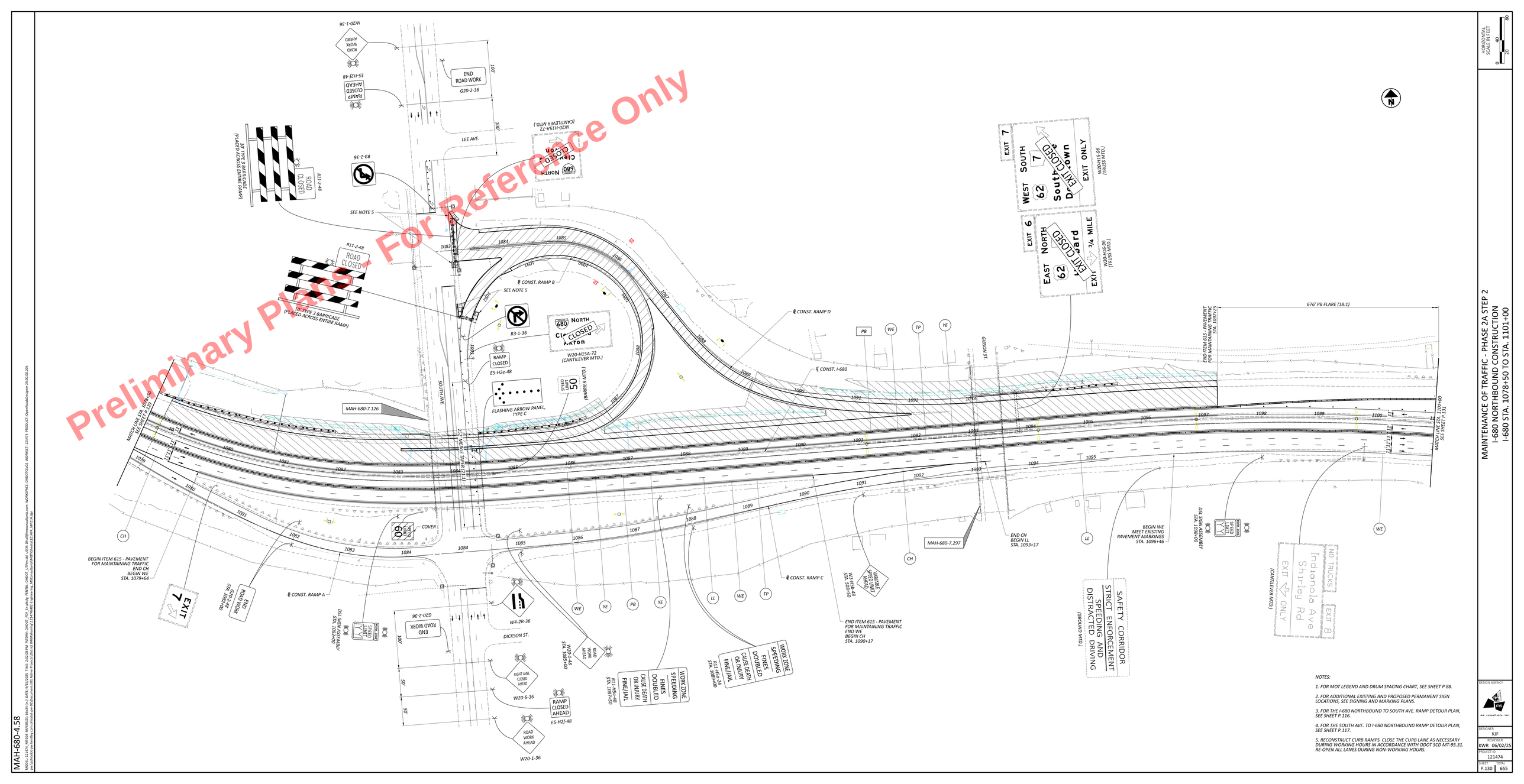

NOTES:

1. FOR MOT LEGEND AND DRUM SPACING CHART, SEE SHEET P.88.

2. FOR ADDITIONAL EXISTING AND PROPOSED PERMANENT SIGN LOCATIONS, SEE SIGNING AND MARKING PLANS.

3. FOR THE I-680 NORTHBOUND TO SOUTH AVE. RAMP DETOUR PLAN, SEE SHEET P.116.

4. FOR THE SOUTH AVE. TO I-680 NORTHBOUND RAMP DETOUR PLAN, SEE SHEET P.117.

5. RECONSTRUCT CURB RAMPS. CLOSE THE CURB LANE AS NECESSARY DURING WORKING HOURS IN ACCORDANCE WITH ODOT SCD MT-95.31. RE-OPEN ALL LANES DURING NON-WORKING HOURS.

HORIZONTAL SCALE IN FEET 0 20 40 80

MAINTENANCE OF TRAFFIC - PHASE 2A STEP 2
I-680 NORTHBOUND CONSTRUCTION
I-680 STA. 1078+50 TO STA. 1101+00

DESIGN AGENCY: mc consultants, inc.

DESIGNER: KJF

REVIEWER: KWR 06/02/25

PROJECT ID: 121474

SHEET P.130 TOTAL 655

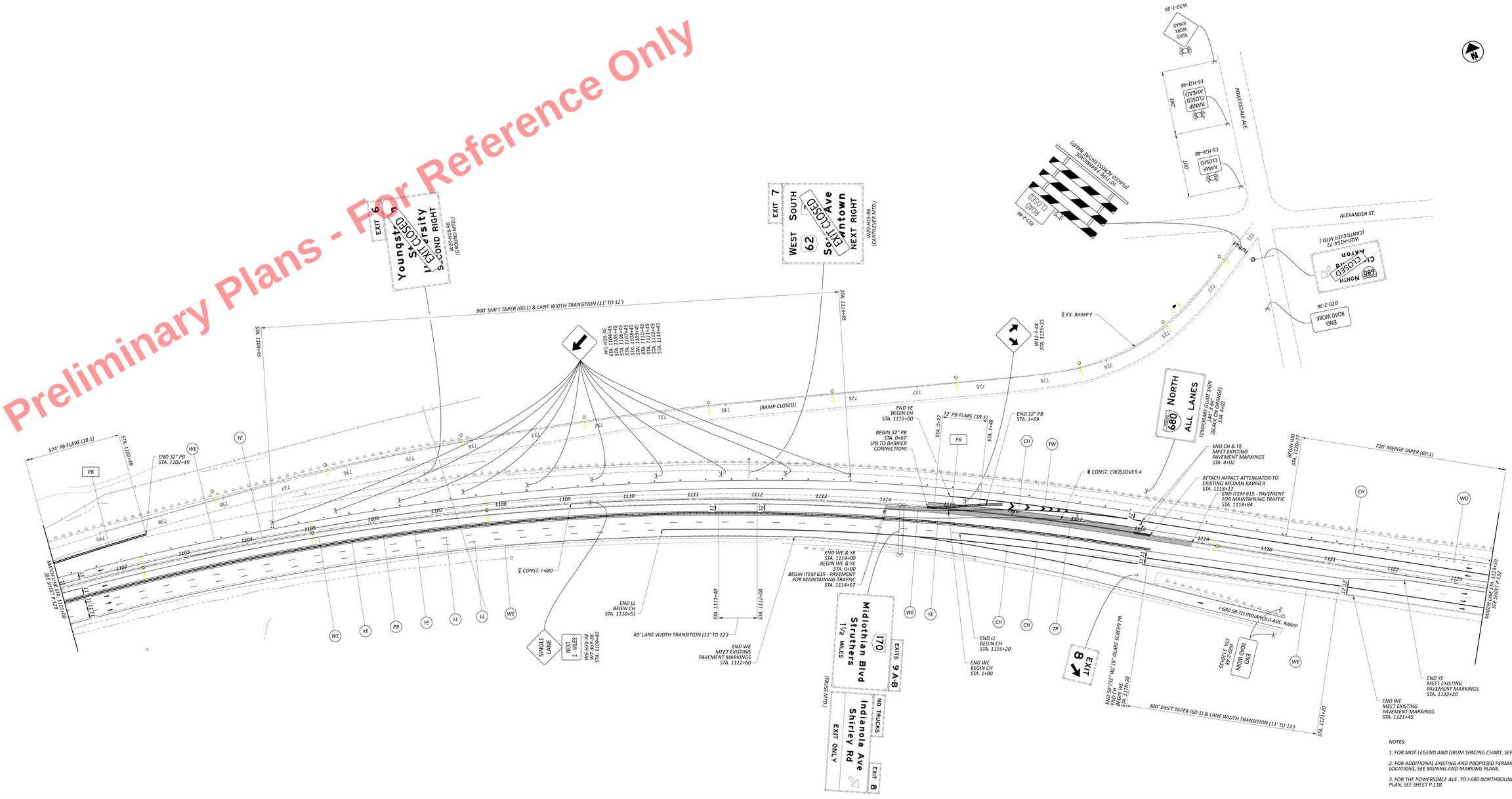

MAH-680-4.58

MODEL: 121474_MPOSS_PAVEMENT_48x24.dgn | DATE: 9/15/2025 TIME: 2:10:21 PM | USER: GWOFF | PW: P:\Proj\121474_MPOSS_PAVEMENT_48x24\Design\Roadway\Plans\121474_MPOSS_PAVEMENT_48x24_TCP_P-plan.dgn | PENTBL: GWOFF_CTPen.tbl | GBL: D:\adot\Projects\121474_MPOSS_PAVEMENT_48x24\Design\Roadway\Plans\121474_MPOSS_PAVEMENT_48x24_TCP_P-plan.dgn | WORKSPACE: CHDOTCIVIL | WORKSET: 121474 | PRODUCT: OpenRoadsDesigner 24.00.00.295

HORIZONTAL SCALE IN FEET
0 20 40 80

MAINTENANCE OF TRAFFIC - PHASE 2A STEP 2
I-680 NORTHBOUND CONSTRUCTION
I-680 STA. 1101+00 TO STA. 1123+50

DESIGN AGENCY
ms consultants, inc.
DESIGNED KJF
REVIEWED KWR 06/02/25
PROJECT ID 121474
SHEET P.131 TOTAL 655

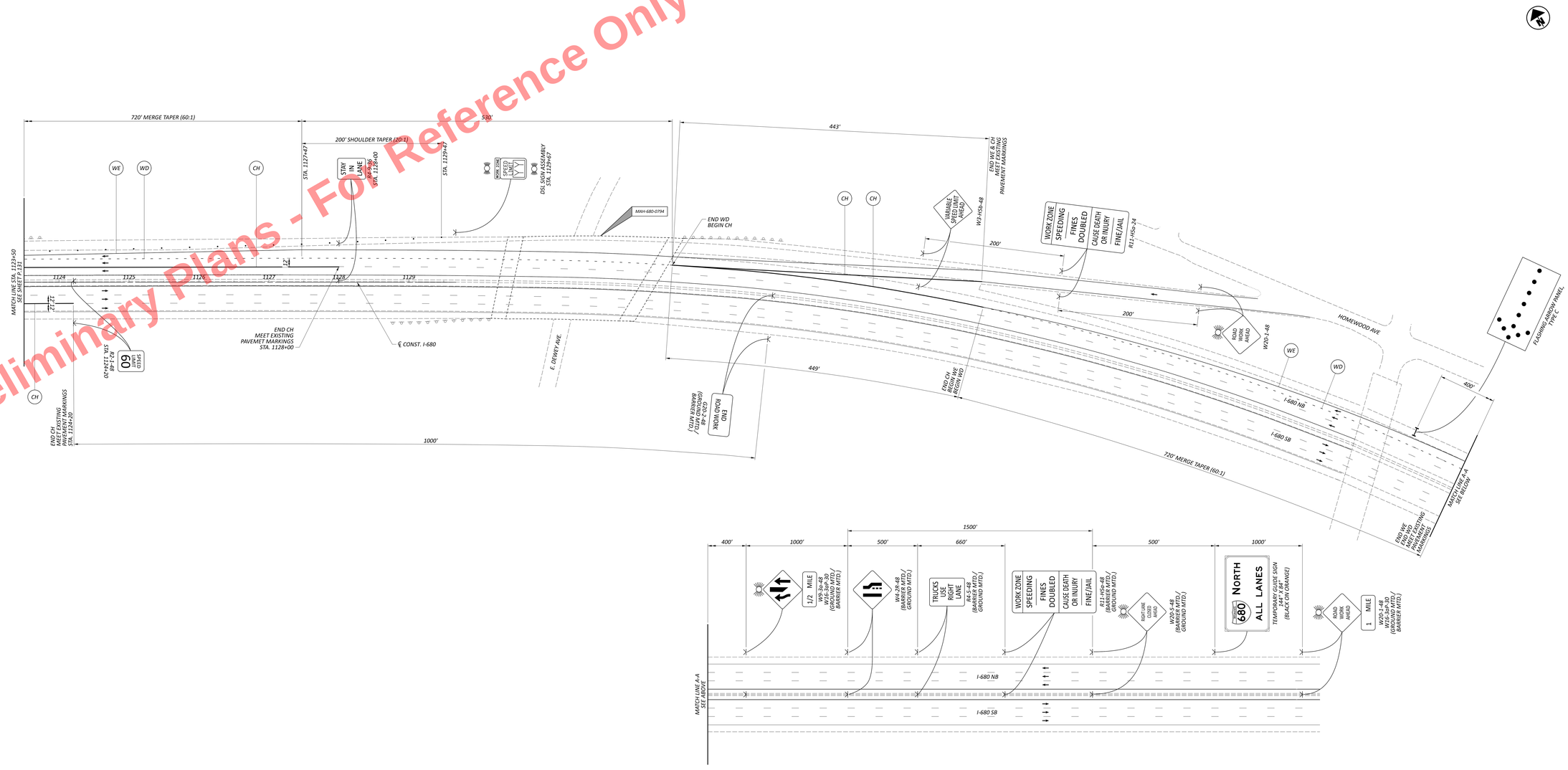

Preliminary Plans - For Reference Only

NOTES:

1. FOR MOT LEGEND AND DRUM SPACING CHART, SEE SHEET P.88.

2. FOR ADDITIONAL EXISTING AND PROPOSED PERMANENT SIGN LOCATIONS, SEE SIGNING AND MARKING PLANS.

HORIZONTAL SCALE IN FEET
0 20 40 80

MAINTENANCE OF TRAFFIC - PHASE 2A STEP 2
I-680 NORTHBOUND CONSTRUCTION
I-680 STA. 1123+50 TO END WORK

DESIGN AGENCY
mc consultants, inc.

DESIGNED KJF
REVIEWED KWR 06/02/25
PROJECT ID 121474
SHEET P.132 TOTAL 655

MAH-680-4.58

MODEL: 121474_MOTDIS_PHFIRSEE1.dgn LEVEL: 3-D DATE: 9/15/2025 TIME: 2:10:32 PM USER: DWOOT_CPH_F-alwg PENTBL: DWOOT_LTPlus.tbl IGRS: DistillPresentation.rsc WORKSPACE: DWOOTCVD WORKSET: 121474 PRODUCT: OpenRoadDesigner 24.00.00.295
ALL PLANS, MATERIAL PROPERTIES AND DRAWINGS ARE PROPRIETARY INFORMATION AND SHALL NOT BE REPRODUCED, COPIED, OR USED IN ANY MANNER WITHOUT THE EXPRESS WRITTEN PERMISSION OF THE OHIO DEPARTMENT OF TRANSPORTATION.

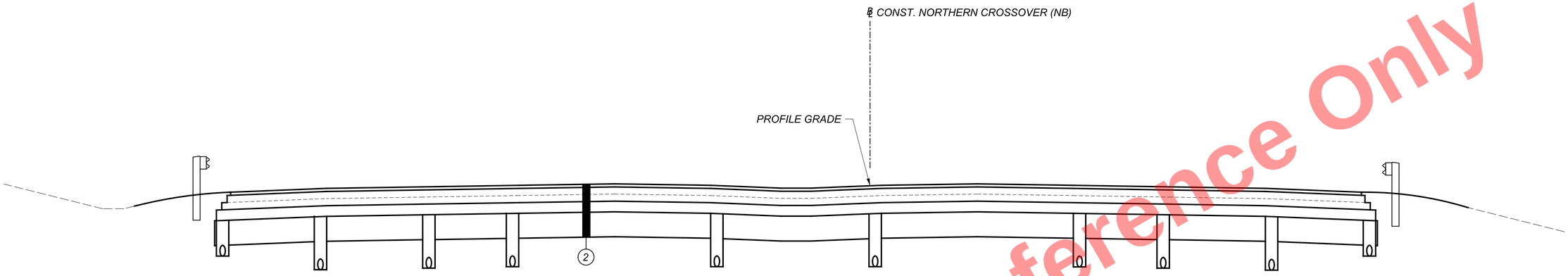

NORTHERN CROSSOVER (NB)

STA. 0+00.00 TO STA. 3+70.21

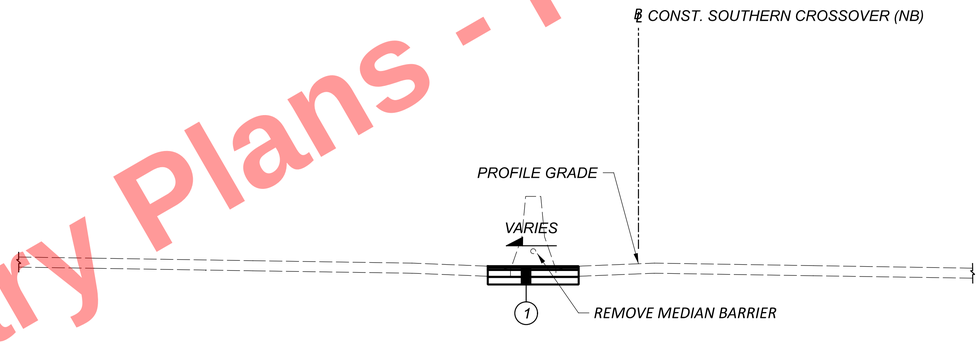

SOUTHERN CROSSOVER (NB) - WIDENING MEDIAN PAVEMENT

STA. 0+00.00 TO STA. 4+01.74

Preliminary Plans - For Reference Only

LEGEND

(1) ITEM 615 - PAVEMENT FOR MAINTAINING TRAFFIC, CLASS A

(2) PERMANEMENT PAVEMENT - SEE I.R. 680 TYPICAL SECTIONS FOR DETAILS

MAINTENANCE OF TRAFFIC TYPICAL SECTIONS - PHASE 2A
NORTHERN AND SOUTHERN CROSSOVERS (NB)

DESIGN AGENCY
ms consultants, inc.

DESIGNER GG

REVIEWER KWR 12/23/24

PROJECT ID 121474

SHEET P.133 | TOTAL 655

MAH-680-4.58

MODEL: Sheet PAPERSIZE: 34x22 (in.) DATE: 9/15/2025 TIME: 2:02:40 PM PLTDRV: OHDOT_PDF_E+.pltcfg PENTBL: OHDOT_Pen.tbl USER: DHall@msconsultants.com WORKSPACE: OHDOTCEv02 WORKSET: 121474 PRODUCT: OpenRoadsDesigner 24.00.00.205
pw:\\ohiodot-pw.bentley.com:ohiodot-pw-02\Documents\01 Active Projects\District 04\Mahoning\121474\402 Engineering_MSConsultants\MOT\Sheets\121474_MY211.dgn

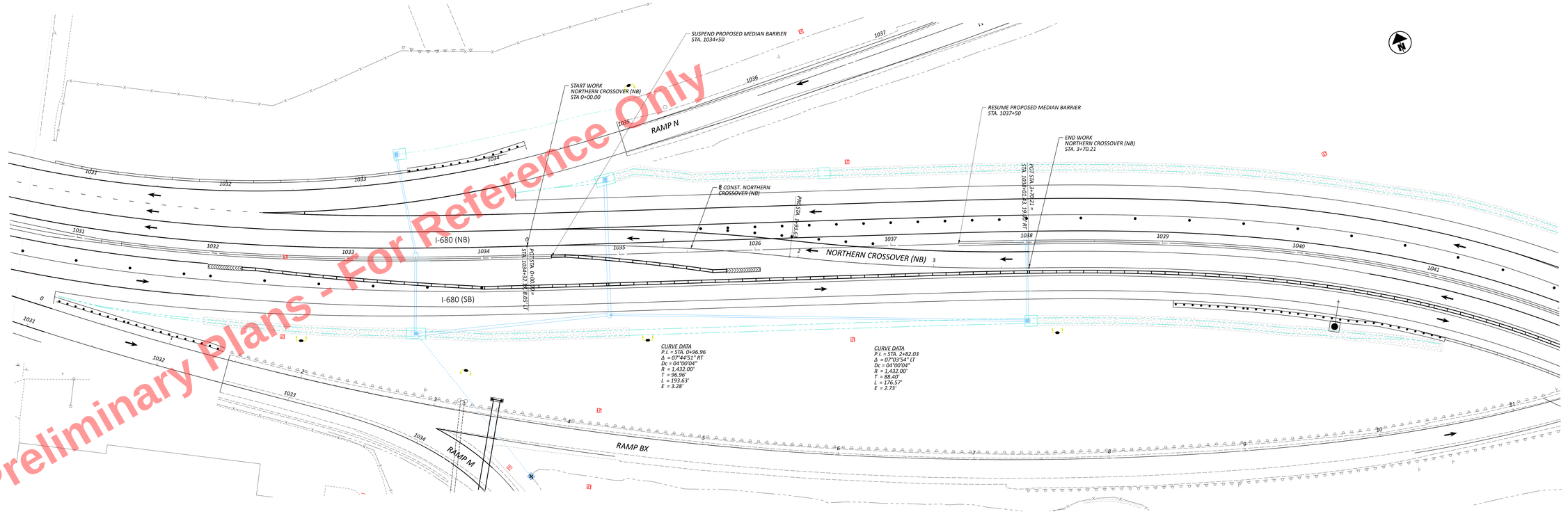

Preliminary plans - For Reference Only

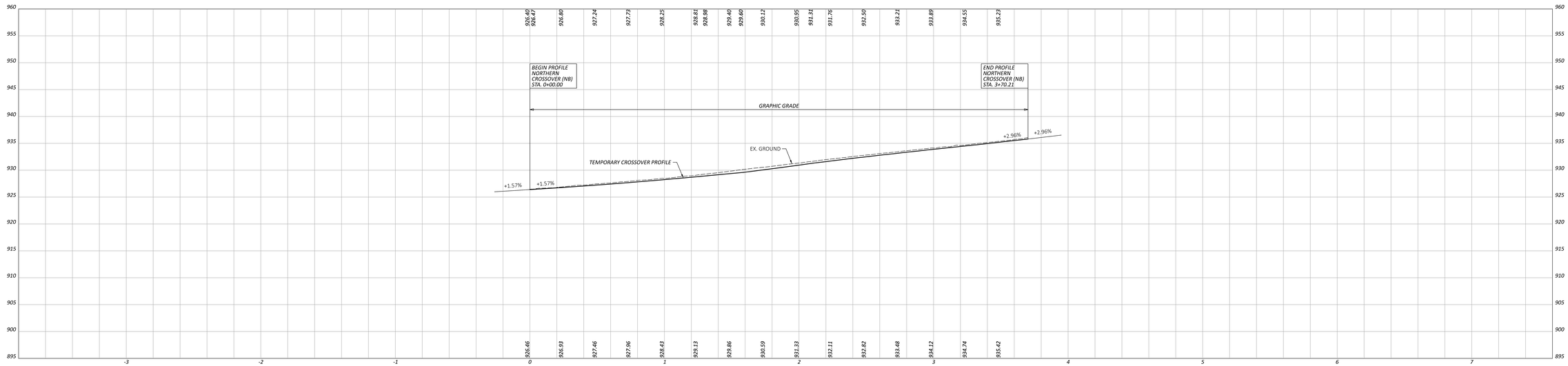

HORIZONTAL SCALE IN FEET
0 10 20 40

MAINTENANCE OF TRAFFIC - PHASE 2A
NORTHERN CROSSOVER (NB)

MAH-680-4.58

DESIGN AGENCY
mk consultants, inc.

DESIGNER: GG
REVIEWER: KWR 12/23/24
PROJECT ID: 121474
SHEET: P.134 TOTAL: 655

MODEL: 121474_SHEET2 PAYFILE: 60x34 in | DATE: 9/15/2025 TIME: 2:33:00 PM USER: GROOT_CPC_P-shelig PENTBL: GROOT_CPHA.tbl USER: DistillerServices@dc.com WORKSPACE: GROOT\CIVIL WORKSET: 121474 PRODUCT: OpenRoadsDesigner 24.00.00.205
ACTIVE FILE: C:\Users\groot\Caltrans\MAH-680-4.58 - Documents\Plans\Sheets\121474_MAH680_TCP_SHEET2.dgn

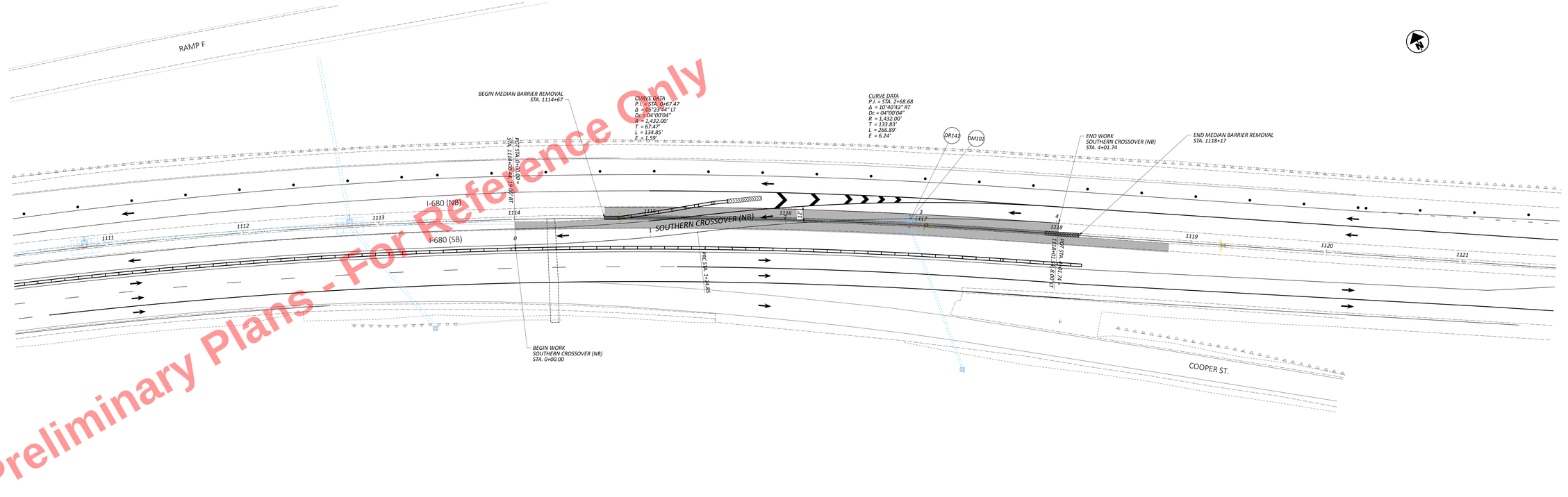

Preliminary Plans - For Reference Only

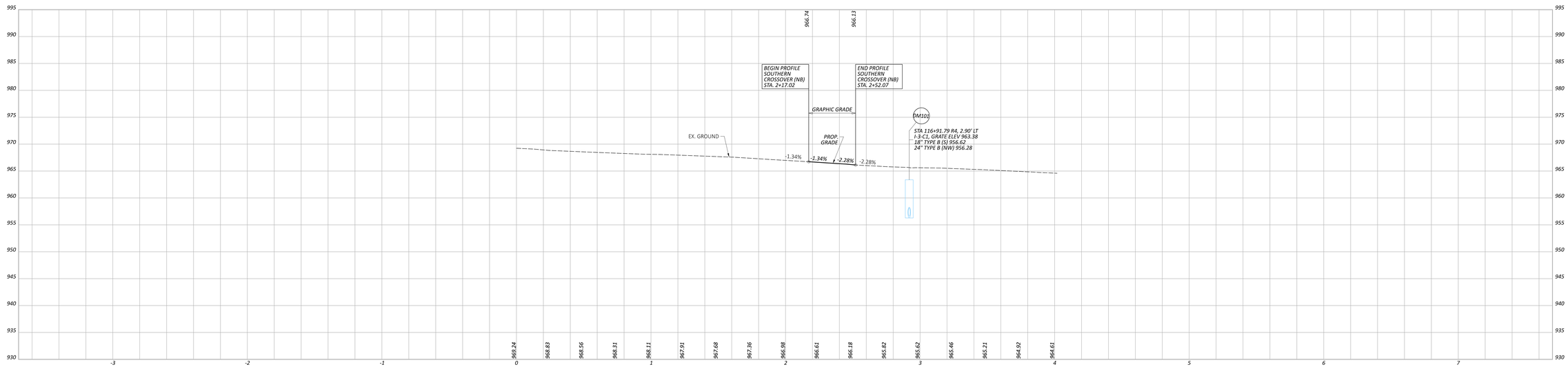

MAH-680-4.58

MODEL: 121474_SHEET2 PAYGRADE: 60x34 H:1 DATE: 9/15/2025 TIME: 2:33:17 PM XYTERN: GRADOT_CPOT_P xLabel PENTBL: GRADOT_CPlot.ctb USER: DiazJ@wsmsandcasa.com WORKSPACE: GRADOTCIVIL3 WORKSET: 121474 PRODUCT: OpenRoadsDesigner 24.00.00.205
XREFS: P:\Projects\121474_MAH-680-4.58\Design\Civil\Plan Production\Sheets\121474_MAH680_Typ Cross Sections_Sheet.dgn P:\Projects\121474_MAH-680-4.58\Design\Civil\Plan Production\Sheets\121474_MAH680_Typ Cross Sections_Sheet.dgn

HORIZONTAL
SCALE IN FEET
0 10 20 40

MAINTENANCE OF TRAFFIC - PHASE 2A
SOUTHERN CROSSOVER (NB)

DESIGN AGENCY
wsp consultants, inc.

DESIGNER	GG
REVIEWER	KWR 12/23/24
PROJECT ID	121474
SHEET	P.135
TOTAL	655

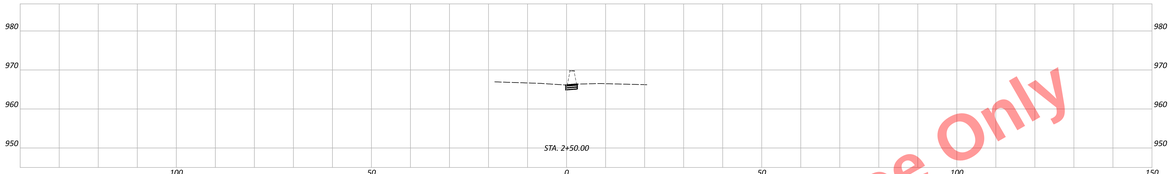

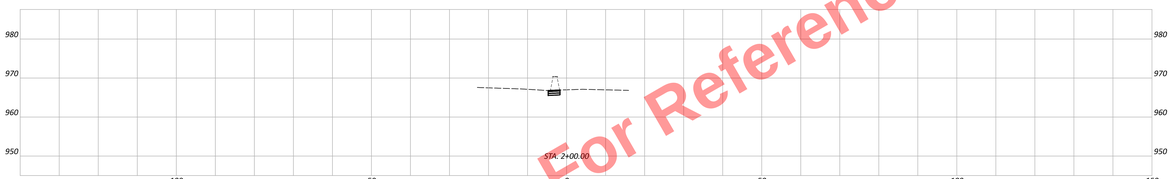

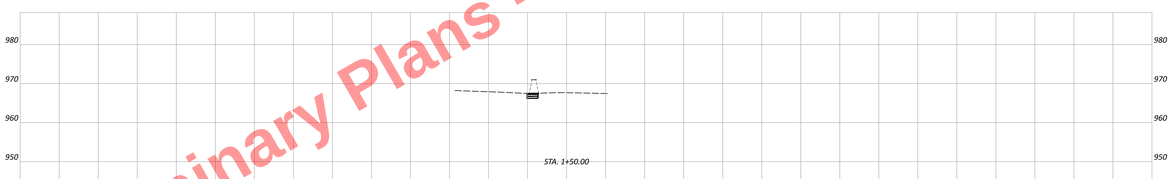

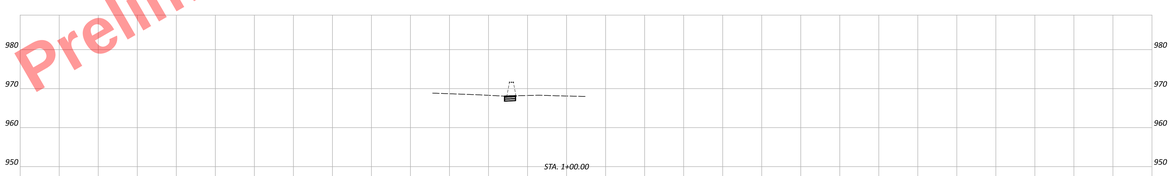

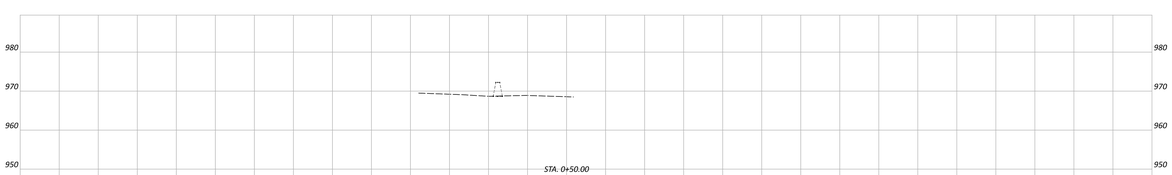

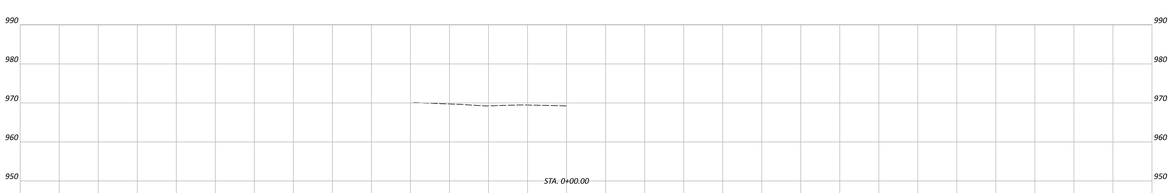

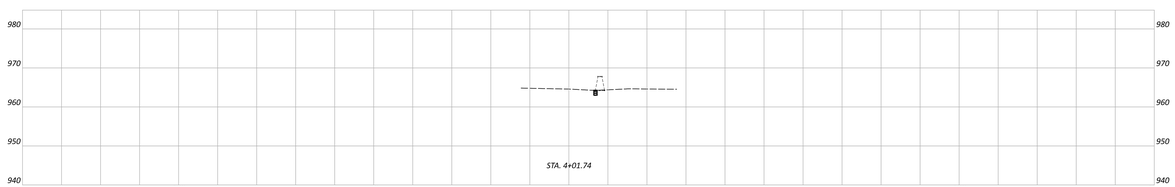

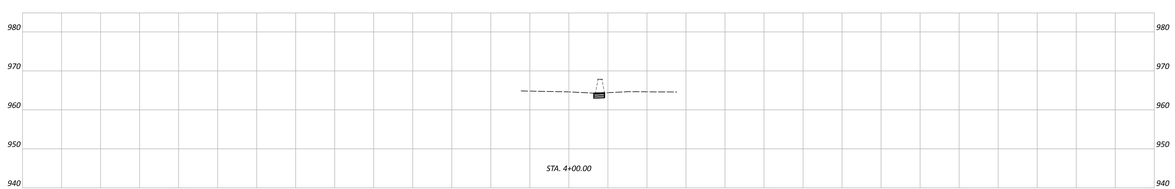

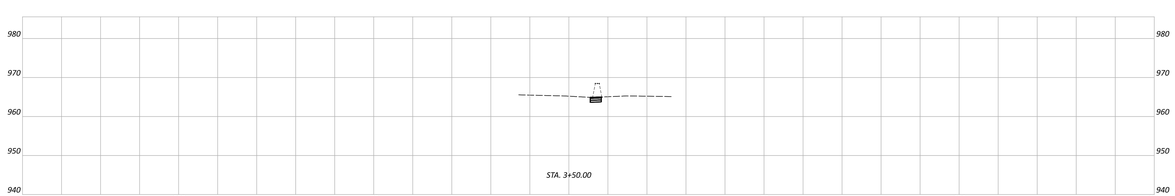

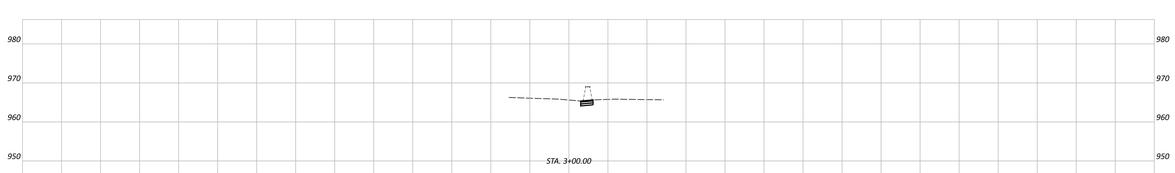

Preliminary Plans - For Reference Only

MAINTENANCE OF TRAFFIC - PHASE 2A
NORTHERN CROSSOVER (NB)

MAH-680-4.58

MODEL: 8611_South - 0+00.00 (Sheet) PAPERSIZE: 66.44 (in.) DATE: 12/27/2023 TIME: 2:33:13 PM PLTBY: DWOOT PSF: 1.ctb PLTSTYLE: DWOOT_CTPrint-SSK.ctb PLTOFFSET: 0.000,0.000 USER: DWolf@mmmarkets.com WORKSPACE: DWOOTSUS02 WORKSET: 121474 PRODUCT: OpenRoadsDesigner 24.00.00.205
FILE PATH: P:\Projects\Contract Work\Contract 121474\Roadway\Sheets\Phase 2A\Maintenance Crossover\121474-MOT-2A-NB.dgn

DESIGN AGENCY	
DESIGNER	GG
REVIEWER	KWR 12/23/24
PROJECT ID	121474

Sheet Totals				SHEET	TOTAL
Seeding	Cut	Fill		P.136	655

LEGEND

- DETOUR DIRECTIONAL ARROW
- K — WORK ZONE SIGN W/ SUPPORT
- WORK ZONE
- OVERHEAD SIGN SUPPORT
- SIGNALIZED INTERSECTION

D3-1-12 (BLACK/ORANGE)
SOUTH AVE
DETOUR
M4-H9T-48
1

D3-1-12 (BLACK/ORANGE)
SOUTH AVE
DETOUR
M4-9L-30
2

D3-1-12 (BLACK/ORANGE)
SOUTH AVE
DETOUR
M4-8-24
M6-2L-21
3

D3-1-12 (BLACK/ORANGE)
SOUTH AVE
TRUCK
DETOUR
M4-4-24 (BLACK/ORANGE)
M4-8-24
M6-2R-21
4

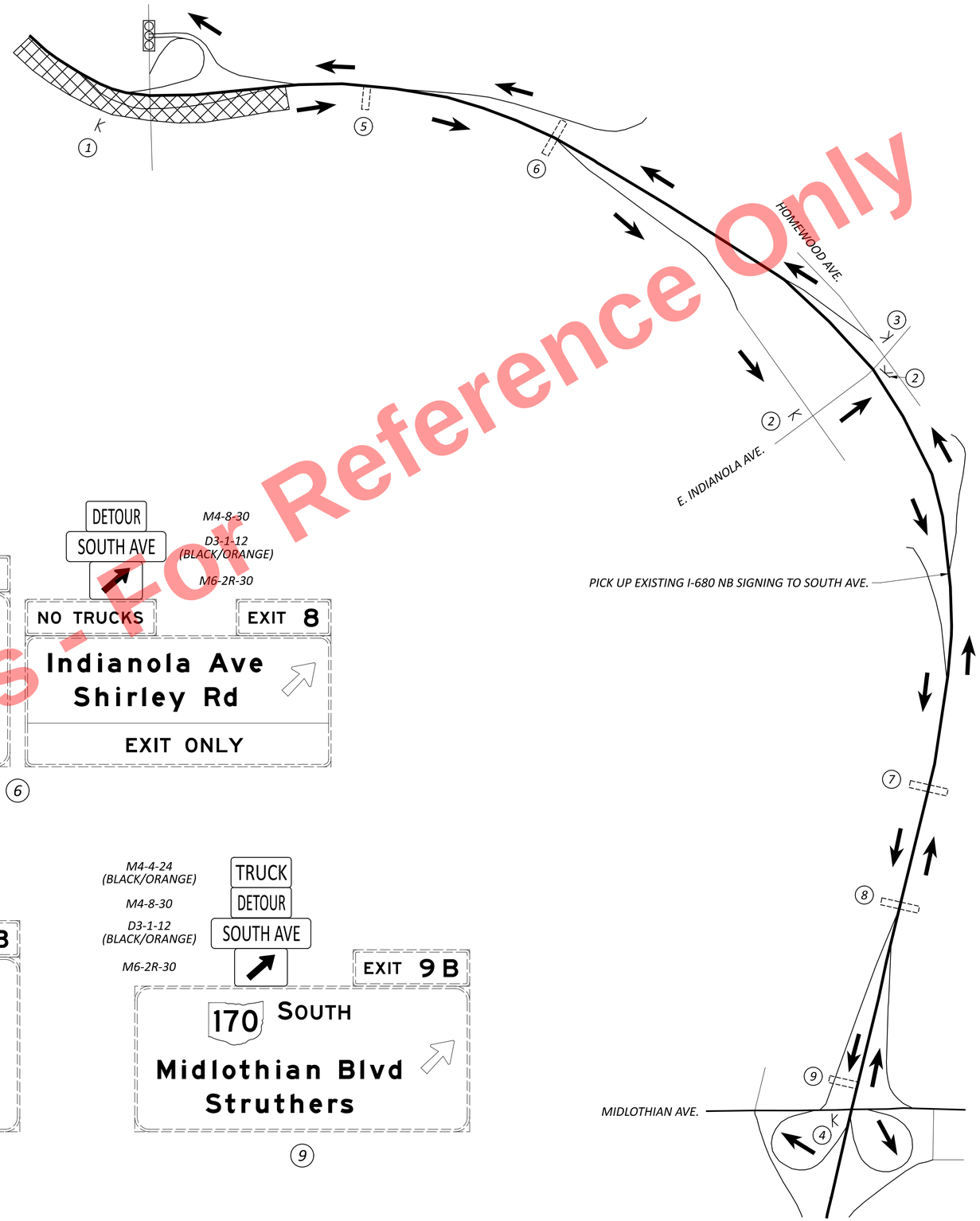

M4-8-30
D3-1-12 (BLACK/ORANGE)
DETOUR
SOUTH AVE
NO TRUCKS
EXIT 8
Indianola Ave
Shirley Rd
EXIT ONLY
5

M4-4-24 (BLACK/ORANGE)
M4-8-30
D3-1-12 (BLACK/ORANGE)
TRUCK
DETOUR
SOUTH AVE
EXITS 9 A-B
170
Midlothian Blvd
Struthers
1½ MILES
6

DETOUR
SOUTH AVE
M4-8-30
D3-1-12 (BLACK/ORANGE)
M6-2R-30
NO TRUCKS
EXIT 8
Indianola Ave
Shirley Rd
EXIT ONLY

M4-4-24 (BLACK/ORANGE)
M4-8-30
D3-1-12 (BLACK/ORANGE)
TRUCK
DETOUR
SOUTH AVE
EXIT 9 B
170 SOUTH
Midlothian Blvd
Struthers
¼ MILES
7

M4-4-24 (BLACK/ORANGE)
M4-8-30
D3-1-12 (BLACK/ORANGE)
TRUCK
DETOUR
SOUTH AVE
EXIT 9 B
170 SOUTH
Midlothian Blvd
Struthers
½ MILES
8

M4-4-24 (BLACK/ORANGE)
M4-8-30
D3-1-12 (BLACK/ORANGE)
M6-2R-30
TRUCK
DETOUR
SOUTH AVE
EXIT 9 B
170 SOUTH
Midlothian Blvd
Struthers
9

Preliminary Plans - For Reference Only

MAH-680-4.58

MAINTENANCE OF TRAFFIC - DETOUR PLAN
PHASE 2B - I-680 SB RAMP TO SOUTH AVE.

DESIGN AGENCY
ms consultants, inc.
DESIGNER KJF
REVIEWER KWR 08/29/24
PROJECT ID 121474
SHEET P.137 TOTAL 655

MODEL: Sheet PAPERSIZE: 34x22 (in.) DATE: 9/15/2025 TIME: 2:04:45 PM PLTDRV: OHDOT_PDF_E+.pltcfg PENTBL: OHDOT_UTPen.tbl USER: DHall@msconsultants.com WORKSPACE: OHDOTCEv02 WORKSET: 121474 PRODUCT: OpenRoadsDesigner 24.00.00.205
pw:\\ohiodot-pw.bentley.com:ohiodot-pw-02\Documents\01 Active Projects\District 04\Mahoning\121474\A02-Engineering_MSConsultants\MOT\Sheets\121474_MD204.dgn

LEGEND

- SIGNALIZED INTERSECTION
- DETOUR DIRECTIONAL ARROW
- K — WORK ZONE SIGN W/ SUPPORT
- WORK ZONE
- TYPE 3 BARRICADES W/ SIGN

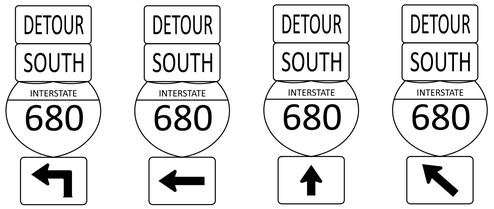

M4-8-24
M3-3-24
M1-1-24-3
M5-1L-21
(1)

M4-8-24
M3-3-24
M1-1-24-3
M6-1L-21
(2)

M4-8-24
M3-3-24
M1-1-24-3
M6-3-21
(3)

M4-8-24
M3-3-24
M1-1-24-3
M6-2L-21
(4)

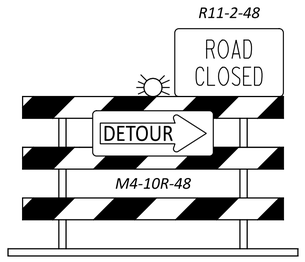

10' TYPE 3 BARRICADE
(PLACED ACROSS ENTIRE RAMP)
(5)

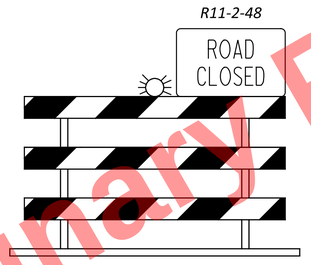

10' TYPE 3 BARRICADE
(PLACED ACROSS ENTIRE RAMP)
(6)

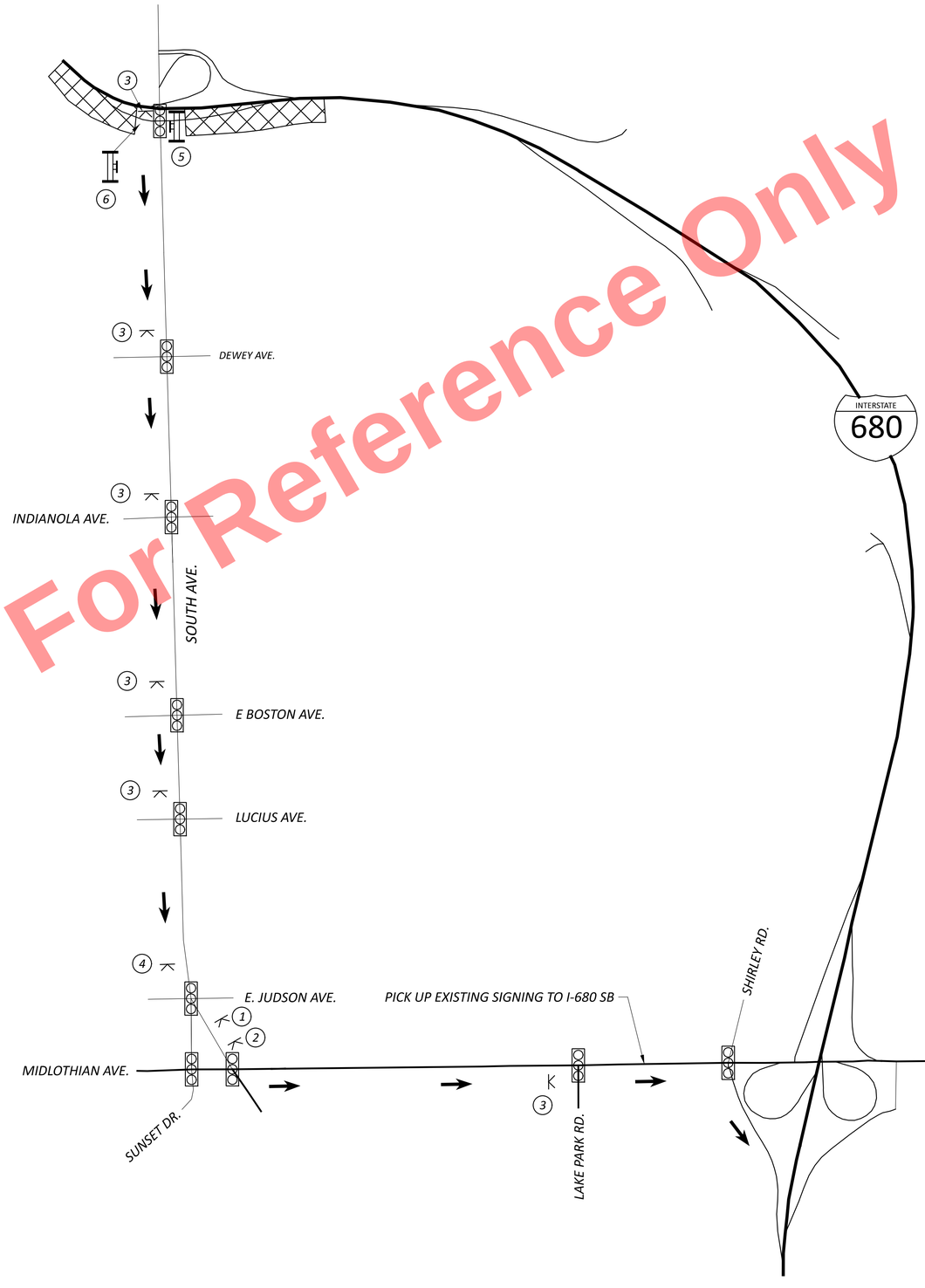

Preliminary Plans - Not For Reference Only

MAINTENANCE OF TRAFFIC - DETOUR PLAN
PHASE 2B - SOUTH AVE. RAMP TO I-680 SB

DESIGN AGENCY
ms consultants, inc.

DESIGNER
KJF

REVIEWER
KWR 08/29/24

PROJECT ID
121474

SHEET P.138 | TOTAL 655

MAH-680-4.58

MODEL: Sheet PAPERSIZE: 34x22 (in.) DATE: 9/15/2025 TIME: 2:04:51 PM PLTDRV: OHDOT_PDF_E+.pltcfg PENTBL: OHDOT_UTPen.tbl USER: DHall@msconsultants.com WORKSPACE: OHDOTCEv02 WORKSET: 121474 PRODUCT: OpenRoadsDesigner 24.00.00.205
pw:\\ohiodot-pw.bentley.com:ohiodot-pw-02\Documents\01 Active Projects\District 04\Mahoning\121474\402-Engineering_MSConsultants\MOT\Sheets\121474_MD205.dgn

LEGEND

DETOUR DIRECTIONAL ARROW — WORK ZONE

K WORK ZONE SIGN W/ SUPPORT — OVERHEAD SIGN SUPPORT

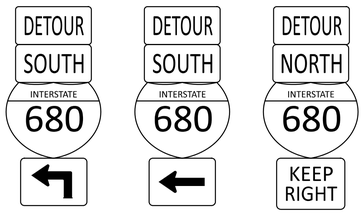

M4-8-24 M3-3-24 M1-1-24-3 M5-1L-21 — (1)

M4-8-24 M3-3-24 M1-1-24-3 M6-1L-21 — (2)

M4-8-30 M3-1-36 M1-1-36-3 M5-H6A-36 — (3)

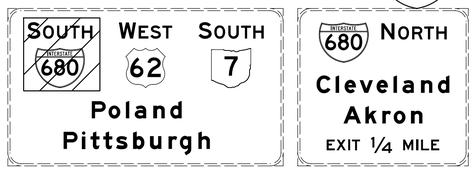

(4)

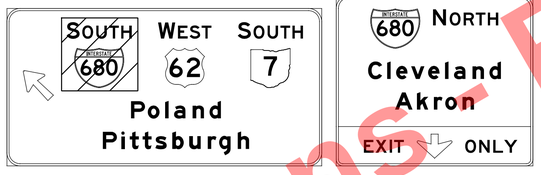

(5)

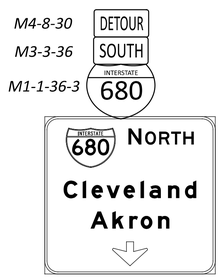

(6)

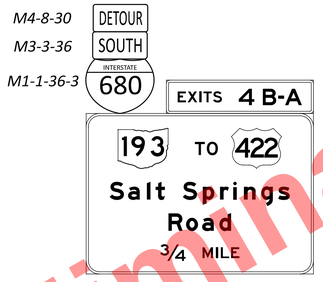

(7)

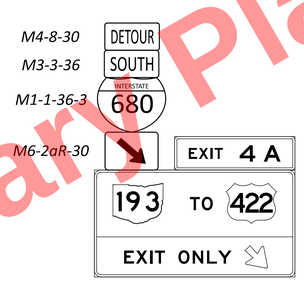

(8)

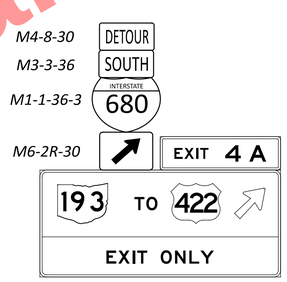

(9)

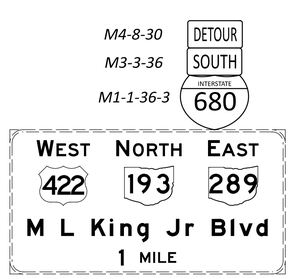

(10)

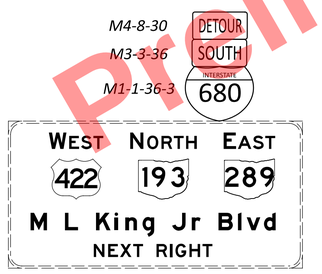

(11)

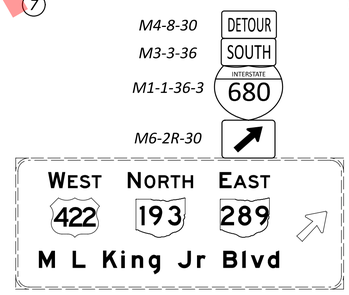

(12)

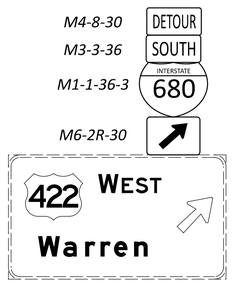

(13)

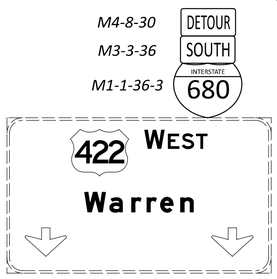

(14)

RAMP TO
I-680 S
CLOSED
FOLLOW DETOUR

SPECIAL
48" X 48"
(BLACK/ORANGE)

(15)

Preliminary Plans - For Reference Only

MAINTENANCE OF TRAFFIC - DETOUR PLAN
PHASE 2B - U.S. 62 WB RAMP TO I-680 SB

DESIGN AGENCY
ms consultants, inc.

DESIGNER KJF
REVIEWER KWR 08/29/24
PROJECT ID 121474
SHEET P.139 TOTAL 655

MAH-680-4.58

MODEL: Sheet PAPERSIZE: 34x22 (in.) DATE: 9/15/2025 TIME: 2:04:56 PM PLTDRV: OHDOT_PDF_E+.pltcfg PENTBL: OHDOT_UTPen.tbl USER: DHall@msconsultants.com WORKSPACE: OHDOTCEv02 WORKSET: 121474 PRODUCT: OpenRoadsDesigner 24.00.00.205
pw:\\ohiodot-pw.bentley.com:ohiodot-pw-02\Documents\01 Active Projects\District 04\Mahoning\121474\A02-Engineering_MSConsultants\MOT\Sheets\121474_MD206.dgn

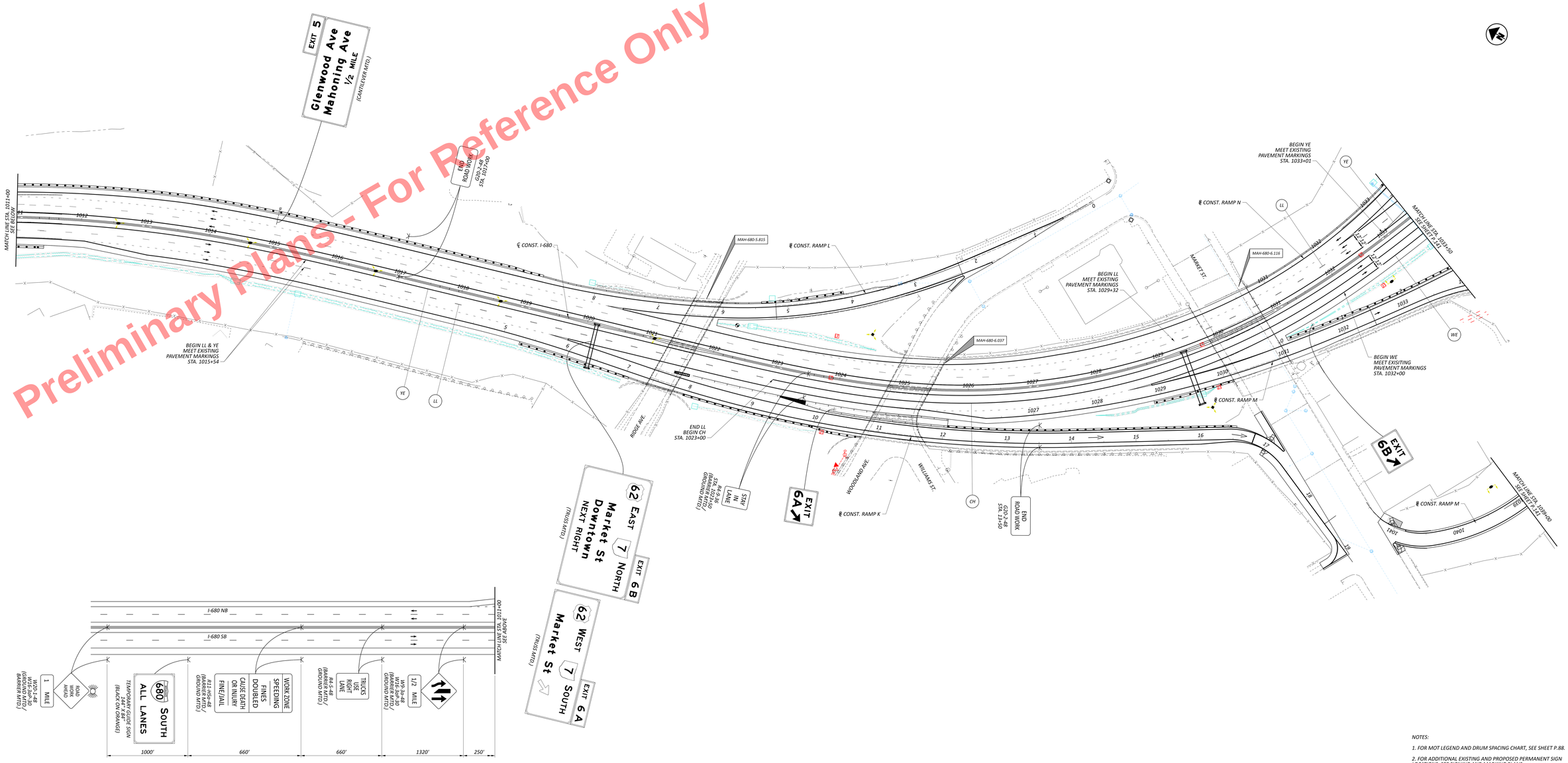

Preliminary Plans - For Reference Only

NOTES:

1. FOR MOT LEGEND AND DRUM SPACING CHART, SEE SHEET P.88.

2. FOR ADDITIONAL EXISTING AND PROPOSED PERMANENT SIGN LOCATIONS, SEE SIGNING AND MARKING PLANS.

HORIZONTAL SCALE IN FEET
0 20 40 80

MAINTENANCE OF TRAFFIC - PHASE 2B
I-680 SOUTHBOUND CONSTRUCTION
I-680 STA. 1011+00 TO STA. 1033+50

DESIGN AGENCY
ms consultants, inc.

DESIGNER
KJF

REVIEWER
KWR 06/02/25

PROJECT ID
121474

SHEET P.140 TOTAL 655

MAH-680-4.58

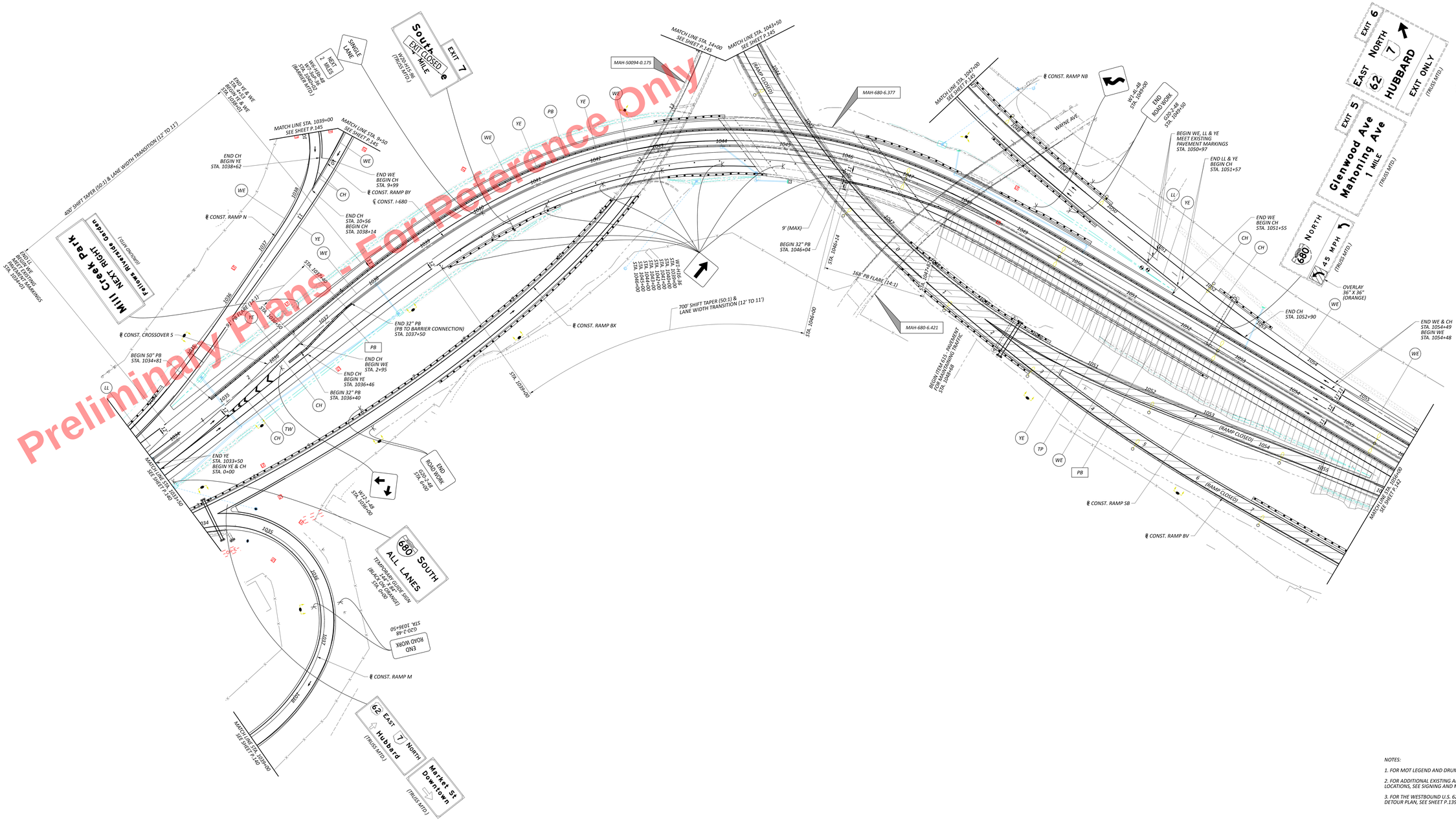

NOTES:

1. FOR MOT LEGEND AND DRUM SPACING CHART, SEE SHEET P.88.
2. FOR ADDITIONAL EXISTING AND PROPOSED PERMANENT SIGN LOCATIONS, SEE SIGNING AND MARKING PLANS.
3. FOR THE WESTBOUND U.S. 62/S.R. 7 TO I-680 SOUTHBOUND RAMP DETOUR PLAN, SEE SHEET P.139.

HORIZONTAL SCALE IN FEET: 0, 20, 40, 80

MAINTENANCE OF TRAFFIC - PHASE 2B
I-680 SOUTHBOUND CONSTRUCTION
I-680 STA. 1033+50 TO STA. 1056+00

DESIGN AGENCY: mb consultants, inc.
DESIGNED: KJF
REVIEWED: KWR 06/02/25
PROJECT ID: 121474
SHEET: P.141 TOTAL: 655

MAH-680-4.58

MODEL: 121474_MOT22 PAPERSIZE: 48x24 in DATE: 9/15/2025 TIME: 2:05:24 PM USER: GHOOT CPSF_F: eng_PENTBL: GHOOT_CPSF_F.ctb FILE: Shell\Pennsylvania\Projects\121474\Final Plans\Traffic\MOT\MAH-680-4.58.dgn WORKSPACE: CHOOTCIVIL3D WORKSET: 121474 PRODUCT: OpenRoadsDesigner 24.00.00.205

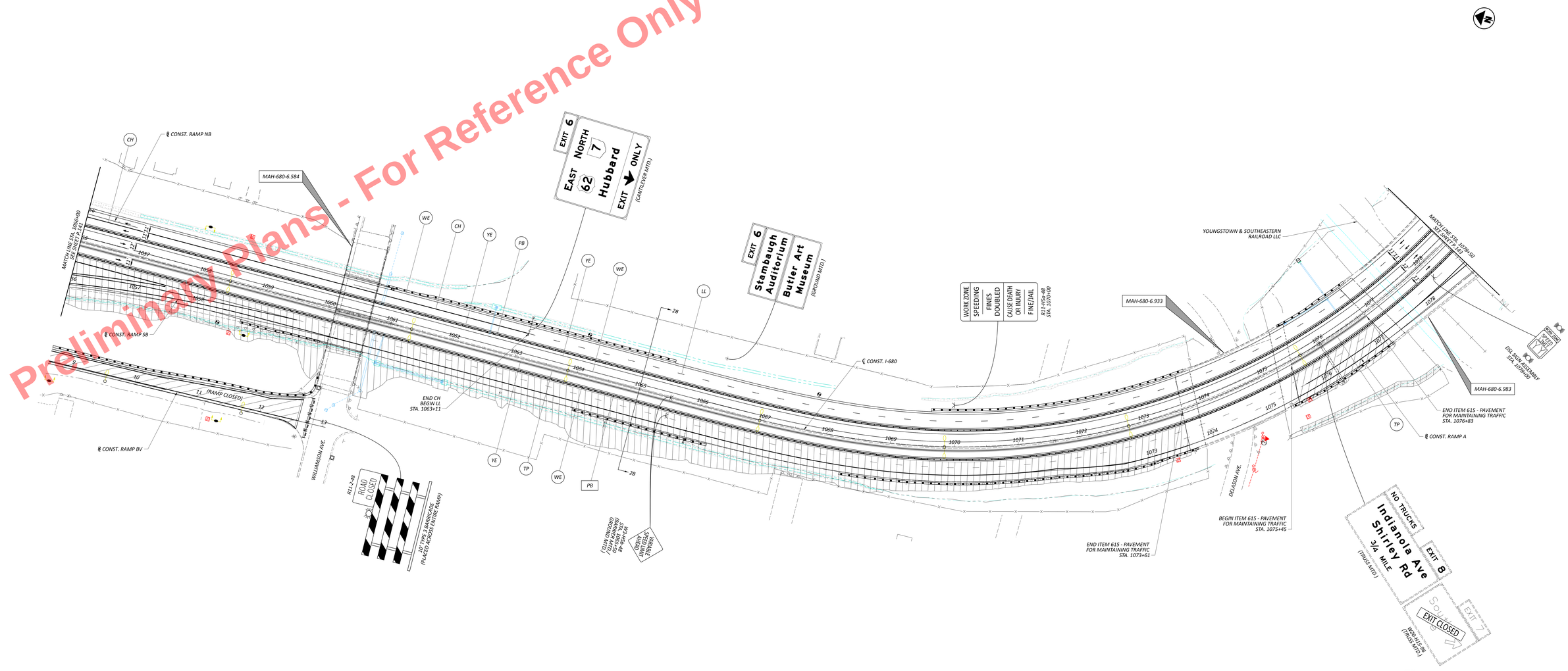

Preliminary Plans - For Reference Only

NOTES:

1. FOR MOT LEGEND AND DRUM SPACING CHART, SEE SHEET P.88.
2. FOR ADDITIONAL EXISTING AND PROPOSED PERMANENT SIGN LOCATIONS, SEE SIGNING AND MARKING PLANS.
3. FOR THE I-680 SOUTHBOUND TO SOUTH AVE. RAMP DETOUR PLAN, SEE SHEET P.137.
4. FOR THE WESTBOUND U.S. 62/S.R. 7 TO I-680 SOUTHBOUND RAMP DETOUR PLAN, SEE SHEET P.139.
5. FOR SECTION 2B-2B, SEE SHEET P.79.

HORIZONTAL SCALE IN FEET
0 20 40 80

MAINTENANCE OF TRAFFIC - PHASE 2B
I-680 SOUTHBOUND CONSTRUCTION
I-680 STA. 1056+00 TO STA. 1078+50

DESIGN AGENCY
mb consultants, inc.

DESIGNER KJF
REVIEWER KWR 06/02/25
PROJECT ID 121474
SHEET P.142 TOTAL 655

MAH-680-4.58

MODEL: 121474_MP203 PAYRIDGE clesk1 DATE: 9/15/2025 TIME: 2:05:38 PM USER: DWOFF_CPH_F e.wing PENTEL DWOFF_LTPlot.stb USER: DWolff@mbakercorp.com WORKSPACE: D:\WORK\CS\ WORKSET: 121474 PRODUCT: OpenRoadsDesigner 24.00.00.295
FILE NAME = D:\Work\CS\121474\Design\Roadway\Plan Sheets\MOT\121474_MOT_MAH-680-4.58.dgn

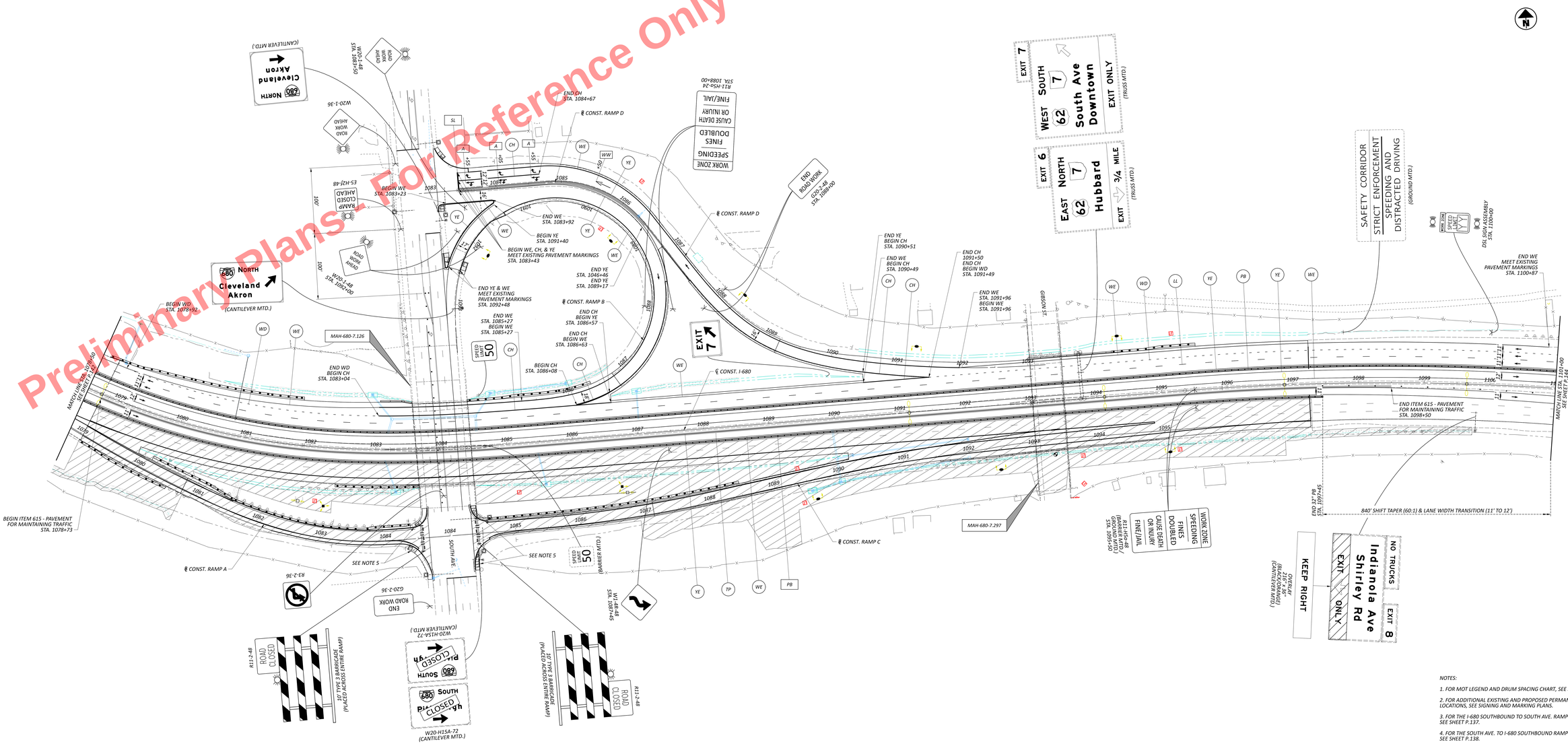
Preliminary Plans - For Reference Only
NORTH
680
Cleveland
Akron
(CANTILEVER MTD.)
BEGIN WD
STA. 1079+92
MATCH LINE STA. 1077+00
SEE SHEET P.142
BEGIN ITEM 615 - PAVEMENT
FOR MAINTAINING TRAFFIC
STA. 1078+73
MAH-680-7.126
END WD
BEGIN CH
STA. 1083+04
BEGIN WE
STA. 1083+23
END WE
STA. 1083+92
BEGIN YE
STA. 1091+40
BEGIN WE, CH, & YE
MEET EXISTING PAVEMENT MARKINGS
STA. 1083+43
END YE & WE
MEET EXISTING
PAVEMENT MARKINGS
STA. 1092+48
END WE
STA. 1085+27
BEGIN WE
STA. 1085+27
BEGIN CH
STA. 1086+08
END CH
STA. 1084+67
℄ CONST. RAMP D
END YE
STA. 1046+46
END YE
STA. 1089+17
℄ CONST. RAMP B
END CH
BEGIN YE
STA. 1086+57
END CH
BEGIN WE
STA. 1086+63
℄ CONST. I-680
EXIT 7
WORK ZONE
SPEEDING
FINES
DOUBLED
CAUSE DEATH
OR INJURY
FINE/JAIL
R11-H5A-24
STA. 1088+00
END
ROAD
WORK
G20-2-48
STA. 1088+00
END YE
BEGIN CH
STA. 1090+51
END WE
BEGIN CH
STA. 1090+49
END CH
1091+50
END CH
BEGIN WD
STA. 1091+49
END WE
STA. 1091+96
BEGIN WE
STA. 1091+96
GIBSON ST.
EXIT 7
SOUTH
7
WEST
62
South Ave
Downtown
EXIT ONLY
(TRUSS MTD.)
EXIT 6
EAST
62
NORTH
7
Hubbard
3/4 MILE
EXIT
(TRUSS MTD.)
SAFETY CORRIDOR
STRICT ENFORCEMENT
SPEEDING AND
DISTRACTED DRIVING
(GROUND MTD.)
SPEED LIMIT XX
DSL SIGN ASSEMBLY
STA. 1100+09
END WE
MEET EXISTING
PAVEMENT MARKINGS
STA. 1100+87
END ITEM 615 - PAVEMENT
FOR MAINTAINING TRAFFIC
STA. 1098+50
MATCH LINE STA. 1101+00
SEE SHEET P.144
840' SHIFT TAPER (60:1) & LANE WIDTH TRANSITION (11' TO 12')
STA. 1102+88
END OF WORK
R11-H5A-48
(GROUND MTD.)
STA. 1095+50
WORK ZONE
SPEEDING
FINES
DOUBLED
CAUSE DEATH
OR INJURY
FINE/JAIL
KEEP RIGHT
EXIT
ONLY
Indianola Ave
Shirley Rd
NO TRUCKS
EXIT 8
OVERHEAD
216" x 96"
(INSTALLED)
(CANTILEVER MTD.)
SOUTH AVE.
SEE NOTE 5
SEE NOTE 5
℄ CONST. RAMP A
℄ CONST. RAMP C
MAH-680-7.297
(BARRIER MTD.)
STA. 1081+49
R3-2-36
G20-2-36
END
ROAD WORK
R11-2-48
ROAD CLOSED
10' TYPE 3 BARRICADE
(PLACED ACROSS ENTIRE RAMP)
W20-H5SA-72
(CANTILEVER MTD.)
SOUTH
680
PIA
CLOSED
W20-H15A-72
(CANTILEVER MTD.)
R11-2-48
ROAD CLOSED
10' TYPE 3 BARRICADE
(PLACED ACROSS ENTIRE RAMP)
W20-1-48
STA. 1083+50
WZO-1-36
ROAD WORK AHEAD
E5-H2J-48
EXIT RAMP CLOSED AHEAD
W20-1-48
STA. 1082+00
ROAD WORK AHEAD
LIMIT
50
SPEED
LIMIT
50
SPEED
LIMIT
50
SPEED

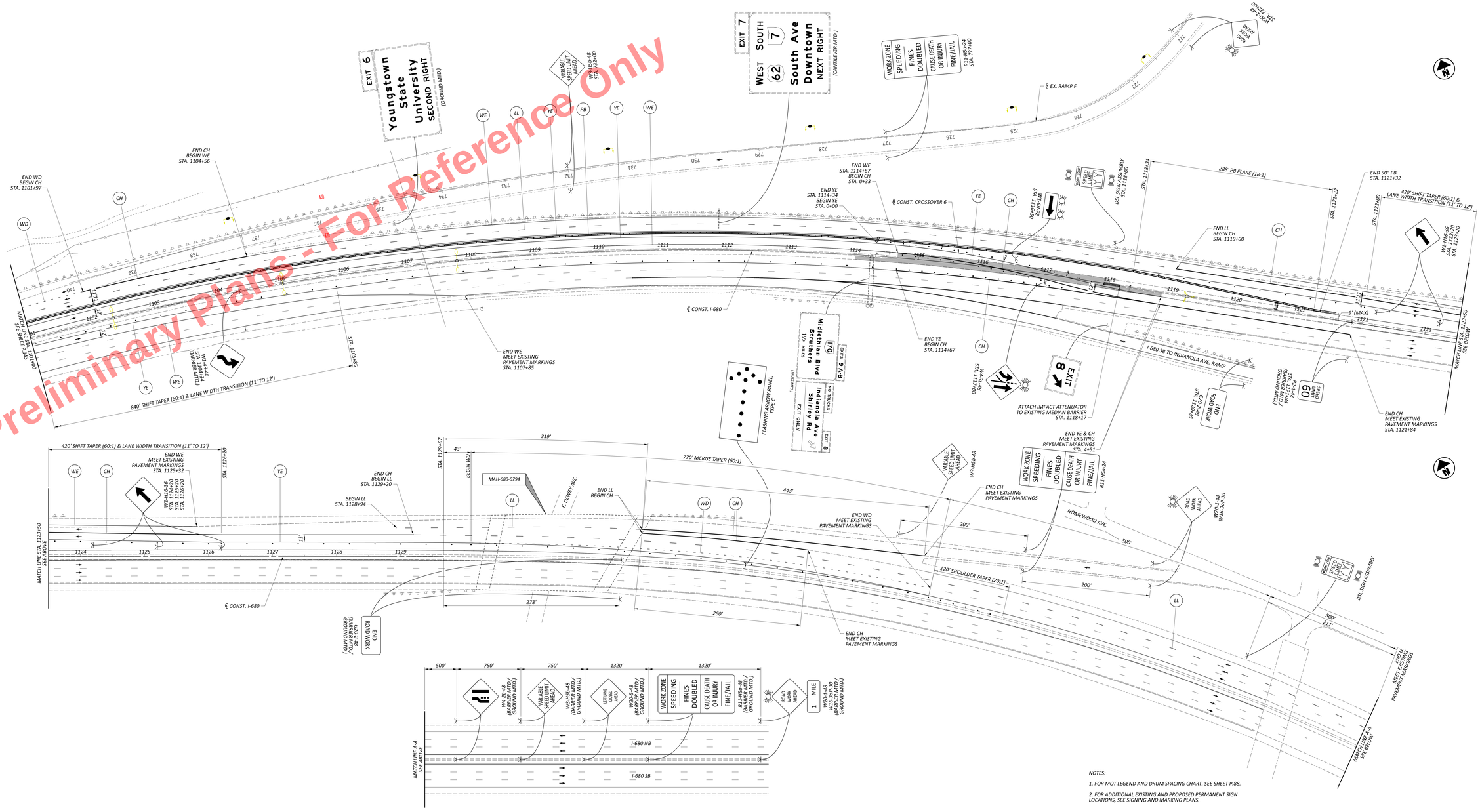

NOTES:

1. FOR MOT LEGEND AND DRUM SPACING CHART, SEE SHEET P.88.

2. FOR ADDITIONAL EXISTING AND PROPOSED PERMANENT SIGN LOCATIONS, SEE SIGNING AND MARKING PLANS.

MAH-680-4.58

MODEL: 121474_MP2DS PAYBASE: 4643.641 DATE: 9/25/2025 TIME: 2:06:00 PM USER: GROOT_PW # using: PWTBL GROOT_LITHIUM USER: DistillPressure@dot.ohio.gov WORKSPACE: GROOT.DGN WORKSET: 121474 PRODUCT: OpenRoadsDesigner 24.00.00.205

MAINTENANCE OF TRAFFIC - PHASE 2B
I-680 SOUTHBOUND CONSTRUCTION
I-680 STA. 1101+00 TO END WORK

HORIZONTAL SCALE IN FEET
0 20 40 80

DESIGN AGENCY
mc consultants, inc.

DESIGNER
KJF

REVIEWER
KWR 06/02/25

PROJECT ID
121474

SHEET P.144 TOTAL 655

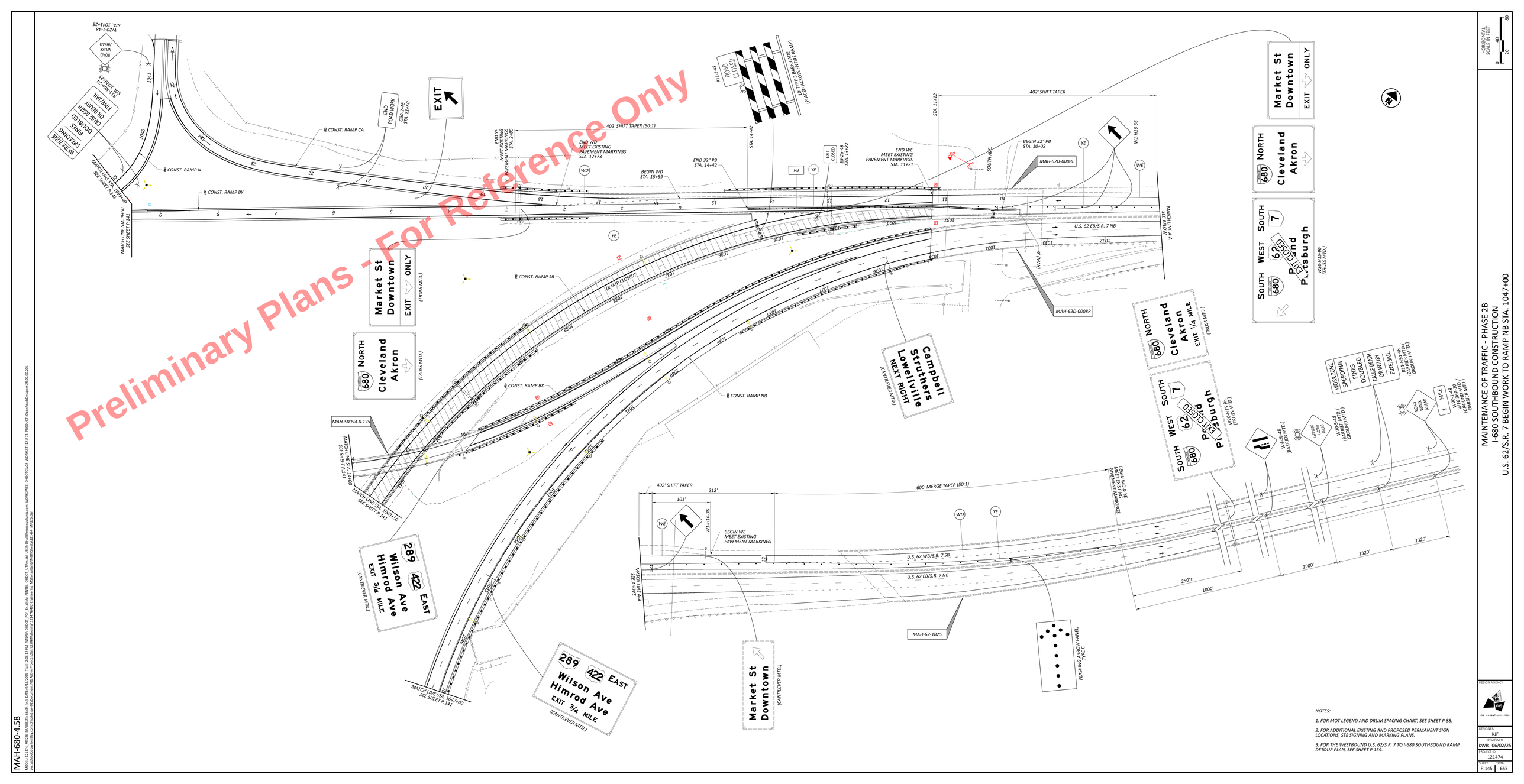

MAH-680-4.58

MAINTENANCE OF TRAFFIC - PHASE 2B
I-680 SOUTHBOUND CONSTRUCTION
U.S. 62/S.R. 7 BEGIN WORK TO RAMP NB STA. 1047+00

NOTES:

1. FOR MOT LEGEND AND DRUM SPACING CHART, SEE SHEET P.88.
2. FOR ADDITIONAL EXISTING AND PROPOSED PERMANENT SIGN LOCATIONS, SEE SIGNING AND MARKING PLANS.
3. FOR THE WESTBOUND U.S. 62/S.R. 7 TO I-680 SOUTHBOUND RAMP DETOUR PLAN, SEE SHEET P.139.

DESIGN AGENCY
ms consultants, inc.
DESIGNER KJF
REVIEWER KWR 06/02/25
PROJECT ID 121474
SHEET P.145 TOTAL 655

MODEL: 121474_MPOSS_PAVEMENT_680-4.58 | DATE: 9/15/2025 TIME: 2:06:53 PM | USER: DWOOT | PSF: Default | STYLE: DWOOT.ctb | File: DistillPavementSheet.dgn | WORKSPACE: D:\WOOT\CAD\ | WORKSET: | 121474 | PRODUCT: OpenRoadDesigner 24.00.00.205

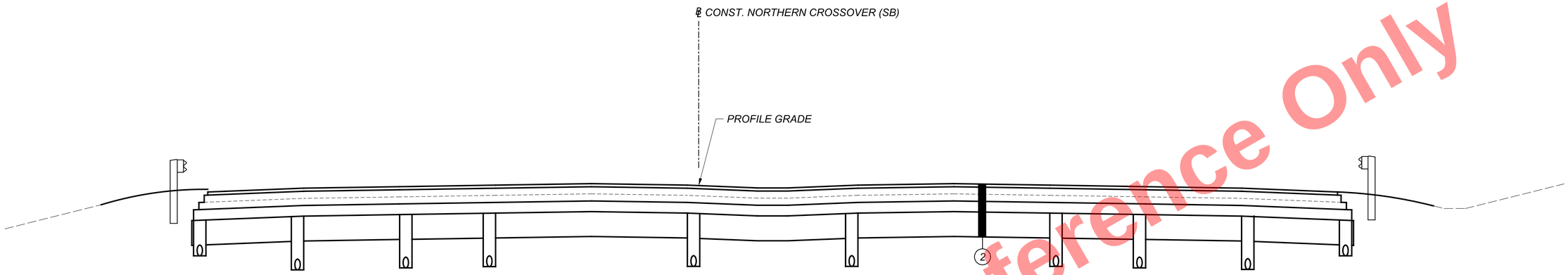

NORTHERN CROSSOVER (SB)

STA. 0+00.00 TO STA. 4+53.00

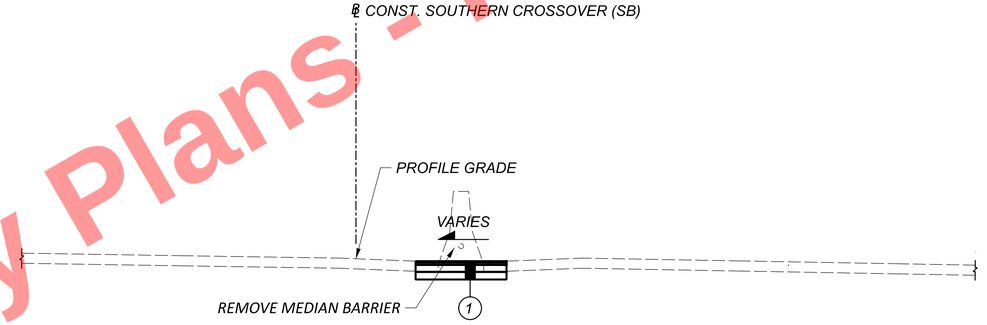

SOUTHERN CROSSOVER (SB) - WIDENING MEDIAN PAVEMENT

STA. 0+00.00 TO STA. 4+87.64

Preliminary Plans - For Reference Only

LEGEND

(1) ITEM 615 - PAVEMENT FOR MAINTAINING TRAFFIC, CLASS A

(2) PERMANEMENT PAVEMENT - SEE I.R. 680 TYPICAL SECTIONS FOR DETAILS

MAINTENANCE OF TRAFFIC TYPICAL SECTIONS - PHASE 2B
NORTHERN AND SOUTHERN CROSSOVERS (SB)

DESIGN AGENCY
ms consultants. inc.

DESIGNER GG
REVIEWER KWR 12/23/24
PROJECT ID 121474
SHEET P.146 TOTAL 655

MAH-680-4.58

MODEL: Sheet PAPERSIZE: 34x22 (in.) DATE: 9/15/2025 TIME: 2:06:21 PM PLTDRV: OHDOT_PDF_E+.pltcfg PENTBL: OHDOT_Pen.tbl USER: DHall@msconsultants.com WORKSPACE: OHDOTCEv02 WORKSET: 121474 PRODUCT: OpenRoadsDesigner 24.00.00.205
pw:\\ohiodot-pw.bentley.com:ohiodot-pw-02\Documents\01 Active Projects\District 04\Mahoning\121474\402-Engineering_MSConsultants\MOT\Sheets\121474_MY221.dgn

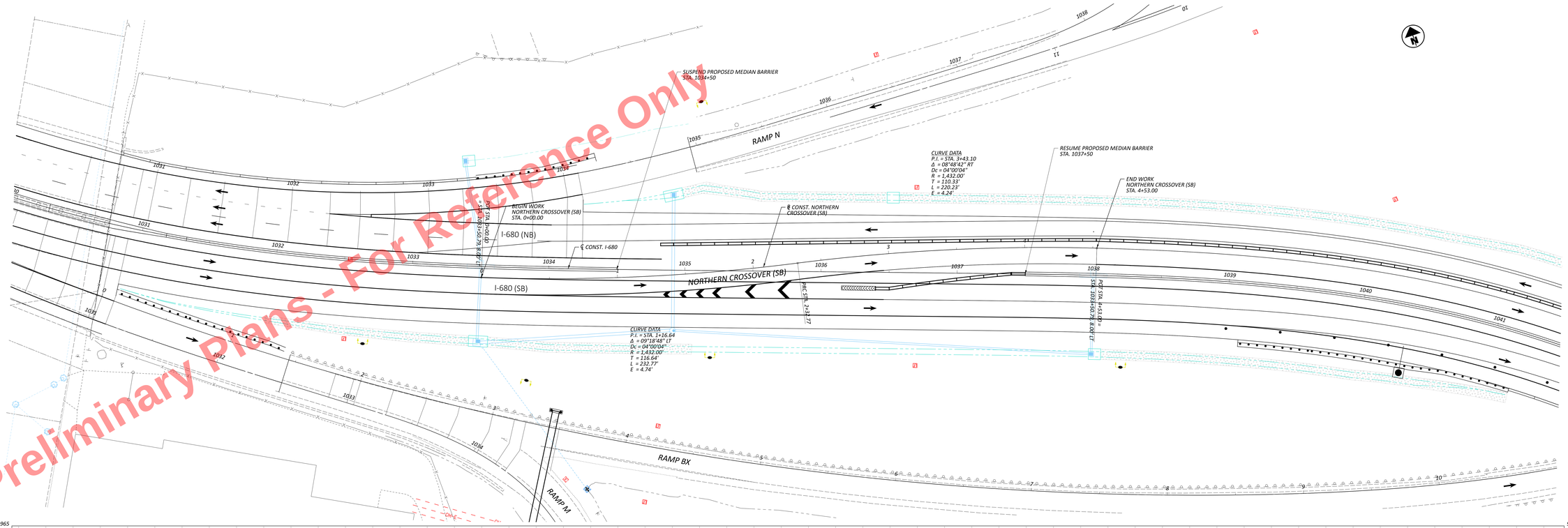

Preliminary Plans - For Reference Only

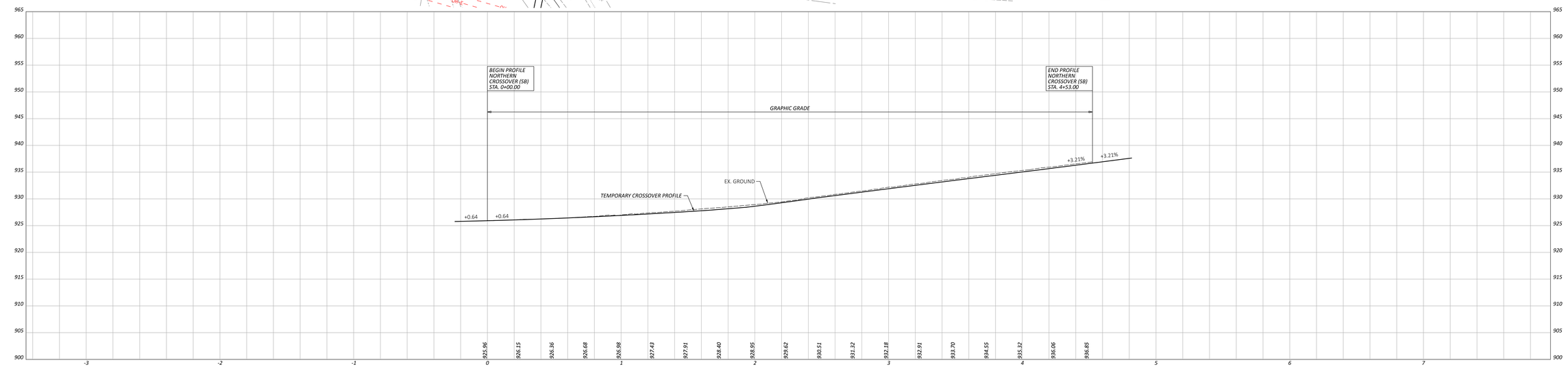

HORIZONTAL SCALE IN FEET
0 10 20 40

MAINTENANCE OF TRAFFIC - PHASE 2B
NORTHERN CROSSOVER (SB)

DESIGN AGENCY
mk consultants, inc.

DESIGNER GG
REVIEWER KWR 06/02/25
PROJECT ID 121474
SHEET P.147 TOTAL 655

MAH-680-4.58

MODEL: 121474_SMOT2 PWFBASE: 60x54 R1 DATE: 9/15/2025 TIME: 2:06:35 PM PITSRV: ORDOT_CPIT_P.xdefg PWTBL: ORDOT_UTHA.tbl USER: DiedaRe@mkconsultants.com WORKSPACE: ORDOT\CIVIL WORKSET: 121474 PRODUCT: OpenRoadsDesigner 24.00.00.205
ACTIVE PLAN: Maintenance of Traffic - Phase 2B - Northern Crossover (SB) PLAN FILE: C:\Projects\121474\Design\Roadway\MOT\121474_MOT_Phase2B_NorthernCrossover(SB).dgn

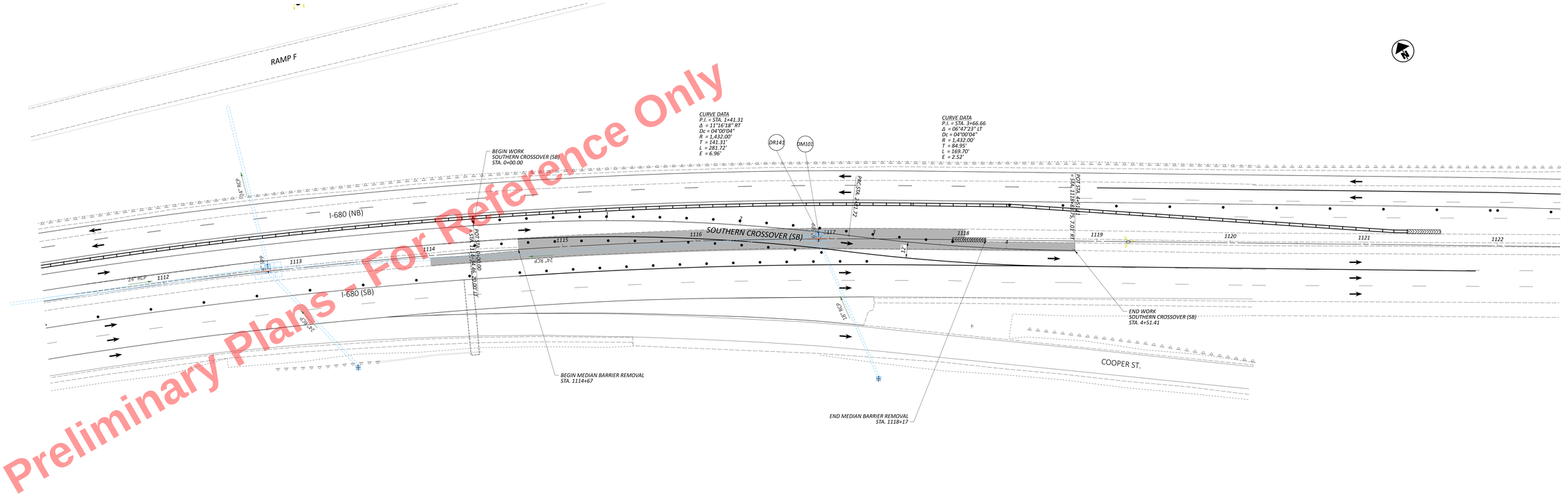

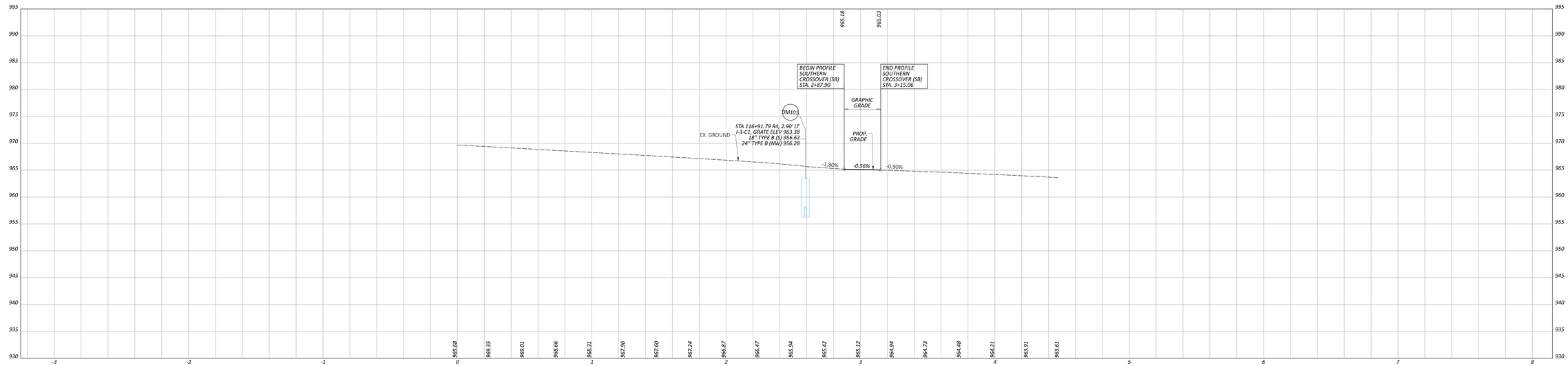

Preliminary Plans - For Reference Only

MAH-680-4.58

MODEL: 121474_SHEET2-1 WORKSET: 64-SA Pro | DATE: 9/15/2025 TIME: 2:07:06 PM SYSTEM: GHOST_PDF_P-LAYER_TYPE:TBL GHOST_LITHIA-SE USER: DHall@mbtransit.com WORKSPACE: GHOSTSXAS WORKSET: 121474 PRODUCT: OpenRoadDesigner 14.00.00.205
ELEMENT: C:\Users\DHall\OneDrive - MBTransit\Documents\MBT Projects\121474 Lithia Road Improvements\CADD\Roadway\121474_SHEET2.dgn

HORIZONTAL
SCALE IN FEET
0 10 20 40

MAINTENANCE OF TRAFFIC - PHASE 2B
SOUTHERN CROSSOVER (SB)

DESIGN AGENCY
mb consultants, inc.

DESIGNER	GG
REVIEWER	KWR 12/23/24
PROJECT ID	121474
SHEET	P.148
TOTAL	655

Preliminary Plans - For Reference Only

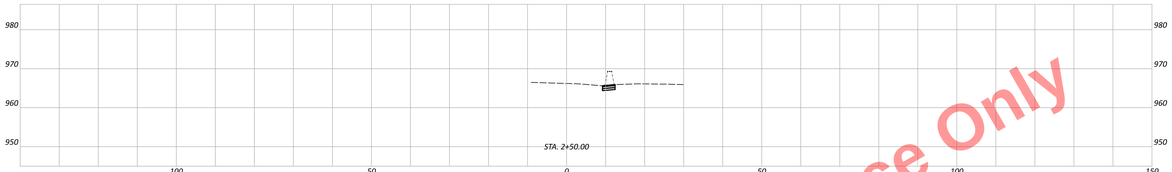

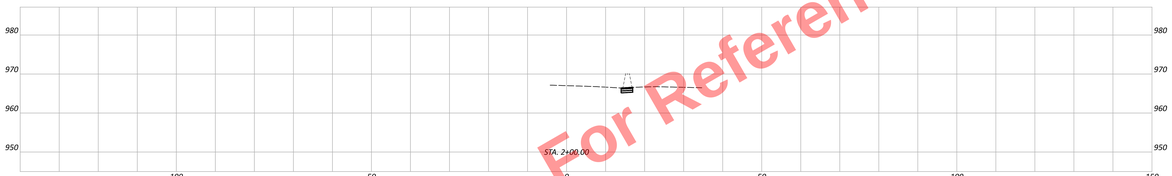

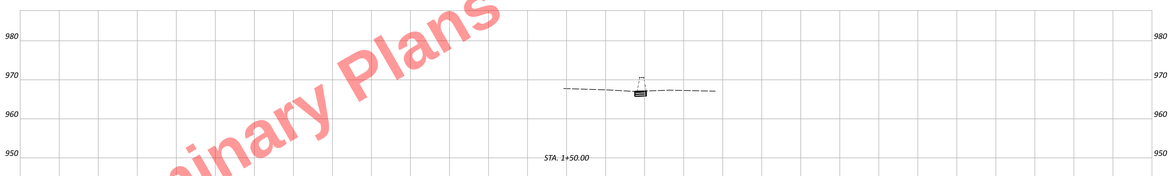

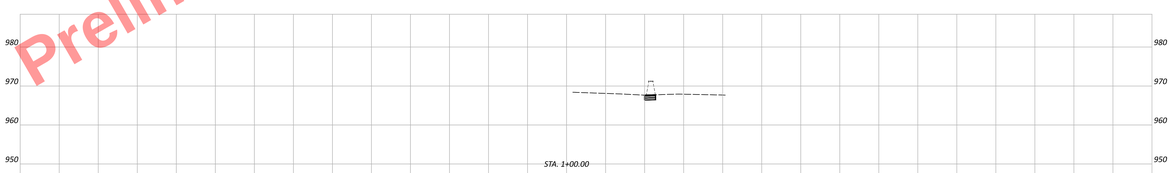

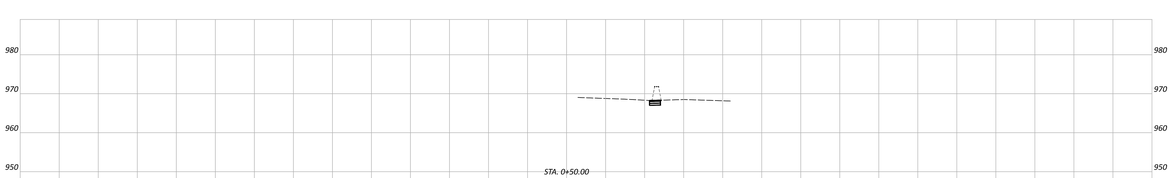

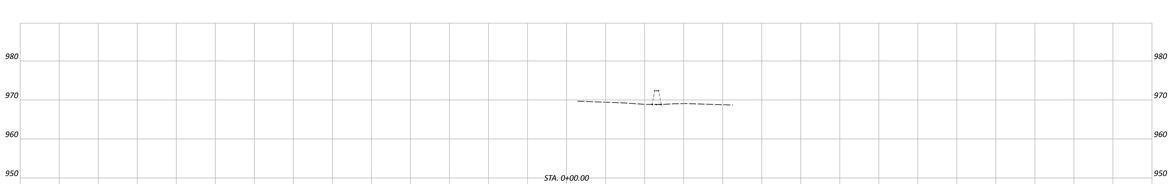

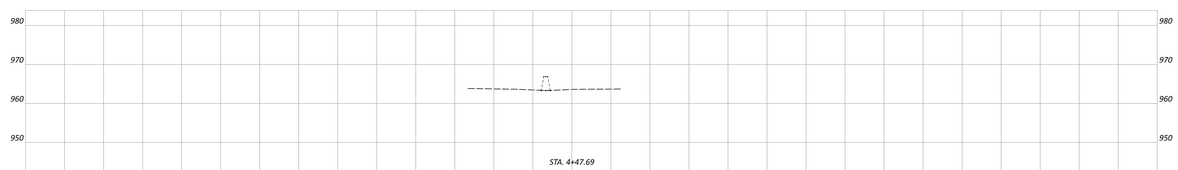

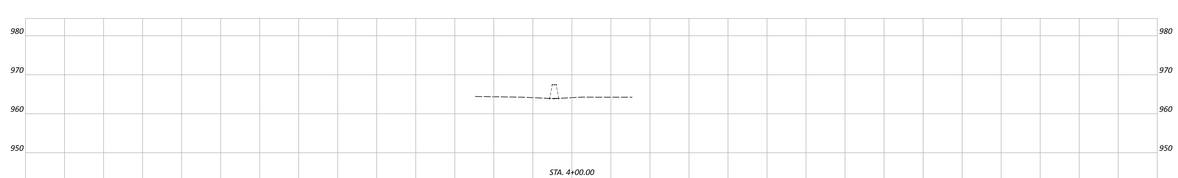

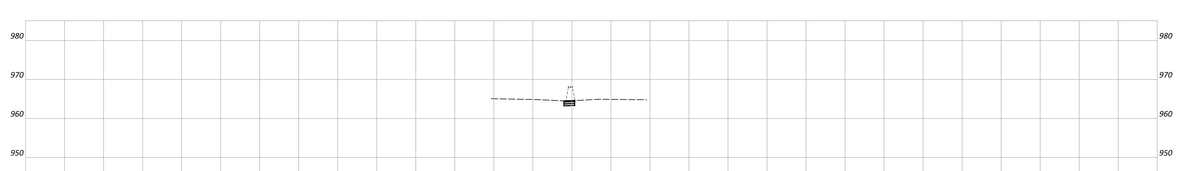

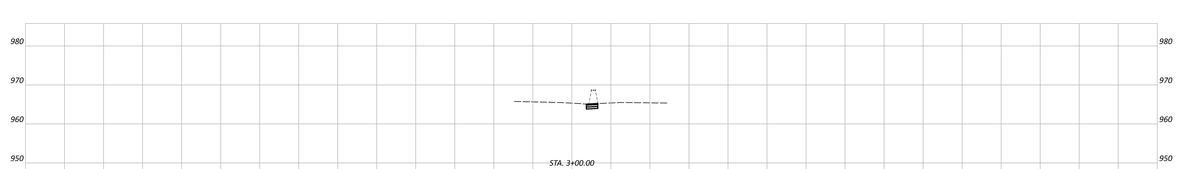

MAINTENANCE OF TRAFFIC - PHASE 2B
SOUTHERN CROSSOVER (SB)

MAH-680-4.58

MODEL: 8X11_South - 0x0x10 (Sheet) PAPERSIZE: 64x44 (in.) DATE: 7/17/2025 TIME: 2:07:13 PM PITDIR: ONEOFF_PSF_E.ukfx|g PENTBL: ONEOF_GTPen.ctb USER: DHall@mmsmailbants.com WORKSPACE: ONEOFFSIZE WORKSET: 121474 PRODUCT: OpenRoadsDesigner 24.00.00.205
FILE: P:\Projects\Active\MAH-680-4.58\Design\Roadway\Sheets\Plan and Profile\MAH-680-4.58 Plan and Profile.dgn

DESIGN AGENCY
mm consultants, inc.
DESIGNER
GG
REVIEWER
KWR 06/02/25
PROJECT ID
121474

Sheet Totals			SHEET	TOTAL
Seeding	Cut	Fill	P.149	655

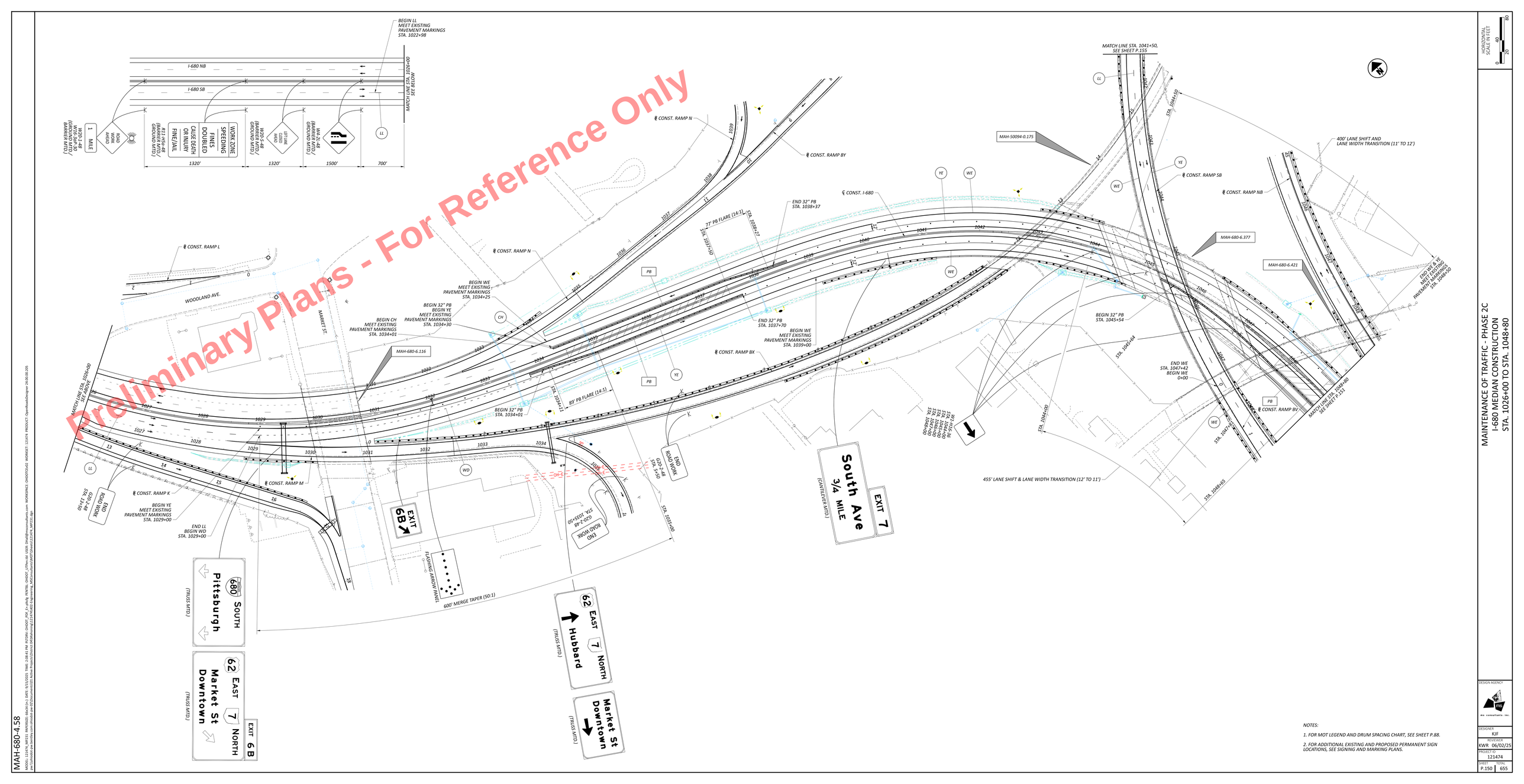

NOTES:

1. FOR MOT LEGEND AND DRUM SPACING CHART, SEE SHEET P.88.

2. FOR ADDITIONAL EXISTING AND PROPOSED PERMANENT SIGN LOCATIONS, SEE SIGNING AND MARKING PLANS.

HORIZONTAL SCALE IN FEET
0 20 40 80

MAINTENANCE OF TRAFFIC - PHASE 2C
I-680 MEDIAN CONSTRUCTION
STA. 1026+00 TO STA. 1048+80

DESIGN AGENCY
ms consultants, inc.

DESIGNER KJF
REVIEWER KWR 06/02/25
PROJECT ID 121474
SHEET P.150 TOTAL 655

MAH-680-4.58

MODEL: 121474_MPT01 PAYFREE: 6inch (in) DATE: 8/15/2025 TIME: 2:08:41 PM USER: GHOOT PW: # plotted PENTBL: GHOOT_CTPlot.ctb USER: DistillPress@msconsult.com WORKSPACE: C:\HOOT\CIVD\ WORKSET: 121474 PRODUCT: OpenRoadsDesigner 24.00.00.205
FILE: C:\Users\ghoot\Documents\MAH-680-4.58_121474_MPT01_Phase2C_MOT_Plan_Sheet.dgn

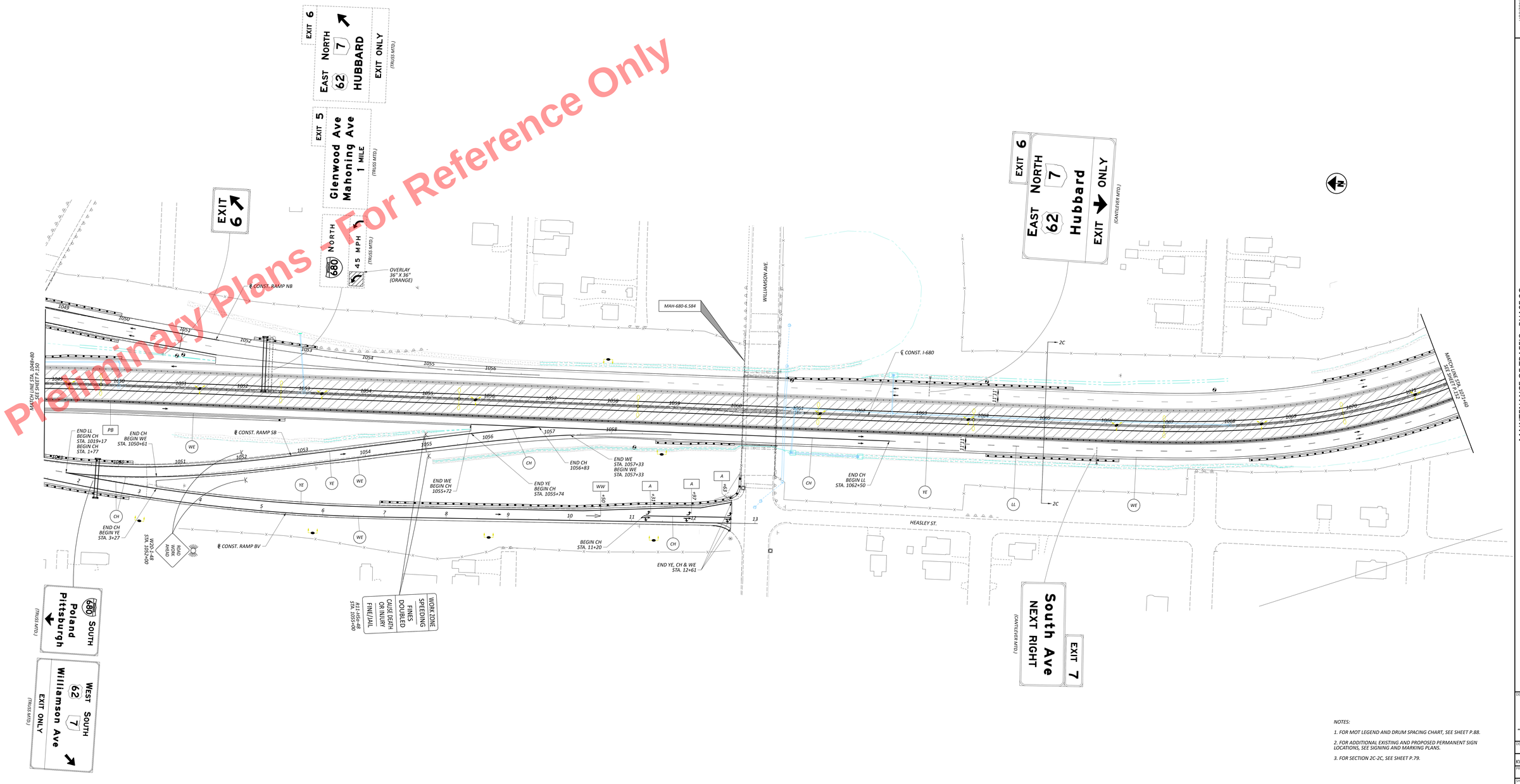

Preliminary Plans - For Reference Only

NOTES:

1. FOR MOT LEGEND AND DRUM SPACING CHART, SEE SHEET P.88.
2. FOR ADDITIONAL EXISTING AND PROPOSED PERMANENT SIGN LOCATIONS, SEE SIGNING AND MARKING PLANS.
3. FOR SECTION 2C-2C, SEE SHEET P.79.

HORIZONTAL SCALE IN FEET 0 20 40 80

MAINTENANCE OF TRAFFIC - PHASE 2C
I-680 MEDIAN CONSTRUCTION
STA. 1048+80 TO STA. 1071+60

DESIGN AGENCY: mc consultants, inc.

DESIGNER: KJF
REVIEWER: KWR 06/02/25
PROJECT ID: 121474
SHEET: P.151 | TOTAL: 655

MAH-680-4.58

MODEL: 121474_MP212_PAPERSIZE: 66x34 (in.) DATE: 5/15/2025 TIME: 2:08:56 PM PLTDRV: CHDOT_PDF_E+ pltcfg PENTBL: CHDOT_UTPwe.tbl USER: DHall@mcconsultants.com WORKSPACE: CHDOTCEv02 WORKSET: 121474 PRODUCT: OpenRoadsDesigner 24.00.00.205
pw:\\pwdcdc.pw.bentley.com:pwdcdc-pw-02\Documents\01 Active Projects\District 04\Mahoning\121474 Hubbard Engineering_MSC\Consultants\MOT\Sheets\121474_MP212.dgn

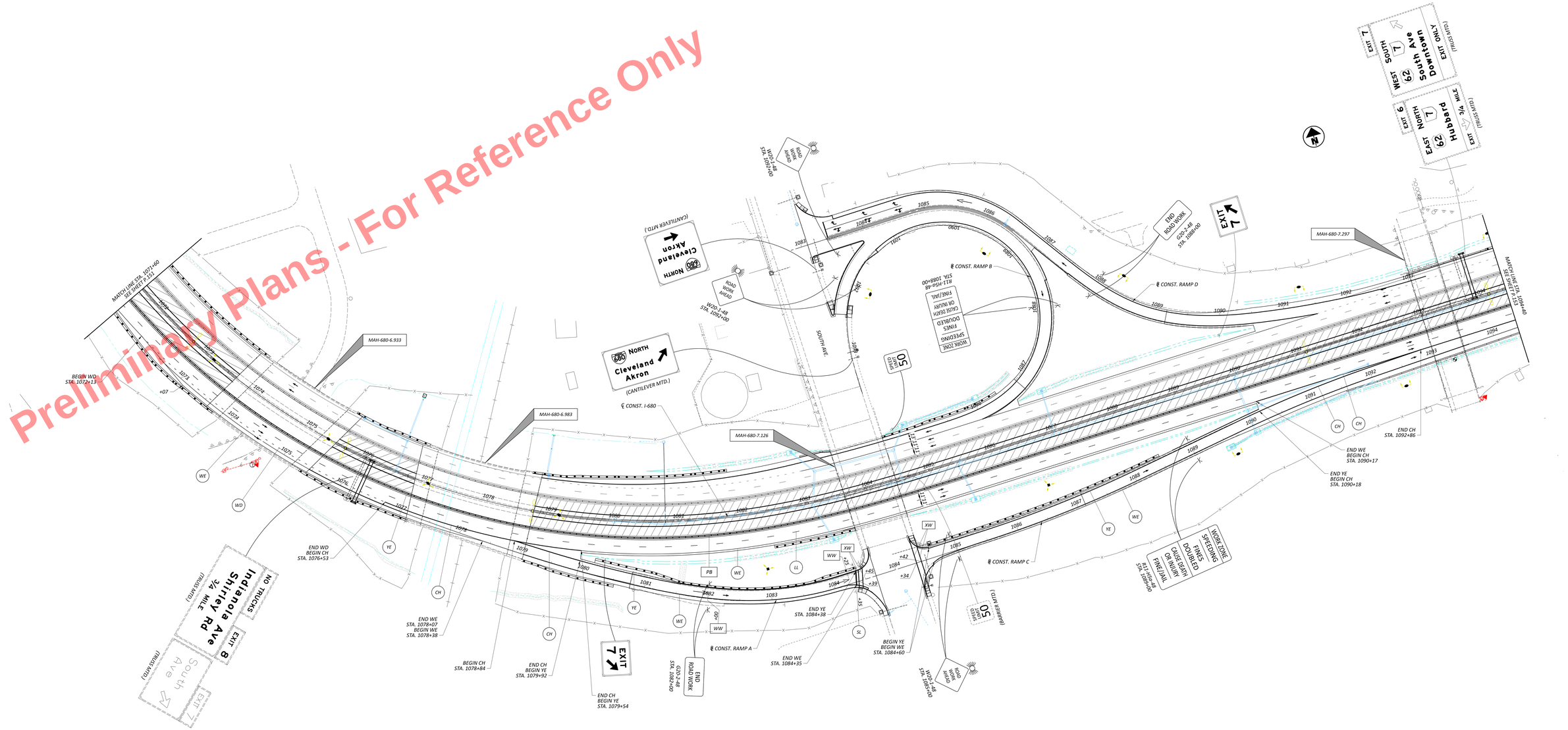
MAINTENANCE OF TRAFFIC - PHASE 2C
I-680 MEDIAN CONSTRUCTION
STA. 1071+60 TO STA. 1094+40
HORIZONTAL SCALE IN FEET
0 20 40 80
MAH-680-4.58
Preliminary Plans - For Reference Only
MATCH LINE STA. 1071+60 SEE SHEET P.151
MATCH LINE STA. 1094+40 SEE SHEET P.153
BEGIN WD STA. 1072+13
MAH-680-6.933
MAH-680-6.983
MAH-680-7.126
MAH-680-7.297
℄ CONST. I-680
℄ CONST. RAMP A
℄ CONST. RAMP B
℄ CONST. RAMP C
℄ CONST. RAMP D
SOUTH AVE
680 NORTH Cleveland Akron (CANTILEVER MTD.)
680 NORTH Cleveland Akron (CANTILEVER MTD.)
SPEED 50
WORK ZONE SPEEDING FINES DOUBLED CAUSE DEATH OR INJURY FINE/JAIL R11-H50-48 STA. 1088+30
WORK ZONE SPEEDING FINES DOUBLED CAUSE DEATH OR INJURY FINE/JAIL R11-H50-48 STA. 1088+00
ROAD WORK AHEAD W20-1-48 STA. 1092+00
ROAD WORK AHEAD W20-1-48 STA. 1084+00
ROAD WORK AHEAD W20-1-48 STA. 1082+00
END ROAD WORK G20-2-48 STA. 1082+00
END ROAD WORK G20-2-48 STA. 1088+00
EXIT 7
EXIT 7
EXIT 8 Indianola Ave Shirley Rd 3/4 MILE (TRUCKS RTD.)
NO TRUCKS
EXIT 7 South Ave (TRUCKS RTD.)
EXIT 6 EAST 62 NORTH 7 Hubbard 3/4 mile EXIT (TRUCKS STD.)
EXIT 7 WEST 62 SOUTH 7 South Ave Downtown EXIT ONLY (TRUCKS RTD.)
END WD BEGIN CH STA. 1076+53
END WE STA. 1078+07 BEGIN WE STA. 1078+38
BEGIN CH STA. 1078+84
END CH BEGIN YE STA. 1079+92
END CH BEGIN YE STA. 1079+54
END YE STA. 1084+38
END WE STA. 1084+35
BEGIN YE BEGIN WE STA. 1084+60
END CH STA. 1092+86
END WE BEGIN CH STA. 1090+17
END YE BEGIN CH STA. 1090+18
(BEHIND EXIT 7)
NOTES:
1. FOR MOT LEGEND AND DRUM SPACING CHART, SEE SHEET P.88.
2. FOR ADDITIONAL EXISTING AND PROPOSED PERMANENT SIGN LOCATIONS, SEE SIGNING AND MARKING PLANS.
DESIGN AGENCY
DESIGNER KJF
REVIEWER KWR 06/02/25
PROJECT ID 121474
SHEET P.152 TOTAL 655
MODEL: 121474_MP152 PAPERSIZE: 42x24 (in) DATE: 8/15/2025 TIME: 2:09:06 PM USER: GROOT_CPF_E-alrig FILEPATH: C:\Projects\121474 I-680 Phase 2C Maintenance of Traffic\Design\121474_MP152.dgn WORKSPACE: CHOOOTCIVD3 WORKSET: 121474 PRODUCT: OpenRoadsDesigner 24.00.00.295

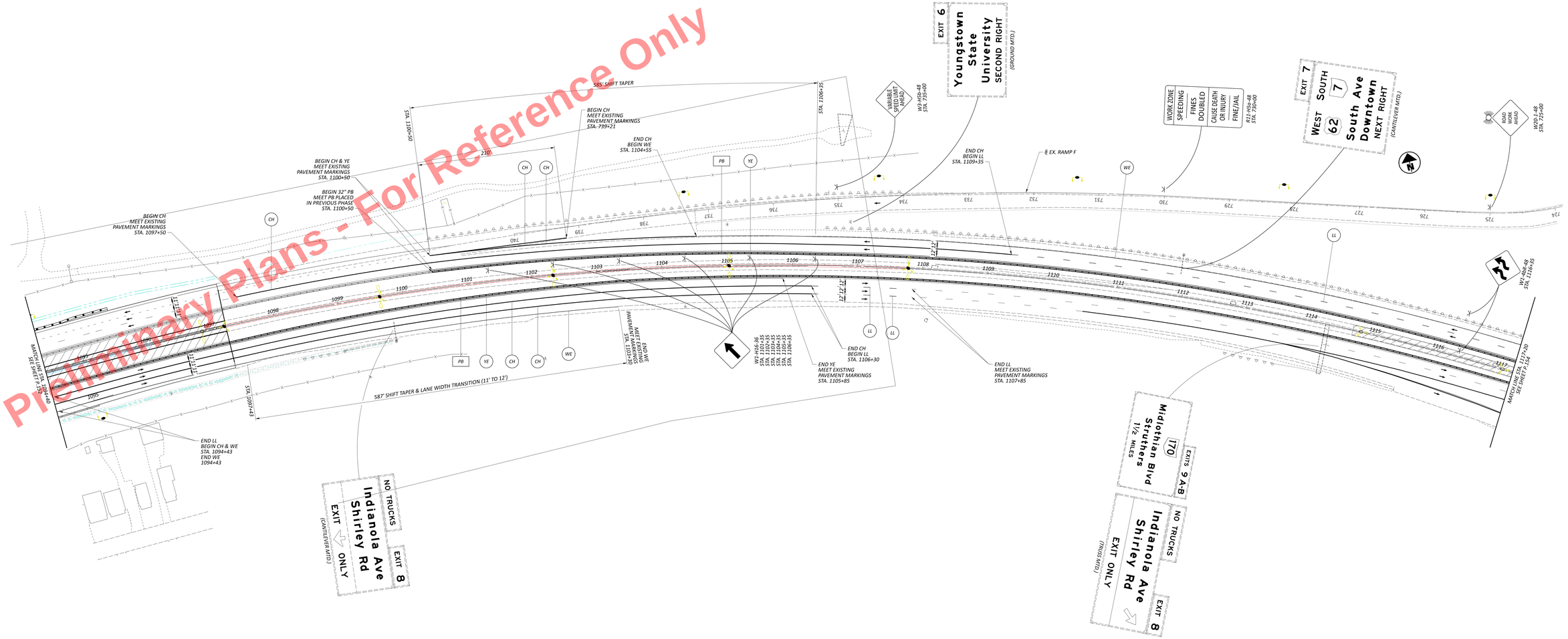

NOTES:

1. FOR MOT LEGEND AND DRUM SPACING CHART, SEE SHEET P.88.

2. FOR ADDITIONAL EXISTING AND PROPOSED PERMANENT SIGN LOCATIONS, SEE SIGNING AND MARKING PLANS.

HORIZONTAL SCALE IN FEET
0 20 40 80

MAINTENANCE OF TRAFFIC - PHASE 2C
I-680 MEDIAN CONSTRUCTION
STA. 1094+40 TO STA. 1117+20

DESIGN AGENCY
mb consultants, inc.

DESIGNED KJF
REVIEWED KWR 06/02/25
PROJECT ID 121474
SHEET P.153 TOTAL 655

MAH-680-4.58

MODEL: 121474_MOT24_PHPTRDET_65x34.DGN | DATE: 6/10/2025 TIME: 3:09:13 PM | USER: GWOOT_CPW | PLOTTED: GWOOT_CPW | PLOTTER: Canon imagePROGRAF TX-4000 | PENTBL: GWOOT_CPW.ctb | USER: DistillPress\mmaki@mb-corp.com | WORKSPACE: GWOOTCIVIL3 | WORKSET: 121474 | PRODUCT: OpenRoadsDesigner 24.00.00.205
ALL DESIGNS, DRAWINGS AND SPECIFICATIONS ARE COPYRIGHTED BY MB CONSULTANTS, INC. AND SHALL NOT BE REUSED WITHOUT WRITTEN CONSENT.

Preliminary Plans - For Reference Only

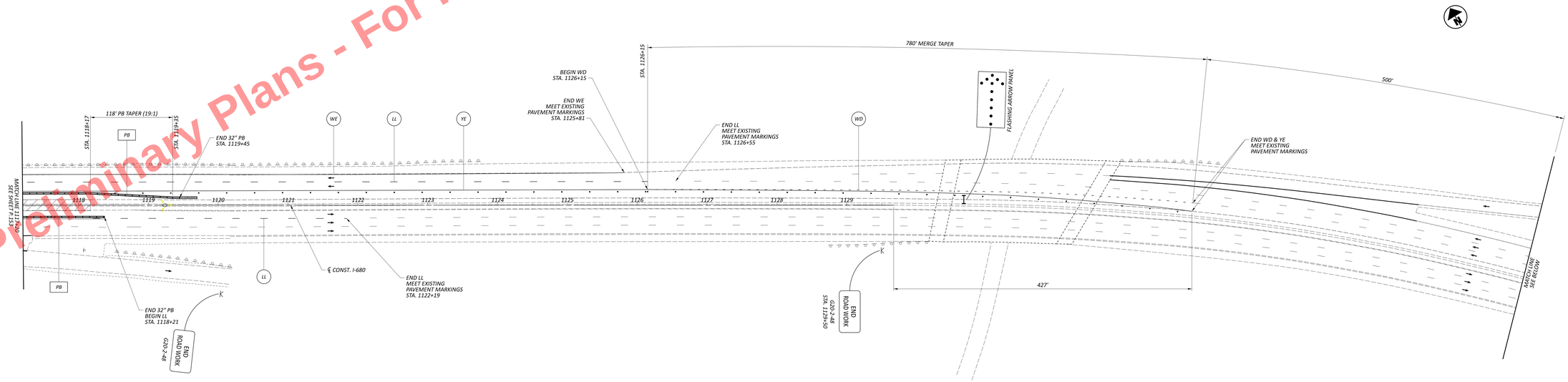

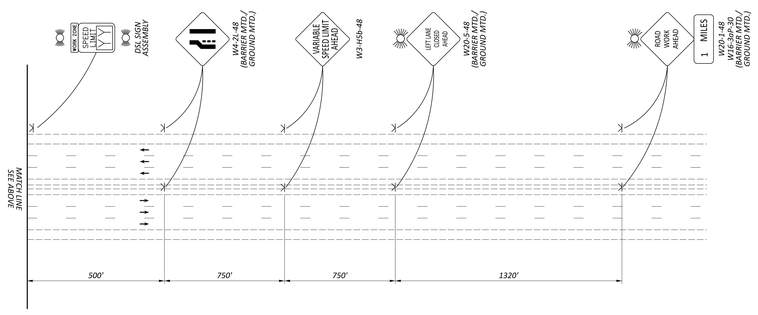

NOTES:

1. FOR MOT LEGEND AND DRUM SPACING CHART, SEE SHEET P.88.

2. FOR ADDITIONAL EXISTING AND PROPOSED PERMANENT SIGN LOCATIONS, SEE SIGNING AND MARKING PLANS.

HORIZONTAL SCALE IN FEET
0 20 40 80

MAINTENANCE OF TRAFFIC - PHASE 2C
I-680 MEDIAN CONSTRUCTION
STA. 1117+20 TO STA. 1140+00

DESIGN AGENCY
ms consultants, inc.

DESIGNER: KJF
REVIEWER: KWR 06/02/25
PROJECT ID: 121474
SHEET: P.154
TOTAL: 655

MAH-680-4.58

BIM MODEL FILE NAME: MAH680_PHASE2C_MOT.dgn | MODEL: 121474_MAP039_PHASE2C_MOT | DATE: 9/15/2025 | TIME: 3:09:28 PM | USER: GWOOT | PW: K:\proj_PW\PEL GWOOT_LTPrecast 100ft Shed\Preliminary\Shed_MOT_Phase2C.pw | PWTEL: GWOOT_LTPrecast 100ft Shed@PrecastGirder.com | WORKSPACE: GWOOTCIVIL3D | WORKSET: 121474 PRODUCT: OpenRoadsDesigner 24.00.00.295

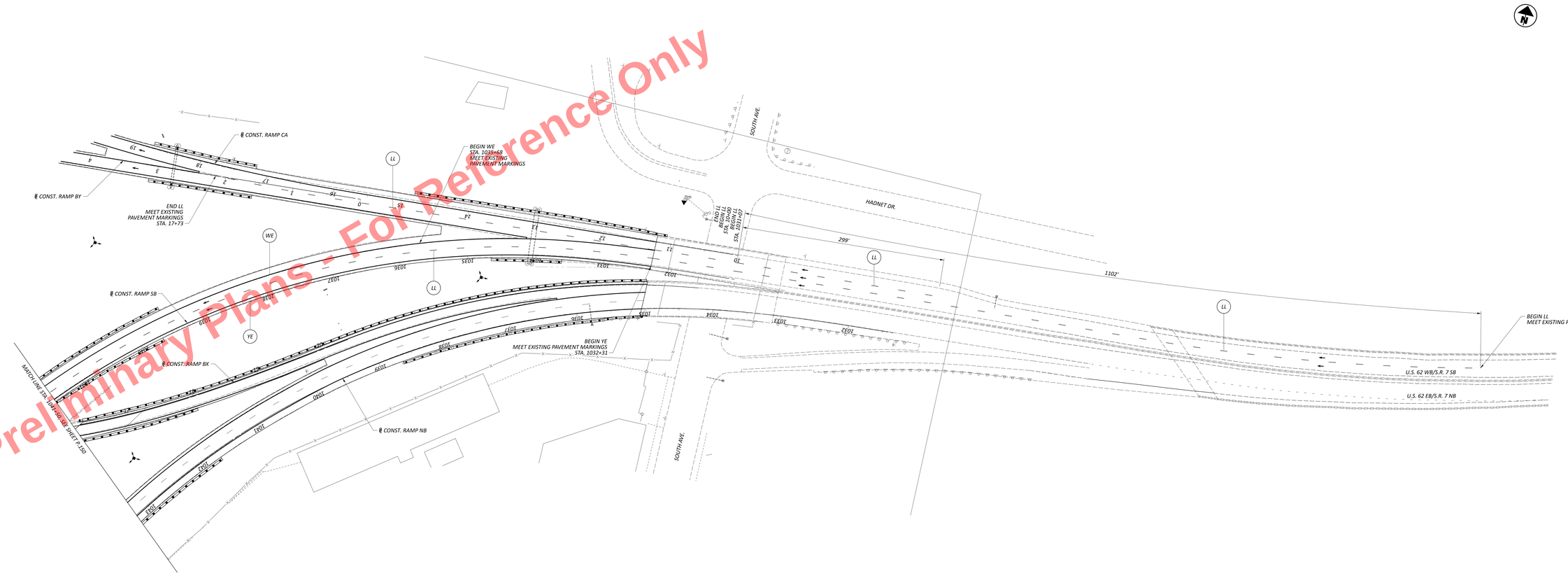

Preliminary Plans - For Reference Only

NOTES:

1. FOR MOT LEGEND AND DRUM SPACING CHART, SEE SHEET P.88.

2. FOR ADDITIONAL EXISTING AND PROPOSED PERMANENT SIGN LOCATIONS, SEE SIGNING AND MARKING PLANS.

HORIZONTAL SCALE IN FEET
0 20 40 80

MAINTENANCE OF TRAFFIC - PHASE 2C
I-680 MEDIAN CONSTRUCTION
U.S. 62/S.R. 7 BEGIN WORK TO RAMP SB STA. 1041+50

DESIGN AGENCY
mc consultants, inc.

DESIGNER
KJF

REVIEWER
KWR 06/02/25

PROJECT ID
121474

SHEET P.155 TOTAL 655

MAH-680-4.58

MODEL: BLP_SB5STA - Plan 6 RAMPBOSE: 66x34 (in.) DATE: 7/13/2025 TIME: 2:09:57 PM PLTDRV: ORIOT_PDF_F-sheet6_PENTBL: ORIOT_Plan.tbl USER: DHAN@mcconsultants.com WORKSPACE: ORIOTCEV02 WORKSET: 121474 PRODUCT: OpenRoadsDesigner 24.00.00.205
pw:\\pwhdsc.pw.bentley.com:pwhdsc-pw-02\Documents\01 Active Projects\District 04\Maintenance\121474\Roadway\Plans\Sheets\121474_MAP_P.dgn

SHEET NUMBER																	PART.	ITEM	ITEM	GRAND	UNIT	DESCRIPTION	SEE SHEET NO.
P.45	P.47	P.48	P.49	P.50	P.74A	P.163	P.166	P.167	P.168	P.169	P.170	P.171	P.195	P.196	P.292		CALC	01/IMS		EXT	TOTAL			
																						ROADWAY	
LS																		LS	201	11001	LS		CLEARING AND GRUBBING, AS PER PLAN	P.45
	27										147,232	68,455						215,714	202	23000	215,714	SY	PAVEMENT REMOVED	
											467							467	202	23500	467	SY	WEARING COURSE REMOVED	
							5,660											5,660	202	30000	5,660	SF	WALK REMOVED	
						28	284											312	202	30600	312	SY	CONCRETE MEDIAN REMOVED	
		350				13,775	1,894											16,019	202	30700	16,019	FT	CONCRETE BARRIER REMOVED	
						977	7,096											8,073	202	32000	8,073	FT	CURB REMOVED	
								3,994	4,120	2,750								10,864	202	35100	10,864	FT	PIPE REMOVED, 24" DIAMETER AND UNDER	
								471	602	77								1,150	202	35200	1,150	FT	PIPE REMOVED, OVER 24" DIAMETER	
						10,871	14,288											25,159	202	38000	25,159	FT	GUARDRAIL REMOVED	
						1												1	202	47800	1	EACH	IMPACT ATTENUATOR REMOVED	
								13	11	2								26	202	58000	26	EACH	MANHOLE REMOVED	
								14	20	30								64	202	58100	64	EACH	CATCH BASIN REMOVED	
								16	17	8								41	202	58200	41	EACH	INLET REMOVED	
					3													3	202	58400	3	EACH	INLET ABANDONED	
					1			2	2									5	202	58401	5	EACH	INLET ABANDONED, AS PER PLAN	P.50
									1									1	202	58701	1	EACH	MANHOLE ABANDONED, AS PER PLAN	P.50
								176	139									315	SPECIAL	20270000	315	FT	FILL AND PLUG EXISTING CONDUIT	P.49
													21,010	10,831				31,841	202	75000	31,841	FT	FENCE REMOVED	
				2														2	202	98100	2	EACH	REMOVAL MISC.: INSPECTION WELL	P.50
				15														15	202	98200	15	FT	REMOVAL MISC.: CONDUIT	P.50
	47		7,140												92,973			100,160	203	10000	100,160	CY	EXCAVATION	
	560														5,129			5,689	203	20000	5,689	CY	EMBANKMENT	
				19														19	203	20001	19	CY	EMBANKMENT, AS PER PLAN	P.50
																	72,634	72,634	204	10000	72,634	SY	SUBGRADE COMPACTION	

Preliminary Plans - For Reference Only

GENERAL SUMMARY

MAH-680-4.58

MODEL: Sheet PAPERSIZE: 34x22 (in.) DATE: 9/15/2025 TIME: 1:42:03 PM PLTDRV: OHDOT_PDF_E+.pltcfg PENTBL: OHDOT_Pen.tbl USER: DHall@msconsultants.com WORKSPACE: OHDOTCEv02 WORKSET: 121474 PRODUCT: OpenRoadsDesigner 24.00.00.205
pw:\\ohiodot-pw.bentley.com:ohiodot-pw-02\Documents\01 Active Projects\District 04\Mahoning\121474\402-Engineering_MSConsultants\Roadway\Sheets\121474_GG001.dgn

DESIGN AGENCY
ms consultants, inc.

DESIGNER
MSN

REVIEWER
CMN 08/29/25

PROJECT ID
121474

SHEET P.156 TOTAL 655

SHEET NUMBER																	PART.	ITEM	ITEM	GRAND	UNIT	DESCRIPTION	SEE SHEET NO.
P.7	P.44	P.45	P.46	P.47	P.48	P.172	P.173	P.175	P.177	P.195	P.196	P.318				CALC	01/IMS		EXT	TOTAL			
																						ROADWAY (CONT.)	
	7,965																7,965	204	13000	7,965	CY	EXCAVATION OF SUBGRADE	
	7,965																7,965	204	30010	7,965	CY	GRANULAR MATERIAL, TYPE B	
				36												78	114	204	45000	114	HOUR	PROOF ROLLING	
	13,409																13,409	204	50000	13,409	SY	GEOTEXTILE FABRIC	
																4,695	4,695	206	10500	4,695	TON	CEMENT	
																155,525	155,525	206	11000	155,525	SY	CURING COAT	
																155,525	155,525	206	15020	155,525	SY	CEMENT STABILIZED SUBGRADE, 14 INCHES DEEP	
						127		156									283	209	60201	283	STA	LINEAR GRADING, AS PER PLAN	P.49
						9,215		4,323									13,538	606	15050	13,538	FT	GUARDRAIL, TYPE MGS	
						313		7,613									7,926	606	15100	7,926	FT	GUARDRAIL, TYPE MGS WITH LONG POSTS	
						25		113									138	606	15150	138	FT	GUARDRAIL, TYPE MGS HALF POST SPACING	
						25											25	606	15250	25	FT	GUARDRAIL, TYPE MGS QUARTER POST SPACING	
								1									1	606	26000	1	EACH	ANCHOR ASSEMBLY, TYPE B	
						16											16	606	26150	16	EACH	ANCHOR ASSEMBLY, MGS TYPE E	
								23									23	606	26150	23	EACH	ANCHOR ASSEMBLY, MGS TYPE E (MASH 2016)	
						7		20									27	606	26550	27	EACH	ANCHOR ASSEMBLY, MGS TYPE T	
						1											1	606	26551	1	EACH	ANCHOR ASSEMBLY, MGS TYPE T, AS PER PLAN	P.210
						21		15									36	606	35002	36	EACH	MGS BRIDGE TERMINAL ASSEMBLY, TYPE 1	
						13		13									26	606	35102	26	EACH	MGS BRIDGE TERMINAL ASSEMBLY, TYPE 2	
						1											1	606	60022	1	EACH	IMPACT ATTENUATOR, TYPE 2 (UNIDIRECTIONAL)	
										20,912	10,829						31,741	607	23000	31,741	FT	FENCE, TYPE CLT	
										91							91	607	23001	91	FT	FENCE, TYPE CLT, AS PER PLAN	P.47
								4,793									4,793	608	10000	4,793	SF	4" CONCRETE WALK	
												172					172	608	13000	172	SF	6" CONCRETE WALK	
								1,161									1,161	608	52000	1,161	SF	CURB RAMP	
							2,152										2,152	622	10100	2,152	FT	CONCRETE BARRIER, SINGLE SLOPE, TYPE B1	
							192		194								386	622	10120	386	FT	CONCRETE BARRIER, SINGLE SLOPE, TYPE C	
							99										99	622	10121	99	FT	CONCRETE BARRIER, SINGLE SLOPE, TYPE C, AS PER PLAN	376A
							9,487										9,487	622	10140	9,487	FT	CONCRETE BARRIER, SINGLE SLOPE, TYPE C1	
							578		1,945								2,523	622	10160	2,523	FT	CONCRETE BARRIER, SINGLE SLOPE, TYPE D	
							1		1								2	622	24841	2	EACH	CONCRETE BARRIER END SECTION, TYPE B, AS PER PLAN	376A
							12		9								21	622	25000	21	EACH	CONCRETE BARRIER END SECTION, TYPE D	
							14										14	622	25006	14	EACH	CONCRETE BARRIER, END ANCHORAGE, REINFORCED, TYPE B1	
							3		1								4	622	25008	4	EACH	CONCRETE BARRIER, END ANCHORAGE, REINFORCED, TYPE C	
							1										1	622	25009	1	EACH	CONCRETE BARRIER, END ANCHORAGE, REINFORCED, TYPE C, AS PER PLAN	P.38
							46										46	622	25014	46	EACH	CONCRETE BARRIER, END ANCHORAGE, REINFORCED, TYPE C1	
							8		3								11	622	25050	11	EACH	CONCRETE BARRIER, END ANCHORAGE, REINFORCED, TYPE D	
					350												350	622	90000	350	FT	BARRIER, MISC.: NEW BARRIER MATCHING EXISTING SHAPE	P.48
																	LS	623	11000	LS		PROVIDING ELECTRONIC INSTRUMENTATION	
25																	25	623	39500	25	EACH	MONUMENT ASSEMBLY ADJUSTED TO GRADE	
4																	4	623	40500	4	EACH	REFERENCE MONUMENT, TYPE A	
		LS															LS	623	50000	LS		PRECONSTRUCTION SURVEY MONUMENT VERIFICATION AND REPORT	
			LS														LS	SPECIAL	69091000	LS		AS-BUILT CONSTRUCTION PLANS	P.46
					6												6	SPECIAL	69098000	6	EACH	VERTICAL CLEARANCE	P.48
									323								323	831	00100	323	FT	LONGITUDINAL CHANNELIZING DEVICE	

Preliminary Plans - For Reference Only

GENERAL SUMMARY

DESIGN AGENCY
ms consultants. inc.

DESIGNER
MSN

REVIEWER
CMN 08/29/25

PROJECT ID
121474

SHEET P.157 | TOTAL 655

MAH-680-4.58

MODEL: Sheet PAPERSIZE: 34x22 (in.) DATE: 9/15/2025 TIME: 1:42:08 PM PLTDRV: OHDOT_PDF_E+.pltcfg PENTBL: OHDOT_Pen.tbl USER: DHall@msconsultants.com WORKSPACE: OHDOTCEv02 WORKSET: 121474 PRODUCT: OpenRoadsDesigner 24.00.00.205
pw:\\ohiodot-pw.bentley.com:ohiodot-pw-02\Documents\01 Active Projects\District 04\Mahoning\121474\402-Engineering_MSConsultants\Roadway\Sheets\121474_GG002.dgn

SHEET NUMBER															PART.	ITEM	ITEM	GRAND	UNIT	DESCRIPTION	SEE SHEET NO.
P.47	P.49	P.50	P.51	P.178	P.179	P.180	P.181		P.192	P.193	P.194	P.197			01/IMS		EXT	TOTAL			
																				EROSION CONTROL	
	8								80						88	601	21050	88	SY	TIED CONCRETE BLOCK MAT WITH TYPE 1 UNDERLAYMENT	
										142					142	601	32000	142	CY	ROCK CHANNEL PROTECTION, TYPE A WITH FILTER	
25											161				186	601	32100	186	CY	ROCK CHANNEL PROTECTION, TYPE B WITH FILTER	
				5	3										8	601	32200	8	CY	ROCK CHANNEL PROTECTION, TYPE C WITH FILTER	
		6													6	659	00100	6	EACH	SOIL ANALYSIS TEST	
		54,401													54,401	659	00300	54,401	CY	TOPSOIL	
1,670	43,147	490,100													534,917	659	10000	534,917	SY	SEEDING AND MULCHING	
		24,505													24,505	659	14000	24,505	SY	REPAIR SEEDING AND MULCHING	
		24,505													24,505	659	15000	24,505	SY	INTER-SEEDING	
		68.35													68.35	659	20000	68.35	TON	COMMERCIAL FERTILIZER	
		101.26													101.26	659	31000	101.26	ACRE	LIME	
		2,713													2,713	659	35000	2,713	MGAL	WATER	
		1,102.73													1,102.73	659	40000	1,102.73	MSF	MOWING	
												10,836			10,836	660	25000	10,836	SY	SODDING STAKED	
										6,001	3,353	4,518			13,872	670	00720	13,872	SY	DITCH EROSION PROTECTION MAT, TYPE B	
															LS	832	15000	LS		STORM WATER POLLUTION PREVENTION PLAN	
															LS	832	15002	LS		STORM WATER POLLUTION PREVENTION INSPECTIONS	
															LS	832	15010	LS		STORM WATER POLLUTION PREVENTION INSPECTION SOFTWARE	
															350,000	832	30000	350,000	EACH	EROSION CONTROL	
										1,540					1,540	836	10000	1,540	SY	SEEDING AND EROSION CONTROL WITH TURF REINFORCING MAT, TYPE 1	
																				ENVIRONMENTAL / REMEDIATION	
			210												210	SPECIAL	69065016	210	TON	WORK INVOLVING PETROLEUM CONTAMINATED SOIL	P.51
			100												100	SPECIAL	69065022	100	GAL	WORK INVOLVING NON-REGULATED WATER	P.51
			100												100	SPECIAL	69065024	100	GAL	WORK INVOLVING REGULATED WATER	P.51
																				DRAINAGE	
				1.5	1.5	0.3	0.6								3.9	602	20000	3.9	CY	CONCRETE MASONRY	
									80,824						80,824	605	11110	80,824	FT	6" SHALLOW PIPE UNDERDRAINS WITH GEOTEXTILE FABRIC	
	25														25	605	13300	25	FT	6" UNCLASSIFIED PIPE UNDERDRAINS	
									47,144						47,144	605	14020	47,144	FT	6" BASE PIPE UNDERDRAINS WITH GEOTEXTILE FABRIC	
	300								2,756						3,056	611	01500	3,056	FT	6" CONDUIT, TYPE F	
				49		51	209								309	611	04400	309	FT	12" CONDUIT, TYPE B	
						48	17								65	611	04400	65	FT	12" CONDUIT, TYPE B, 706.02	
							9								9	611	04400	9	FT	12" CONDUIT, TYPE B, 707.45	
				14		32									46	611	04600	46	FT	12" CONDUIT, TYPE C	
				46											46	611	05201	46	FT	12" CONDUIT, TYPE F, AS PER PLAN, 707.33	P.50
				2,140	2,192	965	1,059								6,356	611	05900	6,356	FT	15" CONDUIT, TYPE B	
				495	638	369	387								1,889	611	06100	1,889	FT	15" CONDUIT, TYPE C	
					9	9									18	611	06100	18	FT	15" CONDUIT, TYPE C, 706.02	
					5										5	611	06100	5	FT	15" CONDUIT, TYPE C,706.08	
						43									43	611	06100	43	FT	15" CONDUIT, TYPE C, 707.33	
				198	286	610	130								1,224	611	07400	1,224	FT	18" CONDUIT, TYPE B	
							14								14	611	07400	14	FT	18" CONDUIT, TYPE B, 706.02	
				65											65	611	07600	65	FT	18" CONDUIT, TYPE C	
				31	133		53								217	611	08201	217	FT	18" CONDUIT, TYPE F, AS PER PLAN, 707.33	P.50
				1,064	348	826	36								2,274	611	10400	2,274	FT	24" CONDUIT, TYPE B	
				144	143										287	611	10600	287	FT	24" CONDUIT, TYPE C	
					10										10	611	11900	10	FT	27" CONDUIT, TYPE B	
				99											99	611	13400	99	FT	30" CONDUIT, TYPE B	
					485										485	611	16400	485	FT	36" CONDUIT, TYPE B	
				318											318	611	96600	318	FT	CONDUIT, BORED OR JACKED, 30" TYPE B	
		10													10	611	97400	10	FT	CONDUIT, MISC.: TYPE C FOR DRAINAGE DISCHARGE CONTINUANCE	P.50
		5													5	611	97400	5	FT	CONDUIT, MISC.: TYPE F FOR DRAINAGE DISCHARGE CONTINUANCE	P.50
				5											5	611	97400	5	FT	CONDUIT, MISC.:33" TYPE C, 706.02	P.50
						1									1	611	98150	1	EACH	CATCH BASIN, NO. 3	
				1	3	6	11								21	611	98180	21	EACH	CATCH BASIN, NO. 3A	

For Reference Only
Preliminary Plans - Not for Construction

GENERAL SUMMARY

DESIGN AGENCY
ms consultants. inc.

DESIGNER MSN
REVIEWER CMN 08/29/25
PROJECT ID 121474
SHEET P.158 TOTAL 655

MAH-680-4.58

MODEL: Sheet PAPERSIZE: 34x22 (in.) DATE: 9/15/2025 TIME: 1:42:12 PM PLTDRV: OHDOT_PDF_E+.pltcfg PENTBL: OHDOT_Pen.tbl USER: DHall@msconsultants.com WORKSPACE: OHDOTCEv02 WORKSET: 121474 PRODUCT: OpenRoadsDesigner 24.00.00.205
pw:\\ohiodot-pw.bentley.com:ohiodot-pw-02\Documents\01 Active Projects\District 04\Mahoning\121474\402-Engineering_MSConsultants\Roadway\Sheets\121474_GG003.dgn

SHEET NUMBER																	PART.	ITEM	ITEM	GRAND	UNIT	DESCRIPTION
P.47	P.48	P.49	P.50	P.74A	P.172	P.175	P.178	P.179	P.180	P.181	P.192	P.318				CALC	01/IMS		EXT	TOTAL		
																						DRAINAGE (CONT.)
							1										1	611	98230	1	EACH	CATCH BASIN, NO. 4
								1	2	5							8	611	98370	8	EACH	CATCH BASIN, NO. 6
							8	10	7	8							33	611	98410	33	EACH	CATCH BASIN, NO. 8
							1	1									2	611	98434	2	EACH	CATCH BASIN, NO. 8A
									2								2	611	98450	2	EACH	CATCH BASIN, NO. 2-2A
									4								4	611	98710	4	EACH	INLET, NO. 2-6
				1													1	611	99110	1	EACH	INLET, NO. 3 FOR SINGLE SLOPE BARRIER, TYPE C1
							15	14	5								34	611	99111	34	EACH	INLET, NO. 3 FOR SINGLE SLOPE BARRIER, TYPE C1, AS PER PLAN
							1			4							5	611	99114	5	EACH	INLET, NO. 3 FOR SINGLE SLOPE BARRIER, TYPE D
							2	3	2								7	611	99574	7	EACH	MANHOLE, NO. 3
							15	15	8								38	611	99575	38	EACH	MANHOLE, NO. 3, AS PER PLAN, BOLTED DOWN
		4									40						44	611	99710	44	EACH	PRECAST REINFORCED CONCRETE OUTLET
			2														2	611	99720	2	EACH	INSPECTION WELL
																						PAVEMENT
281																	281	251	01020	281	SY	PARTIAL DEPTH PAVEMENT REPAIR (442)
281																	281	253	01000	281	SY	PAVEMENT REPAIR
																1,121	1,121	254	01000	1,121	SY	PAVEMENT PLANING, ASPHALT CONCRETE, (1.5")
5																48,181	48,186	302	56000	48,186	CY	ASPHALT CONCRETE BASE, PG64-22, (449)
52												2				39,119	39,173	304	20000	39,173	CY	AGGREGATE BASE
2																38,248	38,250	407	20000	38,250	GAL	NON-TRACKING TACK COAT
																50	50	409	30000	50	FT	SAWING AND SEALING ASPHALT CONCRETE PAVEMENT JOINTS
					496	604											1,100	441	70800	1,100	CY	ASPHALT CONCRETE INTERMEDIATE COURSE, TYPE 1,
																						(449), (UNDER GUARDRAIL)
																10,774	10,774	442	10080	10,774	CY	ASPHALT CONCRETE INTERMEDIATE COURSE, 12.5 MM, TYPE A (446)
																8,643	8,643	442	10300	8,643	CY	ASPHALT CONCRETE SURFACE COURSE, 12.5 MM, TYPE A (447)
2																47	49	442	22100	49	CY	ASPHALT CONCRETE SURFACE COURSE, 12.5 MM, TYPE A (449)
2	10																12	442	22300	12	CY	ASPHALT CONCRETE INTERMEDIATE COURSE, 12.5 MM, TYPE A (449)
																4,093	4,093	452	14010	4,093	SY	10" NON-REINFORCED CONCRETE PAVEMENT, CLASS QC 1P

Preliminary Plans - For Reference Only

GENERAL SUMMARY

MAH-680-4.58

MODEL: Sheet PAPERSIZE: 34x22 (in.) DATE: 9/15/2025 TIME: 1:42:17 PM PLTDRV: OHDOT_PDF_E+.pltcfg PENTBL: OHDOT_Pen.tbl USER: DHall@msconsultants.com WORKSPACE: OHDOTCEv02 WORKSET: 121474 PRODUCT: OpenRoadsDesigner 24.00.00.205
pw:\\ohiodot-pw.bentley.com:ohiodot-pw-02\Documents\01 Active Projects\District 04\Mahoning\121474\402-Engineering_MSConsultants\Roadway\Sheets\121474_GG004.dgn

DESIGN AGENCY
ms consultants, inc.

DESIGNER MSN

REVIEWER CMN 08/29/25

PROJECT ID 121474

SHEET P.159 TOTAL 655

SHEET NUMBER																	PART.	ITEM	ITEM	GRAND	UNIT	DESCRIPTION	SEE SHEET NO.
P.48	P.173	P.177	P.428	P.467	P.468	P.469	P.470	P.471	P.472	P.473	P.474					CALC	01/IMS		EXT	TOTAL			
																						PAVEMENT (CONT.)	
	367	276															643	609	24510	643	FT	CURB, TYPE 4-C	
		6,388															6,388	609	26000	6,388	FT	CURB, TYPE 6	
		369															369	609	72000	369	SY	CONCRETE MEDIAN	
																9.73	9.73	618	40600	9.73	MILE	RUMBLE STRIPS, SHOULDER (ASPHALT CONCRETE)	
																						LIGHTING	
					72	56	30										158	625	00450	158	EACH	CONNECTION, FUSED PULL APART	
					36	28	15										79	625	00460	79	EACH	CONNECTION, UNFUSED PULL APART	
					24	24	3										51	625	00470	51	EACH	CONNECTION, UNFUSED BOLTED	
					33	54	12										99	625	00480	99	EACH	CONNECTION, UNFUSED PERMANENT	
					36	28	15										79	625	10494	79	EACH	LIGHT POLE, LOW MAST, 50'	
2																	2	625	10503	2	EACH	LIGHT POLE (INSTALLATION ONLY), AS PER PLAN	P.54
					1	3											4	625	12200	4	EACH	LIGHT TOWER, BBB100	
					10	8	10										28	625	14200	28	EACH	LIGHT POLE FOUNDATION, 24" X 10' DEEP	
2					26	20	5										53	625	14306	53	EACH	MEDIAN LIGHT POLE FOUNDATION, 10' DEEP	
					1	3											4	625	15200	4	EACH	LIGHT TOWER FOUNDATION, 36" X 25' DEEP	
								26,709	20,631	4,356							51,696	625	23200	51,696	FT	NO. 4 AWG 2400 VOLT DISTRIBUTION CABLE	
168					6,480	5,040	2,700										14,388	625	23400	14,388	FT	NO. 10 AWG POLE AND BRACKET CABLE	
								1,938	2,447	2,221							6,606	625	24320	6,606	FT	1-1/2" DUCT CABLE WITH THREE NO. 4 AWG 2400 VOLT CABLES	
																1,370	1,370	625	25400	1,370	FT	CONDUIT, 2", 725.04	
								6,393	4,805	1,247							12,445	625	25408	12,445	FT	CONDUIT, 2", 725.051	
								1,782	951	125							2,858	625	25500	2,858	FT	CONDUIT, 3", 725.04	
								85	332								417	625	25906	417	FT	CONDUIT, JACKED OR DRILLED, 725.051, 3"	
								444	162								606	625	25911	606	FT	CONDUIT CLEANED AND CABLES REMOVED, AS PER PLAN	P.467
					1	3											4	625	26262	4	EACH	LUMINAIRE, HIGH MAST, SOLID STATE (LED), TYPE V	
					10	8	10										28	625	26272	28	EACH	LUMINAIRE, LOW MAST, SOLID STATE (LED), TYPE III	
					26	20	5										51	625	26272	51	EACH	LUMINAIRE, LOW MAST, SOLID STATE (LED), TYPE V	
2																	2	625	27561	2	EACH	LUMINAIRE, INSTALLATION ONLY, AS PER PLAN	P.54
								2,745	3,228	2,256						685	8,914	625	29000	8,914	FT	TRENCH	
					1												1	625	29900	1	EACH	JUNCTION BOX	
					6	8	1										15	625	29930	15	EACH	MEDIAN JUNCTION BOX	
					9	15	4										28	625	30700	28	EACH	PULL BOX, 725.08, 18"	
					2	4											6	625	30706	6	EACH	PULL BOX, 725.08, 24"	
											15						15	625	31510	15	EACH	PULL BOX REMOVED	
			25		38	34	15										112	625	32000	112	EACH	GROUND ROD	
								1									1	625	33000	1	EACH	STRUCTURE GROUNDING SYSTEM	
					2	2											4	625	34001	4	EACH	POWER SERVICE, AS PER PLAN	P.467
					2	2											4	625	34450	4	EACH	CONTROL CENTER CABINET, COMPLETE	
								2,745	3,228	2,256							8,229	625	36011	8,229	FT	UNDERGROUND WARNING/MARKING TAPE, AS PER PLAN	P.467
					3												3	625	39520	3	EACH	PULL BOX CLEANED	
				LS													LS	SPECIAL	62540000	LS		MAINTAIN EXISTING LIGHTING	P.467
				10													10	SPECIAL	62540010	10	EACH	REPLACEMENT OF EXISTING LIGHTING UNIT	P.467
											9						9	625	75350	9	EACH	LIGHT TOWER REMOVED	
											82						82	625	75400	82	EACH	LIGHT POLE REMOVED	
2																	2	625	75410	2	EACH	LIGHT POLE REMOVED FOR REUSE	
											82						82	625	75500	82	EACH	LIGHT POLE FOUNDATION REMOVED	
											9						9	625	75540	9	EACH	LIGHT TOWER FOUNDATION REMOVED	
1																	1	625	75800	1	EACH	DISCONNECT CIRCUIT	
				4	2	2											8	625	76000	8	EACH	ARC FLASH CALCULATIONS AND LABEL	
																	LS	625	98200	LS		LIGHTING, MISC.: INTELLIGENT TRANSPORTATION SYSTEMS (ITS)	
																						(ITS ITEMS TO BE PROVIDED AHEAD OF FINAL TRACINGS SUBMISSION)	
																34	34	809	00530	34	EACH	ITS JUNCTION BOX, 17x24x6 INCHES	
																11	11	809	01900	11	EACH	ITS PULL BOX WITH PAD AND STANDARD LID ASSEMBLY, 32" WIDE, TYPE 1	
																12,810	12,810	809	23900	12,810	FT	CONDUIT, 2" DIAMETER, HDPE	

Preliminary Plans - For Reference Only

GENERAL SUMMARY

DESIGN AGENCY
ms consultants. inc.

DESIGNER
MSN

REVIEWER
CMN 08/29/25

PROJECT ID
121474

SHEET P.160 TOTAL 655

MAH-680-4.58

MODEL: Sheet PAPERSIZE: 34x22 (in.) DATE: 9/15/2025 TIME: 1:42:22 PM PLTDRV: OHDOT_PDF_E+.pltcfg PENTBL: OHDOT_Pen.tbl USER: DHall@msconsultants.com WORKSPACE: OHDOTCEv02 WORKSET: 121474 PRODUCT: OpenRoadsDesigner 24.00.00.205
pw:\\ohiodot-pw.bentley.com:ohiodot-pw-02\Documents\01 Active Projects\District 04\Mahoning\121474\402-Engineering_MSConsultants\Roadway\Sheets\121474_GG005.dgn

SHEET NUMBER															PART.	ITEM	ITEM EXT	GRAND TOTAL	UNIT	DESCRIPTION	SEE SHEET NO.
P.74	P.172	P.173	P.175	P.177	P.192	P.420	P.426	P.428	P.430	P.431	P.432	P.438			01/IMS						
																				TRAFFIC CONTROL	
										354					354	620	00500	354	EACH	DELINEATOR, POST GROUND MOUNTED, TYPE C	
					40										40	620	00501	40	EACH	DELINEATOR, POST GROUND MOUNTED, AS PER PLAN	P.50
											659				659	621	00100	659	EACH	RPM, TWO-WAY	
											1,103				1,103	621	00101	1,103	EACH	RPM, AS PER PLAN, ONE-WAY	P.420
											1,161				1,161	621	54000	1,161	EACH	RAISED PAVEMENT MARKER REMOVED	
		27													27	626	00102	27	EACH	BARRIER REFLECTOR, TYPE 1, 1 WAY	
		245		47											292	626	00102	292	EACH	BARRIER REFLECTOR, TYPE 1, BIDIRECTIONAL	
	116														116	626	00110	116	EACH	BARRIER REFLECTOR, TYPE 2, 1 WAY	
	35		239												274	626	00110	274	EACH	BARRIER REFLECTOR, TYPE 2, BIDIRECTIONAL	
							220								220	630	02100	220	FT	GROUND MOUNTED SUPPORT, NO. 2 POST	
							2,783								2,783	630	03101	2,783	FT	GROUND MOUNTED SUPPORT, NO. 3 POST, AS PER PLAN	P.420
							519								519	630	04100	519	FT	GROUND MOUNTED SUPPORT, NO. 4 POST	
							50								50	630	06100	50	FT	GROUND MOUNTED SUPPORT, NO. 6 POST	
								257							257	630	06400	257	FT	GROUND MOUNTED STRUCTURAL BEAM SUPPORT, S4X7.7	
								306							306	630	06500	306	FT	GROUND MOUNTED STRUCTURAL BEAM SUPPORT, W6X9	
								137							137	630	07000	137	FT	GROUND MOUNTED STRUCTURAL BEAM SUPPORT, W8X18	
								51							51	630	07500	51	FT	GROUND MOUNTED STRUCTURAL BEAM SUPPORT, W10X22	
								168							168	630	07600	168	FT	GROUND MOUNTED STRUCTURAL BEAM SUPPORT, W10X12	
							371								371	630	08004	371	FT	ONE WAY SUPPORT, NO. 3 POST	
							194								194	630	08600	194	EACH	SIGN POST REFLECTOR	
								46							46	630	09000	46	EACH	BREAKAWAY STRUCTURAL BEAM CONNECTION	
								3							3	630	72320	3	EACH	OVERHEAD SIGN SUPPORT, TYPE TC-12.31, DESIGN 6	
								2							2	630	72330	2	EACH	OVERHEAD SIGN SUPPORT, TYPE TC-12.31, DESIGN 10	
								7							7	630	72410	7	EACH	OVERHEAD SIGN SUPPORT, TYPE TC-15.116, DESIGN 1	
								3							3	630	72420	3	EACH	OVERHEAD SIGN SUPPORT, TYPE TC-15.116, DESIGN 2	
								64							64	630	75000	64	EACH	SIGN ATTACHMENT ASSEMBLY	
							22								22	630	79611	22	EACH	SIGN SUPPORT ASSEMBLY, BARRIER MOUNTED, AS PER PLAN	P.466
							2,631								2,631	630	80100	2,631	SF	SIGN, FLAT SHEET	
								1,234							1,234	630	80200	1,234	SF	SIGN, GROUND MOUNTED EXTRUSHEET	
								8,072							8,072	630	80224	8,072	SF	SIGN, OVERHEAD EXTRUSHEET	
522															522	630	80300	522	SF	SIGN, TEMPORARY OVERLAY	
102															102	630	83000	102	SF	COVERING OF SIGN	
								8							8	630	84010	8	EACH	CONCRETE BARRIER MEDIAN OVERHEAD SIGN SUPPORT FOUNDATION, TYPE TC-21.50	
								48							48	630	84500	48	EACH	GROUND MOUNTED STRUCTURAL BEAM SUPPORT FOUNDATION	
								18							18	630	84510	18	EACH	RIGID OVERHEAD SIGN SUPPORT FOUNDATION	
						243									243	630	84900	243	EACH	REMOVAL OF GROUND MOUNTED SIGN AND DISPOSAL	
									33						33	630	85400	33	EACH	REMOVAL OF GROUND MOUNTED MAJOR SIGN AND DISPOSAL	
						249									249	630	86002	249	EACH	REMOVAL OF GROUND MOUNTED POST SUPPORT AND DISPOSAL	
									48						48	630	86102	48	EACH	REMOVAL OF GROUND MOUNTED STRUCTURAL BEAM SUPPORT AND DISPOSAL	
									76						76	630	87400	76	EACH	REMOVAL OF OVERHEAD MOUNTED SIGN AND DISPOSAL	
						5									5	630	87500	5	EACH	REMOVAL OF POLE MOUNTED SIGN AND DISPOSAL	
							1								1	630	87520	1	EACH	REMOVAL OF POLE MOUNTED SIGN AND REERECTION	
									6						6	630	89706	6	EACH	REMOVAL OF OVERHEAD SIGN SUPPORT AND DISPOSAL, TYPE TC-12.30	
									10						10	630	89802	10	EACH	REMOVAL OF OVERHEAD SIGN SUPPORT AND DISPOSAL, TYPE TC-7.65	
40															40	630	89894	40	EACH	REMOVAL OF TEMPORARY OVERLAY SIGN AND DISPOSAL	
						48									48	630	89902	48	EACH	REMOVAL OF MISCELLANEOUS TRAFFIC CONTROL ITEM, BEAM SUPPORT FOUNDATION	P.420
												178			178	646	10400	178	FT	STOP LINE	
												475			475	646	10510	475	FT	CROSSWALK LINE, 12"	
												68			68	646	10600	68	FT	TRANSVERSE/DIAGONAL LINE	
												281			281	646	10800	281	SF	ISLAND MARKING	
												12			12	646	20300	12	EACH	LANE ARROW	
												16			16	646	20320	16	EACH	WRONG WAY ARROW	
												22			22	807	12010	22	MILE	WET REFLECTIVE EPOXY PAVEMENT MARKING, EDGE LINE, 6"	
												11			11	807	12110	11	MILE	WET REFLECTIVE EPOXY PAVEMENT MARKING, LANE LINE, 6"	
												14,943			14,943	807	12310	14,943	FT	WET REFLECTIVE EPOXY PAVEMENT MARKING, CHANNELIZING LINE, 12"	
												8,908			8,908	807	12410	8,908	FT	WET REFLECTIVE EPOXY PAVEMENT MARKING, DOTTED LINE, 6"	

Preliminary Plans - For Reference Only

GENERAL SUMMARY

DESIGN AGENCY
ms consultants, inc.

DESIGNER MSN
REVIEWER CMN 08/29/25
PROJECT ID 121474
SHEET P.161 TOTAL 655

MAH-680-4.58

MODEL: Sheet PAPERSIZE: 34x22 (in.) DATE: 9/15/2025 TIME: 1:42:26 PM PLTDRV: OHDOT_PDF_E+.pltcfg PENTBL: OHDOT_Pen.tbl USER: DHall@msconsultants.com WORKSPACE: OHDOTCEv02 WORKSET: 121474 PRODUCT: OpenRoadsDesigner 24.00.00.205
pw:\\ohiodot-pw.bentley.com:ohiodot-pw-02\Documents\01 Active Projects\District 04\Mahoning\121474\402-Engineering_MSConsultants\Roadway\Sheets\121474_GG006.dgn

SHEET NUMBER																PART.	ITEM	ITEM EXT	GRAND TOTAL	UNIT	DESCRIPTION	SEE SHEET NO.
P.46	P.52	P.53	P.54	P.55	P.56	P.57	P.58	P.74	P.438							01/IMS						
																					TRAFFIC CONTROL (CONT.)	
									30							30	850	10010	30	MILE	GROOVING FOR 6" RECESSED PAVEMENT MARKING, (ASPHALT)	
									8,201							8,201	850	10110	8,201	FT	GROOVING FOR 6" RECESSED PAVEMENT MARKING, (ASPHALT)	
									14,471							14,471	850	10130	14,471	FT	GROOVING FOR 12" RECESSED PAVEMENT MARKING, (ASPHALT)	
									3							3	850	20010	3	MILE	GROOVING FOR 6" RECESSED PAVEMENT MARKING, (CONCRETE)	
									707							707	850	20110	707	FT	GROOVING FOR 6" RECESSED PAVEMENT MARKING, (CONCRETE)	
									472							472	850	20130	472	FT	GROOVING FOR 12" RECESSED PAVEMENT MARKING, (CONCRETE)	
																					STRUCTURE OVER 20 FOOT SPAN (MAH-680-04.886)	P.491
																					MAINTENANCE OF TRAFFIC	
						550										550	614	11110	550	HOUR	LAW ENFORCEMENT OFFICER WITH PATROL CAR FOR ASSISTANCE	
						1,933		14,186								16,119	614	11630	16,119	FT	INCREASED BARRIER DELINEATION	
								30								30	614	12380	30	EACH	WORK ZONE IMPACT ATTENUATOR, 24" WIDE HAZARDS, (UNIDIRECTIONAL)	
	LS															LS	614	12420	LS		DETOUR SIGNING	
				75												75	614	12484	75	EACH	WORK ZONE INCREASED PENALTIES SIGN	
			50													50	614	12500	50	EACH	REPLACEMENT SIGN	
			100													100	614	12600	100	EACH	REPLACEMENT DRUM	
				1												1	614	12756	1	EACH	WORK ZONE CROSSOVER LIGHTING SYSTEM	
								10,257								10,257	614	12801	10,257	EACH	WORK ZONE RAISED PAVEMENT MARKER, AS PER PLAN	P.56
	500															500	614	13000	500	CY	ASPHALT CONCRETE FOR MAINTAINING TRAFFIC	
						1,123		5,478								6,601	614	13310	6,601	EACH	BARRIER REFLECTOR, TYPE 1, ONE-WAY	
						292										292	614	13312	292	EACH	BARRIER REFLECTOR, TYPE 2, ONE-WAY	
						570		1,503								2,073	614	13350	2,073	EACH	OBJECT MARKER, ONE WAY	
								682								682	614	13360	682	EACH	OBJECT MARKER, TWO WAY	
							50,000									50,000	614	18000	50,000	EACH	MAINTAINING TRAFFIC, MISC.: BRIDGE DECK AND PAVEMENT PATCHING	P.58
							50,000									50,000	614	18000	50,000	EACH	MAINTAINING TRAFFIC, MISC.: SAFETY REPAIRS	P.58
					72											72	614	18601	72	SNMT	PORTABLE CHANGEABLE MESSAGE SIGN, AS PER PLAN	P.56
								7.99								7.99	614	20056	7.99	MILE	WORK ZONE LANE LINE, CLASS I, 6", 807 PAINT	
								6.37								6.37	614	20366	6.37	MILE	WORK ZONE LANE LINE, CLASS I, 6", 648	
								34.83								34.83	614	22056	34.83	MILE	WORK ZONE EDGE LINE, CLASS I, 6", 807 PAINT	
								13.92								13.92	614	22336	13.92	MILE	WORK ZONE EDGE LINE, CLASS I, 6", 648	
								45,803								45,803	614	23110	45,803	FT	WORK ZONE CHANNELIZING LINE, CLASS I, 12", 807 PAINT	
								10,702								10,702	614	23150	10,702	FT	WORK ZONE CHANNELIZING LINE, CLASS I, 12", 648	
								10,322								10,322	614	24102	10,322	FT	WORK ZONE DOTTED LINE, CLASS I, 6", 807 PAINT	
								5,859								5,859	614	24142	5,859	FT	WORK ZONE DOTTED LINE, CLASS I, 6", 648	
								123								123	614	25120	123	FT	WORK ZONE TRANSVERSE/DIAGONAL LINE, CLASS I, 648	
								106								106	614	26120	106	FT	WORK ZONE STOP LINE, CLASS I, 648	
								203								203	614	27010	203	FT	WORK ZONE CROSSWALK LINE, CLASS I, 12"	
								12								12	614	30120	12	EACH	WORK ZONE ARROW, CLASS I, 648	
								9								9	614	30121	9	EACH	WORK ZONE ARROW, CLASS I, 648, AS PER PLAN	P.54
						LS										LS	615	10000	LS		ROADS FOR MAINTAINING TRAFFIC	
								8,557								8,557	615	20001	8,557	SY	PAVEMENT FOR MAINTAINING TRAFFIC, CLASS A, AS PER PLAN	P.57
							1,000									1,000	615	25001	1,000	SY	PAVEMENT FOR MAINTAINING TRAFFIC, CLASS B, AS PER PLAN, TYPE 1	P.58
							1,000									1,000	615	25001	1,000	SY	PAVEMENT FOR MAINTAINING TRAFFIC, CLASS B, AS PER PLAN, TYPE 2	P.58
							1,000									1,000	615	25001	1,000	SY	PAVEMENT FOR MAINTAINING TRAFFIC, CLASS B, AS PER PLAN, TYPE 3	P.58
							1,000									1,000	615	25001	1,000	SY	PAVEMENT FOR MAINTAINING TRAFFIC, CLASS B, AS PER PLAN, TYPE 4	P.58
		160														160	616	10000	160	MGAL	WATER	
								17,590								17,590	622	41011	17,590	FT	PORTABLE BARRIER, 50", AS PER PLAN, A	P.54
								456								456	622	41011	456	FT	PORTABLE BARRIER, 50", AS PER PLAN, B	P.54
								36,883								36,883	622	41100	36,883	FT	PORTABLE BARRIER, UNANCHORED	
				36												36	808	18700	36	SNMT	DIGITAL SPEED LIMIT (DSL) SIGN ASSEMBLY	
																					INCIDENTALS	
																LS	108	10000	LS		CPM PROGRESS SCHEDULE	
																LS	614	11000	LS		MAINTAINING TRAFFIC	
24																24	619	16021	24	MNTH	FIELD OFFICE, TYPE C, AS PER PLAN	P.46
																LS	623	10000	LS		CONSTRUCTION LAYOUT STAKES AND SURVEYING	
																LS	624	10000	LS		MOBILIZATION	

Preliminary Plans - For Reference Only

GENERAL SUMMARY

MAH-680-4.58

MODEL: Sheet PAPERSIZE: 34x22 (in.) DATE: 9/15/2025 TIME: 1:42:45 PM PLTDRV: OHDOT_PDF_E+.pltcfg PENTBL: OHDOT_Pen.tbl USER: DHall@msconsultants.com WORKSPACE: OHDOTCEv02 WORKSET: 121474 PRODUCT: OpenRoadsDesigner 24.00.00.205
pw:\\ohiodot-pw.bentley.com:ohiodot-pw-02\Documents\01 Active Projects\District 04\Mahoning\121474\402-Engineering_MSConsultants\Roadway\Sheets\121474_GG007.dgn

DESIGN AGENCY
ms consultants, inc.

DESIGNER MSN

REVIEWER CMN 08/29/25

PROJECT ID 121474

SHEET P.161A TOTAL 655

REF NO.	SHEET NO.	STATION TO STATION					202 CONCRETE MEDIAN REMOVED SY	202 CONCRETE BARRIER REMOVED FT	202 CURB REMOVED FT	202 GUARDRAIL REMOVED FT	202 IMPACT ATTENUATOR REMOVED EACH
		I.R. 680									
BR-1	P.202	950+65.76	CL	TO	962+18.91	CL		1153			
		RAMP C2			**I.R. 680**						
GR-1	P.202	15+83.68	RT	TO	957+98.63	RT				700	
		I.R. 680									
BR-2	P.202	957+96.49	RT	TO	958+59.79	RT		66			
BR-3	P.202	958+97.33	LT	TO	959+88.01	LT		86			
GR-2	P.202	959+88.67	LT	TO	962+50.15	LT				250	
GR-3	P.204	961+19.25	RT	TO	962+50.15	RT				150	
GR-4	P.204	968+62.59	LT	TO	971+63.04	LT				300	
GR-5	P.204	968+63.14	RT	TO	970+21.43	RT				162.5	
BR-4	P.204	968+77.01	LT	TO	968+94.95	LT		18			
BR-5	P.204	968+77.60	CL	TO	978+94.20	CL		1017			
GR-6	P.206	974+97.85	LT	TO	979+05.75	LT				412.5	
GR-7	P.206	977+78.39	RT	TO	979+05.90	RT				127.5	
CR-1	P.206	978+92.77	LT	TO	979+05.77	LT			13		
CR-2	P.206	978+92.90	RT	TO	979+05.90	RT			13		
GR-8	P.206	980+94.19	LT	TO	995+74.53	LT				1500	
CR-3	P.206	980+94.19	LT	TO	981+07.19	LT			13		
CR-4	P.206	980+94.95	RT	TO	981+06.84	RT			12		
BR-6	P.206	981+06.79	CL	TO	1004+83.46	CL		2377			
		RAMP J			**I.R. 680**						
GR-9	P.210	12+12.16	LT	TO	1004+77.72	LT				1212.5	
		I.R. 680									
GR-10	P.210	999+91.33	RT	TO	1005+11.93	RT				512.5	
CR-5	P.212	1004+74.97	RT	TO	1005+11.94	RT			36		
CR-6	P.212	1006+80.24	LT	TO	1006+92.96	LT			13		
GR-11	P.212	1006+80.24	LT	TO	1019+26.68	LT				1267.5	
BR-7	P.212	1007+13.96	CL	TO	1044+28.33	CL		3714			
GR-12	P.212	1007+24.09	RT	TO	1011+95.02	RT				462.5	
CR-7	P.214	1021+72.54	RT	TO	1025+65.75	RT			404		
MR-1	P.214	1021+73.23	RT	TO	1022+26.61	RT	27.5				
GR-13	P.214	1024+38.14	RT	TO	1024+58.21	RT					1
BR-23	P.214	1024+56.86	RT	TO	1025+37.82	RT		84			
CR-8	P.214	1024+89.07	LT	TO	1025+52.06	LT			61		
CR-9	P.214	1025+95.73	LT	TO	1029+70.59	LT			356		
GR-14	P.218	1039+09.80	RT	TO	1041+19.82	RT				200	
BR-8	P.218	1041+19.98	RT	TO	1043+08.07	RT		179			
GR-15	P.218	1043+08.14	RT	TO	1044+75.20	RT				162.5	
BR-9	P.218	1043+28.70	LT	TO	1044+03.92	LT		83			
CR-10	P.218	1044+60.38	RT	TO	1044+75.22	RT			14		
GR-16	P.218	1046+18.00	LT	TO	1047+75.64	LT				175	
CR-11	P.218	1046+20.02	LT	TO	1046+26.64	LT			7		
BR-10	P.218	1046+90.67	CL	TO	1073+61.10	CL		2670			
BR-11	P.218	1047+73.61	LT	TO	1048+38.06	LT		67			
GR-17	P.218	1047+81.43	RT	TO	1052+59.67	RT				475	
GR-18	P.220	1048+39.30	LT	TO	1049+98.66	LT				162.5	
GR-19	P.220	1058+68.08	RT	TO	1060+11.23	RT				150	
BR-12	P.222	1059+99.87	RT	TO	1060+68.18	RT		69			
TOTALS CARRIED TO SHEET P.163							28	11584	942	8383	1

For Reference Only
Preliminary Plans - Not

ROADWAY REMOVAL SUBSUMMARY

DESIGN AGENCY
ms consultants, inc.

DESIGNER KPK
REVIEWER CMN 08/29/25
PROJECT ID 121474
SHEET P.162 TOTAL 655

MAH-680-4.58

MODEL: Sheet PAPERSIZE: 34x22 (in.) DATE: 9/15/2025 TIME: 1:44:21 PM PLTDRV: OHDOT_PDF_E+.pltcfg PENTBL: OHDOT_Pen.tbl USER: DHall@msconsultants.com WORKSPACE: OHDOTCEv02 WORKSET: 121474 PRODUCT: OpenRoadsDesigner 24.00.00.205
pw:\\ohiodot-pw.bentley.com:ohiodot-pw-02\Documents\01 Active Projects\District 04\Mahoning\121474\402-Engineering_MSConsultants\Roadway\Sheets\121474_GS001.dgn

REF NO.	SHEET NO.	STATION TO STATION					202 CONCRETE MEDIAN REMOVED SY		202 CONCRETE BARRIER REMOVED FT			202 CURB REMOVED FT	202 GUARDRAIL REMOVED FT		202 IMPACT ATTENUATOR REMOVED EACH
		I.R. 680													
BR-13	P.222	1060+12.38	LT	TO	1060+78.91	LT			67						
GR-20	P.222	1060+76.86	LT	TO	1065+42.39	LT							475		
GR-21	P.222	1064+12.90	RT	TO	1066+03.22	RT							200		
GR-22	P.222	1069+91.06	RT	TO	1073+64.78	RT							400		
GR-23	P.224	1069+99.78	LT	TO	1073+80.84	LT							362.5		
GR-24	P.224	1075+17.86	RT	TO	1076+93.92	RT							187.5		
BR-14	P.224	1075+47.05	CL	TO	1076+82.34	CL			135						
CR-12	P.224	1075+54.51	LT	TO	1075+72.48	LT						17			
GR-25	P.224	1075+54.52	LT	TO	1076+86.31	LT							125		
GR-26	P.224	1078+49.78	LT	TO	1082+06.92	LT							337.5		
CR-13	P.224	1078+62.64	LT	TO	1078+81.67	LT						18			
BR-15	P.224	1078+73.94	CL	TO	1097+24.61	CL			1851						
GR-27	P.226	1081+91.35	RT	TO	1083+64.48	RT							187.5		
GR-28	P.226	1084+43.98	LT	TO	1085+82.45	LT							137.5		
BR-16	P.228	1092+90.60	LT	TO	1094+28.37	LT			138						
GR-68	P.228	1094+28.95	LT	TO	1095+03.25	LT							75		
					TOTALS FROM THIS SHEET				2191			35	2488		
					TOTALS FROM SHEET P.162		28		11584			942	8383		1
TOTALS CARRIED TO GENERAL SUMMARY							28		13775			977	10871		1

Preliminary Plans - For Reference Only

ROADWAY REMOVAL SUBSUMMARY

DESIGN AGENCY
ms consultants, inc.

DESIGNER KPK
REVIEWER CMN 08/29/25
PROJECT ID 121474
SHEET P.163 TOTAL 655

MAH-680-4.58

MODEL: Sheet PAPERSIZE: 34x22 (in.) DATE: 9/15/2025 TIME: 1:44:28 PM PLTDRV: OHDOT_PDF_E+.pltcfg PENTBL: OHDOT_Pen.tbl USER: DHall@msconsultants.com WORKSPACE: OHDOTCEv02 WORKSET: 121474 PRODUCT: OpenRoadsDesigner 24.00.00.205
pw:\\ohiodot-pw.bentley.com:ohiodot-pw-02\Documents\01 Active Projects\District 04\Mahoning\121474\402-Engineering_MSConsultants\Roadway\Sheets\121474_GS002.dgn

REF NO.	SHEET NO.						202 WALK REMOVED SF	202 CONCRETE MEDIAN REMOVED SY	202 CONCRETE BARRIER REMOVED FT	202 CURB REMOVED FT	202 GUARDRAIL REMOVED FT
		RAMP B3									
GR-29	P.201	1+81.24	RT	TO	11+09.03	RT					925
GR-30	P.201	6+39.25	LT	TO	10+39.34	LT					413
CR-14	P.230	9+60.90	LT	TO	10+25.30	LT				69	
CR-15	P.230	10+73.62	RT	TO	11+09.03	RT				34	
		RAMP C									
CR-16	P.231	0+06.87	RT	TO	0+80.61	RT				84	
GR-31	P.231	0+20.22	RT	TO	1+34.41	RT					125
CR-17	P.231	0+36.57	LT	TO	0+80.74	LT				46	
GR-32	P.231	0+46.41	LT	TO	1+56.11	LT					112.5
CR-18	P.231	1+18.37	RT	TO	1+35.16	RT				17	
CR-19	P.231	1+30.74	LT	TO	1+56.74	LT				26	
CR-20	P.201	4+36.55	RT	TO	4+51.55	RT				15	
CR-21	P.201	4+58.99	LT	TO	4+78.99	LT				20	
GR-33	P.201	4+59.42	LT	TO	7+57.97	LT					300
		RAMP C3									
GR-34	P.201	952+93.79	LT	TO	954+50.39						200
		SR 193									
GR-35	P.201	1+10.61	LT	TO	2+71.11	LT					162.5
CR-65	P.230	2+62.92	LT	TO	2+75.85	LT				26	
		RAMP D									
GR-36	P.202	1+33.88	RT	TO	16+58.82	RT					1525
GR-37	P.230	8+06.23	LT	TO	15+15.16	LT					712.5
CR-22	P.230	16+53.42	RT	TO	19+10.74	RT				273	
CR-23	P.230	18+40.19	LT	TO	18+70.99	LT				33	
CR-24	P.230	18+75.87	LT	TO	18+80.76	LT				6	
		RAMP G									
CR-25	P.206	2+36.43	RT	TO	3+25.41	RT				99	
WR-1	P.206	2+36.90	RT	TO	2+52.94	RT	63				
		RAMP F									
GR-38	P.206	5+38.77	RT	TO	10+04.40	RT					462.5
GR-39	P.208	8+90.64	LT	TO	10+47.43	LT					175
CR-26	P.234	13+54.25	LT	TO	14+65.83	LT				117	
MR-2	P.234	14+65.83	LT	TO	16+74.14	LT		122			
CR-27	P.234	14+88.71	RT	TO	16+77.72	RT				189	
		RAMP H									
CR-28	P.234	2+59.25	RT	TO	3+87.92	RT				138	
CR-29	P.234	2+02.00	LT	TO	3+90.74	LT				187	
		RAMP J									
CR-30	P.208	11+65.98	LT	TO	14+92.60	LT				326	
CR-31	P.208	14+01.37	RT	TO	14+92.60	RT				93	
		RAMP K									
GR-40	P.214	5+24.71	RT	TO	7+15.00	RT					200
BR-17	P.214	7+12.51	RT	TO	7+90.24	RT			78		
GR-41	P.214	7+87.97	RT	TO	10+59.20	RT					275
CR-32	P.214	7+94.02	LT	TO	17+27.31	LT				887	
CR-33	P.214	10+22.14	RT	TO	19+05.10	RT				913	
GR-42	P.214	11+71.85	LT	TO	16+57.46	LT					487.5
WR-2	P.235	16+72.23	LT	TO	17+27.31	LT	628				
WR-3	P.235	16+94.80	RT	TO	19+00.51	RT	2385				
SUBTOTALS CARRIED TO SHEET P.166							3076	122	78	3598	6075

For Reference Only
Preliminary Plans - For

RAMP ROADWAY REMOVAL SUBSUMMARY

MAH-680-4.58

MODEL: Sheet PAPERSIZE: 34x22 (in.) DATE: 9/15/2025 TIME: 1:44:33 PM PLTDRV: OHDOT_PDF_E+.pltcfg PENTBL: OHDOT_Pen.tbl USER: DHall@msconsultants.com WORKSPACE: OHDOTCEv02 WORKSET: 121474 PRODUCT: OpenRoadsDesigner 24.00.00.205
pw:\\ohiodot-pw.bentley.com:ohiodot-pw-02\Documents\01 Active Projects\District 04\Mahoning\121474\402-Engineering_MSConsultants\RoadwaySheets\121474_GS003.dgn

DESIGN AGENCY
ms consultants, inc.

DESIGNER KPK
REVIEWER CMN 08/29/25
PROJECT ID 121474
SHEET P.164 TOTAL 655

REF NO.	SHEET NO.	STATION TO STATION					202 WALK REMOVED SF	202 CONCRETE MEDIAN REMOVED SY	202 CONCRETE BARRIER REMOVED FT	202 CURB REMOVED FT	202 GUARDRAIL REMOVED FT
		RAMP L									
CR-34	P.214	0+50.70	RT	TO	3+18.14	RT				268	
CR-35	P.214	2+26.42	LT	TO	3+18.81	LT				125	
WR-4	P.214	2+26.74	LT	TO	2+55.25	LT	165				
GR-43	P.214	4+65.15	RT	TO	5+39.84	RT					75
BR-18	P.214	5+40.24	RT	TO	8+73.51	RT			331		
CR-36	P.214	5+66.48	RT	TO	6+81.25	RT				114	
		RAMP M									
GR-44	P.216	1027+99.29	RT	TO	1030+13.61	RT					225
CR-37	P.216	1029+73.13	RT	TO	1030+11.88	RT				40	
CR-38	P.216	1033+54.02	RT	TO	1034+33.41	RT				77	
CR-39	P.216	1034+42.63	LT	TO	1035+28.78	LT				100	
CR-40	P.235	1040+42.74	RT	TO	1041+59.28	RT				115	
CR-41	P.235	1040+50.16	LT	TO	1040+92.79	LT				74	
WR-5	P.235	1040+75.70	LT	TO	1040+92.73	LT	171				
WR-6	P.235	1040+91.18	RT	TO	1041+26.75	RT	349				
		RAMP N									
BR-19	P.216	1030+72.66	LT	TO	1033+22.66	LT			247		
GR-45	P.216	1033+23.15	LT	TO	1034+48.77	LT					125
CR-42	P.236	1038+62.29	RT	TO	1041+68.37	RT				329	
CR-43	P.236	1038+74.49	LT	TO	1041+67.25	LT				294	
		RAMP BX									
GR- 46	P.216	0+62.87	LT	TO	11+29.31	LT					1062.5
CR-44	P.216	3+43.57	RT	TO	4+41.14	RT				100	
GR-47	P.218	7+37.44	RT	TO	11+60.05	RT					437.5
CR-45	P.218	11+22.28	LT	TO	11+29.32	LT				7	
CR-46	P.218	11+51.25	RT	TO	11+60.04	RT				9	
CR-47	P.237	15+82.05	RT	TO	15+90.84	RT				9	
GR-48	P.237	15+82.05	RT	TO	17+95.56	RT					225
CR-48	P.237	16+27.84	LT	TO	16+34.88	LT				7	
GR- 49	P.237	16+27.90	LT	TO	20+41.17	LT					412.5
		RAMP BY									
GR-50	P.236	1+58.03	LT	TO	3+06.29	LT					150
		RAMP CA									
CR-66	P.237	11+08.58	RT	TO	11+21.00	RT				13	
GR-51	P.237	11+20.87	RT	TO	14+79.99	RT					362.5
GR-52	P.236	17+17.77	RT	TO	18+67.48	RT					150
CR-49	P.236	23+07.26	LT	TO	25+77.27	LT				295	
MR-3	P.236	24+80.38	LT	TO	25+77.21	LT		38			
		RAMP NB									
GR-53	P.237	1034+94.92	RT	TO	1039+28.38	RT					450
CR-50	P.237	1034+96.55	LT	TO	1035+07.41	LT				11	
GR-54	P.237	1035+07.84	LT	TO	1038+66.02	LT					362.5
GR-55	P.218	1041+71.28	LT	TO	1049+89.54	LT					812.5
GR-56	P.218	1047+83.89	RT	TO	1049+96.53	RT					225
GR-57	P.220	1052+19.04	LT	TO	1054+96.00	LT					275
		RAMP SB									
GR-58	P.237	1033+64.16	LT	TO	1034+62.66	LT					100
GR-59	P.237	1039+54.26	RT	TO	1042+59.38	RT					325
GR-60	P.237	1039+76.92	LT	TO	1041+94.38	LT					225
SUBTOTALS CARRIED TO SHEET P.166							685	38	578	1987	6000

Preliminary Plans - For Reference Only

RAMP ROADWAY REMOVAL SUBSUMMARY

MAH-680-4.58

MODEL: Sheet PAPERSIZE: 34x22 (in.) DATE: 9/15/2025 TIME: 1:44:38 PM PLTDRV: OHDOT_PDF_E+.pltcfg PENTBL: OHDOT_Pen.tbl USER: DHall@msconsultants.com WORKSPACE: OHDOTCEv02 WORKSET: 121474 PRODUCT: OpenRoadsDesigner 24.00.00.205
pw:\\ohiodot-pw.bentley.com:ohiodot-pw-02\Documents\01 Active Projects\District 04\Mahoning\121474\402-Engineering_MSConsultants\Roadway\Sheets\121474_GS004.dgn

DESIGN AGENCY
ms consultants, inc.

DESIGNER KPK
REVIEWER CMN 08/29/25
PROJECT ID 121474
SHEET P.165 TOTAL 655

REF NO.	SHEET NO.	STATION TO STATION					202 WALK REMOVED	202 CONCRETE MEDIAN REMOVED	202 CONCRETE BARRIER REMOVED	202 CURB REMOVED	202 GUARDRAIL REMOVED
							SF	SY	FT	FT	FT
		RAMP SB									
BR-20	P.218	1041+95.20	LT	TO	1047+65.90	LT			568		
BR-21	P.218	1042+59.50	RT	TO	1047+69.64	RT			527		
GR-61	P.218	1047+62.53	LT	TO	1050+26.90	LT					262.5
		RAMP BV									
GR-62	P.218	0+19.90	RT	TO	2+84.01	RT					262.5
GR-63	P.220	6+95.37	LT	TO	12+76.38	LT					612.5
CR-51	P.222	12+32.63	RT	TO	12+60.15	RT				29	
		RAMP A									
GR-64	P.224	1079+03.48	RT	TO	1080+87.74	RT					187.5
GR-65	P.224	1080+14.93	LT	TO	1084+39.95	LT					412.5
CR-52	P.226	1081+54.93	LT	TO	1081+61.53	LT				6.5	
CR-53	P.226	1081+67.70	LT	TO	1084+66.30	LT				308	
CR-54	P.226	1082+26.13	RT	TO	1084+67.32	RT				279	
WR-7	P.226	1084+47.82	LT	TO	1084+66.30	LT	171				
WR-8	P.226	1084+52.35	RT	TO	1084+66.75	RT	206				
		RAMP B									
CR-55	P.238	1088+35.92	RT	TO	1088+79.74	RT				50	
CR-56	P.238	1091+38.81	RT	TO	1092+48.84	RT				241	
CR-57	P.238	1091+59.79	LT	TO	1092+46.12	LT				93	
WR-9	P.238	1091+84.12	RT	TO	1091+92.82	RT	74				
WR-10	P.238	1092+27.34	RT	TO	1092+48.84	RT	162				
WR-11	P.238	1092+33.53	LT	TO	1092+52.08	LT	142				
		RAMP C									
CR-58	P.226	1084+34.65	RT	TO	1084+42.19	RT				33	
WR-12	P.226	1084+34.65	RT	TO	1084+47.75	RT	187				
CR-59	P.226	1084+35.12	LT	TO	1084+56.32	LT				36	
WR-13	P.226	1084+35.12	LT	TO	1084+57.48	LT	162				
GR-66	P.226	1084+60.82	LT	TO	1088+49.60	LT					387.5
CR-60	P.226	1088+70.89	LT	TO	1090+15.04	LT				145	
GR-67	P.226	1091+50.42	RT	TO	1092+29.84	RT					87.5
BR-22	P.228	1092+25.50	RT	TO	1093+66.30	RT			143		
		RAMP D									
CR-61	P.228	1083+12.19	LT	TO	1083+32.38	LT				34	
WR-14	P.228	1083+12.19	LT	TO	1083+26.36	LT	102				
MR-4	P.228	1083+41.83	CL	TO	1086+88.62	RT		124			
CR-62	P.228	1086+88.62	RT	TO	1087+49.10	RT				61	
		MAHONING AVE.									
CR-63	P.233	5+58.49	RT	TO	6+86.90	RT				144	
WR-15	P.233	5+58.49	RT	TO	6+80.66	RT	652				
CR-64	P.233	7+14.59	RT	TO	7+44.57	RT				51	
WR-16	P.233	7+14.94	RT	TO	7+24.22	RT	41				
SUBTOTALS THIS SHEET							1899	124	1238	1511	2213
SUBTOTALS SHEET P.165							685	38	578	1987	6000
SUBTOTALS SHEET P.164							3076	122	78	3598	6075
TOTALS CARRIED TO GENERAL SUMMARY							5660	284	1894	7096	14288

Preliminary Plans - For Reference Only

RAMP ROADWAY REMOVAL SUBSUMMARY

DESIGN AGENCY
ms consultants, inc.

DESIGNER KPK
REVIEWER CMN 08/29/25
PROJECT ID 121474
SHEET P.166 TOTAL 655

MAH-680-4.58

MODEL: Sheet PAPERSIZE: 34x22 (in.) DATE: 9/15/2025 TIME: 1:44:42 PM PLTDRV: OHDOT_PDF_E+.pltcfg PENTBL: OHDOT_Pen.tbl USER: DHall@msconsultants.com WORKSPACE: OHDOTCEv02 WORKSET: 121474 PRODUCT: OpenRoadsDesigner 24.00.00.205
pw:\\ohiodot-pw.bentley.com:ohiodot-pw-02\Documents\01 Active Projects\District 04\Mahoning\121474\402-Engineering_MSConsultants\Roadway\Sheets\121474_GS005.dgn

REF NO.	SHEET NO.	STATION TO STATION					202 PIPE REMOVED, 24" DIAMETER AND UNDER FT	SPECIAL FILL AND PLUG EXISTING CONDUIT FT	202 PIPE REMOVED, OVER 24" DIAMETER FT		202 CATCH BASIN REMOVED EACH		202 INLET REMOVED EACH	202 INLET ABANDONED, AS PER PLAN EACH	202 MANHOLE REMOVED EACH
		I.R. 680													
DR1	P.202	952+76.20	CL		17+74.80(RAMP C)	RT	90						1		
DR2	P.202	955+01.19	CL		955+00.00	RT	96						1		
DR3	P.202	957+48.20	CL		957+00.00	RT	97						1		
DR4	P.204	960+73.27	RT		960+66.29	RT	39				1				
DR5	P.204	960+66.29			960+50.00	LT	121				1				
DR6	P.204	968+83.12	RT		968+40.00	RT	44				1				
DR7	P.204	968+83.30	CL		969+00.13	LT	20						1		
DR8	P.204	969+00.13	LT		968+69.00	LT	57								1
DR9	P.204	969+92.29	LT		969+00.13	LT	92								1
DR10	P.204	969+94.30	LT		969+92.29	LT	59				1				
DR11	P.204, P.206	971+25.44	LT		969+92.29	LT	133								1
DR12	P.206	971+30.11	LT		971+25.44	LT	6						1		
DR13	P.206	971+29.29	LT		971+25.44	LT	31				1				
DR14	P.206	971+83.65	LT		971+29.29	LT	55				1				
DR15	P.206	975+02.95	LT		971+25.44	LT	377								1
DR16	P.206	975+07.61	LT		975+02.95	LT	6						1		
DR17	P.206	981+41.49	LT		981+08.48	LT	32						1		
DR18	P.206	981+08.48	LT		981+07.00	RT		85						1	
DR19	P.206	981+50.00	RT		981+07.00	RT	43				1				
DR20	P.208	985+61.61	LT		985+60.94	RT	69						1		
DR21	P.208	985+60.94	RT		989+00.00	RT	337				1				
DR22	P.208	989+00.00	RT		989+00.00	LT	59				1				
DR23	P.208, P.210	989+00.00	LT		994+62.09	LT	562								1
DR24	P.210	994+48.60	LT		994+62.09	LT	14						1		
DR25	P.210	994+49.75	RT		994+62.09	LT	60				1				
DR26	P.210	994+62.09	LT		997+14.36	LT	253								1
DR27	P.210	996+14.70	RT		997+14.36	LT	108				1				
DR28	P.210	997+14.36	LT		999+49.01	LT			235						1
DR29	P.210	999+54.19	LT		999+49.01	LT	6						1		
DR30	P.210	999+49.01	LT		1000+41.48	LT			93						1
DR31	P.210	1000+38.16	LT		1000+41.48	LT	6						1		
DR32	P.210	1000+41.48	LT		1001+50.00	LT			138						1
DR33	P.210	1001+50.74	LT		1000+41.48	LT	110								1
DR34	P.210	1001+56.94	LT		1001+50.74	LT	6						1		
DR35	P.210	1001+50.00	LT		1001+55.00	LT			5						1
DR36	P.210	1003+50.00	RT		1003+50.00	LT	183				1				
DR37	P.212	1004+86.50	RT		1004+82.42	RT	32				1				
DR38	P.212	1007+39.37	LT		1007+10.91	LT	29						1		
DR39	P.212	1007+10.91	LT		1007+02.34	LT		91						1	
DR40	P.212	1010+51.54	RT		1010+46.82	LT	10								1
DR41	P.212	1010+55.31	LT		1010+51.54	RT	10						1		
DR42	P.212, P.214	1015+50.00	RT		1010+51.54	RT	497								1
DR43	P.214	1015+50.00	RT		1015+50.00	RT	57				1				
DR44	P.214	1015+74.79	LT		1015+50.00	RT	26						1		
DR45	P.214	1017+12.25	RT		1015+50.00	RT	162						1		
TOTALS CARRIED TO GENERAL SUMMARY							3994	176	471		14		16	2	13

Preliminary Plans - Not For Reference Only

MODEL: DRAINAGE REMOVAL 1 PAPERSIZE: 34x22 (in.) DATE: 9/15/2025 TIME: 1:44:47 PM PLTDRV: OHDOT_PDF_E+.pltcfg PENTBL: OHDOT_Pen.tbl USER: DHall@msconsultants.com WORKSPACE: OHDOTCEv02 WORKSET: 121474 PRODUCT: OpenRoadsDesigner 24.00.00.205
pw:\ohiodot-pw.bentley.com:ohiodot-pw-02\Documents\01 Active Projects\District 04\Mahoning\121474\402-Engineering_MSConsultants\Drainage\Sheets\121474_DS001.dgn

DRAINAGE REMOVAL SUBSUMMARY

DESIGN AGENCY
ms consultants. inc.

DESIGNER

REVIEWER
DNO 5/20/25

PROJECT ID
121474

SHEET P.167 TOTAL 655

REF NO.	SHEET NO.	STATION TO STATION					202 PIPE REMOVED, 24" DIAMETER AND UNDER FT	SPECIAL FILL AND PLUG EXISTING CONDUIT FT	202 PIPE REMOVED, OVER 24" DIAMETER FT		202 CATCH BASIN REMOVED EACH		202 INLET REMOVED EACH	202 INLET ABANDONED, AS PER PLAN EACH	202 MANHOLE REMOVED EACH	202 MANHOLE ABANDONED, AS PER PLAN EACH
		I.R. 680														
DR46	P.214	1019+07.42	RT		1017+12.25	RT	197								1	
DR47	P.214	1019+27.27	LT		1019+07.42	RT	19						1			
DR48	P.214	1019+90.50	LT		1019+27.27	LT	87				1					
DR49	P.214	1020+99.06	RT		1019+07.42	RT	192								1	
DR50	P.214	1020+58.17	LT		1020+50.00	RT	10						1			
DR51	P.214	1020+70.71	LT		1021+00.00	LT	28				1					
DR52	P.214	1021+33.29	LT		1021+00.00	LT	34				1					
DR53	P.214	1021+00.00	LT		1020+99.06	RT	41								1	
DR54	P.214	1021+78.48	RT		1020+99.06	RT	88								1	
DR55	P.214	1022+70.84	LT		1021+78.48	RT	173				1					
DR56	P.216	1029+47.30	RT		1029+54.89	RT	12				1					
DR57	P.216	1030+69.10	RT		1029+54.89	RT	123				1					
DR58	P.216	1029+54.89	RT		1030+59.87	RT	124						1			1
DR59	P.216	1030+84.67	RT		1031+06.48	RT	25				1					
DR60	P.216	1031+06.48	RT		1031+75.04	RT	72				1					
DR61	P.216	1031+51.43	LT		1031+99.75	LT	48						1			
DR62	P.216	1031+99.75	LT		1033+48.75	LT	149								1	
DR63	P.216	1033+02.06	LT		1033+48.75	LT	47						1			
DR64	P.216	1033+01.73	LT		1031+99.75	LT	106								1	
DR65	P.216	1033+50.00	RT		1033+48.75	LT	60				1					
DR66	P.216	1034+89.39	LT		1033+48.75	LT	140								1	
DR67	P.216	1034+91.05	LT		1034+89.39	LT	47				1					
DR68	P.216	1036+24.09	LT		1034+89.39	LT	135						1			
DR69	P.216, P.218	1039+36.09	LT		1036+24.09	LT	312						1			
DR70	P.218	1039+79.78	RT		1039+36.09	LT	70				1					
DR71	P.218	1043+56.79	RT		1043+50.73	RT	9				1					
DR72	P.218	1044+30.50	LT		1044+58.66	RT		51						1		
DR73	P.218	1044+58.66	RT		1044+58.81	RT	12				1					
DR74	P.218	1044+58.81	RT		1045+12.38	RT	51								1	
DR75	P.218	1046+81.28	LT		1047+30.41	LT		88						1		
DR76	P.218	1047+30.41	LT		1047+34.28	LT	5				1					
DR77	P.220	1052+90.05	LT		1052+89.93	LT	93						1			
DR78	P.220	1056+79.37	RT		1052+90.05	LT	389						1			
DR79	P.222	1060+79.78	RT		1060+78.65	LT			119						1	
DR80	P.222	1060+78.65	LT		1060+79.78	LT			69						1	
DR81	P.222	1060+91.74	RT		1060+78.65	LT	72				1					
DR82	P.222	1061+17.98	LT		1060+78.65	LT	39						1			
DR83	P.222	1062+71.12	LT		1061+17.98	LT	153						1			
DR84	P.222	1062+79.13	LT		1062+71.12	LT	55				1					
DR85	P.222	1063+77.35	RT		1062+71.12	LT	106						1			
DR86	P.222	1067+78.92	RT		1063+77.35	RT	402						1			
DR87	P.224	1073+52.07	RT		1073+52.57	LT	96						1			
DR88	P.224	1075+74.04	LT		1075+74.03	LT	16				1					
DR89	P.224	1076+66.01	RT		1076+60.79	LT	128						1			
DR90	P.224	1078+84.94	LT		1078+85.16	LT	16				1					
DR91	P.224	1080+79.81	RT		1080+79.78	LT			13						1	
DR92	P.224, P.226	1083+07.03	RT		1080+79.81	RT			228				1			
DR93	P.226	1083+29.24	RT		1083+07.03	RT	66				1					
DR94	P.226	1083+24.30	LT		1083+07.03	RT	73				1					
DR95	P.226	1084+79.68	RT		1083+07.03	RT			173				1			
TOTALS CARRIED TO GENERAL SUMMARY							4120	139	602		20		17	2	11	1

Preliminary Plans - Not For Reference Only

DRAINAGE REMOVAL SUBSUMMARY

DESIGN AGENCY
ms consultants, inc.

DESIGNER

REVIEWER
DNO 5/20/25

PROJECT ID
121474

SHEET P.168 TOTAL 655

MAH-680-4.58

MODEL: DRAINAGE REMOVAL 2 PAPERSIZE: 34x22 (in.) DATE: 9/15/2025 TIME: 1:44:48 PM PLTDRV: OHDOT_PDF_E+.pltcfg PENTBL: OHDOT_Pen.tbl USER: DHall@msconsultants.com WORKSPACE: OHDOTCEv02 WORKSET: 121474 PRODUCT: OpenRoadsDesigner 24.00.00.205
pw:\\ohiodot-pw.bentley.com:ohiodot-pw-02\Documents\01 Active Projects\District 04\Mahoning\121474\402-Engineering_MSConsultants\Drainage\Sheets\121474_DS001.dgn

REF NO.	SHEET NO.	STATION TO STATION					202 PIPE REMOVED, 24" DIAMETER AND UNDER FT		202 PIPE REMOVED, OVER 24" DIAMETER FT		202 CATCH BASIN REMOVED EACH		202 INLET REMOVED EACH	202 INLET ABANDONED, AS PER PLAN EACH	202 MANHOLE REMOVED EACH
		I.R. 680													
DR96	P.226	1085+56.43	RT		1084+79.68	RT			77				1		
DR97	P.226	1085+39.31	LT		1085+56.43	RT	54				1				
DR98	P.226	1085+54.50	RT		1085+56.43	RT	63				1				
DR99	P.226	1086+79.40	RT		1085+56.43	RT	123								1
DR100	P.226	1087+02.86	LT		1086+79.40	RT	71				1				
DR101	P.226	1087+77.36	RT		1086+79.40	RT	98						1		
DR102	P.226	1089+25.81	RT		1087+77.36	RT	148						1		
DR103	P.226, P.228	1092+58.24	RT		1089+25.81	RT	335						1		
DR104	P.228	1094+36.64	RT		1092+58.24	RT	177								
		RAMP B-3													
DR105	P.230	10+87.94	RT		10+84.24	RT	14				1				
		RAMP D													
DR106	P.230	18+72.68	LT		18+9611	LT	32				1				
DR107	P.230	18+79.03	RT		18+69.20	RT	10				1				
DR108	P.230	18+28.16	RT		18+69.20	RT	41				1				
		RAMP G													
DR109	P.206	2+42.89	RT		2+39.97	RT	8				1				
		RAMP J													
DR110	P.208	14+53.31	LT		13+43.21	LT	108				1				
DR111	P.208	12+48.96	LT		13+43.21	LT	93				1				
DR112	P.208	13+43.21	LT		13+43.59	RT	9						1		
		RAMP F													
DR113	P.234	16+67.54	LT		16+45.68	LT	32				1				
		RAMP H													
DR114	P.234	2+08.61	LT		2+10.52	LT	6				1				
		RAMP K													
DR115	P.214	8+12.83	RT		8+00.05	LT	45				1				
DR116	P.216, P.235	15+03.86	RT		15+75.00	RT	71				1				
DR117	P.235	15+75.00	RT		16+99.12	LT	166								1
DR118	P.235	17+44.82	RT		17+46.00	LT	10				1				
DR119	P.235	18+65.79	RT		18+78.35	LT	14				1				
		RAMP L													
DR120	P.214	5+08.54	LT		5+23.14	RT	54				1				
DR121	P.214	3+21.89	RT		2+36.22	LT	92				1				
DR122	P.214	2+36.22	LT		2+21.34	LT	16				1				
		RAMP N													
DR123	P.216	1030+99.98	LT		1031+93.90	LT	99						1		
DR124	P.216	1032+60.89	LT		1031+93.90	LT	66						1		
DR125	P.216	1031+93.90	LT		1031+92.18	RT	50						1		
DR126	P.216	1033+28.97	LT		1032+91.38	RT	52				1				
DR127	P.216	1033+34.70	LT		1033+32.43	RT	27				1				
DR128	P.216	1033+32.43	RT		1032+91.38	RT	43				1				
DR129	P.216	1034+97.72	LT		1034+74.78	RT	47								
		RAMP BY													
DR130	P.236	10+20.40	RT		9+18.63	RT	103				1				
DR131	P.236	3+57.50	RT		2+99.67	RT	70				1				
		RAMP BX													
DR132	P.237	20+37.49	RT		20+37.14	LT	96				1				
		RAMP A													
DR133	P.226	1084+67.32	RT		1084+76.08	RT	9				1				
		RAMP B													
DR134	P.226	1085+27.46	LT		1085+39.15	RT	67				1				
		RAMP C													
DR135	P.226	1089+55.53	RT		1089+37.87	LT	109				1				
		RAMP D													
DR136	P.238	1086+30.21	LT		1086+20.21	LT	6				1				
		MAHONING AVE													
DR137	P.233	6+56.99	RT		6+66.33	RT	16				1				
TOTALS CARRIED TO GENERAL SUMMARY							2750		77		30		8		2

Preliminary Plans - For Reference Only

DRAINAGE REMOVAL SUBSUMMARY

DESIGN AGENCY
ms consultants. inc.

DESIGNER

REVIEWER
DNO 5/20/25

PROJECT ID
121474

SHEET P.169 TOTAL 655

MAH-680-4.58

MODEL: DRAINAGE REMOVAL 3 PAPERSIZE: 34x22 (in.) DATE: 9/15/2025 TIME: 1:44:48 PM PLTDRV: OHDOT_PDF_E+.pltcfg PENTBL: OHDOT_Pen.tbl USER: DHall@msconsultants.com WORKSPACE: OHDOTCEv02 WORKSET: 121474 PRODUCT: OpenRoadsDesigner 24.00.00.205
pw:\\ohiodot-pw.bentley.com:ohiodot-pw-02\Documents\01 Active Projects\District 04\Mahoning\121474\402-Engineering_MSConsultants\Drainage\Sheets\121474_DS001.dgn

STATION RANGE		SIDE	DISTANCE (D)	BEGIN WIDTH	END WIDTH	AVERAGE WIDTH (W)	SURFACE AREA (A) A=DxW/9		CADD GENERATED AREA		202 PAVEMENT REMOVED	202 WEARING COURSE REMOVED
FROM	TO		FT	FT	FT	FT	SY		SF		SY	SY
I.R. 680												
950+65.64	962+25.48	LT	1159.84						45210.05		5023.34	
950+65.64	962+25.47	RT	1159.83						49859.47		5539.94	
950+65.64	952+70.94	LT	205.30						6518.97		724.33	
952+70.94	954+00.79	LT	129.85						2696.76		299.64	
952+73.89	954+04.78	RT	130.89						4318.26		479.81	
954+04.78	955+74.86	RT	170.08						3604.58		400.51	
953+59.72	956+77.87	LT	318.15						10860.84		1206.76	
956+77.87	960+37.98	LT	360.11						4411.37		490.15	
962+25.48	962+50.43	LT	24.95						1056.49			117.39
962+25.47	962+50.44	RT	24.97						1090.05			121.12
968+46.50	968+71.52	LT	25.02						1036.46			115.16
968+46.48	968+71.45	RT	24.97						1019.94			113.33
968+71.52	978+94.39	LT	1022.87						39026.11		4336.23	
968+71.45	978+94.39	RT	1022.94						52928.85		5880.98	
969+78.20	970+85.59	LT	107.39						2280.84		253.43	
970+85.59	972+56.56	LT	170.97						6131.62		681.29	
981+06.79	1004+80.50	LT	2373.71						95996.18		10666.24	
981+07.03	1004+86.44	RT	2379.41						94483.18		10498.13	
981+07.03	982+19.82	RT	112.79						2603.99		289.33	
982+19.82	983+90.41	RT	170.59						5622.58		624.73	
995+08.21	997+49.50	RT	241.29						7079.43		786.60	
997+49.50	998+99.99	RT	150.49						3151.97		350.22	
996+66.80	999+70.00	LT	303.20						10266.32		1140.70	
999+70.00	1001+64.00	LT	194.00						4365.79		485.09	
1007+10.05	1044+22.02	LT	3711.97						160873.47		17874.83	
1007+17.92	1044+34.82	RT	3716.90						146808.28		16312.03	
1018+25.00	1019+76.90	RT	151.90						3479.50		386.61	
1019+76.90	1021+75.00	RT	198.10						6782.86		753.65	
1019+16.82	1021+24.39	LT	207.57						2290.87		254.54	
1021+24.39	1021+96.61	LT	72.22						5588.64		620.96	
1026+25.71	1028+46.23	RT	220.52						4695.45		521.72	
1028+46.23	1030+90.93	RT	244.70						8635.00		959.44	
1030+49.78	1032+36.13	LT	186.35						4316.17		479.57	
1032+36.13	1034+24.57	LT	188.44						6681.75		742.42	
1046+77.91	1073+62.16	LT	2684.25						123834.40		13759.38	
1047+03.96	1073+60.04	RT	2656.08						120885.28		13431.70	
1051+54.97	1053+76.35	LT	221.38						7085.67		787.30	
1053+76.35	1056+79.78	LT	303.43						3275.65		363.96	
1055+72.36	1057+72.72	RT	200.36						10127.99		1125.33	
1057+72.72	1058+96.78	RT	124.06						8131.29		903.48	
1072+54.08	1073+55.50	RT	101.42						2229.10		247.68	
											0.00	
1075+49.58	1076+81.27	LT	6276.06						6276.06		697.34	
1075+44.56	1076+83.38	RT	9581.54						6259.84		695.54	
1075+28.42	1076+90.31	RT	9581.54						3358.59		373.18	
1078+74.42	1097+24.61	LT	9581.54						103597.34		11510.82	
1078+73.47	1097+24.61	RT	9581.54						95908.51		10656.50	
								SUBTOTALS LT HALF			143615	467

STATION RANGE		SIDE	DISTANCE (D)	BEGIN WIDTH	END WIDTH	AVERAGE WIDTH (W)	SURFACE AREA (A) A=DxW/9		CADD GENERATED AREA		202 PAVEMENT REMOVED	202 WEARING COURSE REMOVED
FROM	TO		FT	FT	FT	FT	SY		SY		SY	SY
I.R. 680												
1078+69.71	1079+53.87	RT	84.16						3358.59		373.18	
1085+27.28	1086+63.26	LT	135.98						4274.28		474.92	
1090+17.50	1095+30.28	RT	512.78						16612.56		1845.84	
1090+48.50	1092+19.11	LT	170.61						5768.48		640.94	
1092+19.11	1093+26.73	LT	107.62						2532.41		281.38	
								SUBTOTALS RT HALF			3616	0
								TOTALS CARRIED TO GENERAL SUMMARY			147232	467

Preliminary Plans - Not For Reference Only

PAVEMENT REMOVAL SUBSUMMARY

DESIGN AGENCY
ms consultants, inc.

DESIGNER
CMJ

REVIEWER
CMN 08/29/25

PROJECT ID
121474

SHEET P.170 TOTAL 655

MAH-680-4.58

MODEL: Sheet PAPERSIZE: 34x22 (in.) DATE: 9/15/2025 TIME: 1:44:54 PM PLTDRV: OHDOT_PDF_E+.pltcfg PENTBL: OHDOT_Pen.tbl USER: DHall@msconsultants.com WORKSPACE: OHDOTCEv02 WORKSET: 121474 PRODUCT: OpenRoadsDesigner 24.00.00.205
pw:\\ohiodot-pw.bentley.com:ohiodot-pw-02\Documents\01 Active Projects\District 04\Mahoning\121474\402-Engineering_MSConsultants\Roadway\Sheets\121474_GS006.dgn

STATION RANGE		SIDE	DISTANCE (D)	BEGIN WIDTH	END WIDTH	AVERAGE WIDTH (W)	SURFACE AREA (A) A=DxW/9		CADD GENERATED AREA		202 PAVEMENT REMOVED	
FROM	TO		FT	FT	FT	FT	SY		SF		SY	
RAMP C - SILLIMAN ST												
0+23.23	1+41.93	LT/RT	118.70						2840.28		315.59	
4+44.09	16+15.98	LT/RT	1171.89						33099.80		3677.76	
16+15.98	17+58.23	LT/RT	142.25						3768.88		418.76	
RAMP D - SALT SPRINGS RD												
6+71.20	7+06.17	LT/RT	34.97						904.30		100.48	
7+06.17	7+81.19	LT/RT	75.02						1941.37		215.71	
7+81.19	19+13.65	LT/RT	1132.46						28659.97		3184.44	
RAMP B3 - SR 193												
4+33.81	4+79.31	LT/RT	45.50						1156.43		128.49	
4+79.31	11+09.85	LT/RT	630.54						16371.15		1819.02	
RAMP C3 - SR 193												
952+23.36	954+87.57	LT/RT	264.21						7725.11		858.35	
SR193												
0+89.52	3+99.15	LT/RT	309.63						8655.75		961.75	
RAMP F - HIGH ST												
8+32.80	9+52.71	LT/RT	119.91						3624.24		402.69	
9+52.71	14+78.83	LT/RT	526.12						13644.72		1516.08	
14+78.83	16+76.60	LT/RT	197.77						4117.16		457.46	
RAMP G - MARSHALL ST												
0+08.11	4+00.87	LT/RT	392.76						7777.30		864.14	
RAMP H - HIGH ST												
2+56.69	14+26.73	LT/RT	1170.04						26756.37		2972.93	
14+26.73	14+49.53	LT/RT	22.80						506.49		56.28	
RAMP J - MARSHALL ST												
8+39.62	8+79.62	LT/RT	40.00						1144.00		127.11	
8+79.62	16+57.02	LT/RT	777.40						18999.54		2111.06	
RAMP K - MARKET ST												
7+97.31	17+00.00	LT/RT	902.69						22631.19		2514.58	
17+00.00	19+10.59	LT/RT	210.59						3363.00		373.67	
RAMP L - MARKET ST												
2+27.45	5+20.00	LT/RT	292.55						6846.67		760.74	
5+20.00	6+06.97	LT/RT	86.97						2301.78		255.75	
RAMP M - MARKET ST												
1031+13.70	1032+49.99	LT/RT	136.29						3939.92		437.77	
1032+49.99	1041+41.32	LT/RT	891.33						25970.62		2885.62	
RAMP N - WOODLAND AVE												
1034+10.66	1034+95.73	LT/RT	85.07						2548.64		283.18	
1034+95.73	1038+27.53	LT/RT	331.80						8621.1		957.90	
1038+27.53	1038+62.31	LT/RT	34.78						960.46		106.72	
1038+62.31	1040+52.38	LT/RT	190.07						3952.95		439.22	
1040+52.38	1041+68.74	LT/RT	116.36						2043.11		227.01	
RAMP CA - WOODLAND AVE RAMP BY - US 62/SR 7												
11+21.40	19+35.61		814.21						31488.32		3498.70	
									SUBTOTALS LT HALF		32929	

STATION RANGE		SIDE	DISTANCE (D)	BEGIN WIDTH	END WIDTH	AVERAGE WIDTH (W)	SURFACE AREA (A) A=DxW/9		CADD GENERATED AREA		202 PAVEMENT REMOVED	
FROM	TO		FT	FT	FT	FT	SY		SY		SY	
RAMP BY - US 62/SR 7												
3+80.51	10+40.71	LT/RT	660.20						13907.02		1545.22	
RAMP CA - WOODLAND AVE												
19+35.61	24+65.69	LT/RT	530.08						11993.96		1332.66	
24+65.69	25+77.57	LT/RT	111.88						2406.82		267.42	
RAMP BX - US 62/SR 7												
3+43.34	11+52.58	LT/RT	809.24						19051.18		2116.80	
15+94.72	19+98.93	LT/RT	404.21						8507.85		945.32	
RAMP SB - US 62/SR 7												
1032+28.72	1054+98.28	LT/RT	2269.56						82994.94		9221.66	
1054+98.28	1055+73.99	LT/RT	75.71						1872.26		208.03	
RAMP NB - US 62/SR 7												
1034+95.33	1050+97.13	LT/RT	1601.80						70644.18		7849.35	
1050+97.13	1051+56.61	LT/RT	59.48						2744.4		304.93	
RAMP BV - WILLIAMSON AVE												
3+26.54	12+61.64	LT/RT	935.10						22800.14		2533.35	
RAMP A - SOUTH AVE												
1079+02.71	1079+92.09	LT/RT	89.38						3476.34		386.26	
1079+92.09	1080+77.05	LT/RT	84.96						2358.8		262.09	
1080+77.05	1084+67.15	LT/RT	390.10						10030.47		1114.50	
RAMP B - SOUTH AVE			#VALUE!									
1086+57.58	1086+75.08	LT/RT	17.50						449.05		49.89	
1086+75.08	1088+83.27	LT/RT	208.19						5421.37		602.37	
1088+83.27	1092+47.64	LT/RT	364.37						11530.45		1281.16	
RAMP C - SOUTH AVE												
1084+34.01	1086+93.00	LT/RT	258.99						6391.13		710.13	
1086+93.00	1090+18.45	LT/RT	325.45						7199.02		799.89	
RAMP D - SOUTH AVE												
1083+10.09	1086+83.92	LT/RT	373.83						16270.42		1807.82	
1086+83.92	1089+19.63	LT/RT	235.71						16270.42		1807.82	
1089+19.63	1090+50.50	LT/RT	130.87						3411.37		379.04	
									SUBTOTALS LT HALF		32929	
									SUBTOTALS RT HALF		35526	
									TOTALS CARRIED TO GENERAL SUMMARY		68455	

Preliminary Plans - For Reference Only

RAMP PAVEMENT REMOVAL SUBSUMMARY

DESIGN AGENCY
ms consultants, inc.

DESIGNER
CMJ

REVIEWER
CMN 08/29/25

PROJECT ID
121474

SHEET P.171 TOTAL 655

MAH-680-4.58

MODEL: Sheet PAPERSIZE: 34x22 (in.) DATE: 9/15/2025 TIME: 1:44:58 PM PLTDRV: OHDOT_PDF_E+.pltcfg PENTBL: OHDOT_Pen.tbl USER: DHall@msconsultants.com WORKSPACE: OHDOTCEv02 WORKSET: 121474 PRODUCT: OpenRoadsDesigner 24.00.00.205
pw:\\ohiodot-pw.bentley.com:ohiodot-pw-02\Documents\01 Active Projects\District 04\Mahoning\121474\402-Engineering_MSConsultants\Roadway\Sheets\121474_GS007.dgn

REF NO.	SHEET NO.	STATION TO STATION						606 GUARDRAIL, TYPE MGS	606 GUARDRAIL, TYPE MGS WITH LONG POSTS	606 GUARDRAIL, TYPE MGS HALF POST SPACING	606 GUARDRAIL, TYPE MGS QUARTER POST SPACING		606 ANCHOR ASSEMBLY, MGS TYPE E, MASH 2016	606 ANCHOR ASSEMBLY, MGS TYPE T	606 ANCHOR ASSEMBLY, MGS TYPE T, AS PER PLAN	606 MGS BRIDGE TERMINAL ASSEMBLY, TYPE 1	606 MGS BRIDGE TERMINAL ASSEMBLY, TYPE 2	606 IMPACT ATTENUATOR, TYPE 2 (UNIDIRECTIONAL)	209 LINEAR GRADING, AS PER PLAN	441 ASPHALT CONCRETE INTERMEDIATE COURSE, TYPE 1, (449), (UNDER GUARDRAIL)	626 BARRIER REFLECTOR, TYPE 2, 1 WAY	626 BARRIER REFLECTOR, TYPE 2, BIDIRECTIONAL
								FT	FT	FT	FT		EACH	EACH	EACH	EACH	EACH	EACH	STA	CY	EACH	EACH
		RAMP C			**I.R. 680**																	
G-1	P.202	15+78.25	RT	TO	957+97.07	RT		625					1			1			8	32		7
		I.R. 680																				
G-2	P.202	959+89.10	LT	TO	960+86.19	LT		67.5								1	1		2	5		3
G-3	P.204	960+85.40	RT	TO	962+19.26	RT		62.5					1			1			2	5		3
G-4	P.204	968+75.69	RT	TO	969+99.94	RT		62.5		25	25			1			1		2	6	3	
G-5	P.204	969+62.52	LT	TO	971+65.04	LT		125					1			1			3	9		3
G-6	P.206	973+93.88	LT	TO	979+08.52	LT		525						1			1		5	24	6	
G-7	P.206	977+78.37	RT	TO	979+06.50	RT		50					1			1			2	6	3	
G-8	P.206	980+93.59	LT	TO	996+65.56	LT		1512.5					1			1			16	74	17	
		RAMP J			**I.R. 680**																	
G-9	P.210	12+12.59	RT	TO	1004+79.72	LT		887.5	312.5						1		1		13	53		13
		I.R. 680																				
G-10	P.210	999+71.20	RT	TO	1005+12.56	RT		450					1			1			6	24	6	
G-11	P.212	1006+79.36	LT	TO	1019+18.82	LT		1233.39								1	1		13	57	14	
G-12	P.212	1007+22.05	RT	TO	1011+43.42	RT		400						1			1		5	19	6	
G-13	P.214	1021+48.83	RT	TO	1021+72.61	RT												1				
G-14	P.218	1039+09.81	RT	TO	1041+22.08	RT		125					1			1			3	9	4	
G-15	P.218	1043+07.32	RT	TO	1044+75.80	RT		132.2								1	1		2	6	3	
G-16	P.218	1042+99.65	LT	TO	1044+05.92	LT		100						1			1		2	6	4	
G-17	P.218	1046+19.42	LT	TO	1047+76.31	LT		135								1	1		2	7	3	
G-18	P.218	1047+79.36	RT	TO	1052+70.97	RT		475						1			1		5	23	6	
G-19	P.220	1048+39.87	LT	TO	1050+03.19	LT		87.5					1			1			2	7	3	
G-20	P.220	1058+72.07	RT	TO	1060+00.19	RT		50					1			1			2	5	3	
G-21	P.222	1060+78.40	LT	TO	1065+43.94	LT		387.5					1			1			5	21	6	
G-22	P.222	1064+07.07	RT	TO	1066+22.26	RT		150					1	1					3	10	3	
G-23	P.222	1068+28.55	RT	TO	1073+64.43	RT		487.5					1			1			6	25	7	
G-24	P.222	1069+61.83	LT	TO	1073+84.53	LT		387.5						1			1		4	19	5	
G-25	P.224	1075+17.86	RT	TO	1076+90.27	RT		159								1	1		2	7		3
G-26	P.224	1075+54.52	LT	TO	1076+87.46	LT		100								1	1		2	5	3	
G-27	P.224	1078+61.23	LT	TO	1081+84.15	LT		225					1			1			4	13	5	
G-28	P.226	1082+41.29	RT	TO	1083+65.06	RT		50					1			1			2	6	3	
		I.R. 680			**RAMP B**																	
G-29	P.226	1084+43.33	LT	TO	1086+37.66	LT		112.5					1			1			2	8		3
		I.R. 680																				
G-30	P.228	1094+27.77	LT	TO	1095+55.81	LT		50					1			1			2	5	3	
TOTALS CARRIED TO GENERAL SUMMARY								9215	313	25	25		16	7	1	21	13	1	127	496	116	35

Preliminary Plans - Not For Reference Only

ROADWAY SUBSUMMARY

DESIGN AGENCY
ms consultants, inc.

DESIGNER KPK

REVIEWER CMN 08/29/25

PROJECT ID 121474

SHEET P.172 TOTAL 655

MAH-680-4.58

MODEL: Sheet PAPERSIZE: 34x22 (in.) DATE: 9/15/2025 TIME: 1:45:03 PM PLTDRV: OHDOT_PDF_E+.pltcfg PENTBL: OHDOT_Pen.tbl USER: DHall@msconsultants.com WORKSPACE: OHDOTCEv02 WORKSET: 121474 PRODUCT: OpenRoadsDesigner 24.00.00.205
pw:\\ohiodot-pw.bentley.com:ohiodot-pw-02\Documents\01 Active Projects\District 04\Mahoning\121474\402-Engineering_MSConsultants\Roadway\Sheets\121474_GS008.dgn

REF NO.	SHEET NO.	STATION TO STATION					609	622	622	622	622	622	622	622	622	622	622	622	622		626	626					
							CURB, TYPE 4-C	CONCRETE BARRIER, SINGLE SLOPE, TYPE B1	CONCRETE BARRIER, SINGLE SLOPE, TYPE C	CONCRETE BARRIER, SINGLE SLOPE, TYPE C, AS PER PLAN	CONCRETE BARRIER, SINGLE SLOPE, TYPE C1	CONCRETE BARRIER, SINGLE SLOPE, TYPE D	CONCRETE BARRIER END SECTION, TYPE D	CONCRETE BARRIER END SECTION, TYPE B, AS PER PLAN	CONCRETE BARRIER, END ANCHORAGE, REINFORCED, TYPE B1	CONCRETE BARRIER, END ANCHORAGE, REINFORCED, TYPE C, AS PER PLAN	CONCRETE BARRIER, END ANCHORAGE, REINFORCED, TYPE C1	CONCRETE BARRIER, END ANCHORAGE, REINFORCED, TYPE D	CONCRETE BARRIER, END ANCHORAGE, REINFORCED, TYPE C		BARRIER REFLECTOR, TYPE 1, 1 WAY	BARRIER REFLECTOR, TYPE 1, BIDIRECTIONAL					
							FT	FT	FT	FT	FT	FT	EACH	EACH	EACH	EACH	EACH	EACH	EACH		EACH	EACH					
		I.R. 680																									
B-1	P.202	950+65.76	CL	TO	962+18.68	CL					1023						6					22					
C-1	P.202	957+79.03	RT	TO	957+96.49	RT	18																				
B-2	P.202	957+96.49	RT	TO	958+62.55	RT						40	1					1				3					
B-3	P.202	958+97.06	LT	TO	959+89.75	LT						60	2									3					
C-2	P.202	959+89.75	LT	TO	960+08.85	LT	18																				
B-25	P.204	960+84.10	LT	TO	961+51.26	LT						20	1					2				3					
C-4	P.204	961+96.91	RT	TO	962+14.24	RT	18																				
B-4	P.204	968+77.60	CL	TO	978+94.20	CL					940						3					18					
B-5	P.204	968+77.65	LT	TO	969+63.13	LT						71	1								3						
C-5	P.204	969+63.13	LT	TO	969+81.28	LT	18																				
C-6	P.206	978+87.71	RT	TO	979+05.88	RT	18																				
C-7	P.206	980+94.19	LT	TO	981+12.33	LT	18																				
B-6	P.206	981+06.93	CL	TO	1004+83.98	CL					2169						8					44					
C-8	P.212	1004+93.45	RT	TO	1005+11.93	RT	18																				
C-9	P.212	1006+79.05	LT	TO	1006+96.82	LT	18																				
B-7	P.212	1007+13.27	CL	TO	1044+29.41	CL		474			2846				6		14					66					
B-8	P.214	1021+72.61	RT	TO	1025+70.00	RT			192	99			1			1			3		5	5					
C-10	P.218	1041+02.21	RT	TO	1041+21.42	RT																					
B-9	P.218	1041+21.44	RT	TO	1043+09.44	RT						150	2								4						
C-11	P.218	1044+56.00	RT	TO	1044+75.20	RT	18																				
C-12	P.218	1046+19.42	LT	TO	1046+36.59	LT	18																				
B-10	P.218	1046+88.39	CL	TO	1073+61.28	CL		1091			1306				4		8					48					
B-11	P.218	1047+74.38	LT	TO	1048+40.46	LT						40	2								3						
C-13	P.220	1048+40.46	LT	TO	1048+58.19	LT	18																				
C-14	P.222	1059+81.45	RT	TO	1059+99.59	RT	18																				
B-12	P.222	1059+99.59	RT	TO	1060+68.59	RT						40	1					1			3						
B-13	P.222	1060+10.00	LT	TO	1060+79.00	LT						40	1					1			3						
C-15	P.222	1060+79.00	LT	TO	1060+97.15	LT	18																				
C-16	P.224	1073+47.67	RT	TO	1073+65.38	RT	19																				
B-14	P.224	1075+46.61	CL	TO	1076+82.16	CL					74						3					2					
C-17	P.224	1075+54.68	LT	TO	1075+73.82	LT	18																				
C-18	P.224	1076+73.18	RT	TO	1076+90.27	RT	18																				
C-19	P.224	1078+61.82	LT	TO	1078+86.77	LT	24																				
B-15	P.224	1078+73.75	CL	TO	1097+24.61	CL		587			1129.00				4		4					34					
B-16	P.226	1083+06.91	LT	TO	1083+56.00	LT						18						2			3						
C-20	P.226	1083+46.83	RT	TO	1083+64.48	RT	18																				
C-21	P.226	1084+43.94	LT	TO	1084+62.45	LT	18																				
B-17	P.228	1093+00.27	LT	TO	1094+28.37	LT						99	1					1			3						
C-22	P.228	1094+28.37	LT	TO	1094+46.52	LT	18																				
TOTALS CARRIED TO GENERAL SUMMARY							367	2152	192	99	9487	578	12	1	14	1	46	8	3		27	248					

Preliminary Plans - For Reference Only

ROADWAY SUBSUMMARY

DESIGN AGENCY
ms consultants. inc.

DESIGNER
KPK

REVIEWER
CMN 08/29/25

PROJECT ID
121474

SHEET P.173 TOTAL 655

MAH-680-4.58

MODEL: Sheet PAPERSIZE: 34x22 (in.) DATE: 9/15/2025 TIME: 1:45:08 PM PLTDRV: OHDOT_PDF_E+.pltcfg PENTBL: OHDOT_Pen.tbl USER: DHall@msconsultants.com WORKSPACE: OHDOTCEv02 WORKSET: 121474 PRODUCT: OpenRoadsDesigner 24.00.00.205
pw:\\ohiodot-pw.bentley.com:ohiodot-pw-02\Documents\01 Active Projects\District 04\Mahoning\121474\4d02-Engineering_MSConsultants\Roadway\Sheets\121474_GS009.dgn

REF NO.	SHEET NO.	STATION TO STATION					606 GUARDRAIL, TYPE MGS FT	606 GUARDRAIL, TYPE MGS WITH LONG POSTS FT	606 GUARDRAIL, TYPE MGS HALF POST SPACING FT	606 ANCHOR ASSEMBLY, MGS TYPE B EACH	606 ANCHOR ASSEMBLY, MGS TYPE E, MASH 2016 EACH	606 ANCHOR ASSEMBLY, MGS TYPE T EACH	606 MGS BRIDGE TERMINAL ASSEMBLY, TYPE 1 EACH	606 MGS BRIDGE TERMINAL ASSEMBLY, TYPE 2 EACH	608 4" CONCRETE WALK SF	608 CURB RAMP SF	209 LINEAR GRADING, AS PER PLAN STA	441 ASPHALT CONCRETE INTERMEDIATE COURSE, TYPE 1, (449), (UNDER GUARDRAIL) CY	626 BARRIER REFLECTOR, TYPE 2, BIDIRECTIONAL EACH
		RAMP B3																	
G-31	P.201	2+38.07	RT	TO	11+10.75	RT	212.5	575			1		1				9	42	12
G-32	P.201	6+39.25	LT	TO	10+43.50	LT		350			1	1					5	18	6
		RAMP C																	
G-33	P.231	0+12.66	RT	TO	1+34.68	RT	50				1		1						3
G-34	P.231	0+42.45	LT	TO	1+57.21	LT	37.5				1		1						3
G-35	P.201	4+56.94	LT	TO	7+56.93	LT		287.5				1		1			3	12	4
		RAMP C3																	
G-36	P.201	952+86.86	LT	TO	954+50.39	LT	187.5					1					2	7	5
		SR 193																	
G-37	P.201	1+10.61	LT	TO	2+76.21	LT	112.5				1						2	7	3
		RAMP D																	
G-38	P.202	1+44.54	RT	TO	16+61.87	RT	562.5	937.5				1		1			16	63	25
G-39	P.230	8+06.23	LT	TO	15+16.89	LT	500	150			1	1					8	30	11
		RAMP F																	
G-40	P.206	5+36.70	RT	TO	10+06.83	RT	425	25				1		1			5	22	7
G-41	P.208	8+55.41	LT	TO	10+50.24	LT	50	100			1	1					3	10	5
		RAMP K																	
G-42	P.214	5+27.19	RT	TO	7+05.72	RT	100				1		1				2	7	3
G-43	P.214	7+90.82	RT	TO	10+74.90	RT	260.4						1	1			3	11	3
G-44	P.214	12+04.29	LT	TO	16+54.12	LT	300	137.5				1		1			5	20	5
W-1	P.235	16+72.16	LT	TO	17+24.42	LT									595	80			
W-2	P.235	16+98.42	RT	TO	19+05.27	RT									2144	68			
		RAMP L																	
W-3	P.214	2+26.40	LT	TO	2+55.31	LT									168.5				
G-45	P.214	4+11.46	RT	TO	5+40.61	RT	50				1		1				2	5	4
		RAMP M																	
G-46	P.216	1028+86.88	RT	TO	1030+14.22	RT	50				1		1				2	5	3
W-4	P.235	1040+76.74	LT	TO	1040+92.77	LT									58	108			
W-5	P.235	1040+91.18	RT	TO	1041+26.75	RT									280	75.5			
		RAMP N																	
G-47	P.216	1033+35.17	RT	TO	1034+25.35	RT	25			1			1				1	3	
		RAMP BX																	
G-48	P.218	0+11.28	LT	TO	11+29.98	LT	75	962.5			1		1				12	41	15
G-49	P.218	7+26.96	RT	TO	11+60.88	RT		362.5			1		1				5	17	9
G-50	P.237	15+79.67	RT	TO	18+00.69	RT		212.5				1		1			3	10	5
		RAMP BX			**RAMP NB**														
G-51	P.237	16+25.64	LT		1034+96.43	RT		837.5					1	1			9	33	10
		RAMP BY		TO															
G-52	P.236	1+58.03	LT	TO	3+11.14	LT	50		37.5		1	1					2	7	3
		RAMP CA																	
G-53	P.237	11+06.98	RT	TO	14+81.95	RT		362.5				1		1			4	22	5
G-54	P.236	17+17.77	RT	TO	18+71.27	RT	50		37.5		1	1					2	9	3
		RAMP NB																	
G-55	P.237	1034+95.99	LT	TO	1038+65.32	LT		287.5			1		1				4	16	8
G-56	P.218	1041+71.28	LT	TO	1049+95.29	LT		750			1	1					9	41	17
TOTALS CARRIED TO P.175							3098	6338	75	1	16	13	12	8	3246	332	118	458	177

Preliminary Plans - For Reference Only

RAMP ROADWAY SUBSUMMARY

DESIGN AGENCY
ms consultants, inc.

DESIGNER KPK
REVIEWER CMN 08/29/25
PROJECT ID 121474
SHEET P.174 TOTAL 655

MAH-680-4.58

MODEL: Sheet PAPERSIZE: 34x22 (in.) DATE: 9/15/2025 TIME: 1:45:13 PM PLTDRV: OHDOT_PDF_E+.pltdg PENTBL: OHDOT_Pen.tbl USER: DHall@msconsultants.com WORKSPACE: OHDOTCEv02 WORKSET: 121474 PRODUCT: OpenRoadsDesigner 24.00.00.205
pw:\\ohiodot-pw.bentley.com:ohiodot-pw-02\Documents\01 Active Projects\District 04\Mahoning\121474\402-Engineering_MSConsultants\Roadway\Sheets\121474_GS010.dgn
_GS010.dgn

REF NO.	SHEET NO.	STATION TO STATION					606 GUARDRAIL, TYPE MGS (FT)	606 GUARDRAIL, TYPE MGS WITH LONG POSTS (FT)	606 GUARDRAIL, TYPE MGS HALF POST SPACING (FT)	606 ANCHOR ASSEMBLY, MGS TYPE B (EACH)	606 ANCHOR ASSEMBLY, MGS TYPE E, MASH 2016 (EACH)	606 ANCHOR ASSEMBLY, MGS TYPE T (EACH)	606 MGS BRIDGE TERMINAL ASSEMBLY, TYPE 1 (EACH)	606 MGS BRIDGE TERMINAL ASSEMBLY, TYPE 2 (EACH)	608 4" CONCRETE WALK (SF)	608 CURB RAMP (SF)	209 LINEAR GRADING, AS PER PLAN (STA)	441 ASPHALT CONCRETE INTERMEDIATE COURSE, TYPE 1, (449), (UNDER GUARDRAIL) (CY)	626 BARRIER REFLECTOR, TYPE 2, BIDIRECTIONAL (EACH)
		RAMP NB																	
G-57	P.218	1047+83.89	RT	TO	1049+97.36	RT	150				1	1					3	10	5
G-58	P.220	1052+13.31	LT	TO	1053+16.77	LT	37.5				1	1					2	5	3
		RAMP SB																	
G-59	P.237	1033+61.96	LT	TO	1034+65.63	LT	37.5				1	1					2	6	3
G-60	P.237	1039+53.96	RT	TO	1042+59.97	RT	200		37.5		1		1				4	14	7
G-61	P.237	1039+66.64	LT	TO	1041+95.80	LT	150				1		1				3	10	5
G-62	P.218	1047+47.21	LT	TO	1050+23.61	LT	262.5					1		1			3	13	6
		RAMP BV																	
G-63	P.218	0+24.03	RT	TO	2+85.55	RT	250					1		1			3	13	6
G-64	P.220	6+91.92	LT	TO	12+76.10	LT		562.5			1			1			7	34	7
		RAMP A																	
G-65	P.224	1079+03.23	RT	TO	1080+52.48	RT	137.5					1		1			2	7	3
G-66	P.224	1080+15.15	LT	TO	1084+40.54	LT		337.5			1		1				5	17	9
W-6	P.226	1084+32.50	RT	TO	1084+66.82	RT									342	89			
W-7	P.226	1084+46.80	LT	TO	1084+66.40	LT									134.5	45			
		RAMP B																	
W-8	P.238	1091+83.78	RT	TO	1091+92.97	RT										81.65			
W-9	P.238	1092+29.32	RT	TO	1092+49.12	RT									30.58	103.55			
W-10	P.238	1092+32.62	LT	TO	1092+52.08	LT									41.25	99.35			
		RAMP C																	
W-11	P.226	1084+34.56	RT	TO	1084+41.54	RT									31.46	113.21			
W-12	P.226	1084+34.78	LT	TO	1084+43.53	LT										106.3			
G-67	P.226	1084+58.27	LT	TO	1088+48.43	LT		375				1		1			4	17	8
		RAMP D																	
W-13	P.228	1083+12.19	LT	TO	1083+27.18	LT									43.61	69.28			
		MAHONING AVE.																	
W-14	P.233	5+58.49	RT	TO	6+85.46	RT									805.68	60.13			
W-15	P.233	7+12.53	RT	TO	7+24.22	RT									116.93	61.22			
					TOTALS FROM THIS SHEET		1225	1275	38		7	7	3	5	1547	829	38	146	62
					TOTALS FROM SHEET NO. 174		3098	6338	75	1	16	13	12	8	3246	332	118	458	177
TOTALS CARRIED TO GENERAL SUMMARY							4323	7613	113	1	23	20	15	13	4793	1161	156	604	239

Preliminary Plans - For Reference Only

RAMP ROADWAY SUBSUMMARY

DESIGN AGENCY
ms consultants. inc.

DESIGNER
KPK

REVIEWER
CMN 08/29/25

PROJECT ID
121474

SHEET P.175 TOTAL 655

MAH-680-4.58

MODEL: Sheet PAPERSIZE: 34x22 (in.) DATE: 9/15/2025 TIME: 1:45:17 PM PLTDRV: OHDOT_PDF_E+.pltcfg PENTBL: OHDOT_Pen.tbl USER: DHall@msconsultants.com WORKSPACE: OHDOTCEv02 WORKSET: 121474 PRODUCT: OpenRoadsDesigner 24.00.00.205
pw:\\ohiodot-pw.bentley.com:ohiodot-pw-02\Documents\01 Active Projects\District 04\Mahoning\121474\402-Engineering_MSConsultants\Roadway\Sheets\121474_GS011.dgn

REF NO.	SHEET NO.	STATION TO STATION					609 CURB, TYPE 4-C (FT)	609 CURB, TYPE 6 (FT)	609 CONCRETE MEDIAN (SY)	622 CONCRETE BARRIER, SINGLE SLOPE, TYPE C (FT)	622 CONCRETE BARRIER, SINGLE SLOPE, TYPE D (FT)	622 CONCRETE BARRIER END SECTION, TYPE B, AS PER PLAN (EACH)	622 CONCRETE BARRIER END SECTION, TYPE D (EACH)	622 CONCRETE BARRIER, END ANCHORAGE, REINFORCED, TYPE C (EACH)	622 CONCRETE BARRIER, END ANCHORAGE, REINFORCED, TYPE D (EACH)	831 LONGITUDINAL CHANNELIZING DEVICE (FT)	626 BARRIER REFLECTOR, TYPE 1, BIDIRECTIONAL (EACH)
		RAMP B3															
C-23	P.230	10+86.15	RT	TO	11+04.57	RT	18										
		RAMP C															
C-24	P.231	0+07.00	RT	TO	0+80.74	RT		83									
C-25	P.231	0+36.53	LT	TO	0+80.74	LT		46									
C-26	P.231	1+18.37	RT	TO	1+35.09	RT	17										
C-27	P.231	1+30.74	LT	TO	1+55.61	LT	25										
C-72	P.201	4+36.99	RT	TO	4+51.57	RT	15										
C-28	P.201	4+58.68	LT	TO	4+78.99	LT	21										
		RAMP D															
C-29	P.230	16+53.39	RT	TO	19+13.38	RT		273									
C-30	P.230	18+40.19	LT	TO	19+13.38	LT		78									
		RAMP G															
C-31	P.206	2+36.07	RT	TO	3+23.05	RT		106									
		RAMP F															
C-32	P.234	14+88.40	RT	TO	16+77.84	RT		190									
M-1	P.234	13+54.27	LT	TO	16+74.10	LT			187							323	
		RAMP H															
C-33	P.234	2+58.69	RT	TO	3+88.08	RT		140									
		RAMP J															
C-34	P.208	11+65.98	LT	TO	14+92.60	LT		326									
C-35	P.208	14+01.36	RT	TO	14+92.60	RT		93									
		RAMP K															
C-36	P.214	6+86.97	RT	TO	7+05.11	RT	18										
B-18	P.214	7+05.11	RT	TO	7+92.82	RT					60		2				3
C-37	P.214	7+92.82	RT	TO	19+05.27	RT		1144									
B-19	P.214	9+81.12	LT	TO	12+06.33	LT				194		1		1			4
C-38	P.214	12+06.33	LT	TO	17+24.42	LT		602									
		RAMP L															
C-39	P.214	0+50.69	RT	TO	3+18.08	RT		268									
C-40	P.214	2+25.92	LT	TO	3+20.00	LT		127									
C-41	P.214	5+22.72	RT	TO	5+40.61	RT	18										
B-20	P.214	5+40.61	RT	TO	8+83.47	RT					314		2				7
		RAMP M															
C-42	P.216	1029+95.56	RT	TO	1030+13.62	RT	18										
C-43	P.216	1032+38.00	RT	TO	1034+33.32	RT		193									
M-2	P.216	1034+42.24	LT	TO	1034+52.75	LT			8								
C-44	P.216	1034+52.75	LT	TO	1035+28.78	LT		88									
C-45	P.235	1040+42.75	RT	TO	1041+25.79	RT		82									
C-46	P.235	1040+50.16	LT	TO	1040+93.16	LT		73									
		RAMP N															
B-21	P.216	1030+72.82	LT	TO	1033+35.78	LT					232		1		1		6
C-47	P.216	1033+35.78	LT	TO	1033+54.06	LT	18										
C-48	P.236	1038+62.31	RT	TO	1041+67.25	RT		224									
M-3	P.236	1040+65.23	RT	TO	1041+67.67	RT			50								
C-49	P.236	1038+74.49	LT	TO	1041+67.25	LT		293									
TOTALS CARRIED TO P.177							168	4429	245	194	606	1	5	1	1	323	20

Preliminary Plans - For Reference Only

RAMP ROADWAY SUBSUMMARY

DESIGN AGENCY
ms consultants, inc.

DESIGNER KPK

REVIEWER CMN 08/29/25

PROJECT ID 121474

SHEET P.176 TOTAL 655

MAH-680-4.58

MODEL: Sheet PAPERSIZE: 34x22 (in.) DATE: 9/15/2025 TIME: 1:45:22 PM PLTDRV: OHDOT_PDF_E+.pltcfg PENTBL: OHDOT_Pen.tbl USER: DHall@msconsultants.com WORKSPACE: OHDOTCEv02 WORKSET: 121474 PRODUCT: OpenRoadsDesigner 24.00.00.205
pw:\\ohiodot-pw.bentley.com:ohiodot-pw-02\Documents\01 Active Projects\District 04\Mahoning\121474\402-Engineering_MSConsultants\Roadway\Sheets\121474_GS012.dgn

REF NO.	SHEET NO.	STATION TO STATION					609	609	609		622	622	622	622	622	622		831	626											
							CURB, TYPE 4-C	CURB, TYPE 6	CONCRETE MEDIAN		CONCRETE BARRIER, SINGLE SLOPE, TYPE C	CONCRETE BARRIER, SINGLE SLOPE, TYPE D	CONCRETE BARRIER END SECTION, TYPE B, AS PER PLAN	CONCRETE BARRIER END SECTION, TYPE D	CONCRETE BARRIER, END ANCHORAGE, REINFORCED, TYPE C	CONCRETE BARRIER, END ANCHORAGE, REINFORCED, TYPE D		LONGITUDINAL CHANNELIZING DEVICE	BARRIER REFLECTOR, TYPE 1, BIDIRECTIONAL											
							FT	FT	SY		FT	FT	EACH	EACH	EACH	EACH		FT	EACH											
		RAMP BX																												
C-50	P.216	3+52.38	RT	TO	4+41.15	RT		90																						
C-51	P.218	11+05.56	LT	TO	11+23.38	LT	18																							
C-52	P.218	11+33.96	RT	TO	11+51.32	RT	18																							
		RAMP CA																												
C-53	P.236	23+07.26	LT	TO	24+80.45	LT		193																						
		RAMP NB																												
C-54	P.237	1034+96.42	RT	TO	1035+13.56	RT	18																							
C-55	P.237	1034+96.62	LT	TO	1035+14.51	LT	18																							
		RAMP SB																												
C-56	P.237	1041+77.38	LT	TO	1041+95.20	LT	18																							
B-22	P.218	1041+95.21	LT	TO	1047+49.21	LT						524		2					12											
C-57	P.218	1042+42.16	RT	TO	1042+59.39	RT	18																							
B-23	P.218	1042+59.39	RT	TO	1047+67.38	RT						495		2					11											
		RAMP BV																												
C-58	P.222	12+31.87	RT	TO	12+60.48	RT		31																						
		RAMP A																												
C-59	P.226	1081+54.93	LT	TO	1081+62.02	LT		7																						
C-60	P.226	1081+65.08	LT	TO	1084+66.90	LT		310																						
C-61	P.226	1082+26.13	RT	TO	1084+67.32	RT		279																						
		RAMP B																												
C-62	P.238	1088+35.92	RT	TO	1088+79.88	RT		51																						
C-63	P.238	1091+38.63	RT	TO	1092+49.12	RT		306																						
C-64	P.238	1091+59.79	LT	TO	1092+52.00	LT		93																						
		RAMP C																												
C-65	P.226	1084+34.06	RT	TO	1084+41.54	RT		32																						
C-66	P.226	1084+34.28	LT	TO	1084+58.77	LT		38																						
C-67	P.226	1088+70.89	LT	TO	1090+18.51	LT		149																						
B-24	P.226	1091+55.58	RT	TO	1095+05.00	RT						320				2			4											
		RAMP D																												
C-68	P.228	1083+11.72	LT	TO	1083+32.15	LT		34																						
M-4	P.228	1083+41.78	CL	TO	1086+88.57	RT			124																					
C-69	P.228	1086+88.57	RT	TO	1087+54.78	RT		67																						
		MAHONING AVE.																												
C-70	P.233	5+58.49	RT	TO	6+86.90	RT		154																						
C-71	P.233	7+12.53	RT	TO	7+97.12	RT		125																						
						TOTALS FROM THIS SHEET	108	1959	124			1339		4		2			27											
						TOTALS FROM SHEET NO. 176	168	4429	245		194	606	1	5	1	1		323	20											
TOTALS CARRIED TO GENERAL SUMMARY							276	6388	369		194	1945	1	9	1	3		323	47											

Preliminary Plans - Not For Reference Only

RAMP ROADWAY SUBSUMMARY

DESIGN AGENCY
ms consultants, inc.

DESIGNER
KPK

REVIEWER
CMN 08/29/25

PROJECT ID
121474

SHEET P.177 TOTAL 655

MAH-680-4.58

MODEL: Sheet PAPERSIZE: 34x22 (in.) DATE: 9/15/2025 TIME: 1:45:27 PM PLTDRV: OHDOT_PDF_E+.pltcfg PENTBL: OHDOT_Pen.tbl USER: DHall@msconsultants.com WORKSPACE: OHDOTCEv02 WORKSET: 121474 PRODUCT: OpenRoadsDesigner 24.00.00.205
pw:\ohiodot-pw.bentley.com:ohiodot-pw-02\Documents\01 Active Projects\District 04\Mahoning\121474\402-Engineering_MSConsultants\Roadway\Sheets\121474_GS013.dgn

REF NO.	SHEET NO.	STATION TO STATION	601 ROCK CHANNEL PROTECTION, TYPE C WITH FILTER CY	602 CONCRETE MASONRY CY	611 12" CONDUIT, TYPE B FT	611 12" CONDUIT, TYPE C, 706.02 FT	611 12" CONDUIT, TYPE F, AS PER PLAN, 707.33 FT	611 15" CONDUIT, TYPE B FT	611 15" CONDUIT, TYPE C FT	611 18" CONDUIT, TYPE B FT	611 18" CONDUIT, TYPE C FT	611 18" CONDUIT, TYPE F, AS PER PLAN, 707.33 FT	611 24" CONDUIT, TYPE B FT	611 24" CONDUIT, TYPE C FT	611 30" CONDUIT, TYPE B FT	611 CONDUIT, BORED OR JACKED, 30" TYPE B FT	611 CONDUIT, MISC.:33" TYPE C, 706.02 FT	611 MANHOLE, NO. 3, AS PER PLAN, BOLTED DOWN EACH	611 CATCH BASIN, NO. 3A EACH	611 CATCH BASIN, NO. 4 EACH	611 CATCH BASIN, NO. 8 EACH	611 CATCH BASIN, NO. 8A EACH	611 INLET, NO. 3 FOR SINGLE SLOPE BARRIER, TYPE C1, AS PER PLAN EACH	611 INLET, NO. 3 FOR SINGLE SLOPE BARRIER, TYPE D EACH	611 MANHOLE, NO. 3 EACH
		I.R. 680																							
D357	P.202	953+00.00 CL TO 17+25.00(RAMP C) RT						108															1		
D358	P.203	17+25.00(RAMP C) RT TO 17+25.00(RAMP C) RT		0.27																					
D359	P.202	957+50.00 CL TO 957+00.00 RT						99															1		
D360	P.202	957+00.00 RT 957+00.00 RT	1.33	0.27																					
D518	P.204	960+73.27 RT TO 960+70.00 RT									24											1			
D361	P.204	960+70.00 RT TO 960+30.39 CL								70												1			
D362	P.204	960+50.00 LT 960+50.00 LT	1.44	0.33																					
D363	P.204	962+00.00 LT TO 960+30.39 CL						139															1		
D364	P.204	960+30.39 CL TO 960+50.00 LT								66													1		
D560	P.204	961+25.01 LT TO 960+62.79 LT							62															1	
D561	P.204	960+62.79 LT 960+62.79 LT		0.27																					
D365	P.204	968+80.00 RT 968+40.00 RT									41											1			
D367	P.206	974+00.00 CL 971+50.00 LT						250															1		
D368	P.204, P.206	971+50.00 LT 969+95.00 LT						155											1						
D370	P.204	969+95.00 LT 968+85.02 CL						107										1							
D371	P.204	968+85.02 CL 968+69.00 LT								52													1		
D375	P.206	981+20.00 CL 981+07.00 RT						83															1		
D379	P.208	985+60.94 RT 989+00.00 RT							337													1			
D380	P.208	989+00.00 RT 992+00.00 RT						294														1			
D381	P.208, P.210	992+00.00 RT 994+49.80 RT						245										1							
D382	P.208	992+00.00 CL 992+00.00 RT						34															1		
D385	P.210	994+49.80 RT 996+50.00 RT											197									1			
D386	P.210	996+50.00 RT 996+52.22 RT											24					1							
D387	P.210	996+52.22 RT 998+50.00 RT											193					1							
D388	P.210	998+50.00 CL 998+50.00 RT						45															1		
D389	P.210	998+50.00 RT 1000+48.39 RT											194					1							
D390	P.210	1000+00.00 CL 1000+48.39 CL						49															1		
D391	P.210	1000+48.39 RT 1001+50.00 RT													99			1							
D392	P.210	1000+48.39 CL 1000+48.39 RT						52															1		
D393	P.210	1001+00.00 CL 1000+48.39 CL						52															1		
D394	P.210	1001+50.00 RT 1001+50.00 LT														137		1							
D503	P.210	1001+50.00 RT 1001+57.11 RT															5								1
D395	P.210	1001+99.99 RT 1003+50.43 RT												144						1					
D396	P.210	1003+50.43 RT 1003+50.00 LT														181						1			
D397	P.210	1003+00.00 CL 1003+00.00 RT						45															1		
D398	P.210	1003+00.00 RT 1001+50.00 RT						146										1							
D501	P.212	1004+86.24 RT 1004+82.39 RT										31							1						
D502	P.212	1004+82.39 RT 1004+82.39 RT	1.67	0.33																					
D401	P.212	1007+50.00 CL 1007+03.63 LT			49	4	46																1		
D402	P.212	1007+03.63 LT 1007+03.21 LT				6																			1
D406	P.212	1010+51.51 RT 1010+46.82 LT								10								1							
D407A	P.212	1012+00.00 RT 1010+51.54 RT											148					1							
D407	P.212	1013+44.99 RT 1012+00.00 RT											145					1							
D408	P.212	1013+49.98 CL 1013+44.99 RT						7															1		
D409	P.212	1014+49.98 RT 1013+44.99 RT											105					1							
D410	P.212	1014+52.39 RT 1014+49.98 RT											58										1		
D411	P.212, P.214	1015+50.00 RT 1014+52.39 RT							96													1			
D412	P.214	1015+50.00 RT 1015+50.00 RT				4																			
D413	P.212, P.214	1016+50.00 RT 1014+49.98 RT						200										1							
D414	P.214	1020+10.00 RT 1020+04.15 RT						30										1							
TOTALS CARRIED TO GENERAL SUMMARY			5	1.5	49	14	46	2140	495	198	65	31	1064	144	99	318	5	15	1	1	8	1	15	1	2

Preliminary Plans - For Reference Only

DRAINAGE SUBSUMMARY

DESIGN AGENCY
ms consultants, inc.

DESIGNER

REVIEWER
DNO 5/20/25

PROJECT ID
121474

SHEET P.178 TOTAL 655

MAH-680-4.58

MODEL: DRAINAGE 1 PAPERSIZE: 34x22 (in.) DATE: 9/15/2025 TIME: 1:45:32 PM PLTDRV: OHDOT_PDF_E+.pltcfg PENTBL: OHDOT_Pen.tbl USER: DHall@msconsultants.com WORKSPACE: OHDOTCEv02 WORKSET: 121474 PRODUCT: OpenRoadsDesigner 24.00.00.205
pw:\\ohiodot-pw.bentley.com:ohiodot-pw-02\Documents\01 Active Projects\District 04\Mahoning\121474\402-Engineering_MSConsultants\Drainage\Sheets\121474_DS003.dgn

REF NO.	SHEET NO.	STATION TO STATION					601 ROCK CHANNEL PROTECTION, TYPE C WITH FILTER CY	602 CONCRETE MASONRY CY	611 15" CONDUIT, TYPE C FT	611 15" CONDUIT, TYPE B FT	611 18" CONDUIT, TYPE B FT	611 18" CONDUIT, TYPE F, AS PER PLAN, 707.33 FT	611 24" CONDUIT, TYPE B FT	611 27" CONDUIT, TYPE B, 706.02 FT	611 30" CONDUIT, TYPE B FT	611 36" CONDUIT, TYPE B FT	611 24" CONDUIT, TYPE C FT	611 CATCH BASIN, NO. 3A EACH	611 CATCH BASIN, NO. 6 EACH		611 CATCH BASIN, NO. 8 EACH	611 CATCH BASIN, NO. 8A EACH	611 INLET, NO. 3 FOR SINGLE SLOPE BARRIER, TYPE C1, AS PER PLAN EACH	611 MANHOLE, NO. 3 EACH	611 MANHOLE, NO. 3, AS PER PLAN, BOLTED DOWN EACH	611 15" CONDUIT, TYPE C, 706.02 FT	611 15" CONDUIT, TYPE C, 706.08 FT		
		I.R. 680																											
D414A	P.214	1020+04.15	RT		1019+00.00	CL				104															1				
D415	P.214	1019+00.00	CL		1016+50.00	RT				250													1						
D417	P.214	1021+88.99	RT		8+10.74(RAMP K)	LT				40															1				
D420A	P.214	1020+04.34	RT		1020+10.00	RT				5									1										
D441	P.216	1029+20.00	CL		1029+52.43	RT				47													1						
D442	P.216	1029+52.43	RT		1030+63.39	RT					115																1		
D443	P.216	1030+63.39	RT		1030+63.39	RT																					1		
D453	P.216	1032+04.22	CL		1032+04.31	RT					40												1						
D454	P.216	1032+04.31	RT		1030+63.39	RT										146											1		
D455	P.216	1032+75.11	CL		1032+04.22	CL				71													1						
D460	P.216	1033+50.00	RT		1032+04.31	RT										150						1							
D461	P.216	1033+50.00	CL		1033+50.00	RT					58												1						
D464	P.216	1036+50.00	LT		1034+91.23	LT			159													1							
D465	P.216	1034+91.23	LT		1034+91.43	RT							100									1							
D466	P.216	1034+91.43	RT		1033+50.00	RT											143										1		
D467	P.218	1037+99.87	RT		1034+91.43	RT			308													1							
D468	P.218	1038+00.00	CL		1037+99.87	RT				61															1				
D492	P.218	1043+56.79	RT		1043+50.73	RT																1						9	
D494	P.218	1044+00.00	CL		1044+58.00	RT				69															1				
D495	P.218	1044+58.00	RT		1044+58.00	RT			12									1											
D496	P.218	1044+58.00	RT		1045+12.38	RT			51																	1			
D497	P.218	1045+12.38	RT		1045+12.38	RT	1.22	0.27																					
D498	P.218	1047+30.27	LT		1047+33.52	LT																1						5	
D607	P.220	1050+00.00	CL		1050+00.00	LT				41															1				
D608	P.220	1050+00.00	LT		1047+66.00	LT				238																	1		
D608A	P.218	1047+66.00	LT		1047+56.47	LT				37																	1		
D609	P.218	1047+56.47	LT		1047+56.47	LT		0.27																					
D613	P.220	1053+00.00	CL		1052+85.89(RAMP NB)	LT				96													1						
D614	P.220	1052+85.89(RAMP NB)	LT		1052+85.89(RAMP NB)	LT		0.27																					
D616	P.222	1060+79.78	RT		1060+78.65	LT										119										1			
D617	P.222	1060+79.78	LT		1060+79.78	LT																				1			
D618	P.222	1060+78.65	LT		1060+79.78	LT										70											1		
D619	P.222	1060+91.80	RT		1060+95.02	LT					73											1							
D620	P.222	1062+00.00	RT		1060+91.80	RT			108													1							
D621	P.222	1061+00.00	CL		1060+95.02	LT				8													1						
D622	P.222	1060+95.02	LT		1060+78.65	LT							17														1		
D623	P.222	1062+52.51	LT		1062+52.51	LT				62												1							
D624	P.222	1062+52.51	LT		1060+95.02	LT				158																	1		
D625	P.222	1065+00.00	LT		1062+52.51	LT				248																	1		
D626	P.222	1068+00.00	CL		1065+00.00	LT				300													1						
D627	P.224	1075+69.02	LT		1076+48.73	LT				76								1											
D628	P.224	1076+48.73	LT		1076+46.56	LT						69															1		
D629	P.224	1076+50.00	CL		1076+48.73	LT				51													1						
D630	P.224	1076+46.56	LT		1076+46.56	LT	1.22	0.33																					
D631	P.224	1078+84.96	LT		1078+85.86	LT						64						1											
D632	P.224	1078+85.86	LT		1078+85.86	LT		0.33																					
D633	P.224	1080+00.00	CL		1080+79.81	RT				80													1						
D635	P.224	1080+79.81	RT		1080+79.78	LT								10													1		
D637	P.226	1082+94.41	LT		1083+25.00	LT				47												1							
D638	P.226	1083+30.00	RT		1083+10.23	RT				63												1							
D639	P.224, P.226	1083+10.23	RT		1080+79.81	RT							231														1		
D640	P.226	1083+50.00	CL		1083+10.23	RT				40													1						
TOTALS CARRIED TO GENERAL SUMMARY							3	1.5	638	2192	286	133	348	10		485	143	3	1		10	1	14	3	15	9	5		

Preliminary Plans - Not For Reference Only

DRAINAGE SUBSUMMARY

MAH-680-4.58

MODEL: DRAINAGE 2 PAPERSIZE: 34x22 (in.) DATE: 9/15/2025 TIME: 1:45:33 PM PLTDRV: OHDOT_PDF_E+.pltcfg PENTBL: OHDOT_Pen.tbl USER: DHall@msconsultants.com WORKSPACE: OHDOTCEv02 WORKSET: 121474 PRODUCT: OpenRoadsDesigner 24.00.00.205
pw:\\ohiodot-pw.bentley.com:ohiodot-pw-02\Documents\01 Active Projects\District 04\Mahoning\121474\02-Engineering_MSConsultants\Drainage\Sheets\121474_DS003.dgn

DESIGN AGENCY
ms consultants, inc.
DESIGNER
REVIEWER
DNO 5/20/25
PROJECT ID
121474
SHEET P.179 TOTAL 655

REF NO.	SHEET NO.	STATION TO STATION	602 CONCRETE MASONRY CY	611 12" CONDUIT, TYPE B FT	611 12" CONDUIT, TYPE C FT	611 15" CONDUIT, TYPE B FT	611 15" CONDUIT, TYPE C FT	611 18" CONDUIT, TYPE B FT	611 24" CONDUIT, TYPE B FT		611 CATCH BASIN, NO. 3 EACH	611 CATCH BASIN, NO. 3A EACH	611 CATCH BASIN, NO. 6 EACH	611 CATCH BASIN, NO. 8 EACH	611 CATCH BASIN, NO. 2-2A EACH		611 INLET, NO. 2-6 EACH	611 INLET, NO. 3 FOR SINGLE SLOPE BARRIER, TYPE C1, AS PER PLAN EACH	611 MANHOLE, NO. 3 EACH	611 MANHOLE, NO. 3, AS PER PLAN, BOLTED DOWN EACH		611 12" CONDUIT, TYPE B, 706.02 FT	611 15" CONDUIT, TYPE C, 707.33 FT	611 15" CONDUIT, TYPE C, 706.02 FT	
		I.R. 680																							
D641	P.226	1084+55.00 LT 1083+25.00 LT							127											1					
D641A	P.226	1083+25.00 LT 1083+10.23 RT							53											1					
D643	P.226	1084+80.00 LT 1084+55.00 LT				41								1											
D644	P.226	1084+30.00 CL 1084+55.00 RT				25												1							
D645	P.226	1084+55.00 RT 1084+55.00 LT							52											1					
D646	P.226	1085+55.00 RT 1085+45.02 RT				58								1											
D647	P.226	1085+49.99 CL 1085+45.02 RT				8												1							
D648	P.226	1085+45.02 RT 1084+55.00 RT							90											1					
D649	P.226	1087+03.00 LT 1087+02.63 RT				70								1											
D650	P.226	1087+02.63 RT 1085+45.02 RT							158											1					
D652A	P.228	1091+99.73 RT 1090+24.28 RT				177							1												
D652B	P.226	1090+24.28 RT 1089+99.45 RT				24							1												
D652C	P.226	1089+99.45 RT 1089+95.02 RT							54											1					
D653	P.226	1090+00.00 CL 1089+95.02 RT				7												1							
D654	P.226	1089+95.02 RT 1087+02.63 RT							292											1					
D655	P.228	1092+72.04 RT 1089+95.02 RT						277												1					
D656	P.228	1096+00.00 CL 1092+72.04 RT						328										1							
		RAMP G																							
D520	P.204	6+50.00 RT 6+60.96 RT				11								1											
D369	P.204	6+60.96 RT 969+95.00(IR680) RT				71													1						
D373	P.206	2+42.38 RT 2+32.60 RT										1										5			
		RAMP F																							
D376	P.208	7+50.00 RT 5+94.89 RT					151							1											
D377	P.206	5+94.89 RT 5+50.82 RT												1									43		
D509	P.234	16+67.54 LT 16+45.68 LT														1						32			
		RAMP H																							
D569	P.234	2+09.75 RT 2+19.37 RT														1						7			
D384	P.210	13+77.36 RT 13+94.15 LT						5																	
		RAMP J																							
D507	P.208	13+41.56 LT 13+45.95 RT														1								9	
D565	P.208	12+48.96 LT 13+41.56 LT					94								1										
D566	P.208	14+53.31 LT 13+41.56 LT					110								1										
		RAMP B-3																							
D516	P.230	10+87.77 RT 10+84.24 RT	0.27				14					1													
		RAMP D																							
D511	P.230	18+28.14 RT 18+69.20 RT		41							1														
D512	P.230	18+79.04 RT 18+69.20 RT		10								1													
D513	P.230	18+73.62 LT 18+96.11 LT			32							1													
		MAHONING AVE.																							
D550	P.233	6+62.89 RT 6+75.73 RT														1						4			
		RAMP K																							
D420	P.214	8+10.74 LT 1020+10.00(IR680) RT				179													1						
D421	P.214	8+12.83 RT 8+10.74 RT				42								1											
D422	P.214	8+50.00 LT 8+10.74 RT				39												1							
D429	P.214	12+10.00 RT 12+10.00 LT				25						1													
D430	P.214	12+10.00 LT 14+00.00 LT				188						1													
TOTALS CARRIED TO GENERAL SUMMARY			0.3	51	32	965	369	610	826		1	6	2	7	2		4	5	2	8		48	43	9	

Preliminary Plans - For Reference Only

DRAINAGE SUBSUMMARY

DESIGN AGENCY
ms consultants. inc.

DESIGNER

REVIEWER
DNO 5/20/25

PROJECT ID
121474

SHEET P.180 TOTAL 655

MAH-680-4.58

MODEL: DRAINAGE 3 PAPERSIZE: 34x22 (in.) DATE: 9/15/2025 TIME: 1:45:34 PM PLTDRV: OHDOT_PDF_E+.pltcfg PENTBL: OHDOT_Pen.tbl USER: DHall@msconsultants.com WORKSPACE: OHDOTCEv02 WORKSET: 121474 PRODUCT: OpenRoadsDesigner 24.00.00.205
pw:\ohiodot-pw.bentley.com:ohiodot-pw-02\Documents\01 Active Projects\District 04\Mahoning\121474\402-Engineering_MSConsultants\Drainage\Sheets\121474_DS003.dgn

REF NO.	SHEET NO.	STATION TO STATION	602 CONCRETE MASONRY CY	611 12" CONDUIT, TYPE B FT	611 15" CONDUIT, TYPE B FT	611 15" CONDUIT, TYPE C FT	611 18" CONDUIT, TYPE B FT	611 18" CONDUIT, TYPE F, AS PER PLAN, 707.33 FT	611 24" CONDUIT, TYPE B FT		611 CATCH BASIN, NO. 3A EACH	611 CATCH BASIN, NO. 6 EACH	611 CATCH BASIN, NO. 8 EACH	611 INLET, NO. 3 FOR SINGLE SLOPE BARRIER, TYPE D EACH			611 12" CONDUIT, TYPE B, 706.02 FT	611 18" CONDUIT, TYPE B, 706.02 FT	611 12" CONDUIT, TYPE B, 707.45 FT
		RAMP K																	
D432	P.216	14+00.00 RT	14+00.00 LT		24						1								
D433	P.216	14+00.00 LT	1029+65.00(RAMP M) RT			215					1								
D434	P.216	15+50.00 RT	1029+65.00(RAMP M) RT				97				1								
D435	P.235	16+50.00 RT	15+50.00 RT		100						1								
D446	P.235	17+44.86 CL	17+51.22 LT								1						9		
D448	P.235	18+71.62 CL	19+27.64 LT								1						8		
		RAMP L																	
D416	P.214	8+09.19 RT	1020+04.15(IR680) RT		68								1						
D418	P.214	5+55.08 LT	1021+88.99(IR680) RT		85								1						
D419	P.214	5+23.14 RT	5+55.08 LT		53								1						
D567	P.214	3+21.89 CL	2+35.91 LT	92							1								
D424	P.214	2+35.91 LT	2+21.33 LT	15							1								
		RAMP M																	
D437	P.216	1029+65.00 RT	1029+70.94 RT			11							1						
D438	P.216	1029+70.94 RT	1029+52.43(IR680) RT		28						1								
D438A	P.216	1030+49.27 RT	1029+70.94 RT		79							1							
D439	P.216	1031+31.00 RT	1030+49.27 RT		69							1							
D459A	P.216	1034+74.65 LT	1033+50.00(IR680) RT															6	
		RAMP N																	
D450	P.216	1031+00.00 LT	1032+00.00 LT		99									1					
D451	P.216	1032+00.00 LT	1032+04.22(IR680) CL		49									1					
D452	P.216	1032+60.83 LT	1032+00.00 LT		60									1					
D457	P.216	1033+28.97 LT	1033+50.00(IR680) LT		76								1						
		RAMP A																	
D657	P.226	1084+67.32 RT	1084+76.24 RT								1								9
		RAMP B																	
D642	P.226	1085+99.07 LT	1084+80.00(IR680) LT			116							1						
		RAMP C																	
D651	P.226	1089+55.53 RT	1090+00.00 RT			45							1						
D652	P.226	1090+00.00 RT	1089+99.45(IR680) RT						36				1						
D675	P.226	1092+00.00 RT	1090+00.00 RT		199									1					
		RAMP D																	
D580	P.238	1086+30.25 LT	1086+30.12 LT								1							8	
		RAMP BY																	
D571	P.236	3+58.49 RT	18+62.28(RAMP CA) RT		70							1							
D572	P.236	18+62.28(RAMP CA) RT	18+62.28(RAMP CA) RT	0.27															
D573	P.236	10+20.45 RT	9+18.63 RT	102								1							
		RAMP BX																	
D575	P.237	20+37.49 RT	20+37.15 LT				33	53				1							
D576	P.237	20+37.15 LT	20+37.15 LT	0.33															
TOTALS CARRIED TO GENERAL SUMMARY			0.6	209	1059	387	130	53	36		11	5	8	4			17	14	9

Preliminary Plans - For Reference Only

DRAINAGE SUBSUMMARY

DESIGN AGENCY
ms consultants, inc.

DESIGNER

REVIEWER
DNO 5/20/25

PROJECT ID
121474

SHEET P.181 TOTAL 675

MAH-680-4.58

MODEL: DRAINAGE 4 PAPERSIZE: 34x22 (in.) DATE: 9/15/2025 TIME: 1:45:35 PM PLTDRV: OHDOT_PDF_E+.pltcfg PENTBL: OHDOT_Pen.tbl USER: DHall@msconsultants.com WORKSPACE: OHDOTCEv02 WORKSET: 121474 PRODUCT: OpenRoadsDesigner 24.00.00.205
pw:\\ohiodot-pw.bentley.com:ohiodot-pw-02\Documents\01 Active Projects\District 04\Mahoning\121474\402-Engineering_MSConsultants\Drainage\Sheets\121474_DS003.dgn

REF NO.	LOCATION	STATION FROM	STATION TO	SIDE	SHEET NO.	UNDERDRAIN OUTLET ELEV.	UNDERDRAIN OUTLET STA.	UNDERDRAIN OUTLET TYPE	601 TIED CONCRETE BLOCK MAT WITH TYPE 1 UNDERLAYMENT SY	611 PRECAST REINFORCED CONCRETE OUTLET EACH	605 6" SHALLOW PIPE UNDERDRAINS WITH GEOTEXTILE FABRIC (20" DEPTH) FT	605 6" BASE PIPE UNDERDRAINS (18" DEPTH) FT	605 6" SHALLOW PIPE UNDERDRAINS WITH GEOTEXTILE FABRIC (30" DEPTH) FT		620 DELINEATOR, POST GROUND MOUNTED, AS PER PLAN EACH	611 6" CONDUIT, TYPE F FT	BENDS AND BRANCHES END CAPS EA			6"x6"x6"x6" CROSS TEE EA	6" DIA. 45 DEG. BEND EA	6" DIA. 90 DEG. BEND EA	6"x6" TEE EA
#1																							
UD423	Ramp C-3	954+92	952+75	LT	P.395, P.416		952+91.42	OUTLET	2	1			245		1	55					1		1
UD427	SR193	3+38	0+83	LT	P.395, P.411	889.33	0+83.39	OUTLET	2	1			242		1	55	1				1		
UD427A	SR193	4+00	3+41	LT	P.411	899.67	3+40.61	EX. INLET					54			5					1		
UD446A	IR680	951+46	950+66	LT	P.396	870.40	950+65.76	EX. UD.			80						1						
UD447A	IR680	952+73	950+66	RT	P.396	870.38	950+65.76	EX. UD.					207				1						
UD448A	IR680	953+81	950+66	RT	P.396	869.82	950+65.76	EX. UD.					315				1						
UD449A	IR680	952+97	950+66	RT	P.396	869.71	950+65.76	EX. UD.					231				1						
UD450	Ramp C	0+50	1+82	LT	P.416	916.00	1+81.95	OUTLET	2	1		106			1	29	1				1		
UD450A	Ramp C	0+48	0+37	LT	P.416	917.43	0+37.42	EX. UD.				12					1						
UD451	Ramp C	0+08	1+39	RT	P.416	916.00	1+39.32	OUTLET	2	1		138			1	15					1		
UD452	Ramp C	4+58	8+00	LT	P.395, P.416	890.31	8+00.00	UD543				342											
UD453	Ramp C	4+37	8+00	RT	P.395, P.416	887.11	8+00.00	OUTLET	2	1		364			1	40						1	1
UD454	Ramp C	8+01	952+23 (Ramp C3)	LT	P.395, P.416	886.63	952+23.39(Ramp C3)	UD459				82					1						1
UD455	Ramp C-3	954+85	952+75	LT	P.395, P.416	887.22	952+75.00	UD423					247										1
UD455A	SR193	3+24	0+87	LT	P.395, P.411	896.46	0+87.35	UD427					236										1
UD456	SR193	3+24	0+83	LT	P.395, P.411	896.43	0+83.09	UD427					240										1
UD457	Ramp C	8+01	13+87	LT	P.395, P.416, P.417	868.91	13+87.32	UD471				592										2	
UD458	Ramp C	952+74	12+98	LT	P.395, P.416, P.417	870.80	12+97.57	UD472				461										1	
UD459	Ramp C	952+74	952+23	LT	P.395, P.416	885.94	952+23.39	UD458				80					1						1
UD460	Ramp B-3	11+04	10+88	RT	P.411	898.74	10+87.94	D516				11				5					1		
UD461	Ramp B-3	11+18	8+00	LT	P.395, P.411	880.19	8+00.00	OUTLET	2	1		339			1	20					2		
UD462	Ramp B-3	10+84	8+00	RT	P.395, P.411	876.28	8+00.00	OUTLET	2	1		281			1	20					2		
UD463	Ramp D	19+13	18+74	LT	P.411	838.68	18+73.62	D513				38				5					1		
UD464	Ramp D	19+13	18+79	RT	P.411	838.80	18+79.03	D512				30				5					1		
UD465	Ramp D	18+71	18+28	LT	P.411	838.74	18+28.14	D511				58				5	1						1
UD466	Ramp D	18+76	18+28	RT	P.411	838.74	18+28.14	D511				40				5	1				1		
UD467	Ramp D	13+00	18+28	LT	P.411	838.74	18+28.14	UD465				529					1						
UD468	Ramp D	13+00	18+28	RT	P.411	838.74	18+28.14	D511				537				5	1				1		
UD469	Ramp B-3	7+99	4+35	LT	P.395, P.396	863.16	4+34.96	OUTLET	2	1		365			1	48	1			2			1
UD470	Ramp B-3	7+99	4+35	RT	P.395, P.396	870.81	4+34.50	UD469				364					1						
UD471	Ramp C	13+87	15+16	RT	P.395, P.396, P.417	870.42	15+15.97	OUTLET	2	1		110			1	30				2			
UD472	Ramp C	12+86	15+16	LT	P.395, P.396, P.417	870.42	15+15.97	UD471				264					1						
UD473	Ramp D	7+07	13+00	LT	P.396, P.411	848.67	13+00.00	OUTLET	2	1		596			1	20	1			2			
UD474	Ramp D	7+07	13+00	RT	P.396, P.411	844.37	13+00.00	OUTLET	2	1		591			1	20	1			2			
UD475	Ramp B-3	2+01	4+34	LT	P.396	871.55	4+33.81	UD469				234					1						
UD476	Ramp B-3	2+01	4+34	RT	P.396	871.30	4+34.26	UD469				233					1						
UD477	Ramp B-3	1+41	4+34	RT	P.396	870.81	4+34.46	UD469				292					1						
UD478	Ramp C	17+59	15+16	LT	P.396, P.417	870.42	15+15.97	UD472				251					1						
UD479	Ramp C	19+49	15+16	RT	P.396, P.417	870.42	15+15.97	UD471				428					1						
UD480	Ramp C	19+56	18+22	RT	P.396, P.417	872.56	18+22.08	UD479				141					1					1	1
UD481	Ramp D	3+01	6+72	RT	P.396, P.417	871.48	6+71.69	UD484					380				1					1	1
UD482	IR680	955+19	953+00	LT	P.396, P.417	872.30	953+00.00	D357					218			47	1					1	1
UD483	Ramp D	3+16	7+06	LT	P.396, P.417	865.76	7+06.20	OUTLET					392			47	1					1	1
UD484	Ramp D	3+01	7+06	RT	P.396, P.417	871.01	7+06.20	UD483					404				1						
UD486	IR680	957+36	953+00	LT	P.396, P.417	872.35	953+00.00	UD482					433				1						
TOTALS CARRIED TO SHEET P.192									22	11	80	7909	3844	0	11	481							

Preliminary Plans - For Reference Only

UNDERDRAIN SUBSUMMARY

DESIGN AGENCY
ms consultants, inc.

DESIGNER

REVIEWER
DNO 5/20/25

PROJECT ID
121474

SHEET P.183 | TOTAL 655

MAH-680-4.58

MODEL: UNDERDRAIN 1 PAPERSIZE: 34x22 (in.) DATE: 9/15/2025 TIME: 1:45:40 PM PLTDRV: OHDOT_PDF_E+.pltcfg PENTBL: OHDOT_Pen.tbl USER: DHall@msconsultants.com WORKSPACE: OHDOTCEv02 WORKSET: 121474 PRODUCT: OpenRoadsDesigner 24.00.00.205
pw:\\ohiodot-pw.bentley.com:ohiodot-pw-02\Documents\01 Active Projects\District 04\Mahoning\121474\402-Engineering_MSConsultants\Drainage\Sheets\121474_DS005.dgn

REF NO.	LOCATION	STATION FROM	STATION TO	SIDE	SHEET NO.	UNDERDRAIN OUTLET ELEV.	UNDERDRAIN OUTLET STA.	UNDERDRAIN OUTLET TYPE	601 TIED CONCRETE BLOCK MAT WITH TYPE 1 UNDERLAYMENT SY	611 PRECAST REINFORCED CONCRETE OUTLET EACH	605 6" SHALLOW PIPE UNDERDRAINS WITH GEOTEXTILE FABRIC (20" DEPTH) FT	605 6" BASE PIPE UNDERDRAINS (18" DEPTH) FT	605 6" SHALLOW PIPE UNDERDRAINS WITH GEOTEXTILE FABRIC (30" DEPTH) FT		620 DELINEATOR, POST GROUND MOUNTED, AS PER PLAN EACH	611 6" CONDUIT, TYPE F FT	BENDS AND BRANCHES END CAPS EA			6"x6"x6"x6" CROSS TEE EA	6" DIA. 45 DEG. BEND EA	6" DIA. 90 DEG. BEND EA	6"x6" TEE EA
#2																							
UD487	IR680	957+48	953+00	RT	P.396, P.417	872.30	953+00.00	D357					337			5	1						1
UD488	IR680	957+49	954+73	RT	P.396, P.417	873.72	954+72.92	UD487					282				1						1
UD489	IR680	957+49	954+73	RT	P.396, P.417	873.98	954+72.92	UD488					303				1					1	
UD490	IR680	957+49	19+50(Ramp C)	RT	P.396, P.417	869.26	19+50.00(Ramp C)	OUTLET	2	1	289				1	17	1				2		
UD491	IR680	960+58	957+50	RT	P.396, P.397	875.87	957+50.00	D359					303			5	1						
UD492	IR680	962+19	957+50	RT	P.396, P.397	876.71	957+50.00	UD494					472				1						
UD493	IR680	962+19	957+50	RT	P.396, P.397	877.73	957+50.00	UD494					483				1						
UD494	IR680	962+19	957+50	RT	P.396, P.397	875.87	957+50.00	D359			492		47			5	1					1	2
UD495	IR680	962+19	3+00 (Ramp D)	LT	P.396, P.397	868.27	3+00.05 (Ramp D)	OUTLET	2	1			468		1	49	1					1	2
UD496	IR680	961+26	3+00 (Ramp D)	LT	P.396, P.397	874.76	3+00.05 (Ramp D)	UD495					373				1						
UD497	IR680	961+13	3+00 (Ramp D)	LT	P.396, P.397	874.44	3+00.05 (Ramp D)	UD495			367						1						
UD497A	IR680	962+19	961+25	LT	P.397	878.00	961+25.01	D560			84					5	1				1		
UD498	IR680	962+19	962+00	RT	P.397	880.37	962+00.00	D363					14			5	1				1		
UD498A	IR680	961+97	960+60	RT	P.397	879.15	960+60.41	D364					132			5	1				1		
UD499	IR680	969+78	968+85	RT	P.397	886.27	968+85.02	UD501					94				1						
UD500	IR680	973+97	968+88	RT	P.397, P.398	885.52	968+88.00	D371					505			5	1						
UD501	IR680	973+99	968+88	RT	P.397, P.398	885.52	968+88.00	D371					558			5	1					3	1
UD502	IR680	973+99	968+80	RT	P.397, P.398	887.60	968+80.00	D365			520					14	1					1	
UD503	Ramp G	3+09	968+88 (IR680)	LT	P.397, P.398	885.52	968+88.00 (IR680)	D371				473	42			5	1					5	1
UD504	Ramp G	3+09	968+88 (IR680)	RT	P.397, P.398	885.52	968+88.00 (IR680)	UD503					469				1					2	2
UD505	IR680	973+99	4+62(Ramp G)	LT	P.398	888.71	4+62.59(Ramp G)	UD504					217				1					1	1
UD506	IR680	973+99	972+57	LT	P.398	889.86	972+56.56	UD505			153						1					1	
UD507	Ramp G	3+07	2+42	RT	P.398	889.66	2+42.38	D373				72				5	1					1	1
UD508	Ramp G	3+07	0+08	LT	P.398	872.57	0+08.11	EX. UD.				302					1					2	
UD509	IR680	978+94	974+00	LT	P.398	891.24	974+00.00	D367			494		38			5	1					1	1
UD510	IR680	978+94	974+00	LT	P.398	891.47	974+00.00	UD509					494				1						
UD511	IR680	978+94	974+00	RT	P.398	891.24	974+00.00	D367					489			5	1				1		
UD512	IR680	978+94	974+00	RT	P.398	891.63	974+00.00	UD513					494				1						
UD513	IR680	978+94	974+00	RT	P.398	891.24	974+00.00	D367			494		48			5	1					1	1
UD514	Ramp F	7+49	5+56	RT	P.398, P.399	898.21	5+56.07	UD516			192						1						
UD515	Ramp F	7+49	5+56	RT	P.398, P.399	898.53	5+56.07	UD516					193				1						
UD516	Ramp F	7+49	5+56	RT	P.398, P.399	895.01	5+56.07	OUTLET	2	1			195		1	39						1	2
UD517	IR680	983+31	981+20	RT	P.398, P.399	898.04	981+20.00	D375					206			5	1						
UD518	IR680	983+29	981+07	LT	P.398, P.399	895.37	981+06.63	OUTLET	2	1			219		1	34	1					1	1
UD519	IR680	983+29	981+07	LT	P.398, P.399	898.33	981+06.63	UD518			223						1						
UD520	Ramp F	7+51	8+42	RT	P.399	899.54	8+42.13	UD522				90					1						
UD521	Ramp F	7+51	8+32	RT	P.399	899.56	8+32.28	UD520					90				1					1	1
UD522	Ramp F	7+51	8+42	LT	P.399	898.81	8+16.86	OUTLET	2	1			112		1	34	1				1	1	1
UD524	Ramp F	14+85	8+42	RT	P.399, P.412	899.54	8+42.13	UD522				629					1						
UD525	Ramp F	14+85	8+42	LT	P.399, P.412	900.93	8+42.13	UD522				696					1						
UD526	IR680	983+33	988+98	RT	P.399	887.85	988+98.00	UD529					564				1						
UD527	IR680	983+90	988+98	RT	P.399	887.73	988+98.00	UD529			506						1						
UD528	IR680	983+33	988+98	RT	P.399	888.40	988+98.00	UD529					565				1						
UD529	IR680	983+33	989+00	LT	P.399	887.59	989+00.00	D380					334			20	1				1	3	3
UD530	IR680	983+33	989+00	LT	P.399	883.10	989+00.00	OUTLET	2	1	572				1	22	1					1	
TOTALS CARRIED TO SHEET P.192									12	6	4386	2262	9140	0	6	299							

Preliminary Plans - For Reference Only

UNDERDRAIN SUBSUMMARY

DESIGN AGENCY
ms consultants, inc.

DESIGNER

REVIEWER
DNO 5/20/25

PROJECT ID
121474

SHEET P.184 TOTAL 655

MAH-680-4.58

MODEL: UNDERDRAIN 2 PAPERSIZE: 34x22 (in.) DATE: 9/15/2025 TIME: 1:45:42 PM PLTDRV: OHDOT_PDF_E+.pltcfg PENTBL: OHDOT_Pen.tbl USER: DHall@msconsultants.com WORKSPACE: OHDOTCEv02 WORKSET: 121474 PRODUCT: OpenRoadsDesigner 24.00.00.205
pw:\\ohiodot-pw.bentley.com:ohiodot-pw-02\Documents\01 Active Projects\District 04\Mahoning\121474\402-Engineering_MSConsultants\Drainage\Sheets\121474_DS005.dgn

REF NO.	LOCATION	STATION FROM	STATION TO	SIDE	SHEET NO.	UNDERDRAIN OUTLET ELEV.	UNDERDRAIN OUTLET STA.	UNDERDRAIN OUTLET TYPE	601 TIED CONCRETE BLOCK MAT WITH TYPE 1 UNDERLAYMENT SY	611 PRECAST REINFORCED CONCRETE OUTLET EACH	605 6" SHALLOW PIPE UNDERDRAINS WITH GEOTEXTILE FABRIC (20" DEPTH) FT	605 6" BASE PIPE UNDERDRAINS (18" DEPTH) FT	605 6" SHALLOW PIPE UNDERDRAINS WITH GEOTEXTILE FABRIC (30" DEPTH) FT		620 DELINEATOR, POST GROUND MOUNTED, AS PER PLAN EACH	611 6" CONDUIT, TYPE F FT	BENDS AND BRANCHES END CAPS EA			6"x6"x6"x6" CROSS TEE EA	6" DIA. 45 DEG. BEND EA	6" DIA. 90 DEG. BEND EA	6"x6" TEE EA
#3																							
UD531	Ramp F	16+71	16+78	LT	P.412	922.79	16+77.74	EX. UD.				6					1						
UD532	Ramp F	14+88	16+68	LT	P.412	922.49	16+67.54	D509				173				5	1				1		
UD533	Ramp F	15+29	16+68	RT	P.412	922.49	16+67.54	D509				141				23	1					1	1
UD534	Ramp F	15+29	16+68	RT	P.412	922.92	16+67.54	UD533				142					1						
UD535	Ramp H	2+88	2+66	RT	P.412	925.59	2+65.95	EX. UD.				36					1						
UD536	Ramp F	14+88	15+24	LT	P.412	925.07	15+24.47	D569				36				5	1				1		
UD537	Ramp H	3+90	2+10	LT	P.412	925.07	2+09.75	D569				174				5	1				1		
UD538	Ramp H	8+01	13+94	LT	P.399, P.400, P.412	869.08	13+94.15	D385				599				12	1				1		
UD538A	Ramp H	3+92	8+10	LT	P.412	900.00	8+09.95	OUTLET	2	1		402			1	37	1				1	3	1
UD539	Ramp H	8+01	13+77	RT	P.399, P.400, P.412	868.32	13+77.36	D384				578				15	1					1	
UD539A	Ramp H	2+90	8+00	RT	P.412	900.43	8+00.00	UD538A				512					1						
UD540	Ramp J	14+93	13+42	RT	P.399	853.64	13+41.56	D507				153				20							1
UD541	Ramp J	14+93	14+53	LT	P.399	857.21	14+53.31	D566				34				5					1		
UD541A	Ramp J	14+51	13+42	LT	P.399	853.64	13+41.56	D507				104				5	1						
UD542	IR680	989+02	992+00	LT	P.399	878.56	992+00.00	D382			304		40			5	1					1	1
UD543	IR680	989+00	992+00	LT	P.399	879.69	992+00.00	UD542					302				1						
UD544	IR680	989+00	992+00	RT	P.399	878.56	992+00.00	D382					295			5	1						
UD545	IR680	989+02	992+00	RT	P.399	878.39	992+00.00	D381					293			5	1					1	
UD545A	IR680	992+02	994+48	RT	P.399, P.400	870.80	994+48.00	UD549					242				1						
UD546	IR680	989+02	992+00	RT	P.399	878.39	992+00.00	D381			293					5	1					1	
UD546A	IR680	992+02	994+48	RT	P.399, P.400	870.67	994+48.00	UD549					242				1						
UD547	IR680	992+04	994+48	RT	P.399, P.400	871.62	994+48.00	UD549					242				1						
UD548	IR680	992+02	994+48	LT	P.399, P.400	872.23	994+48.00	UD549					246				1						
UD549	IR680	992+02	994+50	LT	P.399, P.400	869.08	994+49.80	D385			251		87			10	1				1	1	4
UD550	Ramp H	13+84	15+87	RT	P.400	862.97	15+87.15	D387					200			5	1					1	
UD551	Ramp H	13+92	15+87	LT	P.400	864.21	15+87.14	D386					200			5	1					1	
UD552	Ramp J	9+17	12+49	LT	P.399, P.400	856.59	12+49.02	D565				326				5	1				1		
UD552A	Ramp J	12+51	13+42	LT	P.399	853.64	13+41.56	D507				85				5	1						
UD553	Ramp J	9+17	13+42	RT	P.399, P.400	853.85	13+41.56	UD540				428					1						
UD554	IR680	994+52	996+50	RT	P.400	864.60	996+50.00	D386					190			5	1					1	
UD555	IR680	994+52	14+50(Ramp H)	RT	P.400	867.28	14+50.00(Ramp H)	UD551			67						1					1	
UD556	IR680	994+51	998+50	RT	P.400	859.81	998+50.00	D388					394			5	1						
UD557	IR680	998+53	1000+00	RT	P.400	857.89	1000+00.00	D390					142			5	1						
UD558	IR680	994+51	1000+48	LT	P.400	859.77	1000+48.39	UD561					619				1					2	
UD559	IR680	994+51	1000+48	LT	P.400	858.76	1000+48.39	UD561					600				1						
UD560	Ramp J	9+15	6+66	LT	P.400	862.02	6+66.06	UD558				260					1					3	
UD561	Ramp J	9+15	1000+48(IR680)	RT	P.400	857.76	1000+48.39(IR680)	D392			469		42			10	1			2			1
UD562	IR680	1000+03	1000+48	RT	P.400	857.76	1000+48.39	D392					41			5	1						
UD563	IR680	996+51	998+50	RT	P.400	858.13	998+50.00	D389					196			15	1					1	
UD563A	IR680	998+51	1000+48	RT	P.400	856.94	1000+48.39	UD575					194				1						
UD564	Ramp H	15+88	17+81	RT	P.400	858.13	17+80.95	D389					190			5	1					1	
UD564A	IR680	17+83(Ramp H)	1000+48	RT	P.400	856.94	1000+48.39	D391			191					5	1						1
UD565	IR680	999+00	1000+48	RT	P.400	856.43	1000+48.39	UD575					145				1						
UD566	IR680	1000+97	1000+48	RT	P.400	857.76	1000+48.39	D392					43			5	1						
UD567	IR680	1002+97	1001+00	RT	P.400	857.88	1001+00.00	D393					192			5	1						
TOTALS CARRIED TO SHEET P.192									2	1	1575	4189	5377	0	1	247							

Preliminary Plans - For Reference Only

UNDERDRAIN SUBSUMMARY

MAH-680-4.58
MODEL: UNDERDRAIN 3 PAPERSIZE: 34x22 (in.) DATE: 9/15/2025 TIME: 1:45:42 PM PLTDRV: OHDOT_PDF_E+.pltcfg PENTBL: OHDOT_Pen.tbl USER: DHall@msconsultants.com WORKSPACE: OHDOTCEv02 WORKSET: 121474 PRODUCT: OpenRoadsDesigner 24.00.00.205
pw:\\ohiodot-pw.bentley.com:ohiodot-pw-02\Documents\01 Active Projects\District 04\Mahoning\121474\402-Engineering_MSConsultants\Drainage\Sheets\121474_DS005.dgn

DESIGN AGENCY
ms consultants, inc.
DESIGNER
REVIEWER
DNO 5/20/25
PROJECT ID
121474
SHEET P.185 TOTAL 655

UNDERDRAIN SUBSUMMARY

REF NO.	LOCATION	STATION FROM	STATION TO	SIDE	SHEET NO.	UNDERDRAIN OUTLET ELEV.	UNDERDRAIN OUTLET STA.	UNDERDRAIN OUTLET TYPE	601 TIED CONCRETE BLOCK MAT WITH TYPE 1 UNDERLAYMENT SY	611 PRECAST REINFORCED CONCRETE OUTLET EACH	605 6" SHALLOW PIPE UNDERDRAINS WITH GEOTEXTILE FABRIC (20" DEPTH) FT	605 6" BASE PIPE UNDERDRAINS (18" DEPTH) FT	605 6" SHALLOW PIPE UNDERDRAINS WITH GEOTEXTILE FABRIC (30" DEPTH) FT		620 DELINEATOR, POST GROUND MOUNTED, AS PER PLAN EACH	611 6" CONDUIT, TYPE F FT	BENDS AND BRANCHES: END CAPS EA			6"x6"x6"x6" CROSS TEE EA	6" DIA. 45 DEG. BEND EA	6" DIA. 90 DEG. BEND EA	6"x6" TEE EA
#4																							
UD568	IR680	1002+99	1000+48	LT	P.400	858.76	1000+48.39	UD561					252				1						
UD569	IR680	1002+99	1000+48	LT	P.400	859.77	1000+48.39	UD561					254				1						
UD570	IR680	1002+99	1000+48	LT	P.400	860.68	1000+48.39	UD561			257						1						
UD571	IR680	1004+68	1003+00	LT	P.400, P.401	861.22	1003+00.00	D397			251		49			5	1					1	2
UD572	IR680	1004+76	1003+00	LT	P.400, P.401	862.49	1003+00.00	UD571					178				1						
UD573	IR680	1004+81	1003+00	LT	P.400, P.401	861.98	1003+00.00	UD571					181				1						
UD574	IR680	1004+84	1003+00	RT	P.400, P.401	861.22	1003+00.00	D397					179			5	1						
UD575	IR680	1004+91	1000+48	RT	P.400, P.401	856.10	1000+48.39	D391					462			5	1			1			1
UD576	IR680	1004+98	1000+48	RT	P.400, P.401	856.43	1000+48.39	UD575					441				1						
UD577	IR680	1004+84	1000+48	RT	P.400, P.401	856.94	1000+48.39	UD564A			425						1						
UD577A	IR680	1005+12	1004+86	RT	P.401	865.62	1004+86.21	D501			20					5	1				1		
UD578	IR680	1007+49	1007+37	RT	P.401	868.49	1007+37.06	OUTLET	2	1			85		1	30	1					1	2
UD579	IR680	1007+48	1007+15	RT	P.401	874.86	1007+14.53	UD578					33				1						
UD580	IR680	1010+51	1007+50	RT	P.401	875.25	1007+50.00	D401					295			5	1					1	1
UD581	IR680	1010+51	1007+50	LT	P.401	876.08	1007+50.00	UD582					302				1						
UD582	IR680	1010+51	1007+50	LT	P.401	875.25	1007+50.00	D401					315			5	1						
UD583	IR680	1010+51	1007+36	RT	P.401	873.51	1007+36.07	UD578					308				1						
UD584	IR680	1010+51	1007+31	RT	P.401	873.06	1007+30.74	UD578			308						1						
UD585	IR680	1014+49	1006+93	LT	P.401	869.85	1006+92.74	OUTLET	2	1	773				1	23	1					1	
UD586	IR680	1013+46	1010+52	RT	P.401	885.28	1010+51.54	UD591					295				1						
UD586A	IR680	1014+49	1013+50	RT	P.401	895.42	1013+49.98	D408					94			5	1						
UD587	IR680	1014+50	1010+52	RT	P.401	883.97	1010+51.54	UD588			390						1						
UD588	IR680	1014+50	1010+52	RT	P.401	880.01	1010+51.54	OUTLET					392			32	1					1	1
UD589	IR680	1014+49	1012+07	RT	P.401	889.52	1012+06.96	UD588					251				1					1	
UD590	IR680	1014+49	1010+52	LT	P.401	885.95	1010+51.54	UD591					399				1						
UD591	IR680	1014+49	1010+52	LT	P.401	885.28	1010+51.54	D406					434			5	1					3	1
UD592	IR680	1015+49	1014+54	RT	P.401, P.402	897.19	1014+54.04	UD594			93						1						
UD593	IR680	1015+49	1014+54	RT	P.401, P.402	897.51	1014+54.04	UD594					93				1						
UD594	IR680	1016+98	1014+52	RT	P.401, P.402	897.10	1014+52.39	D410					278			10	1				1	1	2
UD595	IR680	1016+98	1014+50	LT	P.401, P.402	898.87	1014+50.00	UD598					249				1						
UD595A	IR680	1018+96	1014+50	RT	P.401, P.402	898.50	1014+50.00	UD598					447				1						
UD596	IR680	1016+98	1014+50	LT	P.401, P.402	899.73	1014+50.00	UD598					250				1						
UD597	IR680	1018+99	1017+00	LT	P.402	907.15	1017+00.00	UD598					208				1					1	
UD598	IR680	1018+99	1014+50	LT	P.401, P.402	898.00	1014+50.00	D409			451		53			5	1					1	4
UD599	IR680	1019+17	1019+00	LT	P.402	913.23	1019+00.00	UD608					17				1						
UD600	IR680	1019+04	1018+25	RT	P.402	910.79	1018+25.00	UD602					91				1					1	
UD601	Ramp K	8+09	1015+50(IR680)	RT	P.402	900.78	1015+50.00(IR680)	UD602			635						1						
UD602	Ramp K	6+23	1015+50(IR680)	RT	P.402	900.78	1015+50.00(IR680)	D411					450			18	1					1	2
UD603	IR680	1021+88	1019+00	RT	P.402	913.28	1019+00.00	D415					285			5	1						
UD603A	IR680	1020+02	1019+00	RT	P.402	913.28	1019+00.00	D415					124			5	1				1		
UD604	Ramp K	8+09	1021+76(IR680)	RT	P.402	922.42	1021+75.50(IR680)	UD615				26					1					1	1
UD605	Ramp K	8+09	1021+76(IR680)	RT	P.402	923.02	1021+75.50(IR680)	UD604				11					1						
UD606	Ramp K	7+97	1019+00(IR680)	RT	P.402	917.25	1019+00.00(IR680)	D420A				197				10	1					3	
UD607	Ramp L	5+24	1019+00(IR680)	RT	P.402	913.91	1019+00.00(IR680)	UD608				375					1						
UD608	Ramp L	5+56	1019+00(IR680)	LT	P.402	911.34	1019+00.00(IR680)	OUTLET	2	1		22	333		1	17	1					1	4
TOTALS CARRIED TO SHEET P.192									6	3	3603	631	8077	0	3	195							

Preliminary Plans - For Reference Only

DESIGN AGENCY
ms consultants, inc.

DESIGNER

REVIEWER
DNO 5/20/25

PROJECT ID
121474

SHEET P.186 TOTAL 655

MAH-680-4.58

MODEL: UNDERDRAIN 4 PAPERSIZE: 34x22 (in.) DATE: 9/15/2025 TIME: 1:45:43 PM PLTDRV: OHDOT_PDF_E+.pltcfg PENTBL: OHDOT_Pen.tbl USER: DHall@msconsultants.com WORKSPACE: OHDOTCEv02 WORKSET: 121474 PRODUCT: OpenRoadsDesigner 24.00.00.205
pw:\\ohiodot-pw.bentley.com:ohiodot-pw-02\Documents\01 Active Projects\District 04\Mahoning\121474\402-Engineering_MSConsultants\Drainage\Sheets\121474_DS005.dgn

REF NO.	LOCATION	STATION FROM	STATION TO	SIDE	SHEET NO.	UNDERDRAIN OUTLET ELEV.	UNDERDRAIN OUTLET STA.	UNDERDRAIN OUTLET TYPE	601 TIED CONCRETE BLOCK MAT WITH TYPE 1 UNDERLAYMENT SY	611 PRECAST REINFORCED CONCRETE OUTLET EACH	605 6" SHALLOW PIPE UNDERDRAINS WITH GEOTEXTILE FABRIC (20" DEPTH) FT	605 6" BASE PIPE UNDERDRAINS (18" DEPTH) FT	605 6" SHALLOW PIPE UNDERDRAINS WITH GEOTEXTILE FABRIC (30" DEPTH) FT		620 DELINEATOR, POST GROUND MOUNTED, AS PER PLAN EACH	611 6" CONDUIT, TYPE F FT	BENDS AND BRANCHES END CAPS EA			6"x6"x6"x6" CROSS TEE EA	6" DIA. 45 DEG. BEND EA	6" DIA. 90 DEG. BEND EA	6"x6" TEE EA
#5																							
UD609	IR680	1022+49	6+67(Ramp L)	LT	P.402	920.28	6+66.85(Ramp L)	UD608					127				1					1	
UD610	IR680	1022+49	6+07(Ramp L)	LT	P.402	922.49	6+06.97(Ramp L)	UD608			66						1					1	
UD611	IR680	1022+25	8+11 (Ramp K)	LT	P.402	923.00	8+10.74 (Ramp K)	D420				33				5	1				1		
UD612	Ramp L	5+24	5+55	LT	P.402	922.50	5+55.08	D418				32				13	1					1	
UD613	Ramp L	2+34	5+23	LT	P.402	922.00	5+23.14	D419				337				6	1					5	1
UD614	Ramp L	3+25	5+23	RT	P.402	924.31	5+23.14	UD613				197					1						
UD615	IR680	1021+87	1020+04	RT	P.402	916.81	1020+04.34	D420A					169			13	1					1	
UD616	Ramp K	12+08	8+11	RT	P.402	923.00	8+10.74	D421				394				14	1					1	
UD617	Ramp K	12+08	8+11	LT	P.402	923.00	8+10.74	D421				388				5	1				1		
UD618	IR680	1026+19	1022+28	RT	P.402, P.403	922.48	1022+27.66	D422					438			5	1				1		
UD619	IR680	1026+19	1021+89	RT	P.402, P.403	922.59	1021+89.00	D417					429			5	1					1	
UD620	IR680	1026+19	1025+30	RT	P.402, P.403	929.56	1025+30.00	UD619					103				1					1	
UD621	IR680	1026+19	1021+89	RT	P.402, P.403	922.37	1021+89.00	D417					429			5	1					1	
UD622	IR680	1026+27	1022+50	LT	P.402, P.403	922.50	1022+49.97	D418					394			11	1					1	2
UD623	IR680	1026+27	1022+50	LT	P.402, P.403	924.02	1022+49.97	UD622					367				1						
UD624	IR680	1026+27	1022+50	LT	P.402, P.403	923.62	1022+49.97	UD622			365						1						
UD625	Ramp L	0+51	3+22	RT	P.402, P.403	938.25	3+21.89	D567				266				5	1				1		
UD625A	Ramp L	2+53	2+36	LT	P.402	945.12	2+35.91	D424				14				5	1				1		
UD628	Ramp K	13+98	12+10	RT	P.402, P.403	936.37	12+10.00	D429				181				5	1				1		
UD629	Ramp K	13+98	12+10	LT	P.402, P.403	936.20	12+10.00	D430				181				5	1				1		
UD630	Ramp K	15+48	14+00	RT	P.403	940.71	14+00.00	D432				143				5	1				1		
UD631	Ramp K	16+49	14+00	LT	P.403, P.410	940.51	14+00.00	D433				246				5	1				1		
UD632	Ramp K	16+48	15+50	RT	P.410	945.33	15+50.00	D434				93				5	1				1		
UD633	Ramp M	1026+21(IR680)	1029+71	RT	P.403	928.99	1029+70.94	D438				348				5	1				1		
UD634	IR680	1026+21	1029+20	RT	P.403	925.90	1029+20.00	D441			309		26			5	1					1	1
UD634A	IR680	1026+29	1031+00(RampN)	LT	P.403	920.15	1031+00.00(RampN)	D450					489			5	1					3	
UD635	IR680	1026+21	1029+20	RT	P.403	926.46	1029+20.00	UD634					301				1						
UD635A	IR680	1026+29	1030+50	LT	P.403	921.53	1030+50.00	UD636A					412				1					1	
UD636	IR680	1026+21	1029+20	RT	P.403	925.90	1029+20.00	D441					295			5	1						
UD636A	IR680	1026+29	1031+00(RampN)	LT	P.403	920.15	1031+00.00(RampN)	D450			399		45			5	1						1
UD637	IR680	1029+23	1032+04	RT	P.403	921.40	1032+04.00	D453					276			5	1						
UD638	IR680	1029+21	1032+75	RT	P.403	921.83	1032+75.11	UD651					353				1						
UD639	Ramp K	17+43	16+50	LT	P.410	949.08	16+50.00	D435				86				5	1				1		
UD640	Ramp K	17+24	16+50	RT	P.410	949.08	16+50.00	D435				86				23	1					1	
UD641	Ramp K	17+24	16+77	RT	P.410	952.03	16+77.17	EX. UD.				69											
UD642	Ramp K	18+70	17+45	RT	P.410	952.92	17+44.86	D446				120				5	1				1		
UD643	Ramp K	19+04	18+72	LT	P.410	958.58	18+71.62	D448				57				5					1		
UD644	Ramp M	1029+74	1031+18	RT	P.403	929.00	1031+18.39	D439				143				5	1					1	
UD645	Ramp M	1029+66	1031+14	LT	P.403	926.78	1031+13.53	UD651				146					1					1	
UD646	IR680	1029+21	1030+91	RT	P.403	923.09	1030+91.44	UD638					200				1					1	
UD649	IR680	1032+09	1032+75	RT	P.403	921.07	1032+75.11	D455					61			5	1						
UD651	IR680	1030+91	1032+75	RT	P.403	921.07	1032+75.11	D455			202		40			5						1	2
UD652	Ramp BX	2+98	0+09	LT	P.403	926.90	0+09.25	UD651				288					1						
UD653	Ramp N	1031+03	1032+00	LT	P.403	919.02	1032+00.00	D451					95			5	1					1	
UD654	Ramp N	1032+03	1032+61	LT	P.403	918.93	1032+60.83	D452					56			5	1						
TOTALS CARRIED TO SHEET P.192									0	0	1341	3848	5105	0	0	210							

Preliminary Plans - For Reference Only

UNDERDRAIN SUBSUMMARY

MAH-680-4.58

MODEL: UNDERDRAIN 5 PAPERSIZE: 34x22 (in.) DATE: 9/15/2025 TIME: 1:45:44 PM PLTDRV: OHDOT_PDF_E+.pltcfg PENTBL: OHDOT_Pen.tbl USER: DHall@msconsultants.com WORKSPACE: OHDOTCEv02 WORKSET: 121474 PRODUCT: OpenRoadsDesigner 24.00.00.205
pw:\\ohiodot-pw.bentley.com:ohiodot-pw-02\Documents\01 Active Projects\District 04\Mahoning\121474\402-Engineering_MSConsultants\Drainage\Sheets\121474_DS005.dgn

DESIGN AGENCY
ms consultants, inc.

DESIGNER

REVIEWER
DNO 5/20/25

PROJECT ID
121474

SHEET P.187 TOTAL 655

UNDERDRAIN SUBSUMMARY

REF NO.	LOCATION	STATION FROM	STATION TO	SIDE	SHEET NO.	UNDERDRAIN OUTLET ELEV.	UNDERDRAIN OUTLET STA.	UNDERDRAIN OUTLET TYPE	601 TIED CONCRETE BLOCK MAT WITH TYPE 1 UNDERLAYMENT SY	611 PRECAST REINFORCED CONCRETE OUTLET EACH	605 6" SHALLOW PIPE UNDERDRAINS WITH GEOTEXTILE FABRIC (20" DEPTH) FT	605 6" BASE PIPE UNDERDRAINS (18" DEPTH) FT	605 6" SHALLOW PIPE UNDERDRAINS WITH GEOTEXTILE FABRIC (30" DEPTH) FT		620 DELINEATOR, POST GROUND MOUNTED, AS PER PLAN EACH	611 6" CONDUIT, TYPE F FT	BENDS AND BRANCHES END CAPS EA			6"x6"x6"x6" CROSS TEE EA	6" DIA. 45 DEG. BEND EA	6" DIA. 90 DEG. BEND EA	6"x6" TEE EA
#6																							
UD655	IR680	1031+03	1032+75	LT	P.403	920.00	1032+75.11	D455					167			31	1						1
UD657	Ramp M	1034+73	1034+43	RT	P.403	939.82	1034+43.44	UD658				61					1						2
UD658	Ramp M	1034+73	1031+18	RT	P.403	929.00	1031+18.39	D439				345				5	1						2
UD659	Ramp BX	3+77	3+41	RT	P.403	941.22	3+41.34	UD657				40					1					1	
UD660	Ramp M	1040+05	1034+75	LT	P.403, P.410	942.00	1034+74.65	EX. CB.				580				14	1					1	
UD661	Ramp M	1040+05	1034+75	RT	P.403, P.410	941.00	1034+75.12	EX. CB.				520				13	1					1	
UD662	Ramp M	1040+07	1041+15	RT	P.410	959.62	1041+14.91	EX. UD.				105					1						
UD663	Ramp M	1040+07	1040+83	LT	P.410	962.17	1040+82.62	EX. UD.				123					1					2	
UD664	IR680	1034+89	1032+75	RT	P.403	923.18	1032+75.11	UD651			218						1						
UD665	IR680	1034+90	1032+75	RT	P.403	921.83	1032+75.11	UD651					218				1						
UD666	IR680	1033+47	1032+75	RT	P.403	921.07	1032+75.11	D455					67			5	1						
UD667	IR680	1037+99	1033+50	RT	P.403, P.404, P.413	921.24	1033+50.00	D461					447			5	1						
UD668	IR680	1034+90	1032+75	LT	P.403	920.50	1032+75.11	UD655					213				1						
UD669	IR680	1034+90	1034+25	LT	P.403	922.52	1034+24.78	UD671			71						1					1	
UD670	Ramp N	1034+73	1032+61	LT	P.403	918.93	1032+60.83	D452				205				5	1						1
UD671	Ramp N	1034+11	1033+22	LT	P.403	920.19	1033+22.25	UD670				115					1					1	1
UD672	Ramp N	1034+72	1034+11	RT	P.403	922.18	1034+10.73	UD671				63					1						1
UD673	IR680	1037+02	1034+91	LT	P.403, P.413	921.00	1034+91.23	D465					220			12	1					1	1
UD674	IR680	1037+99	1034+93	LT	P.403, P.404, P.413	923.05	1034+92.73	UD673			307						1						
UD676	IR680	1037+99	1037+02	LT	P.404, P.413	929.00	1037+01.51	UD667					107				1					1	1
UD677	IR680	1037+99	1034+91	RT	P.403, P.404, P.413	923.66	1034+91.43	D466					314			5	1						
UD678	IR680	1037+99	1034+91	RT	P.403, P.404	923.66	1034+91.43	D466			301					5	1					1	1
UD679	Ramp BX	6+49	3+00	LT	P.403, P.404	934.55	2+99.89	OUTLET	2	1		347			1	24	1					1	
UD680	Ramp BX	6+49	3+79	RT	P.403, P.404	942.00	3+78.65	EX. CB.				272				18	1					3	
UD681	Ramp N	8+40(Ramp BY)	1034+75	RT	P.403, P.404, P.413	922.74	1034+74.78	UD682				562					1						
UD682	Ramp N	1039+13	1034+75	RT	P.403, P.404, P.413	921.00	1034+74.78	D465				466				10	1					1	2
UD683	Ramp BY	8+40	1038+62(Ramp N)	RT	P.404, P.413	938.45	1038+62.31(Ramp N)	UD684				167					1					1	
UD684	Ramp N	1039+13	1038+17	RT	P.404, P.413	935.28	1038+16.87	UD682				130					1					2	2
UD685	Ramp N	1039+15	1041+67	LT	P.404, P.413	927.01	1041+66.83	EX. UD.				251					1						1
UD686	Ramp N	1039+15	1040+65	RT	P.404, P.413	932.06	1040+65.39	UD685				184					1					1	
UD688	Ramp CA	22+66	25+75	LT	P.413	926.09	25+74.93	UD689				359					1					3	
UD689	Ramp CA	22+66	25+77	RT	P.413	926.00	25+77.31	EX. UD.				305					1						1
UD690	Ramp BX	11+11	6+50	LT	P.404	955.67	6+50.00	UD691				459					1						
UD691	Ramp BX	11+11	6+50	RT	P.404	944.63	6+50.00	OUTLET	2	1		486			1	50	1					1	1
UD692	Ramp BX	11+13	11+22	LT	P.404	967.78	11+22.00	UD693				11					1						
UD693	Ramp BX	11+13	11+22	RT	P.404	966.93	11+22.00	OUTLET	2	1		64			1	11	1					1	1
UD694	IR680	1043+97	1038+00	RT	P.404, P.413	931.91	1038+00.00	D468					589			5	1						
UD695	IR680	1044+55	1038+00	RT	P.404	931.00	1037+99.87	D467					643			14	1					1	1
UD696	IR680	1044+55	1038+01	RT	P.404	931.26	1038+01.43	UD695			625						1					4	
UD697	IR680	1044+22	1038+00	LT	P.404, P.413	932.59	1038+00.00	UD698					628				1						
UD698	IR680	1043+96	1038+00	LT	P.404, P.413	931.91	1038+00.00	D468			623		38			5	1					1	1
UD699	Ramp CA	22+64	3+58(RampBY)	RT	P.413	929.00	3+58.49(RampBY)	D571				368				7	1					1	1
UD700	Ramp CA	22+64	19+16	LT	P.413	929.06	19+16.02	UD699				349					1						1
UD701	Ramp BY	8+38	19+36 (Ramp CA)	RT	P.404, P.413	930.16	19+36.45(Ramp CA)	UD700				471					1					1	
TOTALS CARRIED TO SHEET P.192									6	3	2145	7408	3651	0	3	244							

Preliminary Plans - For Reference Only

DESIGN AGENCY
ms consultants, inc.

DESIGNER

REVIEWER
DNO 5/20/25

PROJECT ID
121474

SHEET P.188 TOTAL 655

MAH-680-4.58

MODEL: UNDERDRAIN 6 PAPERSIZE: 34x22 (in.) DATE: 9/15/2025 TIME: 1:45:44 PM PLTDRV: OHDOT_PDF_E+.pltcfg PENTBL: OHDOT_Pen.tbl USER: DHall@msconsultants.com WORKSPACE: OHDOTCEv02 WORKSET: 121474 PRODUCT: OpenRoadsDesigner 24.00.00.205
pw:\\ohiodot-pw.bentley.com:ohiodot-pw-02\Documents\01 Active Projects\District 04\Mahoning\121474\402-Engineering_MSConsultants\Drainage\Sheets\121474_DS005.dgn

REF NO.	LOCATION	STATION FROM	STATION TO	SIDE	SHEET NO.	UNDERDRAIN OUTLET ELEV.	UNDERDRAIN OUTLET STA.	UNDERDRAIN OUTLET TYPE	601 TIED CONCRETE BLOCK MAT WITH TYPE 1 UNDERLAYMENT SY	611 PRECAST REINFORCED CONCRETE OUTLET EACH	605 6" SHALLOW PIPE UNDERDRAINS WITH GEOTEXTILE FABRIC (20" DEPTH) FT	605 6" BASE PIPE UNDERDRAINS (18" DEPTH) FT	605 6" SHALLOW PIPE UNDERDRAINS WITH GEOTEXTILE FABRIC (30" DEPTH) FT		620 DELINEATOR, POST GROUND MOUNTED, AS PER PLAN EACH	611 6" CONDUIT, TYPE F FT	BENDS AND BRANCHES END CAPS EA			6"x6"x6"x6" CROSS TEE EA	6" DIA. 45 DEG. BEND EA	6" DIA. 90 DEG. BEND EA	6"x6" TEE EA
#7																							
UD702	Ramp BY	8+38	3+58	LT	P.404, P.413	929.00	3+58.49	D571				479				28	1					1	
UD703	Ramp CA	19+14	15+02	RT	P.413, P.414	915.18	15+01.60	EX. CB.				452				9	1					1	2
UD705	Ramp CA	19+14	15+02	LT	P.413, P.414	916.63	16+50.00	UD703				424					1					2	
UD707	Ramp BY	3+57	15+02(Ramp CA)	LT	P.413, P.414	916.59	15+01.60(Ramp CA)	UD703				415					1						
UD708	Ramp CA	15+01	11+21	RT	P.414	905.02	11+20.89	EX. UD.				380					1						
UD709	Ramp CA	15+01	11+21	RT	P.414	903.79	11+21.45	EX. UD.					379				1						
UD711	Ramp CA	15+01	13+10	LT	P.414	909.73	13+09.73	UD713				376					1					3	
UD712	Ramp SB	1035+97	1032+31	LT	P.414	904.33	1032+30.67	EX. UD.				365					1						
UD713	Ramp SB	1035+97	11+21(Ramp CA)	LT	P.414	903.62	11+21.45(Ramp CA)	EX. UD.					375				1						1
UD714	Ramp SB	1035+97	1032+28	RT	P.414	903.43	1032+28.20	EX. UD.					372				1						
UD715	Ramp NB	1035+99	1034+95	RT	P.414	911.60	1034+95.18	EX. UD.				106					1						
UD716	Ramp NB	1035+99	1034+99	RT	P.414	910.09	1034+98.88	EX. UD.					102				1						
UD717	Ramp NB	1035+99	1035+05	LT	P.414	908.75	1035+04.91	EX. UD.					94				1						
UD718	Ramp NB	1035+99	1035+08	LT	P.414	909.20	1035+07.44	EX. UD.				91					1						
UD720	Ramp NB	1039+31	1036+00	LT	P.414	911.53	1036+00.00	OUTLET	2	1			373		1	12	1					1	2
UD721	Ramp NB	1040+99	1036+00	LT	P.414	912.52	1036+00.00	UD720					500				1						
UD722	Ramp NB	1040+99	1036+00	LT	P.414	911.83	1036+00.00	UD720				494					1						
UD723	Ramp NB	1039+31	1035+99	RT	P.414	910.48	1035+98.88	OUTLET	2	1		345			1	23	1					1	
UD725	Ramp SB	1042+96	1035+98	RT	P.414	914.19	1035+98.24	UD732				705					1						
UD726	Ramp NB	1040+99	1039+33	RT	P.414	929.42	1039+32.56	D575				170				10	1					1	1
UD727	Ramp BX	16+27	1039+33	RT	P.414	929.42	1039+32.56	D575				414				14	1				1	3	
UD728	Ramp BX	16+15	20+00	RT	P.414	930.13	19+99.70	UD726				403					1					1	
UD729	Ramp NB	1044+99	1041+00	RT	P.414	930.22	1041+00.00	OUTLET	2	1		441			1	26	1					1	2
UD730	Ramp NB	1044+99	1041+00	LT	P.414	931.56	1041+00.00	UD729				395					1						
UD731	Ramp NB	1044+99	1041+00	LT	P.414	932.28	1041+00.00	UD729					398				1						
UD732	Ramp SB	1042+96	15+02(Ramp CA)	LT	P.414	913.50	15+01.60(Ramp CA)	EX. CB.				723				30	1					1	2
UD733	Ramp SB	1042+96	1035+98	RT	P.414	914.00	1035+98.24	UD732				712					1						
UD734	IR680	1044+29	1044+00	RT	P.404	943.39	1044+00.00	D494					24			5	1						
UD735	Ramp NB	1051+55	1045+00	RT	P.404, P.405	939.90	1045+00.00	OUTLET	2	1		664	34		1	15	1					1	2
UD736	Ramp NB	1051+49	1045+00	LT	P.404, P.405	942.30	1045+00.00	UD735					648				1						
UD737	Ramp NB	1051+49	1045+00	LT	P.404, P.405	943.27	1045+00.00	UD735				645					1						
UD738	Ramp BV	3+60	1042+97(RampSB)	LT	P.404, P.405, P.414	917.03	1042+96.65(RampSB)	EX. CB.				843				8	1					1	2
UD739	Ramp SB	1050+94	1042+97	RT	P.404, P.405, P.414	919.44	1042+96.65	UD738				794					1						
UD740	Ramp SB	1050+94	1042+97	RT	P.404, P.405, P.414	920.27	1042+96.65	UD738				807					1						
UD741	IR680	1049+99	1046+27	LT	P.404, P.405	946.49	1046+27.33	UD742			383						1						
UD742	IR680	1049+99	1046+30	LT	P.404, P.405	943.29	1046+30.21	OUTLET	2	1			339		1	91	1					1	1
UD743	IR680	1049+97	1047+77	RT	P.404, P.405	939.63	1047+77.34	OUTLET	2	1			304		1	109	1					1	2
UD744	IR680	1049+99	1047+48	RT	P.404, P.405	944.23	1047+47.60	UD743					248				1						
UD745	IR680	1049+99	1047+69	RT	P.404, P.405	943.74	1047+68.94	UD743			226						1						
UD749	Ramp BV	3+60	1049+87(RampSB)	LT	P.405	934.19	1049+87.15(RampSB)	UD740				121					1					3	
UD755	IR680	1051+55	1050+00	LT	P.405	947.75	1050+00.00	D608			155					5	1					1	
UD756	IR680	1052+46	1050+00	LT	P.405	946.20	1050+00.00	D607					274			5	1					3	
UD757	IR680	1052+96	1050+00	RT	P.405	946.20	1050+00.00	D607					291			5	1						
UD758	IR680	1052+99	1050+00	RT	P.405	946.42	1050+00.00	UD759					299				1						
UD759	IR680	1052+99	1050+00	RT	P.405	946.20	1050+00.00	D607			336					5	1					1	1
TOTALS CARRIED TO SHEET P.192									12	6	1100	11764	5054	0	6	400							

Preliminary Plans - For Reference Only

UNDERDRAIN SUBSUMMARY

DESIGN AGENCY
ms consultants, inc.

DESIGNER

REVIEWER
DNO 5/20/25

PROJECT ID
121474

SHEET P.189 TOTAL 655

MAH-680-4.58

MODEL: UNDERDRAIN 7 PAPERSIZE: 34x22 (in.) DATE: 9/15/2025 TIME: 1:45:45 PM PLTDRV: OHDOT_PDF_E+.pltcfg PENTBL: OHDOT_Pen.tbl USER: DHall@msconsultants.com WORKSPACE: OHDOTCEv02 WORKSET: 121474 PRODUCT: OpenRoadsDesigner 24.00.00.205
pw:\\ohiodot-pw.bentley.com:ohiodot-pw-02\Documents\01 Active Projects\District 04\Mahoning\121474\402-Engineering_MSConsultants\Drainage\Sheets\121474_DS005.dgn

UNDERDRAIN SUBSUMMARY

REF NO.	LOCATION	STATION FROM	STATION TO	SIDE	SHEET NO.	UNDERDRAIN OUTLET ELEV.	UNDERDRAIN OUTLET STA.	UNDERDRAIN OUTLET TYPE	601 TIED CONCRETE BLOCK MAT WITH TYPE 1 UNDERLAYMENT SY	611 PRECAST REINFORCED CONCRETE OUTLET EACH	605 6" SHALLOW PIPE UNDERDRAINS WITH GEOTEXTILE FABRIC (20" DEPTH) FT	605 6" BASE PIPE UNDERDRAINS (18" DEPTH) FT	605 6" SHALLOW PIPE UNDERDRAINS WITH GEOTEXTILE FABRIC (30" DEPTH) FT		620 DELINEATOR, POST GROUND MOUNTED, AS PER PLAN EACH	611 6" CONDUIT, TYPE F FT	BENDS AND BRANCHES END CAPS EA			6"x6"x6"x6" CROSS TEE EA	6" DIA. 45 DEG. BEND EA	6" DIA. 90 DEG. BEND EA	6"x6" TEE EA
#8																							
UD760	Ramp BV	7+99	3+61	LT	P.405	937.50	3+60.86	EX. CB.				463				8	1					3	1
UD761	Ramp BV	7+99	3+61	LT	P.405	938.53	3+60.86	UD760				436					1						
UD762	Ramp SB	1055+48	1050+96	RT	P.405	937.99	1050+95.70	UD763				458					1					2	
UD763	Ramp SB	1055+74	1050+95	RT	P.405	937.50	1050+95.42	EX. CB.				498				13	1					1	1
UD764	IR680	1055+72	1053+00	RT	P.405	949.44	1053+00.00	UD765			272						1						
UD765	IR680	1056+46	1053+00	RT	P.405	946.39	1053+00.00	OUTLET	2	1			358		1	32	1					1	1
UD766	IR680	1056+80	1051+57(RampNB)	LT	P.405	947.09	1051+57.26(RampNB)	UD773					549				1					1	
UD767	Ramp SB	1058+97	1055+74	RT	P.405	952.30	1055+73.99	UD770					348				1					1	
UD768	Ramp BV	12+61	8+00	LT	P.405, P.406	964.33	8+00.00	UD769				463					1						
UD769	Ramp BV	12+60	8+00	RT	P.405, P.406	961.31	8+00.00	OUTLET	2	1		487			1	36	1					1	1
UD770	IR680	1060+91	1055+50(RampSB)	RT	P.405, P.406	951.76	1055+50.00(RampSB)	OUTLET	2	1	194		359		1	12	1					1	2
UD771	IR680	1060+91	1058+97	RT	P.405, P.406	957.39	1058+96.78	UD770					205				1					1	
UD772	Ramp NB	1060+77(IR680)	1051+50	LT	P.405, P.406	946.69	1051+50.00	UD773			925						1						
UD773	Ramp NB	1060+77(IR680)	1051+50	LT	P.405, P.406	944.90	1051+50.00	OUTLET	2	1			937		1	34	1					1	2
UD774	IR680	1060+93	1053+00	RT	P.405, P.406	949.84	1053+00.00	D613					788			5	1				1		
UD775	IR680	1062+52	1060+95	RT	P.406	995.91	1060+95.00	UD776			157						1						
UD776	IR680	1062+52	1060+92	RT	P.406	960.59	1060+91.80	D619					168			11	1					1	1
UD777	IR680	1062+52	1061+00	RT	P.406	960.33	1061+00.00	D621					147			5	1				1		
UD778	IR680	1062+52	1060+80	LT	P.406	959.53	1060+79.66	D617					181			20	1				1	1	1
UD779	IR680	1062+52	1060+83	LT	P.406	959.73	1060+82.78	UD778			169						1						
UD780	IR680	1065+41	1062+53	RT	P.406	962.87	1062+52.51	UD781					289				1						
UD781	IR680	1067+99	1062+53	RT	P.406	962.75	1062+52.51	D624			551		55			5	1					1	2
UD782	IR680	1067+97	1062+53	RT	P.406	962.80	1062+52.51	UD781					545				1						1
UD783	IR680	1067+97	1065+41	RT	P.406	970.09	1065+41.16	UD784					257				1						
UD784	IR680	1067+99	1065+41	RT	P.406	969.59	1065+41.16	UD782					278				1					1	1
UD785	IR680	1072+51	1065+41	LT	P.406, P.407	969.47	1065+41.16	UD786					706				1					1	
UD786	IR680	1072+51	1062+53	LT	P.406, P.407	962.40	1062+52.51	D623					985			14	1					1	2
UD787	IR680	1072+51	1062+56	LT	P.406, P.407	962.46	1062+55.51	UD786			968						1						
UD788	IR680	1072+49	1068+00	RT	P.406, P.407	977.67	1068+00.00	D626			473		50			5	1					1	2
UD789	IR680	1072+49	1068+00	RT	P.406, P.407	978.41	1068+00.00	UD788					457				1						
UD790	IR680	1072+49	1068+00	RT	P.406, P.407	977.93	1068+00.00	UD788					452				1						
UD791	IR680	1072+49	1068+00	RT	P.406, P.407	977.67	1068+00.00	D626					445			5	1						
UD792	IR680	1072+51	1073+60	RT	P.407	989.55	1073+59.64	OUTLET	2	1	108				1	15	1					1	
UD793	IR680	1072+51	1073+67	LT	P.407	976.32	1073+67.42	OUTLET	2	1			110		1	110	1					1	5
UD794	IR680	1072+51	1073+60	RT	P.407	987.75	1073+60.04	UD793					110				1						
UD795	IR680	1072+51	1073+60	RT	P.407	987.22	1073+60.04	UD793					110				1						
UD796	IR680	1072+53	1073+66	LT	P.407	984.95	1073+65.60	UD793					109				1						
UD797	IR680	1072+67	1073+67	LT	P.407	984.03	1073+67.19	UD793					96				1						
UD798	IR680	1072+52	1073+69	LT	P.407	983.27	1073+68.65	UD793					110				1						
UD799	IR680	1075+37	1076+50	RT	P.407	979.28	1076+50.00	D629					144			5	1					1	2
UD800	IR680	1075+45	1076+50	RT	P.407	980.27	1076+50.00	UD799					106				1						
UD801	IR680	1075+45	1076+50	RT	P.407	979.80	1076+50.00	D629					101			5	1						
UD802	Ramp A	1075+45	1077+13	RT	P.407	974.93	1077+12.74	OUTLET	2	1	180				1	15	1					1	
UD803	IR680	1075+72	1076+75	LT	P.407	974.89	1076+74.66	UD808			98						1						
UD804	IR680	1075+62	1076+76	LT	P.407	975.62	1076+75.67	UD808					109				1						
TOTALS CARRIED TO SHEET P.192									14	7	4095	2805	9664	0	7	355							

Preliminary Plans - For Reference Only

DESIGN AGENCY
ms consultants, inc.
DESIGNER
REVIEWER
DNO 5/20/25
PROJECT ID
121474
SHEET P.190 TOTAL 655

MAH-680-4.58

MODEL: UNDERDRAIN 8 PAPERSIZE: 34x22 (in.) DATE: 9/15/2025 TIME: 1:45:46 PM PLTDRV: OHDOT_PDF_E+.pltcfg PENTBL: OHDOT_Pen.tbl USER: pw:\\ohiodot-pw.bentley.com:ohiodot-pw-02\Documents\01 Active Projects\District 04\Mahoning\121474\402-Engineering_MSConsultants\Drainage\Sheets\121474_DS005.dgn

UNDERDRAIN SUBSUMMARY

REF NO.	LOCATION	STATION FROM	STATION TO	SIDE	SHEET NO.	UNDERDRAIN OUTLET ELEV.	UNDERDRAIN OUTLET STA.	UNDERDRAIN OUTLET TYPE	601 TIED CONCRETE BLOCK MAT WITH TYPE 1 UNDERLAYMENT SY	611 PRECAST REINFORCED CONCRETE OUTLET EACH	605 6" SHALLOW PIPE UNDERDRAINS WITH GEOTEXTILE FABRIC (20" DEPTH) FT	605 6" BASE PIPE UNDERDRAINS (18" DEPTH) FT	605 6" SHALLOW PIPE UNDERDRAINS WITH GEOTEXTILE FABRIC (30" DEPTH) FT		620 DELINEATOR, POST GROUND MOUNTED, AS PER PLAN EACH	611 6" CONDUIT, TYPE F FT	BENDS AND BRANCHES END CAPS EA			6"x6"x6"x6" CROSS TEE EA	6" DIA. 45 DEG. BEND EA	6" DIA. 90 DEG. BEND EA	6"x6" TEE EA
#9																							
UD805	IR680	1075+57	1076+78	LT	P.407	976.58	1076+77.95	UD808					117				1						
UD806	IR680	1076+53	1076+82	RT	P.407	978.96	1076+82.49	UD808					30				1						
UD807	IR680	1076+51	1076+83	RT	P.407	979.45	1076+83.38	UD808					33				1						
UD808	IR680	1076+51	1076+71	LT	P.407	969.46	1076+71.02	OUTLET	2	1			36		1	110	1					1	5
UD809	Ramp A	1079+03	1080+32	LT	P.407	974.70	1080+32.24	OUTLET	2	1		131			1	10	1					2	1
UD810	Ramp A	1079+05	1080+32	RT	P.407	973.57	1080+32.22	OUTLET	2	1		127			1	24	1						1
UD811	IR680	1078+74	1080+00	RT	P.407	967.83	1079+99.92	D633					121			5	1						
UD812	Ramp A	1084+51	1080+32	LT	P.407, P.408	976.88	1080+32.24	UD809				409					1						
UD813	IR680	1078+91	1079+54	RT	P.407	971.85	1079+53.71	UD814					77				1					1	
UD814	IR680	1078+72	1080+80	RT	P.407	967.56	1080+79.81	UD815					214				1						1
UD815	IR680	1079+54	1080+80	RT	P.407	965.22	1080+79.81	D635			133		45			5	1					1	2
UD816	IR680	1078+73	1080+80	RT	P.407	966.17	1080+79.81	UD815					208				1						
UD817	IR680	1078+76	1082+94	LT	P.407, P.408	957.70	1082+94.41	D637					464			10	1					1	3
UD818	IR680	1078+77	1082+95	LT	P.407, P.408	958.93	1082+94.94	UD817					401				1						
UD819	IR680	1078+78	1082+95	LT	P.407, P.408	957.76	1082+94.68	UD817			392						1						
UD820	IR680	1079+62	1082+95	LT	P.407, P.408	958.10	1082+94.94	UD817					319				1						
UD821	IR680	1080+03	1083+50	RT	P.407, P.408	959.76	1083+50.08	D640					342			5	1						
UD822	IR680	1080+80	1084+34	RT	P.407, P.408	959.87	1084+34.21	UD824					356				1						
UD823	IR680	1080+81	1084+34	RT	P.407, P.408	960.44	1084+34.21	UD824					362				1						
UD824	IR680	1080+81	1084+30	RT	P.407, P.408	959.39	1084+30.00	D644			368		48			5	1			2	1		1
UD825	IR680	1083+53	1084+30	RT	P.408	959.39	1084+30.00	D644					72			5	1						
UD826	IR680	1082+96	1083+25	LT	P.408	958.60	1083+25.00	D641A					25			5	1						
UD827	Ramp A	1084+52	1084+66	LT	P.408	983.35	1084+65.82	EX. UD.				30					1						
UD828	Ramp A	1084+66	1080+32	RT	P.407, P.408	976.55	1080+32.22	UD810				479					1					4	
UD829	IR680	1082+96	1083+42	LT	P.408	958.65	1083+41.93	UD830					46				1					1	
UD830	IR680	1082+98	1084+80	LT	P.408	958.56	1084+80.00	UD832			42		137				1					2	1
UD831	IR680	1083+28	1084+55	LT	P.408	958.77	1084+55.00	D641					122			5	1						
UD831A	IR680	1084+58	1084+90	LT	P.408	959.10	1094+80.09	UD832					21										
UD832	IR680	1082+96	1084+80	LT	P.408	958.09	1084+80.00	D643					233			9	1			3			
UD833	IR680	1085+46	1084+30	RT	P.408	959.39	1084+30.00	D644					111			5	1						
UD834	IR680	1085+42	1084+55	RT	P.408	959.77	1084+55.00	D645					83			5	1						
UD834A	IR680	1084+52	1084+34	RT	P.408	959.87	1084+34.21	UD824					18										
UD835	IR680	1085+74	1085+45	RT	P.408	960.40	1085+45.02	D648					24			5	1						
UD836	IR680	1085+74	1084+80	LT	P.408	959.52	1084+80.00	UD832					94				1						
UD837	Ramp B	1085+98	1084+80(IR680)	LT	P.408	958.56	1084+80.00(IR680)	UD832					116				1						
UD838	IR680	1087+02	1084+34	RT	P.408	960.44	1084+34.21	UD824					281				1					2	
UD839	IR680	1087+02	1084+34	RT	P.408	961.33	1084+34.21	UD824			269						1						
UD840	IR680	1087+01	1084+80	LT	P.408	959.31	1084+80.00	UD832					221				1						
UD841	IR680	1087+01	1086+57(RampB)	LT	P.408	962.30	1086+56.76(RampB)	UD851			51						1					1	
UD842	Ramp C	1084+41	1089+44	LT	P.408	968.43	1089+44.09	UD852				503					1						
UD843	Ramp B	1092+48	1091+40	LT	P.415	970.02	1091+40.31	UD844				123					1						
UD844	Ramp B	1091+93	1091+32	LT	P.415	968.75	1091+32.23	UD850				120					1					1	1
UD845	Ramp D	1083+22	1083+57	LT	P.415	968.58	1083+56.99	EX. UD.				19					1						
UD846	Ramp C	1084+35	1089+44	RT	P.408	968.56	1089+44.09	UD852				540					1						
UD847	Ramp D	1086+32	1087+36	LT	P.415	965.65	1087+36.01	EX. CB.				123				12	1			1			1
UD848	Ramp D	1083+23	1087+36	LT	P.415	965.77	1087+36.01	UD847				450					1					4	
UD849	Ramp D	1083+43	1086+30	LT	P.415	966.84	1086+30.25	D580				282				5	1						
TOTALS CARRIED TO SHEET P.192									6	3	1255	3336	4777	0	3	230							

Preliminary Plans - Not For Reference Only

MAH-680-4.58
MODEL: UNDERDRAIN 9 PAPERSIZE: 34x22 (in.) DATE: 9/15/2025 TIME: 1:45:46 PM PLTDRV: OHDOT_PDF_E+.pltcfg PENTBL: OHDOT_Pen.tbl USER: DHall@msconsultants.com WORKSPACE: OHDOTCEv02 WORKSET: 121474 PRODUCT: OpenRoadsDesigner 24.00.00.205
pw:\\ohiodot-pw.bentley.com:ohiodot-pw-02\Documents\01 Active Projects\District 04\Mahoning\121474\402-Engineering_MSConsultants\Drainage\Sheets\121474_DS005.dgn
DESIGN AGENCY
ms consultants, inc.
DESIGNER
REVIEWER
DNO 5/20/25
PROJECT ID
121474
SHEET P.191 TOTAL 655

UNDERDRAIN SUBSUMMARY

REF NO.	LOCATION	STATION FROM	STATION TO	SIDE	SHEET NO.	UNDERDRAIN OUTLET ELEV.	UNDERDRAIN OUTLET STA.	UNDERDRAIN OUTLET TYPE	601 TIED CONCRETE BLOCK MAT WITH TYPE 1 UNDERLAYMENT SY	611 PRECAST REINFORCED CONCRETE OUTLET EACH	605 6" SHALLOW PIPE UNDERDRAINS WITH GEOTEXTILE FABRIC (20" DEPTH) FT	605 6" BASE PIPE UNDERDRAINS (18" DEPTH) FT	605 6" SHALLOW PIPE UNDERDRAINS WITH GEOTEXTILE FABRIC (30" DEPTH) FT		620 DELINEATOR, POST GROUND MOUNTED, AS PER PLAN EACH	611 6" CONDUIT, TYPE F FT	BENDS AND BRANCHES: END CAPS EA			6"x6"x6"x6" CROSS TEE EA	6" DIA. 45 DEG. BEND EA	6" DIA. 90 DEG. BEND EA	6"x6" TEE EA
#10																							
UD850	Ramp B	1085+29	1085+99	LT	P.408, P.415	960.71	1086+99.07	UD851				631					1						1
UD851	Ramp B	1083+43(RampD)	1085+99	LT	P.408, P.415	960.21	1086+99.07	D642				680				12	1					3	2
UD852	Ramp C	1089+99	1089+56	RT	P.408	967.56	1089+55.53	D651				81				16	1			1			1
UD852A	Ramp C	1084+40	1084+35	LT	P.408	983.09	1084+35.36	EX. UD.				15					1						
UD853	Ramp C	1089+98	1089+44	RT	P.408	968.56	1089+44.09	UD852				55					1						
UD854	IR680	1089+97	1085+50	RT	P.408	960.19	1085+49.98	D647					442			5	1						
UD855	IR680	1089+94	1087+03	RT	P.408	962.77	1087+02.63	UD856					291				1						
UD856	IR680	1090+17	1087+03	RT	P.408	962.69	1087+02.63	D650			314		45			5	1					1	1
UD857	IR680	1090+49	1087+04	LT	P.408	963.10	1087+04.45	UD861			344						1						
UD858	Ramp D	1091+42	1087+36	RT	P.408, P.415	966.64	1087+36.01	UD847				419					1						
UD859	Ramp D	1092+71	1090+50	LT	P.408, P.409	968.01	1090+49.89	UD860			230						1					1	
UD860	Ramp D	1092+71	1087+36	LT	P.408, P.409, P.415	965.77	1087+36.01	UD847				530					1						1
UD861	IR680	1092+71	1087+03	LT	P.408, P.409	962.23	1087+03.00	D649					577			11	1					1	1
UD862	IR680	1092+71	1090+00	RT	P.408, P.409	968.10	1089+99.98	D653					266			5	1						
UD863	IR680	1092+71	1089+95	RT	P.408, P.409	968.15	1089+95.02	D654					308			5	1					1	
UD864	Ramp C	1092+50	1090+02	LT	P.408, P.409	968.24	1090+01.75	D652C				252				5	1				1	2	
UD865	Ramp C	1091+90	1090+00	RT	P.408	968.39	1090+00.00	D652				188				6	1				1		
UD866	Ramp C	1092+71	1092+00	RT	P.409	972.87	1092+00.00	D675				66				5	1				1		1
UD867	Ramp C	1092+71	1092+06	RT	P.409	973.01	1092+05.63	UD866				75					1					1	
UD868	IR680	1094+20	1092+72	LT	P.409	973.19	1092+72.04	UD869					148				1						
UD869	IR680	1095+99	1092+72	LT	P.409	973.50	1092+72.04	D655			328		67			5	1					1	3
UD870	IR680	1095+99	1092+72	LT	P.409	973.10	1092+72.04	UD869					340				1					2	
UD871	IR680	1095+99	1094+20	LT	P.409	976.72	1094+20.33	UD872					187				1					1	
UD872	IR680	1095+97	1092+72	RT	P.409	973.06	1092+72.04	UD869					325				1						1
UD873	IR680	1097+25	1092+72	RT	P.409	973.80	1092+72.04	UD876					451				1						1
UD874	IR680	1097+25	1093+82	RT	P.409	975.90	1093+81.93	UD873					366				1					1	
UD875	IR680	1097+25	1092+72(RampC)	RT	P.409	973.82	1092+71.95(RampC)	UD876					451				1						
UD876	IR680	1097+25	1092+72	RT	P.409	973.50	1092+72.04	D655			450		68			5	1					1	2
UD877	IR680	1097+25	1096+00	LT	P.409	979.35	1096+00.00	D656			125		62			5	1					1	2
UD878	IR680	1097+25	1096+00	LT	P.409	980.25	1096+00.00	UD877					125				1						
UD879	IR680	1097+25	1096+00	LT	P.409	979.63	1096+00.00	UD877					125				1						
UD880	IR680	1097+25	1096+00	RT	P.409	979.35	1096+00.00	D656					120			5	1						
								SUBTOTAL FROM THIS SHEET	0	0	1791	2992	4764	0	0	95							
								SUBTOTAL FROM SHEET P.183	22	11	80	7909	3844	0	11	481							
								SUBTOTAL FROM SHEET P.184	12	6	4386	2262	9140	0	6	299							
								SUBTOTAL FROM SHEET P.185	2	1	1575	4189	5377	0	1	247							
								SUBTOTAL FROM SHEET P.186	6	3	3603	631	8077	0	3	195							
								SUBTOTAL FROM SHEET P.187	0	0	1341	3848	5105	0	0	210							
								SUBTOTAL FROM SHEET P.188	6	3	2145	7408	3651	0	3	244							
								SUBTOTAL FROM SHEET P.189	12	6	1100	11764	5054	0	6	400							
								SUBTOTAL FROM SHEET P.190	14	7	4095	2805	9664	0	7	355							
								SUBTOTAL FROM SHEET P.191	6	3	1255	3336	4777	0	3	230							
TOTALS CARRIED TO GENERAL SUMMARY									80	40	21371	47144	59453	0	40	2756							

Preliminary Plans - For Reference Only

DESIGN AGENCY
ms consultants, inc.

DESIGNER

REVIEWER
DNO 5/20/25

PROJECT ID
121474

SHEET P.192 | TOTAL 655

MAH-680-4.58

MODEL: UNDERDRAIN 10 PAPERSIZE: 34x22 (in.) DATE: 9/15/2025 TIME: 1:45:47 PM PLTDRV: OHDOT_PDF_E+.pltcfg PENTBL: OHDOT_Pen.tbl USER: DHall@msconsultants.com WORKSPACE: OHDOTCE.v02 WORKSET: 121474 PRODUCT: OpenRoadsDesigner 24.00.00.205
pw:\\ohiodot-pw.bentley.com:ohiodot-pw-02\Documents\01 Active Projects\District 04\Mahoning\121474\402-Engineering_MSConsultants\Drainage\Sheets\121474_DS005.dgn

REF NO.	SHEET NO.	STATION TO STATION					601 ROCK CHANNEL PROTECTION, TYPE A WITH FILTER CY	670 DITCH EROSION PROTECTION MAT, TYPE B SY	836 SEEDING AND EROSION CONTROL WITH TURF REINFORCING MAT, TYPE 1 SY
		I.R. 680							
E1	P.202	953+50.20	RT		955+50.00	RT			171
E2	P.202	957+07.81	RT		955+50.00	RT			134
E3	P.202	960+00.00	LT		957+21.63	LT			229
E4	P.204	961+12.80	LT		960+00.00	LT			88
E5	P.204	962+18.86	RT		960+76.57	RT		125	
E5A	P.204	968+32.34	CL		968+44.27	CL	142		
E6	P.204	970+35.06	RT		968+85.65	RT		183	
E7	P.204	971+00.00	LT		970+10.70	LT		74	
E8	P.206	971+61.42	LT		971+00.00	LT		51	
E9	P.206	973+17.56	LT		978+65.71	LT			460
E10	P.206	977+00.00	RT		979+46.62	RT		207	
E11	P.206	982+00.00	RT		981+55.64	RT		38	
		I.R. 680							
E12	P.208	984+73.18	RT		985+55.31	RT		37	
E13	P.208	985+94.09	RT		985+69.27	RT		11	
E14	P.208	986+15.69	RT		988+92.50	RT		230	
E15	P.208	990+00.61	RT		993+00.00	RT		252	
E16	P.210	993+00.00	RT		994+44.04	RT		117	
E17	P.210	994+90.08	RT		997+15.64	RT		181	
E18	P.210	997+15.64	RT		1001+95.14	RT		626	
E19	P.210	1002+09.97	RT		1003+44.60	RT		113	
E20	P.210	1004+00.00	RT		1003+58.83	RT		33	
E21	P.212	1004+81.71	RT		1004+00.00	RT		67	
E22	P.212	1008+60.58	RT		1014+25.24	RT			458
E23	P.212	1014+25.24	RT		1014+45.21	RT		17	
E24	P.212	1015+00.00	RT		1014+59.58	RT		33	
E25	P.214	1015+48.01	RT		1015+00.00	RT		39	
E26	P.214	1020+70.39	RT		1015+57.12	RT		427	
E27	P.214	1020+56.56	LT		1019+97.05	LT		50	
E28	P.214	1022+00.00	LT		1022+42.79	LT		36	
E29	P.214	1024+50.24	LT		1022+56.94	LT		157	
E30	P.216	1028+01.34	RT		1029+41.53	RT		66	
E31	P.216	1029+68.72	RT		1029+49.52	RT		10	
E32	P.216	1031+97.36	RT		1033+43.19	RT		125	
E33	P.216	1035+05.74	RT		1033+56.94	RT		125	
E34	P.216	1036+48.00	LT		1034+97.20	LT		127	
E35	P.216	1037+00.00	LT		1036+57.00	LT		36	
E36	P.218	1043+29.80	LT		1037+00.00	LT		553	
E37	P.218	1041+22.08	RT		1038+07.04	RT		250	
E38	P.218	1043+07.31	RT		1043+49.17	RT		33	
E39	P.218	1044+65.45	RT		1043+63.80	RT		79	
E40	P.218	1046+47.01	LT		1047+23.59	LT		37	
E41	P.218	1048+00.00	LT		1047+36.78	LT		30	
E42	P.220	1048+77.40	LT		1048+00.00	LT		36	
E43	P.220	1055+17.23	RT		1050+93.20	RT		356	
E44	P.220	1059+00.00	LT		1050+97.13(RAMP NB)	LT		708	
E45	P.220	1059+00.00	RT		1055+06.48(RAMP SB)	RT		326	
TOTALS CARRIED TO GENERAL SUMMARY							142	6001	1540

Preliminary Plans - For Reference Only

EROSION CONTROL SUBSUMMARY

MAH-680-4.58

MODEL: EROSION CONTROL 1 PAPERSIZE: 34x22 (in.) DATE: 9/15/2025 TIME: 1:45:53 PM PLTDRV: OHDOT_PDF_E+.pltcfg PENTBL: OHDOT_Pen.tbl USER: DHall@msconsultants.com WORKSPACE: OHDOTCEv02 WORKSET: 121474 PRODUCT: OpenRoadsDesigner 24.00.00.205
pw:\\ohiodot-pw.bentley.com:ohiodot-pw-02\Documents\01 Active Projects\District 04\Mahoning\121474\402-Engineering_MSConsultants\Drainage\Sheets\121474_DS002.dgn

DESIGN AGENCY
ms consultants. inc.

DESIGNER

REVIEWER
DNO 5/20/25

PROJECT ID
121474

SHEET P.193 TOTAL 655

REF NO.	SHEET NO.	STATION TO STATION					601 ROCK CHANNEL PROTECTION, TYPE B WITH FILTER CY	670 DITCH EROSION PROTECTION MAT, TYPE B SY
		I.R. 680						
E46	P.222	1062+00.62	LT		1059+00.00	LT		252
E47	P.222	1060+11.04	RT		1059+00.00	RT		94
E48	P.222	1061+99.25	RT		1060+99.14	RT		83
E49	P.222	1062+00.44	LT		1062+45.52	LT		38
E50	P.222	1064+09.49	LT		1062+59.49	LT		125
E51	P.222	1068+95.00	RT		1062+08.32	RT		582
E52	P.222	1069+44.40	LT		1070+00.00	LT		23
E53	P.224	1070+00.00	LT		1074+04.47	LT		171
E54	P.224	1075+14.12	RT		1077+19.50	RT	54	
E55	P.224	1080+18.48	RT		1078+43.56	RT	88	
E56	P.226	1081+00.00	RT		1081+10.00	RT	19	
E57	P.226	1081+24.93	LT		1082+87.12	LT		125
E58	P.226	1081+80.00	RT		1083+23.54	RT		126
E59	P.226	1083+56.47	LT		1083+01.90	LT		44
E60	P.226	1083+65.35	RT		1083+36.92	RT		24
E61	P.226	1084+44.53	LT		1084+72.97	LT		23
E62	P.226	1084+49.80	RT		1085+47.96	RT		83
E63	P.226	1087+12.15	RT		1085+61.89	RT		125
E64	P.226	1086+64.20	LT		1086+96.20	LT		27
E65	P.226	1088+60.25	LT		1087+10.18	LT		125
E66	P.228	1099+72.89	RT		1092+00.00	RT		638
		RAMP F						
E67	P.208	7+47.15	RT		6+46.06	RT		83
E68	P.208	9+52.63	RT		7+55.34	RT		157
		RAMP K						
E69	P.214	10+04.65	RT		8+19.89	RT		83
		RAMP B						
E70	P.226	1085+98.92	LT		1084+87.05	LT		92
E71	P.226	1086+76.29	LT		1086+08.76	LT		52
		RAMP C						
E72	P.226	1089+97.95	RT		1089+62.41	RT		19
E73	P.226	1092+00.00	RT		1090+07.03	RT		159
TOTALS CARRIED TO GENERAL SUMMARY							161	3353

Preliminary Plans - For Reference Only

EROSION CONTROL SUBSUMMARY

MAH-680-4.58

MODEL: EROSION CONTROL 2 PAPERSIZE: 34x22 (in.) DATE: 9/15/2025 TIME: 1:45:54 PM PLTDRV: OHDOT_PDF_E+.pltcfg PENTBL: OHDOT_Pen.tbl USER: DHall@msconsultants.com WORKSPACE: OHDOTCEv02 WORKSET: 121474 PRODUCT: OpenRoadsDesigner 24.00.00.205
pw:\\ohiodot-pw.bentley.com:ohiodot-pw-02\Documents\01 Active Projects\District 04\Mahoning\121474\402-Engineering_MSConsultants\Drainage\Sheets\121474_DS002.dgn

DESIGN AGENCY
ms consultants, inc.

DESIGNER

REVIEWER
DNO 5/20/25

PROJECT ID
121474

SHEET P.194 TOTAL 655

REF NO.	SHEET NO.	STATION TO STATION					202 FENCE REMOVED FT	607 FENCE, TYPE CLT FT	607 FENCE, TYPE CLT, AS PER PLAN FT
RF37	P.551, P.552, P.554	937+47.57	RT	TO	957+47.50	RT	1856		
F37	P.551, P.552, P.554	937+47.57	RT	TO	957+47.50	RT		1855	
RF39	P.553, P.554	945+62.51	LT	TO	950+38.17	LT	635		
F39	P.553, P.554	945+62.51	LT	TO	950+38.17	LT		635	
RF1	P.554, P.555, P.568	956+55.18	RT	TO	962+50.53	RT	826		
F1	P.554, P.555, P.568	956+55.18	RT	TO	962+50.53	RT		826	
RF2	P.555, P.556	969+57.64	LT	TO	973+64.55	LT	455		
F2	P.555, P.556	969+57.64	LT	TO	973+64.55	LT		455	
RF3	P.555, P.556	969+77.10	RT	TO	979+66.62	RT	1184		
F3	P.555, P.556	969+77.10	RT	TO	979+66.07	RT		1178	
RF4	P.556	976+86.93	LT	TO	979+66.62	LT	392		
F4	P.556	976+86.93	LT	TO	979+66.07	LT		392	
RF5	P.556, P.557, P.569	980+29.36	RT	TO	981+26.39	RT	1192		
F5	P.556, P.557, P.569	980+28.28	RT	TO	981+26.39	RT		1192	
RF6	P.556, P.557	980+29.36	LT	TO	989+98.94	LT	1090		
F6	P.556, P.557	980+28.28	LT	TO	989+98.94	LT		1090	
RF7	P.557-P.559, P.569	986+93.25	RT	TO	1005+12.02	LT	2040		
F7	P.557-P.559, P.569	986+93.25	RT	TO	1005+12.02	LT		2040	
RF8	P.557, P.558	991+98.90	LT	TO	1003+85.25	LT	1301		
F8	P.557, P.558	991+98.90	LT	TO	1003+85.25	LT		1300	
RF9	P.559	1006+32.11	LT	TO	1010+19.25	LT	520		
F9	P.559	1006+32.11	LT	TO	1010+19.25	LT		520	
RF10	P.559, P.560	1006+32.11	RT	TO	1021+09.81	RT	1570		
F10	P.559, P.560	1006+32.11	RT	TO	1021+09.81	RT		1570	
RF11	P.559, P.560	1012+26.77	LT	TO	1016+16.55	LT	549		
F11	P.559, P.560	1012+26.77	LT	TO	1016+16.55	LT		549	
RF12	P.560	1019+68.03	LT	TO	1021+53.42	LT	197		
F12	P.560	1019+68.03	LT	TO	1021+53.57	LT		197	
RF13	P.560	1021+51.50	RT	TO	1024+43.47	RT	450		
F13	P.560	1021+51.91	RT	TO	1024+43.47	RT		450	
RF14	P.560, P.561	1021+97.48	LT	TO	1027+88.38	LT	556		
F14	P.560, P.561	1021+97.48	LT	TO	1027+88.38	LT		556	
RF15	P.560, P.561, P.570	1025+40.89	RT	TO	1030+20.32	RT	695		
F15	P.560, P.561, P.570	1025+40.89	RT	TO	1030+20.32	RT		695	
RF16	P.560, P.561	1025+69.63	LT	TO	1029+73.40	LT	380		
F16	P.560, P.561	1025+69.63	LT	TO	1029+73.40	LT		380	
RF17	P.561, P.570	1029+59.46	RT	TO	1029+94.65	RT	76		
F17	P.561, P.570	1029+59.46	RT	TO	1029+94.65	RT		76	
RF18	P.561, P.571	1030+71.48	LT	TO	1038+03.85	LT	1030		
F18	P.561, P.571	1030+71.48	LT	TO	1038+03.85	LT		1030	
RF19	P.561, P.570	1030+83.44	RT	TO	1030+94.04	RT	849		
F19	P.561, P.570	1030+83.44	RT	TO	1030+94.04	RT		848	
RF20	P.561, P.562, P.570	1030+96.11	RT	TO	1046+71.50	RT	1741		
F20	P.561, P.562, P.570	1030+96.11	RT	TO	1046+71.50	RT		1741	
RF21	P.562, P.572	1044+64.87	LT	TO	1046+51.48	LT	1134		
F21	P.562, P.572	1044+64.87	LT	TO	1046+51.48	LT		1134	
RF21A	P.562	1046+51.48	LT	TO	1046+93.44	LT	91		
F21A	P.562	1046+51.48	LT	TO	1046+93.44	LT			91
RF21B	P.562, P.563	1046+93.44	LT	TO	1048+56.93	LT	202		
F21B	P.562, P.563	1046+93.44	LT	TO	1048+56.93	LT		202	
TOTALS CARRIED TO GENERAL SUMMARY							21011	20911	91

Preliminary Plans - Not For Reference Only

FENCE SUBSUMMARY

DESIGN AGENCY
ms consultants, inc.

DESIGNER RJS
REVIEWER CMN 08/29/25
PROJECT ID 121474
SHEET P.195 TOTAL 655

MAH-680-4.58

MODEL: Sheet PAPERSIZE: 34x22 (in.) DATE: 9/15/2025 TIME: 1:46:00 PM PLTDRV: OHDOT_PDF_E+.pltcfg PENTBL: OHDOT_Pen.tbl USER: DHall@msconsultants.com WORKSPACE: OHDOTCEv02 WORKSET: 121474 PRODUCT: OpenRoadsDesigner 24.00.00.205
pw:\\ohiodot-pw.bentley.com:ohiodot-pw-02\Documents\01 Active Projects\District 04\Mahoning\121474\402-Engineering_MSConsultants\Roadway\Sheets\121474_GS014.dgn

REF NO.	SHEET NO.	STATION TO STATION					202 FENCE REMOVED FT	607 FENCE, TYPE CLT FT	607 FENCE, TYPE CLT, AS PER PLAN FT
RF22	P.562, P.563	1047+15.04	RT	TO	1048+17.71	RT	105		
F22	P.562, P.563	1047+15.04	RT	TO	1048+17.71	RT		105	
RF23	P.563, P.564	1048+95.24	LT	TO	1060+05.70	LT	1121		
F23	P.563, P.564	1048+95.24	LT	TO	1060+05.70	LT		1121	
RF24	P.563, P.564	1051+06.08	RT	TO	1059+99.74	RT	899		
F24	P.563, P.564	1051+06.08	RT	TO	1059+99.74	RT		899	
RF25	P.564	1059+71.46	RT	TO	1060+10.25	RT	64		
F25	P.564	1059+71.46	RT	TO	1060+10.25	RT		64	
RF26	P.564, P.565	1060+66.22	RT	TO	1073+76.60	RT	1525		
F26	P.564, P.565	1060+66.22	RT	TO	1073+76.60	RT		1525	
RF27	P.564, P.565	1060+67.24	LT	TO	1073+98.31	LT	1867		
F27	P.564, P.565	1060+67.24	LT	TO	1073+98.31	LT		1866	
RF28	P.565	1075+02.26	RT	TO	1077+17.74	RT	407		
F28	P.565	1075+02.26	RT	TO	1077+17.74	RT		407	
RF29	P.565	1075+39.16	LT	TO	1077+06.06	LT	297		
F29	P.565	1075+39.16	LT	TO	1077+06.06	LT		297	
RF30	P.565, P.566	1078+43.75	RT	TO	1083+65.17	RT	687		
F30	P.565, P.566	1078+43.75	RT	TO	1083+65.17	RT		687	
RF31	P.565, P.566, P.573	1078+49.30	LT	TO	1083+49.25	LT	517		
F31	P.565, P.566, P.573	1078+49.30	LT	TO	1083+49.25	LT		517	
RF32	P.566, P.567	1084+60.29	RT	TO	1093+00.42	RT	858		
F32	P.566, P.567	1084+60.29	RT	TO	1093+00.42	RT		857	
RF33	P.566, P.567, P.573	1084+65.69	LT	TO	1093+03.72	LT	990		
F33	P.566, P.567, P.573	1084+65.69	LT	TO	1093+03.72	LT		990	
RF34	P.567	1093+50.79	RT	TO	1097+35.71	RT	384		
F34	P.567	1093+50.79	RT	TO	1097+35.71	RT		384	
RF35	P.567	1093+51.53	LT	TO	1097+43.68	LT	400		
F35	P.567	1093+51.53	LT	TO	1097+43.68	LT		400	
RF36	P.571	1038+96.54	LT	TO	1042+52.64	LT	711		
F36	P.571	1038+96.54	LT	TO	1042+52.64	LT		711	
TOTALS CARRIED TO GENERAL SUMMARY							10832	10830	

Preliminary Plans - Not For Reference Only

FENCE SUBSUMMARY

MAH-680-4.58

MODEL: Sheet PAPERSIZE: 34x22 (in.) DATE: 9/15/2025 TIME: 1:46:06 PM PLTDRV: OHDOT_PDF_E+.pltcfg PENTBL: OHDOT_Pen.tbl USER: DHall@msconsultants.com WORKSPACE: OHDOTCEv02 WORKSET: 121474 PRODUCT: OpenRoadsDesigner 24.00.00.205
pw:\\ohiodot-pw.bentley.com:ohiodot-pw-02\Documents\01 Active Projects\District 04\Mahoning\121474\402-Engineering_MSConsultants\Roadway\Sheets\121474_GS015.dgn

DESIGN AGENCY
ms consultants, inc.

DESIGNER RJS

REVIEWER CMN 08/29/25

PROJECT ID 121474

SHEET P.196 TOTAL 655

LEGEND

- PART 1 CONSTRUCTION LIMITS
- PART 2 CONSTRUCTION LIMITS
- DRAINAGE AREA
- PROPOSED DITCH
- VEGETATED BIOFILTER

PROJECT DATA			
Total Area (Right-Of-Way) -------- 310.99 acres		Runoff Coefficient for Pre-Construction Site -------- 0.65	
Project Earth Disturbed Area -------- 204.55 acres		Runoff Coefficient for Post Construction Site -------- 0.65	
Estimated Contractor Earth Disturbed Area -------- 1.00 acre		Post Construction BMP: Vegetated biofilter were provided to meet NPDES post-construction requirements.	
Notice of Intent Earth Disturbed Area -------- 205.55 acres			
Impervious (Paved) Area for Pre-Construction Site -------- 103.29 acres		Immediate Receiving Waters -------- Mahoning River	
Impervious (Paved) Area for Post Construction Site -------- 103.29 acres		Subsequent Receiving Waters -------- Beaver River	

PID 121474 BMP QUANTITIES

		670E00720	660E30000
Ref. No.	Sheet No.	Ditch Erosion Protection Mat, Type B	Sodding
VBF No.	---	SY	SY
VBF-30	P.197	292	406
VBF-31	P.198	205	788
VBF-32	P.198	186	837
VBF-33	P.198	271	668
VBF-34	P.199	375	684
VBF-35	P.199	125	267
VBF-36	P.199	567	1244
VBF-37	P.199	375	876
VBF-38	P.199	209	475
VBF-39	P.199	322	1417
VBF-40	P.199	404	861
VBF-41	P.199	584	1088
VBF-42	P.200	179	290
VBF-43	P.200	218	465
VBF-44	P.200	206	470
Totals Carried to General Summary		4518	10836

Preliminary Plans - For Reference Only

PROJECT DESCRIPTION

This project consists of full depth pavement replacement of Mahoning I.R. 680 from the S.R. 193 interchange (SLM-4.58) to south of the South Avenue interchange (SLM-7.37). All interchange ramps within the corridor will be resurfaced, including ramps to and from S.R. 193 and U.S. 62/S.R. 7. This project includes bridge work to MAH-680-4.886 (SFN 5006872). This project also includes the removal of the mahoning avenue entrance ramp to I.R. 680 southbound.

Additional work includes guardrail and concrete barrier replacement, roadway drainage improvements, post-construction stormwater best management practices, sidewalk, curb ramps, signing, lighting and pavement marking.

USGS Map: Youngstown Quadrangle
Youngstown, Ohio

Longitude: 41°07'35"N*

Latitude: 80°44'52"W*

*Longitude and Latitude to Approx. Center of Project

WATER QUALITY REQUIREMENTS

TOTAL PROJECT EDA	204.55 ACRES
NEW IMPERVIOUS AREA IN NEW R/W	0.00 ACRES
PROJECT AREA WITHIN R/W	204.55 ACRES
TREATMENT PERCENT	20.00 %
TOTAL TREATMENT REQUIREMENT*	40.91 ACRES

*CALCULATED PER L&D VOL. 2

BMP SUMMARY

BMP NAME	TREATMENT CREDIT (ACRES)	BEGIN STATION	END STATION	SIDE	LENGTH	WIDTH
VBF-27*	1.16 ACRES	616+01	621+93	LT	592	4
VBF-28*	1.78 ACRES	930+21	936+49	LT	628	4
VBF-29*	1.59 ACRES	937+22	943+19	RT	597	4
VBF-30	0.47 ACRES	960+70	958+57	RT	213	4

* BMPS TO BE INCLUDED IN PID 113321

HORIZONTAL SCALE IN FEET
0 50 100 200

PROJECT SITE PLAN
STA. 610+00.00 TO STA. 970+00.00

MAH-680-4.58

DESIGN AGENCY
ms consultants, inc.
DESIGNER: FCB
REVIEWER: CAB 5/20/2025
PROJECT ID: 121474
SHEET: P.197 TOTAL: 655

MODEL: Sheet PAVEMENT - MAH-680-4.58 | DATE: 9/15/2025 TIME: 9:15:42 AM PATTERN: ONDOT_PSP_11.xPWL PENTBL: ONDOT_Rect.tbl USER: DHall@msconsultants.com WORKSHEET: ONDOTCADD WORKSET: 121474 PRODUCT: OpenRoadsDesigner 24.00.00.205

LEGEND

- PART 1 CONSTRUCTION LIMITS
- PART 2 CONSTRUCTION LIMITS
- DRAINAGE AREA
- PROPOSED DITCH
- VEGETATED BIOFILTER

PROJECT DATA	
Total Area (Right-Of-Way) -------- 310.99 acres	Runoff Coefficient for Pre-Construction Site -------- 0.65
Project Earth Disturbed Area -------- 204.55 acres	Runoff Coefficient for Post Construction Site -------- 0.65
Estimated Contractor Earth Disturbed Area -------- 1.00 acre	Post Construction BMP: Vegetated biofilter were provided to meet NPDES post-construction requirements.
Notice of Intent Earth Disturbed Area -------- 205.55 acres	
Impervious (Paved) Area for Pre-Construction Site -------- 103.29 acres	Immediate Receiving Waters -------- Mahoning River
Impervious (Paved) Area for Post Construction Site -------- 103.29 acres	Subsequent Receiving Waters -------- Beaver River

Preliminary Plans - For Reference Only

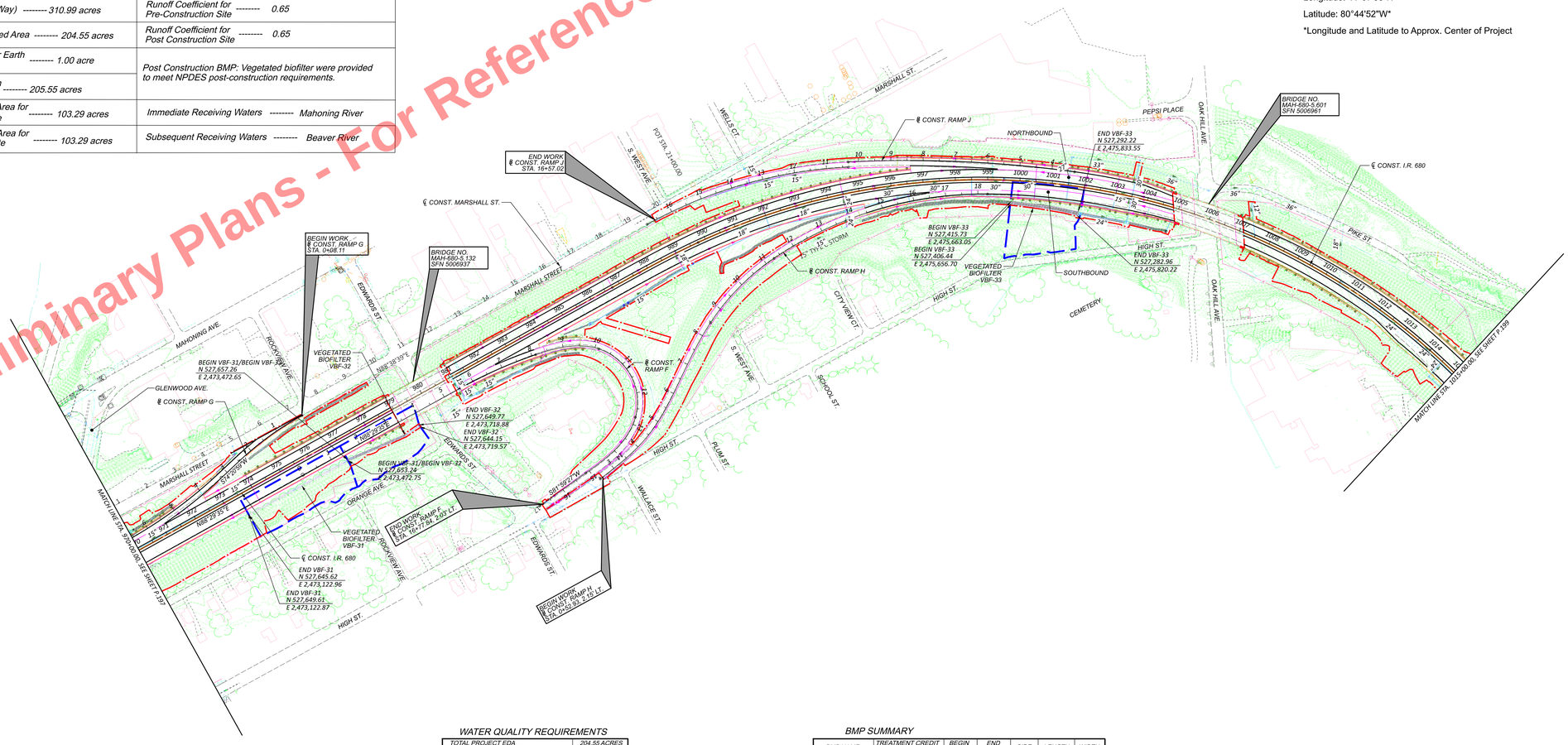

PROJECT DESCRIPTION

This project consists of full depth pavement replacement of Mahoning I.R. 680 from the S.R. 193 interchange (SLM-4.58) to south of the South Avenue interchange (SLM-7.37). All interchange ramps within the corridor will be resurfaced, including ramps to and from S.R. 193 and U.S. 62/S.R. 7. This project includes bridge work to MAH-680-4.886 (SFN 5006872). This project also includes the removal of the mahoning avenue entrance ramp to I.R. 680 southbound.

Additional work includes guardrail and concrete barrier replacement, roadway drainage improvements, post-construction stormwater best management practices, sidewalk, curb ramps, signing, lighting and pavement marking.

USGS Map: Youngstown Quadrangle
Youngstown, Ohio

Longitude: 41°07'35"N*

Latitude: 80°44'52"W*

*Longitude and Latitude to Approx. Center of Project

WATER QUALITY REQUIREMENTS

TOTAL PROJECT EDA	204.55 ACRES
NEW IMPERVIOUS AREA IN NEW R/W	0.00 ACRES
PROJECT AREA WITHIN R/W	204.55 ACRES
TREATMENT PERCENT	20.00 %
TOTAL TREATMENT REQUIREMENT*	40.91 ACRES

*CALCULATED PER L&D VOL. 2

BMP SUMMARY

BMP NAME	TREATMENT CREDIT (ACRES)	BEGIN STATION	END STATION	SIDE	LENGTH	WIDTH
VBF-31	0.98 ACRES	977+00	973+50	RT	350	4
VBF-32	0.80 ACRES	977+00	979+46	RT	246	4
VBF-33	0.50 ACRES	999+77	1002+00	RT	223	8

HORIZONTAL SCALE IN FEET: 0, 50, 100, 200

PROJECT SITE PLAN
STA. 970+00.00 TO STA. 1015+00.00

DESIGN AGENCY: ms consultants, inc.

DESIGNER: FCB
REVIEWER: CAB 10/04/24
PROJECT ID: 121474
SHEET: P.198 TOTAL: 655

MAH-680-4.58

MODEL: Sheet PAVEMENT; FILE: MAH-680-4.58 | DATE: 9/25/2025 TIME: 3:33:01 AM PATTERN: ONHOT_PSP_11.dwg; ENTITY: ONHOT_Rect.dat USER: Shaf@msconsultants.com WORKSPACE: ONHOTCIVIL9 WORKSET: 121474 PRODUCT: OpenRoadsDesigner 24.00.00.205
ALL RIGHTS RESERVED. COPYRIGHT © 2024 BENTLEY SYSTEMS, INCORPORATED. PROPRIETARY AND CONFIDENTIAL. WARNING: UNAUTHORIZED REPRODUCTION PROHIBITED.

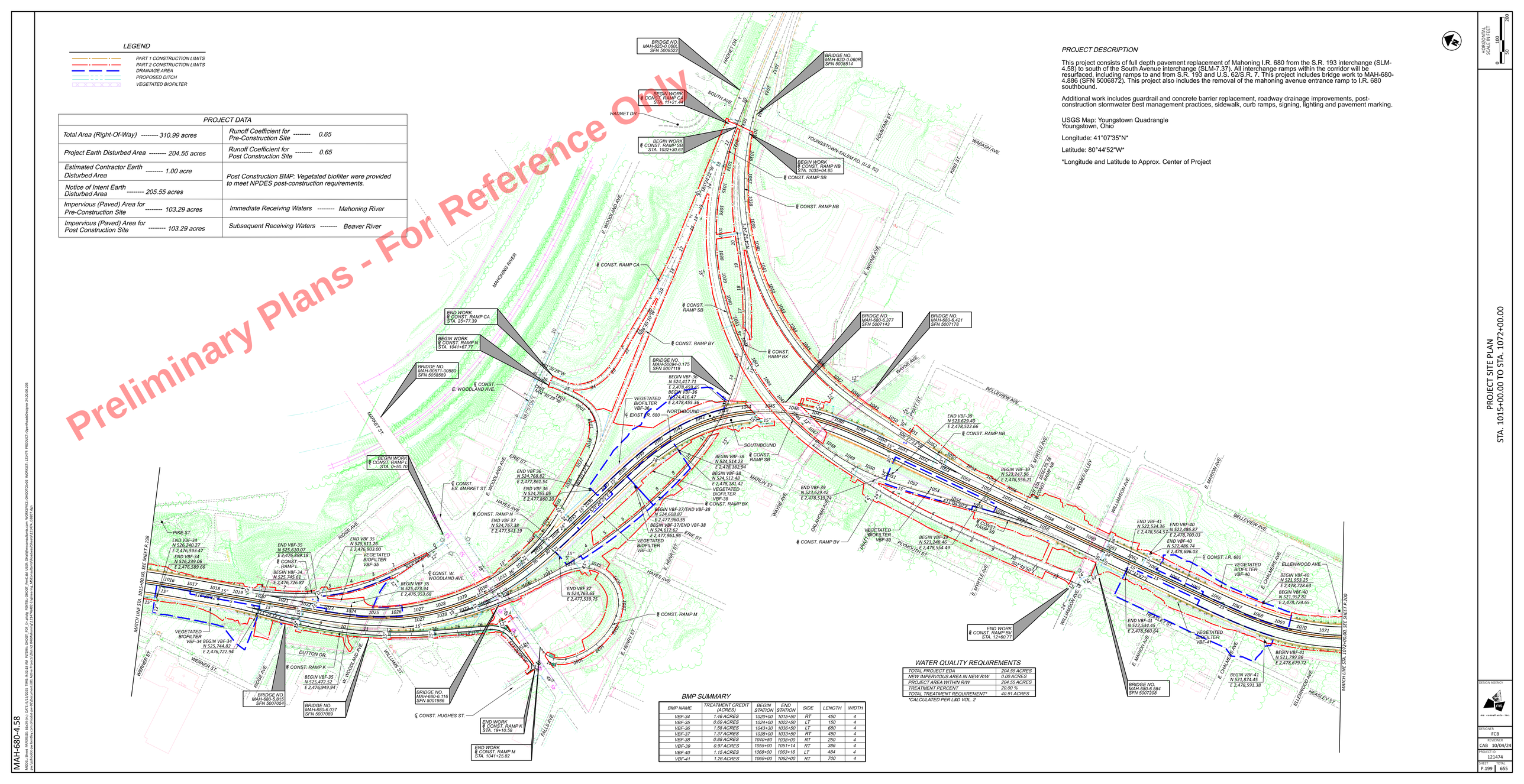

HORIZONTAL SCALE IN FEET 0 50 100 200

PROJECT SITE PLAN
STA. 1015+00.00 TO STA. 1072+00.00

DESIGN AGENCY
mb consultants, inc.
DESIGNER FCB
REVIEWER CAB 10/04/24
PROJECT ID 121474
SHEET P.199 TOTAL 655

MAH-680-4.58

MODEL: Base PAVEMENT: 4in AC | DATE: 9/15/2025 TIME: 3:33:18 AM PATTERN: ONDOT_PSP_11.dotNL PENTBL: ONDOT_Port.ctb USER: bhull@mbconsultants.com WORKSET: ONDOTCADD WORKSET 121474 PROJECT: OpenRoadDesigner 24.00.00.205

LEGEND

- PART 1 CONSTRUCTION LIMITS
- PART 2 CONSTRUCTION LIMITS
- DRAINAGE AREA
- PROPOSED DITCH
- VEGETATED BIOFILTER

PROJECT DATA	
Total Area (Right-Of-Way) -------- 310.99 acres	Runoff Coefficient for Pre-Construction Site -------- 0.65
Project Earth Disturbed Area -------- 204.55 acres	Runoff Coefficient for Post Construction Site -------- 0.65
Estimated Contractor Earth Disturbed Area -------- 1.00 acre	Post Construction BMP: Vegetated biofilter were provided to meet NPDES post-construction requirements.
Notice of Intent Earth Disturbed Area -------- 205.55 acres	
Impervious (Paved) Area for Pre-Construction Site -------- 103.29 acres	Immediate Receiving Waters -------- Mahoning River
Impervious (Paved) Area for Post Construction Site -------- 103.29 acres	Subsequent Receiving Waters -------- Beaver River

Preliminary Plans - For Reference Only

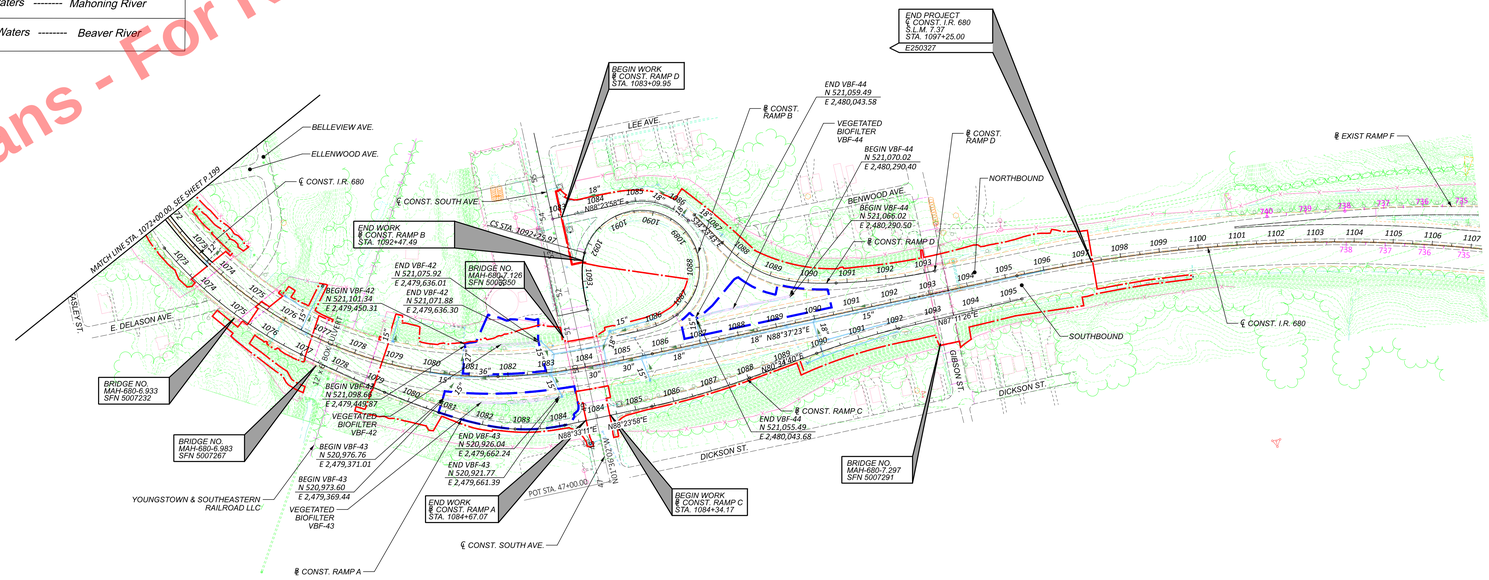

WATER QUALITY REQUIREMENTS

TOTAL PROJECT EDA	204.55 ACRES
NEW IMPERVIOUS AREA IN NEW R/W	0.00 ACRES
PROJECT AREA WITHIN R/W	204.55 ACRES
TREATMENT PERCENT	20.00 %
TOTAL TREATMENT REQUIREMENT*	40.91 ACRES

*CALCULATED PER L&D VOL. 2

BMP SUMMARY

BMP NAME	TREATMENT CREDIT (ACRES)	BEGIN STATION	END STATION	SIDE	LENGTH	WIDTH
VBF-42	0.57 ACRES	1080+86	1083+00	LT	214	4
VBF-43	0.67 ACRES	1080+50	1083+11	RT	261	4
VBF-44	0.68 ACRES	1089+50	1087+03	LT	247	4

PROJECT DESCRIPTION

This project consists of full depth pavement replacement of Mahoning I.R. 680 from the S.R. 193 interchange (SLM-4.58) to south of the South Avenue interchange (SLM-7.37). All interchange ramps within the corridor will be resurfaced, including ramps to and from S.R. 193 and U.S. 62/S.R. 7. This project includes bridge work to MAH-680-4.886 (SFN 5006872). This project also includes the removal of the mahoning avenue entrance ramp to I.R. 680 southbound.

Additional work includes guardrail and concrete barrier replacement, roadway drainage improvements, post-construction stormwater best management practices, sidewalk, curb ramps, signing, lighting and pavement marking.

USGS Map: Youngstown Quadrangle
Youngstown, Ohio

Longitude: 41°07'35"N*

Latitude: 80°44'52"W*

*Longitude and Latitude to Approx. Center of Project

FULL PROJECT BMP SUMMARY

BMP	EDA Treatment Credit (acres)
VBF#1*	1.16
VBF#2*	1.21
VBF#3*	1.16
VBF#4*	0.62
VBF#5*	0.56
VBF#6*	0.86
VBF#7*	0.80
VBF#8*	0.76
VBF#9*	1.23
VBF#10*	0.70
VBF#11*	0.79
VBF#12*	0.80
VBF#13*	0.50
VBF#14*	0.50
VBF#15*	0.93
VBF#16*	0.93
VBF#17*	1.25
VBF#18*	1.40
VBF#19*	1.20
VBF#20*	1.32
VBF#21*	1.09
VBF#22*	1.22
VBF#23*	0.63
VBF#24*	1.48
VBF#25*	0.71
VBF#26*	1.11
VBF#27*	1.16
VBF#28*	1.78
VBF#29*	1.59
VBF#30	0.47
VBF#31	0.98
VBF#32	0.80
VBF#33	0.50
VBF#34	1.46
VBF#35	0.69
VBF#36	1.58
VBF#37	1.37
VBF#38	0.88
VBF#39	0.97
VBF#40	1.15
VBF#41	1.26
VBF#42	0.57
VBF#43	0.67
VBF#44	0.66
Total Treatment Provided	43.46
Total Treatment Required	40.91

*BMPS INCLUDED IN PID 113321

HORIZONTAL SCALE IN FEET
0 50 100 200

PROJECT SITE PLAN
STA. 1072+00.00 TO 1097+24.61

DESIGN AGENCY
ms consultants, inc.

DESIGNER FCB
REVIEWER CAB 10/04/24
PROJECT ID 121474
SHEET P.200 TOTAL 655

MAH-680-4.58

MODEL: Sheet PAVEMENT_MAH-680-4.58 | DATE: 9/25/2025 TIME: 3:33:36 AM PSTDRV: ODOT_PSE_11.dgnPE ENTRY: ODOT_Rect.cfg USER: Shaq@msconsultants.com WORKPACE: ODOTCIVD3 WORKSET: 121474 PRODUCT: OpenRoadsDesigner 24.00.00.205
ALL DRAWINGS REMAIN THE PROPERTY OF THE OHIO DEPARTMENT OF TRANSPORTATION AND ARE NOT TO BE REPRODUCED, COPIED OR USED IN ANY WAY WHATSOEVER WITHOUT THE PRIOR WRITTEN PERMISSION OF THE OHIO DEPARTMENT OF TRANSPORTATION. COPYRIGHT 2024 OHIO DEPARTMENT OF TRANSPORTATION ALL RIGHTS RESERVED.

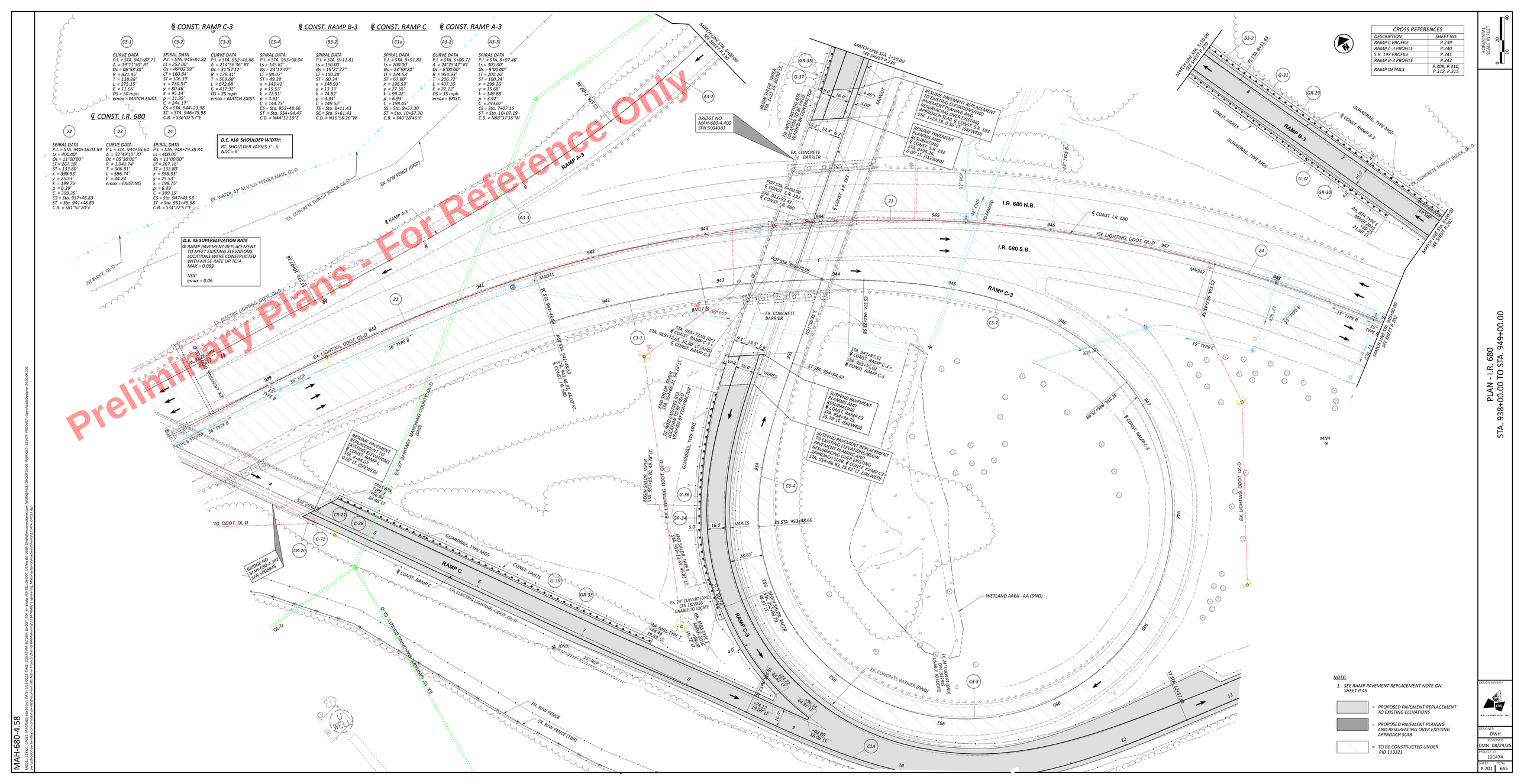
℄ CONST. RAMP C-3
℄ CONST. RAMP B-3
℄ CONST. RAMP C
℄ CONST. RAMP A-3
℄ CONST. I.R. 680
C3-1
CURVE DATA
P.I. = STA. 942+87.71
Δ = 19°11'30" RT.
Dc = 06°58'30"
R = 821.45'
T = 138.88'
L = 275.15'
E = 11.66'
DS = 50 mph
emax = MATCH EXIST.
C3-2
SPIRAL DATA
P.I. = STA. 945+84.82
Ls = 252.00'
Θs = 49°02'59"
LT = 160.84'
ST = 106.39'
x = 230.57'
y = 80.36'
k = 95.14'
p = 11.35'
C = 244.17'
CS = STA. 944+22.98
SC = STA. 946+75.98
C.B. = S36°07'57"E
C3-3
CURVE DATA
P.I. = STA. 952+45.66
Δ = 214°56'36" RT
Dc = 31°57'12"
R = 179.31'
T = 569.68'
L = 672.68'
E = 417.92'
DS = 25 mph
emax = MATCH EXIST.
C3-4
SPIRAL DATA
P.I. = STA. 953+98.04
Ls = 145.81'
Θs = 23°17'47"
LT = 98.07'
ST = 49.38'
x = 143.42'
y = 19.53'
k = 72.51'
p = 4.91'
C = 144.75'
CS = Sta. 953+48.66
ST = Sta. 954+94.47
C.B. = N44°11'19"E
B3-2
SPIRAL DATA
P.I. = STA. 9+11.81
Ls = 150.00'
Θs = 15°21'27"
LT = 100.38'
ST = 50.34'
x = 148.93'
y = 13.33'
k = 74.82'
p = 3.34'
C = 149.52'
TS = Sta. 8+11.43
SC = Sta. 9+61.43
C.B. = N16°56'26"W
C1a
SPIRAL DATA
P.I. = STA. 9+91.88
Ls = 200.00'
Θs = 23°58'20"
LT = 134.58'
ST = 67.80'
x = 196.53'
y = 27.55'
k = 99.42'
p = 6.93'
C = 198.45'
SS = Sta. 8+57.30
ST = Sta. 10+57.30
C.B. = S40°18'46"E
A3-2
CURVE DATA
P.I. = STA. 5+06.72
Δ = 24°25'41" RT
Dc = 6°00'00"
R = 954.93'
T = 206.72'
L = 407.16'
E = 22.12'
DS = 35 mph
emax = EXIST.
A3-3
SPIRAL DATA
P.I. = STA. 8+07.40
Ls = 300.00'
Θs = 9°00'00"
LT = 200.26'
ST = 100.24'
x = 299.26'
y = 15.68'
k = 149.88'
p = 3.92'
C = 299.67'
CS = Sta. 7+07.16
ST = Sta. 10+07.19
C.B. = N88°37'36"W
22
SPIRAL DATA
P.I. = STA. 940+16.01 R4
Ls = 400.00'
Θs = 11°00'00"
LT = 267.18'
ST = 133.80'
x = 398.53'
y = 25.53'
k = 199.75'
p = 6.39'
C = 399.35'
CS = Sta. 937+48.83
ST = Sta. 941+48.83
C.B. = S81°52'20"E
23
CURVE DATA
P.I. = STA. 944+55.64
Δ = 32°49'15" RT
Dc = 05°30'00"
R = 1,041.74'
T = 306.81'
L = 596.74'
E = 44.24'
emax = EXISTING
24
SPIRAL DATA
P.I. = STA. 948+79.38 R4
Ls = 400.00'
Θs = 11°00'00"
LT = 267.18'
ST = 133.80'
x = 398.53'
y = 25.53'
k = 199.75'
p = 6.39'
C = 399.35'
CS = Sta. 947+45.58
ST = Sta. 951+45.58
C.B. = S34°22'57"E
D.E. #10 SHOULDER WIDTH:
RT. SHOULDER VARIES 3' - 5'
NDC = 6'
D.E. #5 SUPERELEVATION RATE
℄ RAMP PAVEMENT REPLACEMENT TO MEET EXISTING ELEVATIONS. LOCATIONS WERE CONSTRUCTED WITH AN SE RATE UP TO A MAX = 0.083
NDC
emax = 0.06
CROSS REFERENCES
DESCRIPTION | SHEET NO.
RAMP C PROFILE | P.239
RAMP C-3 PROFILE | P.240
S.R. 193 PROFILE | P.241
RAMP B-3 PROFILE | P.242
RAMP DETAILS | P.309, P.310, P.312, P.315
HORIZONTAL SCALE IN FEET
0 10 20 40
PLAN - I.R. 680
STA. 938+00.00 TO STA. 949+00.00
MAH-680-4.58
DESIGN AGENCY
DESIGNED DWH
REVIEWED CMN 08/29/25
PROJECT NO. 121474
SHEET P.201 TOTAL 655
NOTE:
1. SEE RAMP PAVEMENT REPLACEMENT NOTE ON SHEET P.49
= PROPOSED PAVEMENT REPLACEMENT TO EXISTING ELEVATIONS
= PROPOSED PAVEMENT PLANING AND RESURFACING OVER EXISTING APPROACH SLAB
= TO BE CONSTRUCTED UNDER PID 113321
Preliminary Plans - For Reference Only

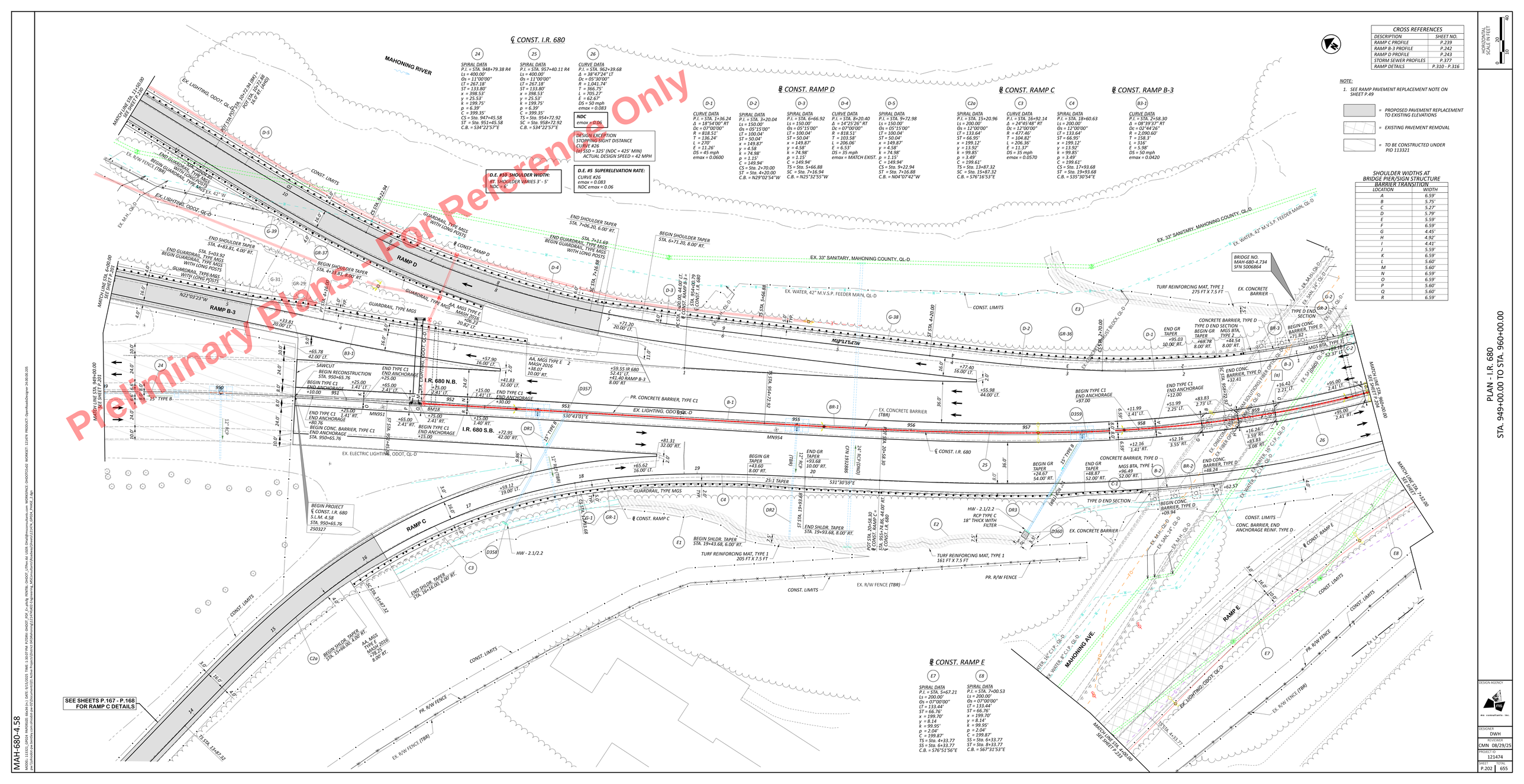
℄ CONST. I.R. 680
MAHONING RIVER
24
SPIRAL DATA
P.I. = STA. 948+79.38 R4
Ls = 400.00'
Θs = 11°00'00"
LT = 267.18'
ST = 133.80'
x = 398.53'
y = 25.53'
k = 199.75'
p = 6.39'
C = 399.35'
CS = Sta. 947+45.58
ST = Sta. 951+45.58
C.B. = S34°22'57"E
25
SPIRAL DATA
P.I. = STA. 957+40.11 R4
Ls = 400.00'
Θs = 11°00'00"
LT = 267.18'
ST = 133.80'
x = 398.53'
y = 25.53'
k = 199.75'
p = 6.39'
C = 399.35'
TS = Sta. 954+72.92
SC = Sta. 958+72.92
C.B. = S34°22'57"E
26
CURVE DATA
P.I. = STA. 962+39.68
Δ = 38°47'24" LT
Dc = 05°30'00"
R = 1,041.74'
T = 366.75'
L = 705.27'
E = 62.67'
DS = 50 mph
emax = 0.083
NDC
emax = 0.06
DESIGN EXCEPTION
STOPPING SIGHT DISTANCE
CURVE #26
(a) SSD = 325' (NDC = 425' MIN)
ACTUAL DESIGN SPEED = 42 MPH
D.E. #10 SHOULDER WIDTH:
RT. SHOULDER VARIES 3' - 5'
NDC = 6
D.E. #5 SUPERELEVATION RATE:
CURVE #26
emax = 0.083
NDC emax = 0.06
℄ CONST. RAMP D
D-1
CURVE DATA
P.I. = STA. 1+36.24
Δ = 18°54'00" RT
Dc = 07°00'00"
R = 818.51'
T = 136.24'
L = 270'
E = 11.26'
DS = 45 mph
emax = 0.0600
D-2
SPIRAL DATA
P.I. = STA. 3+20.04
Ls = 150.00'
Θs = 05°15'00"
LT = 100.04'
ST = 50.04'
x = 149.87'
y = 4.58'
k = 74.98'
p = 1.15'
C = 149.94'
CS = Sta. 2+70.00
ST = Sta. 4+20.00
C.B. = N29°02'54"W
D-3
SPIRAL DATA
P.I. = STA. 6+66.92
Ls = 150.00'
Θs = 05°15'00"
LT = 100.04'
ST = 50.04'
x = 149.87'
y = 4.58'
k = 74.98'
p = 1.15'
C = 149.94'
TS = Sta. 5+66.88
SC = Sta. 7+16.94
C.B. = N25°32'55"W
D-4
CURVE DATA
P.I. = STA. 8+20.40
Δ = 14°25'26" RT
Dc = 07°00'00"
R = 818.51'
T = 103.58'
L = 206.06'
E = 6.53'
DS = 35 mph
emax = MATCH EXIST.
D-5
SPIRAL DATA
P.I. = STA. 9+72.98
Ls = 150.00'
Θs = 05°15'00"
LT = 100.04'
ST = 50.04'
x = 149.87'
y = 4.58'
k = 74.98'
p = 1.15'
C = 149.94'
CS = Sta. 9+22.94
ST = Sta. 7+16.88
C.B. = N04°07'42"W
℄ CONST. RAMP C
C2a
SPIRAL DATA
P.I. = STA. 15+20.96
Ls = 200.00'
Θs = 12°00'00"
LT = 133.64'
ST = 66.95'
x = 199.12'
y = 13.92'
k = 99.85'
p = 3.49'
C = 199.61'
TS = Sta. 13+87.32
SC = Sta. 15+87.32
C.B. = S76°16'53"E
C3
CURVE DATA
P.I. = STA. 16+92.14
Δ = 24°45'48" RT
Dc = 12°00'00"
R = 477.46'
T = 104.82'
L = 206.36'
E = 11.37'
DS = 35 mph
emax = 0.0570
C4
SPIRAL DATA
P.I. = STA. 18+60.63
Ls = 200.00'
Θs = 12°00'00"
LT = 133.64'
ST = 66.95'
x = 199.12'
y = 13.92'
k = 99.85'
p = 3.49'
C = 199.61'
CS = Sta. 17+93.68
ST = Sta. 19+93.68
C.B. = S35°30'54"E
℄ CONST. RAMP B-3
B3-1
CURVE DATA
P.I. = STA. 2+58.30
Δ = 08°39'27" RT
Dc = 02°44'26"
R = 2,090.60'
T = 158.3'
L = 316'
E = 5.98'
DS = 50 mph
emax = 0.0420
℄ CONST. RAMP E
E7
SPIRAL DATA
P.I. = STA. 5+67.21
Ls = 200.00'
Θs = 07°00'00"
LT = 133.44'
ST = 66.76'
x = 199.70'
y = 8.14'
k = 99.95'
p = 2.04'
C = 199.87'
TS = Sta. 4+33.77
SS = Sta. 6+33.77
C.B. = S76°51'56"E
E8
SPIRAL DATA
P.I. = STA. 7+00.53
Ls = 200.00'
Θs = 07°00'00"
LT = 133.44'
ST = 66.76'
x = 199.70'
y = 8.14'
k = 99.95'
p = 2.04'
C = 199.87'
SS = Sta. 6+33.77
ST = Sta. 8+33.77
C.B. = S67°31'53"E
CROSS REFERENCES
DESCRIPTION | SHEET NO.
RAMP C PROFILE | P.239
RAMP B-3 PROFILE | P.242
RAMP D PROFILE | P.243
STORM SEWER PROFILES | P.377
RAMP DETAILS | P.310 - P.316
NOTE:
1. SEE RAMP PAVEMENT REPLACEMENT NOTE ON SHEET P.49
= PROPOSED PAVEMENT REPLACEMENT TO EXISTING ELEVATIONS
= EXISTING PAVEMENT REMOVAL
= TO BE CONSTRUCTED UNDER PID 113321
SHOULDER WIDTHS AT BRIDGE PIER/SIGN STRUCTURE BARRIER TRANSITION
LOCATION | WIDTH
A | 6.59'
B | 5.75'
C | 5.27'
D | 5.79'
E | 5.59'
F | 6.59'
G | 4.45'
H | 4.92'
I | 4.41'
J | 5.59'
K | 6.59'
L | 5.60'
M | 5.60'
N | 6.59'
O | 6.59'
P | 5.60'
Q | 5.60'
R | 6.59'
HORIZONTAL SCALE IN FEET 0 10 20 40
PLAN - I.R. 680
STA. 949+00.00 TO STA. 960+00.00
MAH-680-4.58
DESIGN AGENCY
DESIGNED DWH
REVIEWED CMN 08/29/25
PROJECT ID 121474
SHEET P.202 TOTAL 655
SEE SHEETS P.167 - P.168 FOR RAMP C DETAILS
Preliminary Plans - Not For Reference Only

Preliminary Plans - For Reference Only

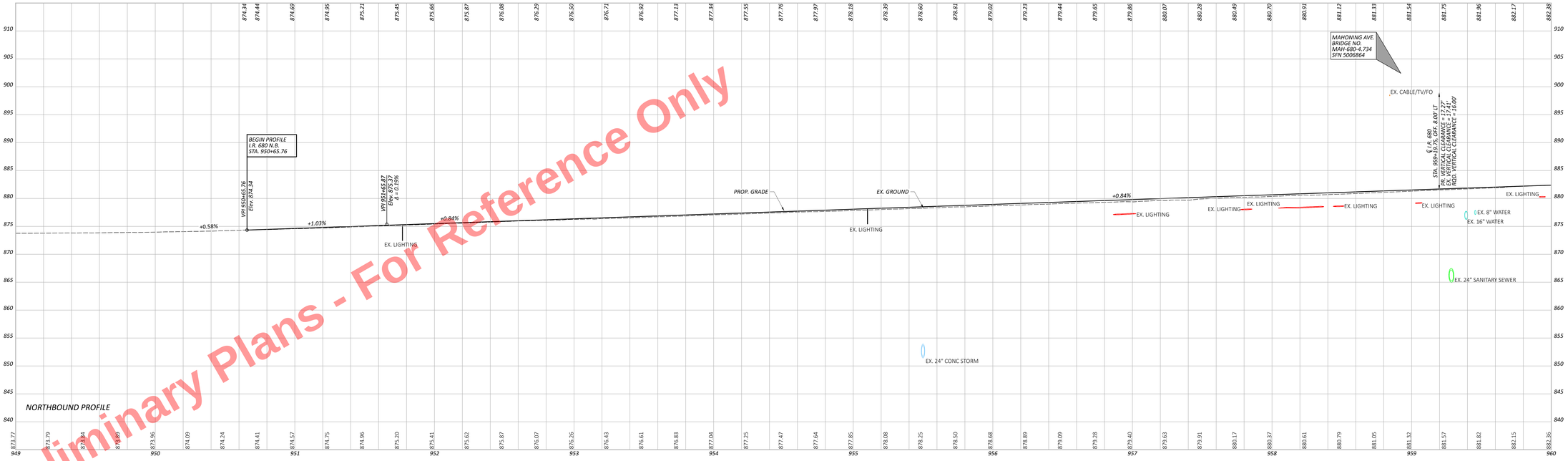

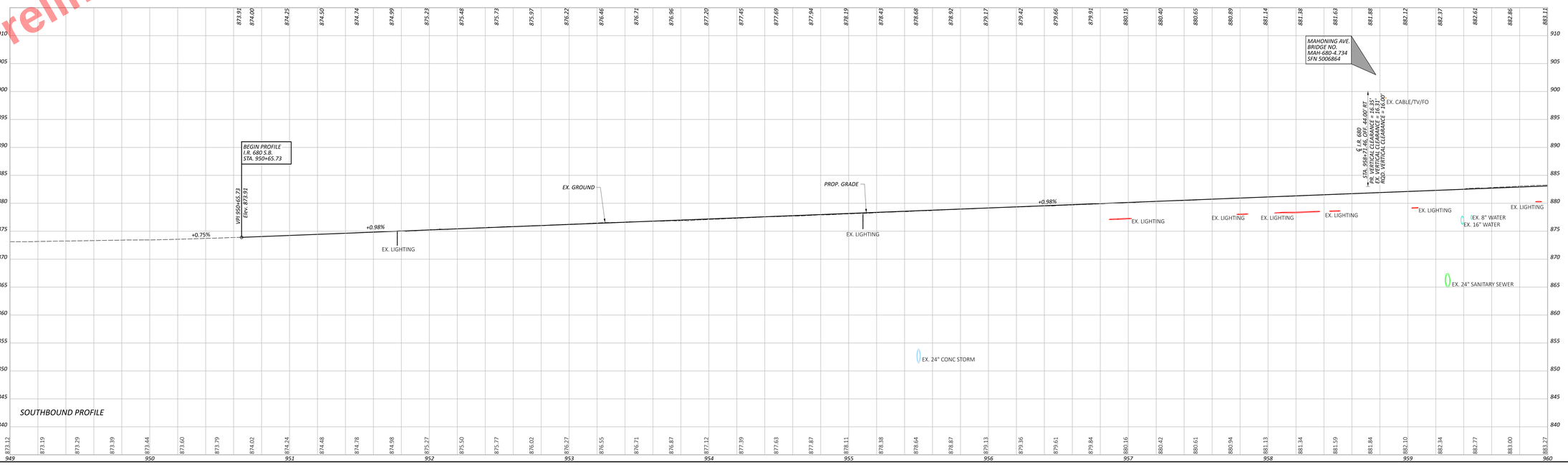

MAH-680-4.58
BOOKS: 11111, 22222, 2WYDOT 66x24 (H) DATE: 10/2/2025 TIME: 1:30:37 PM USER: DHOOT_DPW C:\ukdg PENTRE, DHOOT_DPW.ctb Use Effective Layers.dwg XREFS: DHOOT_DPW.ctb WORKSET: CHOOT1429 WORKSET: 121474 PRODUCT: OpenRoadDesigner 24.00.00.205
ACTIVE PROJECT: C:\Projects\Active\Mahoning County\MAH-680-4.58 PID 121474\Design\Roadway\Profiles\MAH-680-4.58 PROFILE.dgn

PROFILE - I.R. 680
STA. 949+00.00 TO STA. 960+00.00

DESIGN AGENCY
ms consultants, inc.
DESIGNED MSN
REVIEWED JDK 10/04/24
PROJECT ID 121474
SHEET P.203 TOTAL 471

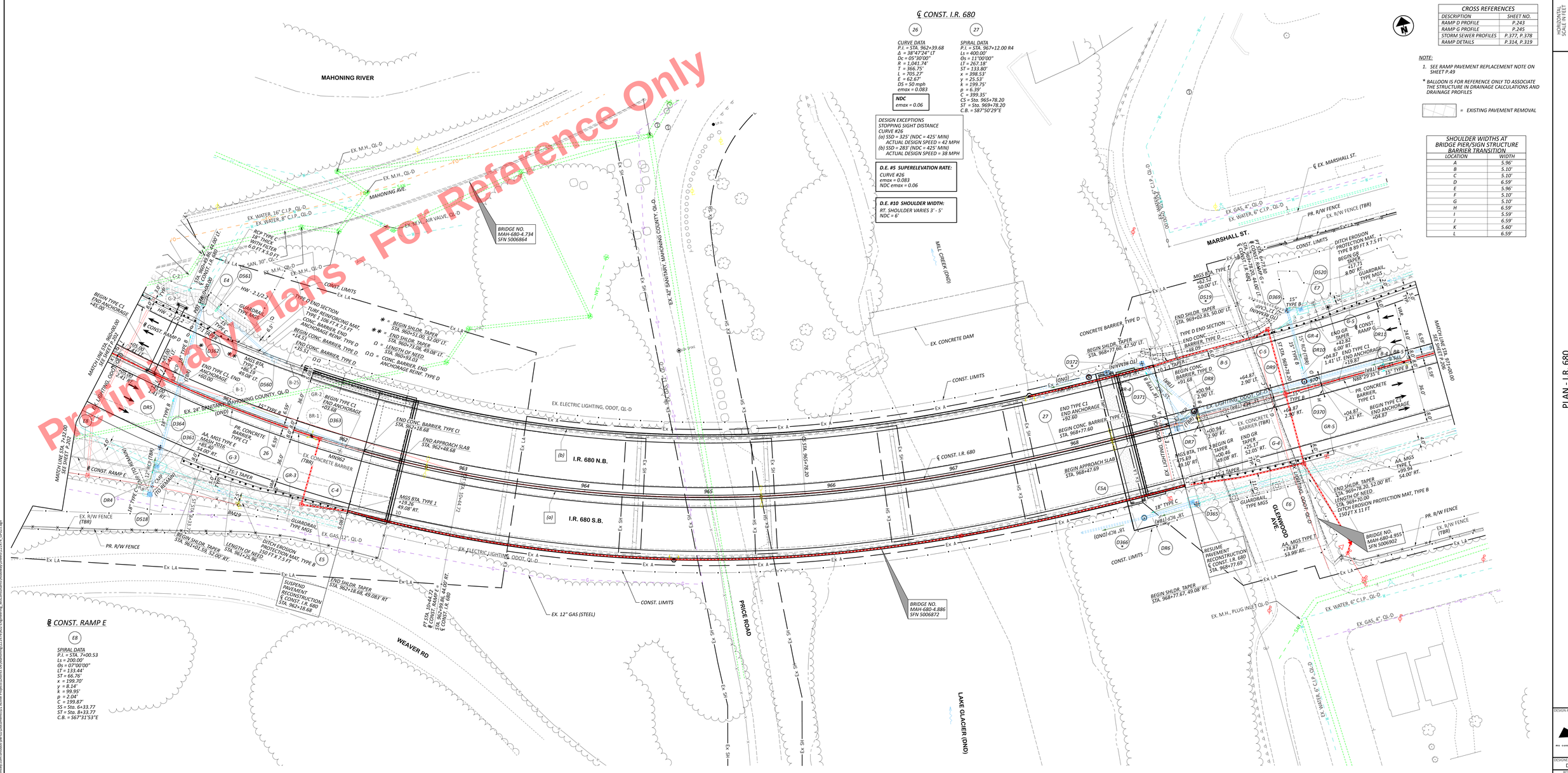
℄ CONST. I.R. 680
MAHONING RIVER
EX. M.H., QL-D
MAHONING AVE.
EX. WATER, 16" C.I.P., QL-D
EX. WATER, 8" C.I.P., QL-D
EX. M.H., AIR VALVE, QL-D
BRIDGE NO. MAH-680-4.734 SFN 5006864
RCP TYPE C 18" THICK WITH FILTER 6.0 FT X 5.0 FT
STA. 960+40.00 ℄ CONST. I.R. 680 40.00' LT.
EX. SAN. 30", QL-D
CONST. LIMITS
EX. LA
HW - 2 1/2:1
GUARDRAIL, TYPE MGS
TYPE D END SECTION
TURF REINFORCING MAT, TYPE E WITH 7.5 FT CONC. BARRIER END ANCHORAGE REINF. TYPE D
BEGIN CONC. BARRIER, TYPE D +14.31
END CONC. BARRIER, TYPE D +35.31
* = BEGIN SHLDR. TAPER STA. 960+51.00, 52.00' LT.
** = END SHLDR. TAPER STA. 960+73.08, 49.08' LT.
D = LENGTH OF NEED STA. 960+51.00
DD = CONC. BARRIER, END ANCHORAGE REINF. TYPE D
MATCH LINE STA. 958+00.00 SEE SHEET P.202
MATCH LINE STA. 973+00.00 SEE SHEET P.203
CONST. RAMP D
CONST. RAMP E
EX. LIGHTING, ODOT, QL-D
EX. 24" SANITARY (DND)
MAHONING COUNTY, QL-D
EX. ELECTRIC LIGHTING, ODOT, QL-D
15" TYPE B
18" TYPE C
END TYPE C1 ANCHORAGE +60.00
BEGIN TYPE C1 END ANCHORAGE +45.00
MGS BTA, TYPE 1 +86.15 49.08' LT.
AA, MGS TYPE 1 MASH 2016 +85.40 54.00' RT.
PR. CONCRETE BARRIER, TYPE C1
22:1 TAPER
EX. CONCRETE BARRIER (TBR)
MN962
BEGIN TYPE C1 END ANCHORAGE +03.68
END CONC. BARRIER, TYPE C1 STA. 962+18.68
END APPROACH SLAB STA. 962+48.68
I.R. 680 N.B.
I.R. 680 S.B.
℄ CONST. I.R. 680
963
964
965
966
967
968
EX. STA. 965+78.20
MGS BTA, TYPE 1 +95.26 49.08' RT.
BEGIN APPROACH SLAB STA. 968+47.69
BEGIN CONC. BARRIER, TYPE C STA. 968+77.60
END TYPE C1 END ANCHORAGE +92.60
EX. R/W FENCE (TBR)
PR. R/W FENCE
BEGIN SHLDR. TAPER STA. 961+01.58, 52.00' RT.
LENGTH OF NEED STA. 961+25.96
DITCH EROSION PROTECTION MAT, TYPE B 150 FT X 17 FT
END SHLDR. TAPER STA. 962+18.68, 49.083' RT
SUSPEND PAVEMENT RECONSTRUCTION ℄ CONST. I.R. 680 STA. 962+18.68
PT STA. 10+00.72 ℄ CONST. RAMP E ℄ CONST. I.R. 680 962+99.96, 44.00' RT.
EX. 12" GAS (STEEL)
CONST. LIMITS
PRICE ROAD
WEAVER RD
BRIDGE NO. MAH-680-4.886 SFN 5006872
LAKE GLACIER (DND)
MILL CREEK (DND)
EX. CONCRETE DAM
MAHONING COUNTY, MAHONING RIVER, 24" EX.
EX. GAS, 4", QL-D
EX. WATER, 6" C.I.P., QL-D
EX. M.H., PLUG INLET QL-D
EX. WATER, 6" C.I.P., QL-D
EX. GAS, 4", QL-D
EX. MARK, 6" C.I.P., QL-D
MARSHALL ST.
℄ EX. MARSHALL ST.
PR. R/W FENCE
EX. R/W FENCE (TBR)
CONST. LIMITS
DITCH EROSION PROTECTION MAT, TYPE B 89 FT X 7.5 FT
BEGIN GR TAPER +17.71 8.00' RT.
GUARDRAIL, TYPE MGS
MGS BTA, TYPE 1 +67.32 50.00' LT.
END SHLDR. TAPER STA. 969+02.83, 50.00' LT.
TYPE D END SECTION
END CONC. BARRIER, TYPE D +18.09
BEGIN CONC. BARRIER, TYPE D +31.68
CONCRETE BARRIER, TYPE D
BEGIN SHLDR. TAPER STA. 968+77.60, 47.50' LT.
END GR TAPER +42.82 6.00' RT.
END TYPE C1 END ANCHORAGE +04.87 1.41' LT.
+19.87
+00.94 2.90' LT.
+64.87 2.90' LT.
+04.87 2.90' RT.
+04.87 1.41' RT.
+00.94 2.90' RT.
+00.94 49.08' RT.
END GR TAPER +25.17 52.05' RT.
MGS BTA, TYPE 2 +75.69 49.10' RT.
BEGIN GR TAPER +00.46 49.08' RT.
22:1 TAPER
EX. CONCRETE BARRIER (TBR)
EX. LIGHTING, ODOT, QL-D
GUARDRAIL, TYPE MGS
GLENWOOD AVE.
AA, MGS TYPE 1 +99.94 54.00' RT.
AA, MGS TYPE 1 +74.87 53.99' RT.
END SHLDR. TAPER STA. 969+78.20, 52.00' RT.
LENGTH OF NEED STA. 969+70.00
DITCH EROSION PROTECTION MAT, TYPE B 150 FT X 11 FT
BRIDGE NO. MAH-680-4.955 SFN 5006902
RESUME PAVEMENT RECONSTRUCTION ℄ CONST. I.R. 680 ℄ CONST. I.R. 680 STA. 968+77.69
BEGIN SHLDR. TAPER STA. 968+77.67, 49.08' RT.
CONST. LIMITS
MAYOLINE STA. 971+00.00 SEE SHEET P.204
VAR. 24.0'
6.59'
36.0'
N88°29'55"E
970
℄ CONST. RAMP G
PR. CONCRETE BARRIER, TYPE C1
BEGIN TYPE C1 END ANCHORAGE +04.87
END TYPE C1 END ANCHORAGE 6.00' RT.
END GR TAPER +42.82
+04.87 1.41' LT.
+19.87
6.59'
15" TYPE B
15" RCP (TBR)
(NBL) ECP, 18"
(GND) ECP, 18"
(NBL) ECP, 24"
(GND) ECP, 24"
(NWBAYLIN OL)
(NBL)
(GND)
(TBR)
(NWBAYLIN)
(TBR) REMARK
(TBR) REMOVE
(TBR) REMOVE
(TBR) REMOVE

Preliminary Plans - For Reference Only



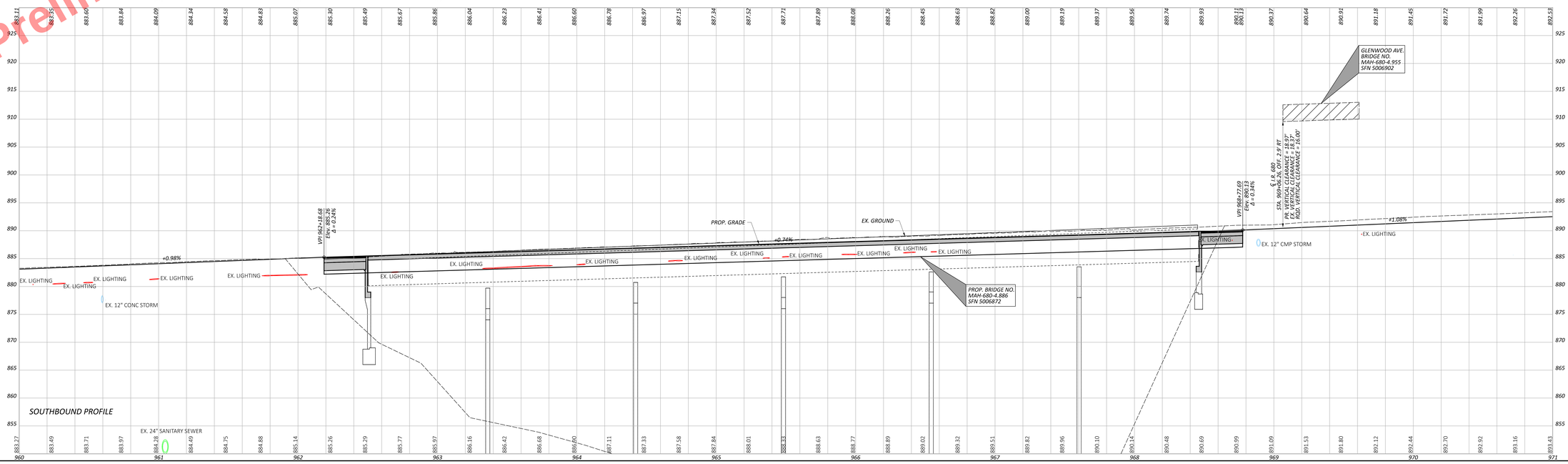

PROFILE - I.R. 680
STA. 960+00.00 TO STA. 971+00.00

MAH-680-4.58

MODEL: 11311_GEO14_PAVEMENT_MAH.dwg | DATE: 10/21/2025 TIME: 1:33:18 PM | PETERV ONDOT_PW | Layout: PAVING ONDOT_LTPlan.tab | XrefAttachment: Plan Production Data.dwg | XrefAttachment: Plan Production Data-Xsections.dwg | XrefAttachment: Plan Production Data-Profile.dwg

DESIGN AGENCY
ms consultants, inc.
DESIGNED: MSN
REVIEWED: JDK 10/04/24
PROJECT ID: 121474
SHEET: P.205 TOTAL: 471

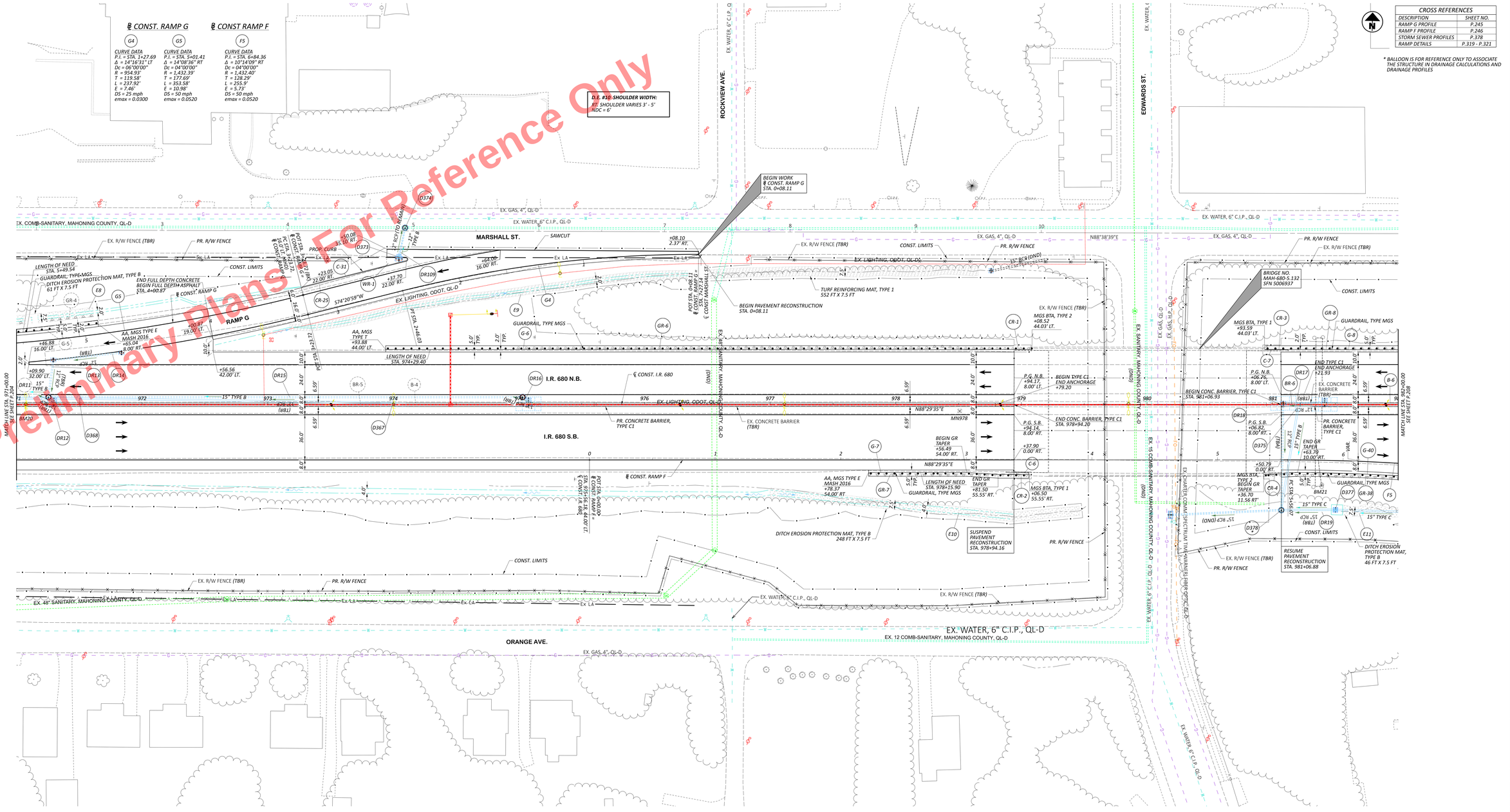

MAH-680-4.58

MODEL: 11X17L | DATE: 05/12/2025 TIME: 1:31:56 PM | PITTSBY DRGDT.PDF | P:\active projects\mahoning county\mah-680-4.58\roadway\sheets\mah680_4.58_plan_sht_971+00_982+00.dgn

DESIGN AGENCY
ms consultants, inc.
DESIGNER DWH
REVIEWER CMN 08/29/25
PROJECT ID 121474
SHEET P.206 TOTAL 655



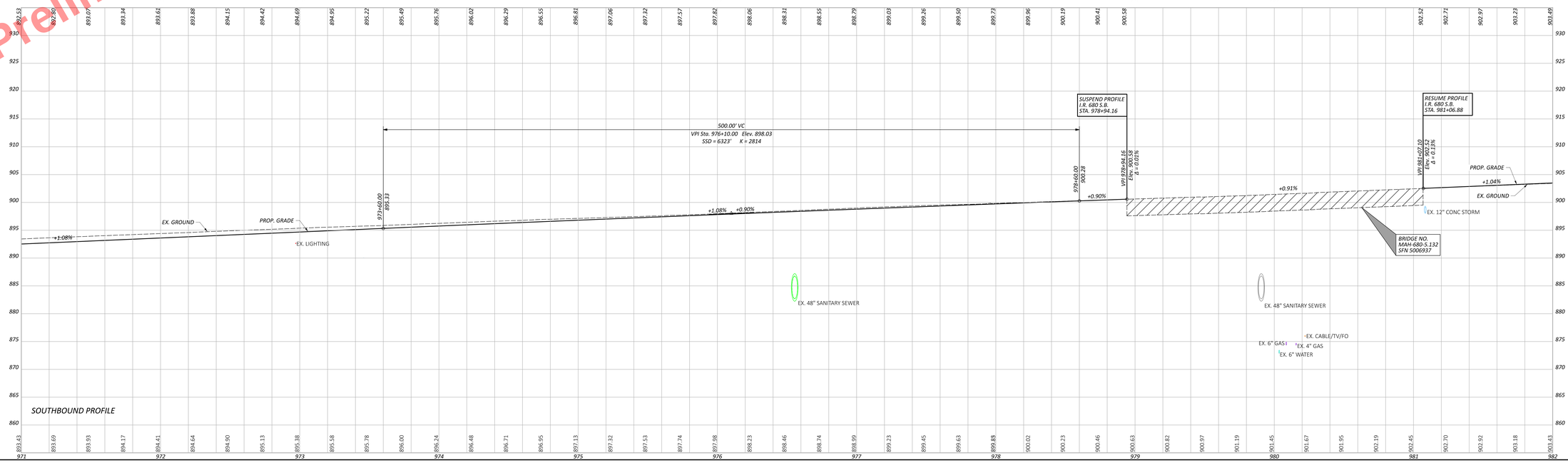

Preliminary Plans - For Reference Only

MAH-680-4.58

PROFILE - I.R. 680
STA. 971+00.00 TO STA. 982+00.00

DESIGN AGENCY
ms consultants, inc.

DESIGNED MSN
REVIEWED JDK 10/04/24
PROJECT ID 121474
SHEET P.207 TOTAL 471

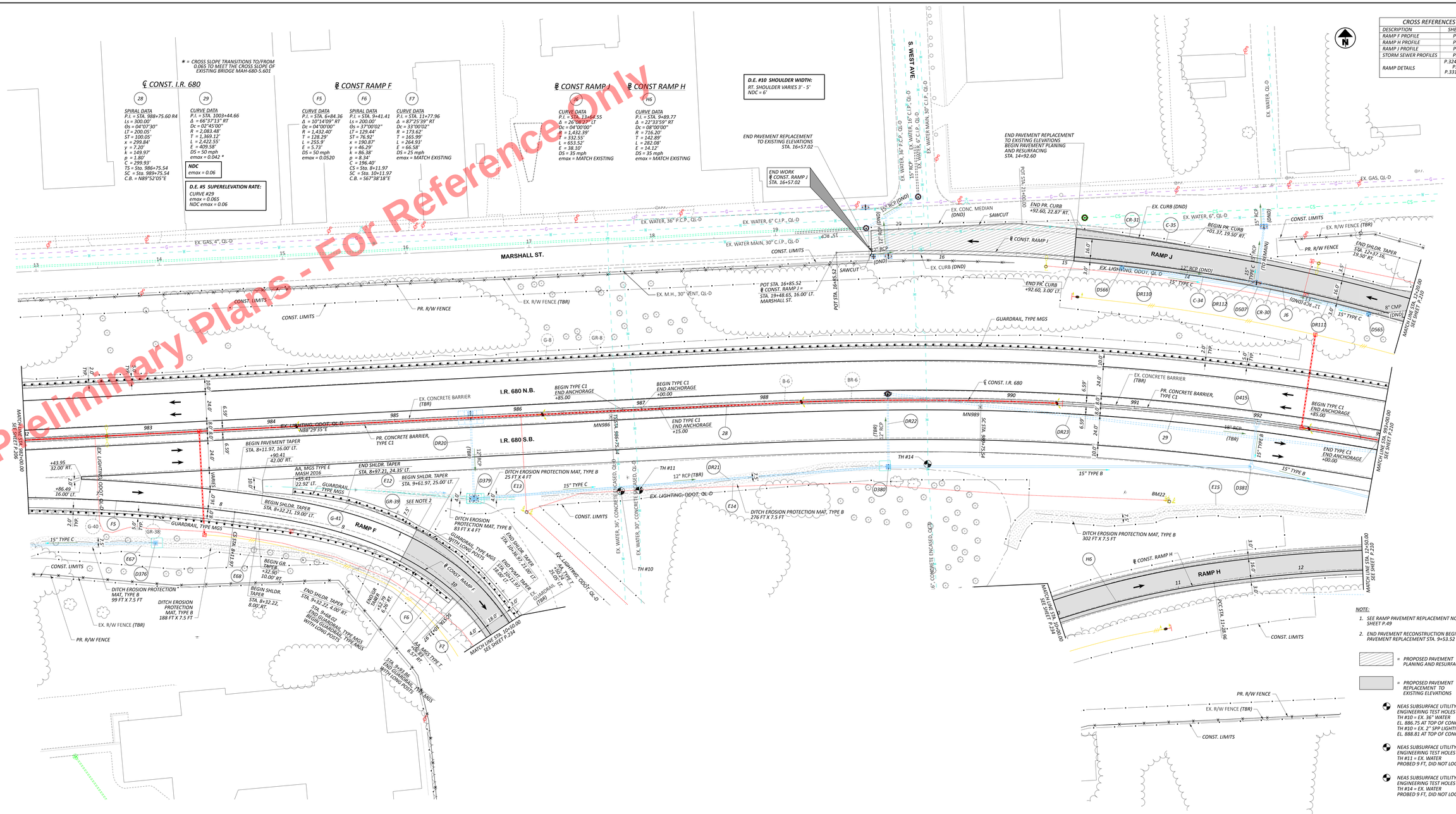

Preliminary Plans - For Reference Only

MAH-680-4.58

PLAN - I.R. 680
STA. 982+00.00 TO STA. 993+00.00

DESIGN AGENCY
ms consultants, inc.
DESIGNED DWH
REVIEWED CMN 08/29/25
PROJECT ID 121474
SHEET P.208
TOTAL 655

Preliminary Plans - For Reference Only

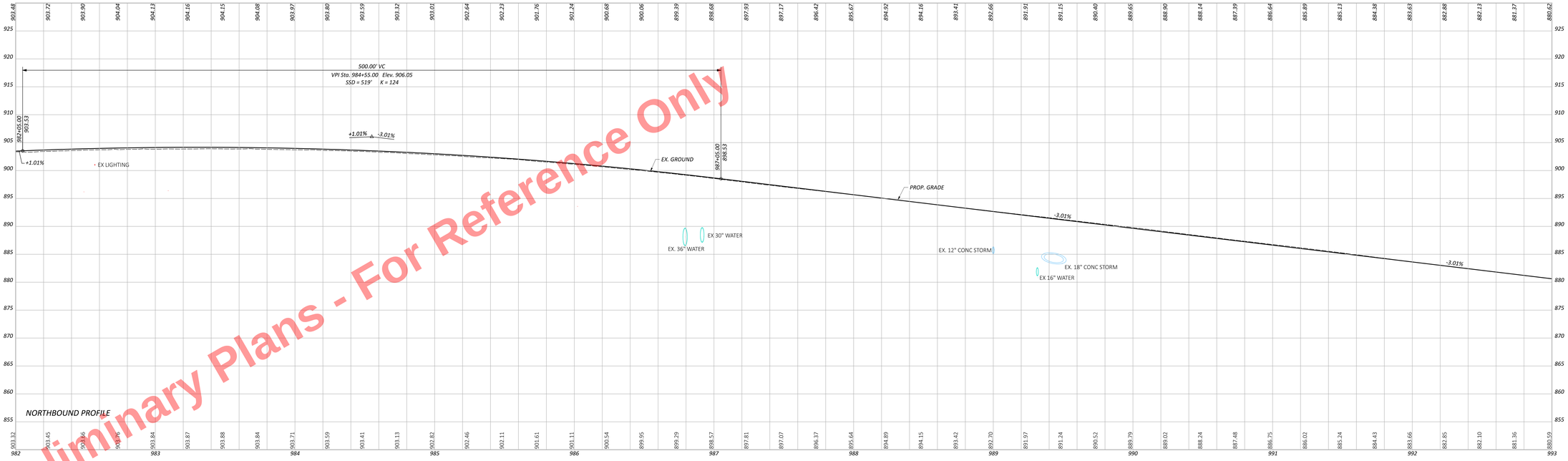

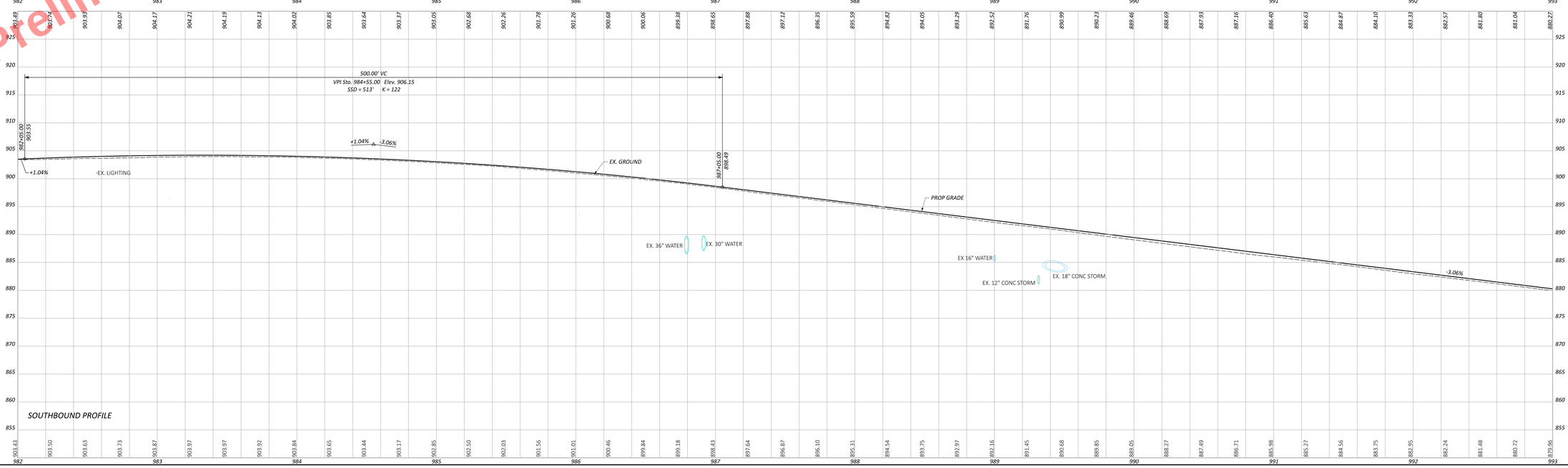

PROFILE - I.R. 680
STA. 982+00.00 TO STA. 993+00.00

MAH-680-4.58

MODEL: 11311_I680_PHASE2_GA24.DWG DATE: 9/25/2025 TIME: 1:33:49 PM PETERV ON DEPT_PW_1.ctb PENTBL ON DEPT_Offset.tbl USER: DNeal@mcmcivil.com WORKSPACE: ON DEPT\GA24 WORKSET: 121474 PRODUCT: OpenRoadsDesigner 24.00.00.205
ALL RIGHTS RESERVED. COPYRIGHT © 2025 MCM CONSULTANTS, INC. THIS DRAWING IS THE PROPERTY OF MCM CONSULTANTS, INC. AND IS NOT TO BE USED FOR ANY PURPOSE OTHER THAN THE SPECIFIC PROJECT FOR WHICH IT WAS PREPARED. REPRODUCTION OR USE FOR ANY OTHER PURPOSE OR OVER THE SIGNATURE AND SEAL OF THE PROFESSIONAL ENGINEER IS PROHIBITED.

DESIGN AGENCY
mc consultants, inc.

DESIGNER: MSN
REVIEWER: CMN 08/29/25
PROJECT #: 121474
SHEET: P.209 TOTAL: 655

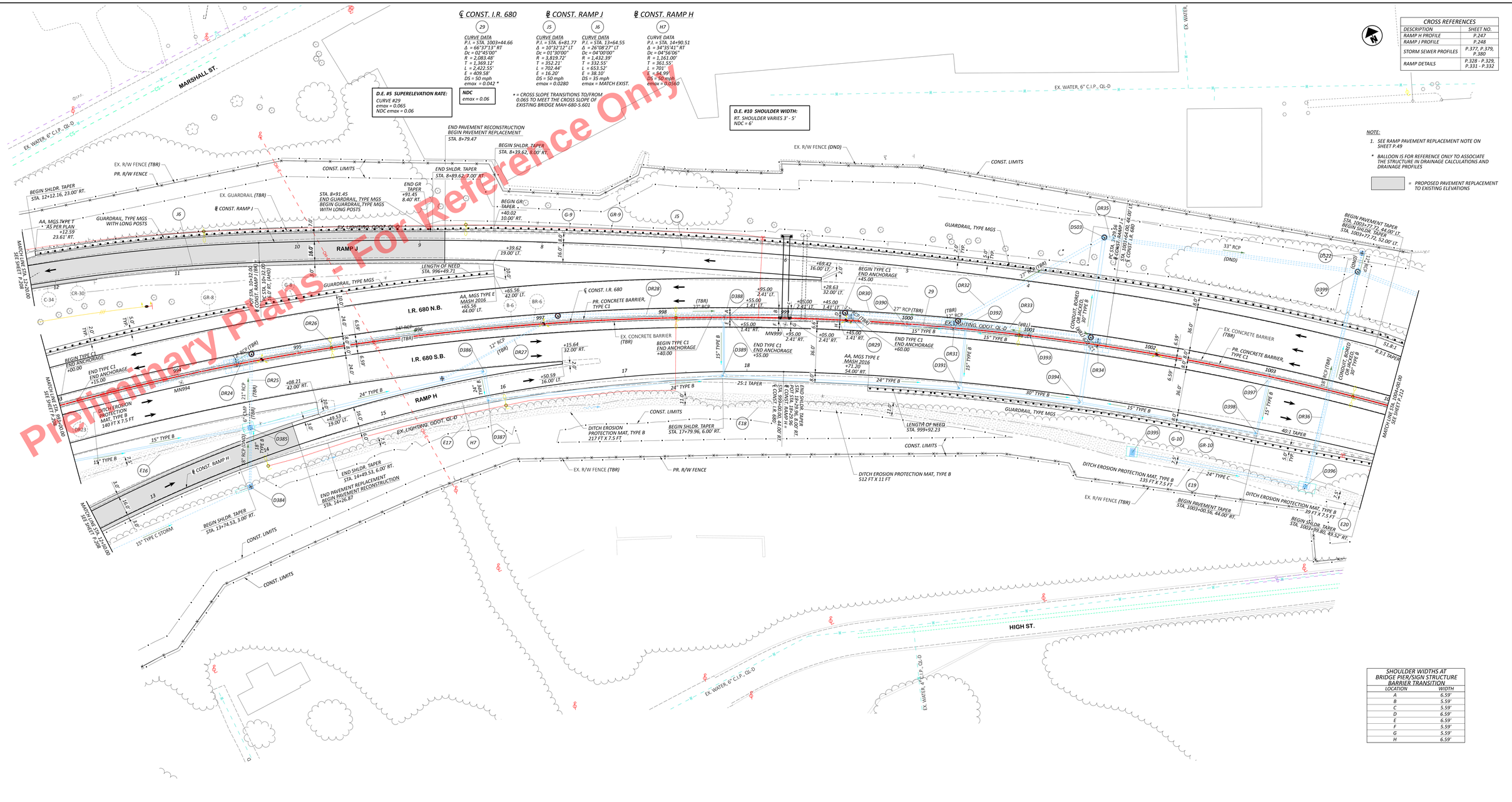

MAH-680-4.58

PLAN - I.R. 680
STA. 993+00.00 TO STA. 1004+00.00

DESIGN AGENCY
mb consultants, inc.
DESIGNED DWH
REVIEWED CMN 08/29/25
PROJECT ID 121474
SHEET P.210 TOTAL 655

MODEL: 11311_12PDX9_PAVEREQD DGN | DATE: 10/31/2025 TIME: 1:33:31 PM | PITSRV: ORDOT_PDF_F.pltcfg | PENTBL: ORDOT_LTPen.tbl | USER: DholdBrennan@kerrs.com | WORKPACE: ORDOTCAD5 | WORKSET: 121474 | PRODUCT: OpenRoadDesigner 24.00.00.205
BENTLEY Open Roads Designer CONNECT Edition | Active Project(s): Kerr Contractors Oregon, LLC - Marshall Ave

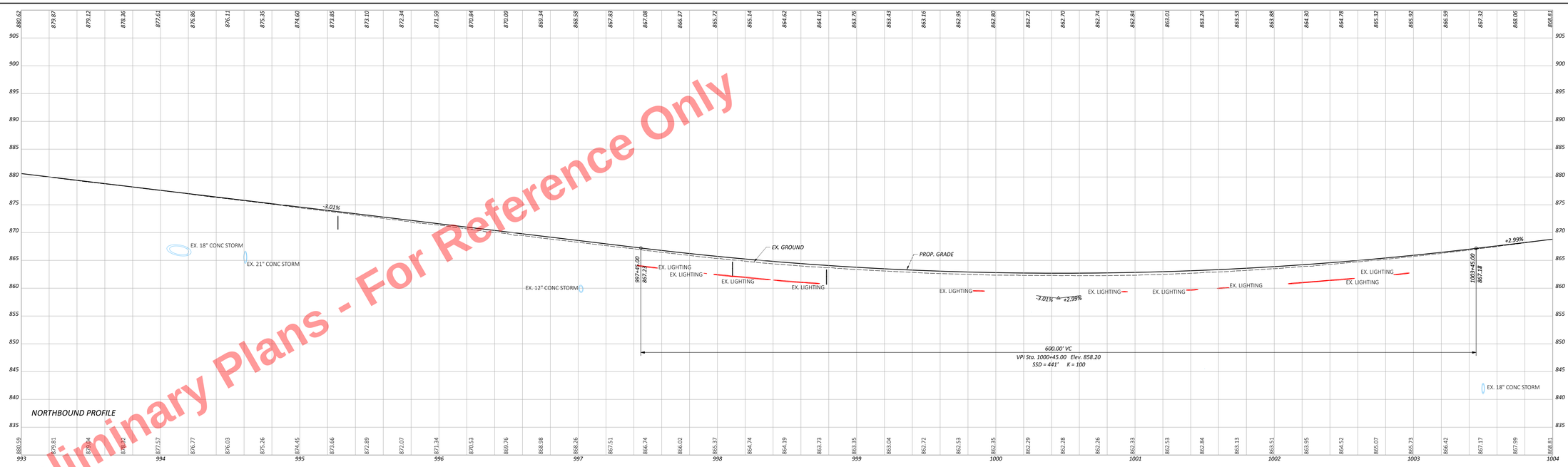

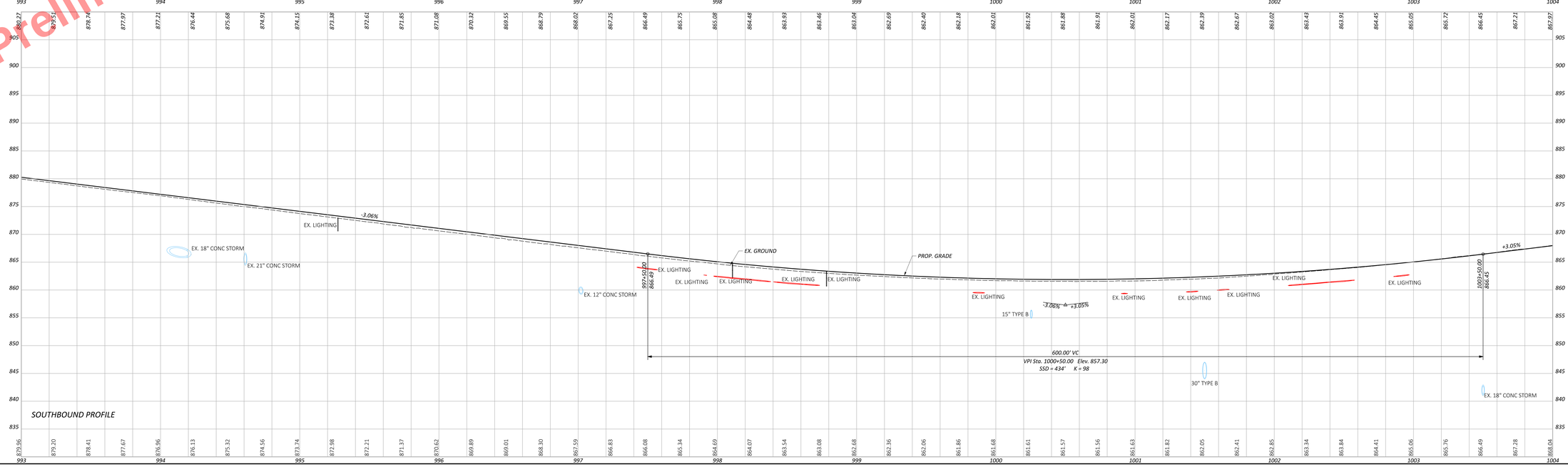

Preliminary Plans - For Reference Only

MAH-680-4.58

PROFILE - I.R. 680
STA. 993+00.00 TO STA. 1004+00.00

DESIGN AGENCY
ms consultants, inc.

DESIGNER MSN
REVIEWER JDK 10/04/24
PROJECT ID 121474
SHEET P.211 TOTAL 471

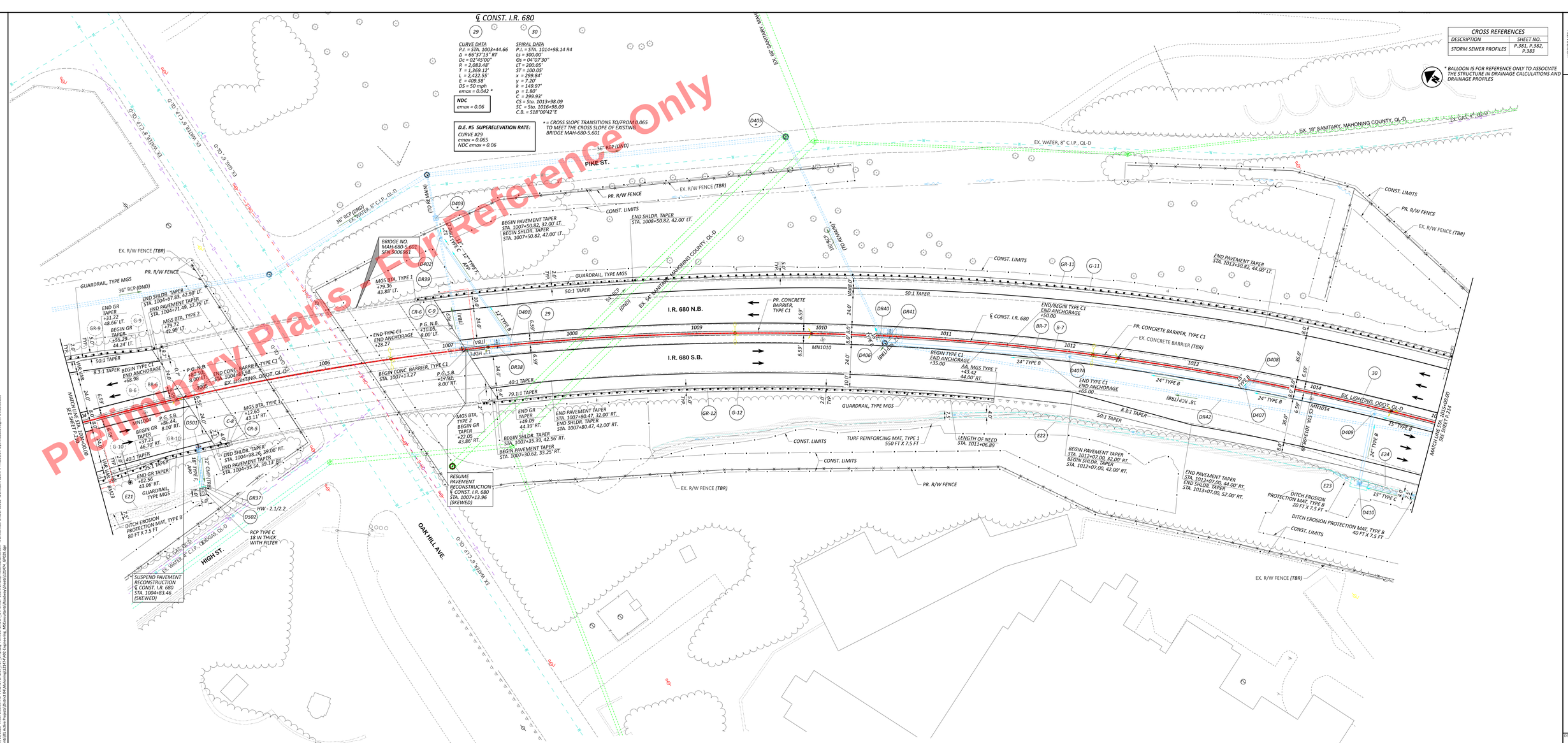

PLAN - I.R. 680
STA. 1004+00.00 TO STA. 1015+00.00

DESIGN AGENCY
ms consultants, inc.
DESIGNED: DWH
REVIEWED: CMN 08/29/25
PROJECT ID: 121474
SHEET: P.212 TOTAL: 655

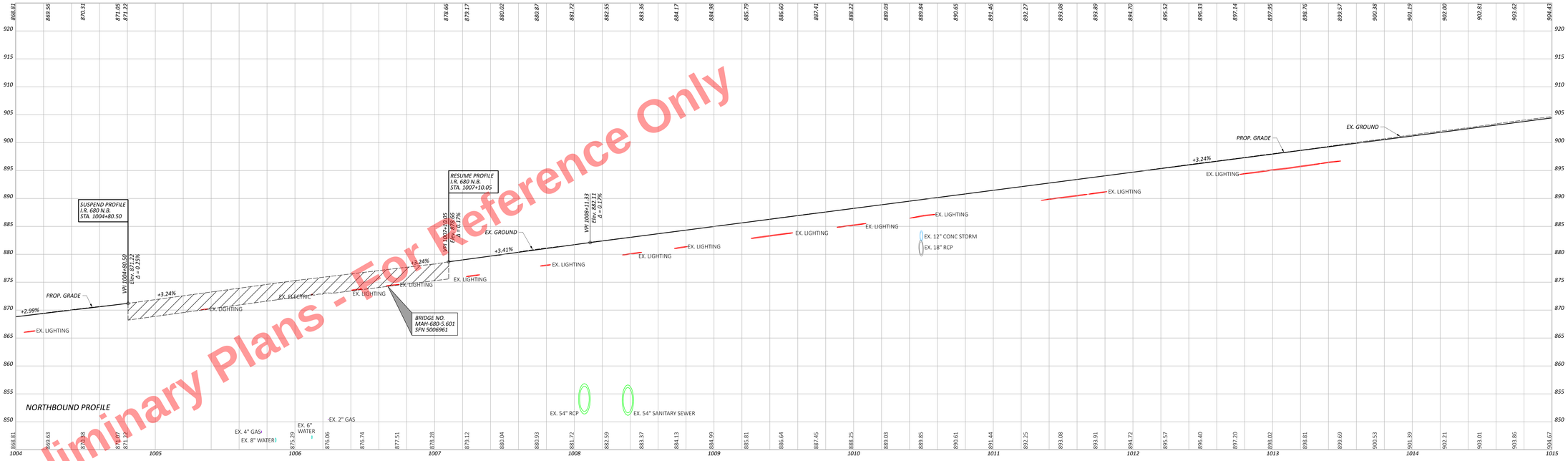

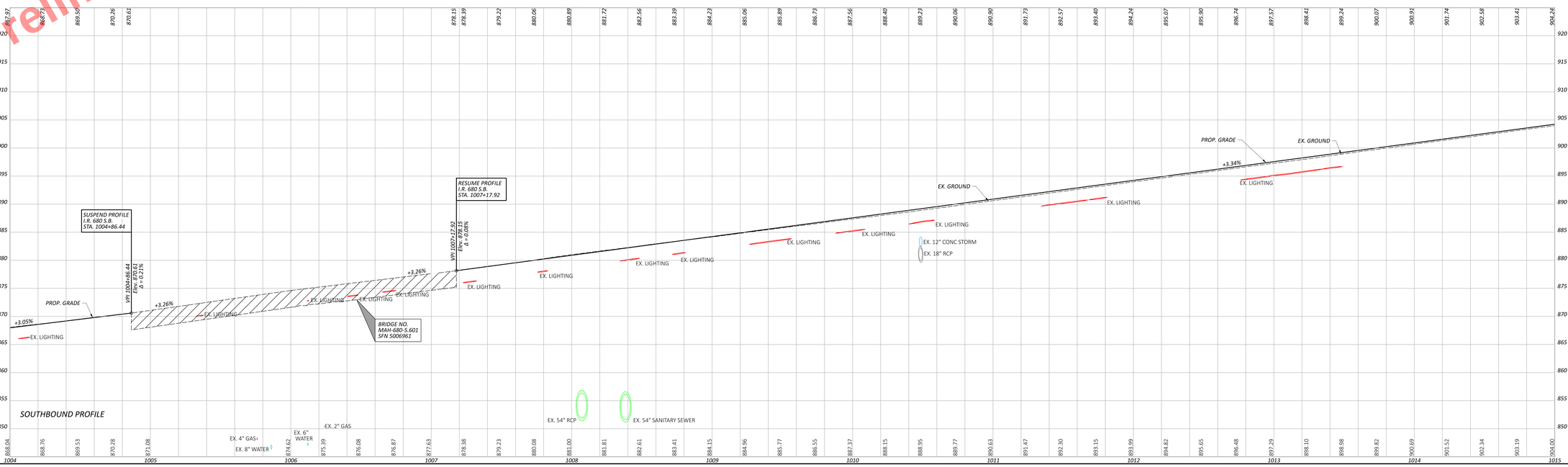

Preliminary Plans - For Reference Only

PROFILE - I.R. 680
STA. 1004+00.00 TO STA. 1015+00.00

MAH-680-4.58

DESIGN AGENCY
mn consultants, inc.

DESIGNER
MSN

REVIEWER
JDK 10/04/24

PROJECT ID
121474

SHEET P.213 TOTAL 471

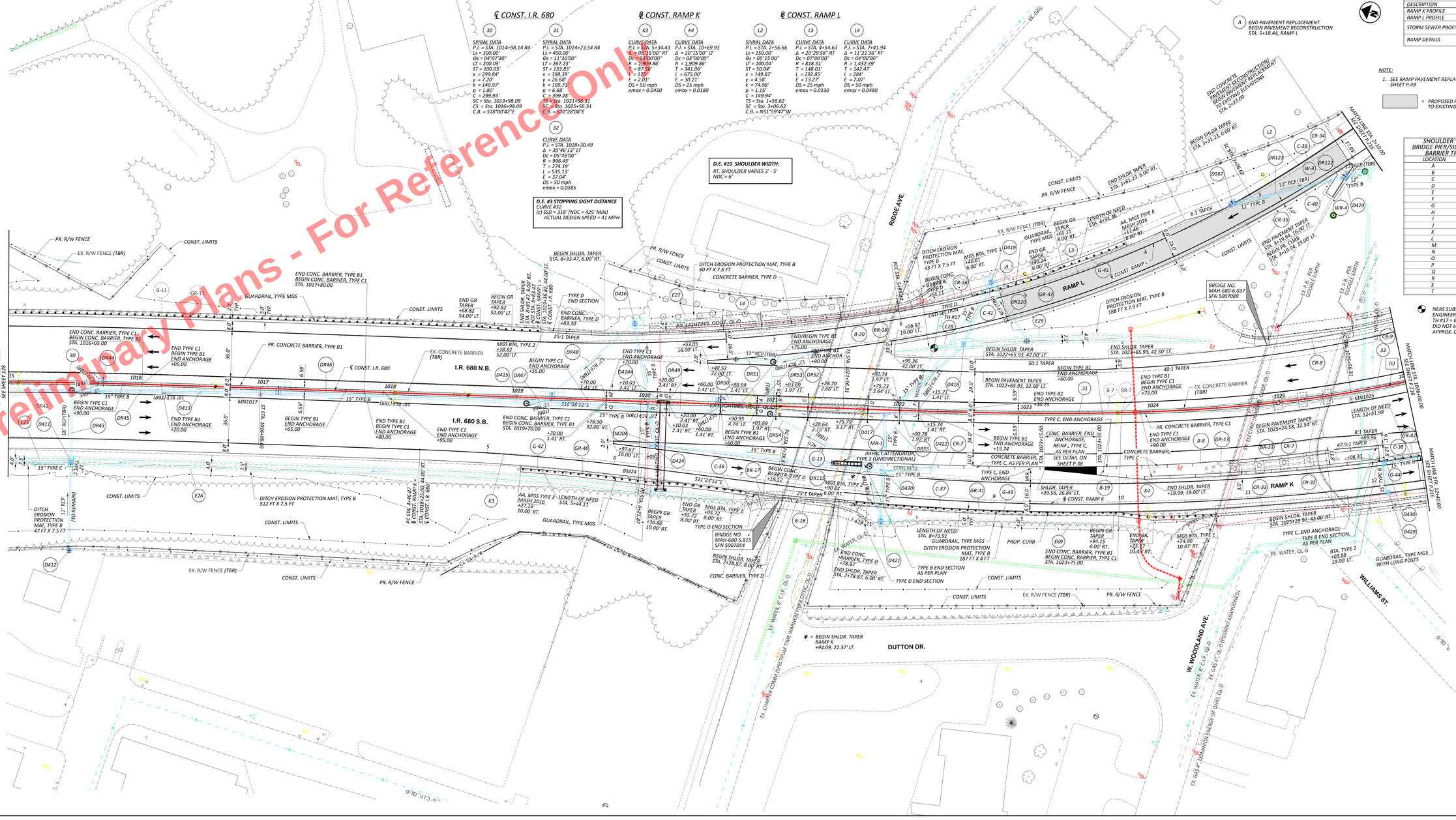

MAH-680-4.58

MODEL: 11X17L (OPEN) JMERIGAR 66x34 PM | DATE: 10/1/2025 TIME: 1:34:47 PM PITSRV ONDOT.PDF | P.214 PENTRE ONDOT_LTPrint.tbl SSER ShadBPmonochrome.ctb mm WORKSPACE: ONDOTCIVD3 WORKSET: 121474 PRODUCT: OpenRoadDesigner 24.00.00.205

DESIGN AGENCY
ms consultants, inc.
DESIGNED ACW
REVIEWED CMN 08/29/25
PROJECT ID 121474
SHEET P.214 TOTAL 655

Preliminary Plans - For Reference Only

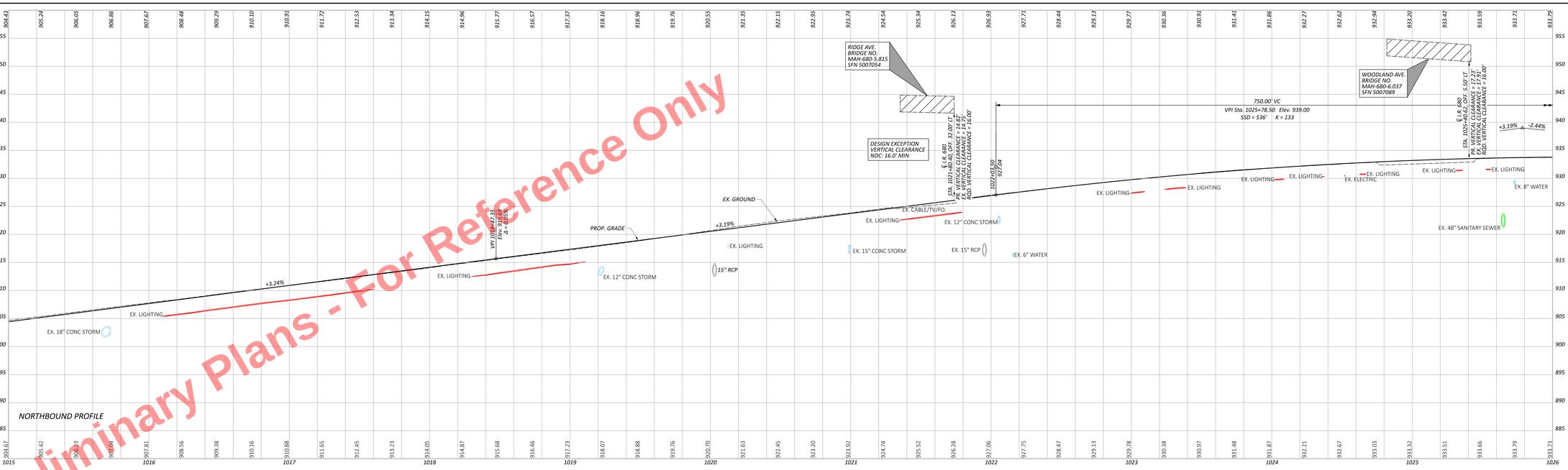

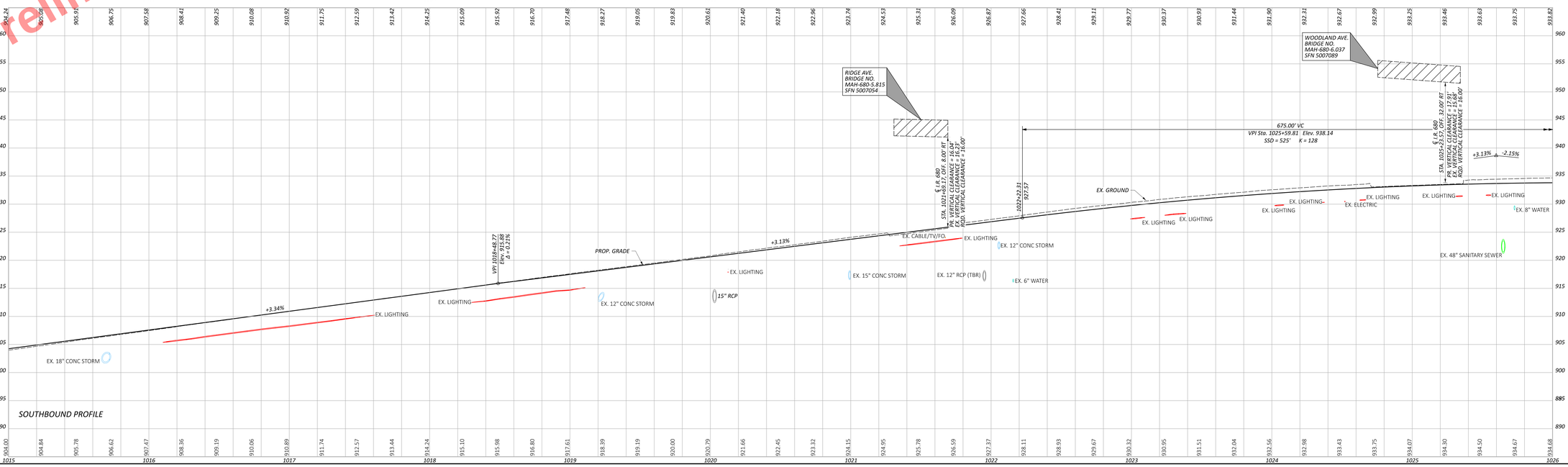

PROFILE - I.R. 680
STA. 1015+00.00 TO STA. 1026+00.00

DESIGN AGENCY
ms consultants, inc.

DESIGNER: MSN
REVIEWER: CMN 08/29/25
PROJECT #: 121474
SHEET: P.215 TOTAL: 655

MAH-680-4.58

MODEL: 11X17L (plots 2to1).ctb DATE: 9/17/2025 TIME: 1:35:53 PM PETERV ONDOT.pltPen Table (Medium).ctb USER: DeadlineJournal.com WORKSPACE: ONDOTCAD3 WORKSET: 121474 PRODUCT: OpenRoadDesigner 24.00.00.205
M:\Projects\Mahoning\MAH-680-4.58\Roadway\Plans\Profile\MAH-680-4.58_PROFILE.dgn

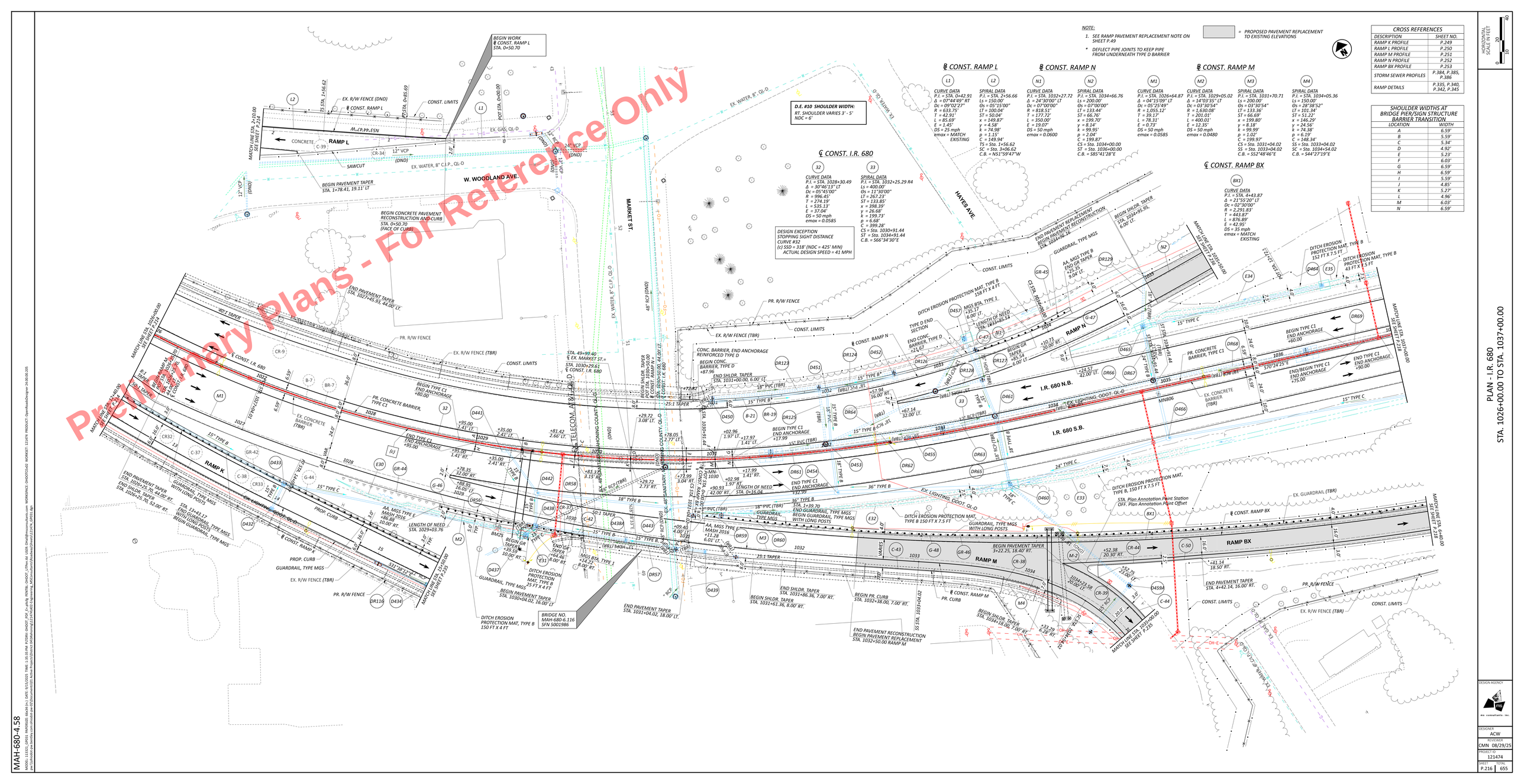
BEGIN WORK & CONST. RAMP L STA. 0+50.70
MATCH LINE STA. 2+10.00 SEE SHEET P.234
EX. R/W FENCE (DND)
℄ CONST. RAMP L
15 STA. 1+56.62
25 STA. 0+85.69
CONST. LIMITS
POT STA. 0+00.00
RAMP L
CONCRETE
C-39
CR-34
12" VCP (DND)
SAWCUT
EX. WATER, 8" C.I.P., QL-D
BEGIN PAVEMENT TAPER STA. 1+78.41, 19.11' LT
W. WOODLAND AVE.
BEGIN CONCRETE PAVEMENT RECONSTRUCTION AND CURB STA. 0+50.70 (FACE OF CURB)
MARKET ST.
EX. WATER, 8" QL-D
HAYES AVE.
℄ CONST. I.R. 680
CURVE DATA P.I. = STA. 1028+30.49 Δ = 30°46'13" LT Dc = 05°45'00" R = 996.45' T = 274.19' L = 535.13' E = 37.04' DS = 50 mph emax = 0.0585
SPIRAL DATA P.I. = STA. 1032+25.29 R4 Ls = 400.00' Θs = 11°30'00" Lt = 267.23' ST = 133.85' x = 398.39' y = 26.68' k = 199.73' p = 6.68' C = 399.28' CS = Sta. 1030+91.44 ST = Sta. 1034+91.44 C.B. = S66°34'30"E
DESIGN EXCEPTION STOPPING SIGHT DISTANCE CURVE #32 (c) SSD = 318' (NDC = 425' MIN) ACTUAL DESIGN SPEED = 41 MPH
D.E. #10 SHOULDER WIDTH: RT. SHOULDER VARIES 3' - 5' NDC = 6'
NOTE:
1. SEE RAMP PAVEMENT REPLACEMENT NOTE ON SHEET P.49
* DEFLECT PIPE JOINTS TO KEEP PIPE FROM UNDERNEATH TYPE D BARRIER
= PROPOSED PAVEMENT REPLACEMENT TO EXISTING ELEVATIONS
℄ CONST. RAMP N
CURVE DATA P.I. = STA. 1032+27.72 Δ = 24°30'00" LT Dc = 07°00'00" R = 818.51' T = 177.72' L = 350.00' E = 19.07' DS = 50 mph emax = 0.0600
SPIRAL DATA P.I. = STA. 1034+66.76 Ls = 200.00' Θs = 07°00'00" Lt = 133.44' ST = 66.76' x = 199.70' y = 8.14' k = 99.95' p = 2.04' C = 199.87' CS = Sta. 1034+00.00 ST = Sta. 1036+00.00 C.B. = S85°41'28"E
℄ CONST. RAMP M
CURVE DATA P.I. = STA. 1026+64.87 Δ = 04°15'09" LT Dc = 05°25'49" R = 1,055.12' T = 39.17' L = 78.31' E = 0.73' DS = 50 mph emax = 0.0585
SPIRAL DATA P.I. = STA. 1029+05.02 Δ = 14°03'35" LT Dc = 03°30'54" R = 1,630.08' T = 201.01' L = 400.01' E = 12.35' DS = 50 mph emax = 0.0480
SPIRAL DATA P.I. = STA. 1031+70.71 Ls = 200.00' Θs = 03°30'54" Lt = 133.36' ST = 66.69' x = 199.80' y = 8.18' k = 99.99' p = 1.02' C = 199.97' CS = Sta. 1031+04.02 SS = Sta. 1033+04.02 C.B. = S52°48'46"E
SPIRAL DATA P.I. = STA. 1034+05.36 Ls = 150.00' Θs = 28°38'52" Lt = 101.34' ST = 51.22' x = 146.29' y = 24.56' k = 74.38' p = 6.19' C = 148.34' SS = Sta. 1033+04.02 SC = Sta. 1034+54.02 C.B. = S44°27'19"E
℄ CONST. RAMP BX
CURVE DATA P.I. = STA. 4+43.87 Δ = 21°55'20" LT Dc = 02°30'00" R = 2,291.83' T = 443.87' L = 876.89' E = 42.98' DS = 35 mph emax = MATCH EXISTING
RAMP N
I.R. 680 N.B.
I.R. 680 S.B.
RAMP K
RAMP M
RAMP BX
BEGIN SHLDR. TAPER STA. 1032+95.95, 6.00' LT.
END PAVEMENT REPLACEMENT BEGIN PAVEMENT RECONSTRUCTION STA. 1034+06.36
AA, MGS TYPE B END GR TAPER +25.35 10.04' LT.
GUARDRAIL, TYPE MGS
BEGIN GR TAPER +85.54 6.00' LT.
DITCH EROSION PROTECTION MAT, TYPE B 158 FT X 4 FT
DITCH EROSION PROTECTION MAT, TYPE B 152 FT X 7.5 FT
DITCH EROSION PROTECTION MAT, TYPE B 43 FT X 7.5 FT
MGS BTA, TYPE 1 +35.17 6.00' LT.
LENGTH OF NEED STA. 1034+48.59
TYPE D END SECTION
END CONC. BARRIER, TYPE D +24.67
CONC. BARRIER, END ANCHORAGE REINFORCED TYPE D
BEGIN CONC. BARRIER, TYPE D +87.96
END SHLDR. TAPER STA. 1031+00.00, 6.00' LT.
BEGIN SHLDR. TAPER STA. 1030+50.00, 44.00' LT.
END SHLDR. TAPER STA. 1030+91.44, 44.00' LT.
25:1 TAPER
STA. 49+99.40 ℄ EX. MARKET ST.= STA. 1030+29.61 ℄ CONST. I.R. 680
BEGIN SHLDR. TAPER STA. 1030+50.00 ℄ CONST. I.R. 680
END PAVEMENT TAPER STA. 1027+45.93, 44.00' LT.
40:1 TAPER
8:1 TAPER
MATCH LINE STA. 2+00.00 SEE SHEET P.234
MATCH LINE STA. 1026+00.00 SEE SHEET P.234
MATCH LINE STA. 1037+00.00 SEE SHEET P.218
PR. R/W FENCE
EX. R/W FENCE (TBR)
CONST. LIMITS
PEDESTRIAN CROSSING PATH, QL-D
BEGIN TYPE C1 END ANCHORAGE +80.00
PR. CONCRETE BARRIER, TYPE C1
EX. CONCRETE BARRIER (TBR)
END TYPE C1 END ANCHORAGE +95.00
BEGIN TYPE C1 END ANCHORAGE +60.00
END TYPE C1 END ANCHORAGE +90.00
BEGIN TYPE C1 END ANCHORAGE +75.00
END/BEGIN TYPE C1 END ANCHORAGE
EX. TELECOMA AT&T QL-D
EX. SANITARY, QL-D
EX. 48" RCP (DND)
EX. 24" RCP (DND)
EX. 12" RCP (DND)
EX. 18" RCP (TBR)
EX. 36" RCP (TBR)
EX. 42" RCP (TBR)
EX. 48" RCP (TBR)
EX. 18" PVC (TBR)
EX. 12" PVC (TBR)
EX. 15" PVC (TBR)
EX. 24" PVC (TBR)
EX. 36" PVC (TBR)
EX. 42" PVC (TBR)
EX. 48" PVC (TBR)
EX. 15" RCP (TBR)
EX. 24" RCP (TBR)
EX. 30" RCP (TBR)
EX. 54" RCP (TBR)
EX. 60" RCP (TBR)
EX. 72" RCP (TBR)
EX. 84" RCP (TBR)
EX. 96" RCP (TBR)
EX. 108" RCP (TBR)
EX. 120" RCP (TBR)
EX. 132" RCP (TBR)
EX. 144" RCP (TBR)
EX. 156" RCP (TBR)
EX. 168" RCP (TBR)
EX.

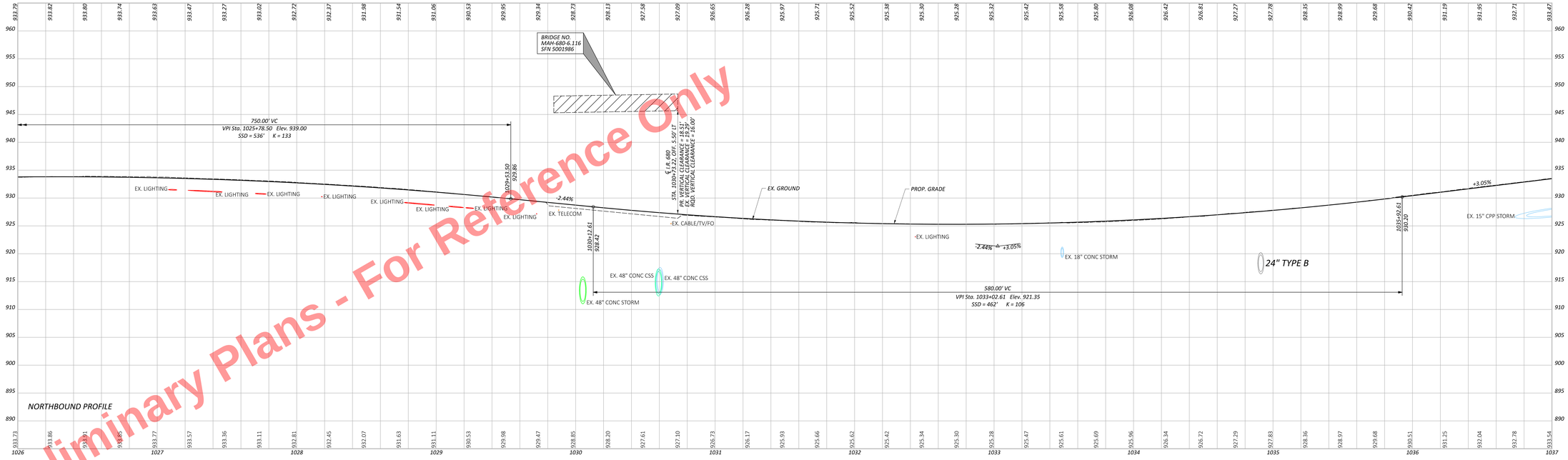

Preliminary Plans - For Reference Only

PROFILE - I.R. 680
STA. 1026+00.00 TO STA. 1037+00.00

MAH-680-4.58

MODEL: 11311_GRDG_PAVEDGE_6x14.DGN | DATE: 9/17/2025 TIME: 1:34:03 PM | PETERV ONDOT_CPW | LAST SAVED BY: PETERV ONDOT_CPW | Config: PENTRE, ONDOT_CPW.cfg | PENTRE, ONDOT_CPW.cfg | Plot Scale: 1.0000 '/ Inch | Plot Date/Time: 9/17/2025 1:34:03 PM | Plotted By: PETERV ONDOT_CPW | Dgn: C:\Users\petrv\Documents\ONDOT\WorkSets\Mainline\Projects\121474\Roadway\Profiles\121474_GRDG_PAVEDGE_6x14.dgn | Dataset: 121474_GRDG_PAVEDGE_6x14 | Default | Active Project: 121474 | Project Manager: Mike Nelson | Project Engineer: Mike Nelson | Design Agency: MS Consultants, Inc. | Client: ODOT | Workset: 121474 | Project: ODOT_CPW.dgn | WORKSET: 121474 | PROJECT: ODOT_CPW.dgn | WORKSET: 121474 | PROJECT: ODOT_CPW.dgn

DESIGN AGENCY
ms consultants, inc.

DESIGNER: MSN
REVIEWER: CMN 08/29/25
PROJECT ID: 121474
SHEET: P.217 TOTAL: 655

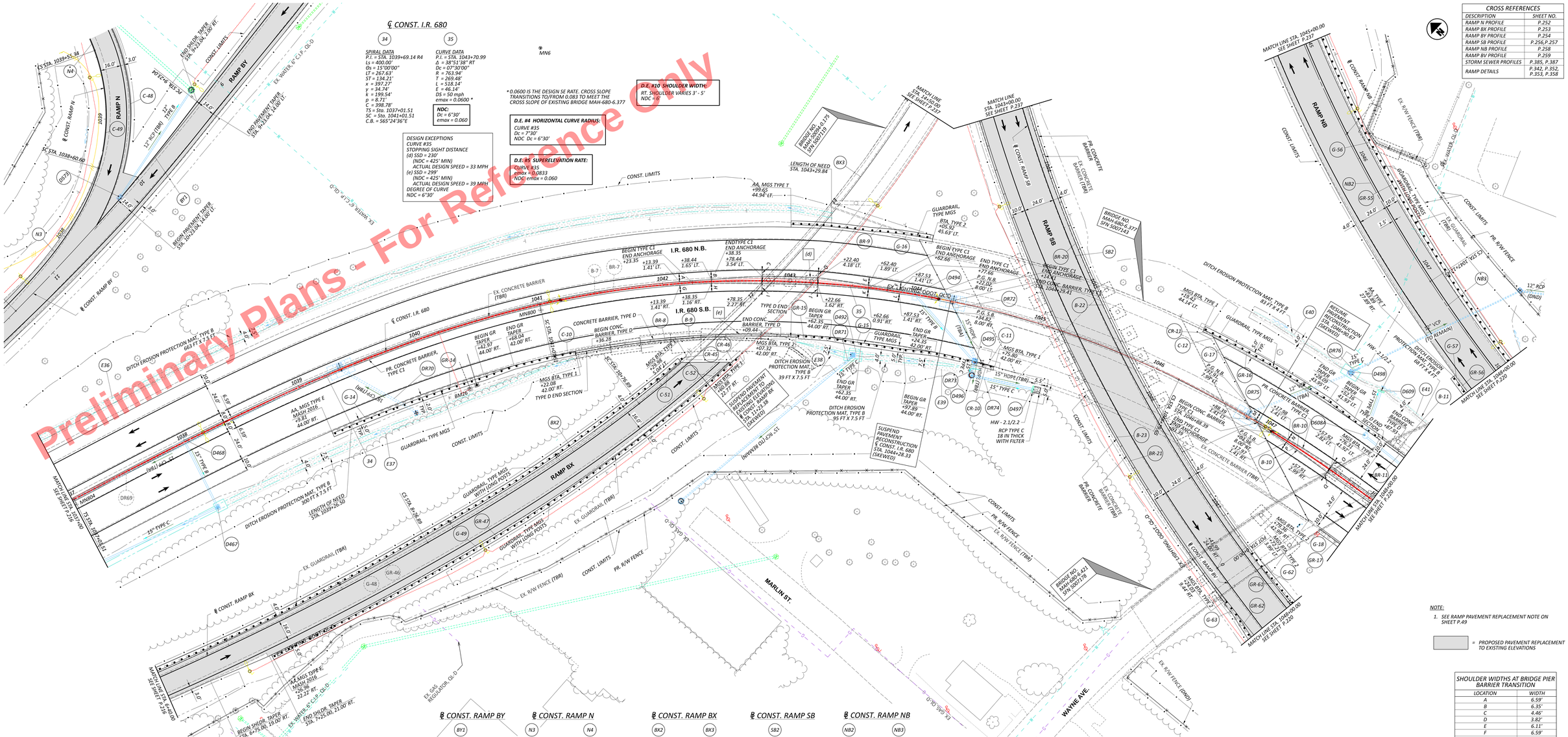

℄ CONST. RAMP BY

CURVE DATA
P.I. = STA. 10+32.68
Δ = 06°34'15" RT
Dc = 03°00'00"
R = 1,909.86'
T = 109.64'
L = 219.03'
E = 3.14'
DS = 40 mph
emax = MATCH EXISTING

℄ CONST. RAMP N

SPIRAL DATA
P.I. = STA. 1038+11.94
Ls = 150.00'
Θs = 28°38'52"
LT = 101.34'
ST = 51.22'
x = 146.29'
y = 24.56'
k = 74.38'
p = 6.19'
C = 148.34'
TS = Sta. 1037+10.60
SC = Sta. 1038+60.60
C.B. = N82°26'48"E

CURVE DATA
P.I. = STA. 1039+09.61
Δ = 36°11'17" LT
Dc = 38°11'50"
R = 150.00'
T = 49.01'
L = 94.74'
E = 7.80'
DS = 25 mph
emax = MATCH EXISTING

℄ CONST. RAMP BX

SPIRAL DATA
P.I. = STA. 9+90.80
Ls = 200.00'
Θs = 08°30'00"
LT = 113.91'
ST = 86.45'
x = 199.41'
y = 12.78'
k = 58.26'
p = 1.02'
C = 199.81'
CS = Sta. 8+76.89
SC = Sta. 10+76.89
C.B. = S76°01'41"E

CURVE DATA
P.I. = STA. 13+53.10
Δ = 32°15'54" LT
Dc = 06°00'00"
R = 954.93'
T = 276.21'
L = 537.75'
E = 39.14'
DS = 35 mph
emax = MATCH EXISTING

℄ CONST. RAMP SB

CURVE DATA
P.I. = STA. 1043+93.74
Δ = 81°26'53" LT
Dc = 05°00'00"
R = 1,145.92'
T = 986.49'
L = 1,628.97'
E = 366.13'
DS = 40 mph
emax = MATCH EXISTING

℄ CONST. RAMP NB

CURVE DATA
P.I. = STA. 1041+49.02
Δ = 63°54'51" LT
Dc = 05°00'00"
R = 1,145.92'
T = 714.86'
L = 1,278.29'
E = 204.69'
DS = 50 mph
emax = MATCH EXISTING

SPIRAL DATA
P.I. = STA. 1048+12.61
Ls = 300.00'
Θs = 07°30'00"
LT = 200.18'
ST = 100.16'
x = 299.49'
y = 13.07'
k = 149.91'
p = 3.27'
C = 299.77'
CS = Sta. 1047+12.45
ST = Sta. 1050+12.45
C.B. = S08°57'11"W

CROSS REFERENCES	
DESCRIPTION	SHEET NO.
RAMP N PROFILE	P.252
RAMP BX PROFILE	P.253
RAMP BY PROFILE	P.254
RAMP SB PROFILE	P.256,P.257
RAMP NB PROFILE	P.258
RAMP BV PROFILE	P.259
STORM SEWER PROFILES	P.385, P.387
RAMP DETAILS	P.342, P.352, P.353, P.358

NOTE:
1. SEE RAMP PAVEMENT REPLACEMENT NOTE ON SHEET P.49

= PROPOSED PAVEMENT REPLACEMENT TO EXISTING ELEVATIONS

SHOULDER WIDTHS AT BRIDGE PIER BARRIER TRANSITION	
LOCATION	WIDTH
A	6.59'
B	6.35'
C	4.46'
D	3.82'
E	6.11'
F	6.59'
G	6.59'
H	6.84'
I	5.73'
J	6.38'
K	7.09'
L	6.59'
M	6.59'
N	6.59'
O	5.18'
P	6.59'
Q	5.01'

HORIZONTAL SCALE IN FEET 0 10 20 40

PLAN - I.R. 680
STA. 1037+00.00 TO STA. 1048+00.00

DESIGN AGENCY: mb consultants, inc.
DESIGNED: DWH
REVIEWED: CMN 08/29/25
PROJECT #: 121474
SHEET: P.218 TOTAL: 655

MAH-680-4.58

BOUNDARY, TOPO, ROADWAY DESIGN FILE | DATE: 10/1/2025 TIME: 1:36:23 PM PITSBY ONDOT.PW [Layout: PAVING ONDOT] [Plan Set: Draft Sheets]mmorris@mbcorp.com WORKSPACE: ONDOTCAD9 WORKSET: 121474 PRODUCT: OpenRoads Designer 24.00.00.205

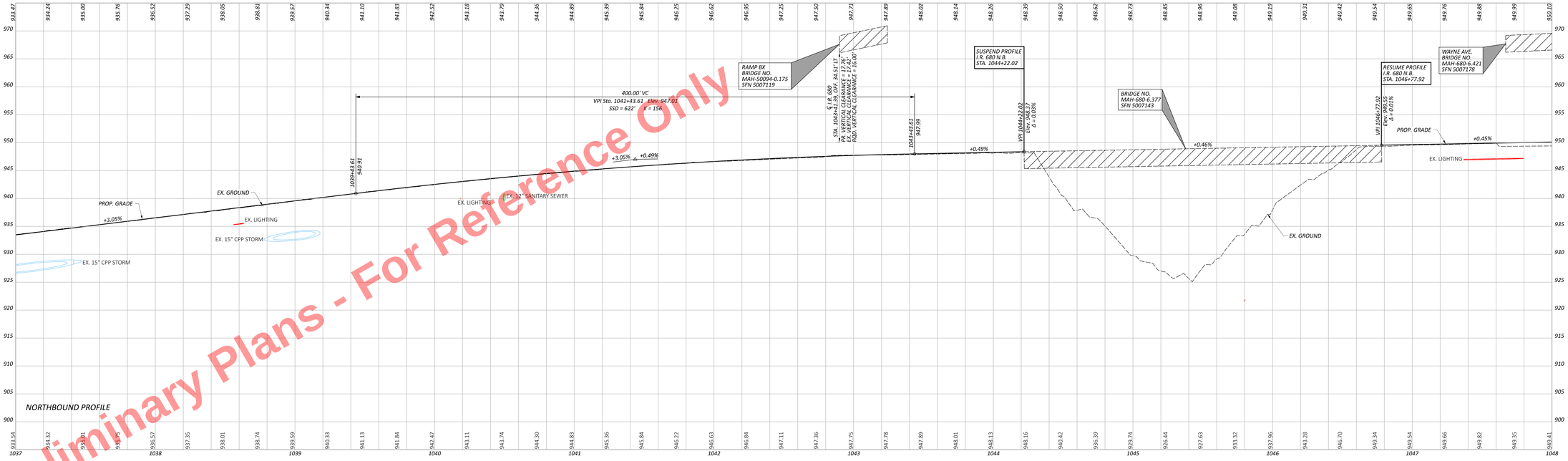

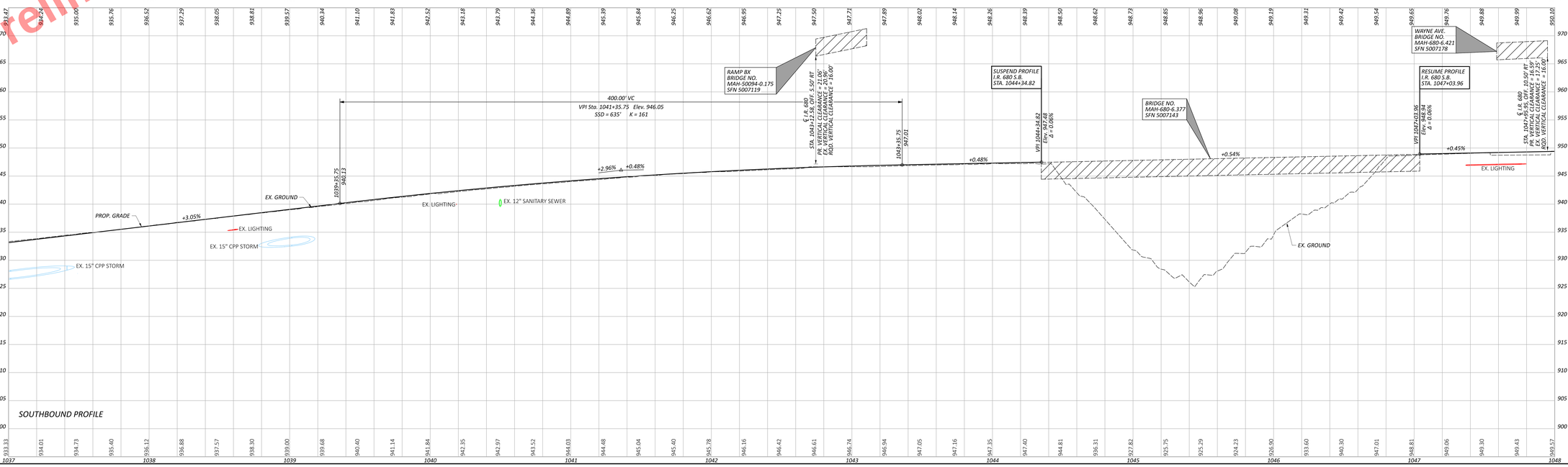

Preliminary Plans - For Reference Only

PROFILE - I.R. 680
STA. 1037+00.00 TO STA. 1048+00.00

MAH-680-4.58

MODEL: 11321_GP01_PAYEGGE (64.bit) DATE: 9/17/2025 TIME: 1:34:53 PM PETERV ONEDOT_DT.mcd (Effective Date: OneMeasureSystem.com WORKSPACE: ONEDOTS429 WORKSET: 121474 PRODUCT: OpenRoadsDesigner 24.00.00.205
ACTIVE: P:\Projects\MAH-680-4.58\Design\Roadway\GP01_PAYEGGE\11321_GP01_PAYEGGE.dgn

DESIGN AGENCY
ms consultants, inc.
DESIGNER MSN
REVIEWER CMN 08/29/25
PROJECT ID 121474
SHEET P.219 TOTAL 655

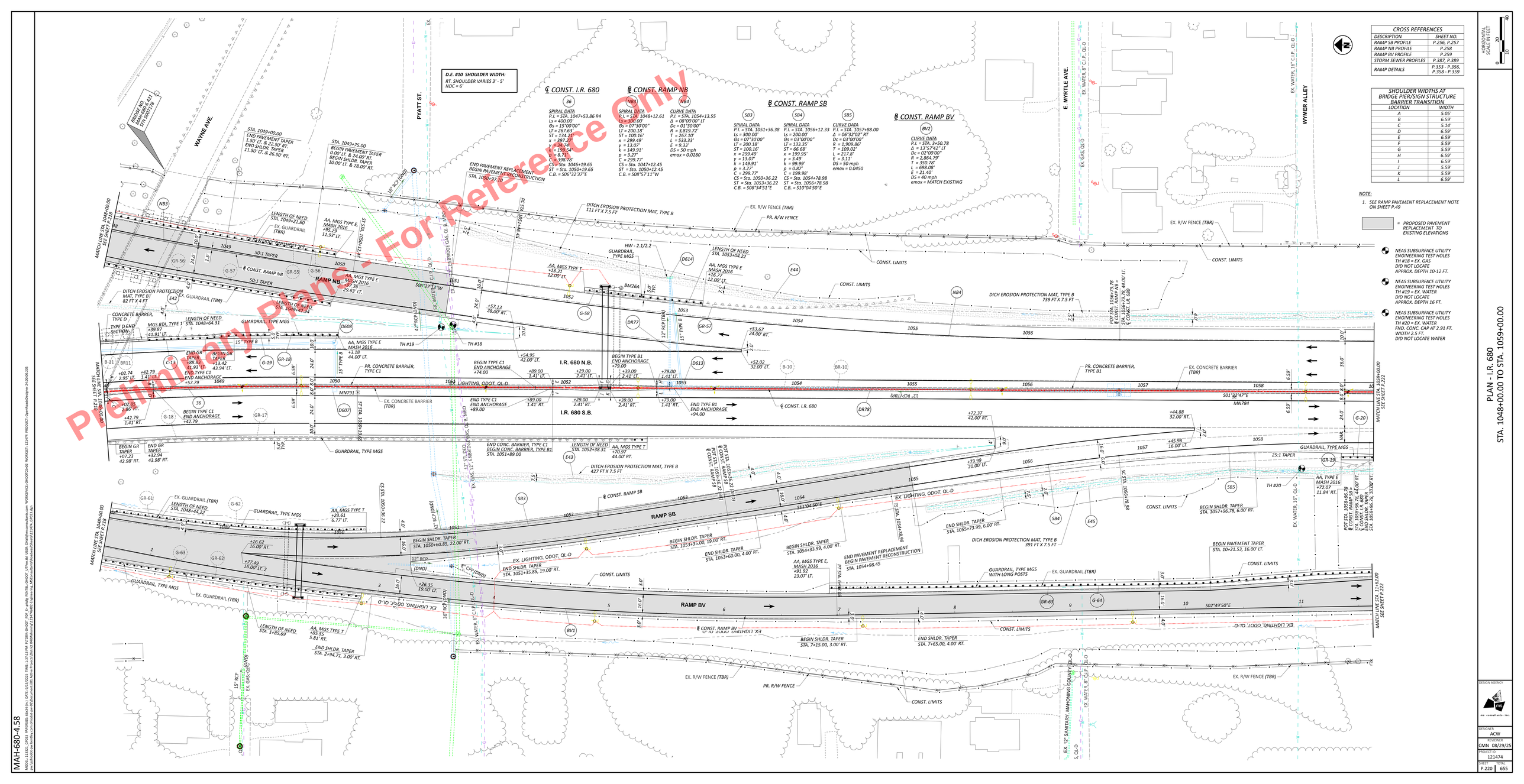
Preliminary Plans - For Reference Only
D.E. #10 SHOULDER WIDTH:
RT. SHOULDER VARIES 3' - 5'
NDC = 6'
℄ CONST. I.R. 680
℄ CONST. RAMP NB
℄ CONST. RAMP SB
℄ CONST. RAMP BV
WAYNE AVE.
PYATT ST.
E. MYRTLE AVE.
WYMER ALLEY
BRIDGE NO. MAH-680-0.21 STR. NO. 3977178
RAMP NB
RAMP SB
RAMP BV
I.R. 680 N.B.
I.R. 680 S.B.
50:1 TAPER
25:1 TAPER
GUARDRAIL, TYPE MGS
GUARDRAIL, TYPE MGS WITH LONG POSTS
EX. GUARDRAIL (TBR)
EX. CONCRETE BARRIER (TBR)
PR. CONCRETE BARRIER, TYPE C1
PR. CONCRETE BARRIER, TYPE B1
CONCRETE BARRIER, TYPE D
EX. R/W FENCE (TBR)
PR. R/W FENCE
CONST. LIMITS
EX. LIGHTING, ODOT, QL-D
EX. WATER, 8" C.I.P., QL-D
EX. WATER, 16" C.I.P., QL-D
EX. GAS, QL-D
EX. 12" SANITARY, MAHONING COUNTY, QL-D
EX. WATER, 8" C.I.P., QL-D
DITCH EROSION PROTECTION MAT, TYPE B
739 FT X 7.5 FT
DITCH EROSION PROTECTION MAT, TYPE B
111 FT X 7.5 FT
DITCH EROSION PROTECTION MAT, TYPE B
391 FT X 7.5 FT
DITCH EROSION PROTECTION MAT, TYPE B
427 FT X 7.5 FT
END PAVEMENT REPLACEMENT
BEGIN PAVEMENT RECONSTRUCTION
STA. 1050+97.70
BEGIN PAVEMENT REPLACEMENT
END PAVEMENT RECONSTRUCTION
STA. 1054+98.45
BEGIN PAVEMENT TAPER
STA. 10+21.53, 16.00' LT.
MATCH LINE STA. 1048+00.00 SEE SHEET P.218
MATCH LINE STA. 1059+00.00 SEE SHEET P.222
S01°32'47"E
MN784
S02°49'50"E
S11°04'50"E
S16°27'13"W
S06°27'13"W
STA. 1049+00.00
END PAVEMENT TAPER
1.50' LT. & 22.50' RT.
END SHLDR. TAPER
11.50' LT. & 26.50' RT.
STA. 1049+75.00
BEGIN PAVEMENT TAPER
0.00' LT. & 24.00' RT.
BEGIN SHLDR. TAPER
10.00' LT. & 28.00' RT.
LENGTH OF NEED
STA. 1049+21.80
+85.29
11.93' LT.
AA, MGS TYPE E
MASH 2016
+85.29
11.93' LT.
LENGTH OF NEED
STA. 1048+64.31
+39.87
41.91' LT.
MGS BTA, TYPE 1
+39.87
41.91' LT.
AA, MGS TYPE E
MASH 2016
+3.18
44.00' LT.
TH #19
TH #18
AA, MGS TYPE T
+23.31
12.00' LT.
AA, MGS TYPE E
MASH 2016
+16.27
12.00' LT.
+57.13
28.00' RT.
+53.67
24.00' RT.
+52.02
32.00' LT.
+54.95
42.00' LT.
+89.00
1.41' LT.
+29.00
2.41' LT.
+79.00
1.41' LT.
+39.00
2.41' LT.
+94.00
+89.00
END CONC. BARRIER, TYPE C1
BEGIN CONC. BARRIER, TYPE B1
STA. 1051+89.00
LENGTH OF NEED
STA. 1052+38.31
AA, MGS TYPE T
+70.97
44.00' RT.
+72.37
42.00' RT.
+73.99
20.00' LT.
+44.88
32.00' RT.
+45.98
16.00' LT.
AA, MGS TYPE E
MASH 2016
+72.07
11.84' RT.
AA, MGS TYPE E
MASH 2016
+91.92
23.07' LT.
AA, MGS TYPE T
+23.61
6.77' LT.
LENGTH OF NEED
STA. 1048+44.22
+16.62
16.00' RT.
+77.49
16.00' LT, 2
LENGTH OF NEED
STA. 1+85.69
AA, MGS TYPE T
+85.55
5.81' RT.
END SHLDR. TAPER
STA. 2+94.71, 3.00' RT.
+26.35
19.00' LT.
BEGIN SHLDR. TAPER
STA. 1050+60.85, 22.00' RT.
END SHLDR. TAPER
STA. 1051+35.85, 19.00' RT.
BEGIN SHLDR. TAPER
STA. 1053+35.00, 19.00' RT.
END SHLDR. TAPER
STA. 1053+60.00, 4.00' RT.
BEGIN SHLDR. TAPER
STA. 1054+33.99, 4.00' RT.
END SHLDR. TAPER
STA. 7+65.00, 4.00' RT.
BEGIN SHLDR. TAPER
STA. 7+15.00, 3.00' RT.
END SHLDR. TAPER
STA. 1055+73.99, 6.00' RT.
BEGIN SHLDR. TAPER
STA. 1057+96.78, 6.00' RT.
POT STA. 1053+38.22 (MID)
PC STA. 1053+58.22
℄ CONST. RAMP SB
POT STA. 1054+78.98
PT STA. 1054+98.45
℄ CONST. RAMP BV
POT STA. 1056+79.78
PC STA. 1056+99.78
℄ CONST. I.R. 680
POT STA. 1058+96.78
PT STA. 1059+16.78
℄ CONST. I.R. 680
12" RCP (DND)
15" RCP (DND)
24" RCP (DND)
30" RCP (DND)
36" RCP (DND)
42" RCP (DND)
6" CPP (DND)
12" RCP (TBR)
15" TYPE B
24" RCP (TBR)
6" CPP (TBR)
EX. 6" CPP (DND)
EX. 15" RCP
EX. 6" CPP (TBR)
EX. 24" RCP (TBR)
EX. 30" RCP (DND)
EX. 36" RCP (DND)
EX. 42" RCP (DND)
EX. 12" RCP (TBR)
EX. 15" RCP (TBR)
EX. 24" RCP (TBR)
EX. 30" RCP (TBR)
EX. 36" RCP (TBR)
EX. 42" RCP (TBR)
EX. 48" RCP (TBR)
EX. 54" RCP (TBR)
EX. 60" RCP (TBR)
EX. 66" RCP (TBR)
EX. 72" RCP (TBR)
EX. 78" RCP (TBR)
EX.



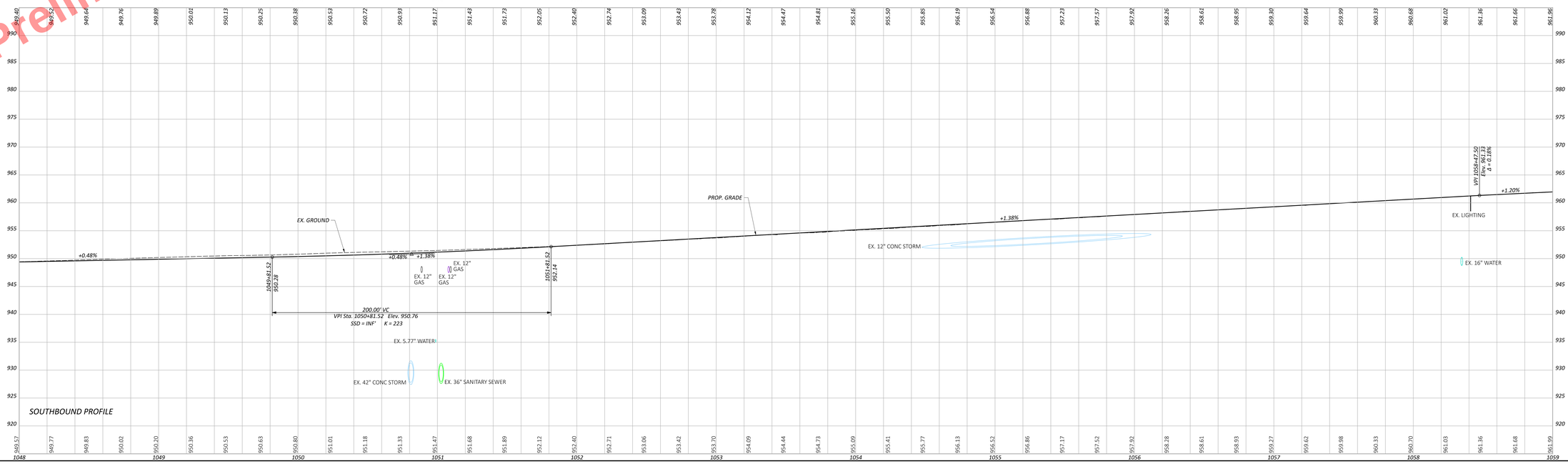

Preliminary Plans - For Reference Only

PROFILE - I.R. 680
STA. 1048+00.00 TO STA. 1059+00.00

MAH-680-4.58

MODEL: 11311_GPDS_PAVEMENT_I680.DGN | DATE: 9/27/2025 TIME: 1:37:39 PM | PETERV | DWGPC.PSF | Config: PENTRE_DWGPC_LPTherm.tbl | LEAN: DeadBeefmaterial.com | WORKSPACE: CWDOT10x24 | WORKSET: 121474 | PRODUCT: OpenRoadsDesigner 24.00.00.205
ALL DRAWINGS PRODUCED AND DISTRIBUTED IN DIGITAL FORMAT ARE FOR INFORMATIONAL PURPOSES ONLY. THE DIGITAL FILES ARE NOT CONTRACT DOCUMENTS.

DESIGN AGENCY
ms consultants, inc.
DESIGNER: MSN
REVIEWER: JDK 10/04/24
PROJECT ID: 121474
SHEET: P.221 TOTAL: 471

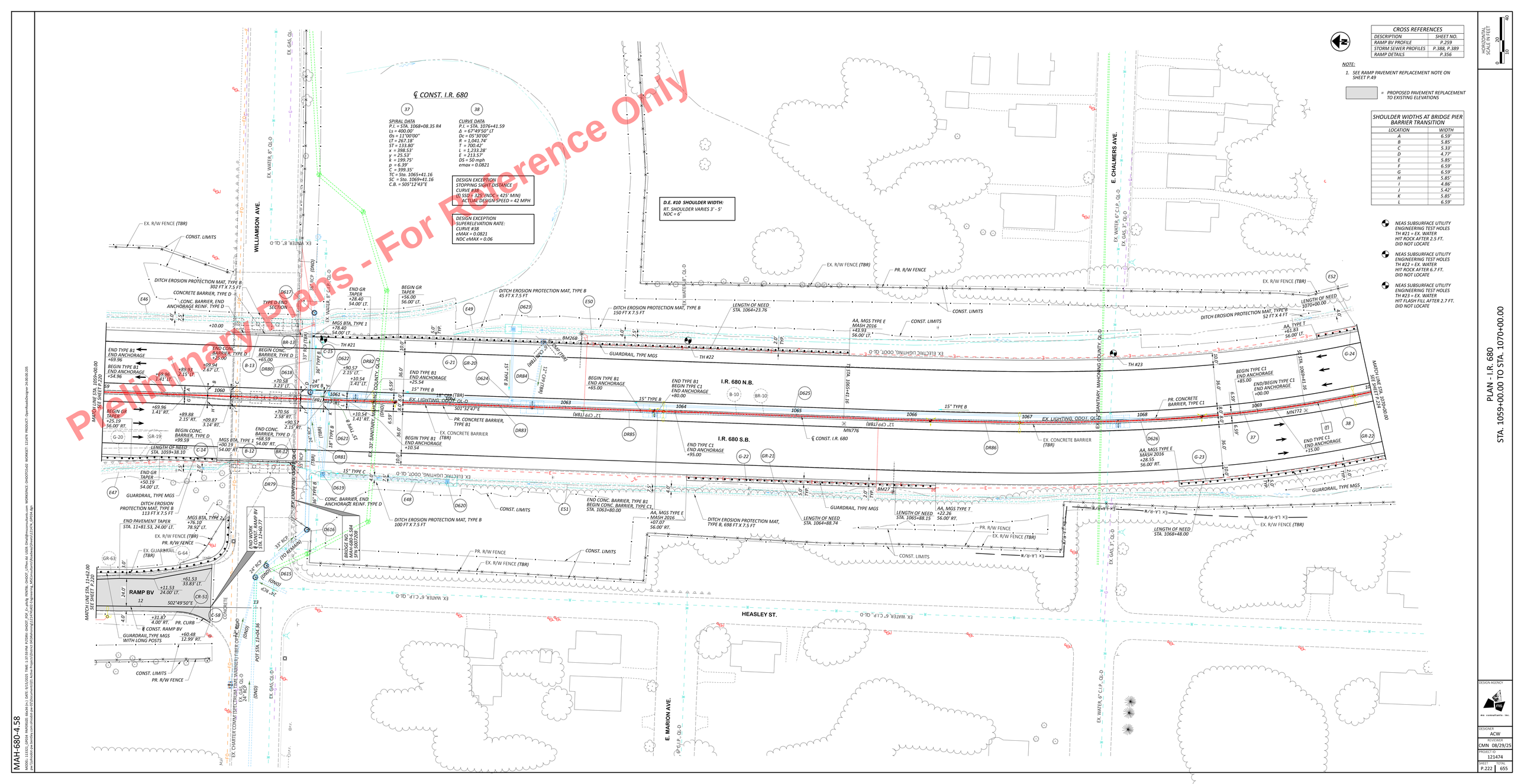
℄ CONST. I.R. 680
SPIRAL DATA
P.I. = STA. 1068+08.35 R4
Ls = 400.00'
Θs = 11°00'00"
LT = 267.18'
ST = 133.80'
x = 398.53'
y = 25.53'
k = 199.75'
p = 6.39'
C = 399.35'
TC = Sta. 1065+41.16
SC = Sta. 1069+41.16
C.B. = S05°12'43"E
CURVE DATA
P.I. = STA. 1076+41.59
Δ = 67°49'50" LT
Dc = 05°30'00"
R = 1,041.74'
T = 700.42'
L = 1,233.28'
E = 213.57'
DS = 50 mph
emax = 0.0821
DESIGN EXCEPTION
STOPPING SIGHT DISTANCE
CURVE #38
(I) SSD = 325' (NDC = 425' MIN)
ACTUAL DESIGN SPEED = 42 MPH
DESIGN EXCEPTION
SUPERELEVATION RATE:
CURVE #38
eMAX = 0.0821
NDC eMAX = 0.06
D.E. #10 SHOULDER WIDTH:
RT. SHOULDER VARIES 3' - 5'
NDC = 6'
WILLIAMSON AVE.
E. CHALMERS AVE.
E. MARION AVE.
HEASLEY ST.
I.R. 680 N.B.
I.R. 680 S.B.
RAMP BV
MATCH LINE STA. 1059+00.00 SEE SHEET P.220
MATCH LINE STA. 1070+00.00 SEE SHEET P.224
MATCH LINE STA. 11+62.00 SEE SHEET P.220
BRIDGE NO. MAH-680-6.984 STA. 1077+28.00
BEGIN WORK RAMP BV STA. 12+60.77
END WORK RAMP BV STA. 12+40.77
POT STA. 13+04.36
EX. GAS, 3" OL-D
EX. WATER, 8" OL-D
EX. WATER, 6" C.I.P. OL-D
EX. GAS, 4" OL-D
EX. GAS, 2" OL-D
EX. SANITARY, MAHONING COUNTY, OL-D
EX. ELECTRIC LIGHTING, ODOT, OL-D
EX. LIGHTING, ODOT, OL-D
EX. CHARTER COMM (SPECTRUM) TIME WARNER) FIBER OPTIC
EX. R/W FENCE (TBR)
PR. R/W FENCE
CONST. LIMITS
CONCRETE BARRIER, TYPE D
CONC. BARRIER, END ANCHORAGE REINF. TYPE D
TYPE D END SECTION
DITCH EROSION PROTECTION MAT, TYPE B 302 FT X 7.5 FT
DITCH EROSION PROTECTION MAT, TYPE B 45 FT X 7.5 FT
DITCH EROSION PROTECTION MAT, TYPE B 150 FT X 7.5 FT
DITCH EROSION PROTECTION MAT, TYPE B 113 FT X 7.5 FT
DITCH EROSION PROTECTION MAT, TYPE B 100 FT X 7.5 FT
DITCH EROSION PROTECTION MAT, TYPE B, 698 FT X 7.5 FT
DITCH EROSION PROTECTION MAT, TYPE B 52 FT X 4 FT
END GR TAPER +28.40 54.00' LT.
BEGIN GR TAPER +56.00 56.00' LT.
MGS BTA, TYPE 1 +78.40 54.00' LT.
MGS BTA, TYPE 2 +76.10 78.92' LT.
END GR TAPER +50.19 54.00' LT.
BEGIN GR TAPER +25.19 56.00' RT.
END PAVEMENT TAPER STA. 11+81.53, 24.00' LT.
BEGIN TYPE B1 END ANCHORAGE +69.96
END TYPE B1 END ANCHORAGE +54.96
BEGIN TYPE B1 END ANCHORAGE +25.54
END TYPE B1 END ANCHORAGE +25.54
BEGIN TYPE B1 END ANCHORAGE +65.00
END TYPE B1 END ANCHORAGE +80.00
BEGIN TYPE B1 (TBR) END ANCHORAGE +10.54
END TYPE C1 END ANCHORAGE +95.00
BEGIN TYPE C1 END ANCHORAGE +85.00
END/BEGIN TYPE C1 END ANCHORAGE +00.00
END TYPE C1 END ANCHORAGE +15.00
BEGIN CONC. BARRIER, TYPE D +65.00
END CONC. BARRIER, TYPE D +68.59
END CONC. BARRIER, TYPE D +25.00
BEGIN CONC. BARRIER, TYPE D +99.59
PR. CONCRETE BARRIER, TYPE B1
EX. CONCRETE BARRIER
EX. CONCRETE BARRIER (TBR)
PR. CONCRETE BARRIER, TYPE C1
CONC. BARRIER, END ANCHORAGE REINF. TYPE D
BEGIN CONC. BARRIER, TYPE D
END CONC. BARRIER, TYPE D
BEGIN CONC. BARRIER, TYPE D
LENGTH OF NEED STA. 1059+38.10
LENGTH OF NEED STA. 1064+23.76
LENGTH OF NEED STA. 1064+88.74
LENGTH OF NEED STA. 1065+88.15
LENGTH OF NEED STA. 1068+48.00
LENGTH OF NEED 1070+00.00
AA, MGS TYPE E MASH 2016 +43.93 56.00' LT.
AA, MGS TYPE E MASH 2016 +07.07 56.00' RT.
AA, MGS TYPE E MASH 2016 +28.55 56.00' RT.
AA, MGS TYPE T +61.83 56.00' LT.
AA, MGS TYPE T +22.26 56.00' RT.
GUARDRAIL, TYPE MGS
GUARDRAIL, TYPE MGS WITH LONG POSTS
EX. GUARDRAIL (TBR)
PR. CURB
℄ CONST. RAMP BV
TH #21
TH #22
TH #23
BM268
BM27
MN776
MN772
NEAS SUBSURFACE UTILITY ENGINEERING TEST HOLES TH #21 = EX. WATER HIT ROCK AFTER 2.5 FT. DID NOT LOCATE
NEAS SUBSURFACE UTILITY ENGINEERING TEST HOLES TH #22 = EX. WATER HIT ROCK AFTER 6.7 FT. DID NOT LOCATE
NEAS SUBSURFACE UTILITY ENGINEERING TEST HOLES TH #23 = EX. WATER HIT FLASH FILL AFTER 2.7 FT. DID NOT LOCATE
CROSS REFERENCES
DESCRIPTION | SHEET NO.
RAMP BV PROFILE | P.259
STORM SEWER PROFILES | P.388, P.389
RAMP DETAILS | P.356
NOTE:
1. SEE RAMP PAVEMENT REPLACEMENT NOTE ON SHEET P.49
= PROPOSED PAVEMENT REPLACEMENT TO EXISTING ELEVATIONS
SHOULDER WIDTHS AT BRIDGE PIER BARRIER TRANSITION
LOCATION | WIDTH
A 6.59'
B 5.85'
C 5.33'
D 4.77'
E 5.85'
F 6.59'
G 6.59'
H 5.85'
I 4.86'
J 5.42'
K 5.85'
L 6.59'
HORIZONTAL SCALE IN FEET 0 10 20 40
PLAN - I.R. 680
STA. 1059+00.00 TO STA. 1070+00.00
DESIGN AGENCY
ms consultants, inc.
DESIGNER ACW
REVIEWER CMN 08/29/25
PROJECT ID 121474
SHEET P.222
TOTAL 655
MAH-680-4.58
Preliminary Plans - For Reference Only

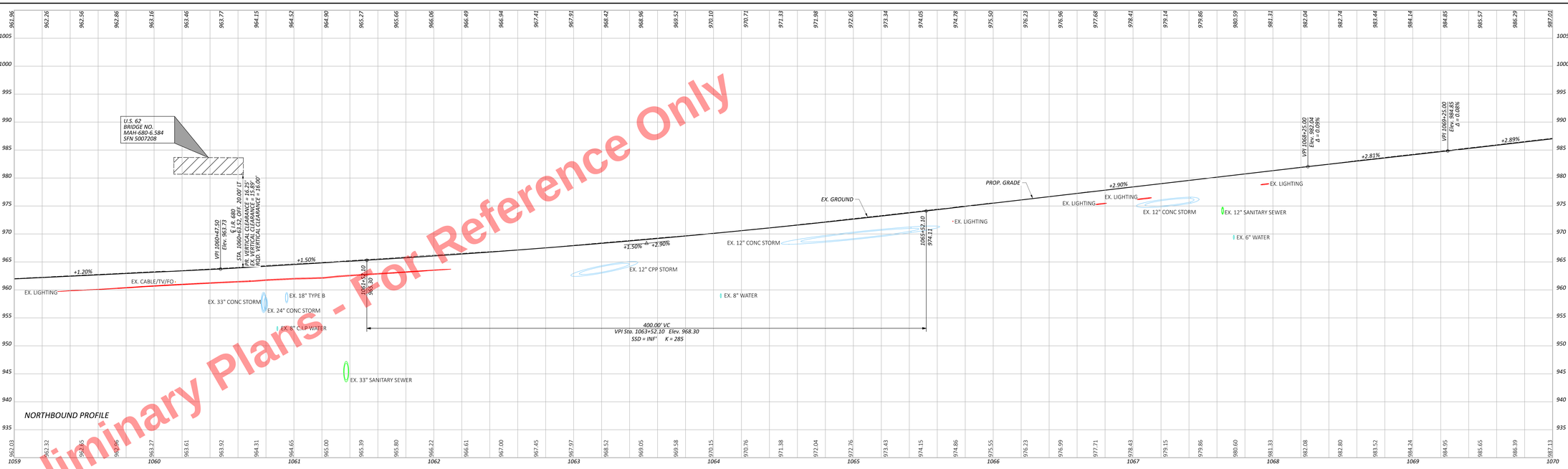

Preliminary Plans - For Reference Only

PROFILE - I.R. 680
STA. 1059+00.00 TO STA. 1070+00.00

MAH-680-4.58

MODEL: 11311_GEO3_NORTHSIDE 66x34.DGN | DATE: 10/7/2025 TIME: 1:38:25 PM | USER: JDOCKERY | PLOT SCALE: 1.0000 '= 1.0000' | PLOTTED BY: JDOCKERY
M:\Projects\Active\Mahoning\121474_Mahoning Northside Interchange\Roadway\Plans\Profile\11311_GEO3_NORTHSIDE 66x34.DGN

DESIGN AGENCY
ms consultants, inc.
DESIGNED MSN
REVIEWED JDK 10/04/24
PROJECT ID 121474
SHEET P.223 TOTAL 471

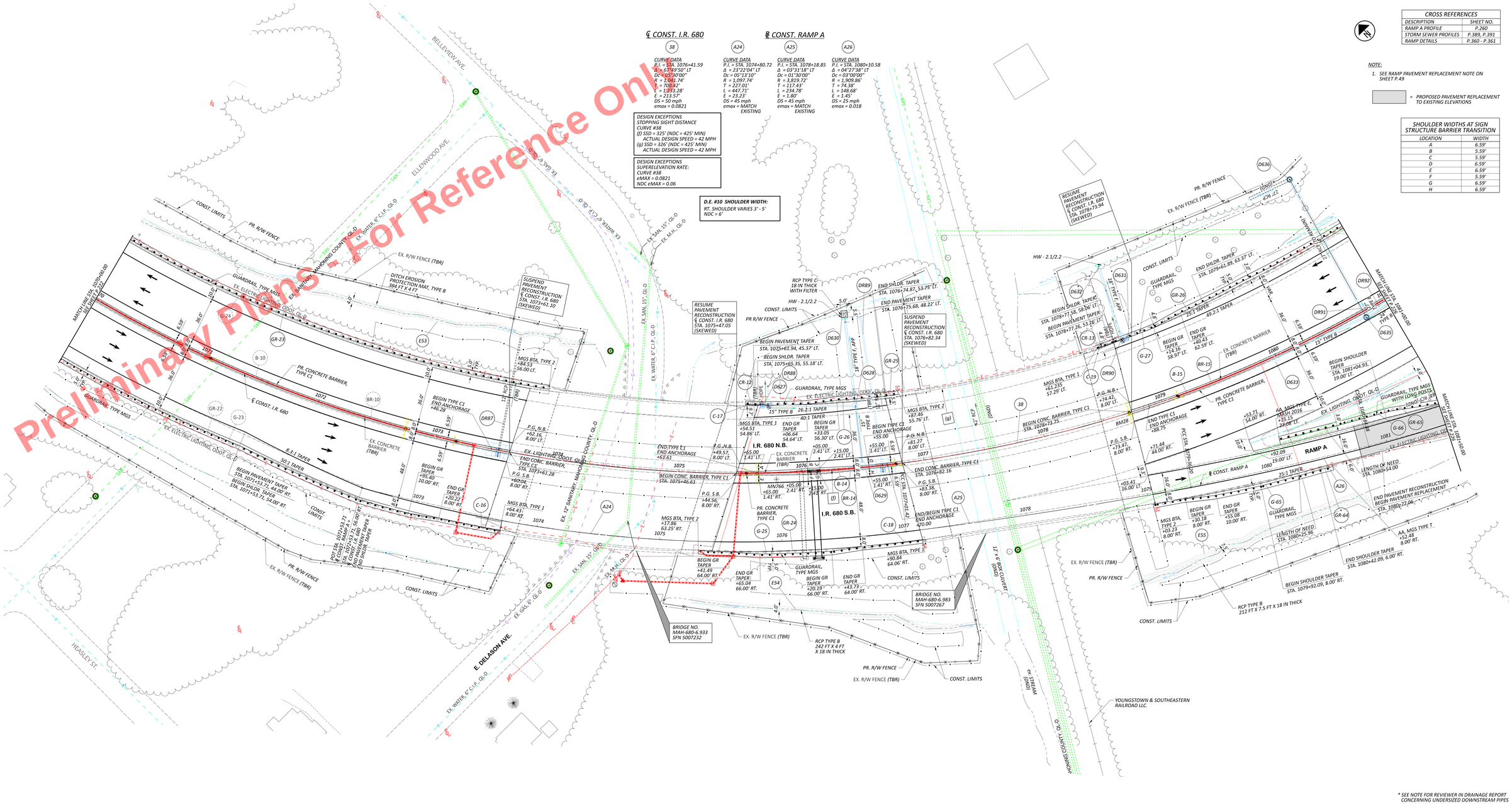
℄ CONST. I.R. 680
℄ CONST. RAMP A
CURVE DATA
P.I. = STA. 1076+41.59
Δ = 67°49'50" LT
Dc = 01°30'00"
R = 3,041.74'
T = 700.42'
L = 1,293.28'
E = 213.57'
DS = 50 mph
emax = 0.0821
CURVE DATA
P.I. = STA. 1074+80.72
Δ = 23°22'04" LT
Dc = 05°13'10"
R = 1,097.74'
T = 227.01'
L = 447.71'
E = 23.23'
DS = 45 mph
emax = MATCH EXISTING
CURVE DATA
P.I. = STA. 1078+18.85
Δ = 03°31'18" LT
Dc = 01°30'00"
R = 3,819.72'
T = 117.43'
L = 234.78'
E = 1.80'
DS = 45 mph
emax = MATCH EXISTING
CURVE DATA
P.I. = STA. 1080+10.58
Δ = 04°27'38" LT
Dc = 03°00'00"
R = 1,909.86'
T = 74.38'
L = 148.68'
E = 1.45'
DS = 25 mph
emax = 0.018
DESIGN EXCEPTIONS
STOPPING SIGHT DISTANCE
CURVE #38
(f) SSD = 325' (NDC = 425' MIN)
ACTUAL DESIGN SPEED = 42 MPH
(g) SSD = 326' (NDC = 425' MIN)
ACTUAL DESIGN SPEED = 42 MPH
DESIGN EXCEPTIONS
SUPERELEVATION RATE:
CURVE #38
eMAX = 0.0821
NDC eMAX = 0.06
D.E. #10 SHOULDER WIDTH:
RT. SHOULDER VARIES 3' - 5'
NDC = 6'
CROSS REFERENCES
DESCRIPTION | SHEET NO.
RAMP A PROFILE | P.260
STORM SEWER PROFILES | P.389, P.391
RAMP DETAILS | P.360 - P.361
NOTE:
1. SEE RAMP PAVEMENT REPLACEMENT NOTE ON SHEET P.49
= PROPOSED PAVEMENT REPLACEMENT TO EXISTING ELEVATIONS
SHOULDER WIDTHS AT SIGN STRUCTURE BARRIER TRANSITION
LOCATION | WIDTH
A 6.59'
B 5.59'
C 5.59'
D 6.59'
E 6.59'
F 5.59'
G 6.59'
H 6.59'
HORIZONTAL SCALE IN FEET
0 10 20 40
PLAN - I.R. 680
STA. 1070+00.00 TO STA. 1081+00.00
Preliminary Plans - For Reference Only
MAH-680-4.58
DESIGN AGENCY
ms consultants, inc.
DESIGNED ACW
REVIEWED CMN 08/29/25
PROJECT ID 121474
SHEET P.224 TOTAL 655
* SEE NOTE FOR REVIEWER IN DRAINAGE REPORT CONCERNING UNDERSIZED DOWNSTREAM PIPES

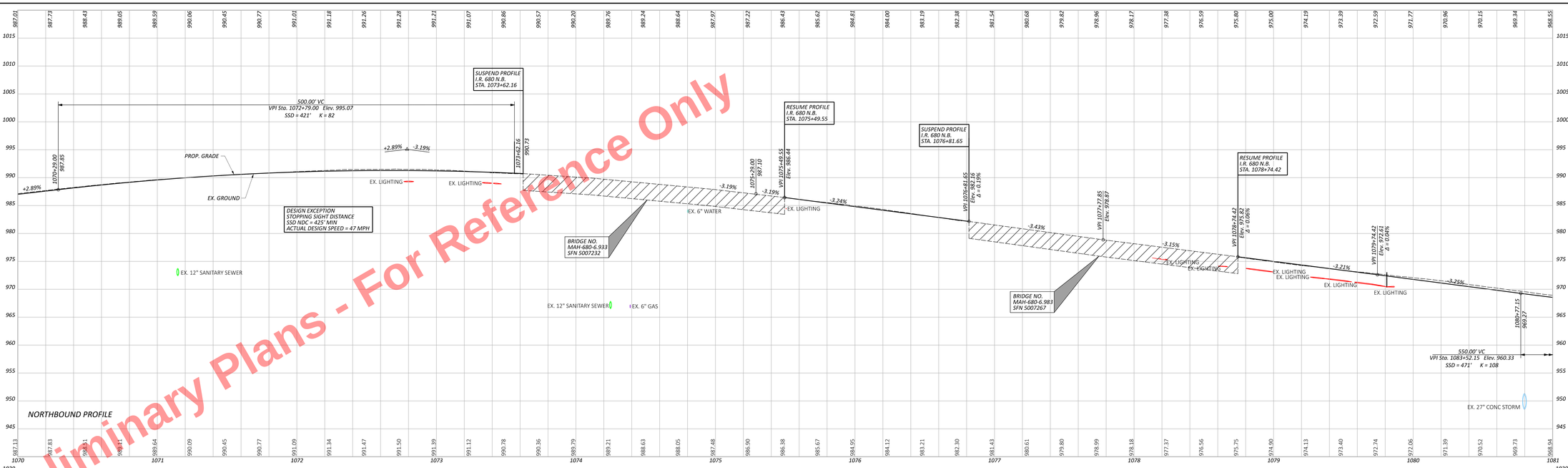

Preliminary Plans - For Reference Only

PROFILE - I.R. 680
STA. 1070+00.00 TO STA. 1081+00.00

MAH-680-4.58

MODEL: 11311_GREEN_AVENUE6 64x24.DWG | DATE: 10/1/2025 TIME: 1:39:33 PM PETERS CHRISTOPHER | Effective Users: DesignStation-Users.com WORKSPACE: CHRISTOPHER WORKSET: 121474 PRODUCT: OpenRoadsDesigner 24.00.00.205
ACTIVE DGN: Plans\Alignments\MAH-680-4.58.dgn

DESIGN AGENCY
ms consultants, inc.
DESIGNER: MSN
REVIEWER: CMN 08/29/25
PROJECT #: 121474
SHEET: P.225 TOTAL: 655

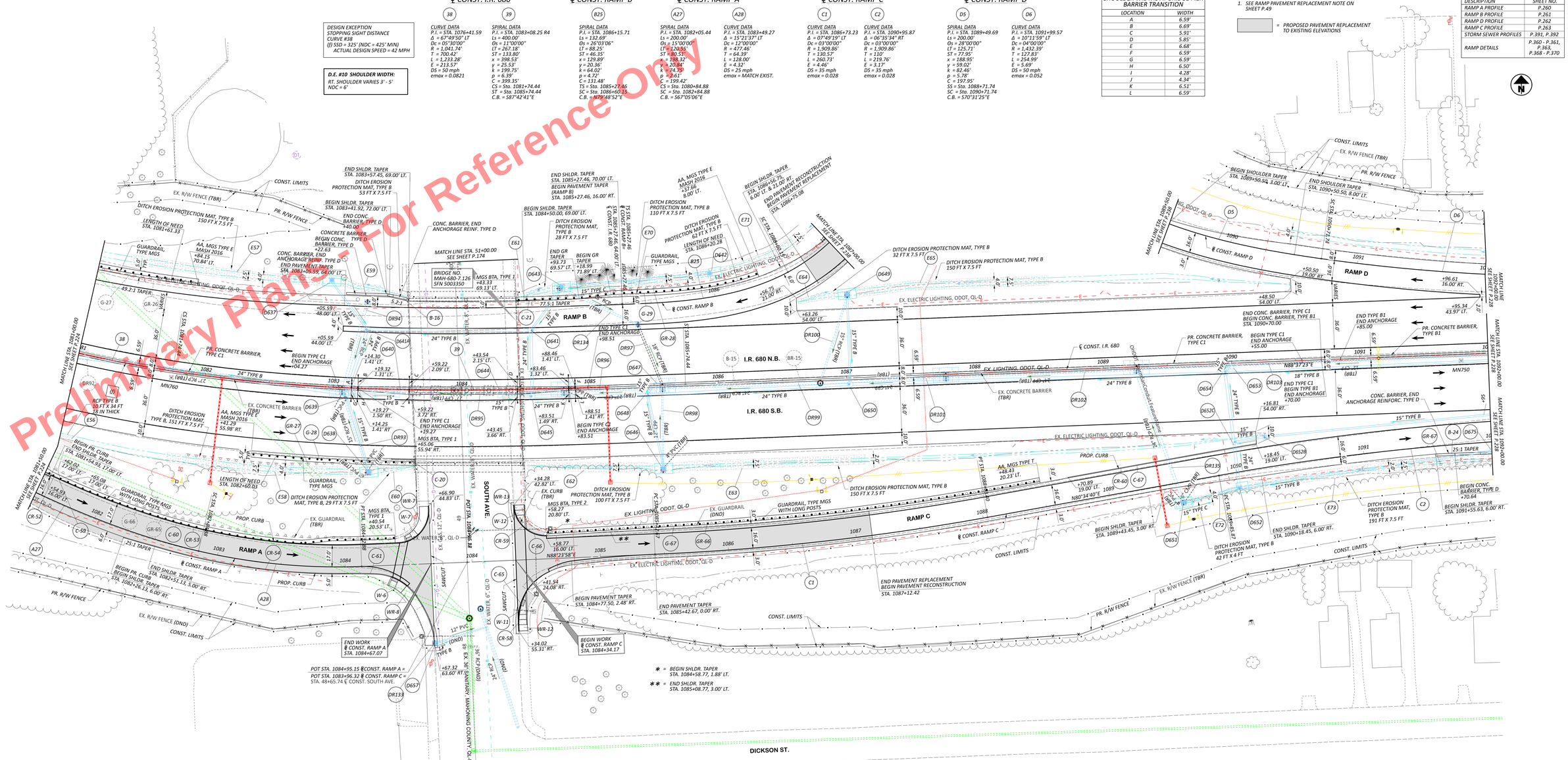
℄ CONST. I.R. 680
℄ CONST. RAMP B
℄ CONST. RAMP A
℄ CONST. RAMP C
℄ CONST. RAMP D
DESIGN EXCEPTION
STOPPING SIGHT DISTANCE
CURVE #38
(I) SSD = 325' (NDC = 425' MIN)
ACTUAL DESIGN SPEED = 42 MPH
D.E. #10 SHOULDER WIDTH:
RT. SHOULDER VARIES 3' - 5'
NDC = 6'
CURVE DATA
P.I. = STA. 1076+41.59
Δ = 67°49'50" LT
Dc = 05°30'00"
R = 1,041.74'
T = 700.42'
L = 1,233.28'
E = 213.57'
DS = 50 mph
emax = 0.0821
SPIRAL DATA
P.I. = STA. 1083+08.25 R4
Ls = 400.00'
Θs = 11°00'00"
LT = 267.18'
ST = 133.80'
x = 398.53'
y = 25.53'
k = 199.75'
p = 6.39'
C = 399.35'
CS = Sta. 1081+74.44
ST = Sta. 1085+74.44
C.B. = 58°42'41"E
SPIRAL DATA
P.I. = STA. 1086+15.71
Ls = 132.69'
Θs = 26°03'06"
LT = 88.25'
ST = 46.35'
x = 129.89'
y = 20.36'
k = 64.02'
p = 4.72'
C = 131.48'
TS = Sta. 1085+27.46
SC = Sta. 1086+60.15
C.B. = 40°48'52"E
SPIRAL DATA
P.I. = STA. 1082+05.44
Ls = 200.00'
Θs = 15°00'00"
LT = 120.55'
ST = 80.51'
x = 198.32'
y = 20.84'
k = 74.75'
p = 2.61'
C = 199.42'
CS = Sta. 1080+84.88
SC = Sta. 1082+84.88
C.B. = 56°05'06"E
CURVE DATA
P.I. = STA. 1083+49.27
Δ = 15°21'37" LT
Dc = 12°00'00"
R = 477.46'
T = 64.39'
L = 128.00'
E = 4.32'
DS = 25 mph
emax = MATCH EXIST.
CURVE DATA
P.I. = STA. 1086+73.23
Δ = 07°49'19" LT
Dc = 03°00'00"
R = 1,909.86'
T = 130.57'
L = 260.73'
E = 4.46'
DS = 35 mph
emax = 0.028
CURVE DATA
P.I. = STA. 1090+95.87
Δ = 06°35'34" RT
Dc = 03°00'00"
R = 1,909.86'
T = 110'
L = 219.76'
E = 3.17'
DS = 35 mph
emax = 0.028
SPIRAL DATA
P.I. = STA. 1089+49.69
Ls = 200.00'
Θs = 28°00'00"
LT = 125.71'
ST = 77.95'
x = 188.95'
y = 59.02'
k = 82.46'
p = 5.78'
C = 197.95'
SS = Sta. 1088+71.74
SC = Sta. 1090+71.74
C.B. = 570°31'25"E
CURVE DATA
P.I. = STA. 1091+99.57
Δ = 10°11'59" LT
Dc = 04°00'00"
R = 1,432.39'
T = 127.83'
L = 254.99'
E = 5.69'
DS = 50 mph
emax = 0.052
SHOULDER WIDTHS AT BRIDGE PIER BARRIER TRANSITION
LOCATION | WIDTH
A 6.59'
B 6.69'
C 5.91'
D 5.85'
E 6.68'
F 6.59'
G 6.59'
H 6.50'
I 4.28'
J 4.34'
K 6.51'
L 6.59'
NOTE:
1. SEE RAMP PAVEMENT REPLACEMENT NOTE ON SHEET P.49
= PROPOSED PAVEMENT REPLACEMENT TO EXISTING ELEVATIONS
CROSS REFERENCES
DESCRIPTION | SHEET NO.
RAMP A PROFILE P.260
RAMP B PROFILE P.261
RAMP D PROFILE P.262
RAMP C PROFILE P.263
STORM SEWER PROFILES P.391, P.392
RAMP DETAILS P.360 - P.361, P.363, P.368 - P.370
HORIZONTAL SCALE IN FEET 0 10 20 40
PLAN - I.R. 680
STA. 1081+00.00 TO STA. 1092+00.00
I.R. 680 N.B.
I.R. 680 S.B.
RAMP A
RAMP B
RAMP C
RAMP D
SOUTH AVE.
DICKSON ST.
BRIDGE NO. MAH-680-7.126 SFN 5003350
POT STA. 1084+95.15 ℄ CONST. RAMP A =
POT STA. 1083+96.32 ℄ CONST. RAMP C =
STA. 48+65.74 ℄ CONST. SOUTH AVE.
POT STA. 47+00.00
* = BEGIN SHLDR. TAPER STA. 1084+58.77, 1.88' LT.
** = END SHLDR. TAPER STA. 1085+08.77, 3.00' LT.
Preliminary Plans - For Reference Only
MAH-680-4.58
DESIGN AGENCY
DESIGNED ACW
REVIEWED CMN 08/29/25
PROJECT ID 121474
SHEET P.226 TOTAL 655

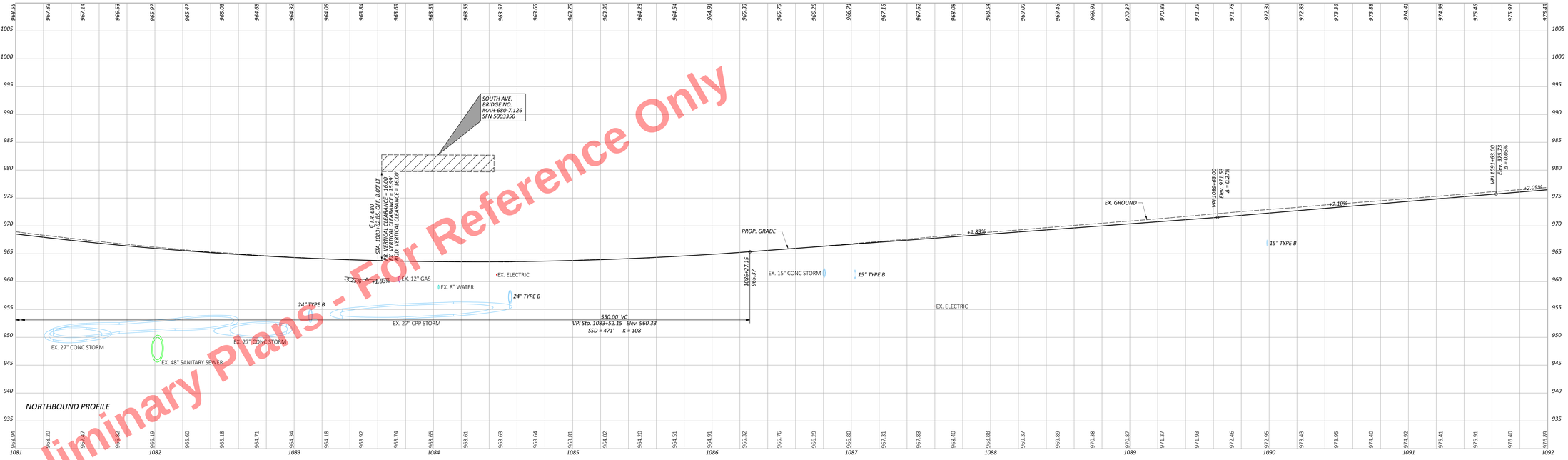

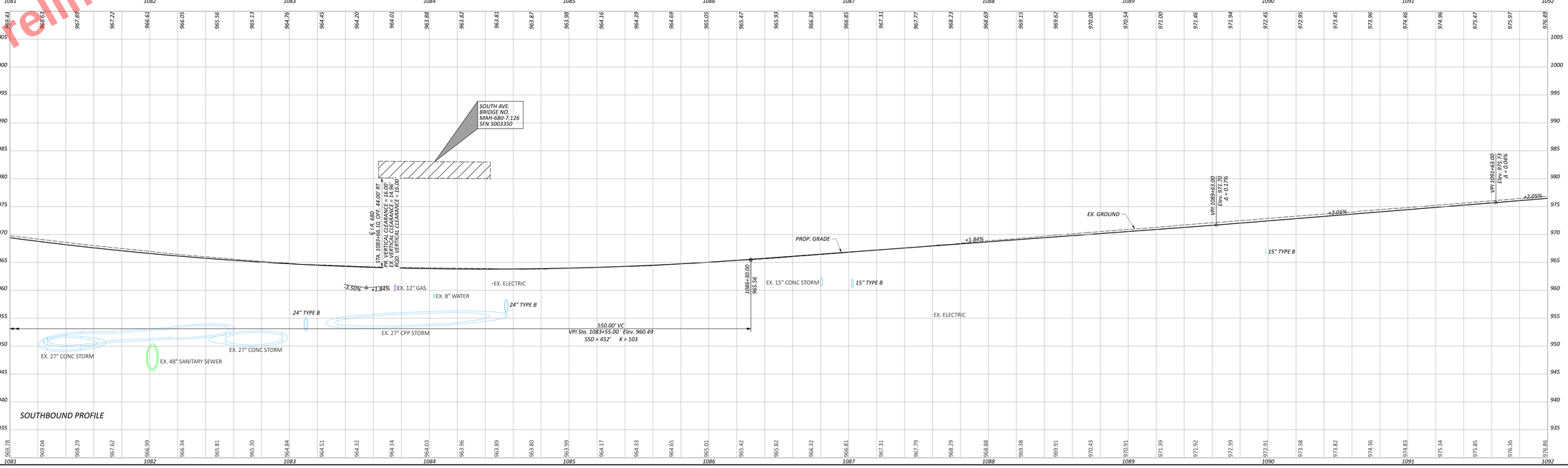

Preliminary Plans - For Reference Only

PROFILE - I.R. 680
STA. 1081+00.00 TO STA. 1092+00.00

DESIGN AGENCY
mn consultants, inc.

DESIGNER: MSN
REVIEWER: JDK 10/04/24
PROJECT NO. 121474
SHEET P.227 TOTAL 471

MAH-680-4.58

MODEL: 11311_GRDS_PAVEMENT_MARKING.dgn DATE: 10/21/2025 TIME: 1:40:00 PM USER: JDOCKTER PSFS: J:\proj PENTRE, DWGS_Effective Date Sheet\mnconsultants.com WORKSPACE: CWDOT01459 WORKSET: 121474 PRODUCT: OpenRoadDesigner 24.00.00.205
ACTIVE PROJECT: J:\proj PENTRE, DWGS_Effective Date Sheet\mnconsultants.com\WORKSPACE: CWDOT01459\WORKSET: 121474\PRODUCT: OpenRoadDesigner 24.00.00.205

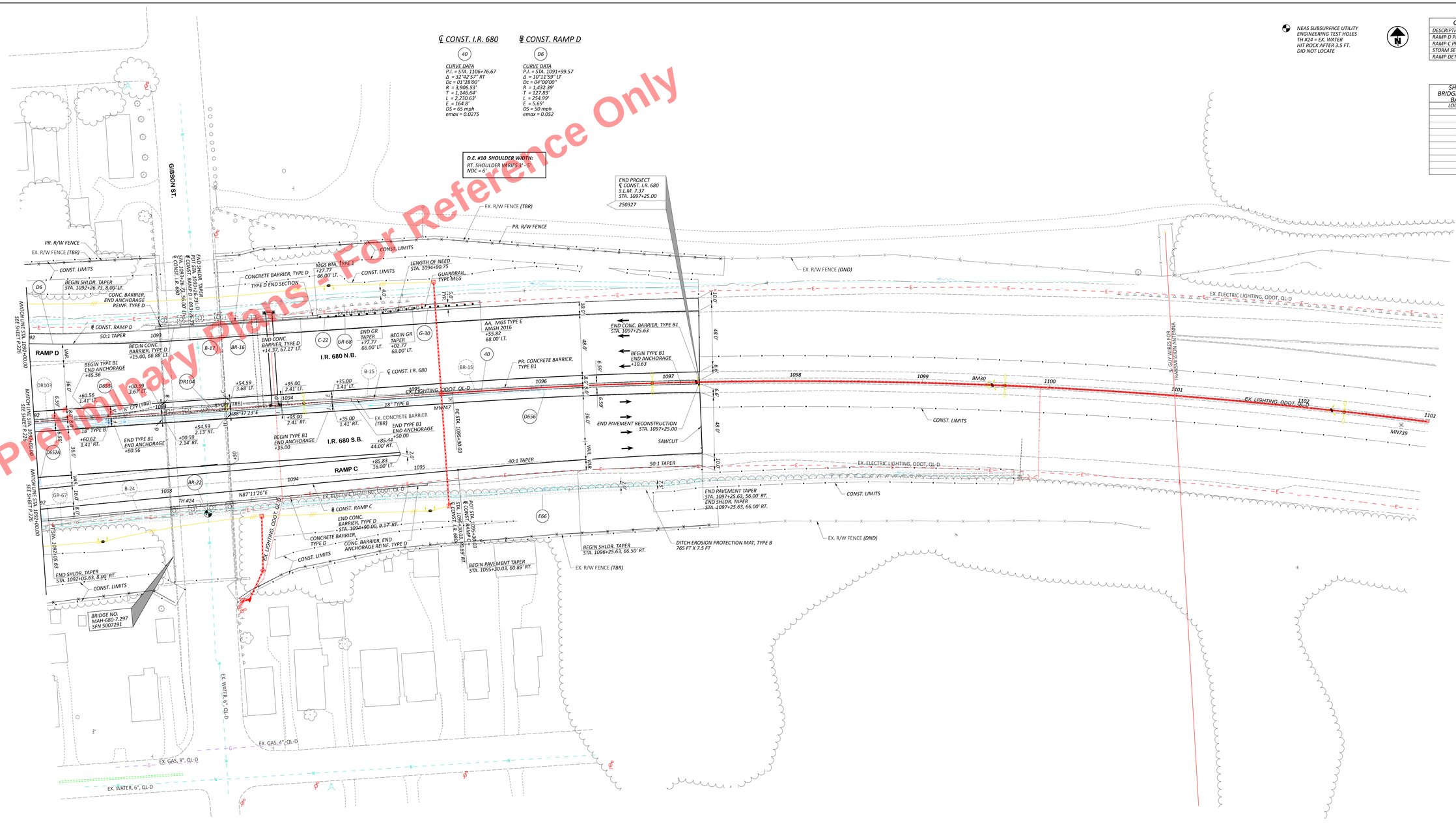

MAH-680-4.58
MODEL: 11321_GPOY_RAMP680 (64).dgn | DATE: 8/21/2025 TIME: 1:40:23 PM PITSNY ONDOT_PDF_F.ssheg PENTEL ONDOT_LTPen.tbl SSER DivaBPmanuscript.sam WORKPACE: ONDOTCAD5 WORKSET: 11147A PRODUCT: OpenRoadDesigner 24.00.00.205
ACCESS: I:\Projects\Mahoning\680\MAH-680-4.58\Roadway\Plans\Sheets\11321_GPOY_RAMP680 (64).dgn

DESIGN AGENCY
ms consultants, inc.
DESIGNER ACW
REVIEWER CMN 08/29/25
PROJECT ID 121474
SHEET P.228 TOTAL 655

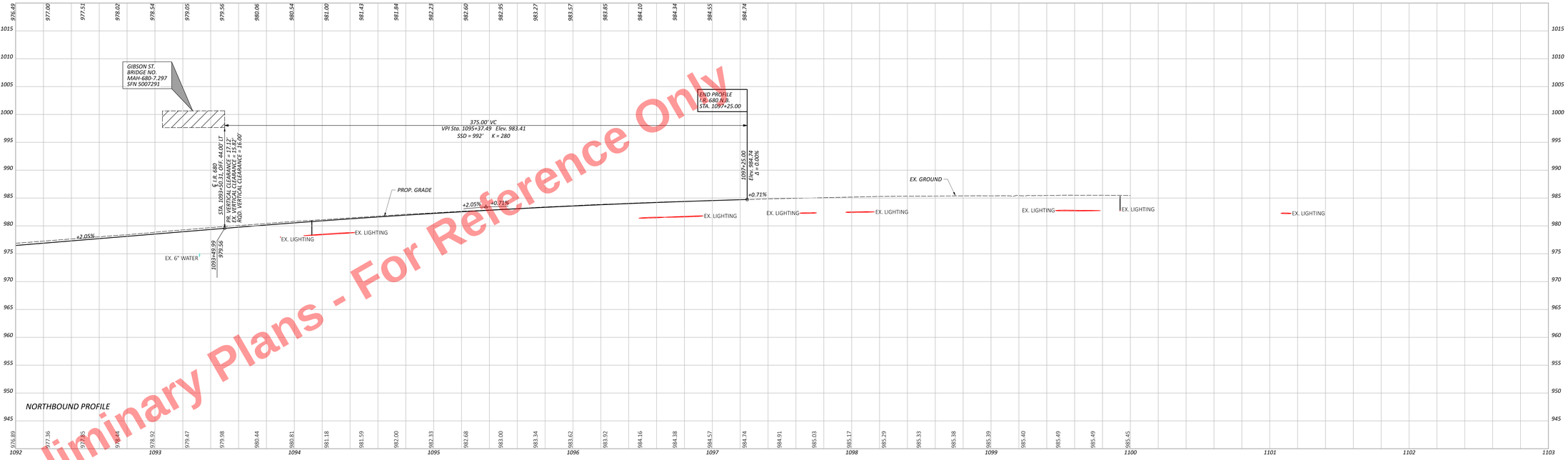

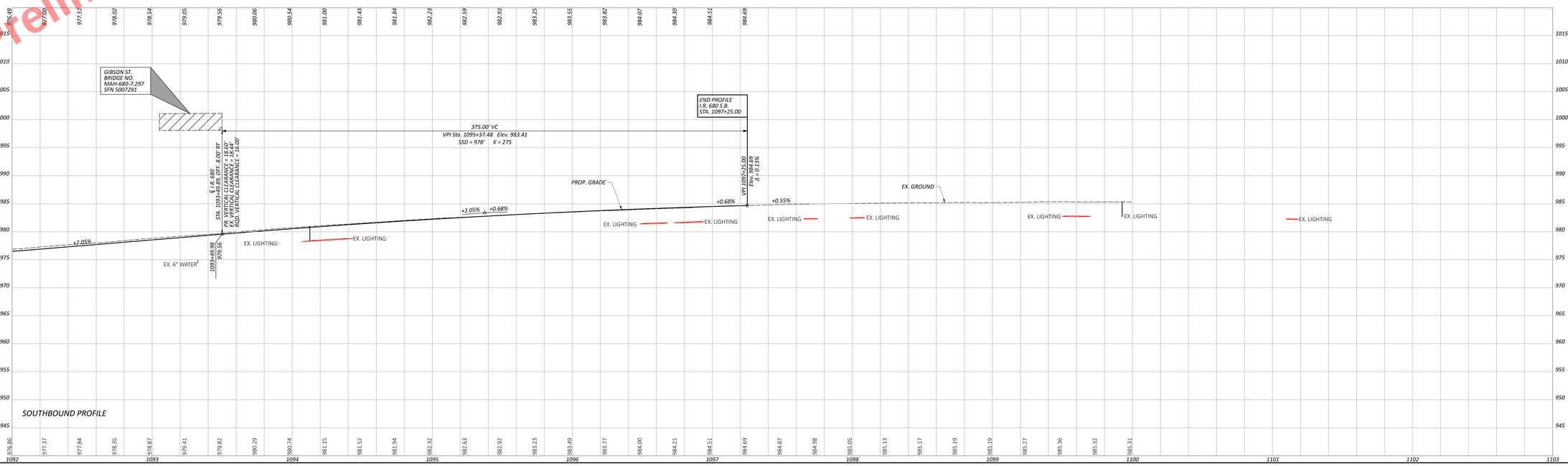

Preliminary Plans - For Reference Only

PROFILE - I.R. 680
STA. 1092+00.00 TO STA. 1103+00.00

MAH-680-4.58

DESIGN AGENCY
mx consultants, inc.
DESIGNER MSN
REVIEWER CMN 08/29/25
PROJECT # 121474
SHEET P.229 TOTAL 655

MODEL: 11311_GIBSON_PAVEMENT_680-4.58.DGN | DATE: 9/17/2025 TIME: 1:40:48 PM | PETERV | DWGNT: C:\Projects\121474\Design\Roadway\Plan and Profile\MAH-680-4.58.dgn
ACTIVE PROJECT: C:\Projects\121474\Design\Roadway\Plan and Profile\121474 Gibson Pavement Preservation.ppk | WORKSET: 121474 PROJECT: OpenRoadDesigner 24.00.00.205

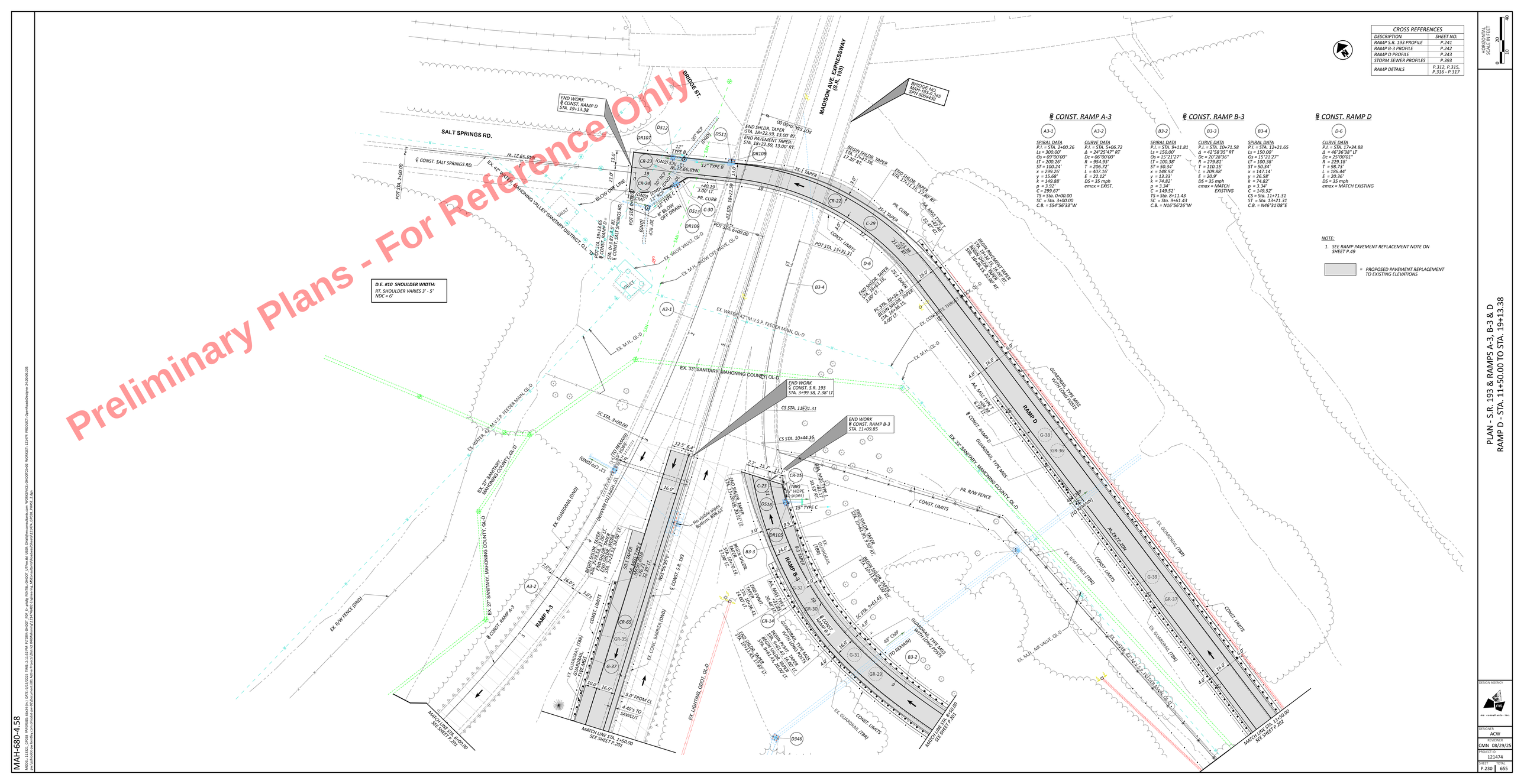

MAH-680-4.58

PLAN - S.R. 193 & RAMPS A-3, B-3 & D
RAMP D - STA. 11+50.00 TO STA. 19+13.38

DESIGN AGENCY
DESIGNED ACW
REVIEWED CMN 08/29/25
PROJECT ID 121474
SHEET P.230 TOTAL 655

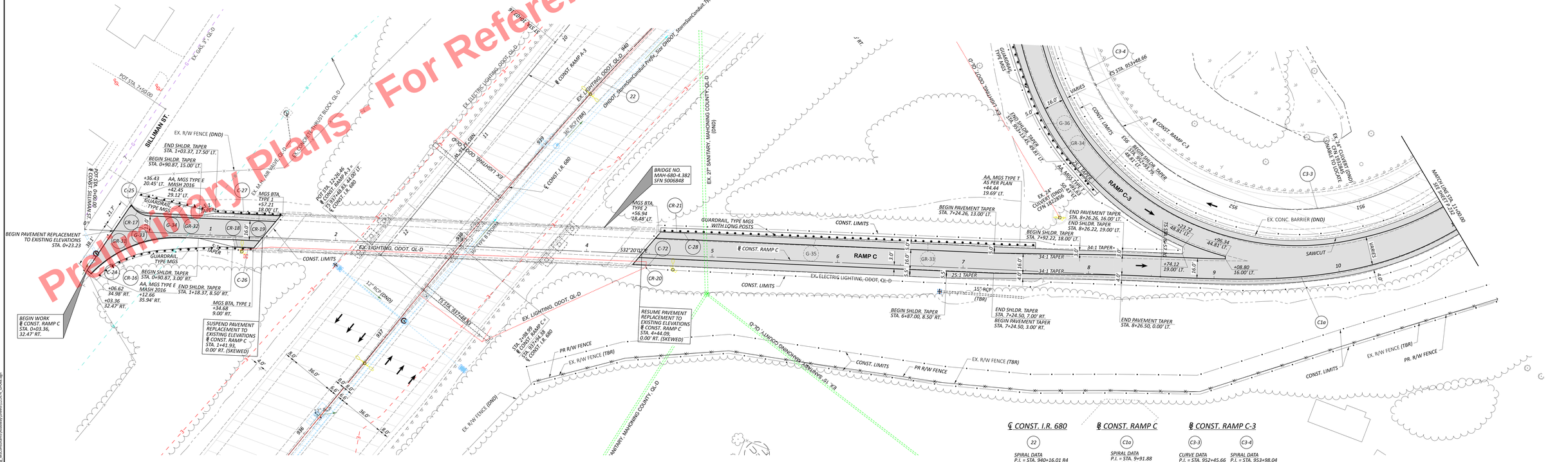
BEGIN PAVEMENT REPLACEMENT TO EXISTING ELEVATIONS STA. 0+23.23
BEGIN WORK ℄ CONST. RAMP C STA. 0+03.36, 32.47' RT.
SUSPEND PAVEMENT REPLACEMENT TO EXISTING ELEVATIONS ℄ CONST. RAMP C STA. 1+41.93, 0.00' RT. (SKEWED)
RESUME PAVEMENT REPLACEMENT TO EXISTING ELEVATIONS ℄ CONST. RAMP C STA. 4+44.09, 0.00' RT. (SKEWED)
SILLIMAN ST.
EX. R/W FENCE (DND)
EX. 6" WATER MAIN
EX. 8" SANITARY
EX. 27" SANITARY, MAHONING COUNTY, QL-D (DND)
EX. ELECTRIC LIGHTING, ODOT, QL-D
EX. LIGHTING, ODOT, QL-D
EX. LIGHTING, ODOT, QL-D
EX. ELECTRIC MANHOLE, QL-D
EX. ELECTRIC MANHOLE BLOCK, QL-D
EX. 12" WATER MAIN
EX. 8" SANITARY
EX. 16" SANITARY, MAHONING COUNTY, QL-D
EX. 16" SANITARY, MAHONING COUNTY, QL-D
EX. R/W FENCE (DND)
EX. R/W FENCE (TBR)
PR R/W FENCE
EX. R/W FENCE (TBR)
PR R/W FENCE
EX. R/W FENCE (TBR)
PR R/W FENCE
CONST. LIMITS
CONST. LIMITS
CONST. LIMITS
CONST. LIMITS
CONST. LIMITS
CONST. LIMITS
EX. LIGHTING, ODOT, QL-D
EX. LIGHTING, ODOT, QL-D
EX. ELECTRIC LIGHTING, ODOT, QL-D
EX. ELECTRIC LIGHTING, ODOT, QL-D
EX. ELECTRIC

Preliminary Plans - For Reference Only

CROSS REFERENCES	
DESCRIPTION	SHEET NO.
RAMP C PROFILE	P.239
RAMP C-3 PROFILE	P.240
RAMP B-3 PROFILE	P.242
RAMP D PROFILE	P.243
I.R. 680 PLAN	P.202
STORM SEWER PROFILES	P.377
RAMP DETAILS	P.309 - P.311

NOTE:

1. SEE RAMP PAVEMENT REPLACEMENT NOTE ON SHEET P.49

= PROPOSED PAVEMENT REPLACEMENT TO EXISTING ELEVATIONS

HORIZONTAL SCALE IN FEET: 0, 10, 20, 40

PLAN & PROFILE - RAMP C AT SILLIMAN ST.
STA. 11+00.00 TO STA. 20+58.30

℄ CONST. RAMP C-3

C-3

CURVE DATA
P.I. = STA. 952+45.66
Δ = 214°56'36" RT
Dc = 31°57'12"
R = 179.31'
T = 569.68'
L = 672.68'
E = 417.92'
DS = 25 mph
emax = MATCH EXISTING

C1b

SPIRAL DATA
P.I. = STA. 11+25.10
Ls = 200.00'
Θs = 23°58'20"
LT = 134.58'
ST = 67.80'
x = 196.53'
y = 27.55'
k = 99.42'
p = 6.93'
C = 198.45'
SS = Sta. 10+57.30
ST = Sta. 12+57.30
C.B. = S72°18'04"E

℄ CONST. RAMP C

C2a

SPIRAL DATA
P.I. = STA. 15+20.96
Ls = 200.00'
Θs = 12°00'00"
LT = 133.64'
ST = 66.95'
x = 199.12'
y = 13.92'
k = 99.85'
p = 3.49'
C = 199.61'
TS = Sta. 13+87.32
SC = Sta. 15+87.32
C.B. = S76°16'53"E

C3

CURVE DATA
P.I. = STA. 16+92.14
Δ = 24°45'48" RT
Dc = 12°00'00"
R = 477.46'
T = 104.82'
L = 206.36'
E = 11.37'
DS = 35 mph
emax = 0.0570

C4

SPIRAL DATA
P.I. = STA. 18+60.63
Ls = 200.00'
Θs = 12°00'00"
LT = 133.64'
ST = 66.95'
x = 199.12'
y = 13.92'
k = 99.85'
p = 3.49'
C = 199.61'
CS = Sta. 17+93.68
ST = Sta. 19+93.68
C.B. = S35°30'54"E

℄ CONST. RAMP D

D-2

SPIRAL DATA
P.I. = STA. 3+20.04
Ls = 150.00'
Θs = 05°15'00"
LT = 100.04'
ST = 50.04'
x = 149.87'
y = 4.58'
k = 74.98'
p = 1.15'
C = 149.94'
CS = Sta. 2+70.00
ST = Sta. 4+20.00
C.B. = N29°02'54"W

D-3

SPIRAL DATA
P.I. = STA. 6+66.92
Ls = 150.00'
Θs = 05°15'00"
LT = 100.04'
ST = 50.04'
x = 149.87'
y = 4.58'
k = 74.98'
p = 1.15'
C = 149.94'
TS = Sta. 5+66.88
SC = Sta. 7+16.94
C.B. = N25°32'55"W

℄ CONST. RAMP B-3

B3-1

CURVE DATA
P.I. = STA. 2+58.30
Δ = 08°39'37" RT
Dc = 02°44'26"
R = 2,090.60'
T = 158.3'
L = 316'
E = 5.98'
DS = 50 mph
emax = 0.0420

℄ CONST. I.R. 680

25

SPIRAL DATA
P.I. = STA. 957+40.11 R4
Ls = 400.00'
Θs = 11°00'00"
LT = 267.18'
ST = 133.80'
x = 398.53'
y = 25.53'
k = 199.75'
p = 6.39'
C = 399.35'
TS = Sta. 954+72.92
SC = Sta. 958+72.92
C.B. = S34°22'57"E

MODEL: 11321_GRADE_RAMPC&D.dgn | DATE: 9/11/2025 TIME: 2:12:27 PM | PITSRV: ONDOT_PSF_F.xdrig PENTBL: ONDOT_LTPen.tbl USER: DholdBrown@dot.ohio.gov WORKPACT: ONDOTCVDS WORKSET: 121474 PRODUCT: OpenRoadDesigner 24.00.00.205
ALL DESIGN FILES REFERENCED IN THIS PLOT ARE LOCATED IN THE FOLLOWING DIRECTORY: C:\Users\DholdBrown\Documents\CADD\Projects\121474\Design\

DESIGN AGENCY: ms consultants, inc.
DESIGNER: ACW
REVIEWER: CMN 08/29/25
PROJECT ID: 121474
SHEET: P.232 TOTAL: 655

Preliminary Plans - For Reference Only

CROSS REFERENCES	
DESCRIPTION	SHEET NO.
RAMP E PLAN	P.202
STORM SEWER PROFILES	P.378

HORIZONTAL SCALE IN FEET: 0, 10, 20, 40

= EXISTING PAVEMENT REMOVAL

* BALLOON IS FOR REFERENCE ONLY TO ASSOCIATE THE STRUCTURE IN DRAINAGE CALCULATIONS AND DRAINAGE PROFILES

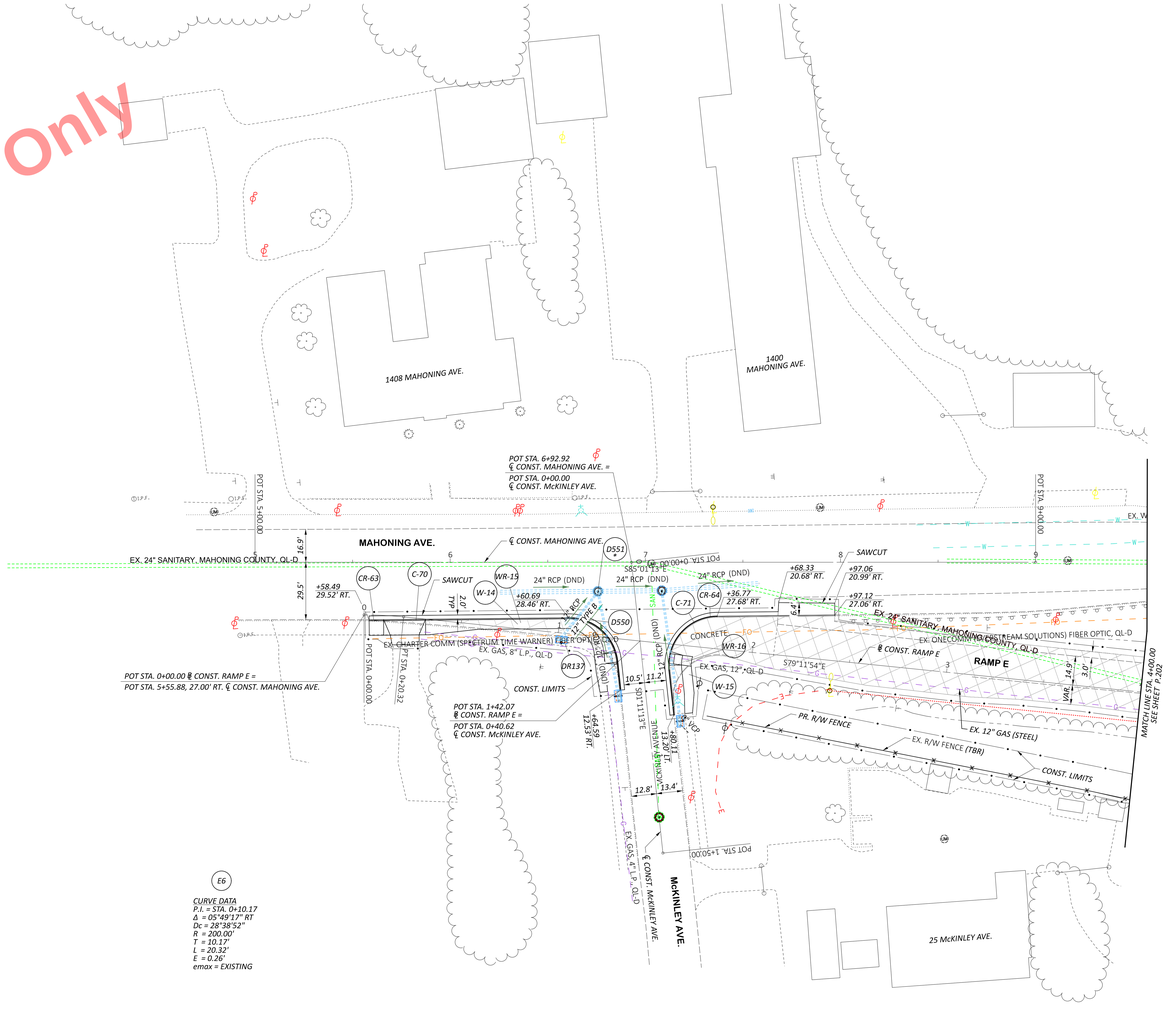

PLAN - RAMP E AT MAHONING AVE
STA. 0+00.00 TO STA. 4+00.00

DESIGN AGENCY: mk consultants, inc.

DESIGNER: DWH
REVIEWER: CMN 08/29/25
PROJECT ID: 121474
SHEET: P.233 TOTAL: 655

MAH-680-4.58

MODEL: 11X17L | DATE: 9/11/2025 TIME: 2:13:39 PM | USER: DHall@mksonline.com | WORKSPACE: CHOOSTCAD9 WORKSET: 121474 PRODUCT: OpenRoadDesigner 24.00.00.205
FILE: P:\Projects\Mahoning Co\MAH-680-4.58\Roadway\Plans\Sheets\121474_MAH680_PLAN_RAMP E AT MAHONING AVE STA 0+00 TO STA 4+00.dgn | DATE: 9/11/2025 TIME: 2:13:39 PM | PITSRV: CHOOT_PSF | xConfig: PENTBL: CHOOT_LTPen.tbl SSER: DHall@mksonline.com

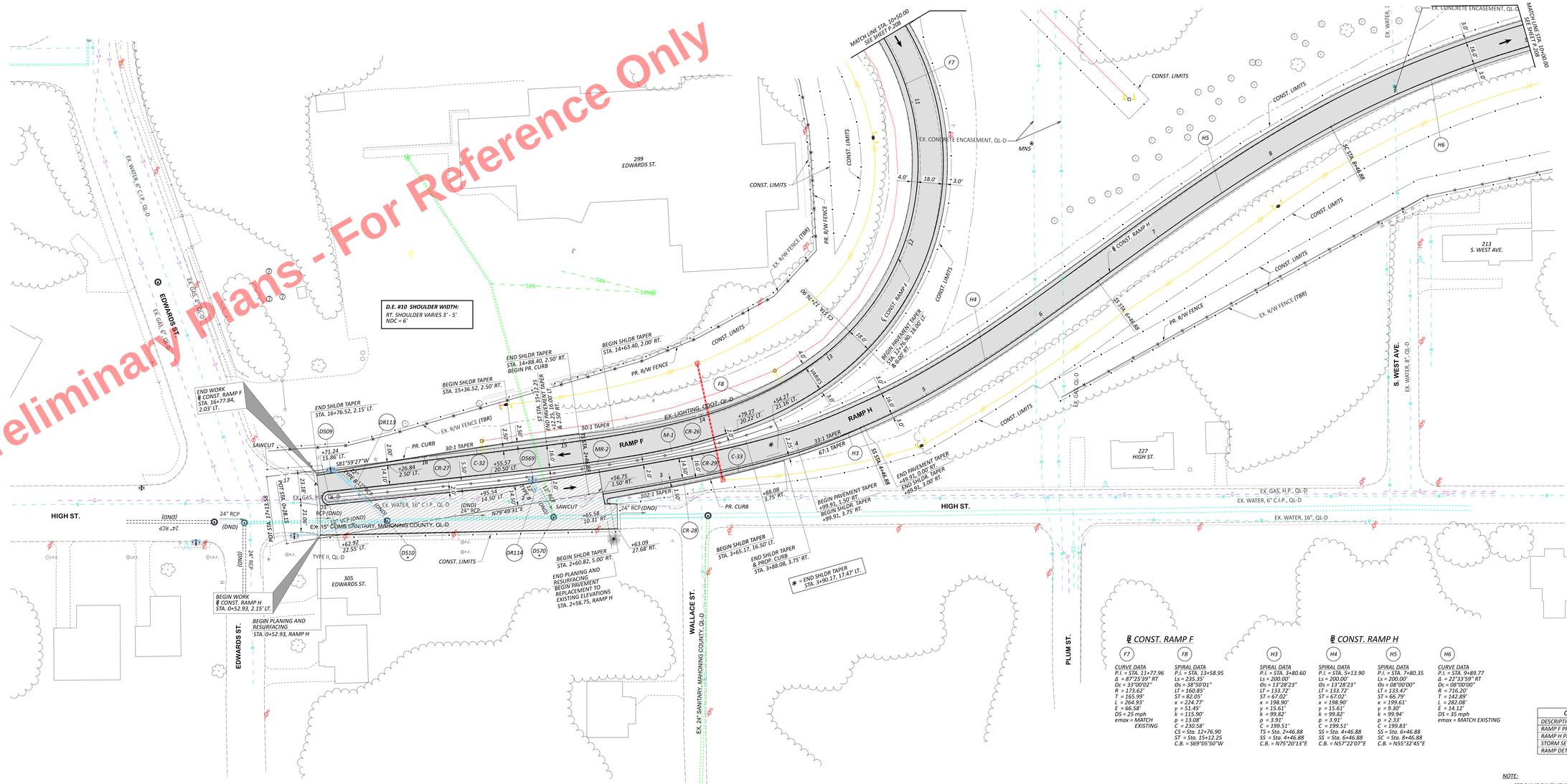
Preliminary Plans - For Reference Only
EDWARDS ST.
HIGH ST.
WALLACE ST.
PLUM ST.
S. WEST AVE.
RAMP F
RAMP H
℄ CONST. RAMP F
℄ CONST. RAMP H
MATCH LINE STA. 10+50.00 SEE SHEET P.206
MATCH LINE STA. 10+00.00 SEE SHEET P.206
D.E. #10 SHOULDER WIDTH: RT. SHOULDER VARIES 3' - 5' NDC = 6'
END WORK ℄ CONST. RAMP F STA. 16+77.84, 2.03' LT.
BEGIN WORK ℄ CONST. RAMP H STA. 0+52.93, 2.15' LT.
BEGIN PLANING AND RESURFACING STA. 0+52.93, RAMP H
END PLANING AND RESURFACING BEGIN PAVEMENT REPLACEMENT TO EXISTING ELEVATIONS STA. 2+56.75, RAMP H
* = END SHLDR TAPER STA. 3+90.17, 17.47' LT.
EX. 15" COMB SANITARY, MAHONING COUNTY, QL-D
EX. 24" SANITARY, MAHONING COUNTY, QL-D
EX. CONCRETE ENCASEMENT, QL-D
EX. WATER, 6" C.I.P., QL-D
EX. WATER, 16" C.I.P., QL-D
EX. GAS, H.P., QL-D
EX. GAS, 6" QL-D
EX. WATER, 8" QL-D
EX. R/W FENCE (TBR)
PR. R/W FENCE
PR. CURB
CONST. LIMITS
SAWCUT
TYPE II, QL-D
299 EDWARDS ST.
305 EDWARDS ST.
213 S. WEST AVE.
227 HIGH ST.
℄ CONST. RAMP F
CURVE DATA P.I. = STA. 11+77.96 Δ = 87°25'39" RT Dc = 33°00'02" R = 173.62' T = 165.99' L = 264.93' E = 66.58' DS = 25 mph emax = MATCH EXISTING
SPIRAL DATA P.I. = STA. 13+58.95 Ls = 235.35' Θs = 38°50'01" LT = 160.85' ST = 82.05' x = 224.77' y = 51.45' k = 115.90' p = 13.08' C = 230.58' CS = Sta. 12+76.90 ST = Sta. 15+12.25 C.B. = S69°05'50"W
℄ CONST. RAMP H
SPIRAL DATA P.I. = STA. 3+80.60 Ls = 200.00' Θs = 13°28'23" LT = 133.72' ST = 67.02' x = 198.90' y = 15.61' k = 99.82' p = 3.91' C = 199.51' TS = Sta. 2+46.88 SS = Sta. 4+46.88 C.B. = N75°20'13"E
SPIRAL DATA P.I. = STA. 5+13.90 Ls = 200.00' Θs = 13°28'23" LT = 133.72' ST = 67.02' x = 198.90' y = 15.61' k = 99.82' p = 3.91' C = 199.51' SS = Sta. 4+46.88 CS = Sta. 6+46.88 C.B. = N57°22'07"E
SPIRAL DATA P.I. = STA. 7+80.35 Ls = 200.00' Θs = 08°00'00" LT = 133.47' ST = 66.79' x = 199.61' y = 9.30' k = 99.94' p = 2.33' C = 199.83' SS = Sta. 6+46.88 SC = Sta. 8+46.88 C.B. = N55°32'45"E
CURVE DATA P.I. = STA. 9+89.77 Δ = 22°33'59" RT Dc = 08°00'00" R = 716.20' T = 142.89' L = 282.08' E = 14.12' DS = 35 mph emax = MATCH EXISTING
CROSS REFERENCES
DESCRIPTION | SHEET NO.
RAMP F PROFILE | P.246
RAMP H PROFILE | P.247
STORM SEWER PROFILES | P.393
RAMP DETAILS | P.325 - P.328
NOTE:
1. SEE RAMP PAVEMENT REPLACEMENT NOTE ON SHEET P.49
* BALLOON IS FOR REFERENCE ONLY TO ASSOCIATE THE STRUCTURE IN DRAINAGE CALCULATIONS AND DRAINAGE PROFILES
= PROPOSED PAVEMENT PLANING AND RESURFACING
= PROPOSED PAVEMENT REPLACEMENT TO EXISTING ELEVATIONS
HORIZONTAL SCALE IN FEET 0 10 20 40
PLAN - RAMPS F & H AT HIGH & EDWARDS ST.
RAMP H - STA. 2+56.74 TO STA. 10+00.00
DESIGN AGENCY
mk consultants, inc.
DESIGNED ACW
REVIEWED CMN 08/29/25
PROJECT ID 121474
SHEET P.234 TOTAL 655
MAH-680-4.58

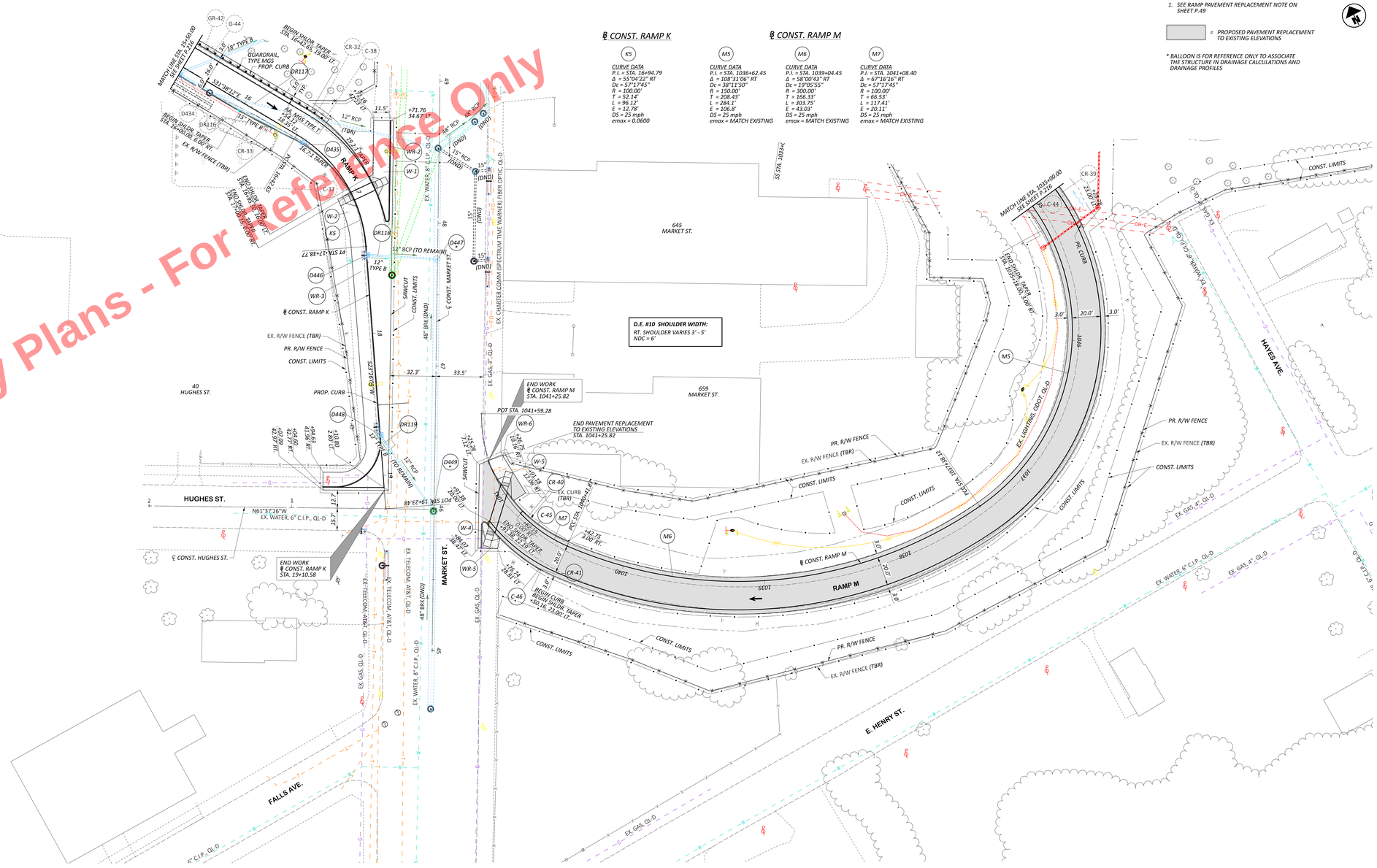
℄ CONST. RAMP K
℄ CONST. RAMP M
K5
M5
M6
M7
CURVE DATA
P.I. = STA. 16+94.79
Δ = 55°04'22" RT
Dc = 57°17'45"
R = 100.00'
T = 52.14'
L = 96.12'
E = 12.78'
DS = 25 mph
emax = 0.0600
CURVE DATA
P.I. = STA. 1036+62.45
Δ = 108°31'06" RT
Dc = 38°11'50"
R = 150.00'
T = 208.43'
L = 284.1'
E = 106.8'
DS = 25 mph
emax = MATCH EXISTING
CURVE DATA
P.I. = STA. 1039+04.45
Δ = 58°00'43" RT
Dc = 19°05'55"
R = 300.00'
T = 166.33'
L = 303.75'
E = 43.03'
DS = 25 mph
emax = MATCH EXISTING
CURVE DATA
P.I. = STA. 1041+08.40
Δ = 67°16'16" RT
Dc = 57°17'45"
R = 100.00'
T = 66.53'
L = 117.41'
E = 20.11'
DS = 25 mph
emax = MATCH EXISTING
D.E. #10 SHOULDER WIDTH:
RT. SHOULDER VARIES 3' - 5'
NDC = 6'
END WORK ℄ CONST. RAMP M STA. 1041+25.82
END PAVEMENT REPLACEMENT TO EXISTING ELEVATIONS STA. 1041+25.82
END WORK ℄ CONST. RAMP K STA. 19+10.58
RAMP K
RAMP M
HUGHES ST.
MARKET ST.
FALLS AVE.
HAYES AVE.
E. HENRY ST.
40 HUGHES ST.
645 MARKET ST.
659 MARKET ST.
EX. CHARTER COMM (SPECTRUM TIME WARNER) FIBER OPTIC, QL-D
EX. GAS, 3", QL-D
EX. WATER, 8" C.I.P., QL-D
EX. TELECOM, AT&T, QL-D
EX. GAS, 4", QL-D
EX. WATER, 6" C.I.P., QL-D
EX. R/W FENCE (TBR)
PR. R/W FENCE
PROP. CURB
CONST. LIMITS
SAWCUT
48" BRK (DND)
EX. LIGHTING, QDOT, QL-D
MATCH LINE STA. 15+00.00 SEE SHEET P-216
MATCH LINE STA. 1035+00.00 SEE SHEET P-215
GUARDRAIL TYPE MGS PROP. CURB
BEGIN SHLDR. TAPER STA. 16+47.05, 12.00' LT.
END SHLDR. TAPER STA. 17+00.00, 6.00' RT.
BEGIN SHLDR. TAPER STA. 19+00.00, 6.00' RT.
END SHLDR. TAPER STA. 19+25.00, 12.00' LT.
BEGIN TURB. REGEN. SHLDR. TAPER STA. 1040+10.23, 20.00' LT.
END SHLDR. TAPER STA. 1039+25.00, 12.00' RT.
END SHLDR. TAPER STA. 1039+25.00, 6.00' RT.
BEGIN TURB. REGEN. SHLDR. TAPER STA. 1040+10.23, 20.00' LT.
POT STA. 1041+59.28
POT STA. 1040+21.57
POT STA. 19+23.48
N61°37'26"W
EX. WATER, 6" C.I.P., QL-D
S31°38'12"E
S5 STA. 1033+00
S5 STA. 1038+00
S5 STA. 1043+00
S5 STA. 1048+00
S5 STA. 1053+00
S5 STA. 1058+00
S5 STA. 1063+00
S5 STA. 1068+00
S5 STA. 1073+00
S5 STA. 1078+00
S5 STA. 1083+00
S5 STA. 1088+00
S5 STA. 1093+00
S5 STA.

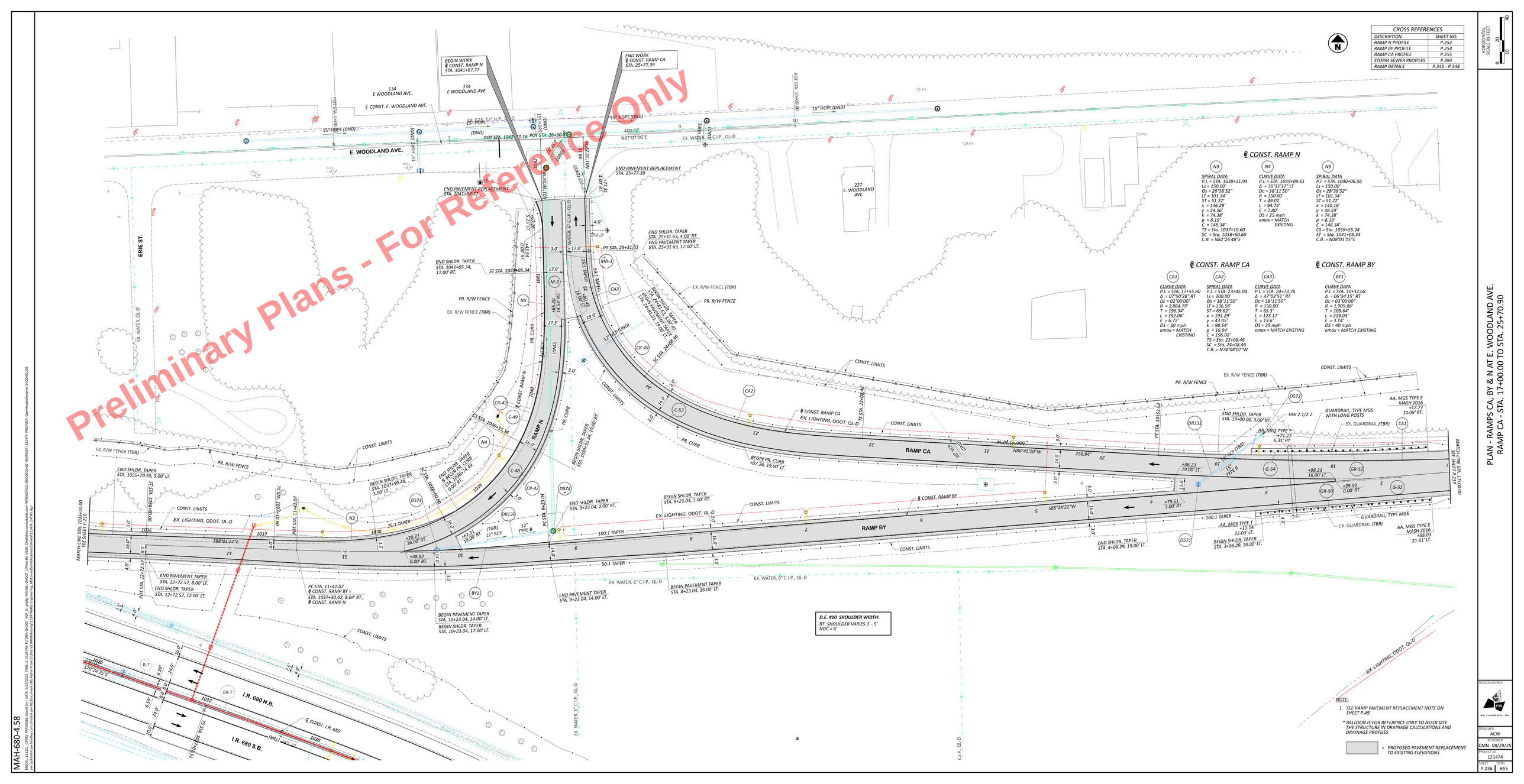
Preliminary Plans - For Reference Only
CROSS REFERENCES
DESCRIPTION | SHEET NO.
RAMP N PROFILE | P.252
RAMP BY PROFILE | P.254
RAMP CA PROFILE | P.255
STORM SEWER PROFILES | P.394
RAMP DETAILS | P.345 - P.348
HORIZONTAL SCALE IN FEET
0 10 20 40
℄ CONST. RAMP N
N3
SPIRAL DATA
P.I. = STA. 1038+11.94
Ls = 150.00'
Θs = 28°38'52"
LT = 101.34'
ST = 51.22'
x = 146.29'
y = 24.56'
k = 74.38'
p = 6.19'
C = 148.34'
TS = Sto. 1037+10.60
SC = Sto. 1038+60.60
C.B. = N82°26'48"E
N4
CURVE DATA
P.I. = STA. 1039+09.61
Δ = 36°11'17" LT
Dc = 38°11'50"
R = 150.00'
T = 49.01'
L = 94.74'
E = 7.80'
DS = 25 mph
emax = MATCH EXISTING
N5
SPIRAL DATA
P.I. = STA. 1040+06.56
Ls = 150.00'
Θs = 28°38'52"
LT = 101.34'
ST = 51.22'
x = 140.16'
y = 48.59'
k = 74.38'
p = 6.19'
C = 148.34'
CS = Sto. 1039+55.34
ST = Sto. 1041+05.34
C.B. = N08°01'15"E
℄ CONST. RAMP CA
CA1
CURVE DATA
P.I. = STA. 17+55.80
Δ = 07°50'28" RT
Dc = 02°00'00"
R = 2,864.79'
T = 196.34'
L = 392.06'
E = 6.72'
DS = 50 mph
emax = MATCH EXISTING
CA2
SPIRAL DATA
P.I. = STA. 23+45.04
Ls = 200.00'
Θs = 38°11'50"
LT = 136.58'
ST = 69.62'
x = 191.29'
y = 43.05'
k = 98.54'
p = 10.94'
C = 196.08'
TS = Sto. 22+08.46
SC = Sto. 24+08.46
C.B. = N74°04'07"W
CA3
CURVE DATA
P.I. = STA. 24+73.76
Δ = 47°02'51" RT
Dc = 38°11'50"
R = 150.00'
T = 65.3'
L = 123.17'
E = 13.6'
DS = 25 mph
emax = MATCH EXISTING
℄ CONST. RAMP BY
BY1
CURVE DATA
P.I. = STA. 10+32.68
Δ = 06°34'15" RT
Dc = 03°00'00"
R = 1,909.86'
T = 109.64'
L = 219.03'
E = 3.14'
DS = 40 mph
emax = MATCH EXISTING
BEGIN WORK ℄ CONST. RAMP N STA. 1041+67.77
END WORK ℄ CONST. RAMP CA STA. 25+77.39
134 E WOODLAND AVE.
℄ CONST. E. WOODLAND AVE.
E. WOODLAND AVE.
ERIE ST.
222 E. WOODLAND AVE.
EX. CMS 12" H.P.S.D.
POT STA. 1042+11.16
POT STA. 26+30.81
POT STA. 0+00.00
15" HDPE (DND)
12" HDPE (DND)
400.00'
N87°07'06"E
EX. WATER, 6" C.I.P., QL-D
END PAVEMENT REPLACEMENT STA. 1041+67.77
END PAVEMENT REPLACEMENT STA. 25+77.39
END SHLDR. TAPER STA. 1041+05.34, 17.00' RT.
ST STA. 1041+05.34
END SHLDR. TAPER STA. 25+31.63, 4.00' RT.
END PAVEMENT TAPER STA. 25+31.63, 17.00' LT.
PT STA. 25+31.63
PR. R/W FENCE
EX. R/W FENCE (TBR)
EX. WATER, QL-D
PR. CURB
℄ CONST. RAMP N
RAMP N
CONST. LIMITS
EX. LIGHTING, ODOT, QL-D
BEGIN SHLDR. TAPER STA. 24+88.46, 3.00' RT. BEGIN PAVEMENT TAPER STA. 24+88.46, 19.00' LT.
TS STA. 24+08.46
SC STA. 24+88.46
℄ CONST. RAMP CA
EX. LIGHTING, ODOT, QL-D
RAMP CA
BEGIN PR. CURB +07.26, 19.00' LT.
A=01°55'09"
N86°45'10"W
256.94'
PT STA. 19+55.80
END SHLDR. TAPER STA. 19+00.00, 3.00' RT.
HW 2.1/2.2
GUARDRAIL, TYPE MGS WITH LONG POSTS
EX. GUARDRAIL (TBR)
AA, MGS TYPE E MASH 2016 +17.77 10.09' RT.
AA, MGS TYPE E +71.27 6.31' RT.
MATCH LINE STA. 17+00.00 SEE SHEET P.237
MATCH LINE STA. 1035+50.00 SEE SHEET P.216
END SHLDR. TAPER STA. 1035+70.95, 3.00' LT.
BEGIN SHLDR. TAPER STA. 1037+99.49, 3.00' LT.
END SHLDR. TAPER STA. 1038+44.49, 0.00' RT.
BEGIN PR. CURB STA. 1038+60.60
TS STA. 1038+60.60
SC STA. 1039+22.14
S88°01'27"E
S85°24'22"W
RAMP BY
℄ CONST. RAMP BY
100:1 TAPER
50:1 TAPER
25:1 TAPER
END PAVEMENT TAPER STA. 12+72.57, 8.00' LT.
END SHLDR. TAPER STA. 12+72.57, 12.00' LT.
PC STA. 11+42.07 ℄ CONST. RAMP BY = STA. 1037+30.42, 8.04' RT., ℄ CONST. RAMP N
PT STA. 11+42.07
PC STA. 9+23.04
END SHLDR. TAPER STA. 9+23.04, 2.00' RT.
BEGIN SHLDR. TAPER STA. 8+23.04, 3.00' RT.
BEGIN PAVEMENT TAPER STA. 8+23.04, 16.00' LT.
END PAVEMENT TAPER STA. 9+23.04, 14.00' LT.
BEGIN PAVEMENT TAPER STA. 10+23.04, 14.00' LT.
BEGIN SHLDR. TAPER STA. 10+23.04, 17.00' LT.
END SHLDR. TAPER STA. 4+06.29, 19.00' LT.
BEGIN SHLDR. TAPER STA. 3+06.29, 20.00' LT.
AA, MGS TYPE T +11.14 22.03' LT.
GUARDRAIL, TYPE MGS
EX. GUARDRAIL (TBR)
AA, MGS TYPE E MASH 2016 +58.03 21.81' LT.
+79.61 3.00' RT.
+99.99 0.00' RT.
+98.23 16.00' LT.
+36.23 19.00' LT.
+67.31 19.00' RT.
+20.27 16.00' RT.
+48.82 0.00' RT.
15" RCP (TBR)
15" TYPE B
12" RCP (TBR)
12" TYPE B
I.R. 680 N.B.
I.R. 680 S.B.
℄ CONST. I.R. 680
EX. WATER, 6" C.I.P., QL-D
C.I.P., QL-D
D.E. #10 SHOULDER WIDTH:
RT. SHOULDER VARIES 3' - 5'
NDC = 6'
NOTE:
1. SEE RAMP PAVEMENT REPLACEMENT NOTE ON SHEET P.49
* BALLOON IS FOR REFERENCE ONLY TO ASSOCIATE THE STRUCTURE IN DRAINAGE CALCULATIONS AND DRAINAGE PROFILES
= PROPOSED PAVEMENT REPLACEMENT TO EXISTING ELEVATIONS
PLAN - RAMPS CA, BY & N AT E. WOODLAND AVE.
RAMP CA - STA. 17+00.00 TO STA. 25+70.90
DESIGN AGENCY
ms consultants, inc.
DESIGNED ACW
REVIEWED CMN 08/29/25
PROJECT ID 121474
SHEET P.236
TOTAL 655
MAH-680-4.58

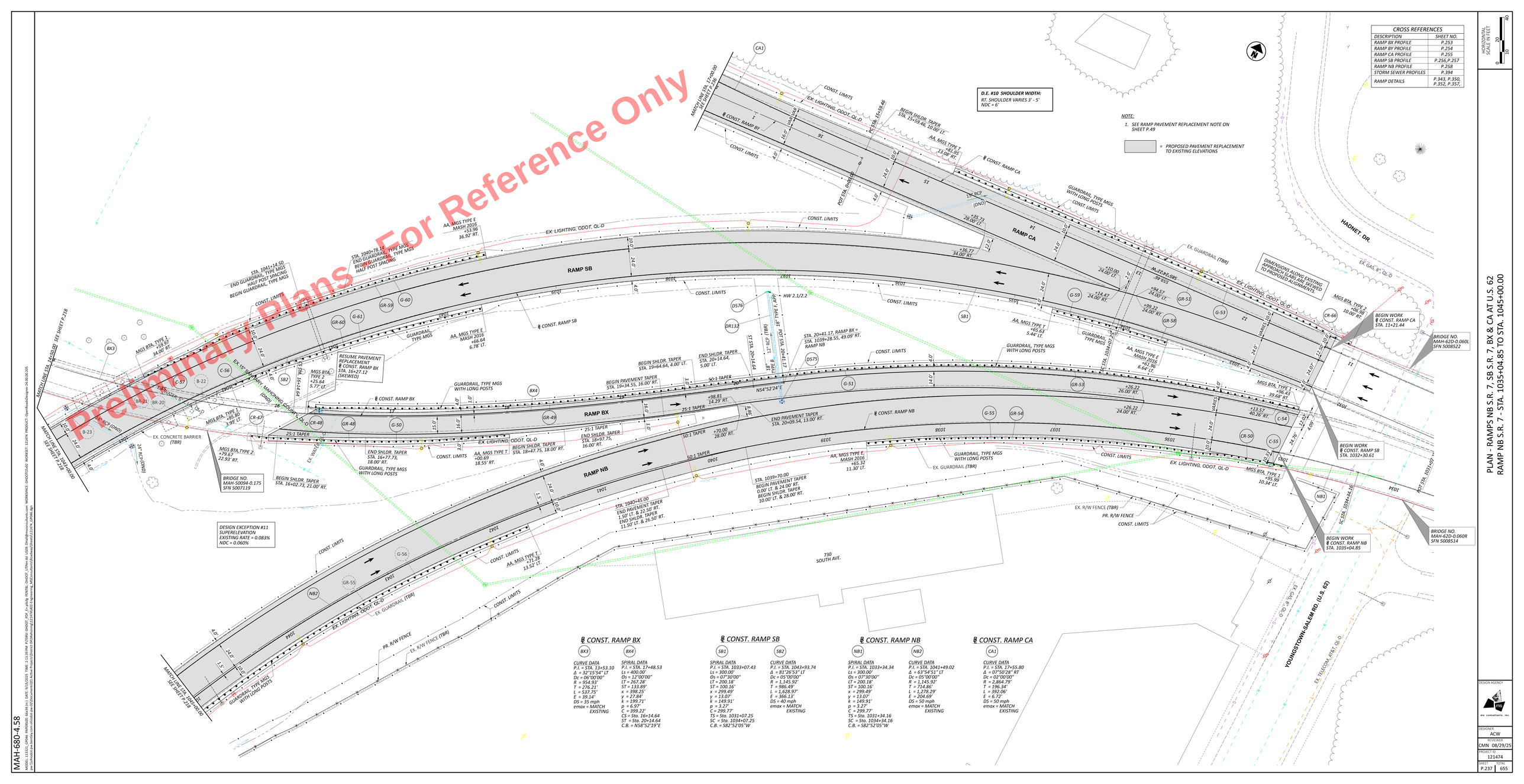
Preliminary Plans For Reference Only
CROSS REFERENCES
DESCRIPTION | SHEET NO.
RAMP BX PROFILE | P.253
RAMP BY PROFILE | P.254
RAMP CA PROFILE | P.255
RAMP SB PROFILE | P.256,P.257
RAMP NB PROFILE | P.258
STORM SEWER PROFILES | P.394
RAMP DETAILS | P.343, P.350, P.352, P.357,
HORIZONTAL SCALE IN FEET 0 10 20 40
D.E. #10 SHOULDER WIDTH:
RT. SHOULDER VARIES 3' - 5'
NDC = 6'
NOTE:
1. SEE RAMP PAVEMENT REPLACEMENT NOTE ON SHEET P.49
= PROPOSED PAVEMENT REPLACEMENT TO EXISTING ELEVATIONS
RAMP SB
RAMP BX
RAMP NB
RAMP CA
HADNET DR.
730 SOUTH AVE.
YOUNGSTOWN-SALEM RD. (U.S. 62)
EX. TELECOM, AT&T, OL-D
EX. GAS, 6", OL-D
EX. GUARDRAIL (TBR)
EX. LIGHTING, ODOT, OL-D
EX. R/W FENCE (TBR)
PR. R/W FENCE
CONST. LIMITS
℄ CONST. RAMP SB
℄ CONST. RAMP BX
℄ CONST. RAMP NB
℄ CONST. RAMP CA
BRIDGE NO. MAH-620-0.060L SFN 5008522
BRIDGE NO. MAH-620-0.060R SFN 5008514
BRIDGE NO. MAH-5094-0.175 SFN 5007119
BEGIN WORK ℄ CONST. RAMP CA STA. 11+21.44
BEGIN WORK ℄ CONST. RAMP SB STA. 1032+30.61
BEGIN WORK ℄ CONST. RAMP NB STA. 1035+04.85
RESUME PAVEMENT REPLACEMENT ℄ CONST. RAMP BX STA. 16+27.12 (SKEWED)
DESIGN EXCEPTION #11
SUPERELEVATION
EXISTING RATE = 0.083%
NDC = 0.060%
℄ CONST. RAMP BX
BX3 CURVE DATA
P.I. = STA. 13+53.10
Δ = 32°15'54" LT
Dc = 06°00'00"
R = 954.93'
T = 276.21'
L = 537.75'
E = 39.14'
DS = 35 mph
emax = MATCH EXISTING
BX4 SPIRAL DATA
P.I. =STA. 17+48.53
Ls = 400.00'
Θs = 12°00'00"
LT = 267.28'
ST = 133.89'
x = 398.25'
y = 27.84'
k = 199.71'
p = 6.97'
C = 399.22'
CS = Sta. 16+14.64
ST = Sta. 20+14.64
C.B. = N58°52'19"E
℄ CONST. RAMP SB
SB1 SPIRAL DATA
P.I. = STA. 1033+07.43
Ls = 300.00'
Θs = 07°30'00"
LT = 200.18'
ST = 100.16'
x = 299.49'
y = 13.07'
k = 149.91'
p = 3.27'
C = 299.77'
TS = Sta. 1031+07.25
SC = Sta. 1034+07.25
C.B. = S82°52'05"W
SB2 CURVE DATA
P.I. = STA. 1043+93.74
Δ = 81°26'53" LT
Dc = 05°00'00"
R = 1,145.92'
T = 986.49'
L = 1,628.97'
E = 366.13'
DS = 40 mph
emax = MATCH EXISTING
℄ CONST. RAMP NB
NB1 SPIRAL DATA
P.I. = STA. 1033+34.34
Ls = 300.00'
Θs = 07°30'00"
LT = 200.18'
ST = 100.16'
x = 299.49'
y = 13.07'
k = 149.91'
p = 3.27'
C = 299.77'
TS = Sta. 1031+34.16
SC = Sta. 1034+34.16
C.B. = S82°52'05"W
NB2 CURVE DATA
P.I. = STA. 1041+49.02
Δ = 63°54'51" LT
Dc = 05°00'00"
R = 1,145.92'
T = 714.86'
L = 1,278.29'
E = 204.69'
DS = 50 mph
emax = MATCH EXISTING
℄ CONST. RAMP CA
CA1 CURVE DATA
P.I. = STA. 17+55.80
Δ = 07°50'28" RT
Dc = 02°00'00"
R = 2,864.79'
T = 196.34'
L = 392.06'
E = 6.72'
DS = 50 mph
emax = MATCH EXISTING
PLAN - RAMPS NB S.R. 7, SB S.R. 7, BX & CA AT U.S. 62
RAMP NB S.R. 7 - STA. 1035+04.85 TO STA. 1045+00.00
DESIGN AGENCY
ms consultants, inc.
DESIGNER ACW
REVIEWER CMN 08/29/25
PROJECT ID 121474
SHEET P.237 TOTAL 655
MAH-680-4.58
MODEL: 11321_GP4M4_PAVEREQ8 (GLU) | DATE: 05/12/2025 TIME: 2:13:39 PM | PITSBY: GHOOT | PSP_F | config: PAVING, GHOOT | Effective Gbl: $GBL-Shell$msmsconsultants.com WORKPACE: GHOOT\CAD\ WORKSET: 121474 PRODUCT: OpenRoads Designer 24.00.00.205

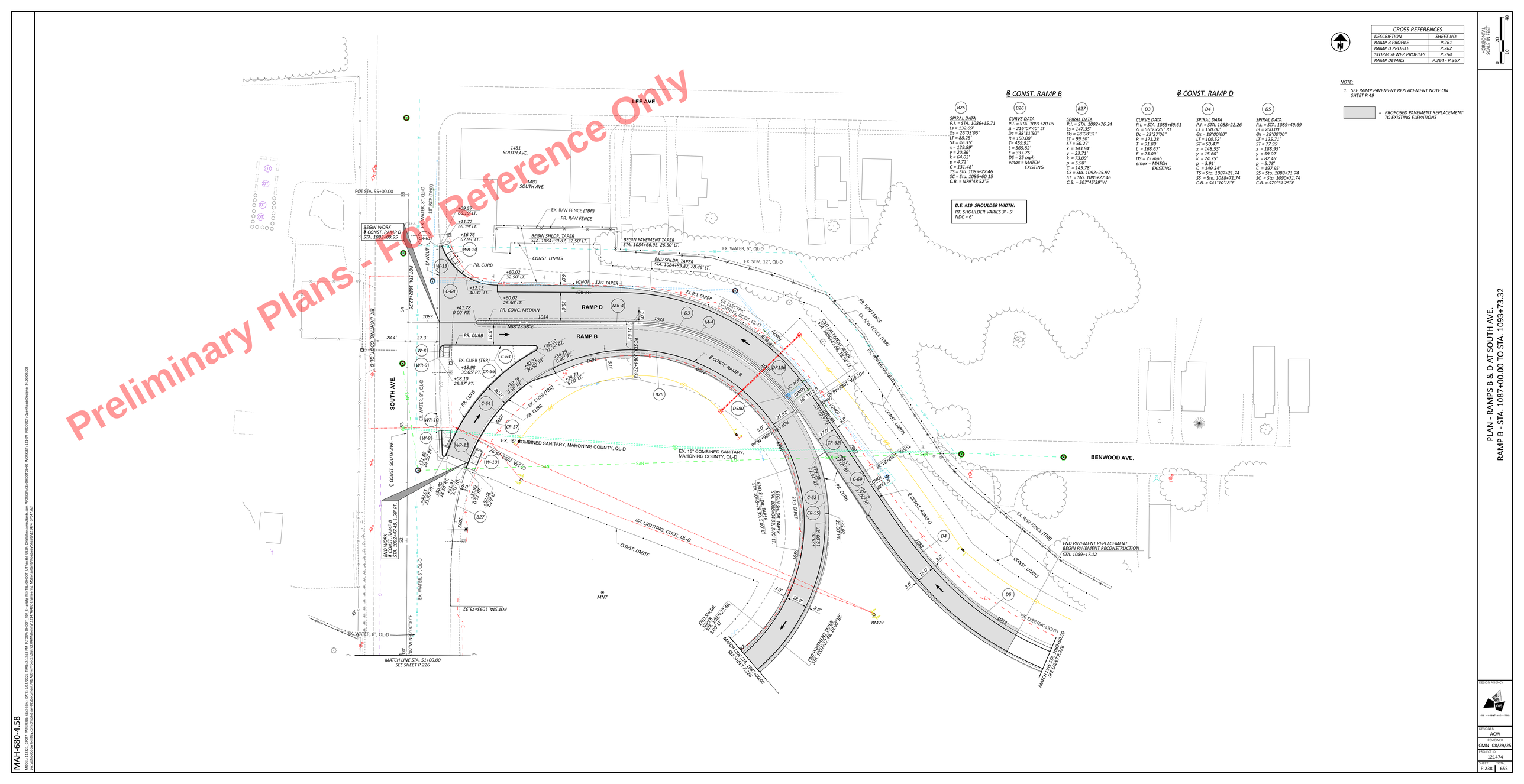

℄ CONST. RAMP B

B25
SPIRAL DATA
P.I. = STA. 1086+15.71
Ls = 132.69'
Θs = 26°03'06"
LT = 88.25'
ST = 46.35'
x = 129.89'
y = 20.36'
k = 64.02'
p = 4.72'
C = 131.48'
TS = Sta. 1085+27.46
SC = Sta. 1086+60.15
C.B. = N79°48'52"E

B26
CURVE DATA
P.I. = STA. 1091+20.05
Δ = 216°07'40" LT
Dc = 38°11'50"
R = 150.00'
T = 459.91'
L = 565.82'
E = 333.75'
DS = 25 mph
emax = MATCH EXISTING

B27
SPIRAL DATA
P.I. = STA. 1092+76.24
Ls = 147.35'
Θs = 28°08'31"
LT = 99.50'
ST = 50.27'
x = 143.84'
y = 23.71'
k = 73.09'
p = 5.98'
C = 145.78'
CS = Sta. 1092+25.97
ST = Sta. 1085+27.46
C.B. = S07°45'39"W

℄ CONST. RAMP D

D3
CURVE DATA
P.I. = STA. 1085+69.61
Δ = 56°25'25" RT
Dc = 33°27'06"
R = 171.28'
T = 91.89'
L = 168.67'
E = 23.09'
DS = 25 mph
emax = MATCH EXISTING

D4
SPIRAL DATA
P.I. = STA. 1088+22.26
Ls = 150.00'
Θs = 18°00'00"
LT = 100.52'
ST = 50.47'
x = 148.53'
y = 15.60'
k = 74.75'
p = 3.91'
C = 149.34'
TS = Sta. 1087+21.74
SS = Sta. 1088+71.74
C.B. = S41°10'18"E

D5
SPIRAL DATA
P.I. = STA. 1089+49.69
Ls = 200.00'
Θs = 28°00'00"
LT = 125.71'
ST = 77.95'
x = 188.95'
y = 59.02'
k = 82.46'
p = 5.78'
C = 197.95'
SS = Sta. 1088+71.74
SC = Sta. 1090+71.74
C.B. = S70°31'25"E

D.E. #10 SHOULDER WIDTH:
RT. SHOULDER VARIES 3' - 5'
NDC = 6'

CROSS REFERENCES	
DESCRIPTION	SHEET NO.
RAMP B PROFILE	P.261
RAMP D PROFILE	P.262
STORM SEWER PROFILES	P.394
RAMP DETAILS	P.364 - P.367

HORIZONTAL SCALE IN FEET: 0, 10, 20, 40

NOTE:
1. SEE RAMP PAVEMENT REPLACEMENT NOTE ON SHEET P.49

= PROPOSED PAVEMENT REPLACEMENT TO EXISTING ELEVATIONS

PLAN - RAMPS B & D AT SOUTH AVE.
RAMP B - STA. 1087+00.00 TO STA. 1093+73.32

DESIGN AGENCY: mb consultants, inc.
DESIGNER: ACW
REVIEWER: CMN 08/29/25
PROJECT ID: 121474
SHEET: P.238 TOTAL: 655

MAH-680-4.58

MODEL: 11321_LDRAY_PAVEREQUEST_ISSUE.DGN | DATE: 9/11/2025 TIME: 2:13:53 PM | PITSRV: ORIOT_PSP_F_sheig PENTBL: ORIOT_LTPen.tbl USER: DholtBrennan@dot.ohio.gov WORKSPACE: ORIOTCVDS WORKSET: 121474 PRODUCT: OpenRoadDesigner 24.00.00.205
ALL DRAWINGS ARE THE PROPERTY OF THE OHIO DEPARTMENT OF TRANSPORTATION AND ARE NOT TO BE USED WITHOUT THE PERMISSION OF THE DIRECTOR OF TRANSPORTATION. © OHIO DOT

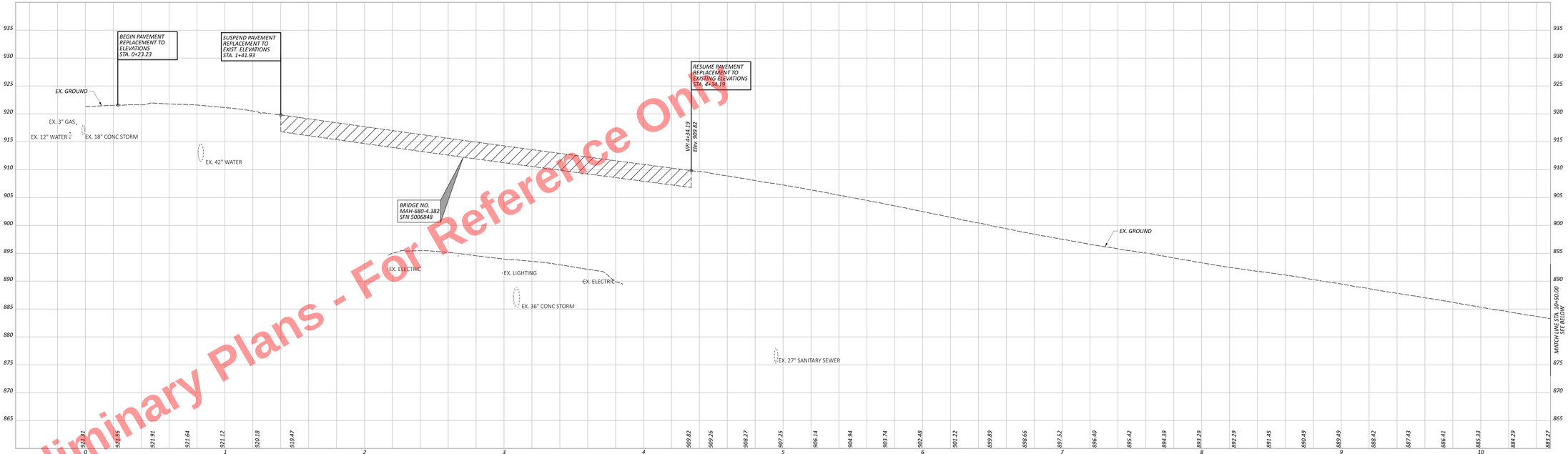

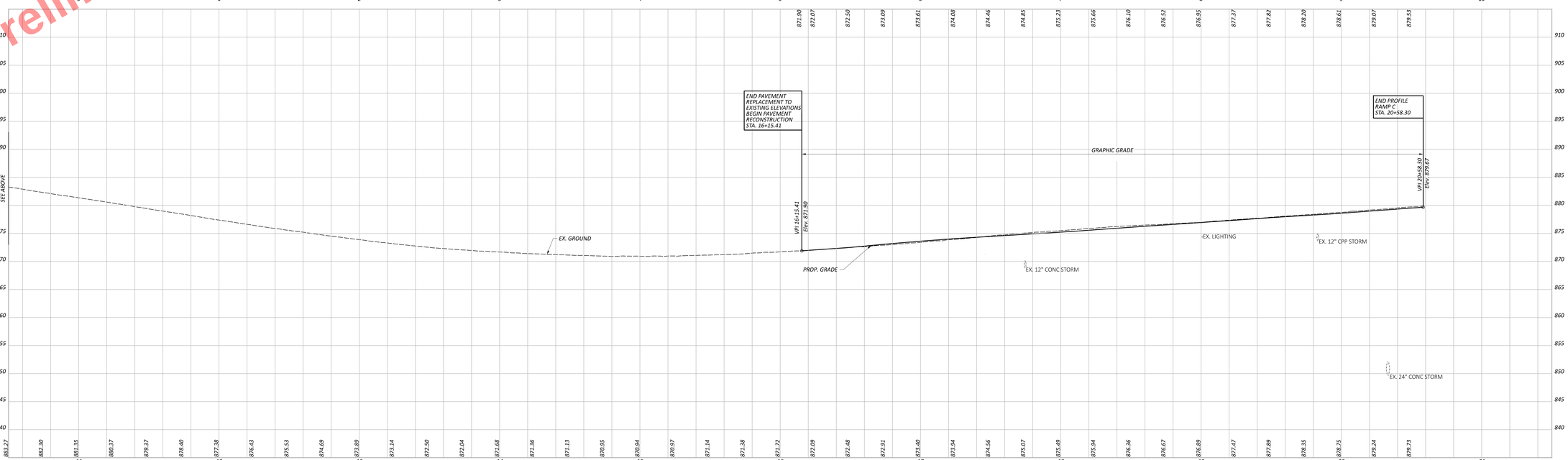

CROSS REFERENCES	
DESCRIPTION	SHEET NO.
RAMP C PLAN	P.137,P.138,P.167,P.168

PROFILE - RAMP C AT SILLIMAN ST.
STA. 0+23.23 TO STA. 20+58.30

NOTES:
THE PROFILE FOR THE LIMITS OF PAVEMENT REPLACEMENT TO EXISTING ELEVATIONS SHALL MATCH THE EXISTING PROFILE ELEVATIONS

Preliminary Plans - For Reference Only

MAH-680-4.58

MODEL: 11311_GF415_PAVEMENT_66x34.DGN | DATE: 9/25/2025 TIME: 2:14:05 PM | PETERV | DRGDT_CP1.cel.dg | PENTBL: DRGDT_CP1.tbl | DGN: Shaded|Invisible|Materials.rsm WORKSET: 121474 PRODUCT: OpenRoadsDesigner 24.00.00.205
ACTIVE PROJECT: Mahoning County\Mahoning County Projects\MAH-680-4.58\Design\Roadway\Plans\121474_Ramp C.dgnlib

DESIGN AGENCY
ms consultants, inc.
DESIGNER: MSN
REVIEWER: CMN 08/29/25
PROJECT ID: 121474
SHEET: P.239 TOTAL: 655

Preliminary Plans - For Reference Only



CROSS REFERENCES	
DESCRIPTION	SHEET NO.
RAMP C-3 PLAN	P.137

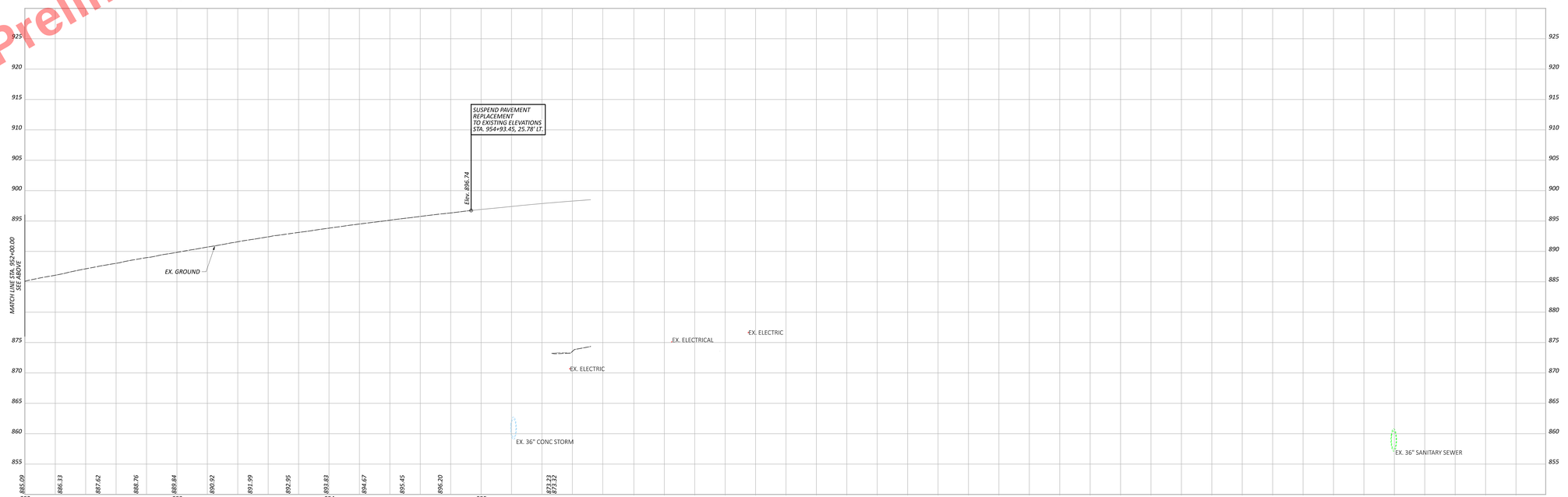

NOTES:

THE PROFILE SHOWN IS ALONG THE CONSTRUCTION BASELINE. PAVEMENT REPLACEMENT TO EXISTING ELEVATIONS SHALL MATCH THE ELEVATIONS AT THE PAVEMENT LOCATION.

PROFILE - RAMP C-3 AT S.R. 193
STA. 941+48.83 TO STA. 955+07.17

MAH-680-4.58

MODEL: 11311_GF4DI_PAVEMENT_6x14.DGN | DATE: 9/25/2025 TIME: 2:14:53 PM | PETRY, CHRIST_PW | P:\Local Data\Christopher.Petry\Documents\ORD\Projects\11311_GF4DI_PAVEMENT_6x14.DGN | PANTEL, CHRIST_LP

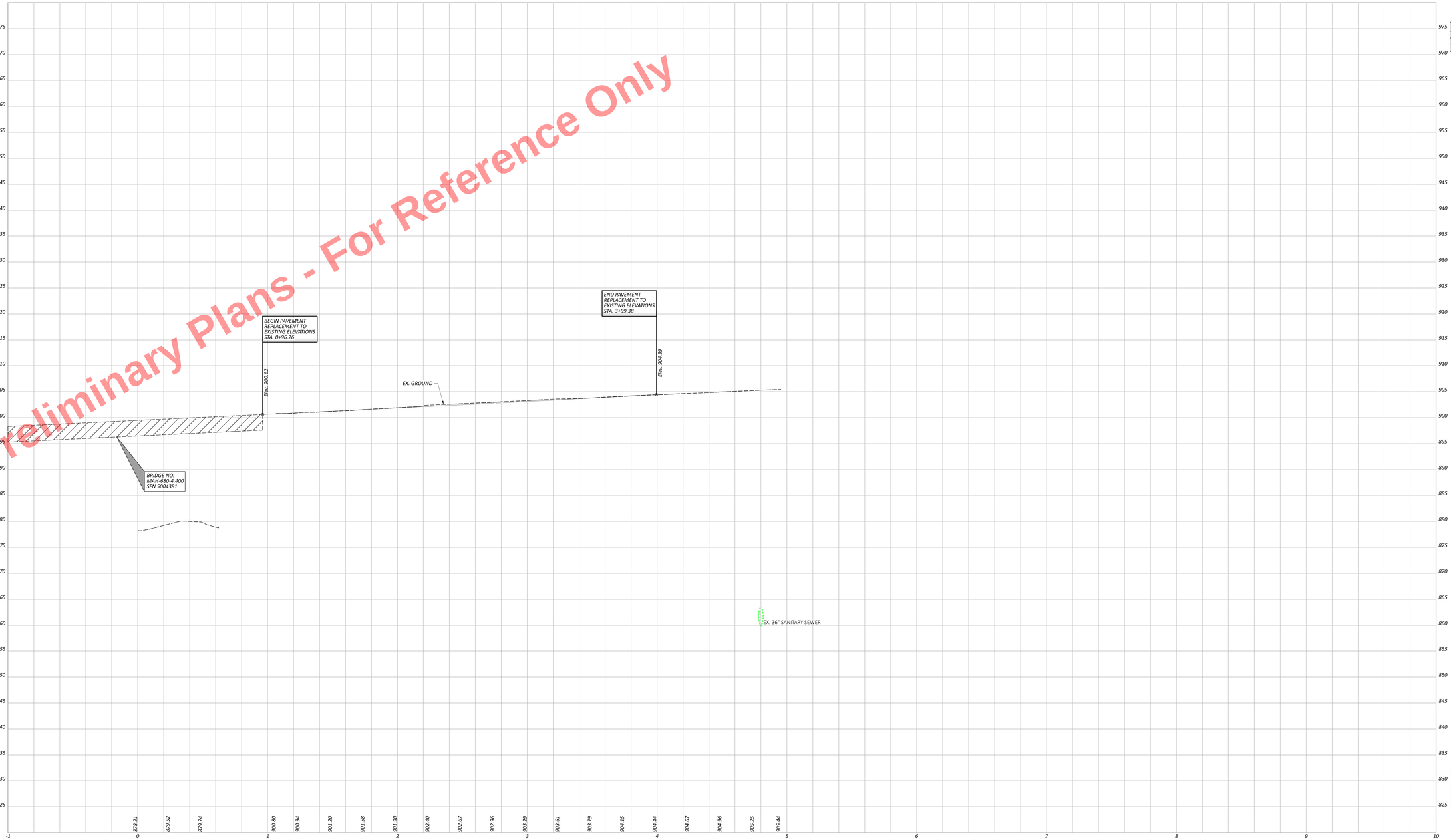

Preliminary Plans - For Reference Only

CROSS REFERENCES	
DESCRIPTION	SHEET NO.
S.R. 193 PLAN	P.137,P.166
STORM SEWER PROFILES	P.415, P.416

NOTES:

PROPOSED PAVEMENT RESURFACING SHALL FOLLOW THE PROFILE OF THE EXISTING PAVEMENT AND STATION LIMITS AS DEFINED IN THE TYPICAL SECTIONS.

PROFILE - S.R. 193
STA. 0+77.80 TO STA. 4+00.59

DESIGN AGENCY
ms consultants, inc.

DESIGNER
MSN

REVIEWER
CMN 08/29/25

PROJECT ID
121474

SHEET P.241 TOTAL 655

MAH-680-4.58

MODEL: 113121_GF421 PAPERSIZE: 66x34 (in.) DATE: 9/15/2025 TIME: 2:34:20 PM PLTDRV: OHDOT_PDF_E+ pltcfg PENTBL: OHDOT_LITPen.tbl USER: DHall@msconsultants.com WORKSPACE: OHDOTEV02 WORKSET: 121474 PRODUCT: OpenRoadsDesigner 24.00.00.205
pw:\\ohdot-pw.bentley.com:ohdot-pw-02\Documents\01 Active Projects\District 04\Mahoning\121474\Engineering_MSConsultants\Roadway\Sheets\121474_GF421.dgn

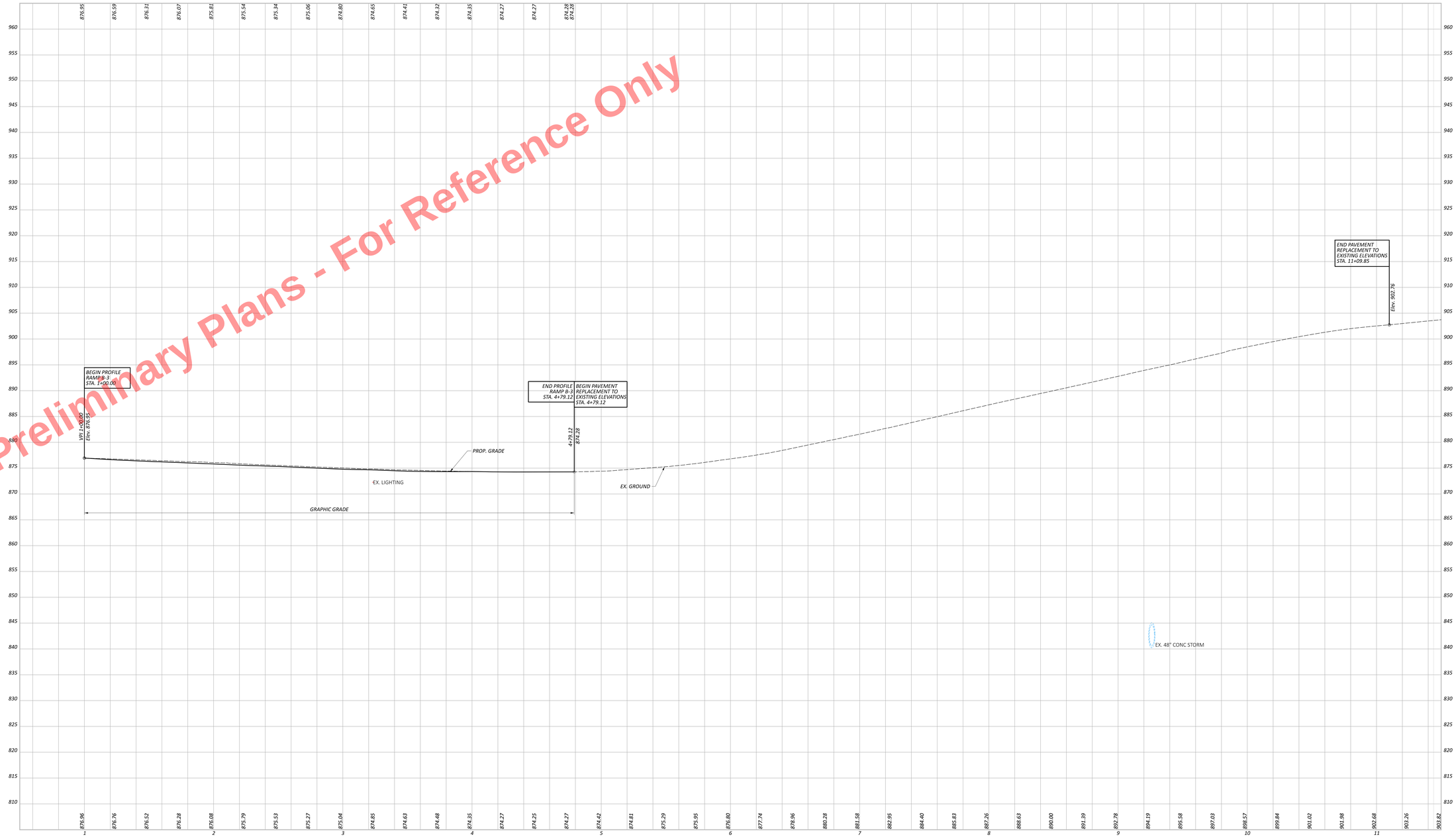

Preliminary Plans - For Reference Only

CROSS REFERENCES	
DESCRIPTION	SHEET NO.
RAMP B-3 PLAN	P.137,P.138,P.166

NOTES:

THE PROFILE FOR THE LIMITS OF PAVEMENT REPLACEMENT TO EXISTING ELEVATIONS SHALL MATCH THE EXISTING PROFILE ELEVATIONS

PROFILE - RAMP B-3 AT S.R. 193
STA. 1+00.00 TO STA. 11+21.88

DESIGN AGENCY
ms consultants, inc.

DESIGNER: MSN
REVIEWER: CMN 08/29/25
PROJECT ID: 121474
SHEET: P.242 TOTAL: 655

MAH-680-4.58

MODEL: 11321_GRAD_PAYREQUEST_RAMP.dgn DATE: 9/25/2025 TIME: 2:14:18 PM USER: CMOOT_CMOOT.PSP [Layout: PAYREQ_CMOOT_CMOOT] File Set: 11321_RAMP_PAYREQUEST_CMOOT.fsf Data Source: Microstation Workspace: C:\Users\cmoot\Documents\Projects\11321_RAMP_PAYREQUEST_CMOOT\ WORKSET: 121474 PRODUCT: OpenRoadsDesigner 24.00.00.205

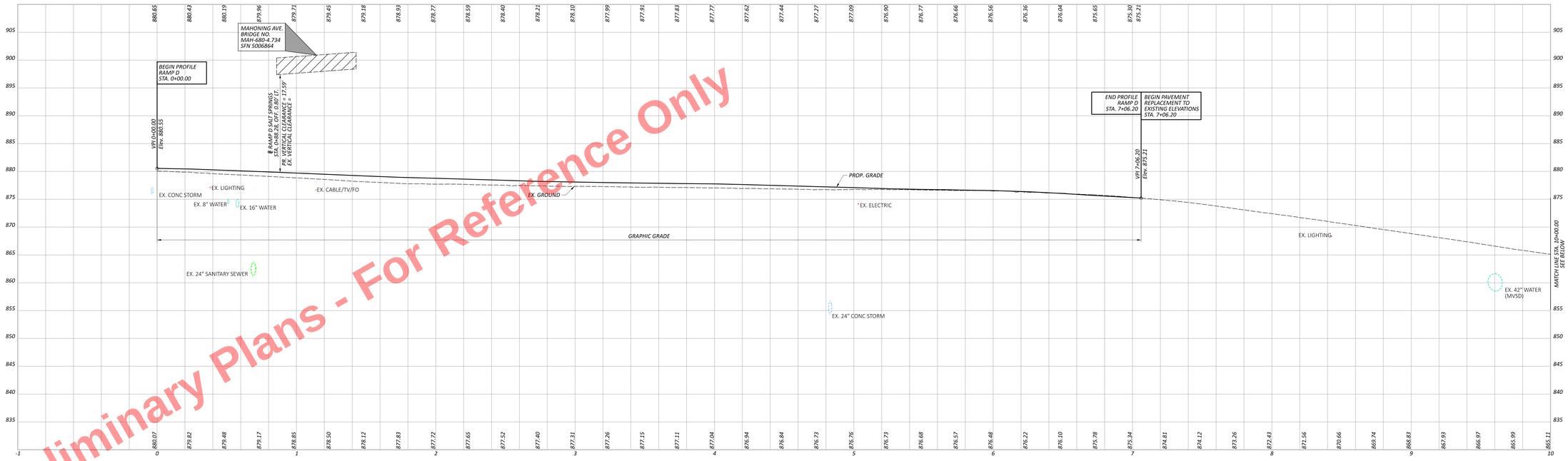

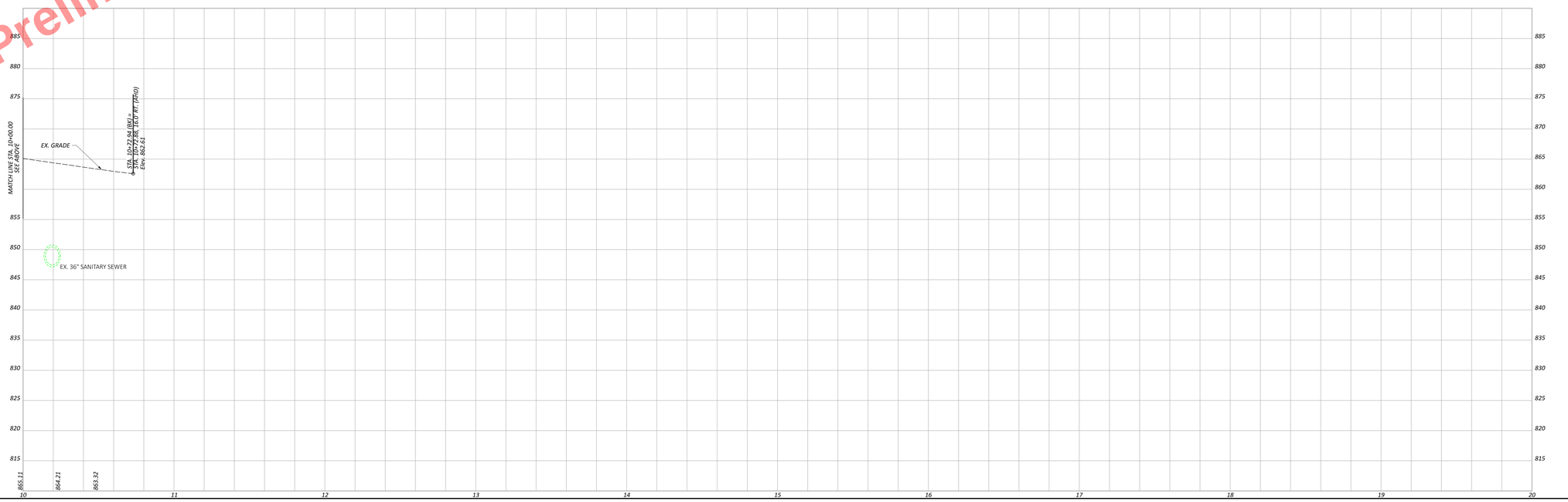

CROSS REFERENCES	
DESCRIPTION	SHEET NO.
RAMP D PLAN	P.138, P.166

Preliminary Plans - For Reference Only

NOTES:

THE PROFILE FOR THE LIMITS OF PAVEMENT REPLACEMENT TO EXISTING ELEVATIONS SHALL MATCH THE EXISTING PROFILE ELEVATIONS

PROFILE - RAMP D AT SALT SPRINGS ROAD STA. 0+00.00 TO STA. 10+72.94

MAH-680-4.58

DESIGN AGENCY
ms consultants, inc.

DESIGNER: MSN
REVIEWER: CMN 08/29/25
PROJECT ID: 121474
SHEET: P.243 TOTAL: 655

MODEL: 11321_GRAD1 PAYROAD: 6&1&4 DNI DATE: 9/25/2025 TIME: 2:14:59 PM USER: DHOOT_DP C:\.sdaig PENTBL: DHOOT_DP.ctb DrawBlessons@sbeta.com WORKSPACE: DHOOT1569 WORKSET: 121474 PRODUCT: OpenRoadsDesigner 24.00.00.205
ALL DRAWINGS ARE PROPRIETARY AND COPYRIGHTED BY THE OHIO DEPARTMENT OF TRANSPORTATION AND ITS LICENSORS. ©2025 ODOT

Preliminary Plans - For Reference Only

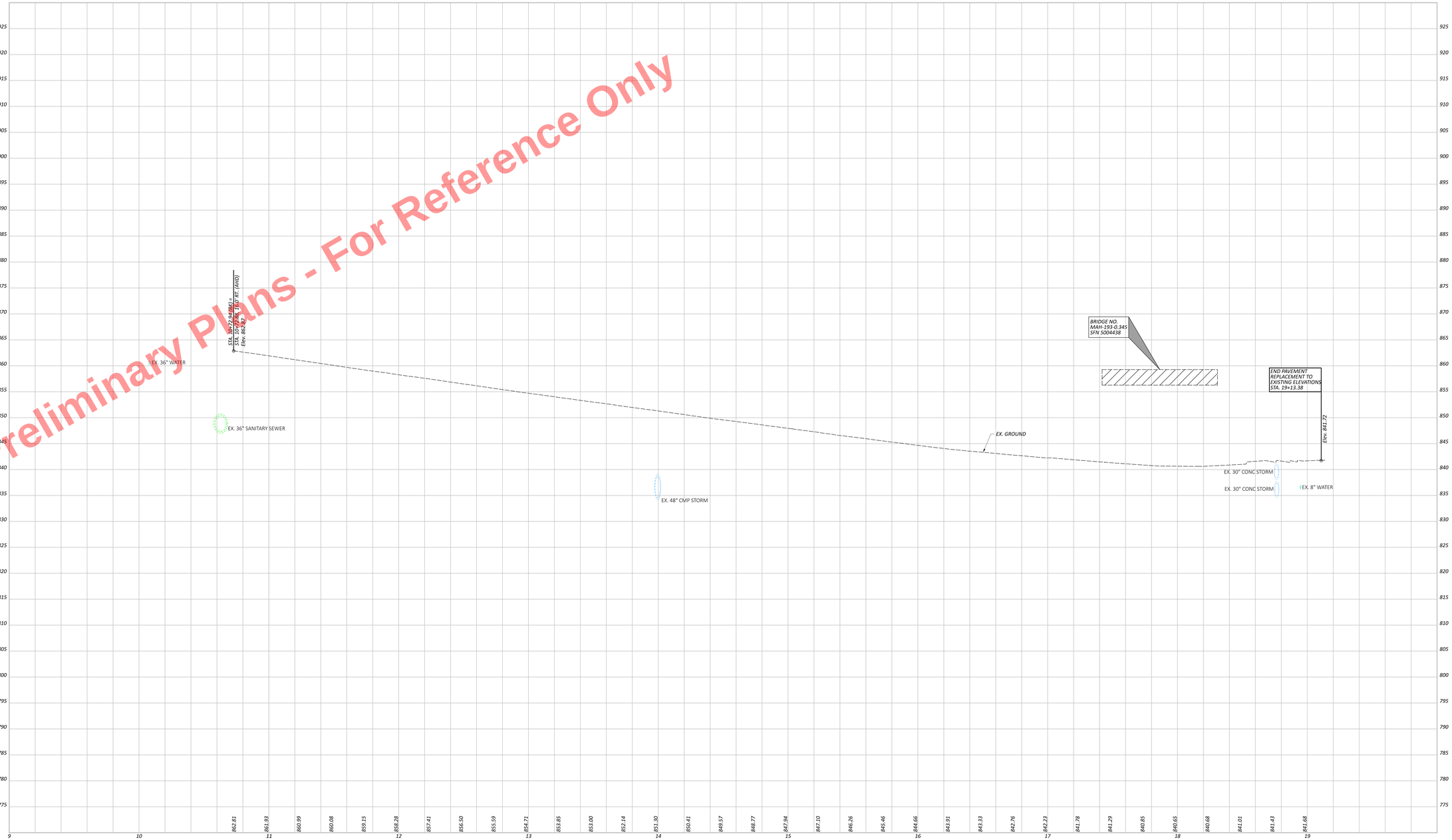

CROSS REFERENCES	
DESCRIPTION	SHEET NO.
RAMP D PLAN	P.118, P.120, P.146

NOTES:

THE PROFILE FOR THE LIMITS OF PAVEMENT REPLACEMENT TO EXISTING ELEVATIONS SHALL MATCH THE EXISTING PROFILE ELEVATIONS

PROFILE - RAMP D AT SALT SPRINGS ROAD
STA. 10+72.88 TO STA. 19+10.74

MAH-680-4.58

MODEL: 11311_GFAS1_PAVEMENT_664.dgn | DATE: 9/17/2025 TIME: 2:14:43 PM | PETERV ONROT_PSF | xdwg PENTBL ONROT_LTPen.tbl (dgk) ShadeBrowns@dot.ny.gov WORKSPACE: ONROUTE649 WORKSET: 121474 PRODUCT: OpenRoadsDesigner 24.00.00.205
ACTIVE FILE: P:\Projects\Mohawk Valley\MAH-680-4.58\Design\Roadway\Plans\11311_GFAS1_PAVEMENT_664.dgn

DESIGN AGENCY
ms consultants, inc.
DESIGNER: MSN
REVIEWER: CMN 08/29/25
PROJECT ID: 121474
SHEET: P.244 TOTAL: 655

Preliminary Plans - For Reference Only

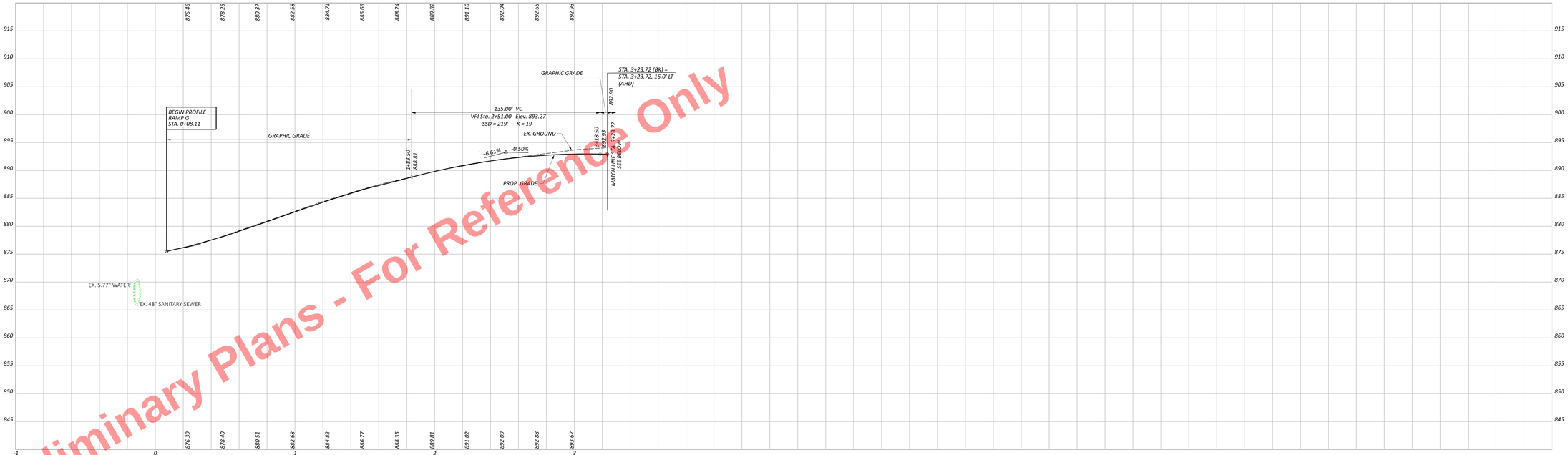

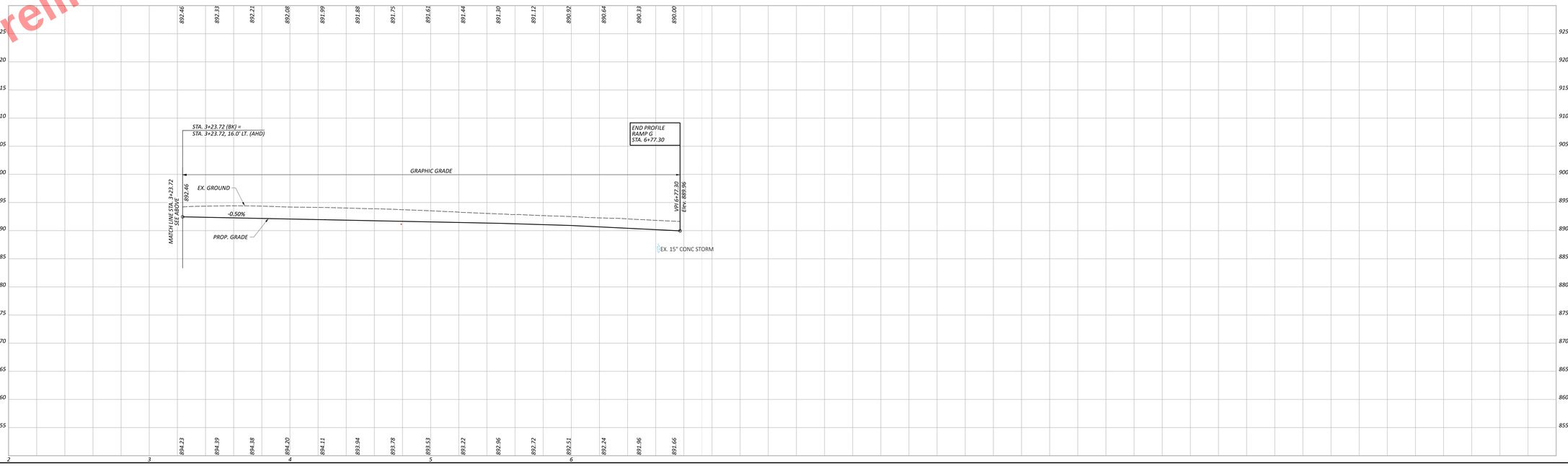

CROSS REFERENCES	
DESCRIPTION	SHEET NO.
RAMP G PLAN	P.138, P.142

PROFILE - RAMP G AT MARSHALL ST.
STA. 0+08.11 TO STA. 6+77.30

MAH-680-4.58

MODEL: 11311_GFADS_PAVEMENT_Std.dgn | DATE: 9/25/2025 TIME: 2:14:47 PM | USER: CMOOT_CPW.txt | PENTEL: CMOOT_LPTPen.tbl | LWT: Default | PLOTSTYLE: Fine Lines.ctb | WORKSPACE: CMOOTS1459 | WORKSET: 121474 | PRODUCT: OpenRoadsDesigner 24.00.00.205
K:\PROJECTS\MAH\680\4.58\Design\Roadway\PLANS\Profiles\Ramp G\11311_GFADS_PAVEMENT_Std.dgn

DESIGN AGENCY
ms consultants, inc.

DESIGNER: MSN
REVIEWER: CMN 08/29/25
PROJECT #: 121474
SHEET: P.245 TOTAL: 655

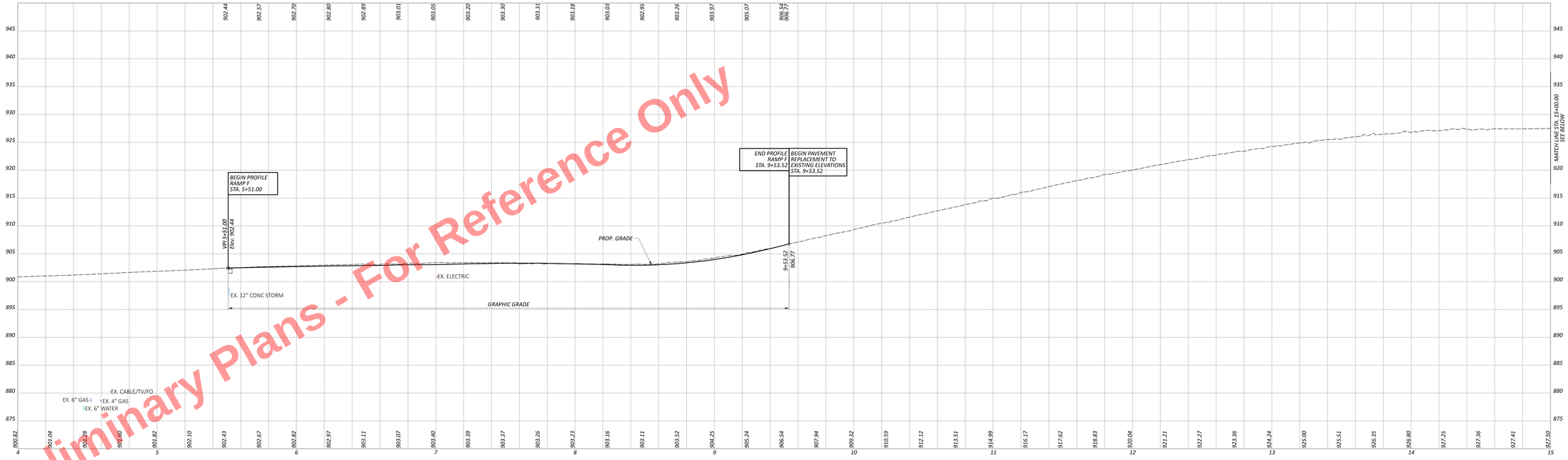

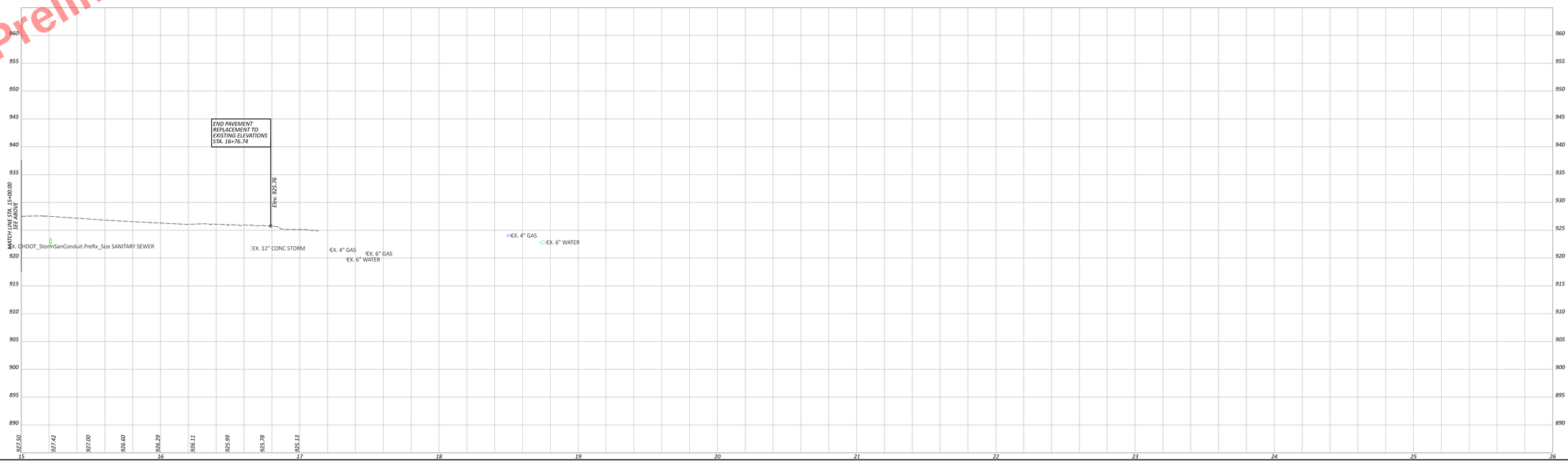

CROSS REFERENCES	
DESCRIPTION	SHEET NO.
RAMP F PLAN	P.144, P.170

Preliminary Plans - For Reference Only

PROFILE - RAMP F AT HIGH AND EDWARDS ST.
STA. 5+51.00 TO STA. 17+04.31

NOTES:

THE PROFILE FOR THE LIMITS OF PAVEMENT REPLACEMENT TO EXISTING ELEVATIONS SHALL MATCH THE EXISTING PROFILE ELEVATIONS

DESIGN AGENCY
ms consultants, inc.

DESIGNER: MSN
REVIEWER: CMN 08/29/25
PROJECT #: 121474
SHEET: P.246 TOTAL: 655

MAH-680-4.58

MODEL: 11311_GRADE_PAVEMENT_664.DGN | DATE: 9/15/2025 TIME: 2:14:53 PM | USER: CMOOT | PW: C:\Users\cmoot\Documents\Projects\121474\Roadway\Plans\11311_GRADE_PAVEMENT_664.dgn

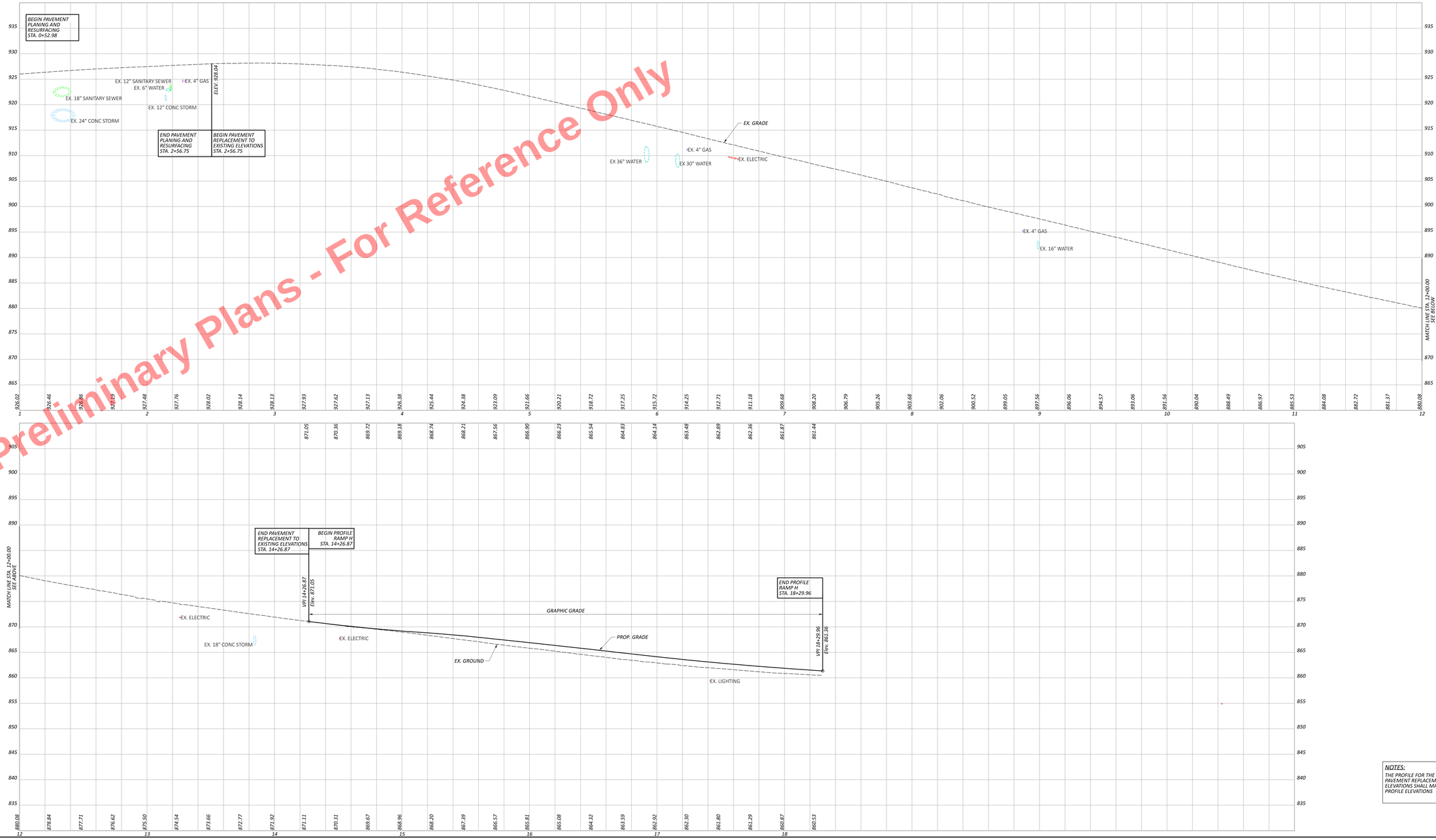

Preliminary Plans - For Reference Only

CROSS REFERENCES	
DESCRIPTION	SHEET NO.
RAMP H PLAN	P.144, P.146, P.170

NOTES:

THE PROFILE FOR THE LIMITS OF PAVEMENT REPLACEMENT TO EXISTING ELEVATIONS SHALL MATCH THE EXISTING PROFILE ELEVATIONS

PROFILE - RAMP H AT HIGH AND EDWARDS ST. STA. 1+71.85 TO STA. 18+01.83

DESIGN AGENCY: ms consultants, inc.

DESIGNER: MSN

REVIEWER: CMN 08/29/25

PROJECT #: 121474

SHEET: P.247 TOTAL: 655

MAH-680-4.58

MODEL: 11321_GREAT_PAYROAD_6634.DGN | DATE: 9/25/2025 TIME: 2:15:00 PM | PETERV ONDOT_PW | ACTIVE ONDOT_DThrasher (ddk.thrasher@jacobs.com WORKSPACE: ONDOTDGN WORKSET: 121474 PRODUCT: OpenRoadsDesigner 24.00.00.205
ACTIVE PW: \\ohcolumpw01.ent.ohdot.net\projects\PID_121474\ROADWAY\PLANS\Sheets\121474_CL1_ESS.dgn

Preliminary Plans - For Reference Only

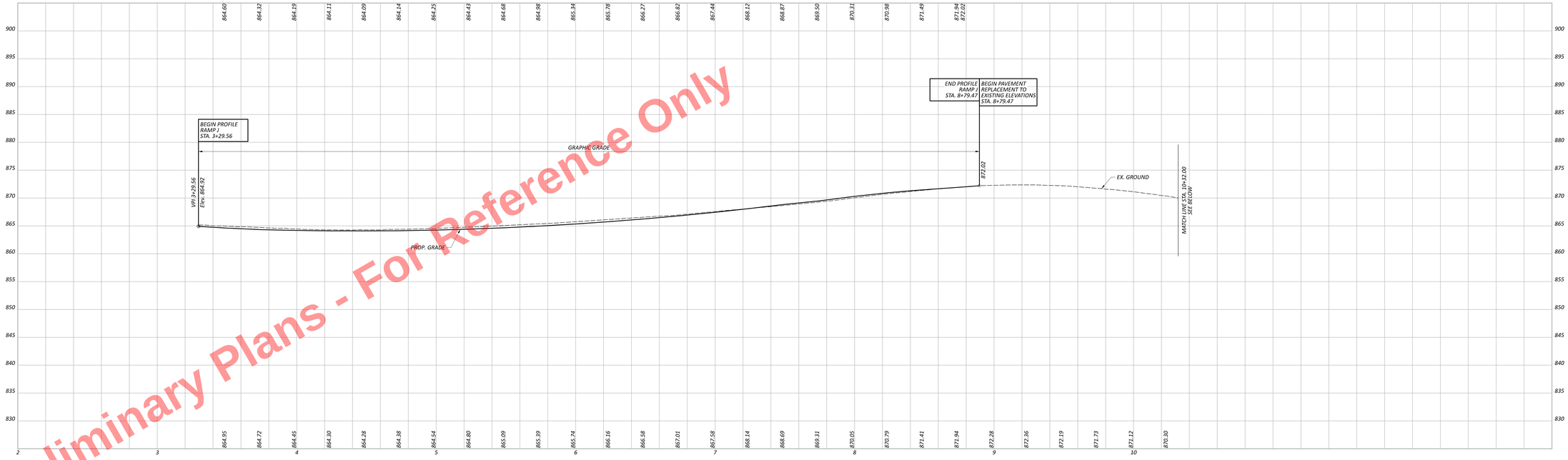

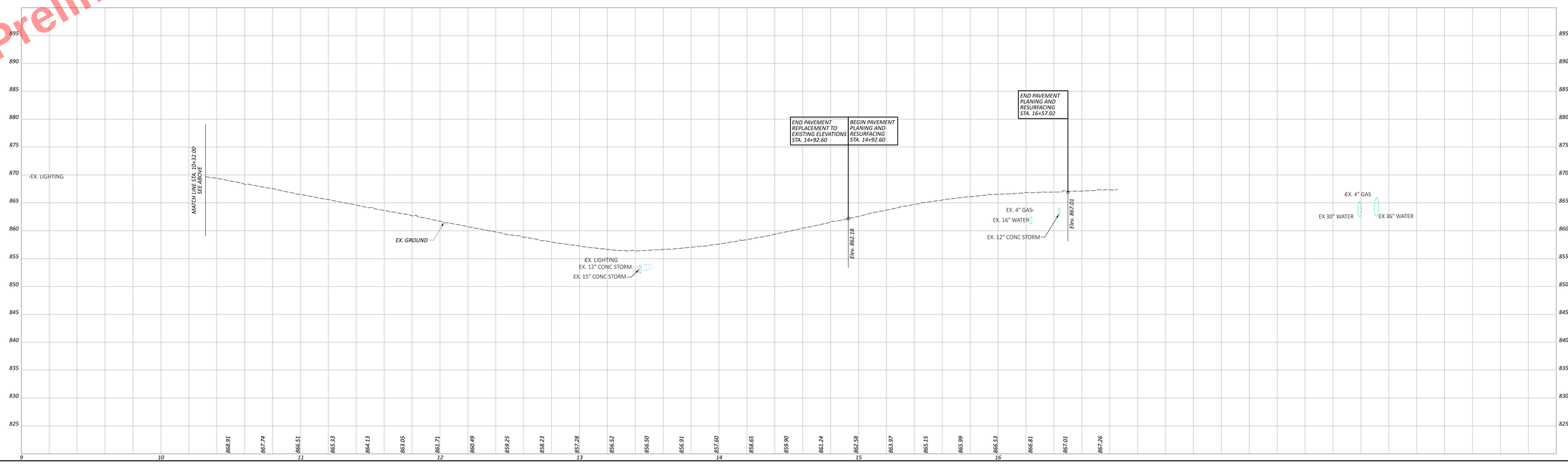

CROSS REFERENCES	
DESCRIPTION	SHEET NO.
RAMP J PLAN	P.144, P.146

NOTES:
THE PROFILE FOR THE LIMITS OF PAVEMENT REPLACEMENT TO EXISTING ELEVATIONS SHALL MATCH THE EXISTING PROFILE ELEVATIONS

PROFILE - RAMP J AT MARSHALL ST.
STA. 3+29.56 TO STA. 15+95.55

DESIGN AGENCY
ms consultants, inc.
DESIGNER: MSN
REVIEWER: CMN 08/29/25
PROJECT ID: 121474
SHEET: P.248 TOTAL: 655

MAH-680-4.58

MODEL: 11311_GFASS_PAVEMENT_66x34.DGN | DATE: 9/25/2025 TIME: 2:15:07 PM | PETERV | DWGPC: J:\Proj\ PENTRE, DWGPC: J:\Proj\at 1&R\ PENTRE, DWGPC: J:\Proj\at 1&R\ Shell\Resources\cells.rsc WORKSET: 121474 PRODUCT: OpenRoadsDesigner 24.00.00.205
ACTIVITY: P:\Projects\Active\2021\Mahoning\121474 Route 680 Pavement Rehab\Design\Roadway\Sheets\121474_GFASS_PAVEMENT_66x34.dgn

Preliminary Plans - For Reference Only

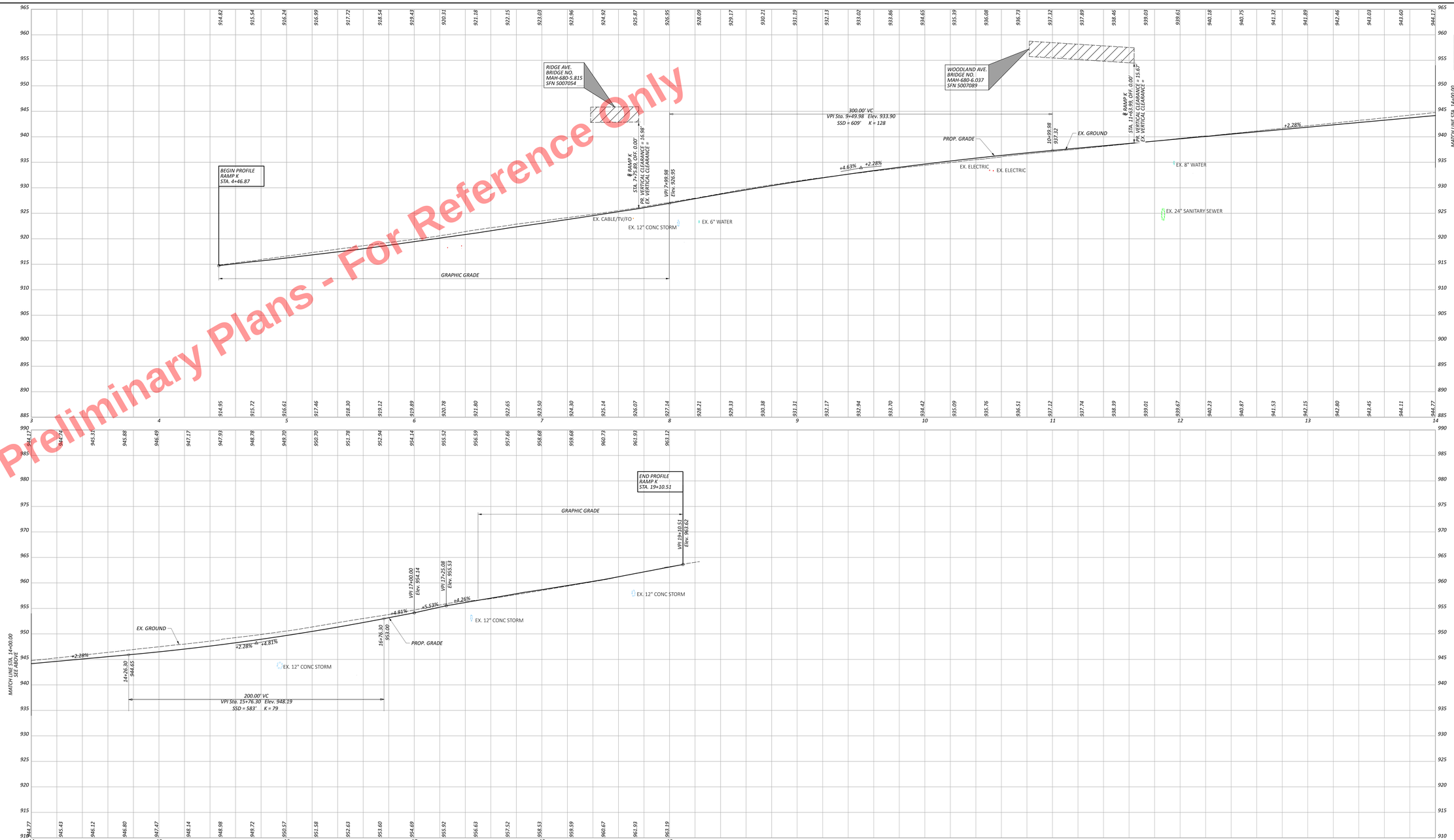

CROSS REFERENCES	
DESCRIPTION	SHEET NO.
RAMP K PLAN	P.150, P.152, P.171

PROFILE - MARKET ST. RAMP K
STA. 4+46.87 TO STA. 19+23.48

DESIGNER	MSN
REVIEWER	CMN 08/29/25
PROJECT #	121474
SHEET	P.249
TOTAL	655

MAH-680-4.58

MODEL: 11X22_GRADE PAVEMENT 66x34.DWG DATE: 9/25/2025 TIME: 2:15:53 PM USER: CMOOT_CPU: J:\Land Projects\Mahoning County\121474 Market Street Improvements\Roadway\Sheets\121474_P.DWG

Preliminary Plans - For Reference Only

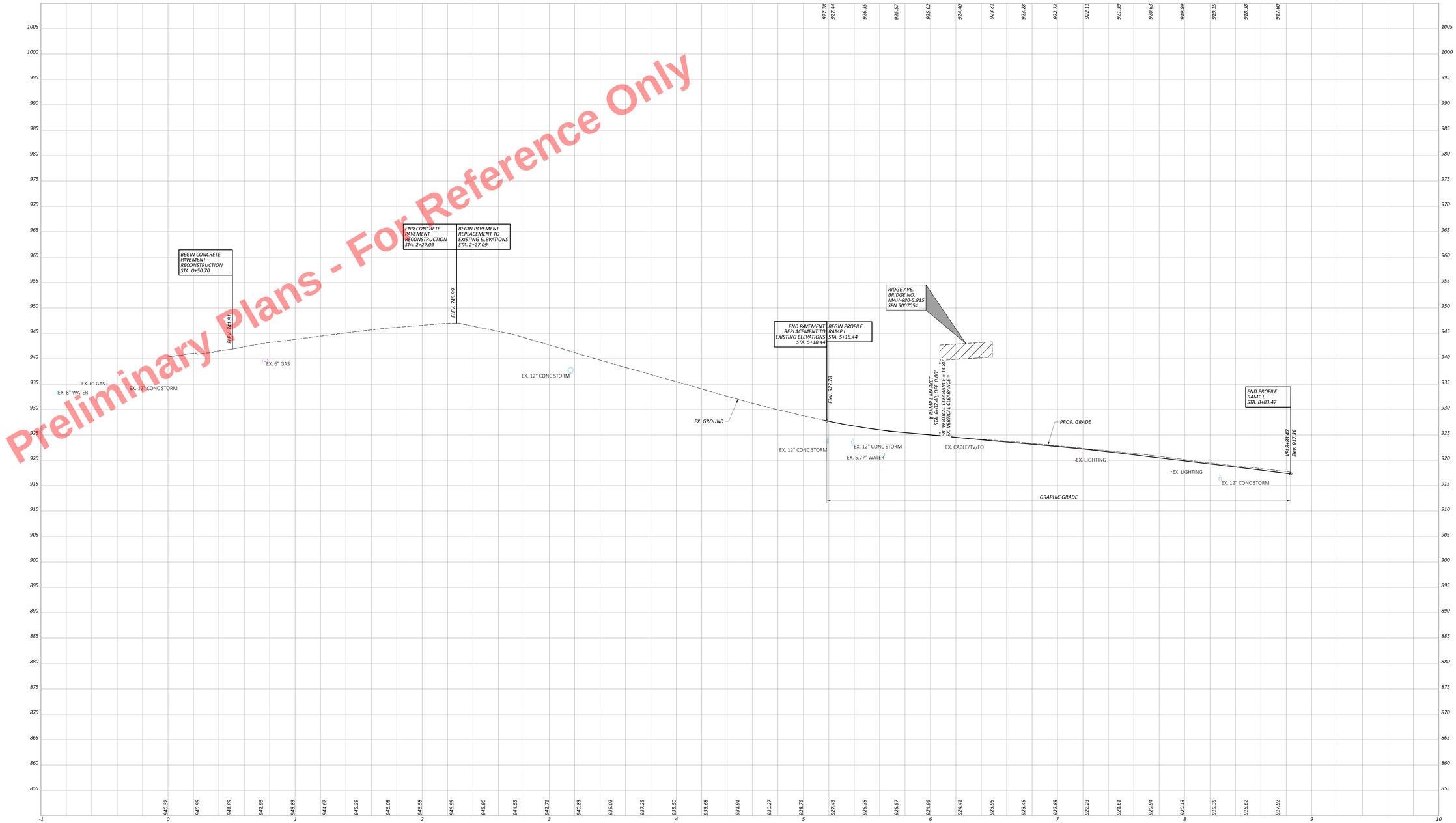

CROSS REFERENCES	
DESCRIPTION	SHEET NO.
RAMP L PLAN	P.150, P.152

NOTES:

PROPOSED PAVEMENT RESURFACING SHALL FOLLOW THE PROFILE OF THE EXISTING PAVEMENT AND STATION LIMITS AS DEFINED IN THE TYPICAL SECTIONS.

PROFILE - RAMP L AT MARKET ST.
STA. 0+00.00 TO STA. 8+83.47

MAH-680-4.58

MODEL: 11311_GEAS_PAVEMENT_66x34.DGN | DATE: 10/7/2025 TIME: 2:15:23 PM | PETERS, CHRISTOPHER | PLOTTED BY: Chris Peters (GEAS) | PENTEL CHRISTOPHER.PSP | PLOTTED: 10/7/2025 | WORKSPACE: C:\PROJECTS\GEAS WORKSET 121474 | PRODUCT: OpenRoadDesigner 24.00.00.205

DESIGN AGENCY: ms consultants, inc.

DESIGNER: MSN

REVIEWER: JDK 10/04/24

PROJECT ID: 121474

SHEET: P.250 TOTAL: 471

Preliminary Plans - For Reference Only



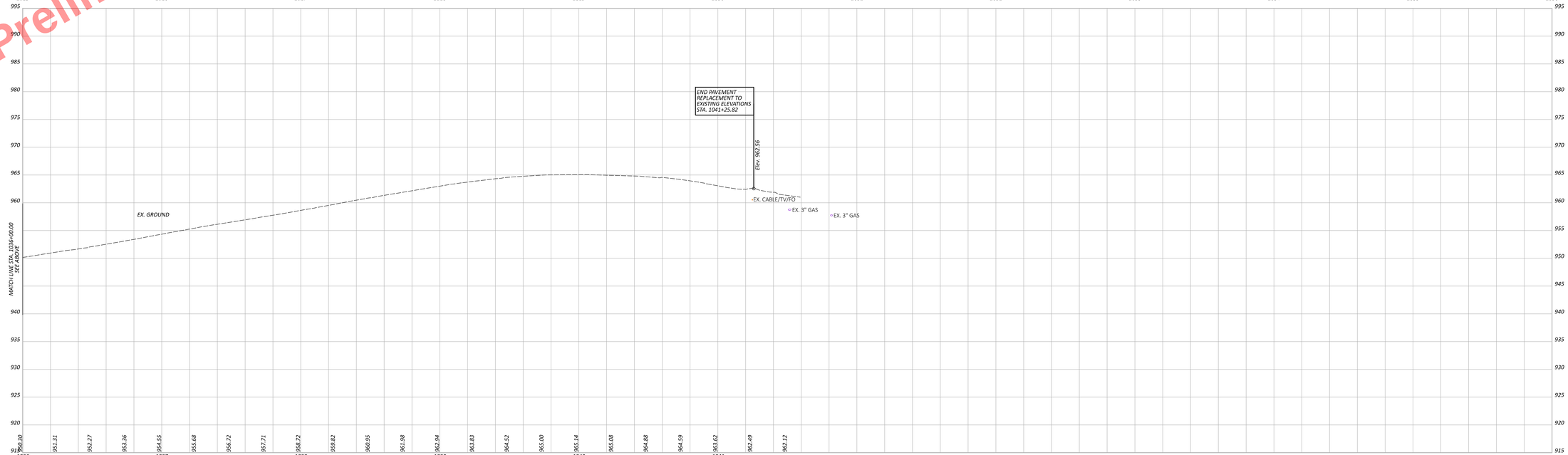

CROSS REFERENCES	
DESCRIPTION	SHEET NO.
RAMP M PLAN	P.152, P.171

NOTES:

THE PROFILE FOR THE LIMITS OF PAVEMENT REPLACEMENT TO EXISTING ELEVATIONS SHALL MATCH THE EXISTING PROFILE ELEVATIONS

PROFILE - RAMP M AT MARKET ST. STA. 1026+25.70 TO STA. 1041+65.96

MAH-680-4.58

MODEL: 11321_GF431_PAVEMENT_Mod4.dgn | DATE: 9/17/2025 TIME: 2:15:28 PM | USER: CMOOT | PW:\\ms-pw-fs01\Projects\11321\Design\Roadway\GF431\Mod4\Plan\11321_GF431_PAVEMENT_Mod4.dgn | WORKSET: 121474 PRODUCT: OpenRoadDesigner 24.00.00.205

DESIGN AGENCY: ms consultants, inc.

DESIGNER: MSN

REVIEWER: CMN 08/29/25

PROJECT ID: 121474

SHEET: P.251 TOTAL: 655

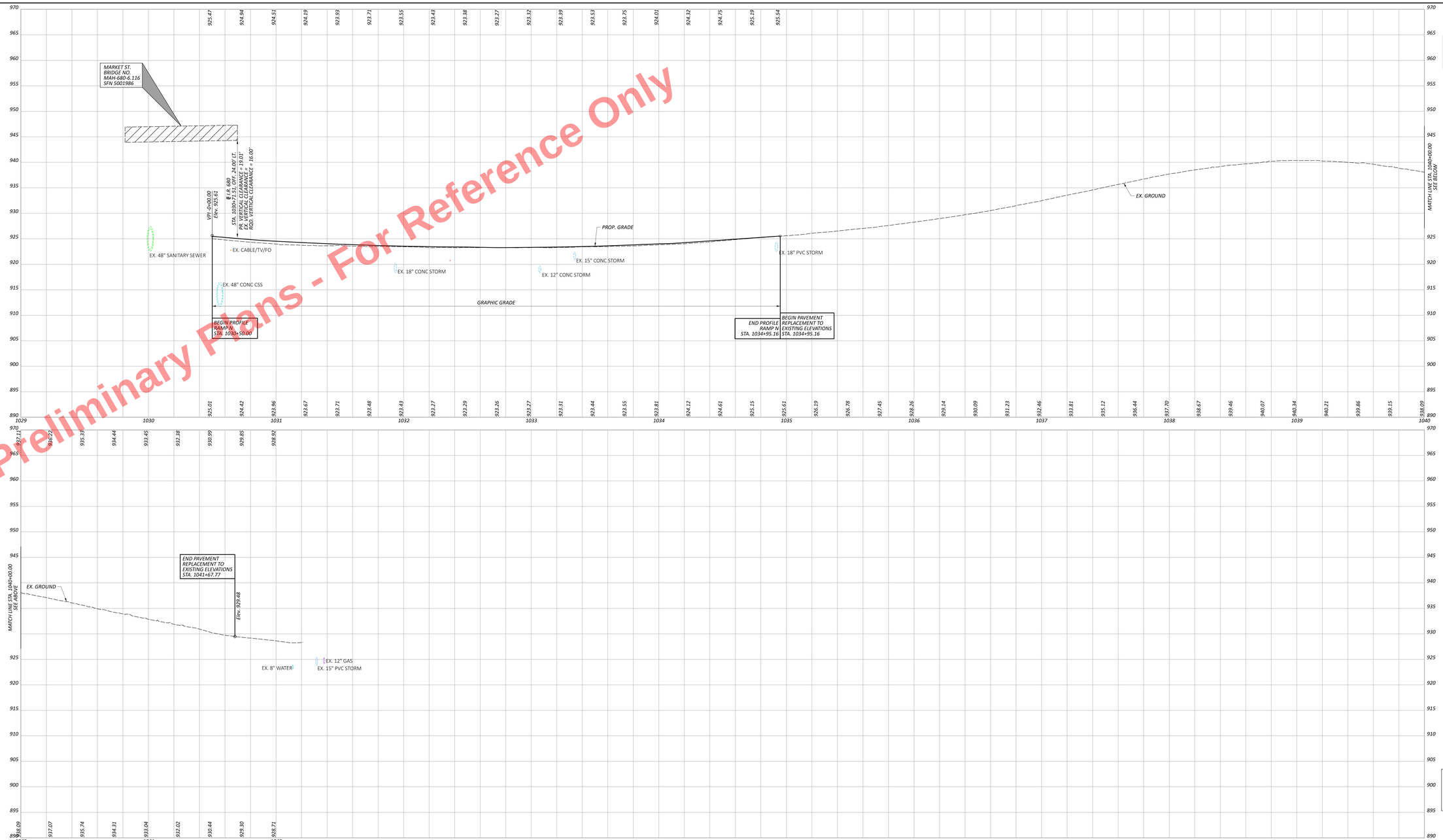

Preliminary Plans - For Reference Only

CROSS REFERENCES	
DESCRIPTION	SHEET NO.
RAMP N PLAN	P.152, P.172

NOTES:

PROPOSED PAVEMENT RESURFACING SHALL FOLLOW THE PROFILE OF THE EXISTING PAVEMENT AND STATION LIMITS AS DEFINED IN THE TYPICAL SECTIONS.

PROFILE - RAMP N AT WOODLAND AVE. STA. 1030+50.00 TO STA. 1042+11.15

MAH-680-4.58

DESIGN AGENCY: ms consultants, inc.

DESIGNER: MSN
REVIEWER: CMN 08/29/25
PROJECT ID: 121474
SHEET: P.252 TOTAL: 655

MODEL: 11311_GFAS1_PAVEDGE (GFAS1) DATE: 9/17/2025 TIME: 2:15:54 PM USER: DHOOT FILE: C:\Users\dhoot\Desktop\Projects\Mahoning County\MAH-680-4.58\Roadway\Plans\11311_GFAS1_PAVEDGE.dgn PLOTTED BY: DHOOT (Dhoot@msconsultants.com) WORKSET: CHOOT1459 PROJECT: OpenRoadDesigner 24.00.00.205

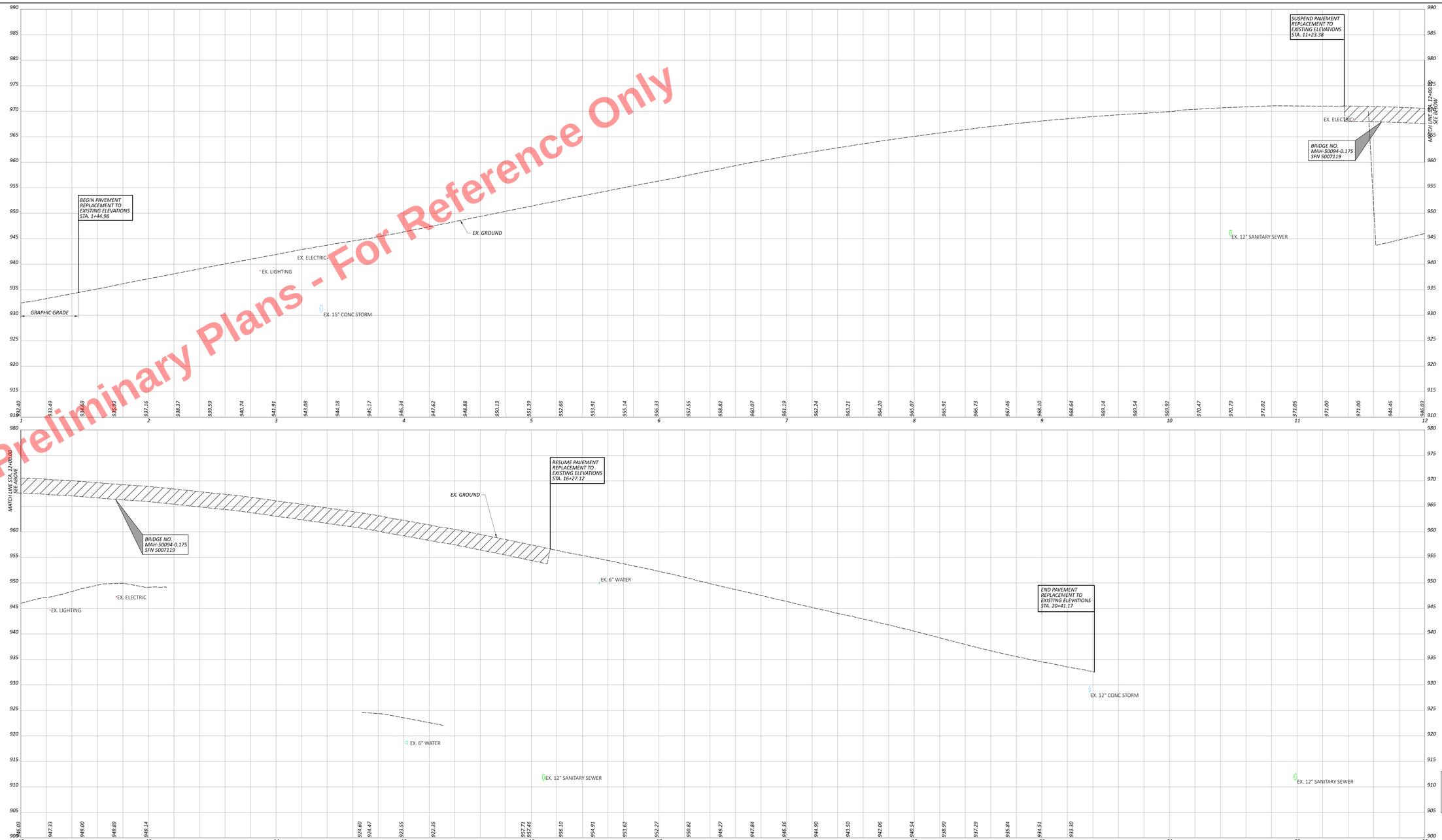

Preliminary Plans - For Reference Only

CROSS REFERENCES	
DESCRIPTION	SHEET NO.
RAMP BX PLAN	P.152, P.154, P.173

NOTES:

PROPOSED PAVEMENT RESURFACING SHALL FOLLOW THE PROFILE OF THE EXISTING PAVEMENT AND STATION LIMITS AS DEFINED IN THE TYPICAL SECTIONS.

PROFILE - RAMP BX AT U.S. 62/S.R. 7
STA. 1+80.89 TO STA. 20+41.58

MAH-680-4.58

MODEL: 11321, (24X3) JNYFIGUE (64x24in) | DATE: 9/21/2025 TIME: 2:15:43 PM | PETERV ON/OFF: ON | F-Lang: ENGINEERING ON/OFF: Off Portrait (Edit) DrawBlueprints.com WORKSPACE: ON/OFF:ON/OFF: ON/OFF:ON/OFF: ON/OFF:ON/OFF

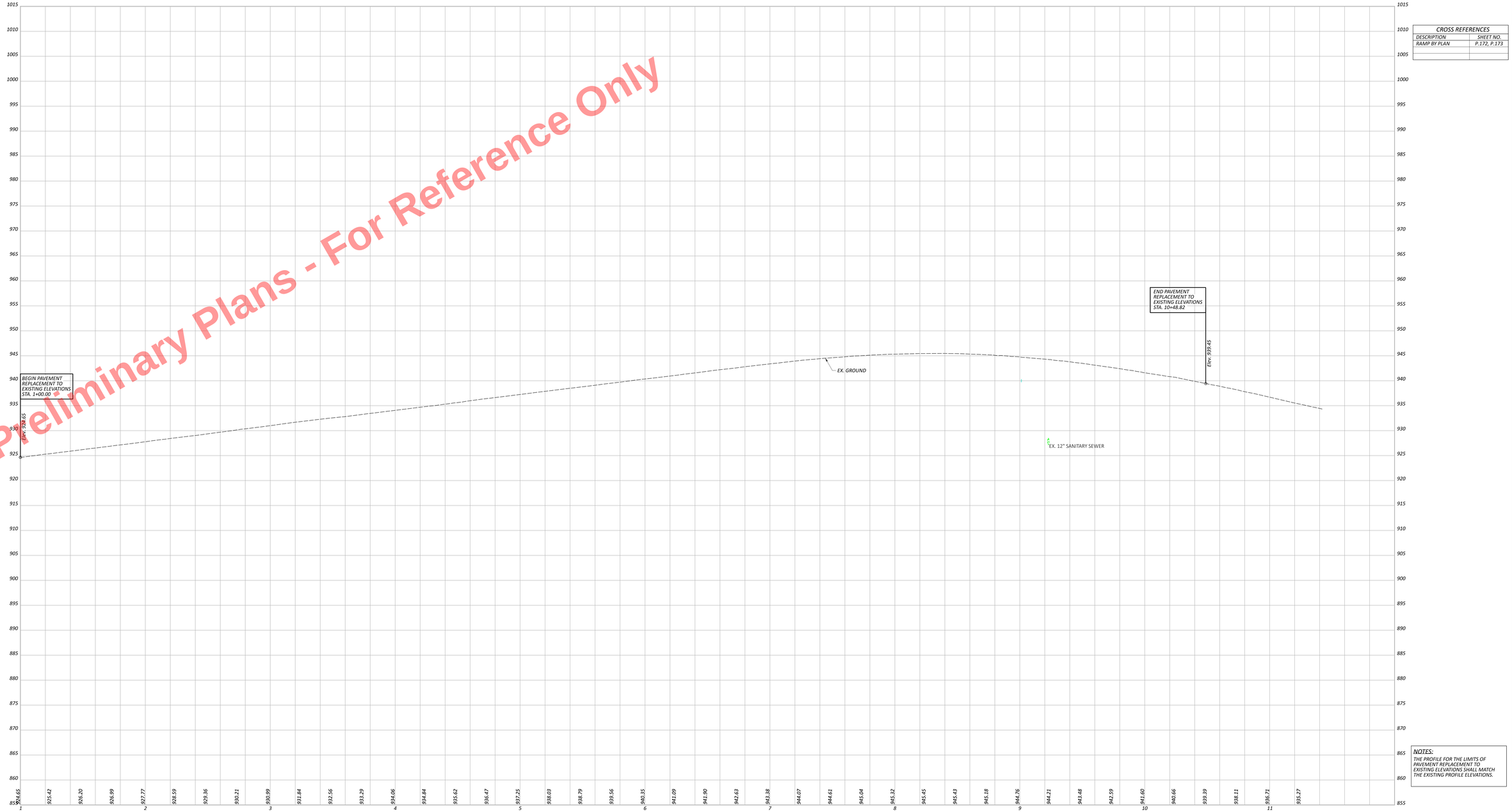

Preliminary Plans - For Reference Only

CROSS REFERENCES	
DESCRIPTION	SHEET NO.
RAMP BY PLAN	P.172, P.173

NOTES:

THE PROFILE FOR THE LIMITS OF PAVEMENT REPLACEMENT TO EXISTING ELEVATIONS SHALL MATCH THE EXISTING PROFILE ELEVATIONS.

PROFILE - RAMP BY AT U.S. 62/S.R. 7
STA. 2+14.54 TO STA. 10+40.71

MAH-680-4.58

BASE: 11311, 2/4/19 PLOTTED: 09/02/25 TIME: 2:15:47 PM USER: DMOTT, DMOTT.PW [Layout: PENTRE, DMOTT, JTherrian (GEN: DeadlineLine.ctb) WORKSET: 121474 PRODUCT: OpenRoadDesigner 24.00.00.205
M:\Civil Projects\Mahoning Co\MAH-680-4.58 Pentre Rdwy Improvements\Roadway\Plans\121474_Profile.dgn

DESIGN AGENCY
ms consultants, inc.
DESIGNER: MSN
REVIEWER: CMN 08/29/25
PROJECT ID: 121474
SHEET: P.254 TOTAL: 655



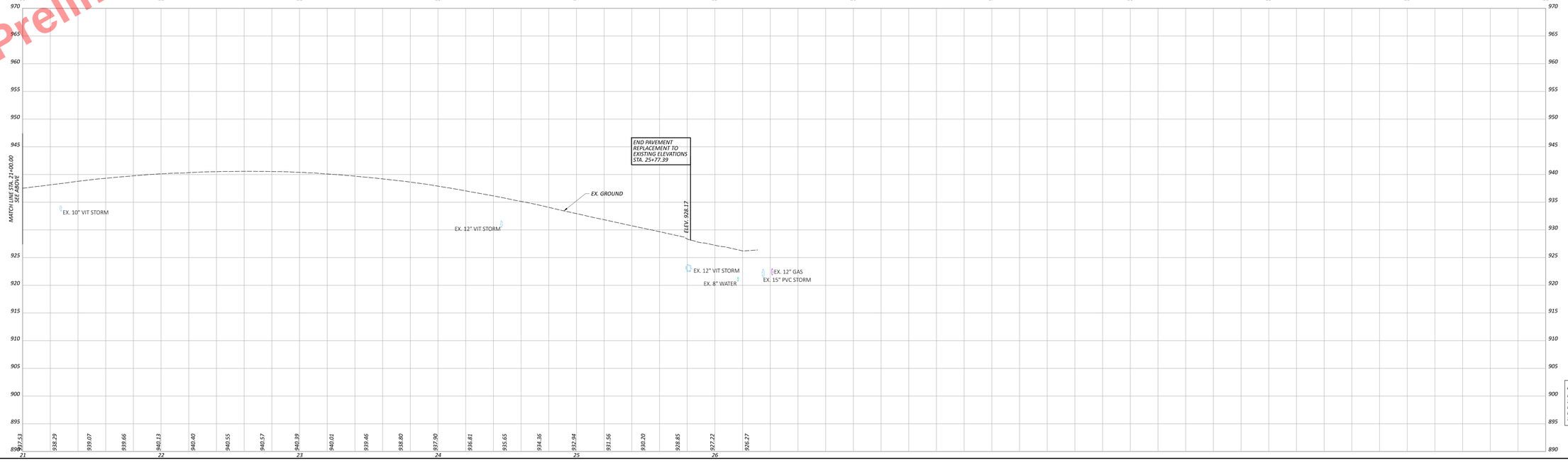

Preliminary Plans - For Reference Only

CROSS REFERENCES	
DESCRIPTION	SHEET NO.
RAMP CA PLAN	P.172, P.173

NOTES:
PROPOSED PAVEMENT RESURFACING SHALL FOLLOW THE PROFILE OF THE EXISTING PAVEMENT AND STATION LIMITS AS DEFINED IN THE TYPICAL SECTIONS.

PROFILE - RAMP CA AT U.S. 62/S.R. 7
STA. 11+21.45 TO STA. 26+14.18

DESIGN AGENCY
ms consultants, inc.

DESIGNER: MSN
REVIEWER: CMN 08/29/25
PROJECT ID: 121474
SHEET: P.255 TOTAL: 655

MAH-680-4.58

Preliminary Plans - For Reference Only



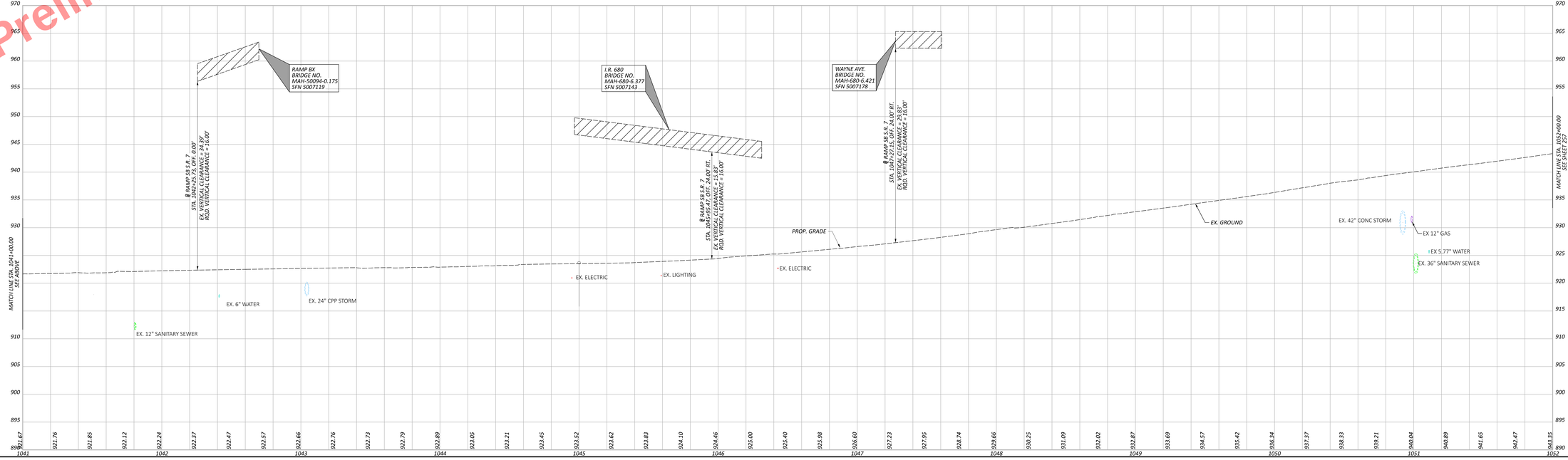

CROSS REFERENCES	
DESCRIPTION	SHEET NO.
RAMP SB PLAN	P.154, P.156, P.173

PROFILE - RAMP SB S.R. 7 AT U.S. 62/S.R. 7
STA. 1031+07.25 TO STA. 1052+00.00

NOTES:
THE PROFILE FOR THE LIMITS OF PAVEMENT REPLACEMENT TO EXISTING ELEVATIONS SHALL MATCH THE EXISTING PROFILE ELEVATIONS

DESIGN AGENCY
ms consultants, inc.
DESIGNER: MSN
REVIEWER: CMN 08/29/25
PROJECT ID: 121474
SHEET: P.256 TOTAL: 655

MAH-680-4.58

BASE: 11321_GF4SS_PAVEMENT_SHEET.dgn DATE: 9/25/2025 TIME: 2:16:00 PM USER: CHOOT_PW
C:\Users\choot\Documents\Projects\11321_GF4SS_PAVEMENT_SHEET_CHOOT.PW_Catalog PENTBL: CHOOT_LTPen.tbl USER: DeadReckoning@outlook.com WORKSPACE: CHOOTS1429 WORKSET: 131474 PRODUCT: OpenRoadDesigner 24.00.00.205

Preliminary Plans - For Reference Only

CROSS REFERENCES	
DESCRIPTION	SHEET NO.
RAMP SB PLAN	P.154, P.156, P.173

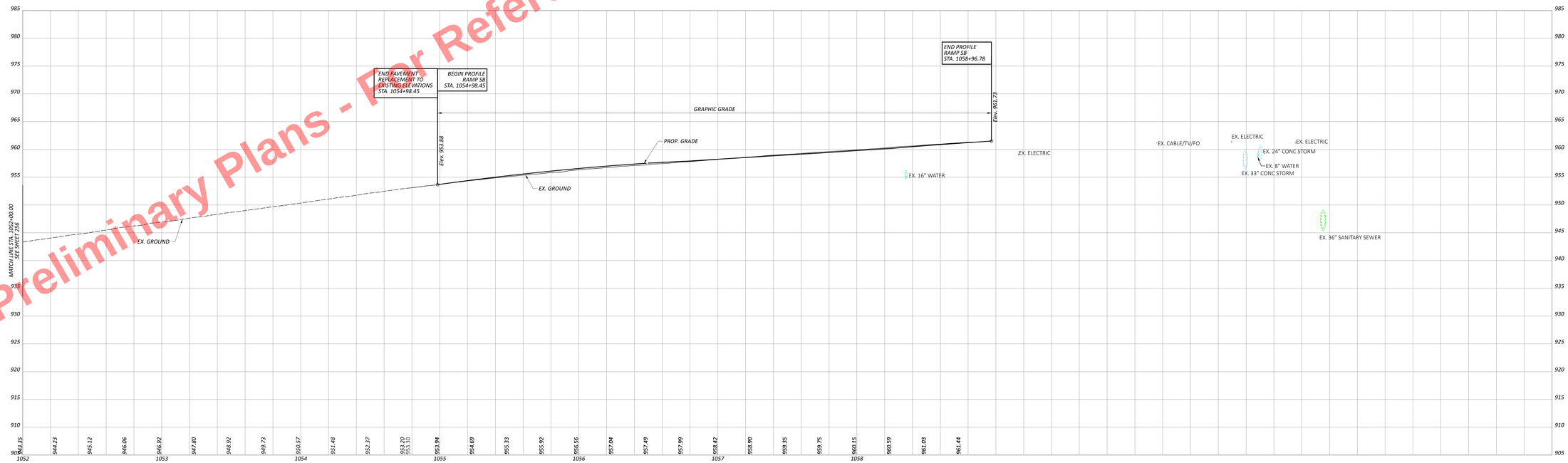

NOTES:

PROPOSED PAVEMENT RESURFACING SHALL FOLLOW THE PROFILE OF THE EXISTING PAVEMENT AND STATION LIMITS AS DEFINED IN THE TYPICAL SECTIONS.

PROFILE - RAMP SB S.R. 7 AT U.S. 62/S.R. 7
STA. 1052+00.00 TO STA. 1058+96.78

DESIGN AGENCY
ms consultants, inc.

DESIGNER: MSN
REVIEWER: CMN 08/29/25
PROJECT ID: 121474
SHEET: P.257 TOTAL: 655

MAH-680-4.58

MODEL: 11321_GRAY_PAVEMENT_66x34.DGN | DATE: 9/25/2025 TIME: 2:16:07 PM | PETRY, CHRIST, PW | C:\plotfig FENTRL CHRIST, J)\Precast 11x34 Sheets\MAH-680-4.58.dgn | WORKSPACE: CHRISTOS69 WORKSET: 121474 PRODUCT: OpenRoadDesigner 24.00.00.205

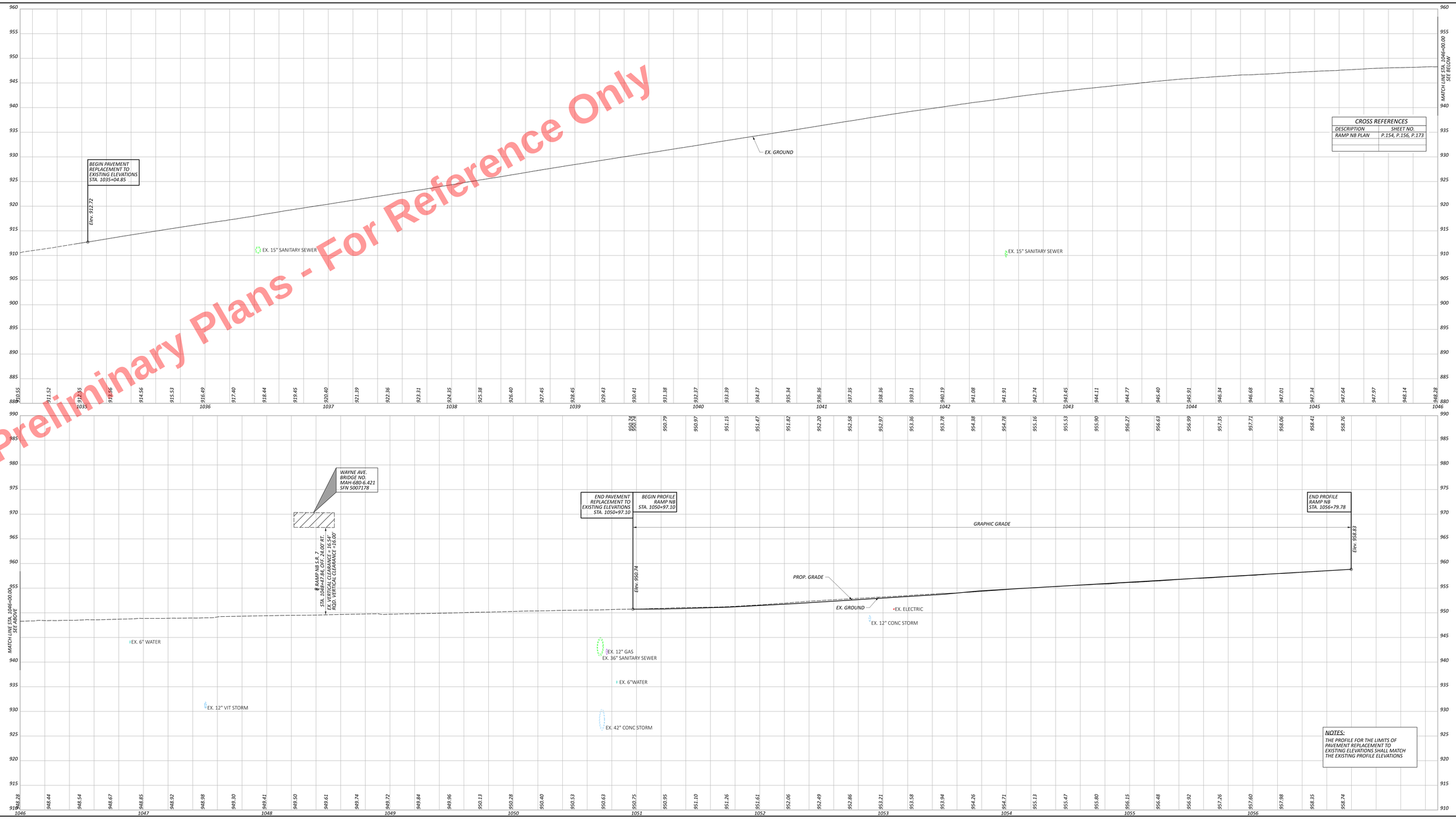

Preliminary Plans - For Reference Only

PROFILE - RAMP NB AT S.R. 7 U.S. 62/S.R. 7
STA. 1035+04.85 TO STA. 1056+79.78

MAH-680-4.58

MODEL: 11311_GEAR_PAVEMENT_664.DGN | DATE: 9/25/2025 TIME: 2:16:16 PM | PETERV | DRGDT_DTM.txt | DRGDT_PNTRL.DRGDT_DTM.txt | DRGDT_PNTRL.DRGDT_PNT | LAYOUT: PNTRL



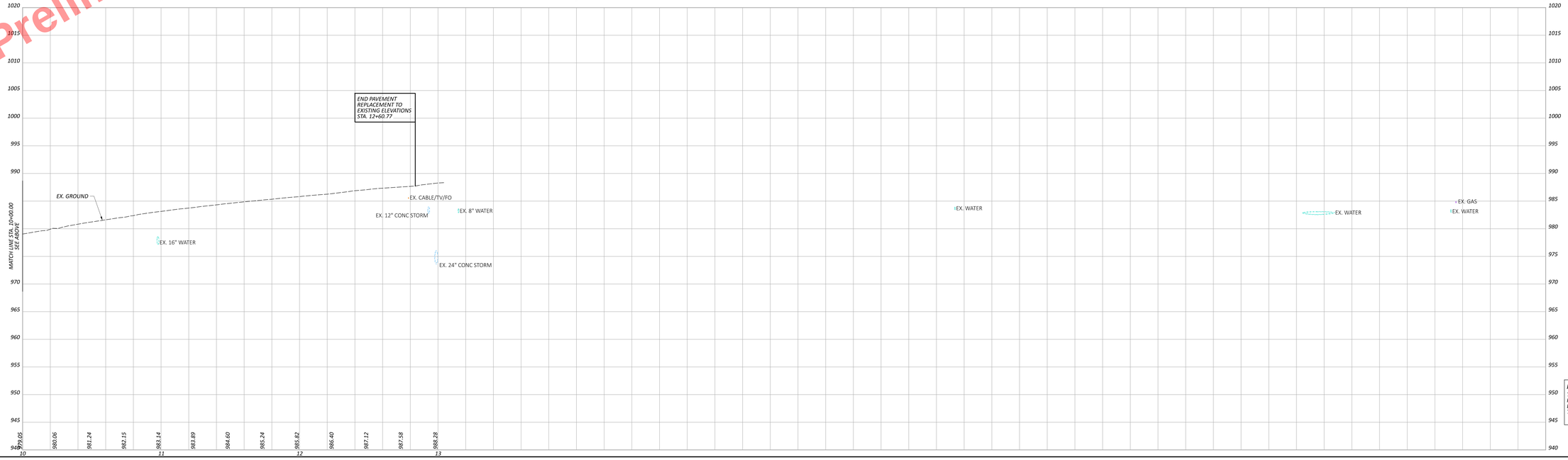

CROSS REFERENCES	
DESCRIPTION	SHEET NO.
RAMP BV PLAN	P.154, P.156, P.158

Preliminary Plans - For Reference Only

PROFILE - RAMP BV AT U.S. 62/S.R. 7 & WILLIAMSON AVE.
STA. 0+00.00 TO STA. 12+83.57

NOTES:
THE PROFILE FOR THE LIMITS OF PAVEMENT REPLACEMENT TO EXISTING ELEVATIONS SHALL MATCH THE EXISTING PROFILE ELEVATIONS

DESIGN AGENCY
ms consultants, inc.

DESIGNER: MSN
REVIEWER: CMN 08/29/25
PROJECT ID: 121474
SHEET: P.259 TOTAL: 655

MAH-680-4.58

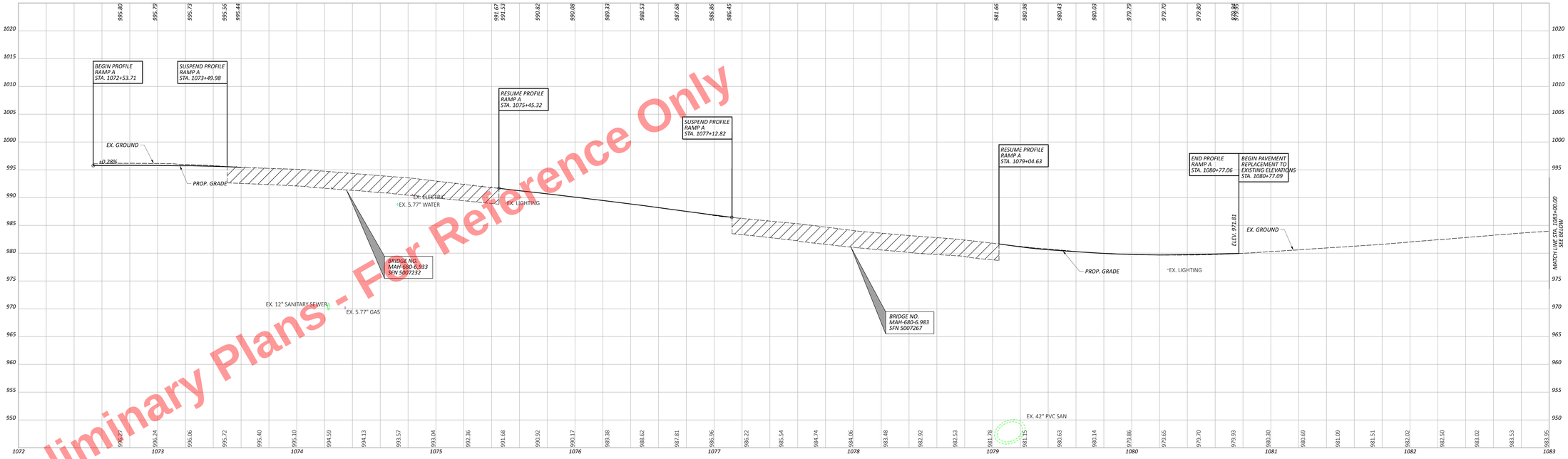

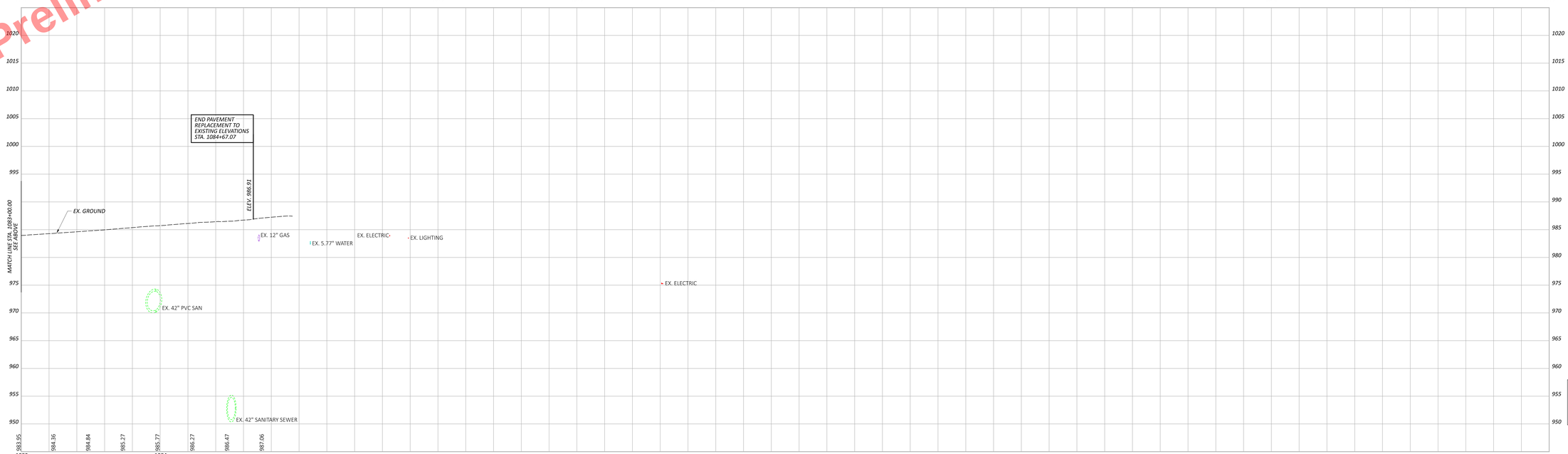

Preliminary Plans - For Reference Only

CROSS REFERENCES	
DESCRIPTION	SHEET NO.
RAMP A PLAN	P.160, P.162

NOTES:
PROPOSED PAVEMENT RESURFACING SHALL FOLLOW THE PROFILE OF THE EXISTING PAVEMENT AND STATION LIMITS AS DEFINED IN THE TYPICAL SECTIONS.

PROFILE - RAMP A AT SOUTH AVE.
STA.1072+53.71 TO STA. 1084+95.18

DESIGN AGENCY
ms consultants, inc.
DESIGNER: MSN
REVIEWER: CMN 08/29/25
PROJECT ID: 121474
SHEET: P.260 TOTAL: 655

MAH-680-4.58

MODEL: 11321_GRADE_PAVEMENT_SHEET.dgn DATE: 9/17/2025 TIME: 2:16:08 PM USER: DMOFF.CHMOFF.PSP C:\ptwlg PENTRE_CHMOFF_DTHerstal (dd)k.DhaiBentley.com WORKSPACE: CHMOFFSHEETS WORKSET: 121474 PRODUCT: OpenRoadDesigner 24.00.00.205
ALL RIGHTS RESERVED. USE OF THIS DESIGN IS SUBJECT TO THE RESTRICTIONS STATED IN YOUR AGREEMENT WITH BENTLEY SYSTEMS, INCORPORATED AND ITS LICENSORS.

Preliminary Plans - For Reference Only

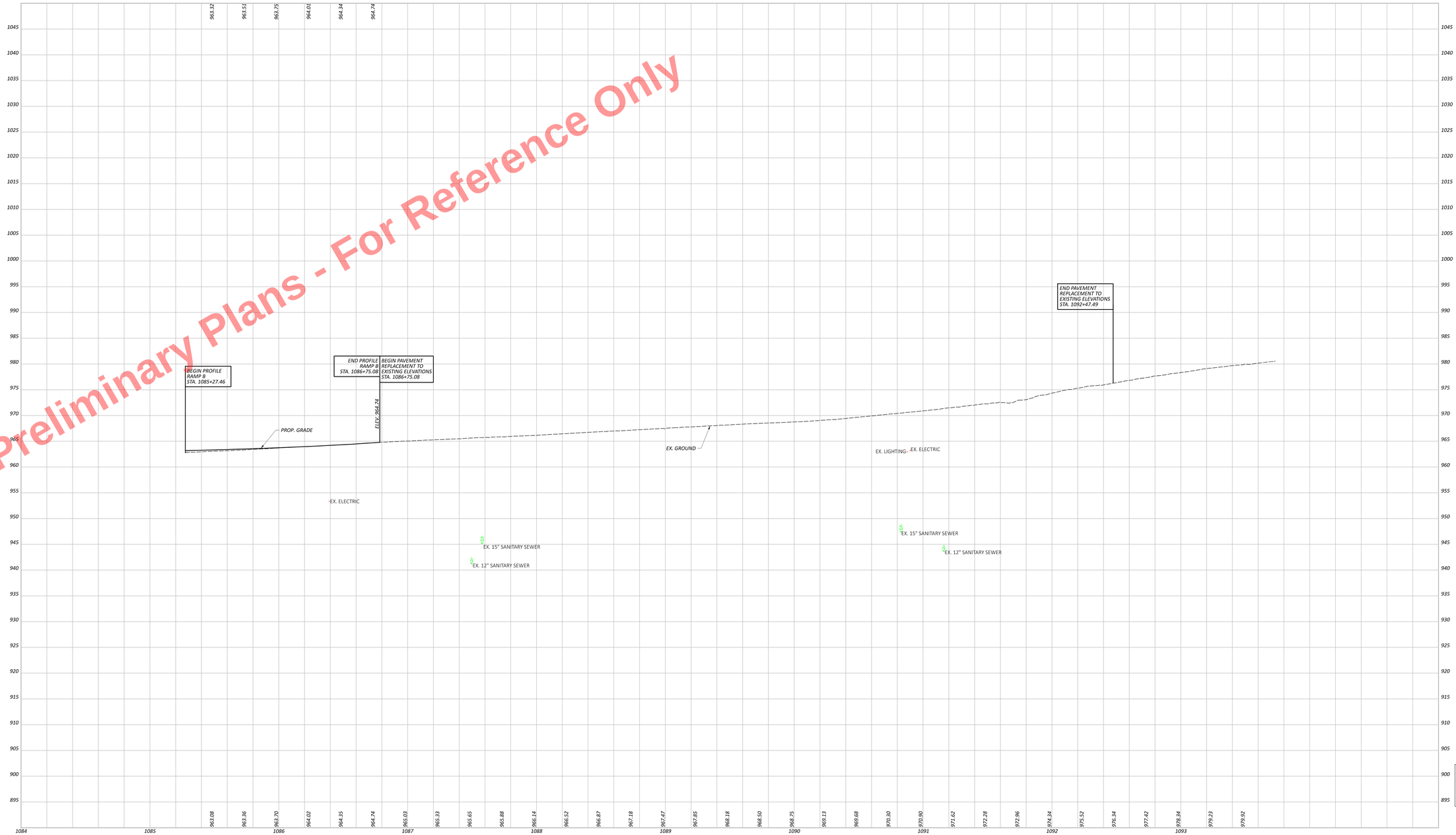

CROSS REFERENCES	
DESCRIPTION	SHEET NO.
RAMP B PLAN	P.162, P.174

NOTES:

PROPOSED PAVEMENT RESURFACING SHALL FOLLOW THE PROFILE OF THE EXISTING PAVEMENT AND STATION LIMITS AS DEFINED IN THE TYPICAL SECTIONS.

PROFILE - RAMP B AT SOUTH AVE.
STA. 1085+27.46 TO STA. 1093+61.41

MAH-680-4.58

MODEL: 11311_(24x1_ANSIB)(d).dgn | DATE: 9/21/2025 TIME: 2:16:59 PM | PETERV ONEOT_DTM=tal (d)(k.Shea@mssnow.com WORKPACE: ONEOTD1459 WORKSET: 121474 PRODUCT: OpenRoadDesigner 24.00.00.205
ACTIVE FILE: P:\Projects\Active\MAH\680-4.58\Design\Roadway\Plans\Profile\11311_(24x1_ANSIB)(d).dgn

DESIGN AGENCY
ms consultants, inc.
DESIGNER: MSN
REVIEWER: CMN 08/29/25
PROJECT #: 121474
SHEET: P.261 TOTAL: 655

Preliminary Plans - For Reference Only

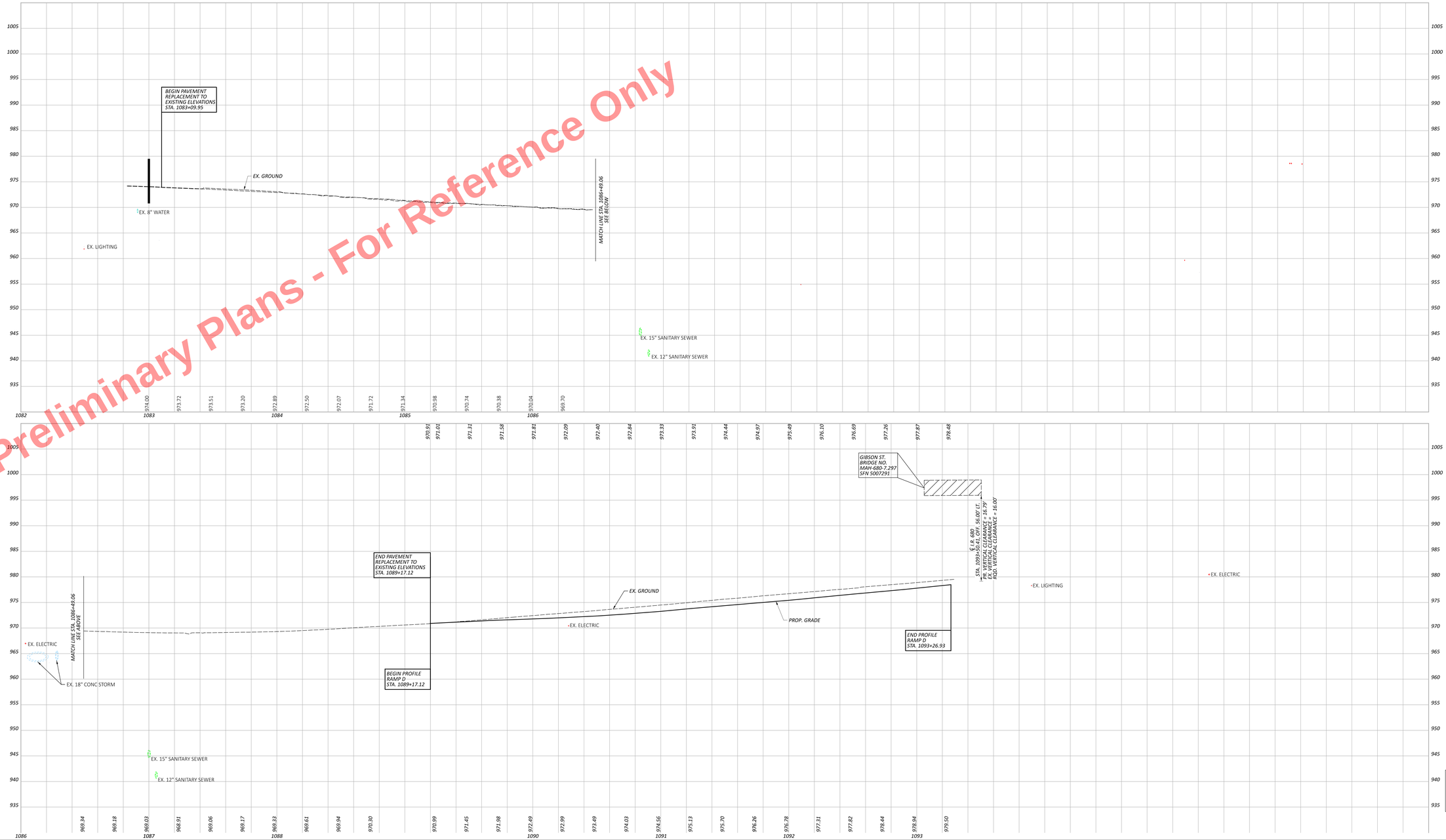

CROSS REFERENCES	
DESCRIPTION	SHEET NO.
RAMP D PLAN	P.162, P.164, P.174

NOTES:

THE PROFILE FOR THE LIMITS OF PAVEMENT REPLACEMENT TO EXISTING ELEVATIONS SHALL MATCH THE EXISTING PROFILE ELEVATIONS

PROFILE - RAMP D AT SOUTH AVE.
STA. 1082+83.08 TO STA. 1093+26.73

MAH-680-4.58

MODEL: 11X31; LEVEL: (24x1); PAPERSIZE: 66x34 (in); DATE: 9/17/2025 TIME: 2:16:48 PM PETERV ONDOT_PW 1.pltcfg PENTBL ONDOT_LWtherm.tbl USER: DeadBrowning@dot.ohio.gov WORKSPACE: ONDOTSVR3 WORKSET: 121474 PRODUCT: OpenRoadsDesigner 24.00.00.205
M:\Projects\Mahoning\680\Pid 121474\Roadway\Plan and Profile\Ramp D\121474_RAMP D PLAN AND PROFILE.dgn

DESIGN AGENCY	ms consultants, inc.
DESIGNER	MSN
REVIEWER	CMN 08/29/25
PROJECT ID	121474
SHEET	P.262
TOTAL	655

Preliminary Plans - For Reference Only

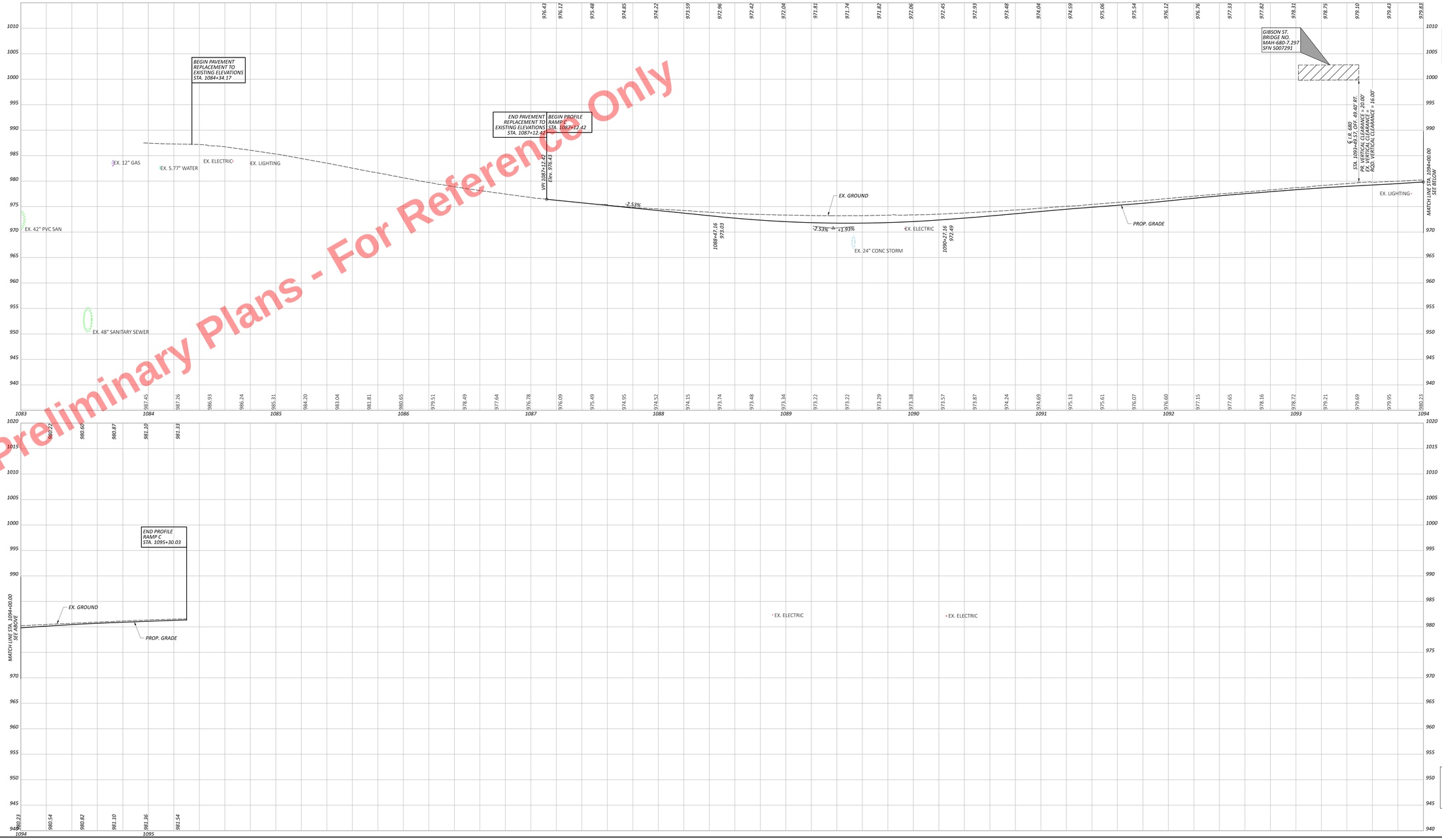

CROSS REFERENCES	
DESCRIPTION	SHEET NO.
RAMP C PLAN	P.162, P.164

NOTES:
THE PROFILES FOR THE LIMITS OF PAVEMENT REPLACEMENT TO EXISTING ELEVATIONS SHALL MATCH THE EXISTING PROFILE ELEVATIONS

PROFILE - RAMP C AT SOUTH AVE.
STA. 1083+96.32 TO STA. 1095+30.03

MAH-680-4.58

MODEL: 11321, (2442) PAVEMENT DGN (M) DATE: 9/27/2025 TIME: 2:34:47 PM USER: JOHNSON, CHRISTOPHER J PATH: C:\Users\cjohnson\Desktop\11321 (2442) PAVEMENT DGN (M).dgn WORKSET: 121474 PROJECT: C:\Projects\MAH-680-4.58\Roadway\Plans\121474.dgn

DESIGN AGENCY
ms consultants, inc.
DESIGNER: MSN
REVIEWER: JDK 10/04/24
PROJECT ID: 121474
SHEET P.263 TOTAL 471

Preliminary Plans - For Reference Only

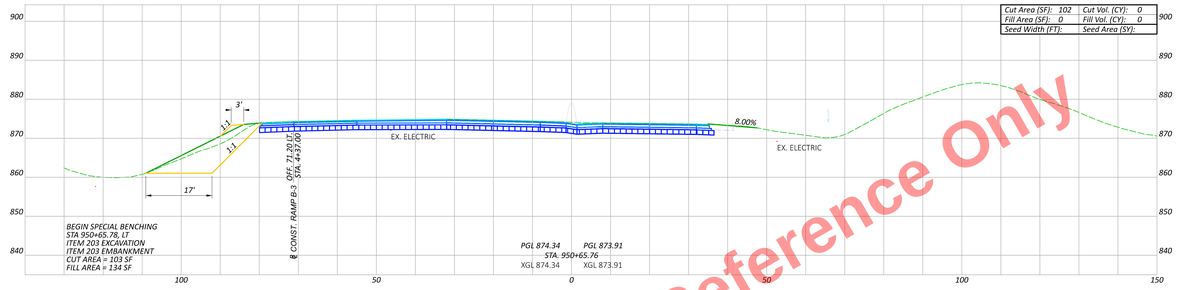

LEGEND:

ITEM 206 - CEMENT STABILIZED SUBGRADE, 14" DEPTH

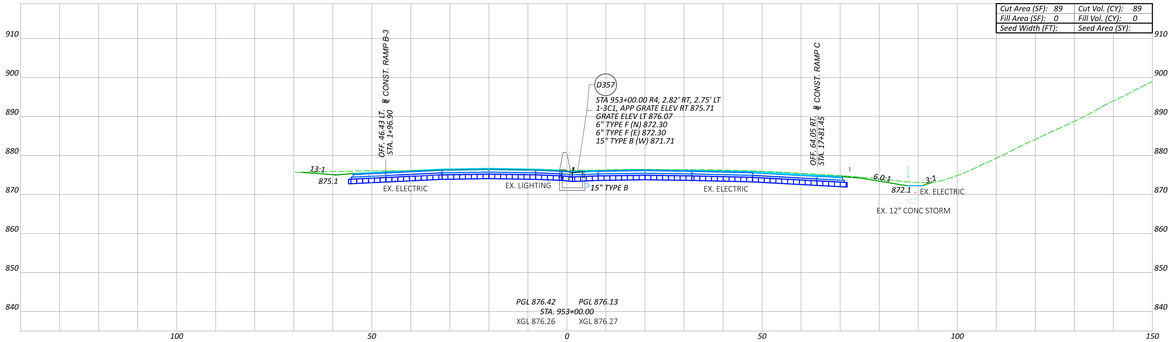

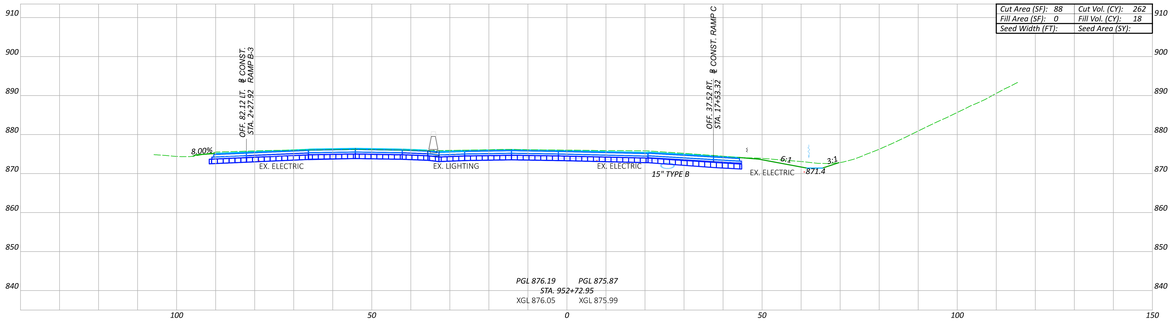

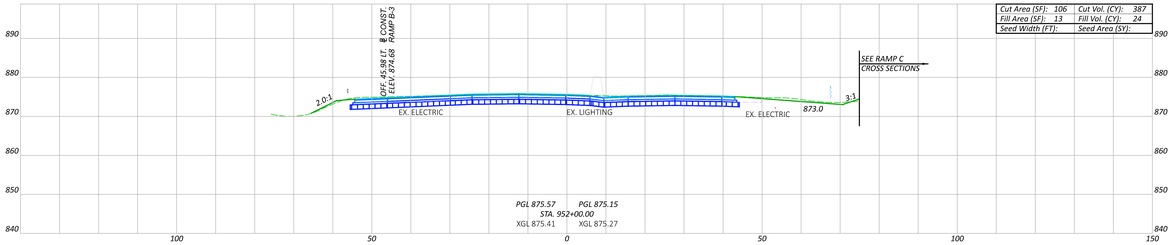

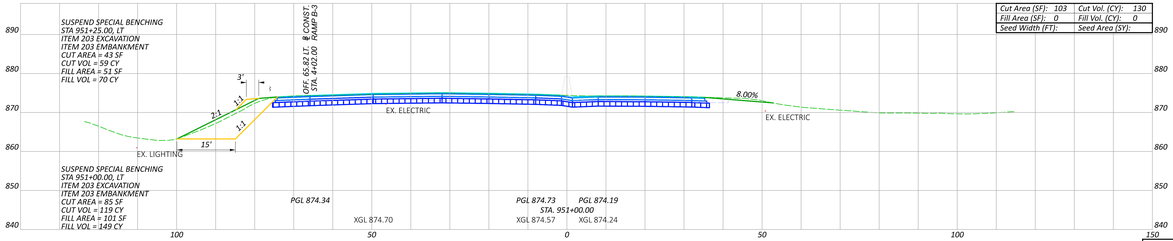

CROSS SECTIONS - I.R. 680
STA. 948+00.00 TO STA. 953+00.00

MAH-680-4.58

MODEL: C3P_ORD_ = 984x600.04 [Sheet] PAPERSIZE: 66x34 IN | DATE: 9/15/2025 TIME: 9:39:52 AM SYSTEM: OHDOT_PW_X.dat|sg PENTBL: OHDOT_PenCol-16X.tbl|ctb WORKSPACE: OHDOTSx64 WORKSET: 111474 PRODUCT: OpenRoadsDesigner 24.00.00.205
ACTIVE: P:\Projects\Mahoning\121474\Design\Roadway\Plan Sheets\Cross Sections\680-4.58 CROSS SECTIONS.dgn

DESIGN AGENCY: ms consultants, inc.
DESIGNER: MSN
REVIEWER: CMN 08/29/25
PROJECT ID: 121474

Sheet Totals			SHEET	TOTAL
Seeding	Cut	Fill	P.264	655
	1046	267		

Preliminary Plans - For Reference Only

LEGEND:

ITEM 206 - CEMENT STABILIZED SUBGRADE, 14" DEPTH

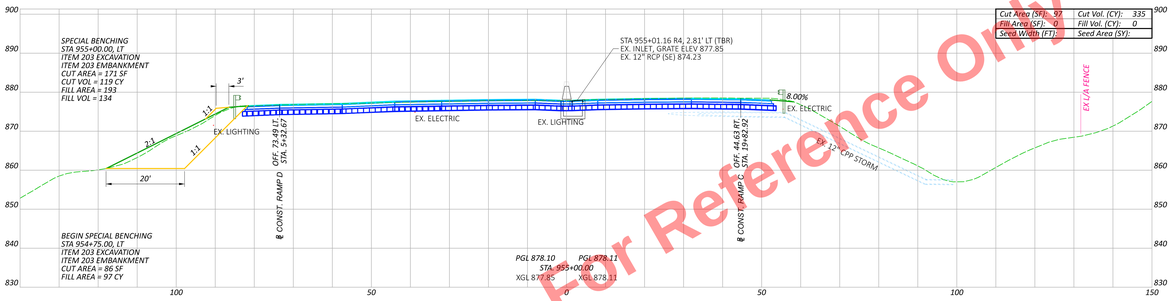

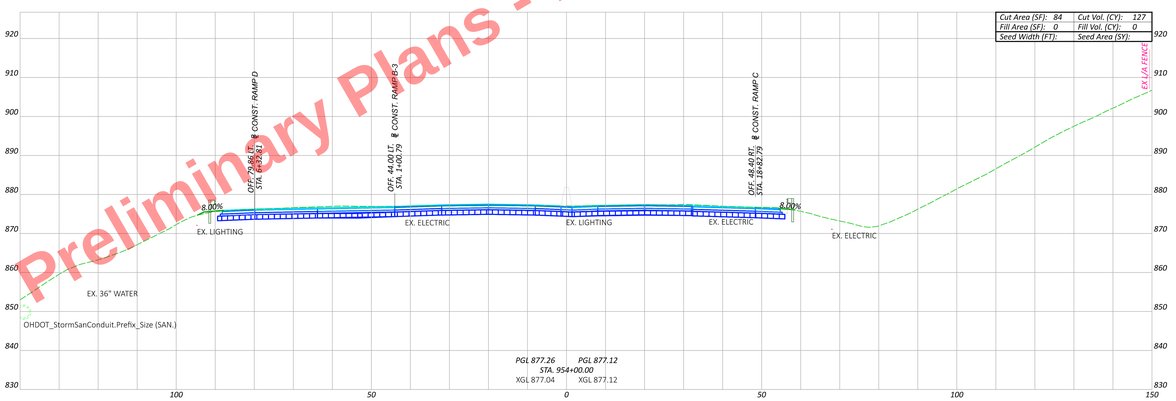

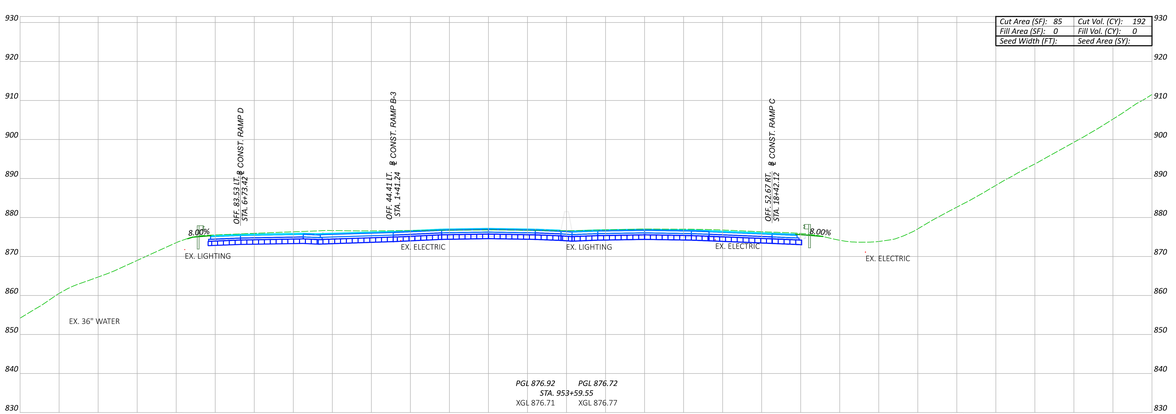

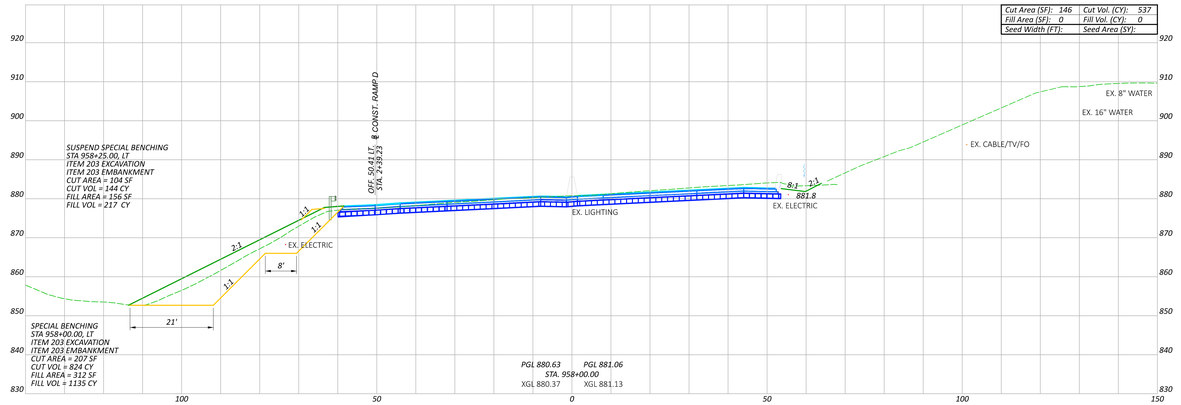

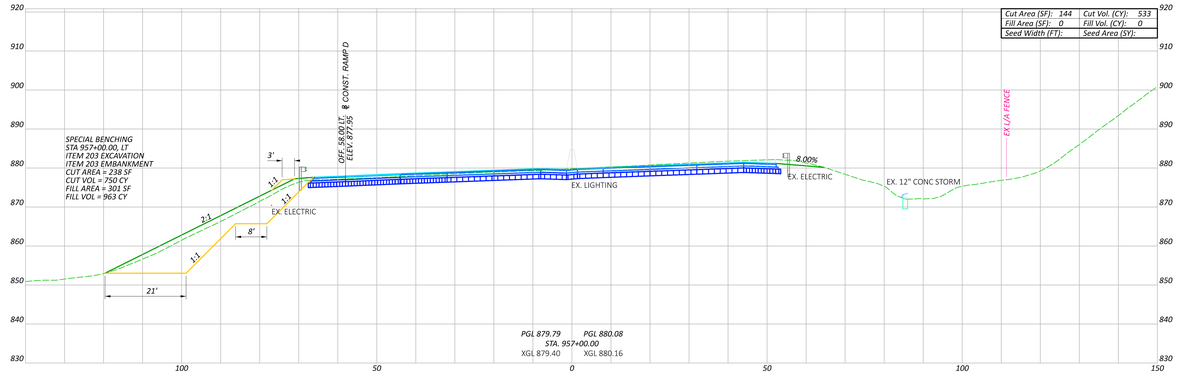

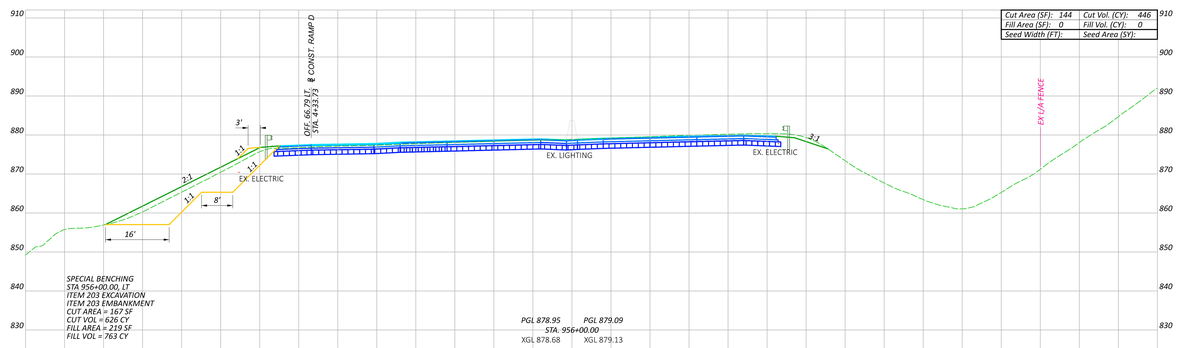

CROSS SECTIONS - I.R. 680
STA. 953+59.55 TO STA. 958+00.00

Sheet Totals			
Seeding	Cut	Fill	SHEET TOTAL
	4615	3272	P.265 655

DESIGN AGENCY: ms consultants, inc.
DESIGNED: MSN
REVIEWED: CMN 08/29/25
PROJECT ID: 121474

MAH-680-4.58

MODEL: CLF_681; - 955+59.55 R4 [Sheet] PAPERSIZE: 66x34 IN | DATE: 9/25/2025 TIME: 9:40:33 AM SYSTEM: OHDOT_PW_X.xml.sg FILENAME: OHDOT_PW_X.xml.sg FILE USER: DrewJ@msconsultants.com WORKSPACE: OHDOTGv03 WORKSET: 111474 PRODUCT: OpenRoadsDesigner 24.00.00.205

Preliminary Plans - For Reference Only

LEGEND:

ITEM 206 - CEMENT STABILIZED SUBGRADE, 14" DEPTH

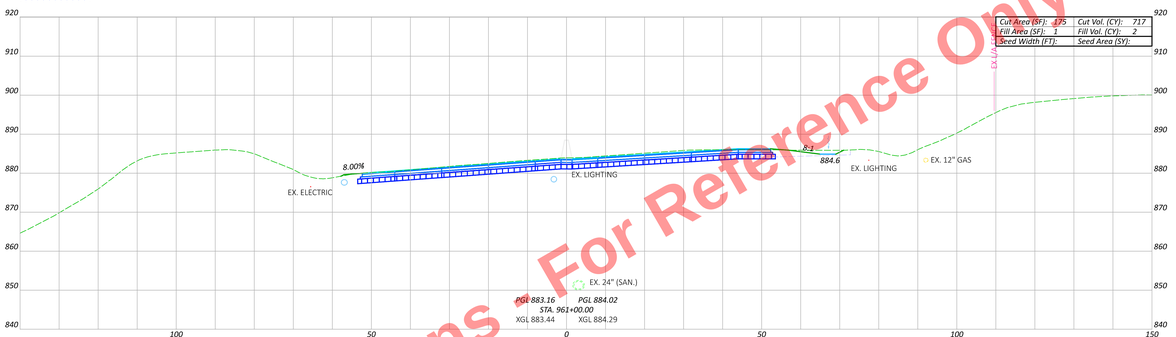

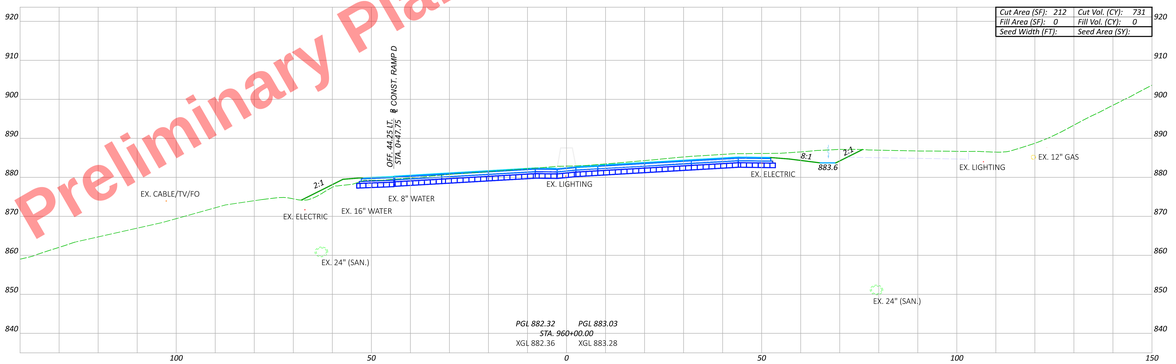

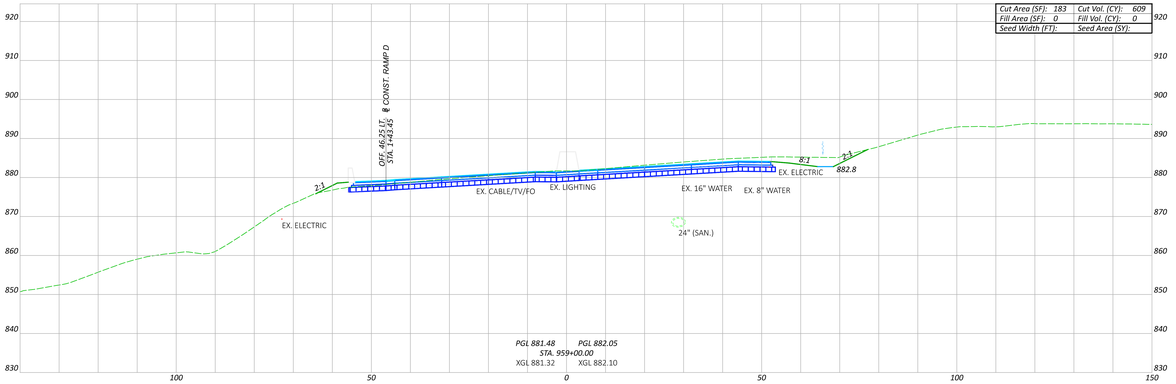

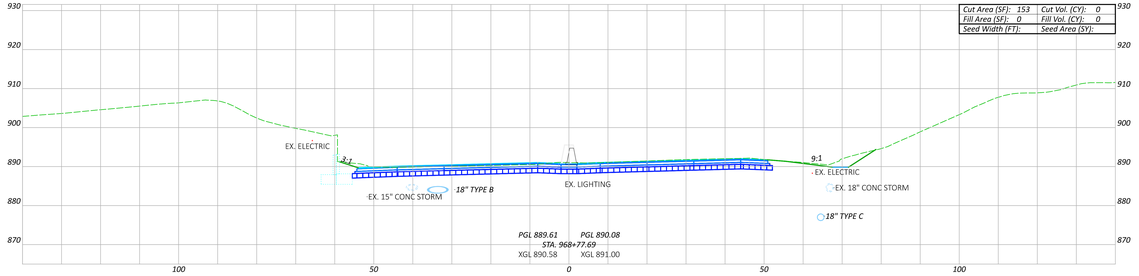

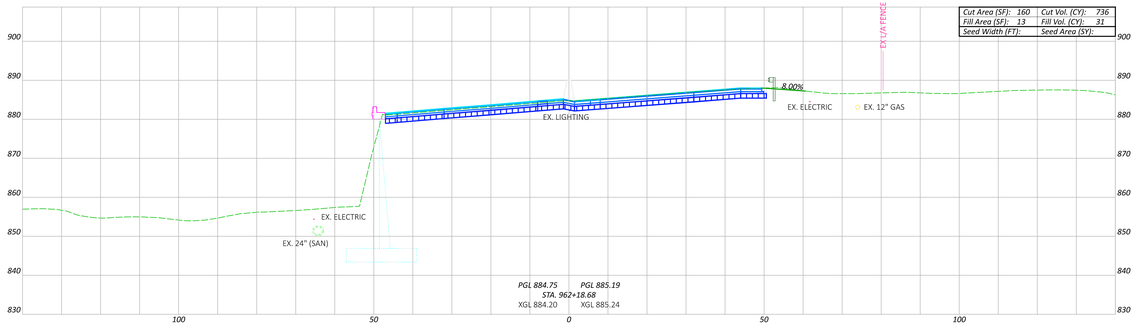

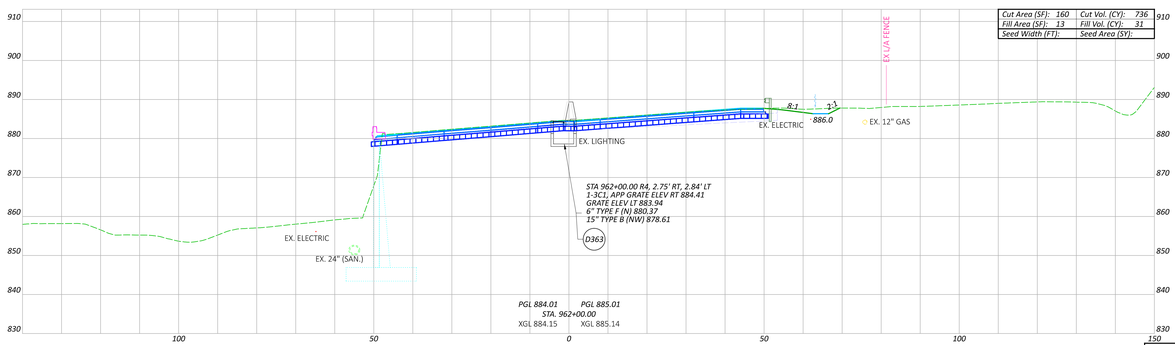

CROSS SECTIONS - I.R. 680
STA. 959+00.00 TO STA. 968+77.60

Sheet Totals				
Seeding	Cut	Fill	SHEET	TOTAL
	2793	33	P.266	655

DESIGN AGENCY: ms consultants, inc.
DESIGNER: MSN
REVIEWER: CMN 08/29/25
PROJECT ID: 121474

MAH-680-4.58

MODEL: C:\MS - 959+00.00 R4 [Sheet] PAYPEGEE 66x34 IN | DATE: 9/25/2025 TIME: 9:40:51 AM SYSTEM: ONDOT_PW_X.prtcfg PLOTTED: ONDOT_PenCat-16X.ctb Sheet@msconsultants.com WORKSPACE: ONDOTSv20 WORKSET: 111474 PRODUCT: OpenRoadsDesigner 24.00.00.205
ALL RIGHTS RESERVED. USE PURSUANT TO COPYRIGHT NOTICE AND LIMITED LICENSE AGREEMENT. UNAUTHORIZED REPRODUCTION OR DISTRIBUTION IS A VIOLATION OF LAW.

Preliminary Plans - For Reference Only

LEGEND:

ITEM 206 - CEMENT STABILIZED SUBGRADE, 14" DEPTH

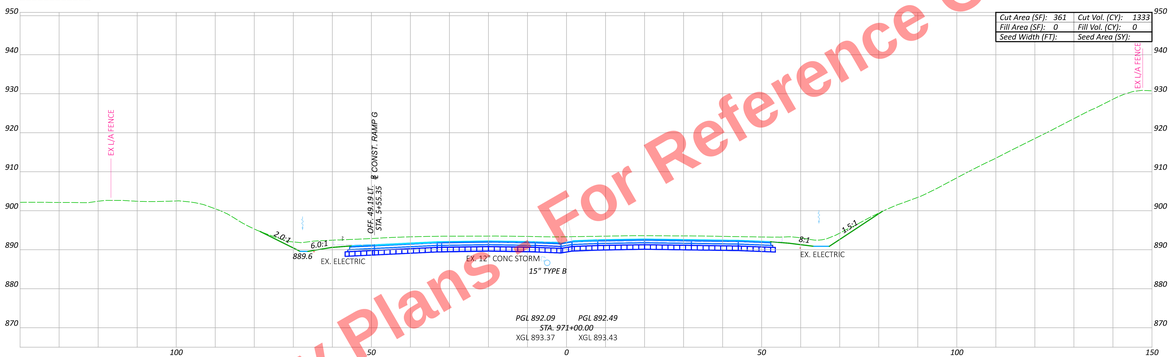

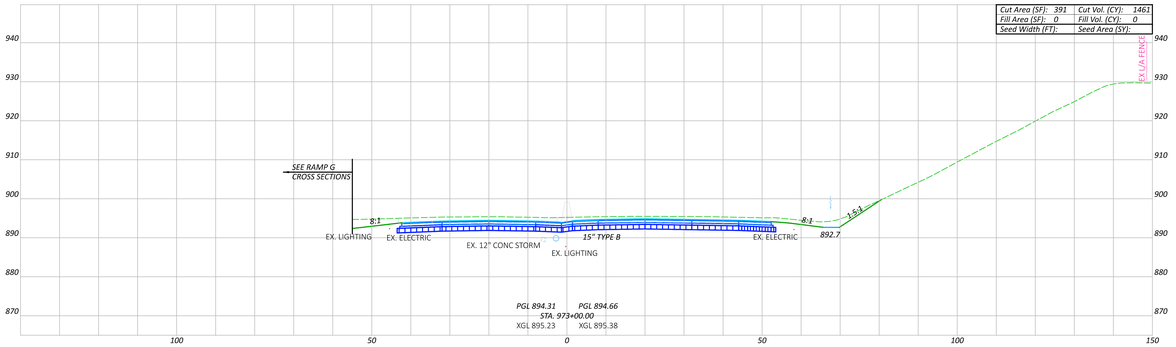

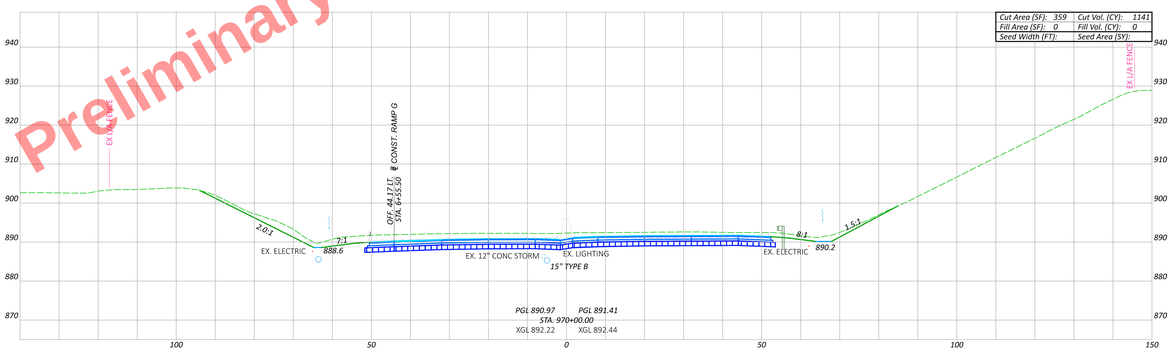

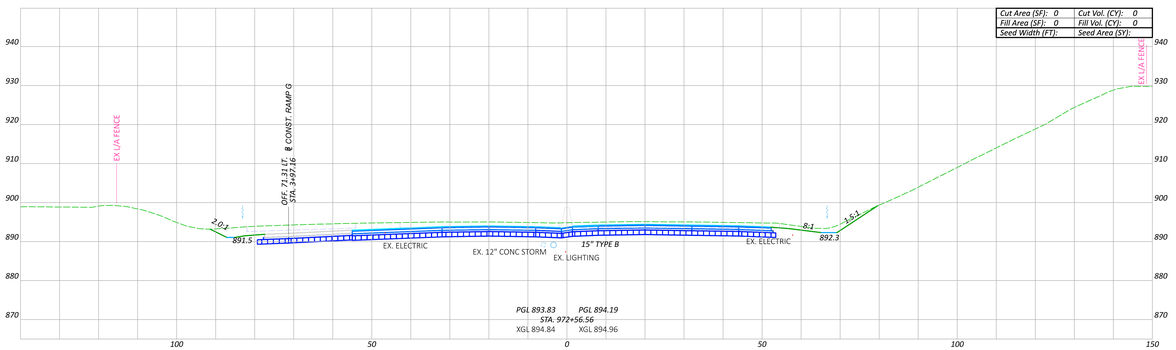

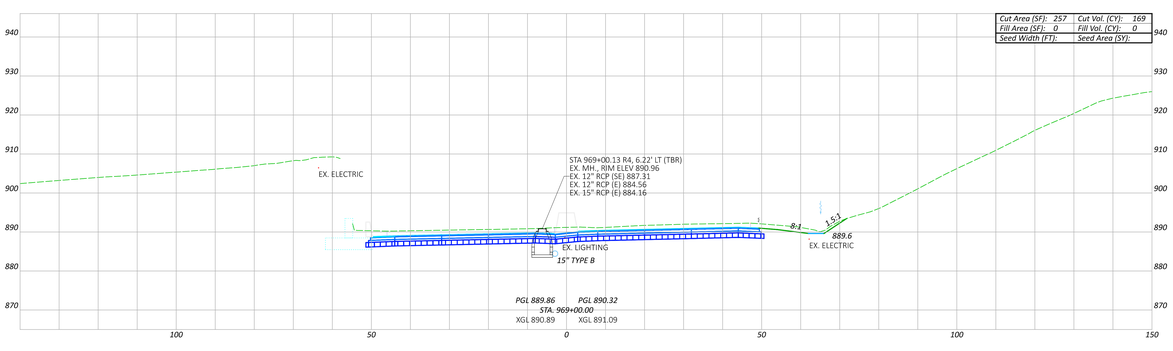

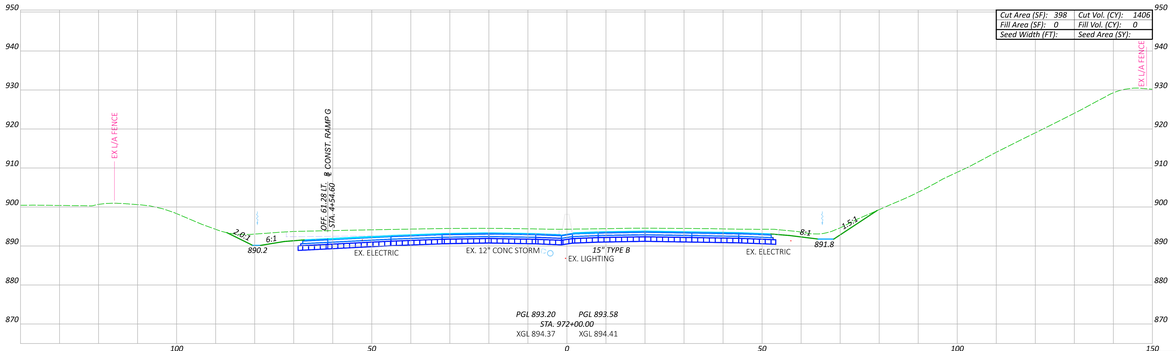

CROSS SECTIONS - I.R. 680
STA. 969+00.00 TO STA. 973+00.00

MAH-680-4.58

MODEL: C:\ARS - 969+00.00 R4 (Shared)_PWPEDGE - 66+54 IN1, DATE: 9/25/2025 - TIME: 9:40:50 AM SYSTEM: ONDOT_PW X-sections\Ramp G\ramp G.dgn PENTBL: ONDOT_PenCtbl USER: DholdRmsconsultants.com WORKSPACE: ONDOTCivil3D WORKSET: 111474 PRODUCT: OpenRoadsDesigner 24.00.00.205
ALL RIGHTS RESERVED. COPYRIGHT © 2025 BENTLEY SYSTEMS, INCORPORATED AND ITS LICENSORS.

DESIGN AGENCY
ms consultants, inc.
DESIGNER MSN
REVIEWER CMN 08/29/25
PROJECT ID 121474

Sheet Totals			SHEET	TOTAL
Seeding	Cut	Fill	P.267	655
	5510	0		

Preliminary Plans - For Reference Only

LEGEND:

ITEM 206 - CEMENT STABILIZED SUBGRADE, 14" DEPTH

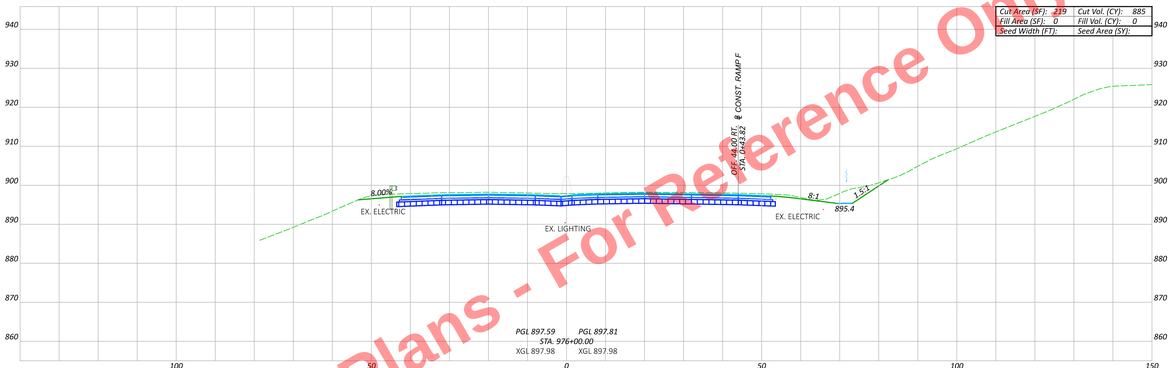

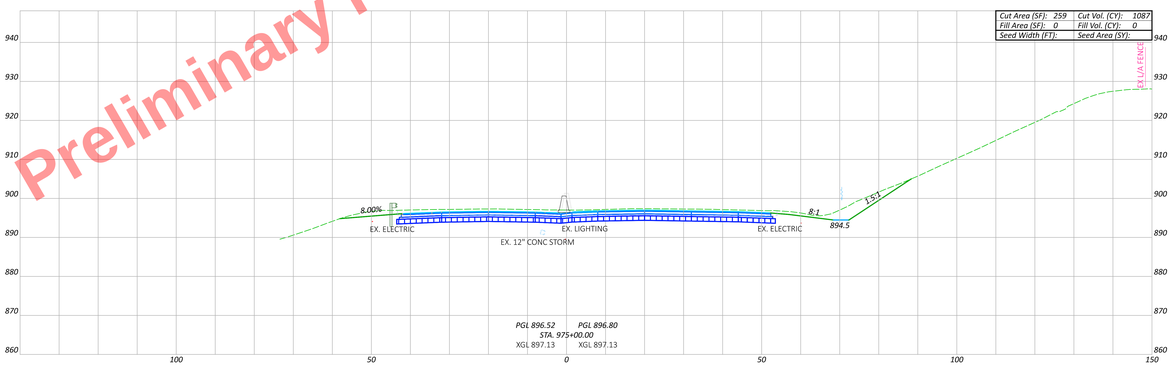

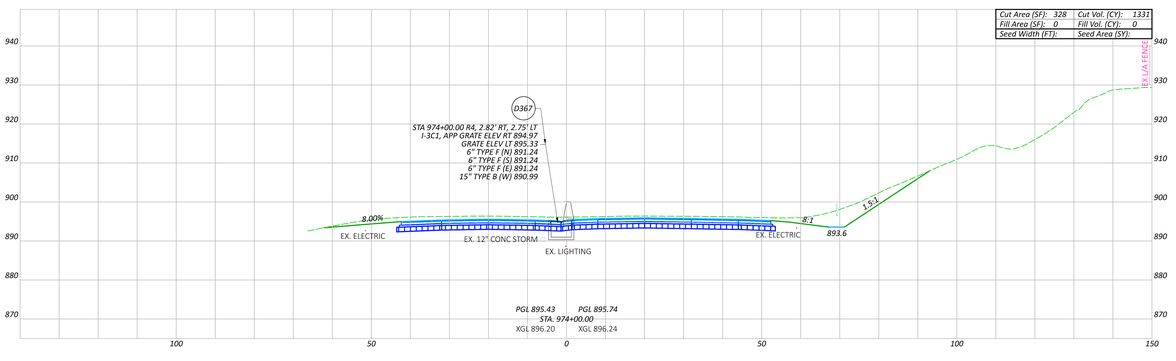

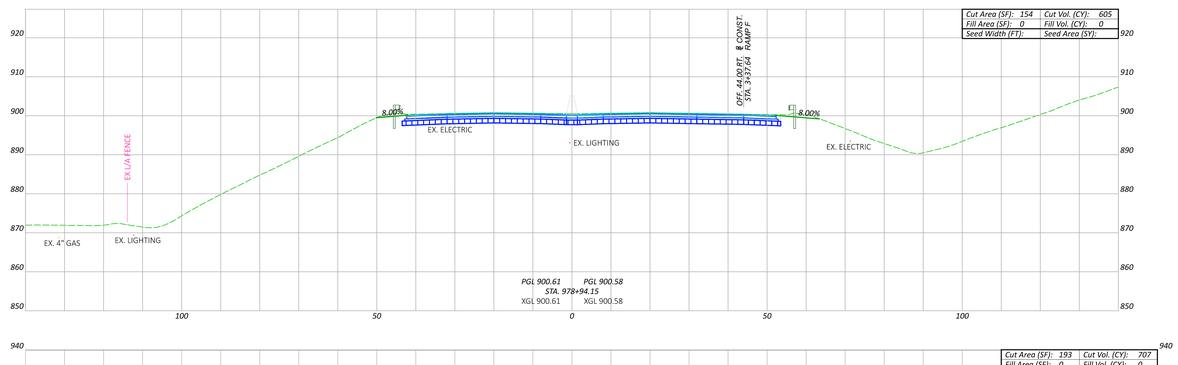

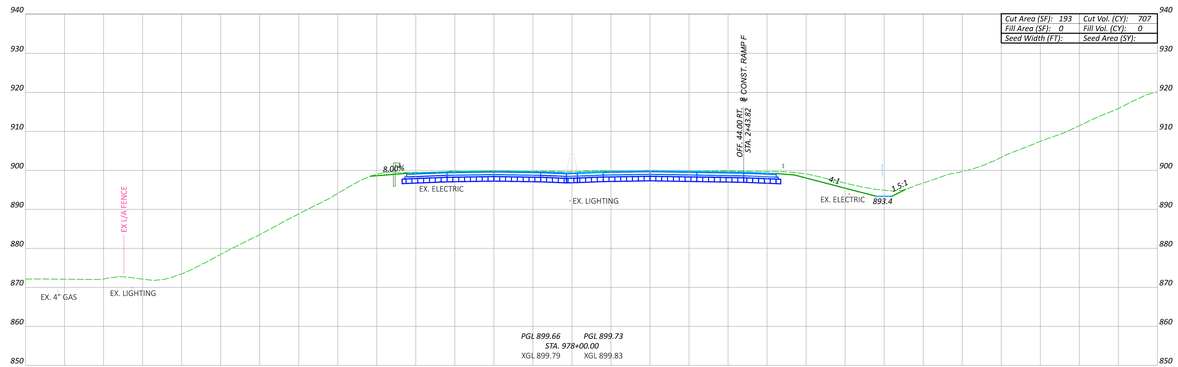

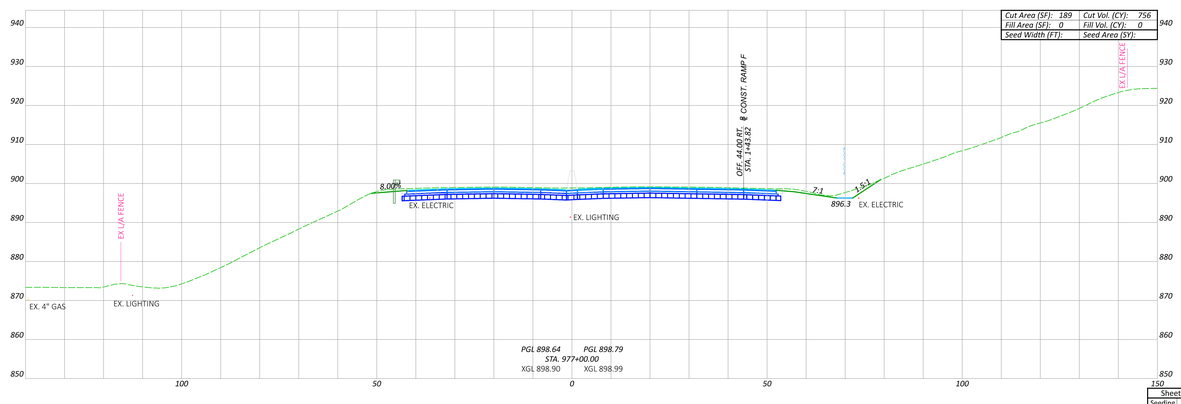

CROSS SECTIONS - I.R. 680
STA. 974+00.00 TO STA. 978+94.15

MAH-680-4.58

MODEL: C3F_SB01 - 3Yrs-0.00 R4 [Sheet] PAYPEGEE 66x34 in | DATE: 9/25/2025 TIME: 9:40:56 AM SYSTEM: CHDOT_PW_X.xml.lg PLOTTED: CHDOT_PenCtbl USER: DHall@mcmcnsultants.com WORKSPACE: CHDOTSv03 WORKSET: 111474 PRODUCT: OpenRoadsDesigner 24.00.00.205
ALL Plan Sheets\Roadway\Cross Sections\MAH-680-4.58 Sheet Files\MAH-680-4.58 Sheet Files - Cross Sections - I.R. 680 STA. 974+00.00 TO STA. 978+94.15.dgn

Sheet Totals			
Seeding	Cut	Fill	SHEET
	5371	0	P.268

TOTAL 655

DESIGN AGENCY

mc consultants, inc.

DESIGNER: MSN
REVIEWER: CMN 08/29/25
PROJECT ID: 121474

Preliminary Plans - For Reference Only

LEGEND:

ITEM 206 - CEMENT STABILIZED SUBGRADE, 14" DEPTH

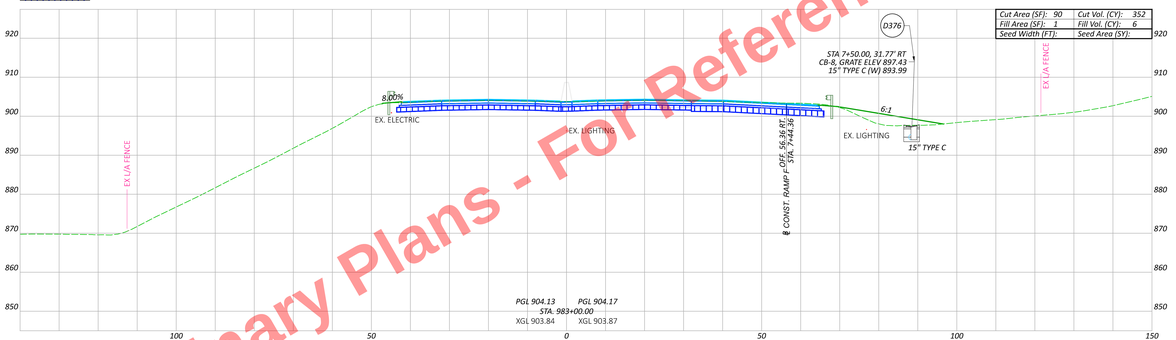

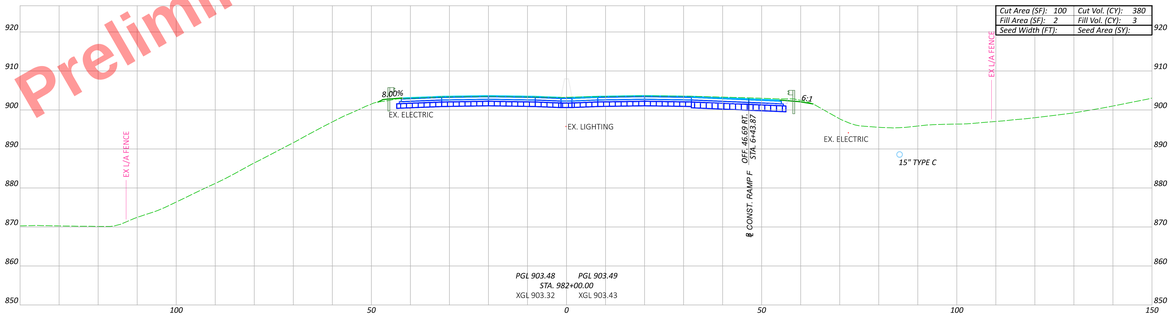

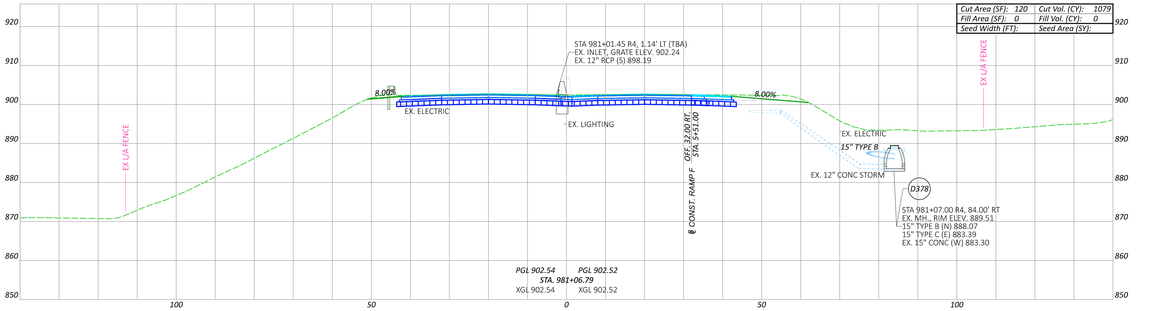

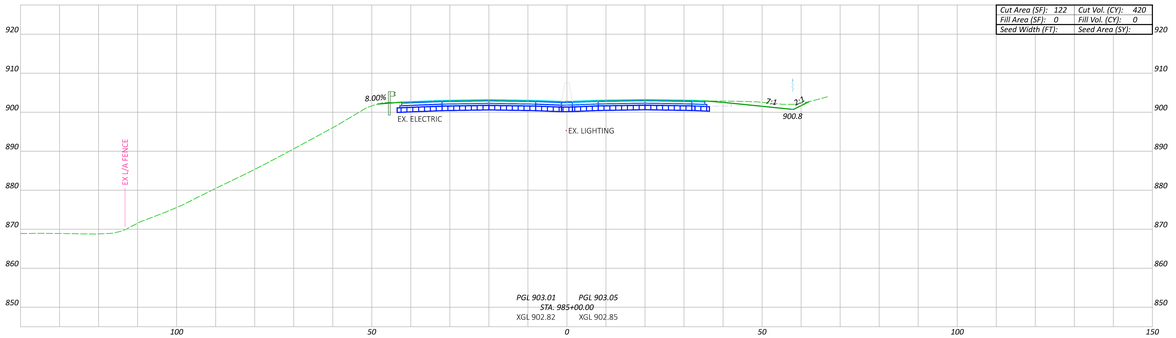

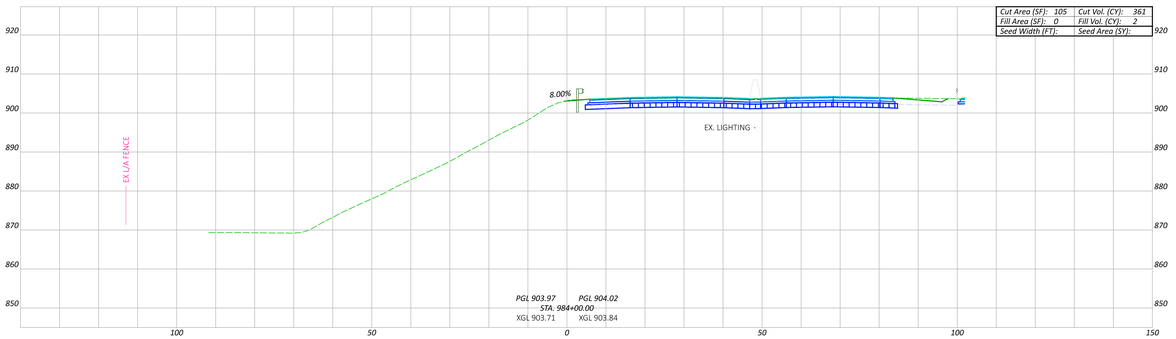

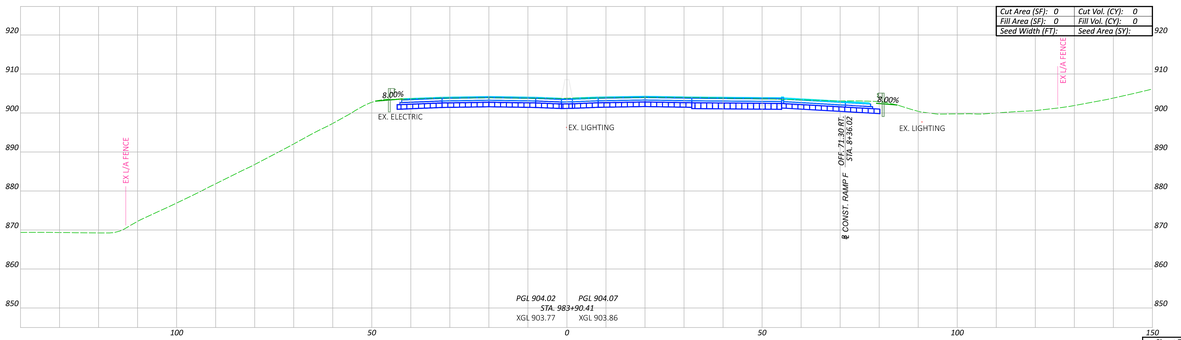

CROSS SECTIONS - I.R. 680
STA. 981+06.79 TO STA. 985+00.00

MAH-680-4.58

MODEL: C:\ARS - 981+06.79 R4 (Shared) PAYPEGEE 66x34 (H) DATE: 9/15/2025 TIME: 9:41:10 AM SYSTEM: CHADOT_PW_X.prj/sg PLOTTED: CHADOT_PenCtbl: USER: DNeal@msconsultants.com WORKSPACE: CHADOTCivil3 WORKSET: 111474 PRODUCT: OpenRoadsDesigner 24.00.00.205
ALL RIGHTS RESERVED. USE PURSUANT TO COPYRIGHT NOTICE AND LIMITED LICENSE AGREEMENT FOR MICROSTATION CONNECT EDITION SOFTWARE.

DESIGN AGENCY
ms consultants, inc.
DESIGNER
MSN
REVIEWER
CMN 08/29/25
PROJECT ID
121474

Sheet Totals				
Seeding	Cut	Fill	SHEET	TOTAL
2592	11		P.269	655

Preliminary Plans - For Reference Only

LEGEND:

ITEM 206 - CEMENT STABILIZED SUBGRADE, 14" DEPTH

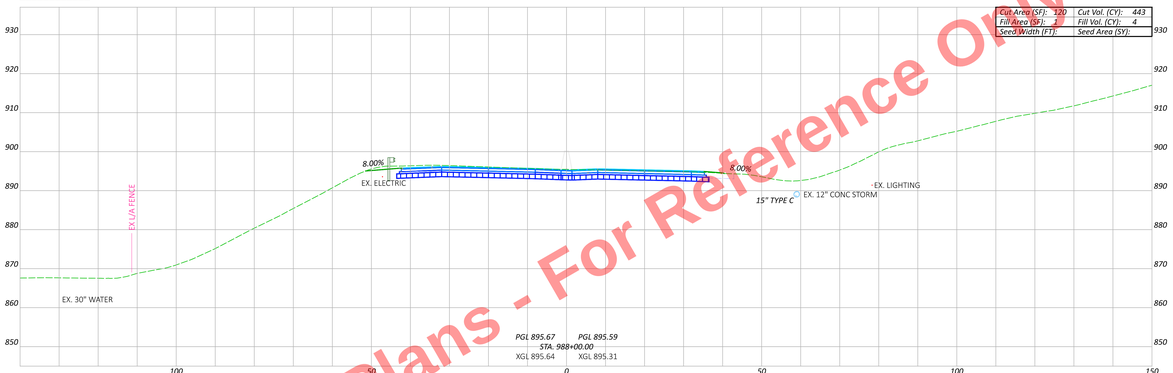

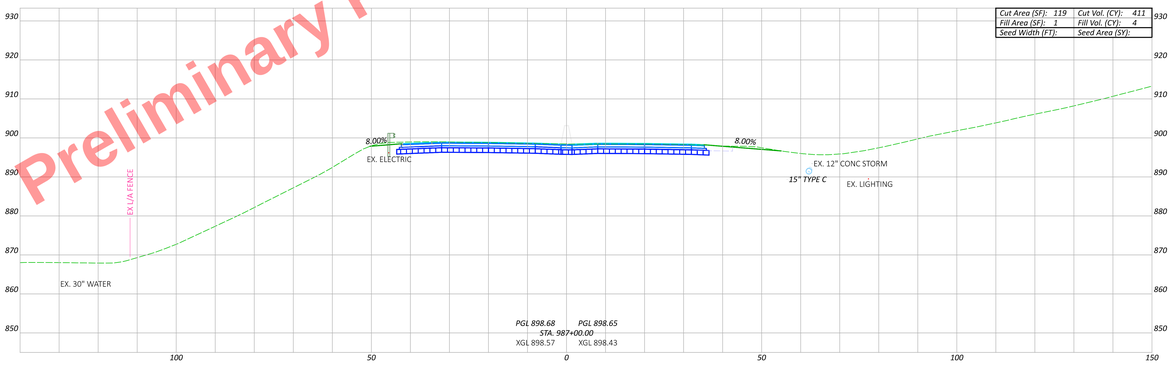

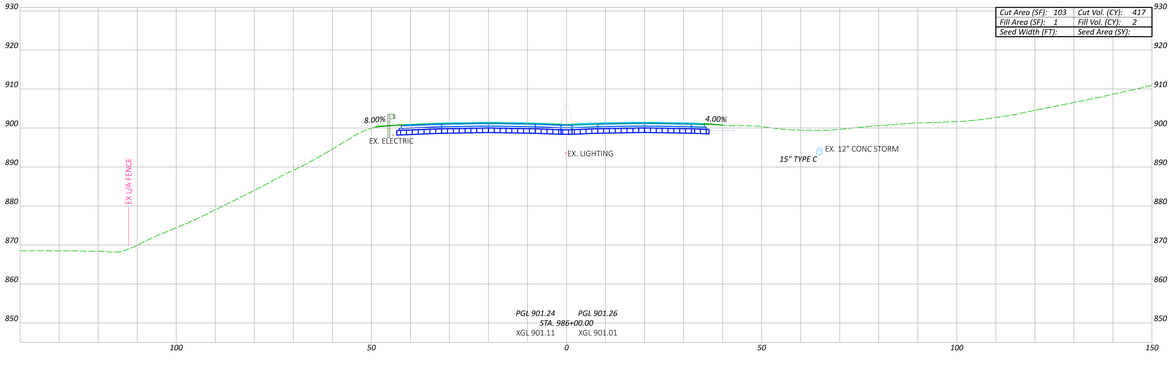

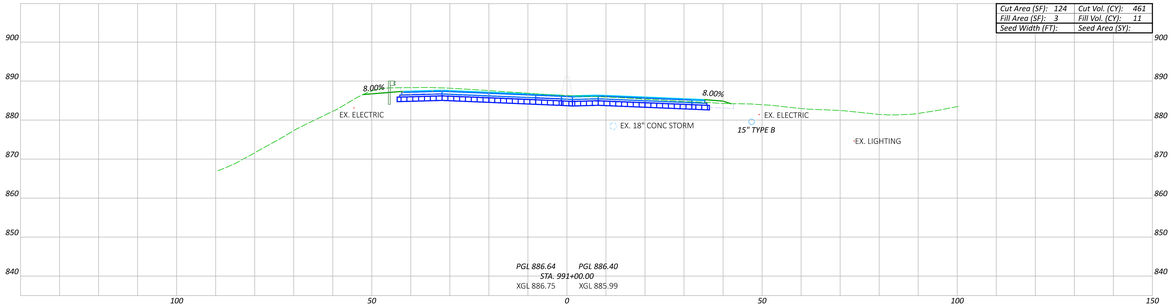

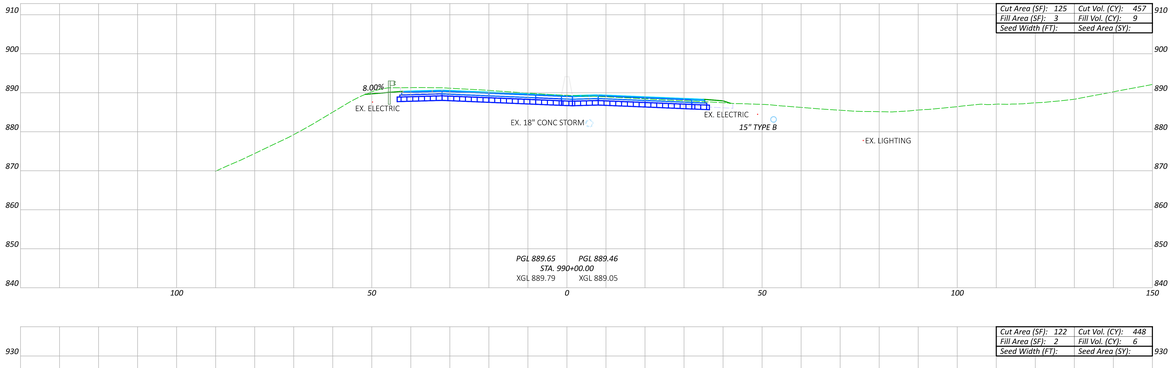

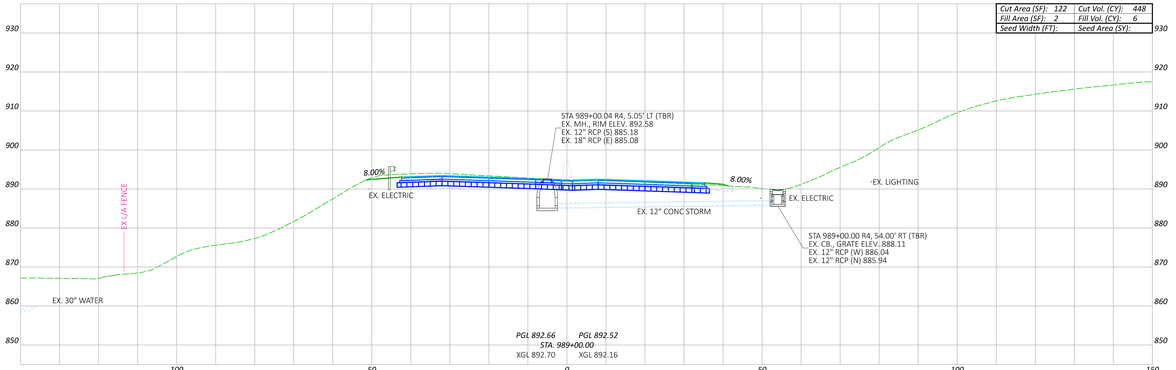

CROSS SECTIONS - I.R. 680
STA. 986+00.00 TO STA. 991+00.00

MAH-680-4.58

MODEL: C:\ARS - 986+00.00 R4 [Sheet] PAYPEGEE: 66x34 IN | DATE: 9/25/2025 - TIME: 9:41:12 AM | XYDIM: ON|OOT: ON | X scale: 1|ZSEL: ON|OOT: ON|Z scale: 1|ZSEL: ON|OOT: ON|Z scale: 1|ZSEL: ON|OOT: ON|Z

Preliminary Plans - For Reference Only

MAH-680-4.58

MODEL: C3F_MB1 - 995+00.00 84 [Sheet] PAPERSIZE: 66x34 IN | DATE: 9/15/2025 - TIME: 9:41:19 AM | PSTERN | ON/OFF: _PSF_X | prefix: PLOTTED, ON/OFF: _PenCal: USER: DNeal@mnconsultants.com WORKSPACE: ON/OFF:ON WORKSET: 111474 PRODUCT: OpenRoadsDesigner 24.00.00.205
ACTIVE: Model: C:\Users\DNeal\mnconsultants.com\Documents - Desktop\111474\Roadway\Sheets\680-4.58_995+00.dgn

LEGEND:

ITEM 206 - CEMENT STABILIZED SUBGRADE, 14" DEPTH

Cut Area (SF): 115	Cut Vol. (CY): 430
Fill Area (SF): 5	Fill Vol. (CY): 17
Seed Width (FT):	Seed Area (SY):

SEE RAMP J CROSS SECTIONS

2:1 EX. ELECTRIC 3:1 EX. ELECTRIC EX. ELECTRIC

EX. 18" CONC STORM

15" TYPE B

PGL 877.61 PGL 877.21
STA. 994+00.00
XGL 877.57 XGL 876.96

Cut Area (SF): 117	Cut Vol. (CY): 441
Fill Area (SF): 4	Fill Vol. (CY): 17
Seed Width (FT):	Seed Area (SY):

8.00% EX. ELECTRIC 3:1 EX. ELECTRIC

EX. 18" CONC STORM

15" TYPE B

PGL 880.62 PGL 880.27
STA. 993+00.00
XGL 880.60 XGL 879.96

Cut Area (SF): 121	Cut Vol. (CY): 454
Fill Area (SF): 5	Fill Vol. (CY): 15
Seed Width (FT):	Seed Area (SY):

D382
STA 992+00.00 R4, 2.79' RT, 2.75' LT
I-3C1, APP GRATE ELEV RT 882.98
GRATE ELEV LT 883.18
6" TYPE F (N) 878.56
6" TYPE F (S) 878.56
15" TYPE B (S) 876.23

D381
STA 992+00.00 R4, 37.00' RT
MH-3, BOLTED DOWN, APP
RIM ELEV 882.03
6" TYPE F (N) 878.39
6" TYPE F (S) 878.39
15" TYPE B (N) 875.37
15" TYPE B (N) 875.37
15" TYPE B (E) 875.37

SEE RAMP J CROSS SECTIONS

8.00% EX. ELECTRIC 3:1 EX. ELECTRIC

EX. 18" CONC STORM

PGL 883.63 PGL 883.33
STA. 992+00.00
XGL 883.66 XGL 882.96

Cut Area (SF): 104	Cut Vol. (CY): 354
Fill Area (SF): 0	Fill Vol. (CY): 0
Seed Width (FT):	Seed Area (SY):

1.60% EX. ELECTRIC EX. LIGHTING

EX. 24" CONC STORM

24" TYPE B

OFF. 59.98 RT.
STA. 15+36.48
℄ CONST. RAMP H

3:1 1:1 865.7

EX LIA FENCE

PGL 871.59 PGL 871.08
STA. 996+00.00
XGL 871.35 XGL 870.62

Cut Area (SF): 104	Cut Vol. (CY): 32
Fill Area (SF): 0	Fill Vol. (CY): 0
Seed Width (FT):	Seed Area (SY):

8.00% EX. ELECTRIC EX. LIGHTING

EX. 24" CONC STORM

24" TYPE B

OFF. 71.17 RT.
STA. 14+46.88
℄ CONST. RAMP H

8.00% EX. ELECTRIC EX. LIGHTING

EX LIA FENCE

PGL 874.35 PGL 873.89
STA. 995+08.21
XGL 874.21 XGL 873.50

Cut Area (SF): 108	Cut Vol. (CY): 413
Fill Area (SF): 0	Fill Vol. (CY): 9
Seed Width (FT):	Seed Area (SY):

8.00% EX. ELECTRIC 8:1

EX. 24" CONC STORM

24" TYPE B

PGL 874.60 PGL 874.15
STA. 995+00.00
XGL 874.45 XGL 873.74

CROSS SECTIONS - I.R. 680
STA. 992+00.00 TO STA. 996+00.00

DESIGN AGENCY

mn consultants, inc.

DESIGNER: MSN
REVIEWER: CMN 08/29/25
PROJECT #: 121474

Sheet Totals				
Seeding	Cut	Fill	SHEET	TOTAL
	2124	58	P.271	655

Preliminary Plans - For Reference Only

LEGEND:

ITEM 206 - CEMENT STABILIZED SUBGRADE, 14" DEPTH

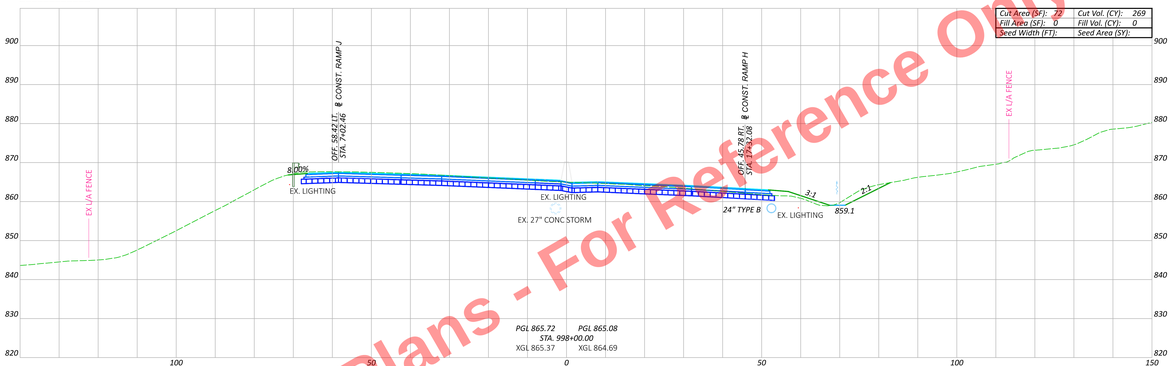

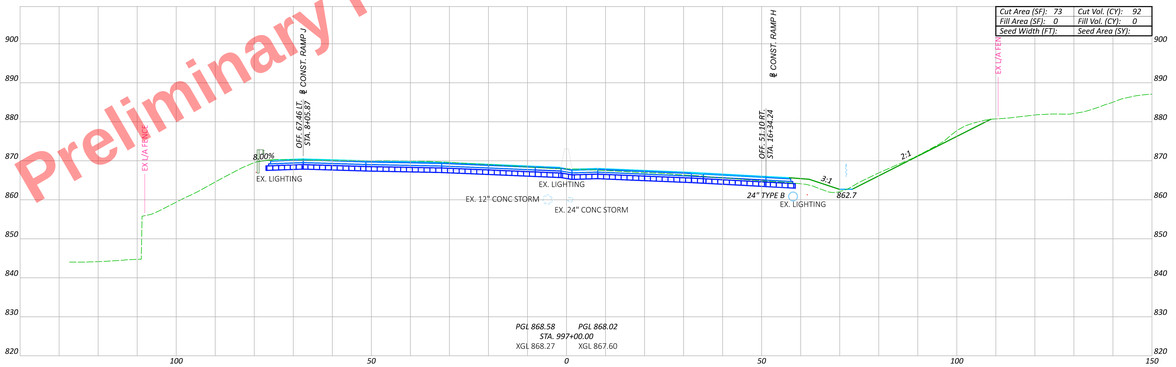

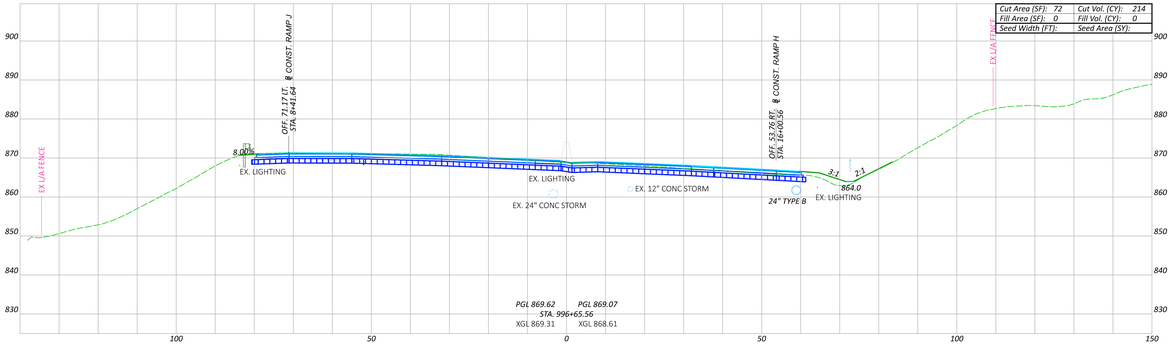

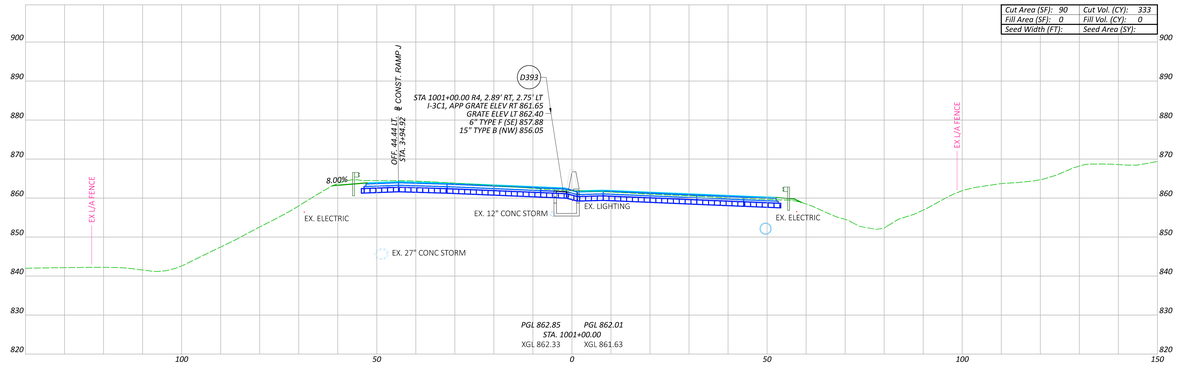

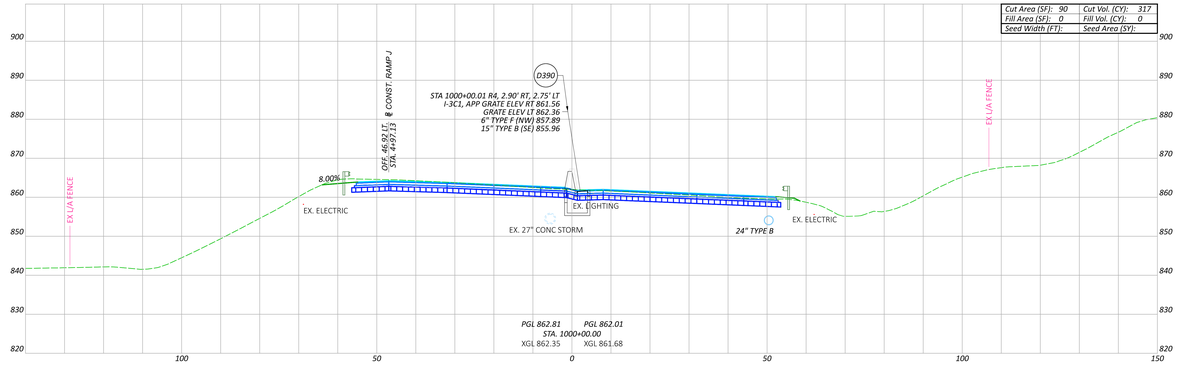

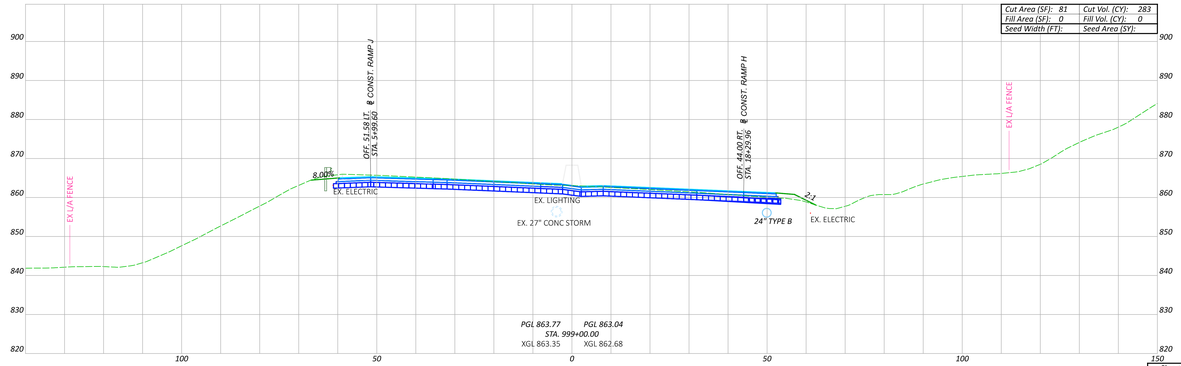

CROSS SECTIONS - I.R. 680
STA. 996+65.56 TO STA. 1001+00.00

MAH-680-4.58

MODEL: C3F_681 - 996+65.58 #4 [Sheet] PAPERSIZE: 66x34 IN | DATE: 9/25/2025 TIME: 9:41:58 AM SYSTEM: DWGOUT_PW X-refs: PLOTBL: DWGOUT_PenCtbl: USER: DWGOUT_Author: WORKSPACE: DWGOUTSv03 WORKSET: 111474 PRODUCT: OpenRoadsDesigner 24.00.00.205
ALL RIGHTS RESERVED. COPYRIGHT © 2025 MS CONSULTANTS, INC. THIS DRAWING AND ITS CONTENTS ARE THE PROPERTY OF MS CONSULTANTS, INC. AND SHALL NOT BE REPRODUCED, COPIED, OR USED IN ANY MANNER WITHOUT THE EXPRESS WRITTEN PERMISSION OF MS CONSULTANTS, INC.

DESIGN AGENCY
ms consultants, inc.

DESIGNED: MSN
REVIEWED: CMN 08/29/25
PROJECT #: 121474

Sheet Totals				
Seeding	Cut	Fill	SHEET	TOTAL
	1508	0	P.272	655

Preliminary Plans - For Reference Only

LEGEND:

ITEM 206 - CEMENT STABILIZED SUBGRADE, 14" DEPTH

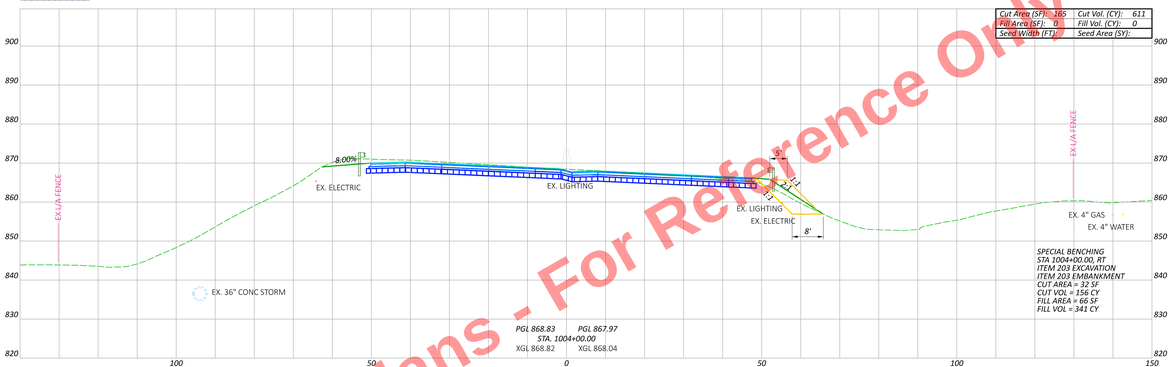

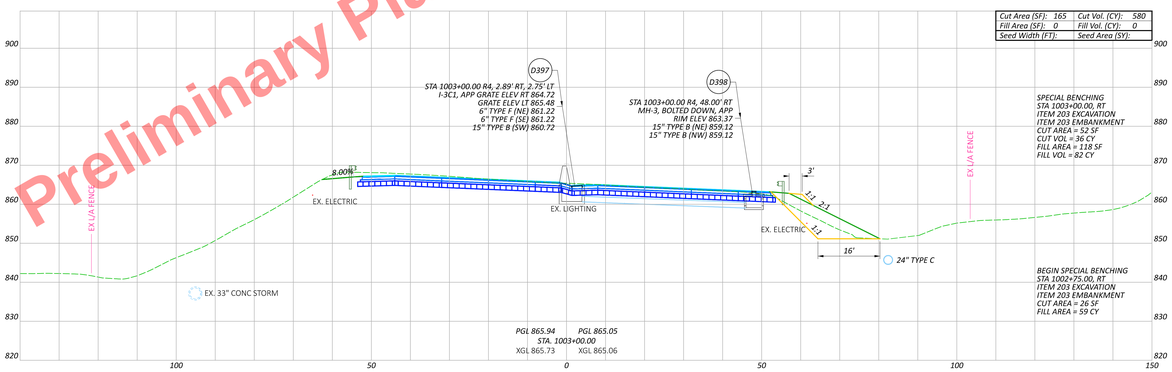

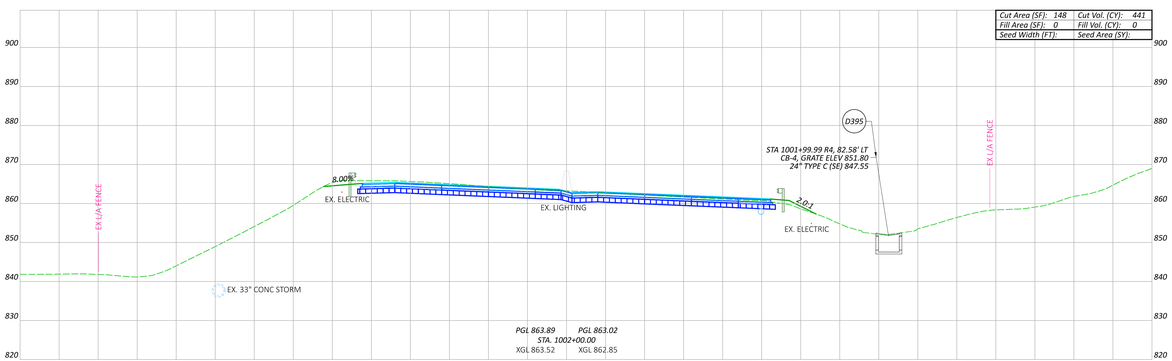

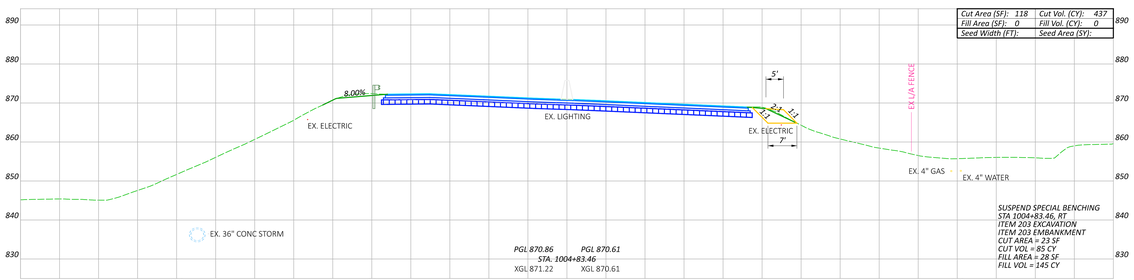

CROSS SECTIONS - I.R. 680
STA. 1002+00.00 TO STA. 1004+83.46

Sheet Totals			
Seeding	Cut	Fill	SHEET TOTAL
2346	568	P.273	655

DESIGN AGENCY: mb consultants, inc.
DESIGNER: MSN
REVIEWER: CMN 08/29/25
PROJECT ID: 121474

MAH-680-4.58

MODEL: C:\MB\...\DGN-680-04.dgn [Sheet] PRINTED: 4:43:14 PM | DATE: 8/15/2025 TIME: 9:43:18 AM | USER: DWOOT_PW | PENTEL DWOOT_PW1.tbl | PENTEL DWOOT_PW1.stb | PLOTTED BY: DWOOT_PW | PLOTTER: Default | Microsoft Print to PDF | PAPER SIZE: ANSI B (11.00 X 17.00 in)
WORKSET: 121474 PROJECT: OpenRoadDesigner 24.00.00.205
WORKSPACE: OHDOTCIVIL
USER: dwoot@mbconsultants.com

Preliminary Plans - For Reference Only

LEGEND:

ITEM 206 - CEMENT STABILIZED SUBGRADE, 14" DEPTH

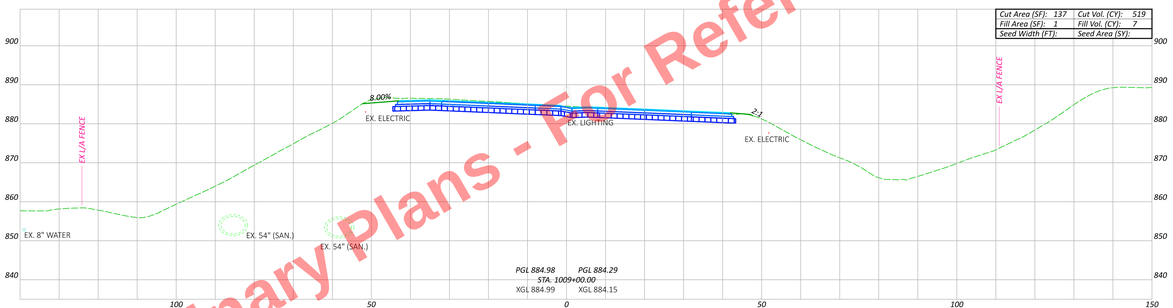

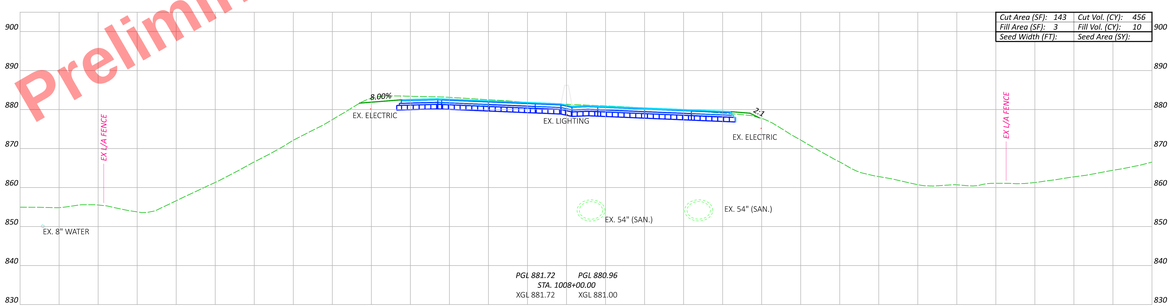

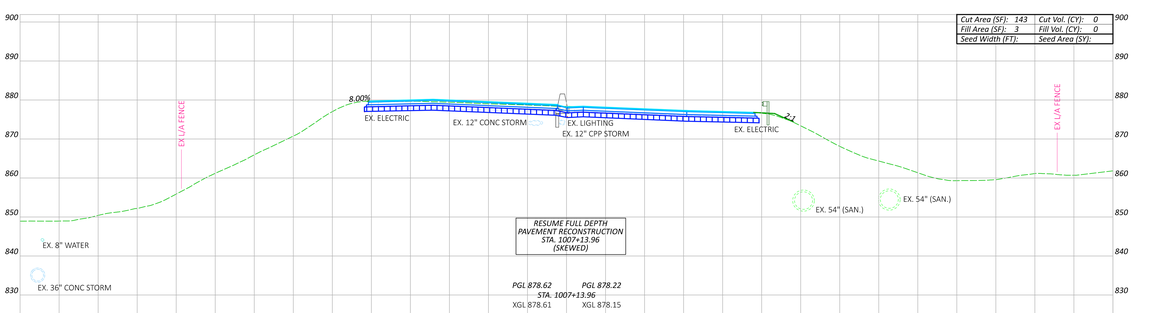

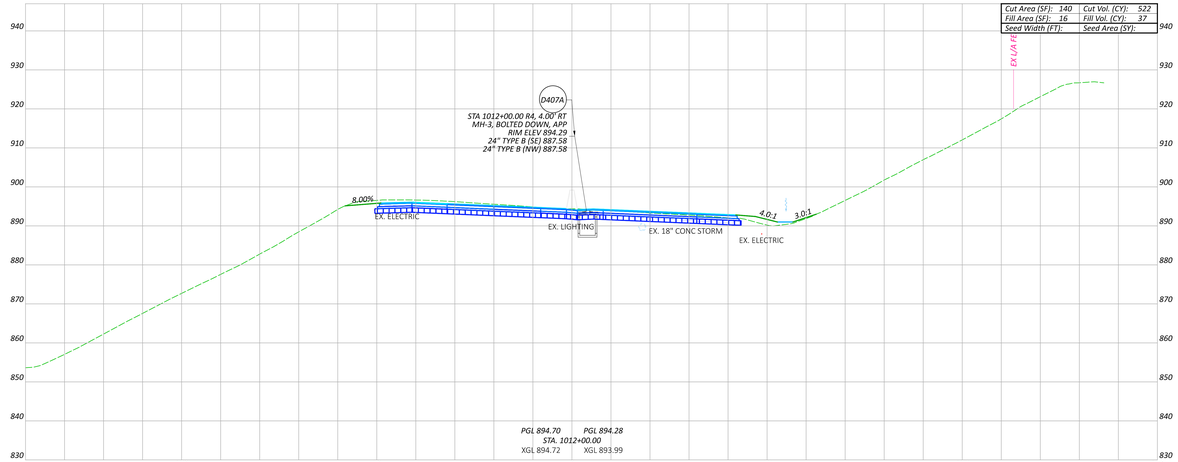

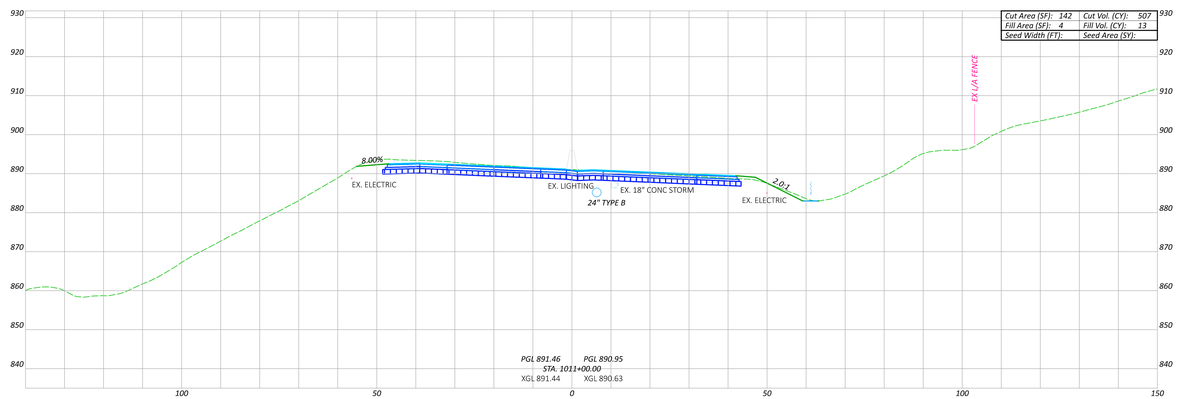

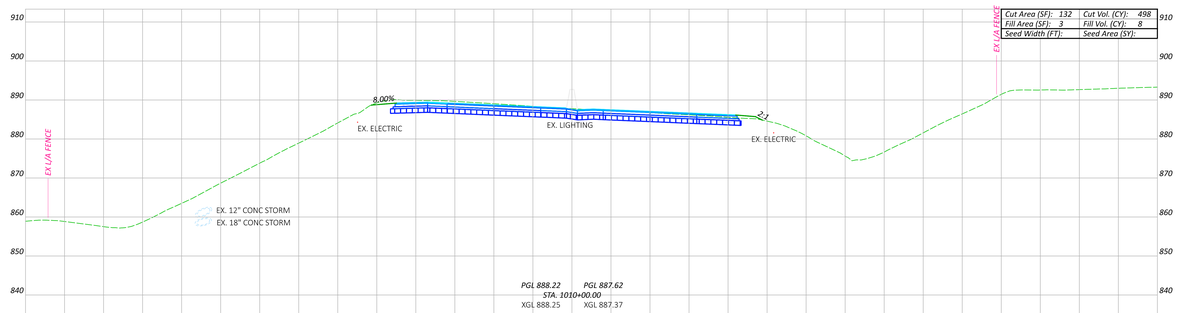

CROSS SECTIONS - I.R. 680
STA. 1007+13.96 TO STA. 1012+00.00

DESIGN AGENCY			
DESIGNER	MSN		
REVIEWER	CMN 08/29/25		
PROJECT ID	121474		
Sheet Totals			
Seeding	Cut	Fill	SHEET TOTAL
	2502	74	P.274 655

MAH-680-4.58

MODEL: C3F_ABR - 1007+13.96 R4 [Sheet] PAYTEZEE, AMBER E. | DATE: 8/15/2025 TIME: 9:43:23 AM | FITDIV: DWORT_PID_FY_dm4g PENTBL: DWORT_Port Ltr 1609 (Ink@transmodulants.com WORKSPACE: DWORTDEVKIT WORKSET: 121474 PRODUCT: OpenRoadsDesigner 24.00.00.205
ALL RIGHTS RESERVED. COPYRIGHT © 2025 BENTLEY SYSTEMS, INCORPORATED. UNAUTHORIZED USE, REPRODUCTION, OR DISTRIBUTION IS A VIOLATION OF LAW.

Preliminary Plans - For Reference Only

LEGEND:

ITEM 206 - CEMENT STABILIZED SUBGRADE, 14" DEPTH

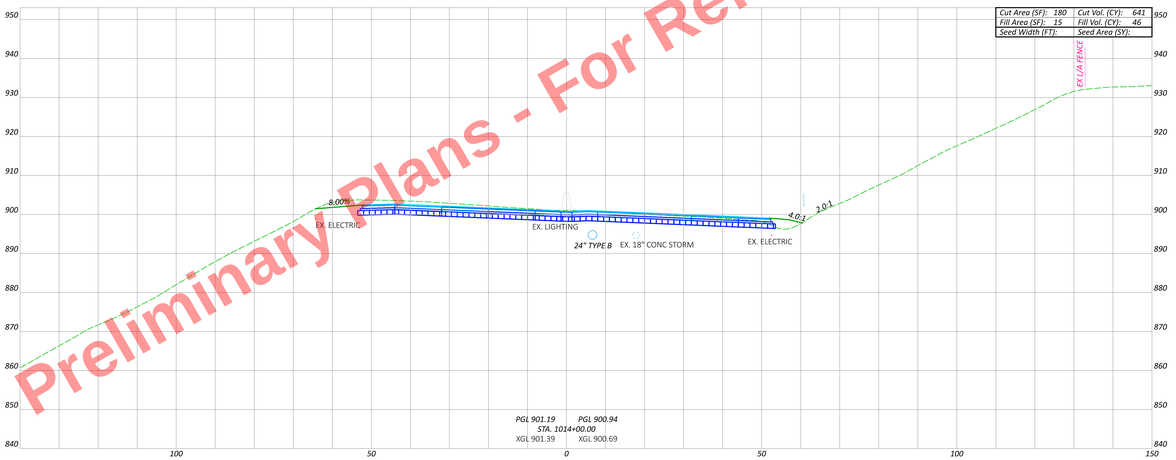

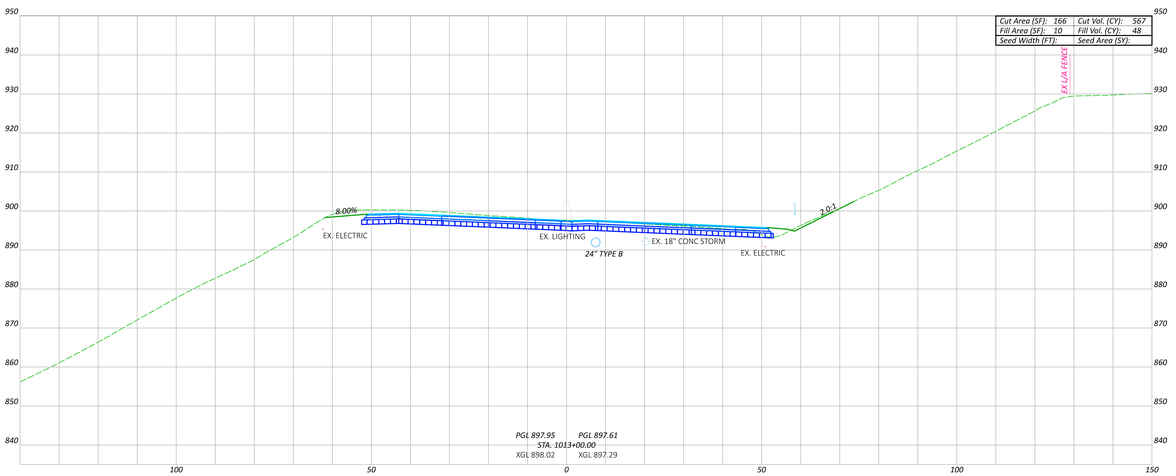

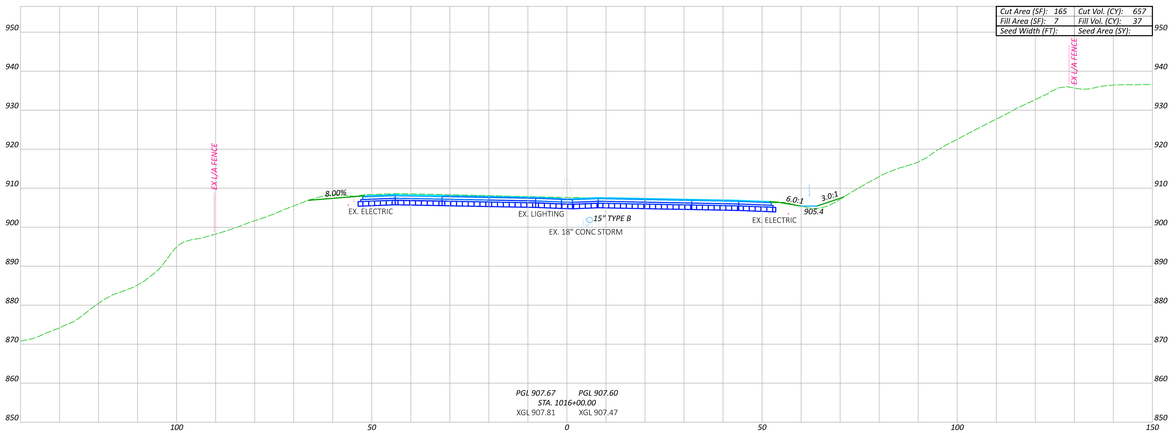

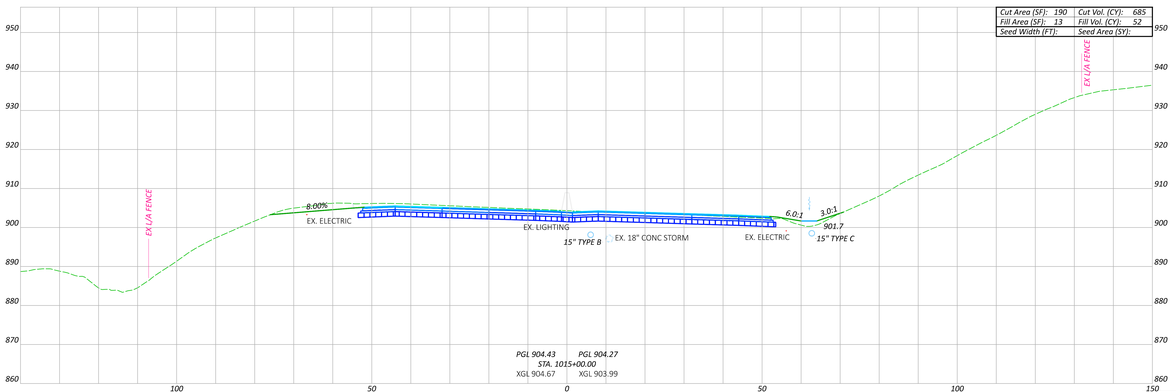

CROSS SECTIONS - I.R. 680
STA. 1013+00.00 TO STA. 1016+00.00

Sheet Totals				
Seeding	Cut	Fill	SHEET	TOTAL
2550	183	P.275	655	

DESIGN AGENCY
ms consultants, inc.

DESIGNER: MSN
REVIEWER: CMN 08/29/25
PROJECT #: 121474

MAH-680-4.58

MODEL: C:\MS - 2015\680 RW Sheet\ PAYITEMS: 680.64 Ea | DATE: 8/15/2025 TIME: 9:43:39 AM | FITDIV: DWORT_PID_FY.dat4g PENTBL: DWORT_Port.tbl USER: DHall@msconsultants.com WORKSPACE: DWORTDGN WORKSET: 121474 PRODUCT: OpenRoadsDesigner 24.00.00.205
ALL RIGHTS RESERVED. COPYRIGHT © 2025 MS CONSULTANTS, INC. | PROPRIETARY AND CONFIDENTIAL | Use Pursuant to Applicable Agreement | Unauthorized Use Is Strictly Prohibited

Preliminary Plans - For Reference Only

LEGEND:

ITEM 206 - CEMENT STABILIZED SUBGRADE, 14" DEPTH

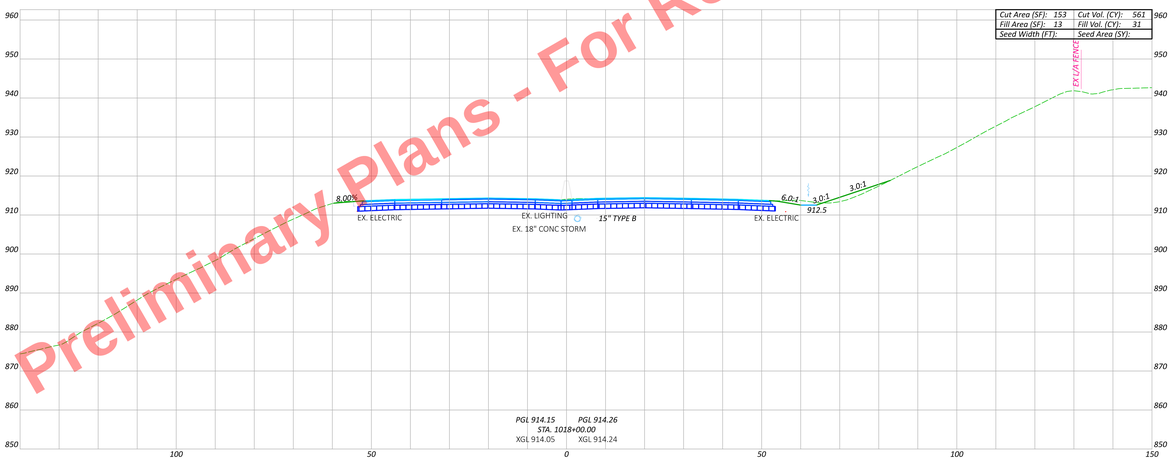

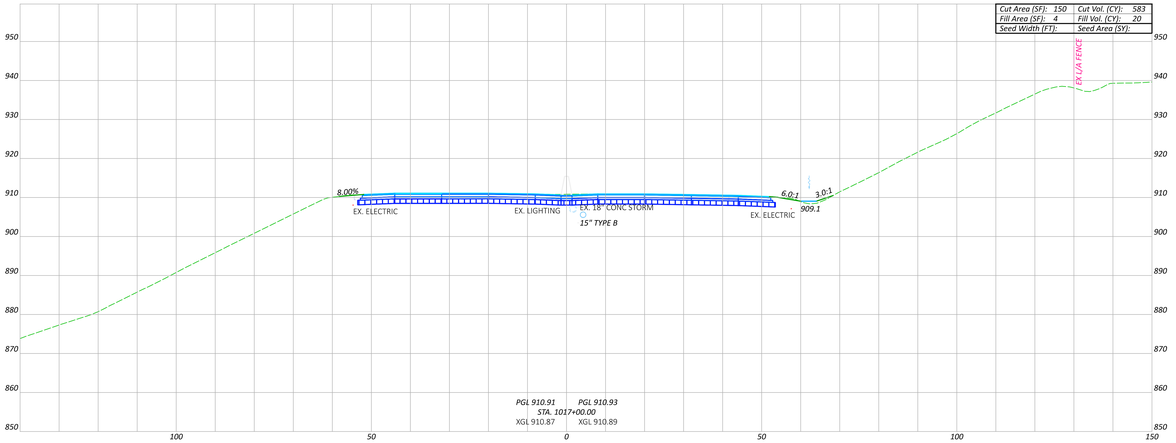

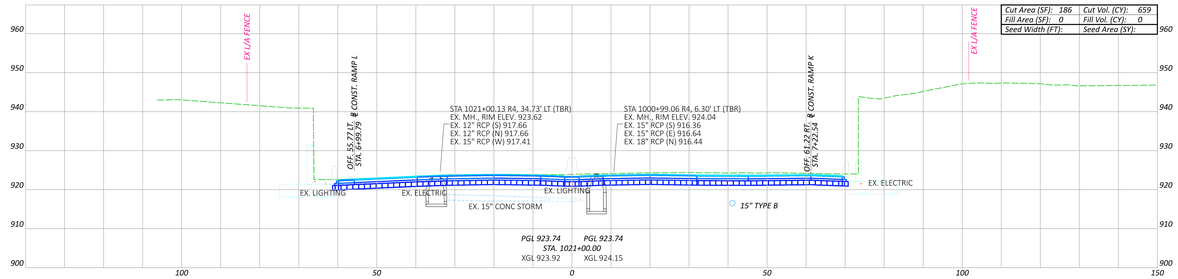

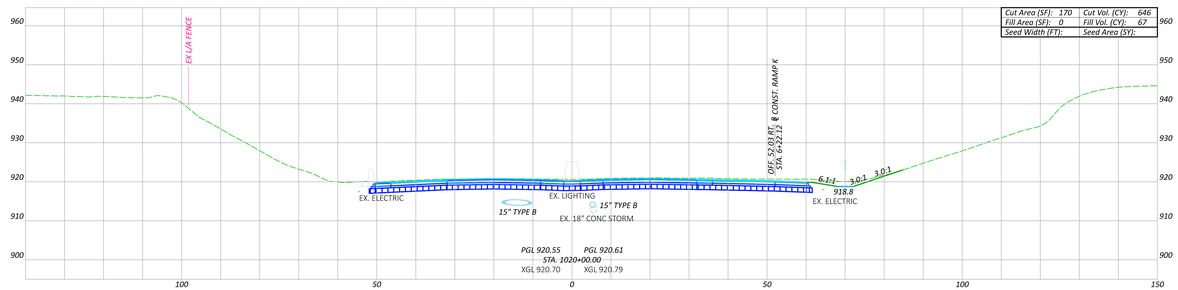

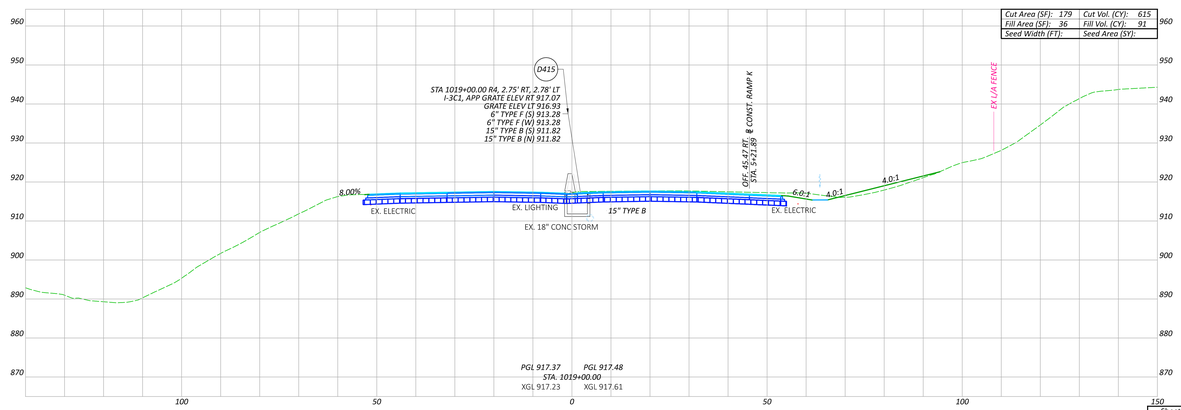

CROSS SECTIONS - I.R. 680
STA. 1017+00.00 TO STA. 1021+00.00

MAH-680-4.58

MODEL: C:\MH - 1017+00.00 R4 (Sheet) PAYTEEZE: 4654.64 ft | DATE: 9/15/2025 TIME: 9:43:39 AM | PSTBW: DWORT_PSE_ET.stb | PSTYBL: DWORT_Port.ctb | LOGIN: DHall@mcconsultants.com WORKSPACE: ONDOTCKVD WORKSET: 121474 PRODUCT: OpenRoadsDesigner 24.00.00.205
ALL RIGHTS RESERVED. COPYRIGHT © 2025 BENTLEY SYSTEMS, INCORPORATED. BENTLEY PROPRIETARY AND CONFIDENTIAL. UNAUTHORIZED USE PROHIBITED.

DESIGN AGENCY
mc consultants, inc.
DESIGNER MSN
REVIEWER CMN 08/29/25
PROJECT ID 121474

Sheet Totals				
Seeding	Cut	Fill	SHEET	TOTAL
	3064	209	P.276	655

Preliminary Plans - For Reference Only

LEGEND:

ITEM 206 - CEMENT STABILIZED SUBGRADE, 14" DEPTH

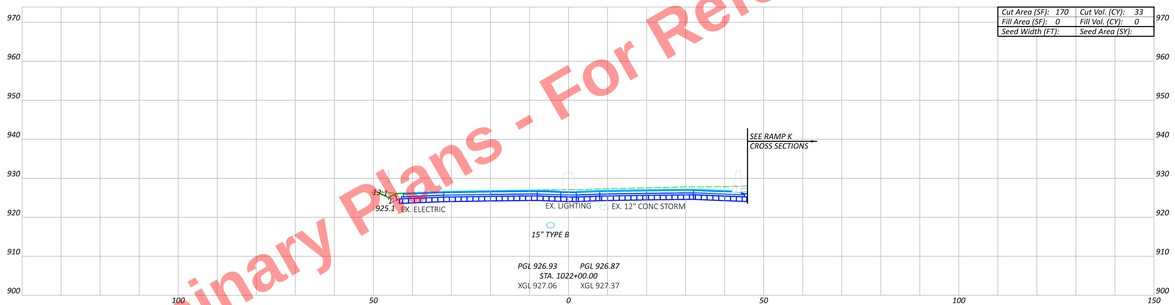

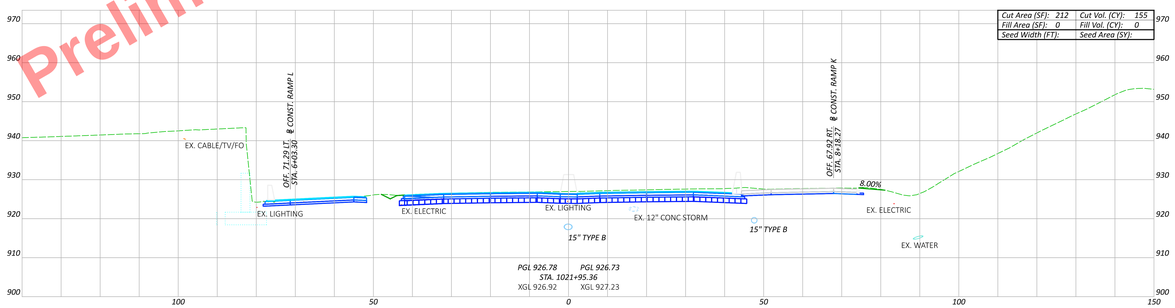

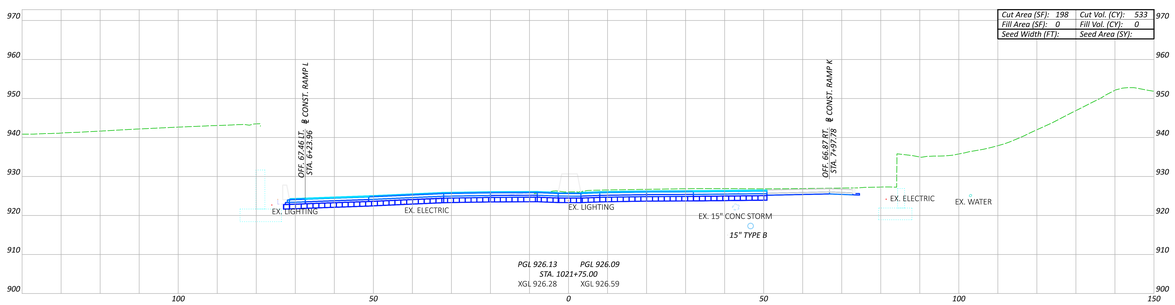

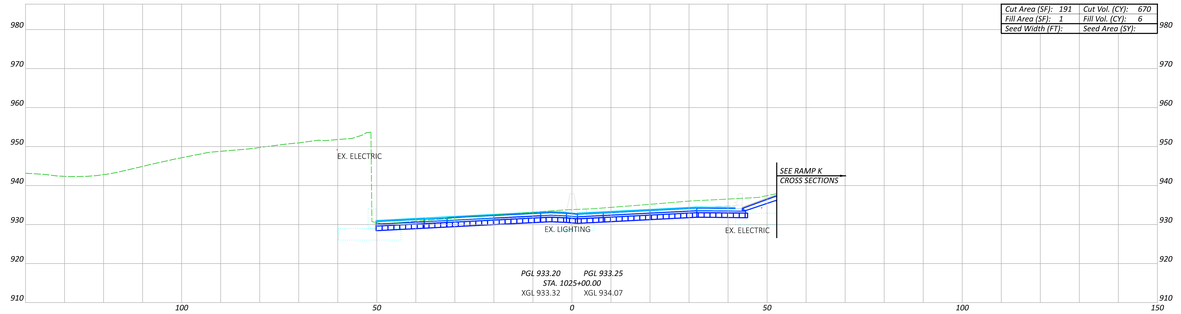

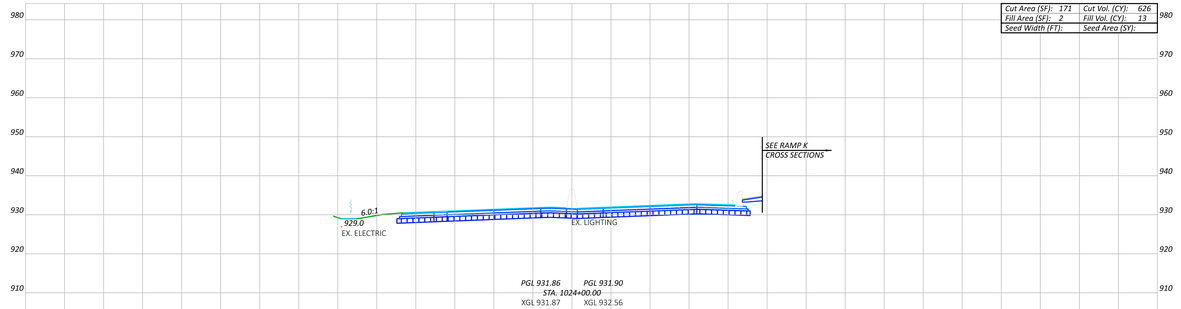

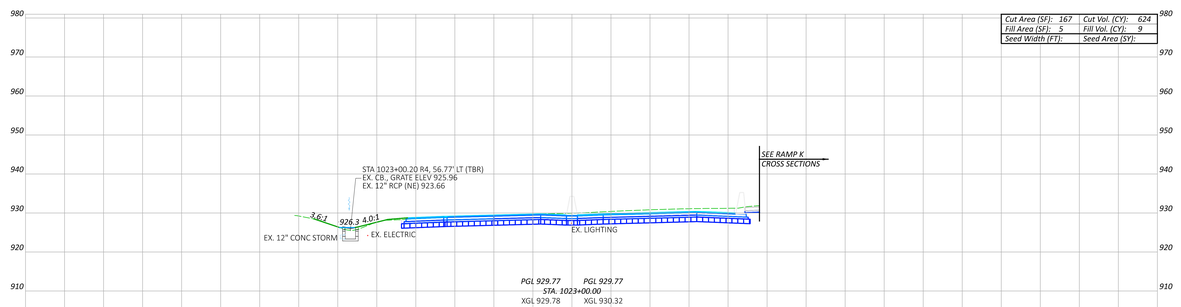

CROSS SECTIONS - I.R. 680
STA. 1021+75.00 TO STA. 1025+00.00

MAH-680-4.58

MODEL: C3F_ABB - 1021+75.00 R4 [Sheet] PAYTEXT: 464.64 ft | DATE: 9/15/2025 TIME: 9:43:41 AM | PSTBW: DWORF_PSF_11.stb | PSTBL: DWORF_Port.ctb | USER: DRay@ms-consultants.com WORKSPACE: DWORF/CIVIL WORKSET: 111474 PRODUCT: OpenRoadsDesigner 24.00.00.205
ALL RIGHTS RESERVED. COPYRIGHT © 2025 BENTLEY SYSTEMS, INCORPORATED. PROPRIETARY AND CONFIDENTIAL. Bentley Systems, Incorporated 685 Stockton Drive, Exton, PA 19341 USA

DESIGN AGENCY
ms consultants, inc.

DESIGNER: MSN
REVIEWER: CMN 08/29/25
PROJECT #: 121474

Sheet Totals				
Seeding	Cut	Fill	SHEET	TOTAL
	2641	28	P.277	655

Preliminary Plans - For Reference Only

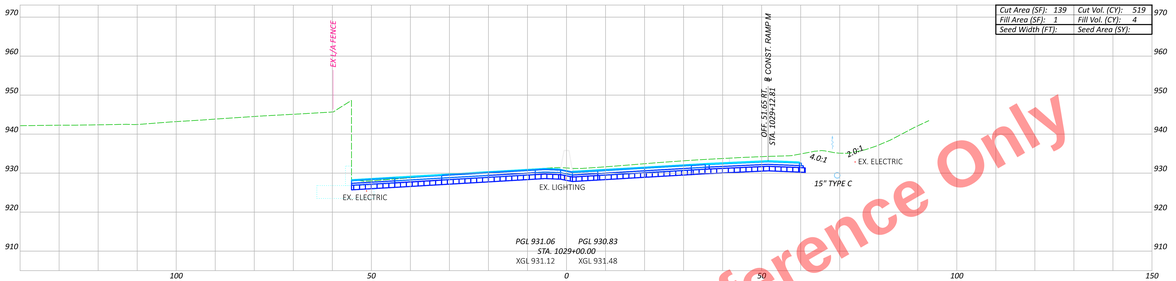

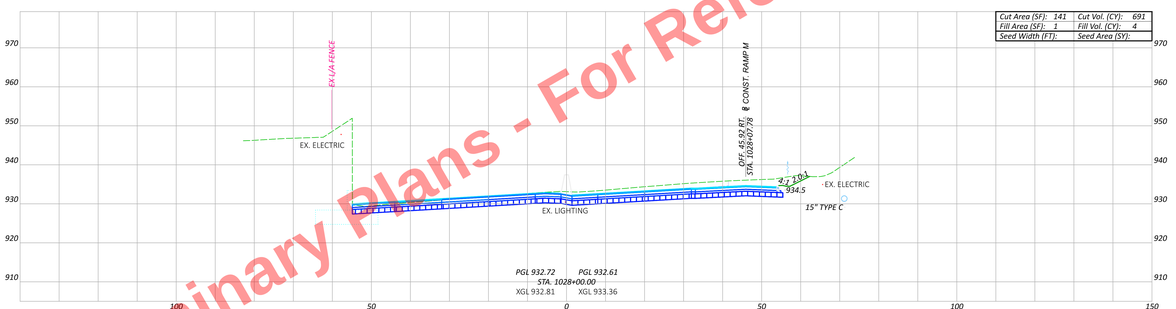

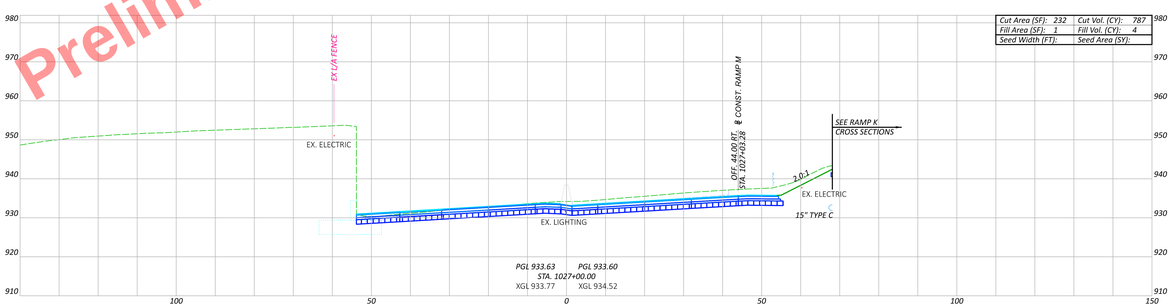

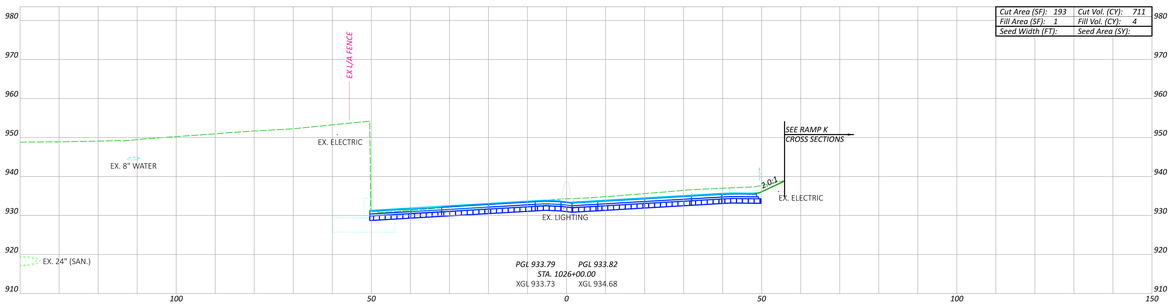

LEGEND:

ITEM 206 - CEMENT STABILIZED SUBGRADE, 14" DEPTH

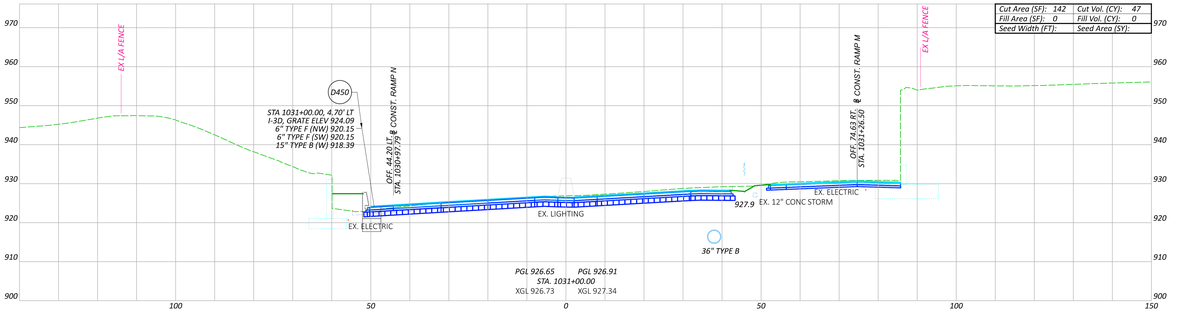

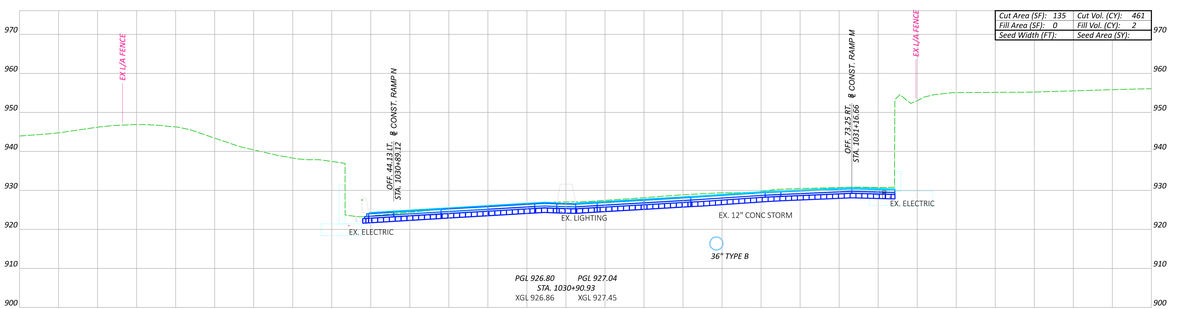

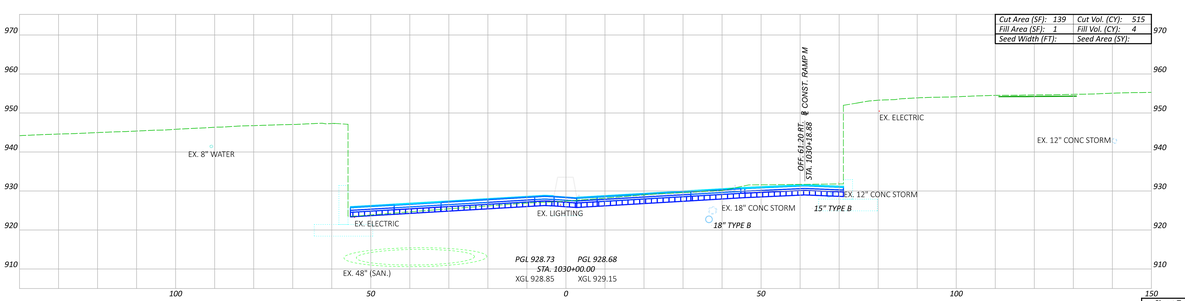

CROSS SECTIONS - I.R. 680
STA. 1026+00.00 TO STA. 1031+00.00

MAH-680-4.58

MODEL: C3F_ABD - 1D0v-0D0 Ah1 [Sheet] PRYTEEZE: 4kb14 En1 DATE: 9/15/2025 TIME: 9:43:14 AM USERN: DeHOff_PW PENTBL: DeHOff_Acct.tbl USER: DHoff@mcconsultants.com WORKSPACE: OHDOTCAD WORKSET: 121474 PRODUCT: OpenRoadsDesigner 24.00.00.205
ALL RIGHTS RESERVED. COPYRIGHT © 2025 OHIO DEPARTMENT OF TRANSPORTATION AND MCCONSULTANTS, INC.

DESIGN AGENCY
mc consultants, inc.
DESIGNER: MSN
REVIEWER: CMN 08/29/25
PROJECT #: 121474

Sheet Totals				
Seeding	Cut	Fill	SHEET	TOTAL
	3731	22	P.278	655

Preliminary Plans - For Reference Only

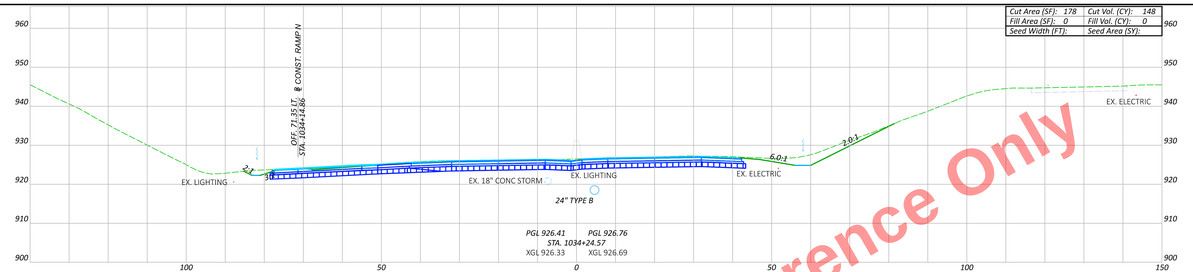



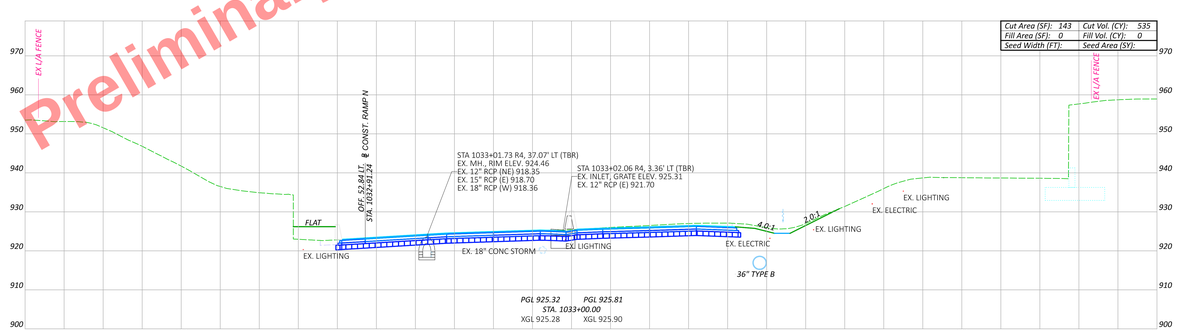

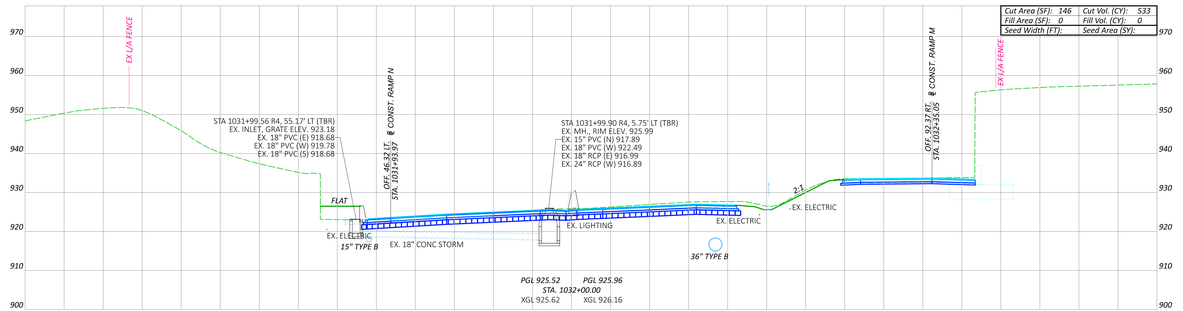

LEGEND:

ITEM 206 - CEMENT STABILIZED SUBGRADE, 14" DEPTH

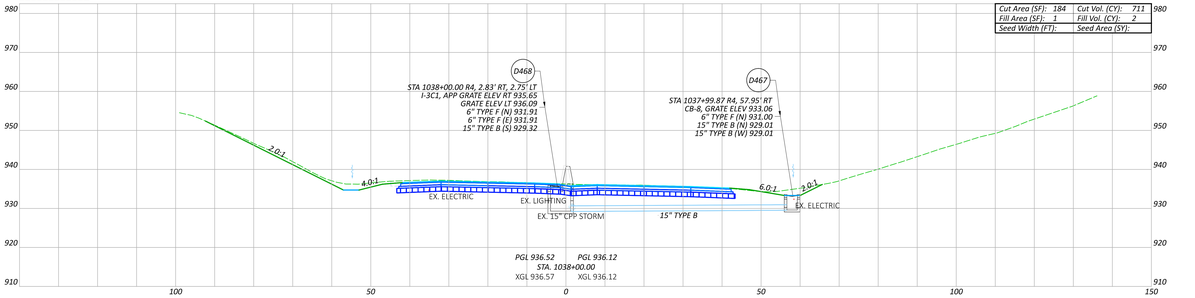

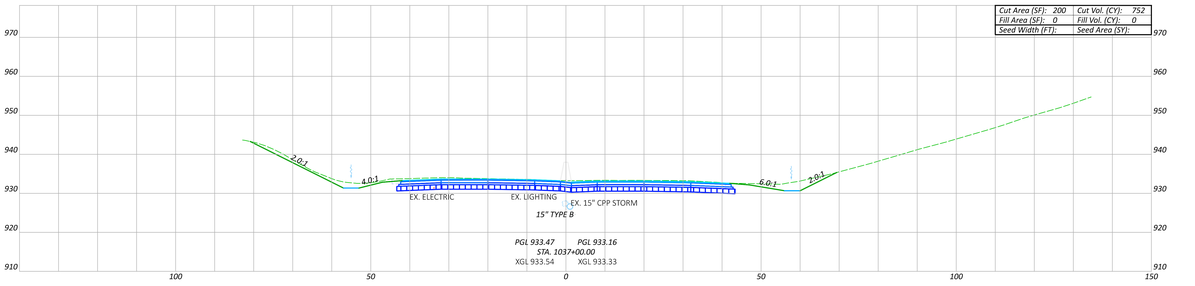

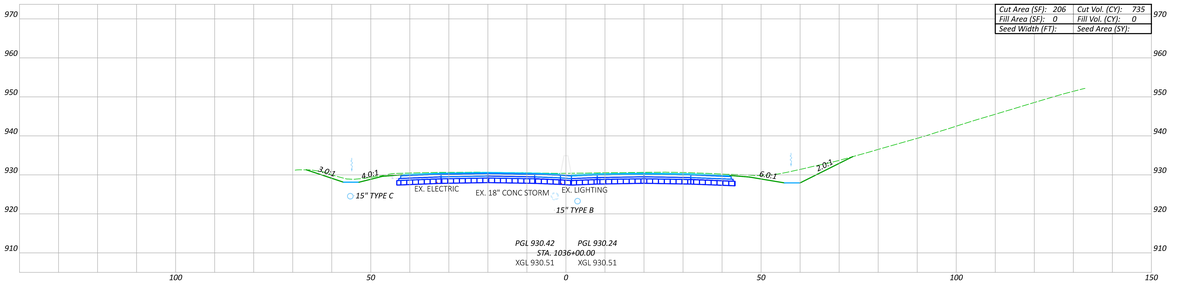

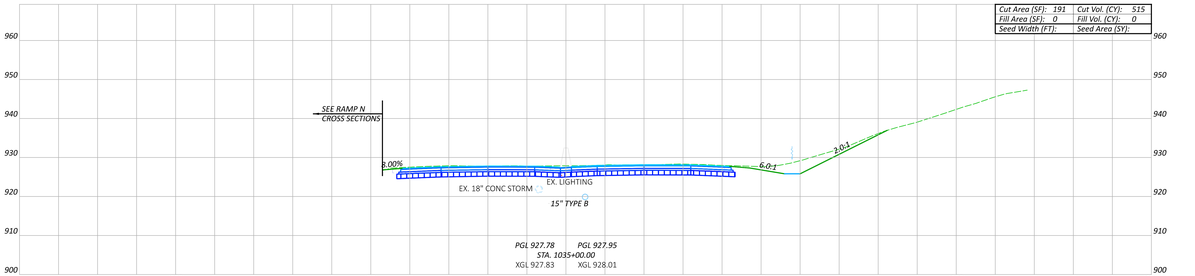

CROSS SECTIONS - I.R. 680
STA. 1032+00.00 TO STA. 1038+00.00

DESIGN AGENCY
ms consultants, inc.
DESIGNER: MSN
REVIEWER: CMN 08/29/25
PROJECT #: 121474

Sheet Totals				
Seeding	Cut	Fill	SHEET	TOTAL
	4466	2	P.279	655

MAH-680-4.58

MODEL: C3F_ABD - 3D\c3d\0-M Sheet(PAYTEEZE, 46x34 in) DATE: 8/15/2025 TIME: 9:43:10 AM PITDIN: DWORT_PSE_V1.dwlg PENTBL: DWORT_Print Std 1609 (Dwl@msconsultants.com WORKSPACE: DWORTCIVIL WORKSET: 121474 PRODUCT: OpenRoadsDesigner 24.00.00.205
ALL RIGHTS RESERVED. COPYRIGHT © 2025 MS CONSULTANTS, INC. ALL RIGHTS RESERVED. Confidential and Proprietary Information of MS CONSULTANTS, INC.

Preliminary Plans - For Reference Only

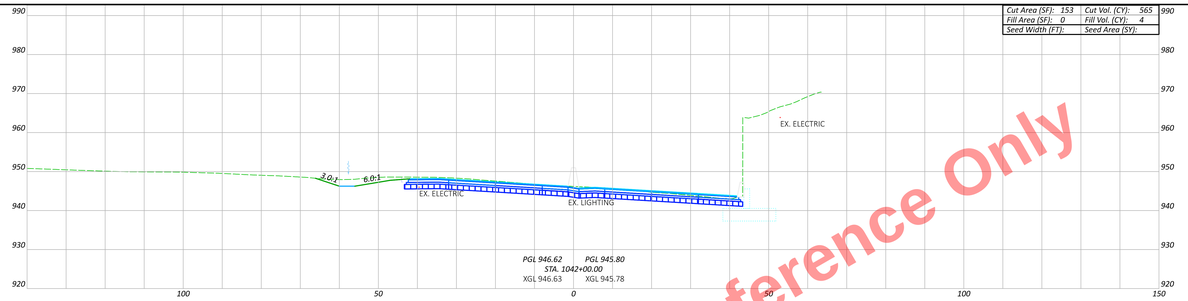

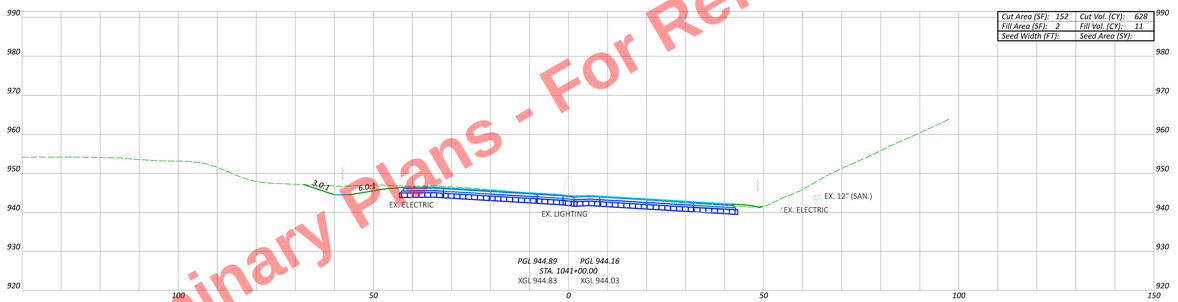

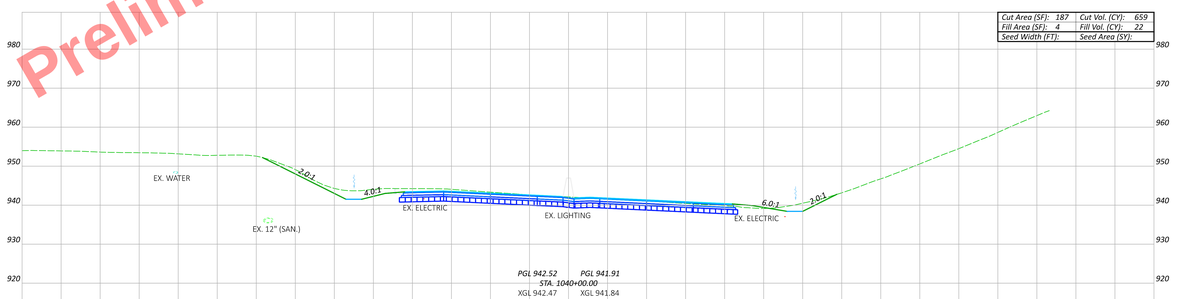

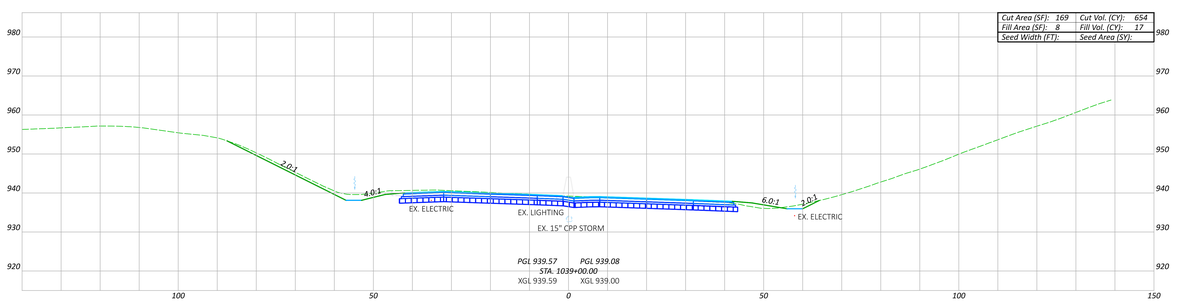

LEGEND:

ITEM 206 - CEMENT STABILIZED SUBGRADE, 14" DEPTH

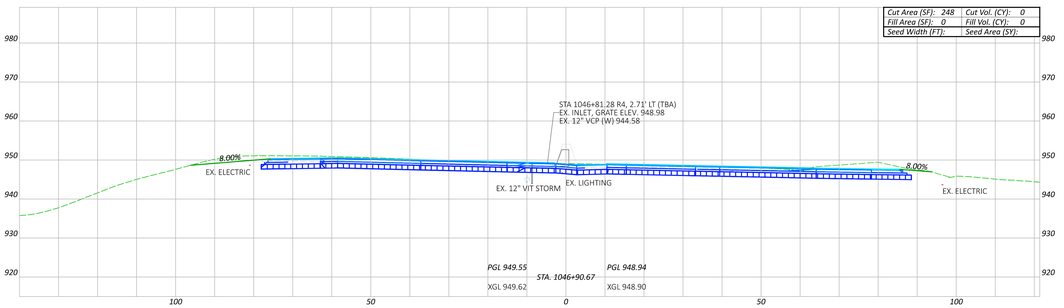

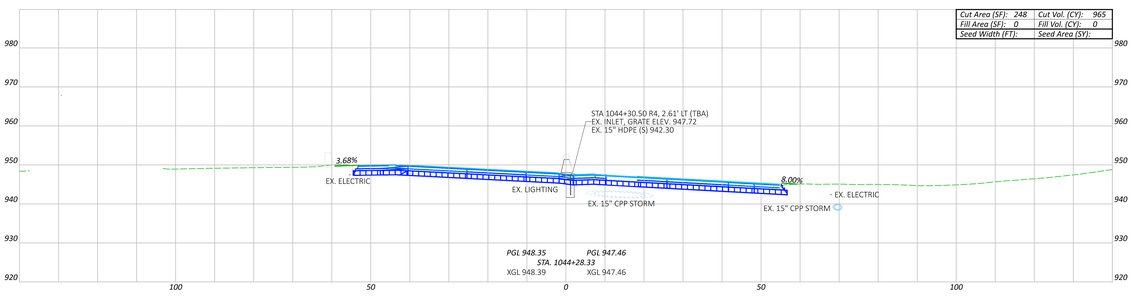

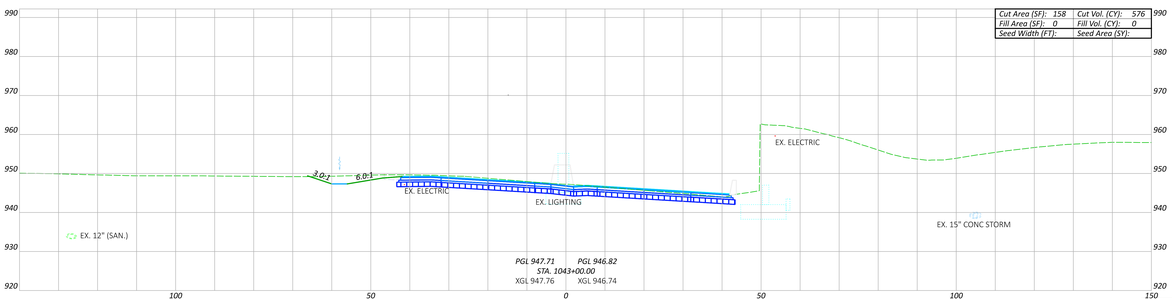

CROSS SECTIONS - I.R. 680
STA. 1039+00.00 TO STA. 1046+90.67

MAH-680-4.58

MODEL: C3F_ABD - 2019v360 64 Sheet) PAYTEZEE, 464.64 ft) DATE: 9/15/2025 TIME: 9:43:14 AM) FITDIV: DWORF_PDF_E1.dmfg PENTBL: DWORF_Port.tbl USER: DIwa@mcconsultants.com WORKSPACE: DWORFCIVIL WORKSET: 121474 PRODUCT: OpenRoadsDesigner 24.00.00.205
ALL Rights Reserved. Unauthorized use of this drawing is prohibited. Copyright © 2025 Ohio Department of Transportation

DESIGN AGENCY
mc consultants, inc.
DESIGNER: MSN
REVIEWER: CMN 08/29/25
PROJECT ID: 121474

Sheet Totals			
Seeding	Cut	Fill	SHEET
4047	54	P.280	TOTAL 655

Preliminary Plans - For Reference Only

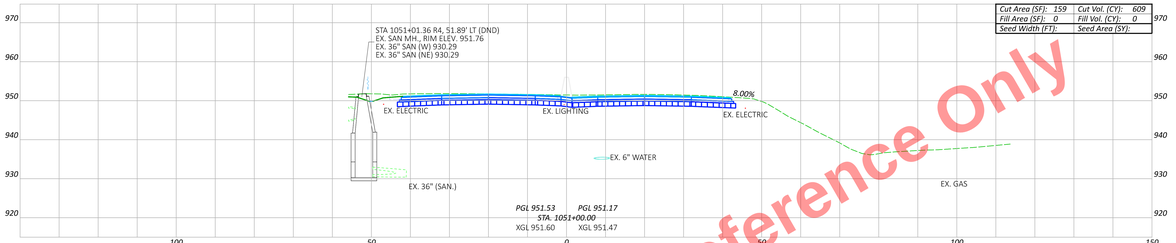

Cut Area (SF): 159	Cut Vol. (CY): 609
Fill Area (SF): 0	Fill Vol. (CY): 0
Seed Width (FT):	Seed Area (SY):

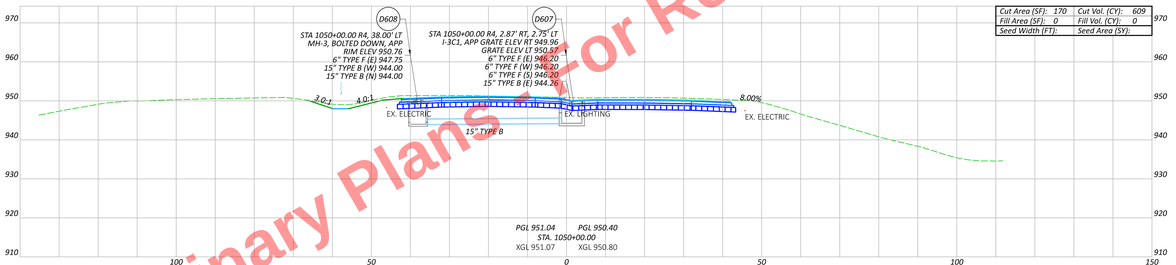

Cut Area (SF): 170	Cut Vol. (CY): 609
Fill Area (SF): 0	Fill Vol. (CY): 0
Seed Width (FT):	Seed Area (SY):

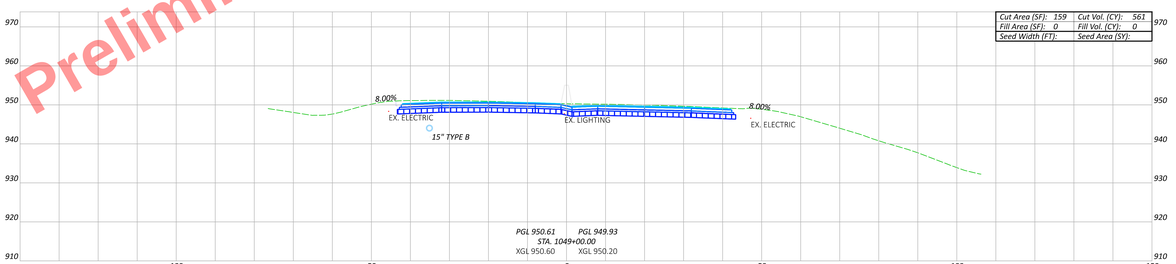

Cut Area (SF): 159	Cut Vol. (CY): 561
Fill Area (SF): 0	Fill Vol. (CY): 0
Seed Width (FT):	Seed Area (SY):

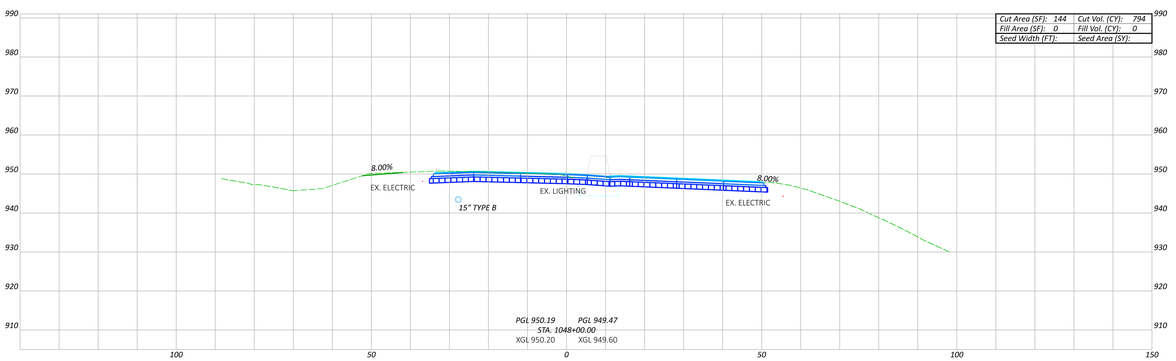

Cut Area (SF): 144	Cut Vol. (CY): 794
Fill Area (SF): 0	Fill Vol. (CY): 0
Seed Width (FT):	Seed Area (SY):

LEGEND:

ITEM 206 - CEMENT STABILIZED SUBGRADE, 14" DEPTH

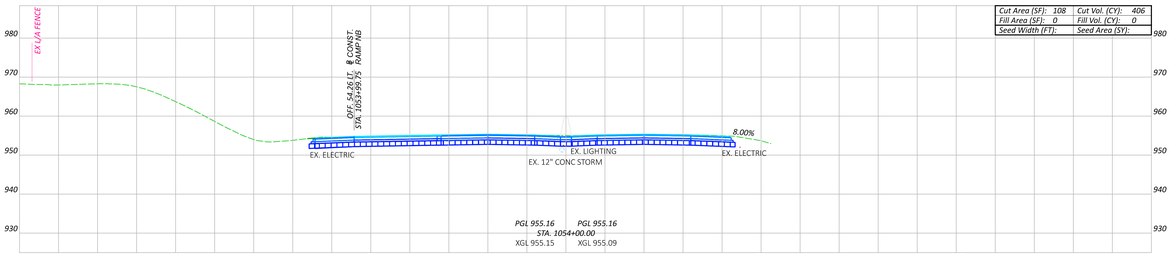

Cut Area (SF): 108	Cut Vol. (CY): 406
Fill Area (SF): 0	Fill Vol. (CY): 0
Seed Width (FT):	Seed Area (SY):

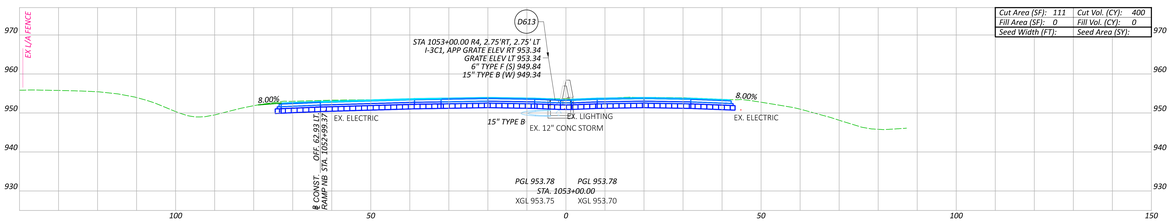

Cut Area (SF): 111	Cut Vol. (CY): 400
Fill Area (SF): 0	Fill Vol. (CY): 0
Seed Width (FT):	Seed Area (SY):

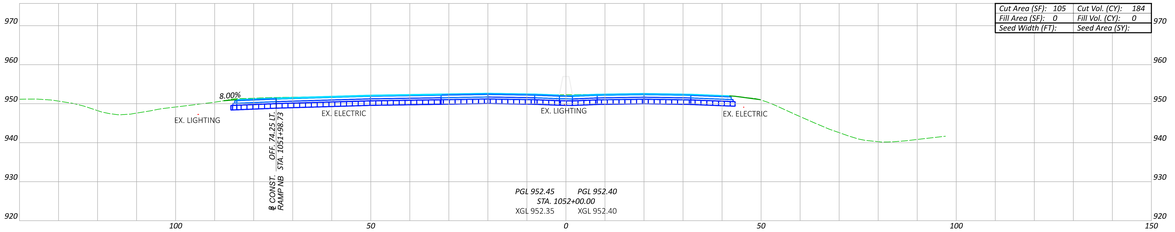

Cut Area (SF): 105	Cut Vol. (CY): 184
Fill Area (SF): 0	Fill Vol. (CY): 0
Seed Width (FT):	Seed Area (SY):

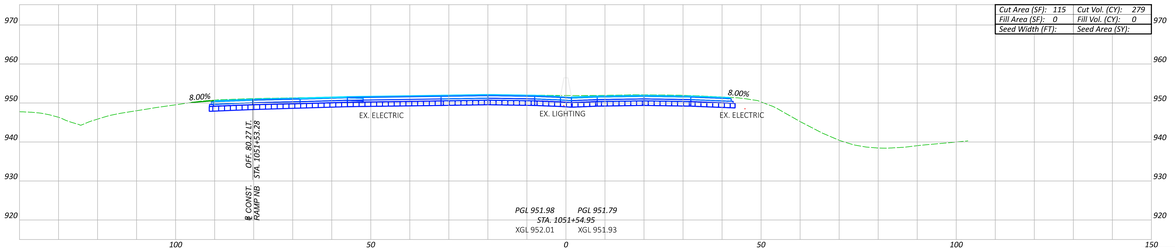

Cut Area (SF): 115	Cut Vol. (CY): 279
Fill Area (SF): 0	Fill Vol. (CY): 0
Seed Width (FT):	Seed Area (SY):

CROSS SECTIONS - I.R. 680
STA. 1048+00.00 TO STA. 1054+00.00

DESIGN AGENCY: ms consultants, inc.
DESIGNED: MSN
REVIEWED: CMN 08/29/25
PROJECT #: 121474

Sheet Totals			SHEET	TOTAL
Seeding	Cut	Fill	P.281	655
	3842	0		

MAH-680-4.58

MODEL: C3P_ABD - 1048+00.00 R4 (Sheet) PRPTEEZEE, 4464.64 ft | DATE: 9/15/2025 TIME: 9:43:12 AM | FITDIV: DWORT_PDF_FY.dmfg | FENTRL: DWORT_Port.ctb | USER: DHall@msconsultants.com WORKSPACE: DWORTDVD1 WORKSET: 121474 PRODUCT: OpenRoadsDesigner 24.00.00.205
ALL USERS MUST COMPLY WITH THE CONDITIONS AND RESTRICTIONS CONTAINED IN THE ELECTRONIC DATA AGREEMENT.

LEGEND:

ITEM 206 - CEMENT STABILIZED SUBGRADE, 14" DEPTH

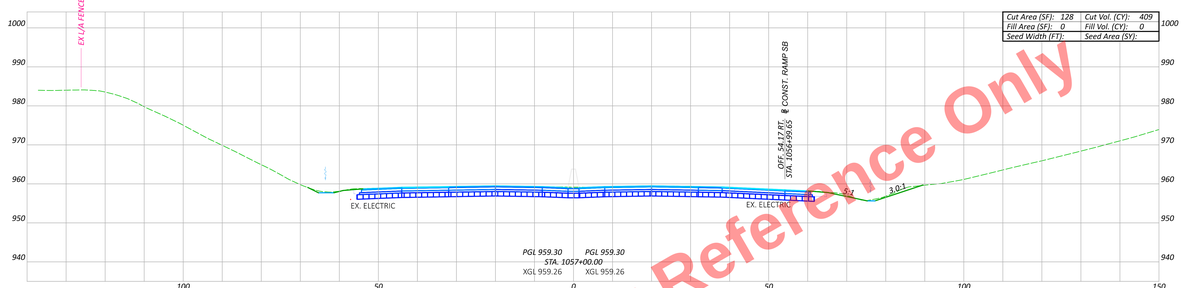

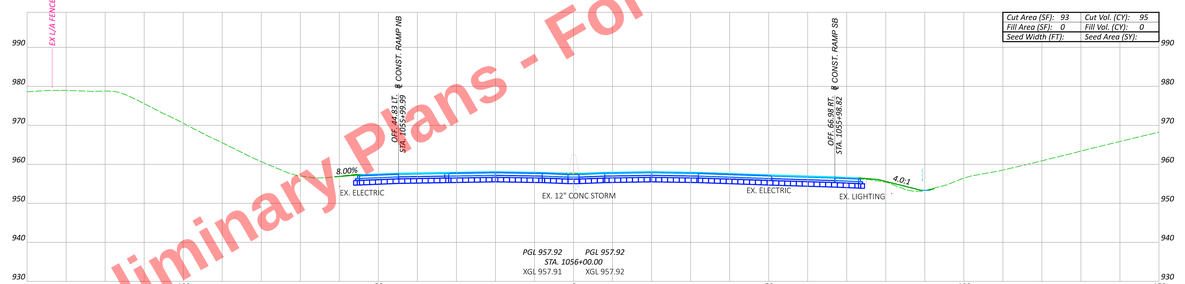

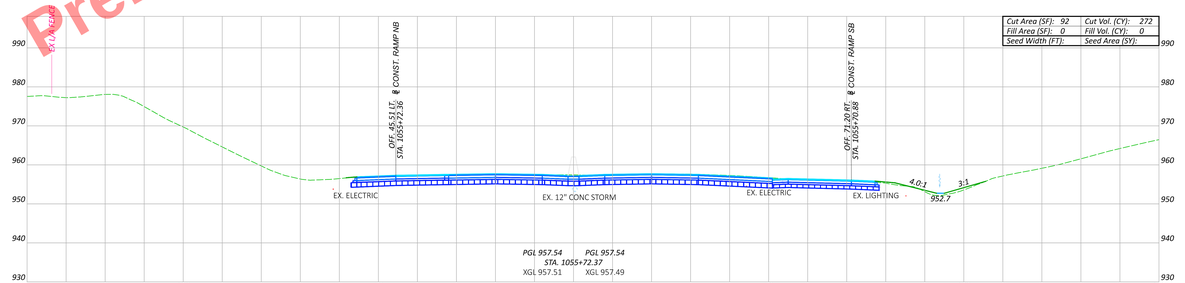

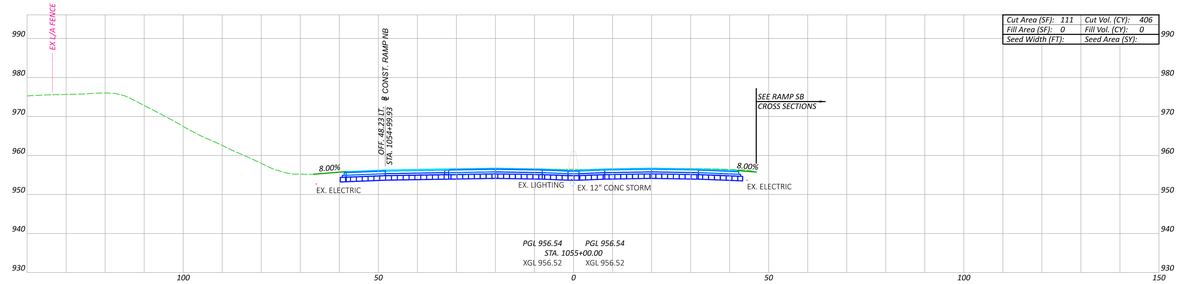

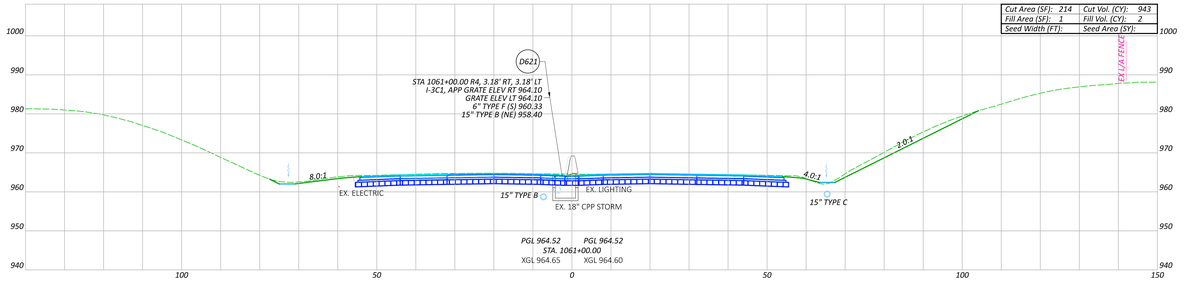

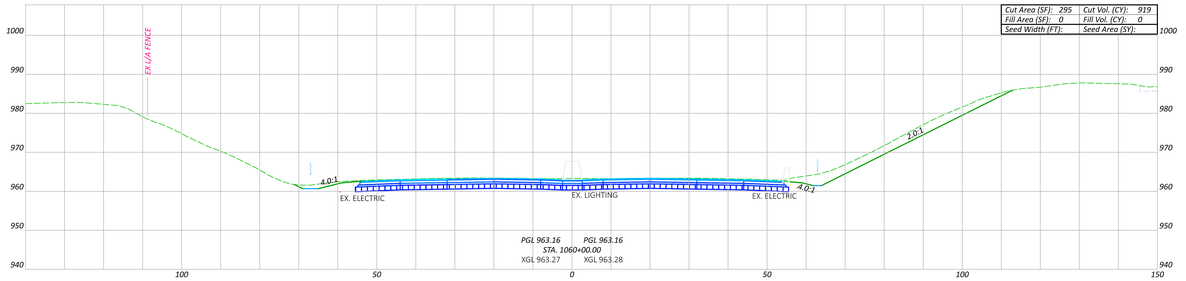

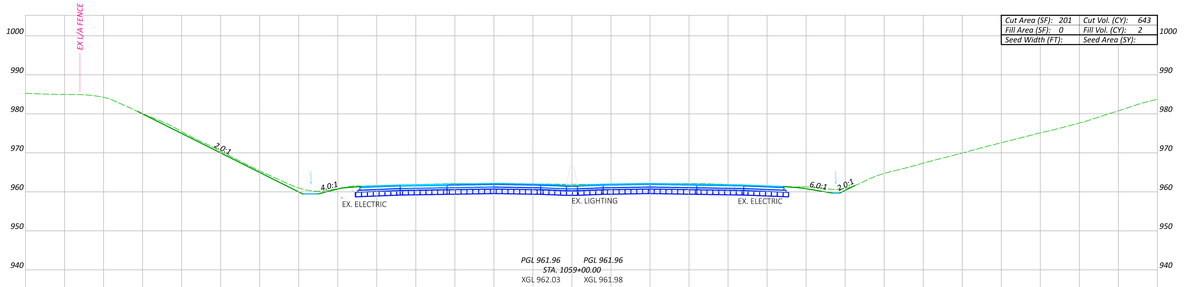

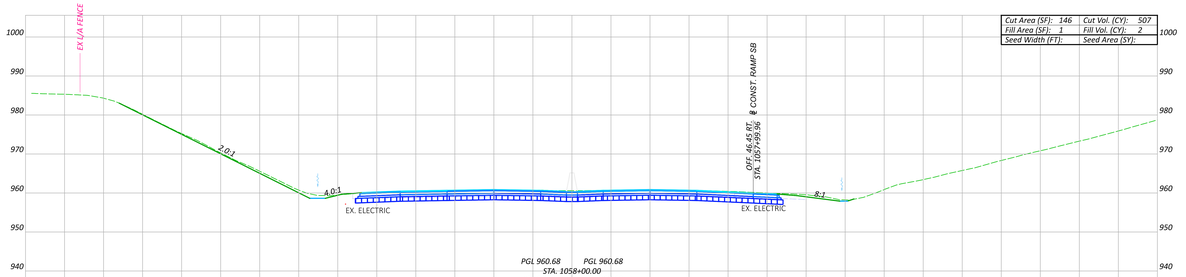

Preliminary Plans - For Reference Only

CROSS SECTIONS - I.R. 680
STA. 1055+00.00 TO STA. 1061+00.00

Sheet Totals				
Seeding	Cut	Fill	SHEET	TOTAL
4194	6		P.282	655

DESIGN AGENCY: mb consultants, inc.
DESIGNER: MSN
REVIEWER: CMN 08/29/25
PROJECT ID: 121474

MAH-680-4.58

MODEL: C:\MB\ - 1055-0030 R4 (Sheet) PAYTEZEE, Alek E4 | DATE: 8/15/2025 TIME: 9:43:12 AM | FITDIV: DWORT_PDF_E1.dmfg, FENTRL DWORT_Port Ltr 11x85 (Inst@mbconsultants.com WORKSPACE: DWORTDVD WORKSET: 121474 PRODUCT: OpenRoadsDesigner 24.00.00.205
ALL RIGHTS RESERVED. COPYRIGHT © 2025 OHIO DEPARTMENT OF TRANSPORTATION AND MB CONSULTANTS, INC.

Preliminary Plans - For Reference Only

LEGEND:

ITEM 206 - CEMENT STABILIZED SUBGRADE, 14" DEPTH

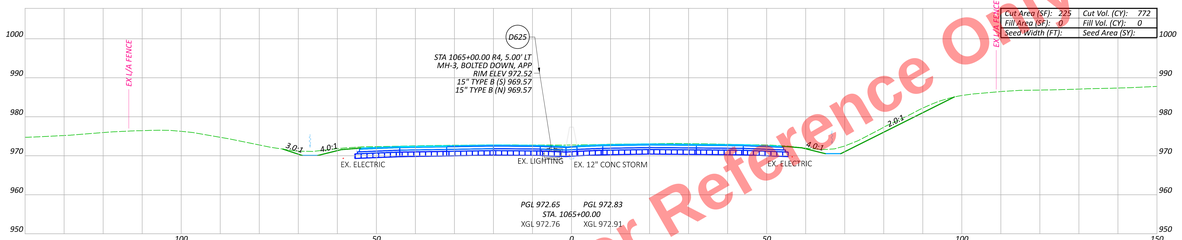

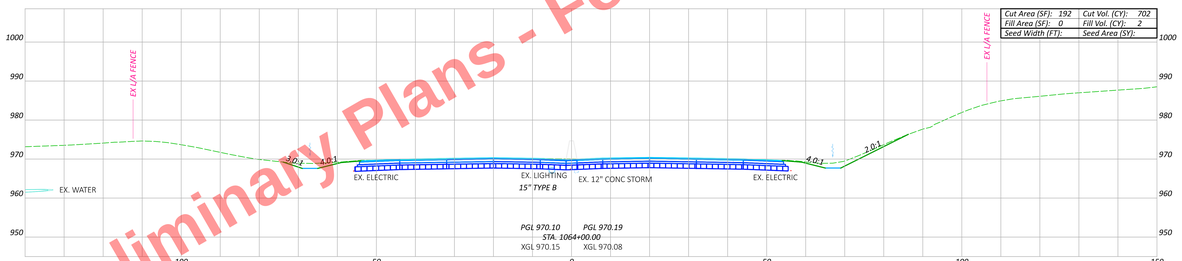

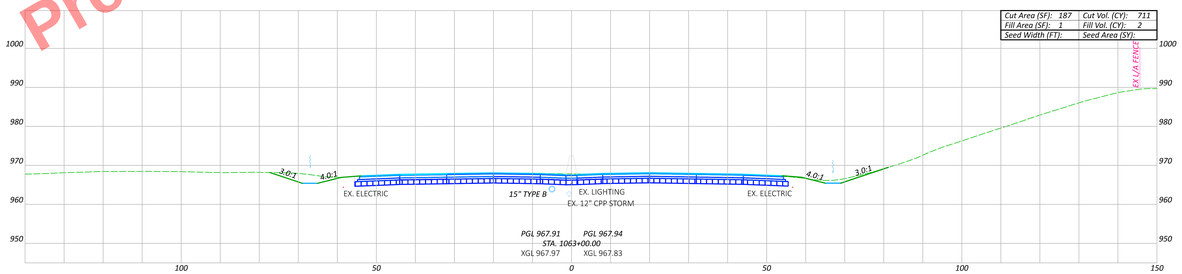

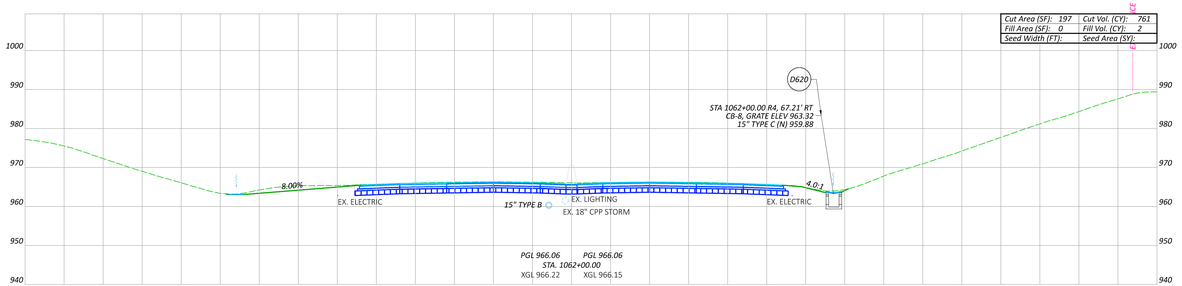

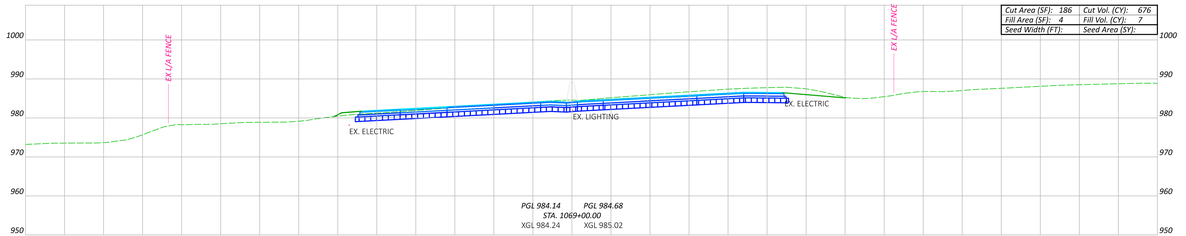

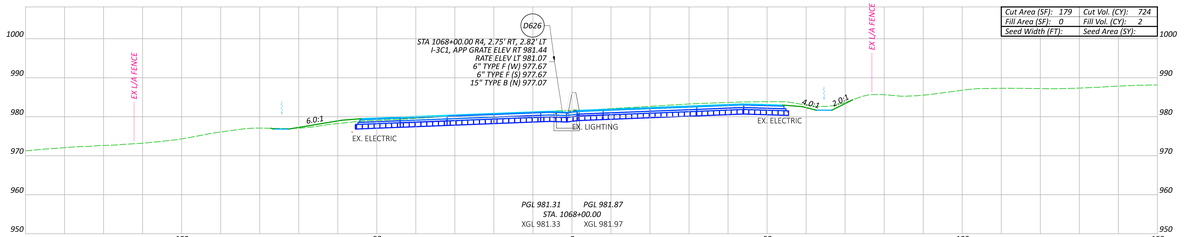

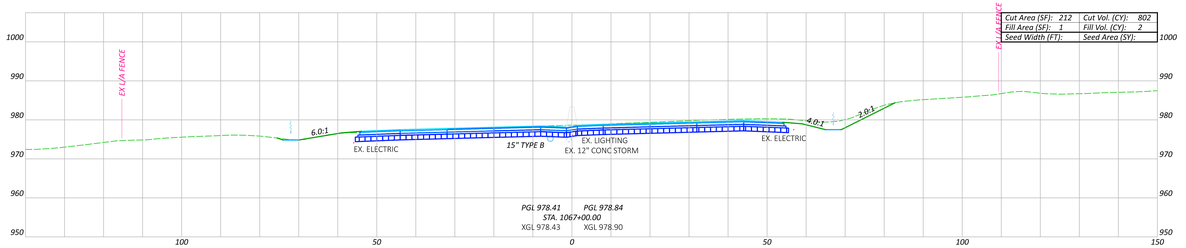

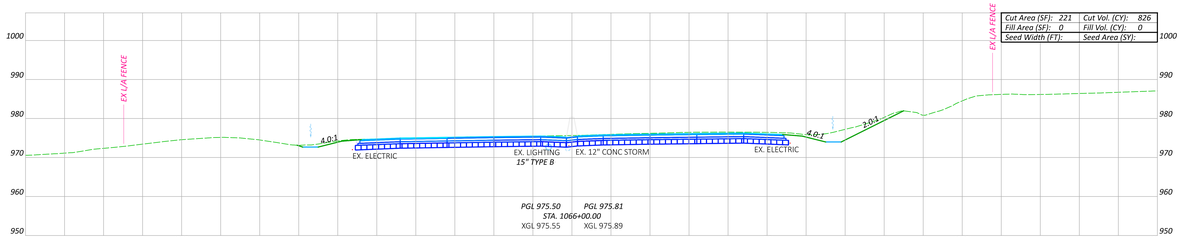

CROSS SECTIONS - I.R. 680
STA. 1062+00.00 TO STA. 1069+00.00

DESIGN AGENCY
ms consultants, inc.
DESIGNER: MSN
REVIEWER: CMN 08/29/25
PROJECT ID: 121474

Sheet Totals				
Seeding	Cut	Fill	SHEET	TOTAL
	5974	17	P.283	655

MAH-680-4.58

MODEL: C:\MH - 680-2020 R4 (Sheet) PAYTEXT: 4x4.54 (in) DATE: 8/15/2025 TIME: 9:43:39 AM USERNAME: DWORT_PW: 14_plot.tbl PENTBL: DWORT_Port.tbl USER: DWolf@msconsultants.com WORKSPACE: ONDOTCKv5 WORKSET: 121474 PRODUCT: OpenRoadsDesigner 24.00.00.205
ALL RIGHTS RESERVED. COPYRIGHT © 2025 OHIO DEPARTMENT OF TRANSPORTATION AND FEDERAL HIGHWAY ADMINISTRATION

Preliminary Plans - For Reference Only

LEGEND:

ITEM 206 - CEMENT STABILIZED SUBGRADE, 14" DEPTH

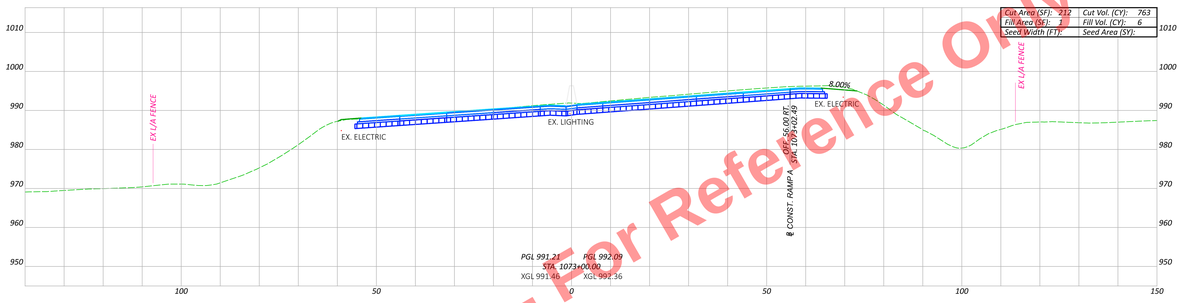

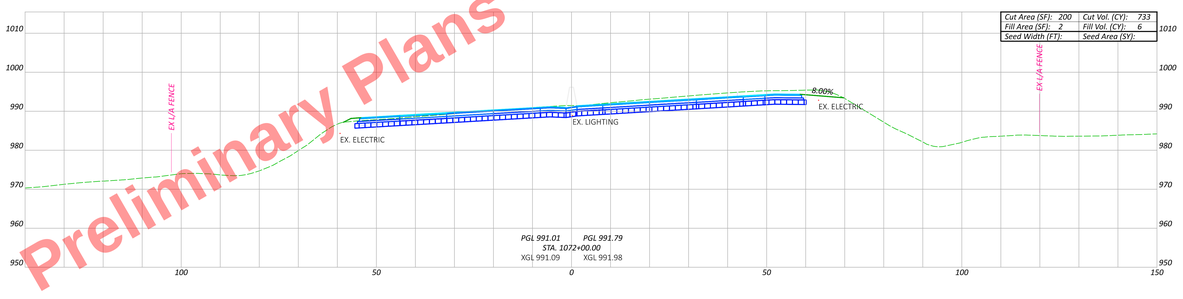

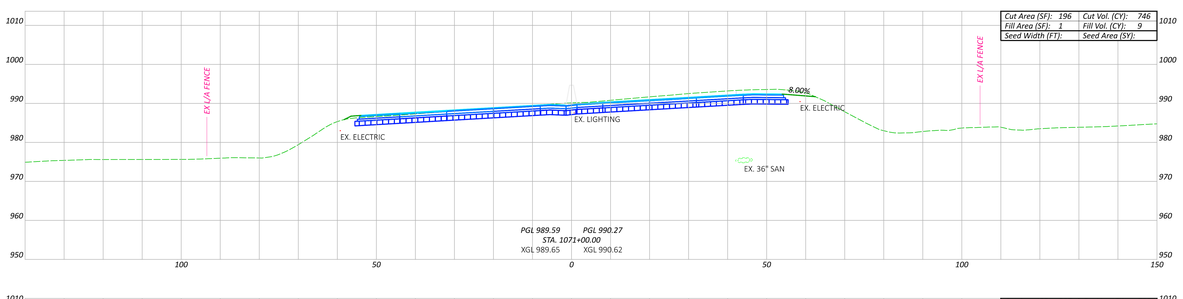

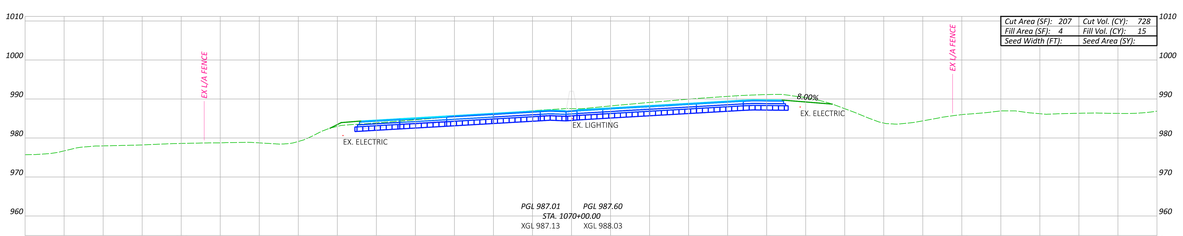

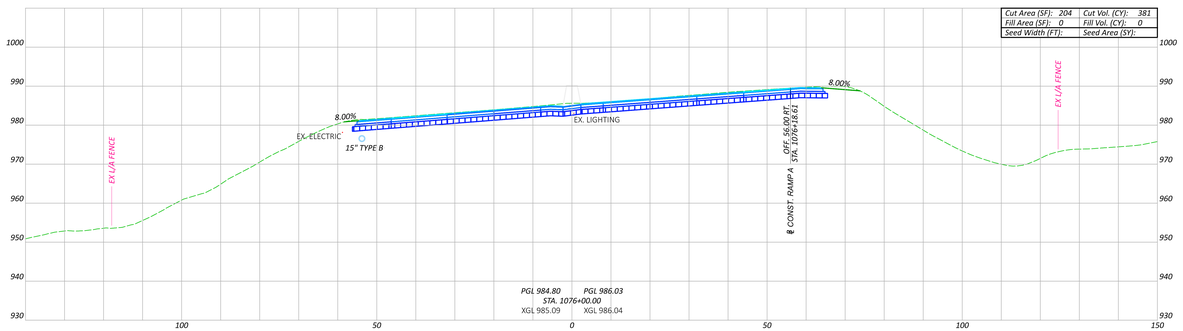

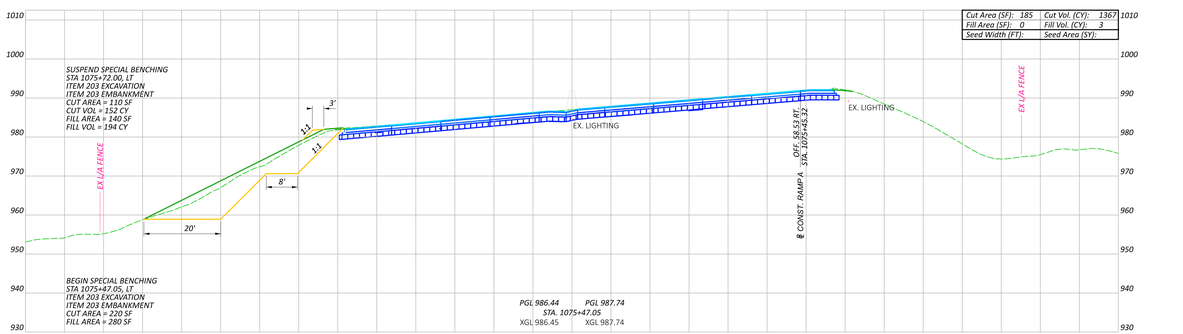

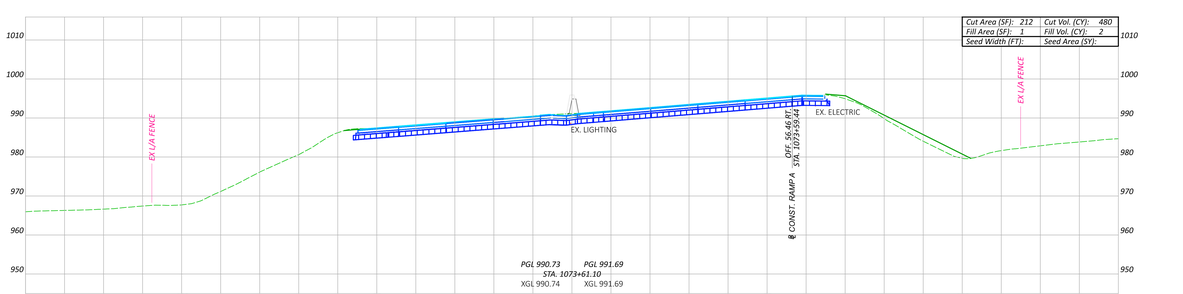

CROSS SECTIONS - I.R. 680
STA. 1070+00.00 TO STA. 1076+00.00

Sheet Totals			
Seeding	Cut	Fill	SHEET TOTAL
5350	193	P.284	655

DESIGN AGENCY: ms consultants, inc.
DESIGNER: MSN
REVIEWER: CMN 08/29/25
PROJECT ID: 121474

MAH-680-4.58

MODEL: C:\ABS - 1070+00.00 to 1076+00.00 Sheet) PAYTEXZEC 4x6.64 Ex1 DATE: 9/15/2025 TIME: 9:43:47 AM USER: DWORT_PW_64.dwg PENTBL: DWORT_Port.ctb USER: DWo@msconsultants.com WORKSPACE: OHIODTCAD WORKSET: 121474 PRODUCT: OpenRoadsDesigner 24.00.00.205

Preliminary Plans - For Reference Only

LEGEND:

ITEM 206 - CEMENT STABILIZED SUBGRADE, 14" DEPTH

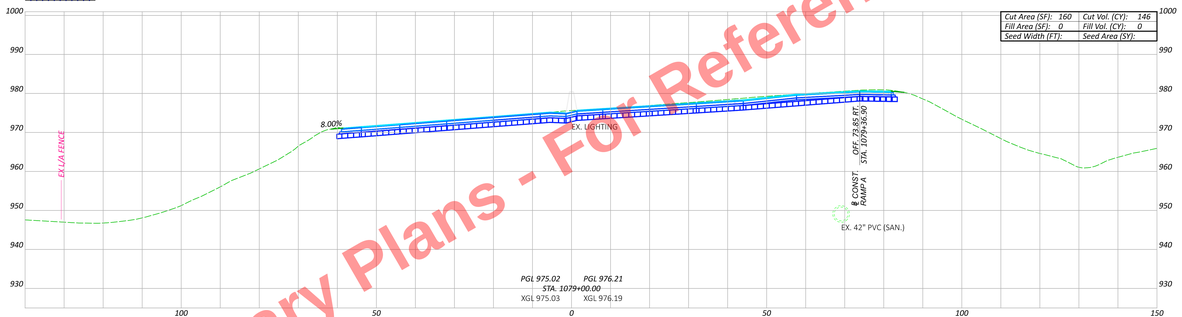

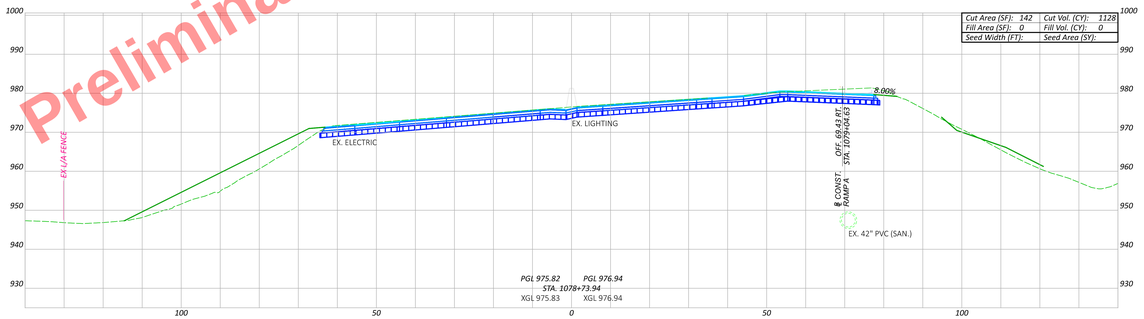

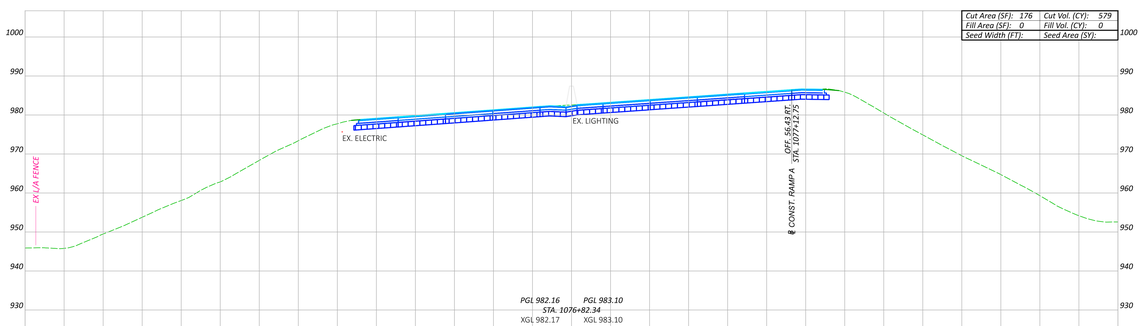

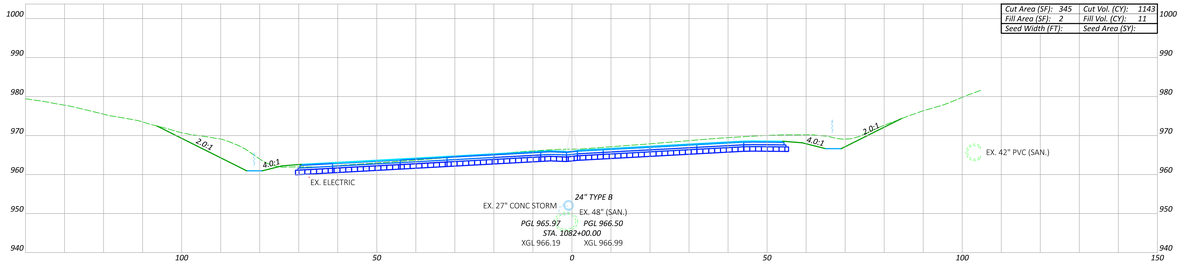

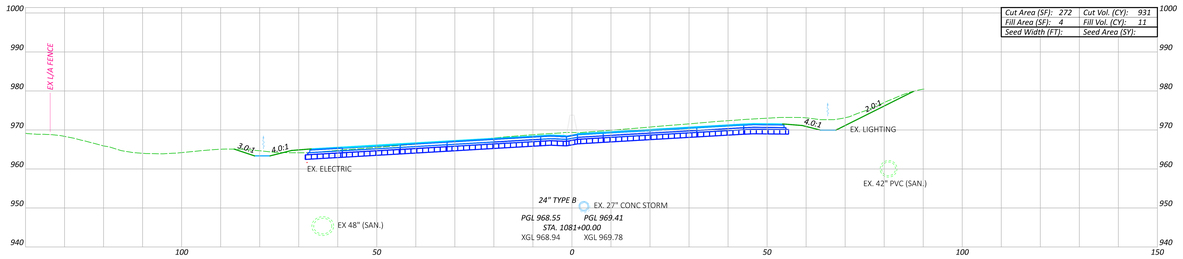

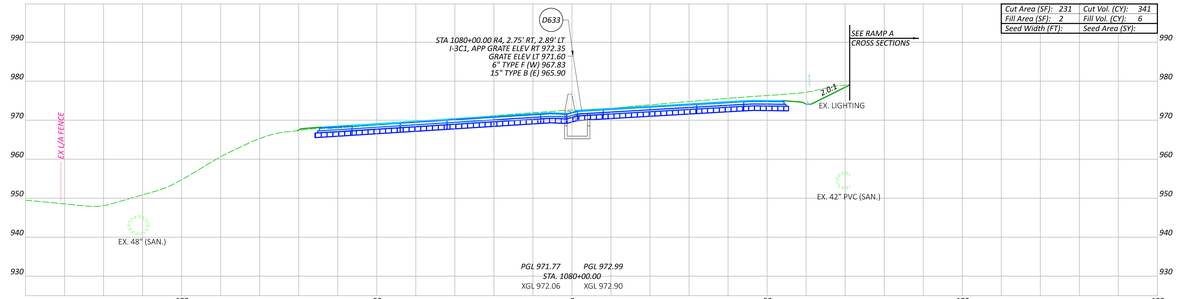

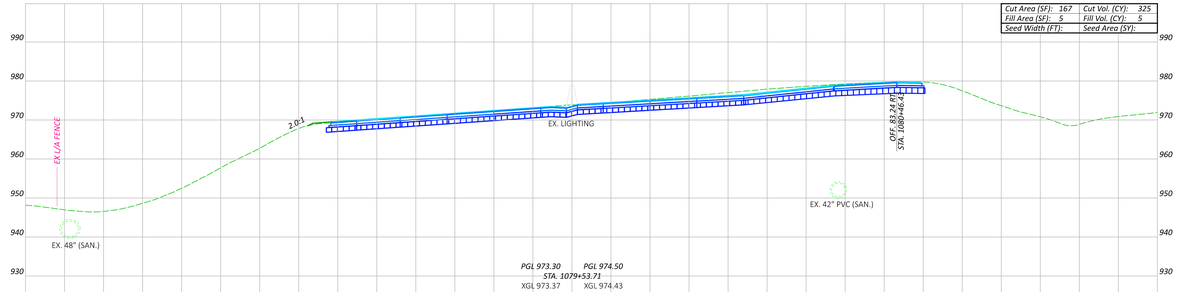

CROSS SECTIONS - I.R. 680
STA. 1076+82.34 TO STA. 1082+00.00

Sheet Totals			
Seeding	Cut	Fill	SHEET
	4593	33	P.285

TOTAL 655

PROJECT ID 121474

DESIGNER MSN

REVIEWER CMN 08/29/25

DESIGN AGENCY

MAH-680-4.58
MODEL: C:\MBS - 1076+82.34 Hi\Sheet\ PAYSHEET_680-04 Hi | DATE: 8/15/2025 TIME: 9:43:14 AM | PSTRW: DWORT_PSH_11.strtg | PSNTBL: DWORT_Port.tbl | USER: DHall@mcconsultants.com WORKSPACE: DWORT/CVEO WORKSET: 121474 PRODUCT: OpenRoadsDesigner 24.00.00.205
FILE: P:\Projects\Roadway\680\MAH-680-4.58\Design\Sheets\Hi\PAYSHEET_680-04 Hi.dgn

LEGEND:

ITEM 206 - CEMENT STABILIZED SUBGRADE, 14" DEPTH

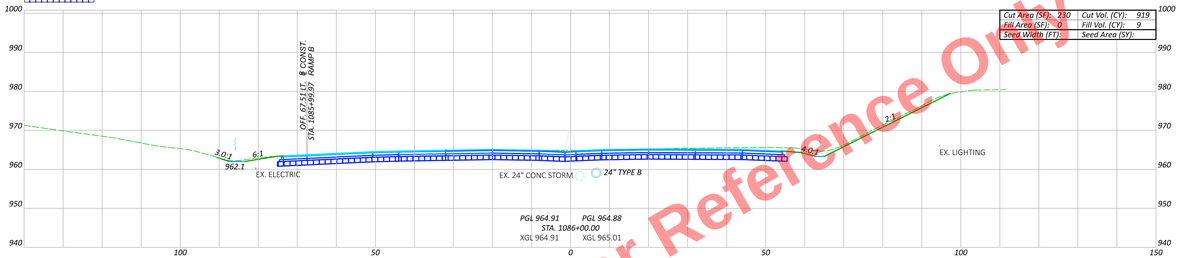

Cut Area (SF):	230	Cut Vol. (CY):	919
Fill Area (SF):	0	Fill Vol. (CY):	9
Seed Width (FT):		Seed Area (SY):	

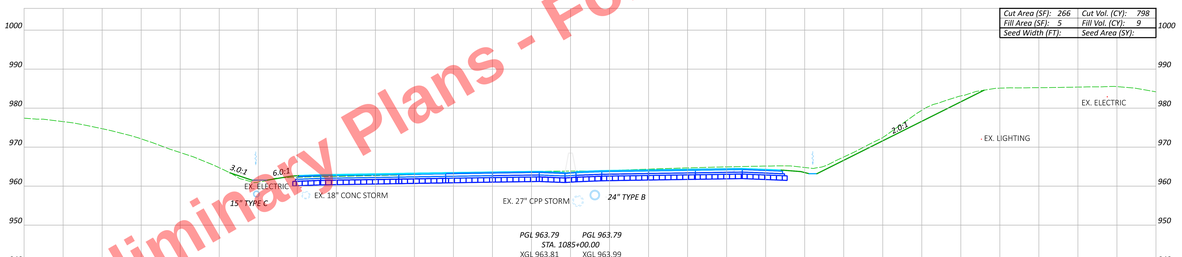

Cut Area (SF):	266	Cut Vol. (CY):	798
Fill Area (SF):	5	Fill Vol. (CY):	9
Seed Width (FT):		Seed Area (SY):	

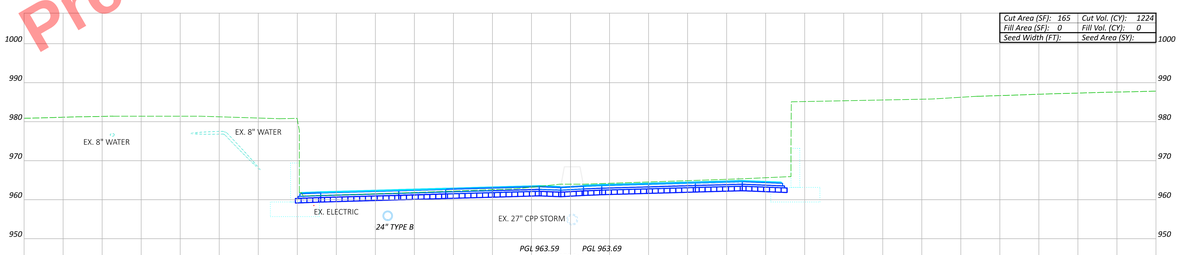

Cut Area (SF):	165	Cut Vol. (CY):	1224
Fill Area (SF):	0	Fill Vol. (CY):	0
Seed Width (FT):		Seed Area (SY):	

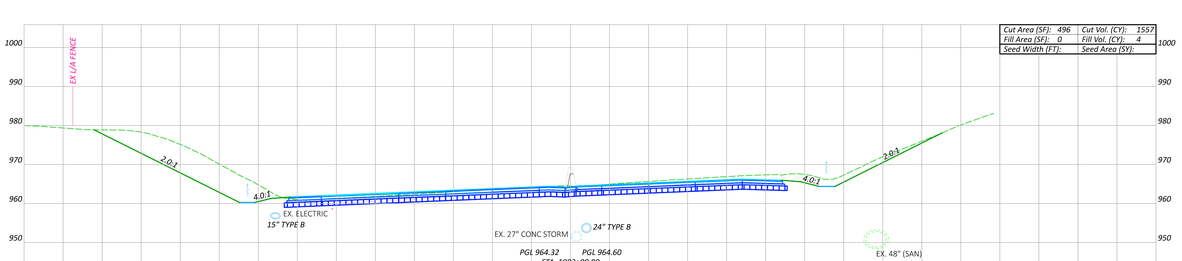

Cut Area (SF):	496	Cut Vol. (CY):	1557
Fill Area (SF):	0	Fill Vol. (CY):	4
Seed Width (FT):		Seed Area (SY):	

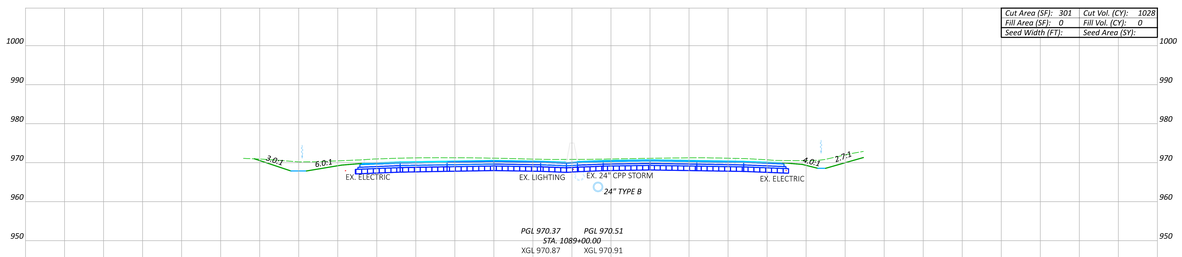

Cut Area (SF):	301	Cut Vol. (CY):	1028
Fill Area (SF):	0	Fill Vol. (CY):	0
Seed Width (FT):		Seed Area (SY):	

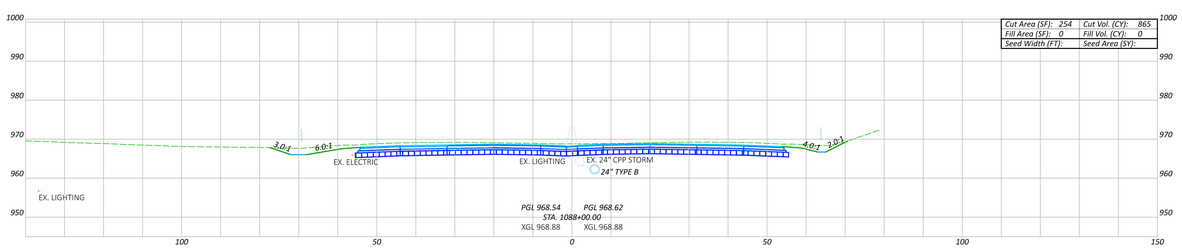

Cut Area (SF):	254	Cut Vol. (CY):	865
Fill Area (SF):	0	Fill Vol. (CY):	0
Seed Width (FT):		Seed Area (SY):	

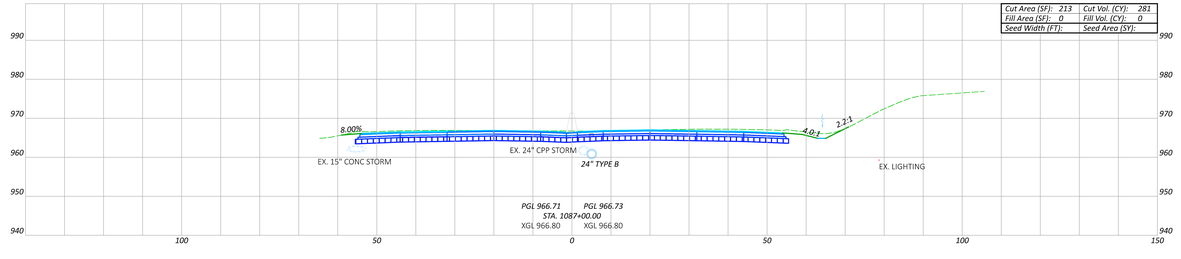

Cut Area (SF):	213	Cut Vol. (CY):	281
Fill Area (SF):	0	Fill Vol. (CY):	0
Seed Width (FT):		Seed Area (SY):	

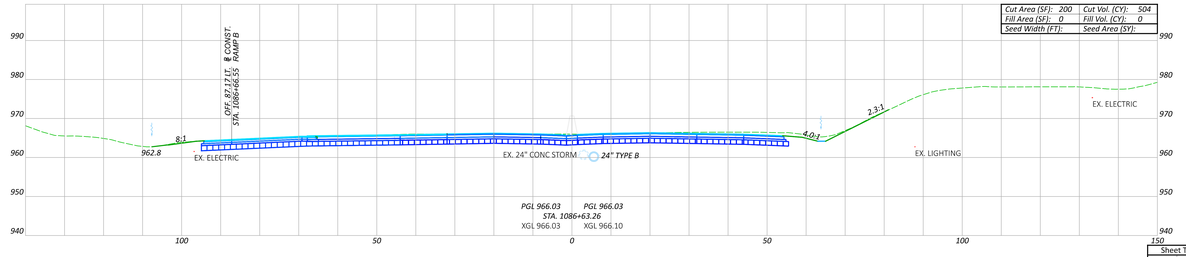

Cut Area (SF):	200	Cut Vol. (CY):	504
Fill Area (SF):	0	Fill Vol. (CY):	0
Seed Width (FT):		Seed Area (SY):	

Preliminary Plans - For Reference Only

CROSS SECTIONS - I.R. 680
STA. 1083+00.00 TO STA. 1089+00.00

MAH-680-4.58

MODEL: C:\ABD_100-0030 Rel 2\Shee PAYTEXT: 464.64 ft | DATE: 9/15/2025 TIME: 9:44:03 AM | PSTBW: DWORT_PSE_11.stb | PSTYPE: DWORT_Port.ctb | USER: DHall@ms-consultants.com WORKSPACE: OHDOTCIVIL WORKSET: 121474 PRODUCT: OpenRoadsDesigner 24.00.00.205
ACTIVE FILE: C:\Projects\MAH-680-4.58\Roadway\Plan Production\Cross Sections\MAH-680-4.58 CS 1083+00 TO 1089+00.dgn

DESIGN AGENCY

ms consultants, inc.

DESIGNER	MSN
REVIEWER	CMN 08/29/25
PROJECT #	121474

Sheet Totals			
Seeding	Cut	Fill	SHEET TOTAL
	7176	22	P.286 655

Preliminary Plans - For Reference Only

LEGEND:

ITEM 206 - CEMENT STABILIZED SUBGRADE, 14" DEPTH

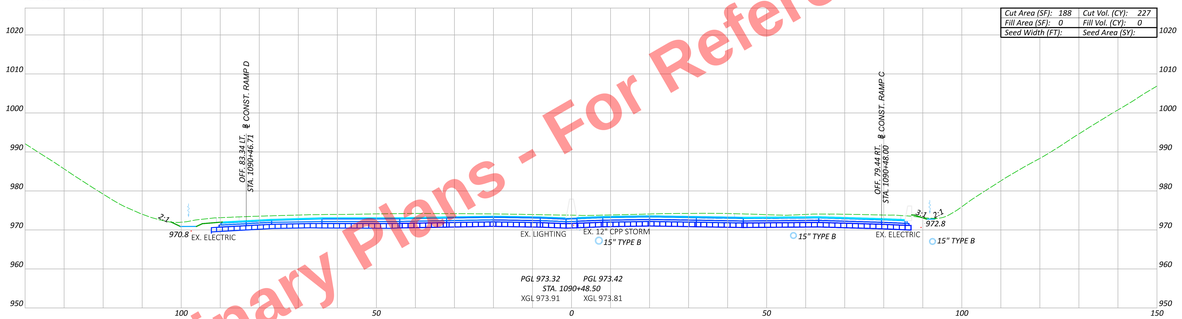

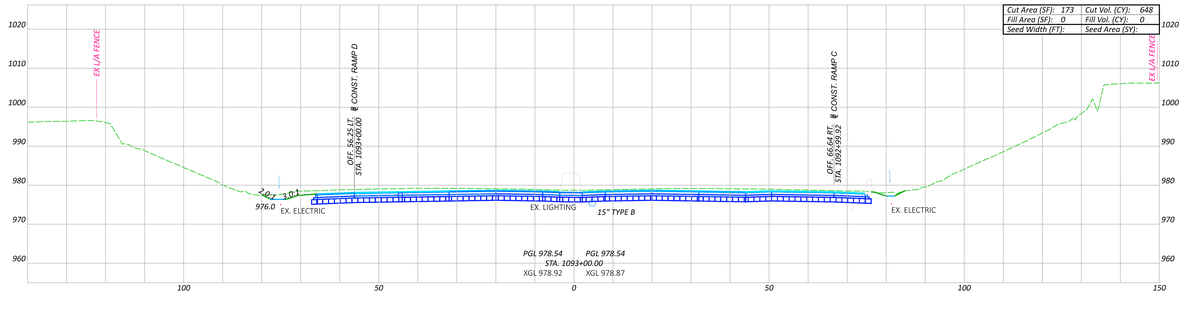

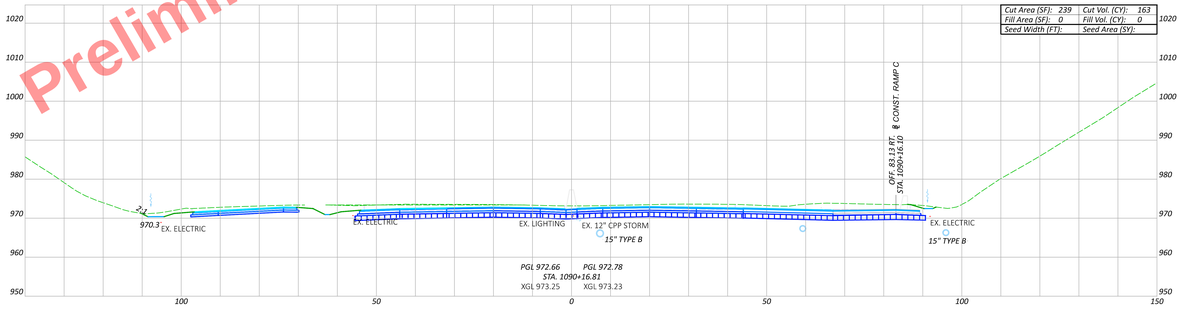

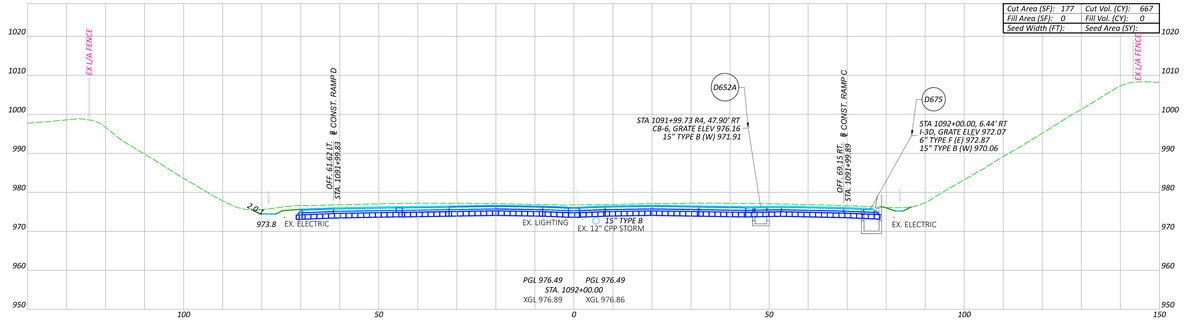

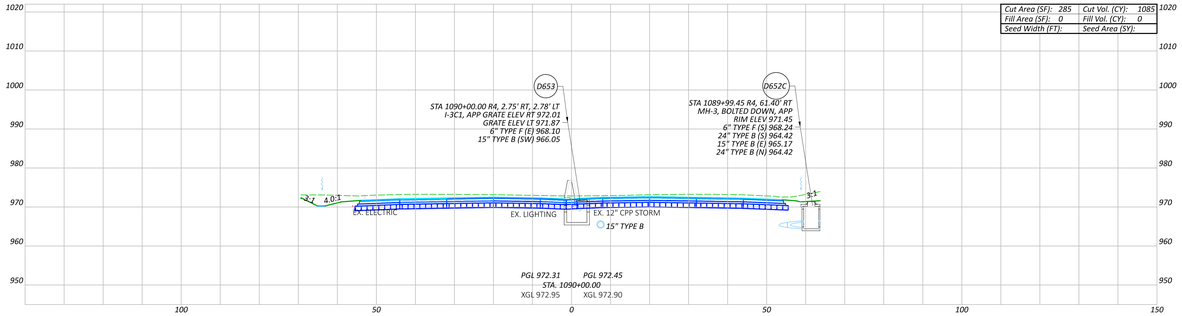

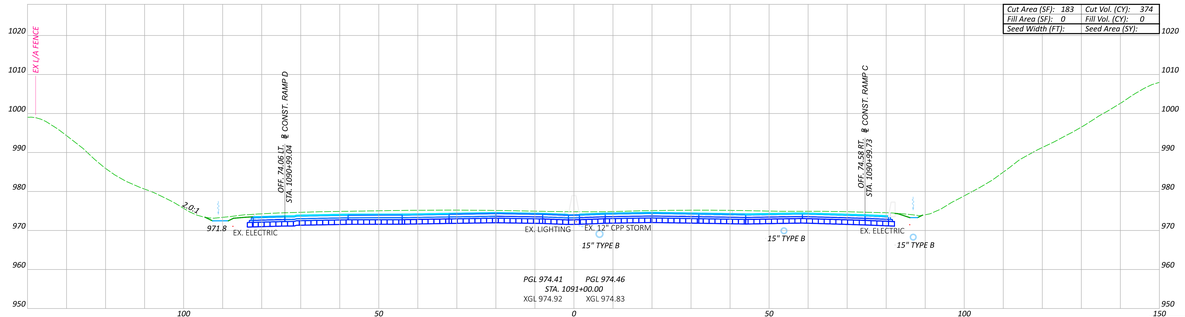

CROSS SECTIONS - I.R. 680
STA. 1090+00.00 TO STA. 1093+00.00

Sheet Totals			
Seeding	Cut	Fill	
	3164	0	

SHEET P.287 TOTAL 655

DESIGN AGENCY: ms consultants, inc.

DESIGNED: MSN
REVIEWED: CMN 08/29/25
PROJECT ID: 121474

MAH-680-4.58

MODEL: C3F_ABD - 1090-060.tin Sheet: PAYITEMS: 660.64 Ea | DATE: 9/15/2025 TIME: 9:44:09 AM | FITTING: DWORT_PID_51.dmfg, FENTRL DWORT_Port.tbl 1689 Dina@msconsultants.com WORKSPACE: ONDOTCIVIL WORKSET: 121474 PRODUCT: OpenRoadsDesigner 24.00.00.205
ALL Rights Reserved. Unauthorized use or distribution prohibited. This electronic file may be altered, intentionally or unintentionally, as a result of conversion from the original electronic format.

Preliminary Plans - For Reference Only

LEGEND:

ITEM 206 - CEMENT STABILIZED SUBGRADE, 14" DEPTH

I.R. 680	TOTALS CARRIED TO CROSS SECTION SHEET P.292
ITEM 203 - EXCAVATION	= 87,917 C.Y.
ITEM 203 - EMBANKMENT	= 888 C.Y.
SPECIAL EMBANKMENT	
ITEM 203 - EXCAVATION	= 3,070 C.Y.
ITEM 203 - EMBANKMENT	= 4,193 C.Y.

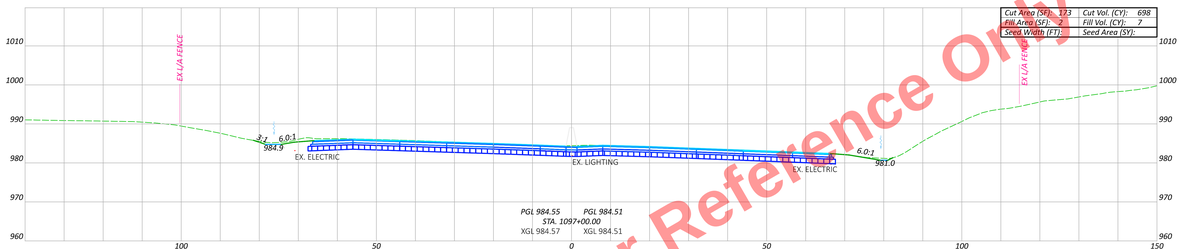

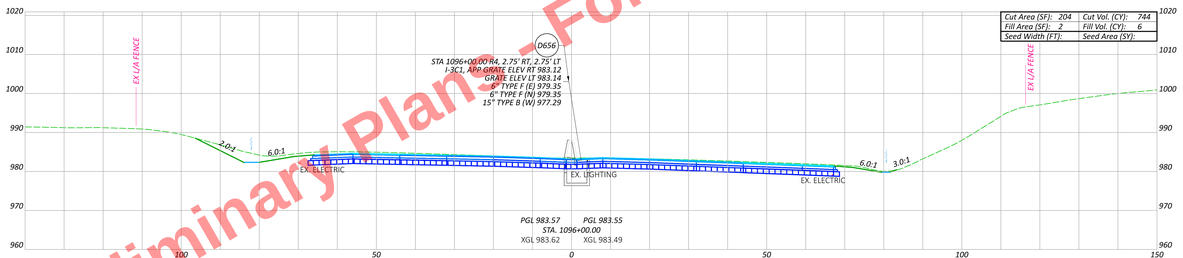

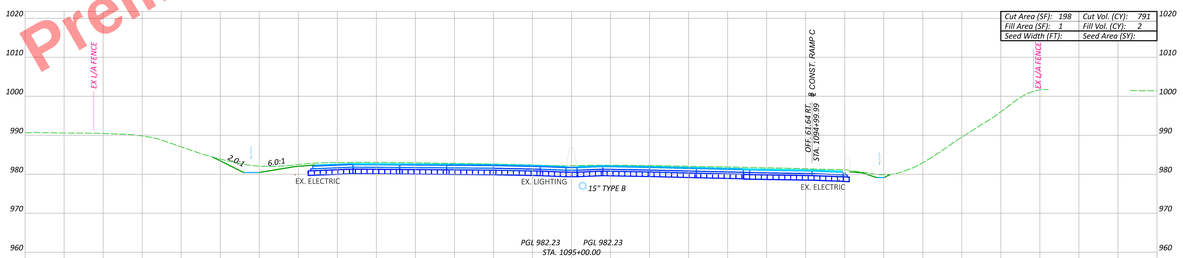

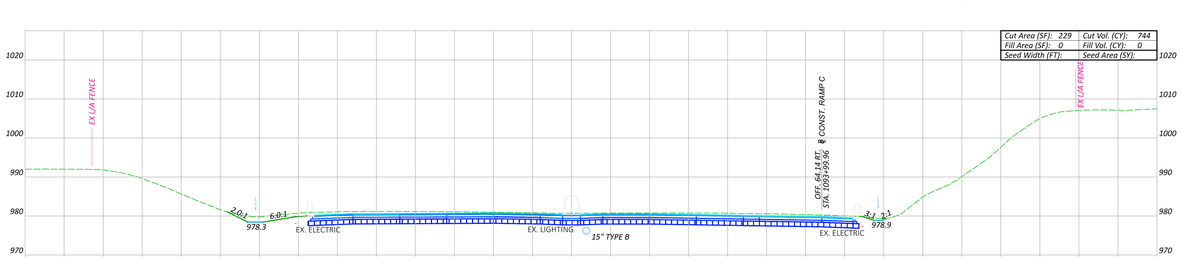

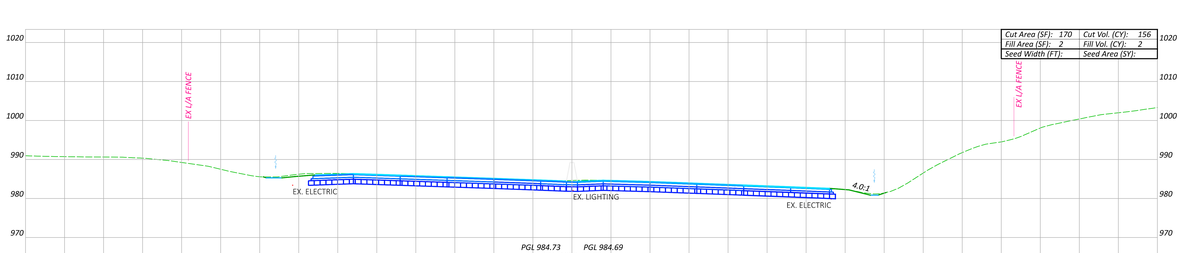

CROSS SECTIONS - I.R. 680
STA. 1094+00.00 TO STA. 1097+24.61

Sheet Totals				
Seeding	Cut	Fill	SHEET	TOTAL
	3133	17	P.288	655

DESIGN AGENCY: ms consultants, inc.
DESIGNED: MSN
REVIEWED: CMN 08/29/25
PROJECT ID: 121474

MAH-680-4.58

MODEL: C:\ABD_ 1094-00.00 R4 (Sheet) PAYFILE: 4x4.54 | DATE: 9/15/2025 TIME: 9:44:15 AM | FITDW: DWORT_P58_E1.dat&_& PENTBL: DWORT_Port.ctb USER: DNall@msconsultants.com WORKSPACE: OHDOTCivil WORKSET: 121474 PRODUCT: OpenRoadsDesigner 24.00.00.205
ALL DRAWINGS ARE PROPERTY OF THE OHIO DEPARTMENT OF TRANSPORTATION AND ARE NOT TO BE USED WITHOUT THE PERMISSION OF ODOT. © 2025

Preliminary Plans - For Reference Only

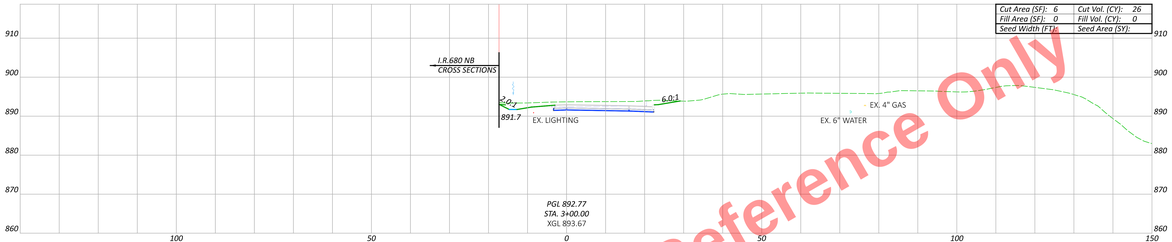

Cut Area (SF):	6	Cut Vol. (CY):	26
Fill Area (SF):	0	Fill Vol. (CY):	0
Seed Width (FT):		Seed Area (SY):	



Cut Area (SF):	8	Cut Vol. (CY):	37
Fill Area (SF):	0	Fill Vol. (CY):	0
Seed Width (FT):		Seed Area (SY):	

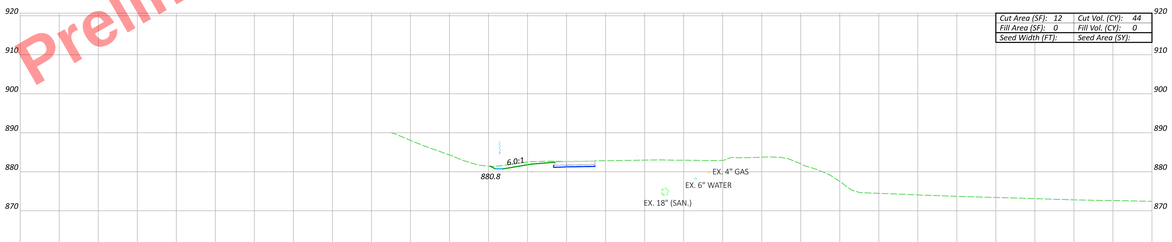

Cut Area (SF):	12	Cut Vol. (CY):	44
Fill Area (SF):	0	Fill Vol. (CY):	0
Seed Width (FT):		Seed Area (SY):	

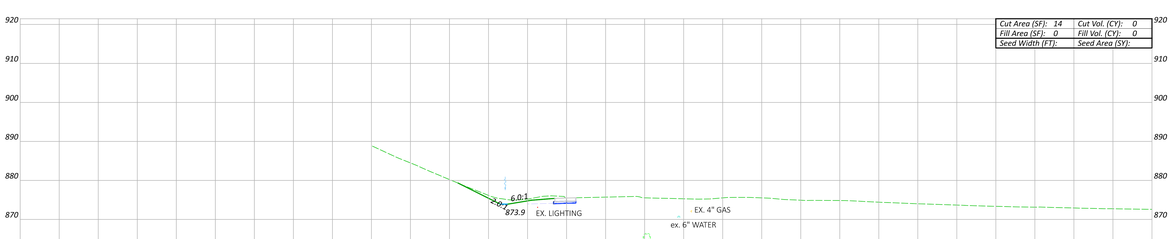

Cut Area (SF):	14	Cut Vol. (CY):	0
Fill Area (SF):	0	Fill Vol. (CY):	0
Seed Width (FT):		Seed Area (SY):	

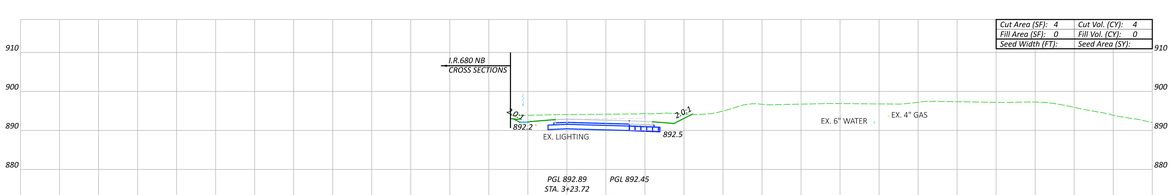

Cut Area (SF):	4	Cut Vol. (CY):	4
Fill Area (SF):	0	Fill Vol. (CY):	0
Seed Width (FT):		Seed Area (SY):	

CROSS SECTIONS - MARSHALL ST. RAMP G
STA. 0+08.11 TO STA. 3+23.72

DESIGN AGENCY
ms consultants, inc.

DESIGNER: MSN
REVIEWER: CMN 08/29/25
PROJECT #: 121474

Sheet Totals				
Seeding	Cut	Fill	SHEET	TOTAL
	111	0	P.289	655

MAH-680-4.58

BASEMODEL_BUP_MS - D:\MS 13 (Sheet) 2024\2024 Sheets\121474 Marshall Rd Ramp G\Roadway\121474 Marshall Rd Ramp G_Roadway_Cross Sections.dgn 08/29/2025 10:48:14 AM PETERH CHKOPT_PSP_F-1.dwg PENTBL CHKOPT_PSP_F-1.dwg PENTBL CHKOPT_PSP_F-1.dwg PENTBL

Preliminary Plans - For Reference Only

MARSHALL ST. RAMP G	TOTALS CARRIED TO CROSS SECTION SHEET P.292
ITEM 203 - EXCAVATION	= 179 C.Y.
ITEM 203 - EMBANKMENT	= 0 C.Y.

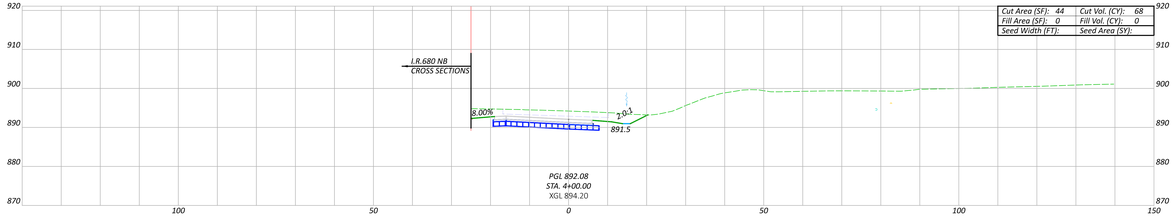

CROSS SECTIONS - MARSHALL ST. RAMP G
STA. 4+00.00

DESIGN AGENCY
mk consultants, inc.

DESIGNER: MSN
REVIEWER: CMN 08/29/25
PROJECT #: 121474

Sheet Totals			SHEET	TOTAL
Seeding	Cut	Fill	P.290	655
	68	0		

MAH-680-4.58

MODEL: BLY_RD11 - 4-00-00 [Sheet] PAPERSIZE: ISO A1 (841 x 594) DATE: 9/15/2025 TIME: 9:49:42 AM PLTDEP: ORIENT_PW_F = portrait PLTMTRL: ORIENT_PW_F.ctb PLTSTYL: ORIENT_PW_F.ctb DWG: C:\Users\MSN\Documents\Projects\MAH-680-4.58\Roadway\Sheets\MAH-680-4.58_CROSS SECTIONS - MARSHALL ST. RAMP G.dwg XREFS: C:\Users\MSN\Documents\Projects\MAH-680-4.58\Roadway\Sheets\MAH-680-4.58_CROSS SECTIONS - MARSHALL ST. RAMP G.dwg XREFBIND: C:\Users\MSN\Documents\Projects\MAH-680-4.58\Roadway\Sheets\MAH-680-4.58_CROSS SECTIONS - MARSHALL ST. RAMP G.dwg USER: MSN@mkconsultants.com WORKSPACE: ORIENTOVID WORKSET: 121474 PRODUCT: OpenRoadsDesigner 24.00.00.205

Preliminary Plans - For Reference Only

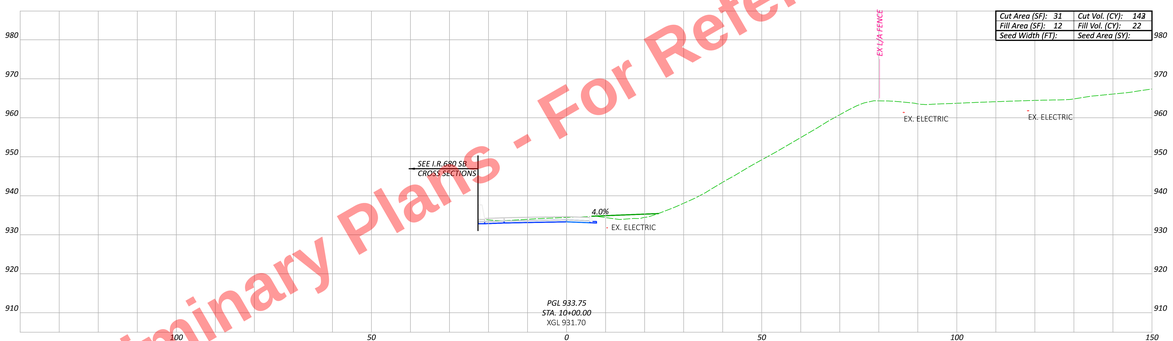

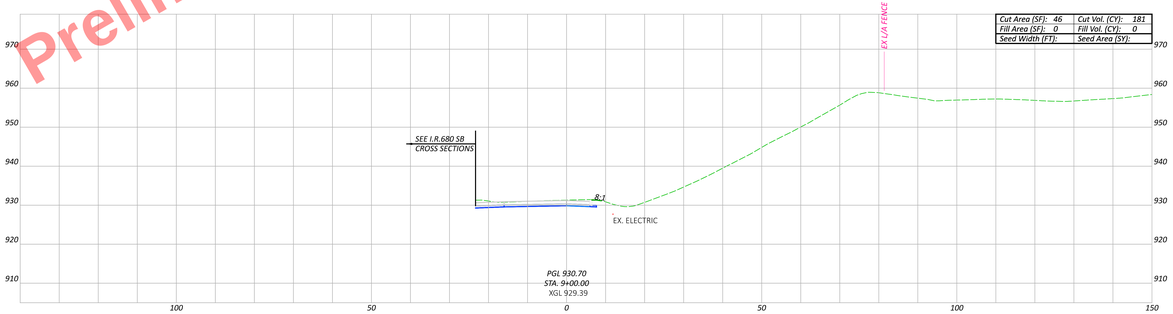

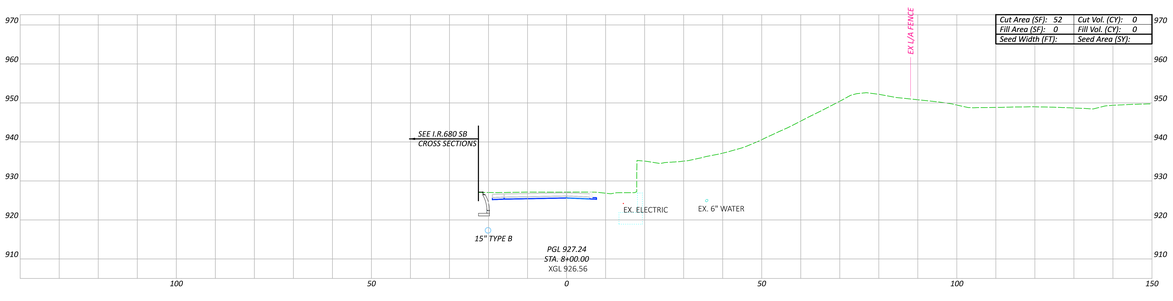

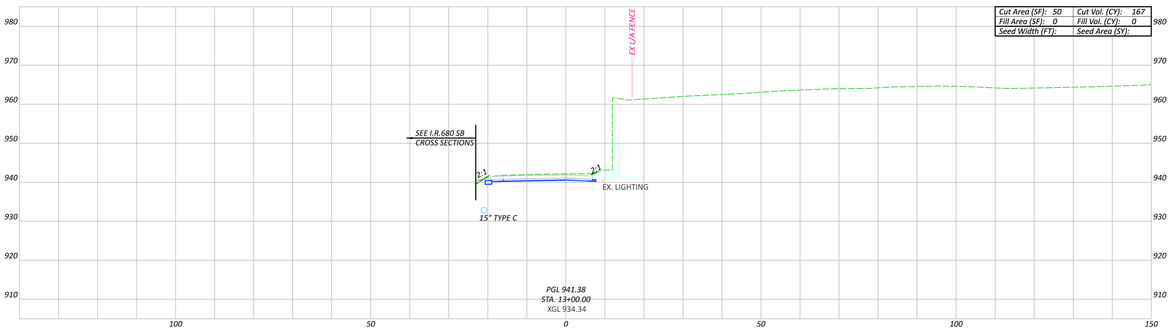

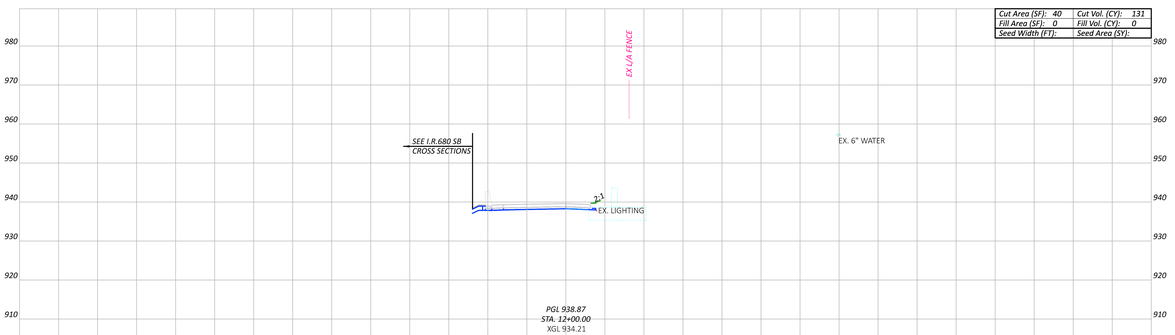

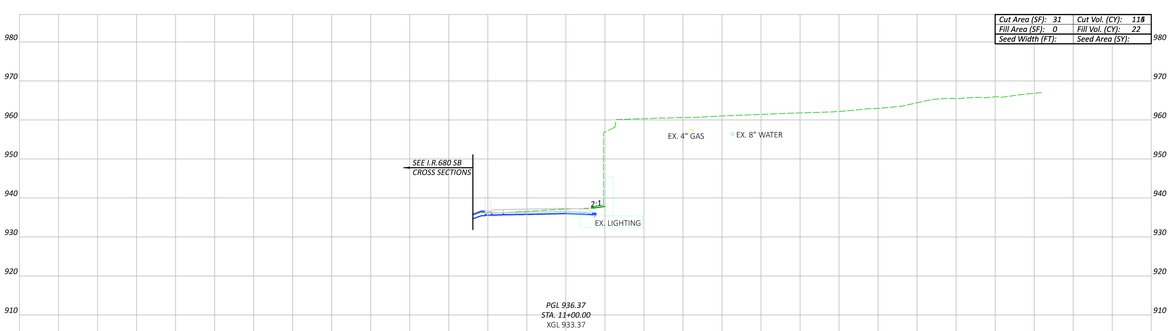

CROSS SECTIONS - RAMP K AT MARKET ST.
STA. 8+00.00 TO STA. 13+00.00

MAH-680-4.58

MODEL: BLF_RK 8+00.00 (Sheet) PLOTSCRIPT: Model.tbl PLOTTED: 9:44:53 AM BY: CMN
DRAWING: P:\Projects\MAH-680-4.58\Design\Roadway\Sheets\MAH-680-4.58_RAMP K_PANEL CHART_Sht.dgn DATE: 9/5/2025 TIME: 9:45:53 AM PLOTSET: CHKDFT_PSF_F-LAYR_PENTBL: CHKDFT_Pen.tbl USER: DHall@dotsoh.onmicrosoft.com WORKSPACE: CHKDFT(X64) WORKSET: 121474 PRODUCT: OpenRoadsDesigner 24.00.00.205

Sheet Totals				
Seeding	Cut	Fill	SHEET	TOTAL
	737	44	P.291	655

DESIGN AGENCY
ms consultants, inc.
DESIGNER: MSN
REVIEWER: CMN 08/29/25
PROJECT ID: 121474

Preliminary Plans - For Reference Only

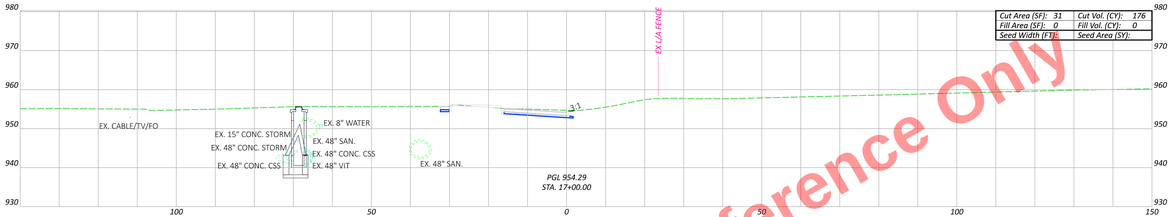

Cut Area (SF): 31	Cut Vol. (CY): 176
Fill Area (SF): 0	Fill Vol. (CY): 0
Seed Width (FT):	Seed Area (SY):

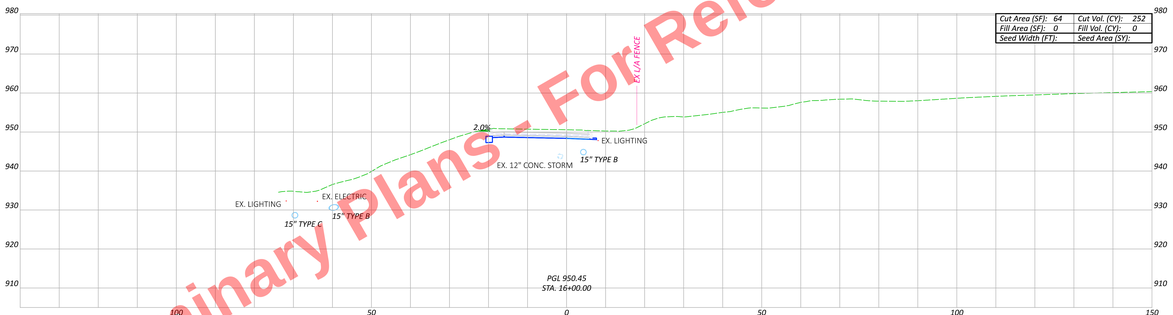

Cut Area (SF): 64	Cut Vol. (CY): 252
Fill Area (SF): 0	Fill Vol. (CY): 0
Seed Width (FT):	Seed Area (SY):

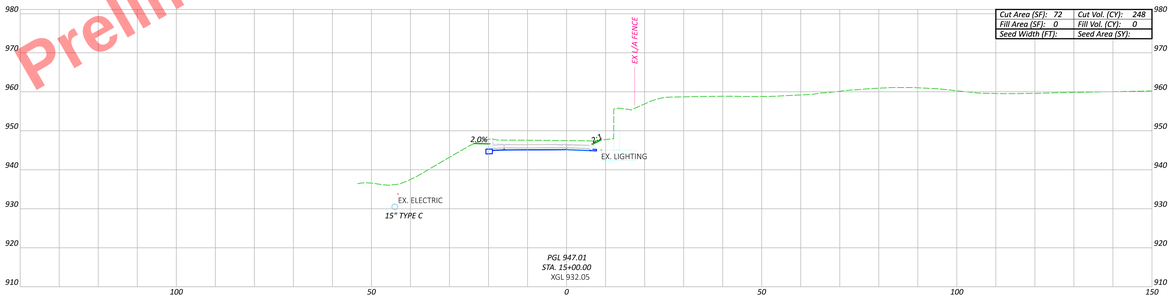

Cut Area (SF): 72	Cut Vol. (CY): 248
Fill Area (SF): 0	Fill Vol. (CY): 0
Seed Width (FT):	Seed Area (SY):

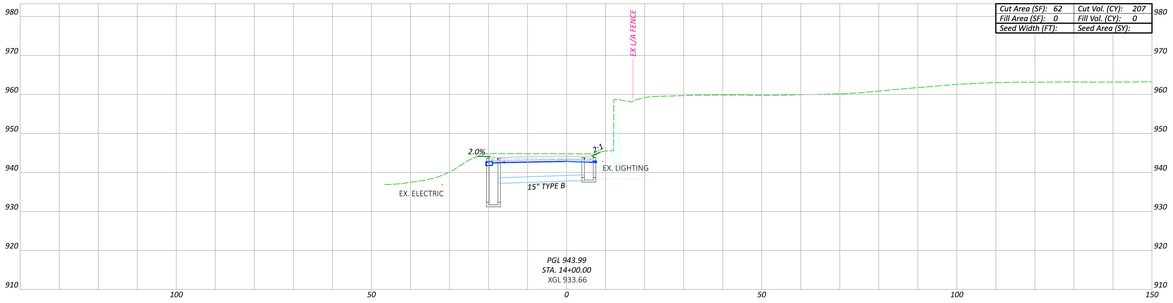

Cut Area (SF): 62	Cut Vol. (CY): 207
Fill Area (SF): 0	Fill Vol. (CY): 0
Seed Width (FT):	Seed Area (SY):

TOTALS	I.R. 680	MARSHALL ST. RAMP G	MARKET ST. RAMP K	SUB-TOTALS
ITEM 203 - EXCAVATION	= 87,917 C.Y.	= 179 C.Y.	= 1,807 C.Y.	= 89,903 C.Y.
ITEM 203 - EMBANKMENT	= 888 C.Y.	= 0 C.Y.	= 48 C.Y.	= 936 C.Y.
SPECIAL EMBANKMENT	= 3,070 C.Y.	= 0 C.Y.	= 0 C.Y.	= 3,070 C.Y.
ITEM 203 - EXCAVATION	= 4,193 C.Y.	= 0 C.Y.	= 0 C.Y.	= 4,193 C.Y.
ITEM 203 - EMBANKMENT				
GRAND TOTALS CARRIED TO THE GENERAL SUMMARY		ITEM 203 - EXCAVATION = 92,973 C.Y. ITEM 203 - EMBANKMENT = 5,129 C.Y.		

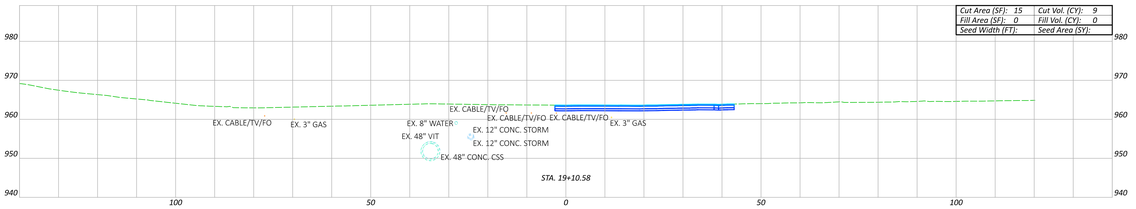

Cut Area (SF): 15	Cut Vol. (CY): 9
Fill Area (SF): 0	Fill Vol. (CY): 0
Seed Width (FT):	Seed Area (SY):

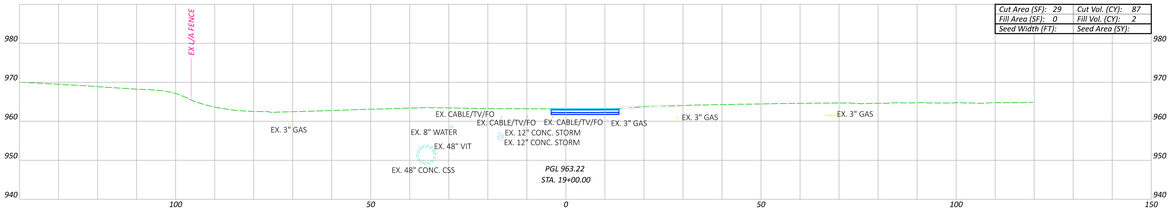

Cut Area (SF): 29	Cut Vol. (CY): 87
Fill Area (SF): 0	Fill Vol. (CY): 2
Seed Width (FT):	Seed Area (SY):

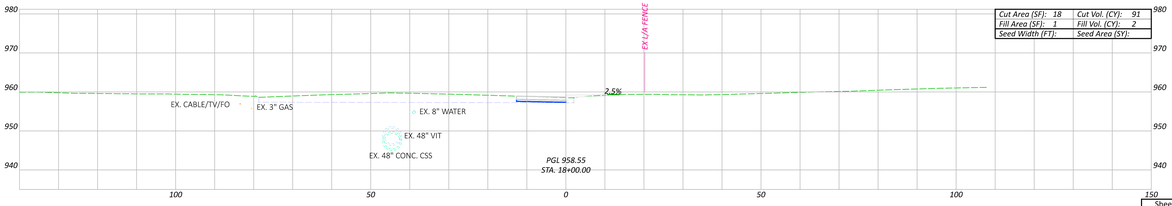

Cut Area (SF): 18	Cut Vol. (CY): 91
Fill Area (SF): 1	Fill Vol. (CY): 2
Seed Width (FT):	Seed Area (SY):

CROSS SECTIONS - RAMP K AT MARKET ST.
STA. 14+00.00 TO STA. 19+10.58

Sheet Totals				
Seeding	Cut	Fill	SHEET	TOTAL
	1070	4	P.292	655

DESIGN AGENCY
DESIGNER MSN
REVIEWER CMN 08/29/25
PROJECT ID 121474

MAH-680-4.58

BLOCK: BLF_RK DATE: 9/15/2025 TIME: 9:48:02 AM PLTDRV: DWGOUT_PDF_F.stb PLTSTBL: DWGOUT_Pen2Col 100% SHARE: mnsquare.com WORKSPACE: DWGOUT5020 WORKSET: 121474 PRODUCT: OpenRoadsDesigner 24.00.00.205
ACTIVITY: 0 PROJECT: 121474 FILE: 121474_680-4.58_CROSS SECTIONS - RAMP K AT MARKET ST.dgn

SUPERELEVATION TABLE - IR 680 CURVE 23

P.I. 944+55.64 | DC 5°30'00" (RT)

REMARKS	NORTHBOUND OUTSIDE EDGE					NORTHBOUND MIDDLE LANE LINE					NB INSIDE EDGE (PROFILE GRADE)		STATION	SB INSIDE EDGE (PROFILE GRADE)		SOUTHBOUND MIDDLE LANE LINE					SOUTHBOUND OUTSIDE EDGE					REMARKS
	ELEVATION	TRANSITION RATE	ELEVATION CORRECTION	CROSS SLOPE	WIDTH	ELEVATION	TRANSITION RATE	ELEVATION CORRECTION	CROSS SLOPE	WIDTH	ELEVATION	OFFSET		OFFSET	ELEVATION	WIDTH	CROSS SLOPE	ELEVATION CORRECTION	TRANSITION RATE	ELEVATION	WIDTH	CROSS SLOPE	ELEVATION CORRECTION	TRANSITION RATE	ELEVATION	
	874.88	333.3:1	0.27	0.0223	12.00	874.61	333.3:1	0.27	0.0223	12.00	874.34	8.00	950+65.76	8.00	873.91	12.00	-0.0130	-0.16	333.3:1	873.76	12.00	-0.0130	-0.16	333.3:1	873.60	
	874.93		0.24	0.0200	12.00	874.69		0.25	0.0211	12.00	874.44	8.00	950+75.00	8.00	874.00	12.00	-0.0107	-0.13		873.87	12.00	-0.0142	-0.17		873.70	
	875.02		0.19	0.0162	12.00	874.82		0.23	0.0193	12.00	874.59	8.00	950+90.00	8.00	874.15	12.00	-0.0069	-0.08		874.07	12.00	-0.0160	-0.19	333.3:1	873.88	
	875.08		0.16	0.0137	12.00	874.91		0.22	0.0180	12.00	874.69	8.00	951+00.00	8.00	874.25	12.00	-0.0044	-0.05		874.20	12.00	-0.0160	-0.19		874.00	
RC	875.17		0.12	0.0097	12.00	875.05	333.3:1	0.19	0.0160	12.00	874.86	8.00	951+16.00	8.00	874.41	12.00	-0.0004	-0.01		874.40	12.00	-0.0160	-0.19		874.21	RC
	875.18		0.11	0.0093	12.00	875.07		0.19	0.0160	12.00	874.88	8.00	951+17.75	8.00	874.42	12.00	0.0000	0.00		874.42	12.00	-0.0160	-0.19		874.23	½ LEVEL
	875.23		0.09	0.0075	12.00	875.14		0.19	0.0160	12.00	874.95	8.00	951+25.00	8.00	874.50	12.00	0.0018	0.02		874.52	12.00	-0.0160	-0.19		874.32	
	875.31		0.01	0.0012	12.00	875.36		0.19	0.0160	12.00	875.16	8.00	951+50.00	8.00	874.74	12.00	0.0081	0.10		874.84	12.00	-0.0160	-0.19		874.65	
ST	875.40		0.00	0.0000	12.00	875.40		0.19	0.0160	12.00	875.21	8.00	951+54.95	8.00	874.79	12.00	0.0093	0.11		874.90	12.00	-0.0160	-0.19		874.71	ST
	875.53		-0.03	-0.0027	12.00	875.56		0.19	0.0160	12.00	875.37	8.00	951+65.76	8.00	874.90	12.00	0.0120	0.14		875.04	12.00	-0.0160	-0.19		874.85	
	875.58		-0.06	-0.0050	12.00	875.64		0.19	0.0160	12.00	875.45	8.00	951+75.00	8.00	874.99	12.00	0.0143	0.17		875.16	12.00	-0.0160	-0.19		874.97	
½ LEVEL	875.61		-0.08	-0.0063	12.00	875.68		0.19	0.0160	12.00	875.49	8.00	951+80.00	8.00	875.04	12.00	0.0156	0.19		875.22	12.00	-0.0160	-0.19		875.03	
	875.62		-0.08	-0.0067	12.00	875.70		0.19	0.0160	12.00	875.51	8.00	951+81.76	8.00	875.05	12.00	0.0160	0.19	333.3:1	875.25	12.00	-0.0160	-0.19		875.05	NC
	875.71		-0.14	-0.0113	12.00	875.85		0.19	0.0160	12.00	875.66	8.00	952+00.00	8.00	875.23	12.00	0.0160	0.19		875.43	12.00	-0.0160	-0.19		875.23	
NC	875.82	333.3:1	-0.19	-0.0160	12.00	876.01		0.19	0.0160	12.00	875.82	8.00	952+18.96	8.00	875.42	12.00	0.0160	0.19		875.61	12.00	-0.0160	-0.19		875.42	
	875.87		-0.19	-0.0160	12.00	876.06		0.19	0.0160	12.00	875.87	8.00	952+25.00	8.00	875.48	12.00	0.0160	0.19		875.67	12.00	-0.0160	-0.19		875.48	
	876.03		-0.19	-0.0160	12.00	876.22		0.19	0.0160	12.00	876.03	8.00	952+44.00	8.00	875.67	12.00	0.0160	0.19		875.86	12.00	-0.0160	-0.19		875.67	

Preliminary Plans - For Reference Only

SUPERELEVATION TABLE
IR-680 STA. 950+50.00 TO STA. 952+25.00

DESIGN AGENCY
ms consultants, inc.

DESIGNER CMJ
REVIEWER CMN 08/29/25
PROJECT ID 121474
SHEET P.293 TOTAL 655

MAH-680-4.58

MODEL: Section 3 Curve 23-2 PAPERSIZE: 34x22 (in.) DATE: 9/15/2025 TIME: 9:48:08 AM PLTDRV: OHDOT_PDF_E+.pltcfg PENTBL: OHDOT_Pen.tbl USER: DHall@msconsultants.com WORKSPACE: OHDOTCivil02 WORKSET: 121474 PRODUCT: OpenRoadsDesigner 24.00.00.205
pw:\\ohiodot-pw.bentley.com:ohiodot-pw-02\Documents\01 Active Projects\District 04\Mahoning\121474\02-Engineering_MSConsultants\Roadway\Sheets\121474_GE003.dgn

SUPERELEVATION TABLE - IR 680 CURVE 26

P.I. 962+39.68 | DC 5°30'00" (LT)

DESIGN EXCEPTION CURVE #26
SUPERELVATION RATE
NDC emax = 0.06

REMARKS	NORTHBOUND OUTSIDE EDGE					NORTHBOUND MIDDLE LANE LINE					NB INSIDE EDGE (PROFILE GRADE)		STATION	SB INSIDE EDGE (PROFILE GRADE)		SOUTHBOUND MIDDLE LANE LINE					SOUTHBOUND OUTSIDE EDGE					REMARKS
	ELEVATION	TRANSITION RATE	ELEVATION CORRECTION	CROSS SLOPE	WIDTH	ELEVATION	TRANSITION RATE	ELEVATION CORRECTION	CROSS SLOPE	WIDTH	ELEVATION	OFFSET		OFFSET	ELEVATION	WIDTH	CROSS SLOPE	ELEVATION CORRECTION	TRANSITION RATE	ELEVATION	WIDTH	CROSS SLOPE	ELEVATION CORRECTION	TRANSITION RATE	ELEVATION	
	877.15		-0.38	-0.0160	24.00	877.53		0.19	0.0160	12.00	877.34	8.00	954+00.00	8.00	877.20	12.00	0.0160	0.19		877.39	12.00	-0.0160	-0.19		877.20	
NC	877.22		-0.38	-0.0160	24.00	877.61	333.3:1	0.19	0.0160	12.00	877.41	8.00	954+08.92	8.00	877.29	12.00	0.0160	0.19		877.48	12.00	-0.0160	-0.19	333.3:1	877.29	NC
	877.31		-0.38	-0.0160	24.00	877.69	▲	0.14	0.0120	12.00	877.55	8.00	954+25.00	8.00	877.44	12.00	0.0160	0.19		877.63	12.00	-0.0120	-0.14	▲	877.49	
	877.44		-0.38	-0.0160	24.00	877.83		0.07	0.0057	12.00	877.76	8.00	954+50.00	8.00	877.69	12.00	0.0160	0.19		877.89	12.00	-0.0057	-0.07		877.82	
TS,1/2 LEVEL	878.27		-0.38	-0.0160	24.00	878.66		0.00	0.0000	12.00	878.66	8.00	954+72.92	8.00	877.92	12.00	0.0160	0.19		878.11	12.00	0.0000	0.00		878.11	TS,1/2 LEVEL
	877.58		-0.38	-0.0160	24.00	877.96		-0.01	-0.0005	12.00	877.97	8.00	954+75.00	8.00	877.94	12.00	0.0160	0.19		878.13	12.00	0.0005	0.01		878.14	
	877.71		-0.38	-0.0160	24.00	878.10		-0.08	-0.0068	12.00	878.18	8.00	955+00.00	8.00	878.18	12.00	0.0160	0.19		878.37	12.00	0.0068	0.08		878.45	
	877.85		-0.38	-0.0160	24.00	878.23		-0.16	-0.0130	12.00	878.39	8.00	955+25.00	8.00	878.43	12.00	0.0160	0.19		878.62	12.00	0.0130	0.16		878.78	
RC	877.91	333.3:1	-0.38	-0.0160	24.00	878.30		-0.19	-0.0160	12.00	878.49	8.00	955+36.92	8.00	878.55	12.00	0.0160	0.19	333.3:1	878.74	12.00	0.0160	0.19		878.93	RC
	877.97	▲	-0.42	-0.0176	24.00	878.39		-0.21	-0.0176	12.00	878.60	8.00	955+50.00	8.00	878.68	12.00	0.0176	0.21	▲	878.89	12.00	0.0176	0.21		879.10	
	878.03	▲	-0.47	-0.0197	24.00	878.50		-0.24	-0.0197	12.00	878.74	8.00	955+66.38	8.00	878.84	12.00	0.0197	0.24	▲	879.07	24.00	0.0197	0.47		879.55	
	878.06	▲	-0.50	-0.0208	24.00	878.56		-0.25	-0.0208	12.00	878.81	8.00	955+75.00	8.00	878.92	12.00	0.0208	0.25	▲	879.17	24.00	0.0208	0.50		879.67	
	878.16	▲	-0.57	-0.0239	24.00	878.73		-0.29	-0.0239	12.00	879.02	8.00	956+00.00	8.00	879.17	12.00	0.0239	0.29	▲	879.46	24.00	0.0239	0.57		880.03	
	878.26	▲	-0.65	-0.0270	24.00	878.91		-0.32	-0.0270	12.00	879.23	8.00	956+25.00	8.00	879.42	12.00	0.0270	0.32	▲	879.74	24.00	0.0270	0.65		880.39	
	878.36	▲	-0.72	-0.0301	24.00	879.08		-0.36	-0.0301	12.00	879.44	8.00	956+50.00	8.00	879.66	12.00	0.0301	0.36	▲	880.02	24.00	0.0301	0.72		880.75	
	878.45	▲	-0.80	-0.0333	24.00	879.25		-0.40	-0.0333	12.00	879.65	8.00	956+75.00	8.00	879.91	12.00	0.0333	0.40	▲	880.31	24.00	0.0333	0.80		881.10	
	878.55	▲	-0.87	-0.0364	24.00	879.42		-0.44	-0.0364	12.00	879.86	8.00	957+00.00	8.00	880.15	12.00	0.0364	0.44	▲	880.59	24.00	0.0364	0.87		881.46	
	878.65	▲	-0.95	-0.0395	24.00	879.60		-0.47	-0.0395	12.00	880.07	8.00	957+25.00	8.00	880.40	12.00	0.0395	0.47	▲	880.87	24.00	0.0395	0.95		881.82	
	878.75	▲	-1.02	-0.0426	24.00	879.77		-0.51	-0.0426	12.00	880.28	8.00	957+50.00	8.00	880.65	12.00	0.0426	0.51	▲	881.16	24.00	0.0426	1.02		882.18	
	878.82	▲	-1.08	-0.0449	24.00	879.89		-0.54	-0.0449	12.00	880.43	8.00	957+68.08	8.00	880.82	12.00	0.0449	0.54	▲	881.36	24.00	0.0449	1.08		882.44	
	878.84	▲	-1.10	-0.0458	24.00	879.94		-0.55	-0.0458	12.00	880.49	8.00	957+75.00	8.00	880.89	12.00	0.0458	0.55	▲	881.44	24.00	0.0458	1.10		882.54	
	878.94	▲	-1.17	-0.0489	24.00	880.11		-0.59	-0.0489	12.00	880.70	8.00	958+00.00	8.00	881.14	12.00	0.0489	0.59	▲	881.72	24.00	0.0489	1.17		882.90	
	879.04	▲	-1.25	-0.0520	24.00	880.29		-0.62	-0.0520	12.00	880.91	8.00	958+25.00	8.00	881.38	12.00	0.0520	0.62	▲	882.01	24.00	0.0520	1.25		883.26	
	879.14	▼	-1.32	-0.0551	24.00	880.46	▼	-0.66	-0.0551	12.00	881.12	8.00	958+50.00	8.00	881.63	12.00	0.0551	0.66	▼	882.29	24.00	0.0551	1.32	▼	883.61	
SC, FS	879.23	333.3:1	-1.39	-0.0580	24.00	880.62	333.3:1	-0.70	-0.0580	12.00	881.31	8.00	958+72.92	8.00	881.86	12.00	0.0580	0.70	333.3:1	882.55	24.00	0.0580	1.39	333.3:1	883.94	SC, FS
	879.24		-1.39	-0.0580	24.00	880.64		-0.70	-0.0580	12.00	881.33	8.00	958+75.00	8.00	881.88	12.00	0.0580	0.70		882.57	24.00	0.0580	1.39		883.96	
	879.45		-1.39	-0.0580	24.00	880.85		-0.70	-0.0580	12.00	881.54	8.00	959+00.00	8.00	882.12	12.00	0.0580	0.70		882.82	24.00	0.0580	1.39		884.21	
	879.66		-1.39	-0.0580	24.00	881.06		-0.70	-0.0580	12.00	881.75	8.00	959+25.00	8.00	882.37	12.00	0.0580	0.70		883.06	24.00	0.0580	1.39		884.46	
	879.87		-1.39	-0.0580	24.00	881.27		-0.70	-0.0580	12.00	881.96	8.00	959+50.00	8.00	882.61	12.00	0.0580	0.70		883.31	24.00	0.0580	1.39		884.70	
	880.08		-1.39	-0.0580	24.00	881.48		-0.70	-0.0580	12.00	882.17	8.00	959+75.00	8.00	882.86	12.00	0.0580	0.70		883.56	24.00	0.0580	1.39		884.95	
	880.29		-1.39	-0.0580	24.00	881.69		-0.70	-0.0580	12.00	882.38	8.00	960+00.00	8.00	883.11	12.00	0.0580	0.70		883.80	24.00	0.0580	1.39		885.19	
	880.50		-1.39	-0.0580	24.00	881.90		-0.70	-0.0580	12.00	882.59	8.00	960+25.00	8.00	883.35	12.00	0.0580	0.70		884.05	24.00	0.0580	1.39		885.44	
	880.53	200:1	-1.39	-0.0580	24.00	881.93	200:1	-0.70	-0.0580	12.00	882.62	8.00	960+28.56	8.00	883.40	12.00	0.0580	0.70		884.09	24.00	0.0580	1.39		885.48	
	880.55	▲	-1.50	-0.0625	24.00	882.05	▲	-0.75	-0.0625	12.00	882.80	8.00	960+50.00	8.00	883.60	12.00	0.0580	0.70		884.29	24.00	0.0580	1.39		885.69	
	880.58	▲	-1.62	-0.0677	24.00	882.20	▲	-0.81	-0.0677	12.00	883.01	8.00	960+75.00	8.00	883.84	12.00	0.0580	0.70		884.54	24.00	0.0580	1.39		885.93	
	880.60	▲	-1.74	-0.0723	24.00	882.33	▲	-0.87	-0.0723	12.00	883.20	8.00	960+97.24	8.00	884.06	12.00	0.0580	0.70	200:1	884.76	24.00	0.0580	1.39	200:1	886.15	
	880.60	▲	-1.75	-0.0729	24.00	882.35	▲	-0.87	-0.0729	12.00	883.22	8.00	961+00.00	8.00	884.09	12.00	0.0586	0.70	▲	884.79	24.00	0.0586	1.41	▲	886.20	
	880.62	▲	-1.87	-0.0781	24.00	882.50	▲	-0.94	-0.0781	12.00	883.43	8.00	961+25.00	8.00	884.34	12.00	0.0638	0.77	▲	885.10	24.00	0.0638	1.53	▲	886.63	
	880.62	▲	-1.88	-0.0783	24.00	882.50	▲	-0.94	-0.0783	12.00	883.44	8.00	961+25.81	8.00	884.34	12.00	0.0640	0.77	▲	885.11	24.00	0.0640	1.53	▲	886.65	
	880.64	200:1	-2.00	-0.0833	24.00	882.64	200:1	-1.00	-0.0833	12.00	883.64	8.00	961+50.00	8.00	884.58	12.00	0.0690	0.83	▲	885.41	24.00	0.0690	1.66	▲	887.07	
	880.85		-2.00	-0.0833	24.00	882.85		-1.00	-0.0833	12.00	883.85	8.00	961+75.00	8.00	884.83	12.00	0.0742	0.89	▲	885.72	24.00	0.0742	1.78	▲	887.50	
	881.06		-2.00	-0.0833	24.00	883.06		-1.00	-0.0833	12.00	884.06	8.00	962+00.00	8.00	885.07	12.00	0.0794	0.95	▼	886.03	24.00	0.0794	1.91	▼	887.93	
PR. APPROACH SLAB	881.22		-2.00	-0.0833	24.00	883.22		-1.00	-0.0833	12.00	884.22	8.00	962+18.68	8.00	885.26	12.00	0.0833	1.00	200:1	886.26	24.00	0.0833	2.00	200:1	888.26	PR. APPROACH SLAB
	881.19		-2.00	-0.0833	24.00	883.19		-1.08	-0.0833	13.00	884.27	8.00	962+25.00	8.00	885.30	12.00	0.0833	1.00		886.30	24.00	0.0833	2.00		888.30	
	881.47		-2.00	-0.0833	24.00	883.47		-1.00	-0.0833	12.00	884.47	8.00	962+50.00	8.00	885.49	12.00	0.0833	1.00		886.49	24.00	0.0833	2.00		888.49	
	881.68		-2.00	-0.0833	24.00	883.68		-1.00	-0.0833	12.00	884.68	8.00	962+75.00	8.00	885.67	12.00	0.0833	1.00		886.67	24.00	0.0833	2.00		888.67	
	881.88		-2.00	-0.0833	24.00	883.88		-1.00	-0.0833	12.00	884.88	8.00	963+00.00	8.00	885.86	12.00	0.0833	1.00		886.86	24.00	0.0833	2.00		888.86	
	882.08		-2.00	-0.0833	24.00	884.08		-1.00	-0.0833	12.00	885.08	8.00	963+25.00	8.00	886.04	12.00	0.0833	1.00		887.04	24.00	0.0833	2.00		889.04	
	882.28		-2.00	-0.0833	24.00	884.28		-1.00	-0.0833	12.00	885.28	8.00	963+50.00	8.00	886.23	12.00	0.0833	1.00		887.23	24.00	0.0833	2.00		889.23	
	882.48		-2.00	-0.0833	24.00	884.48		-1.00	-0.0833	12.00	885.48	8.00	963+75.00	8.00	886.41	12.00	0.0833	1.00		887.41	24.00	0.0833	2.00		889.41	
	882.69		-2.00	-0.0833	24.00	884.69		-1.00	-0.0833	12.00	885.69	8.00	964+00.00	8.00	886.60	12.00	0.0833	1.00		887.60	24.00	0.0833	2.00		889.60	
	882.89		-2.00	-0.0833	24.00	884.89		-1.00	-0.0833	12.00	885.89	8.00	964+25.00	8.00	886.78	12.00	0.0833	1.00		887.78	24.00	0.0833	2.00		889.78	
	883.09		-2.00	-0.0833	24.00	885.09		-1.00	-0.0833	12.00	886.09	8.00	964+50.00	8.00	886.97	12.00	0.0833	1.00		887.97	24.00	0.0833	2.00		889.97	
	883.29		-2.00	-0.0833	24.00	885.29		-1.00	-0.0833	12.00	886.29	8.00	964+75.00	8.00	887.15	12.00	0.0833	1.00		888.15	24.00	0.0833	2.00		890.15	
	883.49		-2.00	-0.0833	24.00	885.49		-1.00	-0.0833	12.00	886.49	8.00	965+00.00	8.00	887.34	12.00	0.0833	1.00		888.34	24.00	0.0833	2.00		890.34	
	883.70		-2.00	-0.0833	24.00	885.69		-1.00	-0.0833	12.00	886.69	8.00	965+25.00	8.00	887.52	12.00	0.0833	1.00		888.52	24.00	0.0833	2.00		890.52	
	883.90		-2.00	-0.0833	24.00	885.90		-1.00	-0.0833	12.00	886.90	8.00	965+50.00	8.00	887.71	12.00	0.0833	1.00		888.71	24.00	0.0833	2.00		890.71	
	884.10		-2.00	-0.0833	24.00	886.10		-1.00	-0.0833	12.00	887.10	8.00	965+75.00	8.00	887.89	12.00	0.0833	1.00		888.89	24.00	0.0833	2.00		890.89	
CS,FS	884.13	145:1	-2.00	-0.0833	24.00	886.12	145:1	-1.00	-0.0833	12.00	887.12	8.00	965+78.20	8.00	878.66	12.00	0.0833	1.00	150:1	879.66	24.00	0.0833	2.00	150:1	881.66	CS,FS
	884.45	145:1	-1.90	-0.0791	24.00	886.35	145:1	-0.95	-0.0791	12.00	887.30	8.00	966+00.00	8.00	888.08	12.00	0.0792	0.95	150:1	889.03	24.00	0.0792	1.90	150:1	890.93	

Preliminary Plans - Not For Reference Only

SUPERELEVATION TABLE
IR-680 STA. 954+00.00 TO STA. 966+00.00

DESIGN AGENCY
ms consultants, inc.

DESIGNER
CMJ

REVIEWER
CMN 08/29/25

PROJECT ID
121474

SHEET P.294 | TOTAL 655

MAH-680-4.58

MODEL: Section 3 Curve 26-1 PAPERSIZE: 34x22 (in.) DATE: 9/15/2025 TIME: 9:48:09 AM PLTDRV: OHDOT_PDF_E+.pltcfg PENTBL: OHDOT_Pen.tbl USER: DHall@msconsultants.com WORKSPACE: OHDOTCivil02 WORKSET: 121474 PRODUCT: OpenRoadsDesigner 24.00.00.205
pw:\\ohiodot-pw.bentley.com:ohiodot-pw-02\Documents\01 Active Projects\District 04\Mahoning\121474\02-Engineering_MSConsultants\Roadway\Sheets\121474_GE003.dgn

SUPERELEVATION TABLE - IR 680 CURVE 26

P.I. 962+39.68 | DC 5°30'00" (LT)

DESIGN EXCEPTION CURVE #26
SUPERELVATION RATE
NDC emax = 0.06

REMARKS	NORTHBOUND OUTSIDE EDGE					NORTHBOUND MIDDLE LANE LINE					NB INSIDE EDGE (PROFILE GRADE)		STATION	SB INSIDE EDGE (PROFILE GRADE)		SOUTHBOUND MIDDLE LANE LINE					SOUTHBOUND OUTSIDE EDGE					REMARKS
	ELEVATION	TRANSITION RATE	ELEVATION CORRECTION	CROSS SLOPE	WIDTH	ELEVATION	TRANSITION RATE	ELEVATION CORRECTION	CROSS SLOPE	WIDTH	ELEVATION	OFFSET		OFFSET	ELEVATION	WIDTH	CROSS SLOPE	ELEVATION CORRECTION	TRANSITION RATE	ELEVATION	WIDTH	CROSS SLOPE	ELEVATION CORRECTION	TRANSITION RATE	ELEVATION	
	884.83	145:1	-1.78	-0.0743	24.00	886.61	145:1	-0.89	-0.0743	12.00	887.50	8.00	966+25.00	8.00	888.26	12.00	0.0746	0.89	150:1	889.16	24.00	0.0746	1.79	150:1	890.95	
	885.20	▲	-1.67	-0.0695	24.00	886.87	▲	-0.83	-0.0695	12.00	887.70	8.00	966+50.00	8.00	888.45	12.00	0.0699	0.84	▲	889.29	24.00	0.0699	1.68	▲	890.97	
	885.58		-1.55	-0.0647	24.00	887.13		-0.78	-0.0647	12.00	887.91	8.00	966+75.00	8.00	888.63	12.00	0.0652	0.78		889.42	24.00	0.0652	1.57		890.98	
	885.95		-1.44	-0.0599	24.00	887.39		-0.72	-0.0599	12.00	888.11	8.00	967+00.00	8.00	888.82	12.00	0.0606	0.73		889.55	24.00	0.0606	1.45		891.00	
	886.33		-1.32	-0.0551	24.00	887.65		-0.66	-0.0551	12.00	888.31	8.00	967+25.00	8.00	889.00	12.00	0.0559	0.67		889.67	24.00	0.0559	1.34		891.02	
	886.70		-1.21	-0.0503	24.00	887.91		-0.60	-0.0503	12.00	888.51	8.00	967+50.00	8.00	889.19	12.00	0.0513	0.62		889.80	24.00	0.0513	1.23		891.03	
	887.08		-1.09	-0.0455	24.00	888.17		-0.55	-0.0455	12.00	888.71	8.00	967+75.00	8.00	889.37	12.00	0.0466	0.56		889.93	24.00	0.0466	1.12		891.05	
	887.45		-0.98	-0.0407	24.00	888.43		-0.49	-0.0407	12.00	888.92	8.00	968+00.00	8.00	889.56	12.00	0.0419	0.50		890.06	24.00	0.0419	1.01		891.07	
	887.83		-0.86	-0.0359	24.00	888.69		-0.43	-0.0359	12.00	889.12	8.00	968+25.00	8.00	889.74	12.00	0.0373	0.45		890.19	24.00	0.0373	0.89		891.09	
	888.20		-0.75	-0.0311	24.00	888.95		-0.37	-0.0311	12.00	889.32	8.00	968+50.00	8.00	889.93	12.00	0.0326	0.39		890.32	24.00	0.0326	0.78		891.10	
	888.58		-0.63	-0.0263	24.00	889.21		-0.32	-0.0263	12.00	889.52	8.00	968+75.00	8.00	890.11	12.00	0.0279	0.34		890.45	24.00	0.0279	0.67		891.12	
	888.92		-0.31	-0.0258	12.00	889.23		-0.31	-0.0258	12.00	889.54	8.00	968+77.60	8.00	890.13	12.00	0.0274	0.33		890.46	24.00	0.0274	0.66		891.12	
	889.28		-0.26	-0.0215	12.00	889.54		-0.26	-0.0215	12.00	889.79	8.00	969+00.00	8.00	890.37	12.00	0.0233	0.28		890.65	24.00	0.0233	0.56		891.21	
	889.36		-0.25	-0.0205	12.00	889.60		-0.25	-0.0205	12.00	889.85	8.00	969+05.00	8.00	890.43	12.00	0.0223	0.27		890.70	24.00	0.0223	0.54		891.23	
	889.67	▼	-0.20	-0.0167	12.00	889.87		-0.20	-0.0167	12.00	890.07	8.00	969+25.00	8.00	890.64	12.00	0.0186	0.22		890.87	24.00	0.0186	0.45		891.31	
RC	889.73	145:1	-0.19	-0.0160	12.00	889.92		-0.19	-0.0160	12.00	890.11	8.00	969+28.46	8.00	890.69	12.00	0.0180	0.22		890.91	24.00	0.0180	0.43		891.34	
	889.87		-0.19	-0.0160	12.00	890.06		-0.17	-0.0140	12.00	890.23	8.00	969+39.00	8.00	890.80	12.00	0.0160	0.19	150:1	890.99	24.00	0.0160	0.38		891.37	RC
	890.02		-0.19	-0.0160	12.00	890.21		-0.14	-0.0119	12.00	890.36	8.00	969+50.00	8.00	890.91	12.00	0.0160	0.19		891.11	24.00	0.0139	0.33		891.44	
	890.36		-0.19	-0.0160	12.00	890.55		-0.08	-0.0071	12.00	890.64	8.00	969+75.00	8.00	891.18	12.00	0.0160	0.19		891.38	24.00	0.0093	0.22		891.60	
ST	890.40		-0.19	-0.0160	12.00	890.59		-0.08	-0.0064	12.00	890.67	8.00	969+78.20	8.00	891.22	12.00	0.0160	0.19		891.41	24.00	0.0087	0.21		891.62	ST
	890.70		-0.19	-0.0160	12.00	890.89		-0.03	-0.0023	12.00	890.92	8.00	970+00.00	8.00	891.45	12.00	0.0160	0.19		891.64	24.00	0.0046	0.11		891.75	
½ LEVEL	890.85		-0.19	-0.0160	12.00	891.05		0.00	0.0000	12.00	891.05	8.00	970+11.50	8.00	891.58	12.00	0.0160	0.19		891.77	24.00	0.0025	0.06		891.83	
	891.03		-0.19	-0.0160	12.00	891.22		0.03	0.0025	12.00	891.19	8.00	970+24.50	8.00	891.72	12.00	0.0160	0.19		891.91	24.00	0.0000	0.00		891.91	½ LEVEL
	891.04		-0.19	-0.0160	12.00	891.23		0.03	0.0025	12.00	891.20	8.00	970+25.00	8.00	891.72	12.00	0.0160	0.19		891.91	24.00	-0.0001	0.00		891.91	
	891.37		-0.19	-0.0160	12.00	891.57		0.09	0.0074	12.00	891.48	8.00	970+50.00	8.00	891.99	12.00	0.0160	0.19		892.18	24.00	-0.0047	-0.11		892.07	
	891.39		-0.19	-0.0160	12.00	891.59		0.09	0.0076	12.00	891.49	8.00	970+51.40	8.00	892.01	12.00	0.0160	0.19		892.20	24.00	-0.0050	-0.12		892.08	
	891.71		-0.19	-0.0160	12.00	891.90	▼	0.15	0.0122	12.00	891.76	8.00	970+75.00	8.00	892.26	12.00	0.0160	0.19		892.45	24.00	-0.0094	-0.23		892.23	
NC	891.98		-0.19	-0.0160	12.00	892.17	145:1	0.19	0.0160	12.00	891.98	8.00	970+95.00	8.00	892.48	12.00	0.0160	0.19		892.67	24.00	-0.0131	-0.31		892.35	
	892.04		-0.19	-0.0160	12.00	892.23		0.19	0.0160	12.00	892.04	8.00	971+00.00	8.00	892.53	12.00	0.0160	0.19		892.72	24.00	-0.0140	-0.34		892.38	
	892.16		-0.19	-0.0160	12.00	892.35		0.19	0.0160	12.00	892.16	9.00	971+10.50	8.00	892.64	12.00	0.0160	0.19		892.84	24.00	-0.0160	-0.38	150:1	892.45	NC

Preliminary Plans - Not For Reference Only

SUPERELEVATION TABLE
IR-680 STA. 966+25.00 TO STA. 971+08.50

DESIGN AGENCY
ms consultants, inc.

DESIGNER CMJ
REVIEWER CMN 08/29/25
PROJECT ID 121474
SHEET P.295 TOTAL 655

MAH-680-4.58

MODEL: Section 3 Curve 26-2 PAPERSIZE: 34x22 (in.) DATE: 9/15/2025 TIME: 9:48:09 AM PLTDRV: OHDOT_PDF_E+.pltcfg PENTBL: OHDOT_Pen.tbl USER: DHall@msconsultants.com WORKSPACE: OHDOTCivil02 WORKSET: 121474 PRODUCT: OpenRoadsDesigner 24.00.00.205
pw:\\ohiodot-pw.bentley.com:ohiodot-pw-02\Documents\01 Active Projects\District 04\Mahoning\121474\02-Engineering_MSConsultants\Roadway\Sheets\121474_GE003.dgn

SUPERELEVATION TABLE - IR 680 CURVE NO. 29

P.I. 1003+44.66 | DC 2°45'00"

DESIGN EXCEPTION CURVE #29
SUPERELEVATION RATE
NDC emax = 0.06

REMARKS	NORTHBOUND OUTSIDE EDGE					NORTHBOUND INSIDE EDGE					NB INSIDE EDGE (PROFILE GRADE)		STATION	SB INSIDE EDGE (PROFILE GRADE)		SOUTHBOUND INSIDE EDGE					SOUTHBOUND OUTSIDE EDGE					REMARKS
	ELEVATION	TRANSITION RATE	ELEVATION CORRECTION	CROSS SLOPE	WIDTH	ELEVATION	TRANSITION RATE	ELEVATION CORRECTION	CROSS SLOPE	WIDTH	ELEVATION	OFFSET		OFFSET	ELEVATION	WIDTH	CROSS SLOPE	ELEVATION CORRECTION	TRANSITION RATE	ELEVATION	WIDTH	CROSS SLOPE	ELEVATION CORRECTION	TRANSITION RATE	ELEVATION	
	901.24		-0.19	-0.0160	12.00	901.43		0.19	0.0160	12.00	901.24	8.00	986+00.00	8.00	901.26	12.00	0.0160	0.19		901.45	12.00	-0.0160	-0.19		901.26	
NC	901.14	367.6:1	-0.19	-0.0160	12.00	901.33		0.19	0.0160	12.00	901.14	8.00	986+04.95	8.00	901.15	12.00	0.0160	0.19	367.6:1	901.34	12.00	-0.0160	-0.19		901.15	NC
	900.73	▲	-0.14	-0.0115	12.00	900.87		0.19	0.0160	12.00	900.68	8.00	986+25.00	8.00	900.68	12.00	0.0115	0.14	▲	900.82	12.00	-0.0160	-0.19		900.63	
	900.18		-0.07	-0.0058	12.00	900.25		0.19	0.0160	12.00	900.06	8.00	986+50.00	8.00	900.06	12.00	0.0058	0.07		900.13	12.00	-0.0160	-0.19		899.94	
	899.58		0.00	-0.0001	12.00	899.58		0.19	0.0160	12.00	899.39	8.00	986+75.00	8.00	899.38	12.00	0.0001	0.00		899.38	12.00	-0.0160	-0.19		899.19	
TS, ½ LEVEL	899.57		0.00	0.0000	12.00	899.57		0.19	0.0160	12.00	899.38	8.00	986+75.55	8.00	899.36	12.00	0.0000	0.00		899.36	12.00	-0.0160	-0.19		899.17	TS, ½ LEVEL
	898.94		0.07	0.0055	12.00	898.87		0.19	0.0160	12.00	898.68	8.00	987+00.00	8.00	898.65	12.00	-0.0055	-0.07		898.58	12.00	-0.0160	-0.19		898.39	
	898.25		0.13	0.0112	12.00	898.12		0.19	0.0160	12.00	897.93	8.00	987+25.00	8.00	897.88	12.00	-0.0112	-0.13		897.75	12.00	-0.0160	-0.19		897.56	
RC	897.67		0.19	0.0160	12.00	897.48	367.6:1	0.19	0.0160	12.00	897.29	8.00	987+46.15	8.00	897.24	12.00	-0.0160	-0.19		897.05	12.00	-0.0160	-0.19	367.6:1	896.86	RC
	897.57		0.20	0.0164	12.00	897.37	▲	0.20	0.0164	12.00	897.17	8.00	987+50.00	8.00	897.12	12.00	-0.0164	-0.20		896.92	12.00	-0.0164	-0.20	▲	896.72	
	986.88		0.23	0.0193	12.00	986.65		0.23	0.0193	12.00	986.42	8.00	987+75.00	8.00	896.35	12.00	-0.0193	-0.23		896.12	12.00	-0.0193	-0.23		895.89	
	896.21		0.27	0.0221	12.00	895.94		0.27	0.0221	12.00	895.67	8.00	988+00.00	8.00	895.59	12.00	-0.0221	-0.27		895.32	12.00	-0.0221	-0.27		895.05	
	895.86		0.28	0.0235	12.00	895.58		0.28	0.0235	12.00	895.30	8.00	988+12.34	8.00	895.21	12.00	-0.0235	-0.28		894.93	12.00	-0.0235	-0.28		894.65	
	895.52		0.30	0.0249	12.00	895.22		0.30	0.0249	12.00	894.92	8.00	988+25.00	8.00	894.82	12.00	-0.0249	-0.30		894.52	12.00	-0.0249	-0.30		894.22	
	894.82		0.33	0.0278	12.00	894.49		0.33	0.0278	12.00	894.16	8.00	988+50.00	8.00	894.05	12.00	-0.0278	-0.33		893.72	12.00	-0.0278	-0.33		893.39	
	894.15		0.37	0.0306	12.00	893.78		0.37	0.0306	12.00	893.41	8.00	988+75.00	8.00	893.29	12.00	-0.0306	-0.37		892.92	12.00	-0.0306	-0.37		892.55	
	893.93		0.38	0.0315	12.00	893.55		0.38	0.0315	12.00	893.17	8.00	988+82.93	8.00	893.05	12.00	-0.0315	-0.38		892.67	12.00	-0.0315	-0.38		892.29	
	893.46		0.40	0.0334	12.00	893.06		0.40	0.0334	12.00	892.66	8.00	989+00.00	8.00	892.52	12.00	-0.0334	-0.40		892.12	12.00	-0.0334	-0.40		891.72	
	892.79		0.44	0.0363	12.00	892.35		0.44	0.0363	12.00	891.91	8.00	989+25.00	8.00	891.76	12.00	-0.0363	-0.44		891.32	12.00	-0.0363	-0.44		890.88	
	892.09		0.47	0.0391	12.00	891.62		0.47	0.0391	12.00	891.15	8.00	989+50.00	8.00	890.99	12.00	-0.0391	-0.47		890.52	12.00	-0.0391	-0.47		890.05	
	891.40	▼	0.50	0.0419	12.00	890.90	▼	0.50	0.0419	12.00	890.40	8.00	989+75.00	8.00	890.23	12.00	-0.0419	-0.50	▼	889.73	12.00	-0.0419	-0.50	▼	889.23	
SC, FS	891.39	367.6:1	0.50	0.0420	12.00	890.89	367.6:1	0.50	0.0420	12.00	890.39	8.00	989+75.54	8.00	890.21	12.00	-0.0420	-0.50	367.6:1	889.71	12.00	-0.0420	-0.50	367.6:1	889.21	SC, FS
	890.65		0.50	0.0420	12.00	890.15		0.50	0.0420	12.00	889.65	8.00	990+00.00	8.00	889.46	12.00	-0.0420	-0.50		888.96	12.00	-0.0420	-0.50		888.46	
	889.90		0.50	0.0420	12.00	889.40		0.50	0.0420	12.00	888.90	8.00	990+25.00	8.00	888.69	12.00	-0.0420	-0.50		888.19	12.00	-0.0420	-0.50		887.69	
	889.14		0.50	0.0420	12.00	888.64		0.50	0.0420	12.00	888.14	8.00	990+50.00	8.00	887.93	12.00	-0.0420	-0.50		887.43	12.00	-0.0420	-0.50		886.93	
	888.39		0.50	0.0420	12.00	887.89		0.50	0.0420	12.00	887.39	8.00	990+75.00	8.00	887.16	12.00	-0.0420	-0.50		886.66	12.00	-0.0420	-0.50		886.16	
	887.64		0.50	0.0420	12.00	887.14		0.50	0.0420	12.00	886.64	8.00	991+00.00	8.00	886.40	12.00	-0.0420	-0.50		885.90	12.00	-0.0420	-0.50		885.40	
	886.89		0.50	0.0420	12.00	886.39		0.50	0.0420	12.00	885.89	8.00	991+25.00	8.00	885.63	12.00	-0.0420	-0.50		885.13	12.00	-0.0420	-0.50		884.63	
	886.14		0.50	0.0420	12.00	885.64		0.50	0.0420	12.00	885.14	8.00	991+50.00	8.00	884.87	12.00	-0.0420	-0.50		884.37	12.00	-0.0420	-0.50		883.87	
	885.38		0.50	0.0420	12.00	884.88		0.50	0.0420	12.00	884.38	8.00	991+75.00	8.00	884.10	12.00	-0.0420	-0.50		883.60	12.00	-0.0420	-0.50		883.10	
	884.63		0.50	0.0420	12.00	884.13		0.50	0.0420	12.00	883.63	8.00	992+00.00	8.00	883.33	12.00	-0.0420	-0.50		882.83	12.00	-0.0420	-0.50		882.33	
	883.88		0.50	0.0420	12.00	883.38		0.50	0.0420	12.00	882.88	8.00	992+25.00	8.00	882.57	12.00	-0.0420	-0.50		882.07	12.00	-0.0420	-0.50		881.57	
	883.13		0.50	0.0420	12.00	882.63		0.50	0.0420	12.00	882.13	8.00	992+50.00	8.00	881.80	12.00	-0.0420	-0.50		881.30	12.00	-0.0420	-0.50		880.80	
	882.37		0.50	0.0420	12.00	881.87		0.50	0.0420	12.00	881.37	8.00	992+75.00	8.00	881.04	12.00	-0.0420	-0.50		880.54	12.00	-0.0420	-0.50		880.04	
	881.62		0.50	0.0420	12.00	881.12		0.50	0.0420	12.00	880.62	8.00	993+00.00	8.00	880.27	12.00	-0.0420	-0.50		879.77	12.00	-0.0420	-0.50		879.27	
	880.87		0.50	0.0420	12.00	880.37		0.50	0.0420	12.00	879.87	8.00	993+25.00	8.00	879.51	12.00	-0.0420	-0.50		879.01	12.00	-0.0420	-0.50		878.51	
	880.12		0.50	0.0420	12.00	879.62		0.50	0.0420	12.00	879.12	8.00	993+50.00	8.00	878.74	12.00	-0.0420	-0.50		878.24	12.00	-0.0420	-0.50		877.74	
	879.36		0.50	0.0420	12.00	878.86		0.50	0.0420	12.00	878.36	8.00	993+75.00	8.00	877.97	12.00	-0.0420	-0.50		877.47	12.00	-0.0420	-0.50		876.97	
	878.61		0.50	0.0420	12.00	878.11		0.50	0.0420	12.00	877.61	8.00	994+00.00	8.00	877.21	12.00	-0.0420	-0.50		876.71	12.00	-0.0420	-0.50		876.21	
	877.86		0.50	0.0420	12.00	877.36		0.50	0.0420	12.00	876.86	8.00	994+25.00	8.00	876.44	12.00	-0.0420	-0.50		875.94	12.00	-0.0420	-0.50		875.44	
	877.11		0.50	0.0420	12.00	876.61		0.50	0.0420	12.00	876.11	8.00	994+50.00	8.00	875.68	12.00	-0.0420	-0.50		875.18	12.00	-0.0420	-0.50		874.68	
	876.35		0.50	0.0420	12.00	875.85		0.50	0.0420	12.00	875.35	8.00	994+75.00	8.00	874.91	12.00	-0.0420	-0.50		874.41	12.00	-0.0420	-0.50		873.91	
	875.60		0.50	0.0420	12.00	875.10		0.50	0.0420	12.00	874.60	8.00	995+00.00	8.00	874.15	12.00	-0.0420	-0.50		873.65	12.00	-0.0420	-0.50		873.15	
	874.85		0.50	0.0420	12.00	874.35		0.50	0.0420	12.00	873.85	8.00	995+25.00	8.00	873.38	12.00	-0.0420	-0.50		872.88	12.00	-0.0420	-0.50		872.38	
	874.10		0.50	0.0420	12.00	873.60		0.50	0.0420	12.00	873.10	8.00	995+50.00	8.00	872.61	12.00	-0.0420	-0.50		872.11	12.00	-0.0420	-0.50		871.61	
	873.34		0.50	0.0420	12.00	872.84		0.50	0.0420	12.00	872.34	8.00	995+75.00	8.00	871.85	12.00	-0.0420	-0.50		871.35	12.00	-0.0420	-0.50		870.85	
	872.59		0.50	0.0420	12.00	872.09		0.50	0.0420	12.00	871.59	8.00	996+00.00	8.00	871.08	12.00	-0.0420	-0.50		870.58	12.00	-0.0420	-0.50		870.08	
	871.84		0.50	0.0420	12.00	871.34		0.50	0.0420	12.00	870.84	8.00	996+25.00	8.00	870.32	12.00	-0.0420	-0.50		869.82	12.00	-0.0420	-0.50		869.32	
	871.09		0.50	0.0420	12.00	870.59		0.50	0.0420	12.00	870.09	8.00	996+50.00	8.00	869.55	12.00	-0.0420	-0.50		869.05	12.00	-0.0420	-0.50		868.55	
	870.34		0.50	0.0420	12.00	869.84		0.50	0.0420	12.00	869.34	8.00	996+75.00	8.00	868.79	12.00	-0.0420	-0.50		868.29	12.00	-0.0420	-0.50		867.79	
	869.58		0.50	0.0420	12.00	869.08		0.50	0.0420	12.00	868.58	8.00	997+00.00	8.00	868.02	12.00	-0.0420	-0.50		867.52	12.00	-0.0420	-0.50		867.02	
	868.83		0.50	0.0420	12.00	868.33		0.50	0.0420	12.00	867.83	8.00	997+25.00	8.00	867.25	12.00	-0.0420	-0.50		866.75	12.00	-0.0420	-0.50		866.25	
	868.08		0.50	0.0420	12.00	867.58		0.50	0.0420	12.00	867.08	8.00	997+50.00	8.00	866.49	12.00	-0.0420	-0.50		865.99	12.00	-0.0420	-0.50		865.49	
	867.37		0.50	0.0420	12.00	866.87		0.50	0.0420	12.00	866.37	8.00	997+75.00	8.00	865.75	12.00	-0.0420	-0.50		865.25	12.00	-0.0420	-0.50		864.75	
	866.72		0.50	0.0420	12.00	866.22		0.50	0.0420	12.00	865.72	8.00	998+00.00	8.00	865.08	12.00	-0.0420	-0.50		864.58	12.00	-0.0420	-0.50		864.08	
	866.14		0.50	0.0420	12.00	865.64		0.50	0.0420	12.00	865.14	8.00	998+25.00	8.00	864.48	12.00	-0.0420	-0.50		863.98	12.00	-0.0420	-0.50		863.48	
	865.62		0.50	0.0420	12.00	865.12		0.50	0.0420	12.00	864.62	8.00	998+50.00	8.00	863.93	12.00	-0.0420	-0.50		863.43	12.00	-0.0420	-0.50		862.93	
	865.16		0.50	0.0420	12.00	864.66		0.50	0.0420	12.00	864.16	8.00	998+75.00	8.00	863.46	12.00	-0.0420	-0.50		862.96	12.00	-0.0420	-0.50		862.46	
	864.77		0.50	0.0420	12.00	864.27		0.50	0.0420	12.00	863.77	8.00	999+00.00	8.00	863.04	12.00	-0.0420	-0.50		862.54	12.00	-0.0420	-0.50		862.04	
	864.43		0.50	0.0420	12.00	863.93		0.50	0.0420	12.00	863.43	8.00	999+25.00	8.00	862.69	12.00	-0.0420	-0.50		862.19	12.00	-0.0420	-0.50		861.69	

Preliminary Plans - Not For Reference Only

SUPERELEVATION TABLE
IR-680 STA. 986+00.00 TO STA. 999+50.00

DESIGN AGENCY
ms consultants, inc.

DESIGNER CMJ
REVIEWER CMN 08/29/25
PROJECT ID 121474
SHEET P.296 TOTAL 655

MAH-680-4.58

MODEL: Section 3 Mainline-6 PAPERSIZE: 34x22 (in.) DATE: 9/15/2025 TIME: 9:48:10 AM PLTDRV: OHDOT_PDF_E+.pltcfg PENTBL: OHDOT_Pen.tbl USER: DHall@msconsultants.com WORKSPACE: OHDOTCivil02 WORKSET: 121474 PRODUCT: OpenRoadsDesigner 24.00.00.205
pw:\\ohiodot-pw.bentley.com:ohiodot-pw-02\Documents\01 Active Projects\District 04\Mahoning\121474\02-Engineering_MSConsultants\Roadway\Sheets\121474_GE003.dgn

SUPERELEVATION TABLE - IR 680 CURVE NO. 29

P.I. 1003+44.66 | DC 2°45'00"

DESIGN EXCEPTION CURVE #29
SUPERELVATION RATE
NDC emax = 0.06

REMARKS	NORTHBOUND OUTSIDE EDGE					NORTHBOUND MIDDLE LANE LINE					NB INSIDE EDGE (PROFILE GRADE)		STATION	SB INSIDE EDGE (PROFILE GRADE)		SOUTHBOUND MIDDLE LANE LINE					SOUTHBOUND OUTSIDE EDGE					REMARKS
	ELEVATION	TRANSITION RATE	ELEVATION CORRECTION	CROSS SLOPE	WIDTH	ELEVATION	TRANSITION RATE	ELEVATION CORRECTION	CROSS SLOPE	WIDTH	ELEVATION	OFFSET		OFFSET	ELEVATION	WIDTH	CROSS SLOPE	ELEVATION CORRECTION	TRANSITION RATE	ELEVATION	WIDTH	CROSS SLOPE	ELEVATION CORRECTION	TRANSITION RATE	ELEVATION	
	864.17		0.50	0.0420	12.00	863.67		0.50	0.0420	12.00	863.16	8.00	999+50.00	8.00	862.40	12.00	-0.0420	-0.50		861.90	24.00	-0.0420	-1.01		860.89	
	863.96		0.50	0.0420	12.00	863.46		0.50	0.0420	12.00	862.95	8.00	999+75.00	8.00	862.18	12.00	-0.0420	-0.50		861.67	24.00	-0.0420	-1.01		860.66	
	863.82		0.50	0.0420	12.00	863.31		0.50	0.0420	12.00	862.81	8.00	1000+00.00	8.00	862.02	12.00	-0.0420	-0.50		861.51	24.00	-0.0420	-1.01		860.50	
	863.73		0.50	0.0420	12.00	863.23		0.50	0.0420	12.00	862.73	8.00	1000+25.00	8.00	861.92	12.00	-0.0420	-0.50		861.41	24.00	-0.0420	-1.01		860.41	
	863.71		0.50	0.0420	12.00	863.21		0.50	0.0420	12.00	862.70	8.00	1000+50.00	8.00	861.88	12.00	-0.0420	-0.50		861.38	24.00	-0.0420	-1.01		860.37	
	863.75		0.50	0.0420	12.00	863.25		0.50	0.0420	12.00	862.75	8.00	1000+75.00	8.00	861.91	12.00	-0.0420	-0.50		861.41	24.00	-0.0420	-1.01		860.40	
	863.86		0.50	0.0420	12.00	863.36		0.50	0.0420	12.00	862.85	8.00	1001+00.00	8.00	862.01	12.00	-0.0420	-0.50		861.50	24.00	-0.0420	-1.01		860.50	
	864.03		0.50	0.0420	12.00	863.52		0.50	0.0420	12.00	863.02	8.00	1001+25.00	8.00	862.17	12.00	-0.0420	-0.50		861.66	24.00	-0.0420	-1.01		860.65	
	864.26		0.50	0.0420	12.00	863.75		0.50	0.0420	12.00	863.25	8.00	1001+50.00	8.00	862.39	12.00	-0.0420	-0.50		861.88	24.00	-0.0420	-1.01		860.87	
BEGIN 3 LANE	864.92		1.01	0.0420	24.00	863.91		0.50	0.0420	12.00	863.40	8.00	1001+64.00	8.00	862.54	12.00	-0.0420	-0.50		862.03	24.00	-0.0420	-1.01		861.03	
	865.05		1.01	0.0420	24.00	864.04		0.50	0.0420	12.00	863.54	8.00	1001+75.00	8.00	862.67	12.00	-0.0420	-0.50		862.17	24.00	-0.0420	-1.01		861.16	
	865.40		1.01	0.0420	24.00	864.39		0.50	0.0420	12.00	863.88	8.00	1002+00.00	8.00	863.02	12.00	-0.0420	-0.50		862.52	24.00	-0.0420	-1.01		861.51	
	865.81		1.01	0.0420	24.00	864.80		0.50	0.0420	12.00	864.30	8.00	1002+25.00	8.00	863.43	12.00	-0.0420	-0.50		862.93	24.00	-0.0420	-1.01		861.92	
	866.29		1.01	0.0420	24.00	865.28		0.50	0.0420	12.00	864.78	8.00	1002+50.00	8.00	863.91	12.00	-0.0420	-0.50		863.40	24.00	-0.0420	-1.01		862.40	
	866.83		1.01	0.0420	24.00	865.82		0.50	0.0420	12.00	865.32	8.00	1002+75.00	8.00	864.45	12.00	-0.0420	-0.50		863.94	24.00	-0.0420	-1.01		862.93	
	867.44		1.01	0.0420	24.00	866.43		0.50	0.0420	12.00	865.92	8.00	1003+00.00	8.00	865.05	12.00	-0.0420	-0.50		864.55	24.00	-0.0420	-1.01		863.54	
	867.45		1.01	0.0420	24.00	866.44		0.50	0.0420	12.00	865.94	8.00	1003+00.56	8.00	865.06	12.00	-0.0420	-0.50		864.56	24.00	-0.0420	-1.01		863.55	BEGIN LANE TAPER
	868.10		1.01	0.0420	24.00	867.09		0.50	0.0420	12.00	866.59	8.00	1003+25.00	8.00	865.72	12.00	-0.0420	-0.50		865.21	23.37	-0.0420	-0.98		864.23	
	868.83		1.01	0.0420	24.00	867.82		0.50	0.0420	12.00	867.32	8.00	1003+50.00	8.00	866.45	12.00	-0.0420	-0.50		865.94	22.73	-0.0420	-0.95		864.99	
	869.58		1.01	0.0420	24.00	868.57		0.50	0.0420	12.00	868.06	8.00	1003+75.00	8.00	867.21	12.00	-0.0420	-0.50		866.71	22.09	-0.0420	-0.93		865.78	
BEGIN LANE TAPER	869.66		1.01	0.0420	24.00	868.65		0.50	0.0420	12.00	868.15	8.00	1003+77.72	8.00	867.29	12.00	-0.0420	-0.50		866.79	22.02	-0.0420	-0.92		865.86	
	869.82		0.97	0.0420	23.20	868.85		0.50	0.0420	12.00	868.35	8.00	1003+84.44	8.00	867.50	12.00	-0.0420	-0.50	200:1	866.99	21.85	-0.0420	-0.92	200:1	866.08	
	869.97	200:1	0.94	0.0420	22.42	869.03	200:1	0.50	0.0420	12.00	868.53	8.00	1003+90.59	8.00	867.68	12.00	-0.0430	-0.52	▲	867.17	21.69	-0.0430	-0.93	▲	866.24	
	870.26	▲	0.93	0.0435	21.33	869.33	▲	0.52	0.0435	12.00	868.81	8.00	1004+00.00	8.00	867.97	12.00	-0.0445	-0.53	▲	867.44	21.29	-0.0445	-0.95	▲	866.49	
	871.00	▼	0.87	0.0477	18.31	870.13	▼	0.57	0.0477	12.00	869.56	8.00	1004+25.00	8.00	868.73	12.00	-0.0484	-0.58	▼	868.15	20.89	-0.0484	-1.01	▼	867.14	
END TAPER/ EXISTING NB	871.72	▲	0.79	0.0518	15.31	870.93	▲	0.62	0.0518	12.00	870.31	8.00	1004+50.00	8.00	869.50	12.00	-0.0523	-0.63	▲	868.87	20.26	-0.0523	-1.06	▲	867.81	
	872.28	200:1	0.66	0.0553	12.00	871.61	200:1	0.66	0.0553	12.00	870.95	8.00	1004+71.49	8.00	870.15	12.00	-0.0557	-0.67	▼	869.48	19.73	-0.0557	-1.10	▼	868.38	
				EX	12.00				EX	12.00		8.00	1004+86.44	8.00	870.61	12.00	-0.0581	-0.70	200:1	869.91	19.20	-0.0581	-1.12	200:1	868.79	
				EX	12.00				EX	12.00			1005+00.00			12.00	EX					EX				
				EX	12.00				EX	12.00			1005+25.00			12.00	EX					EX				
				EX	12.00				EX	12.00			1005+50.00			12.00	EX					EX				
				EX	12.00				EX	12.00			1005+75.00			12.00	EX					EX				
				EX	12.00				EX	12.00			1006+00.00			12.00	EX					EX				
				EX	12.00				EX	12.00			1006+25.00			12.00	EX					EX				
				EX	12.00				EX	12.00			1006+50.00			12.00	EX					EX				
				EX	12.00				EX	12.00			1006+75.00			12.00	EX					EX				
				EX	12.00				EX	12.00			1007+00.00			12.00	EX					EX				
MATCH EXISTING	880.05	200:1	0.69	0.0579	12.00	879.35	200:1	0.69	0.0579	12.00	878.66	8.00	1007+10.05	8.00		12.00	EX					EX				
	880.48	▲	0.66	0.0548	12.00	879.82	▲	0.66	0.0548	12.00	879.17	8.00	1007+25.00	8.00		12.00	EX					EX				
	880.64		0.64	0.0536	12.00	880.00		0.64	0.0536	12.00	879.36	8.00	1007+30.62	8.00	878.57	12.00	-0.0560	-0.67	200:1	877.90	12.00	-0.0560	-0.67	200:1	877.23	MATCH EXISTING
	881.21		0.59	0.0496	12.00	880.61		0.59	0.0496	12.00	880.02	8.00	1007+50.00	8.00	879.22	12.00	-0.0520	-0.62	▲	878.60	12.00	-0.0520	-0.62	▲	877.97	
	881.97	▼	0.57	0.0444	12.74	881.40	▼	0.53	0.0444	12.00	880.87	8.00	1007+75.00	8.00	880.06	12.00	-0.0468	-0.56	▼	879.49	12.00	-0.0468	-0.56	▼	878.93	
	882.30	200:1	0.54	0.0420	12.95	881.76	200:1	0.50	0.0420	12.00	881.26	8.00	1007+86.37	8.00	880.44	12.00	-0.0444	-0.53	▲	879.90	12.00	-0.0444	-0.53	▲	879.37	
	882.70		0.55	0.0420	12.99	882.15		0.50	0.0420	12.00	881.65	8.00	1007+97.82	8.00	880.82	12.00	-0.0420	-0.50	200:1	880.31	12.00	-0.0420	-0.50	200:1	879.81	
	882.78		0.56	0.0420	13.39	882.22		0.50	0.0420	12.00	881.72	8.00	1008+00.00	8.00	880.89	12.00	-0.0420	-0.50		880.39	12.00	-0.0420	-0.50		879.88	
	883.62		0.57	0.0420	13.50	883.05		0.50	0.0420	12.00	882.55	8.00	1008+25.00	8.00	881.72	12.00	-0.0420	-0.50		881.22	12.00	-0.0420	-0.50		880.72	
	884.45		0.58	0.0420	13.89	883.86		0.50	0.0420	12.00	883.36	8.00	1008+50.00	8.00	882.56	12.00	-0.0420	-0.50		882.05	12.00	-0.0420	-0.50		881.55	
	885.28		0.61	0.0420	14.50	884.68		0.50	0.0420	12.00	884.17	8.00	1008+75.00	8.00	883.39	12.00	-0.0420	-0.50		882.89	12.00	-0.0420	-0.50		882.38	
	886.12		0.63	0.0420	15.00	885.49		0.50	0.0420	12.00	884.98	8.00	1009+00.00	8.00	884.23	12.00	-0.0420	-0.50		883.72	12.00	-0.0420	-0.50		883.22	
	886.95		0.65	0.0420	15.50	886.30		0.50	0.0420	12.00	885.79	8.00	1009+25.00	8.00	885.06	12.00	-0.0420	-0.50		884.56	12.00	-0.0420	-0.50		884.05	
	887.78		0.67	0.0420	16.00	887.11		0.50	0.0420	12.00	886.60	8.00	1009+50.00	8.00	885.89	12.00	-0.0420	-0.50		885.39	12.00	-0.0420	-0.50		884.89	
	888.61		0.69	0.0420	16.50	887.92		0.50	0.0420	12.00	887.41	8.00	1009+75.00	8.00	886.73	12.00	-0.0420	-0.50		886.23	12.00	-0.0420	-0.50		885.72	
	889.44		0.71	0.0420	17.00	888.73		0.50	0.0420	12.00	888.22	8.00	1010+00.00	8.00	887.56	12.00	-0.0420	-0.50		887.06	12.00	-0.0420	-0.50		886.55	
	890.27		0.74	0.0420	17.50	889.54		0.50	0.0420	12.00	889.03	8.00	1010+25.00	8.00	888.40	12.00	-0.0420	-0.50		887.89	12.00	-0.0420	-0.50		887.39	
	891.10		0.76	0.0420	18.00	890.35		0.50	0.0420	12.00	889.84	8.00	1010+50.00	8.00	889.23	12.00	-0.0420	-0.50		888.73	12.00	-0.0420	-0.50		888.22	
	891.93		0.78	0.0420	18.50	891.16		0.50	0.0420	12.00	890.65	8.00	1010+75.00	8.00	890.06	12.00	-0.0420	-0.50		889.56	12.00	-0.0420	-0.50		889.06	
	892.77		0.80	0.0420	19.00	891.97		0.50	0.0420	12.00	891.46	8.00	1011+00.00	8.00	890.90	12.00	-0.0420	-0.50		890.39	12.00	-0.0420	-0.50		889.89	
	893.60		0.82	0.0420	19.50	892.78		0.50	0.0420	12.00	892.27	8.00	1011+25.00	8.00	891.73	12.00	-0.0420	-0.50		891.23	12.00	-0.0420	-0.50		890.72	
	894.43		0.84	0.0420	20.00	893.59		0.50	0.0420	12.00	893.08	8.00	1011+50.00	8.00	892.57	12.00	-0.0420	-0.50		892.06	12.00	-0.0420	-0.50		891.56	
	895.26		0.86	0.0420	20.50	894.40		0.50	0.0420	12.00	893.89	8.00	1011+75.00	8.00	893.40	12.00	-0.0420	-0.50		892.90	12.00	-0.0420	-0.50		892.39	
	896.09		0.88	0.0420	21.00	895.21		0.50	0.0420	12.00	894.71	8.00	1012+00.00	8.00	894.23	12.00	-0.0420	-0.50		893.73	12.00	-0.0420	-0.50		893.23	

Preliminary Plans - Not For Reference Only

SUPERELEVATION TABLE
IR-680 STA. 999+75.00 TO STA. 1010+75.00

DESIGN AGENCY
ms consultants, inc.

DESIGNER CMJ
REVIEWER CMN 08/29/25
PROJECT ID 121474
SHEET P.297 TOTAL 655

MAH-680-4.58

MODEL: Section 3 Mainline-7 PAPERSIZE: 34x22 (in.) DATE: 9/15/2025 TIME: 9:48:10 AM PLTDRV: OHDOT_PDF_E+.pltcfg PENTBL: OHDOT_Pen.tbl USER: DHall@mscconsultants.com WORKSPACE: OHDOTCivil02 WORKSET: 121474 PRODUCT: OpenRoadsDesigner 24.00.00.205
pw:\\ohiodot-pw.bentley.com:ohiodot-pw-02\Documents\01 Active Projects\District 04\Mahoning\121474\02-Engineering_MSConsultants\Roadway\Sheets\121474_GE003.dgn

SUPERELEVATION TABLE - IR 680 CURVE NO. 29

P.I. 1003+44.66 | DC 2°45'00"

DESIGN EXCEPTION CURVE #29
SUPERELVATION RATE
NDC emax = 0.06

REMARKS	NORTHBOUND OUTSIDE EDGE					NORTHBOUND MIDDLE LANE LINE					NB INSIDE EDGE (PROFILE GRADE)		STATION	SB INSIDE EDGE (PROFILE GRADE)		SOUTHBOUND MIDDLE LANE LINE					SOUTHBOUND OUTSIDE EDGE					REMARKS
	ELEVATION	TRANSITION RATE	ELEVATION CORRECTION	CROSS SLOPE	WIDTH	ELEVATION	TRANSITION RATE	ELEVATION CORRECTION	CROSS SLOPE	WIDTH	ELEVATION	OFFSET		OFFSET	ELEVATION	WIDTH	CROSS SLOPE	ELEVATION CORRECTION	TRANSITION RATE	ELEVATION	WIDTH	CROSS SLOPE	ELEVATION CORRECTION	TRANSITION RATE	ELEVATION	
	896.92		0.90	0.0420	21.50	896.02		0.50	0.0420	12.00	895.52	8.00	1012+25.00	8.00	895.07	12.00	-0.0420	-0.50		894.57	14.52	-0.0420	-0.61		893.96	
	897.75		0.92	0.0420	22.00	896.83		0.50	0.0420	12.00	896.33	8.00	1012+50.00	8.00	895.90	12.00	-0.0420	-0.50		895.40	17.76	-0.0420	-0.75		894.65	
	898.59		0.95	0.0420	22.50	897.64		0.50	0.0420	12.00	897.14	8.00	1012+75.00	8.00	896.74	12.00	-0.0420	-0.50		896.23	20.69	-0.0420	-0.87		895.36	
	899.42		0.97	0.0420	23.00	898.45		0.50	0.0420	12.00	897.95	8.00	1013+00.00	8.00	897.57	12.00	-0.0420	-0.50		897.07	23.32	-0.0420	-0.98		896.09	
	900.25		0.99	0.0420	23.50	899.26		0.50	0.0420	12.00	898.76	8.00	1013+25.00	8.00	898.41	12.00	-0.0420	-0.50		897.90	24.00	-0.0420	-1.01		896.89	
	901.08		1.01	0.0420	24.00	900.07		0.50	0.0420	12.00	899.57	8.00	1013+50.00	8.00	899.24	12.00	-0.0420	-0.50		898.74	24.00	-0.0420	-1.01		897.73	
	901.89		1.01	0.0420	24.00	900.88		0.50	0.0420	12.00	900.38	8.00	1013+75.00	8.00	900.07	12.00	-0.0420	-0.50		899.57	24.00	-0.0420	-1.01		898.56	
CS	902.64	367.65:1	1.01	0.0420	24.00	901.63	367.65:1	0.50	0.0420	12.00	901.13	8.00	1013+98.09	8.00	901.13	12.00	-0.0420	-0.50	367.65:1	900.62	24.00	-0.0420	-1.01	367.65:1	899.61	CS
	902.69	▲	1.00	0.0418	24.00	901.69	▲	0.50	0.0418	12.00	901.19	8.00	1014+00.00	8.00	900.91	12.00	-0.0418	-0.50	▲	900.41	24.00	-0.0418	-1.00	▲	899.40	
	903.40		0.93	0.0390	24.00	902.46		0.47	0.0390	12.00	902.00	8.00	1014+25.00	8.00	901.74	12.00	-0.0390	-0.47		901.27	24.00	-0.0390	-0.93		900.34	
	904.11		0.87	0.0361	24.00	903.24		0.43	0.0361	12.00	902.81	8.00	1014+50.00	8.00	902.58	12.00	-0.0361	-0.43		902.14	24.00	-0.0361	-0.87		901.28	
	904.82		0.80	0.0333	24.00	904.02		0.40	0.0333	12.00	903.62	8.00	1014+75.00	8.00	903.41	12.00	-0.0333	-0.40		903.01	24.00	-0.0333	-0.80		902.21	
	905.52		0.73	0.0305	24.00	904.79		0.37	0.0305	12.00	904.43	8.00	1015+00.00	8.00	904.24	12.00	-0.0305	-0.37		903.88	24.00	-0.0305	-0.73		903.15	
	906.23		0.66	0.0276	24.00	905.57		0.33	0.0276	12.00	905.24	8.00	1015+25.00	8.00	905.08	12.00	-0.0276	-0.33		904.75	24.00	-0.0276	-0.66		904.08	
	906.94		0.59	0.0248	24.00	906.35		0.30	0.0248	12.00	906.05	8.00	1015+50.00	8.00	905.91	12.00	-0.0248	-0.30		905.61	24.00	-0.0248	-0.59		905.02	
	907.65		0.53	0.0220	24.00	907.12		0.26	0.0220	12.00	906.86	8.00	1015+75.00	8.00	906.75	12.00	-0.0220	-0.26		906.48	24.00	-0.0220	-0.53		905.96	
	908.36		0.46	0.0191	24.00	907.90		0.23	0.0191	12.00	907.67	8.00	1016+00.00	8.00	907.58	12.00	-0.0191	-0.23		907.35	24.00	-0.0191	-0.46		906.89	
	908.79		0.42	0.0174	24.00	908.37		0.21	0.0174	12.00	908.17	8.00	1016+15.33	8.00	908.09	12.00	-0.0174	-0.21		907.88	24.00	-0.0174	-0.42		907.47	
	909.07		0.39	0.0163	24.00	908.68		0.20	0.0163	12.00	908.48	8.00	1016+25.00	8.00	908.42	12.00	-0.0163	-0.20		908.22	24.00	-0.0163	-0.39		907.83	
RC	909.14		0.38	0.0160	24.00	908.75	367.65:1	0.19	0.0160	12.00	908.56	8.00	1016+27.50	8.00	908.50	12.00	-0.0160	-0.19		908.31	24.00	-0.0160	-0.38	367.65:1	907.92	RC
	909.74		0.26	0.0109	24.00	909.48		0.19	0.0160	12.00	909.29	8.00	1016+50.00	8.00	909.25	12.00	-0.0109	-0.13		909.12	24.00	-0.0160	-0.38		908.73	
	910.42		0.13	0.0052	24.00	910.29		0.19	0.0160	12.00	910.10	8.00	1016+75.00	8.00	910.08	12.00	-0.0052	-0.06		910.02	24.00	-0.0160	-0.38		909.64	
ST, ½ LEVEL	911.04		0.00	0.0000	24.00	911.04		0.19	0.0160	12.00	910.85	8.00	1016+98.09	8.00	910.85	12.00	0.0000	0.00		910.85	24.00	-0.0160	-0.38		910.46	ST, ½ LEVEL
	911.09		-0.01	-0.0004	24.00	911.10		0.19	0.0160	12.00	910.91	8.00	1017+00.00	8.00	910.92	12.00	0.0004	0.01		910.92	24.00	-0.0160	-0.38		910.54	
	911.77		-0.15	-0.0061	24.00	911.91		0.19	0.0160	12.00	911.72	8.00	1017+25.00	8.00	911.75	12.00	0.0061	0.07		911.83	24.00	-0.0160	-0.38		911.44	
	911.63	▼	-0.28	-0.0118	24.00	911.91		0.19	0.0160	12.00	911.72	8.00	1017+50.00	8.00	912.59	12.00	0.0118	0.14	▼	912.73	24.00	-0.0160	-0.38		912.34	
NC	912.94	367.65:1	-0.38	-0.0160	24.00	913.33		0.19	0.0160	12.00	913.14	8.00	1017+68.68	8.00	913.21	12.00	0.0160	0.19	367.65:1	913.40	24.00	-0.0160	-0.38		913.02	NC

Preliminary Plans - For Reference Only

SUPERELEVATION TABLE
IR-680 STA. 1011+00.00 TO STA. 1017+68.68

IR-680

DESIGN AGENCY
ms consultants. inc.

DESIGNER
CMJ

REVIEWER
CMN 08/29/25

PROJECT ID
121474

SHEET P.298 | TOTAL 655

MAH-680-4.58

MODEL: Section 3 Mainline-8 PAPERSIZE: 34x22 (in.) DATE: 9/15/2025 TIME: 9:48:11 AM PLTDRV: OHDOT_PDF_E+.pltcfg PENTBL: OHDOT_Pen.tbl USER: DHall@msconsultants.com WORKSPACE: OHDOTCivil02 WORKSET: 121474 PRODUCT: OpenRoadsDesigner 24.00.00.205
pw:\\ohiodot-pw.bentley.com:ohiodot-pw-02\Documents\01 Active Projects\District 04\Mahoning\121474\02-Engineering_MSConsultants\Roadway\Sheets\121474_GE003.dgn

SUPERELEVATION TABLE - IR 680 CURVE NO. 32

P.I. 1028+30.49 | DC 5°45'00"

REMARKS	NORTHBOUND OUTSIDE EDGE					NORTHBOUND MIDDLE LANE LINE					NB INSIDE EDGE (PROFILE GRADE)		STATION	SB INSIDE EDGE (PROFILE GRADE)		SOUTHBOUND MIDDLE LANE LINE					SOUTHBOUND OUTSIDE EDGE					REMARKS
	ELEVATION	TRANSITION RATE	ELEVATION CORRECTION	CROSS SLOPE	WIDTH	ELEVATION	TRANSITION RATE	ELEVATION CORRECTION	CROSS SLOPE	WIDTH	ELEVATION	OFFSET		OFFSET	ELEVATION	WIDTH	CROSS SLOPE	ELEVATION CORRECTION	TRANSITION RATE	ELEVATION	WIDTH	CROSS SLOPE	ELEVATION CORRECTION	TRANSITION RATE	ELEVATION	
NC	923.52		-0.19	-0.0160	12.00	923.71	330.03:1	0.19	0.0160	12.00	923.52	8.00	1020+92.94	8.00	923.52	12.00	0.0160	0.19		923.72	12.00	-0.0160	-0.19	330.03:1	923.52	NC
	923.72		-0.19	-0.0160	12.00	923.91		0.17	0.0142	12.00	923.74	8.00	1021+00.00	8.00	923.74	12.00	0.0160	0.19		923.94	12.00	-0.0142	-0.17		923.77	
	924.43		-0.19	-0.0160	12.00	924.62		0.09	0.0079	12.00	924.53	8.00	1021+25.00	8.00	924.53	12.00	0.0160	0.19		924.72	12.00	-0.0079	-0.09		924.62	
	925.16		-0.19	-0.0160	12.00	925.36		0.02	0.0016	12.00	925.34	8.00	1021+50.00	8.00	925.31	12.00	0.0160	0.19		925.50	12.00	-0.0016	-0.02		925.48	
TS, ½ LEVEL	925.35		-0.19	-0.0160	12.00	925.54		0.00	0.0000	12.00	925.54	8.00	1021+56.31	8.00	925.51	12.00	0.0160	0.19		925.70	12.00	0.0000	0.00		925.70	TS, ½ LEVEL
	925.89		-0.19	-0.0160	12.00	926.08		-0.06	-0.0047	12.00	926.13	8.00	1021+75.00	8.00	926.09	12.00	0.0160	0.19		926.28	12.00	0.0047	0.06		926.34	
	926.61		-0.19	-0.0160	12.00	926.80		-0.13	-0.0110	12.00	926.93	8.00	1022+00.00	8.00	926.87	12.00	0.0160	0.19		927.07	12.00	0.0110	0.13		927.20	
RC	927.16	330.03:1	-0.19	-0.0160	12.00	927.36		-0.19	-0.0160	12.00	927.55	8.00	1022+19.68	8.00	927.49	12.00	0.0160	0.19	330.03:1	927.68	12.00	0.0160	0.19		927.87	RC
	927.31		-0.20	-0.0167	12.00	927.51		-0.20	-0.0167	12.00	927.71	8.00	1022+25.00	8.00	927.66	12.00	0.0167	0.20		927.86	12.00	0.0167	0.20		928.06	
	927.97		-0.24	-0.0198	12.00	928.21		-0.24	-0.0198	12.00	928.44	8.00	1022+50.00	8.00	928.41	12.00	0.0198	0.24		928.65	12.00	0.0198	0.24		928.88	
	928.57		-0.28	-0.0230	12.23	928.86		-0.28	-0.0230	12.00	929.13	8.00	1022+75.00	8.00	929.11	12.00	0.0230	0.28		929.39	12.00	0.0230	0.28		929.66	
	929.12		-0.34	-0.0262	12.85	929.46		-0.31	-0.0261	12.00	929.77	8.00	1023+00.00	8.00	929.77	12.00	0.0261	0.31		930.08	12.00	0.0261	0.31		930.40	
	929.62		-0.40	-0.0293	13.48	930.01		-0.35	-0.0293	12.00	930.36	8.00	1023+25.00	8.00	930.37	12.00	0.0293	0.35		930.73	12.00	0.0293	0.35		931.08	
	930.08		-0.44	-0.0325	13.61	930.52		-0.39	-0.0325	12.00	930.91	8.00	1023+50.00	8.00	930.93	12.00	0.0325	0.39		931.32	12.00	0.0325	0.39		931.71	
	930.46		-0.52	-0.0356	14.72	930.98		-0.43	-0.0356	12.00	931.41	8.00	1023+75.00	8.00	931.44	12.00	0.0356	0.43		931.87	12.00	0.0356	0.43		932.29	
	930.80		-0.60	-0.0388	15.35	931.39		-0.47	-0.0388	12.00	931.86	8.00	1024+00.00	8.00	931.90	12.00	0.0388	0.47		932.37	12.00	0.0388	0.47		932.83	
	931.09		-0.67	-0.0419	15.98	931.76		-0.50	-0.0419	12.00	932.27	8.00	1024+25.00	8.00	932.31	12.00	0.0419	0.50		932.81	12.00	0.0419	0.50		933.32	
	931.34		-0.75	-0.0451	16.60	932.08		-0.54	-0.0451	12.00	932.62	8.00	1024+50.00	8.00	932.67	12.00	0.0451	0.54		933.21	12.00	0.0451	0.54		933.75	
	931.53		-0.83	-0.0482	17.23	932.36		-0.58	-0.0482	12.00	932.94	8.00	1024+75.00	8.00	932.99	12.00	0.0482	0.58		933.56	12.00	0.0482	0.58		934.14	
	931.68		-0.90	-0.0514	17.56	932.58		-0.62	-0.0514	12.00	933.20	8.00	1025+00.00	8.00	933.25	12.00	0.0514	0.62		933.87	12.00	0.0514	0.62		934.48	
	931.76		-1.01	-0.0545	18.48	932.76		-0.65	-0.0545	12.00	933.42	8.00	1025+25.00	8.00	933.46	12.00	0.0545	0.65		934.12	12.00	0.0545	0.65		934.77	
	931.79		-1.10	-0.0577	19.11	932.90		-0.69	-0.0577	12.00	933.59	8.00	1025+50.00	8.00	933.63	12.00	0.0577	0.69		934.32	13.19	0.0577	0.76		935.09	
SC	931.79	330.03:1	-1.13	-0.0585	19.30	932.92	330.03:1	-0.70	-0.0585	12.00	933.62	8.00	1025+56.31	8.00	933.67	12.00	0.0585	0.70	330.03:1	934.37	14.33	0.0585	0.84	330.03:1	935.21	SC
	931.86		-1.15	-0.0585	19.73	933.01		-0.70	-0.0585	12.00	933.71	8.00	1025+75.00	8.00	933.75	12.00	0.0585	0.70		934.45	16.44	0.0585	0.96		935.41	
	931.90		-1.19	-0.0585	20.29	933.09		-0.70	-0.0585	12.00	933.79	8.00	1026+00.00	8.00	933.82	12.00	0.0585	0.70		934.52	20.29	0.0585	1.19		935.71	
	931.89		-1.23	-0.0585	20.98	933.12		-0.70	-0.0585	12.00	933.82	8.00	1026+25.00	8.00	933.84	12.00	0.0585	0.70		934.54	23.81	0.0585	1.39		935.93	
	931.84		-1.26	-0.0585	21.60	933.10		-0.70	-0.0585	12.00	933.80	8.00	1026+50.00	8.00	933.81	12.00	0.0585	0.70		934.51	12.00	0.0585	0.70		935.21	
	931.74		-1.30	-0.0585	22.23	933.04		-0.70	-0.0585	12.00	933.74	8.00	1026+75.00	8.00	933.73	12.00	0.0585	0.70		934.43	12.00	0.0585	0.70		935.13	
	931.59		-1.34	-0.0585	22.86	932.93		-0.70	-0.0585	12.00	933.63	8.00	1027+00.00	8.00	933.60	12.00	0.0585	0.70		934.30	12.00	0.0585	0.70		935.01	
	931.40		-1.37	-0.0585	23.48	932.77		-0.70	-0.0585	12.00	933.47	8.00	1027+25.00	8.00	933.43	12.00	0.0585	0.70		934.13	12.00	0.0585	0.70		934.83	
	931.18		-1.39	-0.0585	23.71	932.57		-0.70	-0.0585	12.00	933.27	8.00	1027+50.00	8.00	933.20	12.00	0.0585	0.70		933.90	12.00	0.0585	0.70		934.61	
	930.91		-1.40	-0.0585	24.00	932.32		-0.70	-0.0585	12.00	933.02	8.00	1027+75.00	8.00	932.93	12.00	0.0585	0.70		933.63	12.00	0.0585	0.70		934.33	
	930.61		-1.40	-0.0585	24.00	932.02		-0.70	-0.0585	12.00	932.72	8.00	1028+00.00	8.00	932.61	12.00	0.0585	0.70		933.31	12.00	0.0585	0.70		934.01	
	930.27		-1.40	-0.0585	24.00	931.67		-0.70	-0.0585	12.00	932.37	8.00	1028+25.00	8.00	932.23	12.00	0.0585	0.70		932.94	12.00	0.0585	0.70		933.64	
	929.88		-1.40	-0.0585	24.00	931.28		-0.70	-0.0585	12.00	931.98	8.00	1028+50.00	8.00	931.81	12.00	0.0585	0.70		932.52	12.00	0.0585	0.70		933.22	
	929.44		-1.40	-0.0585	24.00	930.84		-0.70	-0.0585	12.00	931.54	8.00	1028+75.00	8.00	931.35	12.00	0.0585	0.70		932.05	12.00	0.0585	0.70		932.75	
	928.95		-1.40	-0.0585	24.00	930.36		-0.70	-0.0585	12.00	931.06	8.00	1029+00.00	8.00	930.83	12.00	0.0585	0.70		931.53	12.00	0.0585	0.70		932.23	
	928.42		-1.40	-0.0585	24.00	929.82		-0.70	-0.0585	12.00	930.53	8.00	1029+25.00	8.00	930.29	12.00	0.0585	0.70		930.99	12.00	0.0585	0.70		931.69	
	927.84		-1.40	-0.0585	24.00	929.25		-0.70	-0.0585	12.00	929.95	8.00	1029+50.00	8.00	929.75	12.00	0.0585	0.70		930.46	12.00	0.0585	0.70		931.16	
	927.23		-1.40	-0.0585	24.00	928.64		-0.70	-0.0585	12.00	929.34	8.00	1029+75.00	8.00	929.22	12.00	0.0585	0.70		929.92	12.00	0.0585	0.70		930.62	
	926.62		-1.40	-0.0585	24.00	928.03		-0.70	-0.0585	12.00	928.73	8.00	1030+00.00	8.00	928.68	12.00	0.0585	0.70		929.38	12.00	0.0585	0.70		930.08	
	926.02		-1.40	-0.0585	24.00	927.43		-0.70	-0.0585	12.00	928.13	8.00	1030+25.00	8.00	928.16	12.00	0.0585	0.70		928.86	12.00	0.0585	0.70		929.57	
	925.47		-1.40	-0.0585	24.00	926.88		-0.70	-0.0585	12.00	927.58	8.00	1030+50.00	8.00	927.70	12.00	0.0585	0.70		928.40	12.00	0.0585	0.70		929.10	
	925.68		-0.70	-0.0585	12.00	926.38		-0.70	-0.0585	12.00	927.09	8.00	1030+75.00	8.00	927.28	12.00	0.0585	0.70		927.98	12.00	0.0585	0.70		928.68	
CS	925.39	330.03:1	-0.70	-0.0585	12.00	926.09	330.03:1	-0.70	-0.0585	12.00	926.80	8.00	1030+91.44	8.00	927.03	12.00	0.0585	0.70	330.03:1	927.73	12.00	0.0585	0.70	330.03:1	928.44	CS
	925.27		-0.69	-0.0574	12.00	925.96		-0.69	-0.0574	12.00	926.65	8.00	1031+00.00	8.00	926.91	12.00	0.0574	0.69		927.60	12.00	0.0574	0.69		928.29	
	924.98		-0.65	-0.0543	12.00	925.63		-0.65	-0.0543	12.00	926.28	8.00	1031+25.00	8.00	926.60	12.00	0.0543	0.65		927.25	12.00	0.0543	0.65		927.90	
	924.74		-0.61	-0.0511	12.00	925.35		-0.61	-0.0511	12.00	925.97	8.00	1031+50.00	8.00	926.33	12.00	0.0511	0.61		926.95	12.00	0.0511	0.61		927.56	
	924.56		-0.58	-0.0480	12.00	925.14		-0.58	-0.0480	12.00	925.71	8.00	1031+75.00	8.00	926.12	12.00	0.0480	0.58		926.69	12.00	0.0480	0.58		927.27	
	924.44		-0.54	-0.0448	12.00	924.98		-0.54	-0.0448	12.00	925.52	8.00	1032+00.00	8.00	925.96	12.00	0.0448	0.54		926.49	12.00	0.0448	0.54		927.03	
	924.38		-0.50	-0.0416	12.00	924.88		-0.50	-0.0416	12.00	925.38	8.00	1032+25.00	8.00	925.84	12.00	0.0416	0.50		926.34	12.00	0.0416	0.50		926.84	
	924.37		-0.48	-0.0399	12.00	924.85		-0.48	-0.0399	12.00	925.33	8.00	1032+38.70	8.00	925.80	12.00	0.0399	0.48		926.28	12.00	0.0399	0.48		926.76	
	924.38		-0.46	-0.0385	12.00	924.84		-0.46	-0.0385	12.00	925.30	8.00	1032+50.00	8.00	925.78	12.00	0.0385	0.46		926.24	12.00	0.0385	0.46		926.71	
	924.44		-0.42	-0.0353	12.00	924.86		-0.42	-0.0353	12.00	925.28	8.00	1032+75.00	8.00	925.77	12.00	0.0353	0.42		926.19	12.00	0.0353	0.42		926.62	
	924.55		-0.39	-0.0322	12.00	924.94		-0.39	-0.0322	12.00	925.33	8.00	1033+00.00	8.00	925.81	12.00	0.0322	0.39		926.20	12.00	0.0322	0.39		926.58	
	924.73		-0.35	-0.0290	12.00	925.08		-0.35	-0.0290	12.00	925.43	8.00	1033+25.00	8.00	925.90	12.00	0.0290	0.35		926.25	12.00	0.0290	0.35		926.60	
	924.96		-0.31	-0.0259	12.00	925.27		-0.31	-0.0259	12.00	925.58	8.00	1033+50.00	8.00	926.04	12.00	0.0259	0.31		926.35	12.00	0.0259	0.31		926.66	
	925.26		-0.27	-0.0227	12.00	925.53		-0.27	-0.0227	12.00	925.80	8.00	1033+75.00	8.00	926.23	12.00	0.0227	0.27		926.51	12.00	0.0227	0.27		926.78	
	925.61		-0.23	-0.0195	12.00	925.85		-0.23	-0.0195	12.00	926.08	8.00	1034+00.00	8.00	926.48	12.00	0.0195	0.23		926.71	12.00	0.0195	0.23		926.95	
	926.02	330.03:1	-0.20	-0.0164	12.00	926.22	330.03:1	-0.20	-0.0164	12.00	926.42	8.00	1034+25.00	8.00	926.77	12.00	0.0164	0.20	330.03:1	926.97	12.00	0.0164	0.20	330.03:1	927.16	

Preliminary Plans - Not For Reference Only

SUPERELEVATION TABLE
IR-680 STA. 1020+92.94 TO STA. 1034+28.07

DESIGN AGENCY
ms consultants, inc.

DESIGNER CMJ
REVIEWER CMN 08/29/25
PROJECT ID 121474
SHEET P.299 TOTAL 655

MAH-680-4.58

MODEL: SECTION 4 STA. 1020+92.94 TO STA. 1034+28.07 PAPERSIZE: 34x22 (in.) DATE: 9/15/2025 TIME: 9:48:16 AM PLTDRV: OHDOT_PDF_F+.pltcfg PENTBL: OHDOT_Pen.tbl USER: DHall@msconsultants.com WORKSPACE: OHDOTCEv02 WORKSET: 121474 PRODUCT: OpenRoadsDesigner 24.00.00.205
pw:\\ohiodot-pw.bentley.com:ohiodot-pw-02\Documents\01 Active Projects\District 04\Mahoning\121474\402-Engineering_MSConsultants\Roadway\Sheets\121474_GE004.dgn

SUPERELEVATION TABLE - IR 680 CURVE NO. 32

P.I. 1028+30.49 | DC 5°45'00"

REMARKS	NORTHBOUND OUTSIDE EDGE					NORTHBOUND MIDDLE LANE LINE					NB INISDE EDGE (PROFILE GRADE)		STATION	SB INISDE EDGE (PROFILE GRADE)		SOUTHBOUND MIDDLE LANE LINE					SOUTHBOUND OUTSIDE EDGE					REMARKS
	ELEVATION	TRANSITION RATE	ELEVATION CORRECTION	CROSS SLOPE	WIDTH	ELEVATION	TRANSITION RATE	ELEVATION CORRECTION	CROSS SLOPE	WIDTH	ELEVATION	OFFSET		OFFSET	ELEVATION	WIDTH	CROSS SLOPE	ELEVATION CORRECTION	TRANSITION RATE	ELEVATION	WIDTH	CROSS SLOPE	ELEVATION CORRECTION	TRANSITION RATE	ELEVATION	
	926.08	330.03:1	-0.19	-0.0160	12.00	926.27	330.03:1	-0.19	-0.0160	12.00	926.46	8.00	1034+28.07	8.00	926.81	12.00	0.0160	0.19	330.03:1	927.00	12.00	0.0160	0.19	330.03:1	927.19	RC
	926.49		-0.19	-0.0160	12.00	926.69		-0.13	-0.0105	12.00	926.81	8.00	1034+50.00	8.00	927.11	12.00	0.0160	0.19		927.31	12.00	0.0105	0.13		927.43	
	927.03		-0.19	-0.0160	12.00	927.22		-0.05	-0.0042	12.00	927.27	8.00	1034+75.00	8.00	927.51	12.00	0.0160	0.19		927.70	12.00	0.0042	0.05		927.75	
ST, ½ LEVEL	927.41		-0.19	-0.0160	12.00	927.60		0.00	0.0000	12.00	927.60	8.00	1034+91.44	8.00	927.80	12.00	0.0160	0.19		927.99	12.00	0.0000	0.00		927.99	ST, ½ LEVEL
	927.61		-0.19	-0.0160	12.00	927.81		0.03	0.0022	12.00	927.78	8.00	1035+00.00	8.00	927.95	12.00	0.0160	0.19		928.15	12.00	-0.0022	-0.03		928.12	
	928.26		-0.19	-0.0160	12.00	928.46		0.10	0.0085	12.00	928.35	8.00	1035+25.00	8.00	928.45	12.00	0.0160	0.19		928.64	12.00	-0.0085	-0.10		928.54	
	928.97		-0.19	-0.0160	12.00	929.16		0.18	0.0148	12.00	928.99	8.00	1035+50.00	8.00	929.00	12.00	0.0160	0.19		929.19	12.00	-0.0148	-0.18		929.01	
NC	929.11		-0.19	-0.0160	12.00	929.31	330.03:1	0.19	0.0160	12.00	929.11	8.00	1035+54.81	8.00	929.11	12.00	0.0160	0.19		929.30	12.00	-0.0160	-0.19	330.03:1	929.11	NC

Preliminary Plans - For Reference Only

MODEL: SECTION 4 STA. 1034+50.00 TO STA. 1035+54.81 PAPERSIZE: 34x22 (in.) DATE: 9/15/2025 TIME: 9:48:17 AM PLTDRV: OHDOT_PDF_Ex.pltcfg PENTBL: OHDOT_Pen.tbl USER: DHall@msconsultants.com WORKSPACE: OHDOTCEv02 WORKSET: 121474 PRODUCT: OpenRoadsDesigner 24.00.00.205
pw:\\ohiodot-pw.bentley.com:ohiodot-pw-02\Documents\01 Active Projects\District 04\Mahoning\121474\d02-Engineering_MSConsultants\Roadway\Sheets\121474_GE004.dgn

MAH-680-4.58

SUPERELEVATION TABLE
IR-680 STA. 1034+50.00 TO STA. 1035+54.81
IR-680

DESIGN AGENCY
ms consultants. inc.

DESIGNER CMJ
REVIEWER CMN 08/29/25
PROJECT ID 121474
SHEET P.300 TOTAL 655

SUPERELEVATION TABLE - IR 680 CURVE NO. 35

P.I. 1043+70.99 | DC 7°30'00"

DESIGN EXCEPTION CURVE #35
SUPERELEVATION RATE:
NDC: emax = 0.06

REMARKS	NORTHBOUND OUTSIDE EDGE					NORTHBOUND MIDDLE LANE LINE					NB INSIDE EDGE (PROFILE GRADE)		STATION	SB INSIDE EDGE (PROFILE GRADE)		SOUTHBOUND MIDDLE LANE LINE					SOUTHBOUND OUTSIDE EDGE					REMARKS
	ELEVATION	TRANSITION RATE	ELEVATION CORRECTION	CROSS SLOPE	WIDTH	ELEVATION	TRANSITION RATE	ELEVATION CORRECTION	CROSS SLOPE	WIDTH	ELEVATION	OFFSET		OFFSET	ELEVATION	WIDTH	CROSS SLOPE	ELEVATION CORRECTION	TRANSITION RATE	ELEVATION	WIDTH	CROSS SLOPE	ELEVATION CORRECTION	TRANSITION RATE	ELEVATION	
NC	931.64	320.5:1	-0.19	-0.0160	12.00	931.84		0.19	0.0160	12.00	931.64	8.00	1036+39.97	8.00	931.38	12.00	0.0160	0.19	320.5:1	931.57	12.00	-0.0160	-0.19		931.38	NC
	931.98	▲	-0.16	-0.0134	12.00	932.14		0.19	0.0160	12.00	931.95	8.00	1036+50.00	8.00	931.68	12.00	0.0134	0.16	▲	931.84	12.00	-0.0160	-0.19		931.64	
	932.82		-0.08	-0.0069	12.00	932.90		0.19	0.0160	12.00	932.71	8.00	1036+75.00	8.00	932.42	12.00	0.0069	0.08		932.50	12.00	-0.0160	-0.19		932.31	
	933.66		0.00	-0.0004	12.00	933.67		0.19	0.0160	12.00	933.48	8.00	1037+00.00	8.00	933.16	12.00	0.0004	0.00		933.16	12.00	-0.0160	-0.19		932.97	
TS, ½ LEVEL	933.71		0.00	0.0000	12.00	933.71		0.19	0.0160	12.00	933.52	8.00	1037+01.51	8.00	933.20	12.00	0.0000	0.00		933.20	12.00	-0.0160	-0.19		933.01	TS, ½ LEVEL
	934.50		0.07	0.0061	12.00	934.43		0.19	0.0160	12.00	934.24	8.00	1037+25.00	8.00	933.90	12.00	-0.0061	-0.07		933.82	12.00	-0.0160	-0.19		933.63	
	935.34		0.15	0.0126	12.00	935.19		0.19	0.0160	12.00	935.00	8.00	1037+50.00	8.00	934.64	12.00	-0.0126	-0.15		934.48	12.00	-0.0160	-0.19		934.29	
RC	935.78		0.19	0.0160	12.00	935.59	320.5:1	0.19	0.0160	12.00	935.40	8.00	1037+63.05	8.00	935.02	12.00	-0.0160	-0.19		934.83	12.00	-0.0160	-0.19	320.5:1	934.64	RC
	936.18		0.21	0.0176	12.00	935.97	▲	0.21	0.0176	12.00	935.76	8.00	1037+75.00	8.00	935.38	12.00	-0.0176	-0.21		935.17	12.00	-0.0176	-0.21	▲	934.95	
	937.02		0.25	0.0208	12.00	936.77		0.25	0.0208	12.00	936.53	8.00	1038+00.00	8.00	936.12	12.00	-0.0208	-0.25		935.87	12.00	-0.0208	-0.25		935.62	
	937.86		0.29	0.0241	12.00	937.58		0.29	0.0241	12.00	937.29	8.00	1038+25.00	8.00	936.86	12.00	-0.0241	-0.29		936.57	12.00	-0.0241	-0.29		936.28	
	938.71		0.33	0.0273	12.00	938.38		0.33	0.0273	12.00	938.05	8.00	1038+50.00	8.00	937.60	12.00	-0.0273	-0.33		937.27	12.00	-0.0273	-0.33		936.94	
	939.55		0.37	0.0306	12.00	939.18		0.37	0.0306	12.00	938.81	8.00	1038+75.00	8.00	938.34	12.00	-0.0306	-0.37		937.97	12.00	-0.0306	-0.37		937.60	
	940.39		0.41	0.0338	12.00	939.98		0.41	0.0338	12.00	939.58	8.00	1039+00.00	8.00	939.08	12.00	-0.0338	-0.41		938.67	12.00	-0.0338	-0.41		938.26	
	941.23		0.44	0.0371	12.00	940.78		0.44	0.0371	12.00	940.34	8.00	1039+25.00	8.00	939.82	12.00	-0.0371	-0.44		939.37	12.00	-0.0371	-0.44		938.93	
	942.07		0.48	0.0403	12.00	941.58		0.48	0.0403	12.00	941.10	8.00	1039+50.00	8.00	940.55	12.00	-0.0403	-0.48		940.07	12.00	-0.0403	-0.48		939.58	
	942.10		0.49	0.0404	12.00	941.62		0.49	0.0404	12.00	941.13	8.00	1039+51.11	8.00	940.58	12.00	-0.0404	-0.49		940.10	12.00	-0.0404	-0.49		939.61	
	942.88		0.52	0.0436	12.00	942.35		0.52	0.0436	12.00	941.83	8.00	1039+75.00	8.00	941.25	12.00	-0.0436	-0.52		940.73	12.00	-0.0436	-0.52		940.20	
	943.65		0.56	0.0468	12.00	943.08		0.56	0.0468	12.00	942.52	8.00	1040+00.00	8.00	941.91	12.00	-0.0468	-0.56		941.35	12.00	-0.0468	-0.56		940.78	
	944.38		0.60	0.0501	12.00	943.78		0.60	0.0501	12.00	943.18	8.00	1040+25.00	8.00	942.53	12.00	-0.0501	-0.60		941.93	12.00	-0.0501	-0.60		941.33	
	945.07		0.64	0.0533	12.00	944.43		0.64	0.0533	12.00	943.79	8.00	1040+50.00	8.00	943.11	12.00	-0.0533	-0.64		942.47	12.00	-0.0533	-0.64		941.83	
	945.72		0.68	0.0566	12.00	945.04		0.68	0.0566	12.00	944.36	8.00	1040+75.00	8.00	943.66	12.00	-0.0566	-0.68		942.98	12.00	-0.0566	-0.68		942.30	
	946.33	▼	0.72	0.0598	12.00	945.61	▼	0.72	0.0598	12.00	944.89	8.00	1041+00.00	8.00	944.16	12.00	-0.0598	-0.72	▼	943.45	12.00	-0.0598	-0.72	▼	942.73	
SC	946.36	320.5:1	0.72	0.0600	12.00	945.64	320.5:1	0.72	0.0600	12.00	944.92	8.00	1041+01.51	8.00	944.19	12.00	-0.0600	-0.72	320.5:1	943.47	12.00	-0.0600	-0.72	320.5:1	942.75	SC
	946.83		0.72	0.0600	12.00	946.11		0.72	0.0600	12.00	945.39	8.00	1041+25.00	8.00	944.62	12.00	-0.0600	-0.72		943.90	12.00	-0.0600	-0.72		943.18	
	947.13		0.72	0.0600	12.00	946.41		0.72	0.0600	12.00	945.69	8.00	1041+41.51	8.00	944.91	12.00	-0.0600	-0.72		944.19	12.00	-0.0600	-0.72		943.47	
	947.28		0.72	0.0600	12.00	946.56		0.72	0.0600	12.00	945.84	8.00	1041+50.00	8.00	945.05	12.00	-0.0600	-0.72		944.33	12.00	-0.0600	-0.72		943.61	
	947.69		0.72	0.0600	12.00	946.97		0.72	0.0600	12.00	946.25	8.00	1041+75.00	8.00	945.44	12.00	-0.0600	-0.72		944.72	12.00	-0.0600	-0.72		944.00	
	948.06		0.72	0.0600	12.00	947.34		0.72	0.0600	12.00	946.62	8.00	1042+00.00	8.00	945.80	12.00	-0.0600	-0.72		945.08	12.00	-0.0600	-0.72		944.36	
	948.40		0.72	0.0600	12.00	947.68		0.72	0.0600	12.00	946.96	8.00	1042+25.00	8.00	946.10	12.00	-0.0600	-0.72		945.38	12.00	-0.0600	-0.72		944.66	
	948.69		0.72	0.0600	12.00	947.97		0.72	0.0600	12.00	947.25	8.00	1042+50.00	8.00	946.37	12.00	-0.0600	-0.72		945.65	12.00	-0.0600	-0.72		944.93	
	948.94		0.72	0.0600	12.00	948.22		0.72	0.0600	12.00	947.50	8.00	1042+75.00	8.00	946.60	12.00	-0.0600	-0.72		945.88	12.00	-0.0600	-0.72		945.16	
	949.15		0.72	0.0600	12.00	948.43		0.72	0.0600	12.00	947.71	8.00	1043+00.00	8.00	946.80	12.00	-0.0600	-0.72		946.08	12.00	-0.0600	-0.72		945.36	
	949.33		0.72	0.0600	12.00	948.61		0.72	0.0600	12.00	947.89	8.00	1043+25.00	8.00	946.95	12.00	-0.0600	-0.72		946.23	12.00	-0.0600	-0.72		945.51	
	949.46		0.72	0.0600	12.00	948.74		0.72	0.0600	12.00	948.02	8.00	1043+50.00	8.00	947.08	12.00	-0.0600	-0.72		946.36	12.00	-0.0600	-0.72		945.64	
	949.50		0.72	0.0600	12.00	948.78		0.72	0.0600	12.00	948.06	8.00	1043+58.02	8.00	947.12	12.00	-0.0600	-0.72	200:1	946.40	12.00	-0.0600	-0.72	200:1	945.68	
	949.52	200:1	0.72	0.0600	12.00	948.80	200:1	0.72	0.0600	12.00	948.08	8.00	1043+63.26	8.00	947.14	12.00	-0.0611	-0.73	200:1	946.41	12.00	-0.0611	-0.73	200:1	945.67	
	949.64	▲	0.75	0.0624	12.00	948.89	▲	0.75	0.0624	12.00	948.14	8.00	1043+75.00	8.00	947.20	12.00	-0.0635	-0.76	▲	946.44	12.00	-0.0635	-0.76	▲	945.68	
	949.89	▼	0.81	0.0677	12.00	949.08	▼	0.81	0.0677	12.00	948.27	8.00	1044+00.00	8.00	947.32	12.00	-0.0687	-0.82		946.50	12.00	-0.0687	-0.82		945.67	
EX. APPROACH SLAB	949.93	200:1	0.82	0.0685	12.00	949.11	200:1	0.82	0.0685	12.00	948.29	8.00	1044+04.06	8.00	947.34	12.00	-0.0696	-0.84		946.50	12.00	-0.0696	-0.84		945.67	EX. APPROACH SLAB
				0.0685	12.00				0.0685	12.00	948.39	8.00	1044+25.00	8.00	947.44	12.00	-0.0740	-0.89	▼	946.55	12.00	-0.0740				
				0.0685	12.00				0.0685	12.00	948.43	8.00	1044+34.82	8.00	947.48	12.00	-0.0760	-0.91	200:1	946.57	12.00	-0.0760		200:1		
				EX					EX				1044+50.00				EX					EX				
				EX					EX				1044+75.00				EX					EX				
				EX					EX				1045+00.00				EX					EX				
				EX					EX				1045+25.00				EX					EX				
				EX					EX				1045+50.00				EX					EX				
				EX					EX				1045+75.00				EX					EX				
				EX					EX				1046+00.00				EX					EX				
CS				EX					EX				1046+19.65				EX					EX				CS
				EX					EX				1046+25.00				EX					EX				
				EX					EX				1046+50.00				EX					EX				
				EX					EX				1046+75.00				EX					EX				
	950.75	200:1	0.60	0.0500	12.00	950.15	200:1	0.60	0.0500	12.00	949.55	8.00	1046+77.94				EX					EX				
	950.74	▲	0.54	0.0454	12.00	950.19	▲	0.54	0.0454	12.00	949.65	8.00	1047+00.00				EX					EX				
	950.72		0.48	0.0402	12.00	950.24		0.48	0.0402	12.00	949.76	8.00	1047+25.00				EX					EX				
	950.71		0.43	0.0356	12.00	950.29		0.43	0.0356	12.00	949.86	8.00	1047+47.12	8.00	949.15	12.00	-0.0540	-0.65	200:1	948.50	12.00	-0.0540	-0.65	200:1	947.85	
	950.72		0.42	0.0350	12.00	950.30		0.42	0.0350	12.00	949.88	8.00	1047+50.00	8.00	949.16	12.00	-0.0534	-0.64	▲	948.52	12.00	-0.0534	-0.64	▲	947.88	
EX. APPROACH SLAB	950.70	▼	0.36	0.0298	12.00	950.35	▼	0.36	0.0298	12.00	949.99	8.00	1047+75.00	8.00	949.28	12.00	-0.0482	-0.58	▼	948.70	12.00	-0.0482	-0.58	▼	948.12	EX. APPROACH SLAB
	950.69	200:1	0.29	0.0246	12.00	950.39	200:1	0.29	0.0246	12.00	950.10	8.00	1048+00.00	8.00	949.40	12.00	-0.0430	-0.52	200:1	948.88	12.00	-0.0430	-0.52	200:1	948.37	

Preliminary Plans - Not For Reference Only

SUPERELEVATION TABLE
IR-680 STA. 1036+39.97 TO STA. 1048+25.00

DESIGN AGENCY
ms consultants, inc.

DESIGNER CMJ
REVIEWER CMN 08/29/25
PROJECT ID 121474
SHEET P.301 TOTAL 655

MAH-680-4.58

MODEL: SECTION 4 STA. 1036+39.97 TO STA. 1048+25.00 PAPERSIZE: 34x22 (in.) DATE: 9/15/2025 TIME: 9:48:17 AM PLTDRV: OHDOT_PDF_E+.pltcfg PENTBL: OHDOT_Pen.tbl USER: DHall@msconsultants.com WORKSPACE: OHDOTCEv02 WORKSET: 121474 PRODUCT: OpenRoadsDesigner 24.00.00.205
pw:\\ohiodot-pw.bentley.com:ohiodot-pw-02\Documents\01 Active Projects\District 04\Mahoning\121474\02-Engineering_MSConsultants\Roadway\Sheets\121474_GE004.dgn

SUPERELEVATION TABLE - IR 680 CURVE NO. 35

P.I. 1043+70.99 | DC 7°30'00"

DESIGN EXCEPTION CURVE #35
SUPERELEVATION RATE:
NDC: emax = 0.06

REMARKS	NORTHBOUND OUTSIDE EDGE					NORTHBOUND MIDDLE LANE LINE					NB INSIDE EDGE (PROFILE GRADE)		STATION	SB INSIDE EDGE (PROFILE GRADE)		SOUTHBOUND MIDDLE LANE LINE					SOUTHBOUND OUTSIDE EDGE					REMARKS
	ELEVATION	TRANSITION RATE	ELEVATION CORRECTION	CROSS SLOPE	WIDTH	ELEVATION	TRANSITION RATE	ELEVATION CORRECTION	CROSS SLOPE	WIDTH	ELEVATION	OFFSET		OFFSET	ELEVATION	WIDTH	CROSS SLOPE	ELEVATION CORRECTION	TRANSITION RATE	ELEVATION	WIDTH	CROSS SLOPE	ELEVATION CORRECTION	TRANSITION RATE	ELEVATION	
	950.67	200:1	0.23	0.0194	12.00	950.44	200:1	0.23	0.0194	12.00	950.21	8.00	1048+25.00	8.00	949.52	12.00	-0.0378	-0.45	200:1	949.07	12.00	-0.0378	-0.45	200:1	948.61	
RC	950.67	▲	0.19	0.0160	12.00	950.48	200:1	0.19	0.0160	12.00	950.29	8.00	1048+41.14	8.00	949.60	12.00	-0.0344	-0.41	▲	949.19	12.00	-0.0344	-0.41	▲	948.77	
	950.69		0.17	0.0142	12.00	950.52		0.19	0.0160	12.00	950.33	8.00	1048+50.00	8.00	949.64	12.00	-0.0326	-0.39		949.25	12.00	-0.0326	-0.39		948.86	
	950.74		0.11	0.0089	12.00	950.63		0.19	0.0160	12.00	950.44	8.00	1048+75.00	8.00	949.76	12.00	-0.0274	-0.33		949.43	12.00	-0.0274	-0.33		949.10	
½ LEVEL	950.73		0.00	0.0000	12.00	950.73		0.19	0.0160	12.00	950.54	8.00	1048+96.48	8.00	949.87	12.00	-0.0229	-0.27		949.60	12.00	-0.0229	-0.27		949.32	
	950.72		-0.02	-0.0015	12.00	950.74		0.19	0.0160	12.00	950.55	8.00	1049+00.00	8.00	949.89	12.00	-0.0221	-0.27		949.62	12.00	-0.0221	-0.27		949.36	
	950.72		-0.14	-0.0119	12.00	950.86		0.19	0.0160	12.00	950.67	8.00	1049+25.00	8.00	950.00	12.00	-0.0169	-0.20		949.80	12.00	-0.0169	-0.20		949.59	
	950.72	▼	-0.17	-0.0138	12.00	950.88		0.19	0.0160	12.00	950.69	8.00	1049+29.52	8.00	950.03	12.00	-0.0160	-0.19		949.84	12.00	-0.0160	-0.19	200:1	949.65	RC
NC	950.71	200:1	-0.19	-0.0160	12.00	950.90		0.19	0.0160	12.00	950.71	8.00	1049+34.87	8.00	950.05	12.00	-0.0149	-0.18		949.87	12.00	-0.0160	-0.19		949.68	
	950.78		-0.19	-0.0160	12.00	950.97		0.19	0.0160	12.00	950.78	8.00	1049+50.00	8.00	950.13	12.00	-0.0117	-0.14		949.99	12.00	-0.0160	-0.19		949.80	
	950.89		-0.19	-0.0160	12.00	951.08		0.19	0.0160	12.00	950.89	8.00	1049+75.00	8.00	950.25	12.00	-0.0065	-0.08		950.17	12.00	-0.0160	-0.19		949.98	
	951.00		-0.19	-0.0160	12.00	951.19		0.19	0.0160	12.00	951.00	8.00	1050+00.00	8.00	950.38	12.00	-0.0013	-0.02	▼	950.36	12.00	-0.0160	-0.19		950.17	
	951.03		-0.19	-0.0160	12.00	951.22		0.19	0.0160	12.00	951.03	8.00	1050+06.40	8.00	950.41	12.00	0.0000	0.00	200:1	950.41	12.00	-0.0160	-0.19		950.22	½ LEVEL
ST	951.09		-0.19	-0.0160	12.00	951.28		0.19	0.0160	12.00	951.09	8.00	1050+19.65	8.00	950.50	12.00	0.0028	0.03		950.53	12.00	-0.0160	-0.19		950.34	ST
	951.12		-0.19	-0.0160	12.00	951.31		0.19	0.0160	12.00	951.12	8.00	1050+25.00	8.00	950.53	12.00	0.0039	0.05		950.58	12.00	-0.0160	-0.19		950.38	
	951.23		-0.19	-0.0160	12.00	951.42		0.19	0.0160	12.00	951.23	8.00	1050+50.00	8.00	950.72	12.00	0.0091	0.11		950.83	12.00	-0.0160	-0.19		950.64	
	951.36		-0.19	-0.0160	12.00	951.55		0.19	0.0160	12.00	951.36	8.00	1050+75.00	8.00	950.93	12.00	0.0143	0.17		951.10	12.00	-0.0160	-0.19		950.91	
	951.41		-0.19	-0.0160	12.00	951.60		0.19	0.0160	12.00	951.41	8.00	1050+83.12	8.00	951.00	12.00	0.0160	0.19		951.19	12.00	-0.0160	-0.19		951.00	NC

Preliminary Plans - For Reference Only

SUPERELEVATION TABLE
IR-680 STA. 1048+50.00 TO STA. 1051+04.72

IR-680

DESIGN AGENCY
ms consultants, inc.

DESIGNER CMJ
REVIEWER CMN 08/29/25
PROJECT ID 121474
SHEET P.302 TOTAL 655

MAH-680-4.58

MODEL: SECTION 4 STA. 1048+50.00 TO STA. 1051+04.72 PAPERSIZE: 34x22 (in.) DATE: 9/15/2025 TIME: 9:48:18 AM PLTDRV: OHDOT_PDF_E+.pltcfg PENTBL: OHDOT_Pen.tbl USER: DHall@msconsultants.com WORKSPACE: OHDOTCEv02 WORKSET: 121474 PRODUCT: OpenRoadsDesigner 24.00.00.205
pw:\\ohiodot-pw.bentley.com:ohiodot-pw-02\Documents\01 Active Projects\District 04\Mahoning\121474\02-Engineering_MSConsultants\Roadway\Sheets\121474_GE004.dgn

SUPERELEVATION TABLE - IR 680 CURVE NO. 38

P.I. 1076+41.59 | DC 05°30'00"

REMARKS	NORTHBOUND OUTSIDE EDGE					NORTHBOUND MIDDLE LANE LINE					NB INSIDE EDGE (PROFILE GRADE)		STATION	SB INSIDE EDGE (PROFILE GRADE)		SOUTHBOUND MIDDLE LANE LINE					SOUTHBOUND OUTSIDE EDGE					REMARKS
	ELEVATION	TRANSITION RATE	ELEVATION CORRECTION	CROSS SLOPE	WIDTH	ELEVATION	TRANSITION RATE	ELEVATION CORRECTION	CROSS SLOPE	WIDTH	ELEVATION	OFFSET		OFFSET	ELEVATION	WIDTH	CROSS SLOPE	ELEVATION CORRECTION	TRANSITION RATE	ELEVATION	WIDTH	CROSS SLOPE	ELEVATION CORRECTION	TRANSITION RATE	ELEVATION	
NC	971.40		-0.38	-0.0160	24.00	971.78	210.97:1	0.19	0.0160	12.00	971.59	8.00	1064+60.15	8.00	971.74	12.00	0.0160	0.19		971.93	24.00	-0.0160	-0.38	210.97:1	971.54	NC
	971.75		-0.38	-0.0160	24.00	972.13		0.16	0.0131	12.00	971.98	8.00	1064+75.00	8.00	972.14	12.00	0.0160	0.19		972.33	24.00	-0.0131	-0.31		972.02	
	972.36		-0.38	-0.0160	24.00	972.75		0.10	0.0081	12.00	972.65	8.00	1065+00.00	8.00	972.83	12.00	0.0160	0.19		973.03	24.00	-0.0081	-0.20		972.83	
	972.99		-0.38	-0.0160	24.00	973.38		0.04	0.0032	12.00	973.34	8.00	1065+25.00	8.00	973.55	12.00	0.0160	0.19		973.75	24.00	-0.0032	-0.08		973.67	
TS, ½ LEVEL	973.41		-0.38	-0.0160	24.00	973.80		0.00	0.0000	12.00	973.80	8.00	1065+41.16	8.00	974.03	12.00	0.0160	0.19		974.22	24.00	0.0000	0.00		974.22	TS, ½ LEVEL
	973.65		-0.38	-0.0160	24.00	974.03		-0.02	-0.0017	12.00	974.05	8.00	1065+50.00	8.00	974.30	12.00	0.0160	0.19		974.49	24.00	0.0017	0.04		974.53	
	974.31		-0.38	-0.0160	24.00	974.70		-0.08	-0.0067	12.00	974.78	8.00	1065+75.00	8.00	975.05	12.00	0.0160	0.19		975.25	24.00	0.0067	0.16		975.41	
	974.49		-0.38	-0.0160	24.00	974.88		-0.10	-0.0080	12.00	974.97	8.00	1065+81.67	8.00	975.26	12.00	0.0160	0.19		975.45	24.00	0.0080	0.19		975.64	
	974.98		-0.38	-0.0160	24.00	975.37		-0.14	-0.0116	12.00	975.51	8.00	1066+00.00	8.00	975.81	12.00	0.0160	0.19		976.00	24.00	0.0116	0.28		976.28	
RC	975.57	210.97:1	-0.38	-0.0160	24.00	975.96		-0.19	-0.0160	12.00	976.15	8.00	1066+22.17	8.00	976.48	12.00	0.0160	0.19	210.97:1	976.68	24.00	0.0160	0.38		977.06	RC
	975.64		-0.39	-0.0164	24.00	976.03		-0.20	-0.0164	12.00	976.23	8.00	1066+25.00	8.00	976.57	12.00	0.0164	0.20		976.77	24.00	0.0164	0.39		977.16	
	976.25		-0.47	-0.0197	24.00	976.72		-0.24	-0.0197	12.00	976.96	8.00	1066+50.00	8.00	977.33	12.00	0.0197	0.24		977.56	24.00	0.0197	0.47		978.03	
	976.86		-0.55	-0.0230	24.00	977.41		-0.28	-0.0230	12.00	977.68	8.00	1066+75.00	8.00	978.09	12.00	0.0230	0.28		978.36	24.00	0.0230	0.55		978.91	
	977.46		-0.63	-0.0262	24.00	978.09		-0.31	-0.0262	12.00	978.41	8.00	1067+00.00	8.00	978.84	12.00	0.0262	0.31		979.16	24.00	0.0262	0.63		979.79	
	978.07		-0.71	-0.0295	24.00	978.78		-0.35	-0.0295	12.00	979.14	8.00	1067+25.00	8.00	979.60	12.00	0.0295	0.35		979.95	24.00	0.0295	0.71		980.66	
	978.68		-0.79	-0.0328	24.00	979.47		-0.39	-0.0328	12.00	979.86	8.00	1067+50.00	8.00	980.36	12.00	0.0328	0.39		980.75	24.00	0.0328	0.79		981.54	
	979.29		-0.87	-0.0361	24.00	980.15		-0.43	-0.0361	12.00	980.59	8.00	1067+75.00	8.00	981.12	12.00	0.0361	0.43		981.55	24.00	0.0361	0.87		982.42	
	979.90		-0.95	-0.0394	24.00	980.84		-0.47	-0.0394	12.00	981.31	8.00	1068+00.00	8.00	981.87	12.00	0.0394	0.47		982.34	24.00	0.0394	0.95		983.29	
	980.50		-1.02	-0.0427	24.00	981.53		-0.51	-0.0427	12.00	982.04	8.00	1068+25.00	8.00	982.63	12.00	0.0427	0.51		983.14	24.00	0.0427	1.02		984.17	
	981.09		-1.10	-0.0460	24.00	982.19		-0.55	-0.0460	12.00	982.74	8.00	1068+50.00	8.00	983.31	12.00	0.0460	0.55		983.87	24.00	0.0460	1.10		984.97	
	981.67		-1.18	-0.0493	24.00	982.85		-0.59	-0.0493	12.00	983.44	8.00	1068+75.00	8.00	984.00	12.00	0.0493	0.59		984.59	24.00	0.0493	1.18		985.77	
	982.25		-1.26	-0.0526	24.00	983.51		-0.63	-0.0526	12.00	984.15	8.00	1069+00.00	8.00	984.68	12.00	0.0526	0.63		985.31	24.00	0.0526	1.26		986.57	
	982.83		-1.34	-0.0559	24.00	984.18		-0.67	-0.0559	12.00	984.85	8.00	1069+25.00	8.00	985.37	12.00	0.0559	0.67		986.04	24.00	0.0559	1.34		987.38	
CS	983.22	210.97:1	-1.39	-0.0580	24.00	984.62	210.97:1	-0.70	-0.0580	12.00	985.31	8.00	1069+41.16	8.00	985.85	12.00	0.0580	0.70	210.97:1	986.55	24.00	0.0580	1.39	210.97:1	987.94	CS
	983.48		-1.39	-0.0580	24.00	984.87		-0.70	-0.0580	12.00	985.57	8.00	1069+50.00	8.00	986.11	12.00	0.0580	0.70		986.81	24.00	0.0580	1.39		988.20	
	984.20		-1.39	-0.0580	24.00	985.59		-0.70	-0.0580	12.00	986.29	8.00	1069+75.00	8.00	986.86	12.00	0.0580	0.70		987.55	24.00	0.0580	1.39		988.94	
	984.92		-1.39	-0.0580	24.00	986.32		-0.70	-0.0580	12.00	987.01	8.00	1070+00.00	8.00	987.60	12.00	0.0580	0.70		988.30	24.00	0.0580	1.39		989.69	
	985.65		-1.39	-0.0580	24.00	987.04		-0.70	-0.0580	12.00	987.73	8.00	1070+25.00	8.00	988.35	12.00	0.0580	0.70		989.04	24.00	0.0580	1.39		990.43	
	986.34		-1.39	-0.0580	24.00	987.73		-0.70	-0.0580	12.00	988.43	8.00	1070+50.00	8.00	989.06	12.00	0.0580	0.70		989.76	24.00	0.0580	1.39		991.15	
	986.96		-1.39	-0.0580	24.00	988.35		-0.70	-0.0580	12.00	989.05	8.00	1070+75.00	8.00	989.71	12.00	0.0580	0.70		990.40	24.00	0.0580	1.39		991.79	
	987.51		-1.39	-0.0580	24.00	988.90		-0.70	-0.0580	12.00	989.59	8.00	1071+00.00	8.00	990.27	12.00	0.0580	0.70		990.97	24.00	0.0580	1.39		992.36	
	987.97		-1.39	-0.0580	24.00	989.37		-0.70	-0.0580	12.00	990.06	8.00	1071+25.00	8.00	990.77	12.00	0.0580	0.70		991.46	24.00	0.0580	1.39		992.85	
	988.36		-1.39	-0.0580	24.00	989.75		-0.70	-0.0580	12.00	990.45	8.00	1071+50.00	8.00	991.18	12.00	0.0580	0.70		991.88	24.00	0.0580	1.39		993.27	
	988.82		-1.39	-0.0580	24.00	990.21		-0.70	-0.0580	12.00	990.91	8.00	1071+88.45	8.00	991.67	12.00	0.0580	0.70	200:1	992.37	24.00	0.0580	1.39	200:1	993.76	
	988.92		-1.39	-0.0580	24.00	990.32		-0.70	-0.0580	12.00	991.01	8.00	1072+00.00	8.00	991.79	12.00	0.0596	0.72		992.50	24.00	0.0596	1.43		993.93	
	989.04		-1.39	-0.0580	24.00	990.43		-0.70	-0.0580	12.00	991.13	8.00	1072+16.48	8.00	991.92	12.00	0.0619	0.74		992.66	24.00	0.0619	1.49		994.15	
	989.09	200:1	-1.39	-0.0580	24.00	990.48	200:1	-0.70	-0.0580	12.00	991.17	8.00	1072+24.64	8.00	991.97	12.00	0.0630	0.76		992.73	24.00	0.0630	1.51		994.24	
	989.09		-1.39	-0.0581	24.00	990.48		-0.70	-0.0581	12.00	991.18	8.00	1072+25.00	8.00	991.98	12.00	0.0631	0.76		992.73	24.00	0.0631	1.51		994.25	
	989.05		-1.48	-0.0615	24.00	990.52		-0.74	-0.0615	12.00	991.26	8.00	1072+50.00	8.00	992.09	12.00	0.0665	0.80		992.89	36.00	0.0666	2.40		995.29	
	988.94		-1.56	-0.0650	24.00	990.50		-0.78	-0.0650	12.00	991.28	8.00	1072+75.00	8.00	992.13	12.00	0.0700	0.84		992.97	36.00	0.0700	2.52		995.49	
	988.75		-1.64	-0.0685	24.00	990.39		-0.82	-0.0685	12.00	991.21	8.00	1073+00.00	8.00	992.09	12.00	0.0735	0.88		992.97	36.00	0.0735	2.65		995.62	
	988.48		-1.73	-0.0719	24.00	990.21		-0.86	-0.0719	12.00	991.07	8.00	1073+25.00	8.00	991.97	12.00	0.0770	0.92		992.90	36.00	0.0770	2.77		995.67	
	988.08		-1.82	-0.0760	24.00	989.90		-0.91	-0.0760	12.00	990.82	8.00	1073+54.05	8.00	991.75	12.00	0.0810	0.97	200:1	992.72	36.00	0.0810	2.92	200:1	995.63	
MEET EX. APPROACH SLAB	987.95	200:1	-1.85	-0.0771	24.00	989.80	200:1	-0.93	-0.0771	12.00	990.73	8.00	1073+62.16	8.00	991.67	12.00	EX				36.00	EX				MEET EX. APPROACH SLAB
				EX	24.00				EX	12.00		8.00	1073+75.00	8.00	991.52	12.00	EX				36.00	EX				
				EX	24.00				EX	12.00		8.00	1074+00.00	8.00	991.18	12.00	EX				36.00	EX				
				EX	24.00				EX	12.00		8.00	1074+25.00	8.00	990.76	12.00	EX				36.00	EX				
				EX	24.00				EX	12.00		8.00	1074+50.00	8.00	990.27	12.00	EX				36.00	EX				
				EX	24.00				EX	12.00		8.00	1074+75.00	8.00	989.70	12.00	EX				36.00	EX				
				EX	24.00				EX	12.00		8.00	1075+00.00	8.00	989.06	12.00	EX				36.00	EX				
				EX	24.00				EX	12.00		8.00	1075+25.00	8.00	988.34	12.00	EX				36.00	EX				
MEET EX APPROACH SLAB				EX	24.00				EX	12.00		8.00	1075+44.56	8.00	987.74	12.00	0.0780	0.94		988.67	36.00	0.0780	2.81		991.48	MEET EX. APPROACH SLAB
	983.10		-1.97	-0.0821	24.00	985.07		-0.99	-0.0821	12.00	986.05	8.00	1075+61.47	8.00	987.17	12.00	0.0757	0.91		988.08	36.00	0.0757	2.73		990.80	
RECONSTRUCT, MATCH EXISTING	982.72		-1.93	-0.0803	24.00	984.65		-0.96	-0.0803	12.00	985.62	8.00	1075+75.00	8.00	986.72	12.00	0.0734	0.88		987.60	36.00	0.0734	2.64		990.24	RECONSTRUCT, MATCH EXISTING
	981.98		-1.88	-0.0785	24.00	983.87		-0.94	-0.0785	12.00	984.81	8.00	1076+00.00	8.00	985.88	12.00	0.0743	0.89		986.77	36.00	0.0743	2.67		989.45	
	981.22		-1.85	-0.0771	24.00	983.07		-0.93	-0.0771	12.00	984.00	8.00	1076+25.00	8.00	985.05	12.00	0.0735	0.88		985.93	36.00	0.0735	2.64		988.58	
	980.46		-1.82	-0.0757	24.00	982.28		-0.91	-0.0757	12.00	983.19	8.00	1076+50.00	8.00	984.22	12.00	0.0726	0.87		985.09	36.00	0.0726	2.61		987.70	
MEET EX APPROACH SLAB	979.53		-1.87	-0.0780	24.00	981.40		-0.94	-0.0780	12.00	982.34	8.00	1076+76.39	8.00	983.33	12.00	0.0738	0.89		984.22	36.00	0.0738	2.66		986.87	MEET EX APPROACH SLAB
				EX	24.00				EX	12.00	982.09	8.00	1076+83.38	8.00	983.10	12.00	0.0750	0.90		984.00	36.00	0.0750	2.70		986.70	
				EX	24.00				EX	12.00	981.53	8.00	1077+00.00	8.00	982.53	12.00	EX				36.00	EX				

Preliminary Plans - Not For Reference Only

SUPERELEVATION TABLE
IR-680 STA. 1064+60.15 TO STA. 1077+00.00

DESIGN AGENCY
ms consultants, inc.

DESIGNER CMJ
REVIEWER CMN 08/29/25
PROJECT ID 121474
SHEET P.303 TOTAL 655

MAH-680-4.58

MODEL: SECTION 4 STA. 1064+60.15 TO STA. 1077+00.00 PAPERSIZE: 34x22 (in.) DATE: 9/15/2025 TIME: 9:48:18 AM PLTDRV: OHDOT_PDF_E+.pltcfg PENTBL: OHDOT_Pen.tbl USER: DHall@msconsultants.com WORKSPACE: OHDOTCEv02 WORKSET: 121474 PRODUCT: OpenRoadsDesigner 24.00.00.205
pw:\\ohiodot-pw.bentley.com:ohiodot-pw-02\Documents\01 Active Projects\District 04\Mahoning\121474\02-Engineering_MSConsultants\Roadway\Sheets\121474_GE004.dgn

SUPERELEVATION TABLE - IR 680 CURVE NO. 38

P.I. 1076+41.59 | DC 05°30'00"

REMARKS	NORTHBOUND OUTSIDE EDGE					NORTHBOUND MIDDLE LANE LINE					NB INSIDE EDGE (PROFILE GRADE)		STATION	SB INSIDE EDGE (PROFILE GRADE)		SOUTHBOUND MIDDLE LANE LINE					SOUTHBOUND OUTSIDE EDGE					REMARKS
	ELEVATION	TRANSITION RATE	ELEVATION CORRECTION	CROSS SLOPE	WIDTH	ELEVATION	TRANSITION RATE	ELEVATION CORRECTION	CROSS SLOPE	WIDTH	ELEVATION	OFFSET		OFFSET	ELEVATION	WIDTH	CROSS SLOPE	ELEVATION CORRECTION	TRANSITION RATE	ELEVATION	WIDTH	CROSS SLOPE	ELEVATION CORRECTION	TRANSITION RATE	ELEVATION	
				EX	24.00				EX	12.00		8.00	1077+25.00	8.00		12.00	EX				24.00	EX				
				EX	24.00				EX	12.00		8.00	1077+50.00	8.00		12.00	EX				24.00	EX				
				EX	24.00				EX	12.00		8.00	1077+75.00	8.00		12.00	EX				24.00	EX				
				EX	24.00				EX	12.00		8.00	1078+00.00	8.00		12.00	EX				24.00	EX				
				EX	24.00				EX	12.00		8.00	1078+25.00	8.00		12.00	EX				24.00	EX				
				EX	24.00				EX	12.00		8.00	1078+50.00	8.00		12.00	EX				24.00	EX				
MEET EX APPROACH SLAB	972.96		-1.92	-0.0802	24.00	974.89		-0.96	-0.0802	12.00	975.85	8.00	1078+73.47	8.00	976.94	12.00	0.0663		200:1		24.00	0.0663		200:1		MEET EX APPROACH SLAB
	972.12	200:1	-2.67	-0.0802	33.26	974.79	200:1	-0.96	-0.0802	12.00	975.75	8.00	1078+76.66	8.00	976.85	12.00	0.0659	0.79			24.00	0.0659	1.58			
	971.55		-2.55	-0.0767	33.26	974.10		-0.92	-0.0770	12.00	975.02	8.00	1079+00.00	8.00	976.10	12.00	0.0626	0.75		976.85	24.00	0.0626	1.50		978.35	
	970.79		-2.52	-0.0732	34.46	973.31		-0.88	-0.0735	12.00	974.19	8.00	1079+25.00	8.00	975.31	12.00	0.0591	0.71		976.02	24.00	0.0591	1.42		977.44	
	970.57		-2.48	-0.0720	34.53	973.05		-0.87	-0.0723	12.00	973.92	8.00	1079+33.50	8.00	975.14	12.00	0.0580	0.70	200:1	975.84	24.00	0.0580	1.39	200:1	977.23	
	970.11		-2.44	-0.0696	35.08	972.55		-0.84	-0.0700	12.00	973.39	8.00	1079+50.00	8.00	974.52	12.00	0.0580	0.70		975.22	24.00	0.0580	1.39		976.61	
	969.42		-2.36	-0.0662	35.71	971.78		-0.80	-0.0665	12.00	972.58	8.00	1079+75.00	8.00	973.72	12.00	0.0580	0.70		974.42	24.00	0.0580	1.39		975.81	
	968.74		-2.28	-0.0628	36.33	971.02		-0.76	-0.0631	12.00	971.78	8.00	1080+00.00	8.00	972.90	12.00	0.0580	0.70		973.60	24.00	0.0580	1.39		974.99	
	968.05		-2.20	-0.0595	36.96	970.25		-0.72	-0.0596	12.00	970.96	8.00	1080+25.00	8.00	972.03	12.00	0.0580	0.70		972.73	24.00	0.0580	1.39		974.12	
	967.74	200:1	-2.15	-0.0581	37.04	969.89	200:1	-0.70	-0.0580	12.00	970.59	8.00	1080+36.50	8.00	971.68	12.00	0.0580	0.70		972.37	24.00	0.0580	1.39		973.76	
	967.27		-2.18	-0.0580	37.58	969.45		-0.70	-0.0580	12.00	970.15	8.00	1080+50.00	8.00	971.15	12.00	0.0580	0.70		971.85	24.00	0.0580	1.39		973.24	
	966.42		-2.22	-0.0580	38.34	968.64		-0.70	-0.0580	12.00	969.34	8.00	1080+75.00	8.00	970.28	12.00	0.0580	0.70		970.98	24.00	0.0580	1.39		972.37	
	965.59		-2.27	-0.0580	39.10	967.85		-0.70	-0.0580	12.00	968.55	8.00	1081+00.00	8.00	969.43	12.00	0.0580	0.70		970.13	24.00	0.0580	1.39		971.52	
	964.83		-2.30	-0.0580	39.59	967.12		-0.70	-0.0580	12.00	967.82	8.00	1081+25.00	8.00	968.59	12.00	0.0580	0.70		969.28	24.00	0.0580	1.39		970.68	
	964.12		-2.32	-0.0580	40.08	966.45		-0.70	-0.0580	12.00	967.15	8.00	1081+50.00	8.00	967.83	12.00	0.0580	0.70		968.53	24.00	0.0580	1.39		969.92	
CS	963.49	210.97:1	-2.36	-0.0580	40.69	965.85	210.97:1	-0.70	-0.0580	12.00	966.54	8.00	1081+74.44	8.00	967.15	12.00	0.0580	0.70	210.97:1	967.85	24.00	0.0580	1.39	210.97:1	969.24	CS
	963.48		-2.36	-0.0579	40.71	965.83		-0.70	-0.0579	12.00	966.53	8.00	1081+75.00	8.00	967.14	12.00	0.0579	0.70		967.83	24.00	0.0579	1.39		969.22	
	963.06		-2.26	-0.0546	41.33	965.32		-0.66	-0.0546	12.00	965.97	8.00	1082+00.00	8.00	966.50	12.00	0.0546	0.66		967.16	24.00	0.0546	1.31		968.47	
	962.70		-2.15	-0.0513	41.95	964.86		-0.62	-0.0513	12.00	965.47	8.00	1082+25.00	8.00	965.93	12.00	0.0513	0.62		966.55	24.00	0.0513	1.23		967.78	
	962.41		-2.05	-0.0481	42.58	964.45		-0.58	-0.0481	12.00	965.03	8.00	1082+50.00	8.00	965.43	12.00	0.0481	0.58		966.00	24.00	0.0481	1.15		967.16	
	962.17		-1.94	-0.0448	43.21	964.11		-0.54	-0.0448	12.00	964.65	8.00	1082+75.00	8.00	964.98	12.00	0.0448	0.54		965.52	24.00	0.0448	1.07		966.59	
	962.00		-1.82	-0.0415	43.83	963.82		-0.50	-0.0415	12.00	964.32	8.00	1083+00.00	8.00	964.60	12.00	0.0415	0.50		965.10	24.00	0.0415	1.00		966.09	
	961.91		-1.68	-0.0382	44.00	963.59		-0.46	-0.0382	12.00	964.05	8.00	1083+25.00	8.00	964.28	12.00	0.0382	0.46		964.74	24.00	0.0382	0.92		965.65	
	961.89		-1.53	-0.0349	44.00	963.42		-0.42	-0.0349	12.00	963.84	8.00	1083+50.00	8.00	964.02	12.00	0.0349	0.42		964.44	24.00	0.0349	0.84		965.28	
	961.92		-1.39	-0.0316	44.00	963.31		-0.38	-0.0316	12.00	963.69	8.00	1083+75.00	8.00	963.83	12.00	0.0316	0.38		964.21	24.00	0.0316	0.76		964.96	
START TRANSITION INSIDE LEFT LANES AND OUTSIDE RIGHT LANE	962.01		-1.25	-0.0283	44.00	963.25		-0.34	-0.0283	12.00	963.59	8.00	1084+00.00	8.00	963.69	12.00	0.0283	0.34		964.03	24.00	0.0283	0.68		964.71	
	962.15		-1.10	-0.0250	44.00	963.25		-0.30	-0.0250	12.00	963.55	8.00	1084+25.00	8.00	963.62	12.00	0.0250	0.30		963.92	24.00	0.0250	0.60		964.52	
	962.36		-0.96	-0.0217	44.00	963.31		-0.26	-0.0217	12.00	963.57	8.00	1084+50.00	8.00	963.62	12.00	0.0217	0.26		963.88	24.00	0.0217	0.52		964.40	START TRANSITION INSIDE LEFT LANES AND OUTSIDE RIGHT LANE
	962.62		-0.81	-0.0184	44.00	963.43		-0.22	-0.0184	12.00	963.65	8.00	1084+75.00	8.00	963.67	12.00	0.0184	0.22	210.97:1	963.89	24.00	0.0184	0.44		964.33	
	962.85	210.97:1	-0.71	-0.0160	44.00	963.55		-0.19	-0.0160	12.00	963.75	8.00	1084+93.43	8.00	963.75	12.00	0.0160	0.19		963.94	24.00	0.0160	0.38		964.33	
	962.92		-0.70	-0.0160	44.00	963.63		-0.16	-0.0134	12.00	963.79	8.00	1085+00.00	8.00	963.79	12.00	0.0160	0.19		963.98	24.00	0.0147	0.35		964.33	
	963.23		-0.70	-0.0160	44.00	963.94		-0.04	-0.0035	12.00	963.98	8.00	1085+25.00	8.00	963.97	12.00	0.0160	0.19		964.16	24.00	0.0098	0.23		964.39	
ST, ½ LEVEL	963.68		-0.38	-0.0160	24.00	964.06		0.00	0.0000	12.00	964.06	8.00	1085+33.94	8.00	964.05	12.00	0.0160	0.19		964.24	24.00	0.0080	0.19		964.43	
	963.92		-0.38	-0.0160	24.00	964.31		0.08	0.0063	12.00	964.23	8.00	1085+50.00	8.00	964.21	12.00	0.0160	0.19		964.40	24.00	0.0048	0.12		964.52	
FINISH TRANSITION INSIDE LEFT LANES AND OUTSIDE RIGHT LANE	964.34		-0.38	-0.0160	24.00	964.72	210.97:1	0.19	0.0160	12.00	964.53	8.00	1085+74.44	8.00	964.68	12.00	0.0160	0.19		964.87	24.00	0.0000	0.00		964.87	ST, ½ LEVEL
	964.35		-0.38	-0.0160	24.00	964.73		0.19	0.0160	12.00	964.54	8.00	1085+75.00	8.00	964.69	12.00	0.0160	0.19		964.88	24.00	-0.0001	0.00		964.88	
	964.72		-0.38	-0.0160	24.00	965.10		0.19	0.0160	12.00	964.91	8.00	1086+00.00	8.00	965.05	12.00	0.0160	0.19		965.24	24.00	-0.0050	-0.12		965.12	
	965.14		-0.38	-0.0160	24.00	965.52		0.19	0.0160	12.00	965.33	8.00	1086+25.00	8.00	965.47	12.00	0.0160	0.19		965.66	24.00	-0.0100	-0.24		965.42	
	965.60		-0.38	-0.0160	24.00	965.98		0.19	0.0160	12.00	965.79	8.00	1086+50.00	8.00	965.93	12.00	0.0160	0.19		966.12	24.00	-0.0149	-0.36		965.76	
	965.70		-0.38	-0.0160	24.00	966.08		0.19	0.0160	12.00	965.89	8.00	1086+55.45	8.00	966.03	12.00	0.0160	0.19		966.22	24.00	-0.0160	-0.38	210.97:1	965.84	FINISH TRANSITION INSIDE LEFT LANES AND OUTSIDE RIGHT LANE

Preliminary Plans - Not for Reference Only

SUPERELEVATION TABLE
IR-680 STA. 1077+25.00 TO STA. 1086+55.45

IR-680

DESIGN AGENCY
ms consultants, inc.

DESIGNER CMJ
REVIEWER CMN 08/29/25
PROJECT ID 121474
SHEET P.304 TOTAL 655

MAH-680-4.58

MODEL: SECTION 4 STA. 1077+25.00 TO STA. 1086+55.45 PAPERSIZE: 34x22 (in.) DATE: 9/15/2025 TIME: 9:48:19 AM PLTDRV: OHDOT_PDF_Ex.pltcfg PENTBL: OHDOT_Pen.tbl USER: DHall@msconsultants.com WORKSPACE: OHDOTCEv02 WORKSET: 121474 PRODUCT: OpenRoadsDesigner 24.00.00.205
pw:\\ohiodot-pw.bentley.com:ohiodot-pw-02\Documents\01 Active Projects\District 04\Mahoning\121474\A02-Engineering_MSConsultants\Roadway\Sheets\121474_GE004.dgn

SUPERELEVATION TABLE - IR 680 CURVE NO. 40

PI. 1106+76.67 | DC 01°28'00"

REMARKS	NORTHBOUND OUTSIDE EDGE					NORTHBOUND MIDDLE LANE LINE					NB INSIDE EDGE (PROFILE GRADE)		STATION	SB INSIDE EDGE (PROFILE GRADE)		SOUTHBOUND MIDDLE LANE LINE					SOUTHBOUND OUTSIDE EDGE					REMARKS
	ELEVATION	TRANSITION RATE	ELEVATION CORRECTION	CROSS SLOPE	WIDTH	ELEVATION	TRANSITION RATE	ELEVATION CORRECTION	CROSS SLOPE	WIDTH	ELEVATION	OFFSET		OFFSET	ELEVATION	WIDTH	CROSS SLOPE	ELEVATION CORRECTION	TRANSITION RATE	ELEVATION	WIDTH	CROSS SLOPE	ELEVATION CORRECTION	TRANSITION RATE	ELEVATION	
NC	978.45	233:1	-0.38	-0.0160	24.00	978.83		0.19	0.0160	12.00	978.64	8.00	1093+05.13	8.00	978.64	12.00	0.0160	0.19	233:1	978.83	24.00	-0.0160	-0.38		978.45	NC
	978.91	▲	-0.33	-0.0136	24.00	979.24		0.19	0.0160	12.00	979.05	8.00	1093+25.00	8.00	979.05	12.00	0.0124	0.15	▲	979.20	24.00	-0.0160	-0.38		978.81	
	979.50		-0.26	-0.0107	24.00	979.75		0.19	0.0160	12.00	979.56	8.00	1093+50.00	8.00	979.56	12.00	0.0080	0.10		979.66	24.00	-0.0160	-0.38		979.27	
	980.07		-0.18	-0.0077	24.00	980.26		0.19	0.0160	12.00	980.06	8.00	1093+75.00	8.00	980.06	12.00	0.0035	0.04		980.11	24.00	-0.0160	-0.38		979.72	
	980.44		-0.19	-0.0053	36.00	980.63		0.19	0.0160	12.00	980.44	8.00	1093+94.60	8.00	980.44	12.00	0.0000	0.00		980.44	24.00	-0.0160	-0.38		980.06	½ LEVEL
	980.57		-0.17	-0.0047	36.00	980.73		0.19	0.0160	12.00	980.54	8.00	1094+00.00	8.00	980.54	12.00	-0.0010	-0.01		980.53	24.00	-0.0160	-0.38		980.15	
	981.05		-0.06	-0.0017	36.00	981.11		0.19	0.0160	12.00	980.92	8.00	1094+25.00	8.00	981.00	12.00	-0.0054	-0.07		980.93	24.00	-0.0160	-0.38		980.55	
½ LEVEL	981.44		0.00	0.0000	36.00	981.44		0.19	0.0160	12.00	981.25	8.00	1094+39.34	8.00	981.25	12.00	-0.0080	-0.10		981.15	24.00	-0.0160	-0.38		980.77	
	981.67		0.05	0.0013	36.00	981.63		0.19	0.0160	12.00	981.43	8.00	1094+50.00	8.00	981.43	12.00	-0.0099	-0.12		981.31	24.00	-0.0160	-0.38		980.93	
RC	981.85		0.08	0.0023	36.00	981.77	233:1	0.19	0.0160	12.00	981.58	8.00	1094+58.73	8.00	981.58	12.00	-0.0115	-0.14		981.44	24.00	-0.0160	-0.38	233:1	981.05	RC
	982.21		0.15	0.0043	36.00	982.06	▲	0.22	0.0179	12.00	981.85	8.00	1094+75.00	8.00	981.84	12.00	-0.0144	-0.17		981.67	24.00	-0.0189	-0.45	▲	981.21	
	982.41		0.19	0.0053	36.00	982.22		0.23	0.0190	12.00	981.99	8.00	1094+84.08	8.00	981.97	12.00	-0.0160	-0.19		981.78	24.00	-0.0205	-0.49		981.29	
	982.75		0.26	0.0072	36.00	982.49		0.25	0.0209	12.00	982.24	8.00	1095+00.00	8.00	982.23	12.00	-0.0188	-0.23		982.00	24.00	-0.0234	-0.56		981.44	
	983.25		0.37	0.0102	36.00	982.89		0.29	0.0239	12.00	982.60	8.00	1095+25.00	8.00	982.59	12.00	-0.0233	-0.28		982.31	24.00	-0.0279	-0.67		981.64	
PC	983.35		0.39	0.0108	36.00	982.96		0.29	0.0245	12.00	982.67	8.00	1095+30.03	8.00	982.66	12.00	-0.0242	-0.29	▼	982.37	24.00	-0.0288	-0.69		981.68	PC
	983.72		0.47	0.0131	36.00	983.25		0.32	0.0268	12.00	982.93	8.00	1095+48.94	8.00	982.92	12.00	-0.0276	-0.33	233:1	982.59	24.00	-0.0321	-0.77		981.82	
	983.74		0.47	0.0132	36.00	983.27		0.32	0.0269	12.00	982.95	8.00	1095+50.00	8.00	982.93	12.00	-0.0276	-0.33		982.60	24.00	-0.0323	-0.78		981.83	
	983.88		0.58	0.0160	36.00	983.30		0.36	0.0297	12.00	982.95	8.00	1095+73.55	8.00	983.23	12.00	-0.0276	-0.33		982.90	24.00	-0.0365	-0.88		982.02	
	983.89		0.58	0.0162	36.00	983.31		0.36	0.0299	12.00	982.95	8.00	1095+75.00	8.00	983.25	12.00	-0.0276	-0.33		982.92	26.00	-0.0368	-0.96	▼	981.96	
	984.28		0.60	0.0166	36.00	983.68		0.36	0.0303	12.00	983.32	8.00	1095+78.99	8.00	983.30	12.00	-0.0276	-0.33		982.97	24.00	-0.0375	-0.90	233:1	982.07	
	984.65		0.69	0.0192	36.00	983.96		0.39	0.0328	12.00	983.57	8.00	1096+00.00	8.00	983.55	12.00	-0.0276	-0.33		983.22	24.00	-0.0375	-0.90		982.32	
	985.08		0.80	0.0221	36.00	984.28	▼	0.43	0.0358	12.00	983.85	8.00	1096+25.00	8.00	983.82	12.00	-0.0276	-0.33		983.49	24.00	-0.0375	-0.90		982.59	
	985.14		0.81	0.0226	36.00	984.33	233:1	0.44	0.0363	12.00	983.89	8.00	1096+29.01	8.00	983.86	12.00	-0.0276	-0.33		983.53	24.00	-0.0375	-0.90		982.63	
	985.44		0.90	0.0251	36.00	984.54		0.44	0.0363	12.00	984.10	8.00	1096+50.00	8.00	984.07	12.00	-0.0276	-0.33		983.74	24.00	-0.0375	-0.90		982.84	
	985.79		1.01	0.0281	36.00	984.78		0.44	0.0363	12.00	984.34	8.00	1096+75.00	8.00	984.30	12.00	-0.0276	-0.33		983.97	24.00	-0.0375	-0.90		983.07	
	986.10	▼	1.12	0.0311	36.00	984.99		0.44	0.0363	12.00	984.55	8.00	1097+00.00	8.00	984.51	12.00	-0.0276	-0.33		984.18	24.00	-0.0375	-0.90		983.28	
	986.37	233:1	1.22	0.0338	36.00	985.16		0.44	0.0363	12.00	984.72	8.00	1097+22.85	8.00	984.67	12.00	-0.0276	-0.33		984.34	24.00	-0.0375	-0.90		983.44	
MATCH EXISTING	986.39		1.22	0.0338	36.00	985.17		0.44	0.0363	12.00	984.74	8.00	1097+25.00	8.00	984.69	12.00	-0.0276	-0.33		984.36	24.00	-0.0375	-0.90		983.46	MATCH EXISTING

Preliminary Plans - For Reference Only

SUPERELEVATION TABLE
STA. 1093+05.13 TO STA. 1097+25.00

DESIGN AGENCY
ms consultants, inc.

DESIGNER CMJ
REVIEWER CMN 08/29/25
PROJECT ID 121474
SHEET P.305 TOTAL 655

MAH-680-4.58

MODEL: SECTION 4 STA. 1093+05.13 TO STA. 1096+30.03 PAPERSIZE: 34x22 (in.) DATE: 9/15/2025 TIME: 9:48:19 AM PLTDRV: OHDOT_PDF_E+.pltcfg PENTBL: OHDOT_Pen.tbl USER: DHall@msconsultants.com WORKSPACE: OHDOTCEv02 WORKSET: 121474 PRODUCT: OpenRoadsDesigner 24.00.00.205
pw:\\ohiodot-pw.bentley.com:ohiodot-pw-02\Documents\01 Active Projects\District 04\Mahoning\121474\02-Engineering_MSConsultants\Roadway\Sheets\121474_GE004.dgn

SUPERELEVATION TABLE - IR 680 MARSHALL ST. RAMP G

CURVE NO. G4

P.I. = 1+27.69 | DC = 06°00'00"

LEFT SIDE					BASELINE CONTROL (PROFILE GRADE)		RIGHT SIDE					REMARKS
ELEVATION	TRANSITION RATE	ELEVATION CORRECTION	CROSS SLOPE	WIDTH	STATION	ELEVATION	WIDTH	CROSS SLOPE	ELEVATION CORRECTION	TRANSITION RATE	ELEVATION	
					+8.11	875.51	2.37	0.0215	0.05	143:1	875.56	EXISTING
					+11.11	875.68	2.40	0.0300	0.07	143:1	875.75	
					+25.00	876.46	2.60	0.0300	0.08		876.54	
					+50.00	878.26	3.49	0.0300	0.10		878.36	
					+75.00	880.37	5.04	0.0300	0.15		880.52	
					1+00.00	882.58	7.26	0.0300	0.22		882.80	
					1+25.00	884.71	10.14	0.0300	0.30		885.01	
					1+50.00	886.66	13.72	0.0300	0.41		887.07	
					1+75.00	888.24	16.00	0.0300	0.48		888.72	
					1+91.75	889.33	16.00	0.0300	0.48	143:1	889.81	
					2+00.00	889.82	16.00	0.0264	0.42	▲	890.24	
					2+25.00	891.10	16.00	0.0155	0.25	|	891.35	
					2+50.00	892.04	16.00	0.0045	0.07	|	892.11	
					2+60.41	892.33	16.00	0.0000	0.00	|	892.33	FULL FLAT
					2+75.00	892.65	16.00	-0.0064	-0.10	|	892.55	
					3+00.00	892.93	16.00	-0.0173	-0.28	|	892.65	
					3+23.72	892.90	16.00	-0.0277	-0.44	143:1	892.46	POC

CURVE NO. G5

P.I. = 5+10.41 | DC = 04°00'00"

POT STA. 3+23.72 (BK) RAMP G, 16.0' LT = POT STA. 3+23.72 (AHD) RAMP G

892.90	143:1	0.44	0.0277	16.00	3+23.72	892.46						
892.91	▲	0.45	0.0283	16.00	3+25.00	892.46						
892.94	|	0.63	0.0392	16.00	3+50.00	892.31						
892.99	|	0.80	0.0501	16.00	3+75.00	892.19						
893.00	143:1	0.83	0.0520	16.00	3+79.39	892.17						FS
892.90		0.83	0.0520	16.00	4+00.00	892.07						
892.81		0.83	0.0520	16.00	4+25.00	891.98						
892.70		0.83	0.0520	16.00	4+50.00	891.87						
892.65		0.83	0.0520	16.00	4+60.59	891.82						
892.58		0.83	0.0520	16.00	4+73.60	891.75						
892.57		0.83	0.0520	16.00	4+75.00	891.74						
892.42		0.83	0.0520	16.00	5+00.00	891.59						
892.26		0.83	0.0520	16.00	5+25.00	891.43						
892.21	200:1	0.83	0.0520	16.00	5+34.20	891.38						FS, BEG TRANS
892.08	200:1	0.77	0.0480	16.00	5+47.00	891.31						END TRANS.
892.07		0.77	0.0480	16.00	5+50.00	891.30						
891.91		0.77	0.0480	16.00	5+70.82	891.14						BEGIN TAPER
891.87		0.76	0.0480	15.75	5+75.00	891.11						
891.59		0.68	0.0480	14.14	6+00.00	890.91						
891.25		0.62	0.0480	12.98	6+25.00	890.63						
890.91		0.59	0.0480	12.27	6+50.00	890.32						
890.57		0.58	0.0480	12.01	6+75.00	889.99						
890.53		0.58	0.0480	12.00	6+77.30	889.95						END TAPER/POT
890.54	377.6:1	0.58	0.0480	12.00	969+78.20	889.96						
890.38	▼	0.57	0.0473	12.00	969+75.00	889.81						
890.16	|	0.50	0.0418	12.00	969+50.00	889.66						
889.91	|	0.44	0.0363	12.00	969+25.00	889.47						
889.39	|	0.37	0.0307	12.00	969+00.00	889.02						
889.38	377.6:1	0.31	0.0258	12.00	968+77.60	889.07						

Preliminary Plans - For Reference Only

SUPERELEVATION TABLE
MARSHALL ST. RAMP G

DESIGN AGENCY
ms consultants. inc.

DESIGNER CMJ
REVIEWER CMN 08/29/25
PROJECT ID 121474
SHEET P.306 TOTAL 655

MAH-680-4.58

MODEL: MARSHALL G-J PAPERSIZE: 34x22 (in.) DATE: 9/15/2025 TIME: 9:48:24 AM PLTDRV: OHDOT_PDF_E+.pltcfg PENTBL: OHDOT_Pen.tbl USER: DHall@msconsultants.com WORKSPACE: OHDOTCEv02 WORKSET: 121474 PRODUCT: OpenRoadsDesigner 24.00.00.205
pw:\\ohiodot-pw.bentley.com:ohiodot-pw-02\Documents\01 Active Projects\District 04\Mahoning\121474\A02-Engineering_MSConsultants\Roadway\Sheets\121474_GE303.dgn

SUPERELEVATION TABLE - IR 680 MARKET ST RAMP K

CURVE NO. K3

P.I. = 5+34.43 | DC = 03°00'00"

LEFT SIDE					BASELINE CONTROL		REMARKS
ELEVATION	TRANSITION RATE	ELEVATION CORRECTION	CROSS SLOPE	WIDTH	STATION		
913.90	215:1	0.19	0.0160	12.00	1017+89.38	913.71	N.C.
914.26	▲	0.24	0.0201	12.00	1018+00.00	914.02	
915.09		0.36	0.0298	12.00	1018+25.00	914.73	
RAMP K POT STA. 4+46.87 = I.R. 680 POT STA. 1018+25.00, 44.0' RT							
915.09		0.36	0.0298	12.00	4+46.87	914.73	P.O.T
915.19		0.37	0.0310	12.00	4+50.00	914.82	
916.03	▼	0.49	0.0406	12.20	4+75.00	915.54	
916.38	215:1	0.55	0.0450	12.21	4+86.65	915.83	FS
916.81		0.57	0.0450	12.70	5+00.00	916.24	
917.60		0.61	0.0450	13.50	5+25.00	916.99	
918.34		0.66	0.0450	14.70	5+48.40	917.68	
918.39		0.67	0.0450	14.78	5+50.00	917.72	
918.58	200:1	0.68	0.0450	15.20	5+56.00	917.90	FS
919.17	▲	0.63	0.0391	16.00	5+75.00	918.54	
919.93		0.50	0.0313	16.00	6+00.00	919.43	
920.59		0.39	0.0244	16.00	6+21.87	920.20	PT
920.69		0.38	0.0234	16.00	6+25.00	920.31	
921.40		0.26	0.0160	16.00	6+48.80	921.14	RC
921.43		0.25	0.0156	16.00	6+50.00	921.18	
922.275		0.13	0.0078	16.00	6+75.00	922.15	
923.03		0.00	0.0000	16.00	7+00.00	923.03	FLAT
923.84		-0.13	-0.0078	16.00	7+25.00	923.96	
923.96		-0.14	-0.0090	16.00	7+28.87	924.10	PC

CURVE NO. K4

P.I. = 10+69.93 | DC = 03°00'00"

924.67		-0.25	-0.0156	16.00	7+50.00	924.92	
924.71	▼	-0.26	-0.0160	16.00	7+51.20	924.97	NC
924.91	200:1	-0.29	-0.0180	16.00	7+57.60	925.20	FS
925.59		-0.29	-0.0180	16.00	7+75.00	925.88	
926.66		-0.29	-0.0180	16.00	8+00.00	926.95	
927.80		-0.29	-0.0180	16.00	8+25.00	928.09	
928.88		-0.29	-0.0180	16.00	8+50.00	929.17	
929.92		-0.29	-0.0180	16.00	8+75.00	930.21	
930.90		-0.29	-0.0180	16.00	9+00.00	931.19	
931.84		-0.29	-0.0180	16.00	9+25.00	932.13	
932.73		-0.29	-0.0180	16.00	9+50.00	933.02	
933.57		-0.29	-0.0180	16.00	9+75.00	933.86	
934.36		-0.29	-0.0180	16.00	10+00.00	934.65	
935.10		-0.29	-0.0180	16.00	10+25.00	935.39	
935.79		-0.29	-0.0180	16.00	10+50.00	936.08	
936.44		-0.29	-0.0180	16.00	10+75.00	936.73	
937.03		-0.29	-0.0180	16.00	11+00.00	937.32	
937.60		-0.29	-0.0180	16.00	11+25.00	937.89	
938.18		-0.29	-0.0180	16.00	11+50.00	938.47	
938.74		-0.29	-0.0180	16.00	11+75.00	939.03	
939.32		-0.29	-0.0180	16.00	12+00.00	939.61	
939.89		-0.29	-0.0180	16.00	12+25.00	940.18	
940.46		-0.29	-0.0180	16.00	12+50.00	940.75	
941.03		-0.29	-0.0180	16.00	12+75.00	941.32	
941.60		-0.29	-0.0180	16.00	13+00.00	941.89	
942.17		-0.29	-0.0180	16.00	13+25.00	942.46	
942.74		-0.29	-0.0180	16.00	13+50.00	943.03	
943.31		-0.29	-0.0180	16.00	13+75.00	943.60	
943.88		-0.29	-0.0180	16.00	14+00.00	944.17	
943.97	143:1	-0.29	-0.0180	16.00	14+03.87	944.26	PT, FS
944.10	143:1	-0.26	-0.0160	16.00	14+08.47	944.36	NC
944.48		-0.26	-0.0160	16.00	14+25.00	944.74	
945.05		-0.26	-0.0160	16.00	14+50.00	945.31	

SUPERELEVATION TABLE - IR 680 MARKET ST RAMP K

CURVE NO. K5

P.I. = 16+94.79 | DC = 57°17'45"

LEFT SIDE					BASELINE CONTROL		REMARKS
ELEVATION	TRANSITION RATE	ELEVATION CORRECTION	CROSS SLOPE	WIDTH	STATION	ELEVATION	
946.64	143:1	-0.26	-0.0160	16.00	15+15.44	946.90	NC
946.98	▲	-0.19	-0.0118	16.00	15+25.00	947.17	
947.92		-0.01	-0.0009	16.00	15+50.00	947.93	
948.94		0.16	0.0100	16.00	15+75.00	948.78	
949.53		0.26	0.0160	16.00	15+88.65	949.27	RC
950.04		0.34	0.0210	16.00	16+00.00	949.70	
951.21		0.51	0.0319	16.00	16+25.00	950.70	
952.08		0.63	0.0396	16.00	16+42.65	951.45	PC
952.46		0.68	0.0428	16.00	16+50.00	951.78	
953.80	▼	0.86	0.0537	16.00	16+75.00	952.94	
954.59	143:1	0.96	0.0600	16.00	16+89.33	953.63	FS
954.76	147.7:1	0.96	0.0600	16.00	16+93.01	953.80	FS
955.05	▲	0.91	0.0570	16.00	17+00.00	954.14	
956.26		0.74	0.0465	16.00	17+25.00	955.52	
956.76		0.65	0.0406	16.00	17+38.77	956.11	PT
957.16		0.57	0.0359	16.00	17+50.00	956.59	FS
957.92		0.39	0.0261	15.13	17+71.94	957.53	
958.03	▼	0.37	0.0247	14.86	17+75.00	957.66	
958.39	147.7:1	0.27	0.0197	13.95	17+85.22	958.12	
958.93		0.25	0.0197	12.64	18+00.00	958.68	
959.89		0.21	0.0197	10.42	18+25.00	959.68	
960.89		0.16	0.0197	8.20	18+50.00	960.73	
962.00		0.12	0.0197	6.08	18+73.87	961.88	MATCH EXISTING

Preliminary Plans - For Reference Only

SUPERELEVATION TABLE
MARKET ST. RAMP K

DESIGN AGENCY
ms consultants, inc.

DESIGNER CMJ
REVIEWER CMN 08/29/25
PROJECT ID 121474
SHEET P.307 TOTAL 655

MAH-680-4.58

MODEL: MARKET RAMP K AND L PAPERSIZE: 34x22 (in.) DATE: 9/15/2025 TIME: 9:48:29 AM PLTDRV: OHDOT_PDF_E+.pltcfg PENTBL: OHDOT_Pen.tbl USER: DHall@msconsultants.com WORKSPACE: OHDOTCeV02 WORKSET: 121474 PRODUCT: OpenRoadsDesigner 24.00.00.205
pw:\\ohiodot-pw.bentley.com:ohiodot-pw-02\Documents\01 Active Projects\District 04\Mahoning\121474\02-Engineering_MSConsultants\Roadway\Sheets\121474_GE304.dgn

Preliminary Plans - For Reference Only

(A) STA. 0+36.14
BEGIN SHOULDER TAPER, 21.10' LT.
BEGIN CURB, TYPE 6, 21.10' LT.

(B) STA. 0+51.73
END SHOULDER TAPER, 15.00' LT.

NOTES:

TRANSITION CURB FROM FULL HEIGHT (6") TO 0" IN 10 FEET.

* SAWCUT

ELEVATIONS PROVIDED AT CURB LOCATIONS ARE THE PAVEMENT ELEVATION AT THE FACE OF CURB.

STATION/OFFSET PROVIDED AT SHOULDER AND WALK LOCATIONS ARE AT THE BACK OF SHOULDER AND WALK.

= PROPOSED PAVEMENT REPLACEMENT TO EXISTING ELEVATIONS

= TO BE CONSTRUCTED UNDER PID 113321

HORIZONTAL SCALE IN FEET
0 5 10 20

FRANK SINKWICH STREET

℄ CONST. SILLIMAN ST.

℄ CONST. RAMP C
STA. 0+00.00 =
℄ CONST. SILLIMAN ST.
STA. 6+34.41
EL = 921.31

℄ CONST. RAMP C
STA. 0+47.73, 29.00' LT. =
℄ CONST. SILLIMAN ST.
STA. 6+84.01, 25.67' RT. =
Δ = 51°36'28"
R = 14.00'
L = 12.61'

SUSPEND PAV'T RECONSTRUCTION
STA. 1+41.93

STA. 0+80.74
END CURB, TYPE 6, 15.00' LT.

STA. 0+90.87
BEGIN SHOULDER TAPER, 15.00' LT.

STA. 1+03.37
END SHOULDER TAPER, 17.50' LT.

PROP. FACE OF CURB

SAWCUT (MATCH EXIST.)

10' (TYP.)

121°20'57"

N89°00'55"E

S32°20'02"E

52°46'34"

BRIDGE NO.
MAH-680-4.382
SNF 5006848

℄ CONST. RAMP C

MATCH LINE STA. 2+00.00, SEE SHEET P.309

I.R. 680 N.B.

(C) STA. 6+07.98
BEGIN CURB, TYPE 6, 23.86' RT.

(D) STA. 0+80.74
END CURB, TYPE 6, 3.00' RT.

(E) STA. 0+90.87
BEGIN SHOULDER TAPER, 3.00' RT.

(F) STA. 1+18.37
END SHOULDER TAPER, 8.50' RT.
BEGIN CURB, TYPE 6, 8.50' RT.

(G) STA. 1+35.47
END CURB, TYPE 6, 8.50' RT.

℄ CONST. RAMP C
STA. 0+77.26, 97.00' RT. =
℄ CONST. SILLIMAN ST.
STA. 5+91.77, 116.45' RT. =
Δ = 48°43'12"
R = 94.00'
L = 79.93'

INTERSECTION DETAIL SILLIMAN ST. RAMP C

DESIGN AGENCY
ms consultants, inc.

DESIGNER MSN
REVIEWER CMN 08/29/25
PROJECT ID 121474
SHEET P.308 TOTAL 655

MAH-680-4.58

MODEL: Sheet PAPERSIZE: 34x22 (in.) DATE: 9/15/2025 TIME: 2:39:36 PM PLTDRV: OHDOT_PDF_E+.pltcfg PENTBL: OHDOT_UTPen.tbl USER: DHall@msconsultants.com WORKSPACE: OHDOTCEv02 WORKSET: 121474 PRODUCT: OpenRoadsDesigner 24.00.00.205
pw:\\ohiodot-pw.bentley.com:ohiodot-pw-02\Documents\01 Active Projects\District 04\Mahoning\121474\02-Engineering_MSConsultants\Roadway\Sheets\121474_GI001.dgn

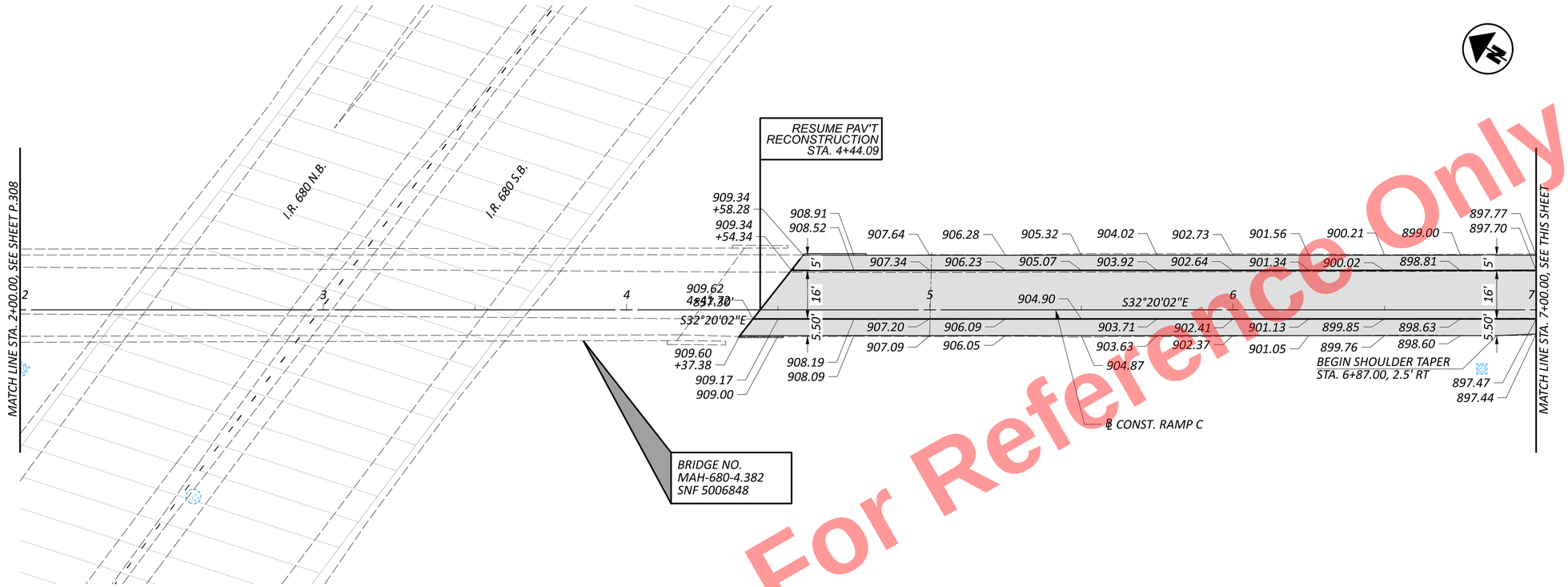

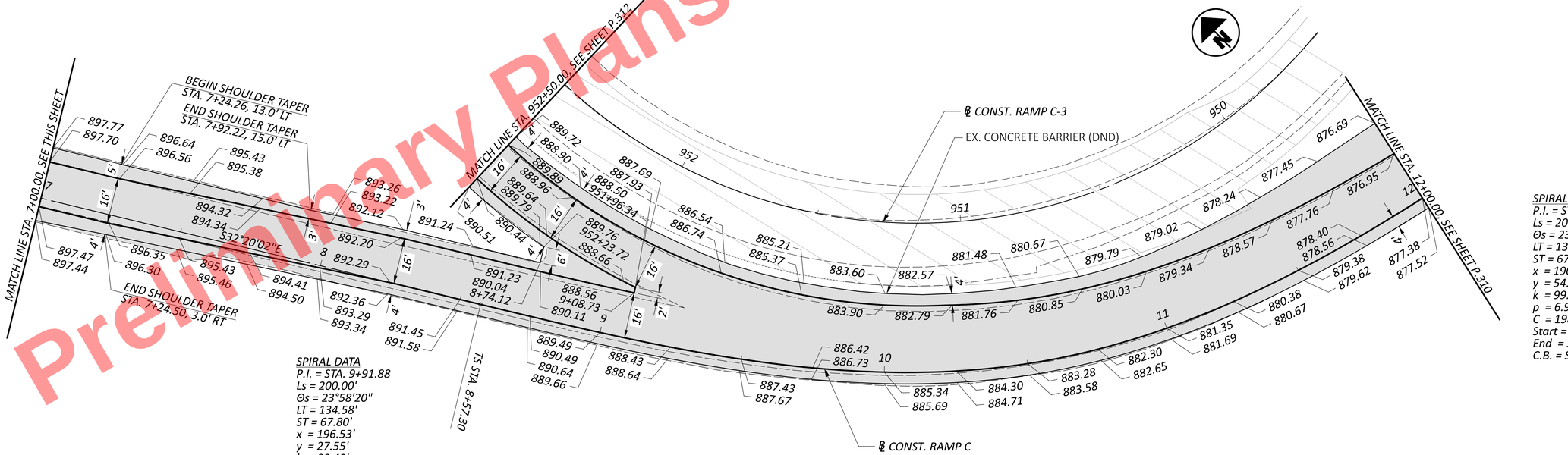

SPIRAL DATA
P.I. = STA. 9+91.88
Ls = 200.00'
Θs = 23°58'20"
LT = 134.58'
ST = 67.80'
x = 196.53'
y = 27.55'
k = 99.42'
p = 6.93'
C = 198.45'
Start = Sta. 8+57.30
End = Sta. 10+57.30
C.B. = S40°18'46"E

SPIRAL DATA
P.I. = STA. 11+25.10
Ls = 200.00'
Θs = 23°58'20"
LT = 134.58'
ST = 67.80'
x = 190.77'
y = 54.68'
k = 99.42'
p = 6.93'
C = 198.45'
Start = Sta. 10+57.30
End = Sta. 12+57.30
C.B. = S72°18'04"E

NOTES:

ELEVATIONS ARE PROVIDED AT EVEN 25 FT. STATION INCREMENTS UNLESS INDICATED OTHERWISE

REFER TO P.308 FOR ALL OTHER NOTES AND LEGEND

Preliminary Plans - For Reference Only

HORIZONTAL SCALE IN FEET
0 5 10 20

RAMP DETAIL
SILLIMAN ST. RAMP C

DESIGN AGENCY
ms consultants, inc.

DESIGNER CJR
REVIEWER CMN 08/29/25
PROJECT ID 121474
SHEET P.309 TOTAL 655

MAH-680-4.58

MODEL: Sheet PAPERSIZE: 34x22 (in.) DATE: 9/15/2025 TIME: 2:39:44 PM PLTDRV: OHDOT_PDF_E+.pltcfg PENTBL: OHDOT_UTPen.tbl USER: DHall@msconsultants.com WORKSPACE: OHDOTCEv02 WORKSET: 121474 PRODUCT: OpenRoadsDesigner 24.00.00.205
pw:\\ohiodot-pw.bentley.com:ohiodot-pw-02\Documents\01 Active Projects\District 04\Mahoning\121474\402-Engineering_MSConsultants\Roadway\Sheets\121474_GI002.dgn

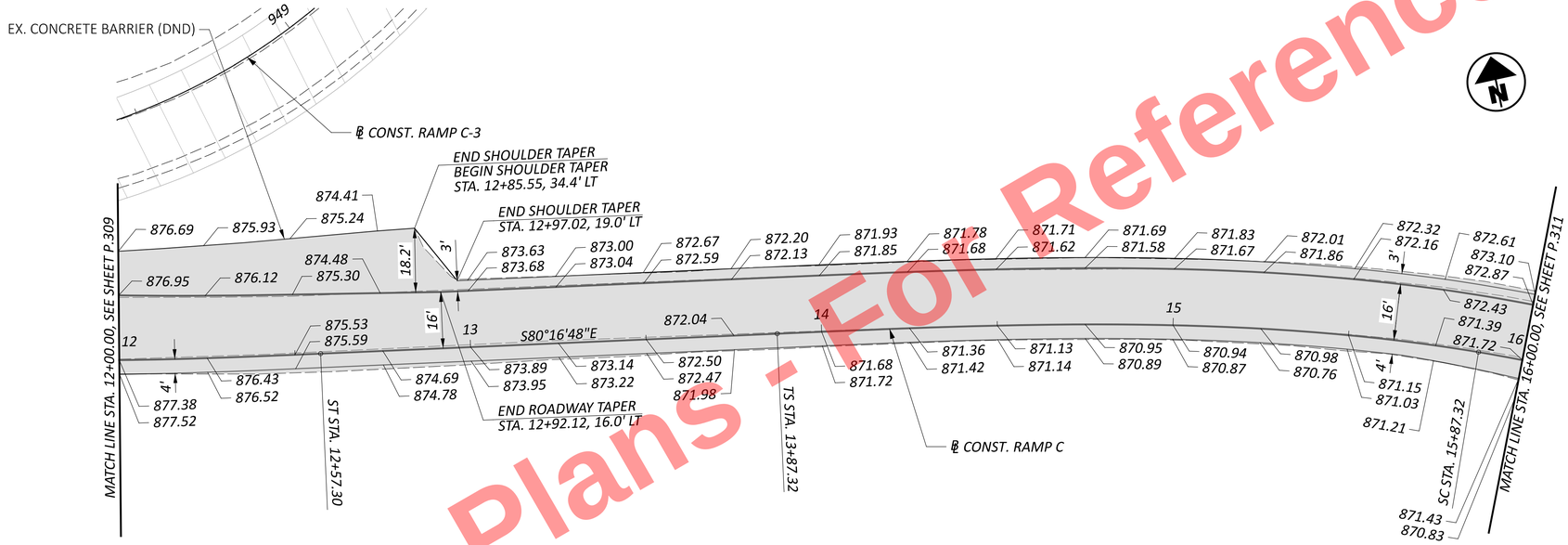

Preliminary Plans - For Reference Only

NOTES:

ELEVATIONS ARE PROVIDED AT EVEN 25 FT. STATION INCREMENTS UNLESS INDICATED OTHERWISE

REFER TO P.308 FOR ALL OTHER NOTES AND LEGEND

HORIZONTAL SCALE IN FEET
0 5 10 20

RAMP DETAIL
SILLIMAN ST. RAMP C

DESIGN AGENCY
ms consultants, inc.

DESIGNER CJR
REVIEWER CMN 08/29/25
PROJECT ID 121474
SHEET P.310 TOTAL 655

MAH-680-4.58

MODEL: Sheet PAPERSIZE: 34x22 (in.) DATE: 9/15/2025 TIME: 2:39:51 PM PLTDRV: OHDOT_PDF_E+.pltcfg PENTBL: OHDOT_UTPen.tbl USER: DHall@msconsultants.com WORKSPACE: OHDOTCEv02 WORKSET: 121474 PRODUCT: OpenRoadsDesigner 24.00.00.205
pw:\\ohiodot-pw.bentley.com:ohiodot-pw-02\Documents\01 Active Projects\District 04\Mahoning\121474\M02-Engineering_MSConsultants\Roadway\Sheets\121474_GI003.dgn

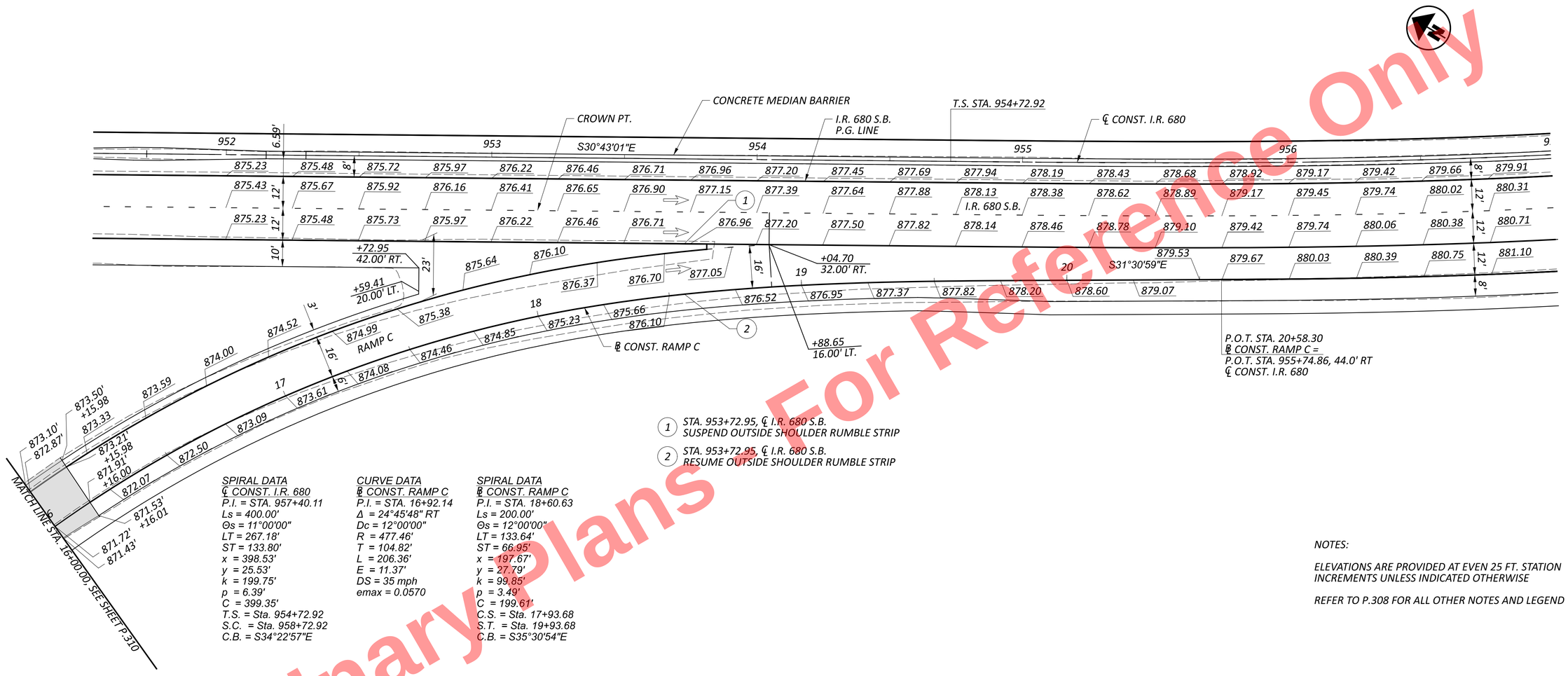

1 STA. 953+72.95, ℄ I.R. 680 S.B.
SUSPEND OUTSIDE SHOULDER RUMBLE STRIP

2 STA. 953+72.95, ℄ I.R. 680 S.B.
RESUME OUTSIDE SHOULDER RUMBLE STRIP

SPIRAL DATA
℄ CONST. I.R. 680
P.I. = STA. 957+40.11
Ls = 400.00'
Θs = 11°00'00"
LT = 267.18'
ST = 133.80'
x = 398.53'
y = 25.53'
k = 199.75'
p = 6.39'
C = 399.35'
T.S. = Sta. 954+72.92
S.C. = Sta. 958+72.92
C.B. = S34°22'57"E

CURVE DATA
℄ CONST. RAMP C
P.I. = STA. 16+92.14
Δ = 24°45'48" RT
Dc = 12°00'00"
R = 477.46'
T = 104.82'
L = 206.36'
E = 11.37'
DS = 35 mph
emax = 0.0570

SPIRAL DATA
℄ CONST. RAMP C
P.I. = STA. 18+60.63
Ls = 200.00'
Θs = 12°00'00"
LT = 133.64'
ST = 66.95'
x = 197.67'
y = 27.79'
k = 99.85'
p = 3.49'
C = 199.61'
C.S. = Sta. 17+93.68
S.T. = Sta. 19+93.68
C.B. = S35°30'54"E

RAMP C GORE DETAILS						
MAINLINE STATION	WIDTH (FT)	SLOPE (%)	WIDTH (FT)	SLOPE (%)	RAMP STATIO	RAMP SIDE
952+72.95	23	-2.37%	N/A	N/A	17+59.41	SB
952+75.00	22.38	-2.40%	N/A	N/A	17+60.30	SB
953+00.00	15.54	-2.47%	N/A	N/A	17+85.39	SB
953+25.00	10.07	-2.60%	N/A	N/A	18+10.17	SB
953+50.00	5.84	-3.57%	N/A	N/A	18+35.11	SB
953+75.00	2.66	-4.53%	N/A	N/A	18+59.41	SB
954+04.70	0	0.00%	N/A	N/A	18+88.65	SB

NOTES:

ELEVATIONS ARE PROVIDED AT EVEN 25 FT. STATION INCREMENTS UNLESS INDICATED OTHERWISE

REFER TO P.308 FOR ALL OTHER NOTES AND LEGEND

Preliminary Plans
For Reference Only

HORIZONTAL SCALE IN FEET
0 10 20 40

RAMP TERMINAL DETAIL - I.R. 680 S.B. SILLIMAN ST. - RAMP C

DESIGN AGENCY
ms consultants, inc.

DESIGNER MSN
REVIEWER CMN 08/29/25
PROJECT ID 121474
SHEET P.311 TOTAL 655

MAH-680-4.58

MODEL: 113321_GI025 PAPERSIZE: 34x22 (in.) DATE: 9/15/2025 TIME: 2:40:00 PM PLTDRV: OHDOT_PDF_E+.pltcfg PENTBL: OHDOT_UTPen.tbl USER: DHall@msconsultants.com WORKSPACE: OHDOTCtv02 WORKSET: 121474 PRODUCT: OpenRoadsDesigner 24.00.00.205
pw:\\ohiodot-pw.bentley.com:ohiodot-pw-02\Documents\01 Active Projects\District 04\Mahoning\121474\02-Engineering_MSConsultants\Roadway\Sheets\121474_GI004.dgn

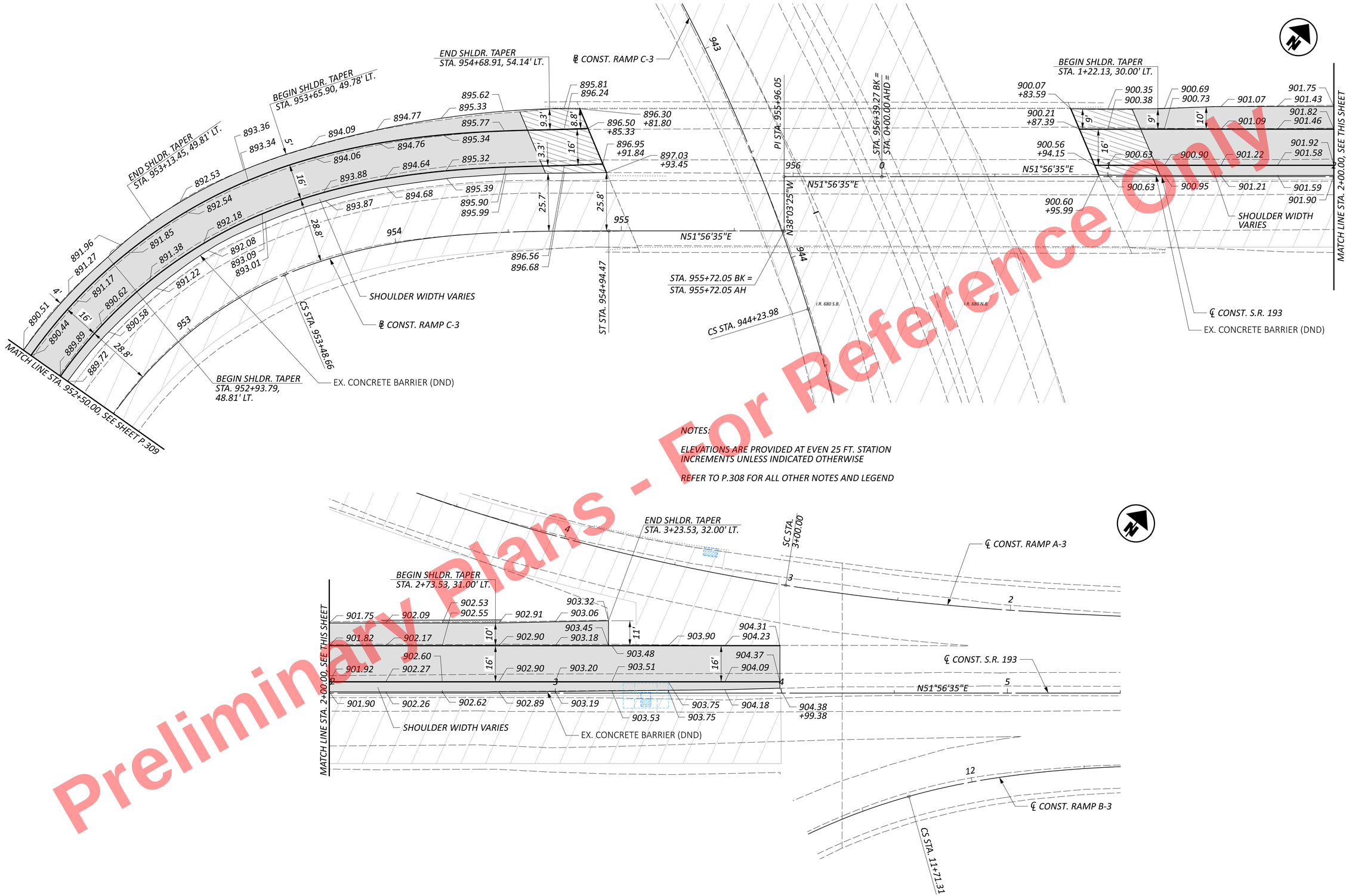

NOTES:

ELEVATIONS ARE PROVIDED AT EVEN 25 FT. STATION INCREMENTS UNLESS INDICATED OTHERWISE

REFER TO P.308 FOR ALL OTHER NOTES AND LEGEND

Preliminary Plans - For Reference Only

HORIZONTAL SCALE IN FEET
0 5 10 20

RAMP DETAIL
EXIT RAMP C-3 TO S.R. 193

DESIGN AGENCY
ms consultants, inc.

DESIGNER CJR
REVIEWER CMN 08/29/25
PROJECT ID 121474
SHEET P.312 TOTAL 655

MAH-680-4.58

MODEL: Sheet PAPERSIZE: 34x22 (in.) DATE: 9/15/2025 TIME: 2:40:08 PM PLTDRV: OHDOT_PDF_E+.pltcfg PENTBL: OHDOT_UTPen.tbl USER: DHall@msconsultants.com WORKSPACE: OHDOTCEv02 WORKSET: 121474 PRODUCT: OpenRoadsDesigner 24.00.00.205
pw:\\ohiodot-pw.bentley.com:ohiodot-pw-02\Documents\01 Active Projects\District 04\Mahoning\121474\A02-Engineering_MSConsultants\Roadway\Sheets\121474_GI005.dgn

RAMP B-3						
MAINLINE STATION	WIDTH (FT)	SLOPE (%)	WIDTH (FT)	SLOPE (%)	RAMP STATION	RAMP SIDE
950+65.78	23	-1.13%	N/A	N/A	4+33.81	NB
950+75.00	21.52	-1.19%	N/A	N/A	4+25.00	NB
951+00.00	17.64	-1.10%	N/A	N/A	3+99.65	NB
951+25.00	14.14	-1.78%	N/A	N/A	3+74.51	NB
951+50.00	10.98	-2.31%	N/A	N/A	3+49.48	NB
951+75.00	8.14	-3.44%	N/A	N/A	3+24.50	NB
952+00.00	5.59	-4.28%	N/A	N/A	2+99.57	NB
952+25.00	3.35	-3.89%	N/A	N/A	2+74.65	NB
952+50.00	1.4	-4.80%	N/A	N/A	2+49.77	NB
952+71.03	0	0.00%	N/A	N/A	2+28.85	NB

1. STA. 950+65.76, ℄ I.R. 680 N.B. BEGIN OUTSIDE AND MEDIAN SHOULDER RUMBLE STRIP
2. STA. 950+65.76, ℄ I.R. 680 S.B. BEGIN OUTSIDE AND MEDIAN SHOULDER RUMBLE STRIP

NOTE:

ELEVATIONS ARE PROVIDED AT EVEN 25 FT. STATION INCREMENTS UNLESS INDICATED OTHERWISE

REFER TO P.308 FOR ALL OTHER NOTES AND LEGEND

HORIZONTAL SCALE IN FEET 0 10 20 40

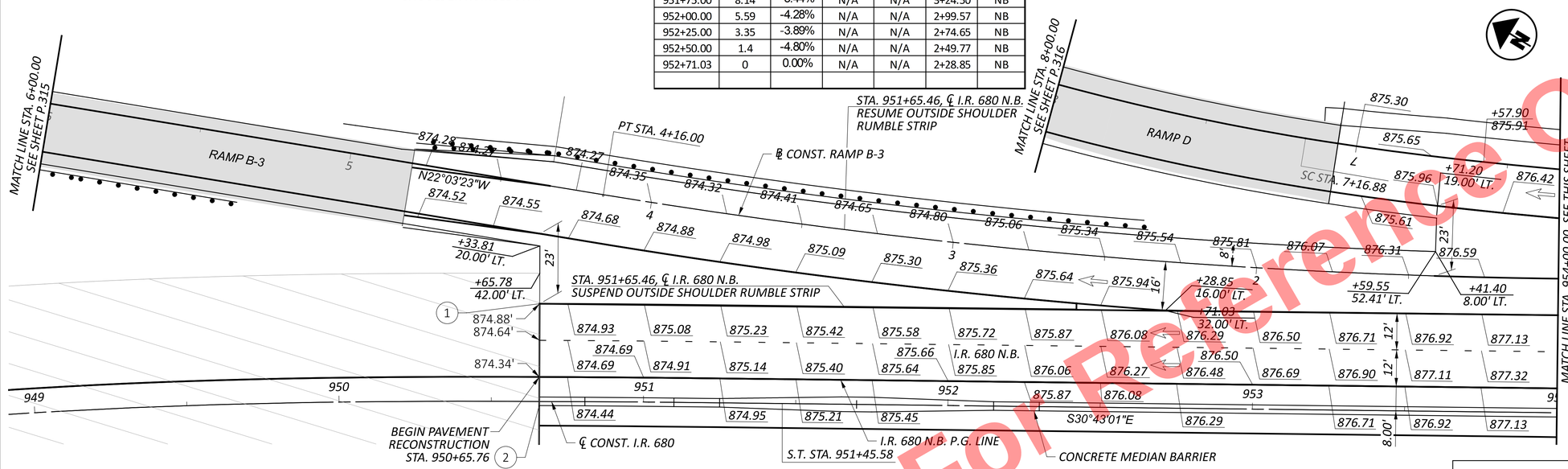

RAMP D						
MAINLINE STATION	WIDTH (FT)	SLOPE (%)	WIDTH (FT)	SLOPE (%)	RAMP STATION	RAMP SIDE
953+59.55	22.96	0.93%	N/A	N/A	6+71.20	NB
953+75.00	21.77	1.04%	N/A	N/A	6+56.41	NB
954+00.00	19.8	1.80%	N/A	N/A	6+31.58	NB
954+25.00	18.04	2.97%	N/A	N/A	6+06.68	NB
954+50.00	16.46	3.35%	N/A	N/A	5+81.71	NB
954+75.00	14.96	3.82%	N/A	N/A	5+56.69	NB
955+00.00	13.46	4.43%	N/A	N/A	5+31.70	NB
955+25.00	11.93	4.64%	N/A	N/A	5+06.80	NB
955+50.00	10.32	4.75%	N/A	N/A	4+81.94	NB
955+75.00	8.61	4.87%	N/A	N/A	4+57.17	NB
956+00.00	6.74	5.08%	N/A	N/A	4+32.47	NB
956+25.00	4.69	4.86%	N/A	N/A	4+07.80	NB
956+50.00	2.45	5.74%	N/A	N/A	3+83.23	NB
956+77.42	0	0.00%	N/A	N/A	3+56.46	NB

SPIRAL DATA
℄ CONST. I.R. 680
P.I. = STA. 948+79.38
Ls = 400.00'
Θs = 11°00'00"
LT = 267.18'
ST = 133.80'
x = 396.08'
y = 50.98'
k = 199.75'
p = 6.39'
C = 399.35'
C.S. = Sta. 947+45.58
S.T. = Sta. 951+45.58
C.B. = S34°22'57"E

CURVE DATA
℄ CONST. RAMP B-3
P.I. = STA. 2+58.30
Δ = 08°39'37" RT
Dc = 02°44'26"
R = 2,090.60'
T = 158.3'
L = 316'
E = 5.98'
DS = 50 mph
emax = 0.0420

SPIRAL DATA
℄ CONST. RAMP D
P.I. = STA. 6+66.92
Ls = 150.00'
Θs = 05°15'00"
LT = 100.04'
ST = 50.04'
x = 149.87'
y = 4.58'
k = 74.98'
p = 1.15'
C = 149.94'
T.S. = Sta. 5+66.88
S.C. = Sta. 7+16.94
C.B. = N25°32'55"W

CURVE DATA
℄ CONST. RAMP D
P.I. = STA. 8+20.40
Δ = 14°25'26" RT
Dc = 07°00'00"
R = 818.51'
T = 103.58'
L = 206.06'
E = 6.53'
DS = 35 mph
emax = MATCH EXISTING

SPIRAL DATA
℄ CONST. I.R. 680
P.I. = STA. 957+40.11
Ls = 400.00'
Θs = 11°00'00"
LT = 267.18'
ST = 133.80'
x = 398.53'
y = 25.53'
k = 199.75'
p = 6.39'
C = 399.35'
T.S. = Sta. 954+72.92
S.C. = Sta. 958+72.92
C.B. = S34°22'57"E

CURVE DATA
℄ CONST. I.R. 680
P.I. = STA. 962+39.68
Δ = 38°47'24" LT
Dc = 05°30'00"
R = 1,041.74'
T = 366.75'
L = 705.27'
E = 62.67'
DS = 50 mph
emax = 0.0833

NDC
emax = 0.06

CURVE DATA
℄ CONST. RAMP D
P.I. = STA. 1+36.24
Δ = 18°54'00" RT
Dc = 07°00'00"
R = 818.51'
T = 136.24'
L = 270'
E = 11.26'
DS = 45 mph
emax = 0.0600

SPIRAL DATA
℄ CONST. RAMP D
P.I. = STA. 3+20.04
Ls = 150.00'
Θs = 05°15'00"
LT = 100.04'
ST = 50.04'
x = 149.66'
y = 9.15'
k = 74.98'
p = 1.15'
C = 149.94'
C.S. = Sta. 2+70.00
S.T. = Sta. 4+20.00
C.B. = N29°02'54"W

DESIGN EXCEPTION
STOPPING SIGHT DISTANCE
CURVE #26
(a) SSD = 325' (NDC = 425' MIN)
ACTUAL DESIGN SPEED = 42 MPH

D.E. #5 SUPERELEVATION RATE:
CURVE #26
emax = 0.083
NDC emax = 0.06

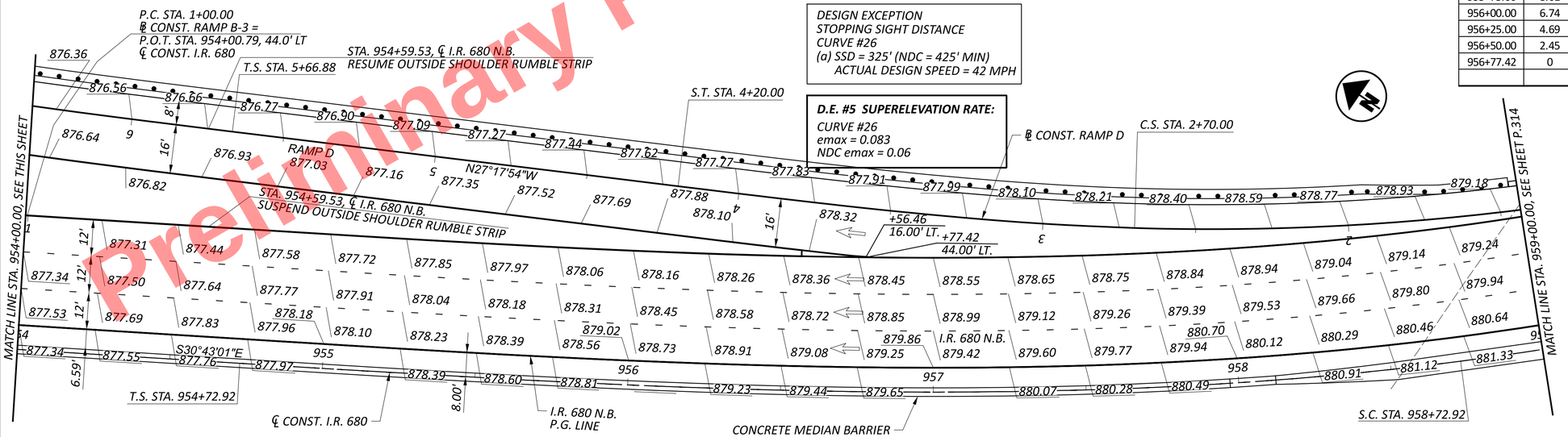

Preliminary Plans - Not For Reference Only

RAMP TERMINAL DETAIL - I.R. 680 N.B.
S.R. 193 RAMP B-3 AND SALT SPRINGS ROAD RAMP D

DESIGN AGENCY
ms consultants, inc.

DESIGNER MSN
REVIEWER WBH 10/04/24
PROJECT ID 121474
SHEET P.313 TOTAL 655

MAH-680-4.58

MODEL: 113321_GI021 PAPERSIZE: 34x22 (in.) DATE: 9/15/2025 TIME: 2:40:22 PM PLTDRV: OHDOT_PDF_E+.pltcfg PENTBL: OHDOT_UTPen.tbl USER: DHall@msconsultants.com WORKSPACE: OHDOTCtv02 WORKSET: 121474 PRODUCT: OpenRoadsDesigner 24.00.00.205
pw:\\ohiodot-pw.bentley.com:ohiodot-pw-02\Documents\01 Active Projects\District 04\Mahoning\121474\02-Engineering_MSConsultants\Roadway\Sheets\121474_GI006.dgn

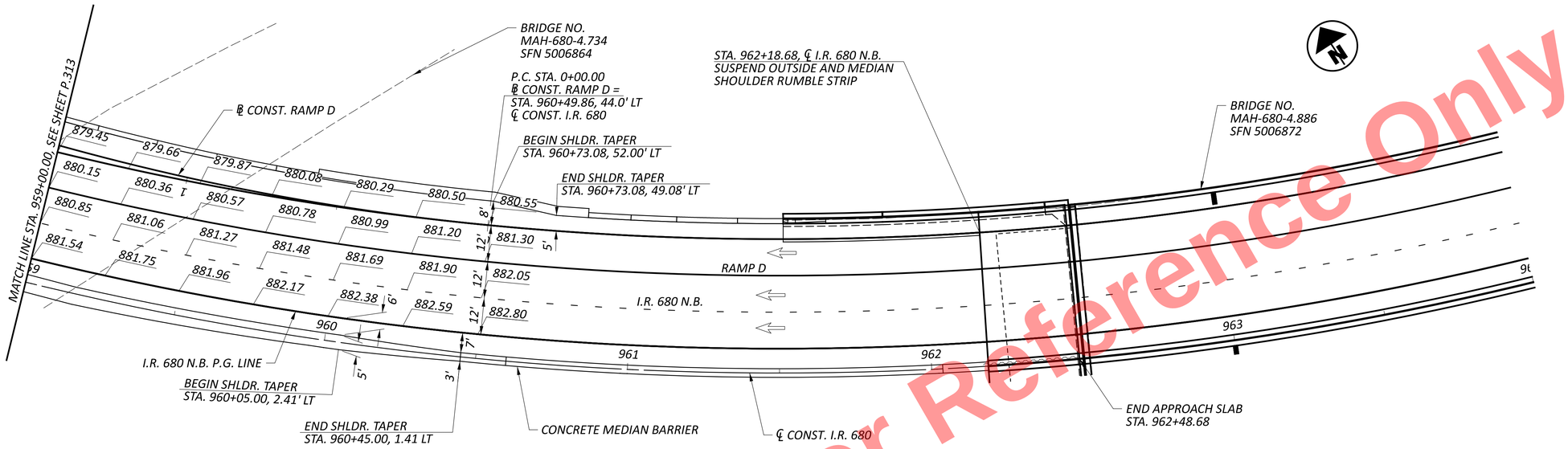

CURVE DATA
℄ CONST. I.R. 680
P.I. = STA. 962+39.68
Δ = 38°47'24" LT
Dc = 05°30'00"
R = 1,041.74'
T = 366.75'
L = 705.27'
E = 62.67'
DS = 50 mph
emax = 0.0833

CURVE DATA
℄ CONST. RAMP D
P.I. = STA. 1+36.24
Δ = 18°54'00" RT
Dc = 07°00'00"
R = 818.51'
T = 136.24'
L = 270'
E = 11.26'
DS = 45 mph
emax = 0.0600

NDC
emax = 0.06

DESIGN EXCEPTION
STOPPING SIGHT DISTANCE
CURVE #26
(a) SSD = 325' (NDC = 425' MIN)
ACTUAL DESIGN SPEED = 42 MPH

D.E. #5 SUPERELEVATION RATE:
CURVE #26
emax = 0.083
NDC emax = 0.06

NOTES:

ELEVATIONS ARE PROVIDED AT EVEN 25 FT. STATION INCREMENTS UNLESS INDICATED OTHERWISE

REFER TO P.308 FOR ALL OTHER NOTES AND LEGEND

Preliminary Plans - For Reference Only

HORIZONTAL SCALE IN FEET
0 10 20 40

RAMP TERMINAL DETAIL - I.R. 680 N.B.
S.R. 193 RAMP B-3 AND SALT SPRINGS ROAD RAMP D

DESIGN AGENCY
ms consultants, inc.

DESIGNER MSN
REVIEWER CMN 08/29/25
PROJECT ID 121474
SHEET P.314 TOTAL 655

MAH-680-4.58

MODEL: 113321_GI022 PAPERSIZE: 34x22 (in.) DATE: 9/15/2025 TIME: 2:40:32 PM PLTDRV: OHDOT_PDF_E+.pltcfg PENTBL: OHDOT_UTPen.tbl USER: DHall@msconsultants.com WORKSPACE: OHDOTCtv02 WORKSET: 121474 PRODUCT: OpenRoadsDesigner 24.00.00.205
pw:\\ohiodot-pw.bentley.com:ohiodot-pw-02\Documents\01 Active Projects\District 04\Mahoning\121474\02-Engineering_MSConsultants\Roadway\Sheets\121474_GI007.dgn

Preliminary Plans For Reference Only

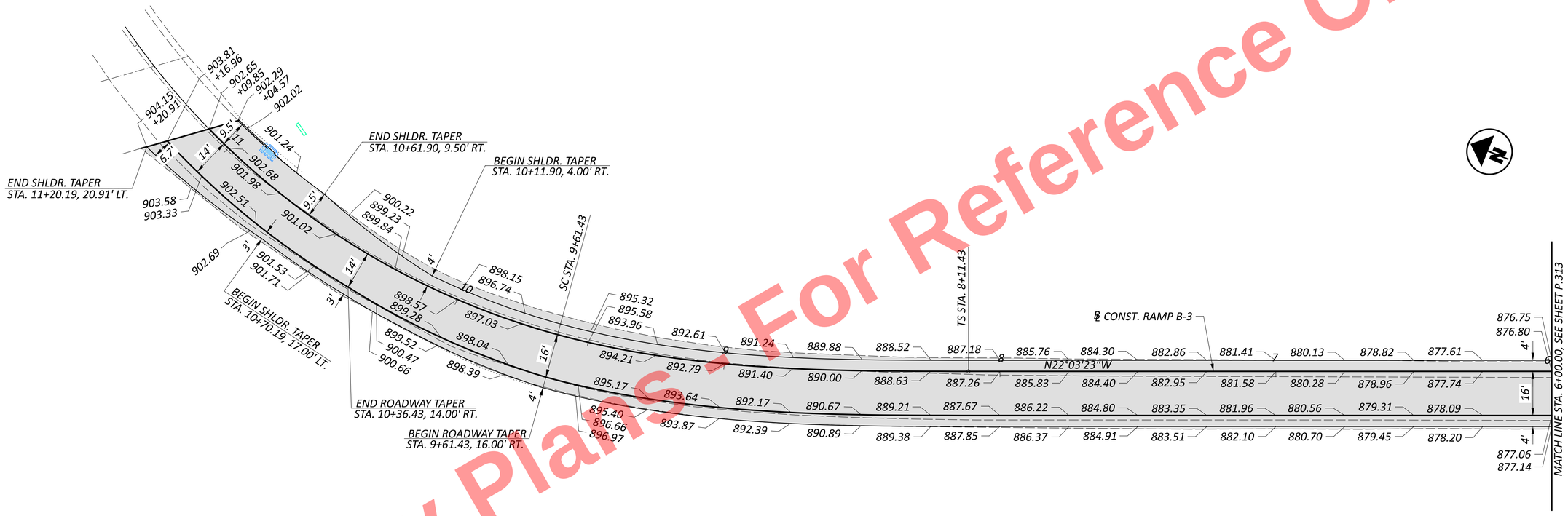

NOTES:

ELEVATIONS ARE PROVIDED AT EVEN 25 FT. STATION INCREMENTS UNLESS INDICATED OTHERWISE

REFER TO P.308 FOR ALL OTHER NOTES AND LEGEND

HORIZONTAL SCALE IN FEET
0 5 10 20

RAMP DETAIL
S.R. 193 RAMP B-3

DESIGN AGENCY
ms consultants, inc.

DESIGNER CJR
REVIEWER CMN 08/29/25
PROJECT ID 121474
SHEET P.315 TOTAL 655

MAH-680-4.58

MODEL: Sheet PAPERSIZE: 34x22 (in.) DATE: 9/15/2025 TIME: 2:40:40 PM PLTDRV: OHDOT_PDF_E+.pltcfg PENTBL: OHDOT_UTPen.tbl USER: DHall@msconsultants.com WORKSPACE: OHDOTCEv02 WORKSET: 121474 PRODUCT: OpenRoadsDesigner 24.00.00.205
pw:\\ohiodot-pw.bentley.com:ohiodot-pw-02\Documents\01 Active Projects\District 04\Mahoning\121474\402-Engineering_MSConsultants\Roadway\Sheets\121474_GI008.dgn

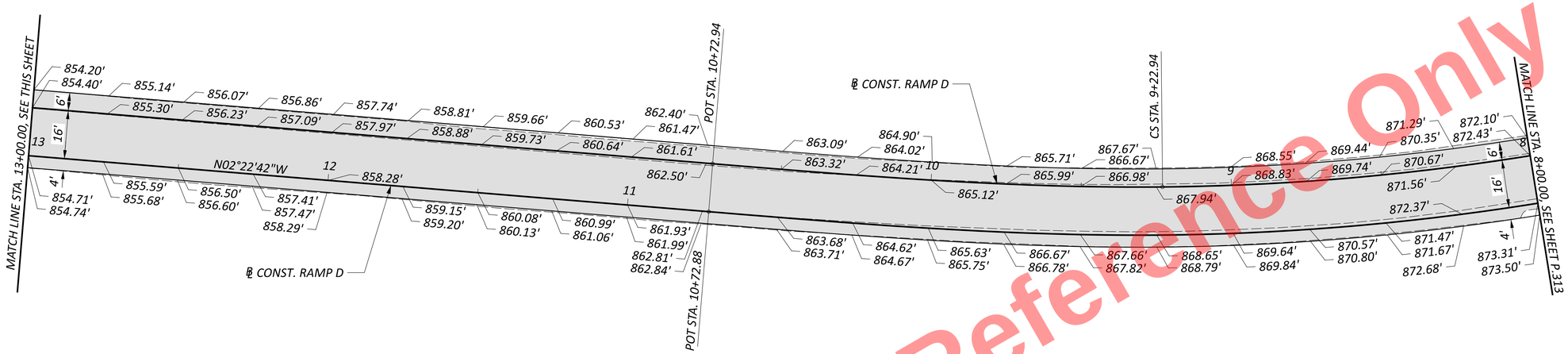

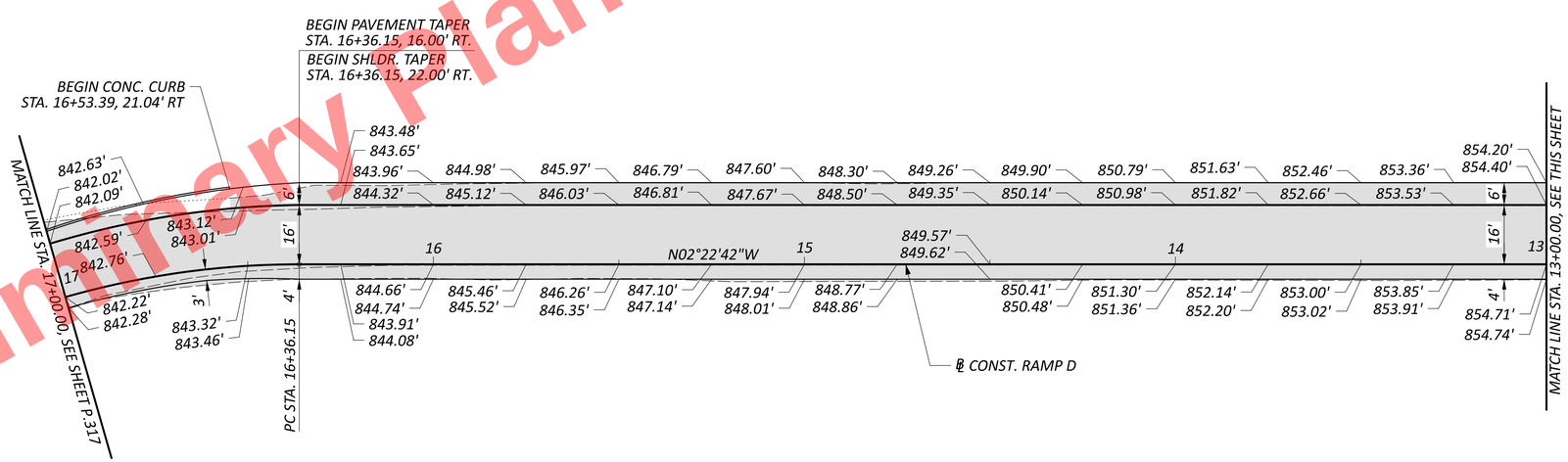

NOTES:

ELEVATIONS ARE PROVIDED AT EVEN 25 FT. STATION INCREMENTS UNLESS INDICATED OTHERWISE

REFER TO P.308 FOR ALL OTHER NOTES AND LEGEND

Preliminary Plans - For Reference Only

HORIZONTAL SCALE IN FEET
0 5 10 20

RAMP DETAIL
SALT SPRINGS ROAD RAMP D

DESIGN AGENCY
ms consultants. inc.

DESIGNER CJR
REVIEWER CMN 08/29/25
PROJECT ID 121474
SHEET P.316 TOTAL 655

MAH-680-4.58

MODEL: Sheet PAPERSIZE: 34x22 (in.) DATE: 9/15/2025 TIME: 2:40:48 PM PLTDRV: OHDOT_PDF_E+.pltcfg PENTBL: OHDOT_UTPen.tbl USER: DHall@msconsultants.com WORKSPACE: OHDOTCEv02 WORKSET: 121474 PRODUCT: OpenRoadsDesigner 24.00.00.205
pw:\\ohiodot-pw.bentley.com:ohiodot-pw-02\Documents\01 Active Projects\District 04\Mahoning\121474\02-Engineering_MSConsultants\Roadway\Sheets\121474_GI009.dgn

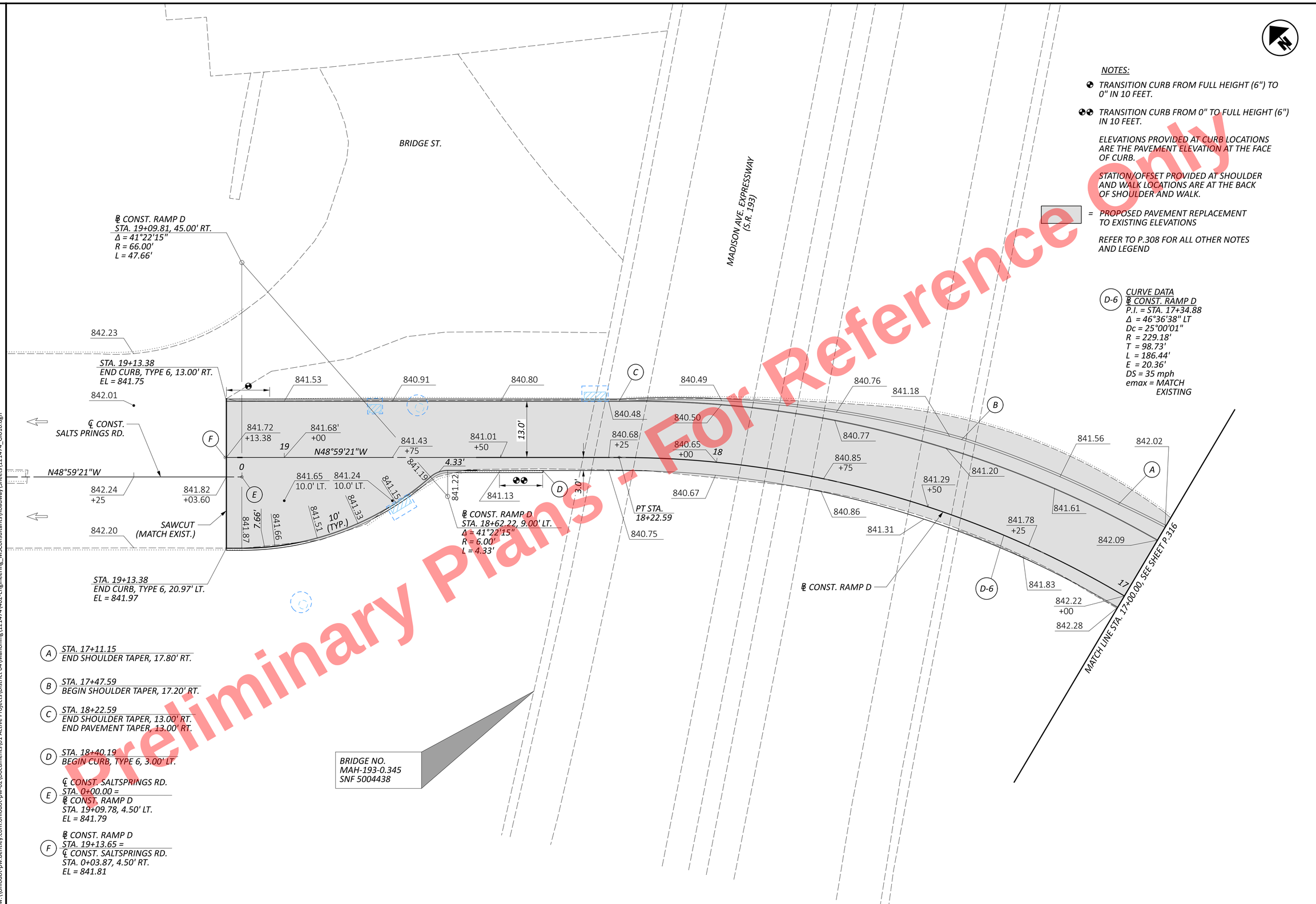

NOTES:

- TRANSITION CURB FROM FULL HEIGHT (6") TO 0" IN 10 FEET.
- TRANSITION CURB FROM 0" TO FULL HEIGHT (6") IN 10 FEET.

ELEVATIONS PROVIDED AT CURB LOCATIONS ARE THE PAVEMENT ELEVATION AT THE FACE OF CURB.

STATION/OFFSET PROVIDED AT SHOULDER AND WALK LOCATIONS ARE AT THE BACK OF SHOULDER AND WALK.

= PROPOSED PAVEMENT REPLACEMENT TO EXISTING ELEVATIONS

REFER TO P.308 FOR ALL OTHER NOTES AND LEGEND

D-6 CURVE DATA
℄ CONST. RAMP D
P.I. = STA. 17+34.88
Δ = 46°36'38" LT
Dc = 25°00'01"
R = 229.18'
T = 98.73'
L = 186.44'
E = 20.36'
DS = 35 mph
emax = MATCH EXISTING

A STA. 17+11.15
END SHOULDER TAPER, 17.80' RT.

B STA. 17+47.59
BEGIN SHOULDER TAPER, 17.20' RT.

C STA. 18+22.59
END SHOULDER TAPER, 13.00' RT.
END PAVEMENT TAPER, 13.00' RT.

D STA. 18+40.19
BEGIN CURB, TYPE 6, 3.00' LT.

E ℄ CONST. SALTSPRINGS RD.
STA. 0+00.00 =
℄ CONST. RAMP D
STA. 19+09.78, 4.50' LT.
EL = 841.79

F ℄ CONST. RAMP D
STA. 19+13.65 =
℄ CONST. SALTSPRINGS RD.
STA. 0+03.87, 4.50' RT.
EL = 841.81

Preliminary Plans - For Reference Only

HORIZONTAL SCALE IN FEET
0 5 10 20

INTERSECTION DETAIL
SALT SPRINGS RD. RAMP D

DESIGN AGENCY
ms consultants, inc.

DESIGNER
MSN

REVIEWER
CMN 08/29/25

PROJECT ID
121474

SHEET P.317 TOTAL 655

MAH-680-4.58

MODEL: Sheet PAPERSIZE: 34x22 (in.) DATE: 9/15/2025 TIME: 2:40:55 PM PLTDRV: OHDOT_PDF_E+.pltcfg PENTBL: OHDOT_UTPen.tbl USER: DHall@msconsultants.com WORKSPACE: OHDOTCEv02 WORKSET: 121474 PRODUCT: OpenRoadsDesigner 24.00.00.205
pw:\\ohiodot-pw.bentley.com:ohiodot-pw-02\Documents\01 Active Projects\District 04\Mahoning\121474\402-Engineering_MSConsultants\Roadway\Sheets\121474_GI010.dgn

Preliminary Plans - For Reference Only

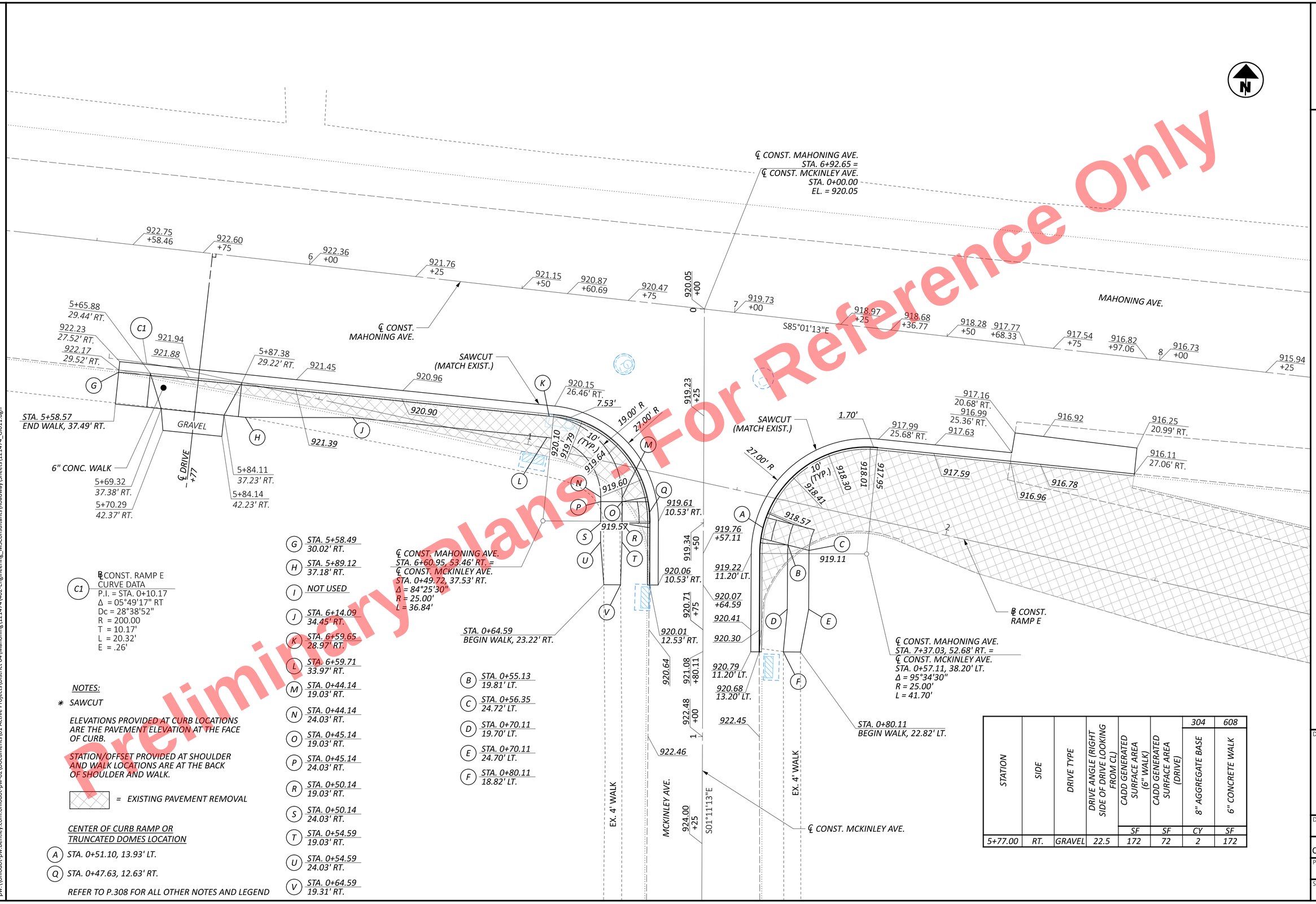

℄ CONST. RAMP E
CURVE DATA
P.I. = STA. 0+10.17
Δ = 05°49'17" RT
Dc = 28°38'52"
R = 200.00
T = 10.17'
L = 20.32'
E = .26'

NOTES:

✱ SAWCUT

ELEVATIONS PROVIDED AT CURB LOCATIONS ARE THE PAVEMENT ELEVATION AT THE FACE OF CURB.

STATION/OFFSET PROVIDED AT SHOULDER AND WALK LOCATIONS ARE AT THE BACK OF SHOULDER AND WALK.

= EXISTING PAVEMENT REMOVAL

CENTER OF CURB RAMP OR TRUNCATED DOMES LOCATION

(A) STA. 0+51.10, 13.93' LT.

(Q) STA. 0+47.63, 12.63' RT.

REFER TO P.308 FOR ALL OTHER NOTES AND LEGEND

(G) STA. 5+58.49 30.02' RT.
(H) STA. 5+89.12 37.18' RT.
(I) NOT USED
(J) STA. 6+14.09 34.45' RT.
(K) STA. 6+59.65 28.97' RT.
(L) STA. 6+59.71 33.97' RT.
(M) STA. 0+44.14 19.03' RT.
(N) STA. 0+44.14 24.03' RT.
(O) STA. 0+45.14 19.03' RT.
(P) STA. 0+45.14 24.03' RT.
(R) STA. 0+50.14 19.03' RT.
(S) STA. 0+50.14 24.03' RT.
(T) STA. 0+54.59 19.03' RT.
(U) STA. 0+54.59 24.03' RT.
(V) STA. 0+64.59 19.31' RT.

(B) STA. 0+55.13 19.81' LT.
(C) STA. 0+56.35 24.72' LT.
(D) STA. 0+70.11 19.70' LT.
(E) STA. 0+70.11 24.70' LT.
(F) STA. 0+80.11 18.82' LT.

STATION	SIDE	DRIVE TYPE	DRIVE ANGLE (RIGHT SIDE OF DRIVE LOOKING FROM CL)	CADD GENERATED SURFACE AREA (6" WALK)	CADD GENERATED SURFACE AREA (DRIVE)	304 8" AGGREGATE BASE	608 6" CONCRETE WALK
				SF	SF	CY	SF
5+77.00	RT.	GRAVEL	22.5	172	72	2	172

HORIZONTAL SCALE IN FEET
0 5 10 20

INTERSECTION DETAIL MAHONING AVE. RAMP E

DESIGN AGENCY
ms consultants, inc.
DESIGNER MSN
REVIEWER CMN 08/29/25
PROJECT ID 121474
SHEET P.318 TOTAL 655

MAH-680-4.58

MODEL: Sheet PAPERSIZE: 34x22 (in.) DATE: 9/15/2025 TIME: 2:41:01 PM PLTDRV: OHDOT_PDF_E+.pltcfg PENTBL: OHDOT_UTPen.tbl USER: DHall@msconsultants.com WORKSPACE: OHDOTCEv02 WORKSET: 121474 PRODUCT: OpenRoadsDesigner 24.00.00.205
pw:\\ohiodot-pw.bentley.com:ohiodot-pw-02\Documents\01 Active Projects\District 04\Mahoning\121474\402-Engineering_MSConsultants\Roadway\Sheets\121474_GI011.dgn

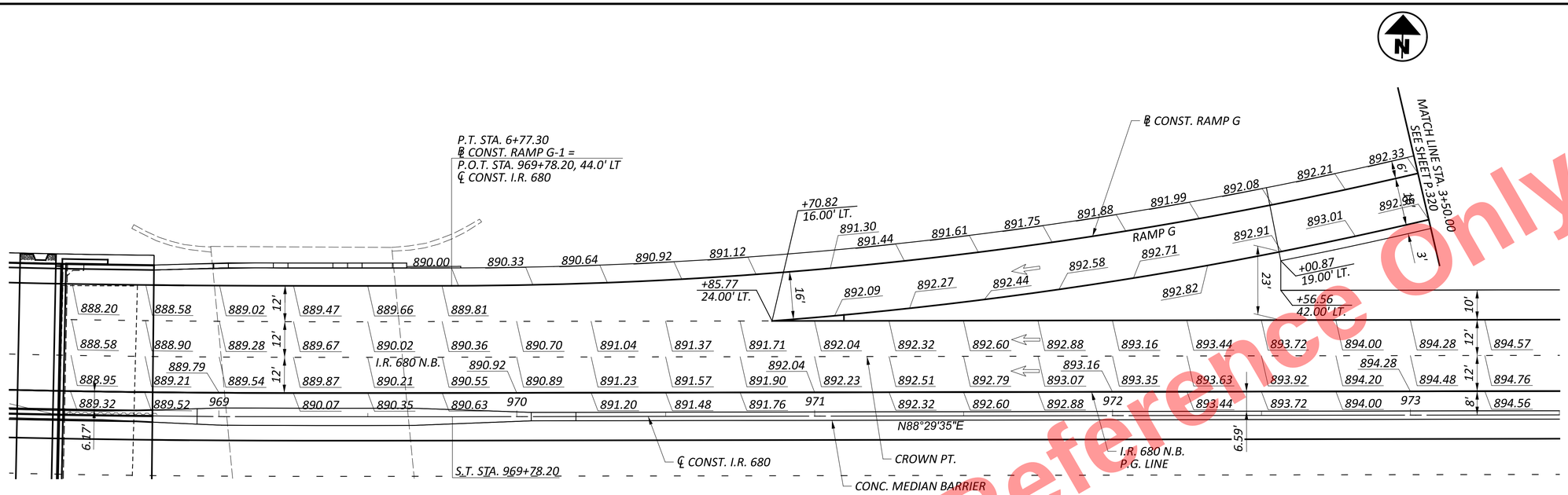

For Reference Only

Preliminary Plans

SPIRAL DATA
℄ CONST. I.R. 680
P.I. = STA. 967+12.00
Ls = 400.00'
Θs = 11°00'00"
LT = 267.18'
ST = 133.80'
x = 396.08'
y = 50.98'
k = 199.75'
p = 6.39'
C = 399.35'
C.S. = Sta. 965+78.20
S.T. = Sta. 969+78.20
C.B. = S87°50'29"E

CURVE DATA
℄ CONST. RAMP G
P.I. = STA. 5+01.41
Δ = 14°08'36" RT
Dc = 04°00'00"
R = 1,432.39'
T = 177.69'
L = 353.58'
E = 10.98'
DS = 50 mph
emax = 0.0520

RAMP G

MAINLINE STATION	WIDTH (FT)	SLOPE (%)	WIDTH (FT)	SLOPE (%)	RAMP STATION	RAMP SIDE
970+85.77	0	0.00%	N/A	N/A	5+70.82	NB
971+00.00	1.3	-0.63%	N/A	N/A	5+56.68	NB
971+25.00	3.46	-2.71%	N/A	N/A	5+31.87	NB
971+50.00	6.23	-3.33%	N/A	N/A	5+06.99	NB
971+75.00	9.43	-3.58%	N/A	N/A	4+82.06	NB
972+00.00	13.08	-3.72%	N/A	N/A	4+57.08	NB
972+25.00	17.18	-3.80%	N/A	N/A	4+32.02	NB
972+50.00	21.73	-3.85%	N/A	N/A	4+06.90	NB
972+56.56	23	-3.86%	N/A	N/A	4+00.87	NB

NOTES:

ELEVATIONS ARE PROVIDED AT EVEN 25 FT. STATION INCREMENTS UNLESS INDICATED OTHERWISE

REFER TO P.308 FOR ALL OTHER NOTES AND LEGEND

HORIZONTAL SCALE IN FEET
0 10 20 40

RAMP TERMINAL DETAIL - I.R. 680 N.B. MARSHALL ST. - RAMP G

DESIGN AGENCY
ms consultants, inc.

DESIGNER MSN
REVIEWER CMN 08/29/25
PROJECT ID 121474
SHEET P.319 TOTAL 655

MAH-680-4.58

MODEL: 113321_GI026 PAPERSIZE: 34x22 (in.) DATE: 9/15/2025 TIME: 2:41:09 PM PLTDRV: OHDOT_PDF_E+.pltcfg PENTBL: OHDOT_UTPen.tbl USER: DHall@msconsultants.com WORKSPACE: OHDOTCtx02 WORKSET: 121474 PRODUCT: OpenRoadsDesigner 24.00.00.205
pw:\\ohiodot-pw.bentley.com:ohiodot-pw-02\Documents\01 Active Projects\District 04\Mahoning\121474\d02-Engineering_MSConsultants\Roadway\Sheets\121474_GI012.dgn

G4 **CURVE DATA**
℄ CONST. RAMP G
P.I. = STA. 1+27.69
Δ = 14°16'31" LT
Dc = 06°00'00"
R = 954.93'
T = 119.58'
L = 237.92'
E = 7.46'
DS = 25 mph
emax = 0.0300

G5 **CURVE DATA**
℄ CONST. RAMP G
P.I. = STA. 5+01.41
Δ = 14°08'36" RT
Dc = 04°00'00"
R = 1,432.39'
T = 177.69'
L = 353.58'
E = 10.98'
DS = 50 mph
emax = 0.0520

NOTES:

◒ TRANSITION CURB FROM FULL HEIGHT (6") TO 0" IN 10 FEET.

✳ SAWCUT

ELEVATIONS PROVIDED AT CURB LOCATIONS ARE THE PAVEMENT ELEVATION AT THE FACE OF CURB.

STATION/OFFSET PROVIDED AT SHOULDER AND WALK LOCATIONS ARE AT THE BACK OF SHOULDER AND WALK.

REFER TO P.308 FOR ALL OTHER NOTES AND LEGEND

(A) STA. 4+79.09
BEGIN CURB, TYPE 6, 20.55' RT.

(B) C.B. NO. 3A
STA. 2+42.38, 26.71' RT.
GRATE EL. = 892.32'

(C) STA. 3+23.05
END CURB, TYPE 6, 22.00' RT.

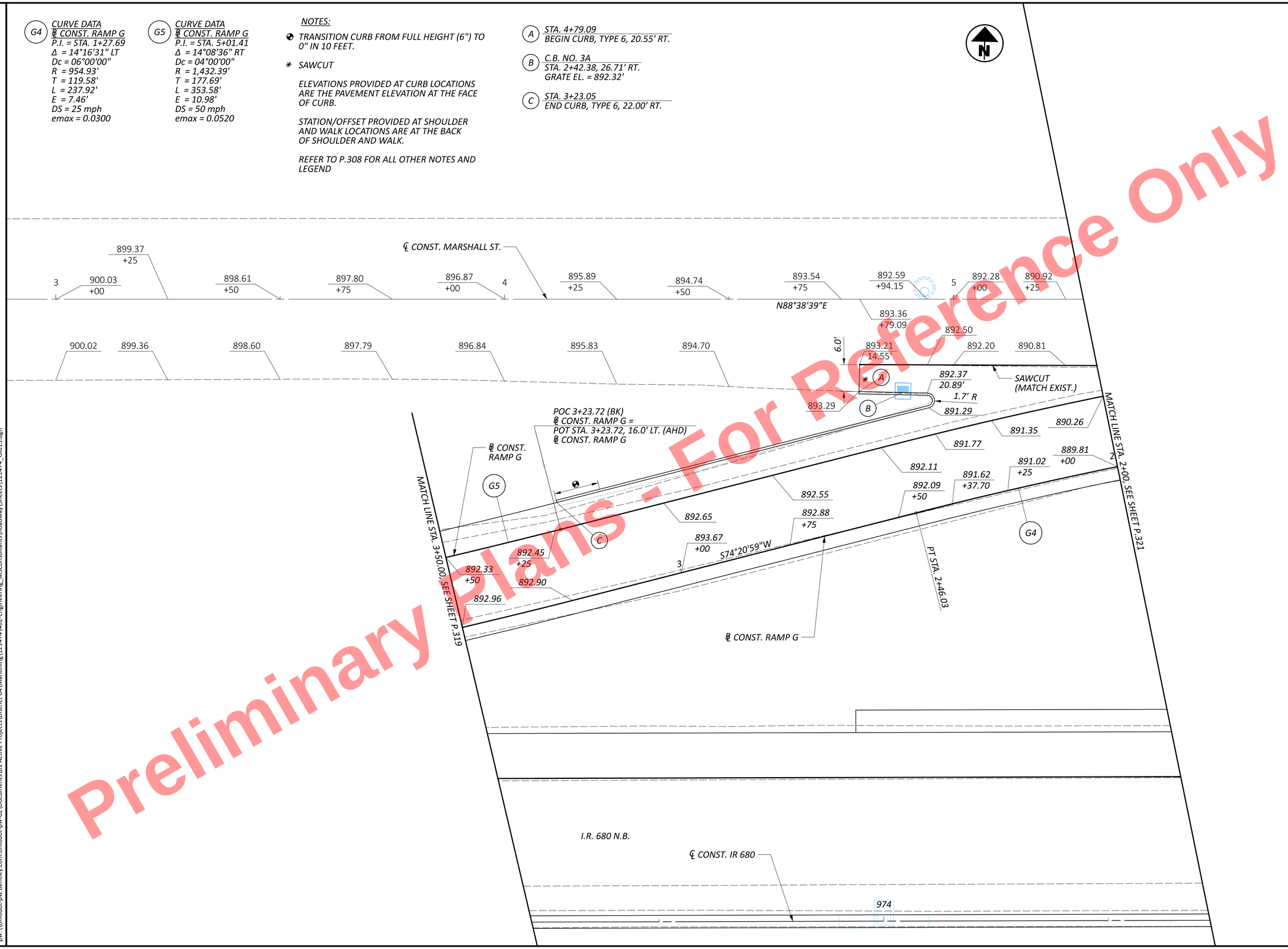

Preliminary Plans - For Reference Only

HORIZONTAL SCALE IN FEET
0 5 10 20

INTERSECTION DETAIL MARSHALL ST. RAMP G

DESIGN AGENCY
ms consultants, inc.

DESIGNER CJR
REVIEWER CMN 08/29/25
PROJECT ID 121474
SHEET P.320 TOTAL 655

MAH-680-4.58

MODEL: Sheet-1 PAPERSIZE: 34x22 (in.) DATE: 9/15/2025 TIME: 2:41:16 PM PLTDRV: OHDOT_PDF_E+.pltcfg PENTBL: OHDOT_UTPen.tbl USER: DHall@msconsultants.com WORKSPACE: OHDOTCEv02 WORKSET: 121474 PRODUCT: OpenRoadsDesigner 24.00.00.205
pw:\\ohiodot-pw.bentley.com:ohiodot-pw-02\Documents\01 Active Projects\District 04\Mahoning\121474\402-Engineering_MSConsultants\Roadway\Sheets\121474_GI013.dgn

G4 CURVE DATA
℄ CONST. RAMP G
P.I. = STA. 1+27.69
Δ = 14°16'31" LT
Dc = 06°00'00"
R = 954.93'
T = 119.58'
L = 237.92'
E = 7.46'
DS = 25 mph
emax = 0.0300

NOTES:

* SAWCUT

STATION/OFFSET PROVIDED AT SHOULDER AND WALK LOCATIONS ARE AT THE BACK OF SHOULDER AND WALK.

REFER TO P.308 FOR ALL OTHER NOTES AND LEGEND

ROCKVIEW AVE.

℄ CONST. MARSHALL ST.

889.45 +50 | 888.18 +69.33 | 887.77 +75 | 885.83 +00 | 6 | 883.74 +25 | 881.39 +50 | 879.07 +75 | 877.16 +00 | 7 | 875.69 +25 | 874.49 +50 | 873.67 +75 | 872.96 +00 | 8

N88°38'39"E

SAWCUT (MATCH EXIST.)

SAWCUT (MATCH EXIST.)

889.35 | 888.02 14.94' | 887.62 | 885.65 | 883.60 | 881.28 | 879.01 | 877.14 | 875.58 | 875.46 15.63' | 874.61 | 873.89 | 873.11

888.72

890.26

889.81 +00

888.35 +75

886.77 +50

884.82 +25

882.68 +00

880.51 +75

878.40 +50

876.39 +25

16.0'

3.0'

2.37'

1

2

G4

℄ CONST. RAMP G

STA. 0+20.00
END SHOULDER TAPER, 3.00' LT.

STA. 0+08.11
BEGIN SHOULDER TAPER, 0.00'

PC STA. 0+08.11
℄ CONST. RAMP G =
POT STA. 7+27.15, 18.00' RT.
℄ CONST. MARSHALL ST.
EL = 875.51

MATCH LINE STA. 2+00, SEE SHEET P.320

I.R. 680 N.B.

℄ CONST. IR 680

975 | 976 | 977

Preliminary Plans - For Reference Only

HORIZONTAL SCALE IN FEET
0 5 10 20

INTERSECTION DETAIL MARSHALL ST. RAMP G

DESIGN AGENCY
ms consultants, inc.

DESIGNER CJR
REVIEWER CMN 08/29/25
PROJECT ID 121474
SHEET P.321 TOTAL 655

MAH-680-4.58

MODEL: Sheet-2 PAPERSIZE: 34x22 (in.) DATE: 9/15/2025 TIME: 2:41:17 PM PLTDRV: OHDOT_PDF_E+.pltcfg PENTBL: OHDOT_UTPen.tbl USER: DHall@mscons
pw:\\ohiodot-pw.bentley.com:ohiodot-pw-02\Documents\01 Active Projects\District 04\Mahoning\121474\402-Engineering_MSConsultants\Roadway\Sheets\1
all@mscnsultants.com WORKSPACE: OHDOTCEv02 WORKSET: 121474 PRODUCT: OpenRoadsDesigner 24.00.00.205
vay\Sheets\121474_GI013.dgn

LEGEND

(L) LONGITUDINAL JOINT (SEE STD. DWG. BP-2.1)

(C) CONTRACTION JOINT (SEE STD. DWG. BP-2.2)

(D) LONGITUDINAL JOINT WITHOUT TIE BARS (SEE STD. DWG. BP-2.1)

(I) EXPANSION JOINT WITHOUT DOWEL BARS (SEE STD. DWG. BP-2.2)

* 1.0' MIN. TO STRUCTURE

NOTE:
JOINT LAYOUTS SHOWN ARE FOR GUIDANCE ONLY. THE ENGINEER AND CONTRACTOR MAY ADJUST JOINT LOCATIONS IN THE FIELD AS APPROPRIATE AND AS PER THE STANDARD CONSTRUCTION DRAWINGS.

(G4) CURVE DATA
℄ R/W CONST. RAMP G
P.I. = STA. 1+27.69
Δ = 14°16'31" LT
Dc = 06°00'00"
R = 954.93'
T = 119.58'
L = 237.92'
E = 7.46'
DS = 25 mph
emax = 0.0300

(G5) CURVE DATA
℄ R/W CONST. RAMP G
P.I. = STA. 5+01.41
Δ = 14°08'36" RT
Dc = 04°00'00"
R = 1,432.39'
T = 177.69'
L = 353.58'
E = 10.98'
DS = 50 mph
emax = 0.0520

RAMP G						
MAINLINE STATION	WIDTH (FT)	SLOPE (%)	WIDTH (FT)	SLOPE (%)	RAMP STATION	RAMP SIDE
970+85.76	0	0.00%	N/A	N/A	5+70.83	NB
971+00.00	1.3	-0.63%	N/A	N/A	5+56.68	NB
971+25.00	3.46	-2.71%	N/A	N/A	5+31.87	NB
971+50.00	6.23	-3.33%	N/A	N/A	5+06.99	NB
971+75.00	9.43	-3.58%	N/A	N/A	4+82.06	NB
972+00.00	13.08	-3.72%	N/A	N/A	4+57.08	NB
972+25.00	17.18	-3.80%	N/A	N/A	4+32.02	NB
972+50.00	21.73	-3.85%	N/A	N/A	4+06.90	NB
972+56.56	23	-3.86%	N/A	N/A	4+00.29	NB

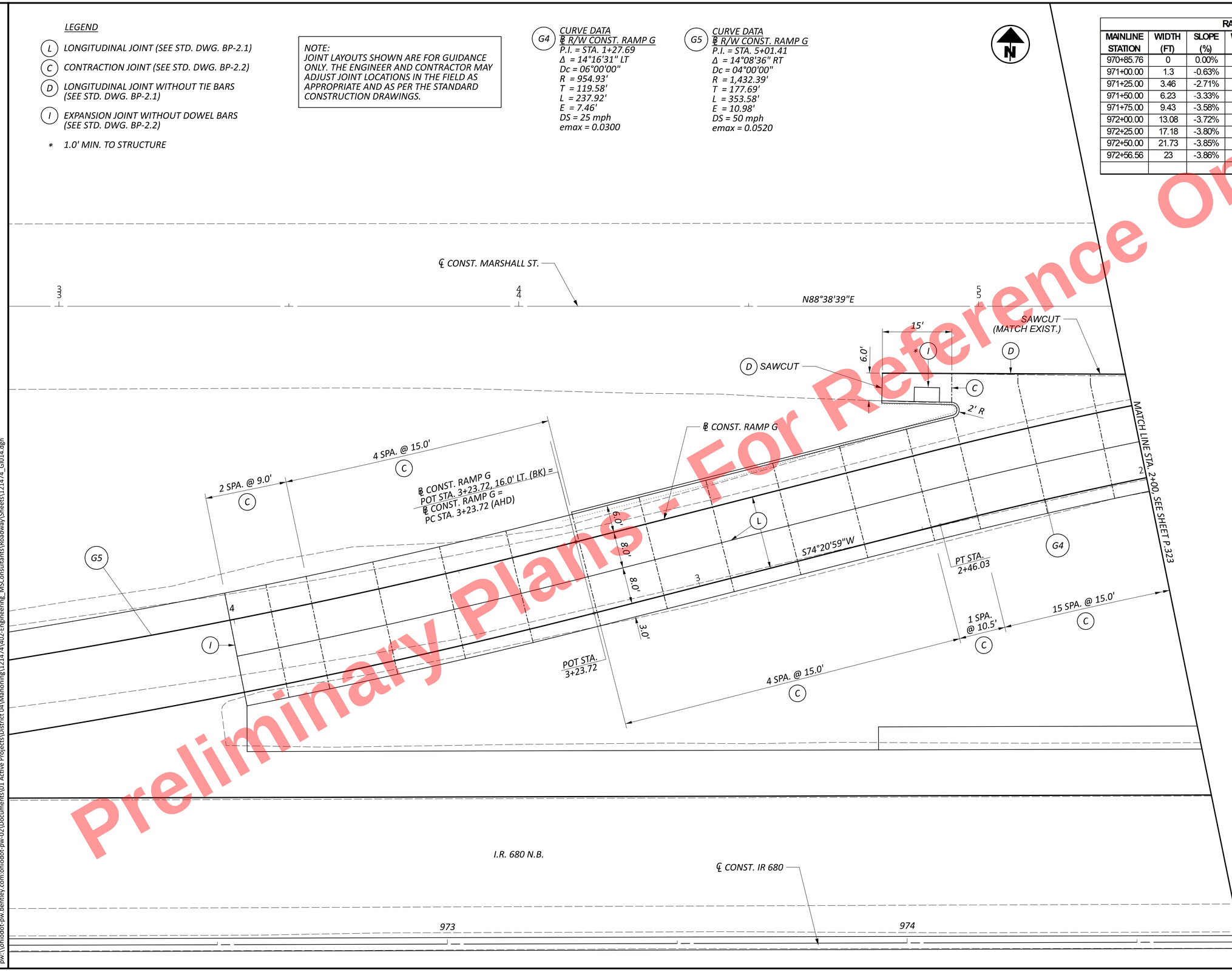

Preliminary Plans - For Reference Only

HORIZONTAL SCALE IN FEET
0 5 10 20

PAVEMENT JOINT DETAIL RAMP G MARSHALL ST.

DESIGN AGENCY
ms consultants, inc.

DESIGNER MSN
REVIEWER CMN 08/29/25
PROJECT ID 121474
SHEET P.322 TOTAL 655

MAH-680-4.58

MODEL: Sheet-1 PAPERSIZE: 34x22 (in.) DATE: 9/15/2025 TIME: 2:41:23 PM PLTDRV: OHDOT_PDF_Ex.pltcfg PENTBL: OHDOT_UTPen.tbl USER: DHall@msconsultants.com WORKSPACE: OHDOTCEv02 WORKSET: 121474 PRODUCT: OpenRoadsDesigner 24.00.00.205
pw:\\ohiodot-pw.bentley.com:ohiodot-pw-02\Documents\01 Active Projects\District 04\Mahoning\121474\02-Engineering_MSConsultants\Roadway\Sheets\121474_GI014.dgn

LEGEND

(L) LONGITUDINAL JOINT (SEE STD. DWG. BP-2.1)

(C) CONTRACTION JOINT (SEE STD. DWG. BP-2.2)

(D) LONGITUDINAL JOINT WITHOUT TIE BARS (SEE STD. DWG. BP-2.1)

NOTE:
JOINT LAYOUTS SHOWN ARE FOR GUIDANCE ONLY. THE ENGINEER AND CONTRACTOR MAY ADJUST JOINT LOCATIONS IN THE FIELD AS APPROPRIATE AND AS PER THE STANDARD CONSTRUCTION DRAWINGS.

(G4) CURVE DATA
℄ R/W CONST. RAMP G
P.I. = STA. 1+27.69
Δ = 14°16'31" LT
Dc = 06°00'00"
R = 954.93'
T = 119.58'
L = 237.92'
E = 7.46'
DS = 25 mph
emax = 0.0300

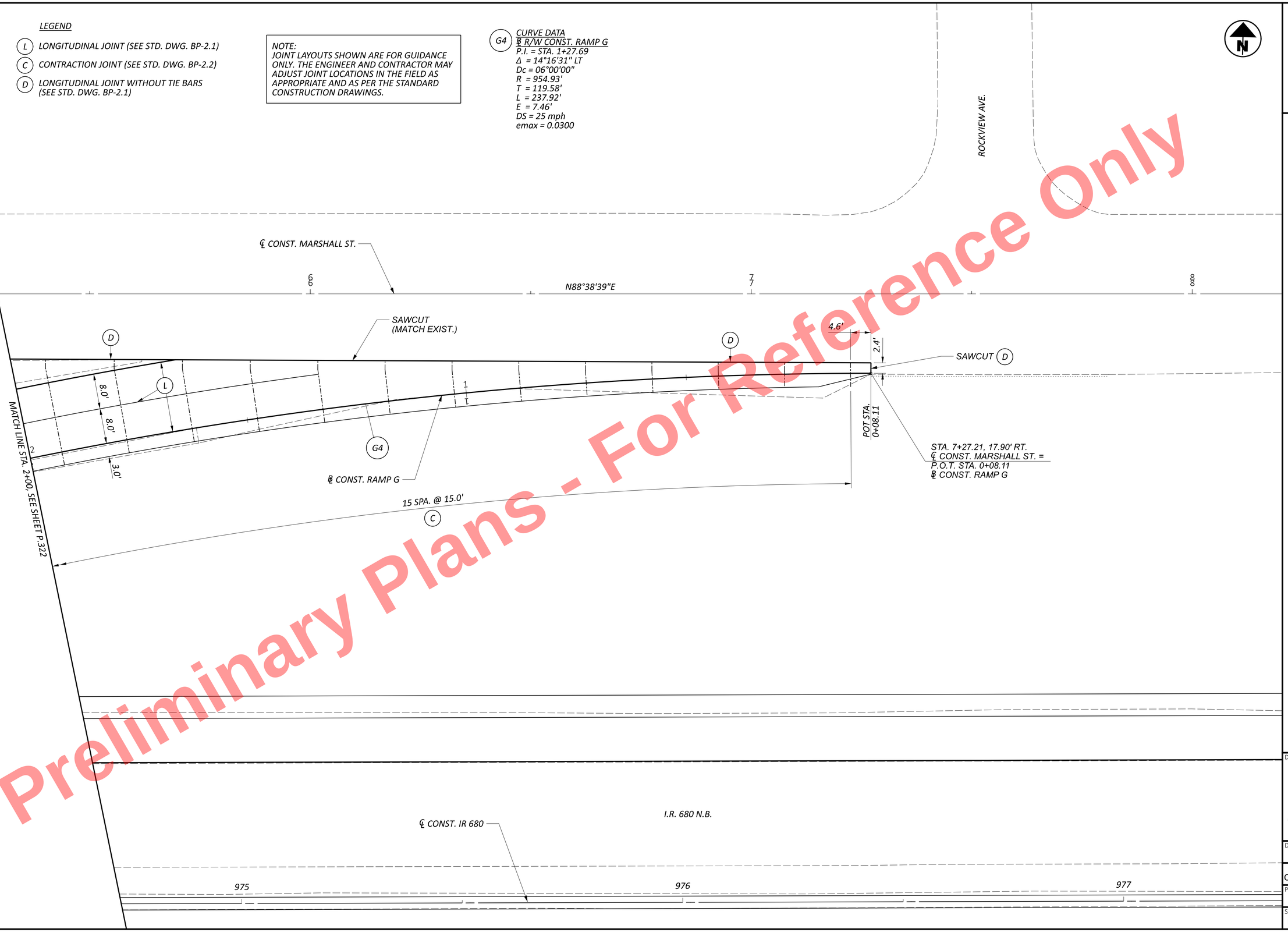

Preliminary Plans - For Reference Only

HORIZONTAL SCALE IN FEET
0 5 10 20

PAVEMENT JOINT DETAIL RAMP G MARSHALL ST.

DESIGN AGENCY
ms consultants, inc.

DESIGNER MSN
REVIEWER CMN 08/29/25
PROJECT ID 121474
SHEET P.323 TOTAL 655

MAH-680-4.58

MODEL: Sheet-2 PAPERSIZE: 34x22 (in.) DATE: 9/15/2025 TIME: 2:41:25 PM PLTDRV: OHDOT_PDF_E+.pltcfg PENTBL: OHDOT_UTPen.tbl USER: DHall@msconsultants.com WORKSPACE: OHDOTCEv02 WORKSET: 121474 PRODUCT: OpenRoadsDesigner 24.00.00.205
pw:\\ohiodot-pw.bentley.com:ohiodot-pw-02\Documents\01 Active Projects\District 04\Mahoning\121474\402 Engineering_MSConsultants\Roadway\Sheets\121474_GI014.dgn

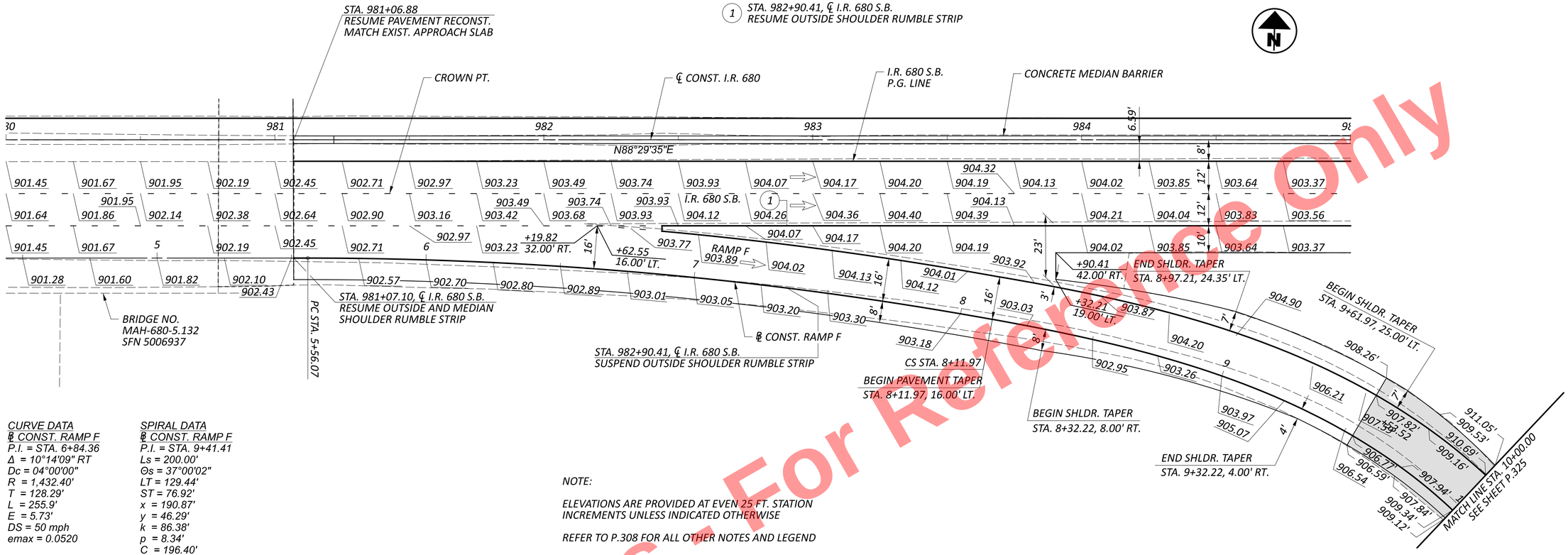

CURVE DATA
℄ CONST. RAMP F
P.I. = STA. 6+84.36
Δ = 10°14'09" RT
Dc = 04°00'00"
R = 1,432.40'
T = 128.29'
L = 255.9'
E = 5.73'
DS = 50 mph
emax = 0.0520

SPIRAL DATA
℄ CONST. RAMP F
P.I. = STA. 9+41.41
Ls = 200.00'
Θs = 37°00'02"
LT = 129.44'
ST = 76.92'
x = 190.87'
y = 46.29'
k = 86.38'
p = 8.34'
C = 196.40'
C.S. = Sta. 8+11.97
S.C. = Sta. 10+11.97
C.B. = S67°38'18"E

NOTE:

ELEVATIONS ARE PROVIDED AT EVEN 25 FT. STATION INCREMENTS UNLESS INDICATED OTHERWISE

REFER TO P.308 FOR ALL OTHER NOTES AND LEGEND

RAMP F

MAINLINE STATION	WIDTH (FT)	SLOPE (%)	WIDTH (FT)	SLOPE (%)	RAMP STATION	RAMP SIDE
982+19.82	0	0.00%	N/A	N/A	6+62.55	SB
982+25.00	0.4	-2.66%	N/A	N/A	6+67.70	SB
982+50.00	2.57	-3.13%	N/A	N/A	6+92.52	SB
982+75.00	5.17	-1.71%	N/A	N/A	7+17.38	SB
983+00.00	8.22	-0.79%	N/A	N/A	7+42.25	SB
983+25.00	11.71	-0.57%	N/A	N/A	7+67.24	SB
983+50.00	15.65	-0.92%	N/A	N/A	7+92.30	SB
983+75.00	20.04	-0.93%	N/A	N/A	8+07.42	SB
983+90.41	23	-0.79%	N/A	N/A	8+32.21	SB

Preliminary Plans - For Reference Only

HORIZONTAL SCALE IN FEET
0 10 20 40

RAMP TERMINAL DETAIL - I.R. 680 N.B.
HIGH ST. RAMP F

DESIGN AGENCY
ms consultants, inc.

DESIGNER MSN
REVIEWER CMN 08/29/25
PROJECT ID 121474
SHEET P.324 TOTAL 655

MAH-680-4.58

MODEL: 113321_GI027 PAPERSIZE: 34x22 (in.) DATE: 9/15/2025 TIME: 2:41:32 PM PLTDRV: OHDOT_PDF_E+.pltcfg PENTBL: OHDOT_UTPen.tbl USER: DHall@msconsultants.com WORKSPACE: OHDOTCtx02 WORKSET: 121474 PRODUCT: OpenRoadsDesigner 24.00.00.205
pw:\\ohiodot-pw.bentley.com:ohiodot-pw-02\Documents\01 Active Projects\District 04\Mahoning\121474\02-Engineering_MSConsultants\Roadway\Sheets\121474_GI015.dgn

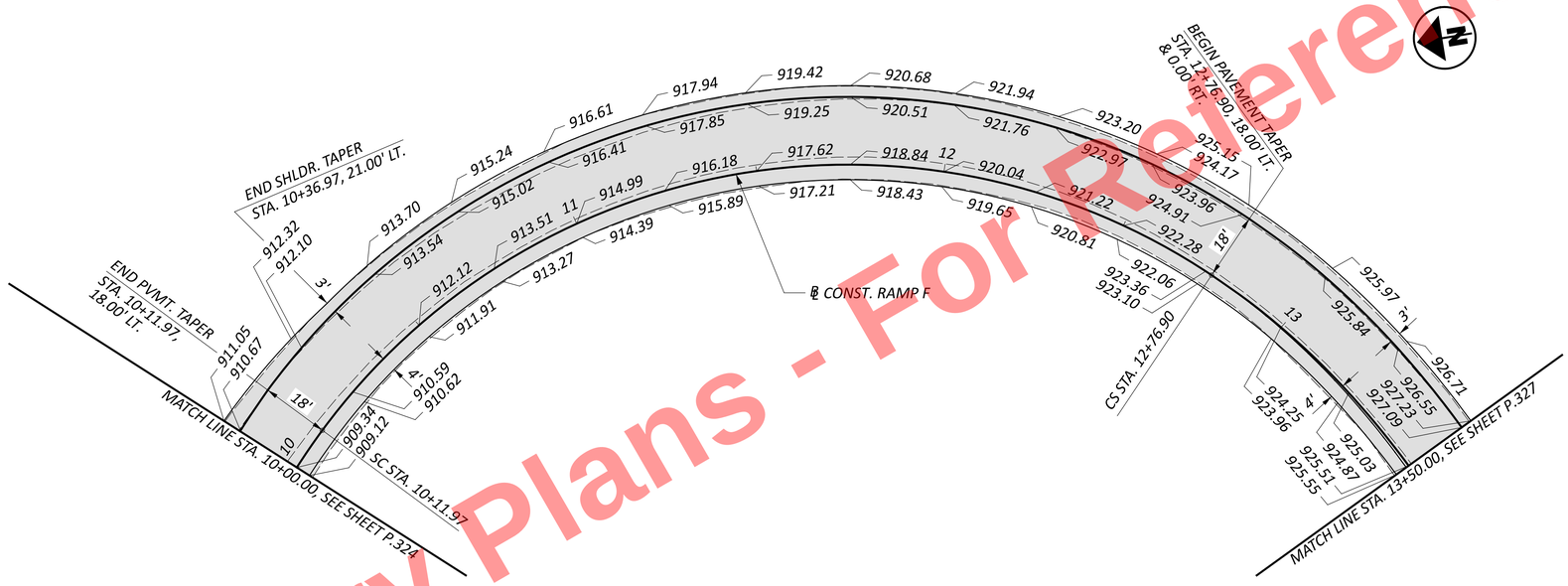

Preliminary Plans - For Reference Only

NOTE:

ELEVATIONS ARE PROVIDED AT EVEN 25 FT. STATION INCREMENTS UNLESS INDICATED OTHERWISE

REFER TO P.308 FOR ALL OTHER NOTES AND LEGEND

HORIZONTAL SCALE IN FEET
0 5 10 20

RAMP DETAIL
HIGH STREET RAMP F

DESIGN AGENCY
ms consultants, inc.

DESIGNER CJR
REVIEWER CMN 08/29/25
PROJECT ID 121474
SHEET P.325 TOTAL 655

MAH-680-4.58

MODEL: Sheet PAPERSIZE: 34x22 (in.) DATE: 9/15/2025 TIME: 2:41:39 PM PLTDRV: OHDOT_PDF_E+.pltcfg PENTBL: OHDOT_UTPen.tbl USER: DHall@msconsultants.com WORKSPACE: OHDOTCEv02 WORKSET: 121474 PRODUCT: OpenRoadsDesigner 24.00.00.205
pw:\\ohiodot-pw.bentley.com:ohiodot-pw-02\Documents\01 Active Projects\District 04\Mahoning\121474\02-Engineering_MSConsultants\Roadway\Sheets\121474_GI016.dgn

Preliminary Plans - For Reference Only

℄ CONST. EDWARD ST.

918.02 +00

920.35 +75

N20°22'31"W

922.72 +50

924.69 +25

℄ CONST. EDWARD ST.

℄ CONST. HIGH ST.

N88°48'29"E

926.11 +50

925.68 +75

925.66 +00

102°38'12"

℄ CONST. HIGH ST.
STA. 2+00.00 (BK) =
℄ CONST. HIGH ST.
STA. 0+00.00, 2.00' LT. (AHD)
EL = 925.66

(925.67) +00

925.72 +25

℄ CONST. EDWARDS ST.
STA. 1+00.00 =
℄ CONST. EDWARDS ST.
STA. 0+00.00, 6.50' RT.
EL = 925.73

925.87 +75

926.29 +50

℄ CONST. EDWARD ST.

N01°32'01"W

926.89 +25

(E) STA. 16+26.84
BEGIN PAVEMENT TAPER, 2.50' RT.

(F) STA. 16+71.37
END QWICK KURB, 20.61' LT.

(G) STA. 16+77.86
END PAVEMENT TAPER, 3.42' LT.

(H) ℄ CONST. RAMP F
STA. 17+13.58 =
℄ CONST. EDWARD ST.
STA. 0+18.89, 23.75' RT. =
℄ CONST. HIGH ST.
STA. 0+16.12, 27.64' LT.

NOTES:

ELEVATIONS PROVIDED AT CURB LOCATIONS ARE THE PAVEMENT ELEVATION AT THE FACE OF CURB.

STATION/OFFSET PROVIDED AT SHOULDER AND WALK LOCATIONS ARE AT THE BACK OF SHOULDER AND WALK.

= PROPOSED PAVEMENT REPLACEMENT TO EXISTING ELEVATIONS

REFER TO P.308 FOR OTHER NOTES AND LEGEND

(1) 925.41 1.98' LT.
(2) 925.70 15.86' LT.
(3) 925.81
(4) 925.38 2.10' LT.
(5) 925.41 3.37' LT.
(6) 925.68 15.81' LT.

STA. 16+77.72
END CURB, TYPE 6, 1.54' LT.
END SHOULDER, 1.54' LT.

STA. 16+76.54
END CURB TAPER, TYPE 6, 1.65' LT.
END SHOULDER TAPER, 1.65' LT.

925.78 +75

925.81 +71.31

INLET NO. 2A
STA. 16+67.54, 1.85' LT.
GRATE EL. = 925.43'

925.35
925.37

925.99 +50

925.62 1.24' LT.

925.13 +00

925.44 3.30' LT.

925.65 2.92' LT.

925.88 16.21' LT.

926.16

925.60 15.76' LT.

4.50' R

SAWCUT (MATCH EXIST.)

4.75' R

℄ CONST. HIGH ST.

925.75 6.79' LT.

925.81 +50

925.80 +54.27

925.79

925.80 7.43' LT.

925.85

925.86 8.78' LT.

925.91 +75

925.81 +60.97

N88°46'29"E

926.11 +00

926.10

926.11 11.18' LT.

℄ CONST. RAMP F

(E) 926.11 +25

925.92 0.44' LT.

926.29 +00

926.23 0.39' RT.

926.60 +75

926.55 1.22' RT.

926.68 2.05' RT.

927.00 +50

S81°59'27"W

16

14.0'

925.94 2.50' LT.

926.19 16.63' LT.

926.43

2.0'

926.30 2.50' LT.

926.67 17.04' LT.

926.91

926.64 2.50' LT.

926.98 17.46' LT.

927.23

926.80 2.50' LT.

927.21 17.87' LT.

927.53

927.45 20.50' LT.

5.5'

2.0'

926.46

926.47 13.58' LT.

926.80

926.81 15.97' LT.

926.84 +50

927.11

927.12 18.37' LT.

08°56'58"

926.50 +25

N79°49'31"E

927.15 +75

925.58 14.28' RT.

925.60 14.17' RT.

925.68 13.95' RT.

925.97 13.57' RT.

926.31 13.19' RT.

926.86 12.81' RT.

926.98 12.42' RT.

BEGIN PAVEMENT PLANING AND RESURFACING
℄ CONST. RAMP H
STA. 0+52.93

℄ CONST. RAMP H
STA. 0+28.15 =
℄ CONST. HIGH ST.
STA. 0+30.17, 20.25' RT.

℄ CONST. RAMP H

℄ CONST. RAMP H
STA. 1+58.32 =
℄ CONST. HIGH ST.
STA. 1+58.71
EL = 926.96

MATCH LINE STA. 15+50, SEE SHEET P.327

HORIZONTAL SCALE IN FEET
0 5 10 20

INTERSECTION DETAIL HIGH ST. RAMP F AND RAMP H

MAH-680-4.58

MODEL: Sheet-1 PAPERSIZE: 34x22 (in.) DATE: 9/15/2025 TIME: 2:41:46 PM PLTDRV: OHDOT_PDF_Ex.pltcfg PENTBL: OHDOT_UTPen.tbl USER: DHall@mscconsultants.com WORKSPACE: OHDOTCEv02 WORKSET: 121474 PRODUCT: OpenRoadsDesigner 24.00.00.205
pw:\\ohiodot-pw.bentley.com:ohiodot-pw-02\Documents\01 Active Projects\District 04\Mahoning\121474\402 Engineering_MSConsultants\Roadway\Sheets\121474_GI017.dgn

DESIGN AGENCY
ms consultants. inc.

DESIGNER CJR
REVIEWER CMN 08/29/25
PROJECT ID 121474
SHEET P.326 TOTAL 655

NOTES:

- TRANSITION CURB FROM FULL HEIGHT (6") TO 0" IN 10 FEET.
- TRANSITION CURB FROM 0" TO FULL HEIGHT (6") IN 10 FEET.

ELEVATIONS PROVIDED AT CURB LOCATIONS ARE THE PAVEMENT ELEVATION AT THE FACE OF CURB.

STATION/OFFSET PROVIDED AT SHOULDER AND WALK LOCATIONS ARE AT THE BACK OF SHOULDER AND WALK.

= PROPOSED PAVEMENT REPLACEMENT TO EXISTING ELEVATIONS

REFER TO P.308 FOR OTHER NOTES AND LEGEND

F8 SPIRAL DATA
℄ CONST. RAMP F
P.I. = STA. 13+58.95
Ls = 235.35'
Θs = 38°50'01"
LT = 160.85'
ST = 82.05'
x = 224.77'
y = 51.45'
k = 115.90'
p = 13.08'
C = 230.58'
CS = Sta. 12+76.90
ST = Sta. 15+12.25
C.B. = S69°05'50"W

H3 SPIRAL DATA
℄ CONST. RAMP H
P.I. = STA. 3+80.60
Ls = 200.00'
Θs = 13°28'23"
LT = 133.72'
ST = 67.02'
x = 198.90'
y = 15.61'
k = 99.82'
p = 3.91'
C = 199.51'
TS = Sta. 2+46.88
SS = Sta. 4+46.88
C.B. = N75°20'13"E

(A) STA. 13+54.27
BEGIN SHOULDER TAPER, 21.16' LT.

(B) STA. 13+56.09
BEGIN QWICK KURB, 25.33' LT.

(C) STA. 13+79.27
BEGIN SHOULDER TAPER, 20.22' LT.

(D) STA. 15+12.25
END PAVEMENT TAPER, 2.50' LT.

(I) STA. 3+90.17
BEGIN SHOULDER TAPER, 17.47' LT.

(J) STA. 3+88.08
END CURB, TYPE 6, 3.75' RT.
BEGIN SHOULDER TAPER, 3.75' RT.

(K) STA. 3+65.17
END SHOULDER TAPER, 16.50' LT.

(L) STA. 2+60.82
END SHOULDER TAPER, 5.00' RT.

(N) INLET NO. 2A
STA. 2+09.75, 16.50' LT.
GRATE EL. = 928.01'

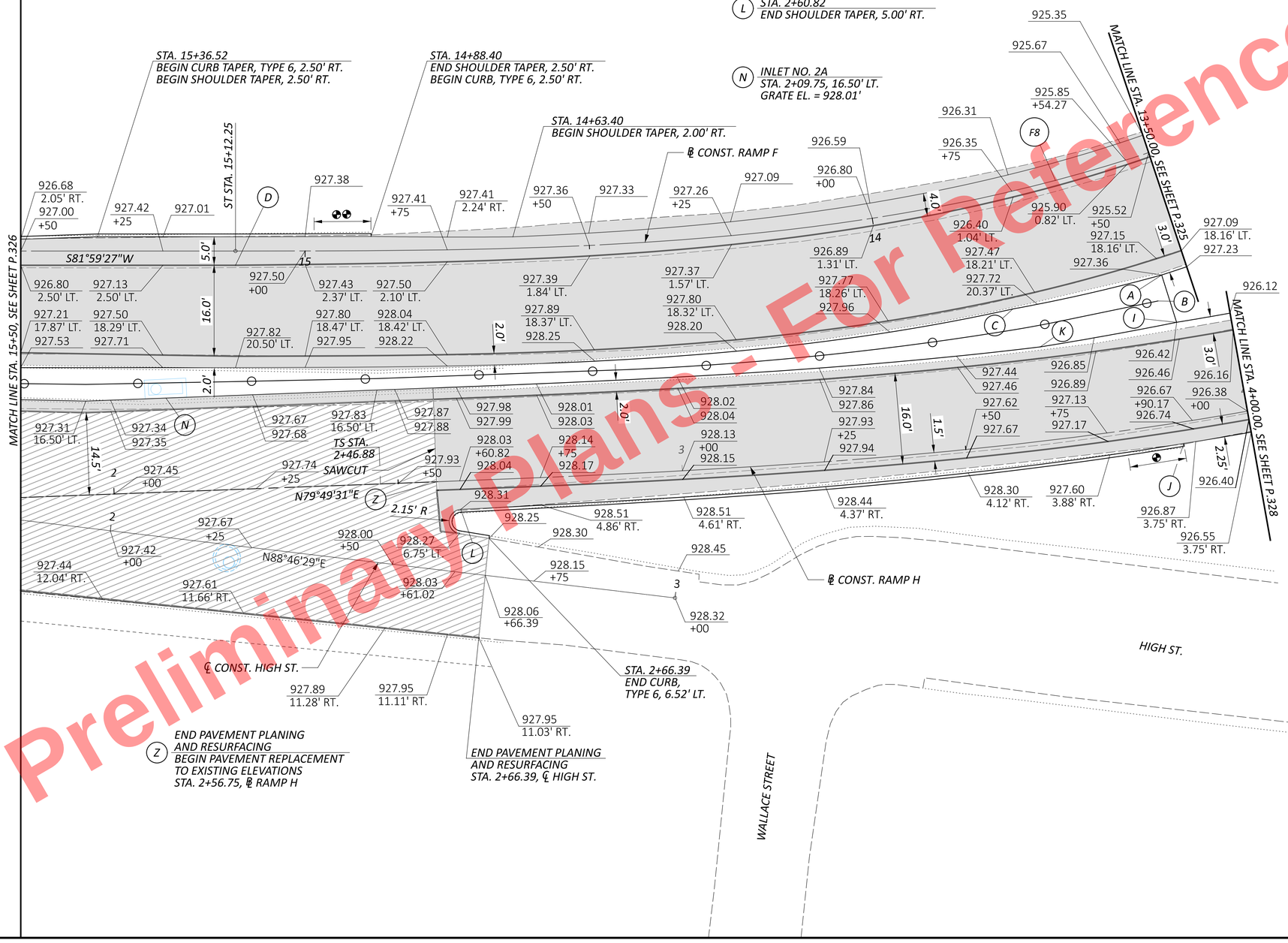

Preliminary Plans - Not For Reference Only

HORIZONTAL SCALE IN FEET
0 5 10 20

INTERSECTION DETAIL
HIGH ST. RAMP F AND RAMP H

DESIGN AGENCY
ms consultants, inc.

DESIGNER CJR
REVIEWER CMN 08/29/25
PROJECT ID 121474
SHEET P.327 TOTAL 655

MAH-680-4.58

MODEL: Sheet-2 PAPERSIZE: 34x22 (in.) DATE: 9/15/2025 TIME: 2:41:48 PM PLTDRV: OHDOT_PDF_E+.pltcfg PENTBL: OHDOT_UTPen.tbl USER: DHall@msconsultants.com WORKSPACE: OHDOTCEv02 WORKSET: 121474 PRODUCT: OpenRoadsDesigner 24.00.00.205
pw:\\ohiodot-pw.bentley.com:ohiodot-pw-02\Documents\01 Active Projects\District 04\Mahoning\121474\A02-Engineering_MSConsultants\Roadway\Sheets\121474_GI017.dgn

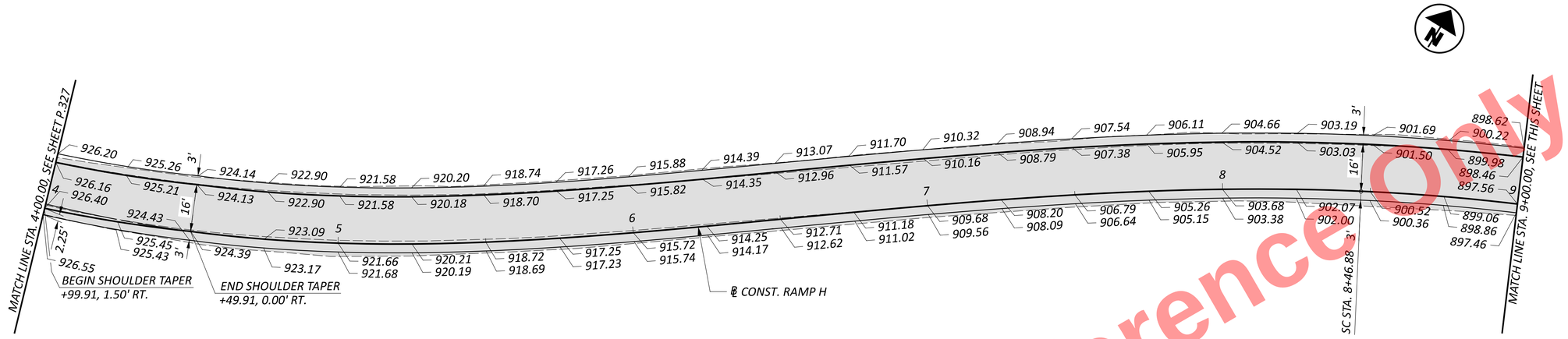

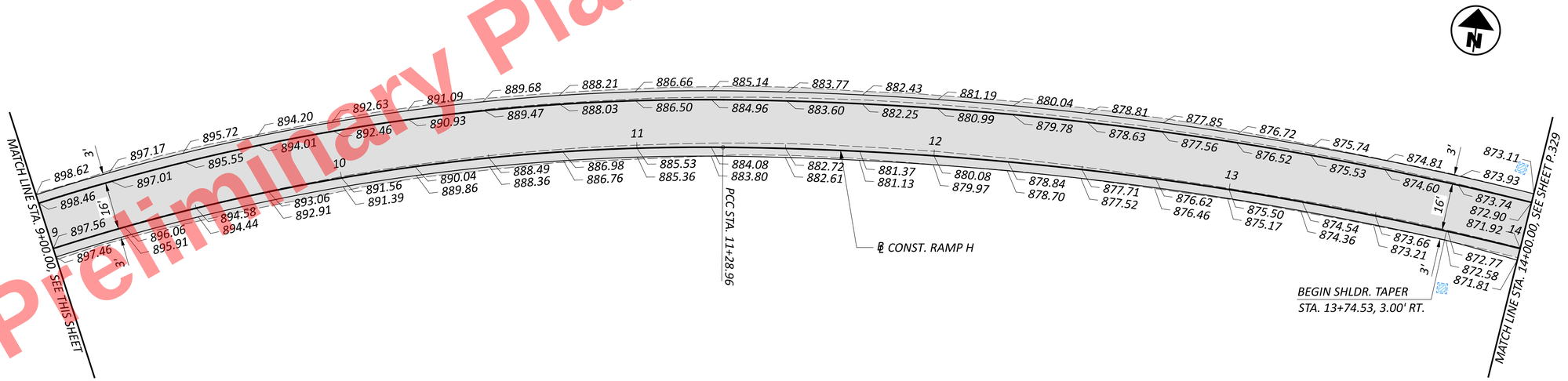

Preliminary Plans - For Reference Only

HORIZONTAL SCALE IN FEET
0 5 10 20

RAMP DETAIL
HIGH STREET RAMP H

NOTE:

ELEVATIONS ARE PROVIDED AT EVEN 25 FT. STATION INCREMENTS UNLESS INDICATED OTHERWISE

REFER TO P.308 FOR ALL OTHER NOTES AND LEGEND

DESIGN AGENCY
ms consultants, inc.

DESIGNER
CJR

REVIEWER
CMN 08/29/25

PROJECT ID
121474

SHEET P.328 | TOTAL 655

MAH-680-4.58

MODEL: Sheet PAPERSIZE: 34x22 (in.) DATE: 9/15/2025 TIME: 2:41:54 PM PLTDRV: OHDOT_PDF_E+.pltcfg PENTBL: OHDOT_UTPen.tbl USER: DHall@msconsultants.com WORKSPACE: OHDOTCEv02 WORKSET: 121474 PRODUCT: OpenRoadsDesigner 24.00.00.205
pw:\\ohiodot-pw.bentley.com:ohiodot-pw-02\Documents\01 Active Projects\District 04\Mahoning\121474\A02-Engineering_MSConsultants\Roadway\Sheets\121474_GI018.dgn

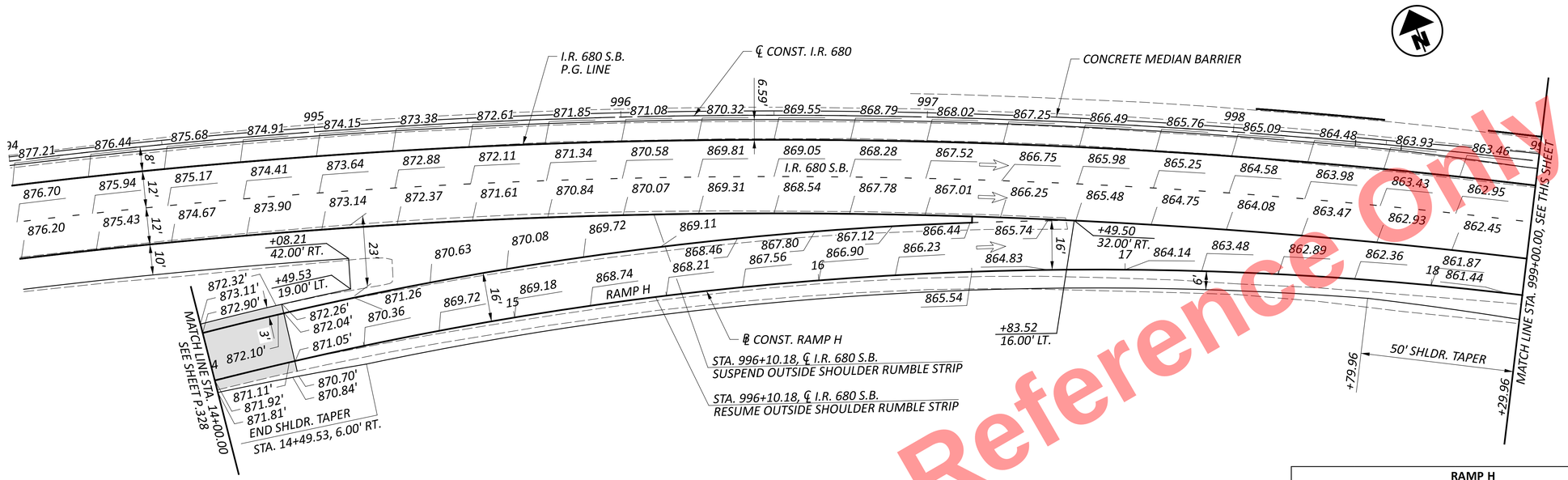

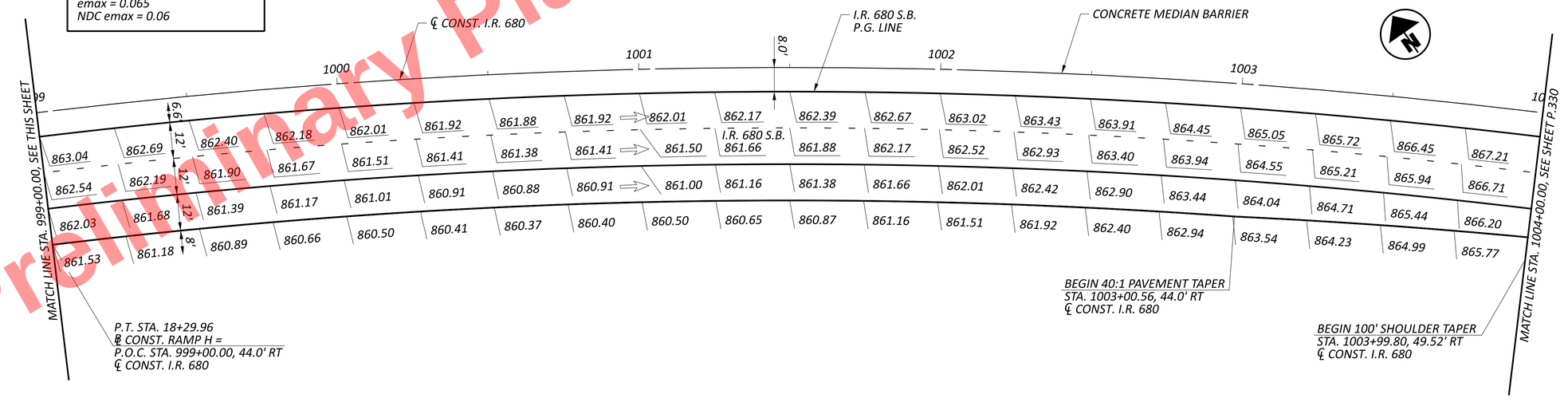

CURVE DATA
℄ CONST. I.R. 680
P.I. = STA. 1003+44.66
Δ = 66°37'13" RT
Dc = 02°45'00"
R = 2,083.48'
T = 1,369.12'
L = 2,422.55'
E = 409.58'
DS = 50 mph
emax = 0.042 *

CURVE DATA
℄ CONST. RAMP H
P.I. = STA. 14+90.51
Δ = 34°35'41" RT
Dc = 04°56'06"
R = 1,161.00'
T = 361.55'
L = 701'
E = 54.99'
DS = 50 mph
emax = 0.0560

* = CROSS SLOPE TRANSITIONS TO/FROM 0.065 TO MEET THE CROSS SLOPE OF EXISTING BRIDGE MAH-680-5.601

NDC
emax = 0.06

D.E. #5 SUPERELEVATION RATE:
CURVE #29
emax = 0.065
NDC emax = 0.06

RAMP H

MAINLINE STATION	WIDTH (FT)	SLOPE (%)	WIDTH (FT)	SLOPE (%)	RAMP STATION	RAMP SIDE
995+08.21	23	-6.98%	N/A	N/A	14+49.53	SB
995+25.00	20.74	-7.28%	N/A	N/A	14+65.41	SB
995+50.00	17.57	-7.43%	N/A	N/A	14+89.67	SB
995+75.00	14.6	-6.49%	N/A	N/A	15+14.02	SB
996+00.00	11.86	-5.61%	N/A	N/A	15+38.20	SB
996+25.00	9.33	-5.61%	N/A	N/A	15+62.49	SB
996+50.00	7.02	-5.62%	N/A	N/A	15+86.79	SB
996+75.00	4.93	-5.63%	N/A	N/A	16+11.05	SB
997+00.00	3.06	-5.63%	N/A	N/A	16+35.38	SB
997+25.00	1.41	-5.69%	N/A	N/A	16+59.73	SB
997+49.50	0	0.00%	N/A	N/A	16+83.52	SB

NOTE:

ELEVATIONS ARE PROVIDED AT EVEN 25 FT. INCREMENTS UNLESS INDICATED OTHERWISE

REFER TO P.308 FOR ALL OTHE RNOTES AND LEGEND

Preliminary Plans - For Reference Only

HORIZONTAL SCALE IN FEET
0 10 20 40

RAMP TERMINAL DETAIL - I.R. 680 S.B. HIGH ST. - RAMP H

DESIGN AGENCY
ms consultants, inc.

DESIGNER MSN
REVIEWER CMN 08/29/25
PROJECT ID 121474
SHEET P.329 TOTAL 655

MAH-680-4.58

MODEL: 113321_GI028 PAPERSIZE: 34x22 (in.) DATE: 9/15/2025 TIME: 2:42:03 PM PLTDRV: OHDOT_PDF_E+.pltcfg PENTBL: OHDOT_UTPen.tbl USER: DHall@msconsultants.com WORKSPACE: OHDOTCtv02 WORKSET: 121474 PRODUCT: OpenRoadsDesigner 24.00.00.205
pw:\\ohiodot-pw.bentley.com:ohiodot-pw-02\Documents\01 Active Projects\District 04\Mahoning\121474\02-Engineering_MSConsultants\Roadway\Sheets\121474_GI019.dgn

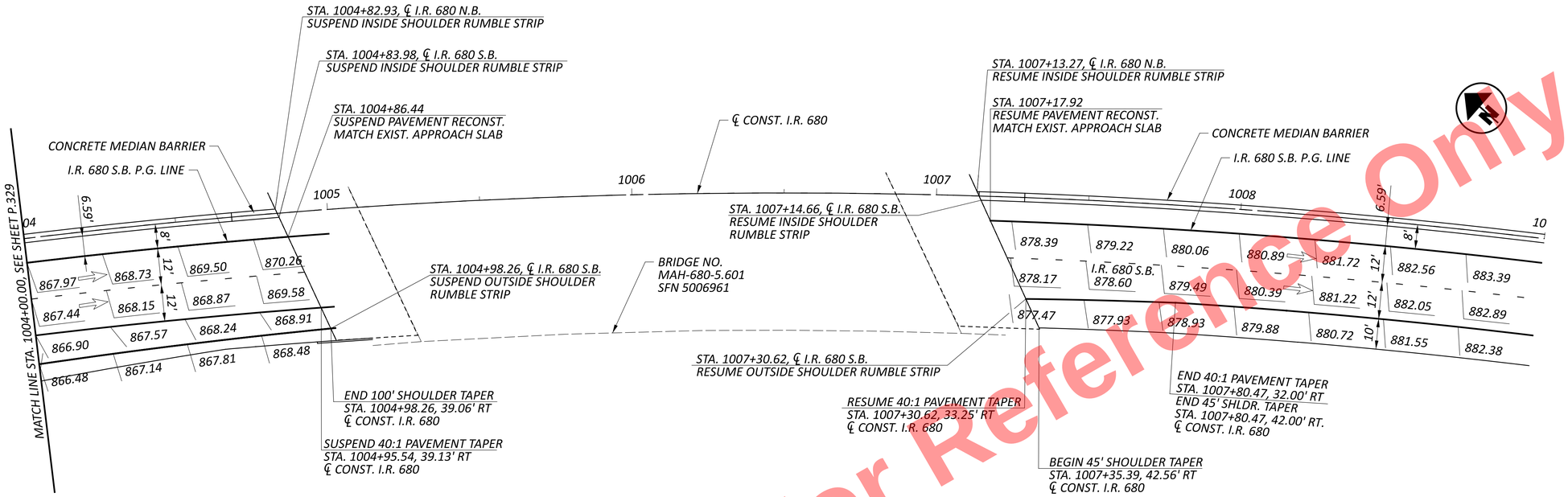

CURVE DATA
℄ CONST. I.R. 680
P.I. = STA. 1003+44.66
Δ = 66°37'13" RT
Dc = 02°45'00"
R = 2,083.48'
T = 1,369.12'
L = 2,422.55'
E = 409.58'
DS = 50 mph
*emax = 0.042 **

NDC
emax = 0.06

D.E. #5 SUPERELEVATION RATE:
CURVE #29
emax = 0.065
NDC emax = 0.06

** = CROSS SLOPE TRANSITIONS TO/FROM 0.065 TO MEET THE CROSS SLOPE OF EXISTING BRIDGE MAH-680-5.601*

NOTE:

ELEVATIONS ARE PROVIDED AT EVEN 25 FT. STATION INCREMENTS UNLESS INDICATED OTHERWISE

REFER TO P.308 FOR ALL OTHER NOTES AND LEGEND

Preliminary Plans - For Reference Only

HORIZONTAL SCALE IN FEET
0 10 20 40

RAMP TERMINAL DETAIL - I.R. 680 S.B. HIGH ST. - RAMP H

DESIGN AGENCY
ms consultants. inc.

DESIGNER
MSN

REVIEWER
CMN 08/29/25

PROJECT ID
121474

SHEET P.330 TOTAL 655

MAH-680-4.58

MODEL: 113321_GI029 PAPERSIZE: 34x22 (in.) DATE: 9/15/2025 TIME: 2:42:11 PM PLTDRV: OHDOT_PDF_E+.pltcfg PENTBL: OHDOT_UTPen.tbl USER: DHall@msconsultants.com WORKSPACE: OHDOTCtv02 WORKSET: 121474 PRODUCT: OpenRoadsDesigner 24.00.00.205
pw:\\ohiodot-pw.bentley.com:ohiodot-pw-02\Documents\01 Active Projects\District 04\Mahoning\121474\A02-Engineering_MSConsultants\Roadway\Sheets\121474_GI020.dgn

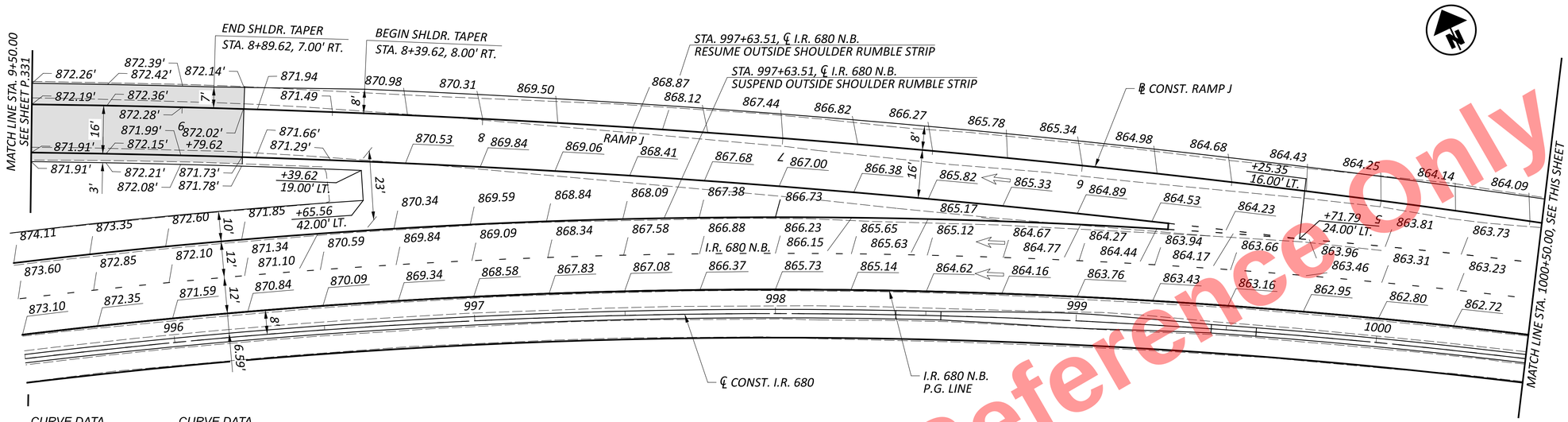

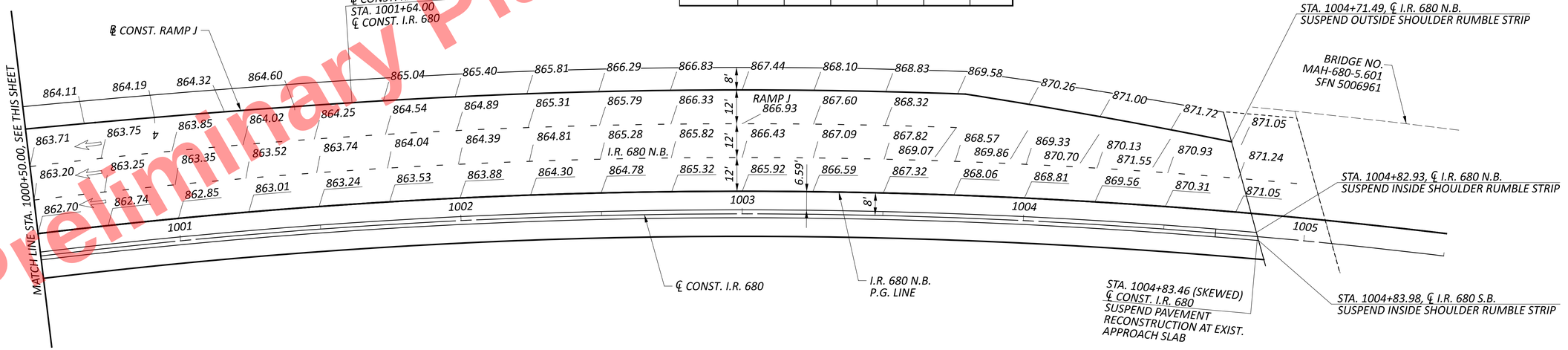

CURVE DATA
℄ CONST. I.R. 680
P.I. = STA. 1003+44.66
Δ = 66°37'13" RT
Dc = 02°45'00"
R = 2,083.48'
T = 1,369.12'
L = 2,422.55'
E = 409.58'
DS = 50 mph
*emax = 0.042 **

CURVE DATA
℄ CONST. RAMP J
P.I. = STA. 6+81.77
Δ = 10°32'12" LT
Dc = 01°30'00"
R = 3,819.72'
T = 352.21'
L = 702.44'
E = 16.20'
DS = 50 mph
emax = 0.0280

** = CROSS SLOPE TRANSITIONS TO/FROM 0.065 TO MEET THE CROSS SLOPE OF EXISTING BRIDGE MAH-680-5.601*

NDC
emax = 0.06

D.E. #5 SUPERELEVATION RATE:
CURVE #29
emax = 0.065
NDC emax = 0.06

RAMP J

MAINLINE STATION	WIDTH (FT)	SLOPE (%)	WIDTH (FT)	SLOPE (%)	RAMP STATION	RAMP SIDE
996+65.56	23	-1.01%	N/A	N/A	8+39.62	NB
996+75.00	21.99	-1.36%	N/A	N/A	8+30.15	NB
997+00.00	19.38	-1.97%	N/A	N/A	8+04.28	NB
997+25.00	16.93	-1.91%	N/A	N/A	7+78.44	NB
997+50.00	14.6	-2.73%	N/A	N/A	7+52.69	NB
997+75.00	12.42	-2.83%	N/A	N/A	7+26.90	NB
998+00.00	10.37	-2.83%	N/A	N/A	7+01.21	NB
998+25.00	8.46	-2.81%	N/A	N/A	6+75.54	NB
998+50.00	6.69	-2.89%	N/A	N/A	6+49.89	NB
998+75.00	5.05	-2.90%	N/A	N/A	6+24.31	NB
999+00.00	3.55	-2.79%	N/A	N/A	5+98.70	NB
999+25.00	2.19	-2.98%	N/A	N/A	5+73.14	NB
999+50.00	0.96	-3.79%	N/A	N/A	5+47.62	NB
999+71.79	0	0.00%	N/A	N/A	5+25.35	NB

NOTE:

ELEVATIONS ARE PROVIDED AT EVEN 25 FT. STATION INCREMENTS UNLESS INDICATED OTHERWISE

REFER TO P.308 FOR ALL OTHER NOTES AND LEGEND

Preliminary Plans - Not for Construction
Reference Only

HORIZONTAL SCALE IN FEET
0 10 20 40

RAMP TERMINAL DETAIL - I.R. 680 N.B. MARSHALL ST. - RAMP J

DESIGN AGENCY
ms consultants, inc.

DESIGNER MSN
REVIEWER CMN 08/29/25
PROJECT ID 121474
SHEET P.331 TOTAL 655

MAH-680-4.58

MODEL: 113321_GI030 PAPERSIZE: 34x22 (in.) DATE: 9/15/2025 TIME: 2:42:18 PM PLTDRV: OHDOT_PDF_E+.pltcfg PENTBL: OHDOT_UTPen.tbl USER: DHall@msconsultants.com WORKSPACE: OHDOTCtx02 WORKSET: 121474 PRODUCT: OpenRoadsDesigner 24.00.00.205
pw:\\ohiodot-pw.bentley.com:ohiodot-pw-02\Documents\01 Active Projects\District 04\Mahoning\121474\402-Engineering_MSConsultants\Roadway\Sheets\121474_GI021.dgn
USER: DHall@msconsultants.com

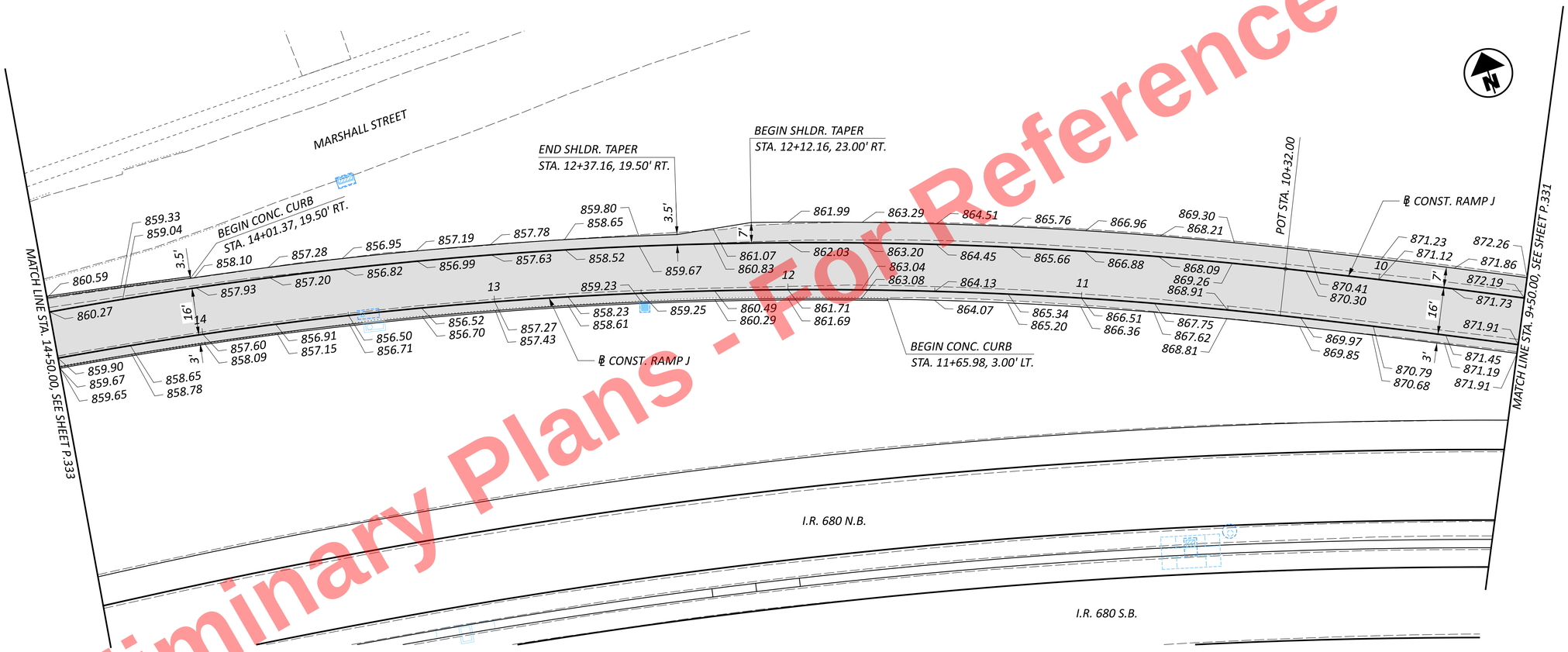

Preliminary Plans - For Reference Only

NOTE:

ELEVATIONS ARE PROVIDED AT EVEN 25 FT. STATION INCREMENTS UNLESS INDICATED OTHERWISE

REFER TO P.308 FOR ALL OTHER NOTES AND LEGEND

HORIZONTAL SCALE IN FEET
0 5 10 20

RAMP DETAIL
MARSHALL STREET RAMP J

DESIGN AGENCY
ms consultants, inc.

DESIGNER CJR
REVIEWER CMN 08/29/25
PROJECT ID 121474
SHEET P.332 TOTAL 655

MAH-680-4.58

MODEL: Sheet PAPERSIZE: 34x22 (in.) DATE: 9/15/2025 TIME: 2:42:25 PM PLTDRV: OHDOT_PDF_E+.pltcfg PENTBL: OHDOT_UTPen.tbl USER: DHall@msconsultants.com WORKSPACE: OHDOTCEv02 WORKSET: 121474 PRODUCT: OpenRoadsDesigner 24.00.00.205
pw:\\ohiodot-pw.bentley.com:ohiodot-pw-02\Documents\01 Active Projects\District 04\Mahoning\121474\A02-Engineering_MSConsultants\Roadway\Sheets\121474_GI022.dgn

NOTES:

- TRANSITION CURB FROM FULL HEIGHT (6") TO 0" IN 10 FEET.

ELEVATIONS PROVIDED AT CURB LOCATIONS ARE THE PAVEMENT ELEVATION AT THE FACE OF CURB.

STATION/OFFSET PROVIDED AT SHOULDER AND WALK LOCATIONS ARE AT THE BACK OF SHOULDER AND WALK.

= PROPOSED PAVEMENT REPLACEMENT TO EXISTING ELEVATIONS

REFER TO P.308 FOR ALL OTHER NOTES AND LEGEND

J6 CURVE DATA
℄ R/W CONST. RAMP J
P.I. = STA. 13+64.55
Δ = 26°08'27" LT.
Dc = 04°00'00"
R = 1,432.39'
T = 332.55'
L = 653.52'
E = 38.10'
DS = 35 mph
emax = MATCH EXISTING

HORIZONTAL SCALE IN FEET
0 5 10 20

S. WEST AVE.

℄ CONST. MARSHALL ST.

20

N88°38'39"E

867.11
+57.02

867.02
+50

866.82
+25

16

866.53
+00

865.98
+75

865.15
+50

863.97
+25

862.58
+00

15

STA. 16+57.02
END PAVEMENT PLANING & RESURFACING

℄ CONST. RAMP J
STA. 16+85.52 =
℄ CONST. MARSHALL ST.
STA. 19+48.65, 16.00' RT.
EL. = 867.41

J6

℄ CONST. RAMP J

POT STA. 21+00.00

STA. 14+92.60
END SHOULDER TAPER, 22.87' RT.
END CURB, TYPE 6, 22.87' RT.

MARSHALL ST.

861.59
21.97' RT.

860.59
20.91' RT.

862.58

862.37

862.18
+92.60

SAWCUT (MATCH EXIST.)

16.0'

861.47

860.27

861.24
+75

859.90
+50

3.0'

862.12

861.20

C.B. NO. 2-2A
STA. 14+53.31, 4.86' RT.
GRATE EL. = 860.15'

859.65

STA. 14+92.60
END PAVEMENT REPLACEMENT TO EXISTING ELEVATIONS
END CURB, TYPE 6, 3.00' LT.
BEGIN PAVEMENT PLANING & RESURFACING

MATCH LINE STA. 14+50.00, SEE SHEET P.332

I.R. 680 N.B.

Preliminary Plans - For Reference Only

INTERSECTION DETAIL MARSHALL ST. RAMP J

DESIGN AGENCY
ms consultants, inc.

DESIGNER MSN
REVIEWER CMN 08/29/25
PROJECT ID 121474
SHEET P.333 TOTAL 655

MAH-680-4.58

MODEL: Sheet PAPERSIZE: 34x22 (in.) DATE: 9/15/2025 TIME: 2:42:32 PM PLTDRV: OHDOT_PDF_E+.pltcfg PENTBL: OHDOT_UTPen.tbl USER: DHall@msconsultants.com WORKSPACE: OHDOTCEv02 WORKSET: 121474 PRODUCT: OpenRoadsDesigner 24.00.00.205
pw:\\ohiodot-pw.bentley.com:ohiodot-pw-02\Documents\01 Active Projects\District 04\Mahoning\121474\402-Engineering_MSConsultants\Roadway\Sheets\121474_GI023.dgn

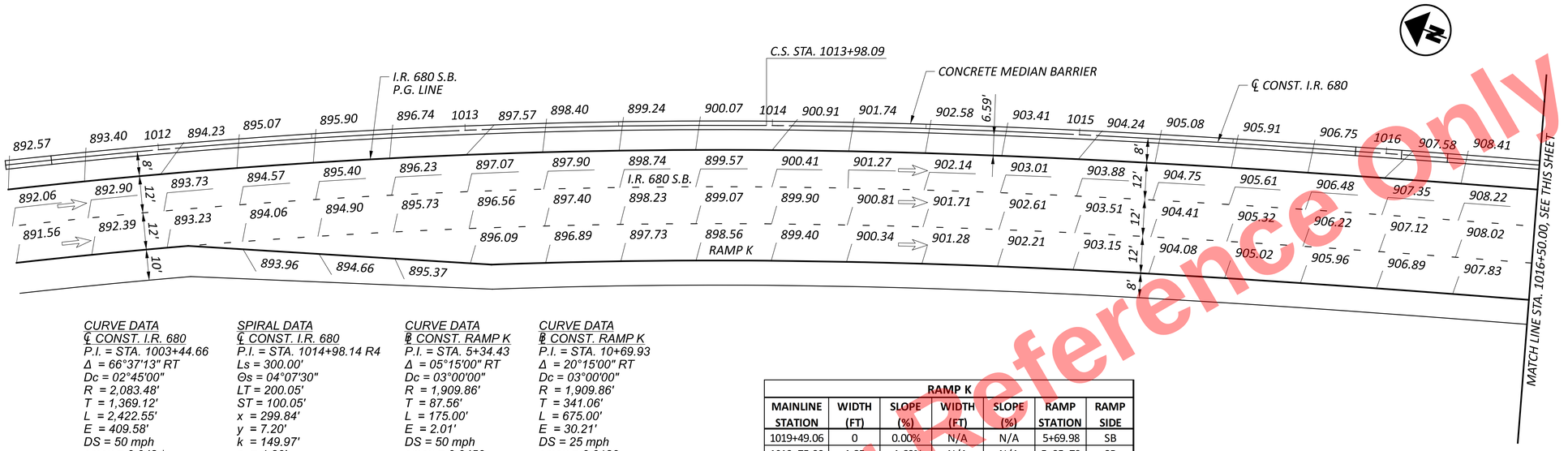

HORIZONTAL SCALE IN FEET
0 10 20 40

RAMP TERMINAL DETAIL - I.R. 680 S.B.
MARKET ST. - RAMP K

CURVE DATA
℄ CONST. I.R. 680
P.I. = STA. 1003+44.66
Δ = 66°37'13" RT
Dc = 02°45'00"
R = 2,083.48'
T = 1,369.12'
L = 2,422.55'
E = 409.58'
DS = 50 mph
emax = 0.042 *

NDC
emax = 0.06

SPIRAL DATA
℄ CONST. I.R. 680
P.I. = STA. 1014+98.14 R4
Ls = 300.00'
Θs = 04°07'30"
LT = 200.05'
ST = 100.05'
x = 299.84'
y = 7.20'
k = 149.97'
p = 1.80'
C = 299.93'
CS = Sta. 1013+98.09
ST = Sta. 1016+98.09
C.B. = S18°00'42"E

CURVE DATA
℄ CONST. RAMP K
P.I. = STA. 5+34.43
Δ = 05°15'00" RT
Dc = 03°00'00"
R = 1,909.86'
T = 87.56'
L = 175.00'
E = 2.01'
DS = 50 mph
emax = 0.0450

CURVE DATA
℄ CONST. RAMP K
P.I. = STA. 10+69.93
Δ = 20°15'00" RT
Dc = 03°00'00"
R = 1,909.86'
T = 341.06'
L = 675.00'
E = 30.21'
DS = 25 mph
emax = 0.0180

D.E. #5 SUPERELEVATION RATE:
CURVE #29
emax = 0.065
NDC emax = 0.06

* = CROSS SLOPE TRANSITIONS TO/FROM 0.065 TO MEET THE CROSS SLOPE OF EXISTING BRIDGE MAH-680-5.601

D.E. #5 SUPERELEVATION RATE:
RAMP PAVEMENT REPLACEMENT TO MEET EXISTING ELEVATIONS.
Φ VARIOUS EXISTING RAMP LOCATIONS WERE CONSTRUCTED WITH AN SE RATE UP TO A A MAX = 0.0833

NDC
emax = 0.06

RAMP K

MAINLINE STATION	WIDTH (FT)	SLOPE (%)	WIDTH (FT)	SLOPE (%)	RAMP STATION	RAMP SIDE
1019+49.06	0	0.00%	N/A	N/A	5+69.98	SB
1019+75.00	1.85	-1.69%	N/A	N/A	5+95+78	SB
1020+00.00	3.97	-1.61%	N/A	N/A	6+20.65	SB
1020+25.00	6.26	-1.60%	N/A	N/A	6+45.75	SB
1020+50.00	8.56	-0.52%	N/A	N/A	6+70.88	SB
1020+75.00	10.86	-0.48%	N/A	N/A	6+95.96	SB
1021+00.00	13.16	-0.43%	N/A	N/A	7+21.07	SB
1021+25.00	15.37	-0.50%	N/A	N/A	7+46.32	SB
1021+50.00	17.27	-0.15%	N/A	N/A	7+71.60	SB
1021+75.00	18.85	1.00%	N/A	N/A	7+96.88	SB

NOTE:

ELEVATIONS ARE PROVIDED AT EVEN 25 FT. STATION INCREMENTS UNLESS INDICATED OTHERWISE

REFER TO P.308 FOR ALL OTHER NOTES AND LEGEND

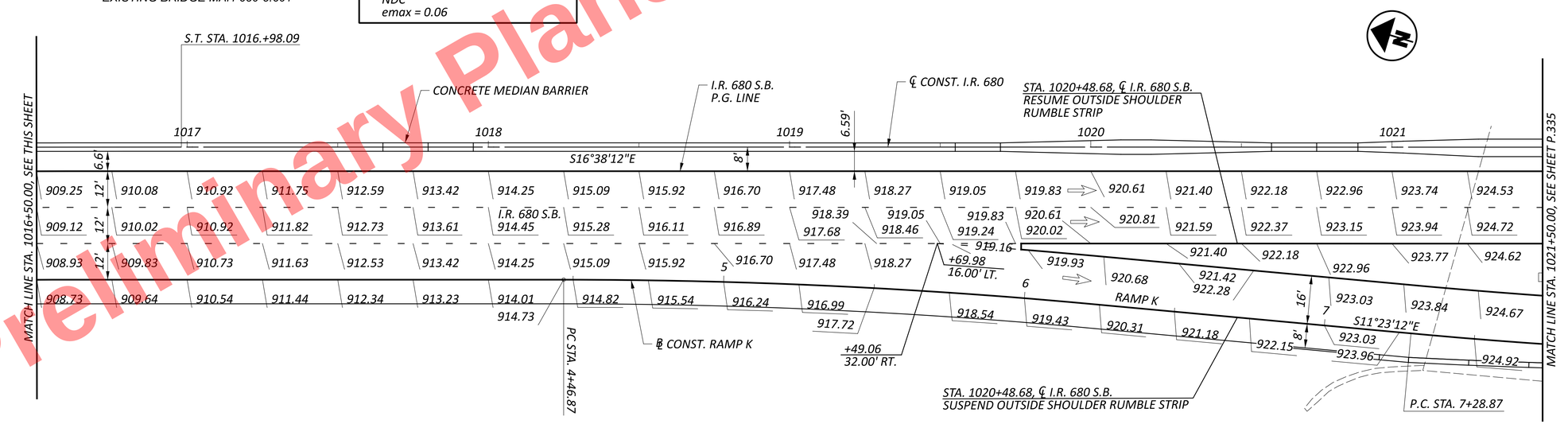

Preliminary Plans - Not For Reference Only

DESIGN AGENCY
ms consultants, inc.

DESIGNER MSN
REVIEWER CMN 08/29/25
PROJECT ID 121474
SHEET P.334 TOTAL 655

MAH-680-4.58

MODEL: 113321_GI031 PAPERSIZE: 34x22 (in.) DATE: 9/15/2025 TIME: 2:42:39 PM PLTDRV: OHDOT_PDF_E+.pltcfg PENTBL: OHDOT_UTPen.tbl USER: DHall@msconsultants.com WORKSPACE: OHDOTCivil02 WORKSET: 121474 PRODUCT: OpenRoadsDesigner 24.00.00.205
pw:\\ohiodot-pw.bentley.com:ohiodot-pw-02\Documents\01 Active Projects\District 04\Mahoning\121474\d02-Engineering_MSConsultants\Roadway\Sheets\121474_GI024.dgn

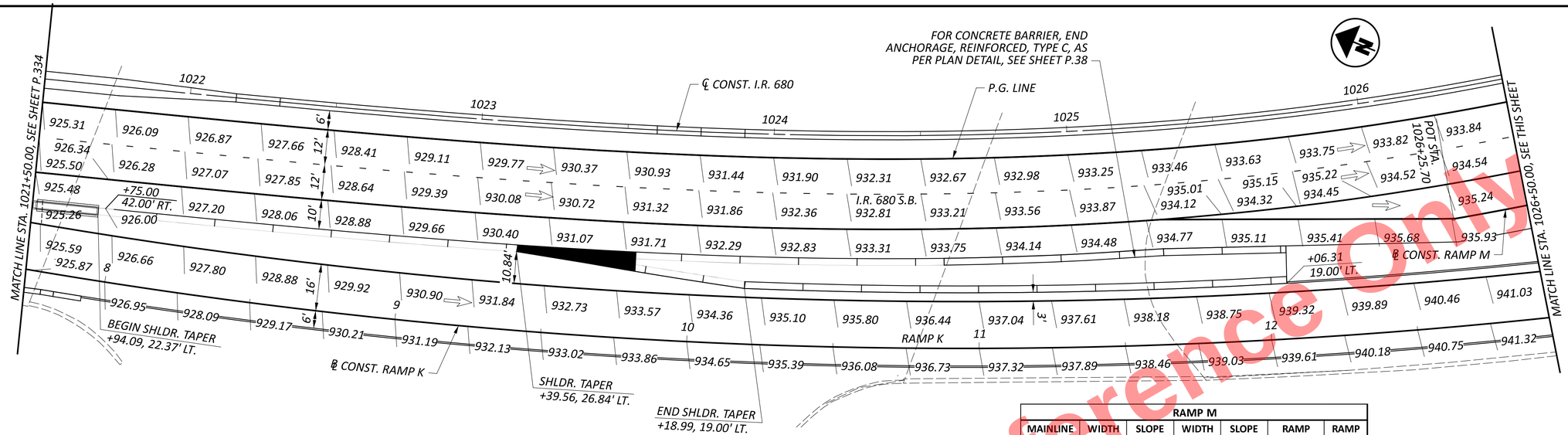

SPIRAL DATA
℄ CONST. I.R. 680
P.I. = STA. 1024+23.54 R4
Ls = 400.00'
Θs = 11°30'00"
LT = 267.23'
ST = 133.85'
x = 398.39'
y = 26.68'
k = 199.73'
p = 6.68'
C = 399.28'
Start = Sta. 1021+56.31
End = Sta. 1025+56.31
C.B. = S20°28'08"E

CURVE DATA
℄ CONST. I.R. 680
P.I. = STA. 1028+30.49
Δ = 30°46'13" LT
Dc = 05°45'00"
R = 996.45'
T = 274.19'
L = 535.13'
E = 37.04'
DS = 50 mph
emax = 0.0585

SPIRAL DATA
℄ CONST. I.R. 680
P.I. = STA. 1032+25.29 R4
Ls = 400.00'
Θs = 11°30'00"
LT = 267.23'
ST = 133.85'
x = 398.39'
y = 26.68'
k = 199.73'
p = 6.68'
C = 399.28'
Start = Sta. 1030+91.44
End = Sta. 1034+91.44
C.B. = S66°34'30"E

CURVE DATA
℄ CONST. RAMP K
P.I. = STA. 10+69.93
Δ = 20°15'00" RT
Dc = 03°00'00"
R = 1,909.86'
T = 341.06'
L = 675.00'
E = 30.21'
DS = 25 mph
emax = 0.0180

CURVE DATA
℄ CONST. RAMP M
P.I. = STA. 1026+64.87
Δ = 04°15'09" LT
Dc = 05°25'49"
R = 1,055.12'
T = 39.17'
L = 78.31'
E = 0.73'
DS = 50 mph
emax = 0.0585

CURVE DATA
℄ CONST. RAMP M
P.I. = STA. 1029+05.02
Δ = 14°03'35" LT
Dc = 03°30'54"
R = 1,630.08'
T = 201.01'
L = 400.01'
E = 12.35'
DS = 50 mph
emax = 0.0480

SPIRAL DATA
℄ CONST. RAMP M
P.I. = STA. 1031+70.71
Ls = 200.00'
Θs = 03°30'54"
LT = 133.36'
ST = 66.69'
x = 199.80'
y = 8.18'
k = 99.99'
p = 1.02'
C = 199.97'
Start = Sta. 1031+04.02
End = Sta. 1033+04.02
C.B. = S52°48'46"E

RAMP M

MAINLINE STATION	WIDTH (FT)	SLOPE (%)	WIDTH (FT)	SLOPE (%)	RAMP STATION	RAMP SIDE
1028+44.89	0	0.00%	N/A	N/A	1028+53.98	SB
1028+50.00	0.28	4.61%	N/A	N/A	1028+59.32	SB
1028+75.00	1.81	5.59%	N/A	N/A	1028+88.45	SB
1029+00.00	3.55	5.98%	N/A	N/A	1029+11.64	SB
1029+25.00	5.58	5.88%	N/A	N/A	1029+37.89	SB
1029+50.00	7.84	5.96%	N/A	N/A	1029+64.23	SB
1029+75.00	10.33	5.98%	N/A	N/A	1029+90.63	SB
1030+00.00	12.81	5.96%	N/A	N/A	1030+17.10	SB
1030+25.00	15.28	5.96%	N/A	N/A	1030+43.63	SB
1030+50.00	17.95	5.90%	N/A	N/A	1030+70.27	SB
1030+75.00	20.89	5.86%	N/A	N/A	1030+97.00	SB
1030+90.93	23	6.29%	N/A	N/A	1031+09.40	SB

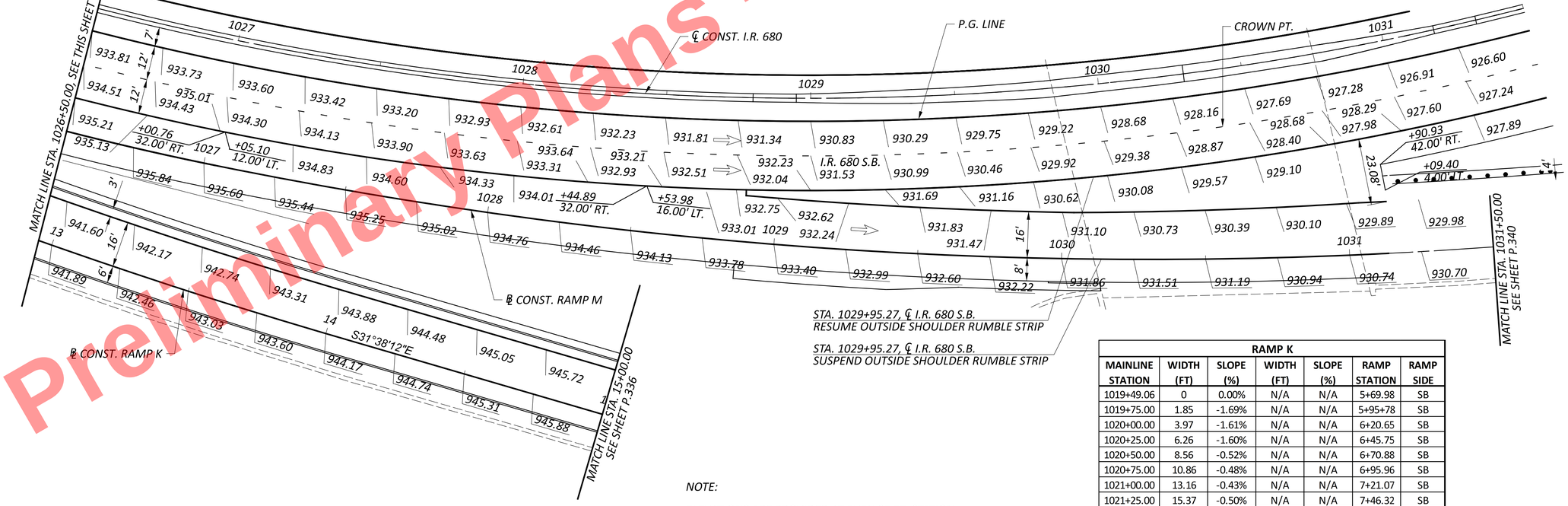

RAMP K

MAINLINE STATION	WIDTH (FT)	SLOPE (%)	WIDTH (FT)	SLOPE (%)	RAMP STATION	RAMP SIDE
1019+49.06	0	0.00%	N/A	N/A	5+69.98	SB
1019+75.00	1.85	-1.69%	N/A	N/A	5+95+78	SB
1020+00.00	3.97	-1.61%	N/A	N/A	6+20.65	SB
1020+25.00	6.26	-1.60%	N/A	N/A	6+45.75	SB
1020+50.00	8.56	-0.52%	N/A	N/A	6+70.88	SB
1020+75.00	10.86	-0.48%	N/A	N/A	6+95.96	SB
1021+00.00	13.16	-0.43%	N/A	N/A	7+21.07	SB
1021+25.00	15.37	-0.50%	N/A	N/A	7+46.32	SB
1021+50.00	17.27	-0.15%	N/A	N/A	7+71.60	SB
1021+75.00	18.85	1.00%	N/A	N/A	7+96.71	SB

NOTE:

ELEVATIONS ARE PROVIDED AT EVEN 25 FT. STATION INCREMENTS UNLESS INDICATED OTHERWISE

REFER TO P.308 FOR ALL OTHER NOTES AND LEGEND

Preliminary Plans - For Reference Only

HORIZONTAL SCALE IN FEET
0 10 20 40

RAMP TERMINAL DETAIL - I.R. 680 S.B.
MARKET ST. - RAMP K AND MARKET ST. - RAMP M

DESIGN AGENCY
ms consultants, inc.

DESIGNER MSN
REVIEWER CMN 08/29/25
PROJECT ID 121474
SHEET P.335 TOTAL 655

MAH-680-4.58

MODEL: 113321_GI032 PAPERSIZE: 34x22 (in.) DATE: 9/15/2025 TIME: 2:42:49 PM PLTDRV: OHDOT_PDF_E+.pltcfg PENTBL: OHDOT_UTPen.tbl USER: DHall@msconsultants.com WORKSPACE: OHDOTCtv02 WORKSET: 121474 PRODUCT: OpenRoadsDesigner 24.00.00.205
pw:\\ohiodot-pw.bentley.com:ohiodot-pw-02\Documents\01 Active Projects\District 04\Mahoning\121474\402-Engineering_MSConsultants\Roadway\Sheets\121474_GI025.dgn

Preliminary Plans - For Reference Only

I.R. 680 S.B.

RAMP M

1030

1029

BRIDGE NO.
MAH-680-0603
SFN 5001986

STA. 48+71.76
END CURB, TYPE 6, 34.17' LT.

STA. 16+42.65
BEGIN SHOULDER TAPER, 19.00' LT.

℄ CONST. MARKET STREET

℄ CONST. RAMP K

S31°38'12"E

N28°28'33"E

11.5' CONC. WALK

SAWCUT (MATCH EXIST.)

3.0'

16.0'

6.0'

2.0'

953.94 +00

953.81

954.72 +75

954.56

954.81 +71.76

954.66

32.17'

954.83

955.64 +50

956.36 +25

955.09

957.04 +02.32

946.42

947.19

948.05

948.98

950.04

951.21

952.47

953.80

946.47 +00

948.14 +25

948.98 +50

949.72 +75

950.57 +00

951.58 +25

952.63 +50

953.60 +75

955.93

956.66

955.17

957.11 +00

954.69 +00

957.05

955.92 +25

956.73

957.09

957.07

956.63 +50

16

17

MATCH LINE STA. 15+00.00, SEE SHEET P.335

MATCH LINE STA. 17+50, SEE SHEET P.337

PC STA. 16+42.65

PT STA. 17+38.77

K5

A

B

1.5' R

16.0'

10' CONC. WALK

EXIST. PARKING LOT

C.B. NO. 3A
STA. 15+50.00, 6.00' RT.
GRATE EL. = 948.27'

STA. 16+00.00
BEGIN SHOULDER TAPER, 6.00' RT.

C.B. NO. 3A
STA. 16+50.00, 3.00' RT.
GRATE EL. = 952.02'

STA. 17+00.00
END SHOULDER TAPER, 0.00'

C.B. NO. 3A
STA. 17+44.86, 0.00'
GRATE EL. = 955.86'

K5 CURVE DATA
℄ CONST. RAMP K
P.I. = STA. 16+94.79
Δ = 55°04'22" RT
Dc = 57°17'45"
R = 100.00'
T = 52.14'
L = 96.12'
E = 12.78'
DS = 25 mph
emax = 0.0600

A 17+23.57, 16.00' LT.
EL = 955.78

B 48+02.32, 34.21' LT.
EL = 956.71

NOTES:

REFER TO P.308 FOR NOTES AND LEGEND

HORIZONTAL SCALE IN FEET
0 5 10 20

INTERSECTION DETAIL
MARKET ST. RAMP K

DESIGN AGENCY
ms consultants, inc.

DESIGNER
CJR

REVIEWER
CMN 08/29/25

PROJECT ID
121474

SHEET P.336 TOTAL 655

MAH-680-4.58

MODEL: Sheet-1 PAPERSIZE: 34x22 (in.) DATE: 9/15/2025 TIME: 2:42:58 PM PLTDRV: OHDOT_PDF_E+.pltcfg PENTBL: OHDOT_UTPen.tbl USER: DHall@msconsultants.com WORKSPACE: OHDOTCEv02 WORKSET: 121474 PRODUCT: OpenRoadsDesigner 24.00.00.205
pw:\\ohiodot-pw.bentley.com:ohiodot-pw-02\Documents\01 Active Projects\District 04\Mahoning\121474\402-Engineering_MSConsultants\Roadway\Sheets\121474_GI026.dgn

Preliminary Plans - For Reference Only

HORIZONTAL SCALE IN FEET
0 5 10 20

INTERSECTION DETAIL
MARKET ST. RAMP K

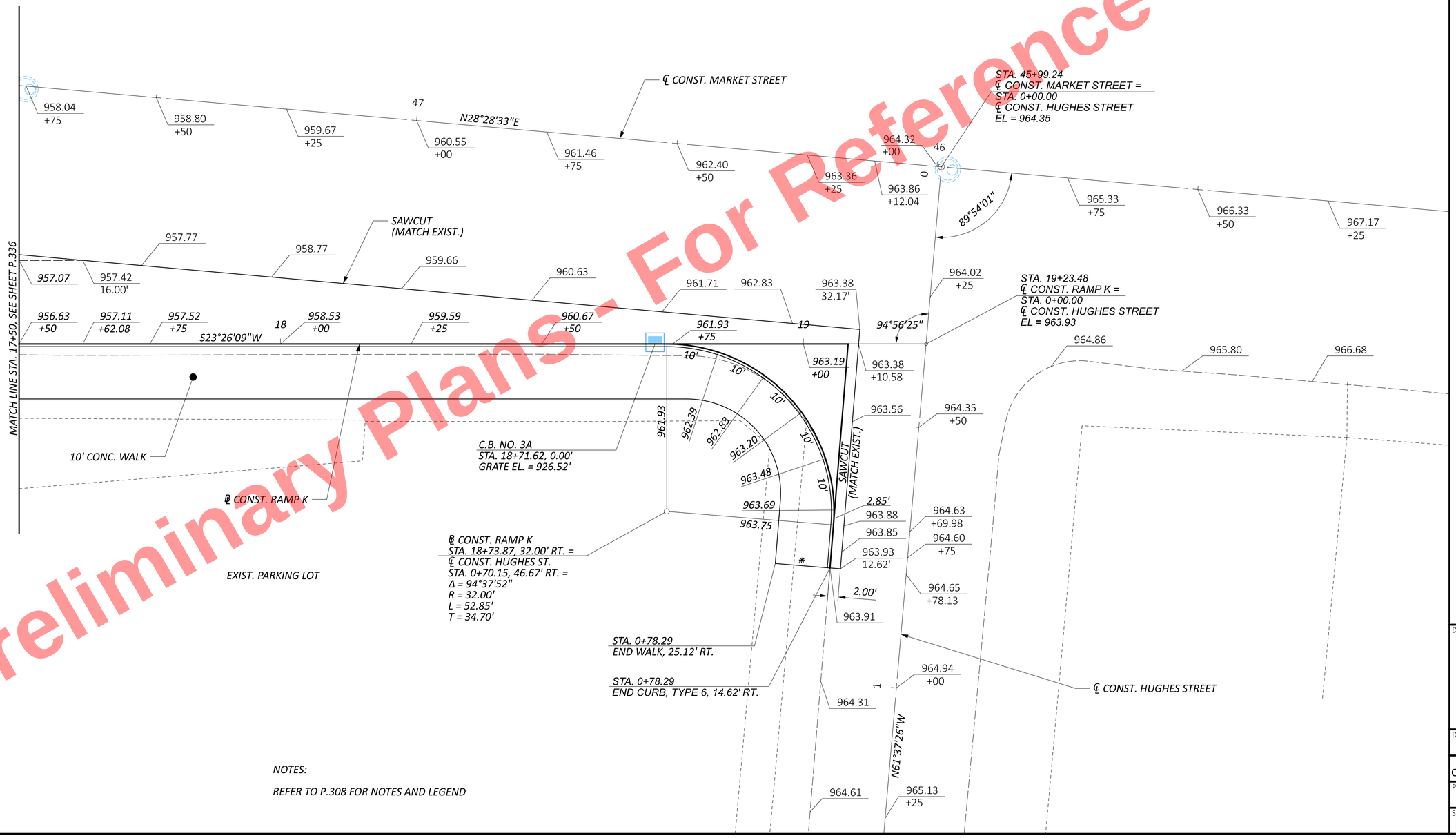

NOTES:

REFER TO P.308 FOR NOTES AND LEGEND

DESIGN AGENCY
ms consultants. inc.

DESIGNER CJR
REVIEWER CMN 08/29/25
PROJECT ID 121474
SHEET P.337 TOTAL 655

MAH-680-4.58

MODEL: Sheet-2 PAPERSIZE: 34x22 (in.) DATE: 9/15/2025 TIME: 2:42:59 PM PLTDRV: OHDOT_PDF_E+.pltcfg PENTBL: OHDOT_UTPen.tbl USER: DHall@msconsultants.com WORKSPACE: OHDOTCEv02 WORKSET: 121474 PRODUCT: OpenRoadsDesigner 24.00.00.205
pw:\\ohiodot-pw.bentley.com:ohiodot-pw-02\Documents\01 Active Projects\District 04\Mahoning\121474\402-Engineering_MSConsultants\Roadway\Sheets\121474_GI026.dgn

Preliminary Plans - For Reference Only

S.B. I.R. 680

RAMP M

BRIDGE NO.
MAH-571-044
SFN 5001986

℄ CONST. MARKET STREET

(D) SAWCUT

2.0'

9.4'

(C)

SAWCUT (MATCH EXIST.)

4 SPA. @ 15.0'

3.0'

8.0'

8.0'

6.0'

(L)

(I) *

15
15

16
16

S31°38'12"E

℄ CONST. RAMP K

PC STA. 16+42.65

K5

SPA. @ 15.0'

5 SPA. @ 15.0'

2 SPA. @ 12.5'

2 SPA. @ 11.7'

9 SPA. @ 15.0'

PT STA. 17+38.77

MATCH LINE STA. 17+50, SEE SHEET P.339

49
49

48
48

17
17

LEGEND

(L) LONGITUDINAL JOINT (SEE STD. DWG. BP-2.1)

(C) CONTRACTION JOINT (SEE STD. DWG. BP-2.2)

(D) LONGITUDINAL JOINT WITHOUT TIE BARS (SEE STD. DWG. BP-2.1)

(I) EXPANSION JOINT WITHOUT DOWEL BARS (SEE STD. DWG. BP-2.2)

* 1.0' MIN. TO STRUCTURE

NOTE:
JOINT LAYOUTS SHOWN ARE FOR GUIDANCE ONLY. THE ENGINEER AND CONTRACTOR MAY ADJUST JOINT LOCATIONS IN THE FIELD AS APPROPRIATE AND AS PER THE STANDARD CONSTRUCTION DRAWINGS.

REFER TO P.308 FOR ALL OTHER NOTES AND LEGEND

(K5) CURVE DATA
℄ CONST. RAMP K
P.I. = STA. 16+94.79
Δ = 55°04'22" RT
Dc = 57°17'45"
R = 100.00'
T = 52.14'
L = 96.12'
E = 12.78'
DS = 25 mph
emax = 0.0600

HORIZONTAL SCALE IN FEET
0 5 10 20

PAVEMENT JOINT DETAIL
RAMP K MARKET ST.

DESIGN AGENCY
ms consultants, inc.

DESIGNER MSN
REVIEWER CMN 08/29/25
PROJECT ID 121474
SHEET P.338 TOTAL 655

MAH-680-4.58

MODEL: Sheet-1 PAPERSIZE: 34x22 (in.) DATE: 9/15/2025 TIME: 2:43:07 PM PLTDRV: OHDOT_PDF_E+.pltcfg PENTBL: OHDOT_UTPen.tbl USER: DHall@msconsultants.com WORKSPACE: OHDOTCEv02 WORKSET: 121474 PRODUCT: OpenRoadsDesigner 24.00.00.205
pw:\\ohiodot-pw.bentley.com:ohiodot-pw-02\Documents\01 Active Projects\District 04\Mahoning\121474\402-Engineering_MSConsultants\Roadway\Sheets\121474_GI027.dgn

Preliminary Plans - For Reference Only

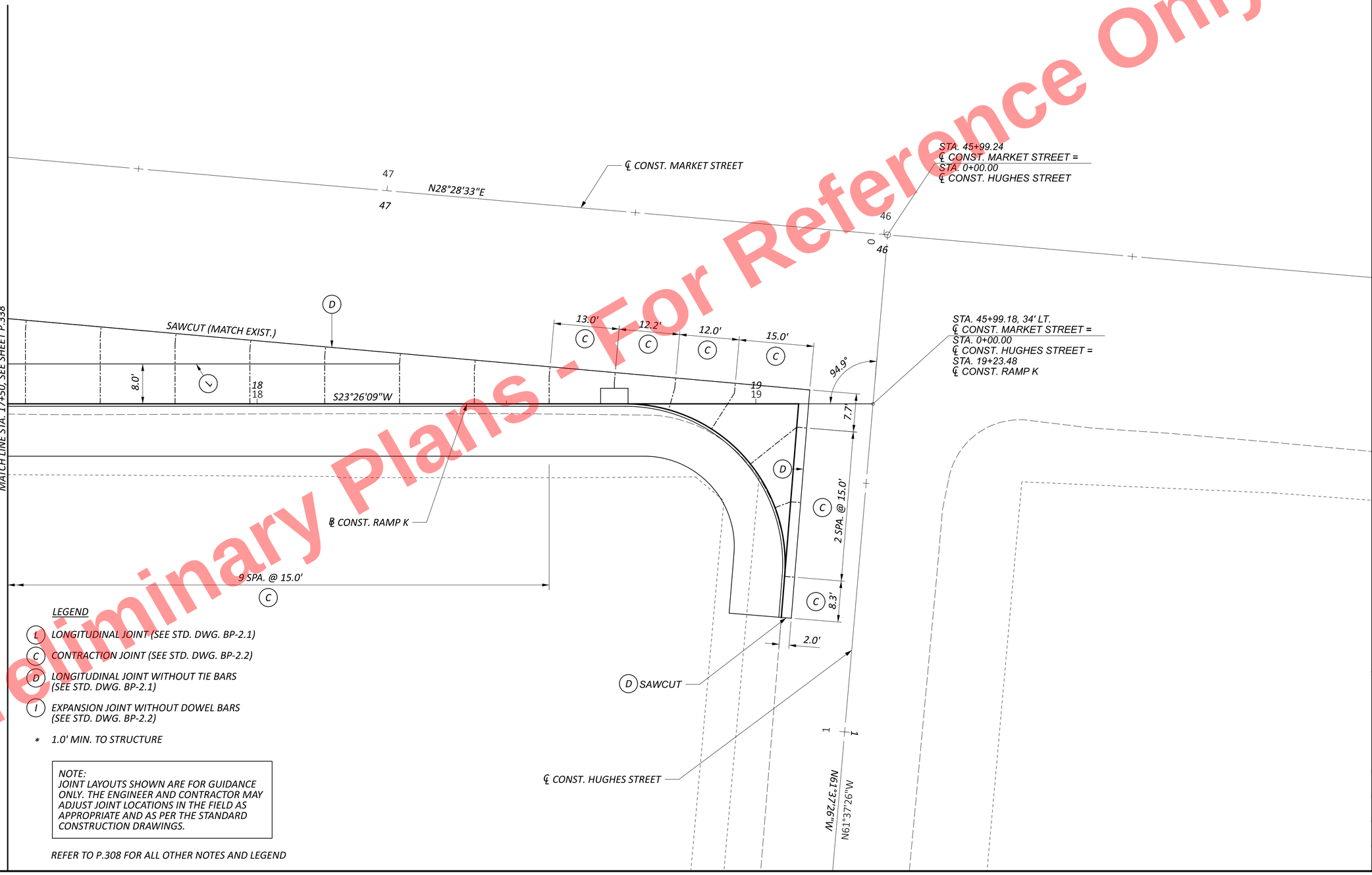

LEGEND

- (L) LONGITUDINAL JOINT (SEE STD. DWG. BP-2.1)
- (C) CONTRACTION JOINT (SEE STD. DWG. BP-2.2)
- (D) LONGITUDINAL JOINT WITHOUT TIE BARS (SEE STD. DWG. BP-2.1)
- (I) EXPANSION JOINT WITHOUT DOWEL BARS (SEE STD. DWG. BP-2.2)
- * 1.0' MIN. TO STRUCTURE

NOTE:
JOINT LAYOUTS SHOWN ARE FOR GUIDANCE ONLY. THE ENGINEER AND CONTRACTOR MAY ADJUST JOINT LOCATIONS IN THE FIELD AS APPROPRIATE AND AS PER THE STANDARD CONSTRUCTION DRAWINGS.

REFER TO P.308 FOR ALL OTHER NOTES AND LEGEND

HORIZONTAL SCALE IN FEET
0 5 10 20

PAVEMENT JOINT DETAIL
RAMP K MARKET ST.

DESIGN AGENCY
ms consultants, inc.

DESIGNER MSN
REVIEWER CMN 08/29/25
PROJECT ID 121474
SHEET P.339 TOTAL 655

MAH-680-4.58

MODEL: Sheet-2 PAPERSIZE: 34x22 (in.) DATE: 9/15/2025 TIME: 2:43:08 PM PLTDRV: OHDOT_PDF_E+.pltcfg PENTBL: OHDOT_UTPen.tbl USER: DHall@msconsultants.com WORKSPACE: OHDOTCEv02 WORKSET: 121474 PRODUCT: OpenRoadsDesigner 24.00.00.205
pw:\\ohiodot-pw.bentley.com:ohiodot-pw-02\Documents\01 Active Projects\District 04\Mahoning\121474\02-Engineering_MSConsultants\Roadway\Sheets\121474_GI027.dgn

NOTE:

ELEVATIONS ARE PROVIDED AT EVEN 25 FT. STATION INCREMENTS UNLESS INDICATED OTHERWISE

REFER TO P.308 FOR ALL OTHER NOTES AND LEGEND

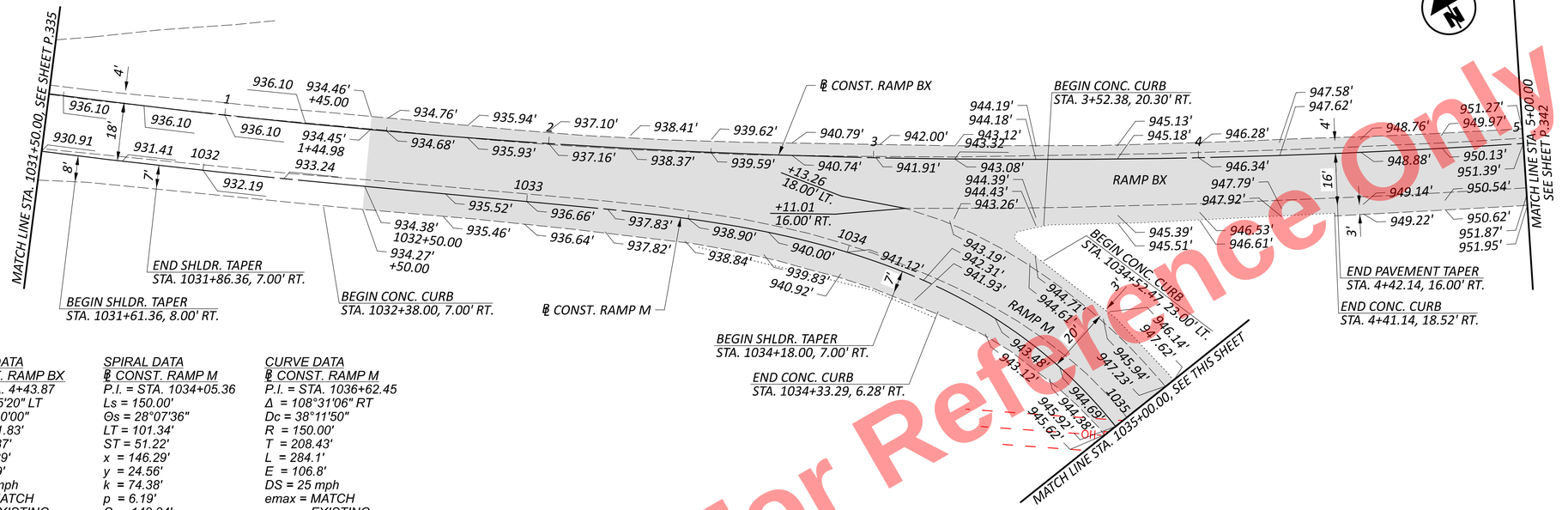

CURVE DATA
℄ CONST. RAMP BX
P.I. = STA. 4+43.87
Δ = 21°55'20" LT
Dc = 02°30'00"
R = 2,291.83'
T = 443.87'
L = 876.89'
E = 42.59'
DS = 35 mph
emax = MATCH EXISTING

SPIRAL DATA
℄ CONST. RAMP M
P.I. = STA. 1034+05.36
Ls = 150.00'
Θs = 28°07'36"
LT = 101.34'
ST = 51.22'
x = 146.29'
y = 24.56'
k = 74.38'
p = 6.19'
C = 148.34'
Start = Sta. 1033+04.02
End = Sta. 1034+54.02
C.B. = S44°27'19"E

CURVE DATA
℄ CONST. RAMP M
P.I. = STA. 1036+62.45
Δ = 108°31'06" RT
Dc = 38°11'50"
R = 150.00'
T = 208.43'
L = 284.1'
E = 106.8'
DS = 25 mph
emax = MATCH EXISTING

Preliminary Plans - For Reference Only

HORIZONTAL SCALE IN FEET
0 10 20 40

RAMP TERMINAL DETAIL - I.R. 680 S.B.
EXIT RAMP M AND ENTRANCE RAMP BX U.S. 62/S.R. 7 RAMP BX

DESIGN AGENCY
ms consultants, inc.

DESIGNER MSN
REVIEWER CMN 08/29/25
PROJECT ID 121474
SHEET P.340 TOTAL 655

MAH-680-4.58

MODEL: 113321_GI044 PAPERSIZE: 34x22 (in.) DATE: 9/15/2025 TIME: 2:43:16 PM PLTDRV: OHDOT_PDF_E+.pltcfg PENTBL: OHDOT_UTPen.tbl USER: DHall@msconsultants.com WORKSPACE: OHDOTCEv02 WORKSET: 121474 PRODUCT: OpenRoadsDesigner 24.00.00.205
pw:\\ohiodot-pw.bentley.com:ohiodot-pw-02\Documents\01 Active Projects\District 04\Mahoning\121474\02-Engineering_MSConsultants\Roadway\Sheets\121474_GI028.dgn

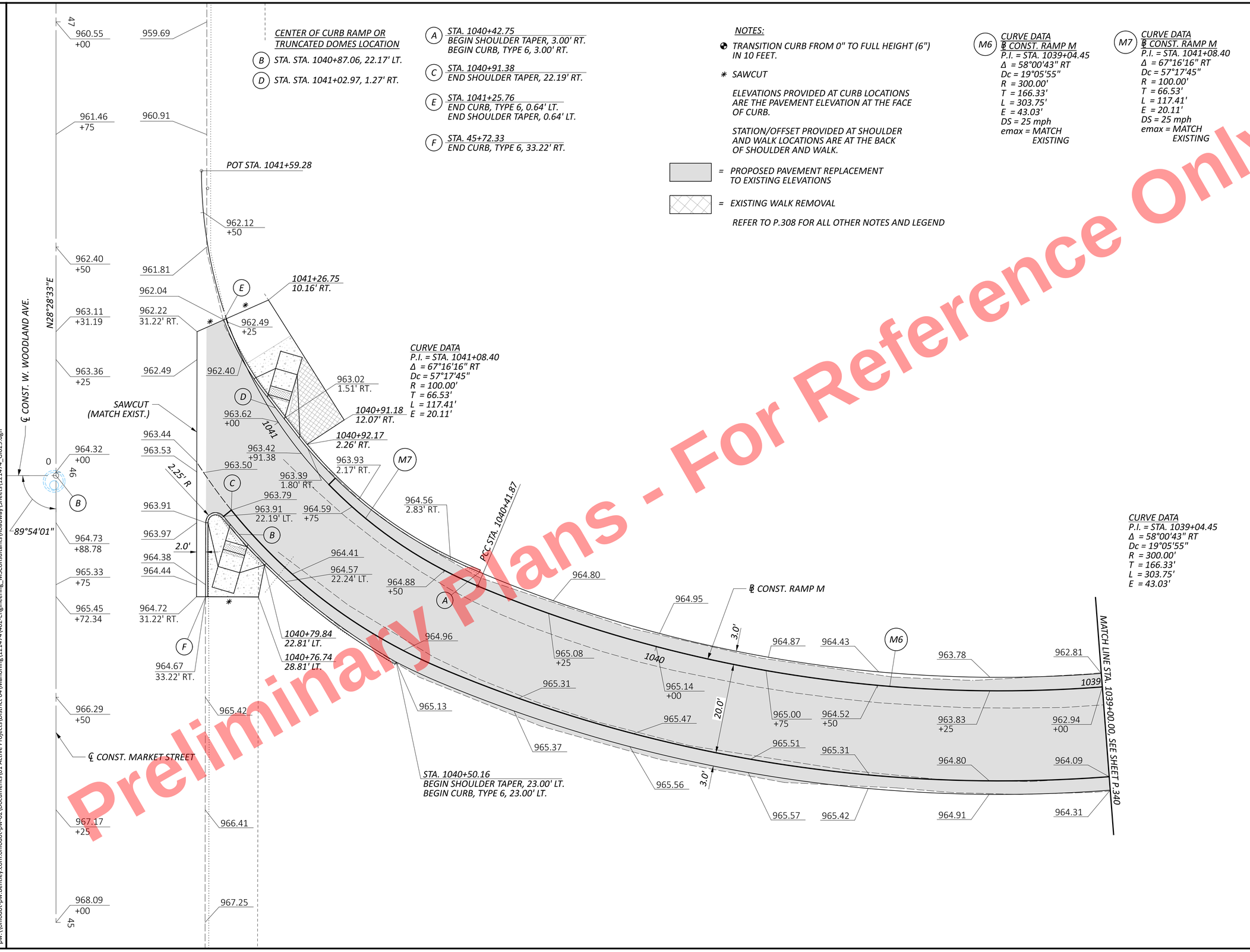

Preliminary Plans - For Reference Only

MAH-680-4.58

MODEL: Sheet PAPERSIZE: 34x22 (in.) DATE: 9/15/2025 TIME: 2:43:23 PM PLTDRV: OHDOT_PDF_E+.pltcfg PENTBL: OHDOT_UTPen.tbl USER: DHall@msconsultants.com WORKSPACE: OHDOTCEv02 WORKSET: 121474 PRODUCT: OpenRoadsDesigner 24.00.00.205
pw:\\ohiodot-pw.bentley.com:ohiodot-pw-02\Documents\01 Active Projects\District 04\Mahoning\121474\402-Engineering_MSconsultants\Roadway\Sheets\121474_GI029.dgn

HORIZONTAL SCALE IN FEET
0 5 10 20

INTERSECTION DETAIL MARKET ST. RAMP M

DESIGN AGENCY
ms consultants, inc.

DESIGNER CJR
REVIEWER CMN 08/29/25
PROJECT ID 121474
SHEET P.341 TOTAL 655

Preliminary Plans - For Reference Only

MODEL: Sheet PAPERSIZE: 34x22 (in.) DATE: 9/15/2025 TIME: 2:43:31 PM PLTDRV: OHDOT_PDF_E+.pltcfg PENTBL: OHDOT_UTPen.tbl USER: DHall@msconsultants.com WORKSPACE: OHDOTCEv02 WORKSET: 121474 PRODUCT: OpenRoadsDesigner 24.00.00.205
pw:\\ohiodot-pw.bentley.com:ohiodot-pw-02\Documents\01 Active Projects\District 04\Mahoning\121474\402-Engineering_MSConsultants\Roadway\Sheets\121474_GI030.dgn

MAH-680-4.58

HORIZONTAL SCALE IN FEET
0 5 10 20

RAMP DETAIL
U.S. 62/S.R. 7 RAMP BX

MATCH LINE STA. 5+00.00, SEE SHEET P.340

℄ CONST. RAMP BX

CS STA. 8+76.89

MATCH LINE STA. 10+00.00, SEE THIS SHEET

BEGIN SHLDR. TAPER
STA. 6+75.00, 19.00' RT.

END SHLDR. TAPER
STA. 7+25.00, 21.00' RT.

I.R. 680 N.B.

I.R. 680 S.B.

CS STA. 10+76.89

END CONC. CURB
STA. 11+23.39, 4.00' LT.

BEGIN CONC. CURB
STA. 11+05.56, 4.00' LT.

MATCH LINE STA. 10+00.00, SEE THIS SHEET

℄ CONST. RAMP BX

MATCH LINE STA. 15+00.00, SEE SHEET P.343

BEGIN CONC. CURB
STA. 11+33.96, 21.00' RT.

END CONC. CURB
STA. 11+51.32, 21.00' RT.

NOTE:

ELEVATIONS ARE PROVIDED AT EVEN 25 FT. STATION INCREMENTS UNLESS INDICATED OTHERWISE

REFER TO P.308 FOR ALL OTHER NOTES AND LEGEND

DESIGN AGENCY
ms consultants, inc.

DESIGNER CJR
REVIEWER CMN 08/29/25
PROJECT ID 121474
SHEET P.342 TOTAL 655

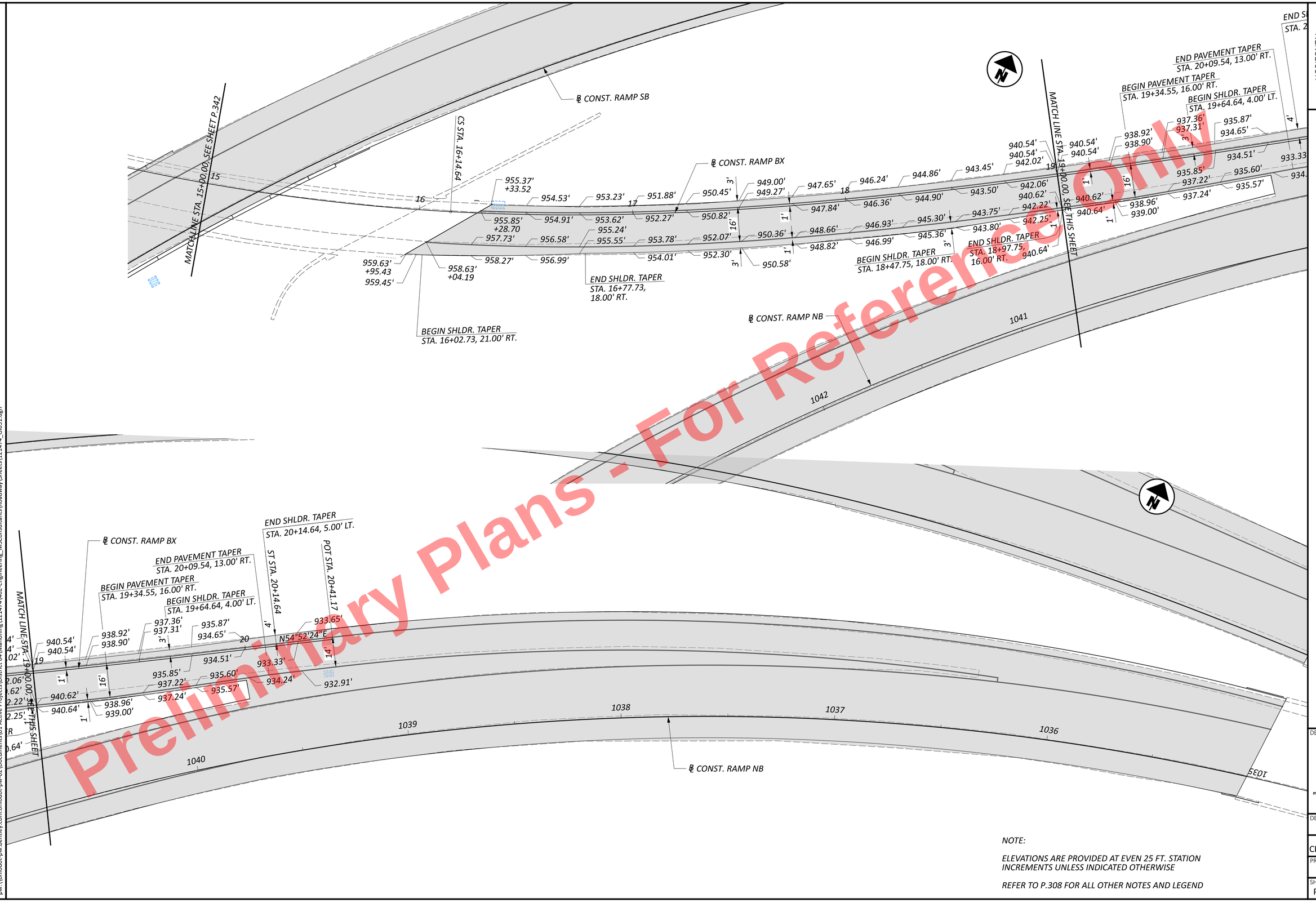

Preliminary Plans - For Reference Only

NOTE:

ELEVATIONS ARE PROVIDED AT EVEN 25 FT. STATION INCREMENTS UNLESS INDICATED OTHERWISE

REFER TO P.308 FOR ALL OTHER NOTES AND LEGEND

HORIZONTAL SCALE IN FEET 0 5 10 20

RAMP DETAIL
U.S. 62/S.R. 7 RAMP BX

DESIGN AGENCY
ms consultants, inc.

DESIGNER CJR
REVIEWER CMN 08/29/25
PROJECT ID 121474
SHEET P.343 TOTAL 655

MAH-680-4.58

MODEL: Sheet PAPERSIZE: 34x22 (in.) DATE: 9/15/2025 TIME: 2:43:38 PM PLTDRV: OHDOT_PDF_E+.pltcfg PENTBL: OHDOT_UTPen.tbl USER: DHall@msconsultants.com WORKSPACE: OHDOTCEv02 WORKSET: 121474 PRODUCT: OpenRoadsDesigner 24.00.00.205
pw:\\ohiodot-pw.bentley.com:ohiodot-pw-02\Documents\01 Active Projects\District 04\Mahoning\121474\402-Engineering_MSConsultants\Roadway\Sheets\121474_GI031.dgn

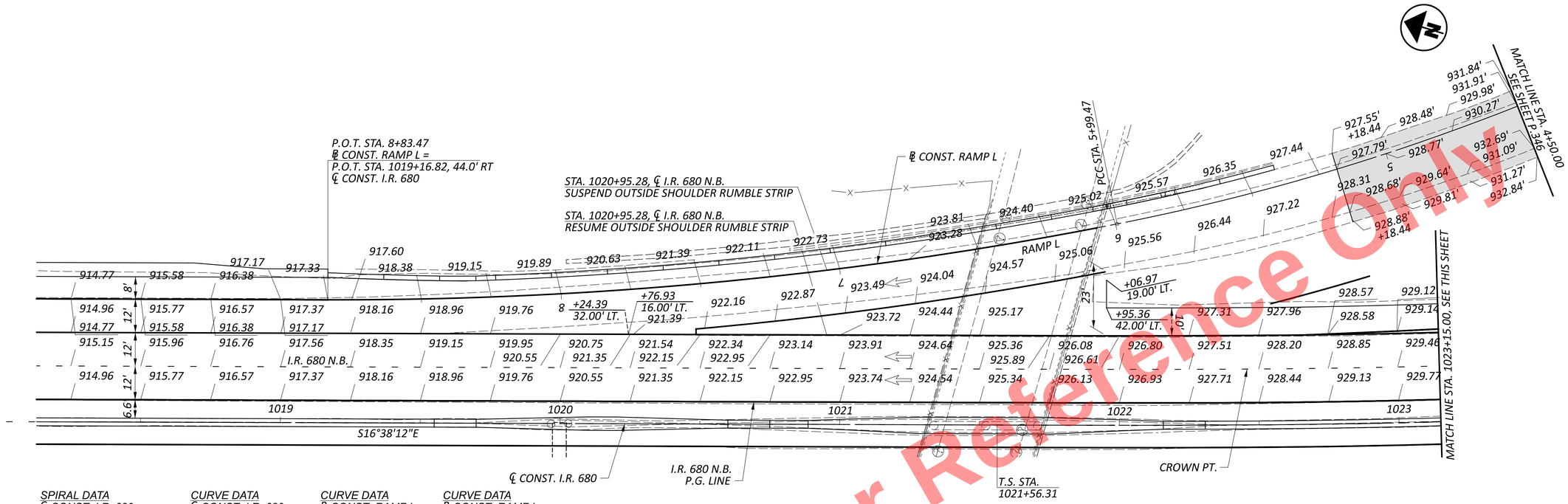

SPIRAL DATA
℄ CONST. I.R. 680
P.I. = STA. 1024+23.54 R4
Ls = 400.00'
Θs = 11°30'00"
LT = 267.23'
ST = 133.85'
x = 398.39'
y = 26.68'
k = 199.73'
p = 6.68'
C = 399.28'
Start = Sta. 1021+56.31
End = Sta. 1025+56.31
C.B. = S20°28'08"E

CURVE DATA
℄ CONST. I.R. 680
P.I. = STA. 1028+30.49
Δ = 30°46'13" LT
Dc = 05°45'00"
R = 996.45'
T = 274.19'
L = 535.13'
E = 37.04'
DS = 50 mph
emax = 0.0585

CURVE DATA
℄ CONST. RAMP L
P.I. = STA. 4+54.63
Δ = 20°29'58" RT
Dc = 07°00'00"
R = 818.51'
T = 148.01'
L = 292.85'
E = 13.27'
DS = 25 mph
emax = 0.0330

CURVE DATA
℄ CONST. RAMP L
P.I. = STA. 7+41.94
Δ = 11°21'36" RT
Dc = 04°00'00"
R = 1,432.39'
T = 142.47'
L = 284'
E = 7.07'
DS = 50 mph
emax = 0.0480

RAMP L						
MAINLINE STATION	WIDTH (FT)	SLOPE (%)	WIDTH (FT)	SLOPE (%)	RAMP STATION	RAMP SIDE
1020+25.00	0	0.00%	N/A	N/A	7+76.39	NB
1020+50.00	2.14	-1.61%	N/A	N/A	7+51.57	NB
1020+75.00	4.66	-2.46%	N/A	N/A	7+26.72	NB
1021+00.00	7.63	-3.51%	N/A	N/A	7+01.83	NB
1021+25.00	11.04	-3.98%	N/A	N/A	6+76.87	NB
1021+50.00	14.89	-4.24%	N/A	N/A	6+51.86	NB
1021+75.00	19.19	-4.49%	N/A	N/A	6+26.79	NB
1021+95.32	23	-4.48%	N/A	N/A	6+07.00	NB

NOTE:

ELEVATIONS ARE PROVIDED AT EVEN 25 FT. STATION INCREMENTS UNLESS INDICATED OTHERWISE

REFER TO P.308 FOR ALL OTHER NOTES AND LEGEND

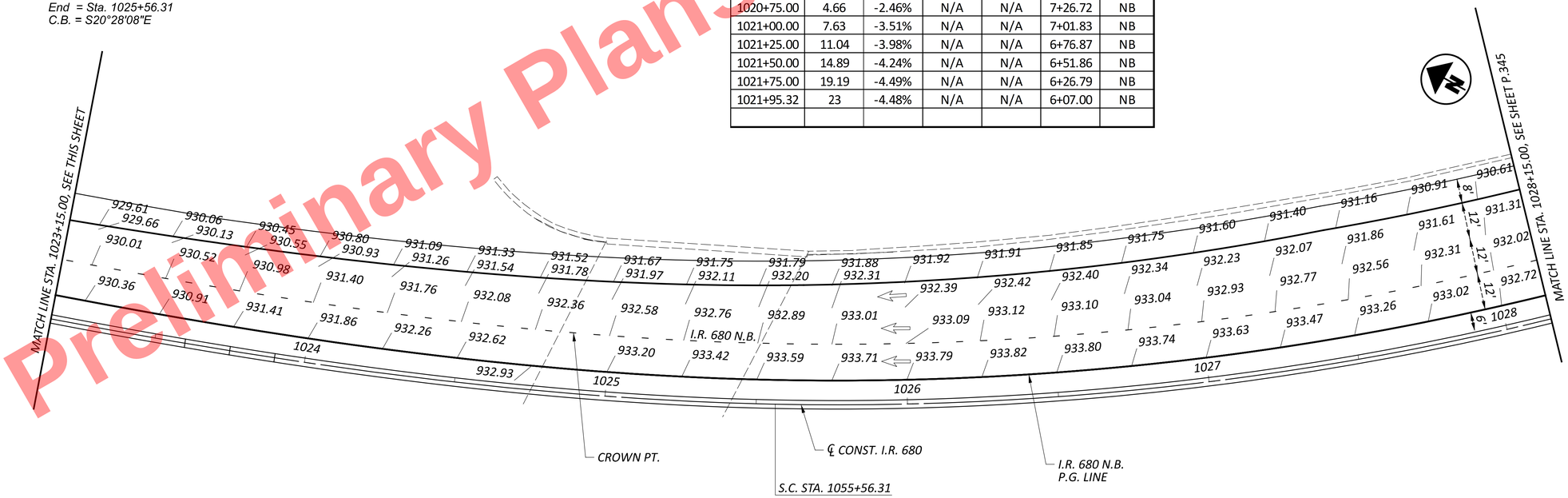

Preliminary Plans - For Reference Only

HORIZONTAL SCALE IN FEET
0 10 20 40

RAMP TERMINAL DETAIL - I.R. 680 N.B.
MARKET ST. - RAMP L

DESIGN AGENCY
ms consultants, inc.

DESIGNER MSN
REVIEWER CMN 08/29/25
PROJECT ID 121474
SHEET P.344 TOTAL 655

MAH-680-4.58

MODEL: 113321_GI032 PAPERSIZE: 34x22 (in.) DATE: 9/15/2025 TIME: 2:43:46 PM PLTDRV: OHDOT_PDF_E+.pltcfg PENTBL: OHDOT_UTPen.tbl USER: DHall@msconsultants.com WORKSPACE: OHDOTCtx02 WORKSET: 121474 PRODUCT: OpenRoadsDesigner 24.00.00.205
pw:\\ohiodot-pw.bentley.com:ohiodot-pw-02\Documents\01 Active Projects\District 04\Mahoning\121474\Roadway\Sheets\121474_GI032.dgn

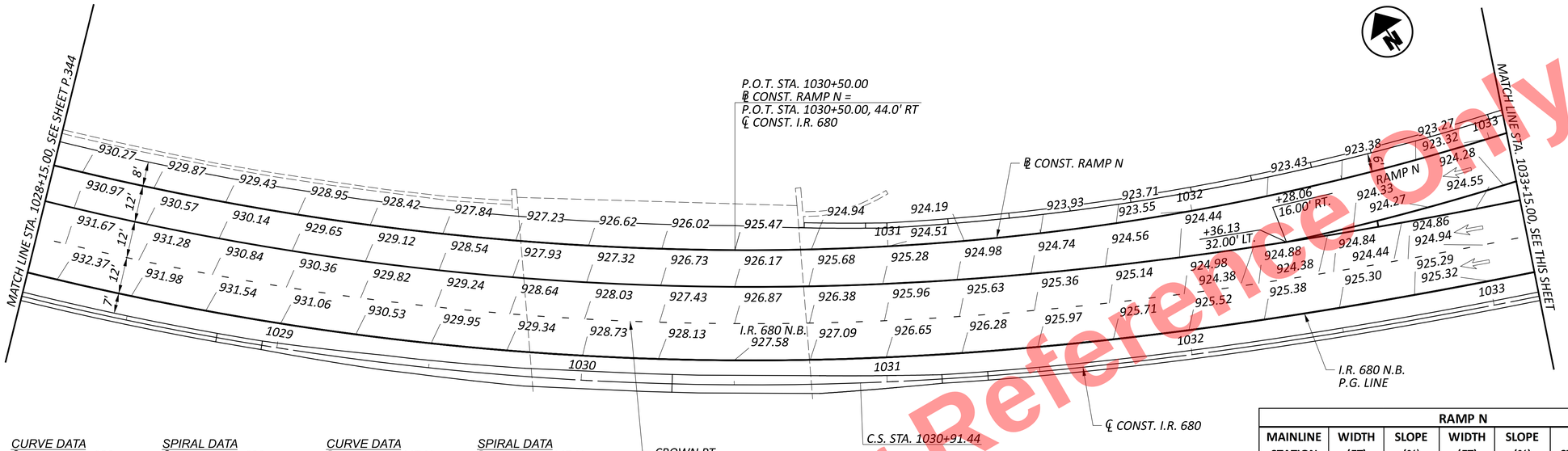

CURVE DATA
℄ CONST. I.R. 680
P.I. = STA. 1028+30.49
Δ = 30°46'13" LT
Dc = 05°45'00"
R = 996.45'
T = 274.19'
L = 535.13'
E = 37.04'
DS = 50 mph
emax = 0.0585

SPIRAL DATA
℄ CONST. I.R. 680
P.I. = STA. 1032+25.29 R4
Ls = 400.00'
Θs = 11°30'00"
LT = 267.23'
ST = 133.85'
x = 398.39'
y = 26.68'
k = 199.73'
p = 6.68'
C = 399.28'
CS = Sta. 1030+91.44
ST = Sta. 1034+91.44
C.B. = S66°34'30"E

CURVE DATA
℄ CONST. RAMP N
P.I. = STA. 1032+27.72
Δ = 24°30'00" LT
Dc = 07°00'00"
R = 818.51'
T = 177.72'
L = 350.00'
E = 19.07'
DS = 50 mph
emax = 0.0600

SPIRAL DATA
℄ CONST. RAMP N
P.I. = STA. 1034+66.76
Ls = 200.00'
Θs = 07°00'00"
LT = 133.44'
ST = 66.76'
x = 199.70'
y = 8.14'
k = 99.95'
p = 2.04'
C = 199.87'
CS = Sta. 1034+00.00
ST = Sta. 1036+00.00
C.B. = S85°41'28"E

RAMP N						
MAINLINE STATION	WIDTH (FT)	SLOPE (%)	WIDTH (FT)	SLOPE (%)	RAMP STATION	RAMP SIDE
1032+36.13	0	0.00%	N/A	N/A	1032+28.06	NB
1032+50.00	0.82	-3.35%	N/A	N/A	1032+41.42	NB
1032+75.00	2.58	-5.55%	N/A	N/A	1032+65.53	NB
1033+00.00	4.76	-5.82%	N/A	N/A	1032+89.70	NB
1033+25.00	7.36	-5.60%	N/A	N/A	1033+13.94	NB
1033+50.00	10.44	-5.20%	N/A	N/A	1033+38.25	NB
1033+75.00	14.07	-4.67%	N/A	N/A	1033+62.68	NB
1034+00.00	18.27	-4.24%	N/A	N/A	1033+87.26	NB
1034+24.57	23	-4.48%	N/A	N/A	1034+10.73	NB

NOTE:

ELEVATIONS ARE PROVIDED AT EVEN 25 FT. STATION INCREMENTS UNLESS INDICATED OTHERWISE

REFER TO P.308 FOR ALL OTHER NOTES AND LEGEND

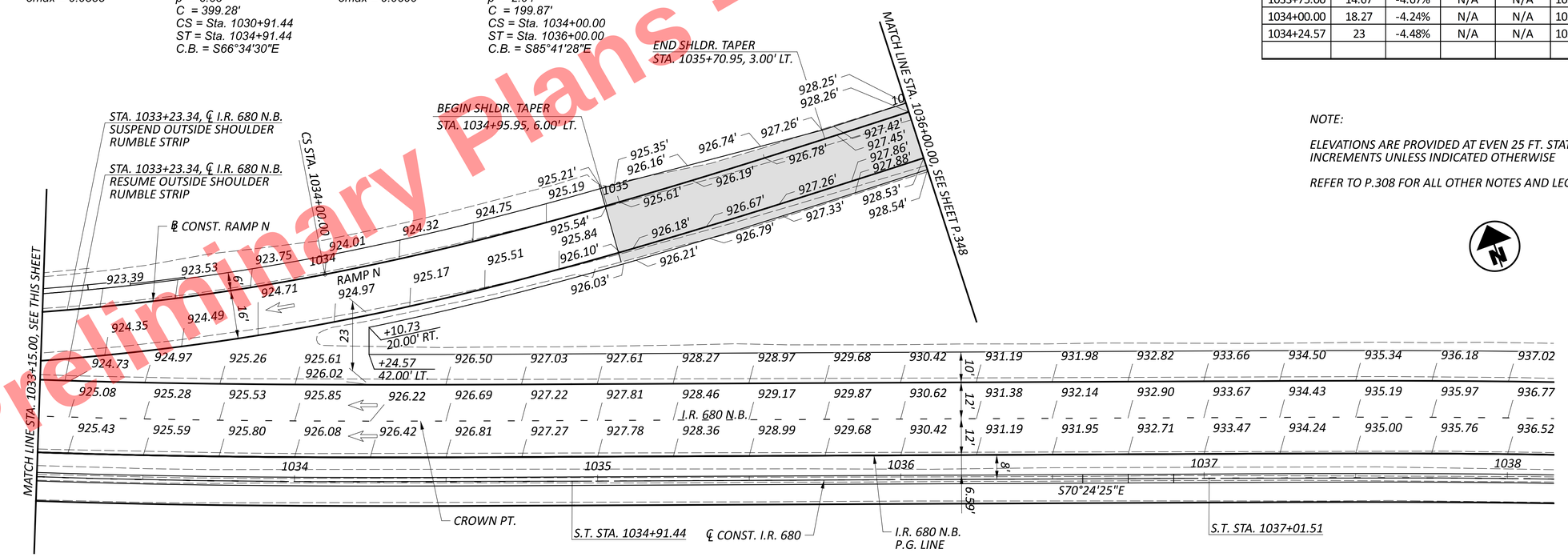

Preliminary Plans - For Reference Only

HORIZONTAL SCALE IN FEET
0 10 20 40

RAMP TERMINAL DETAIL - I.R. 680 N.B. WOODLAND AVE. - RAMP N

DESIGN AGENCY
ms consultants, inc.

DESIGNER MSN
REVIEWER CMN 08/29/25
PROJECT ID 121474
SHEET P.345 TOTAL 655

MAH-680-4.58

MODEL: 113321_GI033 PAPERSIZE: 34x22 (in.) DATE: 9/15/2025 TIME: 2:43:55 PM PLTDRV: OHDOT_PDF_E+.pltcfg PENTBL: OHDOT_UTPen.tbl USER: DHall@msconsultants.com WORKSPACE: OHDOTCEv02 WORKSET: 121474 PRODUCT: OpenRoadsDesigner 24.00.00.205
pw:\\ohiodot-pw.bentley.com:ohiodot-pw-02\Documents\01 Active Projects\District 04\Mahoning\121474\02-Engineering_MSConsultants\Roadway\Sheets\121474_GI033.dgn

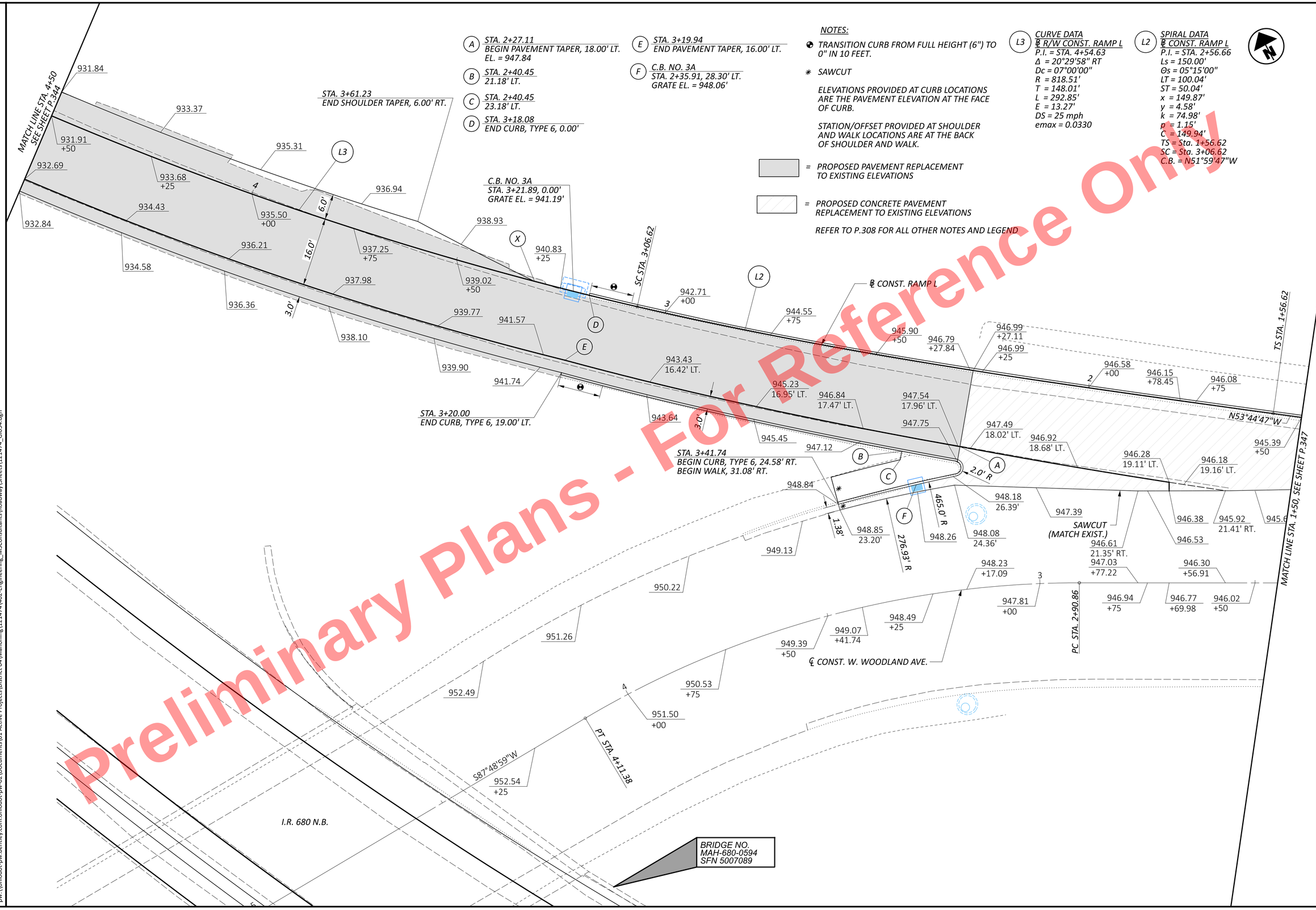

NOTES:

- TRANSITION CURB FROM FULL HEIGHT (6") TO 0" IN 10 FEET.
- SAWCUT

ELEVATIONS PROVIDED AT CURB LOCATIONS ARE THE PAVEMENT ELEVATION AT THE FACE OF CURB.

STATION/OFFSET PROVIDED AT SHOULDER AND WALK LOCATIONS ARE AT THE BACK OF SHOULDER AND WALK.

= PROPOSED PAVEMENT REPLACEMENT TO EXISTING ELEVATIONS

= PROPOSED CONCRETE PAVEMENT REPLACEMENT TO EXISTING ELEVATIONS

REFER TO P.308 FOR ALL OTHER NOTES AND LEGEND

L3 CURVE DATA
℄ R/W CONST. RAMP L
P.I. = STA. 4+54.63
Δ = 20°29'58" RT
Dc = 07°00'00"
R = 818.51'
T = 148.01'
L = 292.85'
E = 13.27'
DS = 25 mph
emax = 0.0330

L2 SPIRAL DATA
℄ CONST. RAMP L
P.I. = STA. 2+56.66
Ls = 150.00'
Θs = 05°15'00"
LT = 100.04'
ST = 50.04'
x = 149.87'
y = 4.58'
k = 74.98'
p = 1.15'
Lc = 149.94'
TS = Sta. 1+56.62
SC = Sta. 3+06.62
C.B. = N51°59'47"W

HORIZONTAL SCALE IN FEET
0 5 10 20

INTERSECTION DETAIL
MARKET ST. RAMP L

Preliminary Plans - For Reference Only

DESIGN AGENCY
ms consultants, inc.

DESIGNER CJR
REVIEWER CMN 08/29/25
PROJECT ID 121474
SHEET P.346 TOTAL 655

MAH-680-4.58

MODEL: Sheet-1 PAPERSIZE: 34x22 (in.) DATE: 9/15/2025 TIME: 2:44:05 PM PLTDRV: OHDOT_PDF_E+.pltcfg PENTBL: OHDOT_UTPen.tbl USER: DHall@msconsultants.com WORKSPACE: OHDOTCEv02 WORKSET: 121474 PRODUCT: OpenRoadsDesigner 24.00.00.205
pw:\\ohiodot-pw.bentley.com:ohiodot-pw-02\Documents\01 Active Projects\District 04\Mahoning\121474\02-Engineering_MSConsultants\Roadway\Sheets\121474_GI034.dgn

L1 CURVE DATA
℄ CONST. RAMP L
P.I. = 0+42.91
Δ = 07°44'49"RT.
Dc = 09°02'27"
R = 633.75'
T = 42.91'
L = 85.69'
E = 1.45'
DS = 25 mph
emax = MATCH EXISTING

NOTES:

* SAWCUT

ELEVATIONS PROVIDED AT CURB LOCATIONS ARE THE PAVEMENT ELEVATION AT THE FACE OF CURB.

STATION/OFFSET PROVIDED AT SHOULDER AND WALK LOCATIONS ARE AT THE BACK OF SHOULDER AND WALK.

= PROPOSED PAVEMENT REPLACEMENT TO EXISTING ELEVATIONS

= PROPOSED CONCRETE PAVEMENT REPLACEMENT TO EXISTING ELEVATIONS

REFER TO P.308 FOR ALL OTHER NOTES AND LEGEND

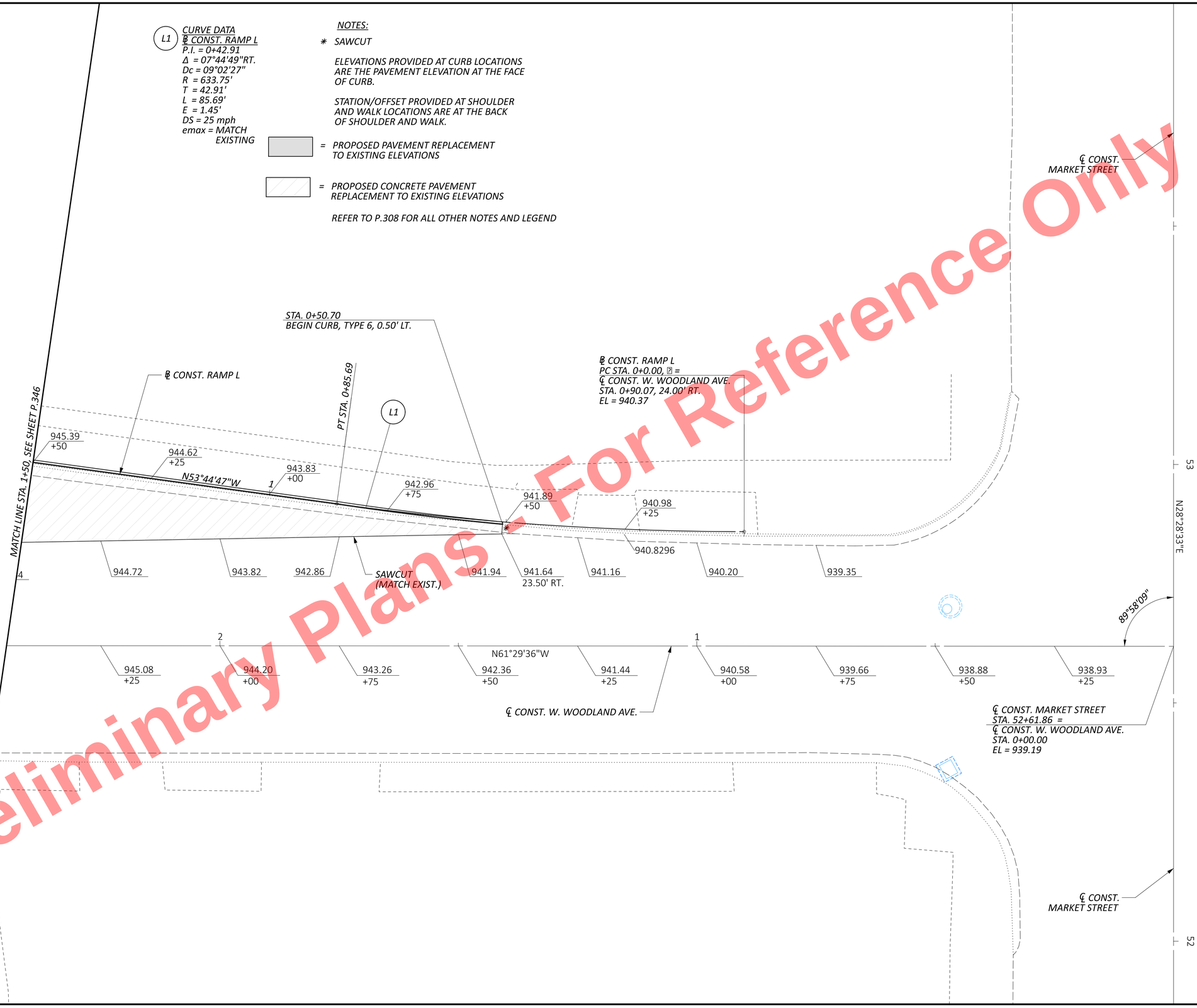

Preliminary Plans - For Reference Only

HORIZONTAL SCALE IN FEET
0 5 10 20

INTERSECTION DETAIL
MARKET ST. RAMP L

DESIGN AGENCY
ms consultants, inc.

DESIGNER CJR
REVIEWER CMN 08/29/25
PROJECT ID 121474
SHEET P.347 TOTAL 655

MAH-680-4.58

MODEL: Sheet-2 PAPERSIZE: 34x22 (in.) DATE: 9/15/2025 TIME: 2:44:06 PM PLTDRV: OHDOT_PDF_E+.pltcfg PENTBL: OHDOT_UTPen.tbl USER: DHall@msconsultants.com WORKSPACE: OHDOTCEv02 WORKSET: 121474 PRODUCT: OpenRoadsDesigner 24.00.00.205
pw:\\ohiodot-pw.bentley.com:ohiodot-pw-02\Documents\01 Active Projects\District 04\Mahoning\121474\402-Engineering_MSConsultants\Roadway\Sheets\121474_GI034.dgn

NOTE:

ELEVATIONS ARE PROVIDED AT EVEN 25 FT. STATION INCREMENTS UNLESS INDICATED OTHERWISE

REFER TO P.308 FOR ALL OTHER NOTES AND LEGEND

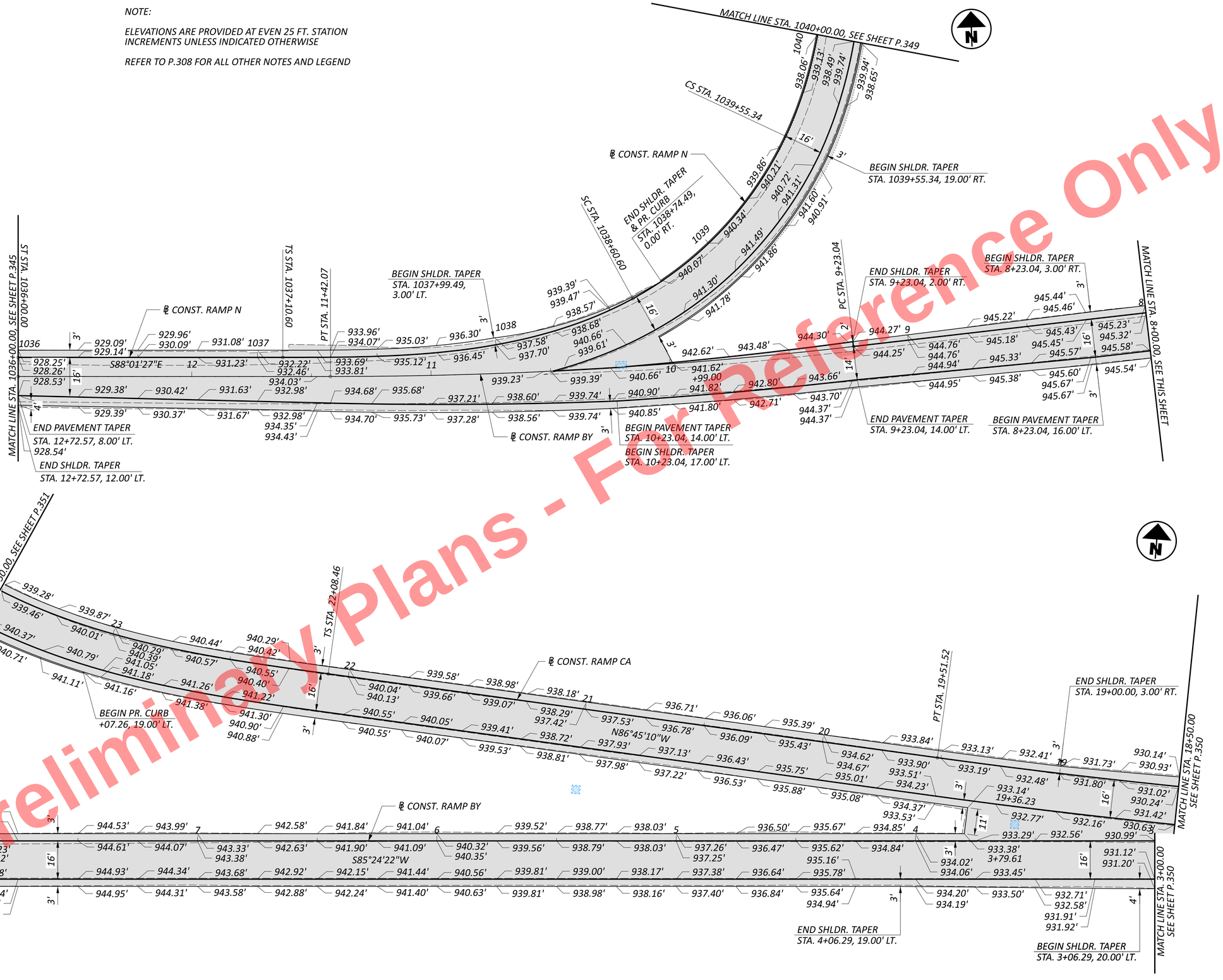

Preliminary Plans - For Reference Only

HORIZONTAL SCALE IN FEET
0 5 10 20

RAMP DETAIL
E. WOODLAND AVE. RAMP N AND RAMP CA, U.S. 62/S.R. 7 RAMP BY

DESIGN AGENCY
ms consultants, inc.

DESIGNER CJR
REVIEWER CMN 08/29/25
PROJECT ID 121474
SHEET P.348 TOTAL 655

MAH-680-4.58

MODEL: Sheet PAPERSIZE: 34x22 (in.) DATE: 9/15/2025 TIME: 2:44:12 PM PLTDRV: OHDOT_PDF_E+.pltcfg PENTBL: OHDOT_UTPen.tbl USER: DHall@msconsultants.com WORKSPACE: OHDOTCEv02 WORKSET: 121474 PRODUCT: OpenRoadsDesigner 24.00.00.205
pw:\\ohiodot-pw.bentley.com:ohiodot-pw-02\Documents\01 Active Projects\District 04\Mahoning\121474\02-Engineering_MSConsultants\Roadway\Sheets\121474_GI035.dgn

Preliminary Plans - For Reference Only

N5 *SPIRAL DATA*
℄ CONST. RAMP N
P.I. = STA. 1040+06.56
Ls = 150.00'
Θs = 28°38'52"
LT = 101.34'
ST = 51.22'
x = 140.16'
y = 48.59'
k = 74.38'
p = 6.19'
C = 148.34'
Start = Sta. 1039+55.34
End = Sta. 1041+05.34
C.B. = N08°01'15"E

NOTES:

ELEVATIONS PROVIDED AT CURB LOCATIONS ARE THE PAVEMENT ELEVATION AT THE FACE OF CURB.

STATION/OFFSET PROVIDED AT SHOULDER AND WALK LOCATIONS ARE AT THE BACK OF SHOULDER AND WALK.

= *PROPOSED PAVEMENT REPLACEMENT TO EXISTING ELEVATIONS*

REFER TO P.308 FOR ALL OTHER NOTES AND LEGEND

A *℄ CONST. RAMP N*
STA. 1042+21.16 =
℄ CONST. E. WOODLAND AVE.
STA. 7+79.06
EL = 928.26

B *STA. 1040+65.20*
END PAVEMENT TAPER, 14.50' RT.
BEGIN SHOULDER, 14.50' RT.

C *STA. 1040+65.20*
END CURB, TYPE 6, 17.50' RT.

HORIZONTAL SCALE IN FEET
0 5 10 20

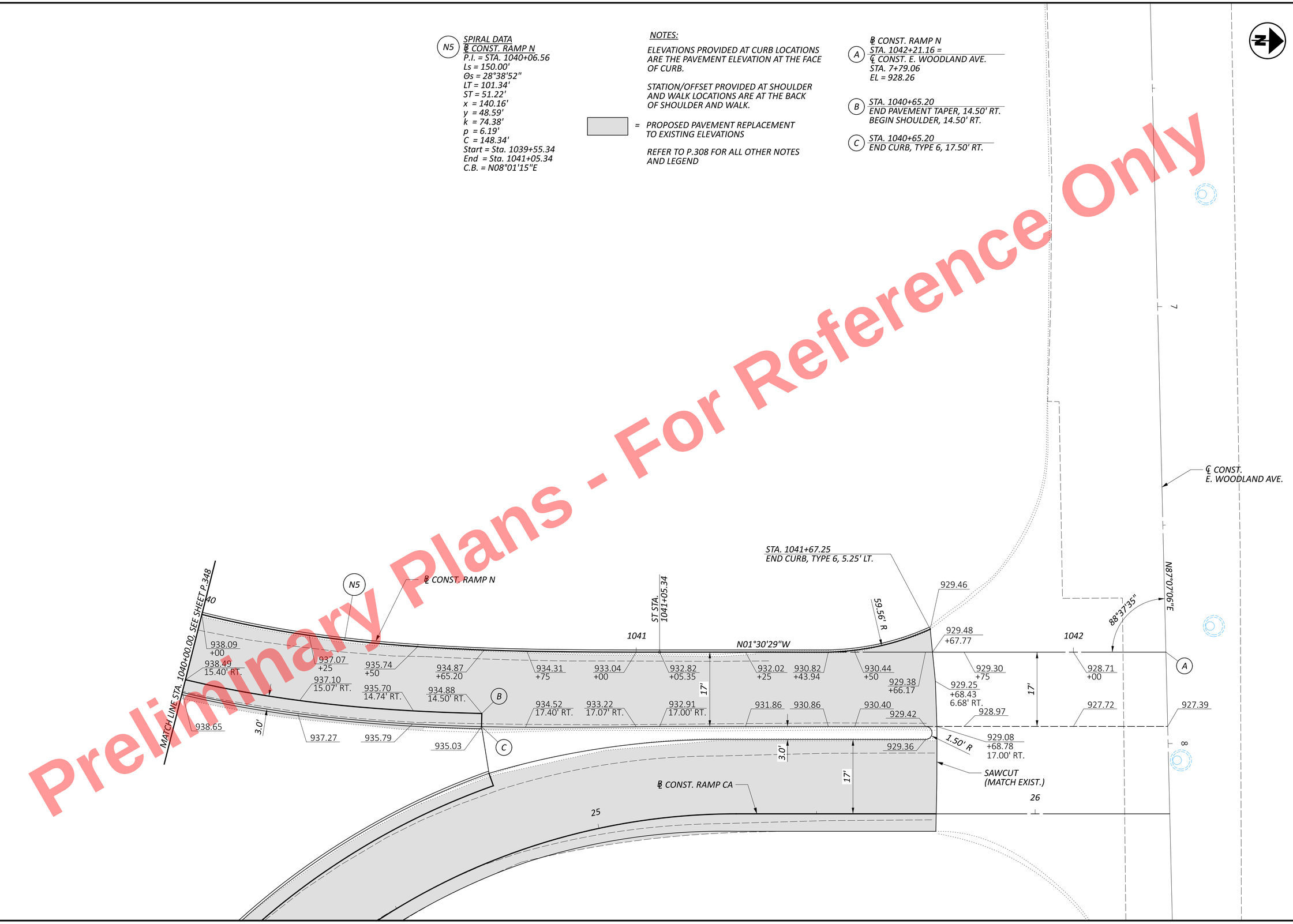

INTERSECTION DETAIL
E. WOODLAND AVE. RAMP N

DESIGN AGENCY
ms consultants, inc.

DESIGNER CJR
REVIEWER CMN 08/29/25
PROJECT ID 121474
SHEET P.349 TOTAL 655

MAH-680-4.58

MODEL: Sheet PAPERSIZE: 34x22 (in.) DATE: 9/15/2025 TIME: 2:44:19 PM PLTDRV: OHDOT_PDF_E+.pltcfg PENTBL: OHDOT_UTPen.tbl USER: DHall@msconsultants.com WORKSPACE: OHDOTCEv02 WORKSET: 121474 PRODUCT: OpenRoadsDesigner 24.00.00.205
pw:\\ohiodot-pw.bentley.com:ohiodot-pw-02\Documents\01 Active Projects\District 04\Mahoning\121474\402-Engineering_MSConsultants\Roadway\Sheets\121474_GI036.dgn

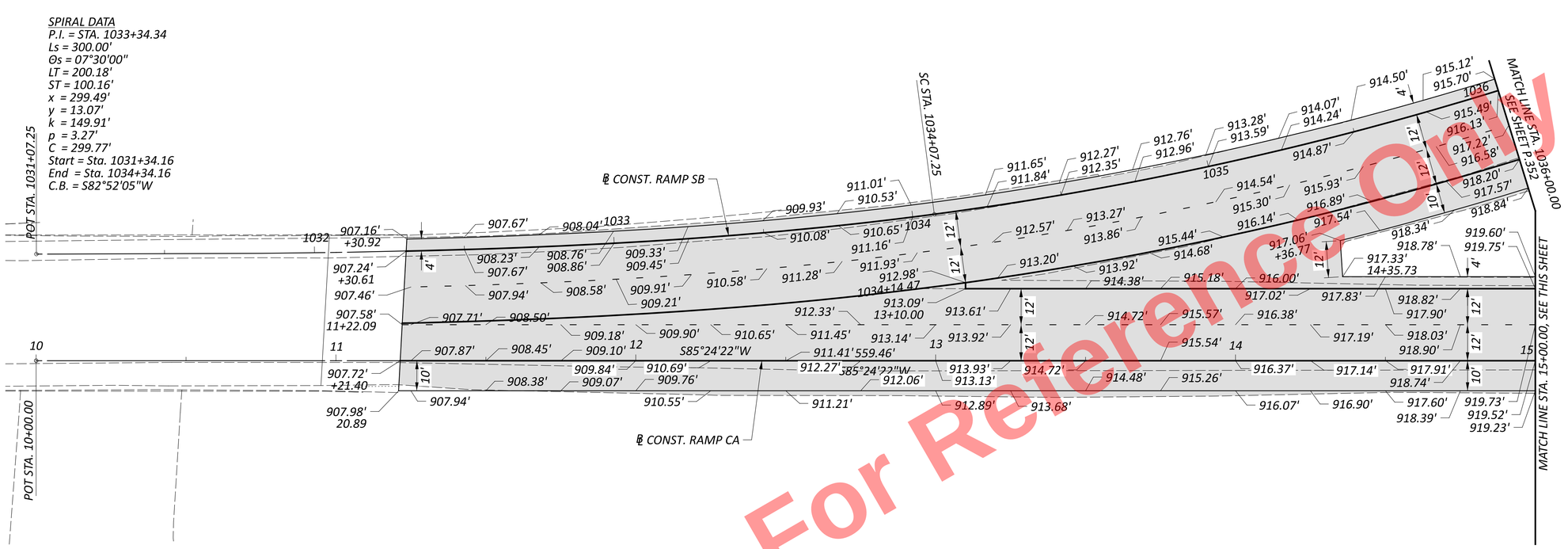

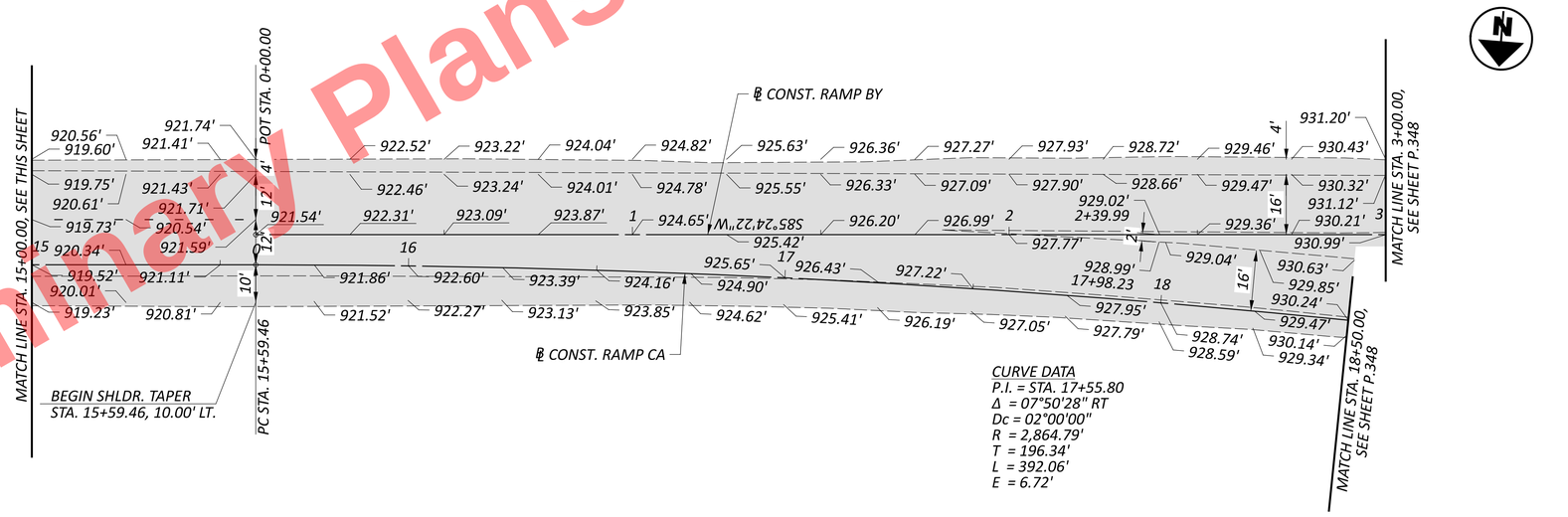

NOTE:

ELEVATIONS ARE PROVIDED AT EVEN 25 FT. STATION INCREMENTS UNLESS INDICATED OTHERWISE

REFER TO P.308 FOR ALL OTHER NOTES AND LEGEND

Preliminary Plans - For Reference Only

RAMP TERMINAL DETAIL
ENTRANCE RAMP CA - RAMP SB AND RAMP CA - RAMP BY

DESIGN AGENCY
ms consultants, inc.

DESIGNER MSN
REVIEWER CMN 08/29/25
PROJECT ID 121474
SHEET P.350 TOTAL 655

MAH-680-4.58

MODEL: 113321_GI046 PAPERSIZE: 34x22 (in.) DATE: 9/15/2025 TIME: 2:44:26 PM PLTDRV: OHDOT_PDF_E+.pltcfg PENTBL: OHDOT_UTPen.tbl USER: DHall@msconsultants.com WORKSPACE: OHDOTCtv02 WORKSET: 121474 PRODUCT: OpenRoadsDesigner 24.00.00.205
pw:\\ohiodot-pw.bentley.com:ohiodot-pw-02\Documents\01 Active Projects\District 04\Mahoning\121474\02-Engineering_MSConsultants\Roadway\Sheets\121474_GI037.dgn

Preliminary Plans - For Reference Only

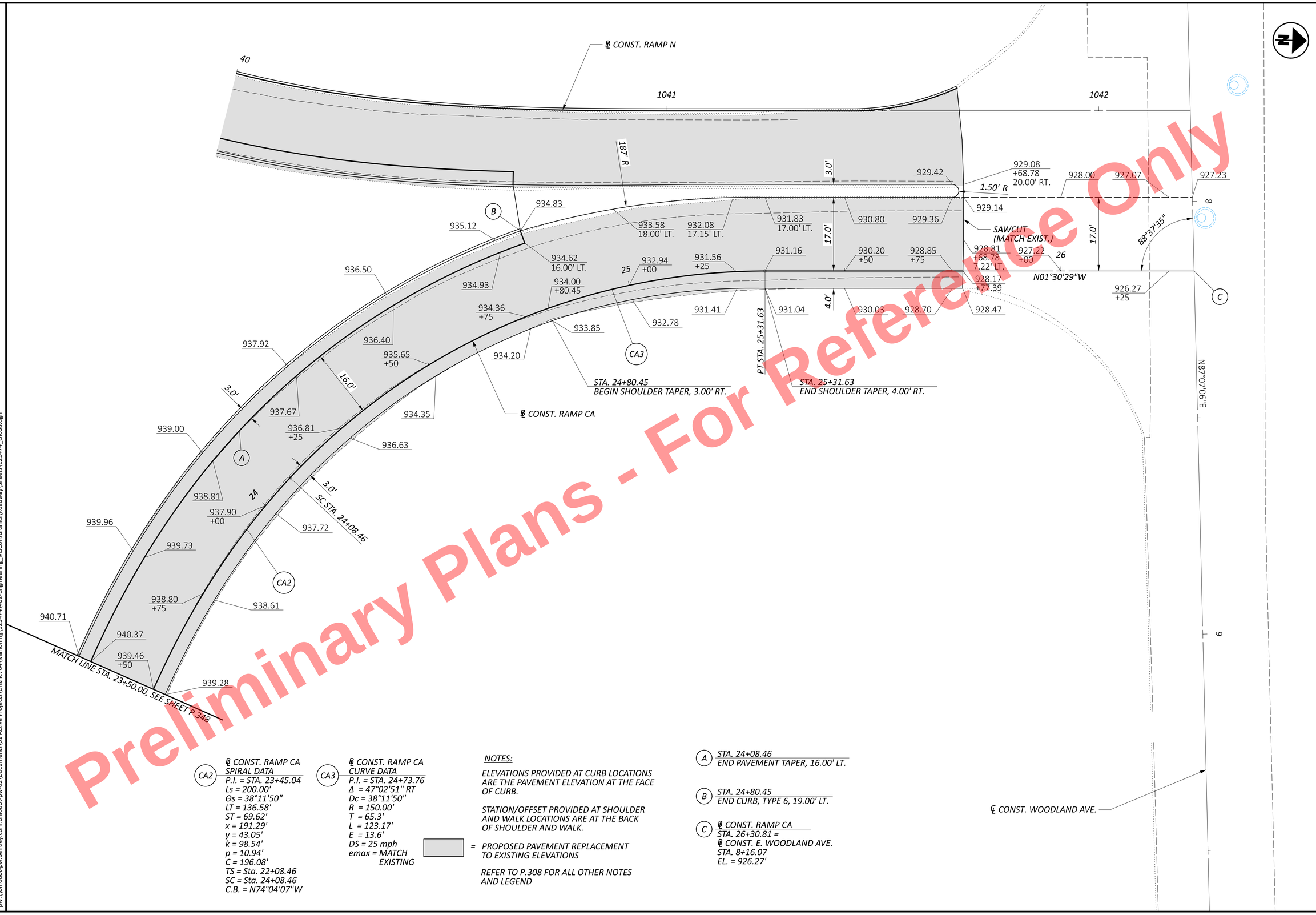

CA2 — ℄ CONST. RAMP CA
SPIRAL DATA
P.I. = STA. 23+45.04
Ls = 200.00'
Θs = 38°11'50"
LT = 136.58'
ST = 69.62'
x = 191.29'
y = 43.05'
k = 98.54'
p = 10.94'
C = 196.08'
TS = Sta. 22+08.46
SC = Sta. 24+08.46
C.B. = N74°04'07"W

CA3 — ℄ CONST. RAMP CA
CURVE DATA
P.I. = STA. 24+73.76
Δ = 47°02'51" RT
Dc = 38°11'50"
R = 150.00'
T = 65.3'
L = 123.17'
E = 13.6'
DS = 25 mph
emax = MATCH EXISTING

= PROPOSED PAVEMENT REPLACEMENT TO EXISTING ELEVATIONS

NOTES:

ELEVATIONS PROVIDED AT CURB LOCATIONS ARE THE PAVEMENT ELEVATION AT THE FACE OF CURB.

STATION/OFFSET PROVIDED AT SHOULDER AND WALK LOCATIONS ARE AT THE BACK OF SHOULDER AND WALK.

REFER TO P.308 FOR ALL OTHER NOTES AND LEGEND

A — STA. 24+08.46
END PAVEMENT TAPER, 16.00' LT.

B — STA. 24+80.45
END CURB, TYPE 6, 19.00' LT.

C — ℄ CONST. RAMP CA
STA. 26+30.81 =
℄ CONST. E. WOODLAND AVE.
STA. 8+16.07
EL. = 926.27'

HORIZONTAL SCALE IN FEET
0 5 10 20

INTERSECTION DETAIL
E. WOODLAND AVE. RAMP CA

DESIGN AGENCY
ms consultants, inc.

DESIGNER MSN
REVIEWER JDK 10/04/24
PROJECT ID 121474
SHEET P.351 TOTAL 500

MAH-680-4.58

MODEL: Sheet PAPERSIZE: 34x22 (in.) DATE: 9/15/2025 TIME: 2:44:33 PM PLTDRV: OHDOT_PDF_E+.pltcfg PENTBL: OHDOT_UTPen.tbl USER: DHall@msconsultants.com WORKSPACE: OHDOTCEv02 WORKSET: 121474 PRODUCT: OpenRoadsDesigner 24.00.00.205
pw:\\ohiodot-pw.bentley.com:ohiodot-pw-02\Documents\01 Active Projects\District 04\Mahoning\121474\402-Engineering_MSConsultants\Roadway\Sheets\121474_GI038.dgn

NOTE:

ELEVATIONS ARE PROVIDED AT EVEN 25 FT. STATION INCREMENTS UNLESS INDICATED OTHERWISE

REFER TO P.308 FOR ALL OTHER NOTES AND LEGEND

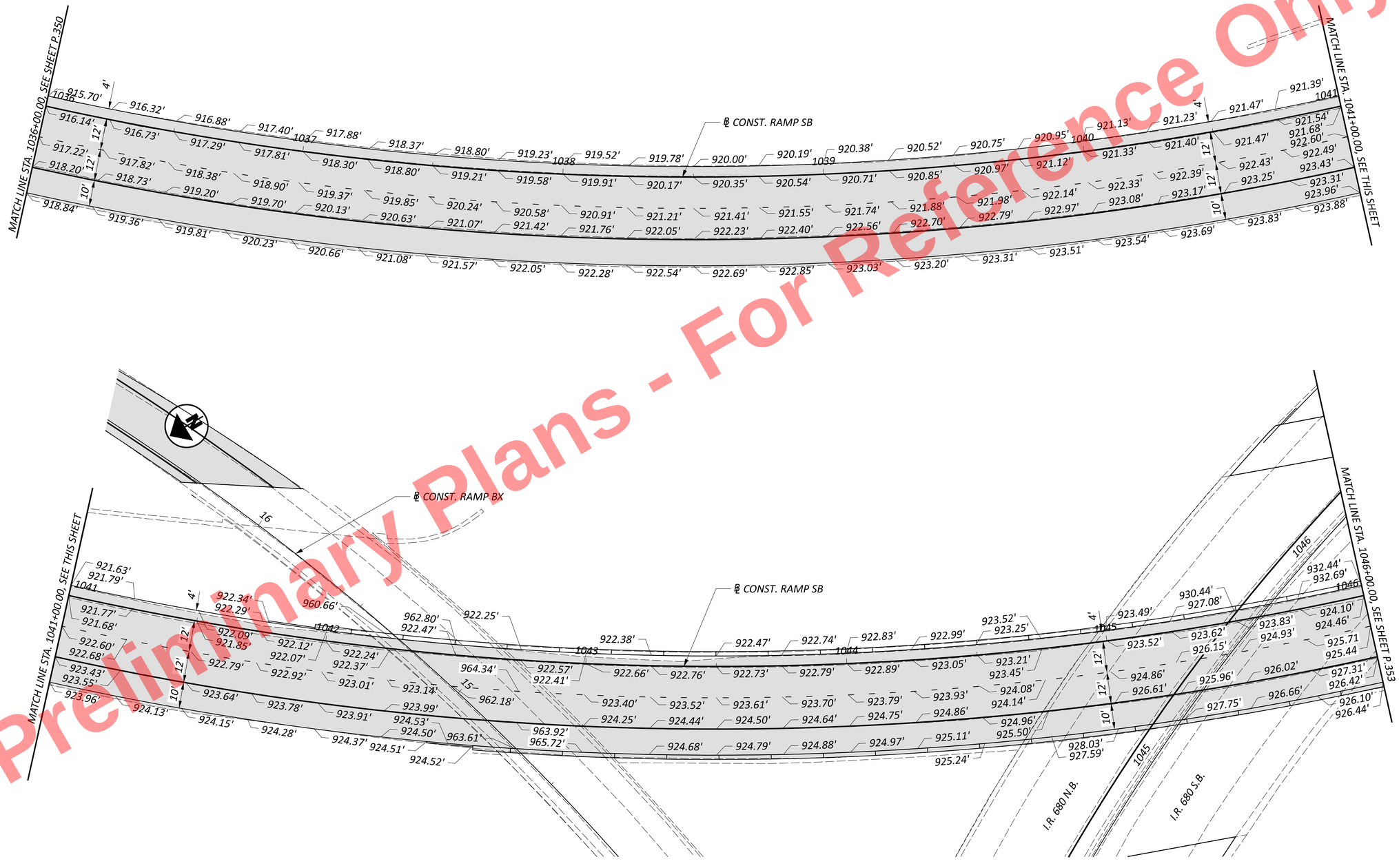

Preliminary Plans - For Reference Only

HORIZONTAL SCALE IN FEET
0 10 20 40

RAMP DETAIL
U.S. 62/S.R. 7 RAMP S.B.

DESIGN AGENCY
ms consultants, inc.

DESIGNER MSN
REVIEWER CMN 08/29/25
PROJECT ID 121474
SHEET P.352 TOTAL 655

MAH-680-4.58

MODEL: 113321_GI033 PAPERSIZE: 34x22 (in.) DATE: 9/15/2025 TIME: 2:44:39 PM PLTDRV: OHDOT_PDF_E+.pltcfg PENTBL: OHDOT_UTPen.tbl USER: DHall@msconsultants.com WORKSPACE: OHDOTCtv02 WORKSET: 121474 PRODUCT: OpenRoadsDesigner 24.00.00.205
pw:\\ohiodot-pw.bentley.com:ohiodot-pw-02\Documents\01 Active Projects\District 04\Mahoning\121474\402-Engineering_MSConsultants\Roadway\Sheets\121474_GI039.dgn

NOTE:

ELEVATIONS ARE PROVIDED AT EVEN 25 FT. STATION INCREMENTS UNLESS INDICATED OTHERWISE

REFER TO P.308 FOR ALL OTHER NOTES AND LEGEND

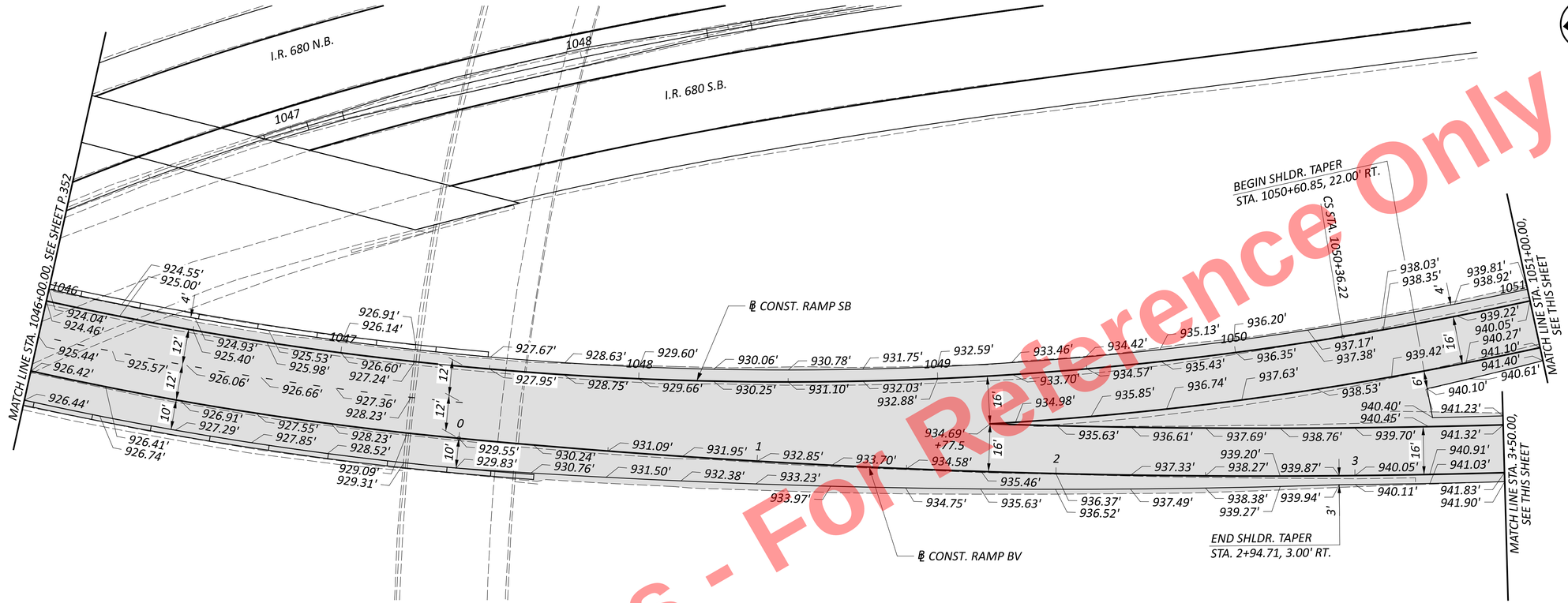

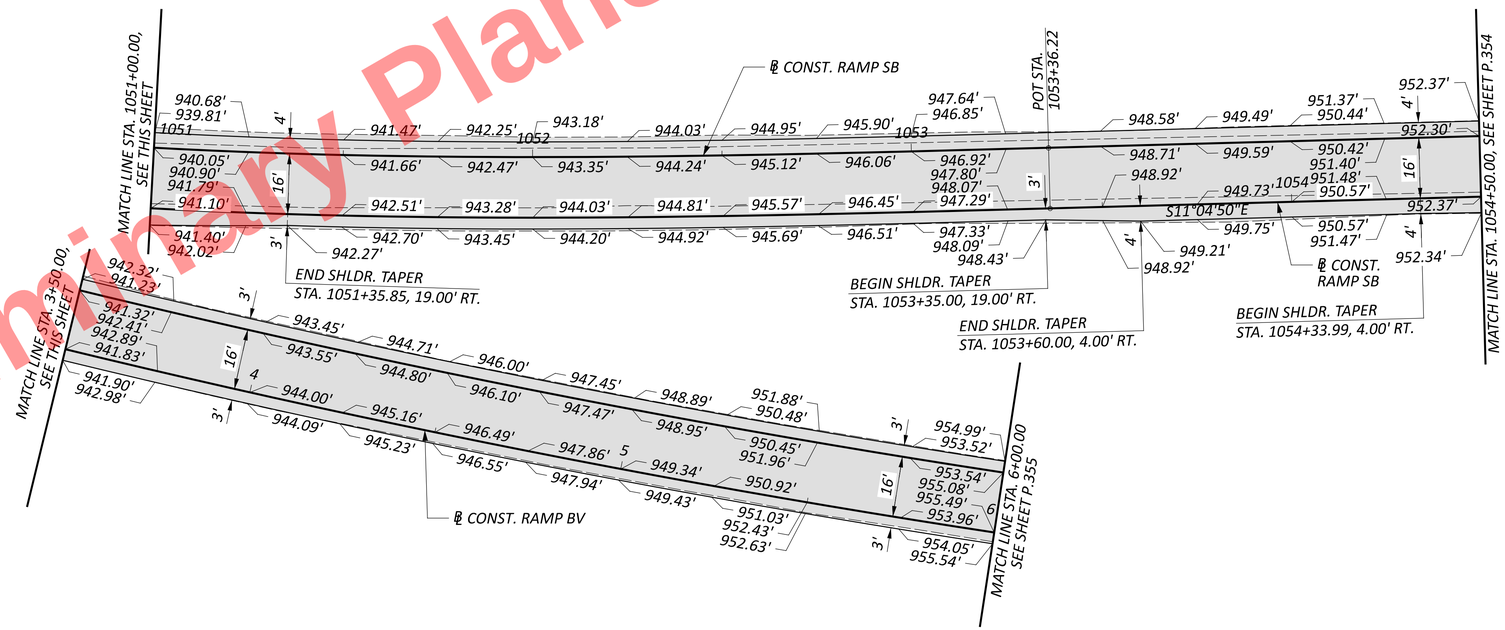

Preliminary Plans - For Reference Only

HORIZONTAL SCALE IN FEET
0 10 20 40

RAMP DETAIL
U.S. 62/S.R. 7 RAMP S.B. AND RAMP BV U.S. 62/S.R. 7, WILLIAMSON AVE.

DESIGN AGENCY
ms consultants, inc.

DESIGNER MSN
REVIEWER CMN 08/29/25
PROJECT ID 121474
SHEET P.353 TOTAL 655

MAH-680-4.58

MODEL: 113321_GI033 PAPERSIZE: 34x22 (in.) DATE: 9/15/2025 TIME: 2:44:47 PM PLTDRV: OHDOT_PDF_E+.pltcfg PENTBL: OHDOT_UTPen.tbl USER: DHall@msconsultants.com WORKSPACE: OHDOTCivil02 WORKSET: 121474 PRODUCT: OpenRoadsDesigner 24.00.00.205
pw:\\ohiodot-pw.bentley.com:ohiodot-pw-02\Documents\01 Active Projects\District 04\Mahoning\121474\02-Engineering_MSConsultants\Roadway\Sheets\121474_GI040.dgn

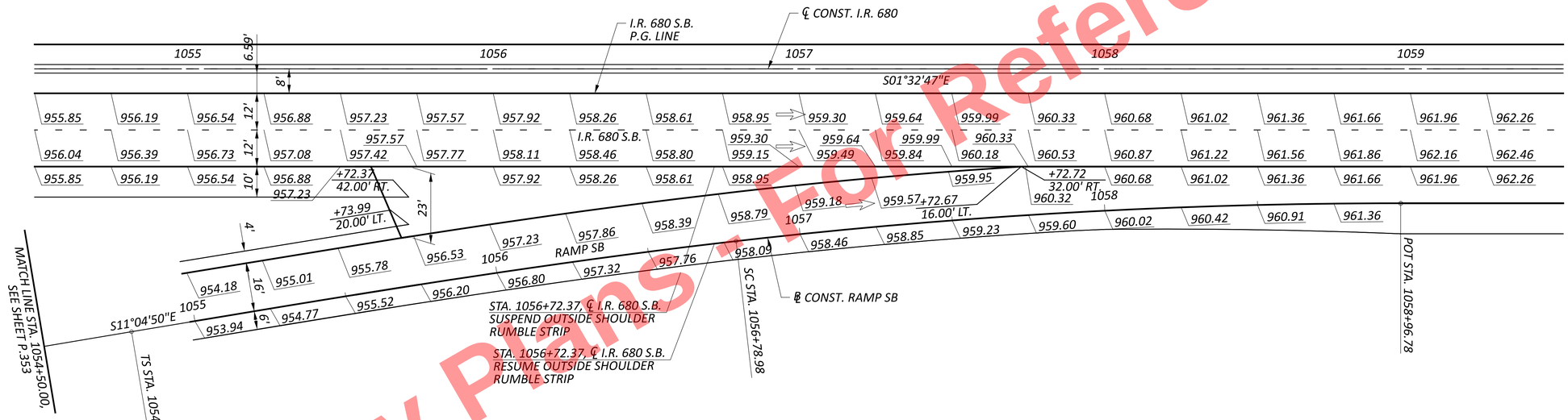

SPIRAL DATA
℄ CONST. RAMP SB
P.I. = STA. 1056+12.33
Ls = 200.00'
Θs = 03°00'00"
LT = 133.35'
ST = 66.68'
x = 199.95'
y = 3.49'
k = 99.99'
p = 0.87'
C = 199.98'
TS = Sta. 1054+78.98
SC = Sta. 1056+78.98
C.B. = S10°04'50"E

CURVE DATA
℄ CONST. RAMP SB
P.I. = STA. 1057+88.00
Δ = 06°32'02" RT
Dc = 03°00'00"
R = 1,909.86'
T = 109.02'
L = 217.8'
E = 3.11'
DS = 50 mph
emax = 0.0450

RAMP SB - SR 7

MAINLINE STATION	WIDTH (FT)	SLOPE (%)	WIDTH (FT)	SLOPE (%)	RAMP STATION	RAMP SIDE
1055+72.37	23	-4.55%	N/A	N/A	1055+73.99	SB
1055+75.00	22.6	-4.45%	N/A	N/A	1055+76.02	SB
1056+00.00	18.8	-3.49%	N/A	N/A	1056+01.19	SB
1056+25.00	15.21	-2.36%	N/A	N/A	1056+26.31	SB
1056+50.00	11.87	-1.60%	N/A	N/A	1056+51.36	SB
1056+75.00	8.82	-1.60%	N/A	N/A	1056+76.34	SB
1057+00.00	6.08	-1.60%	N/A	N/A	1057+01.28	SB
1057+25.00	3.68	-1.60%	N/A	N/A	1057+26.20	SB
1057+50.00	1.6	-1.60%	N/A	N/A	1057+51.07	SB
1057+72.72	0	0.00%	N/A	N/A	1057+72.67	SB

NOTE:

ELEVATIONS ARE PROVIDED AT EVEN 25 FT. STATION INCREMENTS UNLESS INDICATED OTHERWISE

REFER TO P.308 FOR ALL OTHER NOTES AND LEGEND

Preliminary Plans - Not For Reference Only

HORIZONTAL SCALE IN FEET
0 10 20 40

RAMP TERMINAL DETAIL - I.R. 680 S.B. U.S. 62/S.R. 7 RAMP S.B.

DESIGN AGENCY
ms consultants, inc.

DESIGNER MSN
REVIEWER CMN 08/29/25
PROJECT ID 121474
SHEET P.354 TOTAL 655

MAH-680-4.58

MODEL: 113321_GI036-1 PAPERSIZE: 34x22 (in.) DATE: 9/15/2025 TIME: 2:44:55 PM PLTDRV: OHDOT_PDF_E+.pltcfg PENTBL: OHDOT_UTPen.tbl USER: DHall@msconsultants.com WORKSPACE: OHDOTCEv02 WORKSET: 121474 PRODUCT: OpenRoadsDesigner 24.00.00.205
pw:\\ohiodot-pw.bentley.com:ohiodot-pw-02\Documents\01 Active Projects\District 04\Mahoning\121474\Roadway\Sheets\121474_GI041.dgn

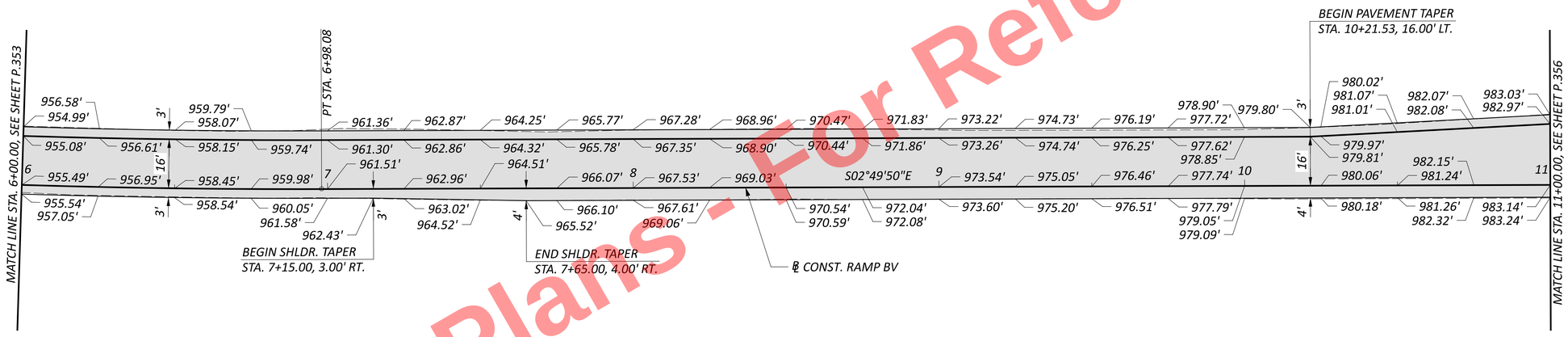

Preliminary Plans - For Reference Only

NOTE:

ELEVATIONS ARE PROVIDED AT EVEN 25 FT. STATION INCREMENTS UNLESS INDICATED OTHERWISE

REFER TO P.308 FOR ALL OTHER NOTES AND LEGEND

HORIZONTAL SCALE IN FEET
0 10 20 40

RAMP DETAIL
U.S. 62/S.R. 7 RAMP BV, WILLIAMSON AVE.

DESIGN AGENCY
ms consultants, inc.

DESIGNER MSN
REVIEWER CMN 08/29/25
PROJECT ID 121474
SHEET P.355 TOTAL 655

MAH-680-4.58

MODEL: 113321_GI033 PAPERSIZE: 34x22 (in.) DATE: 9/15/2025 TIME: 2:45:01 PM PLTDRV: OHDOT_PDF_E+.pltcfg PENTBL: OHDOT_UTPen.tbl USER: DHall@msconsultants.com WORKSPACE: OHDOTCtx02 WORKSET: 121474 PRODUCT: OpenRoadsDesigner 24.00.00.205
pw:\\ohiodot-pw.bentley.com:ohiodot-pw-02\Documents\01 Active Projects\District 04\Mahoning\121474\402-Engineering_MSConsultants\Roadway\Sheets\121474_GI042.dgn

NOTES:

- TRANSITION CURB FROM 0" TO FULL HEIGHT (6") IN 10 FEET.

ELEVATIONS PROVIDED AT CURB LOCATIONS ARE THE PAVEMENT ELEVATION AT THE FACE OF CURB.

STATION/OFFSET PROVIDED AT SHOULDER AND WALK LOCATIONS ARE AT THE BACK OF SHOULDER AND WALK.

= PROPOSED PAVEMENT REPLACEMENT TO EXISTING ELEVATIONS

REFER TO P.308 FOR ALL OTHER NOTES AND LEGEND

BRIDGE NO.
MAH-062-17.499
SFN 5007208

STA. 11+81.50
END PAVEMENT TAPER, 24.00' LT.

STA. 12+11.50
BEGIN PAV'T TAPER, 24.00' LT.

STA. 11+61.50
END PAVEMENT TAPER, 33.83' LT.

WILLIAMSON AVE.

HEASLEY ST.

5:1 TAPER

SAWCUT
(MATCH EXIST.)

MATCH LINE STA. 11+00.00, SEE SHEET P.355

S02°49'50"E

℄ CONST. RAMP BV

STA. 12+31.87
BEGIN CURB, TYPE 6, 4.00' RT.
BEGIN SHOULDER TAPER, 4.00' RT.

STA. 12+60.48
END CURB, TYPE 6, 13.00' RT.
END SHOULDER TAPER, 13.00' RT.

982.94	983.82	984.54	985.13	985.30	3.0'	985.65	985.92	986.12	986.60					
								986.15						
								26.65' LT.						
													986.78	
													986.81	
												986.63		
												31.57' LT.		
982.97	983.85	984.57	985.16	985.33	8.0'	985.68	985.95	986.20	986.72		8.0'		986.93	
19.92' LT.	21.17' LT.	22.42' LT.	23.67' LT.											
982.99	983.87	984.64	985.24	985.38	16.0'	985.77	986.02	986.27	986.77		16.0'		987.00	
983.14	983.89	984.60	985.24	985.39		985.81	986.06	986.40	987.12				987.27	987.75
1 +00	+25	+50	+75	+81.50		12 +00	+11.50	+25	+50				+60.77	+83.39
														13
983.24	983.96	984.65	985.28	985.39	4.0'	985.88	986.21						987.35	
								986.45		987.13				
										987.37			987.79	
										7.40' RT.				

Preliminary Plans - Not For Reference Only

HORIZONTAL SCALE IN FEET
0 5 10 20

INTERSECTION DETAIL
U.S. 62/S.R. 7 RAMP BV AT WILLIAMSON AVE.

DESIGN AGENCY
ms consultants, inc.

DESIGNER: MSN
REVIEWER: CMN 08/29/25
PROJECT ID: 121474
SHEET: P.356 TOTAL: 655

MAH-680-4.58

MODEL: Sheet PAPERSIZE: 34x22 (in.) DATE: 9/15/2025 TIME: 2:45:06 PM PLTDRV: OHDOT_PDF_E+.pltcfg PENTBL: OHDOT_UTPen.tbl USER: DHall@msconsultants.com WORKSPACE: OHDOTCEv02 WORKSET: 121474 PRODUCT: OpenRoadsDesigner 24.00.00.205
pw:\\ohiodot-pw.bentley.com:ohiodot-pw-02\Documents\01 Active Projects\District 04\Mahoning\121474\02-Engineering_MSConsultants\Roadway\Sheets\121474_GI043.dgn

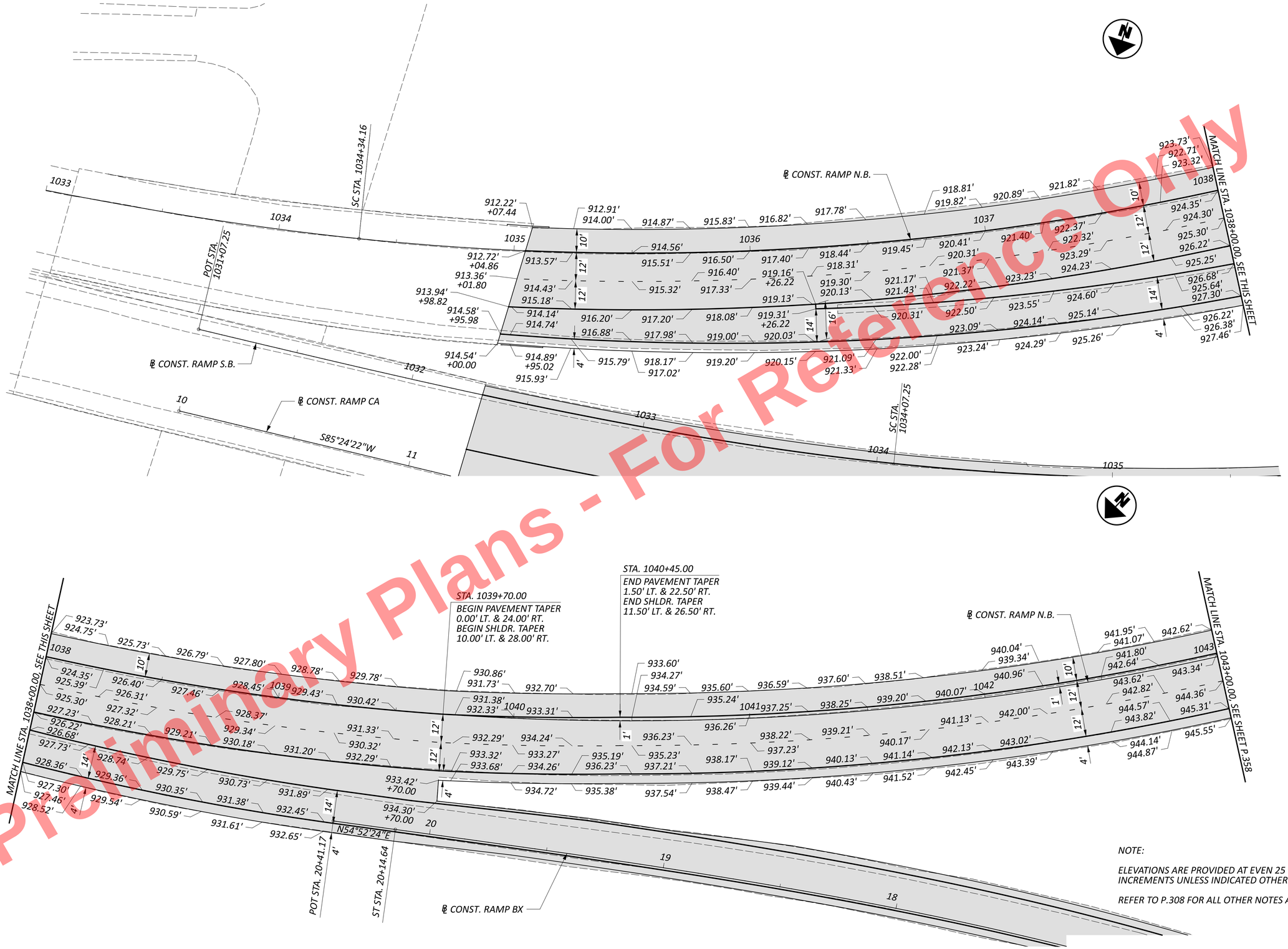

Preliminary Plans - For Reference Only

NOTE:

ELEVATIONS ARE PROVIDED AT EVEN 25 FT. STATION INCREMENTS UNLESS INDICATED OTHERWISE

REFER TO P.308 FOR ALL OTHER NOTES AND LEGEND

HORIZONTAL SCALE IN FEET
0 10 20 40

RAMP DETAIL
U.S. 62/S.R. 7 RAMP N.B.

MAH-680-4.58

DESIGN AGENCY
ms consultants, inc.

DESIGNER MSN
REVIEWER CMN 08/29/25
PROJECT ID 121474
SHEET P.357 TOTAL 655

MODEL: 113321_GI033 PAPERSIZE: 34x22 (in.) DATE: 9/15/2025 TIME: 2:45:13 PM PLTDRV: OHDOT_PDF_E+.pltcfg PENTBL: OHDOT_UTPen.tbl USER: DHall@msconsultants.com WORKSPACE: OHDOTCtv02 WORKSET: 121474 PRODUCT: OpenRoadsDesigner 24.00.00.205
pw:\\ohiodot-pw.bentley.com:ohiodot-pw-02\Documents\01 Active Projects\District 04\Mahoning\121474\02-Engineering_MSConsultants\Roadway\Sheets\121474_GI044.dgn

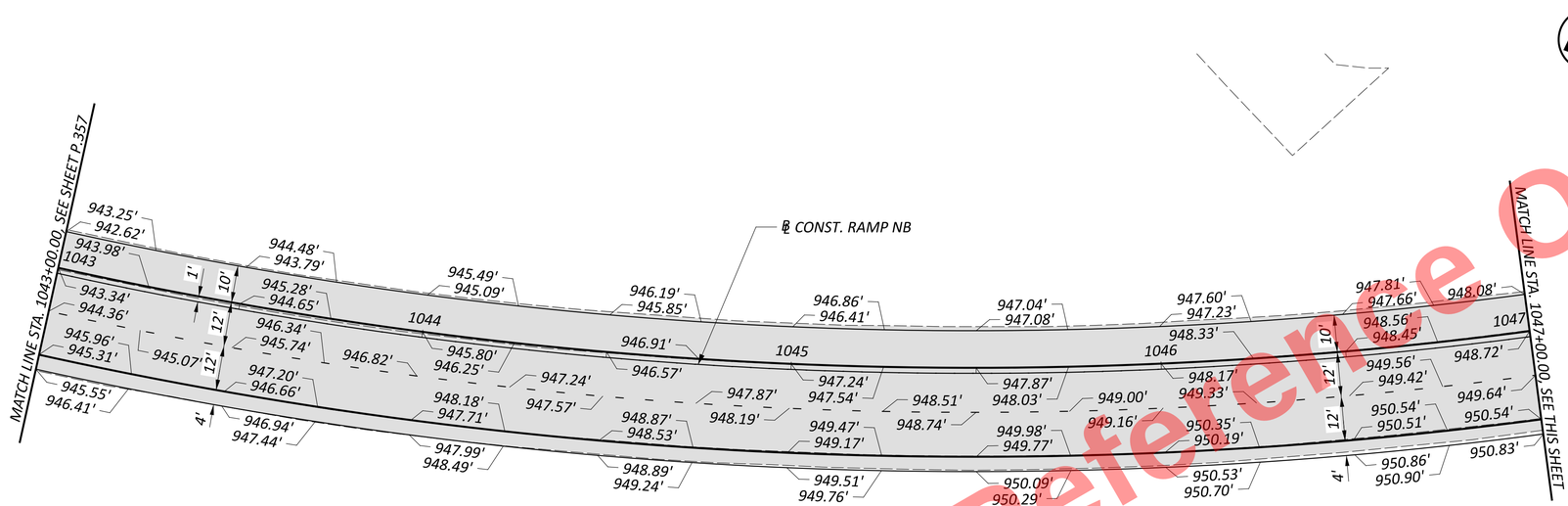

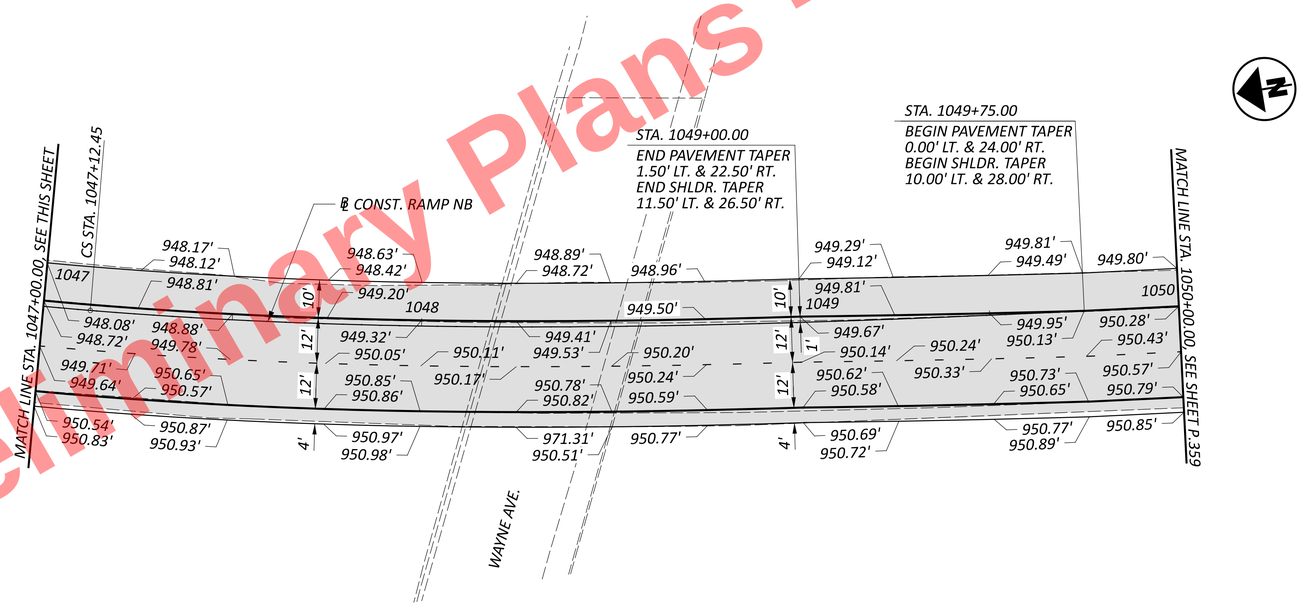

Preliminary Plans - For Reference Only

NOTE:

ELEVATIONS ARE PROVIDED AT EVEN 25 FT. STATION INCREMENTS UNLESS INDICATED OTHERWISE

REFER TO P.308 FOR ALL OTHER NOTES AND LEGEND

HORIZONTAL SCALE IN FEET
0 10 20 40

RAMP DETAIL
U.S. 62/S.R. 7 RAMP N.B.

DESIGN AGENCY
ms consultants, inc.

DESIGNER MSN
REVIEWER CMN 08/29/25
PROJECT ID 121474
SHEET P.358 TOTAL 655

MAH-680-4.58

MODEL: 113321_GI033 PAPERSIZE: 34x22 (in.) DATE: 9/15/2025 TIME: 2:45:21 PM PLTDRV: OHDOT_PDF_E+.pltcfg PENTBL: OHDOT_UTPen.tbl USER: DHall@msconsultants.com WORKSPACE: OHDOTCtv02 WORKSET: 121474 PRODUCT: OpenRoadsDesigner 24.00.00.205
pw:\\ohiodot-pw.bentley.com:ohiodot-pw-02\Documents\01 Active Projects\District 04\Mahoning\121474\02-Engineering_MSConsultants\Roadway\Sheets\121474_GI045.dgn

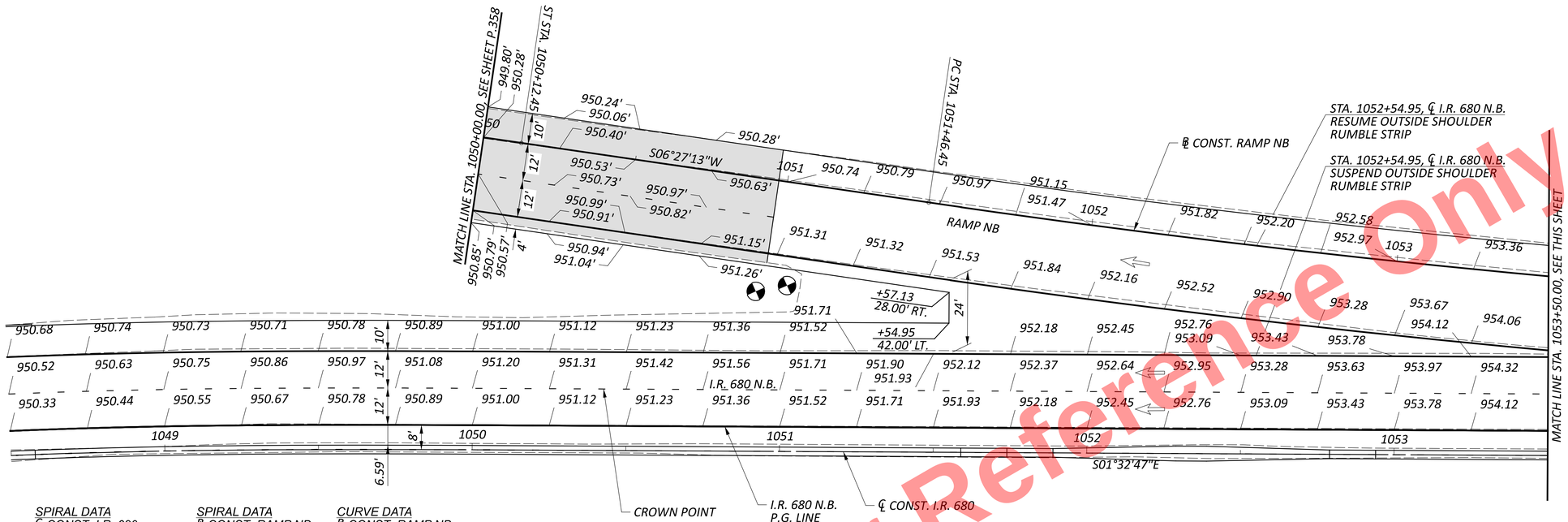

SPIRAL DATA
℄ CONST. I.R. 680
P.I. = STA. 1047+53.86 R4
Ls = 400.00'
Θs = 15°00'00"
LT = 267.63'
ST = 134.21'
x = 397.27'
y = 34.74'
k = 199.54'
p = 8.71'
C = 398.78'
CS = Sta. 1046+19.65
ST = Sta. 1050+19.65
C.B. = S06°32'37"E

SPIRAL DATA
℄ CONST. RAMP NB
P.I. = STA. 1048+12.61
Ls = 300.00'
Θs = 07°30'00"
LT = 200.18'
ST = 100.16'
x = 299.49'
y = 13.07'
k = 149.91'
p = 3.27'
C = 299.77'
CS = Sta. 1047+12.45
ST = Sta. 1050+12.45
C.B. = S08°57'11"W

CURVE DATA
℄ CONST. RAMP NB
P.I. = STA. 1054+13.55
Δ = 08°00'00" LT
Dc = 01°30'00"
R = 3,819.72'
T = 267.10'
L = 533.33'
E = 9.33'
DS = 50 mph
emax = 0.0280

RAMP NB - SR 7

MAINLINE STATION	WIDTH (FT)	SLOPE (%)	WIDTH (FT)	SLOPE (%)	RAMP STATION	RAMP SIDE
1051+54.95	23.93	-1.94%	N/A	N/A	1051+57.13	NB
1051+75.00	21.29	-1.60%	N/A	N/A	1051+76.70	NB
1052+00.00	18.06	-1.59%	N/A	N/A	1052+01.74	NB
1052+25.00	15	-1.60%	N/A	N/A	1052+26.78	NB
1052+50.00	12.1	-1.60%	N/A	N/A	1052+51.79	NB
1052+75.00	9.37	-1.60%	N/A	N/A	1052+76.78	NB
1053+00.00	6.81	-1.60%	N/A	N/A	1053+01.75	NB
1053+25.00	4.41	-1.53%	N/A	N/A	1053+26.71	NB
1053+50.00	2.17	-1.60%	N/A	N/A	1053+51.66	NB
1053+75.00	0.1	-1.66%	N/A	N/A	1053+76.58	NB
1053+76.29	0	0.00%	N/A	N/A	1053+77.87	NB

NOTE:

ELEVATIONS ARE PROVIDED AT EVEN 25 FT. STATION INCREMENTS UNLESS INDICATED OTHERWISE

REFER TO P.308 FOR ALL OTHER NOTES AND LEGEND

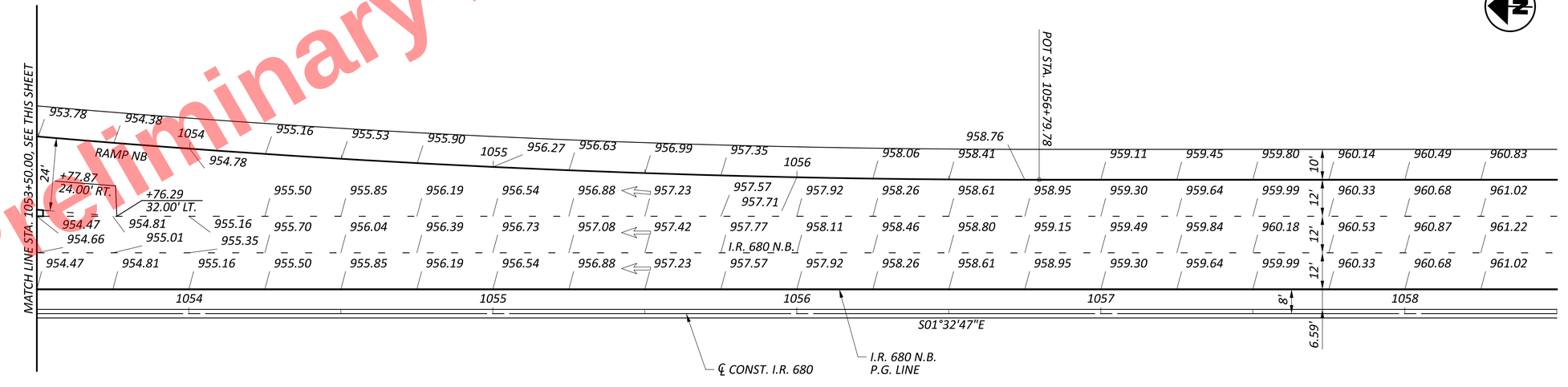

Preliminary Plans
For Reference Only

HORIZONTAL SCALE IN FEET
0 10 20 40

RAMP TERMINAL DETAIL - I.R. 680 N.B.
U.S. 62/S.R. 7 - RAMP N.B.

DESIGN AGENCY
ms consultants, inc.

DESIGNER MSN
REVIEWER CMN 08/29/25
PROJECT ID 121474
SHEET P.359 TOTAL 655

MAH-680-4.58

MODEL: 113321_GI035-1 PAPERSIZE: 34x22 (in.) DATE: 9/15/2025 TIME: 2:45:29 PM PLTDRV: OHDOT_PDF_E+.pltcfg PENTBL: OHDOT_UTPen.tbl USER: DHall@msconsultants.com WORKSPACE: OHDOTCEv02 WORKSET: 121474 PRODUCT: OpenRoadsDesigner 24.00.00.205
pw:\\ohiodot-pw.bentley.com:ohiodot-pw-02\Documents\01 Active Projects\District 04\Mahoning\121474\402-Engineering_MSConsultants\Roadway\Sheets\121474_GI046.dgn

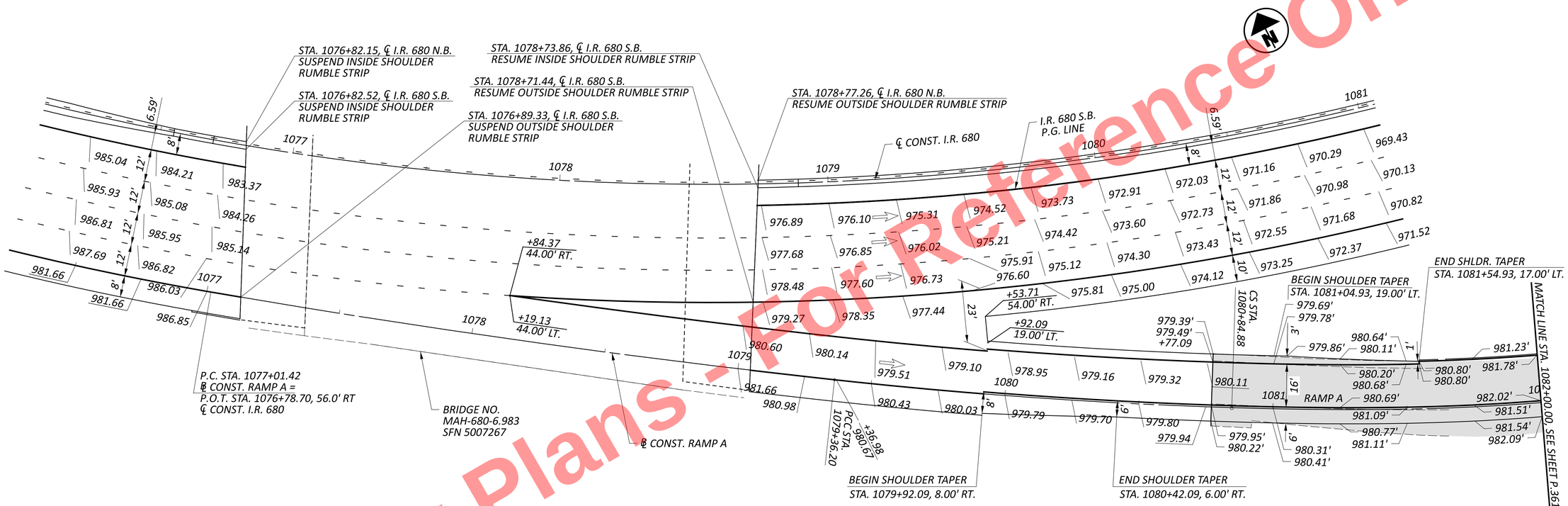

Preliminary Plans - For Reference Only

CURVE DATA
℄ CONST. I.R. 680
P.I. = STA. 1076+41.59
Δ = 67°49'50" LT
Dc = 05°30'00"
R = 1,041.74'
T = 700.42'
L = 1,233.28'
E = 213.57'
DS = 50 mph
emax = 0.0821

CURVE DATA
℄ CONST. RAMP A
P.I. = STA. 1074+80.72
Δ = 23°22'04" LT
Dc = 05°13'10"
R = 1,097.74'
T = 227.01'
L = 447.71'
E = 23.23'
DS = 45 mph
emax = MATCH EXISTING

CURVE DATA
℄ CONST. RAMP A
P.I. = STA. 1078+18.85
Δ = 03°31'18" LT
Dc = 01°30'00"
R = 3,819.72'
T = 117.43'
L = 234.78'
E = 1.80'
DS = 45 mph
emax = MATCH EXISTING

CURVE DATA
℄ CONST. RAMP A
P.I. = STA. 1080+10.58
Δ = 04°27'38" LT
Dc = 03°00'00"
R = 1,909.86'
T = 74.38'
L = 148.68'
E = 1.45'
DS = 25 mph
emax = 0.018

SPIRAL DATA
℄ CONST. RAMP A
P.I. = STA. 1082+05.44
Ls = 200.00'
Θs = 15°00'00"
LT = 120.55'
ST = 80.51'
x = 198.32'
y = 20.84'
k = 74.75'
p = 2.61'
C = 199.42'
CS = Sta. 1080+84.88
SC = Sta. 1082+84.88
C.B. = S67°05'06"E

D.E. #5 SUPERELEVATION RATE:
CURVE #38
emax = 0.0821
NDC emax = 0.06

RAMP A - SOUTH AVENUE

MAINLINE STATION	WIDTH (FT)	SLOPE (%)	WIDTH (FT)	SLOPE (%)	RAMP STATION	RAMP SIDE
1078+72.08	9.46	12.73%	N/A	N/A	1079+04.64	SB
1078+75.00	9.87	12.56%	N/A	N/A	1079+07.72	SB
1079+00.00	13.66	10.58%	N/A	N/A	1079+34.46	SB
1079+25.00	17.87	10.56%	N/A	N/A	1079+61.44	SB
1079+50.00	22.33	10.44%	N/A	N/A	1079+88.58	SB
1079+53.71	23	10.48%	N/A	N/A	1079+92.09	SB

NOTE:

ELEVATION ARE PROVIDED AT EVEN 25 FT.STATION INCREMENTS UNLESS INDICATED OTHERWISE

REFER TO P.308 FOR ALL OTHER NOTES AND LEGEND

HORIZONTAL SCALE IN FEET
0 10 20 40

RAMP TERMINAL DETAIL - I.R. 680 S.B. SOUTH AVE. - RAMP A

DESIGN AGENCY
ms consultants, inc.

DESIGNER MSN
REVIEWER CMN 08/29/25
PROJECT ID 121474
SHEET P.360 TOTAL 655

MAH-680-4.58

MODEL: 113321_GI039-1 PAPERSIZE: 34x22 (in.) DATE: 9/15/2025 TIME: 2:45:38 PM PLTDRV: OHDOT_PDF_E+.pltcfg PENTBL: OHDOT_UTPen.tbl USER: DHall@msconsultants.com WORKSPACE: OHDOTCEv02 WORKSET: 121474 PRODUCT: OpenRoadsDesigner 24.00.00.205
pw:\\ohiodot-pw.bentley.com:ohiodot-pw-02\Documents\01 Active Projects\District 04\Mahoning\121474\402-Engineering_MSConsultants\Roadway\Sheets\121474_GI047.dgn

Preliminary Plans - For Reference Only

I.R. 680 S.B.

BRIDGE NO.
MAH-151-6.765
SFN 5003350

MATCH LINE STA. 1082+00.00, SEE SHEET P.360

981.72 | 982.27 | 982.72 | 983.21 | 983.65 | 984.02 | 984.46 | 984.84 | 985.26 | 985.72

982.02 +00 | 982.51 +25 | 983.03 +50 | 983.53 +75 | 983.95 +00 | 984.36 +25 | 984.84 +50 | 985.27 +75 | 985.77 +00

982.09 | 982.60 | 983.10 | 983.61 | 984.01 | 984.43 | 984.94 | 985.40 | 985.93

6.0' | 17.0' | 5.0'

1083 | 1084

A27 | A28

SC STA. 1082+84.88

℄ CONST. RAMP A

STA. 1082+26.13
BEGIN SHOULDER TAPER, 6.00' RT.
BEGIN CURB, TYPE 6, 6.00' RT.

STA. 1082+51.13
END SHOULDER TAPER, 5.00' RT.

STA. 1084+00.00
BEGIN SHOULDER TAPER, 5.00' RT.

PT STA. 1084+12.88

℄ CONST. SOUTH AVE.

STA. 49+07.91
END CURB, TYPE 6, 28.16' LT.
END WALK, 35.50' LT.

℄ CONST. RAMP A
STA. 1084+41.91, 42.00' LT. =
℄ CONST. SOUTH AVE.
STA. 49+07.88, 53.16' LT.
Δ = 90°13'26"
R = 25.00'
L = 39.37'
T = 25.10'

985.99 28.13' LT. | 986.27 28.10' LT. | 986.29 26.10' LT. | 986.30 | 986.36 | 986.38 26.16' LT. | 986.58 | 986.66 28.16' LT.

986.12 +25 | 986.43 +10.64 | 986.67 +00 | 986.67 +96.71 | 987.19 +75

986.40 +12.58 | 986.49 +07.91 | 986.51 +06.91

986.28 | 986.34 | 986.60 | 986.66 | 986.02 | 985.98 | 986.08 | 986.63 | 986.76 | 986.95 +67.07

9.37' | 27' R | 10' (TYP.) | 17.0'

SAWCUT (MATCH EXIST.)

986.25 +23.83 | 986.27 +25 | 986.56 +41.91 | 986.47 +50

N88°33'11"E

10' (TYP.)

986.86 | 986.91 16.61' RT. 4.87'

987.25

987.84 +50 | 988.46 +25 | 988.60 +18.65 | 988.98 +04.23 | 989.03 +02.22

N01°36'02"W

℄ CONST. RAMP A
STA. 1084+95.18 =
℄ CONST. SOUTH AVE.
STA. 48+65.74
EL. = 987.49

986.44 | 986.65 | 986.96 | 986.99 | 987.09 | 987.40 | 987.63 | 988.02 | 988.43 | 988.48

55.00' R | 32.50' R | 72.50' R | 52' R | 10' (TYP.)

℄ CONST. RAMP A
STA. 1084+20.79, 45.96' RT. =
℄ CONST. SOUTH AVE.
STA. 48+19.98, 74.51' LT.
Δ = 49°56'26"
R = 40.00'
L = 34.87'
T = 18.63'

987.75 | 987.96 28.16' LT. | 988.52 26.16' LT. | 988.56 | 988.61 26.16' LT. | 988.56 28.16' LT. | 989.36

9.29' | 2.75'

℄ CONST. RAMP A
STA. 1083+91.43, 69.85' RT. =
℄ CONST. SOUTH AVE.
STA. 47+96.72, 107.06' LT.
Δ = 20°58'41"
R = 80.00'
L = 29.29'
T = 14.81'

℄ CONST. RAMP A
STA. 1084+17.32, 61.98' RT. =
℄ CONST. SOUTH AVE.
STA. 48+04.27, 78.00' LT.
Δ = 14°36'18"
R = 50.00'
L = 12.75'
T = 6.41'

C.B. NO. 3A
STA. 1084+67.32, 62.12' RT.
GRATE EL. = 988.35'

STA. 48+02.22
END CURB, TYPE 6, 28.00' LT.
END WALK, 35.50' LT.

℄ CONST. SOUTH AVE.

989.08 +00 | 989.64 +75

48 | 49

STA. 1082+00.00, SEE SHEET P.360

STA. 1082+26.13
BEGIN SHOULDER TAPER, 6.00' RT.
BEGIN CURB, TYPE 6, 6.00' RT.

STA. 1082+51.13
END SHOULDER TAPER, 5.00' RT.

SC STA. 1082+84.88

℄ CONST. RAMP A

STA. 1084+00.00
BEGIN SHOULDER TAPER, 5.00' RT.

PT STA. 1084+12.88

STA. 1084+38.84, 10.83' RT.

STA. 1084+51.29, 18.83' LT.

NOTES:

◕ TRANSITION CURB FROM 0" TO FULL HEIGHT (6") IN 10 FEET.

✳ SAWCUT

ELEVATIONS PROVIDED AT CURB LOCATIONS ARE THE PAVEMENT ELEVATION AT THE FACE OF CURB.

STATION/OFFSET PROVIDED AT SHOULDER AND WALK LOCATIONS ARE AT THE BACK OF SHOULDER AND WALK.

= PROPOSED PAVEMENT REPLACEMENT TO EXISTING ELEVATIONS

REFER TO P.308 FOR ALL OTHER NOTES AND LEGEND

(A) STA. 1084+41.51
BEGIN WALK, 21.79' RT.

(B) STA. 1084+49.73
END SHOULDER TAPER, 14.71' RT.

(C) STA. 48+38.87
48.07' LT.

(D) STA. 48+20.56
38.59' LT.

(E) STA. 48+11.79
35.54' LT.

(F) STA. 1084+54.25
BEGIN WALK, 27.00' LT.

CENTER OF CURB RAMP OR TRUNCATED DOMES LOCATION

(1) STA. 1084+38.84, 10.83' RT.

(2) STA. 1084+51.29, 18.83' LT.

(A27) ℄ CONST. RAMP A
SPIRAL DATA
P.I. = STA. 1082+05.44
Ls = 200.00'
Θs = 15°00'00"
LT = 120.55'
ST = 80.51'
x = 198.32'
y = 20.84'
k = 74.75'
p = 2.61'
C = 199.42'
CS = Sta. 1080+84.88
SC = Sta. 1082+84.88
C.B. = S67°05'06"E

(A28) ℄ CONST. RAMP A
CURVE DATA
P.I. = STA. 1083+49.27
Δ = 15°21'37" LT
Dc = 12°00'00"
R = 477.46'
T = 64.39'
L = 128.00'
E = 4.32'
DS = 25 mph
emax = MATCH EXISTING

HORIZONTAL SCALE IN FEET
0 5 10 20

INTERSECTION DETAIL
SOUTH AVE. RAMP A

DESIGN AGENCY
ms consultants, inc.

DESIGNER MSN
REVIEWER CMN 08/29/25
PROJECT ID 121474
SHEET P.361 TOTAL 655

MAH-680-4.58

MODEL: Sheet PAPERSIZE: 34x22 (in.) DATE: 9/15/2025 TIME: 2:45:44 PM PLTDRV: OHDOT_PDF_E+.pltcfg PENTBL: OHDOT_UTPen.tbl USER: DHall@msconsultants.com WORKSPACE: OHDOTCEv02 WORKSET: 121474 PRODUCT: OpenRoadsDesigner 24.00.00.205
pw:\\ohiodot-pw.bentley.com:ohiodot-pw-02\Documents\01 Active Projects\District 04\Mahoning\121474\A02-Engineering_MSConsultants\Roadway\Sheets\121474_GI048.dgn

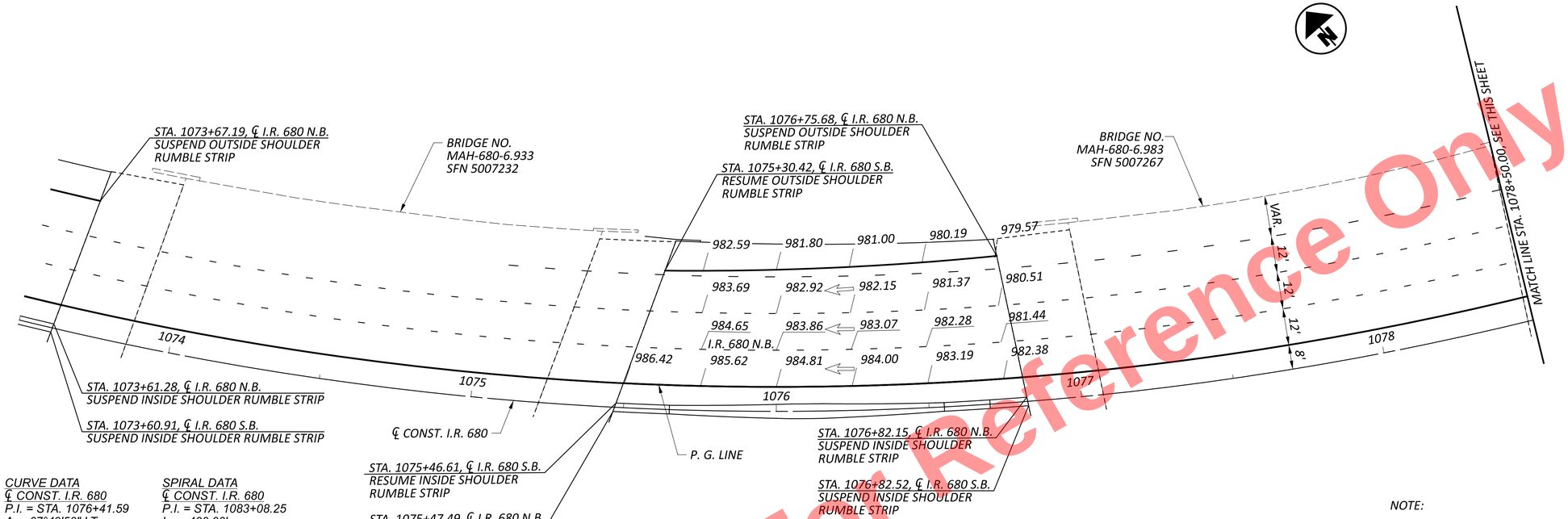

CURVE DATA
℄ CONST. I.R. 680
P.I. = STA. 1076+41.59
Δ = 67°49'50" LT
Dc = 05°30'00"
R = 1,041.74'
T = 700.42'
L = 1,233.28'
E = 213.57'
DS = 50 mph
emax = 0.0821

SPIRAL DATA
℄ CONST. I.R. 680
P.I. = STA. 1083+08.25
Ls = 400.00'
Θs = 11°00'00"
LT = 267.18'
ST = 133.80'
x = 398.53'
y = 25.53'
k = 199.75'
p = 6.39'
C = 399.35'
CS = Sta. 1081+74.44
ST = Sta. 1085+74.44
C.B. = S87°42'41"E

D.E. #5 SUPERELEVATION RATE:
CURVE #38
emax = 0.0821
NDC emax = 0.06

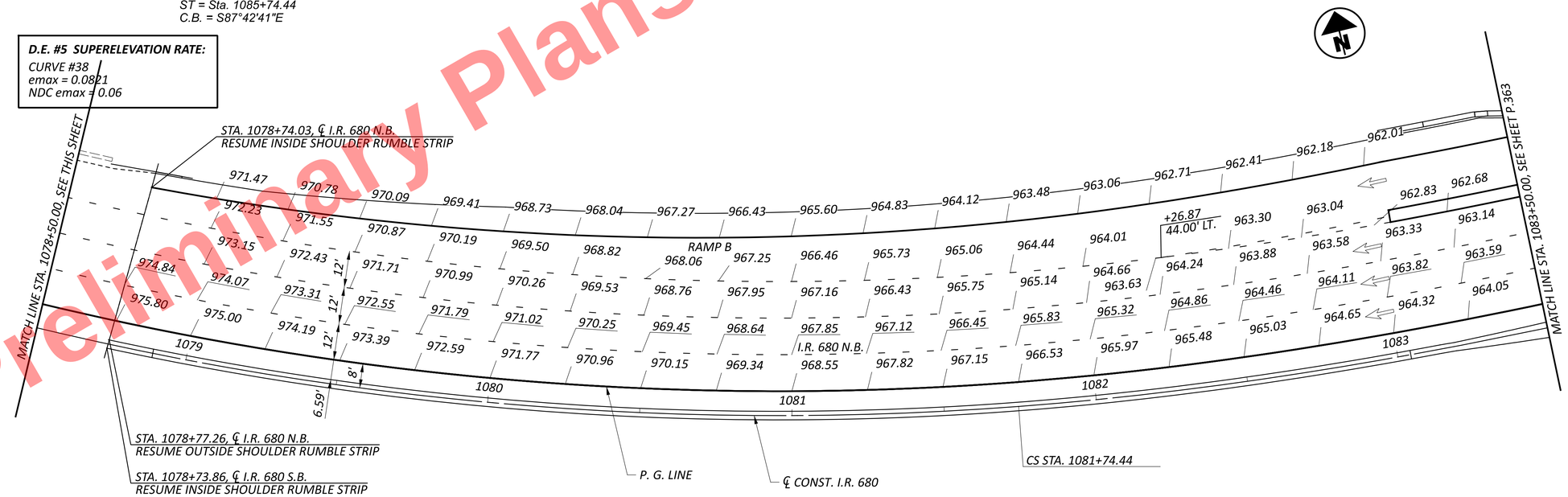

NOTE:

ELEVATIONS ARE PROVIDED AT EVEN 25 FT. INCREMENTS UNLESS INDICATED OTHERWISE

REFER TO P.308 FOR ALL OTHER NOTES AND LEGEND

Preliminary Plans - For Reference Only

HORIZONTAL SCALE IN FEET
0 10 20 40

RAMP TERMINAL DETAIL - I.R. 680 N.B. SOUTH AVE. - RAMP B

DESIGN AGENCY
ms consultants, inc.

DESIGNER MSN
REVIEWER CMN 08/29/25
PROJECT ID 121474
SHEET P.362 TOTAL 655

MAH-680-4.58

MODEL: 113321_GI037-1 PAPERSIZE: 34x22 (in.) DATE: 9/15/2025 TIME: 2:45:52 PM PLTDRV: OHDOT_PDF_E+.pltcfg PENTBL: OHDOT_UTPen.tbl USER: DHall@msconsultants.com WORKSPACE: OHDOTCEv02 WORKSET: 121474 PRODUCT: OpenRoadsDesigner 24.00.00.205
pw:\\ohiodot-pw.bentley.com:ohiodot-pw-02\Documents\01 Active Projects\District 04\Mahoning\121474\02-Engineering_MSConsultants\Roadway\Sheets\121474_GI049.dgn

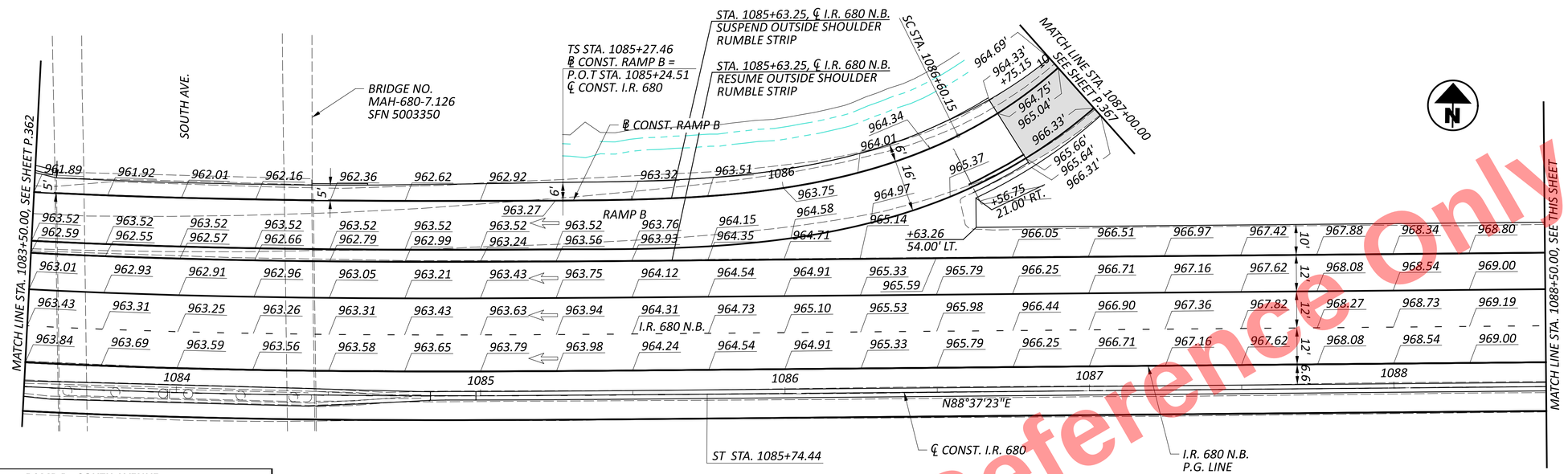

RAMP B - SOUTH AVENUE						
MAINLINE STATION	WIDTH (FT)	SLOPE (%)	WIDTH (FT)	SLOPE (%)	RAMP STATION	RAMP SIDE
1085+27.46	3.9	-2.79%	N/A	N/A	1085+27.46	NB
1085+50.00	3.92	-4.34%	N/A	N/A	1085+49.62	NB
1085+75.00	4.56	-4.16%	N/A	N/A	1085+73.87	NB
1086+00.00	6.68	-2.46%	N/A	N/A	1085+97.78	NB
1086+25.00	11	-2.11%	N/A	N/A	1086+21.47	NB
1086+50.00	18.32	-1.64%	N/A	N/A	1086+45.35	NB
1086+63.26	23.27	-1.36%	N/A	N/A	1086+56.75	NB

SPIRAL DATA
℄ CONST. I.R. 680
P.I. = STA. 1083+08.25
Ls = 400.00'
Θs = 11°00'00"
LT = 267.18'
ST = 133.80'
x = 398.53'
y = 25.53'
k = 199.75'
p = 6.39'
C = 399.35'
CS = Sta. 1081+74.44
ST = Sta. 1085+74.44
C.B. = S87°42'41"E

SPIRAL DATA
℄ CONST. RAMP B
P.I. = STA. 1086+15.71
Ls = 132.69'
Θs = 26°03'06"
LT = 88.25'
ST = 46.35'
x = 129.89'
y = 20.36'
k = 64.02'
p = 4.72'
C = 131.48'
TS = Sta. 1085+27.46
SC = Sta. 1086+60.15
C.B. = N79°48'52"E

CURVE DATA
℄ CONST. RAMP B
P.I. = STA. 1091+20.05
Δ = 216°07'40" LT
Dc = 38°11'50"
R = 150.00'
T = 459.91'
L = 565.82'
E = 333.75'
DS = 25 mph
emax = MATCH EXISTING

SPIRAL DATA
℄ CONST. RAMP D
P.I. = STA. 1089+49.69
Ls = 200.00'
Θs = 28°00'00"
LT = 125.71'
ST = 77.95'
x = 188.95'
y = 59.02'
k = 82.46'
p = 5.78'
C = 197.95'
SS = Sta. 1088+71.74
SC = Sta. 1090+71.74
C.B. = S70°31'25"E

CURVE DATA
℄ CONST. RAMP D
P.I. = STA. 1091+99.57
Δ = 10°11'59" LT
Dc = 04°00'00"
R = 1,432.39'
T = 127.83'
L = 254.99'
E = 5.69'
DS = 50 mph
emax = 0.052

RAMP D - SOUTH AVENUE						
MAINLINE STATION	WIDTH (FT)	SLOPE (%)	WIDTH (FT)	SLOPE (%)	RAMP STATION	RAMP SIDE
1090+48.50	23	0.07%	N/A	N/A	1090+50.50	NB
1090+50.00	22.71	0.03%	N/A	N/A	1090+51.40	NB
1090+75.00	18.04	0.19%	N/A	N/A	1090+76.51	NB
1091+00.00	13.86	0.18%	N/A	N/A	1090+01.58	NB
1091+25.00	10.12	0.16%	N/A	N/A	1090+26.58	NB
1091+50.00	6.82	0.16%	N/A	N/A	1091+51.52	NB
1091+75.00	3.97	0.13%	N/A	N/A	1091+76.40	NB
1092+00.00	1.55	-1.14%	N/A	N/A	1092+01.24	NB
1092+19.13	0	0.00%	N/A	N/A	1092+20.22	NB

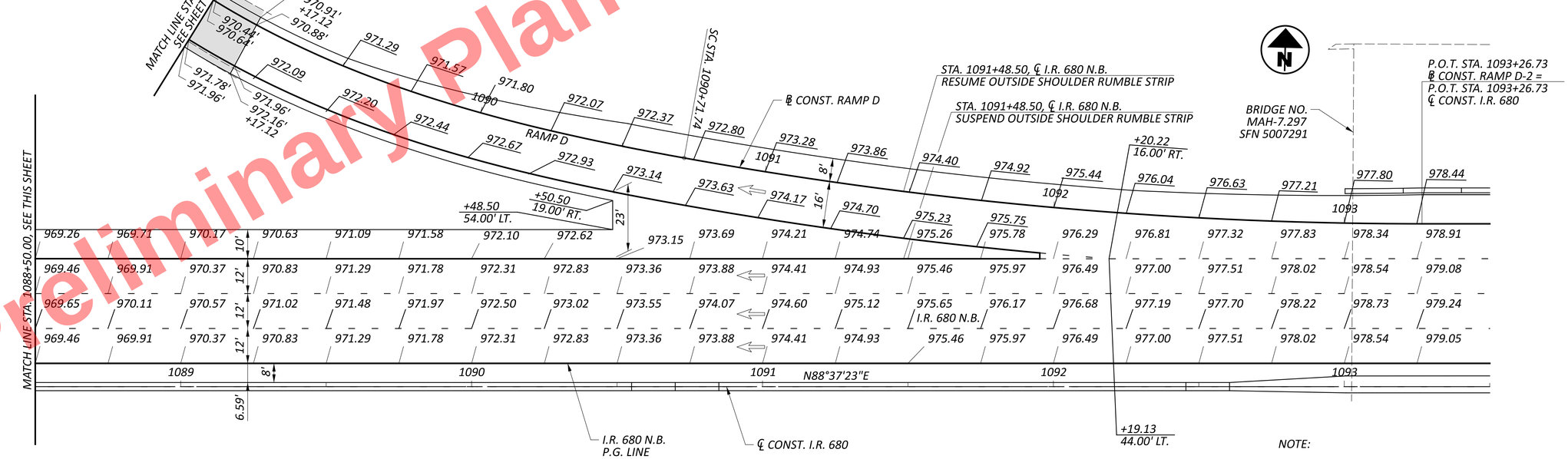

NOTE:

ELEVATIONS ARE PROVIDED AT EVEN 25 FT. STATION INCREMENTS UNLESS INDICATED OTHERWISE

REFER TO P.308 FOR ALL OTHER NOTES AND LEGEND

Preliminary Plans - For Reference Only

HORIZONTAL SCALE IN FEET
0 10 20 40

RAMP TERMINAL DETAIL - I.R. 680 N.B.
EXIT RAMP B - ENTRANCE RAMP D - SOUTH AVE.

DESIGN AGENCY

DESIGNER CMJ
REVIEWER CMN 08/29/25
PROJECT ID 121474
SHEET P.363 TOTAL 655

MAH-680-4.58

MODEL: 113321_GI037-2 PAPERSIZE: 34x22 (in.) DATE: 9/15/2025 TIME: 2:46:00 PM PLTDRV: OHDOT_PDF_E+.pltcfg PENTBL: OHDOT_UTPen.tbl USER: DHall@mssconsultants.com WORKSPACE: OHDOTCEv02 WORKSET: 121474 PRODUCT: OpenRoadsDesigner 24.00.00.205
pw:\\ohiodot-pw.bentley.com:ohiodot-pw-02\Documents\01 Active Projects\District 04\Mahoning\121474\402-Engineering_MSConsultants\Roadway\Sheets\121474_GI050.dgn

Preliminary Plans - For Reference Only

MODEL: Sheet-1 PAPERSIZE: 34x22 (in.) DATE: 9/15/2025 TIME: 2:46:11 PM PLTDRV: OHDOT_PDF_E+.pltcfg PENTBL: OHDOT_UTPen.tbl USER: DHall@msconsultants.com WORKSPACE: OHDOTCEv02 WORKSET: 121474 PRODUCT: OpenRoadsDesigner 24.00.00.205
pw:\\ohiodot-pw.bentley.com:ohiodot-pw-02\Documents\01 Active Projects\District 04\Mahoning\121474\402-Engineering_MSConsultants\Roadway\Sheets\121474_GI051.dgn

MAH-680-4.58

CENTER OF CURB RAMP OR TRUNCATED DOMES LOCATION

(1) STA. 1083+19.82, 51.42' LT.

(2) STA. 1083+16.24, 19.50' RT.

NOTES:

◕ TRANSITION CURB FROM 0" TO FULL HEIGHT (6") IN 10 FEET.

✳ SAWCUT

ELEVATIONS PROVIDED AT CURB LOCATIONS ARE THE PAVEMENT ELEVATION AT THE FACE OF CURB.

STATION/OFFSET PROVIDED AT SHOULDER AND WALK LOCATIONS ARE AT THE BACK OF SHOULDER AND WALK.

▭ = PROPOSED PAVEMENT REPLACEMENT TO EXISTING ELEVATIONS

REFER TO P.308 FOR ALL OTHER NOTES AND LEGEND

(A) STA. 1083+32.15
END CURB, TYPE 6, 40.31' LT.

(D3) ℄ CONST. RAMP D
CURVE DATA
P.I. = STA. 1085+69.61
Δ = 56°25'25" RT
Dc = 33°27'06"
R = 171.28'
T = 91.89'
L = 168.67'
E = 23.09'
DS = 25 mph
emax = MATCH EXISTING

(B26) ℄ CONST. RAMP B
CURVE DATA
P.I. = STA. 1091+20.05
Δ = 216°07'40" LT
Dc = 38°11'50"
R = 150.00'
T = 459.91'
L = 565.82'
E = 333.75'
DS = 25 mph
emax = MATCH EXISTING

HORIZONTAL SCALE IN FEET
0 5 10 20

INTERSECTION DETAIL
SOUTH AVE. RAMP B AND RAMP D

℄ CONST. SOUTH AVE.
55 +00 969.24
54 +00 973.76
+25 972.67
+50 971.57
+55.42 971.33
+75 970.34
+00 973.94
+07.34 973.94
+25 973.76
+25 974.72
+59.27 975.30
+69.57 974.92
+50 975.64
+25 976.42
N01°36'02"W
N88°23'58"E
90°00'00"
1083
1084
1091

STA. 54+55.42
BEGIN CURB, TYPE 6, 28.96' RT.
STA. 54+57.16
BEGIN WALK, 34.00' RT.

℄ CONST. RAMP D
STA. 1083+59.98, 82.50' LT. = ℄ CONST. SOUTH AVE.
STA. 54+71.73, 76.23' RT.
Δ = 70°57'50"
R = 50.00'
L = 61.93'
T = 35.64'

STA. 1083+60.00
BEGIN SHOULDER, 32.50' LT.

℄ CONST. RAMP B
STA. 1082+83.08 = ℄ CONST. SOUTH AVE.
STA. 53+89.23
EL. = 974.20

971.32 | 971.30 | 971.39 | 971.69 | 972.06 | 972.29 | 972.38 | 972.50 | 972.53 | 972.40 | 972.52 | 972.47 | 972.37 | 972.26 | 972.02 | 971.64
971.12 26.81' RT.
1.93'
SAWCUT (MATCH EXIST.)
10' (TYP.)
6.0'
STA. 1084+39.87 BEGIN SHOULDER TAPER, 32.50' LT.
STA. 1084+66.93 BEGIN PAVEMENT TAPER, 26.50' LT.
STA. 1084+89.87 END SHOULDER TAPER, 28.46' LT.

972.77 | 972.72 | 972.64 | 972.87 | 972.82 | 973.73 | 972.72 | 972.60 | 972.50 | 972.29 | 972.02 26.34' LT. | 971.63 24.85' LT.
25.0' | 25.0'
℄ CONST. RAMP D
PC STA. 1084+78.05
D3

973.58 | 973.48 | 973.19 | 972.87 | 972.50 | 972.08 | 971.68 | 971.31
973.96 | 973.83 | 973.63 | 973.25 | 972.97 | 972.86 | 972.36 | 971.73 | 971.28 | 970.96 21.69' RT.
3.0' | 18.0' | 1.5' R | 973.67 | 3.0' | 18.0' | 18.0'
MATCH LINE STA. 1085+00.00 SEE SHEET P.366

974.74 | 974.78 | 974.34 | 974.11 | 973.48 | 972.97 | 2.50' R | 972.67 | 971.83 | 970.97 | 970.24 | 969.99 +63
974.01 +00 | 974.01 27.29' RT. | 974.67 25.35' RT. | 974.90 | 975.09 27.35' RT. | 975.03 25.35' RT. | 975.29
5' R
2
973.26 | 972.86 | 972.63 | 970.90 +00 | 971.62 +25 | 970.31 +75 | 969.81 | 969.40 | 969.68 +50 | 969.19
5.0'
1091
971.75 +31.36 | 972.02 +40.31 | 972.28 +50 | 971.60 | 971.86 | 972.32 | 971.35
144' R
℄ CONST. RAMP B
B26
974.07 | 975.12 | 975.12' | 972.96 +75
20.0'

STA. 53+59.27
BEGIN CURB, TYPE 6, 27.35' RT.

STA. 1091+34.79
BEGIN SHOULDER TAPER, 5.00' LT.

STA. 1091+59.79
BEGIN CURB, TYPE 6, 0.50' RT.
END SHOULDER TAPER, 0.50' RT.

FOR CONTINUATION SEE SHEET P.365

DESIGN AGENCY
ms consultants, inc.

DESIGNER MSN
REVIEWER CMN 08/29/25
PROJECT ID 121474
SHEET P.364 TOTAL 655

Preliminary Plans - For Reference Only

FOR CONTINUATION SEE SHEET P.364

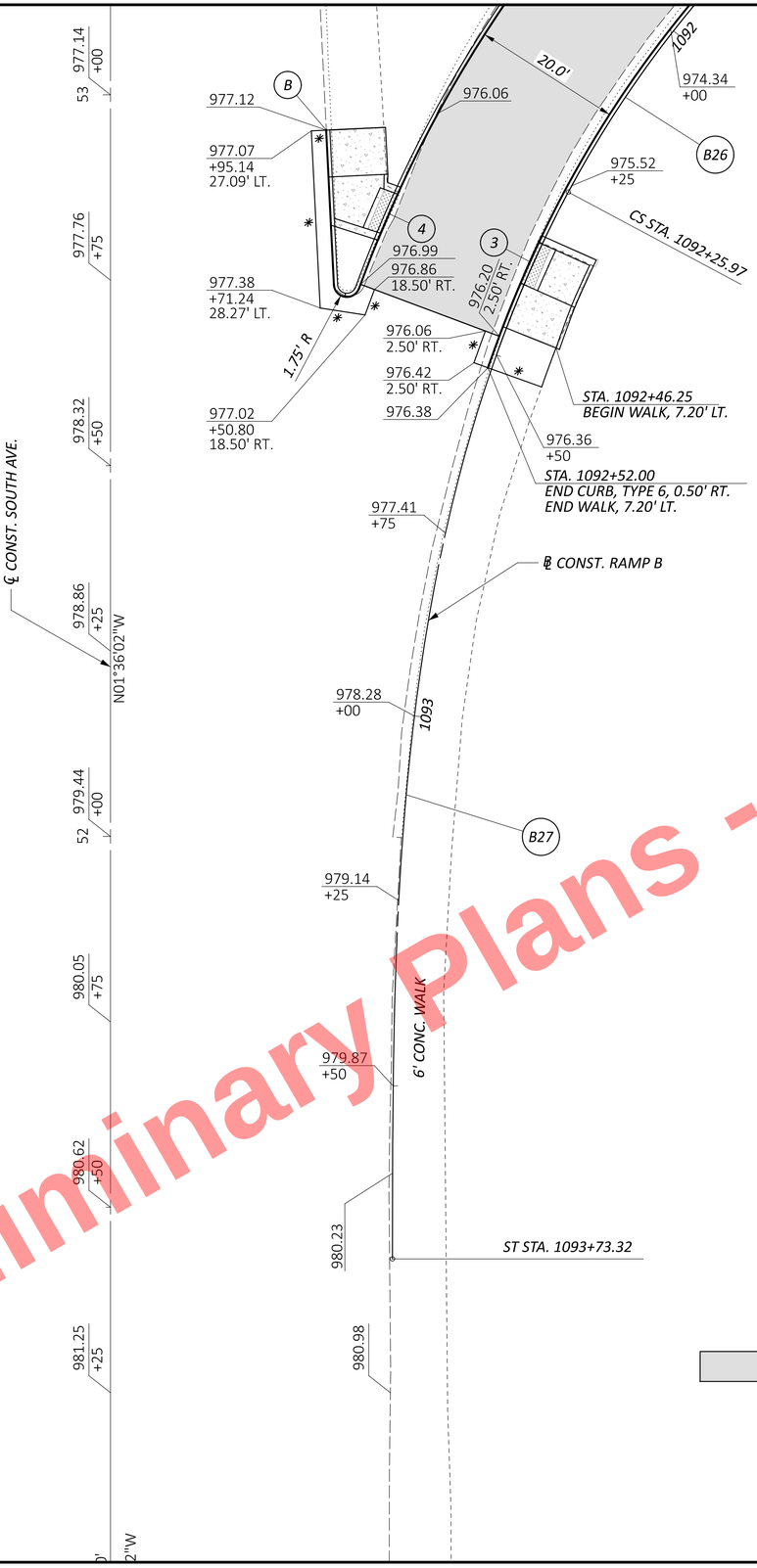

B26 — ℄ CONST. RAMP B
CURVE DATA
P.I. = STA. 1091+20.05
Δ = 216°07'40" LT
Dc = 38°11'50"
R = 150.00'
T = 459.91'
L = 565.82'
E = 333.75'
DS = 25 mph
emax = MATCH EXISTING

B27 — ℄ CONST. RAMP B
SPIRAL DATA
P.I. = STA. 1092+76.24
Ls = 147.35'
Θs = 28°08'31"
LT = 99.50'
ST = 50.27'
x = 143.84'
y = 23.71'
k = 73.09'
p = 5.98'
C = 145.78'
CS = Sta. 1092+25.97
ST = Sta. 1085+27.46
C.B. = S07°45'39"W

HORIZONTAL SCALE IN FEET
0 5 10 20

INTERSECTION DETAIL SOUTH AVE. RAMP B

NOTES:

* SAWCUT

ELEVATIONS PROVIDED AT CURB LOCATIONS ARE THE PAVEMENT ELEVATION AT THE FACE OF CURB.

STATION/OFFSET PROVIDED AT SHOULDER AND WALK LOCATIONS ARE AT THE BACK OF SHOULDER AND WALK.

= PROPOSED PAVEMENT REPLACEMENT TO EXISTING ELEVATIONS

REFER TO P.308 FOR ALL OTHER NOTES AND LEGEND

(B) STA. 52+95.24
END CURB, TYPE 6, 39.08' RT.

CENTER OF CURB RAMP OR TRUNCATED DOMES LOCATION

(3) STA. 1092+36.68, 0.50' RT.

(4) STA. 1092+38.32, 20.50' RT.

DESIGN AGENCY
ms consultants, inc.

DESIGNER MSN
REVIEWER CMN 08/29/25
PROJECT ID 121474
SHEET P.365 TOTAL 655

MAH-680-4.58

MODEL: Sheet-2 PAPERSIZE: 34x22 (in.) DATE: 9/15/2025 TIME: 2:46:12 PM PLTDRV: OHDOT_PDF_E+.pltcfg PENTBL: OHDOT_UTPen.tbl USER: DHall@msconsultants.com WORKSPACE: OHDOTCEv02 WORKSET: 121474 PRODUCT: OpenRoadsDesigner 24.00.00.205
pw:\\ohiodot-pw.bentley.com:ohiodot-pw-02\Documents\01 Active Projects\District 04\Mahoning\121474\402 Engineering_MSConsultants\Roadway\Sheets\121474_GI051.dgn

D3 — ℄ CONST. RAMP D
CURVE DATA
P.I. = STA. 1085+69.61
Δ = 56°25'25" RT
Dc = 33°27'06"
R = 171.28'
T = 91.89'
L = 168.67'
E = 23.09'
DS = 25 mph
emax = MATCH EXISTING

B26 — ℄ CONST. RAMP B
CURVE DATA
P.I. = STA. 1091+20.05
Δ = 216°07'40" LT
Dc = 38°11'50"
R = 150.00'
T = 459.91'
L = 565.82'
E = 333.75'
DS = 25 mph
emax = MATCH EXISTING

NOTES:

ELEVATIONS PROVIDED AT CURB LOCATIONS ARE THE PAVEMENT ELEVATION AT THE FACE OF CURB.

STATION/OFFSET PROVIDED AT SHOULDER AND WALK LOCATIONS ARE AT THE BACK OF SHOULDER AND WALK.

= PROPOSED PAVEMENT REPLACEMENT TO EXISTING ELEVATIONS

REFER TO P.308 FOR ALL OTHER NOTES AND LEGEND

C — C.B. NO. 3A
STA. 1086+30.21, 1.50' LT.
GRATE EL. = 969.56'

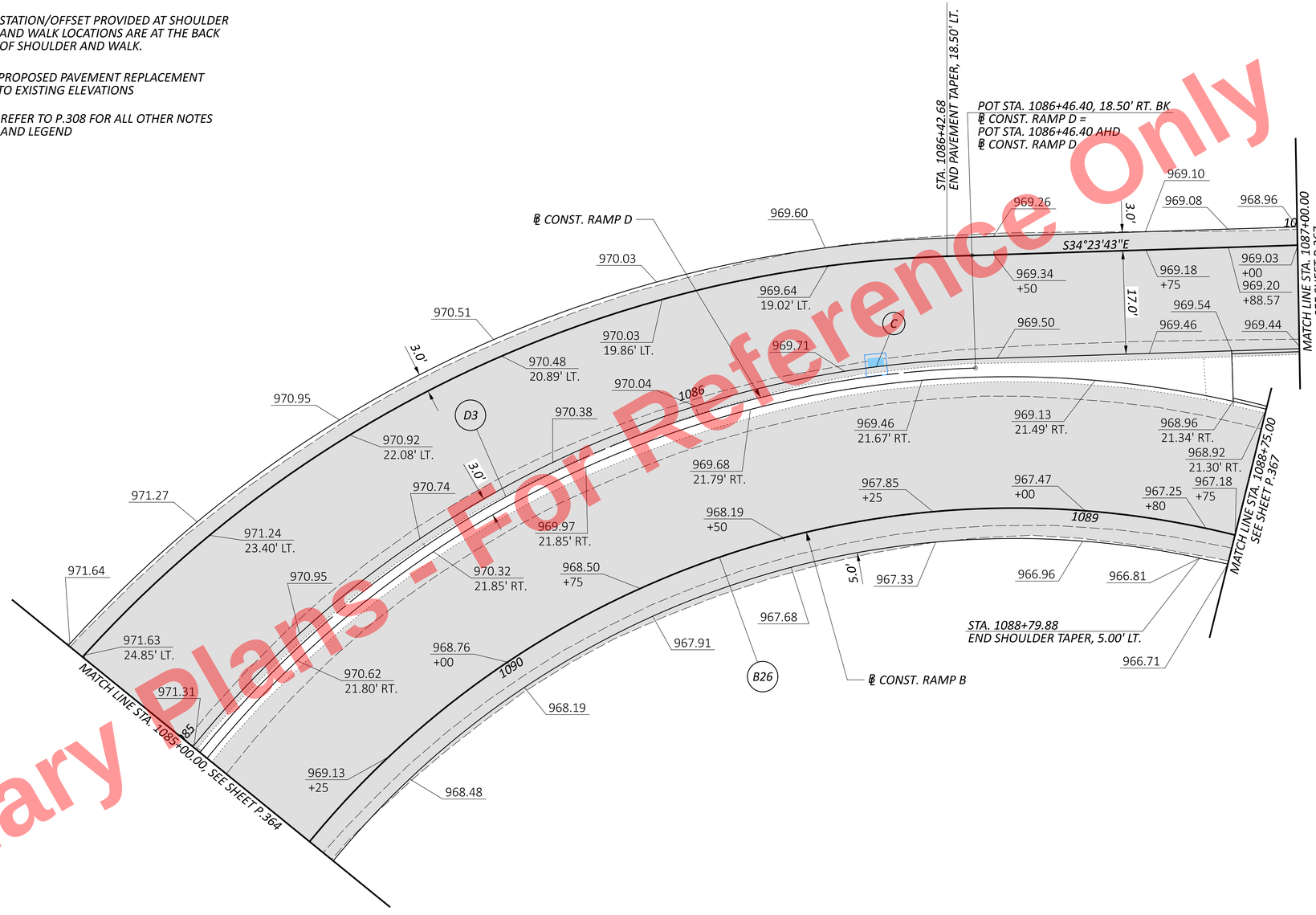

HORIZONTAL SCALE IN FEET
0 5 10 20

RAMP DETAIL
SOUTH AVE. RAMP B AND RAMP D

DESIGN AGENCY
ms consultants, inc.

DESIGNER MSN
REVIEWER CMN 08/29/25
PROJECT ID 121474
SHEET P.366 TOTAL 655

MAH-680-4.58

MODEL: Sheet-3 PAPERSIZE: 34x22 (in.) DATE: 9/15/2025 TIME: 2:46:12 PM PLTDRV: OHDOT_PDF_E+.pltcfg PENTBL: OHDOT_UTPen.tbl USER: DHall@msconsultants.com WORKSPACE: OHDOTCEv02 WORKSET: 121474 PRODUCT: OpenRoadsDesigner 24.00.00.205
pw:\\ohiodot-pw.bentley.com:ohiodot-pw-02\Documents\01 Active Projects\District 04\Mahoning\121474\A02-Engineering_MSConsultants\Roadway\Sheets\121474_GI051.dgn

Preliminary Plans - For Reference Only

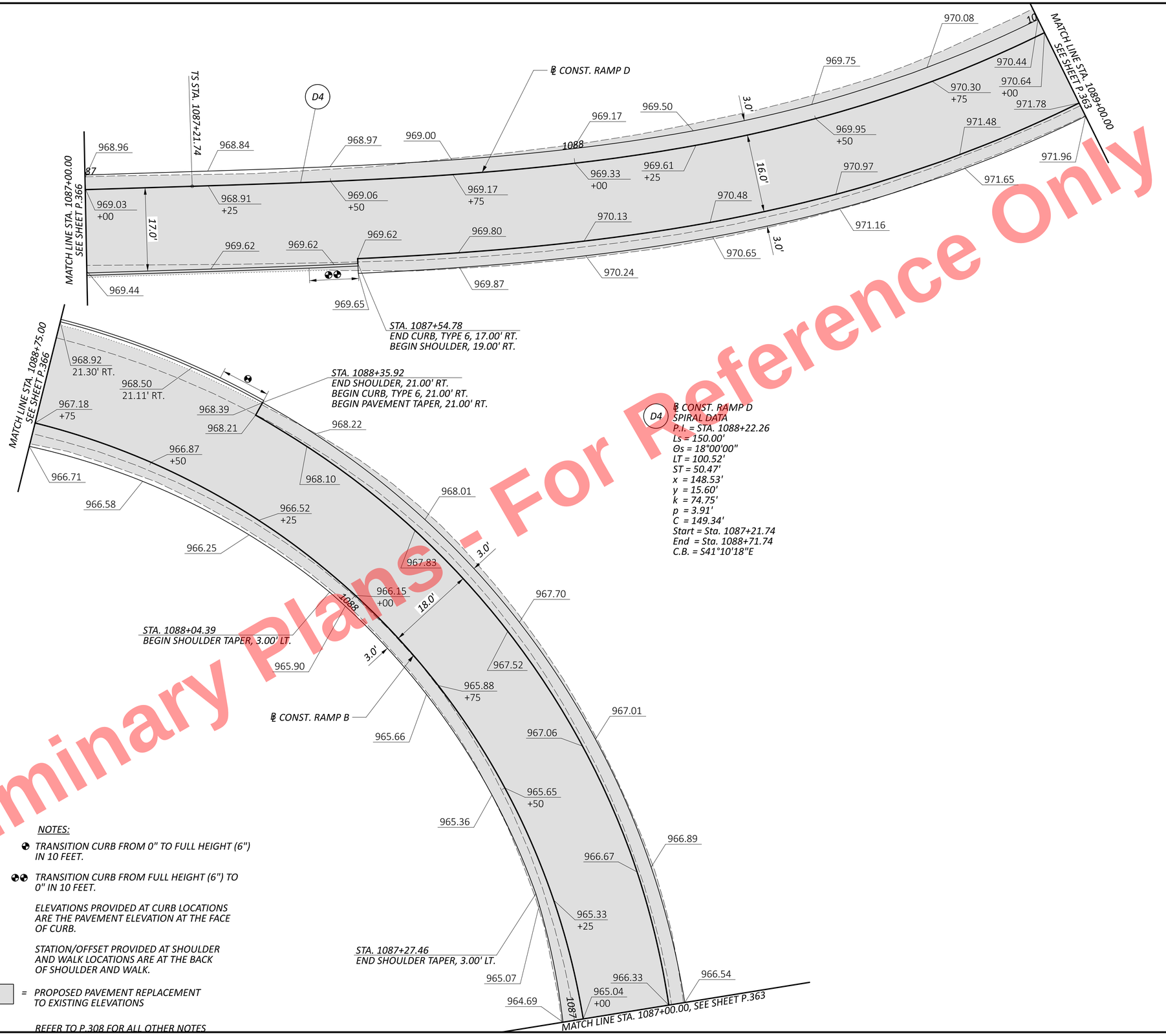

D4 ℄ CONST. RAMP D
SPIRAL DATA
P.I. = STA. 1088+22.26
Ls = 150.00'
Θs = 18°00'00"
LT = 100.52'
ST = 50.47'
x = 148.53'
y = 15.60'
k = 74.75'
p = 3.91'
C = 149.34'
Start = Sta. 1087+21.74
End = Sta. 1088+71.74
C.B. = S41°10'18"E

NOTES:

◔ TRANSITION CURB FROM 0" TO FULL HEIGHT (6") IN 10 FEET.

◔◔ TRANSITION CURB FROM FULL HEIGHT (6") TO 0" IN 10 FEET.

ELEVATIONS PROVIDED AT CURB LOCATIONS ARE THE PAVEMENT ELEVATION AT THE FACE OF CURB.

STATION/OFFSET PROVIDED AT SHOULDER AND WALK LOCATIONS ARE AT THE BACK OF SHOULDER AND WALK.

= PROPOSED PAVEMENT REPLACEMENT TO EXISTING ELEVATIONS

REFER TO P.308 FOR ALL OTHER NOTES

Preliminary Plans - For Reference Only

HORIZONTAL SCALE IN FEET
0 5 10 20

RAMP DETAIL
SOUTH AVE. RAMP B AND RAMP D

DESIGN AGENCY
ms consultants, inc.

DESIGNER MSN
REVIEWER CMN 08/29/25
PROJECT ID 121474
SHEET P.367 TOTAL 655

MAH-680-4.58

MODEL: Sheet-4 PAPERSIZE: 34x22 (in.) DATE: 9/15/2025 TIME: 2:46:13 PM PLTDRV: OHDOT_PDF_E+.pltcfg PENTBL: OHDOT_UTPen.tbl USER: DHall@msconsultants.com WORKSPACE: OHDOTCEv02 WORKSET: 121474 PRODUCT: OpenRoadsDesigner 24.00.00.205
pw:\\ohiodot-pw.bentley.com:ohiodot-pw-02\Documents\01 Active Projects\District 04\Mahoning\121474\402 Engineering_MSConsultants\Roadway\Sheets\121474_GI051.dgn

Preliminary Plans - For Reference Only

I.R. 680 S.B.

BRIDGE NO.
MAH-151-6.765
SFN 5003350

℄ CONST.
SOUTH AVE.

℄ CONST. RAMP C
STA. 1084+58.77, 43.00' LT. =
℄ CONST. SOUTH AVE.
STA. 49+08.91, 63.00' RT.
Δ = 88°03'51"
R = 25.00'
L = 38.43'
T = 24.17'

STA. 1084+58.77
END CURB, TYPE 6, 17.87' LT.
BEGIN SHOULDER TAPER, 17.87' LT.

STA. 1085+08.77
END SHOULDER TAPER, 19.00' LT.

MATCH LINE STA. 1086+50.00, SEE SHEET P 369

SAWCUT
(MATCH EXIST.)

N88°23'58"E

N01°36'02"W

℄ CONST. RAMP C
STA. 1083+96.32 =
℄ CONST. SOUTH AVE.
STA. 48+65.74
EL. = 987.44

℄ CONST. RAMP C
STA. 1084+74.98, 48.00' RT. =
℄ CONST. SOUTH AVE.
STA. 48+17.67, 78.50' RT.
Δ = 70°41'02"
R = 41.00'
L = 50.44'
T = 28.99'

PC STA. 1085+42.67

℄ CONST. RAMP C

℄ CONST.
SOUTH AVE.

16.0'

3.0'

27' R

52' R

50' R

853' R

10'
(TYP.)

986.12 +25
986.43 +10.63
986.47 +08.57
49
986.67 +00
986.51 +06.81
986.75 +96.60
987.19 +75
987.84 +50
988.40 +30.19
986.46 +25
988.74 +15.91
988.87 +10.43
989.08 +00
48
988.92 +08.44
989.64 +75

985.59
985.99 37.95' RT.
986.05 35.95' RT.
986.07 8.43'
986.12 35.95' RT.
986.32 37.93' RT.
986.92
987.05
987.38 +00
987.22 +34.15
987.51
987.95 37.79' RT.
988.12
988.34 35.75' RT.
0.44'
988.44
988.48 35.75' RT.
988.47 37.75' RT.
988.62
989.37

986.05
986.52
986.64
986.44
986.35

985.90
985.03
983.96
982.77
981.60
980.50
979.43
978.48

986.55
986.41
985.96
985.09
984.02
982.84
981.67
980.52
979.45
978.51

986.93 +50
986.77 +58.77
986.24 +75
985.31 +00
984.20 +25
983.40
983.04 +50
981.81 +75
980.64 +00
979.51 +25
978.49 +50

986.90 +59.07 8.21' RT.
986.26 2.81' RT.
986.18 +77.27 2.50' RT.
986.26
985.33
985.32 1.06' RT.
984.22
984.20 0.18' RT.
983.06
981.83
980.66
979.53
978.51

986.82
987.18
987.57
987.88
988.07
988.31
988.31
988.45

1084
1085
1086

A
B
C
D
E
F
1
2
C1

NOTES:

TRANSITION CURB FROM 0" TO FULL HEIGHT (6") IN 10 FEET.

SAWCUT

ELEVATIONS PROVIDED AT CURB LOCATIONS ARE THE PAVEMENT ELEVATION AT THE FACE OF CURB.

STATION/OFFSET PROVIDED AT SHOULDER AND WALK LOCATIONS ARE AT THE BACK OF SHOULDER AND WALK.

= PROPOSED PAVEMENT REPLACEMENT TO EXISTING ELEVATIONS

= EXISTING WALK REMOVAL

REFER TO P.308 FOR ALL OTHER NOTES AND LEGEND

A STA. 49+08.57
BEGIN CURB, TYPE 6, 37.96' RT.

B STA. 49+08.57
45.96' RT.

C STA. 48+10.43
BEGIN CURB, TYPE 6, 37.74' RT.
BEGIN WALK, 44.72' RT.

D STA. 48+15.23
END WALK, 44.72' RT.

E STA. 1084+59.90
BEGIN SHOULDER TAPER, 10.00' RT.

F STA. 1084+77.50
END SHOULDER TAPER, 5.50' RT.

CENTER OF CURB RAMP OR TRUNCATED DOMES LOCATION

1 STA. 1084+37.30, 32.67' RT.

2 STA. 1084+39.08, 28.13' LT.

C1 ℄ CONST. RAMP C
CURVE DATA
P.I. = STA. 1086+73.23
Δ = 07°49'19" LT
Dc = 03°00'00"
R = 1,909.86'
T = 130.57'
L = 260.73'
E = 4.46'
DS = 35 mph
emax = 0.028

HORIZONTAL SCALE IN FEET
0 5 10 20

INTERSECTION DETAIL SOUTH AVE. RAMP C

MAH-680-4.58

DESIGN AGENCY
ms consultants, inc.

DESIGNER MSN
REVIEWER CMN 08/29/25
PROJECT ID 121474
SHEET P.368 TOTAL 655

MODEL: Sheet PAPERSIZE: 34x22 (in.) DATE: 9/15/2025 TIME: 2:46:19 PM PLTDRV: OHDOT_PDF_E+.pltcfg PENTBL: OHDOT_UTPen.tbl USER: DHall@msconsultants.com WORKSPACE: OHDOTCEv02 WORKSET: 121474 PRODUCT: OpenRoadsDesigner 24.00.00.205
pw:\\ohiodot-pw.bentley.com:ohiodot-pw-02\Documents\01 Active Projects\District 04\Mahoning\121474\402 Engineering_MSConsultants\Roadway\Sheets\121474_GI052.dgn

NOTE:

ELEVATIONS ARE PROVIDED AT EVEN 25 FT. STATION INCREMENTS UNLESS INDICATED OTHERWISE

REFER TO P.308 FOR ALL OTHER NOTES AND LEGEND

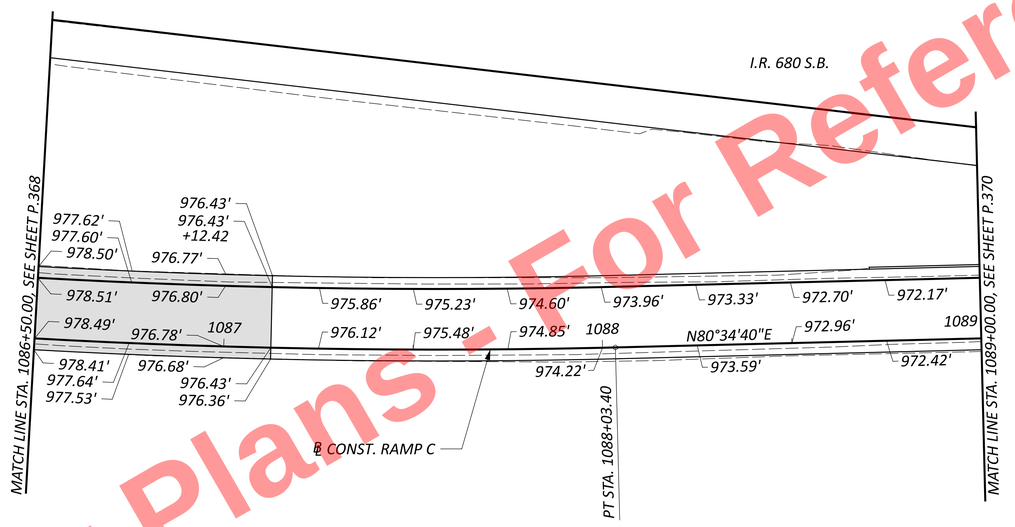

Preliminary Plans - Not For Reference Only

HORIZONTAL SCALE IN FEET
0 10 20 40

RAMP DETAIL
SOUTH AVE. RAMP C

DESIGN AGENCY
ms consultants, inc.

DESIGNER MSN
REVIEWER CMN 08/29/25
PROJECT ID 121474
SHEET P.369 TOTAL 655

MAH-680-4.58

MODEL: 113321_GI033 PAPERSIZE: 34x22 (in.) DATE: 9/15/2025 TIME: 2:46:26 PM PLTDRV: OHDOT_PDF_E+.pltcfg PENTBL: OHDOT_UTPen.tbl USER: DHall@msconsultants.com WORKSPACE: OHDOTCtv02 WORKSET: 121474 PRODUCT: OpenRoadsDesigner 24.00.00.205
pw:\\ohiodot-pw.bentley.com:ohiodot-pw-02\Documents\01 Active Projects\District 04\Mahoning\121474\402 Engineering_MSConsultants\Roadway\Sheets\121474_GI053.dgn

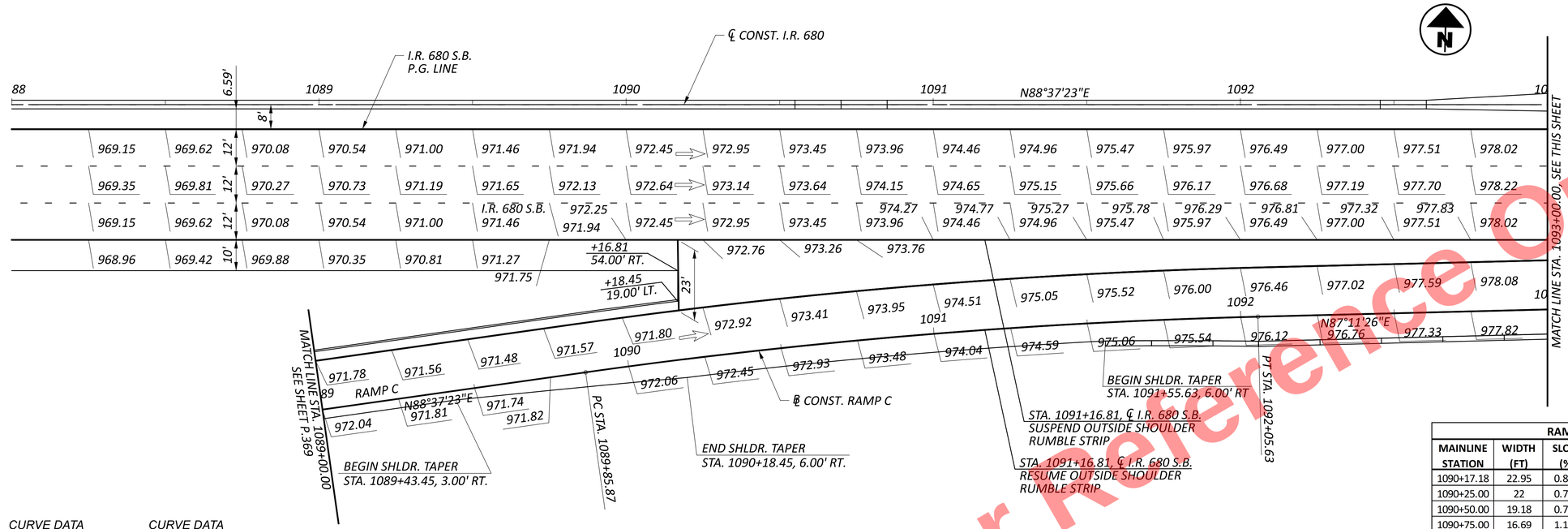

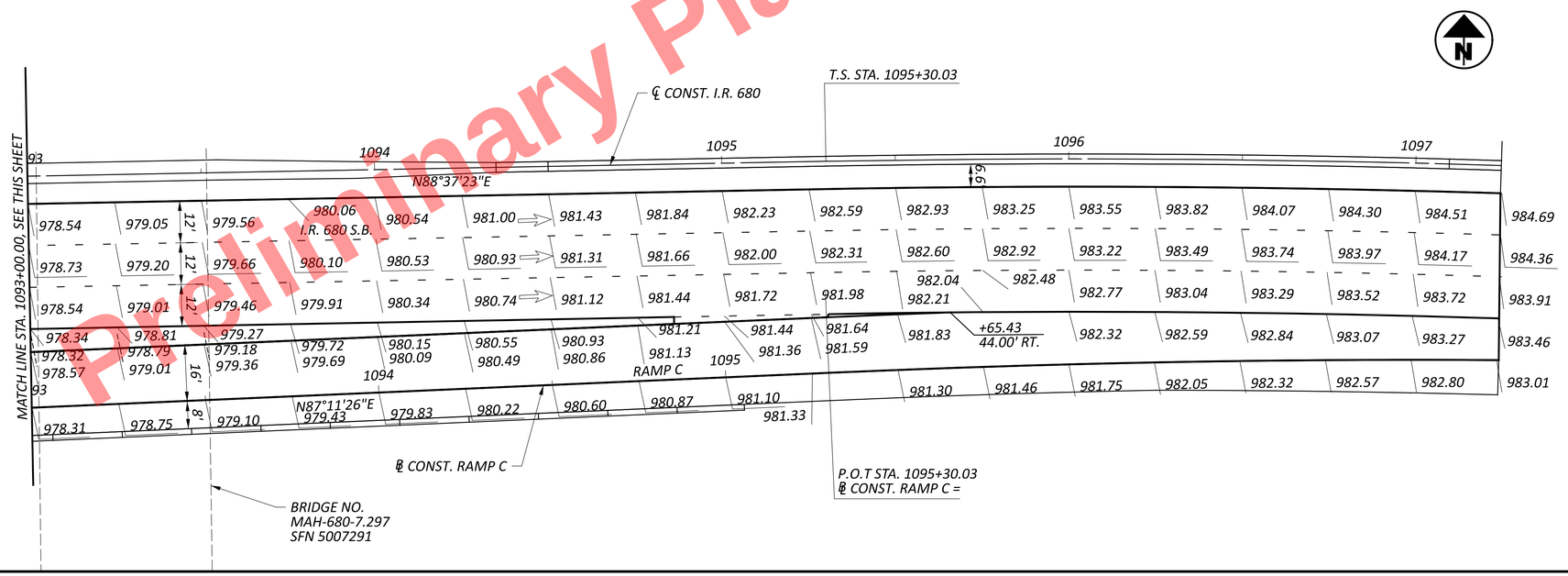

CURVE DATA
℄ CONST. I.R. 680
P.I. = STA. 1106+76.67
Δ = 32°42'57" RT
Dc = 01°28'00"
R = 3,906.53'
T = 1,146.64'
L = 2,230.63'
E = 164.8'
DS = 65 mph
emax = 0.0275

CURVE DATA
℄ CONST. RAMP C
P.I. = STA. 1090+95.87
Δ = 06°35'34" RT
Dc = 03°00'00"
R = 1,909.86'
T = 110'
L = 219.76'
E = 3.17'
DS = 35 mph
emax = 0.028

RAMP C - SOUTH AVENUE

MAINLINE STATION	WIDTH (FT)	SLOPE (%)	WIDTH (FT)	SLOPE (%)	RAMP STATION	RAMP SIDE
1090+17.18	22.95	0.82%	N/A	N/A	1090+18.45	SB
1090+25.00	22	0.75%	N/A	N/A	1090+26.26	SB
1090+50.00	19.18	0.77%	N/A	N/A	1090+51.23	SB
1090+75.00	16.69	1.12%	N/A	N/A	1090+76.15	SB
1091+00.00	14.53	1.67%	N/A	N/A	1091+01.01	SB
1091+25.00	12.69	2.20%	N/A	N/A	1091+25.87	SB
1091+50.00	11.19	2.20%	N/A	N/A	1091+50.72	SB
1091+75.00	10	2.20%	N/A	N/A	1091+75.53	SB
1092+00.00	9.15	1.75%	N/A	N/A	1092+00.34	SB
1092+25.00	8.51	2.51%	N/A	N/A	1092+25.30	SB
1092+50.00	7.89	3.40%	N/A	N/A	1092+50.31	SB
1092+75.00	7.26	3.40%	N/A	N/A	1092+75.32	SB
1093+00.00	6.64	3.39%	N/A	N/A	1093+00.33	SB
1093+25.00	6.01	3.27%	N/A	N/A	1093+25.33	SB
1093+50.00	5.39	1.63%	N/A	N/A	1093+50.34	SB
1093+75.00	4.76	-0.53%	N/A	N/A	1093+75.35	SB
1094+00.00	4.14	-1.32%	N/A	N/A	1094+00.35	SB
1094+25.00	3.51	-1.71%	N/A	N/A	1094+25.36	SB
1094+50.00	2.89	-2.32%	N/A	N/A	1094+50.36	SB
1094+75.00	2.26	-3.69%	N/A	N/A	1094+75.38	SB
1095+00.00	1.64	-4.82%	N/A	N/A	1095+00.39	SB
1095+25.00	1.01	-4.80%	N/A	N/A	1095+25.41	SB
1095+29.63	0.9	-4.80%	N/A	N/A	1095+30.03	SB

NOTE:

ELEVATIONS ARE PROVIDED AT EVEN 25 FT. INCREMENTS UNLESS INDICATED OTHERWISE

REFER TO P.308 FOR ALL OTHER NOTES AND LEGEND

Preliminary Plans - For Reference Only

HORIZONTAL SCALE IN FEET
0 10 20 40

RAMP TERMINAL DETAIL - I.R. 680 S.B. SOUTH AVE. - RAMP C

DESIGN AGENCY
ms consultants, inc.

DESIGNER MSN
REVIEWER CMN 08/29/25
PROJECT ID 121474
SHEET P.370 TOTAL 655

MAH-680-4.58

MODEL: 113321_GI040-1 PAPERSIZE: 34x22 (in.) DATE: 9/15/2025 TIME: 2:46:33 PM PLTDRV: OHDOT_PDF_E+.pltcfg PENTBL: OHDOT_UTPen.tbl USER: DHall@msconsultants.com WORKSPACE: OHDOTCEv02 WORKSET: 121474 PRODUCT: OpenRoadsDesigner 24.00.00.205
pw:\\ohiodot-pw.bentley.com:ohiodot-pw-02\Documents\01 Active Projects\District 04\Mahoning\121474\02-Engineering_MSConsultants\Roadway\Sheets\121474_GI054.dgn

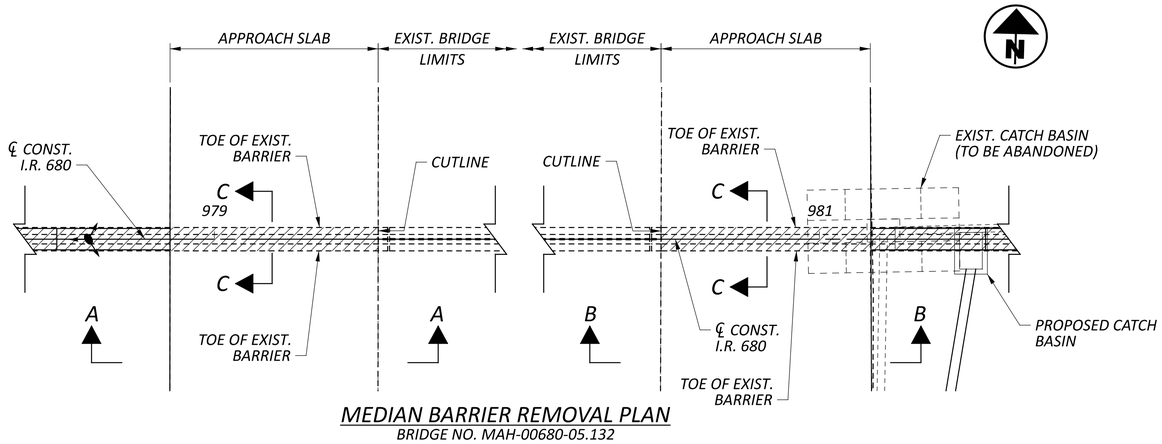

MEDIAN BARRIER REMOVAL PLAN

BRIDGE NO. MAH-00680-05.132

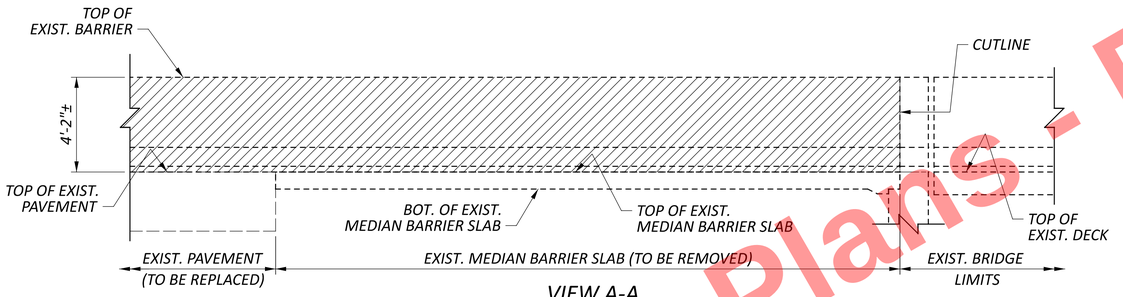

VIEW A-A

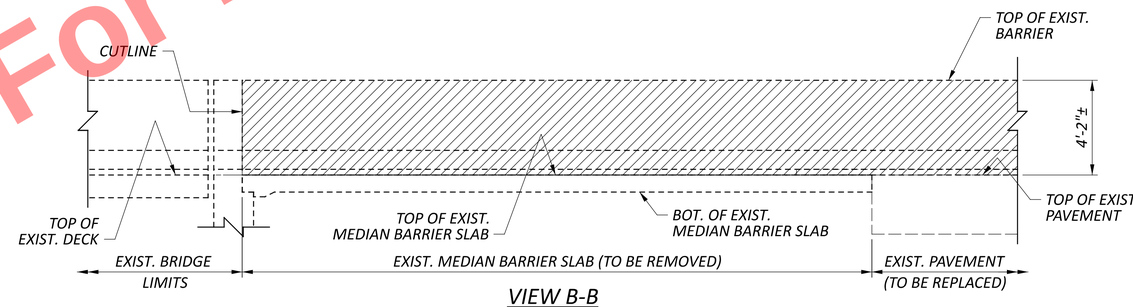

VIEW B-B

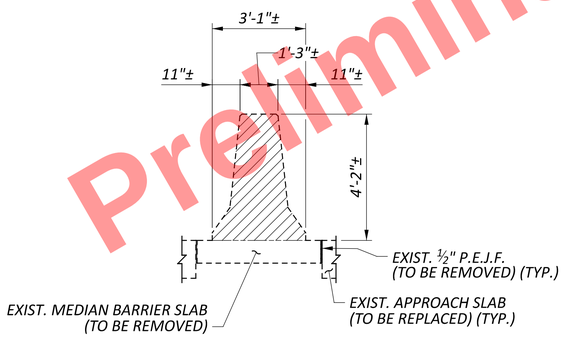

SECTION C-C

LEGEND

- ITEM 202, PORTIONS OF STRUCTURE REMOVED, AS PER PLAN

Preliminary Plans - For Reference Only

MEDIAN BARRIER REMOVAL DETAILS

DESIGN AGENCY
ms consultants, inc.

DESIGNER JSP
REVIEWER WER 05/30/25
PROJECT ID 121474
SHEET P.371 TOTAL 655

MAH-680-0.00

MODEL: CLP_I680 - Plan 1 [Sheet] PAPERSIZE: 34x22 (in.) DATE: 9/15/2025 TIME: 10:13:53 AM PLTDRV: OHDOT_PDF_E+.pltcfg PENTBL: OHDOT_Pen.tbl USER: DHall@msconsultants.com WORKSPACE: OHDOTCEv02 WORKSET: 121474 PRODUCT: OpenRoadsDesigner 24.00.00.205
pw:\\ohiodot-pw.bentley.com:ohiodot-pw-02\Documents\01 Active Projects\District 04\Mahoning\121474\402-Engineering_MSConsultants\Roadway\Sheets\121474_GR002.dgn

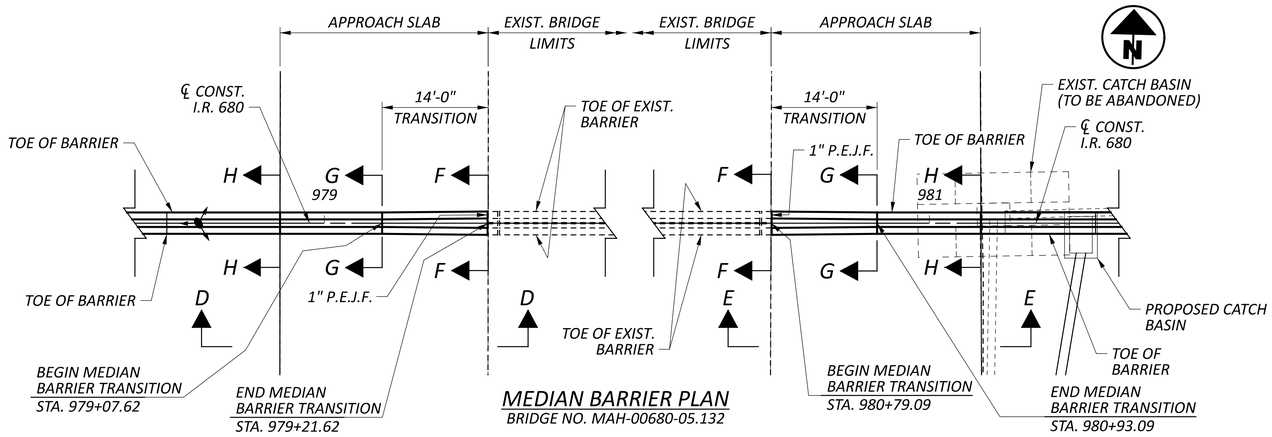

MEDIAN BARRIER PLAN

BRIDGE NO. MAH-00680-05.132

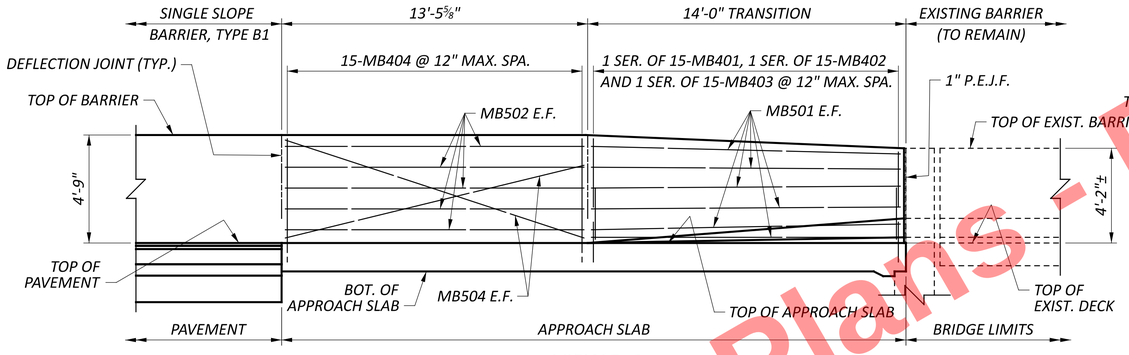

VIEW D-D

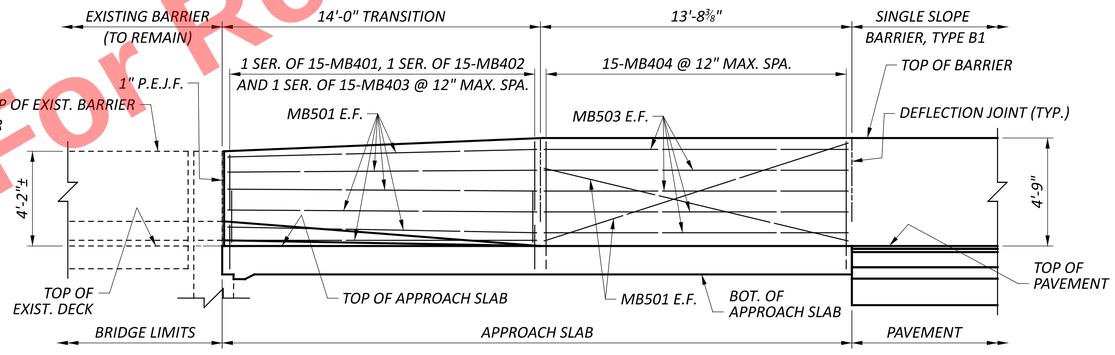

VIEW E-E

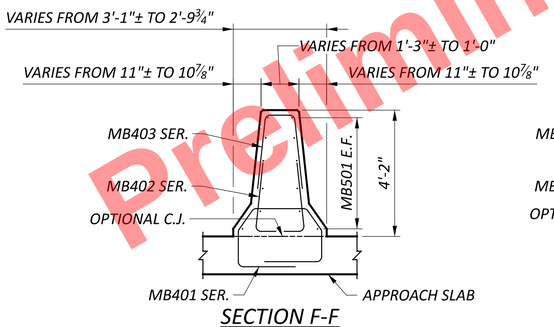

SECTION F-F

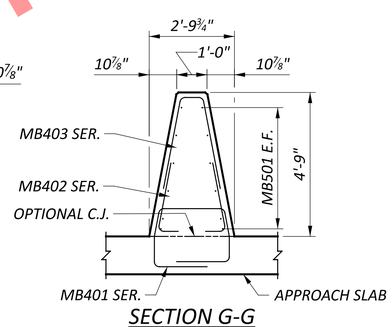

SECTION G-G

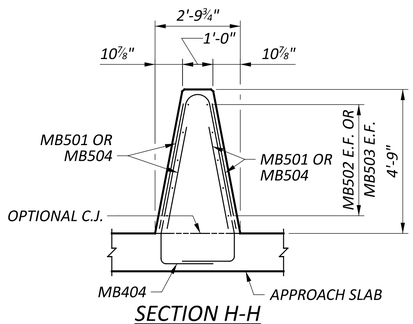

SECTION H-H

NOTES:

1. FOR ADDITIONAL RAILING DETAILS, SEE STANDARD DRAWING SBR-2-20.
2. FOR REINFORCING STEEL LIST, SEE SHEET P.549/655.

Preliminary Plans - For Reference Only

MEDIAN BARRIER TRANSITION DETAILS

MAH-680-0.00

DESIGN AGENCY: ms consultants, inc.
DESIGNER: JSP
REVIEWER: WER 05/30/25
PROJECT ID: 121474
SHEET: P.372 TOTAL: 655

MODEL: CLP_I680 - Plan 1 [Sheet] PAPERSIZE: 34x22 (in.) DATE: 9/15/2025 TIME: 10:14:01 AM PLTDRV: OHDOT_PDF_E+.pltcfg PENTBL: OHDOT_Pen.tbl USER: DHall@msconsultants.com WORKSPACE: OHDOTCEv02 WORKSET: 121474 PRODUCT: OpenRoadsDesigner 24.00.00.205
pw:\ohiodot-pw.bentley.com:ohiodot-pw-02\Documents\01 Active Projects\District 04\Mahoning\121474\402-Engineering_MSConsultants\RoadwayISheets\121474_GR001.dgn

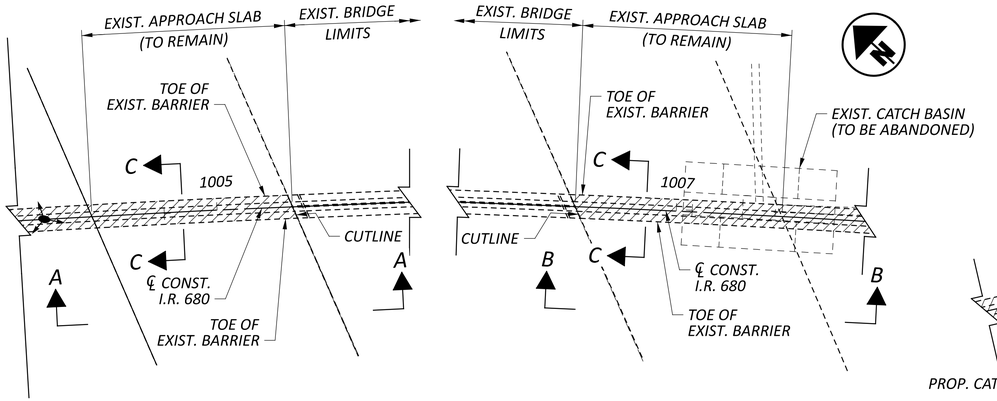

MEDIAN BARRIER REMOVAL PLAN
BRIDGE NO. MAH-00680-05.601

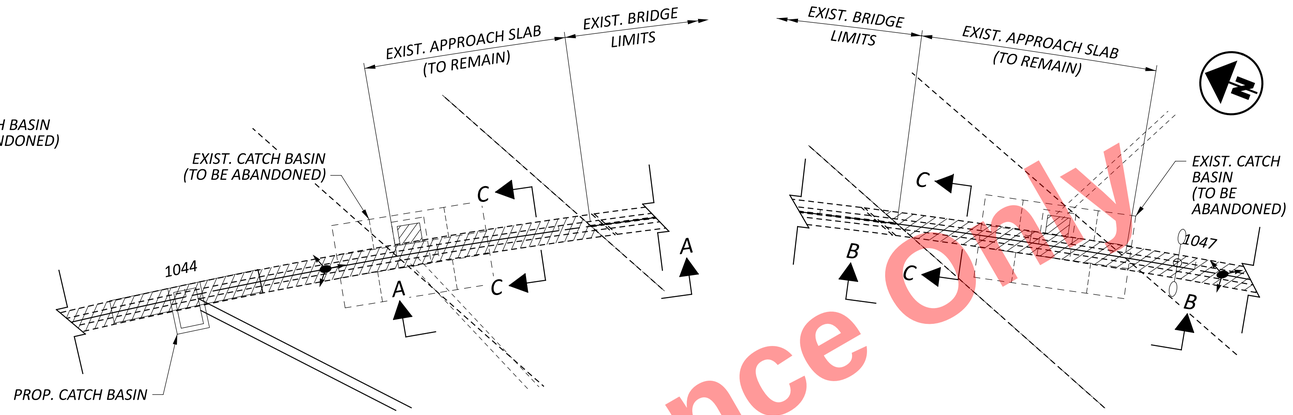

MEDIAN BARRIER REMOVAL PLAN
BRIDGE NO. MAH-00680-06.377

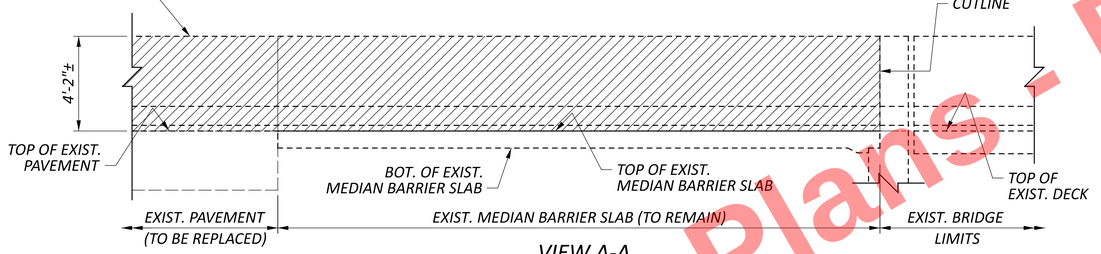

VIEW A-A

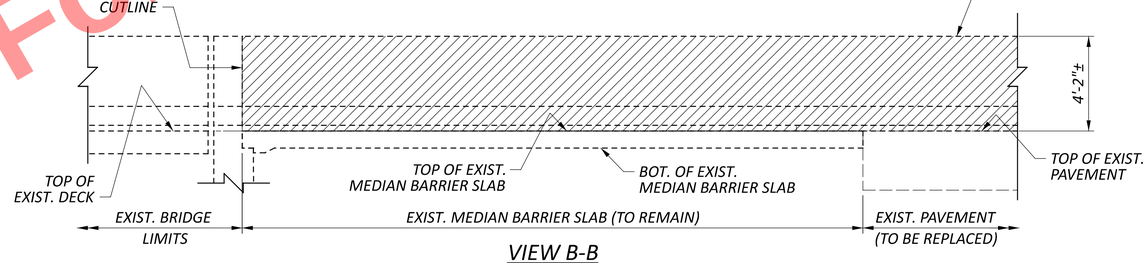

VIEW B-B

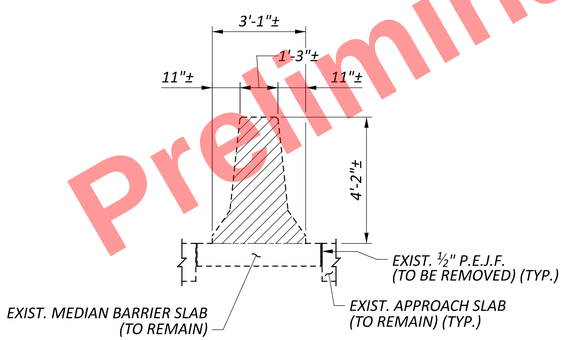

SECTION C-C

LEGEND

- ITEM 202, PORTIONS OF STRUCTURE REMOVED, AS PER PLAN

Preliminary Plans - For Reference Only

MEDIAN BARRIER REMOVAL DETAILS

DESIGN AGENCY
ms consultants, inc.

DESIGNER JSP
REVIEWER WER 05/30/25
PROJECT ID 121474
SHEET P.373 TOTAL 655

MAH-680-0.00

MODEL: CLP_I680 - Plan 1 [Sheet] PAPERSIZE: 34x22 (in.) DATE: 9/15/2025 TIME: 10:14:12 AM PLTDRV: OHDOT_PDF_E+.pltcfg PENTBL: OHDOT_Pen.tbl USER: DHall@msconsultants.com WORKSPACE: OHDOTCEv02 WORKSET: 121474 PRODUCT: OpenRoadsDesigner 24.00.00.205
pw:\\ohiodot-pw.bentley.com:ohiodot-pw-02\Documents\01 Active Projects\District 04\Mahoning\121474\402-Engineering_MSConsultants\Roadway\Sheets\121474_GR003.dgn

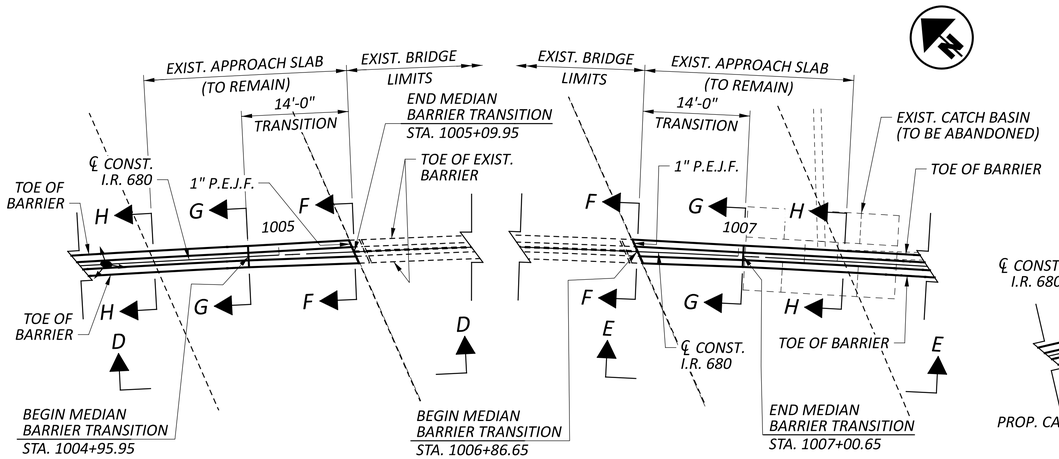

MEDIAN BARRIER PLAN
BRIDGE NO. MAH-00680-05.601

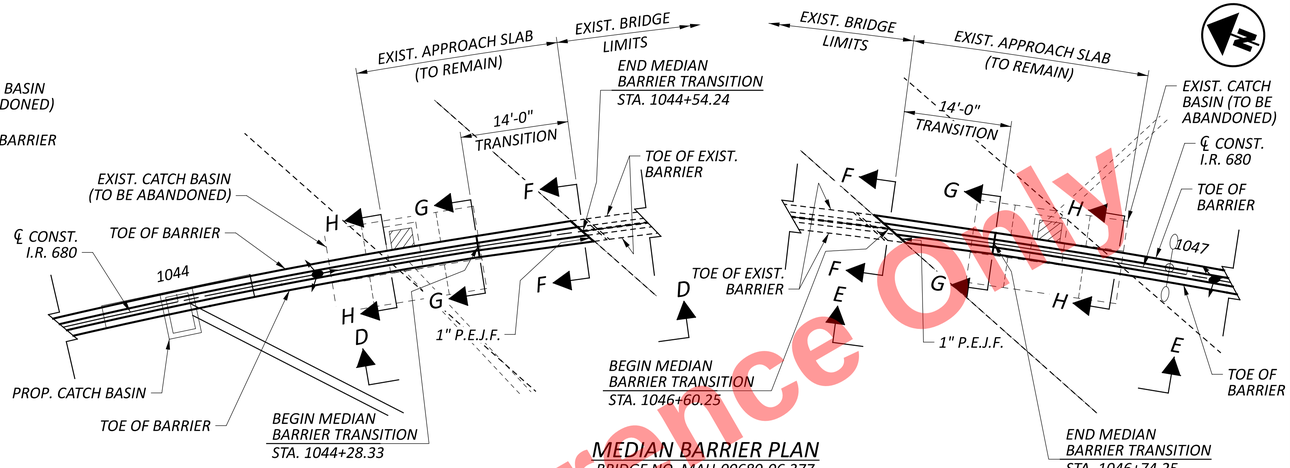

MEDIAN BARRIER PLAN
BRIDGE NO. MAH-00680-06.377

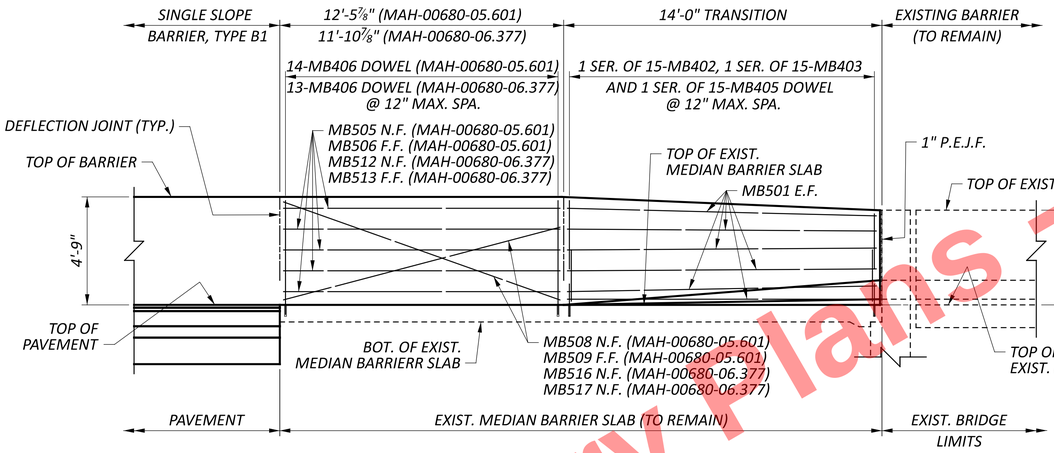

VIEW D-D

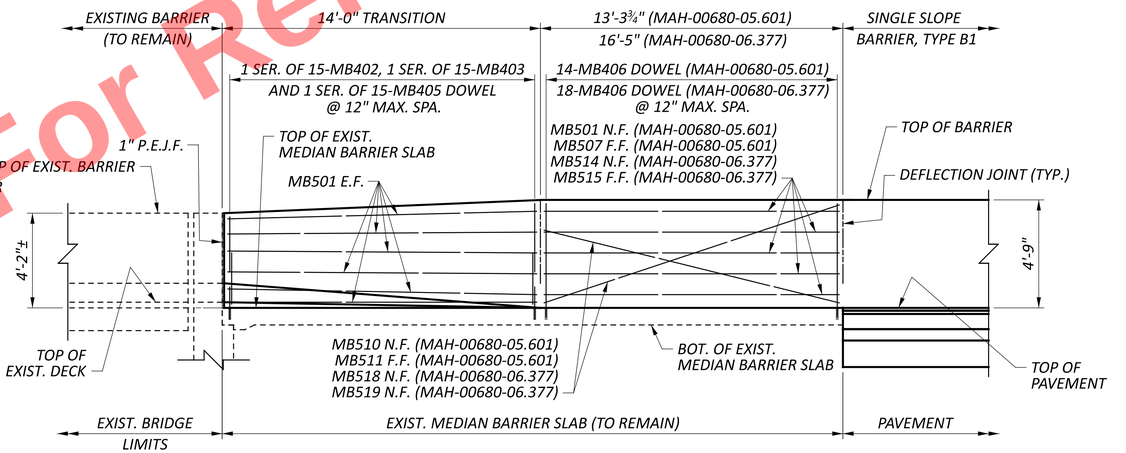

VIEW E-E

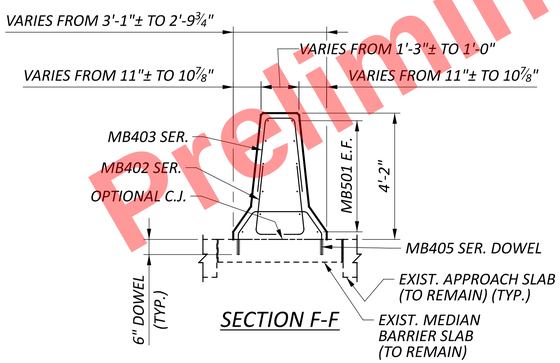

SECTION F-F

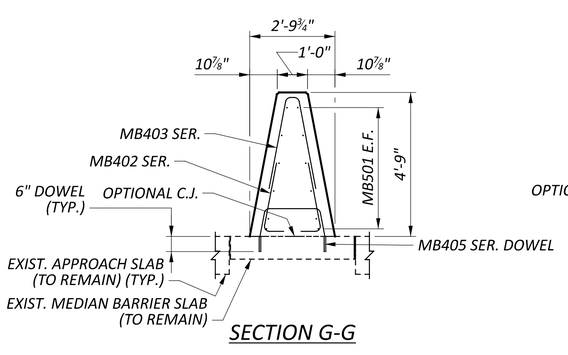

SECTION G-G

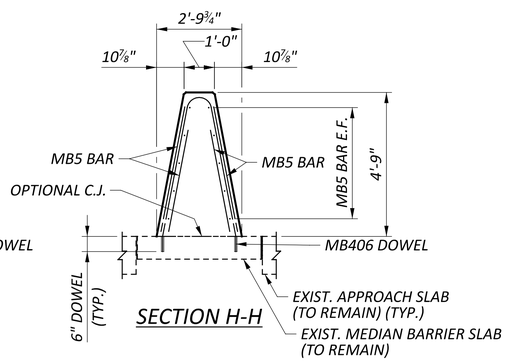

SECTION H-H

NOTES:

1. FOR ADDITIONAL RAILING DETAILS, SEE STANDARD DRAWING SBR-2-20.
2. FOR REINFORCING STEEL LIST, SEE SHEET P.549/655.

Preliminary Plans - For Reference Only

MEDIAN BARRIER TRANSITION DETAILS

MAH-680-0.00

MODEL: CLP_I680 - Plan 1 [Sheet] PAPERSIZE: 34x22 (in.) DATE: 9/15/2025 TIME: 10:14:22 AM PLTDRV: OHDOT_PDF_E+.pltcfg PENTBL: OHDOT_Pen.tbl USER: DHall@msconsultants.com WORKSPACE: OHDOTCEv02 WORKSET: 121474 PRODUCT: OpenRoadsDesigner 24.00.00.205
pw:\\ohiodot-pw.bentley.com:ohiodot-pw-02\Documents\01 Active Projects\District 04\Mahoning\121474\402-Engineering_MSConsultants\Roadway\Sheets\121474_GR004.dgn

DESIGN AGENCY
ms consultants, inc.
DESIGNER JSP
REVIEWER WER 05/30/25
PROJECT ID 121474
SHEET P.374 TOTAL 655

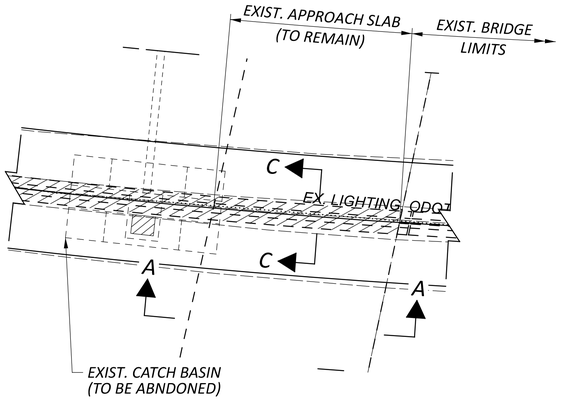

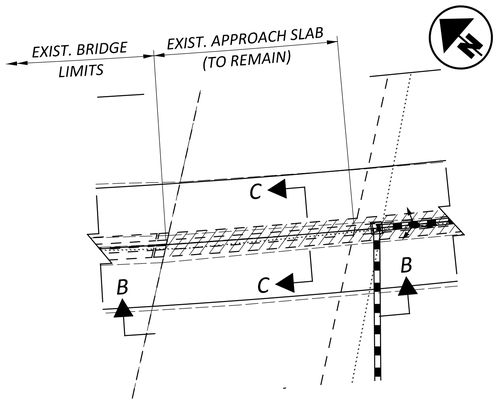

MEDIAN BARRIER REMOVAL PLAN
BRIDGE NO. MAH-00680-06.933

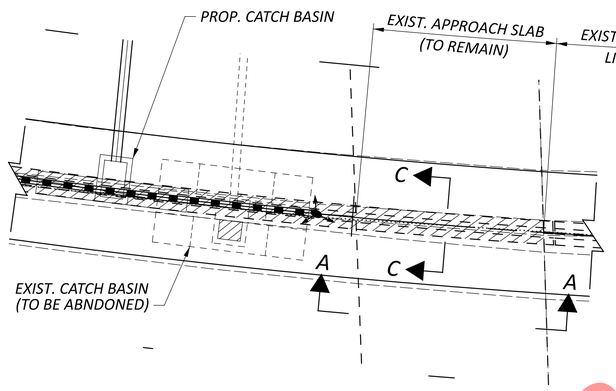

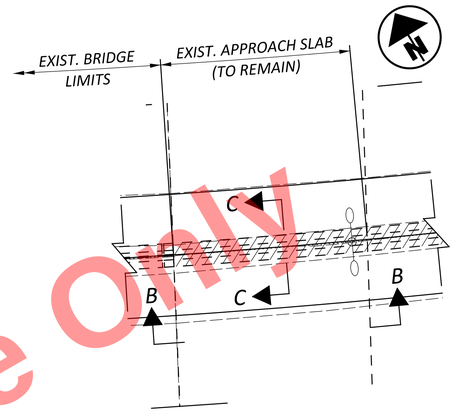

MEDIAN BARRIER REMOVAL PLAN
BRIDGE NO. MAH-00680-06.983

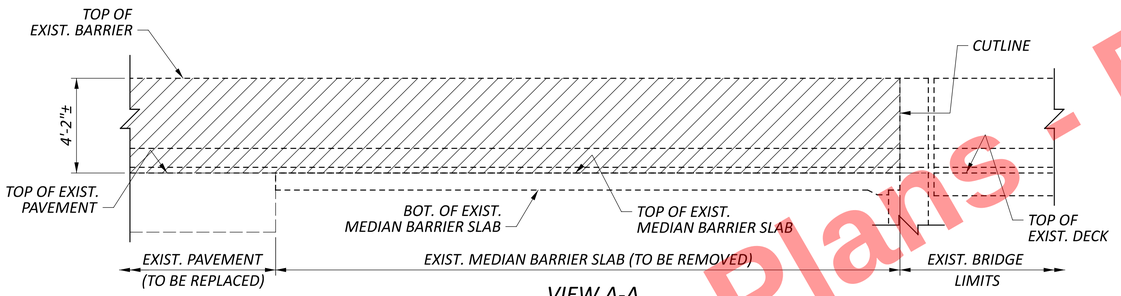

VIEW A-A

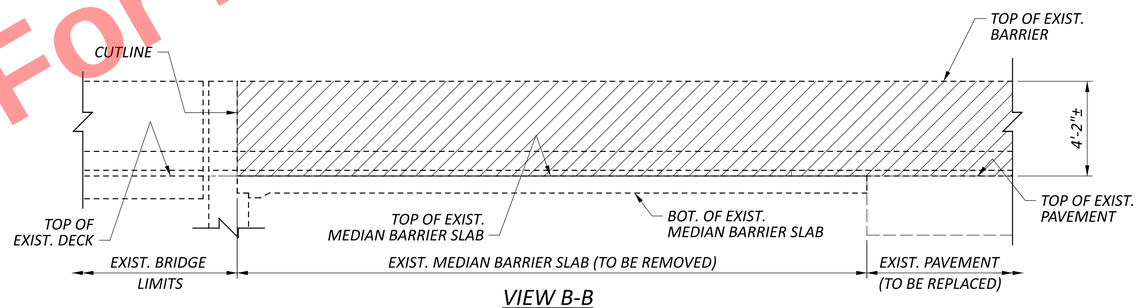

VIEW B-B

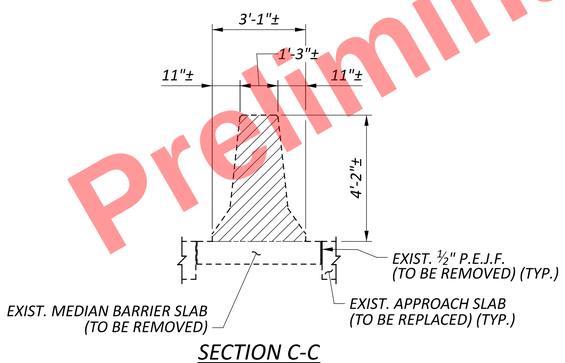

SECTION C-C

LEGEND

- ITEM 202, PORTIONS OF STRUCTURE REMOVED, AS PER PLAN

Preliminary Plans - For Reference Only

MEDIAN BARRIER REMOVAL DETAILS

DESIGN AGENCY
ms consultants, inc.

DESIGNER JSP
REVIEWER WER 05/30/25
PROJECT ID 121474
SHEET P.375 TOTAL 655

MAH-680-0.00

MODEL: Sheet PAPERSIZE: 34x22 (in.) DATE: 9/15/2025 TIME: 10:14:34 AM PLTDRV: OHDOT_PDF_E+.pltcfg PENTBL: OHDOT_Pen.tbl USER: DHall@msconsultants.com WORKSPACE: OHDOTCEv02 WORKSET: 121474 PRODUCT: OpenRoadsDesigner 24.00.00.205
pw:\\ohiodot-pw.bentley.com:ohiodot-pw-02\Documents\01 Active Projects\District 04\Mahoning\121474\402-Engineering_MSConsultants\Roadway\Sheets\121474_GR005.dgn

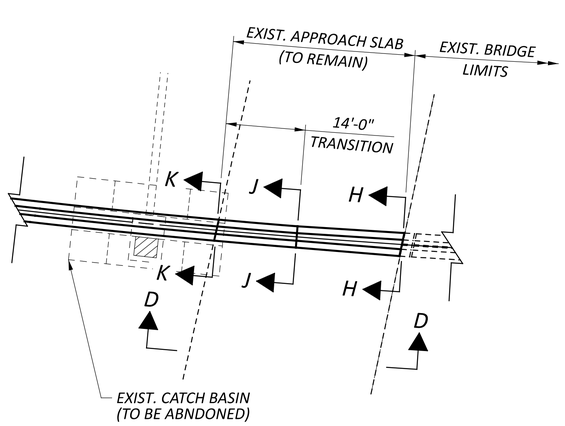

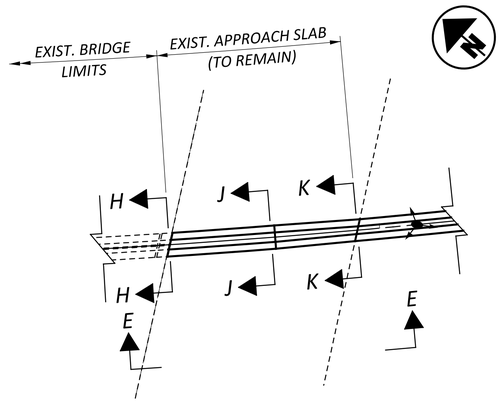

MEDIAN BARRIER PLAN
BRIDGE NO. MAH-00680-06.933

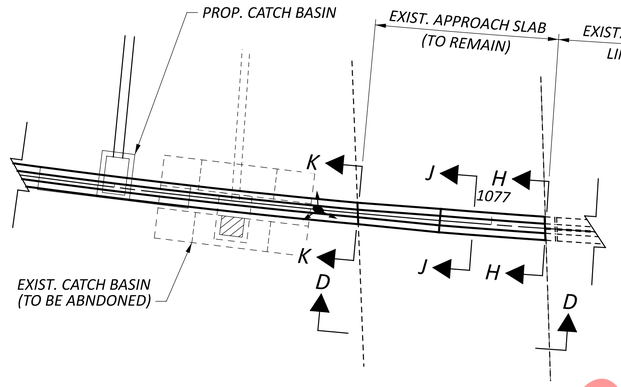

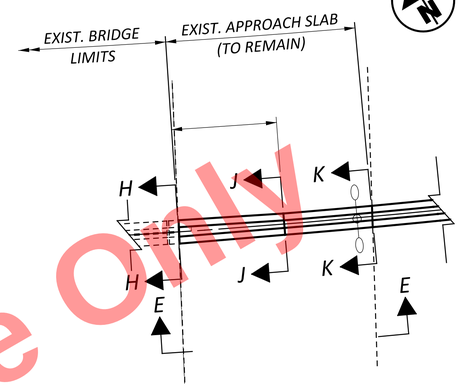

MEDIAN BARRIER PLAN
BRIDGE NO. MAH-00680-06.983

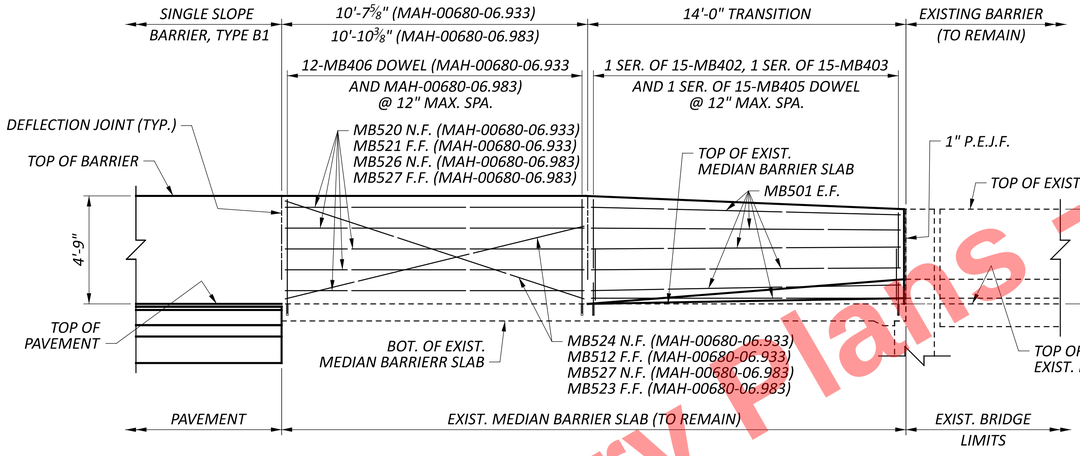

VIEW D-D

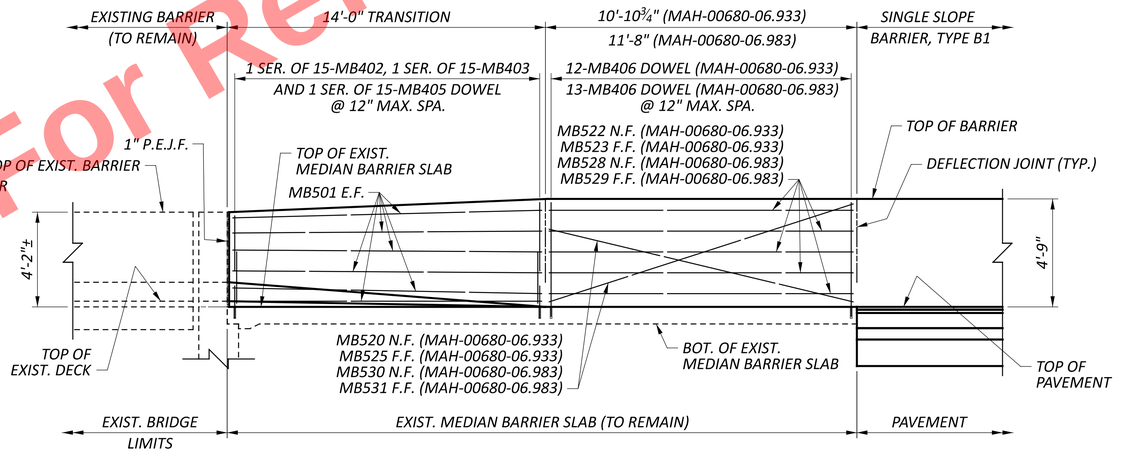

VIEW E-E

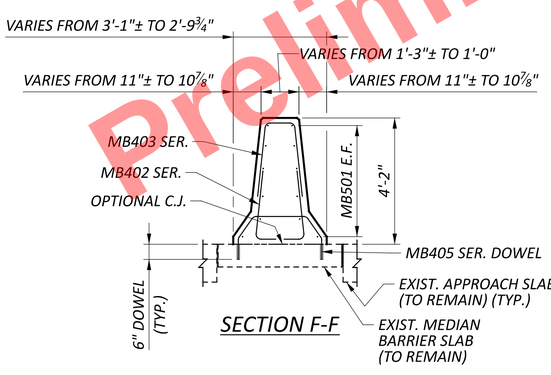

SECTION F-F

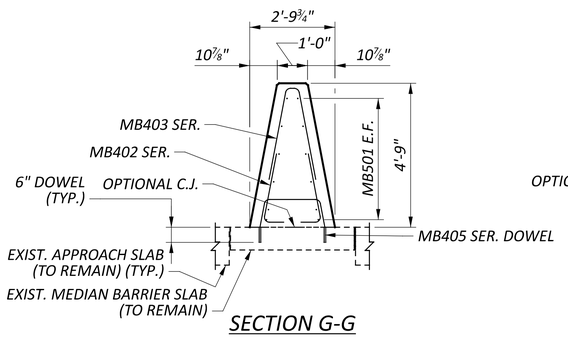

SECTION G-G

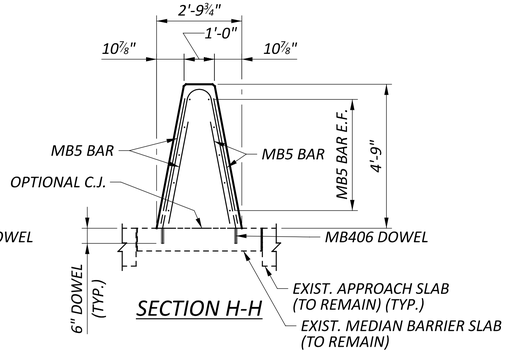

SECTION H-H

NOTES:

1. FOR ADDITIONAL RAILING DETAILS, SEE STANDARD DRAWING SBR-2-20.
2. FOR REINFORCING STEEL LIST, SEE SHEET /.

Preliminary Plans - For Reference Only

MAH-680-0.00

MEDIAN BARRIER TRANSITION DETAILS

DESIGN AGENCY
ms consultants, inc.

DESIGNER JSP

REVIEWER WER 05/30/25

PROJECT ID 121474

SHEET P.376 TOTAL 655

MODEL: Sheet PAPERSIZE: 34x22 (in.) DATE: 9/15/2025 TIME: 10:14:47 AM PLTDRV: OHDOT_PDF_E+.pltcfg PENTBL: OHDOT_Pen.tbl USER: DHall@msconsultants.com WORKSPACE: OHDOTCEv02 WORKSET: 121474 PRODUCT: OpenRoadsDesigner 24.00.00.205
pw:\ohiodot-pw.bentley.com:ohiodot-pw-02\Documents\01 Active Projects\District 04\Mahoning\121474\402-Engineering_MSConsultants\Roadway\Sheets\121474_GR006.dgn

MODEL: Sheet PAPERSIZE: 34x22 (in.) DATE: 9/15/2025 TIME: 10:14:57 AM PLTDRV: OHDOT_PDF_E+.pltcfg PENTBL: OHDOT_Pen.tbl USER: DHall@msconsultants.com WORKSPACE: OHDOTCEv02 WORKSET: 121474 PRODUCT: OpenRoadsDesigner 24.00.00.205
pw:\\ohiodot-pw.bentley.com:ohiodot-pw-02\Documents\01 Active Projects\District 04\Mahoning\121474\402-Engineering_MSConsultants\Roadway\Sheets\121474_GR007.dgn

MAH-680-0.00

CONCRETE BARRIER END SECTION, AS PER PLAN

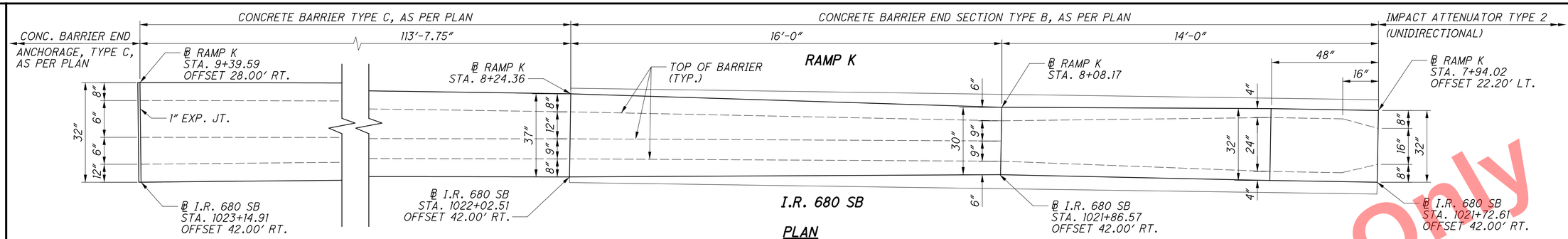

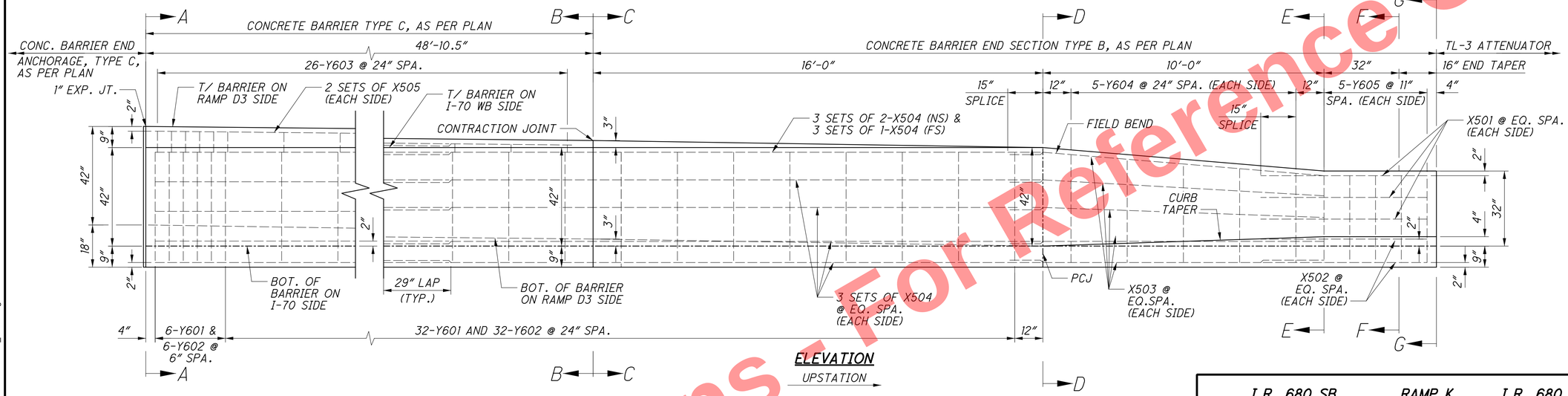

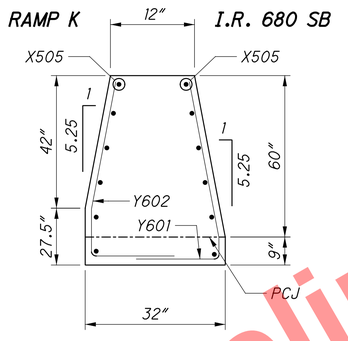

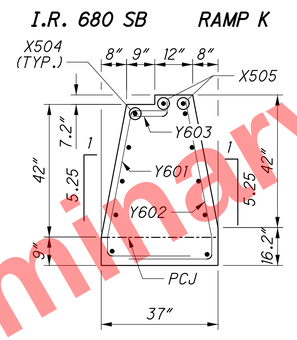

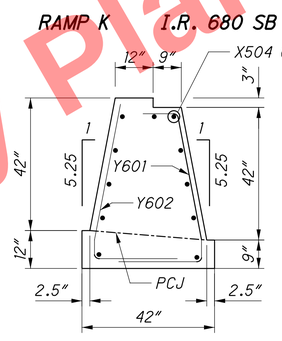

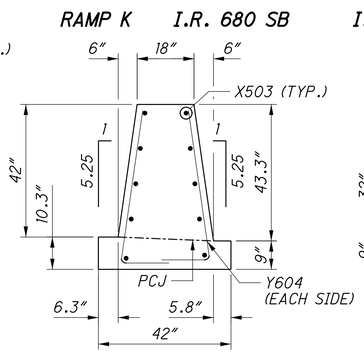

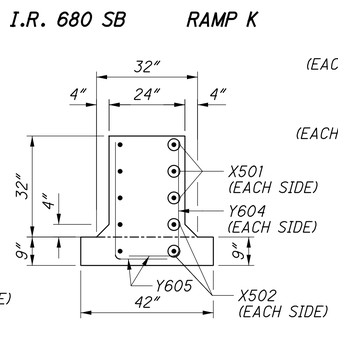

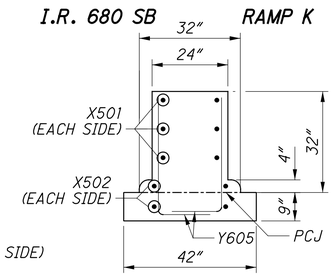

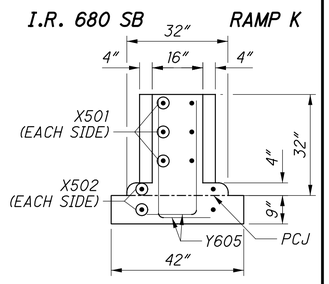

NOTES: FOR MISSING DIMENSIONS, DETAILS AND NOTES FOR THE CONCRETE BARRIER END SECTIONS (TYPE B), SEE ODOT'S STANDARD CONSTRUCTION DRAWINGS RM-4.6.

SEE TYPICAL SECTIONS AND ROADWAY PLAN SHEETS FOR BARRIER PLACEMENT LOCATIONS.

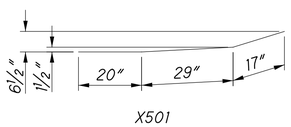

BENDING DIAGRAMS

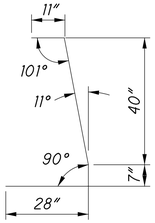

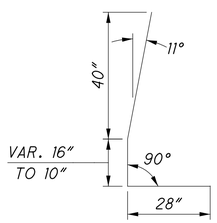

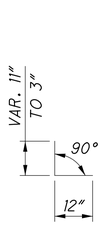

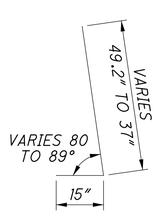

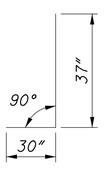

STEEL LIST

MARK	BAR	SHAPE	NO.	LENGTH
X501	#5	BENT	6	5'-6"
X502	#5	STRAIGHT	4	5'-6"
X503	#5	STRAIGHT	10	11'-1"
X504	#5	STRAIGHT	33	23'-8"
X505	#5	STRAIGHT	4	25'-4"
Y601	#6	BENT	38	7'-3"
Y602	#6	BENT	38	VARIES 7'-1" TO 6'-7"
Y603	#6	BENT	26	VARIES 1'-11" TO 1'-3"
Y604	#6	BENT	10	VARIES 4'-4" TO 5'-4"
Y605	#6	BENT	10	5'-7"

Preliminary Plans - For Reference Only

DESIGN AGENCY
ms consultants, inc.

DESIGNER JSP
REVIEWER WER 05/30/25
PROJECT ID 121474
SHEET P.376A TOTAL 655

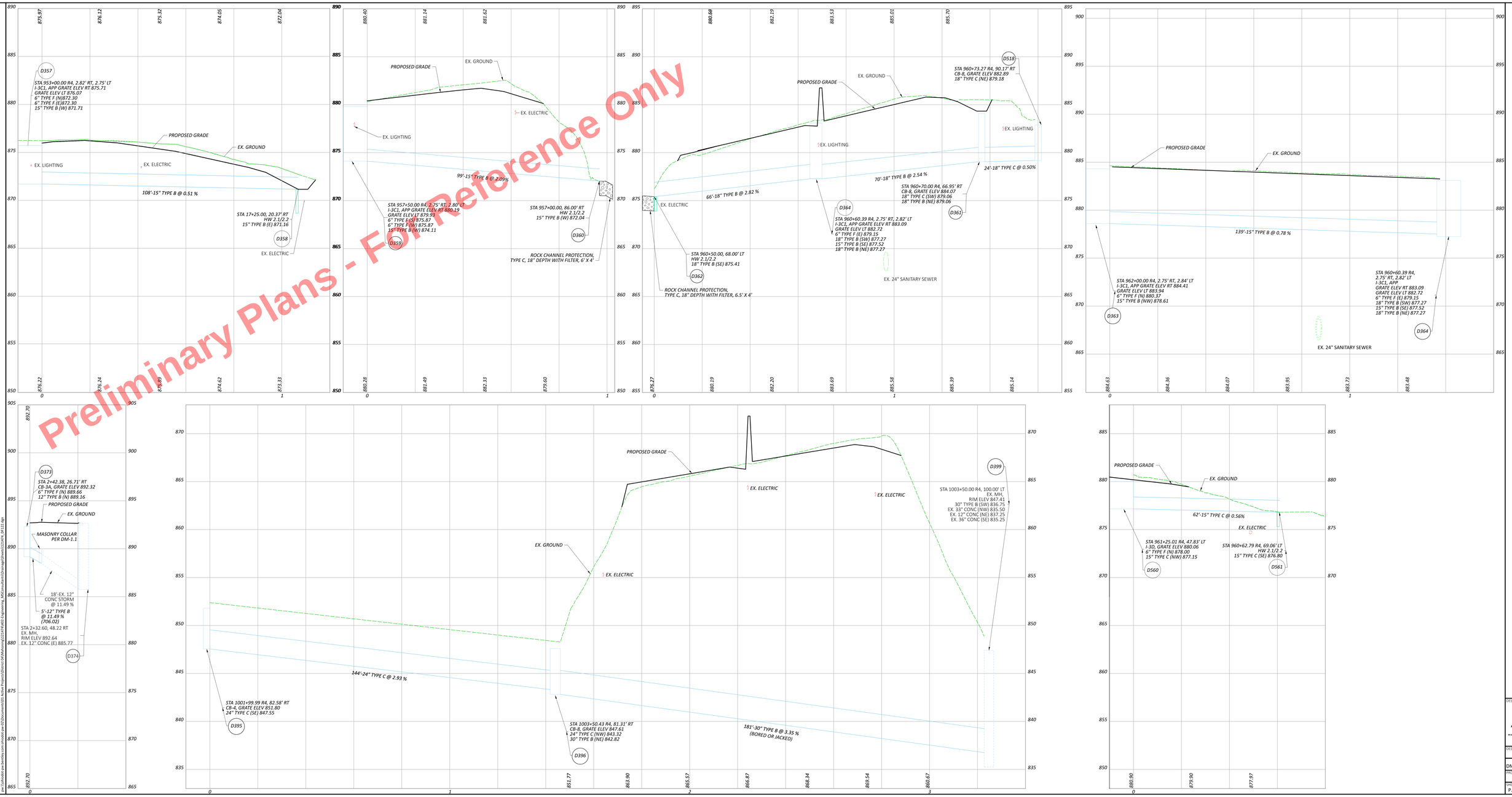

Preliminary Plans - For Reference Only

MAH-680-4.58

MODEL: 11311_CP121 (MYRTDGE) (64.64 in) DATE: 8/15/2025 TIME: 10:17:32 AM USER: dhall
FILE: C:\Users\dhall\Mead & Hunt, Inc\Myrtle Edge - 121474\ROAD Engineering_MEConsultants\Drainage\Sheets\121474_SP122.dgn

STORM SEWER PROFILES
I.R. 680, RAMP G

DESIGN AGENCY
mh consultants, inc.

DESIGNER
JDT

REVIEWER
DNO 12/15/23

PROJECT ID
121474

SHEET P.377 TOTAL 655

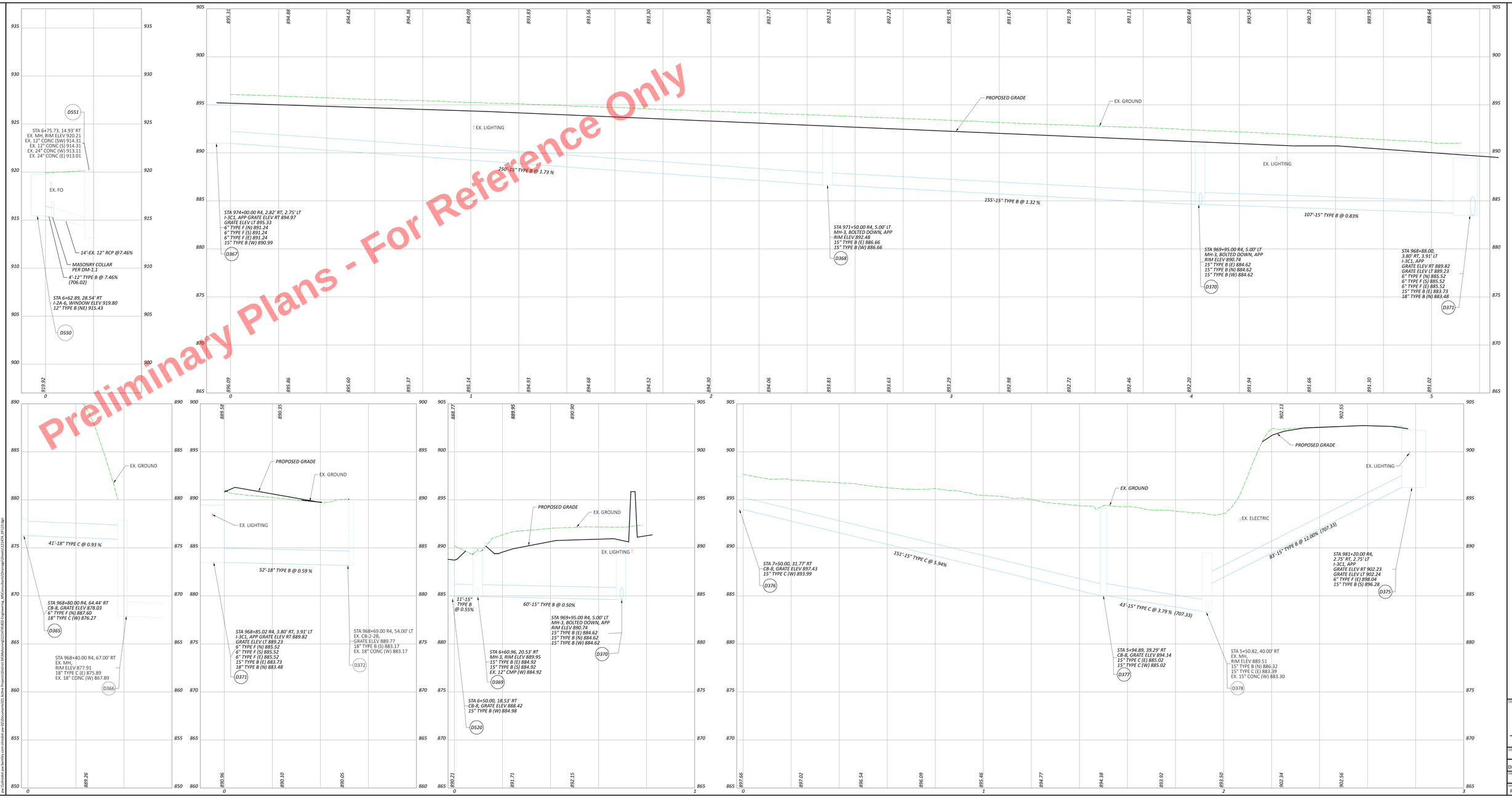

Preliminary Plans - For Reference Only

STORM SEWER PROFILES
I.R. 680, RAMP F, RAMP G, MAHONING AVE.

MAH-680-4.58

MODEL: 11X17L (24 LS) PAPERSIZE: 66x34 (in) DATE: 8/15/2025 TIME: 10:17:40 AM USER: dhall
N:\2024\PROJECTS\121474\ROADWAY\Engineering_MS\Consultants\Drainage\Sheets\121474_SP1F31.dgn

DESIGN AGENCY
ms consultants, inc.
DESIGNER JDT
REVIEWER DNO 12/15/23
PROJECT ID 121474
SHEET P.378 TOTAL 655



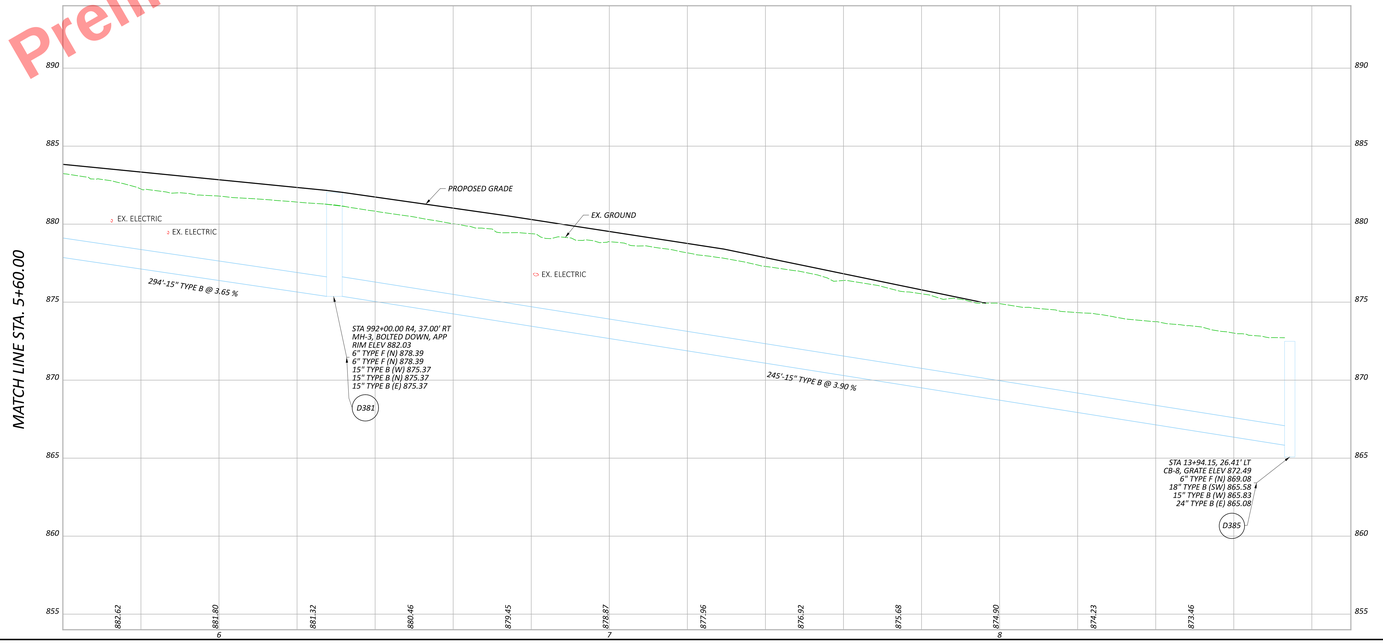

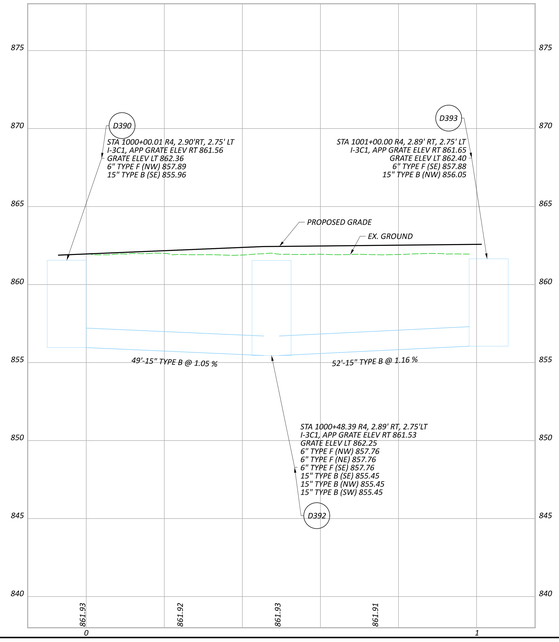

Preliminary Plans - For Reference Only

STORM SEWER PROFILES
I.R. 680

MAH-680-4.58

MODEL: 11311_CP1A_PAVEMENT_68x34.DGN | DATE: 8/15/2025 TIME: 10:34:52 AM USER: dhall
M:\Projects\Mahoning\680\Design\Roadway\Plans\Profiles\121474\MS Engineering_MSConsultants\Drainage\Sheets\121474_SP1A1A.dgn

DESIGN AGENCY
ms consultants, inc.
DESIGNER
JDT
REVIEWER
DNO 12/15/23
PROJECT ID
121474
SHEET P.379 TOTAL 655

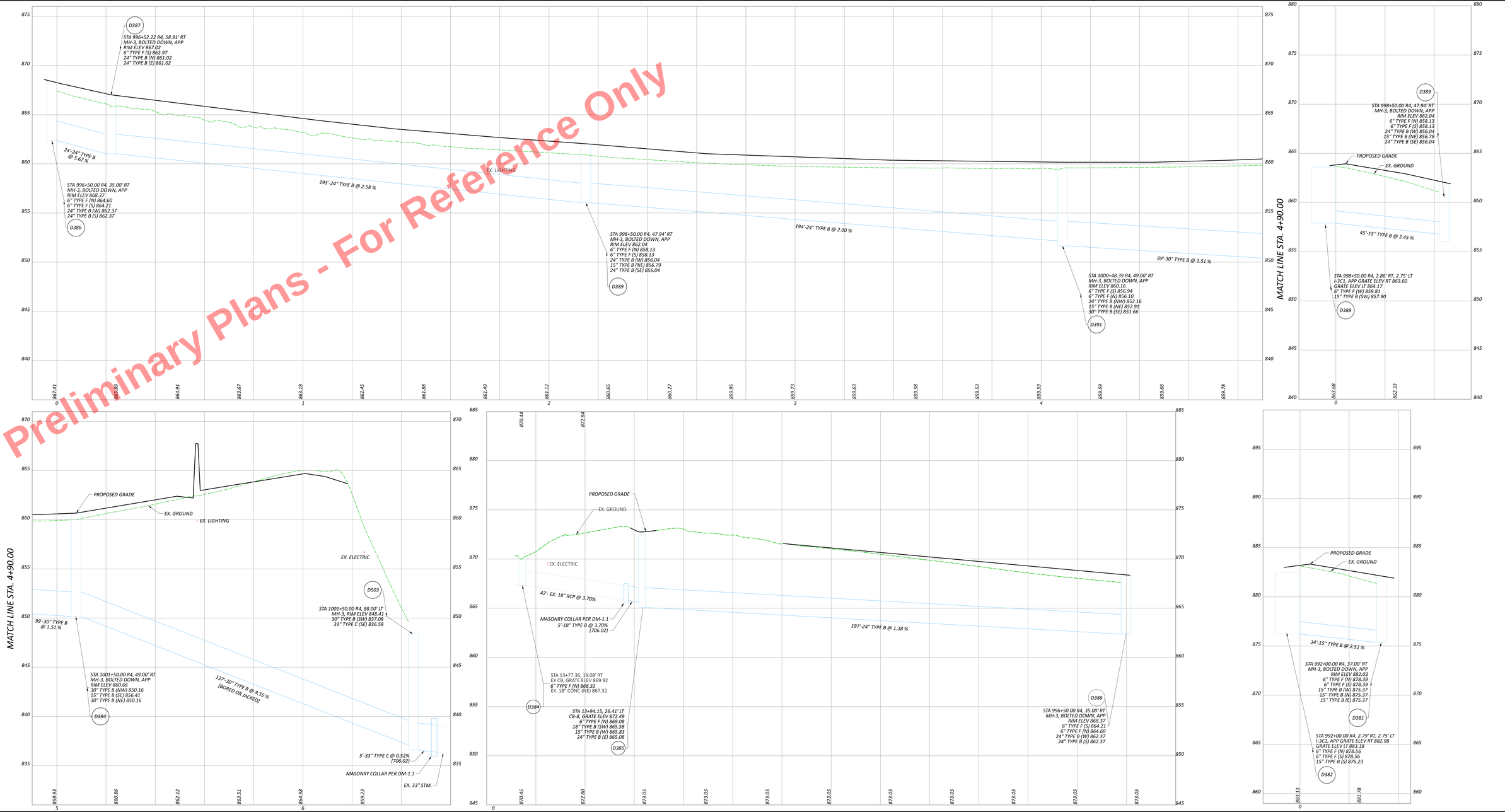

Preliminary Plans - For Reference Only

STORM SEWER PROFILES
I.R. 680, RAMP H

MAH-680-4.58

MODEL: 11X17L (24'X11') PAPERSIZE: 66x34 (in) DATE: 12/15/2023 TIME: 10:27:04 AM USER: dhall
M:\Projects\121474\MS Consultants\Civil\Drawings\Sheets\121474_SP125.dgn

DESIGN AGENCY
ms consultants, inc.
DESIGNER JDT
REVIEWER DNO 12/15/23
PROJECT ID 121474
SHEET P.380 TOTAL 655



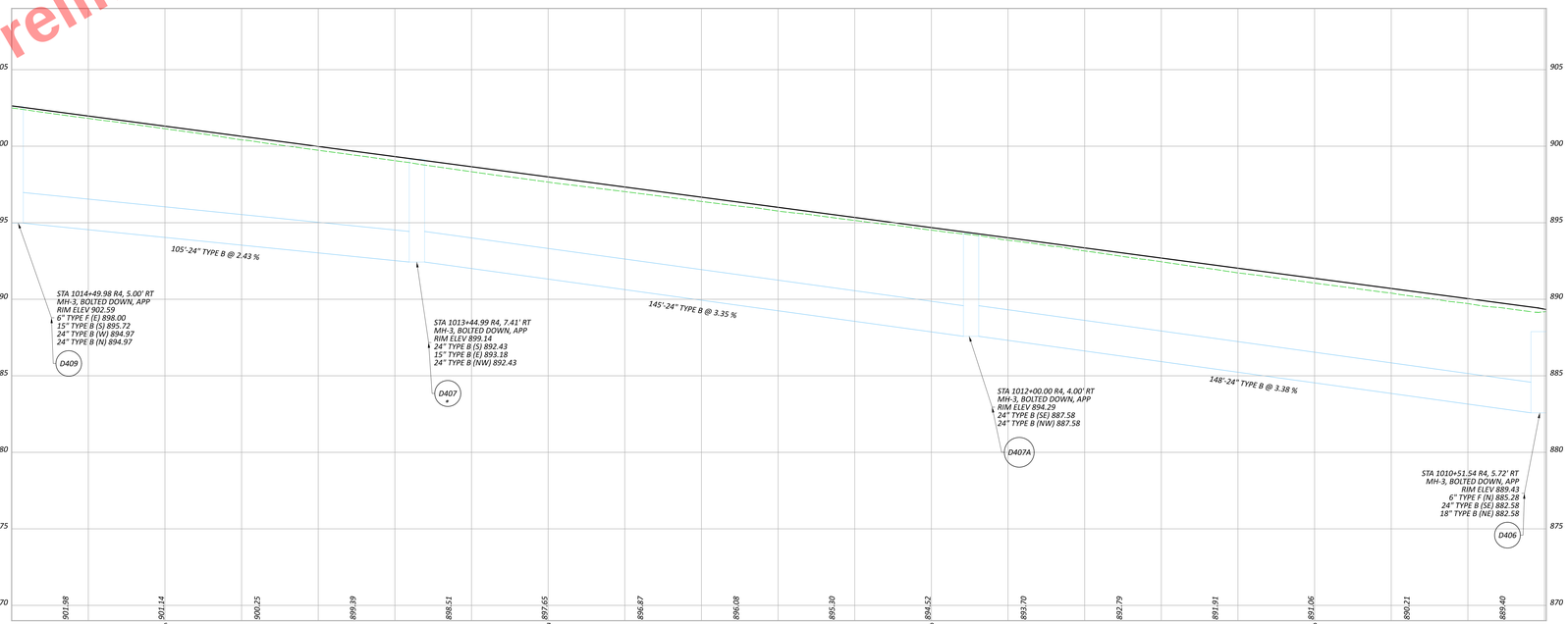

Preliminary Plans - For Reference Only

STORM SEWER PROFILES
I.R. 680

* ENSURE THAT MANHOLE D407 IS ROTATED SO THAT THE LID IS COMPLETELY WITHIN THE ROADWAY SHOULDER

MAH-680-4.58

MODEL: 113121_DF127 PREPARED: 06-14-(m.) DATE: 9/15/2025 TIME: 10:28:14 AM USER: dhall
pw:\\ohiodot-pw.bentley.com:ohiodot-pw-02\Documents\01 Active Projects\District 04\Mahoning\121474\402-Engineering_MSConsultants\Drainage\Sheets\121474_DF127.dgn

DESIGN AGENCY
msconsultants, inc.

DESIGNER
JDT

REVIEWER
DNO 12/15/23

PROJECT ID
121474

SHEET P.381 TOTAL 655

Preliminary Plans - For Reference Only

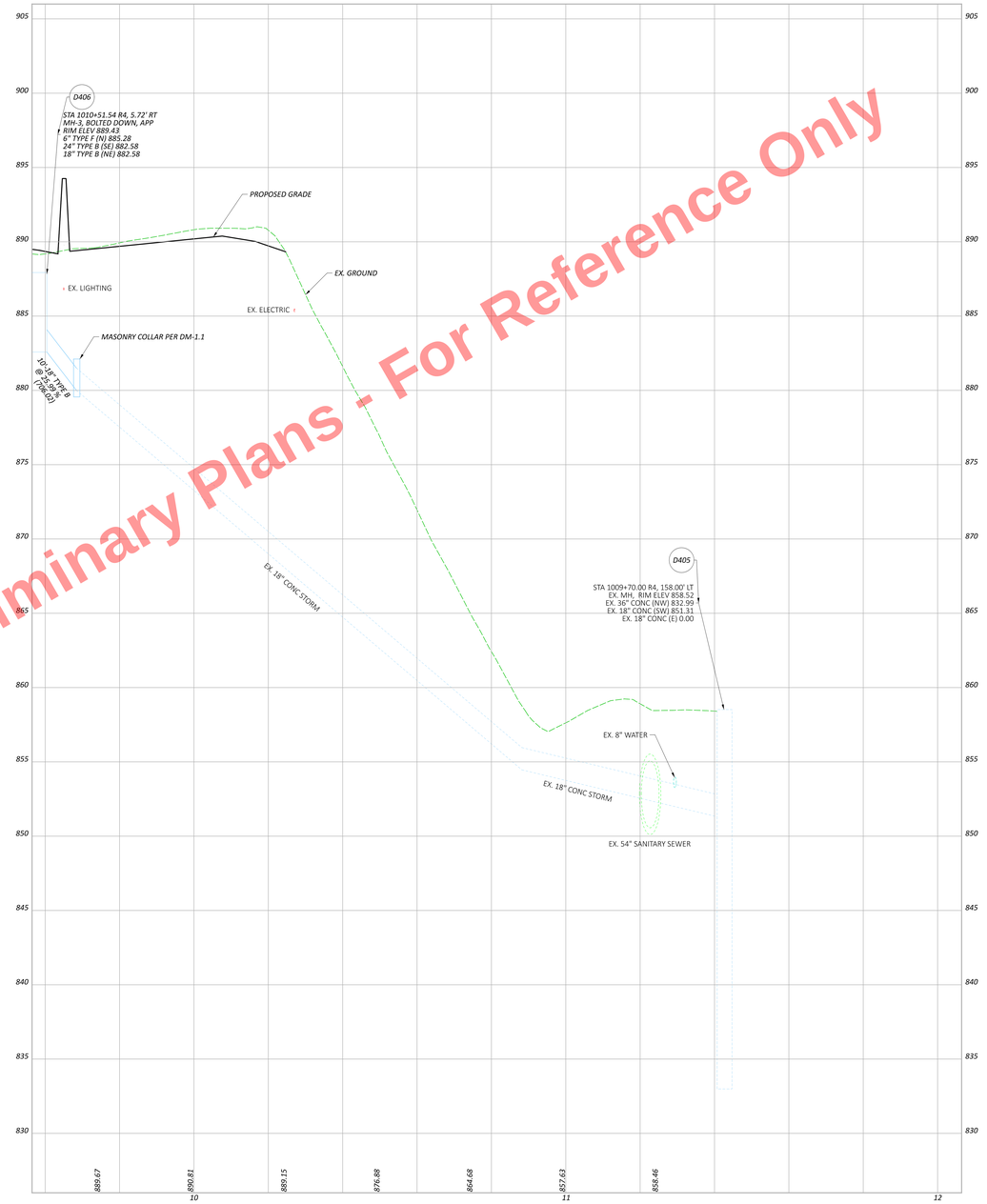

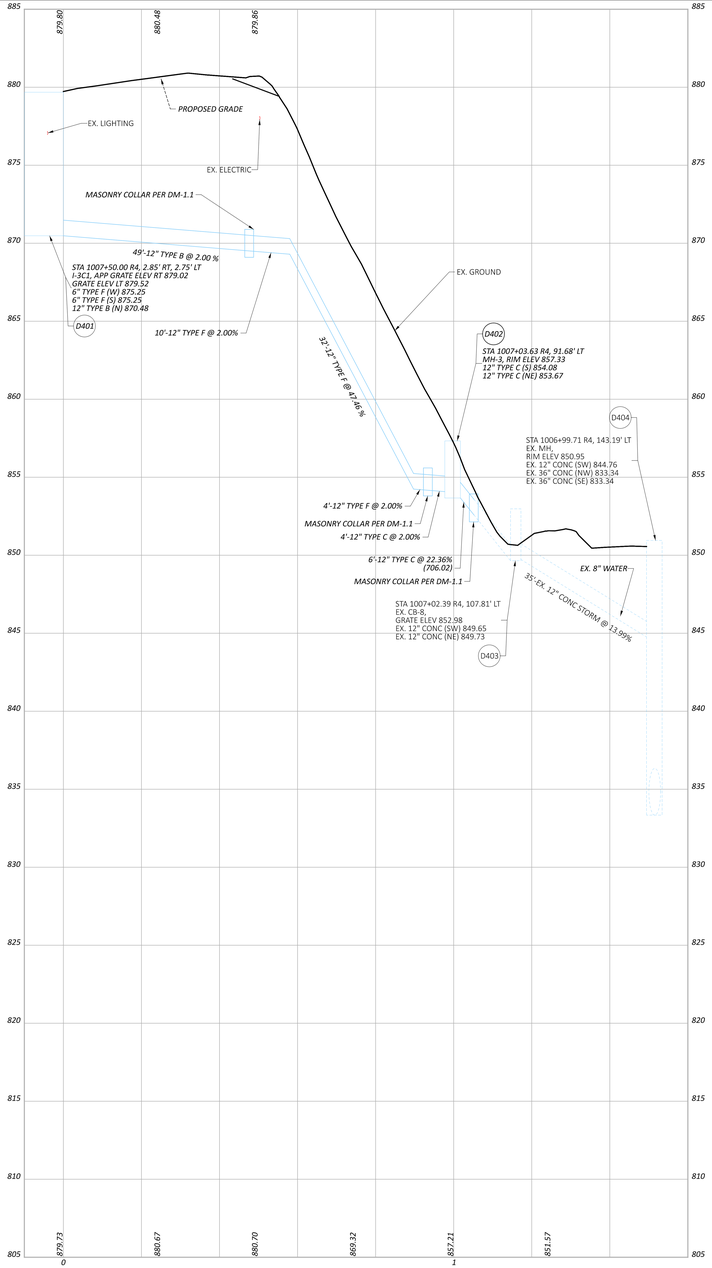

MAH-680-4.58

STORM SEWER PROFILES
I.R. 680

DESIGN AGENCY
mn consultants, inc.

DESIGNER: JDT
REVIEWER: DNO 12/15/23
PROJECT ID: 121474
SHEET: P.382 TOTAL: 655

MODEL: 11X17L (24 lb) PAPERSIZE: 66x34 (in) DATE: 8/15/2025 TIME: 10:36:23 AM USER: dhall
M:\Civil\121474\MS Consultants\Roadway\Sheets\121474_SP128.dgn

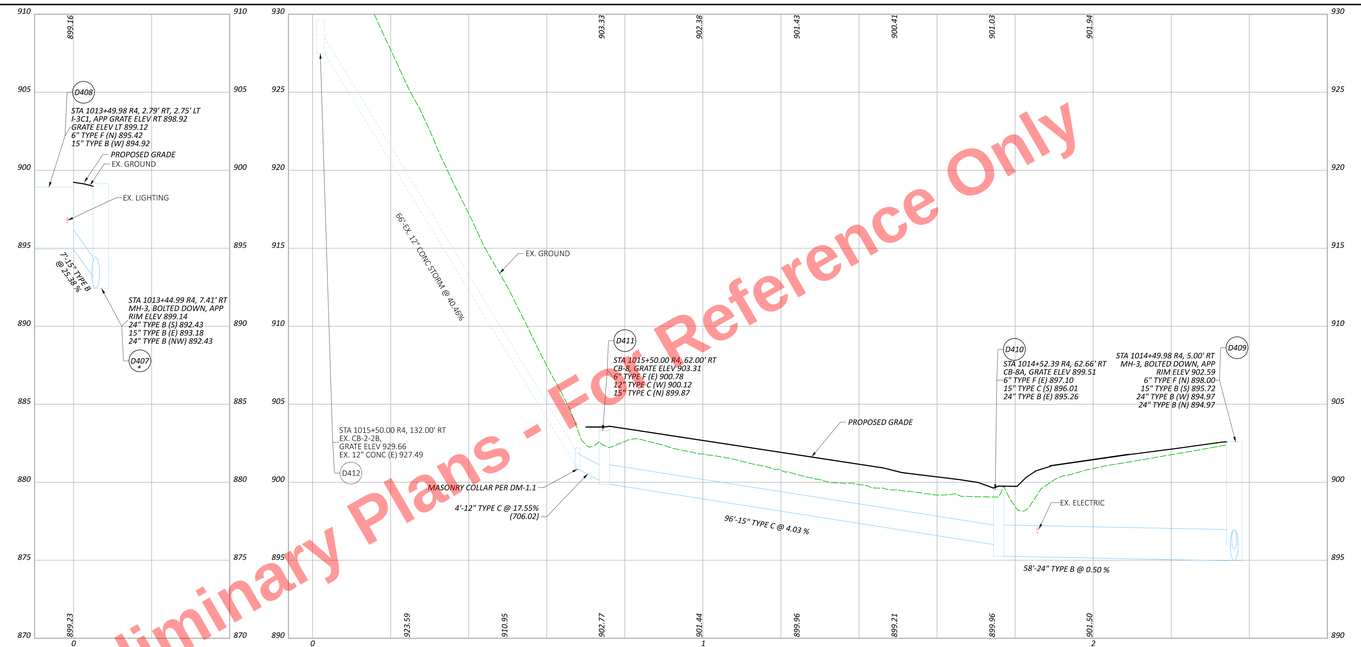

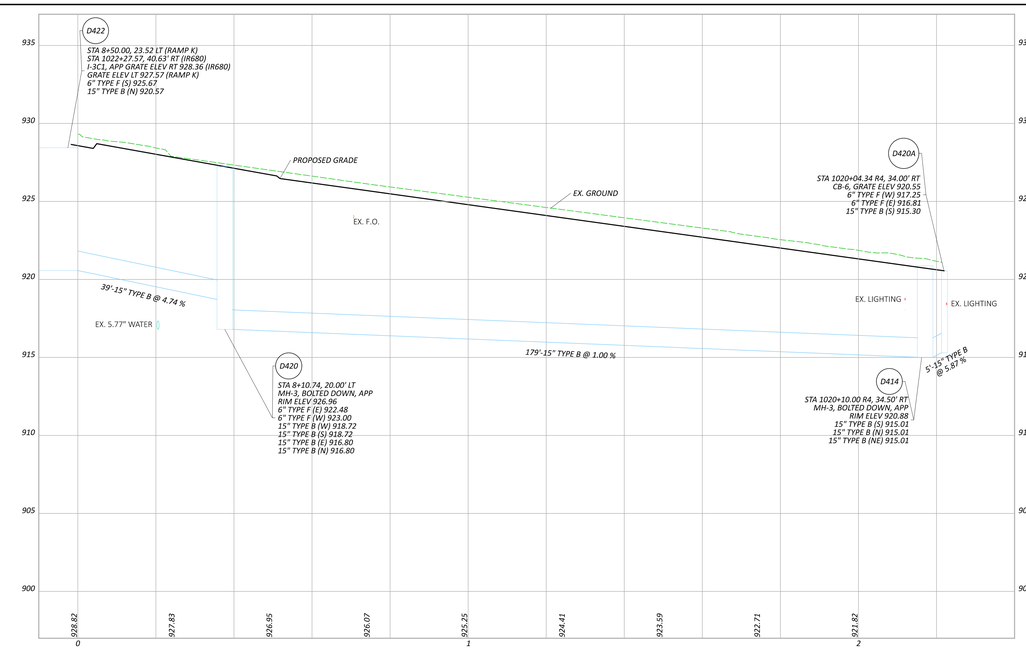

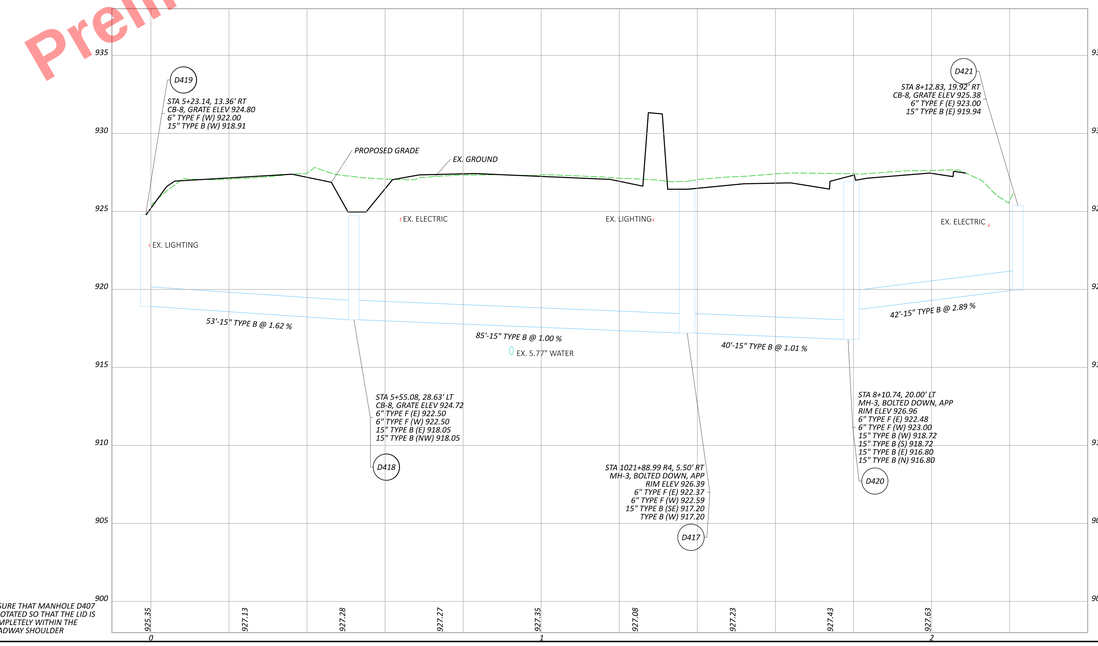

* ENSURE THAT MANHOLE D407 IS ROTATED SO THAT THE LID IS COMPLETELY WITHIN THE ROADWAY SHOULDER

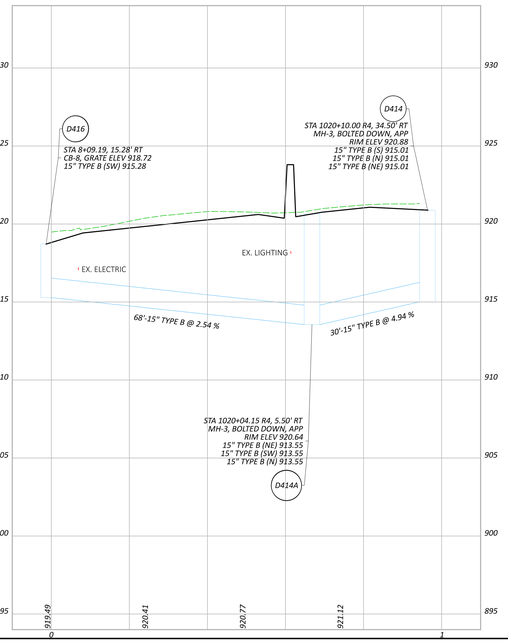

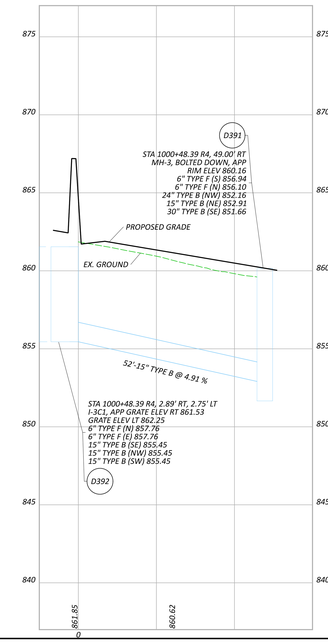

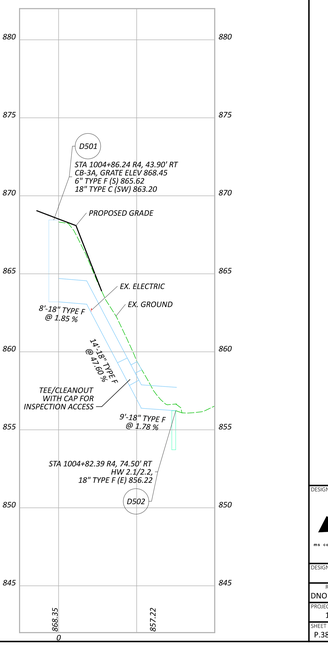

Preliminary Plans - For Reference Only

STORM SEWER PROFILES
I.R. 680, RAMP K, RAMP L

MAH-680-4.58

MODEL: 11X17L (24 LB) PAPERSIZE: 66x34 (IN) DATE: 8/15/2025 TIME: 10:29:29 AM USER: dhall
N:\Projects\Mahoning County\680\MAH-680-4.58\121474\ARD\Engineering_MS\Consultants\Drainage\Sheets\121474_QP129.dgn

DESIGN AGENCY
ms consultants, inc.
DESIGNER JDT
REVIEWER DNO 12/15/23
PROJECT ID 121474
SHEET P.383 TOTAL 655



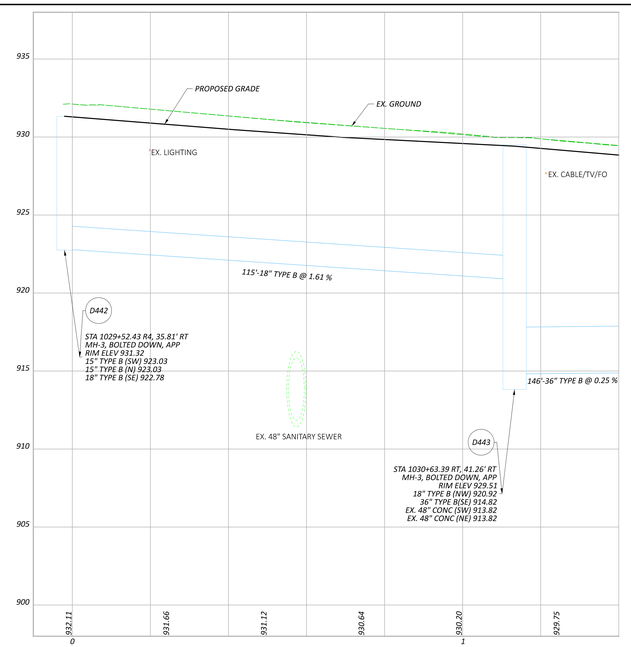

MATCHLINE STA. 1+40.00

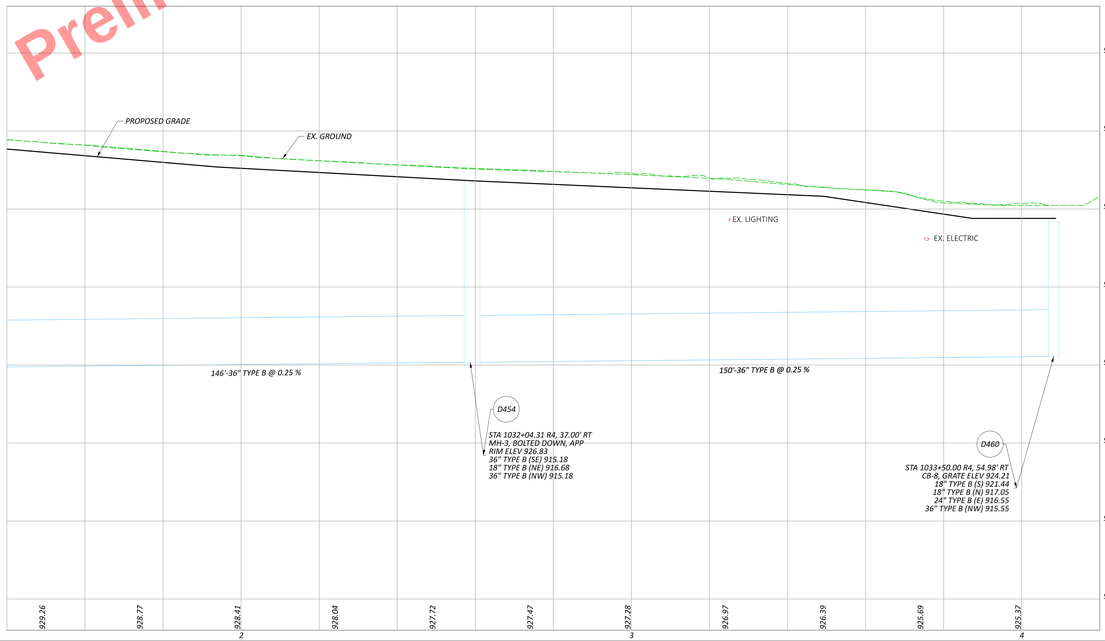

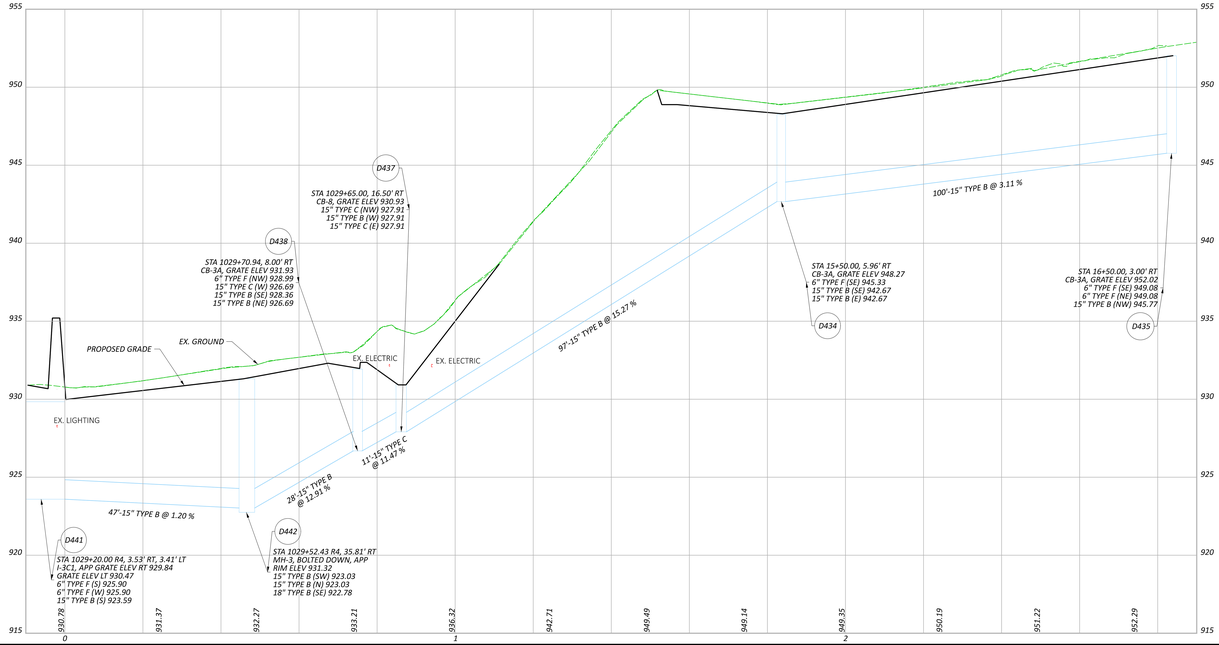

MATCHLINE STA. 1+40.00

STORM SEWER PROFILES
I.R. 680, RAMP K

Preliminary Plans - For Reference Only

MAH-680-4.58

DESIGN AGENCY
ms consultants, inc.
DESIGNED JDT
REVIEWED DNO 12/15/23
PROJECT ID 121474
SHEET P.384 TOTAL 655

MODEL: 11X17L (24 bit) DATE: 8/15/2025 TIME: 10:29:51 AM USER: dhall
M:\Projects\Mahoning County\MAH-680-4.58\121474\ROADS\Engineering_MSConsultants\Drawings\Sheets\121474_SP131.dgn

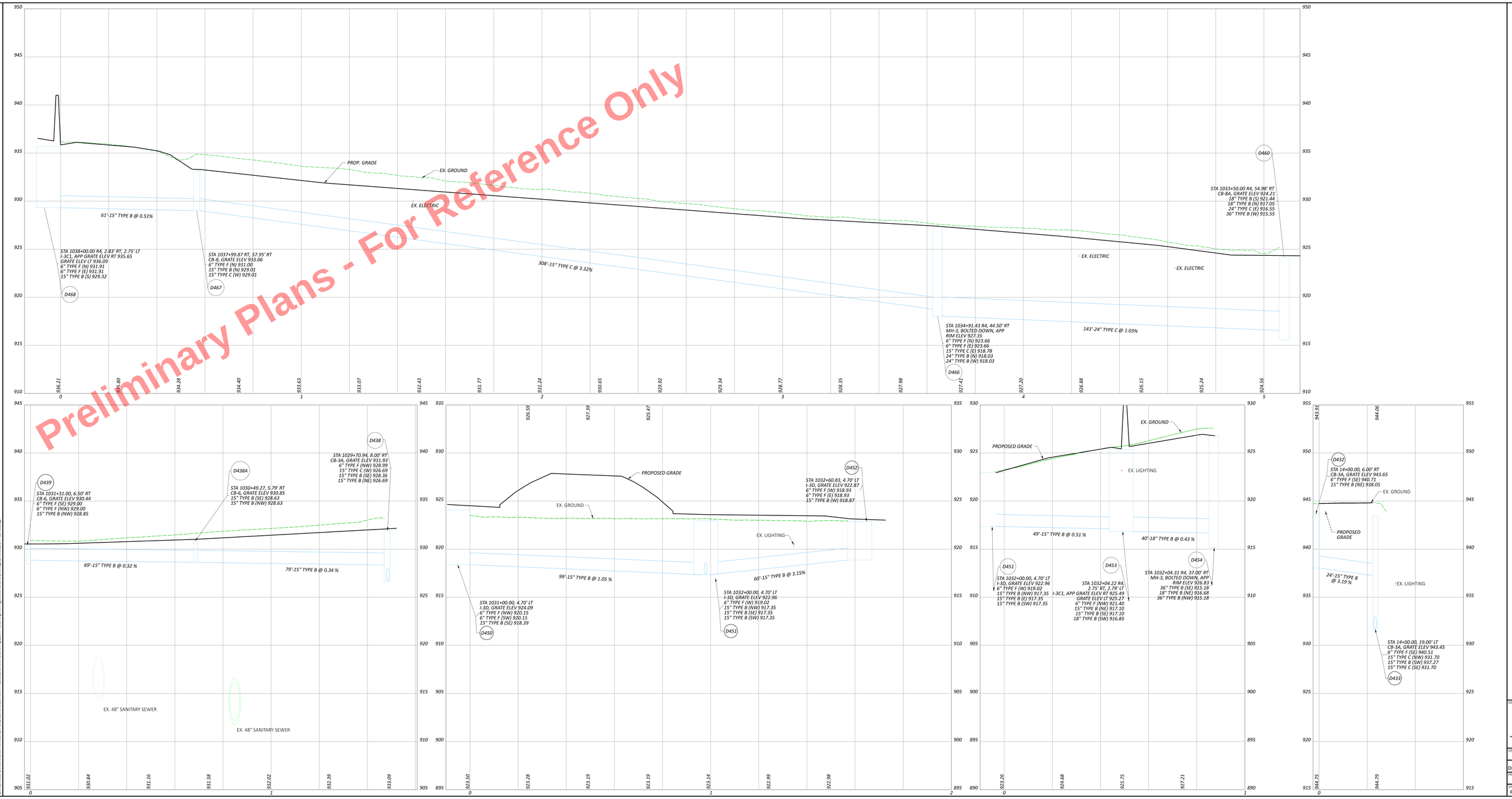

STORM SEWER PROFILES
I.R. 680, RAMP K, RAMP M, RAMP N

MAH-680-4.58

DESIGN AGENCY
mn consultants, inc.

DESIGNER
JDT

REVIEWER
DNO 12/15/23

PROJECT ID
121474

SHEET P.385 TOTAL 655

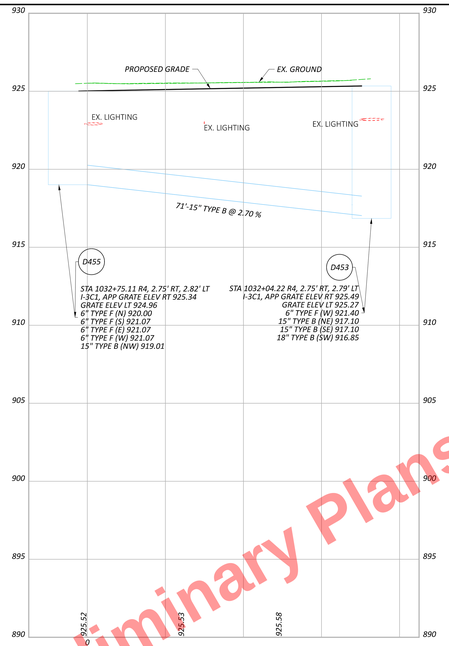

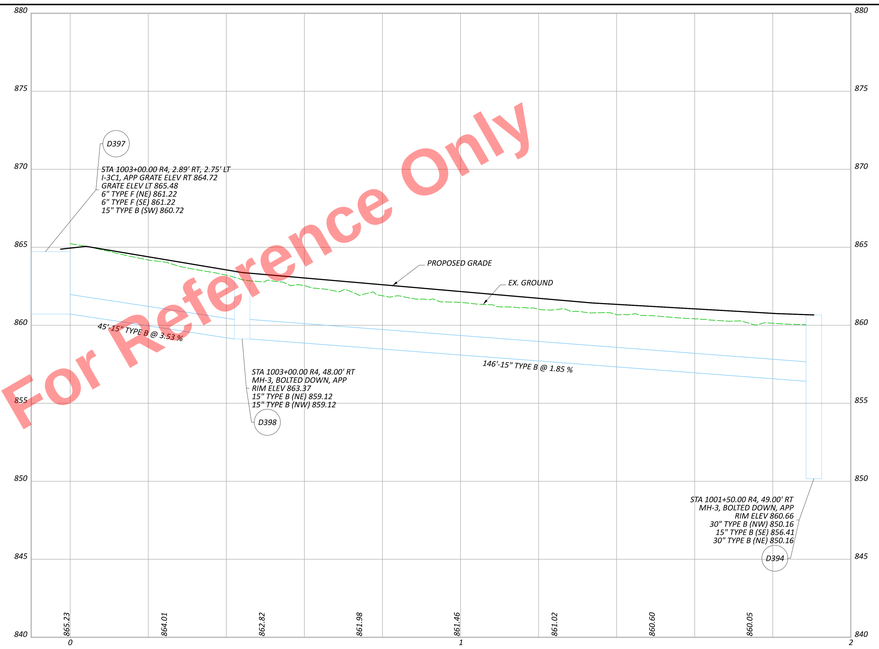

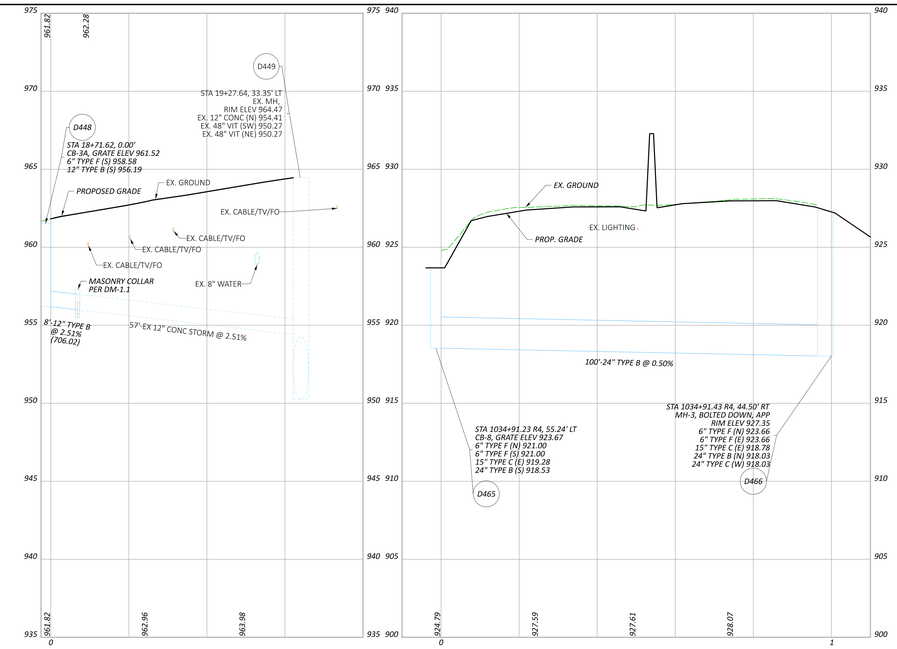

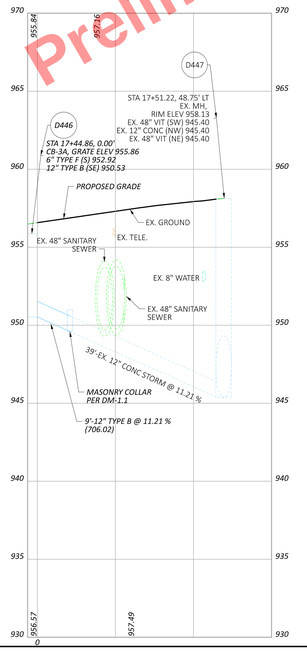

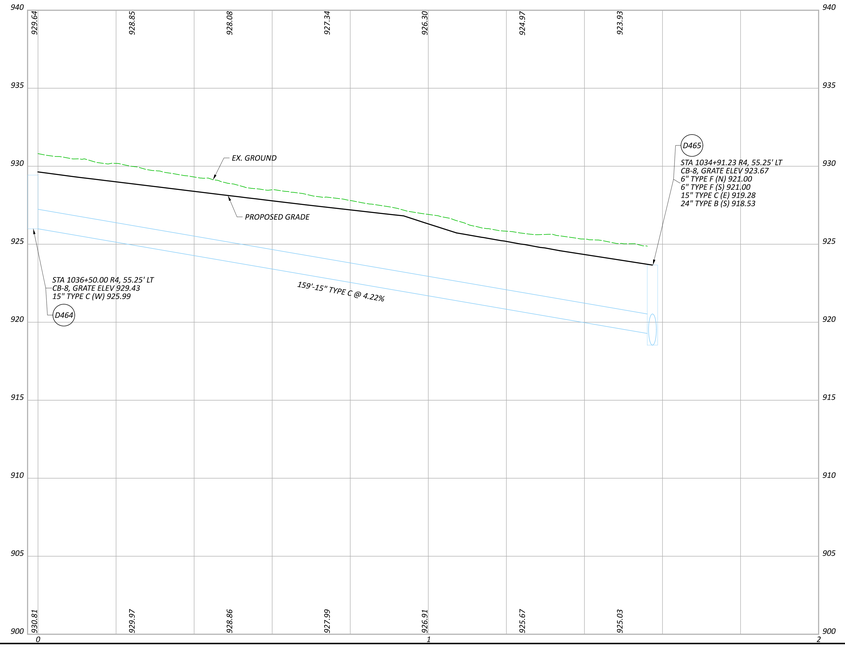

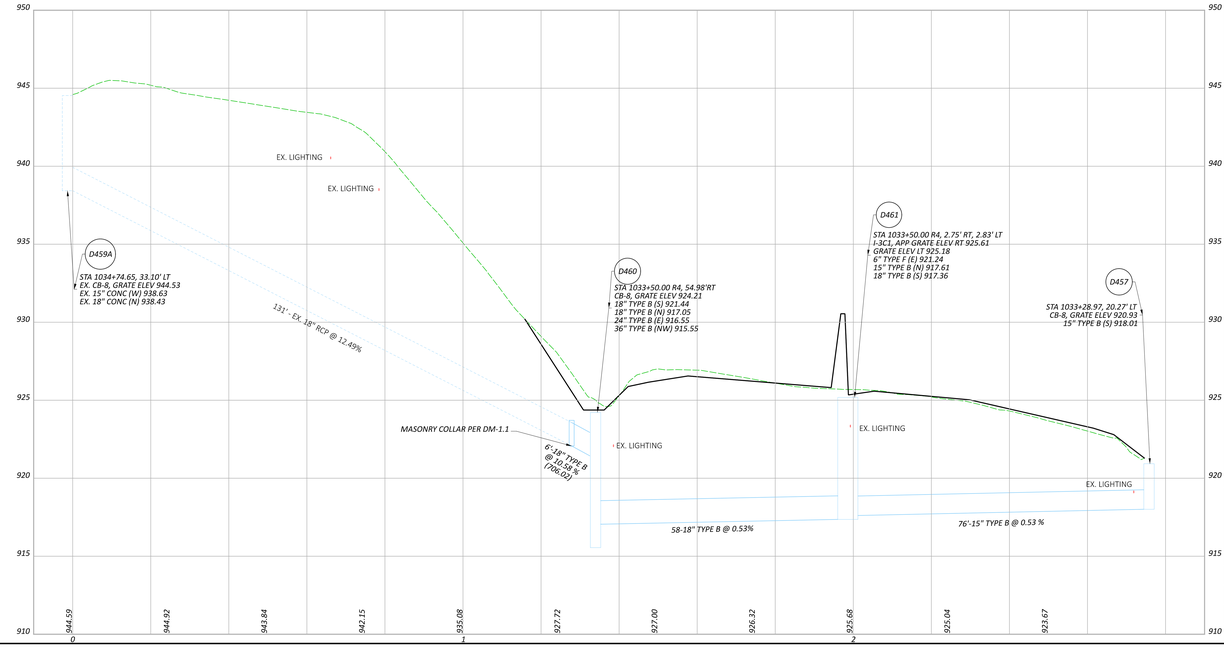

Preliminary Plans - For Reference Only

STORM SEWER PROFILES
I.R. 680, RAMP K

MAH-680-4.58

MODEL: 11X17L (24.5) DATE: 8/15/2025 TIME: 10:31:50 AM USER: dhall
N:\ROAD\Projects\Mahoning Co\680-4.58 Ramp K Improvement\Roadway\Design\Sheets\121474_DF131.dgn

DESIGN AGENCY
ms consultants, inc.
DESIGNER
JDT
REVIEWER
DNO 12/15/23
PROJECT ID
121474
SHEET P.386 TOTAL 655

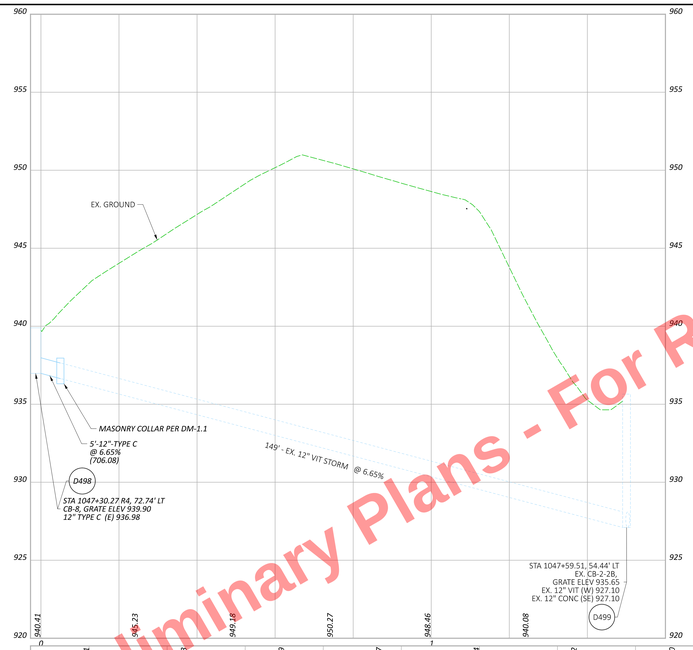

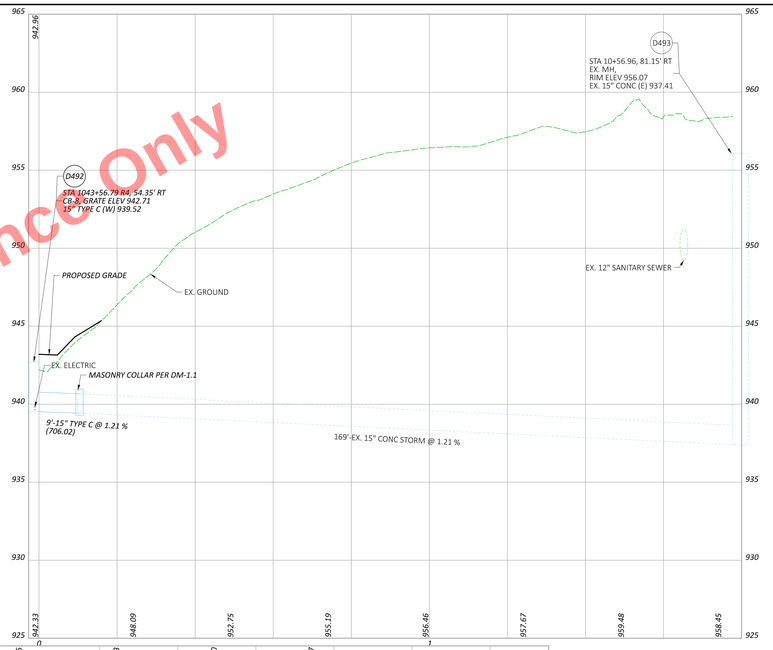

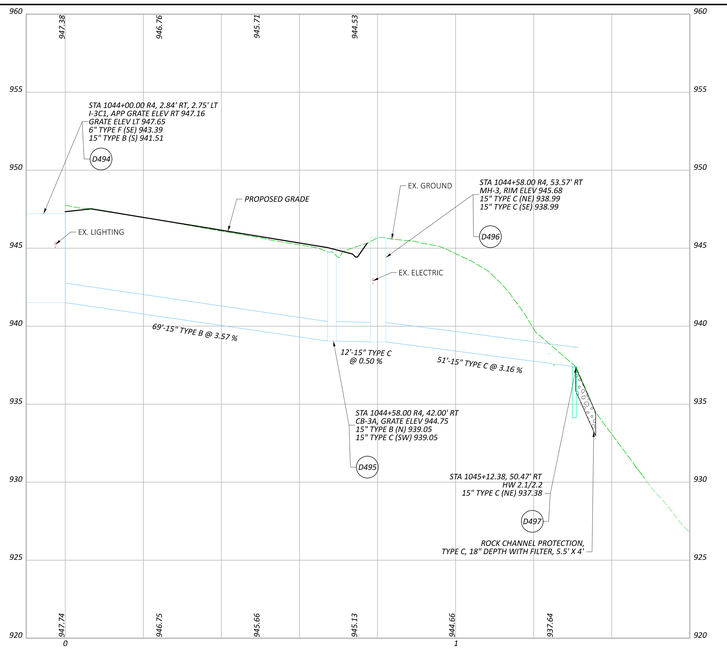

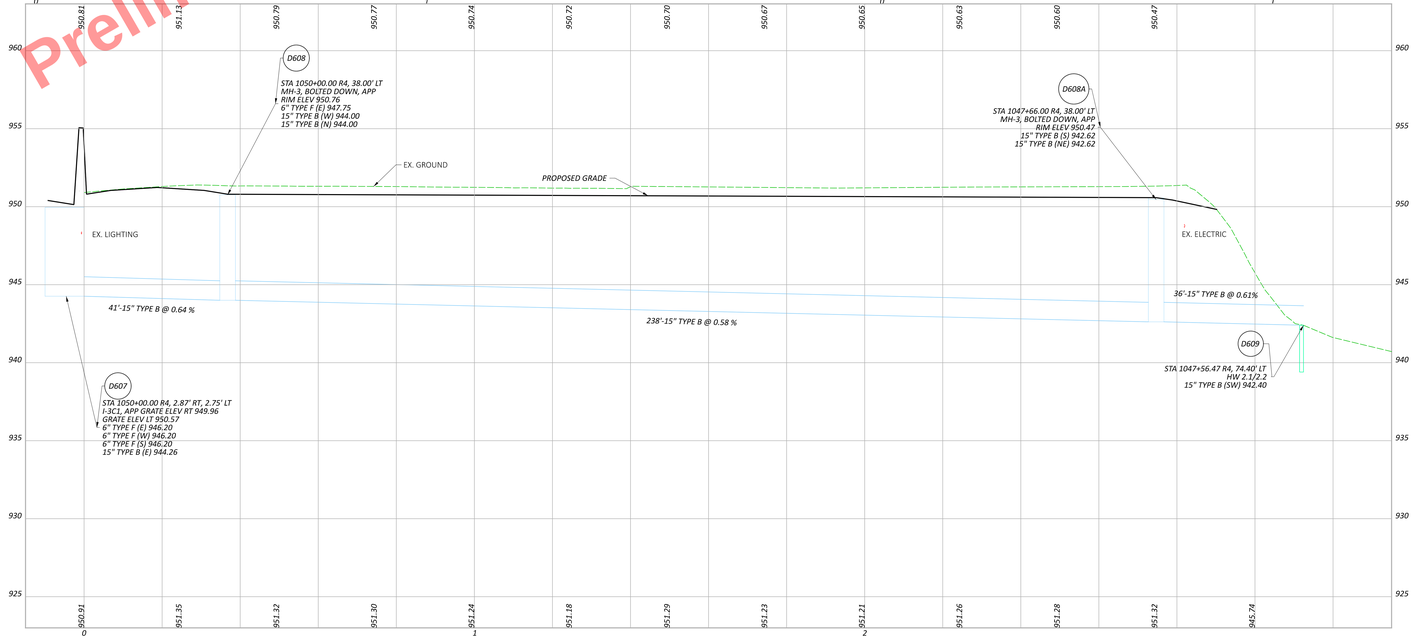

Preliminary Plans - For Reference Only

STORM SEWER PROFILES
I.R. 680

MAH-680-4.58

MODEL: 11X17L (24.5) DATE: 8/15/2025 TIME: 10:53:59 AM USER: dhall
M:\Civil 3D Projects\Roadway\MAH-680-4.58\Plans\Sheets\121474_XP136.dgn

DESIGN AGENCY
mb consultants, inc.
DESIGNER JDT
REVIEWER DNO 12/15/23
PROJECT ID 121474
SHEET P.387 TOTAL 655

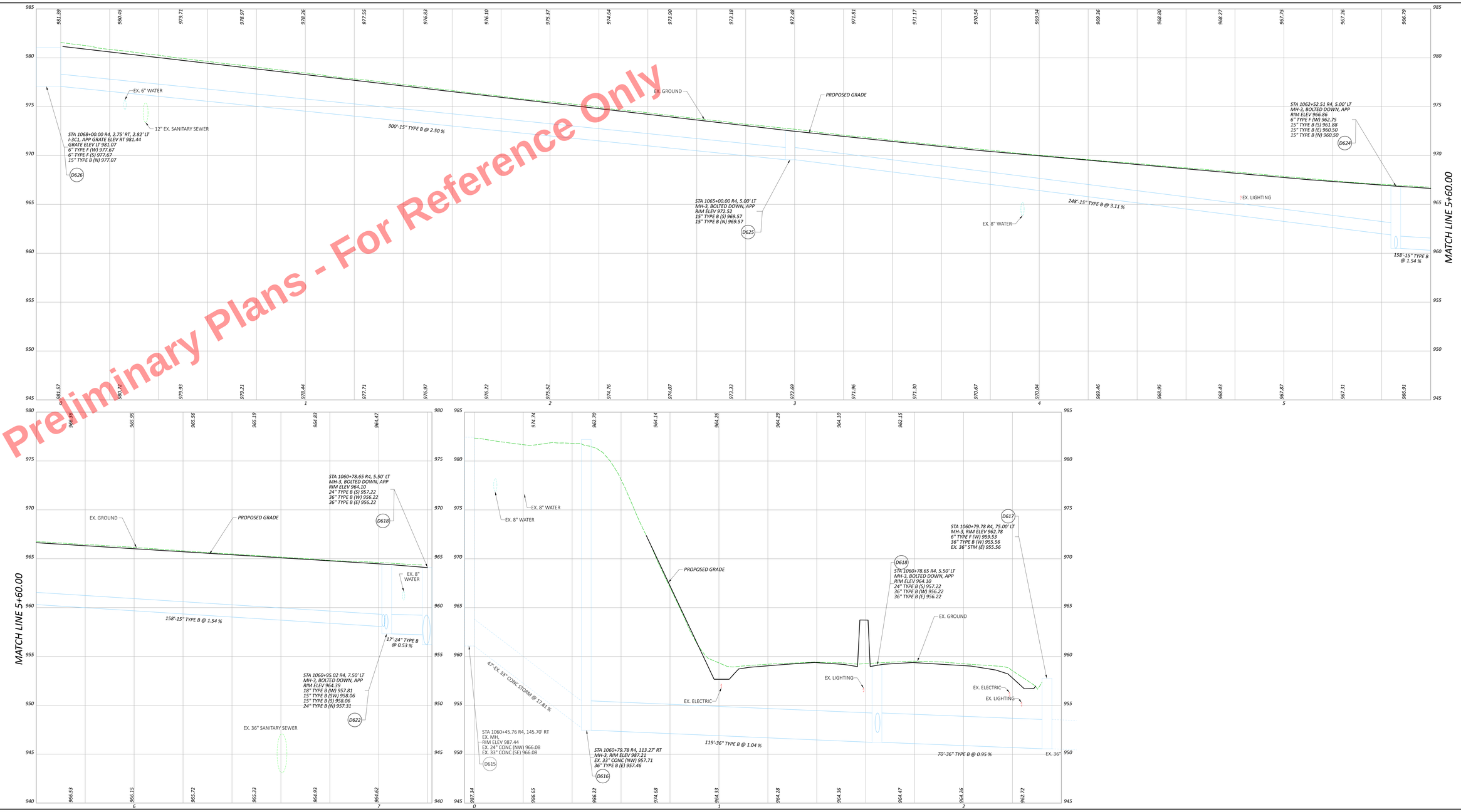

Preliminary Plans - For Reference Only

STORM SEWER PROFILES
I.R. 680

MAH-680-4.58

MODEL: 11X17L (SF15B_PAPERSIZE_66x34.DGN) DATE: 8/15/2025 TIME: 10:34:14 AM USER: dhall
M:\ODOT\Projects\Mahoning\MAH-680-4.58\121474\680_Engineering_MSConsultants\Drawings\Sheets\121474_SF15B.dgn

DESIGN AGENCY
ms consultants, inc.
DESIGNER JDT
REVIEWER DNO 12/15/23
PROJECT ID 121474
SHEET P.388 TOTAL 655

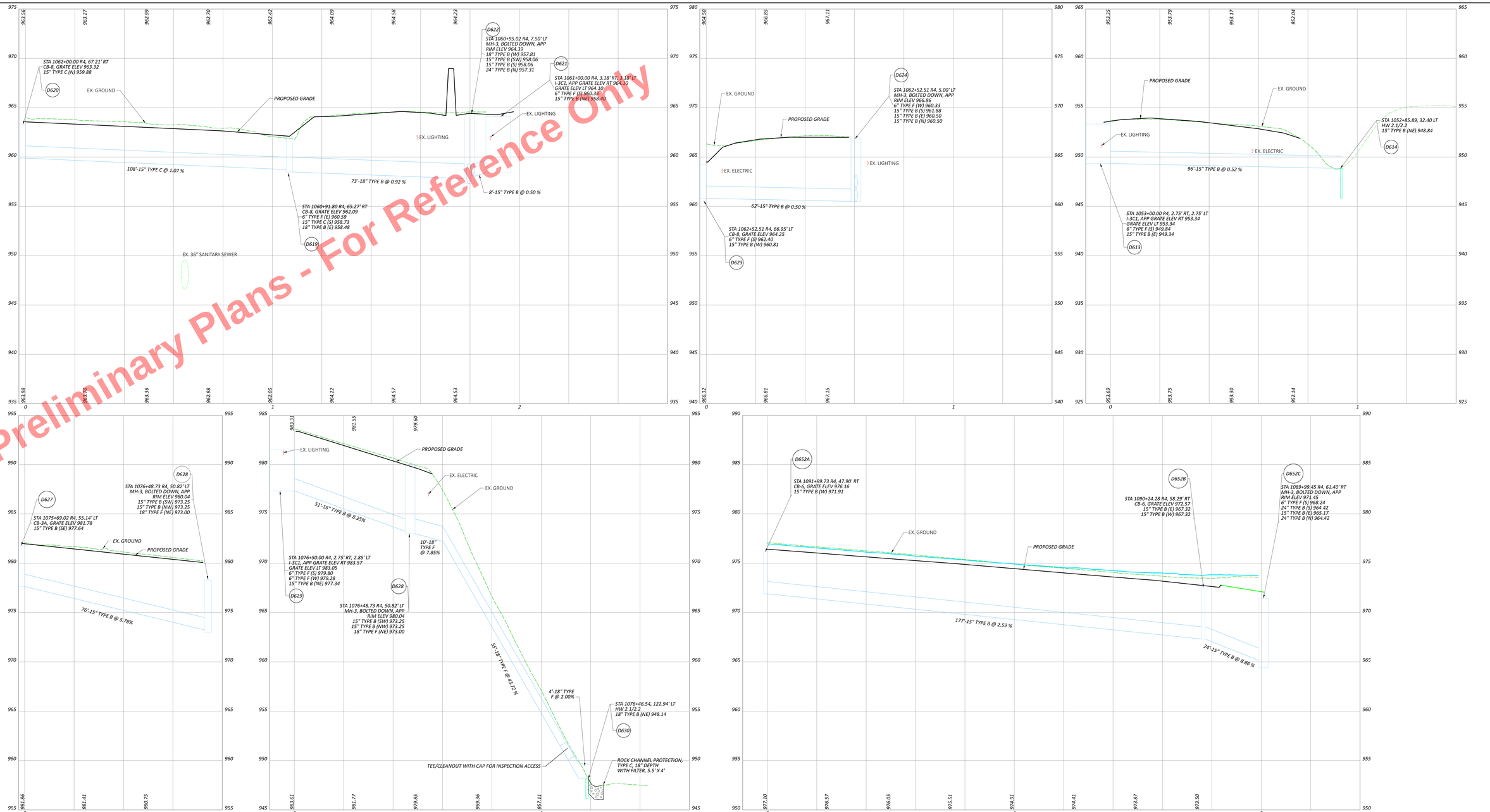

Preliminary Plans - For Reference Only

MAH-680-4.58

MODEL: 11X17L_DF139_PAYROAD_66x34.DGN | DATE: 8/15/2025 TIME: 10:37:21 AM USER: dhall
M:\Projects\Roadway\Mahoning\680\PID121474\ROADS\Engineering_MSConsultants\Drawings\Sheets\121474_DF139.dgn

STORM SEWER PROFILES
I.R. 680

DESIGN AGENCY
ms consultants, inc.

DESIGNED: JDT
REVIEWED: DNO 12/15/23
PROJECT ID: 121474
SHEET: P.389 TOTAL: 655

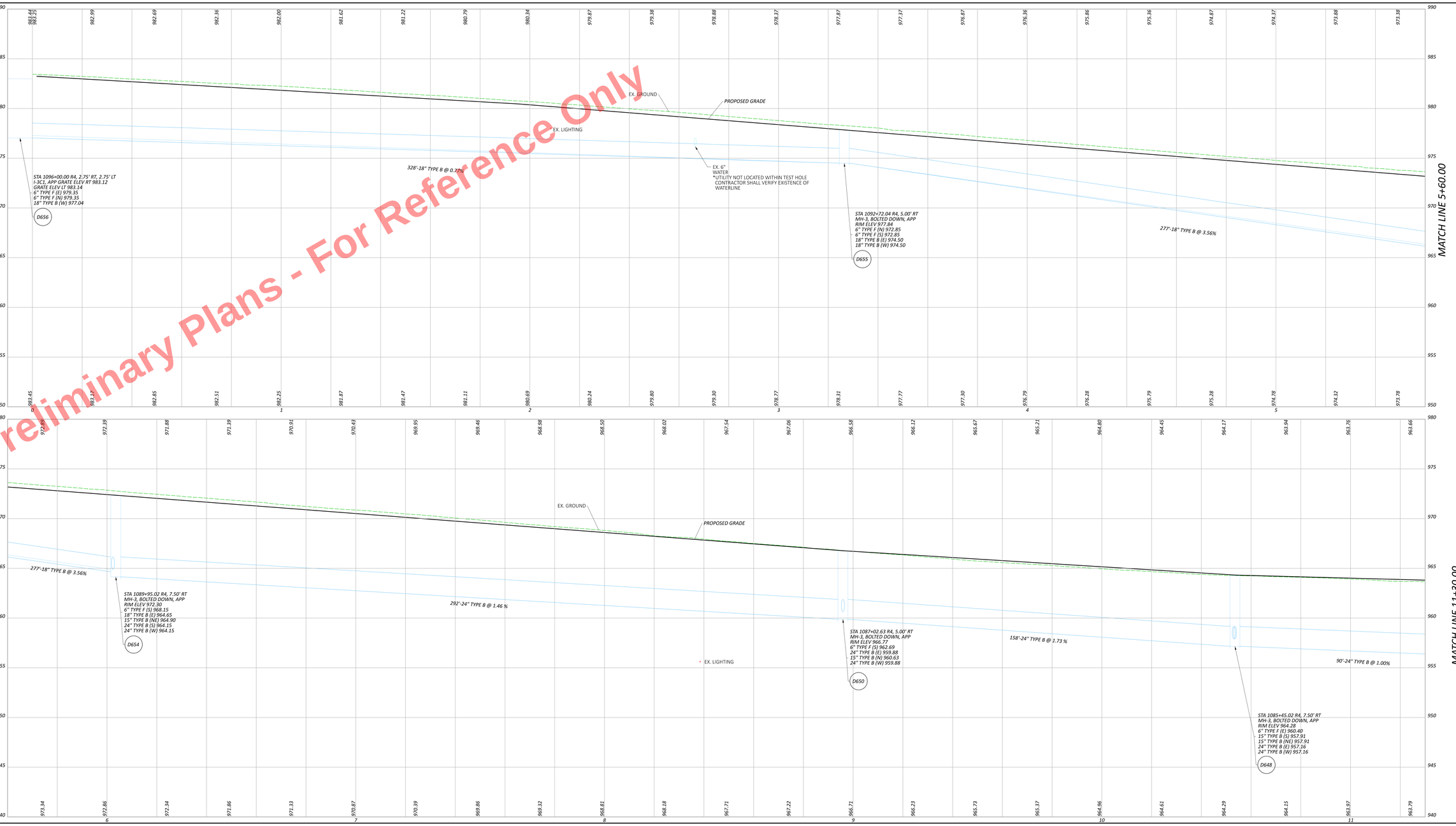

Preliminary Plans - For Reference Only

STORM SEWER PROFILES
I.R. 680

MAH-680-4.58

MODEL: 11X17_LP.tbl PAPERSIZE: 66.04 (in) DATE: 8/15/2025 TIME: 10:37:29 AM USER: dhall
M:\Projects\Mahoning\680\Design\Roadway\Sheets\121474_SP140.dgn

DESIGN AGENCY
ms consultants, inc.
DESIGNER
JDT
REVIEWER
DNO 12/15/23
PROJECT ID
121474
SHEET P.390
TOTAL 655

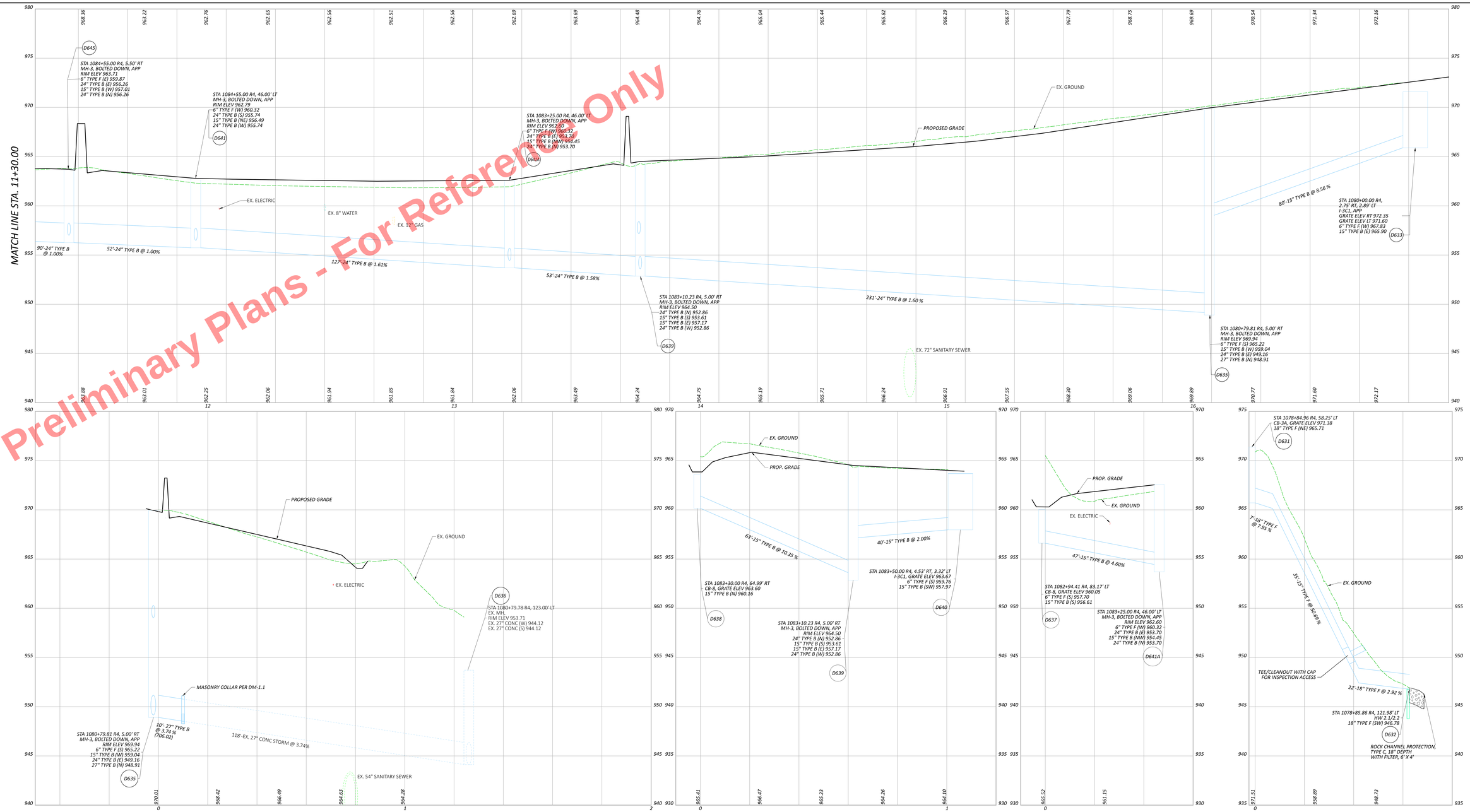

Preliminary Plans - For Reference Only

STORM SEWER PROFILES
I.R. 680

MAH-680-4.58

MODEL: 11311_DF141_PAVEMENT_ISA14.DGN | DATE: 8/15/2025 TIME: 10:44:52 AM USER: dhall
M:\Projects\Roadway\MAH-680-4.58\Design\Drawings\Sheets\121474_DF141.dgn

DESIGN AGENCY
ms consultants, inc.
DESIGNER
JDT
REVIEWER
DNO 12/15/23
PROJECT ID
121474
SHEET
P.391
TOTAL
655



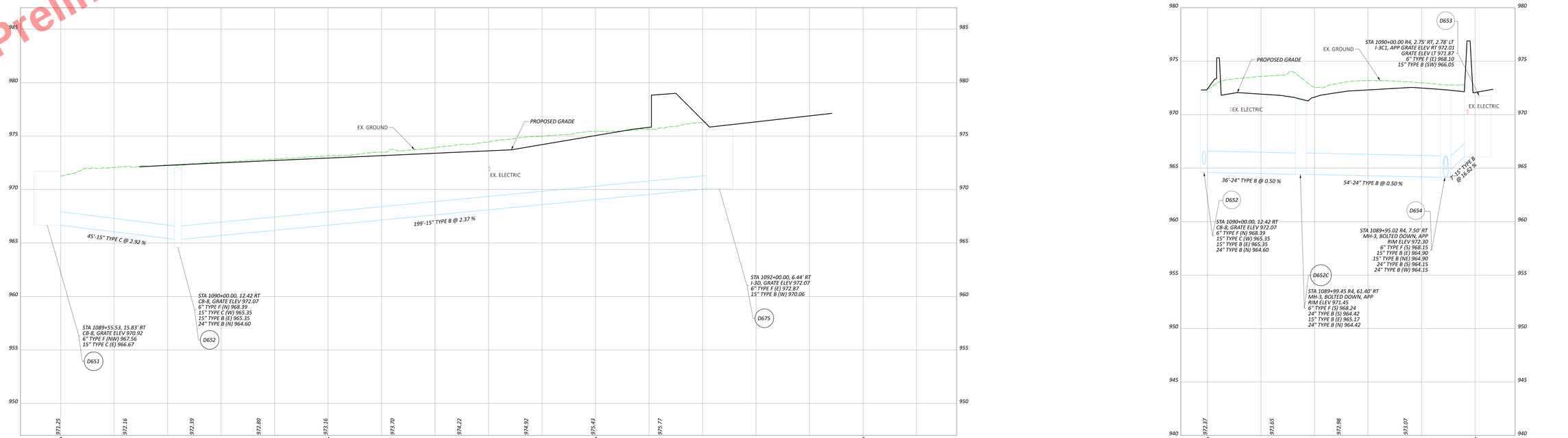

Preliminary Plans - For Reference Only

MAH-680-4.58

MODEL: 11X11, 24"x36", PAPERSIZE: 66x34 (in) DATE: 8/15/2025 TIME: 10:46:59 AM USER: dhall
N:\ROADS\Projects\MAH-680-4.58\Engineering_MS\Consultants\Drainage\Sheets\121474_DF141.dgn

STORM SEWER PROFILES
I.R. 680, RAMP A, RAMP B, RAMP C

DESIGN AGENCY
ms consultants, inc.

DESIGNER: JDT
REVIEWER: DNO 12/15/23
PROJECT ID: 121474
SHEET: P.392 TOTAL: 655

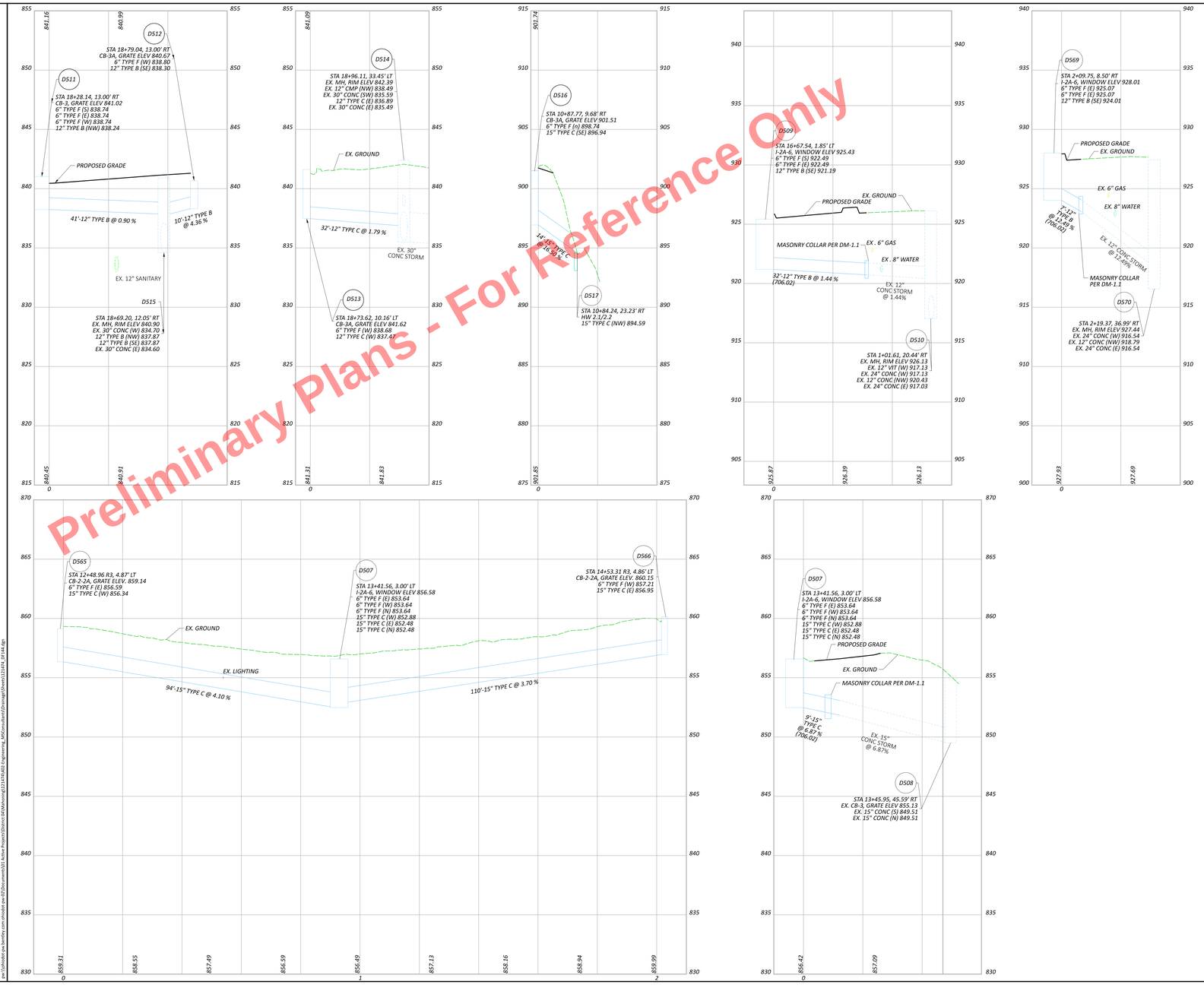

Preliminary Plans - For Reference Only

STORM SEWER PROFILES
I.R. 680, RAMP B-3, RAMP D, RAMP F, RAMP H, RAMP J

MAH-680-4.58

DESIGN AGENCY
mn consultants, inc.

DESIGNER
JDT

REVIEWER
DNO 12/15/23

PROJECT ID
121474

SHEET P.393 TOTAL 655

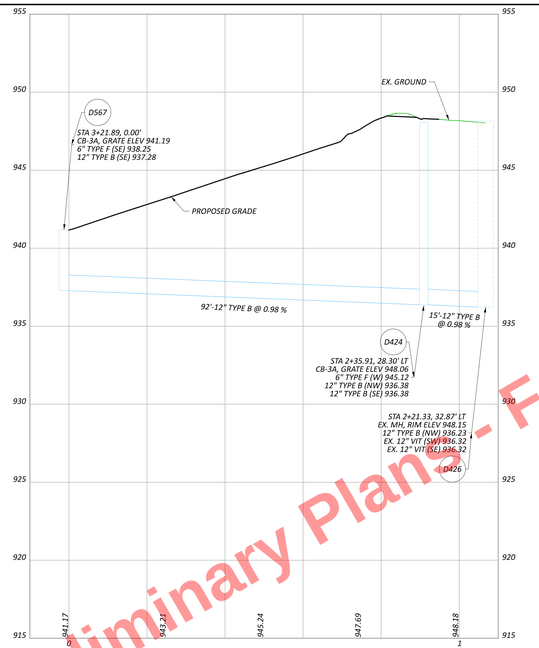

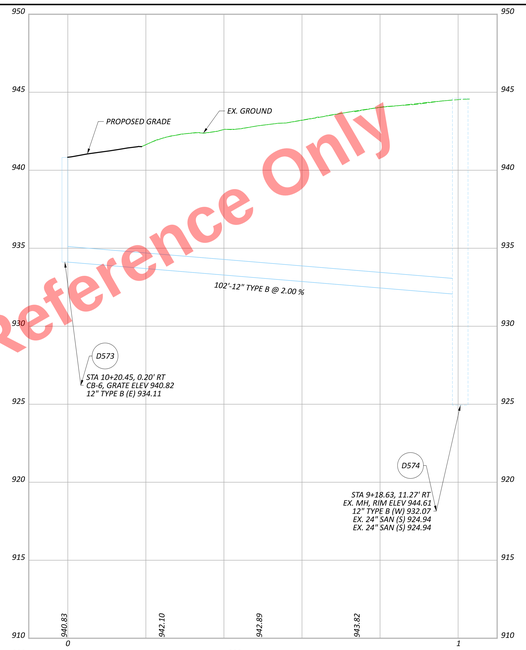

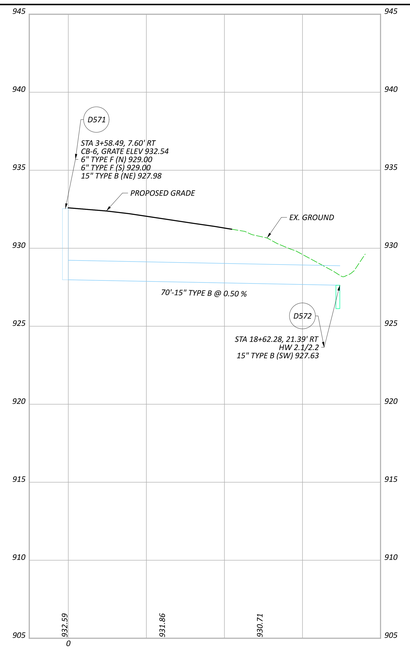

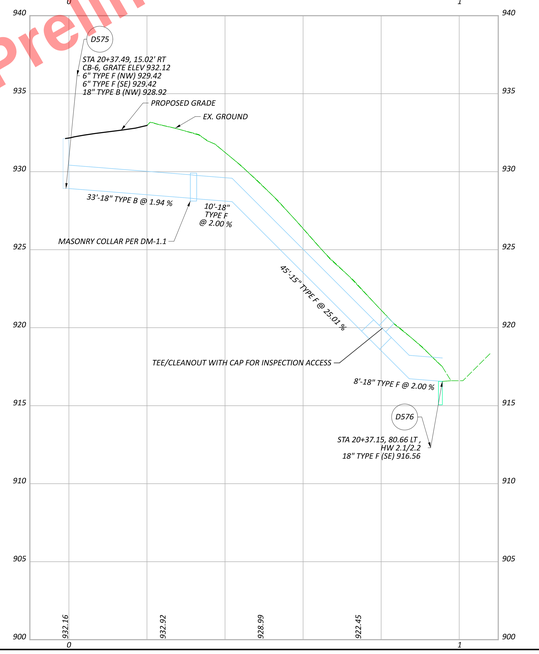

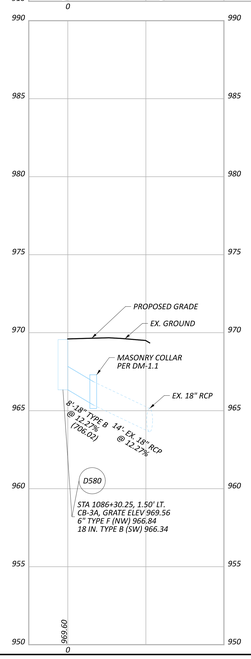

Preliminary Plans - For Reference Only

STORM SEWER PROFILES
I.R. 680, RAMP BX, RAMP BY, RAMP CA, RAMP D, RAMP L

MAH-680-4.58

MODEL: 11X17L (24 bit) PAPERSIZE: 66x34 (in) DATE: 8/15/2025 TIME: 10:41:12 AM USER: dhall
M:\Projects\Cincinnati\Mahoning Co\680\MAH-680-4.58 Interchange Modification\121474\ARD\Engineering_MS\Consultants\Drawings\Sheets\121474_ST145.dgn

DESIGN AGENCY
mb consultants, inc.
DESIGNER JDT
REVIEWER DNO 12/15/23
PROJECT ID 121474
SHEET P.394 TOTAL 655

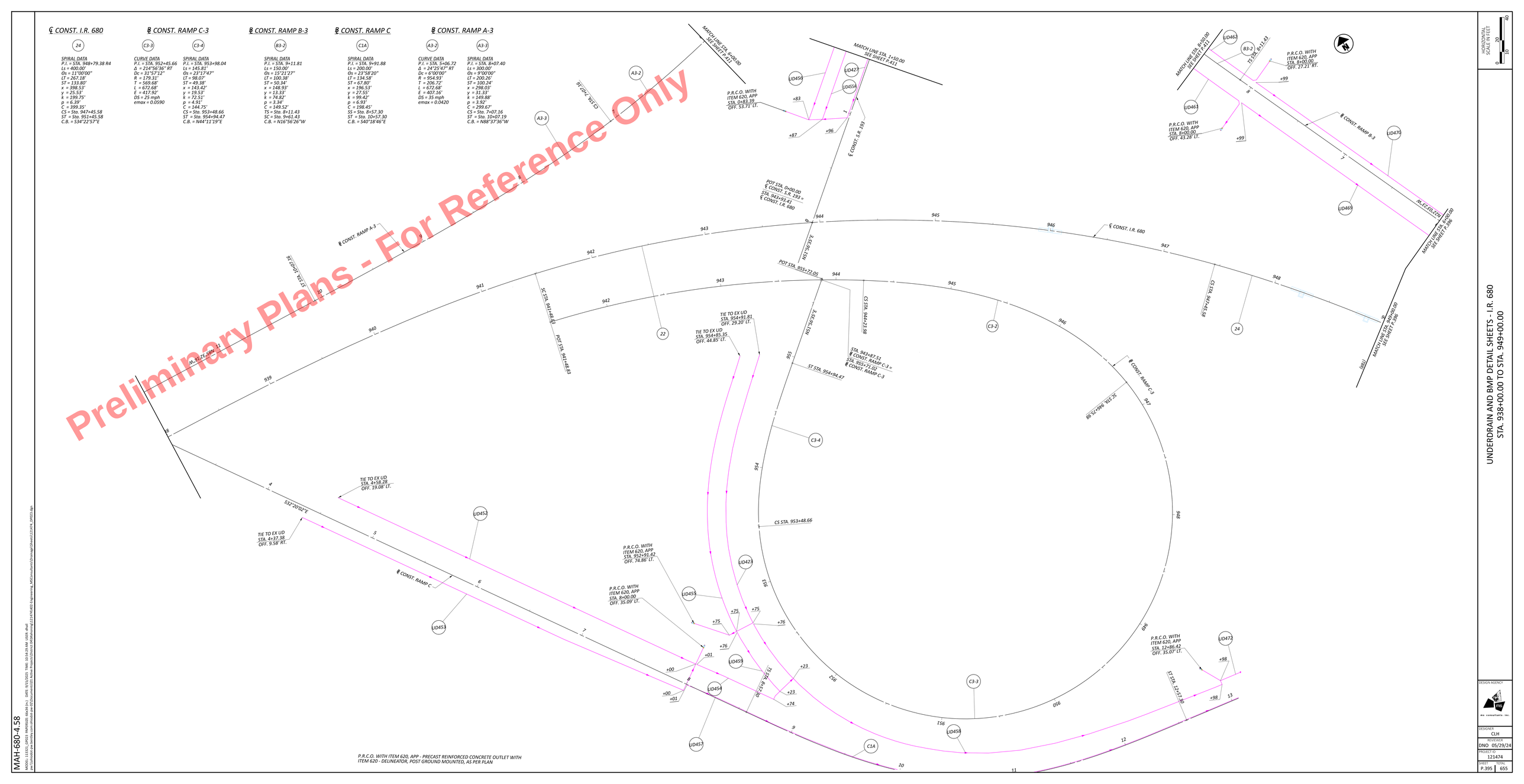
℄ CONST. I.R. 680
24
SPIRAL DATA
P.I. = STA. 948+79.38 R4
Ls = 400.00'
Θs = 11°00'00"
LT = 267.18'
ST = 133.80'
x = 398.53'
y = 25.53'
k = 199.75'
p = 6.39'
C = 399.35'
CS = Sta. 947+45.58
ST = Sta. 951+45.58
C.B. = S34°22'57"E
℄ CONST. RAMP C-3
C3-3
CURVE DATA
P.I. = STA. 952+45.66
Δ = 214°56'36" RT
Dc = 31°57'12"
R = 179.31'
T = 569.68'
L = 672.68'
E = 417.92'
DS = 25 mph
emax = 0.0590
C3-4
SPIRAL DATA
P.I. = STA. 953+98.04
Ls = 145.81'
Θs = 23°17'47"
LT = 98.07'
ST = 49.38'
x = 143.42'
y = 19.53'
k = 72.51'
p = 4.91'
C = 144.75'
CS = Sta. 953+48.66
ST = Sta. 954+94.47
C.B. = N44°11'19"E
℄ CONST. RAMP B-3
B3-2
SPIRAL DATA
P.I. = STA. 9+11.81
Ls = 150.00'
Θs = 15°21'27"
LT = 100.38'
ST = 50.34'
x = 148.93'
y = 13.33'
k = 74.82'
p = 3.34'
C = 149.52'
TS = Sta. 8+11.43
SC = Sta. 9+61.43
C.B. = N16°56'26"W
℄ CONST. RAMP C
C1A
SPIRAL DATA
P.I. = STA. 9+91.88
Ls = 200.00'
Θs = 23°58'20"
LT = 134.58'
ST = 67.80'
x = 196.53'
y = 27.55'
k = 99.42'
p = 6.93'
C = 198.45'
SS = Sta. 8+57.30
ST = Sta. 10+57.30
C.B. = S40°18'46"E
℄ CONST. RAMP A-3
A3-2
CURVE DATA
P.I. = STA. 5+06.72
Δ = 24°25'47" RT
Dc = 6°00'00"
R = 954.93'
T = 206.72'
L = 672.68'
E = 407.16'
DS = 35 mph
emax = 0.0420
A3-3
SPIRAL DATA
P.I. = STA. 8+07.40
Ls = 300.00'
Θs = 9°00'00"
LT = 200.26'
ST = 100.24'
x = 298.03'
y = 31.33'
k = 149.88'
p = 9.92'
C = 299.67'
CS = Sta. 7+07.16
ST = Sta. 10+07.19
C.B. = N88°37'36"W
Preliminary Plans - For Reference Only
MATCH LINE STA. 6+00.00 SEE SHEET P.417
MATCH LINE STA. 1+50.00 SEE SHEET P.417
MATCH LINE STA. 8+50.00 SEE SHEET P.417
MATCH LINE STA. 8+00.00 SEE SHEET P.396
MATCH LINE STA. 940+00.00 SEE SHEET P.396
P.R.C.O. WITH ITEM 620, APP STA. 0+83.39 OFF. 53.71' LT.
P.R.C.O. WITH ITEM 620, APP STA. 8+00.00 OFF. 27.21' RT.
P.R.C.O. WITH ITEM 620, APP STA. 8+00.00 OFF. 43.28' LT.
P.R.C.O. WITH ITEM 620, APP STA. 952+91.42 OFF. 74.86' LT.
P.R.C.O. WITH ITEM 620, APP STA. 8+00.00 OFF. 35.09' LT.
P.R.C.O. WITH ITEM 620, APP STA. 12+86.42 OFF. 35.07' LT.
P.R.C.O. WITH ITEM 620, APP - PRECAST REINFORCED CONCRETE OUTLET WITH ITEM 620 - DELINEATOR, POST GROUND MOUNTED, AS PER PLAN
POT STA. 0+00.00 ℄ CONST. S.R. 199 = STA. 943+93.41 ℄ CONST. I.R. 680
POT STA. 955+72.05
STA. 943+87.13 ℄ CONST. RAMP C-3 = STA. 955+71.02 ℄ CONST. RAMP C-3
ST STA. 954+94.47
CS STA. 953+48.66
CS STA. 944+23.88
CS STA. 941+45.49
SC STA. 941+88.83
POT STA. 941+88.83
ST STA. 940+73.18
ST STA. 12+27.30
TIE TO EX UD STA. 954+91.81 OFF. 29.20' LT.
TIE TO EX UD STA. 954+85.35 OFF. 44.85' LT.
TIE TO EX UD STA. 4+58.28 OFF. 19.08' LT.
TIE TO EX UD STA. 4+37.38 OFF. 9.58' RT.
DE-EXB STA. 951+
N31°56'35"E
N31°56'35"E
S32°20'02"E
UD452
UD453
UD454
UD455
UD456
UD457
UD458
UD459
UD461
UD462
UD463
UD469
UD470
UD472
UD423
UD427
A3-2
A3-3
B3-2
C1A
C3-2
C3-3
C3-4
22
24
℄ CONST. I.R. 680
℄ CONST. RAMP A-3
℄ CONST. RAMP B-3
℄ CONST. RAMP C
℄ CONST. RAMP C-3
Pk-EX.D.CZ24
940
941
942
943
944
945
946
947
948
949
950
951
952
953
954
955
1
2
3
4
5
6
7
8
9
10
11
12
13
+83
+87
+96
+99
+98
+74
+75
+76
+00
+01
+23
N
HORIZONTAL SCALE IN FEET
0
10
20
40
UNDERDRAIN AND BMP DETAIL SHEETS - I.R. 680
STA. 938+00.00 TO STA. 949+00.00
DESIGN AGENCY
ms consultants, inc.
DESIGNED CLH
REVIEWED DNO 05/29/24
PROJECT ID 121474
SHEET P.395
TOTAL 655
MAH-680-4.58
BIDDING 119321, (OPEN) PAVEMENT, 68x34 (in) DATE: 8/15/2025 TIME: 10:54:29 AM USER: dhall
M:\Consultants\Drainage\Sheets\121474_(OPEN)_PAVEMENT_68x34 (in).dgn M:\Consultants\Drainage\Sheets\121474_MSConsultants_Engineering

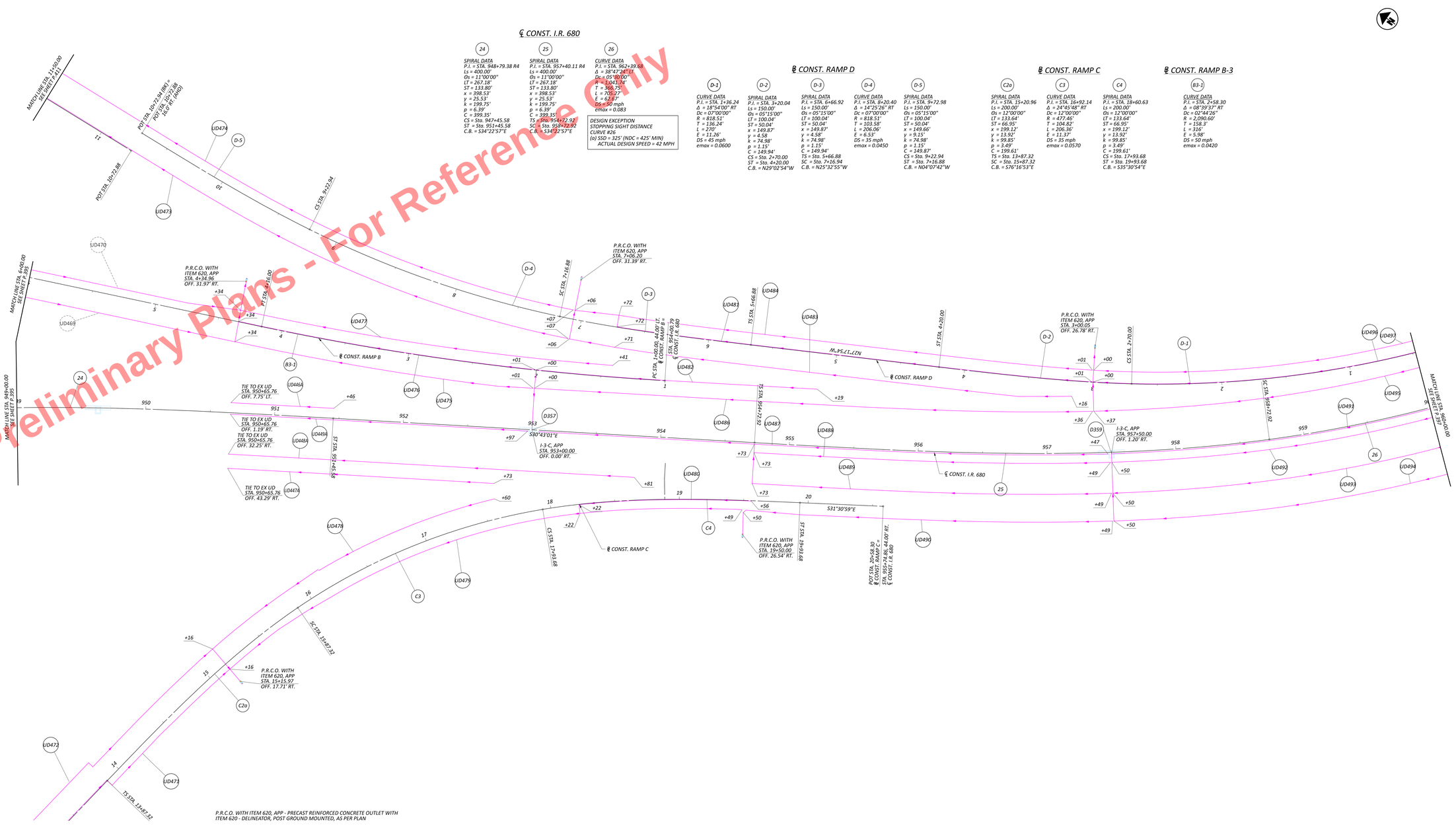

Preliminary Plans - For Reference Only

HORIZONTAL SCALE IN FEET
0 10 20 40

UNDERDRAIN DETAIL - I.R. 680
STA. 949+00.00 TO STA. 960+00.00

MAH-680.4.58

DESIGN AGENCY
ms consultants, inc.

DESIGNED: CLH
REVIEWED: DNO 05/29/24
PROJECT ID: 121474
SHEET: P.396 TOTAL: 655

MODEL: 11321_12PDX_PAVEDGE_6in14 (m) DATE: 8/15/2025 TIME: 10:54:49 AM USER: dhall
N:\Projects\Transportation\ODOT\2021\121474\ROD Engineering_MSConsultants\Drainage\Sheets\121474_UD014.dgn

Preliminary Plans - For Reference Only



HORIZONTAL SCALE IN FEET
0 10 20 40

UNDERDRAIN DETAIL - I.R. 680
STA. 960+00.00 TO STA. 971+00.00

MAH-680-4.58

MODEL: 11X17L | LAYOUT: PAVEMENT | DATE: 8/15/2025 | TIME: 10:54:37 AM | USER: dhall
FILE NAME: P:\Projects\Mahoning\121474\MS Engineering_MSConsultants\Drawings\Sheets\121474_UD015.dgn

DESIGN AGENCY
ms consultants, inc.
DESIGNER: CLH
REVIEWER: DNO 05/29/24
PROJECT ID: 121474
SHEET: P.397 TOTAL: 655

Preliminary Plans - For Reference Only

℄ CONST. RAMP G

G4

CURVE DATA
P.I. = STA. 1+27.69
Δ = 14°16'31" LT
Dc = 06°00'00"
R = 954.93'
T = 119.58'
L = 237.92'
E = 7.46'
DS = 25 mph
emax = 0.0300

G5

CURVE DATA
P.I. = STA. 5+01.41
Δ = 14°08'36" RT
Dc = 04°00'00"
R = 1,432.39'
T = 177.69'
L = 353.58'
E = 10.98'
DS = 50 mph
emax = 0.0520

℄ CONST RAMP F

F5

CURVE DATA
P.I. = STA. 6+84.36
Δ = 10°14'09" RT
Dc = 04°00'00"
R = 1,432.40'
T = 128.29'
L = 255.9'
E = 5.73'
DS = 50 mph
emax = 0.052

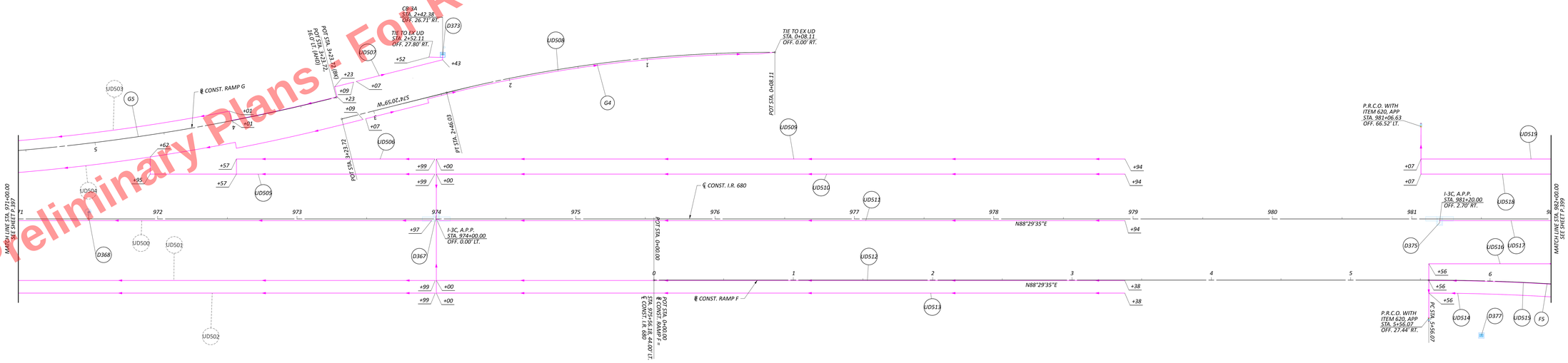

HORIZONTAL SCALE IN FEET
0 10 20 40

UNDERDRAIN DETAIL - I.R. 680
STA. 971+00.00 TO STA. 982+00.00

DESIGN AGENCY
mk consultants, inc.

DESIGNER: CLH
REVIEWER: DNO 05/29/24
PROJECT ID: 121474
SHEET: P.398 TOTAL: 655

MAH-680-4.58

MODEL: 11X17L; LAYOUT: PAPERSIZE_66x34.PC3 DATE: 8/15/2025 TIME: 10:55:08 AM USER: dhall
M:\Projects\Mahoning\680\121474\MDS Engineering_MDS\Consultants\Drawings\Sheets\121474_UD016.dgn

Preliminary Plans - For Reference Only

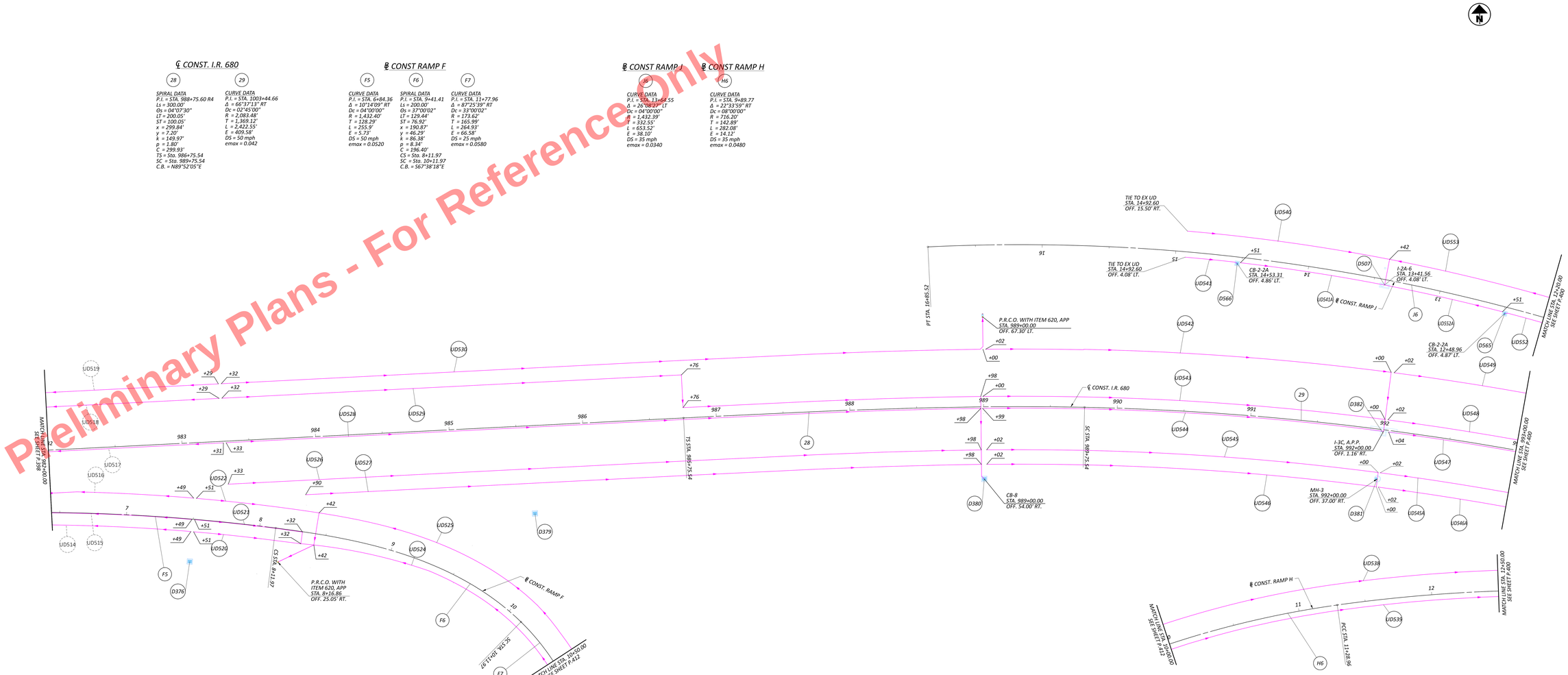

P.R.C.O. WITH ITEM 620, APP - PRECAST REINFORCED CONCRETE OUTLET WITH ITEM 620 - DELINEATOR, POST GROUND MOUNTED, AS PER PLAN

HORIZONTAL SCALE IN FEET
0 10 20 40

UNDERDRAIN DETAIL - I.R. 680
STA. 982+00.00 TO STA. 993+00.00

DESIGN AGENCY
ms consultants, inc.
DESIGNED CLH
REVIEWED DNO 05/29/24
PROJECT ID 121474
SHEET P.399 TOTAL 655

MAH-680-4.58

MODEL: 11X17L | DRGT: PAPERSIZE: 66x34 (in) | DATE: 8/15/2025 TIME: 10:55:20 AM USER: dhall
M:\Projects\Mahoning\680\121474\ROADWAY\Engineering_MS\Consultants\Drawings\Sheets\121474_UD027.dgn

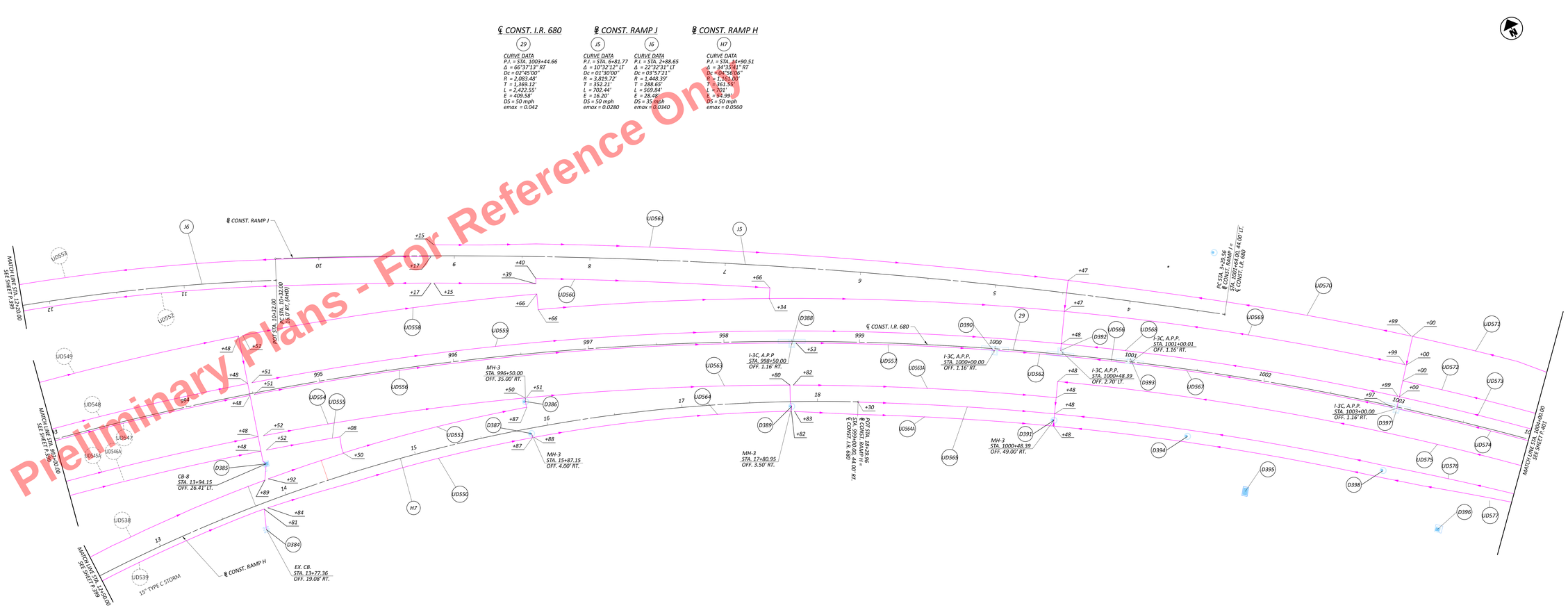

HORIZONTAL SCALE IN FEET
0 10 20 40

UNDERDRAIN DETAIL - I.R. 680
STA. 993+00.00 TO STA. 1004+00.00

DESIGN AGENCY
ms consultants, inc.

DESIGNED CLH
REVIEWED DNO 05/29/24
PROJECT ID 121474
SHEET P.400 TOTAL 655

MAH-680-4.58

MODEL: 11X17, LAYOUT: PAPERSIZE (ledger) | DATE: 8/15/2025 TIME: 10:55:32 AM USER: dhall
M:\Projects\Mahoning\121474\MS Engineering_MSConsultants\Drawings\Sheets\121474_SP003d.dgn

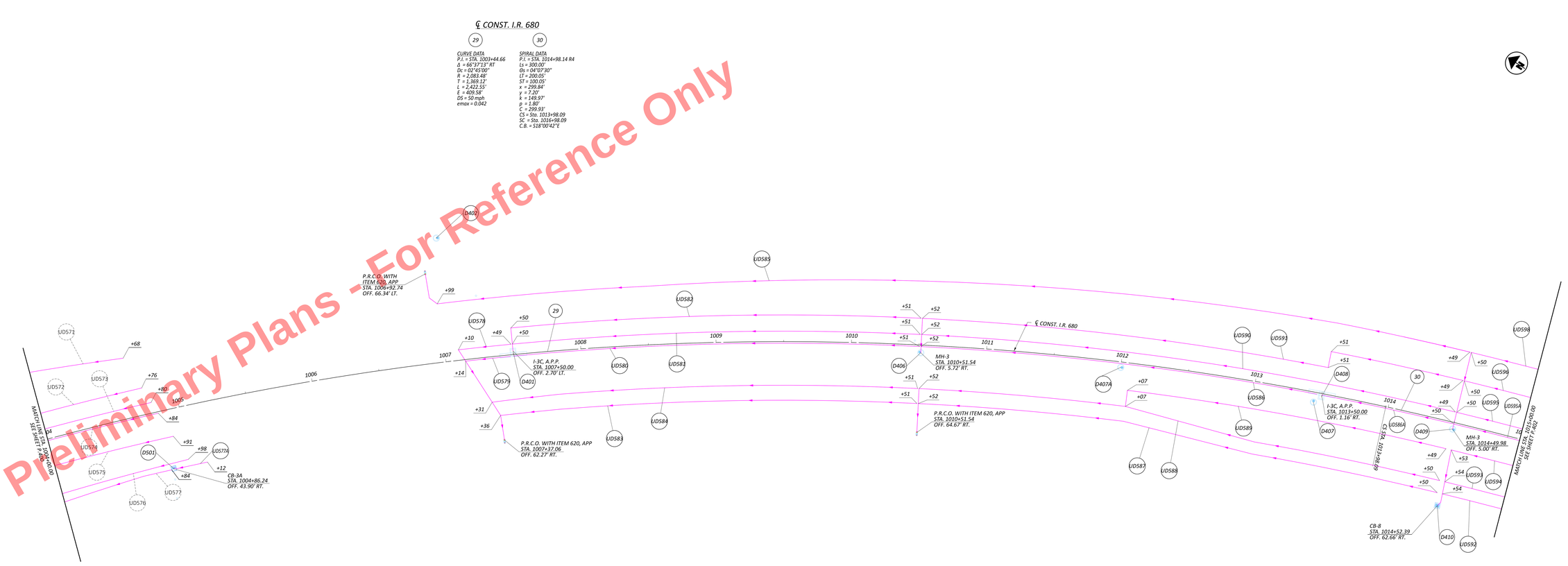

Preliminary Plans - For Reference Only

P.R.C.O. WITH ITEM 620, APP - PRECAST REINFORCED CONCRETE OUTLET WITH ITEM 620 - DELINEATOR, POST GROUND MOUNTED, AS PER PLAN

HORIZONTAL SCALE IN FEET
0 10 20 40

UNDERDRAIN DETAIL - I.R. 680
STA. 1004+00.00 TO STA. 1015+00.00

DESIGN AGENCY
mk consultants, inc.

DESIGNER: CLH
REVIEWER: DNO 05/29/24
PROJECT ID: 121474
SHEET: P.401 TOTAL: 655

MAH-680-4.58

MODEL: 121321_GPKDS_PAVEMENT_664.dgn | DATE: 8/15/2025 TIME: 10:55:42 AM USER: dhall
K:\Projects\Mahoning County\121474\ROD Engineering_MKConsultants\Drawings\Sheets\121474_GPKDS.dgn

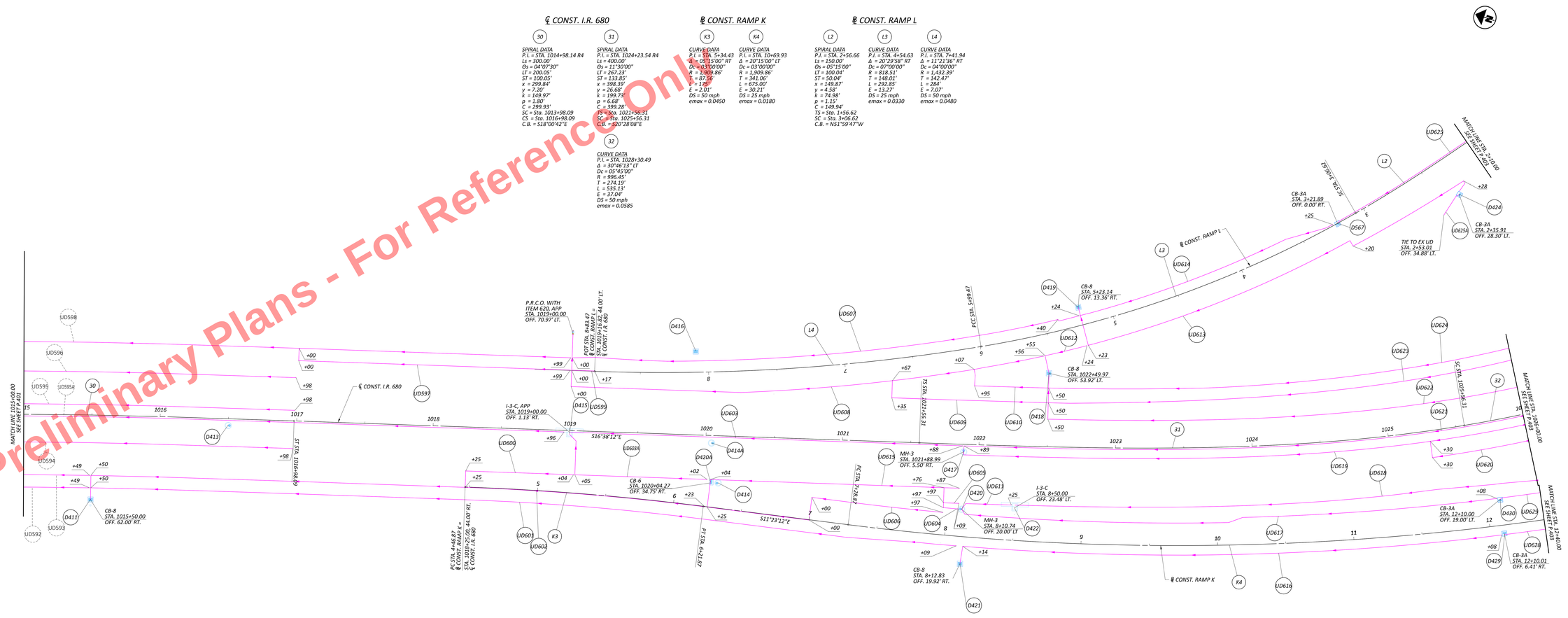

Preliminary Plans - For Reference Only

HORIZONTAL SCALE IN FEET: 0 10 20 40

UNDERDRAIN DETAIL - I.R. 680
STA. 1015+00.00 TO STA. 1026+00.00

DESIGN AGENCY: mk consultants, inc.

DESIGNER	CLH
REVIEWER	DNO 05/29/24
PROJECT ID	121474
SHEET	P.402
TOTAL	655

MAH-680-4.58

MODEL: 11X17_LDPDD_PAPERSIZE_66x34.DGN | DATE: 8/15/2025 TIME: 10:55:55 AM USER: dhall
M:\Projects\Mahoning County\121474\MKD Engineering_MKConsultants\Drawings\Sheets\121474_DP000.dgn

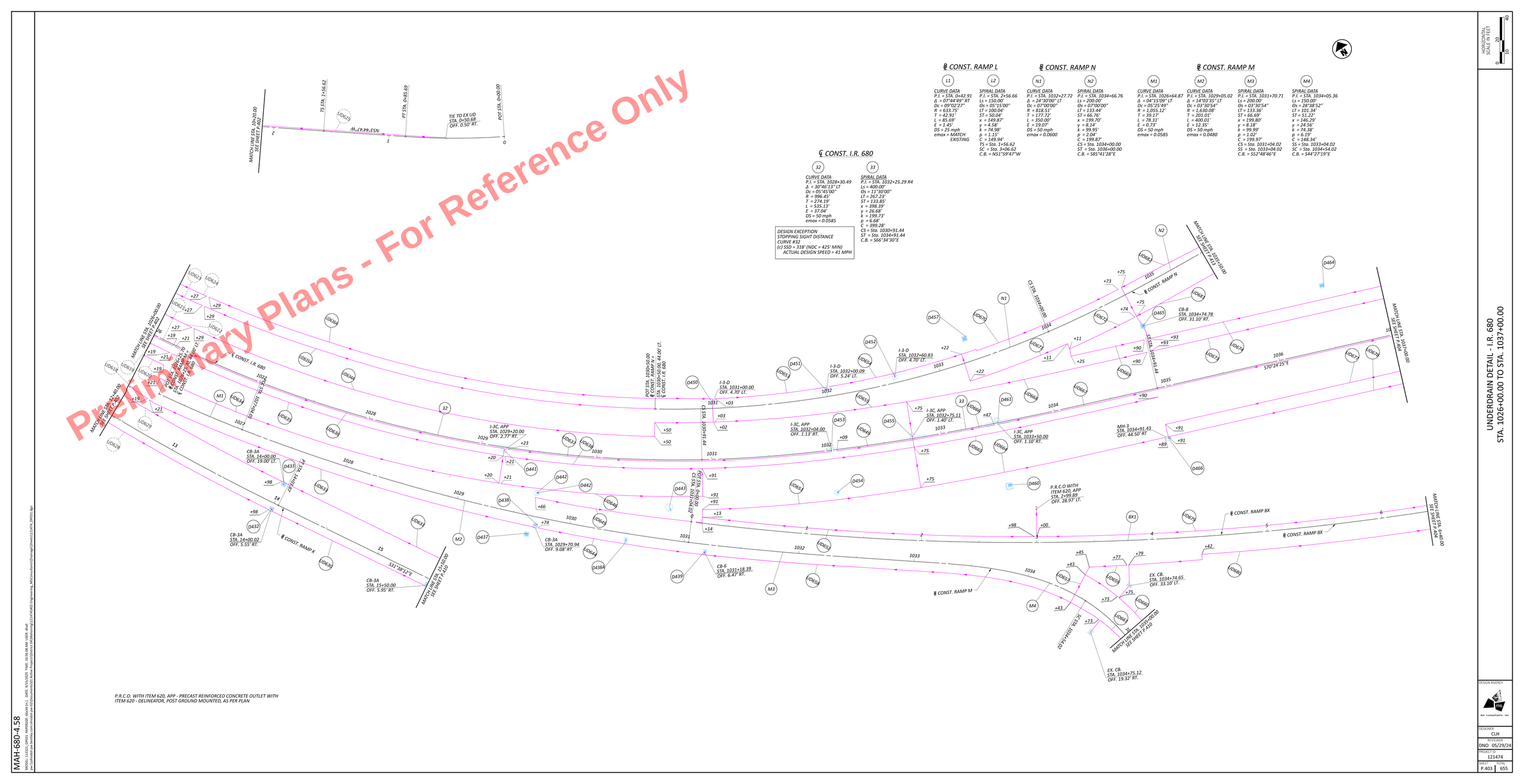
℄ CONST. RAMP L
L1
CURVE DATA
P.I. = STA. 0+42.91
Δ = 07°44'49" RT
Dc = 09°02'27"
R = 633.75'
T = 42.91'
L = 85.69'
E = 1.45'
DS = 25 mph
emax = MATCH EXISTING
L2
SPIRAL DATA
P.I. = STA. 2+56.66
Ls = 150.00'
Θs = 05°15'00"
LT = 100.04'
ST = 50.04'
x = 149.87'
y = 4.58'
k = 74.98'
p = 1.15'
C = 149.94'
TS = Sta. 1+56.62
SC = Sta. 3+06.62
C.B. = N51°59'47"W
℄ CONST. RAMP N
N1
CURVE DATA
P.I. = STA. 1032+27.72
Δ = 24°30'00" LT
Dc = 07°00'00"
R = 818.51'
T = 177.72'
L = 350.00'
E = 19.07'
DS = 50 mph
emax = 0.0600
N2
SPIRAL DATA
P.I. = STA. 1034+66.76
Ls = 200.00'
Θs = 07°00'00"
LT = 133.44'
ST = 66.76'
x = 199.70'
y = 8.14'
k = 99.95'
p = 2.04'
C = 199.87'
CS = Sta. 1034+00.00
ST = Sta. 1036+00.00
C.B. = S85°41'28"E
℄ CONST. RAMP M
M1
CURVE DATA
P.I. = STA. 1026+64.87
Δ = 04°15'09" LT
Dc = 05°25'49"
R = 1,055.12'
T = 39.17'
L = 78.31'
E = 0.73'
DS = 50 mph
emax = 0.0585
M2
CURVE DATA
P.I. = STA. 1029+05.02
Δ = 14°03'35" LT
Dc = 03°30'54"
R = 1,630.08'
T = 201.01'
L = 400.01'
E = 12.35'
DS = 50 mph
emax = 0.0480
M3
SPIRAL DATA
P.I. = STA. 1031+70.71
Ls = 200.00'
Θs = 03°30'54"
LT = 133.36'
ST = 66.69'
x = 199.80'
y = 8.18'
k = 99.99'
p = 1.02'
C = 199.97'
CS = Sta. 1031+04.02
SS = Sta. 1033+04.02
C.B. = S52°48'46"E
M4
SPIRAL DATA
P.I. = STA. 1034+05.36
Ls = 150.00'
Θs = 28°38'52"
LT = 101.34'
ST = 51.22'
x = 146.29'
y = 24.56'
k = 74.38'
p = 6.19'
C = 148.34'
SS = Sta. 1033+04.02
SC = Sta. 1034+54.02
C.B. = S44°27'15"E
℄ CONST. I.R. 680
32
CURVE DATA
P.I. = STA. 1028+30.49
Δ = 30°46'13" LT
Dc = 05°45'00"
R = 996.45'
T = 274.19'
L = 535.13'
E = 37.04'
DS = 50 mph
emax = 0.0585
33
SPIRAL DATA
P.I. = STA. 1032+25.29 R4
Ls = 400.00'
Θs = 11°30'00"
LT = 267.23'
ST = 133.85'
x = 398.39'
y = 26.68'
k = 199.73'
p = 6.68'
C = 399.28'
CS = Sta. 1030+91.44
ST = Sta. 1034+91.44
C.B. = S66°34'30"E
DESIGN EXCEPTION
STOPPING SIGHT DISTANCE
CURVE #32
(c) SSD = 318' (NDC = 425' MIN)
ACTUAL DESIGN SPEED = 41 MPH
Preliminary Plans - For Reference Only
MATCH LINE STA. 10+20.00
SEE SHEET P.402
TS STA. 1+56.62
PT STA. 0+85.69
TIE TO EX UD
STA. 0+50.68
OFF. 0.50' RT.
POT STA. 0+00.00
N53°44'47"W
MATCH LINE STA. 10+00.00
SEE SHEET P.405
MATCH LINE STA. 9+40.00
SEE SHEET P.405
℄ CONST. I.R. 680
EX. CB.
STA. 1027+25.12
OFF. 6.60' LT.
EX. CB.
STA. 1027+50.68
OFF. 6.60' RT.
CB-3A
STA. 14+00.00
OFF. 19.00' LT.
CB-3A
STA. 14+00.02
OFF. 5.55' RT.
℄ CONST. RAMP K
CB-3A
STA. 15+50.00
OFF. 5.95' RT.
531°38'12"E
MATCH LINE STA. 15+50.08
SEE SHEET P.410
I-3C, APP
STA. 1029+20.00
OFF. 2.77' RT.
CB-3A
STA. 1029+70.94
OFF. 9.08' RT.
POT STA. 1029+50.00
℄ CONST. I.R. 680
POT STA. 1030+50.00
℄ CONST. I.R. 680
STA. 1030+50.00, 44.00' LT.
℄ CONST. I.R. 680
CS STA. 1030+91.44
I-3-D
STA. 1031+00.00
OFF. 4.70' LT.
I-3-D
STA. 1032+00.09
OFF. 5.24' LT.
I-3-D
STA. 1032+60.83
OFF. 4.70' LT.
I-3C, APP
STA. 1032+04.00
OFF. 1.13' RT.
I-3C, APP
STA. 1032+75.11
OFF. 1.40' LT.
I-3C, APP
STA. 1033+50.00
OFF. 1.10' RT.
CB-6
STA. 1031+18.39
OFF. 6.47' RT.
℄ CONST. RAMP M
P.R.C.O WITH ITEM 620, APP
STA. 1+99.89
OFF. 28.97' LT.
CS STA. 1034+00.00
℄ CONST. RAMP N
CB-8
STA. 1034+74.78
OFF. 31.10' RT.
ST STA. 1034+91.44
MH-3
STA. 1034+91.43
OFF. 44.50' RT
S70°24'25"E
MATCH LINE STA. 1035+00.00
SEE SHEET P.415
MATCH LINE STA. 1037+00.00
SEE SHEET P.404
℄ CONST. RAMP BX
EX. CB.
STA. 1034+74.65
OFF. 33.10' LT.
EX. CB.
STA. 1034+75.12
OFF. 19.32' RT.
SS STA. 1034+54.02
MATCH LINE STA. 1035+00.00
SEE SHEET P.410
P.R.C.O. WITH ITEM 620, APP - PRECAST REINFORCED CONCRETE OUTLET WITH
ITEM 620 - DELINEATOR, POST GROUND MOUNTED, AS PER PLAN
HORIZONTAL SCALE IN FEET
0
10
20
40
UNDERDRAIN DETAIL - I.R. 680
STA. 1026+00.00 TO STA. 1037+00.00
MAH-680-4.58
DESIGN AGENCY
DESIGNED CLH
REVIEWED DNO 05/29/24
PROJECT NO. 121474
SHEET P.403
TOTAL 655

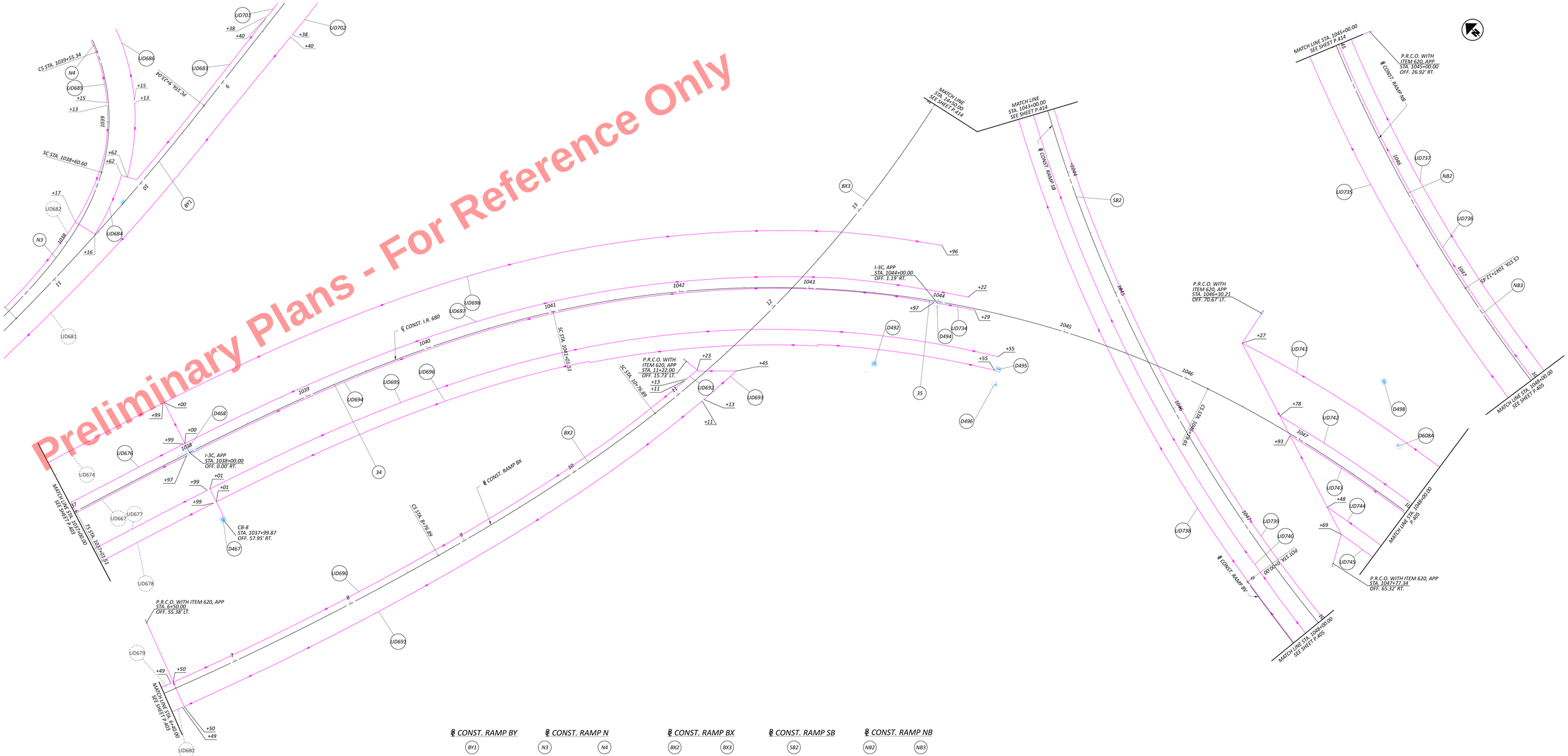

MAH-680.4.58

MICROSTATION V8i (SELECTseries 3) DATE: 5/15/2025 TIME: 10:56:19 AM USER: dhall
M:\Projects\Mahoning County\121474\680\Engineering_MS\Consultants\Drainage\Sheets\121474_DR012.dgn

UNDERDRAIN DETAIL - I.R. 680
STA. 1037+00.00 TO STA. 1048+00.00

HORIZONTAL SCALE IN FEET
0 10 20 40

DESIGN AGENCY
mb consultants, inc.

DESIGNED CLH
REVIEWED DNO 05/29/24
PROJECT ID 121474
SHEET P.404 TOTAL 655

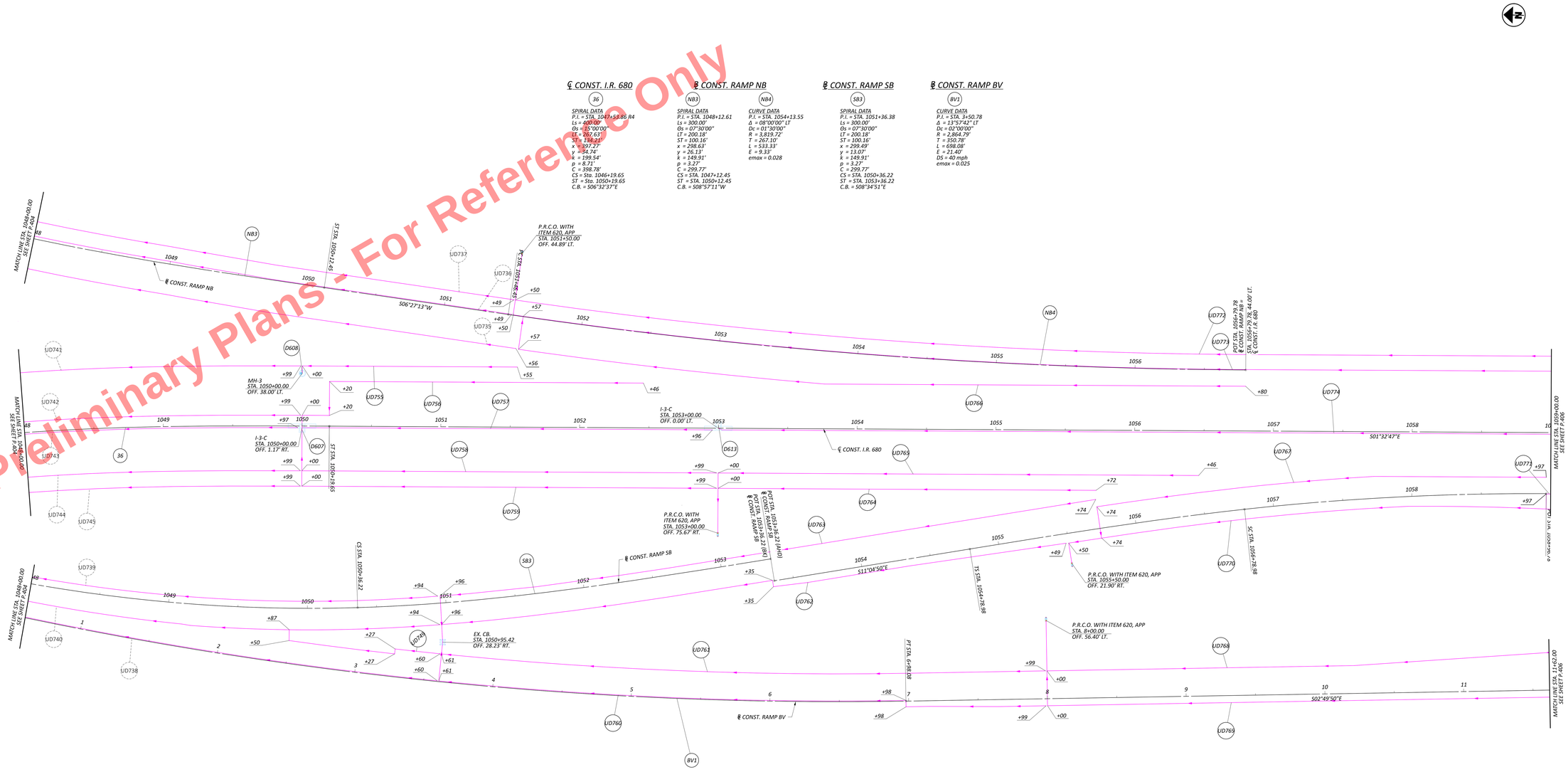

HORIZONTAL SCALE IN FEET
0 10 20 40

UNDERDRAIN DETAIL - I.R. 680
STA. 1048+00.00 TO STA. 1059+00.00

MAH-680-4.58

MODEL: 11311_12P03_PAVEMENT_664.dgn | DATE: 8/15/2025 TIME: 10:56:32 AM USER: dhall
FILE: C:\Users\dhall\Desktop\Projects\MAH-680-4.58\Engineering_MS\Consultants\Drainage\Sheets\121474_DP003.dgn

DESIGN AGENCY
ms consultants, inc.

DESIGNER	CLH
REVIEWER	DNO 05/29/24
PROJECT ID	121474
SHEET	P.405
TOTAL	655

Preliminary Plans - For Reference Only

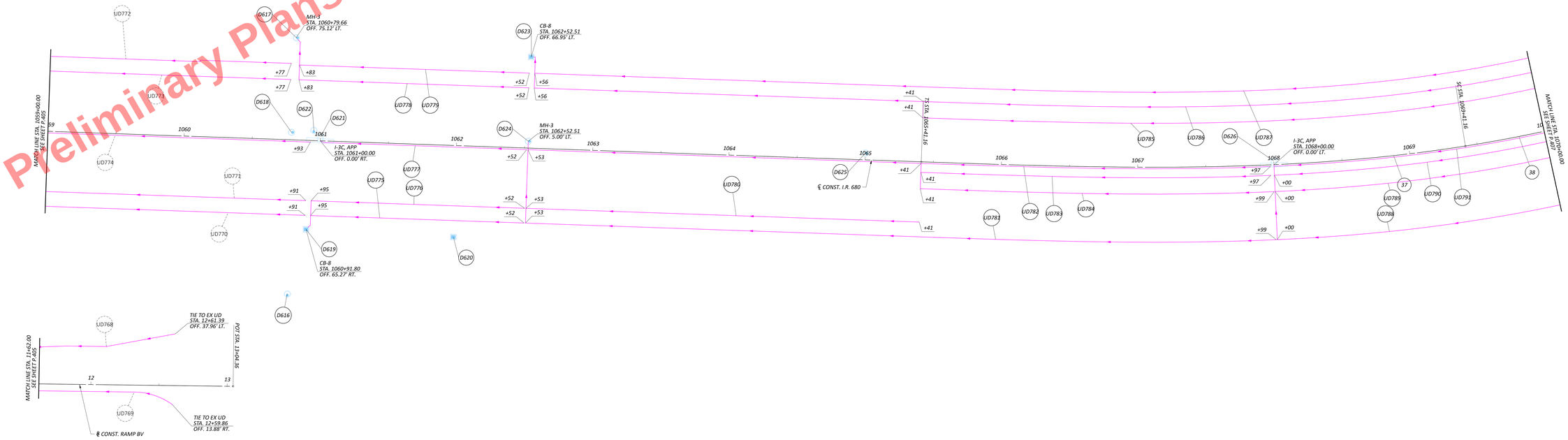

P.R.C.O. WITH ITEM 620, APP - PRECAST REINFORCED CONCRETE OUTLET WITH ITEM 620 - DELINEATOR, POST GROUND MOUNTED, AS PER PLAN

HORIZONTAL SCALE IN FEET
0 10 20 40

UNDERDRAIN DETAIL - I.R. 680
STA. 1059+00.00 TO STA. 1070+00.00

DESIGN AGENCY
ms consultants, inc.

DESIGNED: CLH
REVIEWED: DNO 05/29/24
PROJECT ID: 121474
SHEET: P.406 TOTAL: 655

MAH-680-4.58

PLOTTED BY: Christine Hammond on 05/29/2024 11:54:46 AM
DATE: 8/15/2025 TIME: 10:56:46 AM USER: dhall
PLOT SCALE: 1.0000 '/ Inch
PLOT STYLE TABLE: Full Color.ctb
LAYOUT: 24x36 (H) DATE: 8/15/2025 TIME: 10:56:46 AM USER: dhall
MODEL: 11311_12PDX_PAVEDGE_664.dwg
K:\Projects\Active\Mahoning\121474\MS Engineering_MS\Consultants\Drainage\Sheets\121474_DP014.dgn

Preliminary Plans - For Reference Only

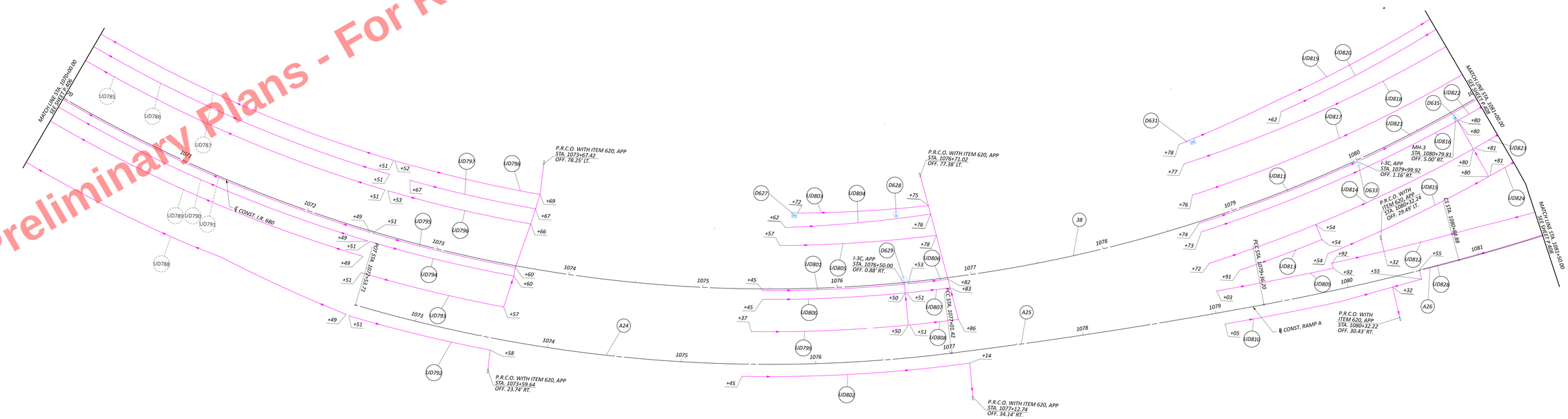

P.R.C.O. WITH ITEM 620, APP - PRECAST REINFORCED CONCRETE OUTLET WITH ITEM 620 - DELINEATOR, POST GROUND MOUNTED, AS PER PLAN

* SEE NOTE FOR REVIEWER IN DRAINAGE REPORT CONCERNING UNDERSIZED DOWNSTREAM PIPES

HORIZONTAL SCALE IN FEET
0 10 20 40

UNDERDRAIN DETAIL - I.R. 680
STA. 1070+00.00 TO STA. 1081+00.00

DESIGN AGENCY
mx consultants, inc.

DESIGNER: CLH
REVIEWER: DNO 05/29/24
PROJECT ID: 121474
SHEET: P.407 TOTAL: 655

MAH-680-4.58

MODEL: 11X11_12PDS_PAVEMENT_682x4.DGN | DATE: 8/15/2025 TIME: 10:56:58 AM USER: dhall
M:\Projects\Hamilton\Hamilton Mountain\Hamilton Mountain 121474\ROAD\Engineering_MX\Consultants\Drawings\Sheets\121474_UP055.dgn

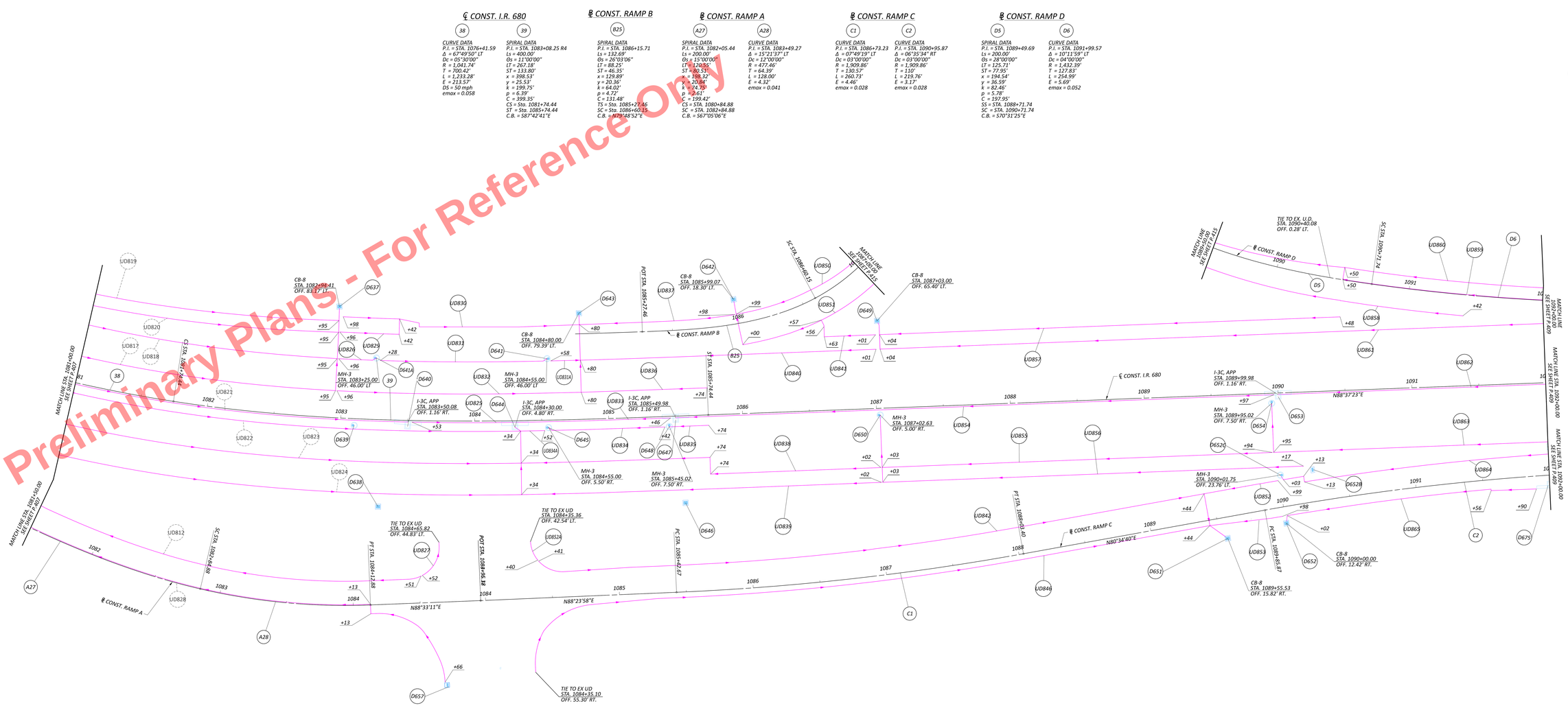

P.R.C.O. WITH ITEM 620, APP - PRECAST REINFORCED CONCRETE OUTLET WITH ITEM 620 - DELINEATOR, POST GROUND MOUNTED, AS PER PLAN

HORIZONTAL SCALE IN FEET
0 10 20 40

UNDERDRAIN DETAIL - I.R. 680
STA. 1081+00.00 TO STA. 1092+00.00

MAH-680-4.58

DESIGN AGENCY
ms consultants, inc.

DESIGNER: CLH
REVIEWER: DNO 05/29/24
PROJECT #: 121474
SHEET: P.408
TOTAL: 655

MODEL: 11X17L_OPEN_PAPERSIZE_66x34.DWG DATE: 8/15/2025 TIME: 10:57:10 AM USER: dhall
N:\Projects\121474\MS Consultants\Civil\Roadway\Plan Sheets\121474_680_Underdrain_Detail.dgn

Preliminary Plans - For Reference Only

℄ CONST. I.R. 680

40

CURVE DATA
P.I. = STA. 1106+76.67
Δ = 32°42'57" RT
Dc = 01°28'00"
R = 3,906.53'
T = 1,146.64'
L = 2,230.63'
E = 164.8'
DS = 65 mph
emax = 0.0275

℄ CONST. RAMP D

D6

CURVE DATA
P.I. = STA. 1091+99.57
Δ = 10°11'59" LT
Dc = 04°00'00"
R = 1,432.39'
T = 127.83'
L = 254.99'
E = 5.69'
emax = 0.052

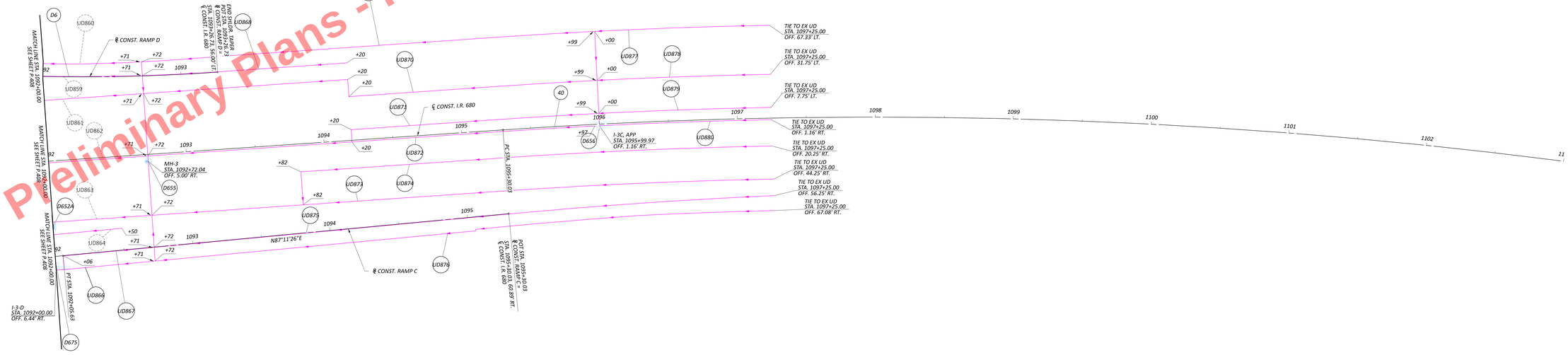

P.R.C.O. WITH ITEM 620, APP - PRECAST REINFORCED CONCRETE OUTLET WITH ITEM 620 - DELINEATOR, POST GROUND MOUNTED, AS PER PLAN

HORIZONTAL SCALE IN FEET
0 10 20 40

UNDERDRAIN DETAIL - I.R. 680
STA. 1092+00.00 TO STA. 1097+25.00

DESIGN AGENCY
ms consultants, inc.

DESIGNED CLH
REVIEWED DNO 05/29/24
PROJECT ID 121474
SHEET P.409 TOTAL 655

MAH-680-4.58

MODEL: 11X17L | DEPOT: PAINTBASE (64.64 in) | DATE: 8/15/2025 TIME: 10:57:23 AM USER: dhall
FILE: C:\Users\dhall\ms consultants, inc\Documents - Projects\121474\ROD Engineering_MSConsultants\Drawings\Sheets\121474_UP0017.dgn

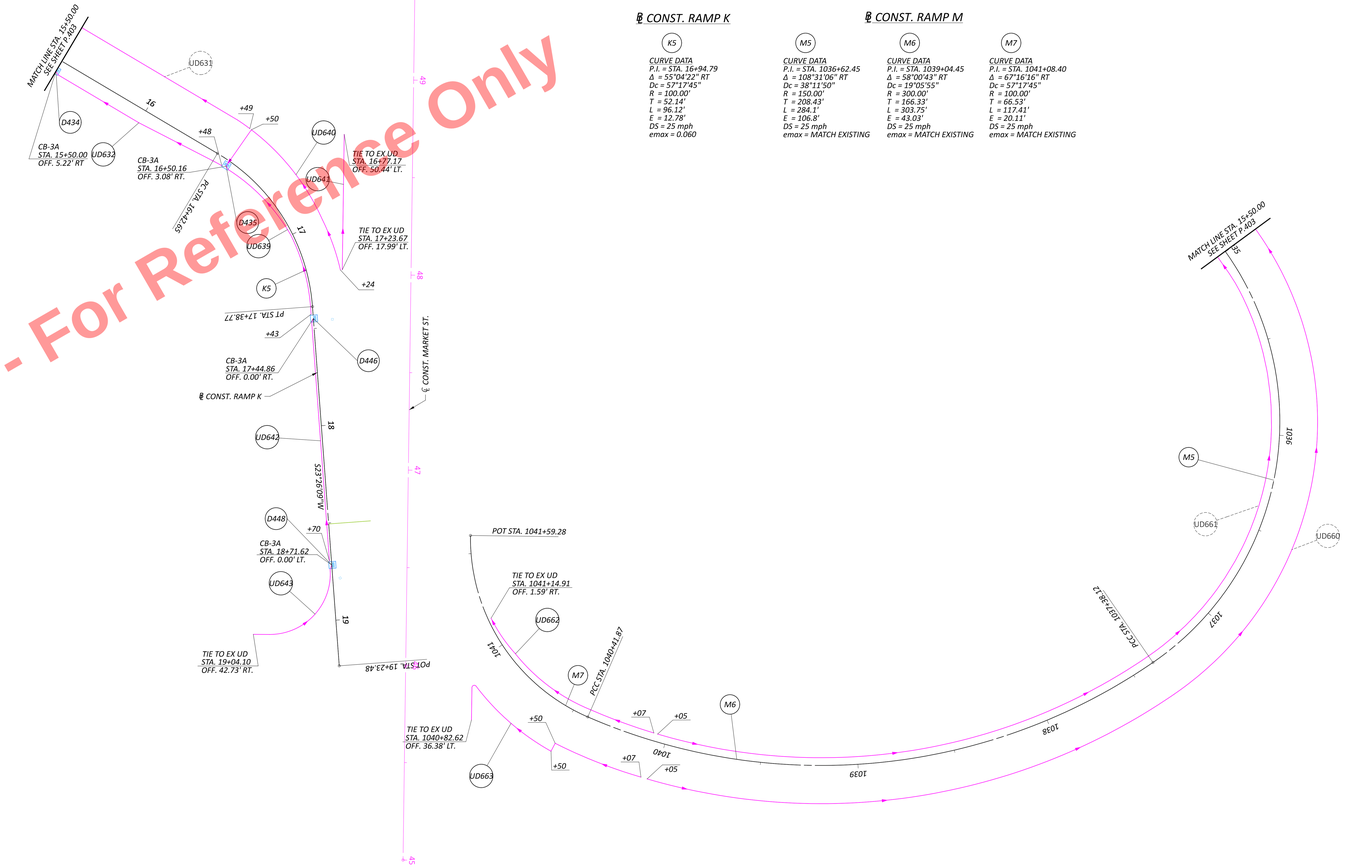

℄ CONST. RAMP K

K5

CURVE DATA
P.I. = STA. 16+94.79
Δ = 55°04'22" RT
Dc = 57°17'45"
R = 100.00'
T = 52.14'
L = 96.12'
E = 12.78'
DS = 25 mph
emax = 0.060

℄ CONST. RAMP M

M5

CURVE DATA
P.I. = STA. 1036+62.45
Δ = 108°31'06" RT
Dc = 38°11'50"
R = 150.00'
T = 208.43'
L = 284.1'
E = 106.8'
DS = 25 mph
emax = MATCH EXISTING

M6

CURVE DATA
P.I. = STA. 1039+04.45
Δ = 58°00'43" RT
Dc = 19°05'55"
R = 300.00'
T = 166.33'
L = 303.75'
E = 43.03'
DS = 25 mph
emax = MATCH EXISTING

M7

CURVE DATA
P.I. = STA. 1041+08.40
Δ = 67°16'16" RT
Dc = 57°17'45"
R = 100.00'
T = 66.53'
L = 117.41'
E = 20.11'
DS = 25 mph
emax = MATCH EXISTING

Preliminary Plans - For Reference Only

P.R.C.O. WITH ITEM 620, APP - PRECAST REINFORCED CONCRETE OUTLET WITH ITEM 620 - DELINEATOR, POST GROUND MOUNTED, AS PER PLAN

HORIZONTAL SCALE IN FEET
0 10 20 40

UNDERDRAIN DETAIL - MARKET ST. & RAMP K
RAMP K - STA. 15+50.00 TO STA. 19+23.48

DESIGN AGENCY
mb consultants, inc.

DESIGNER: CLH
REVIEWER: DNO 05/29/24
PROJECT ID: 121474
SHEET: P.410 TOTAL: 655

MAH-680-4.58

BASE: 11X17_LDP64_PAPERSIZE_64x24.DGN DATE: 8/15/2025 TIME: 10:57:34 AM USER: dhall
PLOTTED FROM: C:\Users\dhall\OneDrive - mbconsultants.com\Desktop\121474\ROD Engineering_MB Consultants\Drainage\Sheets\121474_UDP04.dgn

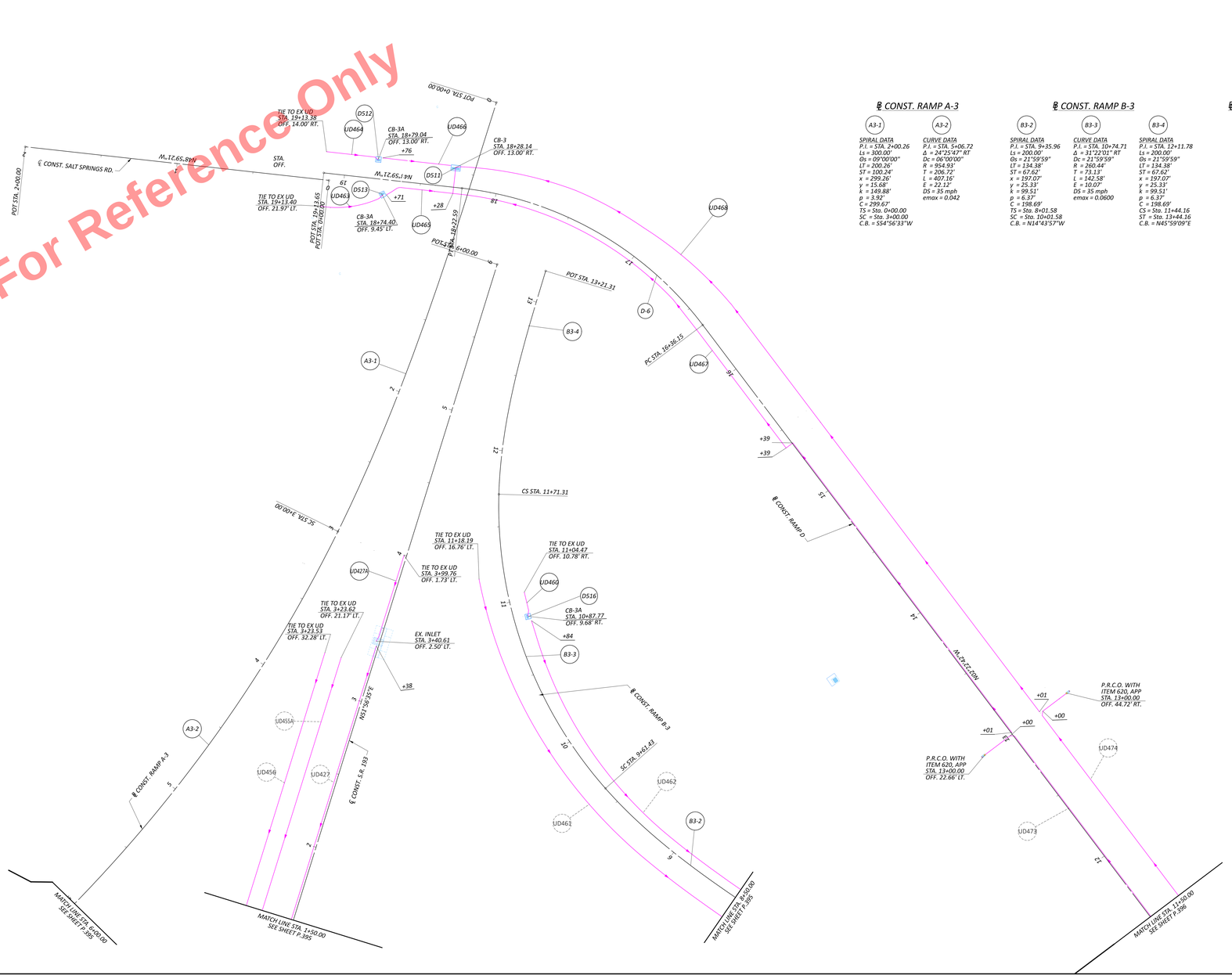

℄ CONST. RAMP A-3

A3-1

SPIRAL DATA
P.I. = STA. 2+00.26
Ls = 300.00'
Θs = 09°00'00"
LT = 200.26'
ST = 100.24'
x = 299.26'
y = 15.68'
k = 149.88'
p = 3.92'
C = 299.67'
TS = Sta. 0+00.00
SC = Sta. 3+00.00
C.B. = S54°56'33"W

A3-2

CURVE DATA
P.I. = STA. 5+06.72
Δ = 24°25'47" RT
Dc = 06°00'00"
R = 954.93'
T = 206.72'
L = 407.16'
E = 22.12'
DS = 35 mph
emax = 0.042

℄ CONST. RAMP B-3

B3-2

SPIRAL DATA
P.I. = STA. 9+35.96
Ls = 200.00'
Θs = 21°59'59"
LT = 134.38'
ST = 67.62'
x = 197.07'
y = 25.33'
k = 99.51'
p = 6.37'
C = 198.69'
TS = Sta. 8+01.58
SC = Sta. 10+01.58
C.B. = N14°43'57"W

B3-3

CURVE DATA
P.I. = STA. 10+74.71
Δ = 31°22'01" RT
Dc = 21°59'59"
R = 260.44'
T = 73.13'
L = 142.58'
E = 10.07'
DS = 35 mph
emax = 0.0600

B3-4

SPIRAL DATA
P.I. = STA. 12+11.78
Ls = 200.00'
Θs = 21°59'59"
LT = 134.38'
ST = 67.62'
x = 197.07'
y = 25.33'
k = 99.51'
p = 6.37'
C = 198.69'
CS = Sta. 11+44.16
ST = Sta. 13+44.16
C.B. = N45°59'09"E

℄ CONST. RAMP D

D-6

CURVE DATA
P.I. = STA. 17+34.88
Δ = 46°36'38" LT
Dc = 25°00'01"
R = 229.18'
T = 98.73'
L = 186.44'
E = 20.36'
DS = 35 mph
emax = 0.0600

Preliminary Plans - For Reference Only

P.R.C.O. WITH ITEM 620, APP - PRECAST REINFORCED CONCRETE OUTLET WITH ITEM 620 - DELINEATOR, POST GROUND MOUNTED, AS PER PLAN

HORIZONTAL SCALE IN FEET
0 10 20 40

UNDERDRAIN AND BMP DETAIL SHEETS - S.R. 193 & RAMPS A-3, B-3 & D
RAMP D - STA. 11+50.00 TO STA. 19+13.65

MAH-680-4.58

MODEL: 11321_GPOR_PAVEDGE_64x24.fm3 DATE: 07/1/2025 TIME: 10:57:46 AM USER: dhall
PATH: P:\Projects\mbconsultants.com\Projects\121474\ROD Engineering_MSConsultants\Drawings\Sheets\121474_GP058.dgn

DESIGN AGENCY
ms consultants, inc.
DESIGNER: CLH
REVIEWER: DNO 05/29/24
PROJECT ID: 121474
SHEET: P.411 TOTAL: 655

Preliminary Plans - For Reference Only

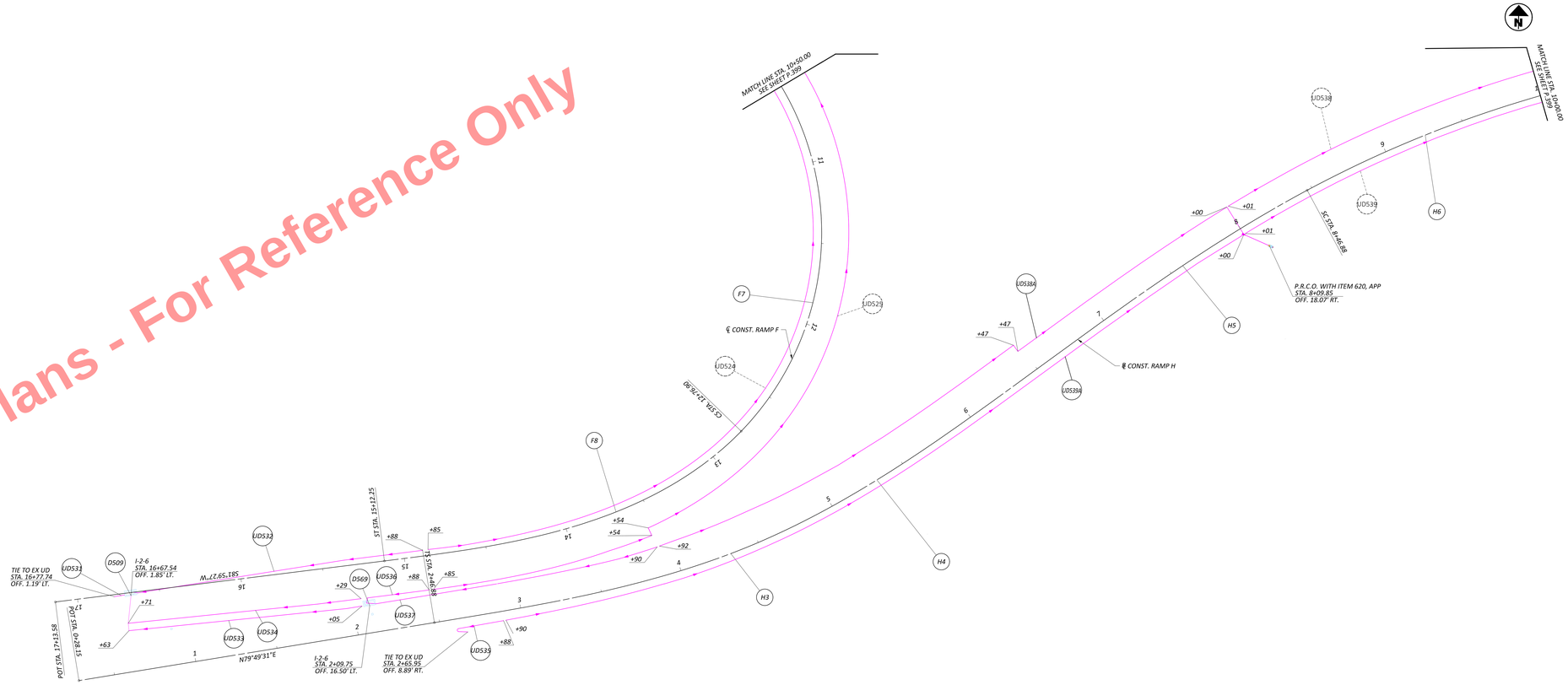

℄ CONST. RAMP F

F7

CURVE DATA
P.I. = STA. 11+77.96
Δ = 87°25'39" RT
Dc = 33°00'02"
R = 173.62'
T = 165.99'
L = 264.93'
E = 66.58'
DS = 25 mph
emax = 0.0580

F8

SPIRAL DATA
P.I. = STA. 13+58.95
Ls = 235.35'
Θs = 38°50'01"
LT = 160.85'
ST = 82.05'
x = 224.77'
y = 51.45'
k = 115.90'
p = 13.08'
C = 230.58'
CS = Sta. 12+76.90
ST = Sta. 15+12.25
C.B. = S69°05'50"W

℄ CONST. RAMP H

H3

SPIRAL DATA
P.I. = STA. 3+80.60
Ls = 200.00'
Θs = 13°28'23"
LT = 133.72'
ST = 67.02'
x = 198.90'
y = 15.61'
k = 99.82'
p = 3.91'
C = 199.51'
TS = Sta. 2+46.88
SS = Sta. 4+46.88
C.B. = N75°20'13"E

H4

SPIRAL DATA
P.I. = STA. 5+13.90
Ls = 200.00'
Θs = 13°28'23"
LT = 133.72'
ST = 67.02'
x = 198.90'
y = 15.61'
k = 99.82'
p = 3.91'
C = 199.51'
SS = Sta. 4+46.88
SS = Sta. 6+46.88
C.B. = N57°22'07"E

H5

SPIRAL DATA
P.I. = STA. 7+80.35
Ls = 200.00'
Θs = 08°00'00"
LT = 133.47'
ST = 66.79'
x = 199.61'
y = 9.30'
k = 99.94'
p = 2.33'
C = 199.83'
SS = Sta. 6+46.88
SC = Sta. 8+46.88
C.B. = N55°32'45"E

H6

CURVE DATA
P.I. = STA. 9+89.77
Δ = 22°33'59" RT
Dc = 08°00'00"
R = 716.20'
T = 142.89'
L = 282.08'
E = 14.12'
DS = 35 mph
emax = 0.0480

P.R.C.O. WITH ITEM 620, APP - PRECAST REINFORCED CONCRETE OUTLET WITH ITEM 620 - DELINEATOR, POST GROUND MOUNTED, AS PER PLAN

HORIZONTAL SCALE IN FEET
0 10 20 40

UNDERDRAIN AND BMP DETAIL SHEETS - RAMPS F & H AT HIGH & EDWARDS ST.
RAMP H - STA. 0+28.15 TO STA. 10+00.00

DESIGN AGENCY
mk consultants, inc.

DESIGNER: CLH
REVIEWER: DNO 05/29/24
PROJECT ID: 121474
SHEET: P.412 TOTAL: 655

MAH-680-4.58

MICROS: 111111, USPWS: PWPF0020 08/24 EN-1 DATE: 07/1/2025 TIME: 10:57:58 AM USER: dhall
FILE NAME: P:\Projects\Active\121474\Engineering_MK\Consultants\Drainage\Sheets\121474_DP041.dgn

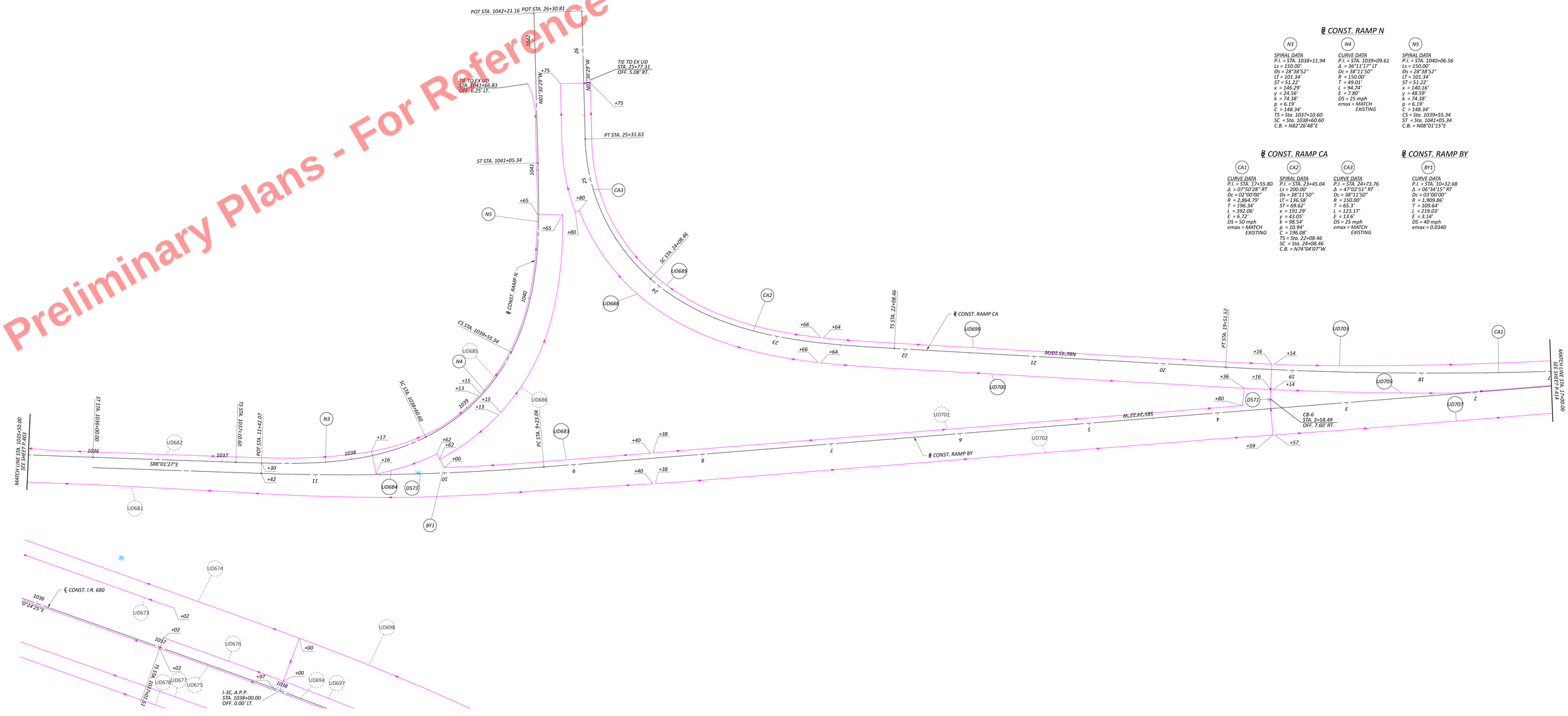

UNDERDRAIN AND BMP DETAIL SHEETS - RAMPS CA, BY & N AT E. WOODLAND AVE.
RAMP CA - STA. 17+00.00 TO STA. 26+24.52

MAH-680-4.58

DESIGN AGENCY
mc consultants, inc.
DESIGNER: CLH
REVIEWER: DNO 05/29/24
PROJECT ID: 121474
SHEET: P.413
TOTAL: 655

MODEL: 11121_GP605_PAVEMENT_66x34.DGN | DATE: 07/1/2025 TIME: 10:56:09 AM USER: dhall
M:\Projects\Mahoning County\121474\MD Engineering_MSConsultants\Drawings\Sheets\121474_GP045.dgn

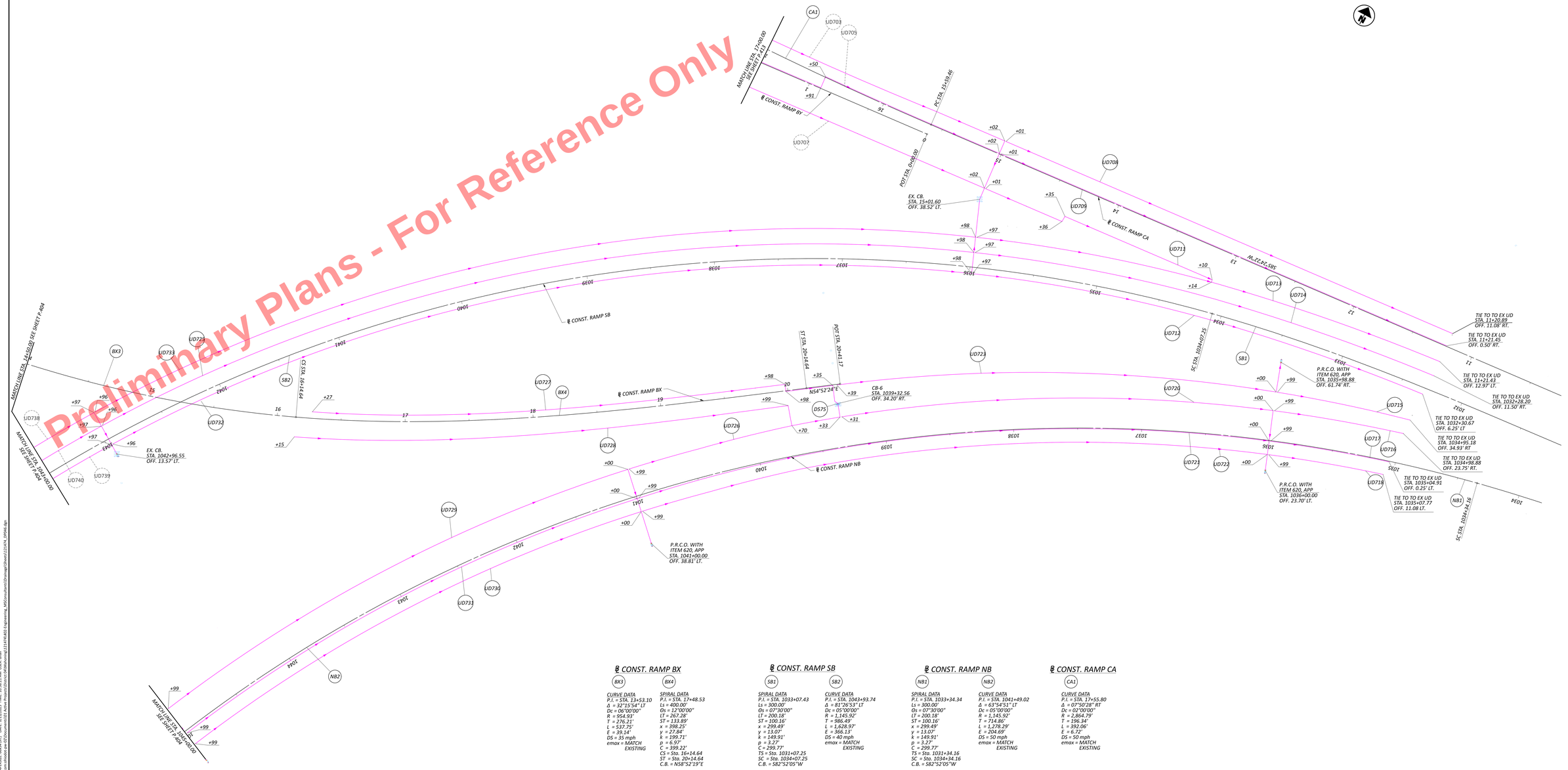

Preliminary Plans - For Reference Only

℄ CONST. RAMP BX

BX3 — CURVE DATA
P.I. = STA. 13+53.10
Δ = 32°15'54" LT
Dc = 06°00'00"
R = 954.93'
T = 276.21'
L = 537.75'
E = 39.14'
DS = 35 mph
emax = MATCH EXISTING

BX4 — SPIRAL DATA
P.I. = STA. 17+48.53
Ls = 400.00'
θs = 12°00'00"
LT = 267.28'
ST = 133.89'
x = 398.25'
y = 27.84'
k = 199.71'
p = 6.97'
C = 399.22'
CS = Sta. 16+14.64
ST = Sta. 20+14.64
C.B. = N58°52'19"E

℄ CONST. RAMP SB

SB1 — SPIRAL DATA
P.I. = STA. 1033+07.43
Ls = 300.00'
θs = 07°30'00"
LT = 200.18'
ST = 100.16'
x = 299.49'
y = 13.07'
k = 149.91'
p = 3.27'
C = 299.77'
TS = Sta. 1031+07.25
SC = Sta. 1034+07.25
C.B. = S82°52'05"W

SB2 — CURVE DATA
P.I. = STA. 1043+93.74
Δ = 81°26'53" LT
Dc = 05°00'00"
R = 1,145.92'
T = 986.49'
L = 1,628.97'
E = 366.13'
DS = 40 mph
emax = MATCH EXISTING

℄ CONST. RAMP NB

NB1 — SPIRAL DATA
P.I. = STA. 1033+34.34
Ls = 300.00'
θs = 07°30'00"
LT = 200.18'
ST = 100.16'
x = 299.49'
y = 13.07'
k = 149.91'
p = 3.27'
C = 299.77'
TS = Sta. 1031+34.16
SC = Sta. 1034+34.16
C.B. = S82°52'05"W

NB2 — CURVE DATA
P.I. = STA. 1041+49.02
Δ = 63°54'51" LT
Dc = 05°00'00"
R = 1,145.92'
T = 714.86'
L = 1,278.29'
E = 204.69'
DS = 50 mph
emax = MATCH EXISTING

℄ CONST. RAMP CA

CA1 — CURVE DATA
P.I. = STA. 17+55.80
Δ = 07°50'28" RT
Dc = 02°00'00"
R = 2,864.79'
T = 196.34'
L = 392.06'
E = 6.72'
DS = 50 mph
emax = MATCH EXISTING

P.R.C.O. WITH ITEM 620, APP - PRECAST REINFORCED CONCRETE OUTLET WITH ITEM 620 - DELINEATOR, POST GROUND MOUNTED, AS PER PLAN

HORIZONTAL SCALE IN FEET
0 10 20 40

UNDERDRAIN AND BMP DETAIL SHEETS - RAMPS NB S.R. 7, SB S.R. 7, BX & CA AT U.S. 62
RAMP NB S.R. 7 - STA. 1035+XX.XX TO STA. 1045+00.00

MAH-680-4.58

MODEL: 11321_GP404_PARTIDAS_data3.fm | DATE: 07/1/2025 TIME: 10:58:21 AM USER: dhall
M:\Projects\Mahoning County\680-4.58 Mahoning County\121474\400 Engineering_MSConsultants\Drainage\Sheets\121474_GP004.dgn

DESIGN AGENCY
ms consultants, inc.
DESIGNER: CLH
REVIEWER: DNO 05/29/24
PROJECT ID: 121474
SHEET: P.414 TOTAL: 655

Preliminary Plans - For Reference Only

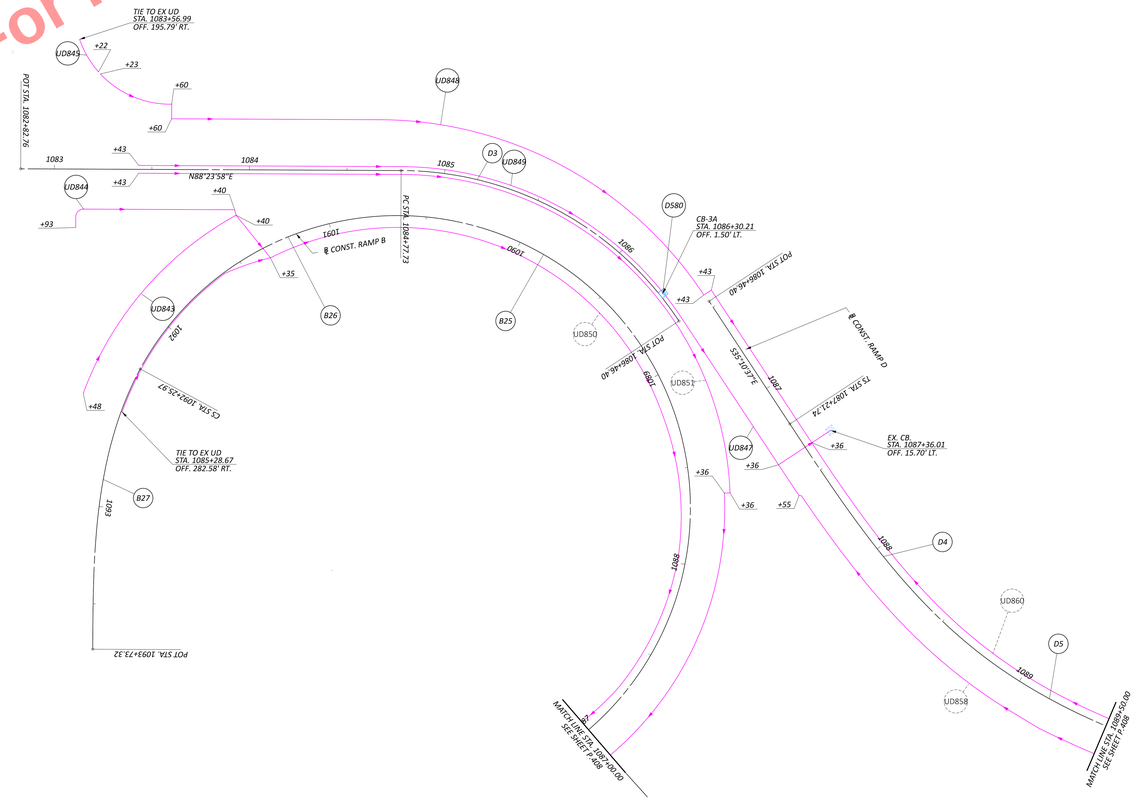

P.R.C.O. WITH ITEM 620, APP - PRECAST REINFORCED CONCRETE OUTLET WITH ITEM 620 - DELINEATOR, POST GROUND MOUNTED, AS PER PLAN

℄ CONST. RAMP B

B25
SPIRAL DATA
P.I. = STA. 1086+15.71
Ls = 132.69'
Θs = 26°03'06"
LT = 88.25'
ST = 46.35'
x = 129.89'
y = 20.36'
k = 64.02'
p = 4.72'
C = 131.48'
TS = Sta. 1085+27.46
SC = Sta. 1086+60.15
C.B. = N79°48'52"E

B26
CURVE DATA
P.I. = STA. 1091+20.05
Δ = 216°07'40" LT
Dc = 38°11'50"
R = 150.00'
T= 459.91'
L = 565.82'
E = 333.75'
DS = 25 mph
emax = MATCH EXISTING

B27
SPIRAL DATA
P.I. = STA. 1092+76.24
Ls = 147.35'
Θs = 28°08'31"
LT = 99.50'
ST = 50.27'
x = 143.84'
y = 23.71'
k = 73.09'
p = 5.98'
C = 145.78'
CS = Sta. 1092+25.97
ST = Sta. 1085+27.46
C.B. = S07°45'39"W

℄ CONST. RAMP D

D3
CURVE DATA
P.I. = STA. 1085+69.61
Δ = 56°25'25" RT
Dc = 33°27'06"
R = 171.28'
T = 91.89'
L = 168.67'
E = 23.09'
DS = 25 mph
emax = MATCH EXISTING

D4
SPIRAL DATA
P.I. = STA. 1088+22.26
Ls = 150.00'
Θs = 18°00'00"
LT = 100.52'
ST = 50.47'
x = 148.53'
y = 15.60'
k = 74.75'
p = 3.91'
C = 149.34'
TS = Sta. 1087+21.74
SS = Sta. 1088+71.74
C.B. = S41°10'18"E

D5
SPIRAL DATA
P.I. = STA. 1089+49.69
Ls = 200.00'
Θs = 28°00'00"
LT = 125.71'
ST = 77.95'
x = 188.95'
y = 59.02'
k = 82.46'
p = 5.78'
C = 197.95'
SS = Sta. 1088+71.74
SC = Sta. 1090+71.74
C.B. = S70°31'25"E

HORIZONTAL SCALE IN FEET
0 10 20 40

UNDERDRAIN AND BMP DETAIL SHEETS - RAMPS B & D AT SOUTH AVE.
RAMP B - STA. 1087+00.00 TO STA. 1093+73.32

DESIGN AGENCY
mo consultants, inc.
DESIGNER: CLH
REVIEWER: DNO 05/29/24
PROJECT ID: 121474
SHEET: P.415 TOTAL: 655

MAH-680-4.58

MICRO: 11X17, LPREF: PAPERSIZE 11X17.PC3 DATE: 5/15/2025 TIME: 10:56:32 AM USER: dhall
FILE NAME: P:\Projects\Mahoning Co\MAH-680-4.58 PID 121474\ROD Engineering_MO\Consultants\Drainage\Sheets\121474_UPDOT.dgn



Preliminary Plans - For Reference Only

P.R.C.O. - PRECAST REINFORCED CONCRETE OUTLET

℄ CONST. I.R. 680

22

SPIRAL DATA
P.I. = STA. 940+16.01 R4
Ls = 400.00'
Θs = 11°00'00"
LT = 267.18'
ST = 133.80'
x = 398.53'
y = 25.53'
k = 199.75'
p = 6.39'
C = 399.35'
TS = STA. 937+48.83
SC = STA. 941+48.83
C.B. = S81°52'20"E

℄ CONST. RAMP C

C1A

SPIRAL DATA
P.I. = STA. 9+91.88
Ls = 200.00'
Θs = 23°58'20"
LT = 134.58'
ST = 67.80'
x = 196.53'
y = 27.55'
k = 99.42'
p = 6.93'
C = 198.45'
SS = STA. 8+57.30
ST = STA. 10+57.30
C.B. = S40°18'46"E

℄ CONST. RAMP C-3

C3-3

CURVE DATA
P.I. = STA. 952+45.66
Δ = 214°56'36" RT
Dc = 31°57'12"
R = 179.31'
T = 569.68'
L = 672.68'
E = 417.92'
emax = 0.059

C3-4

SPIRAL DATA
P.I. = STA. 953+98.04
Ls = 145.81'
Θs = 23°12'47"
LT = 98.07'
ST = 49.38'
x = 143.42'
y = 19.53'
k = 72.51'
p = 4.91'
C = 144.75'
CS = STA. 953+48.66
ST = STA. 954+94.47
C.B. = N44°11'19"E

HORIZONTAL
SCALE IN FEET
0 10 20 40

UNDERDRAIN AND BMP DETAIL SHEETS - RAMP C AT SILLMAN ST.
STA. 0+00.00 TO STA. 11+00.00

MAH-680-4.58

MODEL: 11X17L_DP048_PAVEMENT_664.DGN | DATE: 8/15/2025 TIME: 10:58:43 AM USER: dhall
FILE NAME: P:\Projects\121474\MS Consultants\Drainage\Sheets\121474_DP048.dgn

DESIGN AGENCY
ms consultants, inc.

DESIGNER
CLH

REVIEWER
DNO 05/29/24

PROJECT ID
121474

SHEET P.416 TOTAL 655

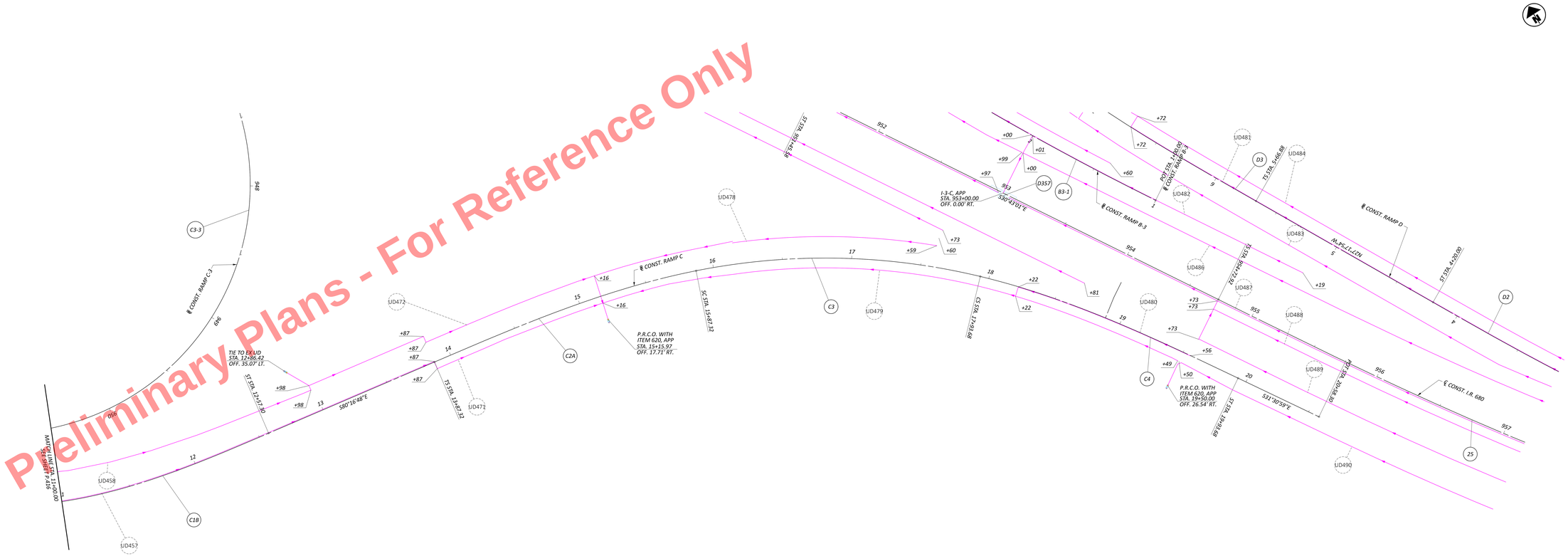

P.R.C.O. WITH ITEM 620, APP - PRECAST REINFORCED CONCRETE OUTLET WITH ITEM 620 - DELINEATOR, POST GROUND MOUNTED, AS PER PLAN

℄ CONST. RAMP C-3

C3-3

CURVE DATA
P.I. = STA. 952+45.66
Δ = 214°56'36" RT
Dc = 31°57'12"
R = 179.31'
T = 569.68'
L = 672.68'
E = 417.92'
DS = 25 mph
emax = 0.0590

℄ CONST. RAMP C

C1b

SPIRAL DATA
P.I. = STA. 11+25.10
Ls = 200.00'
Qs = 23°58'20"
LT = 134.58'
ST = 67.80'
x = 196.53'
y = 27.55'
k = 99.42'
p = 6.93'
C = 198.45'
SS = Sta. 10+57.30
ST = Sta. 12+57.30
C.B. = S72°18'04"E

C2a

SPIRAL DATA
P.I. = STA. 15+20.96
Ls = 200.00'
Qs = 12°00'00"
LT = 133.64'
ST = 66.95'
x = 199.12'
y = 13.92'
k = 99.85'
p = 3.49'
C = 199.61'
TS = Sta. 13+87.32
SC = Sta. 15+87.32
C.B. = S76°16'53"E

C3

CURVE DATA
P.I. = STA. 16+92.14
Δ = 24°45'48" RT
Dc = 12°00'00"
R = 477.46'
T = 104.82'
L = 206.36'
E = 11.37'
DS = 35 mph
emax = 0.0570

C4

SPIRAL DATA
P.I. = STA. 18+60.63
Ls = 200.00'
Qs = 12°00'00"
LT = 133.64'
ST = 66.95'
x = 199.12'
y = 13.92'
k = 99.85'
p = 3.49'
C = 199.61'
CS = Sta. 17+93.68
ST = Sta. 19+93.68
C.B. = S35°30'54"E

℄ CONST. RAMP D

D-2

SPIRAL DATA
P.I. = STA. 3+20.04
Ls = 150.00'
Qs = 05°15'00"
LT = 100.04'
ST = 50.04'
x = 149.87'
y = 4.58'
k = 74.98'
p = 1.15'
C = 149.94'
CS = Sta. 2+70.00
ST = Sta. 4+20.00
C.B. = N29°02'54"W

D-3

SPIRAL DATA
P.I. = STA. 6+66.92
Ls = 150.00'
Qs = 05°15'00"
LT = 100.04'
ST = 50.04'
x = 149.87'
y = 4.58'
k = 74.98'
p = 1.15'
C = 149.94'
TS = Sta. 5+66.88
SC = Sta. 7+16.94
C.B. = N25°32'55"W

℄ CONST. RAMP B-3

B3-1

CURVE DATA
P.I. = STA. 2+58.30
Δ = 08°39'37" RT
Dc = 02°44'26"
R = 2,090.60'
T = 158.3'
L = 316'
E = 5.98'
DS = 50 mph
emax = 0.0420

℄ CONST. I.R. 680

25

SPIRAL DATA
P.I. = STA. 957+40.11 R4
Ls = 400.00'
Qs = 11°00'00"
LT = 267.18'
ST = 133.80'
x = 398.53'
y = 25.53'
k = 199.75'
p = 6.39'
C = 399.35'
TS = Sta. 954+72.92
SC = Sta. 958+72.92
C.B. = S34°22'57"E

Preliminary Plans - For Reference Only

HORIZONTAL SCALE IN FEET
0 10 20 40

UNDERDRAIN AND BMP DETAIL SHEETS - RAMP C AT SILLIMAN ST.
STA. 11+00.00 TO STA. 20+58.30

DESIGN AGENCY
ms consultants, inc.

DESIGNED: CLH
REVIEWED: DNO 05/29/24
PROJECT ID: 121474
SHEET: P.417 TOTAL: 655

MAH-680-4.58

BK2018 | 11121_CPWR PAVEMENT 08x24.ctb | DATE: 8/15/2025 TIME: 10:56:55 AM USER: dhall
K:\2018\11121_CPWR PAVEMENT\Roadway\Plan Production\Contract\121474\MS Engineering_MSConsultants\Drawings\Sheets\121474_UP040.dgn

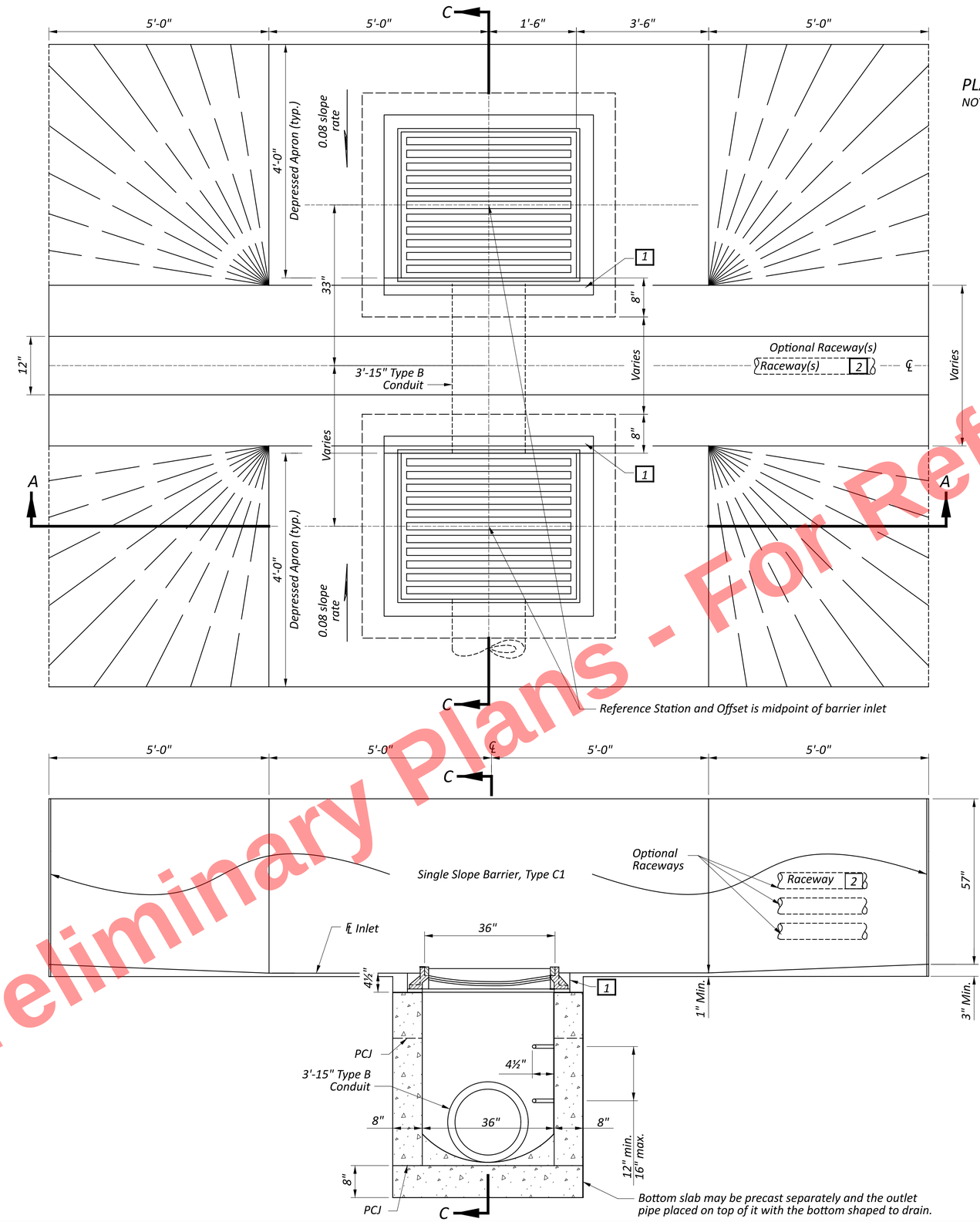

PLAN VIEW
NOT TO SCALE

SECTION A-A
NOT TO SCALE

SEE SHEET 2/2 FOR OTHER SECTIONS

LEGEND

1 After casting is placed, fill void with 4000 psi compressive strength concrete.

2 4" electrical raceway. See Sheet P.419 for Raceway Placement Details.

NOTES

GENERAL: For details of Single Slope Concrete Barriers, see SCD RM-4.3.

WALLS: The walls between the bottom slab and the upper permissible construction joint may be built of brick, concrete block or cast-in-place concrete, 8" nominal thickness for depths of 12' or less.
Precast walls have a minimum thickness of 6" and are reinforced sufficiently to permit shipping and handling without damage. The unit above the upper permissible construction joint may be precast or cast-in-place.

CONCRETE: Provide 4000 psi compressive strength concrete for cast-in-place structures. All precast concrete must meet the requirements of CMS 706.13. Mark the inlet number on the structure. Seal the exposed concrete surfaces of the barrier per Item 512 when specified in the plans.

CASTINGS: Minimum mass of frame and cover is 540 lbs. See Sheet P.419 for CASTING DETAILS.

Lighter weight frames and grates that meet the requirements of CMS 711.14 may also be provided. Grate openings and dimensions may not differ from those shown.

INLETS OVER 12 FEET IN DEPTH: Provide precast or cast-in-place concrete for inlets over 12 feet in depth. Reinforce with #5 bars on 12" centers both vertically and horizontally with 2" clearance from the inside wall face.

OPENINGS: Pipe openings are the outside diameter of the pipe being supplied plus 2" when fabricated or field cut. Fill any voids per C&MS 611.

PCJ: Permissible construction joint.

STEPS: Provide steps according to SCD MH-1

PAYMENT: Payment will be made at the unit price bid per Each for Item 611-Inlet No. 3 for Single Slope Barrier, Type C1, As Per Plan and includes all materials, reinforcing steel, castings, labor and incidentals required to construct the inlet as shown. Sealing of exposed concrete and sealing of the barrier will be paid for under Item 512 when specified in the plans.

Preliminary Plans - For Reference Only

INLET No. 3 FOR SINGLE SLOPE BARRIER, TYPE C1, AS PER PLAN
01/02/24

DESIGN AGENCY
ms consultants. inc.

DESIGNER CLH
REVIEWER DNO 07/12/24
PROJECT ID 121474
SHEET P.418 TOTAL 655

MAH-680-4.58

MODEL: Sheet 1 PAPERSIZE: 34x22 (in.) DATE: 9/15/2025 TIME: 2:48:49 PM PLTDRV: OHDOT_PDF_E+.pltcfg PENTBL: OHDOT_Pen.tbl USER: DHall@msconsultants.com WORKSPACE: OHDOTCEv02 WORKSET: 121474 PRODUCT: OpenRoadsDesigner 24.00.00.205
pw:\\ohiodot-pw.bentley.com:ohiodot-pw-02\Documents\01 Active Projects\District 04\Mahoning\121474\402-Engineering_MSConsultants\Drainage\Sheets\121474_DD001.dgn

Preliminary Plans - For Reference Only

FOR NOTES, LEGEND, PLAN, AND SECTION A-A, SEE SHEET P.418.

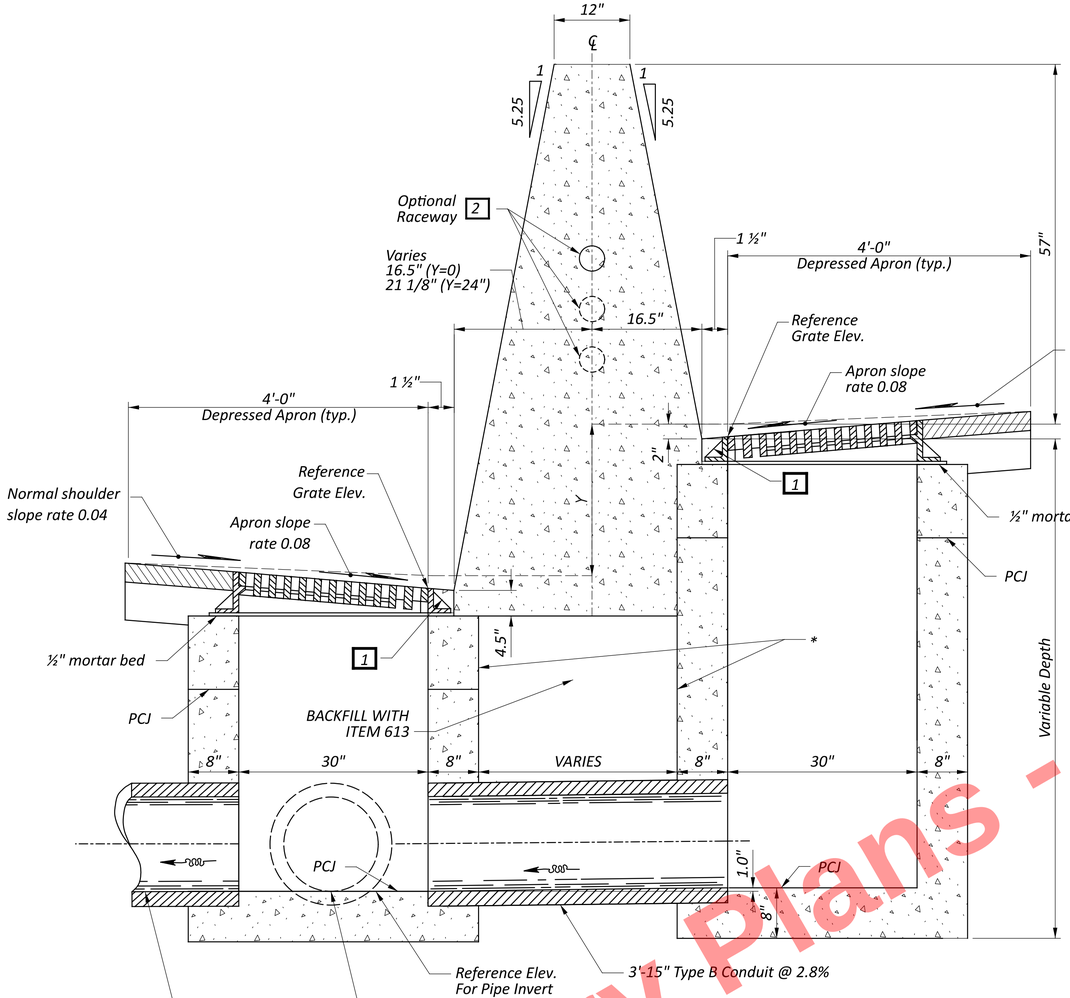

SECTION C-C

OUTLET TO LOW SIDE
NOT TO SCALE

For longitudinal pipe installations, connect downstream end to drainage structure on the same side as the outlet pipe.

Outlet pipe, see plans for size and invert (reverse side as necessary, as shown on plan)

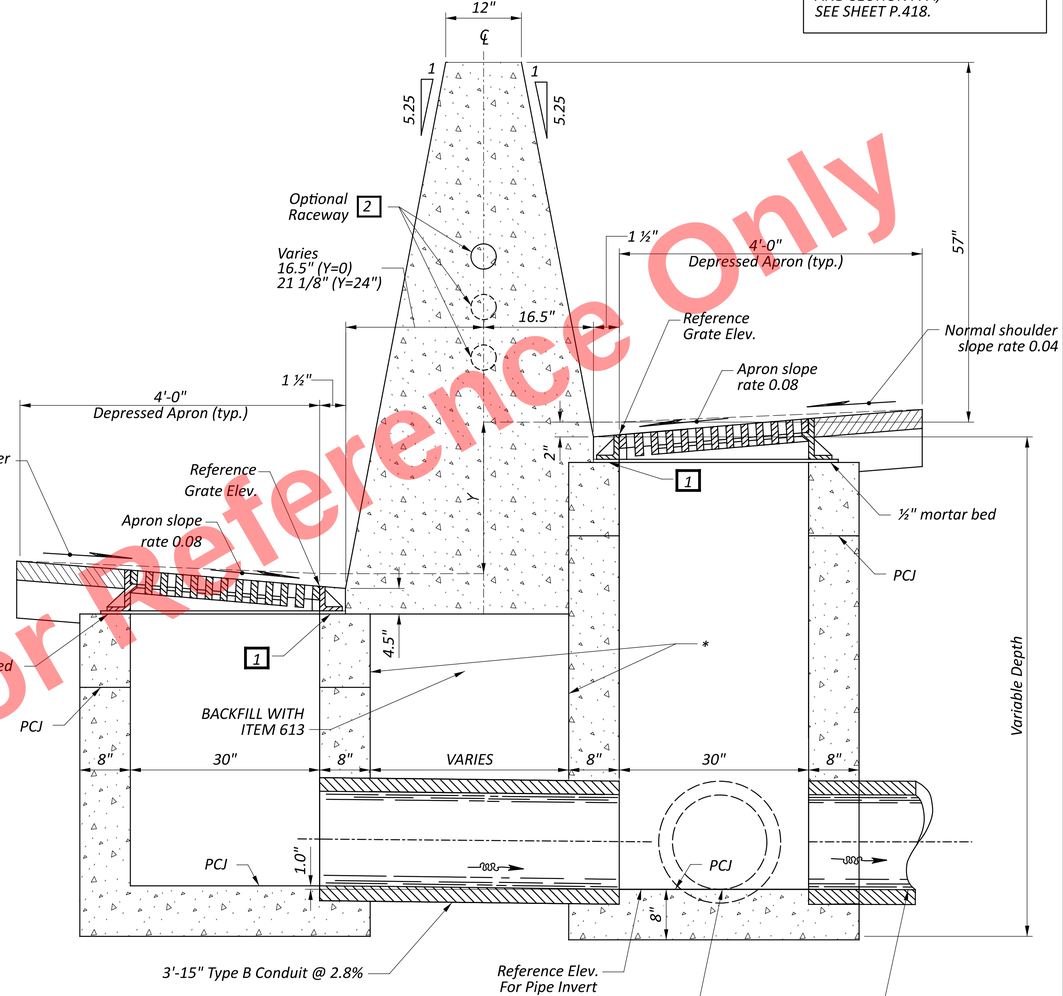

SECTION C-C

OUTLET TO HIGH SIDE
NOT TO SCALE

For longitudinal pipe installations, connect downstream end to drainage structure on the same side as the outlet pipe.

Outlet pipe, see plans for size and invert (reverse side as necessary, as shown on plan)

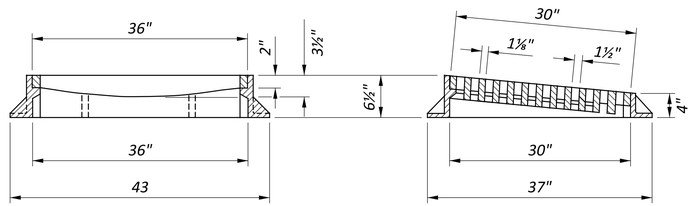

CASTING DETAILS

* In areas where End Anchorages occur, inlet walls shall be modified to accommodate end anchorage barrier width and rebar.

INLET No. 3 FOR SINGLE SLOPE BARRIER, TYPE C1, AS PER PLAN

02/02/24

MAH-680-4.58

MODEL: Sheet 2 PAPERSIZE: 34x22 (in.) DATE: 9/15/2025 TIME: 2:48:50 PM PLTDRV: OHDOT_PDF_E+.pltcfg PENTBL: OHDOT_Pen.tbl USER: DHall@msconsultants.com WORKSPACE: OHDOTCEv02 WORKSET: 121474 PRODUCT: OpenRoadsDesigner 24.00.00.205
pw:\\ohiodot-pw.bentley.com:ohiodot-pw-02\Documents\01 Active Projects\District 04\Mahoning\121474\402 Engineering_MSConsultants\Drainage\Sheets\121474_DD001.dgn

DESIGN AGENCY
ms consultants. inc.

DESIGNER CLH
REVIEWER DNO 07/12/24
PROJECT ID 121474
SHEET P.419 TOTAL 655

ITEM 630 - REMOVAL OF MISC. TRAFFIC CONTROL ITEM, BEAM SUPPORT FOUNDATION

A CONTINGENCY QUANTITY HAS BEEN PROVIDED FOR THIS WORK TO BE USED FOR REMOVAL OF BEAM SUPPORT FOUNDATIONS, AS DIRECTED BY THE ENGINEER, WHEREVER NEEDED THROUGHOUT THE PROJECT.

THE FOLLOWING QUANTITY HAS BEEN CARRIED TO THE GENERAL SUMMARY:

ITEM 630 - REMOVAL OF MISC. TRAFFIC CONTROL ITEM, BEAM SUPPORT FOUNDATION, 48 EACH

SIGN PLACEMENT

THE ELEVATIONS SHOWN IN THE PLANS ARE FOR INFORMATIONAL PURPOSES ONLY. THE EXACT LOCATIONS OF SIGNS ARE TO BE STAKED. THE ENGINEER WILL REVIEW THE LOCATIONS PRIOR TO POST FABRICATION TO INSURE CLEARANCE OF DRIVES, ROADWAYS AND OTHER OBSTACLES. IF THERE ARE ANY CONFLICTS, THEY WILL BE ADJUSTED AS DIRECTED BY THE ENGINEER. UPON ACCEPTANCE OF THE LOCATIONS BY THE ENGINEER AND PRIOR TO POST FABRICATION, THE CONTRACTOR WILL VERIFY THE REQUIRED LENGTH OF THE SIGN POSTS. PAYMENT FOR THIS IS INCIDENTAL TO ALL 630 ITEMS.

ITEM 630 - GROUND MOUNTED SUPPORT, NO. 3 POST, AS PER PLAN

SQUARE POSTS, CMS 730.016, SHALL NOT BE PERMITTED TO BE USED.

ITEM 621 - RPM, AS PER PLAN

RAISED PAVEMENT MARKERS ON LANE LINES ON FREEWAYS SHALL BE ONE-WAY WHITE SPACED AT 80 FT.

ITEM 630 - REMOVAL OF GROUND MOUNTED SIGN AND DISPOSAL
ITEM 630 - REMOVAL OF GROUND MOUNTED POST SUPPORT AND DISPOSAL
ITEM 630 - REMOVAL OF POLE MOUNTED SIGN AND DISPOSAL

THE CONTRACTOR SHALL BE RESPONSIBLE FOR REMOVING AND DISPOSING OF ALL EXISTING GROUND MOUNTED SIGNS AND POST SUPPORTS INDICATED ON THE PLANS AS PER 630.12 AND 630.14. THE APPROXIMATE LOCATIONS OF THE THE ITEMS TO BE REMOVED ARE SHOWN ON THE SIGNING AND PAVEMENT MARKINGS PLAN SHEETS. THE FOLLOWING QUANTITIES HAVE BEEN INCLUDED IN THE GENERAL SUMMARY FOR USE AS DIRECTED BY THE ENGINEER:

ITEM 630 REMOVAL OF GROUND MOUNTED SIGN AND DISPOSAL	*243 EACH*
ITEM 630 REMOVAL OF GROUND MOUNTED POST SUPPORT AND DISPOSAL	*249 EACH*
ITEM 630 REMOVAL OF POLE MOUNTED SIGN AND DISPOSAL	*5 EACH*

PAYMENT FOR 630 REMOVAL OF GROUND MOUNTED SIGN AND DISPOSAL, 630 REMOVAL OF GROUND MOUNTED POST SUPPORT AND DISPOSAL AND ITEM 630 REMOVAL OF POLE MOUNTED SIGN AND DISPOSAL WILL BE MADE AT THE CONTRACT UNIT PRICE FOR EACH SIGN AND SUPPORT REMOVED AND DISPOSED OF, INCLUDING MATERIALS, EQUIPMENT, LABOR AND INCIDENTALS.

PAVEMENT MARKING COORDINATION WITH MAH-680-0.00

THE CONTRACTOR SHALL BE RESPONSIBLE FOR COORDINATING WITH THE ADJACENT MAH-680-4.58, PART 2 MAINTENANCE OF TRAFFIC REQUIREMENTS WITH REGARDS TO THE PLACEMENT OF THE PROPOSED PAVEMENT MARKINGS FOR MAH-680-4.58, PART 1 IN THE EVENT THAT MAH-680-0.00 IS ANTICIPATED TO START WITHIN A MAXIMUM OF 2 YEARS FROM THE COMPLETION DATE OF MAH-680-4.58, PART 1.

IF THE ABOVE CONDITIONS ARE MET, THE FOLLOWING MAINLINE PAVEMENT MARKING ITEMS SHALL BE NON-PERFORMED BETWEEN STA. 950+65.76 TO STA. 978+00.00, LT AND STA. 950+65.76 TO STA. 962+00.00, RT.:

ITEM 807, WET REFLECTIVE EPOXY PAVEMENT MARKING, EDGE LINE, 6"
ITEM 807, WET REFLECTIVE EPOXY PAVEMENT MARKING, LANE LINE, 6"
ITEM 850, GROOVING FOR 6" RECESSED PAVEMENT MARKING, (ASPHALT)
ITEM 850, GROOVING FOR 6" RECESSED PAVEMENT MARKINGS, (CONCRETE)

AND THE FOLLOWING PAVEMENT MARKING ITEMS SHALL BE UTILIZED:

ASPHALT SURFACES
ITEM 648, EDGE LINE, 6" 0.94 MILE
ITEM 648, LANE LINE, 6" 1.00 MILE

CONCRETE SURFACES
ITEM 642, EDGE LINE, 6", TYPE 1 0.23 MILE
ITEM 642, LANE LINE, 6", TYPE 1 0.23 MILE

THE ABOVE QUANTITIES HAVE BEEN INCLUDED IN THE GENERAL SUMMARY FOR USE AS DIRECTED BY THE ENGINEER.

Preliminary Plans - For Reference Only

TRAFFIC CONTROL GENERAL NOTES

MAH-680-4.58

MODEL: Sheet PAPERSIZE: 34x22 (in.) DATE: 9/11/2025 TIME: 12:53:18 PM PLTDRV: OHDOT_PDF_Color_E+.pltcfg PENTBL: OHDOT_PenC.tbl USER: sletterl@fokeng.com WORKSPACE: OHDOTCE.v02 WORKSET: 121474 PRODUCT: OpenRoadsDesigner 24.00.00.205
pw:\\ohiodot-pw.bentley.com:ohiodot-pw-02\Documents\01 Active Projects\District 04\Mahoning\121474\403-Engineering_FokEng\Traffic\Sheets\121474_TN001.dgn

DESIGN AGENCY
TF ASSOCIATES

DESIGNER
SDL

REVIEWER
WHT 09/15/25

PROJECT ID
121474

SHEET P.420 | TOTAL 655

REF NO.	SHEET NO.	LOCATION	STATION	SIDE	CODE	SIZE (INCHES)	630 GROUND MOUNTED SUPPORT, NO. 2 POST FT	630 GROUND MOUNTED SUPPORT, NO. 3 POST, AS PER PLAN FT	630 GROUND MOUNTED SUPPORT, NO. 4 POST FT	630 ONE WAY SUPPORT, NO. 3 POST FT	630 GROUND MOUNTED SUPPORT, NO. 6 POST FT	630 SIGN SUPPORT ASSEMBLY, BARRIER MOUNTED, AS PER PLAN EACH	630 SIGN POST REFLECTOR EACH	630 SIGN, FLAT SHEET SF	630 REMOVAL OF POLE MOUNTED SIGN AND REERECTION EACH
S1	P.439	RAMP C	0+32.00	RT	M3-3-24	24" X 12"		11.0						2.00	
					M1-1-30-3	30" X 24"								5.00	
					M6-1-21	21" X 15"								2.19	
S2	P.439	RAMP C	0+47.00	LT	M3-3-24	24" X 12"		11.0						2.00	
					M1-1-30-3	30" X 24"								5.00	
					M6-1-21	21" X 15"								2.19	
S3	P.439	RAMP C	1+25.00	RT	R5-H10d-36	36" X 36"		13.5						9.00	
S4	P.439	RAMP C	5+28.00	RT	D10-H5a-30	30" X 30"		14.0						6.25	
S5	P.439	RAMP C	7+65.00	RT	R1-2-60	60" X 60"		15.0/16.3					2	10.83	
S6	P.439	SR193	1+23.00	LT	SPECIAL	48" X 48"		15.5/17.0					2	16.00	
S7	P.439	SR193	2+02.00	LT	W13-3-48	48" X 60"			16.5/17.8				2	20.00	
S8	P.439	RAMP C3	953+80.00	LT	W1-6L-60	60" X 30"		14.0/15.5					2	12.50	
S9	P.439	RAMP B3	6+09.00	RT	W13-3-48	48" X 60"			16.5/17.8				2	20.00	
S10	P.439	RAMP B3	7+95.00	RT	W8-13-48	48" X 48"		15.5/17.0					2	16.00	
S11	P.439	RAMP B3	10+40	RT	SPECIAL	30" X 24"	13.5						1	5.00	
S12	P.439	RAMP D	16+45.00	RT	R5-1-48	48" X 48"		15.5/16.8					2	16.00	
					R5-1a-42	42" X 30"								8.75	
S13	P.439	RAMP D	16+45.00	LT	R5-1-48	48" X 48"		15.5/16.8					2	16.00	
					R5-1a-42	42" X 30"								8.75	
S14	P.439	RAMP D	18+50.00	RT	R6-1R-54	54" X 18"				15.0/13.5			2	6.75	
					R6-1L-54	54" X 18"								6.75	
					R5-1-36	36" X 36"								9.00	
S15	P.439	RAMP D	18+50.00	LT	R6-1R-54	54" X 18"				15.0/13.5			2	6.75	
					R6-1L-54	54" X 18"								6.75	
					R5-1-36	36" X 36"								9.00	
S16	P.440	IR680 SB	952+51.00	RT	W4-1R-48	48" X 48"		15.5/15.8					2	16.00	
S17	P.440	RAMP D	5+76.00	RT	W13-2-48	48" X 60"			16.5/17.8				2	20.00	
S18	P.440	IR680 NB	969+99	LT	R21-H2-30	30" X 36"		15.5						7.50	
S19	P.440	RAMP G	5+91.00	RT	W8-13-48	48" X 48"		16.5/17.8					2	16.00	
S20	P.440	RAMP G	4+00.00	RT	R5-H10d-36	36" X 36"		13.5						9.00	
S21	P.440	RAMP G	3+00.00	RT	D10-H5a-30	30" X 30"		13.0						6.25	
S22	P.440	RAMP G	2+64.00	RT	M2-H3-48	48" X 60"		15.5/15.5						20.00	
S23	P.440	IR680 NB	973+23.00	LT	W4-1R-48	48" X 48"		15.5/15.8					2	16.00	
S24	P.440	IR680 NB/SB	975+61.00	CL	D10-5-18	18" X 60"	7.3					1		7.50	
					D10-5-18	18" X 60"								7.50	
S25	P.440	EDWARDS ST		RT	M3-1-24	24" X 12"		11.0						2.00	
					M1-1-30-3	30" X 24"								5.00	
					M5-1-21	21" X 15"								2.19	
S26	P.440	MARSHALL ST	10+39	LT	M3-3-24	24" X 12"		11.0						2.00	
					M1-1-30-3	30" X 24"								5.00	
					M6-1-21	21" X 15"								2.19	
S27	P.440	MARSHALL ST	10+50	RT	M2-H3-48	48" X 60"		15.5/15.5						20.00	
S28	P.440	MARSHALL ST	11+29	LT	M2-H3-48	48" X 60"		15.5/15.5						20.00	
S28A	P.440	MAHONING AVE		RT	R3-Hbb										1
TOTALS CARRIED TO SHEET NO. P.426							20.8	493.8	102.9	57.0		1	29	412.59	1

Preliminary Plans - Not For Reference Only

SIGNING SUBSUMMARY

MAH-680-4.54

MODEL: Sheet PAPERSIZE: 34x22 (in.) DATE: 9/11/2025 TIME: 12:53:24 PM PLTDRV: OHDOT_PDF_Color_E+.pltcfg PENTBL: OHDOT_PenC.tbl USER: sletten@tokeng.com WORKSPACE: OHDOTCEv02 WORKSET: 121474 PRODUCT: OpenRoadsDesigner 24.00.00.205
pw:\\ohiodot-pw.bentley.com:ohiodot-pw-02\Documents\01 Active Projects\District 04\Mahoning\121474\d03-Engineering_FokEng\Traffic\Sheets\121474_TS001.dgn

DESIGN AGENCY
TF ASSOCIATES

DESIGNER SDL

REVIEWER WHT 09/15/25

PROJECT ID 121474

SHEET P.421 TOTAL 655

REF NO.	SHEET NO.	LOCATION	STATION	SIDE	CODE	SIZE (INCHES)	630 GROUND MOUNTED SUPPORT, NO. 2 POST FT	630 GROUND MOUNTED SUPPORT, NO. 3 POST, AS PER PLAN FT	630 GROUND MOUNTED SUPPORT, NO. 4 POST FT	630 ONE WAY SUPPORT, NO. 3 POST FT	630 GROUND MOUNTED SUPPORT, NO. 6 POST FT	630 SIGN SUPPORT ASSEMBLY, BARRIER MOUNTED, AS PER PLAN EACH	630 SIGN POST REFLECTOR EACH	630 SIGN, FLAT SHEET SF
S29	P.441	RAMP F	6+93.00	RT	W13-2-48	48" X 60"			16.5/17.8				2	20.00
S30	P.441	RAMP F	7+70.00	RT	D10-H5a-30	30" X 30"		13.0						6.25
S31	P.441	RAMP F	9+35.00	LT	W1-8R-36	36" X 48"		15.5/16.5					2	12.00
S32	P.441	RAMP F	10+29.00	LT	W1-8R-36	36" X 48"		15.5/16.5					2	12.00
S33	P.441	RAMP F	11+20.00	LT	W1-8R-36	36" X 48"		15.5/16.5					2	12.00
S34	P.441	RAMP F	11+86.00	LT	W1-8R-36	36" X 48"		15.5/16.5					2	12.00
S35	P.441	RAMP F	12+85.00	LT	R5-1-48	48" X 48"		15.5/16.8					2	16.00
					R5-1a-42	42" X 30"								8.75
S36	P.441	RAMP F	14+53.00	RT	R5-1-48	48" X 48"		15.5/16.8					2	16.00
					R5-1a-42	42" X 30"								8.75
S37	P.441	RAMP F	15+50.00	RT	R21-H2-30	30" X 36"		13.5						7.50
S38	P.441	RAMP F	16+00.00	RT	D10-H5a-30	30" X 30"		13.0						6.25
S39	P.441	RAMP F	16+72.00	RT	R6-1R-54	54" X 18"				15.0/13.5			2	6.75
					R6-1L-54	54" X 18"								6.75
					R5-1-36	36" X 36"								9.00
					R1-1-48	48" X 48"								16.00
S40	P.441	RAMP F	16+72.00	LT	R1-1-36	36" X 36"		13.5					2	9.00
					R4-7-24	24" X 30"								5.00
S41	P.441	EDWARDS ST		RT	M3-3-24	24" X 12"		11.0						2.00
					M1-1-30-3	30" X 24"								5.00
					M5-1-21	21" X 15"								2.19
S42	P.441	HIGHT ST		RT	M2-H3-48	48" X 60"		15.5/15.5						20.00
S43	P.441	RAMP H	2+75.00	RT	M3-3-24	24" X 12"		11.0						2.00
					M1-1-30-3	30" X 24"								5.00
					M6-2-21	21" X 15"								2.19
S44	P.441	RAMP H	5+50.00	RT	R5-H10d-36	36" X 36"		13.5						9.00
S45	P.441	RAMP H	10+15.00	RT	D10-H5a-30	30" X 30"		13.0						6.25
S46	P.441	IR680 NB	985+95.00	LT	W8-13-48	48" X 48"		15.5/17.0					2	16.00
S47	P.441	IR680 NB/SB	986+36.00	CL	D10-5-18	18" X 60"	7.3					1		7.50
					D10-5-18	18" X 60"								7.50
S48	P.441	RAMP J	14+75.00	RT	R1-2-60	60" X 60"		15.0/16.3					2	10.83
S49	P.441	RAMP J	11+68.00	LT	R5-1-48	48" X 48"		15.5/16.8					2	16.00
					R5-1a-42	42" X 30"								8.75
S50	P.441	RAMP J	11+68.00	RT	R5-1-48	48" X 48"		15.5/16.8					2	16.00
					R5-1a-42	42" X 30"								8.75
S51	P.441	RAMP J	10+35.00	RT	D10-H5a-30	30" X 30"		13.0						6.25
S52	P.441	RAMP J	8+04.00	RT	W13-2-48	48" X 60"			16.5/17.8				2	20.00
S53	P.441	RAMP J	5+18.00	RT	D10-H5a-30	30" X 30"		13.0						6.25
S54	P.441	IR680 SB	994+59.00	RT	W4-1R-48	48" X 48"		15.5/15.8					2	16.00
S55	P.441	IR680 NB/SB	996+70.00	CL	D10-5-18	18" X 60"	7.3					1		7.50
					D10-5-18	18" X 60"								7.50
S56	P.441	IR680 SB	999+33.00	RT	W8-13-48	48" X 48"		15.5/17.0					2	16.00
S57	P.441	IR680 NB/SB	1007+29.00	CL	D10-5-18	18" X 60"	7.3					1		7.50
					D10-5-18	18" X 60"								7.50
S58	P.441	IR680 SB	1008+16.00	RT	R2-1-48	48" X 60"			16.5/17.8				2	20.00
S59	P.441	IR680 NB	1009+33.00	LT	R2-1-48	48" X 60"			16.5/17.8				2	20.00
S60	P.441	IR680 NB	1011+32.00	LT	W8-13-48	48" X 48"		15.5/17.0					2	16.00
S61	P.441	EDWARDS ST		RT	M3-1-24	24" X 12"		11.0						2.00
					M1-1-30-3	30" X 24"								5.00
					M6-1-21	21" X 15"								2.19
S62	P.441	EDWARDS ST		RT	M3-3-24	24" X 12"		11.0						2.00
					M1-1-30-3	30" X 24"								5.00
					M6-3-21	21" X 15"								2.19
TOTALS CARRIED TO SHEET NO. P.426							21.9	597.8	137.2	28.5		3	38	503.84

Preliminary Plans - Not For Reference Only

SIGNING SUBSUMMARY

DESIGN AGENCY
TF ASSOCIATES

DESIGNER SDL
REVIEWER WHT 09/15/25
PROJECT ID 121474
SHEET P.422 TOTAL 655

MAH-680-4.54

MODEL: Sheet PAPERSIZE: 34x22 (in.) DATE: 9/11/2025 TIME: 12:53:31 PM PLTDRV: OHDOT_PDF_Color_E+.pltcfg PENTBL: OHDOT_PenC.tbl USER: sletten@fokeng.com WORKSPACE: OHDOTCE.v02 WORKSET: 121474 PRODUCT: OpenRoadsDesigner 24.00.00.205
pw:\\ohiodot-pw.bentley.com:ohiodot-pw-02\Documents\01 Active Projects\District 04\Mahoning\121474\403-Engineering_FokEng\TrafficSheets\121474_TS002.dgn

REF NO.	SHEET NO.	LOCATION	STATION	SIDE	CODE	SIZE (INCHES)	630 GROUND MOUNTED SUPPORT, NO. 2 POST FT	630 GROUND MOUNTED SUPPORT, NO. 3 POST, AS PER PLAN FT	630 GROUND MOUNTED SUPPORT, NO. 4 POST FT	630 ONE WAY SUPPORT, NO. 3 POST FT	630 GROUND MOUNTED SUPPORT, NO. 6 POST FT	630 SIGN SUPPORT ASSEMBLY, BARRIER MOUNTED, AS PER PLAN EACH	630 SIGN POST REFLECTOR EACH	630 SIGN, FLAT SHEET SF
S63	P.442	IR680 NB	1019+14.00	LT	M3-1-36	36" X 18"					17.0			4.50
					M1-1-45-3	45" X 36"								11.25
S64	P.442	IR680 NB/SB	1019+14.00	CL	D10-5-18	18" X 60"	7.3					1		7.50
					D10-5-18	18" X 60"								7.50
S65	P.442	RAMP K	8+40.00	RT	W13-2-48	48" X 60"			16.5/17.8				2	20.00
S66	P.442	RAMP K	9+77.00	RT	D10-H5a-30	30" X 30"		13.0						6.25
S67	P.442	RAMP K	14+54.00	RT	R21-H2-30	30" X 36"		13.5						7.50
S68	P.442	RAMP K	16+21.00	LT	R1-6-12	12" X 36"	13.5						1	3.00
S69	P.442	RAMP K	16+21.00	RT	R1-6-12	12" X 36"	13.5						1	3.00
S70	P.442	RAMP K	16+35.00	LT	R3-2-48	48" X 48"								16.00
					R5-1-48	48" X 48"		15.5/16.8					2	16.00
					R5-1a-42	42" X 30"								8.75
S71	P.442	RAMP K	16+35.00	RT	R3-2-48	48" X 48"								16.00
					R5-1-48	48" X 48"		15.5/16.8					2	16.00
					R5-1a-42	42" X 30"								8.75
S72	P.442	RAMP K	16+79.00	LT	R6-1R-54	54" X 18"				15.0/13.5			2	6.75
					R6-1L-54	54" X 18"								6.75
					R5-1-36	36" X 36"								9.00
					R1-1-48	48" X 48"								16.00
S73	P.442	RAMP K	16+78.00	RT	R6-1R-54	54" X 18"				15.0/13.5			2	6.75
					R6-1L-54	54" X 18"								6.75
					R5-1-36	36" X 36"								9.00
					R1-1-48	48" X 48"								16.00
S74	P.442	RAMP M	1029+67.00	RT	W13-2-48	48" X 60"			16.5/17.8				2	20.00
S75	P.442	RAMP M	1032+11.00	LT	R21-H2-30	30" X 36"		13.5						7.50
S76	P.442	RAMP M	1034+91.00	LT	W1-8R-36	36" X 48"		15.5/16.5					2	12.00
S77	P.442	RAMP M	1035+77.00	LT	W1-8R-36	36" X 48"		15.5/16.5					2	12.00
S78	P.442	RAMP M	1036+64.00	LT	W1-8R-36	36" X 48"		15.5/16.5					2	12.00
S79	P.442	RAMP M	1037+53.00	LT	W1-8R-36	36" X 48"		15.5/16.5					2	12.00
S80	P.442	RAMP M	1039+37.00	RT	R5-1-48	48" X 48"		15.5/16.8					2	16.00
					R5-1a-42	42" X 30"								8.75
S81	P.442	RAMP M	1039+37.00	LT	R5-1-48	48" X 48"		15.5/16.8					2	16.00
					R5-1a-42	42" X 30"								8.75
					R3-2-48	48" X 48"								16.00
S82	P.442	RAMP M	1040+89.00	RT	R6-1R-54	54" X 18"				15.0/13.5			2	6.75
					R6-1L-54	54" X 18"								6.75
					R5-1-36	36" X 36"								9.00
					R1-1-48	48" X 48"								16.00
S83	P.442	RAMP M	1040+77.00	LT	R6-1R-54	54" X 18"				15.0/13.5			2	6.75
					R6-1L-54	54" X 18"								6.75
					R5-1-36	36" X 36"								9.00
					R1-1-48	48" X 48"								16.00
S84	P.442	IR680 NB	1022+45.00	LT	W4-1R-48	48" X 48"		15.5/15.8					2	16.00
S85	P.442	RAMP L	4+60.00	RT	W8-13-48	48" X 48"		15.5/17.0					2	16.00
S86	P.442	IR680 NB	1023+76.00	LT	W8-13-48	48" X 48"		15.5/17.0					2	16.00
S87	P.442	RAMP L	3+60.00	RT	D10-H5a-30	30" X 30"		13.0						6.25
S88	P.442	RAMP L	3+01.00	LT	R5-H10d-36	36" X 36"		13.5						9.00
S89	P.442	RAMP L	2+18.00	RT	M3-1-24	24" X 12"		11.0						2.00
					M1-1-30-3	30" X 24"								5.00
					M6-3-21	21" X 15"								2.19
S90	P.442	MARKET ST	53+16.00	LT	M4-5-24	24" X 12"		15.8						2.00
					M3-3-24	24" X 12"								2.00
					M1-1-30-3	30" X 24"								5.00
					M6-3-21	21" X 15"								2.19
TOTALS CARRIED TO SHEET NO. P.426							34.3	446.8	68.6	114.0	17.0	1	36	530.63

Preliminary Plans - For Reference Only

SIGNING SUBSUMMARY

MAH-680-4.54

MODEL: Sheet PAPERSIZE: 34x22 (in.) DATE: 9/11/2025 TIME: 12:53:39 PM PLTDRV: OHDOT_PDF_Color_E+.pltcfg PENTBL: OHDOT_PenC.tbl USER: slettieri@lokeng.com WORKSPACE: OHDOTCEv02 WORKSET: 121474 PRODUCT: OpenRoadsDesigner 24.00.00.205
pw:\\ohiodot-pw.bentley.com:ohiodot-pw-02\Documents\01 Active Projects\District 04\Mahoning\121474\403-Engineering_FokEngTraffic\Sheets\121474_TS003.dgn

DESIGN AGENCY
TF ASSOCIATES

DESIGNER SDL
REVIEWER WHT 09/15/25
PROJECT ID 121474
SHEET P.423 TOTAL 655

REF NO.	SHEET NO.	LOCATION	STATION	SIDE	CODE	SIZE (INCHES)	630 GROUND MOUNTED SUPPORT, NO. 2 POST FT	630 GROUND MOUNTED SUPPORT, NO. 3 POST, AS PER PLAN FT	630 GROUND MOUNTED SUPPORT, NO. 4 POST FT	630 ONE WAY SUPPORT, NO. 3 POST FT	630 GROUND MOUNTED SUPPORT, NO. 6 POST FT	630 SIGN SUPPORT ASSEMBLY, BARRIER MOUNTED, AS PER PLAN EACH	630 SIGN POST REFLECTOR EACH	630 SIGN, FLAT SHEET SF
S91	P.442	IR680 NB/SB	1031+17.00	CL	D10-5-18	18" X 60"	7.3					1		7.50
					D10-5-18	18" X 60"								7.50
S92	P.442	IR680 NB	1034+60.00	LT	W4-1R-48	48" X 48"		15.5/15.8					2	16.00
S93	P.442	IR680 SB	1035+32.00	CL	W1-2R-36	36" x 36"	6.3					1	1	9.00
S94	P.442	IR680 SB	1035+39.00	RT	W1-2R-48	48" X 48"		15.5/16.8					2	16.00
S95	P.442	RAMP BX	2+91.00	LT	M3-2-36	36" X 18"					15.3			4.50
					M1-4-36-2	36" X 36"								9.00
					M6-3-30	30" X 21"								4.38
S96	P.442	RAMP N	1036+24.00	LT	D10-H5a-30	30" X 30"		13.0						6.25
S97	P.443	RAMP BX	8+94.00	RT	D10-H5a-30	30" X 30"		13.0						6.25
S98	P.443	RAMP BX	10+25.00	RT	W8-13-48	48" X 48"		15.5/17.0					2	16.00
S99	P.443	RAMP BX	10+50.00	RT	SPECIAL	30" X 36"		13.5						7.50
S100	P.443	RAMP BX	19+68.00	RT	R1-2-60	60" X 60"		15.5/15.5					2	10.83
S101	P.443	IR680 SB	1039+25.00	RT	W1-13-48	48" X 48"			19.1/19.9				2	16.00
					W13-1P-30	30" X 30"								6.25
S102	P.443	IR680 SB	1040+10.00	RT	W8-13-48	48" X 48"		15.5/17.0					2	16.00
S103	P.443	IR680 NB/SB	1041+00.00	CL	W1-8R-30	30" X 36"	5.3					1	1	7.50
S104	P.443	IR680 NB	1041+00.00	LT	W1-8L-36	36" X 48"		15.5/16.5					2	12.00
S105	P.443	IR680 NB/SB	1041+75.00	CL	D10-5-18	18" X 60"	7.3					1		7.50
					D10-5-18	18" X 60"								7.50
S106	P.443	IR680 NB/SB	1042+00.00	CL	W1-8R-30	30" X 36"	5.3					1	1	7.50
S107	P.443	IR680 NB	1042+00.00	LT	W1-8L-36	36" X 48"		15.5/16.5					2	12.00
S108	P.443	IR680 NB/SB	1042+77.00	CL	W1-8R-30	30" X 36"	5.3					1	2	7.50
					W1-8L-30	30" X 36"								7.50
S109	P.443	IR680 NB	1043+00.00	LT	W1-8L-36	36" X 48"		15.5/16.5					2	12.00
S110	P.443	IR680 NB	1044+00.00	LT	W1-8L-36	36" X 48"		15.5/16.5					2	12.00
S111	P.443	IR680 NB/SB	1044+00.00	CL	W1-8R-30	30" X 36"	5.3					1	1	7.50
S112	P.443	IR680 NB/SB	1045+00.00	CL	W1-8R-30	30" X 36"	5.3					1	1	7.50
S113	P.443	IR680 NB	1045+00.00	LT	W1-8L-36	36" X 48"		15.5/16.5					2	12.00
S114	P.443	IR680 NB	1046+00.00	LT	W1-8L-36	36" X 48"		15.5/16.5					2	12.00
S115	P.443	IR680 NB/SB	1046+00.00	CL	W1-8R-30	30" X 36"	5.3					1	1	7.50
S116	P.443	RAMP BY	9+22.00	RT	W4-1R-48	48" X 48"		15.5/15.8					2	16.00
S117	P.443	RAMP N	1038+37.00	LT	R1-2-60	60" X 60"		15.5/15.5					2	10.83
S118	P.443	E WOODLAND AVE	7+41.00	RT	R3-H8bb-30	30" X 30"	13.0							6.25
S119	P.443	RAMP CA	25+68.00	RT	R6-1R-54	54" X 18"				15.0/13.5			2	6.75
					R6-1L-54	54" X 18"								6.75
					R5-1-36	36" X 36"								9.00
					R1-1-48	48" X 48"								16.00
S120	P.443	RAMP CA	24+00.00	LT	R5-1-48	48" X 48"		15.0/15.5					2	16.00
					R5-1a-42	42" X 30"								8.75
S121	P.443	RAMP CA	24+00.00	RT	R5-1-48	48" X 48"		15.0/15.5					2	16.00
					R5-1a-42	42" X 30"								8.75
S122	P.443	RAMP CA	17+52.00	RT	W13-2-48	48" X 60"			16.5/17.8				2	20.00
S123	P.443	RAMP CA	11+40.00	RT	SPECIAL	30" X 24"		14.5						5.00
S124	P.443	RAMP NB	1045+17.00	RT	D10-H5a-30	30" X 30"		14.0						6.25
TOTALS CARRIED TO SHEET NO. P.426							65.7	542.9	73.3	28.5	15.3	9	44	450.79

Preliminary Plans - Not For Reference Only

SIGNING SUBSUMMARY

DESIGN AGENCY
TF ASSOCIATES

DESIGNER SDL
REVIEWER WHT 09/15/25
PROJECT ID 121474
SHEET P.424 TOTAL 655

MAH-680-4.54

MODEL: Sheet PAPERSIZE: 34x22 (in.) DATE: 9/11/2025 TIME: 12:53:46 PM PLTDRV: OHDOT_PDF_Color_E+.pltcfg PENTBL: OHDOT_PenC.tbl USER: sletterl@fokeng.com WORKSPACE: OHDOTCE.v02 WORKSET: 121474 PRODUCT: OpenRoadsDesigner 24.00.00.205
pw:\\ohiodot-pw.bentley.com:ohiodot-pw-02\Documents\01 Active Projects\District 04\Mahoning\121474\403-Engineering_FokEng\TrafficSheets\121474_TS004.dgn

REF NO.	SHEET NO.	LOCATION	STATION	SIDE	CODE	SIZE (INCHES)	630 GROUND MOUNTED SUPPORT, NO. 2 POST FT	630 GROUND MOUNTED SUPPORT, NO. 3 POST, AS PER PLAN FT	630 GROUND MOUNTED SUPPORT, NO. 4 POST FT	630 ONE WAY SUPPORT, NO. 3 POST FT	630 GROUND MOUNTED SUPPORT, NO. 6 POST FT	630 SIGN SUPPORT ASSEMBLY, BARRIER MOUNTED, AS PER PLAN EACH	630 SIGN POST REFLECTOR EACH	630 SIGN, FLAT SHEET SF
S125	P.444	IR680 NB/SB	1047+20.00	CL	W1-8R-30	30" X 36"	5.3					1	1	7.50
S126	P.444	IR680 NB	1050+75.00	LT	W1-8L-36	36" X 48"		15.5/16.5					2	12.00
S127	P.444	IR680 NB	1048+78.00	LT	W8-13-48	48" X 48"		16.5/17.0					2	16.00
S128	P.444	IR680 NB	1048+78.00	LT	W1-13-48	48" X 48"		15.5/15.7					2	16.00
S129	P.444	IR680 SB	1055+40.00	RT	W4-3R-48	48" X 48"		15.5/15.7					2	16.00
S130	P.444	IR680 NB/SB	1061+00.00	CL	D10-5-18	18" X 60"	7.3					1		7.50
					D10-5-18	18" X 60"								7.50
S131	P.444	IR680 SB	1064+61.00	RT	R2-1-48	48" X 60"			16.7/17.4					20.00
S132	P.444	IR680 SB	1064+61.00	RT	M3-3-36	36" X 18"		17.3/16.4						4.50
					M1-1-45-3	45" X 36"								11.25
S133	P.444	IR680 SB	1069+29.00	RT	W8-13-48	48" X 48"		15.5/17.0					2	16.00
S134	P.444	IR680 NB	1070+05.00	LT	M3-1-36	36" X 18"		16.8/18.0						4.50
					M1-1-45-3	45" X 36"								11.25
S135	P.444	IR680 NB/SB	1071+56.00	CL	D10-5-18	18" X 60"	7.3					1		7.50
					D10-5-18	18" X 60"								7.50
S135A	P.444	SOUTH AVE		RT	M2-1-21	21" X 15"		13.3						2.19
					M1-1-30-3	30" X 24"								5.00
S136	P.444	RAMP SB	1053+18.00	RT	D10-H5a-30	30" X 30"		14.0						6.25
S137	P.444	RAMP BV	11+10.00	LT	R5-1-48	48" X 48"		16.0/16.5					2	16.00
					R5-1a-42	42" X 30"								8.75
S138	P.444	RAMP BV	11+10.00	RT	R5-1-48	48" X 48"		15.0/15.5					2	16.00
					R5-1a-42	42" X 30"								8.75
S139	P.444	RAMP BV	12+61.00	RT	R6-1R-54	54" X 18"				15.0/13.5			2	6.75
					R6-1L-54	54" X 18"								6.75
					R5-1-36	36" X 36"								9.00
					R1-1-48	48" X 48"								16.00
S140	P.444	RAMP BV	12+68.00	LT	R6-1R-54	54" X 18"				15.0/13.5			2	6.75
					R6-1L-54	54" X 18"								6.75
					R5-1-36	36" X 36"								9.00
					R1-1-48	48" X 48"								16.00
S141	P.445	RAMP A	1079+82	RT	D10-H5a-30	30" X 30"		15.0						6.25
S142	P.445	RAMP A	1080+75.00	RT	W3-3-36	36" X 36"					17.5		1	9.00
					R21-H2-30	30" X 36"								7.50
S143	P.445	RAMP A	1083+19.00	RT	R5-1-48	48" X 48"		15.0/15.5					2	16.00
					R5-1a-42	42" X 30"								8.75
S144	P.445	RAMP A	1083+19.00	LT	R5-1-48	48" X 48"		16.0/16.5					2	16.00
					R5-1a-42	42" X 30"								8.75
S145	P.445	RAMP A	1084+30.00	RT	R6-1R-54	54" X 18"				15.0/13.5			2	6.75
					R6-1L-54	54" X 18"								6.75
					R5-1-36	36" X 36"								9.00
S146	P.445	RAMP A	1084+37.00	LT	R6-1R-54	54" X 18"				15.0/13.5			2	6.75
					R6-1L-54	54" X 18"								6.75
					R5-1-36	36" X 36"								9.00
S147	P.445	IR680 NB	1081+57.00	LT	W8-13-48	48" X 48"		15.5/17.0					2	16.00
S148	P.445	IR680 NB/SB	1081+90.00	CL	D10-5-18	18" X 60"	7.3					1		7.50
					D10-5-18	18" X 60"								7.50
S149	P.445	IR680 NB/SB	1083+22.00	CL	R2-1-30	30" X 36"	5.3					1		7.50
S150	P.445	IR680 SB	1083+41.00	RT	R2-1-48	48" X 60"			16.7/17.4					20.00
S151	P.445	IR680 NB/SB	1084+66.00	CL	R2-1-30	30" X 36"	5.3					1		7.50
S152	P.445	IR680 NB	1084+60.00	LT	R2-1-48	48" X 60"			16.7/17.4					20.00
S153	P.445	IR680 NB	1087+23.00	LT	W4-1R-48	48" X 48"		15.5/15.8					2	16.00
S154	P.445	IR680 SB	1089+69.00	RT	W4-1R-48	48" X 48"		15.5/15.8					2	16.00
S155	P.445	IR680 NB/SB	1093+04.00	CL	R4-16-30	30" X 36"	6.3					1		7.50
					W16-H19P-30	30" X 12"								2.50
S156	P.445	IR680 NB	1094+96.00	LT	W13-2-48	48" X 60"			16.5/17.8				2	20.00
S157	P.445	IR680 NB	1095+92.00	LT	W3-5-48	48" X 48"		15.5/15.8					2	16.00
TOTALS CARRIED TO SHEET NO. P.426							44.1	522.7	136.6	114.0	17.5	7	38	586.19

Preliminary Plans - For Reference Only

SIGNING SUBSUMMARY

DESIGN AGENCY
TF ASSOCIATES

DESIGNER SDL
REVIEWER WHT 09/15/25
PROJECT ID 121474
SHEET P.425 TOTAL 655

MAH-680-4.54

MODEL: Sheet PAPERSIZE: 34x22 (in.) DATE: 9/11/2025 TIME: 12:53:53 PM PLTDRV: OHDOT_PDF_Color_E+.pltcfg PENTBL: OHDOT_PenC.tbl USER: slettieri@lokeng.com WORKSPACE: OHDOTCEv02 WORKSET: 121474 PRODUCT: OpenRoadsDesigner 24.00.00.205
pw:\\ohiodot-pw.bentley.com:ohiodot-pw-02\Documents\01 Active Projects\District 04\Mahoning\121474\403-Engineering_FokEngTraffic\Sheets\121474_TS005.dgn

REF NO.	SHEET NO.	LOCATION	STATION	SIDE	CODE	SIZE (INCHES)	630 GROUND MOUNTED SUPPORT, NO. 2 POST FT	630 GROUND MOUNTED SUPPORT, NO. 3 POST, AS PER PLAN FT	630 GROUND MOUNTED SUPPORT, NO. 4 POST FT	630 ONE WAY SUPPORT, NO. 3 POST FT	630 GROUND MOUNTED SUPPORT, NO. 6 POST FT	630 SIGN SUPPORT ASSEMBLY, BARRIER MOUNTED, AS PER PLAN EACH	630 SIGN POST REFLECTOR EACH	630 SIGN, FLAT SHEET SF	630 REMOVAL OF POLE MOUNTED SIGN AND REERECTION EACH
S158	P.445	RAMP C	1084+99.00	RT	R5-H10d-36	36" X 36"		13.5						9.00	
S159	P.445	RAMP C	1087+00.00	RT	D10-H5a-30	30" X 30"		14.0						6.25	
S160	P.445	RAMP B	1089+00.00	LT	D10-H5a-30	30" X 30"		14.0						6.25	
S161	P.445	RAMP B	1090+50.00	LT	R5-H10d-36	36" X 36"		13.5						9.00	
S162	P.445	RAMP B	1091+60.00	LT	R1-2-60	60" X 60"		15.0/16.3					2	10.83	
S163	P.445	RAMP B	1093+20.00	LT	W1-15-36	36" X 36"		15.0						9.00	
					W13-1P-30	30" X 30"								6.25	
S164	P.445	RAMP D	1083+45.00	BL	R4-7-24	24" X 30"	13.0							5.00	
S165	P.445	RAMP D	1083+57.00	LT	R6-1R-54	54" X 18"				15.0/13.5			2	6.75	
					R6-1L-54	54" X 18"								6.75	
					R5-1-36	36" X 36"								9.00	
S166	P.445	RAMP D	1084+68.00	LT	R3-H8bj-36	36" X 30"	13.5							7.50	
S167	P.445	RAMP D	1085+84.00	LT	R5-1-48	48" X 48"		16.0/16.5					2	16.00	
					R5-1a-42	42" X 30"								8.75	
S168	P.445	RAMP D	1090+28.00	LT	W3-3-48	48" X 48"		15.5/16.0					2	16.00	
S169	P.445	RAMP D	1091+00.00	LT	D10-H5a-30	30" X 30"		14.0						6.25	
S170	P.445	IR680 NB	1095+92.00	CL	W3-5-36	36" X 36"	6.3					1	1	9.00	
						TOTALS FROM THIS SHEET	32.8	179.3		28.5		1	9	147.58	
						TOTALS FROM SHEET NO. P.421	20.8	493.8	102.9	57.0		1	29	412.59	1
						TOTALS FROM SHEET NO. P.422	21.9	597.8	137.2	28.5		3	38	503.84	
						TOTALS FROM SHEET NO. P.423	34.3	446.8	68.6	114.0	17.0	1	36	530.63	
						TOTALS FROM SHEET NO. P.424	65.7	542.9	73.3	28.5	15.3	9	44	450.79	
						TOTALS FROM SHEET NO. P.425	44.1	522.7	136.6	114.0	17.5	7	38	586.19	
						TOTALS ALL SHEETS	219.6	2783.3	518.6	370.5	49.8	22	194	2631.62	1
						TOTALS CARRIED TO GENERAL SUMMARY	219.6	2783.3	518.6	370.5	49.8	22	194	2631.6	1

Preliminary Plans - For Reference Only

SIGNING SUBSUMMARY

MAH-680-4.54

MODEL: Sheet PAPERSIZE: 34x22 (in.) DATE: 9/11/2025 TIME: 12:54:00 PM PLTDRV: OHDOT_PDF_Color_E+.pltcfg PENTBL: OHDOT_PenC.tbl USER: sletterl@fokeng.com WORKSPACE: OHDOTCEv02 WORKSET: 121474 PRODUCT: OpenRoadsDesigner 24.00.00.205
pw:\\ohiodot-pw.bentley.com:ohiodot-pw-02\Documents\01 Active Projects\District 04\Mahoning\121474\403-Engineering_Fok Eng\Traffic\Sheets\121474_TS006.dgn

DESIGN AGENCY
TF ASSOCIATES

DESIGNER SDL
REVIEWER WHT 09/15/25
PROJECT ID 121474
SHEET P.426 TOTAL 655

REF NO.	SHEET NO.	LOCATION	STATION	SIDE	CODE	SIZE (INCHES)	625 GROUND ROD EACH	630 GROUND MOUNTED STRUCTURAL BEAM SUPPORT, S4X7.7 FT	630 GROUND MOUNTED STRUCTURAL BEAM SUPPORT, W6X9 FT	630 GROUND MOUNTED STRUCTURAL BEAM SUPPORT, W8X18 FT	630 GROUND MOUNTED STRUCTURAL BEAM SUPPORT, W10X22 FT	630 GROUND MOUNTED STRUCTURAL BEAM SUPPORT, W10X12 FT	630 BREAKAWAY STRUCTURAL BEAM CONNECTION EACH	630 OVERHEAD SIGN SUPPORT, TYPE TC-12.31, DESIGN 6 EACH	630 OVERHEAD SIGN SUPPORT, TYPE TC-12.31, DESIGN 10 EACH	630 OVERHEAD SIGN SUPPORT, TYPE TC-15.116, DESIGN 1 EACH	630 OVERHEAD SIGN SUPPORT, TYPE TC-15.116, DESIGN 2 EACH	630 SIGN ATTACHMENT ASSEMBLY EACH		630 SIGN, GROUND MOUNTED EXTRUSHEET SF	630 SIGN, OVERHEAD EXTRUSHEET SF	630 GROUND MOUNTED STRUCTURAL BEAM SUPPORT FOUNDATION EACH	630 RIGID OVERHEAD SIGN SUPPORT FOUNDATION EACH	630 CONCRETE BARRIER MEDIAN OVERHEAD SIGN SUPPORT FOUNDATION, TYPE TC-21.50 EACH	
M57	P.439	RAMP D	16+45.00	RT		144" X 60"						40.9	2							60		2			
M58	P.439	RAMP B3	9+50.00	RT		156" X 60"						47.6	2							65		2			
M59	P.439	IR680 SB	951+10.00	RT		192" X 60"				43.4			2							80		2			
						180" X 24"														30					
M60	P.440	IR680 NB	951+70.00	LT		252" X 96"	2									1					168		1	1	
					E1-H5P-96	96" X 30"															20				
						216" X 96"															144				
					E1-H5P-96	96" X 30"															20				
M61	P.440	IR680 NB	952+93.00	LT	D3-H3-72	72" X 24"			39.0				2							12		2			
					E5-H1a-72	72" X 60"														30					
M62	P.440	IR680 NB	960+35.00	LT	E1-H5P-96	96" X 30"	2									1					20		1	1	
						180" X 96"															120				
					E1-H5P-96	96" X 30"															20				
						240" X 72"															120				
M63	P.440	IR680 SB	968+94.00	RT	E1-H5P-84	84" X 30"													3		17.5				
						216" X 108"															162				
M64	P.440	IR680 NB	970+25	LT	SPECIAL	108" X 24"	1								1						18		1		
					E1-H5P-96	96" X 30"															20				
						204" X 96"															136				
M64A	P.440	IR680 NB	975+20.00	LT	D12-H17b-SPEC	120" X 48"			34.6				2							40		2			
M65A	P.440	IR680 SB	981+37.00	RT	E1-H5P-120	120" X 30"													6		25				
						168" X 144"															168				
					E1-H5P-84	84" X 30"															17.5				
						252" X 108"															189				
M65B	P.440	IR680 NB	981+37.00	LT	E1-H5P-120	120" X 30"													3		25				
						324" X 156"															351				
M110	P.440	MAHONING/EDWARDS		RT		72" X 72"								1							36		1		
						72" X 72"															36				
M66	P.441	RAMP F	14+35.00	RT	D1-H16-132	132" X 48"			34.7				2							44		2			
M67	P.441	IR680 SB	984+65.00	RT	E5-H1a-72	72" X 60"			36.6				2							30		2			
M68	P.441	IR680 SB	986+90.00	RT	D6-H5-96	96" X 24"		30.4												16		2			
M69	P.441	IR680 SB	991+05.00	RT	E1-H5P-96	96" X 30"					51.0		2							20		2			
						156" X 108"														117					
M70	P.441	IR680 NB	995+79.00	LT	E5-H1a-72	72" X 60"			39.2				2							30		2			
M71	P.441	IR680 NB	999+00.00	LT	E1-H5P-120	120" X 30"	2									1					25		1	1	
						204" X 144"															204				
					E1-H5P-84	84" X 30"															17.5				
						252" X 72"															126				
M72	P.441	IR680 SB	1004+25.00	RT	E1-H5P-96	96" X 30"	1								1						20		1		
						264" X 108"															198				
M73	P.442	IR680 NB	1012+80.00	LT	D6-H5-96	96" X 24"		30.6					2							16		2			
M74	P.442	IR 680 NB	1014+99.00	LT	E1-H5P-84	84" X 30"													3		17.5				
						216" X 96"															144				
M75	P.442	IR680 NB	1020+15.00	LT	E1-H5P-96	96" X 30"	2									1					20		1	1	
						252" X 144"															252				
					E1-H5P-96	96" X 30"															20				
						252" X 96"															168				
M76	P.442	IR680 SB	1023+99.00	RT	E5-H1a-72	72" X 60"		32.7					2							30		2			
M77	P.442	IR680 SB	1029+40	RT		204" X 120"	2										1				170		1	1	
					E1-H5P-96	96" X 30"															20				
						252" X 120"															210				
M78	P.442	MARKET ST	53+20.00	LT		108" X 84"													3		63				
M79	P.442	MARKET ST	522+22.00	RT		108" X 84"													3		63				
M80	P.442	IR680 SB	1031+35.00	RT	E5-H1a-72	72" X 60"			40.1				2							30		2			
M81	P.442	RAMP BX	3+11.00	RT/LT		168" X 72"	2									1					84		1		
						108" X 72"															54		2		
TOTALS CARRIED TO SHEET P.428							14	94.0	225.0	44.0	51.0	89.0	24	1	2	5	1	21		650	3709.0	26	10	5	

Preliminary Plans - For Reference Only

SIGNING SUBSUMMARY (MAJOR)

DESIGN AGENCY
TF ASSOCIATES

DESIGNER SDL
REVIEWER WHT 09/15/25
PROJECT ID 121474
SHEET P.427 TOTAL 655

MAH-680-4.54

MODEL: Sheet PAPERSIZE: 34x22 (in.) DATE: 9/11/2025 TIME: 12:54:06 PM PLTDRV: OHDOT_PDF_Color_Ex-.pltcfg PENTBL: OHDOT_PenC.tbl USER: sletterl@lokeng.com WORKSPACE: OHDOTCEv02 WORKSET: 121474 PRODUCT: OpenRoadsDesigner 24.00.00.205
pw:\\ohiodot-pw.bentley.com:ohiodot-pw-02\Documents\01 Active Projects\District 04\Mahoning\121474\403-Engineering_FokEng\Traffic\Sheets\121474_TS007.dgn

REF NO.	SHEET NO.	LOCATION	STATION	SIDE	CODE	SIZE (INCHES)	625 GROUND ROD EACH	630 GROUND MOUNTED STRUCTURAL BEAM SUPPORT, S4X7.7 FT	630 GROUND MOUNTED STRUCTURAL BEAM SUPPORT, W6X9 FT	630 GROUND MOUNTED STRUCTURAL BEAM SUPPORT, W8X18 FT	630 GROUND MOUNTED STRUCTURAL BEAM SUPPORT, W10X22 FT	630 GROUND MOUNTED STRUCTURAL BEAM SUPPORT, W10X12 FT	630 BREAKAWAY STRUCTURAL BEAM CONNECTION EACH	630 OVERHEAD SIGN SUPPORT, TYPE TC-12.31, DESIGN 6 EACH	630 OVERHEAD SIGN SUPPORT, TYPE TC-12.31, DESIGN 10 EACH	630 OVERHEAD SIGN SUPPORT, TYPE TC-15.116, DESIGN 1 EACH	630 OVERHEAD SIGN SUPPORT, TYPE TC-15.116, DESIGN 2 EACH	630 SIGN ATTACHMENT ASSEMBLY EACH		630 SIGN, GROUND MOUNTED EXTRUSHEET SF	630 SIGN, OVERHEAD EXTRUSHEET SF	630 GROUND MOUNTED STRUCTURAL BEAM SUPPORT FOUNDATION EACH	630 RIGID OVERHEAD SIGN SUPPORT FOUNDATION EACH	630 CONCRETE BARRIER MEDIAN OVERHEAD SIGN SUPPORT FOUNDATION, TYPE TC-21.50 EACH	
M82	P.442	RAMP M	1035+25.00	RT		132" X 60"						38.7	2							55		2			
M83	P.442	IR680 NB	1036+85.00	LT		192" X 60"				45.5			2							80		2			
						180" X 24"														30					
M84	P.443	IR680 SB	1040+35.00	RT	E1-H5P-84	84" X 30"	1								1						17.5		1		
						168" X 72"															84				
M85	P.443	E WOODLAND AVE	7+25.00	RT		108" X 84"	1							1							63		1		
						108" X 84"															63				
M86	P.443	RAMP CA	25+35.00	RT	D1-H17-108	108" X 60"			40.9				2							45		2			
M87	P.443	RAMP BY	4+38.00	RT	E5-H1-72	72" X 60"		30.8					2							30		2			
M88	P.443	RAMP BY	2+77.00	RT/LT		156" X 144"												3			156				
						180" X 108"												3			135				
M89	P.443	RAMP NB	1044+84.00	LT		204" X 144"												3			204				
M90	P.443	RAMP BX	15+90.00	RT		204" X 144"												3			204				
M91	P.443	RAMP SB	1041+10.00	RT/LT		156" X 144"												3			156				
						228" X 156"												3			247				
M92	P.443	RAMP NB	1035+79.00	LT		168" X 120"												3			140				
M93	P.443	RAMP CA	13+00.00	RT/LT		288" X 144"												3			288				
						156" X 144"												3			156				
						180" X 108"												3			135				
M94	P.444	RAMP SB	1049+66.00	RT/LT		156" X 144"	2									1					156		2		
						252" X 156"															273				
M95	P.444	RAMP SB	1051+28.00	RT	E5-H1-72	72" X 60"		33.8					2							30		2			
M96	P.444	IR680 NB	1050+70.00	RT	E5-H1a-72	72" X 60"		34.8					2							30		2			
M97	P.444	IR680 NB	1052+34.00	LT		156" X 96"	2										1				104		1	1	
					E1-H5P-84	84" X 30"															17.5				
						216" X 96"															144				
					E1-H5P-84	84" X 30"															17.5				
						204" X 156"															221				
M98	P.444	IR680 SB	1059+70.00	RT		120" X 84"						40.0	2							70		2			
M99	P.444	IR680 NB	1061+00.00	LT	D6-H5-96	96" X 24"		28.2					2							16		2			
M100	P.444	IR680 NB	1063+12.00	LT	E1-H5P-84	84" X 30"												3			17.5				
						180" X 156"															195				
M101	P.444	IR 680 SB	1065+87.00	RT	E1-H5P-84	84" X 30"												3			17.5				
						156" x 72"															78				
M102	P.444	IR680 NB	1066+15.00	LT	E1-H5P-84	84" X 30"				47.1			2							17.5		2			
						144" X 60"														60					
						144" X 60"														60					
M103	P.445	IR680 SB	1076+10.00	RT	SPECIAL	120" X 30"	2									1					25		1	1	
					E1-H5P-84	84" X 30"															17.5				
						204" X 96"															136				
					E1-H5P-84	84" X 30"															17.5				
						144" X 72"															72				
M104	P.445	IR680 SB	1079+99.00	RT	E5-H1a-72	72" X 60"			39.2				2							30		2			
M105	P.445	SOUTH AVE	52+10.00	RT		144" X 84"	1							1							84		1		
M106	P.445	SOUTH AVE	53+46.00	RT		108" X 108"												3			81				
M107	P.445	SOUTH AVE	48+25.00	RT		120" X 84"												2			70				
						120" X 84"												2			70				
M108	P.445	IR680 NB	1090+10.00	LT	E5-H1a72	72" X 60"		35.0					2							30		2			
M109	P.445	IR680 NB	1093+90.00	LT	E1-HP-84	84" X 30"	2									1					17.5		1	1	
						180" X 168"															210				
					E1-HP-84	84" X 30"															17.5				
						204" X 180"															255				
						TOTALS FROM THIS SHEET	11	163.0	81.0	93.0		79.0	22	2	1	3	1	43		583.5	4363.0	22	8	3	
						TOTALS FROM SHEET NO. P.427	14	94.0	225.0	44.0	51.0	89.0	24	1	2	4	2	21		650.0	3709.0	26	10	5	
						TOTALS CARRIED TO GENERAL SUMMARY	25	257	306	137	51	168	46	3	3	7	3	64		1233.5	8072.0	48	18	8	

For Reference Only
Preliminary Plans - Fo

SIGNING SUBSUMMARY (MAJOR)

MAH-680-4.54

MODEL: Sheet PAPERSIZE: 34x22 (in.) DATE: 9/11/2025 TIME: 12:54:13 PM PLTDRV: OHDOT_PDF_Color_E+.pltcfg PENTBL: OHDOT_PenC.tbl USER: aletteri@tokeng.com WORKSPACE: OHDOTCEv02 WORKSET: 121474 PRODUCT: OpenRoadsDesigner 24.00.00.205
pw:\\ohiodot-pw.bentley.com:ohiodot-pw-02\Documents\01 Active Projects\District 04\Mahoning\121474\403-Engineering_FokEng\Traffic\Sheets\121474_TS008.dgn

DESIGN AGENCY
TF ASSOCIATES

DESIGNER SDL

REVIEWER WHT 09/15/25

PROJECT ID 121474

SHEET P.428 TOTAL 655

REF NO.	SHEET NO.	LOCATION	STATION	SIDE	630 REMOVAL OF GROUND MOUNTED MAJOR SIGN AND DISPOSAL EACH	630 REMOVAL OF GROUND MOUNTED STRUCTURAL BEAM SUPPORT AND DISPOSAL EACH		630 REMOVAL OF OVERHEAD MOUNTED SIGN AND DISPOSAL EACH		630 REMOVAL OF OVERHEAD SIGN SUPPORT AND DISPOSAL, TYPE TC-12.30 EACH	630 REMOVAL OF OVERHEAD SIGN SUPPORT AND DISPOSAL, TYPE TC-7.65 EACH
R1	P.439	RAMP B3	9+42.00	RT	1	2					
R2	P.439	RAMP D	16+40.00	RT	1	2					
R3	P.439	IR680 SB	951+00.00	RT	2	2					
R4	P.440	IR680 NB	951+85.00	LT				4			1
R5	P.440	IR680 NB	952+93.00	LT	2	2					
R6	P.440	IR680 NB	960+00.00	LT				4			1
R7	P.440	IR680 SB	968+94.00	RT				2			
R8	P.440	IR680 NB	970+16.00	LT				3		1	
R9	P.440	IR680 NB	975+13.00	LT	1	2					
R10	P.440	IR680 SB	981+37.00	RT				4			
R11	P.440	IR680 NB	981+37.00	LT				2			
R12	P.441	RAMP F	14+31.00	RT	1	2					
R13	P.441	IR680 SB	984+65.00	RT	1	2					
R14	P.441	IR680 SB	986+86.00	RT	1	2					
R15	P.441	IR680 SB	990+98.00	RT	2	2					
R16	P.441	IR680 NB	995+79.00	LT	1	2					
R17	P.441	IR680 NB	999+15.00	LT				4			1
R18	P.441	IR680 SB	1004+12.00	RT				2		1	
R19	P.442	IR680 NB	1012+73.00	LT	1	2					
R20	P.442	IR680 NB	1014+99.00	LT				2			
R21	P.442	IR680 SB	1020+00.00	RT				4			1
R22	P.442	IR680 SB	1023+99.00	RT	1	2					
R23	P.442	IR680 SB	1029+28.00	RT				3			1
R24	P.442	MARKET ST	53+20.00	LT	1						
R25	P.442	MARKET ST	52+20.00	RT	1						
R26	P.442	IR680 SB	1031+35.00	RT	1	2					
R27	P.442	RAMP BX	3+23.00	RT/LT				2			1
R28	P.442	RAMP M	1035+20.00	RT	1	2					
R29	P.442	IR680 NB	1036+08.00	LT	2	2					
R30	P.443	IR680 SB	1040+29.00	RT				2		1	
R31	P.443	E WOODLAND AVE	7+30.00	RT				2		1	
R32	P.443	RAMP CA	25+25.00	RT	1	2					
R33	P.443	RAMP BY	4+59.00	RT	1	2					
R34	P.443	RAMP BY	2+77.00	RT/LT				2			
R35	P.443	RAMP NB	1044+84.00	LT				1			
R36	P.443	RAMP BX	15+90.00	RT				1			
R37	P.443	RAMP SB	1014+10.00	RT/LT				2			
R38	P.443	RAMP NB	1035+79.00	LT				1			
R39	P.443	RAMP CA	13+00.00	RT/LT				3			
R40	P.444	RAMP SB	1049+55.00	RT/LT				2			1
R41	P.444	RAMP SB	1051+28.00	RT	1	2					
R42	P.444	IR680 NB	1050+70.00	LT	1	2					
R43	P.444	IR680 NB	1052+44.00	LT				5			1
R44	P.444	IR680 SB	1059+65.00	RT	1	2					
R45	P.444	IR680 NB	1060+70.00	LT	2	2					
R46	P.444	IR680 NB	1063+12.00	LT				2			
R47	P.444	IR680 SB	1065+87.00	RT				2			
R48	P.444	IR680 NB	1066+21.00	LT	3	2					
R49	P.445	IR680 SB	1076+00.00	RT				5			1
R50	P.445	IR680 SB	1079+99.00	RT	1	2					
TOTALS CARRIED TO SHEET NO. P.430					32	46		66		4	9

Preliminary Plans - For Reference Only

SIGNING SUBSUMMARY (MAJOR REMOVALS)

MAH-680-4.54

DESIGN AGENCY
TF ASSOCIATES

DESIGNER SDL
REVIEWER WHT 09/15/25
PROJECT ID 121474
SHEET P.429 TOTAL 655

MODEL: Sheet PAPERSIZE: 34x22 (in.) DATE: 9/11/2025 TIME: 12:54:21 PM PLTDRV: OHDOT_PDF_Color_E+.pltcfg PENTBL: OHDOT_PenC.tbl USER: sletterl@fokeng.com WORKSPACE: OHDOTCEv02 WORKSET: 121474 PRODUCT: OpenRoadsDesigner 24.00.00.205
pw:\\ohiodot-pw.bentley.com:ohiodot-pw-02\Documents\01 Active Projects\District 04\Mahoning\121474\403-Engineering_Fok Eng\Traffic\Sheets\121474_TS009.dgn

REF NO.	SHEET NO.	LOCATION	STATION	SIDE	630 REMOVAL OF GROUND MOUNTED MAJOR SIGN AND DISPOSAL EACH	630 REMOVAL OF GROUND MOUNTED STRUCTURAL BEAM SUPPORT AND DISPOSAL EACH		630 REMOVAL OF OVERHEAD MOUNTED SIGN AND DISPOSAL EACH		630 REMOVAL OF OVERHEAD SIGN SUPPORT AND DISPOSAL, TYPE TC-12.30 EACH	630 REMOVAL OF OVERHEAD SIGN SUPPORT AND DISPOSAL, TYPE TC-7.65 EACH
R51	P.445	SOUTH AVE	52+00.00	RT				1		1	
R52	P.445	SOUTH AVE	53+46.00	RT				1			
R53	P.445	SOUTH AVE	48+25.00	RT				2			
R54	P.445	IR680 NB	1089+98.00	LT	1	2					
R55	P.445	IR680 NB	1093+78.00	LT				4			1
R56	P.440	MAHONING AVE/EDWARDS ST		RT				2		1	
TOTALS FROM THIS SHEET					1	2		10		2	1
TOTALS FROM SHEET NO. P.429					32	46		66		4	9
TOTALS CARRIED TO GENERAL SUMMARY					33	48		76		6	10

Preliminary Plans - Not For Reference Only

SIGNING SUBSUMMARY (MAJOR REMOVALS)

MAH-680-4.54

MODEL: Sheet PAPERSIZE: 34x22 (in.) DATE: 9/11/2025 TIME: 12:54:29 PM PLTDRV: OHDOT_PDF_Color_E+.pltcfg PENTBL: OHDOT_PenC.tbl USER: sletterl@fokeng.com WORKSPACE: OHDOTCEv02 WORKSET: 121474 PRODUCT: OpenRoadsDesigner 24.00.00.205
pw:\\ohiodot-pw.bentley.com:ohiodot-pw-02\Documents\01 Active Projects\District 04\Mahoning\121474\403-Engineering_FokEng\Traffic\Sheets\121474_TS010.dgn

DESIGN AGENCY
TF ASSOCIATES

DESIGNER SDL
REVIEWER WHT 09/15/25
PROJECT ID 121474
SHEET P.430 TOTAL 655

ROADWAY	SHEET NO.	STATION FROM	STATION TO	SIDE	INTERVAL (FT)	620 DELINEATOR, POST GROUND MOUNTED, TYPE C (WHITE) EACH	620 DELINEATOR, POST GROUND MOUNTED, TYPE D (YELLOW) EACH
RAMP C	P.439	0+00.00	8+50.00	RT	200	5	
	P.439	8+50.00	13+00.00	RT	50	9	
	P.439	13+00.00	14+50.00	LT	50		3
	P.439/P.440	14+50.00	17+30.00	LT	70		4
	P.440	17+30.00	20+58.30	RT	70	4	
RAMP C3	P.439	952+50.00	955+72.05	LT	50	5	
SR 193 (SB)	P.439	0+00.00	4+00.00	LT	200	2	
RAMP B3	P.439/P.440	1+00.00	8+50.00	RT	200	5	
	P.439	8+50.00	11+21.88	LT	50		5
RAMP D	P.439/P.440	0+00.00	5+50.00	RT	200	4	
	P.439	5+50.00	11+10.00	LT	90		5
	P.439	11+10.00	15+10.00	RT	200	2	
	P.439	15+10.00	19+10.74	RT	50	7	
RAMP G	P.440	2+50.00	6+77.30	RT	200	3	
RAMP F	P.441	0+00.00	8+50.00	RT	200	4	
		8+50.00	17+04.31	LT	50		17
RAMP H	P.441	2+00.60	5+80.00	RT	70	5	
		5+80.00	14+50.00	LT	80		11
		14+50.00	18+29.96	RT	100	5	
RAMP J	P.441	329+56.00	16+85.52	RT	200	7	
RAMP K	P.442	4+46.87	11+00.00	RT	200	4	
		11+00.00	17+00.00	LT	200		4
RAMP L	P.442	0+00.00	6+10.00	LT	90		5
		6+10.00	8+83.47	RT	200	1	
RAMP M	P.442	1026+25.70	1030+50.00	RT	200	3	
		1030+50.00	1034+50.00	-	-		
		1034+50.00	1040+50.00	LT			13
RAMP BX	P.442/P.443	0+00.00	4+00.00	LT	200		3
		4+00.00	10+00.00	RT	200	4	
		10+00.00	19+90.00	RT	90	10	
RAMP N	P.442/P.443	1030+50.00	1034+50.00	LT	90	7	
		1034+50.00	1036+50.00	RT	200		2
		1036+50.00	1041+68.57	RT	50		9
RAMP BY	P.443	4+00.00	10+00.00	RT	200	4	
		0+00.00	10+00.00	LT	200		6
RAMP CA	P.443	11+00.00	22+00.00	RT	200	6	
		22+00.00	25+77.31	LT	50		5
RAMP SB	P.443/P.444	1032+30.70	1035+50.00	LT	100		4
		1035+50.00	1042+50.00	RT	100	8	
		1042+50.00	10+48.00	-	-		
		1048+00.00	1051+00.00	LT	100		4
		1051+00.00	1055+00.00	RT	100	5	
		1055+00.00	1058+96.78	RT	200	2	
TOTALS CARRIED TO COLUMN 2						121	100

ROADWAY	SHEET NO.	STATION FROM	STATION TO	SIDE	INTERVAL (FT)	620 DELINEATOR, POST GROUND MOUNTED, TYPE C (WHITE) EACH	620 DELINEATOR, POST GROUND MOUNTED, TYPE D (YELLOW) EACH
RAMP BV	P.444	0+00.00	12+50.00	RT	200	7	
RAMP NB	P.443/P.444	1035+95.21	1051+00.00	RT	100		17
		1051+00.00	1056+79.78	LT	200	3	
RAMP A	P.445	1072+53.71	1081+50.00	RT	200	6	
		1081+50.00	1085+00.00	RT	70	3	
RAMP C	P.445	1084+34.17	1095+30.03	RT	200	6	
RAMP D	P.445	1083+50.00	1087+00.00	RT/LT	50	8	8
		1087+00.00	1090+50.00	RT	50		7
		1090+50.00	1093+26.73	RT	200	2	
RAMP B	P.445	1085+27.46	1086+50.00	LT	50	3	
		1086+50.00	1088+50.00	RT	50		5
		1088+50.00	1091+50.00	-	-		
		1091+50.00	1092+50.00	RT	50		3
IR680 NB	P.440/P.441	972+57.00	996+50.00	LT	400	7	
	P.441/P.442	1001+64.00	1019+16.82	LT	400	4	
	P.443	1021+95.00	1024+50.00	LT	400	2	
	P.442-P.444	1034+25.00	1051+55.00	LT	400	5	
	P.444-P.445	1056+79.78	1085+27.46	LT	400	6	
	P.445	1086+63.00	1090+49.00	LT	400	2	
	P.445	1093+26.73	1097+24.61	LT	400	1	
IR680 SB	P.439/P.440	950+65.76	952+73.00	RT	400	1	
	P.440	955+74.86	975+56.18	RT	400	4	
	P.441	983+93.00	995+08.00	RT	400	4	
	P.441/P.442	999+00.00	1018+25.00	RT	400	4	
	P.442-P.444	1030+91.00	1055+73.00	RT	400	7	
	P.444/P.445	1058+96.78	1072+53.71	RT	400	3	
	P.445	1079+54.00	1090+17.00	RT	400	4	
	P.445	1095+30.03	1097+24.61	RT	400	1	
TOTALS FROM THIS COLUMN						93	40
TOTALS FROM COLUMN 1						121	100
GRAND TOTAL						354	
TOTALS CARRIED TO GENERAL SUMMARY						354	

DELINEATOR SUBSUMMARY

DESIGN AGENCY
TF ASSOCIATES

DESIGNER
SDL

REVIEWER
WHT 09/15/25

PROJECT ID
121474

SHEET P.431 TOTAL 655

MAH-680-4.54

MODEL: Sheet PAPERSIZE: 34x22 (in.) DATE: 9/11/2025 TIME: 12:54:36 PM PLTDRV: OHDOT_PDF_Color_E+.pltcfg PENTBL: OHDOT_PenC.tbl USER: sletten@pw.lochodot-pw.bentley.com:ohiodot-pw-02\Documents\01 Active Projects\District 04\Mahoning\121474\403-Engineering_FokEng\Traffic\Sheets\121474_TS011.dgn
USER: sletten@fokeng.com WORKSPACE: OHDOTCE.v02 WORKSET: 121474 PRODUCT: OpenRoadsDesigner 24.00.00.205
TS011.dgn

Preliminary Plans - For Reference Only

ROADWAY	SHEET NO.	STATION FROM	STATION TO	SIDE	INTERVAL (FT)	621 RPM, AS PER PLAN, ONE-WAY (WHITE) EACH	621 RPM, TWO-WAY (WHITE/RED) EACH	621 RPM, TWO-WAY (YELLOW/RED) EACH	621 RAISED PAVEMENT MARKER REMOVED EACH
RAMP C	P.439/P.440	0+00	18+88	LT	40/80				32
	P.440	0+00	8+52	LT	80			11	
	P.439/P.440	8+52	9+17	LT	40		3		
	P.439/P.440	9+17	17+59	LT	80			11	
	P.440	17+59	18+88	LT	40		8		
RAMP C3	P.439	951+89	955+72	LT	40/80				7
		951+89	952+40	LT	40		3		
		952+40	955+72	LT	80			4	
SR 193 (SB)	P.439	955+72	4+00	LT	80			5	5
		3+36	4+96	LT	40		4		4
RAMP B3	P.439/P.440	2+29	11+10	LT	40/80				14
	P.439/P.440	2+29	4+34	LT	40		10		
	P.439	4+34	11+10	LT	80			9	
RAMP D	P.439/P.440	3+57	19+13	LT/RT	40/80				31
	P.440	3+57	6+71	LT	40		16		
	P.439/P.440	6+71	18+54	LT/BL	80			15	
	P.439	18+54	19+14	BL	40		3		
RAMP E	P.440	0+00	10+00	LT	40/80				12
RAMP G	P.441	0+08	5+72	LT	40/80				15
		0+08	4+01	LT	80			5	
		4+01	5+72	LT	40		10		
RAMP F	P.441	6+63	17+04	LT	40/80				21
		6+63	8+32	LT	40		10		
		8+32	17+04	LT	80			11	
RAMP H	P.441	0+63	16+84	LT	40/80				30
		0+63	14+49	LT	80			18	
		14+49	16+84	LT	40		12		
		2+15	2+61	RT	40		6		
RAMP J	P.441	5+25	16+57	LT/BL	40/80				19
		5+25	8+40	LT	40		8		
		8+40	16+57	LT/BL	80			11	
		14+92	16+57	RT	40		4		
RAMP K	P.442	5+71	16+80	LT	40/80				23
		5+71	8+00	LT	40		12		
		8+00	16+80	LT	80			11	
RAMP L	P.442	1+67	7+78	LT	40/80				21
		1+67	2+28	LT	40		6		
		2+28	6+07	LT	80			5	
		6+07	7+78	LT	40		10		
RAMP M	P.442	1028+53	1040+92	LT	40/80				26
		1028+53	1031+16	LT	40		14		
		1031+16	1034+23	LT	80			4	
		1034+23	1034+54	LT	40		2		
		1034+54	1040+92	LT	80			8	
TOTALS CARRIED TO COLUMN 2							141	128	260

ROADWAY	SHEET NO.	STATION FROM	STATION TO	SIDE	INTERVAL (FT)	621 RPM, AS PER PLAN, ONE-WAY (WHITE) EACH	621 RPM, TWO-WAY (WHITE/RED) EACH	621 RPM, TWO-WAY (YELLOW/RED) EACH	621 RAISED PAVEMENT MARKER REMOVED EACH
RAMP BX	P.442/P.443	3+22	20+00	BL	80			21	21
RAMP N	P.442/P.443	1032+28	1041+76	RT	40/80				28
	P.443	1032+28	1034+11	RT	40		10		
	P.442/P.443	1034+11	1038+15	RT	80			10	
	P.443	1038+15	1038+61	RT	40		4		
	P.443	1038+61	1041+76	RT	80			4	
RAMP BY	P.443	2+15	10+56	LT	80			11	11
RAMP CA	P.443	11+15	25+75	LT					41
	P.443	11+15	17+74	LT	80	9			
	P.443	12+95	14+66	LT	40		10		
	P.443	14+66	17+74	LT	80			4	
	P.443	17+74	19+51	LT	40		10		
	P.443	19+51	25+75	LT	80			8	
RAMP SB	P.443/P.444	1032+31	1058+97	LT/RT/BL	40/80				72
	P.443/P.444	1032+31	1049+17	RT	80	21			
	P.443/P.444	1049+17	1050+61	RT	40		8		
	P.443/P.444	1032+31	1055+74	BL/LT	80			30	
	P.444	1055+74	1057+74	LT	40		10		
	P.444	1057+74	1058+97	LT	40		3		
RAMP BV	P.444	3+27	12+73	LT	80			12	12
	P.444	11+20	12+73	LT	40		4		4
RAMP NB	P.443/P.444	1035+05	1056+80	RT	40/80				78
	P.443/P.444	1035+05	1051+57	RT	80	21			
	P.443	1036+26	1039+70	RT	40		18		
	P.443/P.444	1039+70	1051+57	RT	80			15	
	P.444	1051+57	1053+79	RT	40		12		
	P.444	1053+79	1058+75	RT/LT	40		12		
RAMP A	P.445	1078+12	1084+35	LT	40/80				16
	P.445	1078+12	1079+92	LT	40		10		
		1079+92	1084+35	LT	80			6	
RAMP C	P.445	1084+42	1095+65	LT/RT	40/80				36
		1084+42	1090+18	LT	80			8	
		1090+18	1095+65	LT/RT	40		28		
RAMP B	P.445	1082+27	1092+92	RT/LT	40/80				34
		1082+27	1086+56	RT/LT	40		22		
		1086+56	1092+50	RT	80			8	
		1092+50	1092+92	RT	40		4		
RAMP D	P.445	1083+45	1092+19	LT/RT	40/80				22
		1083+45	1084+67	LT	40		3		
		1083+45	1090+50	LT/RT	80			9	
		1090+50	1092+19	RT	40		10		
IR680 NB	P.439/P.440	950+66	952+71	LT	80	3			
	P.440	952+71	970+86	LT	80	46			
	P.440-P.444	970+86	1058+75	LT	80	110			
	P.444-P.445	1058+75	1097+25	LT	80	96			
IR680 SB	P.439/P.440	950+66	954+05	RT	80	9			
	P.440-P.441	954+05	982+20	RT	80	70			
	P.441-P.444	982+20	1059+00	RT	80	96			
	P.444-P.445	1059+00	1097+25	RT	80	96			
TOTAL CARRIED TO COLUMN 3						577	178	146	375

ROADWAY	SHEET NO.	STATION FROM	STATION TO	SIDE	INTERVAL (FT)	621 RPM, AS PER PLAN, ONE-WAY (WHITE) EACH	621 RPM, TWO-WAY (WHITE/RED) EACH	621 RPM, TWO-WAY (YELLOW/RED) EACH	621 RAISED PAVEMENT MARKER REMOVED EACH
IR680 NB	P.439-P.445	950+66	1097+25	LT	80				255
	P.439/P.440	950+66	952+71	LT	80	3			
	P.440	952+71	970+86	LT	80	46			
	P.440-P.444	970+86	1058+75	LT	80	110			
	P.444-P.445	1058+75	1097+25	LT	80	96			
IR680 SB	P.439-P.445	950+66	1097+25	RT	80				271
	P.439/P.440	950+66	954+05	RT	80	9			
	P.440/P.441	954+05	982+20	RT	80	70			
	P.441-P.444	982+20	1059+00	RT	80	96			
	P.444/P.445	1059+00	1097+25	RT	80	96			
IR680 NB	P.441-P.442	1007+51	1020+24	LT	60		21		
	P.442	1022+66	1032+36	LT	60		16		
	P.445	1075+07	1082+27	LT	60		12		
IR680 SB	P.441	997+50	1007+80	RT	60		17		
TOTALS FROM THIS COLUMN						526	66		526
TOTALS FROM COLUMN 1							141	128	260
TOTALS FROM COLUMN 2						577	178	146	375
GRAND TOTAL						1103	385	274	1161
TOTALS CARRIED TO GENERAL SUMMARY						1103	659		1161

RAISED PAVEMENT MARKER SUBSUMMARY

Preliminary Plans - Not For Reference Only

DESIGN AGENCY
TF ASSOCIATES

DESIGNER SDL
REVIEWER WHT 09/15/25
PROJECT ID 121474
SHEET P.432 TOTAL 655

MAH-680-4.54

MODEL: Sheet PAPERSIZE: 34x22 (in.) DATE: 9/11/2025 TIME: 12:54:43 PM PLTDRV: OHDOT_PDF_Color_E+.pltcfg PENTBL: OHDOT_PenC.tbl USER: sletterl@lokeng.com WORKSPACE: OHDOTCEv02 WORKSET: 121474 PRODUCT: OpenRoadsDesigner 24.00.00.205
pw:\\ohiodot-pw.bentley.com:ohiodot-pw-02\Documents\01 Active Projects\District 04\Mahoning\121474\403-Engineering_FoxEngTraffic\Sheets\121474_TS012.dgn

SHEET NO.	STATION TO STATION		SIDE		646	646	646		646	646	646		807	807	807	807	807	850		850	850	850		850	850
					STOP LINE, 24" (SL)	CROSSWALK LINE, 12" (CW)	TRANSVERSE/DIAGONAL LINE, 24" (YELLOW) (TL)		ISLAND MARKING (YELLOW) (YPI)	LANE ARROW, 72" (A)	WRONG WAY ARROW , 23.5' (WA)		WET REFLECTIVE EPOXY PAVEMENT MARKING, EDGE LINE, 6" (WHITE) (ELW)	WET REFLECTIVE EPOXY PAVEMENT MARKING, EDGE LINE, 6" (YELLOW) (ELY)	WET REFLECTIVE EPOXY PAVEMENT MARKING, LANE LINE, 6" (LL)	WET REFLECTIVE EPOXY PAVEMENT MARKING, CHANNELIZING LINE, 12" (CH)	WET REFLECTIVE EPOXY PAVEMENT MARKING, DOTTED LINE, 6" (WHITE) (DL)	GROOVING FOR 6" RECESSED PAVEMENT MARKING, (ASPHALT)		GROOVING FOR 6" RECESSED PAVEMENT MARKING, (ASPHALT)	GROOVING FOR 12" RECESSED PAVEMENT MARKING, (ASPHALT)	GROOVING FOR 6" RECESSED PAVEMENT MARKING, (CONCRETE)		GROOVING FOR 6" RECESSED PAVEMENT MARKING, (CONCRETE)	GROOVING FOR 12" RECESSED PAVEMENT MARKING, (CONCRETE)
	FROM	TO			FT	FT	FT		SF	EACH	EACH		MILE	MILE	MILE	FT	FT	MILE		FT	FT	MILE		FT	FT
	IR 680 SB																								
P.439	950+65.76	951+50.00	RT										0.02	0.02	0.02			0.06							
	IR680 NB																								
P.439	950+65.76	951+50.00	LT											0.02	0.02	84		0.04			84				
	RAMP A3																								
P.439	2+04.00	3+87.00	LT													183					183				
	RAMP B3																								
P.439	3+50.00	4+34.00	LT													84					84				
	4+34.00	11+18.00	LT											0.13				0.13							
	3+50.00	11+18.00	BL										0.15					0.15							
	RAMP C																								
P.439	0+81.00	16+50.00	RT/BL										0.30					0.24				0.06			
	0+37.00	8+52.00	LT											0.15				0.09				0.06			
	8+52.00	9+17.00	LT													65					65				
	9+17.00	16+50.00	LT											0.14				0.14							
	RAMP C3																								
P.439	951+89.00	956+39.00	LT											0.09				0.07				0.02			
	951+89.00	952+40.00	LT													64					64				
	952+40.00	956+39.00	LT										0.08					0.06				0.02			
	SR 93 SB																								
	0+00.00	3+36.00	LT										0.06					0.04				0.02			
	3+36.00	4+96.00	LT													160					160				
	0+00.00	4+00.00	LT											0.08				0.06				0.02			
	RAMP D																								
P.439	9+00.00	19+13.00	RT										0.19					0.19							
	9+00.00	18+54.00	LT/BL											0.18				0.18							
	18+54.00	19+14.00	BL				68			140						124					124				
	19+14.00	16+50.00									1														
	18+50.00										1														
	IR 680 SB																								
P.440	951+50.00	952+73.00	RT										0.02					0.02							
	952+73.00	954+05.00	RT													132					132				
	951+50.00	981+50.00	RT											0.57	0.57			0.99				0.15			
	954+05.00	981+50.00	RT										0.53		0.53			0.91				0.15			
	IR680 NB																								
P.440	951+50.00	981+50.00	LT											0.57	0.57			0.99				0.15			
	951+50.00	952+71.00	LT													121					121				
	952+71.00	970+86.00	LT												0.34			0.34							
	953+60.00	956+78.00	LT													316					316				
	956+78.00	960+50.00	LT														359			359					
	956+78.00	970+86.00	LT										0.27					0.16				0.11			
	970+86.00	972+57.00	LT													171					171				
	972+57.00	981+50.00	LT										0.17					0.13				0.04			
	RAMP B3																								
P.440	2+29.00	3+50.00	LT													121					121				
	1+41.00	3+50.00	BL										0.04					0.04							
	RAMP C7																								
P.440	16+50.00	18+89.00	BL										0.05					0.05							
	16+50.00	17+59.00	LT											0.02				0.02							
	17+59.00	18+89.00	LT													133					133				
	RAMP D																								
P.440	3+57.00	9+00.00	BL										0.10					0.10							
	3+57.00	6+72.00	LT													316					316				
	6+72.00	9+00.00	LT											0.04				0.04							
	TOTALS CARRIED TO SHEET NO. P.438						68		140		2		1.98	2.01	2.05	2074	359	5.24		359	2074	0.80			

Preliminary Plans - For Reference Only

PAVEMENT MARKING SUBSUMMARY

MAH-680-4.54

MODEL: Sheet PAPERSIZE: 34x22 (in.) DATE: 9/11/2025 TIME: 12:54:50 PM PLTDRV: OHDOT_PDF_Color_E+.pltcfg PENTBL: OHDOT_PenC.tbl USER: sletten
pw:\\ohiodot-pw.bentley.com:ohiodot-pw-02\Documents\01 Active Projects\District 04\Mahoning\121474\403-Engineering_FokEng\Traffic\Sheets\121474_TS013.dgn

DESIGN AGENCY: TF ASSOCIATES

DESIGNER: SDL

REVIEWER: WHT 09/15/25

PROJECT ID: 121474

SHEET: P.433 | TOTAL: 655

SHEET NO.	STATION TO STATION		SIDE		646	646	646		646	646	646		807	807	807	807	807	850		850	850	850		850	850
					STOP LINE, 24" (SL)	CROSSWALK LINE, 12" (CW)	TRANSVERSE/DIAGONAL LINE, 24" (YELLOW) (TL)		ISLAND MARKING (YELLOW) (YPI)	LANE ARROW, 72" (A)	WRONG WAY ARROW , 23.5' (WA)		WET REFLECTIVE EPOXY PAVEMENT MARKING, EDGE LINE, 6" (WHITE) (ELW)	WET REFLECTIVE EPOXY PAVEMENT MARKING, EDGE LINE, 6" (YELLOW) (ELY)	WET REFLECTIVE EPOXY PAVEMENT MARKING, LANE LINE, 6" (LL)	WET REFLECTIVE EPOXY PAVEMENT MARKING, CHANNELIZING LINE, 12" (CH)	WET REFLECTIVE EPOXY PAVEMENT MARKING, DOTTED LINE, 6" (WHITE) (DL)	GROOVING FOR 6" RECESSED PAVEMENT MARKING, (ASPHALT)		GROOVING FOR 6" RECESSED PAVEMENT MARKING, (ASPHALT)	GROOVING FOR 12" RECESSED PAVEMENT MARKING, (ASPHALT)	GROOVING FOR 6" RECESSED PAVEMENT MARKING, (CONCRETE)		GROOVING FOR 6" RECESSED PAVEMENT MARKING, (CONCRETE)	GROOVING FOR 12" RECESSED PAVEMENT MARKING, (CONCRETE)
	FROM	TO			FT	FT	FT		SF	EACH	EACH		MILE	MILE	MILE	FT	FT	MILE		FT	FT	MILE		FT	FT
	RAMP G																								
P.440	1+69.00	2+38.00	RT													75					75				
	2+38.00	5+71.00	BL/RT										0.06					0.03				0.03			
	0+08.00	4+01.00	BL/LT											0.07				0.04				0.03			
	4+01.00	5+71.00	LT													172					172				
	MARSHALL ST																								
P.440	4+79.00	5+69.00	RT													90					90				
	IR 680 SB																								
P.441	981+50.00	982+20.00	RT										0.01		0.01			0.02							
	982+20.00	983+93.00	RT													173					173				
	983+93.00	995+08.00	RT										0.21					0.21							
	995+08.00	997+50.00	RT													242					242				
	997+50.00	1007+80.00	RT														1015			791				224	
	997+50.00	1011+50.00	RT										0.26					0.22				0.04			
	981+50.00	1011+50.00	RT											0.56	0.57			1.05				0.08			
	IR 680 NB																								
P.441	981+50.00	1011+50.00	LT											0.56	0.57			1.05				0.08			
	981+50.00	996+65.00	LT										0.29					0.29							
	996+65.00	999+72.00	LT													311					311				
	999+72.00	1004+78.00	LT														514			514					
	999+72.00	1011+50.00	LT										0.23					0.19				0.04			
	1007+51.00	1011+50.00	LT														405			405					
	RAMP F																								
P.441	6+63.00	16+72.00	BL										0.19					0.19							
	6+63.00	8+32.00	LT													172					172				
	8+32.00	16+77.00	LT											0.17				0.17							
	13+50.00										1														
	16+62.00										1														
	16+72.00				13																				
	16+77.00								67																
	RAMP H																								
P.441	2+15.00	2+61.00	BL													46					46				
	2+61.00	16+85.00	BL										0.27					0.27							
	0+60.00	14+49.00	LT											0.26				0.26							
	14+49.00	16+85.00	LT													237					237				
	HIGH ST																								
P.441	2+27.00	2+59.00	RT													46					46				
	2+59.00	3+02.00	RT											0.01				0.01							
	RAMP J																								
P.441	5+25.00	8+40.00	LT													313					313				
	8+40.00	16+57.00	BL/LT											0.15				0.15							
	5+25.00	14+92.00	BL/RT										0.18					0.18							
	14+92.00	16+57.00	RT													166					166				
	12+00.00										1														
	15+00.00										1														
	IR 680 SB																								
P.442	1011+50.00	1019+49.00	RT										0.15					0.15							
	1019+49.00	1021+75.00	RT													226					226				
	1021+75.00	1028+45.00	RT										0.13					0.13							
	1028+45.00	1030+91.00	RT													254					254				
	1030+91.00	1037+00.00	RT										0.12					0.12							
	1012+07.00	1019+49.00	RT														737			737					
	1025+30.00	1028+45.00	RT														325			325					
	1011+50.00	1037+00.00	RT											0.49	0.48			0.97							
	TOTALS CARRIED TO SHEET NO. P.438				13				67		4		2.10	2.27	1.63	2523	2996	5.70		2772	2523	0.30		224	

Preliminary Plans - Not For Reference Only

PAVEMENT MARKING SUBSUMMARY

MAH-680-4.54

MODEL: Sheet PAPERSIZE: 34x22 (in.) DATE: 9/11/2025 TIME: 12:54:57 PM PLTDRV: OHDOT_PDF_Color_E+.pltcfg PENTBL: OHDOT_PenC.tbl USER: slettieri@fokeng.com WORKSPACE: OHDOTCE.v02 WORKSET: 121474 PRODUCT: OpenRoadsDesigner 24.00.00.205
pw:\\ohiodot-pw.bentley.com:ohiodot-pw-02\Documents\01 Active Projects\District 04\Mahoning\121474\403-Engineering_FokEng\Traffic\Sheets\121474_TS014.dgn

DESIGN AGENCY
TF ASSOCIATES

DESIGNER SDL

REVIEWER WHT 09/15/25

PROJECT ID 121474

SHEET P.434 | TOTAL 655

SHEET NO.	STATION TO STATION		SIDE		646	646	646		646	646	646		807	807	807	807	807	850		850	850	850		850	850
					STOP LINE, 24" (SL)	CROSSWALK LINE, 12" (CW)	TRANSVERSE/DIAGONAL LINE, 24" (YELLOW) (TL)		ISLAND MARKING (YELLOW) (YPI)	LANE ARROW, 72" (A)	WRONG WAY ARROW , 23.5' (WA)		WET REFLECTIVE EPOXY PAVEMENT MARKING, EDGE LINE, 6" (WHITE) (ELW)	WET REFLECTIVE EPOXY PAVEMENT MARKING, EDGE LINE, 6" (YELLOW) (ELY)	WET REFLECTIVE EPOXY PAVEMENT MARKING, LANE LINE, 6" (LL)	WET REFLECTIVE EPOXY PAVEMENT MARKING, CHANNELIZING LINE, 12" (CH)	WET REFLECTIVE EPOXY PAVEMENT MARKING, DOTTED LINE, 6" (WHITE) (DL)	GROOVING FOR 6" RECESSED PAVEMENT MARKING, (ASPHALT)		GROOVING FOR 6" RECESSED PAVEMENT MARKING, (ASPHALT)	GROOVING FOR 12" RECESSED PAVEMENT MARKING, (ASPHALT)	GROOVING FOR 6" RECESSED PAVEMENT MARKING, (CONCRETE)		GROOVING FOR 6" RECESSED PAVEMENT MARKING, (CONCRETE)	GROOVING FOR 12" RECESSED PAVEMENT MARKING, (CONCRETE)
	FROM	TO			FT	FT	FT		SF	EACH	EACH		MILE	MILE	MILE	FT	FT	MILE		FT	FT	MILE		FT	FT
	IR 680 NB																								
P.442	1011+50.00	1037+00.00	LT											0.48	0.48			0.96							
	1011+50.00	1020+24.00	LT										0.17				881	0.17		881					
	1020+24.00	1021+95.00	LT													171					171				
	1021+95.00	1032+36.00	LT										0.19					0.19							
	1022+66.00	1032+36.00	LT														943			943					
	1032+36.00	1034+25.00	LT													186					186				
	1034+25.00	1037+00.00	LT										0.05					0.05							
	RAMP K																								
P.442	5+70.00	16+80.00	BL										0.21									0.21			
	5+70.00	8+00.00	LT													229									229
	8+00.00	16+80.00	LT											0.17								0.17			
	16+80.00				16																				
	17+02.00					32																			
	14+50.00										1														
	16+70.00										1														
	RAMP L																								
P.442	1+67.00	2+28.00	LT													61									61
	2+28.00	6+07.00	LT											0.07				0.07							
	6+07.00	7+77.00	LT													172					172				
	3+18.00	7+77.00	BL										0.09					0.09							
	WOODLAND AVE																								
P.442	2+59.00	3+19.00	RT													61					61				
	RAMP M																								
P.442	1028+54.00	1040+92.00	BL										0.23					0.23							
	1028+54.00	1031+13.00	LT													257					257				
	1031+13.00	1034+23.00	LT										0.06					0.06							
	1034+23.00	1034+54.00	LT													35					35				
	1034+54.00	1040+81.00	LT											0.13				0.13							
	1040+92.00				29																				
	1040+96.00					58																			
	1039+25.00										1														
	1040+79.00										1														
	RAMP N																								
P.442	1032+29.00	1034+11.00	RT													186					186				
	1034+11.00	1037+00.00	RT											0.06				0.06							
	1032+29.00	1037+00.00	BL										0.09					0.09							
	RAMP BK																								
P.442	3+22.00	6+50.00	BL											0.06				0.06							
	3+22.00	4+42.00	RT													121					121				
	4+42.00	6+50.00	RT										0.04					0.04							
	IR 680 SB																								
P.443	1037+00.00	1047+00.00	RT										0.18	0.19	0.19			0.41				0.15			
	I R 680 NB																								
P.443	1037+00.00	1047+00.00	LT										0.20	0.19	0.19			0.43				0.15			
	RAMP BX																								
P.443	6+50.00	20+00.00	RT										0.26	0.26				0.33				0.19			
	RAMP BY																								
P.443	2+15.00	10+56.00	LT											0.16				0.16							
	2+15.00	3+94.00	BL													179					179				
	3+94.00	9+99.00	BL										0.11					0.11							
	9+99.00	10+56.00	BL													57					57				
	TOTALS CARRIED TO SHEET NO. P.438				45	90					4		1.88	1.77	0.86	1715	1824	3.64		1824	1425	0.87			290

Preliminary Plans - For Reference Only

PAVEMENT MARKING SUBSUMMARY

DESIGN AGENCY
TF ASSOCIATES

DESIGNER
SDL

REVIEWER
WHT 09/15/25

PROJECT ID
121474

SHEET P.435 | TOTAL 655

MAH-680-4.54

MODEL: Sheet PAPERSIZE: 34x22 (in.) DATE: 9/11/2025 TIME: 12:55:04 PM PLTDRV: OHDOT_PDF_Color_E+.pltcfg PENTBL: OHDOT_PenC.tbl USER: slettieri@fokeng.com WORKSPACE: OHDOTCEv02 WORKSET: 121474 PRODUCT: OpenRoadsDesigner 24.00.00.205
pw:\ohiodot-pw.bentley.com:ohiodot-pw-02\Documents\01 Active Projects\District 04\Mahoning\121474\403-Engineering_FokEng\Traffic\Sheets\121474_TS015.dgn

SHEET NO.	STATION TO STATION		SIDE		646	646	646		646	646	646		807	807	807	807	807	850		850	850	850		850	850
					STOP LINE, 24" (SL)	CROSSWALK LINE, 12" (CW)	TRANSVERSE/DIAGONAL LINE, 24" (YELLOW) (TL)		ISLAND MARKING (YELLOW) (YPI)	LANE ARROW, 72" (A)	WRONG WAY ARROW , 23.5' (WA)		WET REFLECTIVE EPOXY PAVEMENT MARKING, EDGE LINE, 6" (WHITE) (ELW)	WET REFLECTIVE EPOXY PAVEMENT MARKING, EDGE LINE, 6" (YELLOW) (ELY)	WET REFLECTIVE EPOXY PAVEMENT MARKING, LANE LINE, 6" (LL)	WET REFLECTIVE EPOXY PAVEMENT MARKING, CHANNELIZING LINE, 12" (CH)	WET REFLECTIVE EPOXY PAVEMENT MARKING, DOTTED LINE, 6" (WHITE) (DL)	GROOVING FOR 6" RECESSED PAVEMENT MARKING, (ASPHALT)		GROOVING FOR 6" RECESSED PAVEMENT MARKING, (ASPHALT)	GROOVING FOR 12" RECESSED PAVEMENT MARKING, (ASPHALT)	GROOVING FOR 6" RECESSED PAVEMENT MARKING, (CONCRETE)		GROOVING FOR 6" RECESSED PAVEMENT MARKING, (CONCRETE)	GROOVING FOR 12" RECESSED PAVEMENT MARKING, (CONCRETE)
	FROM	TO			FT	FT	FT		SF	EACH	EACH		MILE	MILE	MILE	FT	FT	MILE		FT	FT	MILE		FT	FT
	RAMP N																								
P.443	1037+00.00	1038+14.00	RT											0.02				0.02							
	1038+14.00	1038+61.00	RT													51					51				
	1038+61.00	1041+71.00	RT											0.06				0.06							
	1037+00.00	1041+67.00	LT										0.09					0.09							
	1041+67.00								35																
	RAMP CA																								
P.443	12+95.00	14+66.00	LT													171					171				
	14+66.00	17+73.00	LT											0.06				0.06							
	12+95.00	17+73.00	LT												0.09			0.09							
	17+73.00	19+51.00	LT													178					178				
	19+51.00	25+79.00	LT											0.12				0.12							
	12+95.00	25+68.00	BL										0.24					0.24							
	24+00.00										1														
	25+58.00										1														
	25+68.00				16																				
	RAMP SB SR 7																								
P.443	1032+31.00	1034+00.00	BL/RT										0.03	0.03	0.03			0.09							
	1034+00.00	1047+00.00	BL/RT											0.25	0.25			0.50							
	1034+00.00	1035+66.00	RT													170					170				
	1035+66.00	1047+00.00	RT										0.22					0.22							
	RAMP NB SR 7																								
P.443	1035+00.00	1047+00.00	BL/RT										0.23		0.23			0.46							
	1036+26.00	1039+70.00	RT													702					702				
	1039+70.00	1047+00.00	RT											0.14				0.14							
	1035+00.00	1039+70.00	RT											0.09				0.09							
	IR 680 SB																								
P.444	1047+00.00	1055+73.00	RT										0.16					0.16							
	1055+73.00	1059+00.00	RT													327					327				
	1059+00.00	1072+00.00	RT												0.25			0.25							
	1057+73.00	1072+00.00	RT										0.27					0.27							
	1071+54.00	1072+00.00	RT														48			48					
	1047+00.00	1072+00.00	RT											0.47	0.47			0.94							
	IR 680 NB																								
P.444	1047+00.00	1072+00.00	LT											0.47	0.47			0.94							
	1047+00.00	1051+55.00	LT										0.09					0.09							
	1051+55.00	1058+75.00	LT													720					720				
	1058+75.00	1072+00.00	LT												0.25			0.25							
	1053+76.00	1072+00.00	LT										0.34					0.34							
	RAMP SB SR 7																								
P.444	1047+00.00	1049+17.00	BL/RT										0.04		0.04			0.08							
	1049+17.00	1050+61.00	LT													147					147				
	1050+61.00	1057+73.00	LT										0.14					0.14							
	1047+00.00	1055+74.00	LT											0.17				0.17							
	1055+74.00	1057+73.00	LT													201					201				
	RAMP NB SR 7																								
P.444	1047+00.00	1051+57.00	RT											0.09	0.09			0.18							
	1051+57.00	1053+78.00	RT													222					222				
	1047+00.00	1053+78.00	BL										0.13					0.13							
	TOTALS CARRIED TO SHEET NO. P.438				16				35		2		1.98	1.97	2.17	2889	48	6.12		48	2889				

Preliminary Plans - Not For Reference Only

PAVEMENT MARKING SUBSUMMARY

MAH-680-4.54

MODEL: Sheet PAPERSIZE: 34x22 (in.) DATE: 9/11/2025 TIME: 12:55:10 PM PLTDRV: OHDOT_PDF_Color_E+.pltcfg PENTBL: OHDOT_PenC.tbl USER: slettieri@fokeng.com WORKSPACE: OHDOTCE.v02 WORKSET: 121474 PRODUCT: OpenRoadsDesigner 24.00.00.205
pw:\\ohiodot-pw.bentley.com:ohiodot-pw-02\Documents\01 Active Projects\District 04\Mahoning\121474\403-Engineering_FokEng\Traffic\Sheets\121474_TS016.dgn

DESIGN AGENCY
TF ASSOCIATES

DESIGNER
SDL

REVIEWER
WHT 09/15/25

PROJECT ID
121474

SHEET P.436 | TOTAL 655

SHEET NO.	STATION TO STATION		SIDE		646	646	646		646	646	646		807	807	807	807	807	850		850	850	850		850	850
					STOP LINE, 24" (SL)	CROSSWALK LINE, 12" (CW)	TRANSVERSE/DIAGONAL LINE, 24" (YELLOW) (TL)		ISLAND MARKING (YELLOW) (YPI)	LANE ARROW, 72" (A)	WRONG WAY ARROW , 23.5' (WA)		WET REFLECTIVE EPOXY PAVEMENT MARKING, EDGE LINE, 6" (WHITE) (ELW)	WET REFLECTIVE EPOXY PAVEMENT MARKING, EDGE LINE, 6" (YELLOW) (ELY)	WET REFLECTIVE EPOXY PAVEMENT MARKING, LANE LINE, 6" (LL)	WET REFLECTIVE EPOXY PAVEMENT MARKING, CHANNELIZING LINE, 12" (CH)	WET REFLECTIVE EPOXY PAVEMENT MARKING, DOTTED LINE, 6" (WHITE) (DL)	GROOVING FOR 6" RECESSED PAVEMENT MARKING, (ASPHALT)		GROOVING FOR 6" RECESSED PAVEMENT MARKING, (ASPHALT)	GROOVING FOR 12" RECESSED PAVEMENT MARKING, (ASPHALT)	GROOVING FOR 6" RECESSED PAVEMENT MARKING, (CONCRETE)		GROOVING FOR 6" RECESSED PAVEMENT MARKING, (CONCRETE)	GROOVING FOR 12" RECESSED PAVEMENT MARKING, (CONCRETE)
	FROM	TO			FT	FT	FT		SF	EACH	EACH		MILE	MILE	MILE	FT	FT	MILE		FT	FT	MILE		FT	FT
	RAMP BV																								
P.444	1+77.00	12+73.00	BL										0.21					0.21							
	1+77.00	3+27.00	LT													149					149				
	3+27.00	12+73.00	LT											0.18				0.18							
	11+20.00	12+73.00	LT													153					153				
	10+50.00		LT								1														
	11+31.00									2															
	11+97.00									2															
	12+63.00									2															
	12+73.00				59																				
	IR 680 SB																								
P.445	1072+00.00	1077+84.00	RT										0.12				609	0.07		371		0.05		238	
	1077+84.00	1079+54.00	RT													176					85				91
	1079+54.00	1090+17.00	RT										0.20					0.20							
	1090+17.00	1095+65.00	RT													548					548				
	1095+65.00	1101+50.00	RT										0.11				607	0.11		607					
	1072+00.00	1101+50.00	RT											0.56	1.09			1.44				0.21			
	IR 680 NB																								
P.445	1072+00.00	1011+50.00	LT											0.56	1.11			1.46				0.21			
	1072+00.00	1075+07.00	LT										0.06					0.03				0.03			
	1075+07.00	1082+27.00	LT										0.13				690	0.08		445		0.05		245	
	1082+27.00	1086+63.00	LT										0.08			861		0.08			861				
	1086+63.00	1090+49.00	LT										0.07					0.07							
	1090+49.00	1092+19.00	LT													171					171				
	1092+19.00	1100+96.00	LT										0.17				884	0.17		884					
	1100+96.00	1101+50.00	LT													54					54				
	RAMP A																								
P.445	1078+12.00	1084+35.00	BL										0.12					0.10				0.02			
	1078+12.00	1079+92.00	LT													179					88				91
	1079+92.00	1084+35.00	LT											0.08				0.08							
	1082+00.00										1														
	1084+25.00										1														
	1084+35.00				21																				
	1084+45.00					58																			
	RAMP B																								
P.445	1086+56.00	1089+17.00	RT											0.05				0.05							
	1086+56.00	1093+73.00	BL										0.14					0.14							
	1091+40.00	1092+49.00	RT											0.02				0.02							
	1092+49.00	1092+91.00	RT													48					48				
	1092+35.00					38																			
	RAMP C																								
P.445	1084+42.00	1095+65.00	BL										0.21					0.21							
	1084+42.00	1090+18.00	LT											0.11				0.11							
	1090+18.00	1095+65.00	LT													548					548				
	1084+34.00					146																			
TOTALS CARRIED TO SHEET NO. P.438					80	242				6	3		1.62	1.56	2.20	2887	2790	4.81		2307	2705	0.57		483	182

Preliminary Plans - Not For Reference Only

PAVEMENT MARKING SUBSUMMARY

MAH-680-4.54

MODEL: Sheet PAPERSIZE: 34x22 (in.) DATE: 9/11/2025 TIME: 12:55:18 PM PLTDRV: OHDOT_PDF_Color_E+.pltcfg PENTBL: OHDOT_PenC.tbl USER: slettieri@fokeng.com WORKSPACE: OHDOTCEv02 WORKSET: 121474 PRODUCT: OpenRoadsDesigner 24.00.00.205
pw:\ohiodot-pw.bentley.com:ohiodot-pw-02\Documents\01 Active Projects\District 04\Mahoning\121474\403-Engineering_FokEng\Traffic\Sheets\121474_TS017.dgn

DESIGN AGENCY: TF ASSOCIATES

DESIGNER: SDL

REVIEWER: WHT 09/15/25

PROJECT ID: 121474

SHEET: P.437 TOTAL: 655

PAVEMENT MARKING SUBSUMMARY

SHEET NO.	STATION TO STATION		SIDE	646	646	646	646	646	646	807	807	807	807	807	850	850	850	850	850	850
				STOP LINE, 24" (SL)	CROSSWALK LINE, 12" (CW)	TRANSVERSE/DIAGONAL LINE, 24" (YELLOW) (TL)	ISLAND MARKING (YELLOW) (YPI)	LANE ARROW, 72" (A)	WRONG WAY ARROW , 23.5' (WA)	WET REFLECTIVE EPOXY PAVEMENT MARKING, EDGE LINE, 6" (WHITE) (ELW)	WET REFLECTIVE EPOXY PAVEMENT MARKING, EDGE LINE, 6" (YELLOW) (ELY)	WET REFLECTIVE EPOXY PAVEMENT MARKING, LANE LINE, 6" (LL)	WET REFLECTIVE EPOXY PAVEMENT MARKING, CHANNELIZING LINE, 12" (CH)	WET REFLECTIVE EPOXY PAVEMENT MARKING, DOTTED LINE, 6" (WHITE) (DL)	GROOVING FOR 6" RECESSED PAVEMENT MARKING, (ASPHALT)	GROOVING FOR 6" RECESSED PAVEMENT MARKING, (ASPHALT)	GROOVING FOR 12" RECESSED PAVEMENT MARKING, (ASPHALT)	GROOVING FOR 6" RECESSED PAVEMENT MARKING, (CONCRETE)	GROOVING FOR 6" RECESSED PAVEMENT MARKING, (CONCRETE)	GROOVING FOR 12" RECESSED PAVEMENT MARKING, (CONCRETE)
	FROM	TO		FT	FT	FT	SF	EACH	EACH	MILE	MILE	MILE	FT	FT	MILE	FT	FT	MILE	FT	FT
	RAMP D																			
P.445	1083+15.00	1083+92.00	RT							0.01					0.01					
	1083+45.00	1086+49.00	BL								0.12				0.12					
	1086+49.00	1090+50.00	RT								0.08				0.08					
	1090+50.00	1092+19.00	RT										172				172			
	1083+45.00	1084+67.00	LT										122				122			
	1083+45.00	1092+19.00	BL/LT							0.17					0.17					
	1083+15.00				143															
	1083+45.00			24																
	1083+45.00						39													
	1083+55.00							2												
	1084+05.00							2												
	1084+55.00							2												
	1085+50.00								1											
	POWERSDALE RAMP																			
P.445	740+30.00	740+85.00	BL/LT							0.01			55		0.01		55			
	IR 680 SB																			
P.446	1101+50.00	1113+65.00	RT							0.23					0.23					
	1101+50.00	1110+50.00	RT											891		891				
	1110+50.00	1117+30.00	RT										673				673			
	1117+30.00	1120+00.00	RT							0.05					0.05					
	1101+50.00	1120+00.00	RT								0.35	0.70			1.05					
	IR 680 NB																			
P.446	1101+50.00	1120+00.00	LT								0.35	0.70			1.05					
	1101+50.00	1104+55.00	LT										278				278			
	1104+55.00	1120+00.00	LT							0.30					0.30					
	POWERSDALE RAMP																			
P.446	737+21.00	740+30.00	LT							0.06			309		0.06		309			
	COOPER ST/INDIANOLA AVE RAMP																			
P.446	1113+65.00	1117+24.00	RT							0.07			358		0.07		358			
	IR 680 SB																			
P.446	1120+00.00	1124+50.00	RT							0.09	0.09	0.18			0.36					
	IR 680 NB																			
P.446	1120+00.00	1136+70.00	LT								0.33	0.66			0.86			0.13		
	1120+00.00	1132+70.00	LT							0.24					0.19			0.05		
	1132+70.00	1136+70.00	LT										444				444			
	HOMEWOOD AVE/INDIANOLA AVE RAMP																			
P.446	1132+70.00	1136+70.00	LT							0.08			444		0.08		444			
	TOTALS FROM THIS SHEET			24	143		39	6	1	1.31	1.32	2.24	2855	891	4.69	891	2855	0.18		
	TOTALS FROM SHEET NO. P.433					68	140		2	1.98	2.01	2.05	2074	359	5.24	359	2074	0.80		
	TOTALS FROM SHEET NO. P.434			13			67		4	2.10	2.27	1.63	2523	2996	5.70	2772	2523	0.30	224	
	TOTALS FROM SHEET NO. P.435			45	90				4	1.88	1.77	0.86	1715	1824	3.64	1824	1425	0.87		290
	TOTALS FROM SHEET NO. P.436			16			35		2	1.98	1.97	2.17	2889	48	6.12	48	2889			
	TOTALS FROM SHEET NO. P.437			80	242			6	3	1.62	1.56	2.20	2887	2790	4.81	2307	2705	0.57	483	182
	TOTALS CARRIED TO GENERAL SUMMARY			178	475	68	281	12	16	21.77	11.15		14943	8908	30.20	8201	14471	2.72	707	472

Preliminary Plans - Not For Reference Only

MAH-680-4.54

DESIGN AGENCY: TF ASSOCIATES

DESIGNER: SDL

REVIEWER: WHT 09/15/25

PROJECT ID: 121474

SHEET P.438 TOTAL 655

MODEL: Sheet PAPERSIZE: 34x22 (in.) DATE: 9/11/2025 TIME: 12:55:27 PM PLTDRV: OHDOT_PDF_Color_E+.pltcfg PENTBL: OHDOT_PenC.tbl USER: slettieri@tokeng.com WORKSPACE: OHDOTCEv02 WORKSET: 121474 PRODUCT: OpenRoadsDesigner 24.00.00.205
pw:\ohiodot-pw.bentley.com:ohiodot-pw-02\Documents\01 Active Projects\District 04\Mahoning\121474\403-Engineering_FokEng\Traffic\Sheets\121474_TS018.dgn

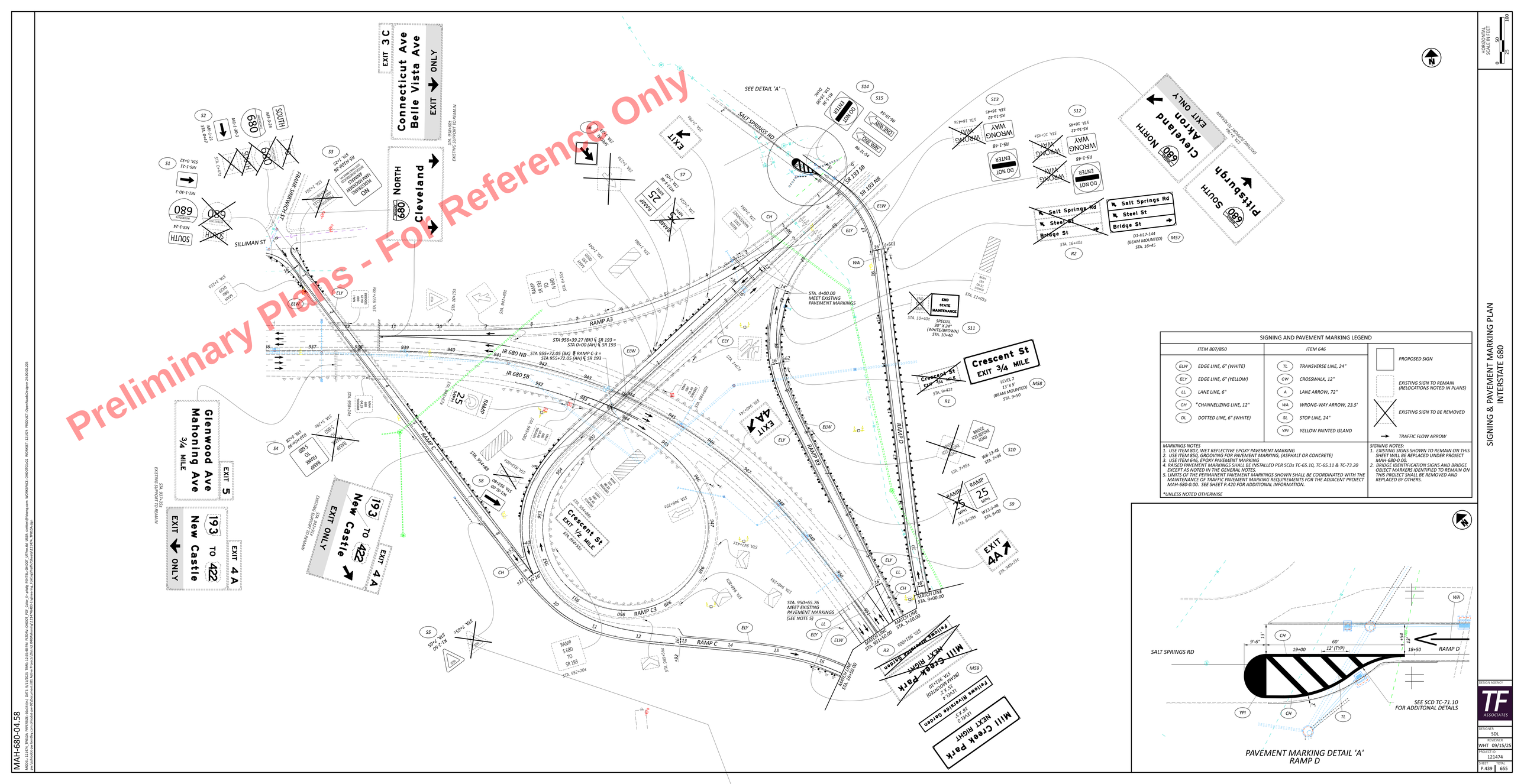

SIGNING AND PAVEMENT MARKING LEGEND

ITEM 807/850		ITEM 646	
ELW	EDGE LINE, 6" (WHITE)	TL	TRANSVERSE LINE, 24"
ELY	EDGE LINE, 6" (YELLOW)	CW	CROSSWALK, 12"
LL	LANE LINE, 6"	A	LANE ARROW, 72"
CH	*CHANNELIZING LINE, 12"	WA	WRONG-WAY ARROW, 23.5'
DL	DOTTED LINE, 6" (WHITE)	SL	STOP LINE, 24"
		YPI	YELLOW PAINTED ISLAND

PROPOSED SIGN

EXISTING SIGN TO REMAIN (RELOCATIONS NOTED IN PLANS)

EXISTING SIGN TO BE REMOVED

TRAFFIC FLOW ARROW

MARKINGS NOTES
1. *USE ITEM 807, WET REFLECTIVE EPOXY PAVEMENT MARKING*
2. *USE ITEM 850, GROOVING FOR PAVEMENT MARKING, (ASPHALT OR CONCRETE)*
3. *USE ITEM 646, EPOXY PAVEMENT MARKING*
4. *RAISED PAVEMENT MARKINGS SHALL BE INSTALLED PER SCDs TC-65.10, TC-65.11 & TC-73.20 EXCEPT AS NOTED IN THE GENERAL NOTES.*
5. *LIMITS OF THE PERMANENT PAVEMENT MARKINGS SHOWN SHALL BE COORDINATED WITH THE MAINTENANCE OF TRAFFIC PAVEMENT MARKING REQUIREMENTS FOR THE ADJACENT PROJECT MAH-680-0.00. SEE SHEET P.420 FOR ADDITIONAL INFORMATION.*

**UNLESS NOTED OTHERWISE*

SIGNING NOTES:
1. *EXISTING SIGNS SHOWN TO REMAIN ON THIS SHEET WILL BE REPLACED UNDER PROJECT MAH-680-0.00.*
2. *BRIDGE IDENTIFICATION SIGNS AND BRIDGE OBJECT MARKERS IDENTIFIED TO REMAIN ON THIS PROJECT SHALL BE REMOVED AND REPLACED BY OTHERS.*

PAVEMENT MARKING DETAIL 'A'
RAMP D

HORIZONTAL SCALE IN FEET
0 25 50 100

SIGNING & PAVEMENT MARKING PLAN
INTERSTATE 680

DESIGN AGENCY
TF ASSOCIATES

DESIGNED	SDL
REVIEWED	WHT 09/15/25
PROJECT ID	121474
SHEET	P.439
TOTAL	655

MAH-680-04.58

MODEL: 121474_TYP01A PAINTED: 09/15/25 TIME: 12:55:46 PM PLOTTED: 09/15/25 TIME: 12:55:46 PM PLOTBY: DHOFF_PRF_Color_Fr.ctb PENTBL: DHOFF_CPPrint.ctb USER: sdelker@fteng.com WORKSPACE: DHOFF2020 WORKSET: 121474 PROJECT: Open\Roadway\mah-14.00-00.205
ALL RIGHTS RESERVED. COPYRIGHT © 2025 TF ASSOCIATES ENGINEERING, INC. PROPRIETARY AND CONFIDENTIAL

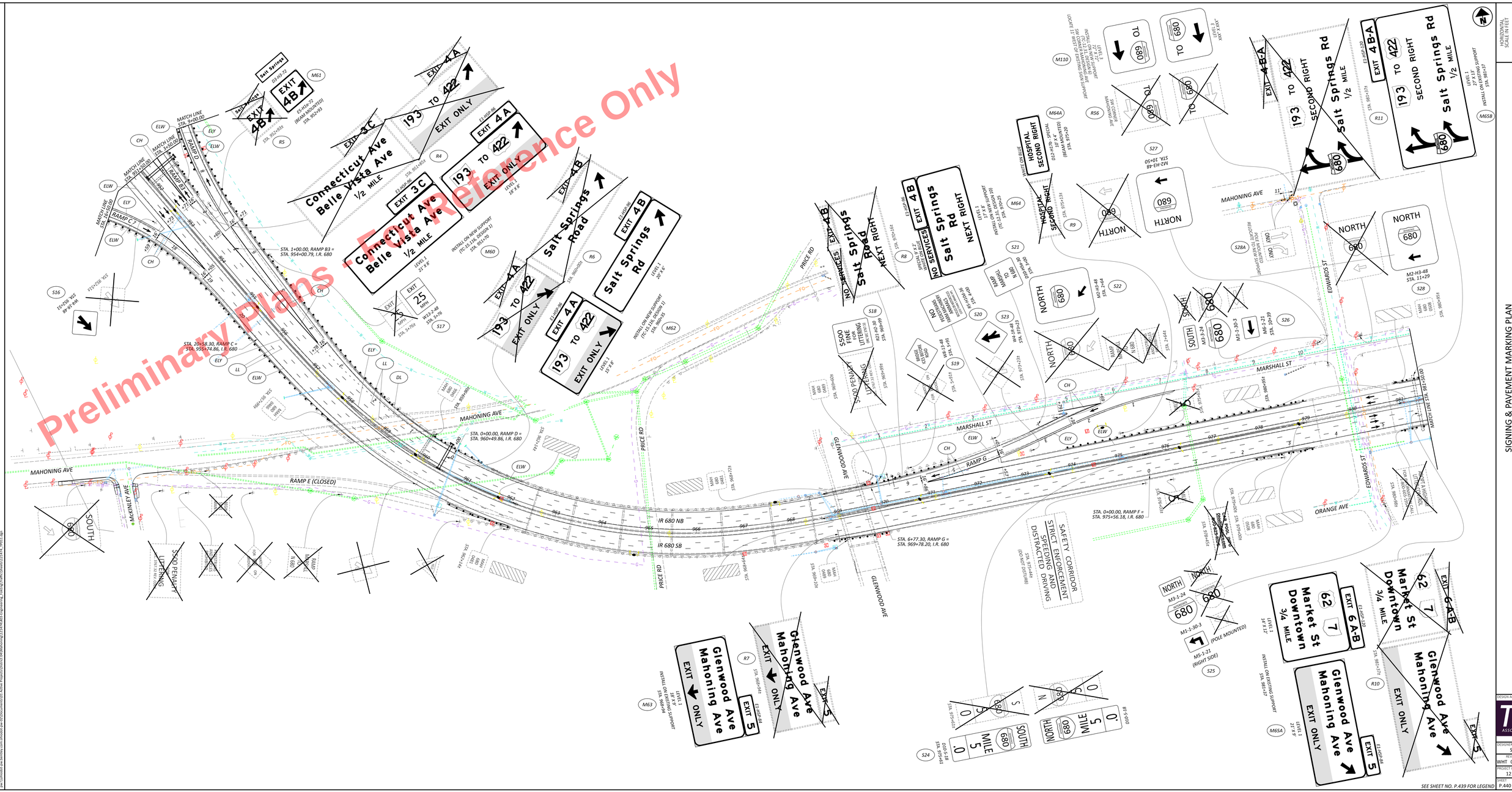

MAH-680-04.58

MODEL: 121474_TRF01_PAVEMARK 68x34.DWG | DATE: 9/11/2025 TIME: 12:55:23 PM PSTDRV: DRDOT_CPM_Color_FY_ePW_PENTEL DRDOT_CPM.ctb | USER: sellman@tfhrg.com WORKSPACE: C:\MDOT\CAD WORKSET: 121474 PRODUCT: OpenRoads Designer 24.00.00.105

SIGNING & PAVEMENT MARKING PLAN
INTERSTATE 680

HORIZONTAL SCALE IN FEET: 0, 25, 50, 100

DESIGN AGENCY: TF ASSOCIATES

DESIGNED: SDL
REVIEWED: WHT 09/15/25
PROJECT #: 121474
SHEET: P.440 TOTAL: 655

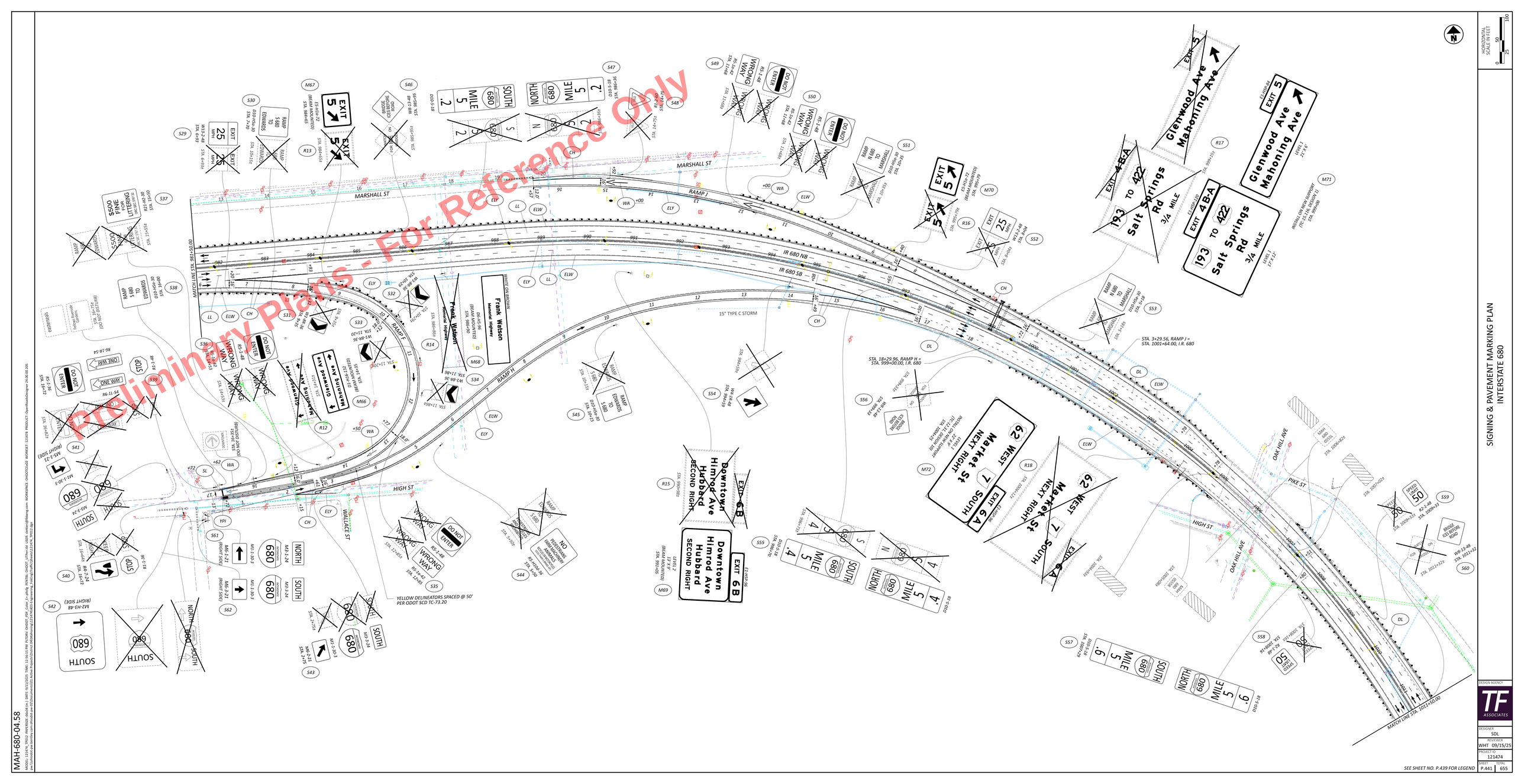

SIGNING & PAVEMENT MARKING PLAN
INTERSTATE 680

HORIZONTAL SCALE IN FEET 0 25 50 100

DESIGN AGENCY: TF ASSOCIATES

DESIGNER: SDL
REVIEWER: WHT 09/15/25
PROJECT ID: 121474
SHEET: P.441 TOTAL: 655

SEE SHEET NO. P.439 FOR LEGEND

MAH-680-04.58

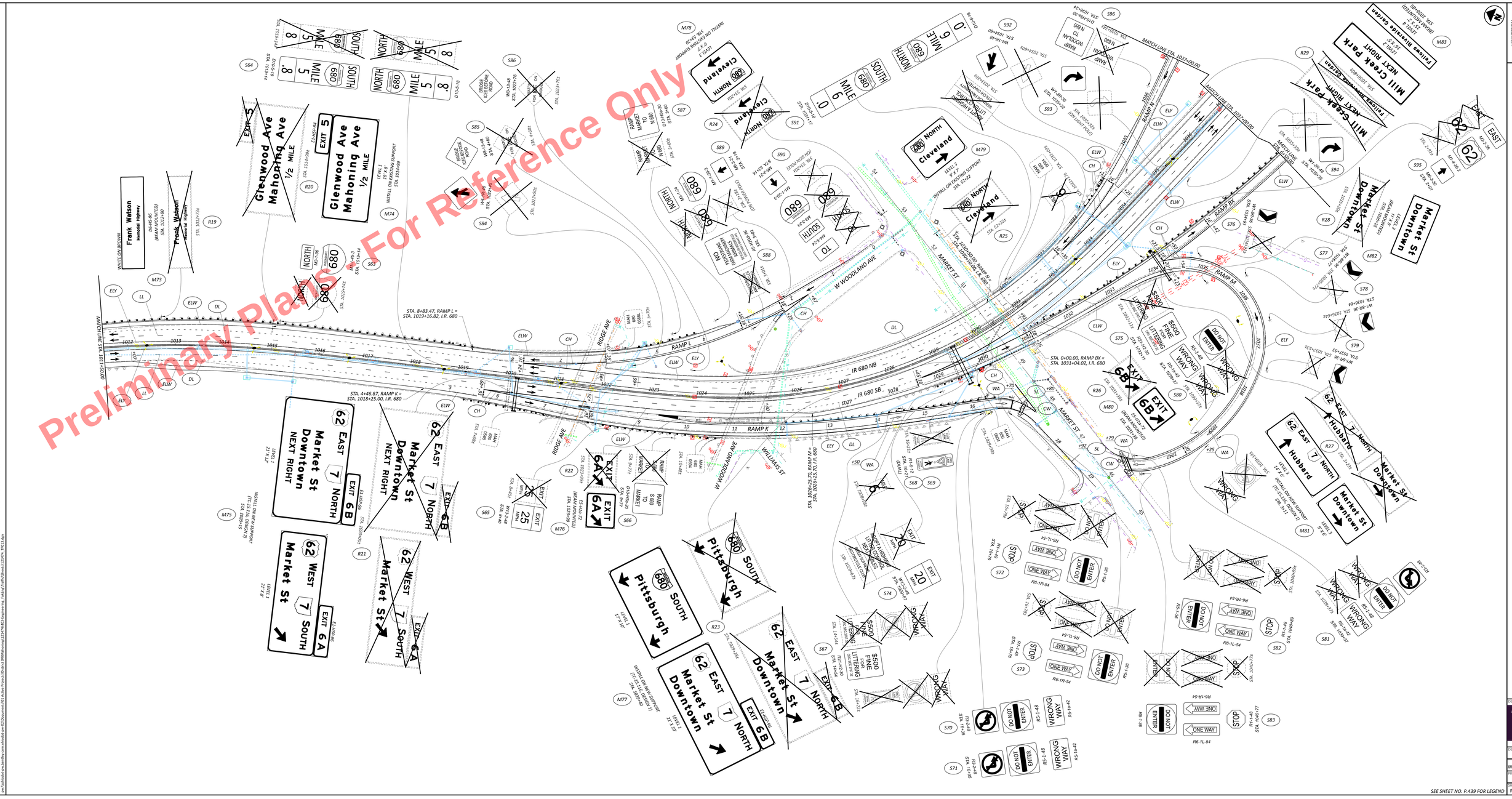

SIGNING & PAVEMENT MARKING PLAN
INTERSTATE 680

HORIZONTAL SCALE IN FEET
0 50 100

DESIGN AGENCY
TF ASSOCIATES

DESIGNER
SDL

REVIEWER
WHT 09/15/25

PROJECT ID
121474

SHEET P.442 TOTAL 655

MAH-680-04.58

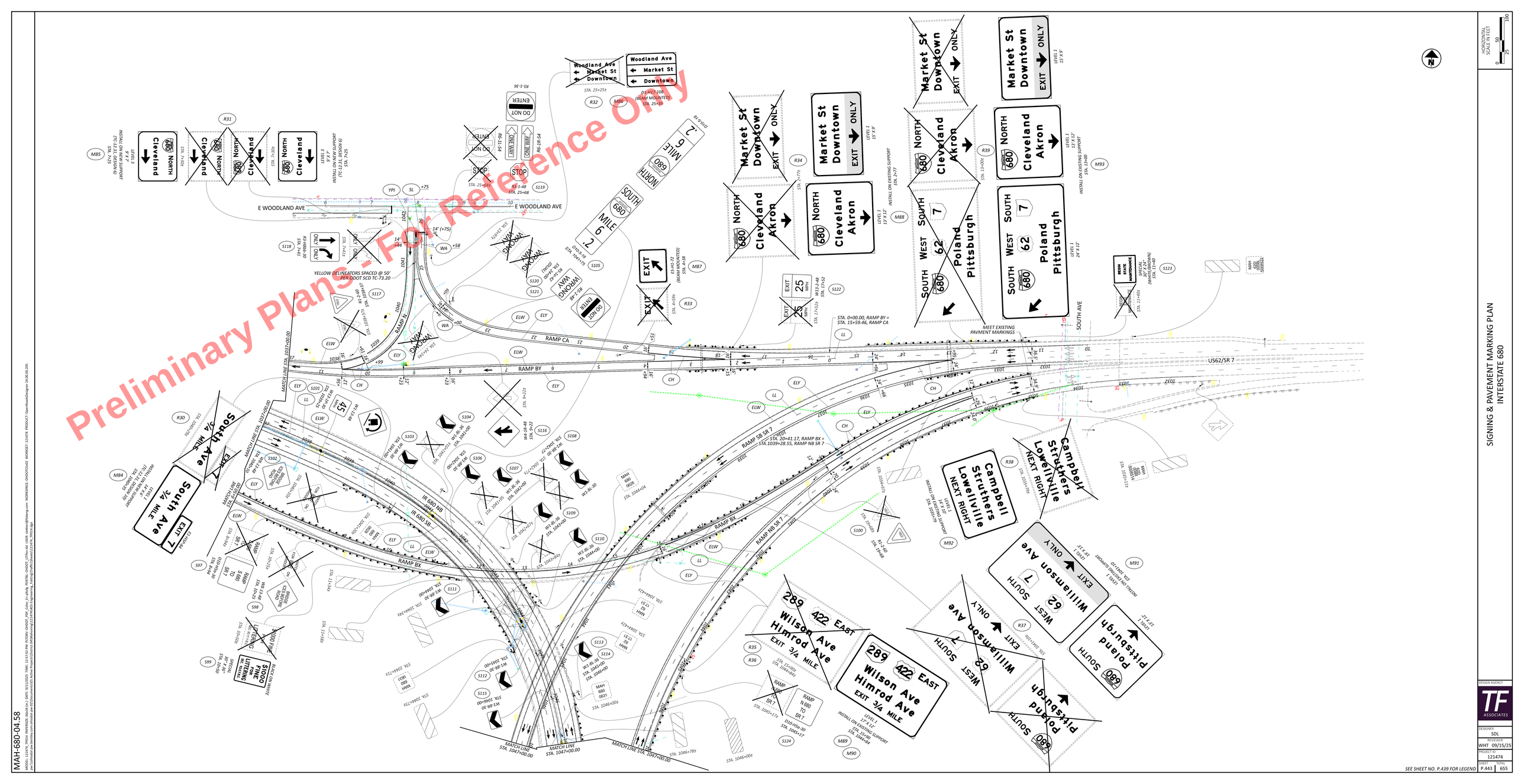

SIGNING & PAVEMENT MARKING PLAN
INTERSTATE 680

DESIGN AGENCY
TF ASSOCIATES

DESIGNER SDL
REVIEWER WHT 09/15/25
PROJECT ID 121474
SHEET P.443 TOTAL 655

SEE SHEET NO. P.439 FOR LEGEND

MAH-680-04.58

MAH-680-04.58

MODEL: 121474_TP01S PAPERSIZE: 66x34 (in.) DATE: 9/11/2025 TIME: 12:57:19 PM PLTDRV: OHDOT_PDF_Color_Ex-plt.cfg PENTBL: OHDOT_LITPen.tbl USER: slettieri@fokeng.com WORKSPACE: OHDOTCLv02 WORKSET: 121474 PRODUCT: OpenRoadsDesigner 24.00.00.205
pw:\\ohiodot-pw-bentley.com:ohiodot-pw-02\Document\01 Active Projects\District 04\Mahoning\121474\K403-Engineering_Folding\Traffic\Sheet\121474_TP01S.dgn

Preliminary Plans - For Reference Only

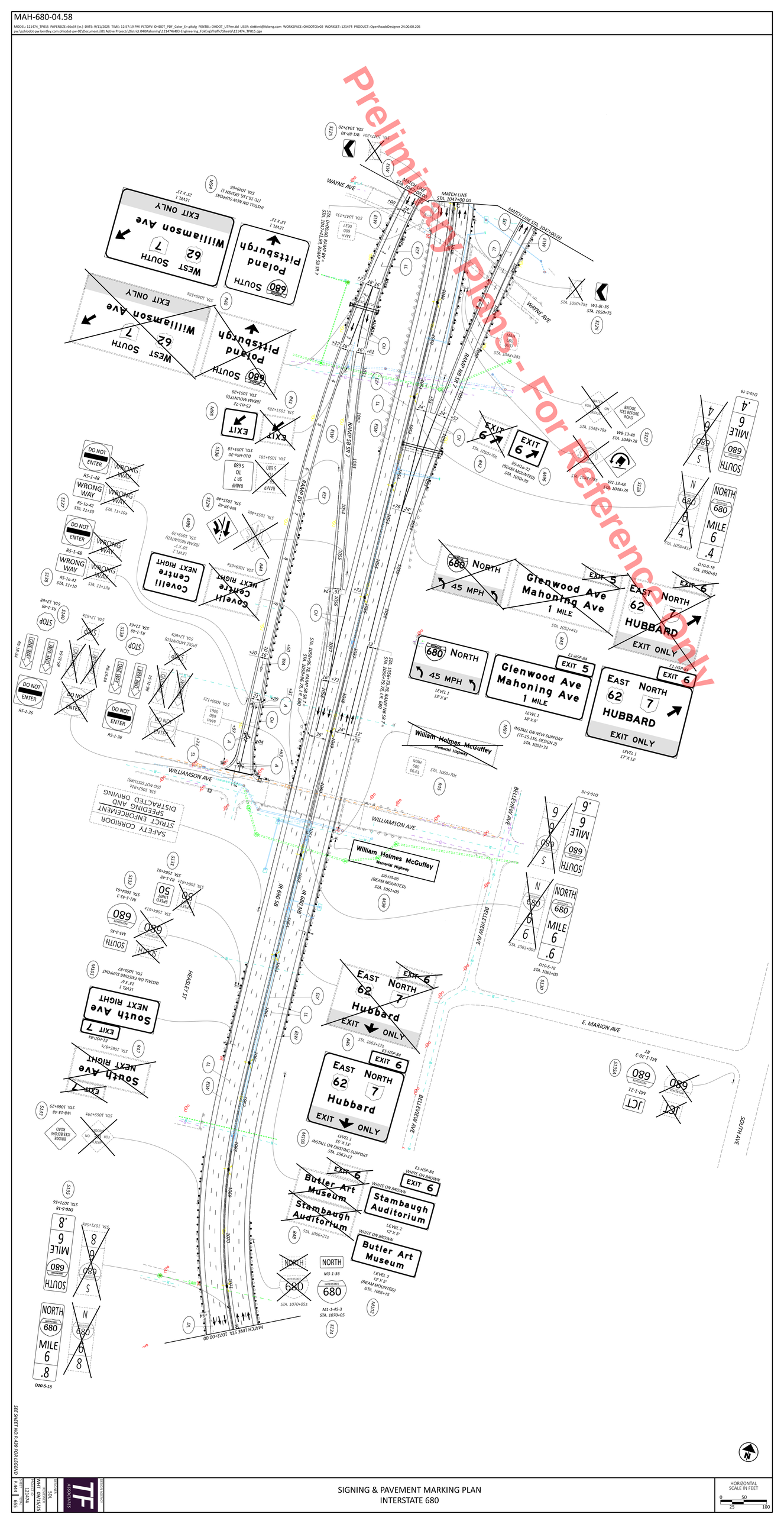

SEE SHEET NO.P-489 FOR LEGEND

P.M.H.	121474	WHT 09/15/25	SIS	TF ASSOCIATES	SIGNING & PAVEMENT MARKING PLAN INTERSTATE 680	HORIZONTAL SCALE IN FEET 0 50 25 100	
DESIGNED	DRAWN	CHECKED	QUANTITIES				

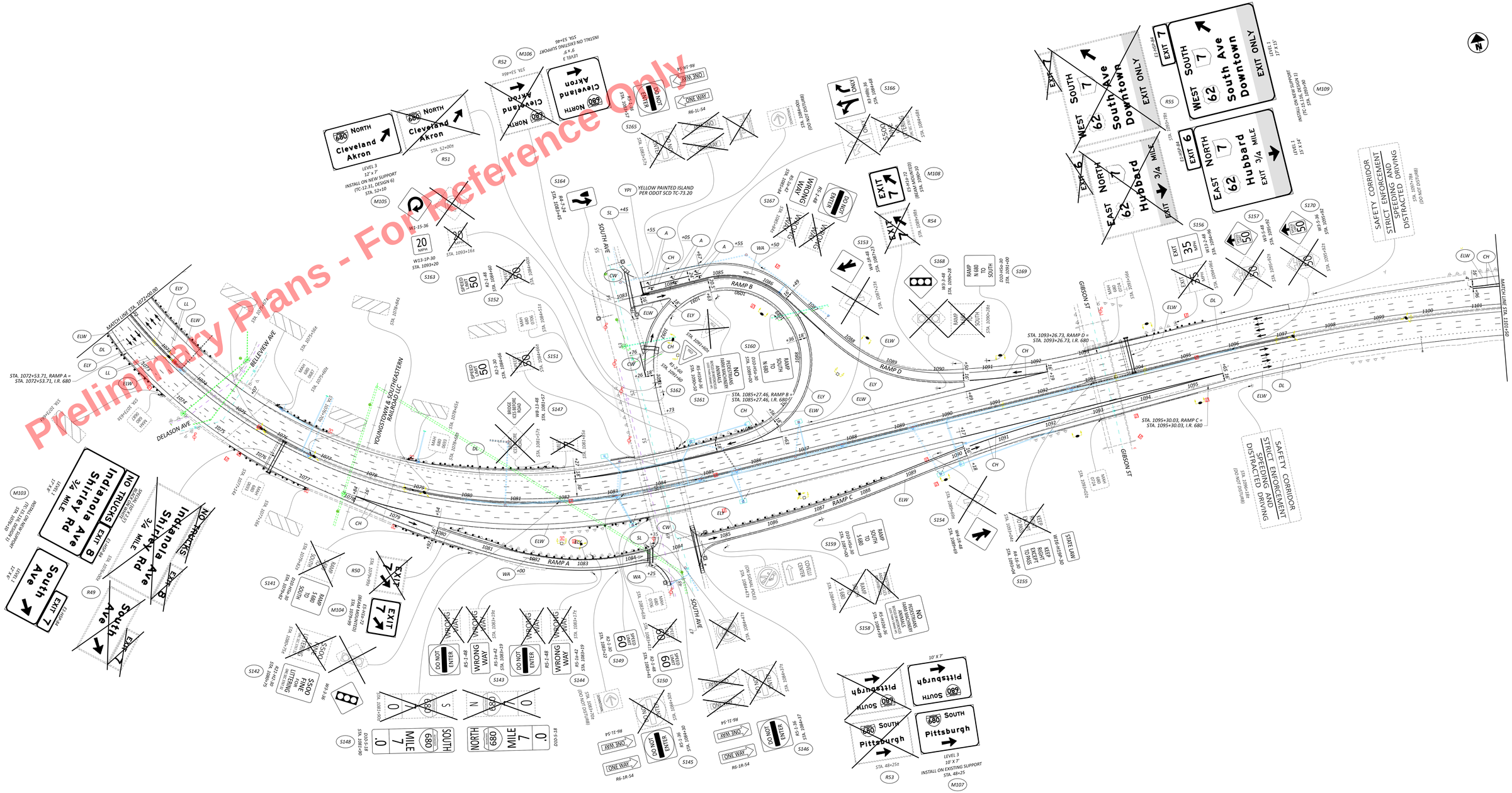
Preliminary Plans - For Reference Only
SIGNING & PAVEMENT MARKING PLAN
INTERSTATE 680
MAH-680-04.58
HORIZONTAL SCALE IN FEET
0 25 50 100
DESIGN AGENCY
TF ASSOCIATES
DESIGNED SDL
REVIEWED WHT 09/15/25
PROJECT ID 121474
SHEET P.445 TOTAL 655
SEE SHEET NO. P.439 FOR LEGEND
MATCH LINE STA. 1072+00.00
MATCH LINE STA. 1101+50
STA. 1072+53.71, RAMP A = STA. 1072+53.71, I.R. 680
STA. 1085+27.46, RAMP B = STA. 1085+27.46, I.R. 680
STA. 1093+26.73, RAMP D = STA. 1093+26.73, I.R. 680
STA. 1095+30.03, RAMP C = STA. 1095+30.03, I.R. 680
DELASON AVE
BELLEVIEW AVE
YOUNGSTOWN & SOUTHEASTERN RAILROAD LLC
SOUTH AVE
GIBSON ST
RAMP A
RAMP B
RAMP C
RAMP D
SAFETY CORRIDOR
STRICT ENFORCEMENT
SPEEDING AND
DISTRACTED DRIVING
NO TRUCKS
Indianola Ave
Shirley Rd
3/4 MILE
EXIT 8
South Ave
EXIT 7
Cleveland
Akron
NORTH
680
EXIT 7
WEST
SOUTH
7
62
South Ave
Downtown
EXIT ONLY
EXIT 6
EAST
NORTH
7
62
Hubbard
3/4 MILE
EXIT
Pittsburgh
SOUTH
680
LEVEL 3
12' x 2'
INSTALL ON NEW SUPPORT
(TC-12.31, DESIGN 6)
STA. 52+00
LEVEL 3
10' X 7'
INSTALL ON EXISTING SUPPORT
STA. 48+25
LEVEL 3
9' x 9'
INSTALL ON EXISTING SUPPORT
STA. 53+46
YELLOW PAINTED ISLAND
PER ODOT SCD TC-73.20
ONE WAY
DO NOT ENTER
WRONG WAY
SPEED LIMIT 50
SPEED LIMIT 60
SPEED LIMIT 55
20 MPH
30 MPH
35 MPH
RAMP NB 680 TO SOUTH
RAMP SB 680 TO SOUTH
RAMP SOUTH TO NB 680
RAMP SOUTH TO SB 680
NO PEDESTRIANS HAZARDOUS ANIMALS
SLOW
STATE LAW
KEEP RIGHT EXCEPT TO PASS
SAFETY CORRIDOR
STRICT ENFORCEMENT
SPEEDING AND
DISTRACTED DRIVING
(DO NOT DISTRIB)

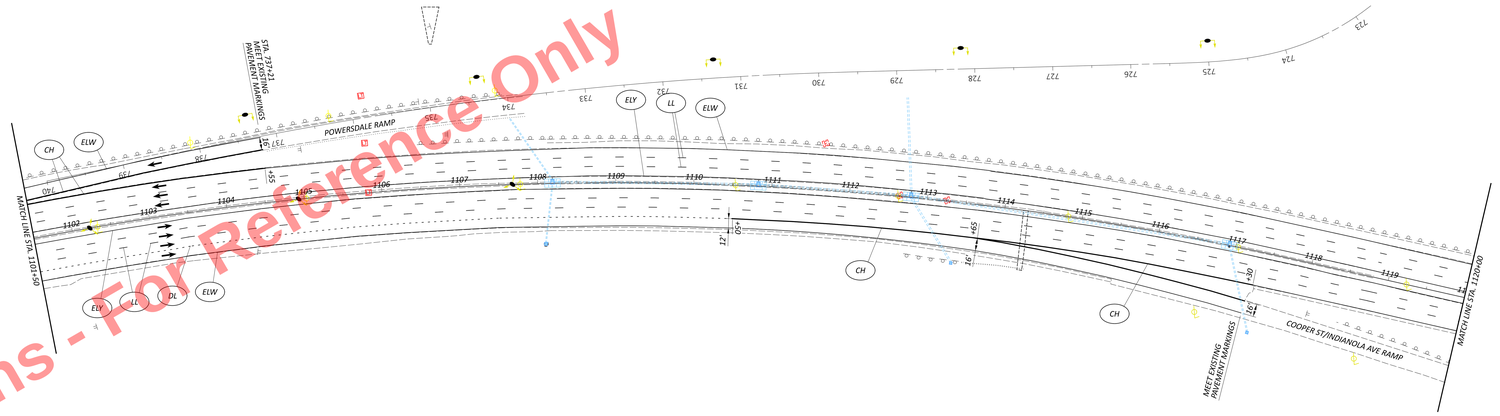

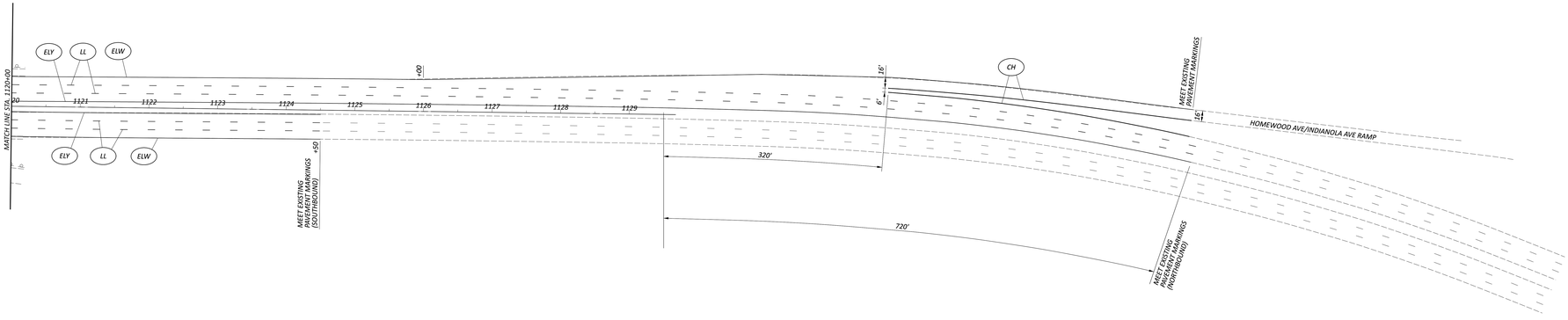

Preliminary Plans - For Reference Only

HORIZONTAL SCALE IN FEET
0 25 50 100

SIGNING & PAVEMENT MARKING PLAN
INTERSTATE 680

DESIGN AGENCY
TF ASSOCIATES

DESIGNER
SDL

REVIEWER
WHT 09/15/25

PROJECT ID
121474

SHEET P.446 TOTAL 655

SEE SHEET NO. P.439 FOR LEGEND

MAH-680-04.58

MODEL: 121474_TP017_PAVEMENT-66A14 (in) DATE: 9/11/2025 TIME: 12:57:53 PM PLTDRV: OHDOT_PDF_Color_E+.pltcfg PENTBL: OHDOT_LITTen.tbl USER: sletter@flokeng.com WORKSPACE: OHDOTCIVD2 WORKSET: 121474 PRODUCT: OpenRoadsDesigner 24.00.00.205
pw:\\ohdot-pw.bentley.com:ohdot-pw-02\Documents\01 Active Projects\District 04\Marketing\121474\Roadway\Engineering\Sheets\Sheets\121474_TP017.dgn

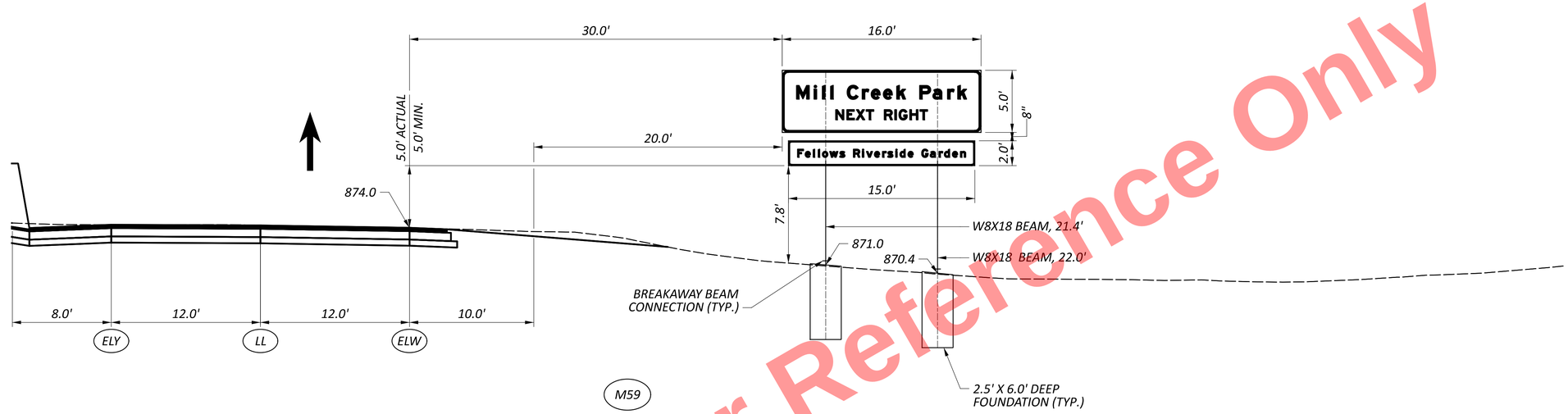

M59

IR 680 SB, STA. 951+00

(LOOKING SOUTH)

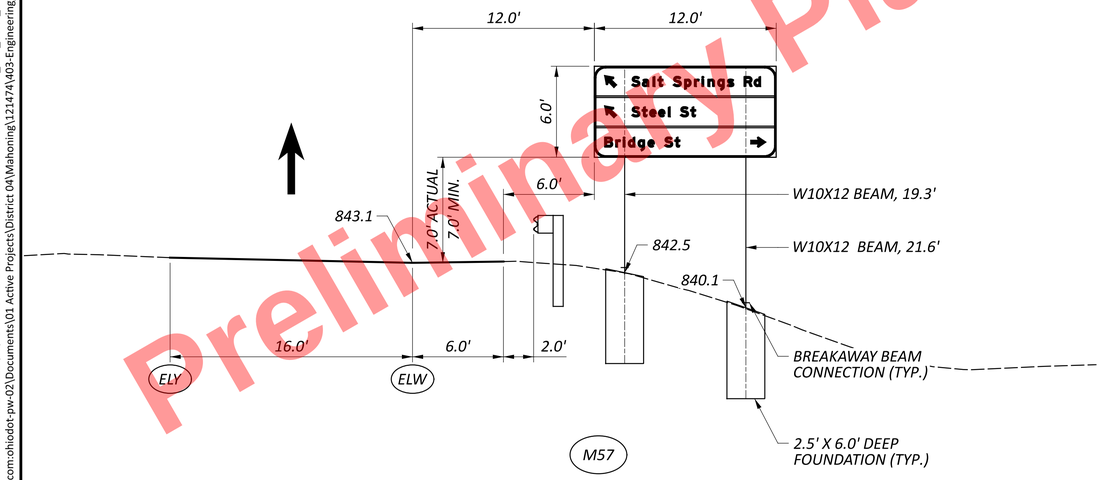

M57

SALT SPRINGS RD, RAMP D

STA. 16+45

(LOOKING NORTH)

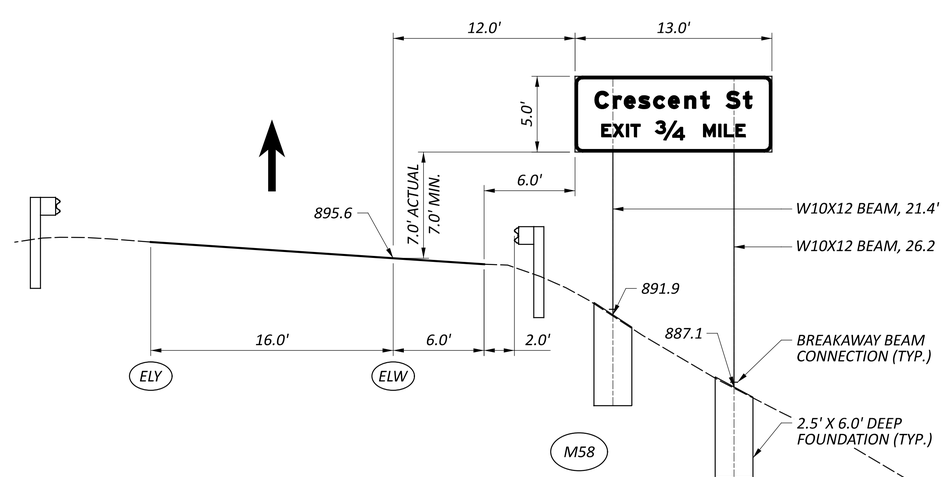

M58

SR 193 NB, RAMP B3

STA. 9+50

(LOOKING NORTH)

Preliminary Plans - For Reference Only

GUIDE SIGN ELEVATION DETAILS
SUPPORT NOs. M57, M58 & M59

DESIGN AGENCY
TF ASSOCIATES

DESIGNER SDL
REVIEWER WHT 09/15/25
PROJECT ID 121474
SHEET P.447 | TOTAL 655

MAH-680-4.58

MODEL: Sheet - M57 M58 M59 PAPERSIZE: 34x22 (in.) DATE: 9/11/2025 TIME: 12:58:14 PM PLTDRV: OHDOT_PDF_Color_E+.pltcfg PENTBL: OHDOT_UTPen.tbl USER: sletterl@fokeng.com WORKSPACE: OHDOTCEx02 WORKSET: 121474 PRODUCT: OpenRoadsDesigner 24.00.00.205
pw:\\ohiodot-pw.bentley.com:ohiodot-pw-02\Documents\01 Active Projects\District 04\Mahoning\121474\03-Engineering_FokEng\Traffic\Sheets\121474_TE001.dgn

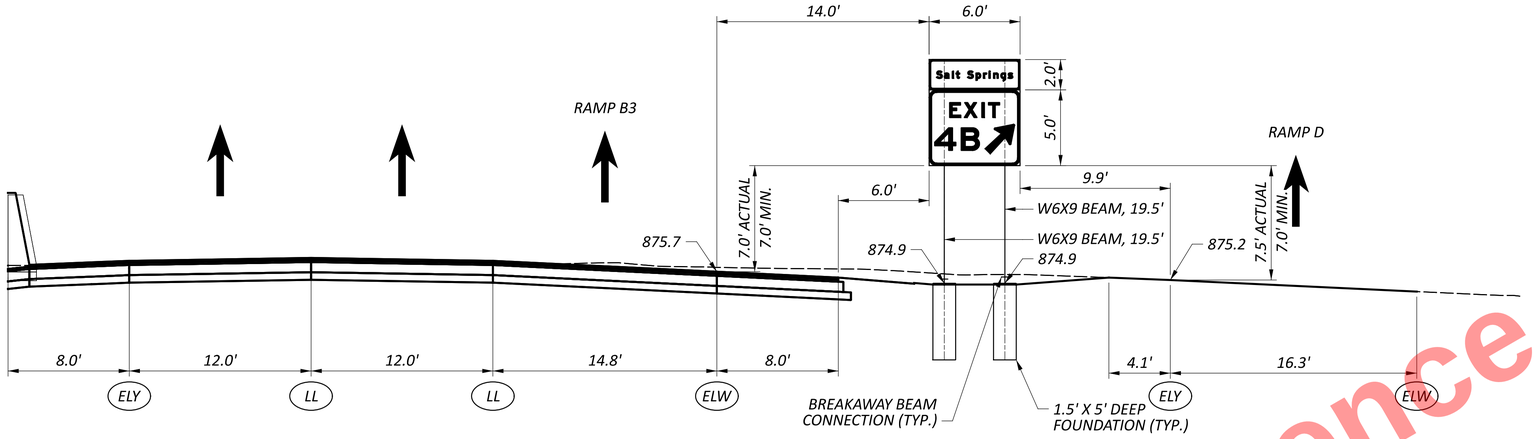

M61

IR 680 NB, STA. 952+93

(LOOKING NORTH)

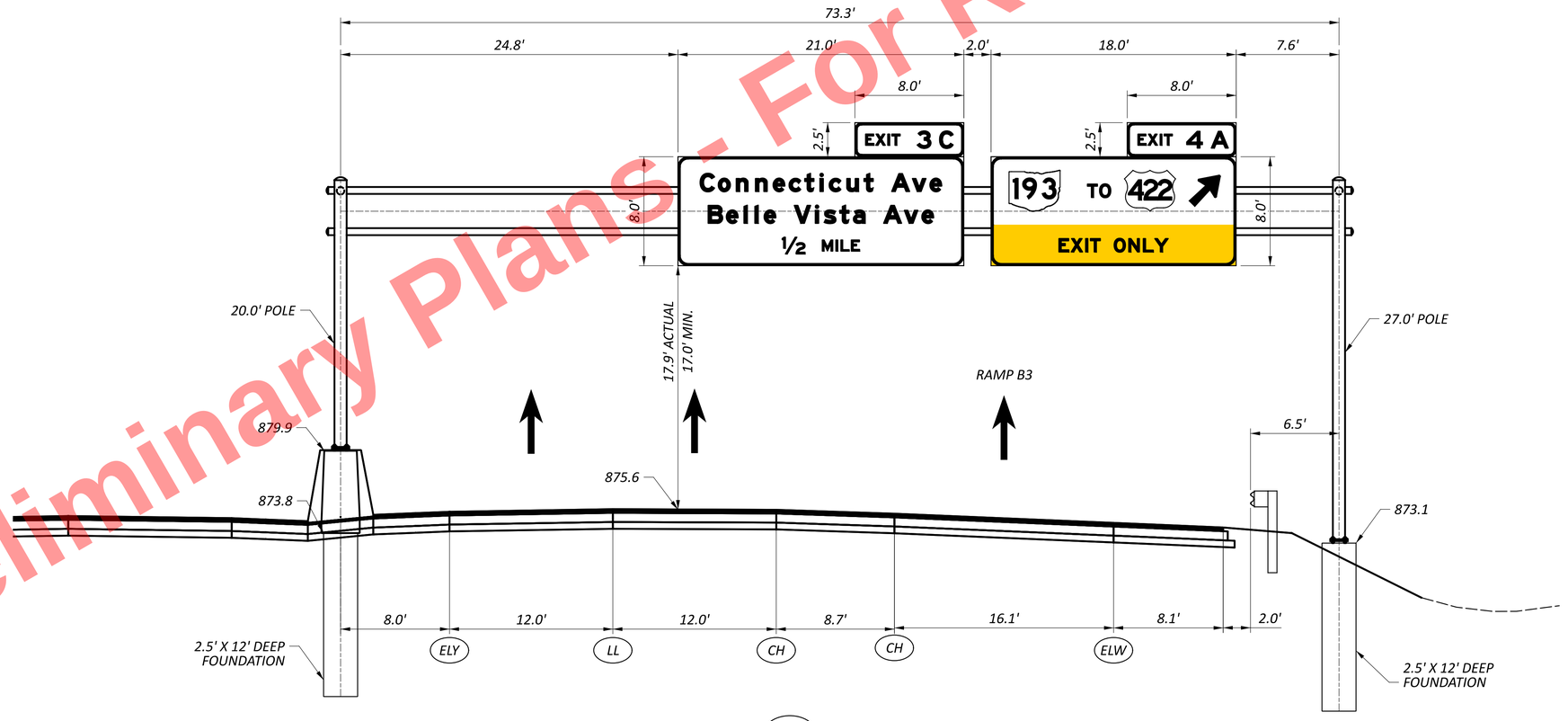

M60

IR 680 NB, STA. 951+70

TC-15.116, DESIGN 1

(LOOKING NORTH)

Preliminary Plans - For Reference Only

GUIDE SIGN ELEVATION DETAILS
SUPPORT NOs. M60 & M61

DESIGN AGENCY
TF ASSOCIATES

DESIGNER SDL
REVIEWER WHT 09/15/25
PROJECT ID 121474
SHEET P.448 TOTAL 655

MAH-680-4.58

MODEL: Sheet - M60 M61 PAPERSIZE: 34x22 (in.) DATE: 9/11/2025 TIME: 12:59:10 PM PLTDRV: OHDOT_PDF_Color_E+.pltcfg PENTBL: OHDOT_UTPen.tbl USER: sletterl@fokeng.com WORKSPACE: OHDOTCEv02 WORKSET: 121474 PRODUCT: OpenRoadsDesigner 24.00.00.205
pw:\\ohiodot-pw.bentley.com:ohiodot-pw-02\Documents\01 Active Projects\District 04\Mahoning\121474\403-Engineering_FokEng\Traffic\Sheets\121474_TE001.dgn

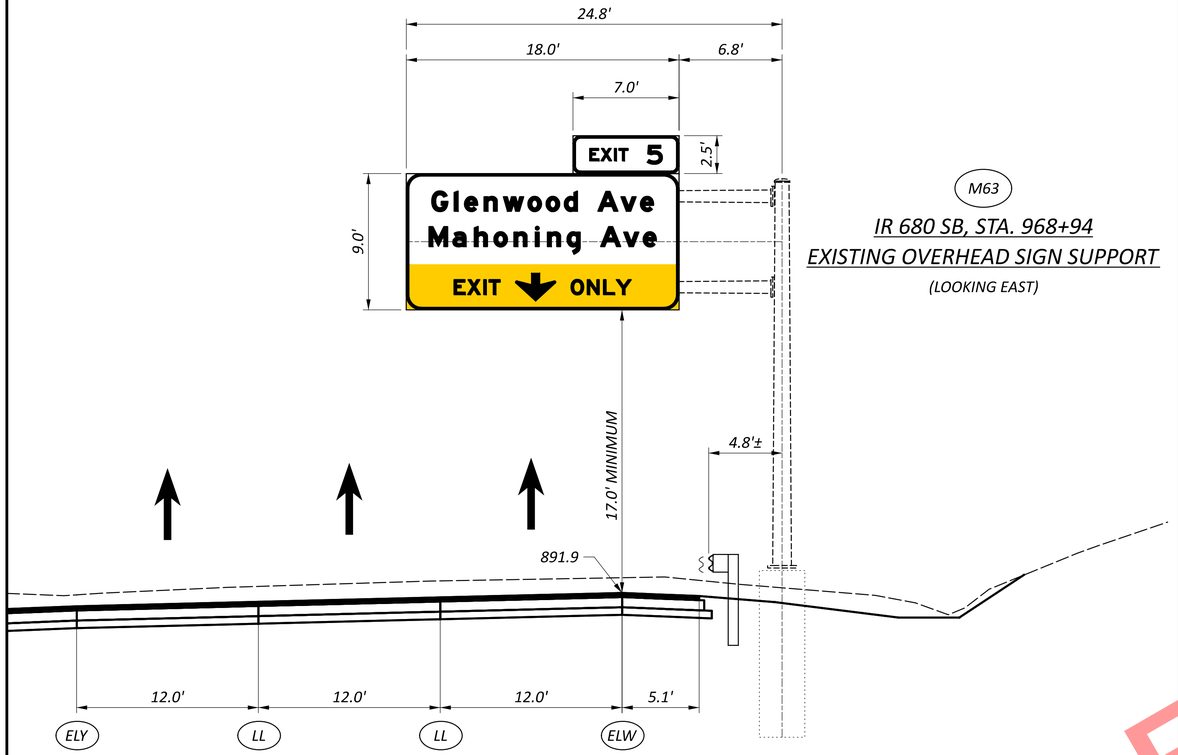

M63

IR 680 SB, STA. 968+94

EXISTING OVERHEAD SIGN SUPPORT

(LOOKING EAST)

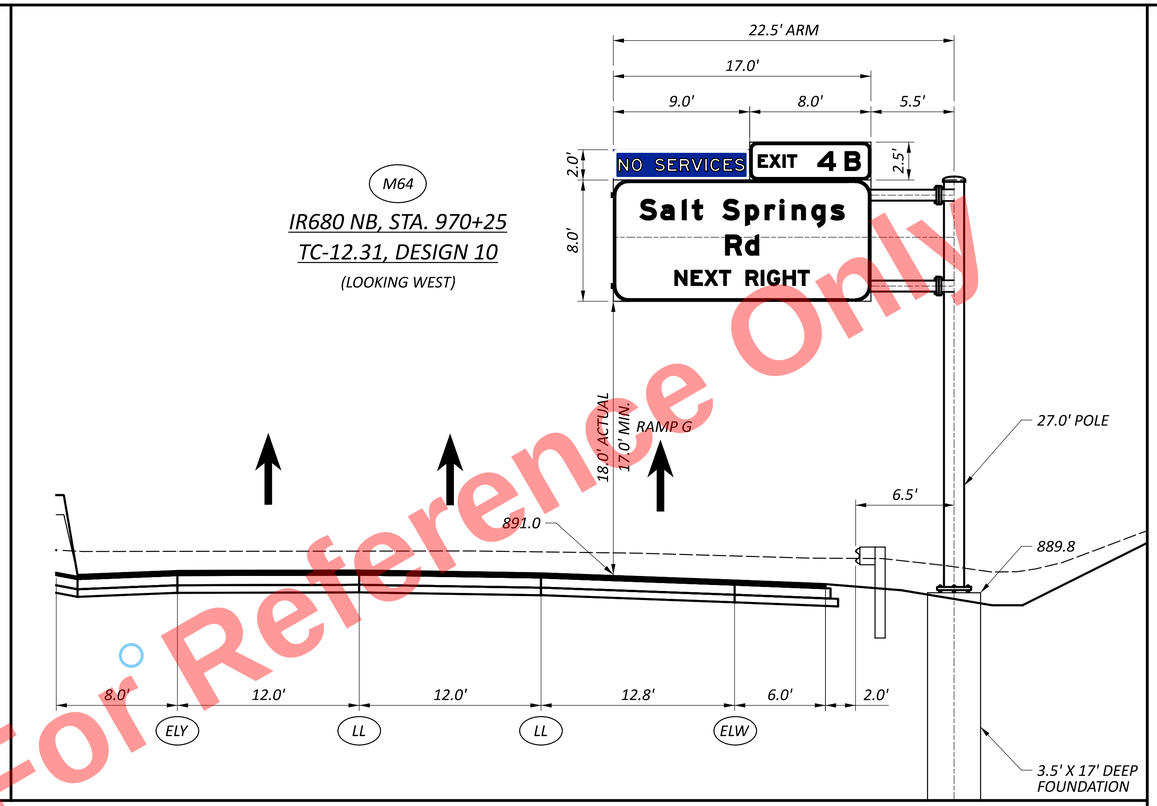

M64

IR680 NB, STA. 970+25

TC-12.31, DESIGN 10

(LOOKING WEST)

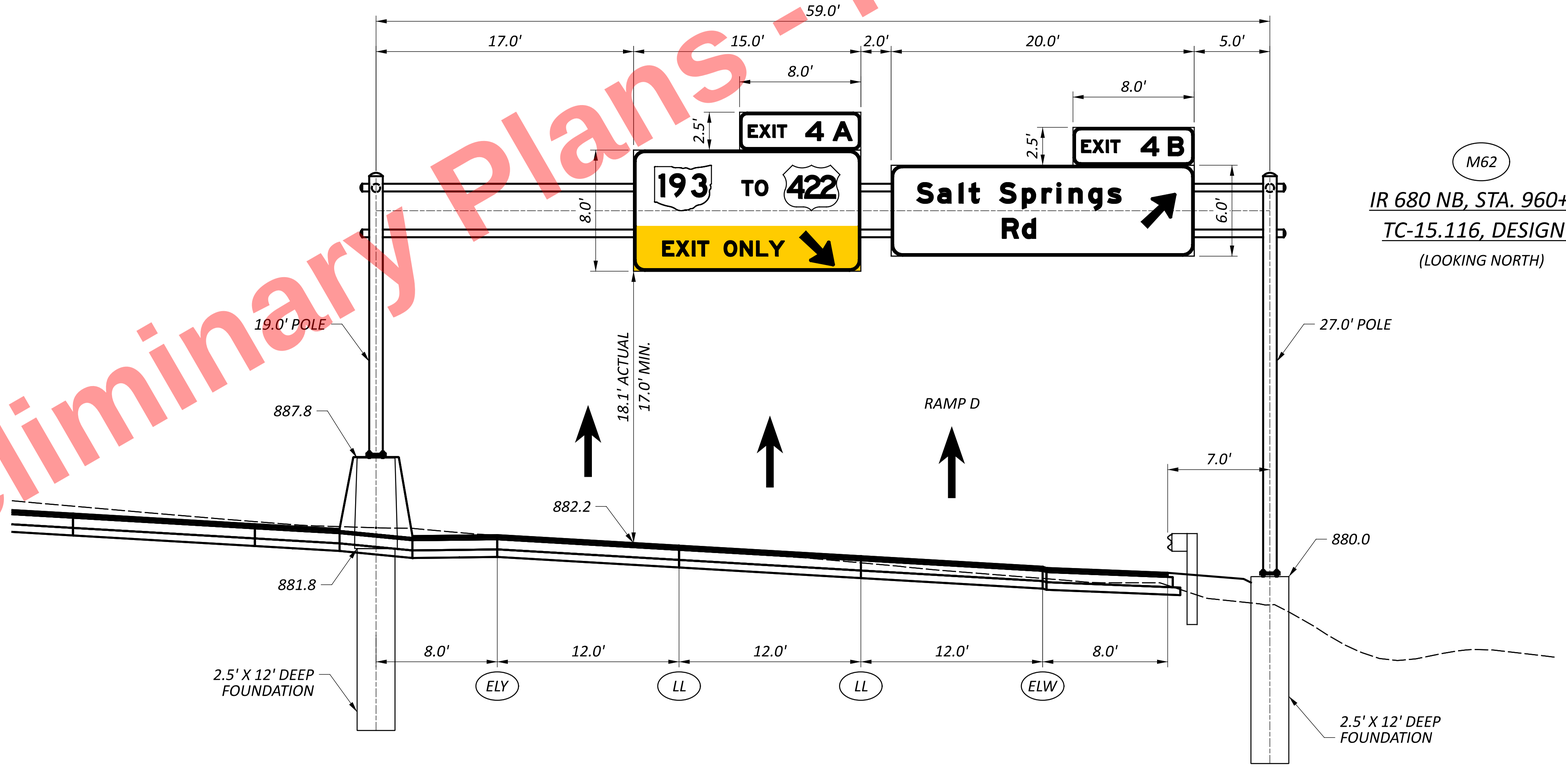

M62

IR 680 NB, STA. 960+35

TC-15.116, DESIGN 1

(LOOKING NORTH)

Preliminary Plans - For Reference Only

GUIDE SIGN ELEVATION DETAILS
SUPPORT NOs. M62, M63 & M64

DESIGN AGENCY
TF ASSOCIATES

DESIGNER
SDL

REVIEWER
WHT 09/15/25

PROJECT ID
121474

SHEET P.449 | TOTAL 655

MAH-680-4.58

MODEL: Sheet - M62 M63 M64 PAPERSIZE: 34x22 (in.) DATE: 9/11/2025 TIME: 12:59:40 PM PLTDRV: OHDOT_PDF_Color_E+.pltcfg PENTBL: OHDOT_UTPen.tbl USER: sletterl@fokeng.com WORKSPACE: OHDOTCEx02 WORKSET: 121474 PRODUCT: OpenRoadsDesigner 24.00.00.205
pw:\\ohiodot-pw.bentley.com:ohiodot-pw-02\Documents\01 Active Projects\District 04\Mahoning\121474\403-Engineering_FokEng\Traffic\Sheets\121474_TE001.dgn

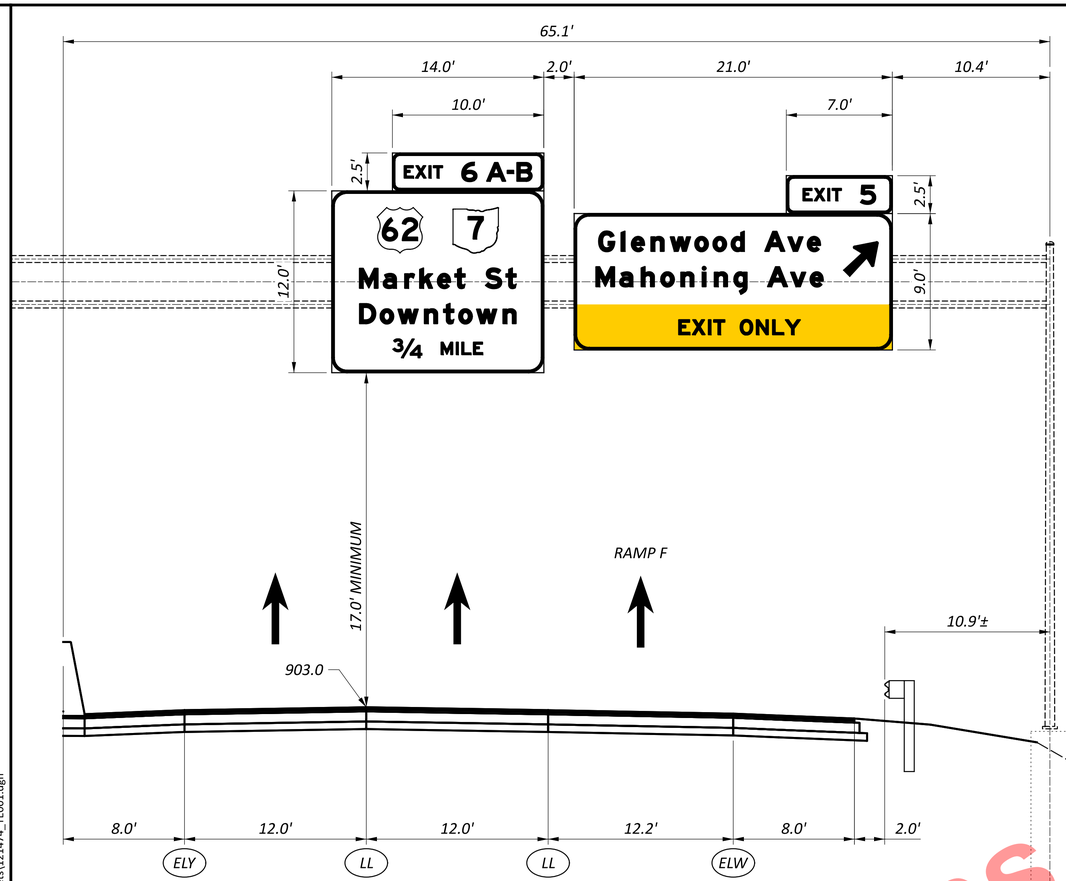

M65A

IR 680 SB, STA. 981+37
EXISTING OVERHEAD SIGN SUPPORT
(LOOKING EAST)

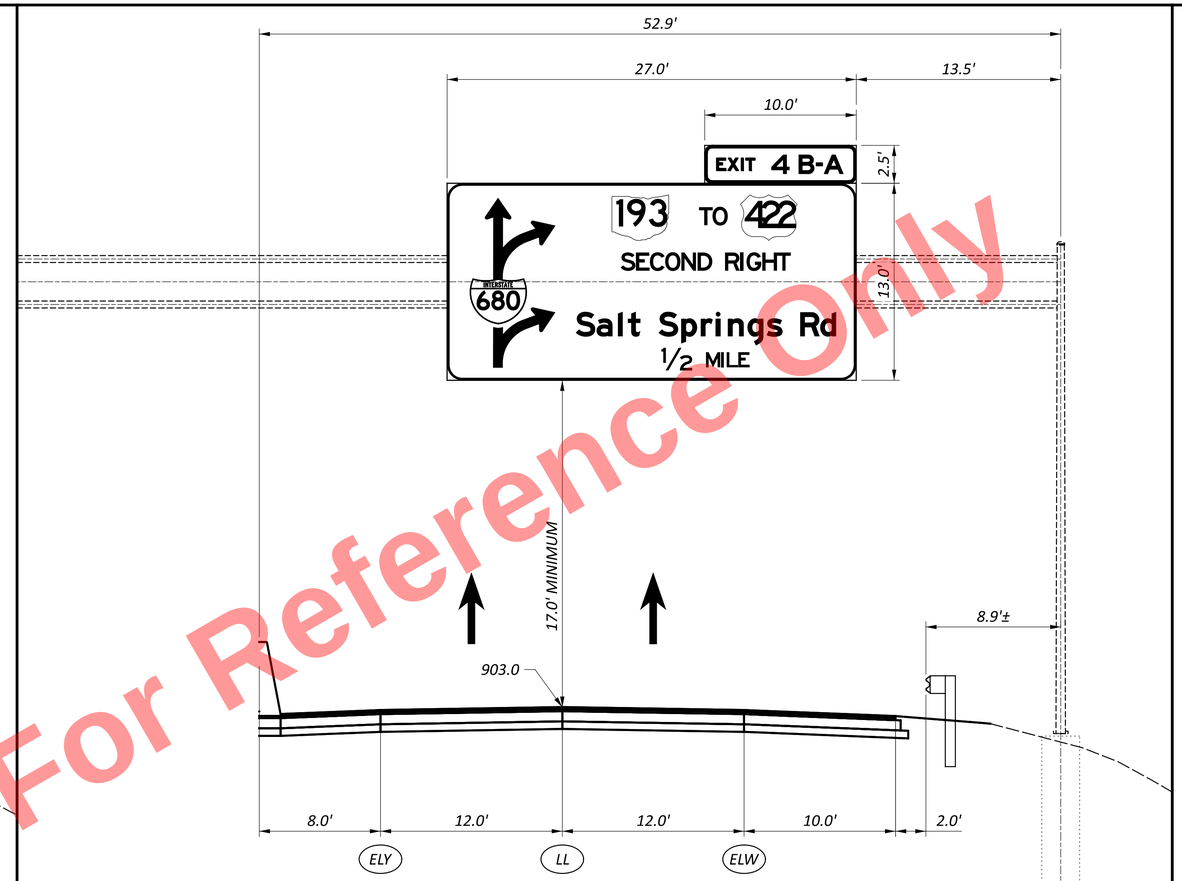

M65B

IR 680 NB, STA. 981+37
EXISTING OVERHEAD SIGN SUPPORT
(LOOKING WEST)

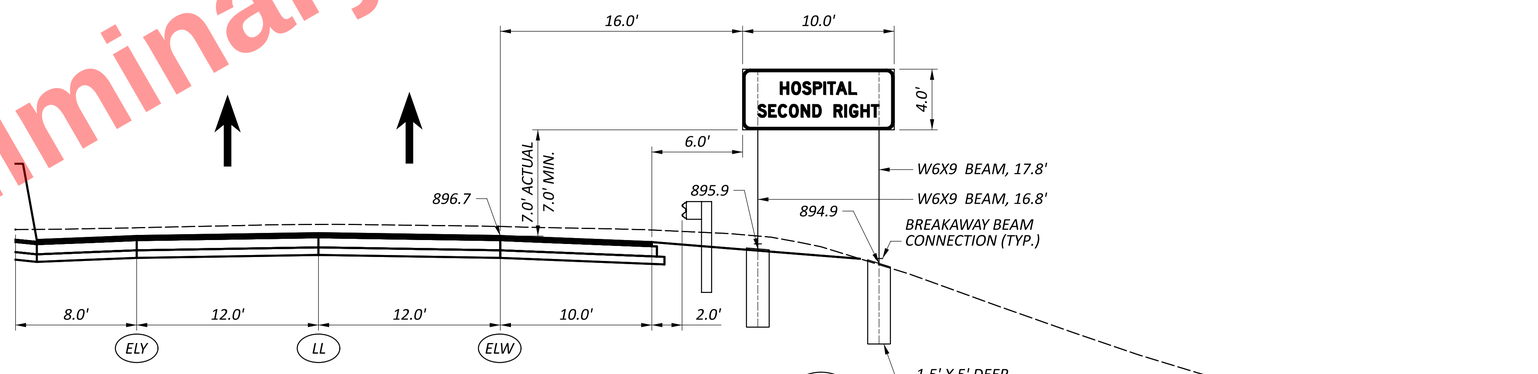

M64A

IR 680 NB, STA. 975+20
(LOOKING WEST)

Preliminary Plans - For Reference Only

GUIDE SIGN ELEVATION DETAILS
SUPPORT NOs. M64A, M65A & M65B

DESIGN AGENCY
TF ASSOCIATES

DESIGNER SDL
REVIEWER WHT 09/15/25
PROJECT ID 121474
SHEET P.450 TOTAL 655

MAH-680-4.58

MODEL: Sheet - M64A M65A M65B PAPERSIZE: 34x22 (in.) DATE: 9/11/2025 TIME: 1:00:13 PM PLTDRV: OHDOT_PDF_Color_E+.pltcfg PENTBL: OHDOT_UTPen.tbl USER: sletterl@fokeng.com WORKSPACE: OHDOTCEv02 WORKSET: 121474 PRODUCT: OpenRoadsDesigner 24.00.00.205
pw:\\ohiodot-pw.bentley.com:ohiodot-pw-02\Documents\01 Active Projects\District 04\Mahoning\121474\403-Engineering_FokEng\Traffic\Sheets\121474_TE001.dgn

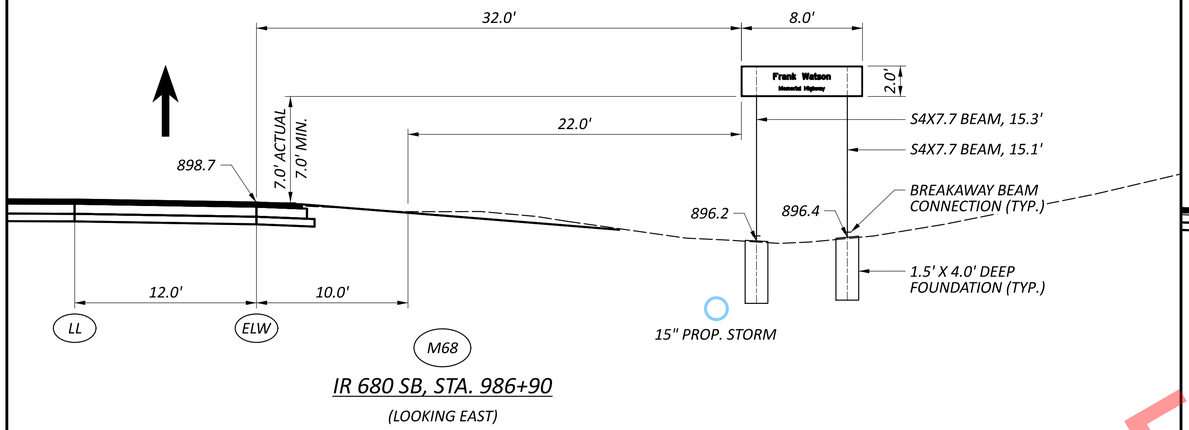

IR 680 SB, STA. 986+90

(LOOKING EAST)

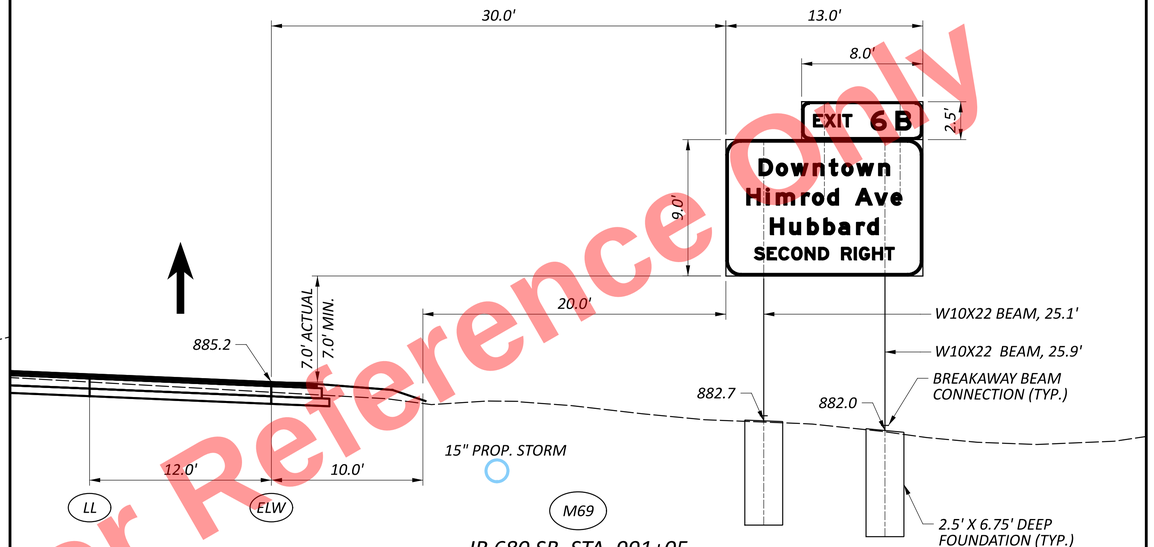

IR 680 SB, STA. 991+05

(LOOKING EAST)

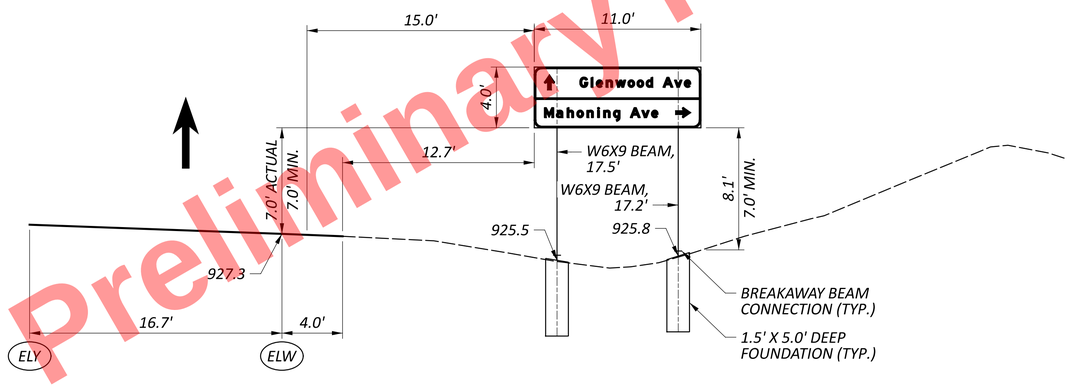

M66

EDWARDS ST, RAMP F

STA. 14+35

(LOOKING WEST)

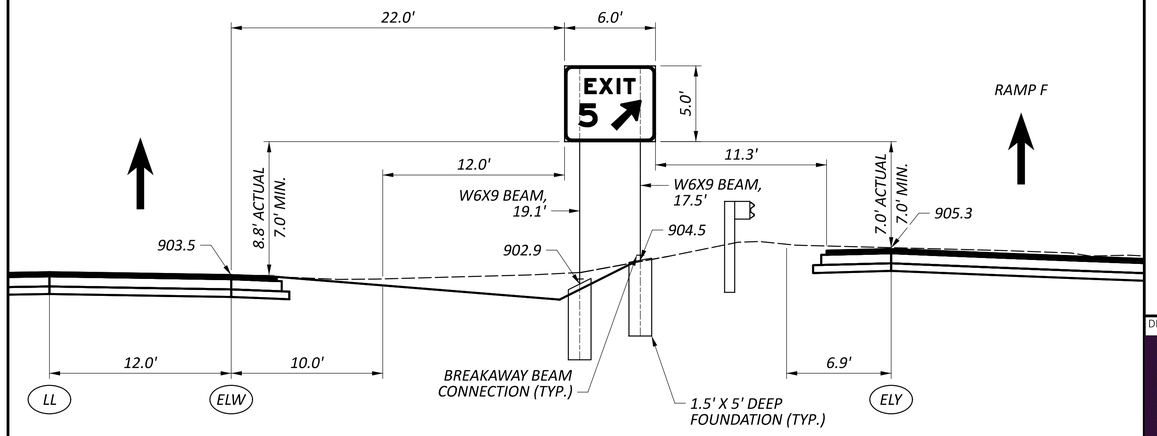

M67

IR 680 SB, STA. 984+65

(LOOKING EAST)

GUIDE SIGN ELEVATION DETAILS
SUPPORT NOs. M66, M67, M68 & M69

DESIGN AGENCY
TF ASSOCIATES

DESIGNER
SDL

REVIEWER
WHT 09/15/25

PROJECT ID
121474

SHEET P.451 | TOTAL 655

MAH-680-4.58

MODEL: Sheet - M66 M67 M68 M69 PAPERSIZE: 34x22 (in.) DATE: 9/11/2025 TIME: 1:00:44 PM PLTDRV: OHDOT_PDF_Color_E+.pltcfg PENTBL: OHDOT_UTPen.tbl USER: sletten@fokeng.com WORKSPACE: OHDOTCEv02 WORKSET: 121474 PRODUCT: OpenRoadsDesigner 24.00.00.205
pw:\\ohiodot-pw.bentley.com:ohiodot-pw-02\Documents\01 Active Projects\District 04\Mahoning\121474\403-Engineering_FokEng\Traffic\Sheets\121474_TE001.dgn

Preliminary Plans - For Reference Only

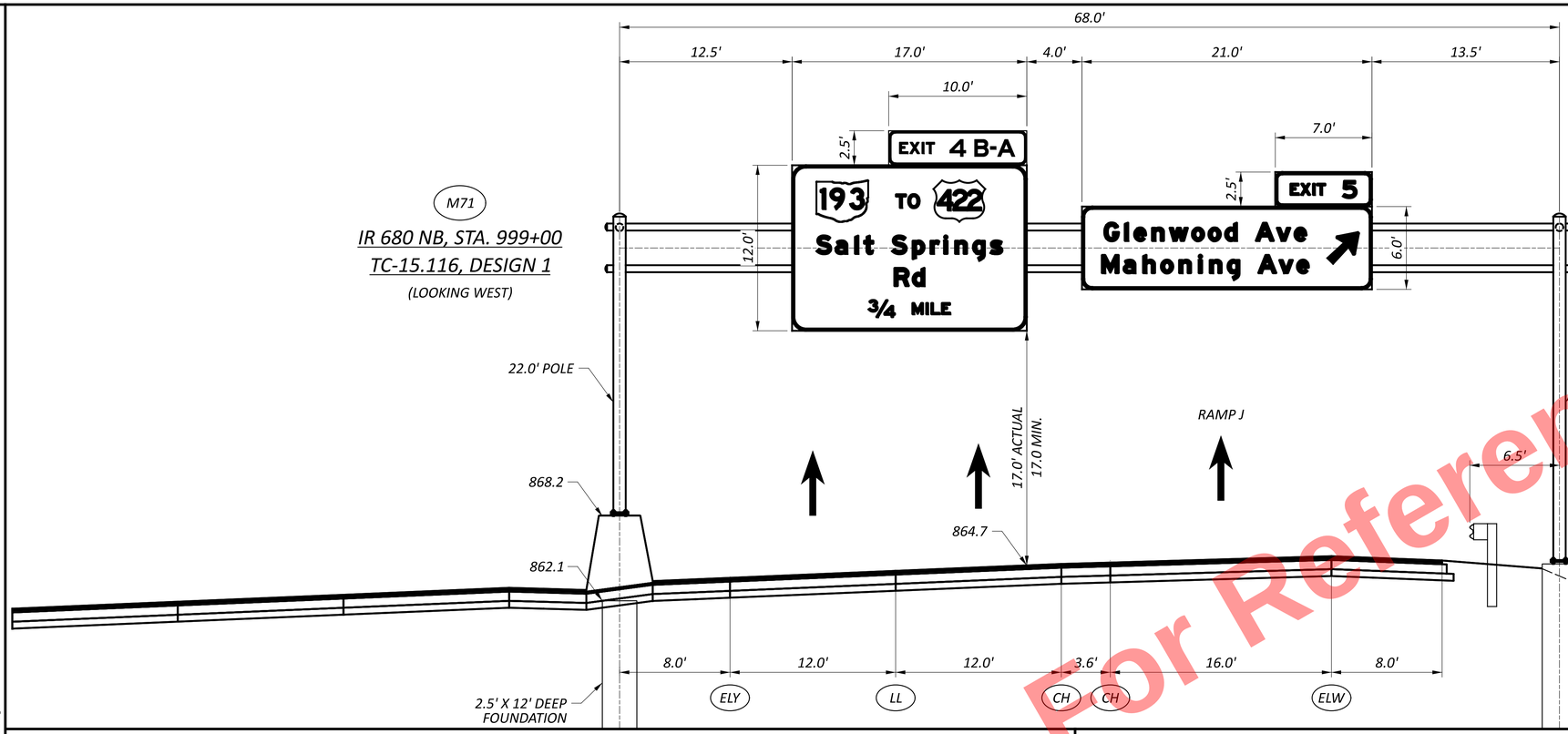

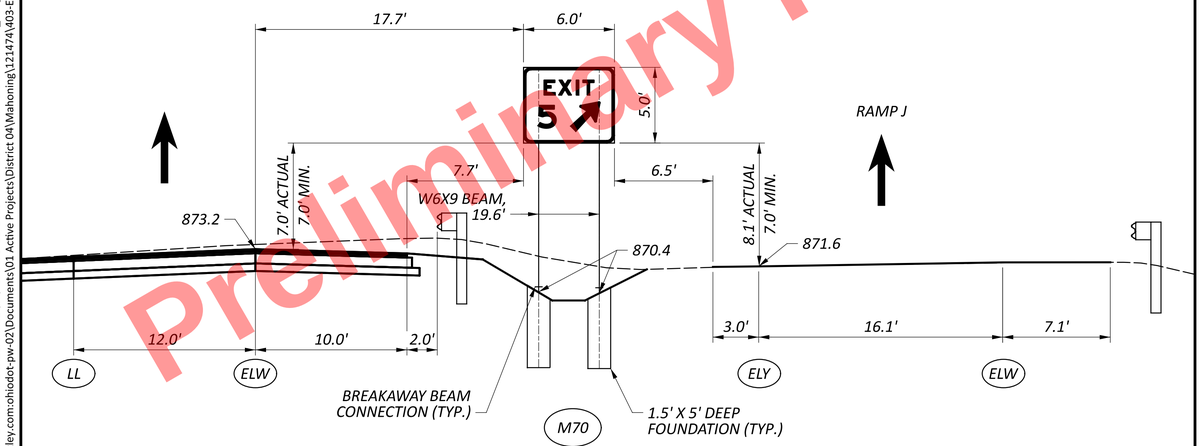

IR 680 NB, STA. 995+79

(LOOKING WEST)

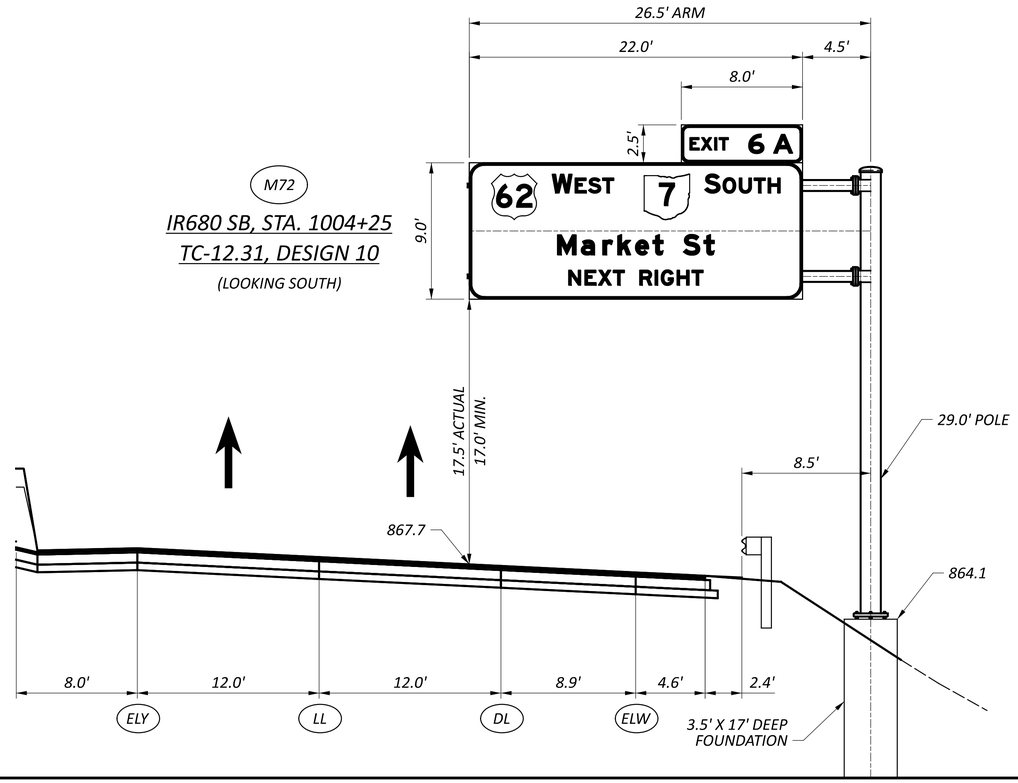

GUIDE SIGN ELEVATION DETAILS
SUPPORT NOs. M70, M71 & M72

DESIGN AGENCY
TF ASSOCIATES

DESIGNER SDL
REVIEWER WHT 09/15/25
PROJECT ID 121474
SHEET P.452 TOTAL 655

MAH-680-4.58

MODEL: Sheet - M70 M71 M72 PAPERSIZE: 34x22 (in.) DATE: 9/11/2025 TIME: 1:01:26 PM PLTDRV: OHDOT_PDF_Color_E+.pltcfg PENTBL: OHDOT_UTPen.tbl USER: pw:\\ohiodot-pw.bentley.com:ohiodot-pw-02\Documents\01 Active Projects\District 04\Mahoning\121474\403-Engineering_FokEng\Traffic\Sheets\121474_TE001.dgn
en.tbl USER: slettieri@fokeng.com WORKSPACE: OHDOTCEv02 WORKSET: 121474 PRODUCT: OpenRoadsDesigner 24.00.00.205

Preliminary Plans - For Reference Only

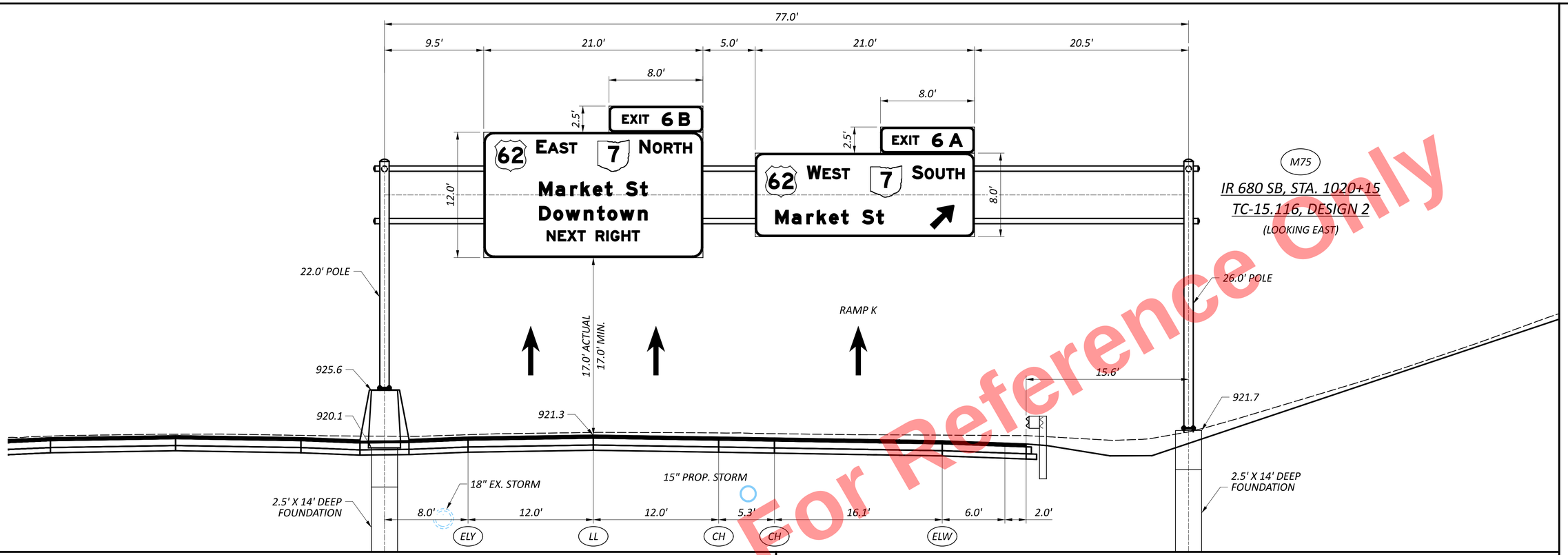

M75

IR 680 SB, STA. 1020+15

TC-15.116, DESIGN 2

(LOOKING EAST)

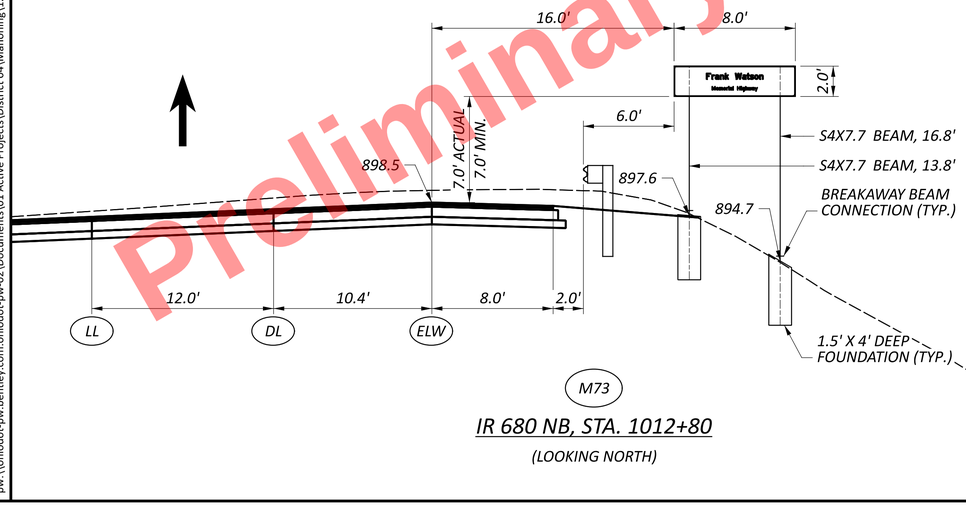

M73

IR 680 NB, STA. 1012+80

(LOOKING NORTH)

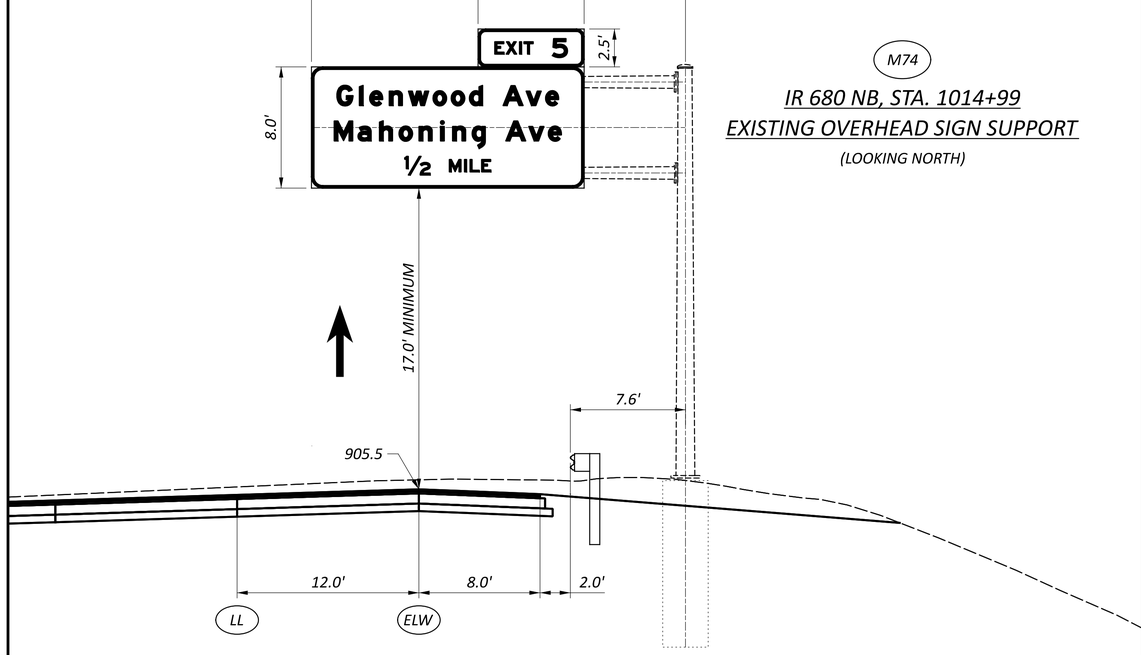

M74

IR 680 NB, STA. 1014+99

EXISTING OVERHEAD SIGN SUPPORT

(LOOKING NORTH)

Preliminary Plans - For Reference Only

GUIDE SIGN ELEVATION DETAILS
SUPPORT NOs. M73, M74 & M75

DESIGN AGENCY
TF ASSOCIATES

DESIGNER SDL
REVIEWER WHT 09/15/25
PROJECT ID 121474
SHEET P.453 TOTAL 655

MAH-680-4.58

MODEL: Sheet - M73 M74 M75 PAPERSIZE: 34x22 (in.) DATE: 9/11/2025 TIME: 1:02:18 PM PLTDRV: OHDOT_PDF_Color_E+.pltcfg PENTBL: OHDOT_UTPen.tbl USER: sletter@fokeng.com WORKSPACE: OHDOTCEv02 WORKSET: 121474 PRODUCT: OpenRoadsDesigner 24.00.00.205
pw:\\ohiodot-pw.bentley.com:ohiodot-pw-02\Documents\01 Active Projects\District 04\Mahoning\121474\03-Engineering_FokEng\Traffic\Sheets\121474_TE002.dgn

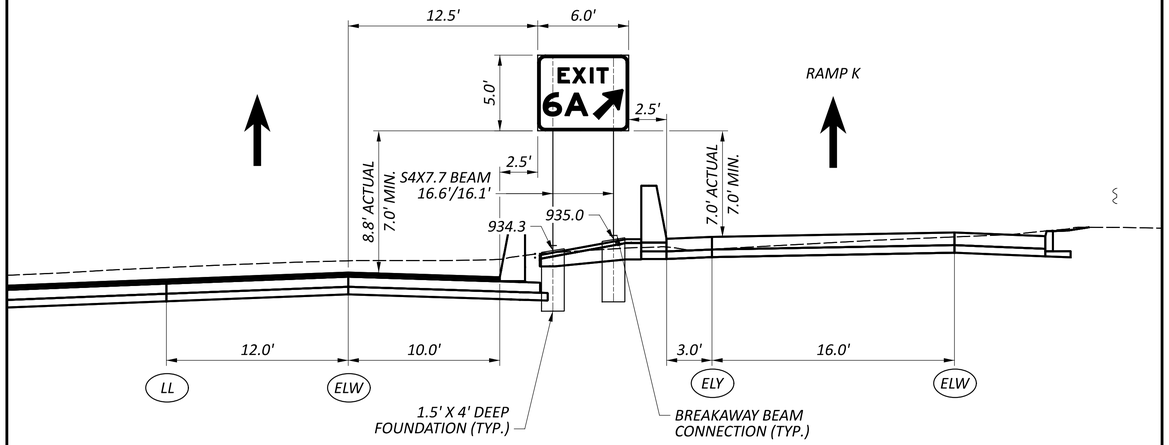

M76

IR 680 SB, STA. 1023+99

(LOOKING EAST)

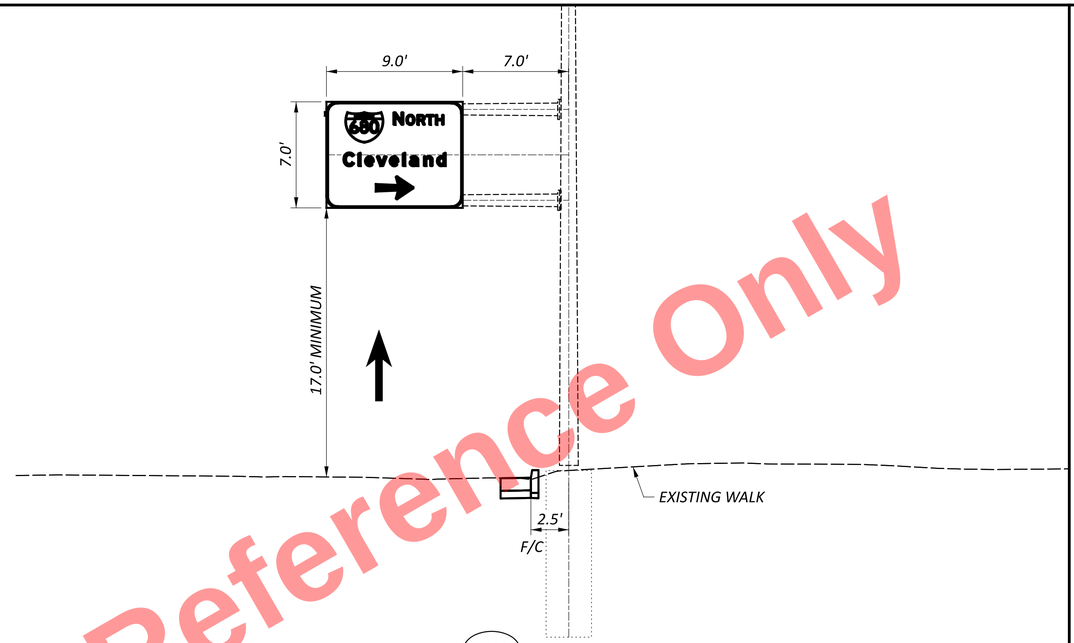

M78

MARKET ST., STA. 53+16

EXISTING OVERHEAD SIGN SUPPORT

(LOOKING SOUTH)

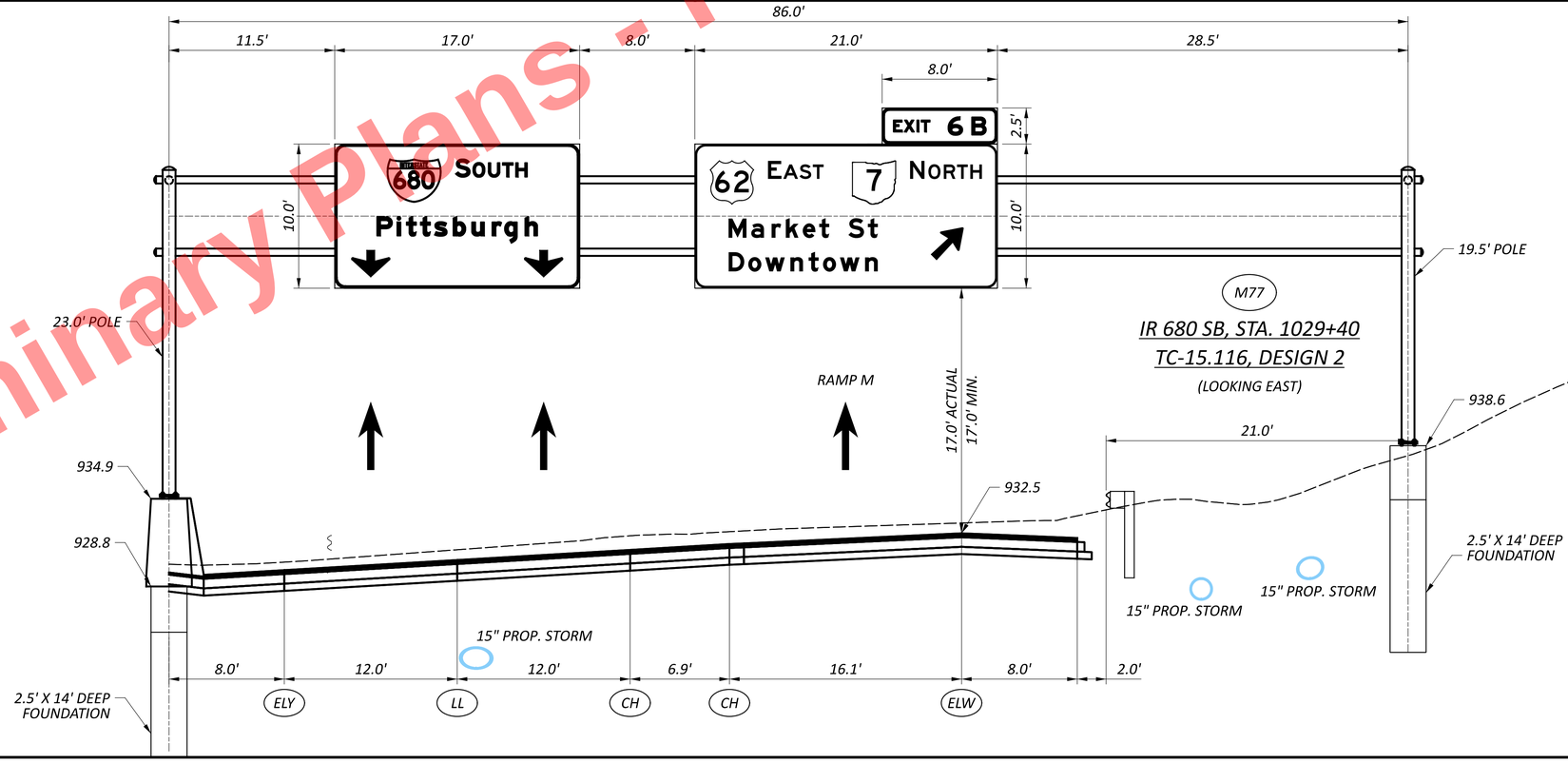

M77

IR 680 SB, STA. 1029+40

TC-15.116, DESIGN 2

(LOOKING EAST)

Preliminary Plans - For Reference Only

GUIDE SIGN ELEVATION DETAILS
SUPPORT NOs. M76, M77 & M78

DESIGN AGENCY
TF ASSOCIATES

DESIGNER
SDL

REVIEWER
WHT 09/15/25

PROJECT ID
121474

SHEET P.454 | TOTAL 655

MAH-680-4.58

MODEL: Sheet - M76 M77 M78 PAPERSIZE: 34x22 (in.) DATE: 9/11/2025 TIME: 1:02:49 PM PLTDRV: OHDOT_PDF_Color_E+.pltcfg PENTBL: OHDOT_UTPen.tbl USER: slettieri@fokeng.com WORKSPACE: OHDOTCEv02 WORKSET: 121474 PRODUCT: OpenRoadsDesigner 24.00.00.205
pw:\\ohiodot-pw.bentley.com:ohiodot-pw-02\Documents\01 Active Projects\District 04\Mahoning\121474\403-Engineering_FokEng\Traffic\Sheets\121474_TE002.dgn

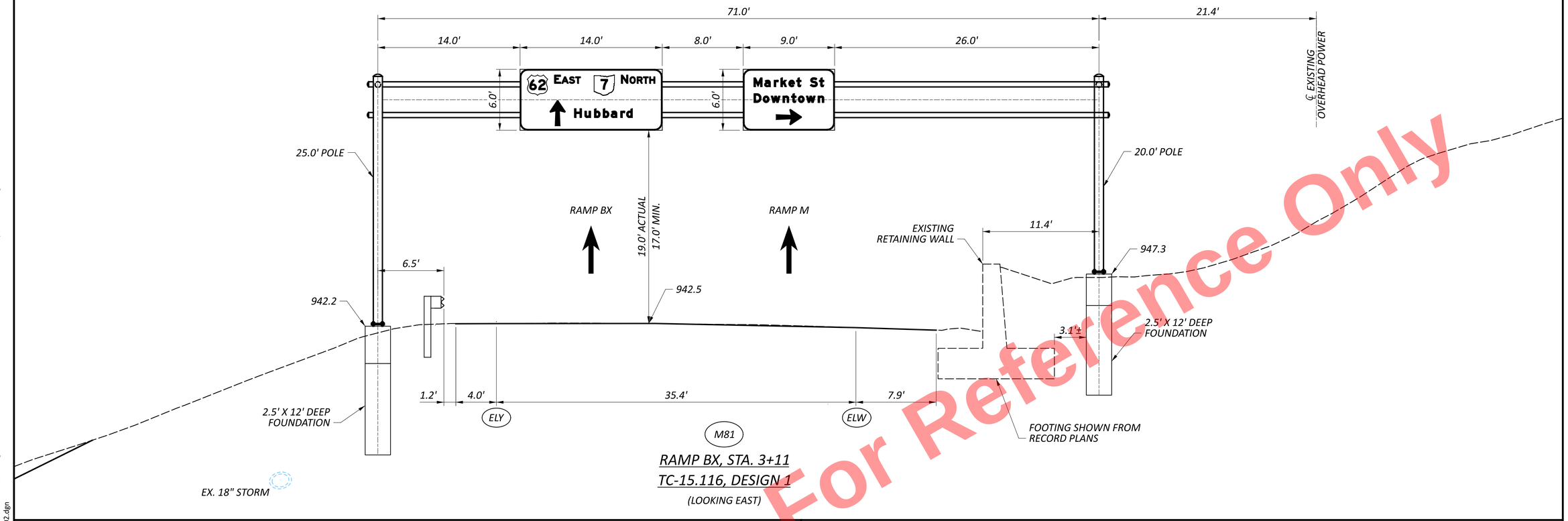

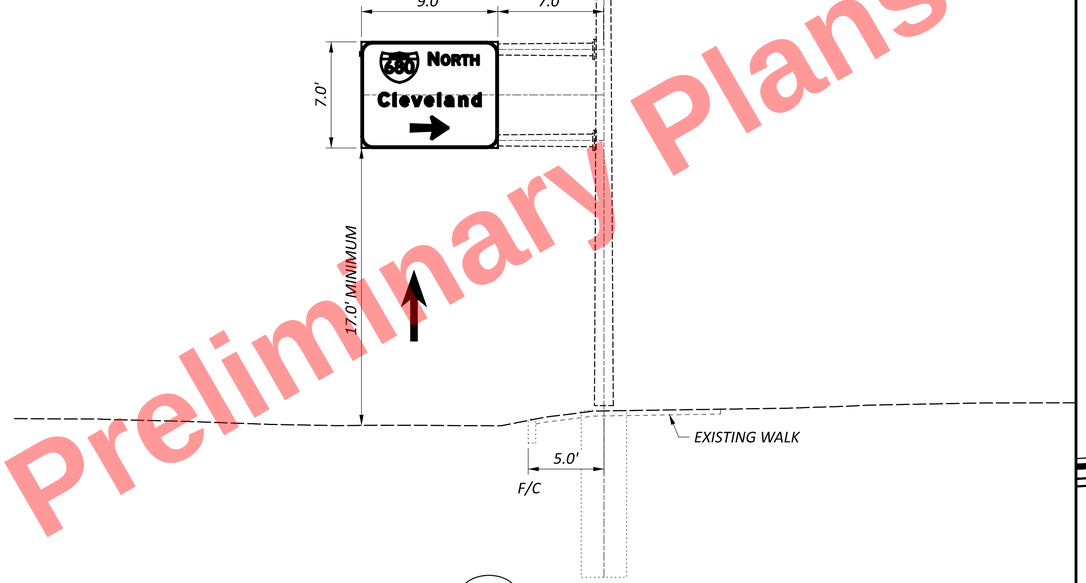

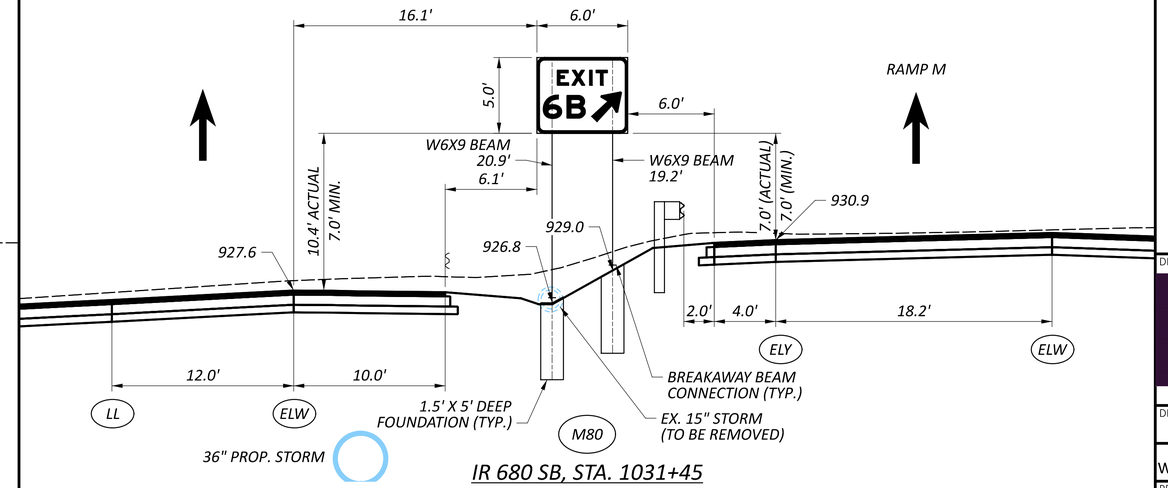

Preliminary Plans - For Reference Only

GUIDE SIGN ELEVATION DETAILS
SUPPORT NOs. M79, M80 & M81

DESIGN AGENCY
TF ASSOCIATES

DESIGNER	SDL
REVIEWER	WHT 09/15/25
PROJECT ID	121474
SHEET	P.455
TOTAL	655

MAH-680-4.58

MODEL: Sheet - M79 M80 M81 PAPERSIZE: 34x22 (in.) DATE: 9/11/2025 TIME: 1:03:04 PM PLTDRV: OHDOT_PDF_Color_E+.pltcfg PENTBL: OHDOT_UTPen.tbl USER: slettieri@fokeng.com WORKSPACE: OHDOTCtx02 WORKSET: 121474 PRODUCT: OpenRoadsDesigner 24.00.00.205
pw:\\ohiodot-pw.bentley.com:ohiodot-pw-02\Documents\01 Active Projects\District 04\Mahoning\121474\03-Engineering_FokEng\Traffic\Sheets\121474_TE002.dgn

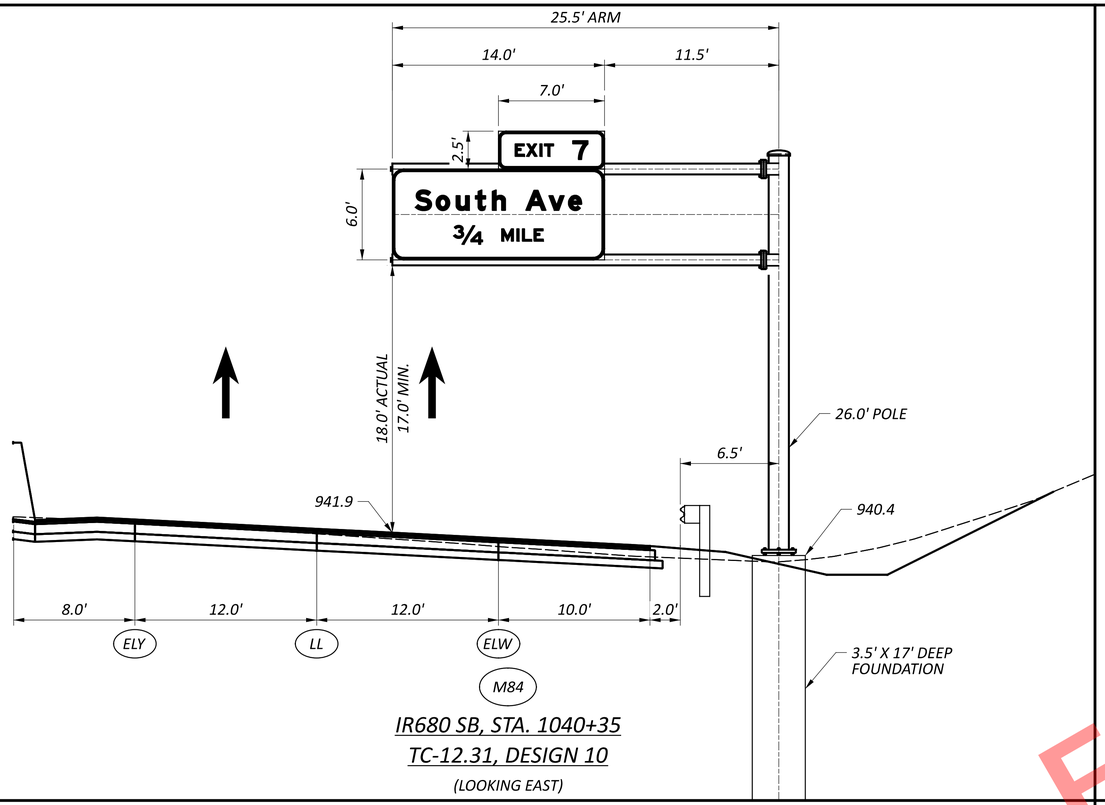

IR680 SB, STA. 1040+35
TC-12.31, DESIGN 10
(LOOKING EAST)

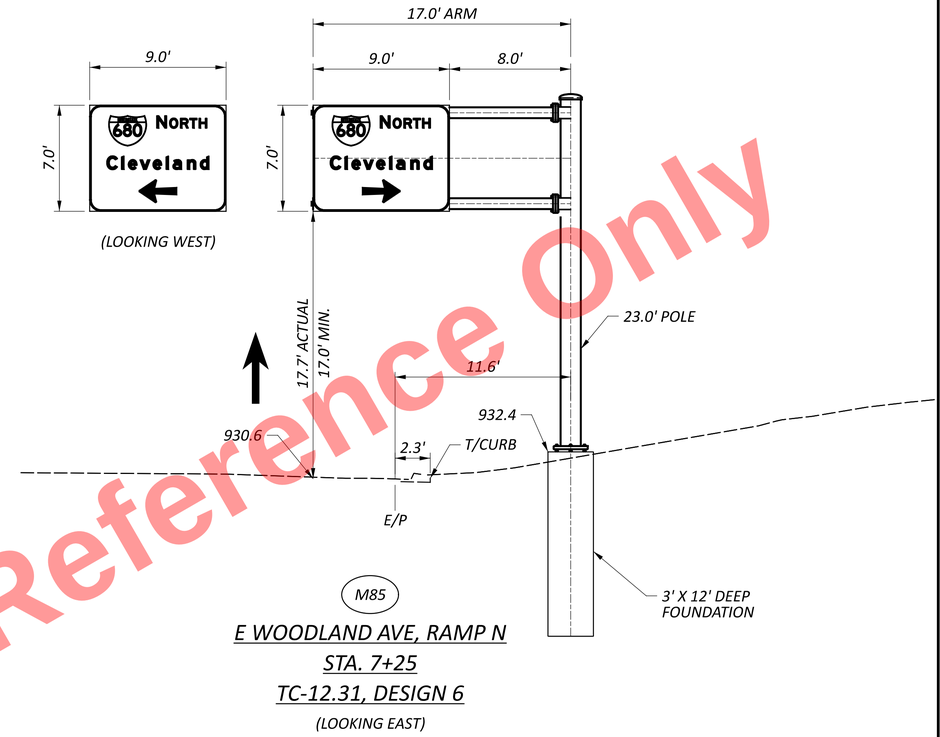

E WOODLAND AVE, RAMP N
STA. 7+25
TC-12.31, DESIGN 6
(LOOKING EAST)

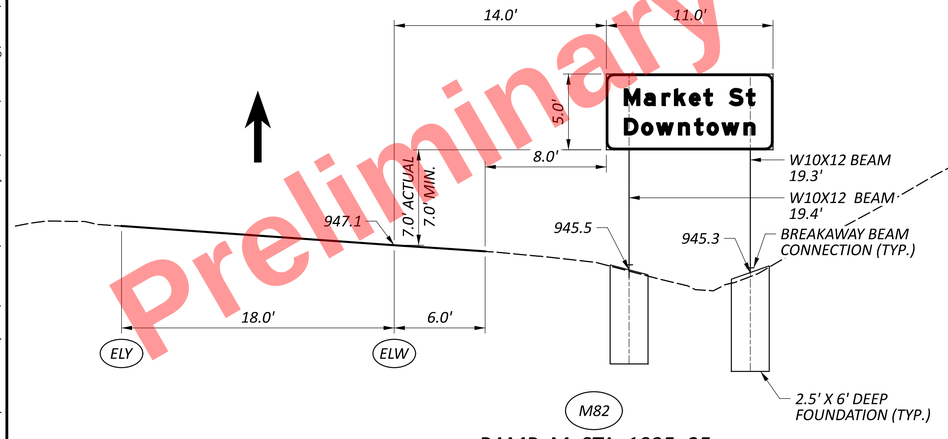

RAMP M, STA. 1035+25
(LOOKING SOUTH)

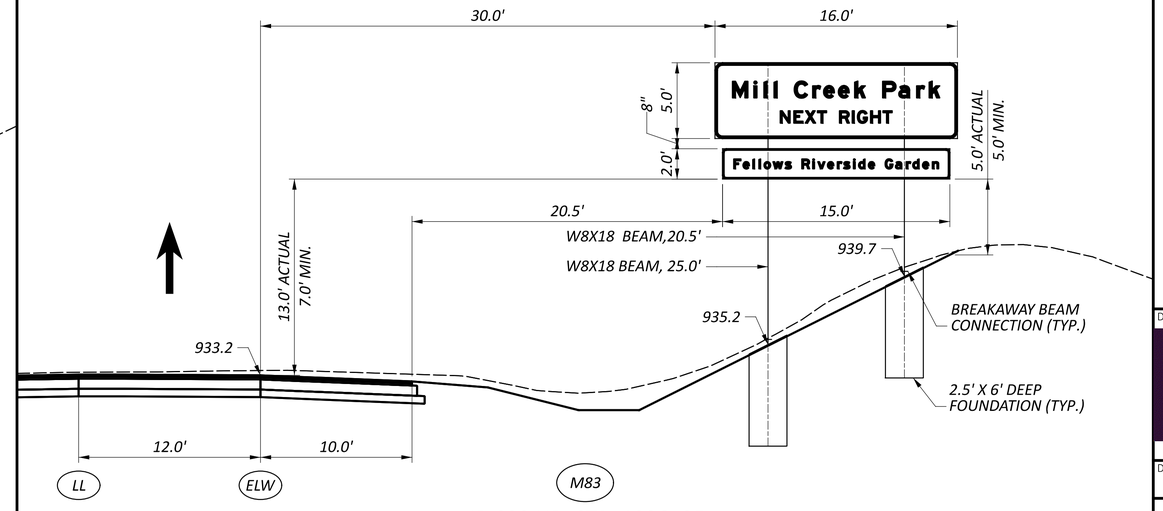

IR 680 NB, STA. 1036+85
(LOOKING EAST)

Preliminary Plans - For Reference Only

GUIDE SIGN ELEVATION DETAILS
SUPPORT NOs. M82, M83, M84 & M85

DESIGN AGENCY
TF ASSOCIATES

DESIGNER
SDL

REVIEWER
WHT 09/15/25

PROJECT ID
121474

SHEET P.456 | TOTAL 655

MAH-680-4.58

MODEL: Sheet - M82 M83 M84 M85 PAPERSIZE: 34x22 (in.) DATE: 9/11/2025 TIME: 1:04:25 PM PLTDRV: OHDOT_PDF_Color_E+.pltcfg PENTBL: OHDOT_UTPen.tbl USER: sletten@fokeng.com WORKSPACE: OHDOTCEv02 WORKSET: 121474 PRODUCT: OpenRoadsDesigner 24.00.00.205
pw:\\ohiodot-pw.bentley.com:ohiodot-pw-02\Documents\01 Active Projects\District 04\Mahoning\121474\403-Engineering_FokEng\Traffic\Sheets\121474_TE002.dgn

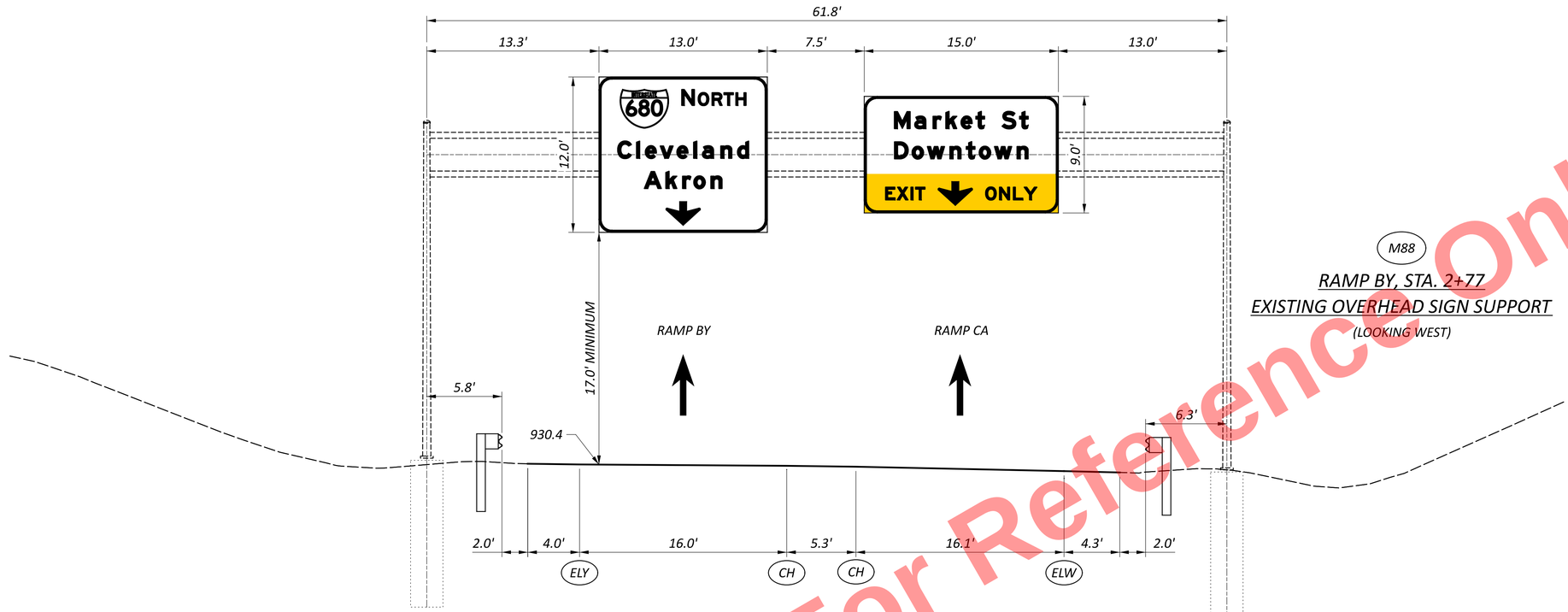

M88

RAMP BY, STA. 2+77

EXISTING OVERHEAD SIGN SUPPORT

(LOOKING WEST)

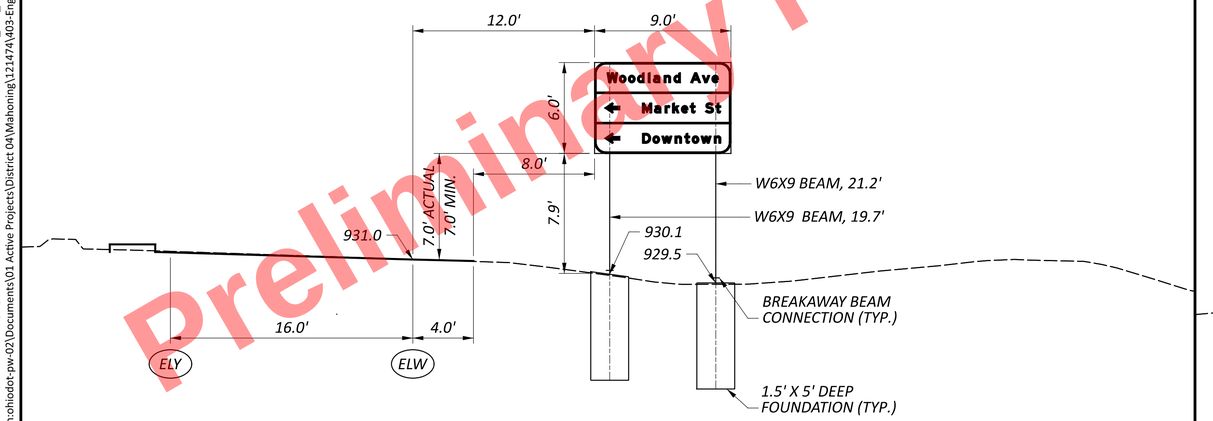

M86

E WOODLAND AVE, RAMP CA

STA. 25+30

(LOOKING NORTH)

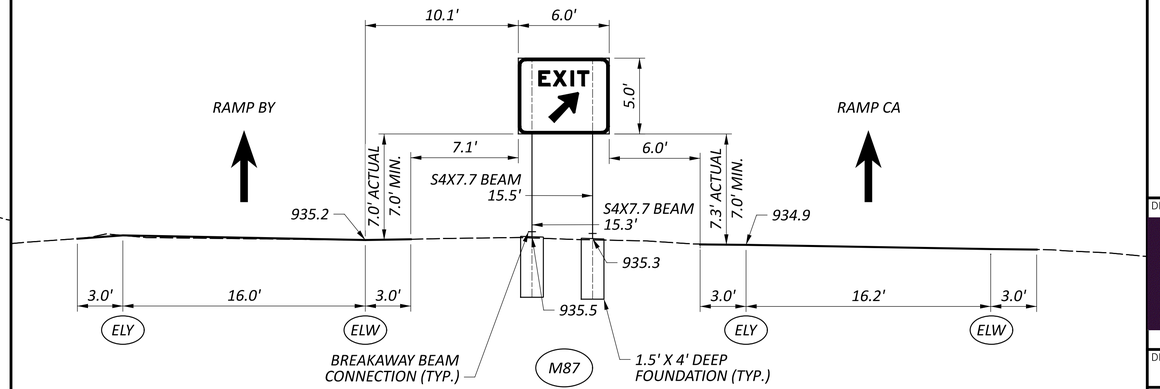

M87

RAMP BY, STA. 4+38

(LOOKING WEST)

GUIDE SIGN ELEVATION DETAILS
SUPPORT NOs. M86, M87 & M88

DESIGN AGENCY
TF ASSOCIATES

DESIGNER SDL

REVIEWER WHT 09/15/25

PROJECT ID 121474

SHEET P.457 | TOTAL 655

MAH-680-4.58

MODEL: Sheet - M86 M87 M88 PAPERSIZE: 34x22 (in.) DATE: 9/11/2025 TIME: 1:04:56 PM PLTDRV: OHDOT_PDF_Color_E+.pltcfg PENTBL: OHDOT_UTPen.tbl USER: slettieri@fokeng.com WORKSPACE: OHDOTCtx02 WORKSET: 121474 PRODUCT: OpenRoadsDesigner 24.00.00.205
pw:\\ohiodot-pw.bentley.com:ohiodot-pw-02\Documents\01 Active Projects\District 04\Mahoning\121474\403-Engineering_FokEng\Traffic\Sheets\121474_TE002.dgn

Preliminary Plans - For Reference Only

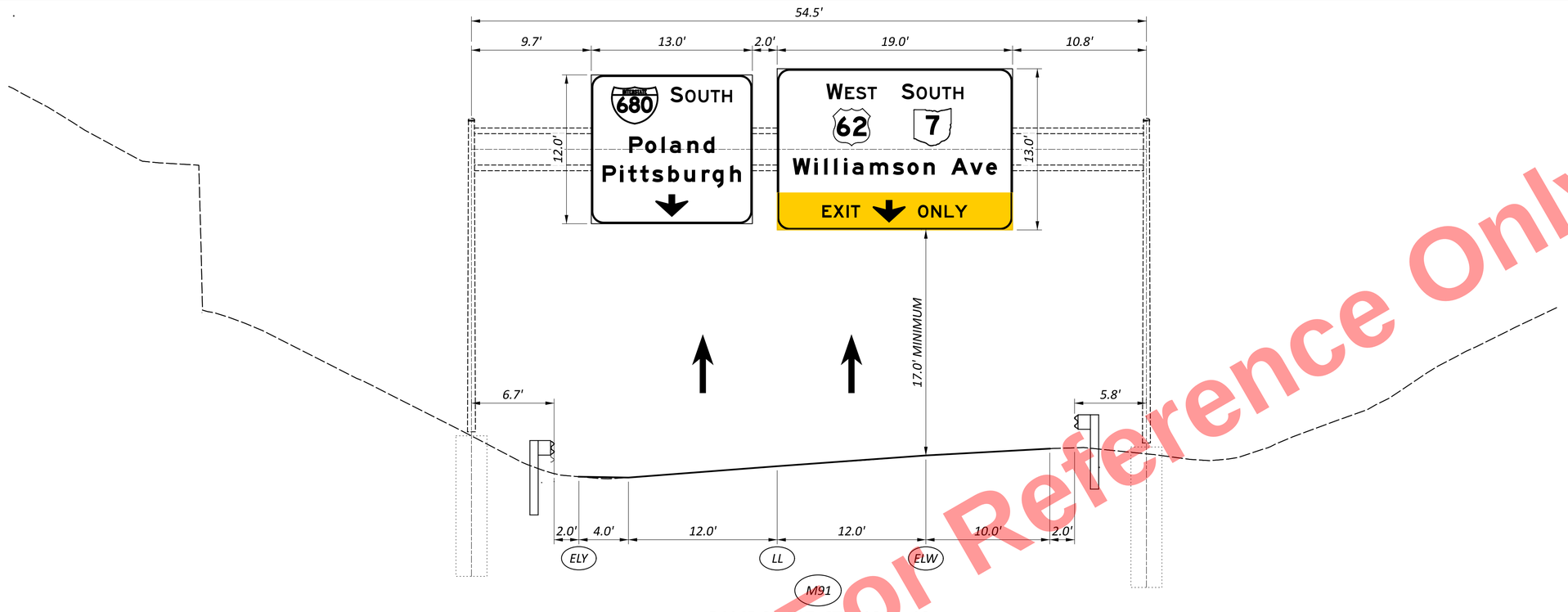

RAMP SB SR7, STA. 1041+10
EXISTING OVERHEAD SIGN SUPPORT
(LOOKING SOUTH)

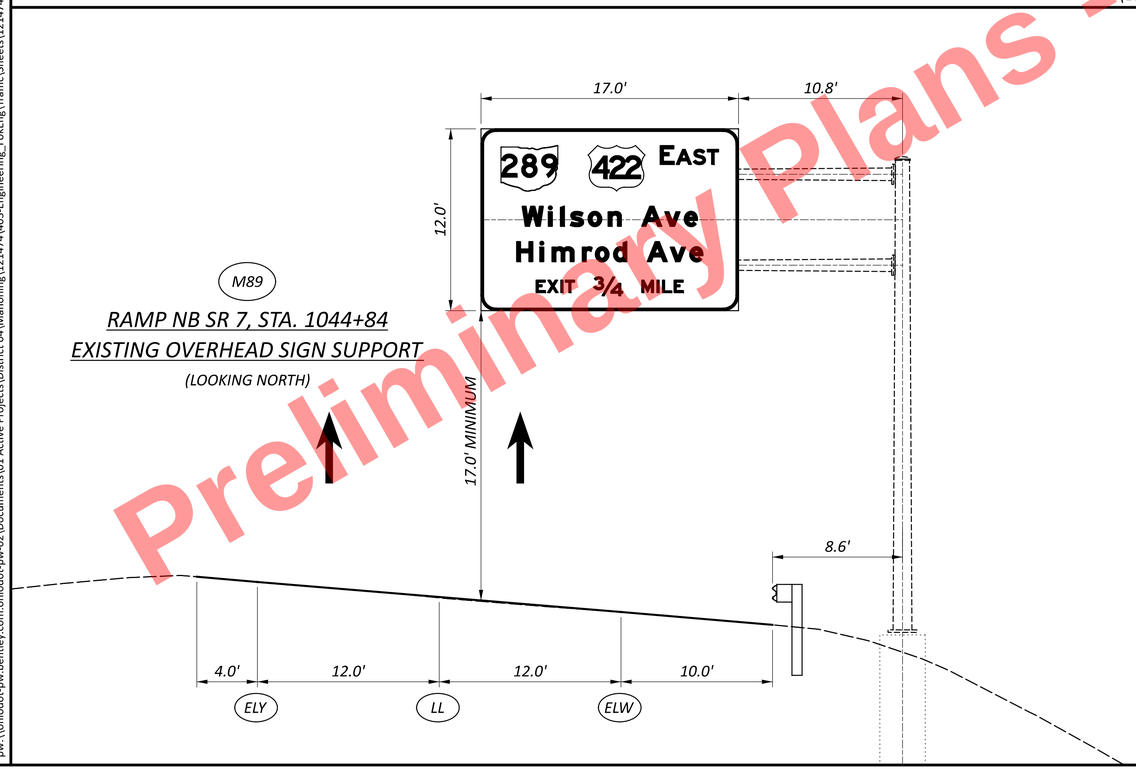

RAMP NB SR 7, STA. 1044+84
EXISTING OVERHEAD SIGN SUPPORT
(LOOKING NORTH)

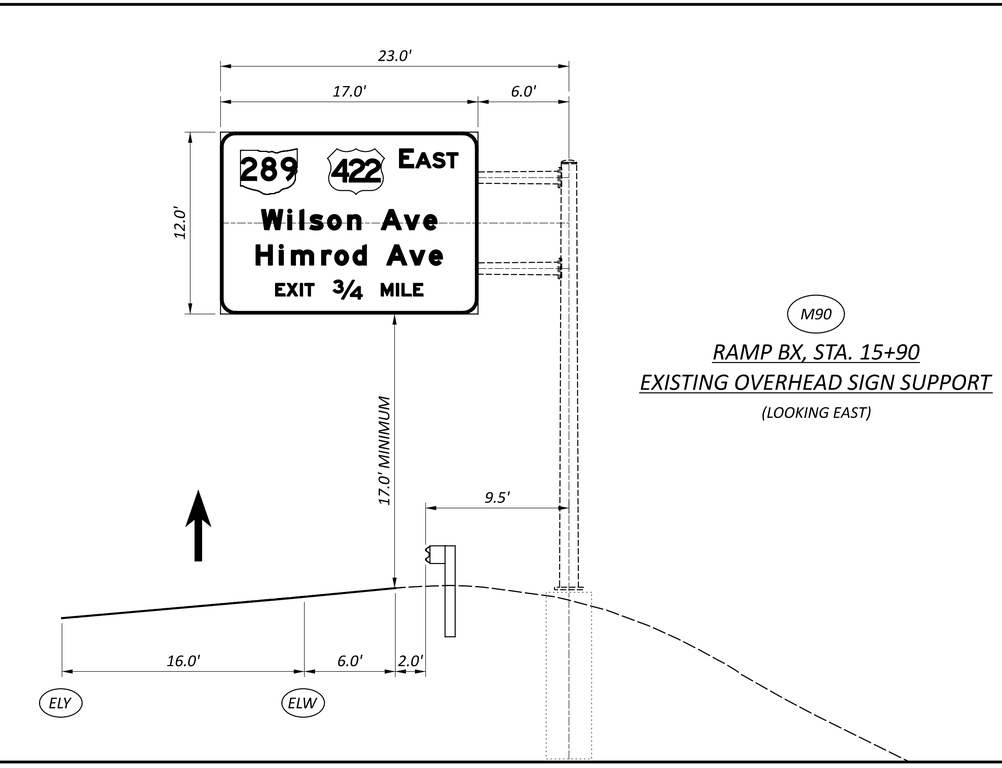

RAMP BX, STA. 15+90
EXISTING OVERHEAD SIGN SUPPORT
(LOOKING EAST)

GUIDE SIGN ELEVATION DETAILS
SUPPORT NOs. M89, M90 & M91

DESIGN AGENCY
TF ASSOCIATES

DESIGNER SDL
REVIEWER WHT 09/15/25
PROJECT ID 121474
SHEET P.458 TOTAL 655

MAH-680-4.58

MODEL: Sheet - M89 M90 M91 PAPERSIZE: 34x22 (in.) DATE: 9/11/2025 TIME: 3:17:33 PM PLTDRV: OHDOT_PDF_E+.pltcfg PENTBL: OHDOT_UTPen.tbl USER: sletteri@fokeng.com WORKSPACE: OHDOTCEv02 WORKSET: 121474 PRODUCT: OpenRoadsDesigner 24.00.00.205
pw:\\ohiodot-pw.bentley.com:ohiodot-pw-02\Documents\01 Active Projects\District 04\Mahoning\121474\A03-Engineering_FokEng\Traffic\Sheets\121474_TE002.dgn
Preliminary Plans - For Reference Only

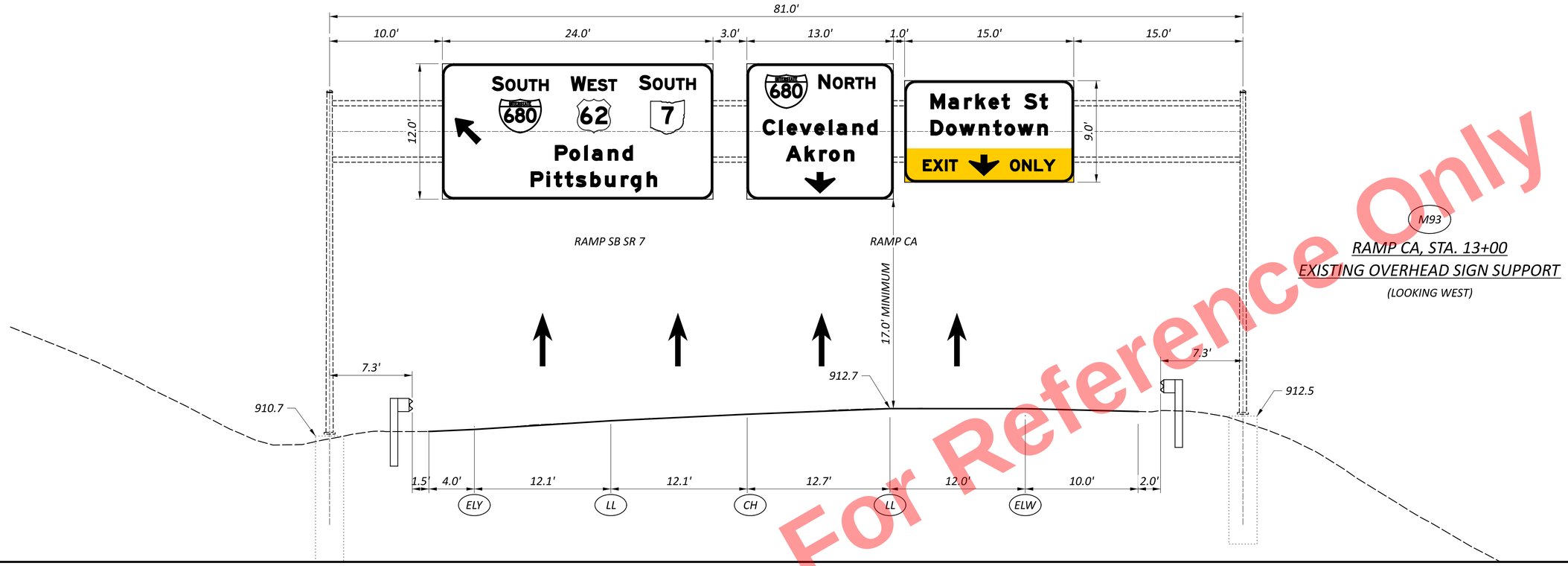

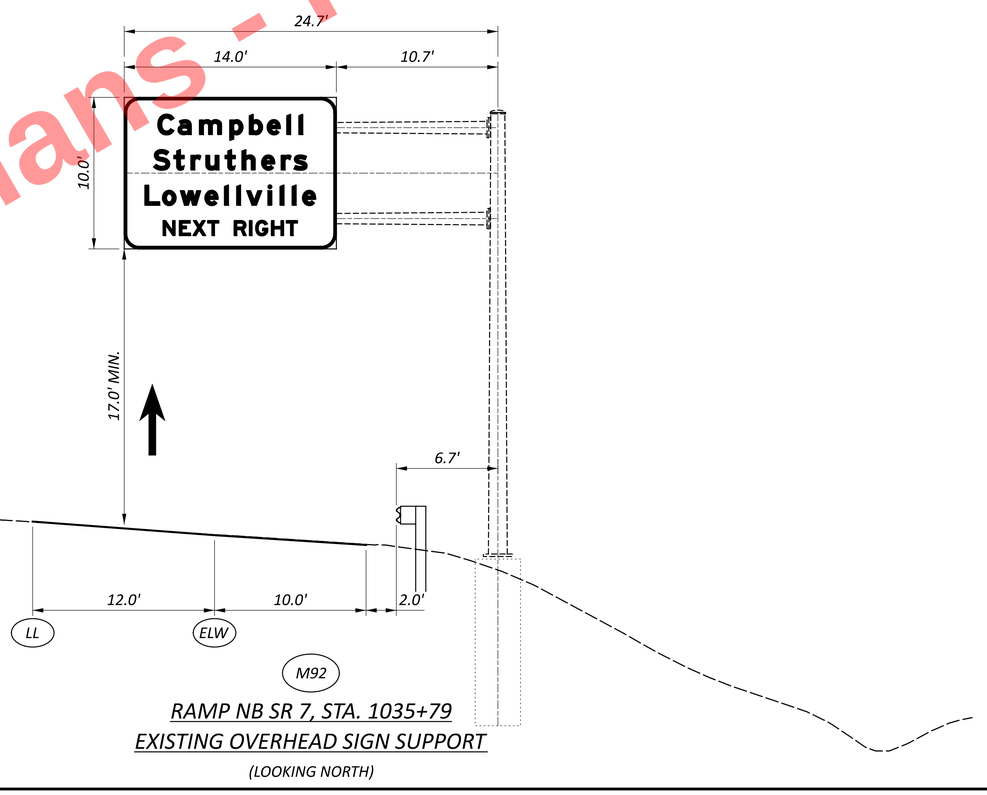

Preliminary Plans - For Reference Only

GUIDE SIGN ELEVATION DETAILS
SUPPORT NOs. M92 & M93

DESIGN AGENCY
TF ASSOCIATES

DESIGNER SDL
REVIEWER WHT 09/15/25
PROJECT ID 121474
SHEET P.459 TOTAL 655

MAH-680-4.58

MODEL: Sheet - M92 M93 PAPERSIZE: 34x22 (in.) DATE: 9/11/2025 TIME: 1:05:36 PM PLTDRV: OHDOT_PDF_Color_E+.pltcfg PENTBL: OHDOT_UTPen.tbl USER: slettieri@fokeng.com WORKSPACE: OHDOTCEv02 WORKSET: 121474 PRODUCT: OpenRoadsDesigner 24.00.00.205
pw:\\ohiodot-pw.bentley.com:ohiodot-pw-02\Documents\01 Active Projects\District 04\Mahoning\121474\403-Engineering_FokEng\Traffic\Sheets\121474_TE002.dgn

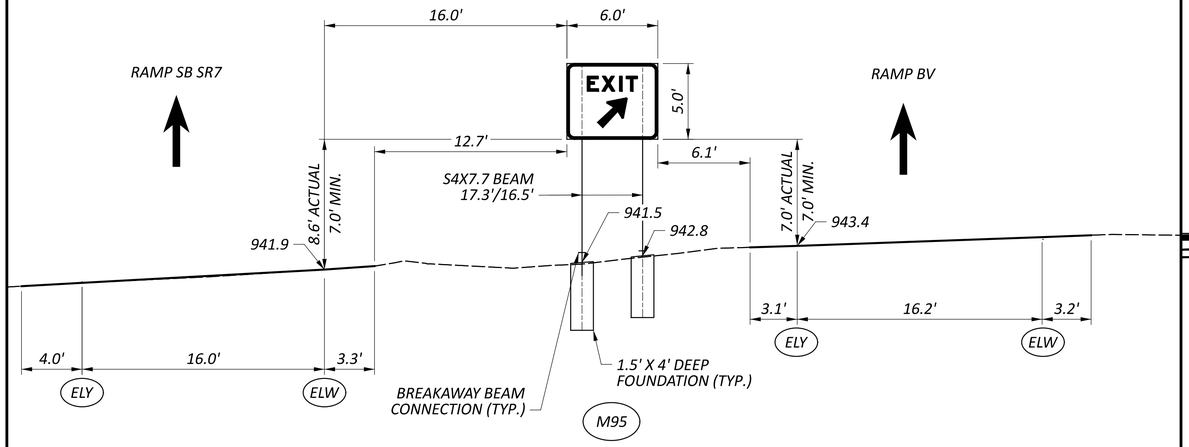

RAMP SB SR 7, STA. 1051+28

(LOOKING SOUTH)

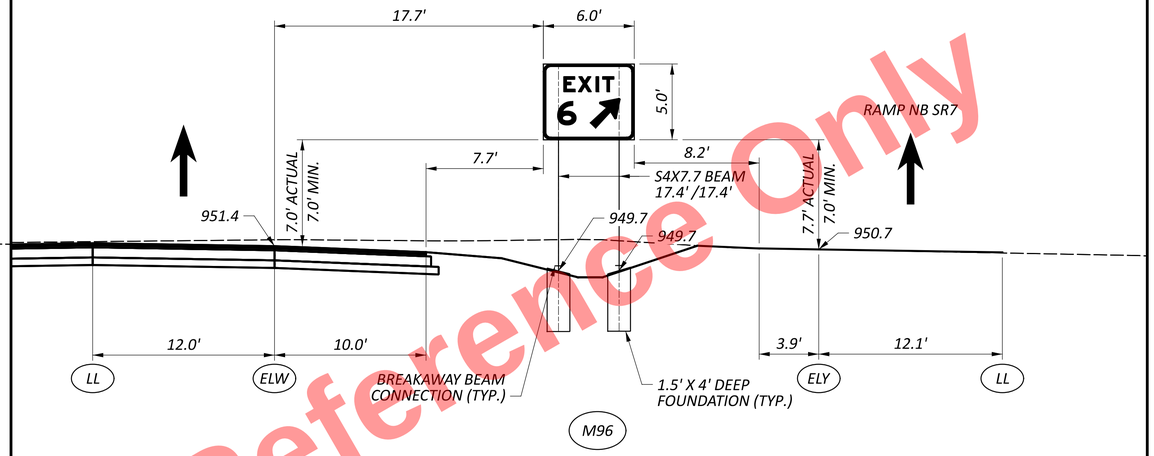

IR 680 NB, STA. 1050+70

(LOOKING NORTH)

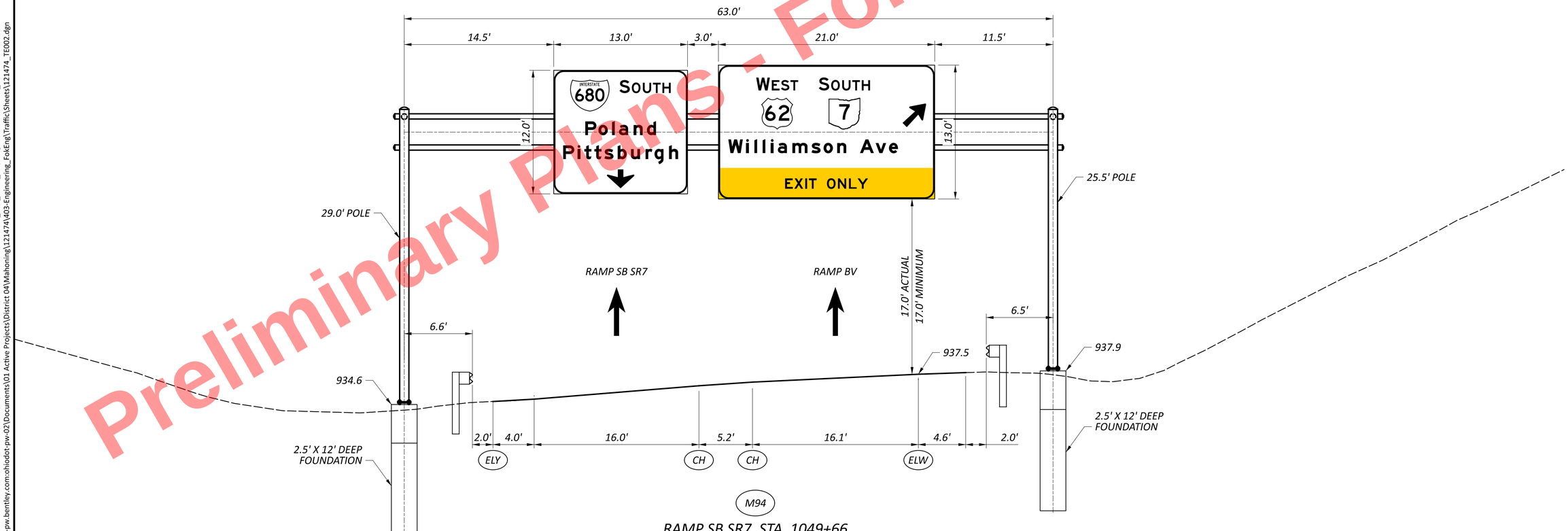

RAMP SB SR7, STA. 1049+66

TC-15.116, DESIGN 1

(LOOKING SOUTH)

Preliminary Plans - For Reference Only

GUIDE SIGN ELEVATION DETAILS
SUPPORT NOs. M94, M95 & M96

DESIGN AGENCY
TF ASSOCIATES

DESIGNER SDL
REVIEWER WHT 09/15/25
PROJECT ID 121474
SHEET P.460 TOTAL 655

MAH-680-4.58

MODEL: Sheet - M94 M95 M96 PAPERSIZE: 34x22 (in.) DATE: 9/11/2025 TIME: 1:06:54 PM PLTDRV: OHDOT_PDF_Color_E+.pltcfg PENTBL: OHDOT_UTPen.tbl USER: slettieri@fokeng.com WORKSPACE: OHDOTCtx02 WORKSET: 121474 PRODUCT: OpenRoadsDesigner 24.00.00.205
pw:\\ohiodot-pw.bentley.com:ohiodot-pw-02\Documents\01 Active Projects\District 04\Mahoning\121474\403-Engineering_FokEng\Traffic\Sheets\121474_TE002.dgn

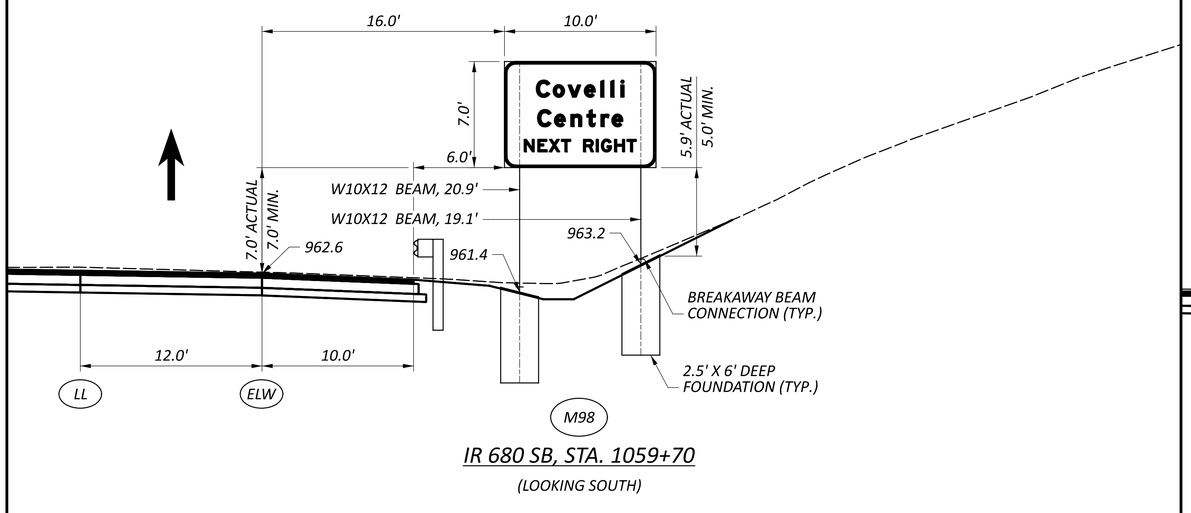

IR 680 SB, STA. 1059+70

(LOOKING SOUTH)

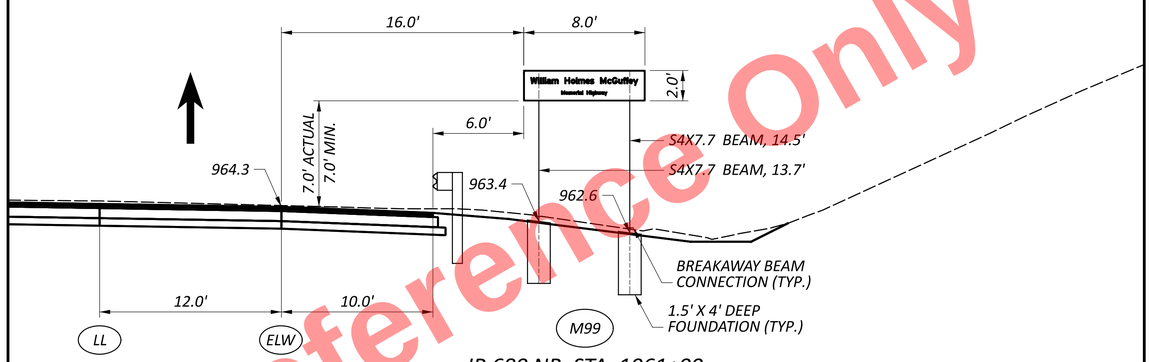

IR 680 NB, STA. 1061+00

(LOOKING NORTH)

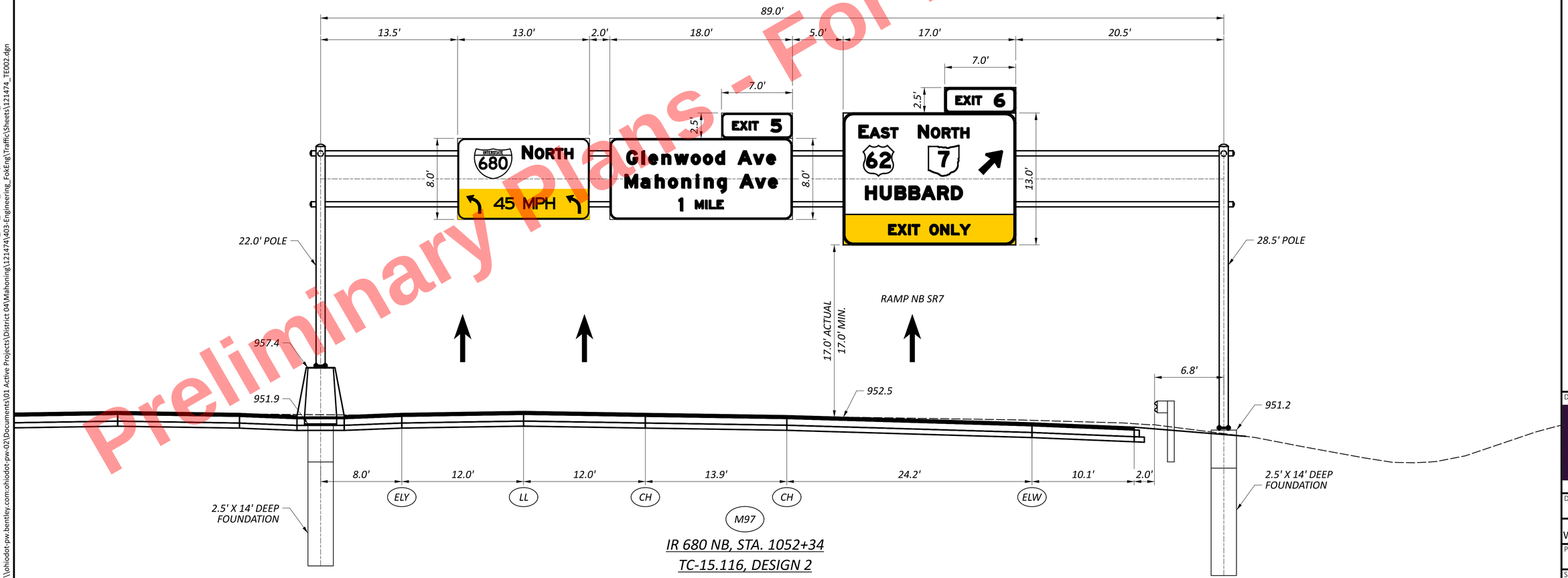

IR 680 NB, STA. 1052+34

TC-15.116, DESIGN 2

(LOOKING NORTH)

Preliminary Plans - For Reference Only

GUIDE SIGN ELEVATION DETAILS
SUPPORT NOs. M97, M98 & M99

DESIGN AGENCY
TF ASSOCIATES

DESIGNER SDL
REVIEWER WHT 09/15/25
PROJECT ID 121474
SHEET P.461 TOTAL 655

MAH-680-4.58

MODEL: Sheet - M97 M98 M99 PAPERSIZE: 34x22 (in.) DATE: 9/11/2025 TIME: 1:07:17 PM PLTDRV: OHDOT_PDF_Color_E+.pltcfg PENTBL: OHDOT_UTPen.tbl USER: slettieri@fokeng.com WORKSPACE: OHDOTCtx02 WORKSET: 121474 PRODUCT: OpenRoadsDesigner 24.00.00.205
pw:\\ohiodot-pw.bentley.com:ohiodot-pw-02\Documents\01 Active Projects\District 04\Mahoning\121474\403-Engineering_FokEng\Traffic\Sheets\121474_TE002.dgn

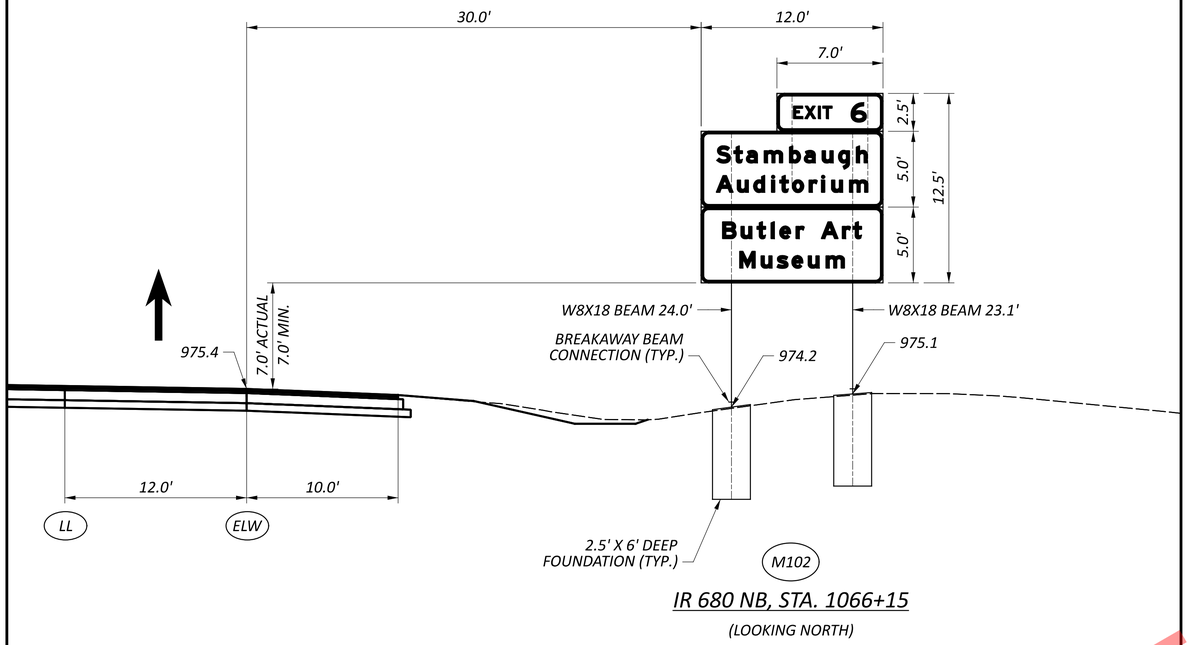

IR 680 NB, STA. 1066+15

(LOOKING NORTH)

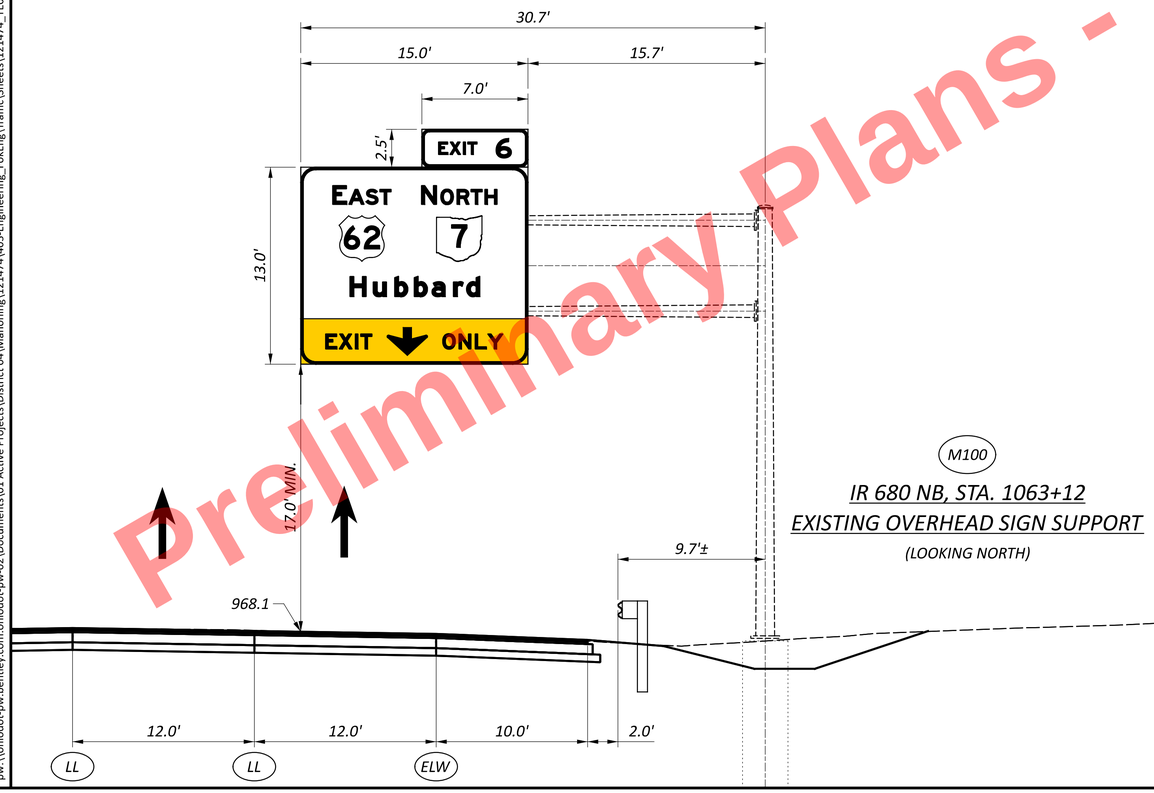

M100

IR 680 NB, STA. 1063+12

EXISTING OVERHEAD SIGN SUPPORT

(LOOKING NORTH)

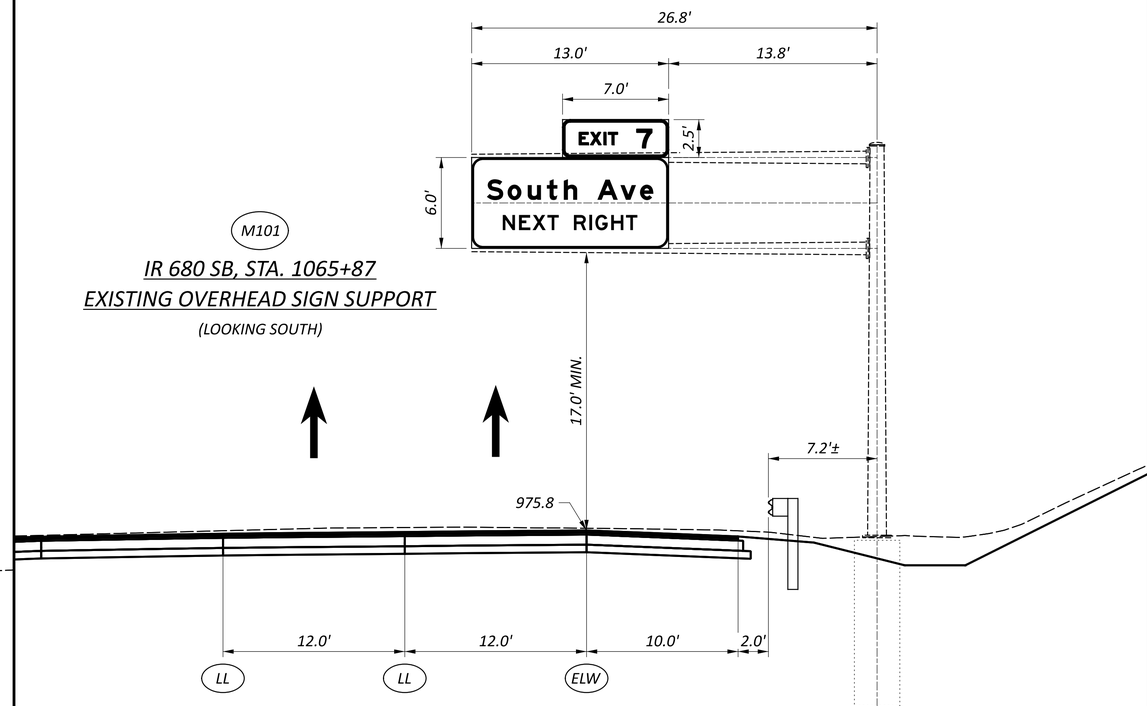

M101

IR 680 SB, STA. 1065+87

EXISTING OVERHEAD SIGN SUPPORT

(LOOKING SOUTH)

GUIDE SIGN ELEVATION DETAILS
SUPPORT NOs. M100, M101 & M102

DESIGN AGENCY
TF ASSOCIATES

DESIGNER SDL
REVIEWER WHT 09/15/25
PROJECT ID 121474
SHEET P.462 TOTAL 655

MAH-680-4.58

MODEL: Sheet - M100 M101 M102 PAPERSIZE: 34x22 (in.) DATE: 9/11/2025 TIME: 1:07:43 PM PLTDRV: OHDOT_PDF_Color_E+.pltcfg PENTBL: OHDOT_UTPen.tbl USER: pw:\\ohiodot-pw.bentley.com:ohiodot-pw-02\Documents\01 Active Projects\District 04\Mahoning\121474\M03-Engineering_FokEng\Traffic\Sheets\121474_TE002.dgn
USER: sletteri@fokeng.com WORKSPACE: OHDOTCEv02 WORKSET: 121474 PRODUCT: OpenRoadsDesigner 24.00.00.205

Preliminary Plans - For Reference Only

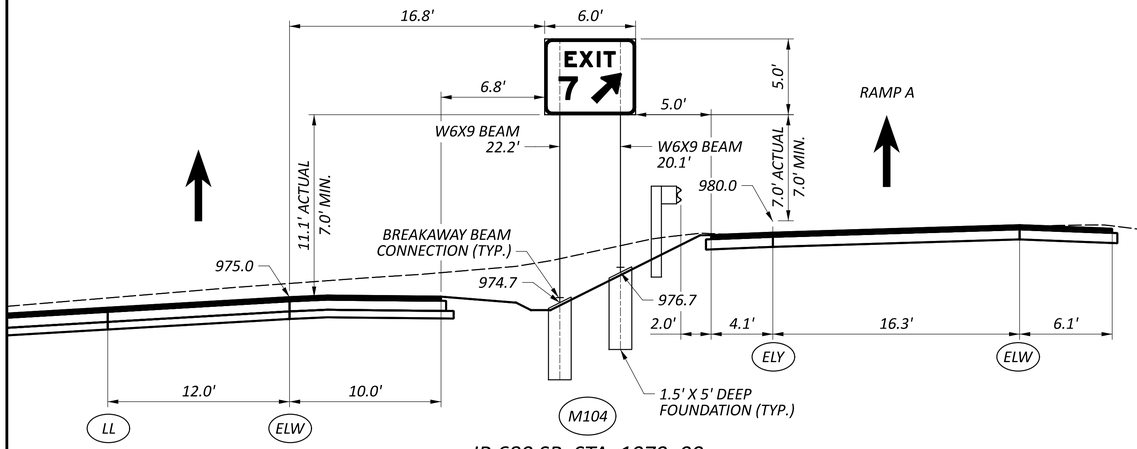

IR 680 SB, STA. 1079+99

(LOOKING EAST)

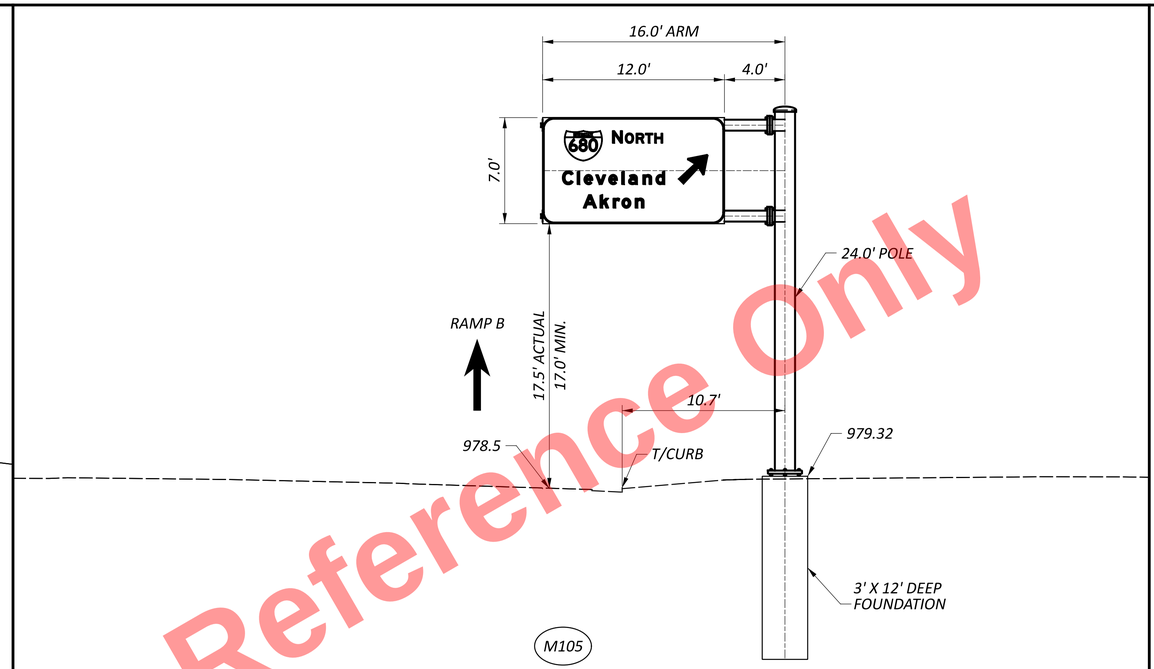

SOUTH AVE, STA. 52+10

TC-12.31, DESIGN 6

(LOOKING NORTH)

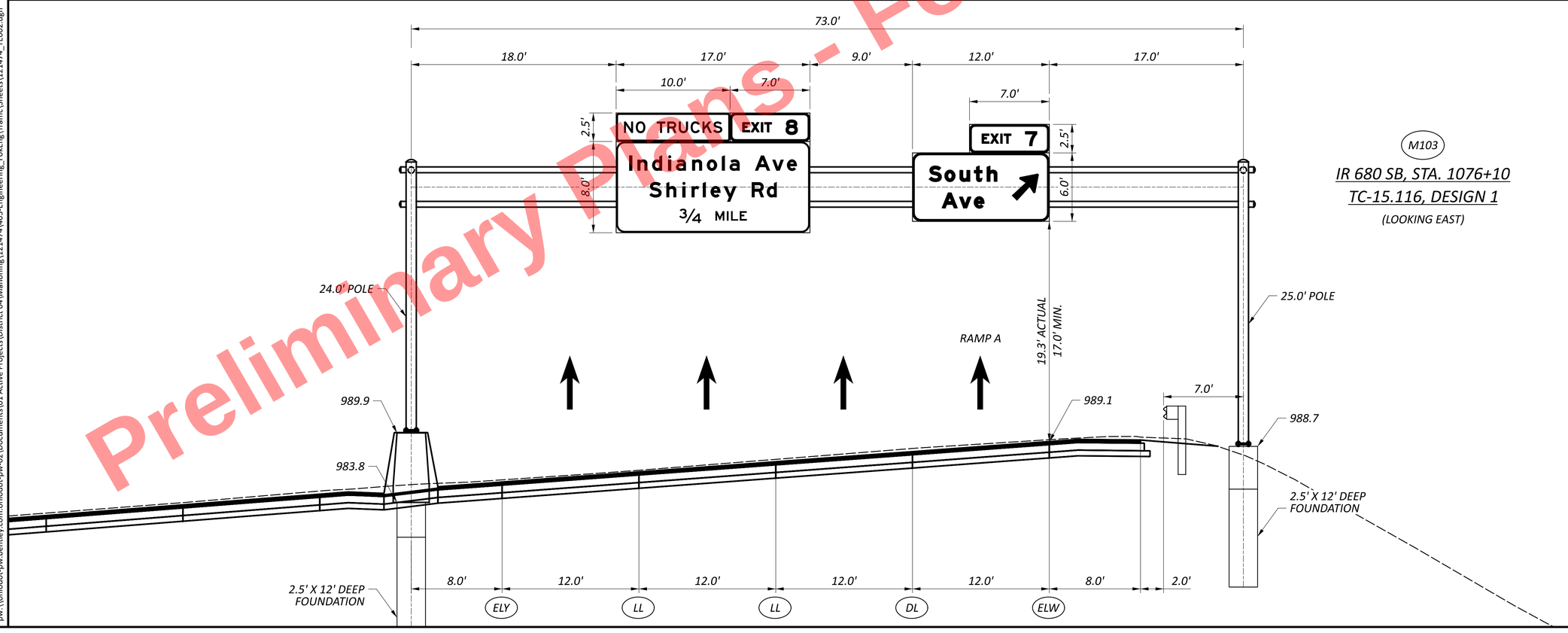

Preliminary Plans - For Reference Only

GUIDE SIGN ELEVATION DETAILS
SUPPORT NOs. 103, 104 & 105

DESIGN AGENCY
TF ASSOCIATES

DESIGNER SDL
REVIEWER WHT 09/15/25
PROJECT ID 121474
SHEET P.463 TOTAL 655

MAH-680-4.58

MODEL: Sheet - M103 M104 M105 PAPERSIZE: 34x22 (in.) DATE: 9/11/2025 TIME: 1:08:12 PM PLTDRV: OHDOT_PDF_Color_E+.pltcfg PENTBL: OHDOT_UTPen.tbl USER: sletteri@fokeng.com WORKSPACE: OHDOTCEv02 WORKSET: 121474 PRODUCT: OpenRoadsDesigner 24.00.00.205
pw:\\ohiodot-pw.bentley.com:ohiodot-pw-02\Documents\01 Active Projects\District 04\Mahoning\121474\03-Engineering_FokEng\Traffic\Sheets\121474_TE002.dgn

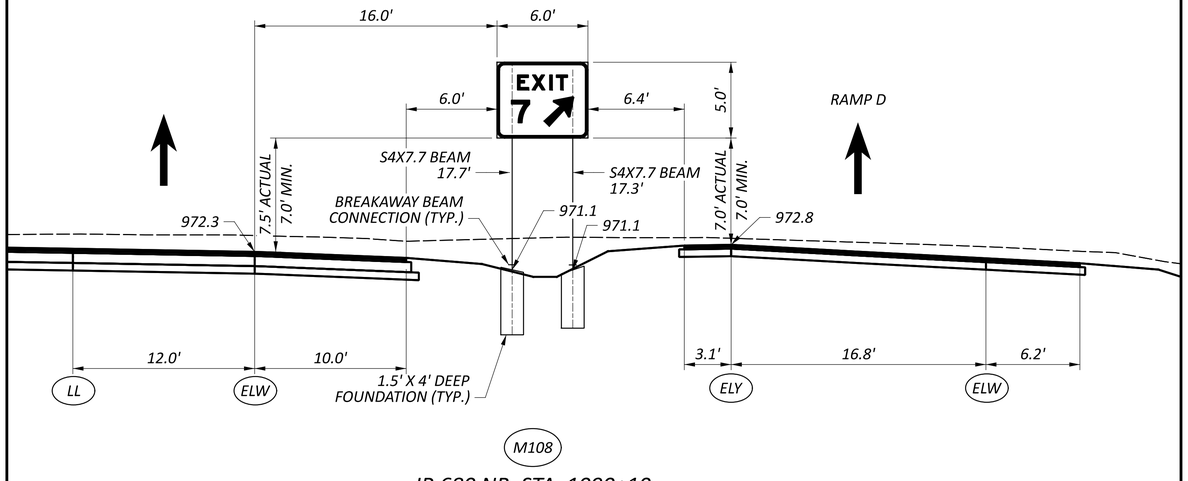

M108

IR 680 NB, STA. 1090+10

(LOOKING WEST)

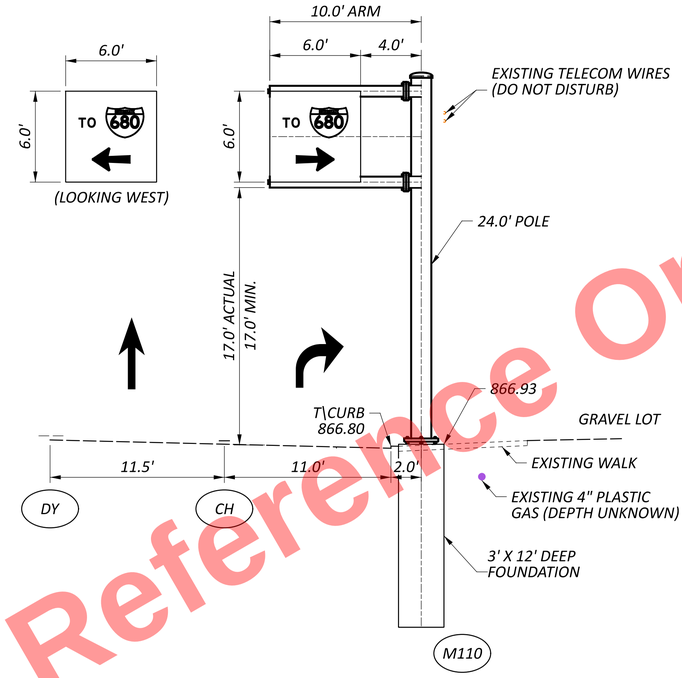

M110

SW CORNER MAHONING AVE/EDWARDS ST INTERSECTION

TC-12.31, DESIGN 6

(LOOKING EAST)

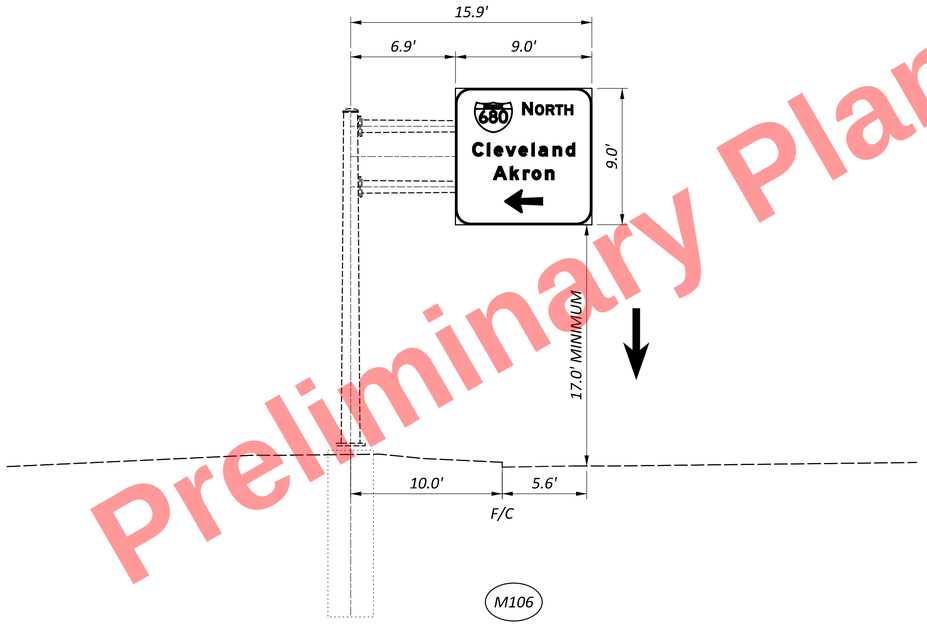

M106

SOUTH AVE, STA. 53+46

EXISTING OVERHEAD SIGN SUPPORT

(LOOKING SOUTH)

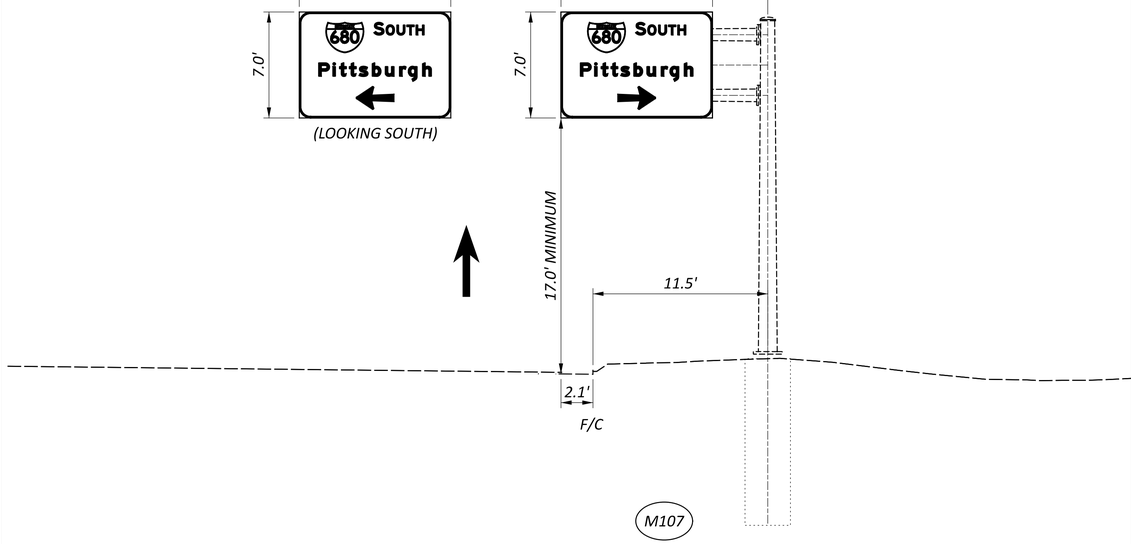

M107

SOUTH AVE, STA. 48+25

EXISTING OVERHEAD SIGN SUPPORT

(LOOKING NORTH)

GUIDE SIGN ELEVATION DETAILS
SUPPORT NOs. M106, M107, 108 & 110

DESIGN AGENCY
TF ASSOCIATES

DESIGNER SDL
REVIEWER WHT 09/15/25
PROJECT ID 121474
SHEET P.464 TOTAL 655

MAH-680-4.58

MODEL: Sheet - M106 M107 M108 M110 PAPERSIZE: 34x22 (in.) DATE: 9/11/2025 TIME: 1:08:44 PM PLTDRV: OHDOT_PDF_Color_E+.pltcfg PENTBL: OHDOT_UTPen.tbl USER: sletteri@fokeng.com WORKSPACE: OHDOTCEv02 WORKSET: 121474 PRODUCT: OpenRoadsDesigner 24.00.00.205
pw:\\ohiodot-pw.bentley.com:ohiodot-pw-02\Documents\01 Active Projects\District 04\Mahoning\121474\03-Engineering_FokEng\Traffic\Sheets\121474_TE002.dgn

Preliminary Plans - For Reference Only

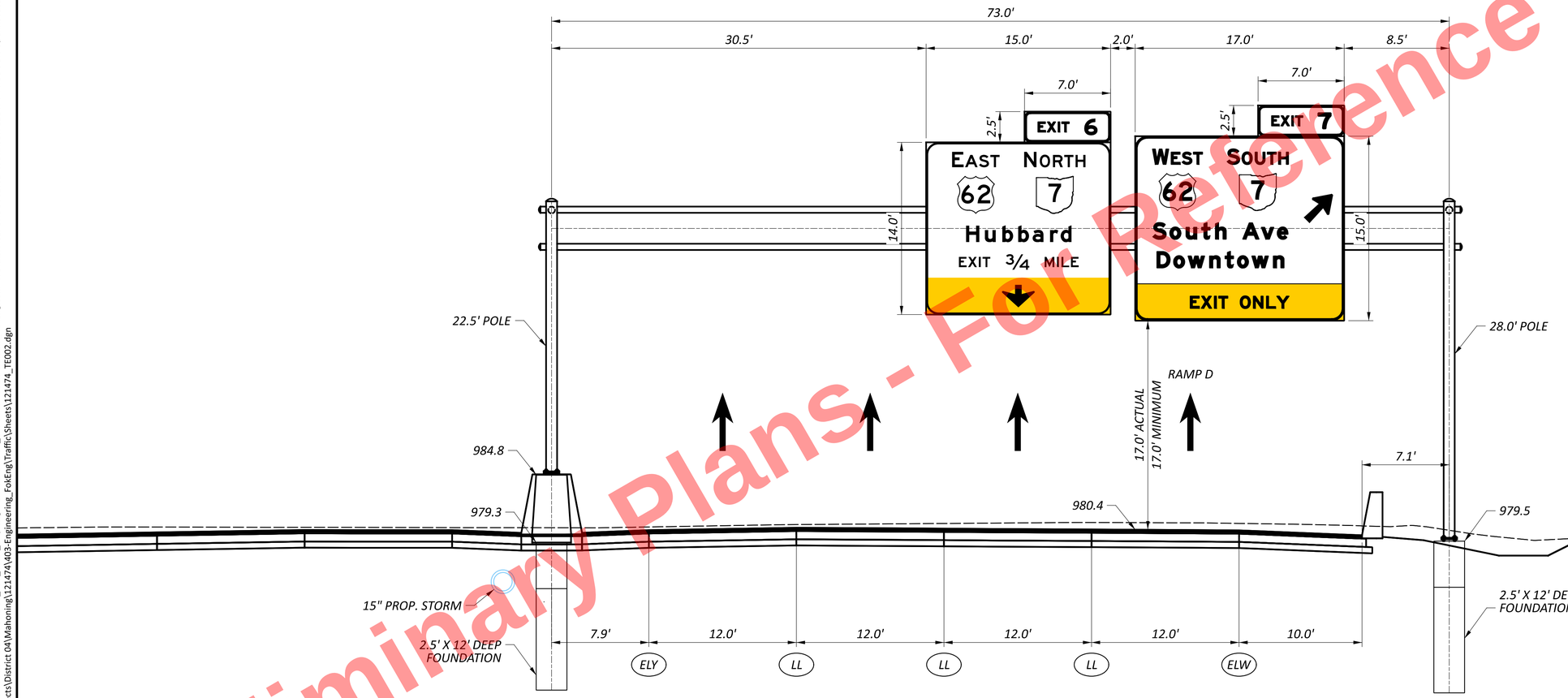

M109

IR 680 NB, STA. 1093+90

TC-15.116, DESIGN 1

(LOOKING WEST)

Preliminary Plans - For Reference Only

GUIDE SIGN ELEVATIONS DETAILS
SUPPORT NOs. M109

DESIGN AGENCY
TF ASSOCIATES

DESIGNER SDL
REVIEWER WHT 09/15/25
PROJECT ID 121474
SHEET P.465 TOTAL 655

MAH-680-4.58

MODEL: Sheet - M109 PAPERSIZE: 34x22 (in.) DATE: 9/11/2025 TIME: 1:09:00 PM PLTDRV: OHDOT_PDF_Color_E+.pltcfg PENTBL: OHDOT_UTPen.tbl USER: sletteri@fokeng.com WORKSPACE: OHDOTCEv02 WORKSET: 121474 PRODUCT: OpenRoadsDesigner 24.00.00.205
pw:\\ohiodot-pw.bentley.com:ohiodot-pw-02\Documents\01 Active Projects\District 04\Mahoning\121474\403-Engineering_FokEng\Traffic\Sheets\121474_TE002.dgn

MODEL: Sheet PAPERSIZE: 34x22 (in.) DATE: 9/11/2025 TIME: 1:09:16 PM PLTDRV: OHDOT_PDF_Color_E+.pltcfg PENTBL: OHDOT_Pen.tbl USER: slettier@fokeng.com WORKSPACE: OHDOTCEv02 WORKSET: 121474 PRODUCT: OpenRoadsDesigner 24.00.00.205
pw:\\ohiodot-pw.bentley.com:ohiodot-pw-02\Documents\01 Active Projects\District 04\Mahoning\121474\403-Engineering_FokEng\Traffic\Sheets\121474_TD001.dgn

MAH-680-4.58

NOTES:

1. The C7 x 9.8 galvanized steel channel shall be welded to the 1" thick galvanized steel plate.
2. The No. 2 post shall be attached to the C7 x 9.8 galavanized steel channel with two 5/8" steel hex head bolts. The holes in the C7 x 9.8 steel channel shall be drilled before galvanizing. The holes shall be 9" center to center.
3. The 5/8" threaded steel bolts shall be attached to the concrete barrier with grout meeting the requirements of CMS 255.02.

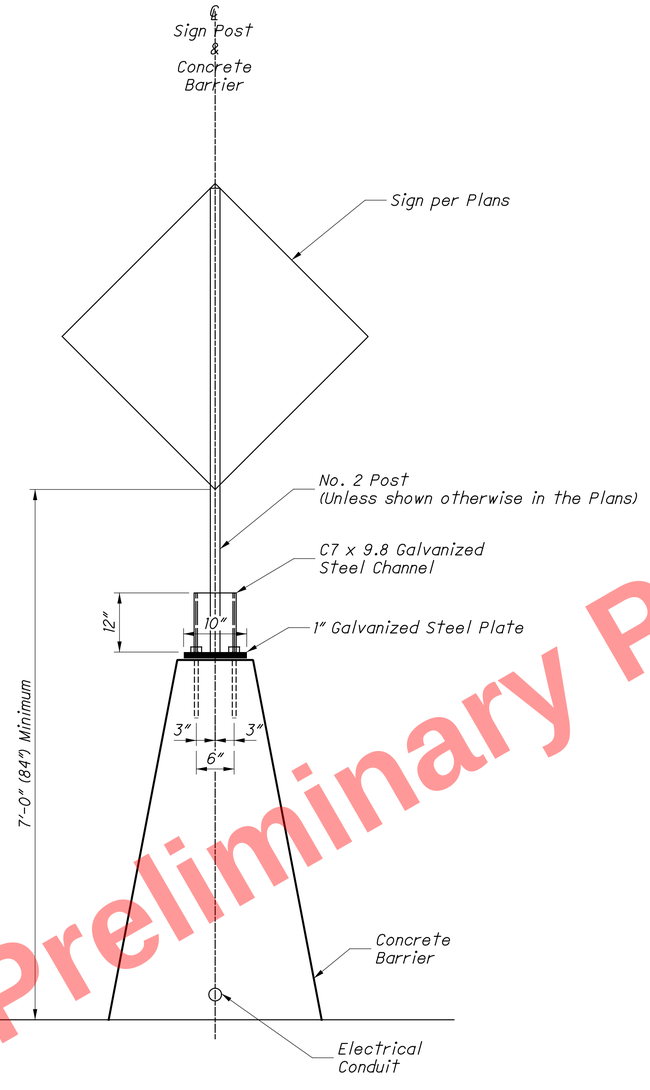

REAR VIEW

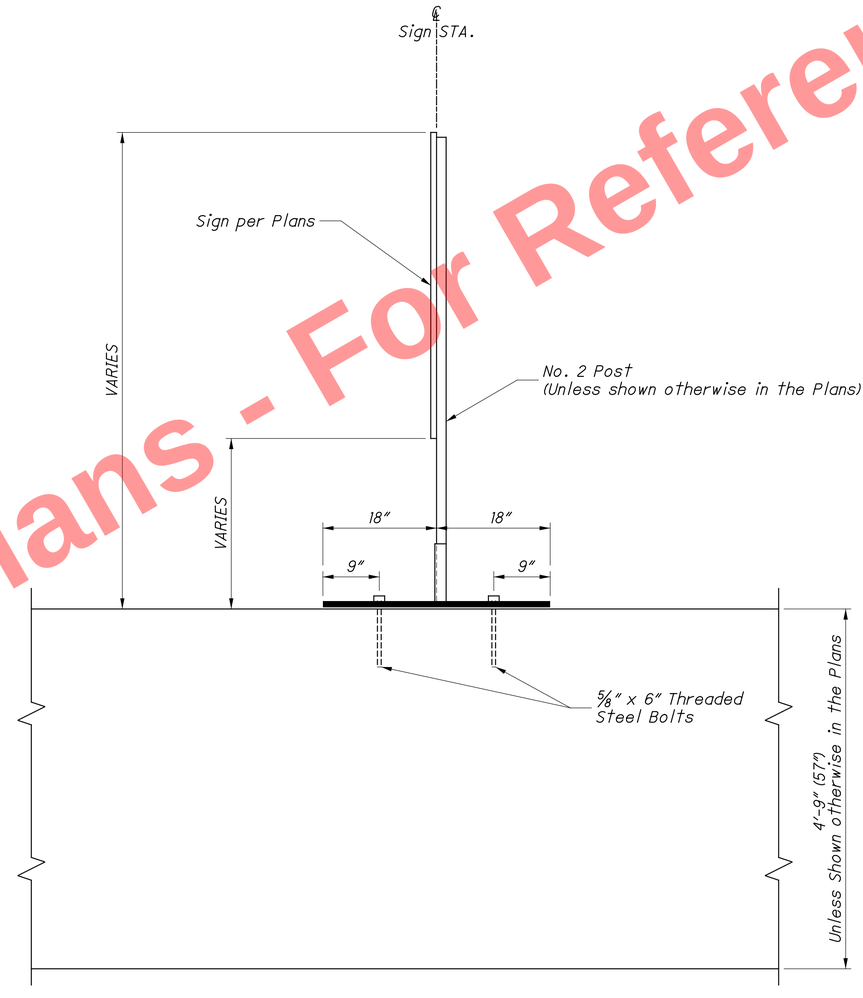

SIDE VIEW

Preliminary Plans - For Reference Only

CONCRETE BARRIER MOUNTED SIGN SUPPORT, AS PER PLAN DETAIL

DESIGN AGENCY
TF ASSOCIATES

DESIGNER	SDL
REVIEWER	WHT 09/15/25
PROJECT ID	121474
SUBSET	1
TOTAL	1
SHEET	P.466
TOTAL	655

625, PULL BOX CLEANED

THIS ITEM OF WORK SHALL CONSIST OF CLEANING AN EXISTING PULL BOX BY REMOVING ANY EXISTING CABLES NOT BEING RECONNECTED, AND DEBRIS SO THAT NEW CABLES CAN BE INSTALLED. ANY UNUSED OPENINGS SHALL BE CLOSED. DISTURBED AREAS NEAR THE PULL BOX SHALL BE CLEARED OF WEEDS OR DEBRIS AND SHALL BE FULLY RESTORED. MATERIAL REMOVED SHALL BECOME THE PROPERTY OF THE CONTRACTOR AND SHALL BE PROPERLY DISPOSED OF OFF OF THE PROJECT SITE.

PAYMENT WILL BE MADE AT THE UNIT PRICE BID UNDER C&MS ITEM 625, "PULL BOX CLEANED" FOR EACH PULL BOX CLEANED WHICH SHALL BE FULL COMPENSATION FOR ALL LABOR, MATERIALS AND INCIDENTALS REQUIRED TO COMPLETE THIS ITEM IN A SATISFACTORY AND WORKMANLIKE MANNER.

625, CONDUIT CLEANED AND CABLES REMOVED, AS PER PLAN

THIS ITEM SHALL CONSIST OF CLEANING AN EXISTING CONDUIT BY REMOVING EXISTING CABLES, MUD AND DEBRIS SO THAT NEW CABLE CAN BE INSTALLED. INCIDENTAL TO THE CLEANING IS THE INSTALLATION OF BUSHINGS AND/OR COUPLINGS ON THE ENDS OF EXISTING CONDUIT AS REQUIRED. MATERIALS REMOVED SHALL BECOME THE PROPERTY OF THE CONTRACTOR FOR PROPER DISPOSAL OFF OF THE PROJECT SITE. DISTURBED AREAS SHALL BE PROPERLY RESTORED.

PAYMENT WILL BE MADE AT THE UNIT PRICE BID UNDER C&MS ITEM 625, "CONDUIT CLEANED AND CABLES REMOVED" PER FOOT OF CONDUIT CLEANED WHICH SHALL BE FULL COMPENSATION FOR ALL LABOR, MATERIALS AND INCIDENTALS REQUIRED TO COMPLETE THIS ITEM IN A SATISFACTORY AND WORKMANLIKE MANNER.

LIGHT POLE ANCHOR BOLTS ON STRUCTURES

WHEN A LIGHT POLE IS MOUNTED ON A PILASTER ON A BRIDGE PARAPET OR ON A RETAINING WALL, THE REQUIRED ANCHOR BOLTS MAY DIFFER IN LENGTH AND/OR SHAPE FROM THOSE REQUIRED WHEN THE POLE IS MOUNTED ON A CAST-IN-PLACE DRILLED SHAFT FOUNDATION. THE COST DIFFERENTIAL FOR FURNISHING SUCH BOLTS IS INCLUDED HEREIN.

IN ADDITION, THERE IS NO FOUNDATION CONSTRUCTION ITEM IN WHICH TO INCLUDE THE SETTING OF THE ANCHOR BOLTS. THUS, THE SETTING OF THE ANCHOR BOLTS INTO THE PILASTER IS ALSO PART OF THIS WORK.

PAYMENT WILL BE MADE AT EACH SUCH POLE LOCATION AT THE UNIT PRICE BID FOR EACH C&MS ITEM 625, "LIGHT POLE ANCHOR BOLTS ON STRUCTURE" AND SHALL BE FULL COMPENSATION FOR FURNISHING AND PLACING THE SET OF ANCHOR BOLTS REQUIRED.

UNDERGROUND WARNING/MARKING TAPE, AS PER PLAN

UNDERGROUND WARNING/MARKING TAPE SHALL BE IN ACCORDANCE WITH CMS 725.22 EXCEPT THE TAPE SHALL NOT BE FURNISHED WITH TRACER WIRE AND THE REQUIRED MINIMUM BREAK STRENGTH SHALL BE WAIVED.

625, POWER SERVICE, AS PER PLAN

IN ADDITION TO THE REQUIREMENTS OF THE SPECIFICATIONS, THE FOLLOWING SHALL APPLY.

THE POWER SUPPLYING AGENCY FOR THIS PROJECT IS:

OHIO EDISON (DISTRIBUTION)
76 S. MAIN STREET
AKRON, OHIO 44308
ATTN: TIMOTHY MARKULIN
tmarkulin@firstenergycorp.com
PH: 330-810-5299

POWER SERVICE: 480 VOLT, 3-WIRE, SINGLE PHASE, GROUNDED NEUTRAL. THIS PROJECT HAS BEEN DESIGNED ON THE BASIS OF 5% VOLTAGE DROP WITH A MAXIMUM UNIFORMITY RATIO OF 4.0 TO 1.0 FOR CONVENTIONAL UNITS AND 3.0 TO 1.0 FOR HIGH MAST UNITS.

ALL POWER SERVICES SHALL BE METERED. THE METER BASE MOUNTING HEIGHT SHALL BE NO MORE THAN FIVE (5) FEET HIGH TO THE CENTER OF THE METER BASE FROM THE GROUND. A NON-FUSED DISCONNECT SHALL BE INSTALLED ON THE POWER SIDE OF THE METER BASE. THE CONTRACTOR SHALL SUPPLY THE NECESSARY METER BASES AND DISCONNECTS.

THE CONTRACTOR SHALL PAY ALL ELECTRICAL ENERGY CHARGES FOR NEW POWER SERVICES ESTABLISHED BY THIS PROJECT. UPON COMPLETION OF THIS PROJECT AND AFTER WRITTEN AUTHORIZATION FROM THE DISTRICT CONSTRUCTION ENGINEER, POWER SERVICE ELECTRICAL ENERGY ACCOUNTS SHALL BE TRANSFERRED TO THE MAINTAINING AGENCY. THIS SHALL INCLUDE NEW POWER SERVICE ESTABLISHED BY THIS PROJECT AS WELL AS REASSIGNMENT OF EXISTING SERVICE DUE TO WORK PERFORMED BY THIS PROJECT. IF POWER SERVICE IS TRANSFERRED PRIOR TO RECEIVING THE WRITTEN AUTHORIZATION, A DISINCENTIVE OF $100 PER DAY SHALL BE ASSESSED FOR EACH CALENDAR DAY OF NON-COMPLIANCE.

PAYMENT WILL BE MADE AT THE UNIT BID PRICE FOR EACH CMS ITEM 625, "POWER SERVICE, AS PER PLAN" WHICH SHALL BE FULL COMPENSATION FOR ALL LABOR, MATERIALS, AND INCIDENTALS REQUIRED TO COMPLETE THIS ITEM IN A SATISFACTORY AND WORKMANLIKE MANNER.

PADLOCKS AND KEYS

PADLOCKS FURNISHED SHALL BE EITHER BRASS OR BRONZE, EQUAL TO MASTER NO. 4BKA OR WILSON BOHANNAN 660A, AND SHALL BE KEYED IN ACCORDANCE WITH C&MS 631.06. PAYMENT SHALL BE INCLUDED IN THE BID FOR THE ITEM(S) BEING LOCKED.

HIGH VOLTAGE TEST WAIVED

THE HIGH VOLTAGE TEST SHALL NOT BE PERFORMED ON CIRCUIT GW CONSTRUCTED BY THIS PROJECT THAT CONNECTS TO EXISTING LIGHTS, SINCE THE TEST COULD DAMAGE THE PORTION OF THE COMPLETED CIRCUIT WHICH HAS BEEN IN SERVICE PRIOR TO THIS PROJECT.

SPECIAL, MAINTAIN EXISTING LIGHTING

EXISTING ROADWAYS WHICH ARE TO REMAIN OPEN TO TRAFFIC DURING CONSTRUCTION OF THIS PROJECT AND WHICH ARE LIGHTED SHALL HAVE THE LIGHTING MAINTAINED AS DESCRIBED HEREIN.

BEFORE ANY WORK IS STARTED IN THE IMMEDIATE VICINITY OF THE EXISTING LIGHTING CIRCUITS, REPRESENTATIVES OF ODOT, THE MAINTAINING AGENCY AND THE CONTRACTOR SHALL MAKE A VISUAL INSPECTION OF THE EXISTING ROADWAY LIGHTING CIRCUITS TO BE MAINTAINED. DURING THIS INSPECTION, A WRITTEN RECORD OF THE CONDITION OF EXISTING LIGHTING SHALL BE MADE BY ODOT'S REPRESENTATIVE. THIS WRITTEN REPORT SHALL NOTE INDIVIDUAL LUMINAIRES WHICH ARE NOT IN WORKING ORDER, INDIVIDUAL POLES WHICH ARE NOT STANDING, AND INDIVIDUAL CIRCUITS WHICH ARE NOT IN WORKING ORDER. THE COMPLETED REPORT SHALL BE SIGNED BY THE REPRESENTATIVES OF ODOT, THE MAINTAINING AGENCY AND THE CONTRACTOR.

IF, AS A RESULT OF THIS INSPECTION, IT IS DETERMINED THAT THE CONDITION OF THE EXISTING SYSTEM IS BELOW THAT REQUIRED FOR THE SAFETY OF THE TRAVELING PUBLIC, THEN THE MAINTAINING AGENCY SHALL MAKE THE REPAIRS NECESSARY TO RETURN THE SYSTEM TO AN ACCEPTABLE CONDITION. FOLLOWING THESE REPAIRS, THE SYSTEM SHALL AGAIN BE INSPECTED AND A REPORT SHALL BE MADE AND SIGNED AS OUTLINED HEREIN.

WHEN THE EXISTING SYSTEM IS IN AN ACCEPTABLE CONDITION, IT SHALL BE TURNED OVER TO THE CONTRACTOR WHO SHALL THEN BE REQUIRED TO MAINTAIN THE EXISTING LIGHTING TO THE CONDITION OUTLINED IN THIS REPORT WITH THE EXCEPTION OF KNOCKDOWNS DUE TO TRAFFIC ACCIDENTS.

REPLACEMENT OF KNOCKED DOWNED UNITS SHALL BE DONE ONLY WHEN THE ENGINEER HAS DETERMINED THAT THE REPLACEMENT OF THE KNOCKED DOWN UNIT IS NECESSARY AND SHALL BE PAID SEPARATELY ON A UNIT BASIS.

BETTERMENTS SHALL BE COVERED IN ITEMS OF WORK PERTAINING TO THE CONSTRUCTION OF PERMANENT IMPROVEMENT.

WHEN THE SEQUENCE OF CONSTRUCTION ACTIVITIES REQUIRES, OR SHOULD THE CONTRACTOR DESIRE, THE REMOVAL OF THE EXISTING LIGHTING BEFORE THE NEW LIGHTING IS OPERATIONAL, THE CONTRACTOR SHALL BE RESPONSIBLE FOR PROVIDING TEMPORARY LIGHTING OF THIS PORTION OF THE ROADWAY.

PRIOR TO INSTALLING SUCH LIGHTING, THE CONTRACTOR SHALL PREPARE AND SUBMIT FOUR SETS OF THE TEMPORARY LIGHTING PLAN TO THE ENGINEER FOR REVIEW AND APPROVAL.

THIS PLAN SHALL SHOW LOCATIONS OF POLES, LENGTHS OF BRACKET ARMS, STYLES OF LUMINAIRES, MOUNTING HEIGHTS, WIRING METHODS AND OTHER PERTINENT INFORMATION. THE TEMPORARY LIGHTING SHALL PROVIDE AN AVERAGE INITIAL INTENSITY OF 1.2 FOOTCANDLES WITH AN AVERAGE TO MINIMUM UNIFORMITY NOT TO EXCEED 3:1. MOUNTING HEIGHT OF TEMPORARY LUMINAIRES SHALL NOT BE LESS THAN 30 FEET, AND THE MINIMUM OVERHEAD CONDUCTOR CLEARANCE SHALL BE 20 FEET. TEMPORARY OVERHEAD CONSTRUCTION SHALL NOT BE LESS THAN GRADE "B" FOR STRENGTH REQUIREMENTS AS DEFINED BY THE NATIONAL ELECTRIC SAFETY CODE. WOOD POLES WITH OVERHEAD WIRING MAY BE USED. HOWEVER, TEMPORARY LIGHTING SHALL MEET FEDERAL AND STATE SAFETY CRITERIA.

SPECIAL, MAINTAIN EXISTING LIGHTING, CONT

IF BREAKAWAY POLES ARE USED TO MEET THESE CRITERIA, THEN UNDERGROUND WIRING SHALL BE USED. RECONDITIONED OR USED MATERIALS MAY BE FURNISHED FOR TEMPORARY LIGHTING.

ALL MATERIALS NECESSARY TO COMPLETE THE TEMPORARY LIGHTING SHALL BE FURNISHED AND INSTALLED BY THE CONTRACTOR. WHEN NO LONGER NEEDED, THE TEMPORARY LIGHTING INSTALLATION SHALL BE REMOVED AND PROPERLY DISPOSED OF BY THE CONTRACTOR.

WHEN THE PROJECT BEGINS AND THE CONTRACTOR HAS TAKEN OVER MAINTENANCE OF THE EXISTING FACILITIES, THE CONTRACTOR IS RESPONSIBLE FOR ALL REQUIRED LAYOUTS AND LOCATIONS OF THE EXISTING AND PROPOSED ELECTRICAL CIRCUITS AND RELATED ITEMS WITHIN THE PROJECT LIMITS. THE CONTRACTOR SHALL LOCATE AND MARK ALL UNDERGROUND ELECTRICAL CIRCUITS (INCLUDING TRAFFIC LOOPS AND LOOP LEAD-INS) FOR THE DURATION OF THE PROJECT.

THE MAINTAINING AGENCY WILL PAY FOR ELECTRICAL ENERGY CONSUMED BY EXISTING POWER SERVICES AND BY PROPOSED PERMANENT POWER SERVICES AFTER ACCEPTANCE OF THE LIGHTING WORK. THE CONTRACTOR WILL PAY FOR ELECTRICAL ENERGY, INSTALLATION, REMOVAL AND MAINTENANCE OF ANY TEMPORARY POWER SERVICES.

THE LUMP SUM PRICE BID FOR ITEM SPECIAL "MAINTAIN EXISTING LIGHTING" SHALL INCLUDE PAYMENT FOR ALL LABOR, EQUIPMENT, MATERIALS AND INCIDENTALS NECESSARY TO MAINTAIN THE EXISTING LIGHTING AS SPECIFIED HEREIN.

THE UNIT PRICE BID FOR ITEM SPECIAL "REPLACEMENT OF EXISTING LIGHTING UNIT" SHALL BE FULL PAYMENT FOR THE REPLACEMENT OF AN EXISTING LIGHTING UNIT WHICH HAS BEEN KNOCKED DOWN AFTER THE AFOREMENTIONED INSPECTION AND SHALL INCLUDE ALL LABOR, EQUIPMENT, MATERIALS AND INCIDENTALS NECESSARY TO PROVIDE A REPLACEMENT FOR SUCH UNIT.

ITEM SPECIAL MAINTAIN EXISTING LIGHTING - 1 LUMP SUM
ITEM SPECIAL REPLACEMENT OF EXISTING LIGHTING UNIT - 10 EACH

ITEM 625 ARC FLASH CALCULATIONS AND LABEL

THE CONTRACTOR SHALL SATISFY THE REQUIREMENTS OF ODOT SUPPLEMENTAL SPECIFICATION 825 FOR THE CONTROL CENTERS. THE CONTRACTOR MAY BE ABLE TO OBTAIN LABELS FOR THE ODOT MAINTAINED INSTALLATIONS FROM THE ODOT SIGN SHOP, 1606 WEST BROAD ST., COLUMBUS, OH 43223, FOR NON-ODOT MAINTAINED INSTALLATIONS THE CONTRACTOR IS RESPONSIBLE FOR OBTAINING THE LABEL MADE FROM "ENGINEER GRADE" SIGN SHEETING OR AN EQUIVALENT LABEL MATERIAL.

THE ODOT OFFICE OF ROADWAY ENGINEERING AND THE DISTRICT OFFICE HAVE AN EXCEL SPREADSHEET AVAILABLE UPON REQUEST, TO ASSIST WITH MAKING AND DOCUMENTING THE REQUIRED CALCULATIONS.

METHOD OF MEASUREMENT SHALL BE AS PER 825.06. THE FOLLOWING QUANTITIES HAVE BEEN CARRIED TO THE GENERAL SUMMARY.

ITEM 625 ARC FLASH CALCULATION AND LABEL - 4 EACH

Preliminary Plans - For Reference Only

LIGHTING NOTES

DESIGN AGENCY 2LMN
DESIGNER ANL
REVIEWER EMW 06/2/25
PROJECT ID 121474
SHEET P.467 TOTAL 655

MAH-680-0.00

MODEL: Sheet PAPERSIZE: 34x22 (in.) DATE: 9/15/2025 TIME: 11:24:33 AM PLTDRV: OHDOT_PDF_Color_E+.pltcfg PENTBL: OHDOT_Pen.tbl USER: WORKSPACE: OHDOTCEv02 WORKSET: 121474 PRODUCT: OpenRoadsDesigner 10.10.23.15
pw:\\ohiodot-pw.bentley.com:ohiodot-pw-02\Documents\01 Active Projects\District 04\Mahoning\121474\405-Engineering_2LMN\Lighting\Sheets\121474_LN001.dgn

REF NO.	SHEET NO.	STATION	625 CONNECTION, FUSED PULL APART EACH	625 CONNECTION, UNFUSED PULL APART EACH	625 CONNECTION, UNFUSED BOLTED EACH	625 CONNECTION, UNFUSED PERMANENT EACH	625 LIGHT POLE, LOW MAST, 50' EACH	625 LIGHT TOWER, BBB100 EACH	625 LIGHT POLE FOUNDATION, 24" X 10' DEEP EACH	625 MEDIAN LIGHT POLE FOUNDATION, 10' DEEP EACH	625 LIGHT TOWER FOUNDATION, 36" X 25' DEEP EACH	625 NO. 10 AWG POLE AND BRACKET CABLE FT	625 LUMINAIRE, HIGH MAST, SOLID STATE (LED), TYPE V EACH	625 LUMINAIRE, LOW MAST, SOLID STATE (LED), TYPE III EACH	625 LUMINAIRE, LOW MAST, SOLID STATE (LED), TYPE V EACH	625 JUNCTION BOX EACH	625 MEDIAN JUNCTION BOX EACH	625 PULL BOX, 725.08, 18" EACH	625 PULL BOX, 725.08, 24" EACH	625 GROUND ROD EACH	625 POWER SERVICE, AS PER PLAN EACH	625 CONTROL CENTER CABINET, COMPLETE EACH	625 PULL BOX CLEANED EACH
EX-PB-1	475	8+43.07																					1
EX-PB-2	475	8+44.47																					1
PB-GW-01	475	951+77.10																					1
GW-1-01	475	952+57.47	2	1			1			1		180			1					1			
GW-1-02	475	955+24.51	2	1			1			1		180			1					1			
GW-1-03	475	957+84.62	2	1			1			1		180			1					1			
GW-1-04	475	959+79.27	2	1			1			1		180			1					1			
PB-GW-02	475	961+81.76			3	3											1						
GW-1-05	475	961+74.82	2	1			1			1		180			1					1			
PB-GW-03	475	961+83.11																1					
GW-1-06	476	964+73.40	2	1			1		1			180		1						1			
PB-GW-04	476	966+96.16			3											1							
GW-1-07	476	967+72.59	2	1			1		1			180		1						1			
PB-GW-05	476	969+74.47				3													1				
PB-GW-06	476	969+74.99			3												1						
PB-GW-07	476	969+75.15																1					
CC-GW	476	969+93.66																			1	1	
GW-2-01	476	970+73.68	2	1			1			1		180			1					1			
GW-2-02	476	973+50.59	2	1			1			1		180			1					1			
PB-GW-08	476	947+45.47			3	3											1						
PB-GW-09	476	2+12.93				3												1					
GW-2-04	476	1+79.39	2	1			1		1			180		1						1			
GW-2-03	476	976+28.30	2	1			1			1		180			1					1			
GW-2-05	476	978+83.39	2	1			1			1		180			1					1			
GW-2-06	476	981+90.21	2	1			1			1		180			1					1			
PB-GW-10	476	983+41.34			3	3											1						
PB-GW-11	476	7+89.65				3												1					
GW-2-07	476	11+21.59	2	1			1		1			180		1						1			
PB-GW-12	476	13+91.66				3												1					
GW-2-08	476	15+37.52	2	1			1		1			180		1						1			
PB-GW-13	476	3+42.57				3												1					
GW-2-09	476	4+80.18	2	1			1		1			180		1						1			
GW-2-10	476	7+84.52	2	1			1		1			180		1						1			
GW-2-11	476	10+83.01	2	1			1		1			180		1						1			
GW-2-12	476	984+20.17	2	1			1			1		180			1					1			
GW-2-13	476	986+19.89	2	1			1			1		180			1					1			
GW-2-14	476	988+29.96	2	1			1			1		180			1					1			
GW-2-15	476	990+37.10	2	1			1			1		180			1					1			
WA-1-01	476	14+87.12	2	1			1		1			180		1						1			
PB-WA-01	477	12+87.32				3	0												1				
WA-1-02	477	11+27.52	2	1			1		1			180		1						1			
PB-WA-02	477	992+36.51			3		0										1						
WA-1-04	477	994+69.77	2	1			1			1		180			1					1			
WA-1-05	477	997+02.47	2	1			1			1		180			1					1			
WA-1-06	477	999+50.30	2	1			1			1		180			1					1			
WA-1-07	477	1002+06.20	2	1			1			1		180			1					1			
WA-1-08	477	1004+77.15	2	1			1			1		180			1					1			
WA-1-09	477	1007+31.94	2	1			1			1		180			1					1			
WA-1-10	477	1009+92.28	2	1			1			1		180			1					1			
WA-1-11	477	1012+39.76	2	1			1			1		180			1					1			
WA-1-12	477	1014+63.58	2	1			1			1		180			1					1			
WA-1-13	477	1016+62.79	2	1			1			1		180			1					1			
WA-1-14	477	1018+61.49	2	1			1			1		180			1					1			
WA-1-15	478	1021+06.78	2	1			1			1		180			1					1			
PB-WA-03	478	1023+86.04			3	3											1						
PB-WA-04	478	1023+86.04																	1				
CC-WA	478	10+44.03																			1	1	
PB-WA-05	478	1023+84.35				3												1					
WA-2-12	478	1024+41.17						1			1		1							2			
PB-WA-06	478	1026+90.91			3													1					
TOTALS CARRIED TO GENERAL SUMMARY			72	36	24	33	36	1	10	26	1	6480	1	10	26	1	6	9	2	38	2	2	3

Preliminary Plans - For Reference Only

LIGHTING SUBSUMMARY (1 OF 7)

DESIGN AGENCY 2LMN

DESIGNER ANL

REVIEWER EMW 06/2/25

PROJECT ID 121474

SHEET P.468 TOTAL 655

MAH-680-0.00

MODEL: Sheet PAPERSIZE: 34x22 (in.) DATE: 9/15/2025 TIME: 11:24:38 AM PLTDRV: OHDOT_PDF_Color_E+.pltcfg PENTBL: OHDOT_Pen.tbl USER: WORKSPACE: OHDOTCEv02 WORKSET: 121474 PRODUCT: OpenRoadsDesigner 10.10.23.15
pw:\\ohiodot-pw.bentley.com:ohiodot-pw-02\Documents\01 Active Projects\District 04\Mahoning\121474\405-Engineering_2LMN\Lighting\Sheets\121474_LS001.dgn
_LS001.dgn

REF NO.	SHEET NO.	STATION	625 CONNECTION, FUSED PULL APART EACH	625 CONNECTION, UNFUSED PULL APART EACH	625 CONNECTION, UNFUSED BOLTED EACH	625 CONNECTION, UNFUSED PERMANENT EACH	625 LIGHT POLE, LOW MAST, 50' EACH	625 LIGHT TOWER, BBB100 EACH	625 LIGHT POLE FOUNDATION, 24" X 10' DEEP EACH	625 MEDIAN LIGHT POLE FOUNDATION, 10' DEEP EACH	625 LIGHT TOWER FOUNDATION, 36" X 25' DEEP EACH	625 NO. 10 AWG POLE AND BRACKET CABLE FT	625 LUMINAIRE, HIGH MAST, SOLID STATE (LED), TYPE V EACH	625 LUMINAIRE, LOW MAST, SOLID STATE (LED), TYPE III EACH	625 LUMINAIRE, LOW MAST, SOLID STATE (LED), TYPE V EACH	625 JUNCTION BOX EACH	625 MEDIAN JUNCTION BOX EACH	625 PULL BOX, 725.08, 18" EACH	625 PULL BOX, 725.08, 24" EACH	625 GROUND ROD EACH	625 POWER SERVICE, AS PER PLAN EACH	625 CONTROL CENTER CABINET, COMPLETE EACH	625 PULL BOX CLEANED EACH
PB-WA-07	478	1029+70.76			3	3											1						
PB-WA-08	478	1029+70.76				3												1					
WA-2-11	478	1029+71.25						1			1		1								2		
WA-2-10	478	1032+55.32	2	1			1			1		180			1						1		
PB-WA-09	478	1034+77.70			3	3											1						
PB-WA-10	478	1034+77.70																1					
PB-WA-11	478	4+17.67				3												1					
PB-WA-12	478	1035+21.60																1					
PB-WA-13	478	1035+29.64				3												1					
WA-2-09	478	2+92.66	2	1			1		1			180		1							1		
WA-2-08	478	1036+44.75	2	1			1		1			180		1							1		
WA-2-07	478	1039+22.98	2	1			1		1			180		1							1		
WA-2-06	478	1035+45.56	2	1			1			1		180			1						1		
PB-WA-14	478	1036+88.11			3	3											1						
PB-WA-15	478	1036+88.11																1					
PB-WA-16	478	1036+80.52																1					
PB-WA-17	478	1036+93.01				3												1					
WA-2-05	478	1037+35.73	2	1			1		1			180		1							1		
WA-2-04	478	1039+68.70	2	1			1		1			180		1							1		
WA-2-03	478	1038+36.75	2	1			1			1		180			1						1		
WA-2-02	478	1041+18.25	2	1			1			1		180			1						1		
WA-2-01	478	1044+18.75	2	1			1			1		180			1						1		
DA-1-01	478	1047+03.74	2	1			1			1		180			1						1		
DA-1-02	479	1049+19.97	2	1			1			1		180			1						1		
DA-1-03	479	1051+30.92	2	1			1			1		180			1						1		
DA-1-04	479	1053+28.94	2	1			1			1		180			1						1		
DA-1-05	479	1055+78.04	2	1			1			1		180			1						1		
DA-1-06	479	1058+77.72	2	1			1			1		180			1						1		
DA-1-07	479	1061+52.48	2	1			1			1		180			1						1		
DA-1-08	479	1063+76.32	2	1			1			1		180			1						1		
DA-1-09	479	1066+16.51	2	1			1			1		180			1						1		
DA-1-10	479	1068+51.58	2	1			1			1		180			1						1		
DA-1-11	479	1071+05.23	2	1			1			1		180			1						1		
DA-1-12	479	1073+16.72	2	1			1			1		180			1						1		
PB-DA-04	479	1073+31.70			3												1						
PB-DA-03	479	1073+31.70																1					
CC-DA	479	1074+61.84																				1	1
PB-DA-01	479	1075+29.58																	1				
PB-DA-02	479	1075+44.59				3												1					
PB-DA-05	479	1075+50.00			3												1						
DA-1-13	479	1075+54.95	2	1			1			1		180			1						1		
DA-1-14	479	1076+77.09	2	1			1			1		180			1						1		
GA-1-01	480	1079+13.79	2	1			1			1		180			1						1		
PB-GA-01	480	1082+13.40			3	3											1						
PB-GA-02	480	1082+13.39				3												1					
GA-1-02	480	1082+26.00						1			1		1								2		
PB-GA-03	480	1085+13.40			3												1						
PB-GA-04	480	1085+13.37				3												1					
GA-1-03	480	1086+69.82						1			1		1								2		
PB-GA-05	480	1089+37.56				3												1					
PB-GA-06	480	1089+39.94				3												1					
GA-1-04	480	1089+61.19	2	1			1		1			180		1							1		
GA-1-05	480	1092+46.47	2	1			1		1			180		1							1		
PB-GA-07	480	1093+72.84				6													1				
PB-GA-08	480	1093+69.83																	1				
CC-GA	480	1093+57.02																				1	1
GA-1-06	480	1095+05.26	2	1			1		1			180		1							1		
PB-GA-13	480	1095+20.36				6													1				
PB-GA-12	480	1095+21.06			3												1						
PB-GA-11	480	1095+21.06				3												1					
TOTALS CARRIED TO GENERAL SUMMARY			56	28	24	54	28	3	8	20	3	5040	3	8	20		8	15	4	34	2	2	

Preliminary Plans - For Reference Only

MAH-680-0.00
MODEL: Sheet PAPERSIZE: 34x22 (in.) DATE: 9/15/2025 TIME: 11:24:43 AM PLTDRV: OHDOT_PDF_Color_E+.pltcfg PENTBL: OHDOT_Pen.tbl USER: WORKSPACE: OHDOTCEv02 WORKSET: 121474 PRODUCT: OpenRoadsDesigner 10.10.23.15
pw:\\ohiodot-pw.bentley.com:ohiodot-pw-02\Documents\01 Active Projects\District 04\Mahoning\121474\405-Engineering_2LMN\Lighting\Sheets\121474_LS002.dgn

DESIGN AGENCY 2LMN
DESIGNER ANL
REVIEWER EMW 06/2/25
PROJECT ID 121474
SHEET P.469 TOTAL 655

REF NO.	SHEET NO.	STATION	625 CONNECTION, FUSED PULL APART EACH	625 CONNECTION, UNFUSED PULL APART EACH	625 CONNECTION, UNFUSED BOLTED EACH	625 CONNECTION, UNFUSED PERMANENT EACH	625 LIGHT POLE, LOW MAST, 50' EACH	625 LIGHT TOWER, BBB100 EACH	625 LIGHT POLE FOUNDATION, 24" X 10' DEEP EACH	625 MEDIAN LIGHT POLE FOUNDATION, 10' DEEP EACH	625 LIGHT TOWER FOUNDATION, 36" X 25' DEEP EACH	625 NO. 10 AWG POLE AND BRACKET CABLE FT	625 LUMINAIRE, HIGH MAST, SOLID STATE (LED), TYPE V EACH	625 LUMINAIRE, LOW MAST, SOLID STATE (LED), TYPE III EACH	625 LUMINAIRE, LOW MAST, SOLID STATE (LED), TYPE V EACH	625 JUNCTION BOX EACH	625 MEDIAN JUNCTION BOX EACH	625 PULL BOX, 725.08, 18" EACH	625 PULL BOX, 725.08, 24" EACH	625 GROUND ROD EACH	625 POWER SERVICE, AS PER PLAN EACH	625 CONTROL CENTER CABINET, COMPLETE EACH	625 PULL BOX CLEANED EACH
GA-1-11	480	1094+38.47	2	1			1		1			180		1							1			
GA-1-10	480	1091+28.89	2	1			1		1			180		1							1			
GA-1-09	480	1088+30.17	2	1			1		1			180		1							1			
PB-GA-10	480	1086+02.45				3												1						
GA-1-08	480	1089+33.94	2	1			1		1			180		1							1			
PB-GA-09	480	1089+63.20				3												1						
GA-1-07	480	1092+05.83	2	1			1		1			180		1							1			
GA-2-01	480	1097+21.91	2	1			1	0		1		180			1						1			
GA-2-02	480	1099+54.89	2	1			1			1		180			1						1			
GA-2-03	480	1102+22.73	2	1			1			1		180			1						1			
GA-2-04	480	1104+92.97	2	1			1			1		180			1						1			
PB-GA-14	480	1105+82.89			3	3											1							
PB-GA-15	480	735+90.31																1						
PB-GA-16	480	735+85.31				3												1						
GA-2-05	480	737+34.54	2	1			1		1			180		1							1			
GA-2-06	481	1107+67.57	2	1			1			1		180			1						1			
GA-2-07	481	734+36.09	2	1			1		1			180		1							1			
GA-2-08	481	731+33.87	2	1			1		1			180		1							1			
GA-2-09	481	728+17.35	2	1			1		1			180		1							1			
GA-2-10	481	724+99.96	2	1			1		1			180		1							1			
GA-2-11	481	722+61.27	2	1			1		1			180		1							1			
TOTALS CARRIED TO GENERAL SUMMARY			32	16	3	12	16		11	5		2880		11	5		1	4		16				

Preliminary Plans - For Reference Only

MAH-680-0.00

MODEL: Sheet PAPERSIZE: 34x22 (in.) DATE: 9/15/2025 TIME: 11:24:48 AM PLTDRV: OHDOT_PDF_Color_E+.pltcfg PENTBL: OHDOT_Pen.tbl USER: WORKSPACE: OHDOTCEv02 WORKSET: 121474 PRODUCT: OpenRoadsDesigner 10.10.23.15
pw:\\ohiodot-pw.bentley.com:ohiodot-pw-02\Documents\01 Active Projects\District 04\Mahoning\121474\405-Engineering_2LMN\Lighting\Sheets\121474_LS003.dgn

DESIGN AGENCY 2LMN

DESIGNER ANL

REVIEWER EMW 06/2/25

PROJECT ID 121474

SHEET P.470 TOTAL 655

REF NO.	SHEET NO.	STATION TO STATION			625 NO. 4 AWG 2400 VOLT DISTRIBUTION CABLE FT	625 1-1/2" DUCT CABLE WITH THREE NO. 4 AWG 2400 VOLT CABLES FT	625 CONDUIT, 2", 725.051 FT	625 CONDUIT, 3", 725.04 FT	625 CONDUIT, JACKED OR DRILLED, 725.04, AS PER PLAN, 3" FT	625 CONDUIT CLEANED AND CABLES REMOVED, AS PER PLAN FT	625 TRENCH FT	625 STRUCTURE GROUNDING SYSTEM EACH	625 UNDERGROUND WARNING/MARKING TAPE FT
PB-GW-01	475	951+77.10	TO	952+57.47	270		80						
GW-1-01	475	952+57.47	TO	955+24.51	831		267						
GW-1-02	475	955+24.51	TO	957+84.62	810		260						
GW-1-03	475	957+84.62	TO	959+79.27	615		195						
GW-1-04	475	959+79.27	TO	961+74.82	618		196						
GW-1-05	475	961+74.82	TO	961+81.76	51		7						
PB-GW-02	475	961+81.76	TO	961+83.11	195			55			55		55
PB-GW-03	475/476	961+83.11	TO	964+73.40	945			305			38		38
bridge	475/476	962+18.6	TO	968+77.69								1	
GW-1-06	476	964+73.40	TO	966+96.16	729			233					
PB-GW-04	476	966+96.16	TO	969+74.47	882			284			98		98
PB-GW-05	476	969+74.47	TO	969+93.66	510			75			75		75
PB-GW-05	476	969+74.47	TO	969+74.99	408			58			58		58
PB-GW-06	476	969+74.99	TO	969+75.15	192			54			54		54
GW-1-07	476	967+72.59	TO	969+75.15	633			201			12		12
PB-GW-06	476	969+74.99	TO	970+73.68	327		99						
GW-2-01	476	970+73.68	TO	973+50.59	861		277						
GW-2-02	476	973+50.59	TO	974+45.47	315		95						
PB-GW-08	476	974+45.47	TO	2+12.93	246			72			72		72
GW-2-04	476	1+79.39	TO	2+12.93		43					33		33
PB-GW-08	476	974+45.47	TO	976+28.30	579		183						
GW-2-03	476	976+28.30	TO	978+83.39	795		255						
GW-2-05	476	978+83.39	TO	981+90.21	312		94			213			
GW-2-06	476	981+90.21	TO	983+41.34	483		151						
PB-GW-10	476	983+41.34	TO	7+89.65	282			84			84		84
PB-GW-11	476	7+89.65	TO	11+21.59		306					296		296
GW-2-07	476	11+21.59	TO	13+91.66		234					224		224
PB-GW-12	476	13+91.66	TO	15+37.52		150					140		140
PB-GW-12	476	13+91.66	TO	3+42.57	285				85				
PB-GW-13	476	3+42.57	TO	4+80.18		155					145		145
GW-2-09	476	4+80.18	TO	7+84.52		317					307		307
GW-2-10	476	7+84.52	TO	10+83.01		297					287		287
PB-GW-10	476	983+41.34	TO	984+20.17	267		79						
GW-2-12	476	984+20.17	TO	986+19.89	630		200						
GW-2-13	476	986+19.89	TO	988+29.96	660		210						
GW-2-14	476	988+29.96	TO	990+37.10	651		207						
PB-WA-01	477/476	12+87.32	TO	14+87.12		205					195		195
WA-1-02	477	11+27.52	TO	12+87.32		166					156		156
PB-WA-01	477	12+87.32	TO	992+36.51	261			77			77		77
PB-WA-02	477	992+36.51	TO	992+42.52	48		6						
WA-1-03	477	992+42.52	TO	994+69.77	711		227						
WA-1-04	477	994+69.77	TO	997+02.47	729		233						
WA-1-05	477	997+02.47	TO	999+50.30	774		248						
WA-1-06	477	999+50.30	TO	1002+06.20	798		256						
WA-1-07	477	1002+06.20	TO	1004+77.15	843		271						
WA-1-08	477	1004+77.15	TO	1007+31.94	102		24			231			
WA-1-09	477	1007+31.94	TO	1009+92.28	810		260						
WA-1-10	477	1009+92.28	TO	1012+39.76	774		248						
WA-1-11	477	1012+39.76	TO	1014+63.58	702		224						
WA-1-12	477	1014+63.58	TO	1016+62.79	627		199						
WA-1-13	477	1016+62.79	TO	1018+61.49	627		199						
WA-1-14	477/478	1018+61.49	TO	1021+06.78	765		245						
WA-1-15	478	1021+06.78	TO	1023+86.04	867		279						
PB-WA-05	478	1023+84.35	TO	1023+86.04	225			65			65		65
PB-WA-05	478	1023+84.35	TO	1024+41.17		65					55		55
PB-WA-03	478	1023+86.04	TO	1023+86.04	285			85			85		85
PB-WA-04	478	1023+86.04	TO	10+44.03	219			63			63		63
PB-WA-03	478	1023+86.04	TO	1026+90.91	945		305						
PB-WA-06	478	1026+90.91	TO	1029+70.76	870		280						
PB-WA-07	478	1029+70.76	TO	1029+70.76	243			71			71		71
TOTALS CARRIED TO GENERAL SUMMARY					26607	1938	6359	1782	85	444	2745	1	2745

Preliminary Plans - Not For Reference Only

DESIGN AGENCY 2LMN

DESIGNER ANL

REVIEWER EMW 06/2/25

PROJECT ID 121474

SHEET P.471 TOTAL 655

MAH-680-0.00

MODEL: Sheet PAPERSIZE: 34x22 (in.) DATE: 9/15/2025 TIME: 11:24:52 AM PLTDRV: OHDOT_PDF_Color_E+.pltcfg PENTBL: OHDOT_Pen.tbl USER: WORKSPACE: OHDOTCEv02 WORKSET: 121474 PRODUCT: OpenRoadsDesigner 10.10.23.15
pw:\\ohiodot-pw.bentley.com:ohiodot-pw-02\Documents\01 Active Projects\District 04\Mahoning\121474\405-Engineering_2LMN\Lighting\Sheets\121474_LS004.dgn

REF NO.	SHEET NO.	STATION TO STATION			625 NO. 4 AWG 2400 VOLT DISTRIBUTION CABLE FT	625 1-1/2" DUCT CABLE WITH THREE NO. 4 AWG 2400 VOLT CABLES FT	625 CONDUIT, 2", 725.051 FT	625 CONDUIT, 3", 725.04 FT	625 CONDUIT, JACKED OR DRILLED, 725.04, AS PER PLAN, 3" FT	625 CONDUIT CLEANED AND CABLES REMOVED, AS PER PLAN FT	625 TRENCH FT	625 STRUCTURE GROUNDING SYSTEM EACH	625 UNDERGROUND WARNING/MARKING TAPE FT
PB-WA-08	478	1029+70.76	TO	1029+71.25		43					33		33
PB-WA-07	478	1029+70.76	TO	1032+55.32	885		285						
WA-2-10	478	1032+55.32	TO	1034+77.70	696		222						
PB-WA-09	478	1034+77.70	TO	1034+77.70	165			45			45		45
PB-WA-10	478	1034+77.70	TO	4+17.67	246			72			72		72
WA-2-09	478	2+92.66	TO	4+17.67		134					124		124
PB-WA-11	478	4+17.67	TO	1035+21.60	312				94				
PB-WA-12	478	1035+21.60	TO	1035+29.64	174				48				
PB-WA-13	478	1035+29.64	TO	1036+44.75		118					108		108
WA-2-08	478	1036+44.75	TO	1039+22.98		279					269		269
PB-WA-09	478	1034+77.70	TO	1035+46.56	237		69						
WA-2-06	478	1035+46.56	TO	1036+88.11	456		142						
PB-WA-14	478	1036+88.11	TO	1036+88.11	177			49			49		49
WA-2-04	478	1039+68.70	TO	1037+35.73		244					234		234
PB-WA-17	478	1036+93.01	TO	1037+35.73		56					46		46
PB-WA-16	478	1036+80.52	TO	1036+93.01	153				41				
PB-WA-16	478	1036+80.52	TO	1036+88.11	243			71			71		71
PB-WA-14	478	1036+88.11	TO	1038+80.52	477		149						
WA-2-03	478	1038+80.52	TO	1041+18.25	876		282						
WA-2-02	478	1041+18.25	TO	1044+18.75	933		301						
DA-1-01	478, 479	1047+03.74	TO	1049+19.97	678		216						
DA-1-02	479	1049+19.97	TO	1051+30.92	663		211						
DA-1-03	479	1051+30.92	TO	1053+28.94	624		198						
DA-1-04	479	1053+28.94	TO	1055+78.04	777		249						
DA-1-05	479	1055+78.04	TO	1058+77.72	930		300						
DA-1-06	479	1058+77.72	TO	1061+52.48	819		263						
DA-1-07	479	1061+52.48	TO	1063+76.32	735		235						
DA-1-08	479	1063+76.32	TO	1066+16.51	750		240						
DA-1-09	479	1066+16.51	TO	1068+51.58	735		235						
DA-1-10	479	1068+51.58	TO	1071+05.23	792		254						
DA-1-11	479	1071+05.23	TO	1073+16.72	666		212						
DA-1-12	479	1073+16.72	TO	1073+31.70	75		15						
PB-DA-04	479	1073+31.70	TO	1073+31.70	249			73			73		73
PB-DA-03	479	1073+31.70	TO	1075+44.59	756			70		162	70		70
PB-DA-02	479	1075+44.59	TO	1075+50.00	234			68			68		68
PB-DA-05	479	1075+50.00	TO	1075+54.95	45		5						
DA-1-13	479	1075+54.95	TO	1076+77.09	396		122						
CC-DA	479	1074+61.84	TO	1075+29.58	252			74			74		74
PB-DA-01	479	1075+29.58	TO	1075+44.59	114			28			28		28
GA-1-01	480	1079+13.79	TO	1082+13.40	930		300						
PB-GA-02	480	1082+13.39	TO	1082+13.40	276			82			82		82
PB-GA-02	480	1082+13.40	TO	1082+26.00		25					15		15
PB-GA-01	480	1082+13.40	TO	1085+13.40	930		300						
PB-GA-04	480	1085+13.37	TO	1085+13.40	252			74			74		74
PB-GA-04	480	1085+13.37	TO	1086+69.82		167					157		157
GA-1-03	480	1086+69.82	TO	1089+37.56		278					268		268
PB-GA-05	480	1089+37.56	TO	1089+39.94	192				54				
PB-GA-06	480	1089+39.94	TO	1089+61.19		31					21		21
GA-1-04	480	1089+61.19	TO	1092+46.47		293					283		283
GA-1-05	480	1092+46.47	TO	1093+72.84		137					127		127
CC-GA	480	1093+57.02	TO	1093+69.83	210			25			25		25
PB-GA-08	480	1093+69.83	TO	1093+72.84	318			43			43		43
PB-GA-07	480	1093+72.84	TO	1095+05.26		143					133		133
GA-1-06	480	1095+05.26	TO	1095+20.36		25					15		15
PB-GA-13	480	1095+20.36	TO	1095+21.06	594			89			89		89
PB-GA-12	480	1095+21.06	TO	1095+21.06	294			88			88		88
GA-1-08	480	1089+33.94	TO	1089+63.20		34					24		24
PB-GA-09	480	1089+63.20	TO	1092+05.83		213					203		203
PB-GA-10	480	1086+02.45	TO	1089+63.20	315				95				
PB-GA-10	480	1086+02.45	TO	1089+33.94		244					234		234
TOTALS CARRIED TO GENERAL SUMMARY					20631	2464	4805	951	332	162	3245		3245

Preliminary Plans - For Reference Only

MAH-680-0.00
MODEL: Sheet PAPERSIZE: 34x22 (in.) DATE: 9/15/2025 TIME: 11:24:57 AM PLTDRV: OHDOT_PDF_Color_E+.pltcfg PENTBL: OHDOT_Pen.tbl USER: WORKSPACE: OHDOTCEv02 WORKSET: 121474 PRODUCT: OpenRoadsDesigner 10.10.23.15
pw:\\ohiodot-pw.bentley.com:ohiodot-pw-02\Documents\01 Active Projects\District 04\Mahoning\121474\405-Engineering_2LMN\Lighting\Sheets\121474_LS005.dgn

DESIGN AGENCY 2LMN
DESIGNER ANL
REVIEWER EMW 06/2/25
PROJECT ID 121474
SHEET P.472 TOTAL 655

REF NO.	SHEET NO.	STATION TO STATION			625 NO. 4 AWG 2400 VOLT DISTRIBUTION CABLE FT	625 1-1/2" DUCT CABLE WITH THREE NO. 4 AWG 2400 VOLT CABLES FT	625 CONDUIT, 2", 725.051 FT	625 CONDUIT, 3", 725.04 FT	625 CONDUIT, JACKED OR DRILLED, 725.04, AS PER PLAN, 3" FT	625 CONDUIT CLEANED AND CABLES REMOVED, AS PER PLAN FT	625 TRENCH FT	625 STRUCTURE GROUNDING SYSTEM EACH	625 UNDERGROUND WARNING/MARKING TAPE FT
GA-1-09	480	1089+33.94	TO	1091+28.89		288					278		278
GA-1-10	480	1091+28.89	TO	1094+38.47		315					305		305
GA-1-11	480	1094+38.47	TO	1095+21.06		93					83		83
PB-GA-12	480	1095+21.06	TO	1097+21.97	633		201						
GA-2-01	480	1097+21.97	TO	1099+54.89	729		233						
GA-2-02	480	1099+54.89	TO	1102+22.73	834		268						
GA-2-03	480	1102+22.73	TO	1104+92.97	840		270						
GA-2-04	480	1104+92.97	TO	1105+82.89	300		90						
PB-GA-14	480	1105+82.89	TO	735+90.31	222			64			64		64
PB-GA-16	480	735+85.31	TO	735+90.31	213			61			61		61
PB-GA-16	480	735+85.31	TO	737+34.54		160					150		150
PB-GA-14	480/481	1105+82.89	TO	1107+67.57	585		185						
GA-2-11	480/481	722+61.27	TO	724+99.96		237					227		227
GA-2-10	480/481	724+99.96	TO	728+17.35		327					317		317
GA-2-09	480/481	728+17.35	TO	731+33.87		327					317		317
GA-2-08	480/481	731+33.87	TO	734+36.09		314					304		304
GA-2-07	481/480	734+36.09	TO	735+85.31		160					150		150
			TO										
			TO										
			TO									

REF NO.	SHEET NO.	STATION TO STATION			625 PULL BOX REMOVED	625 LIGHT TOWER REMOVED	625 LIGHT POLE REMOVED	625 LIGHT POLE FOUNDATION REMOVED	625 LIGHT TOWER FOUNDATION REMOVED	SPECIAL REPLACEMENT OF EXISTING LIGHTING UNIT
					EACH	EACH	EACH	EACH	EACH	EACH
	475-481	935+11.52	TO	1129+50.00	15					10
	475	935+11.52	TO	963+61.52		1	7	7	1	
	476	963+61.52	TO	992+11.52		3	12	12	3	
	477	992+11.52	TO	1020+61.52			14	14		
	478	1020+61.52	TO	1049+11.52		1	21	21	1	
	479	1049+11.52	TO	1077+61.52			10	10		
	480	1077+61.52	TO	1106+11.52		4	9	9	4	
	481	1106+11.52	TO	1126+50.00			9	9		
TOTALS CARRIED TO GENERAL SUMMARY					15	9	82	82	9	10

Preliminary Plans - For Reference Only

LIGHTING SUBSUMMARY (7 OF 7)

DESIGN AGENCY
2LMN

DESIGNER
ANL

REVIEWER
EMW 06/2/25

PROJECT ID
121474

SHEET P.474 | TOTAL 655

MAH-680-0.00

MODEL: Sheet PAPERSIZE: 34x22 (in.) DATE: 9/15/2025 TIME: 11:25:06 AM PLTDRV: OHDOT_PDF_Color_E+.pltcfg PENTBL: OHDOT_Pen.tbl USER: WORKSPACE: OHDOTCEv02 WORKSET: 121474 PRODUCT: OpenRoadsDesigner 10.10.23.15
pw:\\ohiodot-pw.bentley.com:ohiodot-pw-02\Documents\01 Active Projects\District 04\Mahoning\121474\405-Engineering_2LMN\Lighting\Sheets\121474_LS007.dgn

Preliminary Plans - For Reference Only

ITS LEGEND

TR	PR. ITS CONDUIT
	PR. 24" ITS JUNCTION BOX
	PR. 32" ITS PULL BOX

ITS CONDUIT CODES

13	2" CONDUIT, 725.04 IN BARRIER - EMPTY
14	2-2" CONDUIT, 725.04 IN TRENCH - EMPTY

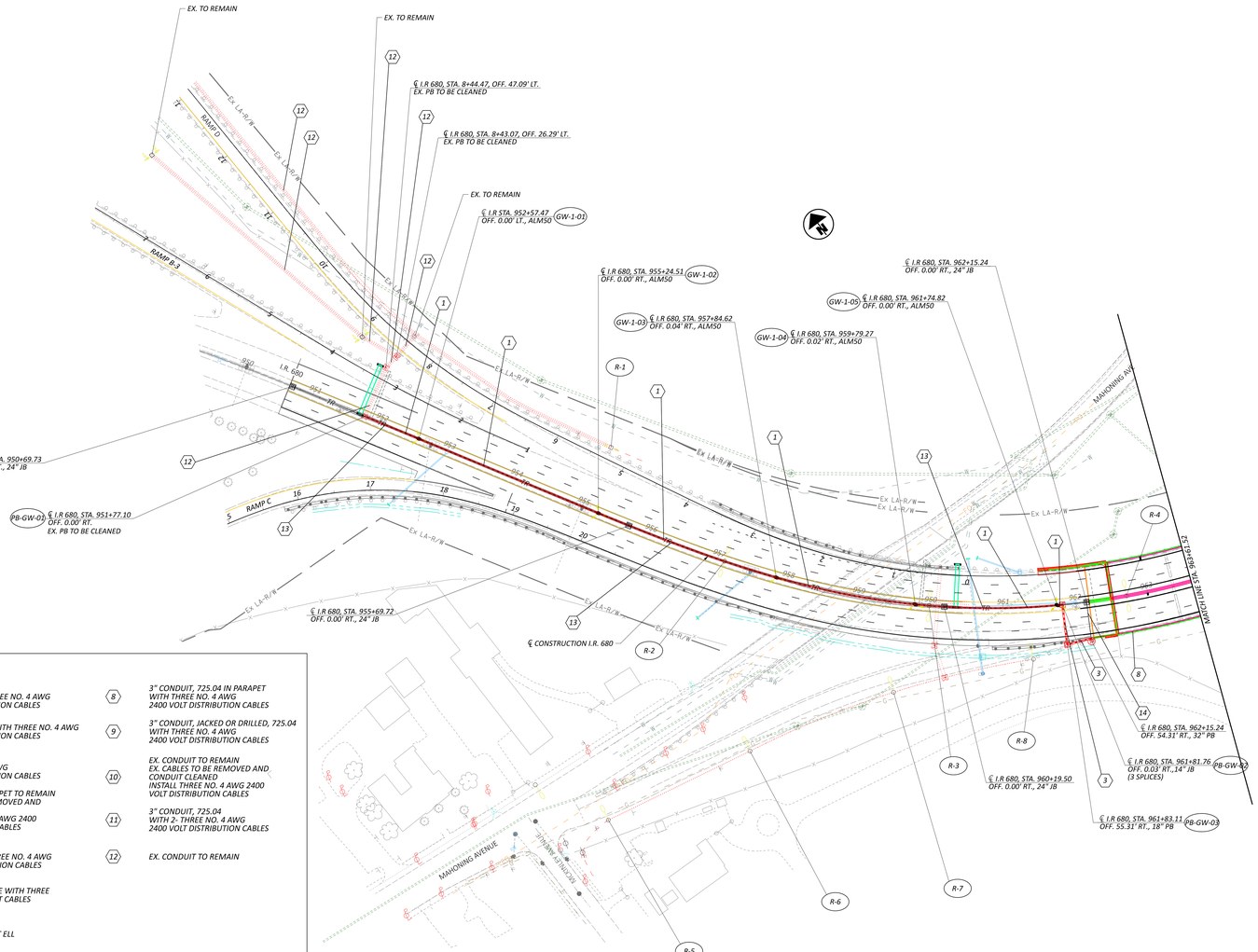

LIGHTING LEGEND

- EX. HIGH MAST TOWER W/ 2 LUMINAIRES
- EX. CONVENTIONAL LIGHT POLE WITH BRACKET ARM
- EX. TWO ARM CONVENTIONAL LIGHT POLE
- EX. CONDUIT
- PR. HIGH MAST TYPE V TOWER W/ 3 LUMINAIRES
- PR. LOW MAST TYPE V LIGHT POLE
- PR. LOW MAST TYPE III LIGHT POLE W/ SHIELDS
- PR. PULL BOX
- PR. CONTROL CENTER
- PR. CONDUIT
- 1 1/2" DUCT CABLE WITH THREE NO.4 AWG 2400 VOLT CABLES
- STUB & CAP CONDUIT ELL

LIGHT POLE IDENTIFICATION NO.



PULL BOX / JUNCTION BOX IDENTIFCATION NO.



LIGHT POLE DESIGN NO.



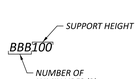

CONDUIT CODES

1	2" CONDUIT, 725.051 IN BARRIER WITH THREE NO. 4 AWG 2400 VOLT DISTRIBUTION CABLES
2	1 1/2" DUCT CABLE WITH THREE NO. 4 AWG 2400 VOLT DISTRIBUTION CABLES
3	3" CONDUIT, 725.04 WITH THREE NO. 4 AWG 2400 VOLT DISTRIBUTION CABLES
4	EX. CONDUIT IN PARAPET TO REMAIN EX. CABLES TO BE REMOVED AND CONDUIT CLEANED INSTALL THREE NO. 4 AWG 2400 VOLT DISTRIBUTION CABLES
5	3" CONDUIT, 725.04 IN BARRIER WITH THREE NO. 4 AWG 2400 VOLT DISTRIBUTION CABLES
6	2 - 1 1/2" DUCT CABLE WITH THREE NO. 4 AWG 2400 VOLT CABLES
7	STUB & CAP CONDUIT ELL
8	3" CONDUIT, 725.04 IN PARAPET WITH THREE NO. 4 AWG 2400 VOLT DISTRIBUTION CABLES
9	3" CONDUIT, JACKED OR DRILLED, 725.04 WITH THREE NO. 4 AWG 2400 VOLT DISTRIBUTION CABLES
10	EX. CONDUIT TO REMAIN EX. CABLES TO BE REMOVED AND CONDUIT CLEANED INSTALL THREE NO. 4 AWG 2400 VOLT DISTRIBUTION CABLES
11	3" CONDUIT, 725.04 WITH 2- THREE NO. 4 AWG 2400 VOLT DISTRIBUTION CABLES
12	EX. CONDUIT TO REMAIN

HORIZONTAL SCALE IN FEET
0 25 50 100

LIGHTING AND ITS PLAN
STA. 935+11.52 TO STA. 963+61.52

DESIGN AGENCY
2LMN

DESIGNER: DJD
REVIEWER: EMW 01/29/25
PROJECT ID: 121474
SHEET: P-475 TOTAL: 655

MAH-680-0.00

MODEL: 11X17L_LPORO PAPERSIZE: 66x34.0in | DATE: 01/31/2025 TIME: 11:25:26 AM PITSPH: ORIGOT_PNT.CTB | PENTBL: ORIGOT_PNT.CTB USER: WORKSPACE: ORIGOTITLEXT WORKSET: 121474 PRODUCT: OpenRoadsDesigner 10.10.2.115
ENVIRONMENT: C:\Program Files\Bentley\OpenRoads Designer CE\Configuration\Organization\OpenRoads Standards\Environments\Default.env

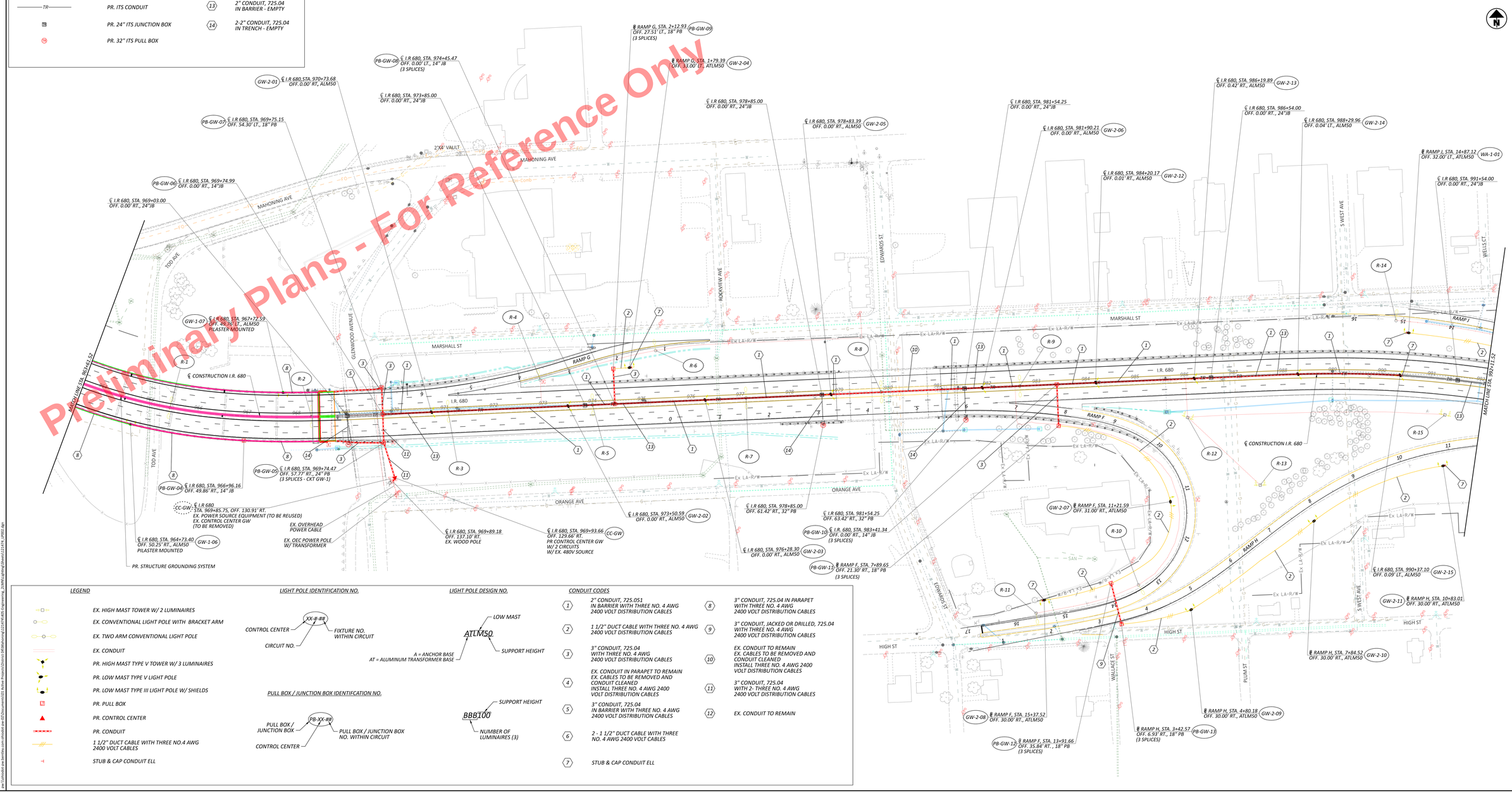
ITS LEGEND
PR. ITS CONDUIT
PR. 24" ITS JUNCTION BOX
PR. 32" ITS PULL BOX
ITS CONDUIT CODES
13 2" CONDUIT, 725.04 IN BARRIER - EMPTY
14 2-2" CONDUIT, 725.04 IN TRENCH - EMPTY
Preliminary Plans - For Reference Only
MAHONING AVE
TOD AVE
GLENWOOD AVENUE
MARSHALL ST
ROCKVIEW AVE
EDWARDS ST
S WEST AVE
WELLS ST
ORANGE AVE
HIGH ST
WALLACE ST
PLUM ST
I.R. 680
RAMP G
RAMP F
RAMP H
RAMP I
CONSTRUCTION I.R. 680
MATCH LINE STA. 963+61.52
MATCH LINE STA. 992+11.52
2'X3' VAULT
PR. STRUCTURE GROUNDING SYSTEM
LEGEND
EX. HIGH MAST TOWER W/ 2 LUMINAIRES
EX. CONVENTIONAL LIGHT POLE WITH BRACKET ARM
EX. TWO ARM CONVENTIONAL LIGHT POLE
EX. CONDUIT
PR. HIGH MAST TYPE V TOWER W/ 3 LUMINAIRES
PR. LOW MAST TYPE V LIGHT POLE
PR. LOW MAST TYPE III LIGHT POLE W/ SHIELDS
PR. PULL BOX
PR. CONTROL CENTER
PR. CONDUIT
1 1/2" DUCT CABLE WITH THREE NO.4 AWG 2400 VOLT CABLES
STUB & CAP CONDUIT ELL
LIGHT POLE IDENTIFICATION NO.
XX-#-##
CONTROL CENTER
FIXTURE NO. WITHIN CIRCUIT
CIRCUIT NO.
PULL BOX / JUNCTION BOX IDENTIFCATION NO.
PB-XX-##
PULL BOX / JUNCTION BOX
PULL BOX / JUNCTION BOX NO. WITHIN CIRCUIT
CONTROL CENTER
LIGHT POLE DESIGN NO.
LOW MAST
ATLM50
SUPPORT HEIGHT
A = ANCHOR BASE
AT = ALUMINUM TRANSFORMER BASE
SUPPORT HEIGHT
BBB100
NUMBER OF LUMINAIRES (3)
CONDUIT CODES
1 2" CONDUIT, 725.051 IN BARRIER WITH THREE NO. 4 AWG 2400 VOLT DISTRIBUTION CABLES
2 1 1/2" DUCT CABLE WITH THREE NO. 4 AWG 2400 VOLT DISTRIBUTION CABLES
3 3" CONDUIT, 725.04 WITH THREE NO. 4 AWG 2400 VOLT DISTRIBUTION CABLES
4 EX. CONDUIT IN PARAPET TO REMAIN EX. CABLES TO BE REMOVED AND CONDUIT CLEANED INSTALL THREE NO. 4 AWG 2400 VOLT DISTRIBUTION CABLES
5 3" CONDUIT, 725.04 IN BARRIER WITH THREE NO. 4 AWG 2400 VOLT DISTRIBUTION CABLES
6 2 - 1 1/2" DUCT CABLE WITH THREE NO. 4 AWG 2400 VOLT CABLES
7 STUB & CAP CONDUIT ELL
8 3" CONDUIT, 725.04 IN PARAPET WITH THREE NO. 4 AWG 2400 VOLT DISTRIBUTION CABLES
9 3" CONDUIT, JACKED OR DRILLED, 725.04 WITH THREE NO. 4 AWG 2400 VOLT DISTRIBUTION CABLES
10 EX. CONDUIT TO REMAIN EX. CABLES TO BE REMOVED AND CONDUIT CLEANED INSTALL THREE NO. 4 AWG 2400 VOLT DISTRIBUTION CABLES
11 3" CONDUIT, 725.04 WITH 2- THREE NO. 4 AWG 2400 VOLT DISTRIBUTION CABLES
12 EX. CONDUIT TO REMAIN
HORIZONTAL SCALE IN FEET 0 25 50 100
LIGHTING & ITS PLAN
STA. 963+61.52 TO STA. 992+11.52
DESIGN AGENCY 2LMN
DESIGNER DJD
REVIEWER EMW 01/29/25
PROJECT ID 121474
SHEET P.476
TOTAL 655
MAH-680-0.00
MODEL: 11X17L_LPOA5 PAPERSIZE: 64.54 IN | DATE: 01/31/2025 TIME: 11:36:12 AM PETERS: DROOT_PW1.CTB | PENTBL: DROOT_PW1.CTB | PENTBL: DROOT_PWC.CTB USER: WORKSPACE: DROOT\CIVD WORKSET: 121474 PRODUCT: OpenRoads Designer 10.10.2.115
FILENAME: C:\Projects\121474\Roadway\Plans\Lighting\MAH-680-0.00_LIGHTING.dgn

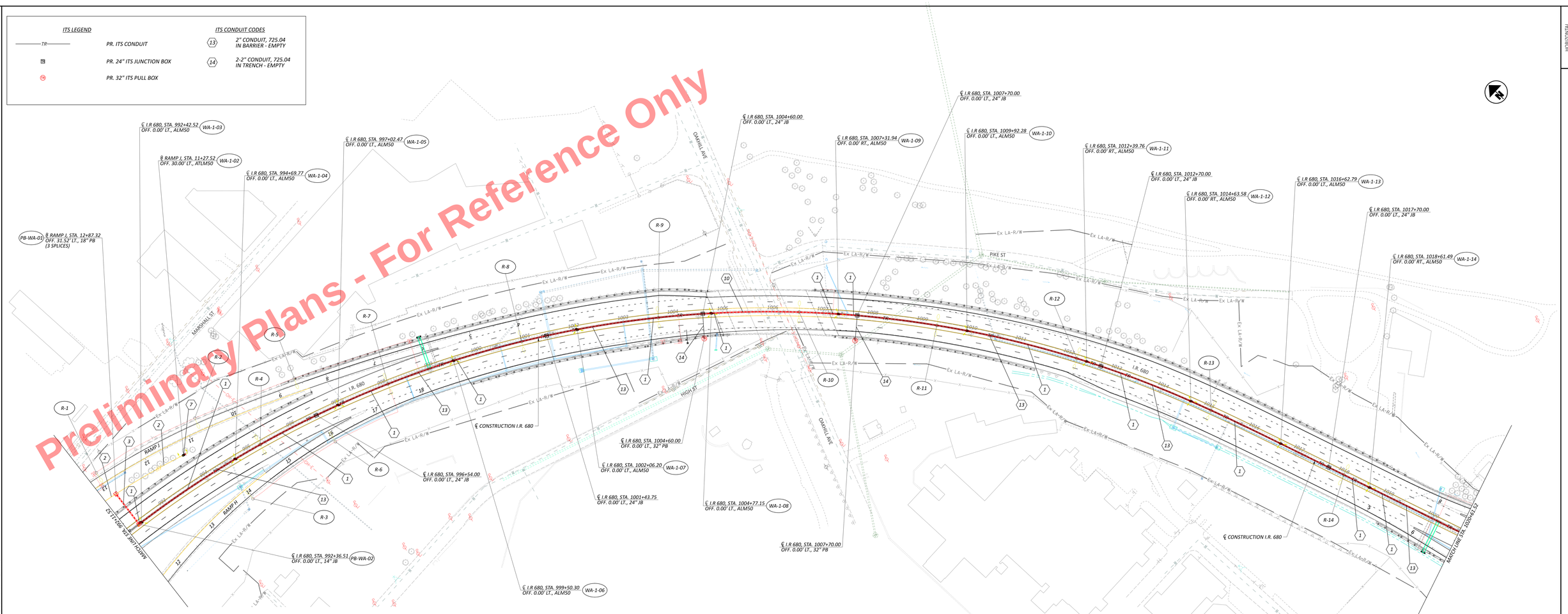

Preliminary Plans - For Reference Only

HORIZONTAL SCALE IN FEET
0 25 50 100

LIGHTING & ITS PLAN
STA. 992+11.52 TO STA. 1020+61.52

MAH-680-0.00

DESIGN AGENCY 2LMN
DESIGNED DJD
REVIEWED EMW 01/29/25
PROJECT ID 121474
SHEET P.477 TOTAL 655

MODEL: 11X17L_LPOS PLOTSTYLE: 6641B.CTB | DATE: 01/31/2025 TIME: 11:26:22 AM PLOTBY: DBOOT DGN: C:\dgn_PW\TRL\DBOOT\DBOOT_PW1_Color_11x17.dgn WORKSPACE: DEFAULT WORKSET: 121474 PRODUCT: OpenRoadsDesigner 10.10.2315

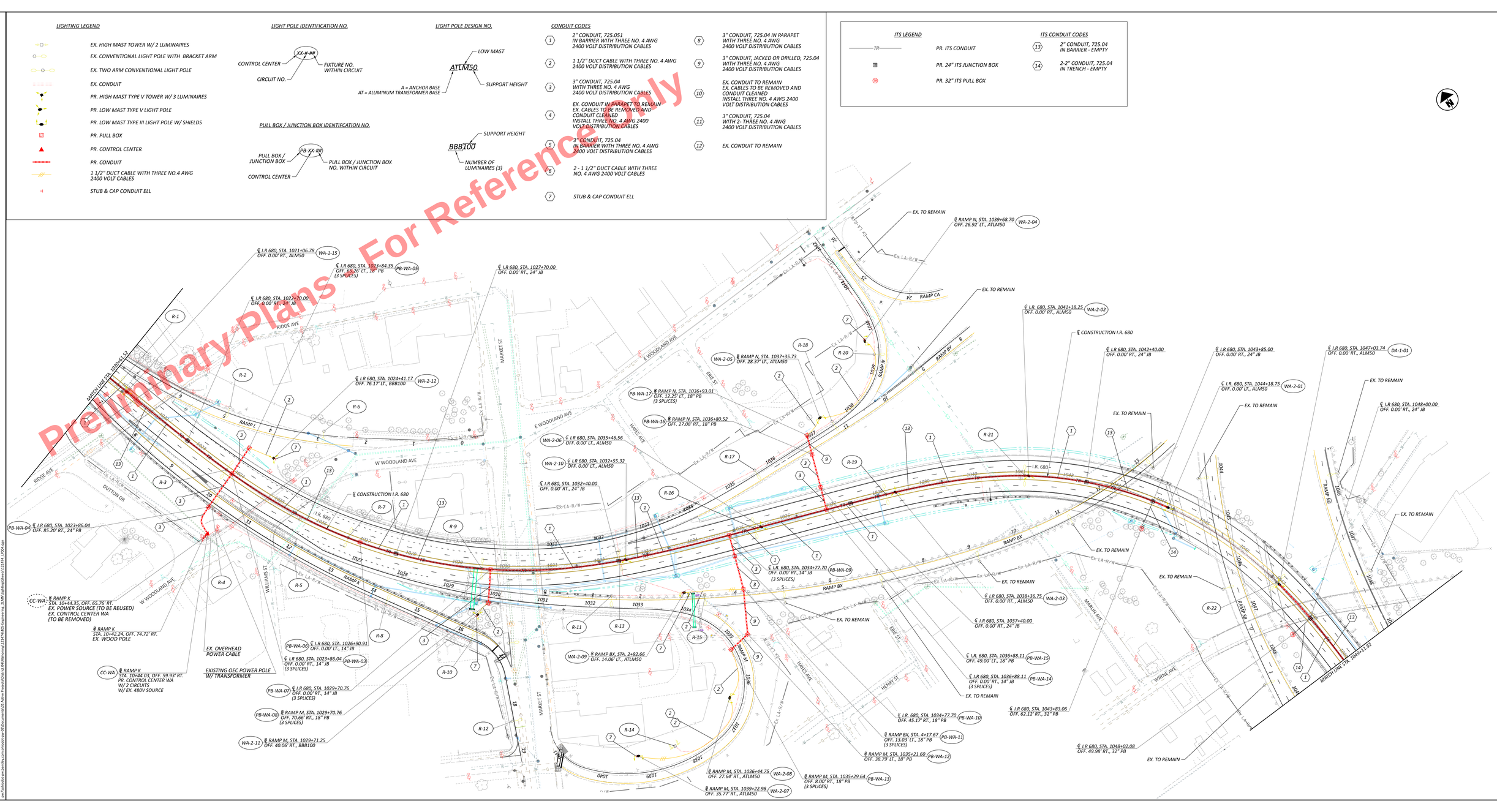
LIGHTING LEGEND
EX. HIGH MAST TOWER W/ 2 LUMINAIRES
EX. CONVENTIONAL LIGHT POLE WITH BRACKET ARM
EX. TWO ARM CONVENTIONAL LIGHT POLE
EX. CONDUIT
PR. HIGH MAST TYPE V TOWER W/ 3 LUMINAIRES
PR. LOW MAST TYPE V LIGHT POLE
PR. LOW MAST TYPE III LIGHT POLE W/ SHIELDS
PR. PULL BOX
PR. CONTROL CENTER
PR. CONDUIT
1 1/2" DUCT CABLE WITH THREE NO.4 AWG 2400 VOLT CABLES
STUB & CAP CONDUIT ELL
LIGHT POLE IDENTIFICATION NO.
CONTROL CENTER
XX-#-##
FIXTURE NO. WITHIN CIRCUIT
CIRCUIT NO.
LIGHT POLE DESIGN NO.
LOW MAST
ATLM50
SUPPORT HEIGHT
A = ANCHOR BASE
AT = ALUMINUM TRANSFORMER BASE
PULL BOX / JUNCTION BOX IDENTIFCATION NO.
PULL BOX / JUNCTION BOX
PB-XX-##
PULL BOX / JUNCTION BOX NO. WITHIN CIRCUIT
CONTROL CENTER
SUPPORT HEIGHT
BBB100
NUMBER OF LUMINAIRES (3)
CONDUIT CODES
1 2" CONDUIT, 725.051 IN BARRIER WITH THREE NO. 4 AWG 2400 VOLT DISTRIBUTION CABLES
2 1 1/2" DUCT CABLE WITH THREE NO. 4 AWG 2400 VOLT DISTRIBUTION CABLES
3 3" CONDUIT, 725.04 WITH THREE NO. 4 AWG 2400 VOLT DISTRIBUTION CABLES
4 EX. CONDUIT IN BARRIER TO REMAIN EX. CABLES TO BE REMOVED AND CONDUIT CLEANED INSTALL THREE NO. 4 AWG 2400 VOLT DISTRIBUTION CABLES
5 3" CONDUIT, 725.04 IN BARRIER WITH THREE NO. 4 AWG 2400 VOLT DISTRIBUTION CABLES
6 2 - 1 1/2" DUCT CABLE WITH THREE NO. 4 AWG 2400 VOLT CABLES
7 STUB & CAP CONDUIT ELL
8 3" CONDUIT, 725.04 IN PARAPET WITH THREE NO. 4 AWG 2400 VOLT DISTRIBUTION CABLES
9 3" CONDUIT, JACKED OR DRILLED, 725.04 WITH THREE NO. 4 AWG 2400 VOLT DISTRIBUTION CABLES
10 EX. CONDUIT TO REMAIN EX. CABLES TO BE REMOVED AND CONDUIT CLEANED INSTALL THREE NO. 4 AWG 2400 VOLT DISTRIBUTION CABLES
11 3" CONDUIT, 725.04 WITH 2- THREE NO. 4 AWG 2400 VOLT DISTRIBUTION CABLES
12 EX. CONDUIT TO REMAIN
ITS LEGEND
PR. ITS CONDUIT
PR. 24" ITS JUNCTION BOX
PR. 32" ITS PULL BOX
ITS CONDUIT CODES
13 2" CONDUIT, 725.04 IN BARRIER - EMPTY
14 2-2" CONDUIT, 725.04 IN TRENCH - EMPTY
Preliminary Plans For Reference Only
MATCH LINE STA. 1020+61.52
MATCH LINE STA. 1049+11.52
RIDGE AVE
DUTTON DR
W WOODLAND AVE
E WOODLAND AVE
MARKET ST
WILLIAM ST
HAYES AVE
ERIE ST
HENRY ST
MARIN AVE
WAYNE AVE
RAMP L
RAMP K
RAMP M
RAMP BX
RAMP CA
RAMP NA
RAMP NB
I.R. 680
CONSTRUCTION I.R. 680
EX. TO REMAIN
EX. OVERHEAD POWER CABLE
EXISTING OEC POWER POLE W/ TRANSFORMER
WA-1-15 ℄ I.R 680, STA. 1021+06.78 OFF. 0.00' RT., ALM50
PB-WA-05 ℄ I.R 680, STA. 1023+84.35 OFF. 68.26' LT., 18" PB (3 SPLICES)
℄ I.R 680, STA. 1027+70.00 OFF. 0.00' RT., 24" JB
℄ I.R 680, STA. 1022+70.00 OFF. 0.00' RT., 24" JB
WA-2-12 ℄ I.R 680, STA. 1024+41.17 OFF. 76.17' LT., BBB100
WA-2-06 ℄ I.R 680, STA. 1035+46.56 OFF. 0.00' LT., ALM50
WA-2-10 ℄ I.R 680, STA. 1032+55.32 OFF. 0.00' LT., ALM50
℄ I.R 680, STA. 1032+40.00 OFF. 0.00' RT., 24" JB
PB-WA-04 ℄ I.R 680, STA. 1023+86.04 OFF. 85.20' RT., 24" PB
CC-WA ℄ RAMP K STA. 10+44.35, OFF. 65.76' RT. EX. POWER SOURCE (TO BE REUSED) EX. CONTROL CENTER WA (TO BE REMOVED)
℄ RAMP K STA. 10+42.24, OFF. 74.72' RT. EX. WOOD POLE
CC-WA ℄ RAMP K STA. 10+44.03, OFF. 59.93' RT. PR. CONTROL CENTER WA W/ 2 CIRCUITS W/ EX. 480V SOURCE
PB-WA-06 ℄ I.R 680, STA. 1026+90.91 OFF. 0.00' LT., 14" JB
PB-WA-03 ℄ I.R 680, STA. 1023+86.04 OFF. 0.00' RT., 14" JB (3 SPLICES)
PB-WA-07 ℄ I.R 680, STA. 1029+70.76 OFF. 0.00' RT., 14" JB (3 SPLICES)
PB-WA-08 ℄ RAMP M, STA. 1029+70.76 OFF. 70.66' RT., 18" PB (3 SPLICES)
WA-2-11 ℄ RAMP M, STA. 1029+71.25 OFF. 40.06' RT., BBB100
WA-2-09 ℄ RAMP BX, STA. 2+92.66 OFF. 14.06' LT., ALM50
PB-WA-17 ℄ RAMP N, STA. 1036+93.01 OFF. 12.25' LT., 18" PB (3 SPLICES)
PB-WA-16 ℄ RAMP N, STA. 1036+80.52 OFF. 27.08' RT., 18" PB
WA-2-05 ℄ RAMP N, STA. 1037+35.73 OFF. 28.33' LT., ALM50
PB-WA-09 ℄ I.R 680, STA. 1034+77.70 OFF. 0.00' RT., 14" JB (3 SPLICES)
WA-2-08 ℄ RAMP M, STA. 1036+44.75 OFF. 27.64' RT., ALM50
WA-2-07 ℄ RAMP M, STA. 1039+22.98 OFF. 35.77' RT., ALM50
PB-WA-13 ℄ RAMP M, STA. 1035+29.64 OFF. 8.00' RT., 18" PB (3 SPLICES)
PB-WA-12 ℄ RAMP M, STA. 1035+21.60 OFF. 38.79' LT., 18" PB
PB-WA-11 ℄ RAMP BX, STA. 4+17.67 OFF. 13.03' LT., 18" PB (3 SPLICES)
PB-WA-10 ℄ I.R. 680, STA. 1034+77.70 OFF. 45.17' RT., 18" PB
WA-2-04 ℄ RAMP N, STA. 1039+68.70 OFF. 26.92' LT., ALM50
WA-2-02 ℄ I.R. 680, STA. 1041+18.25 OFF. 0.00' RT., ALM50
℄ CONSTRUCTION I.R. 680
℄ I.R 680, STA. 1042+40.00 OFF. 0.00' RT., 24" JB
℄ I.R 680, STA. 1043+85.00 OFF. 0.00' RT., 24" JB
℄ I.R 680, STA. 1047+03.74 OFF. 0.00' RT., ALM50
DA-1-01
WA-2-01 ℄ I.R 680, STA. 1044+18.75 OFF. 0.00' LT., ALM50
℄ I.R 680, STA. 1048+00.00 OFF. 0.00' RT., 24" JB
WA-2-03 ℄ I.R 680, STA. 1038+36.75 OFF. 0.00' RT., ALM50
℄ I.R 680, STA. 1037+40.00 OFF. 0.00' RT., 24" JB
PB-WA-15 ℄ I.R 680, STA. 1036+88.11 OFF. 49.00' LT., 18" PB
PB-WA-14 ℄ I.R 680, STA. 1036+88.11 OFF. 0.00' RT., 14" JB (3 SPLICES)
℄ I.R 680, STA. 1043+83.06 OFF. 62.12' RT., 32" PB
℄ I.R 680, STA. 1048+02.08 OFF. 49.98' RT., 32" PB
HORIZONTAL SCALE IN FEET 0 25 50 100
LIGHTING & ITS PLAN
STA. 1020+61.52 TO STA. 1049+11.52
DESIGN AGENCY 2LMN
DESIGNED DJD
REVIEWED EMW 01/29/25
PROJECT ID 121474
SHEET P.478 TOTAL 655
MAH-680-0.00
MODEL: 11X17L_LPOR3 PAPERSIZE: 841x594 (mm) | DATE: 01/27/2025 TIME: 11:26:28 AM PETERV: DROOT_PRT_Color_11.ctb PEN TBL: DROOT_Print.ctb USER: WORKSPACE: DROOT\CIVIL WORKSET: 121474 PRODUCT: OpenRoads Designer 10.10.2.115
ELEMENTS FROM REFERENCE FILE(S): ROADWAY_PLAN_MAH-680-0.00_121474_DGN_ROADWAY_PLAN_MAH-680-0.00_121474_DGN_ROADWAY_PLAN_MAH-680-0.00_121474_DGN_

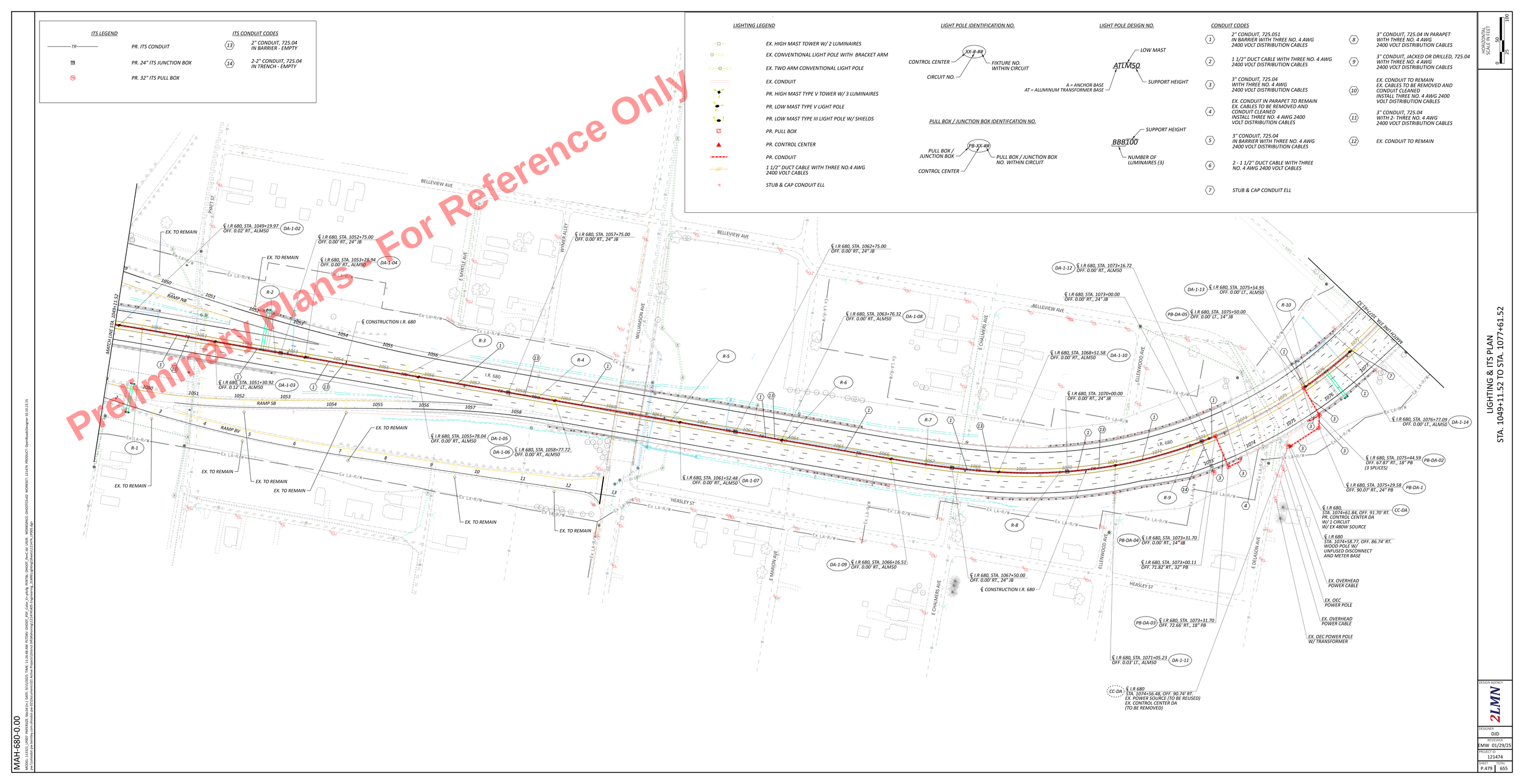

LIGHTING & ITS PLAN
STA. 1049+11.52 TO STA. 1077+61.52

MAH-680-0.00

DESIGN AGENCY 2LMN
DESIGNER DJD
REVIEWER EMW 01/29/25
PROJECT ID 121474
SHEET P.479 TOTAL 655

MODEL: 11X17L_LPORT PAPERSIZE: 841x594 mm | DATE: 01/31/2025 TIME: 11:36:48 AM PETDEV: ODOT_PDF_Color_11x17.pltcfg PENTBL: ODOT_Port.ctb USER: WORKSPACE: ODOTSTUDIO WORKSET: 121474 PRODUCT: OpenRoadsDesigner 10.10.2315
ALL DESIGN AND CONSTRUCTION SHALL CONFORM TO THE CURRENT EDITION OF THE OHIO DEPARTMENT OF TRANSPORTATION CONSTRUCTION AND MATERIAL SPECIFICATIONS (CMS).

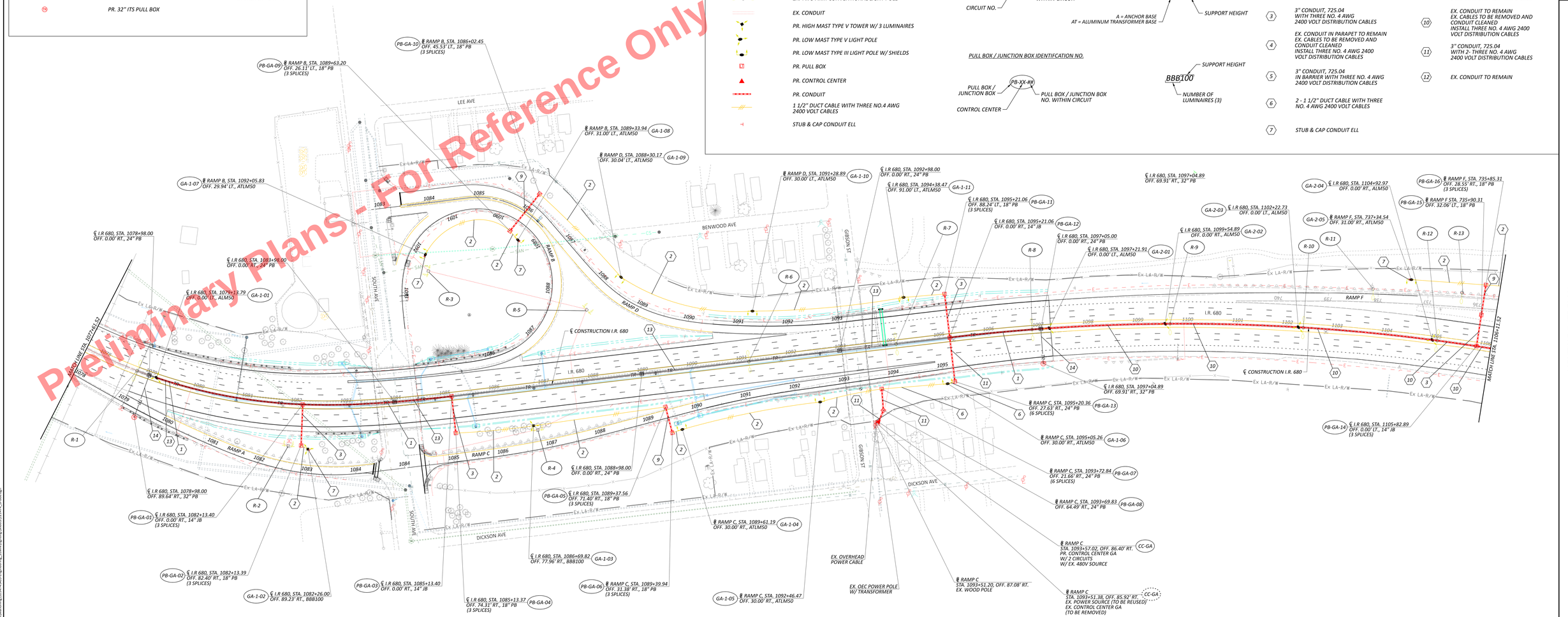

MAH-680-0.00

LIGHTING & ITS PLAN
STA. 1077+61.52 TO STA. 1106+11.52

DESIGN AGENCY 2LMN
DESIGNER DJD
REVIEWER EMW 01/29/25
PROJECT ID 121474
SHEET P.480 TOTAL 655

MODEL: 11X17_LDWG PAPERSIZE: 64.54 in | DATE: 01/31/2025 TIME: 11:27:00 AM PSTDRV: DROOT_PKT_Color_FY.ctb*pkg PENTBL: DROOT_PKT.ctb USERK: WORKSPACE: DROOT/CIVD WORKSET: 121474 PRODUCT: OpenRoads Designer 10.10.2.115
ALL PLANS PRODUCED AND PROVIDED BY THE CONSULTANT ARE INSTRUMENTS OF SERVICE AND SHALL REMAIN THE PROPERTY OF THE CONSULTANT.

Preliminary Plans - For Reference Only

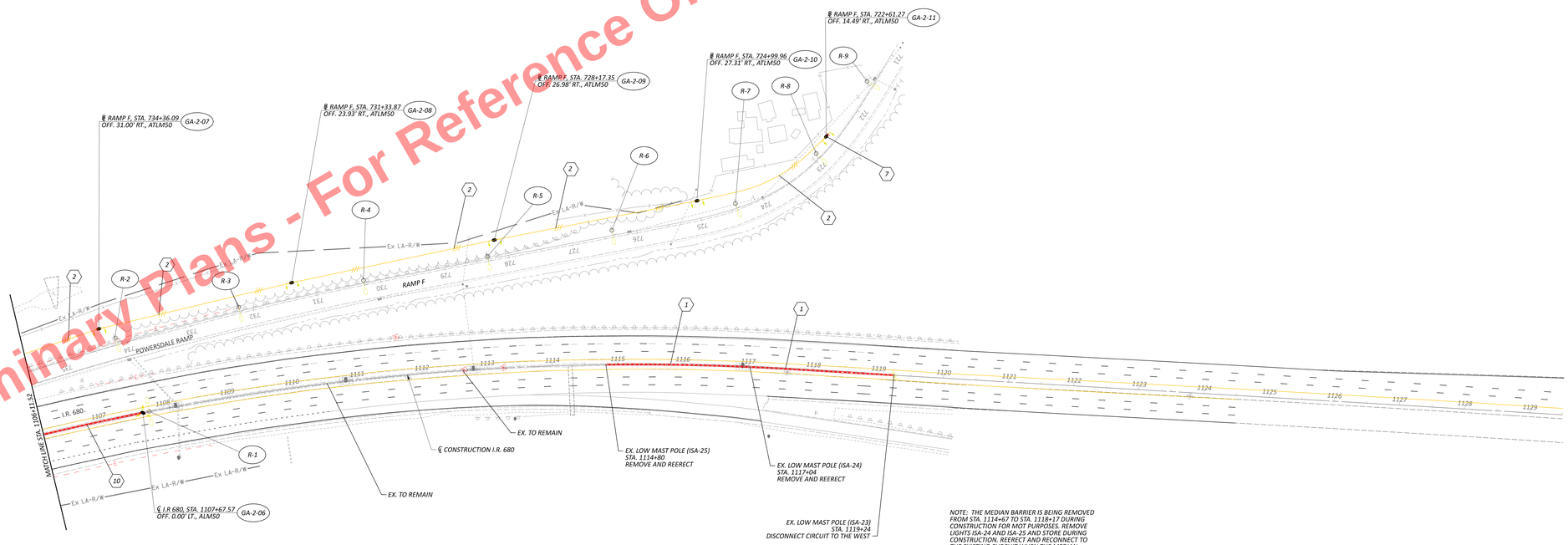

NOTE: THE MEDIAN BARRIER IS BEING REMOVED FROM STA. 1114+67 TO STA. 1118+17 DURING CONSTRUCTION FOR MOT PURPOSES. REMOVE LIGHTS ISA-24 AND ISA-25 AND STORE DURING CONSTRUCTION. REERECT AND RECONNECT TO THE EXISTING CURCUIT WHEN THE MEDIAN BARRIER IS REPLACED. SEE MOTE NOTES FOR DETAILS AND PAYMENT.

LEGEND

- EX. HIGH MAST TOWER W/ 2 LUMINAIRES
- EX. CONVENTIONAL LIGHT POLE WITH BRACKET ARM
- EX. TWO ARM CONVENTIONAL LIGHT POLE
- EX. CONDUIT
- PR. HIGH MAST TYPE V TOWER W/ 3 LUMINAIRES
- PR. LOW MAST TYPE V LIGHT POLE
- PR. LOW MAST TYPE III LIGHT POLE W/ SHIELDS
- PR. PULL BOX
- PR. CONTROL CENTER
- PR. CONDUIT
- 1 1/2" DUCT CABLE WITH THREE NO.4 AWG 2400 VOLT CABLES
- STUB & CAP CONDUIT ELL

LIGHT POLE IDENTIFICATION NO.

XX-#-##
CONTROL CENTER
FIXTURE NO. WITHIN CIRCUIT
CIRCUIT NO.

PULL BOX / JUNCTION BOX IDENTIFCATION NO.

PB-XX-##
PULL BOX / JUNCTION BOX
PULL BOX / JUNCTION BOX NO. WITHIN CIRCUIT
CONTROL CENTER

LIGHT POLE DESIGN NO.

LOW MAST
ATLM50
SUPPORT HEIGHT
A = ANCHOR BASE
AT = ALUMINUM TRANSFORMER BASE

SUPPORT HEIGHT
BBB100
NUMBER OF LUMINAIRES (3)

CONDUIT CODES

1. 2" CONDUIT, 725.051 IN BARRIER WITH THREE NO. 4 AWG 2400 VOLT DISTRIBUTION CABLES
2. 1 1/2" DUCT CABLE WITH THREE NO. 4 AWG 2400 VOLT DISTRIBUTION CABLES
3. 3" CONDUIT, 725.04 WITH THREE NO. 4 AWG 2400 VOLT DISTRIBUTION CABLES
4. EX. CONDUIT IN PARAPET TO REMAIN EX. CABLES TO BE REMOVED AND CONDUIT CLEANED INSTALL THREE NO. 4 AWG 2400 VOLT DISTRIBUTION CABLES
5. 3" CONDUIT, 725.04 IN BARRIER WITH THREE NO. 4 AWG 2400 VOLT DISTRIBUTION CABLES
6. 2 - 1 1/2" DUCT CABLE WITH THREE NO. 4 AWG 2400 VOLT CABLES
7. STUB & CAP CONDUIT ELL
8. 3" CONDUIT, 725.04 IN PARAPET WITH THREE NO. 4 AWG 2400 VOLT DISTRIBUTION CABLES
9. 3" CONDUIT, JACKED OR DRILLED, 725.04 WITH THREE NO. 4 AWG 2400 VOLT DISTRIBUTION CABLES
10. EX. CONDUIT TO REMAIN EX. CABLES TO BE REMOVED AND CONDUIT CLEANED INSTALL THREE NO. 4 AWG 2400 VOLT DISTRIBUTION CABLES
11. 3" CONDUIT, 725.04 WITH 2- THREE NO. 4 AWG 2400 VOLT DISTRIBUTION CABLES
12. EX. CONDUIT TO REMAIN

HORIZONTAL SCALE IN FEET
0 25 50 100

LIGHTING PLAN
STA. 1106+11.52 TO STA. 1129+50.00

DESIGN AGENCY
2LMN
DESIGNER: DJD
REVIEWER: EMW 01/29/25
PROJECT ID: 121474
SHEET: P.481 TOTAL: 655

MAH-680-0.00

MODEL: 11X11_LOOD AVERAGE 64x64 (m) DATE: 01/15/2025 TIME: 11:27:11 AM PITDRV: GROUP_PKG_Color_FY.ctb*pkg PENTBL: GROUP_PKG_Color_FY.ctb*pkg WORKDWG: GROUP_PKG_Color_FY.dwg WORKSPACE: GROUP_PKG_Color_FY.dwg WORKSET: 121474 PRODUCT: OpenRoadsDesigner 10.10.2315
FILE: P:\121474\Design\Roadway\Lighting\Plans\MAH-680-0.00_LIGHTING PLAN.dgn

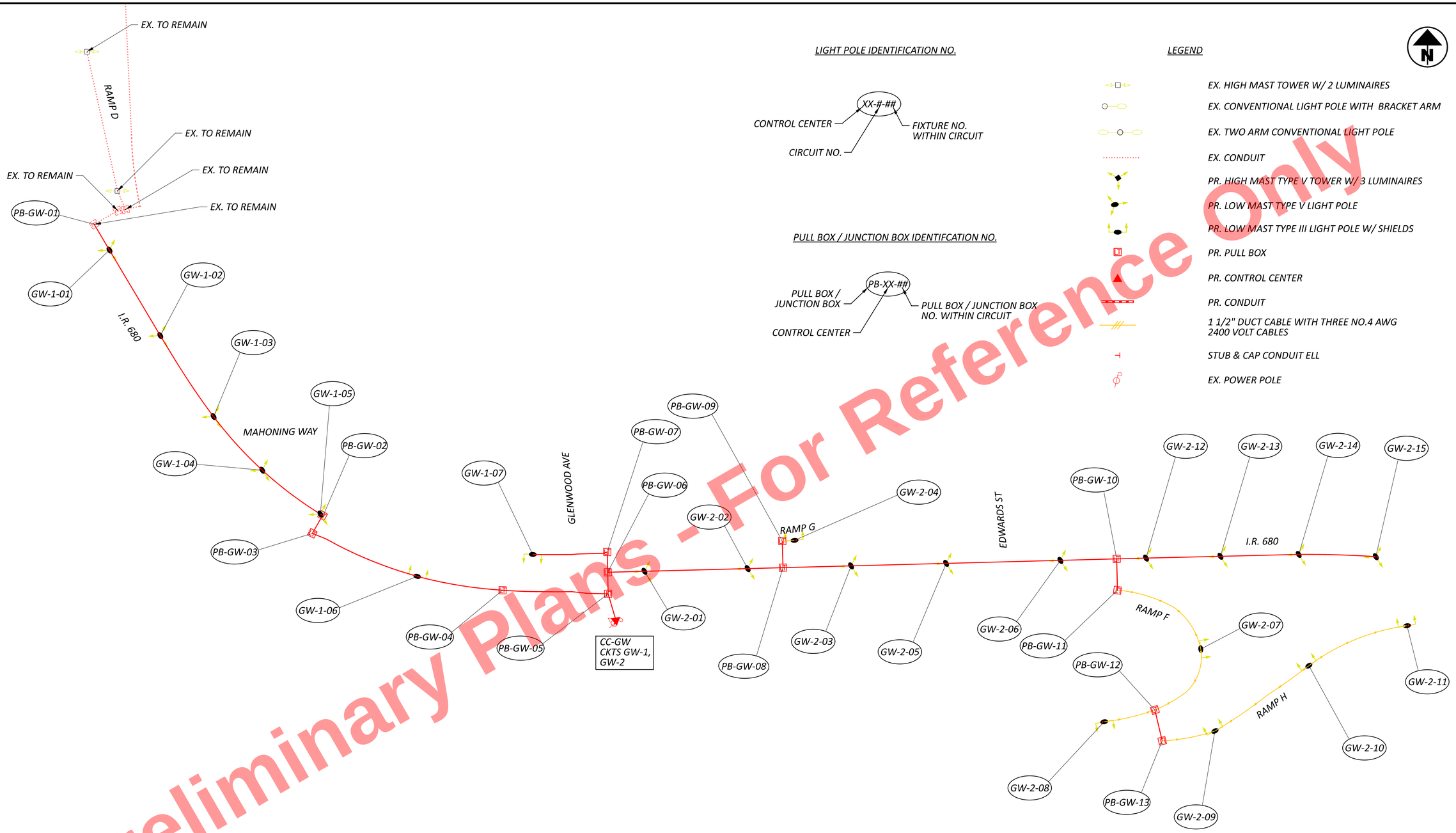

LIGHT POLE IDENTIFICATION NO.

PULL BOX / JUNCTION BOX IDENTIFCATION NO.

LEGEND

- EX. HIGH MAST TOWER W/ 2 LUMINAIRES
- EX. CONVENTIONAL LIGHT POLE WITH BRACKET ARM
- EX. TWO ARM CONVENTIONAL LIGHT POLE
- EX. CONDUIT
- PR. HIGH MAST TYPE V TOWER W/ 3 LUMINAIRES
- PR. LOW MAST TYPE V LIGHT POLE
- PR. LOW MAST TYPE III LIGHT POLE W/ SHIELDS
- PR. PULL BOX
- PR. CONTROL CENTER
- PR. CONDUIT
- 1 1/2" DUCT CABLE WITH THREE NO.4 AWG 2400 VOLT CABLES
- STUB & CAP CONDUIT ELL
- EX. POWER POLE

Preliminary Plans - For Reference Only

CONTROL CENTER	LINE VOLTS	CONNECTED LOAD (KVA)	SERVICE ENTRANCE CONDUCTOR SIZE - AWG	ENCLOSURE RATING (AMPS)	CIRCUIT NUMBER	CIRCUIT LOAD (AMPS)	CIRCUIT FUSE SIZE (AMPS)	CIRCUIT CABLE SIZE (AWG)	MAINTAINING AGENCY
GW	480	10.75	2	60	1	8.90	20	4	ODOT
					2	13.50	20	4	

CIRCUIT SCHEMATIC & CONTROL CENTER DATA
CONTROL CENTER GW

DESIGN AGENCY: 2LMN
DESIGNER: ANL
REVIEWER: EMW 06/2/25
PROJECT ID: 121474
SHEET: P.482 TOTAL: 655

MAH-680-0.00

MODEL: Sheet PAPERSIZE: 34x22 (in.) DATE: 9/15/2025 TIME: 11:27:24 AM PLTDRV: OHDOT_PDF_Color_E+.pltcfg PENTBL: OHDOT_PenC.tbl USER: WORKSPACE: OHDOTCEv02 WORKSET: 121474 PRODUCT: OpenRoadsDesigner 10.10.23.15
pw:\\ohiodot-pw.bentley.com:ohiodot-pw-02\Documents\01 Active Projects\District 04\Mahoning\121474\405-Engineering_2LMN\Lighting\Sheets\121474_LC001.dgn

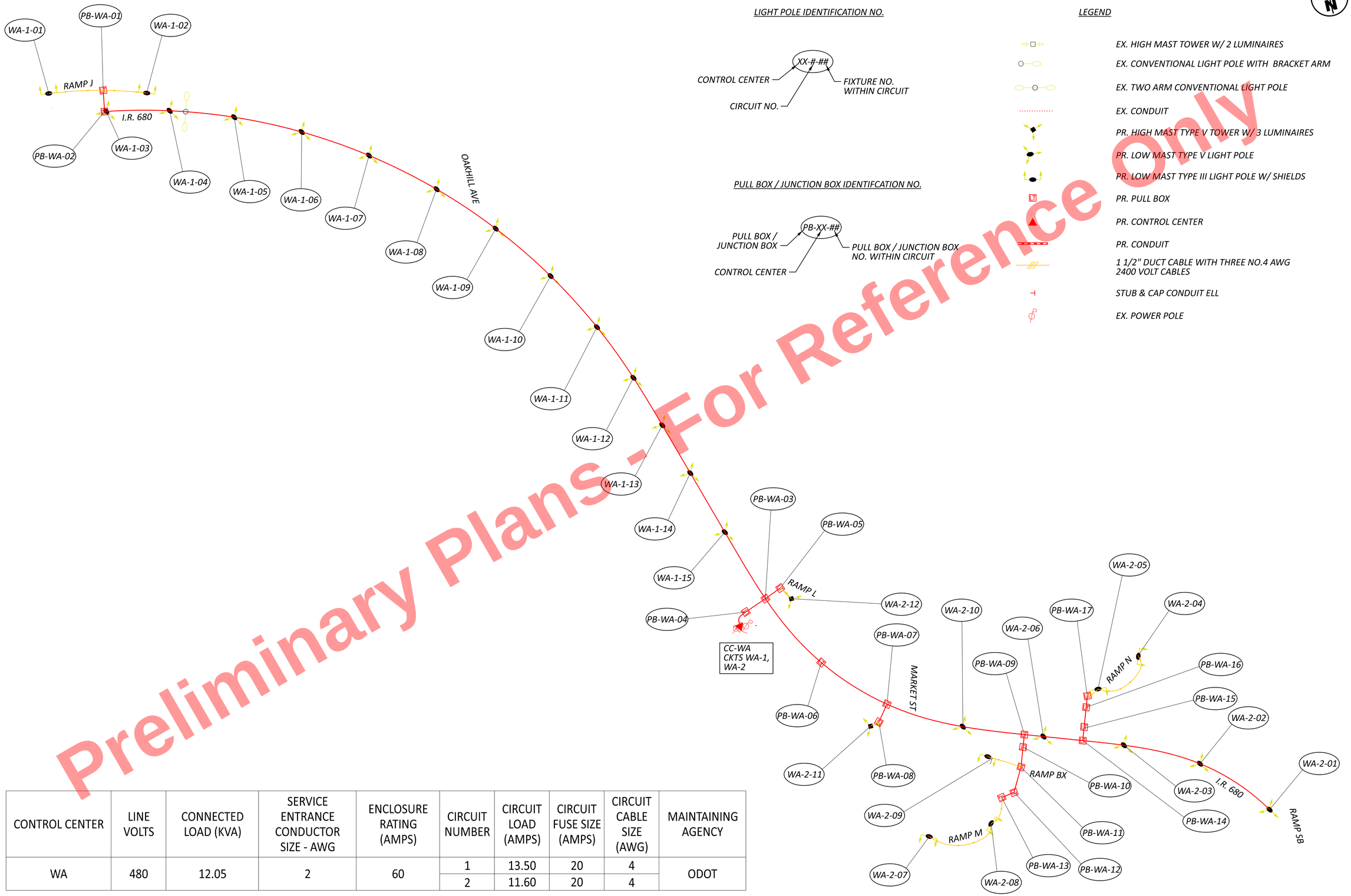

LIGHT POLE IDENTIFICATION NO.

PULL BOX / JUNCTION BOX IDENTIFCATION NO.

LEGEND

- EX. HIGH MAST TOWER W/ 2 LUMINAIRES
- EX. CONVENTIONAL LIGHT POLE WITH BRACKET ARM
- EX. TWO ARM CONVENTIONAL LIGHT POLE
- EX. CONDUIT
- PR. HIGH MAST TYPE V TOWER W/ 3 LUMINAIRES
- PR. LOW MAST TYPE V LIGHT POLE
- PR. LOW MAST TYPE III LIGHT POLE W/ SHIELDS
- PR. PULL BOX
- PR. CONTROL CENTER
- PR. CONDUIT
- 1 1/2" DUCT CABLE WITH THREE NO.4 AWG 2400 VOLT CABLES
- STUB & CAP CONDUIT ELL
- EX. POWER POLE

CONTROL CENTER	LINE VOLTS	CONNECTED LOAD (KVA)	SERVICE ENTRANCE CONDUCTOR SIZE - AWG	ENCLOSURE RATING (AMPS)	CIRCUIT NUMBER	CIRCUIT LOAD (AMPS)	CIRCUIT FUSE SIZE (AMPS)	CIRCUIT CABLE SIZE (AWG)	MAINTAINING AGENCY
WA	480	12.05	2	60	1	13.50	20	4	ODOT
					2	11.60	20	4	

Preliminary Plans - For Reference Only

CIRCUIT SCHEMATIC & CONTROL CENTER DATA
CONTROL CENTER WA

DESIGN AGENCY: 2LMN
DESIGNER: ANL
REVIEWER: EMW 06/2/25
PROJECT ID: 121474
SHEET: P.483 TOTAL: 655

MAH-680-0.00

MODEL: Sheet PAPERSIZE: 34x22 (in.) DATE: 9/15/2025 TIME: 11:27:29 AM PLTDRV: OHDOT_PDF_Color_E+.pltcfg PENTBL: OHDOT_PenC.tbl USER: WORKSPACE: OHDOTCEv02 WORKSET: 121474 PRODUCT: OpenRoadsDesigner 10.10.23.15
pw:\\ohiodot-pw.bentley.com:ohiodot-pw-02\Documents\01 Active Projects\District 04\Mahoning\121474\405-Engineering_2LMN\Lighting\Sheets\121474_LC002.dgn

Preliminary Plans - For Reference Only

LIGHT POLE IDENTIFICATION NO.

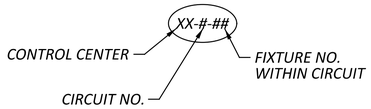

PULL BOX / JUNCTION BOX IDENTIFCATION NO.

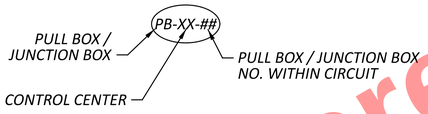

LEGEND

- EX. HIGH MAST TOWER W/ 2 LUMINAIRES
- EX. CONVENTIONAL LIGHT POLE WITH BRACKET ARM
- EX. TWO ARM CONVENTIONAL LIGHT POLE
- EX. CONDUIT
- PR. HIGH MAST TYPE V TOWER W/ 3 LUMINAIRES
- PR. LOW MAST TYPE V LIGHT POLE
- PR. LOW MAST TYPE III LIGHT POLE W/ SHIELDS
- PR. PULL BOX
- PR. CONTROL CENTER
- PR. CONDUIT
- 1 1/2" DUCT CABLE WITH THREE NO.4 AWG 2400 VOLT CABLES
- STUB & CAP CONDUIT ELL
- EX. POWER POLE

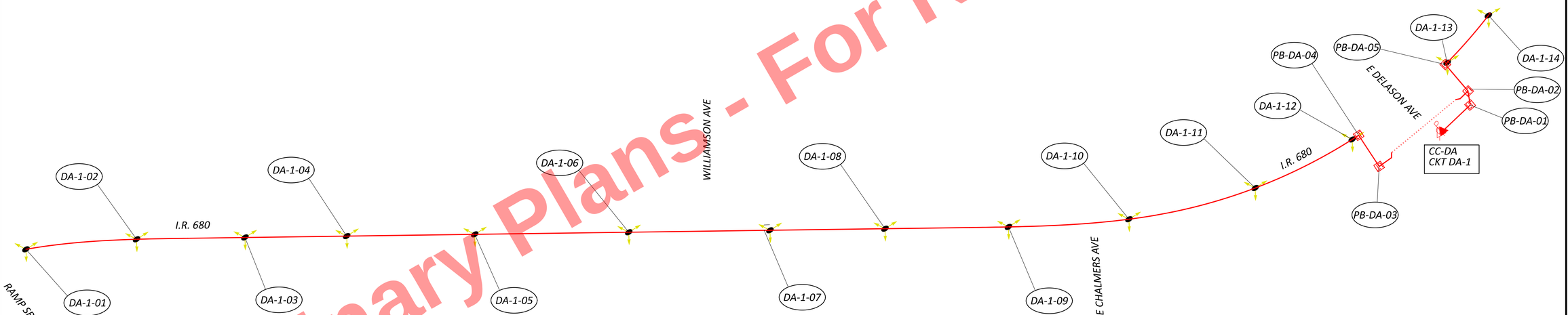

CONTROL CENTER	LINE VOLTS	CONNECTED LOAD (KVA)	SERVICE ENTRANCE CONDUCTOR SIZE - AWG	ENCLOSURE RATING (AMPS)	CIRCUIT NUMBER	CIRCUIT LOAD (AMPS)	CIRCUIT FUSE SIZE (AMPS)	CIRCUIT CABLE SIZE (AWG)	MAINTAINING AGENCY
DA	480	6.05	2	60	1	12.60	20	4	ODOT

CIRCUIT SCHEMATIC & CONTROL CENTER DATA
CONTROL CENTER DA

DESIGN AGENCY
2LMN

DESIGNER ANL

REVIEWER EMW 06/2/25

PROJECT ID 121474

SHEET P.484 | TOTAL 655

MAH-680-0.00

MODEL: Sheet PAPERSIZE: 34x22 (in.) DATE: 9/15/2025 TIME: 11:27:34 AM PLTDRV: OHDOT_PDF_Color_E+.pltcfg PENTBL: OHDOT_PenC.tbl USER: WORKSPACE: OHDOTCEv02 WORKSET: 121474 PRODUCT: OpenRoadsDesigner 10.10.23.15
pw:\\ohiodot-pw.bentley.com:ohiodot-pw-02\Documents\01 Active Projects\District 04\Mahoning\121474\405-Engineering_2LMN\Lighting\Sheets\121474_LC003.dgn

MODEL: Sheet PAPERSIZE: 34x22 (in.) DATE: 9/15/2025 TIME: 11:27:39 AM PLTDRV: OHDOT_PDF_Color_E+.pltcfg PENTBL: OHDOT_PenC.tbl USER: WORKSPACE: OHDOTCEv02 WORKSET: 121474 PRODUCT: OpenRoadsDesigner 10.10.23.15
pw:\\ohiodot-pw.bentley.com:ohiodot-pw-02\Documents\01 Active Projects\District 04\Mahoning\121474\405-Engineering_2LMN\Lighting\Sheets\121474_LC004.dgn

MAH-680-0.00

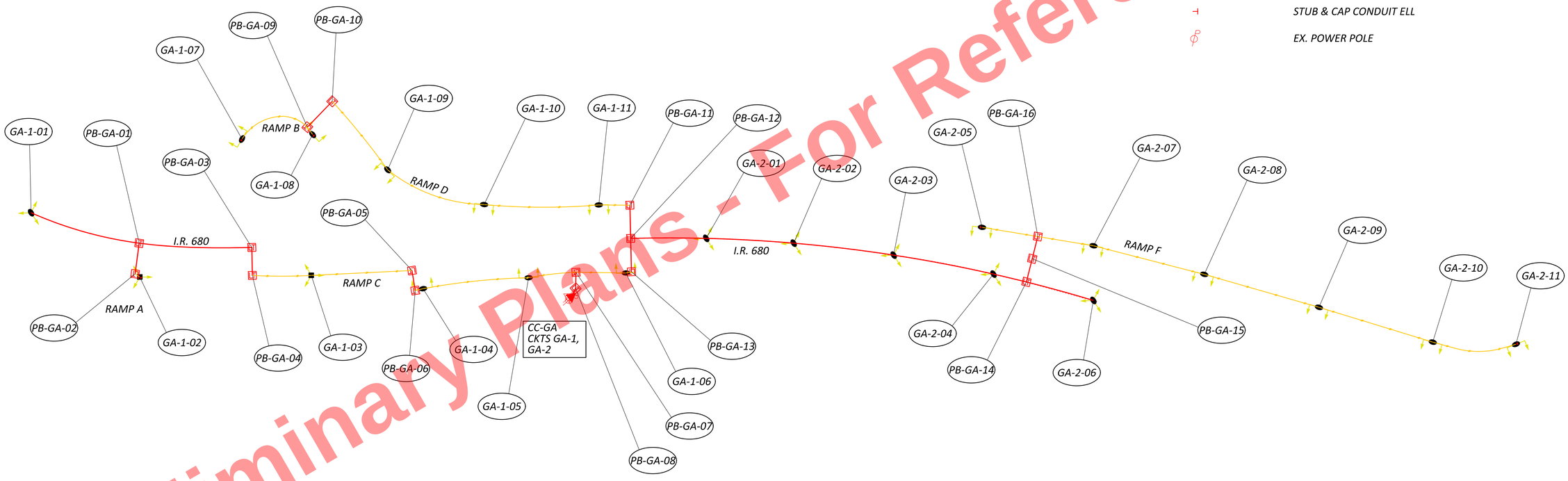

Preliminary Plans - For Reference Only

CONTROL CENTER	LINE VOLTS	CONNECTED LOAD (KVA)	SERVICE ENTRANCE CONDUCTOR SIZE - AWG	ENCLOSURE RATING (AMPS)	CIRCUIT NUMBER	CIRCUIT LOAD (AMPS)	CIRCUIT FUSE SIZE (AMPS)	CIRCUIT CABLE SIZE (AWG)	MAINTAINING AGENCY
GA	480	10.32	2	60	1	10.70	20	4	ODOT
					2	10.80	20	4	

CIRCUIT SCHEMATIC & CONTROL CENTER DATA
CONTROL CENTER GA

DESIGN AGENCY
2LMN

DESIGNER
ANL

REVIEWER
EMW 06/2/25

PROJECT ID
121474

SHEET P.485 | TOTAL 655

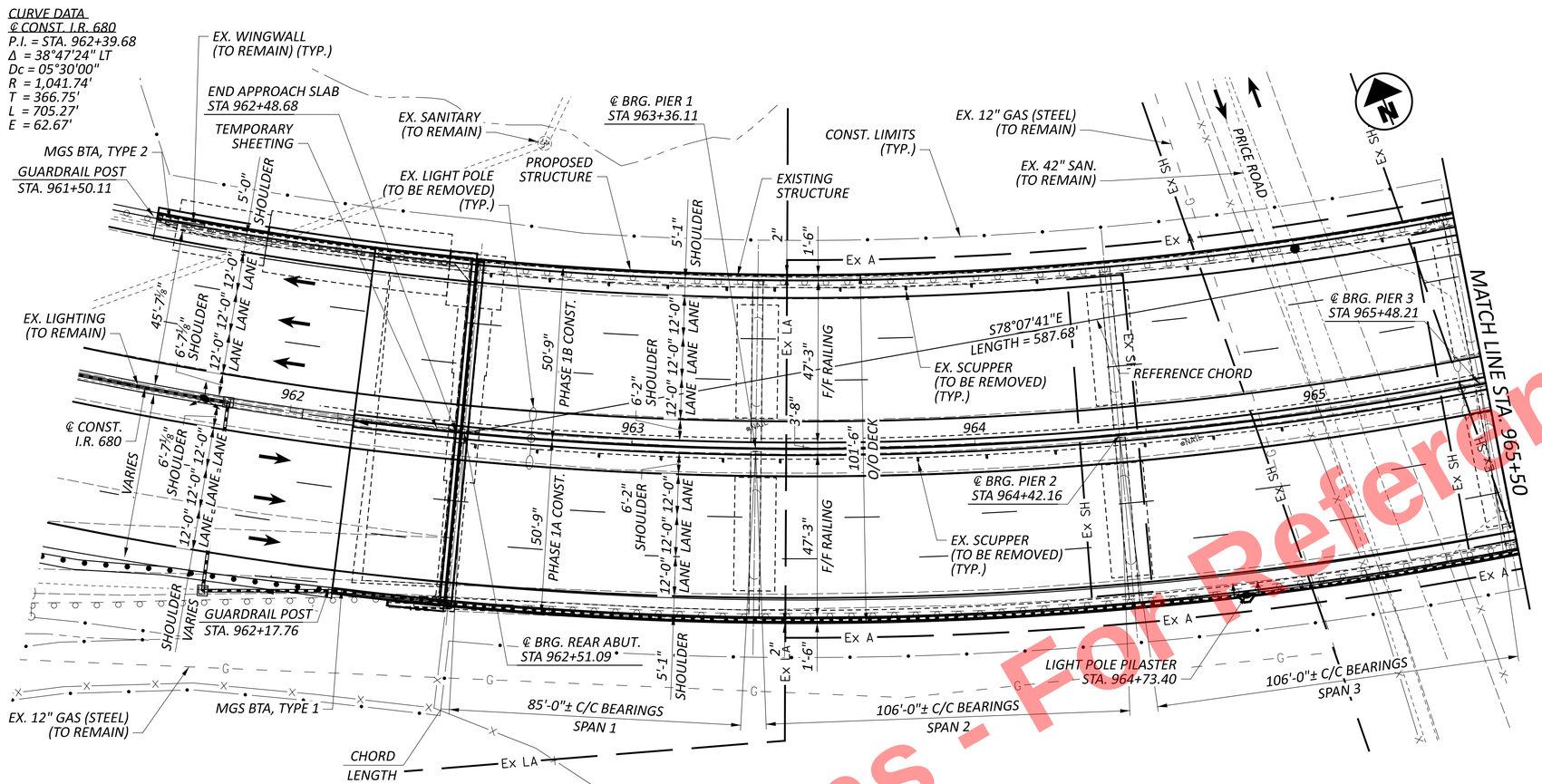

PLAN

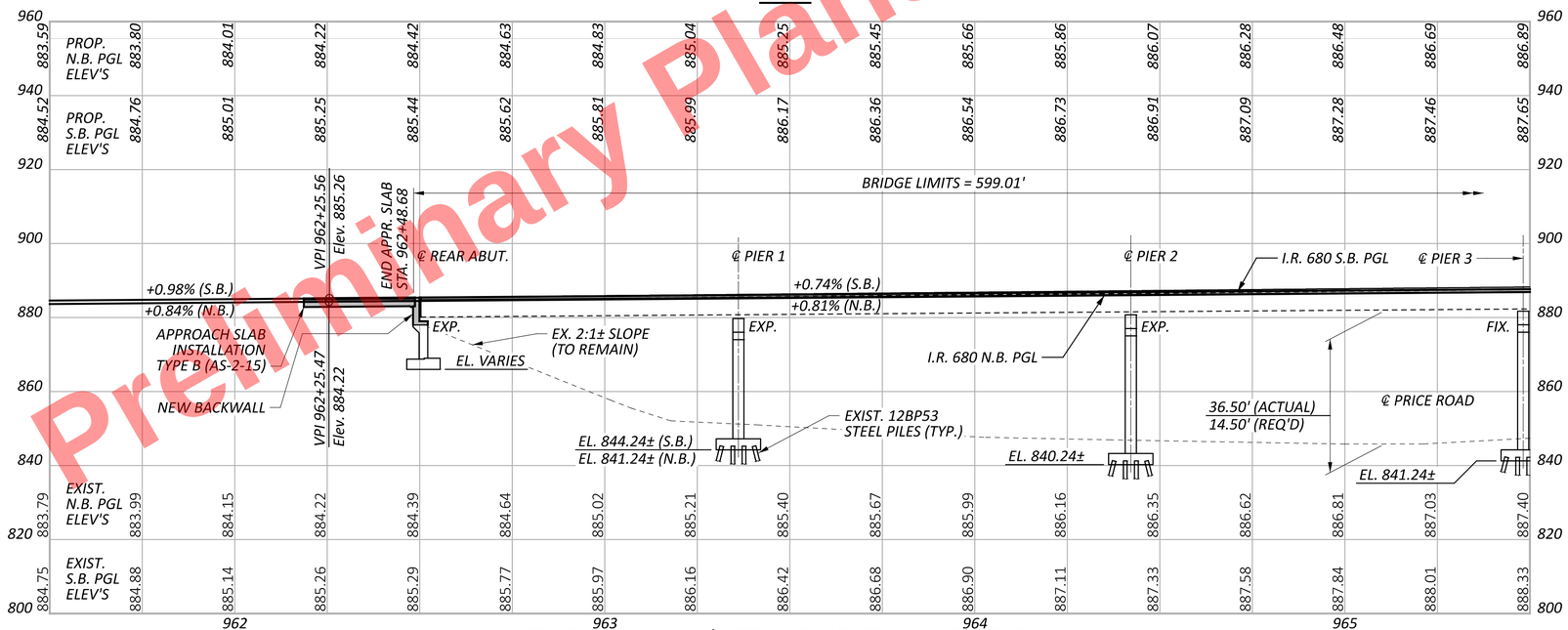

PROFILE ALONG 8.0' LEFT AND RIGHT ℄ CONST. I.R. 680

Preliminary Plans - For Reference Only

BENCHMARK DATA

BM #19 STA.	961+36.64,	ELEV.	887.94,	OFFSET	70.30',	RT.
BM #20 STA.	971+07.51,	ELEV.	896.08,	OFFSET	0.42',	RT.

FOR ADDITIONAL BENCHMARK INFORMATION. SEE ROADWAY PLAN SHEET P.7 OF 655.

NOTES

1. EARTHWORK LIMITS SHOWN ARE APPROXIMATE. ACTUAL SLOPES SHALL CONFORM TO PLAN CROSS SECTIONS.
2. THE REFERENCE CHORD IS A STRAIGHT LINE CONNECTING THE ℄ OF EXISTING ABUTMENT BEARINGS.

DESIGN TRAFFIC:

2026 ADT =	48,500	2026 ADTT =	2910
2046 ADT =	48,500	2046 ADTT =	2910

DIRECTIONAL DISTRIBUTION = 50%

LEGEND

● 14'-6" REQUIRED MINIMUM VERTICAL CLEARANCE
36'-6" ACTUAL MINIMUM VERTICAL CLEARANCE

EXISTING STRUCTURE

TYPE: CONTINUOUS STEEL GIRDER WITH REINFORCED CONCRETE DECK AND SUBSTRUCTURE.

SPANS: 85'-0"±, 106'-0"±, 106'-0"±, 106'-0"±, 106'-0"±, 85'-0"± C/C PIERS AND ABUTS. (CHORD LENGTHS ALONG ℄ CONST. I.R. 680)

ROADWAY: 44'-0"± T/T CURB (LT. & RIGHT)

LOADING: CF 2000 (57) ADEQUATE FOR AASHTO ALTERNATE LOADING

SKEW: RADIAL

WEARING SURFACE: 1"± MONOLITHIC

APPROACH SLABS: 25'-0"± LONG AS-1-54

ALIGNMENT: 5°-30'-00"± CURVE TO SPIRAL LEFT

SUPERELEVATION: VARIES (0.083± FT/FT MAXIMUM)

STRUCTURE FILE NUMBER: 5006872

DATE BUILT: 1963

DISPOSITION: TO BE REHABILITATED

PROPOSED STRUCTURE

PROPOSED WORK: REMOVE AND REPLACE BACKWALLS AND ABUTMENT SEATS. LOWER FRAMING. NEW BEARINGS. PATCH AND SEAL SUBSTRUCTURES. NEW CONCRETE DECK MADE COMPOSITE WITH EXISTING STEEL GIRDERS. NEW FULL WIDTH APPROACH SLABS.

TYPE: SIX-SPAN CONTINUOUS BUILT-UP STEEL (33 KSI) GIRDER BRIDGE WITH COMPOSITE REINFORCED CONCRETE DECK. EXIST. T-TYPE PIERS ON PILING AND STUB ABUTMENTS ON SPREAD FOOTINGS.

SPANS: 85'-0"±, 106'-0"±, 106'-0"±, 106'-0"±, 106'-0"±, 85'-0"± C/C PIERS AND ABUTS. (CHORD LENGTHS ALONG ℄ CONST. I.R. 680)

ROADWAY: 47'-3" F/F RAILING (LT. & RT.)

LOADING: SUBSTRUCTURE: CF 2000 (57) ADEQUATE FOR AASHTO ALT. LOADING
SUPERSTRUCTURE: HL93 WITH 0.0 KSF FUTURE WEARING SURFACE

SKEW: RADIAL

WEARING SURFACE: 1" MONOLITHIC CONCRETE

APPROACH SLABS: 30'-0" LONG (AS-1-15, AS-2-15) TYPE B INSTALLATION

ALIGNMENT: 5°-30'-00"± CURVE TO SPIRAL LEFT

SUPERELEVATION: VARIES (0.0833 FT/FT MAXIMUM)

DECK AREA: 60,362 SQ. FT.

COORDINATES: LATITUDE 41°06'01.77"N
LONGITUDE 80°40'21.60"W

HORIZONTAL SCALE IN FEET
0 10 20 40

SITE PLAN (1 OF 2)
BRIDGE NO. MAH-00680-04.886
OVER PRICE ROAD & MILL CREEK

SFN	5006872
DESIGN AGENCY	ms consultants, inc.
DESIGNER	JSE
CHECKER	SJR
REVIEWER	WER 05/30/25
PROJECT ID	121474
SUBSET	1
TOTAL	64
SHEET	P.486
TOTAL	655

MAH-680-0.00

MODEL: 113321_SFN_5006872_SP001 PAPERSIZE: 34x22 (in.) DATE: 9/15/2025 TIME: 2:44:10 PM PLTDRV: OHDOT_PDF_Color_E+.pltcfg PENTBL: OHDOT_Pen.tbl USER: JElias@msconsultants.com WORKSPACE: OHDOTCEv02 WORKSET: 121474 PRODUCT: OpenRoadsDesigner 24.00.01.62
pw:\\ohiodot-pw.bentley.com:ohiodot-pw-02\Documents\01 Active Projects\District 04\Mahoning\121474\402-Engineering_MSConsultants\Structures\SFN_5006872_SP001.dgn
pw:\\ohiodot-pw.bentley.com:ohiodot-pw-02\Documents\01 Active Projects\District 04\Mahoning\121474\402-Engineering_MSConsultants\Structures\SFN_5006872_SP002.dgn

CURVE DATA
℄ CONST. I.R. 680
P.I. = STA. 962+39.68
Δ = 38°47'24" LT
Dc = 05°30'00"
R = 1,041.74'
T = 366.75'
L = 705.27'
E = 62.67'

SPIRAL DATA
℄ CONST. I.R. 680
P.I. = STA. 967+12.00 R4
Ls = 400.00'
Θs = 11°00'00"
LT = 267.18'
ST = 133.80'
x = 398.53'
y = 25.53'
k = 199.75'
p = 6.39'
C = 399.35'
Start = Sta. 965+78.20
End = Sta. 969+78.20
C.B. = S87°50'29"E

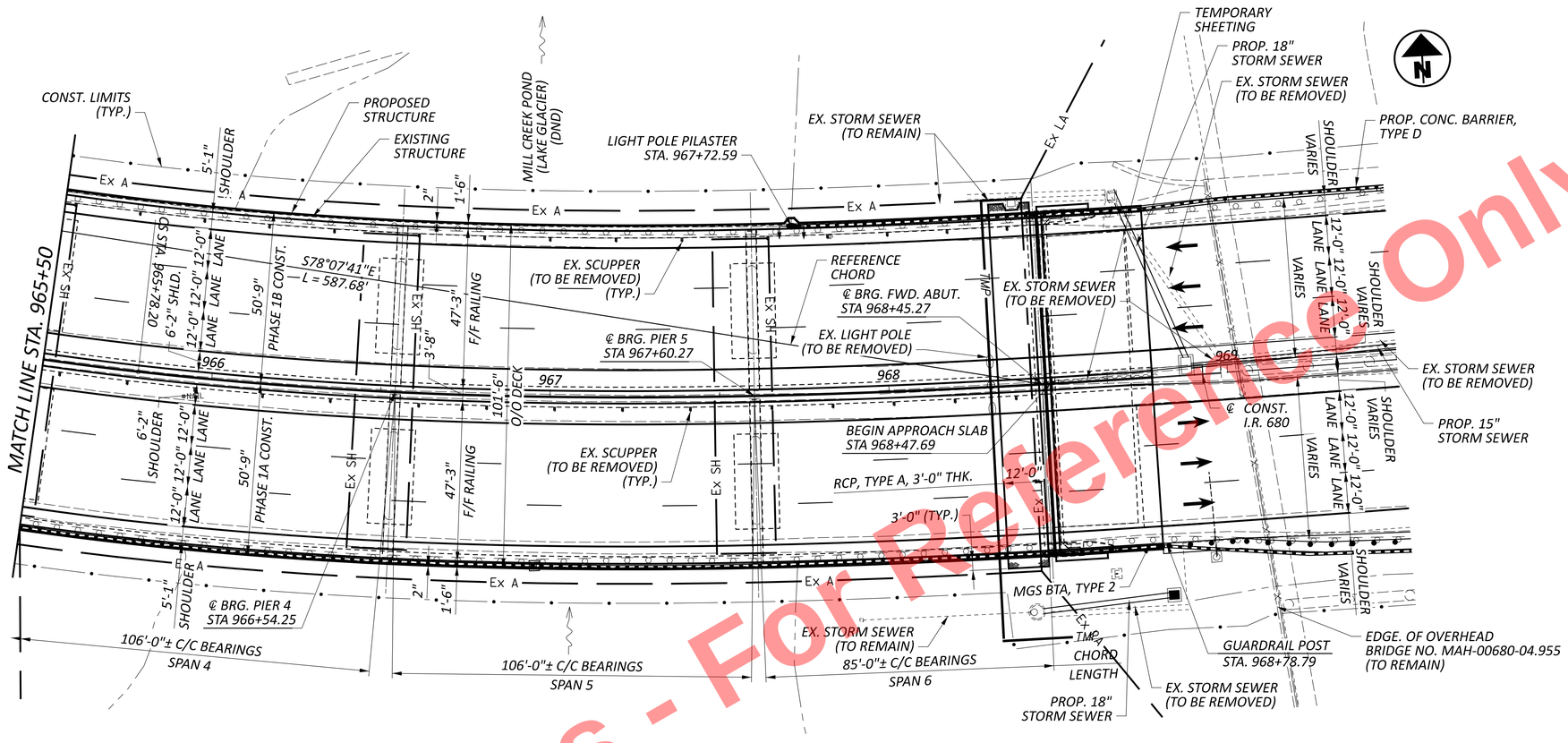

PLAN

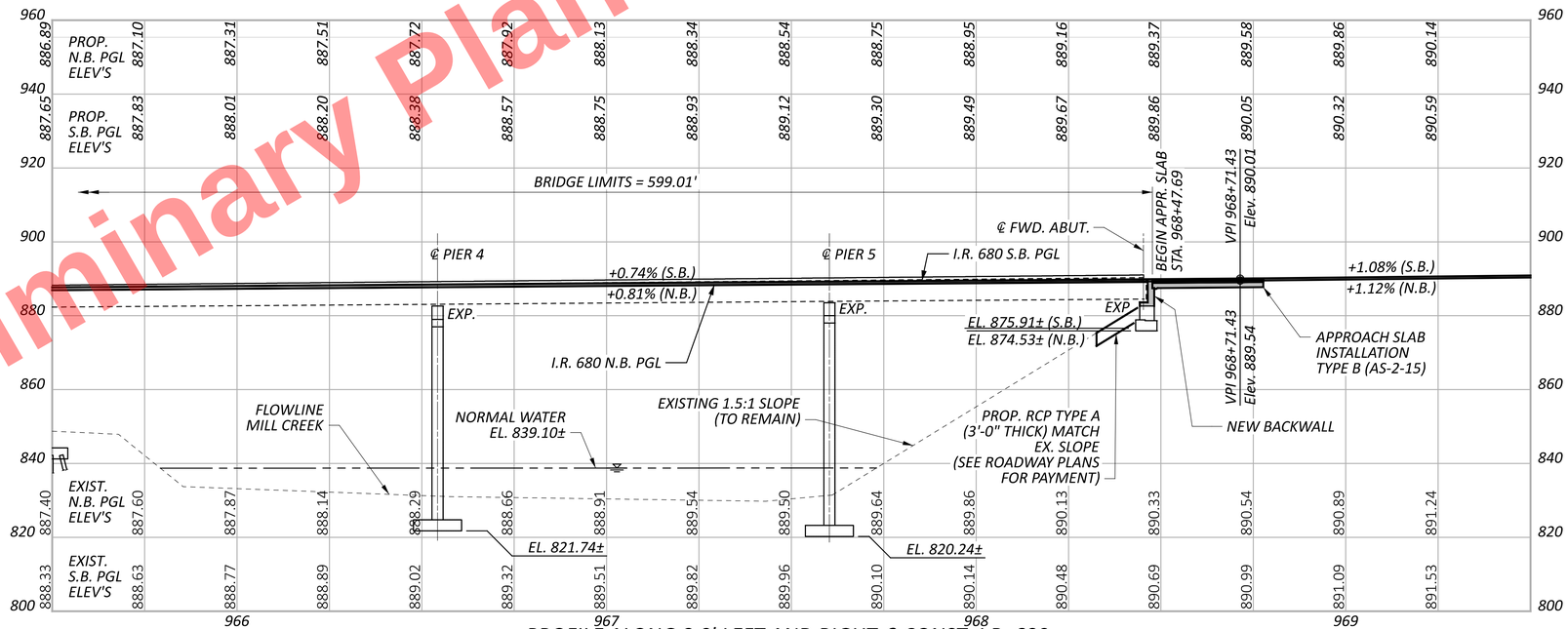

PROFILE ALONG 8.0' LEFT AND RIGHT ℄ CONST. I.R. 680

Preliminary Plans - For Reference Only

HORIZONTAL SCALE IN FEET
0 10 20 40

SITE PLAN (2 OF 2)
BRIDGE NO. MAH-00680-04.886
OVER PRICE ROAD & MILL CREEK

SFN	5006872
DESIGN AGENCY	ms consultants, inc.
DESIGNER	JSE
CHECKER	SJR
REVIEWER	WER 05/30/25
PROJECT ID	121474
SUBSET	2
TOTAL	64
SHEET	P.487
TOTAL	655

MAH-680-0.00

MODEL: 113321_SFN_5006872_SP002 PAPERSIZE: 34x22 (in.) DATE: 9/15/2025 TIME: 2:44:37 PM PLTDRV: OHDOT_PDF_Color_E+.pltcfg PENTBL: OHDOT_Pen.tbl USER: JElias@msconsultants.com WORKSPACE: OHDOTCEv02 WORKSET: 121474 PRODUCT: OpenRoadsDesigner 24.00.01.62
pw:\\ohiodot-pw.bentley.com:ohiodot-pw-02\Documents\01 Active Projects\District 04\Mahoning\121474\02-Engineering_MSConsultants\Structures\SFN_5006872\Sheets\121474_SFN_5006872_SP002.dgn

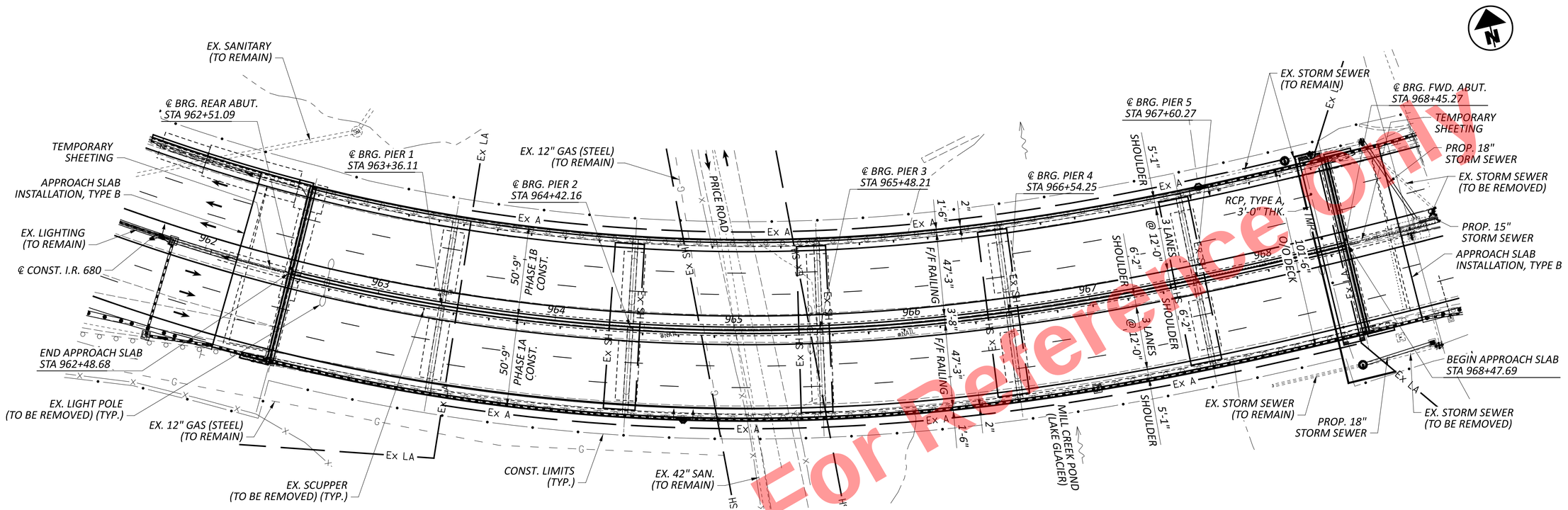

GENERAL PLAN

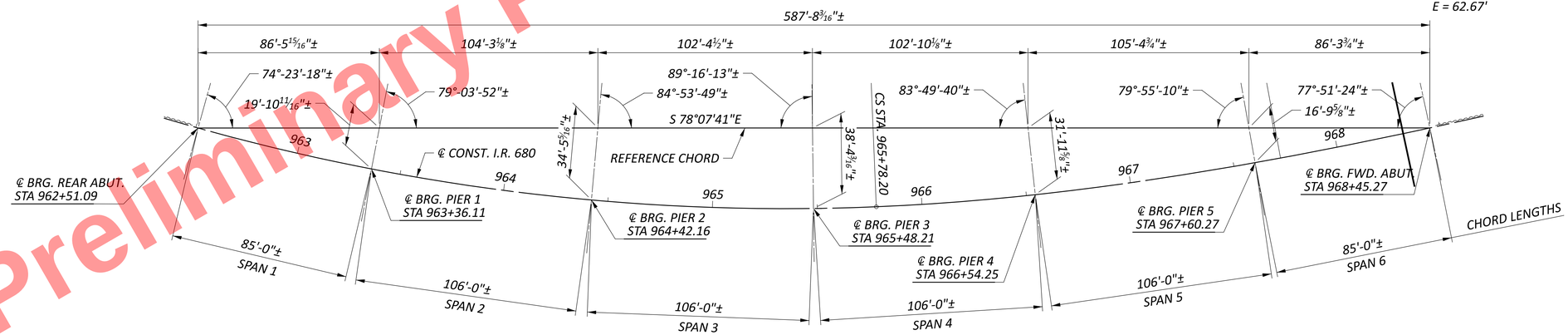

GEOMETRIC LAYOUT

℄ CONST. I.R. 680

CURVE DATA
P.I. = STA. 962+39.68
Δ = 38°47'24" LT
Dc = 05°30'00"
R = 1,041.74'
T = 366.75'
L = 705.27'
E = 62.67'

SPIRAL DATA
P.I. = STA. 967+12.00 R4
Ls = 400.00'
Θs = 11°00'00"
LT = 267.18'
ST = 133.80'
x = 398.53'
y = 25.53'
k = 199.75'
p = 6.39'
C = 399.35'
START = STA. 965+78.20
END = STA. 969+78.20
C.B. = S87°50'29"E

NOTES:

1. ALL SUBSTRUCTURE CENTERLINES ARE RADIAL TO ℄ CONST. I.R. 680.

Preliminary Plans - For Reference Only

HORIZONTAL SCALE IN FEET
0 15 30 60

GENERAL PLAN AND GEOMETRIC LAYOUT
BRIDGE NO. MAH-00680-04.886
OVER PRICE ROAD & MILL CREEK

SFN 5006872
DESIGN AGENCY
ms consultants, inc.

DESIGNER	CHECKER
JSE	SJR

REVIEWER: WER 05/30/25
PROJECT ID: 121474
SUBSET: 3 TOTAL: 64
SHEET: P.488 TOTAL: 655

MAH-680-0.00

MODEL: CLP_I680 - Plan 1 [Sheet] PAPERSIZE: 34x22 (in.) DATE: 9/15/2025 TIME: 2:44:55 PM PLTDRV: OHDOT_PDF_Color_E+.pltcfg PENTBL: OHDOT_Pen.tbl USER: JElias@msconsultants.com WORKSPACE: OHDOTEv02 WORKSET: 121474 PRODUCT: OpenRoadsDesigner 24.00.01.62
pw:\\ohiodot-pw.bentley.com:ohiodot-pw-02\Documents\01 Active Projects\District 04\Mahoning\121474\402-Engineering_MSConsultants\Structures\SFN_5006872\Sheets\121474_SFN_5006872_SG001.dgn

STANDARD DRAWINGS AND SUPPLEMENTAL SPECIFICATIONS

REFER TO THE FOLLOWING STANDARD BRIDGE DRAWINGS:

A-1-20	REVISED	07-19-24	GSD-1-19	REVISED	07-19-24
AS-1-15	REVISED	01-20-23	SBR-1-20	REVISED	07-19-24
AS-2-15	REVISED	07-21-23	SBR-2-20	REVISED	07-19-24
EXJ-4-87	REVISED	01-19-24			

AND TO THE FOLLOWING SUPPLEMENTAL SPECIFICATION:

800-2023 DATED 07-18-25

DESIGN SPECIFICATIONS

THE SUPERSTRUCTURE, INCLUDING THE DECK AND ELASTOMERIC BEARINGS, CONFORMS TO THE 9th EDITION OF THE "LRFD BRIDGE DESIGN SPECIFICATIONS" ADOPTED BY THE AMERICAN ASSOCIATION OF STATE HIGHWAY AND TRANSPORTATION OFFICIALS, 2020 AND THE ODOT BRIDGE DESIGN MANUAL, 2020.

OPERATIONAL IMPORTANCE

A LOAD MODIFIER OF 1.0 HAS BEEN ASSUMED FOR THE DESIGN OF THIS STRUCTURE IN ACCORDANCE WITH THE AASHTO LRFD BRIDGE DESIGN SPECIFICATIONS, ARTICLE 1.3.5 AND THE ODOT BRIDGE DESIGN MANUAL.

DESIGN LOADING

DESIGN LOADING INCLUDES:

DECK: VEHICULAR LIVE LOAD: HL-93
FUTURE WEARING SURFACE (FWS) OF 0.060 KIPS/SQ.FT

EXISTING BEAMS: LOAD RATED WITH VEHICULAR LIVE LOAD: HL-93
FUTURE WEARING SURFACE (FWS) OF 0.0 KIPS/SQ.FT

EXISTING SUBSTRUCTURE: VEHICULAR LIVE LOAD: CF-2000(57)
ADEQUATE FOR AASHTO ALTERNATE LOADING

EXISTING FOUNDATION: VEHICULAR LIVE LOAD: CF-2000(57)
ADEQUATE FOR AASHTO ALTERNATE LOADING

THIS BRIDGE RECEIVED AN APPROVED DESIGN EXCEPTION FOR DESIGN LOADING STRUCTURAL CAPACITY.

DESIGN DATA

CONCRETE CLASS:
COMPRESSIVE STRENGTH 4.5 KSI (SUPERSTRUCTURE)

CONCRETE CLASS:
COMPRESSIVE STRENGTH 4.0 KSI (SUBSTRUCTURE)

CONCRETE REINFORCEMENT:
EPOXY COATED STEEL REINFORCEMENT - MINIMUM YIELD STRENGTH 60-KSI (DECK, RAILINGS, ABUTMENTS & WINGWALLS)

GFRP REINFORCEMENT (RAILINGS)

GALVANIZED STEEL REINFORCEMENT - MINIMUM YIELD STRENGTH 60-KSI (ABUTMENT & WINGWALL DOWELS)

STRUCTURAL STEEL - ASTM A709 GRADE 50 - YIELD STRENGTH 50 KSI

MONOLITHIC WEARING SURFACE

MONOLITHIC WEARING SURFACE IS ASSUMED, FOR DESIGN PURPOSES, TO BE 1 INCH THICK.

ADHESIVE ANCHOR/DOWEL SYSTEM

INSTALL ADHESIVE ANCHORS/DOWELS AT THE ABUTMENTS AND WINGWALLS ACCORDING TO THE MANUFACTURER'S INSTALLATION INSTRUCTIONS PUBLISHED IN THE ICC-ES REPORTS LISTED BELOW.

THE HOLES FOR THE ADHESIVE ANCHORS SHALL BE DRILLED WITH A HAMMER DRILL AND CARBIDE BIT PRIOR TO THE INSTALLATION OF THE ANCHORS, CLEAN AND DRY THE HOLES IN A MANNER CONSISTENT WITH THE MANUFACTURER'S REQUIREMENTS FOR DRY CONCRETE.

HTTPS://ICC-ES.ORG/EVALUATION-REPORT-PROGRAM/REPORTS-DIRECTORY/

SELECT FROM ONE OF THE FOLLOWING APPROVED PRODUCTS:

ADHESIVE ANCHOR/DOWEL SYSTEM
OPTION 1 - ICC-ES ESR REPORT NUMBER

ADHESIVE ANCHOR/DOWEL SYSTEM
OPTION 2 - ICC-ES ESR REPORT NUMBER

FACTORED ANCHOR/DOWEL LOADS:
TENSION 36.9 KIPS
SHEAR 7.1 KIPS

THE CONTRACTOR MAY USE A SUBSTITUTE ADHESIVE ANCHOR/DOWEL SYSTEM THAT MEETS THE ACCEPTANCE CRITERIA OF ICEES AC308 - POST-INSTALLED ADHESIVE ANCHORS IN CONCRETE ELEMENTS. THE SUBSTITUTE ANCHORS SHALL MEET OR EXCEED THE CAPACITY OF THE ADHESIVE ANCHOR/DOWEL SYSTEMS LISTED ABOVE.

ADHESIVE ANCHORS/DOWELS SHALL NOT BE SUBSTITUTED WITH MECHANICAL ANCHORS.

THE CONTRACTOR SHALL SUPPLY DOCUMENTATION SEALED BY AN OHIO REGISTERED PROFESSIONAL ENGINEER ENSURING THAT THE SUBSTITUTE ADHESIVE ANCHOR/DOWEL SYSTEM PROVIDES SUFFICIENT CAPACITY FOR THIS APPLICATION IN ACCORDANCE WITH AASHTO LRFD SECTION 5.13. INSTALL THE ANCHORS ACCORDING TO THE MANUFACTURER'S INSTALLATION INSTRUCTIONS PUBLISHED IN THE ICC-ES REPORT.

ITEM 202 - PORTIONS OF STRUCTURE REMOVED, OVER 20 FOOT SPAN, AS PER PLAN

THIS WORK CONSISTS OF THE REMOVAL OF CONCRETE DECKS INCLUDING SIDEWALKS, CONCRETE BRIDGE RAILINGS, DECK JOINTS, BEARINGS AND OTHER APPURTENANCES FROM STEEL SUPPORTING SYSTEMS (BEAMS, GIRDERS, CROSS-FRAMES, ETC.). THE PROVISIONS OF ITEM 202 APPLY EXCEPT AS SPECIFIED BY THE FOLLOWING NOTES. PERFORM WORK CAREFULLY DURING DECK REMOVALS TO PROTECT PORTIONS OF SUCH SYSTEMS THAT ARE TO BE SALVAGED AND INCORPORATED INTO THE PROPOSED STRUCTURE. THE DEPARTMENT WILL NOT PERMIT THE USE OF EXPLOSIVES, HEADACHE BALLS AND/OR HOE RAM TYPE OF EQUIPMENT. SUBMIT CONSTRUCTION PLANS ACCORDING TO C&MS 501.05.

EXISTING STRUCTURE VERIFICATION

DETAILS AND DIMENSIONS SHOWN ON THESE PLANS PERTAINING TO THE EXISTING STRUCTURE HAVE BEEN OBTAINED FROM PLANS OF THE EXISTING STRUCTURE AND FROM FIELD OBSERVATIONS AND MEASUREMENTS. CONSEQUENTLY, THEY ARE INDICATIVE OF THE EXISTING STRUCTURE AND THE PROPOSED WORK BUT THEY SHALL BE CONSIDERED TENTATIVE AND APPROXIMATE. THE CONTRACTOR IS REFERRED TO C&MS SECTIONS 102.05, 105.02 AND 513.04. BASE CONTRACT BID PRICES UPON A RECOGNITION OF THE UNCERTAINTIES DESCRIBED ABOVE AND UPON A PREBID EXAMINATION OF THE EXISTING STRUCTURE. HOWEVER, THE DEPARTMENT WILL PAY FOR ALL PROJECT WORK BASED UPON ACTUAL DETAILS AND DIMENSIONS THAT HAVE BEEN VERIFIED IN THE FIELD.

ITEM 202 - PORTIONS OF STRUCTURE REMOVED, OVER 20 FOOT SPAN, AS PER PLAN (CONTINUED)

PROTECTION OF STEEL SUPPORT SYSTEMS: BEFORE DECK SLAB CUTTING BEGINS, DRAW THE OUTLINE OF PRIMARY STEEL MEMBERS IN CONTACT WITH THE BOTTOM OF THE DECK ON THE SURFACE OF DECK. DRILL SMALL DIAMETER PILOT HOLES 2 INCHES OUTSIDE THESE LINES TO CONFIRM THE LOCATION OF FLANGE EDGES. DECK CUTS OVER OR WITHIN 2 INCHES OF FLANGE EDGES SHALL NOT EXTEND LOWER THAN THE BOTTOM LAYER OF DECK SLAB REINFORCING STEEL. CUTS MADE OUTSIDE 2 INCHES OF FLANGE EDGES MAY EXTEND THE FULL DEPTH OF THE DECK. PERFORM WORK CAREFULLY DURING CUTTING OF THE DECK SLAB TO AVOID DAMAGING STEEL MEMBERS THAT ARE TO BE INCORPORATED INTO THE PROPOSED STRUCTURE. REPLACE OR REPAIR STEEL MEMBERS DAMAGED BY THE DECK SLAB CUTTING OPERATIONS AT NO COST TO THE PROJECT. AT LEAST 7 DAYS BEFORE PERFORMING REPAIR WORK, SUBMIT A PROPOSED REPAIR PLAN, DEVELOPED BY AN OHIO REGISTERED PROFESSIONAL ENGINEER TO THE ENGINEER. OBTAIN THE ENGINEER'S APPROVAL BEFORE PERFORMING REPAIR.

REMOVAL METHODS: THE CONTRACTOR MAY REMOVE CONCRETE BY CUTTING AND BY MEANS OF HAND OPERATED PNEUMATIC HAMMERS EMPLOYING POINTED OR BLUNTED CHISEL TYPE TOOLS. FOR REMOVALS OVER STRUCTURAL MEMBERS (STEEL GIRDERS), THE CONTRACTOR MAY USE A HAMMER HEAVIER THAN 35 POUNDS BUT NOT TO EXCEED 90 POUNDS UNLESS APPROVED BY THE ENGINEER. REMOVAL METHODS OVER STRUCTURAL MEMBERS SHALL ENSURE ADEQUATE DEPTH CONTROL AND PREVENT NICKING OR GOUGING THE PRIMARY STRUCTURAL MEMBERS. DUE TO THE POSSIBLE PRESENCE OF ATTACHMENTS (E.G., FINISHING MACHINE, SCUPPER AND FORM SUPPORTS, ETC.) TO EXISTING STRUCTURAL MEMBERS, PERFORM WORK CAREFULLY DURING DECK REMOVAL TO AVOID DAMAGING STRUCTURAL MEMBERS THAT ARE TO REMAIN. REPLACE OR REPAIR STRUCTURAL MEMBERS DAMAGED BY THE REMOVAL OPERATIONS AT NO COST TO THE PROJECT. AT LEAST 7 DAYS BEFORE PERFORMING REPAIR WORK, SUBMIT A PROPOSED REPAIR PLAN, DEVELOPED BY AN OHIO REGISTERED PROFESSIONAL ENGINEER TO THE ENGINEER. OBTAIN THE ENGINEER'S APPROVAL BEFORE PERFORMING REPAIR.

EXISTING WELDED ATTACHMENTS: REMOVE EXISTING WELDED ATTACHMENTS (E.G., FINISHING MACHINE AND FORM SUPPORTS; AND SUPPORTS FOR SCUPPERS AND BULB ANGLES WHICH ARE TO BE REMOVED) LOCATED IN THE DESIGNATED TENSION PORTIONS OF THE TOP FLANGES OF EXISTING STEEL MEMBERS AND GRIND THE FLANGE SURFACES SMOOTH. CAREFULLY GRIND PARALLEL TO THE FLANGES.

MEASUREMENT & PAYMENT: THE DEPARTMENT WILL MEASURE THE QUANTITY OF REMOVALS ON A LUMP SUM BASIS. THE DEPARTMENT WILL PAY FOR THE ACCEPTED QUANTITIES OF REMOVALS AT THE CONTRACT PRICE FOR ITEM 202 - PORTIONS OF STRUCTURE REMOVED, AS PER PLAN.

CUT LINE CONSTRUCTION JOINT PREPARATION

SAW CUT BOUNDARIES OF PROPOSED CONCRETE REMOVALS 1 INCH DEEP. REMOVE CONCRETE TO A ROUGH SURFACE. LEAVE THE EXISTING CONCRETE REINFORCEMENT, IF REQUIRED IN THE PLANS, IN PLACE. INSTALL DOWEL BARS IF SPECIFIED. PRIOR TO CONCRETE PLACEMENT ABRASIVELY CLEAN JOINT SURFACES AND EXISTING EXPOSED REINFORCEMENT TO REMOVE LOOSE AND DISINTEGRATED CONCRETE AND LOOSE RUST. THOROUGHLY CLEAN THE JOINT SURFACE AND EXPOSED REINFORCEMENT OF ALL DIRT, DUST, RUST OR OTHER FOREIGN MATERIAL BY THE USE OF WATER, AIR UNDER PRESSURE, OR OTHER METHODS THAT PRODUCE SATISFACTORY RESULTS. EXISTING STEEL REINFORCEMENT DOES NOT HAVE TO HAVE A BRIGHT STEEL FINISH BUT REMOVE ALL PACK AND LOOSE RUST. THOROUGHLY DRENCH EXISTING CONCRETE SURFACES WITH CLEAN WATER AND ALLOW TO DRY TO A DAMP CONDITION BEFORE PLACING CONCRETE.

SUBSTRUCTURE CONCRETE REMOVAL

REMOVE CONCRETE BY MEANS OF APPROVED PNEUMATIC HAMMERS EMPLOYING POINTED AND BLUNT CHISEL TOOLS. THE DEPARTMENT WILL NOT PERMIT HYDRAULIC HOE-RAM TYPE HAMMERS. THE WEIGHT OF THE HAMMER SHALL NOT BE MORE THAN 35 POUNDS FOR REMOVAL WITHIN 18 INCHES OF PORTIONS TO BE PRESERVED. OUTSIDE THE 18-IN LIMIT, THE CONTRACTOR MAY USE HAMMERS NOT EXCEEDING 90 POUNDS UPON THE APPROVAL OF THE ENGINEER. DO NOT PLACE PNEUMATIC HAMMERS IN DIRECT CONTACT WITH CONCRETE REINFORCEMENT THAT IS TO BE RETAINED IN THE REBUILT STRUCTURE.

ITEM 503 - UNCLASSIFIED EXCAVATION, AS PER PLAN

EXCAVATION IN FRONT OF THE EXISTING ABUTMENTS AND SIDES OF WINGWALLS AS PER C&MS 503.09 SHALL BE A LUMP SUM QUANTITY AND IS INCLUDED WITH ITEM 503, UNCLASSIFIED EXCAVATION.

UNCLASSIFIED EXCAVATION SHALL BE IN ACCORDANCE WITH CMS ITEM 503 EXCEPT THAT THE BACKFILL MATERIAL SHALL BE MATERIAL CONFORMING TO CMS 703.17 AND MEET THE COMPACTION REQUIREMENTS OF CMS 304.05. IN ADDITION, THE BACKFILL MATERIAL SHALL BE PLACED AND COMPACTED IN 6" LIFTS. EXCAVATION OF THE EXISTING POROUS BACKFILL SHALL BE INCLUDED IN THIS ITEM.

ITEM 510 - DOWEL HOLES WITH NONSHRINK, NONMETALLIC GROUT, AS PER PLAN

PRIOR TO DRILLING DOWEL HOLES, LOCATE ALL EXISTING REINFORCING STEEL WITH AID OF A REINFORCING STEEL BAR LOCATOR (PACHOMETER). IF AN EXISTING BAR IS ENCOUNTERED AT THE SAME LOCATION AS A PROPOSED DOWEL HOLE, MOVE THE DOWEL HOLE TO EITHER SIDE OF THE EXISTING BAR. ALL WORK AND EQUIPMENT REQUIRED FOR LOCATING EXISTING BARS SHALL BE INCLUDED FOR PAYMENT UNDER ITEM 510, DOWEL HOLES WITH NON-SHRINK, NONMETALLIC GROUT AS PER PLAN.

ITEM 512 - SEALING OF CONCRETE SURFACES, AS PER PLAN, (PERMANENT GRAFFITI PROTECTION)

APPLY A PERMANENT GRAFFITI COATING QUALIFIED ACCORDING TO S1083 THAT IS COMPATIBLE WITH THE CONCRETE SEALER OVER WHICH IT IS APPLIED. APPLY THE GRAFFITI COATING IN ACCORDANCE WITH THE MANUFACTURER'S PRINTED INSTRUCTION.

THE PERMANENT GRAFFITI COATING SHALL BE APPLIED ON TOP OF THE NEW EPOXY-URETHANE SEALER AND PLACED AT THE FOLLOWING LOCATIONS:

PIERS 1, 2 AND 3 (LEFT)
PIERS 1, 2 AND 3 (RIGHT)

THE LIMITS SHALL BE APPLIED TO THE ENTIRE PIER SHAFT PERIMETER FROM THE EXISTING GROUNDLINE TO 10 FEET ABOVE.

Preliminary Plans Not For Reference Only

GENERAL NOTES (1 OF 2)
BRIDGE NO. MAH-00680-04.886
OVER PRICE ROAD & MILL CREEK

SFN 5006872
DESIGN AGENCY: ms consultants, inc.
DESIGNER JSE | CHECKER SJR
REVIEWER WER 05/30/25
PROJECT ID 121474
SUBSET 4 | TOTAL 64
SHEET P.489 | TOTAL 655

MAH-680-0.00

MODEL: Sheet PAPERSIZE: 34x22 (in.) DATE: 9/15/2025 TIME: 11:13:37 AM PLTDRV: OHDOT_PDF_Color_Ex.pltcfg PENTBL: OHDOT_Pen.tbl USER: WORKSPACE: OHDOTCEv02 WORKSET: 121474 PRODUCT: OpenRoadsDesigner 10.12.02.4
pw:\\ohiodot-pw.bentley.com:ohiodot-pw-02\Documents\01 Active Projects\District 04\Mahoning\121474\02-Engineering_MSConsultants\Structures\SFN_5006872_SN001.dgn

ITEM 503 - COFFERDAMS AND EXCAVATION BRACING, AS PER PLAN

THE DESIGN SHOWN ON THE PLANS FOR TEMPORARY SUPPORT OF EXCAVATION IS ONE REPRESENTATIVE DESIGN THAT MAY BE USED TO CONSTRUCT THE PROJECT. THE CONTRACTOR MAY CONSTRUCT THE DESIGN SHOWN ON THE PLANS OR PREPARE AN ALTERNATE DESIGN TO SUPPORT THE SIDES OF EXCAVATION. IF CONSTRUCTING AN ALTERNATE DESIGN FOR TEMPORARY SUPPORT OF EXCAVATION, PREPARE AND PROVIDE PLANS IN ACCORDANCE WITH C&MS 501.05. THE DEPARTMENT WILL PAY FOR THE TEMPORARY SUPPORT OF EXCAVATION AT THE CONTRACT LUMP SUM PRICE FOR COFFERDAMS AND EXCAVATION BRACING, AS PER PLAN. THE DEPARTMENT WILL NOT MAKE ADDITIONAL PAYMENT FOR PROVIDING AN ALTERNATE DESIGN.

THE EXCAVATION BRACING SHALL MEET THE FOLLOWING REQUIREMENTS:

		R.A.	F.A.
BEGIN	STATION	962+33.0	968+47.7
	OFFSET	0.0' LT.	0.0' LT.
	TOP ELEVATION	885.5	891.5
	BOT. ELEVATION	853.0	860.0
END	STATION	962+48.6	968+63.0
	OFFSET	0.0' LT.	0.0' LT.
	TOP ELEVATION	885.5	891.5
	BOT. ELEVATION	853.0	860.0
DESIGN EXCAVATION DEPTH (FT.)		10.6	10.4
MINIMUM SECTION MODULUS (cu. in./ft.)		23.1	22.1

MATERIAL FOR EXCAVATION BRACING SHALL BE ASTM A572, GRADE 50 STEEL, MINIMUM YIELD 50 KSI.

ITEM 513 - STRUCTURAL STEEL MEMBERS, LEVEL UF, AS PER PLAN

AFTER THE DECK SLAB IS REMOVED, THE CONTRACTOR AND ENGINEER SHALL INSPECT THE WEBS AT THE ENDS OF THE GIRDERS AT THE ABUTMENTS. ANY DETERIORATION ENCOUNTERED SHALL BE REPAIRED AS DIRECTED BY THE ENGINEER. THE TYPICAL GIRDER REPAIR DETAIL SHOWN ON SHEET 32/64 IS TO BE USED AS A GUIDE FOR REPAIR.

PRIOR TO FIELD WELDING OF THE NEW STRUCTURAL STEEL AND WEB PLATES, THE CONTRACTOR SHALL REMOVE ALL LOOSE AND DISINTEGRATED DEBRIS. BLAST CLEAN AREAS TO BE WELDED TO NEAR WHITE METAL CONDITION. ALL FAYING SURFACES OF THE REPAIR AREAS SHALL BE PAINTED PER CMS ITEM 514.

ALL REQUIREMENTS OF C&MS 513 APPLY TO SHOP FABRICATED MEMBERS. PERFORM WORK FOR FIELD FABRICATED MEMBERS ACCORDING TO ITEM 513, EXCEPT AS MODIFIED HEREIN. THE DEPARTMENT WILL NOT REQUIRE THE CONTRACTOR PERFORMING FIELD FABRICATION TO BE PREQUALIFIED AS SPECIFIED IN S1078. SUBMIT A WRITTEN LETTER OF MATERIAL ACCEPTANCE IN ACCORDANCE WITH C&MS 501.06, TO THE ENGINEER. PROVIDE THE ENGINEER "AS-BUILT" DRAWINGS ACCORDING TO C&MS 513.06, EXCEPT C&MS 501.04 DOES NOT APPLY. UPON RECEIPT OF THE ENGINEER'S ACCEPTANCE, SUPPLY A COPY OF THE DRAWINGS, ACCORDING TO S1002 TO THE OFFICE OF MATERIAL MANAGEMENT FOR RECORD PURPOSES.

THE FOLLOWING MEMBERS ARE INCLUDED AS A CONTINGENCY IN THIS ITEM:

L 4" X 4" X $\frac{7}{16}$".....40 EACH

THE FOLLOWING PLATE SIZE IS INCLUDED AS A CONTIGINCY IN THIS ITEM:

$\frac{3}{8}$" THICK PLATE.....600 LB

THE FOLLOWING QUANTITY IS CARRIED TO THE ESTIMATED QUANTITIES:

ITEM 513 - STRUCTURAL STEEL MEMBERS, LEVEL UF,
AS PER PLAN .....4700 LB

ITEM 512 - CONCRETE REPAIR BY EPOXY INJECTION, AS PER PLAN

THE CONTRACTOR SHALL VISUALLY INSPECT THE PIERS, ABUTMENTS, AND WINGWALLS TO DETERMINE THE LOCATION AND EXTENT OF THE CRACKED CONCRETE TO BE REPAIRED BY EPOXY INJECTION. ALL CRACK REPAIR LENGTHS SHALL BE APPROVED BY THE ENGINEER. A CONTINGENCY QUANTITY OF 50 FT IS INCLUDED IN THE ESTIMATED QUANTITIES.

ITEM 513 - STRUCTURAL STEEL MEMBERS, LEVEL 4, AS PER PLAN

THIS ITEM SHALL INCLUDE THE REMOVAL OF THE END CROSSFRAMES, BOLTS AND CONNECTION PLATES AND THE REPLACEMENT WITH NEW END CROSSFRAMES, INCLUDING STIFFENER AND CONNECTION PLATES.

THE EXISTING END CROSSFRAMES SHALL BE REMOVED FLUSH WITH THE EXISTING GIRDERS. BLAST CLEAN AREAS OF REMOVAL. REPAIR ANY AREA DAMAGED BY THE REMOVAL PROCESS.

PAYMENT TO REMOVE AND INSTALL THE NEW END CROSSFRAMES AS SHOWN IN THE PLANS, INCLUDING PLATES AND CONNECTIONS, ALL EQUIPMENT, LABOR, MATERIALS AND INCIDENTALS, SHALL BE INCLUDED WITH ITEM 513, STRUCTURAL STEEL MEMBERS, LEVEL 4, AS PER PLAN.

ITEM 516 - JACKING AND TEMPORARY SUPPORT OF SUPERSTRUCTURE, AS PER PLAN

THIS WORK CONSISTS OF RAISING OR RE-POSITIONING EXISTING STRUCTURES TO THE DIMENSIONS AND REQUIREMENTS DEFINED IN THE PROJECT PLANS.

SUBMIT CONSTRUCTION PLANS IN ACCORDANCE WITH CMS 501.05.

THE BRIDGE BEARINGS SHALL BE FULLY SEATED AT ALL CONTACT AREAS. IF FULL SEATING IS NOT ATTAINED, SUBMIT A REPAIR PLAN TO THE ENGINEER. THE DEPARTMENT WILL NOT PAY FOR THE REPAIR COSTS TO ENSURE FULL SEATING ON BEARINGS.

THE DEPARTMENT WILL MEASURE THIS WORK ON A LUMP SUM BASIS.

THE DEPARTMENT WILL PAY FOR THE ACCEPTED QUANTITIES AT THE CONTRACT PRICE FOR ITEM 516, JACKING AND TEMPORARY SUPPORT OF SUPERSTRUCTURE, AS PER PLAN.

ITEM 519 - PATCHING CONCRETE STRUCTURE, AS PER PLAN

THE CONTRACTOR SHALL VISUALLY INSPECT THE SUBSTRUCTURES TO DETERMINE THE LOCATION AND EXTENT OF SPALLED AND DELAMINATED CONCRETE TO BE REPAIRED BY PATCHING. ALL LOCATIONS AND AREAS SHALL BE APPROVED BY THE ENGINEER.

PRIOR TO THE SURFACE CLEANING SPECIFIED IN C&MS 519.04 AND WITHIN 24 HOURS OF PLACING PATCHING MATERIAL, BLAST CLEAN ALL SURFACES TO BE PATCHED INCLUDING THE EXPOSED REINFORCING STEEL. ACCEPTABLE METHODS INCLUDE: HIGH-PRESSURE WATER BLASTING WITH, OR WITHOUT, ABRASIVES IN THE WATER, ABRASIVE BLASTING WITH CONTAINMENT OR VACUUM ABRASIVE BLASTING.

A CONTINGENCY QUANTITY OF 100 SF IS INCLUDED IN THE ESTIMATED QUANTITIES.

DECK PLACEMENT DESIGN ASSUMPTIONS

THE FOLLOWING ASSUMPTIONS OF CONSTRUCTION MEANS AND METHODS WERE MADE FOR THE ANALYSIS AND DESIGN OF THE SUPERSTRUCTURE. THE CONTRACTOR IS RESPONSIBLE FOR THE DESIGN OF THE FALSEWORK SUPPORT SYSTEM WITHIN THESE PARAMETERS AND WILL ASSUME RESPONSIBILITY FOR SUPERSTRUCTURE ANALYSIS FOR DEVIATION FROM THESE DESIGN ASSUMPTIONS.

AN EIGHT WHEEL FINISHING MACHINE WITH A MAXIMUM WHEEL LOAD OF 2.38 KIPS.

A MINIMUM OUT-TO-OUT WHEEL SPACING AT EACH END OF THE MACHINE OF 103 INCHES.

A MAXIMUM SPACING OF OVERHANG FALSEWORK BRACKETS OF 48 INCHES.

A MAXIMUM DISTANCE FROM THE CENTERLINE OF THE FASCIA GIRDER TO THE FACE OF THE SAFETY HANDRAIL OF 65 INCHES.

ABBREVIATIONS

ABUT. - ABUTMENT
APPR. - APPROACH
APPROX. - APPROXIMATE
BOT. - BOTTOM
BRG. - BEARING
C/C - CENTER TO CENTER
C.J. - CONSTRUCTION JOINT
COL. - COLUMN
CONC. - CONCRETE
CONST. - CONSTRUCTION
DIA. - DIAMETER
EL. - ELEV. - ELEVATION
E.W. - EACH WAY
EX. - EXIST. - EXISTING
EXP. - EXPANSION
EQ. SPA. - EQUAL SPACE
E.F. - EACH FACE
F.A. - FORWARD ABUTMENT
F.F. - FAR FACE
F/F - FACE TO FACE
FTG. - FOOTING
FWD. - FORWARD
MAX. - MAXIMUM
M.O.T. - MAINTENACE OF TRAFFIC
MIN. - MINIMUM
N.F. - NEAR FACE
O/O - OUT TO OUT
P.E.J.F. - PREFORMED EXPANSION JOINT FILLER
R.A. - REAR ABUTMENT
RCP - ROCK CHANNEL PROTECTION
REINF. - REINFORCING
RT. - RIGHT
SCD - STANDARD CONSTRUCTION DRAWING
SER. - SERIES
SPA. - SPACING
STA. - STATION
T & B - TOP AND BOTTOM
TYP. - TYPICAL
T/T - TOE TO TOE
U.N.O. - UNLESS NOTED OTHERWISE
VAR. - VARIES
V.C. - VERTICAL CURVE
VERT. - VERTICAL
W.P. - WORKPOINT

ASBESTOS NOTIFICATION

A CERTIFIED ASBESTOS HAZARD EVALUATION SPECIALIST INSPECTED THE BRIDGE STRUCTURE SCHEDULED FOR DEMOLITION AND/OR REHABILITATION;

THE INSPECTION DETERMINED THAT 40 SQUARE FEET OF EXPANSION JOINT MATERIAL AT THE REAR ABUTMENT LEFT WINGWALL CONTAINS ASBESTOS. THE ASBESTOS CONTAINING MATERIAL SHALL BE REMOVED AND DISPOSED OF BY THE CONTRACTOR. THE CONTRACTOR SHALL ENSURE THAT THE ABATEMENT, TRANSPORT, AND DISPOSAL OF ASBESTOS CONTAINING MATERIAL IS CONDUCTED IN ACCORDANCE WITH ALL FEDERAL, STATE, AND LOCAL REGULATIONS. THE CONTRACTOR SHALL ENSURE THAT ALL DOCUMENTATION RELATED TO THE ABATEMENT, TRANSPORT, AND DISPOSAL OF ASBESTOS CONTAINING MATERIALS IS SUBMITTED TO THE PROJECT ENGINEER FOR RECORD KEEPING WITHIN 2 WEEKS OF COMPLETION.

THE DEPARTMENT HAS PROVIDED A COPY OF THE OHIO ENVIRONMENTAL PROTECTION AGENCY (OEPA) NOTIFICATION OF DEMOLITION AND RENOVATION FORM (PARTIALLY COMPLETED) AND THE ASBESTOS INSPECTION REPORT IN THE SPECIAL PROVISIONS FOR THIS PROJECT. THE CONTRACTOR SHALL COMPLETE THE FORM AND SUBMIT IT TO THE OEPA AT LEAST TEN (10) WORKING DAYS PRIOR TO THE START OF ANY DEMOLITION AND/OR RENOVATION. ONLINE SUBMISSION IS AVAILABLE AT HTTP://WWW.EPA.OHIO.GOV/ASBESTOS AND IS ENCOURAGED OR, THE CONTRACTOR SHALL SUBMIT IT TO ONE OF THE ADDRESSES BELOW:

ASBESTOS PROGRAM
OHIO EPA, DAPC
P.O. BOX 1049
COLUMBUS, OH 43216-1049

OR

ASBESTOS PROGRAM
OHIO EPA, DAPC
50 W. TOWN ST., SUITE 700
COLUMBUS, OH 43215

THE FORM SHALL INCLUDE:

1. THE CONTRACTORS NAME AND ADDRESS
2. THE SCHEDULED DATES FOR THE START AND COMPLETION OF THE STRUCTURE DEMOLITION AND/OR RENOVATION
3. DESCRIPTION OF THE PLANNED DEMOLITION WORK AND THE METHODS BE USED
4. ALL NECESSARY FEES

THE CONTRACTOR SHALL PROVIDE A COPY OF THE COMPLETED NOTIFICATION OF DEMOLITION AND RENOVATION FORM TO THE PROJECT ENGINEER AT LEAST TEN (10) WORKING DAYS PRIOR TO THE START OF ANY DEMOLITION AND/OR RENOVATION.

THE CONTRACTOR SHALL FURNISH ALL FEES, LABOR, AND MATERIALS NECESSARY TO COMPLETE AND SUBMIT THE OEPA NOTIFICATION FORM. PAYMENT FOR THIS WORK SHALL BE INCLUDED IN ITEM 202 - PORTIONS OF STRUCTURE REMOVED, OVER 20 FOOT SPAN, AS PER PLAN.

THE CONTRACTOR SHALL FURNISH ALL THE LABOR, EQUIPMENT, AND MATERIALS NECESSARY TO PROPERLY ABATE, TRANSPORT, AND DISPOSE OF ASBESTOS CONTAINING MATERIALS IN A LANDFILL LICENSED BY THE LOCAL HEALTH DEPARTMENT AND PERMITTED BY THE OHIO ENVIRONMENTAL PROTECTION AGENCY - DIVISION OF AIR POLLUTION CONTROL TO ACCEPT ASBESTOS CONTAINING MATERIAL. PAYMENT FOR THIS WORK SHALL BE INCLUDED IN ITEM SPECIAL - STRUCTURES, REMOVAL OF ASBESTOS CONTAINING MATERIAL.

Preliminary Plans - For Reference Only

GENERAL NOTES (2 OF 2)
BRIDGE NO. MAH-00680-04.886
OVER PRICE ROAD & MILL CREEK

SFN 5006872
DESIGN AGENCY
ms consultants, inc.
DESIGNER JSE | CHECKER SJR
REVIEWER WER 05/30/25
PROJECT ID 121474
SUBSET 5 | TOTAL 64
SHEET P.490 | TOTAL 655

MAH-680-0.00

MODEL: Sheet PAPERSIZE: 34x22 (in.) DATE: 9/15/2025 TIME: 11:13:44 AM PLTDRV: OHDOT_PDF_Color_E+.pltcfg PENTBL: OHDOT_Pen.tbl USER: WORKSPACE: OHDOTCEv02 WORKSET: 121474 PRODUCT: OpenRoadsDesigner 10.12.02.4
pw:\\ohiodot-pw.bentley.com:ohiodot-pw-02\Documents\01 Active Projects\District 04\Mahoning\121474\402-Engineering_MSConsultants\Structures\SFN_5006872_SN002.dgn

ESTIMATED QUANTITIES (02/IMS)

ITEM	ITEM EXT.	TOTAL	UNIT	DESCRIPTION	ABUTMENTS	PIERS	SUPERSTRUCTURE	GENERAL	SHEET REF.
202	11203	LS		PORTIONS OF STRUCTURE REMOVED, OVER 20 FOOT SPAN, AS PER PLAN					4/64
202	22900	423	SY	APPROACH SLAB REMOVED				423	
503	11101	LS		COFFERDAMS AND EXCAVATION BRACING, AS PER PLAN					5/64
503	21301	LS		UNCLASSIFIED EXCAVATION, AS PER PLAN					4/64
509	10000	630,671	LB	EPOXY COATED STEEL REINFORCEMENT	30,979		580,313	19,379	
509	26000	6,664	LB	GALVANIZED STEEL REINFORCEMENT	6,664				
509	30020	37,159	FT	NO. 4 DEFORMED GFRP REINFORCEMENT			37,159		
510	10001	651	EACH	DOWEL HOLES WITH NONSHRINK, NONMETALLIC GROUT, AS PER PLAN	651				4/64
511	34447	1,747	CY	CLASS QC2 CONCRETE WITH QC/QA, BRIDGE DECK, AS PER PLAN			1,747		49/64
511	34450	509	CY	CLASS QC2 CONCRETE WITH QC/QA, BRIDGE DECK (PARAPET)			509		
511	45712	268	CY	CLASS QC1 CONCRETE WITH QC/QA, ABUTMENT	268				
512	10001	194	SY	SEALING OF CONCRETE SURFACES, AS PER PLAN, (PERMANENT GRAFFITI PROTECTION)		194			4/64
512	10100	6,240	SY	SEALING OF CONCRETE SURFACES (EPOXY-URETHANE)	526	2,534	3,180		
512	10601	100	FT	CONCRETE REPAIR BY EPOXY INJECTION, AS PER PLAN				100	5/64
512	74000	194	SY	REMOVAL OF EXISTING COATINGS FROM CONCRETE SURFACES		194			
513	10201	4,700	LB	STRUCTURAL STEEL MEMBERS, LEVEL UF, AS PER PLAN			4,700		5/64
513	10281	11,600	LB	STRUCTURAL STEEL MEMBERS, LEVEL 4, AS PER PLAN			11,600		5/64
513	20000	18,195	EACH	WELDED STUD SHEAR CONNECTORS			18,195		
514	00050	128	SF	SURFACE PREPARATION OF EXISTING STRUCTURAL STEEL			128		
514	00056	128	SF	FIELD PAINTING OF EXISTING STRUCTURAL STEEL, PRIME COAT			128		
514	00060	1,800	SF	FIELD PAINTING STRUCTURAL STEEL, INTERMEDIATE COAT			1,800		
514	00066	1,800	SF	FIELD PAINTING STRUCTURAL STEEL, FINISH COAT			1,800		
514	00504	1	MNHR	GRINDING FINS, TEARS, SLIVERS ON EXISTING STRUCTURAL STEEL			1		
514	10000	2	EACH	FINAL INSPECTION REPAIR			2		
516	11210	199	FT	STRUCTURAL EXPANSION JOINT INCLUDING ELASTOMERIC STRIP SEAL			199		
516	13600	377	SF	1" PREFORMED EXPANSION JOINT FILLER			377		
516	13900	48	SF	2" PREFORMED EXPANSION JOINT FILLER	48				
516	44100	12	EACH	ELASTOMERIC BEARING WITH INTERNAL LAMINATES AND LOAD PLATE (NEOPRENE) (17" X 20" X 2.668")		12			
516	44200	48	EACH	ELASTOMERIC BEARING WITH INTERNAL LAMINATES AND LOAD PLATE (NEOPRENE) (17.5" X 20" X 3.273")		48			
516	44300	24	EACH	ELASTOMERIC BEARING WITH INTERNAL LAMINATES AND LOAD PLATE (NEOPRENE) (14" X 15" X 4.565")	24				
516	47001	LS		JACKING AND TEMPORARY SUPPORT OF SUPERSTRUCTURE, AS PER PLAN					5/64
518	21200	103	CY	POROUS BACKFILL WITH GEOTEXTILE FABRIC	103				
519	11101	100	SF	PATCHING CONCRETE STRUCTURE, AS PER PLAN	100				5/64
526	30010	676	SY	REINFORCED CONCRETE APPROACH SLABS WITH QC/QA (T=17")				676	
526	90020	113	SY	TYPE B INSTALLATION				113	
SPECIAL	53000600	40	SF	STRUCTURES, REMOVAL OF ASBESTOS CONTAINING MATERIAL	40				5/64

Preliminary Plans - For Reference Only

ESTIMATED QUANTITIES
BRIDGE NO. MAH-00680-04.886
OVER PRICE ROAD & MILL CREEK

SFN 5006872

DESIGN AGENCY

ms consultants, inc.

DESIGNER	CHECKER
JSE	SJR

REVIEWER
WER 05/30/25

PROJECT ID
121474

SUBSET	TOTAL
6	64

SHEET	TOTAL
P.491	655

MAH-680-0.00

MODEL: Sheet PAPERSIZE: 34x22 (in.) DATE: 9/15/2025 TIME: 11:13:53 AM PLTDRV: OHDOT_PDF_Color_E+.pltcfg PENTBL: OHDOT_Pen.tbl USER: WORKSPACE: OHDOTCEv02 WORKSET: 121474 PRODUCT: OpenRoadsDesigner 10.12.02.4
pw:\\ohiodot-pw.bentley.com:ohiodot-pw-02\Documents\01 Active Projects\District 04\Mahoning\121474\02-Engineering_MSConsultants\Structures\SFN_5006872\Sheets\121474_SFN_5006872_SQ001.dgn

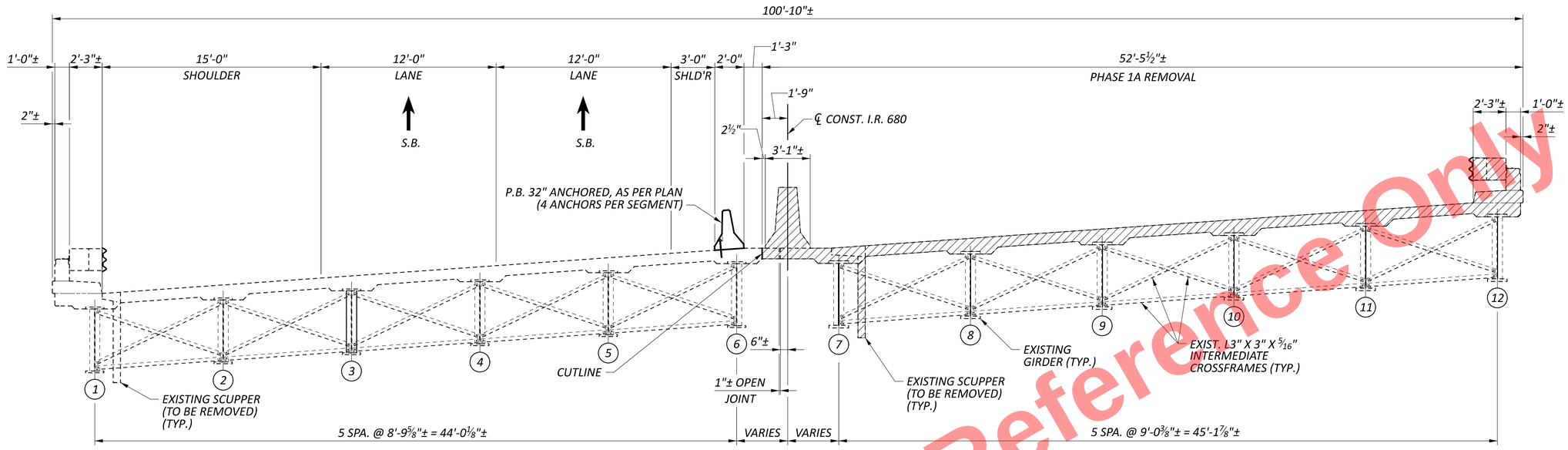

LEFT BRIDGE (N.B.)

RIGHT BRIDGE (S.B.)

PHASE 1A REMOVAL & MOT

(LOOKING UPSTATION)

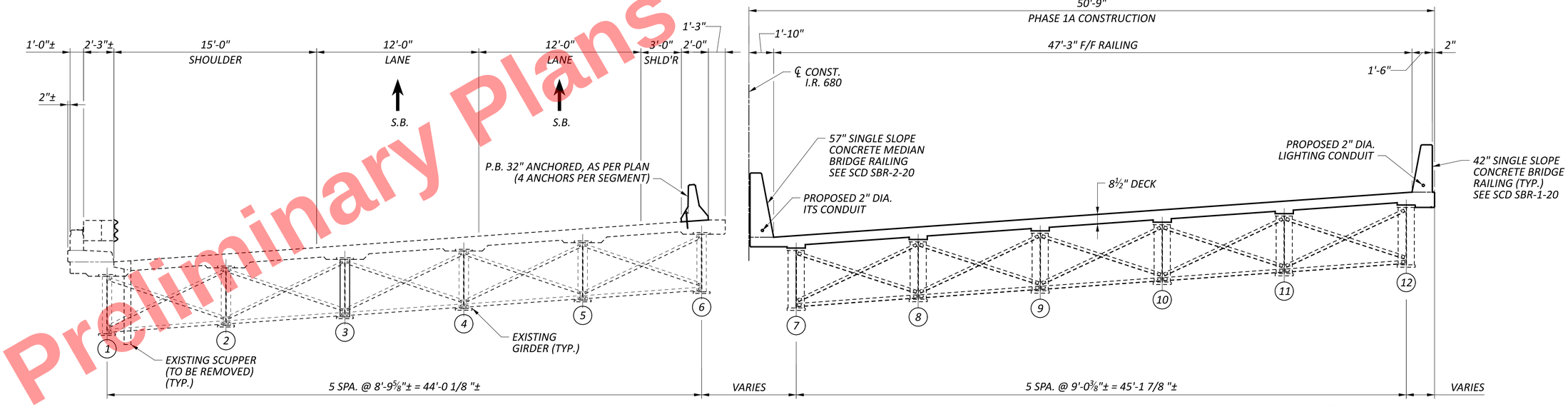

LEFT BRIDGE (N.B.)

RIGHT BRIDGE (S.B.)

PHASE 1A CONSTRUCTION & MOT

(LOOKING UPSTATION)

LEGEND

(1) - DENOTES GIRDER NUMBER

- ITEM 202 - PORTIONS OF STRUCTURE REMOVED OVER 20 FOOT SPAN, AS PER PLAN

Preliminary Plans - For Reference Only

PHASE 1A CONSTRUCTION
BRIDGE NO. MAH-00680-04.886
OVER PRICE ROAD & MILL CREEK

MAH-680-0.00

SFN 5006872

DESIGN AGENCY

ms consultants, inc.

DESIGNER	CHECKER
JSE	SJR

REVIEWER
WER 05/30/25

PROJECT ID
121474

SUBSET	TOTAL
7	64

SHEET	TOTAL
P.492	655

MODEL: Sheet PAPERSIZE: 34x22 (in.) DATE: 9/15/2025 TIME: 11:14:01 AM PLTDRV: OHDOT_PDF_Color_Ex.pltcfg PENTBL: OHDOT_Pen.tbl USER: WORKSPACE: OHDOTCEv02 WORKSET: 121474 PRODUCT: OpenRoadsDesigner 10.12.02.4
pw:\\ohiodot-pw.bentley.com:ohiodot-pw-02\Documents\01 Active Projects\District 04\Mahoning\121474\02-Engineering_MSConsultants\Structures\SFN_5006872\Sheets\121474_SFN_5006872_SC001.dgn

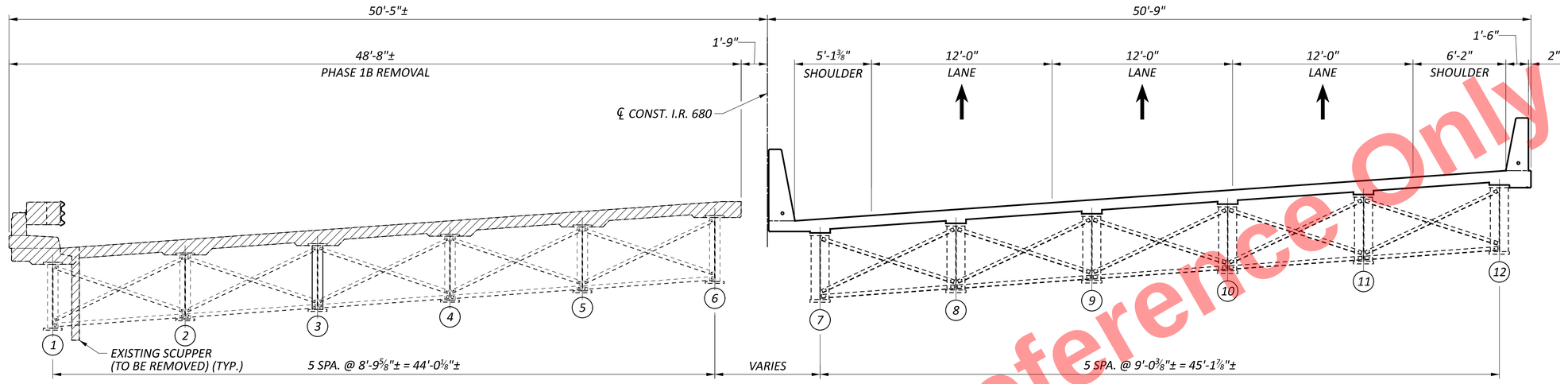

LEFT BRIDGE (N.B.)

PHASE 1B REMOVAL & MOT
(LOOKING UPSTATION)

RIGHT BRIDGE (S.B.)

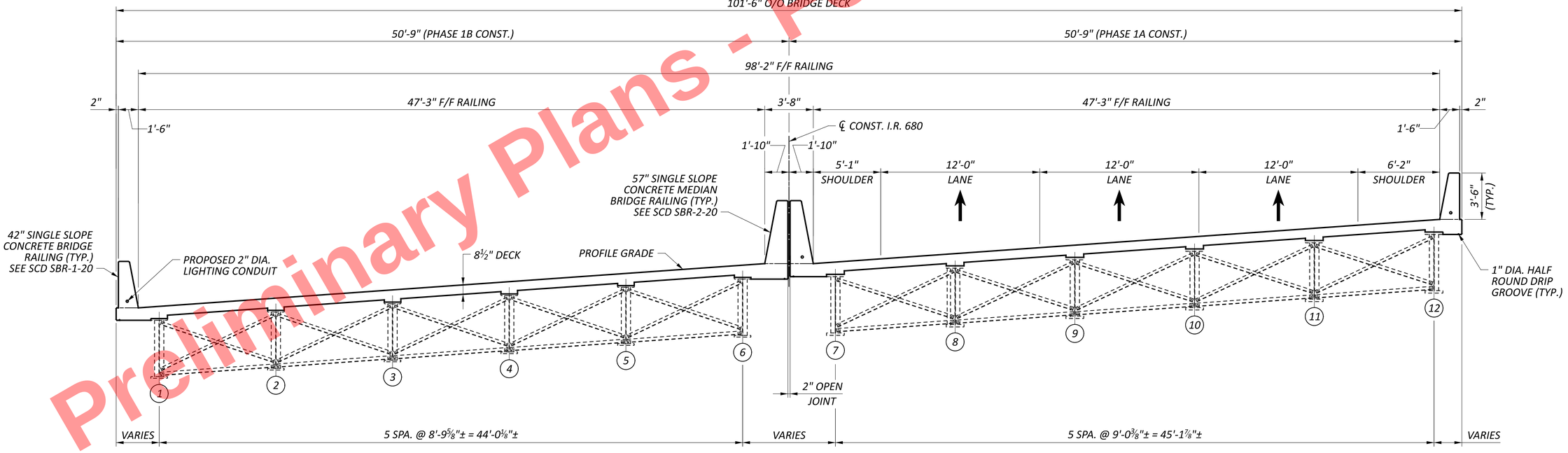

LEFT BRIDGE (N.B.)

PHASE 1B CONSTRUCTION & MOT
(LOOKING UPSTATION)

RIGHT BRIDGE (S.B.)

LEGEND

(1) - DENOTES GIRDER NUMBER

- ITEM 202 - PORTIONS OF STRUCTURE REMOVED OVER 20 FOOT SPAN, AS PER PLAN

Preliminary Plans - For Reference Only

PHASE 1B CONSTRUCTION
BRIDGE NO. MAH-00680-04.886
OVER PRICE ROAD & MILL CREEK

SFN 5006872
DESIGN AGENCY
ms consultants, inc.
DESIGNER JSE | CHECKER SJR
REVIEWER WER 05/30/25
PROJECT ID 121474
SUBSET 8 | TOTAL 64
SHEET P.493 | TOTAL 655

MAH-680-0.00

MODEL: Sheet PAPERSIZE: 34x22 (in.) DATE: 9/15/2025 TIME: 11:14:10 AM PLTDRV: OHDOT_PDF_Color_E+.pltcfg PENTBL: OHDOT_Pen.tbl USER: WORKSPACE: OHDOTCEv02 WORKSET: 121474 PRODUCT: OpenRoadsDesigner 10.12.02.4
pw:\\ohiodot-pw.bentley.com:ohiodot-pw-02\Documents\01 Active Projects\District 04\Mahoning\121474\402-Engineering_MSConsultants\Structures\SFN_5006872\Sheets\121474_SFN_5006872_SC002.dgn

SEQUENCE OF CONSTRUCTION

PHASE 1A REMOVALS AND CONSTRUCTION

1. *CONSTRUCT NORTHERN AND SOUTHERN CROSSOVERS.*
2. *CLOSE RAMP 'E' AND PLACE NORTHBOUND DETOUR.*
3. *PLACE TRAFFIC CONTROL AND PORTABLE BARRIER.*
4. *DIVERT SOUTHBOUND TRAFFIC AND MAINTAIN TWO LANES ON THE NORTHBOUND BRIDGE.*

SOUTHBOUND BRIDGE

5. *INSTALL FALSEWORK FOR NECESSARY PROTECTION UNDER THE BRIDGE.*
6. *REMOVE APPROACH SLAB PARAPETS AND PORTIONS OF APPROACH SLAB AND INSTALL EXCAVATION BRACING AT ABUTMENTS.*
7. *REMOVE EXISTING LIGHT POLES, BRIDGE DECK AND PORTIONS OF EXISTING APPROACH SLABS AS NOTED ON THE PLANS. INSTALL NEW ROCK CHANNEL PROTECTION AT FORWARD ABUTMENT.*
8. *JACK AND SUPPORT GIRDERS AT EACH SUBSTRUCTURE PER ITEM 516, JACKING AND TEMPORARY SUPPORT OF SUPERSTRUCTURE, AS PER PLAN.*
9. *REMOVE ABUTMENT ROCKER BEARINGS, BACKWALLS, AND PORTIONS OF BREASTWALLS AND WINGWALLS AS NOTED ON THE PLANS.*
10. *REMOVE EXISTING END CROSSFRAMES AND PERFORM NECESSARY WEB REPAIR AT THE ENDS OF GIRDERS.*
11. *CONSTRUCT NEW ABUTMENT SEATS, SEISMIC PEDESTALS AND PORTIONS OF NEW WINGWALLS. SET NEW ELASTOMERIC EXPANSION BEARINGS.*
12. *REMOVE EXISTING ROCKER BEARINGS AT PIERS 1, 2, 4 AND 5 AND SET NEW ELASTOMERIC EXPANSION BEARINGS.*
13. *AT PIER 3:*

    REMOVE EXISTING BOLSTER BEARINGS AND BOTTOM AND DIAGONAL ANGLES. THE TOP ANGLES SHALL REMAIN IN PLACE FOR LATERAL STABILITY.

    DRILL AND GROUT NEW BEARING ANCHORS AND SET NEW FIXED ELASTOMERIC BEARINGS AS NOTED ON THE PLANS.

    REMOVE TOP ANGLE AND INSTALL NEW CROSSFRAMES.
14. *CHECK AND ENSURE BEARING ALIGNMENT AND RESET FRAMING. COMPLETE FIELD WELDING AT ALL BEARINGS.*
15. *INSTALL NEW END CROSSFRAMES, EXPANSION JOINTS AND SHEAR CONNECTORS.*
16. *PLACE CONCRETE DECK, PARAPETS AND LIGHT POLE PILASTERS.*
17. *CONSTRUCT NEW ABUTMENT BACKWALLS, REMAINING PORTIONS OF WINGWALLS AND PLACE NEW POROUS BACKFILL WITH GEOTEXTILE FABRIC.*
18. *CONSTRUCT NEW APPROACH SLABS AND PARAPETS.*
19. *INSTALL NEW LIGHT POLES.*
20. *SEAL CONCRETE SURFACES.*
21. *TOUCH-UP PAINT STRUCTURAL STEEL AT WELD LOCATIONS.*

PHASE 1B REMOVALS AND CONSTRUCTION

1. *CONTINUE NORTHBOUND DETOUR.*
2. *DIVERT AND MAINTAIN THREE LANES OF TRAFFIC ON THE SOUTHBOUND BRIDGE.*

NORTHBOUND BRIDGE

3. *INSTALL FALSEWORK FOR NECESSARY PROTECTION UNDER THE BRIDGE.*
4. *REMOVE APPROACH SLAB PARAPETS, EXISTING APPROACH SLABS AND BRIDGE DECK AS NOTED ON THE PLANS. INSTALL NEW ROCK CHANNEL PROTECTION AT FORWARD ABUTMENT.*
5. *JACK AND SUPPORT GIRDERS AT EACH SUBSTRUCTURE PER ITEM 516, JACKING AND TEMPORARY SUPPORT OF SUPERSTRUCTURE, AS PER PLAN.*
6. *REMOVE ABUTMENT ROCKER BEARINGS, BACKWALLS, AND PORTIONS OF BREASTWALLS AND WINGWALLS AS NOTED ON THE PLANS.*
7. *REMOVE EXISTING END CROSSFRAMES AND PERFORM NECESSARY WEB REPAIR AT THE ENDS OF GIRDERS.*
8. *CONSTRUCT NEW ABUTMENT SEATS, SEISMIC PEDESTALS AND PORTIONS OF NEW WINGWALLS. SET NEW ELASTOMERIC EXPANSION BEARINGS.*
9. *REMOVE EXISTING ROCKER BEARINGS AT PIERS 1, 2, 4 AND 5 AND SET NEW ELASTOMERIC EXPANSION BEARINGS.*
10. *AT PIER 3:*

    REMOVE EXISTING BOLSTER BEARINGS AND BOTTOM AND DIAGONAL ANGLES. THE TOP ANGLES SHALL REMAIN IN PLACE FOR LATERAL STABILITY.

    DRILL AND GROUT NEW BEARING ANCHORS AND SET NEW FIXED ELASTOMERIC BEARINGS AS NOTED ON THE PLANS.

    REMOVE TOP ANGLE AND INSTALL NEW CROSSFRAMES.
11. *CHECK AND ENSURE BEARING ALIGNMENT AND RESET FRAMING. COMPLETE FIELD WELDING AT ALL BEARINGS.*
12. *INSTALL NEW END CROSSFRAMES, EXPANSION JOINTS AND SHEAR CONNECTORS.*
13. *PLACE NEW CONCRETE DECK AND PARAPETS.*
14. *CONSTRUCT NEW ABUTMENT BACKWALLS, REMAINING PORTIONS OF WINGWALLS AND PLACE NEW POROUS BACKFILL WITH GEOTEXTILE FABRIC.*
15. *CONSTRUCT NEW APPROACH SLABS AND PARAPETS.*
16. *INSTALL NEW LIGHT POLE.*
17. *PERFORM CONCRETE PATCHING OF SUBSTRUCTURES AND CRACK REPAIRS.*
18. *SEAL CONCRETE SURFACES.*
19. *TOUCH-UP PAINT STRUCTURAL STEEL AT WELD LOCATIONS.*
20. *REMOVE TRAFFIC CONTROL AND RESUME NORMAL TRAFFIC PER MAINTENANCE OF TRAFFIC PLANS.*

Preliminary Plans - For Reference Only

SEQUENCE OF CONSTRUCTION NOTES
BRIDGE NO. MAH-00680-04.886
OVER PRICE ROAD & MILL CREEK

SFN 5006872

DESIGN AGENCY

ms consultants, inc.

DESIGNER	CHECKER
JSE	SJR

REVIEWER: WER 05/30/25

PROJECT ID: 121474

SUBSET	TOTAL
9	64

SHEET	TOTAL
P.494	655

MAH-680-0.00

MODEL: Sheet PAPERSIZE: 34x22 (in.) DATE: 9/15/2025 TIME: 11:14:18 AM PLTDRV: OHDOT_PDF_Color_E+.pltcfg PENTBL: OHDOT_Pen.tbl USER: WORKSPACE: OHDOTCEv02 WORKSET: 121474 PRODUCT: OpenRoadsDesigner 10.12.02.4
pw:\\ohiodot-pw.bentley.com:ohiodot-pw-02\Documents\01 Active Projects\District 04\Mahoning\121474\402-Engineering_MSConsultants\Structures\SFN_5006872\Sheets\121474_SFN_5006872_SC003.dgn

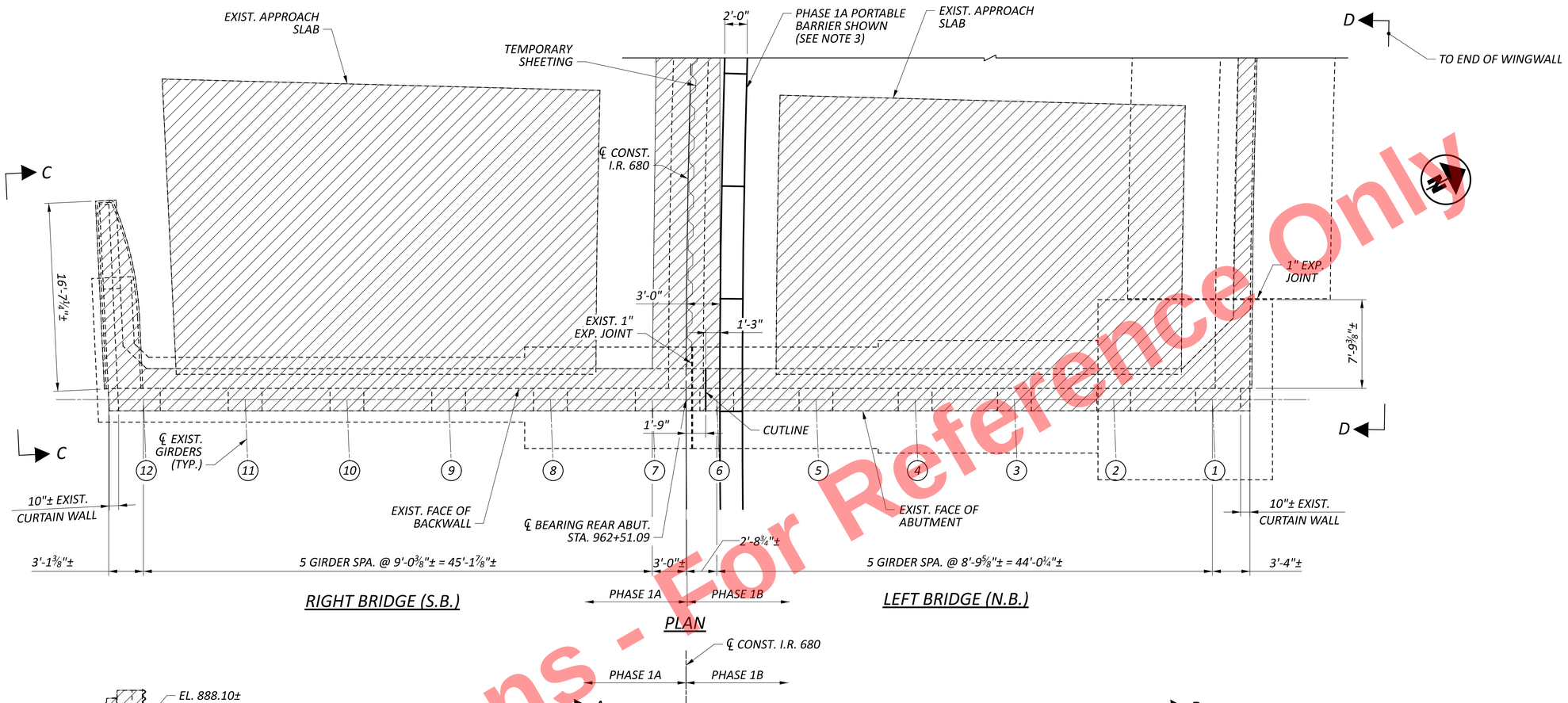

LEGEND:

- ITEM 202 - PORTIONS OF STRUCTURE REMOVED, OVER 20 FOOT SPAN, AS PER PLAN
- (1) - DENOTES GIRDER NUMBER

NOTES:

1. FOR SECTION A-A AND SECTION B-B, SEE SHEET 11/64.
2. FOR VIEW C-C AND VIEW D-D, SEE SHEET 12/64.
3. THE PORTABLE BARRIER SHALL BE ANCHORED IN EACH PHASE WITH 4 ANCHORS PER SEGMENT ON THE TRAFFIC SIDE.

Preliminary Plans - For Reference Only

REAR ABUTMENT REMOVAL PLAN AND ELEVATION
BRIDGE NO. MAH-00680-04.886
OVER PRICE ROAD & MILL CREEK

SFN 5006872
DESIGN AGENCY
ms consultants, inc.
DESIGNER JSE | CHECKER LAW
REVIEWER WER 05/30/25
PROJECT ID 121474
SUBSET 10 | TOTAL 64
SHEET P.495 | TOTAL 655

MAH-680-0.00

MODEL: Sheet PAPERSIZE: 34x22 (in.) DATE: 9/15/2025 TIME: 11:14:33 AM PLTDRV: OHDOT_PDF_Color_Ex.pltcfg PENTBL: OHDOT_Pen.tbl USER: WORKSPACE: OHDOTCEv02 WORKSET: 121474 PRODUCT: OpenRoadsDesigner 10.12.02.4
pw:\\ohiodot-pw.bentley.com:ohiodot-pw-02\Documents\01 Active Projects\District 04\Mahoning\121474\02-Engineering_MSConsultants\Structures\SFN_5006872\Sheets\121474_SFN_5006872_SV002.dgn
pw:\\ohiodot-pw.bentley.com:ohiodot-pw-02\Documents\01 Active Projects\District 04\Mahoning\121474\02-Engineering_MSConsultants\Structures\SFN_5006872\Structures\SFN_5006872\Sheets\121474_SFN_5006872_SV002.dgn

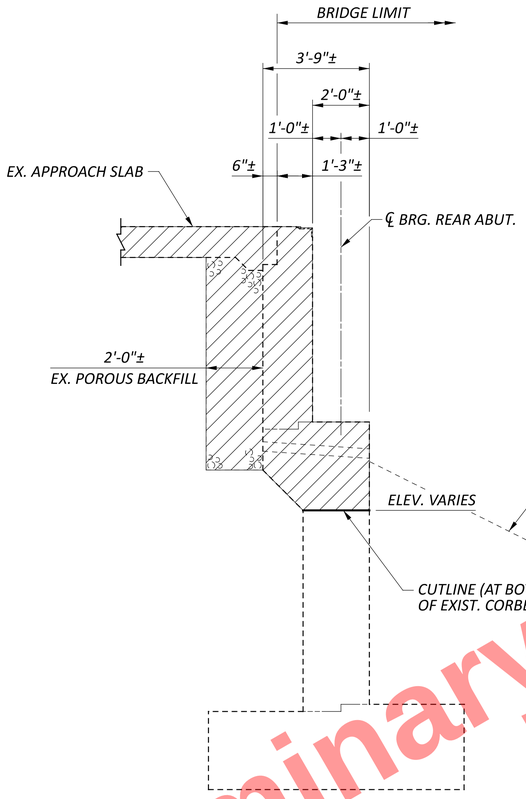

SECTION A-A

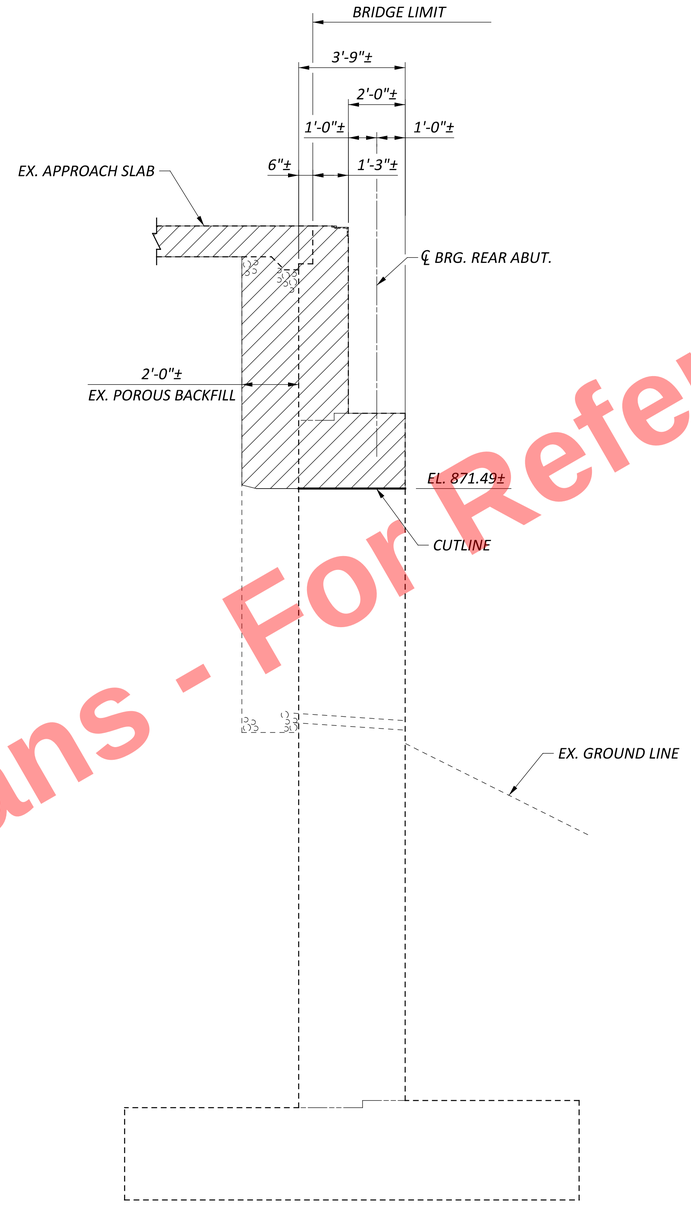

SECTION B-B

LEGEND:

- ITEM 202 - PORTIONS OF STRUCTURE REMOVED, OVER 20 FOOT SPAN, AS PER PLAN

NOTES:

1. FOR LOCATION OF SECTION A-A AND SECTION B-B, SEE SHEET 10/64.

Preliminary Plans - For Reference Only

REAR ABUTMENT REMOVAL DETAILS
BRIDGE NO. MAH-00680-04.886
OVER PRIVE ROAD & MILL CREEK

SFN 5006872
DESIGN AGENCY
ms consultants, inc.
DESIGNER JSE | CHECKER LAW
REVIEWER WER 05/30/25
PROJECT ID 121474
SUBSET 11 | TOTAL 64
SHEET P.496 | TOTAL 655

MAH-680-0.00

MODEL: Sheet PAPERSIZE: 34x22 (in.) DATE: 9/15/2025 TIME: 11:14:42 AM PLTDRV: OHDOT_PDF_Color_E+.pltcfg PENTBL: OHDOT_Pen.tbl USER: WORKSPACE: OHDOTCEv02 WORKSET: 121474 PRODUCT: OpenRoadsDesigner 10.12.02.4
pw:\\ohiodot-pw.bentley.com:ohiodot-pw-02\Documents\01 Active Projects\District 04\Mahoning\121474\A02-Engineering_MSConsultants\Structures\SFN_5006872\Sheets\121474_SFN_5006872_SV003.dgn

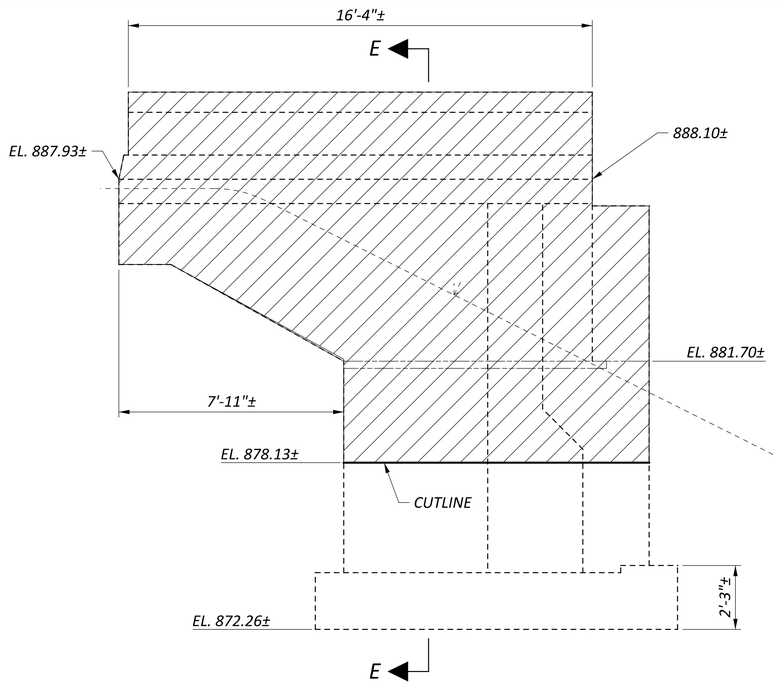

VIEW C-C

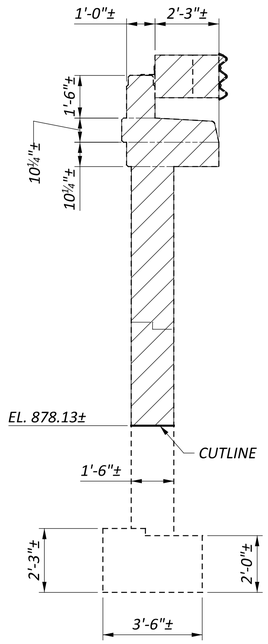

VIEW E-E

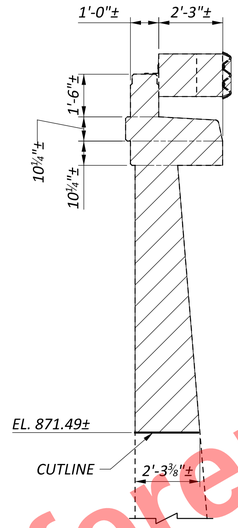

VIEW F-F

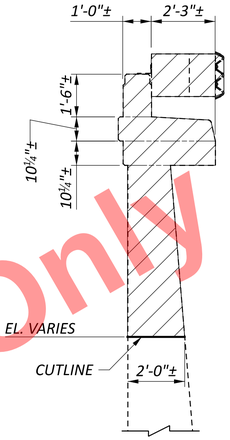

VIEW G-G

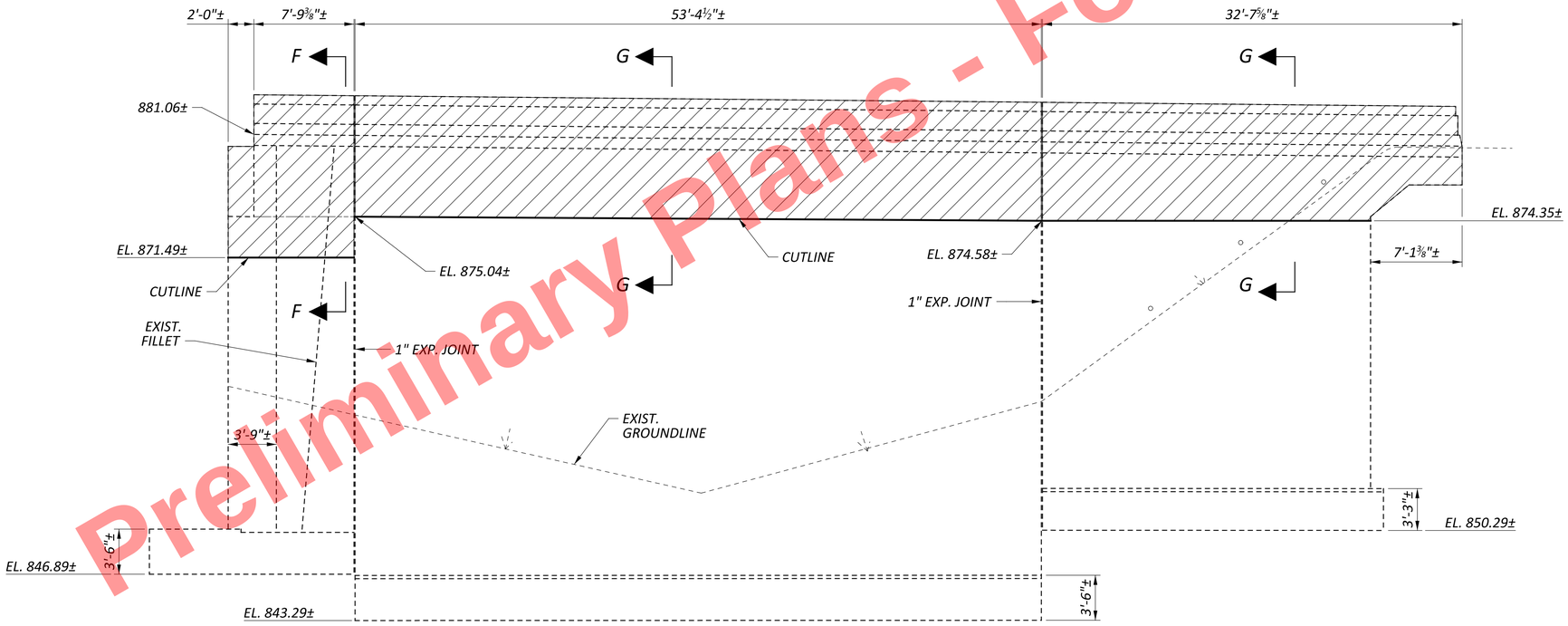

VIEW D-D

LEGEND

- ITEM 202 - PORTIONS OF STRUCTURE REMOVED, OVER 20 FOOT SPAN, AS PER PLAN

NOTES:

1. FOR LOCATION OF VIEW C-C AND VIEW D-D, SEE SHEET 10/64.

Preliminary Plans - For Reference Only

REAR ABUTMENT REMOVAL DETAILS
BRIDGE NO. MAH-00680-04.886
OVER PRICE ROAD & MILL CREEK

SFN 5006872

DESIGN AGENCY
ms consultants. inc.

DESIGNER	CHECKER
JSE	LAW

REVIEWER: WER 05/30/25

PROJECT ID: 121474

SUBSET	TOTAL
12	64

SHEET	TOTAL
P.497	655

MAH-680-0.00

MODEL: Sheet PAPERSIZE: 34x22 (in.) DATE: 9/15/2025 TIME: 11:14:51 AM PLTDRV: OHDOT_PDF_Color_E+.pltcfg PENTBL: OHDOT_Pen.tbl USER: WORKSPACE: OHDOTCEv02 WORKSET: 121474 PRODUCT: OpenRoadsDesigner 10.12.02.4
pw:\\ohiodot-pw.bentley.com:ohiodot-pw-02\Documents\01 Active Projects\District 04\Mahoning\121474\402-Engineering_MSConsultants\Structures\SFN_5006872\Sheets\121474_SFN_5006872_SV001.dgn

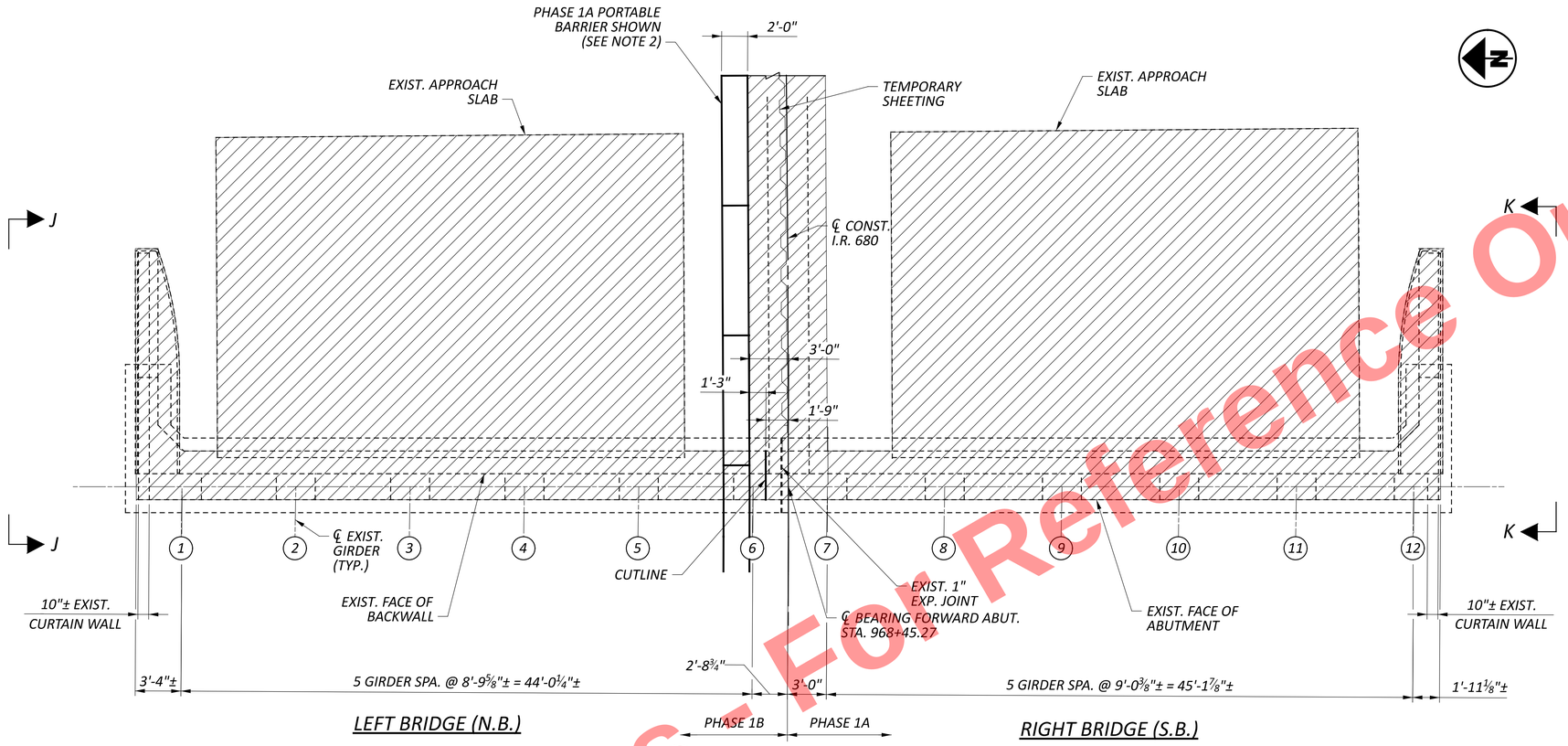

PLAN

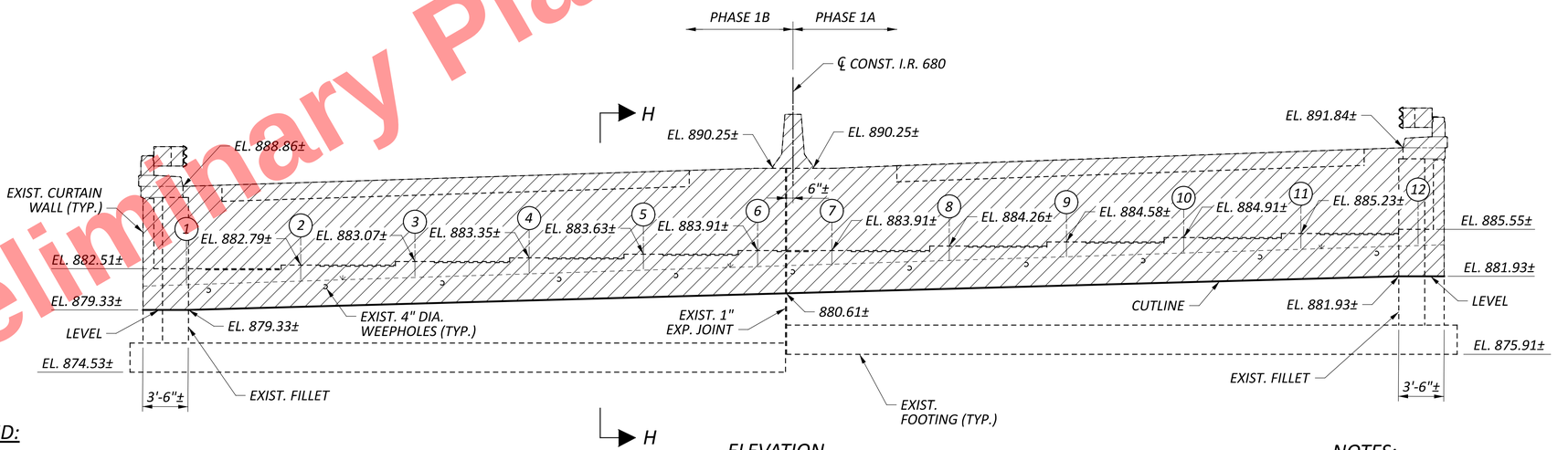

ELEVATION

LEGEND:

- ITEM 202 - PORTIONS OF STRUCTURE REMOVED, OVER 20 FOOT SPAN, AS PER PLAN
- (1) - DENOTES GIRDER NUMBER

NOTES:

1. FOR SECTION H-H, VIEW J-J AND VIEW K-K, SEE SHEET 14/64.
2. THE PORTABLE BARRIER SHALL BE ANCHORED IN EACH PHASE WITH 4 ANCHORS PER SEGMENT ON THE TRAFFIC SIDE.

Preliminary Plans - For Reference Only

FORWARD ABUTMENT REMOVAL PLAN AND ELEVATION
BRIDGE NO. MAH-00680-04.886
OVER PRICE ROAD & MILL CREEK

SFN	5006872
DESIGN AGENCY	ms consultants, inc.
DESIGNER	JSE
CHECKER	LAW
REVIEWER	WER 05/30/25
PROJECT ID	121474
SUBSET	13
TOTAL	64
SHEET	P.498
TOTAL	655

MAH-680-0.00

MODEL: Sheet PAPERSIZE: 34x22 (in.) DATE: 9/15/2025 TIME: 11:15:02 AM PLTDRV: OHDOT_PDF_Color_E+.pltcfg PENTBL: OHDOT_Pen.tbl USER: WORKSPACE: OHDOTCEv02 WORKSET: 121474 PRODUCT: OpenRoadsDesigner 10.12.02.4
pw:\\ohiodot-pw.bentley.com:ohiodot-pw-02\Documents\01 Active Projects\District 04\Mahoning\121474\02-Engineering_MSConsultants\Structures\SFN_5006872\Sheets\121474_SFN_5006872_SV004.dgn

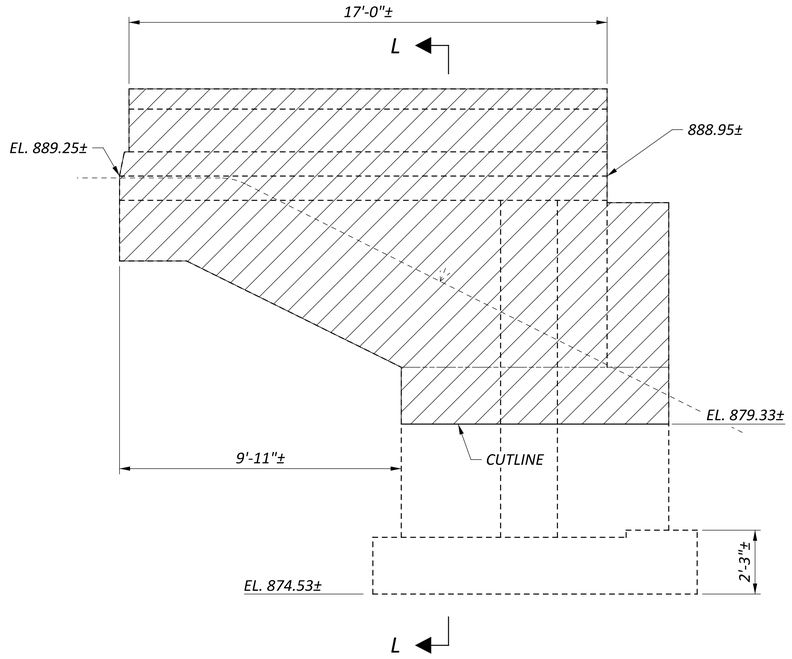

VIEW J-J

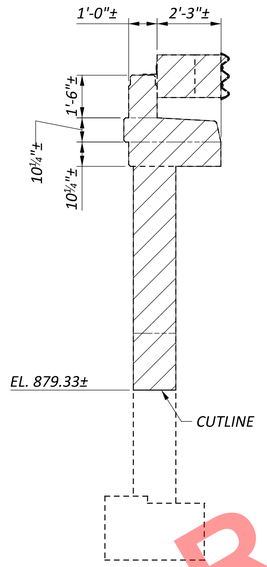

SECTION L-L

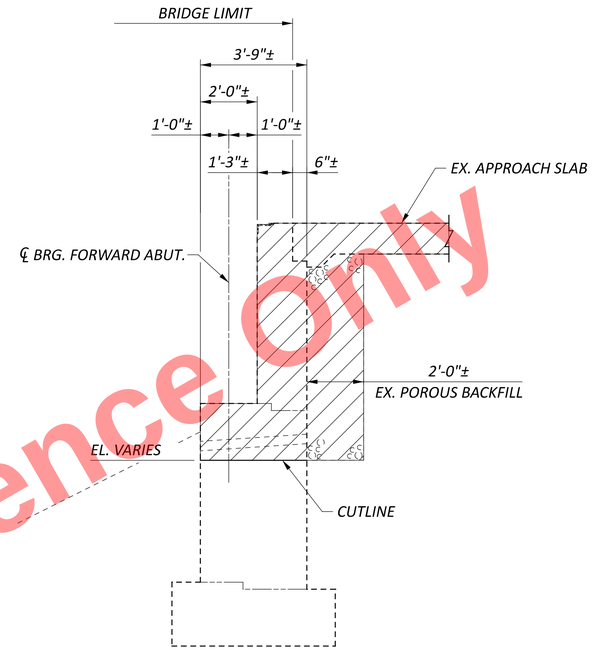

SECTION H-H

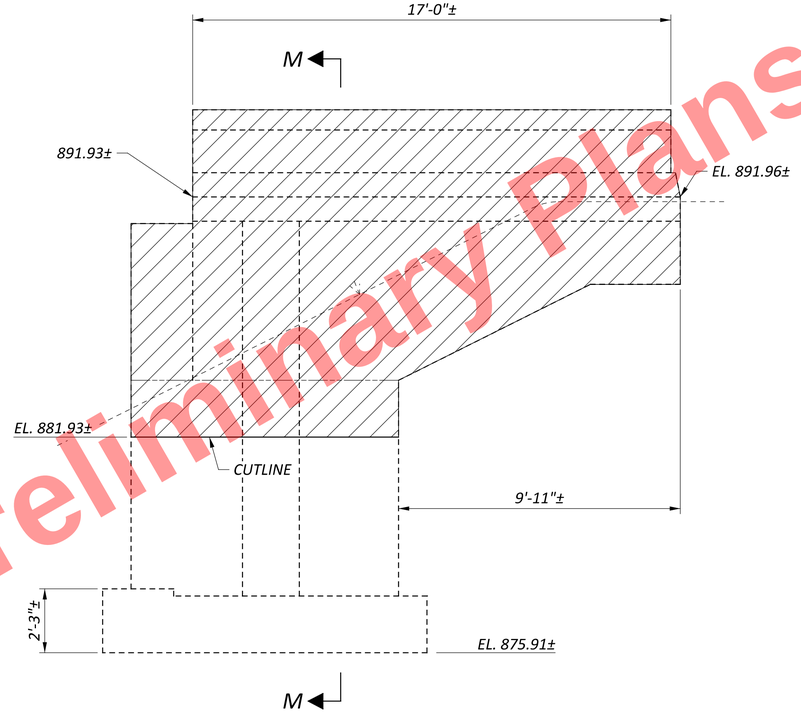

VIEW K-K

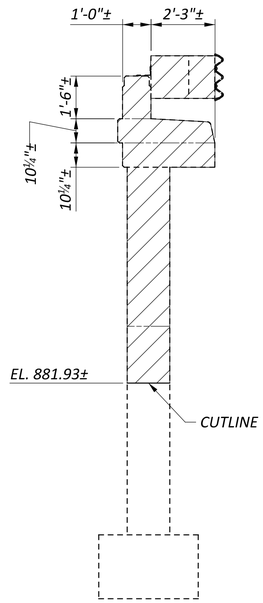

SECTION M-M

LEGEND:

- ITEM 202 - PORTIONS OF STRUCTURE REMOVED, OVER 20 FOOT SPAN, AS PER PLAN

NOTES:

1. FOR LOCATION OF VIEW J-J, VIEW K-K AND SECTION H-H, SEE SHEET 13/64.

Preliminary Plans - For Reference Only

FORWARD ABUTMENT REMOVAL DETAILS
BRIDGE NO. MAH-00680-04.886
OVER PRICE ROAD & MILL CREEK

SFN 5006872

DESIGN AGENCY

ms consultants, inc.

DESIGNER	CHECKER
JSE	LAW

REVIEWER: WER 05/30/25

PROJECT ID: 121474

SUBSET	TOTAL
14	64

SHEET	TOTAL
P.499	655

MAH-680-0.00

MODEL: Sheet PAPERSIZE: 34x22 (in.) DATE: 9/15/2025 TIME: 11:15:14 AM PLTDRV: OHDOT_PDF_Color_E+.pltcfg PENTBL: OHDOT_Pen.tbl USER: WORKSPACE: OHDOTCEv02 WORKSET: 121474 PRODUCT: OpenRoadsDesigner 10.12.02.4
pw:\\ohiodot-pw.bentley.com:ohiodot-pw-02\Documents\01 Active Projects\District 04\Mahoning\121474\402-Engineering_MSConsultants\Structures\SFN_5006872\Sheets\121474_SFN_5006872_SV005.dgn

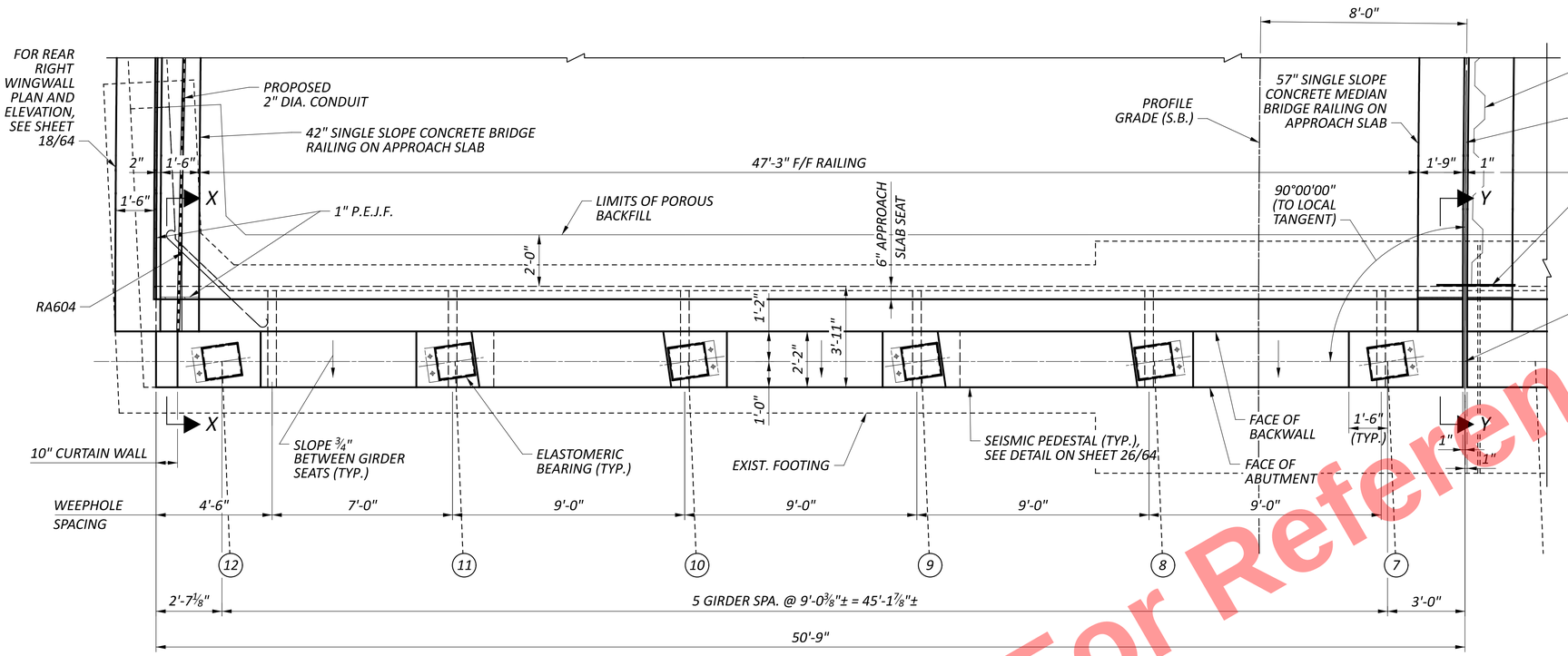

LEGEND:

(7) - INDICATES GIRDER NUMBER

NOTES:

1. FOR SECTION A-A, SEE SHEET 17/64.
2. FOR SEISMIC PEDESTAL DETAIL, SEE SHEET 26/64.
3. BRIDGE SEAT REINFORCING, SETTING ANCHORS: ACCURATELY PLACE REINFORCING STEEL IN THE VICINITY OF THE BRIDGE SEAT TO AVOID INTERFERENCE WITH THE DRILLING OF BEARING ANCHOR HOLES OR THE PRE-SETTING OF BEARING ANCHORS.
4. ADJUST ABUTMENT REINFORCEMENT AS NECESSARY TO PLACE SEISMIC PEDESTAL REINFORCEMENT.
5. FOR ELASTOMERIC BEARING DETAILS, SEE SHEET 37/64.
6. 3'-0" WIDE NEOPRENE MATERIAL CENTERED ON JOINT FROM 1'-6" BELOW CUTLINE C.J. TO BOTTOM OF APPROACH SLAB. DURING PHASE 1A, ADHERE 1'-6" VERTICAL WIDTH, FOLD BACK ALONG TEMPORARY SHEETING AND PROTECT. ADHERE REMAINDER AFTER PHASE 1B IS CONSTRUCTED.
7. FOR RAILING ON BACKWALL DETAILS AND CURTAIN WALL DETAILS, SEE SHEET 22/64.
8. MINIMUM REBAR LAPS:

   #5 BAR = 2'-5"
   #6 BAR = 3'-7"
9. ALL ABUTMENT AND WINGWALL DOWELS SHALL BE GALVANIZED PER 509.12.
10. FOR SECTION X-X AND SECTION Y-Y, SEE SHEET 22/64.

For Reference Only
Preliminary Plans - For

REAR RIGHT ABUTMENT PLAN AND ELEVATION (PHASE 1A)
BRIDGE NO. MAH-00680-04.886
OVER PRICE ROAD & MILL CREEK

SFN 5006872
DESIGN AGENCY
ms consultants. inc.
DESIGNER JSE | CHECKER LAW
REVIEWER WER 05/30/25
PROJECT ID 121474
SUBSET 15 | TOTAL 64
SHEET P.500 | TOTAL 655

MAH-680-0.00

MODEL: Sheet PAPERSIZE: 34x22 (in.) DATE: 9/15/2025 TIME: 11:15:21 AM PLTDRV: OHDOT_PDF_Color_E+.pltcfg PENTBL: OHDOT_Pen.tbl USER: WORKSPACE: OHDOTCEv02 WORKSET: 121474 PRODUCT: OpenRoadsDesigner 10.12.02.4
pw:\\ohiodot-pw.bentley.com:ohiodot-pw-02\Documents\01 Active Projects\District 04\Mahoning\121474\402-Engineering_MSConsultants\Structures\SFN_5006872\Sheets\121474_SFN_5006872_SR003.dgn

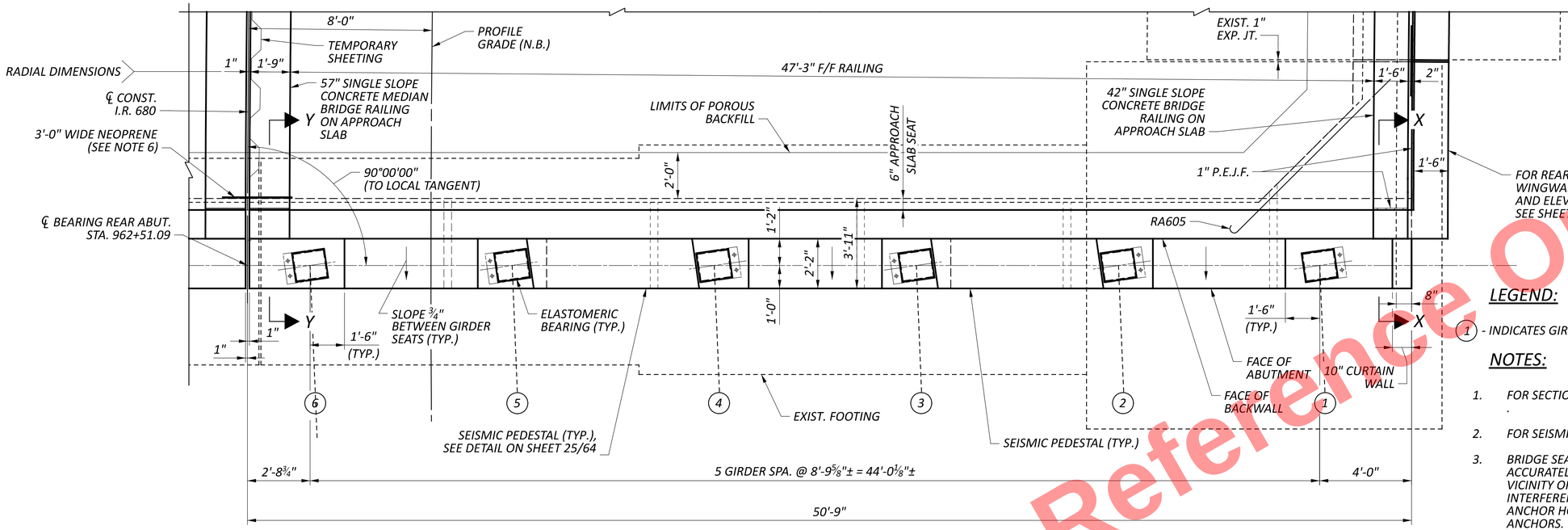

PLAN

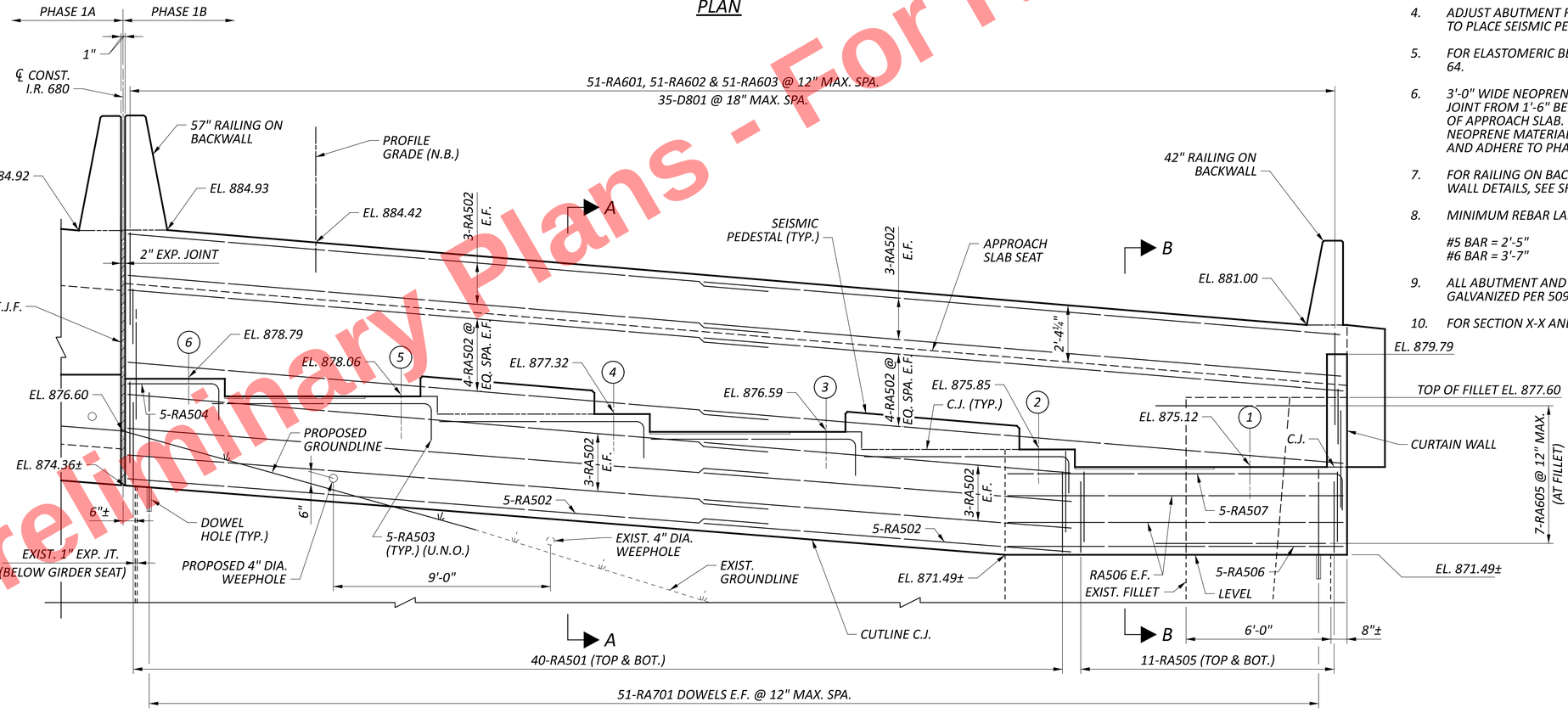

ELEVATION

LEGEND:

(1) - INDICATES GIRDER NUMBER

NOTES:

1. FOR SECTION A-A AND SECTION B-B, SEE SHEET 17/64 .
2. FOR SEISMIC PEDESTAL DETAIL, SEE SHEET 25/64.
3. BRIDGE SEAT REINFORCING, SETTING ANCHORS: ACCURATELY PLACE REINFORCING STEEL IN THE VICINITY OF THE BRIDGE SEAT TO AVOID INTERFERENCE WITH THE DRILLING OF BEARING ANCHOR HOLES OR THE PRE-SETTING OF BEARING ANCHORS.
4. ADJUST ABUTMENT REINFORCEMENT AS NECESSARY TO PLACE SEISMIC PEDESTAL REINFORCEMENT.
5. FOR ELASTOMERIC BEARING DETAILS, SEE SHEET 37/64.
6. 3'-0" WIDE NEOPRENE MATERIAL CENTERED ON JOINT FROM 1'-6" BELOW CUTLINE C.J. TO BOTTOM OF APPROACH SLAB. DURING PHASE 1B, UNFOLD NEOPRENE MATERIAL INSTALLED DURING PHASE 1A AND ADHERE TO PHASE 1B BACKWALL.
7. FOR RAILING ON BACKWALL DETAILS AND CURTAIN WALL DETAILS, SEE SHEET 22/64.
8. MINIMUM REBAR LAPS:

   #5 BAR = 2'-5"
   #6 BAR = 3'-7"
9. ALL ABUTMENT AND WINGWALL DOWELS SHALL BE GALVANIZED PER 509.12.
10. FOR SECTION X-X AND SECTION Y-Y, SEE SHEET 22/64.

Preliminary Plans - For Reference Only

REAR LEFT ABUTMENT PLAN AND ELEVATION (PHASE 1B)
BRIDGE NO. MAH-00680-04.886
OVER PRICE ROAD & MILL CREEK

SFN	5006872
DESIGN AGENCY	ms consultants, inc.
DESIGNER	JSE
CHECKER	LAW
REVIEWER	WER 05/30/25
PROJECT ID	121474
SUBSET	16
TOTAL	64
SHEET	P.501
TOTAL	655

MAH-680-0.00

MODEL: Sheet PAPERSIZE: 34x22 (in.) DATE: 9/15/2025 TIME: 11:15:28 AM PLTDRV: OHDOT_PDF_Color_E+.pltcfg PENTBL: OHDOT_Pen.tbl USER: WORKSPACE: OHDOTCEv02 WORKSET: 121474 PRODUCT: OpenRoadsDesigner 10.12.02.4
pw:\\ohiodot-pw.bentley.com:ohiodot-pw-02\Documents\01 Active Projects\District 04\Mahoning\121474\02-Engineering_MSConsultants\Structures\SFN_5006872\Sheets\121474_SFN_5006872_SR002.dgn

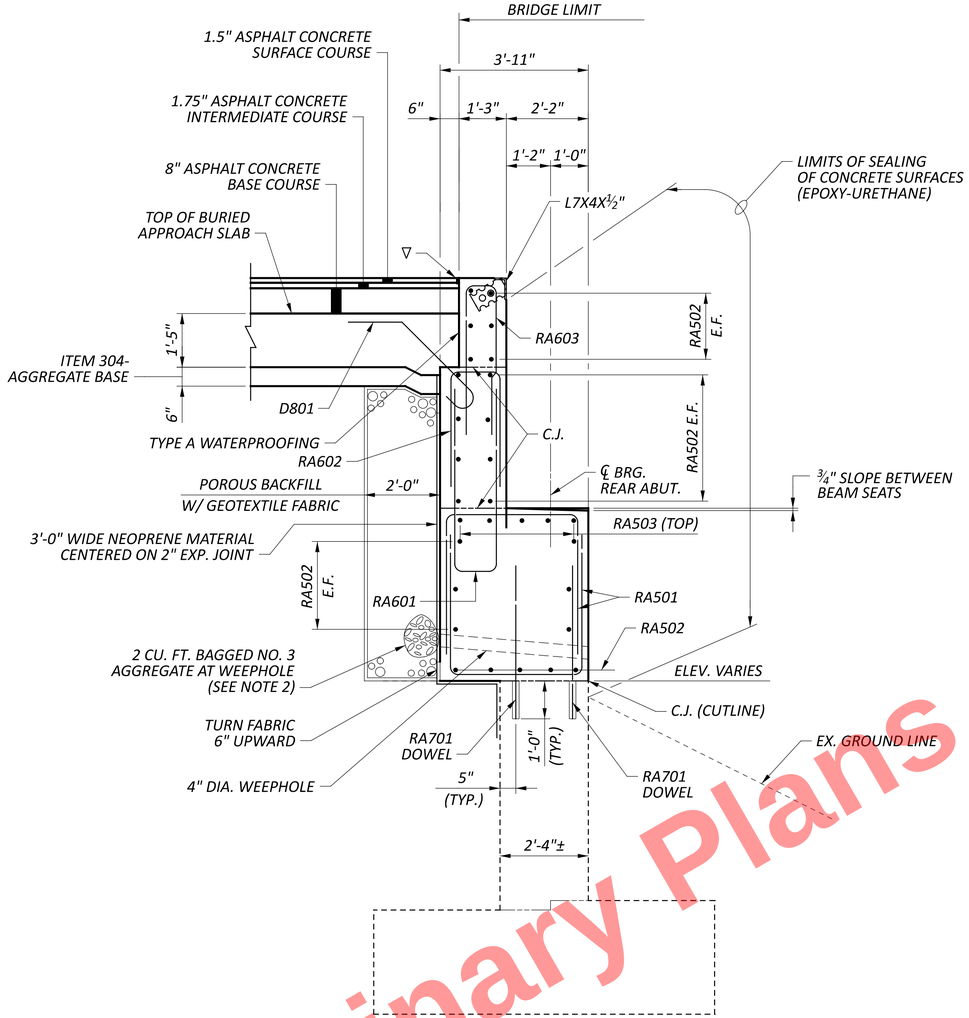

SECTION A-A

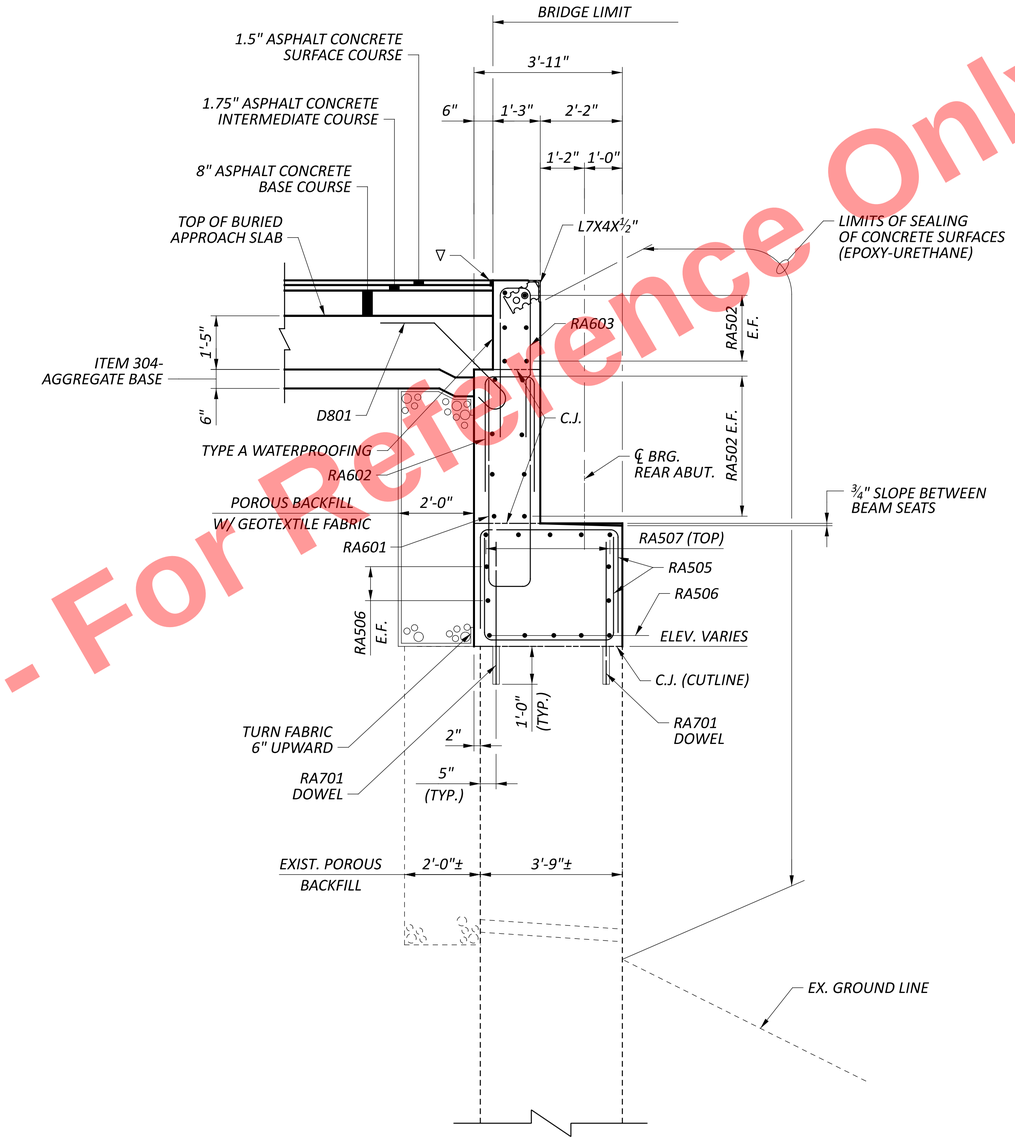

SECTION B-B

LEGEND:

∇ - *SEE DETAIL B, STD. DWG. AS-1-15.*

NOTES:

1. *FOR LOCATION OF SECTIONS A-A AND SECTION B-B, SEE SHEETS 15/64 AND 16/64.*
2. *NO. 3 BAGGED AGGREGATE SHALL BE INCLUDED WITH POROUS BACKFILL FOR PAYMENT.*

Preliminary Plans - For Reference Only

REAR ABUTMENT SECTIONS
BRIDGE NO. MAH-00680-04.886
OVER PRICE ROAD & MILL CREEK

SFN 5006872
DESIGN AGENCY
ms consultants. inc.
DESIGNER JSE | CHECKER LAW
REVIEWER WER 05/30/25
PROJECT ID 121474
SUBSET 17 | TOTAL 64
SHEET P.502 | TOTAL 655

MAH-680-0.00

MODEL: Sheet PAPERSIZE: 34x22 (in.) DATE: 9/15/2025 TIME: 11:15:34 AM PLTDRV: OHDOT_PDF_Color_E+.pltcfg PENTBL: OHDOT_Pen.tbl USER: WORKSPACE: OHDOTCEv02 WORKSET: 121474 PRODUCT: OpenRoadsDesigner 10.12.02.4
pw:\\ohiodot-pw.bentley.com:ohiodot-pw-02\Documents\01 Active Projects\District 04\Mahoning\121474\402-Engineering_MSConsultants\Structures\SFN_5006872\Sheets\121474_SFN_5006872_SR001.dgn

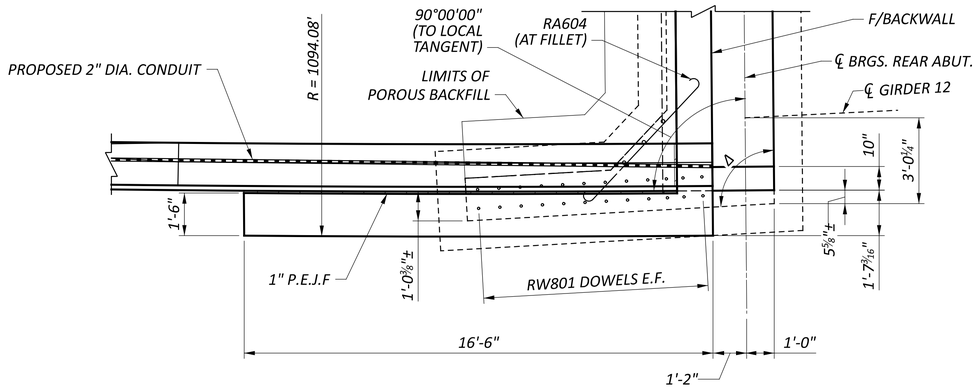

PLAN

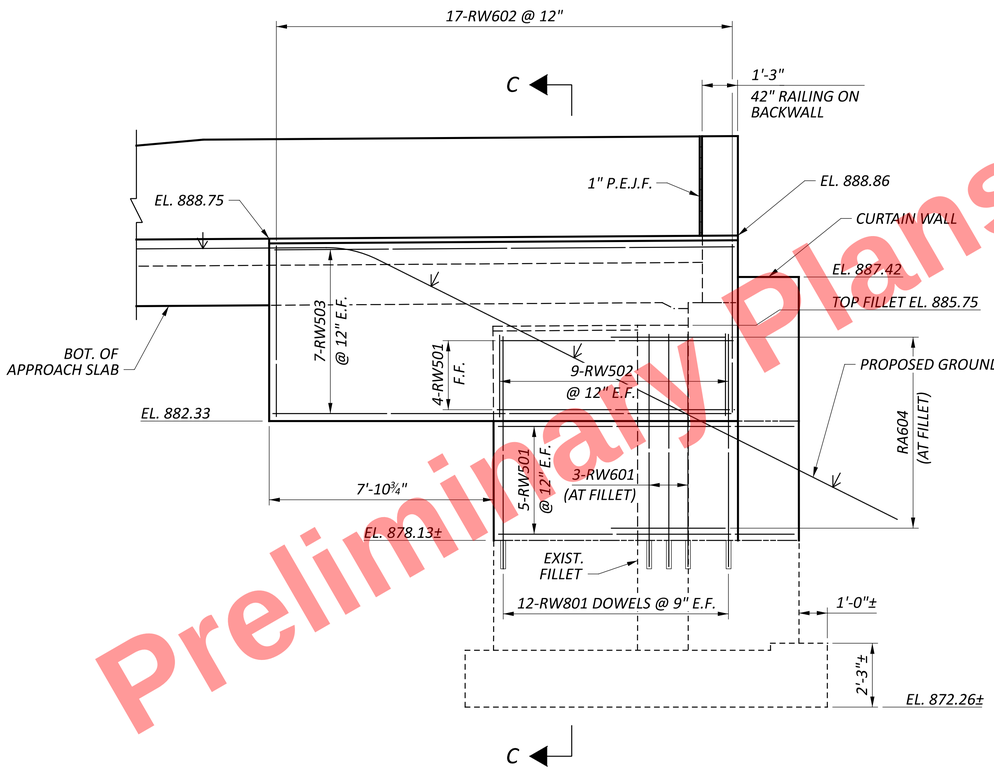

ELEVATION

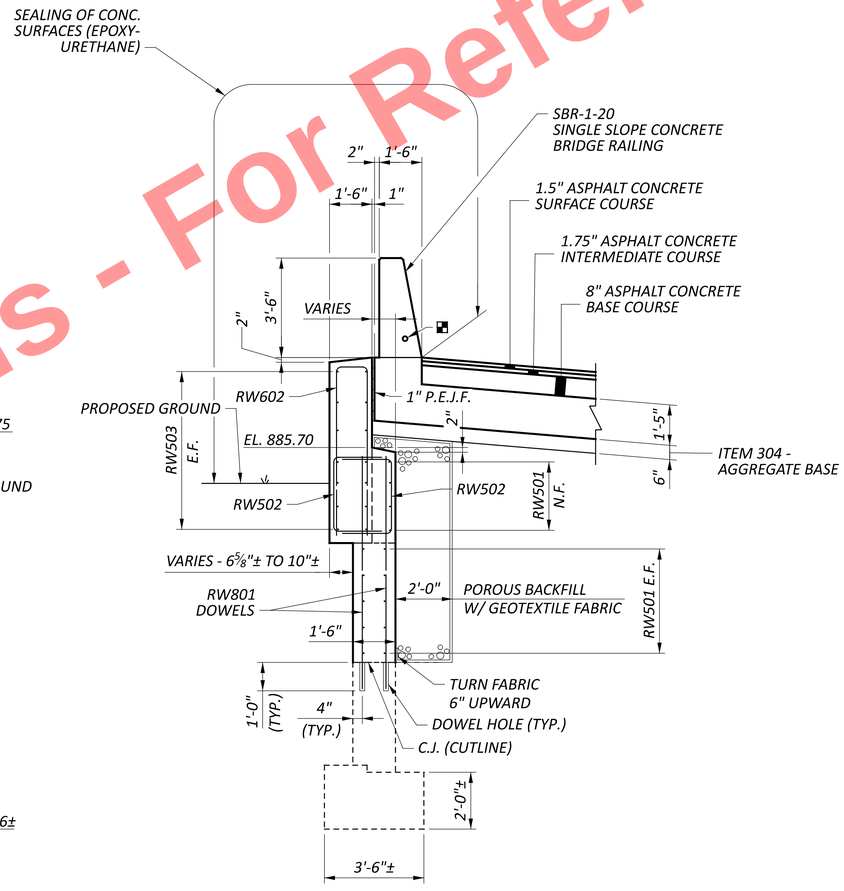

SECTION C-C

LEGEND

- ■ - PROPOSED 2" DIA. CONDUIT
- Δ - 92°43'21"

NOTES:

1. FOR RAILING ON APPROACH SLAB DETAILS, SEE SHEET 59/64.
2. FOR 42" RAILING ON BACKWALL, SEE DETAIL 1, SHEET 22/64.
3. FOR CURTAIN WALL DETAILS, SEE SHEET 22/64.

Preliminary Plans - For Reference Only

REAR ABUTMENT RIGHT WINGWALL PLAN AND ELEVATION
BRIDGE NO. MAH-00680-04.886
OVER PRICE ROAD & MILL CREEK

SFN	5006872
DESIGN AGENCY	ms consultants, inc.
DESIGNER	JSE
CHECKER	LAW
REVIEWER	WER 05/30/25
PROJECT ID	121474
SUBSET	18
TOTAL	64
SHEET	P.503
TOTAL	655

MAH-680-0.00

MODEL: Sheet PAPERSIZE: 34x22 (in.) DATE: 9/15/2025 TIME: 11:15:40 AM PLTDRV: OHDOT_PDF_Color_E+.pltcfg PENTBL: OHDOT_Pen.tbl USER: WORKSPACE: OHDOTCEv02 WORKSET: 121474 PRODUCT: OpenRoadsDesigner 10.12.02.4
pw:\\ohiodot-pw.bentley.com:ohiodot-pw-02\Documents\01 Active Projects\District 04\Mahoning\121474\402-Engineering_MSConsultants\Structures\SFN_5006872\Sheets\121474_SFN_5006872_SR004.dgn

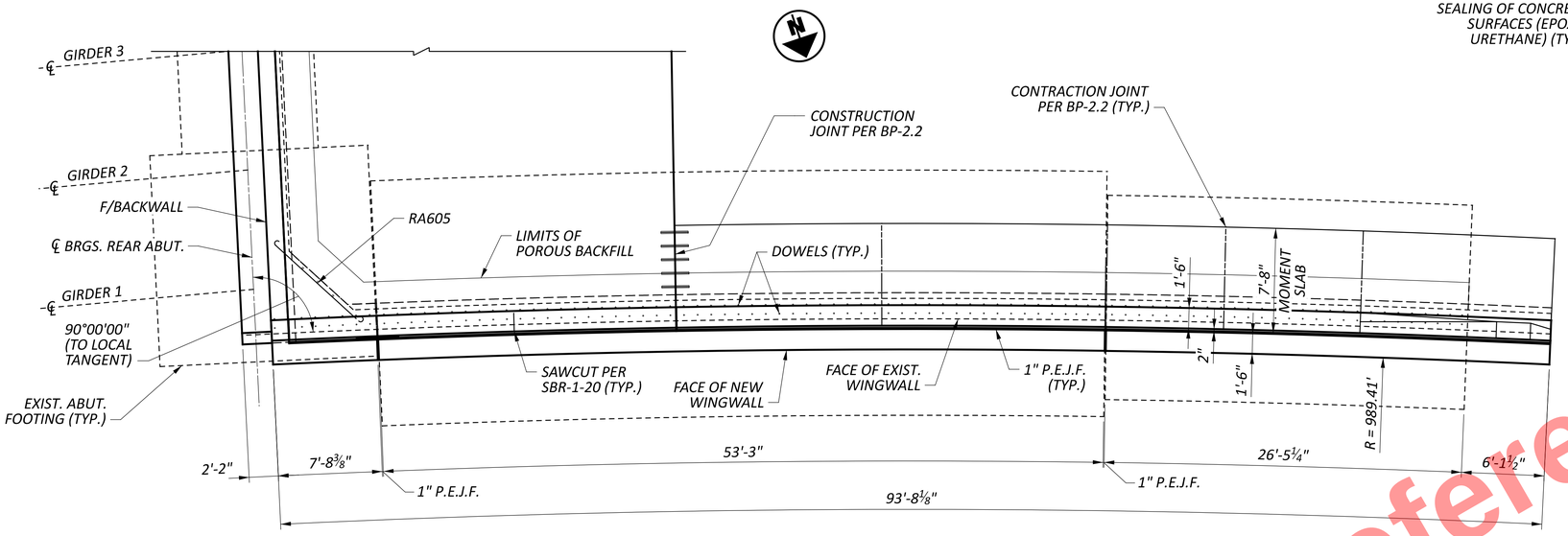

PLAN

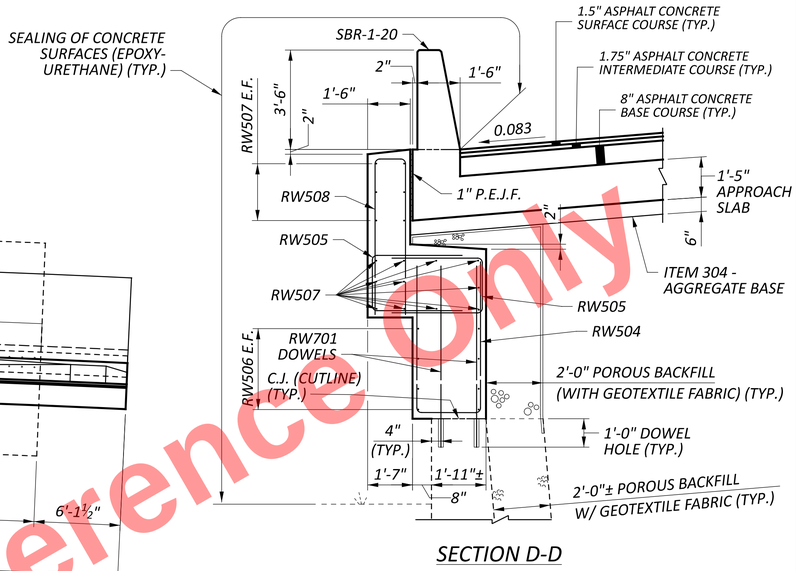

SECTION D-D

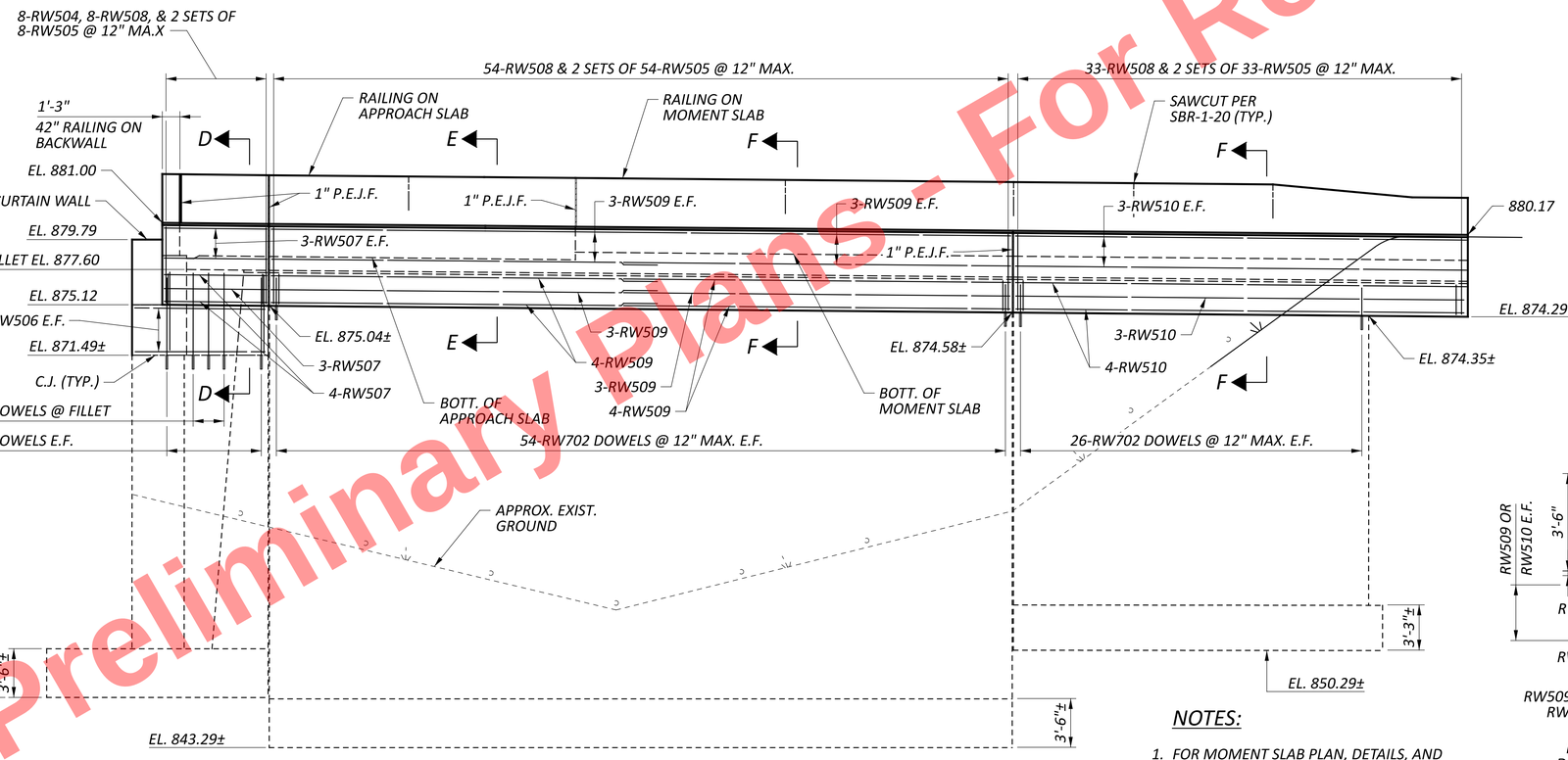

ELEVATION

NOTES:

1. FOR MOMENT SLAB PLAN, DETAILS, AND PARAPET DETAILS SEE SHEET 61/64.
2. FOR RAILING ON APPROACH SLAB DETAILS, SEE SHEET 58/64.
3. FOR 42" RAILING ON BACKWALL, SEE DETAIL 1, SHEET 22/64.
4. FOR CURTAIN WALL DETAIL, SEE SHEET 22/64.

SECTION E-E

(FOR INFORMATION NOT SHOWN, SEE SECTION D-D)

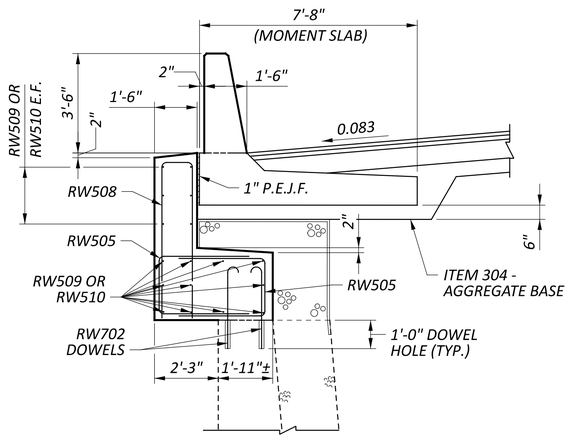

SECTION F-F

(FOR INFORMATION NOT SHOWN, SEE SECTION D-D)

Preliminary Plans - For Reference Only

REAR ABUTMENT LEFT WINGWALL PLAN AND ELEVATION
BRIDGE NO. MAH-00680-04.886
OVER PRICE ROAD & MILL CREEK

SFN 5006872
DESIGN AGENCY ms consultants, inc.
DESIGNER JSE | CHECKER LAW
REVIEWER WER 05/30/25
PROJECT ID 121474
SUBSET 19 | TOTAL 64
SHEET P.504 | TOTAL 655

MAH-680-0.00

MODEL: Sheet PAPERSIZE: 34x22 (in.) DATE: 9/15/2025 TIME: 11:15:47 AM PLTDRV: OHDOT_PDF_Color_Ex.pltcfg PENTBL: OHDOT_Pen.tbl USER: WORKSPACE: OHDOTCEv02 WORKSET: 121474 PRODUCT: OpenRoadsDesigner 10.12.02.4
pw:\\ohiodot-pw.bentley.com:ohiodot-pw-02\Documents\01 Active Projects\District 04\Mahoning\121474\02-Engineering_MSConsultants\Structures\SFN_5006872_SR005.dgn
FN_5006872\Sheets\121474_SFN_5006872_SR005.dgn

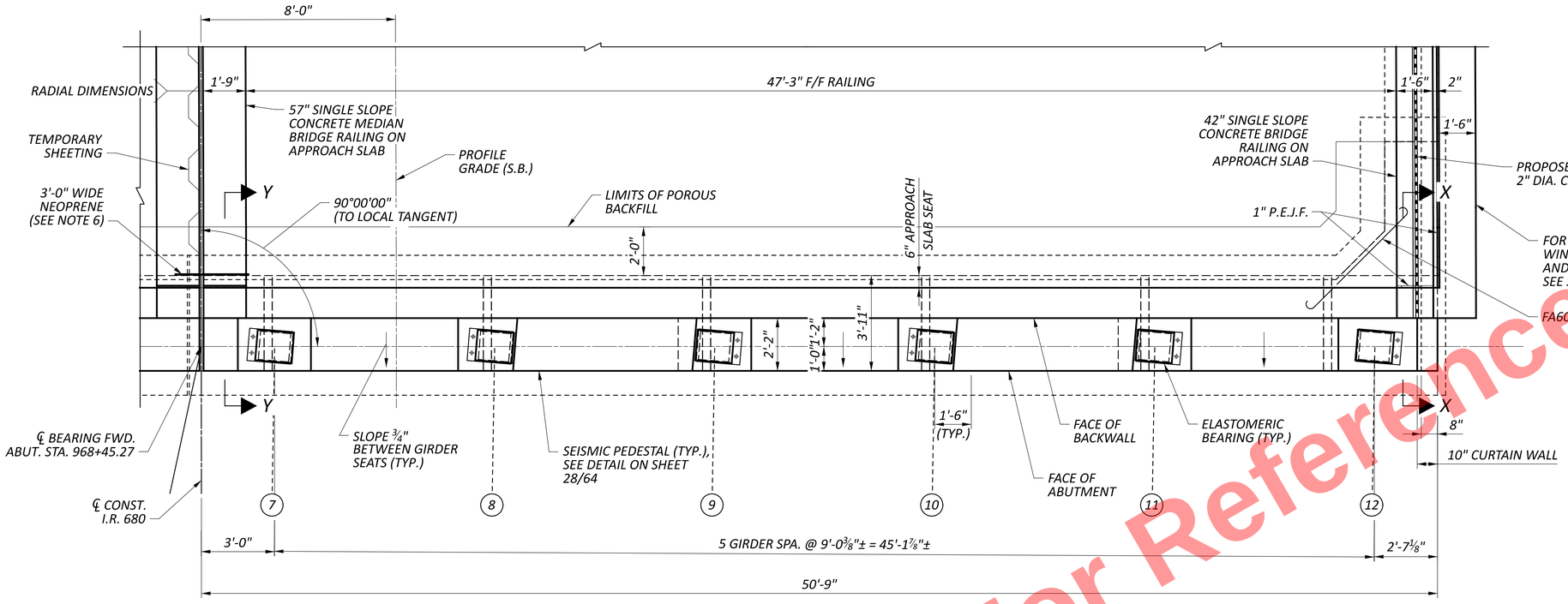

PLAN

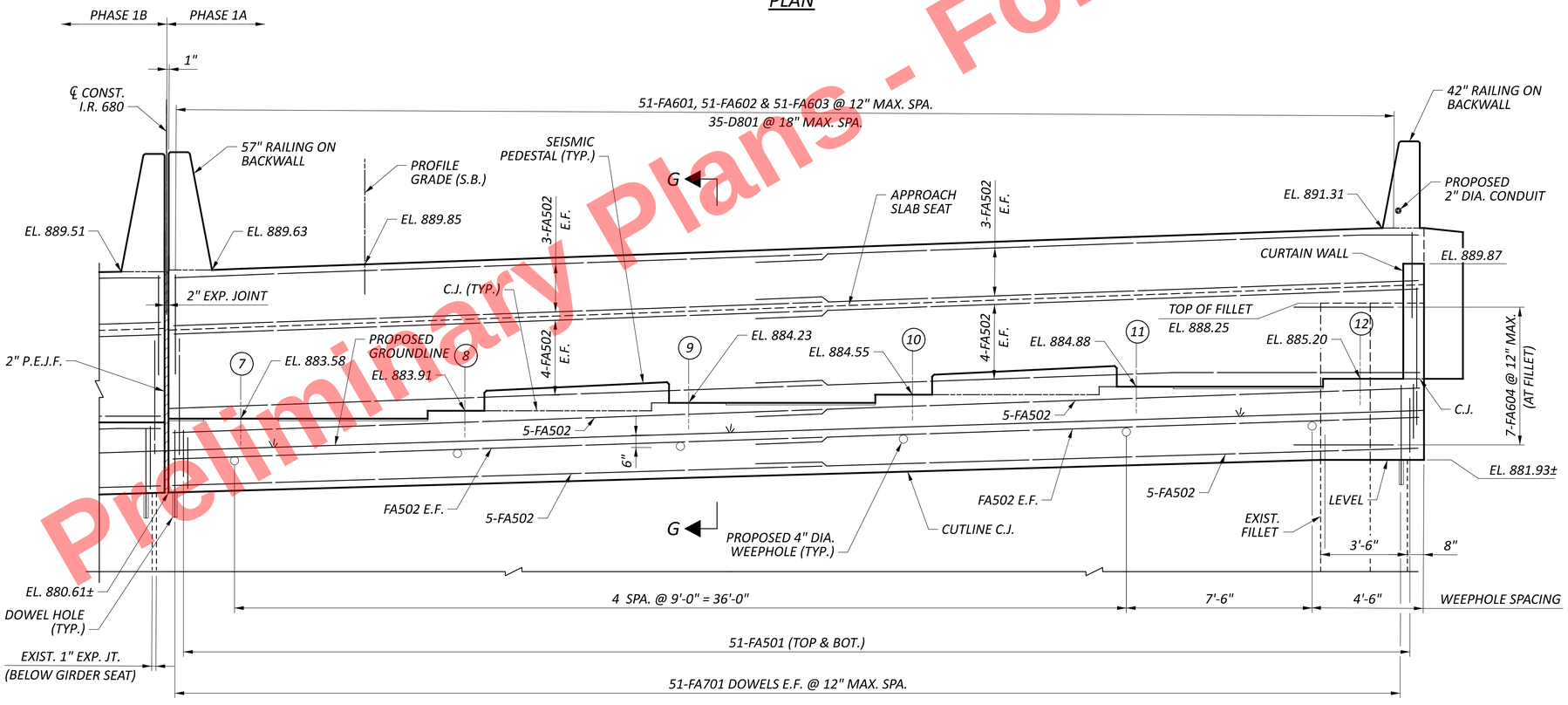

ELEVATION

LEGEND:

(7) - INDICATES GIRDER NUMBER

NOTES:

1. FOR SECTION G-G, SECTION X-X AND SECTION Y-Y, SEE SHEET 22/64.
2. FOR SEISMIC PEDESTAL DETAIL, SEE SHEET 28/64.
3. BRIDGE SEAT REINFORCING, SETTING ANCHORS: ACCURATELY PLACE REINFORCING STEEL IN THE VICINITY OF THE BRIDGE SEAT TO AVOID INTERFERENCE WITH THE DRILLING OF BEARING ANCHOR HOLES OR THE PRE-SETTING OF BEARING ANCHORS.
4. ADJUST ABUTMENT REINFORCEMENT AS NECESSARY TO PLACE SEISMIC PEDESTAL REINFORCEMENT.
5. FOR ELASTOMERIC BEARING DETAILS, SEE SHEET 37/64.
6. 3'-0" WIDE NEOPRENE MATERIAL CENTERED ON JOINT FROM 1'-6" BELOW CUTLINE C.J. TO BOTTOM OF APPROACH SLAB. DURING PHASE 1A, ADHERE 1'-6" VERTICAL WIDTH, FOLD BACK ALONG TEMPORARY SHEETING AND PROTECT. ADHERE REMAINDER AFTER PHASE 1B IS CONSTRUCTED.
7. FOR RAILING ON BACKWALL DETAILS AND CURTAIN WALL DETAILS, SEE SHEET 22/64.
8. MINIMUM REBAR LAPS:

   #5 BAR = 2'-5"
   #6 BAR = 3'-7"
9. ALL ABUTMENT AND WINGWALL DOWELS SHALL BE GALVANIZED PER 509.12.

Preliminary Plans - For Reference Only

RIGHT ABUTMENT PLAN AND ELEVATION (PHASE 1A)
BRIDGE NO. MAH-00680-04.886
OVER PRICE ROAD & MILL CREEK
FORWARD RIGHT

SFN	5006872
DESIGN AGENCY	ms consultants, inc.
DESIGNER	JSE
CHECKER	LAW
REVIEWER	WER 05/30/25
PROJECT ID	121474
SUBSET	20
TOTAL	64
SHEET	P.505
TOTAL	655

MAH-680-0.00

MODEL: Sheet PAPERSIZE: 34x22 (in.) DATE: 9/15/2025 TIME: 11:15:53 AM PLTDRV: OHDOT_PDF_Color_E+.pltcfg PENTBL: OHDOT_Pen.tbl USER: WORKSPACE: OHDOTCEv02 WORKSET: 121474 PRODUCT: OpenRoadsDesigner 10.12.02.4
pw:\\ohiodot-pw.bentley.com:ohiodot-pw-02\Documents\01 Active Projects\District 04\Mahoning\121474\02-Engineering_MSConsultants\Structures\SFN_5006872\Sheets\121474_SFN_5006872_SF002.dgn

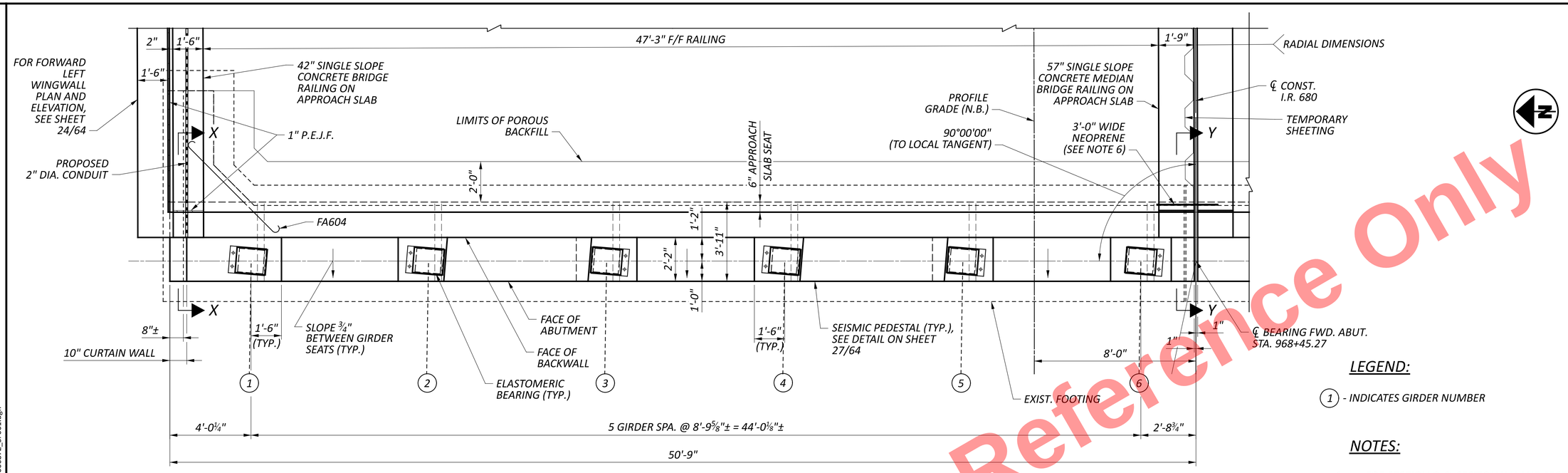

PLAN

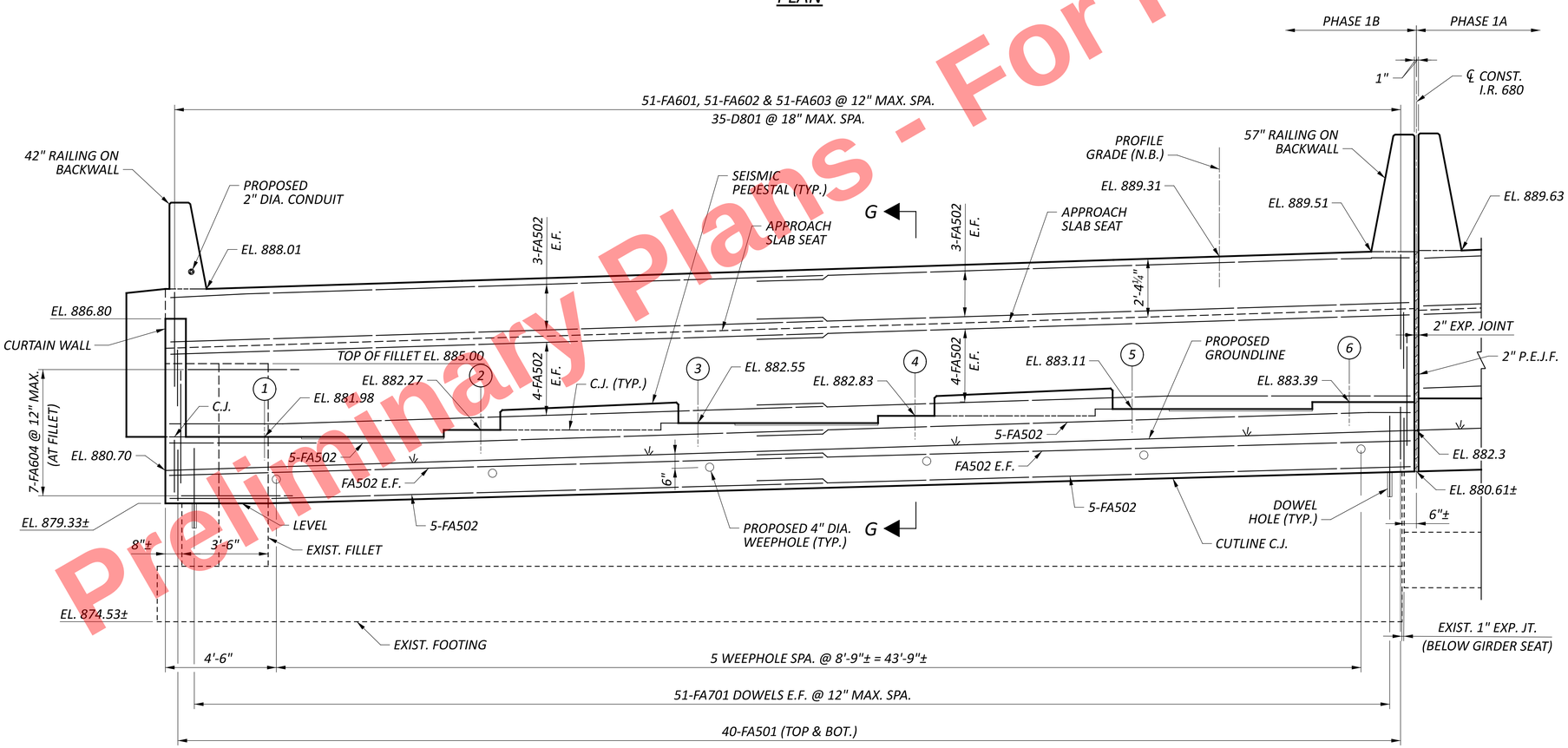

ELEVATION

LEGEND:

(1) - INDICATES GIRDER NUMBER

NOTES:

1. FOR SECTION G-G, SECTION X-X AND SECTION Y-Y, SEE SHEET 22/64.
2. FOR SEISMIC PEDESTAL DETAIL, SEE SHEET 27/64.
3. BRIDGE SEAT REINFORCING, SETTING ANCHORS: ACCURATELY PLACE REINFORCING STEEL IN THE VICINITY OF THE BRIDGE SEAT TO AVOID INTERFERENCE WITH THE DRILLING OF BEARING ANCHOR HOLES OR THE PRE-SETTING OF BEARING ANCHORS.
4. ADJUST ABUTMENT REINFORCEMENT AS NECESSARY TO PLACE SEISMIC PEDESTAL REINFORCEMENT.
5. FOR ELASTOMERIC BEARING DETAILS, SEE SHEET 37/64.
6. 3'-0" WIDE NEOPRENE MATERIAL CENTERED ON JOINT FROM 1'-6" BELOW CUTLINE C.J. TO BOTTOM OF APPROACH SLAB. DURING PHASE 1B, UNFOLD NEOPRENE MATERIAL INSTALLED DURING PHASE 1A AND ADHERE TO PHASE 1B BACKWALL.
7. FOR RAILING ON BACKWALL DETAILS AND CURTAIN WALL DETAILS, SEE SHEET 22/64.
8. MINIMUM REBAR LAPS:

   #5 BAR = 2'-5"
   #6 BAR = 3'-7"
9. ALL ABUTMENT AND WINGWALL DOWELS SHALL BE GALVANIZED PER 509.12.

For Reference Only
Preliminary Plans - For

FORWARD LEFT ABUTMENT PLAN AND ELEVATION (PHASE 1B)
BRIDGE NO. MAH-00680-04.886
OVER PRICE ROAD & MILL CREEK

SFN	5006872
DESIGN AGENCY	ms consultants. inc.
DESIGNER	JSE
CHECKER	LAW
REVIEWER	WER 05/30/25
PROJECT ID	121474
SUBSET	21
TOTAL	64
SHEET	P.506
TOTAL	655

MAH-680-0.00

MODEL: Sheet PAPERSIZE: 34x22 (in.) DATE: 9/15/2025 TIME: 11:16:01 AM PLTDRV: OHDOT_PDF_Color_E+.pltcfg PENTBL: OHDOT_Pen.tbl USER: WORKSPACE: OHDOTCEv02 WORKSET: 121474 PRODUCT: OpenRoadsDesigner 10.12.02.4
pw:\\ohiodot-pw.bentley.com:ohiodot-pw-02\Documents\01 Active Projects\District 04\Mahoning\121474\402-Engineering_MSConsultants\Structures\SFN_5006872\Sheets\121474_SFN_5006872_SF001.dgn

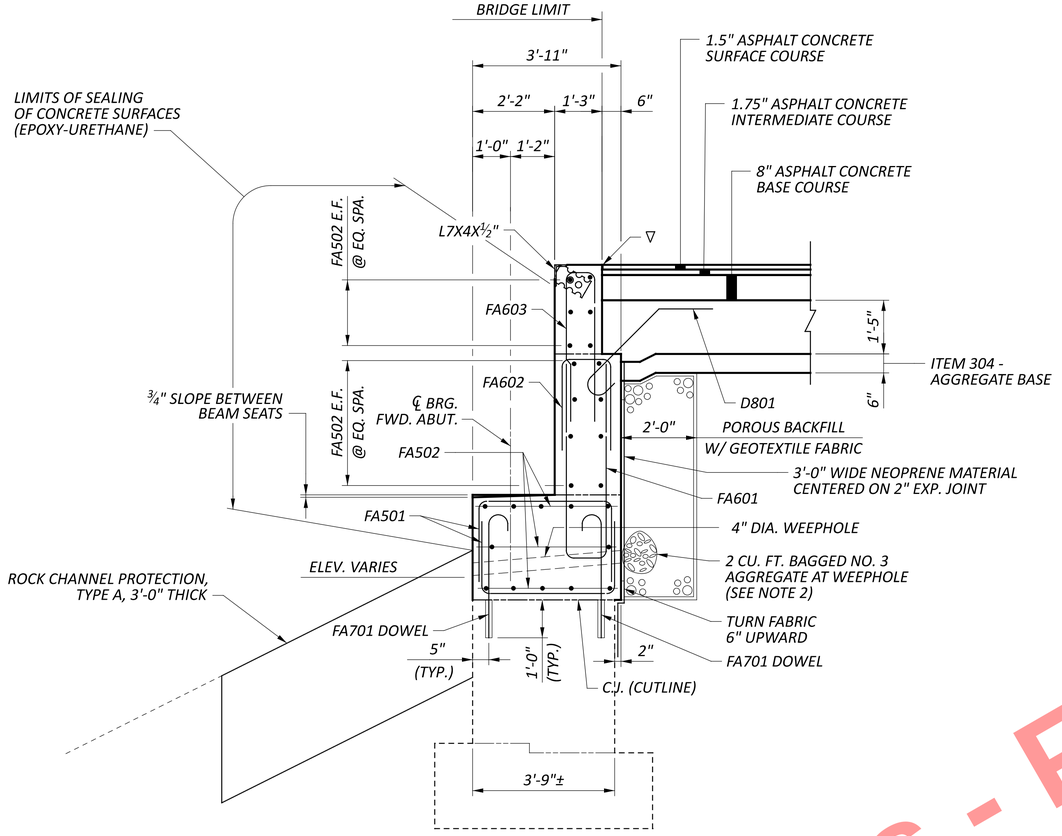

SECTION G-G

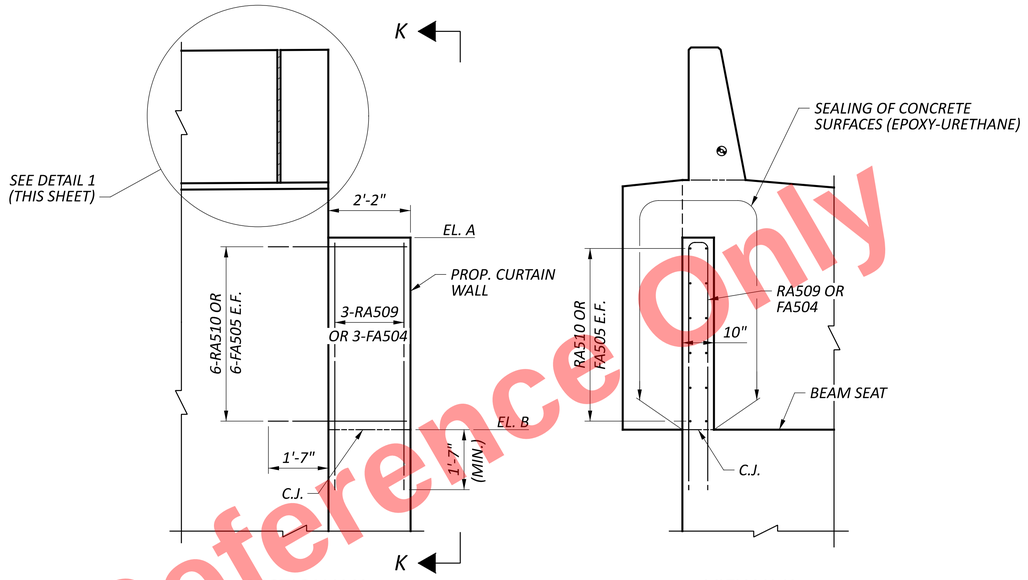

SECTION X-X VIEW K-K

TYPICAL CURTAIN WALL DETAIL

	R.A. LEFT	R.A. RIGHT	F.A. LEFT	F.A. RIGHT
ELEV. A	879.79	887.11	886.80	889.87
ELEV. B	875.12	882.33	881.98	885.20

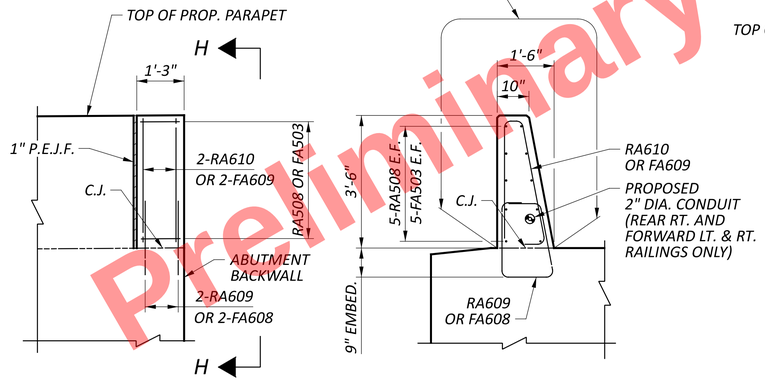

DETAIL 1 VIEW H-H

42" RAILING ON BACKWALL DETAIL

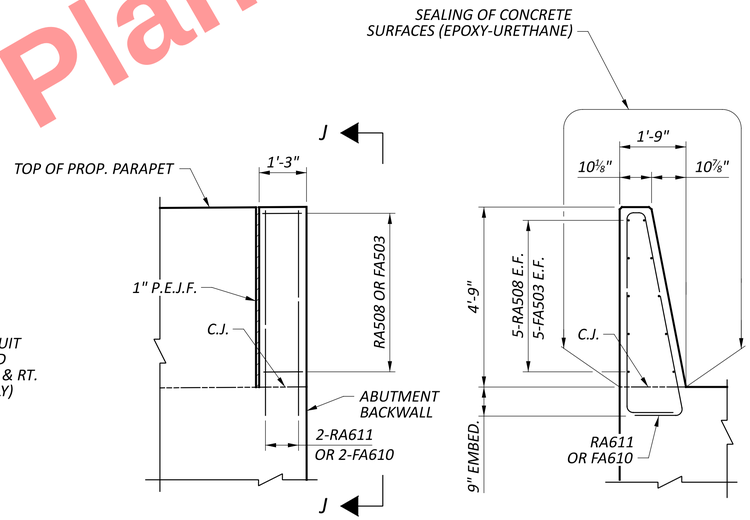

SECTION Y-Y VIEW J-J

57" RAILING ON BACKWALL DETAIL

LEGEND:

▽ - SEE DETAIL B, STD. DWG. AS-1-15.

NOTES:

1. FOR LOCATION OF SECTION G-G, SEE SHEETS 20/64 AND 21/64.
2. NO. 3 BAGGED AGGREGATE SHALL BE INCLUDED WITH POROUS BACKFILL FOR PAYMENT.
3. FOR LOCATION OF SECTION X-X AND SECTION Y-Y, SEE SHEETS 15/64, 16/64, 20/64 AND 21/64.

Preliminary Plans - For Reference Only

FORWARD ABUTMENT SECTIONS AND MISCELLANEOUS DETAILS
BRIDGE NO. MAH-00680-04.886
OVER PRICE ROAD & MILL CREEK

SFN 5006872
DESIGN AGENCY ms consultants, inc.
DESIGNER JSE | CHECKER LAW
REVIEWER WER 05/30/25
PROJECT ID 121474
SUBSET 22 | TOTAL 64
SHEET P.507 | TOTAL 655

MAH-680-0.00

MODEL: Sheet PAPERSIZE: 34x22 (in.) DATE: 9/15/2025 TIME: 11:16:06 AM PLTDRV: OHDOT_PDF_Color_Ex.pltcfg PENTBL: OHDOT_Pen.tbl USER: WORKSPACE: OHDOTCEv02 WORKSET: 121474 PRODUCT: OpenRoadsDesigner 10.12.02.4
pw:\\ohiodot-pw.bentley.com:ohiodot-pw-02\Documents\01 Active Projects\District 04\Mahoning\121474\02-Engineering_MSConsultants\Structures\SFN_5006872\Sheets\121474_SFN_5006872_SF003.dgn
USER: pw:\\ohiodot-pw.bentley.com:ohiodot-pw-02\Documents\01 Active Projects\District 04\Mahoning\121474\02-Engineering_MSConsultants\Structures\SFN_5006872\Structures\SFN_5006872_SF003.dgn

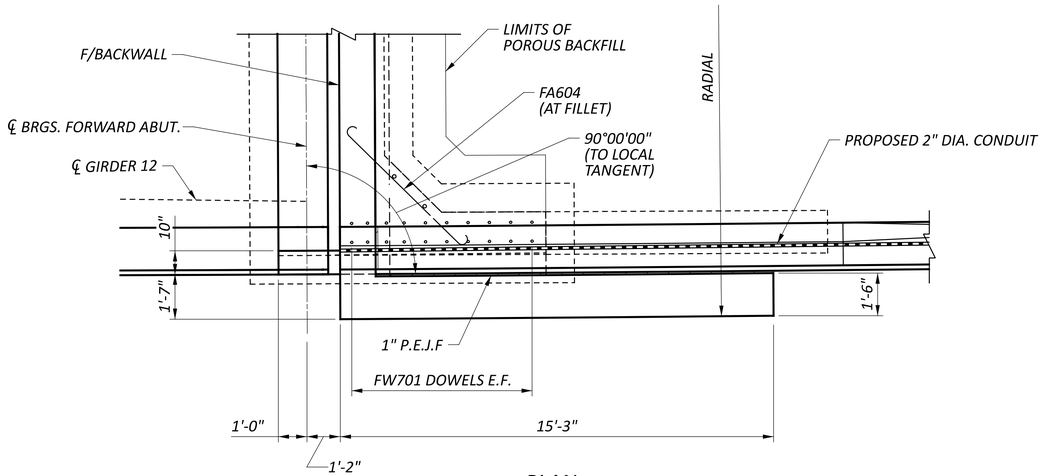

PLAN

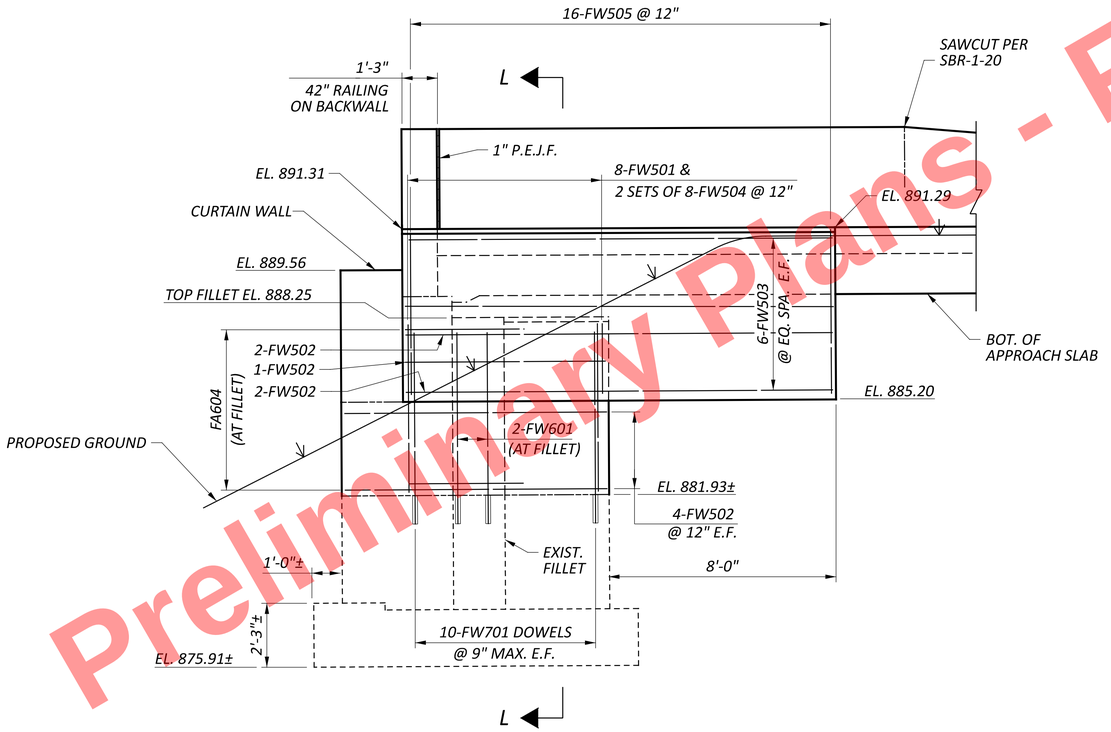

ELEVATION

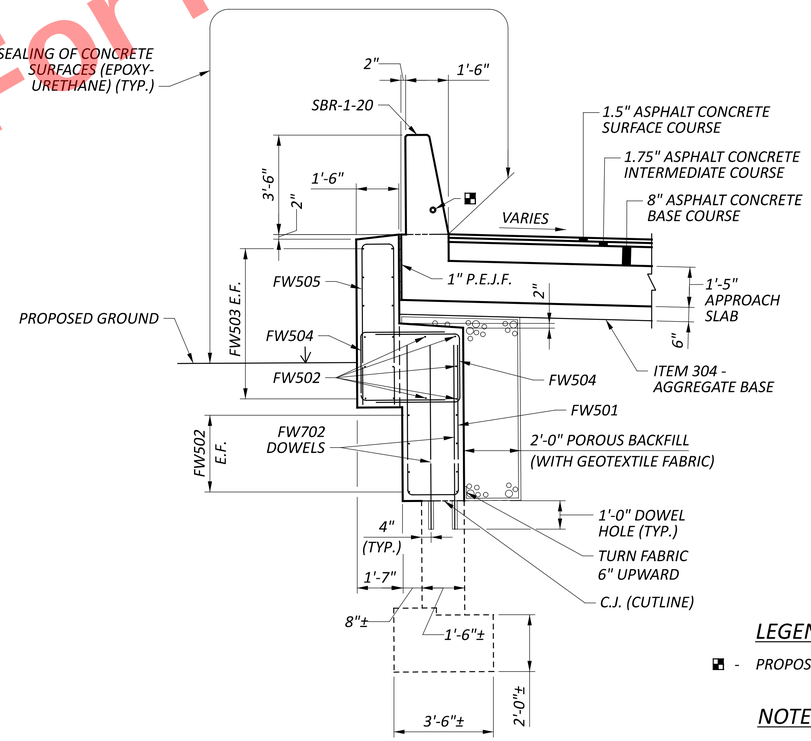

SECTION L-L

LEGEND

■ - PROPOSED 2" DIA. CONDUIT

NOTES:

1. FOR RAILING ON APPROACH SLAB DETAILS, SEE SHEET 59/64.
2. FOR 42" RAILING ON BACKWALL, SEE DETAIL 1, SHEET 22/64.
3. FOR CURTAIN WALL DETAILS, SEE SHEET 22/64.

Preliminary Plans - For Reference Only

FORWARD ABUTMENT RIGHT WINGWALL PLAN AND ELEVATION
BRIDGE NO. MAH-00680-04.886
OVER PRICE ROAD & MILL CREEK

SFN 5006872
DESIGN AGENCY: ms consultants, inc.
DESIGNER JSE | CHECKER LAW
REVIEWER WER 05/30/25
PROJECT ID 121474
SUBSET 23 | TOTAL 64
SHEET P.508 | TOTAL 655

MAH-680-0.00

MODEL: Sheet PAPERSIZE: 34x22 (in.) DATE: 9/15/2025 TIME: 11:16:13 AM PLTDRV: OHDOT_PDF_Color_E+.pltcfg PENTBL: OHDOT_Pen.tbl USER: WORKSPACE: OHDOTCEv02 WORKSET: 121474 PRODUCT: OpenRoadsDesigner 10.12.02.4
pw:\\ohiodot-pw.bentley.com:ohiodot-pw-02\Documents\01 Active Projects\District 04\Mahoning\121474\A02-Engineering_MSConsultants\Structures\SFN_5006872\Sheets\121474_SFN_5006872_SF009.dgn

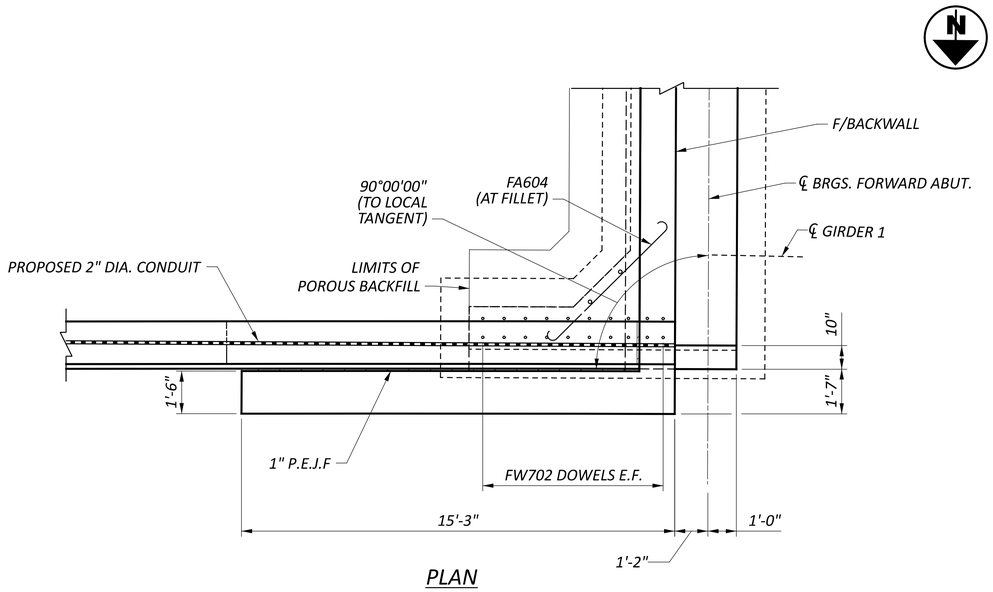

PLAN

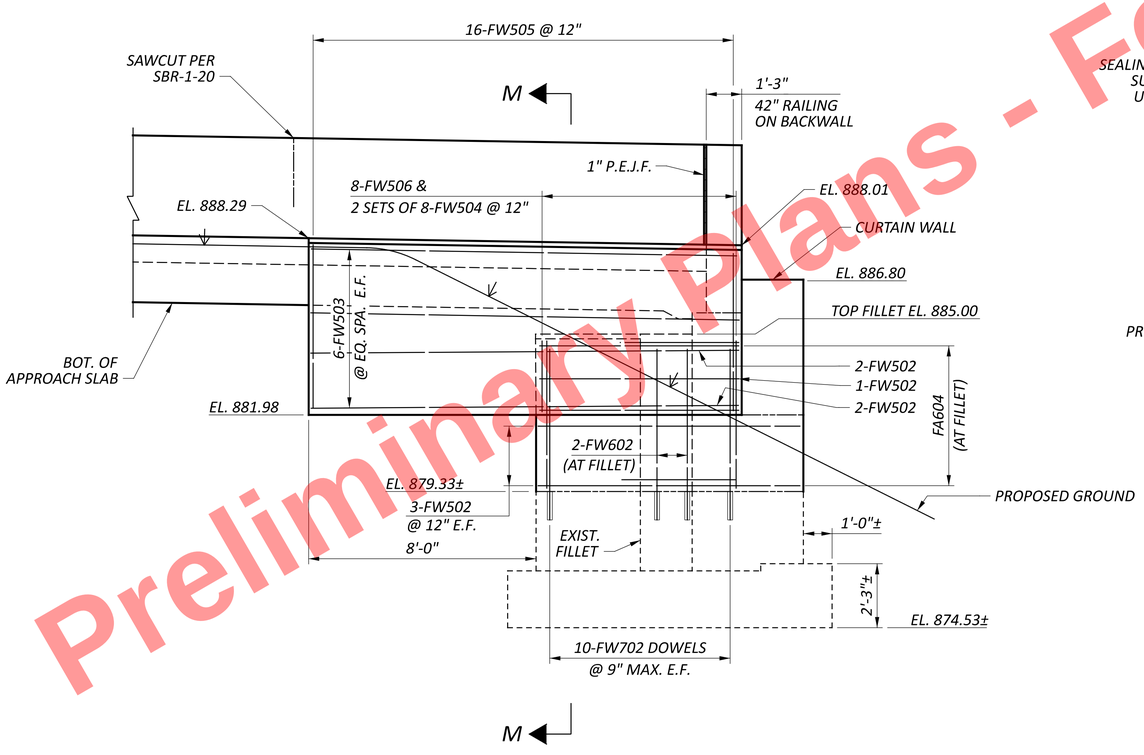

ELEVATION

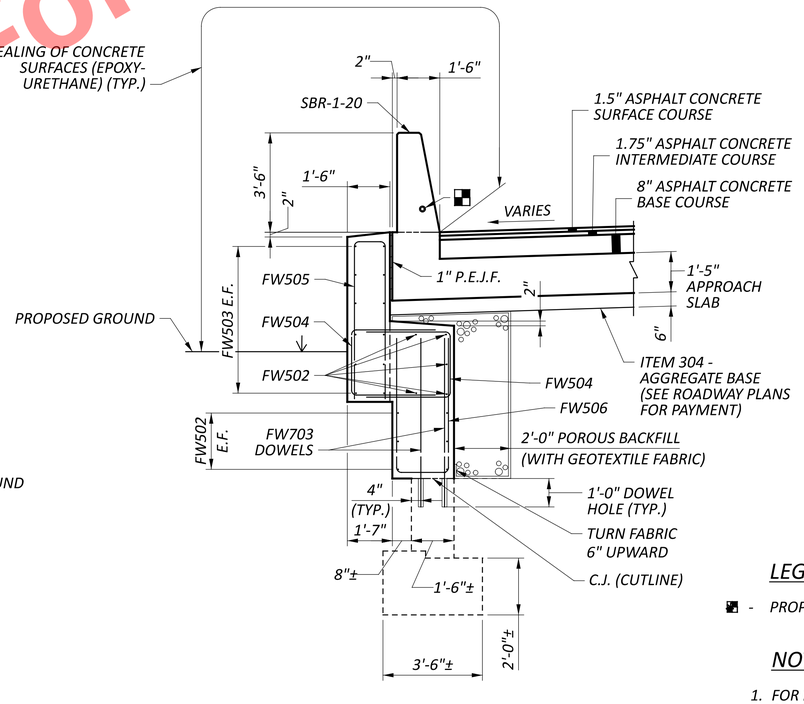

SECTION M-M

LEGEND

■ - PROPOSED 2" DIA. CONDUIT

NOTES:

1. FOR RAILING ON APPROACH SLAB DETAILS, SEE SHEET 58/64.
2. FOR 42" RAILING ON BACKWALL, SEE DETAIL 1, SHEET 22/64.
3. FOR CURTAIN WALL DETAILS, SEE SHEET 22/64.

Preliminary Plans - For Reference Only

FORWARD ABUTMENT LEFT WINGWALL PLAN AND ELEVATION
BRIDGE NO. MAH-00680-04.886
OVER PRICE ROAD & MILL CREEK

SFN 5006872
DESIGN AGENCY ms consultants, inc.
DESIGNER JSE | CHECKER LAW
REVIEWER WER 05/30/25
PROJECT ID 121474
SUBSET 24 | TOTAL 64
SHEET P.509 | TOTAL 655

MAH-680-0.00

MODEL: Sheet PAPERSIZE: 34x22 (in.) DATE: 9/15/2025 TIME: 11:16:19 AM PLTDRV: OHDOT_PDF_Color_E+.pltcfg PENTBL: OHDOT_Pen.tbl USER: WORKSPACE: OHDOTCEv02 WORKSET: 121474 PRODUCT: OpenRoadsDesigner 10.12.02.4
pw:\\ohiodot-pw.bentley.com:ohiodot-pw-02\Documents\01 Active Projects\District 04\Mahoning\121474\02-Engineering_MSConsultants\Structures\SFN_5006872\Sheets\121474_SFN_5006872_SF004.dgn

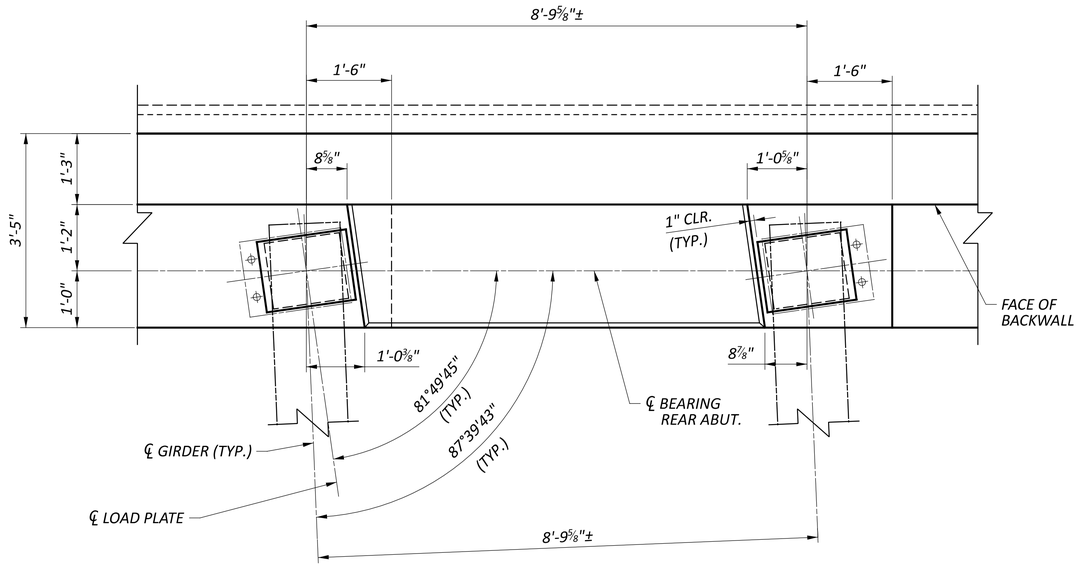

PLAN

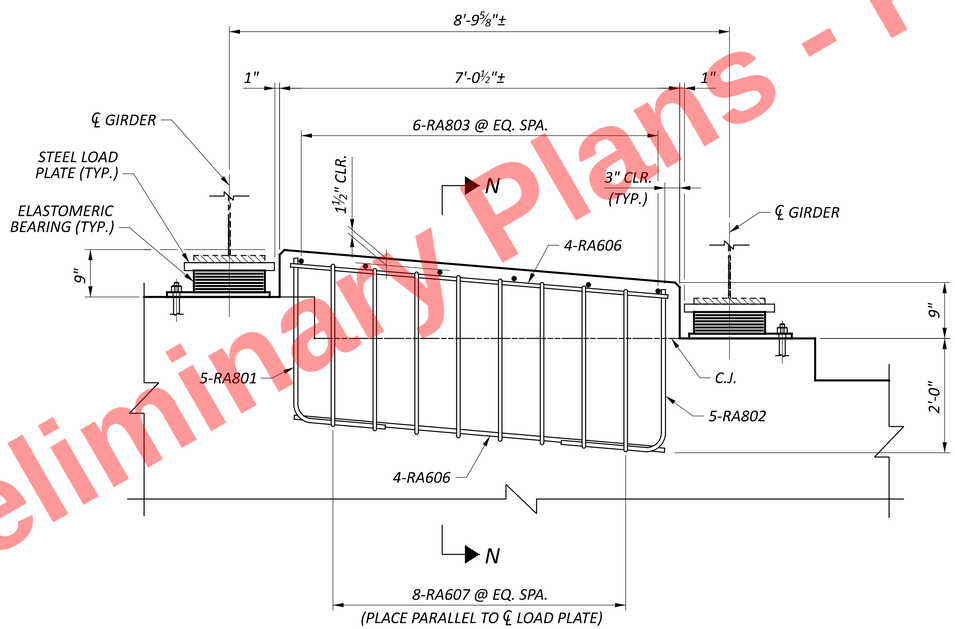

ELEVATION

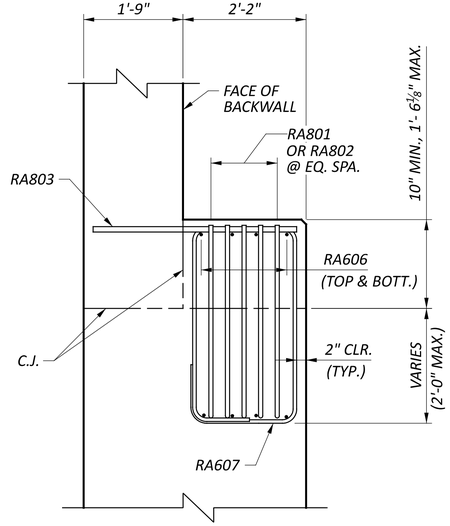

SECTION N-N

NOTE:

1. FOR SEISMIC PEDESTAL LOCATIONS, SEE SHEET 16/64.

Preliminary Plans - For Reference Only

REAR ABUTMENT LEFT SEISMIC PEDESTAL DETAILS
BRIDGE NO. MAH-00680-04.886
OVER PRICE ROAD & MILL CREEK

SFN 5006872

DESIGN AGENCY
ms consultants. inc.

DESIGNER	CHECKER
JSE	LAW

REVIEWER
WER 05/30/25

PROJECT ID
121474

SUBSET	TOTAL
25	64

SHEET	TOTAL
P.510	655

MAH-680-0.00

MODEL: Sheet PAPERSIZE: 34x22 (in.) DATE: 9/15/2025 TIME: 11:16:25 AM PLTDRV: OHDOT_PDF_Color_E+.pltcfg PENTBL: OHDOT_Pen.tbl USER: WORKSPACE: OHDOTCEv02 WORKSET: 121474 PRODUCT: OpenRoadsDesigner 10.12.02.4
pw:\\ohiodot-pw.bentley.com:ohiodot-pw-02\Documents\01 Active Projects\District 04\Mahoning\121474\402-Engineering_MSConsultants\Structures\SFN_5006872\Sheets\121474_SFN_5006872_SP005.dgn

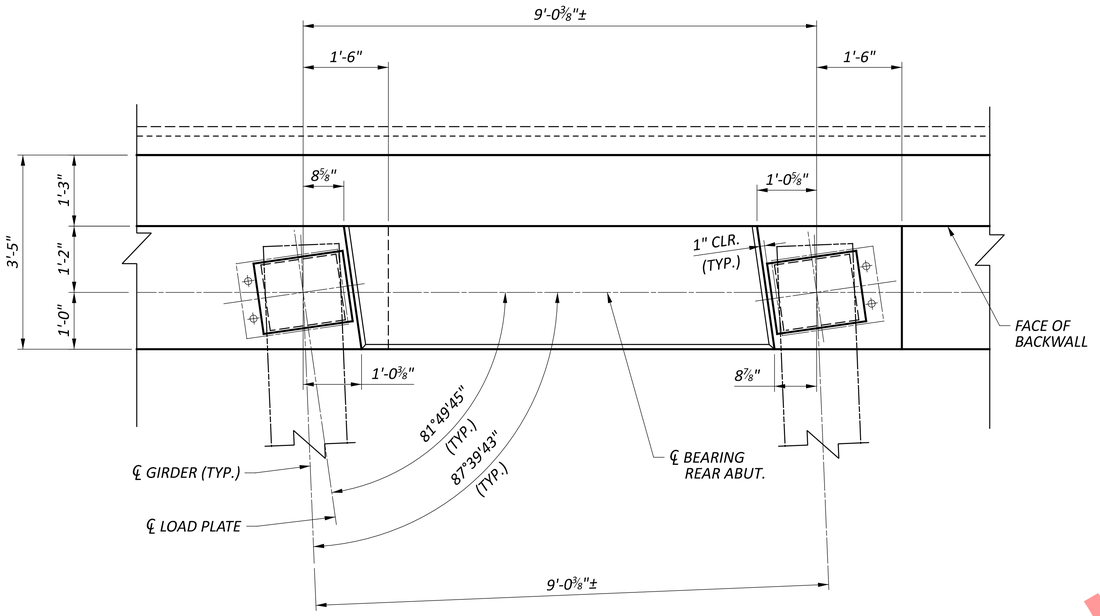

PLAN

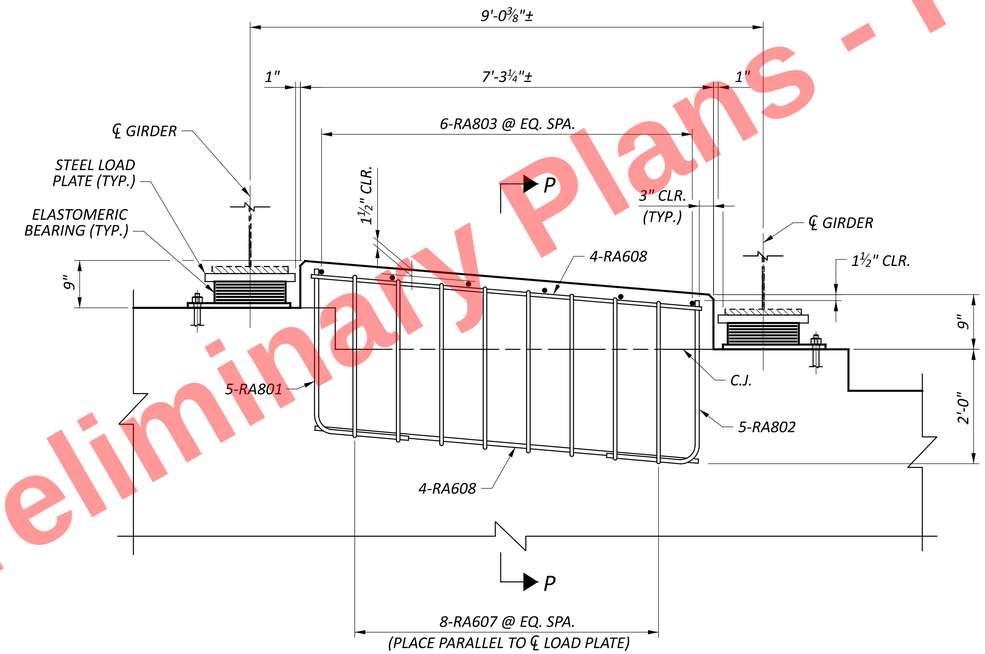

ELEVATION

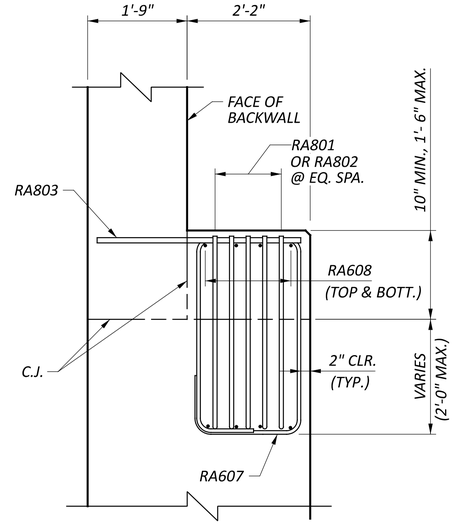

SECTION P-P

NOTE:

1. FOR SEISMIC PEDESTAL LOCATIONS, SEE SHEET 15/64.

Preliminary Plans - For Reference Only

REAR ABUTMENT RIGHT SEISMIC PEDESTAL DETAILS
BRIDGE NO. MAH-00680-04.886
OVER PRICE ROAD & MILL CREEK

SFN 5006872
DESIGN AGENCY
ms consultants, inc.
DESIGNER JSE | CHECKER LAW
REVIEWER WER 05/30/25
PROJECT ID 121474
SUBSET 26 | TOTAL 64
SHEET P.511 | TOTAL 655

MAH-680-0.00

MODEL: Sheet PAPERSIZE: 34x22 (in.) DATE: 9/15/2025 TIME: 11:16:32 AM PLTDRV: OHDOT_PDF_Color_E+.pltcfg PENTBL: OHDOT_Pen.tbl USER: WORKSPACE: OHDOTCEv02 WORKSET: 121474 PRODUCT: OpenRoadsDesigner 10.12.02.4
pw:\\ohiodot-pw.bentley.com:ohiodot-pw-02\Documents\01 Active Projects\District 04\Mahoning\121474\402-Engineering_MSConsultants\Structures\SFN_5006872\Sheets\121474_SFN_5006872_SP006.dgn

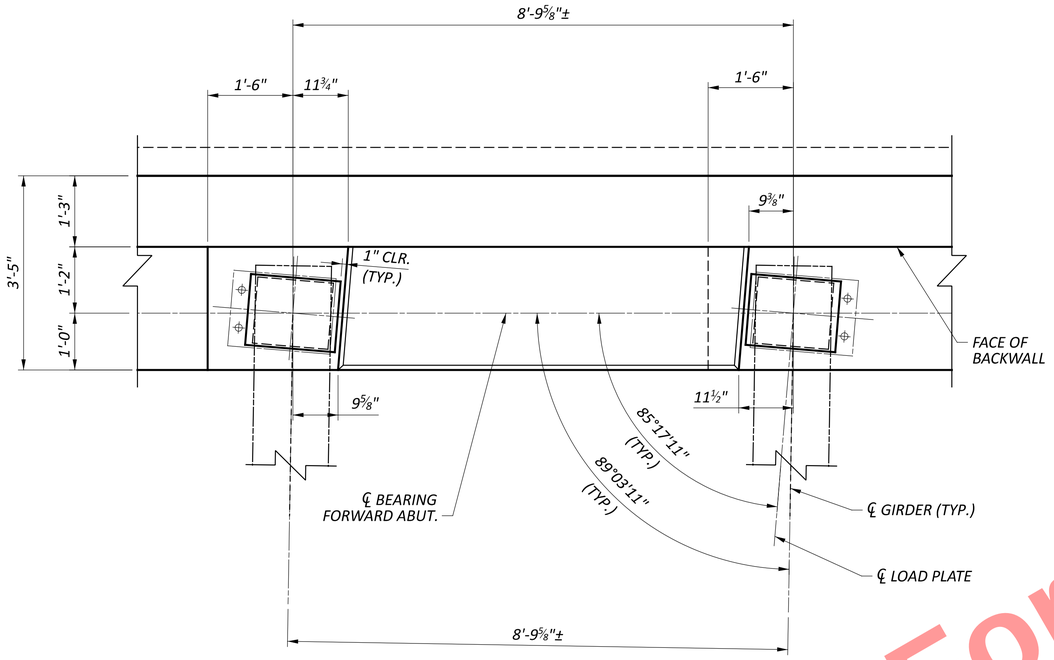

PLAN

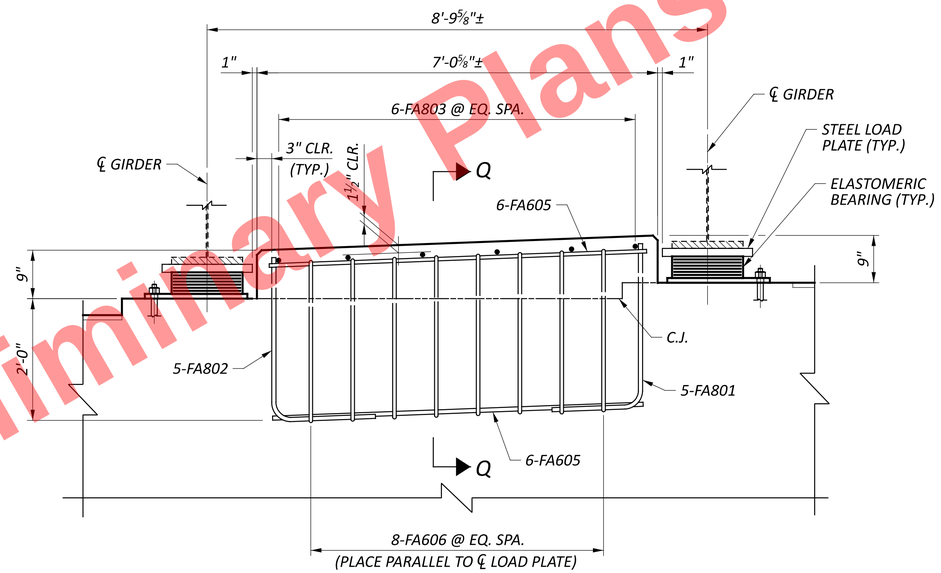

ELEVATION

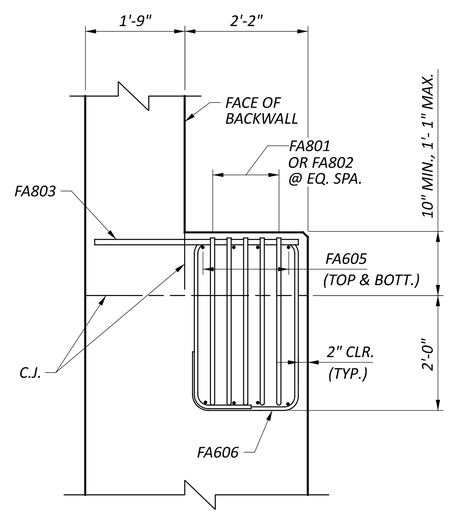

SECTION Q-Q

NOTE:

1. FOR SEISMIC PEDESTAL LOCATIONS, SEE SHEET 21/64.

Preliminary Plans - For Reference Only

FORWARD ABUTMENT LEFT SEISMIC PEDESTAL DETAILS
BRIDGE NO. MAH-00680-04.886
OVER PRICE ROAD & MILL CREEK

SFN 5006872
DESIGN AGENCY
ms consultants, inc.
DESIGNER JSE | CHECKER LAW
REVIEWER WER 05/30/25
PROJECT ID 121474
SUBSET 27 | TOTAL 64
SHEET P.512 | TOTAL 655

MAH-680-0.00

MODEL: Sheet PAPERSIZE: 34x22 (in.) DATE: 9/15/2025 TIME: 11:16:38 AM PLTDRV: OHDOT_PDF_Color_Ex.pltcfg PENTBL: OHDOT_Pen.tbl USER: WORKSPACE: OHDOTCEv02 WORKSET: 121474 PRODUCT: OpenRoadsDesigner 10.12.02.4
pw:\\ohiodot-pw.bentley.com:ohiodot-pw-02\Documents\01 Active Projects\District 04\Mahoning\121474\02-Engineering_MSConsultants\Structures\SFN_5006872\Sheets\121474_SFN_5006872_SF007.dgn

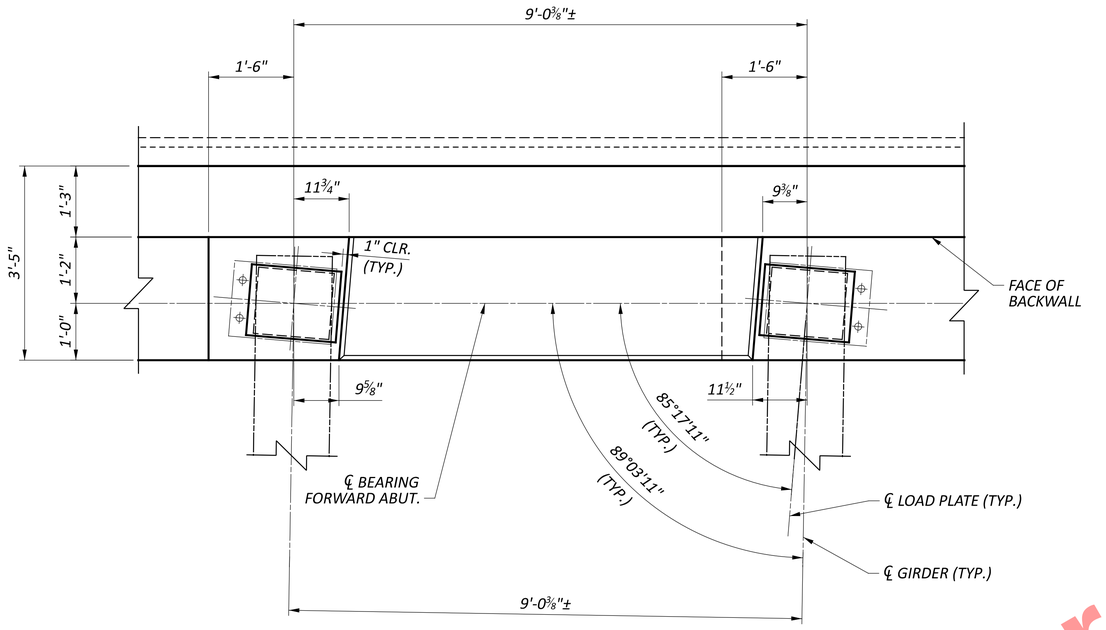

PLAN

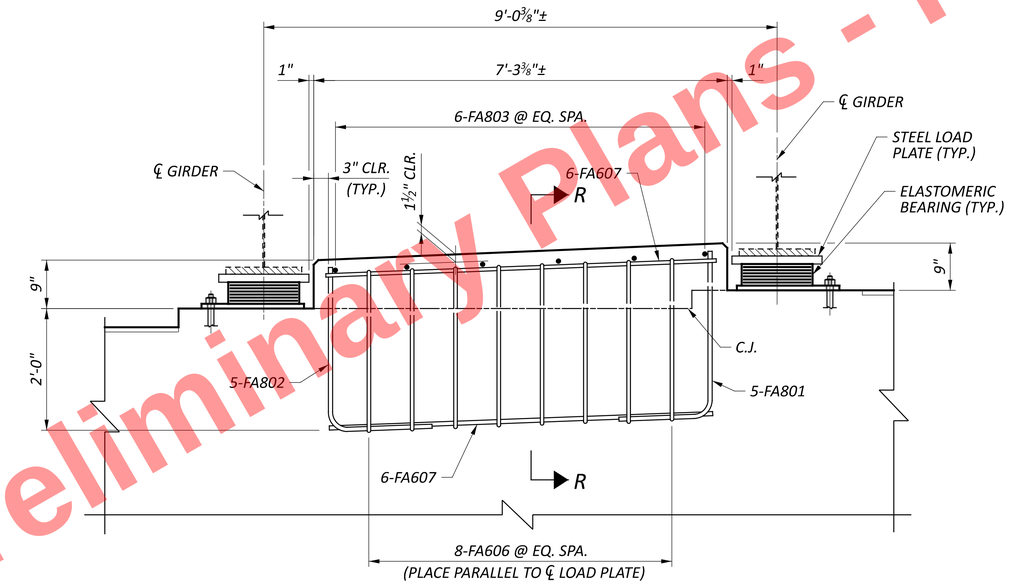

ELEVATION

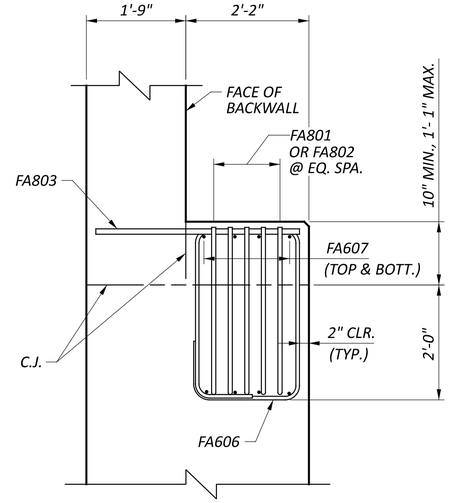

SECTION R-R

NOTES:

1. FOR SEISMIC PEDESTAL LOCATIONS, SEE SHEET 20/64.

Preliminary Plans - For Reference Only

FORWARD ABUTMENT RIGHT SEISMIC PEDESTAL DETAILS
BRIDGE NO. MAH-00680-04.886
OVER PRICE ROAD & MILL CREEK

SFN	5006872
DESIGN AGENCY	ms consultants, inc.
DESIGNER	JSE
CHECKER	LAW
REVIEWER	WER 05/30/25
PROJECT ID	121474
SUBSET	28
TOTAL	64
SHEET	P.513
TOTAL	655

MAH-680-0.00

MODEL: Sheet PAPERSIZE: 34x22 (in.) DATE: 9/15/2025 TIME: 11:16:44 AM PLTDRV: OHDOT_PDF_Color_E+.pltcfg PENTBL: OHDOT_Pen.tbl USER: WORKSPACE: OHDOTCEv02 WORKSET: 121474 PRODUCT: OpenRoadsDesigner 10.12.02.4
pw:\\ohiodot-pw.bentley.com:ohiodot-pw-02\Documents\01 Active Projects\District 04\Mahoning\121474\02-Engineering_MSConsultants\Structures\SFN_5006872\Sheets\121474_SFN_5006872_SF008.dgn

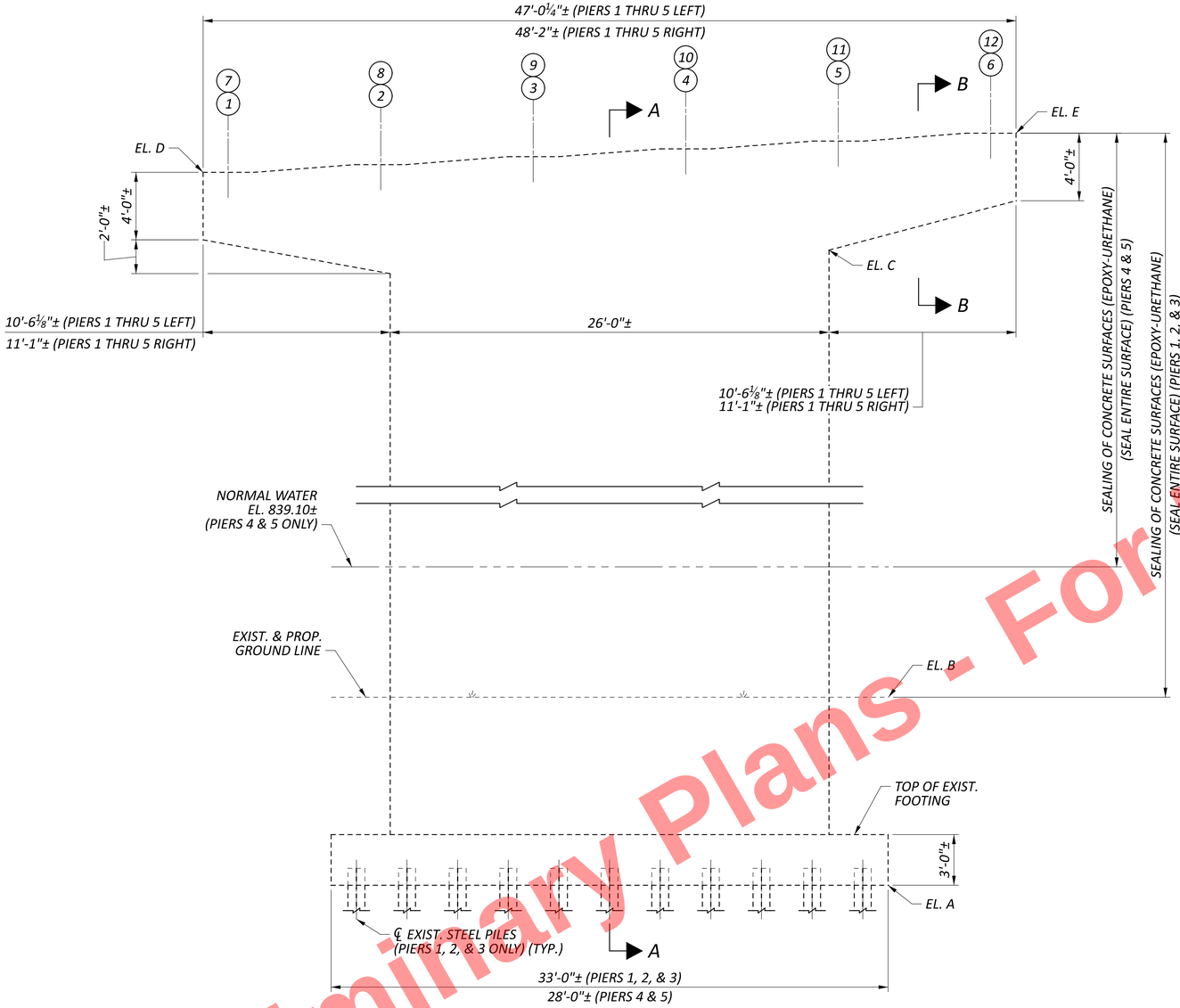

TYPICAL PIER ELEVATION
(LOOKING UPSTATION)

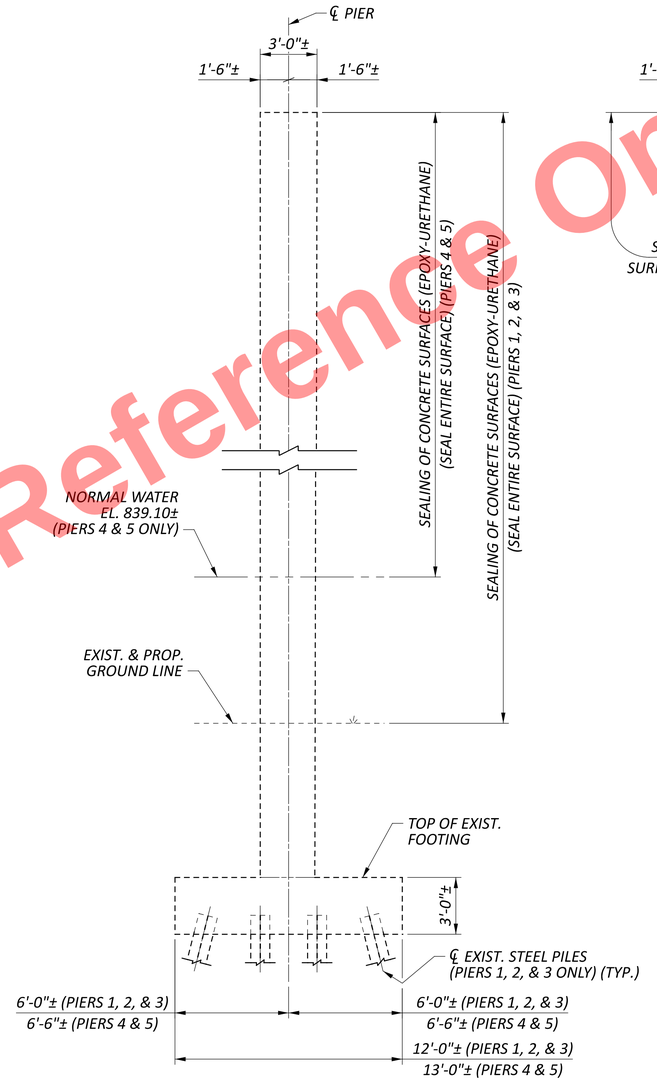

SECTION A-A

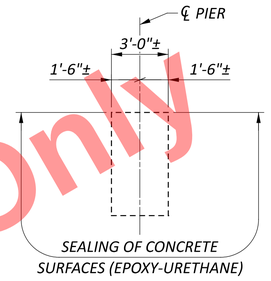

SECTION B-B

LOCATION	ELEV. A	ELEV. B	ELEV. C	ELEV. D	ELEV. E
PIER #1 LEFT	841.24±	851.22±	871.00±	874.80±	878.47±
PIER #1 RIGHT	844.24±	851.22±	874.70±	878.44±	882.20±
PIER #2 LEFT	840.24±	846.85±	872.00±	875.79±	879.46±
PIER #2 RIGHT	840.24±	846.85±	875.70±	879.44±	883.20±
PIER #3 LEFT	841.24±	847.29±	873.00±	876.79±	880.46±
PIER #3 RIGHT	841.24±	847.29±	876.70±	880.44±	884.20±
PIER #4 LEFT	821.74±	831.16±	874.26±	878.45±	881.46±
PIER #4 RIGHT	821.74±	831.16±	877.34±	881.44±	884.61±
PIER #5 LEFT	820.24±	831.38±	875.61±	880.36±	882.48±
PIER #5 RIGHT	820.24±	831.38±	877.86±	882.47±	884.79±

LEGEND:

(1) - INDICATES GIRDER NUMBER

Preliminary Plans - For Reference Only

TYPICAL PIER SEALING DETAILS
BRIDGE NO. MAH-00680-04.886
OVER PRICE ROAD & MILL CREEK

SFN 5006872
DESIGN AGENCY
ms consultants, inc.
DESIGNER JSE | CHECKER SJR
REVIEWER WER 05/30/25
PROJECT ID 121474
SUBSET 29 | TOTAL 64
SHEET P.514 | TOTAL 655

MAH-680-0.00

MODEL: Sheet PAPERSIZE: 34x22 (in.) DATE: 9/15/2025 TIME: 11:16:49 AM PLTDRV: OHDOT_PDF_Color_E+.pltcfg PENTBL: OHDOT_Pen.tbl USER: WORKSPACE: OHDOTCEv02 WORKSET: 121474 PRODUCT: OpenRoadsDesigner 10.12.02.4
pw:\\ohiodot-pw.bentley.com:ohiodot-pw-02\Documents\01 Active Projects\District 04\Mahoning\121474\402-Engineering_MSConsultants\Structures\SFN_5006872\Sheets\121474_SFN_5006872_SI001.dgn

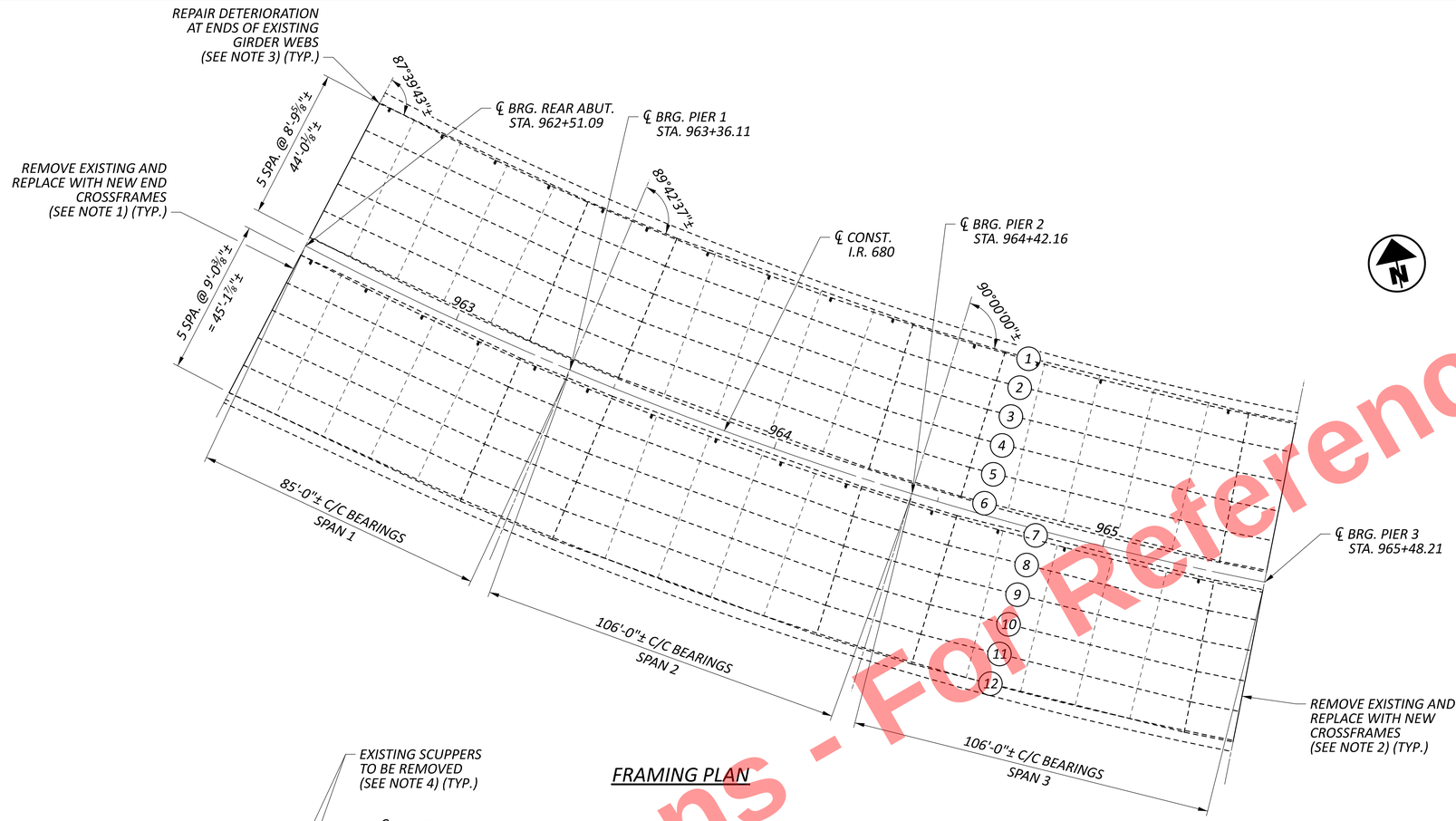

FRAMING PLAN

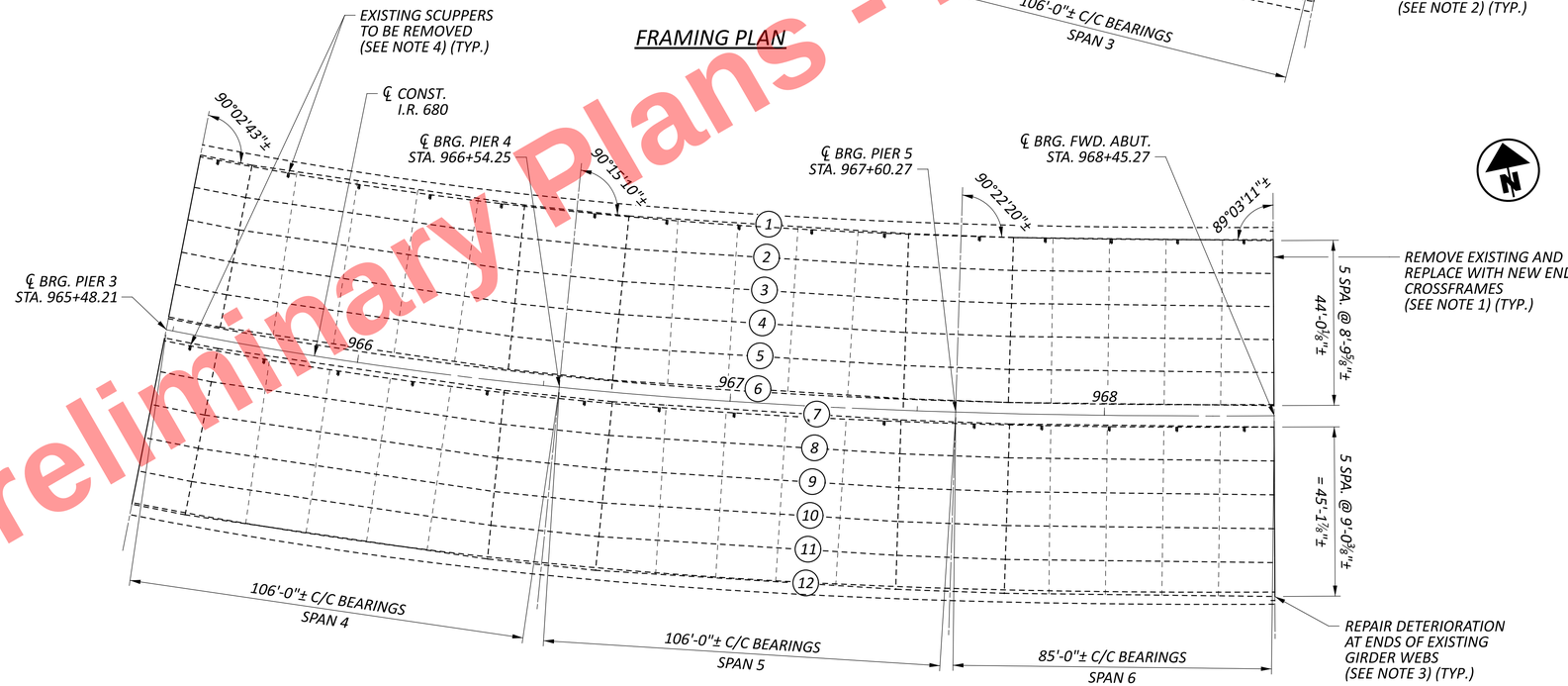

FRAMING PLAN

LEGEND

(1) - INDICATES GIRDER NUMBER

NOTES:

1. FOR END CROSSFRAME DETAILS, SEE SHEETS 33/64 AND 34/64.
2. FOR PIER 3 CROSSFRAME DETAILS, SEE SHEET 35/64.
3. FOR END OF GIRDER WEB REPAIR, SEE SHEET 32/64.
4. AFTER REMOVING EXISTING SCUPPERS, GRIND ALL SCUPPER WELD LOCATIONS SMOOTH. INCLUDE WITH ITEM 202 FOR PAYMENT.

FRAMING PLAN
BRIDGE NO. MAH-00680-04.886
OVER PRICE ROAD & MILL CREEK

SFN	5006872
DESIGN AGENCY	ms consultants, inc.
DESIGNER	JSE
CHECKER	TVB
REVIEWER	WER 05/30/25
PROJECT ID	121474
SUBSET	30
TOTAL	64
SHEET	P.515
TOTAL	655

MAH-680-0.00

MODEL: Sheet PAPERSIZE: 34x22 (in.) DATE: 9/15/2025 TIME: 11:16:55 AM PLTDRV: OHDOT_PDF_Color_Ex.pltcfg PENTBL: OHDOT_Pen.tbl USER: WORKSPACE: OHDOTCEv02 WORKSET: 121474 PRODUCT: OpenRoadsDesigner 10.12.02.4
pw:\\ohiodot-pw.bentley.com:ohiodot-pw-02\Documents\01 Active Projects\District 04\Mahoning\121474\02-Engineering_MSConsultants\Structures\SFN_5006872\Sheets\121474_SFN_5006872_SS001.dgn

Preliminary Plans - For Reference Only

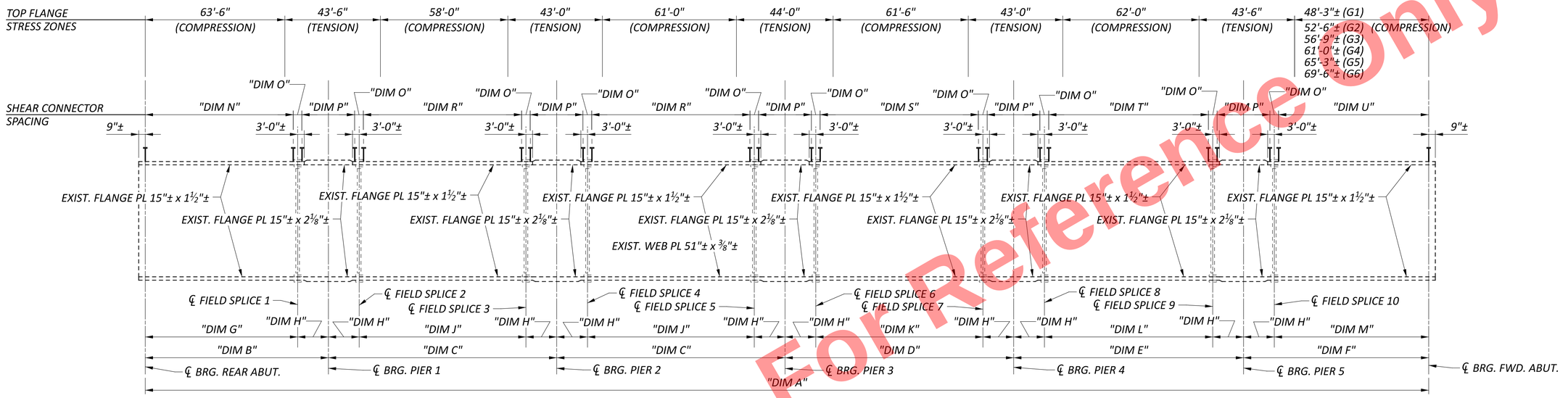

GIRDER ELEVATION

(LEFT BRIDGE - GIRDERS 1 THRU 6)

GIRDER DIMENSIONS (LEFT BRIDGE)												
GIRDER	"DIM A"	"DIM B"	"DIM C"	"DIM D"	"DIM E"	"DIM F"	"DIM G"	"DIM H"	"DIM J"	"DIM K"	"DIM L"	"DIM M"
1	571'-2 7/8"±	81'-2 1/8"±	101'-2 1/2"±	101'-6 1/2"±	102'-9 1/4"±	83'-4"±	67'-2 1/8"±	14'-0"±	73'-2 1/2"±	73'-6 1/2"±	74'-9 1/4"±	69'-4"±
2	575'-6"±	81'-10 3/4"±	102'-1 1/4"±	102'-4 1/2"±	103'-4 1/2"±	83'-7 3/4"±	67'-10 3/4"±	14'-0"±	74'-1 1/4"±	74'-4 1/2"±	75'-4 1/2"±	69'-7 3/4"±
3	579'-9 1/8"±	82'-7 3/8"±	103'-0"±	103'-2 1/2"±	103'-11 3/4"±	83'-11 1/2"±	68'-7 3/8"±	14'-0"±	75'-0"±	75'-2 1/2"±	75'-11 3/4"±	69'-11 1/2"±
4	584'-0 3/16"±	83'-3 15/16"±	103'-10 3/4"±	104'-0 1/2"±	104'-7"±	84'-3 1/4"±	69'-3 15/16"±	14'-0"±	75'-10 3/4"±	76'-0 1/2"±	76'-7"±	70'-3 1/4"±
5	588'-3 7/16"±	84'-0 9/16"±	104'-9 1/2"±	104'-10 1/2"±	105'-2 5/16"±	84'-7 1/16"±	70'-0 9/16"±	14'-0"±	76'-9 1/2"±	76'-10 1/2"±	77'-2 5/16"±	70'-7 1/16"±
6	592'-5 15/16"±	84'-9 1/8"±	105'-8 1/4"±	105'-8 9/16"±	105'-9 9/16"±	84'-10 3/16"±	70'-9 1/8"±	14'-0"±	77'-8 1/4"±	77'-8 9/16"±	77'-9 9/16"±	70'-10 13/16"±

SHEAR CONNECTOR SPACING (LEFT BRIDGE)							
GIRDER	"DIM N"	"DIM O"	"DIM P"	"DIM R"	"DIM S"	"DIM T"	"DIM U"
1	66 SPA. @ 12" MAX. = 65'-2 1/8"±	4'-0"	24 SPA. @ 12" = 24'-0"	70 SPA. @ 12" MAX. = 69'-2 1/2"±	70 SPA. @ 12" MAX. = 69'-6 1/2"±	71 SPA. @ 12" MAX. = 70'-9 1/4"±	68 SPA. @ 12" = 67'-4"±
2	66 SPA. @ 12" MAX. = 65'-10 3/4"±	4'-0"	24 SPA. @ 12" = 24'-0"	71 SPA. @ 12" MAX. = 70'-1 1/4"±	71 SPA. @ 12" MAX. = 70'-4 1/2"±	72 SPA. @ 12" MAX. = 71'-4 1/2"±	68 SPA. @ 12" = 67'-7 3/4"±
3	67 SPA. @ 12" MAX. = 66'-7 3/8"±	4'-0"	24 SPA. @ 12" = 24'-0"	71 SPA. @ 12" MAX. = 71'-0"±	72 SPA. @ 12" MAX. = 71'-2 1/2"±	72 SPA. @ 12" MAX. = 71'-11 3/4"±	68 SPA. @ 12" = 67'-11 1/2"±
4	68 SPA. @ 12" MAX. = 67'-3 15/16"±	4'-0"	24 SPA. @ 12" = 24'-0"	72 SPA. @ 12" MAX. = 71'-10 3/4"±	73 SPA. @ 12" MAX. = 72'-0 1/2"±	73 SPA. @ 12" MAX. = 72'-7"±	69 SPA. @ 12" = 68'-3 1/4"±
5	69 SPA. @ 12" MAX. = 68'-0 9/16"±	4'-0"	24 SPA. @ 12" = 24'-0"	73 SPA. @ 12" MAX. = 72'-9 1/2"±	73 SPA. @ 12" MAX. = 72'-10 1/2"±	74 SPA. @ 12" MAX. = 73'-2 3/16"±	69 SPA. @ 12" = 68'-7 1/16"±
6	69 SPA. @ 12" MAX. = 68'-9 1/8"±	4'-0"	24 SPA. @ 12" = 24'-0"	74 SPA. @ 12" MAX. = 73'-8 1/4"±	74 SPA. @ 12" MAX. = 73'-8 9/16"±	74 SPA. @ 12" MAX. = 73'-9 9/16"±	69 SPA. @ 12" = 68'-10 13/16"±

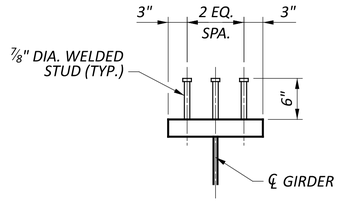

WELDED SHEAR STUD CONNECTION DETAIL

NOTE: SHEAR STUDS SHALL BE LOCATED NO CLOSER THAN 3" FROM EDGE OF GIRDER SPLICE PLATE.

NOTES:

1. FOR NOTES AND TYPICAL GIRDER REPAIR DETAILS, SEE SHEET 32/64.

Preliminary Plans
For Reference Only

GIRDER ELEVATION AND DETAILS (1 OF 2)
BRIDGE NO. MAH-00680-04.886
OVER PRICE ROAD & MILL CREEK

SFN 5006872
DESIGN AGENCY
ms consultants, inc.
DESIGNER JSE | CHECKER TVB
REVIEWER WER 05/30/25
PROJECT ID 121474
SUBSET 31 | TOTAL 64
SHEET P.516 | TOTAL 655

MAH-680-0.00

MODEL: Sheet PAPERSIZE: 34x22 (in.) DATE: 9/15/2025 TIME: 11:17:01 AM PLTDRV: OHDOT_PDF_Color_E+.pltcfg PENTBL: OHDOT_Pen.tbl USER: WORKSPACE: OHDOTCEv02 WORKSET: 121474 PRODUCT: OpenRoadsDesigner 10.12.02.4
pw:\\ohiodot-pw.bentley.com:ohiodot-pw-02\Documents\01 Active Projects\District 04\Mahoning\121474\A02-Engineering_MSConsultants\Structures\SFN_5006872\Sheets\121474_SFN_5006872_SS002.dgn

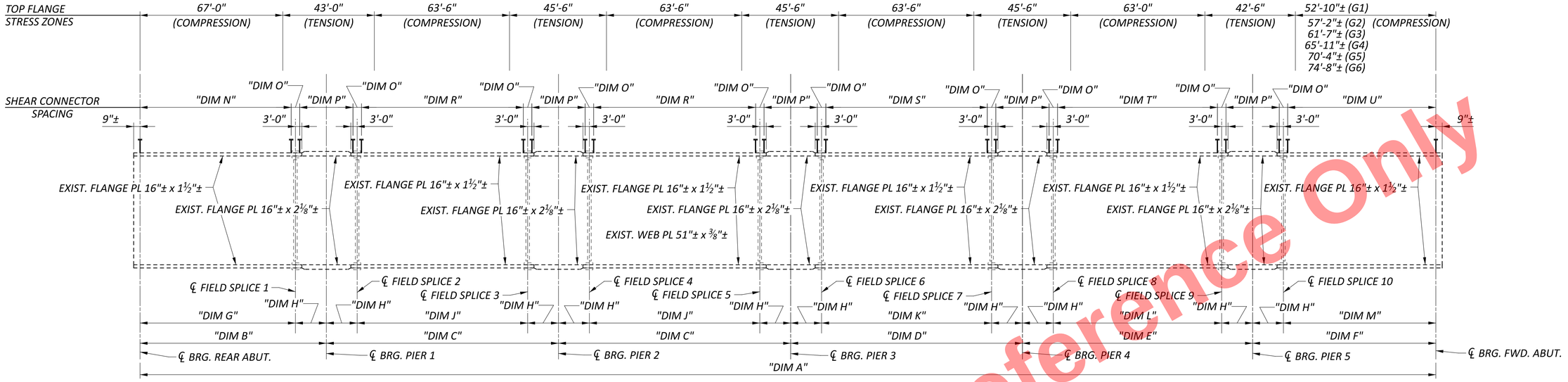

GIRDER ELEVATION

(RIGHT BRIDGE - GIRDERS 7 THRU 12)

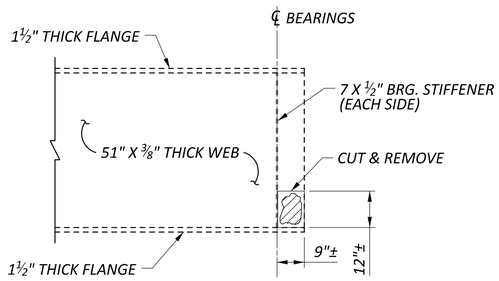

PARTIAL GIRDER ELEVATION (TYPE 1)

(AT ABUTMENTS)
(SHOWING DETERIORATION)

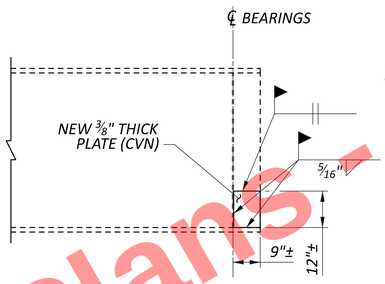

PARTIAL GIRDER ELEVATION (TYPE 1)

(REHABILITATION)

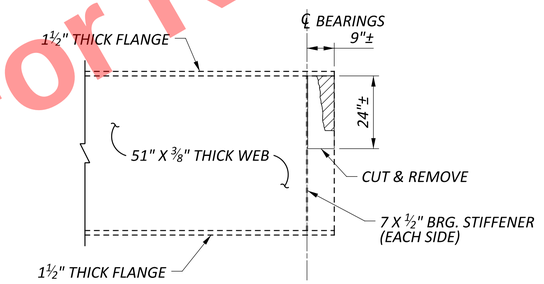

PARTIAL GIRDER ELEVATION (TYPE 2)

(AT ABUTMENTS)
(SHOWING DETERIORATION)

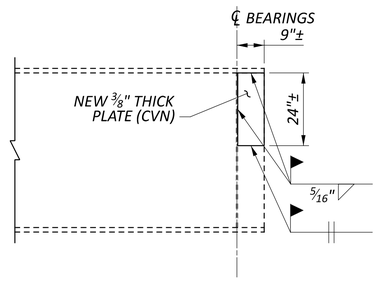

PARTIAL GIRDER ELEVATION (TYPE 2)

(REHABILITATION)

LEGEND

- APPROXIMATE DETERIORATION OF STRUCTURAL STEEL

NOTES:

1. FOR FRAMING PLAN AND DETAILS, SEE SHEET 30/64.
2. WELD ATTACHMENTS OF SUPPORTS FOR CONCRETE DECK FINISHING MACHINE TO AREAS OF THE FASCIA STRINGER FLANGES DESIGNATED "COMPRESSION". DO NOT WELD ATTACHMENTS TO AREAS DESIGNATED "TENSION". FILLET WELDS TO COMPRESSION FLANGES SHALL BE AT LEAST 1" FROM EDGE OF FLANGE, BE NO MORE THAN 2" LONG AND BE AT LEAST ¼" FOR THICKNESS UP TO ¾" OR 5/16" FOR GREATER THAN ¾" THICK.
3. ALL DIMENSIONS SHOWN IN ELEVATION ARE ALONG ℄ GIRDER.
4. CVN: WHERE A SHAPE OR PLATE IS DESIGNATED (CVN), FURNISH MATERIAL THAT MEETS THE MINIMUM NOTCH TOUGHNESS REQUIREMENTS AS SPECIFIED IN 711.01.
5. FOR WELDED SHEAR STUD CONNECTION DETAIL, SEE SHEET 31/64.
6. ⅜" THICK WEB PLATE SHALL BE ASTM A709 GRADE 36 OR 50 AND SUBJECT TO LEVEL UF FABRICATION REQUIREMENTS OF ODOT CONSTRUCTION AND MATERIAL SPECIFICATION 513.
7. THE CONTRACTOR SHALL FIELD PAINT A 10-FOOT LENGTH OF THE EXISTING GIRDER ENDS AFTER END CROSS FRAMES ARE REPLACED AND WEB REPAIRS ARE PERFORMED. THE CONTRACTOR SHALL NOT OVERSPRAY ONTO THE CONCRETE DECK OR CONCRETE SUBSTRUCTURE COMPONENTS (BACK WALLS, ABUTMENTS AND PIERS). PAINTING SHALL BE CONFINED TO THE STRUCTURAL STEEL COMPONENTS. THE COLOR OF THE FINISH COAT SHALL BE FCN 15526 (BLUE) TO MATCH EXISTING PAINT COLOR.

GIRDER DIMENSIONS (RIGHT BRIDGE)

GIRDER	"DIM A"	"DIM B"	"DIM C"	"DIM D"	"DIM E"	"DIM F"	"DIM G"	"DIM H"	"DIM J"	"DIM K"	"DIM L"	"DIM M"
1	595'-3 13/16"±	85'-2 13/16"±	106'-3¼"±	106'-3"±	106'-2¼"±	85'-1¼"±	70'-8 13/16"±	14'-6"±	77'-3¼"±	77'-3"±	77'-2¼"±	70'-7¼"±
2	599'-8¼"±	85'-11⅝"±	107'-2¼"±	107'-1¼"±	106'-9¾"±	85'-5⅛"±	71'-5⅝"±	14'-6"±	78'-2¼"±	78'-1¼"±	77'-9¾"±	70'-11⅛"±
3	604'-0¾"±	86'-8½"±	108'-1¼"±	107'-11 9/16"±	107'-5 3/16"±	85'-9"	72'-2½"±	14'-6"±	79'-1¼"±	78'-11 9/16"±	78'-5 3/16"±	71'-3"±
4	608'-5¼"±	87'-5 5/16"±	109'-0 5/16"±	108'-9 13/16"±	108'-0⅝"±	86'-0⅞"±	72'-11 5/16"±	14'-6"±	80'-0 5/16"±	79'-9 13/16"±	79'-0⅝"±	71'-6⅞"±
5	612'-9 11/16"±	88'-2 3/16"±	109'-11 5/16"±	109'-8 1/16"±	108'-8 1/16"±	86'-4¾"±	73'-8 3/16"±	14'-6"±	80'-11 5/16"±	80'-8 1/16"±	79'-8 1/16"±	71'-10¾"±
6	617'-2 3/16"±	88'-11"±	110'-10⅜"±	110'-6 5/16"±	109'-3½"±	86'-8⅝"±	74'-5"±	14'-6"±	81'-10⅜"±	81'-6 5/16"±	80'-3½"±	72'-2⅝"±

SHEAR CONNECTOR SPACING (RIGHT BRIDGE)

GIRDER	"DIM N"	"DIM O"	"DIM P"	"DIM R"	"DIM S"	"DIM T"	"DIM U"
7	69 SPA. @ 12" MAX. = 68'-8 13/16"±	4'-0"	25 SPA. @ 12" = 25'-0"	74 SPA. @ 12" MAX. = 73'-3¼"±	74 SPA. @ 12" MAX. = 73'-3"±	74 SPA. @ 12" MAX. = 73'-2¼"±	69 SPA. @ 12" = 68'-7¼"±
8	70 SPA. @ 12" MAX. = 69'-5⅝"±	4'-0"	25 SPA. @ 12" = 25'-0"	75 SPA. @ 12" MAX. = 74'-2¾"±	75 SPA. @ 12" MAX. = 74'-1¼"±	74 SPA. @ 12" MAX. = 73'-9¾"±	69 SPA. @ 12" = 68'-11⅛"±
9	71 SPA. @ 12" MAX. = 70'-2½"±	4'-0"	25 SPA. @ 12" = 25'-0"	76 SPA. @ 12" MAX. = 75'-1¼"±	75 SPA. @ 12" MAX. = 74'-11 9/16"±	75 SPA. @ 12" MAX. = 74'-5 3/16"±	70 SPA. @ 12" = 69'-3"±
10	71 SPA. @ 12" MAX. = 70'-11 5/16"±	4'-0"	25 SPA. @ 12" = 25'-0"	77 SPA. @ 12" MAX. = 76'-0 5/16"±	76 SPA. @ 12" MAX. = 75'-9 13/16"±	76 SPA. @ 12" MAX. = 75'-0⅝"±	70 SPA. @ 12" = 69'-6⅞"±
11	72 SPA. @ 12" MAX. = 71'-8 3/16"±	4'-0"	25 SPA. @ 12" = 25'-0"	77 SPA. @ 12" MAX. = 76'-11 5/16"±	77 SPA. @ 12" MAX. = 76'-8 1/16"±	76 SPA. @ 12" MAX. = 75'-8 1/16"±	70 SPA. @ 12" = 69'-10¾"±
12	73 SPA. @ 12" MAX. = 72'-5"±	4'-0"	25 SPA. @ 12" = 25'-0"	78 SPA. @ 12" MAX. = 77'-10⅜"±	78 SPA. @ 12" MAX. = 77'-6 5/16"±	77 SPA. @ 12" MAX. = 76'-3½"±	71 SPA. @ 12" = 70'-2⅝"±

Preliminary Plans - For Reference Only

GIRDER ELEVATION AND DETAILS (2 OF 2)
BRIDGE NO. MAH-00680-04.886
OVER PRICE ROAD & MILL CREEK

SFN 5006872
DESIGN AGENCY
ms consultants, inc.
DESIGNER JSE | CHECKER TVB
REVIEWER WER 05/30/25
PROJECT ID 121474
SUBSET 32 | TOTAL 64
SHEET P.517 | TOTAL 655

MAH-680-0.00

MODEL: Sheet PAPERSIZE: 34x22 (in.) DATE: 9/15/2025 TIME: 11:17:07 AM PLTDRV: OHDOT_PDF_Color_E+.pltcfg PENTBL: OHDOT_Pen.tbl USER: WORKSPACE: OHDOTCEv02 WORKSET: 121474 PRODUCT: OpenRoadsDesigner 10.12.02.4
pw:\\ohiodot-pw.bentley.com:ohiodot-pw-02\Documents\01 Active Projects\District 04\Mahoning\121474\02-Engineering_MSConsultants\Structures\SFN_5006872\Structures\SFN_5006872_SS005.dgn

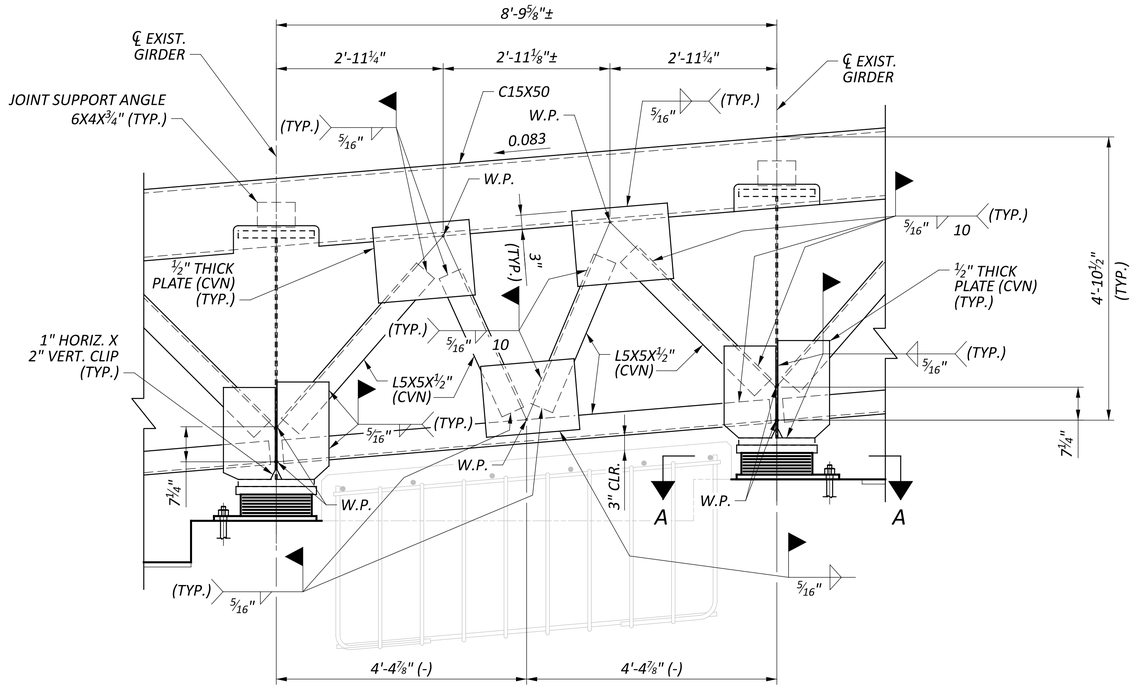

REAR ABUTMENT LEFT BRIDGE END CROSSFRAME DETAIL

(LOOKING UPSTATION)

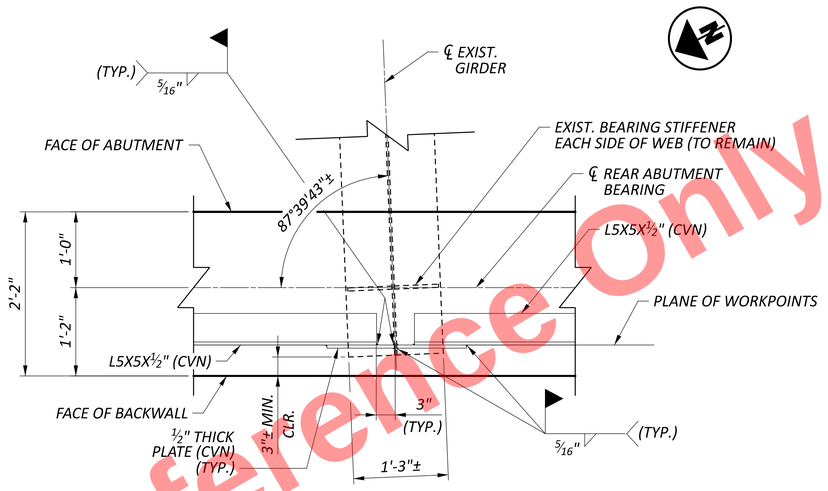

SECTION A-A

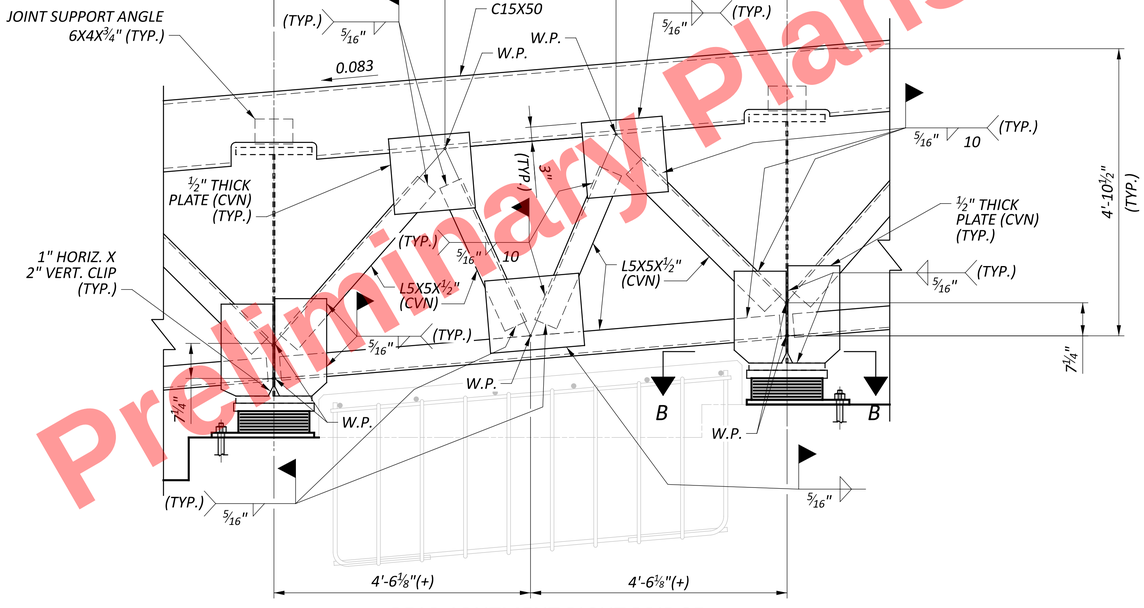

REAR ABUTMENT RIGHT BRIDGE END CROSSFRAME DETAIL

(LOOKING UPSTATION)

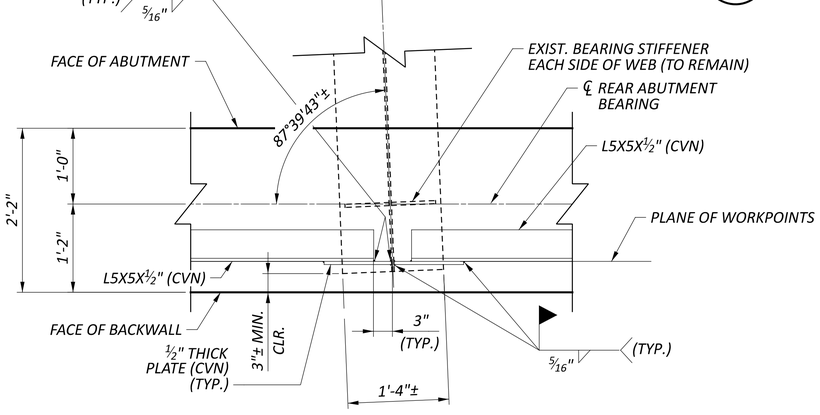

SECTION B-B

LEGEND:

W.P. = WORKPOINT

NOTES:

1. FOR ADDITIONAL END CROSSFRAME DETAILS , SEE STANDARD DRAWING GSD-1-19.
2. WHERE A SHAPE OR PLATE IS DESIGNATED (CVN), FURNISH MATERIAL THAT MEETS THE MINIMUM NOTCH TOUGHNESS REQUIREMENTS AS SPECIFIED IN 711.01.
3. FOR FORWARD ABUTMENT END CROSSFRAME DETAILS , SEE SHEET 34/64.
4. WEB REPAIR AT GIRDER ENDS NOT SHOWN. FOR REPAIR DETAILS, SEE SHEET 32/64.
5. THE CONTRACTOR SHALL FIELD PAINT END CROSS FRAMES AFTER END CROSS FRAMES ARE REPLACED AND EXISTING GIRDER WEB REPAIRS ARE PERFORMED. THE CONTRACTOR SHALL NOT OVERSPRAY ONTO THE CONCRETE DECK OR CONCRETE SUBSTRUCTURE COMPONENTS (BACK WALLS, ABUTMENTS AND PIERS). PAINTING SHALL BE CONFINED TO THE STRUCTURAL STEEL COMPONENTS. THE COLOR OF THE FINISH COAT SHALL BE FCN 15526 (BLUE) TO MATCH EXISTING PAINT COLOR.

Preliminary Plans - For Reference Only

REAR ABUTMENT END CROSSFRAME DETAILS
BRIDGE NO. MAH-00680-04.886
OVER PRICE ROAD & MILL CREEK

SFN 5006872
DESIGN AGENCY
ms consultants, inc.
DESIGNER JSE | CHECKER TVB
REVIEWER WER 05/30/25
PROJECT ID 121474
SUBSET 33 | TOTAL 64
SHEET P.518 | TOTAL 655

MAH-680-0.00

MODEL: Sheet PAPERSIZE: 34x22 (in.) DATE: 9/15/2025 TIME: 11:17:14 AM PLTDRV: OHDOT_PDF_Color_E+.pltcfg PENTBL: OHDOT_Pen.tbl USER: WORKSPACE: OHDOTCEv02 WORKSET: 121474 PRODUCT: OpenRoadsDesigner 10.12.02.4
pw:\\ohiodot-pw.bentley.com:ohiodot-pw-02\Documents\01 Active Projects\District 04\Mahoning\121474\402-Engineering_MSConsultants\Structures\SFN_5006872\Sheets\121474_SFN_5006872_SS003.dgn

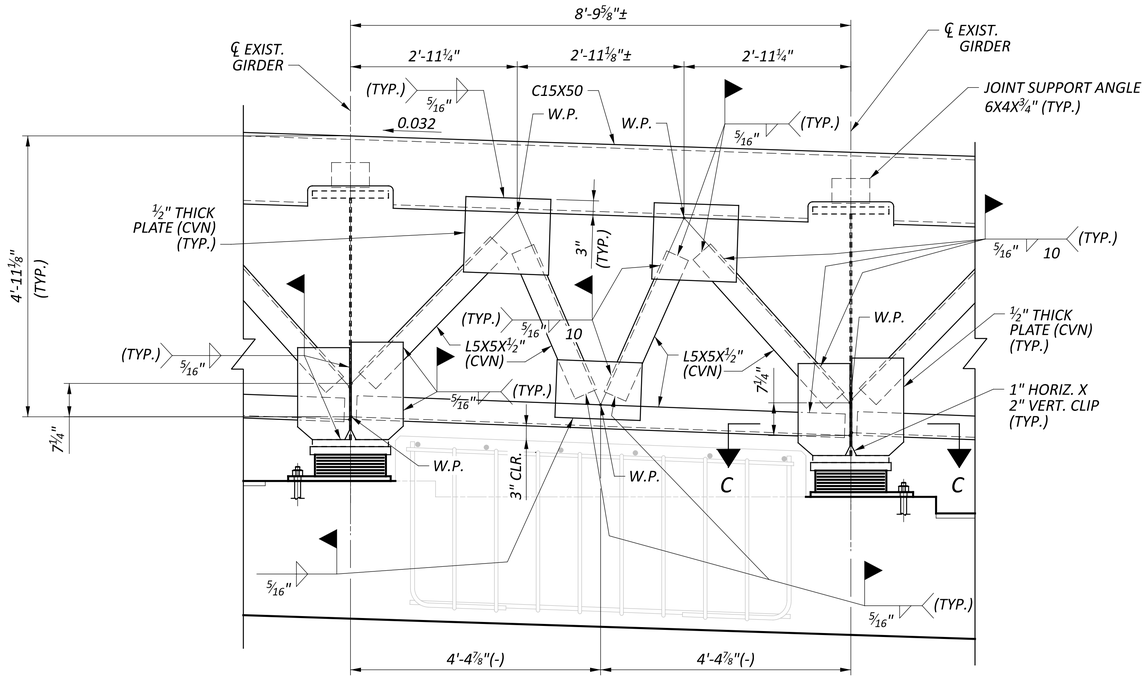

FORWARD ABUTMENT LEFT BRIDGE END CROSSFRAME ELEVATION

(LOOKING DOWNSTATION)

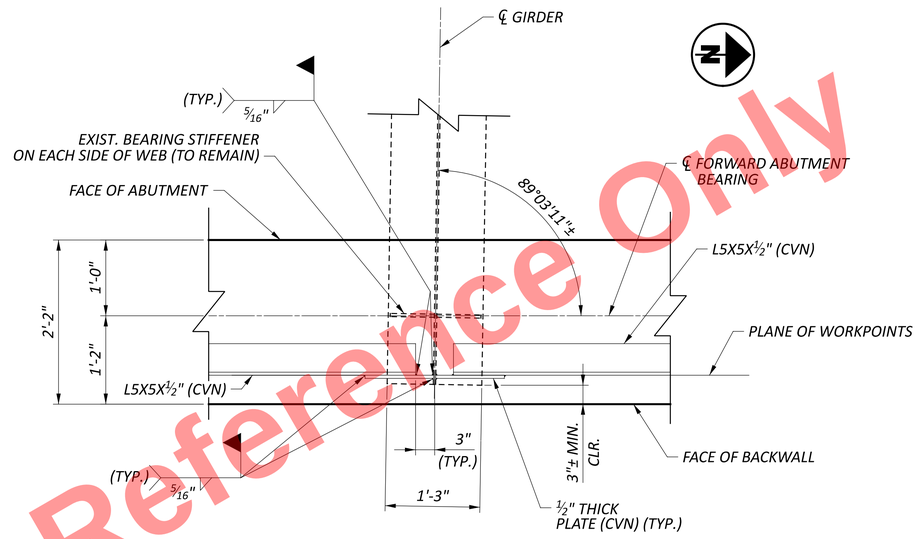

SECTION C-C

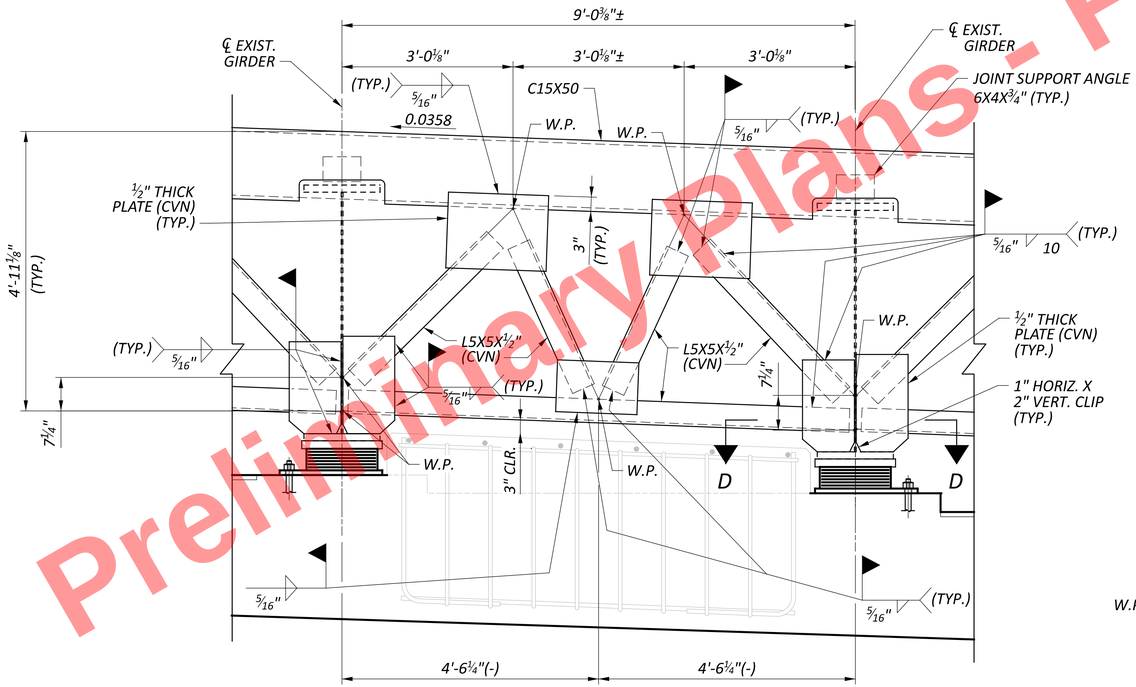

FORWARD ABUTMENT RIGHT BRIDGE END CROSSFRAME ELEVATION

(LOOKING DOWNSTATION)

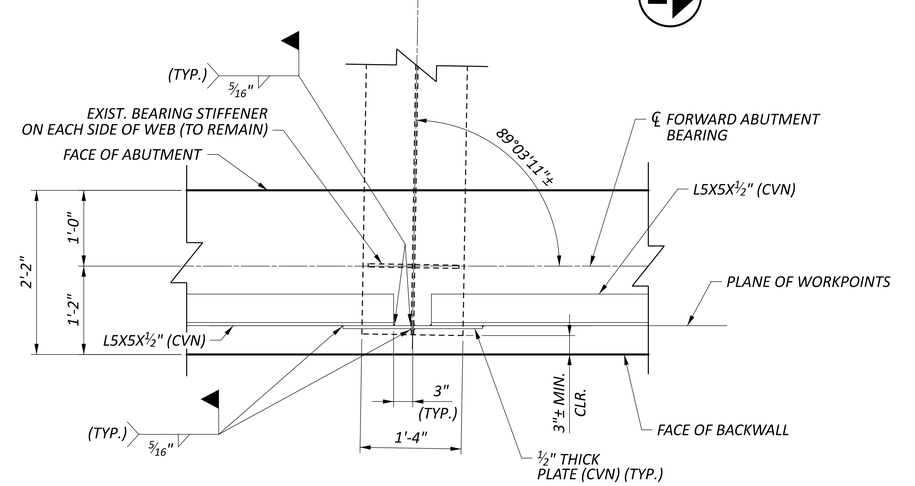

SECTION D-D

LEGEND:

W.P. = WORKPOINT

NOTES:

1. FOR ADDITIONAL END CROSSFRAME DETAILS , SEE STANDARD DRAWING GSD-1-19.
2. WHERE A SHAPE OR PLATE IS DESIGNATED (CVN), FURNISH MATERIAL THAT MEETS THE MINIMUM NOTCH TOUGHNESS REQUIREMENTS AS SPECIFIED IN 711.01.
3. FOR REAR ABUTMENT END CROSSFRAME DETAILS , SEE SHEET 33/64.
4. WEB REPAIR AT GIRDER ENDS NOT SHOWN. FOR REPAIR DETAILS, SEE SHEET 32/64.
5. THE CONTRACTOR SHALL FIELD PAINT END CROSS FRAMES AFTER END CROSS FRAMES ARE REPLACED AND EXISTING GIRDER WEB REPAIRS ARE PERFORMED. THE CONTRACTOR SHALL NOT OVERSPRAY ONTO THE CONCRETE DECK OR CONCRETE SUBSTRUCTURE COMPONENTS (BACK WALLS, ABUTMENTS AND PIERS). PAINTING SHALL BE CONFINED TO THE STRUCTURAL STEEL COMPONENTS. THE COLOR OF THE FINISH COAT SHALL BE FCN 15526 (BLUE) TO MATCH EXISTING PAINT COLOR.

Preliminary Plans - For Reference Only

FORWARD ABUTMENT END CROSSFRAME DETAILS
BRIDGE NO. MAH-00680-04.886
OVER PRICE ROAD & MILL CREEK

SFN 5006872
DESIGN AGENCY ms consultants, inc.
DESIGNER JSE | CHECKER TVB
REVIEWER WER 05/30/25
PROJECT ID 121474
SUBSET 34 | TOTAL 64
SHEET P.519 | TOTAL 655

MAH-680-0.00

MODEL: Sheet PAPERSIZE: 34x22 (in.) DATE: 9/15/2025 TIME: 11:17:21 AM PLTDRV: OHDOT_PDF_Color_E+.pltcfg PENTBL: OHDOT_Pen.tbl USER: WORKSPACE: OHDOTCEv02 WORKSET: 121474 PRODUCT: OpenRoadsDesigner 10.12.02.4
pw:\\ohiodot-pw.bentley.com:ohiodot-pw-02\Documents\01 Active Projects\District 04\Mahoning\121474\402-Engineering_MSConsultants\Structures\SFN_5006872_SS004.dgn

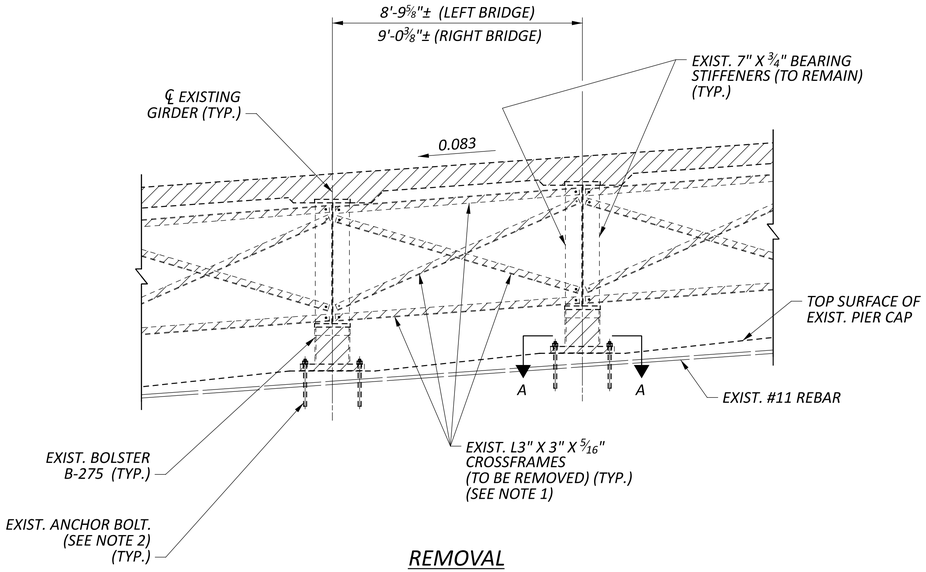

REMOVAL

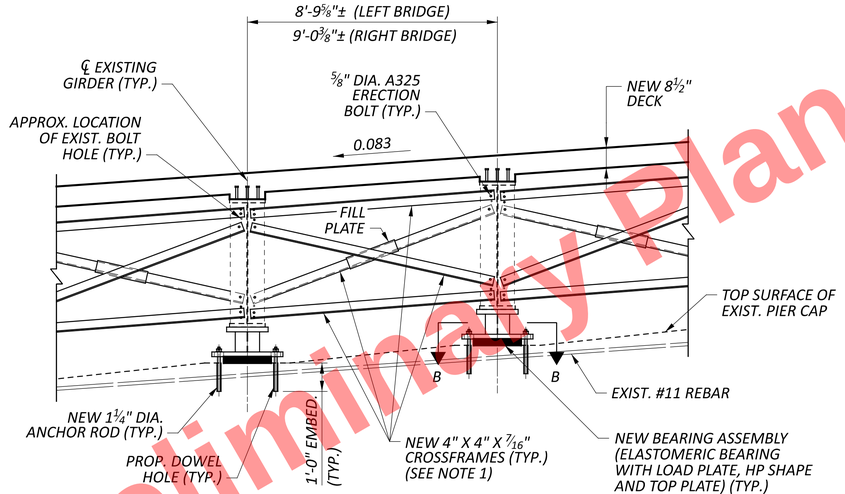

PROPOSED

PARTIAL PIER 3 ELEVATION

(LEFT OR RIGHT BRIDGE)
(LOOKING UPSTATION)

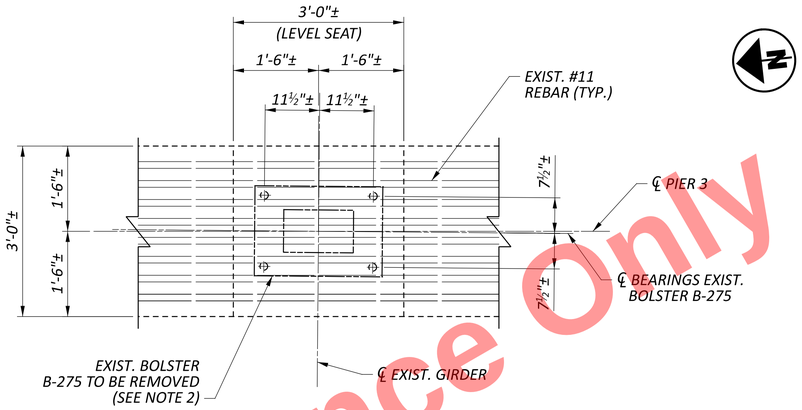

SECTION A-A

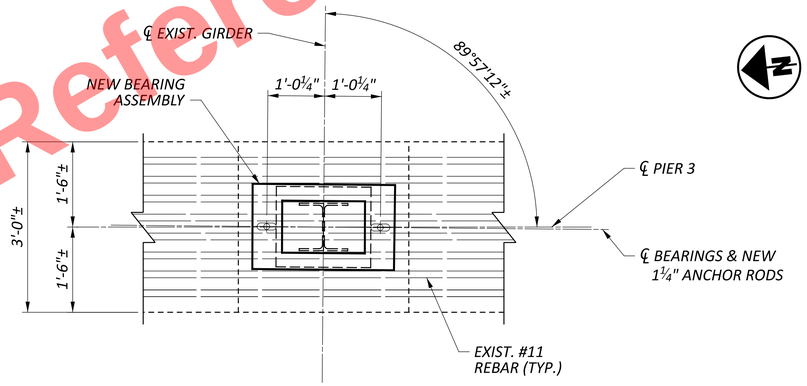

SECTION B-B

LEGEND:

- ITEM 202 - PORTIONS OF STRUCTURE REMOVED, OVER 20 FOOT SPAN, AS PER PLAN

NOTES:

1. CONTRACTOR SHALL REMOVE THE EXISTING 3" X 3" X 5⁄16" CROSSFRAMES, INCLUDING ERECTION BOLTS. THE EXISTING 7" X ¾" BEARING STIFFENERS SHALL REMAIN AND BE RE-USED TO ATTACH THE NEW 4" X 4" X 7⁄16" CROSSFRAMES.
2. REMOVE EXISTING BOLSTERS INCLUDING NUTS AND WASHERS. CONTRACTOR SHALL CUT AND REMOVE PORTION OF EXISTING ANCHOR BOLTS FLUSH WITH TOP SURFACE OF EXISTING PIER CAP.
3. REFER TO GSD-1-19 FOR ADDITIONAL CROSS FRAME DETAILS.
4. FOR PIER 3 BEARING DETAILS, SEE SHEET 38/64.
5. THE CONTRACTOR SHALL FIELD PAINT THE NEW CROSS FRAMES AT PIER 3 AND PORTIONS OF PAINT COATING SYSTEM (WELD LOCATIONS, ETC.) THAT ARE DAMAGED DUE TO REMOVAL AND REPLACEMENT OF CROSS FRAMES AT PIER 3. THE CONTRACTOR SHALL NOT OVERSPRAY ONTO THE CONCRETE DECK OR CONCRETE SUBSTRUCTURE COMPONENTS (BACK WALLS, ABUTMENTS AND PIERS). PAINTING SHALL BE CONFINED TO THE STRUCTURAL STEEL COMPONENTS. THE COLOR OF THE FINISH COAT SHALL BE FCN 15526 (BLUE) TO MATCH EXISTING PAINT COLOR.

Preliminary Plans - For Reference Only

PIER 3 CROSSFRAME REMOVAL AND REPLACEMENT
BRIDGE NO. MAH-00680-04.886
OVER PRICE ROAD & MILL CREEK

SFN 5006872
DESIGN AGENCY
ms consultants, inc.

DESIGNER	CHECKER
JSE	TVB

REVIEWER: WER 05/30/25
PROJECT ID: 121474
SUBSET: 35 TOTAL: 64
SHEET: P.520 TOTAL: 655

MAH-680-0.00

MODEL: Sheet PAPERSIZE: 34x22 (in.) DATE: 9/15/2025 TIME: 11:17:27 AM PLTDRV: OHDOT_PDF_Color_E+.pltcfg PENTBL: OHDOT_Pen.tbl USER: WORKSPACE: OHDOTCEv02 WORKSET: 121474 PRODUCT: OpenRoadsDesigner 10.12.02.4
pw:\\ohiodot-pw.bentley.com:ohiodot-pw-02\Documents\01 Active Projects\District 04\Mahoning\121474\402-Engineering_MSConsultants\Structures\SFN_5006872\Sheets\121474_SFN_5006872_SS006.dgn

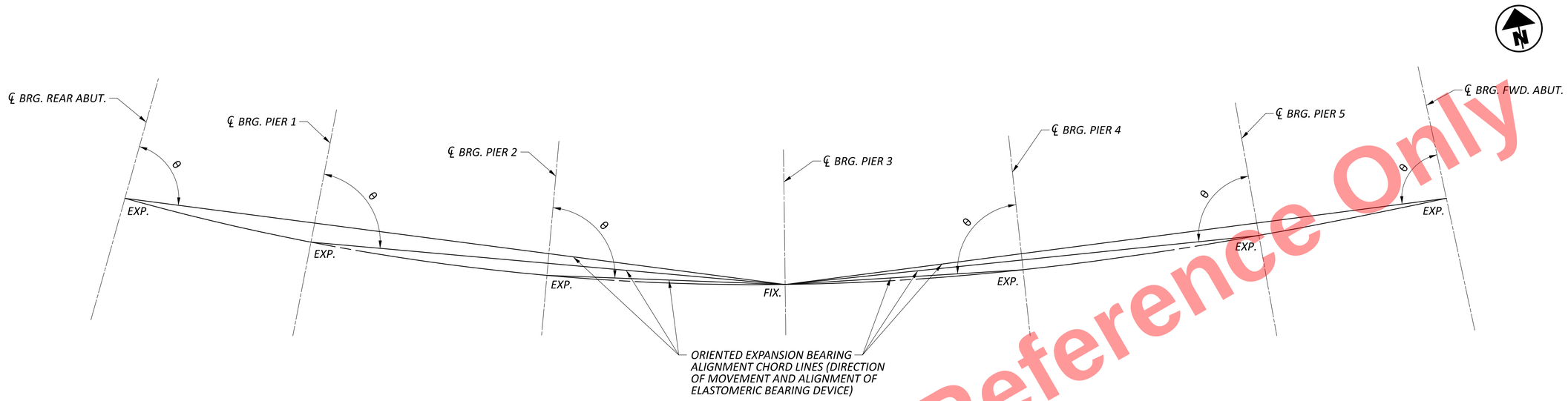

BEARING ORIENTATION PLAN

NOTES:

1. *LOAD PLATE:*

   THE STEEL LOAD PLATE, MASONRY PLATE AND TOP PLATE SHALL BE ASTM A709 GRADE 50 AND SHALL BE PAINTED AS PER ITEM 514.

   THE STEEL LOAD PLATE, AND MASONRY PLATE AT ABUTMENTS, SHALL BE BONDED BY VULCANIZATION TO THE ELASTOMER DURING THE MOLDING PROCESS.

2. *ELASTOMERIC BEARINGS:*

   THE ELASTOMER SHALL HAVE A HARDNESS OF 50 DUROMETER. THE BEARINGS WERE DESIGNED IN ACCORDANCE WITH SECTION 14.7.6 (METHOD A) OF THE AASHTO LRFD BRIDGE DESIGN SPECIFICATIONS. THE LONG-TERM COMPRESSION PROOF LOAD TEST (AASHTO STANDARD SPECIFICATIONS FOR HIGHWAY BRIDGES, DIVISION II, SECTION 18.7.2.6) IS NOT REQUIRED).

3. *ALL BEARINGS SHALL BE MARKED PRIOR TO SHIPPING. THE MARKS SHALL INCLUDE THE BEARING LOCATION ON THE BRIDGE, AND A DIRECTION ARROW THAT POINT UP-STATION. ALL MARKS SHALL BE PERMANENT AND BE VISIBLE AFTER THE BEARING IS INSTALLED.*

4. *ANCHOR BOLTS (RODS) SHALL BE IN ACCORDANCE WITH ASTM F1554 (GRADE 105) AND HOT-DIP GALVANIZED IN ACCORDANCE WITH CMS 711.02. ANCHOR BOLT HOLE DIAMETER SHALL BE BOLT DIAMETER PLUS 1/4". FURNISHING AND INSTALLING ANCHOR RODS AND ALL ASSOCIATED NUTS/WASHERS SHALL BE INCLUDED WITH PAYMENT FOR BEARINGS.*

5. *ORIENTATION OF BEARINGS ARE SET WITH THEIR LONGITUDINAL DIRECTION ON A CHORD FROM EACH SUPPORT TO FIXED PIER NO. 3 FOR EACH GIRDER LINE.*

PIER HP10X57 HEIGHT (INCHES)																								
LEFT BRIDGE													RIGHT BRIDGE											
GIRDER NO.	1		2		3		4		5		6		GIRDER NO.	7		8		9		10		11		12	
PIER NO.	th1	th2	th1	th2	th1	th2	th1	th2	th1	th2	th1	th2	PIER NO.	th1	th2	th1	th2	th1	th2	th1	th2	th1	th2	th1	th2
1	10.917	10.999	10.889	10.971	10.899	10.981	10.908	10.990	10.918	11.000	10.927	11.009	1	12.270	12.344	12.276	12.350	12.284	12.358	12.292	12.366	12.300	12.374	12.306	12.380
2	9.383	9.465	9.356	9.438	9.365	9.447	9.375	9.457	9.384	9.466	9.394	9.476	2	9.715	9.789	9.722	9.796	9.730	9.804	9.738	9.812	9.746	9.820	9.752	9.826
3	8.453	8.535	8.425	8.507	8.435	8.517	8.443	8.525	8.453	8.535	8.462	8.544	3	7.768	7.842	7.775	7.849	7.783	7.857	7.790	7.864	7.798	7.872	7.805	7.879
4	5.441	5.523	5.417	5.499	5.423	5.505	5.430	5.512	5.437	5.519	5.443	5.525	4	5.399	5.473	5.414	5.488	5.430	5.504	5.447	5.521	5.463	5.537	5.478	5.552
5	2.715	2.797	2.697	2.779	2.701	2.783	2.705	2.787	2.708	2.790	2.712	2.794	5	3.980	4.054	3.972	4.046	3.964	4.038	3.956	4.030	3.948	4.022	3.940	4.014

BEARING LOCATION	BEARING ORIENTATION ANGLE θ	GIRDER ORIENTATION ANGLE β	BEARING TYPE	NO. REQ'D. PER LOCATION	DEAD LOAD (KIPS)	LIVE LOAD (KIPS)	TOTAL LOAD (DL+LL) (KIPS)	Le (inches)	We (inches)	Tpi (inches)	NO. OF Tpi'S	Tpe (1 EA.) (inches)	NUMBER OF INTERNAL LAMINATES (12 GAGE)	Te (inches)	STEEL LOAD PLATE			STEEL TOP PLATE			MASONRY PLATE			Tt (inches)
															Lb (inches)	Wb (inches)	Tb (inches)	Lb' (inches)	Wb' (inches)	Tb' (inches)	Lm (inches)	Wm (inches)	Tm (inches)	
REAR ABUTMENT	81°-49'-45"	87°-39'-43"	EXP	12	64.2	81.9	146.1	14	15	0.5625	7	N/A	6	4.565	15	19	1.500	N/A	N/A	N/A	15	21	1.000	7.190 *
PIER 1	84°-10'-02"	89°-42'-37"	EXP	12	221.6	155.0	376.6	17.5	20	0.5	5	0.25	5	3.273	18.5	21	2.000	11	17.5	2.000	N/A	N/A	N/A	5.273
PIER 2	87°-05'-01"	90°-00'-00"	EXP	12	219.4	157.4	376.8	17.5	20	0.5	5	0.25	5	3.273	18.5	21	2.000	11	17.5	2.000	N/A	N/A	N/A	5.273
PIER 3	N/A	89°-57'-12"	FIX	12	219.3	155.5	374.8	17	20	0.5	4	0.25	4	2.668	18	30.5	2.000	11	17.5	2.000	N/A	N/A	N/A	4.668
PIER 4	87°-22'-43"	89°-44'-50"	EXP	12	219.4	157.4	376.8	17.5	20	0.5	5	0.25	5	3.273	18.5	21	2.000	11	17.5	2.000	N/A	N/A	N/A	5.273
PIER 5	85°-49'-43"	89°-37'-40"	EXP	12	221.6	155.0	376.6	17.5	20	0.5	5	0.25	5	3.273	18.5	21	2.000	11	17.5	2.000	N/A	N/A	N/A	5.273
FORWARD ABUTMENT	85°-17'-11"	89°-03'-11"	EXP	12	64.2	81.9	146.1	14	15	0.5625	7	N/A	6	4.565	15	19	1.500	N/A	N/A	N/A	15	21	1.000	7.190 *

** INCLUDES 1/8" PREFORMED BEARING PAD*

Preliminary Plans - For Reference Only

BEARING ORIENTATION PLAN AND NOTES
BRIDGE NO. MAH-00680-04.886
OVER PRICE ROAD & MILL CREEK

SFN 5006872
DESIGN AGENCY
ms consultants, inc.
DESIGNER JSE | CHECKER SJR
REVIEWER WER 05/30/25
PROJECT ID 121474
SUBSET 36 | TOTAL 64
SHEET P.521 | TOTAL 655

MAH-680-0.00

MODEL: Sheet PAPERSIZE: 34x22 (in.) DATE: 9/15/2025 TIME: 11:17:33 AM PLTDRV: OHDOT_PDF_Color_E+.pltcfg PENTBL: OHDOT_Pen.tbl USER: WORKSPACE: OHDOTCEv02 WORKSET: 121474 PRODUCT: OpenRoadsDesigner 10.12.02.4
pw:\\ohiodot-pw.bentley.com:ohiodot-pw-02\Documents\01 Active Projects\District 04\Mahoning\121474\402-Engineering_MSConsultants\Structures\SFN_5006872\Sheets\121474_SFN_5006872_SB001.dgn

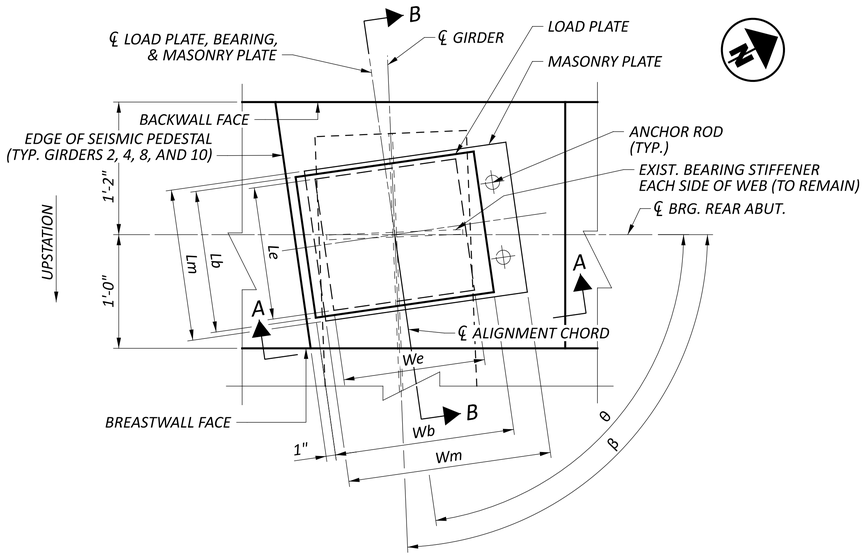

PLAN AT REAR ABUTMENT
(TYP. GIRDERS 1, 2, 4, 7, 8, AND 10)

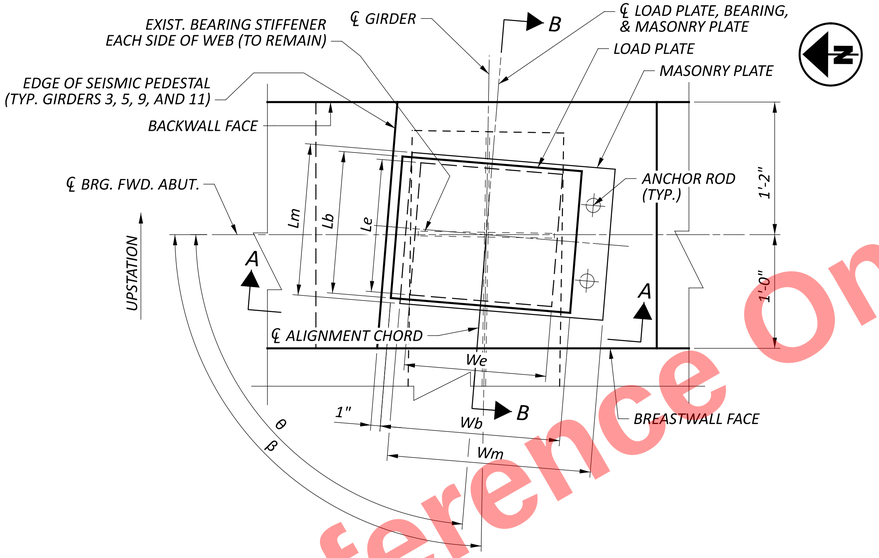

PLAN AT FORWARD ABUTMENT
(TYP. GIRDERS 3, 5, 6, 9, 11, AND 12)

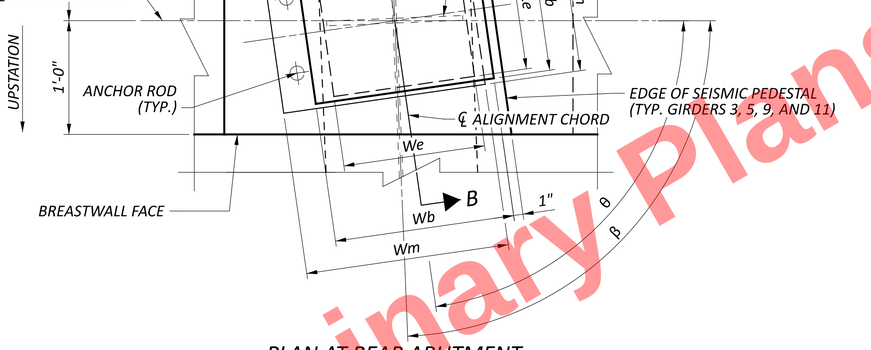

PLAN AT REAR ABUTMENT
(TYP. GIRDERS 3, 5, 6, 9, 11, AND 12)

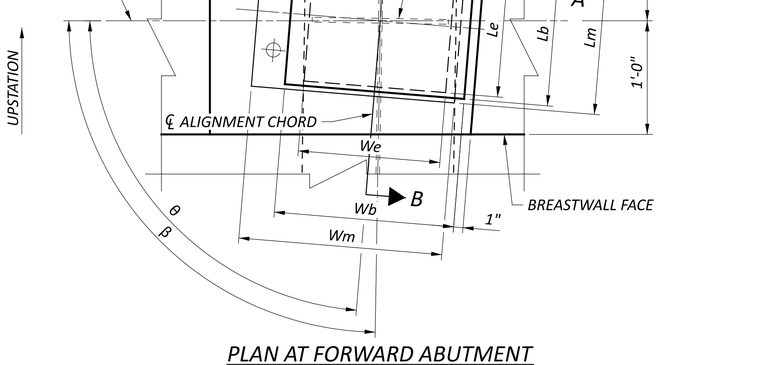

PLAN AT FORWARD ABUTMENT
(TYP. GIRDERS 1, 2, 4, 7, 8, AND 10)

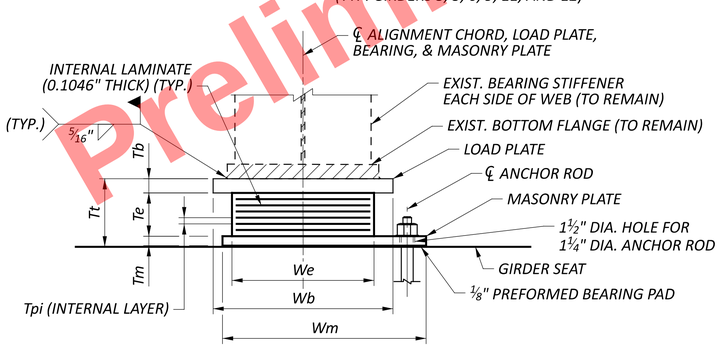

VIEW A-A

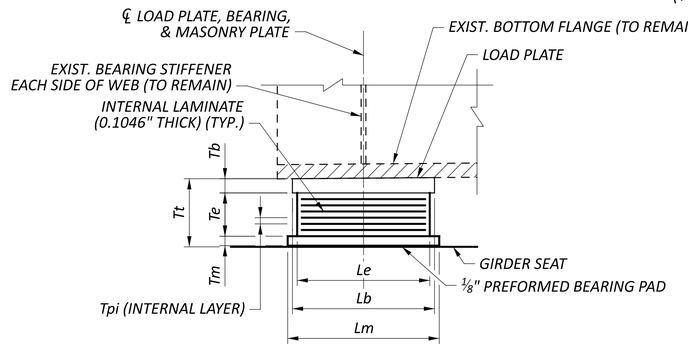

SECTION B-B

NOTES:

1. FOR BEARING ORIENTATION ANGLE θ, GIRDER ORIENTATION ANGLE β, AND ADDITIONAL NOTES, SEE SHEET 36/64.

Preliminary Plans - For Reference Only

ABUTMENT ELASTOMERIC BEARING DETAILS
BRIDGE NO. MAH-00680-04.886
OVER PRICE ROAD & MILL CREEK

SFN	5006872
DESIGN AGENCY	ms consultants, inc.
DESIGNER	JSE
CHECKER	SJR
REVIEWER	WER 05/30/25
PROJECT ID	121474
SUBSET	37
TOTAL	64
SHEET	P.522
TOTAL	655

MAH-680-0.00

MODEL: Sheet PAPERSIZE: 34x22 (in.) DATE: 9/15/2025 TIME: 11:17:39 AM PLTDRV: OHDOT_PDF_Color_E+.pltcfg PENTBL: OHDOT_Pen.tbl USER: WORKSPACE: OHDOTCEv02 WORKSET: 121474 PRODUCT: OpenRoadsDesigner 10.12.02.4
pw:\\ohiodot-pw.bentley.com:ohiodot-pw-02\Documents\01 Active Projects\District 04\Mahoning\121474\02-Engineering_MSConsultants\Structures\SFN_5006872\Sheets\121474_SFN_5006872_SB002.dgn

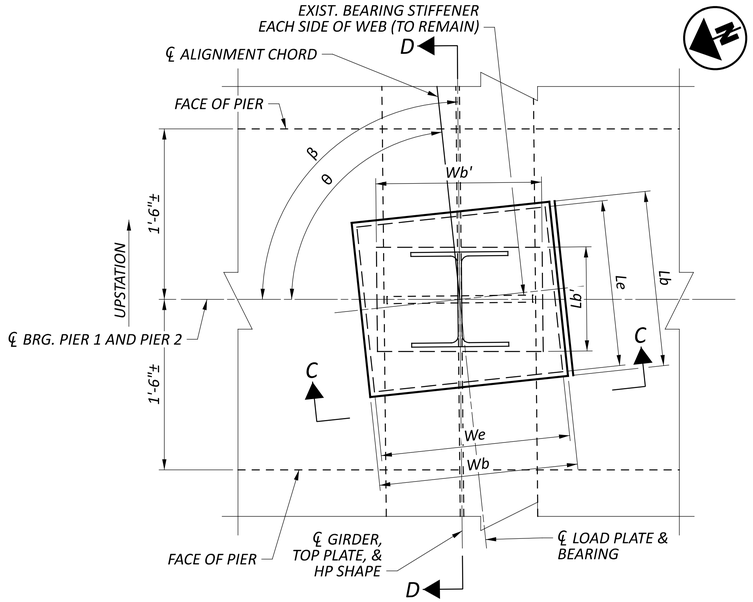

PLAN AT PIERS 1 AND 2

(PIER 1 SHOWN, PIER 2 SIMILAR)

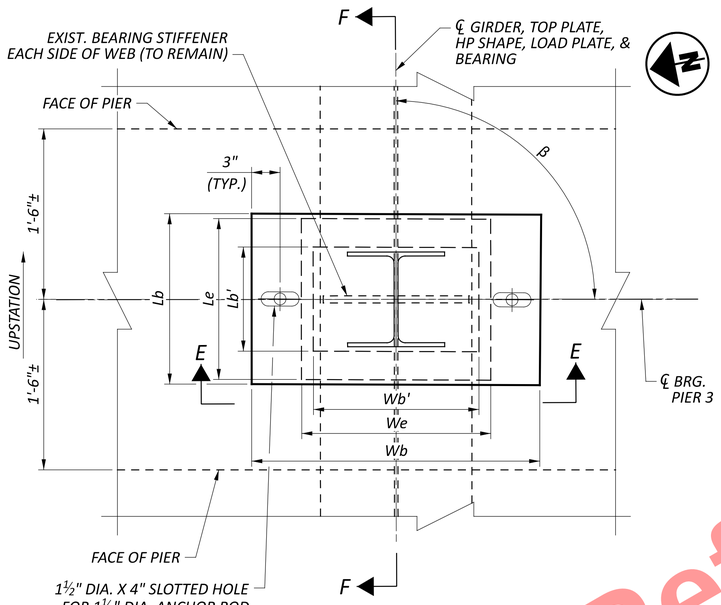

PLAN AT PIER 3

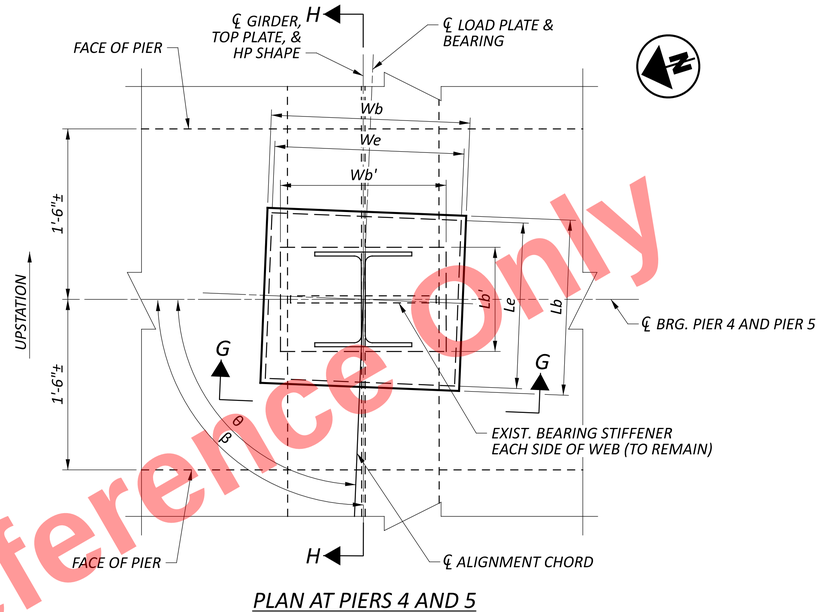

PLAN AT PIERS 4 AND 5

(PIER 4 SHOWN, PIER 5 SIMILAR)

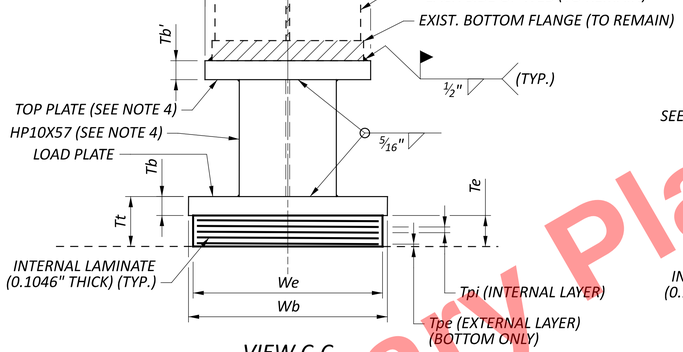

VIEW C-C

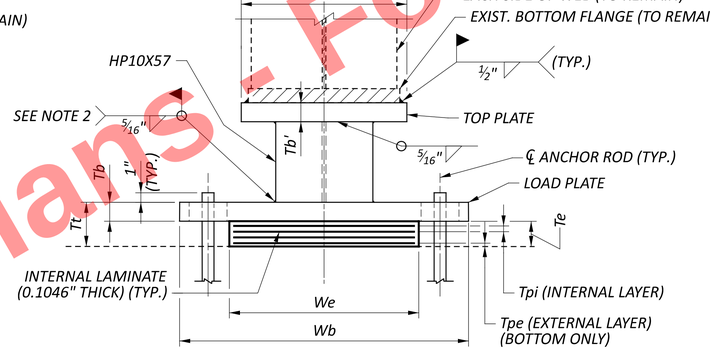

VIEW E-E

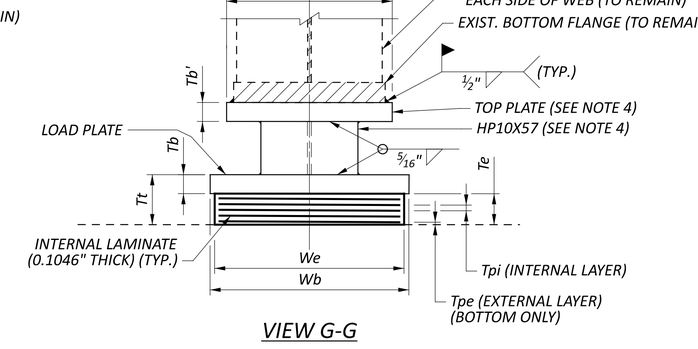

VIEW G-G

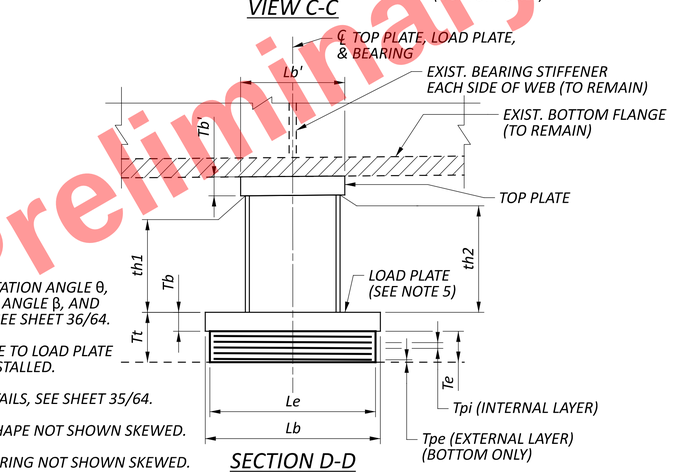

SECTION D-D

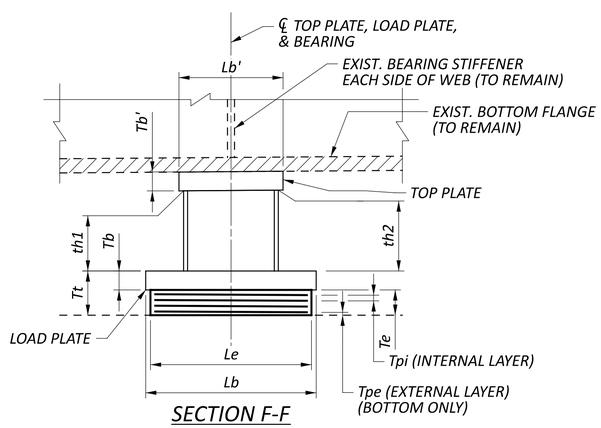

SECTION F-F

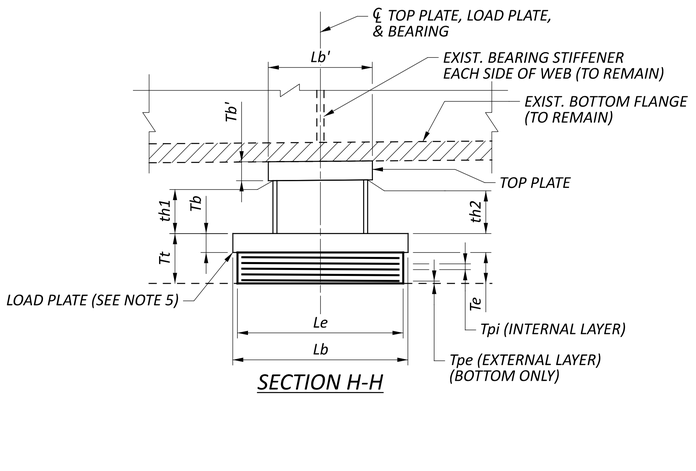

SECTION H-H

NOTES:

1. FOR BEARING ORIENTATION ANGLE θ, GIRDER ORIENTATION ANGLE β, AND ADDITIONAL NOTES, SEE SHEET 36/64.
2. FIELD WELD HP SHAPE TO LOAD PLATE AFTER BEARING IS INSTALLED.
3. FOR ADDITIONAL DETAILS, SEE SHEET 35/64.
4. TOP PLATE AND HP SHAPE NOT SHOWN SKEWED.
5. LOAD PLATE AND BEARING NOT SHOWN SKEWED.

Preliminary Plans - For Reference Only

PIER ELASTOMERIC BEARING DETAILS

BRIDGE NO. MAH-00680-04.886
OVER PRICE ROAD & MILL CREEK

SFN	5006872
DESIGN AGENCY	ms consultants. inc.
DESIGNER	JSE
CHECKER	SJR
REVIEWER	WER 05/30/25
PROJECT ID	121474
SUBSET	38
TOTAL	64
SHEET	P.523
TOTAL	655

MAH-680-0.00

MODEL: Sheet PAPERSIZE: 34x22 (in.) DATE: 9/15/2025 TIME: 11:17:46 AM PLTDRV: OHDOT_PDF_Color_E+.pltcfg PENTBL: OHDOT_Pen.tbl USER: WORKSPACE: OHDOTCEv02 WORKSET: 121474 PRODUCT: OpenRoadsDesigner 10.12.02.4
pw:\\ohiodot-pw.bentley.com:ohiodot-pw-02\Documents\01 Active Projects\District 04\Mahoning\121474\402-Engineering_MSConsultants\Structures\SFN_5006872\Sheets\121474_SFN_5006872_SB003.dgn

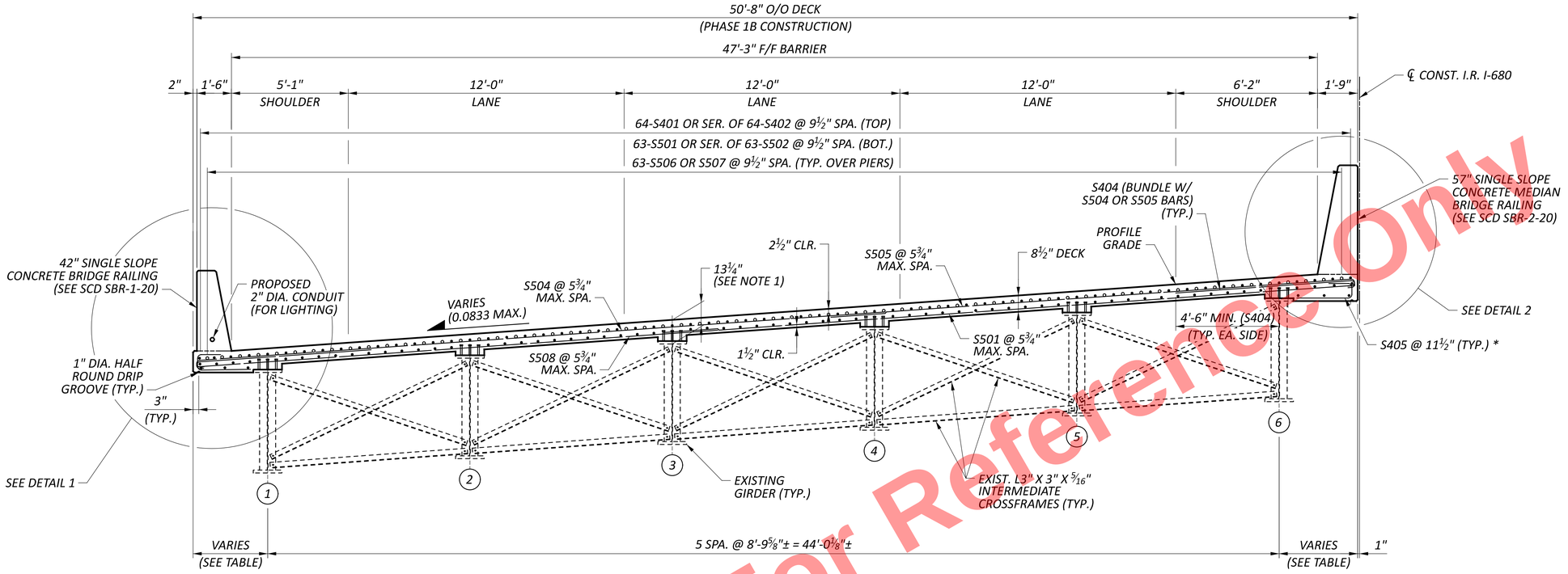

TRANSVERSE SECTION
(LEFT BRIDGE)

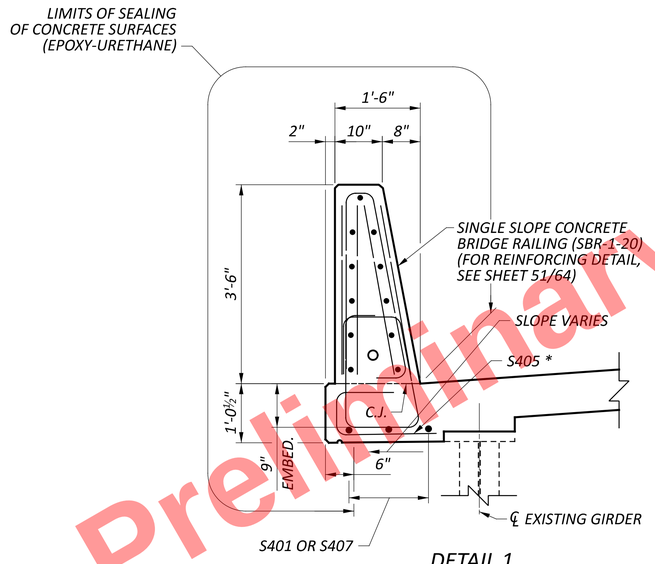

DETAIL 1

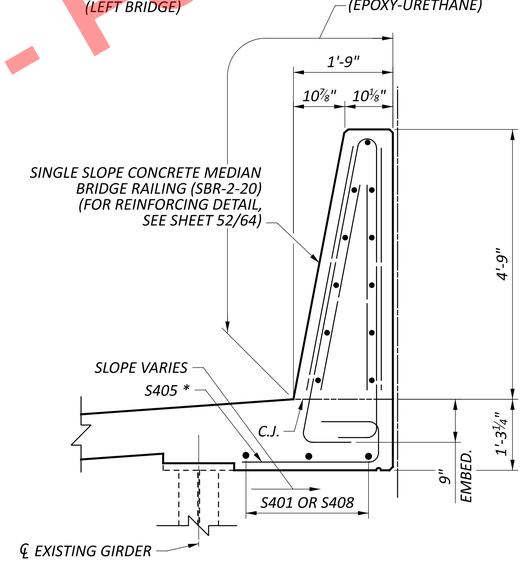

DETAIL 2

LEGEND

(1) - DENOTES GIRDER NUMBER

* - DUE TO THE VARIABLE OVERHANG, THE CONTRACTOR SHALL TRIM THE GLASS FIBER REINFORCED POLYMER (GFRP) S405 BARS TO CLEAR THE EDGE OF EXISTING GIRDER FLANGE BY 2".

NOTES:

1. DECK SLAB CONCRETE QUANTITY

   THE ESTIMATED QUANTITY OF DECK SLAB CONCRETE IS BASED ON THE CONSTANT DECK SLAB THICKNESS, AS SHOWN, PLUS THE QUANTITY OF CONCRETE THAT FORMS EACH GIRDER HAUNCH. THE ESTIMATE ASSUMES A VARIABLE HAUNCH THICKNESS AND A HAUNCH WIDTH EQUAL TO THE TOP FLANGE WIDTH. DEVIATE FROM THIS HAUNCH THICKNESS AS NECESSARY TO PLACE THE DECK SURFACE AT THE FINISHED GRADE.

   THE HAUNCH THICKNESS WAS MEASURED AT THE CENTERLINE OF THE GIRDER, FROM THE SURFACE OF THE DECK TO THE BOTTOM OF THE TOP FLANGE MINUS THE DECK SLAB THICKNESS. THE AREA OF ALL EMBEDDED STEEL PLATES HAS BEEN DEDUCTED FROM THE HAUNCH QUANTITY IN ACCORDANCE WITH 511.23.

2. FOR DECK PLAN, SEE SHEET 42/64.
3. FOR ADDITIONAL LEFT RAILING DETAILS, SEE SHEET 51/64.
4. FOR ADDITIONAL RIGHT MEDIAN RAILING DETAILS, SEE SHEET 52/64.

DECK LAYOUT TABLE (OVERHANGS)

OFFSETS FROM CENTERLINE OF EXTERIOR BEAM TO EDGE OF DECK SLAB (MEASURED PERPENDICULAR TO ℄ BEAM)

	SPAN 1					SPAN 2				SPAN 3				SPAN 4				SPAN 5				SPAN 6			
	R.A.	0.25 L	0.50 L	0.75 L	PIER 1	0.25 L	0.50 L	0.75 L	PIER 2	0.25 L	0.50 L	0.75 L	PIER 3	0.25 L	0.50 L	0.75 L	PIER 4	0.25 L	0.50 L	0.75 L	PIER 5	0.25 L	0.50 L	0.75 L	F.A.
BEAM 1	4'-0"	3'-4 ½"	3'-2"	3'-4 ½"	3'-4 ¼"	3'-2"	2'-8 ½"	2'-10 ⅞"	3'-3 ¼"	3'-1 ⅞"	2'-8 ½"	2'-10 ¾"	3'-3 ¼"	3'-2 ⅛"	2'-9 ¼"	2'-11 ⅝"	3'-4 ¾"	3'-4 ⅝"	3'-1 ⅛"	3'-3 ⅛"	3'-7 ½"	3'-8 ½"	3'-7 ⅝"	3'-8 ⅞"	4'-0 ¼"
BEAM 6	2'-7 ¾"	3'-3 ½"	3'-6 ⅛"	3'-3 ⅝"	3'-3 ½"	3'-6 ¼"	3'-11 ⅞"	3'-9 ½"	3'-4 ½"	3'-6 ⅜"	4'-0"	3'-9 ⅝"	3'-4 ½"	3'-6"	3'-11 ⅛"	3'-8 ⅝"	3'-3 ⅛"	3'-3 ½"	3'-7"	3'-5 ⅛"	3'-0 ⅜"	2'-11 ½"	3'-0 ½"	2'-11 ⅛"	2'-7 ¾"

Preliminary Plans - For Reference Only

TRANSVERSE SECTION (1 OF 2)
BRIDGE NO. MAH-00680-04.886
OVER PRICE ROAD & MILL CREEK

SFN 5006872
DESIGN AGENCY
ms consultants, inc.
DESIGNER JSE | CHECKER TVB
REVIEWER WER 05/30/25
PROJECT ID 121474
SUBSET 39 | TOTAL 64
SHEET P.524 | TOTAL 655

MAH-680-0.00

MODEL: Sheet PAPERSIZE: 34x22 (in.) DATE: 9/15/2025 TIME: 11:17:52 AM PLTDRV: OHDOT_PDF_Color_Ex.pltcfg PENTBL: OHDOT_Pen.tbl USER: WORKSPACE: OHDOTCEv02 WORKSET: 121474 PRODUCT: OpenRoadsDesigner 10.12.02.4
pw:\\ohiodot-pw.bentley.com:ohiodot-pw-02\Documents\01 Active Projects\District 04\Mahoning\121474\02-Engineering_MSConsultants\Structures\SFN_5006872_ST001.dgn
pw:\\ohiodot-pw.bentley.com:ohiodot-pw-02\Documents\01 Active Projects\District 04\Mahoning\121474\02-Engineering_MSConsultants\Structures\SFN_5006872_ST001.dgn

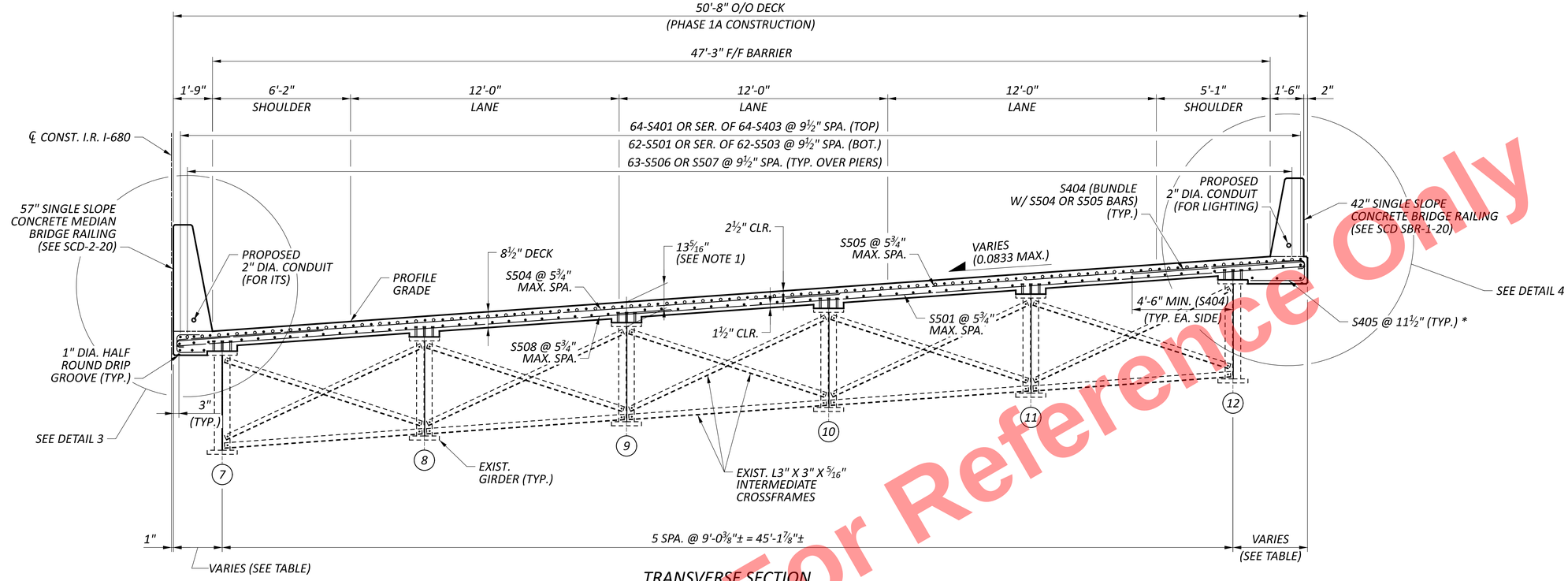

TRANSVERSE SECTION

(RIGHT BRIDGE)

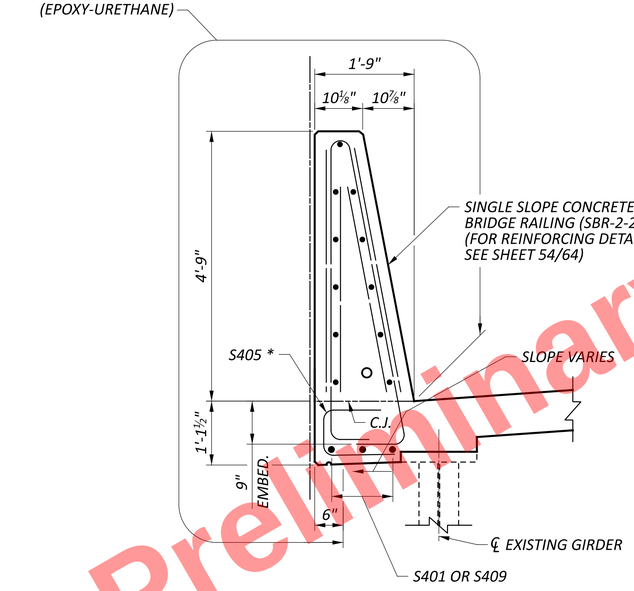

DETAIL 3

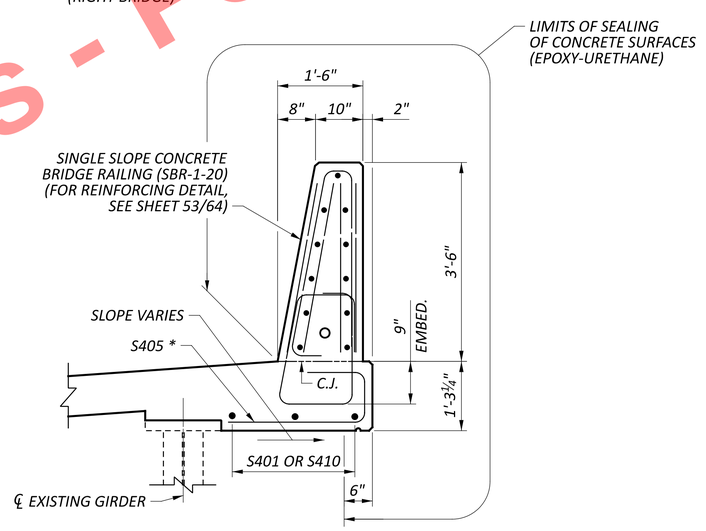

DETAIL 4

LEGEND

(1) - DENOTES GIRDER NUMBER

* - DUE TO THE VARIABLE OVERHANG, THE CONTRACTOR SHALL TRIM THE GLASS FIBER REINFORCED POLYMER (GFRP) S405 BARS TO CLEAR THE EDGE OF EXISTING GIRDER FLANGE BY 2".

NOTES:

1. DECK SLAB CONCRETE QUANTITY

   THE ESTIMATED QUANTITY OF DECK SLAB CONCRETE IS BASED ON THE CONSTANT DECK SLAB THICKNESS, AS SHOWN, PLUS THE QUANTITY OF CONCRETE THAT FORMS EACH GIRDER HAUNCH. THE ESTIMATE ASSUMES A VARIABLE HAUNCH THICKNESS AND A HAUNCH WIDTH EQUAL TO THE TOP FLANGE WIDTH. DEVIATE FROM THIS HAUNCH THICKNESS AS NECESSARY TO PLACE THE DECK SURFACE AT THE FINISHED GRADE.

   THE HAUNCH THICKNESS WAS MEASURED AT THE CENTERLINE OF THE GIRDER, FROM THE SURFACE OF THE DECK TO THE BOTTOM OF THE TOP FLANGE MINUS THE DECK SLAB THICKNESS. THE AREA OF ALL EMBEDDED STEEL PLATES HAS BEEN DEDUCTED FROM THE HAUNCH QUANTITY IN ACCORDANCE WITH 511.23.

2. FOR DECK PLAN, SEE SHEET 42/64.
3. FOR ADDITIONAL RIGHT RAILING DETAILS, SEE SHEET 53/64.
4. FOR ADDITIONAL LEFT MEDIAN RAILING DETAILS, SEE SHEET 54/64.

DECK LAYOUT TABLE (OVERHANGS)

OFFSETS FROM CENTERLINE OF EXTERIOR BEAM TO EDGE OF DECK SLAB (MEASURED PERPENDICULAR TO ℄ BEAM)

	SPAN 1					SPAN 2				SPAN 3				SPAN 4				SPAN 5				SPAN 6			
	R.A.	0.25 L	0.50 L	0.75 L	PIER 1	0.25 L	0.50 L	0.75 L	PIER 2	0.25 L	0.50 L	0.75 L	PIER 3	0.25 L	0.50 L	0.75 L	PIER 4	0.25 L	0.50 L	0.75 L	PIER 5	0.25 L	0.50 L	0.75 L	F.A.
BEAM 7	2'-11"	2'-3 1/8"	2'-0 1/2"	2'-3 1/8"	2'-2 7/8"	2'-0 1/2"	1'-6 3/4"	1'-9 1/4"	2'-2"	2'-0 3/8"	1'-6 5/8"	1'-9 1/8"	2'-2"	2'-0 3/4"	1'-7 1/2"	1'-10"	2'-3 3/8"	2'-3 1/4"	1'-11 5/8"	2'-1 5/8"	2'-6 1/8"	2'-7 1/8"	2'-6 1/4"	2'-7 5/8"	2'-11"
BEAM 12	2'-6 5/8"	3'-2 7/8"	3'-5 5/8"	3'-2 7/8"	3'-2 3/4"	3'-5 5/8"	3'-11 5/8"	3'-9"	3'-3 3/4"	3'-5 3/4"	3'-11 5/8"	3'-9 1/8"	3'-3 3/4"	3'-5 3/8"	3'-10 7/8"	3'-8 1/4"	3'-2 3/8"	3'-2 3/4"	3'-6 1/2"	3'-4 3/8"	2'-11 5/8"	2'-10 3/4"	2'-11 3/4"	2'-10 1/4"	2'-6 7/8"

Preliminary Plans - For Reference Only

TRANSVERSE SECTION (2 OF 2)
BRIDGE NO. MAH-00680-04.886
OVER PRICE ROAD & MILL CREEK

SFN 5006872
DESIGN AGENCY
ms consultants, inc.
DESIGNER JSE | CHECKER TVB
REVIEWER WER 05/30/25
PROJECT ID 121474
SUBSET 40 | TOTAL 64
SHEET P.525 | TOTAL 655

MAH-680-0.00

MODEL: Sheet PAPERSIZE: 34x22 (in.) DATE: 9/15/2025 TIME: 11:17:58 AM PLTDRV: OHDOT_PDF_Color_E+.pltcfg PENTBL: OHDOT_Pen.tbl USER: WORKSPACE: OHDOTCEv02 WORKSET: 121474 PRODUCT: OpenRoadsDesigner 10.12.02.4
pw:\\ohiodot-pw.bentley.com:ohiodot-pw-02\Documents\01 Active Projects\District 04\Mahoning\121474\402-Engineering_MSConsultants\Structures\SFN_5006872\Sheets\121474_SFN_5006872_ST002.dgn

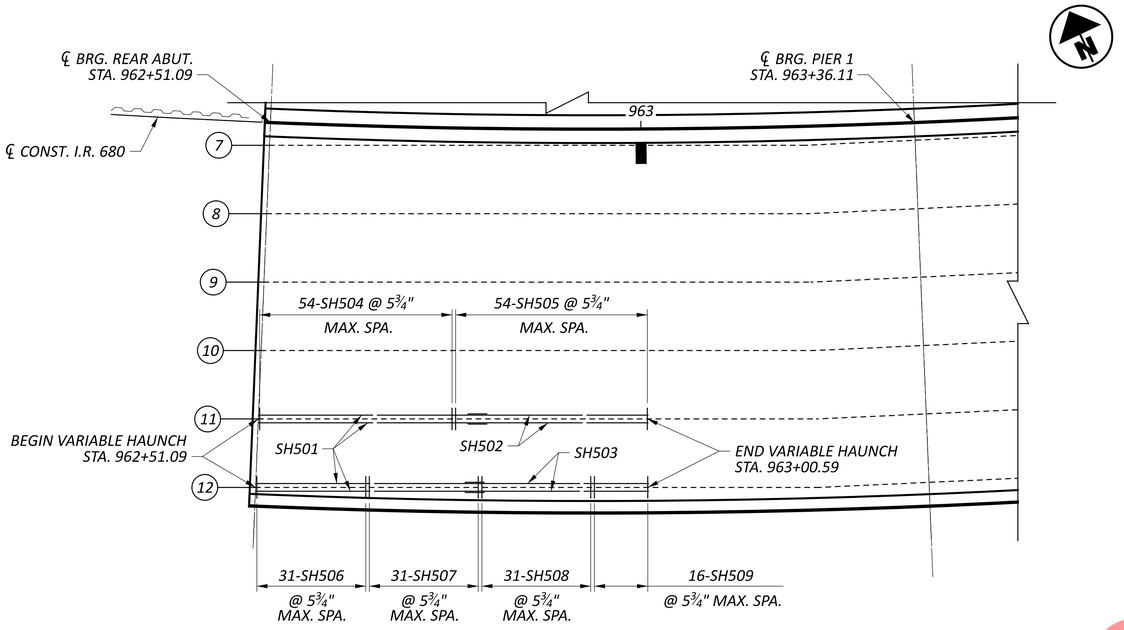

PARTIAL DECK PLAN

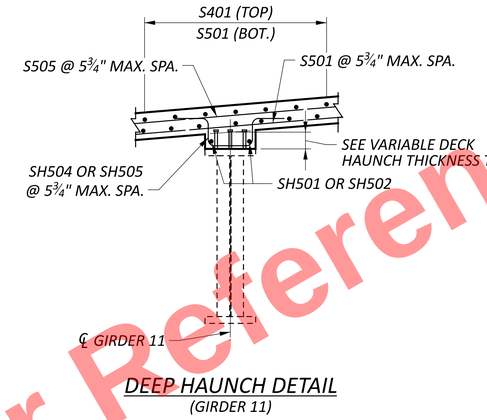

DEEP HAUNCH DETAIL
(GIRDER 11)

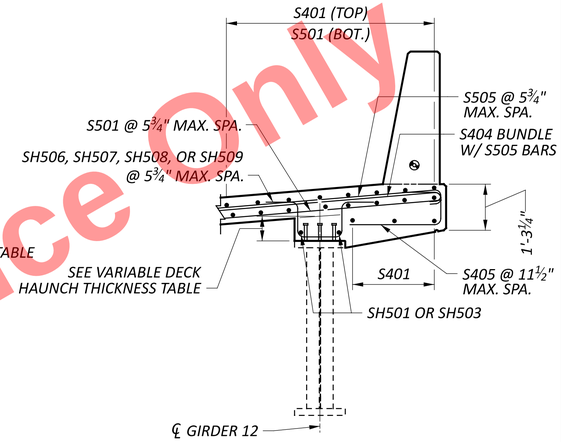

DEEP HAUNCH DETAIL
(GIRDER 12)

VARIABLE DECK HAUNCH THICKNESS TABLE				
SPAN NO.	SPAN 1			
GIRDER NO.	GIRDER 11		GIRDER 12	
STATION	962+51.09	963+00.59	961+51.09	963+00.59
HAUNCH THICKNESS *	5¼"	2"	7⅞"	2"

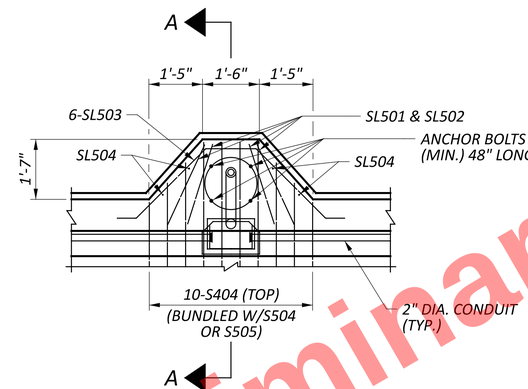

LIGHT POLE PILASTER DETAIL
(PLAN VIEW)

ANCHOR BOLTS SHALL CONFORM TO ASTM F1554 GRADE 55
AND BE GALVANIZED A MINIMUM OF 12 " ON THE THREADED END

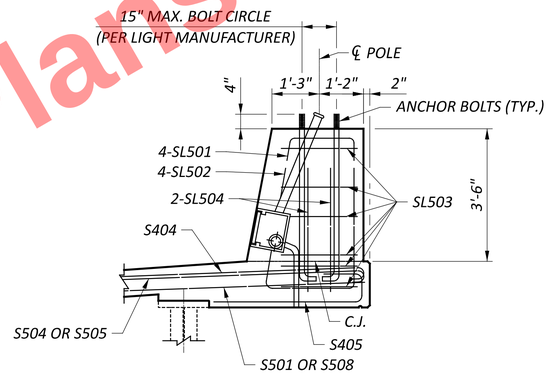

SECTION A-A

LEGEND

(12) - DENOTES GIRDER NUMBER

* - THE VARIABLE HAUNCH THICKNESS IS MEASURED AT THE CENTERLINE OF GIRDER 11 AND GIRDER 12, FROM THE BOTTOM OF THE DECK TO THE TOP OF THE TOP FLANGE.

NOTES:

1. REFER TO STD. DWG. HL-10.13 & HL-20.14 FOR ADDITIONAL LIGHTING DETAILS.
2. FOR DECK PLAN, SEE SHEET 42/64.
3. FOR REINFORCEMENT SCHEDULE, SEE SHEET 64/64.

Preliminary Plans - For Reference Only

DECK HAUNCH AND LIGHT POLE DETAILS
BRIDGE NO. MAH-00680-04.886
OVER PRICE ROAD & MILL CREEK

SFN 5006872
DESIGN AGENCY
ms consultants, inc.
DESIGNER JSE | CHECKER SJR
REVIEWER WER 05/30/25
PROJECT ID 121474
SUBSET 41 | TOTAL 64
SHEET P.526 | TOTAL 655

MAH-680-0.00

MODEL: Sheet PAPERSIZE: 34x22 (in.) DATE: 9/15/2025 TIME: 11:18:05 AM PLTDRV: OHDOT_PDF_Color_Ex-pltcfg PENTBL: OHDOT_Pen.tbl USER: WORKSPACE: OHDOTCEv02 WORKSET: 121474 PRODUCT: OpenRoadsDesigner 10.12.02.4
pw:\\ohiodot-pw.bentley.com:ohiodot-pw-02\Documents\01 Active Projects\District 04\Mahoning\121474\02-Engineering_MSConsultants\Structures\SFN_5006872\Sheets\121474_SFN_5006872_ST003.dgn

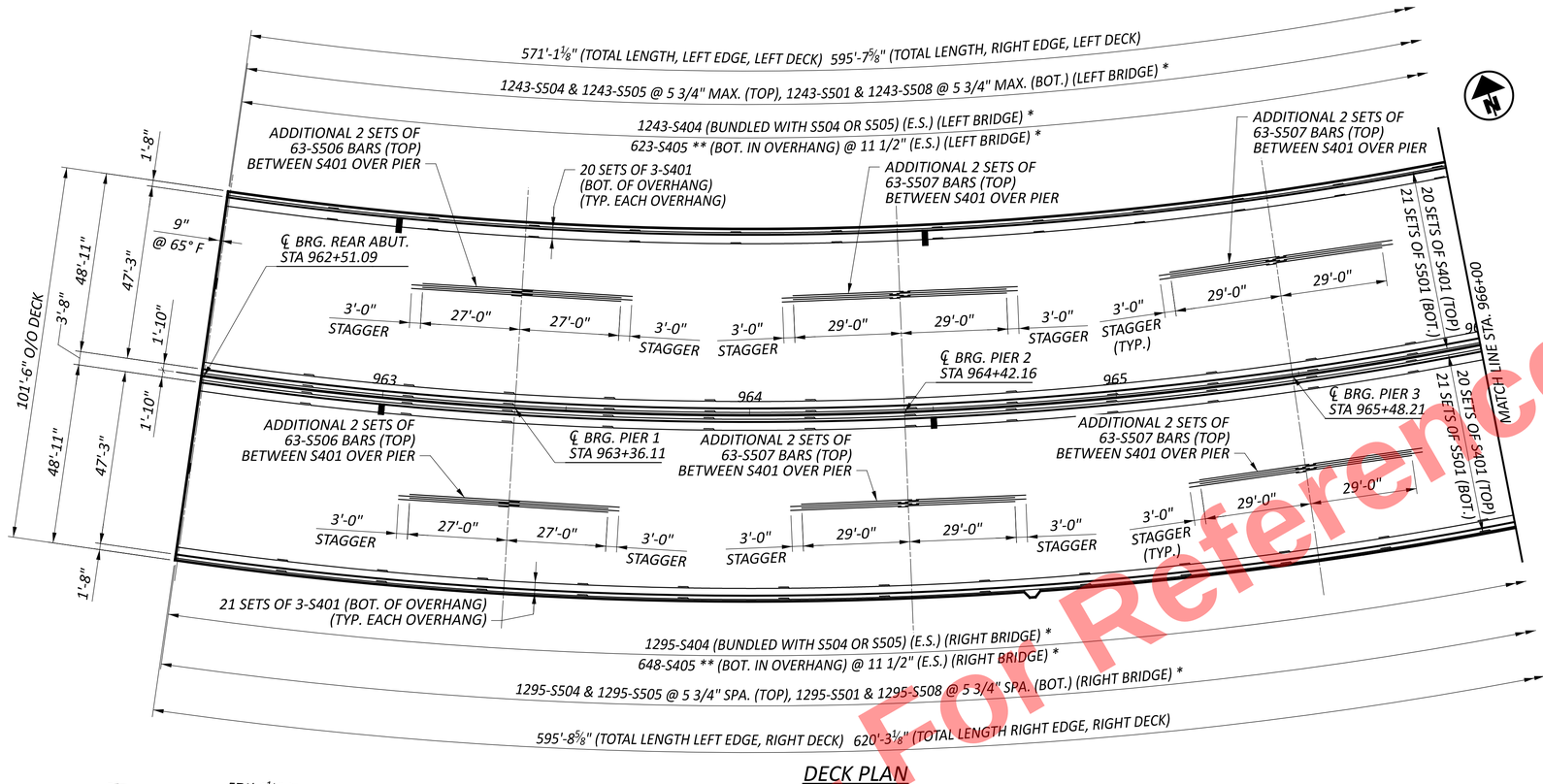

DECK PLAN

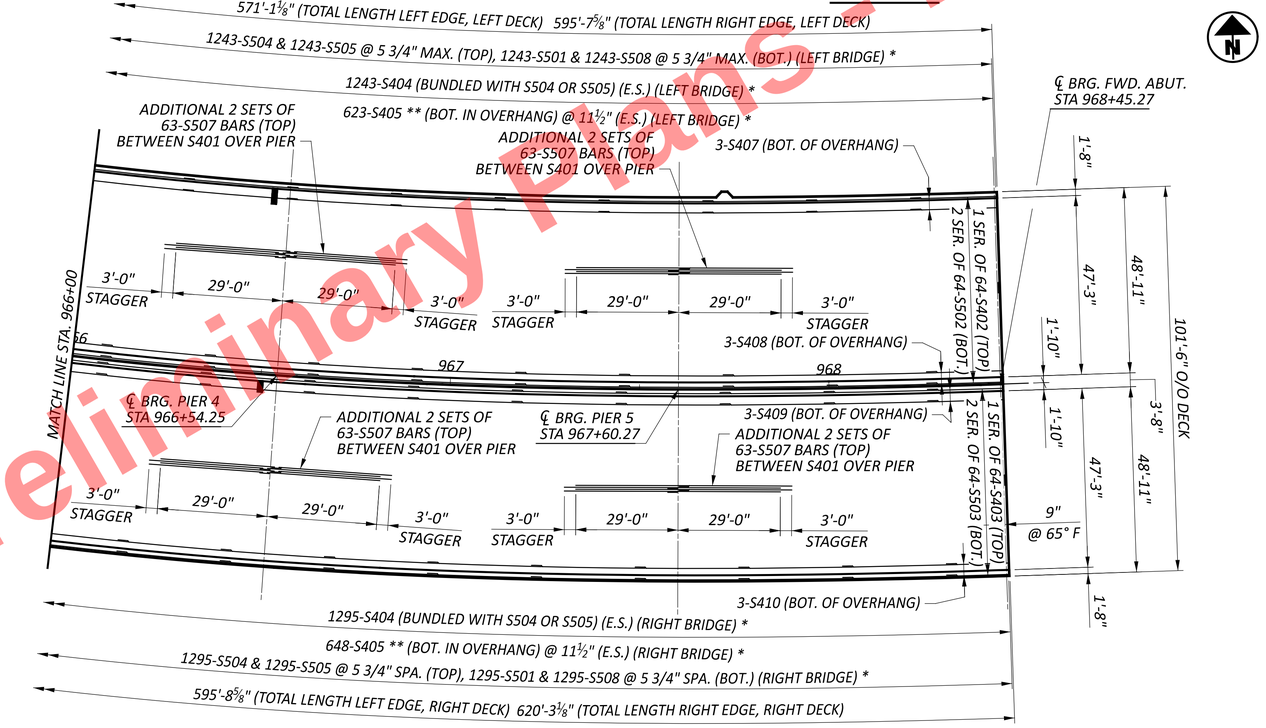

DECK PLAN

LEGEND

* - PLACED RADIALLY

** - GLASS FIBER REINFORCED POLYMER BARS

NOTES:

1. FOR REINFORCEMENT SCHEDULES, SEE SHEET 63/64.
2. FOR RAILING REINFORCEMENT, SEE SHEETS 51/64 THRU 54/64.
3. MINIMUM REBAR LAPS:

   #4 BARS = 1'-11"
   #5 BARS = 2'-5"

4. FOR DECK HAUNCH DETAILS FOR GIRDERS 11 AND 12 IN SPAN 1, SEE SHEET 41/64.

Preliminary Plans - For Reference Only

HORIZONTAL SCALE IN FEET
0 10 20 40

DECK PLAN

BRIDGE NO. MAH-00680-04.886 OVER PRICE ROAD & MILL CREEK

SFN 5006872
DESIGN AGENCY ms consultants, inc.
DESIGNER JSE | CHECKER TVB
REVIEWER WER 05/30/25
PROJECT ID 121474
SUBSET 42 | TOTAL 64
SHEET P.527 | TOTAL 655

MAH-680-0.00

MODEL: CLP_I680 - Plan 1 [Sheet] PAPERSIZE: 34x22 (in.) DATE: 9/15/2025 TIME: 11:18:12 AM PLTDRV: OHDOT_PDF_Color_E+.pltcfg PENTBL: OHDOT_Pen.tbl USER: WORKSPACE: OHDOTCtv02 WORKSET: 121474 PRODUCT: OpenRoadsDesigner 10.12.02.4
pw:\\ohiodot-pw.bentley.com:ohiodot-pw-02\Documents\01 Active Projects\District 04\Mahoning\121474\02-Engineering_MSConsultants\Structures\SFN_5006872\Sheets\121474_SFN_5006872_SD001.dgn

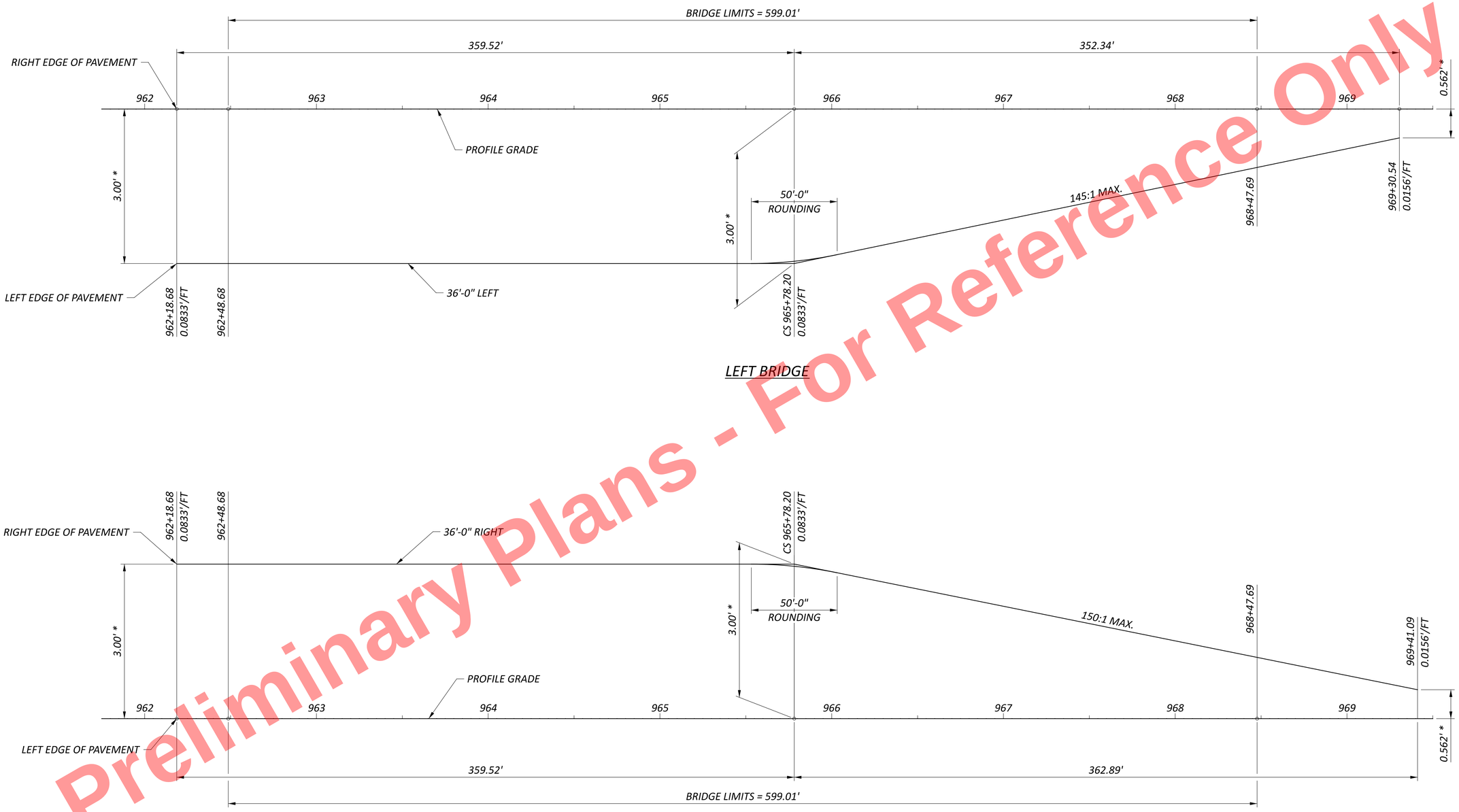

Preliminary Plans - For Reference Only

LEGEND

* - VERTICAL DIFFERENCE BETWEEN PROFILE GRADE AND EDGE OF PAVEMENT

SUPERELEVATION TRANSITION DIAGRAMS
BRIDGE NO. MAH-00680-04.886
OVER PRICE ROAD & MILL CREEK

SFN	5006872
DESIGN AGENCY	ms consultants, inc.
DESIGNER	JSE
CHECKER	TVB
REVIEWER	WER 05/30/25
PROJECT ID	121474
SUBSET	43
TOTAL	64
SHEET	P.528
TOTAL	655

MAH-680-0.00

MODEL: Sheet PAPERSIZE: 34x22 (in.) DATE: 9/15/2025 TIME: 11:18:20 AM PLTDRV: OHDOT_PDF_Color_Ex.pltcfg PENTBL: OHDOT_Pen.tbl USER: WORKSPACE: OHDOTCEv02 WORKSET: 121474 PRODUCT: OpenRoadsDesigner 10.12.02.4
pw:\\ohiodot-pw.bentley.com:ohiodot-pw-02\Documents\01 Active Projects\District 04\Mahoning\121474\A02-Engineering_MSConsultants\Structures\SFN_5006872\Sheets\121474_SFN_5006872_SD002.dgn

DECK SCREED ELEVATION TABLE

		SPAN 1						SPAN 2							
SPAN NO.	LOCATION	℄ BRG. R.A.	0.20	0.40	0.60	0.80	SPLICE 1	℄ BRG. PIER 1	SPLICE 2	0.20	0.40	0.60	0.80	SPLICE 3	℄ BRG. PIER 2
A (LEFT TOE OF RAILING)	STATION	962+51.09	962+68.10	962+85.10	963+02.11	963+19.11	963+21.76	963+36.11	963+50.46	963+57.32	963+78.53	963+99.74	964+20.95	964+27.80	964+42.16
	FINAL TOP OF DECK ELEVATION	881.01	881.15	881.29	881.43	881.57	881.59	881.71	881.83	881.88	882.06	882.23	882.41	882.46	882.58
	DECK SCREED ELEV. ****	881.01						881.71							882.58
GIRDER 1	STATION	962+51.09	962+68.10	962+85.10	963+02.11	963+19.11	963+21.76	963+36.11	963+50.46	963+57.32	963+78.53	963+99.74	964+20.95	964+27.80	964+42.16
	ELEV. AFTER DECK REMOVAL *	----						----							----
	ELEV. BEFORE DECK REMOVAL *	----						----							----
	SURVEYED REBOUND **	----						----							----
	ADJUSTED REBOUND ***	----						----							----
	FINAL TOP OF DECK ELEVATION	881.20	881.30	881.42	881.56	881.72	881.74	881.85	881.96	882.00	882.14	882.32	882.53	882.59	882.70
	TOP OF HAUNCH ELEV. *****	880.49						881.14							881.99
GIRDER 2	STATION	962+51.09	962+68.10	962+85.10	963+02.11	963+19.11	963+21.76	963+36.11	963+50.46	963+57.32	963+78.53	963+99.74	964+20.95	964+27.80	964+42.16
	ELEV. AFTER DECK REMOVAL *	----						----							----
	ELEV. BEFORE DECK REMOVAL *	----						----							----
	SURVEYED REBOUND **	----						----							----
	ADJUSTED REBOUND ***	----						----							----
	FINAL TOP OF DECK ELEVATION	881.93	882.03	882.15	882.29	882.45	882.47	882.58	882.70	882.73	882.87	883.05	883.26	883.33	883.44
	TOP OF HAUNCH ELEV. *****	881.22						881.87							882.73
GIRDER 3	STATION	962+51.09	962+68.10	962+85.10	963+02.11	963+19.11	963+21.76	963+36.11	963+50.46	963+57.32	963+78.53	963+99.74	964+20.95	964+27.80	964+42.16
	ELEV. AFTER DECK REMOVAL *	----						----							----
	ELEV. BEFORE DECK REMOVAL *	----						----							----
	SURVEYED REBOUND **	----						----							----
	ADJUSTED REBOUND ***	----						----							----
	FINAL TOP OF DECK ELEVATION	882.67	882.76	882.88	883.02	883.18	883.21	883.31	883.43	883.47	883.61	883.78	883.99	884.06	884.17
	TOP OF HAUNCH ELEV. *****	881.96						882.60							883.46
GIRDER 4	STATION	962+51.09	962+68.10	962+85.10	963+02.11	963+19.11	963+21.76	963+36.11	963+50.46	963+57.32	963+78.53	963+99.74	964+20.95	964+27.80	964+42.16
	ELEV. AFTER DECK REMOVAL *	----						----							----
	ELEV. BEFORE DECK REMOVAL *	----						----							----
	SURVEYED REBOUND **	----						----							----
	ADJUSTED REBOUND ***	----						----							----
	FINAL TOP OF DECK ELEVATION	883.40	883.50	883.61	883.75	883.92	883.94	884.05	884.16	884.20	884.34	884.51	884.72	884.79	884.90
	TOP OF HAUNCH ELEV. *****	882.69						883.34							884.19
GIRDER 5	STATION	962+51.09	962+68.10	962+85.10	963+02.11	963+19.11	963+21.76	963+36.11	963+50.46	963+57.32	963+78.53	963+99.74	964+20.95	964+27.80	964+42.16
	ELEV. AFTER DECK REMOVAL *	----						----							----
	ELEV. BEFORE DECK REMOVAL *	----						----							----
	SURVEYED REBOUND **	----						----							----
	ADJUSTED REBOUND ***	----						----							----
	FINAL TOP OF DECK ELEVATION	884.14	884.23	884.35	884.49	884.65	884.68	884.78		884.93	885.07	885.25	885.46	885.53	885.64
	TOP OF HAUNCH ELEV. *****	883.43						884.07							884.93
B (PROFILE GRADE)	STATION	962+51.09	962+68.10	962+85.10	963+02.11	963+19.11	963+21.76	963+36.11	963+50.46	963+57.32	963+78.53	963+99.74	964+20.95	964+27.80	964+42.16
	FINAL TOP OF DECK ELEVATION	884.43	884.57	884.71	884.85	884.99	885.01	885.13	885.25	885.31	885.48	885.66	885.83	885.89	886.01
	DECK SCREED ELEV. ****	884.43						885.13							886.01
GIRDER 6	STATION	962+51.09	962+68.10	962+85.10	963+02.11	963+19.11	963+21.76	963+36.11	963+50.46	963+57.32	963+78.53	963+99.74	964+20.95	964+27.80	964+42.16
	ELEV. AFTER DECK REMOVAL *	----						----							----
	ELEV. BEFORE DECK REMOVAL *	----						----							----
	SURVEYED REBOUND **	----						----							----
	ADJUSTED REBOUND ***	----						----							----
	FINAL TOP OF DECK ELEVATION	884.87	884.96	885.08	885.22	885.38	885.41	885.51		885.67	885.81	885.98	886.19	886.26	886.37
	TOP OF HAUNCH ELEV. *****	884.16						884.80							885.66
C (RIGHT TOE OF RAILING)	STATION	962+51.09	962+68.10	962+85.10	963+02.11	963+19.11	963+21.76	963+36.11	963+50.46	963+57.32	963+78.53	963+99.74	964+20.95	964+27.80	964+42.16
	FINAL TOP OF DECK ELEVATION	884.95	885.09	885.23	885.37	885.51	885.53	885.65	885.76	885.82	886.00	886.17	886.34	886.40	886.52
	DECK SCREED ELEV. ****	884.95						885.65							886.52

Preliminary Plans - For Reference Only

NOTES:

1. FOR NOTES, SEE SHEET 49/64.
2. FOR LEFT BRIDGE SPANS 3 AND 4 DECK SCREED ELEVATIONS, SEE SHEET 45/64.
3. FOR LEFT BRIDGE SPANS 5 AND 6 DECK SCREED ELEVATIONS, SEE SHEET 46/64.
4. FOR RIGHT BRIDGE DECK SCREED ELEVATIONS, SEE SHEETS 47/64 THRU 49/64.
5. FOR KEY PLAN AND KEY SECTION, SEE SHEET 50/64.

LEFT BRIDGE DECK SCREED ELEVATIONS (1 OF 3)
BRIDGE NO. MAH-00680-04.886
OVER PRICE ROAD & MILL CREEK

SFN 5006872

DESIGN AGENCY
ms consultants, inc.

DESIGNER	CHECKER
JSE	SJR

REVIEWER: WER 05/30/25

PROJECT ID: 121474

SUBSET	TOTAL
44	64

SHEET	TOTAL
P.529	655

MAH-680-0.00

MODEL: Sheet PAPERSIZE: 34x22 (in.) DATE: 9/15/2025 TIME: 11:18:25 AM PLTDRV: OHDOT_PDF_Color_E+.pltcfg PENTBL: OHDOT_Pen.tbl USER: WORKSPACE: OHDOTCEv02 WORKSET: 121474 PRODUCT: OpenRoadsDesigner 10.12.02.4
pw:\\ohiodot-pw.bentley.com:ohiodot-pw-02\Documents\01 Active Projects\District 04\Mahoning\121474\02-Engineering_MSConsultants\Structures\SFN_5006872\Structures\SFN_5006872_SD003.dgn

DECK SCREED ELEVATION TABLE

			SPAN 3						SPAN 4						
SPAN NO.	LOCATION	℄ BRG. PIER 2	SPLICE 4	0.20	0.40	0.60	0.80	SPLICE 5	℄ BRG. PIER 3	SPLICE 6	0.20	0.40	0.60	0.80	SPLICE 7	℄ BRG. PIER 4
A (LEFT TOE OF RAILING)	STATION	964+42.16	964+56.52	964+63.37	964+84.58	965+05.79	965+27.00	965+33.85	965+48.21	965+62.57	965+69.42	965+90.63	966+11.84	966+33.04	966+39.96	966+54.25
	FINAL TOP OF DECK ELEVATION	882.58	882.70	882.76	882.93	883.11	883.28	883.34	883.46	883.57	883.63	883.91	884.25	884.59	884.70	884.93
	DECK SCREED ELEV. ****	882.58							883.46							884.93
GIRDER 1	STATION	964+42.16	964+56.52	964+63.37	964+84.58	965+05.79	965+27.00	965+33.85	965+48.21	965+62.57	965+69.42	965+90.63	966+11.84	966+33.04	966+39.96	966+54.25
	ELEV. AFTER DECK REMOVAL *	----							----							----
	ELEV. BEFORE DECK REMOVAL *	----							----							----
	SURVEYED REBOUND **	----							----							----
	ADJUSTED REBOUND ***	----							----							----
	FINAL TOP OF DECK ELEVATION	882.70	882.83	882.86	883.00	883.18	883.39	883.45	883.56	883.68	883.72	883.96	884.30	884.67	884.79	885.01
	TOP OF HAUNCH ELEV. *****	881.99							882.85							884.30
GIRDER 2	STATION	964+42.16	964+56.52	964+63.37	964+84.58	965+05.79	965+27.00	965+33.85	965+48.21	965+62.57	965+69.42	965+90.63	966+11.84	966+33.04	966+39.96	966+54.25
	ELEV. AFTER DECK REMOVAL *	----							----							----
	ELEV. BEFORE DECK REMOVAL *	----							----							----
	SURVEYED REBOUND **	----							----							----
	ADJUSTED REBOUND ***	----							----							----
	FINAL TOP OF DECK ELEVATION	883.44	883.56	883.59	883.73	883.91	884.12	884.18	884.29	884.41	884.45	884.67	884.98	885.31	885.41	885.61
	TOP OF HAUNCH ELEV. *****	882.73							883.58							884.90
GIRDER 3	STATION	964+42.16	964+56.52	964+63.37	964+84.58	965+05.79	965+27.00	965+33.85	965+48.21	965+62.57	965+69.42	965+90.63	966+11.84	966+33.04	966+39.96	966+54.25
	ELEV. AFTER DECK REMOVAL *	----							----							----
	ELEV. BEFORE DECK REMOVAL *	----							----							----
	SURVEYED REBOUND **	----							----							----
	ADJUSTED REBOUND ***	----							----							----
	FINAL TOP OF DECK ELEVATION	884.17	884.29	884.33	884.47	884.64	884.85	884.92	885.03	885.15	885.19	885.38	885.65	885.95	886.04	886.22
	TOP OF HAUNCH ELEV. *****	883.46							884.32							885.51
GIRDER 4	STATION	964+42.16	964+56.52	964+63.37	964+84.58	965+05.79	965+27.00	965+33.85	965+48.21	965+62.57	965+69.42	965+90.63	966+11.84	966+33.04	966+39.96	966+54.25
	ELEV. AFTER DECK REMOVAL *	----							----							----
	ELEV. BEFORE DECK REMOVAL *	----							----							----
	SURVEYED REBOUND **	----							----							----
	ADJUSTED REBOUND ***	----							----							----
	FINAL TOP OF DECK ELEVATION	884.90	885.02	885.06	885.20	885.38	885.59	885.65	885.76	885.88	885.92	886.09	886.33	886.59	886.67	886.82
	TOP OF HAUNCH ELEV. *****	884.19							885.05							886.11
GIRDER 5	STATION	964+42.16	964+56.52	964+63.37	964+84.58	965+05.79	965+27.00	965+33.85	965+48.21	965+62.57	965+69.42	965+90.63	966+11.84	966+33.04	966+39.96	966+54.25
	ELEV. AFTER DECK REMOVAL *	----							----							----
	ELEV. BEFORE DECK REMOVAL *	----							----							----
	SURVEYED REBOUND **	----							----							----
	ADJUSTED REBOUND ***	----							----							----
	FINAL TOP OF DECK ELEVATION	885.64	885.76	885.79	885.93	886.11	886.32	886.39	886.50	886.61	886.65	886.81	887.00	887.23	887.30	887.43
	TOP OF HAUNCH ELEV. *****	884.93							885.79							886.72
B (PROFILE GRADE)	STATION	964+42.16	964+56.52	964+63.37	964+84.58	965+05.79	965+27.00	965+33.85	965+48.21	965+62.57	965+69.42	965+90.63	966+11.84	966+33.04	966+39.96	966+54.25
	FINAL TOP OF DECK ELEVATION	886.01	886.12	886.18	886.36	886.53	886.70	886.76	886.88	887.00	887.05	887.23	887.40	887.58	887.64	887.75
	DECK SCREED ELEV. ****	886.01							886.88							887.75
GIRDER 6	STATION	964+42.16	964+56.52	964+63.37	964+84.58	965+05.79	965+27.00	965+33.85	965+48.21	965+62.57	965+69.42	965+90.63	966+11.84	966+33.04	966+39.96	966+54.25
	ELEV. AFTER DECK REMOVAL *	----							----							----
	ELEV. BEFORE DECK REMOVAL *	----							----							----
	SURVEYED REBOUND **	----							----							----
	ADJUSTED REBOUND ***	----							----							----
	FINAL TOP OF DECK ELEVATION	886.37	886.49	886.53	886.67	886.84	887.05	887.12	887.23	887.35	887.39	887.52	887.68	887.87	887.93	888.04
	TOP OF HAUNCH ELEV. *****	885.66							886.52							887.33
C (RIGHT TOE OF RAILING)	STATION	964+42.16	964+56.52	964+63.37	964+84.58	965+05.79	965+27.00	965+33.85	965+48.21	965+62.57	965+69.42	965+90.63	966+11.84	966+33.04	966+39.96	966+54.25
	FINAL TOP OF DECK ELEVATION	886.52	886.64	886.69	886.87	887.04	887.22	887.28	887.39	887.51	887.57	887.73	887.88	888.03	888.08	888.18
	DECK SCREED ELEV. ****	886.52							887.39							888.18

Preliminary Plans - For Reference Only

NOTES:

1. *FOR NOTES, SEE SHEET 49/64.*
2. *FOR LEFT BRIDGE SPANS 1 AND 2 DECK SCREED ELEVATIONS, SEE SHEET 44/64.*
3. *FOR LEFT BRIDGE SPANS 5 AND 6 DECK SCREED ELEVATIONS, SEE SHEET 46/64.*
4. *FOR RIGHT BRIDGE DECK SCREED ELEVATIONS, SEE SHEETS 47/64 THRU 49/64.*
5. *FOR KEY PLAN AND KEY SECTION, SEE SHEET 50/64.*

LEFT BRIDGE DECK SCREED ELEVATIONS (2 OF 3)
BRIDGE NO. MAH-00680-04.886
OVER PRICE ROAD & MILL CREEK

SFN 5006872
DESIGN AGENCY
ms consultants, inc.
DESIGNER JSE | CHECKER SJR
REVIEWER WER 05/30/25
PROJECT ID 121474
SUBSET 45 | TOTAL 64
SHEET P.530 | TOTAL 655

MAH-680-0.00

MODEL: Sheet PAPERSIZE: 34x22 (in.) DATE: 9/15/2025 TIME: 11:18:31 AM PLTDRV: OHDOT_PDF_Color_E+.pltcfg PENTBL: OHDOT_Pen.tbl USER: WORKSPACE: OHDOTCEv02 WORKSET: 121474 PRODUCT: OpenRoadsDesigner 10.12.02.4
pw:\\ohiodot-pw.bentley.com:ohiodot-pw-02\Documents\01 Active Projects\District 04\Mahoning\121474\402-Engineering_MSConsultants\Structures\SFN_5006872\Sheets\121474_SFN_5006872_SD004.dgn

DECK SCREED ELEVATION TABLE

		SPAN 5							SPAN 6						
SPAN NO.	LOCATION	℄ BRG. PIER 4	SPLICE 8	0.20	0.40	0.60	0.80	SPLICE 9	℄ BRG. PIER 5	SPLICE 10	0.20	0.40	0.60	0.80	℄ BRG. F.A.
A (LEFT TOE OF RAILING)	STATION	966+54.25	966+68.53	966+75.55	966+96.75	967+17.96	967+39.07	967+46.09	967+60.27	967+74.47	967+77.27	967+94.27	968+11.27	968+28.27	968+45.27
	FINAL TOP OF DECK ELEVATION	884.93	885.16	885.27	885.62	885.96	886.30	886.41	886.64	886.87	886.92	887.19	887.47	887.74	888.01
	DECK SCREED ELEV. ****	884.93							886.64						888.01
GIRDER 1	STATION	966+54.25	966+68.53	966+75.55	966+96.75	967+17.96	967+39.07	967+46.09	967+60.27	967+74.47	967+77.27	967+94.27	968+11.27	968+28.27	968+45.27
	ELEV. AFTER DECK REMOVAL *	----							----						----
	ELEV. BEFORE DECK REMOVAL *	----							----						----
	SURVEYED REBOUND **	----							----						----
	ADJUSTED REBOUND ***	----							----						----
	FINAL TOP OF DECK ELEVATION	885.01	885.24	885.34	885.66	886.00	886.36	886.47	886.70	886.93	886.97	887.24	887.51	887.78	888.06
	TOP OF HAUNCH ELEV. *****	884.30							885.99						887.35
GIRDER 2	STATION	966+54.25	966+68.53	966+75.55	966+96.75	967+17.96	967+39.07	967+46.09	967+60.27	967+74.47	967+77.27	967+94.27	968+11.27	968+28.27	968+45.27
	ELEV. AFTER DECK REMOVAL *	----							----						----
	ELEV. BEFORE DECK REMOVAL *	----							----						----
	SURVEYED REBOUND **	----							----						----
	ADJUSTED REBOUND ***	----							----						----
	FINAL TOP OF DECK ELEVATION	885.61	885.82	885.91	886.19	886.50	886.82	886.92	887.12	887.33	887.37	887.60	887.85	888.09	888.34
	TOP OF HAUNCH ELEV. *****	884.90							886.41						887.63
GIRDER 3	STATION	966+54.25	966+68.53	966+75.55	966+96.75	967+17.96	967+39.07	967+46.09	967+60.27	967+74.47	967+77.27	967+94.27	968+11.27	968+28.27	968+45.27
	ELEV. AFTER DECK REMOVAL *	----							----						----
	ELEV. BEFORE DECK REMOVAL *	----							----						----
	SURVEYED REBOUND **	----							----						----
	ADJUSTED REBOUND ***	----							----						----
	FINAL TOP OF DECK ELEVATION	886.22	886.40	886.48	886.73	887.00	887.28	887.37	887.55	887.73	887.76	887.97	888.19	888.40	888.62
	TOP OF HAUNCH ELEV. *****	885.51							886.84						887.91
GIRDER 4	STATION	966+54.25	966+68.53	966+75.55	966+96.75	967+17.96	967+39.07	967+46.09	967+60.27	967+74.47	967+77.27	967+94.27	968+11.27	968+28.27	968+45.27
	ELEV. AFTER DECK REMOVAL *	----							----						----
	ELEV. BEFORE DECK REMOVAL *	----							----						----
	SURVEYED REBOUND **	----							----						----
	ADJUSTED REBOUND ***	----							----						----
	FINAL TOP OF DECK ELEVATION	886.82	886.98	887.05	887.26	887.49	887.74	887.82	887.97	888.13	888.16	888.34	888.52	888.71	888.91
	TOP OF HAUNCH ELEV. *****	886.11							887.26						888.20
GIRDER 5	STATION	966+54.25	966+68.53	966+75.55	966+96.75	967+17.96	967+39.07	967+46.09	967+60.27	967+74.47	967+77.27	967+94.27	968+11.27	968+28.27	968+45.27
	ELEV. AFTER DECK REMOVAL *	----							----						----
	ELEV. BEFORE DECK REMOVAL *	----							----						----
	SURVEYED REBOUND **	----							----						----
	ADJUSTED REBOUND ***	----							----						----
	FINAL TOP OF DECK ELEVATION	887.43	887.56	887.61	887.79	887.99	888.20	888.27	888.40	888.53	888.56	888.71	888.86	889.02	889.19
	TOP OF HAUNCH ELEV. *****	886.72							887.69						888.48
B (PROFILE GRADE)	STATION	966+54.25	966+68.53	966+75.55	966+96.75	967+17.96	967+39.07	967+46.09	967+60.27	967+74.47	967+77.27	967+94.27	968+11.27	968+28.27	968+45.27
	FINAL TOP OF DECK ELEVATION	887.75	887.87	887.93	888.10	888.28	888.45	888.51	888.63	888.74	888.77	888.91	889.05	889.19	889.33
	DECK SCREED ELEV. ****	887.75							888.63						889.33
GIRDER 6	STATION	966+54.25	966+68.53	966+75.55	966+96.75	967+17.96	967+39.07	967+46.09	967+60.27	967+74.47	967+77.27	967+94.27	968+11.27	968+28.27	968+45.27
	ELEV. AFTER DECK REMOVAL *	----							----						----
	ELEV. BEFORE DECK REMOVAL *	----							----						----
	SURVEYED REBOUND **	----							----						----
	ADJUSTED REBOUND ***	----							----						----
	FINAL TOP OF DECK ELEVATION	888.04	888.14	888.18	888.32	888.49	888.66	888.72	888.83	888.93	888.95	889.08	889.20	889.33	889.47
	TOP OF HAUNCH ELEV. *****	887.33							888.12						888.76
C (RIGHT TOE OF RAILING)	STATION	966+54.25	966+68.53	966+75.55	966+96.75	967+17.96	967+39.07	967+46.09	967+60.27	967+74.47	967+77.27	967+94.27	968+11.27	968+28.27	968+45.27
	FINAL TOP OF DECK ELEVATION	888.18	888.28	888.33	888.48	888.63	888.78	888.83	888.93	889.03	889.05	889.16	889.28	889.40	889.52
	DECK SCREED ELEV. ****	888.18							888.93						889.52

Preliminary Plans - Not For Reference Only

NOTES:

1. FOR NOTES, SEE SHEET 49/64.
2. FOR LEFT BRIDGE SPANS 1 AND 2 DECK SCREED ELEVATIONS, SEE SHEET 44/64.
3. FOR LEFT BRIDGE SPANS 3 AND 4 DECK SCREED ELEVATIONS, SEE SHEET 45/64.
4. FOR RIGHT BRIDGE DECK SCREED ELEVATIONS, SEE SHEETS 47/64 THRU 49/64.
5. FOR KEY PLAN AND KEY SECTION, SEE SHEET 50/64.

LEFT BRIDGE DECK SCREED ELEVATIONS (3 OF 3)
BRIDGE NO. MAH-00680-04.886
OVER PRICE ROAD & MILL CREEK

SFN 5006872
DESIGN AGENCY
ms consultants, inc.
DESIGNER JSE | CHECKER SJR
REVIEWER WER 05/30/25
PROJECT ID 121474
SUBSET 46 | TOTAL 64
SHEET P.531 | TOTAL 655

MAH-680-0.00

MODEL: Sheet PAPERSIZE: 34x22 (in.) DATE: 9/15/2025 TIME: 11:18:37 AM PLTDRV: OHDOT_PDF_Color_E+.pltcfg PENTBL: OHDOT_Pen.tbl USER: WORKSPACE: OHDOTCEv02 WORKSET: 121474 PRODUCT: OpenRoadsDesigner 10.12.02.4
pw:\\ohiodot-pw.bentley.com:ohiodot-pw-02\Documents\01 Active Projects\District 04\Mahoning\121474\402-Engineering_MSConsultants\Structures\SFN_5006872\Sheets\121474_SFN_5006872_SD005.dgn

DECK SCREED ELEVATION TABLE

SPAN NO.	LOCATION	SPAN 1						SPAN 2							
		℄ BRG. R.A.	0.20	0.40	0.60	0.80	SPLICE 1	℄ BRG. PIER 1	SPLICE 2	0.20	0.40	0.60	0.80	SPLICE 3	℄ BRG. PIER 2
D (LEFT TOE OF RAILING)	STATION	962+51.09	962+68.10	962+85.10	963+02.11	963+19.11	963+21.59	963+36.11	963+50.61	963+57.32	963+78.53	963+99.74	964+20.95	964+27.61	964+42.16
	FINAL TOP OF DECK ELEVATION	884.93	885.06	885.18	885.31	885.43	885.45	885.56	885.66	885.71	885.87	886.03	886.18	886.23	886.34
	DECK SCREED ELEV. ****	884.93						885.56							886.34
GIRDER 7	STATION	962+51.09	962+68.10	962+85.10	963+02.11	963+19.11	963+21.59	963+36.11	963+50.61	963+57.32	963+78.53	963+99.74	964+20.95	964+27.61	964+42.16
	ELEV. AFTER DECK REMOVAL *	----						----							----
	ELEV. BEFORE DECK REMOVAL *	----						----							----
	SURVEYED REBOUND **	----						----							----
	ADJUSTED REBOUND ***	----						----							----
	FINAL TOP OF DECK ELEVATION	885.03	885.11	885.21	885.33	885.48	885.51	885.60	885.71	885.74	885.87	886.02	886.21	886.28	886.38
	TOP OF HAUNCH ELEV. *****	884.32						884.89							885.67
E (PROFILE GRADE)	STATION	962+51.09	962+68.10	962+85.10	963+02.11	963+19.11	963+21.59	963+36.11	963+50.61	963+57.32	963+78.53	963+99.74	964+20.95	964+27.61	964+42.16
	FINAL TOP OF DECK ELEVATION	885.45	885.57	885.70	885.82	885.95	885.96	886.07	886.18	886.23	886.38	886.54	886.70	886.75	886.85
	DECK SCREED ELEV. ****	885.45						886.07							886.85
GIRDER 8	STATION	962+51.09	962+68.10	962+85.10	963+02.11	963+19.11	963+21.59	963+36.11	963+50.61	963+57.32	963+78.53	963+99.74	964+20.95	964+27.61	964+42.16
	ELEV. AFTER DECK REMOVAL *	----						----							----
	ELEV. BEFORE DECK REMOVAL *	----						----							----
	SURVEYED REBOUND **	----						----							----
	ADJUSTED REBOUND ***	----						----							----
	FINAL TOP OF DECK ELEVATION	885.78	885.86	885.96	886.09	886.24	886.26	886.35	886.46	886.50	886.62	886.77	886.96	887.03	887.14
	TOP OF HAUNCH ELEV. *****	885.07						885.64							886.43
GIRDER 9	STATION	962+51.09	962+68.10	962+85.10	963+02.11	963+19.11	963+21.59	963+36.11	963+50.61	963+57.32	963+78.53	963+99.74	964+20.95	964+27.61	964+42.16
	ELEV. AFTER DECK REMOVAL *	----						----							----
	ELEV. BEFORE DECK REMOVAL *	----						----							----
	SURVEYED REBOUND **	----						----							----
	ADJUSTED REBOUND ***	----						----							----
	FINAL TOP OF DECK ELEVATION	886.54	886.61	886.72	886.84	886.99	887.01	887.11	887.22	887.25	887.37	887.52	887.72	887.78	887.89
	TOP OF HAUNCH ELEV. *****	885.83						886.40							887.18
GIRDER 10	STATION	962+51.09	962+68.10	962+85.10	963+02.11	963+19.11	963+21.59	963+36.11	963+50.61	963+57.32	963+78.53	963+99.74	964+20.95	964+27.61	964+42.16
	ELEV. AFTER DECK REMOVAL *	----						----							----
	ELEV. BEFORE DECK REMOVAL *	----						----							----
	SURVEYED REBOUND **	----						----							----
	ADJUSTED REBOUND ***	----						----							----
	FINAL TOP OF DECK ELEVATION	887.29	887.37	887.47	887.59	887.74	887.77	887.86	887.97	888.00	888.12	888.28	888.47	888.54	888.64
	TOP OF HAUNCH ELEV. *****	886.58						887.15							887.93
GIRDER 11	STATION	962+51.09	962+68.10	962+85.10	963+02.11	963+19.11	963+21.59	963+36.11	963+50.61	963+57.32	963+78.53	963+99.74	964+20.95	964+27.61	964+42.16
	ELEV. AFTER DECK REMOVAL *	----						----							----
	ELEV. BEFORE DECK REMOVAL *	----						----							----
	SURVEYED REBOUND **	----						----							----
	ADJUSTED REBOUND ***	----						----							----
	FINAL TOP OF DECK ELEVATION	888.04	888.12	888.22	888.35	888.49	888.52	888.61	888.72	888.75	888.87	889.03	889.22	889.29	889.40
	TOP OF HAUNCH ELEV. *****	887.33						887.90							888.69
GIRDER 12	STATION	962+51.09	962+68.10	962+85.10	963+02.11	963+19.11	963+21.59	963+36.11	963+50.61	963+57.32	963+78.53	963+99.74	964+20.95	964+27.61	964+42.16
	ELEV. AFTER DECK REMOVAL *	----						----							----
	ELEV. BEFORE DECK REMOVAL *	----						----							----
	SURVEYED REBOUND **	----						----							----
	ADJUSTED REBOUND ***	----						----							----
	FINAL TOP OF DECK ELEVATION	888.79	888.87	888.97	889.10	889.25	889.27	889.37	889.48	889.51	889.63	889.78	889.97	890.04	890.15
	TOP OF HAUNCH ELEV. *****	888.08						888.66							889.44
F (RIGHT TOE OF RAILING)	STATION	962+51.09	962+68.10	962+85.10	963+02.11	963+19.11	963+21.59	963+36.11	963+50.61	963+57.32	963+78.53	963+99.74	964+20.95	964+27.61	964+42.16
	FINAL TOP OF DECK ELEVATION	888.87	888.99	889.12	889.24	889.37	889.39	889.49	889.60	889.65	889.81	889.96	890.12	890.17	890.28
	DECK SCREED ELEV. ****	888.87						889.49							890.28

Preliminary Plans - For Reference Only

NOTES:

1. FOR NOTES, SEE SHEET 49/64.
2. FOR RIGHT BRIDGE SPANS 3 AND 4 DECK SCREED ELEVATIONS, SEE SHEET 48/64.
3. FOR RIGHT BRIDGE SPANS 5 AND 6 DECK SCREED ELEVATIONS, SEE SHEET 49/64.
4. FOR LEFT BRIDGE DECK SCREED ELEVATIONS, SEE SHEETS 44/64 THRU 46/64.
5. FOR KEY PLAN AND KEY SECTION, SEE SHEET 50/64.

RIGHT BRIDGE DECK SCREED ELEVATIONS (1 OF 3)
BRIDGE NO. MAH-00680-04.886
OVER PRICE ROAD & MILL CREEK

SFN 5006872
DESIGN AGENCY
ms consultants, inc.
DESIGNER JSE | CHECKER SJR
REVIEWER WER 05/30/25
PROJECT ID 121474
SUBSET 47 | TOTAL 64
SHEET P.532 | TOTAL 655

MAH-680-0.00

MODEL: Sheet PAPERSIZE: 34x22 (in.) DATE: 9/15/2025 TIME: 11:18:43 AM PLTDRV: OHDOT_PDF_Color_Ex.pltcfg PENTBL: OHDOT_Pen.tbl USER: WORKSPACE: OHDOTCEv02 WORKSET: 121474 PRODUCT: OpenRoadsDesigner 10.12.02.4
pw:\\ohiodot-pw.bentley.com:ohiodot-pw-02\Documents\01 Active Projects\District 04\Mahoning\121474\02-Engineering_MSConsultants\Structures\SFN_5006872\Sheets\121474_SFN_5006872_SD006.dgn

DECK SCREED ELEVATION TABLE

			SPAN 3						SPAN 4						
SPAN NO.	LOCATION	℄ BRG. PIER 2	SPLICE 4	0.20	0.40	0.60	0.80	SPLICE 5	℄ BRG. PIER 3	SPLICE 6	0.20	0.40	0.60	0.80	SPLICE 7	℄ BRG. PIER 4
D (LEFT TOE OF RAILING)	STATION	964+42.16	964+56.66	964+63.37	964+84.58	965+05.79	965+27.00	965+33.71	965+48.21	965+62.71	965+69.42	965+90.63	966+11.84	966+33.04	966+39.75	966+54.25
	FINAL TOP OF DECK ELEVATION	886.34	886.45	886.49	886.65	886.81	886.96	887.01	887.12	887.23	887.28	887.44	887.62	887.80	887.86	887.98
	DECK SCREED ELEV. ****	886.34							887.12							887.98
GIRDER 7	STATION	964+42.16	964+56.66	964+63.37	964+84.58	965+05.79	965+27.00	965+33.71	965+48.21	965+62.71	965+69.42	965+90.63	966+11.84	966+33.04	966+39.75	966+54.25
	ELEV. AFTER DECK REMOVAL *	----							----							----
	ELEV. BEFORE DECK REMOVAL *	----							----							----
	SURVEYED REBOUND **	----							----							----
	ADJUSTED REBOUND ***	----							----							----
	FINAL TOP OF DECK ELEVATION	886.38	886.50	886.54	886.66	886.81	887.00	887.07	887.18	887.30	887.34	887.47	887.65	887.86	887.93	888.06
	TOP OF HAUNCH ELEV. *****	885.67							886.47							887.35
E (PROFILE GRADE)	STATION	964+42.16	964+56.66	964+63.37	964+84.58	965+05.79	965+27.00	965+33.71	965+48.21	965+62.71	965+69.42	965+90.63	966+11.84	966+33.04	966+39.75	966+54.25
	FINAL TOP OF DECK ELEVATION	886.85	886.96	887.01	887.16	887.32	887.48	887.53	887.63	887.74	887.79	887.95	888.10	888.26	888.31	888.41
	DECK SCREED ELEV. ****	886.85							887.63							888.41
GIRDER 8	STATION	964+42.16	964+56.66	964+63.37	964+84.58	965+05.79	965+27.00	965+33.71	965+48.21	965+62.71	965+69.42	965+90.63	966+11.84	966+33.04	966+39.75	966+54.25
	ELEV. AFTER DECK REMOVAL *	----							----							----
	ELEV. BEFORE DECK REMOVAL *	----							----							----
	SURVEYED REBOUND **	----							----							----
	ADJUSTED REBOUND ***	----							----							----
	FINAL TOP OF DECK ELEVATION	887.14	887.25	887.29	887.41	887.56	887.76	887.82	887.93	888.05	888.09	888.21	888.35	888.53	888.59	888.69
	TOP OF HAUNCH ELEV. *****	886.43							887.22							887.98
GIRDER 9	STATION	964+42.16	964+56.66	964+63.37	964+84.58	965+05.79	965+27.00	965+33.71	965+48.21	965+62.71	965+69.42	965+90.63	966+11.84	966+33.04	966+39.75	966+54.25
	ELEV. AFTER DECK REMOVAL *	----							----							----
	ELEV. BEFORE DECK REMOVAL *	----							----							----
	SURVEYED REBOUND **	----							----							----
	ADJUSTED REBOUND ***	----							----							----
	FINAL TOP OF DECK ELEVATION	887.89	888.01	888.04	888.16	888.32	888.51	888.58	888.69	888.80	888.84	888.94	889.05	889.19	889.24	889.32
	TOP OF HAUNCH ELEV. *****	887.18							887.98							888.61
GIRDER 10	STATION	964+42.16	964+56.66	964+63.37	964+84.58	965+05.79	965+27.00	965+33.71	965+48.21	965+62.71	965+69.42	965+90.63	966+11.84	966+33.04	966+39.75	966+54.25
	ELEV. AFTER DECK REMOVAL *	----							----							----
	ELEV. BEFORE DECK REMOVAL *	----							----							----
	SURVEYED REBOUND **	----							----							----
	ADJUSTED REBOUND ***	----							----							----
	FINAL TOP OF DECK ELEVATION	888.64	888.76	888.79	888.91	889.07	889.26	889.33	889.44	889.56	889.60	889.67	889.75	889.86	889.90	889.96
	TOP OF HAUNCH ELEV. *****	887.93							888.73							889.25
GIRDER 11	STATION	964+42.16	964+56.66	964+63.37	964+84.58	965+05.79	965+27.00	965+33.71	965+48.21	965+62.71	965+69.42	965+90.63	966+11.84	966+33.04	966+39.75	966+54.25
	ELEV. AFTER DECK REMOVAL *	----							----							----
	ELEV. BEFORE DECK REMOVAL *	----							----							----
	SURVEYED REBOUND **	----							----							----
	ADJUSTED REBOUND ***	----							----							----
	FINAL TOP OF DECK ELEVATION	889.40	889.51	889.55	889.67	889.82	890.01	890.08	890.19	890.31	890.35	890.40	890.45	890.53	890.55	890.59
	TOP OF HAUNCH ELEV. *****	888.69							889.48							889.88
GIRDER 12	STATION	964+42.16	964+56.66	964+63.37	964+84.58	965+05.79	965+27.00	965+33.71	965+48.21	965+62.71	965+69.42	965+90.63	966+11.84	966+33.04	966+39.75	966+54.25
	ELEV. AFTER DECK REMOVAL *	----							----							----
	ELEV. BEFORE DECK REMOVAL *	----							----							----
	SURVEYED REBOUND **	----							----							----
	ADJUSTED REBOUND ***	----							----							----
	FINAL TOP OF DECK ELEVATION	890.15	890.27	890.30	890.42	890.57	890.77	890.84	890.95	891.06	891.10	891.14	891.15	891.19	891.21	891.23
	TOP OF HAUNCH ELEV. *****	889.44							890.24							890.52
F (RIGHT TOE OF RAILING)	STATION	964+42.16	964+56.66	964+63.37	964+84.58	965+05.79	965+27.00	965+33.71	965+48.21	965+62.71	965+69.42	965+90.63	966+11.84	966+33.04	966+39.75	966+54.25
	FINAL TOP OF DECK ELEVATION	890.28	890.38	890.43	890.59	890.74	890.90	890.95	891.06	891.16	891.21	891.28	891.28	891.29	891.29	891.29
	DECK SCREED ELEV. ****	890.28							891.06							891.29

Preliminary Plans - For Reference Only

NOTES:

1. FOR NOTES, SEE SHEET 49/64.
2. FOR RIGHT BRIDGE SPANS 1 AND 2 DECK SCREED ELEVATIONS, SEE SHEET 47/64.
3. FOR RIGHT BRIDGE SPANS 5 AND 6 DECK SCREED ELEVATIONS, SEE SHEET 49/64.
4. FOR LEFT BRIDGE DECK SCREED ELEVATIONS, SEE SHEETS 44/64 THRU 46/64.
5. FOR KEY PLAN AND KEY SECTION, SEE SHEET 50/64.

RIGHT BRIDGE DECK SCREED ELEVATIONS (2 OF 3)
BRIDGE NO. MAH-00680-04.886
OVER PRICE ROAD & MILL CREEK

SFN 5006872
DESIGN AGENCY
ms consultants, inc.
DESIGNER JSE | CHECKER SJR
REVIEWER WER 05/30/25
PROJECT ID 121474
SUBSET 48 | TOTAL 64
SHEET P.533 | TOTAL 655

MAH-680-0.00

MODEL: Sheet PAPERSIZE: 34x22 (in.) DATE: 9/15/2025 TIME: 11:18:50 AM PLTDRV: OHDOT_PDF_Color_Ex.pltcfg PENTBL: OHDOT_Pen.tbl USER: WORKSPACE: OHDOTCEv02 WORKSET: 121474 PRODUCT: OpenRoadsDesigner 10.12.02.4
pw:\\ohiodot-pw.bentley.com:ohiodot-pw-02\Documents\01 Active Projects\District 04\Mahoning\121474\02-Engineering_MSConsultants\Structures\SFN_5006872\Sheets\121474_SFN_5006872_SD007.dgn

DECK SCREED ELEVATION TABLE															
		SPAN 5							SPAN 6						
SPAN NO.	LOCATION	℄ BRG. PIER 4	SPLICE 8	0.20	0.40	0.60	0.80	SPLICE 9	℄ BRG. PIER 5	SPLICE 10	0.20	0.40	0.60	0.80	℄ BRG. F.A.
D (LEFT TOE OF RAILING)	STATION	966+54.25	966+68.75	966+75.46	966+96.66	967+17.86	967+39.07	967+45.77	967+60.27	967+74.77	967+77.27	967+94.27	968+11.27	968+28.27	968+45.27
	FINAL TOP OF DECK ELEVATION	887.98	888.10	888.16	888.34	888.52	888.70	888.75	888.88	889.00	889.02	889.16	889.31	889.45	889.60
	DECK SCREED ELEV. ****	887.98							888.88						889.60
GIRDER 7	STATION	966+54.25	966+68.75	966+75.46	966+96.66	967+17.86	967+39.07	967+45.77	967+60.27	967+74.77	967+77.27	967+94.27	968+11.27	968+28.27	968+45.27
	ELEV. AFTER DECK REMOVAL *	----							----						----
	ELEV. BEFORE DECK REMOVAL *	----							----						----
	SURVEYED REBOUND **	----							----						----
	ADJUSTED REBOUND ***	----							----						----
	FINAL TOP OF DECK ELEVATION	888.06	888.19	888.24	888.40	888.57	888.77	888.83	888.96	889.08	889.10	889.24	889.38	889.52	889.67
	TOP OF HAUNCH ELEV. *****	887.35							888.25						888.96
E (PROFILE GRADE)	STATION	966+54.25	966+68.75	966+75.46	966+96.66	967+17.86	967+39.07	967+45.77	967+60.27	967+74.77	967+77.27	967+94.27	968+11.27	968+28.27	968+45.27
	FINAL TOP OF DECK ELEVATION	888.41	888.52	888.57	888.73	888.88	889.04	889.09	889.19	889.30	889.32	889.44	889.57	889.70	889.82
	DECK SCREED ELEV. ****	888.41							889.19						889.82
GIRDER 8	STATION	966+54.25	966+68.75	966+75.46	966+96.66	967+17.86	967+39.07	967+45.77	967+60.27	967+74.77	967+77.27	967+94.27	968+11.27	968+28.27	968+45.27
	ELEV. AFTER DECK REMOVAL *	----							----						----
	ELEV. BEFORE DECK REMOVAL *	----							----						----
	SURVEYED REBOUND **	----							----						----
	ADJUSTED REBOUND ***	----							----						----
	FINAL TOP OF DECK ELEVATION	888.69	888.80	888.84	888.96	889.11	889.27	889.32	889.42	889.52	889.54	889.65	889.76	889.88	890.00
	TOP OF HAUNCH ELEV. *****	887.98							888.71						889.29
GIRDER 9	STATION	966+54.25	966+68.75	966+75.46	966+96.66	967+17.86	967+39.07	967+45.77	967+60.27	967+74.77	967+77.27	967+94.27	968+11.27	968+28.27	968+45.27
	ELEV. AFTER DECK REMOVAL *	----							----						----
	ELEV. BEFORE DECK REMOVAL *	----							----						----
	SURVEYED REBOUND **	----							----						----
	ADJUSTED REBOUND ***	----							----						----
	FINAL TOP OF DECK ELEVATION	889.32	889.41	889.44	889.53	889.64	889.77	889.81	889.89	889.97	889.98	890.06	890.15	890.23	890.32
	TOP OF HAUNCH ELEV. *****	888.61							889.18						889.61
GIRDER 10	STATION	966+54.25	966+68.75	966+75.46	966+96.66	967+17.86	967+39.07	967+45.77	967+60.27	967+74.77	967+77.27	967+94.27	968+11.27	968+28.27	968+45.27
	ELEV. AFTER DECK REMOVAL *	----							----						----
	ELEV. BEFORE DECK REMOVAL *	----							----						----
	SURVEYED REBOUND **	----							----						----
	ADJUSTED REBOUND ***	----							----						----
	FINAL TOP OF DECK ELEVATION	889.96	890.02	890.04	890.10	890.17	890.27	890.30	890.35	890.41	890.42	890.48	890.54	890.59	890.64
	TOP OF HAUNCH ELEV. *****	889.25							889.64						889.93
GIRDER 11	STATION	966+54.25	966+68.75	966+75.46	966+96.66	967+17.86	967+39.07	967+45.77	967+60.27	967+74.77	967+77.27	967+94.27	968+11.27	968+28.27	968+45.27
	ELEV. AFTER DECK REMOVAL *	----							----						----
	ELEV. BEFORE DECK REMOVAL *	----							----						----
	SURVEYED REBOUND **	----							----						----
	ADJUSTED REBOUND ***	----							----						----
	FINAL TOP OF DECK ELEVATION	890.59	890.63	890.64	890.66	890.71	890.77	890.79	890.82	890.86	890.86	890.89	890.92	890.95	890.97
	TOP OF HAUNCH ELEV. *****	889.88							890.11						890.26
GIRDER 12	STATION	966+54.25	966+68.75	966+75.46	966+96.66	967+17.86	967+39.07	967+45.77	967+60.27	967+74.77	967+77.27	967+94.27	968+11.27	968+28.27	968+45.27
	ELEV. AFTER DECK REMOVAL *	----							----						----
	ELEV. BEFORE DECK REMOVAL *	----							----						----
	SURVEYED REBOUND **	----							----						----
	ADJUSTED REBOUND ***	----							----						----
	FINAL TOP OF DECK ELEVATION	891.23	891.24	891.24	891.23	891.24	891.26	891.28	891.29	891.30	891.30	891.30	891.31	891.30	891.29
	TOP OF HAUNCH ELEV. *****	890.52							890.58						890.58
F (RIGHT TOE OF RAILING)	STATION	966+54.25	966+68.75	966+75.46	966+96.66	967+17.86	967+39.07	967+45.77	967+60.27	967+74.77	967+77.27	967+94.27	968+11.27	968+28.27	968+45.27
	FINAL TOP OF DECK ELEVATION	891.29	891.30	891.30	891.30	891.31	891.31	891.31	891.32	891.32	891.32	891.32	891.33	891.31	891.29
	DECK SCREED ELEV. ****	891.29							891.32						891.29

Preliminary Plans - For Reference Only

SCREED ELEVATIONS

1. SURVEY BOTTOM OF EXISTING GIRDERS AT THE LOCATIONS SHOWN IN THE TABLES PRIOR TO DECK REMOVAL AND AFTER DECK REMOVAL.
2. COMPUTE THE AMOUNT OF SURVEYED REBOUND FOR THESE GIRDERS BY SUBTRACTING THE ELEVATIONS AFTER REMOVAL FROM THE ELEVATIONS BEFORE REMOVAL.
3. COMPUTE THE ADJUSTED REBOUND FOR THESE GIRDERS BY MULTIPLYING THE SURVEYED REBOUND BY THE RATIO OF THE PROPOSED DEAD LOAD TO EXISTING DEAD LOAD. SEE THE RATIO VALUE SHOWN ON THIS SHEET.
4. ADD THE AMOUNT OF ADJUSTED REBOUND TO THE FINAL TOP OF DECK ELEVATIONS TO OBTAIN THE DECK SCREED ELEVATIONS. USE REBOUND OF THE CLOSEST GIRDER TO DETERMINE GUTTER DECK SCREED ELEVATION.

NOTES:

1. THE COST OF SURVEYING IS CONSIDERED INCIDENTAL TO DECK CONSTRUCTION AND SHALL BE INCLUDED WITH ITEM 511, CLASS QC2 CONCRETE WITH QC/QA, BRIDGE DECK, AS PER PLAN FOR PAYMENT.
2. FOR RIGHT BRIDGE SPANS 1 AND 2 DECK SCREED ELEVATIONS, SEE SHEET 47/64.
3. FOR RIGHT BRIDGE SPANS 3 AND 4 DECK SCREED ELEVATIONS, SEE SHEET 48/64.
4. FOR LEFT BRIDGE DECK SCREED ELEVATIONS, SEE SHEETS 44/64 THRU 46/64.
5. FOR TRANSVERSE SECTIONS AND ADDITIONAL NOTES, SEE SHEETS 40/64 AND 39/64.
6. FOR KEY PLAN AND KEY SECTION, SEE SHEET 50/64.

LEGEND

BRG. - BEARING

F.A. - FORWARD ABUTMENT

R.A. - REAR ABUTMENT

* - BOTTOM OF GIRDER ELEVATION SURVEYED DURING CONSTRUCTION

** - SURVEYED REBOUND = GIRDER ELEVATION AFTER DECK REMOVAL MINUS GIRDER ELEVATION BEFORE DECK REMOVAL

*** - ADJUSTED REBOUND, RATIO OF PROPOSED DEAD LOAD TO EXISTING DEAD LOAD (SHOWN BELOW) MULTIPLIED BY THE SURVEYED REBOUND

**** - DECK SCREED ELEVATION = ADJUSTED REBOUND ADDED TO THE FINAL TOP OF DECK ELEVATION

***** - TOP OF HAUNCH ELEVATION = ADJUSTED REBOUND ADDED TO THE FINAL TOP OF DECK ELEVATION, MINUS THE DECK THICKNESS OF 8.5" (0.71')

$$\frac{\text{PROPOSED DEAD LOAD}}{\text{EXISTING DEAD LOAD}} = \begin{matrix} 0.90 \text{ (LEFT BRIDGE)} \\ 0.82 \text{ (RIGHT BRIDGE)} \end{matrix}$$

RIGHT BRIDGE DECK SCREED ELEVATIONS (3 OF 3)
BRIDGE NO. MAH-00680-04.886
OVER PRICE ROAD & MILL CREEK

SFN 5006872
DESIGN AGENCY
ms consultants, inc.
DESIGNER JSE | CHECKER SJR
REVIEWER WER 05/30/25
PROJECT ID 121474
SUBSET 49 | TOTAL 64
SHEET P.534 | TOTAL 655

MAH-680-0.00

MODEL: Sheet PAPERSIZE: 34x22 (in.) DATE: 9/15/2025 TIME: 11:18:56 AM PLTDRV: OHDOT_PDF_Color_Ex.pltcfg PENTBL: OHDOT_Pen.tbl USER: WORKSPACE: OHDOTCEv02 WORKSET: 121474 PRODUCT: OpenRoadsDesigner 10.12.02.4
pw:\\ohiodot-pw.bentley.com:ohiodot-pw-02\Documents\01 Active Projects\District 04\Mahoning\121474\02-Engineering_MSConsultants\Structures\SFN_5006872\Sheets\121474_SFN_5006872_SD008.dgn

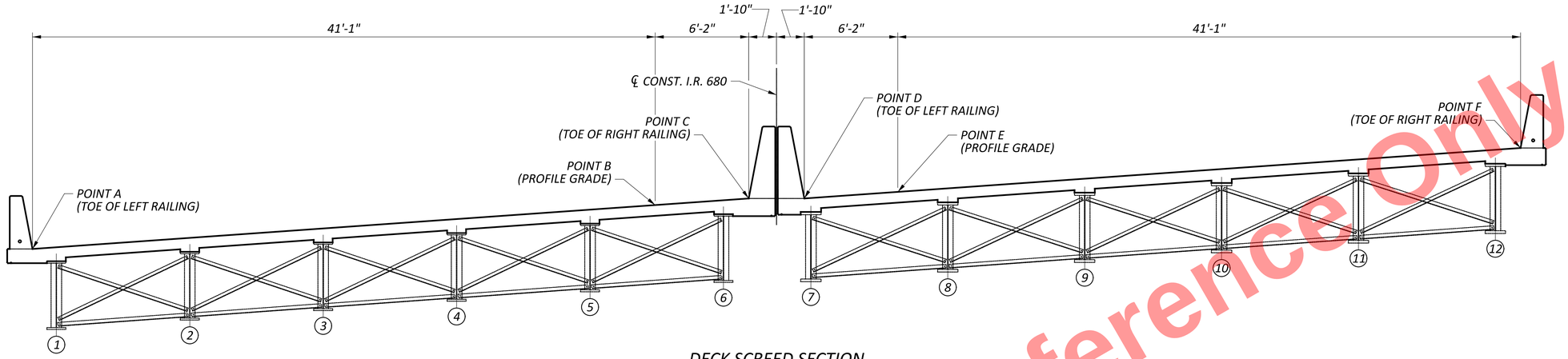

DECK SCREED SECTION

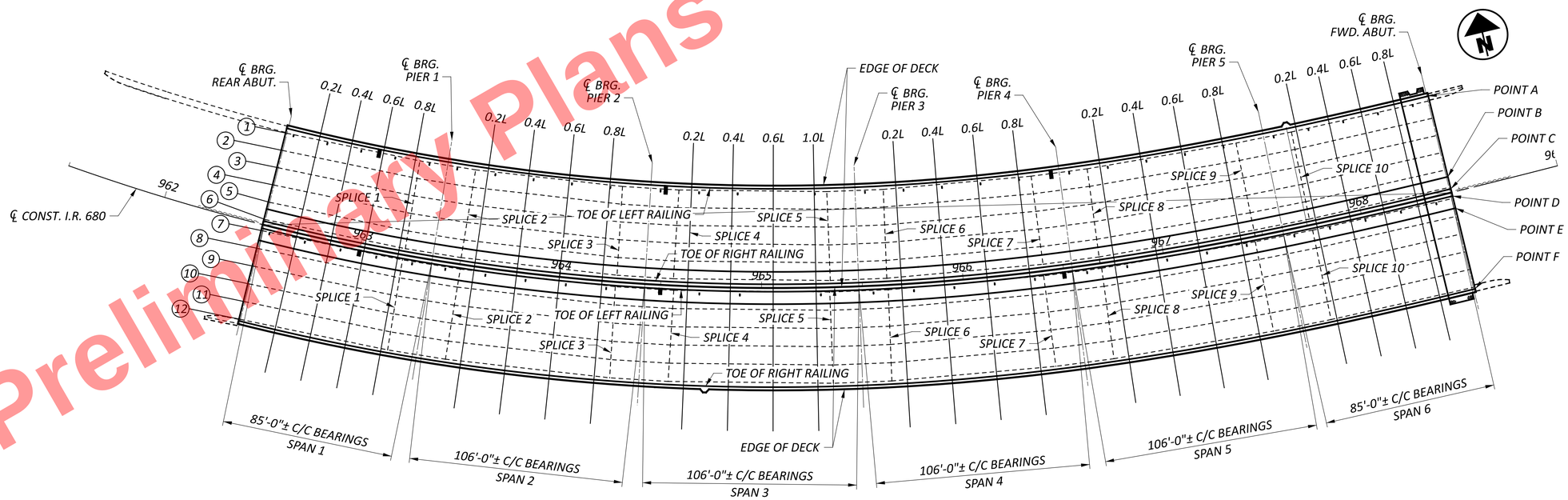

DECK SCREED KEY PLAN

LEGEND

(#) - DENOTES GIRDER NUMBER

NOTES:

1. SEE SHEETS 47/64 THRU 49/64 FOR RIGHT BRIDGE DECK SCREED ELEVATIONS.
2. SEE SHEETS 44/64 THRU 46/64 FOR LEFT BRIDGE DECK SCREED ELEVATIONS.

Preliminary Plans - For Reference Only

DECK SCREED PLAN AND SECTION
BRIDGE NO. MAH-00680-04.886
OVER PRICE ROAD & MILL CREEK

SFN 5006872

DESIGN AGENCY
ms consultants, inc.

DESIGNER	CHECKER
JSE	SJR

REVIEWER: WER 05/30/25

PROJECT ID: 121474

SUBSET	TOTAL
50	64

SHEET	TOTAL
P.535	655

MAH-680-0.00

MODEL: CLP_I680 - Plan 1 [Sheet] PAPERSIZE: 34x22 (in.) DATE: 9/15/2025 TIME: 11:19:03 AM PLTDRV: OHDOT_PDF_Color_E+.pltcfg PENTBL: OHDOT_Pen.tbl USER: WORKSPACE: OHDOTCtx02 WORKSET: 121474 PRODUCT: OpenRoadsDesigner 10.12.02.4
pw:\\ohiodot-pw.bentley.com:ohiodot-pw-02\Documents\01 Active Projects\District 04\Mahoning\121474\402-Engineering_MSConsultants\Structures\SFN_5006872\Sheets\121474_SFN_5006872_SD009.dgn

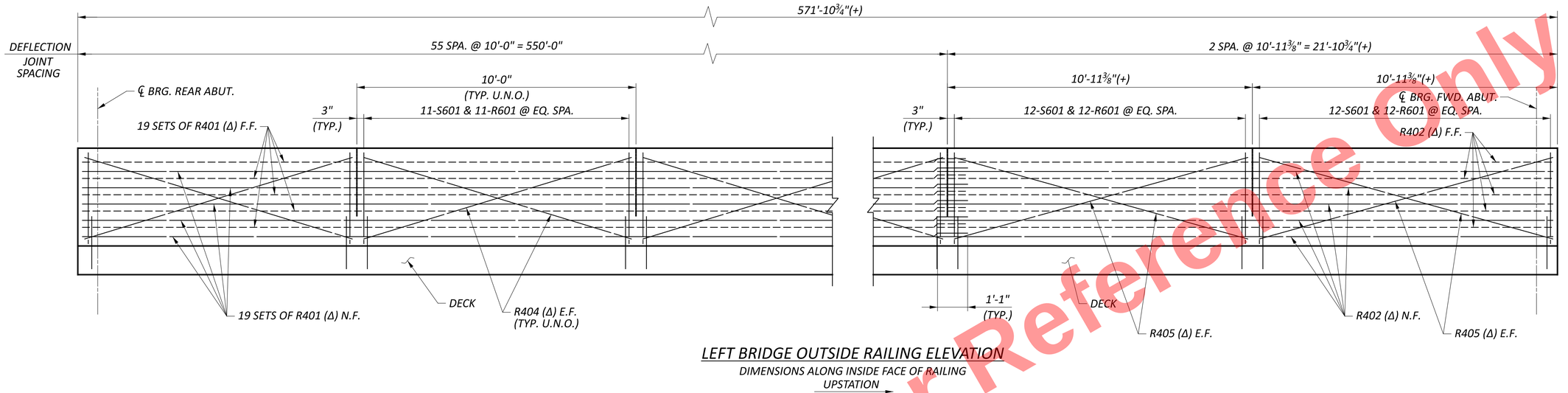

LEFT BRIDGE OUTSIDE RAILING ELEVATION

DIMENSIONS ALONG INSIDE FACE OF RAILING
UPSTATION →

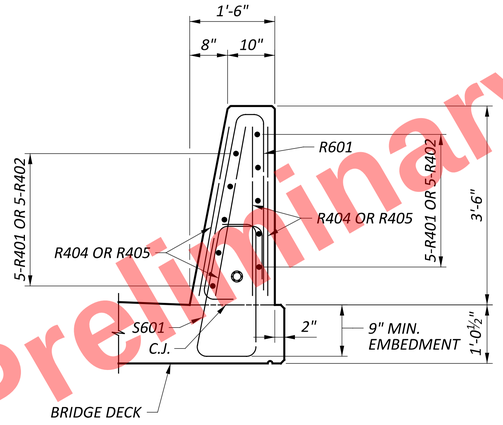

RAILING SECTION

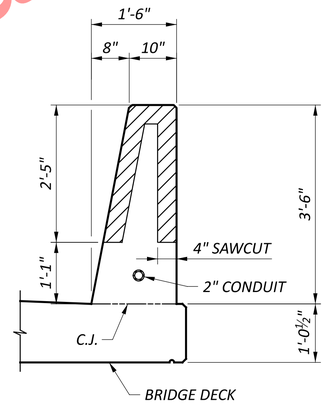

DEFLECTION JOINT DETAIL

LEGEND:

Δ - USE NO. 4 GLASS FIBER REINFORCING POLYMER (G.F.R.P.) FOR HORIZONTAL REINFORCING BARS R401 AND R402 AND STIFFENING BARS R404 AND R405.

NOTES:

1. FOR ADDITIONAL NOTES AND RAILING DETAILS, SEE STANDARD BRIDGE DRAWING SBR-1-20.
2. FOR DECK REINFORCING PLAN, SEE SHEET 42/64.
3. FOR RAILING ON APPROACH SLAB, SEE SHEETS 56/64, 58/64, AND 60/64.
4. FOR EXPANSION JOINT DETAILS, SEE SHEET 55/64.

Preliminary Plans - For Reference Only

LEFT BRIDGE RAILING ELEVATION (OUTSIDE)
BRIDGE NO. MAH-00680-04.886
OVER PRICE ROAD & MILL CREEK

SFN 5006872
DESIGN AGENCY
ms consultants, inc.
DESIGNER JSE | CHECKER SJR
REVIEWER WER 05/30/25
PROJECT ID 121474
SUBSET 51 | TOTAL 64
SHEET P.536 | TOTAL 655

MAH-680-0.00

MODEL: Sheet PAPERSIZE: 34x22 (in.) DATE: 9/15/2025 TIME: 11:19:10 AM PLTDRV: OHDOT_PDF_Color_E+.pltcfg PENTBL: OHDOT_Pen.tbl USER: WORKSPACE: OHDOTCEv02 WORKSET: 121474 PRODUCT: OpenRoadsDesigner 10.12.02.4
pw:\\ohiodot-pw.bentley.com:ohiodot-pw-02\Documents\01 Active Projects\District 04\Mahoning\121474\02-Engineering_MSConsultants\Structures\SFN_5006872\Sheets\121474_SFN_5006872_SA001.dgn

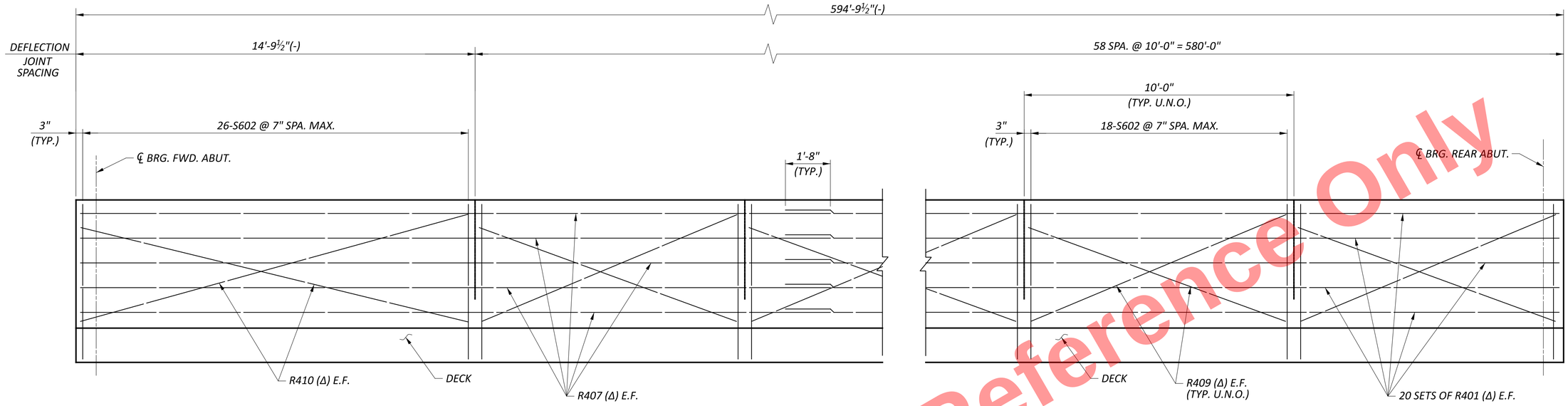

LEFT BRIDGE MEDIAN RAILING ELEVATION

DIMENSIONS ALONG INSIDE FACE OF RAILING
UPSTATION

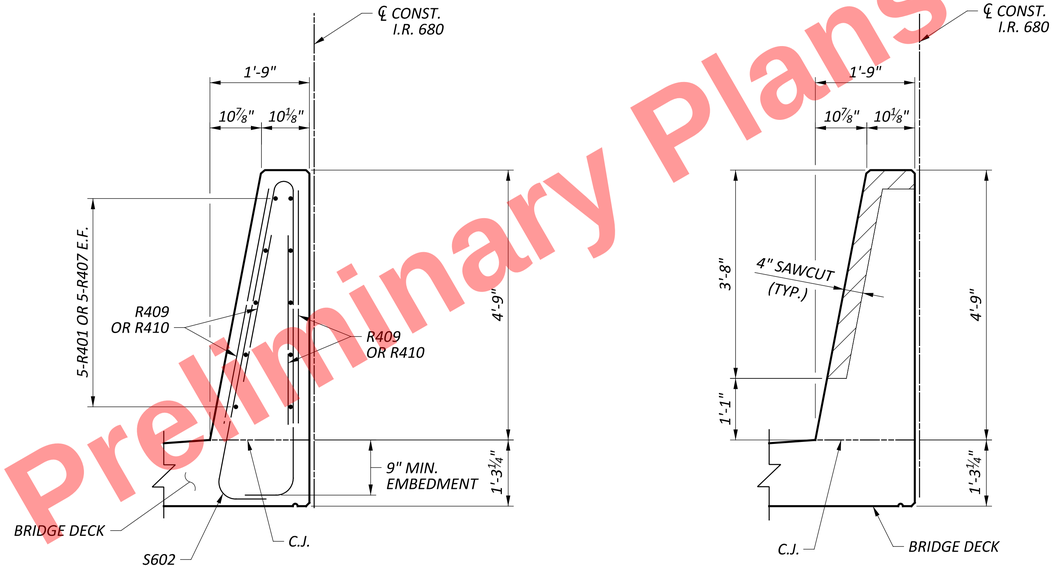

MEDIAN BARRIER SECTION

DEFLECTION JOINT DETAIL

LEGEND:

Δ - USE NO. 4 GLASS FIBER REINFORCING POLYMER (G.F.R.P.) FOR HORIZONTAL REINFORCING BARS R401 AND R407 AND STIFFENING BARS R409 AND R410.

NOTES:

1. FOR ADDITIONAL NOTES AND MEDIAN BARRIER DETAILS, SEE STANDARD BRIDGE DRAWING SBR-2-20.
2. FOR DECK REINFORCING PLAN, SEE SHEET 42/64.
3. FOR RAILING ON APPROACH SLAB, SEE SHEETS 56/64, 58/64, AND 60/64.
4. FOR EXPANSION JOINT DETAILS, SEE SHEET 55/64.

Preliminary Plans - For Reference Only

LEFT BRIDGE RAILING ELEVATION (MEDIAN)
BRIDGE NO. MAH-00680-04.886
OVER PRICE ROAD & MILL CREEK

SFN 5006872
DESIGN AGENCY
ms consultants, inc.

DESIGNER	CHECKER
JSE	SJR

REVIEWER: WER 05/30/25
PROJECT ID: 121474
SUBSET 52 / TOTAL 64
SHEET P.537 / TOTAL 655

MAH-680-0.00

MODEL: Sheet PAPERSIZE: 34x22 (in.) DATE: 9/15/2025 TIME: 11:19:18 AM PLTDRV: OHDOT_PDF_Color_E+.pltcfg PENTBL: OHDOT_Pen.tbl USER: WORKSPACE: OHDOTCEv02 WORKSET: 121474 PRODUCT: OpenRoadsDesigner 10.12.02.4
pw:\\ohiodot-pw.bentley.com:ohiodot-pw-02\Documents\01 Active Projects\District 04\Mahoning\121474\02-Engineering_MSConsultants\Structures\SFN_5006872\Sheets\121474_SFN_5006872_SA003.dgn

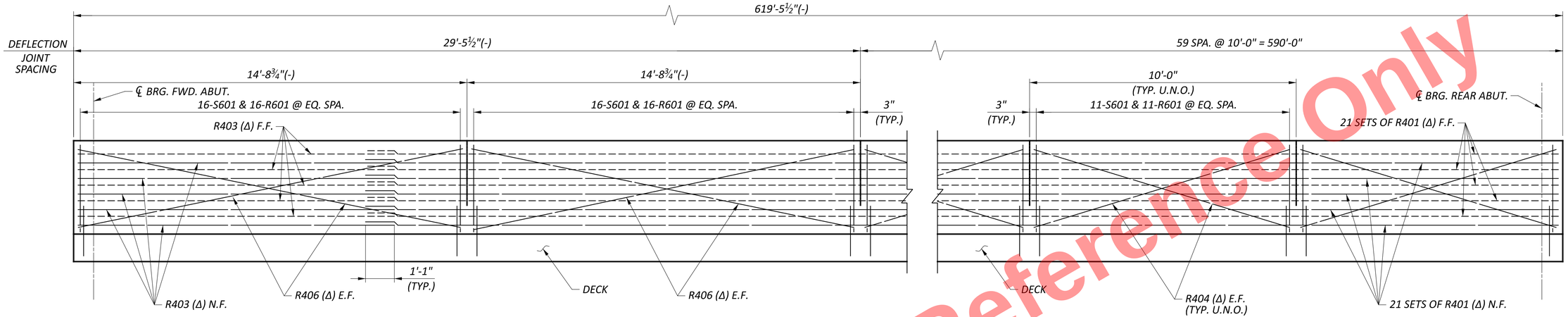

RIGHT BRIDGE OUTSIDE RAILING ELEVATION

DIMENSIONS ALONG INSIDE FACE OF RAILING
UPSTATION

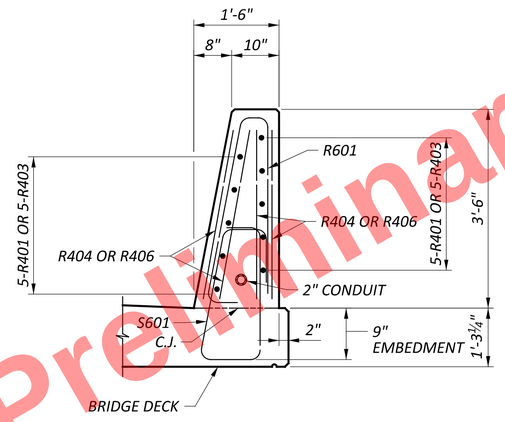

RAILING SECTION

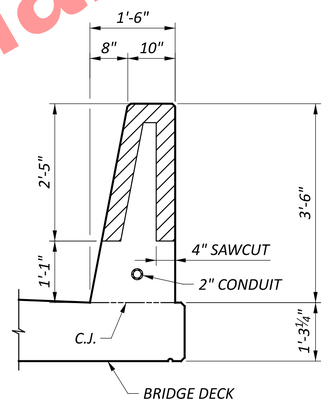

DEFLECTION JOINT DETAIL

LEGEND:

Δ - USE NO. 4 GLASS FIBER REINFORCING POLYMER (G.F.R.P.) FOR HORIZONTAL REINFORCING BARS R401 AND R403 AND STIFFENING BARS R404 AND R406.

NOTES:

1. FOR ADDITIONAL NOTES AND RAILING DETAILS, SEE STANDARD BRIDGE DRAWING SBR-1-20.
2. FOR DECK REINFORCING PLAN, SEE SHEET 42/64.
3. FOR RAILING ON APPROACH SLAB, SEE SHEETS 57/64, 59/64, AND 60/64.
4. FOR EXPANSION JOINT DETAILS, SEE SHEET 55/64.

Preliminary Plans - For Reference Only

RIGHT BRIDGE RAILING ELEVATION (OUTSIDE)
BRIDGE NO. MAH-00680-04.886
OVER PRICE ROAD & MILL CREEK

SFN 5006872
DESIGN AGENCY
ms consultants, inc.
DESIGNER JSE | CHECKER SJR
REVIEWER WER 05/30/25
PROJECT ID 121474
SUBSET 53 | TOTAL 64
SHEET P.538 | TOTAL 655

MAH-680-0.00

MODEL: Sheet PAPERSIZE: 34x22 (in.) DATE: 9/15/2025 TIME: 11:19:25 AM PLTDRV: OHDOT_PDF_Color_E+.pltcfg PENTBL: OHDOT_Pen.tbl USER: WORKSPACE: OHDOTCEv02 WORKSET: 121474 PRODUCT: OpenRoadsDesigner 10.12.02.4
pw:\\ohiodot-pw.bentley.com:ohiodot-pw-02\Documents\01 Active Projects\District 04\Mahoning\121474\02-Engineering_MSConsultants\Structures\SFN_5006872\Sheets\121474_SFN_5006872_SA002.dgn

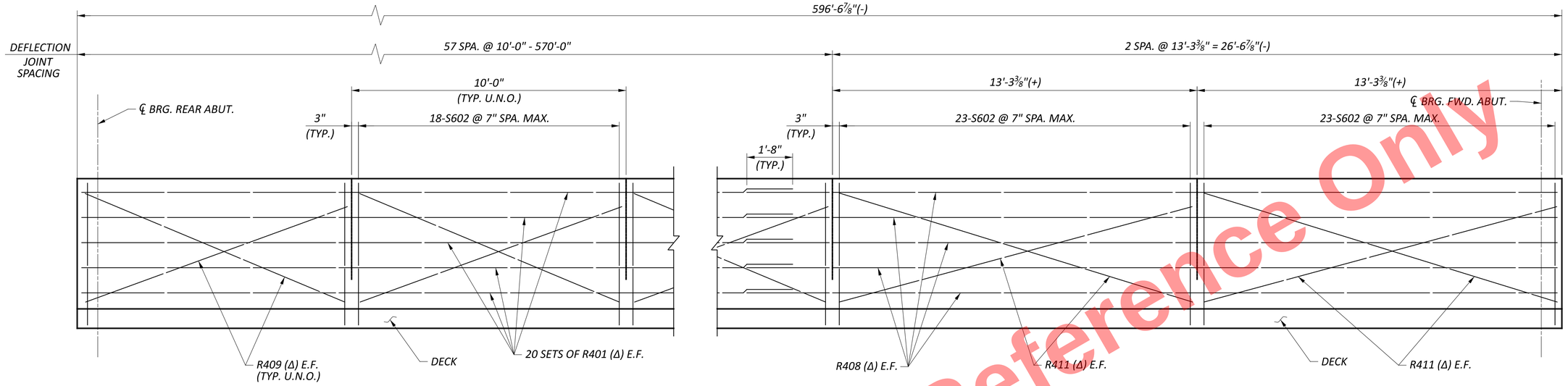

RIGHT BRIDGE MEDIAN RAILING ELEVATION

DIMENSIONS ALONG INSIDE FACE OF RAILING

UPSTATION →

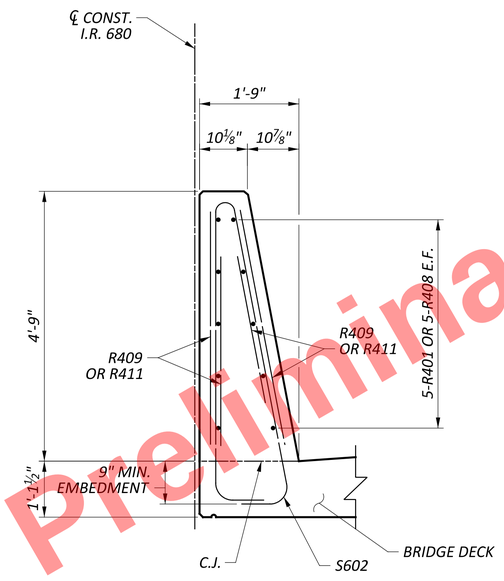

MEDIAN BARRIER SECTION

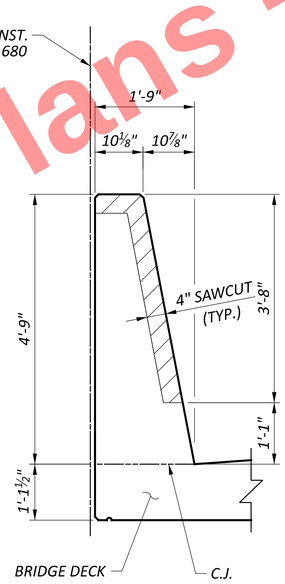

DEFLECTION JOINT DETAIL

LEGEND:

Δ - USE NO. 4 GLASS FIBER REINFORCING POLYMER (G.F.R.P.) FOR HORIZONTAL REINFORCING BARS R401 AND R408 AND STIFFENING BARS R409 AND R411.

NOTES:

1. FOR ADDITIONAL NOTES AND MEDIAN BARRIER DETAILS, SEE STANDARD BRIDGE DRAWING SBR-2-20.
2. FOR DECK REINFORCING PLAN, SEE SHEET 42/64.
3. FOR RAILING ON APPROACH SLAB, SEE SHEETS 57/64, 59/64, AND 60/64.
4. FOR EXPANSION JOINT DETAILS, SEE SHEET 55/64.

Preliminary Plans - For Reference Only

RIGHT BRIDGE RAILING ELEVATION (MEDIAN)
BRIDGE NO. MAH-00680-04.886
OVER PRICE ROAD & MILL CREEK

SFN 5006872
DESIGN AGENCY
ms consultants, inc.
DESIGNER JSE | CHECKER SJR
REVIEWER WER 05/30/25
PROJECT ID 121474
SUBSET 54 | TOTAL 64
SHEET P.539 | TOTAL 655

MAH-680-0.00

MODEL: Sheet PAPERSIZE: 34x22 (in.) DATE: 9/15/2025 TIME: 11:19:31 AM PLTDRV: OHDOT_PDF_Color_E+.pltcfg PENTBL: OHDOT_Pen.tbl USER: WORKSPACE: OHDOTCEv02 WORKSET: 121474 PRODUCT: OpenRoadsDesigner 10.12.02.4
pw:\\ohiodot-pw.bentley.com:ohiodot-pw-02\Documents\01 Active Projects\District 04\Mahoning\121474\402-Engineering_MSConsultants\Structures\SFN_5006872\Sheets\121474_SFN_5006872_SA004.dgn

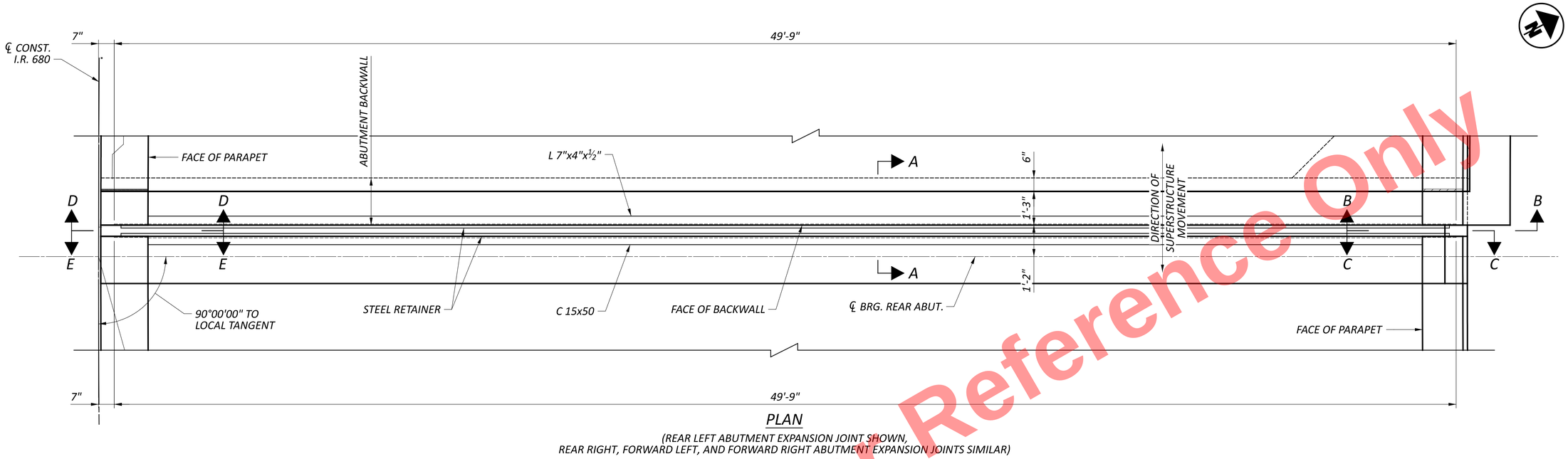

PLAN

(REAR LEFT ABUTMENT EXPANSION JOINT SHOWN, REAR RIGHT, FORWARD LEFT, AND FORWARD RIGHT ABUTMENT EXPANSION JOINTS SIMILAR)

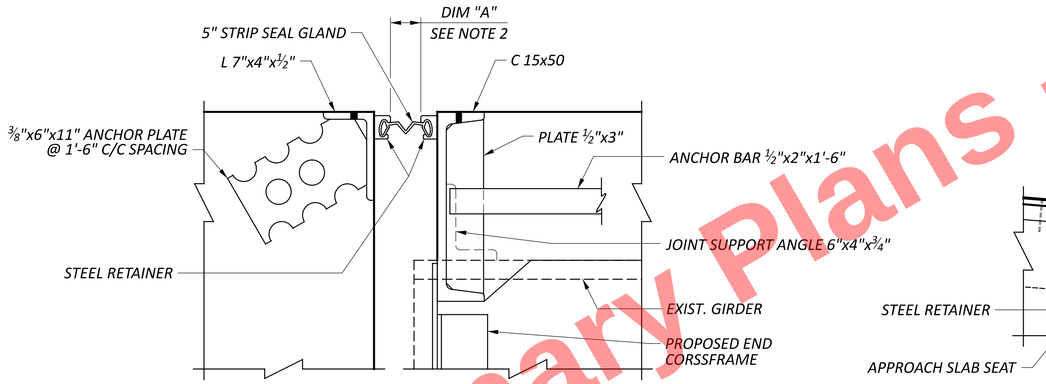

SECTION A-A

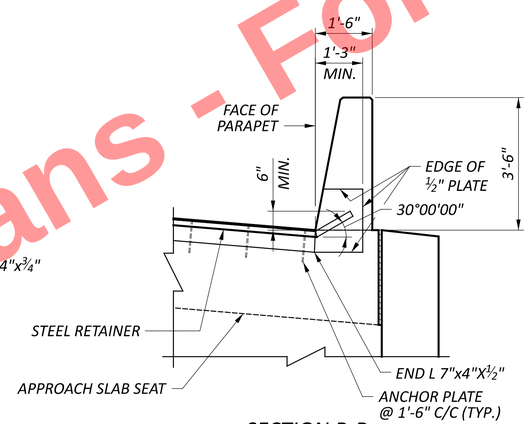

SECTION B-B

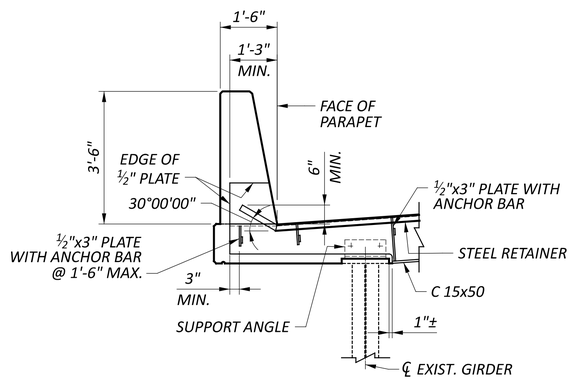

SECTION C-C

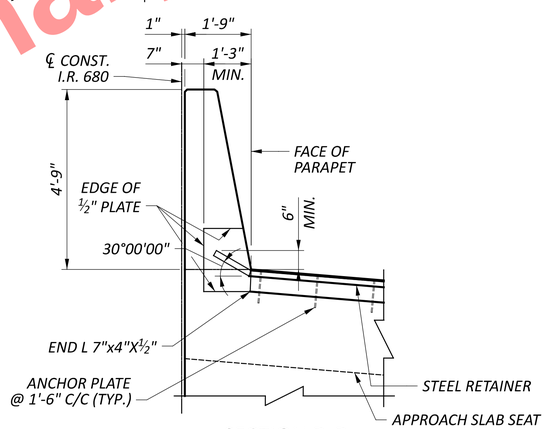

SECTION D-D

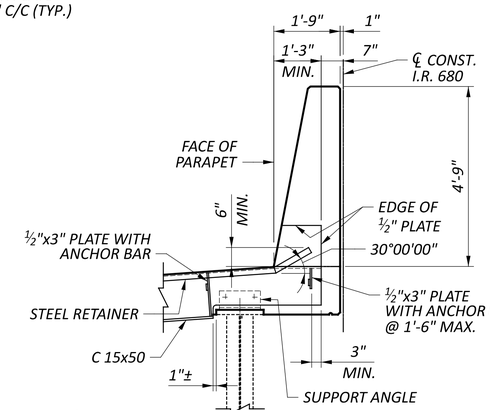

SECTION E-E

NOTES:

1. CONSTRUCT EXPANSION JOINTS TO ROADWAY GRADE AND CROSS SLOPE.
2. REFER TO STANDARD DRAWING EXJ-4-87 FOR ADDITIONAL DETAILS.
3. EACH STRIP SEAL GLAND SHALL BE FURNISHED AND INSTALLED IN ONE CONTINUOUS PIECE.
4. THE TOTAL RANGE OF SUPERSTRUCTURE MOVEMENT FOR THE REAR ABUTMENT AND FORWARD ABUTMENT = 3.50"

Preliminary Plans - For Reference Only

ABUTMENT EXPANSION JOINT DETAILS
BRIDGE NO. MAH-00680-04.886
OVER PRICE ROAD & MILL CREEK

SFN 5006872
DESIGN AGENCY: ms consultants, inc.
DESIGNER JSE | CHECKER SJR
REVIEWER WER 05/30/25
PROJECT ID 121474
SUBSET 55 | TOTAL 64
SHEET P.540 | TOTAL 655

MAH-680-0.00

MODEL: Sheet PAPERSIZE: 34x22 (in.) DATE: 9/15/2025 TIME: 11:19:37 AM PLTDRV: OHDOT_PDF_Color_E+.pltcfg PENTBL: OHDOT_Pen.tbl USER: WORKSPACE: OHDOTCEv02 WORKSET: 121474 PRODUCT: OpenRoadsDesigner 10.12.02.4
pw:\\ohiodot-pw.bentley.com:ohiodot-pw-02\Documents\01 Active Projects\District 04\Mahoning\121474\402-Engineering_MSConsultants\Structures\SFN_5006872_SX001.dgn

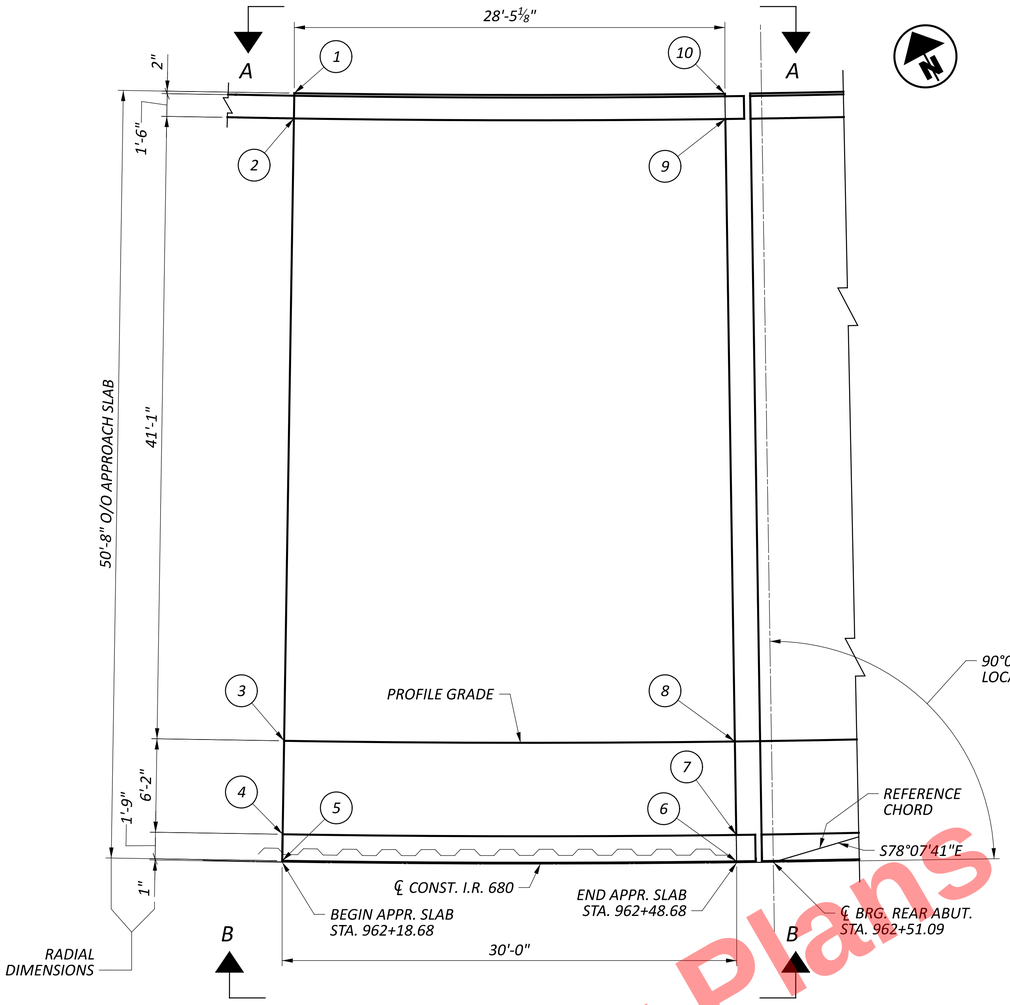

REAR LEFT APPROACH SLAB PLAN

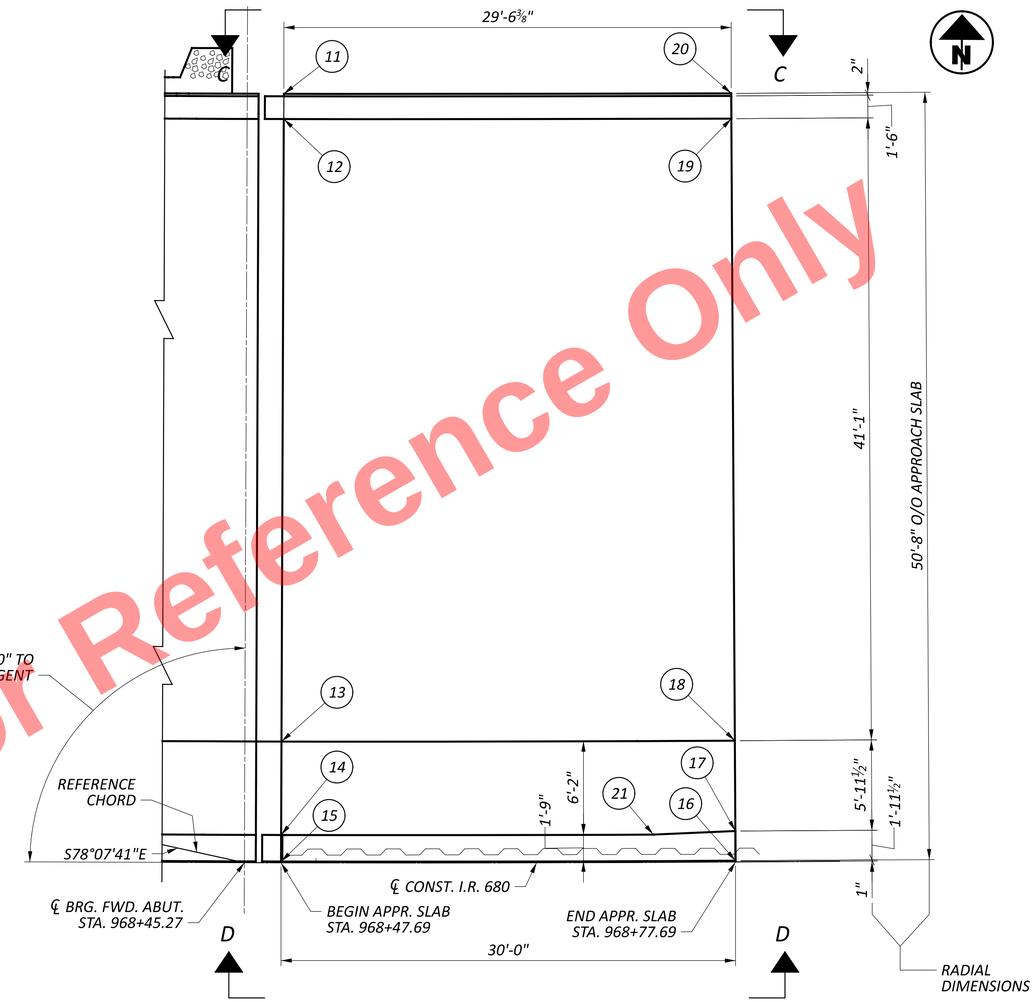

FORWARD LEFT APPROACH SLAB PLAN

REAR LEFT ELEVATIONS				
LOCATION	STATION	OFFSET	TOP OF ASPHALT ELEVATION *	TOP OF CONCRETE ELEVATION
1	962+18.68	50.75' LT.	N/A	880.74
2	962+18.68	49.08' LT.	880.74	879.81
3	962+18.68	8.00' LT.	884.17	883.23
4	962+18.68	1.83' LT.	884.68	883.74
5	962+18.68	0.08' LT.	N/A	884.68
6	962+48.68	0.08' LT.	N/A	884.92
7	962+48.67	1.83' LT.	884.92	883.99
8	962+48.66	8.00' LT.	884.41	883.47
9	962+48.56	49.08' LT.	880.99	880.05
10	962+48.55	50.75' LT.	N/A	880.99

FORWARD LEFT ELEVATIONS				
LOCATION	STATION	OFFSET	TOP OF ASPHALT ELEVATION *	TOP OF CONCRETE ELEVATION
11	968+47.75	50.75' LT.	N/A	888.03
12	968+47.74	49.08' LT.	888.03	887.09
13	968+47.70	8.00' LT.	889.32	888.38
14	968+47.69	1.83' LT.	889.52	888.58
15	968+47.69	0.08' LT.	N/A	889.52
16	968+77.69	0.08' LT.	N/A	889.76
17	968+77.69	2.04' LT.	889.76	888.83
18	968+77.69	8.00' LT.	889.61	888.67
19	968+77.70	49.08' LT.	888.55	887.61
20	968+77.70	50.75' LT.	N/A	888.55
21	968+72.27	1.83' LT.	889.71	888.78

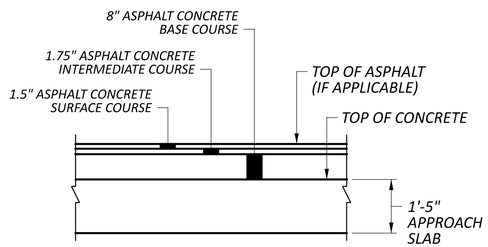

SCHEMATIC DIAGRAM

LEGEND:

(1) - APPROACH SLAB ELEVATION MARK

* - SEE SCHEMATIC DIAGRAM FOR DETAILS

NOTES:

1. ELEVATIONS GIVEN ARE FOR TOP OF CONCRETE AND TOP OF ASPHALT AS APPLICABLE.
2. FOR APPROACH SLAB REINFORCEMENT REQUIREMENTS AND ADDITIONAL STANDARD APPROACH SLAB DETAILS, SEE STD. DRAWINGS AS-1-15 & AS-2-15. APPROACH SLAB SHALL BE TYPE B INSTALLATION.
3. FOR VIEW A-A, VIEW B-B, VIEW C-C, AND VIEW D-D, SEE SHEET 58/64.

Preliminary Plans - For Reference Only

REAR AND FORWARD LEFT APPROACH SLAB PLAN
BRIDGE NO. MAH-00680-04.886
OVER PRICE ROAD & MILL CREEK

SFN 5006872
DESIGN AGENCY
ms consultants, inc.

DESIGNER	CHECKER
JSE	SJR

REVIEWER WER 05/30/25
PROJECT ID 121474
SUBSET 56 | TOTAL 64
SHEET P.542 | TOTAL 655

MAH-680-0.00

MODEL: Sheet PAPERSIZE: 34x22 (in.) DATE: 9/15/2025 TIME: 11:19:44 AM PLTDRV: OHDOT_PDF_Color_E+.pltcfg PENTBL: OHDOT_Pen.tbl USER: WORKSPACE: OHDOTCEv02 WORKSET: 121474 PRODUCT: OpenRoadsDesigner 10.12.02.4
pw:\\ohiodot-pw.bentley.com:ohiodot-pw-02\Documents\01 Active Projects\District 04\Mahoning\121474\402-Engineering_MSConsultants\Structures\SFN_5006872\Sheets\121474_SFN_5006872_SW001.dgn

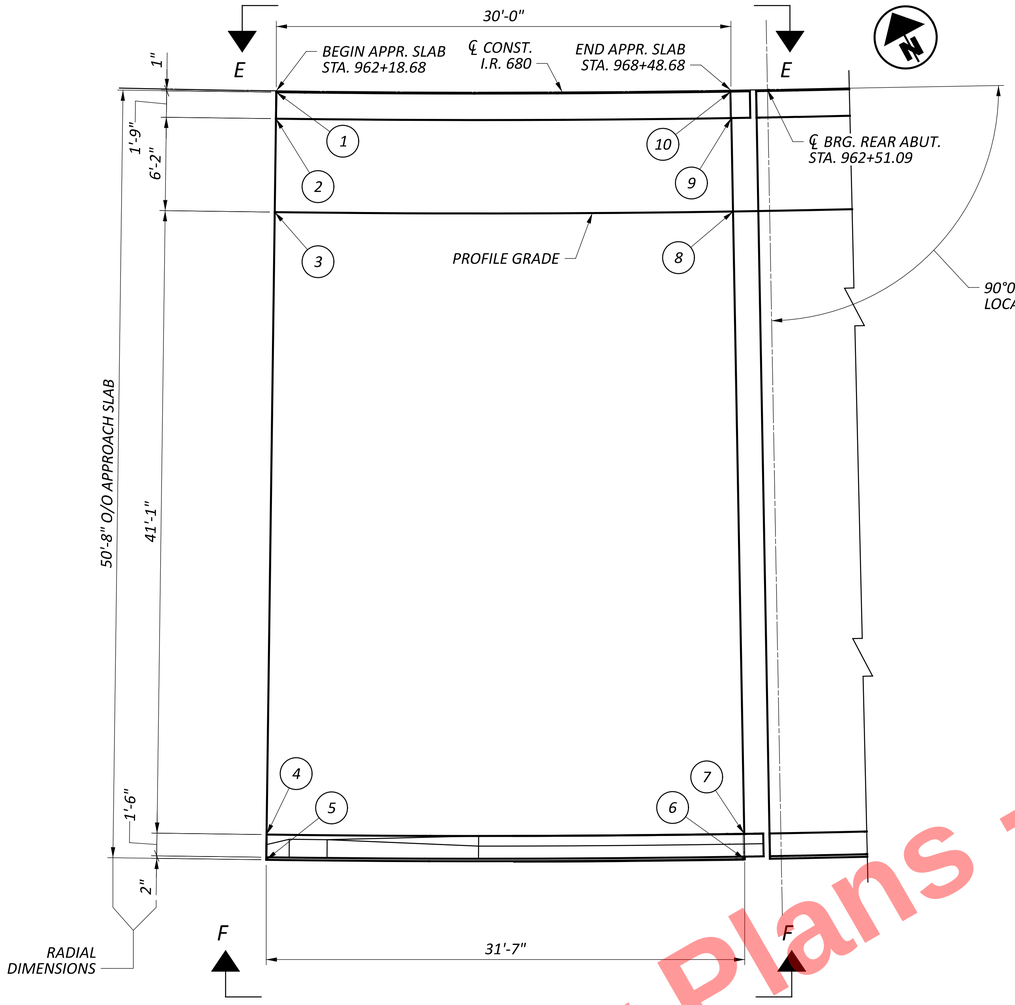

REAR RIGHT APPROACH SLAB PLAN

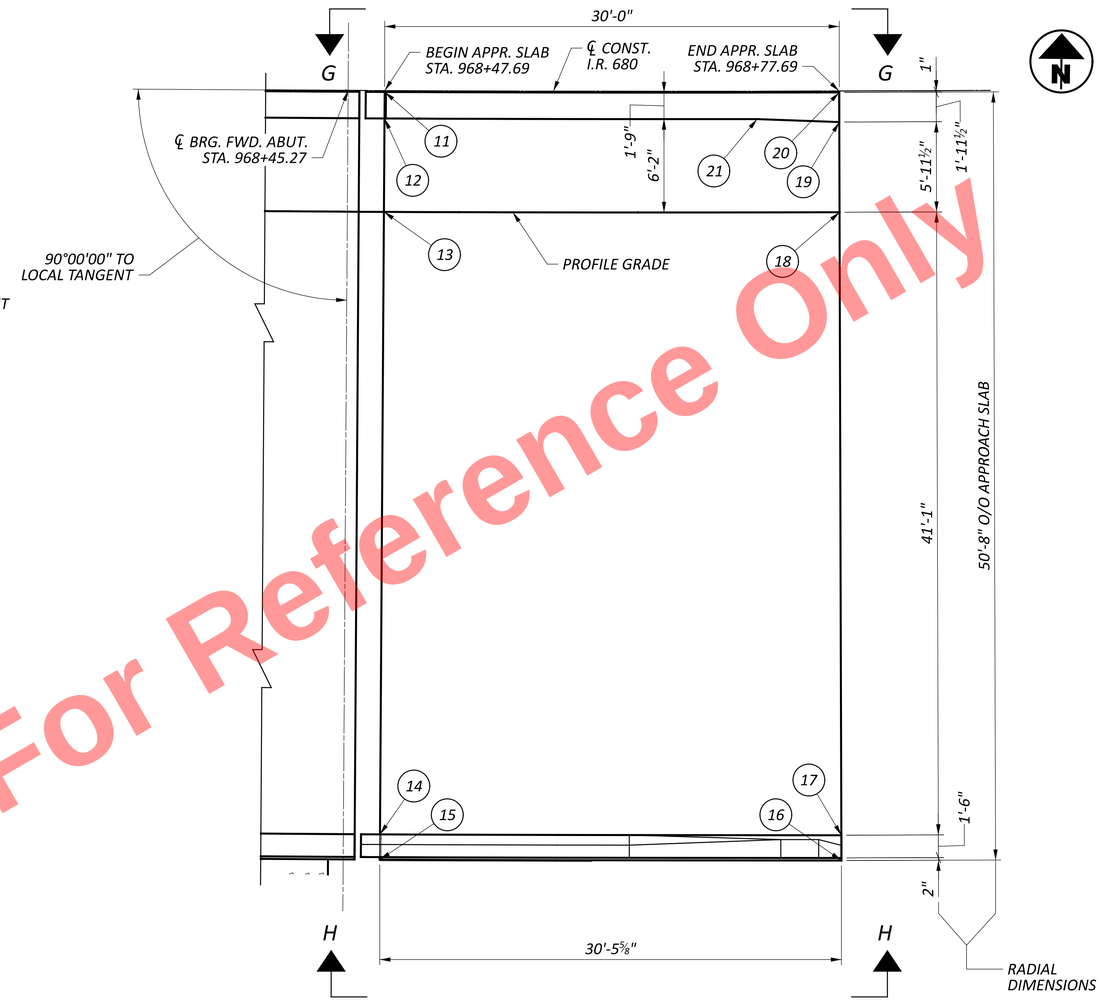

FORWARD RIGHT APPROACH SLAB PLAN

REAR RIGHT ELEVATIONS				
LOCATION	STATION	OFFSET	TOP OF ASPHALT ELEVATION *	TOP OF CONCRETE ELEVATION
1	962+18.68	0.08' RT.	N/A	884.68
2	962+18.68	1.83' RT.	884.68	883.74
3	962+18.68	8.00' RT.	885.19	884.26
4	962+18.68	49.08' RT.	888.62	887.68
5	962+18.68	50.75' RT.	N/A	888.62
6	962+48.79	50.75' RT.	N/A	888.85
7	962+48.79	49.08' RT.	888.85	887.92
8	962+48.70	8.00' RT.	885.43	884.49
9	962+48.68	1.83' RT.	884.92	883.98
10	962+48.68	0.08' RT.	N/A	884.92

FORWARD RIGHT ELEVATIONS				
LOCATION	STATION	OFFSET	TOP OF ASPHALT ELEVATION *	TOP OF CONCRETE ELEVATION
11	968+47.69	0.08' RT.	N/A	889.65
12	968+47.69	1.83' RT.	889.65	888.71
13	968+47.68	8.00' RT.	889.86	888.93
14	968+47.63	49.08' RT.	891.31	890.38
15	968+47.63	50.75' RT.	N/A	891.31
16	968+77.68	50.75' RT.	N/A	891.27
17	968+77.68	49.08' RT.	891.27	890.33
18	968+77.69	8.00' RT.	890.08	889.14
19	968+77.69	2.04' RT.	889.90	888.97
20	968+77.69	0.08' RT.	N/A	889.90
21	968+72.27	1.83' RT.	889.83	889.90

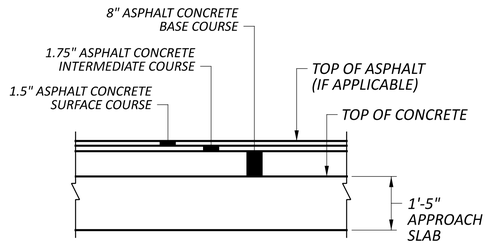

SCHEMATIC DIAGRAM

LEGEND:

(1) - *APPROACH SLAB ELEVATION MARK*

* - *SEE SCHEMATIC DIAGRAM FOR DETAILS*

NOTES:

1. *ELEVATIONS GIVEN ARE FOR TOP OF CONCRETE AND TOP OF ASPHALT AS APPLICABLE.*
2. *FOR APPROACH SLAB REINFORCEMENT REQUIREMENTS AND ADDITIONAL STANDARD APPROACH SLAB DETAILS, SEE STD. DRAWINGS AS-1-15 & AS-2-15. APPROACH SLAB SHALL BE TYPE B INSTALLATION.*
3. *FOR VIEW E-E, VIEW F-F, VIEW G-G, AND VIEW H-H, SEE SHEET 59/64.*

Preliminary Plans - For Reference Only

REAR AND FORWARD RIGHT APPROACH SLAB PLAN

BRIDGE NO. MAH-00680-04.886
OVER PRICE ROAD & MILL CREEK

SFN 5006872
DESIGN AGENCY
ms consultants, inc.

DESIGNER	CHECKER
JSE	SJR

REVIEWER WER 05/30/25
PROJECT ID 121474
SUBSET 57 / TOTAL 64
SHEET P.543 / TOTAL 655

MAH-680-0.00

MODEL: Sheet PAPERSIZE: 34x22 (in.) DATE: 9/15/2025 TIME: 11:19:51 AM PLTDRV: OHDOT_PDF_Color_E+.pltcfg PENTBL: OHDOT_Pen.tbl USER: WORKSPACE: OHDOTCEv02 WORKSET: 121474 PRODUCT: OpenRoadsDesigner 10.12.02.4
pw:\\ohiodot-pw.bentley.com:ohiodot-pw-02\Documents\01 Active Projects\District 04\Mahoning\121474\A02-Engineering_MSConsultants\Structures\SFN_5006872\Sheets\121474_SFN_5006872_SW002.dgn

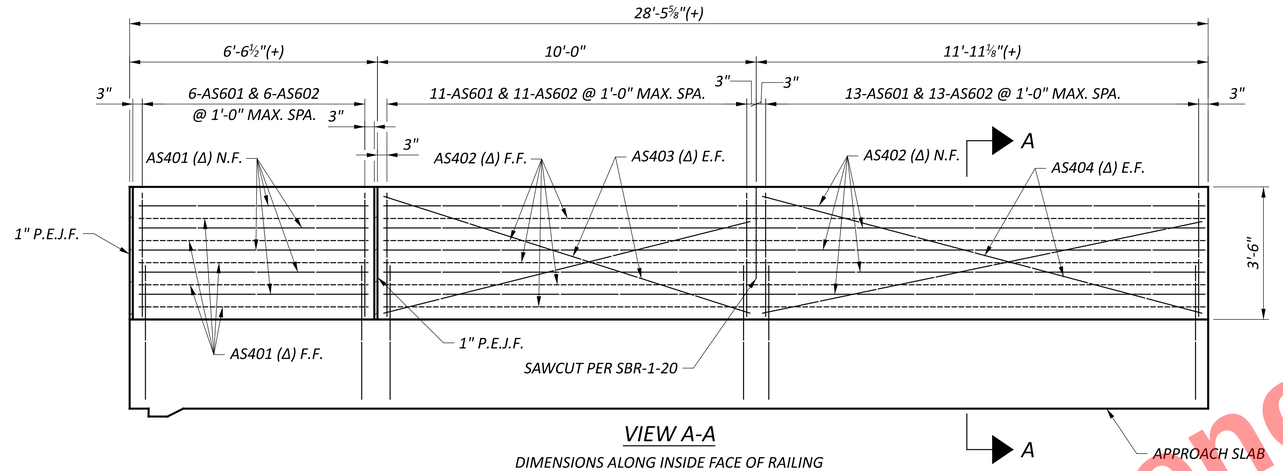

VIEW A-A

DIMENSIONS ALONG INSIDE FACE OF RAILING

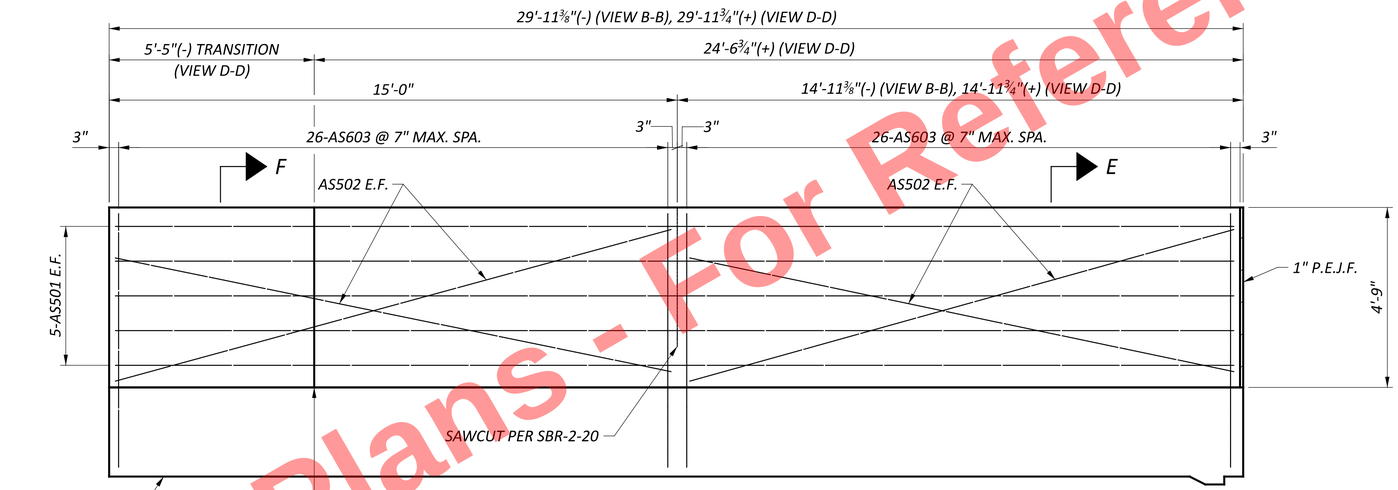

VIEW B-B (AS SHOWN)

VIEW D-D (OPPOSITE HAND & AS NOTED)

DIMENSIONS ALONG INSIDE FACE OF RAILING

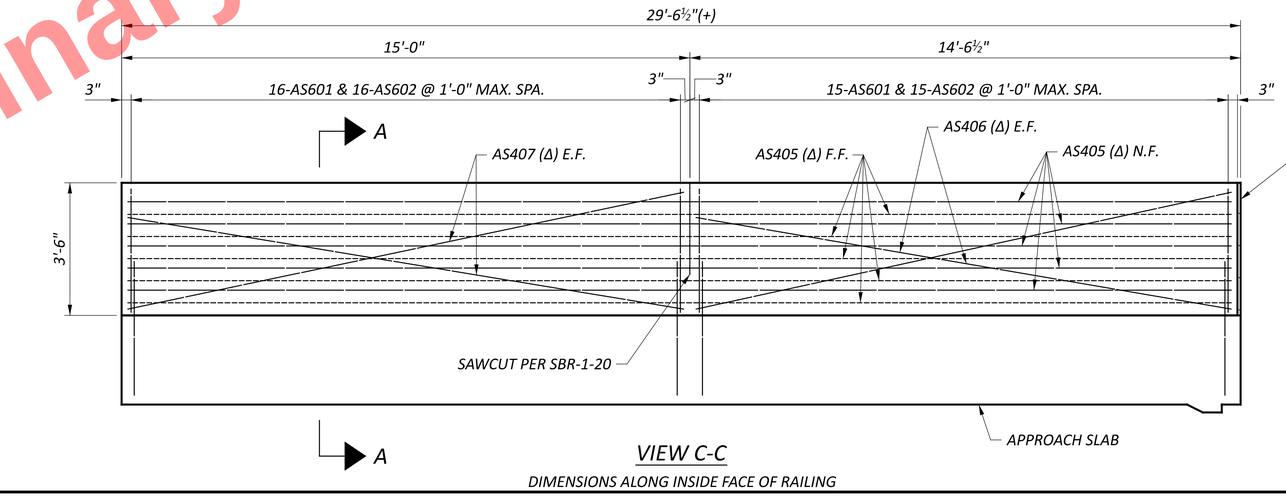

VIEW C-C

DIMENSIONS ALONG INSIDE FACE OF RAILING

LEGEND:

Δ - USE NO. 4 GLASS FIBER REINFORCING POLYMER (G.F.R.P.) FOR HORIZONTAL REINFORCING BARS AS401, AS402, AND AS405 AND STIFFENING BARS AS403, AS404, AS406, AND AS407.

NOTES:

1. FOR LOCATION OF VIEW A-A, VIEW B-B, VIEW C-C, AND VIEW D-D, SEE SHEET 56/64.
2. FOR SECTION A-A, SECTION E-E, AND SECTION F-F, SEE SHEET 60/64.
3. FOR ADDITIONAL RAILING DETAILS, SEE SCD SBR-1-20 AND SBR-2-20.

Preliminary Plans - For Reference Only

REAR AND FORWARD LEFT APPROACH SLAB DETAILS
BRIDGE NO. MAH-00680-04.886
OVER PRICE ROAD & MILL CREEK

SFN	5006872
DESIGN AGENCY	ms consultants, inc.
DESIGNER	JSE
CHECKER	SJR
REVIEWER	WER 05/30/25
PROJECT ID	121474
SUBSET	58
TOTAL	64
SHEET	P.544
TOTAL	655

MAH-680-0.00

MODEL: Sheet PAPERSIZE: 34x22 (in.) DATE: 9/15/2025 TIME: 11:19:58 AM PLTDRV: OHDOT_PDF_Color_E+.pltcfg PENTBL: OHDOT_Pen.tbl USER: WORKSPACE: OHDOTCEv02 WORKSET: 121474 PRODUCT: OpenRoadsDesigner 10.12.02.4
pw:\\ohiodot-pw.bentley.com:ohiodot-pw-02\Documents\01 Active Projects\District 04\Mahoning\121474\402-Engineering_MSConsultants\Structures\SFN_5006872\Sheets\121474_SFN_5006872_SW003.dgn

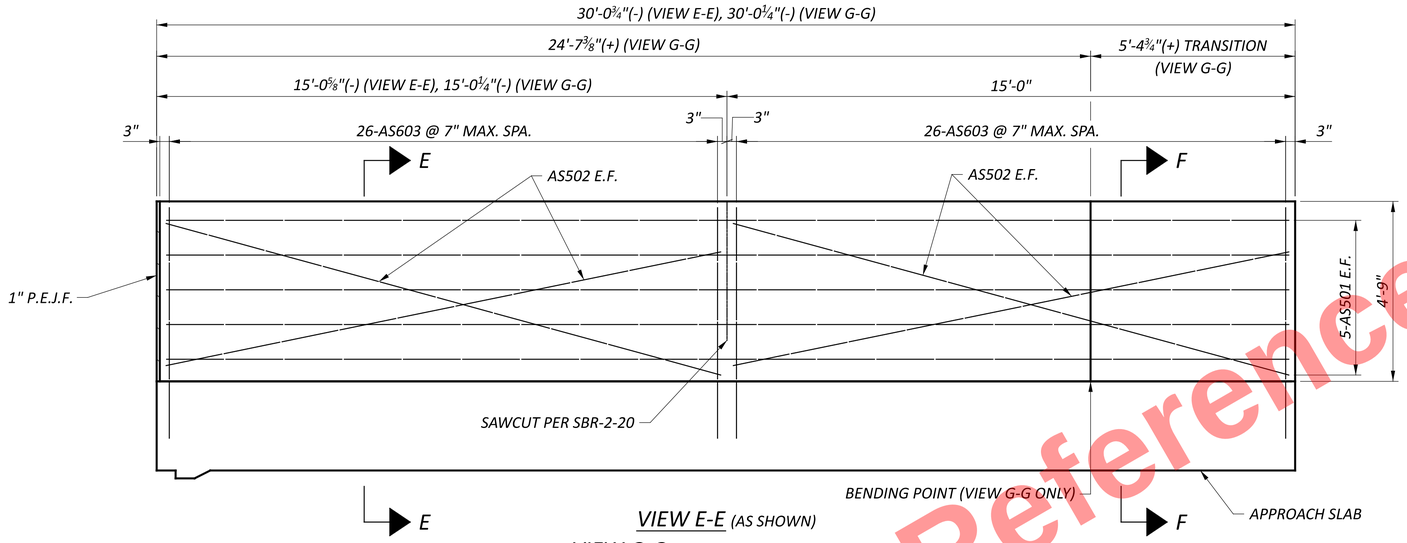

VIEW E-E (AS SHOWN)

VIEW G-G (OPPOSITE HAND & AS NOTED)

DIMENSIONS ALONG INSIDE FACE OF RAILING

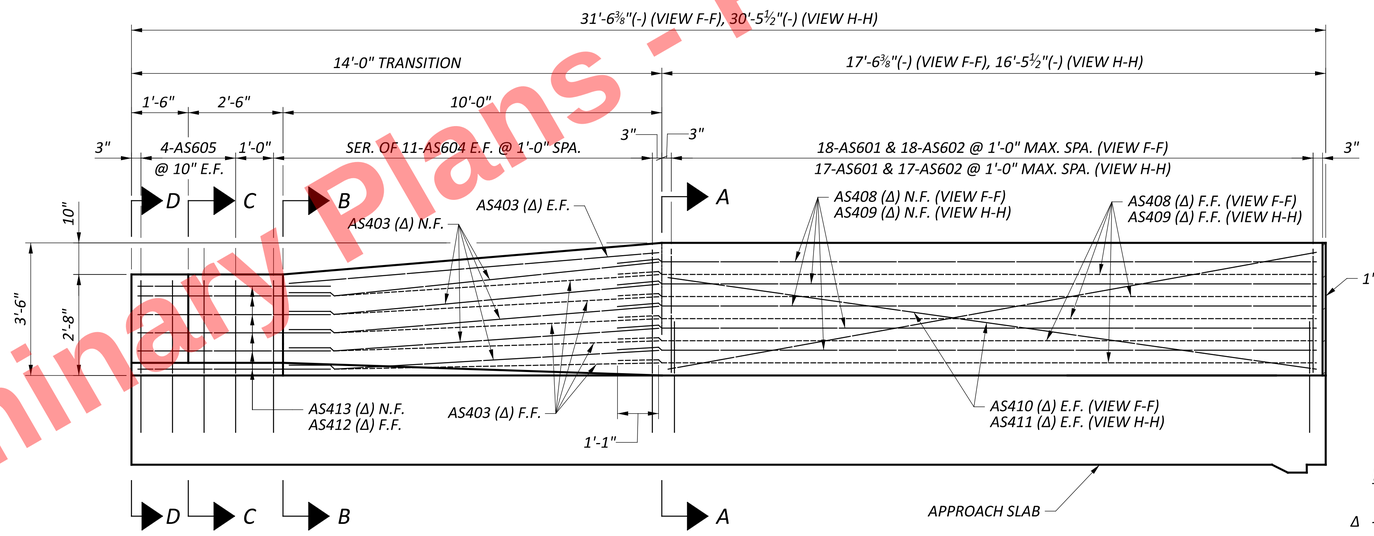

VIEW F-F (AS SHOWN)

VIEW H-H (OPPOSITE HAND & AS NOTED)

DIMENSIONS ALONG INSIDE FACE OF RAILING

LEGEND:

Δ - USE NO. 4 GLASS FIBER REINFORCING POLYMER (G.F.R.P.) FOR HORIZONTAL REINFORCING BARS AS403, AS408, AS409, AS412, AND AS413 AND STIFFENING BARS AS410 AND AS411.

NOTES:

1. FOR LOCATION OF VIEW E-E, VIEW F-F, VIEW G-G, AND VIEW H-H, SEE SHEET 57/64.
2. FOR SECTION A-A, SECTION B-B, SECTION C-C, SECTION D-D, SECTION E-E, AND SECTION F-F, SEE SHEET 60/64.
3. FOR ADDITIONAL RAILING DETAILS, SEE SCD SBR-1-20 AND SBR-2-20.

Preliminary Plans - For Reference Only

REAR AND FORWARD RIGHT APPROACH SLAB DETAILS
BRIDGE NO. MAH-00680-04.886
OVER PRICE ROAD & MILL CREEK

SFN	5006872
DESIGN AGENCY	ms consultants, inc.
DESIGNER	JSE
CHECKER	SJR
REVIEWER	WER 05/30/25
PROJECT ID	121474
SUBSET	59
TOTAL	64
SHEET	P.545
TOTAL	655

MAH-680-0.00

MODEL: Sheet PAPERSIZE: 34x22 (in.) DATE: 9/15/2025 TIME: 11:20:06 AM PLTDRV: OHDOT_PDF_Color_E+.pltcfg PENTBL: OHDOT_Pen.tbl USER: WORKSPACE: OHDOTCEv02 WORKSET: 121474 PRODUCT: OpenRoadsDesigner 10.12.02.4
pw:\\ohiodot-pw.bentley.com:ohiodot-pw-02\Documents\01 Active Projects\District 04\Mahoning\121474\A02-Engineering_MSConsultants\Structures\SFN_5006872\Sheets\121474_SFN_5006872_SW004.dgn

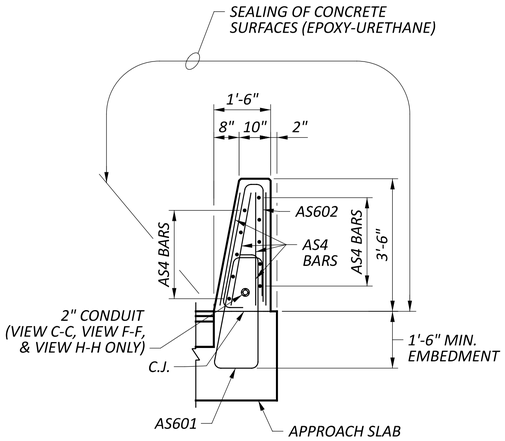

SECTION A-A

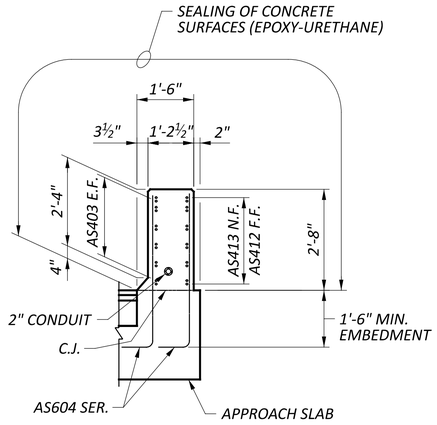

SECTION B-B

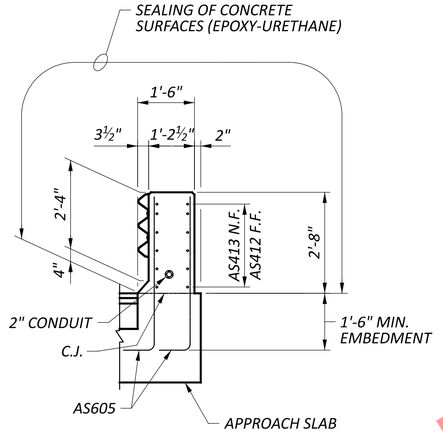

SECTION C-C

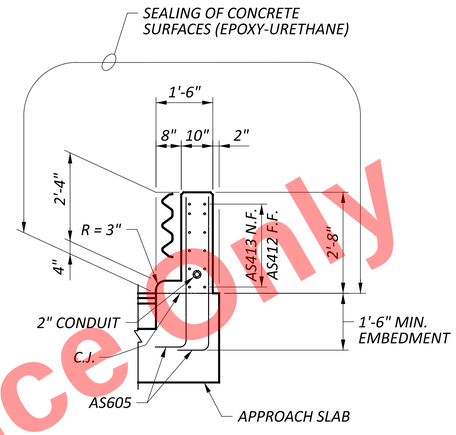

SECTION D-D

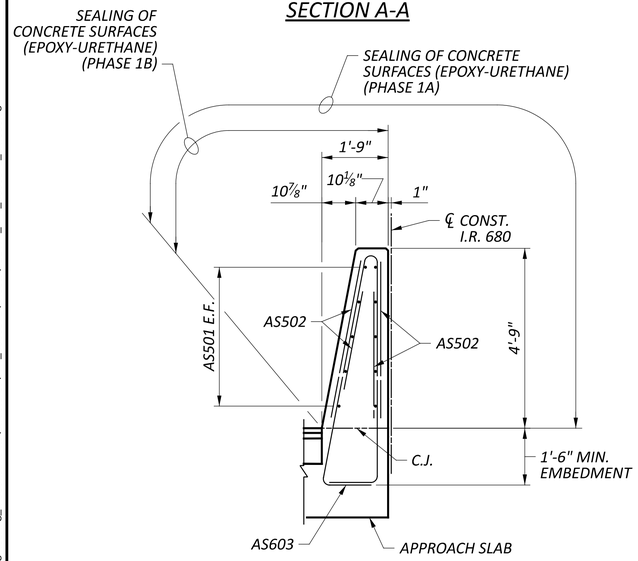

SECTION E-E

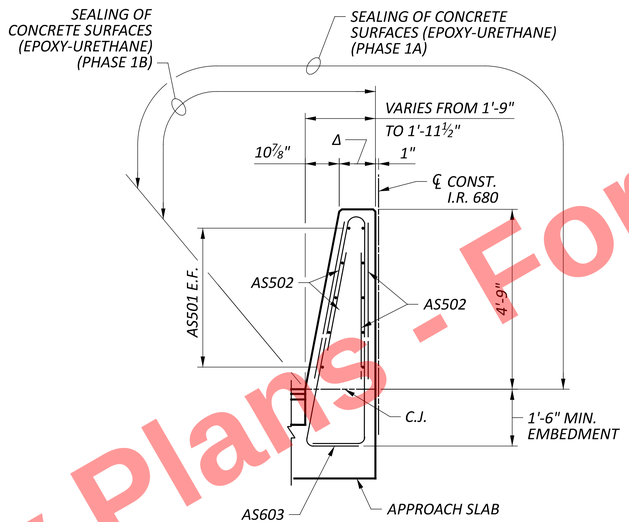

SECTION F-F

LEGEND

Δ - *VARIES FROM 10⅛" TO 1'-0⅝"*

NOTES:

1. *FOR LOCATION OF SECTION A-A, SECTION E-E, AND SECTION F-F, SEE SHEETS 58/64 AND 59/64.*
2. *FOR LOCATION OF SECTION B-B, SECTION C-C, AND SECTION D-D, SEE SHEET 59/64.*
3. *FOR ADDITIONAL RAILING DETAILS, SEE SCD SBR-1-20 AND SBR-2-20.*

Preliminary Plans - For Reference Only

APPROACH SLAB SECTIONS
BRIDGE NO. MAH-00680-04.886
OVER PRICE ROAD & MILL CREEK

SFN	5006872
DESIGN AGENCY	ms consultants, inc.
DESIGNER	JSE
CHECKER	SJR
REVIEWER	WER 05/30/25
PROJECT ID	121474
SUBSET	60
TOTAL	64
SHEET	P.546
TOTAL	655

MAH-680-0.00

MODEL: Sheet PAPERSIZE: 34x22 (in.) DATE: 9/15/2025 TIME: 11:20:12 AM PLTDRV: OHDOT_PDF_Color_E+.pltcfg PENTBL: OHDOT_Pen.tbl USER: WORKSPACE: OHDOTCEv02 WORKSET: 121474 PRODUCT: OpenRoadsDesigner 10.12.02.4
pw:\\ohiodot-pw.bentley.com:ohiodot-pw-02\Documents\01 Active Projects\District 04\Mahoning\121474\402-Engineering_MSConsultants\Structures\SFN_5006872\Sheets\121474_SFN_5006872_SM006.dgn

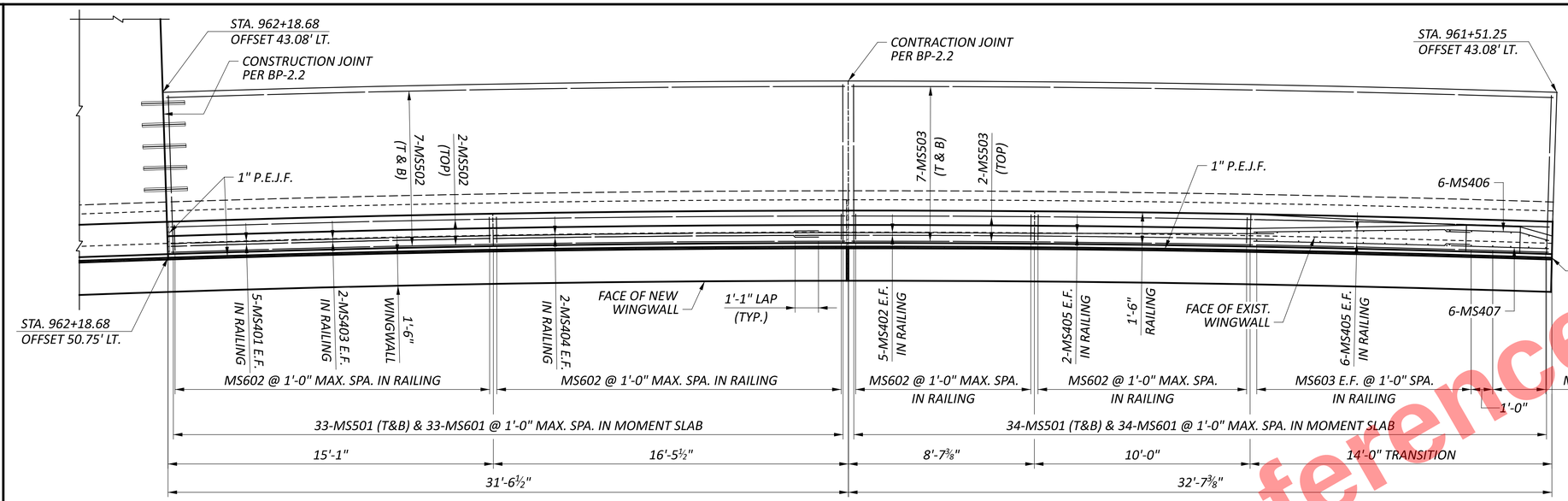

MOMENT SLAB & RAILING PLAN

(STATIONS AND OFFSETS MEASURED FROM ℄ CONST. I.R. 680)
(DIMENSIONS MEASURED ALONG OUTSIDE FACE OF RAILING)

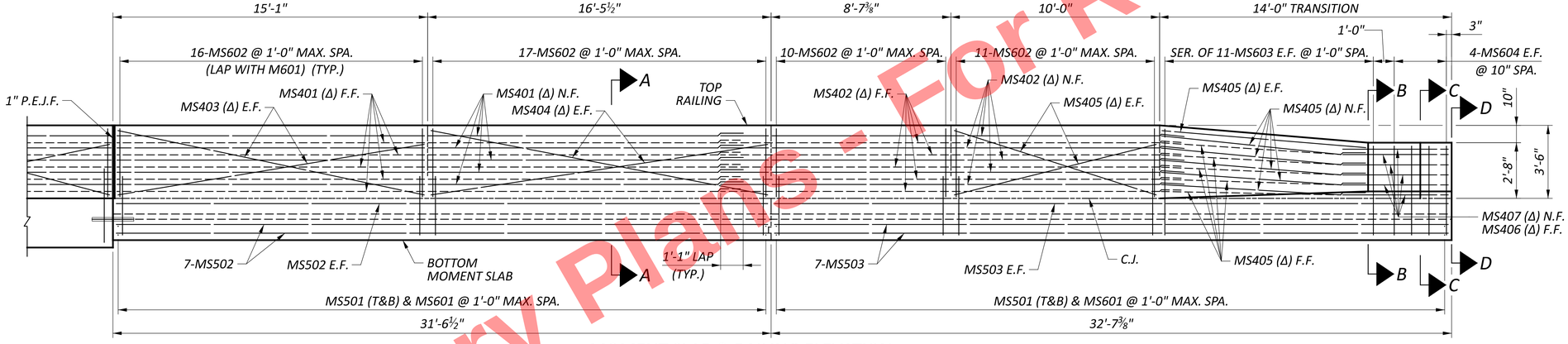

MOMENT SLAB & RAILING ELEVATION

(DIMENSIONS MEASURED ALONG OUTSIDE FACE OF RAILING)

LEGEND:

Δ - USE NO. 4 GLASS FIBER REINFORCING POLYMER (G.F.R.P.) FOR HORIZONTAL REINFORCING BARS MS401, MS402, MS405, MS406, AND MS407 AND STIFFENING BARS MS403, MS404, AND MS405.

NOTES:

1. FOR WINGWALL PLAN, ELEVATION AND DETAILS, SEE SHEET 19/64.
2. FOR MOMENT SLAB AND RAILING REINFORCEMENT LIST, SEE SHEET 64/64.
3. CONCRETE FOR MOMENT SLAB AND PARAPET TO BE INCLUDED WITH ITEM 511, CLASS QC2 CONCRETE, MISC.: MOMENT SLAB AND PARAPET WITH QC/QA.

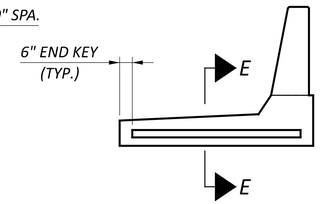

CONTRACTION JOINT DETAIL

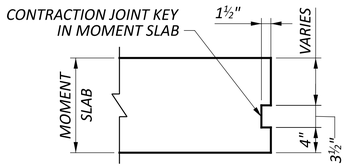

SECTION E-E

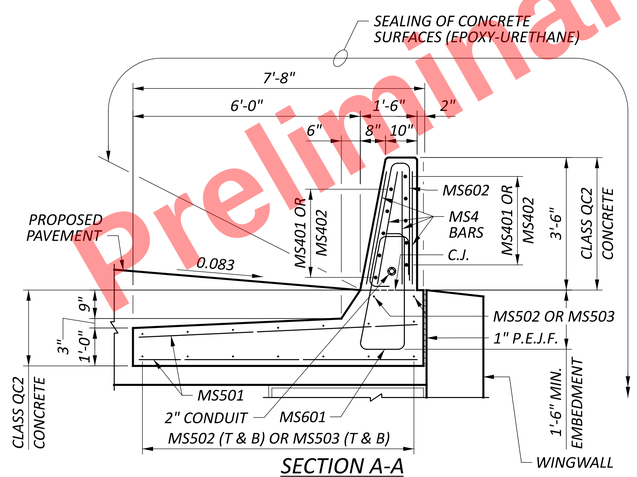

SECTION A-A

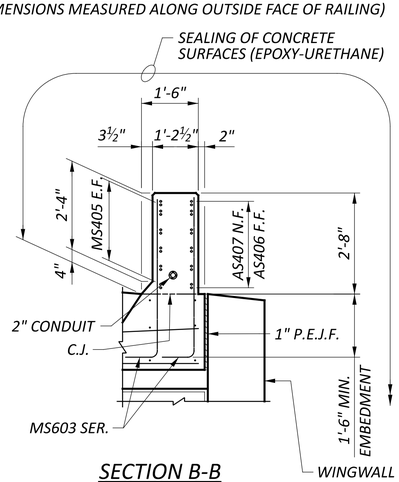

SECTION B-B

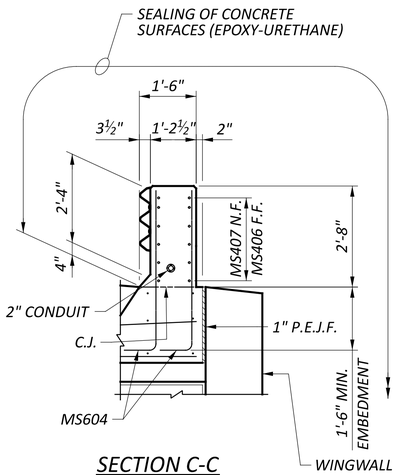

SECTION C-C

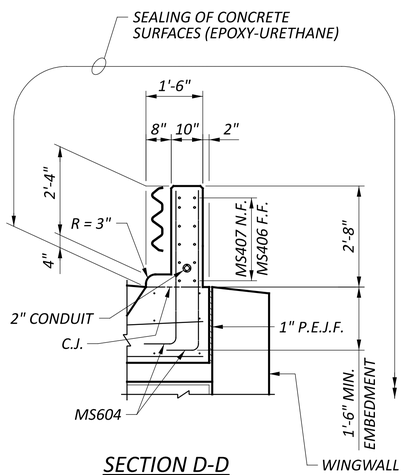

SECTION D-D

Preliminary Plans - For Reference Only

MOMENT SLAB PLAN AND DETAILS
BRIDGE NO. MAH-00680-04.886
OVER PRICE ROAD & MILL CREEK

SFN	5006872
DESIGN AGENCY	ms consultants, inc.
DESIGNER	JSE
CHECKER	SJR
REVIEWER	WER 05/30/25
PROJECT ID	121474
SUBSET	61
TOTAL	64
SHEET	P.547
TOTAL	655

MAH-680-0.00

MODEL: Sheet PAPERSIZE: 34x22 (in.) DATE: 9/15/2025 TIME: 11:20:18 AM PLTDRV: OHDOT_PDF_Color_E+.pltcfg PENTBL: OHDOT_Pen.tbl USER: WORKSPACE: OHDOTCEv02 WORKSET: 121474 PRODUCT: OpenRoadsDesigner 10.12.02.4
pw:\\ohiodot-pw.bentley.com:ohiodot-pw-02\Documents\01 Active Projects\District 04\Mahoning\121474\A02-Engineering_MSConsultants\Structures\SFN_5006872\Sheets\121474_SFN_5006872_SM007.dgn

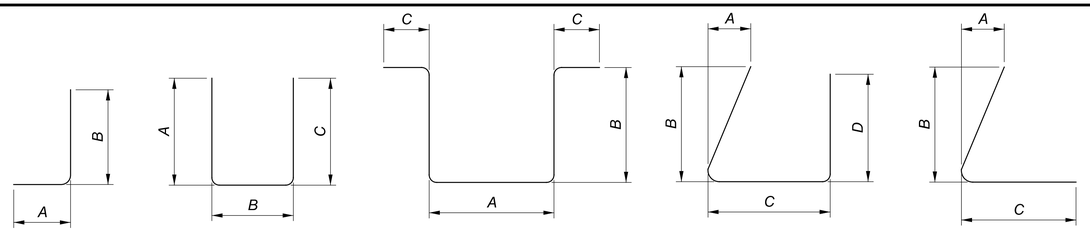

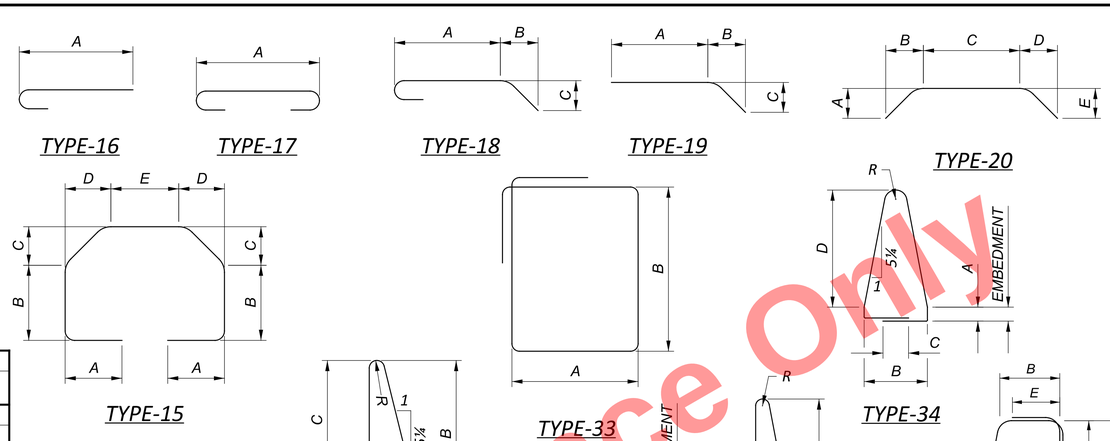

MARK	MATERIAL TYPE	NUMBER			LENGTH	WEIGHT	TYPE	DIMENSIONS						
		REAR	FORWARD	TOTAL				A	B	C	D	E	R	INC.
ABUTMENT BARS (EPOXY COATED STEEL REINFORCEMENT - ECSR)														
RA501	ECSR	182		182	9'-10"	1,867	2	3'-3"	3'-7"	3'-3"				
RA502	ECSR	100		100	26'-6"	2,764	STR	26'-6"						
RA503	ECSR	45		45	9'-10"	462	1	1'-6"	8'-6"					
RA504	ECSR	10		10	5'-2"	54	1	1'-6"	3'-9"					
RA505	ECSR	22		22	9'-1"	208	2	2'-10"	3'-7"	2'-10"				
RA506	ECSR	9		9	13'-9"	129	STR	13'-9"						
RA507	ECSR	5		5	12'-4"	64	1	1'-6"	11'-0"					
RA508	ECSR	40		40	0'-11"	38	STR	11"						
RA509	ECSR	6		6	13'-3"	83	2	6'-6"	6"	6'-6"				
RA510	ECSR	24		24	3'-7"	90	STR	3'-7"						
RA601	ECSR	102		102	12'-9"	1,953	2	5'-10"	1'-5"	5'-10"				
RA602	ECSR	102		102	9'-5"	1,443	2	4'-2"	1'-5"	4'-2"				
RA603	ECSR	102		102	8'-0"	1,226	2	3'-8"	11"	3'-8"				
RA604	ECSR	7		7	6'-7"	69	17	5'-3"						
RA605	ECSR	7		7	11'-1"	117	17	9'-9"						
RA606	ECSR	8		8	7'-1"	85	STR	7'-1"						
RA607	ECSR	16		16	10'-2"	244	33	1'-10"	2'-8"					
RA608	ECSR	8		8	7'-4"	88	STR	7'-4"						
RA609	ECSR	4		4	7'-1"	43	37	9"	10"	1'-5"	1'-0"	7"		
RA610	ECSR	4		4	7'-0"	42	23	6"	3'-3"	3'-3"			2"	
RA611	ECSR	4		4	13'-0"	78	35	9"	1'-0"	8"	4'-7"		2"	
RA701	GALVANIZED	204		204	5'-4"	2,224	16	4'-6"						
RA801	ECSR	10		10	4'-2"	111	19	2'-8"	2"	1'-6"				
RA802	ECSR	10		10	4'-0"	107	11	2"	1'-6"	2'-8"				
RA803	ECSR	12		12	3'-7"	115	STR	3'-7"						
D801	ECSR	70	70	140	5'-1"	1,900	18	2'-10"	1'-0"	1'-0"				
RW501	ECSR	14		14	10'-5"	152	STR	10'-5"						
RW502	ECSR	18		18	6'-1"	114	2	1'-9"	2'-11"	1'-9"				
RW503	ECSR	14		14	16'-2"	236	STR	16'-2"						
RW504	ECSR	8		8	13'-3"	111	2	5'-7"	2'-3"	5'-7"				
RW505	ECSR	190		190	8'-6"	1,684	2	3'-4"	2'-2"	3'-4"				
RW506	ECSR	8		8	9'-6"	79	STR	9'-6"						
RW507	ECSR	17		17	7'-4"	130	STR	7'-4"						
RW508	ECSR	95		95	11'-8"	1,156	2	5'-5"	1'-2"	5'-5"				
RW509	ECSR	34		34	27'-8"	981	STR	27'-8"						
RW510	ECSR	17		17	32'-3"	572	STR	32'-3"						
RW601	ECSR	3		3	8'-3"	37	STR	8'-3"						
RW602	ECSR	17		17	12'-8"	323	2	5'-11"	1'-2"	5'-11"				
RW603	GALVANIZED	3		3	6'-9"	30	STR	6'-9"						
RW701	GALVANIZED	16		16	6'-9"	221	STR	6'-9"						
RW702	GALVANIZED	160		160	4'-0"	1,308	16	3'-2"						
RW801	GALVANIZED	24		24	8'-3"	529	STR	8'-3"						

MARK	MATERIAL TYPE	NUMBER			LENGTH	WEIGHT	TYPE	DIMENSIONS						
		REAR	FORWARD	TOTAL				A	B	C	D	E	R	INC.
ABUTMENT BARS (EPOXY COATED STEEL REINFORCEMENT - ECSR) (CONTINUED)														
FA501	ECSR		204	204	8'-4"	1,773	2	2'-6"	3'-7"	2'-6"				
FA502	ECSR		104	104	26'-5"	2,865	STR	26'-5"						
FA503	ECSR		40	40	0'-11"	38	STR	11"						
FA504	ECSR		6	6	12'-9"	80	2	6'-3"	6"	6'-3"				
FA505	ECSR		24	24	3'-7"	90	STR	3'-7"						
FA601	ECSR		102	102	12'-7"	1,928	2	5'-9"	1'-5"	5'-9"				
FA602	ECSR		102	102	9'-3"	1,417	2	4'-1"	1'-5"	4'-1"				
FA603	ECSR		102	102	7'-11"	1,213	2	3'-8"	11"	3'-8"				
FA604	ECSR		14	14	6'-7"	138	17	5'-3"						
FA605	ECSR		8	8	7'-1"	85	STR	7'-1"						
FA606	ECSR		16	16	10'-2"	244	33	1'-10"	2'-8"					
FA607	ECSR		8	8	7'-3"	87	STR	7'-3"						
FA608	ECSR		4	4	7'-1"	43	37	9"	10"	1'-5"	1'-0"	7"		
FA609	ECSR		4	4	7'-0"	42	23	6"	3'-3"	3'-3"			2"	
FA610	ECSR		4	4	13'-0"	78	35	9"	1'-0"	8"	4'-7"		2"	
FA701	GALVANIZED		204	204	4'-4"	1,807	16	3'-6"						
FA801	ECSR		10	10	4'-2"	111	19	2'-8"	1"	1'-6"				
FA802	ECSR		10	10	4'-0"	107	11	1"	1'-6"	2'-8"				
FA803	ECSR		12	12	3'-7"	115	STR	3'-7"						
FW501	ECSR		8	8	13'-7"	113	2	6'-0"	1'-10"	6'-0"				
FW502	ECSR		24	24	9'-1"	227	STR	9'-1"						
FW503	ECSR		24	24	14'-11"	373	STR	14'-11"						
FW504	ECSR		32	32	9'-1"	303	2	3'-5"	2'-6"	3'-5"				
FW505	ECSR		32	32	12'-4"	412	2	5'-8"	1'-2"	5'-8"				
FW506	ECSR		8	8	12'-3"	102	2	5'-4"	1'-10"	5'-4"				
FW601	ECSR		2	2	7'-0"	21	STR	7'-0"						
FW602	ECSR		2	2	6'-4"	19	STR	6'-4"						
FW701	GALVANIZED		20	20	7'-0"	286	STR	7'-0"						
FW702	GALVANIZED		20	20	6'-4"	259	STR	6'-4"						

ECSR	TOTAL = 30,979
GALVANIZED	TOTAL = 6,664

NOTES:

1. FOR NOTES, SEE SHEET 64/64.

Preliminary Plans - Not For Reference Only

REINFORCING STEEL LIST (1 OF 3)
BRIDGE NO. MAH-00680-04.886
OVER PRICE ROAD & MILL CREEK

SFN 5006872
DESIGN AGENCY
ms consultants, inc.

DESIGNER	CHECKER
JSE	SJR

REVIEWER
WER 05/30/25

PROJECT ID
121474

SUBSET	TOTAL
62	64

SHEET	TOTAL
P.548	655

MAH-680-0.00

MODEL: Sheet PAPERSIZE: 34x22 (in.) DATE: 9/15/2025 TIME: 11:20:25 AM PLTDRV: OHDOT_PDF_Color_Ex.pltcfg PENTBL: OHDOT_Pen.tbl USER: WORKSPACE: OHDOTCEv02 WORKSET: 121474 PRODUCT: OpenRoadsDesigner 10.12.02.4
pw:\\ohiodot-pw.bentley.com:ohiodot-pw-02\Documents\01 Active Projects\District 04\Mahoning\121474\02-Engineering_MSConsultants\Structures\SFN_5006872_SU001.dgn
pw:\\ohiodot-pw.bentley.com:ohiodot-pw-02\Documents\01 Active Projects\District 04\Mahoning\121474\Sheets\121474_SFN_5006872_SU001.dgn

MARK	MATERIAL TYPE	NUMBER	LENGTH	WEIGHT	TYPE	DIMENSIONS						
						A	B	C	D	E	R	INC.
SUPERSTRUCTURE BARS (EPOXY COATED STEEL REINFORCEMENT)												
S401	ECSR	2,870	30'-0"	57,515	STR							
S402	ECSR	1 SER. OF 64	9'-1" TO 33'-7"	907	STR							0'-4 5/8"
S403	ECSR	1 SER. OF 64	5'-9" TO 30'-2"	765	STR							0'-4 5/8"
S404	ECSR	5,076	8'-10"	29,952	16	8'-4"						
S405	ECSR	2,542	4'-8"	7,924	2	1'-0"	9"	3'-1"				
S406	NOT USED											
S407	ECSR	3	9'-1"	18	STR							
S408	ECSR	3	33'-7"	67	STR							
S409	ECSR	3	5'-9"	12	STR							
S410	ECSR	3	30'-2"	60	STR							
S501	ECSR	5,162	30'-0"	161,519	STR							
S502	ECSR	2 SER. OF 64	10'-9" TO 23'-0"	0 2,267 0	STR							0'-2 3/8"
S503	ECSR	2 SER. OF 64	9'-4" TO 21'-6"	2,078	STR							0'-2 3/8"
S504	ECSR	2,538	30'-7"	80,958	16	30'-0"						
S505	ECSR	2,538	23'-4"	61,766	16	22'-9"						
S506	ECSR	252	29'-8"	7,797	STR							
S507	ECSR	1,008	31'-8"	33,293	STR							
S508	ECSR	2,538	22'-9"	60,222	STR							
S509	NOT USED											
S601	ECSR	1,310	7'-6"	14,757	37	11"	10"	1'-5"	1'-0"	7"		
S602	ECSR	2,142	13'-6"	43,433	35	1'-0"	1'-0"	8"	4'-7"		2"	
S603	NOT USED											
S604	NOT USED											
			TOTAL =	565,310								

MARK	MATERIAL TYPE	NUMBER	LENGTH	TOTAL LENGTH	TYPE	DIMENSIONS						
						A	B	C	D	E	R	INC.
BRIDGE RAILING BARS (GLASS FIBER REINFORCED POLYMER REINFORCEMENT - GFRP)												
R401	GFRP	800	30'-0"	24,000	STR							
R402	GFRP	10	21'-5"	214	STR							
R403	GFRP	10	11'-10"	118	STR							
R404	GFRP	456	10'-0"	4,560	STR							
R405	GFRP	8	10'-11"	87	STR							
R406	GFRP	8	14'-9"	118	STR							
R407	GFRP	10	27'-9"	278	STR							
R408	GFRP	10	28'-9"	288	STR							
R409	GFRP	460	10'-6"	4,830	STR							
R410	GFRP	4	15'-6"	62	STR							
R411	GFRP	8	13'-11"	111	STR							
			TOTAL =	34,666								

MARK	MATERIAL TYPE	NUMBER	LENGTH	WEIGHT	TYPE	DIMENSIONS						
						A	B	C	D	E	R	INC.
BRIDGE RAILING BARS (EPOXY COATED STEEL REINFORCEMENT - ECSR)												
R601	ECSR	1,310	7'-0"	13,773	23	6"	3'-3"	3'-3"				
			TOTAL =	13,773								

MARK	MATERIAL TYPE	NUMBER	LENGTH	WEIGHT	TYPE	DIMENSIONS						
						A	B	C	D	E	R	INC.
MEDIAN BARRIER TRANSITION BARS (EPOXY COATED STEEL REINFORCEMENT - ECSR)												
MB401	ECSR	2 SER. OF 15	8'-7" TO 9'-2"	178	15	1'-9" TO 1'-11"	1'-2"	8"	2" TO 6"	1'-8"		0'-0 1/2"
MB402	ECSR	150	2'-9"	276	11	2"	2'-3"	7"				
MB403	ECSR	10 SER. OF 15	5'-5" TO 6'-5"	593	20	2'-5" TO 3'-0"	5" TO 8"	7" TO 4"	5" TO 8"	2'-5" TO 3'-0"		0'-0 7/8"
MB404	ECSR	30	14'-10"	297	34	1'-0"	2'-5"	1'-0"	4'-7"		4"	
MB405	ECSR	8 SER. OF 15	5'-3" TO 5'-7"	434	15	0"	1'-2"	8"	2" TO 6"	1'-8"		0'-0 1/4"
MB406	ECSR	108	11'-5"	824	34	1'-0"	0"	0"	4'-7"		4"	
MB501	ECSR	129	13'-8"	1,839	STR							
MB502	ECSR	10	13'-2"	137	STR							
MB503	ECSR	10	13'-4"	139	STR							
MB504	ECSR	4	13'-6"	56	STR							
MB505	ECSR	5	11'-8"	61	STR							
MB506	ECSR	5	12'-8"	66	STR							
MB507	ECSR	5	12'-4"	64	STR							
MB508	ECSR	2	13'-0"	27	STR							
MB509	ECSR	2	12'-0"	25	STR							
MB510	ECSR	2	14'-0"	29	STR							
MB511	ECSR	2	12'-8"	26	STR							
MB512	ECSR	7	10'-5"	76	STR							
MB513	ECSR	5	12'-9"	66	STR							
MB514	ECSR	5	18'-4"	96	STR							
MB515	ECSR	5	13'-10"	72	STR							
MB516	ECSR	2	10'-9"	22	STR							
MB517	ECSR	2	13'-1"	27	STR							
MB518	ECSR	2	18'-8"	39	STR							
MB519	ECSR	2	14'-2"	30	STR							
MB520	ECSR	7	10'-6"	77	STR							
MB521	ECSR	5	10'-1"	53	STR							
MB522	ECSR	5	10'-2"	53	STR							
MB523	ECSR	7	11'-0"	80	STR							
MB524	ECSR	2	10'-10"	23	STR							
MB525	ECSR	2	11'-4"	24	STR							
MB526	ECSR	5	10'-4"	54	STR							
MB527	ECSR	7	10'-8"	78	STR							
MB528	ECSR	5	11'-3"	59	STR							
MB529	ECSR	5	11'-5"	60	STR							
MB530	ECSR	2	11'-7"	24	STR							
MB531	ECSR	2	11'-9"	25	STR							
			TOTAL =	6,109								

NOTES:

1. *FOR BAR TYPES, SEE SHEET 62/64.*
2. *FOR NOTES, SEE SHEET 64/64.*

Preliminary Plans - For Reference Only

REINFORCING STEEL LIST (2 OF 3)
BRIDGE NO. MAH-00680-04.886
OVER PRICE ROAD & MILL CREEK

SFN 5006872

DESIGN AGENCY
ms consultants. inc.

DESIGNER	CHECKER
JSE	SJR

REVIEWER WER 05/30/25

PROJECT ID 121474

SUBSET	TOTAL
63	64

SHEET	TOTAL
P.549	655

MAH-680-0.00

MODEL: Sheet PAPERSIZE: 34x22 (in.) DATE: 9/15/2025 TIME: 11:20:31 AM PLTDRV: OHDOT_PDF_Color_E+.pltcfg PENTBL: OHDOT_Pen.tbl USER: WORKSPACE: OHDOTCEv02 WORKSET: 121474 PRODUCT: OpenRoadsDesigner 10.12.02.4
pw:\\ohiodot-pw.bentley.com:ohiodot-pw-02\Documents\01 Active Projects\District 04\Mahoning\121474\02-Engineering_MSConsultants\Structures\SFN_5006872\Sheets\121474_SFN_5006872_SL002.dgn

MARK	MATERIAL TYPE	NUMBER			LENGTH	TOTAL LENGTH	TYPE	DIMENSIONS						
		REAR	FORWARD	TOTAL				A	B	C	D	E	R	INC.
APPROACH SLAB RAILING BARS (GLASS FIBER REINFORCED POLYMER REINFORCEMENT - GFRP)														
AS401	GFRP	10		10	6'-1"	61	STR							
AS402	GFRP	10		10	21'-6"	215	STR							
AS403	GFRP	16	12	28	10'-0"	280	STR							
AS404	GFRP	4		4	11'-11"	48	STR							
AS405	GFRP		10	10	29'-1"	291	STR							
AS406	GFRP		4	4	14'-5"	58	STR							
AS407	GFRP		4	4	15'-0"	60	STR							
AS408	GFRP	10		10	17'-1"	171	STR							
AS409	GFRP		10	10	16'-0"	160	STR							
AS410	GFRP	4		4	17'-5"	70	STR							
AS411	GFRP		4	4	16'-4"	65	STR							
AS412	GFRP	6	6	12	6'-4"	76	25	2'-6"	2'-5"	1'-5"	2"	5"		
AS413	GFRP	6	6	12	5'-1"	61	STR							
					TOTAL =	1,616								

MARK	MATERIAL TYPE	NUMBER			LENGTH	WEIGHT	TYPE	DIMENSIONS						
		REAR	FORWARD	TOTAL				A	B	C	D	E	R	INC.
APPROACH SLAB RAILING BARS (EPOXY COATED STEEL REINFORCEMENT - ECSR)														
AS501	ECSR	10		10	29'-6"	308	STR							
AS502	ECSR	10	20	30	29'-7"	926	STR							
AS503	ECSR	4		4	29'-10"	124	STR							
AS504	ECSR	4	8	12	29'-11"	374	STR							
AS601	ECSR	48	48	96	10'-2"	1,466	37	2'-1"	10"	1'-5"	1'-0"	7"		
AS602	ECSR	48	48	96	7'-0"	1,009	23	6"	3'-3"	3'-3"				
AS603	ECSR	104	104	208	15'-8"	4,895	35	2'-1"	1'-0"	8"	4'-7"			
AS604	ECSR	2 SER. OF 11	2 SER. OF 11	4 SER. OF 11	5'-5" TO 6'-3"	387	1	1'-0"	4'-7" TO 5'-5"					0'-2"
AS605	ECSR	8	8	16	5'-5"	130	1	1'-0"	4'-7"					
					TOTAL =	9,619								

MARK	MATERIAL TYPE	NUMBER	LENGTH	WEIGHT	TYPE	DIMENSIONS					
						A	B	C	D	E	INC.
LIGHT POLE PILASTER BARS (EPOXY COATED STEEL REINFORCEMENT - ECSR)											
SL501	ECSR	8	2'-9"	23	2	7"	1'-10"	7"			
SL502	ECSR	8	8'-5"	70	9	7"	3'-2"	2'-4"	3'-2"		
SL503	ECSR	12	7'-5"	93	21	1'-4"	1'-10"	6"	1'-10"		
SL504	ECSR	8	3'-2"	26	STR						
			TOTAL =	212							

MARK	MATERIAL TYPE	NUMBER	LENGTH	TOTAL LENGTH	TYPE	DIMENSIONS						
						A	B	C	D	E	R	INC.
MOMENT SLAB & RAILING BARS (GLASS FIBER REINFORCED POLYMER REINFORCEMENT - GFRP)												
MS401	GFRP	10	30'-0"	300	STR							
MS402	GFRP	10	22'-2"	222	STR							
MS403	GFRP	4	15'-1"	60	STR							
MS404	GFRP	4	16'-5"	66	STR							
MS405	GFRP	16	10'-0"	160	STR							
MS406	GFRP	6	6'-4"	38	STR							
MS407	GFRP	6	5'-1"	31	STR							
			TOTAL =	877								

MARK	MATERIAL TYPE	NUMBER	LENGTH	WEIGHT	TYPE	DIMENSIONS						
						A	B	C	D	E	R	INC.
MOMENT SLAB & RAILING BARS (EPOXY COATED STEEL REINFORCEMENT - ECSR)												
MS501	ECSR	134	7'-4"	1,025	STR							
MS502	ECSR	16	31'-2"	520	STR							
MS503	ECSR	16	32'-3"	538	STR							
MS601	ECSR	54	9'-4"	757	37	1'-9"	10"	1'-5"	1'-0"	7"		
MS602	ECSR	54	7'-0"	568	23	6"	3'-3"	3'-3"				
	ECSR	2	5'-1"				4'-3"					
MS603	ECSR	SER. OF	TO	182	1	1'-0"	TO					0'-1"
		11	5'-11"				5'-1"					
MS604	ECSR	8	5'-1"	61	1	1'-0"	4'-3"					
			TOTAL =	3,651								

MARK	MATERIAL TYPE	NUMBER	LENGTH	WEIGHT	TYPE	DIMENSIONS					
						A	B	C	D	E	INC.
DECK HAUNCH BARS (EPOXY COATED STEEL REINFORCEMENT - ECSR)											
SH501	ECSR	4	30'-0"	125	STR						
SH502	ECSR	2	23'-7"	49	STR						
SH503	ECSR	2	24'-0"	50	STR						
SH504	ECSR	54	3'-6"	197	6	1'-2"	7"	10"			
SH505	ECSR	54	3'-4"	188	6	1'-2"	6"	10"			
SH506	ECSR	31	4'-0"	129	6	1'-2"	10"	10"			
SH507	ECSR	31	3'-8"	119	6	1'-2"	8"	10"			
SH508	ECSR	31	3'-4"	108	6	1'-2"	6"	10"			
SH509	ECSR	16	3'-2"	53	6	1'-2"	5"	10"			
			TOTAL =	1,018							

NOTES:

1. *FOR BAR TYPES, SEE SHEET 62/64.*
2. *TYPE 'STR' INDICATES A STRAIGHT BAR.*
2. *BAR SIZE: THE BAR SIZE NUMBER IS SPECIFIED ON THE PLANS IN THE BAR MARK COLUMN. THE FIRST DIGIT WHERE THREE DIGITS ARE USED AND THE FIRST TWO DIGITS WHERE FOUR DIGITS ARE USED INDICATES THE BAR SIZE NUMBER. FOR EXAMPLE, AN S601 IS A #6 BAR. BAR DIMENSIONS SHOWN ARE OUT TO OUT UNLESS OTHERWISE INDICATED. R INDICATES INSIDE RADIUS, UNLESS OTHERWISE NOTED. "STD." WRITTEN IN PLACE OF A DIMENSION INDICATES A STANDARD BEND AT THE END OF THE BAR.*
3. *ALL REINFORCEMENT SHALL BE EPOXY COATED UNLESS NOTED OTHERWISE.*

Preliminary Plans - For Reference Only

REINFORCING STEEL LIST (3 OF 3)
BRIDGE NO. MAH-00680-04.886
OVER PRICE ROAD & MILL CREEK

SFN 5006872
DESIGN AGENCY
ms consultants, inc.

DESIGNER	CHECKER
JSE	SJR

REVIEWER WER 05/30/25
PROJECT ID 121474

SUBSET	TOTAL
64	64

SHEET	TOTAL
P.550	655

MAH-680-0.00

MODEL: Sheet PAPERSIZE: 34x22 (in.) DATE: 9/15/2025 TIME: 11:20:37 AM PLTDRV: OHDOT_PDF_Color_E+.pltcfg PENTBL: OHDOT_Pen.tbl USER: WORKSPACE: OHDOTCEv02 WORKSET: 121474 PRODUCT: OpenRoadsDesigner 10.12.02.4
pw:\\ohiodot-pw.bentley.com:ohiodot-pw-02\Documents\01 Active Projects\District 04\Mahoning\121474\402-Engineering_MSConsultants\Structures\SFN_5006872\Sheets\121474_SFN_5006872_SL003.dgn

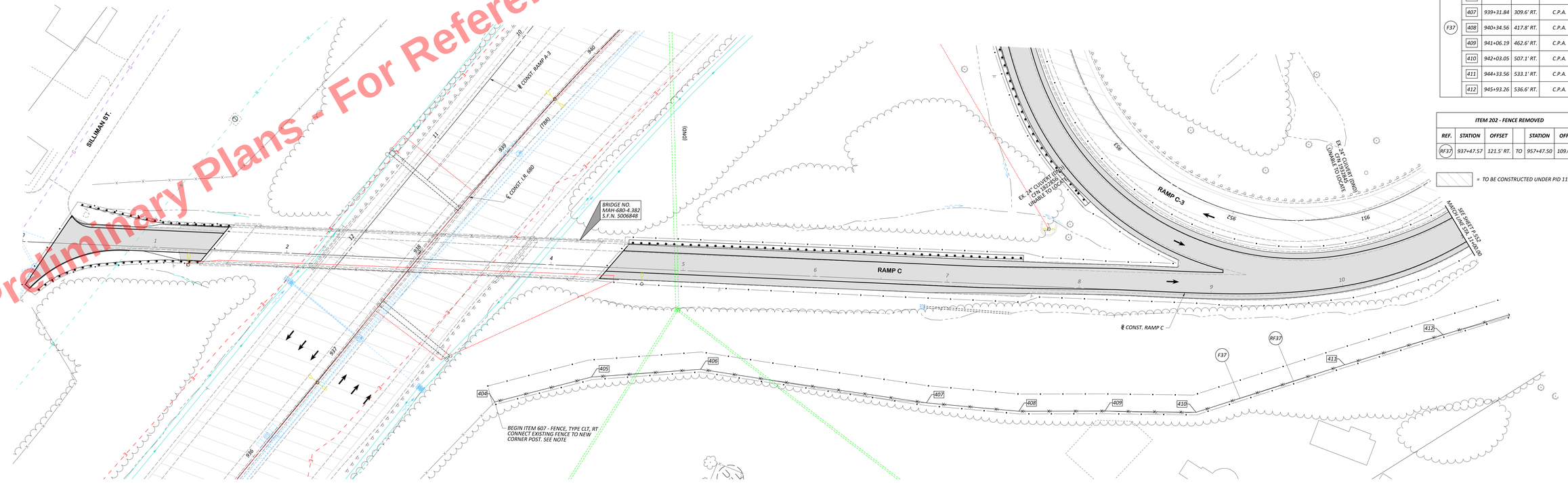

Preliminary Plans - For Reference Only

NOTE: CUT EXISTING FENCE AND ATTACH TO THE NEW CONER POST. COST FOR THIS WORK INCLUDED IN THE UNIT PRICE BID FOR THE FENCE REMOVED ITEM

LEGEND:
C.P.A. - CORNER POST ASSEMBLY
ALL STATION AND OFFSET VALUES ARE BASED ON CL CONST. I.R. 680

ITEM 607 - FENCE, TYPE CLT

REF.	PT. #	STATION	OFFSET	CONNECTION
F37	404	937+47.57	113.8' RT.	C.P.A.
	405	938+09.29	158.5 RT.	C.P.A.
	406	938+69.21	218.0' RT.	C.P.A.
	407	939+31.84	309.6' RT.	C.P.A.
	408	940+34.56	417.8' RT.	C.P.A.
	409	941+06.19	462.6' RT.	C.P.A.
	410	942+03.05	507.1' RT.	C.P.A.
	411	944+33.56	533.1' RT.	C.P.A.
	412	945+93.26	536.6' RT.	C.P.A.

ITEM 202 - FENCE REMOVED

REF.	STATION	OFFSET		STATION	OFFSET
RF37	937+47.57	121.5' RT.	TO	957+47.50	109.0' RT.

= TO BE CONSTRUCTED UNDER PID 113321

HORIZONTAL SCALE IN FEET
0 10 20 40

FENCE PLAN - RAMPS C AT SILLIMAN ST.
STA. 0+00.00 TO STA. 11+00.00

DESIGN AGENCY
mb consultants, inc.

DESIGNER: CJR
REVIEWER: CMN 08/29/25
PROJECT ID: 121474
SHEET: P.551 TOTAL: 655

MAH-680-4.58

MODEL: 113321_GP404_PAVEMENT_664.dgn | DATE: 9/15/2025 TIME: 11:07:59 AM | PLOTBY: CMONEY_PW | PLOTSCALE: 1.0000 | DGNLIB: CMoney@transcore.com | WORKSPACE: CMONEYSS-WS | WORKSET: 121474 PRODUCT: OpenRoadsDesigner 24.00.00.205
ACTIVE PROJECT: C:\Projects\MAH-680-4.58\Design\Roadway\Plans\Pavement\121474_PAVEMENT_664.dgn

Preliminary Plans - For Reference Only

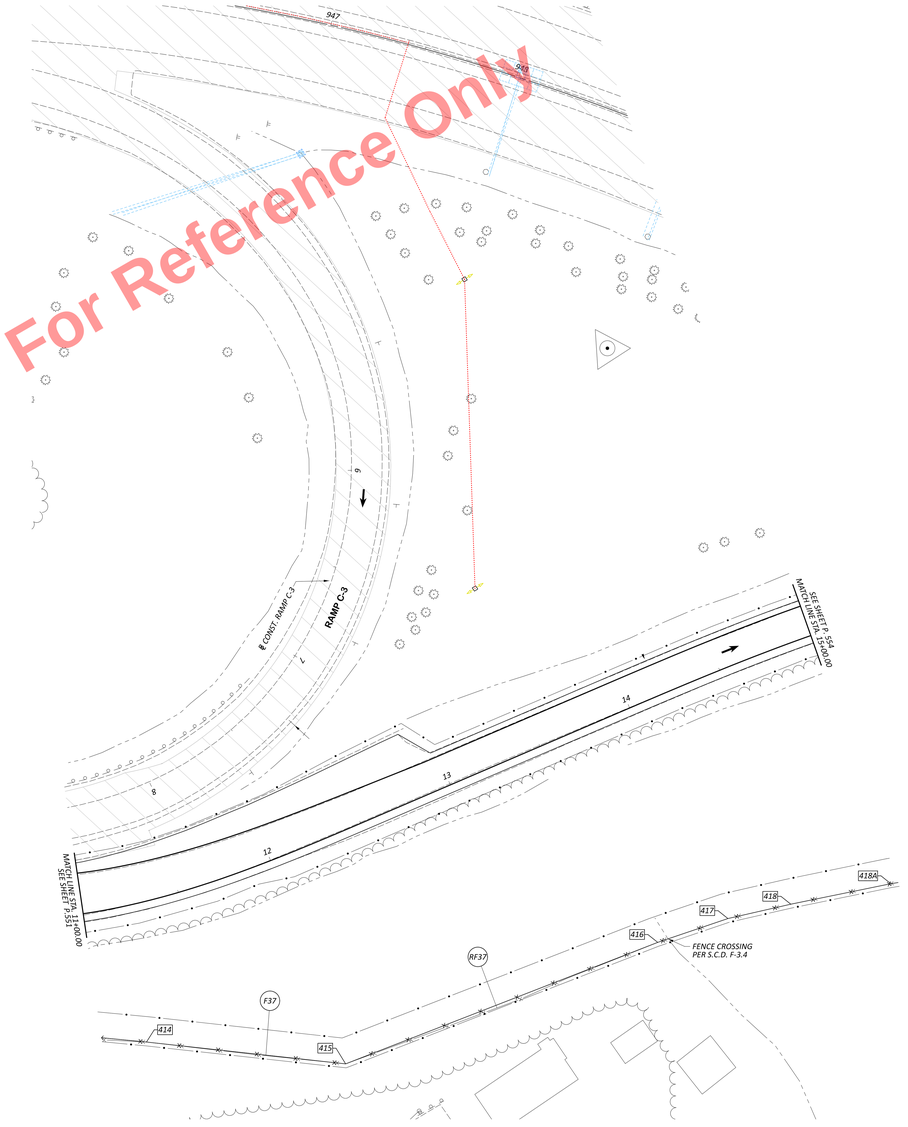

LEGEND:
C.P.A. = CORNER POST ASSEMBLY
ALL STAION AND OFFSET VALUES ARE BASE ON CL CONST.
I.R. 680

ITEM 607 - FENCE, TYPE CLT				
REF.	PT. #	STATION	OFFSET	CONNECTION
F37	414	947+47.94	529.0' RT	C.P.A.
	415	949+12.57	502.9' RT.	C.P.A.
	416	950+57.75	382.3' RT.	C.P.A
	417	950+86.62	355.6' RT.	C.P.A.
	418	951+13.31	334.7' RT.	C.P.A.
	418A	951+54.99	302.6' RT.	C.P.A.

ITEM 202 - FENCE REMOVED					
REF.	STATION	OFFSET		STATION	OFFSET
RF37	930+42.22	121.5' RT.	TO	957+47.50	109.0' RT.

= *TO BE CONSTRUCTED UNDER PID 113321*

HORIZONTAL SCALE IN FEET
0 10 20 40

FENCE PLAN
STA. 11+00.00 TO STA. 20+58.30

DESIGN AGENCY
mk consultants, inc.

DESIGNER: CJR
REVIEWER: CMN 08/29/25
PROJECT ID: 121474
SHEET: F.552 TOTAL: 655

MAH-680-4.58

MODEL: 113321_GP609_PAVEMENT_DESIGNATION | DATE: 7/21/2025 TIME: 11:08:11 AM |FILTER: GP609T_PSP_F+.dwlg |USER: DHall@mksconsultants.com WORKSPACE: GP609T(CAD) WORKSET: 121474 PRODUCT: OpenRoadsDesigner 24.00.00.205
FILE PATH: P:\Projects\MAH-680-4.58\Design\Roadway\Plan Sheets\Fence\MAH-680-4.58_FENCE.dgn

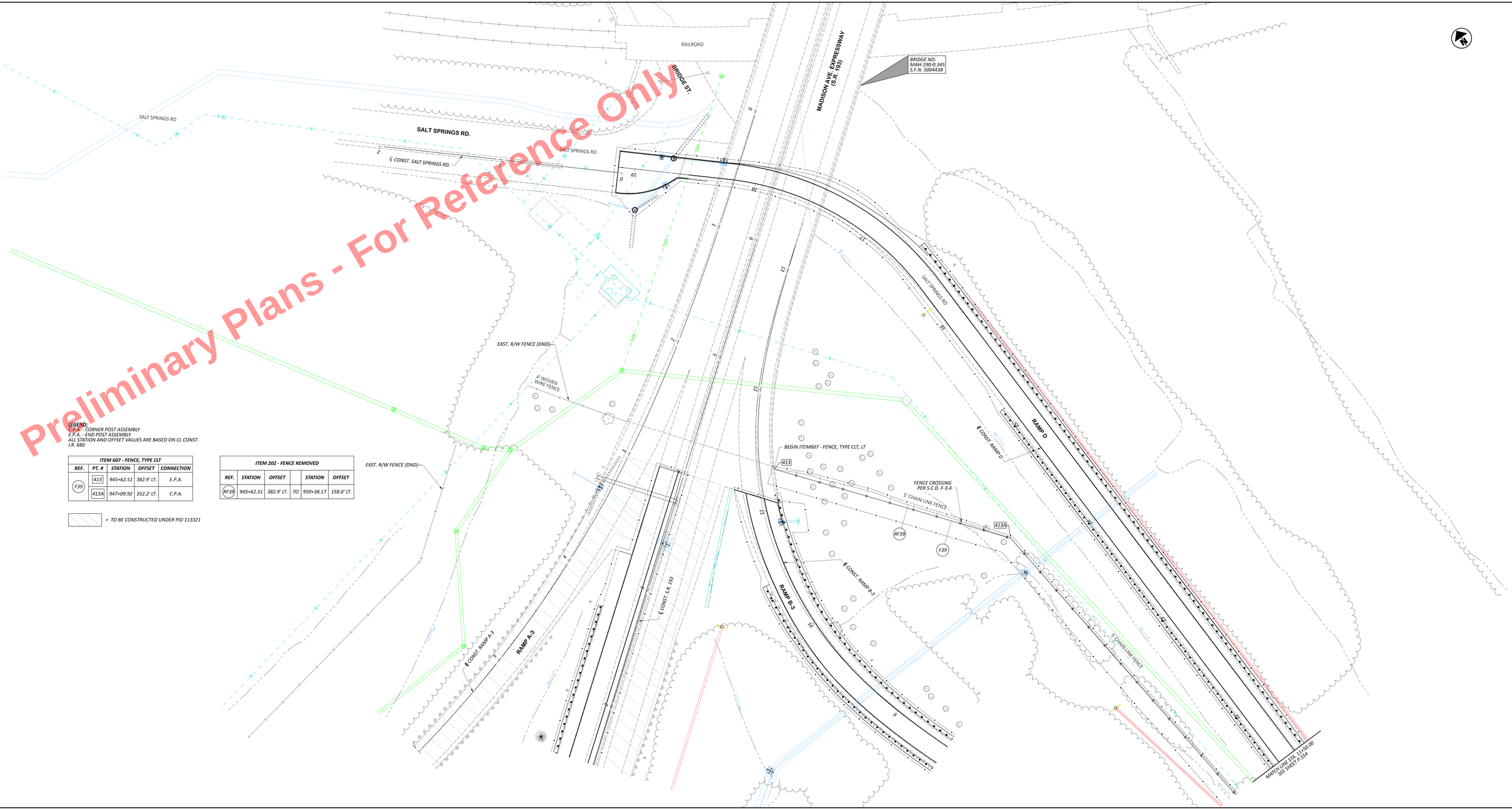

Preliminary Plans - For Reference Only

LEGEND:
C.P.A. - CORNER POST ASSEMBLY
E.P.A. - END POST ASSEMBLY
ALL STATION AND OFFSET VALUES ARE BASED ON CL CONST.
I.R. 680

ITEM 607 - FENCE, TYPE CLT

REF.	PT. #	STATION	OFFSET	CONNECTION
F39	413	945+62.51	382.9' LT.	E.P.A.
	413A	947+09.92	352.2' LT.	C.P.A.

= TO BE CONSTRUCTED UNDER PID 113321

ITEM 202 - FENCE REMOVED

REF.	STATION	OFFSET		STATION	OFFSET
RF39	945+62.51	382.9' LT.	TO	950+38.17	158.0' LT.

HORIZONTAL SCALE IN FEET
0 10 20 40

FENCE PLAN - RAMP D AT SALT SPRINGS RD. STA. 11+50.00 TO STA. 19+13.65

DESIGN AGENCY
mn consultants, inc.

DESIGNED: CJR
REVIEWED: CMN 08/29/25
PROJECT ID: 121474
SHEET: F.553 TOTAL: 655

MAH-680-4.58

MODEL: 113321_CAPEDA_RAMPD&B3&A3.dgn | DATE: 10/31/2025 TIME: 11:08:29 AM |KITDPW_CMNDOT_PDF_F+.shtml| PLOTTER: CMNDOT_LJTHru.bat | USER: DNolf@mnconsultants.com | WORKSPACE: CMNDOTCivil3D | WORKSET: 121474 PRODUCT: OpenRoadsDesigner 24.00.00.205
ALL DIMENSIONS ARE HORIZONTAL UNLESS OTHERWISE NOTED | FILE PATH: S:\Projects\MAH\680-4.58\Design\Roadway\Sheets\113321_CAPEDA_RAMPD&B3&A3.dgn

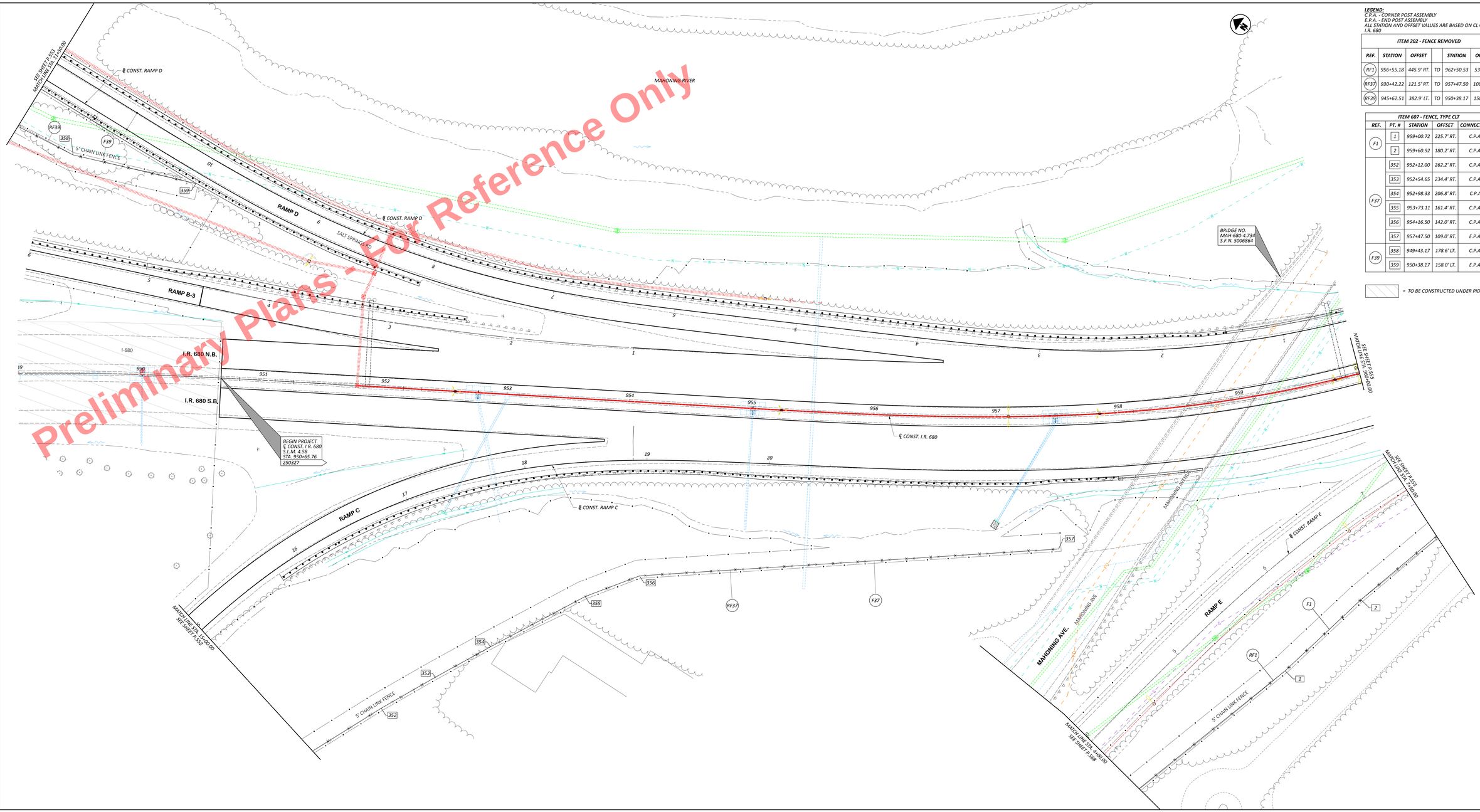

Preliminary Plans - For Reference Only

LEGEND:
C.P.A. - CORNER POST ASSEMBLY
E.P.A. - END POST ASSEMBLY
ALL STATION AND OFFSET VALUES ARE BASED ON CL CONST. I.R. 680

ITEM 202 - FENCE REMOVED					
REF.	STATION	OFFSET		STATION	OFFSET
RF1	956+55.18	445.9' RT.	TO	962+50.53	53.9' RT.
RF37	930+42.22	121.5' RT.	TO	957+47.50	109.0' RT.
RF39	945+62.51	382.9' LT.	TO	950+38.17	158.0' LT.

ITEM 607 - FENCE, TYPE CLT				
REF.	PT. #	STATION	OFFSET	CONNECTION
F1	1	959+00.72	225.7' RT.	C.P.A.
	2	959+60.92	180.2' RT.	C.P.A.
F37	352	952+12.00	262.2' RT.	C.P.A.
	353	952+54.65	234.4' RT.	C.P.A.
	354	952+98.33	206.8' RT.	C.P.A
	355	953+73.11	161.4' RT.	C.P.A.
	356	954+16.50	142.0' RT.	C.P.A.
	357	957+47.50	109.0' RT.	E.P.A.
F39	358	949+43.17	178.6' LT.	C.P.A.
	359	950+38.17	158.0' LT.	E.P.A.

= *TO BE CONSTRUCTED UNDER PID 113321*

HORIZONTAL SCALE IN FEET
0 10 20 40

FENCE PLAN
STA. 949+00.00 TO STA. 960+00.00

MAH-680-4.58

MODEL: 113321_GENDA_RAMPD&E_682&I-680 | DATE: 10/1/2025 TIME: 11:08:44 AM |FITZPH| DGN[P_PSP_F+.dgn]& |FITZPH| PLOTTED: DWG[P_OTHER.dwg] |FITZPH| USER: DNG[jfitzpatrick@mcgeeinc.com WORKSPACE: DWG[FITZUSE] WORKSET: 121474 PRODUCT: OpenRoads Designer 24.10.00.205
ACTIVE: C:\Projects\113321_GENDA_RAMPD&E_682&I-680\Roadway\Plans\Sheets\P_GENERAL\P_OTHER.dgn

DESIGN AGENCY
mc consultants, inc.
DESIGNER: CJR
REVIEWER: CMN 08/29/25
PROJECT ID: 121474
SHEET: P.554 TOTAL: 655

LEGEND:

C.P.A. - CORNER POST ASSEMBLY
E.P.A. - END POST ASSEMBLY
A.C. - ABUTMENT CONNECTION
ALL STATION AND OFFSET VALUES ARE BASED ON CL CONST. I.R. 680

ITEM 202 - FENCE REMOVED					
REF.	STATION	OFFSET		STATION	OFFSET
RF1	956+55.18	445.9' RT.	TO	962+50.53	53.9' RT.
RF2	969+57.64	62.9 LT.	TO	973+64.55	114.5' LT.
RF3	969+77.10	141.2' RT.	TO	979+66.62	0.00' RT.

ITEM 607 - FENCE, TYPE CLT				
REF.	PT. #	STATION	OFFSET	CONNECTION
F1	3	960+62.80	126.2' RT.	C.P.A.
	4	961+50.39	90.0' RT.	C.P.A.
	5	961+84.62	82.3' RT.	C.P.A.
	6	962+18.33	80.5' RT.	C.P.A.
	7	962+50.00	80.6' RT.	C.P.A.
	8	962+50.53	53.9' RT.	A.C.
F2	9	969+57.64	62.9' LT.	E.P.A.
	10	969+56.03	100.6' LT.	C.P.A.
	11	969+58.55	108.9' LT.	C.P.A.
	12	969+64.72	115.4' LT.	C.P.A.
	13	969+74.17	117.1' LT.	C.P.A.
F3	14	969+77.10	141.2' RT.	E.P.A.
	15	969+83.52	137.4' RT.	C.P.A.
	16	969+97.21	145.4' RT.	C.P.A.

Preliminary Plans - For Reference Only

MAHONING RIVER
MAHONING AVE
BRIDGE NO. MAH-680-4.734 SFN 5006864
MILL CREEK (DND)
MARSHA ST.
MARSHALL ST
5' CHAIN LINK FENCE
GLENWOOD AVENUE
℄ CONST. RAMP G
SEE SHEET F.556 MATCH LINE STA. 971+00.00
SEE SHEET F.554 MATCH LINE STA. 960+00.00
RAMP E
MAHONING AVE RAMP TO I-680
I.R. 680 N.B.
I.R. 680 S.B.
℄ CONST. I.R. 680
WEAVER RD.
6' CHAIN LINK FENCE
3' WOOD RAIL FENCE
PRICE ROAD
LAKE GLACIER (DND)
BRIDGE NO. MAH-680-4.886 SFN 5006872
BRIDGE NO. MAH-680-4.955 SFN 5006902
GLENWOOD AVE.
ORANGE AVE.
ORANGE AVE

HORIZONTAL SCALE IN FEET
0 10 20 40

FENCE PLAN
STA. 960+00.00 TO STA. 971+00.00

DESIGN AGENCY
mn consultants, inc.
DESIGNER CJR
REVIEWER CMN 08/29/25
PROJECT ID 121474
SHEET P.555 TOTAL 655

MAH-680-4.58

MODEL: 11X17L (GRID) JMATRIDGE 66x34 IN | DATE: 10/31/2025 TIME: 11:08:53 AM |FILTER: GRADE*,PSP_F*,dwg| FILTER: GRADE*,*Offset Ditch*|Offset Ditch|Division:Culverts.com WORKSPACE: GRADEFILES WORKSET: 121474 PRODUCT: OpenRoads Designer 24.10.00.205
ACTIVE PROJECT: Mahoning County\Mahoning County Roadway Improvements\MAH-680-4.58 Ramp E Mahoning Ave Ramp to I-680

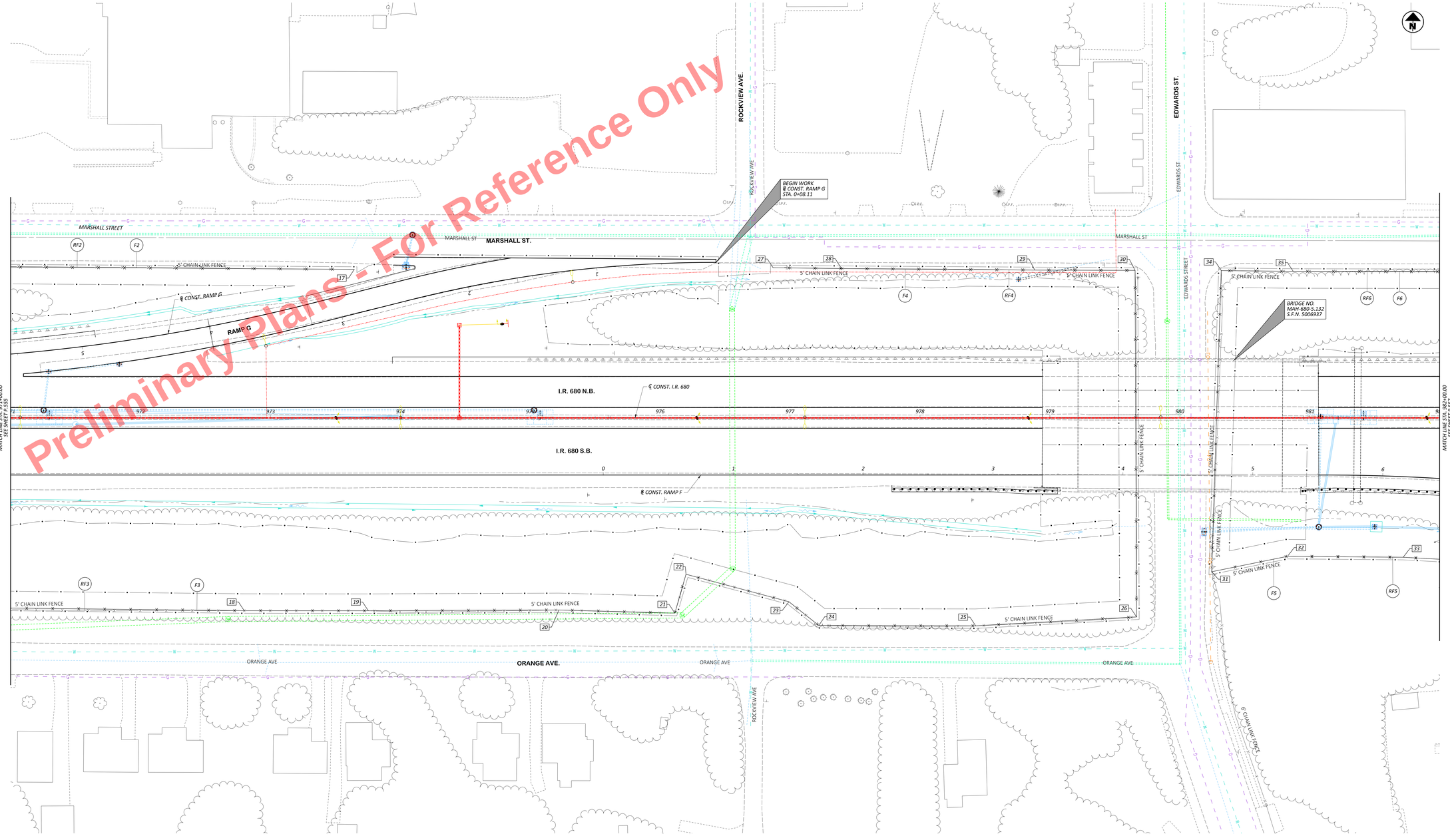

Preliminary Plans - For Reference Only

LEGEND:
C.P.A. - CORNER POST ASSEMBLY
E.P.A. - END POST ASSEMBLY
ALL STATION AND OFFSET VALUES ARE BASED ON CL CONST. I.R. 680

ITEM 202 - FENCE REMOVED

REF.	STATION	OFFSET		STATION	OFFSET
RF2	969+57.64	62.9 LT.	TO	973+64.55	114.5' LT.
RF3	969+77.10	141.2' RT.	TO	979+66.62	0.00' RT.
RF4	976+86.93	115.7' LT.	TO	979+66.62	0.00' LT.
RF5	980+29.36	0.00' RT.	TO	981+26.39	467.3' RT.
RF6	980+29.36	0.00' LT.	TO	989+98.94	112.5' LT.

ITEM 607 - FENCE, TYPE CLT

REF.	PT. #	STATION	OFFSET	CONNECTION
F2	17	973+64.55	114.5' LT.	E.P.A.
F3	18	972+79.83	148.5' RT.	C.P.A.
	19	973+75.35	148.6' RT.	C.P.A.
	20	975+22.07	148.0' RT.	C.P.A.
	21	976+11.30	150.4' RT.	C.P.A.
	22	976+19.88	120.4' RT.	C.P.A.
	23	976+99.13	141.7' RT.	C.P.A.
	24	977+22.13	159.9' RT.	C.P.A.
	25	978+42.86	160.2' RT.	C.P.A.
	26	979+66.72	153.3' RT.	C.P.A.
F4	27	976+86.93	115.7' LT.	E.P.A.
	28	977+39.59	115.1' LT.	C.P.A.
	29	978+88.36	113.9' LT.	C.P.A.
	30	979+65.59	113.7' LT.	C.P.A.
F5	31	980+24.50	118.5' RT.	C.P.A.
	32	980+82.92	106.6' RT.	C.P.A.
	33	981+71.95	107.3' RT.	C.P.A.
F6	34	980+31.90	113.5' LT.	C.P.A.
	35	980+87.32	112.9' LT.	C.P.A.

HORIZONTAL SCALE IN FEET
0 10 20 40

FENCE PLAN
STA. 971+00.00 TO STA. 982+00.00

DESIGN AGENCY
mx consultants, inc.

DESIGNER CJR
REVIEWER CMN 08/29/25
PROJECT ID 121474
SHEET P.556 TOTAL 655

MAH-680-4.58

MODEL: 11311_QPEDS_PAVEMENT_680-4.DWG | DATE: 10/1/2025 TIME: 11:09:09 AM | PLOTTED: QHOOT_PSP_4.dwg | PLOTTED: QHOOT_Office.ctb | USER: QHoot@mxconsultants.com | WORKSPACE: QHOOTSCAD | WORKSET: 121474 | PRODUCT: OpenRoadsDesigner 24.10.00.205
DGN FILE: P:\Projects\Active\MAH\680\Pavement\Rehab\Design\Roadway\Plan\11311_QPEDS_PAVEMENT_680-4.dgn

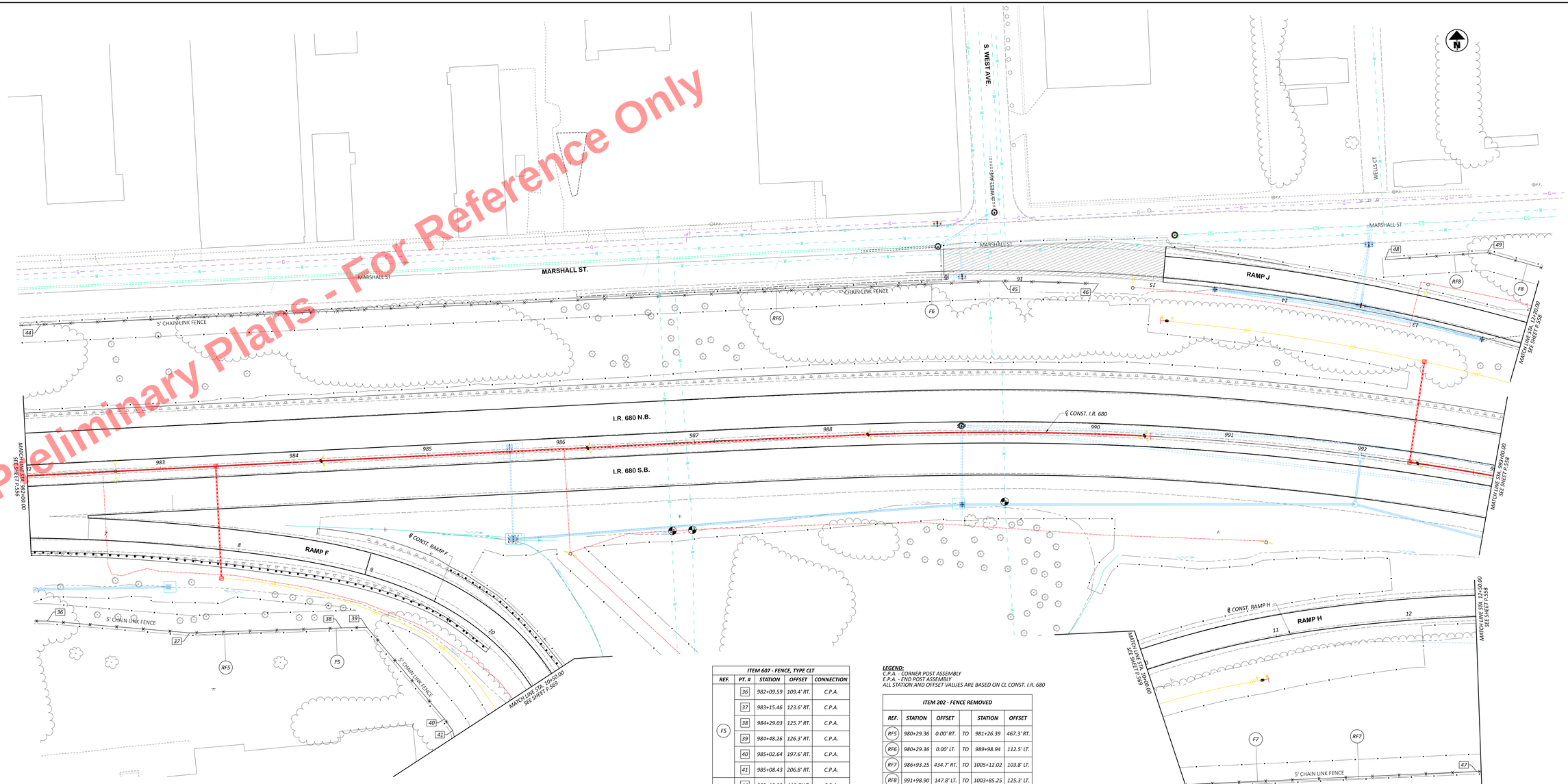

Preliminary Plans - For Reference Only

ITEM 607 - FENCE, TYPE CLT

REF.	PT. #	STATION	OFFSET	CONNECTION
F5	36	982+09.59	109.4' RT.	C.P.A.
	37	983+15.46	123.6' RT.	C.P.A.
	38	984+29.03	125.7' RT.	C.P.A.
	39	984+48.26	126.3' RT.	C.P.A.
	40	985+02.64	197.6' RT.	C.P.A.
	41	985+08.43	206.8' RT.	C.P.A.
F6	44	982+15.95	112.7' LT.	C.P.A.
	45	989+30.25	113.4' LT.	C.P.A.
	46	989+98.94	112.5' LT.	E.P.A.
F7	47	993+29.94	259.3' RT.	C.P.A.
F8	48	991+98.90	147.8' LT.	E.P.A.
	49	992+68.70	164.0 LT.	C.P.A.

LEGEND:
C.P.A. - CORNER POST ASSEMBLY
E.P.A. - END POST ASSEMBLY
ALL STATION AND OFFSET VALUES ARE BASED ON CL CONST. I.R. 680

ITEM 202 - FENCE REMOVED

REF.	STATION	OFFSET		STATION	OFFSET
RF5	980+29.36	0.00' RT.	TO	981+26.39	467.3' RT.
RF6	980+29.36	0.00' LT.	TO	989+98.94	112.5' LT.
RF7	986+93.25	434.7' RT.	TO	1005+12.02	103.8' LT.
RF8	991+98.90	147.8' LT.	TO	1003+85.25	125.3' LT.

HORIZONTAL SCALE IN FEET
0 10 20 40

FENCE PLAN
STA. 971+00.00 TO STA. 982+00.00

DESIGN AGENCY
mc consultants, inc.

DESIGNER CJR
REVIEWER CMN 08/29/25
PROJECT ID 121474
SHEET P.557 TOTAL 655

MAH-680-4.58

MODEL: 11311_GPKEY_PARTIDGE 68x34 IN | DATE: 10/1/2025 TIME: 4:01:59 PM PITSKY GROOT_PSP_F LaDOTD PENTEL GROOT_LTPrint.tbl USER: DholdBrennan@dot.la.gov WORKSPACE: CHOOTVOL5 WORKSET: 121474 PRODUCT: OpenRoadDesigner 24.00.00.205
FILE: P:\Projects\Maintenance and Preservation\Bridge Rehabilitation\MAH-680-4.58\Roadway\Plans\Fence\MAH-680-4.58_FENCE.dgn

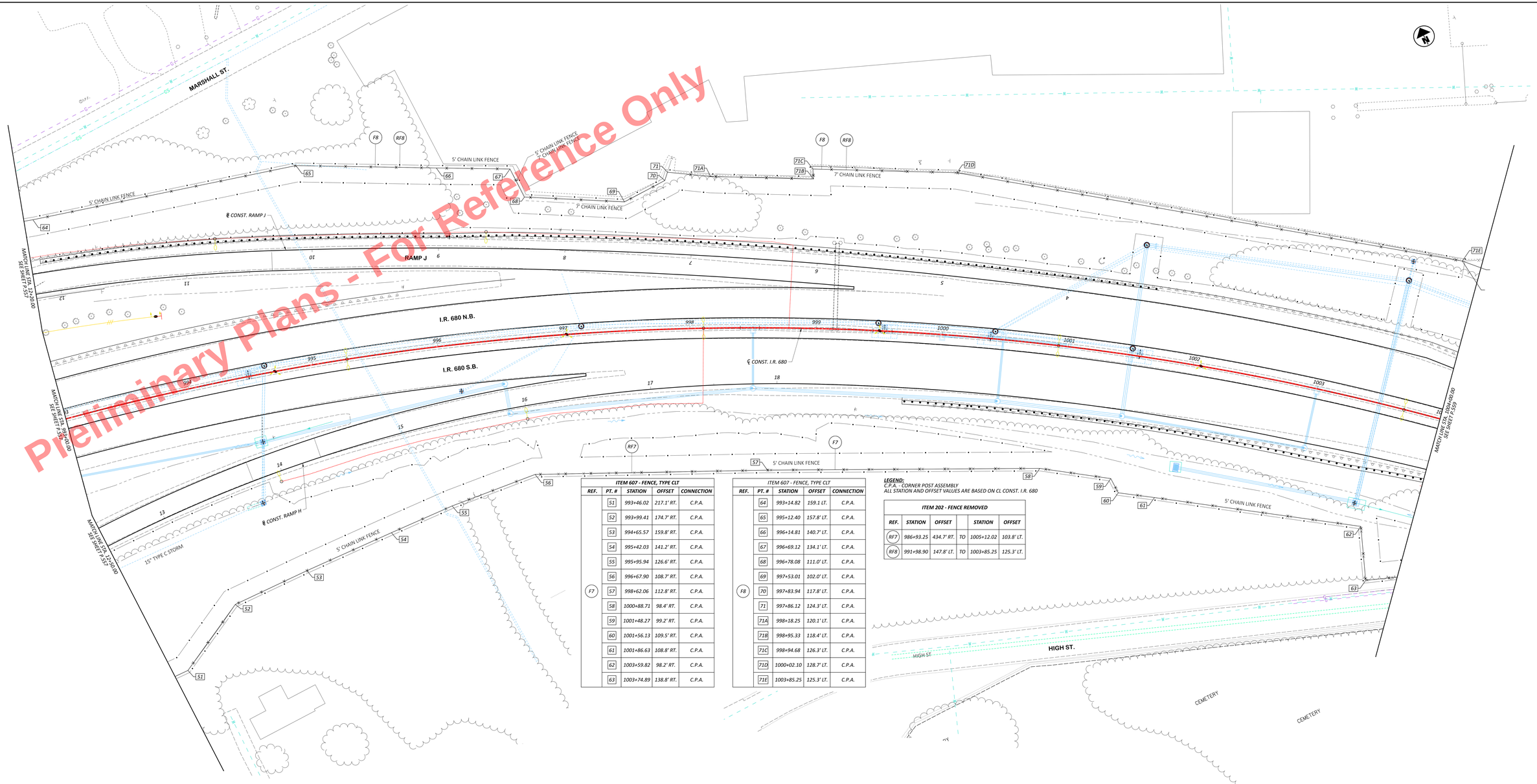

Preliminary Plans - For Reference Only

ITEM 607 - FENCE, TYPE CLT

REF.	PT. #	STATION	OFFSET	CONNECTION
	51	993+46.02	217.1' RT.	C.P.A.
	52	993+99.41	174.7' RT.	C.P.A.
	53	994+65.57	159.8' RT.	C.P.A.
	54	995+42.03	141.2' RT.	C.P.A.
	55	995+95.94	126.6' RT.	C.P.A.
	56	996+67.90	108.7' RT.	C.P.A.
F7	57	998+62.06	112.8' RT.	C.P.A.
	58	1000+88.71	98.4' RT.	C.P.A.
	59	1001+48.27	99.2' RT.	C.P.A.
	60	1001+56.13	109.5' RT.	C.P.A.
	61	1001+86.63	108.8' RT.	C.P.A.
	62	1003+59.82	98.2' RT.	C.P.A.
	63	1003+74.89	138.8' RT.	C.P.A.

ITEM 607 - FENCE, TYPE CLT

REF.	PT. #	STATION	OFFSET	CONNECTION
	64	993+14.82	159.1 LT.	C.P.A.
	65	995+12.40	157.8' LT.	C.P.A.
	66	996+14.81	140.7' LT.	C.P.A.
	67	996+69.12	134.1' LT.	C.P.A.
	68	996+78.08	111.0' LT.	C.P.A.
	69	997+53.01	102.0' LT.	C.P.A.
F8	70	997+83.94	117.8' LT.	C.P.A.
	71	997+86.12	124.3' LT.	C.P.A.
	71A	998+18.25	120.1' LT.	C.P.A.
	71B	998+95.33	118.4' LT.	C.P.A.
	71C	998+94.68	126.3' LT.	C.P.A.
	71D	1000+02.10	128.7' LT.	C.P.A.
	71E	1003+85.25	125.3' LT.	C.P.A.

LEGEND:
C.P.A. - CORNER POST ASSEMBLY
ALL STATION AND OFFSET VALUES ARE BASED ON CL CONST. I.R. 680

ITEM 202 - FENCE REMOVED

REF.	STATION	OFFSET		STATION	OFFSET
RF7	986+93.25	434.7' RT.	TO	1005+12.02	103.8' LT.
RF8	991+98.90	147.8' LT.	TO	1003+85.25	125.3' LT.

NOTE: CUT EXISTING FENCE AND ATTACH TO THE NEW CORNER POST. COST FOR THIS WORK INCLUDED IN THE UNIT PRICE BID FOR THE FENCE REMOVED ITEM

HORIZONTAL SCALE IN FEET: 0, 10, 20, 40

FENCE PLAN
STA. 993+00.00 TO STA. 1004+00.00

DESIGN AGENCY: mn consultants, inc.
DESIGNER: CJR
REVIEWER: CMN 08/29/25
PROJECT #: 121474
SHEET: P.558
TOTAL: 655

MAH-680-4.58

MODEL: 11311_GPOR_PAVEMENT_664.dgn | DATE: 10/1/2025 TIME: 11:13:16 AM |PLOTBY: GHOOT_PW | dwng: PLOTBY, GHOOT_Office.tbl USER: GHoot@mnconsultants.com WORKINGS: GHOOT.cel WORKSET: 121474 PRODUCT: OpenRoadsDesigner 24.10.00.205
REFERENCES: Project Information.dgn|Project Information.dgn|Project Information.dgn|11311_GPOR_PAVEMENT_664.dgn|11311_GPOR_PAVEMENT_664.dgn|11311_GPOR_PAVEMENT_664

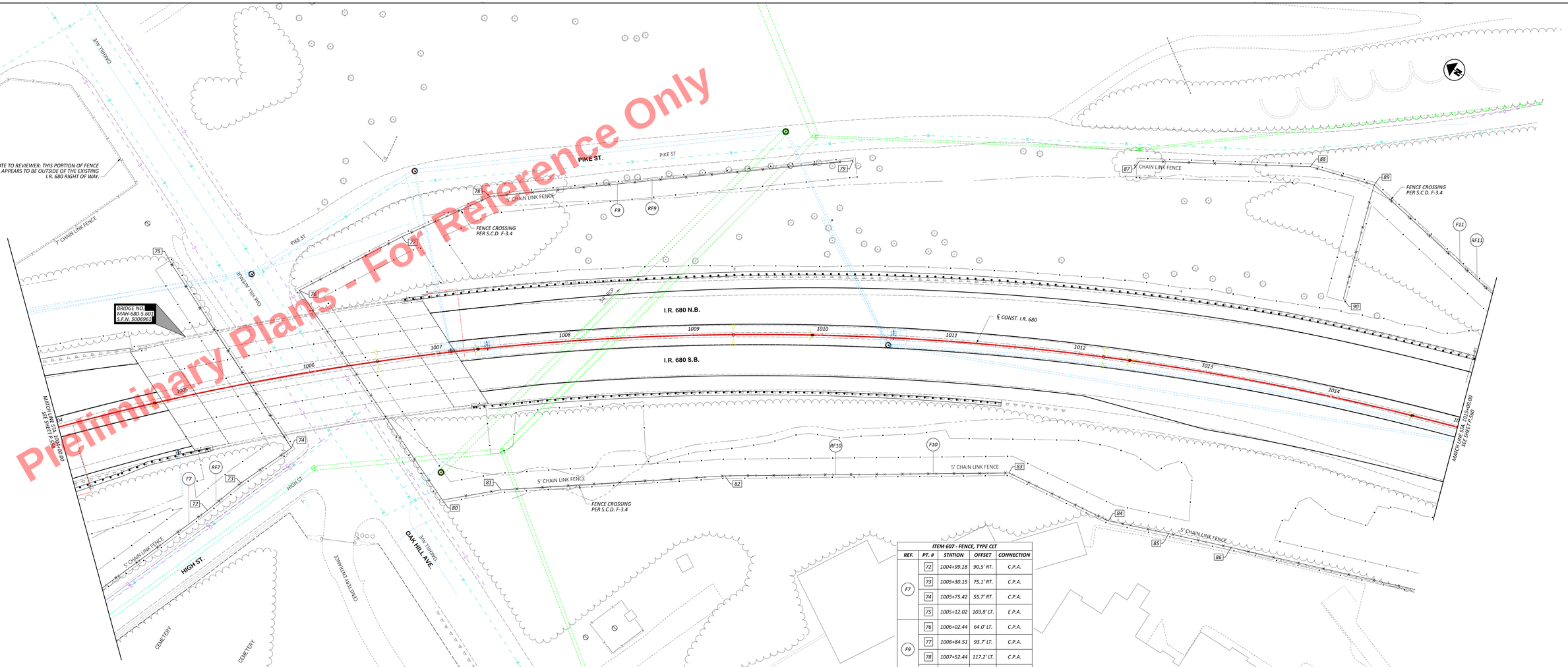

Preliminary Plans - For Reference Only

ITEM 607 - FENCE, TYPE CLT

REF.	PT. #	STATION	OFFSET	CONNECTION
F7	72	1004+99.18	90.5' RT.	C.P.A.
	73	1005+30.15	75.1' RT.	C.P.A.
	74	1005+75.42	55.7' RT.	C.P.A.
	75	1005+12.02	103.8' LT.	E.P.A.
F9	76	1006+02.44	64.0' LT.	C.P.A.
	77	1006+84.51	93.7' LT.	C.P.A.
	78	1007+52.44	117.2' LT.	C.P.A.
	79	1010+19.25	136.6' LT.	E.P.A.
F10	80	1006+90.00	113.5' RT.	C.P.A.
	81	1007+38.80	110.8' RT.	C.P.A.
	82	1009+22.82	109.8' RT.	C.P.A.
	83	1011+55.06	98.1' RT.	C.P.A.
	84	1012+40.94	125.9' RT.	C.P.A.
	85	1012+91.78	128.6' RT.	C.P.A.
	86	1013+44.65	130.7' RT.	C.P.A.
F11	87	1012+26.77	154.9' LT.	E.P.A.
	88	1013+49.00	172.0' LT.	C.P.A.
	89	1013+96.50	168.0' LT.	C.P.A.
	90	1013+92.15	76.6' LT.	E.P.A.

LEGEND:
C.P.A. - CORNER POST ASSEMBLY
E.P.A. - END POST ASSEMBLY
ALL STATION AND OFFSET VALUES ARE BASED ON CL CONST. I.R. 680

ITEM 202 - FENCE REMOVED

REF.	STATION	OFFSET		STATION	OFFSET
RF7	986+93.25	434.7' RT.	TO	1005+12.02	103.8' LT.
RF9	1006+32.11	0.0' LT.	TO	1010+19.25	136.6' LT.
RF10	1006+32.11	0.0' RT.	TO	1021+09.81	78.3' RT.
RF11	1012+26.77	154.9' LT.	TO	1016+16.55	109.1' LT.

HORIZONTAL SCALE IN FEET
0 10 20 40

FENCE PLAN
STA. 1004+00.00 TO STA. 1015+00.00

DESIGN AGENCY
ms consultants, inc.

DESIGNED: CJR
REVIEWED: CMN 08/29/25
PROJECT ID: 121474
SHEET: F.559 TOTAL: 655

MAH-680-4.58

MODEL: 11311_GPKDY_PAVEMENT_682A.DGN | DATE: 10/1/2025 TIME: 11:13:23 AM |PITDRV_GPKDY_PSE_F1.dwg| PITDRV_GPKDY_UTM.tbl| USER: DHall|Pressure Dynamics.com WORKSPACE: GPKDYSTAGE WORKSET: 121474 PRODUCT: OpenRoadsDesigner 24.10.00.205
ACTIVE PROJECT: Mahoning-680-4.58 PROJECTWISE DATASOURCE: PW_WORKDIR:\\Documents\Mahoning-680-4.58\

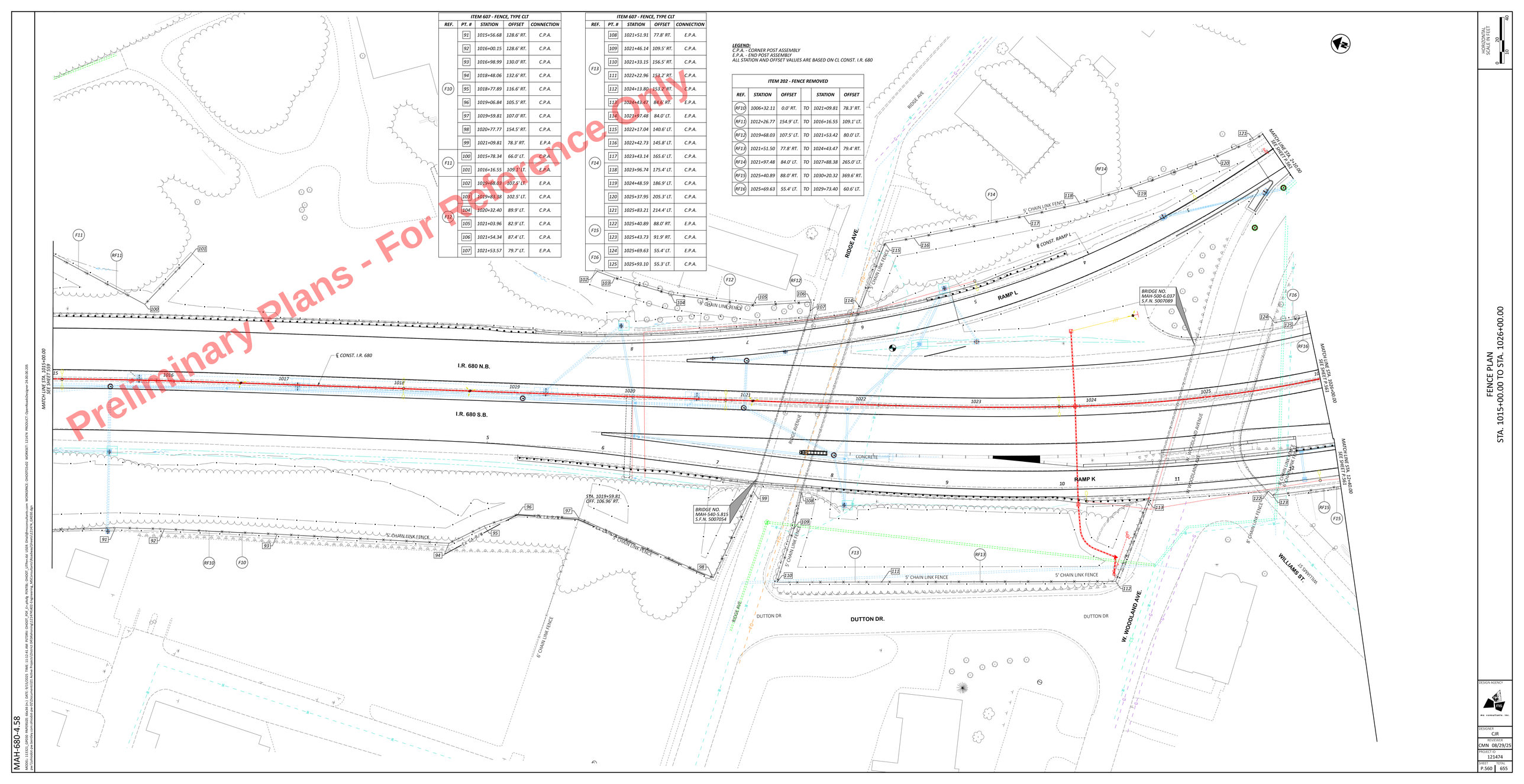
ITEM 607 - FENCE, TYPE CLT
REF. | PT. # | STATION | OFFSET | CONNECTION
F10 | 91 | 1015+56.68 | 128.6' RT. | C.P.A.
92 | 1016+00.15 | 128.6' RT. | C.P.A.
93 | 1016+98.99 | 130.0' RT. | C.P.A.
94 | 1018+48.06 | 132.6' RT. | C.P.A.
95 | 1018+77.89 | 116.6' RT. | C.P.A.
96 | 1019+06.84 | 105.5' RT. | C.P.A.
F11 | 97 | 1019+59.81 | 107.0' RT. | C.P.A.
98 | 1020+77.77 | 154.5' RT. | C.P.A.
99 | 1021+09.81 | 78.3' RT. | E.P.A
100 | 1015+78.34 | 66.0' LT. | C.P.A.
101 | 1016+16.55 | 109.1' LT. | E.P.A.
F12 | 102 | 1019+68.03 | 107.5' LT. | E.P.A.
103 | 1019+83.38 | 102.5' LT. | C.P.A.
104 | 1020+32.40 | 89.9' LT. | C.P.A.
105 | 1021+03.96 | 82.9' LT. | C.P.A.
106 | 1021+54.34 | 87.4' LT. | C.P.A.
107 | 1021+53.57 | 79.7' LT. | E.P.A.
ITEM 607 - FENCE, TYPE CLT
REF. | PT. # | STATION | OFFSET | CONNECTION
F13 | 108 | 1021+51.91 | 77.8' RT. | E.P.A.
109 | 1021+46.14 | 109.5' RT. | C.P.A.
110 | 1021+33.15 | 156.5' RT. | C.P.A.
111 | 1022+22.96 | 153.2' RT. | C.P.A.
112 | 1024+13.80 | 153.2' RT. | C.P.A.
113 | 1024+43.47 | 84.6' RT. | E.P.A.
F14 | 114 | 1021+97.48 | 84.0' LT. | E.P.A.
115 | 1022+17.04 | 140.6' LT. | C.P.A.
116 | 1022+42.73 | 145.8' LT. | C.P.A.
117 | 1023+43.14 | 165.6' LT. | C.P.A.
118 | 1023+96.74 | 175.4' LT. | C.P.A.
119 | 1024+48.59 | 186.9' LT. | C.P.A.
120 | 1025+37.95 | 205.3' LT. | C.P.A.
121 | 1025+83.21 | 214.4' LT. | C.P.A.
F15 | 122 | 1025+40.89 | 88.0' RT. | E.P.A.
123 | 1025+43.73 | 91.9' RT. | C.P.A.
F16 | 124 | 1025+69.63 | 55.4' LT. | E.P.A.
125 | 1025+93.10 | 55.3' LT. | C.P.A.
LEGEND:
C.P.A. - CORNER POST ASSEMBLY
E.P.A. - END POST ASSEMBLY
ALL STATION AND OFFSET VALUES ARE BASED ON CL CONST. I.R. 680
ITEM 202 - FENCE REMOVED
REF. | STATION | OFFSET | | STATION | OFFSET
RF10 | 1006+32.11 | 0.0' RT. | TO | 1021+09.81 | 78.3' RT.
RF11 | 1012+26.77 | 154.9' LT. | TO | 1016+16.55 | 109.1' LT.
RF12 | 1019+68.03 | 107.5' LT. | TO | 1021+53.42 | 80.0' LT.
RF13 | 1021+51.50 | 77.8' RT. | TO | 1024+43.47 | 79.4' RT.
RF14 | 1021+97.48 | 84.0' LT. | TO | 1027+88.38 | 265.0' LT.
RF15 | 1025+40.89 | 88.0' RT. | TO | 1030+20.32 | 369.6' RT.
RF16 | 1025+69.63 | 55.4' LT. | TO | 1029+73.40 | 60.6' LT.
Preliminary Plans - For Reference Only
I.R. 680 N.B.
I.R. 680 S.B.
℄ CONST. I.R. 680
RIDGE AVE.
RAMP L
RAMP K
℄ CONST. RAMP L
BRIDGE NO. MAH-500-6.037 S.F.N. 5007089
BRIDGE NO. MAH-540-5.815 S.F.N. 5007054
MATCH LINE STA. 1015+00.00 SEE SHEET P.561
MATCH LINE STA. 1026+00.00 SEE SHEET P.561
MATCH LINE STA. 1140.00 SEE SHEET P.561
STA. 1019+59.81 OFF. 106.96' RT.
5' CHAIN LINK FENCE
6' CHAIN LINK FENCE
8' CHAIN LINK FENCE
CONCRETE
DUTTON DR.
DUTTON DR
W. WOODLAND AVE.
WILLIAMS ST.
E. SMITH
HORIZONTAL SCALE IN FEET
0 10 20 40
FENCE PLAN
STA. 1015+00.00 TO STA. 1026+00.00
DESIGN AGENCY
DESIGNER CJR
REVIEWER CMN 08/29/25
PROJECT ID 121474
SHEET P.560
TOTAL 655
MAH-680-4.58
MODEL: 11X17L | DATE: 10/1/2025 | TIME: 11:13:41 AM | USER: DWIGHT, PAT | PLANS: DWIGHT, PAT | DGN: PWIDEL DWIGHT_UTILITY.DGN | DGN@transcore.com

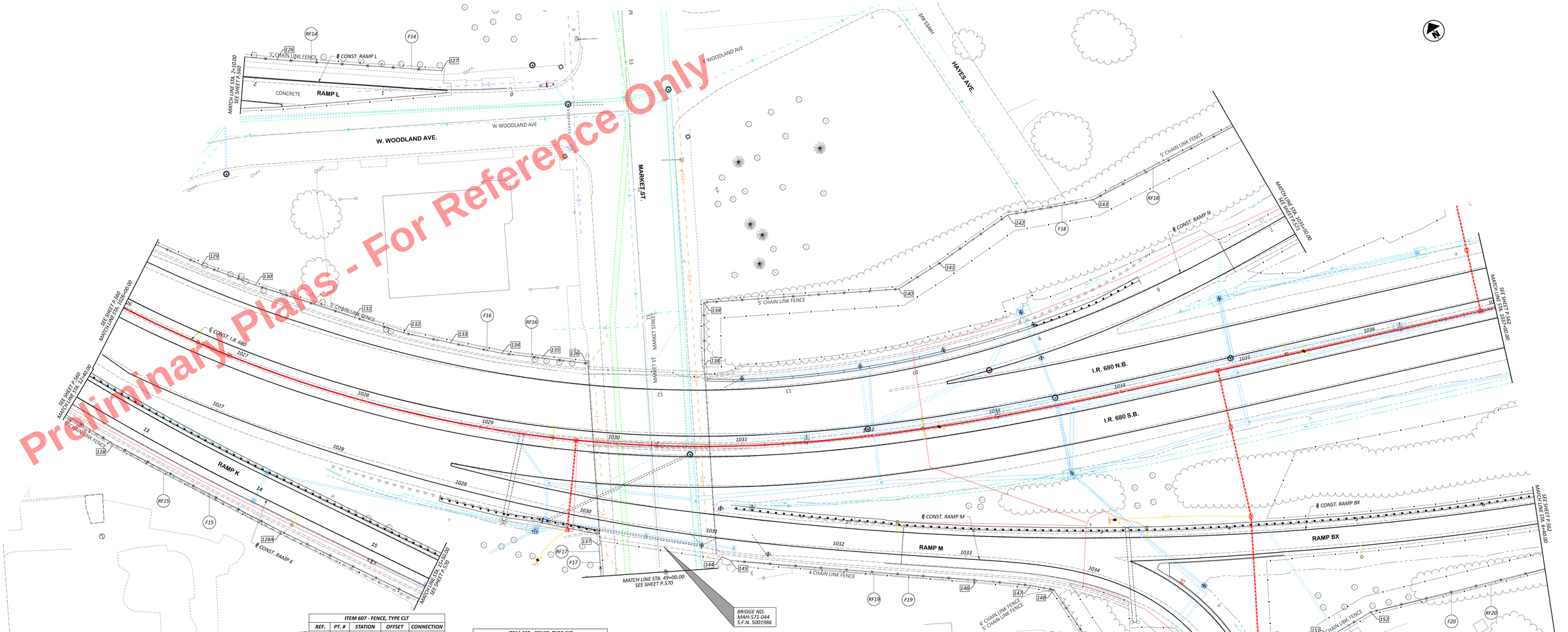

Preliminary Plans - For Reference Only

ITEM 607 - FENCE, TYPE CLT

REF.	PT. #	STATION	OFFSET	CONNECTION
F14	126	1026+24.30	227.2' LT.	C.P.A.
	127	1027+88.38	265.0' LT.	E.P.A.
F15	128	1026+37.60	99.3' RT.	C.P.A.
	128A	1027+70.32	116.2' RT.	E.P.A.
F16	129	1026+41.67	56.8' LT.	C.P.A.
	130	1026+89.14	58.8' LT.	C.P.A.
	131	1027+75.82	60.7' LT.	C.P.A.
	132	1028+18.47	59.4' LT.	C.P.A.
	133	1028+58.48	60.2' LT.	C.P.A.
	134	1029+01.92	59.8' LT.	C.P.A.
	135	1029+35.51	60.7' LT.	C.P.A.
	136	1029+73.40	60.6' LT.	E.P.A.
F17	137	1029+94.65	80.4' RT.	E.P.A.

ITEM 607 - FENCE, TYPE CLT

REF.	PT. #	STATION	OFFSET	CONNECTION
F18	138	1030+71.48	64.1' LT.	E.P.A.
	139	1030+70.78	112.6' LT.	C.P.A.
	140	1032+39.44	111.1' LT.	C.P.A.
	141	1032+77.10	126.4' LT.	C.P.A.
	142	1033+39.80	153.7' LT.	C.P.A.
	143	1034+11.14	151.8' LT.	C.P.A.
F19	144	1030+83.44	86.3' RT.	E.P.A.
	145	1030+89.78	89.5' RT.	E.P.A.
	146	1032+65.35	123.3' RT.	C.P.A.
	147	1033+03.55	134.2' RT.	C.P.A.
	148	1033+19.90	141.0' RT.	C.P.A.

ITEM 607 - FENCE, TYPE CLT

REF.	PT. #	STATION	OFFSET	CONNECTION
F19	371	1033+77.37	280.3' RT.	C.P.A.
	372	1033+82.09	266.6' RT.	C.P.A.
	373	1033+79.38	248.9' RT.	C.P.A.
	374	1033+44.87	243.8' RT.	C.P.A.
	375	1033+48.06	212.9' RT.	C.P.A.
F20	149	1035+11.11	286.8' RT.	C.P.A.
	150	1034+91.76	234.0' RT.	C.P.A.
	151	1035+16.78	222.3' RT.	C.P.A.
	152	1035+52.25	210.6' RT.	C.P.A.

LEGEND:
C.P.A. - CORNER POST ASSEMBLY
E.P.A. - END POST ASSEMBLY
ALL STATION AND OFFSET VALUES ARE BASED ON CL CONST. I.R. 680

ITEM 202 - FENCE REMOVED

REF.	STATION	OFFSET		STATION	OFFSET
RF14	1021+97.48	84.0' LT.	TO	1027+88.38	265.0' LT.
RF15	1025+40.89	88.0' RT.	TO	1030+20.32	369.6' RT.
RF16	1025+69.63	55.4' LT.	TO	1029+73.40	60.6' LT.
RF17	1029+59.46	126.1' RT.	TO	1029+94.65	80.4' RT.
RF18	1030+71.48	64.1' LT.	TO	1038+03.85	495.4' LT.
RF19	1030+83.44	86.3' RT.	TO	1030+94.04	355.3' RT.
RF20	1030+96.11	469.3' RT.	TO	1046+71.50	188.2' RT.

HORIZONTAL SCALE IN FEET 0 10 20 40

FENCE PLAN
STA. 1026+00.00 TO STA. 1037+00.00

DESIGN AGENCY
mk consultants, inc.

DESIGNER CJR
REVIEWER CMN 08/29/25
PROJECT ID 121474
SHEET P.561 TOTAL 655

MAH-680-4.58

BOUNDARY AND PROPERTY INFORMATION IS FOR DESIGN PURPOSES ONLY. PROPERTY LINES ARE NOT TO BE USED TO DETERMINE OWNERSHIP OR FOR RIGHT OF WAY PURPOSES.
MODEL: 121321_GPKEY_PARTIDGE 68x24.PKY | DATE: 10/31/2025 TIME: 11:17:23 AM INTERV: GHOST_PSP_1 xfmtg: PVIMEL GHOST_UTIlm.tbl: USER: DHall@mkconsultants.com WORKSPACE: GHOSTS\DHall WORKSET: 121474 PRODUCT: OpenRoadsDesigner 24.10.00.205

NOTE: SEE SHEET P.571
FOR FENCE WORK
ADJACET TO RAMP N

ITEM 607 - FENCE, TYPE CLT				
REF.	PT. #	STATION	OFFSET	CONNECTION
F20	154	1037+08.71	207.3' RT.	C.P.A.
	155	1037+56.17	206.5' RT.	C.P.A.
	156	1037+59.14	214.4' RT.	C.P.A.
	157	1037+82.32	207.0' RT.	C.P.A.
	158	1038+26.78	196.2' RT.	C.P.A.
	159	1038+38.03	191.6' RT.	C.P.A.
	160	1038+50.24	189.2' RT.	C.P.A.
	161	1038+66.84	188.2' RT.	C.P.A.
	162	1038+74.48	189.9' RT.	C.P.A.
	163	1038+90.65	193.6' RT.	C.P.A.
	164	1038+99.03	199.0' RT.	C.P.A.
	165	1039+01.36	203.6' RT.	C.P.A.
	166	1040+47.22	202.7' RT.	C.P.A.
	167	1041+78.05	171.1' RT.	C.P.A.
	168	1042+24.02	150.0' RT.	C.P.A.
	169	1044+18.66	137.8' RT.	C.P.A.
	170	1046+40.62	204.2' RT.	C.P.A.
	171	1046+71.50	188.2' RT.	E.P.A.

ITEM 607 - FENCE, TYPE CLT				
REF.	PT. #	STATION	OFFSET	CONNECTION
F21	172	1046+53.77	293.0' LT.	C.P.A.
F21A	173	1046+51.48	284.3' LT.	C.P.A.*
	174	1046+55.14	243.8' LT.	C.P.A.*
	175	1046+64.30	238.2' LT.	C.P.A.*
	176	1046+93.44	243.4' LT.	C.P.A.*
F21B	177	1047+02.50	236.2' LT.	C.P.A.
	178	1047+09.64	231.5' LT.	C.P.A.
	179	1047+31.61	220.6' LT.	C.P.A.
	180	1047+73.13	206.5' LT.	C.P.A.
F22	181	1047+15.04	208.2' RT.	E.P.A.
	182	1047+10.47	225.5' RT.	C.P.A.

* STRUCTURE MOUNTED FENCE, SEE ITEM 607, P.47

LEGEND:
C.P.A. - CORNER POST ASSEMBLY
E.P.A. - END POST ASSEMBLY
ALL STATION AND OFFSET VALUES ARE BASED ON CL CONST. I.R. 680

ITEM 202 - FENCE REMOVED					
REF.	STATION	OFFSET		STATION	OFFSET
RF20	1030+96.11	469.3' RT.	TO	1046+71.50	188.2' RT.
RF21	1044+64.87	1224.0' LT.	TO	1046+51.48	284.3' LT.
RF21A	1046+51.48	284.3' LT.	TO	1046+93.44	243.4' LT.
RF21B	1046+93.44	243.4' LT.	TO	1048+56.93	184.0' LT.
RF22	1047+15.04	208.2' RT.	TO	1048+17.71	232.7' RT.

Preliminary Plans - For Reference Only

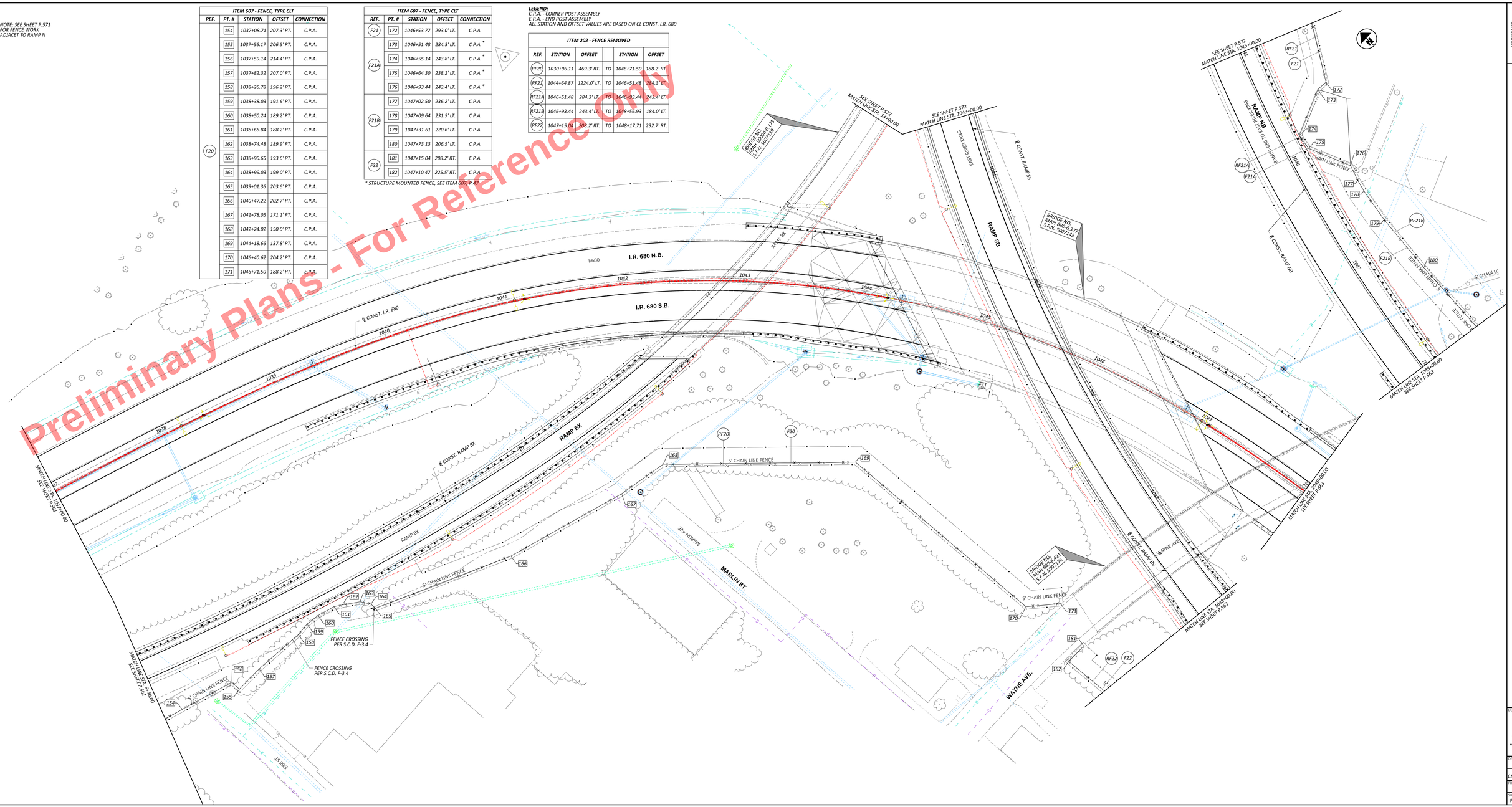

FENCE PLAN
STA. 1037+00.00 TO STA. 1048+00.00

HORIZONTAL SCALE IN FEET
0 10 20 40

DESIGN AGENCY
mc consultants, inc.

DESIGNED CJR
REVIEWED CMN 08/29/25
PROJECT ID 121474
SHEET P.562 TOTAL 655

MAH-680-4.58

MODEL: 11X17L (GPD3) JMATRIDGE 08/28 PM | DATE: 10/31/2025 TIME: 11:11:03 AM JMTOPO: GMODEL.PRF | # dwg: P:\PROJECTS\121474 MAH-680-4.58\Design\Roadway\Sheets\121474_MAH-680-4.58_GMODEL.dgn | Cell: GMODEL | Dgn: $$$$USER$$$$ | Ref: C:\Users\jmatridge\Documents\CADD\Workspaces\Standards\Cells\Global.dgn | WORKSPACE: CADDOTS-CHEST WORKSET: 121474 PRODUCT: OpenRoadsDesigner 24.00.00.205

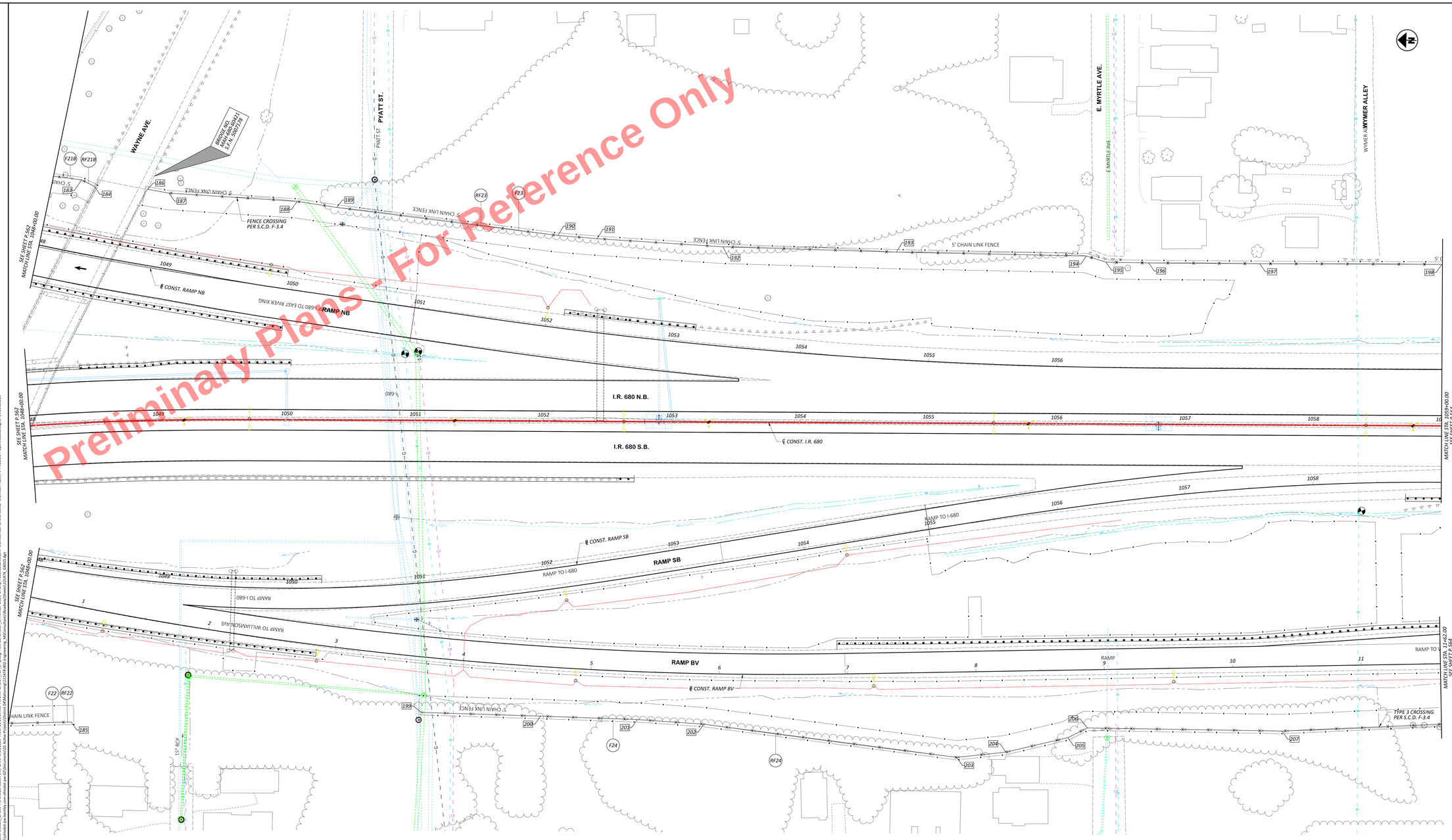

Preliminary Plans - For Reference Only

LEGEND:
C.P.A. - CORNER POST ASSEMBLY
E.P.A. - END POST ASSEMBLY
A.C. - ABUTMENT CONNECTION
ALL STATION AND OFFSET VALUES ARE BASED ON CL CONST. I.R. 680

ITEM 202 - FENCE REMOVED

REF.	STATION	OFFSET		STATION	OFFSET
RF21	1044+64.87	1224.0' LT.	TO	1048+56.93	184.0' LT.
RF22	1047+15.04	208.2' RT.	TO	1048+17.71	232.7' RT.
RF23	1048+95.24	180.4' LT.	TO	1060+05.70	106.9' LT.
RF24	1051+06.08	227.7' RT.	TO	1059+99.74	227.9' RT.

ITEM 607 - FENCE, TYPE CLT

REF.	PT. #	STATION	OFFSET	CONNECTION
F21	183	1048+48.29	189.4' LT.	C.P.A.
	184	1048+56.93	184.0' LT.	A.C.
F22	185	1048+17.71	232.7' RT.	E.P.A.
F23	186	1048+95.24	180.4' LT.	A.C.
	187	1049+10.76	177.2' LT.	C.P.A.
	188	1050+07.30	170.5' LT.	C.P.A.
	189	1050+38.09	166.0' LT.	C.P.A.
	190	1052+10.59	145.0' LT.	C.P.A.
	191	1052+41.23	142.6' LT.	C.P.A.
	192	1053+39.24	136.8' LT.	C.P.A.
	193	1054+74.48	133.4' LT.	C.P.A.
	194	1056+22.58	131.1' LT.	C.P.A.
	195	1056+37.78	126.4' LT.	C.P.A.
	196	1056+71.01	126.0' LT.	C.P.A.
	197	1057+57.50	125.8' LT.	C.P.A.
	198	1058+99.55	126.1' LT.	C.P.A.
F24	199	1051+06.08	227.7' RT.	E.P.A.
	200	1051+98.99	230.2' RT.	C.P.A.
	201	1052+74.48	232.4' RT.	C.P.A.
	202	1053+26.26	235.8' RT.	C.P.A.
	203	1055+23.43	260.6' RT.	C.P.A.
	204	1055+61.71	256.4' RT.	C.P.A.
	205	1056+10.05	244.7' RT.	C.P.A.
	206	1056+25.20	237.1' RT.	C.P.A.
	207	1057+76.91	238.8' RT.	C.P.A.

HORIZONTAL SCALE IN FEET
0 10 20 40

FENCE PLAN
STA. 1048+00.00 TO STA. 1059+00.00

DESIGN AGENCY
ms consultants, inc.
DESIGNER CJR
REVIEWER CMN 08/29/25
PROJECT ID 121474
SHEET P.563 TOTAL 655

MAH-680-4.58

MODEL: 11X17L | DATE: 10/31/2025 TIME: 11:31:19 AM | USER: DWG | FILE: P:\Proj\121474 - 2024 Bridge Group\Design\Roadway\Sheets\121474_Fence_Plan_Sheets.dgn | DESIGNER: CJR | REVIEWER: CMN 08/29/25 | PROJECT ID: 121474 | SHEET: P.563 | TOTAL: 655 | DESIGN AGENCY: ms consultants, inc.

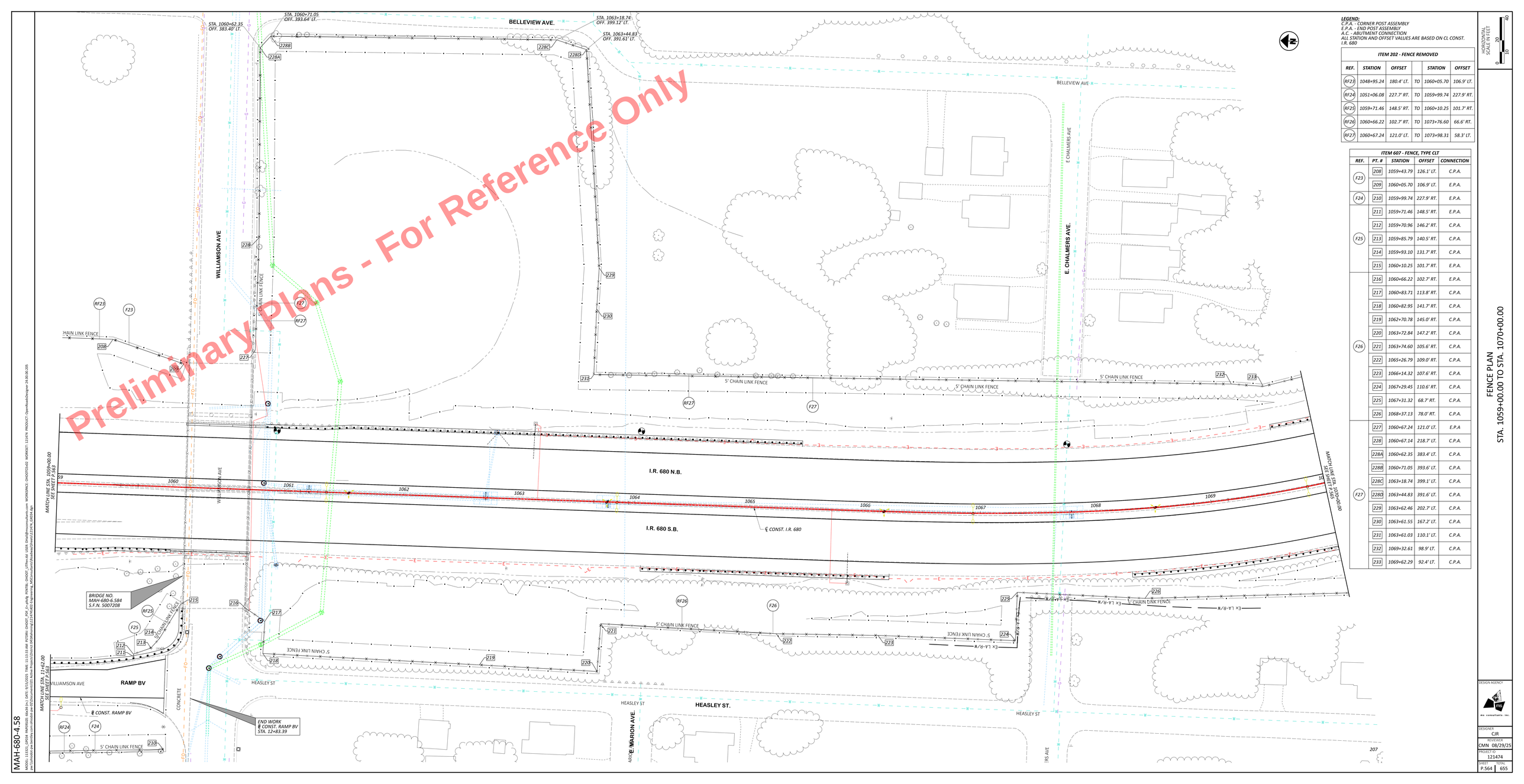

LEGEND:
C.P.A. - CORNER POST ASSEMBLY
E.P.A. - END POST ASSEMBLY
A.C. - ABUTMENT CONNECTION
ALL STATION AND OFFSET VALUES ARE BASED ON CL CONST. I.R. 680

ITEM 202 - FENCE REMOVED

REF.	STATION	OFFSET		STATION	OFFSET
RF23	1048+95.24	180.4' LT.	TO	1060+05.70	106.9' LT.
RF24	1051+06.08	227.7' RT.	TO	1059+99.74	227.9' RT.
RF25	1059+71.46	148.5' RT.	TO	1060+10.25	101.7' RT.
RF26	1060+66.22	102.7' RT.	TO	1073+76.60	66.6' RT.
RF27	1060+67.24	121.0' LT.	TO	1073+98.31	58.3' LT.

ITEM 607 - FENCE, TYPE CLT

REF.	PT. #	STATION	OFFSET	CONNECTION
F23	208	1059+43.79	126.1' LT.	C.P.A.
	209	1060+05.70	106.9' LT.	E.P.A.
F24	210	1059+99.74	227.9' RT.	E.P.A.
F25	211	1059+71.46	148.5' RT.	E.P.A.
	212	1059+70.96	146.2' RT.	C.P.A.
	213	1059+85.79	140.5' RT.	C.P.A.
	214	1059+93.10	131.7' RT.	C.P.A.
	215	1060+10.25	101.7' RT.	E.P.A.
F26	216	1060+66.22	102.7' RT.	E.P.A.
	217	1060+83.71	113.8' RT.	C.P.A.
	218	1060+82.95	141.7' RT.	C.P.A.
	219	1062+70.78	145.0' RT.	C.P.A.
	220	1063+72.84	147.2' RT.	C.P.A.
	221	1063+74.60	105.6' RT.	C.P.A.
	222	1065+26.79	109.0' RT.	C.P.A.
	223	1066+14.32	107.6' RT.	C.P.A.
	224	1067+29.45	110.6' RT.	C.P.A.
	225	1067+31.32	68.7' RT.	C.P.A.
	226	1068+37.13	78.0' RT.	C.P.A.
F27	227	1060+67.24	121.0' LT.	E.P.A
	228	1060+67.14	218.7' LT.	C.P.A.
	228A	1060+62.35	383.4' LT.	C.P.A.
	228B	1060+71.05	393.6' LT.	C.P.A.
	228C	1063+18.74	399.1' LT.	C.P.A.
	228D	1063+44.83	391.6' LT.	C.P.A.
	229	1063+62.46	202.7' LT.	C.P.A.
	230	1063+61.55	167.2' LT.	C.P.A.
	231	1063+61.03	110.1' LT.	C.P.A.
	232	1069+32.61	98.9' LT.	C.P.A.
	233	1069+62.29	92.4' LT.	C.P.A.

HORIZONTAL SCALE IN FEET
0 10 20 40

FENCE PLAN
STA. 1059+00.00 TO STA. 1070+00.00

MAH-680-4.58

DESIGN AGENCY
ms consultants, inc.
DESIGNER CJR
REVIEWER CMN 08/29/25
PROJECT NO. 121474
SHEET P.564 TOTAL 655

BENTLEY SYSTEMS, INCORPORATED LICENSED COPY: MS CONSULTANTS, INC. - COLUMBUS, OH
MODEL: 121474_GENERAL PLANS\FENCE SHEETS.DGN | DATE: 10/31/2025 TIME: 11:11:13 AM | USER: CMN | PSETTING: GROUP_PSF_1 | PLOTTED: 10/31/2025 11:11:13 AM | PLOTSPU: GROUP_PSF_1 | PLOTTER: DWG To PDF.pltcfg | PLOTSTYLE: Default.ctb | LEVEL: Default | PRINTED BY: CMN
DGN: C:\Users\cmn\Desktop\121474 PROJECT\121474_GENERAL PLANS\FENCE SHEETS.DGN | WORKSPACE: Default | WORKSET: 121474 PROJECT | OpenRoadsDesigner 24.00.00.205

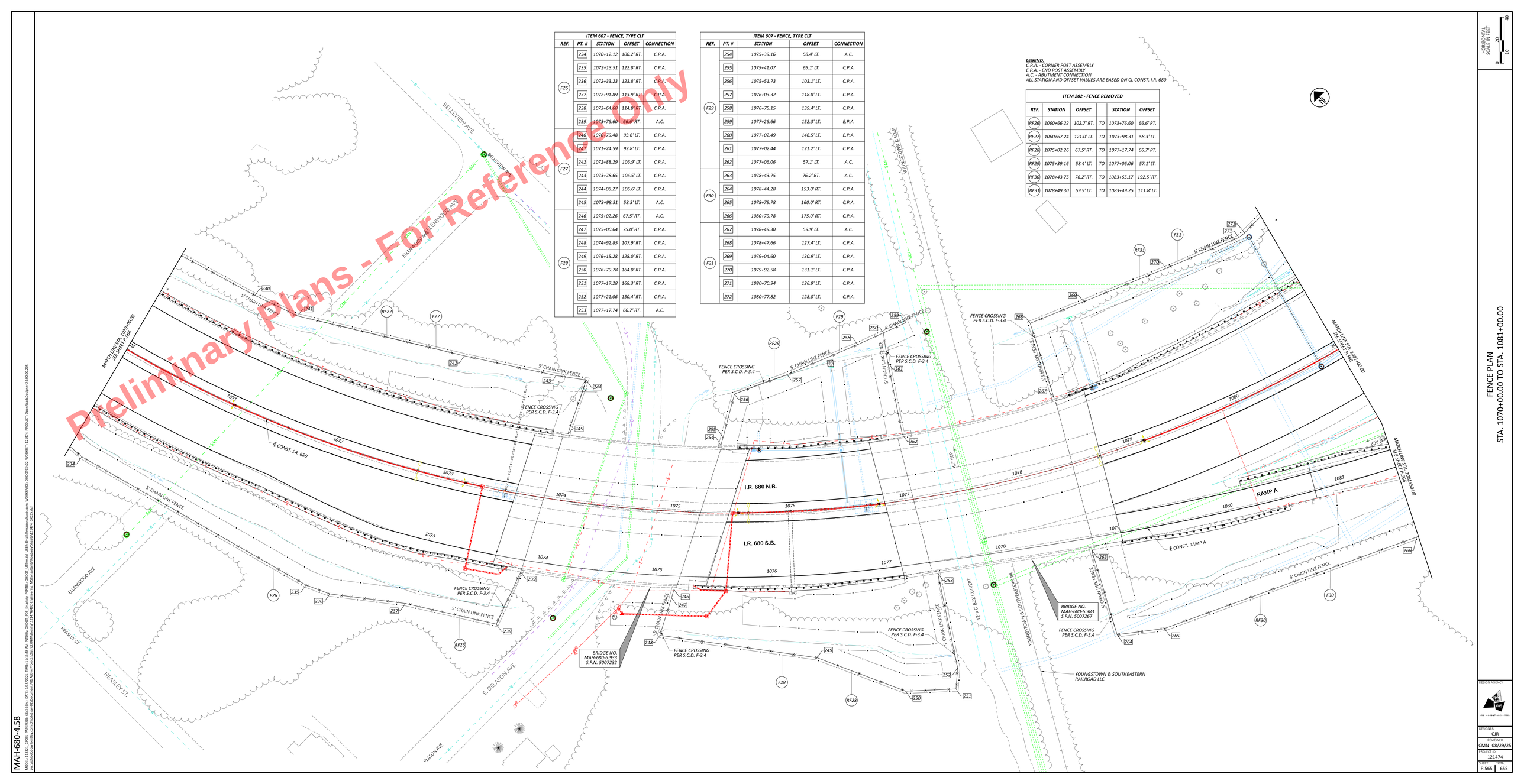

ITEM 607 - FENCE, TYPE CLT

REF.	PT. #	STATION	OFFSET	CONNECTION
F26	234	1070+12.12	100.2' RT.	C.P.A.
	235	1072+13.51	122.8' RT.	C.P.A.
	236	1072+33.23	123.8' RT.	C.P.A.
	237	1072+91.89	113.9' RT.	C.P.A.
	238	1073+64.60	114.8' RT.	C.P.A.
	239	1073+76.60	66.6' RT.	A.C.
F27	240	1070+79.48	93.6' LT.	C.P.A.
	241	1071+24.59	92.8' LT.	C.P.A.
	242	1072+88.29	106.9' LT.	C.P.A.
	243	1073+78.65	106.5' LT.	C.P.A.
	244	1074+08.27	106.6' LT.	C.P.A.
	245	1073+98.31	58.3' LT.	A.C.
F28	246	1075+02.26	67.5' RT.	A.C.
	247	1075+00.64	75.0' RT.	C.P.A.
	248	1074+92.85	107.9' RT.	C.P.A.
	249	1076+15.28	128.0' RT.	C.P.A.
	250	1076+79.78	164.0' RT.	C.P.A.
	251	1077+17.28	168.3' RT.	C.P.A.
	252	1077+21.06	150.4' RT.	C.P.A.
	253	1077+17.74	66.7' RT.	A.C.

ITEM 607 - FENCE, TYPE CLT

REF.	PT. #	STATION	OFFSET	CONNECTION
F29	254	1075+39.16	58.4' LT.	A.C.
	255	1075+41.07	65.1' LT.	C.P.A.
	256	1075+51.73	103.1' LT.	C.P.A.
	257	1076+03.32	118.8' LT.	C.P.A.
	258	1076+75.15	139.4' LT.	C.P.A.
	259	1077+26.66	152.3' LT.	E.P.A.
F30	260	1077+02.49	146.5' LT.	E.P.A.
	261	1077+02.44	121.2' LT.	C.P.A.
	262	1077+06.06	57.1' LT.	A.C.
F31	263	1078+43.75	76.2' RT.	A.C.
	264	1078+44.28	153.0' RT.	C.P.A.
	265	1078+79.78	160.0' RT.	C.P.A.
	266	1080+79.78	175.0' RT.	C.P.A.
	267	1078+49.30	59.9' LT.	A.C.
	268	1078+47.66	127.4' LT.	C.P.A.
	269	1079+04.60	130.9' LT.	C.P.A.
	270	1079+92.58	131.1' LT.	C.P.A.
	271	1080+70.94	126.9' LT.	C.P.A.
	272	1080+77.82	128.0' LT.	C.P.A.

LEGEND:
C.P.A. - CORNER POST ASSEMBLY
E.P.A. - END POST ASSEMBLY
A.C. - ABUTMENT CONNECTION
ALL STATION AND OFFSET VALUES ARE BASED ON CL CONST. I.R. 680

ITEM 202 - FENCE REMOVED

REF.	STATION	OFFSET		STATION	OFFSET
RF26	1060+66.22	102.7' RT.	TO	1073+76.60	66.6' RT.
RF27	1060+67.24	121.0' LT.	TO	1073+98.31	58.3' LT.
RF28	1075+02.26	67.5' RT.	TO	1077+17.74	66.7' RT.
RF29	1075+39.16	58.4' LT.	TO	1077+06.06	57.1' LT.
RF30	1078+43.75	76.2' RT.	TO	1083+65.17	192.5' RT.
RF31	1078+49.30	59.9' LT.	TO	1083+49.25	111.8' LT.

HORIZONTAL SCALE IN FEET
0 10 20 40

FENCE PLAN
STA. 1070+00.00 TO STA. 1081+00.00

DESIGN AGENCY
mn consultants, inc.

DESIGNER: CJR
REVIEWER: CMN 08/29/25
PROJECT ID: 121474
SHEET: P.565 TOTAL: 655

MAH-680-4.58

BENTLEY PRODUCT: OpenRoadsDesigner 24.00.00.205 WORKSET: 121474 WORKSPACE: CONCEPTCENTER WORKSPACE: C:\Projects\Mahoning\MAH-680-4.58\ MODEL: 11311_GPKDS_PARTIAGE 68x24 PH 1 DATE: 10/31/2025 TIME: 11:13:48 AM USER: DHall@mnconsultants.com

NOTE: CONNECT EXISTING FENCE TO THE NEW CORNER POST IF REQUIRED. COST INCLUDED UNDER THE APPLICABLE NEW FENCE ITEM.

LEGEND:
C.P.A. - CORNER POST ASSEMBLY
E.P.A. - END POST ASSEMBLY
ALL STATION AND OFFSET VALUES ARE BASED ON ℄ CONST. I.R. 680

ITEM 202 - FENCE REMOVED

REF.	STATION	OFFSET		STATION	OFFSET
RF30	1078+43.75	76.2' RT.	TO	1083+65.17	192.5' RT.
RF31	1078+49.30	59.9' LT.	TO	1083+49.25	111.8' LT.
RF32	1084+60.29	178.8' RT.	TO	1093+00.42	149.8' RT.
RF33	1084+65.69	454.0' LT.	TO	1093+03.72	122.1' LT.

ITEM 607 - FENCE, TYPE CLT

REF.	PT. #	STATION	OFFSET	CONNECTION
F30	273	1081+27.25	175.2' RT.	C.P.A.
	274	1082+67.51	191.0' RT.	C.P.A.
	275	1083+20.94	181.0' RT.	C.P.A.
	276	1083+58.11	178.9' RT.	C.P.A.
	277	1083+65.17	192.5' RT.	E.P.A.
F31	278	1081+17.77	137.9' LT.	C.P.A.
	279	1081+50.58	145.5' LT.	C.P.A.
	280	1082+39.26	143.7' LT.	C.P.A.

ITEM 607 - FENCE, TYPE CLT

REF.	PT. #	STATION	OFFSET	CONNECTION
F32	281	1084+60.29	178.8' RT.	E.P.A.
	282	1085+98.17	205.4' RT.	C.P.A.
	283	1087+05.54	207.4' RT.	C.P.A.
	284	1087+15.85	210.7' RT.	C.P.A.
	287	1088+74.48	206.6' RT.	C.P.A.
	288	1090+03.87	165.2' RT.	C.P.A.
	289	1090+96.47	152.6' RT.	C.P.A.
	290	1091+36.55	147.2' RT.	C.P.A.
	291	1091+72.66	145.0' RT.	C.P.A.
F33	292	1090+19.34	159.0' LT.	C.P.A.
	293	1090+35.36	152.1' LT.	C.P.A.
	294	1091+01.20	137.7' LT.	C.P.A.
	297	1091+53.83	126.0' LT.	C.P.A.
	298	1091+61.90	125.2' LT.	C.P.A.
	299	1091+83.83	124.3' LT.	C.P.A.

Preliminary Plans - For Reference Only

SEE NOTE
6' CHAIN LINK FENCE
MATCH LINE SEE SHEET P.573
MATCH LINE STA. 51+00.00 SEE SHEET P.573
BRIDGE NO. MAH-680-7.126 S.F.N. 5003350
MATCH LINE STA. 1087+00.00 SEE SHEET P.573
MATCH LINE STA. 1080+00.00 SEE SHEET P.565
MATCH LINE STA. 1081+50.00 SEE SHEET P.565
℄ CONST. RAMP A
RAMP A
℄ CONST. RAMP B
RAMP B
℄ CONST. RAMP C
RAMP C
℄ CONST. RAMP D
RAMP D
I.R. 680 N.B.
I.R. 680 S.B.
℄ CONST. I.R. 680
SOUTH AVE.
SOUTH AVE
DICKSON AVE
DICKSON ST.
5' CHAIN LINK FENCE
MATCH LINE STA. 1089+00.00 SEE SHEET P.567
MATCH LINE STA. 1092+00.00 SEE SHEET P.567
MATCH LINE STA. 1089+50.00 SEE SHEET P.573

HORIZONTAL SCALE IN FEET
0 10 20 40

FENCE PLAN
STA. 1081+00.00 TO STA. 1092+00.00

DESIGN AGENCY
mn consultants, inc.
DESIGNER CJR
REVIEWER CMN 08/29/25
PROJECT ID 121474
SHEET P.566 TOTAL 655

MAH-680-4.58

MODEL: 11X17L (24X36 .PMP/DGN .DGN) | DATE: 10/31/2025 TIME: 11:13:59 AM | PITDRV: DROOT_PDF_F+.pltcfg | PITPEN: DROOT_CTPen.tbl | USER: DNG@mnconsultants.com | WORKSPACE: DROOT\CAD | WORKSET: 121474 | PRODUCT: OpenRoadsDesigner 24.00.00.205
FILE: P:\Projects\Mahoning\680\121474\Roadway\Sheets\121474_680_FENCE_PLAN_1081+00_TO_1092+00.dgn

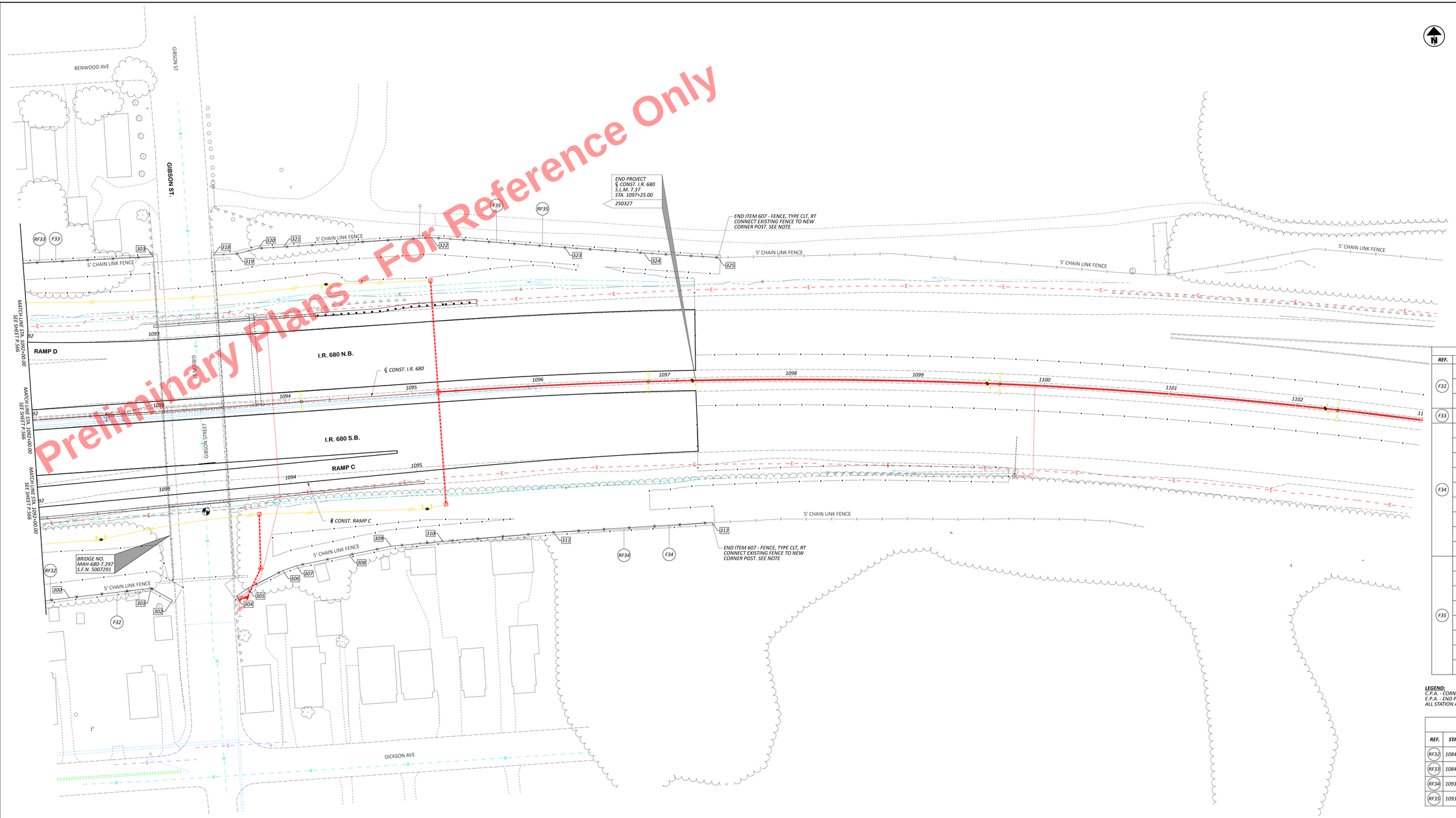

ITEM 607 - FENCE, TYPE CLT				
REF.	PT. #	STATION	OFFSET	CONNECTION
	300	1092+19.36	142.1' RT.	C.P.A.
F32	301	1092+84.09	139.1' RT.	C.P.A.
	302	1093+00.42	149.8' RT.	E.P.A.
F33	303	1093+03.72	122.1' LT.	E.P.A.
	304	1093+50.79	150.0' RT.	E.P.A.
	305	1093+60.55	144.2' RT.	C.P.A.
	306	1093+88.91	132.3' RT.	C.P.A.
	307	1093+99.86	129.2' RT.	C.P.A.
F34	308	1094+42.11	123.5' RT.	C.P.A.
	309	1094+75.47	119.0' RT.	C.P.A.
	310	1095+16.60	118.0' RT.	C.P.A.
	311	1096+06.71	116.1' RT.	C.P.A.
	312	1097+35.71	112.5' RT.	C.P.A.
	318	1093+51.53	120.2' LT.	E.P.A.
	319	1093+70.13	120.0' LT.	C.P.A.
	320	1093+87.21	123.1' LT.	C.P.A.
F35	321	1094+07.06	122.8' LT.	C.P.A.
	322	1095+24.04	122.1' LT.	C.P.A.
	323	1096+25.93	108.2' LT.	C.P.A.
	324	1096+86.56	101.6' LT.	C.P.A.
	325	1097+43.68	96.8' LT.	C.P.A.

LEGEND:
C.P.A. - CORNER POST ASSEMBLY
E.P.A. - END POST ASSEMBLY
ALL STATION AND OFFSET VALUES ARE BASED ON CL CONST. I.R. 680

ITEM 202 - FENCE REMOVED					
REF.	STATION	OFFSET		STATION	OFFSET
RF32	1084+60.29	178.8' RT.	TO	1093+00.42	149.8' RT.
RF33	1084+65.69	454.0' LT.	TO	1093+03.72	122.1' LT.
RF34	1093+50.79	150.0' RT.	TO	1097+35.71	112.5' RT.
RF35	1093+51.53	120.2' LT.	TO	1097+43.68	96.8' LT.

NOTE: CUT EXISTING FENCE AND ATTACH TO THE NEW CORNER POST. COST FOR THIS WORK INCLUDED IN THE UNIT PRICE BID FOR THE FENCE REMOVED ITEM

HORIZONTAL SCALE IN FEET
0 10 20 40

FENCE PLAN
STA. 1092+00.00 TO STA. 1103+00.00

DESIGN AGENCY
ms consultants, inc.
DESIGNER CJR
REVIEWER CMN 08/29/25
PROJECT ID 121474
SHEET F-567 TOTAL 655

MAH-680-4.58

MODEL: 121321_GPROF_PAVEMENT_664.dgn | DATE: 10/1/2025 TIME: 11:14:12 AM |FITDPL GPROFF_PDF_F+.dwg| FITDPL GPROFF_LITHIA.SS8| DIGITIZED BY: CMN|Plotted on: 10/1/2025

Preliminary Plans - For Reference Only



LEGEND:
C.P.A. - CORNER POST ASSEMBLY
ALL STATION AND OFFSET VALUES ARE BASED ON CL CONST. I.R. 680

ITEM 202 - FENCE REMOVED					
REF.	STATION	OFFSET		STATION	OFFSET
RF1	956+55.18	445.9' RT.	TO	962+50.53	53.9' RT.

ITEM 607 - FENCE, TYPE CLT				
REF.	PT. #	STATION	OFFSET	CONNECTION
F1	337	956+55.18	445.9' RT.	E.P.A.
	338	957+82.64	319.9' RT.	C.P.A.

HORIZONTAL SCALE IN FEET
0 10 20 40

FENCE PLAN - RAMP E AT MAHONING AVE.
STA. 0+00.00 TO STA. 4+00.00

DESIGN AGENCY
mc consultants, inc.

DESIGNER
CJR

REVIEWER
CMN 08/29/25

PROJECT ID
121474

SHEET P.568 TOTAL 655

MAH-680-4.58

MODEL: 121474_GPROS_PAPERSIZE_66x34 (in.) DATE: 9/15/2025 TIME: 11:14:23 AM PLTDRV: OHDOT_PDF_Ex.pltcfg PENTBL: OHDOT_UTPwrtbl USER: Dhall@mcconsultants.com WORKSPACE: OHDOTCIVD2 WORKSET: 121474 PRODUCT: OpenRoadsDesigner 24.00.00.205
pw:\\ohdot-pw.bentley.com:ohdot-pw-02\Documents\501 Alum Projects\District 04\Mahoning\121474\Roadway\Sheets\121474_G8045.dgn

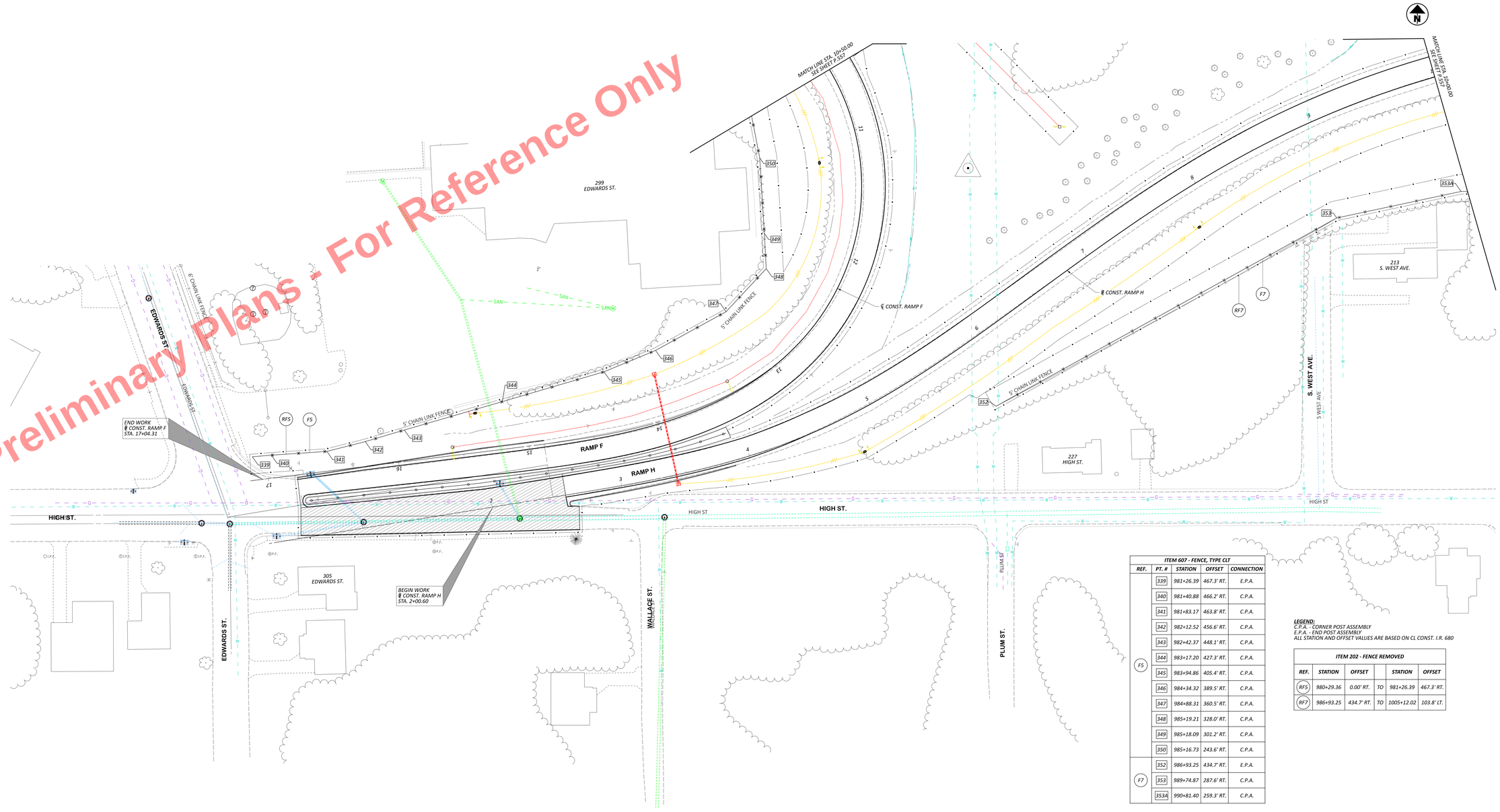

Preliminary Plans - For Reference Only

ITEM 607 - FENCE, TYPE CLT				
REF.	PT. #	STATION	OFFSET	CONNECTION
F5	339	981+26.39	467.3' RT.	E.P.A.
	340	981+40.88	466.2' RT.	C.P.A.
	341	981+83.17	463.8' RT.	C.P.A.
	342	982+12.52	456.6' RT.	C.P.A.
	343	982+42.37	448.1' RT.	C.P.A.
	344	983+17.20	427.3' RT.	C.P.A.
	345	983+94.86	405.4' RT.	C.P.A.
	346	984+34.32	389.5' RT.	C.P.A.
	347	984+88.31	360.5' RT.	C.P.A.
	348	985+19.21	328.0' RT.	C.P.A.
	349	985+18.09	301.2' RT.	C.P.A.
	350	985+16.73	243.6' RT.	C.P.A.
F7	352	986+93.25	434.7' RT.	E.P.A.
	353	989+74.87	287.6' RT.	C.P.A.
	353A	990+81.40	259.3' RT.	C.P.A.

LEGEND:
C.P.A. - CORNER POST ASSEMBLY
E.P.A. - END POST ASSEMBLY
ALL STATION AND OFFSET VALUES ARE BASED ON CL CONST. I.R. 680

ITEM 202 - FENCE REMOVED					
REF.	STATION	OFFSET		STATION	OFFSET
RF5	980+29.36	0.00' RT.	TO	981+26.39	467.3' RT.
RF7	986+93.25	434.7' RT.	TO	1005+12.02	103.8' LT.

HORIZONTAL SCALE IN FEET
0 10 20 40

FENCE PLAN - RAMPS F & H AT HIGH ST.
RAMP H - STA. 0+28.15 TO STA. 10+00.00

DESIGN AGENCY
mk consultants, inc.

DESIGNER: CJR
REVIEWER: CMN 08/29/25
PROJECT ID: 121474
SHEET: P.569 TOTAL: 655

MAH-680-4.58

MODEL: 11X17L (ORD) JMATHEWS 08/28/25 | DATE: 10/31/2025 TIME: 11:14:36 AM PITDRV: ORIENT_PDF_F+_alt4g PENTBL: ORIENT_UTM.tbl USER: DNolf@mkconsultants.com WORKSPACE: ORIENTEXPRESS WORKSET: 121474 PRODUCT: OpenRoadsDesigner 24.00.00.205
FILE: P:\Projects\Active\MAH-680-4.58\Design\Roadway\Plan Sheets\Fence\MAH-680-4.58_Fence_Plan_Sheet.dgn

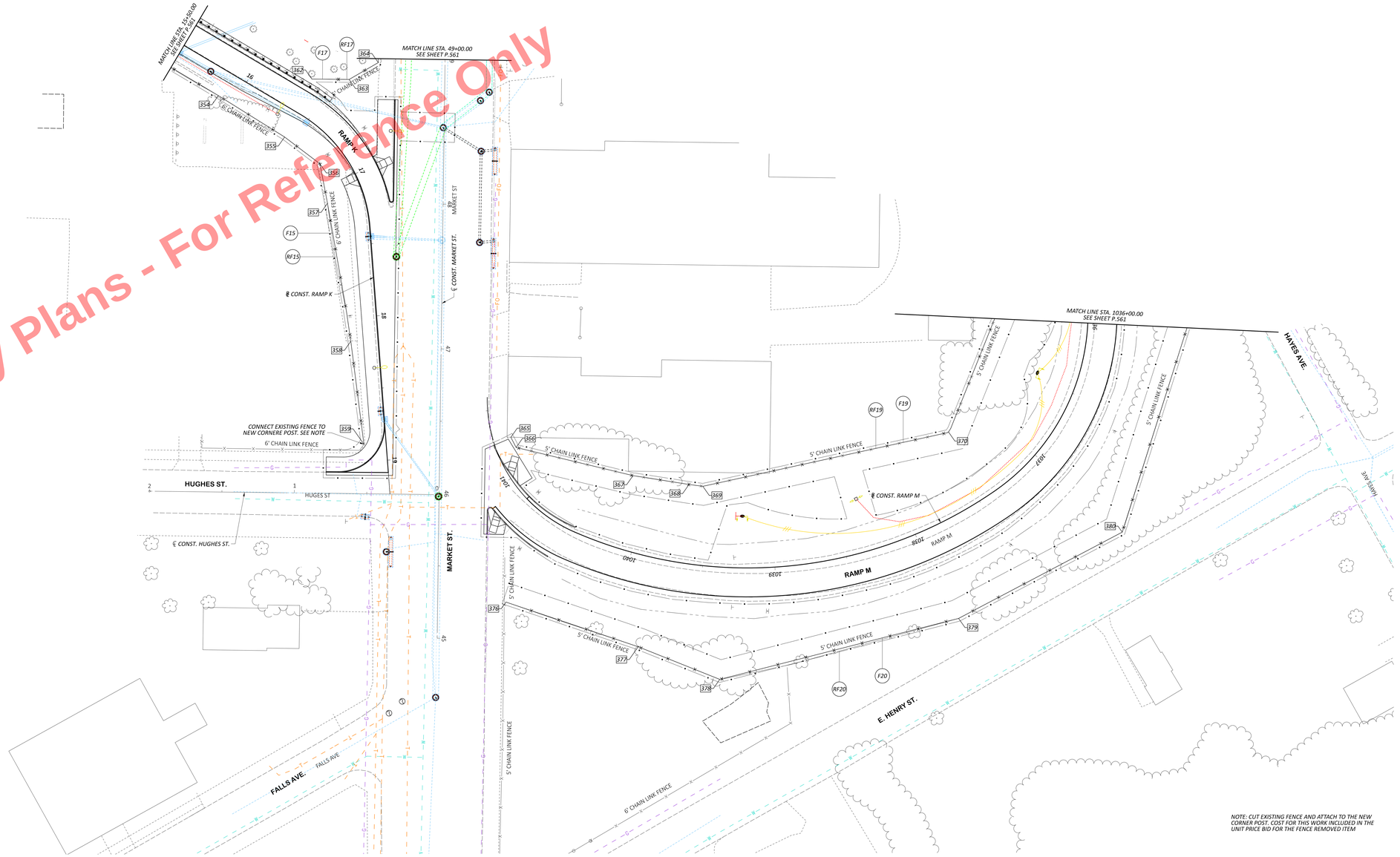

Preliminary Plans - For Reference Only

LEGEND:
C.P.A. - CORNER POST ASSEMBLY
E.P.A. - END POST ASSEMBLY
ALL STATION AND OFFSET VALUES ARE BASED ON CL CONST. I.R. 680

ITEM 202 - FENCE REMOVED					
REF.	STATION	OFFSET		STATION	OFFSET
RF15	1025+40.89	88.0' RT.	TO	1030+20.32	369.6' RT.
RF17	1029+59.46	126.1' RT.	TO	1029+94.65	80.4' RT.
RF19	1030+83.44	86.3' RT.	TO	1030+94.04	355.3' RT.
RF20	1030+96.11	469.3' RT.	TO	1046+71.50	188.2' RT.

ITEM 607 - FENCE, TYPE CLT				
REF.	PT. #	STATION	OFFSET	CONNECTION
F15	354	1029+06.32	151.3' RT.	C.P.A.
	355	1029+50.19	169.1' RT.	C.P.A.
	356	1029+73.52	182.7' RT.	C.P.A.
	357	1029+81.73	208.7' RT.	C.P.A.
	358	1030+06.29	300.4' RT.	C.P.A.
	359	1030+20.32	369.6' RT.	C.P.A.
F17	362	1029+59.46	126.1' RT.	E.P.A.
	363	1029+81.98	121.8' RT.	C.P.A.
	364	1029+98.14	107.0' RT.	C.P.A.
F19	365	1030+94.04	355.3' RT.	E.P.A.
	366	1030+97.00	362.2' RT.	C.P.A.
	367	1031+57.65	379.6' RT.	C.P.A.
	368	1031+87.19	386.2' RT.	C.P.A.
	369	1031+94.55	387.8' RT.	C.P.A.
	370	1033+36.26	362.9' RT.	C.P.A.
F20	376	1030+96.11	469.3' RT.	E.P.A.
	377	1031+60.04	497.9' RT.	C.P.A.
	378	1032+00.01	521.5' RT.	C.P.A.
	379	1033+30.08	491.8' RT.	C.P.A.
	380	1034+36.02	446.7' RT.	C.P.A.

HORIZONTAL SCALE IN FEET
0 10 20 40

FENCE PLAN - RAMPS K & M AT MARKET ST.
RAMP M - STA. 1035+00.00 TO STA. 1041+65.96

DESIGN AGENCY
ms consultants, inc.
DESIGNER CJR
REVIEWER CMN 08/29/25
PROJECT ID 121474
SHEET P.570 TOTAL 655

MAH-680-4.58

MODEL: 121474_GENERAL PURPOSE.dgn | DATE: 10/31/2025 TIME: 11:14:46 AM | PLOTBY: CMOOT | PLOTSCALE: 1.0000 | PLOTTER: \\msconsultants.com\dfs\Projects\121474\Design\Roadway\Plans\121474_GENERAL PURPOSE.dgn

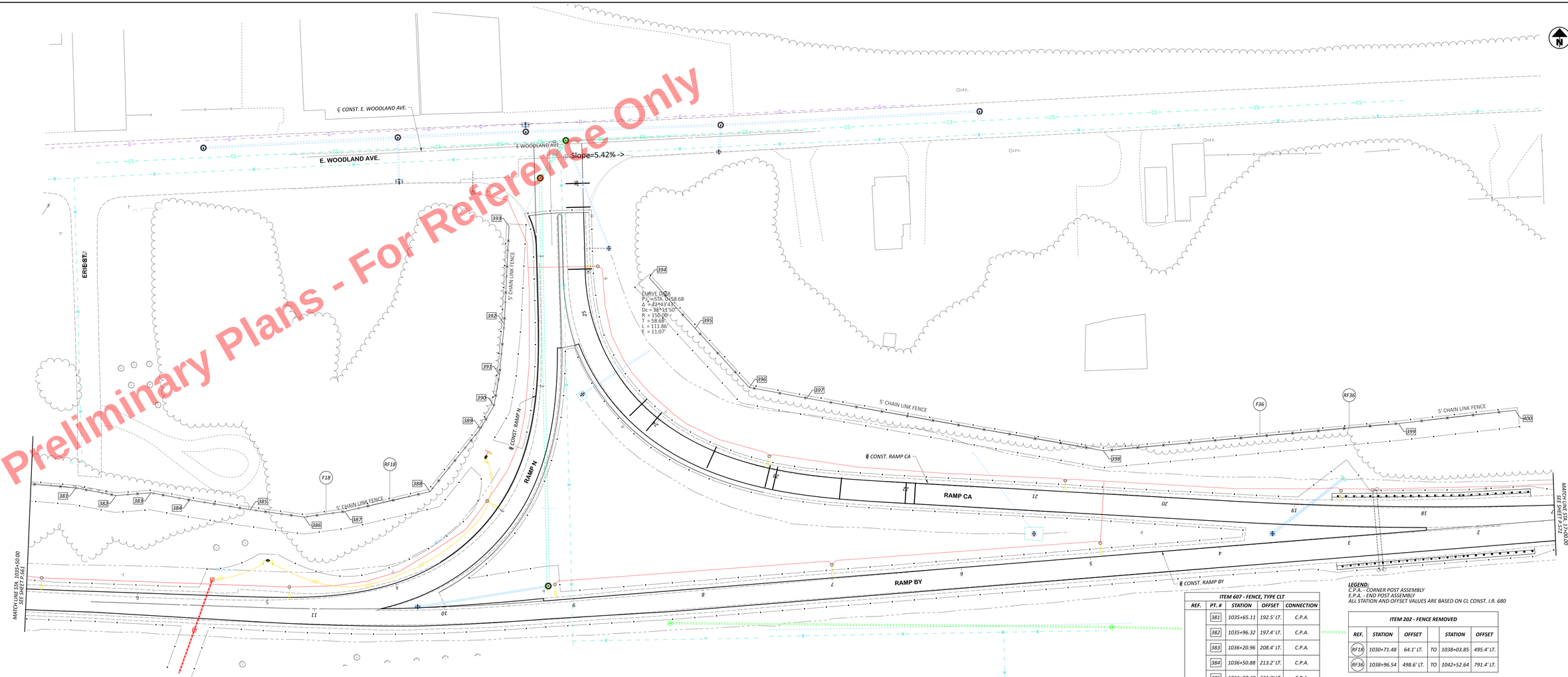

Preliminary Plans - For Reference Only

ITEM 607 - FENCE, TYPE CLT				
REF.	PT. #	STATION	OFFSET	CONNECTION
F18	381	1035+65.11	192.5' LT.	C.P.A.
	382	1035+96.32	197.4' LT.	C.P.A.
	383	1036+20.96	208.4' LT.	C.P.A.
	384	1036+50.88	213.2' LT.	C.P.A.
	385	1036+97.49	221.8' LT.	C.P.A.
	386	1037+38.07	230.4' LT.	C.P.A.
	387	1037+64.99	245.0' LT.	C.P.A.
	388	1038+17.30	282.3' LT.	C.P.A.
	389	1038+34.03	341.6' LT.	C.P.A.
	390	1038+36.93	361.9' LT.	C.P.A.
	391	1038+32.84	385.8' LT.	C.P.A.
	392	1038+23.69	423.7' LT.	C.P.A.
	393	1038+03.85	495.4' LT.	E.P.A.

LEGEND:
C.P.A. - CORNER POST ASSEMBLY
E.P.A. - END POST ASSEMBLY
ALL STATION AND OFFSET VALUES ARE BASED ON CL CONST. I.R. 680

ITEM 202 - FENCE REMOVED					
REF.	STATION	OFFSET		STATION	OFFSET
RF18	1030+71.48	64.1' LT.	TO	1038+03.85	495.4' LT.
RF36	1038+96.54	498.6' LT.	TO	1042+52.64	791.4' LT.

ITEM 607 - FENCE, TYPE CLT				
REF.	PT. #	STATION	OFFSET	CONNECTION
F36	394	1038+96.54	498.6' LT.	E.P.A.
	395	1039+32.54	477.2' LT.	C.P.A.
	396	1039+73.90	454.1' LT.	C.P.A.
	397	1040+04.08	467.1' LT.	C.P.A.
	398	1041+37.38	556.5' LT.	C.P.A.
	399	1042+24.16	720.6' LT.	C.P.A.
	400	1042+52.64	791.4' LT.	E.P.A.

HORIZONTAL SCALE IN FEET
0 10 20 40

FENCE PLAN - RAMPS CA, N, & BY AT US 62/SR 7
RAMP CA - STA. 17+00.00 TO STA. 26+24.52

DESIGN AGENCY
mk consultants, inc.
DESIGNER CJR
REVIEWER CMN 08/29/25
PROJECT ID 121474
SHEET P-571 TOTAL 655

MAH-680-4.58

MODEL: 11X17L_LANDS_PARTIALS_682x431 | DATE: 10/1/2025 TIME: 11:15:00 AM PITDRV_ORIENT_PSF_FS.shtml PITDRV_ORIENT_PSF_FS.shtml PITDRV_OFFSET_PSF_FS.shtml PITDRV_OFFSET_PSF_FS.shtml
FILE NAME: P:\Projects\MAH-680-4.58\Design\Roadway\Sheets\FENCE PLAN\MAH-680-4.58_FENCE PLAN_RAMPS CA, N, & BY AT US 62_SR 7.dgn
USER: DNiff@mksconsultants.com WORKSPACE: CMDOTCIVIL3D WORKSET: 121474 PRODUCT: OpenRoadsDesigner 24.00.00.205

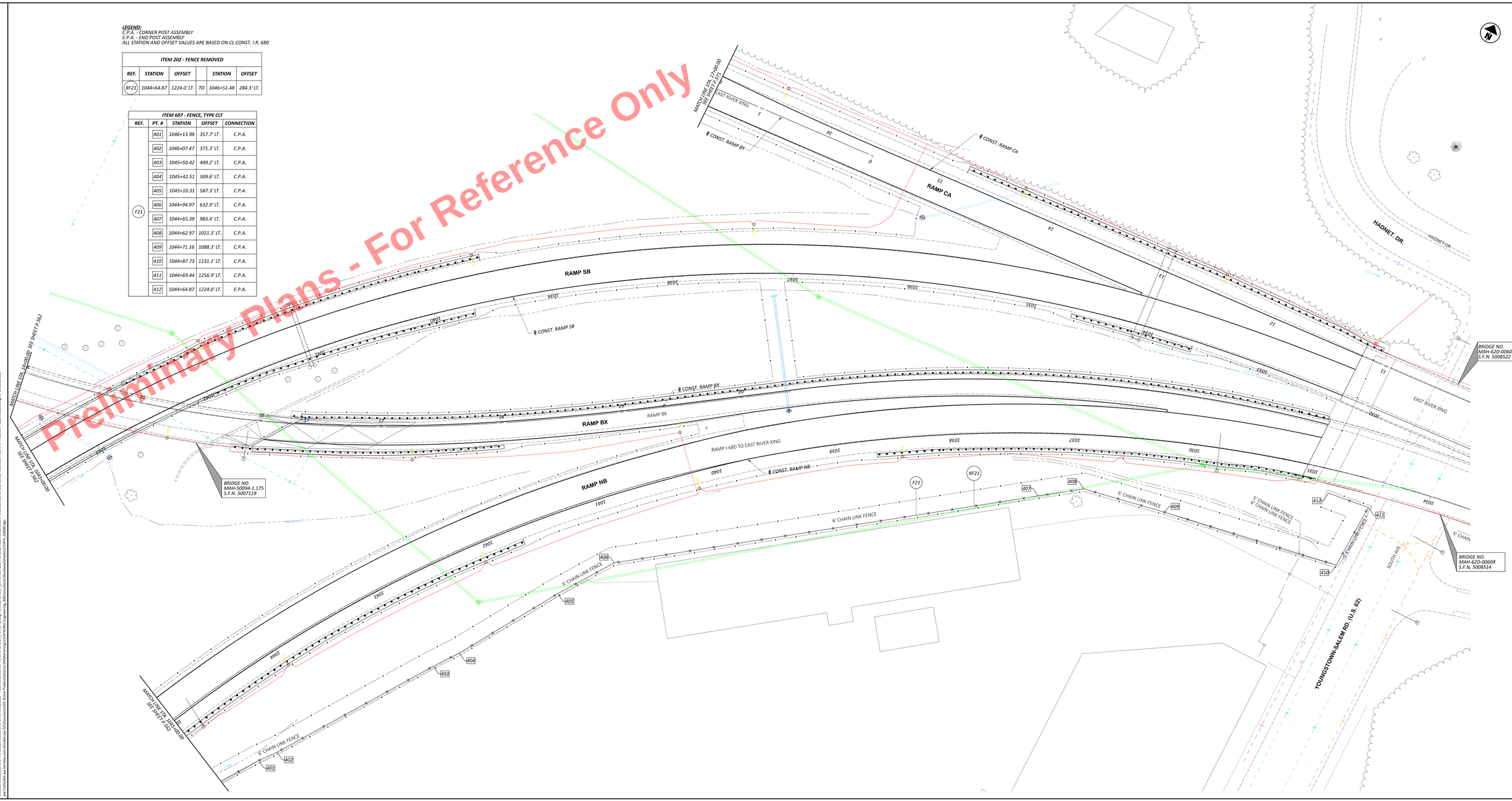

MAH-680-4.58

FENCE PLAN - RAMPS NB S.R. 7, BX & CA AT U.S. 62
RAMP NB S.R. 7 - STA. 1035+00.00 TO STA. 1045+00.00

DESIGN AGENCY
mc consultants, inc.
DESIGNER: CJR
REVIEWER: CMN 08/29/25
PROJECT ID: 121474
SHEET: P.572 TOTAL: 655

MODEL: 121321_GP604_PARTIDGE 68/24 PH | DATE: 10/31/2025 TIME: 11:15:33 AM | PITOPH_GP604T_PSP_F1.dwg PITOPH_GP604T_LTPlan.tbl USER: DHall@mcaware.com WORKSPACE: GP604TOOLSET WORKSET: 121474 PRODUCT: OpenRoadsDesigner 24.10.00.205
ACTIVE PROJECT: C:\Projects\121474 - 2025 Mahoning Co\Roadway\Plan Sheets\Fence\121474_Fence.dgn

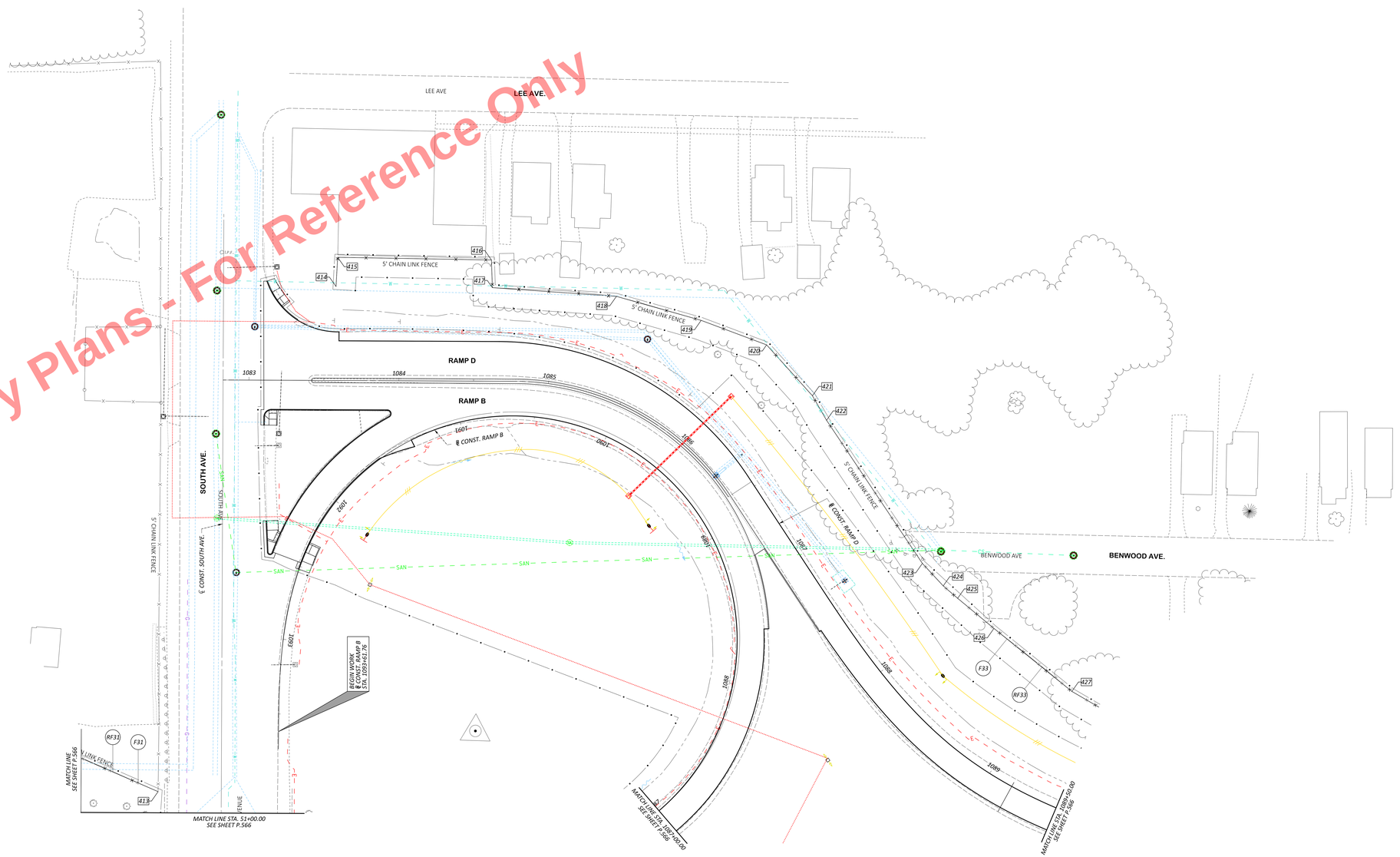

Preliminary Plans - For Reference Only

LEGEND:
C.P.A. - CORNER POST ASSEMBLY
E.P.A. - END POST ASSEMBLY
A.C. - ABUTMENT CONNECTION
ALL STATION AND OFFSET VALUES ARE BASED ON CL CONST. I.R. 680

ITEM 202 - FENCE REMOVED					
REF.	STATION	OFFSET		STATION	OFFSET
RF31	1078+49.30	59.9' LT.	TO	1083+49.25	111.8' LT.
RF33	1084+65.69	454.0' LT.	TO	1093+03.72	122.1' LT.

ITEM 607 - FENCE, TYPE CLT				
REF.	PT. #	STATION	OFFSET	CONNECTION
F31	413	1083+49.25	111.8' LT.	A.C.
	414	1084+65.69	454.0' LT.	E.P.A.
	415	1084+66.45	473.5' LT.	C.P.A.
	416	1085+75.74	473.0' LT.	C.P.A.
	417	1085+76.53	454.6' LT.	C.P.A.
	418	1086+59.40	449.4' LT.	C.P.A.
	419	1087+16.09	433.9' LT.	C.P.A.
	420	1087+59.94	417.9' LT.	C.P.A.
F33	421	1087+90.83	384.1' LT.	C.P.A.
	422	1088+00.39	367.8' LT.	C.P.A.
	423	1088+65.16	272.8' LT.	C.P.A.
	424	1088+79.20	257.9' LT.	C.P.A.
	425	1088+88.90	249.7' LT.	C.P.A.
	426	1089+13.28	229.8' LT.	C.P.A.
	427	1089+65.67	188.1' LT.	C.P.A.
	428	1089+84.03	177.7' LT.	C.P.A.

HORIZONTAL SCALE IN FEET
0 10 20 40

FENCE PLAN - RAMPS B & D AT SOUTH AVE.
RAMP B - STA. 1087+00.00 TO STA. 1093+73.32

DESIGN AGENCY
mc consultants, inc.

DESIGNER: CJR
REVIEWER: CMN 08/29/25
PROJECT ID: 121474
SHEET: P.573 TOTAL: 655

MAH-680-4.58

MODEL: 121321_GPKEY_PARTIESSE_682A1.PKI | DATE: 9/15/2025 TIME: 11:15:20 AM | KEYSPK: GPKEY_PSP_F1.shtml | PLOTTED: GPKEY_OTTER.SEER | DWG: DWG[Emission.com] WORKSPACE: GPKEYSTUDIO WORKSET: 121474 PRODUCT: OpenRoadsDesigner 24.00.00.205
ACTIVITY: PLOT FENCE PLAN - RAMPS B & D AT SOUTH AVE. RAMP B - STA. 1087+00.00 TO STA. 1093+73.32 | USER: CMN

PROJECT DESCRIPTION

THE PROJECT CONSISTS OF FULL DEPTH PAVEMENT REPLACEMENT OF MAHONING I.R. 680 FROM THE S.R. 193 INTERCHANGE (SLM-4.58) TO SOUTH OF THE SOUTH AVENUE INTERCHANGE (SLM-7.37), ALL INTERCHANGE RAMPS WITHIN THE CORRIDOR WILL BE RESURFACED, INCLUDING RAMPS TO AND FROM S.R. 193 AND U.S. 62/S.R. 7. INCLUDES BRIDGE WORK TO MAH-680-4.886 (SFN 5006872). THIS PROJECT ALSO INCLUDES THE REMOVAL OF THE MAHONING AVENUE ENTRANCE RAMP TO I.R. 680 SOUTHBOUND.

ADDITIONAL WORK INCLUDES GUARDRAIL AND CONCRETE BARRIER REPLACEMENT, ROADWAY DRAINAGE IMPROVEMENTS, SIDEWALK, CURB RAMPS, SIGNING, LIGHTING AND PAVEMENT MARKINGS.

HISTORIC RECORDS

THERE WERE NO HISTORICAL RECORDS CONSIDERED IN OUR ANALYSES AND DESIGN RECOMMENDATIONS. ALTHOUGH, HISTORIC RECORDS WERE REVIEWED FOR REFERENCE; INCLUDING PREIVOUS LANDSLIDE IN SUB-BATCH 13457.

GEOLOGY

THE SITE IS UNDERLAIN BY ALLEGHENY/POTTSVILLE GROUP BEDROCK. THE BEDROCK CONSISTS OF INTERBEDDED CONGLOMERATES, SANDSTONES, SILTSTONES, AND SHALES.
THE SITE LIES IN THE KILBUCK-GLACIATED PITTSBURGH PLATEAU PHYSIOGRAPHIC REGION OF OHIO. COMMON SOILS IN THE REGION INCLUDE WISCONSINAN-AGE CLAYEY TILL OVERLAIN BY MORE RECENT GRANULAR ALLUVIUM. THE SOILS RANGE FROM THIN COVER IN THE UPLANDS, TO THICK IN ADJACENT BURIED VALLEYS. THIN COAL BEDS ARE NOT UNCOMMON IN THE REGION.

RECONNAISSANCE

THREE SITE VISITS WERE MADE BY SOMAT PERSONNEL BETWEEN JANUARY AND FEBRUARY 2022. STARTING FROM THE NORTHERN END OF THE ALIGNMENT, THE ELEVATION GENERALLY DECREASES APPROACHING THE MAHONING RIVER AND GRADUALLY INCREASES SOUTH OF THE RIVER CROSSING.

THE SURFACE PAVEMENT ALONG THE ALIGNMENT CONSISTS OF ASPHALTIC CEMENT CONCRETE AT THE SURFACE. MODERATE TO SEVERE LEVELS OF CRACKING, EDGE CRACKING, AND RAVELING WERE NOTED ALONG THE ENTIRETY OF THE ALIGNMENT. HOWEVER, OUR SCOPE OF WORK DID NOT INCLUDE DETAILED PAVEMENT CONDITION SURVEY. BEDROCK OUTCROPS CONSISTING OF SANDSTONE AND SHALE WERE NOTED ALONG THE ALIGNMENT ROUGHLY NEAR SECTION 7.07. BOTH THE OBSERVED SANDSTONES AND SHALES WERE HIGHLY WEATHERED AND VERY WEAK.

NO DEFICIENCIES WERE NOTED IN EXISTING STRUCTURES OR EMBANKMENTS ALONG THE ALIGNMENT AT THE TIME OF OUR VISIT, AND NO DRAINAGE PROBLEMS WERE OBSERVED AT THE TIME OF OUR OBSERVATION.

SUBSURFACE EXPLORATION

THE FIELD OPERATIONS FOR THIS INVESTIGATION WERE PERFORMED BETWEEN MARCH 21, 2022, AND JUNE 23, 2022, AND CONSISTED OF 221 TEST BORINGS, WITH 115 BORINGS WITHIN THIS PROJECT LIMIT. THE SOIL BORINGS WERE DRILLED USING A TRUCK-MOUNTED DRILL RIG ADVANCING HOLLOW STEM AUGERS TO DEPTHS RANGING BETWEEN 2 AND 16.2 FEET BELOW EXISTING GRADES. THE TRUCK RIG AUTOMATIC HAMMER USED IN THIS INVESTIGATION HAD A DRILL ROD ENERGY RATIO OF 68.4%. ALL SOIL SAMPLES WERE RECOVERED USING SPLIT-SPOON SAMPLING PROCEDURES IN ACCORDANCE WITH ASTM STANDARD D1586 ("STANDARD METHOD FOR PENETRATION TESTS AND SPLIT BARREL SAMPLING OF SOILS"). THE SAMPLES WERE TAKEN CONTINUOUSLY, AND WHERE BEDROCK WAS ENCOUNTERED, THE BORINGS WERE TERMINATED ON SAMPLER REFUSAL.

EXPLORATION FINDINGS

THE SOIL OVERBURDEN OBSERVED BELOW THE FILL MATERIALS AND ABOVE THE BEDROCK CONSISTED OF VARIOUS STRATUMS OF MATERIALS, INCLUDING GRAVEL AND/OR STONE FRAGMENTS (A-1A), GRAVEL AND/OR STONE FRAGMENTS WITH SAND (A-1B), SILTY CLAY (A-6B), CLAY (A-7-6), SILT AND CLAY (A-6A), SANDY SILT (A-4A), COARSE AND FINE SAND (A-3A), AND FINE SAND (A-3). THE CONSISTENCY OF THE COHESIVE MATERIALS GENERALLY RANGED FROM STIFF TO HARD, WITH SOFT OR MEDIUM STRATA ENCOUNTERED IN B-055-021, B-057-021, B-107-021, B-130-021, B-153-021, AND B-195-021. THE APPARENT DENSITY OF THE GRANULAR SOILS RANGED FROM VERY LOOSE TO VERY DENSE.

THE SOILS ENCOUNTERED IN THIS INVESTIGATION RANGED FROM DRY TO MOIST, WITH THE VAST MAJORITY BEING DAMP. NO GROUNDWATER WAS ENCOUNTERED DURING DRILLING OR UPON COMPLETION OF THE SOIL BORINGS. BEDROCK WAS ENCOUNTERED IN 30 OF THE SOIL BORINGS AT DEPTHS RANGING BETWEEN 0.5 AND 11 FEET BELOW EXISTING GRADES.

SPECIFICATIONS

THIS GEOTECHNICAL EXPLORATION WAS PERFORMED IN ACCORDANCE WITH THE STATE OF OHIO, DEPARTMENT OF TRANSPORTATION, OFFICE OF GEOTECHNICAL ENGINEERING, SPECIFICATIONS FOR GEOTECHNICAL EXPLORATION, DATED JULY 16, 2021.

AVAILABLE INFORMATION

THE SOIL, BEDROCK, AND GROUNDWATER INFORMATION COLLECTED FOR THIS SUBSURFACE EXPLORATION THAT CAN BE CONVENIENTLY DISPLAYED ON THE GEOTECHNICAL PROFILE SHEETS HAS BEEN PRESENTED. GEOTECHNICAL REPORTS, IF PREPARED, ARE AVAILABLE FOR REVIEW ON THE OFFICE OF CONTRACT SALES WEBSITE.

LEGEND

DESCRIPTION	ODOT CLASS (GI),	CLASSIFIED MECH./VISUAL	
GRAVEL AND/OR STONE FRAGMENTS	A-1-a (0)	9	17
GRAVEL AND/OR STONE FRAGMENTS WITH SAND	A-1-b (0)	13	26
GRAVEL AND/OR STONE FRAGMENTS WITH SAND AND SILT	A-2-4 (0)	6	5
GRAVEL AND/OR STONE FRAGMENTS WITH SAND AND SILT	A-2-5		
GRAVEL AND/OR STONE FRAGMENTS WITH SAND, SILT AND CLAY	A-2-6	0	3
FINE SAND	A-3 (0)	0	48
COARSE AND FINE SAND	A-3a (0)	4	67
SANDY SILT	A-4a (4)	57	69
SILT	A-4b (8)	7	15
SILT AND CLAY	A-6a (7)	11	13
SILTY CLAY	A-6b (5)	1	10
CLAY	A-7-6 (8)	2	4
	TOTAL	110	277
	Rock	0	30

PAVEMENT AND/OR BASE	VISUAL
SANDSTONE	
SHALE	
SOIL CUTTINGS BACKFILL MIXED WITH BENTONITE PELLETS OR CHIPS	
Asphalt or Concrete Pavement Patch	
Soil Cuttings Backfill	
PAVEMENT OR BASE = X = APPROXIMATE THICKNESS	VISUAL
SOD AND TOPSOIL = X = APPROXIMATE THICKNESS	VISUAL

BORING LOCATION - PLAN VIEW.

DRIVE SAMPLE AND/OR ROCK CORE BORING PLOTTED TO VERTICAL SCALE ONLY. HORIZONTAL BAR INDICATES A CHANGE IN STRATIGRAPHY.

WC — INDICATES WATER CONTENT IN PERCENT.

N_{60} — INDICATES STANDARD PENETRATION RESISTANCE NORMALIZED TO 60% DRILL ROD ENERGY RATIO.

X/Y/Z — NUMBER OF BLOWS FOR STANDARD PENETRATION TEST (SPT):
X= NUMBER OF BLOWS FOR FIRST 6 INCHES.
Y= NUMBER OF BLOWS FOR SECOND 6 INCHES.
Z= NUMBER OF BLOWS FOR THIRD 6 INCHES.

W — INDICATES FREE WATER ELEVATION.

● — INDICATES A PLASTIC MATERIAL WITH A MOISTURE CONTENT EQUAL TO OR GREATER THAN THE LIQUID LIMIT MINUS 3.

⊖ — INDICATES A NON-PLASTIC MATERIAL WITH A MOISTURE CONTENT GREATER THAN 25 % OR GREATER THAN 19 % WITH A WET APPEARANCE.

SS — INDICATES A SPLIT SPOON SAMPLE.

NP — INDICATES A NON-PLASTIC SAMPLE.

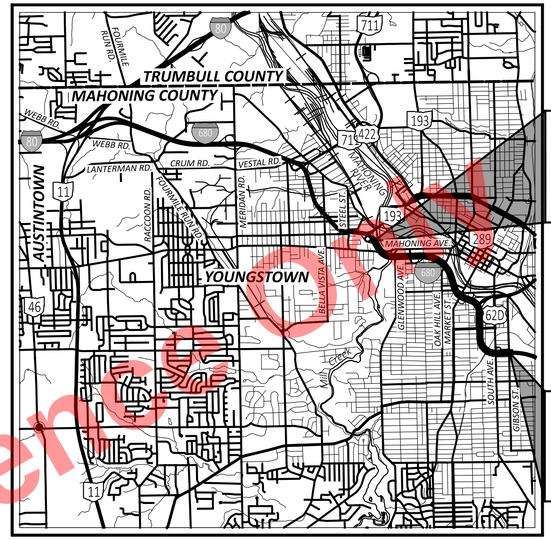

BEGIN PROJECT STA. 950+ 65.76 S.L.M 4.58

END PROJECT STA. 1097+ 25.00 S.L.M 7.37

LOCATION MAP

SCALE IN MILES

0 1 2 3 4

N

PARTICLE SIZE DEFINITIONS

12"	3"	2.0 mm	0.42 mm	0.074 mm	0.005 mm
BOULDERS	COBBLES	GRAVEL	COARSE SAND	FINE SAND	SILT	CLAY
		No. 10 SIEVE	No. 40 SIEVE	No. 200 SIEVE		

INDEX OF SHEETS	PAGES
EXPLORATION NOTES	P.574
SUMMARY OF SOIL TEST DATA	P.575-P.581
IR-680 GEOTECHNICAL PLAN/PROFILE PLANS	P.582 -P.611
IR-680 RAMP PLANS	P.612 -P.631
IR-680 RAMP PROFILE PLANS	P.632-P.655

RECON. - JANUARY 2022/FEBRUARY 2022
DRILLING - MARCH 2022 TO MARCH 2024
DRAWN - NOVEMBER 2024
REVIEWED - NOVEMBER 2024

Preliminary Plans - For Reference

GEOTECHNICAL PROFILE-ROADWAY

DESIGN AGENCY
Somat Engineering of Ohio, Inc.

DESIGNER CJW
REVIEWER JDZ 05/30/25
PROJECT ID 121474
SUBSET 1 | TOTAL 82
SHEET P. 574 | TOTAL P. 655

MAH-680-4.80

MODEL: Sheet PAPERSIZE: 34x22 (in.) DATE: 9/5/2025 TIME: 1:24:52 PM PLTDRV: OHDOT_PDF_F+.pltcfg PENTBL: OHDOT_Pen.tbl USER: czinner@somateng.com WORKSPACE: OHDOTCEv02 WORKSET: 121474 PRODUCT: OpenRoadsDesigner 24.00.01.62
pw:\\ohiodot-pw.bentley.com:ohiodot-pw-02\Documents\01 Active Projects\District 04\Mahoning\121474\401-Engineering_Somat\Geotechnical\Sheets\121474_IC001.dgn

MAH-680-4.80

MODEL: Sheet PAPERSIZE: 11x17 (in.) DATE: 8/13/2025 TIME: 3:15:24 PM PLTDRV: OHDOT_E+.pltcfg PENTBL: OHDOT_Pen.tbl USER: lmartinez@somateng.com WORKSPACE: OHDOTCEv02 WORKSET: 121474 PRODUCT: OpenRoadsDesigner 23.00.01.11
pw:\\ohiodot-pw.bentley.com:ohiodot-pw-02\Documents\01 Active Projects\District 04\Mahoning\121474\401-Engineering_Somat\Geotechnical\Sheets\121474_ID001.dgn

SUMMARY OF SOIL TEST DATA
I-680 NB/SB

EXPLOR. ID	SAMPLE FROM	-	TO	ID	N60	% REC	tsf HP	% GR	% CS	% FS	% SILT	% CLAY	LL	PL	PI	% WC	ODOT CLASS (GI)	ppm SO4	CLASSIFICATION
B-065-0-21	1.5	-	3	SS1	54	94	-	29	22	26	18	5	-	-	-	-	A-3a (VISUAL)	<100	BR. TO GR., C. AND F. SAND, SOME GRAV.
STA.957+50,32' RT.	3	-	4.5	SS2	52	94	-	21	24	32	17	6	-	-	-	-	A-3a (VISUAL)	-	BR. TO GR., C. AND F. SAND, SOME GRAV.
LAT.=41.1017	4.5	-	5	SS3	35	94	-	-	-	-	-	-	-	-	-	12	A-3a (VISUAL)	-	BR. TO GR., C. AND F. SAND, SOME GRAV.
LONG.=-80.67512	5	-	6	SS3	-	-	-	-	-	-	-	-	-	-	-	12	A-4a (VISUAL)	-	BR., SANDY SILT, DAMP
	6	-	7.5	SS4	45	94	-	-	-	-	-	-	-	-	-	12	A-4a (VISUAL)	-	BR., SANDY SILT, TR. GRAV., DAMP
B-066-0-21	1.5	-	3	SS1	33	100	-	23	23	35	15	4	-	-	-	-	A-3a (VISUAL)	<100	BR., C. AND F. SAND, SOME GRAV.
STA.960+67,44' LT.	3	-	4.5	SS2	14	100	-	31	34	19	13	3	-	-	-	-	A-3a (VISUAL)	-	BR., C. AND F. SAND, SOME GRAV.
LAT.=41.101207 LONG.=-80.67415	4.5	-	6	SS3	13	100	-	-	-	-	-	-	-	-	-	7	A-3a (VISUAL)	-	BR., C. AND F. SAND, SOME GRAV.
	6	-	7.5	SS4	12	100	-	-	-	-	-	-	-	-	-	6	A-3a (VISUAL)	-	BR., C. AND F. SAND, SOME GRAV.
B-067-0-21	0.6	-	2.1	SS1	44	100	-	41	22	13	-	-	-	-	-	-	A-1-b (VISUAL)	480	BR. TO DARK GR., GRAV. AND/OR STONE
STA.977+72,45' RT.	2.1	-	2.9	SS2	11	100	0.25	-	-	-	-	-	-	-	-	-	A-6a (VISUAL)	-	BLK, SILT AND CLAY, TR. SAND, TR. GRAV.
LAT.=41.100355 LONG.=-80.668254	2.9	-	3.6	SS2	-	-	1.75	-	-	-	-	-	-	-	-	-	A-6a (VISUAL)	-	GR., SILT & CLAY, LITTLE GRAV., TR. SAND
	3.6	-	5.1	SS3	13	17	-	-	-	-	-	-	-	-	-	-	A-6a (VISUAL)	-	GR., SILT & CLAY, LITTLE GRAV.,TR. SAND
	5.1	-	6.6	SS4	15	100	2.75	0	0	0	57	43	33	20	13	-	A-6a (9)	-	-
B-068-0-21	1.3	-	2.8	SS1	38	100	-	30	8	33	21	8	-	-	-	-	A-3 (VISUAL)	330	BR., F. SAND, SOME SILT, SOME GRAV.
STA.972+53,35' LT.	2.8	-	3.63	SS2	20/50/4"	100	-	-	-	-	-	-	-	-	-	12	Rock (VISUAL)	-	SANDSTONE, BR..
LAT.=41.100569 LONG.=-80.670138	4.3	-	4.6	SS3	50/3"	100	-	-	-	-	-	-	-	-	-	4	Rock (VISUAL)	-	SANDSTONE, GR..
B-069-0-21	1.5	-	3	SS1	42	94	-	-	-	-	-	-	-	-	-	-	A-4a (VISUAL)	<100	BR., SANDY SILT, TR. GR.
STA.977+23,39' RT.	3	-	4.5	SS2	29	83	-	-	-	-	-	-	-	-	-	-	A-4a (VISUAL)	-	GR., SANDY SILT, TR.GRAV. PARTINGS
LAT.=41.10037 LONG.=-80.66843	4.5	-	6	SS3	18	94	-	12	9	14	44	21	23	17	6	-	A-4a (6)	-	-
	6	-	7.5	SS4	25	89	-	-	-	-	-	-	-	-	-	-	A-4a (VISUAL)	-	MED. DENSE, BR., SANDY SILT, TR. GRAV.
B-070-0-21	1.1	-	2.6	SS1	5	33	-	52	20	13	-	-	-	-	-	-	A-1-b (VISUAL)	790	BR., GRAV. WITH SAND, TR. SILT
STA.978+83,43' LT.	2.6	-	4.1	SS2	4	22	-	38	16	13	20	13	25	15	10	-	A-2-4 (0)	-	-
LAT.=41.100599 LONG.=-80.667853	4.1	-	5.6	SS3	23	100	-	-	-	-	-	-	-	-	-	-	A-2-4 (VISUAL)	-	BR., GRAV. W. SAND, SILT, & CLAY
	5.6	-	7.1	SS4	24	100	-	-	-	-	-	-	-	-	-	-	A-2-4 (VISUAL)	-	BR., GRAV. W. SAND, SILT, & CLAY
B-071-0-21	1.5	-	3	SS1	36	94	-	-	-	-	-	-	-	-	-	-	A-3 (VISUAL)	190	BR., SILTY SAND, TR. CLAY, TR. GRAV.
STA.982+83,31' RT.	3	-	4.5	SS2	23	94	-	-	-	-	-	-	-	-	-	-	A-4a (VISUAL)	-	BR., SANDY SILT, TR.SANDSTONE FRAG.
LAT.=41.1004 LONG.=-80.6664	4.5	-	6	SS3	22	78	-	-	-	-	-	-	-	-	-	-	A-3 (VISUAL)	-	DARK GR., SILTY SAND,TR. GRAV.
	6	-	7.5	SS4	25	89	-	-	-	-	-	-	-	-	-	-	A-4b (VISUAL)	-	DARK GR., CLAYEY SILT,TR. BRICKS, DAMP
B-072-0-21	1.3	-	2.8	SS1	14	100	-	24	19	30	19	8	-	-	-	-	A-3a (VISUAL)	1500	BR., C. & F. SAND, SOME GRAV.
STA.986+73,36' LT.	2.8	-	4.3	SS2	26	100	4.5+	14	14	19	35	18	27	17	10	-	A-4a (4)	-	-
LAT.=41.100591 LONG.=-80.664987	4.3	-	5.8	SS3	23	100	-	-	-	-	-	-	-	-	-	9	Rock (VISUAL)	-	SHALE, DARK GR..
	5.8	-	7.3	SS4	14	100	-	-	-	-	-	-	-	-	-	10	Rock (VISUAL)	-	SHALE, DARK GR..
B-073-0-21	0.7	-	2.2	SS1	24	17	-	0	0	0	69	31	28	19	9	-	A-4b (8)	1300	-
STA.990+85,36' RT.	2.2	-	3.7	SS2	21	100	-	0	0	0	68	32	29	19	10	-	A-4b (8)	-	-
LAT.=41.100352 LONG.=-80.663508	3.7	-	5	SS3	27	100	-	-	-	-	-	-	-	-	-	-	A-4b (VISUAL)	-	GR., SILT, DAMP
	5	-	5.2	SS3	-	-	-	-	-	-	-	-	-	-	-	-	Rock (VISUAL)	-	SANDSTONE, TAN.
	5.2	-	6.7	SS4	39	100	-	25	32	36	-	-	-	-	-	-	A-3a (VISUAL)	-	BR., C. AND F. SAND, TR. SILT, TR. GRAV.
B-074-0-21	1.3	-	2.8	SS1	45	6	-	-	-	-	-	-	-	-	-	2	A-1-a (VISUAL)	-	LOW RECOVERY GRAV. BLOCKED SAMPLER
STA.994+67,33' LT.	2.8	-	4.3	SS2	48	100	-	14	13	23	37	13	21	15	6	-	A-4a (3)	260	-
LAT.=41.100316 LONG.=-80.662103	4.3	-	5.8	SS3	44	100	-	10	13	13	43	21	34	21	13	-	A-6a (7)	-	-
	5.8	-	7.3	SS4	46	100	-	-	-	-	-	-	-	-	-	8	Rock (VISUAL)	-	SHALE, DARK GR..
B-075-0-21	0.5	-	1.5	SS1	30	89	-	28	37	23	3	9	NP	NP	NP	17	A-1-b (0)	-	-
STA.999+25,32' RT.	1.5	-	2	SS1	-	-	4.5+	-	-	-	-	-	-	-	-	-	A-7-6 (VISUAL)	390	GR., CLAY, DAMP
LAT.=41.09965 LONG.=-80.66068	2	-	3.5	SS2	48	89	-	-	-	-	-	-	-	-	-	9	A-1-b (VISUAL)	-	GR., GRAV. WITH SAND, LITTLE SILT, DAMP
	3.5	-	5	SS3	24	89	-	-	-	-	-	-	-	-	-	12	A-1-b (VISUAL)	-	GR., GRAV. WITH SAND, LITTLE SILT, DAMP
	5	-	6.5	SS4	34	89	-	35	22	20	14	9	20	15	5	10	A-1-b (0)	-	-
B-076-0-21	0.4	-	1.2	SS1	26	100	-	23	18	19	40	40	24	15	9	-	A-4a (1)	1300	-
STA.1002+80,53' LT.	1.2	-	1.9	SS1	-	-	3	-	-	-	-	-	-	-	-	-	A-6a (VISUAL)	-	BR., SILT AND CLAY, DAMP
LAT.=41.099284 LONG.=-80.659442	1.9	-	3.4	SS2	34	100	-	-	-	-	-	-	-	-	-	-	A-4a (VISUAL)	-	SANDY SILT, TR. GRAV., DAMP
	3.4	-	3.9	SS2	25	100	-	-	-	-	-	-	-	-	-	-	Rock (VISUAL)	-	SANDSTONE, BR..
	3.9	-	4.9	SS3	-	-	4.5+	7	7	17	47	22	-	-	-	-	A-6a (VISUAL)	-	GR., SILT & CLAY, SOME SAND, TR. GRAV.
	4.9	-	6.4	SS4	14	11	-	-	-	-	-	-	-	-	-	-	A-1-a (VISUAL)	-	BR., GRAV., LITTLE SAND
B-077-0-21	1	-	2.5	SS1	13	89	-	11	10	9	36	34	25	17	8	13	A-4a (7)	-	-
STA.1004+39,25' RT.	2.5	-	4	SS2	23	89	-	-	-	-	-	-	-	-	-	16	A-4a (VISUAL)	360	GR. TO BR., SANDY SILT,LITTLE GRAV.
LAT.=41.09883 LONG.=-80.6592	4	-	5.5	SS3	18	89	-	-	-	-	-	-	-	-	-	15	A-4a (VISUAL)	-	GR. TO BR., SANDY SILT,LITTLE GRAV.
	5.5	-	7	SS4	17	89	-	15	16	18	32	19	23	16	7	14	A-4a (3)	-	-
B-078-0-21	1.2	-	2.7	SS1	22	100	-	43	17	21	14	5	-	-	-	-	A-1-b (VISUAL)	600	BR., STONE FRAG. W. SAND, LITTLE SILT
STA.1008+67,32' LT.	2.7	-	4.2	SS2	27	100	4.5+	10	15	20	38	17	24	17	7	-	A-4a (4)	-	-
LAT.=41.09803 LONG.=-80.658041	4.2	-	5.7	SS3	22	22	4.5+	-	-	-	-	-	-	-	-	13	A-4a (VISUAL)	-	BR., SANDY SILT, LITTLE GRAV.
	5.7	-	7.2	SS4	19	100	-	5	7	14	58	16	23	19	4	11	A-4b (8)	-	-
B-079-0-21	0.6	-	0.9	SS1	18	100	-	17	13	22	26	22	22	13	9	-	A-4a (3)	830	-
STA.1012+72,33' RT.	0.9	-	2.1	SS1	-	-	4.5+	-	-	-	-	-	-	-	-	-	A-6a (VISUAL)	-	GR., SILT AND CLAY, TR. SAND,TR. GRAV.
LAT.=41.096973 LONG.=-80.657547	2.1	-	3.6	SS2	20	100	4.5+	1	14	29	34	22	22	14	8	-	A-4a (4)	-	-
	3.6	-	5.1	SS3	11	100	1	-	-	-	-	-	-	-	-	-	A-4a (VISUAL)	-	GR., SANDY SILT,TR. GRAV., DAMP
	5.1	-	6.6	SS4	12	100	1.75	-	-	-	-	-	-	-	-	-	A-4a (VISUAL)	-	GR., SANDY SILT,TR. GRAV., DAMP
B-080-0-21	1.4	-	2.9	SS1	50	100	-	26	25	18	20	11	25	18	7	-	A-2-4 (0)	1000	-
STA.1015+99,45' LT.	2.9	-	4.4	SS2	43	100	-	31	21	17	22	9	-	-	-	-	A-2-4 (VISUAL)	-	BR., STONE FRAG. WITH SAND, SILT, & CLAY
LAT.=41.096193 LONG.=-80.656895	4.4	-	5.9	SS3	35	100	-	-	-	-	-	-	-	-	-	13	A-3a (VISUAL)	-	BR., STONE FRAG. WITH SAND, SILT, & CLAY
	5.9	-	7.4	SS4	69	56	-	-	-	-	-	-	-	-	-	11	A-1-a (VISUAL)	-	BR., STONE FRAG.,TR. SILT, TR. SAND
B-081-0-21	1.5	-	3	SS1	54	89	-	33	26	27	7	7	NP	NP	NP	8	A-1-b (0)	-	-
STA.1020+23,23' RT.	3	-	4.5	SS2	42	94	-	-	-	-	-	-	-	-	-	7	A-1-b (VISUAL)	<100	BR., GRAV. WITH SAND, TR. SILT, DAMP
LAT.=41.09502 LONG.=-80.65672	4.5	-	6	SS3	37	94	-	18	44	27	2	9	NP	NP	NP	8	A-1-b (0)	-	-
	6	-	7.5	SS4	34	94	-	-	-	-	-	-	-	-	-	6	A-1-b (VISUAL)	-	BR., GRAV. WITH SAND, TR. SILT, DAMP
B-082-0-21	1	-	2.5	SS1	16	100	-	0	0	0	73	27	28	20	8	-	A-4b (8)	-	-
STA.1023+57,46' LT.	2.5	-	4	SS2	17	100	-	0	0	0	66	34	34	21	13	-	A-6a (9)	1200	-
LAT.=41.094197 LONG.=-80.65615	4	-	5.5	SS3	22	100	-	-	-	-	-	-	-	-	-	-	A-6a (VISUAL)	-	GR., SILT AND CLAY, DAMP
	5.5	-	7	SS4	23	100	-	-	-	-	-	-	-	-	-	-	A-6a (VISUAL)	-	GR., SILT AND CLAY, DAMP
B-083-0-21	1.5	-	2.46		14/50/6"	100		-	-	-	-	-	-	-	-	-	A-1-a (VISUAL)	-	GR., GRAV. AND/OR STONE FRAG.
STA.1027+58,32' RT.	3	-	4.5		58	94		-	-	-	-	-	-	-	-	-	A-1-b (VISUAL)	1100	BR., GRAV. WITH SAND, WITH GRAV., MOIST
LAT.=41.09313 LONG.=-80.65573	4.5	-	6		32	83		-	-	-	-	-	-	-	-	-	A-3 (VISUAL)	-	BR., F. SAND, TR. GRAV. PARTINGS
	6	-	7.5		29	89		-	-	-	-	-	-	-	-	-	A-3 (VISUAL)	-	GR., SILTY SAND, TR. GRAV.,MOIST

MAH-680-4.80

MODEL: Sheet PAPERSIZE: 11x17 (in.) DATE: 8/13/2025 TIME: 3:04:47 PM PLTDRV: OHDOT_E+.pltcfg PENTBL: OHDOT_Pen.tbl USER: lmartinez@somateng.com WORKSPACE: OHDOTCEv02 WORKSET: 121474 PRODUCT: OpenRoadsDesigner 23.00.01.11
pw:\\ohiodot-pw.bentley.com:ohiodot-pw-02\Documents\01 Active Projects\District 04\Mahoning\121474\401-Engineering_Somat\Geotechnical\Sheets\121474_ID002.dgn

SUMMARY OF SOIL TEST DATA

I-680 NB/SB

EXPLOR. ID	FROM	-	TO	SAMPLE ID	N60	% REC	tsf HP	% GR	% CS	% FS	% SILT	% CLAY	LL	PL	PI	% WC	ODOT CLASS (GI)	ppm SO4	CLASSIFICATION
B-084-0-21	1.3	-	2.8	SS1	48	67	-	19	41	25	14	1	-	-	-	-	A-3a (VISUAL)	2500	GREENISH-GR., C. AND F. SAND
STA.1031+47,34' LT.	2.8	-	4.3	SS2	16	100	4.5+	13	11	29	31	16	18	15	3	-	A-4a (2)	-	-
LAT.=41.09258 LONG.=-80.654511	4.3	-	5.8	SS3	31	100	-	-	-	-	-	-	-	-	-	18	A-4a (VISUAL)	-	BR., SANDY SILT, LITTLE GRAV., MOIST
	5.8	-	7.3	SS4	38	100	-	0	1	5	40	54	26	17	9	-	A-4a (8)	-	-
B-085-0-21	0.6	-	1.93	SS1	7/47/50/4"	44	-	-	-	-	-	-	-	-	-	-	Rock (VISUAL)	1100	SHALE, GR.
STA.1035+40,36' RT.	2.1	-	2.4	SS2	50/4"	100	-	-	-	-	-	-	-	-	-	-	Rock (VISUAL)	-	SHALE, GR.
LAT.=41.091981 LONG.=-80.653311																			
B-086-0-21	1.3	-	2.8	SS1	20	100	2.5	14	11	14	42	19	27	17	10	-	A-4a (5)	250	-
STA.1039+83,36' LT.	2.8	-	4.3	SS2	41	100	4.5+	16	12	13	36	23	27	18	9	-	A-4a (5)	-	-
LAT.=41.091698 LONG.=-80.651715	4.3	-	5.8	SS3	63	100	-	-	-	-	-	-	-	-	-	7	Rock (VISUAL)	-	SHALE, GR.
	5.8	-	6.7	SS4	22/50/5"	100	-	-	-	-	-	-	-	-	-	7	Rock (VISUAL)	-	SHALE, GR.
B-087-0-21	1.5	-	3	SS1	35	33	-	-	-	-	-	-	-	-	-	44	A-1-b (VISUAL)	2700	BR. TO BLK, GRAV. WITH SAND, TR. SILT
STA.1043+77,18' RT.	3	-	4.5	SS2	32	78	-	49	21	15	-	-	NP	NP	NP	10	A-1-b (0)	-	-
LAT.=41.09087 LONG.=-80.65078	4.5	-	6	SS3	26	56	-	-	-	-	-	-	-	-	-	16	A-1-b (VISUAL)	-	BR. TO BLK, GRAV. WITH SAND, TR. SILT
	6	-	7.5	SS4	7	89	-	35	20	18	16	11	21	14	7	12	A-2-4 (0)	-	-
B-088-0-21	1.2	-	2.7	SS1	14	100	-	20	12	22	-	-	-	-	-	-	A-4a (VISUAL)	310	SANDY SILT, DAMP
STA.1047+24,45' LT.	2.7	-	4.2	SS2	7	100	-	25	13	19	-	-	-	-	-	-	A-4a (VISUAL)	-	SANDY SILT, DAMP
LAT.=41.090031 LONG.=-80.650124	4.2	-	5.7	SS3	7	100	-	-	-	-	-	-	-	-	-	-	A-4a (VISUAL)	-	SANDY SILT, DAMP
B-089-0-21	1.5	-	3	SS1	16	56	-	52	32	13	-	-	NP	NP	NP	13	A-1-a (0)	-	-
STA.1051+37,26' RT.	3	-	4.5	SS2	7	56	-	-	-	-	-	-	-	-	-	10	A-4a (VISUAL)	-	BR. TO GR., SANDY SILT, SOME GRAV.
LAT.=41.08888 LONG.=-80.65032	4.5	-	6	SS3	6	83	-	22	12	14	32	20	27	18	9	12	A-4a (3)	-	-
	6	-	7.5	SS4	8	89	3	-	-	-	-	-	-	-	-	12	A-4a (VISUAL)	240	BR. TO GR., SANDY SILT, SOME GRAV.
B-090-0-21	1.2	-	2.7	SS1	73	56	-	17	32	23	22	6	-	-	-	-	A-3a (VISUAL)	-	GR., C. AND F. SAND, TR. SILT, TR. GRAV.
STA.1055+73,43' LT.	2.7	-	4.2	SS2	83	100	-	27	16	24	25	8	-	-	-	-	A-2-4 (VISUAL)	160	GR., GRAV. WITH SAND, SILT, AND CLAY
LAT.=41.087687 LONG.=-80.650061	4.2	-	5.7	SS3	59	100	-	-	-	-	-	-	-	-	-	10	A-3a (VISUAL)	-	GR., C. AND F. SAND,SOME SILT
	5.7	-	7.2	SS4	54	100	-	-	-	-	-	-	-	-	-	10	A-3a (VISUAL)	-	GR., C. AND F. SAND,SOME SILT
B-091-0-21	1	-	2.5	SS1	60	100	-	16	17	27	25	15	21	16	5	-	A-4a (1)	2100	-
STA.1059+40,52' RT.	2.5	-	4	SS2	38	100	-	-	-	-	-	-	-	-	-	-	A-4a (VISUAL)	-	GR., SANDY SILT,LITTLE GRAV.
LAT.=41.086676 LONG.=-80.650396	4	-	5.5	SS3	71	100	-	0	4	60	22	14	NP	NP	NP	-	A-4a (0)	-	-
	5.5	-	6.9	SS4	27/33/50/5"	100	-	-	-	-	-	-	-	-	-	-	A-4a (VISUAL)	-	GR., SANDY SILT, DAMP
B-092-0-21	1.3	-	1.6	SS1	50/3"	100	-	16	31	25	22	6	-	-	-	-	A-3a (VISUAL)	<100	C. AND F. SAND (Cement Stabilized Soil)
STA.1063+52,42' LT.	2.8	-	4.3	SS2	62	100	-	0	7	66	21	6	-	-	-	-	A-3 (VISUAL)	-	VERY DENSE, LIGHT BR., F. SAND
LAT.=41.085547 LONG.=-80.650048	4.3	-	5.22	SS3	40/50/5"	36	-	-	-	-	-	-	-	-	-	6	Rock (VISUAL)	-	SANDSTONE, LIGHT BR..
	5.8	-	7.1	SS4	15/30/50/3"	67	-	-	-	-	-	-	-	-	-	6	Rock (VISUAL)	-	SANDSTONE, LIGHT GR..
B-093-0-21	1.5	-	3	SS1	43	83	-	-	-	-	-	-	-	-	-	18	A-4a (VISUAL)	2100	BR., SANDY SILT, LITTLE GRAV.
STA.1067+20,54' RT.	3	-	4.5	SS2	32	89	-	20	7	17	43	13	NP	NP	NP	74	A-4a (4)	-	-
LAT.=41.08453 LONG.=-80.65038	4.5	-	6	SS3	23	89	-	31	20	27	14	8	NP	NP	NP	12	A-1-b (0)	-	-
	6	-	7.5	SS4	50	83	-	-	-	-	-	-	-	-	-	13	A-1-b (VISUAL)	-	BR., GRAV. WITH SAND, LITTLE SILT
B-094-0-21	1.3	-	2.8	SS1	22	100	4.5+	7	10	21	44	18	22	19	3	3	A-4a (5)	180	-
STA.1072+10,44' LT.	2.8	-	4.3	SS2	20	100	4.5+	8	9	20	42	21	26	16	10	11	A-4a (6)	-	-
LAT.=41.08329 LONG.=-80.64964	4.3	-	5.8	SS3	14	100	3.75	-	-	-	-	-	-	-	-	18	A-4a (VISUAL)	-	BR., SANDY SILT, TR. GRAV., DAMP
	5.8	-	6.6	SS4	12	100	3.5	-	-	-	-	-	-	-	-	18	A-4a (VISUAL)	-	BR., SANDY SILT, TR. GRAV., DAMP
	6.6	-	7.3	SS4	-	-	1.5	-	-	-	-	-	-	-	-	-	A-4a (VISUAL)	-	BR., SANDY SILT, TR. GRAV., DAMP
B-095-0-21	1	-	2.5	SS1	58	100	-	22	49	27	1	1	NP	NP	NP	17	A-1-b (0)	-	-
STA.1072+64,40' RT.	2.5	-	4	SS2	32	100	4.5+	22	19	23	23	13	25	18	7	13	A-4a (0)	170	-
LAT.=41.083054 LONG.=-80.649819	4	-	5.5	SS3	24	100	4.5+	-	-	-	-	-	-	-	-	13	A-4a (VISUAL)	-	BR., SANDY SILT,SOME GRAV., DAMP
	5.5	-	7	SS4	14	100	3.75	-	-	-	-	-	-	-	-	11	A-4a (VISUAL)	-	BR., SANDY SILT,SOME GRAV., DAMP
B-096-0-21	1.3	-	1.6	SS1	50/4"	100	-	25	36	21	16	2	-	-	-	-	A-3a (VISUAL)	8000	C. AND F. SAND, SOME GRAV.
STA.1076+32,45' LT.	2.8	-	4.3	SS2	42	100	4.5+	-	-	-	-	-	-	-	-	12	A-4a (VISUAL)	-	BR., SANDY SILT, LITTLE GRAV., DAMP
LAT.=41.082421 LONG.=-80.648747	4.3	-	5.8	SS3	23	100	4.5+	12	10	23	35	20	25	17	8	12	A-4a (4)	-	
	5.8	-	7.3	SS4	41	100	4.5+	-	-	-	-	-	-	-	-	-	A-4a (VISUAL)	-	BR., SANDY SILT, LITTLE GRAV., DAMP
B-097-0-21	1.3	-	2.8	SS1	13	100	-	25	15	21	21	18	27	22	5	-	A-4a (1)	250	-
STA.1080+64,48' RT.	2.8	-	4.3	SS2	24	100	3.75	12	10	26	33	19	24	17	7	-	A-4a (3)	-	-
LAT.=41.081635 LONG.=-80.64754	4.3	-	5.8	SS3	54	100	4.5+	-	-	-	-	-	-	-	-	-	A-4a (VISUAL)	-	BR.-GR., SANDY SILT, LITTLE GRAV.
	5.8	-	7.3	SS4	24	100	-	-	-	-	-	-	-	-	-	-	A-4a (VISUAL)	-	GRAV. , MOTT. BR. AND GR.,SANDY SILT
B-098-0-21	1.6	-	2.02	SS1	50/5"	100	-	19	19	30	23	9	-	-	-	-	A-3a (VISUAL)	1500	BR., C. AND F. SAND, SOME SILT
STA.1085+23,47' LT.																			
LAT.=41.08175 LONG.=-80.645842																			
B-099-0-21	1.3	-	2.22	SS1	22/50/5"	100	-	-	-	-	-	-	-	-	-	10	A-1-a (VISUAL)	200	BR. TO GR., STONE FRAG., SOME SILT
STA.1088+68,30' RT.	2.8	-	3.1	SS2	50/3"	67	-	-	-	-	-	-	-	-	-	8	A-1-a (VISUAL)	-	GR., STONE FRAG., TR. SILT, TR. SAND
LAT.=41.08154 LONG.=-80.64459																			
B-100-0-21	0.8	-	2.3	SS1	69	100	-	39	27	19	-	-	-	-	-	26	A-3a (VISUAL)	2000	BLUE, C. AND F. SAND, SOME GRAV.
STA.1092+64,71' LT.	2.3	-	2.6	SS2	50/4"	100	-	-	-	-	-	-	-	-	-	-	A-1-a (VISUAL)	-	GRAV.
LAT.=41.081821 LONG.=-80.643154																			
B-101-0-21	1.3	-	2.8	SS1	34	100	-	13	36	12	26	13	41	24	17	12	A-7-6 (3)	-	-
STA.1096+61,45' RT.	2.8	-	3.7	SS2	38/50/5"	-	-	-	-	-	-	-	-	-	-	12	Rock (VISUAL)	220	SHALE, GR..
LAT.=41.0815 LONG.=-80.64172	4.3	-	4.7	SS3	50/5"	-	-	-	-	-	-	-	-	-	-	10	Rock (VISUAL)	-	SHALE, GR..
B-102-0-21	2.8	-	4.3	SS2	16	22	4.5+	8	12	27	38	15	22	16	6	-	A-4a (4)	780	-
STA.1098+69,61' LT.	4.3	-	5.8	SS3	22	100	4.5+	9	13	19	37	22	24	16	8	-	A-4a (5)	-	-
LAT.=41.081756 LONG.=-80.64094	5.8	-	7.3	SS4	44	33	-	-	-	-	-	-	-	-	-	13	A-1-a (VISUAL)	-	BR., STONE FRAG., TR. SAND, TR. SILT
B-103-0-21	0.5	-	2	SS1	21	100	4.5+	2	17	13	19	49	45	23	22	-	A-7-6 (12)	270	-
STA.1104+76,58' RT.	2	-	3.5	SS2	41	100	-	-	-	-	-	-	-	-	-	-	Rock (VISUAL)	-	SHALE, GR., HIGHLY WEATHERED.
LAT.=41.081167 LONG.=-80.638839	3.5	-	4.75	SS3	21/43/50/3"	100	-	-	-	-	-	-	-	-	-	-	Rock (VISUAL)	-	SHALE, GR., HIGHLY WEATHERED.
	5	-	5.8	SS4	45/50/3"	56	-	-	-	-	-	-	-	-	-	-	Rock (VISUAL)	-	SHALE, GR., HIGHLY WEATHERED.
	6	-	7.5	SS4	34	94	-	-	-	-	-	-	-	-	-	6	A-1-b (VISUAL)	-	BR., GRAV. WITH SAND, TR. SILT, DAMP

MODEL: Sheet PAPERSIZE: 11x17 (in.) DATE: 8/13/2025 TIME: 12:12:07 PM PLTDRV: OHDOT_PDF_E+.pltcfg PENTBL: OHDOT_Pen.tbl USER: aalqasem@somateng.com WORKSPACE: OHDOTCEv02 WORKSET: 121474 PRODUCT: OpenRoadsDesigner 24.00.00.205
pw:\\ohiodot-pw.bentley.com:ohiodot-pw-02\Documents\01 Active Projects\District 04\Mahoning\121474\401-Engineering_Somat\Geotechnical\Sheets\121474_ID003.dgn

SUMMARY OF SOIL TEST DATA
SB I-680 ON RAMP FROM FRANK SINKWICH

EXPLOR. ID	FROM	-	TO	SAMPLE ID	N60	% REC	tsf HP	% GR	% CS	% FS	% SILT	% CLAY	LL	PL	PI	% WC	ODOT CLASS (GI)	ppm SO4	CLASSIFICATION
B-147-0-21	1.2	-	2.7	SS1	5	56	3.5	-	-	-	-	-	-	-	-	17	A-4a (VISUAL)	110	BR., SANDY SILT, LITTLE GRAV., DAMP
STA.1+18,2' LT.	2.7	-	4.2	SS2	12	100	4.5+	13	13	17	32	25	20	14	6	14	A-4a (4)	-	-
LATITUDE=41.105574	4.2	-	5.7	SS3	23	100	4.5+	-	-	-	-	-	-	-	-	13	A-4a (VISUAL)	-	BR., SANDY SILT,LITTLE TO TR. GRAV., DAMP
LONGITUDE=-80.680312	5.7	-	7.2	SS4	44	100	4.5+	9	16	19	31	25	22	15	7	12	A-4a (4)	-	-
B-148-0-21	1.1	-	2.6	SS1	43	100	-	55	23	13	6	3	NP	NP	NP	8	A-1-a (0)	-	-
STA.4+76,17' LT.	2.6	-	4.1	SS2	17	100	4.5+	10	18	21	33	18	22	15	7	12	A-4a (3)	170	-
LATITUDE=41.104755	4.1	-	5.6	SS3	18	100	4.5+	-	-	-	-	-	-	-	-	14	A-4a (VISUAL)	-	BR., SANDY SILT, TR. GRAV., DAMP
LONGITUDE=-80.679596																			
B-149-0-21	0.9	-	2.4	SS1	20	28	-	56	20	16	6	2	NP	NP	NP	8	A-1-a (0)	-	BR., C. & F. SAND, SOME SILT, LITTLE GRAV., MOIST TO WET
STA.8+50,2' LT.	2.4	-	3.9	SS2	8	100	-	-	-	-	-	-	-	-	-	16	A-3a (VISUAL)	280	-
LATITUDE=41.103853	3.9	-	5.4	SS3	15	100	-	14	21	32	22	11	19	16	3	15	A-3a (0)	-	BR., C. & F. SAND, SOME SILT, LITTLE GRAV., MOIST TO WET
LONGITUDE=-80.678939	5.4	-	6.9	SS4	21	100	-	-	-	-	-	-	-	-	-	14	A-3a (VISUAL)	-	
B-150-0-21	0.5	-	2	SS1	51	100	-	33	34	27	2	4	NP	NP	NP	11	A-1-b (0)	-	BR., SANDY SILT, LITTLE GRAV., MOIST TO WET
STA.11+65,31' LT.	2	-	3.5	SS2	19	44	-	-	-	-	-	-	-	-	-	12	A-4a (VISUAL)	880	-
LATITUDE=41.103372	3.5	-	4.83	SS3	10/14/50/4"	100	-	19	13	16	36	16	17	15	2	17	A-4a (3)	-	SANDSTONE, BR..
LONGITUDE=-80.678092	5	-	5.3	SS4	50/4"	75	-	-	-	-	-	-	-	-	-	4	Rock (VISUAL)	-	BR., GRAV., & SAND, TR. SILT, DAMP
B-151-0-21	1	-	2.5	SS1	53	100	-	-	-	-	-	-	-	-	-	6	A-1-a (VISUAL)	-	BR., GRAV., SOME SAND, TR. SILT, DAMP
STA.14+62,4' LT.	2.5	-	3.25	SS2	23/50/3"	100	-	56	18	16	6	4	NP	NP	NP	6	A-1-a (0)	<100	-
LATITUDE=41.103137	4	-	4.83	SS3	15/50/4"	90	-	-	-	-	-	-	-	-	-	4	A-1-a (VISUAL)	-	
LONGITUDE=-80.677065	5.5	-	7	SS4	100	100	-	61	15	12	8	4	NP	NP	NP	3	A-1-a (0)	-	BR., GRAV., AND SAND, TR. SILT, DRY
B-152-0-21	1.1	-	2.6	SS1	46	100	-	-	-	-	-	-	-	-	-	3	A-1-a (VISUAL)	-	BR., GRAV., SOME SAND, TR. SILT, DRY
STA.17+06,20' LT.	2.6	-	4.1	SS2	54	100	-	54	27	11	6	2	NP	NP	NP	2	A-1-a (0)	410	-
LATITUDE=41.102907	4.1	-	5.6	SS3	56	100	-	-	-	-	-	-	-	-	-	3	A-1-a (VISUAL)	-	
LONGITUDE=-80.676218	5.6	-	7.1	SS4	49	100	-	62	18	10	9	1	NP	NP	NP	3	A-1-a (0)	-	

SUMMARY OF SOIL TEST DATA
I-680 ON RAMP FROM 193

EXPLOR. ID	FROM	-	TO	SAMPLE ID	N60	% REC	tsf HP	% GR	% CS	% FS	% SILT	% CLAY	LL	PL	PI	% WC	ODOT CLASS (GI)	ppm SO4	CLASSIFICATION
B-158-0-21	1	-	2.5	SS1	68	100	-	26	24	24	-	-	-	-	-	15	A-3a (VISUAL)	1400	BR., C. AND F. SAND, & GRAV., LITTLE SILT, MOIST (CEMENT STAB.)
STA.1+94,12' LT.	2.5	-	4	SS2	32	100	4.5+	8	17	30	28	17	18	14	4	12	A-4a (2)	-	-
LATITUDE=41.105062	4	-	5.5	SS3	16	17	-	-	-	-	-	-	-	-	-	14	A-3 (VISUAL)	-	BR., F. SAND, LITTLE SILT, MOIST
LONGITUDE=-80.677365	5.5	-	7	SS4	25	100	-	-	-	-	-	-	-	-	-	11	A-3 (VISUAL)	-	BR., F. SAND, LITTLE SILT, MOIST

SUMMARY OF SOIL TEST DATA
NB I-680 OFF RAMP TO 193

EXPLOR. ID	FROM	-	TO	SAMPLE ID	N60	% REC	tsf HP	% GR	% CS	% FS	% SILT	% CLAY	LL	PL	PI	% WC	ODOT CLASS (GI)	ppm SO4	CLASSIFICATION
B-159-0-21	1.2	-	2.7	SS1	42	100	4.5+	-	-	-	-	-	-	-	-	10	A-4a (VISUAL)	750	BR., SANDY SILT, LITTLE GRAV., DAMP
STA.11+13,17' LT.	2.7	-	4.2	SS2	41	44	-	28	18	30	10	14	20	14	6	4	A-2-4 (0)	-	-
LATITUDE=41.105251	4.2	-	5.7	SS3	26	100	4.5+	12	11	18	42	17	21	15	6	10	A-4a (5)	-	-
LONGITUDE=-80.676654	5.7	-	7.2	SS4	24	100	4.5+	-	-	-	-	-	-	-	-	11	A-4a (VISUAL)	-	BR., SANDY SILT, LITTLE GRAV., DAMP
B-160-0-21	0.1	-	1.6	SS1	45	33	-	30	40	26	1	3	NP	NP	NP	34	A-1-b (0)	-	-
STA.6+66,2' RT.	1.6	-	3.1	SS2	29	100	4.5+	25	27	29	6	13	18	14	4	10	A-1-b (0)	210	-
LATITUDE=41.104061	3.1	-	4.6	SS3	26	100	-	-	-	-	-	-	-	-	-	11	A-1-b (VISUAL)	-	BR., GRAV. W. SAND,TR. SILT, DAMP @3.4-4.6': GR. SHALE
LONGITUDE=-80.676339	4.6	-	6.1	SS4	31	100	4.5+	-	-	-	-	-	-	-	-	11	A-1-b (VISUAL)	-	BR., GRAV. W. SAND,TR. SILT, DAMP @3.4-4.6': GR. SHALE

MODEL: Sheet PAPERSIZE: 11x17 (in.) DATE: 8/13/2025 TIME: 12:12:16 PM PLTDRV: OHDOT_PDF_E+.pltcfg PENTBL: OHDOT_Pen.tbl USER: aalqasem@somateng.com WORKSPACE: OHDOTCEv02 WORKSET: 121474 PRODUCT: OpenRoadsDesigner 24.00.00.205
pw:\\ohiodot-pw.bentley.com:ohiodot-pw-02\Documents\01 Active Projects\District 04\Mahoning\121474\401-Engineering_Somat\Geotechnical\Sheets\121474_ID004.dgn

SUMMARY OF SOIL TEST DATA
NB I-680 OFF RAMP TO SALT SPRINGS

EXPLOR. ID	FROM	-	TO	SAMPLE ID	N60	% REC	tsf HP	% GR	% CS	% FS	% SILT	% CLAY	LL	PL	PI	% WC	ODOT CLASS (GI)	ppm SO4	CLASSIFICATION
B-161-0-21	`	-	3.5	SS1	7	89	-	14	26	26	22	12	NP	NP	NP	27	A-3a (0)	-	-
STA.17+13,15' RT.	3.5	-	5	SS2	8	56	-	62	6	11	13	8	-	-	-	21	A-1-b (VISUAL)	-	BR., GRAV. W. SAND
LATITUDE=41.10562	5	-	6.5	SS3	7	89	-	-	-	-	-	-	-	-	-	31	A-1-b (VISUAL)	210	BR., GRAV. W. SAND
LONGITUDE=-80.67585	6.5	-	8	SS4	6	89	-	-	-	-	-	-	-	-	-	25	A-1-b (VISUAL)	-	BR., GRAV. W. SAND
B-162-0-21	0.5	-	2	SS1	30	94	-	36	24	24	-	-	-	-	-	14	A-3a (VISUAL)	-	BR., C. & F., GRAV.
STA.13+52,21' RT.	2	-	3.5	SS2	18	89	-	15	19	25	23	18	22	15	7	11	A-4a (1)	-	-
LATITUDE=41.10462	3.5	-	5	SS3	24	89	-	-	-	-	-	-	-	-	-	13	A-4a (VISUAL)	610	GR.-BR.,SANDY SILT, GRAV.
LONGITUDE=-80.67575	5	-	6.5	SS4	36	89	-	-	-	-	-	-	-	-	-	11	A-4a (VISUAL)	-	GR.-BR.,SANDY SILT, GRAV.
B-163-0-21	1.5	-	3	SS1	32	89	-	-	-	-	-	-	-	-	-	8	A-3a (VISUAL)	<100	BR., C. & F., GRAV.
STA.9+56,19' LT.	3	-	4.5	SS2	32	89	-	35	15	21	-	-	-	-	-	14	A-3a (VISUAL)	-	BR., C. & F., GRAV.
LATITUDE=41.10353	4.5	-	6	SS3	30	94	-	7	22	19	27	25	26	16	10	8	A-4a (3)	-	-
LONGITUDE=-80.6758	6	-	7.5	SS4	23	89	-	-	-	-	-	-	-	-	-	13	A-4a (VISUAL)	-	-

SUMMARY OF SOIL TEST DATA
SB I-680 ON RAMP FROM MAHONING

EXPLOR. ID	FROM	-	TO	SAMPLE ID	N60	% REC	tsf HP	% GR	% CS	% FS	% SILT	% CLAY	LL	PL	PI	% WC	ODOT CLASS (GI)	ppm SO4	CLASSIFICATION
B-165-0-21	1.5	-	3	SS1	30	44	-	3	20	35	25	17	-	-	-	-	A-3 (VISUAL)	250	BR., SILTY SAND,DAMP
STA.4+62,16' LT.	3	-	4.5	SS2	20	94	-	0	0	4	82	14	-	-	-	-	A-4b (VISUAL)	-	BR., SILTY SAND,DAMP
LATITUDE=41.1013	4.5	-	6	SS3	20	94	-	-	-	-	-	-	-	-	-	-	A-4b (VISUAL)	-	BR., SANDY SILT, GRAV
LONGITUDE=-80.67555	6	-	7.5	SS4	18	94	-	-	-	-	-	-	-	-	-	-	A-4b (VISUAL)	-	BR., SANDY SILT, GRAV.
B-166-0-21	1.5	-	3	SS1	7	94	-	25	21	28	-	-	-	-	-	11	A-3a (VISUAL)	390	
STA.7+97,8' LT.	3	-	4.5	SS2	19	94	4.5+	0	2	10	54	34	25	16	9	14	A-4b (8)	-	-
LATITUDE=41.10098	4.5	-	6	SS3	43	94	4.5+	-	-	-	-	-	-	-	-	22	A-4b (VISUAL)	-	GR. TO BR., SILT, SAND
LONGITUDE=-80.6744	6	-	7.5	SS4	36	89	-	-	-	-	-	-	-	-	-	5	A-4b (VISUAL)	-	GR. TO BR., SILT, SAND

SUMMARY OF SOIL TEST DATA
NB I-680 ON RAMP FROM MARSHALL

EXPLOR. ID	FROM	-	TO	SAMPLE ID	N60	% REC	tsf HP	% GR	% CS	% FS	% SILT	% CLAY	LL	PL	PI	% WC	ODOT CLASS (GI)	ppm SO4	CLASSIFICATION
B-167-0-21	0.5	-	2	SS1	21	94	-	39	21	22	-	-	-	-	-	16	A-3a (VISUAL)	120	
STA.5+81,48' RT.	2	-	2.2	SS2	50/2"	100	-	-	-	-	-	-	-	-	-	2	A-3a (VISUAL)	-	BR., C. AND F. SAND, DAMP
LATITUDE=41.10062																			
LONGITUDE=-80.6708																			
B-168-0-21	1	-	2.5	SS1	19	94	-	-	-	-	-	-	-	-	-	8	A-3 (VISUAL)	410	
STA.1+73,2' RT.	2.5	-	4	SS2	24	94	-	28	38	26	5	3	-	-	-	-	A-3 (VISUAL)	-	BR., F. SAND, TR.GRAV.
LATITUDE=41.10077	4	-	5.5	SS3	22	94	-	-	-	-	-	-	-	-	-	-	A-3 (VISUAL)	-	BR., F. SAND, TR.GRAV.
LONGITUDE=-80.66932	5.5	-	7	SS4	23	94	4.5+	-	-	-	-	-	23	16	7	-	A-7-6 (VISUAL)	-	HARD, BR., SANDY CLAY

SUMMARY OF SOIL TEST DATA
SB I-680 OFF RAMP TO HIGH

EXPLOR. ID	FROM	-	TO	SAMPLE ID	N60	% REC	tsf HP	% GR	% CS	% FS	% SILT	% CLAY	LL	PL	PI	% WC	ODOT CLASS (GI)	ppm SO4	CLASSIFICATION
B-169-0-21	1.5	-	3	SS1	19	89	4.5+	4	6	12	54	24	25	17	8	11	A-4b (8)	-	-
STA.8+98,7' RT.	3	-	4.5	SS2	29	89	4.5+	-	-	-	-	-	33	19	14	11	A-2-6 (VISUAL)	660	GR., GRAV. WITH SAND
LATITUDE=41.10023	4.5	-	6	SS3	25	89	4.5+	-	-	-	-	-	-	-	-	11	A-2-6 (VISUAL)	-	GR., GRAV. WITH SAND
LONGITUDE=-80.6658	6	-	7.5	SS4	29	89	4.5+	11	20	25	35	9	-	-	-	11	A-2-6 (VISUAL)	-	GR., GRAV. WITH SAND
B-170-0-21	1.5	-	3	SS1	21	89	4.5+	21	27	22	18	12	NP	NP	NP	12	A-2-4 (0)	-	-
STA.12+39,22' LT.	3	-	4.5	SS2	25	89	4.5+	17	13	26	25	19	23	16	7	9	A-4a (2)	990	-
LATITUDE=41.09948	4.5	-	6	SS3	19	89	4.5+	-	-	-	-	-	-	-	-	11	A-4a (VISUAL)	-	GR., SANDY SILT, GRAV
LONGITUDE=-80.6653	6	-	7.5	SS4	27	94	4.5+	28	29	22	-	-	-	-	-	13	A-3a (VISUAL)	-	BR., C. & F.SAND GRAV. SILT
B-171-0-21	1.5	-	3	SS1	24	83	-	-	-	-	-	-	-	-	-	16	A-3 (VISUAL)	-	DARK GR., SILTY SAND
STA.15+63,18' RT.	3	-	4.5	SS2	7	56	-	-	-	-	-	-	-	-	-	12	A-3 (VISUAL)	-	BR. TO ORANGE, SILTY SAND, GRAV.
LATITUDE=41.09925	4.5	-	6	SS3	5	56	-	-	-	-	-	-	-	-	-	12	A-3 (VISUAL)	8000	BR. TO ORANGE, SILTY SAND GRAV.
LONGITUDE=-80.66643	6	-	7.5	SS4	19	89	-	51	20	16	-	-	-	-	-	9	A-3 (VISUAL)	-	BR., F. SAND, TR. GRAV., DAMP

SUMMARY OF SOIL TEST DATA
SB I-680 OFF RAMP TO HIGH

EXPLOR. ID	FROM	-	TO	SAMPLE ID	N60	% REC	tsf HP	% GR	% CS	% FS	% SILT	% CLAY	LL	PL	PI	% WC	ODOT CLASS (GI)	ppm SO4	CLASSIFICATION
B-172-0-21	1.5	-	3	SS1	35	89	-	-	-	-	-	-	-	-	-	-	A-3 (VISUAL)	-	BR., F. SAND, TR. CLAY, DAMP
STA.5+37,6' LT.	3	-	4.5	SS2	14	94	-	-	-	-	-	-	-	-	-	-	A-3 (VISUAL)	<100	BR., SILTY SAND, CLAY GRAV
LATITUDE=41.09937	4.5	-	6	SS3	17	94	-	-	-	-	-	-	-	-	-	18	A-3 (VISUAL)	-	BR., SILTY SAND, GRAV.
LONGITUDE=-80.66515	6	-	7.5	SS4	5	94	-	-	-	-	-	-	-	-	-	16	A-3 (VISUAL)	-	BR., SILTY SAND, GRAV.
B-173-0-21	2.38	-	3.88	SS2	25	100	-	0	0	0	52	48	31	18	13	17	A-6a (9)	1200	-
STA.9+14,22' LT.	3.88	-	5.38	SS3	20	100	-	1	0	0	71	28	29	21	8	18	A-4b (8)	-	-
LATITUDE=41.099962	5.38	-	6.88	SS4	22	100	-	-	-	-	-	-	-	-	-	21	A-4b (VISUAL)	-	GR., SILT, TR. GRAV., DAMP
LONGITUDE=-80.664013																			
B-174-0-21	0.92	-	2.42	SS1	25	100	-	23	24	38	-	-	-	-	-	7	A-3 (VISUAL)	-	BR., F. SAND, LITTLE GRAV.
STA.12+87,2' LT.	2.42	-	3.92	SS2	24	100	-	23	33	27	-	-	-	-	-	6	A-3 (VISUAL)	-	BR., F. SAND, TR. GRAV.
LATITUDE=41.100063	3.92	-	5.42	SS3	60	100	-	-	-	-	-	-	-	-	-	4	A-3 (VISUAL)	140	BR., F. SAND, LITTLE GRAV.
LONGITUDE=-80.662654	5.42	-	6.92	SS4	77	100	-	-	-	-	-	-	-	-	-	6	A-3 (VISUAL)	-	BR., F. SAND, LITTLE GRAV.

SUMMARY OF SOIL TEST DATA
NB I-680 OFF RAMP TO MARSHALL

EXPLOR. ID	FROM	-	TO	SAMPLE ID	N60	% REC	tsf HP	% GR	% CS	% FS	% SILT	% CLAY	LL	PL	PI	% WC	ODOT CLASS (GI)	ppm SO4	CLASSIFICATION
B-175-0-21	1.5	-	3	SS1	17	94	-	-	-	-	-	-	-	-	-	12	A-3 (VISUAL)	-	BR., SILTY SAND, TR. GRAV.
STA.14+07,12' RT.	3	-	4.5	SS2	15	89	-	-	-	-	-	-	-	-	-	12	A-3 (VISUAL)	-	BR., SILTY SAND, TR. GRAV.
LATITUDE=41.10078	4.5	-	6	SS3	10	100	-	21	1	20	50	8	-	-	-	20	A-3 (VISUAL)	-	BR., F. SAND, GRAV.
LONGITUDE=-80.66328	6	-	7.5	SS4	13	100	-	-	-	-	-	-	-	-	-	15	A-3 (VISUAL)	-	BR., F. SAND, GRAV.
B-176-0-21	1.5	-	3	SS1	23	17	-	-	-	-	-	-	27	23	4	-	A-4a (VISUAL)	-	GR., SANDY SILT, GRAV.
STA.11+46,8' RT.	3	-	4.5	SS2	29	78	-	16	16	17	32	19	26	19	7	-	A-4a (3)	-	-
LATITUDE=41.10057	4.5	-	6	SS3	40	89	-	45	20	16	12	7	-	-	-	16	A-1-b (VISUAL)	-	BR., GRAV. WITH SAND
LONGITUDE=-80.66237	6	-	7.5	SS4	11	67	-	-	-	-	-	-	NP	NP	NP	24	Rock (VISUAL)	-	SANDSTONE, OFF-WHITE.
B-177-0-21	1	-	2.5	SS1	31	100	-	32	15	22	22	9	-	-	-	-	A-2-4 (VISUAL)	730	BR., GRAV. WITH SAND, SILT
STA.6+56,14' RT.	2.5	-	4	SS2	29	100	-	24	19	19	25	13	24	17	7	-	A-4a (1)	-	-
LATITUDE=41.099999	4	-	5.5	SS3	23	100	-	-	-	-	-	-	-	-	-	9	A-4a (VISUAL)	-	BR., SANDY SILT GRAV.
LONGITUDE=-80.660755	5.5	-	7	SS4	29	100	-	-	-	-	-	-	-	-	-	9	A-4a (VISUAL)	-	BR., SANDY SILT GRAV.

SHEET	SUBSET	PROJECT ID	REVIEWER	DESIGNER	DESIGN AGENCY
P. 578	5	121474	JDZ 05/30/25	CJW	
TOTAL P. 655	TOTAL 82				

GEOTECHNICAL PROFILE
SUMMARY OF SOIL TEST DATA

MAH-680-4.80

MODEL: Sheet PAPERSIZE: 11x17 (in.) DATE: 8/13/2025 TIME: 12:12:24 PM PLTDRV: OHDOT_PDF_E+.pltcfg PENTBL: OHDOT_Pen.tbl USER: aalqasem@somateng.com WORKSPACE: OHDOTCEv02 WORKSET: 121474 PRODUCT: OpenRoadsDesigner 24.00.00.205
pw:\\ohiodot-pw.bentley.com:ohiodot-pw-02\Documents\01 Active Projects\District 04\Mahoning\121474\401-Engineering_Somat\Geotechnical\Sheets\121474_ID005.dgn

SUMMARY OF SOIL TEST DATA
SB I-680 OFF RAMP TO MARKET SB

EXPLOR. ID	FROM	-	TO	SAMPLE ID	N60	% REC	tsf HP	% GR	% CS	% FS	% SILT	% CLAY	LL	PL	PI	% WC	ODOT CLASS (GI)	ppm SO4	CLASSIFICATION
B-178-0-21	0.8	-	2.3	SS1	23	100	-	3	17	63	-	-	-	-	-	9	A-3 (VISUAL)	<100	BR., F. S&,LITTLE SILT
STA.8+14,21' LT.	2.3	-	3.8	SS2	23	100	-	0	20	72	-	-	-	-	-	7	A-3 (VISUAL)	-	BR., F. S&,LITTLE SILT
LATITUDE=41.094557	3.8	-	5.3	SS3	22	100	-	-	-	-	-	-	-	-	-	17	A-3 (VISUAL)	-	BR., F. S&,LITTLE SILT
LONGITUDE=-80.656642	5.3	-	6.8	SS4	29	100	-	-	-	-	-	-	-	-	-	22	A-3 (VISUAL)	-	BR., F. S&,LITTLE SILT, GRAV.
B-179-0-21	1.1	-	2.6	SS1	23	44	-	42	20	22	-	-	-	-	-	8	A-3 (VISUAL)	-	BR., F. S&, TR. GRAV., DAMP
STA.12+24,4' LT.	2.6	-	4.1	SS2	23	100	-	24	29	25	-	-	-	-	-	23	A-3 (VISUAL)	1100	BR., F. S&, TR.nGRAV.
LATITUDE=41.093486	4.1	-	5.6	SS3	24	100	-	-	-	-	-	-	-	-	-	19	A-3a (VISUAL)	-	BR., C. & F. S&, TR. SILT,GRAV.
LONGITUDE=-80.656222	5.6	-	7.1	SS4	16	44	-	-	-	-	-	-	-	-	-	8	A-3a (VISUAL)	-	BR., C. & F. S&, TR. SILT GRAV.
B-180-0-21	1.1	-	2.6	SS1	20	100	-	37	22	24	-	-	-	-	-	9	A-3 (VISUAL)	240	MED. DENSE, F. S&, TR. SILT, GRAV.
STA.15+81,20' LT.	2.6	-	4.1	SS2	27	100	4.5+	8	9	16	42	25	-	-	-	16	A-6b (VISUAL)	-	GR., SILTY CLAY, TR. S&, GRAV.
LATITUDE=41.092653	4.1	-	5.6	SS3	11	100	2	-	-	-	-	-	-	-	-	18	A-7-6 (VISUAL)	-	GR.-BR., CLAY, TR.
LONGITUDE=-80.655543	5.6	-	7.1	SS4	4	100	2	-	-	-	-	-	-	-	-	25	A-7-6 (VISUAL)	-	GR.-BR., CLAY, TR. GRAV.
B-181-0-21	1	-	2.5	SS1	27	28	-	57	24	11	-	-	-	-	-	27	A-3a (VISUAL)	-	BLUE-GR., C. & F. GRAV.
STA.17+84,2' LT.	2.5	-	4	SS2	20	100	3.5	9	11	23	31	26	-	-	-	13	A-6b (VISUAL)	<100	BR., SILTY CLAY, GRAV.
LATITUDE=41.092109	4	-	5.5	SS3	11	100	2	-	-	-	-	-	-	-	-	15	A-6b (VISUAL)	-	BR., SILTY CLAY,LITTLE GRAV.
LONGITUDE=-80.655538	5.5	-	7	SS4	18	100	2	-	-	-	-	-	-	-	-	13	A-6b (VISUAL)	-	BR., SILTY CLAY,LITTLE GRAV.

SUMMARY OF SOIL TEST DATA
NB I-680 ON RAMP FROM RIDGE

EXPLOR. ID	FROM	-	TO	SAMPLE ID	N60	% REC	tsf HP	% GR	% CS	% FS	% SILT	% CLAY	LL	PL	PI	% WC	ODOT CLASS (GI)	ppm SO4	CLASSIFICATION
B-182-0-21	0.8	-	2.3	SS1	27	100	-	34	22	32	-	-	-	-	-	8	A-3 (VISUAL)	-	BR., F. S&, LITTLE GRAV.
STA.5+87,10' LT.	2.3	-	3.8	SS2	41	100	-	26	33	21	-	-	-	-	-	6	A-3a (VISUAL)	<100	BR., C. & F. S&, TR. SILT GRAV.
LATITUDE=41.094582	3.8	-	5.3	SS3	43	100	-	-	-	-	-	-	-	-	-	8	A-3a (VISUAL)	-	BR., C. & F. S&, TR. SILT, TR. GRAV.
LONGITUDE=-80.656232	5.3	-	6.8	SS4	49	100	-	-	-	-	-	-	-	-	-	-	A-3a (VISUAL)	-	BR., C. & F. S&, TR. SILT GRAV.
B-183-0-21	1.1	-	2.6	SS1	16	100	-	28	21	22	-	-	-	-	-	9	A-3a (VISUAL)	410	BR., C. & F. GRAV.
STA.3+12,5' RT.	2.6	-	4.1	SS2	8	100	-	28	20	27	-	-	-	-	-	9	A-3a (VISUAL)	-	BR., C. & F. SILT GRAV.
LATITUDE=41.094008	4.1	-	5.6	SS3	14	100	-	-	-	-	-	-	-	-	-	16	A-3a (VISUAL)	-	BR., C. & F. SILT GRAV.
LONGITUDE=-80.655585	5.6	-	7.1	SS4	24	100	-	-	-	-	-	-	-	-	-	18	A-3 (VISUAL)	-	BR., SOME SILT GRAV.

SUMMARY OF SOIL TEST DATA
SB I-680 OFF RAMP TO MARKET NB

EXPLOR. ID	FROM	-	TO	SAMPLE ID	N60	% REC	tsf HP	% GR	% CS	% FS	% SILT	% CLAY	LL	PL	PI	% WC	ODOT CLASS (GI)	ppm SO4	CLASSIFICATION
B-184-0-21	0.3	-	1.8	SS1	37	100	-	-	-	-	-	-	-	-	-	19	A-3a (VISUAL)	2400	BR., C. & F., TR. GRAV.
STA.1031+11,44' LT.	1.8	-	2.8	SS2	17	100	-	-	-	-	-	-	-	-	-	26	A-3a (VISUAL)	-	BR., C. & F. GRAV.
LATITUDE=41.092508	2.8	-	3.3	SS2	-	-	2	-	-	-	-	-	-	-	-	-	A-6a (VISUAL)	-	GR., SILT & CLAY GRAV.
LONGITUDE=-80.6548	3.3	-	4.8	SS3	21	100	2	1	0	9	41	49	32	20	12	19	A-6a (9)	-	-
	4.8	-	6.3	SS4	20	100	4	-	-	-	-	-	-	-	-	18	A-6a (VISUAL)	-	GR., SILT & CLAY, GRAV.
B-185-0-21	0.3	-	1.05	SS1	32/50/3"	67	-	41	34	18	-	-	-	-	-	26	A-3a (VISUAL)	5800	-
STA.1035+22,19' LT.	1.8	-	3.3	SS2	34	100	4.5+	7	10	27	36	20	35	27	8	8	A-4a (4)	-	BR., C. & F. GRAV.
LATITUDE=41.091611	3.3	-	4.8	SS3	25	100	4.5+	-	-	-	-	-	-	-	-	10	A-4a (VISUAL)	-	-
LONGITUDE=-80.653865	4.8	-	6.3	SS4	22	100	4.5+	-	-	-	-	-	-	-	-	9	A-4a (VISUAL)	-	GR., SANDY SILT GRAV.
																			GR., SANDY SILT, GRAV.
B-186-0-21	1.1	-	2.6	SS1	54	100	-	56	14	13	-	-	-	-	-	29	A-3a (VISUAL)	2300	
STA.1038+05,10' RT.	2.6	-	4.1	SS2	11	100	-	0	0	0	49	51	-	-	-	16	A-4b (VISUAL)	-	BR., C. & F. SILT, GRAV.
LATITUDE=41.091231	4.1	-	5.6	SS3	10	100	-	-	-	-	-	-	-	-	-	25	A-4b (VISUAL)	-	GR., SILT, DAMP
LONGITUDE=-80.654646	5.6	-	7.1	SS4	12	100	-	-	-	-	-	-	-	-	-	25	A-4b (VISUAL)	-	GR., SILT, DAMP
																			GR., SILT, DAMP
B-187-0-21	0.4	-	1.07	SS1	29/50/2"	100	-	-	-	-	-	-	-	-	-	28	A-3a (VISUAL)	2300	
STA.1040+48,11' LT.	1.9	-	3.4	SS2	45	100	-	13	9	20	39	19	21	15	6	8	A-4a (5)	-	BR TO GR., C. & F.GRAV
LATITUDE=41.091501	3.4	-	4.9	SS3	27	100	-	-	-	-	-	-	-	-	-	12	A-4a (VISUAL)	-	-
LONGITUDE=-80.655433	4.9	-	6.1	SS4	29	100	4.5+	-	-	-	-	-	-	-	-	10	A-4a (VISUAL)	-	BR., SANDY SILT,GRAV.
	6.1	-	6.4	SS4	-	-	-	-	-	-	-	-	-	-	-	-	A-3a (VISUAL)	-	BR., SANDY SILT,LITTLE GRAV.
																			GR., C. & F. S&, TR. SILT, GRAV.

SUMMARY OF SOIL TEST DATA
SB I-680 OFF RAMP TO NB 62

EXPLOR. ID	FROM	-	TO	SAMPLE ID	N60	% REC	tsf HP	% GR	% CS	% FS	% SILT	% CLAY	LL	PL	PI	% WC	ODOT CLASS (GI)	ppm SO4	CLASSIFICATION
B-188-0-21	1	-	2.5	SS1	15	100	-	68	16	9	-	-	-	-	-	7	A-3a (VISUAL)	-	BR., C. & F. , TR. SILT, TR. GRAV.
STA.6+74,7' LT.	2.5	-	4	SS2	5	33	-	58	7	5	-	-	-	-	-	9	A-3a (VISUAL)	-	BR., C. F., TR. SILT GRAV.
LATITUDE=41.0915	4	-	5.5	SS3	3	28	-	-	-	-	-	-	-	-	-	5	A-3a (VISUAL)	-	BR., C. & F. , TR. SILT, GRAV.
LONGITUDE=-80.652812	5.5	-	7	SS4	14	39	-	-	-	-	-	-	-	-	-	15	A-3a (VISUAL)	890	BR., C. & F., LITTLE SILT, GRAV.
B-189-0-21	1	-	2.5	SS1	55	100	-	45	35	19	0	1	NP	NP	NP	28	A-1-b (0)	230	-
STA.10+87,9' RT.	2.5	-	4	SS2	29	83	2.5	-	-	-	-	-	-	-	-	14	A-4a (VISUAL)	-	GR., SILT, LITTLE GRAV.
LATITUDE=41.091105	4	-	5.5	SS3	32	100	4.5+	19	13	23	27	18	21	16	5	12	A-4a (2)	-	-
LONGITUDE=-80.651406	5.5	-	7	SS4	14	100	-	-	-	-	-	-	-	-	-	9	A-4a (VISUAL)	-	GR., SILT, LITTLE GRAV.
B-190-0-21	1.08	-	2.42	SS1	22/33/50/4"	100	-	40	36	19	1	4	NP	NP	NP	17	A-1-b (0)	1100	-
STA.16+60,5' LT.	2.58	-	2.83	SS2	50/3"	100	-	-	-	-	-	-	-	-	-	13	A-1-b (VISUAL)	-	BR., GRAV., SILT
LATITUDE=41.091344																			
LONGITUDE=-80.64938																			

SUMMARY OF SOIL TEST DATA
NB I-680 ON RAMP FROM WOODLAND

EXPLOR. ID	FROM	-	TO	SAMPLE ID	N60	% REC	tsf HP	% GR	% CS	% FS	% SILT	% CLAY	LL	PL	PI	% WC	ODOT CLASS (GI)	ppm SO4	CLASSIFICATION
B-191-0-21	1.1	-	1.85	SS1	11/50/3"	100	-	28	10	11	31	20	35	19	16	-	A-6b (5)	-	-
STA.1033+21,12' LT.	2.6	-	2.9	SS2	50/3"	100	-	-	-	-	-	-	-	-	-	-	Rock (VISUAL)	650	SHALE, GR..
LATITUDE=41.092457																			
LONGITUDE=-80.653881																			
B-192-0-21	0.5	-	1.75	SS1	27/34/50/3"	100	-	35	45	16	-	-	-	-	-	55	A-3a (VISUAL)	8000	BR., C. & F., & GRAV. SILT
STA.1036+87,12' RT.	2	-	3.5	SS2	69	100	-	20	7	5	44	24	31	19	12	5	A-6a (7)	-	-
LATITUDE=41.092277	3.5	-	4.25	SS3	31/50/3"	100	-	-	-	-	-	-	-	-	-	6	Rock (VISUAL)	-	SHALE, GR..
LONGITUDE=-80.652581	5	-	5.2	SS4	50/2"	50	-	-	-	-	-	-	-	-	-	4	Rock (VISUAL)	-	SHALE, GR..
B-193-0-21	0.1	-	1.6	SS1	45	100	-	17	33	31	-	-	-	-	-	18	A-3a (VISUAL)	3000	BR., C. & F. , SILT GRAV.
STA.1038+35,6' LT.	1.6	-	3.1	SS2	24	56	-	19	15	29	-	-	-	-	-	11	A-3 (VISUAL)	-	BR., F. S&, SOME SILT, GRAV.
LATITUDE=41.092341	3.1	-	4.6	SS3	23	100	-	-	-	-	-	-	-	-	-	5	A-4b (VISUAL)	-	GR., STONE FRAG., TR.
LONGITUDE=-80.652048	4.6	-	5.35	SS4	8/50/3"	100	-	-	-	-	-	-	-	-	-	10	A-1-a (VISUAL)	-	SHALE, GR..
B-194-0-21	1.1	-	2.6	SS1	26	100	4.5+	2	11	34	32	21	25	17	8	24	A-4a (4)	1200	-
STA.1040+77,20' RT.	2.6	-	4.1	SS2	13	100	-	18	17	26	-	-	-	-	-	13	A-3a (VISUAL)	-	BR., C. & F., GRAV.
LATITUDE=41.092851	4.1	-	5.6	SS3	14	100	-	-	-	-	-	-	-	-	-	19	A-3a (VISUAL)	-	BR., C. & F. GRAV.
LONGITUDE=-80.651559	5.6	-	7.1	SS4	14	100	-	-	-	-	-	-	-	-	-	14	A-3a (VISUAL)	-	BR., C. & F. GRAV.

GEOTECHNICAL PROFILE
SUMMARY OF SOIL TEST DATA

MODEL: Sheet PAPERSIZE: 11x17 (in.) DATE: 8/13/2025 TIME: 12:12:33 PM PLTDRV: OHDOT_PDF_E+.pltcfg PENTBL: OHDOT_Pen.tbl USER: aalqasem@somateng.com WORKSPACE: OHDOTCEv02 WORKSET: 121474 PRODUCT: OpenRoadsDesigner 24.00.00.205
pw:\\ohiodot-pw.bentley.com:ohiodot-pw-02\Documents\01 Active Projects\District 04\Mahoning\121474\401-Engineering_Somat\Geotechnical\Sheets\121474_ID006.dgn

SUMMARY OF SOIL TEST DATA
NB 62 OFF RAMP TO WOODLAND

EXPLOR. ID	FROM	-	TO	SAMPLE ID	N60	% REC	tsf HP	% GR	% CS	% FS	% SILT	% CLAY	LL	PL	PI	% WC	ODOT CLASS (GI)	ppm SO4	CLASSIFICATION
B-195-0-21	1.2	-	2.7	SS1	15	100	-	45	16	15	-	-	-	-	-	11	A-1-b (VISUAL)	170	BR., GRAV. WITH SAND, LITTLE SILT, DAMP
STA.23+28,5' RT.	2.7	-	4.2	SS2	6	6	-	-	-	-	-	-	-	-	-	-	A-1-b (VISUAL)	-	BR., GRAV. WITH SAND, LITTLE SILT, DAMP
LATITUDE=41.09259	4.2	-	5.7	SS3	3	39	0.25	8	17	22	32	21	28	16	12	19	A-6a (4)	-	-
LONGITUDE=-80.651054	5.7	-	7.2	SS4	15	100	-	-	-	-	-	-	-	-	-	15	A-6a (VISUAL)	-	BR., SILT & CLAY, & SAND, TR.
B-196-0-21	1.3	-	2.8	SS1	19	100	-	29	24	29	-	-	-	-	-	7	A-1-b (VISUAL)	-	BR., GRAV. WITH SAND, TR. SILT, DAMP
STA.7+51,9' RT.	2.8	-	4.3	SS2	20	44	-	-	-	-	-	-	-	-	-	8	A-1-a (VISUAL)	-	BR., STONE FRAG., LITTLE SAND, TR.
LATITUDE=41.092334	4.3	-	5.8	SS3	17	33	-	-	-	-	-	-	-	-	-	8	A-1-a (VISUAL)	-	BR., STONE FRAG., LITTLE SAND, TR.
LONGITUDE=-80.651004	5.8	-	7.3	SS4	8	100	1.5	8	10	20	38	24	25	14	11	15	A-6a (6)	<100	-
B-197-0-21	0.9	-	2.4	SS1	14	17	-	-	-	-	-	-	-	-	-	21	A-3a (VISUAL)	-	BR., C. & F. SAND, TR. SILT, TR. GRAV.
STA.19+72,8' LT.	2.4	-	3.9	SS2	19	100	-	54	17	13	-	-	-	-	-	7	A-3a (VISUAL)	-	BR., C. & F. SAND, TR. SILT, GRAV.
LATITUDE=41.092445	3.9	-	5.4	SS3	17	100	-	7	47	37	-	-	-	-	-	7	A-3 (VISUAL)	-	BR., F. SAND, TR. SILT, DAMP
LONGITUDE=-80.649784	5.4	-	6.9	SS4	19	100	-	-	-	-	-	-	-	-	-	15	A-3a (VISUAL)	<100	BR., C. AND F. SAND, TR. SILT
B-198-0-21	0.6	-	2.1	SS1	53	100	-	1	7	72	-	-	-	-	-	47	A-3 (VISUAL)	1900	BR., F. SAND, TR. SILT,MOIST
STA.15+48,15' RT.	2.1	-	3.6	SS2	31	100	-	1	7	63	-	-	-	-	-	7	A-3 (VISUAL)	-	BR., F. SAND, LITTLE SILT, TR.GRAV.
LATITUDE=41.092496	3.6	-	5.1	SS3	19	100	-	-	-	-	-	-	-	-	-	13	A-3 (VISUAL)	-	BR., F. SAND, LITTLE SILT, MOIST
LONGITUDE=-80.64825	5.1	-	6.6	SS4	25	100	-	-	-	-	-	-	-	-	-	17	A-3 (VISUAL)	-	BR., F. SAND, LITTLE SILT, MOIST
B-199-0-21	1.1	-	2.6	SS1	29	100	4.5+	18	14	25	27	16	-	-	-	13	A-6b (VISUAL)	1300	BR., SILTY CLAY, LITTLE GRAV.
STA.11+44,13' RT.	2.6	-	4.1	SS2	31	100	4.5+	5	11	18	37	29	-	-	-	12	A-6b (VISUAL)	-	BR., SILTY CLAY, LITTLE GRAV.
LATITUDE=41.092555	4.1	-	5.6	SS3	22	100	4.5+	-	-	-	-	-	-	-	-	12	A-6b (VISUAL)	-	BR., SILTY CLAY, LITTLE GRAV.
LONGITUDE=-80.646786	5.6	-	7.1	SS4	23	100	4.5+	-	-	-	-	-	-	-	-	9	A-6b (VISUAL)	-	BR., SILTY CLAY, LITTLE GRAV.

SUMMARY OF SOIL TEST DATA
SB 62 OFF RAMP TO SB I-680

EXPLOR. ID	FROM	-	TO	SAMPLE ID	N60	% REC	tsf HP	% GR	% CS	% FS	% SILT	% CLAY	LL	PL	PI	% WC	ODOT CLASS (GI)	ppm SO4	CLASSIFICATION
B-200-0-21	0.6	-	2.1	SS1	69	100	-	55	29	12	-	-	NP	NP	NP	33	A-1-a (0)	-	-
STA.1036+05,35' RT.	2.1	-	3.6	SS2	22	100	-	-	-	-	-	-	-	-	-	14	A-3a (VISUAL)	<100	BR., C. AND F. SAND, LITTLE SILT, TR. GRAV.
LATITUDE=41.092302	3.6	-	5.1	SS3	22	100	-	1	3	71	18	7	NP	NP	NP	19	A-3a (0)	-	-
LONGITUDE=-80.64807	5.1	-	6.6	SS4	24	100	-	-	-	-	-	-	-	-	-	20	A-3a (VISUAL)	-	BR., C. AND F. SAND, LITTLE SILT, TR. GRAV.
B-201-0-21	1	-	2.5	SS1	38	100	-	-	-	-	-	-	-	-	-	33	A-1-b (VISUAL)	6400	BR., GRAV. WITH SAND, TR. SILT
STA.1039+80,2' RT.	2.5	-	4	SS2	23	100	-	42	41	13	-	-	NP	NP	NP	3	A-1-b (0)	-	-
LATITUDE=41.091702	4	-	5.5	SS3	17	100	-	-	-	-	-	-	-	-	-	17	A-1-b (VISUAL)	-	BR., GRAV. WITH SAND, TR. SILT
LONGITUDE=-80.649201	5.5	-	7	SS4	89	100	-	21	18	30	19	12	20	17	3	13	A-2-4 (0)	-	-
B-202-0-21	1	-	2.5	SS1	14	100	-	-	-	-	-	-	-	-	-	16	A-3a (VISUAL)	370	BR., C. AND F. SAND, TR. SILT
STA.1043+79,34' RT.	2.5	-	4	SS2	42	100	-	58	16	15	8	3	NP	NP	NP	7	A-1-a (0)	-	-
LATITUDE=41.090917	4	-	5.5	SS3	20	100	-	-	-	-	-	-	-	-	-	5	A-3a (VISUAL)	-	BR., C. AND F. SAND, SOME SILT
LONGITUDE=-80.650236	5.5	-	7	SS4	17	100	-	7	9	50	26	8	NP	NP	NP	18	A-3a (0)	-	-

SUMMARY OF SOIL TEST DATA
SB 62 OFF RAMP TO HEASLEY

EXPLOR. ID	FROM	-	TO	SAMPLE ID	N60	% REC	tsf HP	% GR	% CS	% FS	% SILT	% CLAY	LL	PL	PI	% WC	ODOT CLASS (GI)	ppm SO4	CLASSIFICATION
B-203-0-21	0.8	-	2.3	SS1	31	100	-	-	-	-	-	-	-	-	-	8	A-6a (VISUAL)	1300	GR., SILT AND CLAY,DAMP
STA.0+51,7' RT.	2.3	-	3.8	SS2	49	100	-	21	6	13	39	21	34	20	14	8	A-6a (7)	-	-
LATITUDE=41.089826	3.8	-	5.3	SS3	60	100	-	-	-	-	-	-	-	-	-	4	A-6a (VISUAL)	-	GR., SILT AND CLAY,DAMP
LONGITUDE=-80.650756	5.3	-	6.8	SS4	61	100	-	17	8	17	34	24	30	17	13	8	A-6a (6)	-	-
B-204-0-21	1.3	-	2.8	SS1	23	100	4.5+	12	12	29	28	19	21	14	7	12	A-4a (2)	220	-
STA.4+52,18' LT.	2.8	-	4.3	SS2	8	44	-	76	10	7	-	-	-	-	-	8	A-1-a (VISUAL)	-	BR., GRAV., LITTLE SAND, TR. SILT, DAMP
LATITUDE=41.08873	4.3	-	5.8	SS3	37	56	-	-	-	-	-	-	-	-	-	7	A-1-a (VISUAL)	-	BR., GRAV., LITTLE SAND, TR. SILT, DAMP
LONGITUDE=-80.650851	5.8	-	7.3	SS4	13	100	2.5	-	-	-	-	-	-	-	-	18	A-4a (VISUAL)	-	BR., SANDY SILT, LITTLE GRAV., DAMP
B-206-0-21	1.2	-	2.7	SS1	38	100	-	-	-	-	-	-	-	-	-	9	A-4a (VISUAL)	1100	GR., SANDY SILT, LITTLE GRAV., DAMP
STA.8+41,1' LT.	2.7	-	4.2	SS2	25	100	-	15	11	26	34	14	16	13	3	10	A-4a (3)	-	-
LATITUDE=41.087665	4.2	-	5.7	SS3	29	100	-	-	-	-	-	-	-	-	-	8	A-4a (VISUAL)	-	GR., SANDY SILT, LITTLE GRAV., DAMP
LONGITUDE=-80.650912	5.7	-	7.2	SS4	37	100	-	17	9	24	33	17	19	13	6	7	A-4a (3)	-	-
B-208-0-21	1.5	-	3	SS1	15	100	-	-	-	-	-	-	-	-	-	14	A-4a (VISUAL)	480	BR., SANDY SILT, TR. TO LITTLE GRAV., DAMP
STA.11+91,27' LT.	3	-	4.5	SS2	16	100	-	10	8	19	42	21	24	17	7	14	A-4a (6)	-	-
LATITUDE=41.086708	4.5	-	6	SS3	13	100	-	-	-	-	-	-	-	-	-	9	A-4a (VISUAL)	-	BR., SANDY SILT, TR. TO LITTLE GRAV., DAMP
LONGITUDE=-80.650781	6	-	7.5	SS4	16	100	-	16	9	18	40	17	18	14	4	16	A-4a (4)	-	-

SUMMARY OF SOIL TEST DATA
SB 62 OFF RAMP TO SB I-680

EXPLOR. ID	FROM	-	TO	SAMPLE ID	N60	% REC	tsf HP	% GR	% CS	% FS	% SILT	% CLAY	LL	PL	PI	% WC	ODOT CLASS (GI)	ppm SO4	CLASSIFICATION
B-205-0-21	1.2	-	2.7	SS1	30	100	-	47	18	16	-	-	-	-	-	15	A-1-b (VISUAL)	-	BR., GRAV. WITH SAND, TRAVE SILT, DAMP
STA.1051+69,15' RT.	2.7	-	4.2	SS2	7	100	-	-	-	-	-	-	-	-	-	17	A-4a (VISUAL)	330	
LATITUDE=41.088776	4.2	-	5.7	SS3	6	100	-	-	-	-	-	-	-	-	-	21	A-4a (VISUAL)	-	DARK GR., SANDY SILT, TR. GRAV.
LONGITUDE=-80.650711	5.7	-	7.2	SS4	10	100	2	9	12	23	35	21	24	15	9	26	A-4a (4)	-	-
B-207-0-21	0.9	-	2.4	SS1	64	100	-	-	-	-	-	-	-	-	-	14	A-4b (VISUAL)	260	GR., SILT, TR. SAND, TR. GRAV., DAMP
STA.1055+47,16' LT.	2.4	-	3.9	SS2	49	100	-	-	-	-	-	-	-	-	-	10	A-4b (VISUAL)	-	GR., SILT, TR. SAND, TR. GRAV., DAMP
LATITUDE=41.087757	3.9	-	5.4	SS3	44	100	-	-	-	-	-	-	-	-	-	12	A-4a (VISUAL)	-	GR., SANDY SILT, TR. GRAV., DAMP
LONGITUDE=-80.650431	5.4	-	6.9	SS4	37	100	-	-	-	-	-	-	-	-	-	7	A-3 (VISUAL)	-	GR., F. SAND, LITTLE SILT, LITTLE GRAV.

MODEL: Sheet PAPERSIZE: 11x17 (in.) DATE: 8/13/2025 TIME: 12:12:42 PM PLTDRV: OHDOT_PDF_E+.pltcfg PENTBL: OHDOT_Pen.tbl USER: aalqasem@somateng.com WORKSPACE: OHDOTCEv02 WORKSET: 121474 PRODUCT: OpenRoadsDesigner 24.00.00.205
pw:\\ohiodot-pw.bentley.com:ohiodot-pw-02\Documents\01 Active Projects\District 04\Mahoning\121474\401-Engineering_Somat\Geotechnical\Sheets\121474_ID007.dgn

SUMMARY OF SOIL TEST DATA
NB I-680 OFF RAMP TO NB 62

EXPLOR. ID	FROM	-	TO	SAMPLE ID	N60	% REC	tsf HP	% GR	% CS	% FS	% SILT	% CLAY	LL	PL	PI	% WC	ODOT CLASS (GI)	ppm SO4	CLASSIFICATION
B-209-0-21	0.8	-	2.3	SS1	33	100	-	34	27	26	-	-	-	-	-	37	A-3a (VISUAL)	1300	DARK GR., C. & F. SAND, & GRAV.
STA.1035+51,1' RT.	2.3	-	3.8	SS2	25	100	-	-	-	-	-	-	-	-	-	11	A-3a (VISUAL)	-	DARK GR., C. & F. SAND, & GRAV.
LATITUDE=41.092218	3.8	-	5.3	SS3	24	100	3.5	8	8	18	37	29	25	17	8	10	A-4a (6)	-	-
LONGITUDE=-80.646862	5.3	-	6.8	SS4	15	100	2.5	-	-	-	-	-	-	-	-	22	A-4a (VISUAL)	-	GR.-BR., SANDY SILT,TR. GRAV.
B-210-0-21	1	-	2.5	SS1	35	100	-	51	29	13	-	-	-	-	-	39	A-3a (VISUAL)	1500	BR., C. AND F. SAND, TR. SILT
STA.1039+50,1' RT.	2.5	-	4	SS2	23	28	-	-	-	-	-	-	-	-	-	5	A-3a (VISUAL)	-	BR., C. AND F. SAND, LITTLE GRAV.
LATITUDE=41.091727	4	-	5.5	SS3	21	100	-	55	20	12	-	-	-	-	-	5	A-3a (VISUAL)	-	BR., C. AND F. SAND, LITTLE GRAV.
LONGITUDE=-80.648148	5.5	-	7	SS4	57	56	-	-	-	-	-	-	-	-	-	6	A-3a (VISUAL)	-	BR., C. & F. SAND, LITTLE GRAV.,
B-211-0-21	1	-	2.5	SS1	44	56	-	42	26	28	-	-	-	-	-	20	A-1-b (VISUAL)	230	BR., GRAV. W. SAND, TR. SILT, DAMP
STA.1043+41,3' LT.	2.5	-	4	SS2	22	100	-	13	16	26	31	14	20	16	4	10	A-4a (2)	-	-
LATITUDE=41.090944	4	-	5.5	SS3	27	100	-	-	-	-	-	-	-	-	-	10	A-4a (VISUAL)	-	BR., SANDY SILT, LITTLE GRAV., DAMP
LONGITUDE=-80.649108	5.5	-	7	SS4	41	44	-	-	-	-	-	-	-	-	-	6	A-3a (VISUAL)	-	BR., C. AND F. SAND, TR. SILT, TR. GRAV.
B-212-0-21	0.6	-	2.1	SS1	29	100	4.5+	11	10	23	38	18	23	18	5	14	A-4a (4)	1700	-
STA.1046+75,22' RT.	2.1	-	3.6	SS2	34	100	-	10	11	35	-	-	-	-	-	14	A-4a (VISUAL)	-	DARK GR., SANDY SILT, LITTLE GRAV.,
LATITUDE=41.090142	3.6	-	5.1	SS3	42	100	-	-	-	-	-	-	-	-	-	11	A-4a (VISUAL)	-	DARK GR., SANDY SILT, LITTLE GRAV.,
LONGITUDE=-80.649714	5.1	-	6.6	SS4	18	100	4.5+	-	-	-	-	-	-	-	-	11	A-6b (VISUAL)	-	BR., SILTY CLAY, LITTLE SAND, GRAV.
B-213-0-21	1	-	1.2	SS1	-	-	-	-	-	-	-	-	-	-	-	17	A-4a (VISUAL)	1200	SANDSTONE COBBLE BLOCKED SAMPLER
STA.1050+38,7' LT.	2.3	-	3.8	SS2	25	100	-	13	11	35	-	-	-	-	-	11	A-4a (VISUAL)	-	BR., SANDY SILT, TR. TO LITTLE GRAV.
LATITUDE=41.089144	3.8	-	5.3	SS3	20	100	4.5+	7	12	20	40	21	24	18	6	13	A-4a (5)	-	-
LONGITUDE=-80.649853	5.3	-	6.8	SS4	32	100	4.5+	-	-	-	-	-	-	-	-	9	A-4a (VISUAL)	-	BR., SANDY SILT, TR. TO LITTLE GRAV.,

SUMMARY OF SOIL TEST DATA
SB I-680 OFF RAMP TO SOUTH AVE

EXPLOR. ID	FROM	-	TO	SAMPLE ID	N60	% REC	tsf HP	% GR	% CS	% FS	% SILT	% CLAY	LL	PL	PI	% WC	ODOT CLASS (GI)	ppm SO4	CLASSIFICATION
B-214-0-21	0.2	-	1.7	SS1	45	44	-	40	30	19	-	-	-	-	-	24	A-1-b (VISUAL)	-	BR., GRAV. WITH SAND, TR. SILT
STA.1080+32,24' LT.	1.7	-	3.2	SS2	26	100	-	7	11	20	46	16	21	14	7	11	A-4a (5)	-	-
LATITUDE=41.081657	3.2	-	4.7	SS3	10	100	1.25	-	-	-	-	-	-	-	-	14	A-4a (VISUAL)	220	GR., SANDY SILT, TR. GRAV.,
LONGITUDE=-80.647824	4.7	-	5	SS4	19	100	0.25	-	-	-	-	-	-	-	-	-	A-4a (VISUAL)	-	GR., SANDY SILT, TR. GRAV.,
	5	-	6.2	SS4	-	-	-	-	-	-	-	-	-	-	-	11	A-4a (VISUAL)	-	GR., SANDY SILT, TR. GRAV.,
B-215-0-21	1	-	2.5	SS1	15	100	-	9	12	21	39	19	22	16	6	13	A-4a (5)	<100	-
STA.1083+26,6' LT.	2.5	-	4	SS2	13	100	-	6	11	23	41	19	20	15	5	12	A-4a (5)	-	-
LATITUDE=41.081294	4	-	4.9	SS3	12/50/5"	73	-	-	-	-	-	-	-	-	-	12	Rock (VISUAL)	-	SANDSTONE, TAN.
LONGITUDE=-80.646895	5.5	-	7	SS4	21	100	-	-	-	-	-	-	-	-	-	12	A-3 (VISUAL)	-	TAN, F. SAND, SOME STONE FRAG., TR.

SUMMARY OF SOIL TEST DATA
NB I-680 ON RAMP FROM SOUTH AVE

EXPLOR. ID	FROM	-	TO	SAMPLE ID	N60	% REC	tsf HP	% GR	% CS	% FS	% SILT	% CLAY	LL	PL	PI	% WC	ODOT CLASS (GI)	ppm SO4	CLASSIFICATION
B-216-0-21	1.4	-	2.9	SS1	19	100	4.5+	5	9	23	35	28	25	16	9	15	A-4a (6)	370	-
STA.1087+20,14' RT.	2.9	-	3.3	SS2	50/5"	100	4.5+	-	-	-	-	-	-	-	-	14	Rock (VISUAL)	-	SANDSTONE, GR..
LATITUDE=41.081929																			
LONGITUDE=-80.645144																			
B-219-0-21	1.3	-	2.8	SS1	52	100	-	2	12	24	40	22	19	13	6	7	A-4a (5)	1000	-
STA.1091+25,5' RT.	2.8	-	4.3	SS2	16	100	2.5	9	11	23	35	22	20	14	6	12	A-4a (4)	-	-
LATITUDE=41.082612	4.3	-	5.8	SS3	19	100	-	-	-	-	-	-	-	-	-	7	A-4a (VISUAL)	-	GR., SANDY SILT, TR. GRAV., DAMP
LONGITUDE=-80.645817	5.8	-	7.3	SS4	21	100	4.5+	-	-	-	-	-	-	-	-	14	A-4a (VISUAL)	-	GR., SANDY SILT, TR. GRAV., DAMP

SUMMARY OF SOIL TEST DATA
NB I-680 OFF RAMP TO SOUTH AVE

EXPLOR. ID	FROM	-	TO	SAMPLE ID	N60	% REC	tsf HP	% GR	% CS	% FS	% SILT	% CLAY	LL	PL	PI	% WC	ODOT CLASS (GI)	ppm SO4	CLASSIFICATION
B-218-0-21	1.1	-	2.6	SS1	56	100	4	9	9	26	32	24	-	-	-	-	A-6b (VISUAL)	460	BR., SILTY CLAY, LITTLE SAND, TR. GRAV., DAMP
STA.1084+18,39' LT.	2.6	-	4.1	SS2	52	100	-	23	19	36	-	-	-	-	-	-	A-3 (VISUAL)	-	BR. TO GR., F. SAND, GRAV., DAMP
LATITUDE=41.082803	4.1	-	5.6	SS3	42	100	-	-	-	-	-	-	-	-	-	-	A-3 (VISUAL)	-	BR. TO GR., F.SAND, LITTLE SILT
LONGITUDE=-80.645812	5.6	-	7.1	SS4	15	100	-	-	-	-	-	-	-	-	-	-	A-3 (VISUAL)	-	BR., F. SAND, LITTLE SILT,GRAV.
B-217-0-21	1.1	-	2.6	SS1	42	44	4.5+	9	9	19	33	30	25	14	11	-	A-6a (6)	460	-
STA.1086+95,11' RT.	2.6	-	3.35	SS2	12/50/3"	22	-	-	-	-	-	-	-	-	-	-	Rock (VISUAL)	-	SANDSTONE, BR..
LATITUDE=41.082394	4.1	-	4.4	SS3	50/3"	100	-	43	7	28	-	-	-	-	-	-	Rock (VISUAL)	-	SANDSTONE, BR. to GR.
LONGITUDE=-80.644946																			
B-220-0-21	1.1	-	1.85	SS1	16/50/3"	67	-	-	-	-	-	-	-	-	-	-	A-4b (VISUAL)	510	BR., SILT, SOME GRAV.,TR. SAND
STA.1090+34,13' LT.	2.6	-	2.9	SS2	50/3"	100	-	-	-	-	-	-	-	-	-	-	Rock (VISUAL)	-	SANDSTONE, GR..
LATITUDE=41.081895																			
LONGITUDE=-80.64397																			

SUMMARY OF SOIL TEST DATA
SB I-680 ON RAMP FROM SOUTH AVE

EXPLOR. ID	FROM	-	TO	SAMPLE ID	N60	% REC	tsf HP	% GR	% CS	% FS	% SILT	% CLAY	LL	PL	PI	% WC	ODOT CLASS (GI)	ppm SO4	CLASSIFICATION
B-221-0-21	1.4	-	2.57	SS1	5/8/50/2"	100	4.5+	8	12	23	38	19	22	16	6	14	A-4a (4)	1000	-
STA.1085+61,23' LT.	2.9	-	3.1	SS2	50/2"	100	-	-	-	-	-	-	-	-	-	6	Rock (VISUAL)	-	SANDSTONE, BR. TO TAN.
LATITUDE=41.081324																			
LONGITUDE=-80.645693																			
B-222-0-21	0.3	-	1.8	SS1	29	67	-	65	22	9	-	-	-	-	-	15	A-3a (VISUAL)	-	DARK BR., C. AND F. SAND (Cement Stabilized Soil)
STA.1089+09,9' LT.	1.8	-	2	SS2	50/2"	100	-	-	-	-	-	-	-	-	-	5	Rock (VISUAL)	-	SANDSTONE, GR..
LATITUDE=41.081379																			
LONGITUDE=-80.644439																			

GEOTECHNICAL PROFILE
SUMMARY OF SOIL TEST DATA

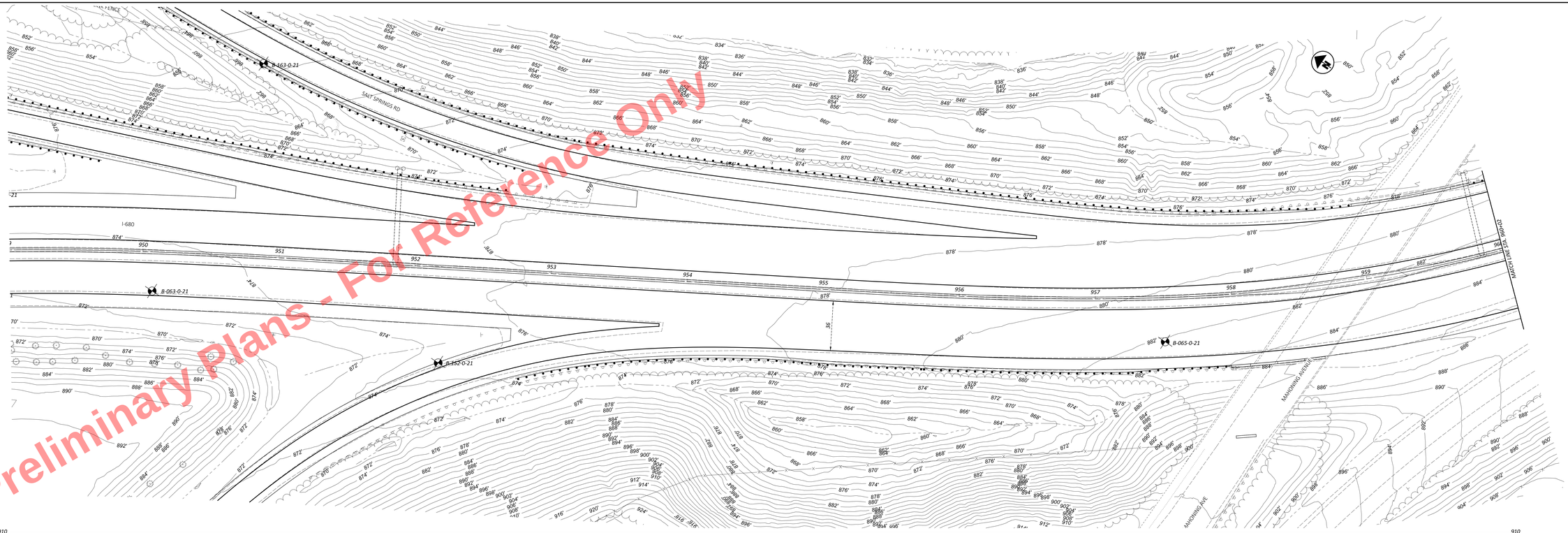

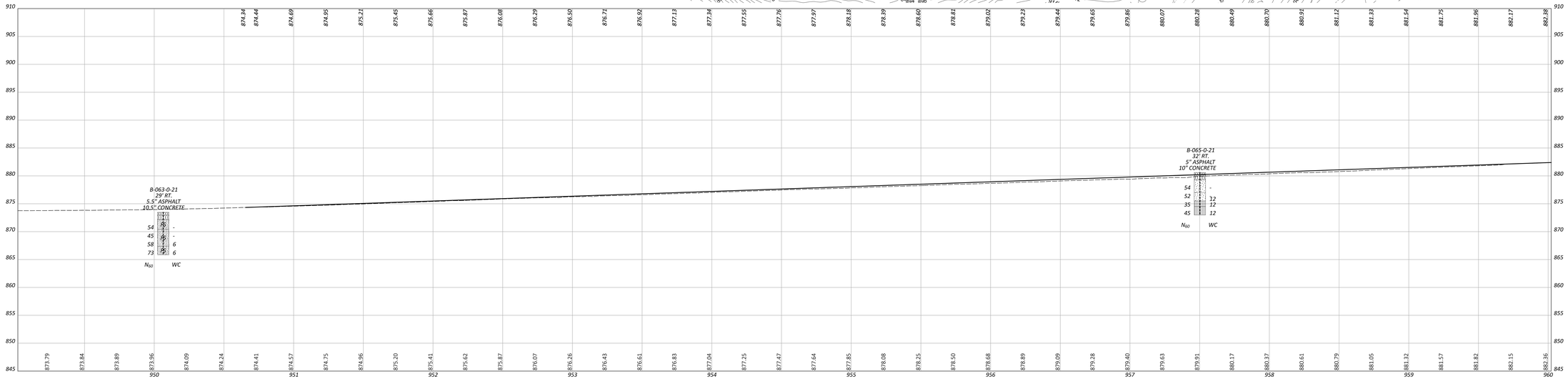

Preliminary Plans - For Reference Only

HORIZONTAL SCALE IN FEET 0 10 20 40

GEOTECHNICAL PROFILE - ROADWAY
STA 949+02 to STA 960+02 I-680 NB

DESIGN AGENCY

DESIGNER CJW

REVIEWER JDZ 05/30/25

PROJECT ID 121474

SHEET P. 582 TOTAL P. 655

MAH-680-4.80

MODEL: CEG_MAIN - Centerline-15 PAPERSIZE: 66x34 (in.) DATE: 6/2/2025 TIME: 2:40:40 PM USER: conner
pw:\\pwbaldr.pw.bentley.com:pwbaldr-pw-02\Documents\01 Active Projects\District 04\Mahoning\121474\Engineering_Sonnet\Geotechnical\Sheets\121474_IP201.dgn

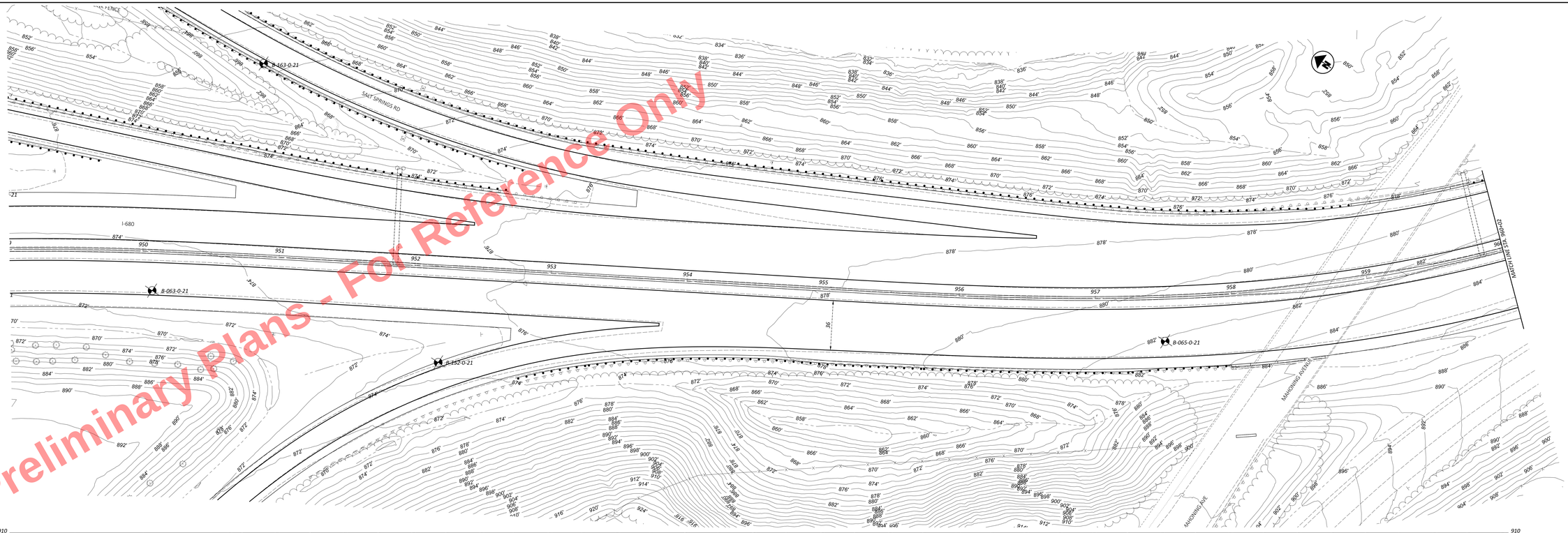

Preliminary Plans - For Reference Only

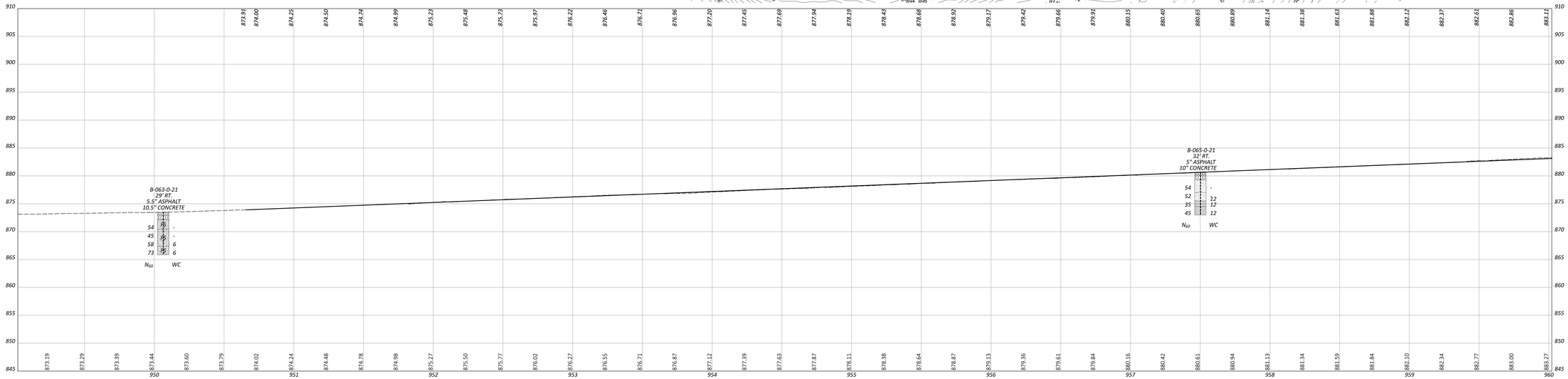

MAH-680-4.80

MODEL: GEO_ABS - Centerline-15 PAPERSIZE: 66x34 (in.) DATE: 6/2/2025 TIME: 2:41:35 PM USER: conner
pw://sbinfo.pw.bentley.com:sbinfo04-pw-02/Documents/01 Active Projects/District 04/Mahoning/121474/01-Engineering_Sonnet/Geotechnical/Sheets/121474_IP202.dgn

HORIZONTAL SCALE IN FEET
0 10 20 40

GEOTECHNICAL PROFILE - ROADWAY
STA 949+02 to STA 960+02 I-680 SB

DESIGN AGENCY
SE
Sonnet Engineering Group, Inc.

DESIGNER
CJW

REVIEWER
JDZ 05/30/25

PROJECT ID
121474

SHEET P. 583 TOTAL P. 655

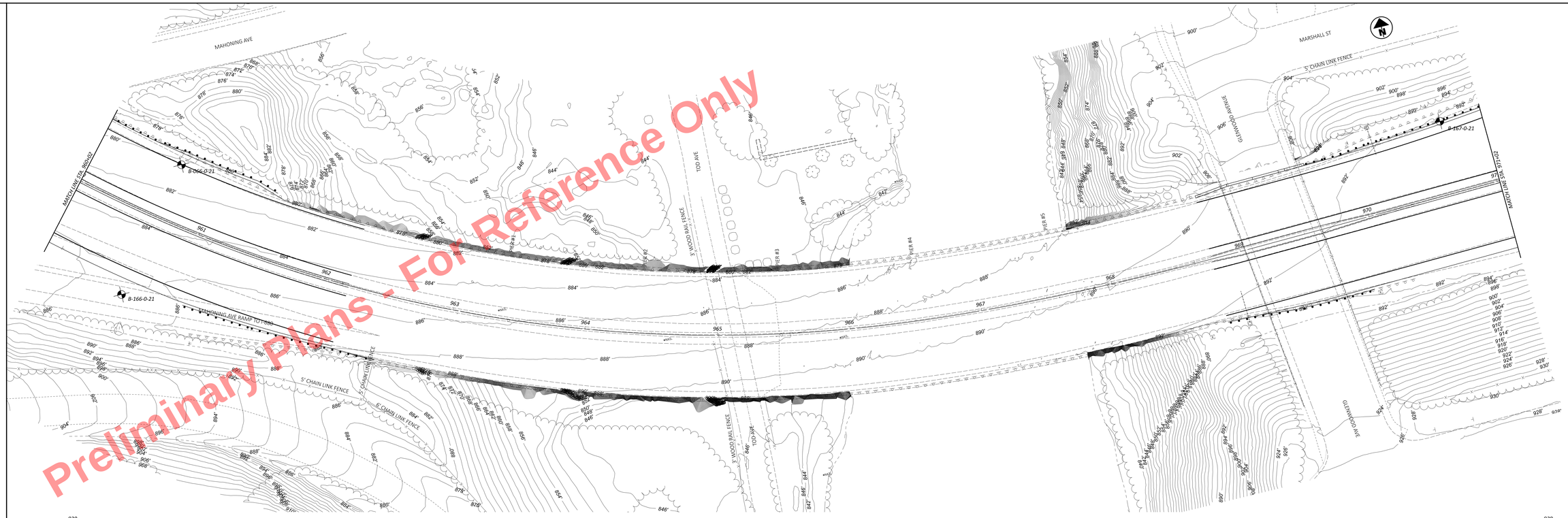

Preliminary Plans - For Reference Only

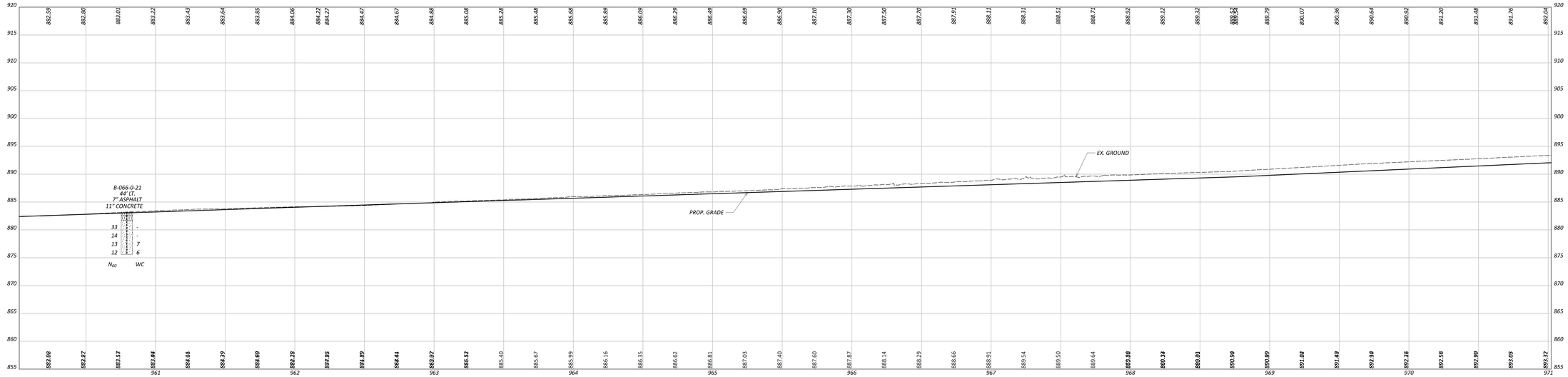

HORIZONTAL SCALE IN FEET
0 10 20 40

GEOTECHNICAL PROFILE - ROADWAY
STA. 960+02 TO STA. 971+02 I-680 NB

DESIGN AGENCY
Mohan Engineering Group, Inc.

DESIGNER
CJW

REVIEWER
JDZ 05/30/25

PROJECT ID
121474

SHEET P. 584 TOTAL P. 655

MAH-680-4.80

MODEL: CLIP_682 - Centerline-16 PAPERSIZE: 66x34 (in.) DATE: 6/2/2025 TIME: 2:42:17 PM USER: conner
pw:\\pwinfo-pw.bentley.com:pw-02\Documents\01 Active Projects\District 04\Mahoning\121474\02-Engineering_Somat\Geotechnical\Sheets\121474_IP203.dgn

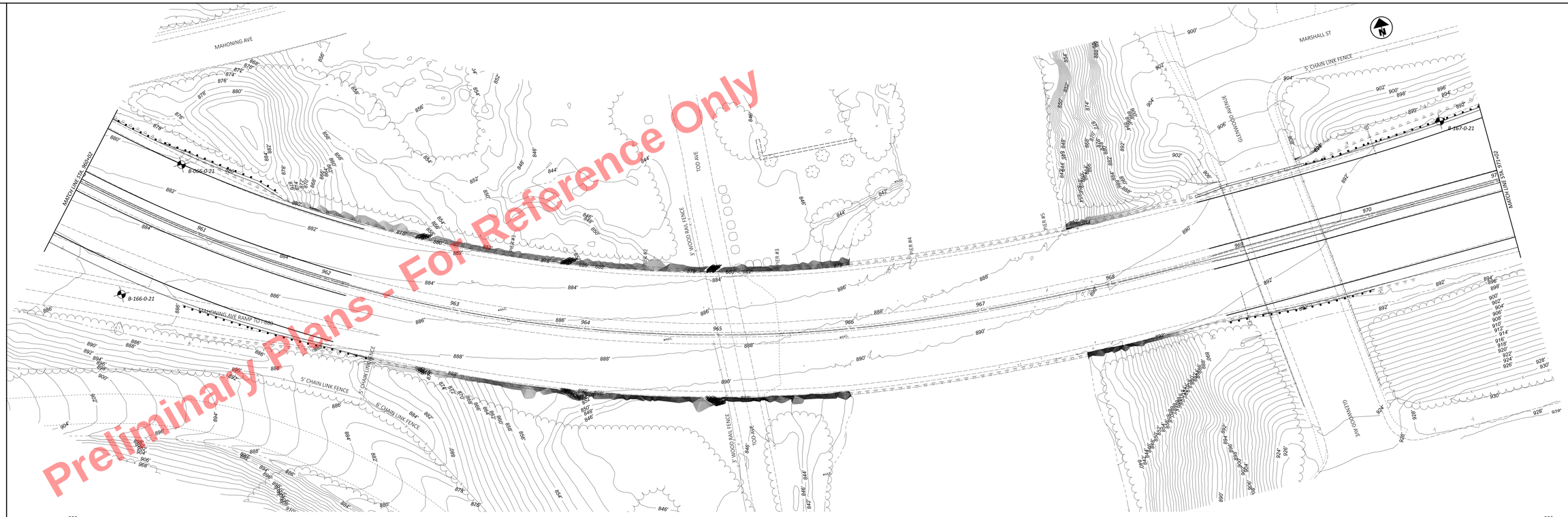

Preliminary Plans - For Reference Only

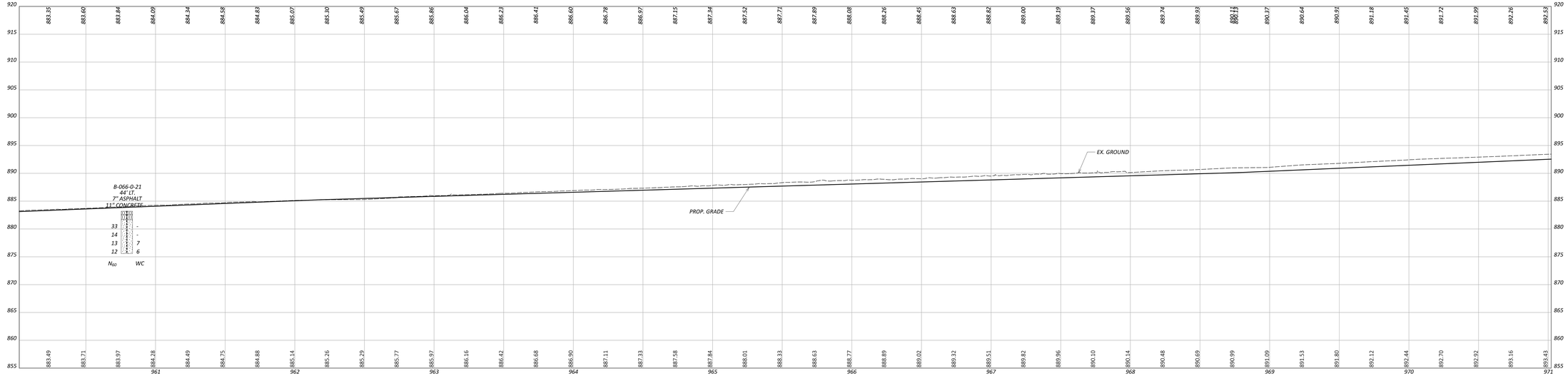

HORIZONTAL SCALE IN FEET
0 10 20 40

GEOTECHNICAL PROFILE - ROADWAY
STA. 960+02 TO STA 971+02 I-680 SB

DESIGN AGENCY
Stantec Engineering Services, Inc.

DESIGNER
CJW

REVIEWER
JDZ 05/30/25

PROJECT ID
121474

SHEET P. 585 TOTAL P. 655

MAH-680-4.80

MODEL: CLIP_6802 - Centerline-16 PAPERSIZE: 66x34 (in.) DATE: 6/2/2025 TIME: 3:39:35 PM USER: conner
pw:\\pwinfo-pw.bentley.com:pwdata-pw-02\Documents\01 Active Projects\District 04\Mahoning\121474\02-Engineering_Somat\Geotechnical\Sheets\121474_IP204.dgn

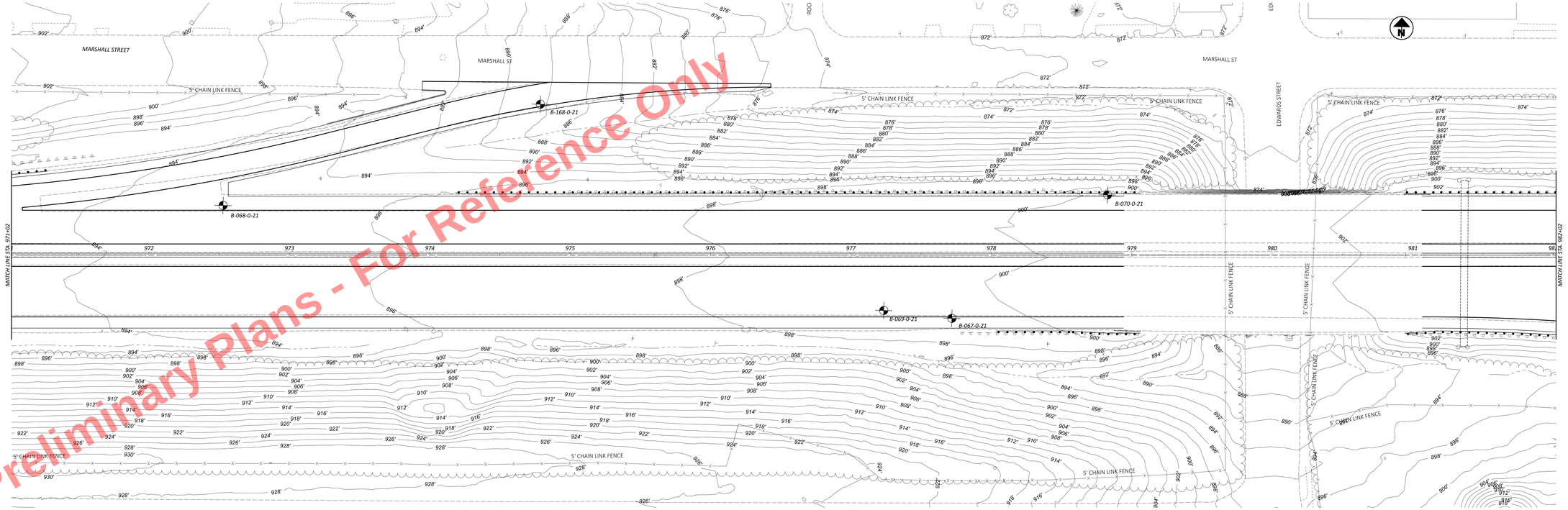

Preliminary Plans - For Reference Only

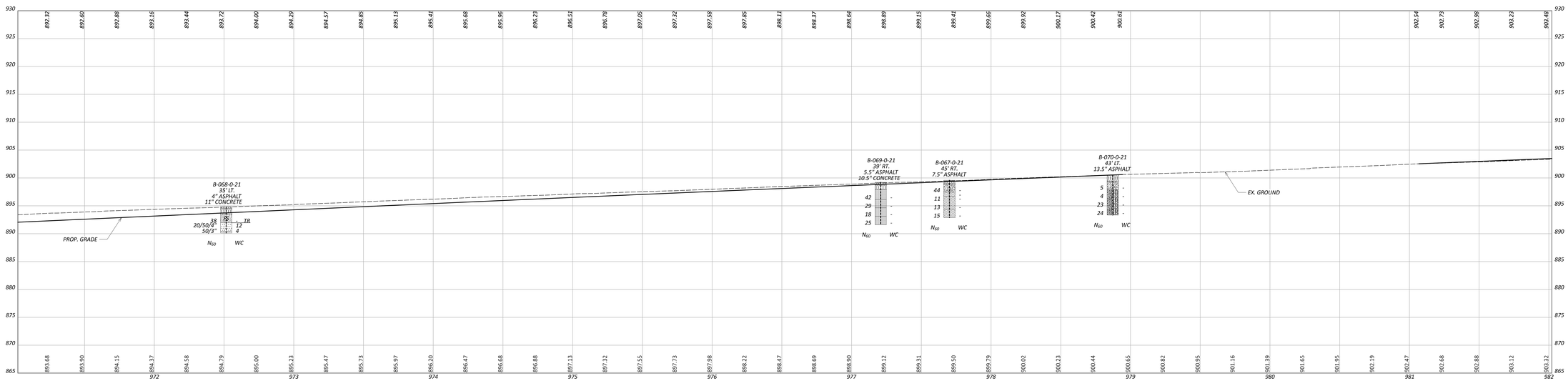

HORIZONTAL SCALE IN FEET

GEOTECHNICAL PROFILE - ROADWAY
STA. 971+02 TO STA. 982+02 I-680 NB

DESIGN AGENCY

DESIGNER CJW

REVIEWER JDZ 05/30/25

PROJECT ID 121474

SHEET P. 586 TOTAL P. 655

MAH-680-4.80

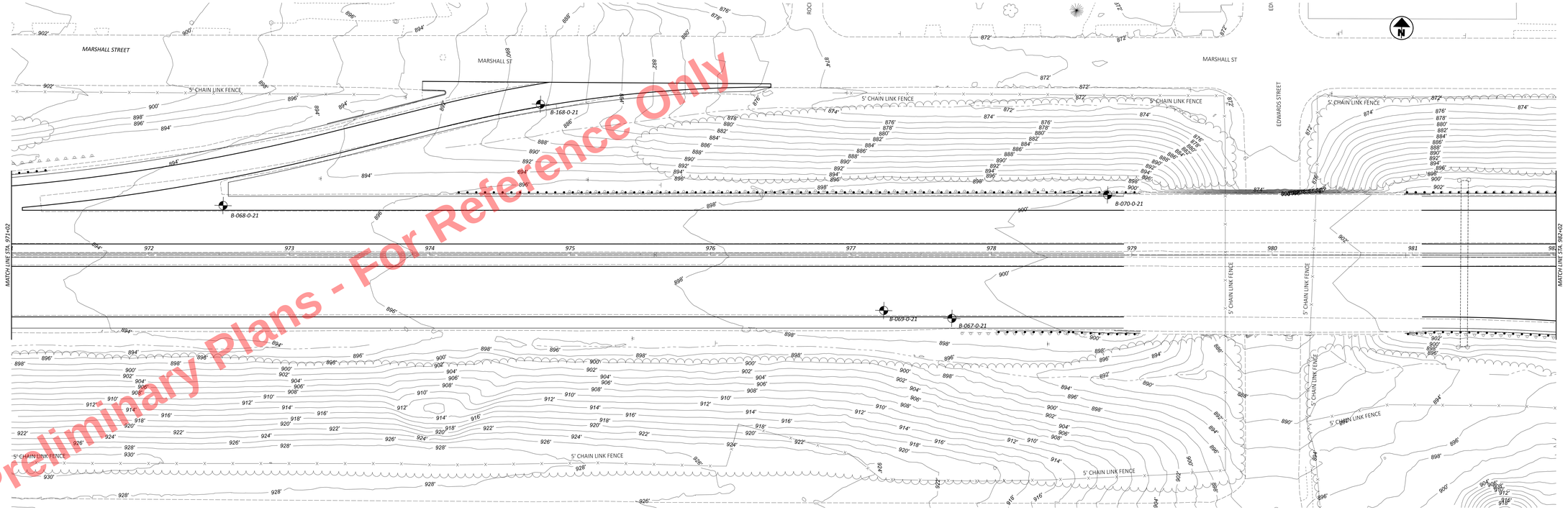

Preliminary Plans - For Reference Only

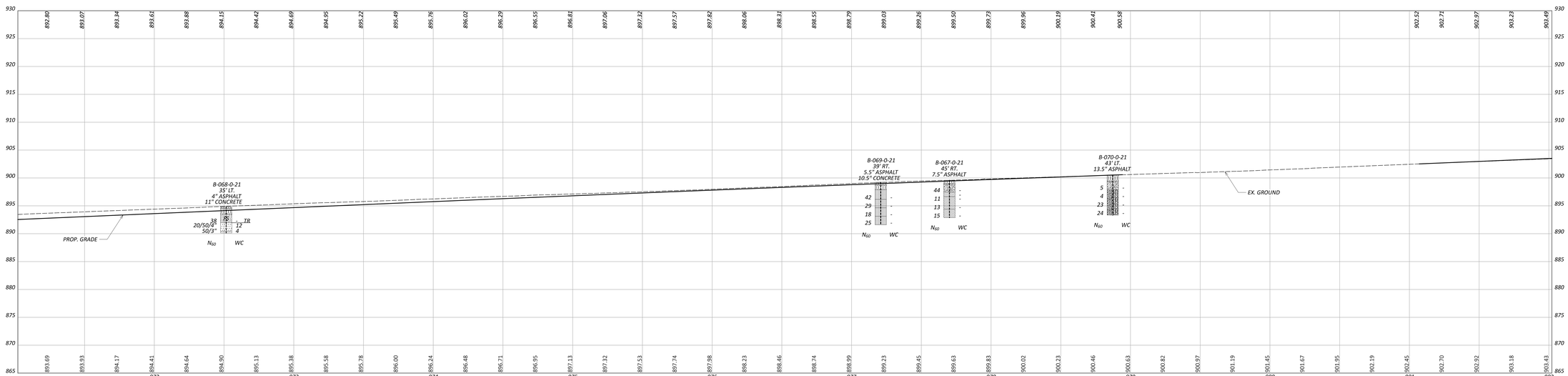

HORIZONTAL SCALE IN FEET

0 10 20 40

GEOTECHNICAL PROFILE - ROADWAY
STA. 971+02 TO STA. 982+02 I-680 SB

DESIGN AGENCY

DESIGNER CJW

REVIEWER JDZ 05/30/25

PROJECT ID 121474

SHEET P. 587 TOTAL P. 655

MAH-680-4.80

MODEL: CLP_6B21 - Centerline-17 PAPERSIZE: 66x34 (in.) DATE: 6/2/2025 TIME: 2:44:25 PM USER: cstoner
pw:\\pwbaldr.pw.bentley.com:pwbaldr-pw-02\Documents\01 Active Projects\Districts (04)\Mahoning\121474\401 Engineering_Somat\Geotechnical\Sheets\121474_IP206.dgn

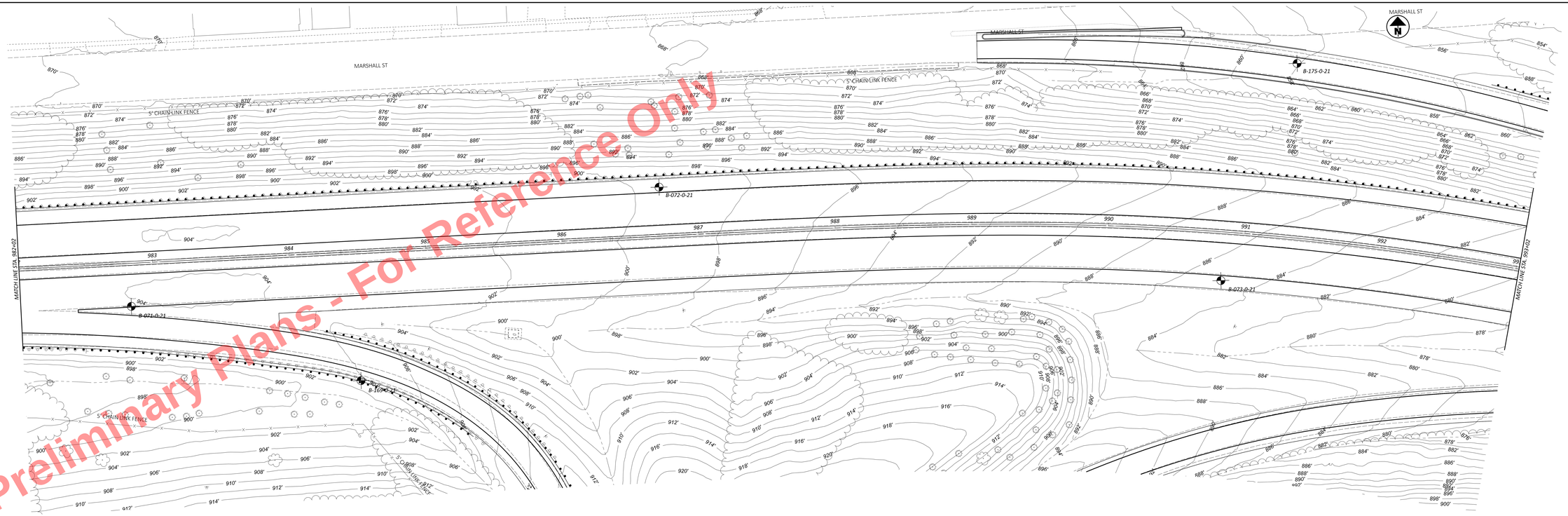

Preliminary Plans - For Reference Only

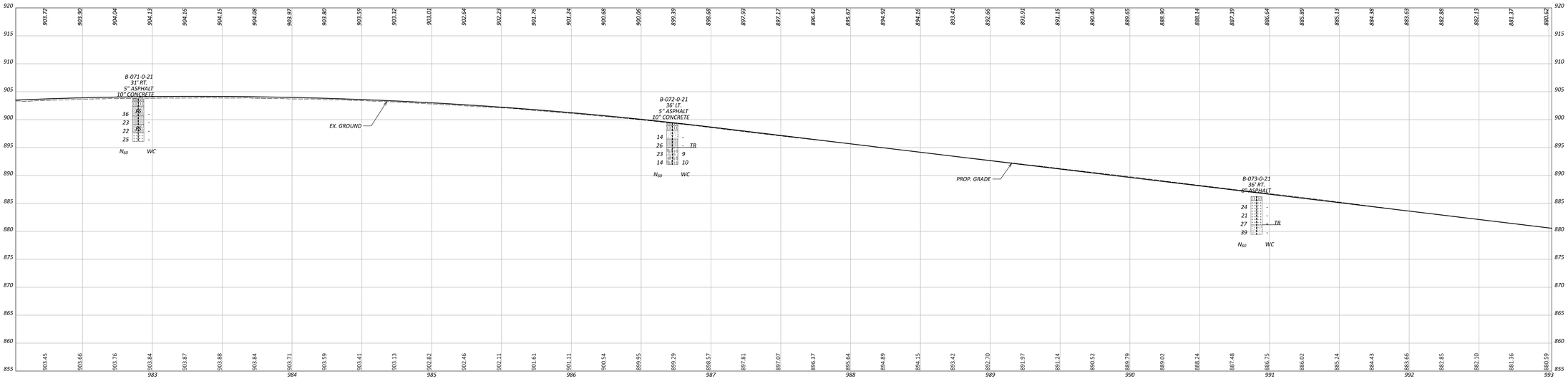

HORIZONTAL SCALE IN FEET

GEOTECHNICAL PROFILE - ROADWAY
STA. 982+02 TO STA. 993+02 I-680 NB

DESIGN AGENCY

DESIGNER CJW

REVIEWER JDZ 05/30/25

PROJECT ID 121474

SHEET P. 588 TOTAL P. 655

MAH-680-4.80

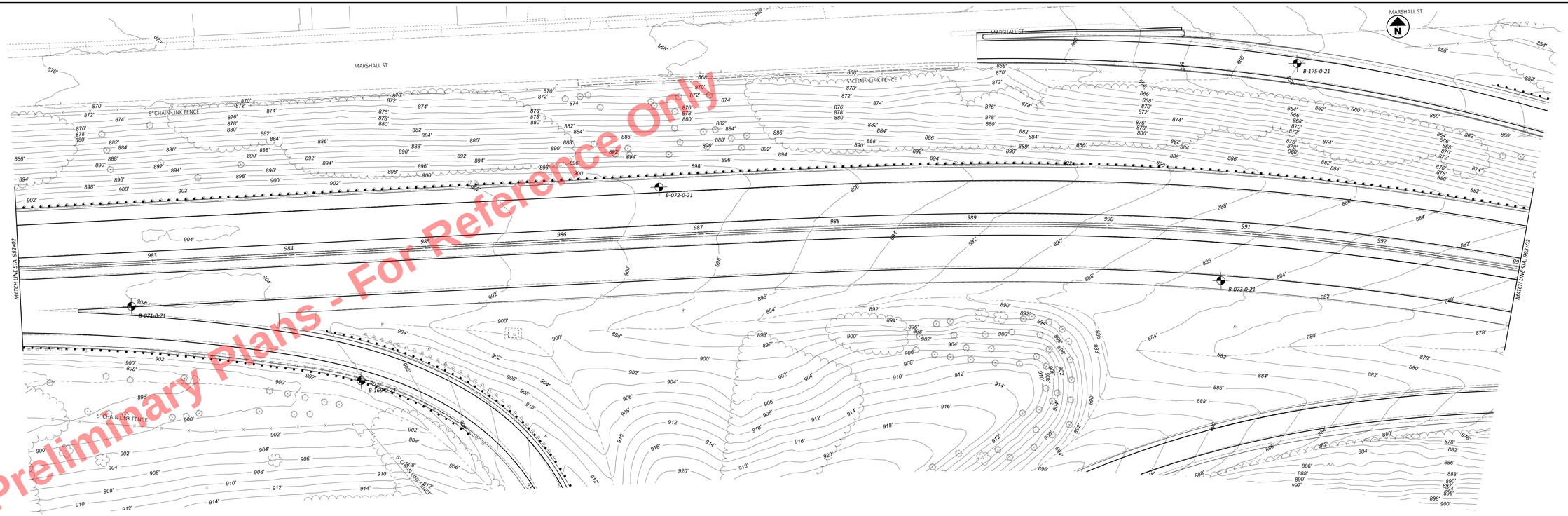

Preliminary Plans - For Reference Only

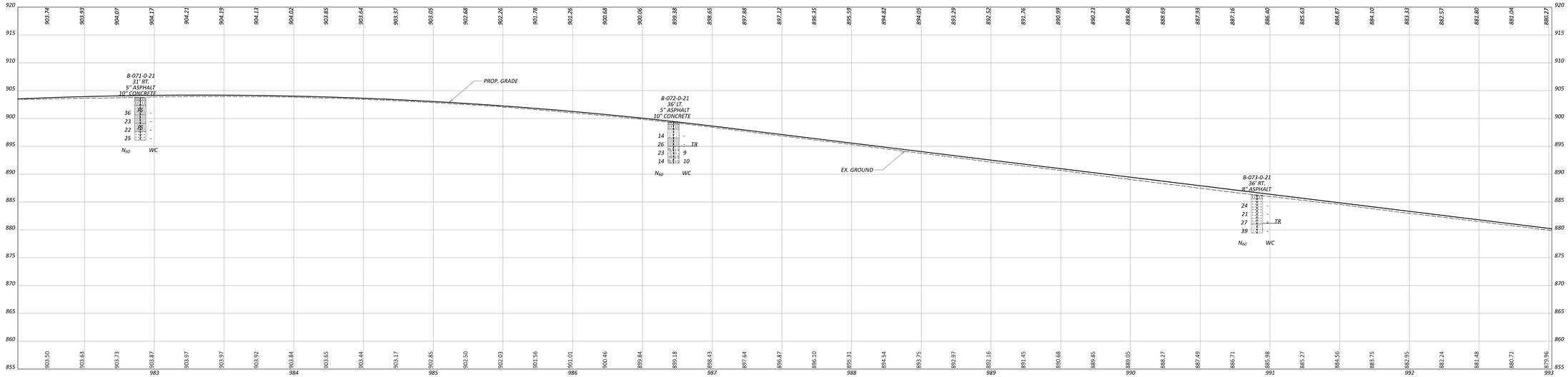

HORIZONTAL SCALE IN FEET

GEOTECHNICAL PROFILE - ROADWAY
STA. 982+02 TO STA. 993+02 I-680 SB

DESIGN AGENCY

DESIGNER CJW

REVIEWER JDZ 05/30/25

PROJECT ID 121474

SHEET P. 589 TOTAL P. 655

MAH-680-4.80

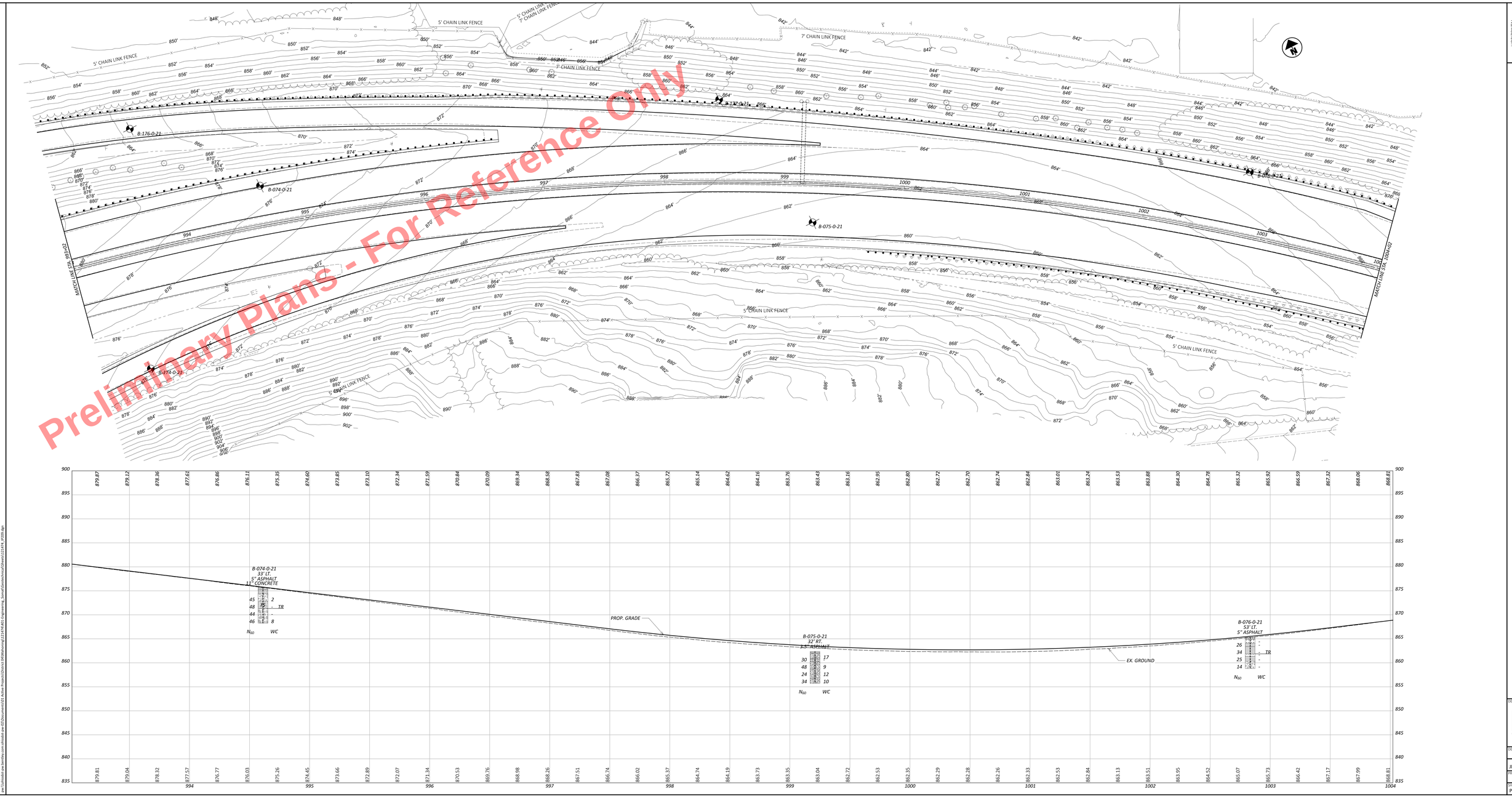

Preliminary Plans - For Reference Only

HORIZONTAL SCALE IN FEET

GEOTECHNICAL PROFILE - ROADWAY
STA. 993+02 TO STA. 1004+02 I-680 NB

DESIGN AGENCY

DESIGNER CJW

REVIEWER JDZ 05/30/25

PROJECT ID 121474

SHEET P. 590 TOTAL P. 655

MAH-680-4.80

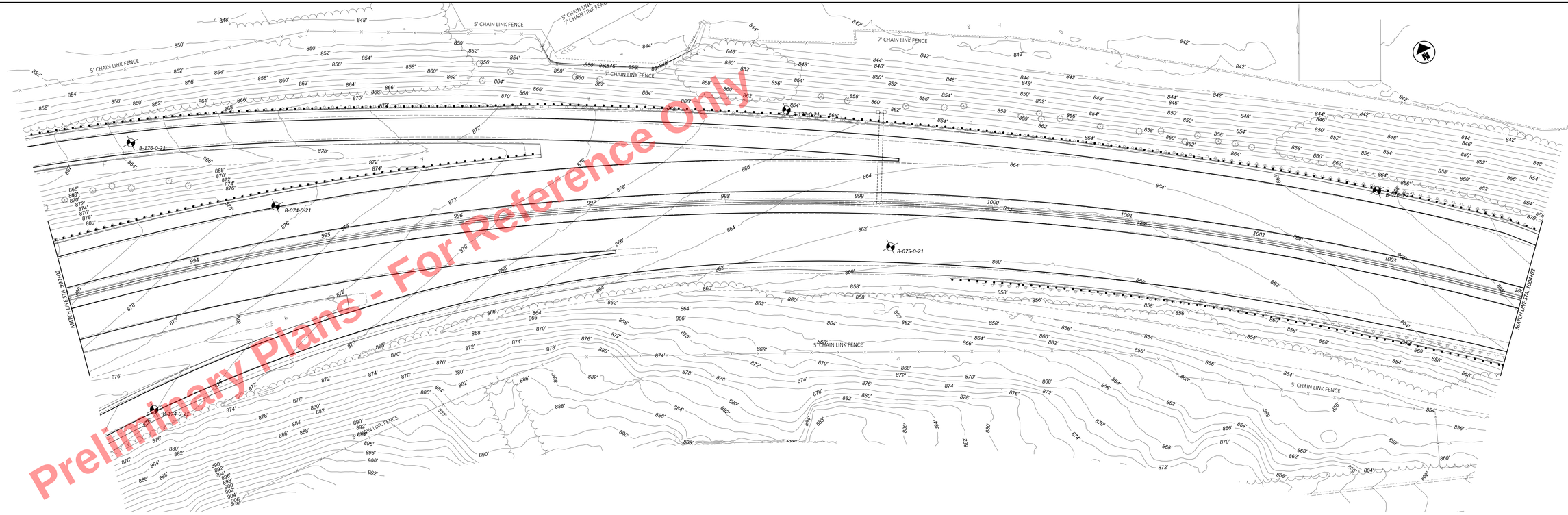

Preliminary Plans - For Reference Only

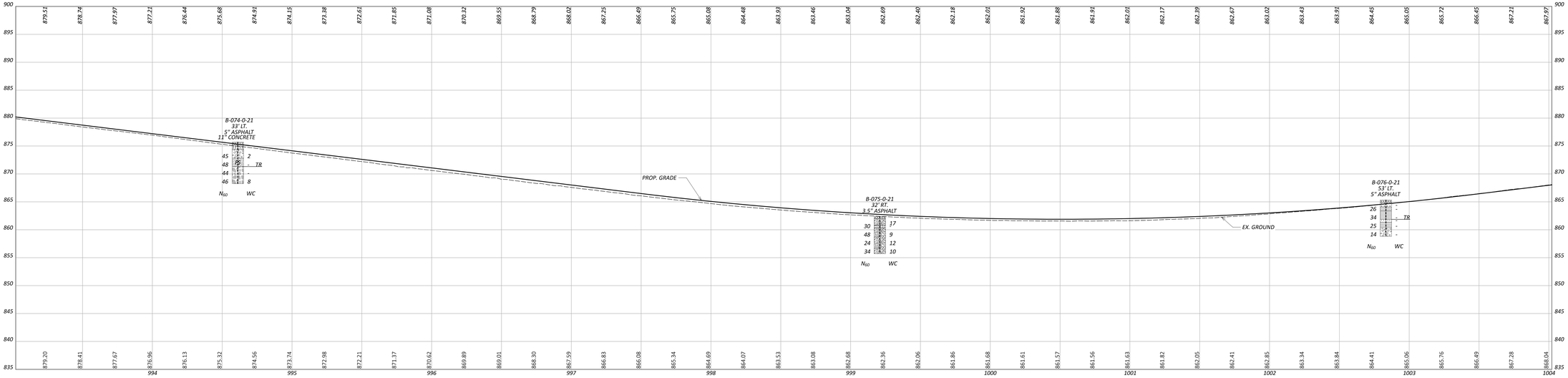

HORIZONTAL SCALE IN FEET

GEOTECHNICAL PROFILE - ROADWAY
STA. 993+02 TO STA. 1004+02 I-680 SB

DESIGN AGENCY

DESIGNER CJW

REVIEWER JDZ 05/30/25

PROJECT ID 121474

SHEET P. 591 TOTAL P. 655

MAH-680-4.80



Preliminary Plans - For Reference Only

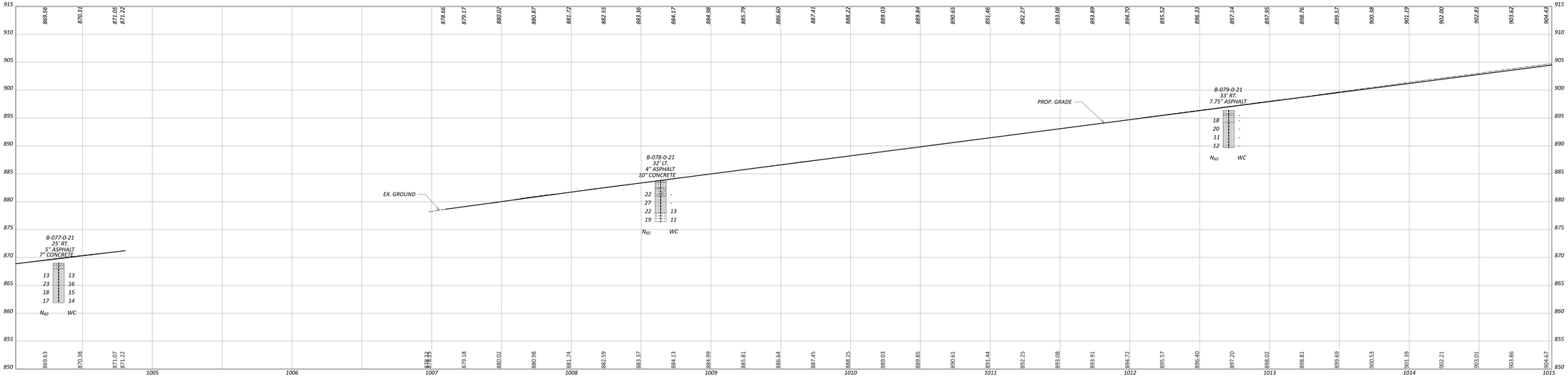

HORIZONTAL SCALE IN FEET

GEOTECHNICAL PROFILE - ROADWAY
STA. 1004+02 TO STA. 1015+02 I-680 NB

DESIGN AGENCY

DESIGNER CJW

REVIEWER JDZ 05/30/25

PROJECT ID 121474

SHEET P. 592 TOTAL P. 655

MAH-680-4.80



Preliminary Plans - For Reference Only

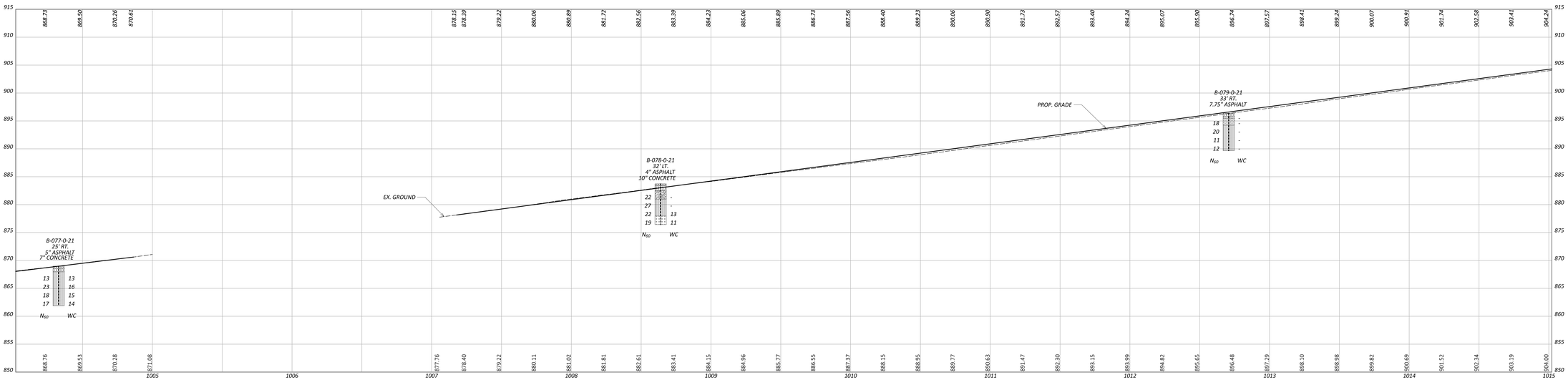

HORIZONTAL SCALE IN FEET

GEOTECHNICAL PROFILE - ROADWAY
STA. 1004+02 TO STA. 1015+02 I-680 SB

DESIGN AGENCY

DESIGNER CJW

REVIEWER JDZ 05/30/25

PROJECT ID 121474

SHEET P. 593 TOTAL P. 655

MAH-680-4.80

Preliminary Plans - For Reference Only

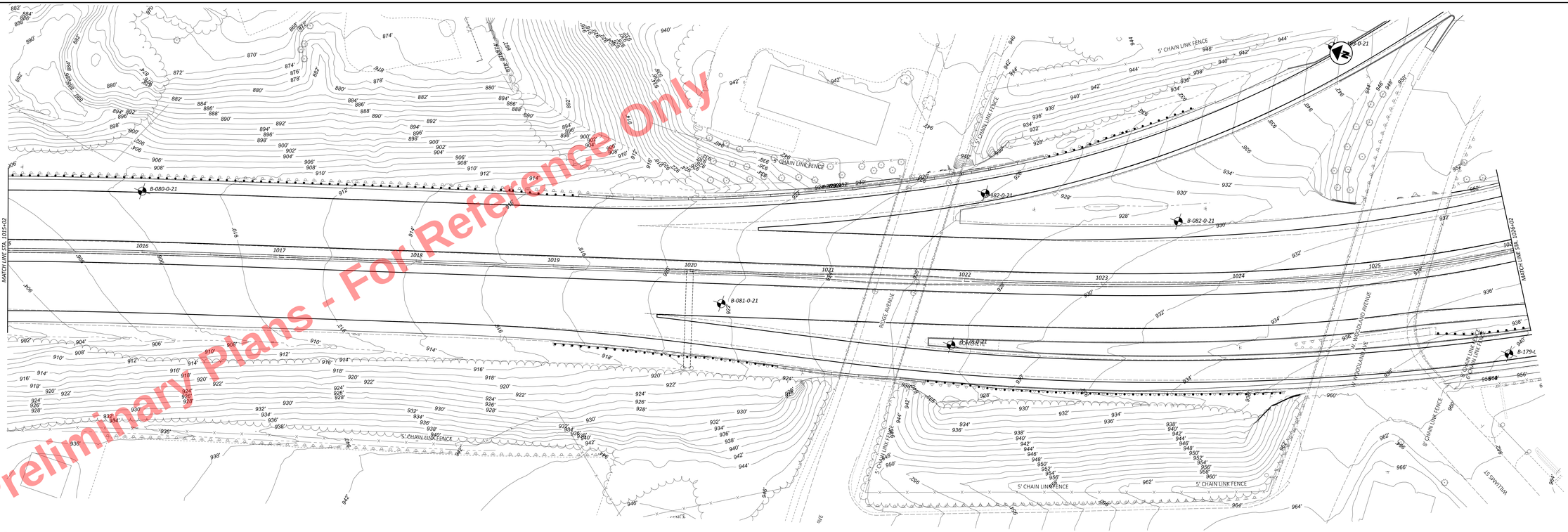

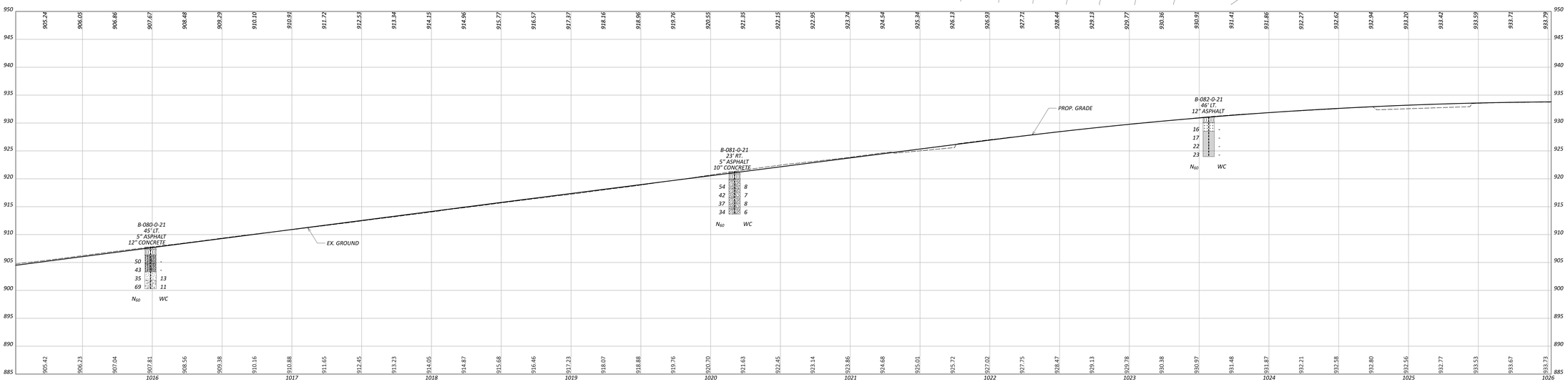

HORIZONTAL SCALE IN FEET

GEOTECHNICAL PROFILE - ROADWAY
STA. 1015+02 TO STA. 1026+02 I-680 NB

DESIGN AGENCY

DESIGNER CJW

REVIEWER JDZ 05/30/25

PROJECT ID 121474

SHEET P. 594 TOTAL P. 655

MAH-680-4.80

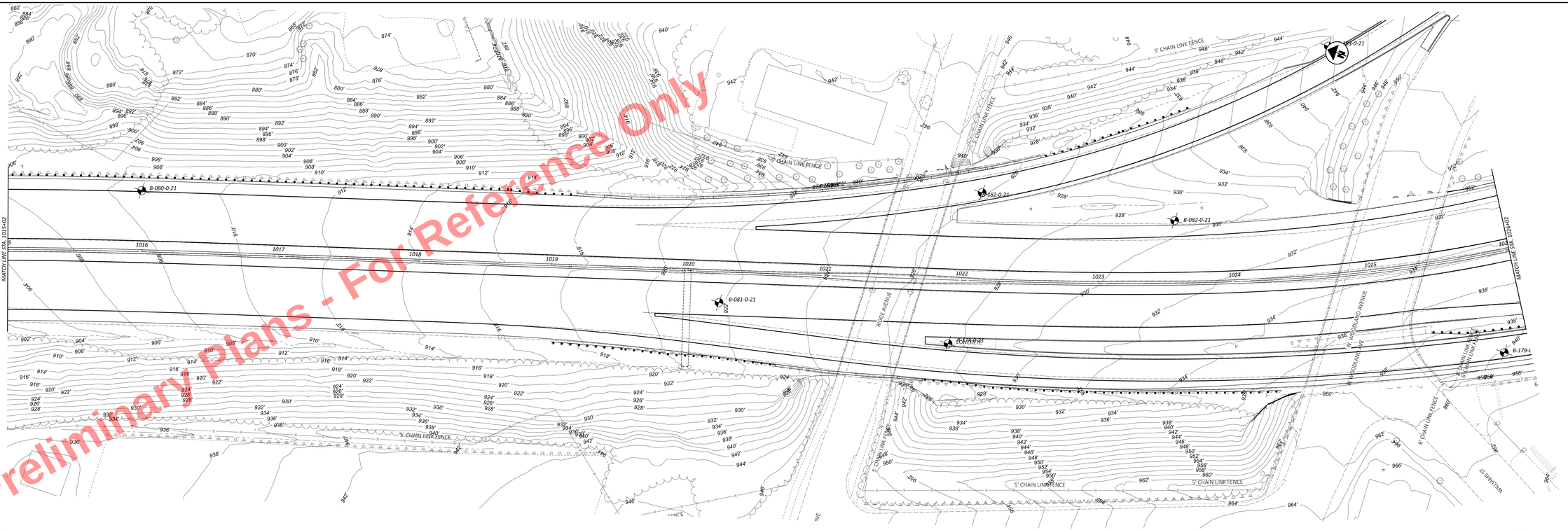

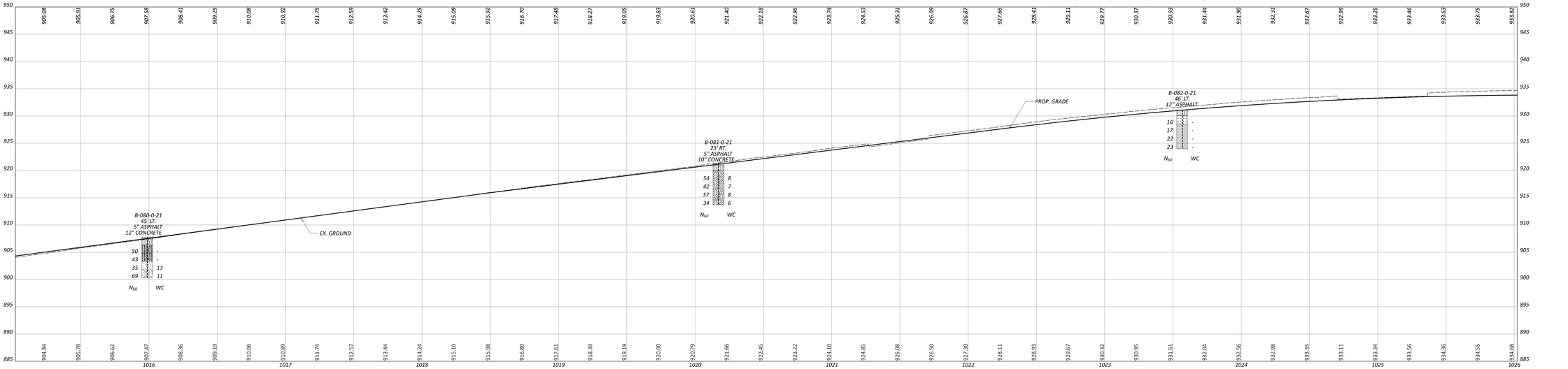

Preliminary Plans - For Reference Only

HORIZONTAL SCALE IN FEET 0 10 20 40

GEOTECHNICAL PROFILE - ROADWAY
STA. 1015+02 TO STA. 1026+02 I-680 SB

DESIGN AGENCY

DESIGNER CJW

REVIEWER JDZ 05/30/25

PROJECT ID 121474

SHEET P. 595 TOTAL P. 655

MAH-680-4.80

MODEL: CLIP_6082 - Centerline-21 PAPERSIZE: 66x34 (in.) DATE: 6/2/2025 TIME: 2:50:03 PM USER: conner
pw:\\pbdesign.pw.bentley.com:pbdesign-pw-02\Documents\01 Active Projects\District 04\Maintenance\121474\02-Engineering_Sonnet\Geotechnical\Sheets\121474_IP214.dgn

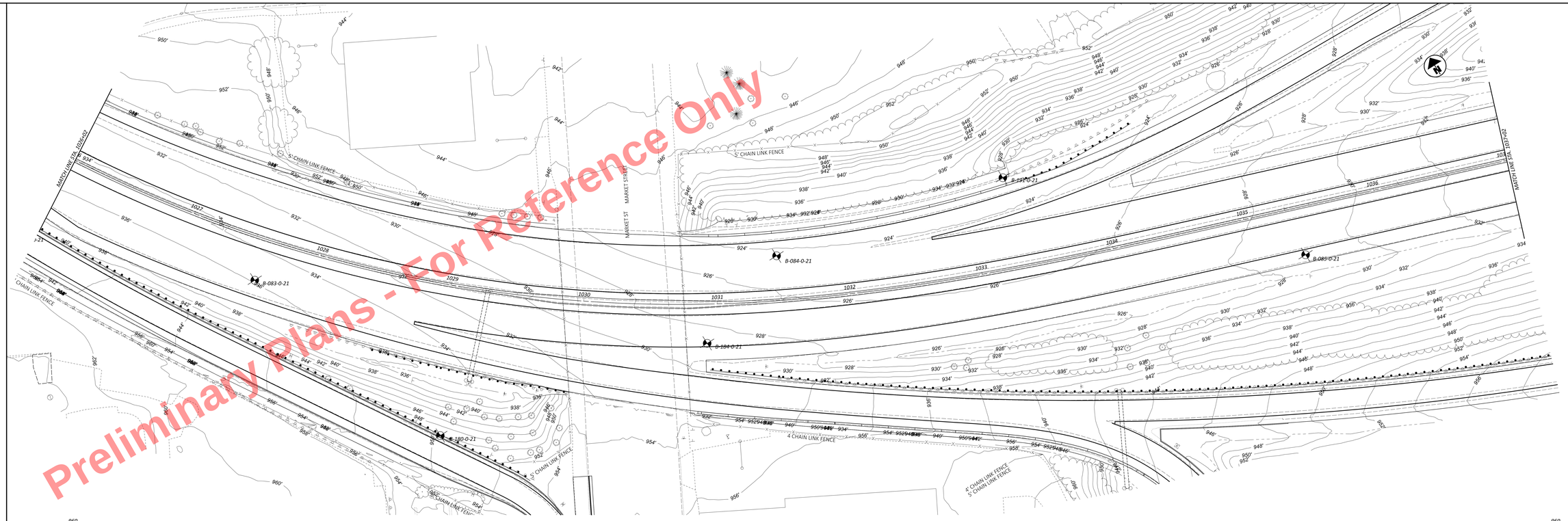

Preliminary Plans - For Reference Only

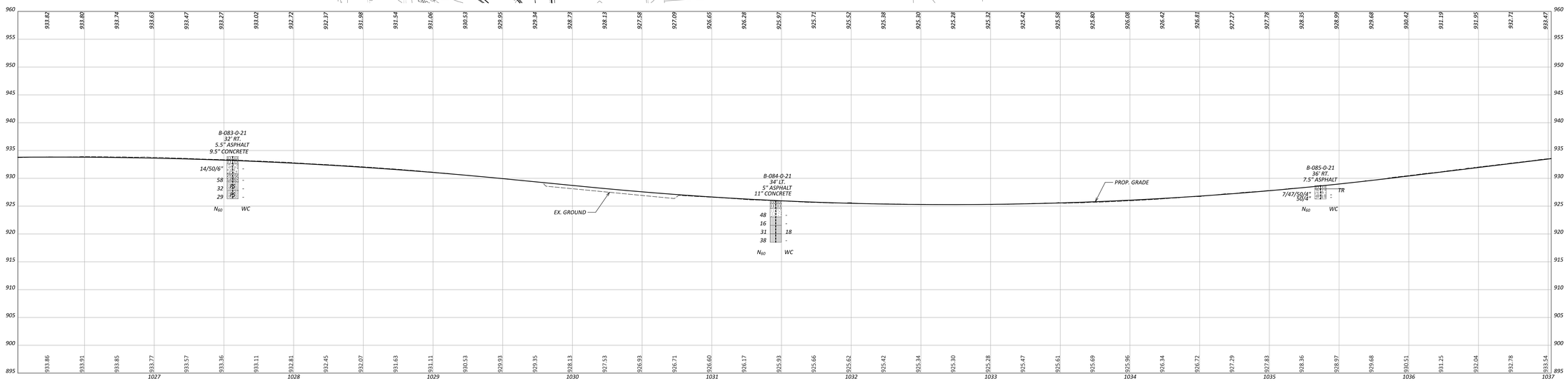

HORIZONTAL SCALE IN FEET
0 10 20 40

GEOTECHNICAL PROFILE - ROADWAY
STA. 1026+02 TO STA. 1037+02 I-680 NB

DESIGN AGENCY
SE
Sealed Engineering Group, Inc.

DESIGNER
CJW

REVIEWER
JDZ 05/30/25

PROJECT ID
121474

SHEET P. 596 TOTAL P. 655

MAH-680-4.80

MODEL: CLP_6B2 - Centerline-22 PAPERSIZE: 66x34 (in.) DATE: 6/2/2025 TIME: 2:50:45 PM USER: cstoner
pw://sdsdocs.pw.bentley.com:sdsdocs-pw-02/Documents/01 Active Projects/District 04/Mahoning/121474/401-Engineering_Sonnet/Geotechnical/Sheets/121474_IP215.dgn

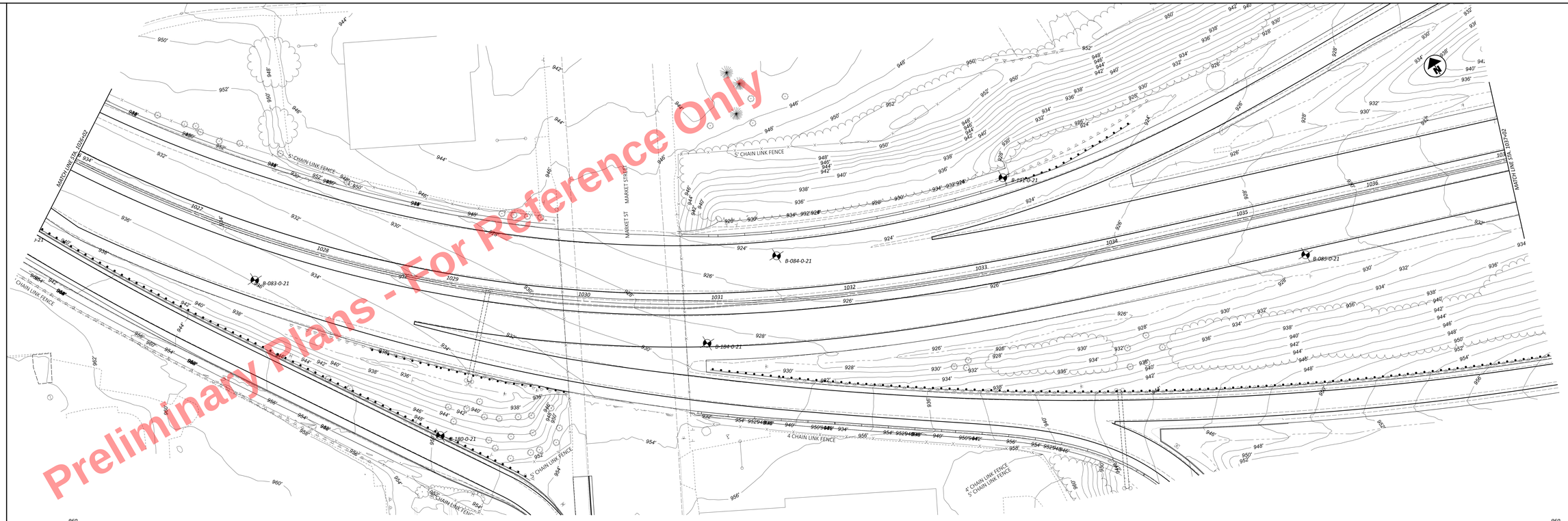

Preliminary Plans - For Reference Only

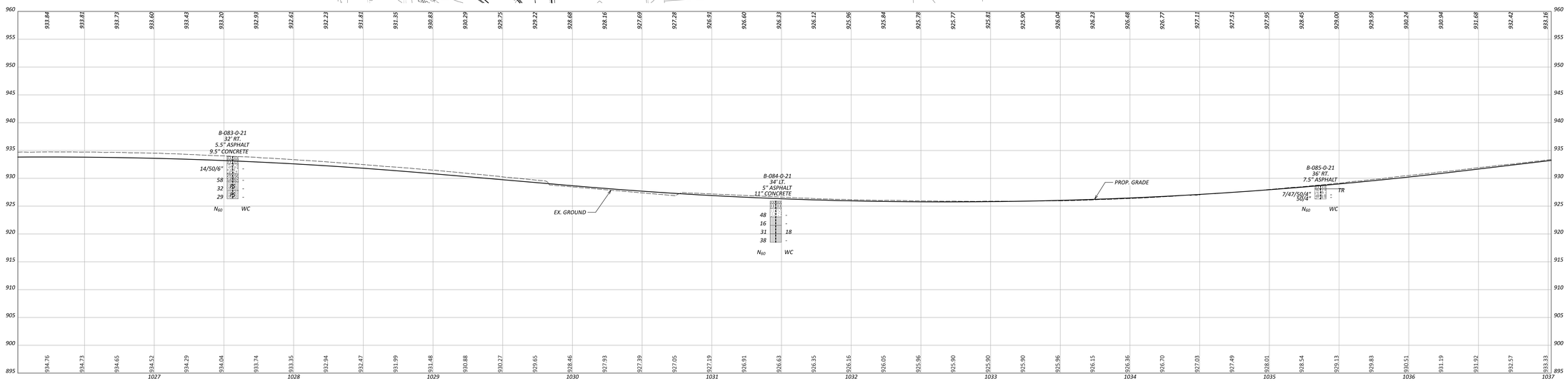

HORIZONTAL SCALE IN FEET
0 10 20 40

GEOTECHNICAL PROFILE - ROADWAY
STA. 1026+02 TO STA. 1037+02 I-680 SB

DESIGN AGENCY
SE
Sealed Engineering Inc.

DESIGNER
CJW

REVIEWER
JDZ 05/30/25

PROJECT ID
121474

SHEET P. 597 TOTAL P. 655

MAH-680-4.80

MODEL: CLP_6681 - Centerline-22 PAPERSIZE: 66x34 (in.) DATE: 6/2/2025 TIME: 2:51:20 PM USER: cstone
pw://sheldot.pw.bentley.com:sheldot-pw-02/Documents/01 Active Projects/District 04/Mahoning/121474/02-Engineering_Sonnet/Geotechnical/Sheets/121474_IP216.dgn

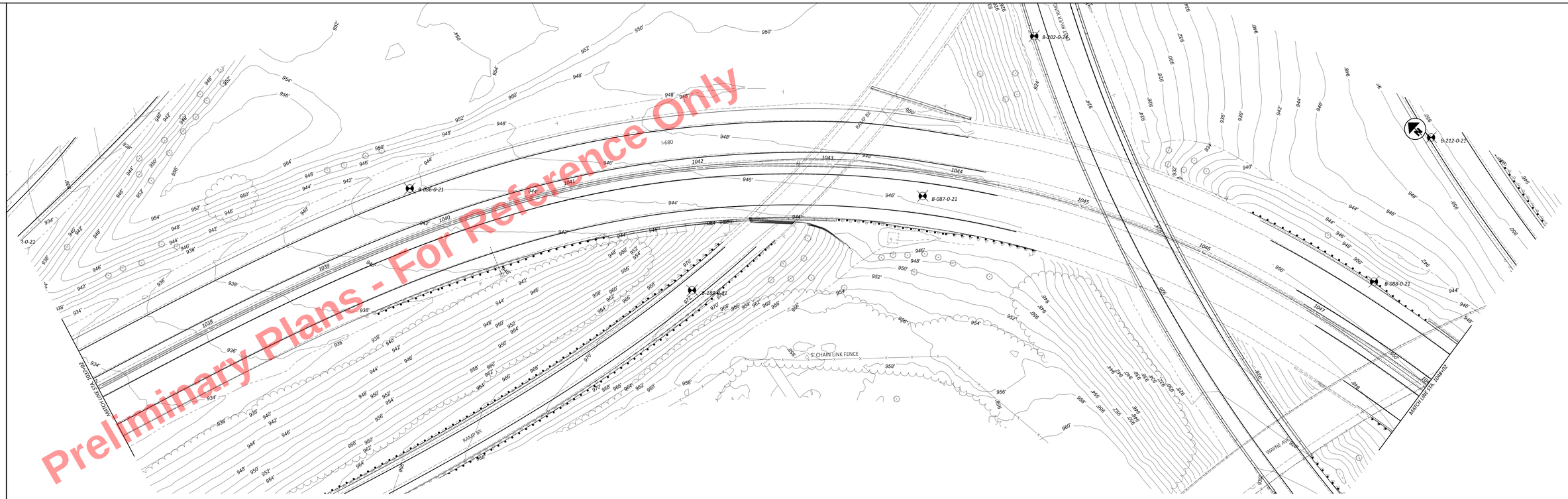

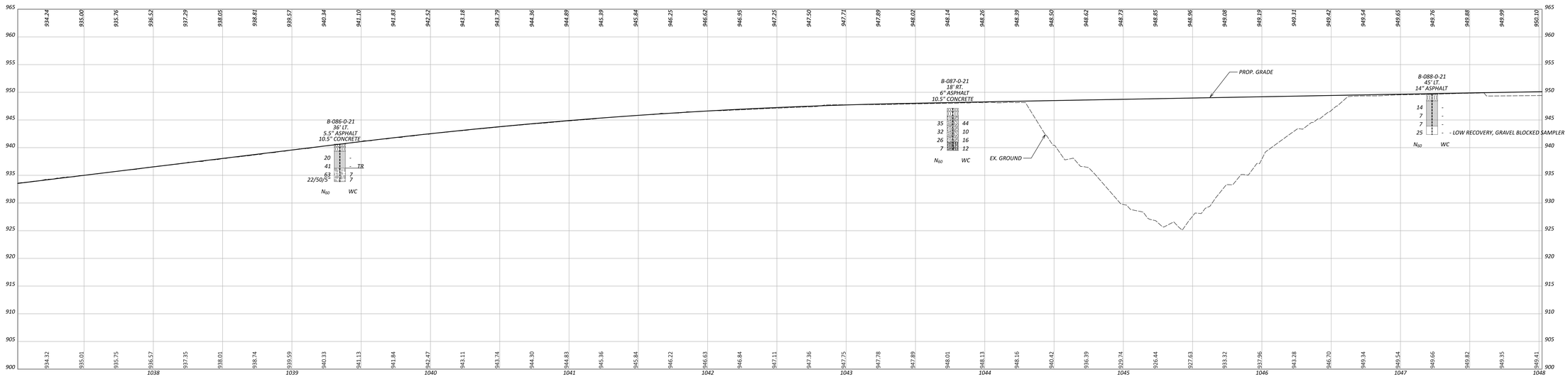

HORIZONTAL SCALE IN FEET

0 10 20 40

GEOTECHNICAL PROFILE - ROADWAY
STA. 1037+02 TO STA. 1048+02 I-680 NB

DESIGN AGENCY

DESIGNER CJW

REVIEWER JDZ 05/30/25

PROJECT ID 121474

SHEET P. 598 TOTAL P. 655

MAH-680-4.80

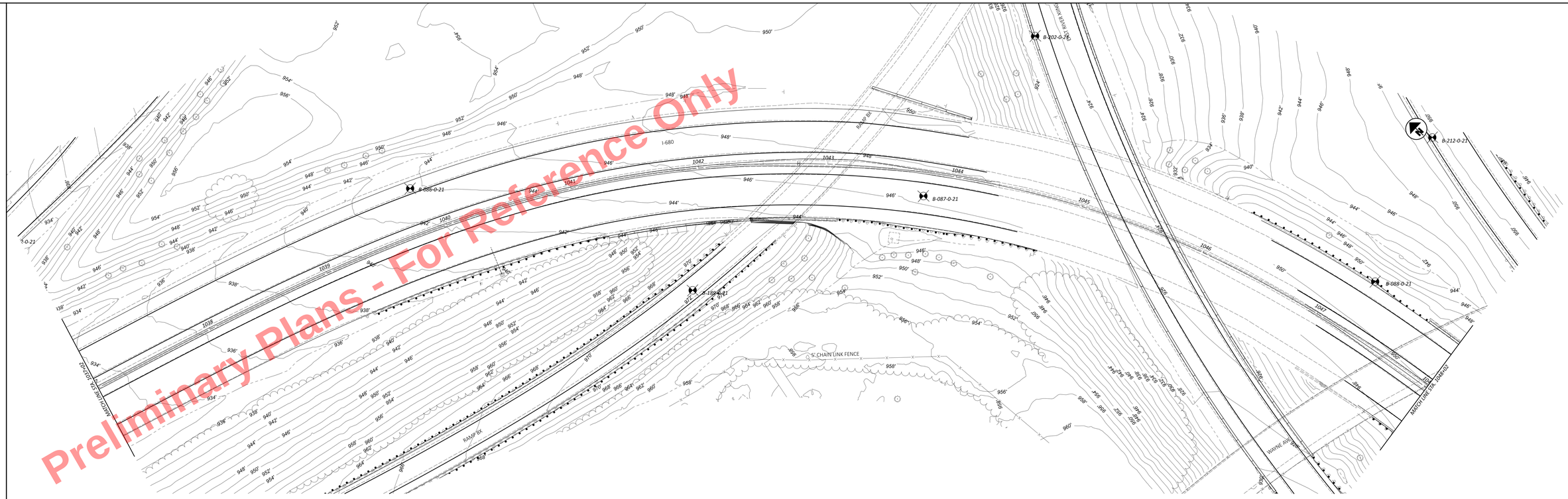

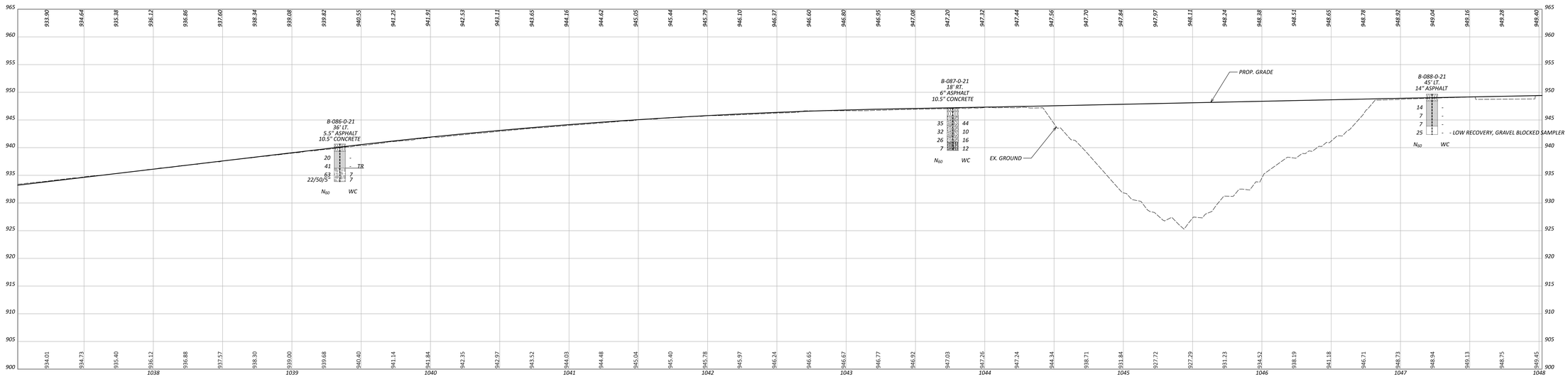

HORIZONTAL SCALE IN FEET

GEOTECHNICAL PROFILE - ROADWAY
STA. 1037+02 TO STA. 1048+02 I-680 SB

DESIGN AGENCY

DESIGNER CJW

REVIEWER JDZ 05/30/25

PROJECT ID 121474

SHEET P. 599 TOTAL P. 655

MAH-680-4.80

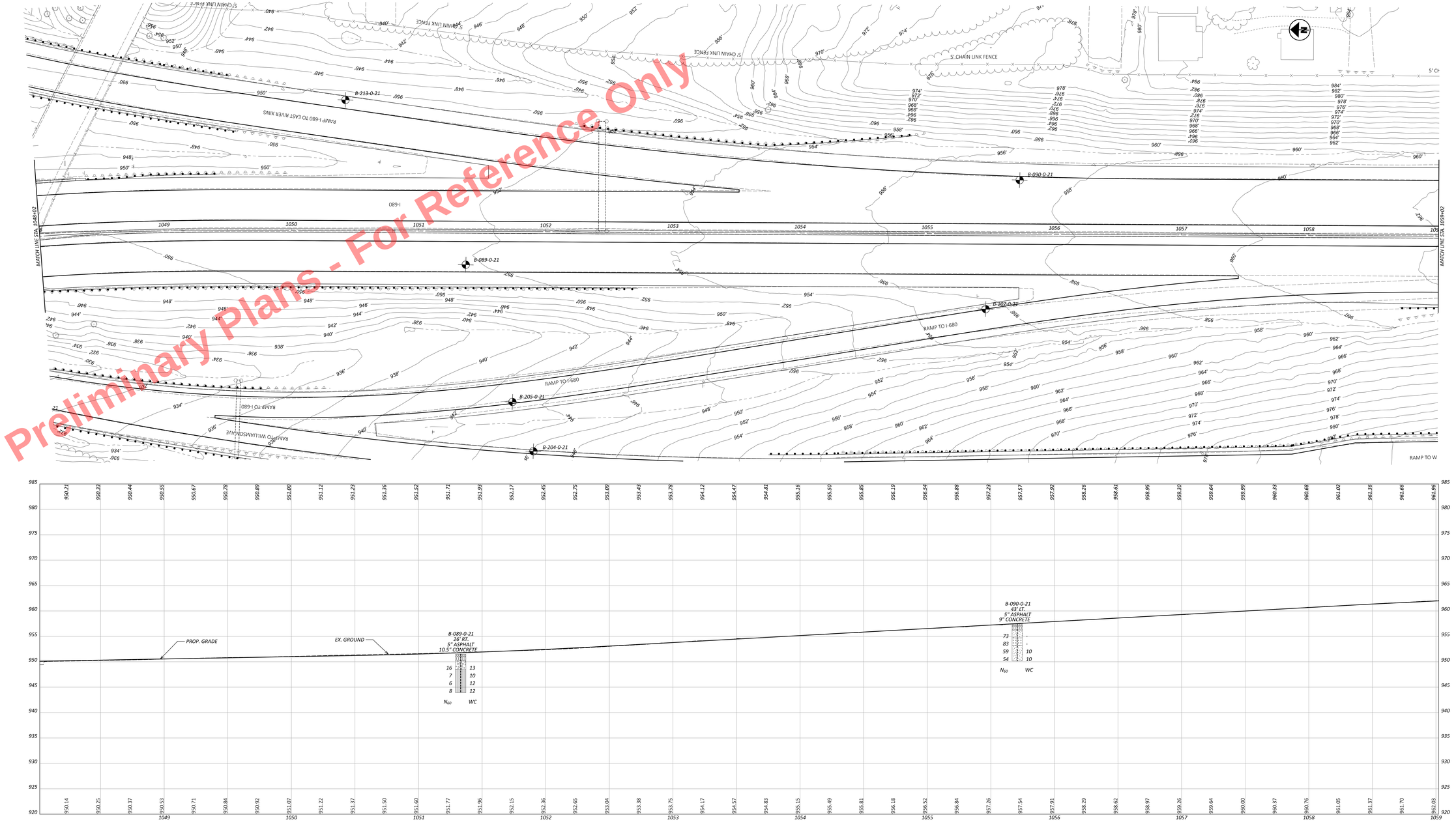

HORIZONTAL SCALE IN FEET

GEOTECHNICAL PROFILE - ROADWAY
STA. 1048+02 TO STA. 1059+02 I-680 NB

DESIGN AGENCY

DESIGNER CJW

REVIEWER JDZ 05/30/25

PROJECT ID 121474

SHEET P. 600 TOTAL P. 655

MAH-680-4.80

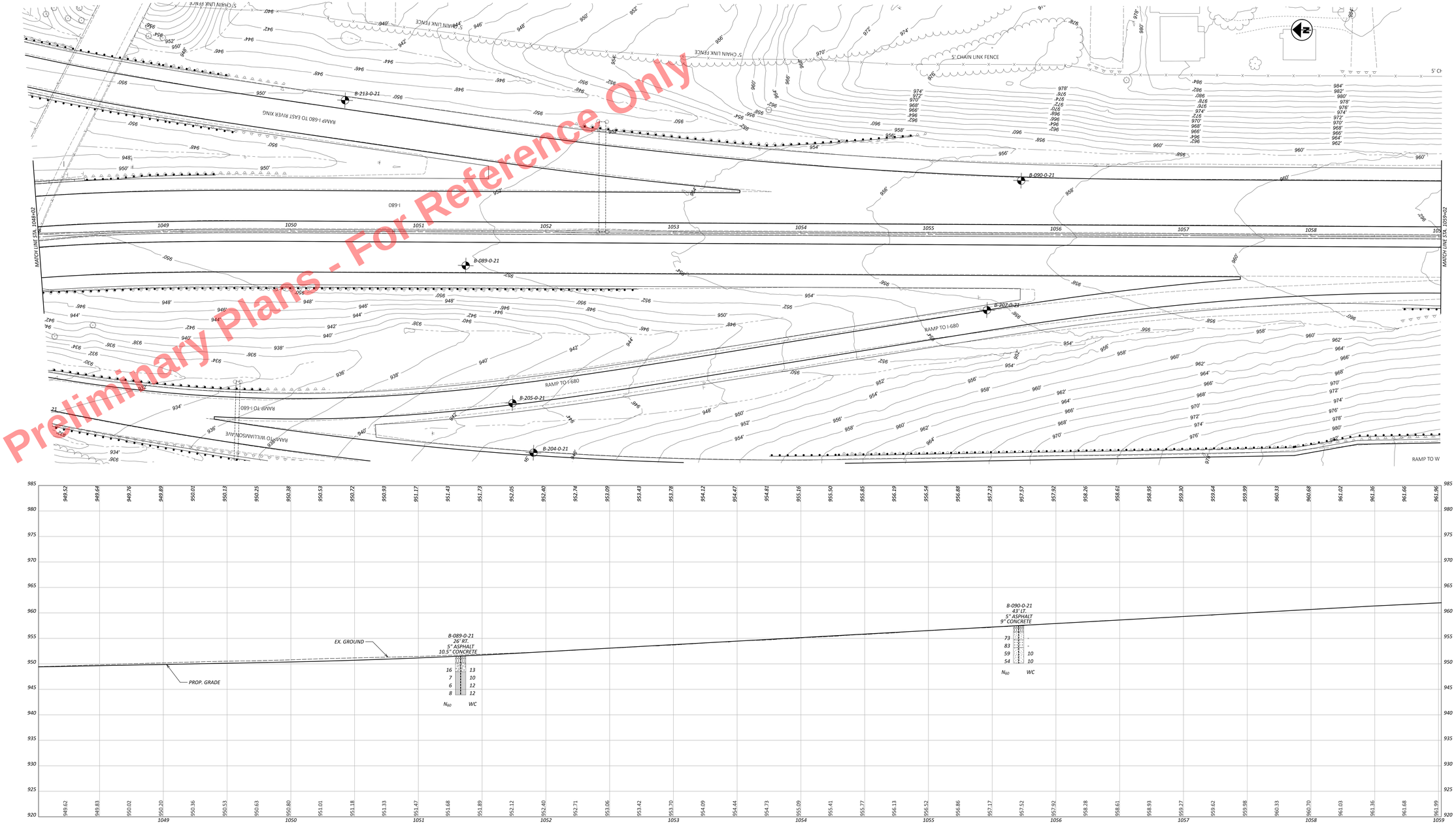

HORIZONTAL SCALE IN FEET

GEOTECHNICAL PROFILE - ROADWAY
STA. 1048+02 TO STA. 1059+02 I-680 SB

DESIGN AGENCY

DESIGNER CJW

REVIEWER JDZ 05/30/25

PROJECT ID 121474

SHEET P. 601 TOTAL P. 655

MAH-680-4.80



Preliminary Plans - For Reference Only

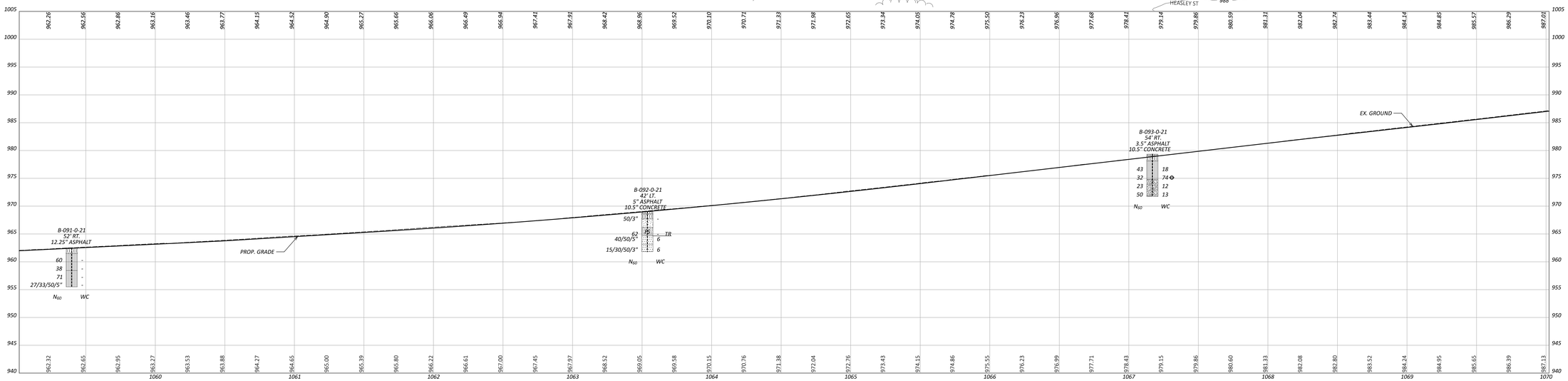

HORIZONTAL SCALE IN FEET

0 10 20 40

GEOTECHNICAL PROFILE - ROADWAY
STA. 1059+02 TO STA. 1070+02 I-680 NB

DESIGN AGENCY

DESIGNER CJW

REVIEWER JDZ 05/30/25

PROJECT ID 121474

SHEET P. 602 TOTAL P. 655

MAH-680-4.80

MODEL: CIP_9682 - Centerline-25 PAPERSIZE: 666x34 (in.) DATE: 6/2/2025 TIME: 2:54:33 PM USER: cstoner
pw:\\pwbaldr.pw.bentley.com:pwbaldr-pw-02\Documents\01 Active Projects\District 04\Mahoning\121474\401 Engineering_Somat\Geotechnical\Sheets\121474_IP221.dgn



Preliminary Plans - For Reference Only

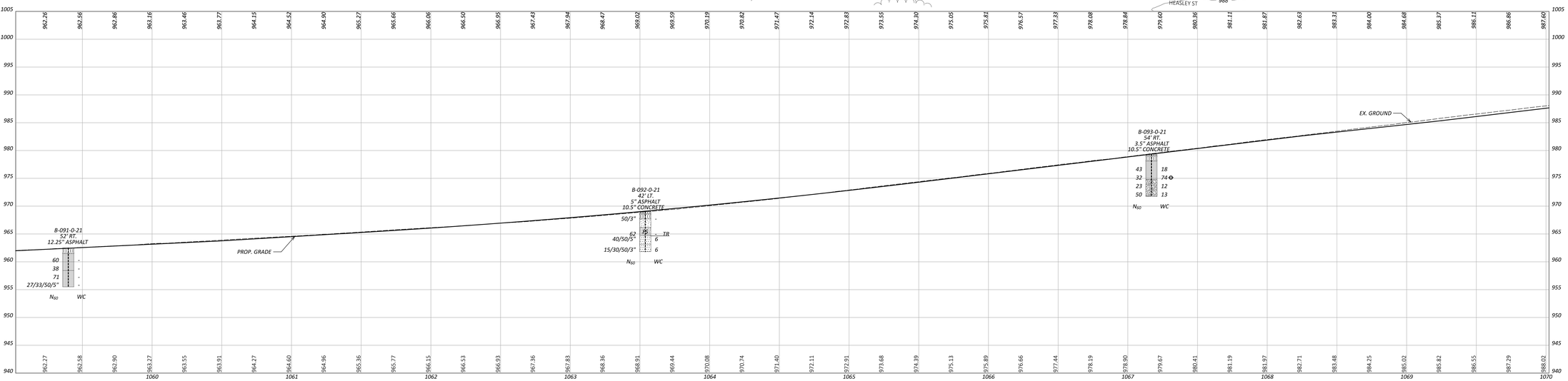

HORIZONTAL SCALE IN FEET

0 10 20 40

GEOTECHNICAL PROFILE - ROADWAY
STA. 1059+02 TO STA. 1070+02 I-680 SB

DESIGN AGENCY

DESIGNER CJW

REVIEWER JDZ 05/30/25

PROJECT ID 121474

SHEET P. 603 TOTAL P. 655

MAH-680-4.80

MODEL: CLP_68_Cr - Centerline-25 PAPERSIZE: 66x34 (in.) DATE: 6/2/2025 TIME: 2:55:07 PM USER: cstoner
pw:\\pwbiadpw.pw.bentley.com:pwbiadpw-02\Documents\01 Active Projects\District 04\Maintenance\121474\401 Engineering_Somat\Geotechnical\Sheets\121474_IP222.dgn

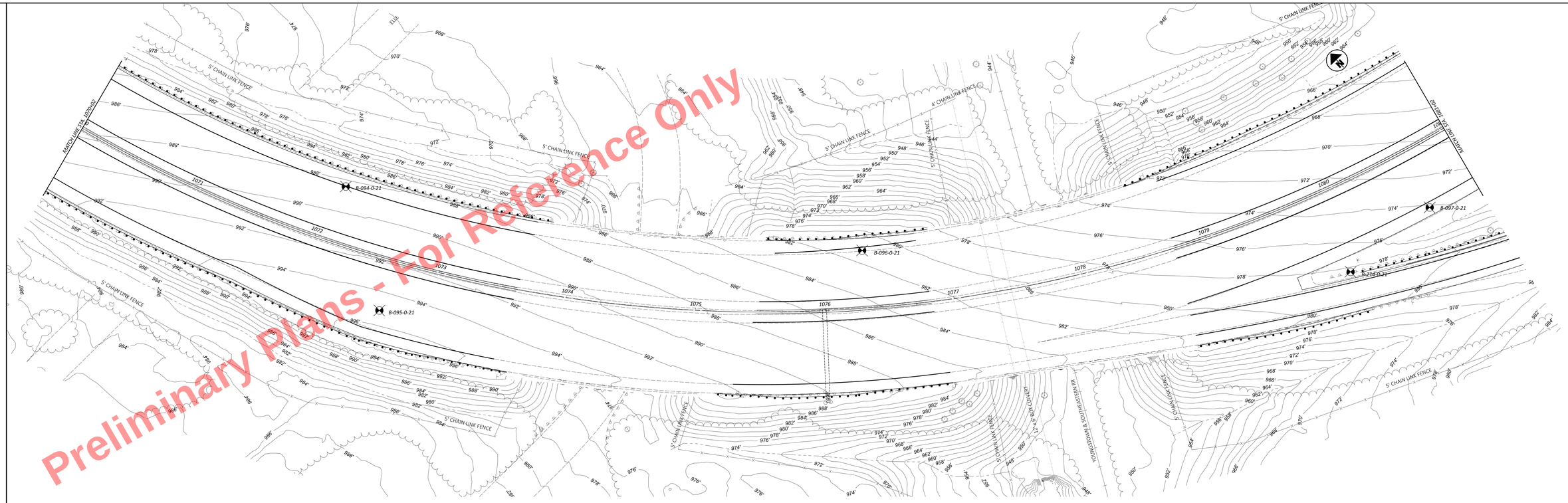

Preliminary Plans - For Reference Only

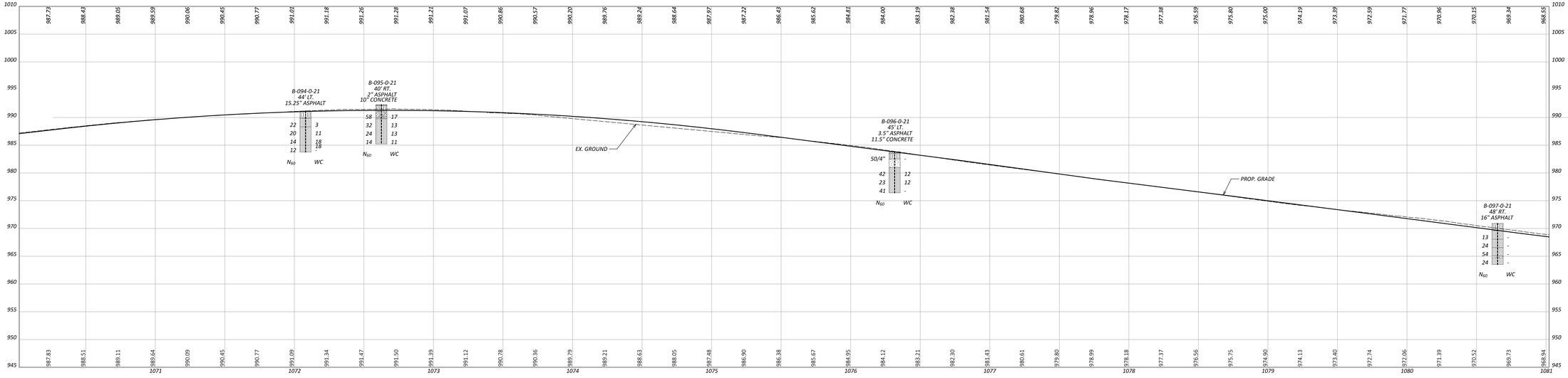

HORIZONTAL SCALE IN FEET

GEOTECHNICAL PROFILE - ROADWAY
STA. 1070+02 TO STA. 1081+02 I-680 NB

DESIGN AGENCY

DESIGNER
CJW

REVIEWER
JDZ 05/30/25

PROJECT ID
121474

SHEET P. 604 TOTAL P. 655

MAH-680-4.80

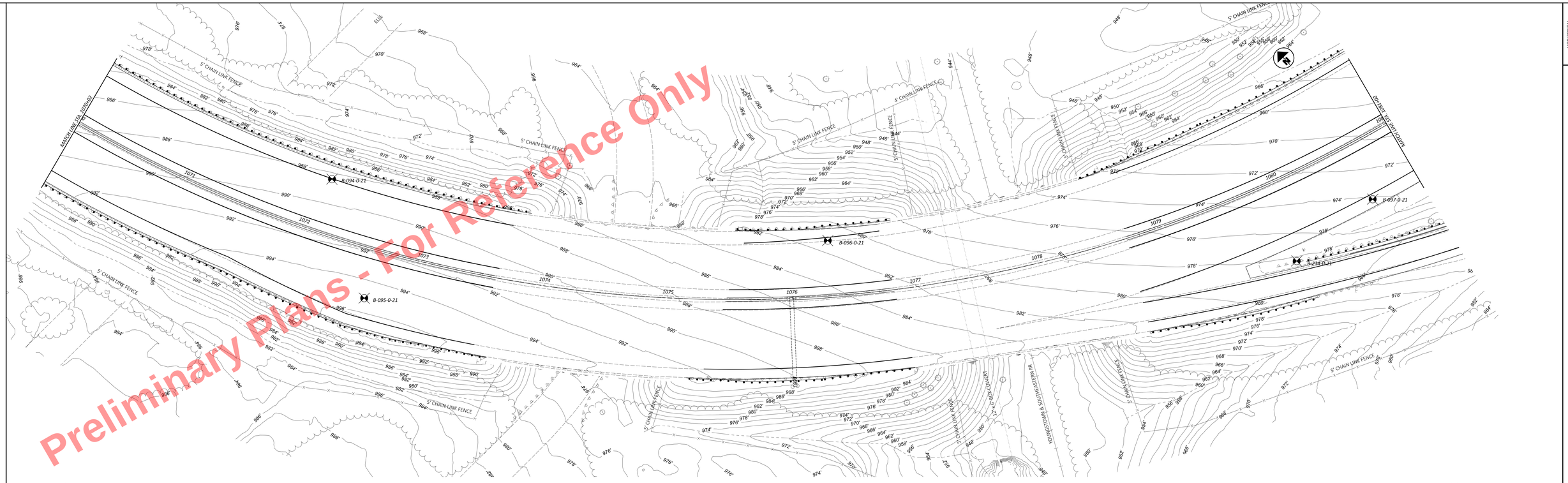

Preliminary Plans - For Reference Only

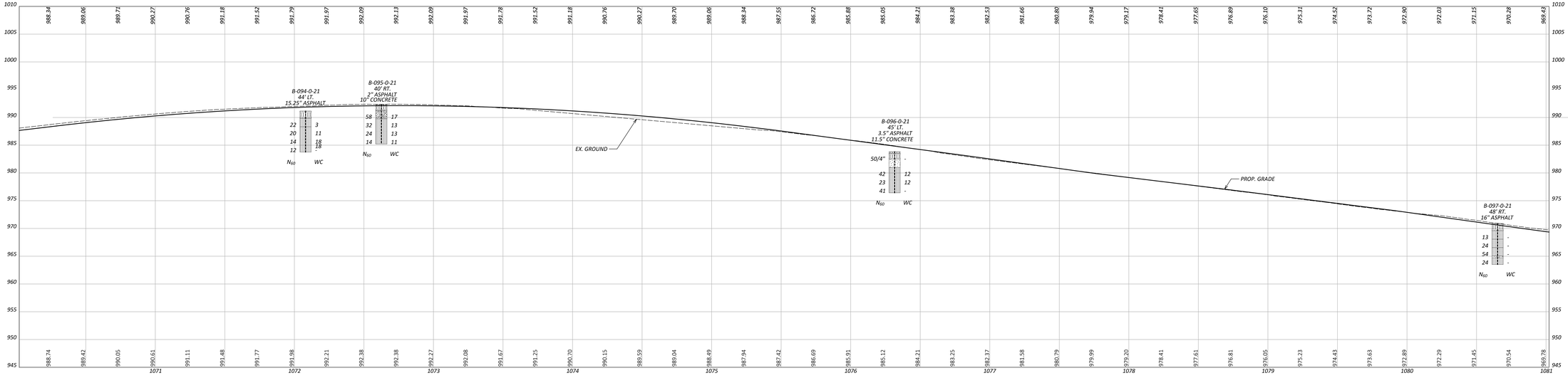

HORIZONTAL SCALE IN FEET

GEOTECHNICAL PROFILE - ROADWAY
STA. 1070+02 TO STA. 1081+02 I-680 SB

DESIGN AGENCY

DESIGNER CJW

REVIEWER JDZ 05/30/25

PROJECT ID 121474

SHEET P. 605 TOTAL P. 655

MAH-680-4.80

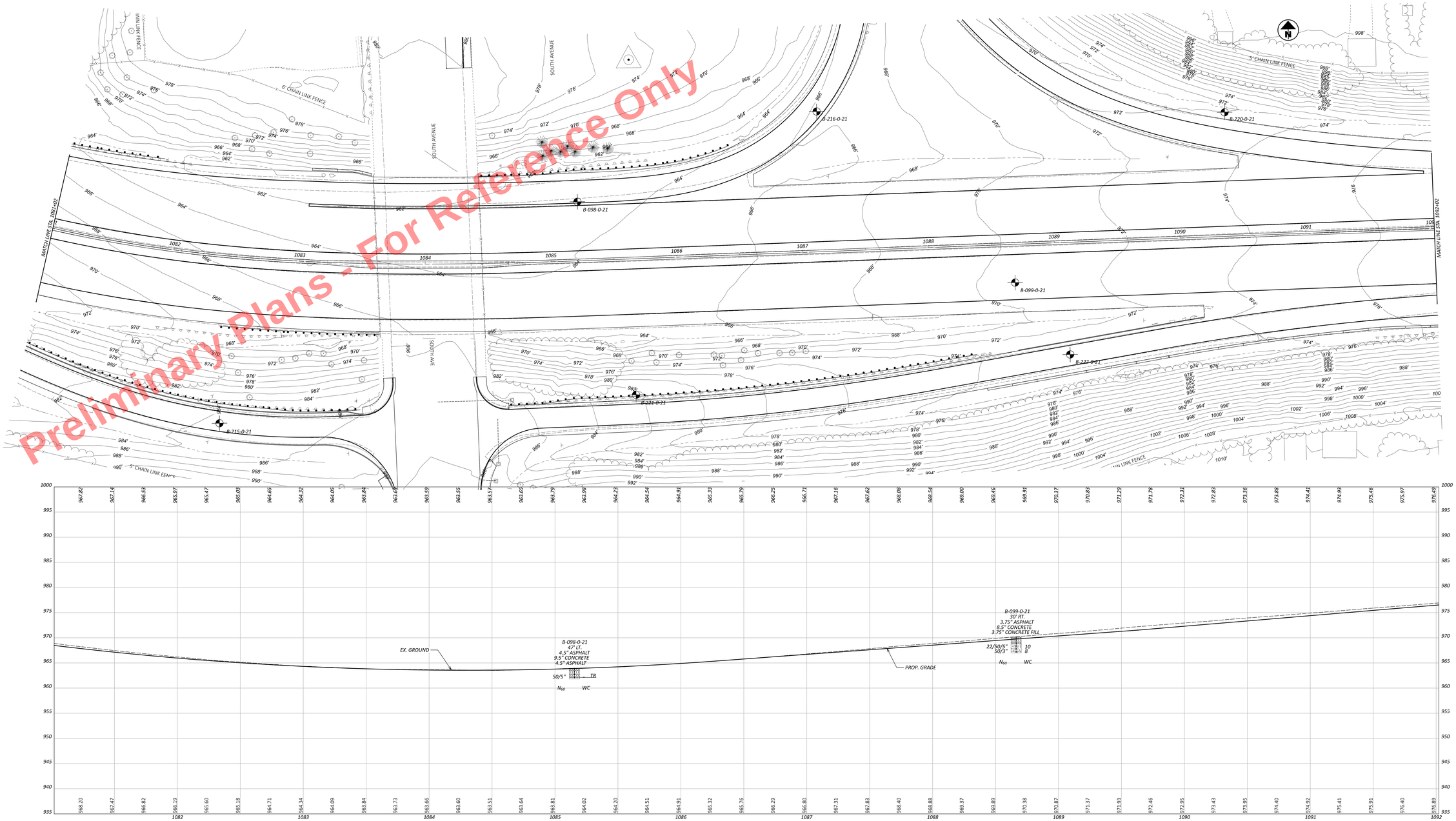

HORIZONTAL SCALE IN FEET

0 10 20 40

GEOTECHNICAL PROFILE - ROADWAY
STA. 1081+02 TO STA. 1092+02 I-680 NB

DESIGN AGENCY

DESIGNER: CJW

REVIEWER: JDZ 05/30/25

PROJECT ID: 121474

SHEET: P. 606 TOTAL: P. 655

MAH-680-4.80

MODEL: 02_IF_680_1 - Centerline-27 PAPERSIZE: 66x34 (in.) DATE: 6/2/2025 TIME: 2:57:04 PM USER: cstone
pw:\\pwbaldo.pw.bentley.com:pwbaldo-pw-02\Documents\01 Active Projects\District 04\Mahoning\121474\02-Engineering_Sonnet\Geotechnical\Sheets\121474_IF225.dgn

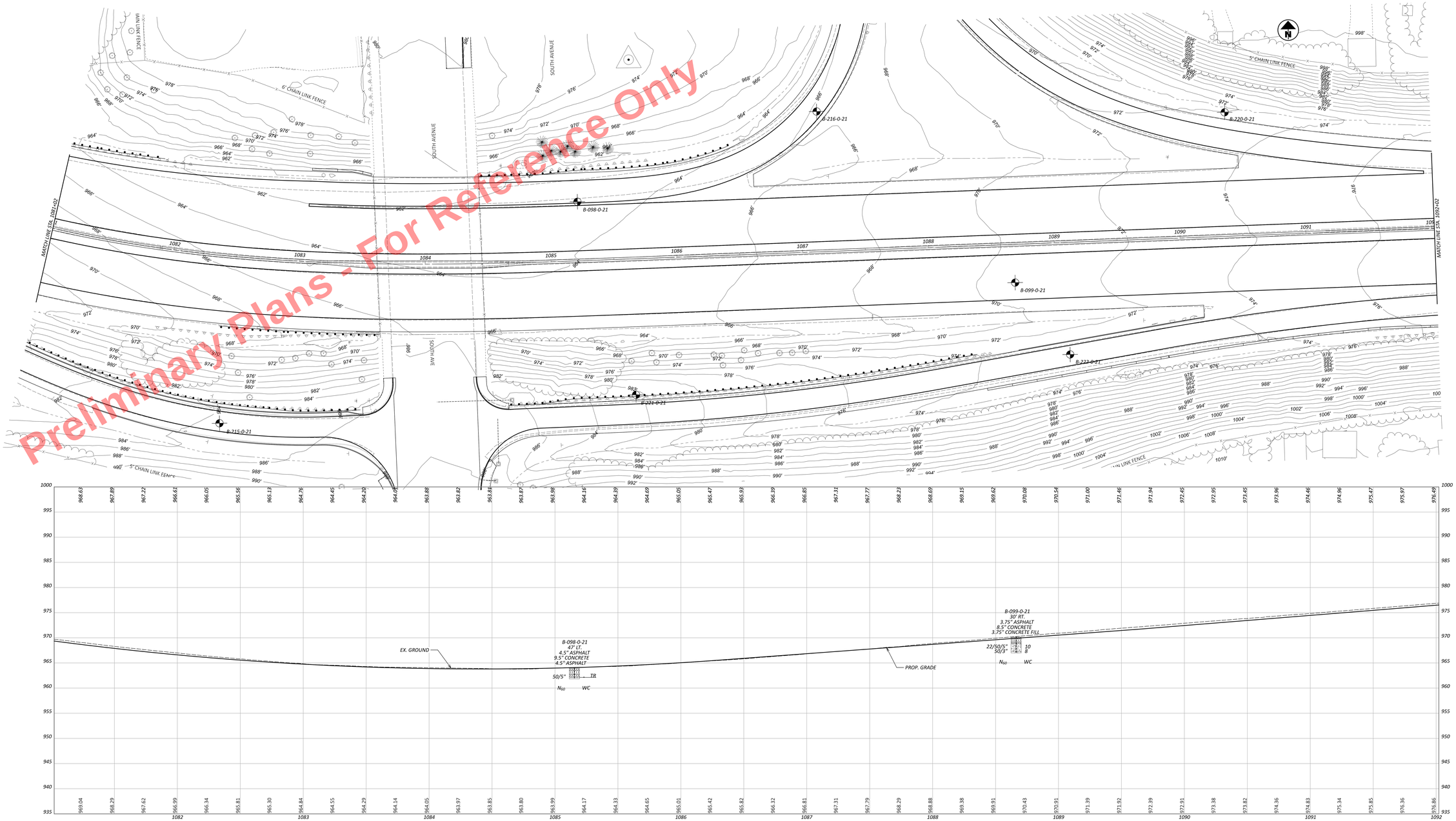

HORIZONTAL SCALE IN FEET

0 10 20 40

GEOTECHNICAL PROFILE - ROADWAY
STA. 1081+02 TO STA. 1092+02 I-680 SB

DESIGN AGENCY

DESIGNER: CJW

REVIEWER: JDZ 05/30/25

PROJECT ID: 121474

SHEET: P. 607 TOTAL: P. 655

MAH-680-4.80

MODEL: CLIP_6082 - Centerline-27 PAPERSIZE: 66x34 (in.) DATE: 6/2/2025 TIME: 2:57:39 PM USER: cstone
pw:\\pwinfo-pw.bentley.com:pwinfo-pw-02\Documents\01 Active Projects\District 04\Mahoning\121474\02-Engineering_Somat\Geotechnical\Sheets\121474_IP226.dgn

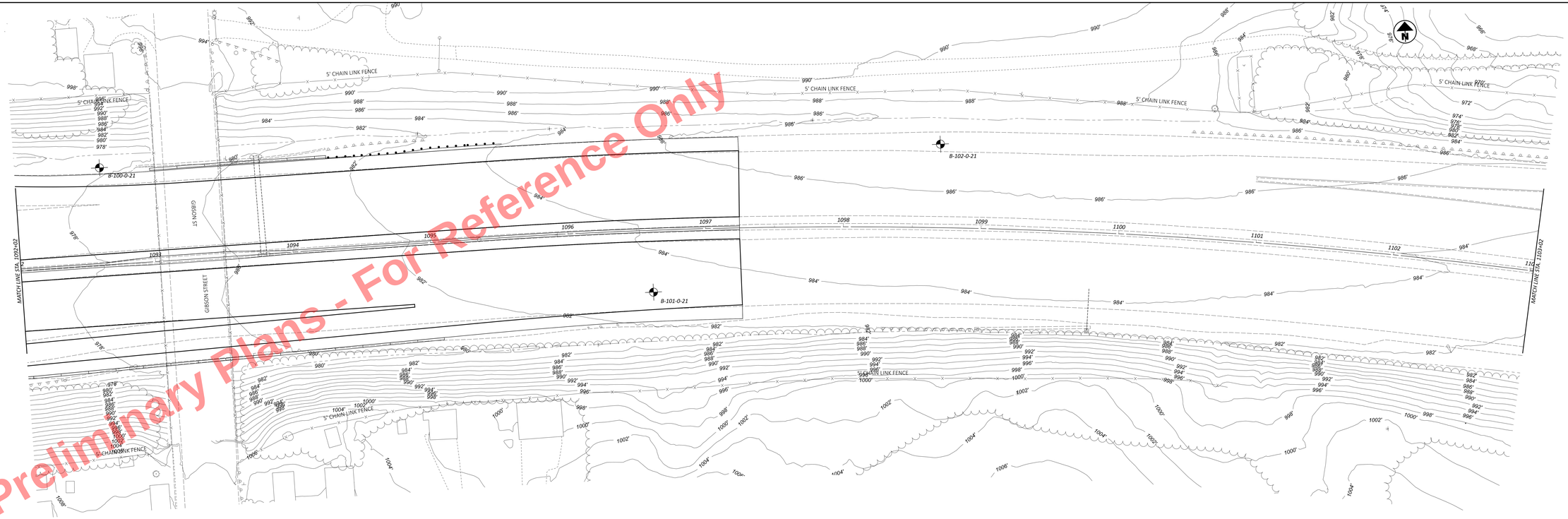

Preliminary Plans - For Reference Only

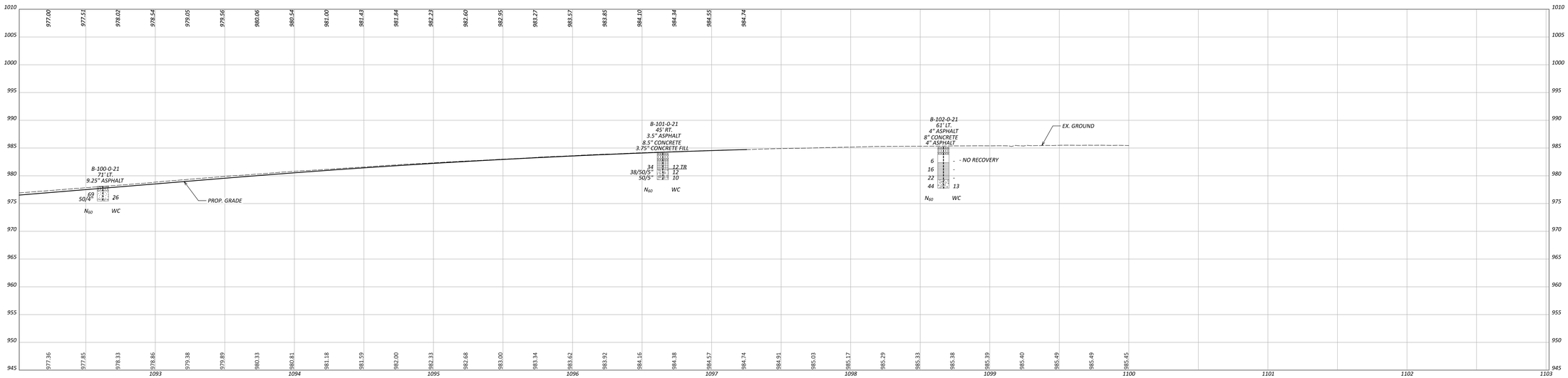

HORIZONTAL SCALE IN FEET

GEOTECHNICAL PROFILE - ROADWAY
STA. 1092+02 TO STA. 1103+02 I-680 NB

DESIGN AGENCY

DESIGNER CJW

REVIEWER JDZ 05/30/25

PROJECT ID 121474

SHEET P. 608 TOTAL P. 655

MAH-680-4.80

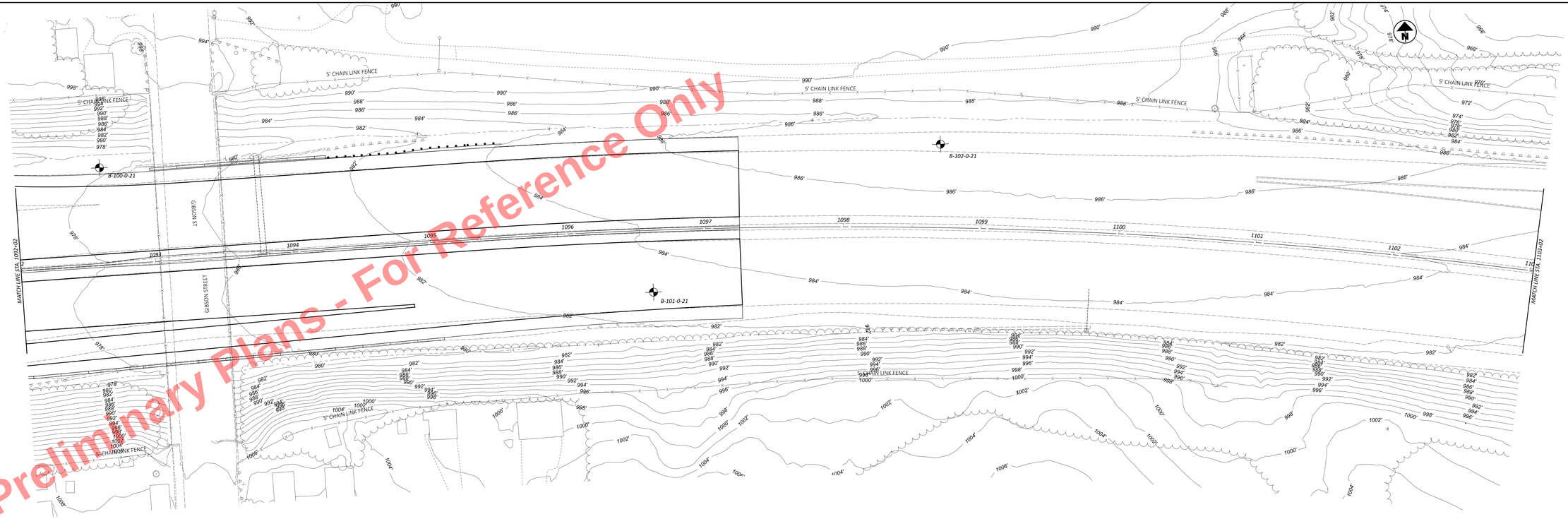

Preliminary Plans - For Reference Only

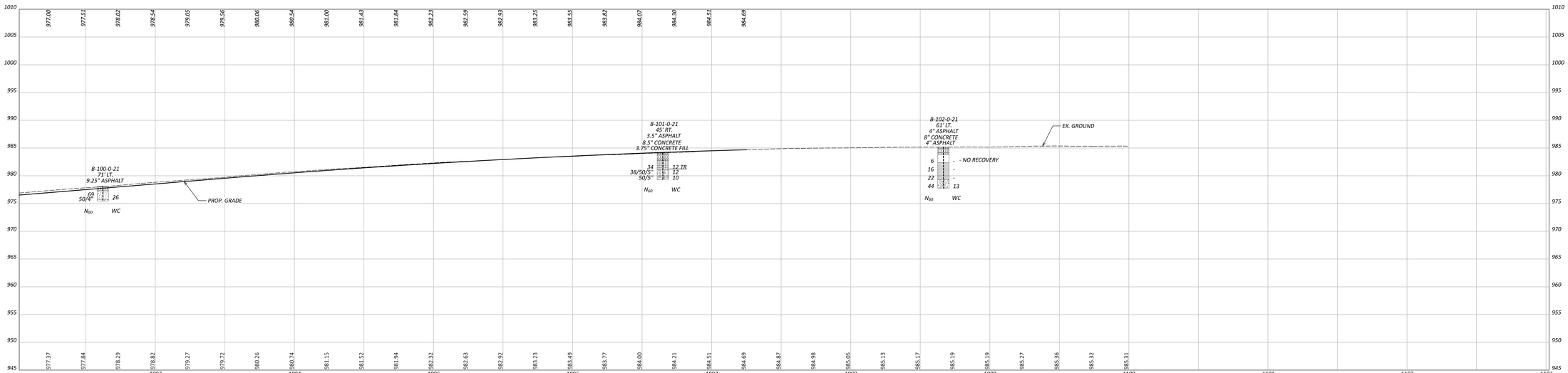

HORIZONTAL SCALE IN FEET

GEOTECHNICAL PROFILE - ROADWAY
STA. 1092+02 TO STA. 1103+02 I-680 SB

DESIGN AGENCY

DESIGNER: CJW
REVIEWER: JDZ 05/30/25
PROJECT ID: 121474
SHEET: P. 609 TOTAL: P. 655

MAH-680-4.80



Preliminary Plans - For Reference Only

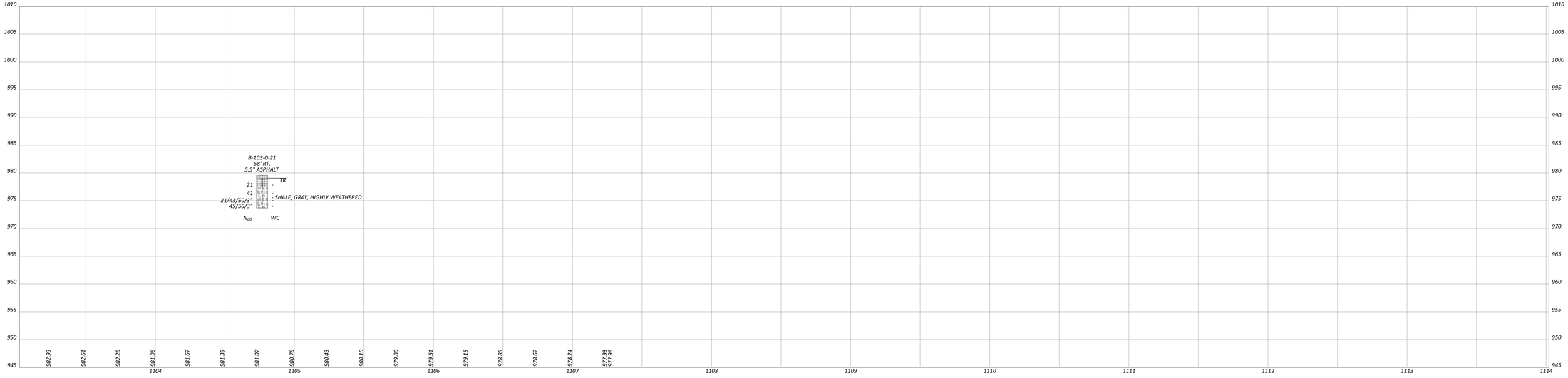

HORIZONTAL SCALE IN FEET
0 10 20 40

GEOTECHNICAL PROFILE - ROADWAY
STA. 1103+02 TO STA. 1107+29 I-680 NB

DESIGN AGENCY
Mark Sigmund Jones, Inc.

DESIGNER
CJW

REVIEWER
JDZ 05/30/25

PROJECT ID
121474

SHEET P. 610 TOTAL P. 655

MAH-680-4.80

MODEL: CLIP_6B2 - Centerline-29 PAPERSIZE: 66x34 (in.) DATE: 6/2/2025 TIME: 2:59:36 PM USER: conner
pw:\\sjobsdc.pw.bentley.com:sjobsdc-pw-02\Documents\01 Active Projects\District 04\Mahoning\121474\02-Engineering_Sonnet\Geotechnical\Sheets\121474_IP229.dgn



Preliminary Plans - For Reference Only

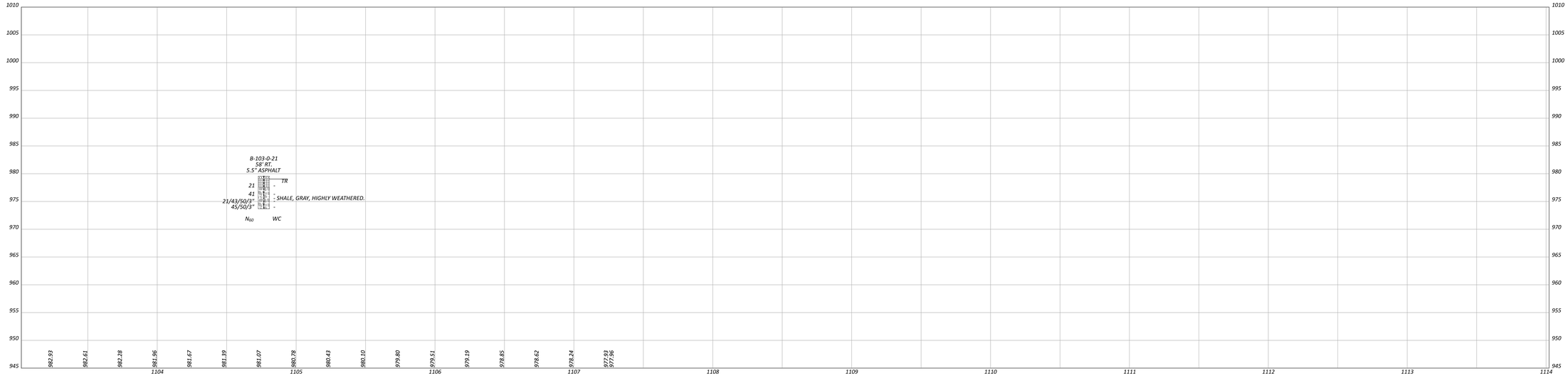

HORIZONTAL SCALE IN FEET
0 10 20 40

GEOTECHNICAL PROFILE - ROADWAY
STA. 1103+02 TO STA. 1107+29 I-680 SB

DESIGN AGENCY
Mark Sigmund Jones, Inc.

DESIGNER
CJW

REVIEWER
JDZ 05/30/25

PROJECT ID
121474

SHEET P. 611 TOTAL P. 655

MAH-680-4.80

MODEL: CLP_681 - Centerline-29 PAPERSIZE: 66x34 (in.) DATE: 6/2/2025 TIME: 3:00:11 PM USER: cstoner
pw:\\sheldoc-pw.bentley.com:sheldoc-pw-02\Documents\01 Active Projects\District 04\Mahoning\121474\401 Engineering_Somat\Geotechnical\Sheets\121474_IP330.dgn

CROSS REFERENCES	
DESCRIPTION	SHEET NO.
RAMP C GEOTECHNICAL PROFILE	P.632

HORIZONTAL SCALE IN FEET 0 10 20 40

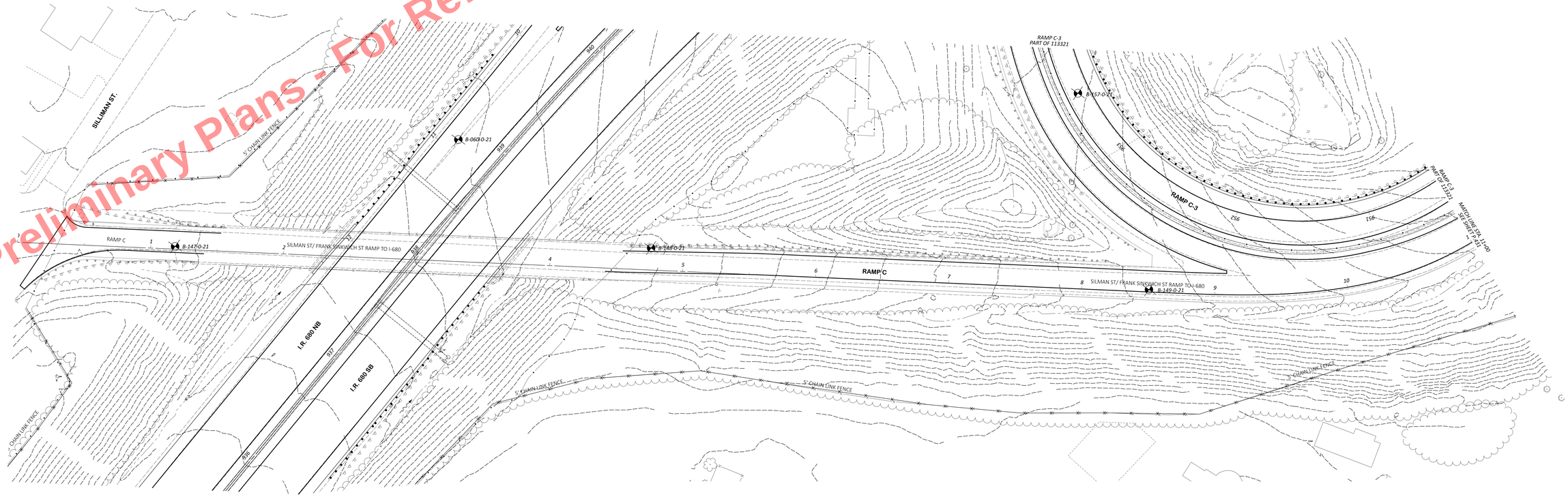

Preliminary Plans - For Reference Only

GEOTECHNICAL PLAN - RAMP C AT SILLIMAN ST.
RAMP C - STA. 0+00 TO STA. 11+00

DESIGN AGENCY

DESIGNER CJW

REVIEWER JDZ 05/30/25

PROJECT ID 121474

SHEET P. 612 TOTAL P. 655

MAH-680-4.80

MODEL: Ramp C Silliman-1 [Sheet] PAPERSIZE: 66x34 (in.) DATE: 6/2/2025 TIME: 9:29:56 AM USER: aalaxiem
pw:\\pwindo-pw.bentley.com:pwindo-pw-02\Documents\01 Active Projects\District 04\MAH-680\121474\01 Engineering_Sonal\Geotechnical\Sheets\121474_IP117.dgn



Preliminary Plans - For Reference Only

CROSS REFERENCES	
DESCRIPTION	SHEET NO.
RAMP B-3 GEOTECHNICAL PROFILE	P.634
RAMP D GEOTECHNICAL PROFILE	P.635 P.636
RAMP S.R. 193 GEOTECHNICAL PROFILE	P.633

HORIZONTAL SCALE IN FEET
0 10 20 40

GEOTECHNICAL PLAN - S.R. 193 & RAMPS A-3, B-3 &D
RAMP A-3 - STA. 0+00 TO STA. 6+00

DESIGN AGENCY
Kansas Engineering Services

DESIGNER
CJW

REVIEWER
JDZ 05/30/25

PROJECT ID
121474

SHEET P. 613 TOTAL P. 655

MAH-680-4.80

MODEL: Ramp A-3 B-3 [Sheet] PAPERSIZE: 66x34 (in.) DATE: 6/2/2025 TIME: 9:31:43 AM USER: sakiparam
pw:\\pbsdsdir.pw.bentley.com:pbsdsdir-pw-02\Documents\Q1 Active Projects\District 04\Mahoning\121474\401-Engineering_Somerlf\Geotechnical\Sheets\121474_IP118.dgn

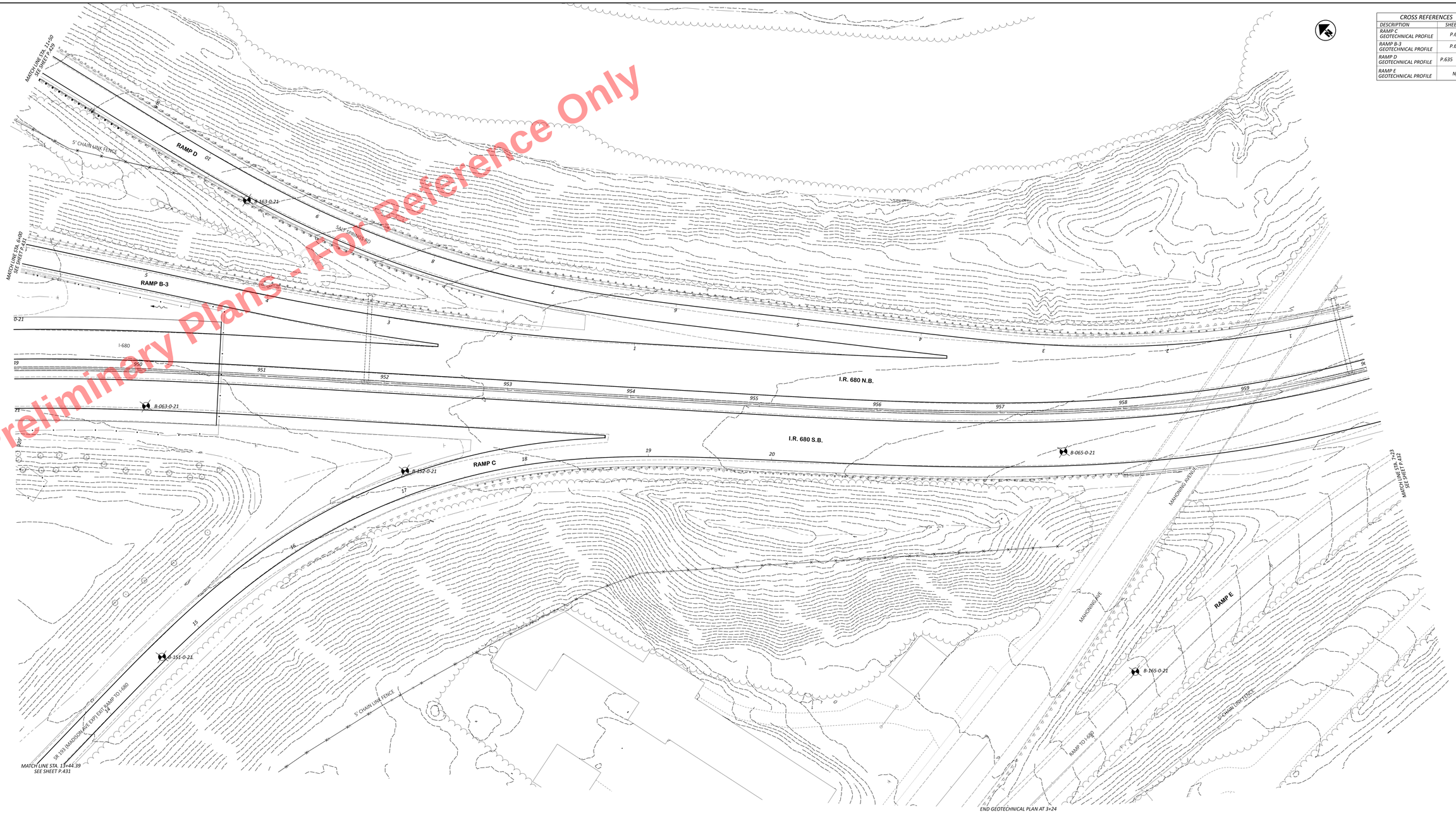

Preliminary Plans - For Reference Only

CROSS REFERENCES	
DESCRIPTION	SHEET NO.
RAMP C GEOTECHNICAL PROFILE	P.632
RAMP B-3 GEOTECHNICAL PROFILE	P.634
RAMP D GEOTECHNICAL PROFILE	P.635 P.636
RAMP E GEOTECHNICAL PROFILE	N/A

HORIZONTAL SCALE IN FEET 0 10 20 40

GEOTECHNICAL PLAN - RAMPS C, B-3, D, & E
RAMP D - STA. 0+48 TO STA. 11+50

DESIGN AGENCY
Stantec Engineering Ltd. 2022, Inc.

DESIGNER CJW
REVIEWER JDZ 05/30/25
PROJECT ID 121474
SHEET P. 614 TOTAL P. 655

MAH-680-4.80

MODEL: Ramp C end (Sheet) PAPERSIZE: 66x34 (in.) DATE: 6/2/2025 TIME: 9:32:42 AM USER: aalassem
pw:\\pbdsdsc.pw.bentley.com:rshadsdc-pw-02\Documents\01 Active Projects\District 04\Mahoning\121474\401 Engineering_Somat\Geotechnical\Sheets\121474_SP119.dgn

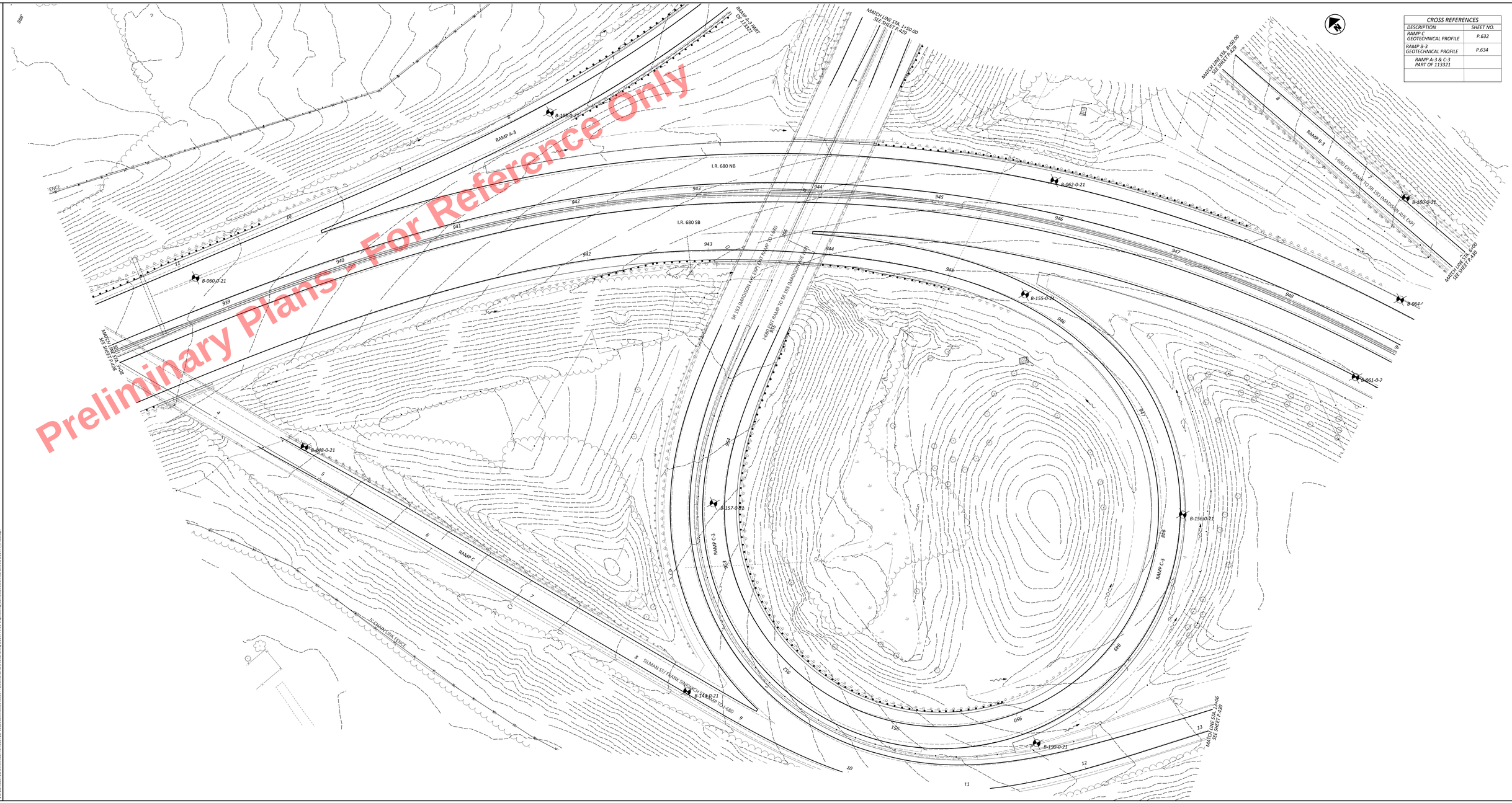

CROSS REFERENCES	
DESCRIPTION	SHEET NO.
RAMP C GEOTECHNICAL PROFILE	P.632
RAMP B-3 GEOTECHNICAL PROFILE	P.634
RAMP A-3 & C-3 PART OF 113321	

HORIZONTAL SCALE IN FEET 0 10 20 40

GEOTECHNICAL PLAN - RAMPS C, C-3, B-3, & A-3
RAMP B-3 - STA. 6+00 TO STA. 8+50

DESIGN AGENCY

DESIGNER CJW

REVIEWER JDZ 05/30/25

PROJECT ID 121474

SHEET P. 615 TOTAL P. 655

MAH-680-4.80

MODEL: Ramp C GE B3 (Sheet) RAPERSIZE: 66x34 (in.) DATE: 6/2/2025 TIME: 9:33:12 AM USER: aalquann
pw:\\pwbdsc.pw.bentley.com:pwbdsc.pw-02\Documents\01 Active Projects\District 04\Mahoning\121474\Engineering_Sonnet\Geotechnical\Sheets\121474_SP120.dgn

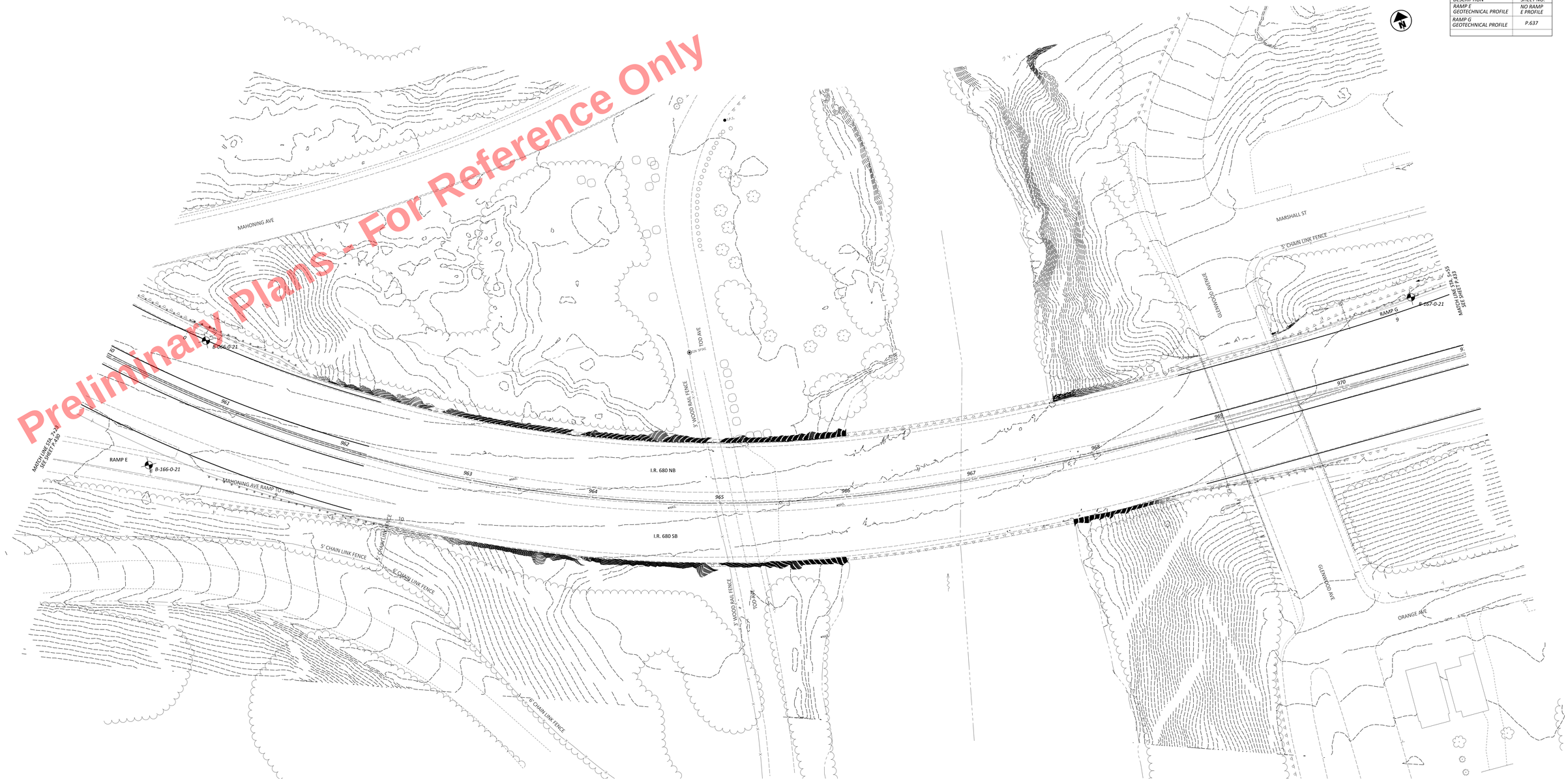

CROSS REFERENCES	
DESCRIPTION	SHEET NO.
RAMP E GEOTECHNICAL PROFILE	NO RAMP E PROFILE
RAMP G GEOTECHNICAL PROFILE	P.637

HORIZONTAL SCALE IN FEET
0 10 20 40

GEOTECHNICAL PLAN - RAMPS E & G
RAMP G - STA. 5+55 TO STA. 6+77

DESIGN AGENCY
SE
Sewer Engineering of Ohio, Inc.

DESIGNER
CJW

REVIEWER
JDZ 05/30/25

PROJECT ID
121474

SHEET P. 616 TOTAL P. 655

MAH-680-4.80

MODEL: Ramp E at Mahoning Ramp G1 at Marshall [Sheet] PAPERSIZE: 66x34 (in.) DATE: 6/2/2025 TIME: 9:34:24 AM USER: aalsaram
pw:\\sheridan.pw.bentley.com:sheridan.pw-02\Documents\01 Active Projects\District 04\Mahoning\121474\Mahoning Ramp G\Geotechnical\Sheets\121474_SP121.dgn

Preliminary Plans - For Reference Only

CROSS REFERENCES	
DESCRIPTION	SHEET NO.
RAMP G GEOTECHNICAL PROFILE	P.637



HORIZONTAL SCALE IN FEET
0 10 20 40

GEOTECHNICAL PLAN - RAMP G AT MARSHALL ST
STA. 0+08 TO STA. 5+55

DESIGN AGENCY

DESIGNER
CJW

REVIEWER
JDZ 05/30/25

PROJECT ID
121474

SHEET P. 617 TOTAL P. 655

MAH-680-4.80

MODEL: Ramp G at Marshall [Sheet] PAPERSIZE: 66x34 (in.) DATE: 6/2/2025 TIME: 9:35:28 AM USER: aaiquanm
pw:\\pwhdsc.pw.bentley.com:pwhdsc\pw-02\Documents\01 Active Projects\District 04\Mahoning\121474\02 Engineering_Somat\Geotechnical\Sheets\121474_IP122.dgn

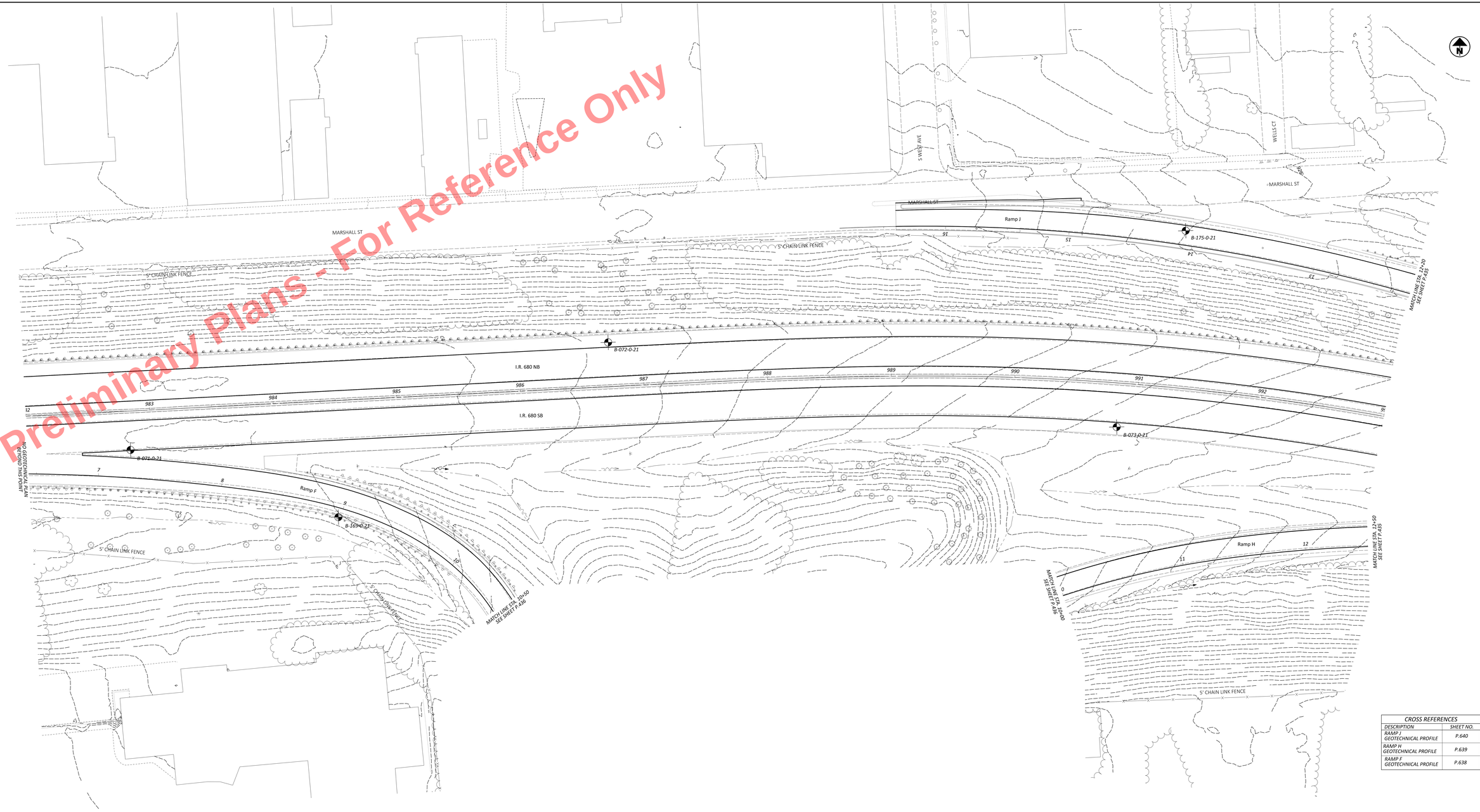

CROSS REFERENCES	
DESCRIPTION	SHEET NO.
RAMP J GEOTECHNICAL PROFILE	P.640
RAMP H GEOTECHNICAL PROFILE	P.639
RAMP F GEOTECHNICAL PROFILE	P.638

HORIZONTAL SCALE IN FEET
0 10 20 40

GEOTECHNICAL PLAN - RAMPS F, H, & J
RAMP J - STA. 12+20 TO STA. 16+85

DESIGN AGENCY
SE
Sealed Engineering of Ohio, Inc.

DESIGNER
CJW

REVIEWER
JDZ 05/30/25

PROJECT ID
121474

SHEET P. 618 TOTAL P. 655

MAH-680-4.80

MODEL: Ramps F H J Plan (Sheet) PREFERENCE: 66x34 (in.) DATE: 6/2/2025 TIME: 9:36:25 AM USER: aalaquem
pw:\\shaddoc.pw.bentley.com:shaddoc-pw-02\Documents\01 Active Projects\District 04\Mahoning\121474\Engineering_Sonar\Geotechnical\Sheets\121474_IP123.dgn



Preliminary Plans - For Reference Only

CROSS REFERENCES	
DESCRIPTION	SHEET NO.
RAMP J GEOTECHNICAL PROFILE	P.639
RAMP H GEOTECHNICAL PROFILE	P.638

HORIZONTAL SCALE IN FEET
0 10 20 40

GEOTECHNICAL PLAN - RAMPS H & J
RAMP J - STA. 3+29 TO STA. 12+20

DESIGN AGENCY
Stantec Engineering of Ohio, Inc.

DESIGNER
CJW

REVIEWER
JDZ 05/30/25

PROJECT ID
121474

SHEET P. 619 TOTAL P. 655

MAH-680-4.80

MODEL: Ramp J H Plan (Sheet) PAPERSIZE: 66x34 (in.) DATE: 6/2/2025 TIME: 9:48:46 AM USER: aalapsem
pw:\\pwinddot.pw.bentley.com:pwinddot-pw-02\Documents\01 Active Projects\District 04\Mahoning\121474\401 Engineering_Somat\Geotechnical\Sheets\121474_IP136.dgn

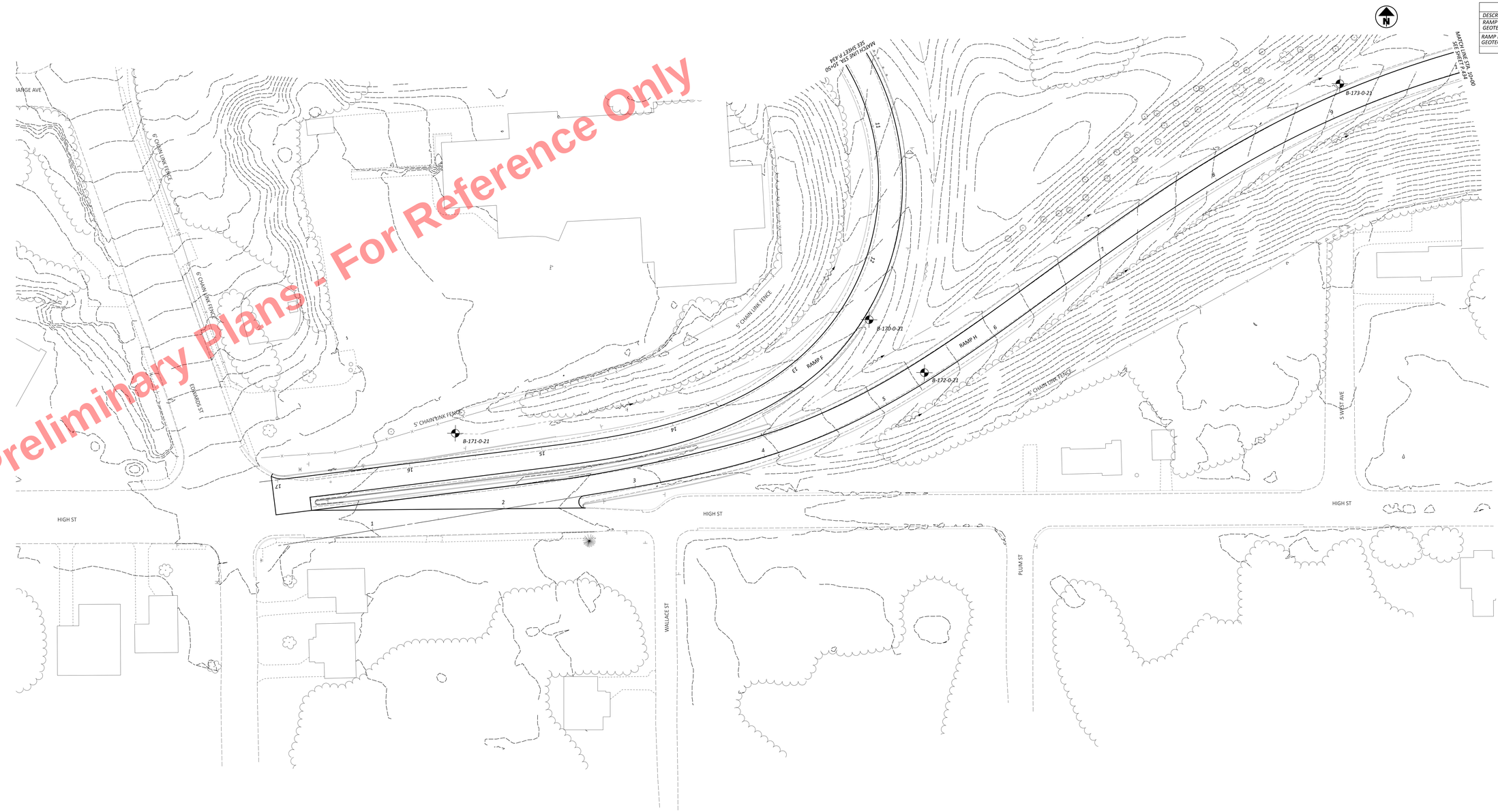

Preliminary Plans - For Reference Only

CROSS REFERENCES	
DESCRIPTION	SHEET NO.
RAMP F GEOTECHNICAL PROFILE	P.638
RAMP H GEOTECHNICAL PROFILE	P.639

HORIZONTAL SCALE IN FEET
0 10 20 40

GEOTECHNICAL PLAN - RAMPS F & H
RAMP H - STA. 0+28 TO STA. 10+00

DESIGN AGENCY
Jacobs Engineering Group Inc.

DESIGNER
CJW

REVIEWER
JDZ 05/30/25

PROJECT ID
121474

SHEET P. 620 TOTAL P. 655

MAH-680-4.80

MODEL: Ramps H F (Sheet) PAPERSIZE: 66.4x34 (in.) DATE: 6/2/2025 TIME: 9:37:22 AM USER: adapsem
pw:\\jacobsdc.pw.bentley.com:jacobsdc-pw-02\Documents\01 Active Projects\District 04\MAH-680\121474\401-Engineering_Somat\Geotechnical\Sheets\121474_IP124.dgn

Preliminary Plans - For Reference Only

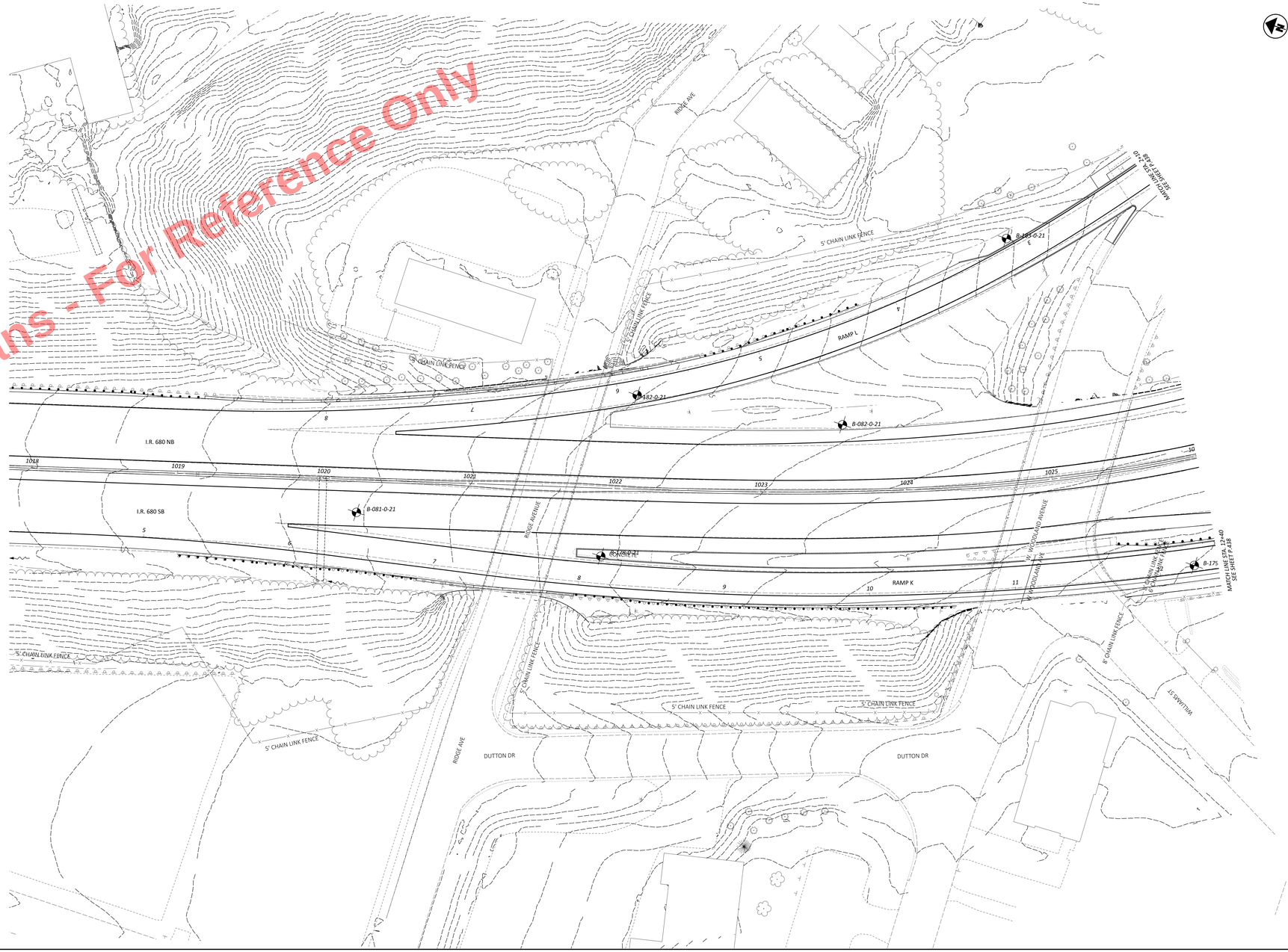

CROSS REFERENCES	
DESCRIPTION	SHEET NO.
RAMP K GEOTECHNICAL PROFILE	P.641
RAMP L GEOTECHNICAL PROFILE	P.642

HORIZONTAL SCALE IN FEET
0 10 20 40

GEOTECHNICAL PLAN - RAMPS K & L
RAMP L - STA. 2+10 TO STA. 8+83

DESIGN AGENCY
SE
Sensor Engineering of Ohio, Inc.

DESIGNER
CJW

REVIEWER
JDZ 05/30/25

PROJECT ID
121474

SHEET P. 621 TOTAL P. 655

MAH-680-4.80

MODEL: Ramp K Lot Marker 51 (Sheet) PAPERSIZE: 66x34 (in.) DATE: 6/2/2025 TIME: 9:38:18 AM USER: sdoppen
pw:\\sdoppen.pw.bentley.com:sdoppen-02\Documents\03 Active Projects\District 04\Mahoning\121474\R02 Engineering_Somat\Geotechnical\Sheets\121474_IP125.dgn

CROSS REFERENCES	
DESCRIPTION	SHEET NO.
RAMP K GEOTECHNICAL PROFILE	P.641
RAMP L GEOTECHNICAL PROFILE	P.642
RAMP N GEOTECHNICAL PROFILE	P.644
RAMP M GEOTECHNICAL PROFILE	P.643
RAMP BX GEOTECHNICAL PROFILE	P.645

HORIZONTAL SCALE IN FEET
0 10 20 40



Preliminary Plans - For Reference Only

GEOTECHNICAL PLAN - RAMPS K, L, N, M, & BX
RAMP K - STA. 15+50 TO STA. 19+23

DESIGN AGENCY
SE
Sensor Engineering of Ohio, Inc.

DESIGNER
CJW

REVIEWER
JDZ 05/30/25

PROJECT ID
121474

SHEET P. 622 TOTAL P. 655

MAH-680-4.80

MODEL: Ramps K, M, N, BX (Sheet) PREPARED: 6/6/24 (jm) DATE: 6/2/2025 TIME: 9:39:11 AM USER: aalsonem
pw:\\pbsolder.pw.bentley.com:pbsolder.pw:02\Documents\50 Active Projects\District 04\Mahoning\121474\R01 Engineering_Sensor\Geotechnical\Sheets\121474_SP126.dgn

CROSS REFERENCES	
DESCRIPTION	SHEET NO.
RAMP K GEOTECHNICAL PROFILE	P.641
RAMP M GEOTECHNICAL PROFILE	P.643



Preliminary Plans - For Reference Only

HORIZONTAL SCALE IN FEET
0 10 20 40

GEOTECHNICAL PLAN - RAMPS K & M
RAMP M - STA. 1035+00 TO STA. 1041+66

DESIGN AGENCY
SE
Sensing Engineering of Silicon Valley

DESIGNER
CJW

REVIEWER
JDZ 05/30/25

PROJECT ID
121474

SHEET P. 623 TOTAL P. 655

MAH-680-4.80

MODEL: Ramps K M (Sheet) PAPERSIZE: 66x34 (in.) DATE: 6/2/2025 TIME: 9:39:32 AM USER: aalquwem
pw:\\pbadsfor.pw.bentley.com:pbadsfor-pw-02\Documents\01 Active Projects\District 04\Mahoning\121474\401-Engineering_Somat\Geotechnical\Sheets\121474_IP127.dgn

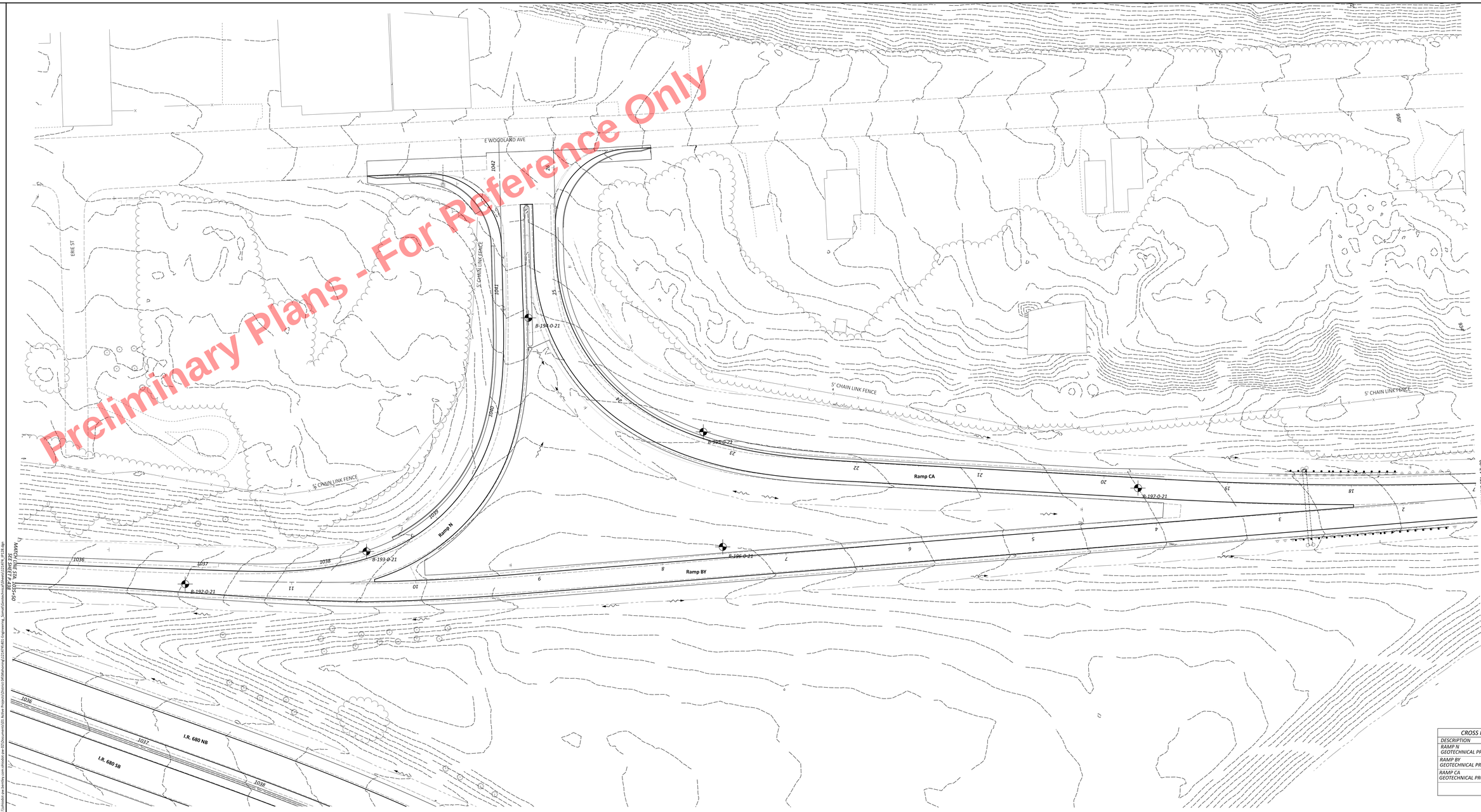
E WOODLARD AVE
ERIE ST
5' CHAIN LINK FENCE
B-194-0-21
B-195-0-21
B-197-0-21
B-193-0-21
B-192-0-21
B-196-0-21
Ramp CA
Ramp N
Ramp BY
I.R. 680 NB
I.R. 680 SB
MATCH LINE STA. 10+50
SEE SHEET P.643
MATCH LINE STA. 17+00
SEE SHEET P.645
1036
1037
1038
1039
1040
1041
1042
1043
1044
1045
1046
1047
1048
1049
1050
1051
1052
1053
1054
1055
1056
1057
1058
1059
1060
1061
1062
1063
1064
1065
1066
1067
1068
1069
1070
1071
1072
1073
1074
1075

CROSS REFERENCES	
DESCRIPTION	SHEET NO.
RAMP SB GEOTECHNICAL PROFILE	P.648 P.649
RAMP NB GEOTECHNICAL PROFILE	P.650
RAMP BX GEOTECHNICAL PROFILE	P.645
RAMP CA GEOTECHNICAL PROFILE	P.647

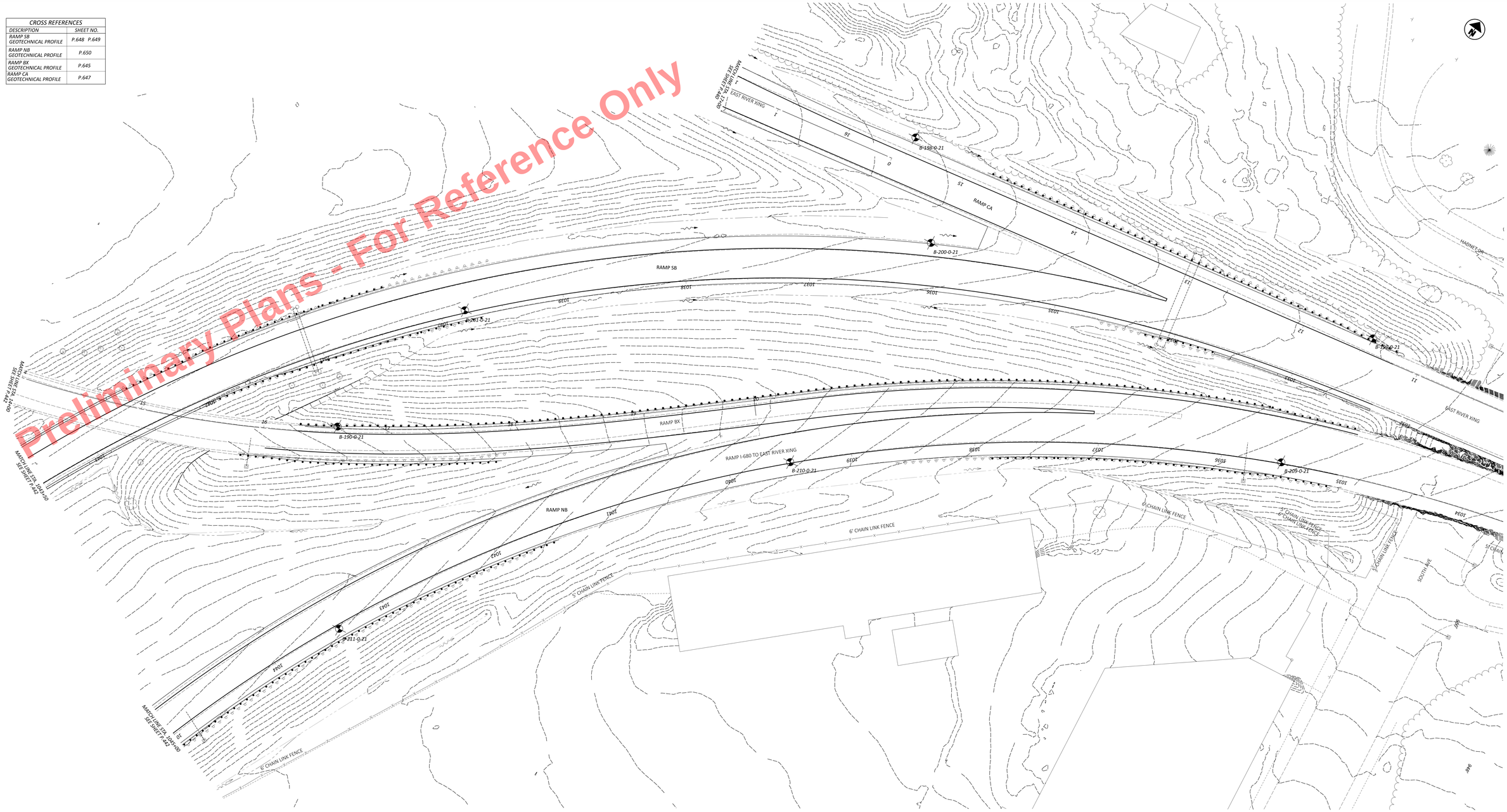

HORIZONTAL SCALE IN FEET
0 10 20 40

GEOTECHNICAL PLAN - RAMPS SB, NB, BX, &CA
RAMP BX - STA. 14+00 TO STA. 20+41

DESIGN AGENCY
SE
Sensing Engineering Of Sensors, Inc.

DESIGNER
CJW

REVIEWER
JDZ 05/30/25

PROJECT ID
121474

SHEET P. 625 TOTAL P. 655

MAH-680-4.80

MODEL: Ramps BX SB587 NB587 CA [Sheet] PAPERSIZE: 66x34 (in.) DATE: 6/2/2025 TIME: 9:40:33 AM USER: aalqasem
pw:\\sheldon-pw.bentley.com:sheldon-pw-02\Documents\02 Active Projects\District 04\Mahoning\121474\Engineering_Sensor\Geotechnical\Sheets\121474_BP129.dgn

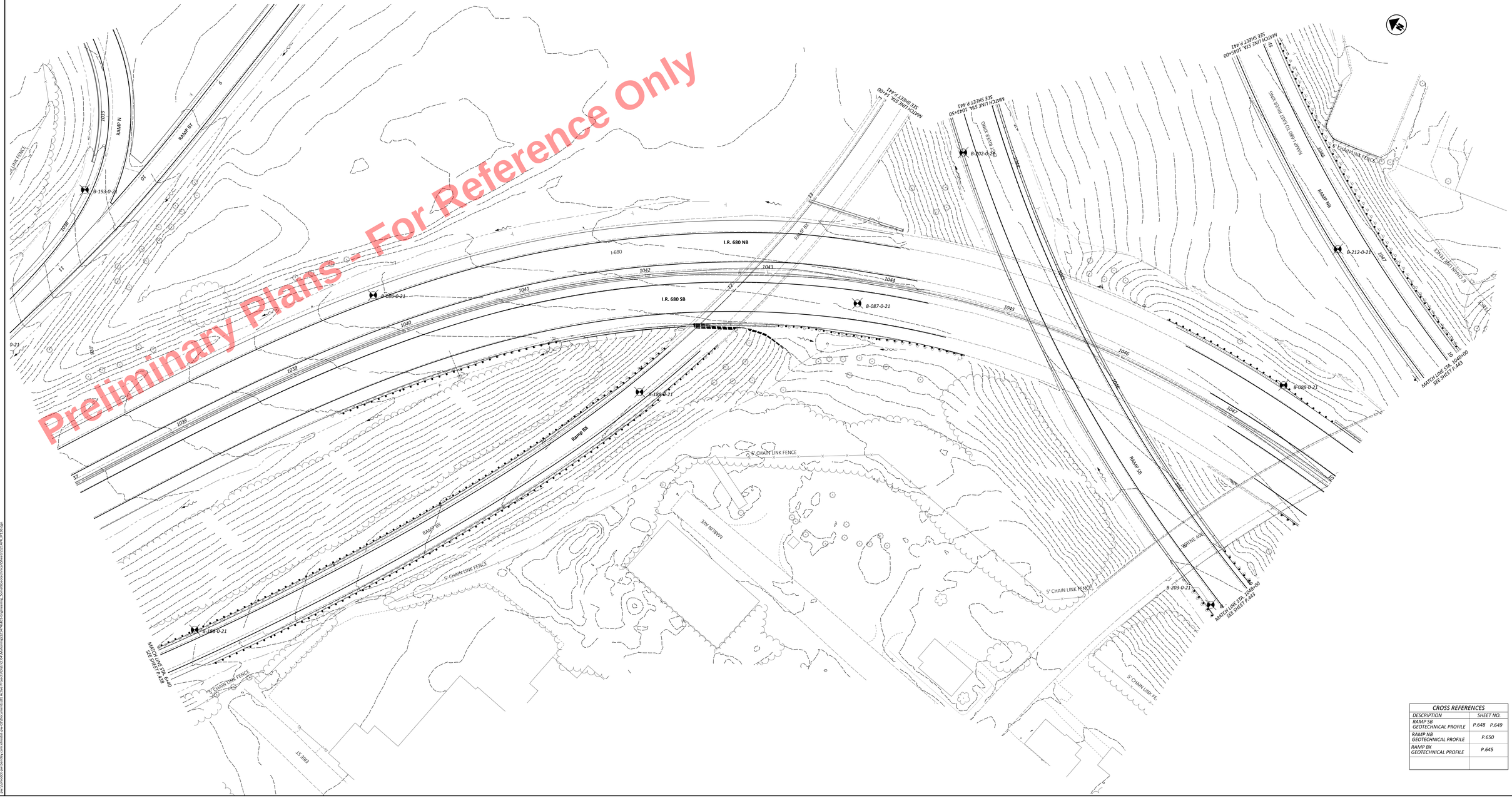

CROSS REFERENCES	
DESCRIPTION	SHEET NO.
RAMP SB GEOTECHNICAL PROFILE	P.648 P.649
RAMP NB GEOTECHNICAL PROFILE	P.650
RAMP BX GEOTECHNICAL PROFILE	P.645

HORIZONTAL SCALE IN FEET
0 10 20 40

GEOTECHNICAL PLAN - RAMPS SB, NB, & BX
RAMP BX - STA. 6+40 TO STA. 14+00

DESIGN AGENCY
Kansas Engineering Services

DESIGNER
CJW

REVIEWER
JDZ 05/30/25

PROJECT ID
121474

SHEET P. 626 TOTAL P. 655

MAH-680-4.80

MODEL: Ramps SB&BY NB&BY BX [Sheet] PAPERSIZE: 66x34 (in.) DATE: 6/2/2025 TIME: 9:41:17 AM USER: aklapsem
pw:\\shaddor-pw.bentley.com:shaddor-pw-02\Documents\50 Alterra Projects\District 04\Mahoning\121474\R_Engineering_Somat\Geotechnical\Sheets\121474_IP130.dgn

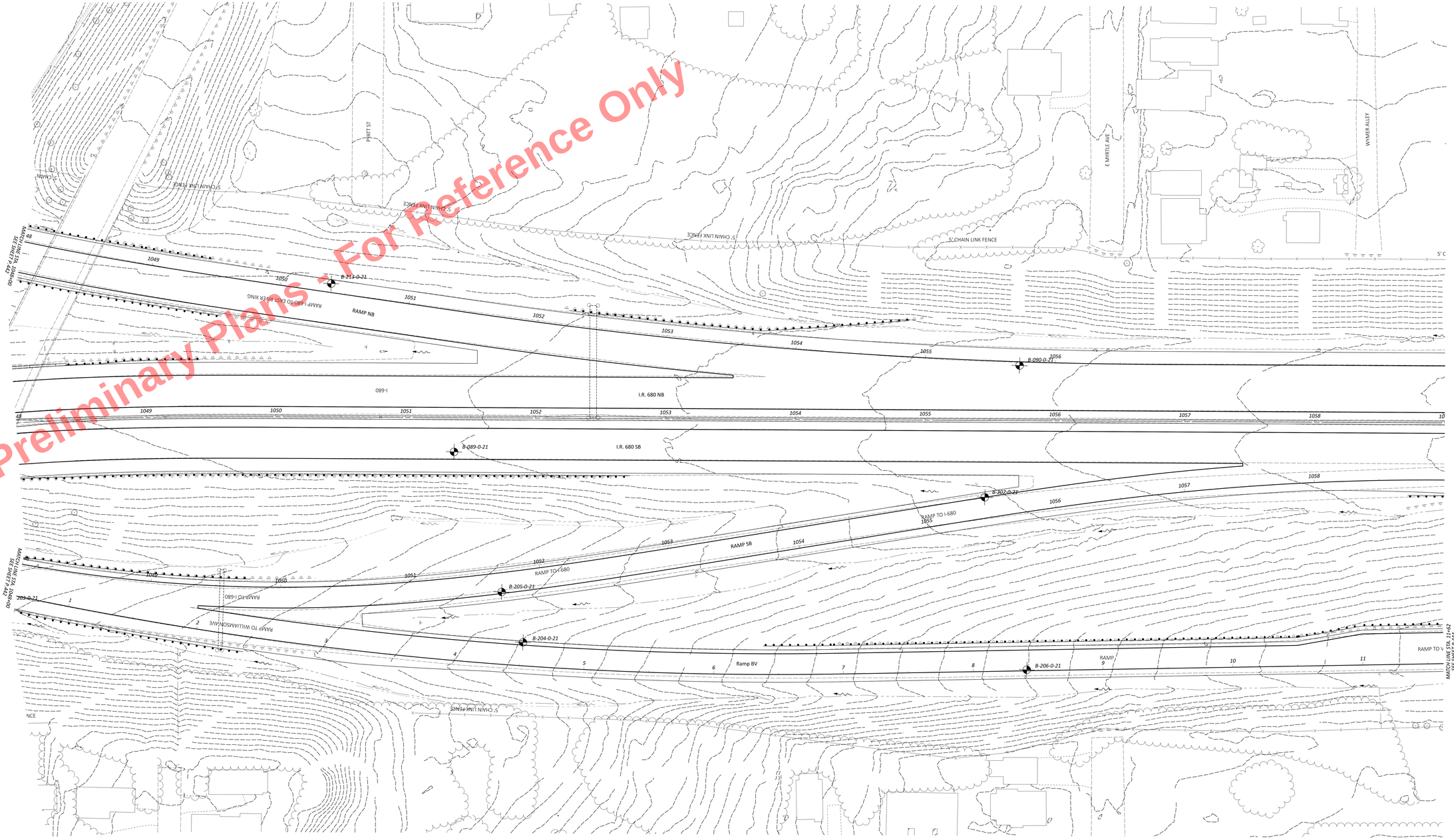

CROSS REFERENCES	
DESCRIPTION	SHEET NO.
RAMP NB GEOTECHNICAL PROFILE	P.650
RAMP SB GEOTECHNICAL PROFILE	P.648 P.649
RAMP BV GEOTECHNICAL PROFILE	P.651,

HORIZONTAL SCALE IN FEET
0 10 20 40

GEOTECHNICAL PLAN - RAMPS BV, NB, & SB
RAMP BV - STA. 0+59 TO STA. 11+62

DESIGN AGENCY
SE
Sealed Engineering of Oregon, Inc.

DESIGNER
CJW

REVIEWER
JDZ 05/30/25

PROJECT ID
121474

SHEET P. 627 TOTAL P. 655

MAH-680-4.80

MODEL: Ramps BV SB587 NB587 (Sheet) PAPERSIZE: 66x34 (in.) DATE: 6/2/2025 TIME: 9:41:36 AM USER: aalapaem
pw:\\sheldon-pw.bentley.com:sheldon-pw-02\Documents\01 Active Projects\District 04\Mahoning\121474\Engineering_Sonnet\Geotechnical\Sheets\121474_BP131.dgn

Preliminary Plans - For Reference Only

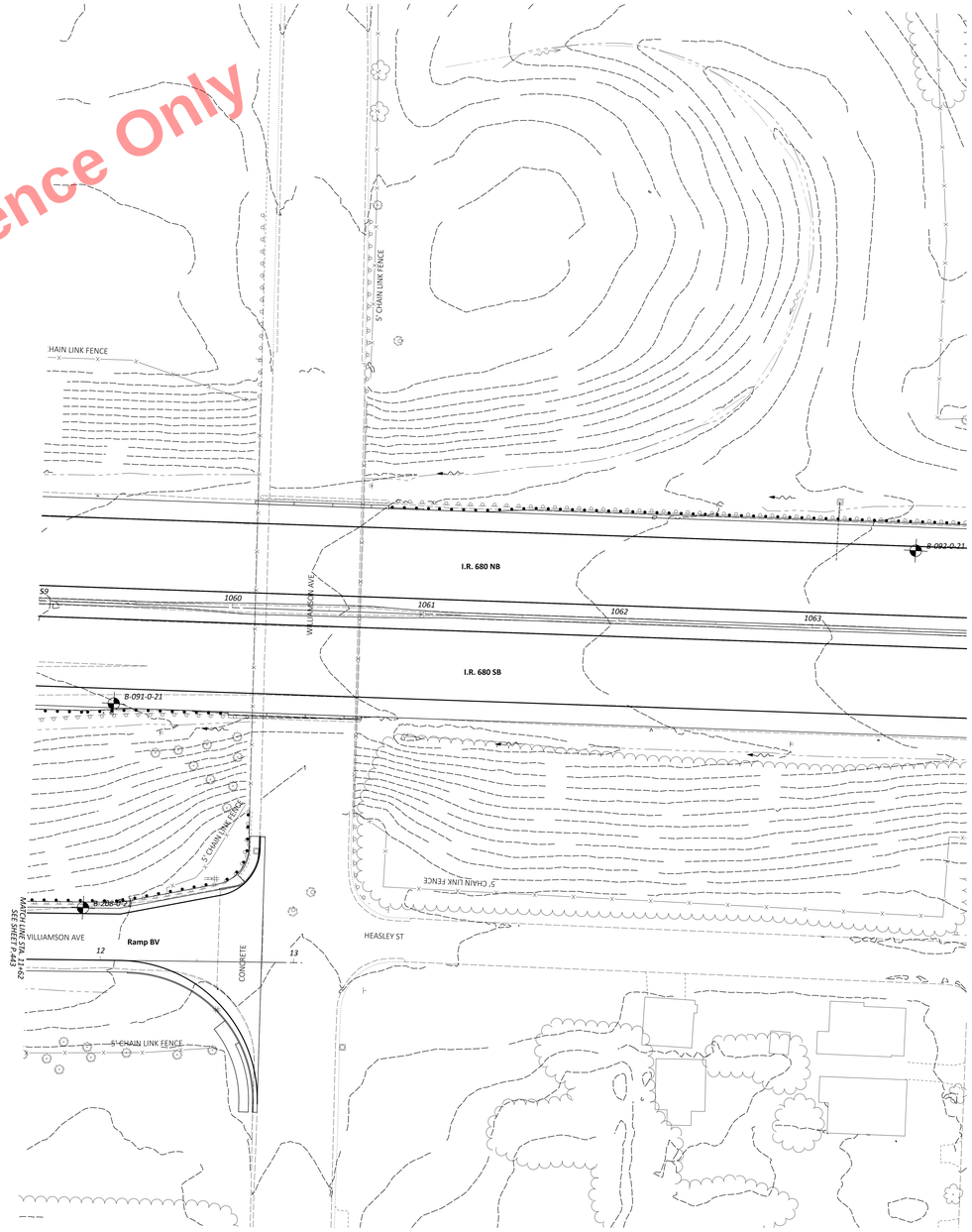

CROSS REFERENCES	
DESCRIPTION	SHEET NO.
RAMP BV GEOTECHNICAL PROFILE	P.651

HORIZONTAL SCALE IN FEET
0 10 20 40

GEOTECHNICAL PLAN - RAMP BV
RAMP BV - STA. 11+62 TO STA. 13+04

DESIGN AGENCY

DESIGNER CJW
REVIEWER JDZ 05/30/25
PROJECT ID 121474
SHEET P. 628 TOTAL P. 655

MAH-680-4.80

Preliminary Plans - For Reference Only

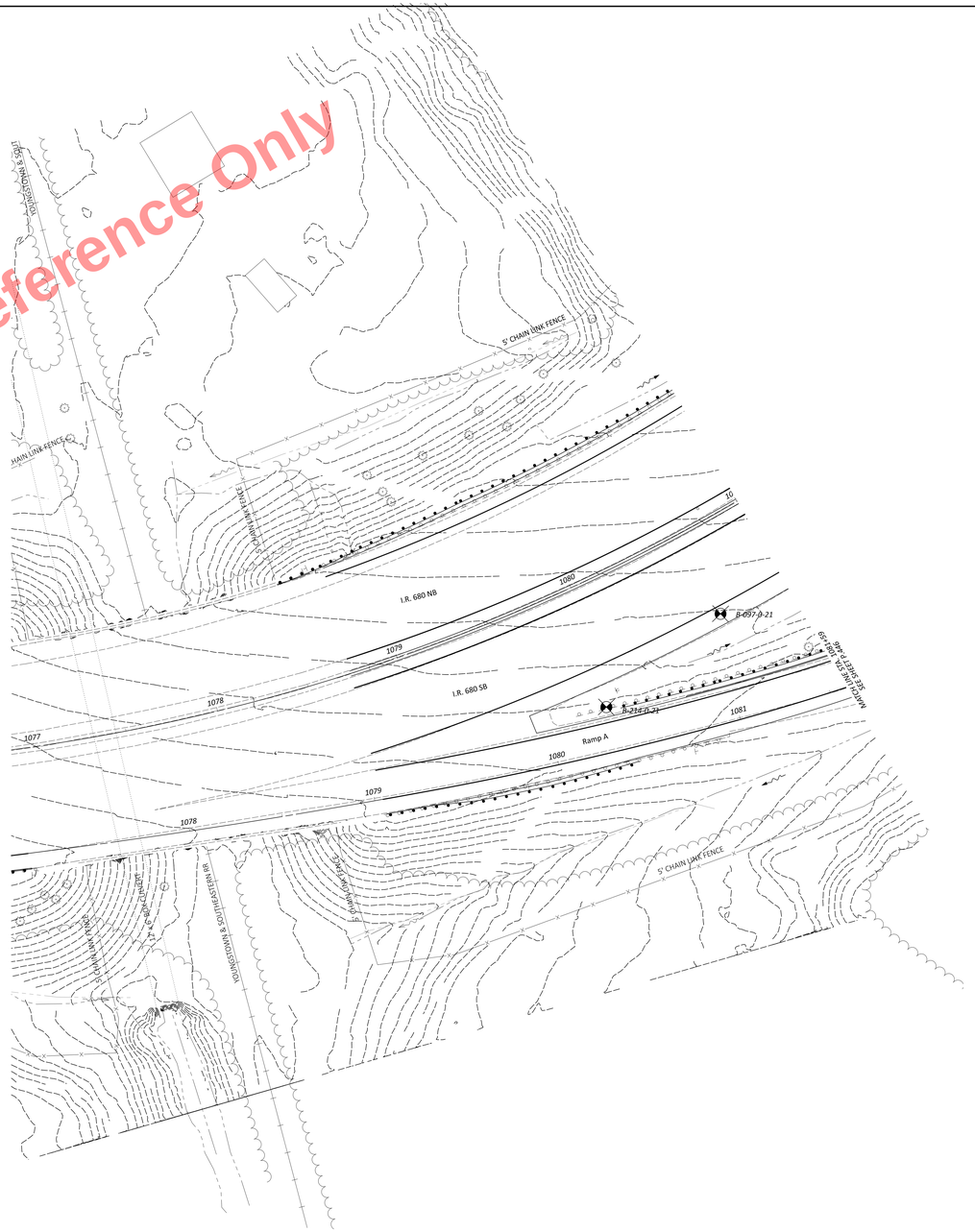

CROSS REFERENCES	
DESCRIPTION	SHEET NO.
RAMP A GEOTECHNICAL PROFILE	P.652

HORIZONTAL SCALE IN FEET
0 10 20 40

GEOTECHNICAL PLAN - RAMP A AT SOUTH AVE
RAMP A - STA. 1072+53 TO STA. 1081+59

DESIGN AGENCY
SE
Science Engineering Of Ohio, Inc.

DESIGNER
CJW

REVIEWER
JDZ 05/30/25

PROJECT ID
121474

SHEET P. 629 TOTAL P. 655

MAH-680-4.80

MODEL: Ramp A at South Ave [Sheet] PAPERSIZE: 66x34 (in.) DATE: 6/2/2025 TIME: 9:43:35 AM USER: sabiqsam
pw:\\shaodoc.pw.bentley.com:shaodoc-pw-02\Documents\01 Active Projects\District 04\Mahoning\121474\401 Engineering_Scenarios\Geotechnical\Sheets\121474_IP133.dgn

CROSS REFERENCES	
DESCRIPTION	SHEET NO.
RAMP A GEOTECHNICAL PROFILE	P.652
RAMP B GEOTECHNICAL PROFILE	P.653
RAMP C GEOTECHNICAL PROFILE	P.655
RAMP D GEOTECHNICAL PROFILE	P.654

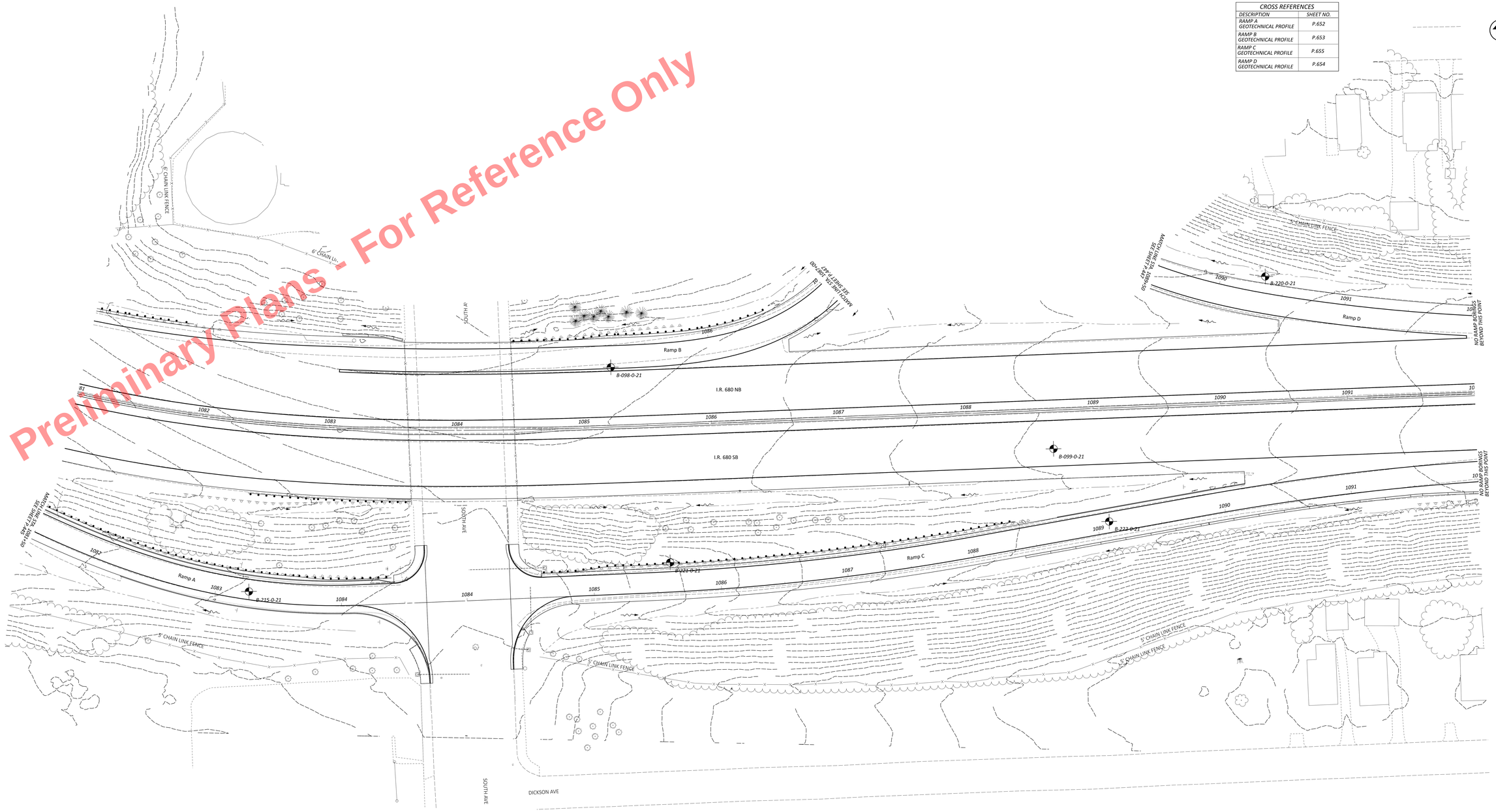

HORIZONTAL SCALE IN FEET
0 10 20 40

GEOTECHNICAL PLAN - RAMPS A, B, C, & D AT SOUTH AVE
RAMP C - STA. 1083+96 TO STA. 1092+00

DESIGN AGENCY
Kansas Department of Transportation

DESIGNER
CJW

REVIEWER
JDZ 05/30/25

PROJECT ID
121474

SHEET P. 630 TOTAL P. 655

MAH-680-4.80

MODEL: Ramps A, B, C, D at South Ave [Sheet] PAPERSIZE: 66x44 (in.) DATE: 6/2/2025 TIME: 9:43:18 AM USER: aalquwem
pw:\\pwhdoc.pw.bentley.com:pwhdoc\pw-02\Documents\01 Active Projects\District 04\Mahoning\121474\401-Engineering_Sonnet\Geotechnical\Sheets\121474_BP134.dgn

CROSS REFERENCES	
DESCRIPTION	SHEET NO.
RAMP B GEOTECHNICAL PROFILE	P.653
RAMP D GEOTECHNICAL PROFILE	P.654

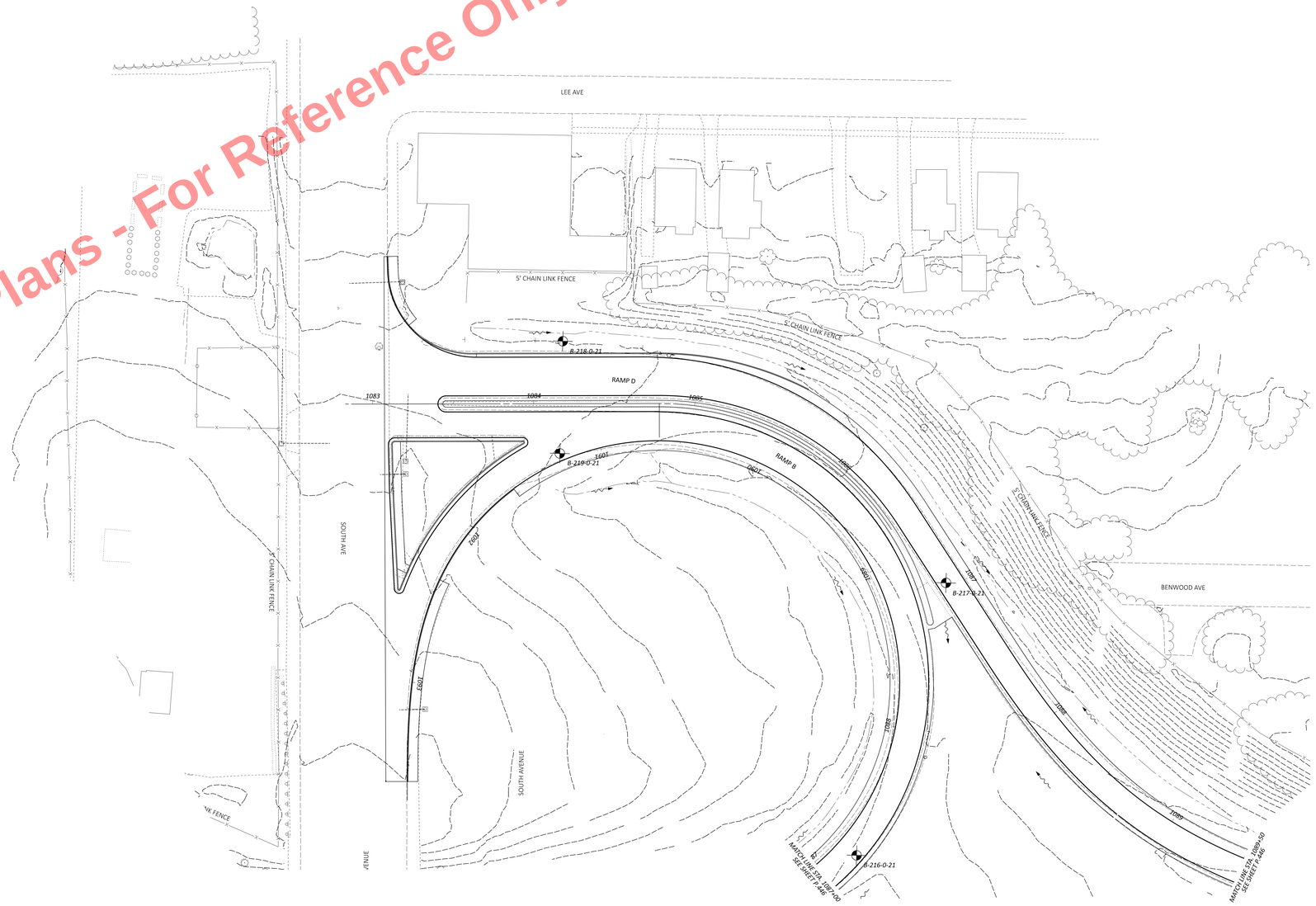

Preliminary Plans - For Reference Only

HORIZONTAL SCALE IN FEET
0 10 20 40

GEOTECHNICAL PLAN - RAMPS B & D AT SOUTH AVE
RAMP B - STA. 1087+00 TO STA. 1093+73

DESIGN AGENCY
Sealed Engineering of Ohio, Inc.

DESIGNER
CJW

REVIEWER
JDZ 05/30/25

PROJECT ID
121474

SHEET P. 631 TOTAL P. 655

MAH-680-4.80

MODEL: Ramps B D (Sheet) PREPERIOTE:64x34 (in.) DATE: 6/2/2025 TIME: 9:44:14 AM USER: aulopsem
pw:\\pbsolder.pw.bentley.com:pbsolder.pw:02\Documents\01 Active Projects\District 04\Mahoning\121474\401 Engineering_Somat\Geotechnical\Sheets\121474_IP135.dgn

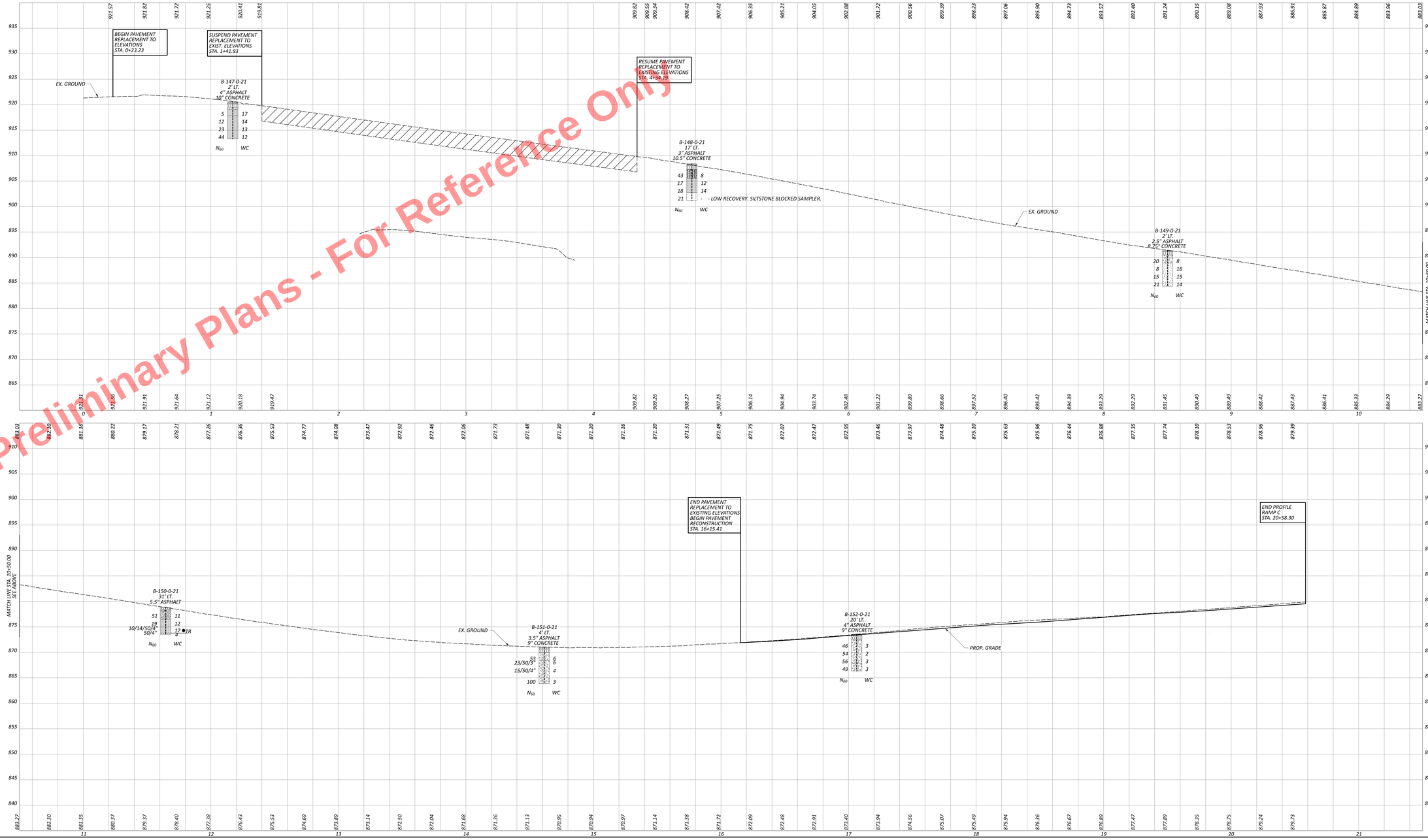

CROSS REFERENCES	
DESCRIPTION	SHEET NO.
RAMP C GEOTECHNICAL PLAN	P.612, P.614, P.615

Preliminary Plans - For Reference Only

GEOTECHNICAL PROFILE - RAMP C AT SILLIMAN ST.
STA. 0+23.23 TO STA. 20+58.30

DESIGN AGENCY

DESIGNER CJW

REVIEWER JDZ 05/30/25

PROJECT ID 121474

SHEET P. 632 TOTAL P. 655

MAH-680-4.80

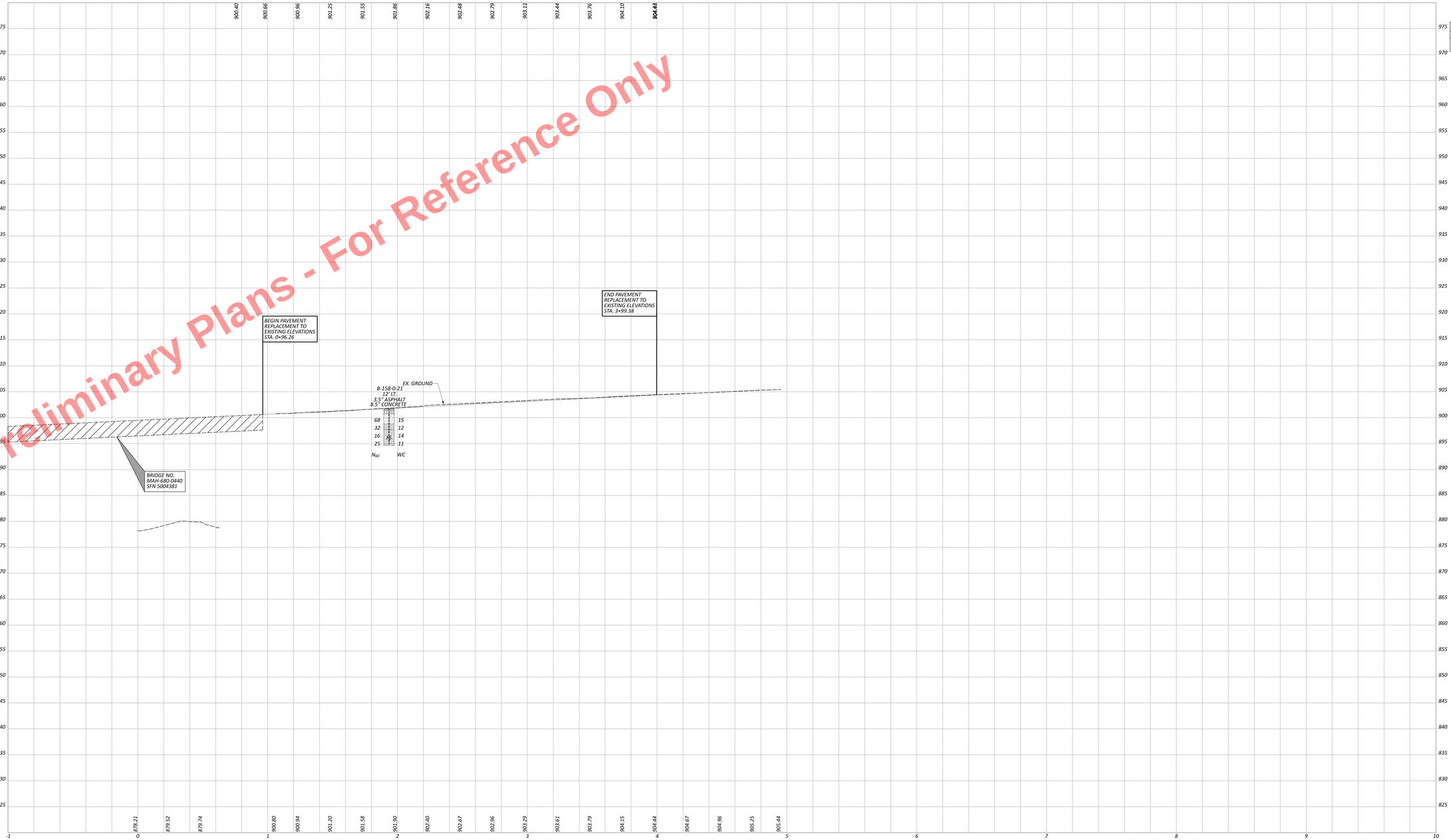

Preliminary Plans - For Reference Only

CROSS REFERENCES	
DESCRIPTION	SHEET NO.
S.R. 193 GEOTECHNICAL PLAN	P.613, P.615

GEOTECHNICAL PROFILE - S.R. 193
STA. 0+77.80 TO STA. 4+00.59

MAH-680-4.80

MODEL: 113121_GF421 PAPERSIZE: 66x34 (in.) DATE: 6/2/2025 TIME: 11:46:40 AM USER: sakquam
pw:\\pwhdoc-pw.bentley.com:pwhdoc-pw-02\Documents\01 Active Projects\District 6\Mahoning\121474\401-Engineering_Sonnet\Geotechnical\Sheets\121474_IF021.dgn

DESIGN AGENCY
Parsons Engineering of Ohio, Inc.

DESIGNER
CJW

REVIEWER
JDZ 05/30/25

PROJECT ID
121474

SHEET P. 633 TOTAL P. 655

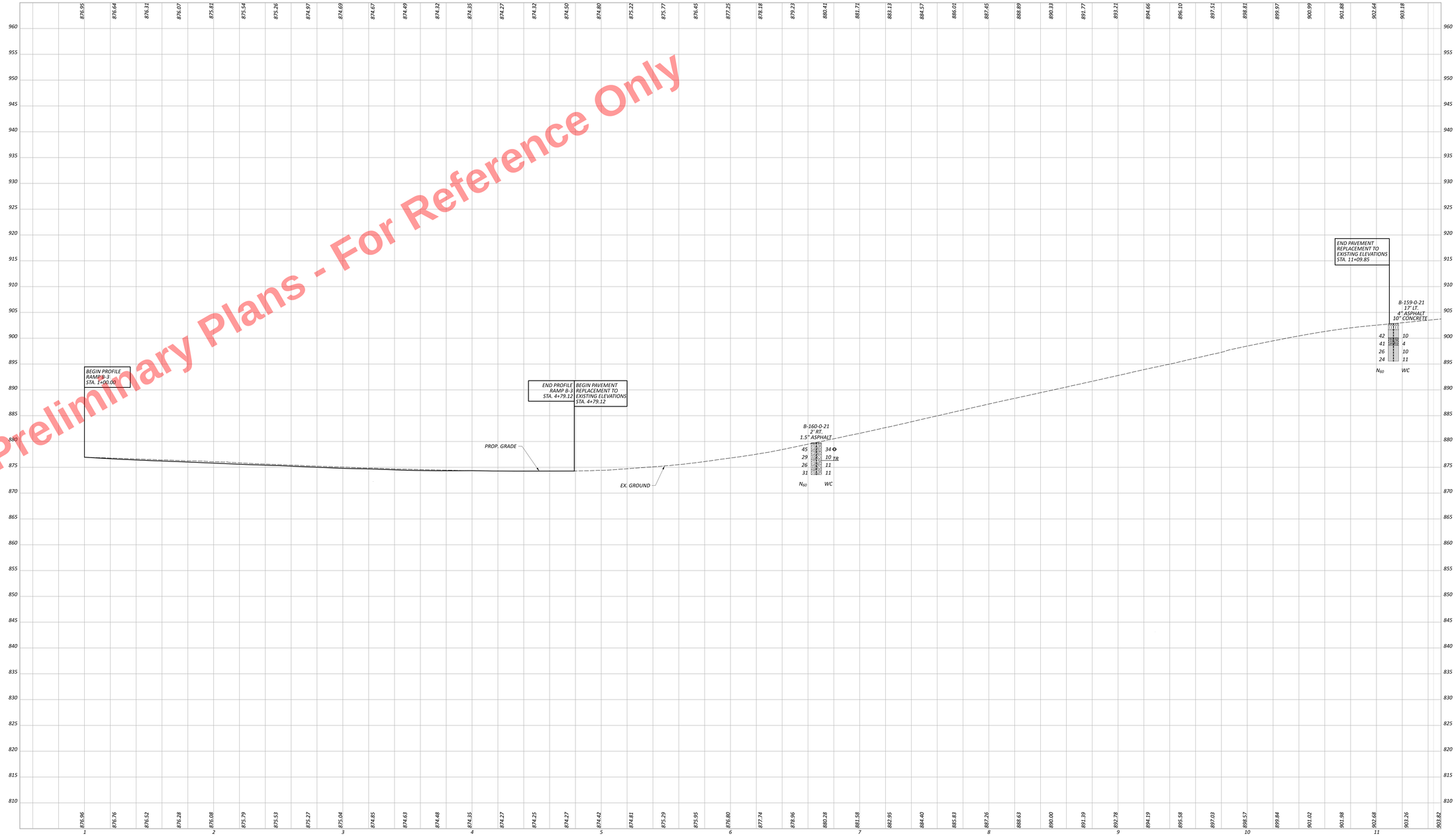

Preliminary Plans - For Reference Only

CROSS REFERENCES

DESCRIPTION	SHEET NO.
RAMP B-3 GEOTECHNICAL PLAN	P.613, P.614, P.615

GEOTECHNICAL PROFILE - RAMP B-3 AT S.R. 193
STA. 1+00.00 TO STA. 11+21.88

MAH-680-4.80

ACTIVE PW:\Projects\MAH-680-4.80\Engineering\Geotechnical\Sheets\121474_P002.dgn
MODEL: 121474_GP402_PAVEMAP_Default (m) DATE: 6/2/2025 TIME: 11:47:29 AM USER: jadejam

DESIGN AGENCY
DESIGNER: CJW
REVIEWER: JDZ 05/30/25
PROJECT #: 121474
SHEET P. 634 | TOTAL P. 655



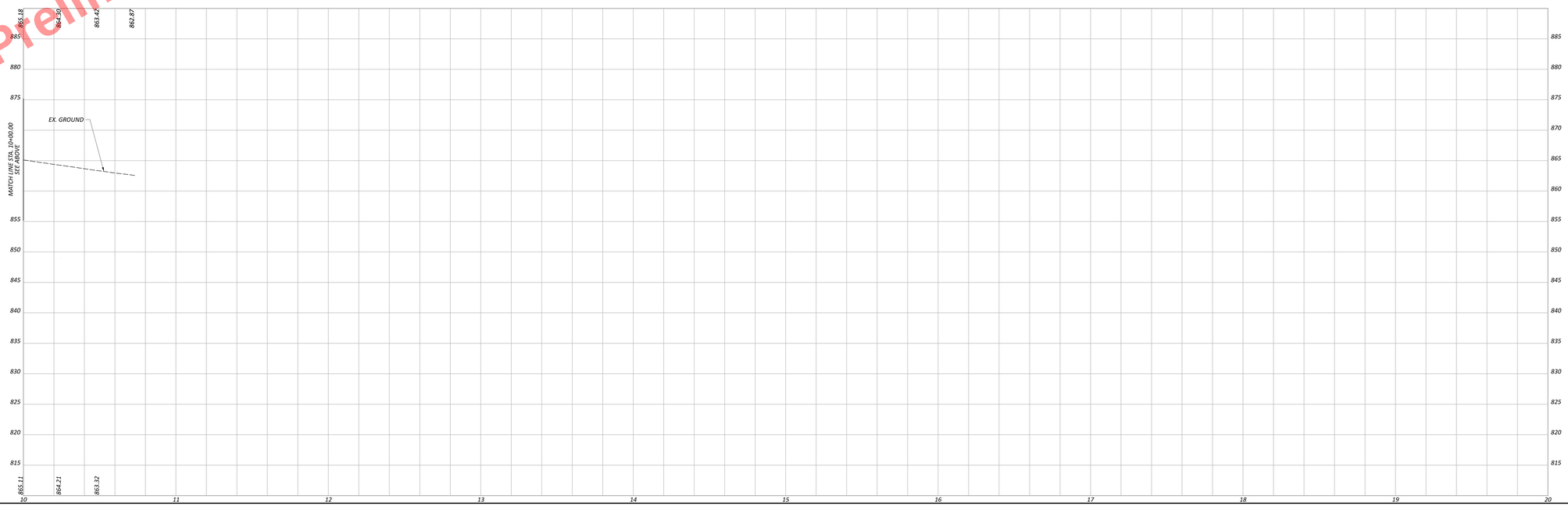

CROSS REFERENCES	
DESCRIPTION	SHEET NO.
RAMP D GEOTECHNICAL PLAN	P.614, P.613,

Preliminary Plans - For Reference Only

GEOTECHNICAL PROFILE - RAMP D AT SALT SPRINGS ROAD
STA. 0+00.00 TO STA. 10+72.94

MAH-680-4.80

MODEL: 111371_GF423 PAPERSIZE: 66x34 (in.) DATE: 6/2/2025 TIME: 11:47:43 AM USER: saliquam
pw:\\sheldot-pw.bentley.com:sheldot-pw-02\Documents\01 Active Projects\District 04\Mahoning\121474\401-Engineering_Sonnet\Geotechnical\Sheets\121474_IF023.dgn

DESIGN AGENCY
Shelly Eastman & Associates

DESIGNER
CJW

REVIEWER
JDZ 05/30/25

PROJECT ID
121474

SHEET P. 635 TOTAL P. 655

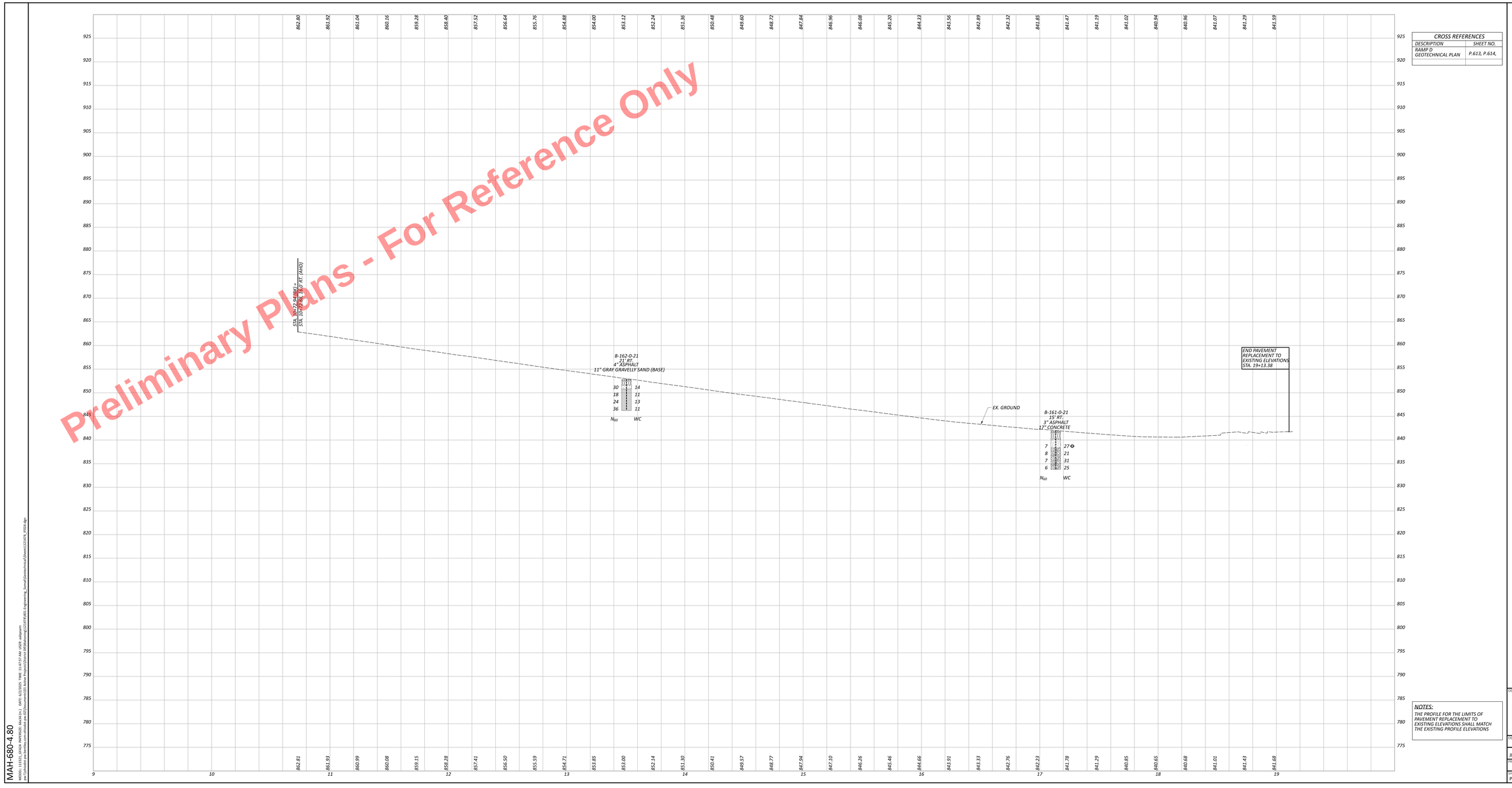

CROSS REFERENCES	
DESCRIPTION	SHEET NO.
RAMP D GEOTECHNICAL PLAN	P.613, P.614,

NOTES:

THE PROFILE FOR THE LIMITS OF PAVEMENT REPLACEMENT TO EXISTING ELEVATIONS SHALL MATCH THE EXISTING PROFILE ELEVATIONS

GEOTECHNICAL PROFILE - RAMP D AT SALT SPRINGS ROAD
STA. 10+72.88 TO STA. 19+10.74

DESIGN AGENCY

Sheet Engineering & Design

DESIGNER CJW

REVIEWER JDZ 05/30/25

PROJECT ID 121474

SHEET P. 636 TOTAL P. 655

MAH-680-4.80

MODEL: 121371_GF424 PAPERSIZE: 66x34 (in.) DATE: 6/2/2025 TIME: 11:47:57 AM USER: sabquam
pw:\\pwbdsc.pw.bentley.com:pwbdsc-pw-02\Documents\01 Active Projects\District 04\Mahoning\121474\401-Engineering_Sonnet\Geotechnical\Sheets\121474_IF024.dgn



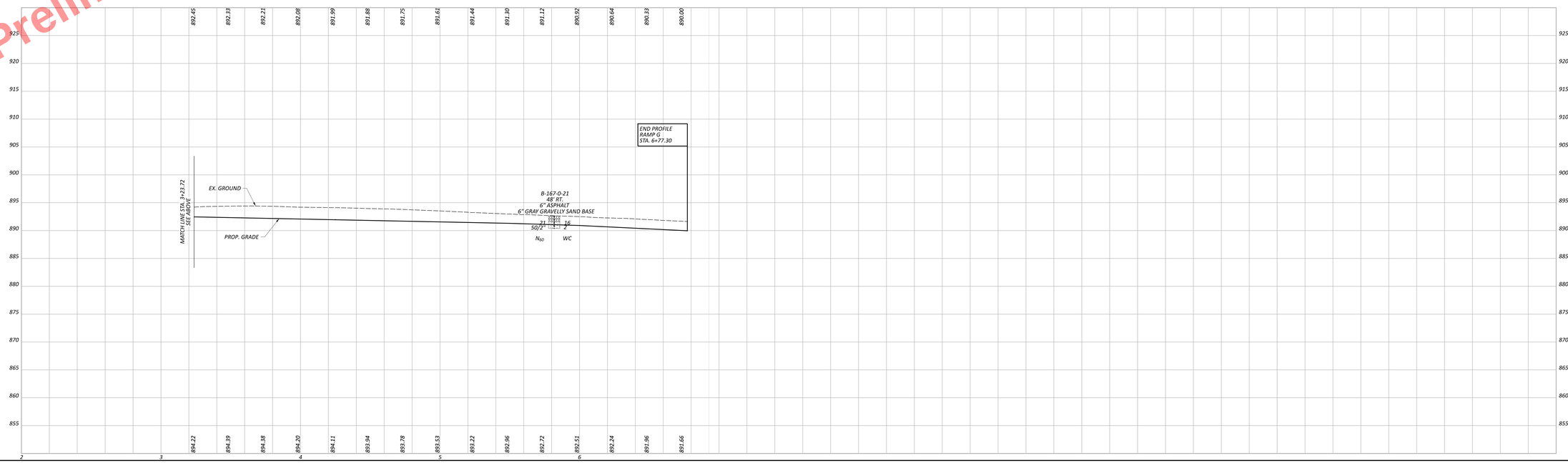

Preliminary Plans - For Reference Only

CROSS REFERENCES	
DESCRIPTION	SHEET NO.
RAMP G GEOTECHNICAL PLAN	P.616, P.617

GEOTECHNICAL PROFILE - RAMP G AT MARSHALL ST.
STA. 0+08.11 TO STA. 6+77.30

MAH-680-4.80

MICRO: 11311, GFACS: JNYERGER, 66x34 (in) DATE: 6/2/2025 TIME: 11:48:12 AM USER: jadejarm
FILE NAME: P:\Projects\Active\MAH\MAH-680-4.80\Engineering_Sonsif\Geotechnical\Sheets\121474_P002.dgn

DESIGN AGENCY
DESIGNER: CJW
REVIEWER: JDZ 05/30/25
PROJECT ID: 121474
SHEET: P. 637
TOTAL: P. 655

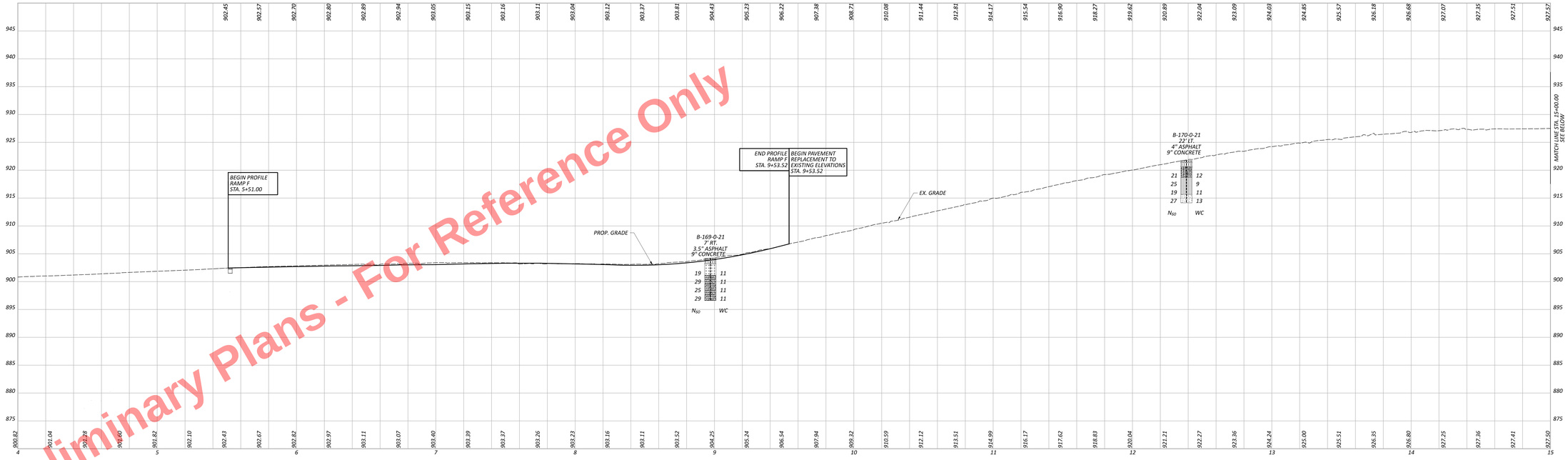



Preliminary Plans - For Reference Only

CROSS REFERENCES	
DESCRIPTION	SHEET NO.
RAMP F GEOTECHNICAL PLAN	P.618, P.620,

NOTES:
THE PROFILE FOR THE LIMITS OF PAVEMENT REPLACEMENT TO EXISTING ELEVATIONS SHALL MATCH THE EXISTING PROFILE ELEVATIONS

GEOTECHNICAL PROFILE - RAMP F AT HIGH AND EDWARDS ST.
STA. 5+51.00 TO STA. 17+04.31

DESIGN AGENCY
Parsons Transportation Group, Inc.

DESIGNER
CJW

REVIEWER
JDZ 05/30/25

PROJECT ID
121474

SHEET P. 638 TOTAL P. 655

MAH-680-4.80

MODEL: 113121_GF426 PAPERSIZE: 66x34 (in.) DATE: 6/2/2025 TIME: 11:48:29 AM USER: saldpasm
pw:\\sdadsc-pw.bentley.com:sdadsc-pw-02\Documents\01 Active Projects\District 04\Mahoning\121474\401-Engineering_Sonnet\Geotechnical\Sheets\121474_IF026.dgn

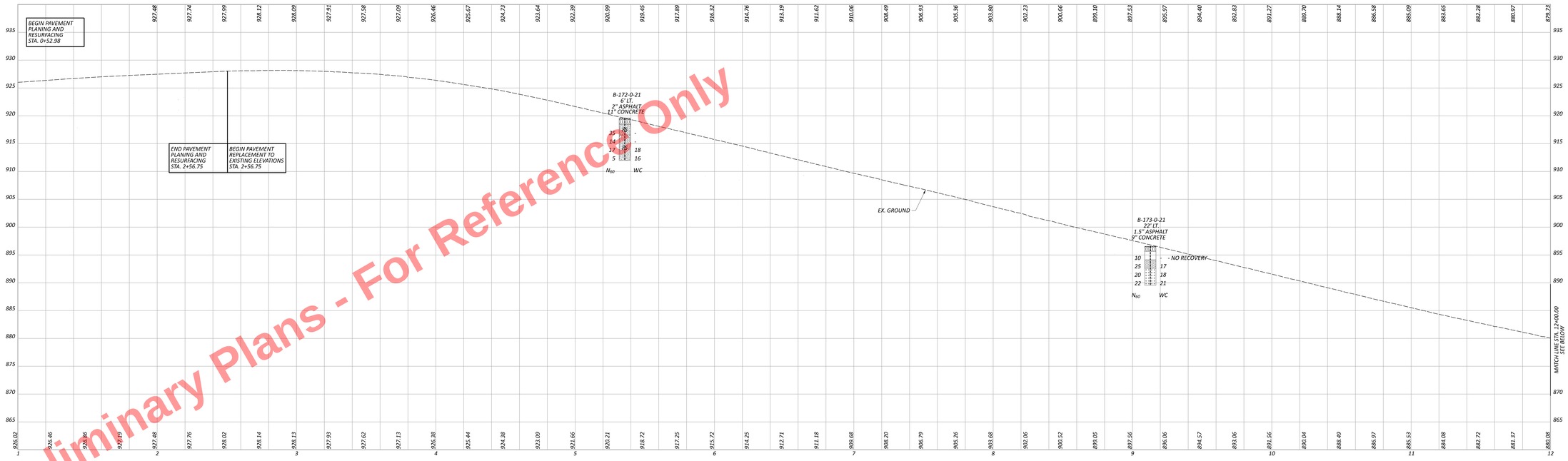

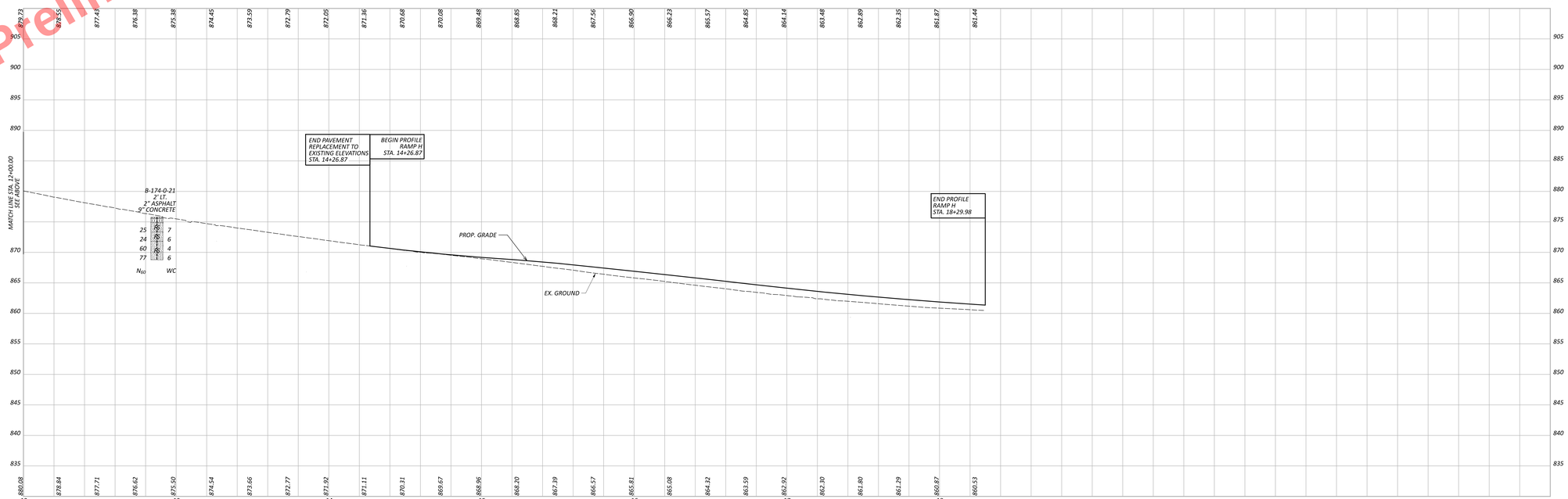

Preliminary Plans - For Reference Only

CROSS REFERENCES	
DESCRIPTION	SHEET NO.
RAMP H GEOTECHNICAL PLAN	P.618, P.619, P.620

NOTES:

THE PROFILE FOR THE LIMITS OF PAVEMENT REPLACEMENT TO EXISTING ELEVATIONS SHALL MATCH THE EXISTING PROFILE ELEVATIONS

GEOTECHNICAL PROFILE - RAMP H AT HIGH AND EDWARDS ST. STA. 1+71.85 TO STA. 18+01.83

MAH-680-4.80

MICROSTATION FILE: C:\Projects\MAH-680-4.80\Engineering\Geotechnical\Sheets\121474_P027.dgn
MODEL: 121474_GP427 - PAVEMENT - GEOTECH | DATE: 6/2/2025 TIME: 11:48:47 AM USER: jadejarm

DESIGN AGENCY: SE

DESIGNER: CJW

REVIEWER: JDZ 05/30/25

PROJECT ID: 121474

SHEET: P. 639 TOTAL: P. 655

Preliminary Plans - For Reference Only



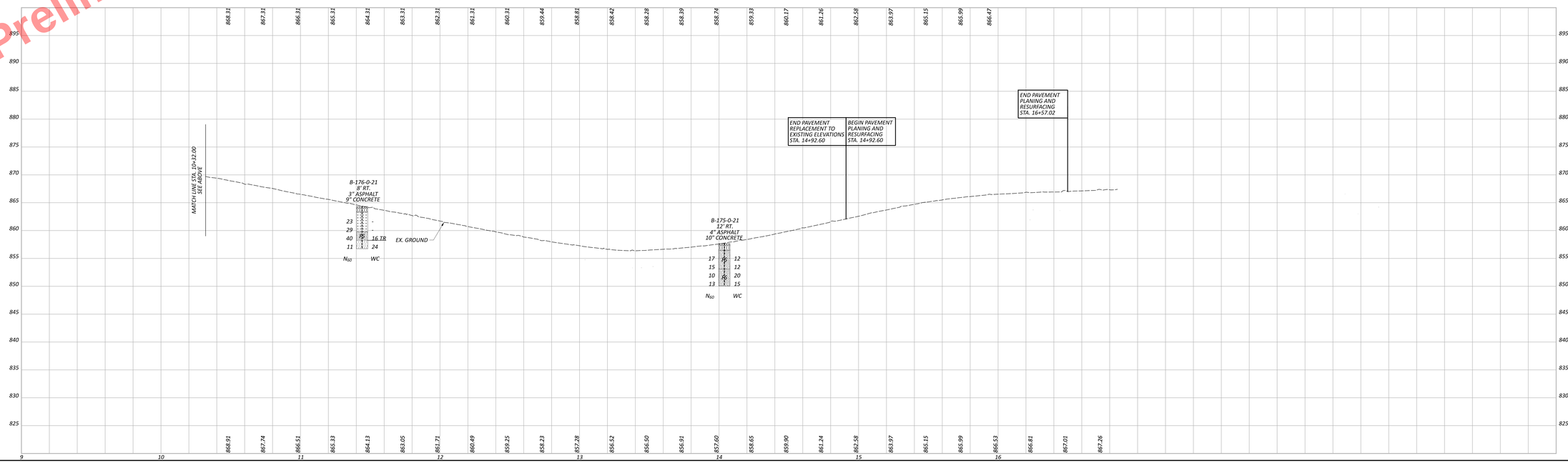

CROSS REFERENCES	
DESCRIPTION	SHEET NO.
RAMP J GEOTECHNICAL PLAN	P.618, P.619

NOTES:
THE PROFILE FOR THE LIMITS OF PAVEMENT REPLACEMENT TO EXISTING ELEVATIONS SHALL MATCH THE EXISTING PROFILE ELEVATIONS

GEOTECHNICAL PROFILE - RAMP J AT MARSHALL ST.
STA. 3+29.56 TO STA. 15+95.55

MAH-680-4.80

MICROSTATION CONNECT EDITION (10.21.00.1) DATE: 6/2/2025 TIME: 11:49:03 AM USER: jadgarth
DGN: C:\Projects\Mahoning\121474\Roadway\Plan Production\121474_RP01.dgn Engineering_SmallGeotechnicalSheets\121474_RP01.dgn

DESIGN AGENCY
DESIGNER: CJW
REVIEWER: JDZ 05/30/25
PROJECT ID: 121474
SHEET P. 640 TOTAL P. 655

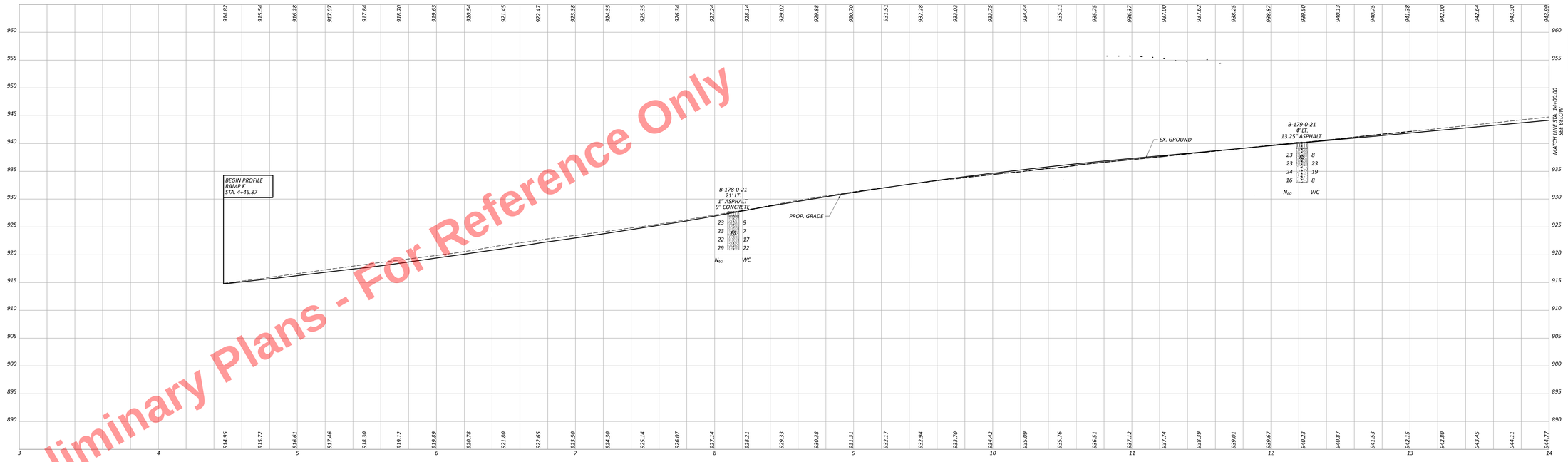

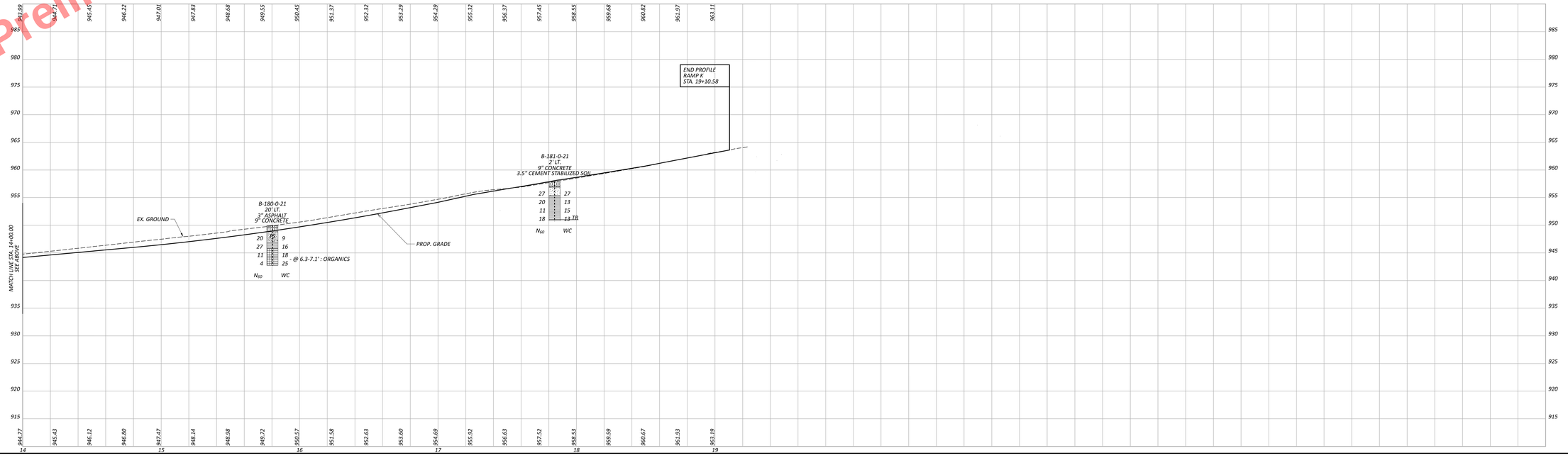

CROSS REFERENCES	
DESCRIPTION	SHEET NO.
RAMP K GEOTECHNICAL PLAN	P.621, P.622, P.623

Preliminary Plans - For Reference Only

GEOTECHNICAL PROFILE - RAMP K AT MARKET ST.
STA. 4+46.87 TO STA. 19+23.48

DESIGN AGENCY

DESIGNER: CJW
REVIEWER: JDZ 05/30/25
PROJECT ID: 121474
SHEET: P. 641 TOTAL: P. 655

MAH-680-4.80

Preliminary Plans - For Reference Only

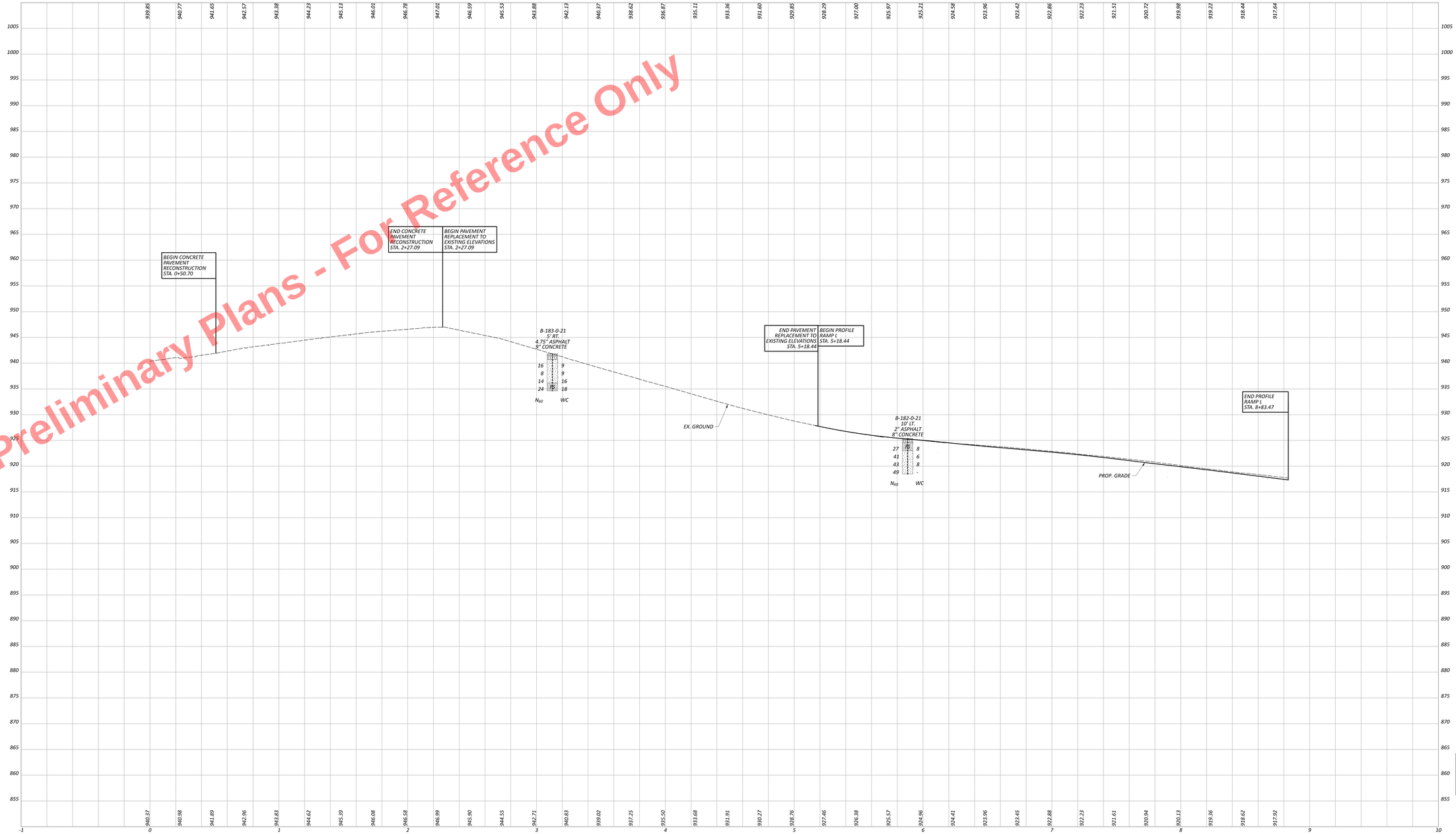

CROSS REFERENCES	
DESCRIPTION	SHEET NO.
RAMP L GEOTECHNICAL PLAN	P.621, P.622

NOTES:

PROPOSED PAVEMENT RESURFACING SHALL FOLLOW THE PROFILE OF THE EXISTING PAVEMENT AND STATION LIMITS AS DEFINED IN THE TYPICAL SECTIONS.

GEOTECHNICAL PROFILE - RAMP L AT MARKET ST.
STA. 0+00.00 TO STA. 8+83.47

MAH-680-4.80

BUREAU OF CONSTRUCTION AND MATERIALS PRINTED BY: Thomas.Mitchell DATE: 6/2/2025 TIME: 11:51:13 AM USER: tmitchell
MICRO STATION V8i (SELECTSERIES 4) [08.11.09.1294] M:\Projects\Mah\680\121474\801 Engineering_Sheets\Geotechnical\Sheets\121474_P002.dgn

DESIGN AGENCY
SE
STRAND ASSOCIATES

DESIGNER CJW
REVIEWER JDZ 05/30/25
PROJECT # 121474
SHEET P. 642 TOTAL P. 655

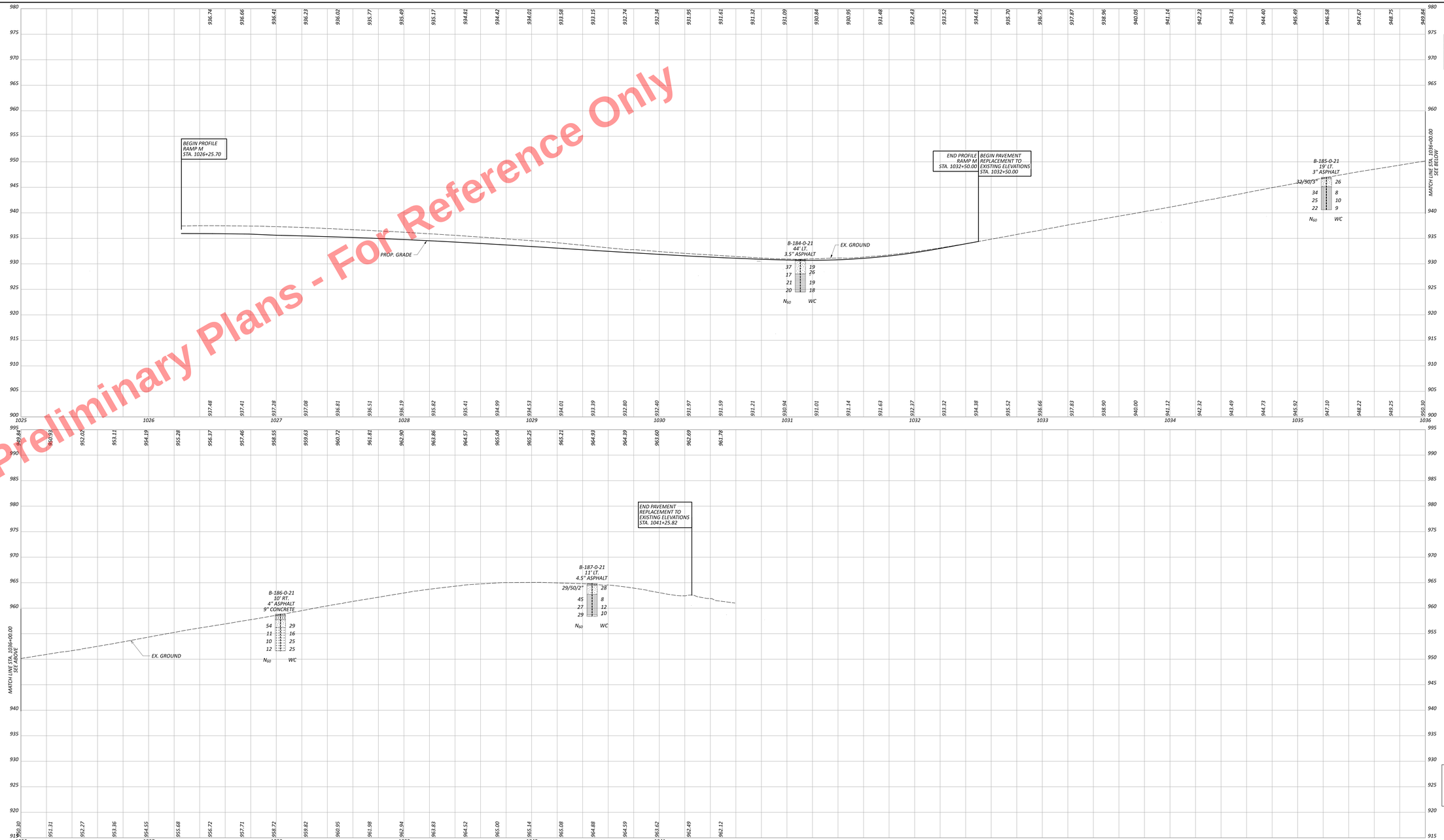

Preliminary Plans - For Reference Only

CROSS REFERENCES	
DESCRIPTION	SHEET NO.
RAMP M GEOTECHNICAL PLAN	P.622, P.623

NOTES:

THE PROFILE FOR THE LIMITS OF PAVEMENT REPLACEMENT TO EXISTING ELEVATIONS SHALL MATCH THE EXISTING PROFILE ELEVATIONS

GEOTECHNICAL PROFILE - RAMP M AT MARKET ST. STA. 1026+25.70 TO STA. 1041+65.96

MAH-680-4.80

MICROSTATION FILE: c:\projects\mah\680-4.80\roadway\plan\sheets\121474_P031.dgn
MODEL: 121474_P031 (DATA) PAPERSIZE: 66x34 (in) DATE: 6/2/2025 TIME: 11:51:24 AM USER: jadejam
ACTIVE PROJECT: c:\projects\mah\680-4.80\roadway\plan\121474.ppk Engineering_Scroll\Geotechnical\Sheets\121474_P031.dgn

DESIGN AGENCY: SE

DESIGNER: CJW
REVIEWER: JDZ 05/30/25
PROJECT ID: 121474
SHEET P. 643 TOTAL P. 655





Preliminary Plans - For Reference Only

CROSS REFERENCES	
DESCRIPTION	SHEET NO.
RAMP N GEOTECHNICAL PLAN	P.622, P.624,

NOTES:

PROPOSED PAVEMENT RESURFACING SHALL FOLLOW THE PROFILE OF THE EXISTING PAVEMENT AND STATION LIMITS AS DEFINED IN THE TYPICAL SECTIONS.

GEOTECHNICAL PROFILE - RAMP N AT MARKET ST. STA. 1030+50.00 TO STA. 1042+11.15

MAH-680-4.80

MODEL: 11X17L (24X3) PAPERSIZE: 66x34 (in) DATE: 6/2/2025 TIME: 11:51:19 AM USER: jadejam
M:\Projects\Mahoning\MAH-680-4.80\Roadway\Plan Preparation\Sheets\121474\01 Engineering_Sheets\Geotechnical\Sheets\121474_P032.dgn

DESIGN AGENCY
DESIGNED: CJW
REVIEWED: JDZ 05/30/25
PROJECT ID: 121474
SHEET P. 644 TOTAL P. 655

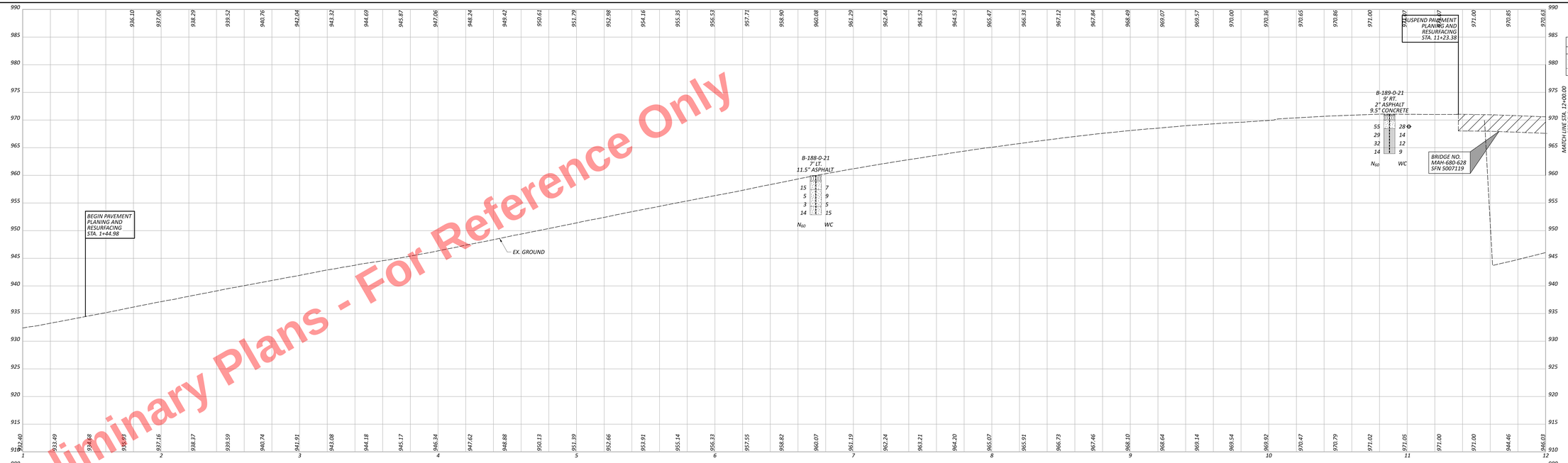

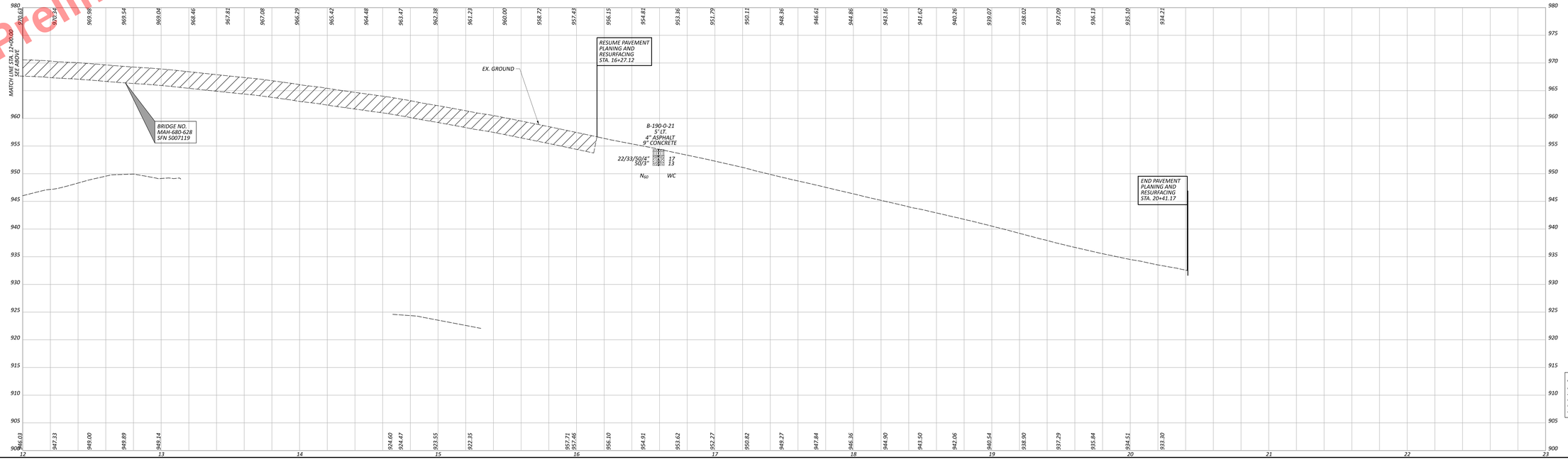

CROSS REFERENCES	
DESCRIPTION	SHEET NO.
RAMP BX GEOTECHNICAL PLAN	P.622, P.625, P.626

Preliminary Plans - For Reference Only

NOTES:
PROPOSED PAVEMENT RESURFACING SHALL FOLLOW THE PROFILE OF THE EXISTING PAVEMENT AND STATION LIMITS AS DEFINED IN THE TYPICAL SECTIONS.

GEOTECHNICAL PROFILE - RAMP BX AT U.S. 62/S.R. 7
STA. 1+80.89 TO STA. 20+41.58

MAH-680-4.80

MODEL: 113121_C4433 PAPERSIZE: 66x34 (in.) DATE: 6/2/2025 TIME: 11:51:53 AM USER: salquam
pw:\\sdadsc-pw.bentley.com:sdadsc-pw-02\Documents\01 Active Projects\District 6\Mahoning\121474\401-Engineering_Sonnet\Geotechnical\Sheets\121474_IF033.dgn

DESIGN AGENCY
Sonnet Engineering of Ohio, Inc.

DESIGNER
CJW

REVIEWER
JDZ 05/30/25

PROJECT ID
121474

SHEET P. 645 TOTAL P. 655

Preliminary Plans - For Reference Only

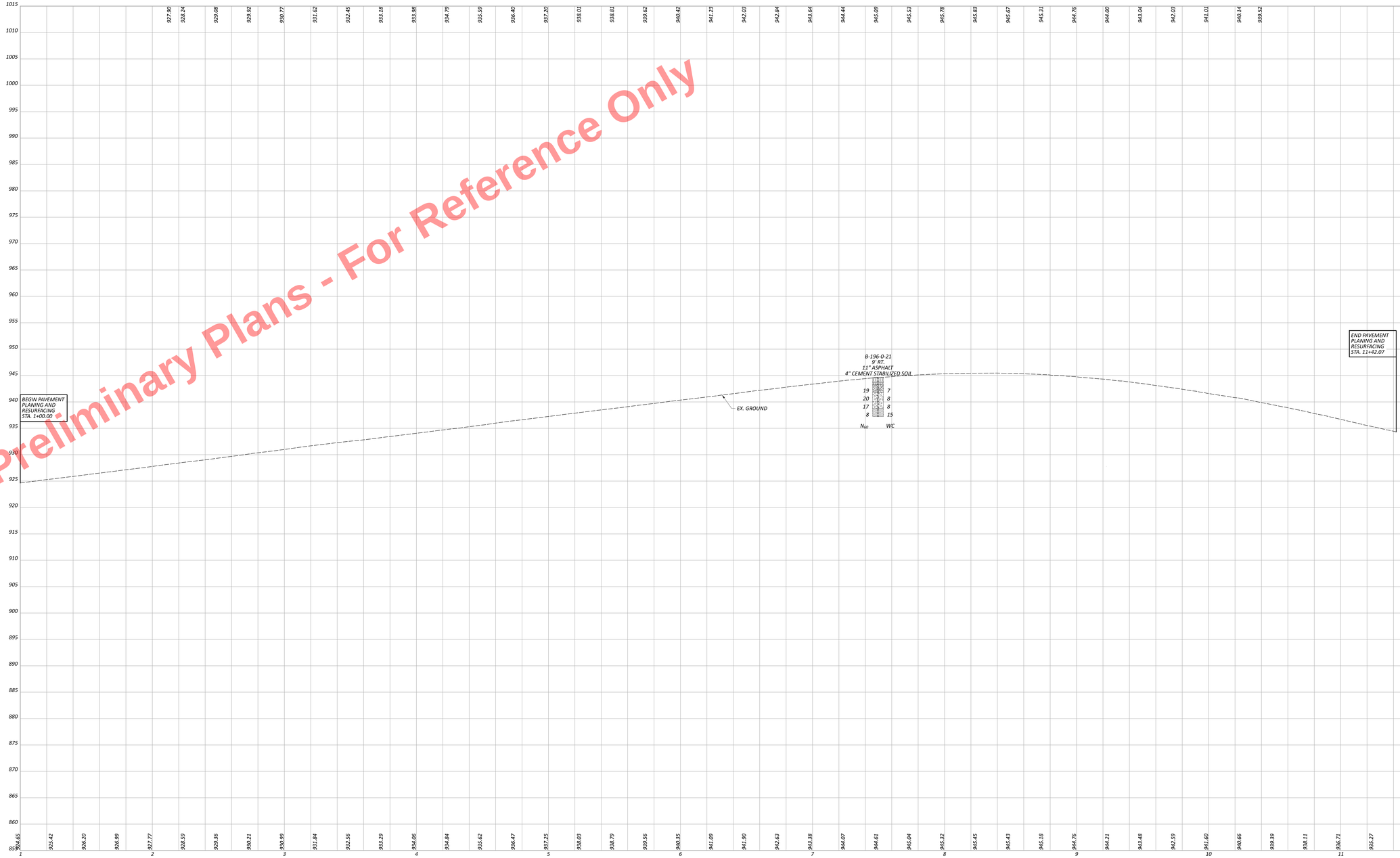

CROSS REFERENCES	
DESCRIPTION	SHEET NO.
RAMP BY GEOTECHNICAL PLAN	P.624, ,

NOTES:

PROPOSED PAVEMENT RESURFACING SHALL FOLLOW THE PROFILE OF THE EXISTING PAVEMENT AND STATION LIMITS AS DEFINED IN THE TYPICAL SECTIONS.

GEOTECHNICAL PROFILE - RAMP BY AT U.S. 62/S.R. 7
STA. 2+14.54 TO STA. 10+40.71

MAH-680-4.80

BY: Jeffrey.Zeller@dot.ohio.gov DATE: 6/2/2025 TIME: 11:51:19 AM USER: Jeffzeller
M:\Projects\Mahoning\MAH-680-4.80\Roadway\Plan Production\Sheets\121474_P014.dgn

DESIGN AGENCY: SE

DESIGNED: CJW
REVIEWED: JDZ 05/30/25
PROJECT ID: 121474
SHEET P. 646 TOTAL P. 655

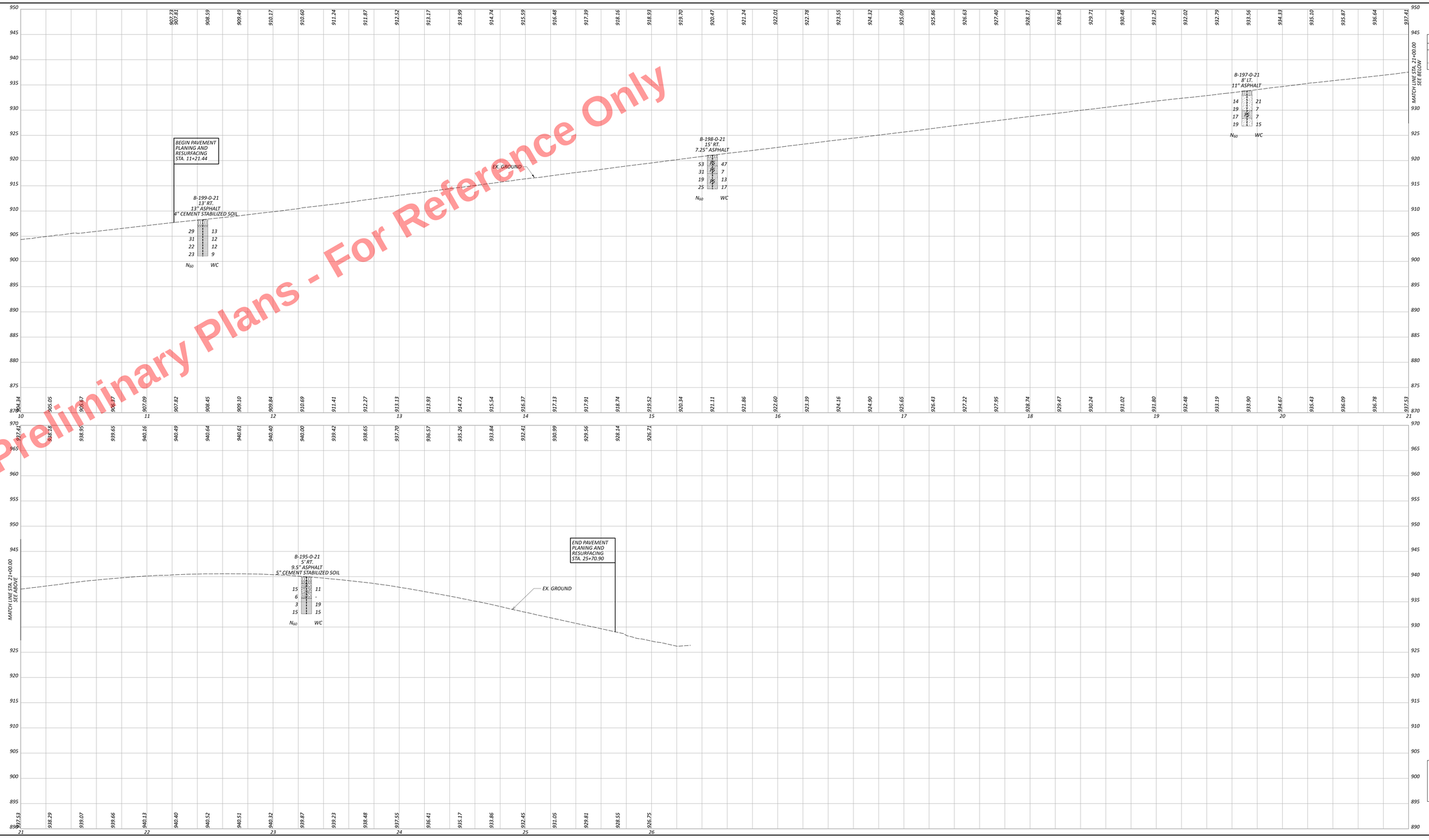

Preliminary Plans - For Reference Only

CROSS REFERENCES	
DESCRIPTION	SHEET NO.
RAMP CA GEOTECHNICAL PLAN	P.624, P.625

NOTES:

PROPOSED PAVEMENT RESURFACING SHALL FOLLOW THE PROFILE OF THE EXISTING PAVEMENT AND STATION LIMITS AS DEFINED IN THE TYPICAL SECTIONS.

GEOTECHNICAL PROFILE - RAMP CA AT U.S. 62/S.R. 7
STA. 11+21.45 TO STA. 26+14.18

DESIGN AGENCY
Bonnell Engineering of Ohio, Inc.

DESIGNER
CJW

REVIEWER
JDZ 05/30/25

PROJECT ID
121474

SHEET P. 647 TOTAL P. 655

MAH-680-4.80

MODEL: 113121_GF435_PAPERSIZE: 66x34 (in.) DATE: 6/2/2025 TIME: 11:52:31 AM USER: saliquam
pw:\\sheridan.pw.bentley.com:sheridan-pw-02\Documents\01 Active Projects\District 04\Mahoning\121474\401-Engineering_Sonnet\Geotechnical\Sheets\121474_IF035.dgn

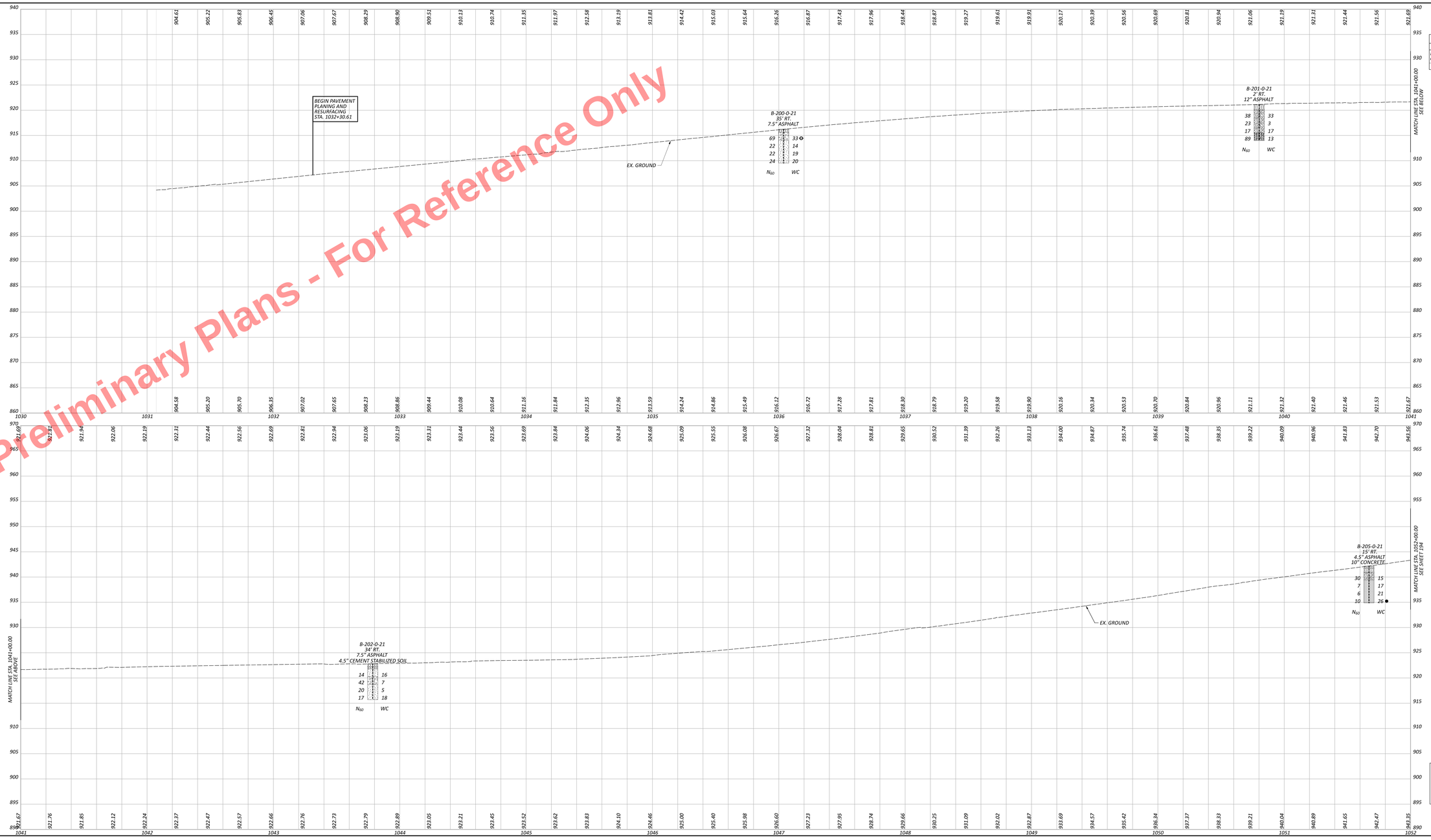

Preliminary Plans - For Reference Only

CROSS REFERENCES	
DESCRIPTION	SHEET NO.
RAMP SB GEOTECHNICAL PLAN	P.625, P.626, P.627

GEOTECHNICAL PROFILE - RAMP SB S.R. 7 AT U.S. 62/S.R. 7
STA. 1031+07.25 TO STA. 1052+00.00

NOTES:
PROPOSED PAVEMENT RESURFACING SHALL FOLLOW THE PROFILE OF THE EXISTING PAVEMENT AND STATION LIMITS AS DEFINED IN THE TYPICAL SECTIONS.

DESIGN AGENCY
Strand Engineering of Ohio, Inc.

DESIGNER: CJW
REVIEWER: JDZ 05/30/25
PROJECT ID: 121474
SHEET: P. 648 TOTAL: P. 655

MAH-680-4.80

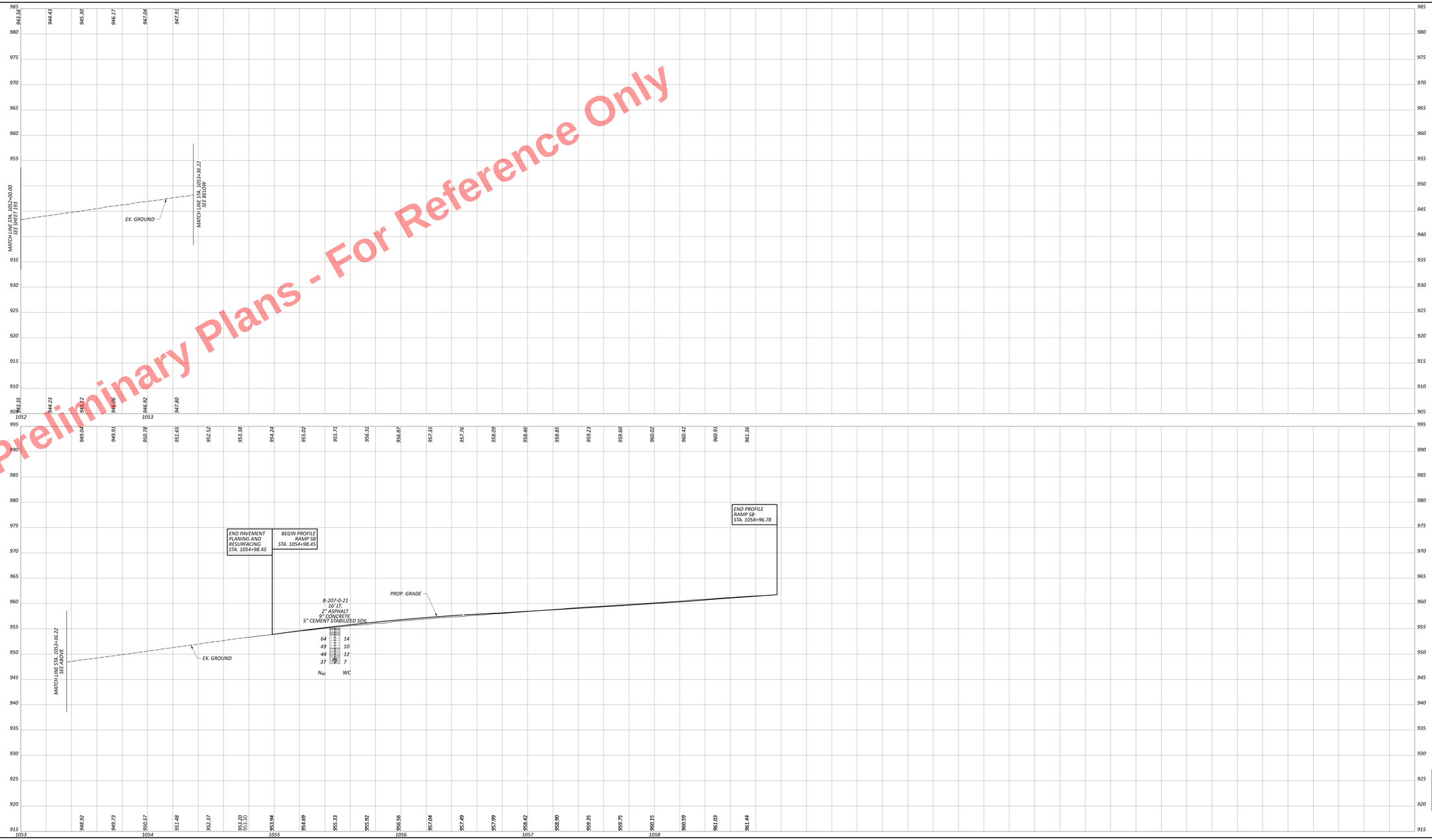

Preliminary Plans - For Reference Only

CROSS REFERENCES	
DESCRIPTION	SHEET NO.
RAMP SB GEOTECHNICAL PLAN	P.625, P.626, P.627

NOTES:

PROPOSED PAVEMENT RESURFACING SHALL FOLLOW THE PROFILE OF THE EXISTING PAVEMENT AND STATION LIMITS AS DEFINED IN THE TYPICAL SECTIONS.

GEOTECHNICAL PROFILE - RAMP SB S.R. 7 AT U.S. 62/S.R. 7
STA. 1052+00.00 TO STA. 1058+96.78

MAH-680-4.80

MODEL: 11X17L (24X3" PAPERSIZE: 66x34 (in)) DATE: 6/2/2025 TIME: 11:51:00 AM USER: jadejam
M:\ROADWAY\Projects\MAH\680\4.80\Roadway\Plan Production\121474\01 Engineering_Survey\Geotechnical\Sheets\121474_P037.dgn

DESIGN AGENCY: SE

DESIGNED: CJW
REVIEWED: JDZ 05/30/25
PROJECT #: 121474
SHEET: P. 649 TOTAL: P. 655

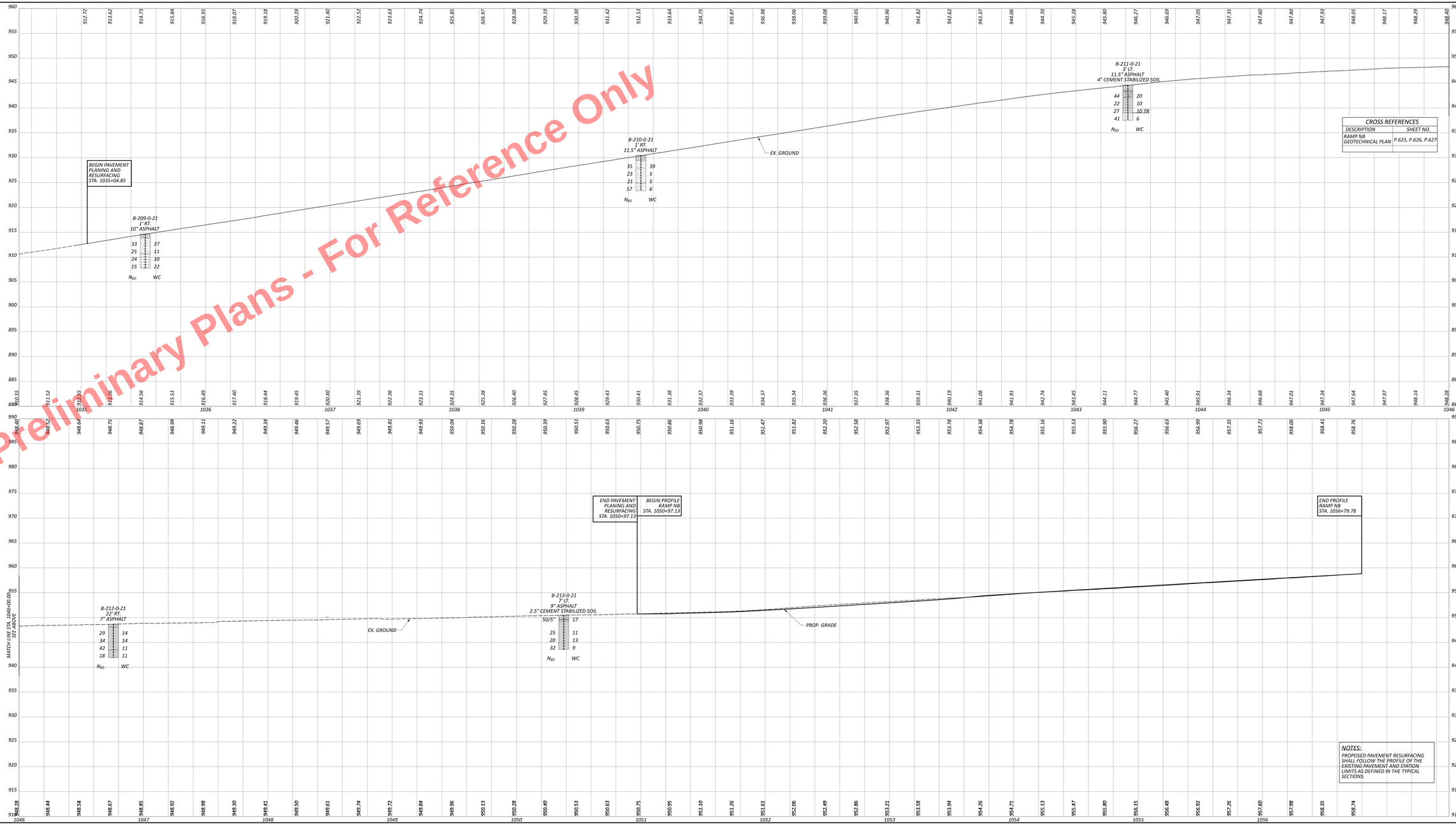

Preliminary Plans - For Reference Only

GEOTECHNICAL PROFILE - RAMP NB AT S.R. 7 U.S. 62/S.R. 7
STA. 1035+04.85 TO STA. 1056+79.78

MAH-680-4.80

MICRO: 11311, LEVEL: PAVEMENT, DGN: DATE: 6/2/2025, TIME: 11:53:24 AM, USER: jadgarn
M:\Projects\Mahoning\680\4.80\Engineering_Scoof\Geotechnical\Sheets\121474_P038.dgn

DESIGN AGENCY

DESIGNER: CJW
REVIEWER: JDZ 05/30/25
PROJECT ID: 121474
SHEET P. 650 TOTAL P. 655

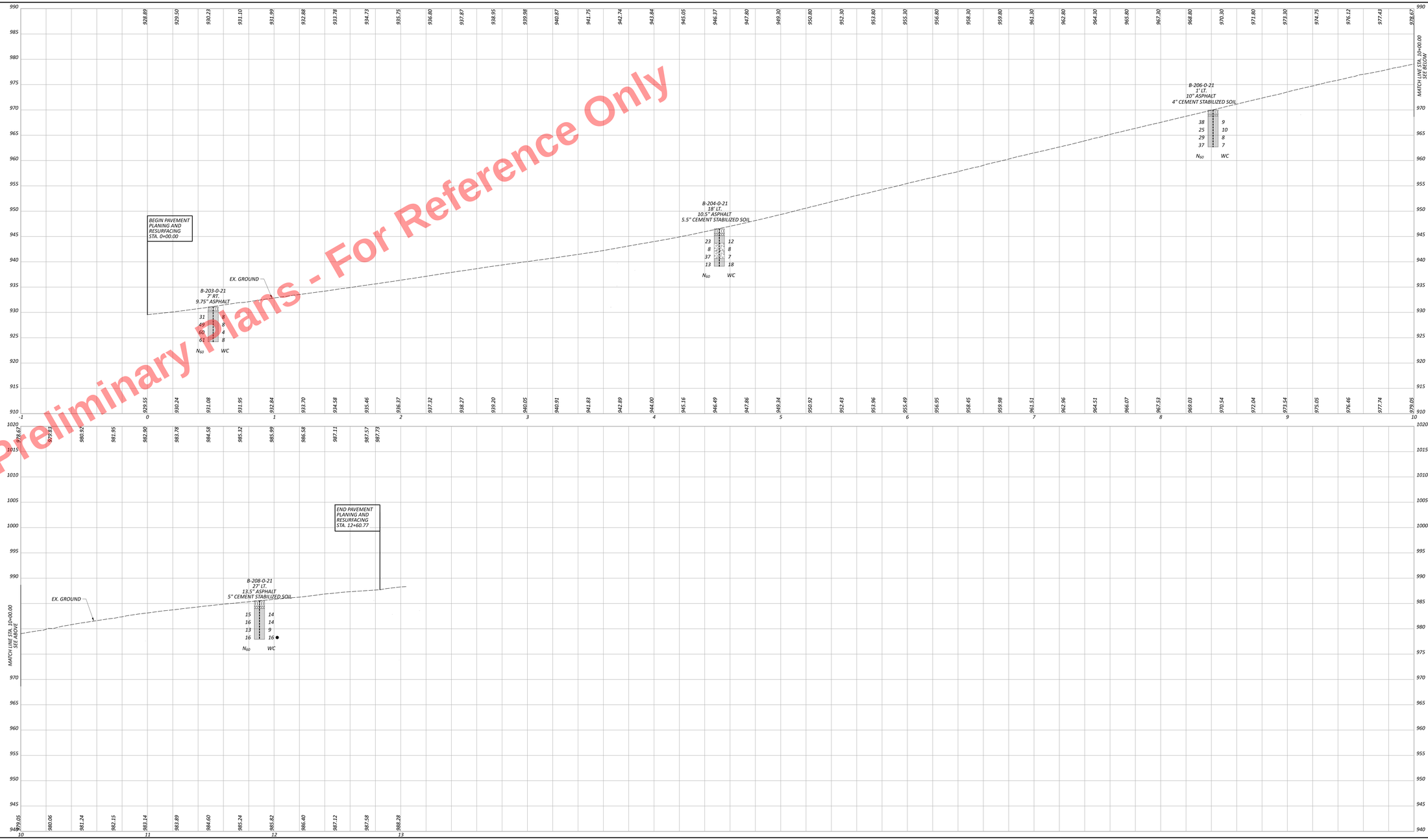

Preliminary Plans - For Reference Only

CROSS REFERENCES	
DESCRIPTION	SHEET NO.
RAMP BV GEOTECHNICAL PLAN	P.627, P.628,

NOTES:
PROPOSED PAVEMENT RESURFACING SHALL FOLLOW THE PROFILE OF THE EXISTING PAVEMENT AND STATION LIMITS AS DEFINED IN THE TYPICAL SECTIONS.

GEOTECHNICAL PROFILE - RAMP BV AT U.S. 62/S.R. 7 & WILLIAMSON AVE.
STA. 0+00.00 TO STA. 12+83.57

DESIGN AGENCY
Stantec Engineering Services, Inc.

DESIGNER: CJW
REVIEWER: JDZ 05/30/25
PROJECT ID: 121474
SHEET: P. 651 TOTAL: P. 655

MAH-680-4.80



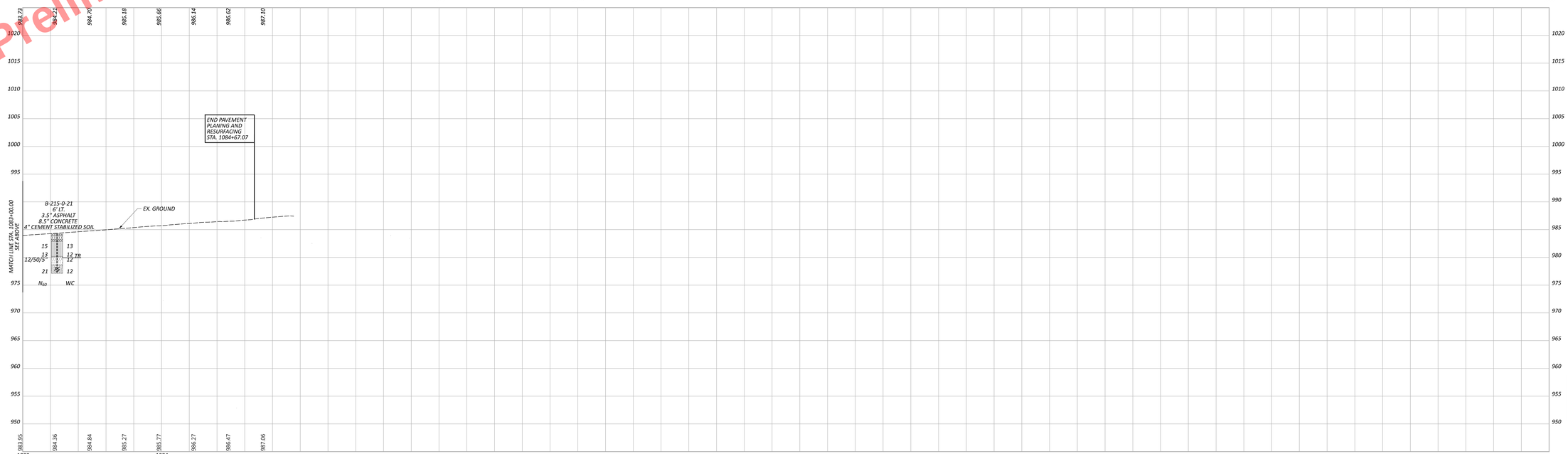

Preliminary Plans - For Reference Only

CROSS REFERENCES	
DESCRIPTION	SHEET NO.
RAMP A GEOTECHNICAL PLAN	P.629, P.630

NOTES:

PROPOSED PAVEMENT RESURFACING SHALL FOLLOW THE PROFILE OF THE EXISTING PAVEMENT AND STATION LIMITS AS DEFINED IN THE TYPICAL SECTIONS.

GEOTECHNICAL PROFILE - RAMP A AT SOUTH AVE.
STA.1072+53.71 TO STA. 1084+95.18

DESIGN AGENCY

DESIGNED: CJW

REVIEWED: JDZ 05/30/25

PROJECT #: 121474

SHEET P. 652 | TOTAL P. 655

MAH-680-4.80

MODEL: 11X17L (24 bit) PAPERSIZE: 66x34 (in) DATE: 6/2/2025 TIME: 11:51:59 AM USER: jadejarm
FILENAME: P:\Projects\Mahoning\680\121474\01 Engineering_Sonsf\Geotechnical\Sheets\121474_sht66.dgn

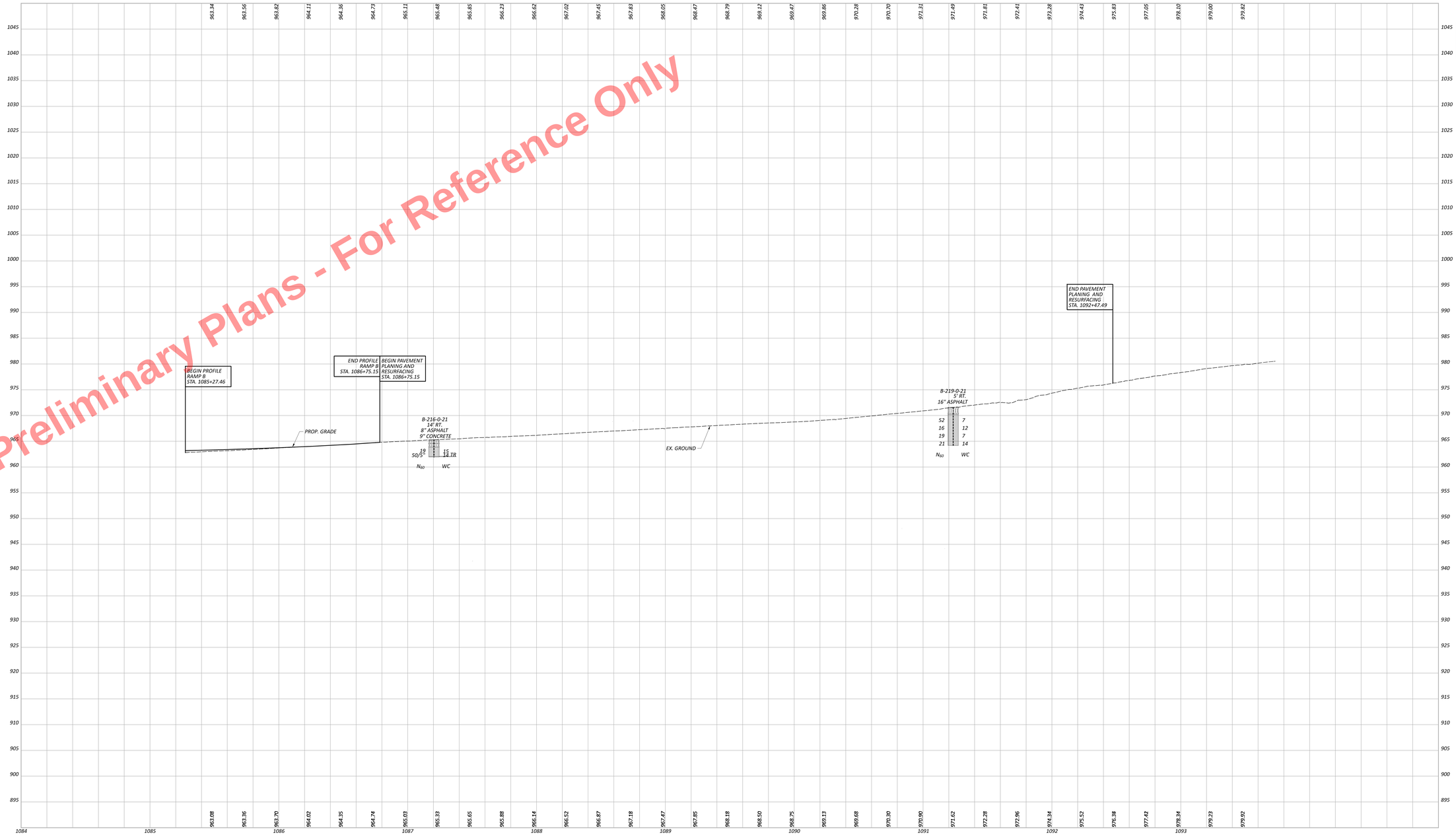

Preliminary Plans - For Reference Only

CROSS REFERENCES	
DESCRIPTION	SHEET NO.
RAMP B GEOTECHNICAL PLAN	P.630, P.631

NOTES:

PROPOSED PAVEMENT RESURFACING SHALL FOLLOW THE PROFILE OF THE EXISTING PAVEMENT AND STATION LIMITS AS DEFINED IN THE TYPICAL SECTIONS.

GEOTECHNICAL PROFILE - RAMP B AT SOUTH AVE. STA. 1085+27.46 TO STA. 1093+61.41

MAH-680-4.80

MICROSTATION V8i (SELECTseries 4) [DATE: 6/2/2025 TIME: 11:54:14 AM USER: jadejarm]
M:\Civil\121474\Roadway\Geotechnical\Sheets\121474_GP01.dgn

DESIGN AGENCY: SE

DESIGNER: CJW

REVIEWER: JDZ 05/30/25

PROJECT ID: 121474

SHEET P. 653 TOTAL P. 655



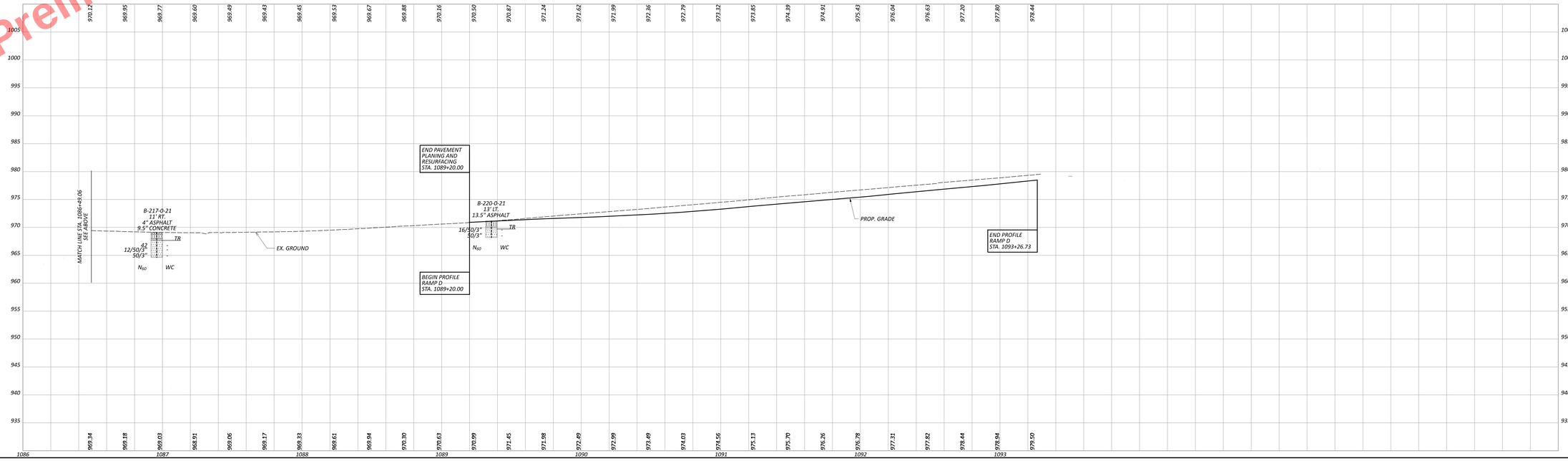

Preliminary Plans - For Reference Only

CROSS REFERENCES	
DESCRIPTION	SHEET NO.
RAMP D GEOTECHNICAL PLAN	P.630, P.631,

NOTES:
PROPOSED PAVEMENT RESURFACING SHALL FOLLOW THE PROFILE OF THE EXISTING PAVEMENT AND STATION LIMITS AS DEFINED IN THE TYPICAL SECTIONS.

GEOTECHNICAL PROFILE - RAMP D AT SOUTH AVE.
STA. 1082+83.08 TO STA. 1093+26.73

DESIGN AGENCY
Bound Engineering of Ohio, Inc.

DESIGNER
CJW

REVIEWER
JDZ 05/30/25

PROJECT ID
121474

SHEET P. 654 TOTAL P. 655

MAH-680-4.80

MODEL: 113121_GF442_PAPERSIZE: 66x34 (in.) DATE: 6/2/2025 TIME: 11:54:34 AM USER: saliquam
pw:\\pbdoc-pw.bentley.com:pbdoc-pw-02\Documents\01 Active Projects\District 04\Mahoning\121474\401-Engineering_Somat\Geotechnical\Sheets\121474_IF042.dgn

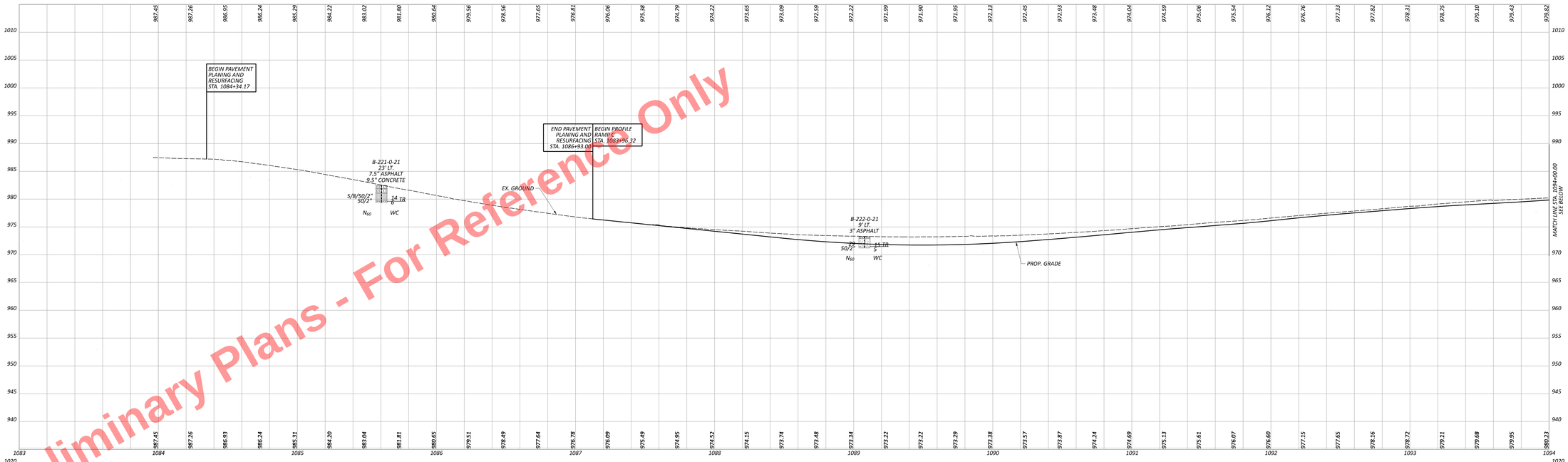

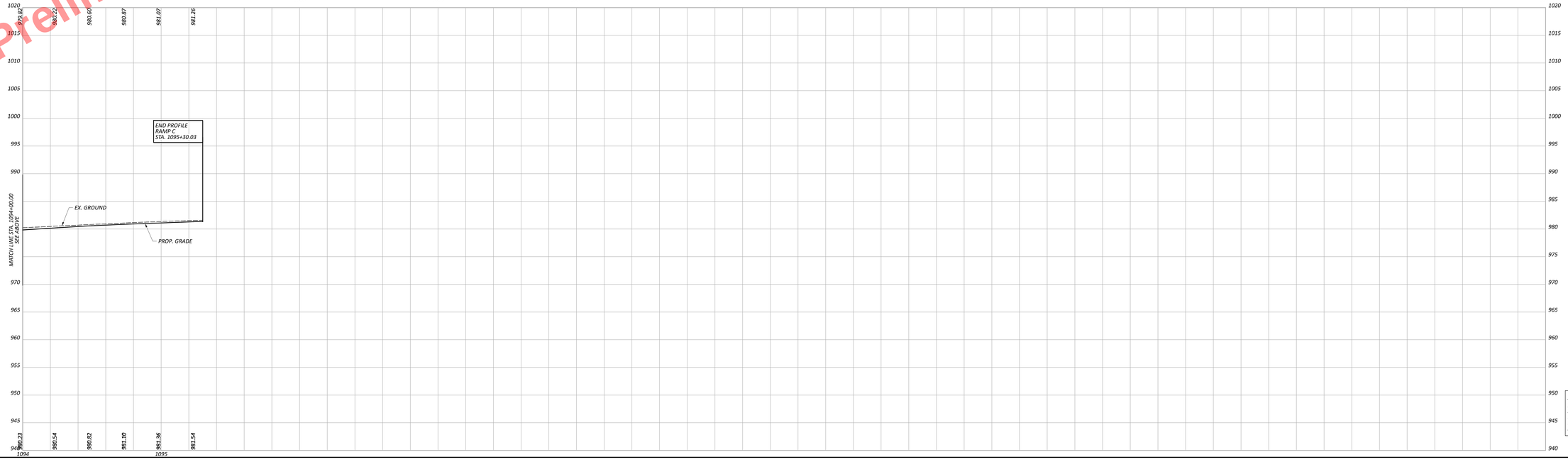

CROSS REFERENCES	
DESCRIPTION	SHEET NO.
RAMP C GEOTECHNICAL PLAN	P.630,

NOTES:

PROPOSED PAVEMENT RESURFACING SHALL FOLLOW THE PROFILE OF THE EXISTING PAVEMENT AND STATION LIMITS AS DEFINED IN THE TYPICAL SECTIONS.

GEOTECHNICAL PROFILE - RAMP C AT SOUTH AVE.
STA. 1083+96.32 TO STA. 1095+30.03

DESIGN AGENCY

DESIGNER: CJW

REVIEWER: JDZ 05/30/25

PROJECT ID: 121474

SHEET: P. 655 TOTAL: P. 655

MAH-680-4.80

Preliminary Plans - For Reference Only