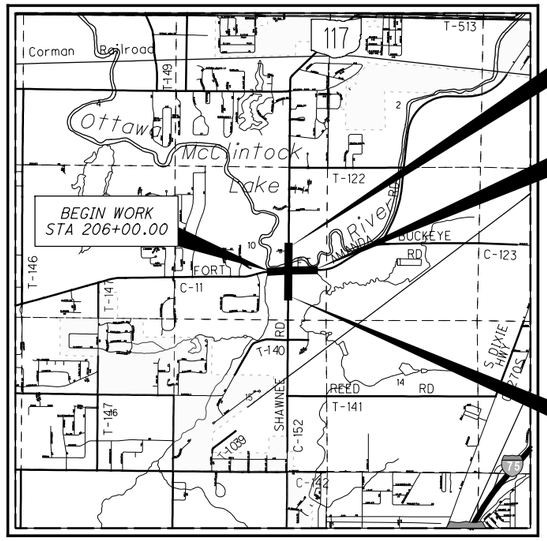

LOCATION MAP

LATITUDE: 40°42'21" N LONGITUDE: 84°09'05" W

SCALE IN MILES

0 0.5 1 1.5 2

N

PORTION TO BE IMPROVED
INTERSTATE HIGHWAY
FEDERAL ROUTES
STATE ROUTES
COUNTY & TOWNSHIP ROADS
OTHER ROADS

STATE OF OHIO
DEPARTMENT OF TRANSPORTATION

ALL - SHAWNEE ROAD

ALLEN COUNTY

FINAL SUBMITTAL
MARCH 03, 2014

PROJECT DESCRIPTION

RECONSTRUCTION OF A 0.35 MILE PORTION OF SHAWNEE ROAD INCLUDING REALIGNMENT OF SHAWNEE ROAD AND FORT AMANDA ROAD, NEW BRIDGE INSTALLATION OVER THE OTTAWA RIVER, REMOVAL OF THE EXISTING TRAFFIC SIGNAL AND INSTALLATION OF A ROUNDABOUT AT THE INTERSECTION OF SHAWNEE ROAD AND FORT AMANDA ROAD.

PROJECT EARTH DISTURBED AREA: 8.58 ACRES
ESTIMATED CONTRACTOR EARTH DISTURBED AREA: 1.25 ACRES
NOTICE OF INTENT EARTH DISTURBED AREA: 9.83 ACRES

INDEX OF SHEETS:

TITLE SHEET	1
SURVEY CONTROL	2
PROJECT SITE PLAN	3
TYPICAL SECTIONS	4 - 6
GENERAL NOTES	7 - 10
MAINTENANCE OF TRAFFIC NOTES	11 - 12
MAINTENANCE OF TRAFFIC TYPICAL SECTIONS	13 - 15
MAINTENANCE OF TRAFFIC PLAN SHEETS	16 - 40
GENERAL SUMMARY	41 - 45
SUBSUMMARIES	46 - 52
PLAN AND PROFILE (SHAWNEE RD)	53 - 57
PLAN AND PROFILE (FORT AMANDA RD)	58 - 61
PLAN AND PROFILE (SHARED USE PATH)	62
PLAN AND PROFILE (COUNCILHOUSE DRIVE)	63
PLAN AND PROFILE (BLUE JACKET COURT)	64
CROSS SECTIONS (SHAWNEE RD)	65 - 77
CROSS SECTIONS (FORT AMANDA RD)	78 - 87
CROSS SECTIONS (SHARED USE PATH)	88 - 91
ALIGNMENT DETAILS	92 - 96
INTERSECTION DETAILS	97 - 99
ROUNDABOUT GRADING DETAILS	100-101
ROUNDABOUT DETAILS	102
DRIVE DETAILS	103 - 104
DRIVE PROFILES	105 - 113
STORM SEWER PROFILE	114
CULVERT DETAIL	115
CULVERT PROFILES AND DITCH CROSS SECTIONS	116 - 117
SIGN AND PAVEMENT MARKINGS	118 - 132
LIGHTING PLANS	133 - 142
LANDSCAPE PLANS	143 - 147
BRIDGE PLANS	148 - 179
RIGHT OF WAY PLANS	180 - 206

2013 SPECIFICATIONS

THE STANDARD SPECIFICATIONS OF THE STATE OF OHIO, DEPARTMENT OF TRANSPORTATION, INCLUDING CHANGES AND SUPPLEMENTAL SPECIFICATIONS LISTED IN THE PROPOSAL SHALL GOVERN THIS IMPROVEMENT.

I HEREBY APPROVE THESE PLANS AND DECLARE THAT THE MAKING OF THISIMPROVEMENT WILL NOT REQUIRE THE CLOSING TO TRAFFIC OF THE HIGHWAY EXCEPT AS NOTED ON SHEET11 ,AND THAT PROVISIONS FOR THE MAINTENANCE AND SAFETY OF TRAFFIC WILL BE AS SET FORTH ON THE PLANS AND ESTIMATES.

APPROVED _____

DATE _____ ALLEN COUNTY ENGINEER

APPROVED _____

DATE _____ ALLEN COUNTY COMMISSIONER

APPROVED _____

DATE _____ ALLEN COUNTY COMMISSIONER

APPROVED _____

DATE _____ ALLEN COUNTY COMMISSIONER

DESIGN DESIGNATION

	SHAWNEE RD NORTH OF FORT AMANDA RD	SHAWNEE RD SOUTH OF FORT AMANDA RD	FORT AMANDA RD EAST OF SHAWNEE RD	FORT AMANDA RD WEST OF SHAWNEE RD
CURRENT ADT (2011)	13590	14100	9560	8830
DESIGN YEAR ADT (2031)	16150	16870	10100	9160
DESIGN HOURLY VOLUME (2031)	1610	1690	1000	900
DIRECTIONAL DISTRIBUTION	51%	50%	52%	54%
TRUCKS (24 HOUR B&C)	1%	2%	1%	1%
DESIGN SPEED	45 MPH	45 MPH	45 MPH	45 MPH
LEGAL SPEED	45 MPH	45 MPH	45 MPH	45 MPH
DESIGN FUNCTIONAL CLASSIFICATION:	URBAN MINOR ARTERIAL	URBAN MINOR ARTERIAL	URBAN MINOR ARTERIAL	URBAN COLLECTOR
NHS PROJECT	NO			

DESIGN EXCEPTIONS

DESIGN FEATURE	APPROVAL DATE
HORIZONTAL ALIGNMENT (TAPER RATES)	11/18/2012
STOPPING SIGHT DISTANCE	11/18/2012

UNDERGROUND UTILITIES

CONTACT BOTH SERVICES
CALL TWO WORKING DAYS
BEFORE YOU DIG

CALL
1-800-362-2764
(TOLL FREE)

OHIO UTILITIES PROTECTION SERVICE
NON-MEMBERS
MUST BE CALLED DIRECTLY

OIL & GAS PRODUCERS PROTECTIVE SERVICE CALL: **1-800-925-0988**

PLAN PREPARED BY:

DLZ
614 West Superior Ave - Suite 1000 Cleveland, OH 44113
(216) 771-1090

KOHLI & KALIHER ASSOCIATES, INC.
ENGINEERS AND SURVEYORS
2244 Baton Rouge Ave., Lima, Ohio 45805 419-227-1135

ENGINEERS SEAL: SHEETS:1 - 147

STATE OF OHIO
STEVEN G. JEWELL
E-42096
REGISTERED
PROFESSIONAL ENGINEER

SIGNED: Steven G. Jewell
DATE: 03-03-2014

ENGINEERS SEAL: SHEETS:148 - 206

STATE OF OHIO
IAN KOHLI
E-77529
REGISTERED
PROFESSIONAL ENGINEER

SIGNED: Ian Kohli
DATE: 03-03-2014

STANDARD CONSTRUCTION DRAWINGS										SUPPLEMENTAL SPECIFICATIONS	
BP-1.1	7-28-00	CB-1.1	1-18-13	HL-10.11	1/17/14	TC-41.20	10-18-13	ALLEN COUNTY SCD'S		SS 800	1-17-14
BP-2.1	7-19-13	CB-2.1	1-18-13	HL-10.12	1/17/14	TC-41.30	10-18-13			SS 832	1-17-14
BP-2.2	7-18-08	CB-2.2	1-17-14	HL-10.13	1/17/14	TC-41.40	10-18-13	MB-1	10-5-06	SS 861	7-19-13
BP-3.1	4-20-12	CB-2.3	1-18-13	HL-20.11	1/17/14	TC-41.50	10-18-13	MB-1-B	10-5-06	SS 895	12-31-12
BP-4.1	7-19-13	HW-2.2	1-18-13	HL-20.14	1/17/14	TC-42.20	10-18-13			SS 995	1-20-12
BP-5.1	7-19-13	MH-1.2	1-18-13	HL-30.11	1/17/14	TC-52.10	10-18-13				
BP-7.1	10-15-10	DM-1.1	1-18-13	HL-30.21	1/17/14	TC-52.20	1/17/14			SPECIAL PROVISIONS	
		DM-1.2	1-18-13	HL-30.22	1/17/14	TC-65.11	1/17/14				
BR-2-98	7-20-12	DM-1.4	1-18-13	HL-30.31	1/17/14	TC-73.10	4-20-12			USACE PERMIT NO.	
				HL-30.32	1/17/14					2012-01322	
RM-5.1	4-18-03			HL-30.33	1/17/14	MT-97.12	7-19-13			APR. DATE: 1-23-14	
RM-5.2	1/17/14			HL-40.10	1/17/14	MT-101.60	7-19-13				
				HL-50.21	1/17/14	MT-101.90	7-19-13				
LA-1.2	1-16-09			HL-60.11	1/17/14	MT-105.10	7-19-13				
				HL-60.12	1/17/14						
				HL-60.31	1/17/14						

FEDERAL PROJECT NO. E040(587)

PID NO. 77305

CONSTRUCTION PROJECT NO.

RAILROAD INVOLVEMENT NONE

ALL-SHAWNEE RD

M:\Proj\1121\100\77305\roadway\sheets\77305GT001.dgn 3/3/2014 11:16:00 AM scorcoran

BENCH MARK "O" (ORIGIN) ELEVATION=832.78 (NAVD88) [NORTH 20123.05, EAST 20022.5116]

TOP CENTER OF THE CORPS OF ENGINEERS STANDARD DISK DESIGNATED "OR-1" AS FOUND AT THE TOP OF THE SOUTHEAST WINGWALL OF THE EXISTING SHAWNEE ROAD BRIDGE OVER THE OTTAWA RIVER. THIS MARK IS 21.4 FEET RIGHT OF STATION 101+23.2 OF THE CENTERLINE OF SURVEY OF SHAWNEE ROAD.

NOTE: THE NGVD29 ELEVATION GIVEN FOR THIS MARK IS 833.22; THEREFORE 0.44 FEET MUST BE ADDED TO PERTINENT NAVD88 ELEVATIONS IN ORDER TO CONVERT TO THE DATUM OF NGVD29 WHICH HAS HISTORICALLY BEEN USED FOR FLOOD MAPPING IN THE AREA OF THIS PROJECT.

BENCH MARK "A" ELEVATION=831.13 (NAVD88) [NORTH 20819.86, EAST 20063.40]

WHITE PAINTED SQUARE IN THE TOP NORTHEAST CORNER OF THE CONCRETE HEADWALL ON THE NORTH SIDE OF THE BLACKTOP DRIVEWAY LEADING EAST FROM SHAWNEE ROAD TO THE FAITH CHRISTIAN CHURCH. THIS MARK IS 56.0 FEET RIGHT OF STATION 108+20.4 OF THE CENTERLINE OF SURVEY OF SHAWNEE ROAD.

BENCH MARK "B" ELEVATION=842.24 (NAVD 88) [NORTH 19370.56, EAST 19971.12]

CHISELED CROSS IN THE TOP OF THE SOUTH RIM OF THE SANITARY SEWER MANHOLE NUMBERED SH-03/095, AS SAME IS LOCATED ON THE WEST SIDE OF SHAWNEE ROAD, OPPOSITE THE ARBY'S RESTAURANT AND IN FRONT OF THE BUSINESSES AT 2500-2508 SHAWNEE ROAD. THIS MARK IS 23.2 FEET LEFT OF STATION 93+70.3 OF THE CENTERLINE OF SURVEY OF SHAWNEE ROAD.

BENCH MARK "C" ELEVATION=839.67 (NAVD88) [NORTH 19936.50, EAST 20964.46]

MAGNAIL SET FOUR INCHES SOUTH AND FOUR INCHES EAST FROM THE TOP NORTHWEST CORNER OF A CONCRETE WATER METER PIT ON THE SOUTH SIDE OF FORT AMANDA ROAD, ABOUT 110 FEET NORTHEASTERLY FROM THE NORTHEAST CORNER OF THE OLD GROCERY STORE COMPLEX. THIS MARK IS 78.4 FEET RIGHT OF STATION 28+42.4 OF THE CENTERLINE OF SURVEY OF FORT AMANDA ROAD.

BENCH MARK "D" ELEVATION=825.45 (NAVD88) [NORTH 19931.12, EAST 19325.07]

MAGNAIL SET THREE INCHES SOUTH AND THREE INCHES EAST FROM THE TOP NORTHWEST CORNER OF A CONCRETE SANITARY SEWER CHAMBER ON THE SOUTH SIDE OF FORT AMANDA ROAD JUST WEST OF THE LITTLE OTTAWA RIVER. THIS MARK IS 25.6 FEET RIGHT OF STATION 12+01.1 OF THE CENTERLINE OF SURVEY OF FORT AMANDA ROAD.

FOR ALIGNMENT DETAILS SEE SHEETS 92 - 96

M:\Proj\1121\1001\77305\roadway\sheets\77305GB001.dgn 1/13/2014 5:29:00 PM scorcoran

PROJECT DESCRIPTION

RECONSTRUCTION OF A 0.35 MILE PORTION OF SHAWNEE ROAD INCLUDING REALIGNMENT OF SHAWNEE ROAD AND FORT AMANDA ROAD, NEW BRIDGE INSTALLATION OVER THE OTTAWA RIVER, REMOVAL OF THE EXISTING TRAFFIC SIGNAL AND INSTALLATION OF A ROUNDABOUT AT THE INTERSECTION OF SHAWNEE ROAD AND FORT AMANDA ROAD.

TOTAL AREA (RIGHT-OF-WAY)	12.42 AC	RUNOFF COEFFICIENT FOR PRE-CONSTRUCTION SITE	0.66
PROJECT EARTH DISTURBED AREA	8.58 AC	RUNOFF COEFFICIENT FOR POST-CONSTRUCTION SITE	0.70
ESTIMATED CONTRACTOR EARTH DISTURBED AREA	1.25 AC	POST CONSTRUCTION BMP: AS PER L&D VOL 2	MANUFACTURED SYSTEM
NOTICE OF INTENT EARTH DISTURBED AREA	9.83 AC		
IMPERVIOUS (PAVED) AREA FOR PRE-CONSTRUCTION SITE	5.04 AC	IMMEDIATE RECEIVING WATERS:	OTTAWA RIVER
IMPERVIOUS (PAVED) AREA FOR POST-CONSTRUCTION SITE	6.18 AC	SUBSEQUENT RECEIVING WATERS:	LITTLE OTTAWA RIVER

USGS QUADRANT: LIMA, OHIO

LATITUDE: 40°42'21" N
LONGITUDE: 84°09'05" W

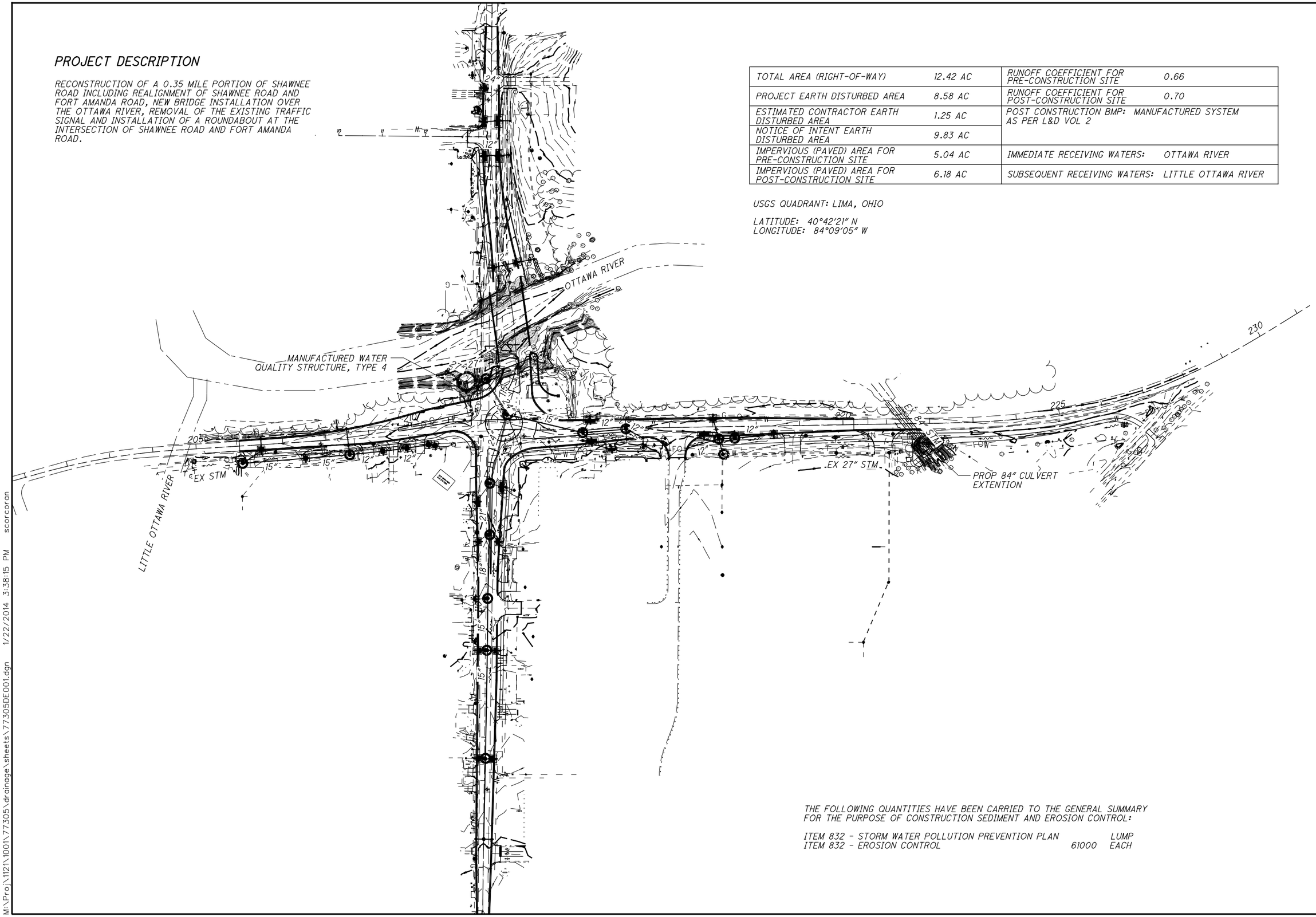

THE FOLLOWING QUANTITIES HAVE BEEN CARRIED TO THE GENERAL SUMMARY FOR THE PURPOSE OF CONSTRUCTION SEDIMENT AND EROSION CONTROL:

ITEM 832 - STORM WATER POLLUTION PREVENTION PLAN		LUMP
ITEM 832 - EROSION CONTROL	61000	EACH

HORIZONTAL SCALE IN FEET
0 50 100 200

PROJECT SITE PLAN

ALL SHAWNEE RD

M:\Proj\1121\1001\77305\drainage\sheets\77305DE001.dgn 1/22/2014 3:38:15 PM scorcoran

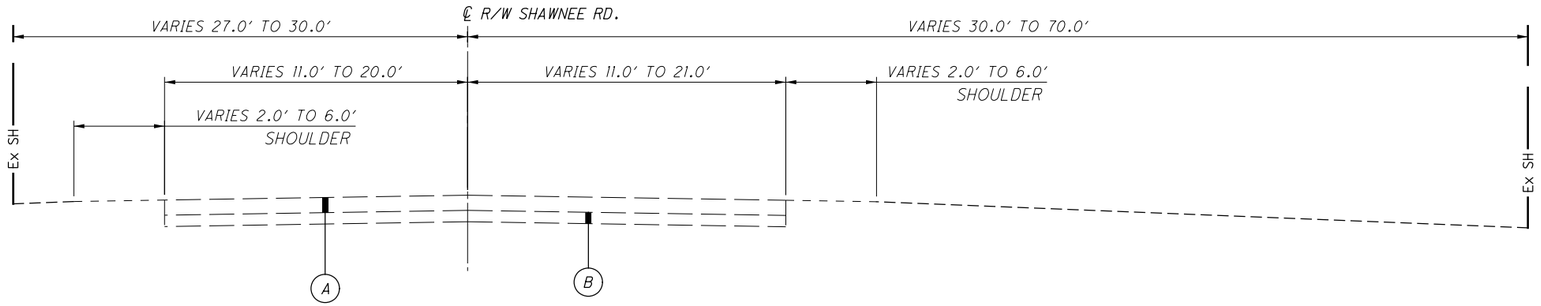

NORMAL EXISTING SECTION - SHAWNEE ROAD

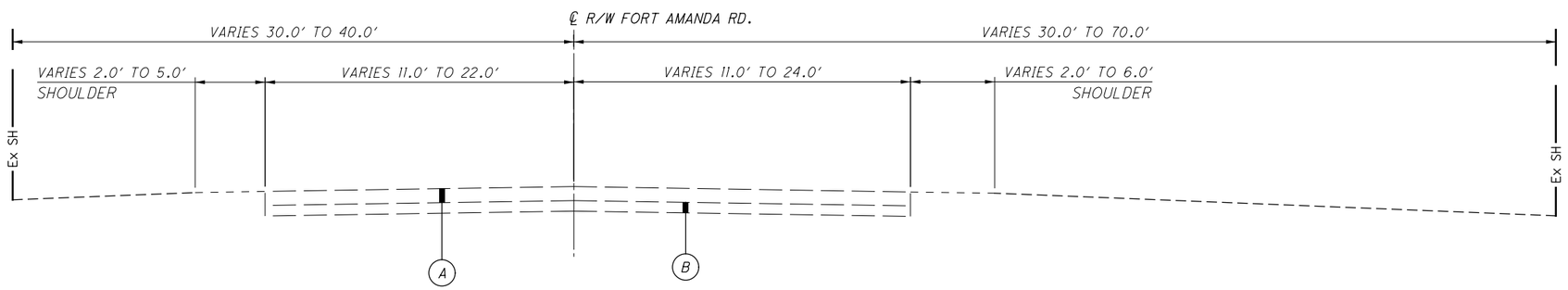

NORMAL EXISTING SECTION - FORT AMANDA ROAD

LEGEND

(A) 9" - 12" ASPHALT CONCRETE

(B) 5" - 9" AGGREGATE BASE

EXISTING TYPICAL SECTIONS

ALL-SHAWNEE RD

M:\Proj\1121\1001\77305\roadway\sheets\77305GY001.dgn 1/13/2014 5:29:04 PM scorcoran

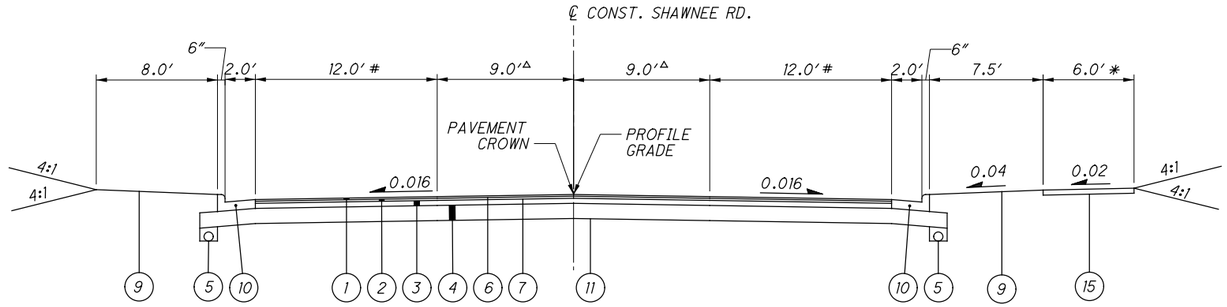

NORMAL SECTION - SHAWNEE ROAD
STA 102+44.00 TO STA 110+28.62
△ VARIES 0'-0" STA 102+44.00 TO 5'-6" STA 104+37.10
△ VARIES 5'-6" STA 104+37.10 TO 9'-0" STA 108+31.62
VARIES 11'-7½" STA 102+44.00 TO 11'-0" STA 104+37.10
VARIES 11'-0" STA 104+37.10 TO 12'-0" STA 108+31.62
* WALK BEGINS AT STA 107+76.69

LEGEND

1. ITEM 448 - 1¼" ASPHALT CONCRETE SURFACE COURSE, TYPE 1, PG64-22
2. ITEM 448 - 1¾" ASPHALT CONCRETE INTERMEDIATE COURSE, TYPE 2, PG64-22
3. ITEM 301 - 4" ASPHALT CONCRETE BASE, PG 64-22
4. ITEM 304 - 12" AGGREGATE BASE
5. ITEM 605 - 6" BASE PIPE UNDERDRAIN , 707.33, PERFORATED
6. ITEM 407 - TACK COAT FOR INTERMEDIATE COURSE (0.04 GAL/SY)
7. ITEM 407 - TACK COAT (0.075 GAL/SY)
8. ITEM 204 - SUBGRADE COMPACTION
9. ITEM 659 - SEEDING AND MULCHING
10. ITEM 609 - COMBINATION CURB AND GUTTER, TYPE 2
11. ITEM SPECIAL - 16" CEMENT STABILIZATION
12. ITEM 609 - CURB, TYPE 3-B
13. ITEM 451 - 10" REINFORCED CONCRETE PAVEMENT, STAMPED COBBLESTONE FINISH, CLASS QC1, AS PER PLAN
14. ITEM 609 - CURB, TYPE 6
15. ITEM 608 - 4" CONCRETE WALK
16. ITEM 304 - 6" AGGREGATE BASE
17. ITEM 609 - CURB, TYPE 2-B
18. ITEM 601 - 6" ARTICULATING CONCRETE BLOCK REVETMENT SYSTEM, TYPE 2
19. ITEM SPECIAL - GEOGRID
20. ITEM 304 - 8" AGGREGATE BASE
21. ITEM 204 - GEOTEXTILE FABRIC

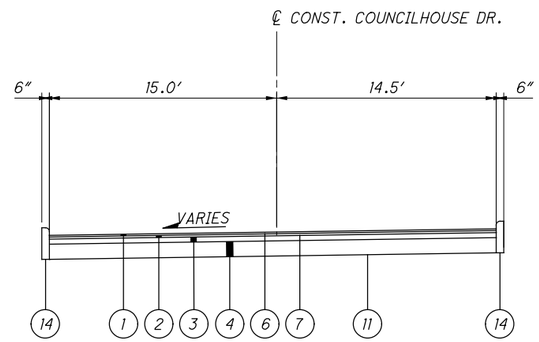

NORMAL SECTION - COUNCILHOUSE DRIVE
STA 400+48.00 TO STA 400+67.50

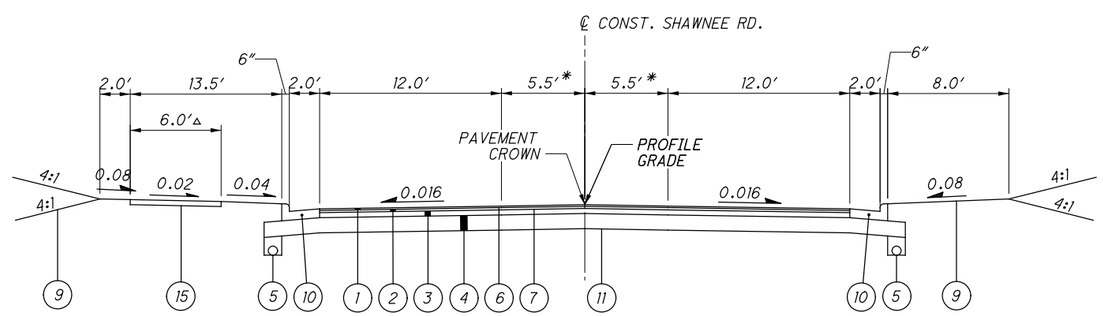

NORMAL SECTION - SHAWNEE ROAD
STA. 117+77.68 TO STA 123+52.00
* VARIES 5.5' TO 1.2' STA 121+38.50 TO STA 123+52.00
△ STA 117+77.68 TO STA 120+81.32

ALL-SHAWNEE RD

TYPICAL SECTIONS - SHAWNEE ROAD & COUNCILHOUSE DRIVE

M:\Proj\1121\1001\77305\roadway\sheets\77305GY002.dgn 2/10/2014 3:19:53 PM scorcoran

TO BE SEEDED AND FILLED WITH SOIL MIXTURE

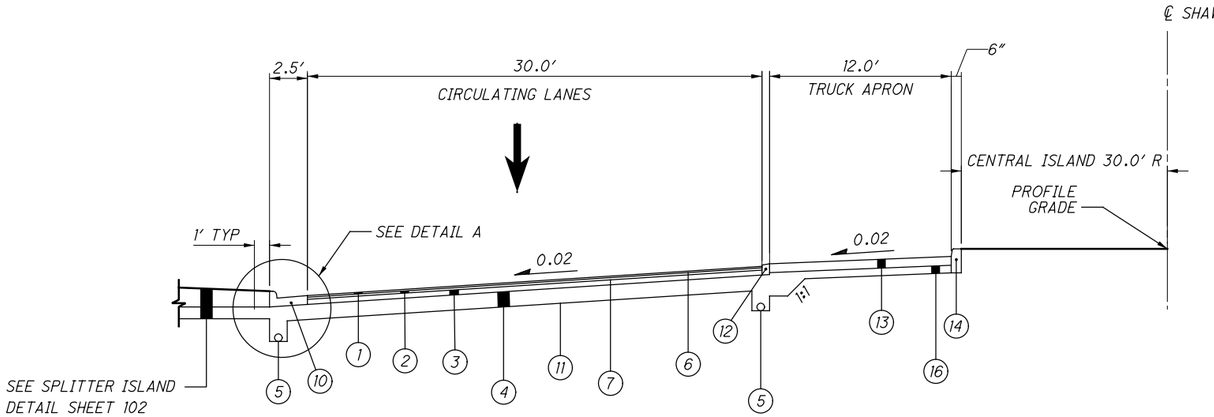

NORMAL SECTION - SHAWNEE RD AND FORT AMANDA RD
PROPOSED ROUNDABOUT TYPICAL SECTION

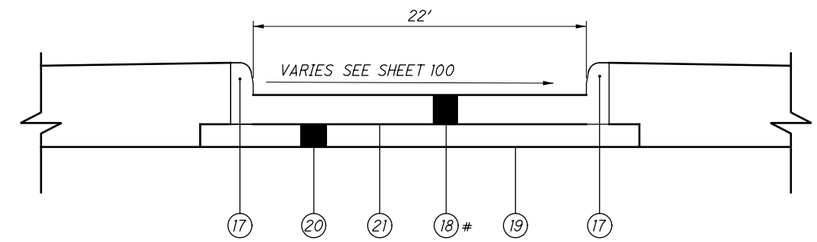

SUPERLOAD DRIVE DETAIL

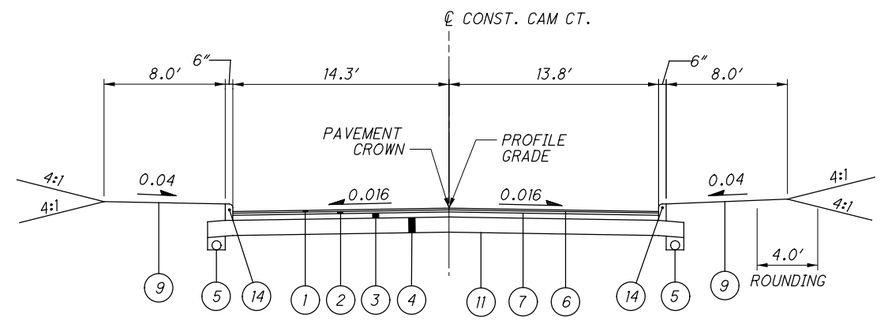

NORMAL SECTION - CAM CT.
STA 303+49.45 TO STA 304+00

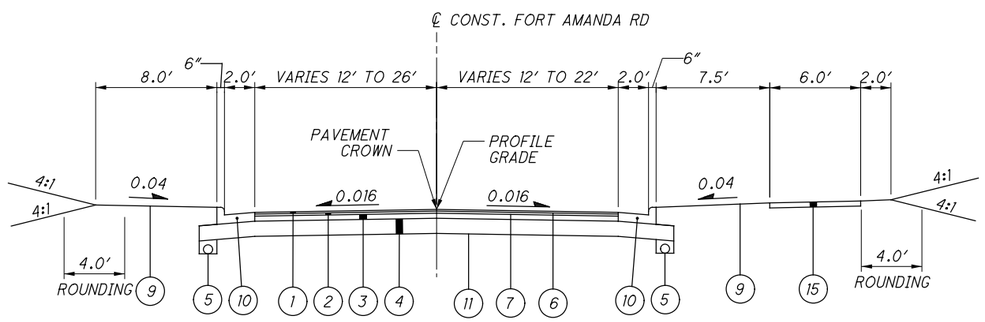

NORMAL SECTION - FORT AMANDA ROAD
STA. 206+00 TO STA 209+65.62

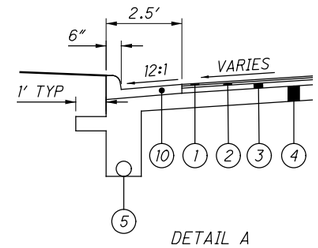

DETAIL A
CURB AND GUTTER

**TRANSITIONS FROM +2.0% AT STA 218+50 TO -2.0% AT STA 219+00
-2.0% STA. 219+00 TO STA. 220+25.00

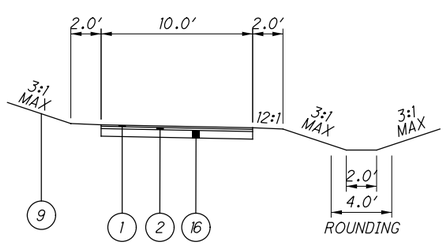

NORMAL SECTION - SHARED USE PATH
STA. 600+00 TO STA. 607+33.26

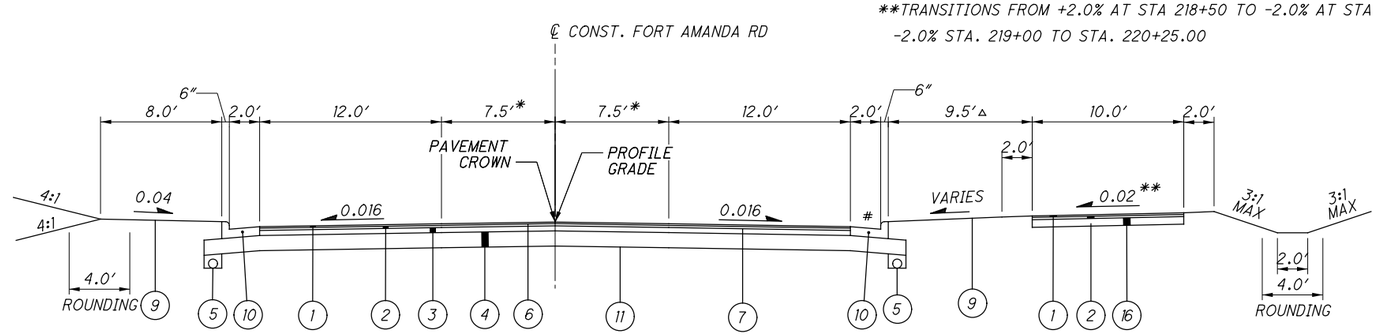

NORMAL SECTION - FORT AMANDA ROAD
STA. 215+78.09 TO STA 220+25.00
* VARIES 7.5′ STA 217+53.33 TO 0′ STA 220+25.00
△ VARIES 5.0′ TO 9.5′

CURB AND GUTTER EXTENDS TO STA. 222+00.00

TYPICAL SECTIONS - SHAWNEE RD AND FORT AMANDA RD

ALL-SHAWNEE RD

M:\Proj\1121\1001\77305\roadway\sheets\77305GY003.dgn 2/10/2014 3:19:53 PM scorcoran

GENERAL

UTILITIES

THE UTILITIES LISTED BELOW ARE ALL UTILITIES LOCATED WITHIN THE PROJECT CONSTRUCTION LIMITS TOGETHER WITH THEIR RESPECTIVE OWNERS

MR. KENT SHOEMAKER
CITY OF LIMA
WATER DEPARTMENT
1405 RESERVOIR ROAD
LIMA, OH 45804
419-221-5175
EMAIL =
kent.shoemaker@cityhall.lima.oh.us

MR. STEVE KAYATIN
COUNTY ENGINEER
ALLEN COUNTY SANITARY ENGINEERS
3230 NORTH COLE STREET
LIMA, OH 45801
419-996-4675
EMAIL =
skayatin@allencountyohio.com

DAN WILSON
CUSTOMER DESIGN TECHNICIAN
AEP (DISTRIBUTION)
369 E. O'CONNOR AVE
LIMA, OH 45801
EMAIL =
dewilson@aep.com

TRAM (NGOC) Q. TRINH
ENGINEER
AEP
(TRANSMISSION LINE ENGINEERING)
700 MORRISON ROAD
GAHANNA, OH 43230
PHONE: 614-552-1355
FAX: 614-552-1818
EMAIL =
tqtrinh@aep.com

MR. MARTY WHITE
DISTRICT R/W AGENT
BUCKEYE PARTNERS, L.P.
940 BUCKEYE ROAD
LIMA, OH 45804
419-993-8000
EMAIL =
mwhite@buckeye.com

MR. BILL PERRIN
ENGINEER
CENTURY LINK
122 SOUTH ELIZABETH STREET
LIMA, OH 45801
419-226-6220
EMAIL =
william.r.perrin@centurylink.com

MR. RANDY HEINL
FACILITIES MANAGER
TELEPHONE SERVICE COMPANY
2 WILLIPIE STREET
WAPAKONETA, OH 45895
419-645-2100
EMAIL =
randy@telserco.com

MR. GARY HOHENBRINK
TIME WARNER CABLE
3100 ELIDA ROAD
LIMA, OH 45805
419-996-2272
EMAIL =
gary.hohenbrink@twcable.com

MR. GLENN HASTINGS
ALLEN WATER DISTRICT
P.O. BOX 724
LIMA, OH 45801-0724
419-224-0724

MR. MIKE CAPRELLA
CITY OF LIMA
UTILITY FIELD SERVICES
1405 RESERVOIR ROAD
LIMA, OH 45801
419-221-5294
EMAIL =
mike.caprella@cityhall.lima.oh.us

MR. TONY WILKERSON
DOMINION EAST OHIO GAS
ENGINEERING DEPARTMENT
150 SOUTH JACKSON STREET
LIMA, OH 45801
419-226-4867
EMAIL =
ANTHONY.C.WILKERSON@dom.com

WORK LIMITS

THE WORK LIMITS SHOWN ON THESE PLANS ARE FOR PHYSICAL CONSTRUCTION ONLY. PROVIDE THE INSTALLATION AND OPERATION OF ALL WORK ZONE TRAFFIC CONTROL AND WORK ZONE TRAFFIC CONTROL DEVICES REQUIRED BY THESE PLANS WHETHER INSIDE OR OUTSIDE THESE WORK LIMITS.

UTILITIES

THE LOCATION OF THE UNDERGROUND UTILITIES SHOWN ON THE PLANS ARE AS OBTAINED FROM THE OWNERS AS REQUIRED BY SECTION 153.64 O.R.C. CONTRACTOR SHALL FIELD VERIFY LOCATIONS WITH THE PROJECT INSPECTOR PRIOR TO BEGINNING CONSTRUCTION.

BUCKEYE OIL PIPELINE NOTE

CONTRACTOR SHALL CONTACT BUCKEYE PARTNERS, L.P. BEFORE ANY CONSTRUCTION WORK BEGINS TO DETERMINE APPROPRIATE ACTIONS WHEN THEY ENCOUNTER A BUCKEYE PIPELINE. CONTRACTOR SHALL MAKE REFERENCE TO THE RIGHT-OF-WAY USE RESTRICTIONS SPECIFICATIONS, SPECIFICALLY SECTIONS 2.5, 2.6, AND 3.9.1C. FOR A COPY OF THE RIGHT-OF-WAY USE RESTRICTIONS SPECIFICATIONS PLEASE CONTACT BRION RHODES AT(BRHODES@ALLENCOUNTYOHIO.COM)

BUCKEYE PIPELINE VIBRATION LIMITATION

VIBRATION SHALL BE MONITORED BY A SEISMOGRAPH LOCATED DIRECTLY OVER THE PIPELINE AT ITS CLOSEST POINT TO THE VIBRATOR(S). THE CONTRACTOR SHALL PROVIDE, AT THIER EXPENSE, THE MONITORING SERVICE WHICH MUST BE APPROVED

THE CONTRACTOR SHALL DETERMINE AND LIMIT THE MAXIMUM PEAK FORCE ALLOWED UNDER CONTINUOUS SEISMOGRAPHIC VIBRATION MONITORING SUCH THAT THE PEAK PARTICLE VELOCITY WILL NOT EXCEED 2.0 INCHES PER SECOND.

SEISMIC VIBRATION SURVEYS SHALL NOT BE CONDUCTED CLOSER THAN 100 FEET TO THE PIPELINE

SURVEYING PARAMETERS

USE THE FOLLOWING HORIZONTAL POSITIONING AND VERTICAL POSITIONING PARAMETERS FOR ALL SURVEYING:

HORIZONTAL POSITIONING

COORDINATE SYSTEM: LOCAL PROJECT DATUM BASIS OF COORDINATES: EXISTING MONUMENT BOX AT THE CENTER OF THE INTERSECTION OF SHAWNEE RD. AND FORT AMANDA RD.
N 20,000.0000 E 20,000.0000
BASIS OF BEARINGS: GRID NORTH OF THE OHIO STATE PLANE COORDINATE SYSTEM, NORTH ZONE (NAD83)

VERTICAL CONTROL

CONTRACTOR SHALL USE CONVENTIONAL SURVEYING METHODS, NOT GPS.

ORTHOMETRIC HEIGHT DATUM: NAVD 88 BENCHMARK ORIGIN "O": USACE DISK, STAMPED 833.218 (NGVD29), IN SOUTHEAST ABUTMENT WINGWALL OF EXISTING SHAWNEE RD. BRIDGE OVER THE OTTAWA RIVER (STRUCTURE FILE NO. 0249661).
COORDINATES: N 20123.05 E 20022.51
PROJECT ELEVATION OF USGS DISK= 832.7800 (NAVD88)

WORK HOURS AND NOISE CONTROL

THE CONTRACTOR SHALL RESTRICT HIS WORKING HOURS TO THOSE PERMITTED BY LOCAL ORDINANCES OR ANY OTHER APPLICABLE ORDINANCES, LAWS OR REGULATIONS EXCEPT AS HE MAY OBTAIN WRITTEN VARIANCES FROM SUCH ORDINANCES, LAWS OR REGULATIONS FROM THE APPROPRIATE GOVERNING AUTHORITIES.

THE NOISE LEVEL RESULTING FROM THE CONSTRUCTION SHALL BE WITHIN THE LIMITS SPECIFIED IN OSHA REGULATIONS AND ALL LOCAL ORDINANCES.

CONSTRUCTION LAYOUT STAKES AND SURVEYING, AS PER PLAN

VERIFY THE POSITION OF ALL SURVEY MONUMENTS SHOWN IN THE CONTRACT DOCUMENTS PRIOR TO CONSTRUCTION ACTIVITIES. USE STANDARD ACCEPTABLE SURVEYING MEASUREMENT TECHNIQUES SUITABLE TO MEET THE REQUIREMENTS OF OHIO ADMINISTRATIVE CODE SECTION 4733-37, "STANDARDS FOR BOUNDARY SURVEYS". PREPARE AND SUBMIT TO THE ENGINEER A REPORT WITH THE COORDINATES, STATION, OFFSET, AND A DESCRIPTION OF EACH SURVEY MONUMENT FOUND BEFORE BEGINNING EARTH MOVING, RESURFACING, OR PAVING ACTIVITIES. INCLUDE THE SIZE, MATERIAL, CONDITION, ANY CAP STAMPING OR MARKINGS, AND NOTE ANY DIFFERENCES FROM THE PLAN LOCATIONS OF THE SURVEY MONUMENTS. IF ADDITIONAL SURVEY MONUMENTS NOT SHOWN IN THE CONTRACT DOCUMENTS ARE ENCOUNTERED, PROTECT, REFERENCE, AND PRESERVE THEM IN THE SAME MANNER AS SURVEY MONUMENTS THAT ARE SHOWN IN THE CONTRACT DOCUMENTS. INCLUDE THE ADDITIONAL SURVEY MONUMENTS IN THE REPORT.

ALL COSTS ASSOCIATED WITH THE EQUIPMENT, LABOR, AND MATERIALS NECESSARY FOR PERFORMING THE ABOVE WORK SHALL BE INCLUDED IN THE PRICE LUMP SUM BID FOR ITEM 623 - CONSTRUCTION LAYOUT STAKES, AS PER PLAN.

MONUMENT ASSEMBLY, AS PER PLAN

MONUMENTS SHALL BE CONSTRUCTED IN ACCORDANCE WITH DETAILS AS SHOWN ON ALLEN COUNTY STANDARD CONSTRUCTION DRAWINGS MB-1 AND MB-1-B (OR AS DIRECTED BY THE ALLEN COUNTY ENGINEER) AND AT THE LOCATIONS SHOWN ON SHEET NO. 2 OF 27 OF THE RIGHT OF WAY PLANS. A TOTAL OF 2 EACH, ITEM 623 MONUMENT ASSEMBLY, AS PER PLAN, SHALL BE SET (OR RESET) DURING CONSTRUCTION.

R/W AND PROPERTY MONUMENTATION

THE CONTRACTOR SHALL REPLACE ANY RIGHT OF WAY MONUMENTS AND ANY PROPERTY LINE MONUMENTS LOCATED OUTSIDE THE ROAD RIGHT OF WAY WHICH HAVE BEEN DISTURBED DURING CONSTRUCTION. NO ADDITIONAL PAYMENT WILL BE GIVEN FOR THIS WORK

THE PLACING OF ALL MONUMENTS SHALL BE UNDER THE DIRECTION OF A PROFESSIONAL SURVEYOR REGISTERED IN THE STATE OF OHIO.

SUBGRADE STABILIZATION WITH GEOGRID

UNSUITABLE SOILS MAY BE ENCOUNTERED AS DESCRIBED IN THE "SUBSURFACE EXPLORATION REPORT FOR SHAWNEE ROAD" AVAILABLE IN THE ALLEN COUNTY ENGINEERS OFFICE. UNDERCUTTING AND REPLACEMENT WITH SUITABLE MATERIALS MAY BE NECESSARY IN SPOT LOCATIONS. ACTUAL DEPTHS AND LIMITS SHALL BE DETERMINED BY THE PROJECT ENGINEER IN THE FIELD BASED ON THE RESULTS OF THE PROOF ROLLING IN ACCORDANCE WITH ITEM 204. SEE ITEM 204 - SUBGRADE COMPACTION UNDER SPECIFICATIONS IN THE BID DOCUMENTS FOR SUBGRADE COMPACTION REQUIREMENTS. THE FOLLOWING CONTINGENCY QUANTITIES HAVE BEEN INCLUDED IN THE GENERAL SUMMARY:

ALTERNATE BID ITEMS FOR SUBGRADE STABILIZATION WITH GEOGRID
THERE ARE TWO ALTERNATES FOR PERFORMING SUBGRADE STABILIZATION WITH GEOGRID. BID ALL ALTERNATE BID ITEMS.

ALTERNATE 1: UNDERCUT AND REPLACE WITH GRANULAR MATERIAL TYPE F, AS PER PLAN USING GEOTEXTILE FABRIC, AS PER PLAN AND A GENERIC GEOGRID CONFORMING TO SUPPLEMENTAL SPECIFICATION 861,

ALTERNATE 2: UNDERCUT AND REPLACE WITH GRANULAR MATERIAL TYPE F, AS PER PLAN AND A PROPRIETARY GEOGRID AS SPECIFIED BELOW.

ITEM 861, GEOGRID FOR SUBGRADE STABILIZATION, AS PER PLAN, "TENSAR TRIAX TX140"

FURNISH "TENSAR TRIAX TX140" GEOGRD FROM "TENSAR INTERNATIONAL, CORPORATION, INC., ATLANTA, GEORGIA". INSTALL ACCORDING TO SUPPLEMENTAL SPECIFICATION 861

ALTERNATE 1: GENERIC GEOGRID

ITEM 204 - EXCAVATION OF SUBGRADE	611 C.Y.
ITEM 204 - GRANULAR MATERIAL, TYPE F, AS PER PLAN*	611 C.Y.
ITEM 204 - GEOTEXTILE FABRIC, AS PER PLAN	1000 S.Y.
ITEM 861 - GEOGRID FOR SUBGRADE STABILIZATION	1000 S.Y.

ALTERNATE 2: "TENSAR TRIAX TX140" GEOGRID

ITEM 204 - EXCAVATION OF SUBGRADE	500 C.Y.
ITEM 204 - GRANULAR MATERIAL, TYPE F, AS PER PLAN*	500 C.Y.
ITEM 861 - GEOGRID FOR SUBGRADE STABILIZATION AS PER PLAN, "TENSAR TRIAX TX140"	1000 S.Y.

* = (#2 STONE SUB-BASE)

ITEM 204 - PROOF ROLLING

THE FOLLOWING QUANTITY IS PROVIDED IN THE GENERAL SUMMARY TO ADDRESS LOCATIONS REQUIRING PROOF ROLLING AS DETERMINED BY THE ENGINEEER.

ITEM 204 - PROOF ROLLING -	14 HOURS
CHEMICALLY STABILIZED AREA	13 HOURS
SUBGRADE COMPACTION AREA	1 HOURS

DATE RESTRICTIONS ON STREAM WORK

IN STREAM WORK IS NOT PERMITTED BETWEEN THE DATES OF APRIL 15 AND JUNE 30TH. CONTRACTOR SHALL SCHEDULE CULVERT CONSTRUCTION WORK AND BRIDGE CONSTRUCTION WORK AS TO NOT INTERFERE WITH THIS DATE RESTRICTION.

STREAM IMPACTS

MITIGATION FOR STREAM IMPACTS WILL BE PERFORMED IN ACCORDANCE WITH THE MITIGATION REQUIREMENTS IN SECTIONS 404 AND 401 OF THE CLEAN WATER ACT AND ALL THE CONDITIONS OF THE SECTION 404 PERMIT AND OHIO EPA SECTION 401 WATER QUALITY CERTIFICATION SHALL BE ADHERED TO DURING CONSTRUCTION.

THE SPECIFICATIONS SET FORTH IN THE MOST CURRENT VERSION OF ODOT'S CONSTRUCTION AND MATERIAL SPECIFICATIONS, LOCATION AND DESIGN MANUAL, STANDARD DRAWINGS, AND SUPPLEMENTAL SPECIFICATIONS 832-TEMPORARY EROSION CONTROL WILL BE USED TO ENSURE ADEQUATE EROSION AND SEDIMENT CONTROL DURING CONSTRUCTION. BEST MANAGEMENT PRACTICES FOR EROSION AND SEDIMENT CONTROL SHALL BE IMPLEMENTED DURING CONSTRUCTION TO MINIMIZE WATER QUALITY IMPACTS.

INDIANA BAT HABITAT

PRIOR TO RECONSTRUCTION OF THE BRIDGE OVER THE OTTAWA RIVER, THE UNDERSIDES OF THE BRIDGE SHALL BE CAREFULLY EXAMINED FOR THE PRESENCE OF BATS, ESPECIALLY FROM APRIL 1 TO SEPTEMBER 30. ADDITIONALLY, THE TREES WITHIN THE PROJECT AREA THAT MAY BE POTENTIALLY SUITABLE HABITAT FOR INDIANA BATS WILL NOT BE REMOVED DURING THE PERIOD THAT THE BATS MAY BE USING THEM FOR ROOSTING OR BROOD RAISING. ANY TREE REMOVAL REQUIRED WILL TAKE PLACE FROM NOVEMBER 15 TO MARCH 15.

M:\Proj\1121\1001\77305\roadway\sheets\77305GN001.dgn 2/13/2014 8:59:00 AM scorcoran

ENVIRONMENTAL WORK

INTRODUCTION

ENVIRONMENTAL STUDIES HAVE SHOWN THAT THERE IS A POTENTIAL OF ENCOUNTERING PETROLEUM CONTAMINATED MATERIALS AND HAZARDOUS WASTE DURING DEMOLITION AND EXCAVATIONS FOR CONSTRUCTION ACTIVITIES ON THE FISCA PROPERTY. IMPACTED SOILS AND GROUNDWATER ARE ANTICIPATED AT PARCEL 18 - FISCA (VACANT), 2690 FORT AMANDA ROAD AND PARCEL 16 - MARATHON (VACANT), 2400 SHAWNEE ROAD. ADDITIONALLY, CONTAMINATED WATER, SLUDGES, AND SOLIDS MAY BE PRESENT ON THE FISCA PROPERTY AND IN DRUMS ON THE PROPERTY. ALL EXCAVATIONS WITHIN THE AFOREMENTIONED LIMITS AND ANY CONTAMINATED OR HAZARDOUS MATERIALS ON THE PROPERTY SHALL BE PAID FOR UNDER THE ORIGINAL PLAN BID ITEMS.

SITE SPECIFIC HEALTH AND SAFETY PLAN (SSHSP)

THE CONTRACTOR SHALL CERTIFY IN WRITING TO THE ENGINEER WITHIN TWO WEEKS AFTER CONTRACT EXECUTION THAT THE CONTRACTOR HAS PREPARED A SSHSP IN ACCORDANCE WITH OSHA 29 CFR PART 1910.120 FOR OPERATIONS INVOLVING HAZARDOUS SUBSTANCES AT THE PROPERTY OR WITHIN THE AFOREMENTIONED LIMITS. THE CONTRACTOR SHALL MAKE THE SSHSP AVAILABLE AT THE PROJECT SITE. COPIES OF THE ENVIRONMENTAL STUDIES ARE AVAILABLE FOR EXAMINATION IN THE ALLEN COUNTY ENGINEER'S OFFICE. THIS INFORMATION MAY BE USED BY THE CONTRACTOR TO DEVELOP THE SSHSP.

CONTAMINATED SOILS

MATERIAL SAMPLING FOR CONTAMINATED SOILS THE CONTRACTOR SHALL PROVIDE THE ENGINEER WITH TEN (10) DAYS NOTICE PRIOR BEGINNING ANY EXCAVATION WITHIN THE AFOREMENTIONED LIMITS. ALL MATERIAL EXCAVATED BY THE CONTRACTOR BETWEEN THESE LIMITS DURING CONSTRUCTION SHALL BE SUBJECT TO TESTING BY AN INSPECTOR PROVIDED BY THE CONTRACTOR.

TEMPORARY STORAGE OF CONTAMINATED SOILS

ALL EXCAVATED MATERIAL WHICH IS DETERMINED TO BE POTENTIALLY CONTAMINATED WITH PETROLEUM SUBSTANCES SHALL TO BE STOCKPILED IN AN AREA PROVIDED BY THE CONTRACTOR AND APPROVED BY THE ENGINEER. THE CONTRACTOR SHALL STOCKPILE THE MATERIAL IN A LEAK PROOF, COVERED CONTAINER PROVIDED BY THE CONTRACTOR. THE MATERIAL SHALL REMAIN ON-SITE UNTIL ANALYTICAL RESULTS ARE RECEIVED BY THE ENGINEER. AS AN ALTERNATE, THE ENGINEER MAY PERMIT TEMPORARY STORAGE OF SUSPECTED CONTAMINATED SOILS ON AN IMPERMEABLE MEMBRANE. THE MEMBRANE SHOULD BE SURROUNDED BY A STABLE BARRIER TO PREVENT THE SUSPECT SOILS FROM COMING IN CONTACT WITH THE ORIGINAL SOILS. AN IMPERMEABLE MEMBRANE SHALL BE PLACED OVER THE STOCKPILE TO PREVENT CONTACT WITH PRECIPITATION AND/OR SURFACE RUN-OFF.

MATERIAL EVALUATION

THE NON LIQUID MATERIALS WILL BE CLASSIFIED IN ONE OF THE FOLLOWING 3 CATEGORIES:

1. WORK INVOLVING NON-REGULATED SOILS

THE CONTRACTOR'S INSPECTOR WILL DETERMINE IF THE EXCAVATED SOILS ARE NON-REGULATED. THE WORK INVOLVED IN THIS ITEM SPECIAL INCLUDES HANDLING, STORAGE, AND DISPOSAL/USE OF NON-REGULATED SOILS. EXCAVATED SOILS MAY NOT BE USED AS BACKFILL FOR OTHER PROJECT PURPOSES.

2. WORK INVOLVING PETROLEUM-CONTAMINATED SOILS

THE CONTRACTOR'S INSPECTOR WILL DETERMINE IF THE SOILS ARE PETROLEUM-CONTAMINATED SOIL (PCS). THE CONTRACTOR WILL PROVIDE THE ENGINEER WITH THESE TEST RESULTS AND DECISION. THE CONTRACTOR SHALL BE RESPONSIBLE FOR OBTAINING ALL NECESSARY PERMITS AND APPROVALS TO TRANSPORT THE MATERIAL TO A LICENSED (BY THE LOCAL HEALTH DEPT.) AND PERMITTED (BY THE OHIO ENVIRONMENTAL PROTECTION AGENCY) SOLID WASTE FACILITY OR A PETROLEUM CONTAMINATED SOIL REMEDIATION FACILITY (PCSRF) FOR PROPER DISPOSAL OR REMEDIATION. THE WORK INVOLVED IN THIS PAY ITEM INCLUDES HANDLING, STORAGE, TESTING (FOR DISPOSAL OR REMEDIATION), AND DISPOSAL OR REMEDIATION OF PCS.

3. WORK INVOLVING HAZARDOUS WASTE

THE CONTRACTOR WILL DETERMINE IF THE SOILS, SLUDGES, AND SOLIDS ARE A HAZARDOUS WASTE BASED ON THE TEST RESULTS PROVIDED BY THE CONTRACTOR'S INSPECTOR. THE CONTRACTOR WILL PROVIDE THE ENGINEER WITH THE DECISION AND TEST RESULTS. THE CONTRACTOR SHALL BE RESPONSIBLE FOR OBTAINING ALL NECESSARY PERMITS AND APPROVALS AND TO TRANSPORT THE MATERIAL TO A PERMITTED (BY THE STATE ENVIRONMENTAL PROTECTION AGENCY) HAZARDOUS WASTE DISPOSAL FACILITY. THE WORK INVOLVED IN THIS PAY ITEM INCLUDES HANDLING, STORAGE, TESTING, AND DISPOSAL OF HAZARDOUS WASTE AND INCLUDES SOILS, SOLIDS, AND POTENTIALLY SLUDGES.

BACKFILL OF EXCAVATED AREAS

ALL EXCAVATED AREAS SHALL BE BACKFILLED WITH SUITABLE MATERIAL IN ACCORDANCE WITH THE PROJECT PLANS, APPLICABLE ODOT SPECIFICATIONS, AND/OR AS DIRECTED BY THE ENGINEER. ON THE FISCA PROPERTY, PIPES AND CONDUITS **SHALL BE BACKFILLED AND BEDDED WITH LOW STRENGTH MORTAR BACKFILL MATERIAL WITH NO GRANULAR MATERIAL BEING PLACED IN THE EXCAVATION TO PREVENT PETROLEUM PRODUCTS FROM MIGRATING.** THIS WORK SHALL BE PAID FOR AS PER ITEM 613 - LOW STRENGTH MORTAR BACKFILL MATERIAL.

CONTAMINATED WATER

IF EXCAVATIONS WITHIN THE AFOREMENTIONED LIMITS REQUIRE DEWATERING FOR CONSTRUCTION PURPOSES, THE CONTRACTOR SHALL DEWATER AND SUBSEQUENTLY DISPOSE OF WATERS BY METHODS APPROVED BY ENGINEER. ALL WATER CONTAINERIZED BY THE CONTRACTOR BETWEEN THESE LIMITS SHALL BE SUBJECT TO TESTING BY AN INSPECTOR PROVIDED BY THE CONTRACTOR. THE CONTRACTOR SHALL OBTAIN ALL THE NECESSARY PERMITS AND/OR AUTHORIZATIONS NEEDED TO STORE, TRANSPORT AND DISPOSE OF THE WATER IN ACCORDANCE WITH APPLICABLE LOCAL, STATE OR FEDERAL REGULATIONS.

THE ENGINEER WILL USE THE TESTS PROVIDED BY THE CONTRACTOR TO CLASSIFY THE WATER REMOVED FROM THE SITE INTO ONE OF THE TWO FOLLOWING CATEGORIES.

1. WORK INVOLVING WATER.

THE CONTRACTOR'S INSPECTOR WILL DETERMINE IF THE WATER IS NON-REGULATED. THE METHOD FOR DISPOSING OF THE NON-REGULATED WATER SHALL BE APPROVED BY THE ENGINEER. WORK INVOLVED WITH THIS ITEM SPECIAL INCLUDES THE HANDLING, STORAGE, TESTING (FOR DISPOSAL) AND DISPOSAL OF THE NON-REGULATED WATER.

2. WORK INVOLVING REGULATED WATER

THE CONTRACTOR'S INSPECTOR WILL DETERMINE IF THE WATER IS REGULATED. THE CONTRACTOR SHALL BE RESPONSIBLE FOR DISPOSAL OF THE REGULATED WATER. THE METHOD FOR DISPOSING OF THE REGULATED WATER SHALL BE APPROVED BY THE ENGINEER. THE WORK INVOLVED IN THIS ITEM SPECIAL INCLUDES THE HANDLING, STORAGE, TESTING (FOR DISPOSAL), AND DISPOSAL OF REGULATED WATER.

REGULATED UNDERGROUND STORAGE TANKS

THE CONTRACTOR SHALL REMOVE SIX (6) PETROLEUM UNDERGROUND STORAGE TANKS, ASSOCIATED PUMP ISLANDS AND PIPING LOCATED AT THE FISCA PROPERTY IN ACCORDANCE WITH ODOT CMS 202.08. THE ESTIMATED QUANTITY HAS BEEN INCLUDED IN THE GENERAL SUMMARY FOR THIS WORK.

DRUM DISPOSAL

DRUMS OF RESIDUAL INVESTIGATION DERIVED WASTE ARE LOCATED ON THE FORMER FISCA SERVICE STATION BUILDING SITE. MATERIALS CONTAINED WITHIN THE DRUMS SHALL BE SAMPLED AND CHARACTERIZED FOR DISPOSAL BY THE CONTRACTOR. THE TESTING (FOR DISPOSAL), HANDLING, REMOVAL, AND DISPOSAL OF THE DRUMS AND THEIR CONTENTS WILL BE INCLUDED WITH ITEM SPECIAL - DRUM REMOVED.

ABANDONMENT OF MONITORING WELLS

A TOTAL OF 10 MONITORING WELLS ARE PRESENT ON THE VACANT FORMER FISCA SERVICE STATION. THESE WELLS SHALL BE ABANDONED IN ACCORDANCE WITH THE OHIO DEPARTMENT OF NATURAL RESOURCES' (ODNR) TECHNICAL GUIDELINES FOR SEALING UNUSED WELLS (APPENDIX 4, SEALING MONITORING WELLS AND BOREHOLES). PAYMENT FOR THIS WORK SHALL BE AS PER ITEM WORK INVOLVING ABANDONMENT OF GROUNDWATER MONITORING WELLS. [SEE SHEET(S)55 & 59 FOR MONITORING WELL LOCATIONS.]

GENERAL NOTES

ALL TRANSPORT VEHICLES USED FOR THE MOVEMENT OF REGULATED SOILS AND/OR WATER SHALL MEET APPLICABLE LOCAL, STATE, AND FEDERAL REQUIREMENTS. THE CONTRACTOR SHALL MAINTAIN RECORDS (SUCH AS DAILY LOGS, LANDFILL TICKETS, MANIFESTS, ETC.) DOCUMENT THE SOURCE, MOVEMENT, AND DESTINATION OF EACH TRUCKLOAD OF CONTAMINATED SOIL. ONE COPY OF EACH OF THESE RECORDS SHALL BE SUBMITTED TO THE ENGINEER.

BASIS OF PAYMENT

THE CONTRACTOR SHALL FURNISH ALL THE LABOR, EQUIPMENT, AND MATERIALS NECESSARY TO PROPERLY DEVELOP AND COMPLY WITH A SSHSP, STORE, TEST (FOR DISPOSAL), TRANSPORT, AND DISPOSE OF REGULATED MATERIALS INCLUDING ANY REQUIRED APPROVALS, PERMITS, OR FEES WITHIN THE LIMITS IDENTIFIED ABOVE. PAYMENT FOR THIS WORK SHALL BE MADE AT THE CONTRACT PRICES BID PER TON, PER GALLON, PER CUBIC YARD, PER REGULATED UNDERGROUND STORAGE TANK, PER MONITORING WELL, AND PER LUMP SUM. THE BASIS FOR CONVERSION OF CUBIC YARDS TO TONS IS 1.5 TON/CUBIC YARD.

THE FOLLOWING ESTIMATED QUANTITIES ARE INCLUDED IN THE GENERAL SUMMARY FOR THE WORK NOTED ABOVE:

690E65000 - WORK INVOLVING NON-REGULATED MATERIALS 800 TON
690E65016 - WORK INVOLVING PETROLEUM-CONTAMINATED SOIL 1500 TON
690E65014 - WORK INVOLVING HAZARDOUS WASTE 50 TON
690E65024 - WORK INVOLVING REGULATED WATER 10,000 GALLONS
690E65020 - WORK INVOLVING WATER 5,000 GALLONS
613E41200 - LOW STRENGTH MORTAR BACKFILL 500 CUBIC YARDS
690E65300 - GROUND WATER MONITORING WELL ABANDONMENT 10 EACH
202E67000 - REGULATED UNDERGROUND STORAGE TANK REMOVED 6 EACH
690E65030 - SPECIAL - DRUM REMOVED - 6 EACH

BUILDING DEMOLITION

BUILDING DEMOLITION ON THE FISCA PARCEL SHALL BE AS PER ODOT CMS 202.06. REMOVAL OF THE FILLING STATION CANOPY AND ANY ADDITIONAL ITEMS INCLUDED IN THE REMOVAL ARE CONSIDERED INCIDENTAL TO THIS ITEM. ITEMS CONDUCIVE WITH A SERVICE AND FILLING STATION MAY BE PRESENT WITHIN THE STRUCTURE BUT NOT READILY VISIBLE (HYDRAULIC LIFTS, OIL/WATER SEPARATOR, ETC.). REMOVAL OF THESE ITEMS IS INCIDENTAL TO THE FOLLOWING DEMOLITION PAY ITEM:
ITEM 202 BUILDING DEMOLISHED - PARCEL 18, 2690 FORT AMANDA ROAD; 1 STORY BLOCK COMMERCIAL BUILDING

DURING BUILDING DEMOLITION, ANY PETROLEUM CONTAMINATED SOIL, HAZARDOUS WASTE, OR REGULATED WATER ENCOUNTERED SHALL BE ADDRESSED PER THE ENVIRONMENTAL WORK NOTE ABOVE.

SECTION 4(F) RESOURCES

DURING CONSTRUCTION OF THE PROJECT, THE CONTRACTOR SHALL NOT PERFORM ANY WORK, LOCATE ANY EQUIPMENT OR MATERIALS, OR OTHERWISE OCCUPY ANY TRAIL AREA OUTSIDE OF THE DESIGNATED PROJECT LIMITS. ADDITIONALLY, IN ORDER TO PROTECT THE SECTION 4(F) PROPERTY, BLAZE ORANGE TEMPORARY CONSTRUCTION FENCING SHALL BE INSTALLED ALONG THE PROPOSED CONSTRUCTION LIMITS PRIOR TO THE START OF CONSTRUCTION. FOR FURTHER DETAILS SEE SHARED USE PATH NOTE ON SHEET 12 .

CALCULATED SWC
CHECKED JMZ

GENERAL NOTES

ALL-SHAWNEE RD

M:\Proj\1121\1001\77305\roadway\sheets\77305GN003.dgn 2/13/2014 8:59:01 AM scorcoran

WATERWAY PERMITS

ALL PROJECTS INVOLVING JURISDICTIONAL WATERS OF THE U.S. ARE SUBJECT TO REGULATION UNDER SECTIONS 404 AND 401 OF THE CLEAN WATER ACT. A NATIONWIDE PERMIT NO.14 (#2012-01322) HAS BEEN OBTAINED BY THE ALLEN COUNTY ENGINEERS OFFICE. ALLEN COUNTY WILL INCLUDE THE WATERWAY PERMIT AS PART OF THE CONSTRUCTION CONTRACT. THE PROJECT CONTRACTOR SHALL ADHERE TO THE WATERWAY PERMIT TERMS & THE SPECIFIED SPECIAL CONDITIONS THROUGHOUT THE PROJECT CONSTRUCTION.

CLEARING AND GRUBBING, AS PER PLAN

REMOVE ALL TREES AND STUMPS UNLESS SPECIFICALLY DESIGNATED IN THE PLANS AS "DO NOT DISTURB", WITHIN THE CONSTRUCTION LIMITS UNDER THE LUMP SUM BID FOR ITEM 201, CLEARING AND GRUBBING, AS PER PLAN. THE FOLLOWING IS AN APPROXIMATE ESTIMATE OF THE NUMBER OF TREES AND STUMPS TO BE REMOVED.

SIZES	NO. TREES	NO. STUMPS	TOTAL
18"	35	0	35
30"	4	0	4
48"	0	0	0
60"	0	0	0

EROSION CONTROL

SEEDING AND MULCHING

THE FOLLOWING QUANTITIES ARE PROVIDED TO PROMOTE GROWTH AND CARE OF PERMANENT SEEDED AREAS:

ITEM 659, SOIL ANALYSIS TEST	2 EACH
ITEM 659, TOPSOIL	1109 CU. YD.
ITEM 659, SEEDING AND MULCHING	9991 SQ. YD.
ITEM 659, REPAIR SEEDING AND MULCHING	500 SQ. YD
ITEM 659, INTER-SEEDING	500 SQ. YD.
ITEM 659, COMMERCIAL FERTILIZER	1.40 TON
ITEM 659, LIME	2.16 ACRES
ITEM 659, WATER	55 M. GAL.

SEEDING AND MULCHING SHALL BE APPLIED TO ALL AREAS OF EXPOSED SOIL BETWEEN THE RIGHT-OF-WAY LINES, AND WITHIN THE CONSTRUCTION LIMITS FOR AREAS OUTSIDE THE RIGHT-OF-WAY LINES COVERED BY WORK AGREEMENT OR SLOPE EASEMENT. QUANTITY CALCULATIONS FOR SEEDING AND MULCHING ARE BASED ON THESE LIMITS.

PAVEMENT

PART-WIDTH CONSTRUCTION

BECAUSE OF THE NECESSITY TO BUILD THIS PROJECT UNDER TRAFFIC AND TO CONSTRUCT THE FULL PAVEMENT WIDTH IN STAGES, EXERCISE CARE TO PREVENT THE CONSTRUCTION OF A BUTT JOINT IN THE BASE COURSES. LAP LONGITUDINAL JOINTS AS SHOWN ON STANDARD CONSTRUCTION DRAWING BP-3.1.

ITEM 609 - CURB TYPE 6, AS PER PLAN

AT LOCATIONS DETAILED IN THE PLANS, CONTRACTOR SHALL PLACE CURB TYPE 6 WITH A 0" REVEAL CURB CUT. TOP OF CURB SHALL BE FLUSH WITH PAVEMENT.

ITEM 202 - PAVEMENT REMOVED

THE COST OF REMOVING AND DISPOSING OF ITEMS PURSUANT TO ITEM 202.05 INCLUDING BUT NOT LIMITED TO PAVEMENT CONCRETE, AGGREGATE BASE COURSE, WEARING COURSE REMOVALS, SIDEWALK, DRIVEWAYS, SHALL INCLUDE THE COST OF FULL- DEPTH SAW CUTTING. REMOVED PAVEMENT SHALL NOT BE USED AS EMBANKMENT.

CURB RAMP

THE CONTRACTOR SHALL BE RESPONSIBLE FOR VERIFYING TYPE OF CURB RAMP PROPOSED IN THE PLANS. IN SITUATIONS WHERE A DIFFERENT TYPE OF CURB RAMP OR A MODIFICATION IS NEEDED, THE CONTRACTOR SHALL INSTALL THAT RAMP WITH THE APPROVAL OF THE ENGINEER AT NO ADDITIONAL COSTS. CURB RAMP TYPE AS SPECIFIED OR MODIFIED SHALL INCLUDE THE COST FOR LAYOUT, INSTALLATION OF WALK WITHIN THE RAMP AREAS, CURB, AND TILE AS SPECIFIED ELSEWHERE IN THE PLANS/SPECIFICATIONS/STANDARD CURB RAMP DETAILS.

IMPACTS DUE TO TEMPORARY PAVEMENT

THE FOLLOWING CONTINGENCY ITEMS ARE TO BE USED AS DETERMINED BY THE PROJECT ENGINEER IN THE FIELD FOR RESTORING DRIVES, CURB, AND PAVED AREAS THAT ARE IMPACTED BY THE TEMPORARY PAVEMENT USED TO MAINTAIN TRAFFIC.

ITEM 301 - ASPHALT CONCRETE BASE PG64-22 (DRIVEWAYS) 15 CU YD

ITEM 448 - ASPHALT CONCRETE SURFACE COURSE, TYPE 1, PG 64-22 (DRIVEWAYS) 5 CU YD

ITEM 609 - CURB, TYPE 6 100 FEET

DRAINAGE

ITEM 202 - PIPE REMOVAL

ALL CONDUITS ENCOUNTERED DURING REMOVAL OPERATIONS AND DETERMINE TO BE INACTIVE OR ARE TO BE ABANDONED, SHALL BE REMOVED. NO CRUSHING WILL BE ALLOWED. FILLING AND PLUGING OF EXISTING CONDUITS MAY BE ALLOWED IF APPROVED BY THE ENGINEER.

FILL AND PLUG EXISTING CONDUITS SHALL CONSIST OF THE CONSTRUCTION OF BULKHEADS IN AN EXISTING CONDUIT AND FILLING THE AREA THUS SEALED OFF WITH ITEM 613, MATERIAL APPROVED BY THE ENGINEER. ALL EXISTING CONDUIT LOCATED LESS THAN 5 FEET FROM THE BOTTOM OF PROPOSED PAVEMENT SHALL BE REMOVED AND TRENCH PROPERLY FILLED WITH STONE.

BULKHEADS SHALL BE LOCATED AT THE LIMITS OF THE AREA TO BE FILLED AS INDICATED ON THE PLANS. THE BULKHEADS SHALL CONSIST OF BRICK OR CONCRETE MASONRY WITH A MINIMUM THICKNESS OF 12 INCHES.

THE FILL MATERIAL SHALL BE PUMPED INTO PLACE, OR PLACED BY OTHER MEANS APPROVED BY THE ENGINEER, SO THAT, AFTER SETTLEMENT, AT LEAST 90 PERCENT OF THE CROSS- SECTIONAL AREA OF THE CONDUIT, FOR ITS ENTIRE LENGTH, SHALL BE FILLED. THE LENGTH OF FILLED AND PLUGGED CONDUIT TO BE PAID FOR SHALL BE THE ACTUAL NUMBER OF FEET (MEASURED ALONG THE CENTERLINE OF EACH CONDUIT FROM OUTER FACE TO OUTER FACE OF BULKHEADS) FILLED AND PLUGGED AS DESCRIBED ABOVE. AND PLUG EXISTING CONDUIT.

THE LENGTH MEASURED AS PROVIDED ABOVE, SHALL BE PAID FOR AT THE CONTRACT PRICE PER FOOT FOR, ITEM 202 - PIPE REMOVED

FARM DRAINS

ALL FARM DRAINS, WHICH ARE ENCOUNTERED DURING CONSTRUCTION, SHALL BE PROVIDED WITH UNOBSTRUCTED OUTLETS. EXISTING COLLECTORS WHICH ARE LOCATED BELOW THE ROADWAY DITCH ELEVATIONS, AND WHICH CROSS THE ROADWAY, SHALL BE REPLACED WITHIN THE (RIGHT OF WAY) (CONSTRUCTION) LIMITS BY ITEM 611 CONDUIT, TYPE B, 707.33 CONDUIT.

EXISTING COLLECTORS AND ISOLATED FARM DRAINS, WHICH ARE ENCOUNTERED ABOVE THE ELEVATION OF ROADWAY DITCHES, SHALL BE OUTLETTED INTO THE ROADWAY DITCH BY 611 TYPE F, 707.33 CONDUIT. THE OPTIMUM OUTLET ELEVATION SHALL BE ONE FOOT ABOVE THE FLOWLINE ELEVATION OF THE DITCH. LATERAL FIELD TILES WHICH CROSS THE ROADWAY SHALL BE INTERCEPTED BY 611, TYPE E, 707.33 CONDUIT, AND CARRIED IN A LONGITUDINAL DIRECTION TO AN ADEQUATE OUTLET OR ROAD- WAY CROSSING.
THE LOCATION, TYPE, SIZE AND GRADE OF REPLACEMENTS SHALL BE DETERMINED BY THE ENGINEER AND PAYMENT SHALL BE MADE ON FINAL MEASUREMENTS.

EROSION CONTROL PADS AND ANIMAL GUARDS SHALL BE PROVIDED AT THE OUTLET END OF ALL FARM DRAINS AS PER STANDARD CONSTRUCTION DRAWING DM-1.1, EXCEPT WHEN THEY OUTLET INTO A DRAINAGE STRUCTURE. PAYMENT FOR THE EROSION CONTROL PADS AND ANIMAL GUARDS AND ANY NECESSARY BENDS OR BRANCHES SHALL BE INCLUDED FOR PAYMENT IN THE PERTINENT CONDUIT ITEMS.

THE FOLLOWING ESTIMATED QUANTITIES HAVE BEEN INCLUDED IN THE GENERAL SUMMARY FOR THE WORK NOTED ABOVE:

611 4" CONDUIT, TYPE E, AS PER PLAN	100 FT.
611 6" CONDUIT, TYPE B, AS PER PLAN	100 FT.
611 10" CONDUIT, TYPE B, AS PER PLAN	100 FT.
611 18" CONDUIT, TYPE B, AS PER PLAN	100 FT.

CROSSINGS AND CONNECTIONS TO EXISTING PIPES AND UTILITIES

WHERE PLANS PROVIDE FOR A PROPOSED CONDUIT TO BE CONNECTED TO, OR CROSS OVER OR UNDER AN EXISTING SEWER OR UNDERGROUND UTILITY, THE CONTRACTOR SHALL LOCATE THE EXISTING PIPES OR UTILITIES BOTH AS TO LINE, GRADE, AND FUNCTION BEFORE STARTING TO LAY THE PROPOSED CONDUIT.

IF IT IS DETERMINED THAT THE ELEVATION OF THE EXISTING CONDUIT, OR EXISTING APPURTENANCE TO BE CONNECTED, DIFFERS FROM THE PLAN ELEVATION OR RESULTS IN A CHANGE IN THE PLAN CONDUIT SLOPE, THE ENGINEER SHALL BE NOTIFIED BEFORE STARTING CONSTRUCTION OF ANY PORTION OF THE PROPOSED CONDUIT WHICH WILL BE AFFECTED BY THE VARIANCE IN THE EXISTING ELEVATIONS.

IF IT IS DETERMINED THAT THE PROPOSED CONDUIT WILL INTERSECT AN EXISTING SEWER OR UNDERGROUND UTILITY IF CONSTRUCTED AS SHOWN ON THE PLAN, THE ENGINEER SHALL BE NOTIFIED BEFORE STARTING CONSTRUCTION OF ANY PORTION OF THE PROPOSED CONDUIT WHICH WOULD BE AFFECTED BY THE INTERFERENCE WITH AN EXISTING FACILITY.

PAYMENT FOR ALL THE OPERATIONS DESCRIBED ABOVE SHALL BE INCLUDED IN THE CONTRACT PRICE FOR THE PERTINENT 611 CONDUIT ITEM.

ITEM 611 - CATCH BASIN, NO. 6, AS PER PLAN

NEW CATCH BASIN SHALL BE INSTALLED WITH BICYCLE SAFE GRATES. QUANTITIES AND LOCATIONS ARE SHOWN IN THE PLANS AND SHALL BE PAID FOR AT THE CONTRACT PRICE FOR ITEM 611, EACH, CATCH BASIN NO. 6, AS PER PLAN

REVIEW OF DRAINAGE FACILITIES

BEFORE ANY WORK IS STARTED ON THE PROJECT AND AGAIN BEFORE FINAL ACCEPTANCE BY THE STATE, REPRESENTATIVES OF THE STATE AND THE CONTRACTOR, ALONG WITH LOCAL REPRESENTATIVES, SHALL MAKE AN INSPECTION OF ALL EXISTING SEWERS WHICH ARE TO REMAIN IN SERVICE AND WHICH MAY BE AFFECTED BY THE WORK. THE CONDITION OF THE EXISTING CONDUITS AND THEIR APPURTENANCE SHALL BE DETERMINED FROM FIELD OBSERVATIONS. RECORDS OF THE INSPECTION SHALL BE KEPT IN WRITING BY THE ENGINEER.

ALL NEW CONDUITS, INLETS, CATCH BASINS, AND MANHOLES CONSTRUCTED AS A PART OF THE PROJECT SHALL BE FREE OF ALL FOREIGN MATTER AND IN A CLEAN CONDITION BEFORE THE PROJECT WILL BE ACCEPTED BY THE ENGINEER.

ALL EXISTING SEWERS INSPECTED INITIALLY BY THE ABOVE MENTIONED PARTIES SHALL BE MAINTAINED AND LEFT IN A CONDITION REASONABLY COMPARABLE TO THAT DETERMINED BY THE ORIGINAL INSPECTION. ANY CHANGE IN THE CONDITION RESULTING FROM THE CONTRACTOR'S OPERATIONS SHALL BE CORRECTED BY THE CONTRACTOR TO THE SATISFACTION OF THE ENGINEER.

PAYMENT FOR ALL OPERATIONS DESCRIBED ABOVE SHALL BE INCLUDED IN THE CONTRACT PRICE FOR THE PERTINENT 611 CONDUIT ITEMS.

ITEM 611 - PIPE CULVERTS, SEWERS AND DRAINS, AS PER PLAN

UNLESS OTHERWISE SPECIFIED IN THE PLANS, ALL PIPE CULVERTS, SEWERS AND DRAINS INSTALLED BY THE CONTRACTOR SHALL BE LIMITED TO ITEMS 706.02, 706.04, 706.08, 707.01, 707.02, 707.03, 707.33 AND 748.01 OR ANY OTHER THAT IS ACCEPTABLE TO THE ENGINEER. ITEMS 707.01 AND 707.02 SHALL BE ALLOWED WITH THE EXCEPTION OF HELICAL OR SPIRAL CORRUGATED PIPE. NO SPIRAL PIPE SHALL BE PERMITTED UNLESS AUTHORIZED BY THE ENGINEER. ALL PROPOSED DRAINAGE ITEMS ON THE FISCA PROPERTY SITE SHALL BE BACKFILLED AS DIRECTED IN THE ENVIRONMENTAL NOTE ON SHEET 8 .

MANHOLES, CATCH BASINS AND INLETS REMOVED OR ABANDONED

ALL CASTINGS SHALL BE CAREFULLY REMOVED AND DELIVERED TO THE ALLEN COUNTY ENGINEER'S OFFICE:
(1501 N. SURGAR ST., LIMA, OH. 45801)

PAYMENT FOR ALL OF THE ABOVE SHALL BE INCLUDED IN THE CONTRACT PRICE FOR THE PERTINENT 202 ITEM.

ITEM SPECIAL - MISCELLANEOUS METAL

EXISTING CASTINGS MAY PROVE TO BE UNSUITABLE FOR REUSE, AS DETERMINED BY THE ENGINEER. IT SHALL BE THE CONTRACTOR'S RESPONSIBILITY TO PROVIDE THE CASTINGS OF THE REQUIRED TYPE, SIZE AND STRENGTH (HEAVY OR LIGHT DUTY) FOR THE PARTICULAR STRUCTURE IN QUESTION. ALL MATERIAL SHALL MEET ITEM 611 OF THE SPECIFICATIONS AND SHALL HAVE THE PRIOR APPROVAL OF THE ENGINEER.

THE CONTRACTOR IS CAUTIONED TO USE EXTREME CARE IN THE REMOVAL, STORAGE AND REPLACEMENT OF ALL EXISTING CASTINGS. CASTINGS DAMAGED BY THE NEGLIGENCE OF THE CONTRACTOR, AS DETERMINED BY THE ENGINEER, SHALL BE REPLACED WITH THE PROPER NEW CASTINGS

THE FOLLOWING ESTIMATED QUANTITY HAS BEEN CARRIED TO THE GENERAL SUMMARY FOR USE AS DIRECTED BY THE ENGINEER.
SPECIAL, MISCELLANEOUS METAL 10,000 POUNDS

CALCULATED SWC
CHECKED JMZ

GENERAL NOTES

ALL-SHAWNEE RD

M:\Proj\1121\1001\77305\roadway\sheets\77305GN004.dgn 2/13/2014 8:59:02 AM scorcoran

ITEM SPECIAL - MAILBOX SUPPORT

THIS WORK SHALL CONSIST OF FURNISHING AND ERECTING MAILBOX SUPPORTS AND ANY ASSOCIATED MOUNTING HARDWARE IN ACCORDANCE WITH PLAN DETAILS, AND ATTACHING AN OWNER-SUPPLIED MAILBOX AT LOCATIONS SPECIFIED IN THE PLAN, OR OTHERWISE ESTABLISHED BY THE ENGINEER.

WOOD POSTS SHALL BE NOMINAL 4 INCHES BY 4 INCHES SQUARE OR 4.5 INCHES DIAMETER ROUND, AND CONFORM TO 710.14.

STEEL POSTS SHALL BE NOMINAL PIPE SIZE 2 INCHES I.D., AND CONFORM TO AASHTO M 181.

ALL HARDWARE INCLUDING BUT NOT LIMITED TO PLATES, SCREWS, BOLTS, AND ETC. SHALL BE COMMERCIAL-GRADE GALVANIZED STEEL.

POSTS SHALL BE SET PER THE FIRST PARAGRAPH OF 606.03, AND SHALL IN NO INSTANCE BE ENCASED IN CONCRETE.

SUPPORT HARDWARE SHALL ACCOMMODATE EITHER A SINGLE OR A DOUBLE MAILBOX INSTALLATION, AND NO MORE THAN TWO BOXES MAY BE MOUNTED ON A SINGLE POST.

THE MAILBOX SHALL BE SECURELY AND NEATLY ATTACHED BY THE CONTRACTOR TO THE NEW SUPPORT. THE CONTRACTOR SHALL FURNISH ALL NECESSARY ATTACHMENT HARDWARE (NUTS, BOLTS, PLATES, SPACERS, AND WASHERS) AS NECESSARY TO ACCOMMODATE THE COMPLETE INSTALLATION.

IN THE ABSENCE OF A NEW BOX SUPPLIED BY THE OWNER, THE CONTRACTOR SHALL SALVAGE THE EXISTING BOX AND PLACE IT ON THE NEW SUPPORT. DUE CARE SHALL BE EXERCISED IN SUCH AN OPERATION, AND THE CONTRACTOR SHALL BE RE- SPONSIBLE FOR REPAIRING OR REPLACING ANY BOX DAMAGED BY IMPROPER HANDLING ON HIS PART, AS JUDGED AND DIRECTED BY THE ENGINEER.

THE CONTRACTOR SHALL BE RESPONSIBLE FOR COORDINATING WITH THE LOCAL POST MASTER REGARDING THE TIMING OF THE MOVEMENT OF ANY MAILBOX TO A NEW LOCATION.

PAYMENT UNDER THIS ITEM SHALL BE LIMITED TO FINAL PERMANENT INSTALLATIONS. TEMPORARY INSTALLATIONS SHALL BE IN ACCORDANCE WITH 107.10. HOWEVER, THE SAME MATERIAL AND SIZE LIMITATIONS AS FOR PERMANENT INSTALLATIONS SHALL APPLY.

MAILBOX SUPPORTS, COMPLETE IN PLACE, WILL BE PAID FOR AT THE CONTRACT UNIT PRICE PER EACH, FOR ITEM SPECIAL MAILBOX SUPPORT SYSTEM, (SINGLE) (DOUBLE).

EROSION CONTROL AT BRIDGE

THE FOLLOWING QUANTITY, AS DETAILED IN THE BRIDGE PLANS, HAS BEEN CARRIED TO THE GENERAL SUMMARY.

ITEM 601 - ROCK CHANNEL PROTECTION, TYPE C, WITH AGGREGATE FILTER 961 CY

SPECIAL - MISC.: FLAG POLE

CONTRACTOR SHALL INSTALL FLAG POLES AS DETAILED IN THE PLANS ON SHEET 145 . PAYMENT FOR SPECIAL - MISC.: FLAG POLE SHALL BE MADE AT THE UNIT PRICE BID AND SHALL INCLUDE ALL LABOR, MATERIALS AND EQUIPMENT NECESSARY TO CONSTRUCT A COMPLETE INSTALLATION OF THE FLAG POLES AS SPECIFIED. FLAG POLE HEIGHTS AND FOUNDATION DEPTHS ARE DETAILED ON SHEET 145 .

SPECIAL - BOLLARD
SPECIAL - MISC.: REMOVABLE BOLLARD

CONTRACTOR SHALL INSTALL BOLLARDS AS DETAILED IN THE PLANS ON SHEET 145 . PAYMENT FOR SPECIAL - BOLLARD AND SPECIAL - MISC.: REMOVABLE BOLLARD SHALL BE MADE AT THE UNIT PRICE BID AND SHALL INCLUDE ALL LABOR, MATERIALS AND EQUIPMENT NECESSARY TO CONSTRUCT A COMPLETE INSTALLATION OF THE BOLLARDS AND REMOVABLE BOLLARDS AS SPECIFIED.

SPECIAL - MISC.: CHAIN

CONTRACTOR SHALL INSTALL THE BOLLARD CHAIN AS DETAILED IN THE PLANS ON SHEET 145 . PAYMENT FOR SPECIAL - MISC.: CHAIN SHALL BE MADE AT THE UNIT PRICE BID AND SHALL INCLUDE ALL LABOR, MATERIALS AND EQUIPMENT NECESSARY TO CONSTRUCT THE CHAIN AS SPECIFIED.

SPECIAL - MISC.: IRRIGATION SYSTEM

CONTRACTOR SHALL INSTALL THE IRRIGATION SYSTEM AS DETAILED IN THE PLANS ON SHEET 143 . PAYMENT FOR SPECIAL - MISC.: IRRIGATION SYSTEM SHALL BE MADE AT THE LUMP SUM PRICE BID AND SHALL INCLUDE ALL LABOR, MATERIALS AND EQUIPMENT NECESSARY TO CONSTRUCT A COMPLETE INSTALLATION OF THE IRRIGATION SYSTEM AS SPECIFIED.

SPECIAL - MISC.: 6', 10' ARTIFICIAL TREE

CONTRACTOR SHALL INSTALL THE ARTIFICIAL TREE AS DETAILED IN THE PLANS ON SHEET 145 . PAYMENT FOR SPECIAL - MISC.: 6' ARTIFICIAL TREE AND SPECIAL - MISC.: 10' ARTIFICIAL TREE SHALL BE MADE AT THE LUMP SUM PRICE BID AND SHALL INCLUDE ALL LABOR, MATERIALS AND EQUIPMENT NECESSARY TO CONSTRUCT A COMPLETE INSTALLATION OF THE ARTIFICIAL TREE AS SPECIFIED.

ITEM 451 - 10" REINFORCED CONCRETE PAVEMENT, STAMPED COBBLESTONE FINISH, CLASS QC1, AS PER PLAN
ITEM 452 - 4" NON-REINFORCED CONCRETE PAVEMENT, STAMPED COBBLESTONE FINISH, CLASS QC1, AS PER PLAN

THIS ITEM SHALL BE CONSTRUCTED AS PER ITEM 451 AND ITEM 452 (SEE SHEET 102 WITH THE FOLLOWING ADDITIONAL CONDITIONS:

THE INTERIOR PORTION OF THESE SPLITTER ISLAND AND TRUCK APRON SECTIONS SHALL CONTAIN INTEGRALLY COLORED CONCRETE USING CHROMIX AD-MIXTURES, AS PROVIDED BY L.M. SCOFIELD COMPANY, DOUGLASVILLE GEORGIA (800) 800-9900, OR AN APPROVED EQUAL MATCHING FEDERAL COLOR NUMBER 33522.

IN ADDITION, THESE INTERIOR PORTIONS OF THE SPLITTER ISLAND AND TRUCK APRON SHALL HAVE A STAMPED SURFACE AND SEALED WITH A NON-EPOXY SEALER AS PER CMS ITEM 512. THE STAMPED SURFACE SHALL CONFORM TO THE FOLLOWING PATTERN OR AN APPROVED EQUAL:

1. COBBLESTONE (SPLITTER ISLAND AND TRUCK APRON)

THE CONCRETE STAMP MANUFACTURER SHALL SUBMIT EVIDENCE OF AT LEAST TWO SIMILAR STAMPED CONCRETE CONSTRUCTION PROJECTS WITHIN THE LAST FIVE YEARS FOR REVIEW AND APPROVAL BY THE ENGINEER. THE CONTACTOR SHALL COORDINATE WITH THE CONCRETE STAMP PANEL MANUFACTURER TO ASSURE UNDERSTANDING OF THE PANEL USE, TEST STAMPING REQUIREMENTS, AND FINAL CONSTRUCTION PROCEDURES.

THE CONTRACTOR SHALL ON-SITE, OR AT A LOCATION APPROVED BY THE ENGINEER, A 4'X4'X8" FINISHED SAMPLE (INCLUDING CONCRETE SEALANT) OF THE STAMPED CONCRETE MEDIAN FOR APPROVAL BY THE ENGINEER AND ALLEN COUNTY PRIOR TO CONSTRUCTION OF THE CONCRETE SPLITTER ISLAND AND TRUCK APRONS IN THE ROADWAY. THE APPROVED SAMPLE SHALL SERVE AS THE STANDARD FOR THE FINISH TO THE CONCRETE. THE SAMPLE SHALL BE DISPOSED OF BY THE CONTRACTOR AT THE DIRECTION OF THE ENGINEER.

ALL EXPOSED CONCRETE SURFACES SHALL BE SEALED WITH A CLEAR CONCRETE SEALANT PER ITEM 512.

AS PER THE ABOVE DETAILS, ALL MATERIALS, LABOR, EQUIPMENT, AND INCIDENTALS REQUIRED FOR THE CONSTRUCTION OF THE CONCRETE SPLITTER ISLAND AND TRUCK APRONS, AS PER PLAN (INCLUDING THE SAMPLE) SHALL BE INCLUDED IN THE ITEM 451 - 10" REINFORCED CONCRETE PAVEMENT, STAMPED COBBLESTONE FINISH, CLASS QC1, AS PER PLAN AND ITEM 452 - 4" NON-REINFORCED CONCRETE PAVEMENT, STAMPED COBBLESTONE FINISH, CLASS QC1, AS PER PLAN.

ITEM 601 - ARTICULATING CONCRETE BLOCK REVETMENT SYSTEM, TYPE 2, AS PER PLAN

THIS ITEM SHALL BE CONSTRUCTED AS PER ITEM 601 WITH THE FOLLOWING ADDITIONAL CONDITIONS.

THE CONCRETE BLOCK SYSTEM IS BEING USED TO PROVIDE A DRIVABLE SURFACE FOR LARGE (SUPERLOAD, MULTIPLE AXLE) VEHICLES THAT PERIODICALLY NEED ACCESS THROUGH THE INTERSECTION, BUT CANNOT NAVIGATE THE ROUNDABOUT. BESIDES PROVIDING A DRIVABLE SURFACE, THIS CONSTRUCTION PROVIDES FOR PLANTING GRASS FOR A NATURAL LOOK.

THE CONTRACTOR SHALL PROVIDE A FINISHED SAMPLE OF THE CONCRETE BLOCK FOR APPROVAL BY THE ENGINEER AND ALLEN COUNTY PRIOR TO CONSTRUCTION OF THE BLOCK DRIVE. THE APPROVED SAMPLE WILL SERVE AS THE STANDARD FOR THE FINISH OF THE BLOCK DRIVE. (SEE SHEETS 102 FOR DESIGN LAYOUT AND COLOR REQUIREMENTS.)

THE CONTRACTOR SHALL FILL THE GAPS BETWEEN THE BLOCKS WITH TOPSOIL CONSISTING OF ABOUT 1/3 TOPSOIL, PEAT, AND SAND, AND PLACE ODOT SEEDING MIX CLASS 3B ON THE AREA OF THE CONCRETE BLOCKS.

AS PER THE ABOVE DETAILS, ALL MATERIALS, LABOR, EQUIPMENT, AND INCIDENTALS REQUIRED FOR THE CONSTRUCTION OF THE ARTICULATING CONCRETE BLOCK REVETMENT SYSTEM, TYPE 2, AS PER PLAN (INCLUDING THE SAMPLE) SHALL BE INCLUDED IN ITEM 601 - ARTICULATING CONCRETE BLOCK REVETMENT SYSTEM, TYPE 2, AS PER PLAN.

THE FOLLOWING QUANTITIES HAVE BEEN INCLUDED FOR THIS ITEM AND HAVE BEEN CARRIED TO THE GENERAL SUMMARY:

ITEM 653 - TOPSOIL FURNISHED AND PLACED, AS PER PLAN 10 CY

ITEM 659 - SEEDING AND MULCHING , CLASS 3B 50 SY

SANITARY

MAINTENANCE OF SEWER FLOW

THE CONTRACTOR SHALL CONDUCT HIS OPERATIONS SO AS TO MAINTAIN SEWER FLOW AT ALL TIMES THROUGH EXISTING FACILITIES WHICH ARE TO REMAIN IN PLACE UNTIL THEY ARE REPLACED WITH NEW FACILITIES THAT ARE COMPLETED AND PLACED IN USE. PAYMENT FOR ANY ADDITIONAL COST INVOLVED IN MAINTAINING THESE FLOWS BY PUMPING OR BY ANY OTHER MEANS APPROVED BY THE ENGINEER SHALL BE INCLUDED IN THE UNIT PRICE OF THE RESPECTIVE ITEM 611 CONDUIT.

WATERWORK

THE FOLLOWING CONTINGENCY QUANTITY SHALL BE CARRIED TO THE GENERAL SUMMARY, TO BE USED AS DETERMINED BY THE PROJECT ENGINEER IN THE FIELD AS NECESSARY DUE TO CONFLICTS BETWEEN WATER FACILITIES AND OTHER UNDERGROUND UTILITIES.

ITEM 638 - 6" WATERMAIN, DUCTILE IRON PIPE, ANSI CLASS 52, WITH RESTRAINED MECHANICAL JOINT FITTINGS 75 FT

THE FOLLOWING CONTINGENCY ITEMS ARE TO BE USED AS DETERMINED BY THE PROJECT ENGINEER IN THE FIELD FOR ACCOMODATING EXISTING WATER FACILITIES IMPACTED BY THE TEMPORARY PAVEMENT.

ITEM 638 - VALVE BOX ADJUSTED TO GRADE
40 EACH
ITEM 638 METER AND CHAMBER REMOVED AND RESET
10 EACH
ITEM 638 FIRE HYDRANT EXTENDED AND ADJUSTED TO GRADE
4 EACH

TRAFFIC CONTROL

ITEM 630 - GROUND MOUNTED SUPPORT, NO, 2 POST, AS PER PLAN AND GROUND MOUNTED SUPPORT, NO. 3 POST, AS PER PLAN.

GROUND MOUNTED SIGN SUPPORT POSTS SHALL BE SQUARE SHAPED POSTS THAT ARE TO BE REMOVABLE AS INDICATED IN THE PLANS. SIGN SUPPORTS SHALL INCLUDE AN ANCHOR BASE, AS PER TC-41.20, AND ANCHORED FLUSH WITH THE PAVEMENT.

1. REMOVABLE SIGN POSTS SHALL BE LOCKABLE WITH A REMOVABLE PIN AND EXTERIOR PADLOCK, BE EASILY REMOVED, AND INSTALLED INTO A RECESSED GROUND SLEEVE/RECEIVER.

2. WHEN SIGN POST IS TEMPORARILY REMOVED, MOUNTING/GROUND HARDWARE AND LOCKABLE HARDWARE SHALL NOT PROTURDE ABOVE FINISH GRADE PRESENTING A HAZARD TO VEHICLE TIRES.

3. INSTALL REMOVABLE SIGN POSTS AS PER MANUFACTURER SPECIFICATIONS.

4. THE SIGN SUPPORT ANCHOR BASES FOR THE REMOVABLE SIGNS THAT ARE LOCATED IN THE CONCRETE BLOCK AREA SHALL BE ADJUSTED TO FIT WITHIN THE OPENINGS WITHIN THE CONCRETE BLOCK. THESE ANCHOR BASES SHALL BE FIRMLY INSTALLED IN THE OPENINGS USING A CONCRETE, MORTAR OR EPOXY MIX.

RAISED PAVEMENT MARKER, AS PER PLAN

ITEM 621 - RPM, AS PER PLAN SHALL BE INSTALLED IN LOCATIONS AS SPECIFIED IN THE PLANS ON SHEET 124 .

EACH SET OF THREE RPM'S SHALL BE INSTALLED SO THAT ALL THREE RPM'S ARE EQUALLY SPACED.

RPM'S SHALL HAVE 1-WAY, YELLOW REFLECTORS AND THEY SHALL BE PLOWABLE.

TRAFFIC SIGNALS

ITEM 632 - REMOVAL OF TRAFFIC SIGNAL INSTALLATION, AS PER PLAN

TRAFFIC SIGNAL INSTALLATIONS, INCLUDING SIGNAL HEADS, CABLE, MESSENGER WIRE, STRAIN POLES, STRAIN POLE FOUNDATIONS AS INDICATED, CABINET, CONTROLLER, ETC., SHALL BE REMOVED IN ACCORDANCE WITH CMS 632.26 AND AS INDICATED ON THE PLANS. REMOVED ITEMS SHALL BE DELIVERED TO THE ALLEN COUNTY ENGINEER, 1501 N. SURGAR ST., LIMA OH. 45801

4 3-SECTION VEHICULAR SIGNAL HEADS
4 5-SECTION VEHICULAR SIGNAL HEADS
2 STRAIN POLES
CONTROLLER AND CABINET
OVERHEAD SIGNS

IN THE EVENT THE ITEMS STORED ON THE PROJECT FOR SALVAGE BY THE LOCAL AGENCY ARE NOT REMOVED, THE CONTRACTOR SHALL, WHEN DIRECTED BY THE ENGINEER IN WRITING, REMOVE AND DISPOSE OF THE ITEMS AT NO ADDITIONAL COST TO THE PROJECT.

CALCULATED SWC CHECKED JMZ

GENERAL NOTES

ALL-SHAWNEE RD

M:\Proj\1121\10011\77305\roadway\sheets\77305GN005.dgn 3/12/2014 12:16:27 PM scorcoran

ITEM 614 - MAINTAINING TRAFFIC

FOR ALL PHASES OF CONSTRUCTION, TRAFFIC IS TO BE MAINTAINED ON PROPOSED TEMPORARY PAVEMENT, NEWLY CONSTRUCTED PERMANENT PAVEMENT, OR ON THE PROPOSED DETOUR ROUTE. TEMPORARY CLOSURES AND FLAGGERS MAY BE USED AS LONG AS THE ITEM OF WORK FOR WHICH THEY ARE REQUIRED CAN BE COMPLETED IN LESS THAN ONE DAY. TEMPORARY CLOSURES MAY ONLY BE PERFORMED BETWEEN THE HOURS OF 10 PM AND 5 AM.

TRAFFIC SHALL BE MAINTAINED ON EXISTING ROADWAYS AND RAMPS IN ACCORDANCE WITH THE OHIO MANUAL OF UNIFORM TRAFFIC CONTROL DEVICES FOR STREETS AND HIGHWAYS, CURRENT EDITION, LATEST REVISION, THE SPECIFICATIONS AND THE FOLLOWING:

1. A MINIMUM OF ONE TEN FOOT LANE IN EACH DIRECTION SHALL BE MAINTAINED ON THE EXISTING PAVEMENT (COMPLETED PAVEMENT AND TEMPORARY PAVEMENT) DURING CONSTRUCTION OF THE WORK.

2. ONLY DURING OFF-PEAK PERIODS (ie ANY PERIOD OTHER THAN 6-9AM AND 2-6PM) SHALL THE CONTRACTOR INSTALL AND SUBSEQUENTLY RESET ALL TRAFFIC CONTROL NECESSARY FOR THE WORK ZONE FOR EACH CONSTRUCTION PHASE.

3. WEEKEND WORK SHALL BE PERFORMED DURING THE HOURS OF 7AM TO 7PM. NO SUNDAY WORK SHALL BE PERMITTED UNLESS GIVEN AUTHORIZATION FROM THE ALLEN COUNTY ENGINEER.

4. NO WORK WILL BE PERMITTED ON HOLIDAYS

ALL WORK AND TRAFFIC CONTROL DEVICES SHALL BE IN ACCORDANCE WITH CMS 614 AND OTHER APPLICABLE PORTIONS OF THE SPECIFICATIONS, AS WELL AS THE OHIO MANUAL OF UNIFORM TRAFFIC CONTROL DEVICES. PAYMENT FOR ALL LABOR, EQUIPMENT AND MATERIALS SHALL BE INCLUDED IN THE LUMP SUM CONTRACT PRICE FOR ITEM 614, MAINTAINING TRAFFIC, UNLESS SEPARATELY ITEMIZED IN THE PLAN.

SEQUENCE OF CONSTRUCTION

IN AREAS OF THE PROPOSED SPLITTER ISLANDS AND CENTER ISLAND, PHASES 1-3 SHALL ONLY INCLUDE ROUGH GRADING. THESE AREAS WILL BE COVERED WITH TEMPORARY PAVEMENT AS NEEDED TO MAINTAIN TRAFFIC.

PHASE 1

SHAWNEE ROAD SOUTH OF FORT AMANDA ROAD:

CONSTRUCT WESTERN HALF OF SHAWNEE ROAD WHILE MAINTAINING TRAFFIC ON TEMPORARY PAVEMENT WITHIN THE EXISTING R/W. CONSTRUCT PROPOSED STORM SEWER TRUNK LINE AND PROPOSED SANITARY SEWER. USE FLAGGERS AND TEMPORARY CLOSURES TO CONSTRUCT PIPE THROUGH INTERSECTION. THIS WORK SHALL BE COMPLETED IN LESS THAN ONE DAY.

SHAWNEE ROAD NORTH OF FORT AMANDA ROAD:

CONSTRUCT EASTERN PORTION OF PROPOSED BRIDGE WHILE MAINTAINING TRAFFIC ON EXISTING BRIDGE. ALSO CONSTRUCT EASTERN PORTION OF SHAWNEE ROAD TO NORTHERN PROJECT LIMIT. MAINTAIN TRAFFIC ON TEMPORARY PAVEMENT.

FORT AMANDA ROAD:

CONSTRUCT CULVERT EXTENSION BETWEEN STATIONS 221+00 TO 222+00 BEFORE PLACING TEMPORARY PAVEMENT. BETWEEN STATIONS 206+00 AND 208+50, CONSTRUCT NORTHERN PORTION OF ROADWAY WHILE MAINTAINING TRAFFIC ON EXISTING PAVEMENT AND TEMPORARY PAVEMENT. FROM STATION 208+50 TO 220+25, CONSTRUCT ENTIRE ROADWAY WIDTH WHILE MAINTAINING TRAFFIC WITH TEMPORARY PAVEMENT.

PHASE 1A

CONSTRUCT REMAINING PORTIONS OF WEST AND NORTH LEGS WHILE MAINTAINING TRAFFIC ON TEMPORARY PAVEMENT BUILT DURING PHASE 1. ONE-WAY WESTBOUND TRAFFIC WILL BE MAINTAINED ON FORT AMANDA ROAD FOR A MAXIMUM OF TWO (2) WEEKS. DETOUR ROUTE FOR EASTBOUND TRAFFIC TO BE PROVIDED BY ALLEN COUNTY.

PHASE 2

SHAWNEE ROAD SOUTH OF FORT AMANDA ROAD:
CONSTRUCT REMAINING EASTERN HALF OF SHAWNEE ROAD WHILE MAINTAINING TRAFFIC ON THE NEWLY CONSTRUCTED PAVEMENT. CONSTRUCT REMAINING PORTION OF EAST LEG OF ROUNDABOUT.

SHAWNEE ROAD NORTH OF FORT AMANDA ROAD:
TRAFFIC IS TO BE MAINTAINED ON EXISTING BRIDGE, EXISTING ROADWAY AND A PORTION OF THE NEWLY CONSTRUCTED PAVEMENT.

PHASE 3

SHAWNEE ROAD SOUTH OF FORT AMANDA ROAD:
MAINTAIN NORTHBOUND TRAFFIC ON TEMPORARY PAVEMENT CONSTRUCTED DURING PHASE 1 AND MAINTAIN SOUTHBOUND TRAFFIC ON NEWLY CONSTRUCTED PAVEMENT BUILT DURING PHASE 2.

SHAWNEE ROAD NORTH OF FORT AMANDA ROAD:
CONSTRUCT WESTERN HALF OF PROPOSED BRIDGE AND REMAINING PORTION OF NORTH LEG OF ROUNDABOUT. SHIFT TRAFFIC TO NEWLY CONSTRUCTED EASTERN PORTION OF BRIDGE AND NEW PAVEMENT NORTH OF BRIDGE. LIMIT NORTHBOUND CLOSURE DURING SHIFT TO FRIDAY AT 9 PM TO MONDAY AT 6 AM. CONSTRUCT NORTHWEST QUADRANT AND SOUTHWEST QUADRANT OF ROUNDABOUT USING FLAGGERS AND TEMPORARY CLOSURES DURING THE NIGHT AND WEEKEND.

PHASE 4

CONSTRUCT SPLITTER ISLANDS, CENTER ISLAND AND TRUCK APRON WHILE MAINTAINING TRAFFIC ON THE OUTER LANE OF THE ROUNDABOUT ON ALL FOUR APPROACHES.

ITEM 614 WORK ZONE MARKING SIGN SHALL BE INCLUDED IN THE LUMP SUM CONTRACT PRICE FOR ITEM 614, MAINTAINING TRAFFIC BEEN INCLUDED IN THE PLAN. THIS SHALL INCLUDE, BUT NOT BE LIMITED TO, THE FOLLOWING SIGNS: W8-1 [BUMP], W6-3 [TWO-WAY TRAFFIC], W8-H13 [NO EDGE LINES], R4-1 [DO NOT PASS], R4-2 [PASS WITH CARE], W8-11 [UNEVEN LANES]. THESE QUANTITIES SHALL BE AS PER 614.04.

THE CONTRACTOR SHALL NOT USE CONCIL HOUSE DRIVE AS A MEANS TO DETOUR TRAFFIC THROUGHOUT THE DURATION OF THE PROJECT,

THE FOLLOWING QUANTITIES SHALL BE USED FOR THE MAINTENANCE OF TRAFFIC ON THIS PROJECT:

503, COFFERDAMS AND EXCAVATION BRACING	LUMP SUM
614, WORK ZONE EDGE LINE, CLASS I, TYPE 1,	5.00 MILE
614, WORK ZONE EDGE LINE, CLASS I, 642 PAINT	4.65 MILE
614, WORK ZONE CENTER LINE, CLASS I, TYPE	1.55 MILE
614, WORK ZONE CENTER LINE, CLASS I, 642 PAINT	1.25 MILE
614, WORK ZONE STOP LINE, CLASS I, TYPE 1,	125 FT
614, WORK ZONE STOP LINE, CLASS I, 642 PAINT	60 FT
614, WORK ZONE DOTTED LINE, CLASS I, TYPE 1,	550 FT
614, WORK ZONE ARROW, CLASS I, TYPE 1,	4 EACH
614, WORK ZONE IMPACT ATTENUATOR,	11 EACH
622, PORTABLE BARRIER, 32",	3130 FT
622, PORTABLE BARRIER, 32", BRIDGE MOUNTED	200 FT

MAINTAINING ACCESS TO ALL PROPERTIES

ACCESS TO ALL ADJACENT PROPERTIES AND THEIR DRIVES WITHIN THE WORK LIMITS SHALL BE MAINTAINED TO SHAWNEE ROAD AND FORT AMANDA ROAD BY THE CONTRACTOR AT ALL TIMES, AS PER 614.02(A). SEE "MAINTAINING ACCESS AT EXISTING DRIVES" NOTE FOR ADDITIONAL STIPULATIONS.

PARCEL 15: (BP STATION)
CONSTRUCTION ON THE DRIVES FOR PARCEL 15 SHALL BE CONSTRUCTED PART WIDTH. CONSTRUCTION FOR THE TWO DRIVES SHALL NOT BE PERFORMED CONCURRENTLY UNLESS AUTHORIZED BY ENGINEER.

PARCEL 28: (CHASE BANK)
CONSTRUCTION OF THE PROPOSED DRIVE ON THE WEST SIDE OF PARCEL 28 SHALL BE COMPLETED BEFORE THE EXISTING DRIVE ON THE EAST SIDE OF PARCEL 28 IS REMOVED

MAINTAINING ACCESS AT EXISTING DRIVES

RECONSTRUCTION OF THE DRIVES AND PLACEMENT OF CONDUIT ACROSS DRIVES AT THE BUSINESS PARCELS WITHIN THE WORK LIMITS OF THE PROJECT SHALL BE PERFORMED PART-WIDTH.

AT PROPERTIES WITH MULTIPLE DRIVES, PROPOSED DRIVES SHALL BE RECONSTRUCTED PRIOR TO THE REMOVAL OF THE EXISTING DRIVES. VEHICLES SHALL HAVE ACCESS TO/FROM THE PROPERTY VIA A MINIMUM 16 FOOT WIDE DRIVE AT EACH DRIVE LOCATION AT ALL TIMES, UNLESS NOTED OTHERWISE IN THESE PLANS.

CONSTRUCTION OF ALL NEW DRIVES SHALL BE COMPLETED WITHIN THE MAXIMUM NOTED DURATION. AGGREGATE DRIVES OR STEEL PLATES ARE PERMITTED DURING CONSTRUCTION. IT IS PERMISSIBLE TO TEMPORARILY WIDEN A DRIVE ONE OR BOTH WAYS DURING CONSTRUCTION IN ORDER TO COMPLY WITH THIS STIPULATION. ALL AREAS DISTURBED BY TEMPORARY WIDENING SHALL BE RESTORED TO THEIR PRIOR CONDITIONS.

THE CONTRACTOR SHALL PROVIDE A PROCEDURE FOR MAINTAINING ACCESS DURING THE RECONSTRUCTION OF DRIVES FOR EACH PROPERTY TO THE ENGINEER FOR APPROVAL, IN WRITING.

THE CONTRACTOR SHALL ALSO COORDINATE THIS WORK WITH THE RESPECTIVE PROPERTY OWNER AND BUSINESS MANAGER A MINIMUM OF FOURTEEN (14) DAYS PRIOR TO BEGINING ANY WORK

PARKING DISRUPTION LIMITATIONS

THE CONTRACTOR IS TO KEEP ANY DISRUPTION OF PARKING AND BUSINESS TRAFFIC FLOW WITHIN THE TEMPORARY RIGHT OF WAY TO A MINIMUM. PARKING/TRAFFIC FLOW DISRUPTION WILL BE ALLOWED ONLY ONCE AND WILL BE LIMITED TO THE MAXIMUM DURATION OF FOURTEEN (14) CALENDER DAYS. THE CONTRACTOR SHALL ALSO COORDINATE THIS WORK WITH THE RESPECTIVE PROPERTY OWNER AND BUSINESS MANAGER A MINIMUM OF FOURTEEN (14) DAYS PRIOR TO BEGINNING ANY WORK.

PARCEL 19 (STRIP MALL)

THE CONTRACTOR SHALL ATTEMPT TO PERFORM WORK ON MONDAYS AND OTHER NON-PEAK BUSINESS HOURS. CONSTRUCTION ON THE TWO DRIVES SHALL NOT BE PERFORMED CONCURRENTLY UNLESS AUTHORIZED BY THE ENGINEER.

PARCEL 23 (DRY CLEANERS)

THE CONTRACTOR SHALL NOT PROHIBIT ACCESS TO THE TWO PARKING SPACES ADJACENT TO THE DRIVEWAY LOCATED AT STA 123+17, LT FOR A PERIOD OF LONGER THAN 30 DAYS.

ITEM 615 - PAVEMENT FOR MAINTAINING TRAFFIC, CLASS A, AS PER PLAN

THE FOLLOWING ESTIMATED QUANTITIES HAVE BEEN INCLUDED IN THE GENERAL SUMMARY TO BE USED IN CONSTRUCTING THE PAVEMENT FOR MAINTAINING TRAFFIC, CLASS A, AS PER PLAN.

ITEM 615 - PAVEMENT FOR MAINTAINING TRAFFIC, CLASS A, AS PER PLAN	10,575 S.Y.
ITEM 616 - WATER,	24 M GAL
ITEM 411, STABILIZED CRUSHED AGGREGATE,	1200 CU.YD.

UPON COMPLETION OF THE PROJECT, THE CONTRACTOR SHALL REMOVE THE PAVEMENT FOR MAINTAINING TRAFFIC INCLUDING ANY TEMPORARY DRAINAGE FACILITIES. THE AFFECTED EXISTING EARTH MEDIAN AND PAVED SHOULDERS SHALL BE RESTORED TO THEIR ORIGINAL CONDITION AS DIRECTED BY THE ENGINEER AND AS PER 615.08.

PAVEMENT FOR MAINTAINING TRAFFIC SHALL NOT BE OPENED TO TRAFFIC UNTIL ALL WORK ZONE TRAFFIC CONTROL DEVICES, SIGNS, PAVEMENT MARKINGS AND PORTABLE CONCRETE BARRIER HAVE BEEN ERECTED AND APPROVED BY THE ENGINEER.

ALTHOUGH ESTIMATES FOR TEMPORARY EXCAVATION, EMBANKMENT AND TEMPORARY DRAINAGE FACILITIES MAY BE SHOWN ON THE PLAN DETAILS, THESE ITEMS SHALL BE CONSIDERED INCIDENTAL TO, AND INCLUDED WITH PAYMENT FOR ITEM 615 PAVEMENT FOR MAINTAINING TRAFFIC, CLASS A, AS PER PLAN.

FLOODLIGHTING

FLOODLIGHTING OF THE WORK SITE FOR OPERATIONS CONDUCTED DURING NIGHTTIME PERIODS SHALL BE ACCOMPLISHED SO THAT THE LIGHTS DO NOT CAUSE GLARE TO THE DRIVERS ON THE ROADWAY. TO ENSURE THE ADEQUACY OF THE FLOODLIGHT PLACEMENT, THE CONTRACTOR AND THE ENGINEER SHALL DRIVE THROUGH THE WORK SITE EACH NIGHT WHEN THE LIGHTING IS IN PLACE AND OPERATIVE PRIOR TO COMMENCING ANY WORK. IF GLARE IS DETECTED, THE LIGHT PLACEMENT AND SHIELDING SHALL BE ADJUSTED TO THE SATISFACTION OF THE ENGINEER BEFORE WORK PROCEEDS.

PAYMENT FOR ALL LABOR, EQUIPMENT AND MATERIALS SHALL BE INCLUDED IN THE LUMP SUM CONTRACT PRICE FOR ITEM 614, MAINTAINING TRAFFIC.

DUST CONTROL

THE FOLLOWING QUANTITIES HAVE BEEN CARRIED TO THE GENERAL SUMMARY FOR THE PURPOSES OF DUST CONTROL DURING CONSTRUCTION

ITEM 616 - WATER 47 M GAL

SAFETY SERVICE NOTIFICATION

MINOR, SHORT-TERM TEMPORARY IMPACTS TO FIRE, POLICE AND EMERGENCY MEDICAL SERVICES WILL OCCUR DURING THE PROJECT CONSTRUCTION. CONTRACTOR WILL NOTIFY THE ALLEN COUNTY ENGINEER'S OFFICE 15 DAYS IN ADVANCE OF CONSTRUCTION, LANE RESTRICTIONS, CLOSURES, DETOUR ROUTES, AND OTHER CONSTRUCTION RELATED ACTIVITIES THAT WOULD CAUSE INCONVENIENCES TO THESE SERVICES. THE ALLEN COUNTY ENGINEER'S OFFICE WILL NOTIFY THE LOCAL EMERGENCY SERVICES OF THE PROJECT PRIOR TO PROJECT CONSTRUCTION.

M:\Proj\1121\1001\77305\not\sheets\77305MN001.dgn 1/22/2014 3:57:15 PM scorcoran

ITEM 614 - WORK ZONE IMPACT ATTENUATOR FOR 24" WIDE HAZARDS (UNIDIRECTIONAL OR BIDIRECTIONAL)

THIS ITEM SHALL CONSIST OF FURNISHING AND INSTALLING A NON-GATING IMPACT ATTENUATOR. FURNISH AN IMPACT ATTENUATOR FROM THE OFFICE OF ROADWAY ENGINEERING APPROVED LIST FOR WORK ZONE IMPACT ATTENUATORS. THE APPROVED LIST IS AVAILABLE AT THE "ROADWAY STANDARDS: PROPRIETARY ROADSIDE SAFETY DEVICES" WEB PAGE ON THE OFFICE OF ROADWAY ENGINEERING WEBSITE.

INSTALLATION SHALL BE AT THE LOCATIONS SPECIFIED IN THE PLANS IN ACCORDANCE WITH THE MANUFACTURER'S SPECIFICATIONS.

THE CONTRACTOR SHALL REPAIR OR REPLACE A DAMAGED UNIT WITHIN 24 HOURS OF A DAMAGING IMPACT.

WHEN BIDIRECTIONAL DESIGNS ARE SPECIFIED, THE CONTRACTOR SHALL SUPPLY APPROPRIATE TRANSITIONS.

WHEN GATING IMPACT ATTENUATORS ARE DESIRED, THE CONTRACTOR SHALL SUBMIT DOCUMENTATION TO THE ENGINEER FOR ACCEPTANCE.

THE COST FOR THE ADDITIONAL BARRIER REQUIRED FOR A GATING IMPACT ATTENUATOR SHALL BE INCLUDED IN THE COST OF THE GATING IMPACT ATTENUATOR.

PAYMENT FOR THE ABOVE WORK SHALL BE MADE AT THE UNIT PRICE BID AND SHALL INCLUDE ALL LABOR, TOOLS, EQUIPMENT AND MATERIALS NECESSARY TO CONSTRUCT AND MAINTAIN A COMPLETE AND FUNCTIONAL IMPACT ATTENUATOR SYSTEM, INCLUDING ALL RELATED BACKUPS, TRANSITIONS, LEVELING PADS, HARDWARE AND GRADING, NOT SEPARATELY SPECIFIED, AS REQUIRED BY THE MANUFACTURER.

ITEM 614, PORTABLE CHANGEABLE MESSAGE SIGN, AS PER PLAN

THE CONTRACTOR SHALL FURNISH, INSTALL, MAINTAIN AND REMOVE, WHEN NO LONGER NEEDED, A CHANGEABLE MESSAGE SIGN. THE SIGN SHALL BE OF A TYPE SHOWN ON A LIST OF APPROVED PCMS UNITS AVAILABLE ON THE (OFFICE OF MATERIALS MANAGEMENT WEB PAGE). THE LIST CONTAINS CLASS A AND B UNITS WITH MINIMUM LEGIBILITY DISTANCES OF 650 FEET AND 475 FEET, RESPECTIVELY.

EACH SIGN SHALL BE TRAILER-MOUNTED AND EQUIPPED WITH A FUNCTIONAL DIMMING MECHANISM, TO DIM THE SIGN DURING DARKNESS, AND A TAMPER AND VANDAL PROOF ENCLOSURE. EACH SIGN SHALL BE PROVIDED WITH APPROPRIATE TRAINING AND OPERATION INSTRUCTIONS TO ENABLE ON-SITE PERSONNEL TO OPERATE AND TROUBLESHOOT THE UNIT. THE SIGN SHALL ALSO BE CAPABLE OF BEING POWERED BY AN ELECTRICAL SERVICE DROP FROM A LOCAL UTILITY COMPANY.

PLACEMENT, OPERATION, MAINTENANCE AND ALL ACTIVATION OF THE SIGNS BY THE CONTRACTOR SHALL BE AS DIRECTED BY THE ENGINEER. THE PCMS SHALL BE LOCATED IN A HIGHLY VISIBLE POSITION YET PROTECTED FROM TRAFFIC. THE CONTRACTOR SHALL, AT THE DIRECTION OF THE ENGINEER, RELOCATE THE PCMS TO IMPROVE VISIBILITY OR ACCOMMODATE CHANGED CONDITIONS. WHEN NOT IN USE, THE PCMS SHALL BE TURNED OFF. ADDITIONALLY, WHEN NOT IN USE FOR EXTENDED PERIODS OF TIME, THE PCMS SHALL BE TURNED AWAY FROM ALL TRAFFIC.

THE CONTRACTOR SHALL IMPLEMENT A SYSTEM WHEREBY CHANGEABLE MESSAGES WILL BE IMPLEMENTED WITHIN 1 HOUR FOLLOWING TELEPHONE NOTIFICATION FROM THE PROJECT ENGINEER TO A DESIGNATED PHONE.

ALL MESSAGES TO BE DISPLAYED ON THE SIGN WILL BE PROVIDED BY THE ENGINEER. A LIST OF ALL REQUIRED PRE-PROGRAMMED MESSAGES WILL BE GIVEN TO THE CONTRACTOR AT THE PROJECT PRECONSTRUCTION CONFERENCE. THE SIGN SHALL HAVE THE CAPABILITY TO STORE UP TO 99 MESSAGES. MESSAGE MEMORY OR PRE-PROGRAMMED DISPLAYS SHALL NOT BE LOST AS A RESULT OF POWER FAILURES TO THE ON-BOARD COMPUTER. THE SIGN LEGEND SHALL BE CAPABLE OF BEING CHANGED IN THE FIELD. THREE-LINE PRESENTATION FORMATS WITH UP TO SIX MESSAGE PHASES SHALL BE SUPPORTED. PCMS FORMAT SHALL PERMIT THE COMPLETE MESSAGE FOR EACH PHASE TO BE READ AT LEAST TWICE. THE PCMS SHALL CONTAIN AN ACCURATE CLOCK AND PROGRAMMING LOGIC WHICH WILL ALLOW THE SIGN TO BE ACTIVATED, DEACTIVATED OR MESSAGES CHANGED AUTOMATICALLY AT DIFFERENT TIMES OF THE DAY FOR DIFFERENT DAYS OF THE WEEK.

THE PCMS SHALL CONTAIN A CELLULAR TELEPHONE DATA LINK WHICH WILL (IN ACTIVE CELLULAR PHONE AREAS) ALLOW REMOTE SIGN ACTIVATION, MESSAGE CHANGES, MESSAGE ADDITIONS AND REVISIONS TO TIME OF DAY PROGRAMS. THE SYSTEM SHALL ALSO PERMIT VERIFICATION OF CURRENT AND PROGRAMMED MESSAGES.

THE PCMS UNIT SHALL BE MAINTAINED IN GOOD WORKING ORDER BY THE CONTRACTOR IN ACCORDANCE WITH THE PROVISIONS OF CMS 614.07. THE CONTRACTOR SHALL, PRIOR TO ACTIVATING THE UNIT, MAKE ARRANGEMENTS, WITH AN AUTHORIZED SERVICE AGENT FOR THE PCMS, TO ASSURE PROMPT SERVICE IN THE EVENT OF FAILURE. ANY FAILURE SHALL NOT RESULT IN THE SIGN BEING OUT OF SERVICE FOR MORE THAN 12 HOURS, INCLUDING WEEKENDS. FAILURE TO COMPLY MAY RESULT IN AN ORDER TO STOP WORK AND OPEN ALL TRAFFIC LANES AND/OR IN THE DEPARTMENT TAKING APPROPRIATE ACTION TO SAFELY CONTROL TRAFFIC. THE ENTIRE COST TO CONTROL TRAFFIC, ACCRUED BY THE DEPARTMENT DUE TO THE CONTRACTOR'S NONCOMPLIANCE, WILL BE DEDUCTED FROM MONEYS DUE, OR TO BECOME DUE THE CONTRACTOR ON HIS CONTRACT.

THE CONTRACTOR SHALL BE RESPONSIBLE FOR 24-HOUR-PER-DAY OPERATION AND MAINTENANCE OF THESE SIGNS ON THE PROJECT FOR THE DURATION OF THE PHASES WHEN THE PLAN REQUIRES THEIR USE.

THE CONTRACTOR SHALL PLACE CHANGEABLE MESSAGE SIGNS AT THE FOLLOWING LOCATIONS:

1. SHAWNEE ROAD (NORTHBOUND), JUST NORTH OF W. BREESE ROAD.

2. JUST EAST OF THE INTERSECTION OF WAPAK ROAD AND FORT AMANDA ROAD (SE QUADRANT).

3. THE WEST APPROACH (EASTBOUND) OF FORT AMANDA ROAD AND WONDERLICK ROAD.

4. THE WEST APPROACH (EASTBOUND) OF FORT AMANDA ROAD AND YOAKAM ROAD (SW QUADRANT).

5. THE SOUTH APPROACH (SOUTHBOUND) OF SHAWNEE ROAD AND ADGATE ROAD.

6. JUST WEST OF THE INTERSECTION OF FORT AMANDA ROAD AND BUCKEYE ROAD (NE QUADRANT)

7. JUST NORTH OF THE INTERSECTION OF SHAWNEE ROAD AND ZURMEHLY ROAD (NE QUADRANT)

PAYMENT FOR THE ABOVE DESCRIBED ITEM SHALL BE AT THE CONTRACT UNIT PRICE. PAYMENT SHALL INCLUDE ALL LABOR, MATERIALS, EQUIPMENT, FUELS, LUBRICATING OILS, SOFT-WARE, HARDWARE AND INCIDENTALS TO PERFORM THE ABOVE DESCRIBED WORK.

ITEM 614, PORTABLE CHANGEABLE MESSAGE SIGN, AS PER PLAN
126 SIGN MONTH

COUNCILHOUSE DRIVE RESTRICTIONS

THE CONTRACTOR SHALL NOT USE COUNCILHOUSE DRIVE TO REROUTE TRAFFIC DURING CONSTRUCTION. DRIVE IS A PRIVATE DRIVE AND SHALL BE FOR PRIVATE USE ONLY

WORK OVER WATERLINE

THE CONTRACTOR SHALL AVOID DRIVING HEAVY EQUIPMENT OVER SECTIONS OF THE EXISTING WATERLINE THAT MAY ARE HAVE BEEN AFFECTED BY THE CONSTRUCTION OF THE TEMPORARY PAVEMENT. APPROXIMATE DEPTHS OF WATERLINE ARE SHOWN IN THE PROPOSED CROSS SECTIONS ON SHEETS 65-91 . CAUTION SHOULD BE TAKEN NOT TO DRIVE CONSTRUCTION EQUIPMENT OVER AREAS WITH REDUCED COVER.

COVERING OF SIGNS

THE CONTRACTOR WILL COVER ANY EXISTING AND/OR PROPOSED SIGN INSTALLATION WHICH IS IN CONFLICT WITH THE MAINTENANCE OF TRAFFIC PLANS. THE SIGNS SHALL BE COVERED IN SUCH A MANNER AS TO AVOID DAMAGING THE SIGN WHEN THE COVER IS REMOVED. THE COVER SHALL BE TOTALLY OPAQUE AND COVERS THE ENTIRE SIGN FACE. THE USE OF ADHESIVE TAPE APPLIED DIRECTLY TO THE SIGN FACE IS STRICTLY PROHIBITED. THE CONTRACTOR WILL PROVIDE ALL OF THE "CLOSED" PLAQUES NECESSARY. THE OVERLAY MAY BE RIVETED TO THE SIGN. THE CONTRACTOR SHALL PROVIDE ALL OF THE PLAQUES, SIGNS, AND SIGN PANELS NECESSARY.

UNLESS SEPARATELY ITEMIZED IN THE PLAN, THE LUMP SUM PRICE BID FOR ITEM 614 MAINTAINING TRAFFIC SHALL INCLUDE ALL COSTS NECESSARY TO COVER AND/OR MODIFY CONFLICTING SIGN INSTALLATIONS.

SHARED-USE PATH

THE CONTRACTOR SHALL MAKE EVERY EFFORT TO LIMIT THE IMPACTS TO THE EXISTING ROTARY RIVER BIKE PATH WHEN CONNECTING THE SHARED-USE PATH AS PART OF THIS PROJECT. THE ROTARY RIVER BIKE PATH IS TO REMAIN OPEN TO TRAVELLERS AT ALL TIMES. THE PAVEMENT OF THE EXISTING BIKE PATH AT THIS INTERSECTION CAN BE OUT OF SERVICE FOR NO MORE THAN 5 CALENDAR DAYS. ADDITIONALLY, DURING THIS TIME PERIOD, THE CONTRACTOR SHALL BUILD, MAINTAIN, AND REMOVE A TEMPORARY PATH (RUN-A-ROUND) TO SAFELY ACCOMMODATE TRAVELLERS ON THE ROTARY RIVER BIKE PATH. THE TEMPORARY PATH SHALL BE BUILT WITHIN THE TEMPORARY RIGHT OF WAY LIMITS. PAYMENT FOR THE WORK DESCRIBED HEREIN WILL BE INCLUDED IN ITEM 614 - MAINTENANCE OF TRAFFIC, LUMP. SEE FURTHER DETAILS ON SECTION 4(F) RESOURCES NOTE ON SHEET 8.

M:\Proj\1121\1001\77305\mot\sheets\77305MN002.dgn 2/10/2014 8:30:36 AM scorcoran

NOTE: TEMPORARY SHORING FOR USE DURING CONSTRUCTION AS NOTED IN THESE PLANS WILL BE PAID FOR AS ITEM 503 COFFERDAMS AND EXCAVATION BRACING. THIS LUMP SUM ITEM IS CARRIED TO THE GENERAL SUMMARY.

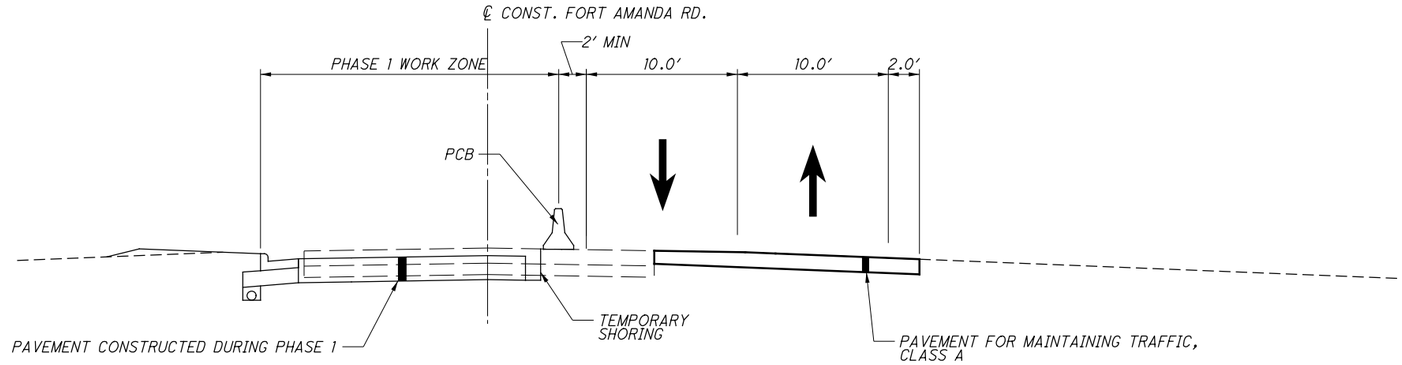

MAINTENANCE OF TRAFFIC CROSS SECTION - PHASE 1
FORT AMANDA ROAD STA 207+00

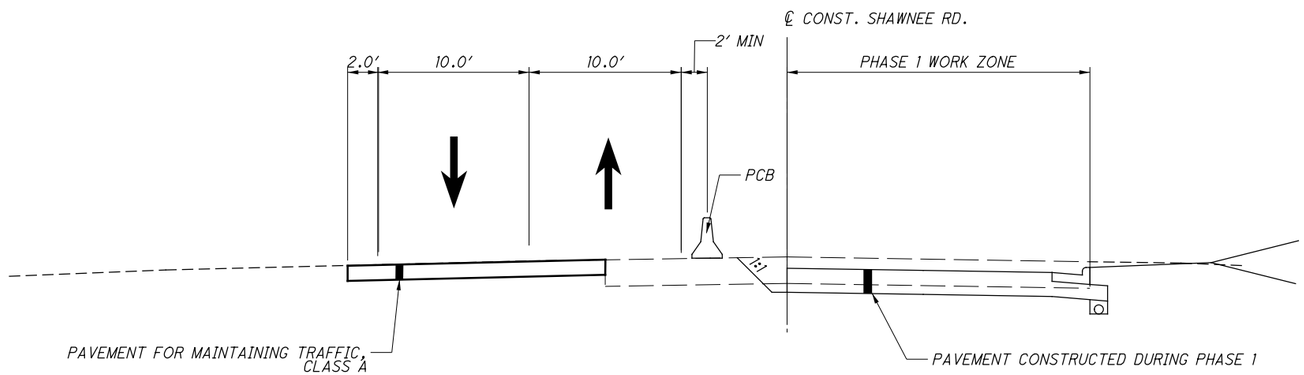

MAINTENANCE OF TRAFFIC CROSS SECTION - PHASE 1
SHAWNEE ROAD STA 120+00

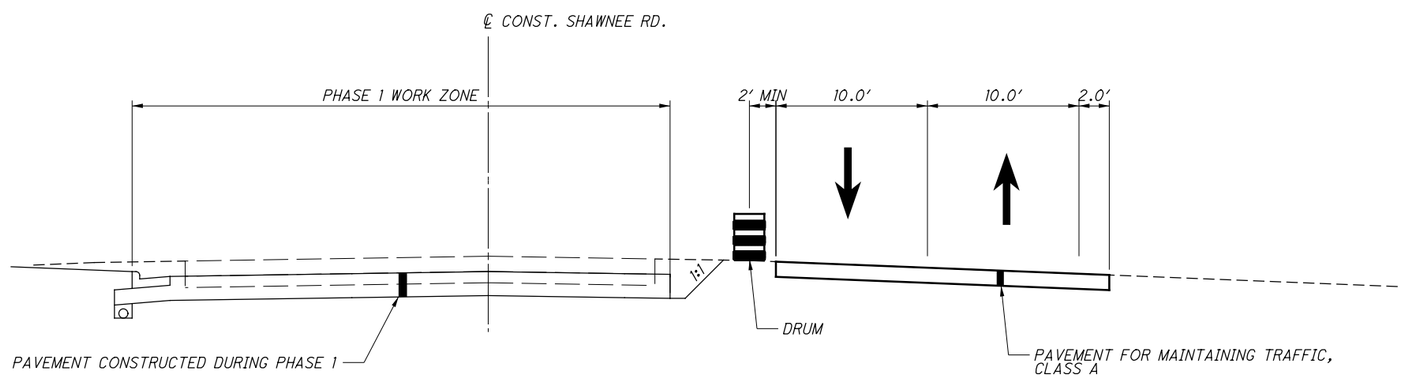

MAINTENANCE OF TRAFFIC CROSS SECTION - PHASE 1
SHAWNEE ROAD STA 109+00

MAINTENANCE OF TRAFFIC TYPICAL SECTIONS PHASE 1

ALL-SHAWNEE RD

M:\Proj\112\1001\77305\mot\sheets\77305MY001.dgn 1/13/2014 5:29:10 PM scorcoran

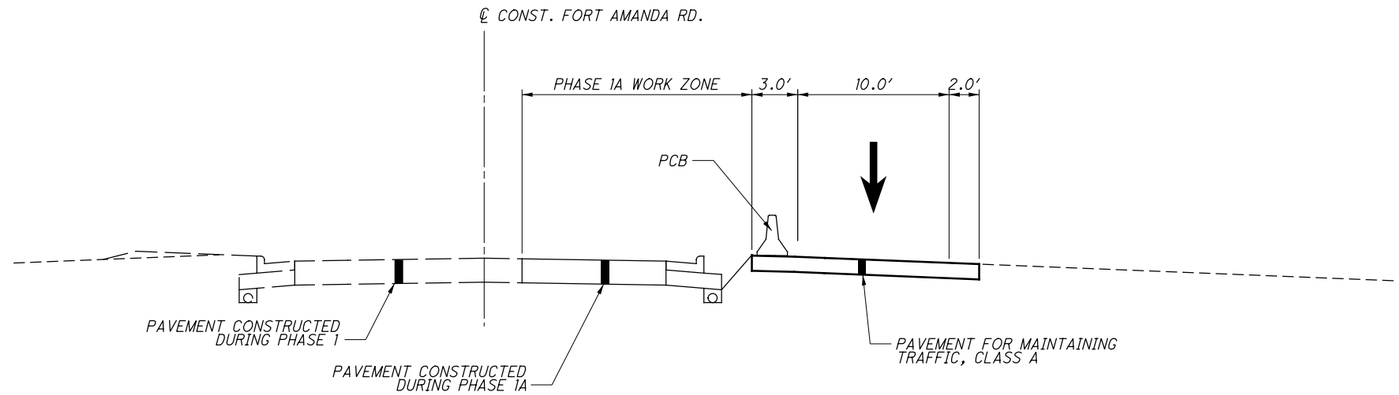

MAINTENANCE OF TRAFFIC CROSS SECTION - PHASE 1A
FORT AMANDA ROAD STA 207+00

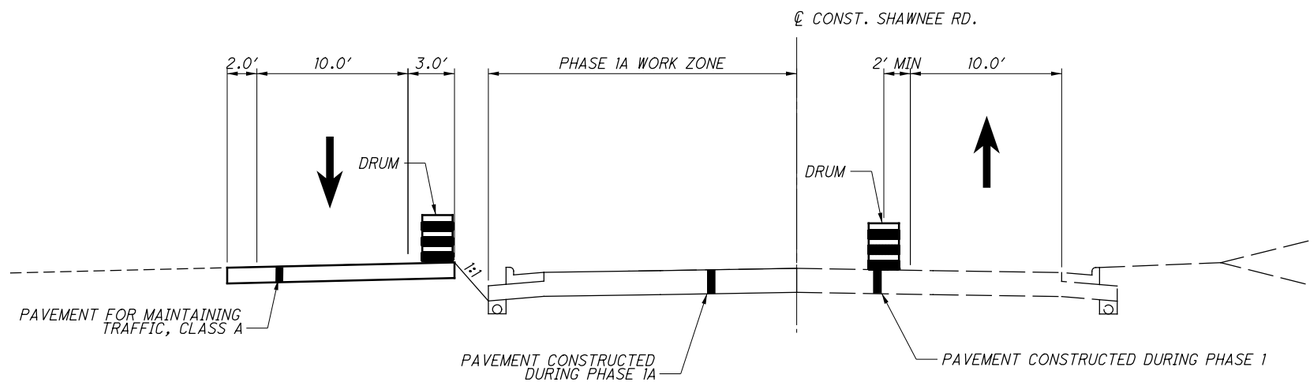

MAINTENANCE OF TRAFFIC CROSS SECTION - PHASE 1A
SHAWNEE ROAD STA 122+00

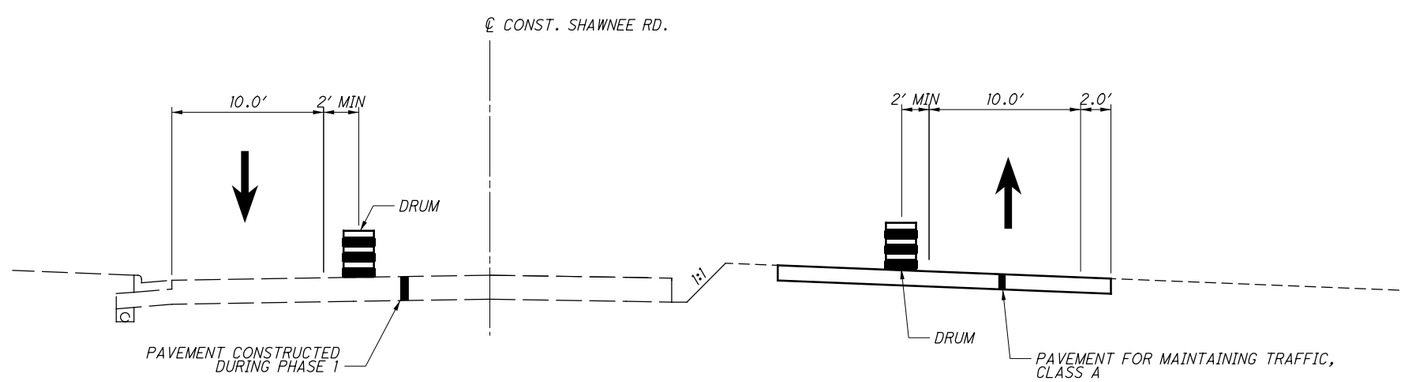

MAINTENANCE OF TRAFFIC CROSS SECTION - PHASE 1A
SHAWNEE ROAD STA 109+00

MAINTENANCE OF TRAFFIC TYPICAL SECTIONS PHASE 1A

ALL-SHAWNEE RD

M:\Proj\1121\1001\77305\mot\sheets\77305MY002.dgn 1/13/2014 5:29:10 PM scorcoran

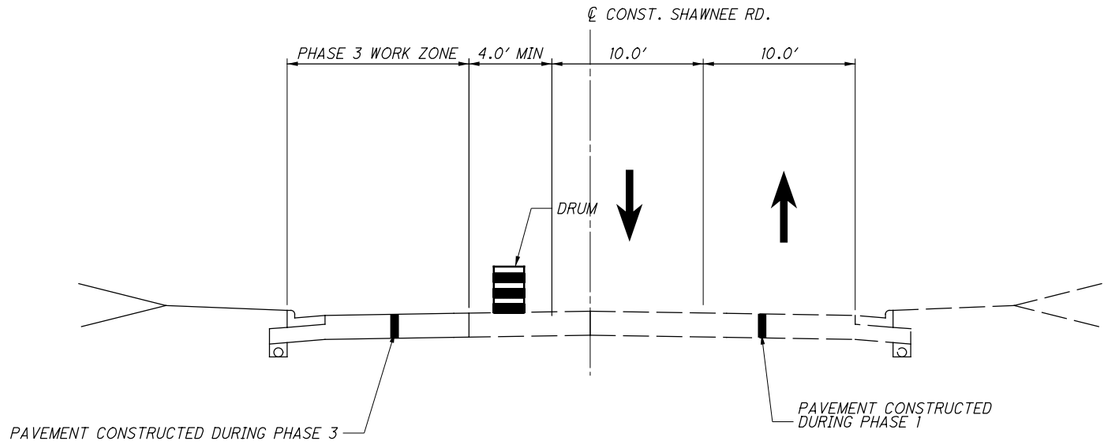

MAINTENANCE OF TRAFFIC CROSS SECTION - PHASE 3
SHAWNEE ROAD STA 120+00

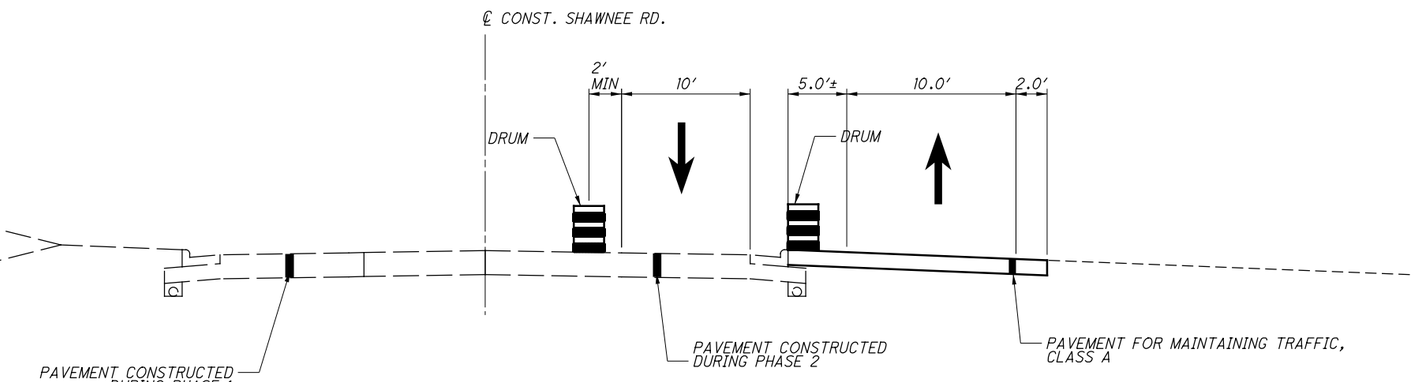

MAINTENANCE OF TRAFFIC CROSS SECTION - PHASE 3
SHAWNEE ROAD STA 120+00

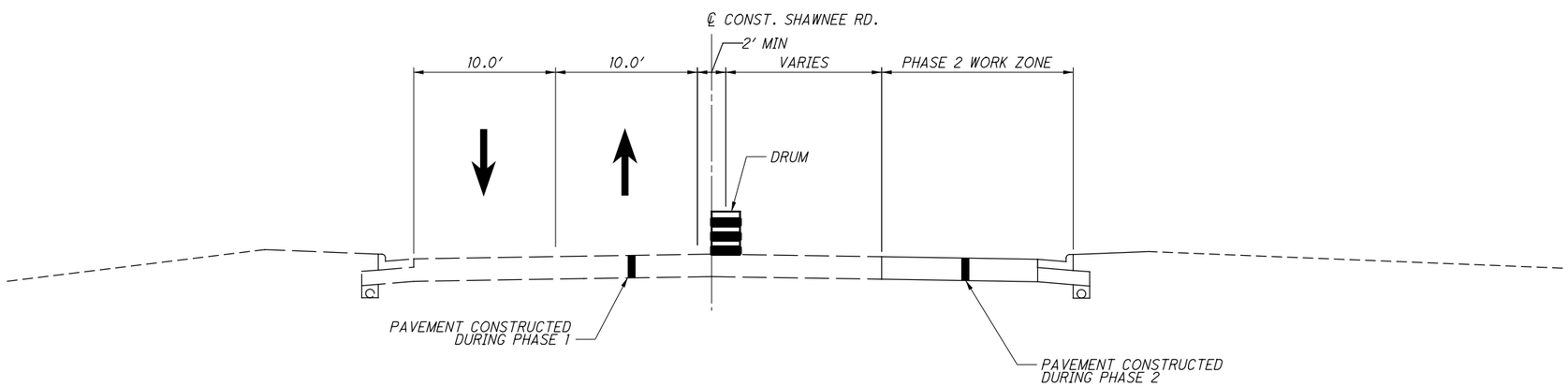

MAINTENANCE OF TRAFFIC CROSS SECTION - PHASE 2
SHAWNEE ROAD STA 109+00

MAINTENANCE OF TRAFFIC TYPICAL SECTIONS PHASE 2 AND PHASE 3

ALL-SHAWNEE RD

M:\Proj\1121\1001\77305\mot\sheets\77305MY003.dgn 1/13/2014 5:29:11 PM scorcoran

TYPICAL DRUM SPACING
TANGENTS - 30' C/C
TAPERS - 30' C/C

END ROAD WORK
G20-2-36
STA. 92+00

BEGIN TAPER EDGELINE
+35, 15' LT

BEGIN DRUMS
+00, 15' LT

W1-H11-36
STA. 99+95

ELW

CL

92 93 94 95 96 97 98 99 100

15' 15'

SHAWNEE RD

N 1°51'58.4" W

2'

MATCH LINE STA 104+00
SEE THIS SHEET

W1-4R-36
STA. 96+00

BEGIN TAPER CENTERLINE
+06, 0' RT

BEGIN TEMP. PAVEMENT
+00, 14.5' RT

W1-H11-36
STA. 99+95
STA. 97+00

W20-1-36
W13-1P-24
STA. 93+60

ROAD WORK AHEAD

35 MPH

PAVEMENT MARKING LEGEND

- ELW - EDGE LINE (WHITE)
- ELY - EDGE LINE (YELLOW)
- CL - CENTER LINE
- SL - STOP LINE
- DL - DOTTED LINE
- LA - LANE ARROW

PAVEMENT FOR MAINTAINING TRAFFIC

TEMPORARY WORK ZONE

WORK ZONE DRUMS

PORTABLE CONCRETE BARRIER (PCB)

ROAD CLOSED

TYPE III BARRICADE
R11-2-48
STA. 102+30

W1-H11-36
STA. 104+60
STA. 108+70

MATCH LINE STA 104+00
SEE THIS SHEET

101 102 103 104 105 106 107 108 109 110

N 1°51'58.4" W

SHAWNEE RD

N 0°30'53" W

N 0°48'10" W

MATCH LINE STA 111+00
SEE SHEET 17

ELW

CL

END TAPER
+61, 0' RT

BEGIN TAPER
+32, 29' RT

W1-H11-36
STA. 104+60

W1-4L-36
STA. 110+50

NOTE: SEE CROSS SECTIONS SHEETS 65 - 91 FOR LIMITS OF TEMPORARY PAVEMENT

ALL STATION AND OFFSET LABELS ARE REFERENCED TO THE PROPOSED CENTERLINE OF SHAWNEE OR FORT AMANDA ROAD RESPECTIVELY

HORIZONTAL SCALE IN FEET
0 20 40 80

CALCULATED SWC
CHECKED CRP

MAINTENANCE OF TRAFFIC PLAN SHEET
PHASE 1 - SHAWNEE RD

ALL - SHAWNEE RD

M:\Proj\112\1001\77305\mot\sheets\77305MP101.dgn 1/13/2014 5:29:12 PM scorcoran

TYPICAL DRUM SPACING

TANGENTS - 30' C/C

TAPERS - 30' C/C

NOTE: SEE CROSS SECTIONS SHEETS 65 - 91 FOR LIMITS OF TEMPORARY PAVEMENT

FOR PAVEMENT MARKING LEGEND SEE SHEET 16

ALL STATION AND OFFSET LABELS ARE REFERENCED TO THE PROPOSED CENTERLINE OF SHAWNEE OR FORT AMANDA ROAD RESPECTIVELY

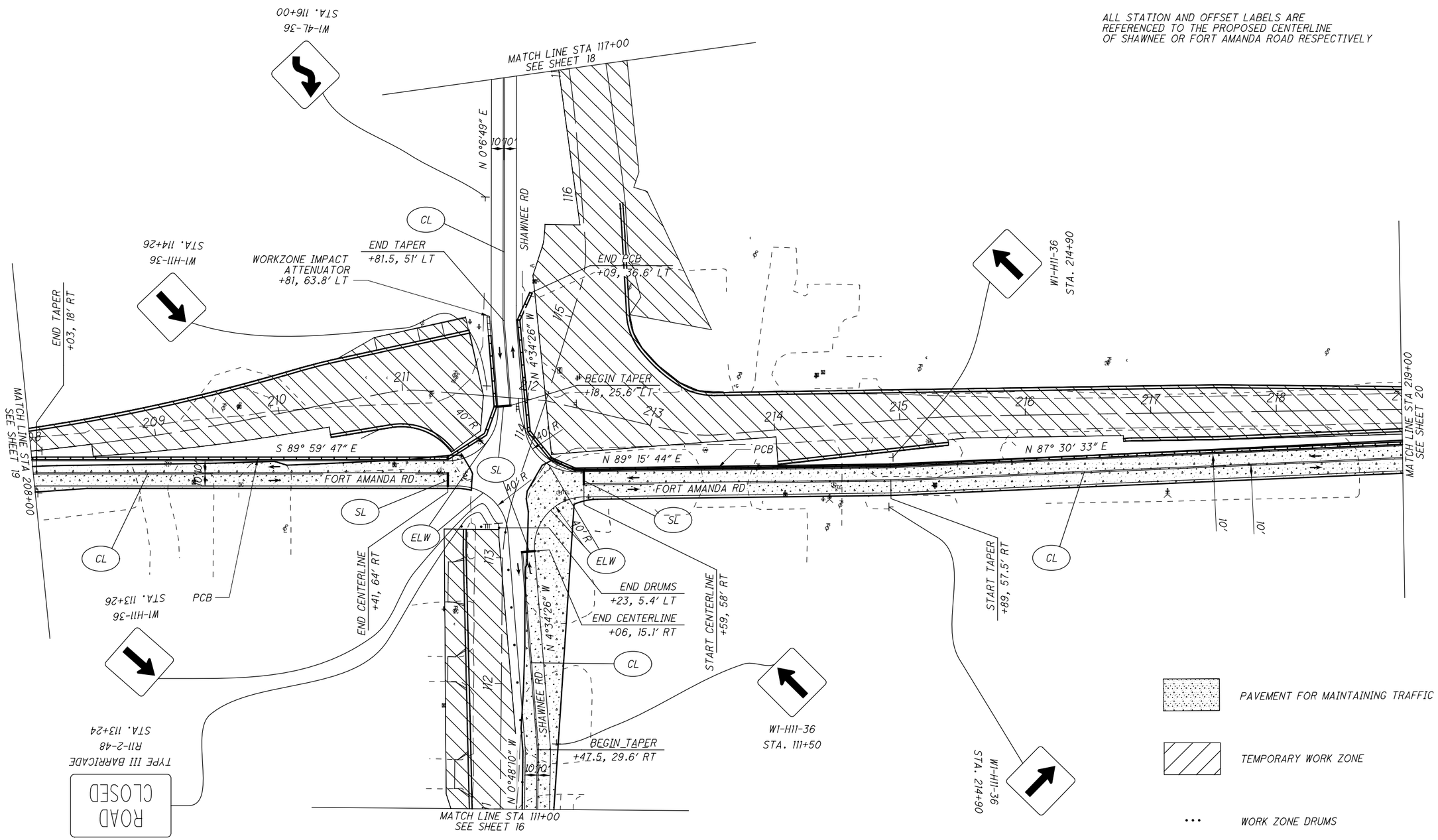

HORIZONTAL SCALE IN FEET 0 20 40 80

CALCULATED SWC

CHECKED CRP

MAINTENANCE OF TRAFFIC PLAN SHEET
PHASE 1 - SHAWNEE RD ROUNDABOUT

ALL - SHAWNEE RD

M:\Proj\1121\1001\77305\mot\sheets\77305MP102.dgn 1/13/2014 5:29:13 PM scorcoran

TYPICAL DRUM SPACING

TANGENTS - 30' C/C

TAPERS - 30' C/C

NOTE: SEE CROSS SECTIONS SHEETS 65 - 91 FOR LIMITS OF TEMPORARY PAVEMENT

FOR PAVEMENT MARKING LEGEND SEE SHEET 16

ALL STATION AND OFFSET LABELS ARE REFERENCED TO THE PROPOSED CENTERLINE OF SHAWNEE OR FORT AMANDA ROAD RESPECTIVELY

PAVEMENT FOR MAINTAINING TRAFFIC

TEMPORARY WORK ZONE

WORK ZONE DRUMS

PORTABLE CONCRETE BARRIER (PCB)

HORIZONTAL SCALE IN FEET 0 20 40 80

CALCULATED SWC CHECKED CRP

MAINTENANCE OF TRAFFIC PLAN SHEET
PHASE 1 - SHAWNEE RD

ALL - SHAWNEE RD

M:\Proj\1121\100\77305\mot\sheets\77305MP103.dgn 1/13/2014 5:29:13 PM scorcoran

TYPICAL DRUM SPACING

TANGENTS - 30' C/C

TAPERS - 30' C/C

(1)

P.I. Sta. 204+44.78, 6.9' LT
Δ = 13° 54' 50" (RT)
Dc = 4° 18' 59"
R = 1,327.38'
T = 161.97'
L = 322.34'
E = 9.85'
C = 321.55'
C.B. = N 86° 29' 09" E

(2)

P.I. Sta. 206+04.81, 16.4' RT
Δ = 8° 09' 23" (LT)
Dc = 11° 14' 04"
R = 510.00'
T = 36.36'
L = 72.60'
E = 1.29'
C = 72.54'
C.B. = N 89° 21' 52" E

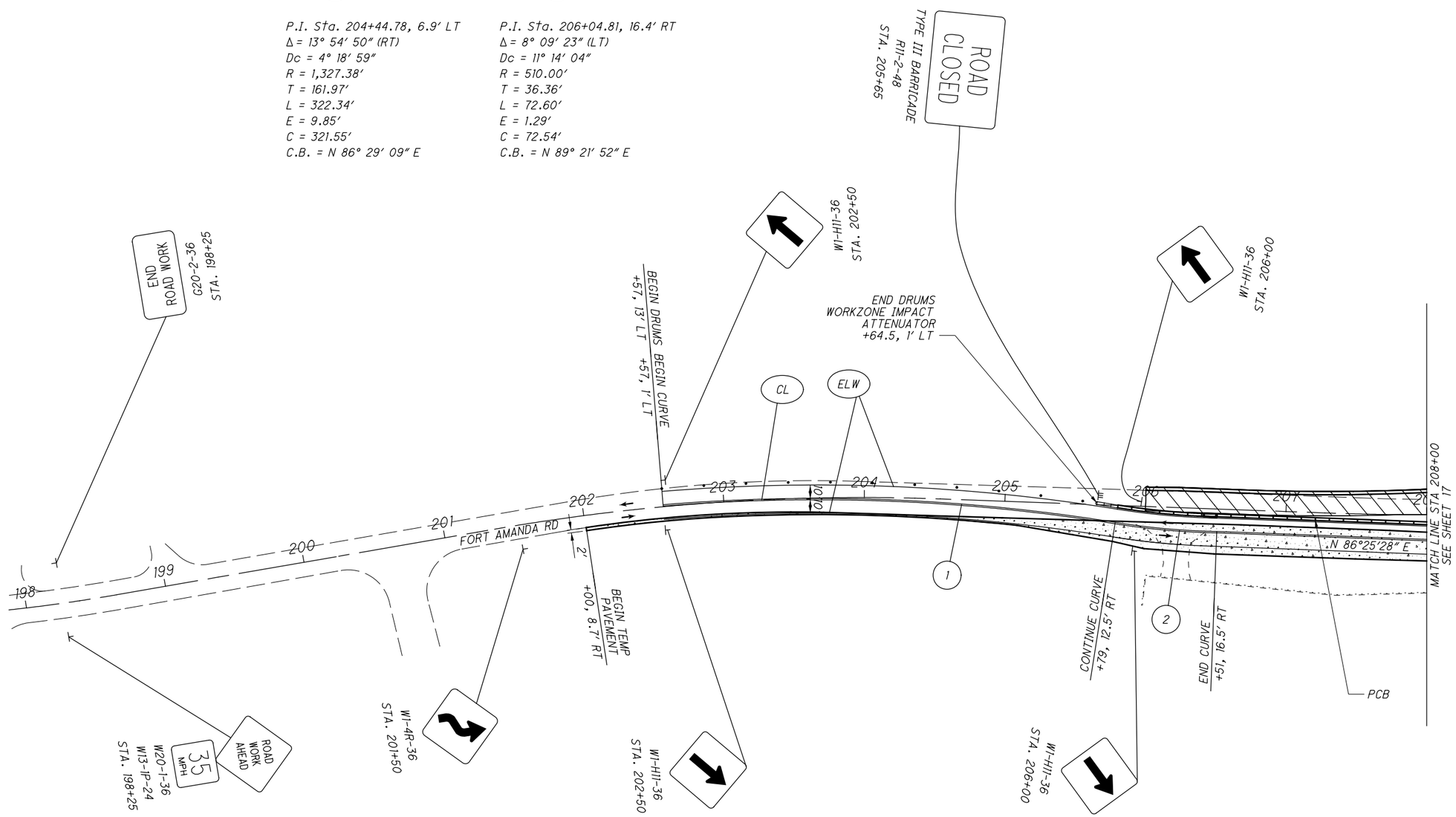

PAVEMENT FOR MAINTAINING TRAFFIC

TEMPORARY WORK ZONE

WORK ZONE DRUMS

PORTABLE CONCRETE BARRIER (PCB)

NOTE: SEE CROSS SECTIONS SHEETS 65 - 91 FOR LIMITS OF TEMPORARY PAVEMENT

FOR PAVEMENT MARKING LEGEND SEE SHEET 16

ALL STATION AND OFFSET LABELS ARE REFERENCED TO THE PROPOSED CENTERLINE OF SHAWNEE OR FORT AMANDA ROAD RESPECTIVELY

N

0 20 40 80
HORIZONTAL SCALE IN FEET

CALCULATED SWC
CHECKED CRP

MAINTENANCE OF TRAFFIC PLAN SHEET
PHASE 1 - FORT AMANDA RD

ALL - SHAWNEE RD

M:\Proj\1121\1001\77305\mot\sheets\77305MP104.dgn 1/13/2014 5:29:14 PM scorcoran

TYPICAL DRUM SPACING

TANGENTS - 30' C/C

TAPERS - 30' C/C

NOTE: SEE CROSS SECTIONS SHEETS 65 - 91 FOR LIMITS OF TEMPORARY PAVEMENT

FOR PAVEMENT MARKING LEGEND SEE SHEET 16

ALL STATION AND OFFSET LABELS ARE REFERENCED TO THE PROPOSED CENTERLINE OF SHAWNEE OR FORT AMANDA ROAD RESPECTIVELY

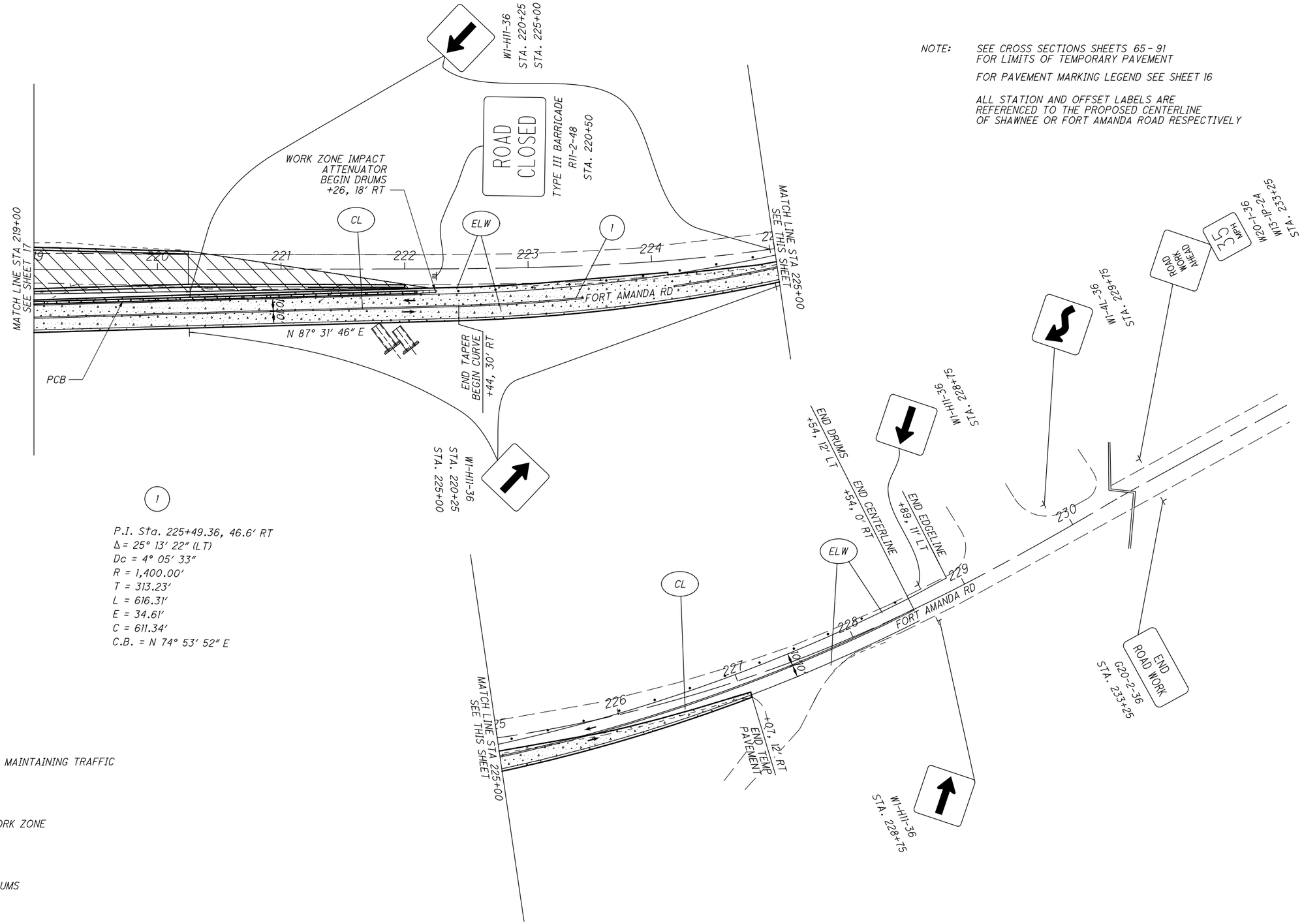

1

P.I. Sta. 225+49.36, 46.6' RT
Δ = 25° 13' 22" (LT)
Dc = 4° 05' 33"
R = 1,400.00'
T = 313.23'
L = 616.31'
E = 34.61'
C = 611.34'
C.B. = N 74° 53' 52" E

PAVEMENT FOR MAINTAINING TRAFFIC

TEMPORARY WORK ZONE

WORK ZONE DRUMS

PORTABLE CONCRETE BARRIER (PCB)

HORIZONTAL SCALE IN FEET 0 20 40 80

CALCULATED SWC
CHECKED CRP

MAINTAINENCE OF TRAFFIC PLANSHEET
PHASE 1 - FORT AMANDA RD

ALL - SHAWNEE RD

M:\Proj\1121\1001\77305\mot\sheets\77305MP105.dgn 1/22/2014 3:38:19 PM scorcoran

TYPICAL DRUM SPACING

TANGENTS - 30' C/C

TAPERS - 30' C/C

NOTE: SEE CROSS SECTIONS SHEETS 65 - 91 FOR LIMITS OF TEMPORARY PAVEMENT

ALL STATION AND OFFSET LABELS ARE REFERENCED TO THE PROPOSED CENTERLINE OF SHAWNEE OR FORT AMANDA ROAD RESPECTIVELY

FOR PAVEMENT MARKING LEGEND SEE SHEET 16

PAVEMENT FOR MAINTAINING TRAFFIC

TEMPORARY WORK ZONE

WORK ZONE DRUMS

PORTABLE CONCRETE BARRIER (PCB)

HORIZONTAL SCALE IN FEET 0 20 40 80

CALCULATED SWC
CHECKED CRP

MAINTENANCE OF TRAFFIC PLAN SHEET
PHASE 1A - SHAWNEE RD

ALL - SHAWNEE RD

M:\Proj\1121\1001\77305\mot\sheets\77305MP1A01.dgn 1/13/2014 5:29:16 PM scorcoran

TYPICAL DRUM SPACING

TANGENTS - 30' C/C

TAPERS - 30' C/C

NOTE: SEE CROSS SECTIONS SHEETS 65 - 91 FOR LIMITS OF TEMPORARY PAVEMENT

ALL STATION AND OFFSET LABELS ARE REFERENCED TO THE PROPOSED CENTERLINE OF SHAWNEE OR FORT AMANDA ROAD RESPECTIVELY

FOR PAVEMENT MARKING LEGEND SEE SHEET 16

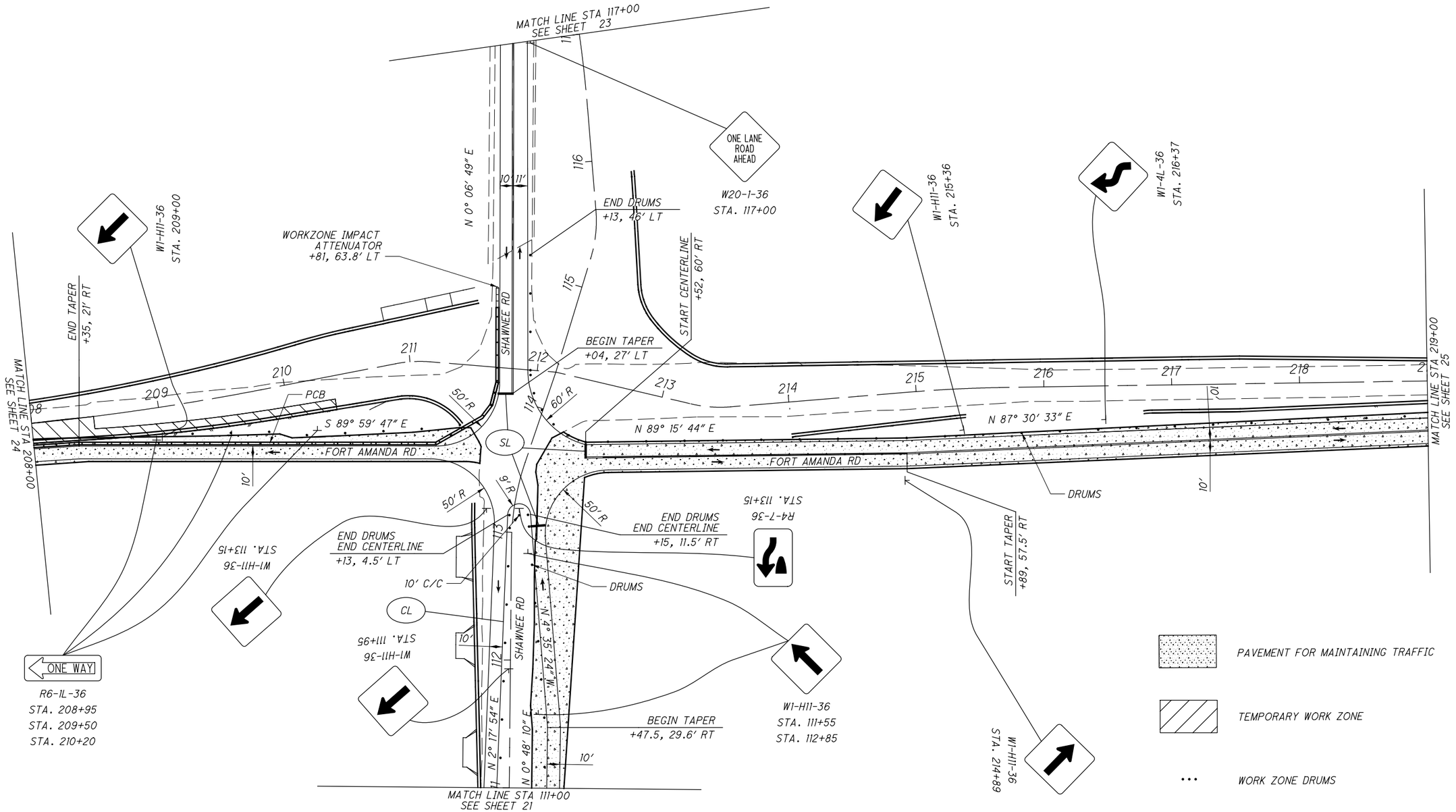

HORIZONTAL SCALE IN FEET 0 20 40 80

CALCULATED SWC
CHECKED CRP

MAINTENANCE OF TRAFFIC PLAN SHEET
PHASE 1A - SHAWNEE RD ROUNDABOUT

ALL - SHAWNEE RD

M:\Proj\1121\1001\77305\mot\sheets\77305MP1A02.dgn 1/13/2014 5:29:17 PM scorcoran

TYPICAL DRUM SPACING
TANGENTS - 30' C/C
TAPERS - 30' C/C

PORTABLE CONCRETE BARRIER (PCB)
WORK ZONE DRUMS
TEMPORARY WORK ZONE
NIGHT AND WEEKEND WORK ZONE
PAVEMENT FOR MAINTAINING TRAFFIC

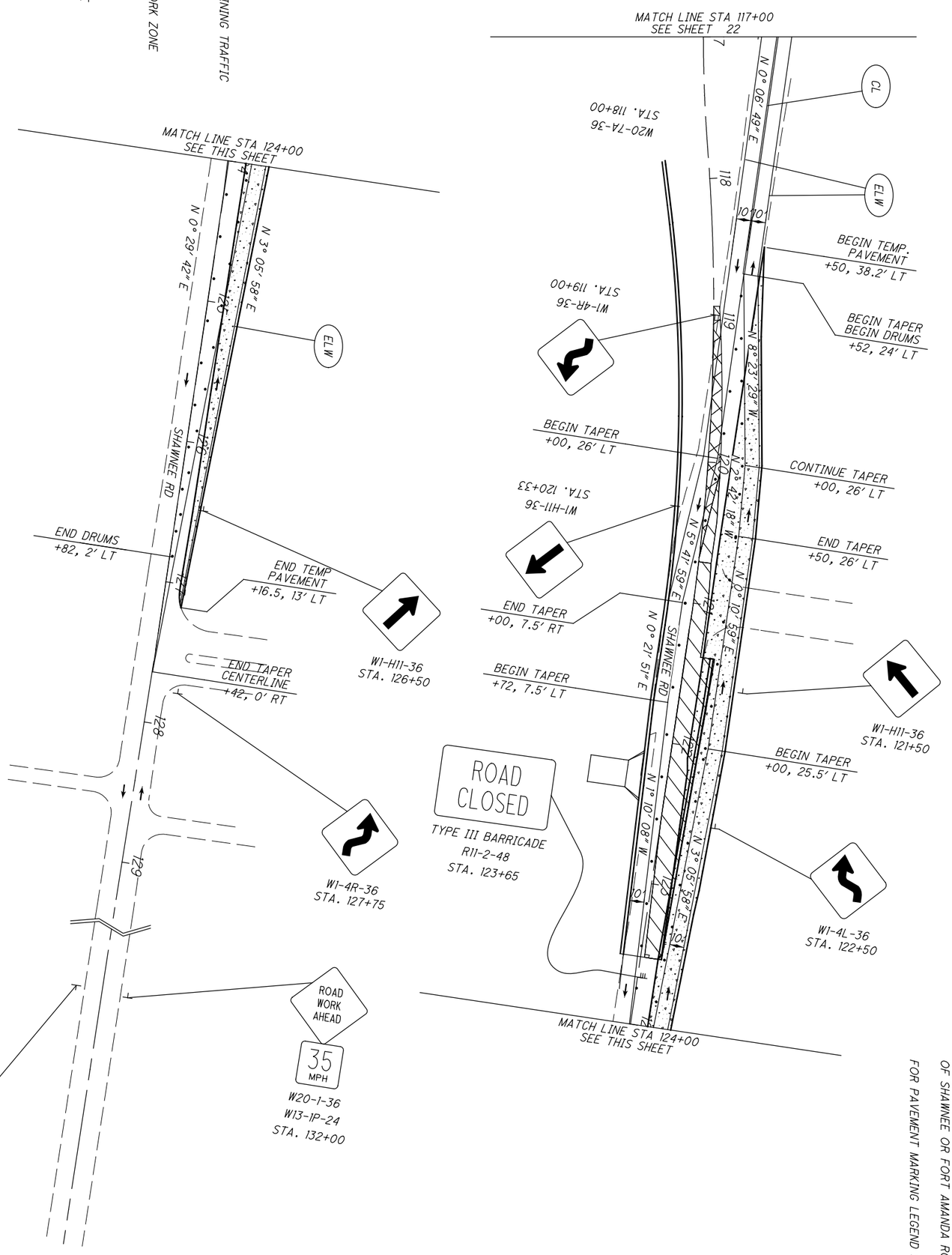

NOTE:
SEE CROSS SECTIONS SHEETS 65 - 91 FOR LIMITS OF TEMPORARY PAVEMENT
ALL STATION AND OFFSET LABELS ARE REFERENCED TO THE PROPOSED CENTERLINE OF SHAWNEE OR FORT AMANDA ROAD RESPECTIVELY
FOR PAVEMENT MARKING LEGEND SEE SHEET 16

23 / 206	ALL - SHAWNEE RD	MAINTENANCE OF TRAFFIC PLAN SHEET PHASE 1A - SHAWNEE RD	CALCULATED SWC CHECKED CRP 0 20 40 80 HORIZONTAL SCALE IN FEET

TYPICAL DRUM SPACING
TANGENTS - 30' C/C
TAPERS - 30' C/C

(1)
P.I. Sta. 203+60.71; 4' LT
Δ = 8° 47' 05" (RT)
Dc = 4° 18' 48"
R = 1,328.38'
T = 102.04'
L = 203.67'
E = 3.91'
C = 203.47'
C.B. = N 83° 55' 16" E

(2)
P.I. Sta. 204+89.67; 3' RT
Δ = 5° 29' 12" (RT)
Dc = 9° 32' 57"
R = 600.00'
T = 28.75'
L = 57.46'
E = 0.69'
C = 57.43'
C.B. = S 88° 56' 35" E

(3)
P.I. Sta. 206+06.14, 18.5' RT
Δ = 7° 24' 41" (LT)
Dc = 14° 19' 26"
R = 400.00'
T = 25.91'
L = 51.74'
E = 0.84'
C = 51.70'
C.B. = S 89° 54' 19" E

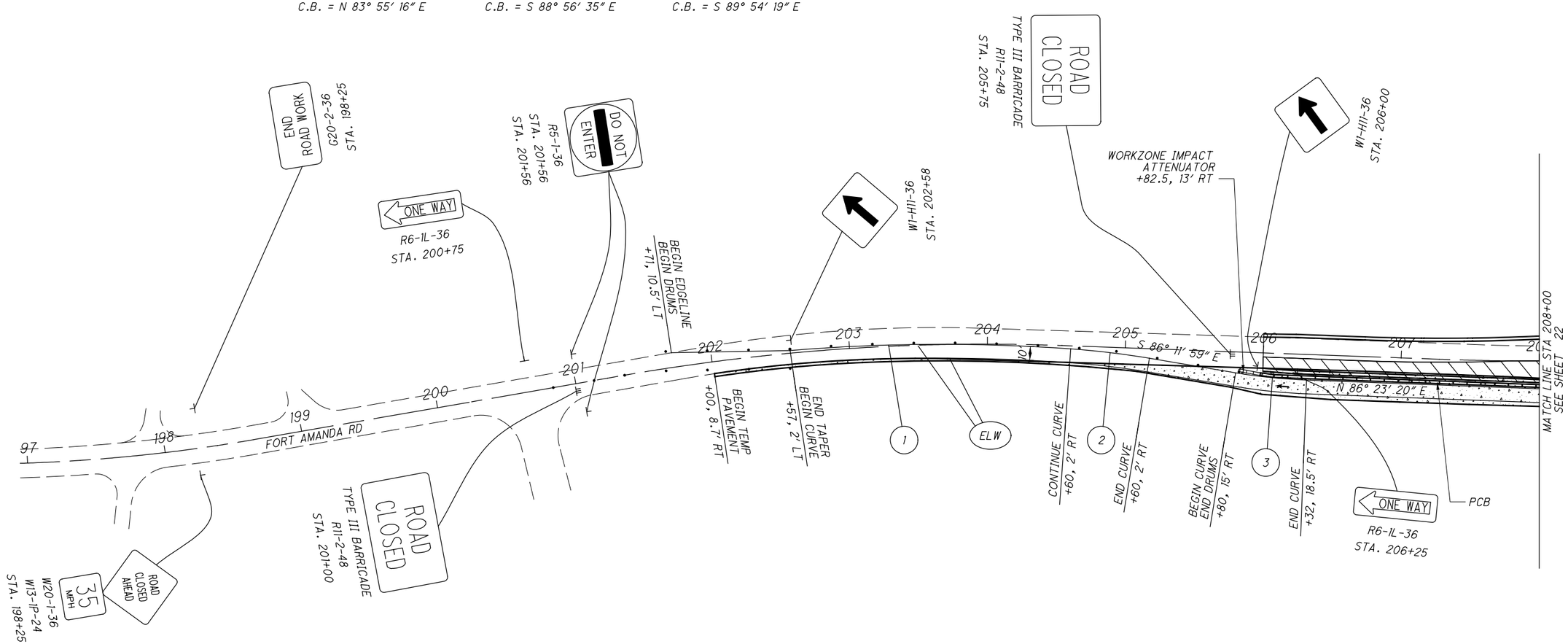

PAVEMENT FOR MAINTAINING TRAFFIC

TEMPORARY WORK ZONE

WORK ZONE DRUMS

PORTABLE CONCRETE BARRIER (PCB)

NOTE: SEE CROSS SECTIONS SHEETS 65 - 91 FOR LIMITS OF TEMPORARY PAVEMENT

ALL STATION AND OFFSET LABELS ARE REFERENCED TO THE PROPOSED CENTERLINE OF SHAWNEE OR FORT AMANDA ROAD RESPECTIVELY

FOR PAVEMENT MARKING LEGEND SEE SHEET 16

HORIZONTAL SCALE IN FEET 0 20 40 80

CALCULATED SWC
CHECKED CRP

MAINTENANCE OF TRAFFIC PLAN SHEET
PHASE 1A - FORT AMANDA RD

ALL - SHAWNEE RD

M:\Proj\1121\1001\77305\mot\streets\77305MP1A04.dgn 1/13/2014 5:29:18 PM scorcoran

NOTE: SEE CROSS SECTIONS SHEETS 65 - 91 FOR LIMITS OF TEMPORARY PAVEMENT

ALL STATION AND OFFSET LABELS ARE REFERENCED TO THE PROPOSED CENTERLINE OF SHAWNEE OR FORT AMANDA ROAD RESPECTIVELY

FOR PAVEMENT MARKING LEGEND SEE SHEET 16

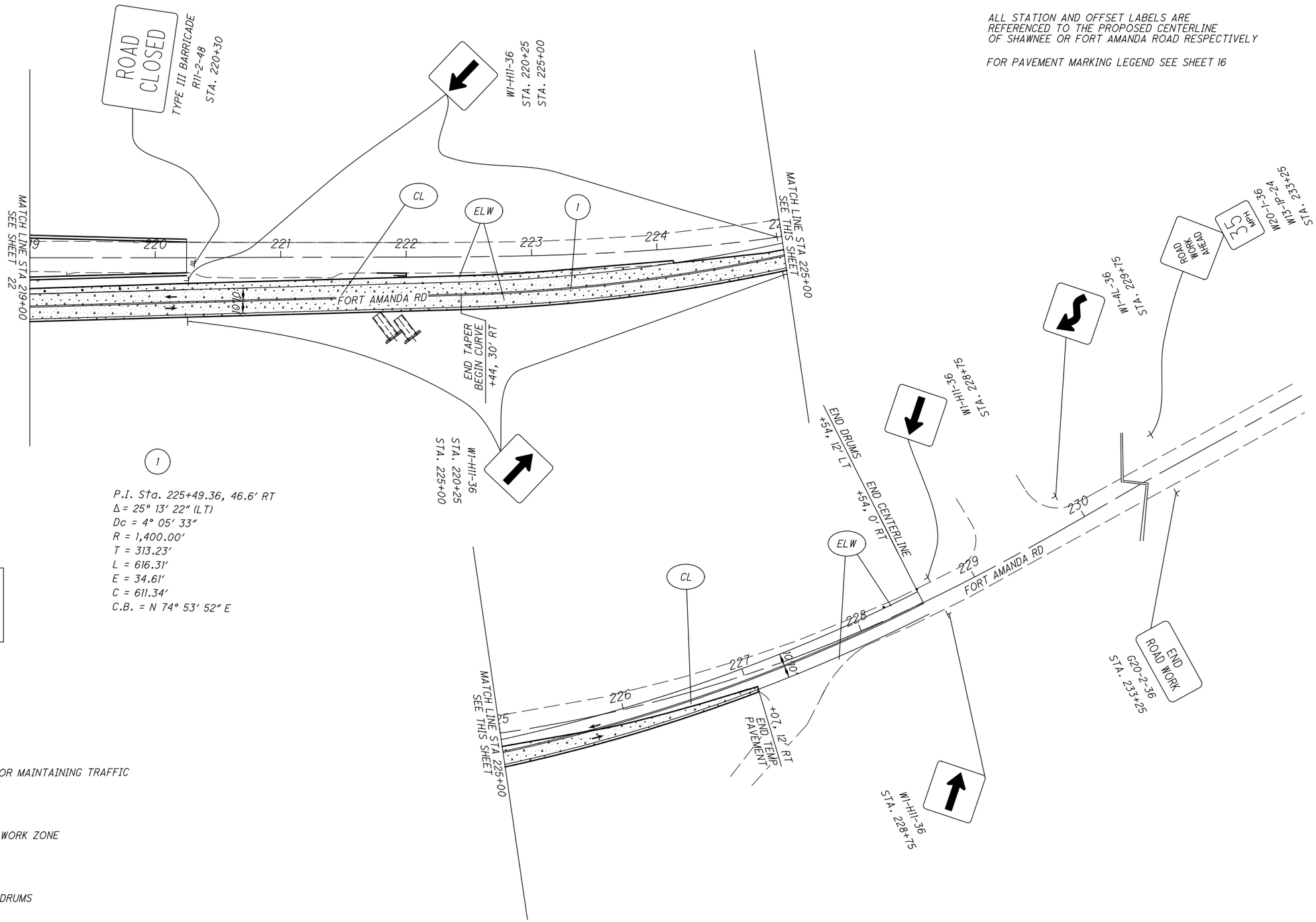

P.I. Sta. 225+49.36, 46.6' RT
Δ = 25° 13' 22" (LT)
Dc = 4° 05' 33"
R = 1,400.00'
T = 313.23'
L = 616.31'
E = 34.61'
C = 611.34'
C.B. = N 74° 53' 52" E

TYPICAL DRUM SPACING
TANGENTS - 30' C/C
TAPERS - 30' C/C

PAVEMENT FOR MAINTAINING TRAFFIC

TEMPORARY WORK ZONE

WORK ZONE DRUMS

PORTABLE CONCRETE BARRIER (PCB)

HORIZONTAL SCALE IN FEET 0 20 40 80

CALCULATED SWC
CHECKED CRP

MAINTAINENCE OF TRAFFIC PLANSHEET
PHASE 1A - FORT AMANDA RD

ALL - SHAWNEE RD

M:\Proj\1121\1001\77305\mot\sheets\77305MP1A05.dgn 1/22/2014 3:38:20 PM scorcoran

TYPICAL DRUM SPACING
TANGENTS - 30' C/C
TAPERS - 30' C/C

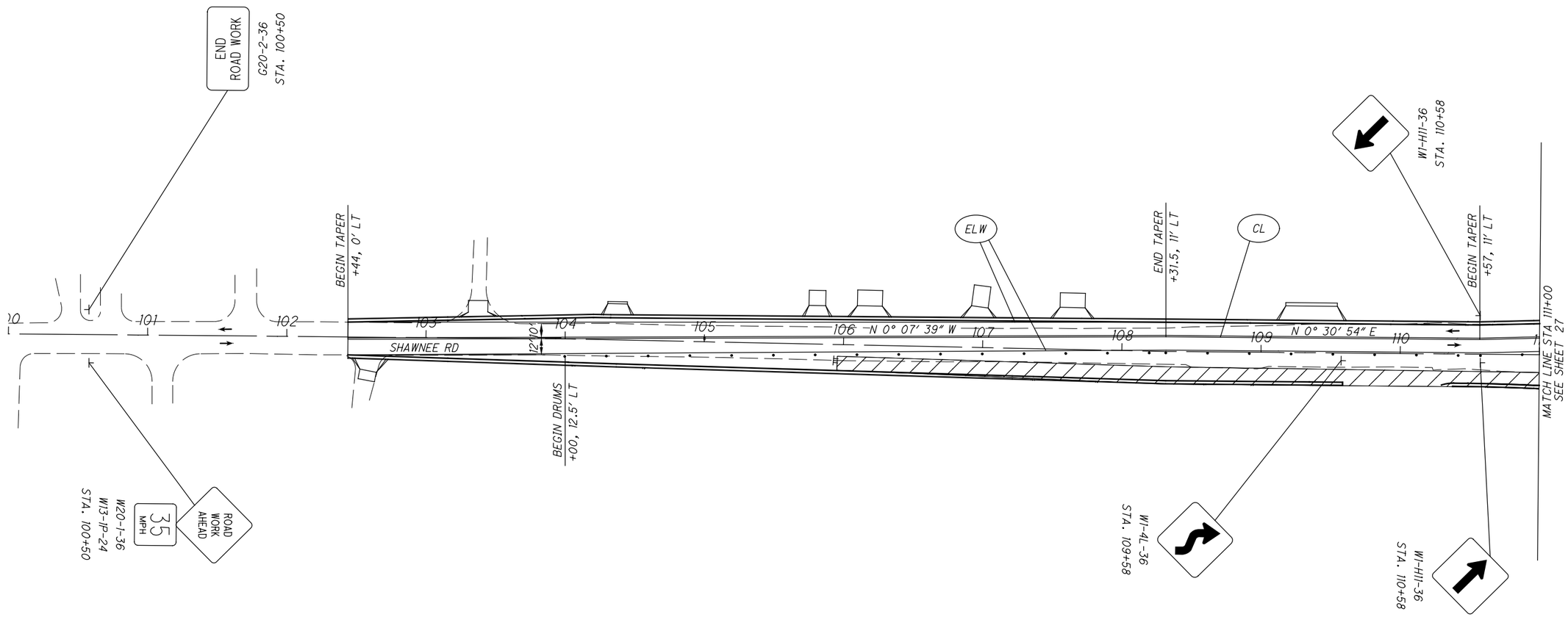

PAVEMENT FOR MAINTAINING TRAFFIC

TEMPORARY WORK ZONE

WORK ZONE DRUMS

PORTABLE CONCRETE BARRIER (PCB)

NOTE: SEE CROSS SECTIONS SHEETS 65-91 FOR LIMITS OF TEMPORARY PAVEMENT

ALL STATION AND OFFSET LABELS ARE REFERENCED TO THE PROPOSED CENTERLINE OF SHAWNEE OR FORT AMANDA ROAD RESPECTIVELY

FOR PAVEMENT MARKING LEGEND SEE SHEET 16

N

0 20 40 80
HORIZONTAL SCALE IN FEET

CALCULATED SWC
CHECKED CRP

MAINTENANCE OF TRAFFIC PLAN SHEET
PHASE 2 - SHAWNEE RD

ALL - SHAWNEE RD

M:\Proj\1121\1001\77305\mot\sheets\77305MP201.dgn 1/13/2014 5:29:20 PM scorcoran

TYPICAL DRUM SPACING

TANGENTS - 30' C/C

TAPERS - 30' C/C

P.I. Sta. 209+23.63, 9.7' RT
Δ = 5° 37' 11" (LT)
Dc = 3° 51' 02"
R = 1,488.00'
T = 73.03'
L = 145.95'
E = 1.79'
C = 145.89'
C.B. = N 83° 31' 28" E

NOTE: SEE CROSS SECTIONS SHEETS 65 - 91 FOR LIMITS OF TEMPORARY PAVEMENT

ALL STATION AND OFFSET LABELS ARE REFERENCED TO THE PROPOSED CENTERLINE OF SHAWNEE OR FORT AMANDA ROAD RESPECTIVELY

FOR PAVEMENT MARKING LEGEND SEE SHEET 16

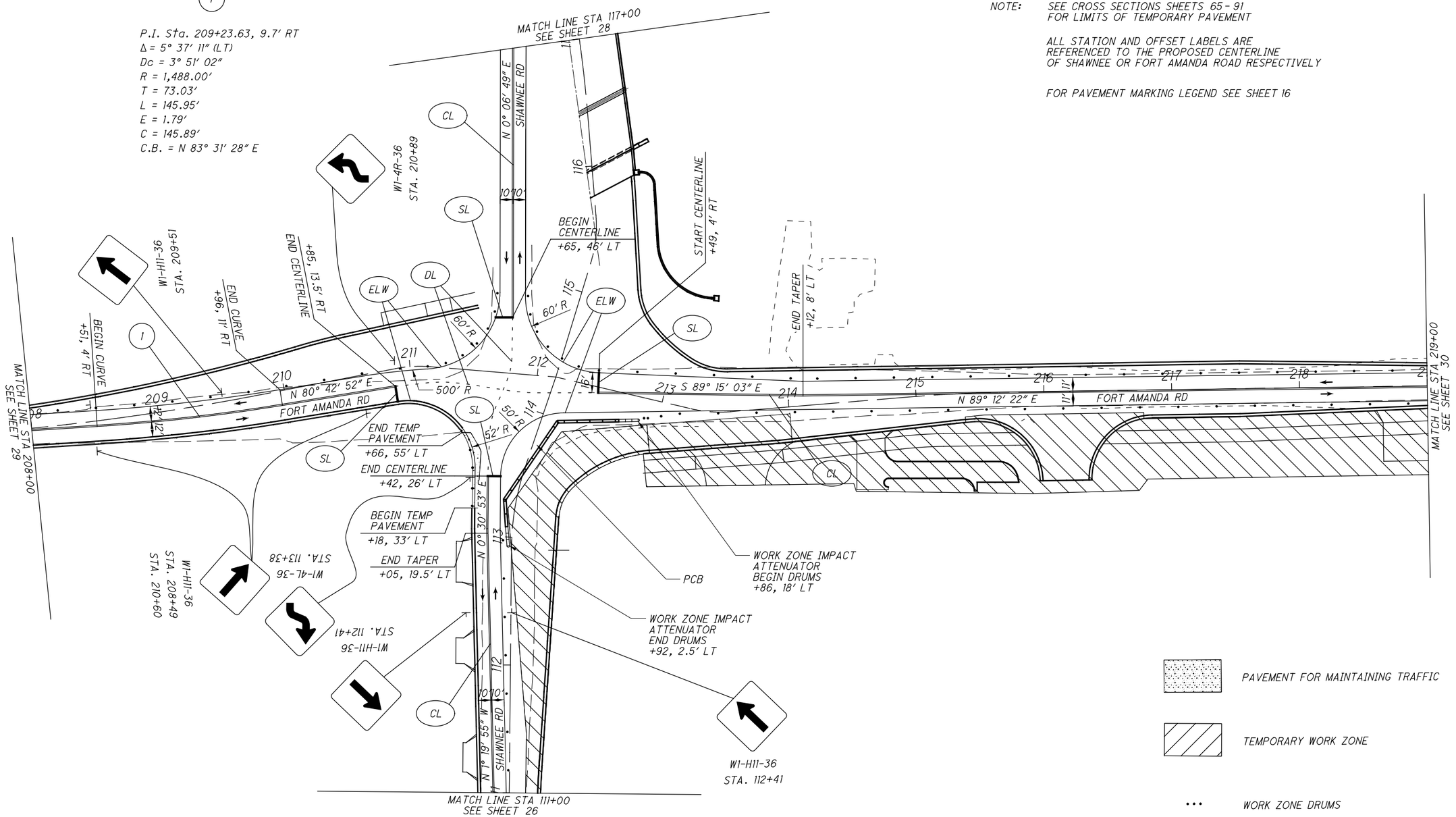

HORIZONTAL SCALE IN FEET 0 20 40 80

CALCULATED SWC
CHECKED CRP

MAINTENANCE OF TRAFFIC PLAN SHEET
PHASE 2 - SHAWNEE RD ROUNDABOUT

ALL - SHAWNEE RD

M:\Proj\1121\1001\77305\mot\sheets\77305MP202.dgn 1/13/2014 5:29:21 PM scorcoran

TYPICAL DRUM SPACING

TANGENTS - 30' C/C

TAPERS - 30' C/C

NOTE: SEE CROSS SECTIONS SHEETS 65 - 91 FOR LIMITS OF TEMPORARY PAVEMENT

ALL STATION AND OFFSET LABELS ARE REFERENCED TO THE PROPOSED CENTERLINE OF SHAWNEE OR FORT AMANDA ROAD RESPECTIVELY

FOR PAVEMENT MARKING LEGEND SEE SHEET 16

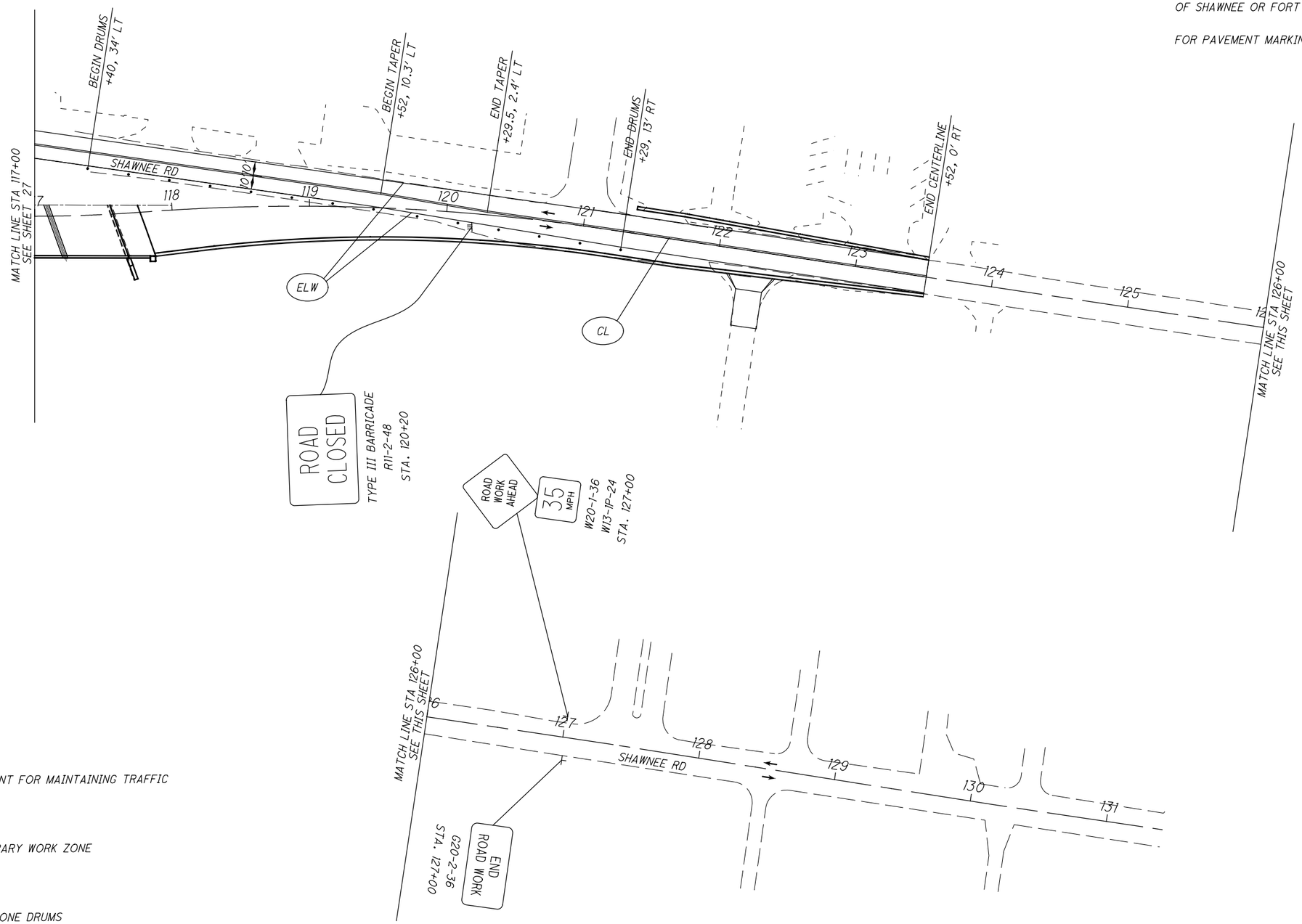

PAVEMENT FOR MAINTAINING TRAFFIC

TEMPORARY WORK ZONE

WORK ZONE DRUMS

PORTABLE CONCRETE BARRIER (PCB)

HORIZONTAL SCALE IN FEET 0 20 40 80

CALCULATED SWC

CHECKED CRP

MAINTENANCE OF TRAFFIC PLAN SHEET
PHASE 2 - SHAWNEE RD

ALL - SHAWNEE RD

M:\Proj\1121\1001\77305\mot\sheets\77305MP203.dgn 1/13/2014 5:29:21 PM scorcoran

TYPICAL DRUM SPACING

TANGENTS - 30' C/C

TAPERS - 30' C/C

NOTE: SEE CROSS SECTIONS SHEETS 65 - 91 FOR LIMITS OF TEMPORARY PAVEMENT

ALL STATION AND OFFSET LABELS ARE REFERENCED TO THE PROPOSED CENTERLINE OF SHAWNEE OR FORT AMANDA ROAD RESPECTIVELY

FOR PAVEMENT MARKING LEGEND SEE SHEET 16

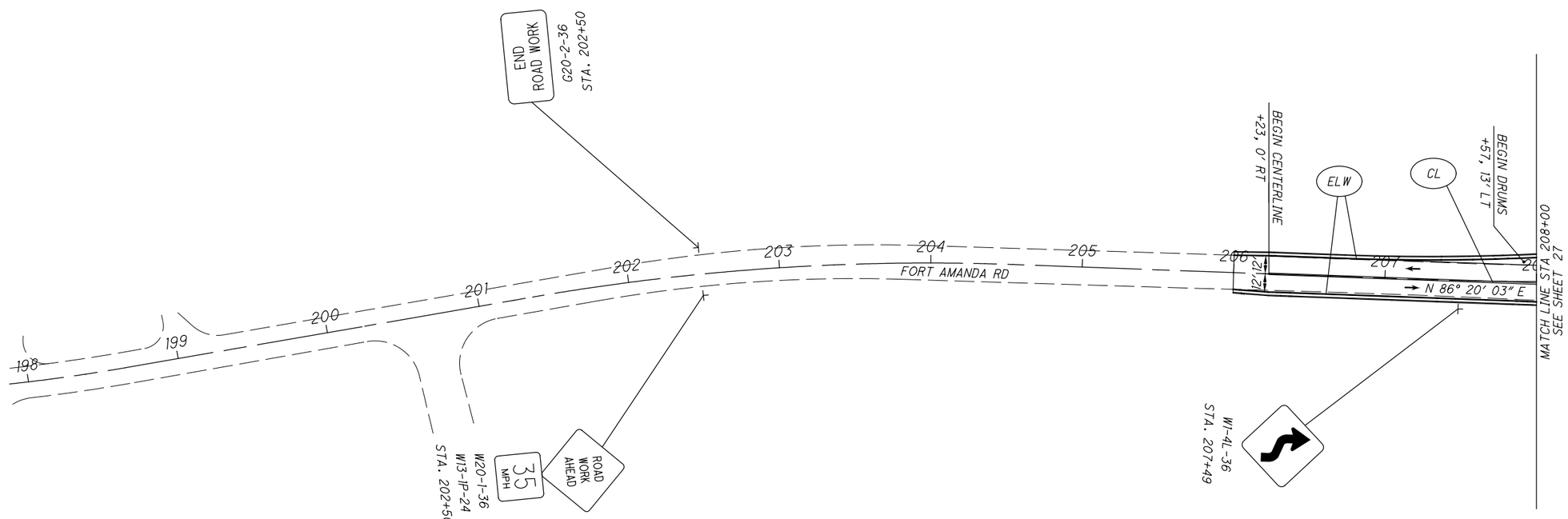

PAVEMENT FOR MAINTAINING TRAFFIC

TEMPORARY WORK ZONE

WORK ZONE DRUMS

PORTABLE CONCRETE BARRIER (PCB)

HORIZONTAL SCALE IN FEET 0 20 40 80

CALCULATED SWC
CHECKED CRP

MAINTENANCE OF TRAFFIC PLAN SHEET
PHASE 2 - FORT AMANDA RD

ALL - SHAWNEE RD

M:\Proj\1121\1001\77305\mot\sheets\77305MP204.dgn 1/13/2014 5:29:22 PM scorcoran

TYPICAL DRUM SPACING

TANGENTS - 30' C/C

TAPERS - 30' C/C

NOTE: SEE CROSS SECTIONS SHEETS 65 - 91 FOR LIMITS OF TEMPORARY PAVEMENT

ALL STATION AND OFFSET LABELS ARE REFERENCED TO THE PROPOSED CENTERLINE OF SHAWNEE OR FORT AMANDA ROAD RESPECTIVELY

FOR PAVEMENT MARKING LEGEND SEE SHEET 16

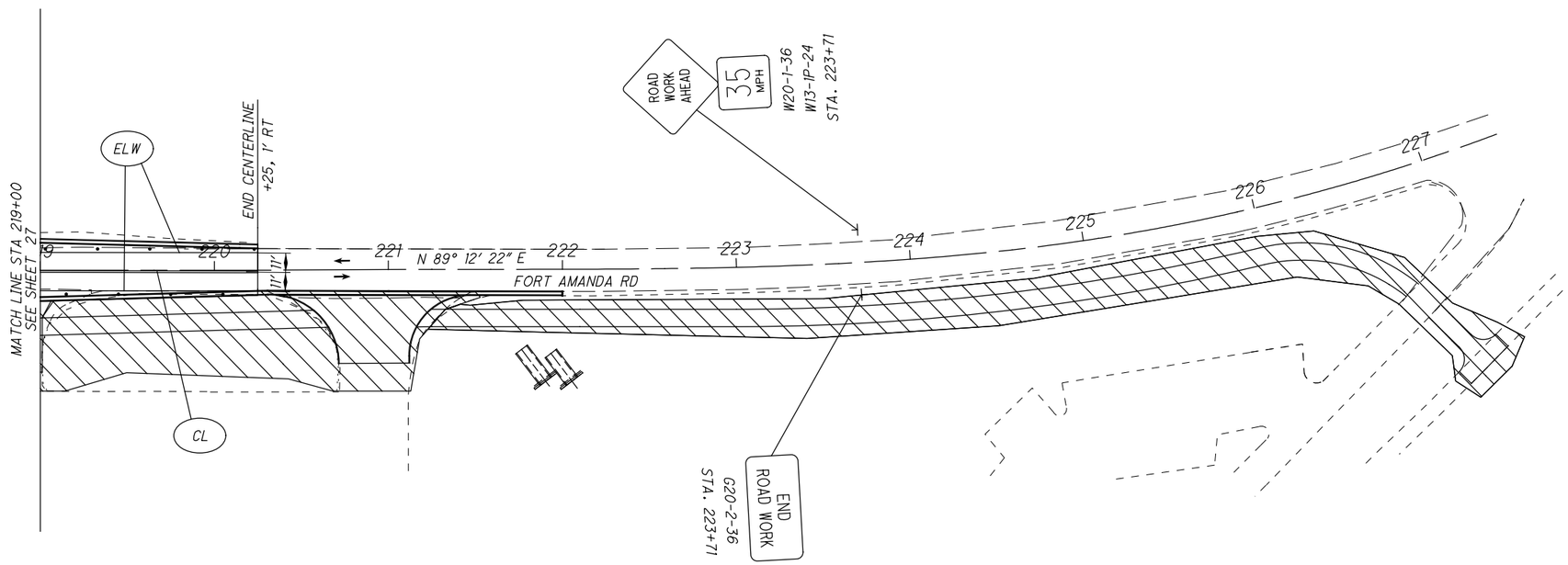

PAVEMENT FOR MAINTAINING TRAFFIC

TEMPORARY WORK ZONE

WORK ZONE DRUMS

PORTABLE CONCRETE BARRIER (PCB)

HORIZONTAL SCALE IN FEET 0 20 40 80

CALCULATED SWC
CHECKED CRP

MAINTAINENCE OF TRAFFIC PLANSHEET
PHASE 2 - FORT AMANDA RD

ALL - SHAWNEE RD

M:\Proj\1121\1001\77305\mot\sheets\77305MP205.dgn 1/22/2014 3:38:22 PM scorcoran

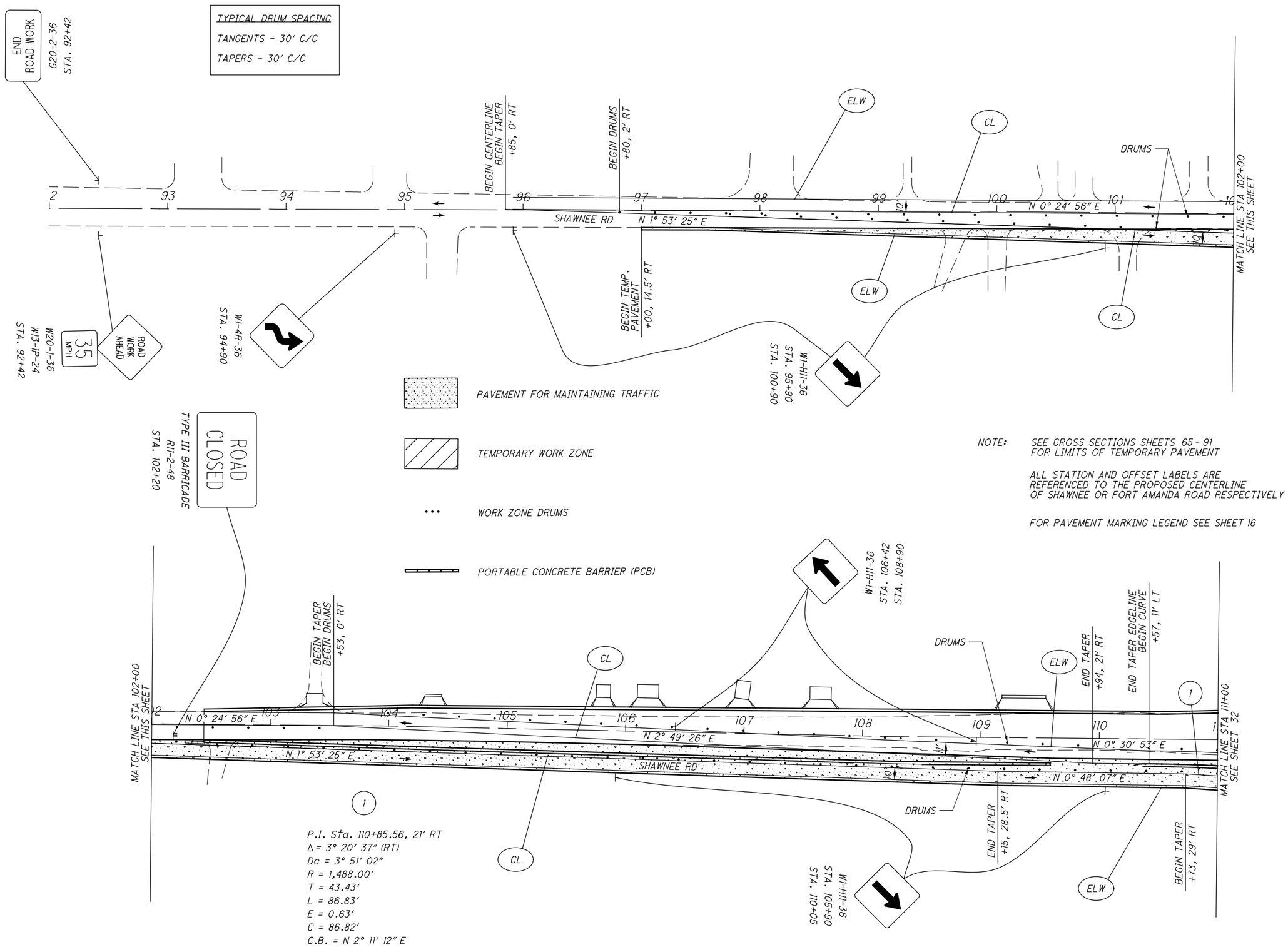

NOTE: SEE CROSS SECTIONS SHEETS 65 - 91 FOR LIMITS OF TEMPORARY PAVEMENT

ALL STATION AND OFFSET LABELS ARE REFERENCED TO THE PROPOSED CENTERLINE OF SHAWNEE OR FORT AMANDA ROAD RESPECTIVELY

FOR PAVEMENT MARKING LEGEND SEE SHEET 16

HORIZONTAL SCALE IN FEET 0 20 40 80

CALCULATED SWC
CHECKED CRP

MAINTENANCE OF TRAFFIC PLAN SHEET
PHASE 3 - SHAWNEE RD

ALL - SHAWNEE RD

M:\Proj\1121\1001\77305\mot\sheets\77305MP301.dgn 1/13/2014 5:29:23 PM scorcoran

TYPICAL DRUM SPACING
TANGENTS - 30' C/C
TAPERS - 30' C/C

(1)

P.I. Sta. 116+00.25, 20.4' RT
Δ = 13° 05' 03" (LT)
Dc = 14° 41' 28"
R = 390.00'
T = 44.73'
L = 89.06'
E = 2.56'
C = 88.87'
C.B. = N 1° 15' 12" W

(2)

P.I. Sta. 211+12.61, 2' RT
Δ = 16° 32' 43" (RT)
Dc = 11° 27' 33"
R = 500.00'
T = 72.70'
L = 144.39'
E = 5.26'
C = 143.88'
C.B. = S 89° 55' 03" E

NOTE: SEE CROSS SECTIONS SHEETS 65 - 91 FOR LIMITS OF TEMPORARY PAVEMENT

ALL STATION AND OFFSET LABELS ARE REFERENCED TO THE PROPOSED CENTERLINE OF SHAWNEE OR FORT AMANDA ROAD RESPECTIVELY

FOR PAVEMENT MARKING LEGEND SEE SHEET 16

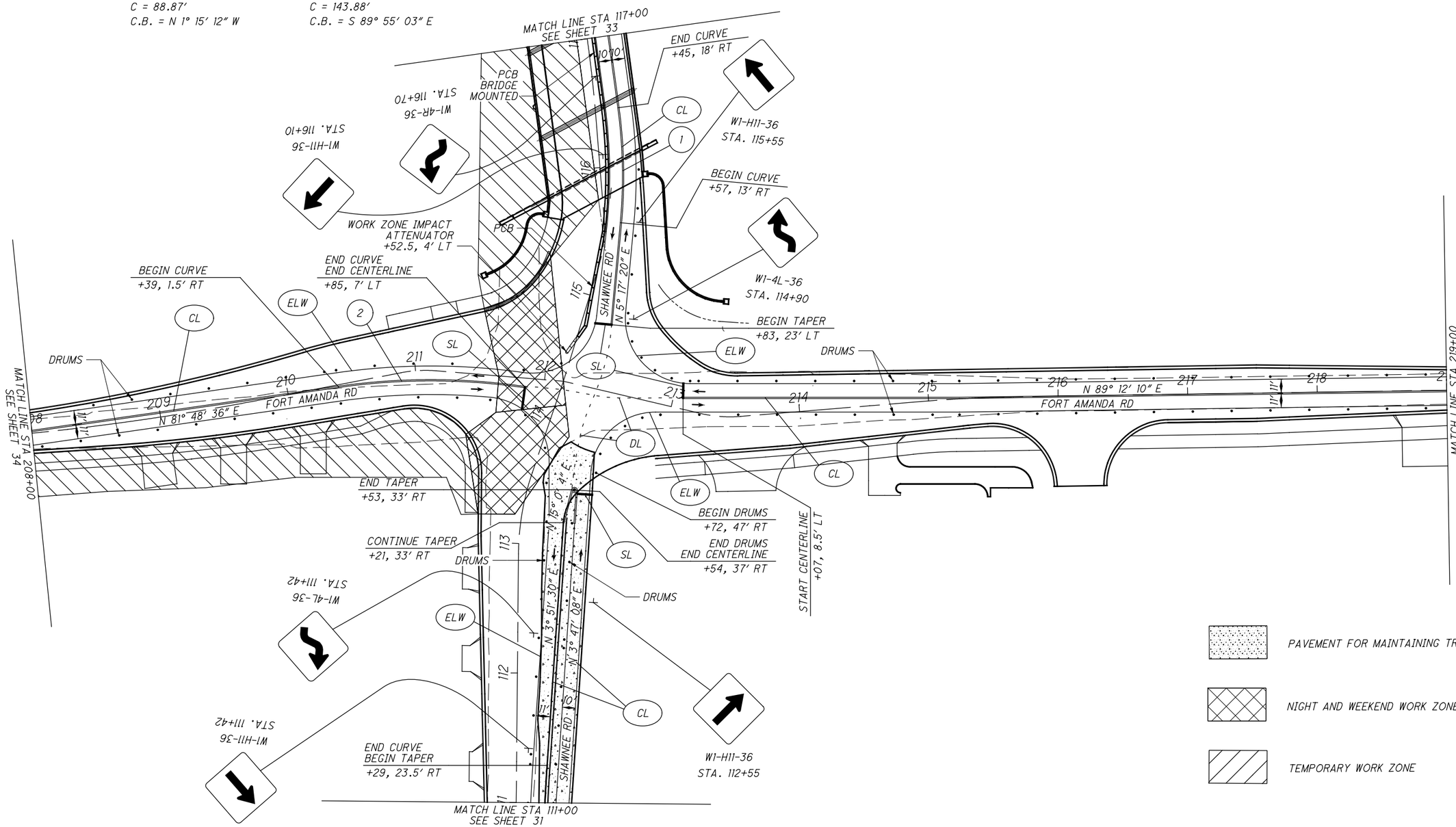

HORIZONTAL SCALE IN FEET 0 20 40 80

CALCULATED SWC
CHECKED CRP

MAINTENANCE OF TRAFFIC PLAN SHEET
PHASE 3 - SHAWNEE RD ROUNDABOUT

ALL - SHAWNEE RD

M:\Proj\1121\1001\77305\mot\sheets\77305MP302.dgn 1/13/2014 5:29:24 PM scorcoran

TYPICAL DRUM SPACING

TANGENTS - 30' C/C

TAPERS - 30' C/C

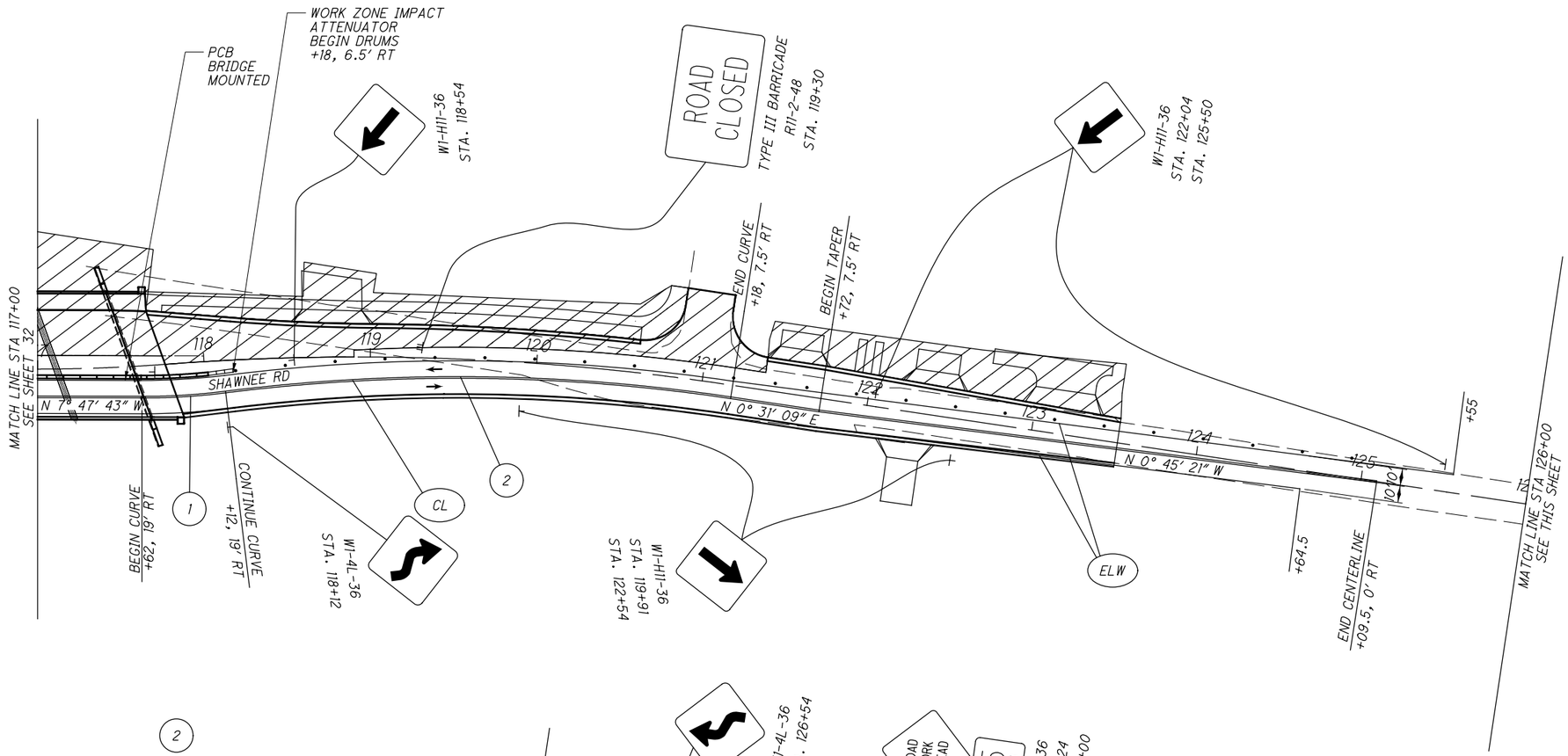

1

P.I. Sta. 119+65.04, 0' RT
Δ = 15° 42' 24" (RT)
Dc = 5° 09' 42"
R = 1,110.00'
T = 153.10'
L = 304.29'
E = 10.51'
C = 303.34'
C.B. = N 7° 20' 03" W

2

P.I. Sta. 117+86.58, 20.5' RT
Δ = 7° 23' 32" (LT)
Dc = 14° 41' 28"
R = 390.00'
T = 25.19'
L = 50.32'
E = 0.81'
C = 50.28'
C.B. = N 11° 29' 29" W

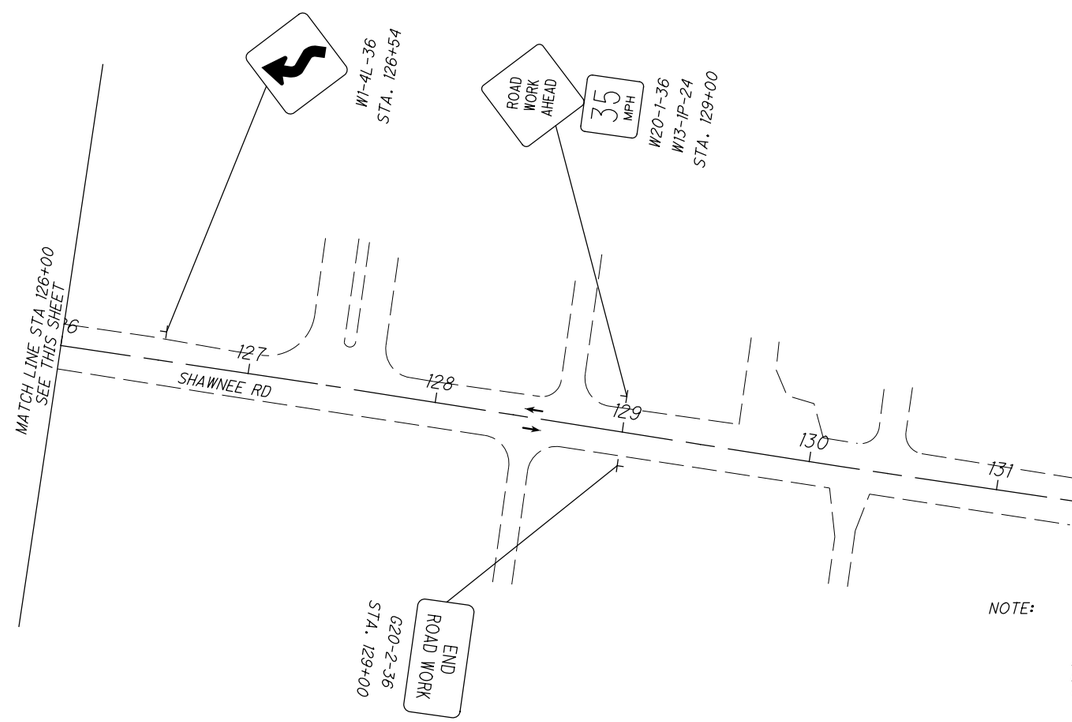

PAVEMENT FOR MAINTAINING TRAFFIC

TEMPORARY WORK ZONE

WORK ZONE DRUMS

PORTABLE CONCRETE BARRIER (PCB)

NOTE: SEE CROSS SECTIONS SHEETS 65 - 91 FOR LIMITS OF TEMPORARY PAVEMENT

ALL STATION AND OFFSET LABELS ARE REFERENCED TO THE PROPOSED CENTERLINE OF SHAWNEE OR FORT AMANDA ROAD RESPECTIVELY

FOR PAVEMENT MARKING LEGEND SEE SHEET 16

HORIZONTAL SCALE IN FEET 0 20 40 80

CALCULATED SWC
CHECKED CRP

MAINTENANCE OF TRAFFIC PLAN SHEET
PHASE 3 - SHAWNEE RD

ALL - SHAWNEE RD

M:\Proj\112\100\77305\mot\sheets\77305MP303.dgn 1/13/2014 5:29:24 PM scorcoran

TYPICAL DRUM SPACING

TANGENTS - 30' C/C

TAPERS - 30' C/C

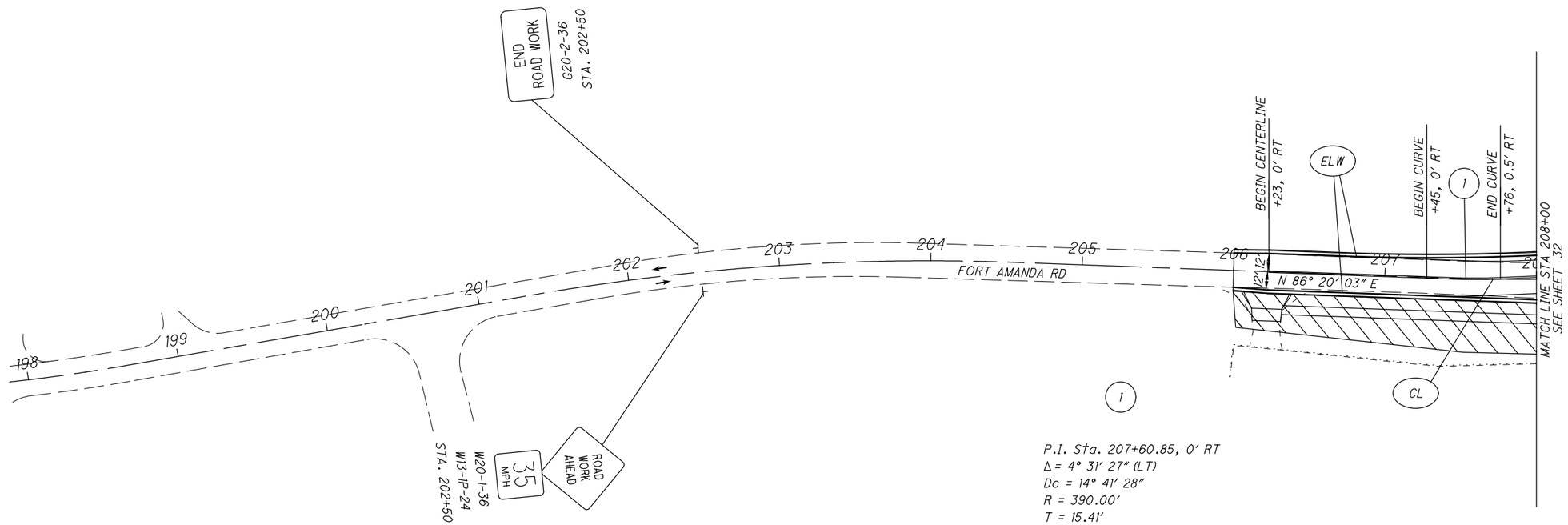

P.I. Sta. 207+60.85, 0' RT
Δ = 4° 31' 27" (LT)
Dc = 14° 41' 28"
R = 390.00'
T = 15.41'
L = 30.80'
E = 0.30'
C = 30.79'
C.B. = N 84° 04' 20" E

PAVEMENT FOR MAINTAINING TRAFFIC

TEMPORARY WORK ZONE

WORK ZONE DRUMS

PORTABLE CONCRETE BARRIER (PCB)

NOTE: SEE CROSS SECTIONS SHEETS 65 - 91 FOR LIMITS OF TEMPORARY PAVEMENT

ALL STATION AND OFFSET LABELS ARE REFERENCED TO THE PROPOSED CENTERLINE OF SHAWNEE OR FORT AMANDA ROAD RESPECTIVELY

FOR PAVEMENT MARKING LEGEND SEE SHEET 16

HORIZONTAL SCALE IN FEET 0 20 40 80

CALCULATED SWC
CHECKED CRP

MAINTENANCE OF TRAFFIC PLAN SHEET
PHASE 3 - FORT AMANDA RD

ALL - SHAWNEE RD

M:\Proj\1121\1001\77305\mot\sheets\77305MP304.dgn 1/13/2014 5:29:25 PM scorcoran

TYPICAL DRUM SPACING

TANGENTS - 30' C/C

TAPERS - 30' C/C

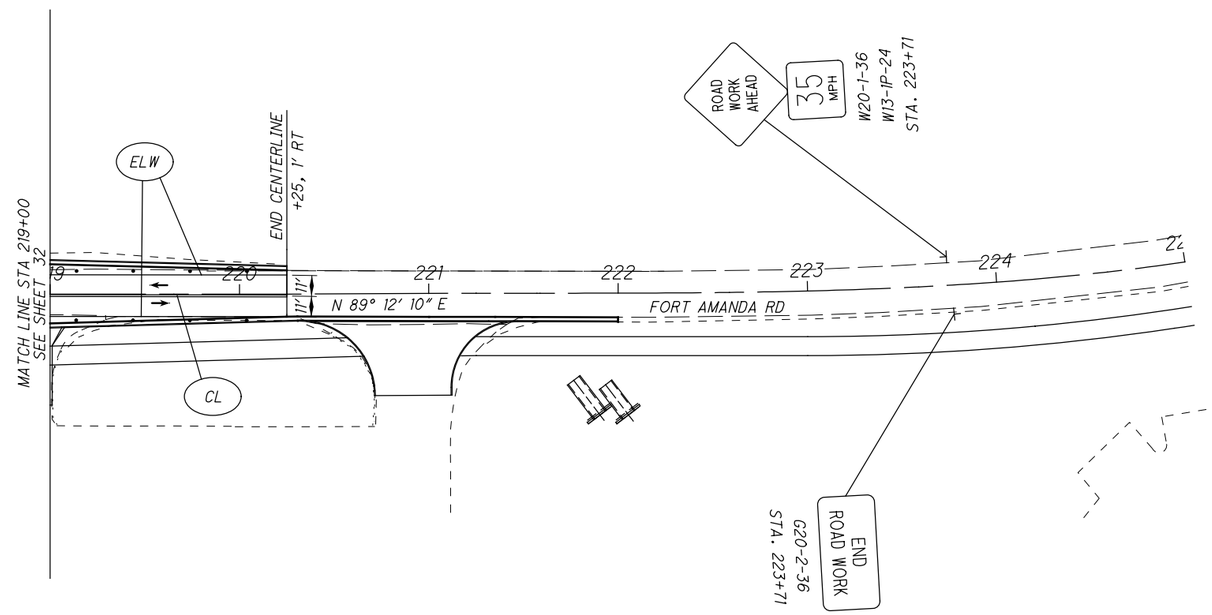

PAVEMENT FOR MAINTAINING TRAFFIC

TEMPORARY WORK ZONE

WORK ZONE DRUMS

PORTABLE CONCRETE BARRIER (PCB)

NOTE: SEE CROSS SECTIONS SHEETS 65 - 91 FOR LIMITS OF TEMPORARY PAVEMENT

ALL STATION AND OFFSET LABELS ARE REFERENCED TO THE PROPOSED CENTERLINE OF SHAWNEE OR FORT AMANDA ROAD RESPECTIVELY

FOR PAVEMENT MARKING LEGEND SEE SHEET 16

HORIZONTAL SCALE IN FEET 0 20 40 80

CALCULATED SWC
CHECKED CRP

MAINTAINENCE OF TRAFFIC PLANSHEET
PHASE 3 - FORT AMANDA RD

ALL - SHAWNEE RD

M:\Proj\1121\1001\77305\mot\sheets\77305MP305.dgn 1/22/2014 3:38:22 PM scorcoran

TYPICAL DRUM SPACING

TANGENTS - 30' C/C

TAPERS - 30' C/C

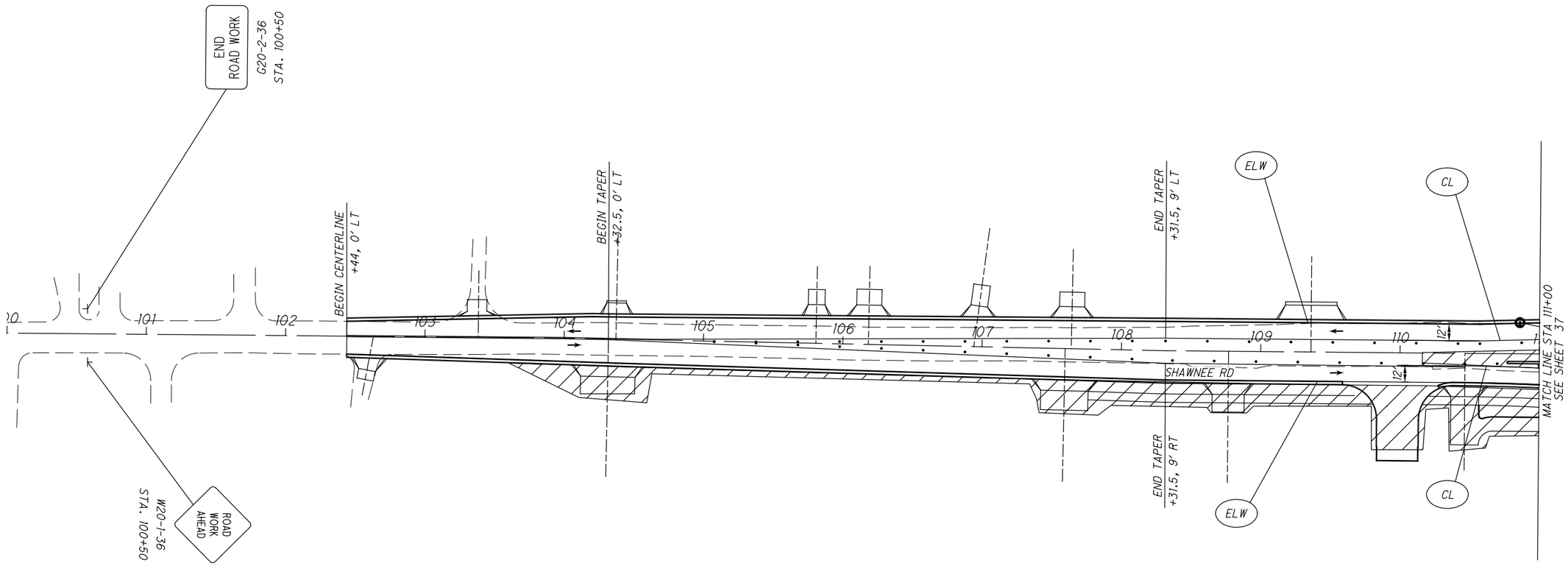

PAVEMENT FOR MAINTAINING TRAFFIC

TEMPORARY WORK ZONE

WORK ZONE DRUMS

PORTABLE CONCRETE BARRIER (PCB)

NOTE: SEE CROSS SECTIONS SHEETS 65 - 91 FOR LIMITS OF TEMPORARY PAVEMENT

ALL STATION AND OFFSET LABELS ARE REFERENCED TO THE PROPOSED CENTERLINE OF SHAWNEE OR FORT AMANDA ROAD RESPECTIVELY

FOR PAVEMENT MARKING LEGEND SEE SHEET 16

N

0 20 40 80
HORIZONTAL SCALE IN FEET

CALCULATED SWC
CHECKED CRP

MAINTENANCE OF TRAFFIC PLAN SHEET
PHASE 4 - SHAWNEE RD

ALL - SHAWNEE RD

M:\Proj\1121\1001\77305\mot\sheets\77305MP401.dgn 1/13/2014 5:29:26 PM scorcoran

TYPICAL DRUM SPACING
TANGENTS - 30' C/C
TAPERS - 30' C/C

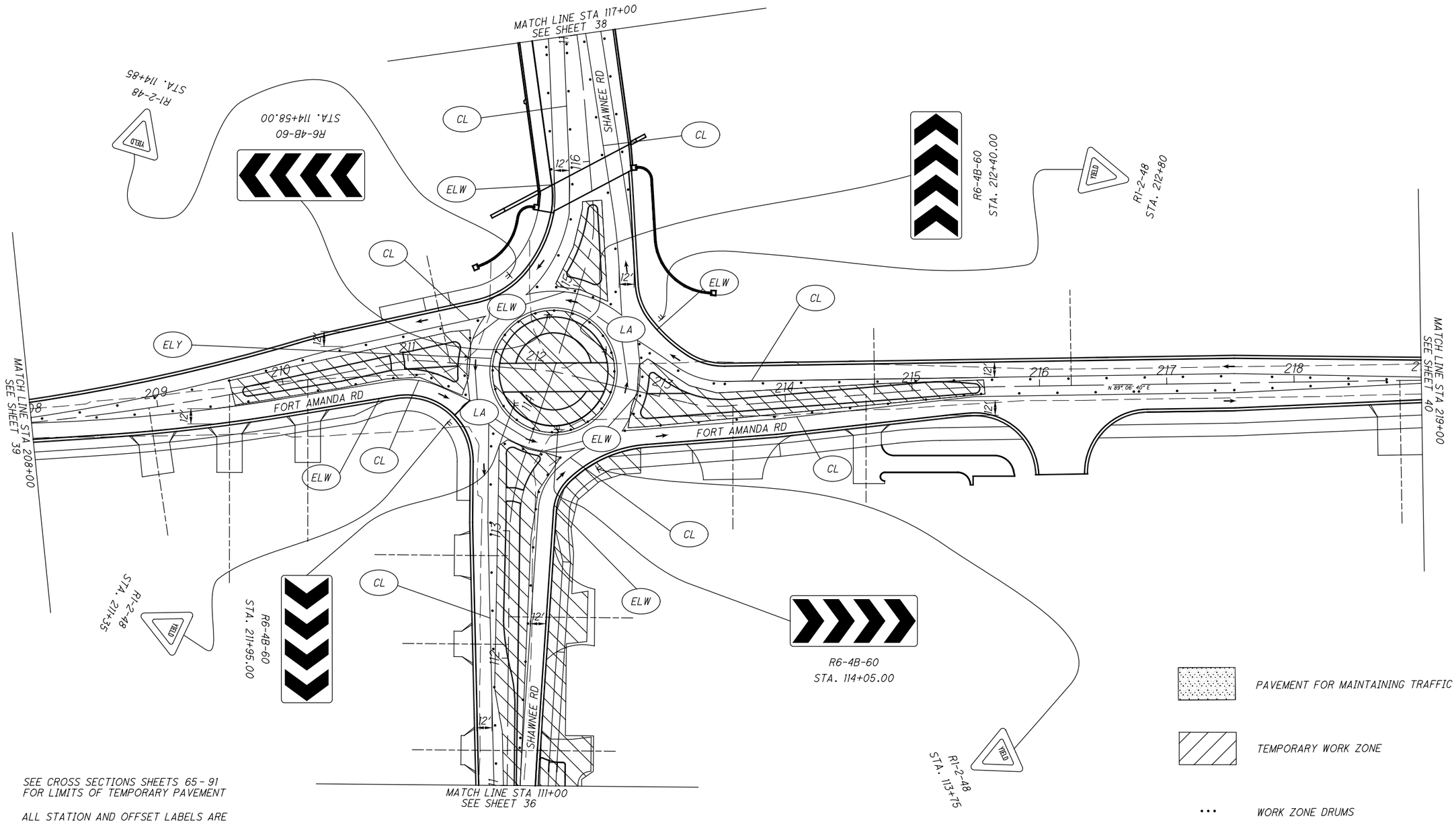

NOTE: SEE CROSS SECTIONS SHEETS 65 - 91 FOR LIMITS OF TEMPORARY PAVEMENT

ALL STATION AND OFFSET LABELS ARE REFERENCED TO THE PROPOSED CENTERLINE OF SHAWNEE OR FORT AMANDA ROAD RESPECTIVELY

FOR PAVEMENT MARKING LEGEND SEE SHEET 16

HORIZONTAL SCALE IN FEET 0 20 40 80

CALCULATED SWC
CHECKED CRP

MAINTENANCE OF TRAFFIC PLAN SHEET
PHASE 4 - SHAWNEE RD ROUNDABOUT

ALL - SHAWNEE RD

M:\Proj\1121\1001\77305\mot\sheets\77305MP402.dgn 1/13/2014 5:29:27 PM scorcoran

TYPICAL DRUM SPACING

TANGENTS - 30' C/C

TAPERS - 30' C/C

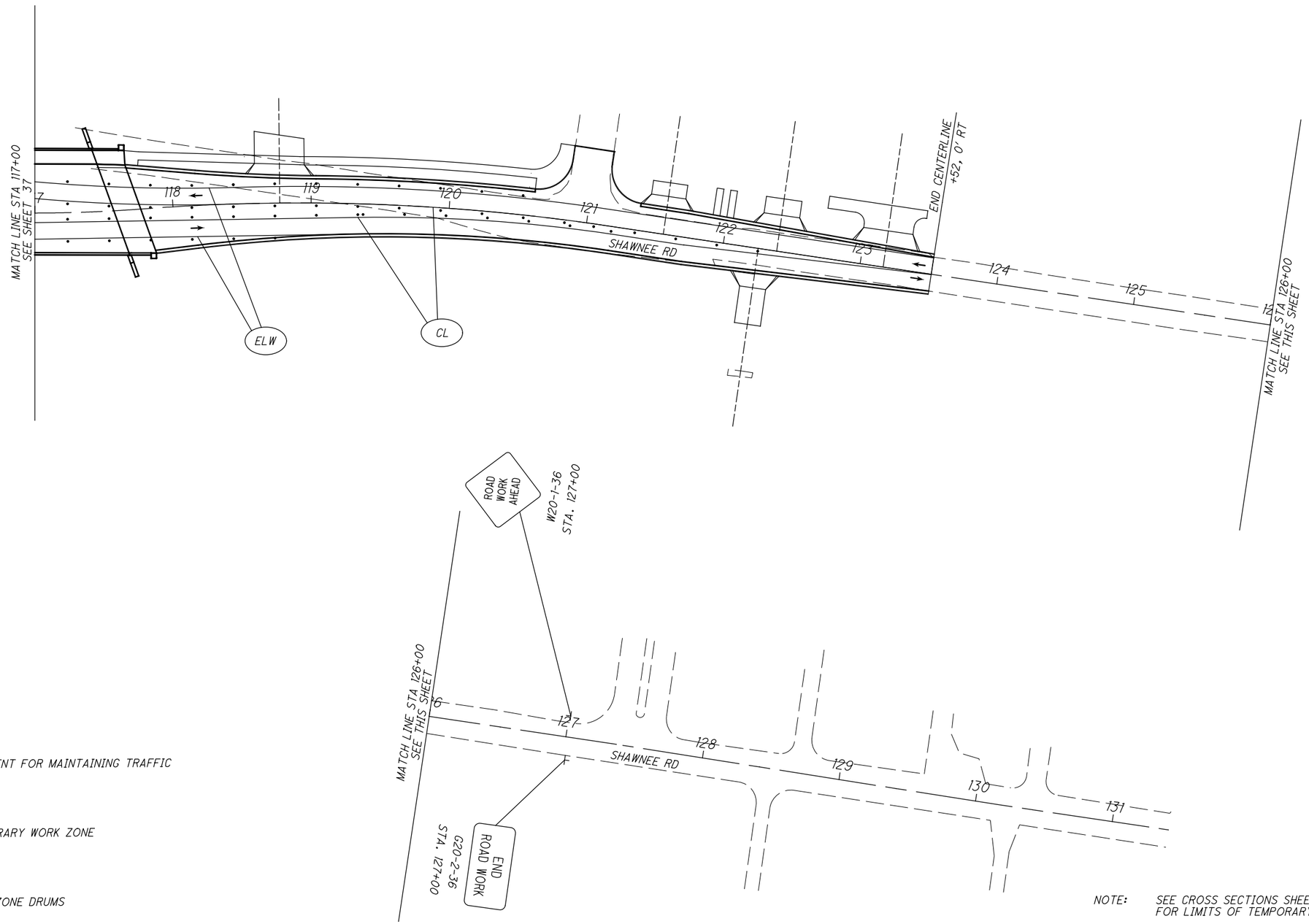

PAVEMENT FOR MAINTAINING TRAFFIC

TEMPORARY WORK ZONE

WORK ZONE DRUMS

PORTABLE CONCRETE BARRIER (PCB)

NOTE: SEE CROSS SECTIONS SHEETS 65 - 91 FOR LIMITS OF TEMPORARY PAVEMENT

ALL STATION AND OFFSET LABELS ARE REFERENCED TO THE PROPOSED CENTERLINE OF SHAWNEE OR FORT AMANDA ROAD RESPECTIVELY

FOR PAVEMENT MARKING LEGEND SEE SHEET 16

HORIZONTAL SCALE IN FEET 0 20 40 80

CALCULATED SWC

CHECKED CRP

MAINTENANCE OF TRAFFIC PLAN SHEET
PHASE 4 - SHAWNEE RD

ALL - SHAWNEE RD

M:\Proj\1121\1001\77305\mot\sheets\77305MP403.dgn 1/13/2014 5:29:28 PM scorcoran

TYPICAL DRUM SPACING

TANGENTS - 30' C/C

TAPERS - 30' C/C

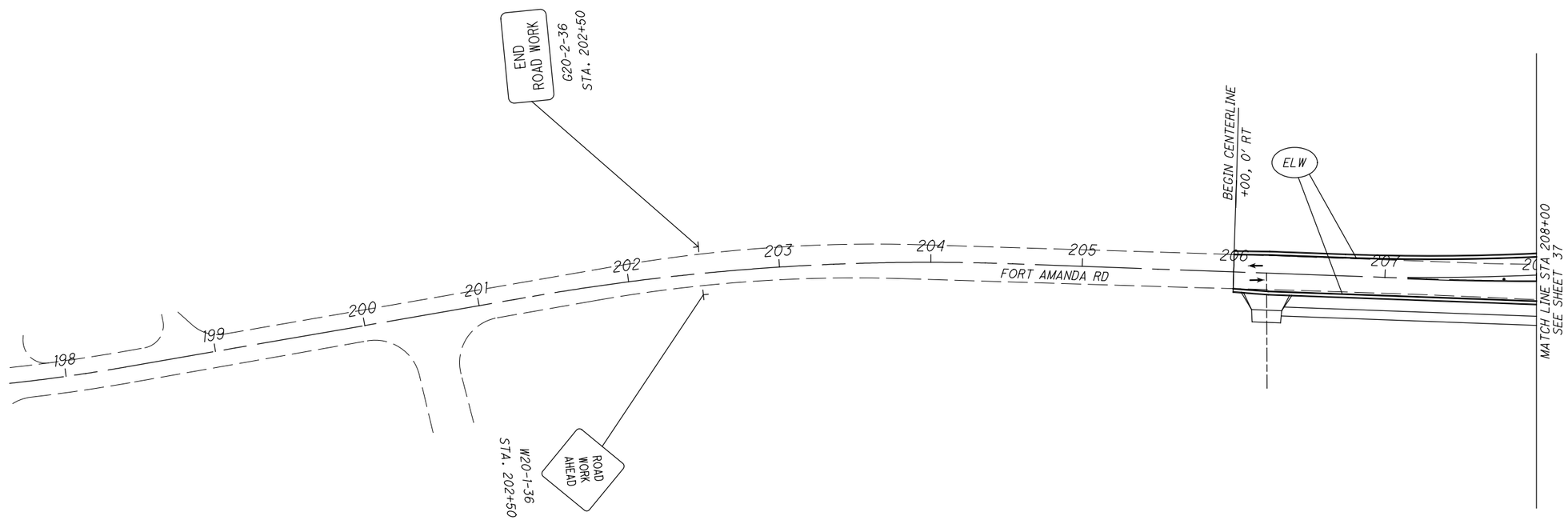

PAVEMENT FOR MAINTAINING TRAFFIC

TEMPORARY WORK ZONE

WORK ZONE DRUMS

PORTABLE CONCRETE BARRIER (PCB)

NOTE: SEE CROSS SECTIONS SHEETS 65 - 91 FOR LIMITS OF TEMPORARY PAVEMENT

ALL STATION AND OFFSET LABELS ARE REFERENCED TO THE PROPOSED CENTERLINE OF SHAWNEE OR FORT AMANDA ROAD RESPECTIVELY

FOR PAVEMENT MARKING LEGEND SEE SHEET 16

HORIZONTAL SCALE IN FEET 0 20 40 80

CALCULATED SWC
CHECKED CRP

MAINTENANCE OF TRAFFIC PLAN SHEET
PHASE 4 - FORT AMANDA RD

ALL - SHAWNEE RD

M:\Proj\1121\1001\77305\mot\sheets\77305MP404.dgn 1/13/2014 5:29:28 PM scorcoran

TYPICAL DRUM SPACING
TANGENTS - 30' C/C
TAPERS - 30' C/C

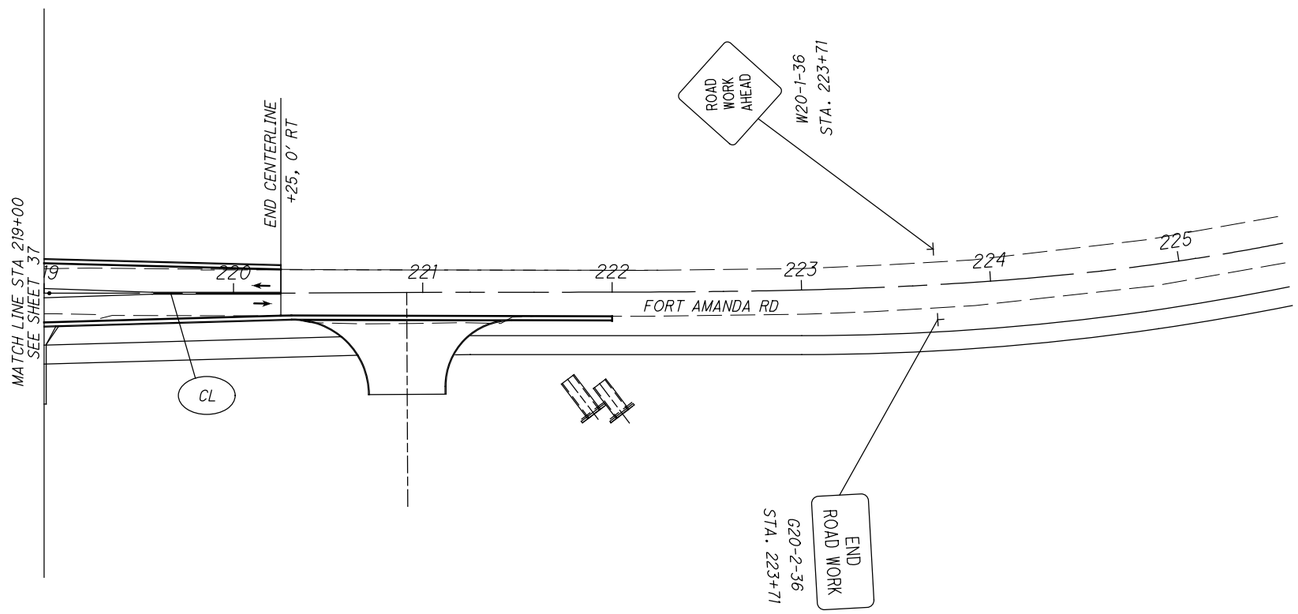

PAVEMENT FOR MAINTAINING TRAFFIC

TEMPORARY WORK ZONE

WORK ZONE DRUMS

PORTABLE CONCRETE BARRIER (PCB)

NOTE: SEE CROSS SECTIONS SHEETS 65 - 91 FOR LIMITS OF TEMPORARY PAVEMENT

ALL STATION AND OFFSET LABELS ARE REFERENCED TO THE PROPOSED CENTERLINE OF SHAWNEE OR FORT AMANDA ROAD RESPECTIVELY

FOR PAVEMENT MARKING LEGEND SEE SHEET 16

HORIZONTAL SCALE IN FEET 0 20 40 80

CALCULATED SWC
CHECKED CRP

MAINTAINENCE OF TRAFFIC PLANSHEET
PHASE 4 - FORT AMANDA RD

ALL - SHAWNEE RD

M:\Proj\1121\1001\77305\mot\sheets\77305MP405.dgn 1/22/2014 3:38:24 PM scorcoran

SHEET NUMBER												PARTICIPATION			ITEM	ITEM EXT.	GRAND TOTAL	UNIT	DESCRIPTION	SEE SHEET NO.
7	8	47	48	49	50	51	52	91	115			01/BRO/BR	02/CMQ/OT	100% LOCAL						
																			ROADWAY	
LUMP													LUMP		201	11001	LUMP		CLEARING AND GRUBBING, AS PER PLAN	9
				12105	5788								17893		202	23000	17893	SQ YD	PAVEMENT REMOVED	
				375									375		202	32000	375	FT	CURB REMOVED	
						933	910						1843		202	35100	1843	FT	PIPE REMOVED, 24" AND UNDER	
		295											295		202	38000	295	FT	GUARDRAIL REMOVED	
	LUMP												LUMP		202	56000	LUMP		BUILDING DEMOLISHED - PARCEL 18, 2690 FORT AMANDA ROAD; 1 STORY BLOCK COMMERCIAL BUILDING	
						8	12						20		202	58100	20	EACH	CATCH BASIN REMOVED	
							1						1		202	58500	1	EACH	CATCH BASIN ABANDONED	
	6												6		202	67000	6	EACH	REGULATED UNDERGROUND STORAGE TANK REMOVED	
									236				236		SPECIAL	20270100	236	FT	PIPE CLEANOUT	
		10											10		202	98100	10	EACH	REMOVAL MISC.: BOLLARD	
		13											13		202	98100	13	EACH	REMOVAL MISC.: GROUND MOUNTED SIGN	
		4											4		202	98100	4	EACH	REMOVAL MISC.: PARKING LOT LIGHT	
		1											1		202	98100	1	EACH	REMOVAL MISC.: PAYPHONE REMOVAL	
		4											4		202	98100	4	EACH	REMOVAL MISC.: SIGN	
		4											4		202	98100	4	EACH	REMOVAL MISC.: FLOOD LIGHT	
		8											8		202	98100	8	EACH	REMOVAL MISC.: SPRINKLER HEAD	
								7986					7986		203	10000	7986	CU YD	EXCAVATION	
								6506					6506		203	20000	6506	CU YD	EMBANKMENT	
					2799								2799		204	10000	2799	SQ YD	SUBGRADE COMPACTION	
14													14		204	45000	14	HOUR	PROOF ROLLING	
				145									145		204	50000	145	SQ YD	GEOTEXTILE FABRIC	
				820									820		206	10500	820	TON	CEMENT	
				20714									20714		206	11000	20714	SQ YD	CURING COAT	
		105											105		607	98000	105	FT	FENCE, MISC.: WOOD FENCE	61
			11318										11318		608	10000	11318	SQ FT	4" CONCRETE WALK	
			179										179		608	13000	179	SQ FT	6" CONCRETE WALK	
					2667								2667		608	15000	2667	SQ FT	8" CONCRETE WALK	
			450										450		608	52010	450	SQ FT	CURB RAMP, TYPE A1	
			506										506		608	52020	506	SQ FT	CURB RAMP, TYPE A2	
			442										442		608	52030	442	SQ FT	CURB RAMP, TYPE B1	
			72										72		608	53020	72	SQ FT	DETECTABLE WARNING	
2													2		623	38501	2	EACH	MONUMENT ASSEMBLY, AS PER PLAN	7
				145									145		SPECIAL	69012020	145	SQ YD	GEOGRID	
		9											9		SPECIAL	69050100	9	EACH	MAILBOX SUPPORT SYSTEM, SINGLE	
		9											9		SPECIAL	69050350	9	EACH	MAILBOX REMOVED AND RESET	
		18											18		SPECIAL	69050600	18	EACH	BOLLARD	10
	800												800		SPECIAL	69065000	800	TON	WORK INVOLVING NON-REGULATED MATERIALS	8
	50												50		SPECIAL	69065014	50	TON	WORK INVOLVING HAZARDOUS WASTE	8
	1500												1500		SPECIAL	69065016	1500	TON	WORK INVOLVING PETROLEUM CONTAMINATED SOIL	8
	5000												5000		SPECIAL	69065020	5000	GALLON	WORK INVOLVING WATER	8
	10000												10000		SPECIAL	69065024	10000	GALLON	WORK INVOLVING REGULATED WATER	8
	6												6		SPECIAL	69065030	6	EACH	DRUM REMOVED	8
	10												10		SPECIAL	69065300	10	EACH	GROUND WATER MONITORING WELL ABANDONMENT	8
		4											4		SPECIAL	69098000	4	EACH	MISC.: REMOVABLE BOLLARD WITH SLEEVE	10
		3											3		SPECIAL	69098000	3	EACH	MISC.: FLAG POLE	10
		4											4		SPECIAL	69098000	4	EACH	MISC.: 6' ARTIFICIAL TREE	10
		2											2		SPECIAL	69098000	2	EACH	MISC.: 10' ARTIFICIAL TREE	10
		180											180		SPECIAL	69098100	180	FT	MISC.: CHAIN	10
																			ALTERNATE 1	
611													611		204	13000	611	CU YD	EXCAVATION OF SUBGRADE	
611													611		204	30051	611	CU YD	GRANULAR MATERIAL, TYPE F, AS PER PLAN	7
1000													1000		204	50001	1000	SQ YD	GEOTEXTILE FABRIC, AS PER PLAN	7
1000													1000		861	10000	1000	SQ YD	GEOGRID FOR SUBGRADE STABILIZATION	

CALCULATED SWC
CHECKED JMZ

GENERAL SUMMARY

ALL-SHAWNEE RD

M:\Proj\1121\1001\77305\roadway\sheets\77305GG001.dgn 3/7/2014 9:01:57 AM scorcoran

SHEET NUMBER											PARTICIPATION			ITEM	ITEM EXT.	GRAND TOTAL	UNIT	DESCRIPTION	SEE SHEET NO.
3	7	8	9	10	47	49	51	52	115	134	01/BRO/BR	02/CMQ/OT	100% LOCAL						
																		ROADWAY (CONTINUED)	
																		ALTERNATE 2	
	500											500		204	13000	500	CU YD	EXCAVATION OF SUBGRADE	
	500											500		204	30051	500	CU YD	GRANULAR MATERIAL, TYPE F, AS PER PLAN	7
	1000											1000		861	10001	1000	SQ YD	GEOGRID FOR SUBGRADE STABILIZATION, AS PER PLAN	7
																		EROSION CONTROL	
			145									145		601	23011	145	SQ YD	ARTICULATING CONCRETE BLOCK REVETMENT SYSTEM, TYPE 2, AS PER PLAN	10
				961								961		601	32210	961	CU YD	ROCK CHANNEL PROTECTION, TYPE C WITH AGGREGATE FILTER	
				10								10		653	10001	10	CU YD	TOPSOIL FURNISHED AND PLACED, AS PER PLAN	10
			2									2		659	00100	2	EACH	SOIL ANALYSIS TEST	
			1109									1109		659	00300	1109	CU YD	TOPSOIL	
				50								50		659	00530	50	SQ YD	SEEDING AND MULCHING, CLASS 3B	
			9991									9991		659	10000	9991	SQ YD	SEEDING AND MULCHING	
			500									500		659	14000	500	SQ YD	REPAIR SEEDING AND MULCHING	
			500									500		659	15000	500	SQ YD	INTER-SEEDING	
			1.4									1.4		659	20000	1.4	TON	COMMERCIAL FERTILIZER	
			2.16									2.16		659	31000	2.16	ACRE	LIME	
			55									55		659	35000	55	M GAL	WATER	
								51				51		670	00700	51	SQ YD	DITCH EROSION PROTECTION	
							43					43		670	00710	43	SQ YD	DITCH EROSION PROTECTION MAT, TYPE A	
					1							1		SPECIAL	68043100	1	EACH	COMPLETE IRRIGATION SYSTEM	10
LUMP												LUMP		832	15000	LUMP		STORM WATER POLLUTION PREVENTION PLAN	
61000												61000		832	30000	61000	EACH	EROSION CONTROL	
																		DRAINAGE	
							0.88	0.6	8.1			9.58		602	20000	9.58	CU YD	CONCRETE MASONRY	
						6615						6615		605	14000	6615	FT	6" BASE PIPE UNDERDRAINS, 707.33, PERFORATED	
			100							380		480		611	00401	480	FT	4" CONDUIT, TYPE E, AS PER PLAN	9
			100				107	27				234		611	00901	234	FT	6" CONDUIT, TYPE B, AS PER PLAN	9
							31					31		611	01101	31	FT	6" CONDUIT, TYPE C, AS PER PLAN	9
							4	22				26		611	02001	26	FT	8" CONDUIT, TYPE C, AS PER PLAN	9
			100									100		611	03101	100	FT	10" CONDUIT, TYPE B, AS PER PLAN	9
							476	407				883		611	04401	883	FT	12" CONDUIT, TYPE B, AS PER PLAN	9
							134	561				695		611	04601	695	FT	12" CONDUIT, TYPE C, AS PER PLAN	9
							370	180				550		611	05901	550	FT	15" CONDUIT, TYPE B, AS PER PLAN	9
							204	257				461		611	06101	461	FT	15" CONDUIT, TYPE C, AS PER PLAN	9
			100									100		611	07401	100	FT	18" CONDUIT, TYPE B, AS PER PLAN	9
							150					150		611	08901	150	FT	21" CONDUIT, TYPE B, AS PER PLAN	9
							383					383		611	10401	383	FT	24" CONDUIT, TYPE B, AS PER PLAN	9
								47				47		611	12101	47	FT	27" CONDUIT, TYPE C, AS PER PLAN	9
								48				48		611	13601	48	FT	30" CONDUIT, TYPE C, AS PER PLAN	9
									43			43		611	28001	43	FT	84" CONDUIT, TYPE A, 706.02, AS PER PLAN	9
							6	3				9		611	98150	9	EACH	CATCH BASIN, NO. 3	
							10	8				18		611	98180	18	EACH	CATCH BASIN, NO. 3A	
							1					1		611	98370	1	EACH	CATCH BASIN, NO. 6	
								1				1		611	98371	1	EACH	CATCH BASIN, NO. 6, AS PER PLAN	9
							1	4				5		611	98470	5	EACH	CATCH BASIN, NO. 2-2B	
								1				1		611	98480	1	EACH	CATCH BASIN, NO. 2-2B WITH BICYCLE SAFE GRATE	
							1					1		611	98630	1	EACH	CATCH BASIN ADJUSTED TO GRADE	
							7	7				14		611	99574	14	EACH	MANHOLE, NO. 3	
					8							8		611	99654	8	EACH	MANHOLE ADJUSTED TO GRADE	
					9							9		611	99660	9	EACH	MANHOLE RECONSTRUCTED TO GRADE	
			10000									10000		SPECIAL	61199820	10000	POUND	MISCELLANEOUS METAL	
		500										500		613	41200	500	CU YD	LOW STRENGTH MORTAR BACKFILL	8
								1				1		895	10040	1	EACH	MANUFACTURED WATER QUALITY STRUCTURE, TYPE 4	

CALCULATED SWC
CHECKED JMZ

GENERAL SUMMARY

ALL-SHAWNEE RD

M:\Proj\112\1001\77305\roadway\sheets\77305GG002.dgn 3/3/2014 9:04:46 AM scorcoran

SHEET NUMBER											PARTICIPATION			ITEM	ITEM EXT.	GRAND TOTAL	UNIT	DESCRIPTION	SEE SHEET NO.
9	10	11	47	48	49	50	134	135			01/BRO/BR	02/CMQ/OT	100% LOCAL						
																		PAVEMENT	
					1650							1650		301	46000	1650	CU YD	ASPHALT CONCRETE BASE, PG64-22	
15						126						141		301	48000	141	CU YD	ASPHALT CONCRETE BASE, PG64-22 (DRIVEWAYS)	
				30	6650	4						6684		304	20000	6684	CU YD	AGGREGATE BASE	
					1205							1205		407	10000	1205	GALLON	TACK COAT	
					643							643		407	14000	643	GALLON	TACK COAT FOR INTERMEDIATE COURSE	
		1200										1200		411	10000	1200	CU YD	STABILIZED CRUSHED AGGREGATE	
					780							780		448	46050	780	CU YD	ASPHALT CONCRETE INTERMEDIATE COURSE, TYPE 2, PG64-22	
					580							580		448	47020	580	CU YD	ASPHALT CONCRETE SURFACE COURSE, TYPE 1, PG64-22	
5						44						49		448	48020	49	CU YD	ASPHALT CONCRETE SURFACE COURSE, TYPE 1, PG64-22 (DRIVEWAYS)	
					357							357		451	15011	357	SQ YD	10" REINFORCED CONCRETE PAVEMENT, CLASS QC1, STAMPED COBBLESTONE FINISH, AS PER PLAN	10
					882							882		452	09011	882	SQ YD	4" NON-REINFORCED CONCRETE PAVEMENT, CLASS QC1, STAMPED COBBLESTONE FINISH, AS PER PLAN	10
						30						30		452	10010	30	SQ YD	6" NON-REINFORCED CONCRETE PAVEMENT, CLASS QC1	
						1222						1222		452	12010	1222	SQ YD	8" NON-REINFORCED CONCRETE PAVEMENT, CLASS QC1	
					6294							6294		609	12000	6294	FT	COMBINATION CURB AND GUTTER, TYPE 2	
					112							112		609	14000	112	FT	CURB, TYPE 2-A	
					220							220		609	20000	220	FT	CURB, TYPE 3-A	
100					2042	435						2577		609	26000	2577	FT	CURB, TYPE 6	
					215							215		609	26001	215	FT	CURB, TYPE 6, AS PER PLAN	9
																		WATER WORK	
	75											75		638	00700	75	FT	6" WATER MAIN DUCTILE IRON PIPE ANSI CLASS 52, WITH RESTRAINED MECHANICAL JOINT FITTINGS	
	4											4		638	10300	4	EACH	FIRE HYDRANT EXTENDED AND ADJUSTED TO GRADE	
	40		17									57		638	10800	57	EACH	VALVE BOX ADJUSTED TO GRADE	
	10											10		638	11100	10	EACH	METER AND CHAMBER REMOVED AND RESET	
																		LIGHTING	
							32					32		625	00450	32	EACH	CONNECTION, FUSED PULL APART	
							90					90		625	00480	90	EACH	CONNECTION, UNFUSED PERMANENT	
							16					16		625	10481	16	EACH	LIGHT POLE, DECORATIVE, AS PER PLAN	141
								4				4		625	10614	4	EACH	LIGHT POLE ANCHOR BOLTS ON STRUCTURE	
							16					16		625	14000	16	EACH	LIGHT POLE FOUNDATION, 24" X 6' DEEP	
							2634					2634		625	23000	2634	FT	NO. 4 AWG 600 VOLT DISTRIBUTION CABLE	
							14544					11367	3177	625	23304	14544	FT	NO. 8 AWG 600 VOLT DISTRIBUTION CABLE	
							1152					1152		625	23400	1152	FT	NO. 10 AWG POLE AND BRACKET CABLE	
							70						70	625	25000	70	FT	CONDUIT, 3/4", 725.04	
							467					467		625	25400	467	FT	CONDUIT, 2", 725.04	
							2288					2244	44	625	25402	2288	FT	CONDUIT, 2", 725.05	
							380					309	71	625	25500	380	FT	CONDUIT, 3", 725.04	
							292					292		625	25502	292	FT	CONDUIT, 3", 725.05	
							16					16		625	27551	16	EACH	LUMINAIRE, DECORATIVE, AS PER PLAN, ASSYMETRIC TEARDROP, 250 WATT HPS	133
							3487					3372	115	625	29000	3487	FT	TRENCH	
								1				1		625	29920	1	EACH	STRUCTURE JUNCTION BOX	
								14				11	3	625	30700	14	EACH	PULL BOX, 725.08, 18"	
								6				6		625	30706	6	EACH	PULL BOX, 725.08, 24"	
								15				15		625	32000	15	EACH	GROUND ROD	
								1				1		625	33000	1	EACH	STRUCTURE GROUNDING SYSTEM	
							1					1		625	34001	1	EACH	POWER SERVICE, AS PER PLAN	133
							3487					3372	115	625	36000	3487	FT	PLASTIC CAUTION TAPE	
								1				1		625	75506	1	EACH	LUMINAIRE REMOVED	
								1				1		625	75801	1	EACH	DISCONNECT CIRCUIT, AS PER PLAN	133
								9					9	625	98000	9	EACH	LIGHTING, MISC.: FLOOD LIGHTS FOR FLAG POLE	133
								2					2	625	98000	2	EACH	LIGHTING, MISC.: FLOOD LIGHTS FOR SIGNS	133
								1				1		625	98000	1	EACH	LIGHTING, MISC.: DOUBLE DUPLEX GFI ON PEDESTAL	133

CALCULATED SWC
CHECKED JMZ

GENERAL SUMMARY

ALL-SHAWNEE RD

M:\Proj\112\1001\77305\roadway\sheets\77305GG003.dgn 3/12/2014 12:16:28 PM scorcoran

SHEET NUMBER											PARTICIPATION			ITEM	ITEM EXT.	GRAND TOTAL	UNIT	DESCRIPTION	SEE SHEET NO.
47	119	122	143	144							01/BRO/BR	02/CMQ/OT	100% LOCAL						
																		TRAFFIC CONTROL	
	12											12		621	00101	12	EACH	RPM, 1 WAY, YELLOW, AS PER PLAN	10
		456										456		630	02100	456	FT	GROUND MOUNTED SUPPORT, NO. 2 POST	
		48										48		630	02101	48	FT	GROUND MOUNTED SUPPORT, NO. 2 POST, AS PER PLAN	10
		264										264		630	03100	264	FT	GROUND MOUNTED SUPPORT, NO. 3 POST	
		36										36		630	3101	36	FT	GROUND MOUNTED SUPPORT, NO. 3 POST, AS PER PLAN	10
		180										180		630	04100	180	FT	GROUND MOUNTED SUPPORT, NO. 4 POST	
		12										12		630	08002	12	FT	ONE WAY SUPPORT, NO. 2 POST	
		12										12		630	08510	12	FT	STREET NAME SIGN SUPPORT, NO. 2 POST	
		59										59		630	08600	59	EACH	SIGN POST REFLECTOR	
		547.7										547.7		630	80100	547.7	SQ FT	SIGN, FLAT SHEET	
		1										1		630	80500	1	EACH	SIGN, DOUBLE FACED, STREET NAME	
		29										29		630	84900	29	EACH	REMOVAL OF GROUND MOUNTED SIGN AND DISPOSAL	
		24										24		630	86002	24	EACH	REMOVAL OF GROUND MOUNTED POST SUPPORT AND DISPOSAL	
	0.65											0.65		646	10000	0.65	MILE	EDGE LINE, 4"	
	0.18											0.18		646	10100	0.18	MILE	LANE LINE, 4", SOLID	
	1.47											1.47		646	10200	1.47	MILE	CENTER LINE	
	408											408		646	10300	408	FT	CHANNELIZING LINE, 8"	
	104											104		646	10400	104	FT	STOP LINE	
	539											539		646	10500	539	FT	CROSSWALK LINE	
	910											910		646	10600	910	FT	TRANSVERSE/DIAGONAL LINE	
	127											127		646	10800	127	SQ FT	ISLAND MARKING	
	28											28		646	20300	28	EACH	LANE ARROW	
	191											191		646	20800	191	FT	YIELD LINE	
																		TRAFFIC SIGNALS	
7												7		625	31510	7	EACH	PULL BOX REMOVED	
1												1		632	90101	1	EACH	REMOVAL OF TRAFFIC SIGNAL INSTALLATION, AS PER PLAN	10
																		LANDSCAPING	
			27									27		661	14000	27	EACH	PERENNIALS, NO. 2, PENNISETUM ORIENTALE 'KARLEY ROSE'	
			59									59		661	14000	59	EACH	PERENNIALS, NO. 3, PANICUM VERGATUM 'HEAVY METAL'	
			72									72		661	20020	72	EACH	DECIDUOUS SHRUB, 18" HEIGHT, BERBERIS THUNBERGII 'MARIA'	
				15								15		661	20020	15	EACH	DECIDUOUS SHRUB, 18" HEIGHT, CEPHALANTHUS OCCIDENTALIS	
				15								15		661	20020	15	EACH	DECIDUOUS SHRUB, 18" HEIGHT, CORONUS AMOMUM	
				20								20		661	20020	20	EACH	DECIDUOUS SHRUB, 18" HEIGHT, PHYSOCARPUS OPULIFOLIUS	
				15								15		661	20060	15	EACH	DECIDUOUS SHRUB, 3' HEIGHT, CEPHALANTHUS OCCIDENTALIS	
				15								15		661	20060	15	EACH	DECIDUOUS SHRUB, 3' HEIGHT, CORONUS AMOMUM	
				20								20		661	20060	20	EACH	DECIDUOUS SHRUB, 3' HEIGHT, PHYSOCARPUS OPULIFOLIUS	
			17									17		661	30070	17	EACH	EVERGREEN SHRUB, 2.5' HEIGHT, JUNIPERUS CHINENSIS 'SEA GREEN'	
				2								2		661	40040	2	EACH	DECIDUOUS TREE, 1" CALIPER, SALIX NIGRA	
				2								2		661	40040	2	EACH	DECIDUOUS TREE, 1" CALIPER, PLATANUS OCCIDENTALIS	
				1								1		661	40040	1	EACH	DECIDUOUS TREE, 1" CALIPER, ACER SACCHARINUM	
			2									2		661	40080	2	EACH	DECIDUOUS TREE, 2" CALIPER, AMELANCHIER X GRANDIFLORA	
			1									1		661	40100	1	EACH	DECIDUOUS TREE, 2-1/2" CALIPER, PLATANUS X ACERIFOLIA 'BLOODGOOD'	
																		STRUCTURES 20' AND OVER	
																		FOR STRUCTURE ALL - C.R. 152-0334, SEE SHEET 154	

CALCULATED SWC
CHECKED JMZ

GENERAL SUMMARY

ALL-SHAWNEE RD

M:\Proj\112\1001\77305\roadway\sheets\77305GG004.dgn 1/13/2014 6:18:49 PM scorcoran

SHEET NUMBER											PARTICIPATION			ITEM	ITEM EXT.	GRAND TOTAL	UNIT	DESCRIPTION	SEE SHEET NO.
11	12										01/BRO/BR	02/CMQ/OT	100% LOCAL						
																		MAINTENANCE OF TRAFFIC	
LUMP												LUMP		503	11100	LUMP		COFFERDAMS AND EXCAVATION BRACING	
11												11		614	12338	11	EACH	WORK ZONE IMPACT ATTENUATOR (BIDIRECTIONAL)	
	126											126		614	18601	126	SIGN MNTH	PORTABLE CHANGEABLE MESSAGE SIGN, AS PER PLAN	12
1.25												1.25		614	21100	1.25	MILE	WORK ZONE CENTER LINE, CLASS I, 642 PAINT	
1.55												1.55		614	21200	1.55	MILE	WORK ZONE CENTER LINE, CLASS I, 740.06, TYPE I	
4.65												4.65		614	22100	4.65	MILE	WORK ZONE EDGE LINE, CLASS I, 642 PAINT	
5												5		614	22200	5	MILE	WORK ZONE EDGE LINE, CLASS I, 740.06, TYPE I	
550												550		614	24400	550	FT	WORK ZONE DOTTED LINE, CLASS I, 740.06, TYPE I	
60												60		614	26200	60	FT	WORK ZONE STOP LINE, CLASS I, 642 PAINT	
125												125		614	26400	125	FT	WORK ZONE STOP LINE, CLASS I, 740.06, TYPE I	
4												4		614	30400	4	EACH	WORK ZONE ARROW, CLASS I, 740.06, TYPE I	
10575												10575		615	20001	10575	SQ YD	PAVEMENT FOR MAINTAINING TRAFFIC, CLASS A, AS PER PLAN	11
71												71		616	10000	71	M GAL	WATER	
3130												3130		622	41000	3130	FT	PORTABLE BARRIER, 32"	
200												200		622	41020	200	FT	PORTABLE BARRIER, 32", BRIDGE MOUNTED	
																		MISCELLANEOUS	
														SPECIAL	10810000	LUMP		CPM PROGRESS SCHEDULE	
														614	11000	LUMP		MAINTAINING TRAFFIC	
														619	16010	16	MNTH	FIELD OFFICE, TYPE B	
														624	10000	LUMP		MOBILIZATION	
														623	10001	LUMP		CONSTRUCTION LAYOUT STAKES AND SURVEYING, AS PER PLAN	7

CALCULATED SWC
CHECKED JMZ

GENERAL SUMMARY

ALL-SHAWNEE RD

M:\Proj\1121\1001\77305\roadway\sheets\77305GG005.dgn 1/13/2014 5:29:31 PM scorcoran

REF. NO.	SHEET NO.	STATION TO STATION		202 GUARDRAIL REMOVED	202 REMOVAL MISC.: BOLLARD	202 REMOVAL MISC.: GROUND MOUNTED SIGN	202 REMOVAL MISC.: PARKING LOT LIGHT	202 REMOVAL MISC.: PAYPHONE REMOVAL	202 REMOVAL MISC.: SIGN	202 REMOVAL MISC.: FLOOD LIGHT	202 REMOVAL MISC.: SPRINKLER HEAD	607 FENCE, MISC.: WOOD FENCE	611 MANHOLE ADJUSTED TO GRADE	611 MANHOLE RECONSTRUCT TO GRADE	625 PULLBOX REMOVED	632 REMOVAL OF TRAFFIC SIGNAL INSTALLATION	638 VALVEBOX ADJUSTED TO GRADE	680 SPECIAL - COMPLETE IRRIGATION SYSTEM	690 MAILBOX SUPPORT SYSTEM, SINGLE	690 MAILBOX REMOVED AND RESET	690 SPECIAL - BOLLARD	690 SPECIAL MISC.: REMOVABLE BOLLARD WITH SLEEVE	690 SPECIAL MISC.: FLAG POLE	690 SPECIAL MISC.: 6' ARTIFICIAL TREE	690 SPECIAL MISC.: 10' ARTIFICIAL TREE	690 SPECIAL MISC.: CHAIN
				FT	EACH	EACH	EACH	EACH	EACH	EACH	EACH	FT	EACH	EACH	EACH	EACH	EACH	EACH	EACH	EACH	EACH	EACH	EACH	EACH	EACH	EACH	FT
R-1	53	103+58.00																	1	1							
R-2		104+20.00																	1	1							
R-3		105+65.00																	2	2							
R-4		105+96.71																	1	1							
SAN-1		104+19.42												1													
R-5	54	106+71.00											1				1										
R-6		107+11.76	107+15.59			1				1																	
R-7		107+85.00												1													
R-8		108+06.00	108+20.22		3																						
R-9		108+10.42	108+43.31								2																
R-10		110+15.09									1																
R-11		110+55.00									2																
R-12		110+84.00													1												
R-13		110+85.00	110+87.00														2										
SAN-2		107+77.74												1													
SAN-3		110+85.95											1														
R-14	55	111+10.81									1																
R-15		111+38.25	111+42.35								2																
R-16		111+77.00													1												
R-17		112+26.14				1																					
R-18		112+65.00			2																						
R-19		113+47.00	114+86.00													1											
R-20		113+61.00	113+69.00														2										
R-21		113+67.00															1										
R-22		114+50.99					1																				
R-23		114+54.00	115+18.00	70																							
R-24		114+56.63						1																			
R-25		114+58.10				1																					
R-26		114+61.00												1													
R-27		115+07.00	115+66.00	50																							
R-28		114+63.44					1																				
R-29		115+32.52			1																						
R-30		115+37.80			1																						
R-31		115+38.06			1																						
SAN-4		114+01.27											1														
		CENTER ISLAND																1			18	4	3	4	2	180
R-32	56	117+05.00	117+74.00	65																							
R-33		117+19.00	117+85.00	65																							
R-34		117+25.00													1												
R-35		117+50.00													1												
R-36		117+70.98							1																		
R-37		118+35.00	118+41.00		2																						
R-38		118+38.00																	1	1							
R-39		118+39.77							1																		
SAN-5		119+09.97											1														
TOTALS TO SHEET 47				**250**	**10**	**3**	**2**	**1**	**2**	**1**	**8**		**4**	**4**	**4**	**1**	**6**	**1**	**6**	**6**	**18**	**4**	**3**	**4**	**2**	**180**

CALCULATED SWC
CHECKED SJB

ROADWAY SUBSUMMARY

ALL- SHAWNEE RD

M:\Proj\1121\1001\77305\roadway\sheets\77305GS001.dgn 2/13/2014 8:48:02 AM scorcoran

REF. NO.	SHEET NO.	STATION TO STATION		202 GUARDRAIL REMOVED	202 REMOVAL MISC.: BOLLARD	202 REMOVAL MISC.: GROUND MOUNTED SIGN	202 REMOVAL MISC.: PARKING LOT LIGHT	202 REMOVAL MISC.: PAYPHONE REMOVAL	202 REMOVAL MISC.: SIGN	202 REMOVAL MISC.: FLOOD LIGHT	202 REMOVAL MISC.: SPRINKLER HEAD	607 FENCE, MISC.: WOOD FENCE	611 MANHOLE ADJUSTED TO GRADE	611 MANHOLE RECONSTRUCT TO GRADE	625 PULLBOX REMOVED	632 REMOVAL OF TRAFFIC SIGNAL INSTALLATION	638 VALVEBOX ADJUSTED TO GRADE	680 SPECIAL - COMPLETE IRRIGATION SYSTEM	690 MAILBOX SUPPORT SYSTEM, SINGLE	690 MAILBOX REMOVED AND RESET	690 SPECIAL - BOLLARD	690 SPECIAL MISC.: REMOVABLE BOLLARD WITH SLEEVE	690 SPECIAL MISC.: FLAG POLE	690 SPECIAL MISC.: 6' ARTIFICIAL TREE	690 SPECIAL MISC.: 10' ARTIFICIAL TREE	690 SPECIAL MISC.: CHAIN
				FT	EACH	EACH	EACH	EACH	EACH	EACH	EACH	FT	EACH	EACH	EACH	EACH	EACH	EACH	EACH	EACH	EACH	EACH	EACH	EACH	EACH	FT
R-40	57	120+10.02															1									
R-41		120+67.00															1									
R-42		121+15.00															1									
R-43		121+21.83							1																	
R-44		121+44.00											1				1									
R-45		121+96.00																	1	1						
R-46		121+96.58							1																	
R-47		122+58.00																	1	1						
R-48		122+79.00																	1	1						
R-49		122+84.00															1									
R-50		123+17.00															1									
R-51		123+35.00															1									
R-52	58	207+73.00															1									
R-53		208+00.00															1									
R-54		208+66.50								1																
R-55		208+68.15				1																				
R-56		208+70.87								1																
SAN-6		206+81.65												1												
R-57	59	209+14.88				1																				
R-58		209+24.00												1			1									
R-59		209+35.00				1																				
R-60		209+60.09													1											
SAN-7		209+06.29												1												
R-61		209+64.58				1																				
R-62		212+71.00	213+16.00	45																						
R-63		213+28.79								1																
R-64		213+44.00												1												
R-65	60	214+74.01				1																				
R-66		215+09.43					1																			
R-67		215+13.00													1											
R-68		215+25.00											1				1									
R-69		215+45.34				1																				
R-70		216+21.57					1																			
R-71		217+65.86				1																				
R-72		217+66.29				1																				
SAN-8		215+22.46											1													
R-73	61	221+34.20				1																				
R-74		221+37.00	222+42.00									105														
SAN-9		219+13.92												1												
SAN-10		221+14.64											1													
R-75	62	226+38.73				1									1											
TOTALS FROM THIS SHEET				**45**		**10**	**2**		**2**	**3**		**105**	**4**	**5**	**3**		**11**	**0**	**3**	**3**						
TOTALS FROM SHEET 46				**250**	**10**	**3**	**2**	**1**	**2**	**1**	**8**	**0**	**4**	**4**	**4**	**1**	**6**	**1**	**6**	**6**	**18**	**4**	**3**	**4**	**2**	**180**
TOTALS CARRIED TO GEN. SUM.				**295**	**10**	**13**	**4**	**1**	**4**	**4**	**8**	**105**	**8**	**9**	**7**	**1**	**17**	**1**	**9**	**9**	**18**	**4**	**3**	**4**	**2**	**180**

CALCULATED SWC
CHECKED SJB

ROADWAY SUBSUMMARY

ALL- SHAWNEE RD

M:\Proj\1121\1001\77305\roadway\sheets\77305GS002.dgn 2/13/2014 8:48:02 AM scorcoran

REF. NO.	SHEET NO.	STATION TO STATION		SIDE	LENGTH L	AVERAGE WIDTH W	SURFACE AREA A A-LxW	PLANIMETERED AREAS	304 AGGREGATE BASE CY	608 4" CONCRETE WALK SF	608 6" CONCRETE WALK SF	608 CURB RAMP, TYPE A1 SF	608 CURB RAMP, TYPE A2 SF	608 CURB RAMP, TYPE B1 SF	608 DETECTABLE WARNING SF				
SW-1	54	107+76.69	108+65.41	RT	89.83	6.00	539.00			539									
SW-2		108+88.41	109+81.49	RT	79.17	6.00	475.00			475			77						
SW-3		110+15.61	110+36.69	RT	9.00	6.00	54.00			54			65						
SW-4		110+56.69	111+18.40	RT	61.67	6.00	370.00			370									
SW-5	55	111+36.72	112+05.39	RT	68.67	6.00	412.00			412									
SW-6		112+76.14	113+19.08	RT	43.34	7.13	309.00			309		142							
SW-7		113+18.28	113+74.72	LT	80.40	10.00	804.00			804				221					
DW-1		113+22.92	113+33.55	CL					15		91				35				
SW-8	56	117+67.17	118+59.65	LT	92.36	6.41	592.00			592									
SW-9		118+94.91	120+73.27	LT	178.37	6.52	1163.00			1163									
SW-10	57	120+69.69	120+84.36	LT	16.55	11.00	182.00			182		165							
SW-11		121+89.61	121+94.57	LT	19.00	5.00	95.00			95									
SW-12		121+99.71	122+04.51	LT	18.80	5.00	94.00			94									
SW-13	58	206+32.50	208+81.21	RT	250.33	6.00	1502.00			1502									
SW-14	59	209+04.84	209+41.67	RT	37.00	6.00	222.00			222									
SW-15		209+60.44	210+03.16	RT	42.00	6.00	252.00			252									
SW-16		210+22.26	210+80.17	RT	58.14	7.00	407.00			407		143							
SW-17		211+00.37	211+12.15	LT	15.00	10.00	150.00			150				221					
SW-18		211+26.74	212+02.03	LT	110.00	10.00	1100.00			1100									
SW-19		212+46.58	213+33.15	RT	111.10	10.00	1111.00			1111									
SW-20		213+92.36	214+50.91	RT	58.00	10.00	580.00			580									
DW-2		210+86.07	210+96.25	CL					15		88				37				
SW-21	60	214+72.85	215+65.51	RT	90.50	10.00	905.00			905			185						
CR-1		216+60.62		RT									179						
TOTALS CARRIED TO GENERAL SUMMARY									**30**	**11318**	**179**	**450**	**506**	**442**	**72**				

CALCULATED JJG
CHECKED SWC

SIDEWALK SUBSUMMARY

ALL - SHAWNEE RD

M:\Proj\1121\1001\77305\roadway\sheets\77305GS003.dgn 1/13/2014 5:29:33 PM scorcoran

DESCRIPTION	AREA*	202 PAVEMENT REMOVED	202 CURB REMOVED	204 GEOTEXILE FABRIC	206 CEMENT	206 CURING COAT	301 ASPHALT CONCRETE BASE, PG64-22	304 AGGREGATE BASE	407 TACK COAT	407 TACK COAT FOR INTERMEDIATE COURSE	448 ASPHALT CONCRETE INTERMEDIATE COURSE, TYPE 2, PG64-22	448 ASPHALT CONCRETE SURFACE COUSE, TYPE 1, PG64-22	451 10" REINFORCED CONCRETE PAVEMENT, STAMPED COBBLESTONE FINISH, CLASS QC1, AS PER PLAN	452 4" NON-REINFORCED CONCRETE PAVEMENT, STAMPED COBBLESTONE FINISH, CLASS QC1, AS PER PLAN	601 ARTICULATING CONCRETE BLOCK REVETMENT SYSTEM, TYPE 2, AS PER PLAN	605 6" BASE PIPE UNDERDRAIN, 707.33, PERFORATED	609 CURB, TYPE 2-A	609 COMBINATION CURB AND GUTTER, TYPE 2	609 CURB TYPE 3-B	609 CURB, TYPE 6	609 CURB, TYPE 6, AS PER PLAN	690 SPECIAL - GEOGRID
	SY	SY	FT	SY	TON	SY	CY	CY	GAL	GAL	CY	CY	SY	SY	SY	FT	FT	FT	FT	FT	FT	SY
SUBGRADE AREA - ROADWAY	18030				714	18030																
SUBGRADE AREA - SHARED USE PATH	1300				51	1300																
PAVEMENT AREA - ROADWAY	14835	12105	375				1650	5779	1113	594	730	520										
PAVEMENT AREA - SHARED USE PATH	1225							204	92	49	50	60										
STA 102+40 RT (SHAWNEE) TO STA 222+00 RT (FORT AMANDA)																2036		2020		107		
STA 102+40 LT (SHAWNEE) TO STA 206+00 RT (FORT AMANDA)																1685		1685				
STA 206+00 LT (FORT AMANDA) TO STA 115+63 LT (SHAWNEE)																655		655				
STA 117+77 LT (SHAWNEE) TO STA 123+52 LT (SHAWNEE)																612		512		100		
STA 117+77 RT (SHAWNEE) TO STA 123+52 RT (SHAWNEE)																561		561				
STA 115+89 RT (SHAWNEE) TO STA 220+25 LT (FORT AMANDA)																861		861				
NORTH SPLITTER ISLAND	102				4	102		64						102						154		
EAST SPLITTER ISLAND	370				15	370		220					30	340						554	55	
SOUTH SPLITTER ISLAND	235				9	235		156						235						607		
WEST SPLITTER ISLAND	230				9	230		135					25	205						375	55	
TRUCK APRON	302				12	302		41					302			205			220	145	105	
SUPERLOAD BYPASS THRU CENTRAL ISLAND	145			145	6	145		51							145		112					145
(* AREAS CALCULATED BY CADD)																						
TOTALS CARRIED TO GENERAL SUMMARY		**12105**	**375**	**145**	**820**	**20714**	**1650**	**6650**	**1205**	**643**	**780**	**580**	**357**	**882**	**145**	**6615**	**112**	**6294**	**220**	**2042**	**215**	**145**

CALCULATED SWC
CHECKED SJB

PAVEMENT SUBSUMMARY

ALL- SHAWNEE RD

M:\Proj\1121\1001\77305\roadway\sheets\77305GS004.dgn 2/10/2014 3:21:54 PM scorcoran

REFERENCE NO.	SHEET NO.	STATION	SIDE	DRIVE TYPE/COMP R=RESIDENTIAL C=COMMERCIAL AS=ASPHALT AG=AGGREGATE CO=CONCRETE	APRON LENGTH	APRON WIDTH AT CURB	DRIVEWAY LENGTH	DRIVE WIDTH AT BACK OF APRON/WALK	APRON AREA	SIDEWALK AREA	DRIVE AREA		202 PAVEMENT REMOVED	204 SUBGRADE COMPACTION	301 ASPHALT CONCRETE BASE, PG64-22 (DRIVEWAYS)	304 AGGREGATE BASE	448 ASPHALT CONCRETE SURFACE COURSE, TYPE 1, PG64-22 (DRIVEWAYS)	452 6" NON-REINFORCED CONCRETE PAVEMENT, CLASS QC1	452 8" NON-REINFORCED CONCRETE PAVEMENT, CLASS QC1	608 8" CONCRETE WALK	609 CURB, TYPE 6			
					FT.	FT.	FT.	FT.	SF	SF	SF		SY	SY	CY	CY	CY	SY	SY	SF	FT			
DR-1	53	102+63.00	RT	C/AS	8.5	25.3	7.0	12.0	159	--	84		27	27			0.4		18					
DR-2		103+38.32	LT	C/AS	7.7	27.0	3.5	14.0	158	--	50		24	23			0.2		18					
DR-3		104+31.84	RT	C/AS	8.0	52.0	12.2	39.0	342	--	476		146	91	5.1		1.9		38					
DR-4		104+37.14	LT	R/AS	7.7	23.0	--	14.0	142	--	--		28	16				16						
DR-5		105+80.63	LT	R/AG	7.5	21.0	10.9	12.0	124	--	131		47	28		4		14						
DR-6	54	106+18.37	LT	C/AS	7.5	31.0	11.3	18.0	184	--	203		68	43	2.2		0.8		20					
DR-7		106+94.06	LT	C/AS	7.6	25.0	15.2	12.0	140	--	182		15	36	2		0.8		16					
DR-8		107+59.69	RT	C/AS	7.5	47.0	13.9	34.0	304	--	472		164	86	5.1		1.9		34					
DR-9		107+64.01	LT	C/AS	7.5	31.0	10.5	18.0	184	--	188		63	41	2		0.8		20					
DR-10		108+76.91	RT	C/AS	7.5	36.0	6.6	23.0	221	138	153		94	57	1.7		0.6		25	138				
DR-11		109+36.03	LT	C/AS	10.0	50.0	2.4	37.0	435	--	89		74	58	1		0.4		48					
DR-12		110+46.69	RT	C/AS	7.5	32.0	28.6	20.0	195	120	860		163	131	9.3		3.4		22	120				
DR-13	55	111+27.48	LT	C/AS	8.0	36.0	2.7	23.0	236	--	63		44	33	0.7		0.3		26					
DR-14		111+27.72	RT	C/AS	7.5	22.0	26.2	18.0	140	104	918		241	129	9.9		3.6		16	104	110			
DR-15		112+10.85	LT	C/AS	8.0	33.0	6.3	20.0	212	--	127		53	38	1.4		0.5		24					
DR-16		112+32.48	RT	C/CO	7.5	47.0	13.8	34.0	569	425	1049		208	227					180	425				
DR-17		112+80.43	LT	C/AS	8.0	38.0	4.4	32.0	280	--	140		112	47	1.5		0.6		31					
DR-18	56	118+77.31	LT	C/AS	7.6	51.0	15.3	36.0	321	212	547		14	120	5.9		2.2		36	212				
DR-19	57	121+56.10	LT	C/AS	7.6	38.0	10.0	25.0	240	--	250		72	54	2.7		1		27					
DR-20		122+25.51	RT	C/AS	10.0	35.0	26.8	19.0	270	--	509		140	87	5.5		2		30					
DR-21		122+39.04	LT	C/AS	8.1	39.0	12.0	26.0	264	--	312		48	64	3.4		1.3		29					
DR-22		123+16.88	LT	C/AS	10.4	49.0	18.6	36.0	1	--	980		177	109	10.6		3.8		0					
DR-23	58	206+21.73	RT	C/AS	10.0	33.0	8.0	20.0	269	--	156		71	47	1.7		0.7		30					
DR-24		208+93.04	RT	C/AS	7.5	37.0	18.5	24.0	229	145	457		91	92	4.9		1.8		25	145				
DR-25	59	209+57.18	RT	C/AS	7.6	33.0	23.3	20.0	201	122	466		77	88	5		1.8		22	122				
DR-26		210+19.77	RT	C/AS	7.6	33.5	24.8	20.0	201	121	496		47	91	5.4		2		22	121				
DR-27		211+33.00	LT	C/CO	10.0	20.0	30.0	10.0	100	100	300			56					44	11				
DR-28		213+58.51	RT	C/CO	5.0	49.1	9.3	37.0	374	688	743		183	201	8				124	688				
DR-29	60	214+63.50	RT	C/AS	5.0	35.0	29.1	24.6	143	221	2113		510	275	22.8		8.2		16	221	202			
DR-30		218+83.10	RT	C/AS	9.5	49.0	20.6	36.0	403	360	743		252	167	8		2.9		45	360				
DR-31	61	220+91.51	RT	C/AS	40	119.5	--	40	2133	--	--		2535	237					237		123			
TOTALS CARRIED TO GENERAL SUMMARY													**5788**	**2799**	**126**	**4**	**44**	**30**	**1222**	**2667**	**435**			

CALCULATED SWC
CHECKED SJB

DRIVE SUBSUMMARY

ALL- SHAWNEE RD

M:\Proj\1121\1001\77305\roadway\sheets\77305GS005.dgn 1/13/2014 5:29:34 PM scorcoran

REF. NO.	SHEET NO.	STATION FROM	STATION TO	SIDE	202 PIPE REMOVED, 24" AND UNDER	202 CATCH BASIN REMOVED	602 CONCRETE MASONRY	611 6" CONDUIT, TYPE B, AS PER PLAN	611 6" CONDUIT, TYPE C, AS PER PLAN	611 8" CONDUIT, TYPE C, AS PER PLAN	611 12" CONDUIT, TYPE B, AS PER PLAN	611 12" CONDUIT, TYPE C, AS PER PLAN	611 15" CONDUIT, TYPE B, AS PER PLAN	611 15" CONDUIT, TYPE C, AS PER PLAN	611 21" CONDUIT, TYPE B, AS PER PLAN	611 24" CONDUIT, TYPE B, AS PER PLAN	611 CATCH BASIN, NO. 2-2B	611 CATCH BASIN, NO. 3A	611 CATCH BASIN, NO. 3	611 CATCH BASIN, NO. 6	611 CATCH BASIN ADJUSTED TO GRADE	611 MANHOLE NO 3	670 DITCH EROSION PROTECTION MAT, TYPE A
					FT	EACH	CU YD	FT	FT	FT	FT	FT	FT	FT	FT	FT	EACH	EACH	EACH	EACH	EACH	EACH	SY
D-1	53	104+65	104+65	LT/CL							18							1					
D-2		104+65	104+65	RT/CL							19							1					
D-3		104+65	106+50	CL									185									1	
D-4	54	106+50	106+50	LT/CL							21							1					
D-5		106+50	106+50	RT/CL							21							1					
D-6		106+50	109+00	CL									250									1	
D-7		109+00	109+00	LT/CL							23							1					
D-8		109+00	109+00	RT/CL							23							1					
D-9		109+00	110+20	CL									120									1	
D-10		110+18	110+20	RT/CL							28										1		
D-11		110+20	111+70	CL											150							1	
D-12		110+17	111+08	RT	90																		
D-13	55	111+50	111+70	LT/CL							35							1					
D-14		111+50	111+70	RT/CL							31							1					
D-15		111+70	112+85	CL												115						1	
D-16		112+41	112+85	LT/CL							54								1				
D-17		112+70	112+76	RT		1			31								1						
D-18		112+76	112+85	RT/CL							32									1			
D-19		112+85	114+50	CL												163						1	
D-20		113+64	114+50	RT/CL				107															
D-21		114+50	115+15	CL/LT												97						1	
D-22		115+80	115+59	RT/LT							69							1					
D-23		115+59	115+15	LT								45						1					
D-24		111+87	112+70	RT	83	1																	
D-25		112+70	112+70	RT	32																		
D-26		112+70	113+74	RT	95	1																	
D-27		113+68	113+97	RT	40																		
D-28		113+97	115+68	RT	181	1																	
D-29		114+47	114+77	LT	35																		
D-30		111+08	111+73	LT	65	1																	
D-31		111+73	112+45	LT	72	1																	
D-32		112+45	112+57	LT	13	1																	
D-33	56	118+00	118+00	LT/RT							59							1					
D-34		118+00	118+00	RT			0.21					39						1					
D-35		117+50	118+00	RT																			43
D-36		117+48	119+50	RT			0.25							200								1	
D-37		119+50	119+54	RT	4									4									
D-38		117+27	119+50	CL/RT	223																		
D-39	57	120+55	120+55	LT/RT							40								1				
D-40		120+55	120+55	RT			0.21					25							1				
D-40A		121+32	121+35	LT/RT							40								1				
D-40B		121+35	121+35	RT			0.21					25							1				
D-41		122+14	122+10	LT		1				4						8			1				
TOTALS CARRIED TO GENERAL SUMMARY					933	8	0.88	107	31	4	476	134	370	204	150	383	1	10	6	1	1	7	43

CALCULATED SWC
CHECKED SJB

DRAINAGE SUBSUMMARY - SHAWNEE RD

ALL- SHAWNEE RD

M:\Proj\1121\100\77305\drainage\sheets\77305DS001.dgn 1/13/2014 5:29:34 PM scorcoran

REF. NO.	SHEET NO.	STATION FROM	STATION TO	SIDE	202 PIPE REMOVED, 24" AND UNDER	202 CATCH BASIN REMOVED	202 CATCH BASIN ABANDONED	602 CONCRETE MASONRY	611 6" CONDUIT, TYPE B, AS PER PLAN	611 8" CONDUIT, TYPE C, AS PER PLAN	611 12" CONDUIT, TYPE B, AS PER PLAN	611 12" CONDUIT, TYPE C, AS PER PLAN	611 15" CONDUIT, TYPE B, AS PER PLAN	611 15" CONDUIT, TYPE C, AS PER PLAN	611 27" CONDUIT, TYPE C, AS PER PLAN	611 30" CONDUIT, TYPE C, AS PER PLAN	611 CATCH BASIN, NO. 2-2B	611 CATCH BASIN, NO. 2-2B, WITH BICYCLE SAFE GRATE	611 CATCH BASIN, NO. 3A	611 CATCH BASIN, NO. 3	611 CATCH BASIN, NO. 6 AS PER PLAN	611 MANHOLE NO 3	670 DITCH EROSION PROTECTION MAT	895 MANUFACTURED WATER QUALITY STRUCTURE, TYPE 4
					FT	EACH	EACH	CU YD	FT	FT	FT	FT	FT	FT	FT	FT	EACH	EACH	EACH	EACH	EACH	EACH	SY	EACH
D-42	58	205+95	206+05	RT	10									10										
D-43		206+05	207+50	RT										145								1		
D-44		206+05	206+50	RT								52												
D-45		206+50	206+50	LT/RT							28								2					
D-46		207+50	208+50	RT										102			1							
D-47		208+50	209+25	RT								76										1		
D-48		208+50	208+50	RT								22												
D-49		208+50	208+50	LT/RT							38								2					
D-50		206+05	207+51	RT	157																			
D-51		208+64	209+71	RT	110	1																		
D-52	59	209+25	209+80	RT								56					1							
D-53		209+80	210+30	RT								50					1							
D-54		210+30	210+45	RT								16					1							
D-55		210+96	211+20	LT				0.6								48								
D-56		211+20	211+64	LT											47							1		1
D-57		212+21	214+00	LT									180											
D-58		209+71	210+45	RT	75		1																	
D-59		212+33	212+63	RT	37	1																		
D-60		212+63	213+26	RT	66	1																		
D-61		213+26	213+98	RT	78	1																		
D-62		212+49	212+81	LT	33	1																		
D-63	60	214+00	214+18	CL/LT							34									1				
D-64		214+00	214+18	CL/RT							32													
D-65		214+00	215+00	CT							100											1		
D-66		214+18	214+59	RT								45								1	1			
D-67		215+00	215+00	CL/RT	27				27															
D-68		215+00	215+38	CL/RT							44											1		
D-69		215+38	215+39	RT	5					22								1	1					
D-70		216+42	217+13	RT								74								1				
D-71		217+00	217+13	LT/RT							51								1					
D-72		217+13	217+22	RT								37												
D-73		217+13	217+50	RT								37										1		
D-74		217+50	217+50	RT								6							1					
D-75		217+50	218+40	RT								90							1			1		
D-76		213+98	214+99	RT	100	1																		
D-77		214+55	214+60	RT	18	1																		
D-78		214+99	215+90	RT	89	1																		
D-79		215+36	215+64	RT	35	2																		
D-80		217+20	217+20	RT	35	1																		
D-81	61	220+50	221+30								80													
D-82		221+59	221+82	RT																			30	
D-83		222+12	222+31	RT																			21	
D-84		219+82	219+82	RT	35	1																		
TOTALS CARRIED TO GEN. SUM.					**910**	**12**	**1**	**0.6**	**27**	**22**	**407**	**561**	**180**	**257**	**47**	**48**	**4**	**1**	**8**	**3**	**1**	**7**	**51**	**1**

CALCULATED SWC
CHECKED SJB

DRAINAGE SUBSUMMARY- FORT AMANDA RD

ALL- SHAWNEE RD

M:\Proj\1121\1001\77305\drainage\sheets\77305DS002.dgn 1/13/2014 5:29:34 PM scorcoran

FOR CROSS SECTIONS SEE SHEET 65-77
FOR ALIGNMENT DETAILS SEE SHEET 92-96
FOR GRADING DETAILS SEE SHEET 100-101
FOR DRIVE PROFILES SEE SHEET 106-113

* 10 FOOT TRANSITION FROM CURB HEIGHT 0 TO 6 INCHES

Δ CONTRACTOR TO FIELD VERIFY DRIVE CENTERLINE ELEVATIONS AND SLOPES

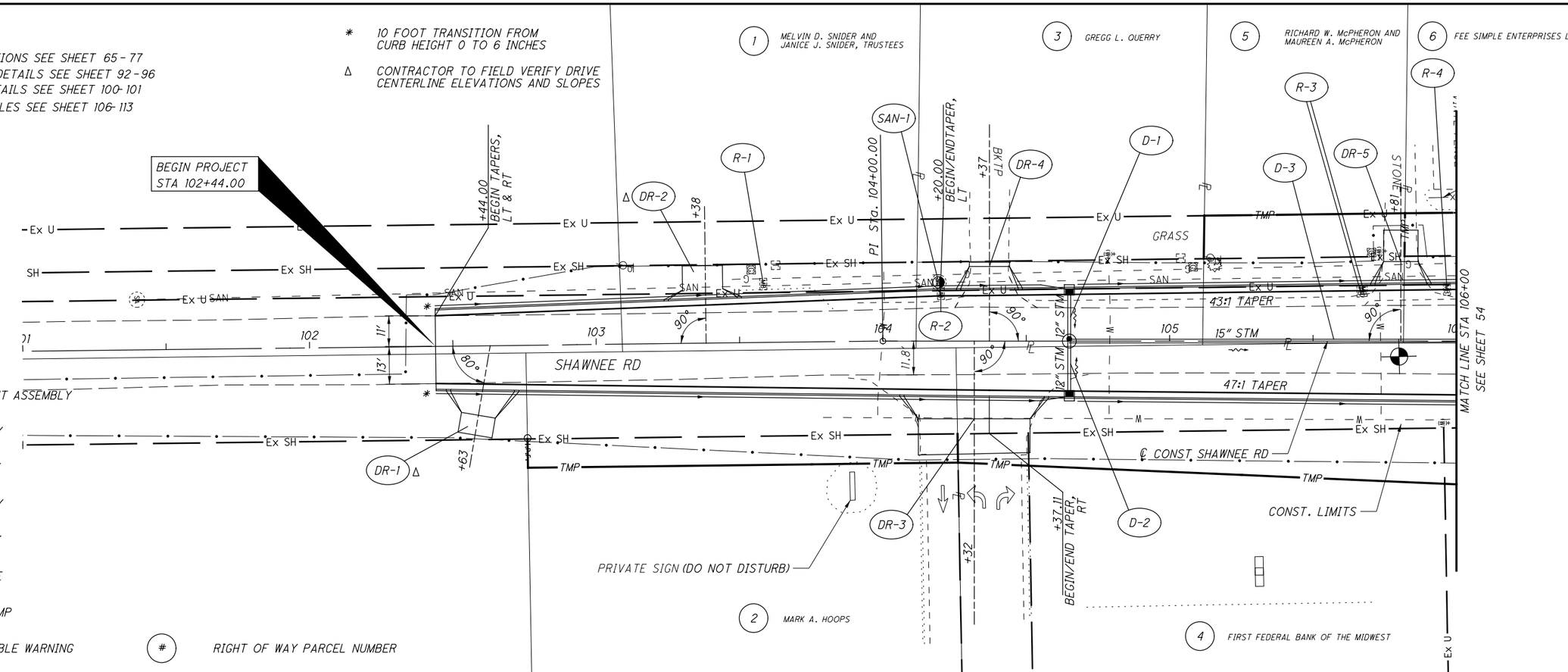

LEGEND

M	MONUMENT ASSEMBLY
SAN	SANITARY
R	ROADWAY
DR	DRIVEWAY
SW	SIDEWALK
D	DRAINAGE
CR	CURB RAMP
DW	DETECTABLE WARNING
#	RIGHT OF WAY PARCEL NUMBER

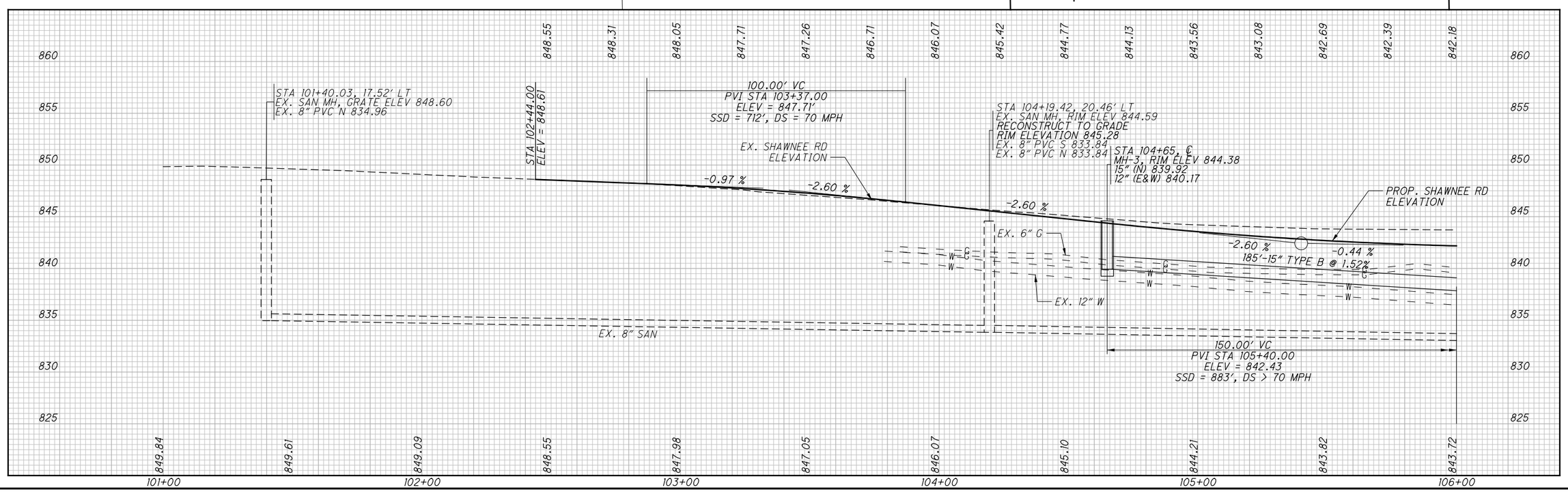

HORIZONTAL SCALE IN FEET 0 10 20 40

CALCULATED RDC
CHECKED SJB

PLAN AND PROFILE - SHAWNEE ROAD
STA 101+00.00 TO STA 106+00.00

ALL-SHAWNEE RD

M:\Proj\121\1001\77305\roadway\sheets\77305GP001.dgn 1/13/2014 5:29:36 PM scorcoran

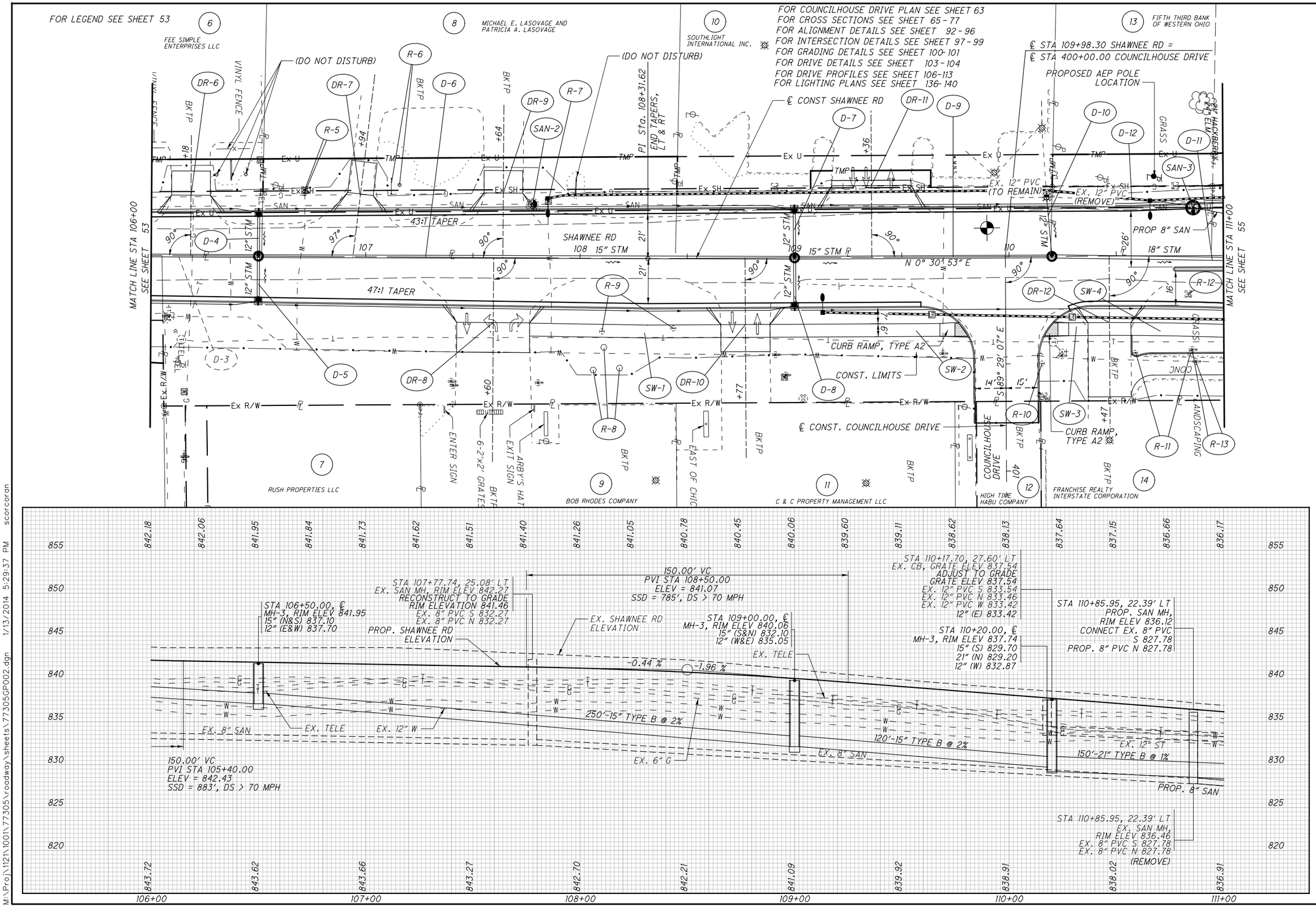

HORIZONTAL SCALE IN FEET 0 10 20 40

CALCULATED RDC
CHECKED SJB

PLAN AND PROFILE - SHAWNEE ROAD
STA 106+00.00 TO STA 111+00.00

ALL-SHAWNEE RD

M:\Proj\1121\100\77305\roadway\sheets\77305GP002.dgn 1/13/2014 5:29:37 PM scorcoran

FOR CROSS SECTIONS SEE SHEET 65 - 77
FOR ALIGNMENT DETAILS SEE SHEET 92 - 96
FOR GRADING DETAILS SEE SHEET 100- 101
FOR ROUNDABOUT DETAILS SEE SHEET 102
FOR DRIVE PROFILES SEE SHEET 106- 113
FOR STORM SEWER PROFILES SEE SHEET 114
FOR LIGHTING PLANS SEE SHEET 136- 140
FOR LANDSCAPING PLANS SEE SHEET143- 147

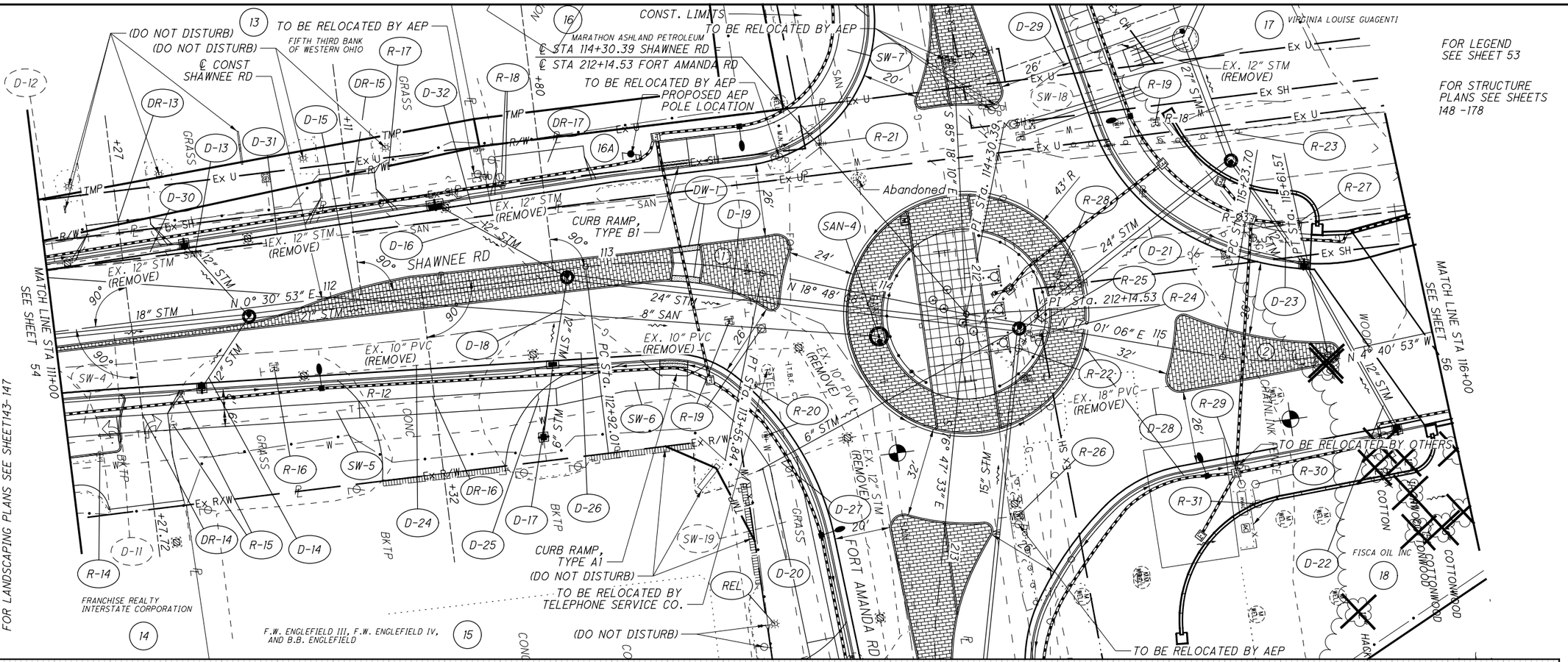

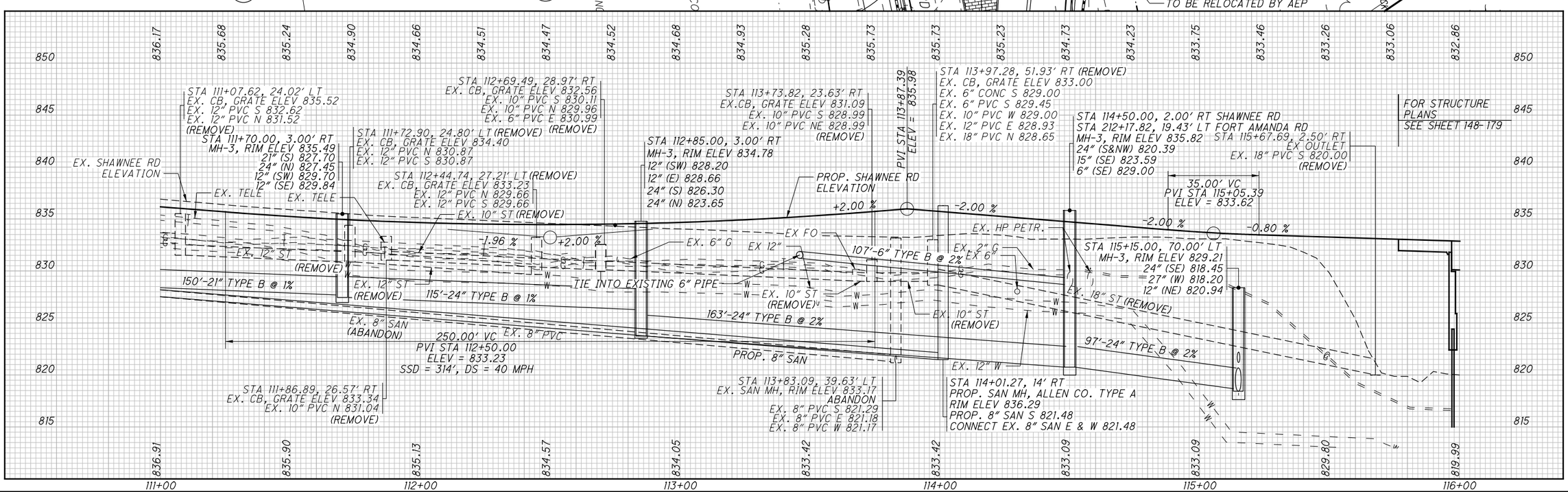

HORIZONTAL SCALE IN FEET 0 10 20 40

CALCULATED RDC
CHECKED SJB

PLAN AND PROFILE - SHAWNEE ROAD
STA 111+00.00 TO STA 116+00.00

ALL-SHAWNEE RD

M:\Proj\1121\1001\77305\roadway\sheets\77305GP003.dgn 3/3/2014 10:15:05 AM scorcoran

FOR LEGEND SEE SHEET 53

FOR CROSS SECTIONS SEE SHEET 65 - 77
FOR ALIGNMENT DETAILS SEE SHEET 92 - 96
FOR GRADING DETAILS SEE SHEET 100- 101
FOR DRIVE PROFILES SEE SHEET 106- 113
FOR STORM SEWER PROFILES SEE SHEET 114
FOR LIGHTING PLANS SEE SHEET 136- 140
FOR BRIDGE PLANS SEE SHEET 148 - 179

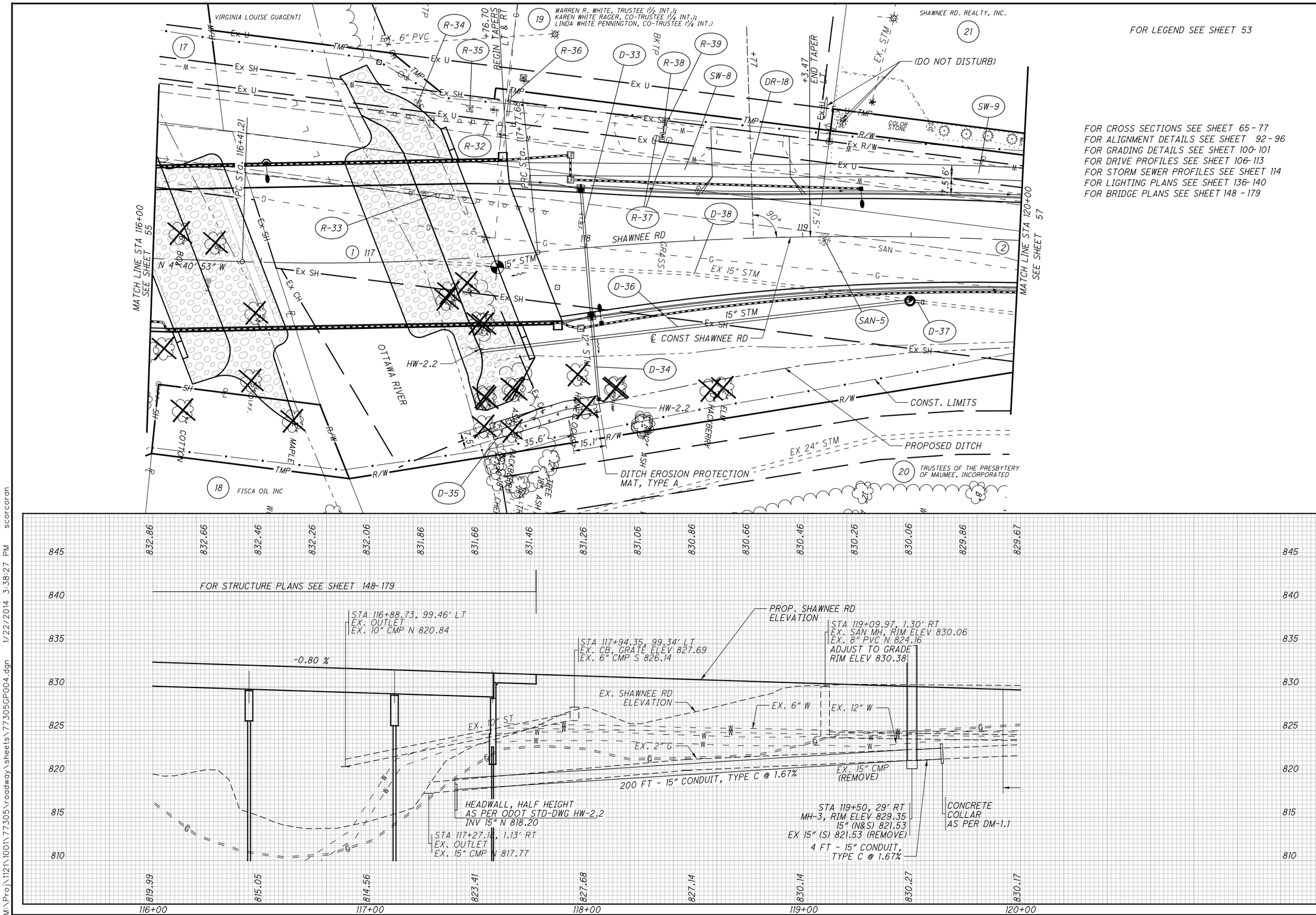

HORIZONTAL SCALE IN FEET 0 10 20 40

CALCULATED RDC
CHECKED SJB

PLAN AND PROFILE - SHAWNEE ROAD
STA 116+00.00 TO STA 121+00.00

ALL-SHAWNEE RD

M:\Proj\112\100\77305\roadway\sheets\77305GP004.dgn 1/22/2014 3:38:27 PM scorcoran

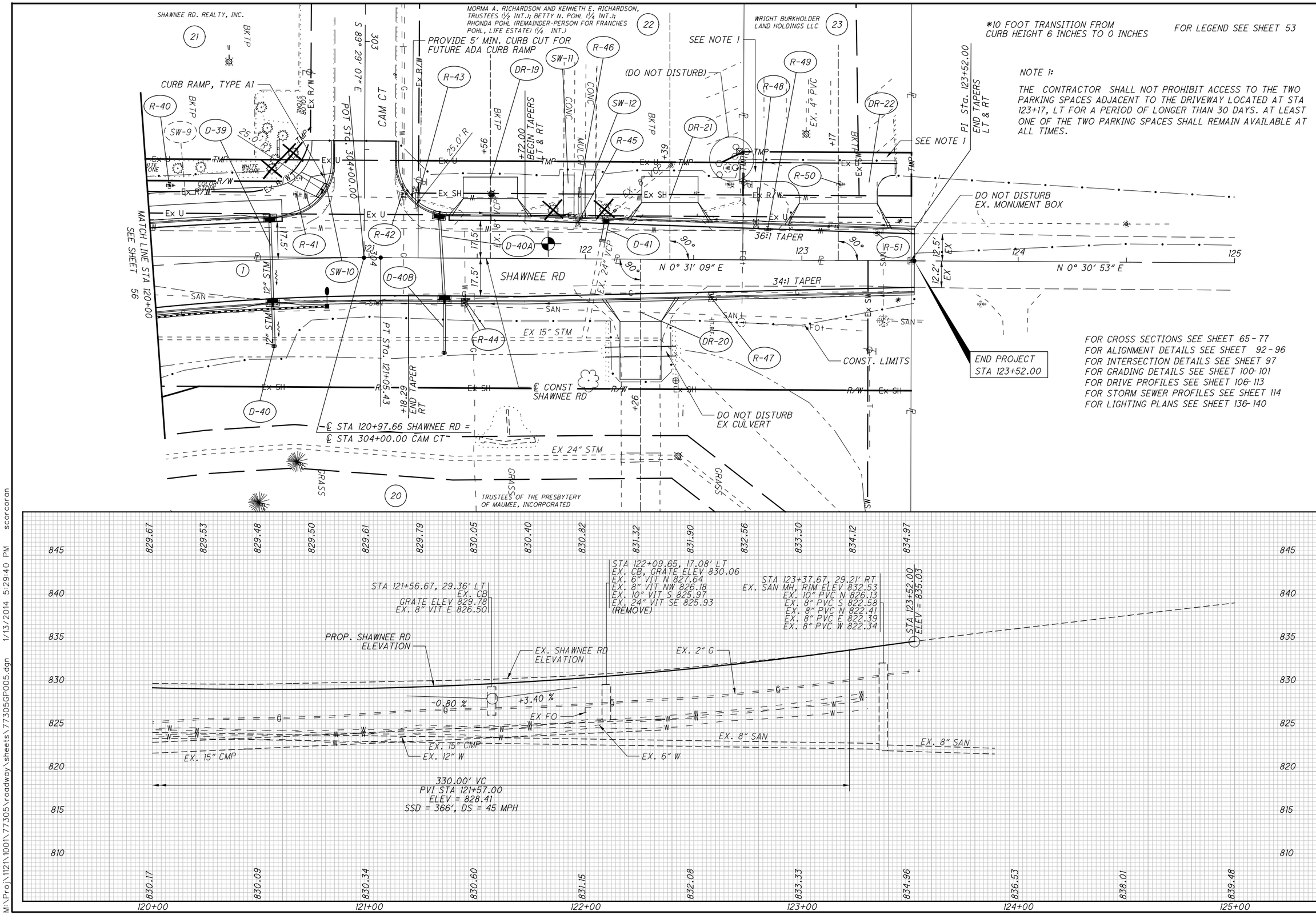

HORIZONTAL SCALE IN FEET 0 10 20 40

CALCULATED RDC
CHECKED SJB

PLAN AND PROFILE - SHAWNEE ROAD
STA 121+00.00 TO STA 126+00.00

ALL-SHAWNEE RD

M:\Proj\121\1001\77305\roadway\sheets\77305GP005.dgn 1/13/2014 5:29:40 PM scorcoran

*10 FOOT TRANSITION FROM CURB HEIGHT 0 TO 6 INCHES

FOR CROSS SECTIONS SEE SHEET 78 - 87
FOR ALIGNMENT DETAILS SEE SHEET 92 - 96
FOR GRADING DETAILS SEE SHEET 100- 101
FOR DRIVE PROFILES SEE SHEET 106- 113
FOR STORM SEWER PROFILES SEE SHEET 114
FOR LIGHTING PLANS SEE SHEET 136- 140

FOR LEGEND SEE SHEET 53

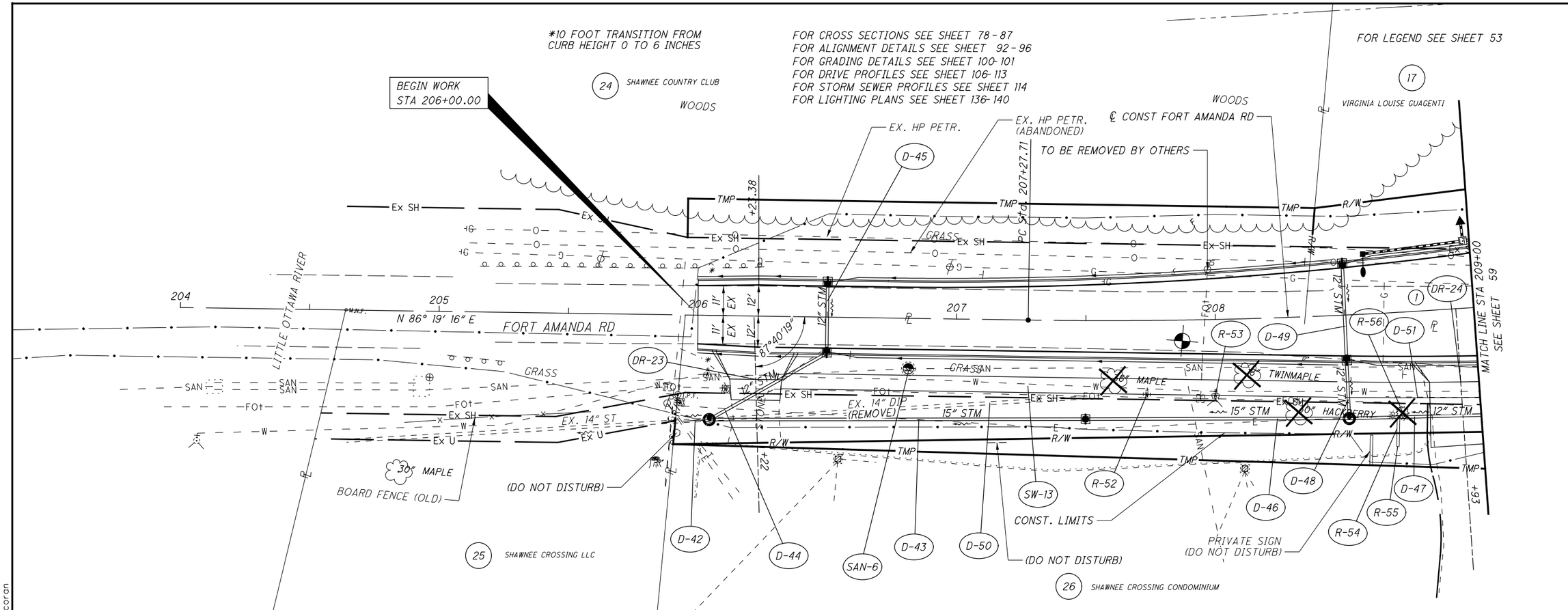

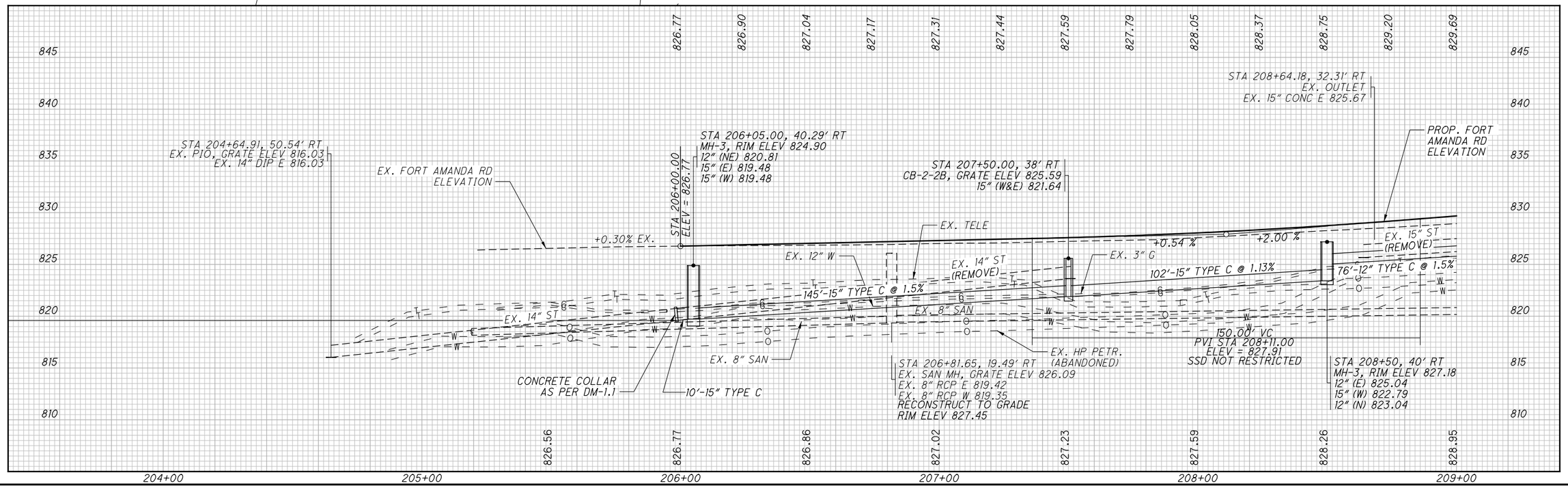

HORIZONTAL SCALE IN FEET 0 10 20 40

CALCULATED SJB
CHECKED RDC

PLAN AND PROFILE - FORT AMANDA ROAD
STA 204+00.00 TO STA 209+00.00

ALL-SHAWNEE RD

M:\Proj\112\100\77305\roadway\sheets\77305GP006.dgn 1/13/2014 5:29:40 PM scorcoran

FOR CROSS SECTIONS SEE SHEET 78 - 87
FOR ALIGNMENT DETAILS SEE SHEET 92 - 96
FOR GRADING DETAILS SEE SHEET 100- 101
FOR ROUNDABOUT DETAILS SEE SHEET 102
FOR DRIVE DETAILS SEE SHEET 103- 104
FOR DRIVE PROFILES SEE SHEET 106- 113
FOR STORM SEWER PROFILES SEE SHEET 114
FOR LIGHTING PLANS SEE SHEET 136- 140
FOR LANDSCAPING PLAN SEE SHEET 143

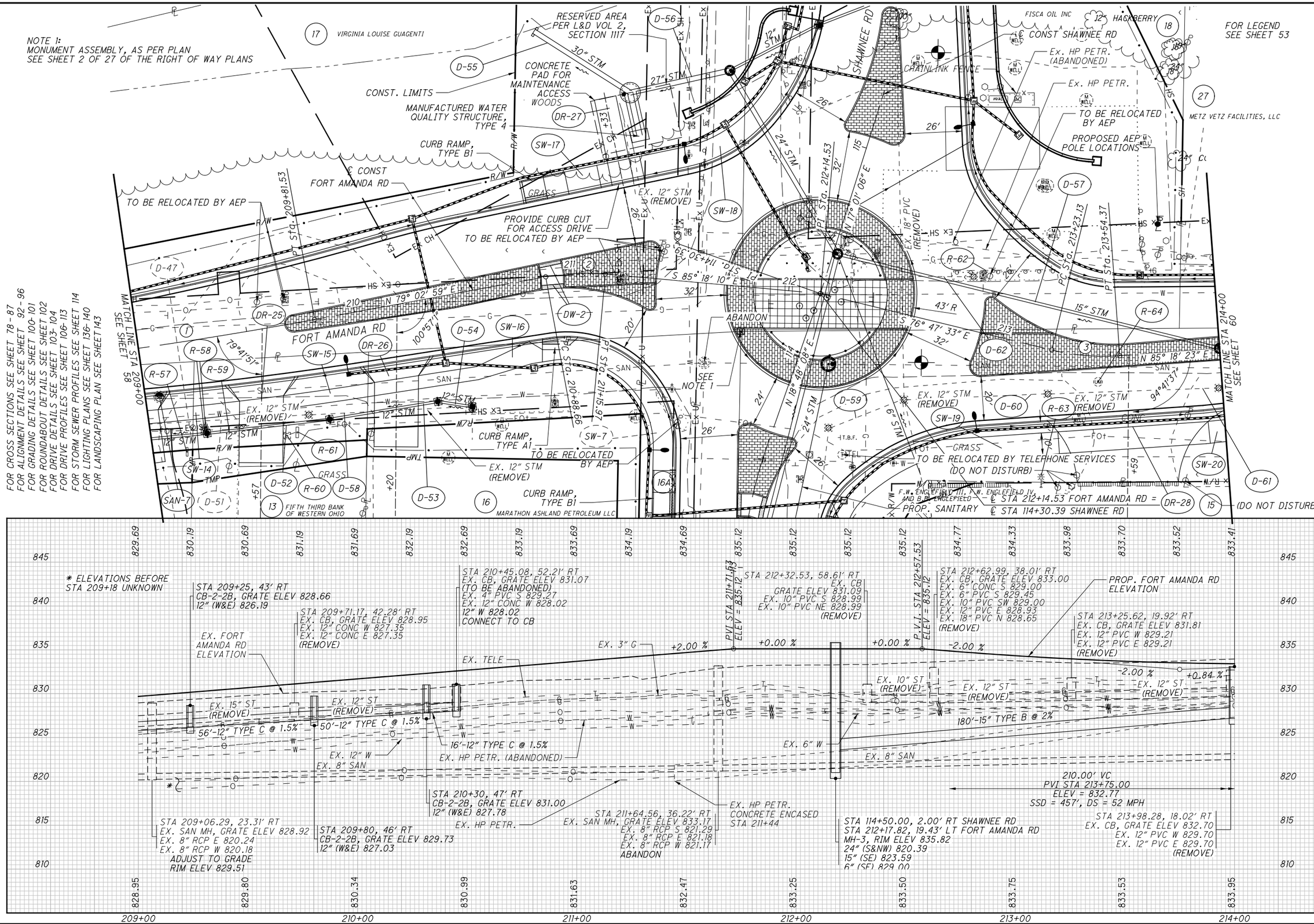

HORIZONTAL SCALE IN FEET 0 10 20 40

CALCULATED SJB
CHECKED RDC

PLAN AND PROFILE - FORT AMANDA ROAD STA 209+00.00 TO STA 214+00.00

ALL-SHAWNEE RD

M:\Proj\1121\10011\77305\roadway\sheets\77305GP007.dgn 3/3/2014 10:16:47 AM scorcoran

FOR LEGEND SEE SHEET 53

* INDICATES SHARED USE PATH STATIONS & ELEVATIONS

FOR ACCESS DRIVE PLAN SEE SHEET 64
FOR CROSS SECTIONS SEE SHEET 78 - 87
FOR ALIGNMENT DETAILS SEE SHEET 92 - 96
FOR INTERSECTION DETAILS SEE SHEET 99
FOR GRADING DETAILS SEE SHEET 100- 101
FOR DRIVE DETAILS SEE SHEET 104
FOR DRIVE PROFILES SEE SHEET 106- 113
FOR STORM SEWER PROFILES SEE SHEET 114
FOR LIGHTING PLANS SEE SHEET 136- 140

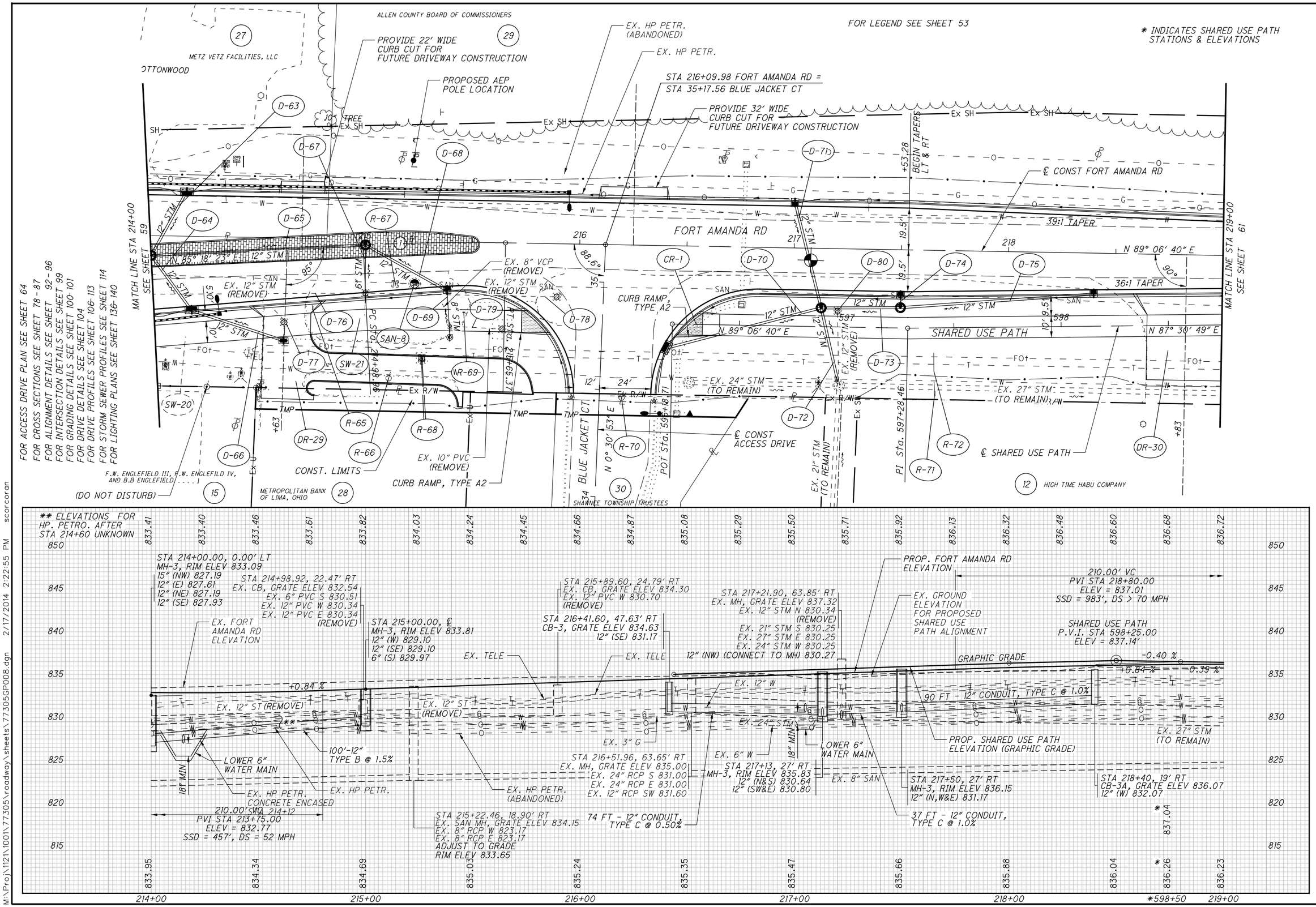

HORIZONTAL SCALE IN FEET 0 10 20 40

CALCULATED SJB
CHECKED RDC

PLAN AND PROFILE - FORT AMANDA ROAD
STA 214+00.00 TO STA 219+00.00

ALL-SHAWNEE RD

M:\Proj\1121\1001\77305\roadway\sheets\77305GP008.dgn 2/17/2014 2:22:55 PM scorcoran

*10 FOOT TRANSITION FROM CURB HEIGHT 6 INCHES TO 0

**TRANSITION SHARED USE PATH CROSS SLOPE FROM 2% TO MATCH DRIVEWAY OVER A LENGTH OF 25 FEET.

ALLEN COUNTY BOARD OF COMMISSIONERS

29

FOR LEGEND SEE SHEET 53

FOR CROSS SECTIONS SEE SHEET 78 - 91
FOR ALIGNMENT DETAILS SEE SHEET 92 - 96
FOR GRADING DETAILS SEE SHEET 100- 101
FOR DRIVE PROFILES SEE SHEET 106- 113
FOR STORM SEWER PROFILES SEE SHEET 114
FOR CULVERT DETAILS SEE SHEET 115
FOR CULVERT PROFILES AND
DITCH CROSS SECTIONS SEE SHEET 116 - 117

NOTE: NO WORK WILL BE PERMITTED ON THE NORTH END OF THE CULVERTS

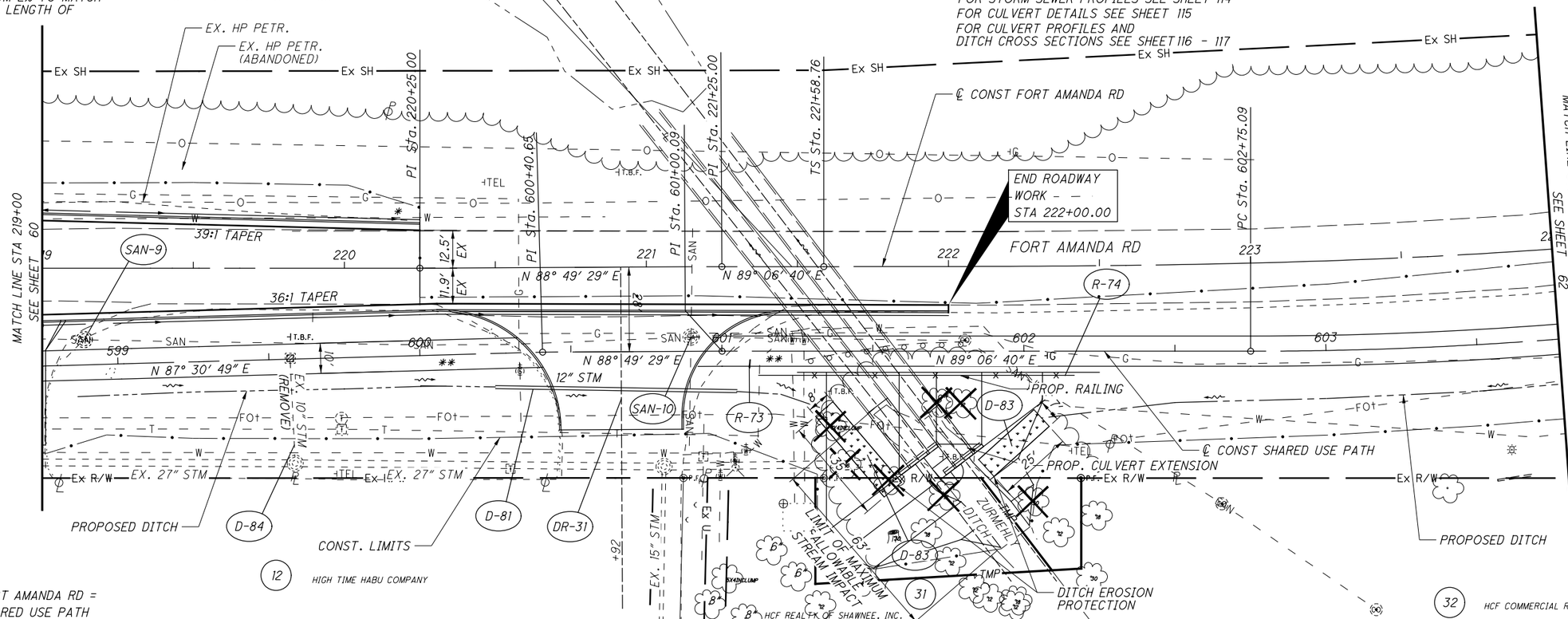

PROFILE NOTE:

STA 200+25.00 FORT AMANDA RD =
STA 600+00.00 SHARED USE PATH

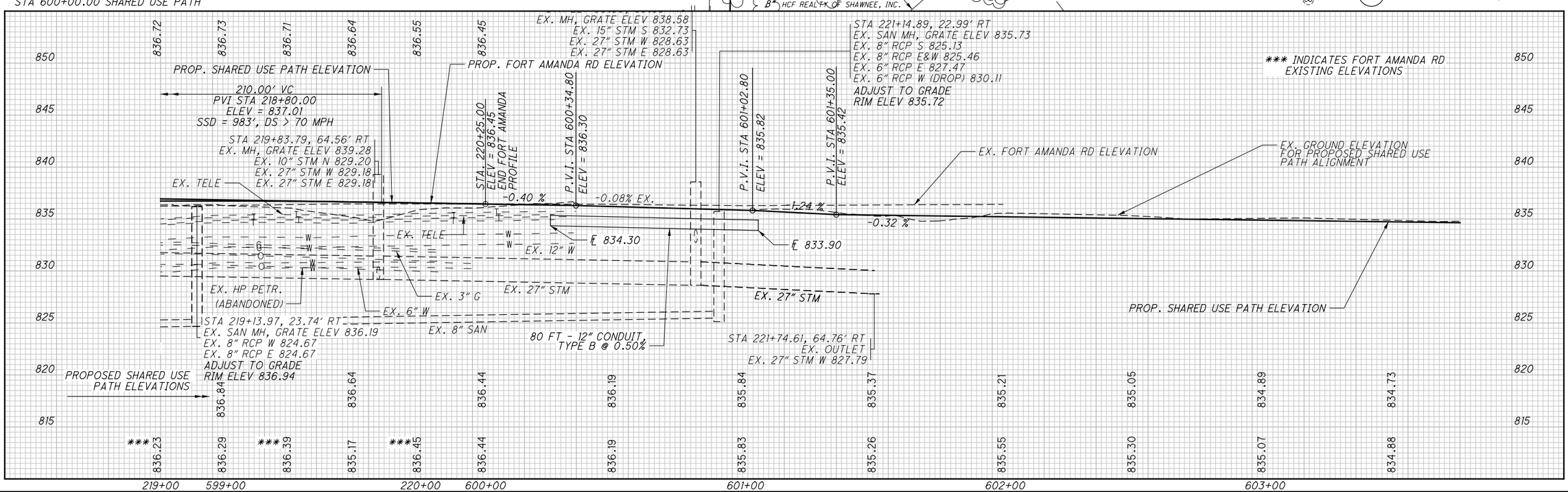

HORIZONTAL SCALE IN FEET 0 10 20 40

CALCULATED SJB
CHECKED RDC

PLAN AND PROFILE - FORT AMANDA ROAD
STA 219+00.00 TO STA 224+00.00

ALL-SHAWNEE RD

M:\Proj\121\100\77305\roadway\sheets\77305GP009.dgn 2/10/2014 8:51:07 AM scorcoran

FOR LEGEND SEE SHEET 53
FOR CROSS SECTIONS SEE SHEET 88 - 91
FOR SHARED USE PATH RESTRICTIONS SEE SHEETS 8 & 12

(1)

P.I. STA. 229+00.68
Ls= 350.00'
f s = 8° 45' 00"
LT = 233.62'
ST = 116.93'
x = 349.18'
y = 17.79'
k = 174.86'
p = 4.45'

(2)

P.I. Sta. 604+28.23
Δ = 13° 26' 12" (LT)
Dc = 4° 24' 27"
R = 1,300.00'
T = 153.14'
L = 304.87'
E = 8.99'
C = 304.17'
C.B. = N 82° 23' 34" E

(3)

P.I. Sta. 606+35.05
Δ = 57° 41' 52" (RT)
Dc = 57° 17' 45"
R = 100.00'
T = 55.09'
L = 100.70'
E = 14.17'
C = 96.50'
C.B. = S 75° 28' 36" E

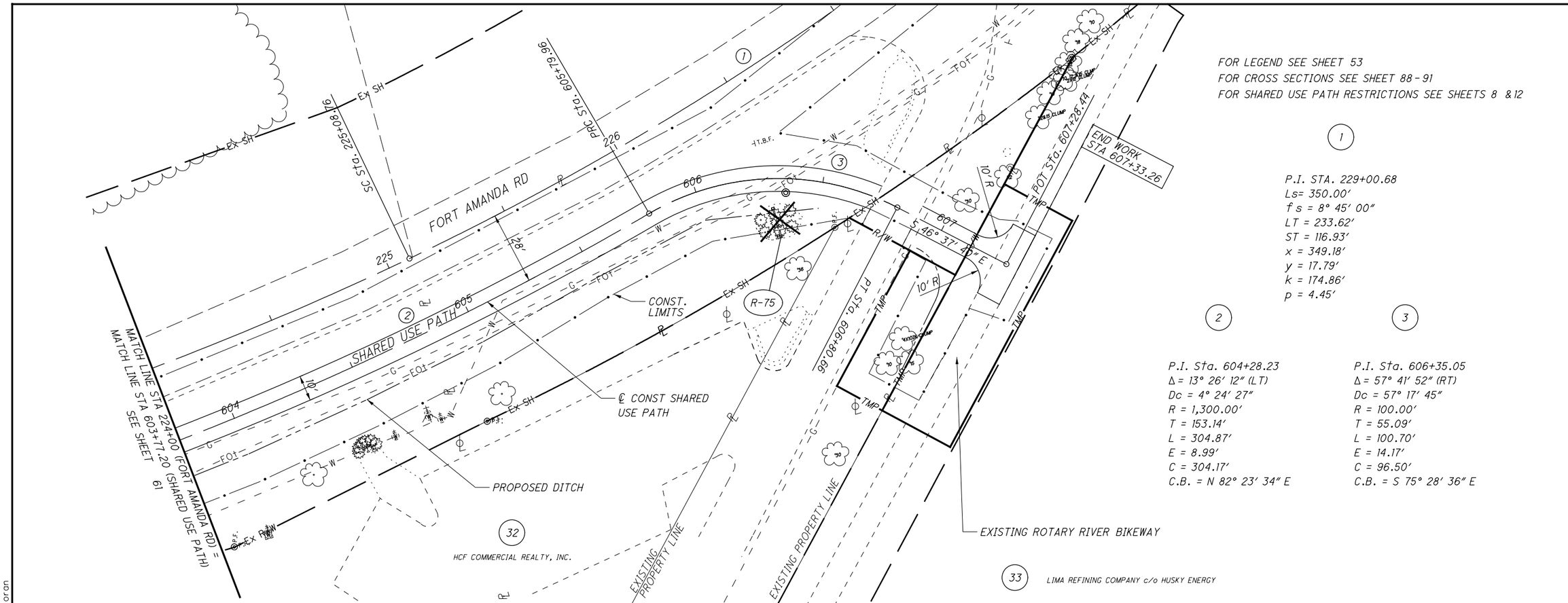

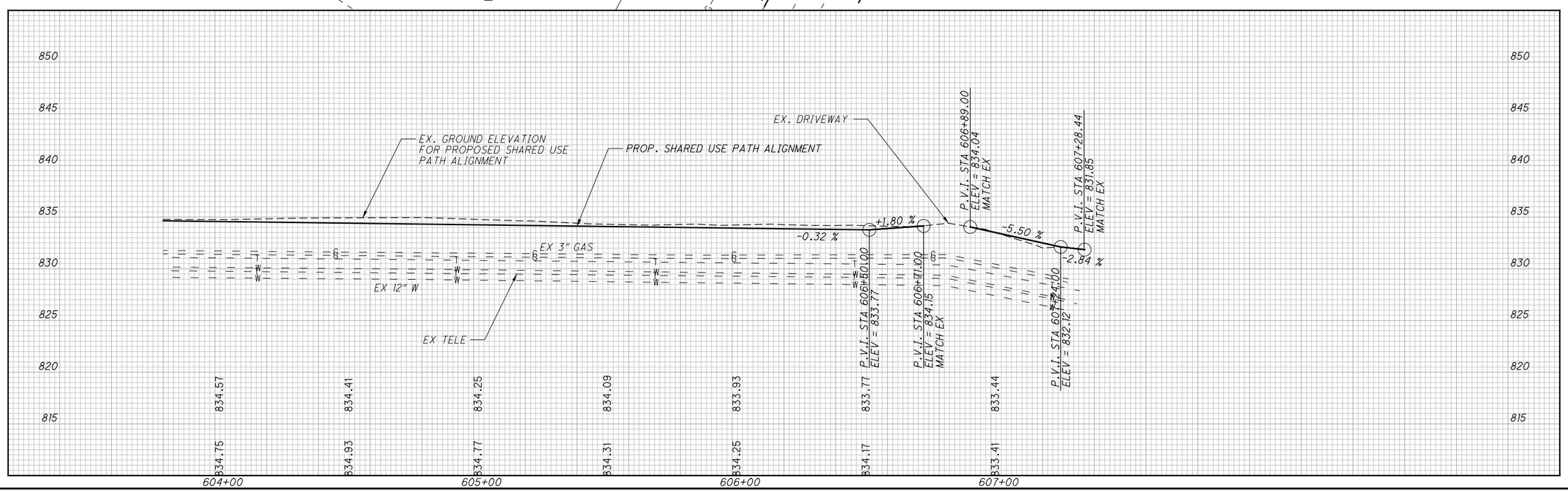

HORIZONTAL SCALE IN FEET
0 10 20 40

CALCULATED
CHECKED

PLAN AND PROFILE - SHARED USE PATH
STA 603+77.20 TO STA 607+28.44

ALL-SHAWNEE RD

M:\Proj\1121\100\77305\roadway\sheets\77305GP010.dgn 1/22/2014 3:38:28 PM scorcoran

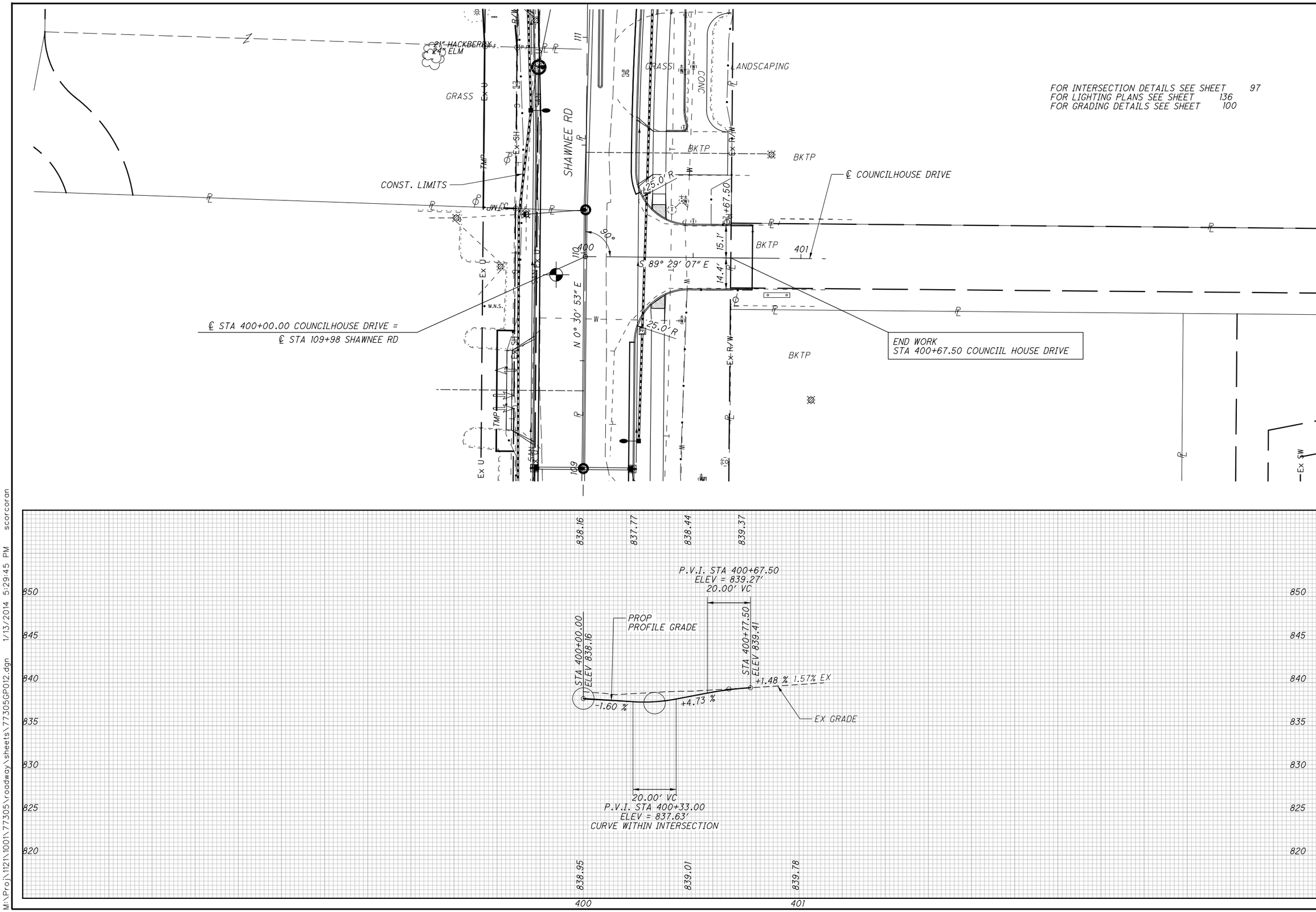

HORIZONTAL SCALE IN FEET
0 10 20 40

CALCULATED RDC
CHECKED SJB

PLAN AND PROFILE COUNCILHOUSE DRIVE

ALL-SHAWNEE RD

M:\Proj\1121\1001\77305\roadway\sheets\77305GP012.dgn 1/13/2014 5:29:45 PM scorcoran

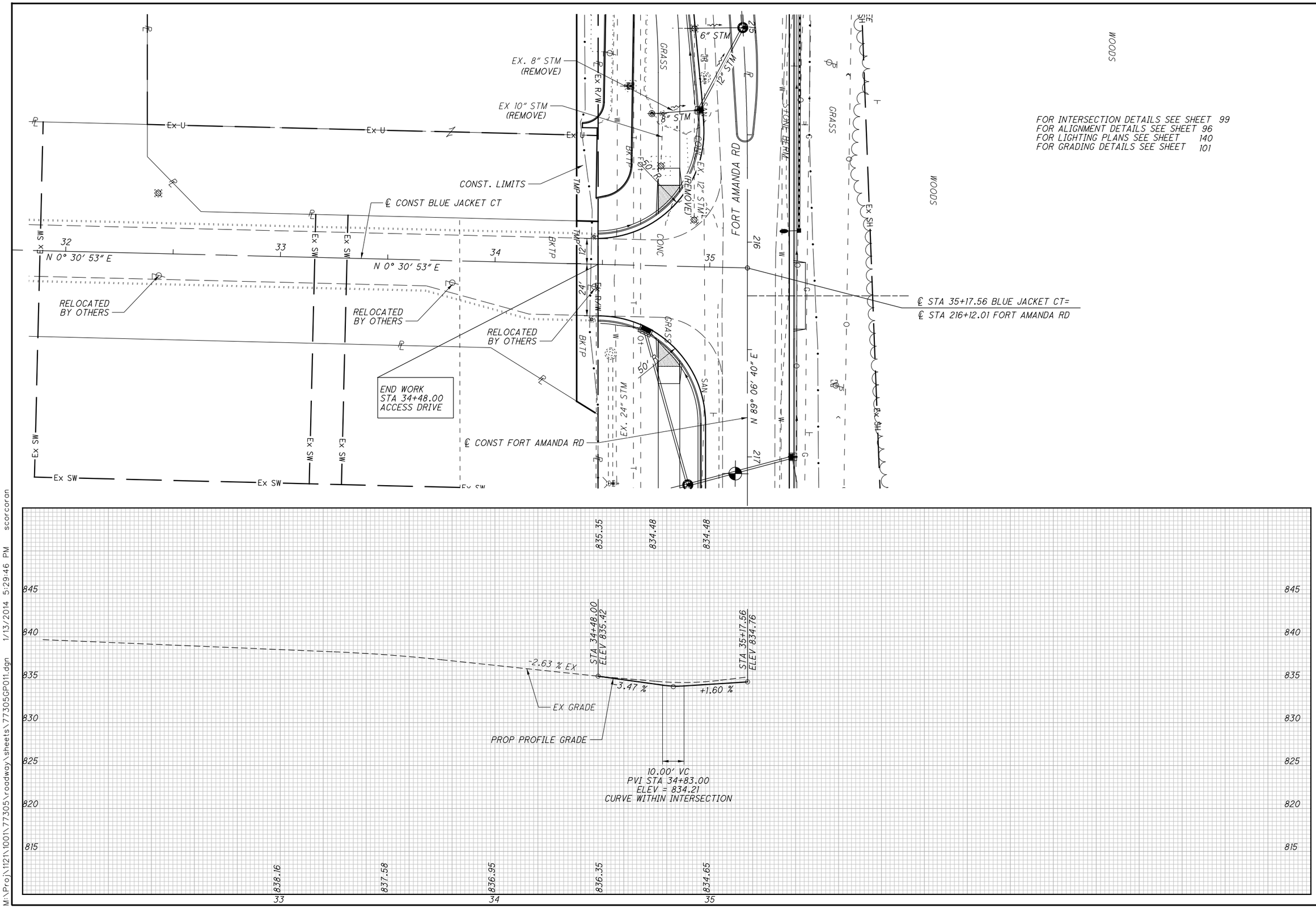

HORIZONTAL SCALE IN FEET 0 10 20 40

CALCULATED RDC
CHECKED SJB

PLAN AND PROFILE BLUE JACKET COURT

ALL-SHAWNEE RD

M:\Proj\112\1001\77305\roadway\sheets\77305GP011.dgn 1/13/2014 5:29:46 PM scorcoran

SEEDING END WIDTH	SEEDING SQ. YDS.	END AREA CUT	END AREA FILL	VOLUME CUT	VOLUME FILL
9	31	25	4	51	4
0		25	0	0	0

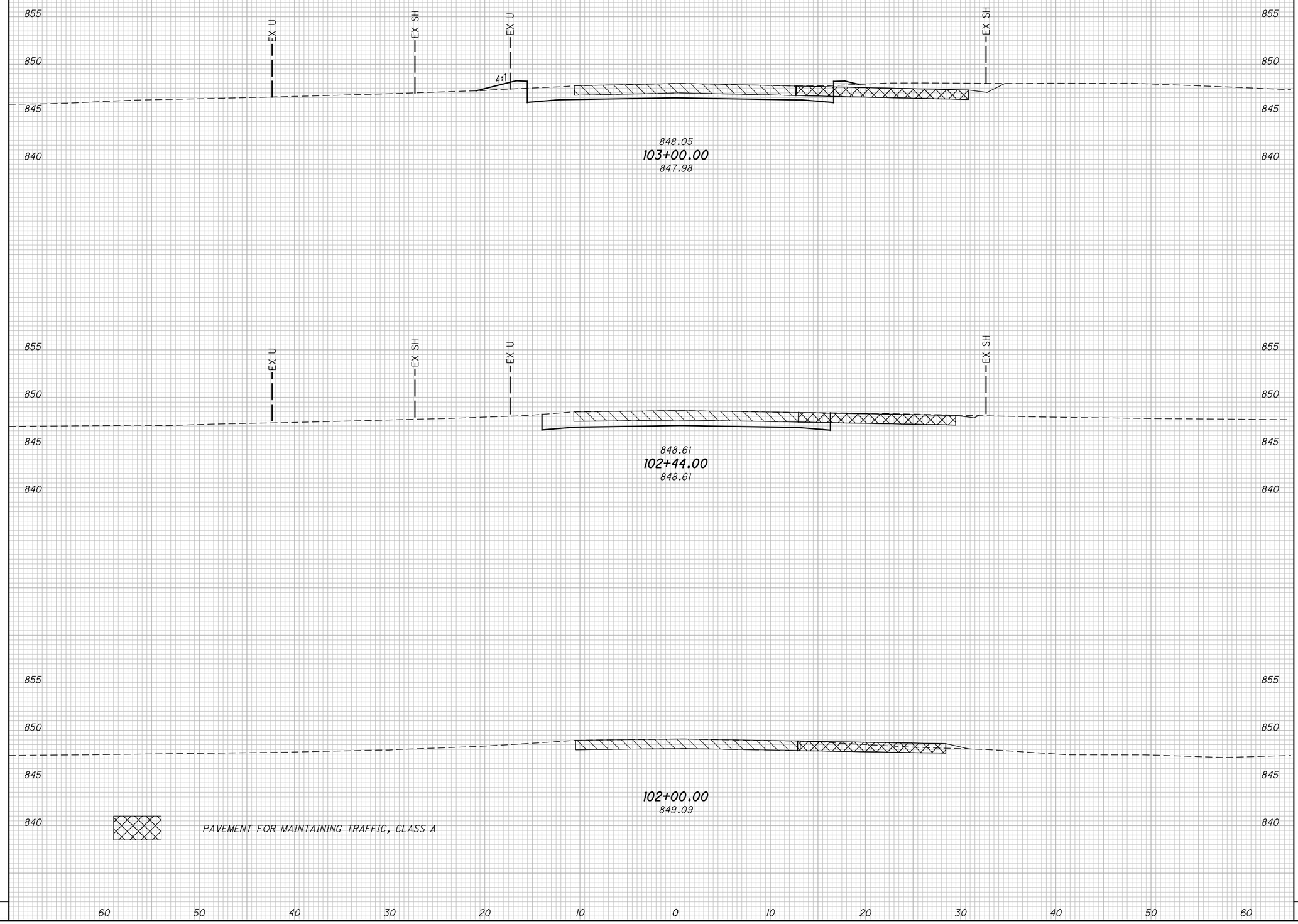

CALCULATED SWC
CHECKED VLW

CROSS SECTIONS
STA. 102+00.00 TO STA. 103+00.00

ALL-SHAWNEE RD

M:\Proj\1121\100\77305\roadway\sheets\77305XS001.dgn 1/13/2014 5:29:47 PM scorcoran

SEEDING END WIDTH	SEEDING SQ. YDS.	END AREA CUT	END AREA FILL	VOLUME CUT	VOLUME FILL
7	50	52	2	84	6
10	61	38	5	53	9
11	61	19	5	41	7

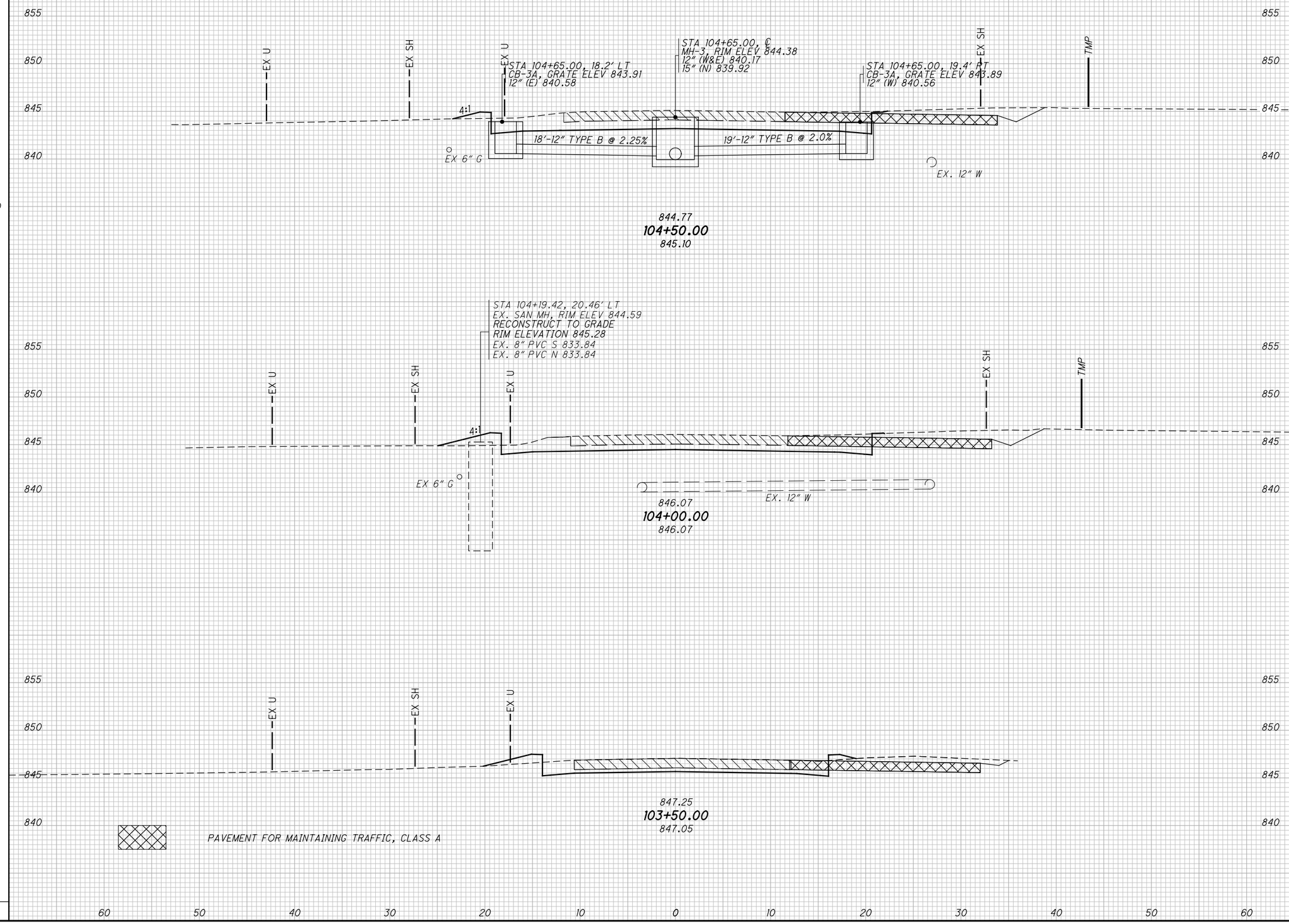

CALCULATED SWC
CHECKED VLW

CROSS SECTIONS
STA. 103+50.00 TO STA. 104+50.00

ALL-SHAWNEE RD

M:\Proj\1121\1001\77305\roadway\sheets\77305XS001.dgn 1/13/2014 5:29:47 PM scorcoran

SEEDING END WIDTH	SEEDING SQ. YDS.	END AREA CUT	END AREA FILL	VOLUME CUT	VOLUME FILL
7	44	109	0	185	0
7	44	91	0	148	1
8	45	68	1	111	3

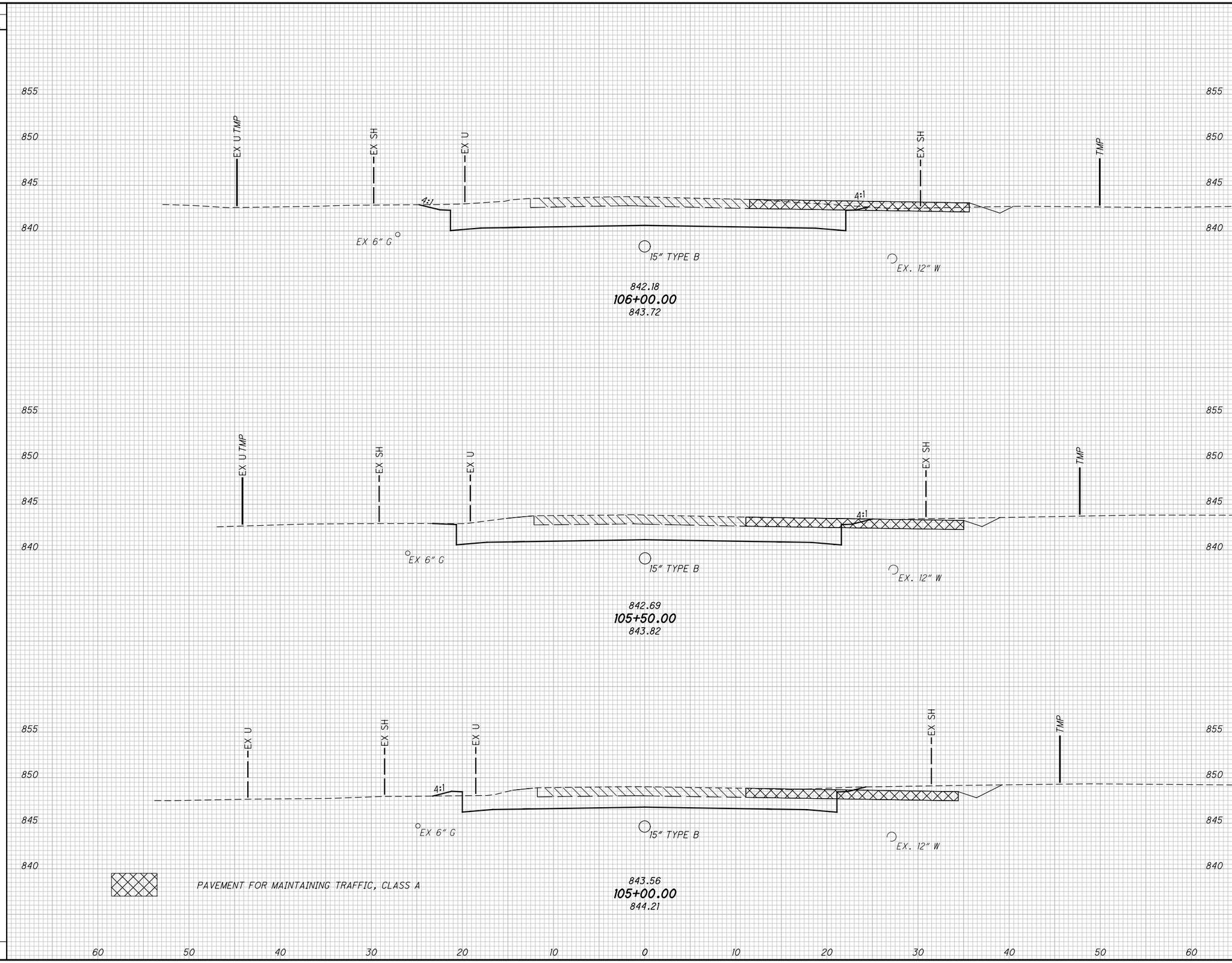

CALCULATED SWC
CHECKED VLW

CROSS SECTIONS
STA. 105+00.00 TO STA. 106+00.00

ALL-SHAWNEE RD

M:\Proj\1121\1001\77305\roadway\sheets\77305XS001.dgn 1/13/2014 5:29:48 PM scorcoran

SEEDING END WIDTH	SEEDING SQ. YDS.	END AREA CUT	END AREA FILL	VOLUME CUT	VOLUME FILL
12	72	139	0	262	0
13	61	145	0	239	0
8	45	114	0	206	0

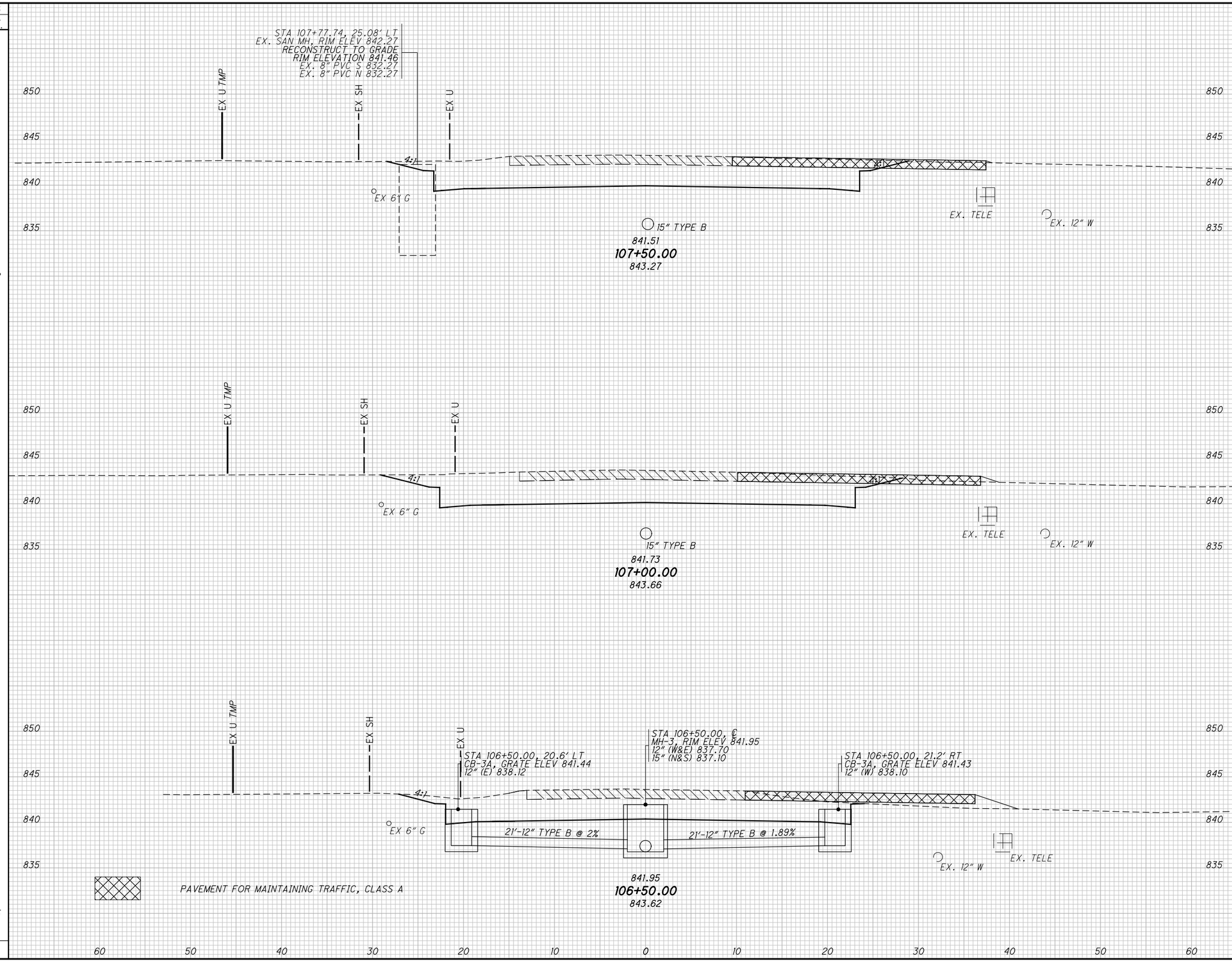

CALCULATED SWC
CHECKED VLW

CROSS SECTIONS

STA. 106+50.00 TO STA. 107+50.00

ALL-SHAWNEE RD

M:\Proj\1121\1001\77305\roadway\sheets\77305XS001.dgn 1/13/2014 5:29:48 PM scorcoran

SEEDING END WIDTH	SEEDING SQ. YDS.	END AREA CUT	END AREA FILL	VOLUME CUT	VOLUME FILL
19	106	110	0	233	0
18	100	142	0	261	0
16	78	140	0	258	0

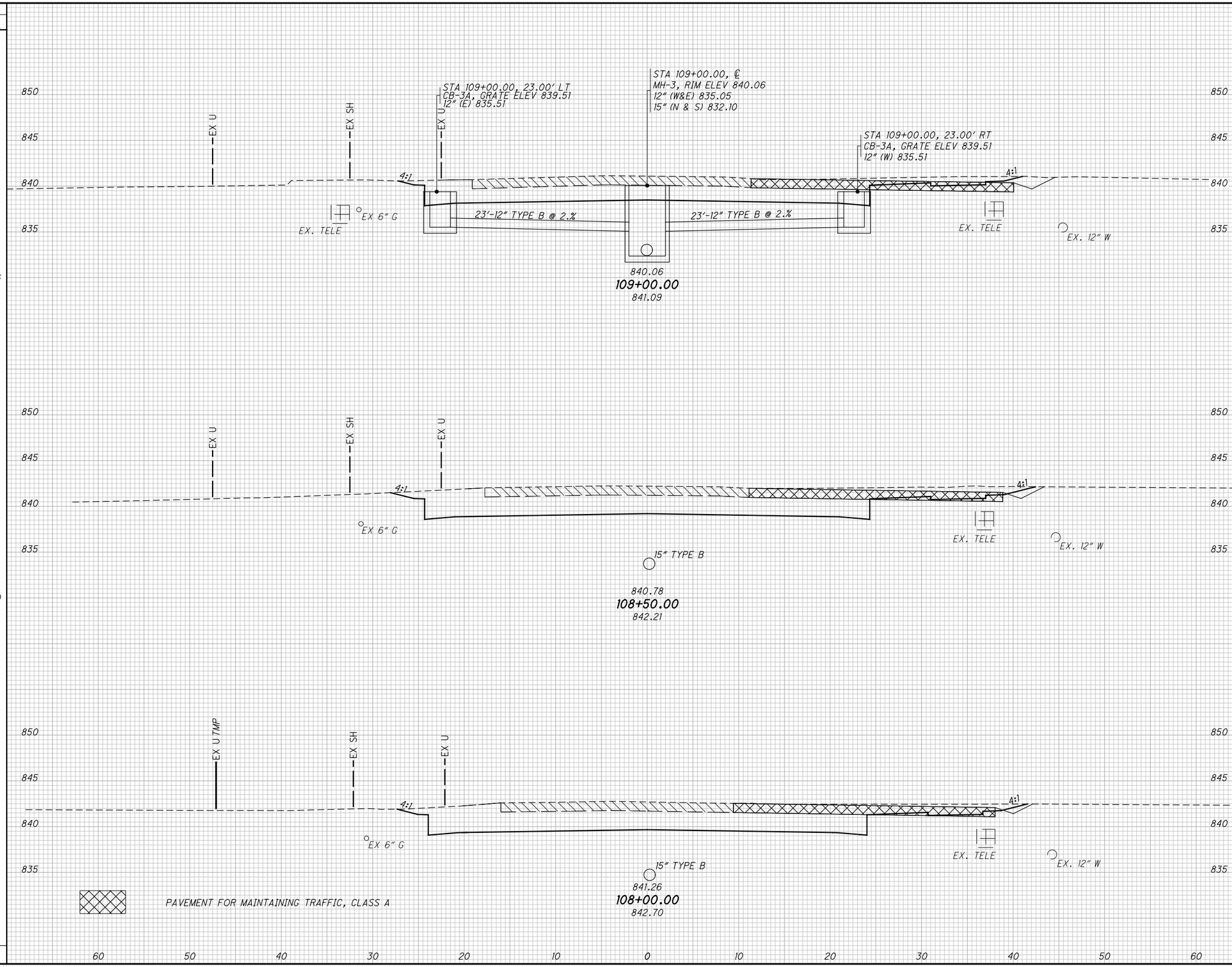

CALCULATED SWC
CHECKED VLW

CROSS SECTIONS
STA. 108+00.00 TO STA. 109+00.00
ALL-SHAWNEE RD

M:\Proj\1121\1001\77305\roadway\sheets\77305XS001.dgn 1/13/2014 5:29:48 PM scorcoran

SEEDING END WIDTH	SEEDING SQ. YDS.
19	106
17	100
18	105

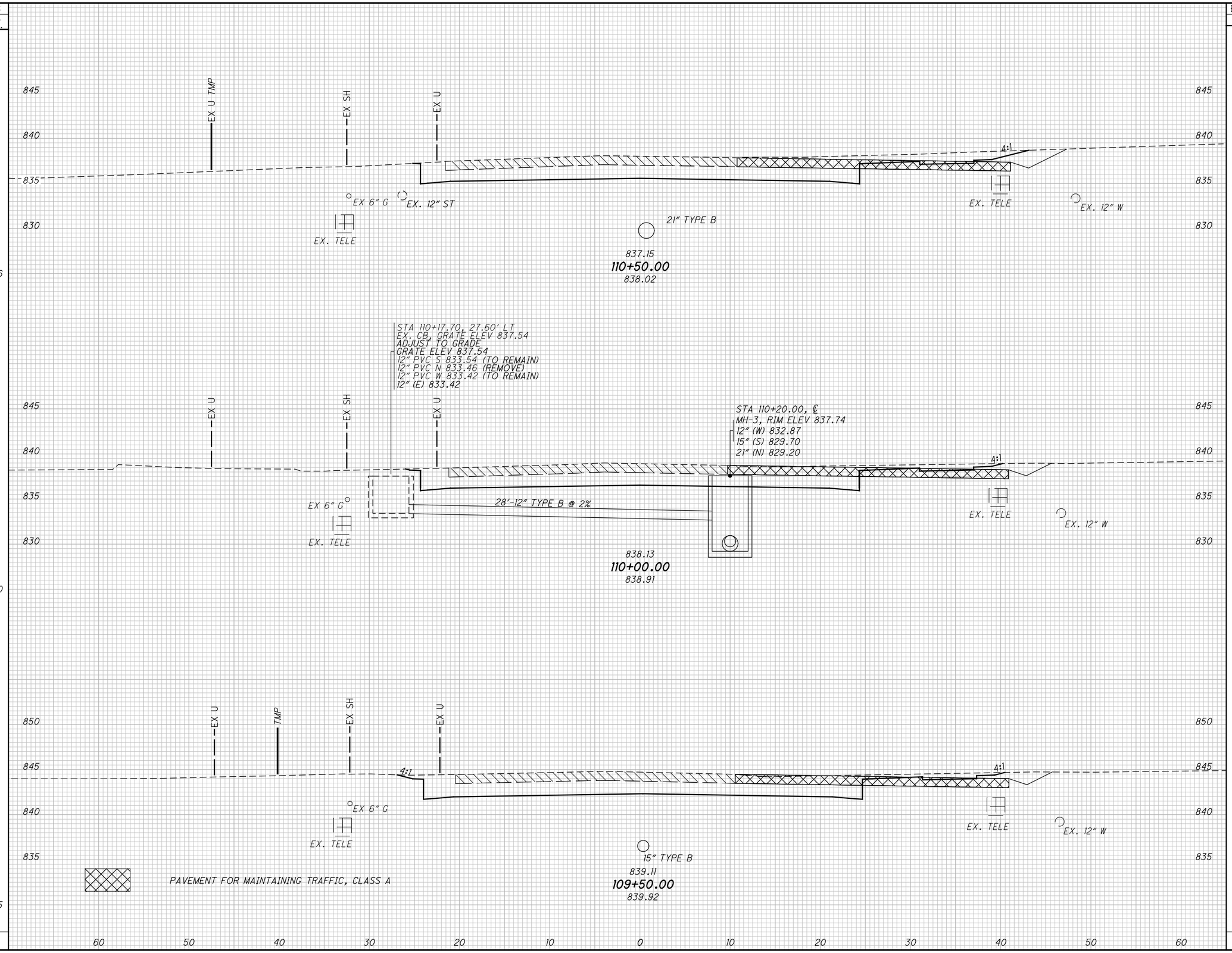

END AREA CUT	END AREA FILL	VOLUME CUT	VOLUME FILL
106	0		
		183	0
93	0		
		173	0
94	0		
		189	0

CALCULATED SWC
CHECKED VLW

CROSS SECTIONS
STA. 109+50.00 TO STA. 110+50.00

ALL-SHAWNEE RD

M:\Proj\1121\1001\77305\roadway\sheets\77305XS001.dgn 1/13/2014 5:29:49 PM scorcoran

SEEDING END WIDTH	SEEDING SQ. YDS.	END AREA CUT	END AREA FILL	VOLUME CUT	VOLUME FILL
12	95	83	1	169	1
22	133	100	0	188	0
24	123	103	0	193	0

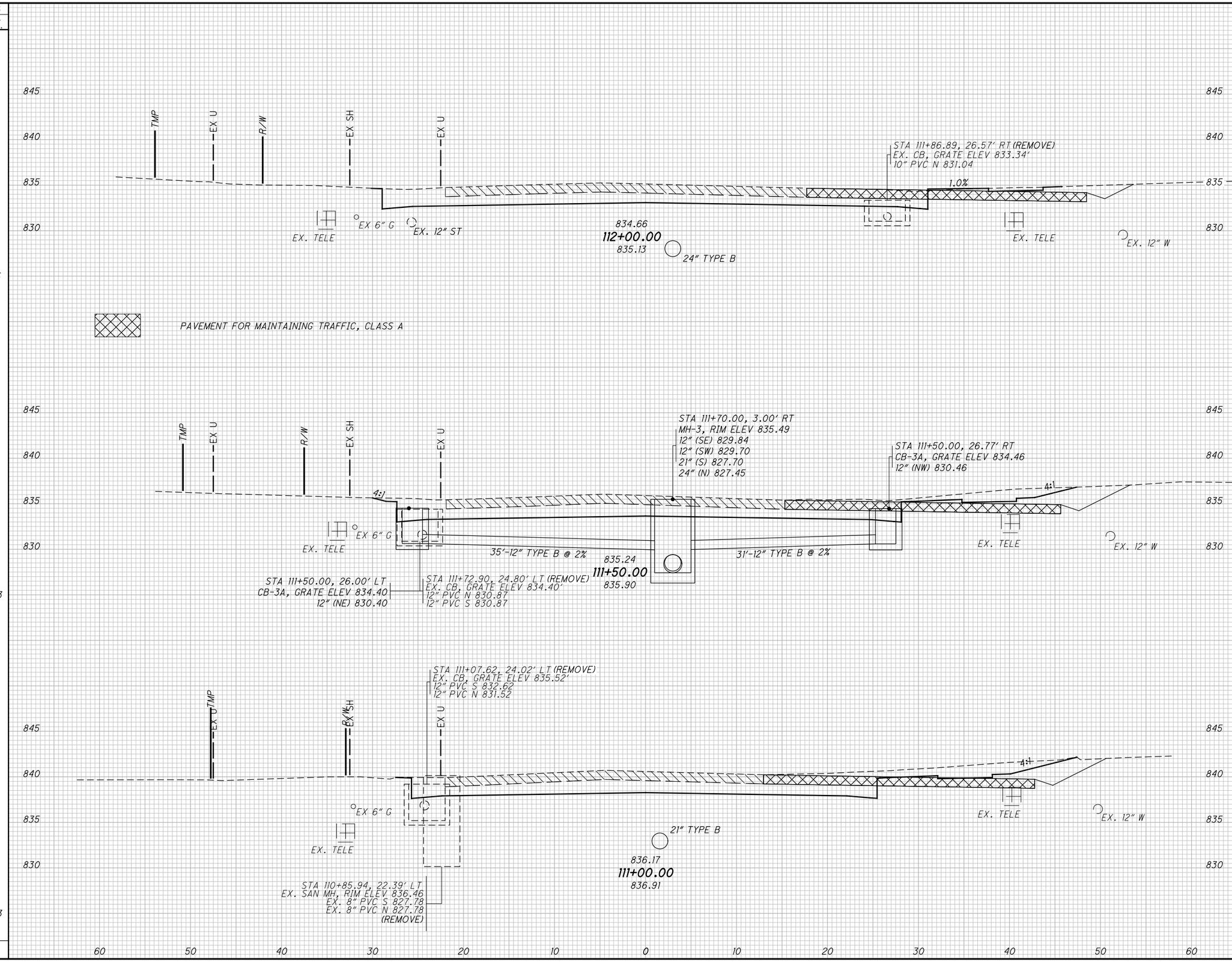

CALCULATED SWC
CHECKED VLW

CROSS SECTIONS
STA. 111+00.00 TO STA. 112+00.00

ALL-SHAWNEE RD

M:\Proj\1121\1001\77305\roadway\sheets\77305XS001.dgn 1/13/2014 5:29:49 PM scorcoran

SEEDING END WIDTH	SEEDING SQ. YDS.	END AREA CUT	END AREA FILL	VOLUME CUT	VOLUME FILL
31	122	3	114	31	122
12	105	30	14	92	20
26	106	69	8	140	8

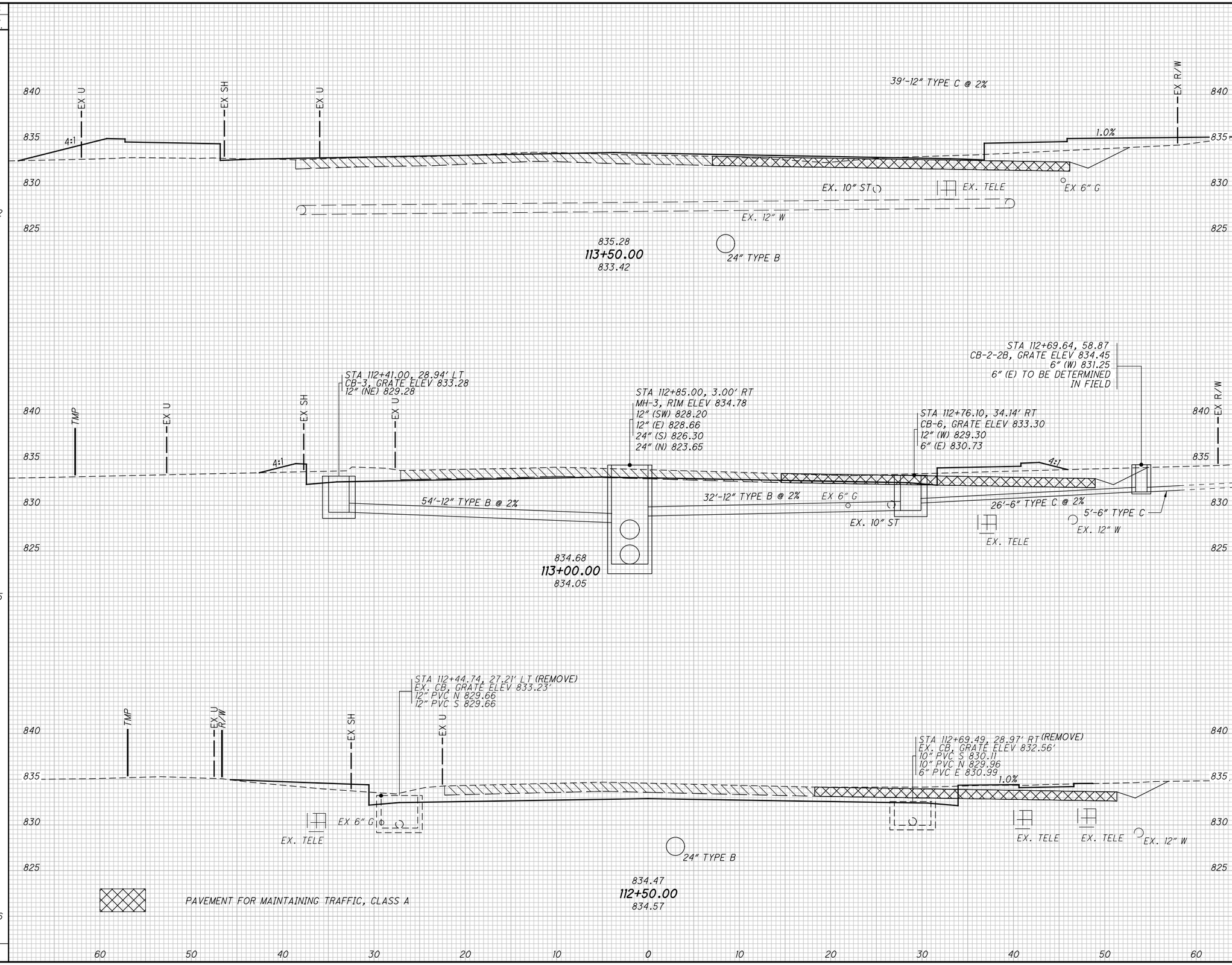

CALCULATED SWC
CHECKED VLW

CROSS SECTIONS
STA. 112+50.00 TO STA. 113+50.00

ALL-SHAWNEE RD

M:\Proj\1121\1001\77305\roadway\sheets\77305XS001.dgn 1/13/2014 5:29:50 PM scorcoran

SEEDING END WIDTH	SEEDING SQ. YDS.
62	356
64	166

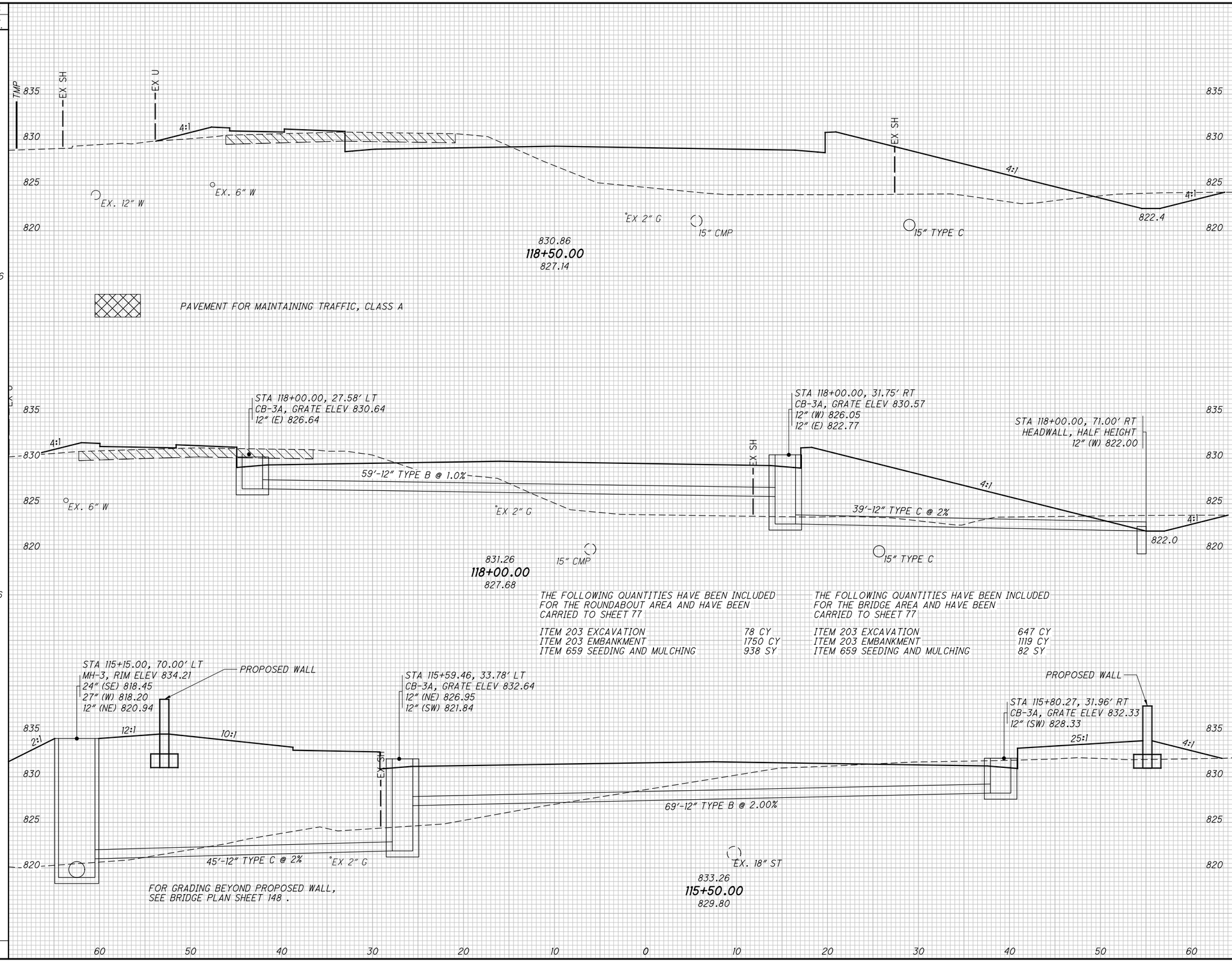

END AREA CUT	END AREA FILL	VOLUME CUT	VOLUME FILL
30	269		
		57	563
31	339		
		27	293

CALCULATED SWC
CHECKED VLW

CROSS SECTIONS
STA. 115+50.00 TO STA. 118+50.00

ALL-SHAWNEE RD

M:\Proj\1121\1001\77305\roadway\sheets\77305XS001.dgn 1/13/2014 5:29:50 PM scorcoran

SEEDING END WIDTH	SEEDING SQ. YDS.	END AREA CUT	END AREA FILL	VOLUME CUT	VOLUME FILL
55	295	77	11	110	60
51	311	42	55	71	193
60	339	35	154	60	391

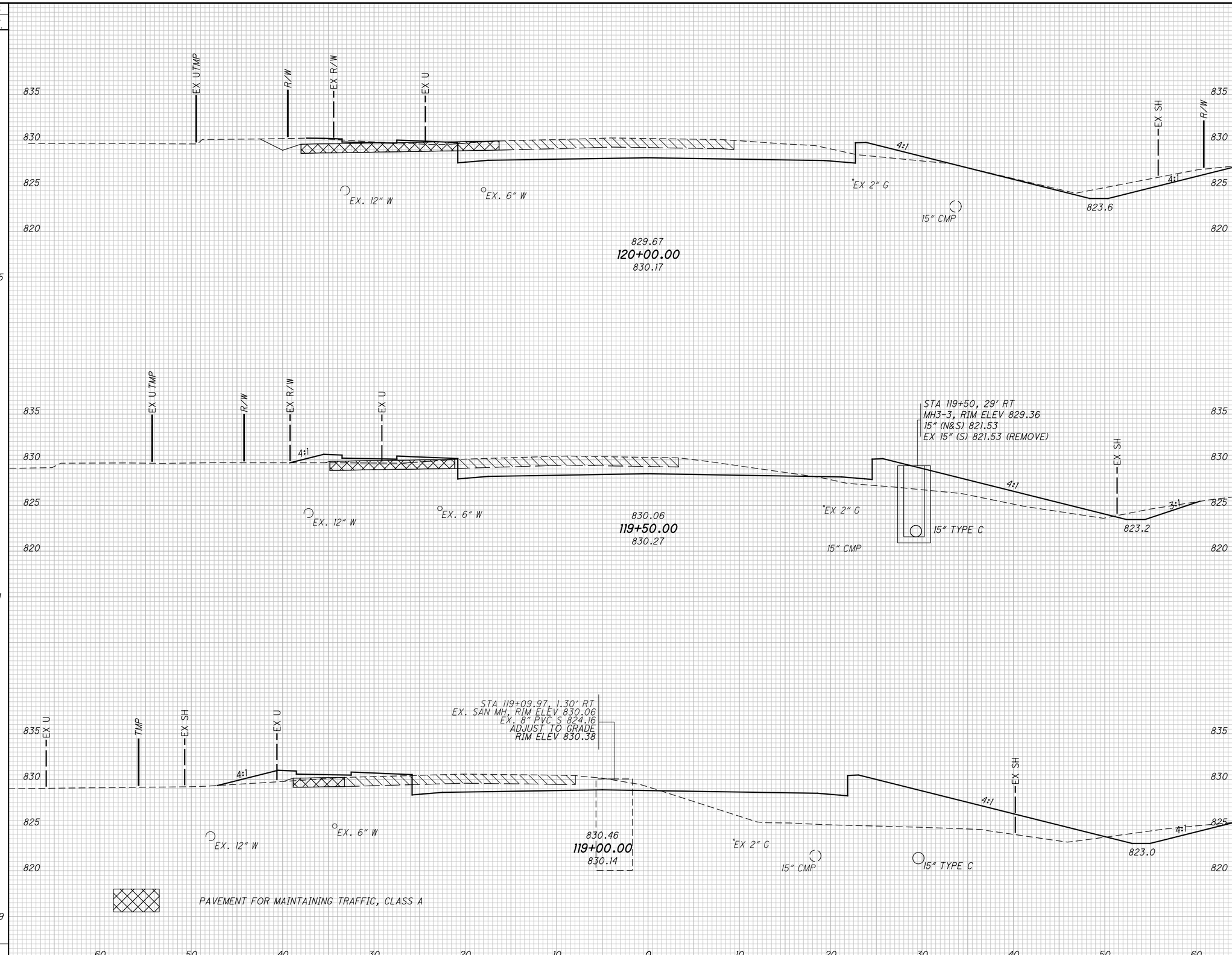

CALCULATED SWC
CHECKED VLW

CROSS SECTIONS
STA. 119+00.00 TO STA. 120+00.00

ALL-SHAWNEE RD

M:\Proj\1121\1001\77305\roadway\sheets\77305XS001.dgn 1/13/2014 5:29:51 PM scorcoran

SEEDING END WIDTH	SEEDING SQ. YDS.	END AREA CUT	END AREA FILL	VOLUME CUT	VOLUME FILL
8	33	57	1	128	1
3	50	82	0	130	2
15	200	59	2	126	11

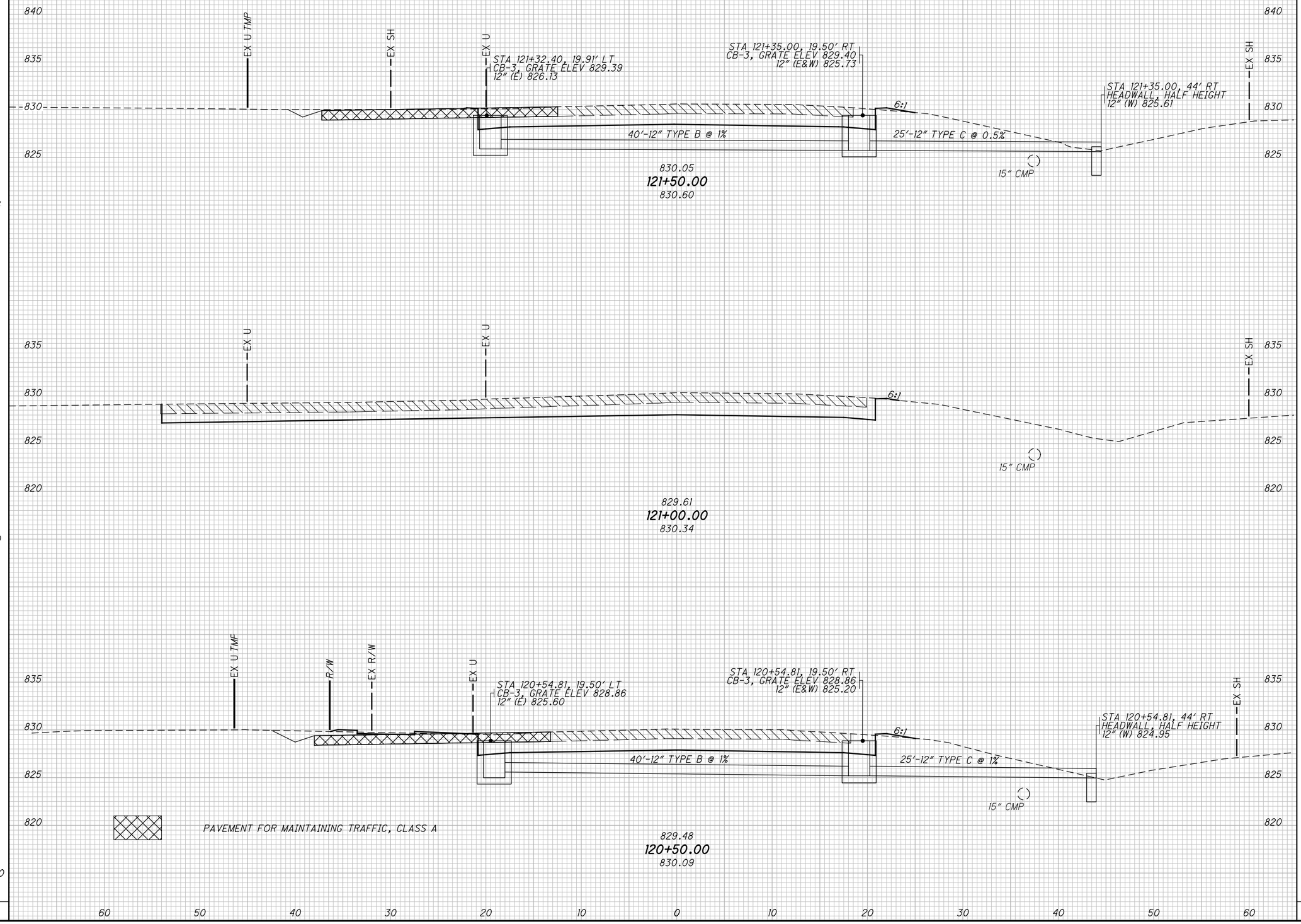

CALCULATED SWC
CHECKED VLW

CROSS SECTIONS
STA. 120+50.00 TO STA. 121+50.00

ALL-SHAWNEE RD

M:\Proj\1121\1001\77305\roadway\sheets\77305XS001.dgn 1/13/2014 5:29:51 PM scorcoran

SEEDING END WIDTH	SEEDING SQ. YDS.	END AREA CUT	END AREA FILL	VOLUME CUT	VOLUME FILL
15	72	27	6	59	8
10	56	37	3	81	4
8	50	50	2	99	2

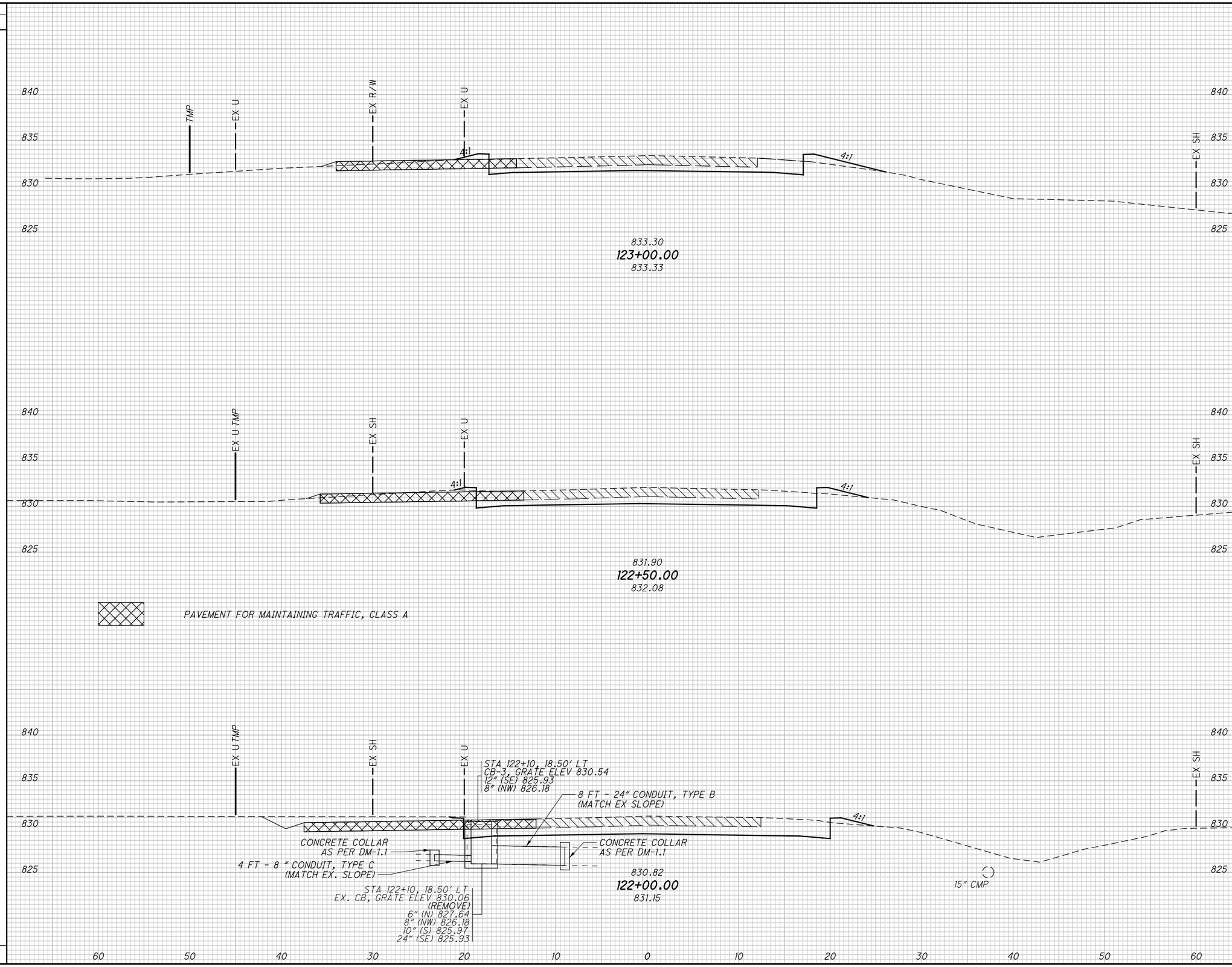

CALCULATED SWC
CHECKED VLW

CROSS SECTIONS
STA. 122+00.00 TO STA. 123+00.00

ALL-SHAWNEE RD

M:\Proj\1121\1001\77305\roadway\sheets\77305XS001.dgn 1/13/2014 5:29:51 PM scorcoran

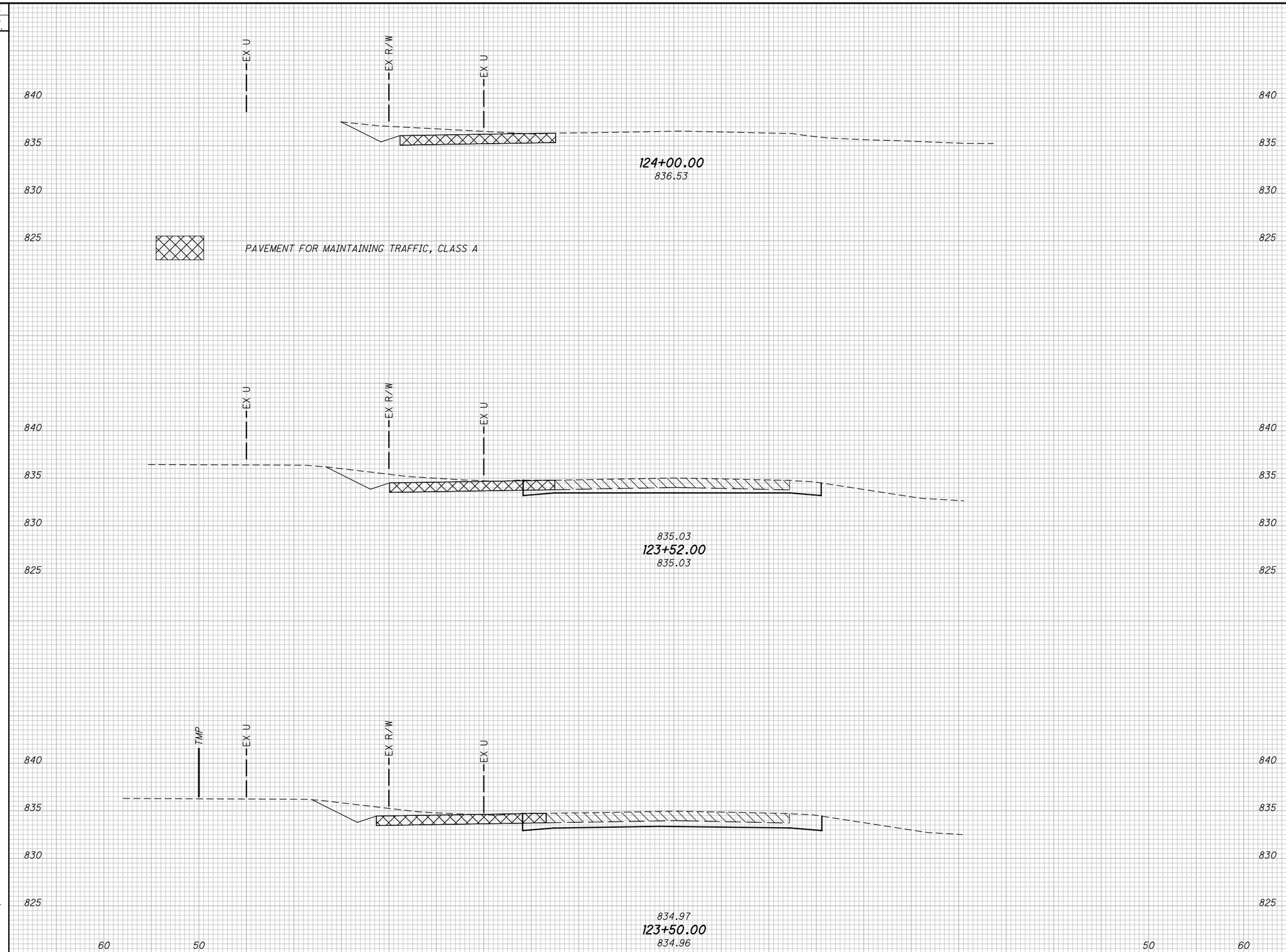

SEEDING END WIDTH	SEEDING SQ. YDS.		END AREA CUT	END AREA FILL	VOLUME CUT	VOLUME FILL
0			21	0		
	0				2	0
0			24	0		
	45				48	5
	938	TOTALS FROM ROUNDABOUT AREA			78	1750
	82	TOTALS FROM BRIDGE AREA			647	1119
	4789	TOTALS CARRIED TO SHEET 91			5213	4583

CALCULATED SWC
CHECKED VLW

CROSS SECTIONS
STA. 123+50.00 TO STA. 124+00.00

ALL-SHAWNEE RD

M:\Proj\1121\1001\77305\roadway\sheets\77305XS001.dgn 1/13/2014 5:29:52 PM scorcoran

SEEDING		END AREA		VOLUME	
END WIDTH	SQ. YDS.	CUT	FILL	CUT	FILL
38	105	18	59	31	54
0		16	0		

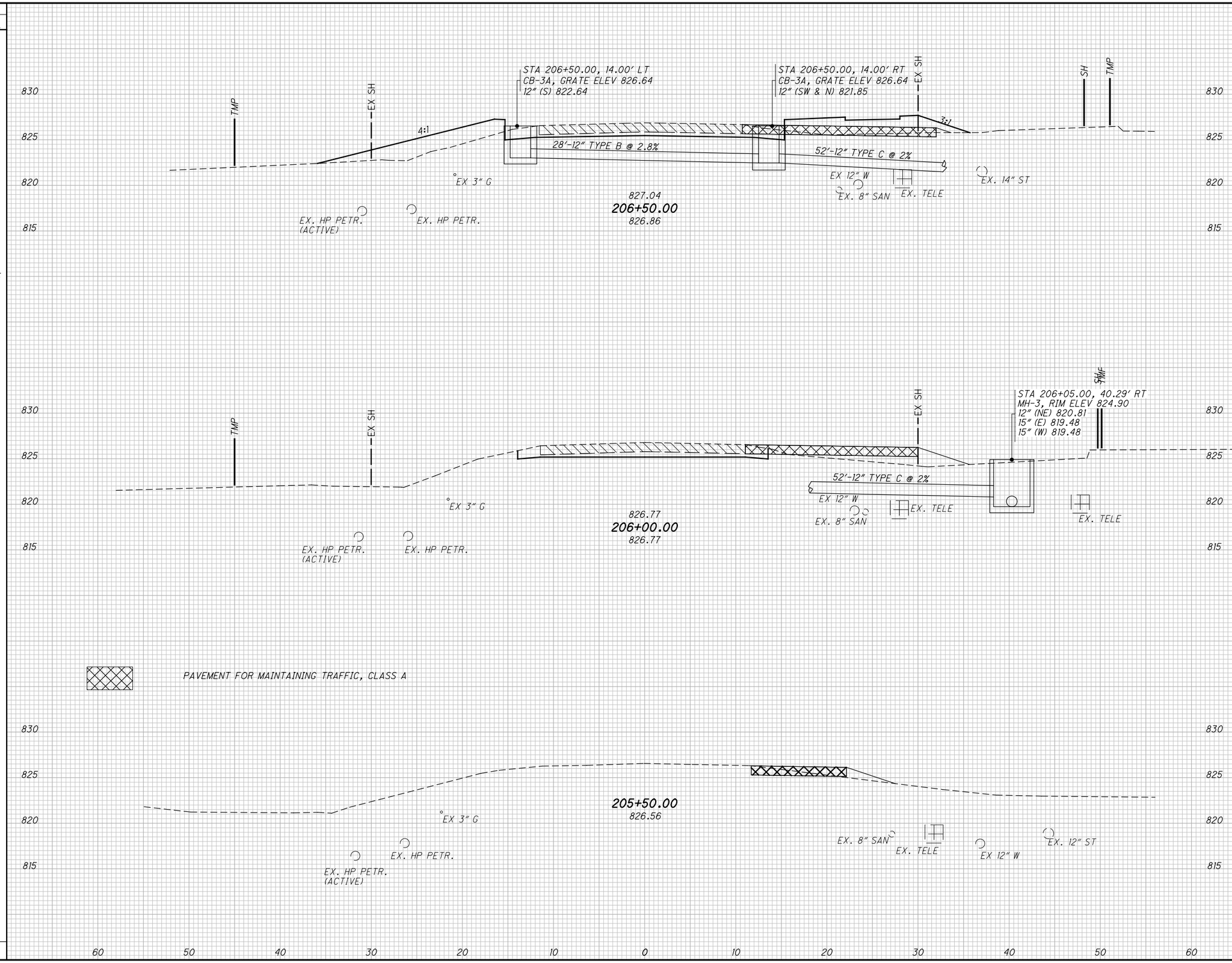

CALCULATED SWC
CHECKED VLW

CROSS SECTIONS
STA. 205+50.00 TO STA. 206+50.00

ALL-SHAWNEE RD

M:\Proj\1121\1001\77305\roadway\sheets\77305XS002.dgn 1/13/2014 5:29:53 PM scorcoran

SEEDING END WIDTH	SEEDING SQ. YDS.	END AREA CUT	END AREA FILL	VOLUME CUT	VOLUME FILL
44	239	9	107	20	181
41	228	13	89	26	132
39	216	15	54	30	104

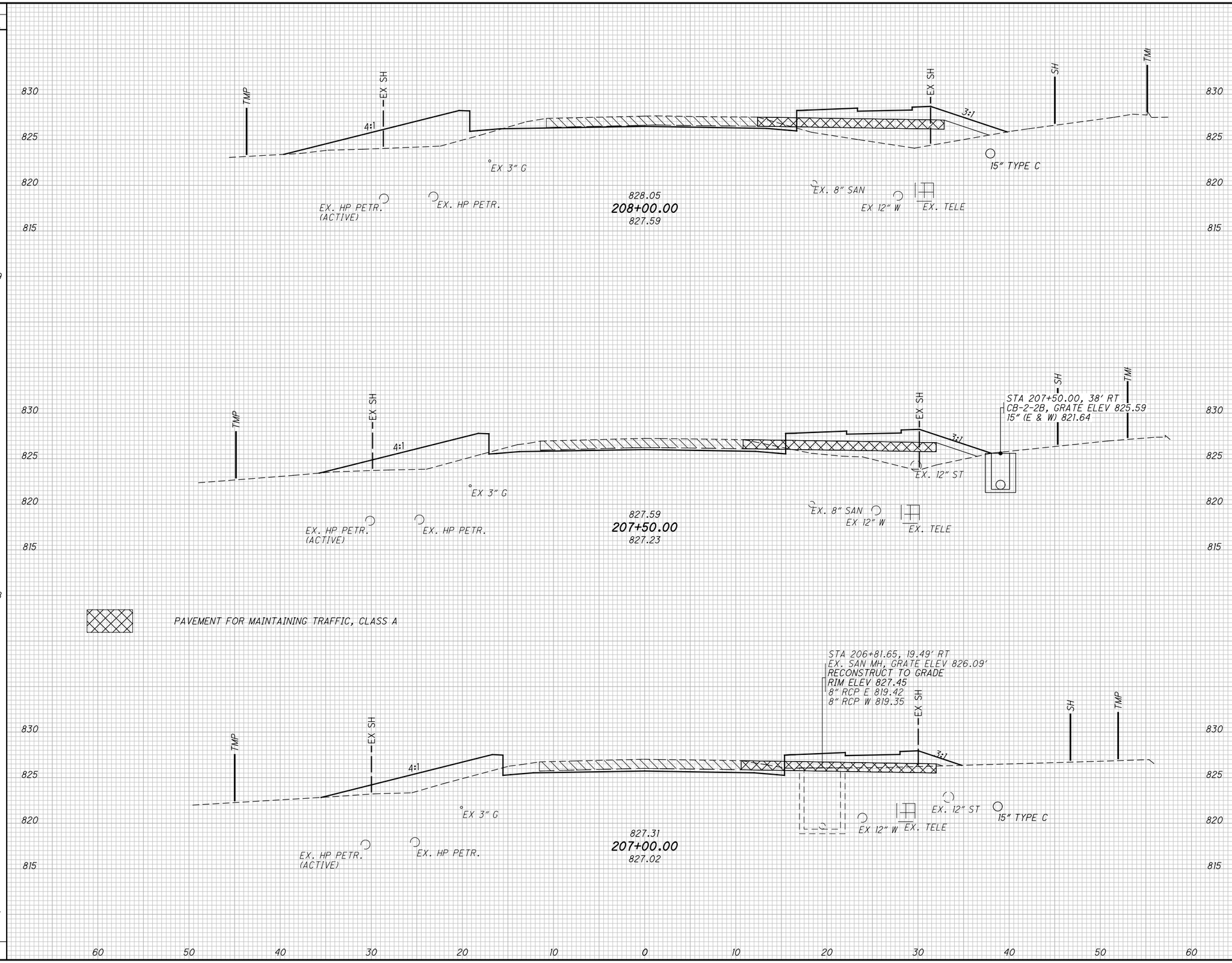

CALCULATED SWC
CHECKED VLW

CROSS SECTIONS
STA. 207+00.00 TO STA. 208+00.00

ALL-SHAWNEE RD

M:\Proj\1121\1001\77305\roadway\sheets\77305XS002.dgn 1/13/2014 5:29:53 PM scorcoran

SEEDING END WIDTH	SEEDING SQ. YDS.	END AREA CUT	END AREA FILL	VOLUME CUT	VOLUME FILL
30	167	10	44	19	76
29	172	10	38	23	95
33	216	15	64	23	158

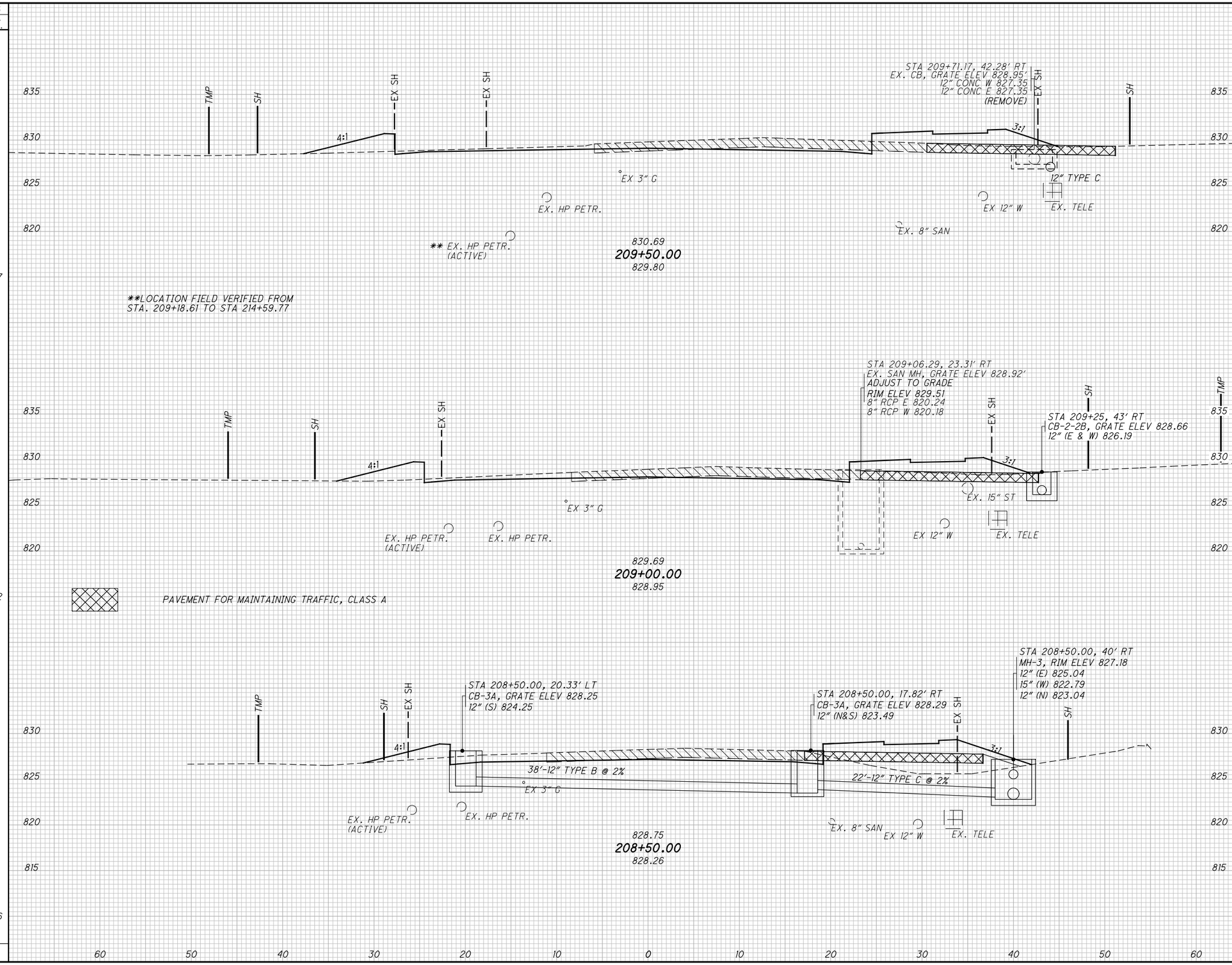

CALCULATED SWC
CHECKED VLW

CROSS SECTIONS

STA. 208+50.00 TO STA. 209+50.00

ALL-SHAWNEE RD

M:\Proj\1121\1001\77305\roadway\sheets\77305XS002.dgn 1/13/2014 5:29:53 PM scorcoran

SEEDING END WIDTH	SEEDING SQ. YDS.	END AREA CUT	END AREA FILL	VOLUME CUT	VOLUME FILL
31	167	2	155	5	213
28	161	3	76	8	121
29	167	5	55	14	92

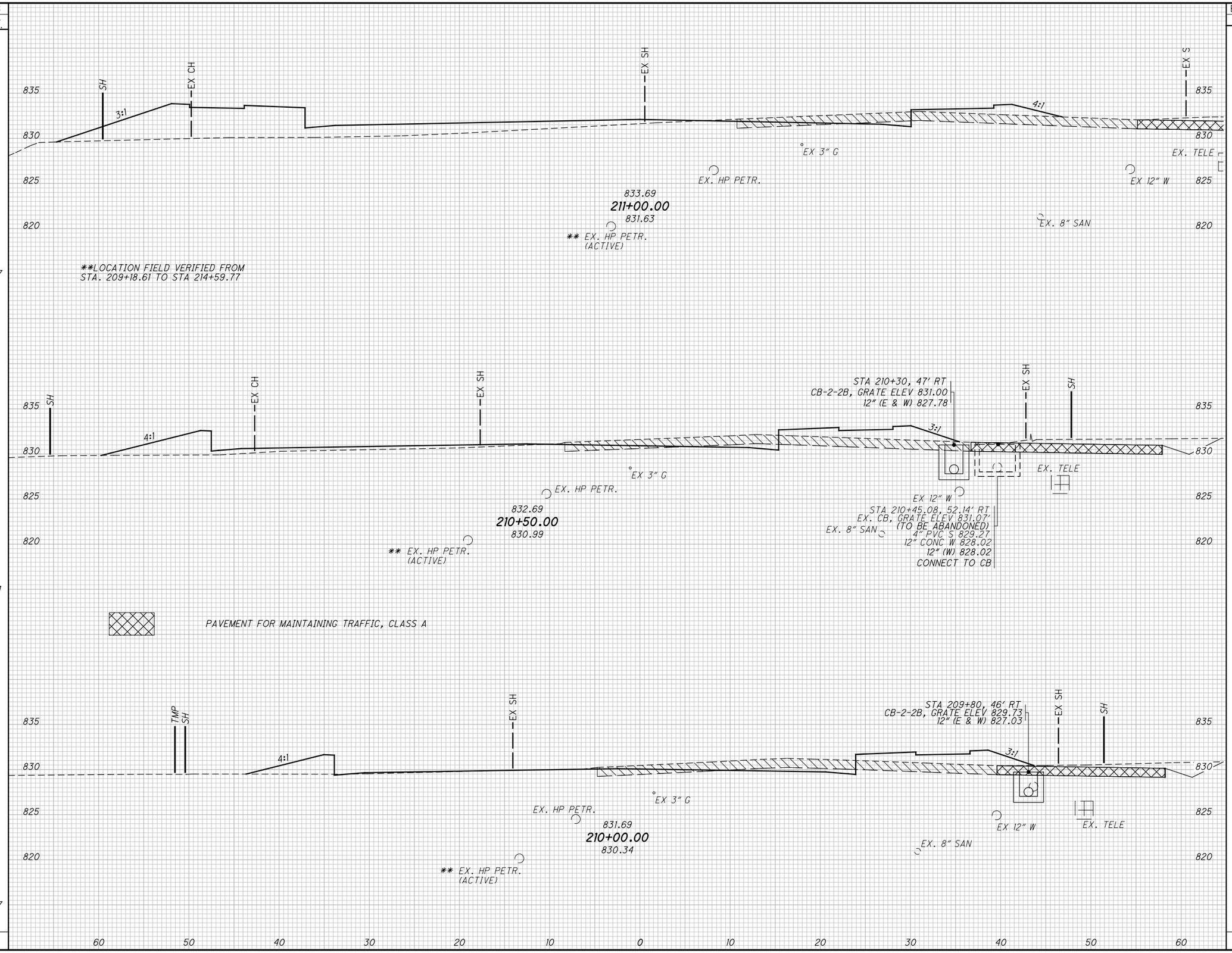

CALCULATED SWC
CHECKED VLW

CROSS SECTIONS
STA. 210+00.00 TO STA. 211+00.00

ALL-SHAWNEE RD

M:\Proj\1121\1001\77305\roadway\sheets\77305XS002.dgn 1/13/2014 5:29:54 PM scorcoran

SEEDING END WIDTH	SEEDING SQ. YDS.	END AREA CUT	END AREA FILL	VOLUME CUT	VOLUME FILL
14	78	105	0	165	0
13	116	74	0	141	5
29		78	5		

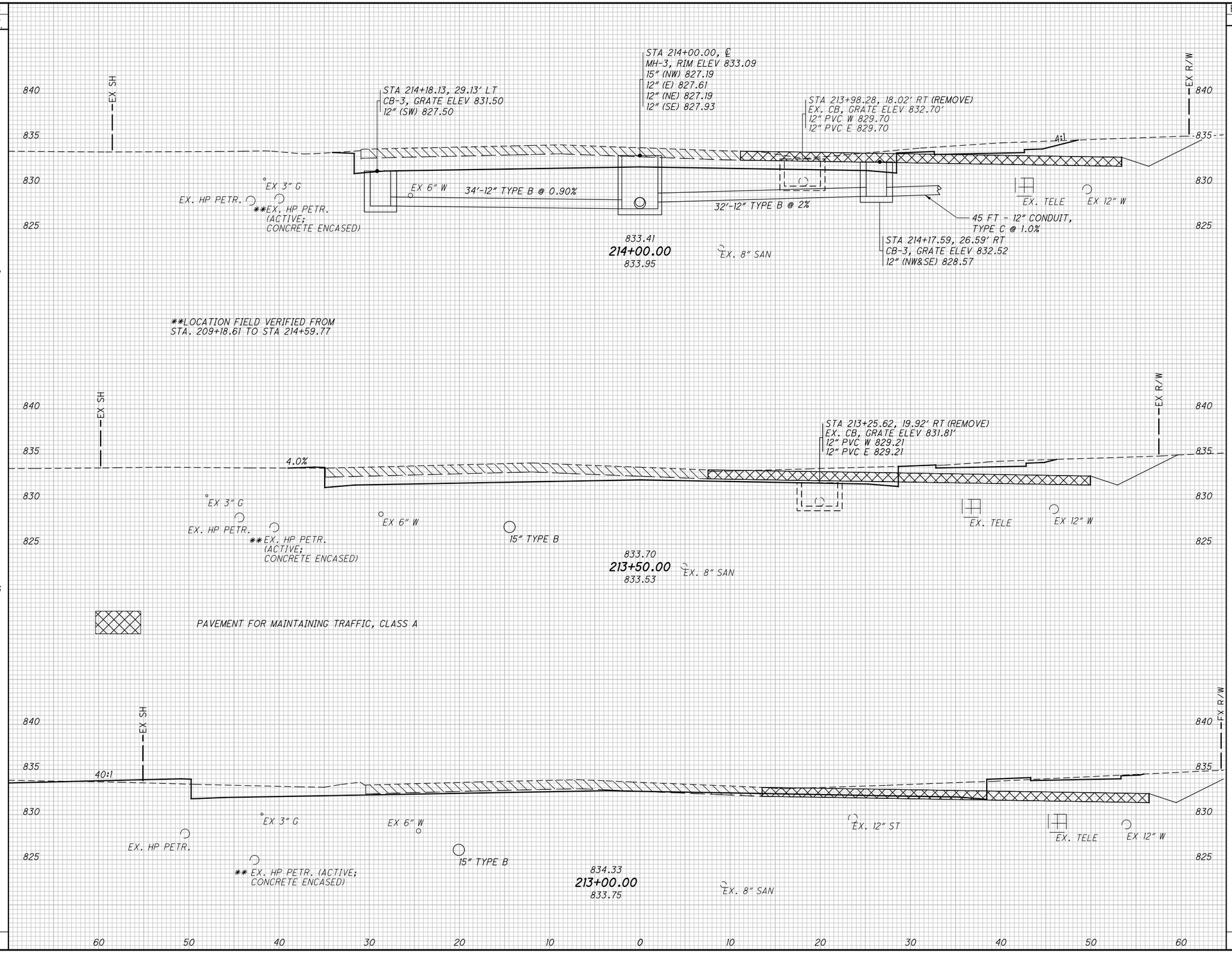

CALCULATED SWC
CHECKED VLW

CROSS SECTIONS
STA. 213+00.00 TO STA. 214+00.00

ALL-SHAWNEE RD

M:\Proj\1121\100\77305\roadway\sheets\77305XS002.dgn 1/22/2014 3:38:29 PM scorcoran

SEEDING END WIDTH	SEEDING SQ. YDS.	END AREA CUT	END AREA FILL	VOLUME CUT	VOLUME FILL
12	89	78	1	176	2
19	100	112	2	232	2
16	84	138	0	224	0

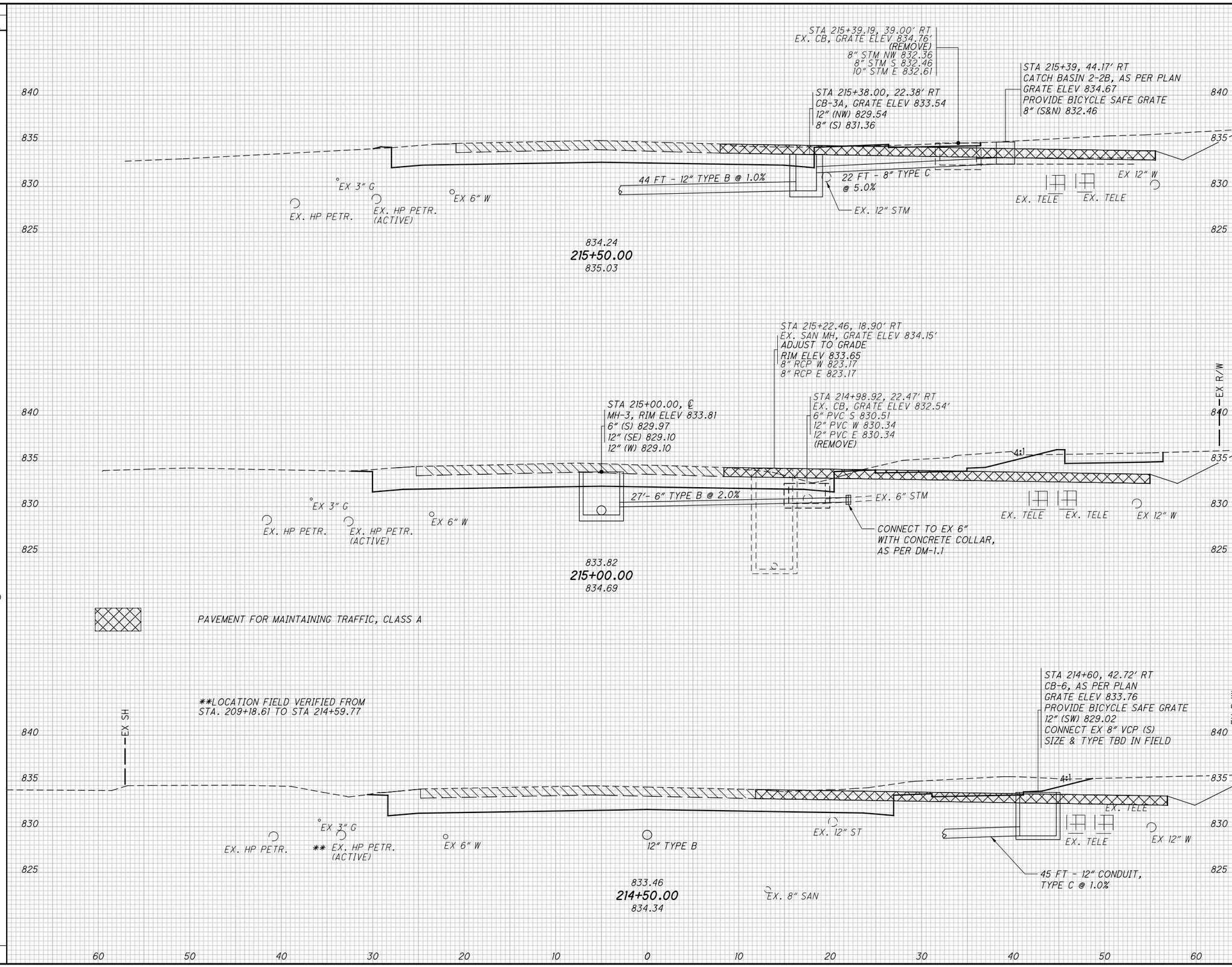

CALCULATED SWC
CHECKED VLW

CROSS SECTIONS

STA. 214+50.00 TO STA. 215+50.00

ALL-SHAWNEE RD

M:\Proj\1121\1001\77305\roadway\sheets\77305XS002.dgn 1/13/2014 5:29:54 PM scorcoran

SEEDING END WIDTH	SEEDING SQ. YDS.	END AREA CUT	END AREA FILL	VOLUME CUT	VOLUME FILL
21	117	37	20	87	21
20	72	57	4	197	4
5	50	156	1	216	1

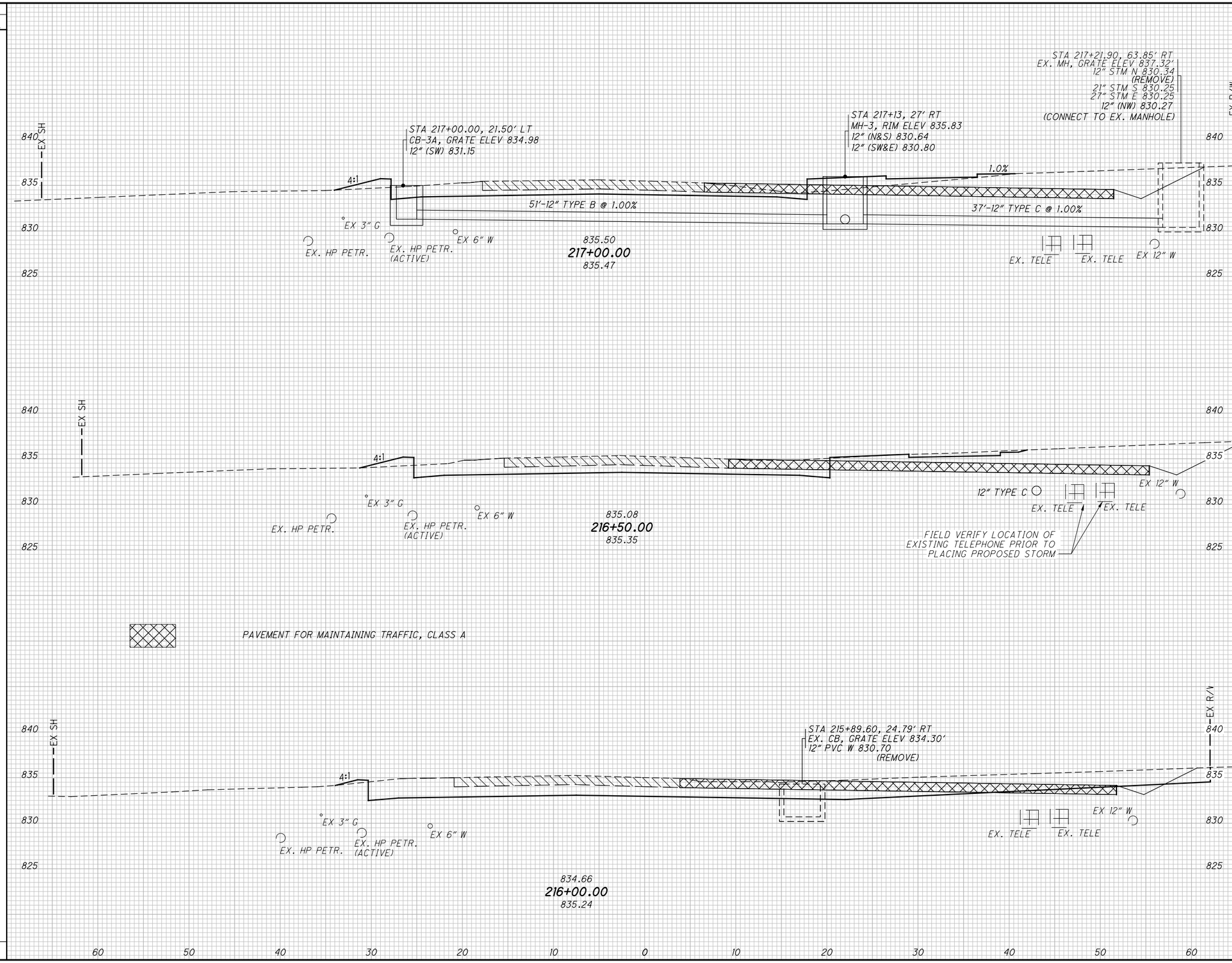

CALCULATED SWC
CHECKED VLW

CROSS SECTIONS
STA. 216+00.00 TO STA. 217+00.00

ALL-SHAWNEE RD

M:\Proj\1121\1001\77305\roadway\sheets\77305XS002.dgn 1/13/2014 5:29:55 PM scorcoran

SEEDING END WIDTH	SEEDING SQ. YDS.	END AREA CUT	END AREA FILL	VOLUME CUT	VOLUME FILL
27	172	16	21	32	44
33	177	19	26	42	49
30	144	27	27	59	43

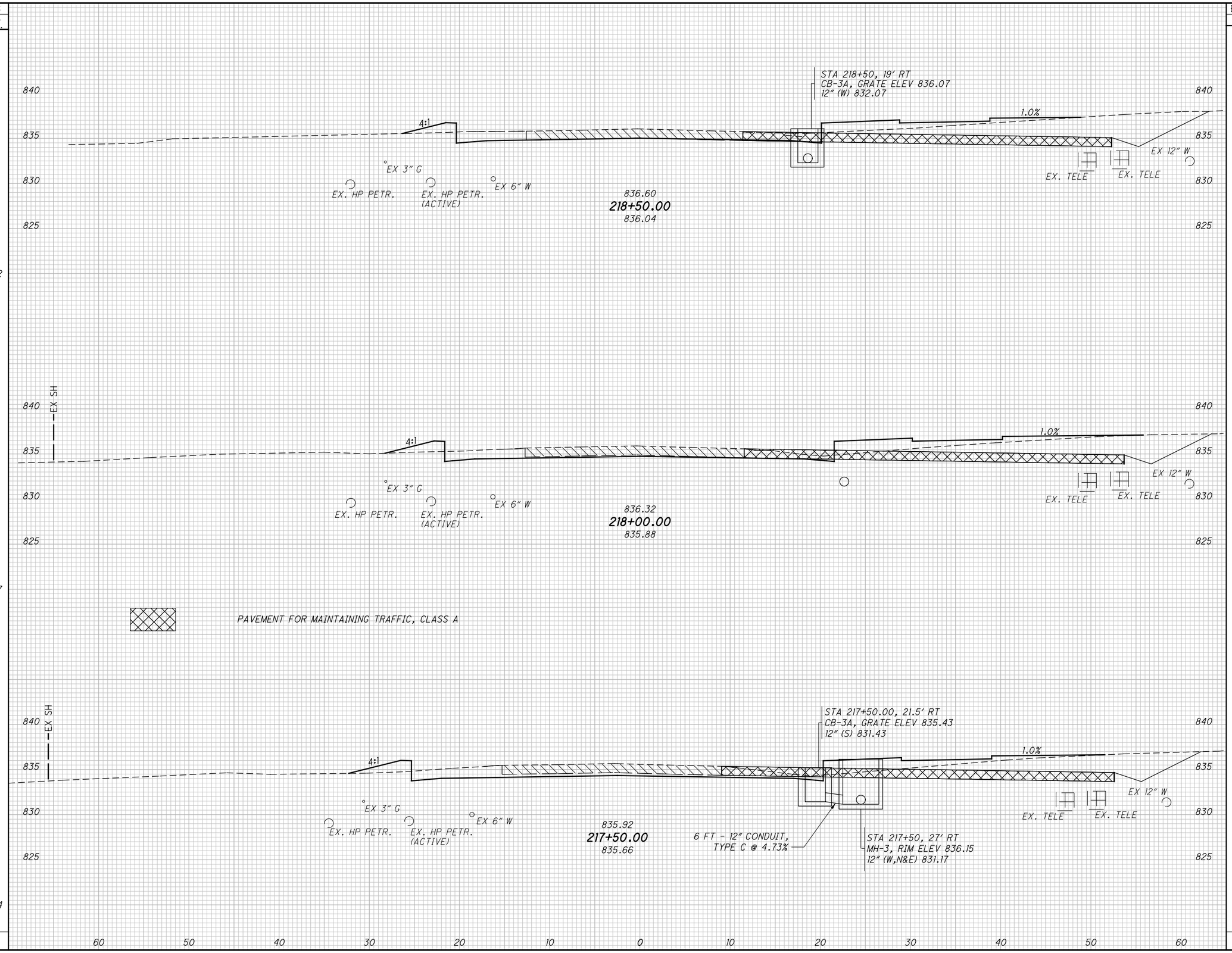

CALCULATED SWC
CHECKED VLW

CROSS SECTIONS
STA. 217+50.00 TO STA. 218+50.00

ALL-SHAWNEE RD

M:\Proj\1121\1001\77305\roadway\sheets\77305XS002.dgn 1/13/2014 5:29:55 PM scorcoran

SEEDING END WIDTH	SEEDING SQ. YDS.	END AREA CUT	END AREA FILL	VOLUME CUT	VOLUME FILL
42	227	42	14	67	29
40	211	31	17	48	29
35	178	21	14	35	32

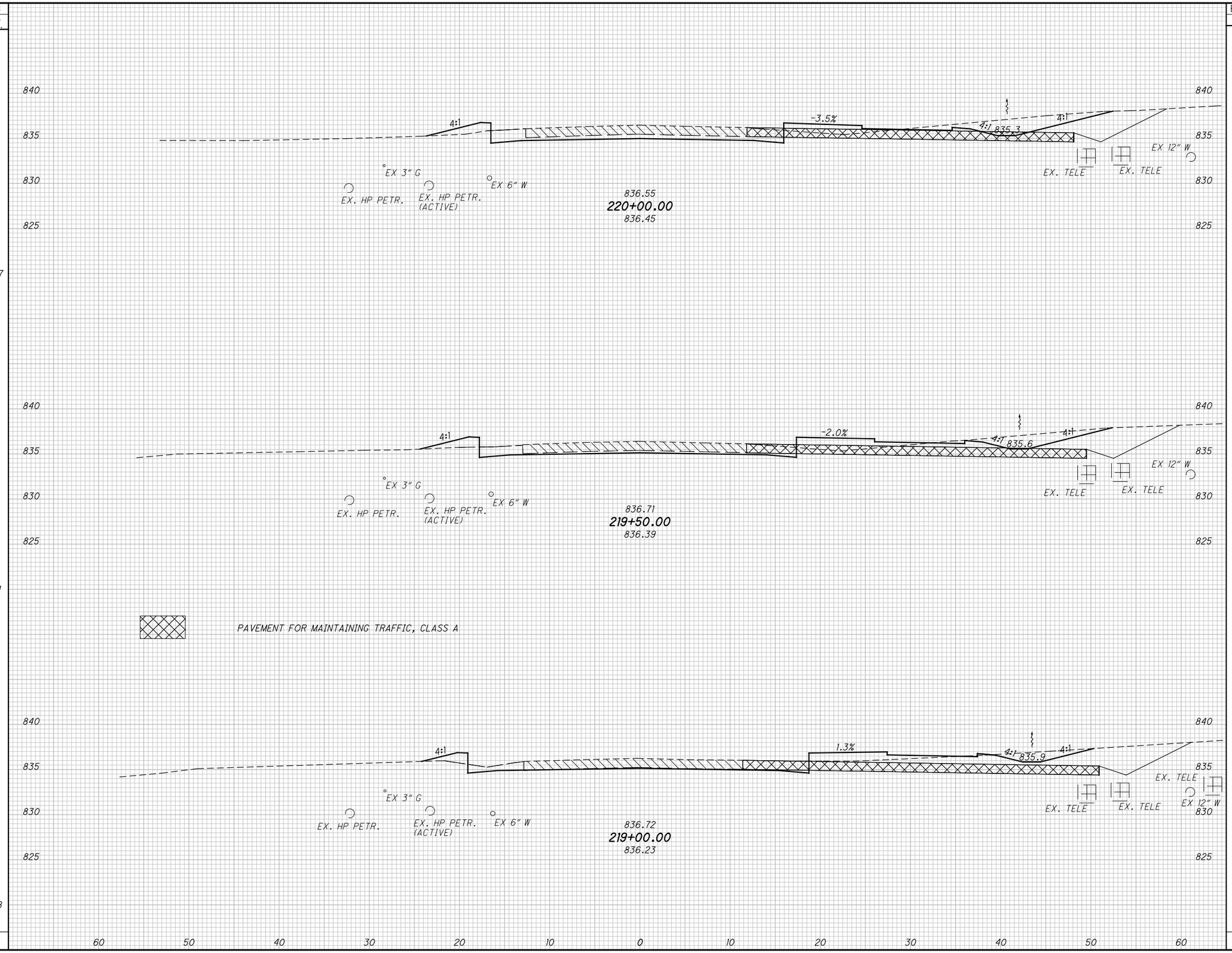

CALCULATED SWC
CHECKED VLW

CROSS SECTIONS
STA. 219+00.00 TO STA. 220+00.00

ALL-SHAWNEE RD

M:\Proj\1121\1001\77305\roadway\sheets\77305XS002.dgn 1/13/2014 5:29:56 PM scorcoran

SEEDING		END AREA		VOLUME	
END WIDTH	SQ. YDS.	CUT	FILL	CUT	FILL
30	100	60	5	47	9
	3753			1967	1496

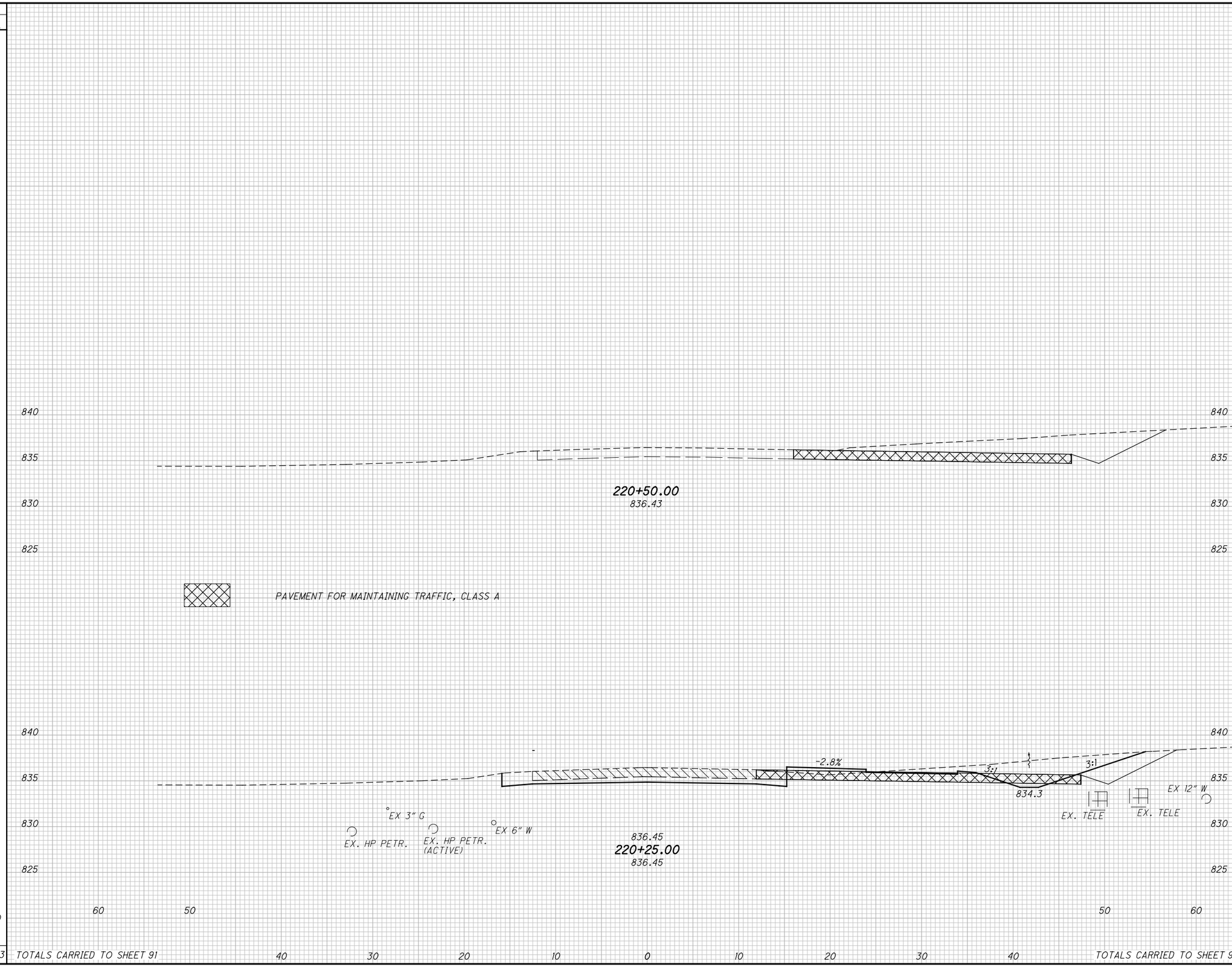

CALCULATED SWC
CHECKED VLW

CROSS SECTIONS
STA. 220+25.00 TO STA. 221+00.00

ALL-SHAWNEE RD

M:\Proj\1121\1001\77305\roadway\sheets\77305XS002.dgn 1/13/2014 5:29:56 PM scorcoran

SEEDING END WIDTH	SEEDING SQ. YDS.
18	
	50
0	
	64
23	

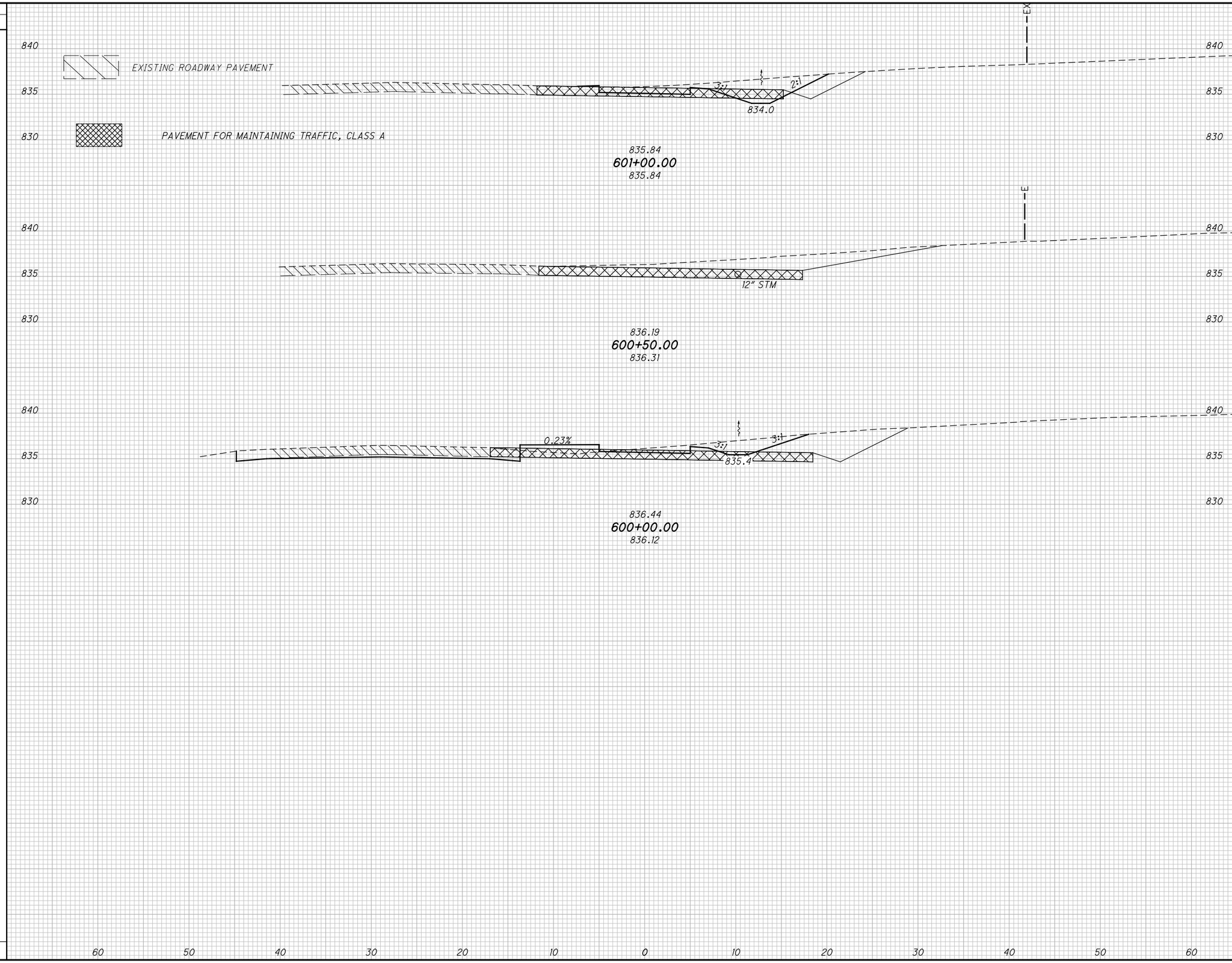

END AREA CUT	END AREA FILL	VOLUME CUT	VOLUME FILL
31	0		
		29	0
0	0		
		15	7
16	7		

CALCULATED SWC
CHECKED VLW

CROSS SECTIONS
STA. 599+00.00 TO STA. 601+00.00

ALL-SHAWNEE RD

M:\Proj\1121\100\77305\Roadway\sheets\77305XS003.dgn 1/13/2014 5:29:57 PM scorcoran

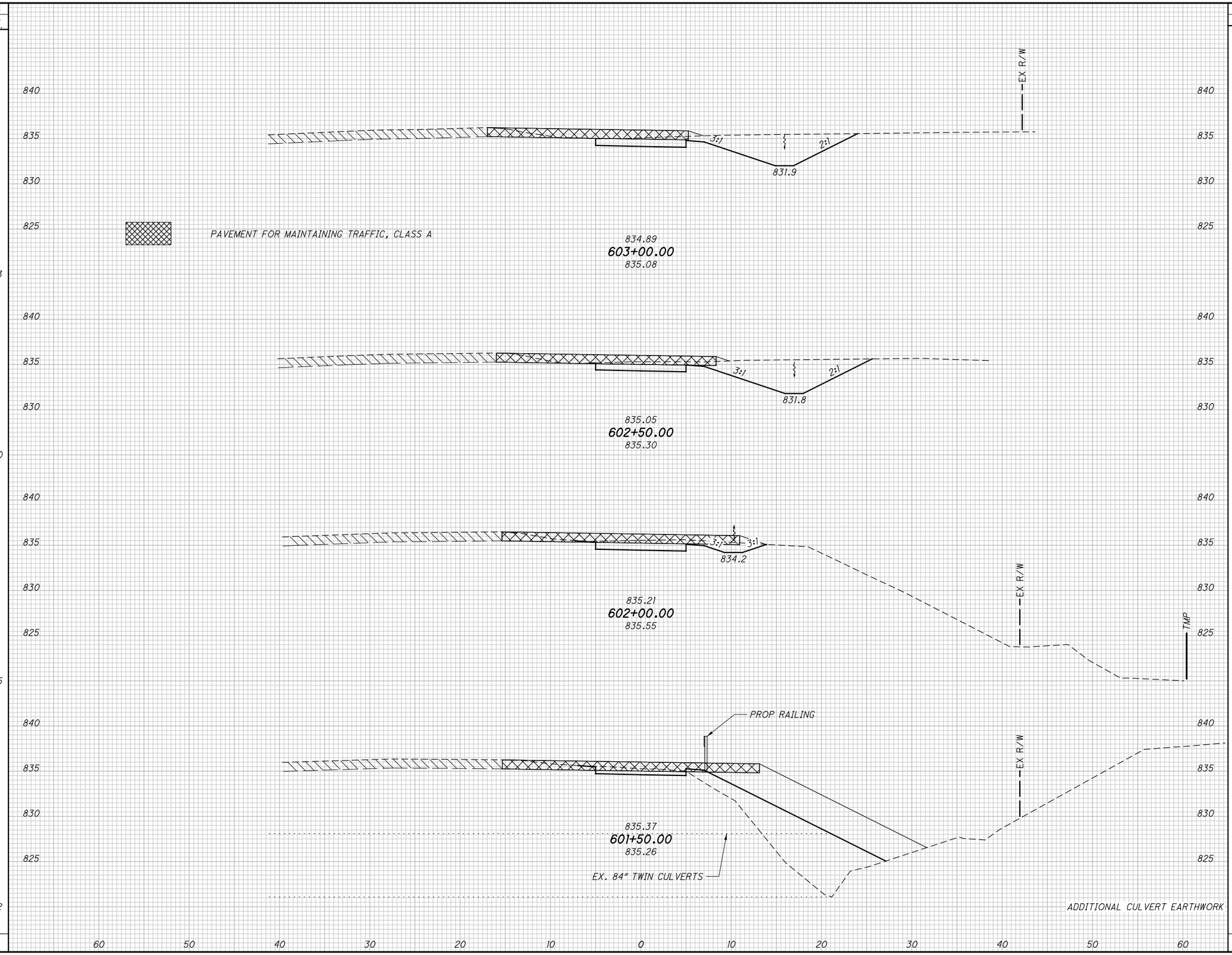

SEEDING END WIDTH	SEEDING SQ. YDS.	END AREA CUT	END AREA FILL	VOLUME CUT	VOLUME FILL
20		46	0		
	123			91	0
23		52	0		
	100			64	0
11		17	0		
	105			22	71
26		7	77		
	122			35	71
				53	278

CALCULATED SWC
CHECKED VLW

CROSS SECTIONS
STA. 601+50.00 TO STA. 603+00.00

ALL-SHAWNEE RD

M:\Proj\1121\1001\77305\roadway\sheets\77305XS003.dgn 1/13/2014 5:29:57 PM scorcoran

SEEDING END WIDTH	SEEDING SQ. YDS.	END AREA CUT	END AREA FILL	VOLUME CUT	VOLUME FILL
21	122	40	0	75	0
22	128	41	0	77	0
23	128	42	0	77	0
22	122	41	0	81	0

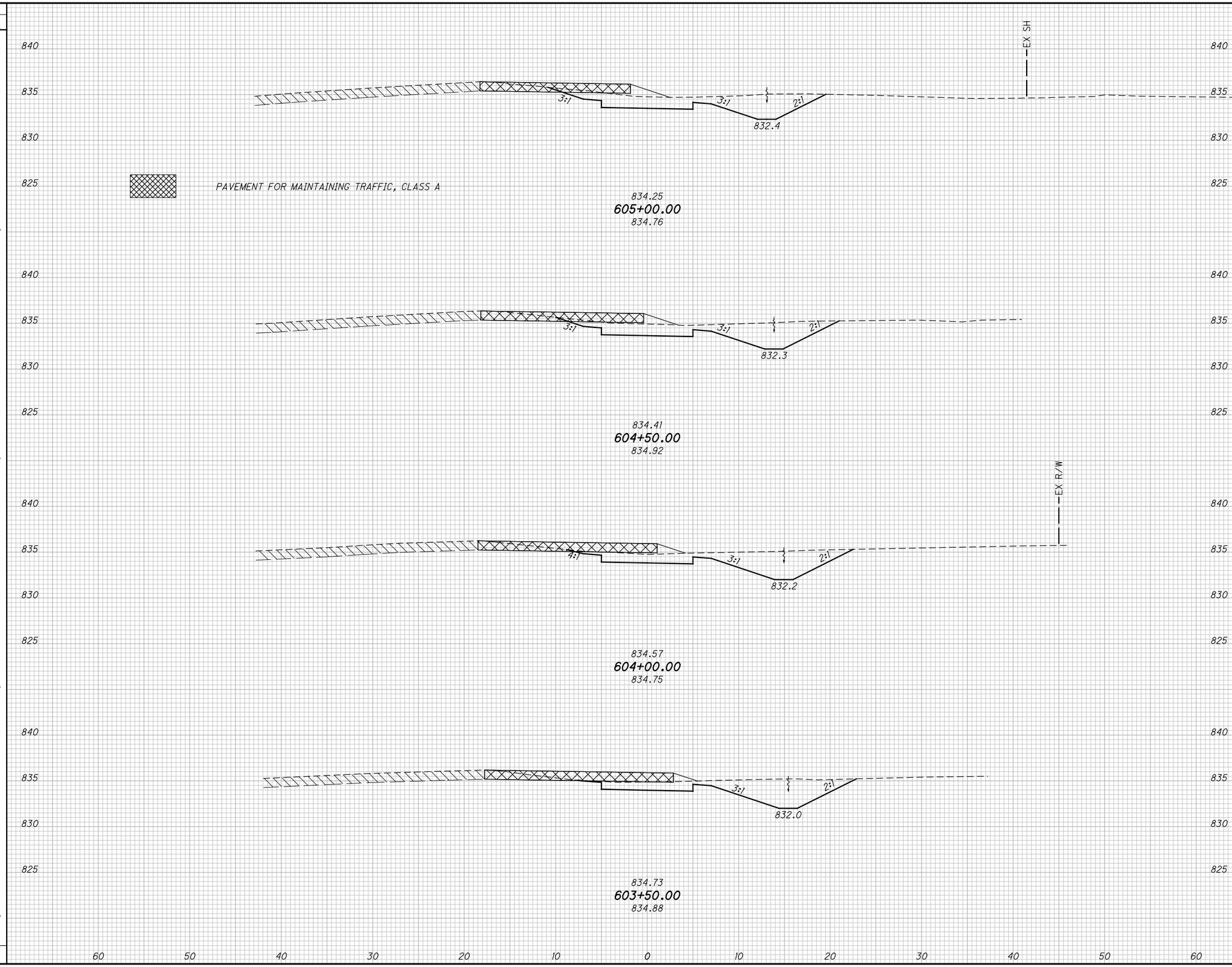

CALCULATED SWC
CHECKED VLW

CROSS SECTIONS
STA. 603+50.00 TO STA. 605+00.00

ALL-SHAWNEE RD

M:\Proj\1121\1001\77305\roadway\sheets\77305XS003.dgn 1/13/2014 5:29:57 PM scorcoran

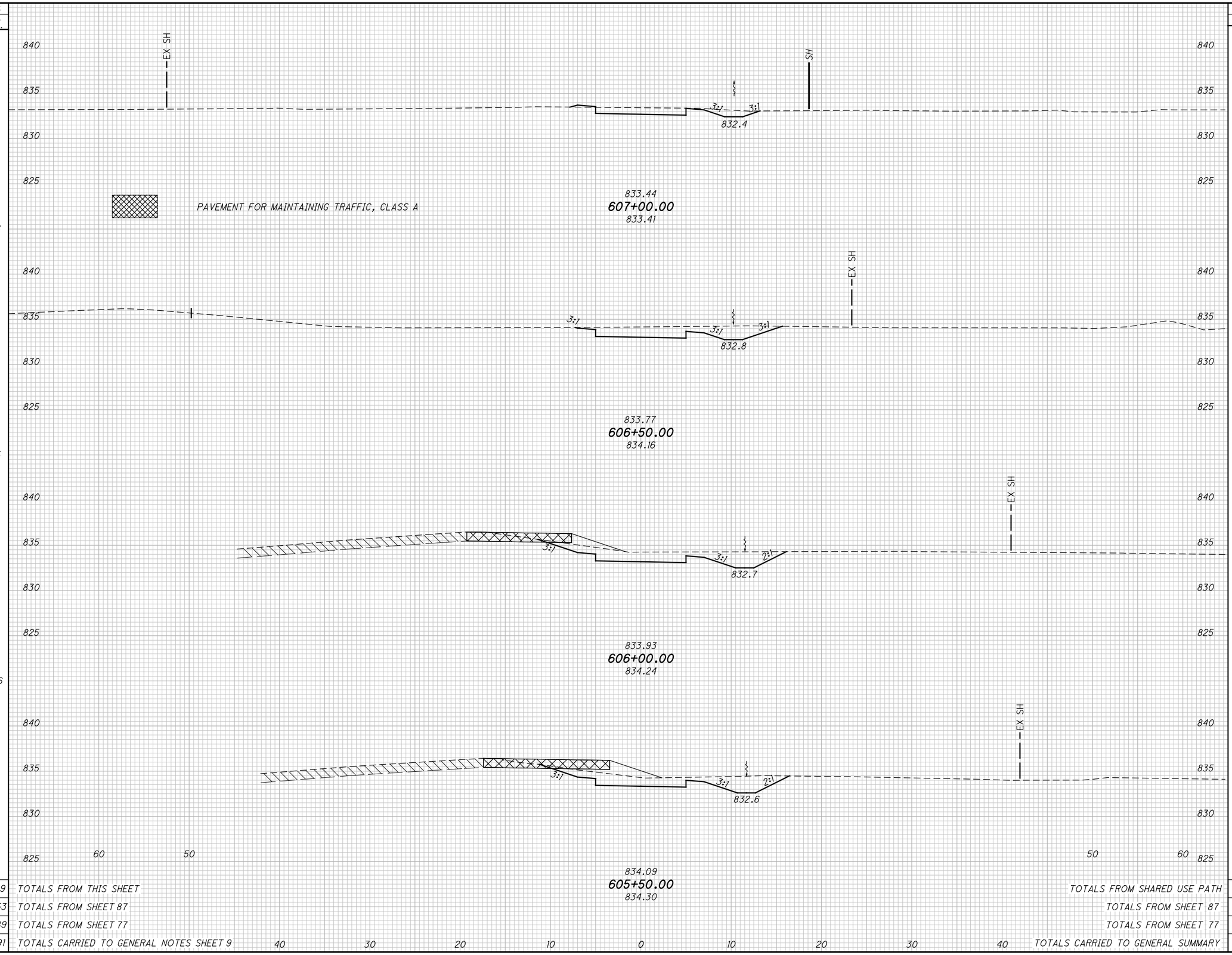

SEEDING END WIDTH	SEEDING SQ. YDS.	END AREA CUT	END AREA FILL	VOLUME CUT	VOLUME FILL
11	73	10	0	30	0
13	95	22	0	45	0
19	106	27	0	50	0
18	111	27	0	62	0

1449	TOTALS FROM THIS SHEET	TOTALS FROM SHARED USE PATH	806	427
3753	TOTALS FROM SHEET 87	TOTALS FROM SHEET 87	1967	1496
4789	TOTALS FROM SHEET 77	TOTALS FROM SHEET 77	5213	4583
9991	TOTALS CARRIED TO GENERAL NOTES SHEET 9	TOTALS CARRIED TO GENERAL SUMMARY	7986	6506

CALCULATED SWC
CHECKED VLW

CROSS SECTIONS
STA. 605+50.00 TO STA. 607+00.00

ALL-SHAWNEE RD

M:\Proj\1121\1001\77305\roadway\sheets\77305XS003.dgn 1/13/2014 5:29:57 PM scorcoran

Bench Mark "B" - Elevation=842.24 (NAVD88) [North 19370.56, East 19971.12]
Chiseled cross in the top if the south rim of the sanitary sewer manhole numbered SH-03 / 095 located on the west side of Shawnee Road. This mark is 25.08 feet Left of Station 107+77.74 of the centerline of Construction of Shawnee Road.

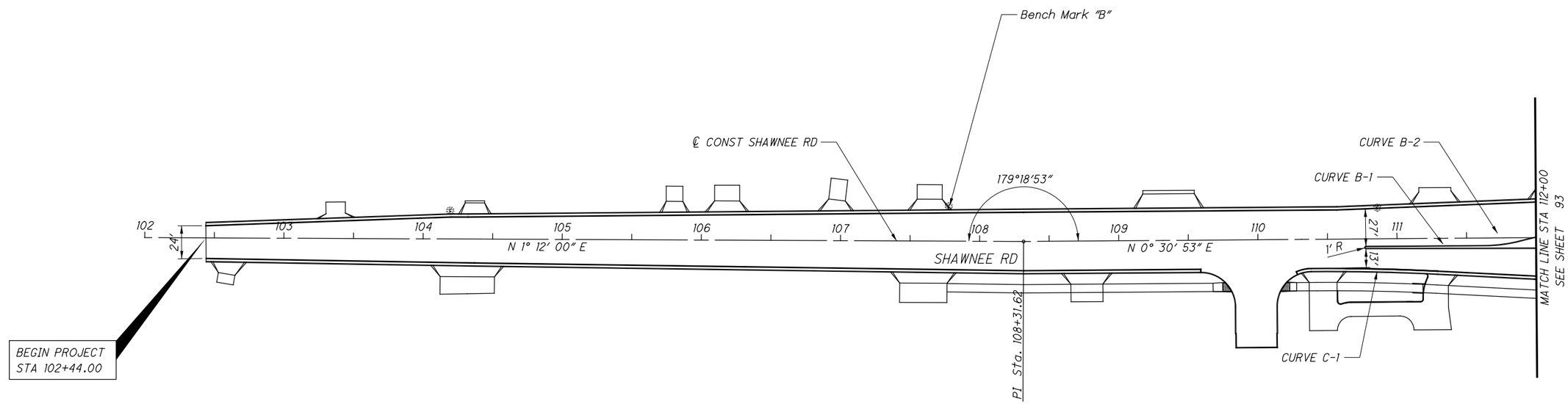

CURVE DATA										
CURVE	PI STA	PI NORTHING	PI EASTING	Dc	Δ	T (FT)	L (FT)	R (FT)	BEGIN CURVE	END CURVE
B-1	111+33.18	19725.4061	20005.0328	56° 10' 20"	14° 39' 52"	13.12	26.11	102.00	111+20.05	111+45.88
B-2	111+72.07	19764.3846	19995.2063	28° 56' 14"	15° 34' 19"	27.07	53.81	198.00	111+45.88	111+99.14
C-1	110+85.50	19677.5675	20022.6037	3° 51' 21"	3° 20' 37"	43.37	86.72	1486.00	110+42.13	111+28.80

N

HORIZONTAL SCALE IN FEET
0 20 40 80

CALCULATED JEE
CHECKED JMZ

ALIGNMENT DETAIL
SHAWNEE ROAD

ALL-SHAWNEE RD

M:\Proj\1121\1001\77305\roadway\sheets\77305GI003.dgn 1/13/2014 5:30:05 PM scorcoran

(A1)
P.I. Sta. 113+24.20
Δ = 18° 17′ 14″ (RT)
Dc = 28° 38′ 52″
R = 200.00′
T = 32.19′
L = 63.83′
E = 2.57′
C = 63.56′
C.B. = N 9° 39′ 31″ E

(A2)
P.I. Sta. 115+42.86
Δ = 21° 41′ 58″ (LT)
Dc = 57° 17′ 45″
R = 100.00′
T = 19.17′
L = 37.87′
E = 1.82′
C = 37.65′
C.B. = N 6° 10′ 07″ E

(A3)
P.I. Sta. 117+09.55
Δ = 7° 39′ 59″ (LT)
Dc = 5° 37′ 02″
R = 1,020.00′
T = 68.34′
L = 136.48′
E = 2.29′
C = 136.38′
C.B. = N 8° 30′ 52″ W

(A6)
P.I. Sta. 211+02.40
Δ = 15° 38′ 51″ (RT)
Dc = 57° 17′ 45″
R = 100.00′
T = 13.74′
L = 27.31′
E = 0.94′
C = 27.23′
C.B. = N 86° 52′ 24″ E

(A7)
P.I. Sta. 213+38.88
Δ = 17° 54′ 04″ (LT)
Dc = 57° 17′ 45″
R = 100.00′
T = 15.75′
L = 31.24′
E = 1.23′
C = 31.12′
C.B. = S 85° 44′ 35″ E

FOR SPLITTER AND CENTER ISLAND DETAILS SEE SHEET 102

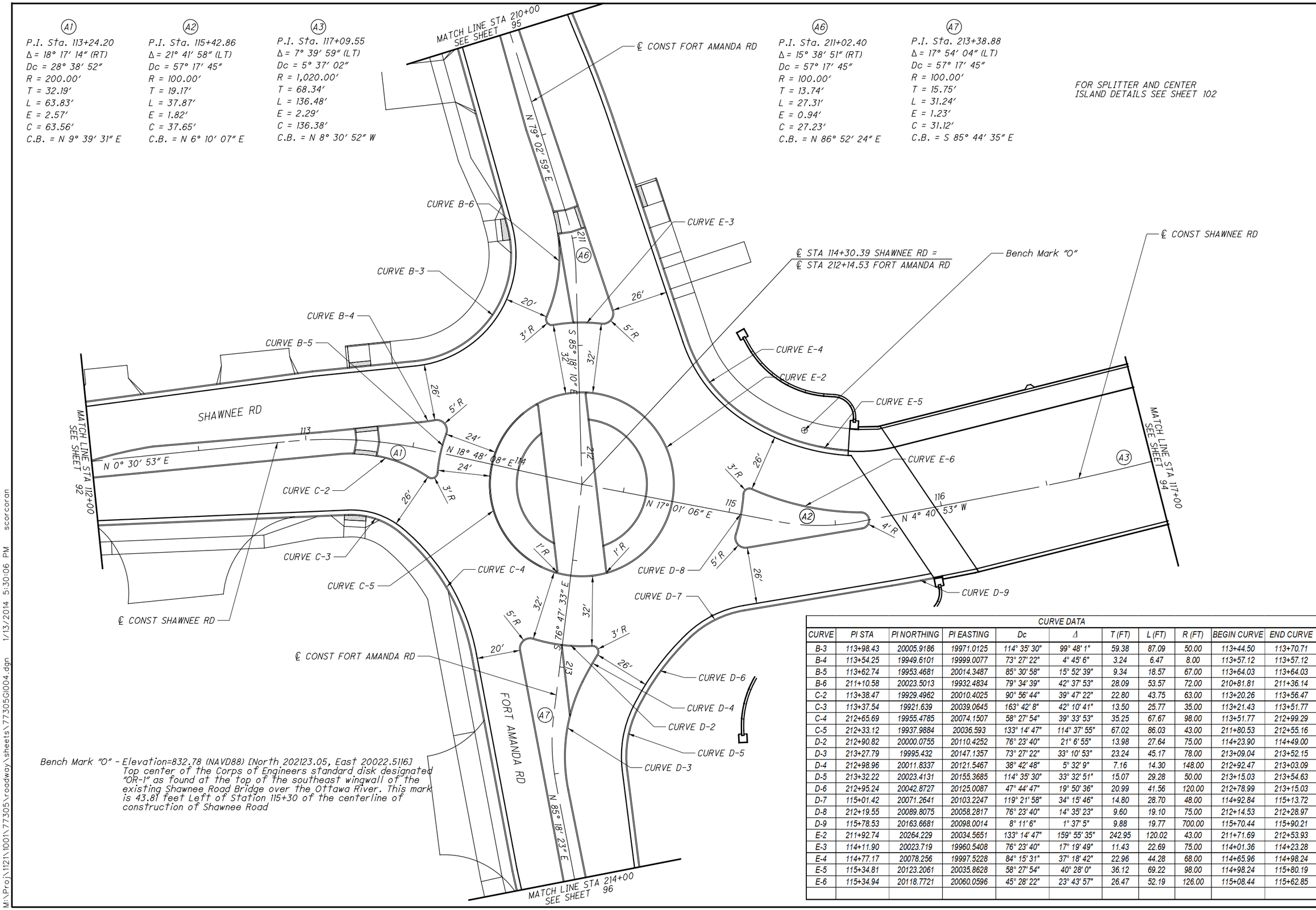

Bench Mark "O" - Elevation=832.78 (NAVD88) [North 202123.05, East 20022.5116]
Top center of the Corps of Engineers standard disk designated "OR-1" as found at the top of the southeast wingwall of the existing Shawnee Road Bridge over the Ottawa River. This mark is 43.81 feet Left of Station 115+30 of the centerline of construction of Shawnee Road

CURVE DATA

CURVE	PI STA	PI NORTHING	PI EASTING	Dc	Δ	T (FT)	L (FT)	R (FT)	BEGIN CURVE	END CURVE
B-3	113+98.43	20005.9186	19971.0125	114° 35′ 30″	99° 48′ 1″	59.38	87.09	50.00	113+44.50	113+70.71
B-4	113+54.25	19949.6101	19999.0077	73° 27′ 22″	4° 45′ 6″	3.24	6.47	8.00	113+57.12	113+57.12
B-5	113+62.74	19953.4681	20014.3487	85° 30′ 58″	15° 52′ 39″	9.34	18.57	67.00	113+64.03	113+64.03
B-6	211+10.58	20023.5013	19932.4834	79° 34′ 39″	42° 37′ 53″	28.09	53.57	72.00	210+81.81	211+36.14
C-2	113+38.47	19929.4962	20010.4025	90° 56′ 44″	39° 47′ 22″	22.80	43.75	63.00	113+20.26	113+56.47
C-3	113+37.54	19921.639	20039.0645	163° 42′ 8″	42° 10′ 41″	13.50	25.77	35.00	113+21.43	113+51.77
C-4	212+65.69	19955.4785	20074.1507	58° 27′ 54″	39° 33′ 53″	35.25	67.67	98.00	113+51.77	212+99.29
C-5	212+33.12	19937.9884	20036.593	133° 14′ 47″	114° 37′ 55″	67.02	86.03	43.00	211+80.53	212+55.16
D-2	212+90.82	20000.0755	20110.4252	76° 23′ 40″	21° 6′ 55″	13.98	27.64	75.00	114+23.90	114+49.00
D-3	213+27.79	19995.432	20147.1357	73° 27′ 22″	33° 10′ 53″	23.24	45.17	78.00	213+09.04	213+52.15
D-4	212+98.96	20011.8337	20121.5467	38° 42′ 48″	5° 32′ 9″	7.16	14.30	148.00	212+92.47	213+03.09
D-5	213+32.22	20023.4131	20155.3685	114° 35′ 30″	33° 32′ 51″	15.07	29.28	50.00	213+15.03	213+54.63
D-6	212+95.24	20042.8727	20125.0087	47° 44′ 47″	19° 50′ 36″	20.99	41.56	120.00	212+78.99	213+15.03
D-7	115+01.42	20071.2641	20103.2247	119° 21′ 58″	34° 15′ 46″	14.80	28.70	48.00	114+92.84	115+13.72
D-8	212+19.55	20089.8075	20058.2817	76° 23′ 40″	14° 35′ 23″	9.60	19.10	75.00	212+14.53	212+28.97
D-9	115+78.53	20163.6681	20098.0014	8° 11′ 6″	1° 37′ 5″	9.88	19.77	700.00	115+70.44	115+90.21
E-2	211+92.74	20264.229	20034.5651	133° 14′ 47″	159° 55′ 35″	242.95	120.02	43.00	211+71.69	212+53.93
E-3	114+11.90	20023.719	19960.5408	76° 23′ 40″	17° 19′ 49″	11.43	22.69	75.00	114+01.36	114+23.28
E-4	114+77.17	20078.256	19997.5228	84° 15′ 31″	37° 18′ 42″	22.96	44.28	68.00	114+65.96	114+98.24
E-5	115+34.81	20123.2061	20035.8628	58° 27′ 54″	40° 28′ 0″	36.12	69.22	98.00	114+98.24	115+80.19
E-6	115+34.94	20118.7721	20060.0596	45° 28′ 22″	23° 43′ 57″	26.47	52.19	126.00	115+08.44	115+62.85

HORIZONTAL SCALE IN FEET 0 10 20 40

CALCULATED JEE
CHECKED JMZ

ROUNDABOUT ALIGNMENT DETAIL
SHAWNEE ROAD AND FORT AMANDA ROAD

ALL-SHAWNEE RD

M:\Proj\1121\1001\77305\roadway\sheets\77305GI004.dgn 1/13/2014 5:30:06 PM scorcoran

(A3)

P.I. Sta. 117+09.55
Δ = 7° 39′ 59″ (LT)
Dc = 5° 37′ 02″
R = 1,020.00′
T = 68.34′
L = 136.48′
E = 2.29′
C = 136.38′
C.B. = N 8° 30′ 52″ W

(A4)

P.I. Sta. 119+42.21
Δ = 12° 31′ 08″ (RT)
Dc = 3° 49′ 11″
R = 1,500.00′
T = 164.53′
L = 327.74′
E = 9.00′
C = 327.09′
C.B. = N 6° 05′ 17″ W

Bench Mark "A" - Elevation=831.13 (NAVD88) [North 20819.86, East 20063.40]
White painted square in the top northeast corner of the concrete headwall on the north side of the blacktop driveway leading east from Shawnee Road to the Faith Christian Church. This mark is 56.04 feet Right of Station 122+42.15 of the centerline of construction of Shawnee Road

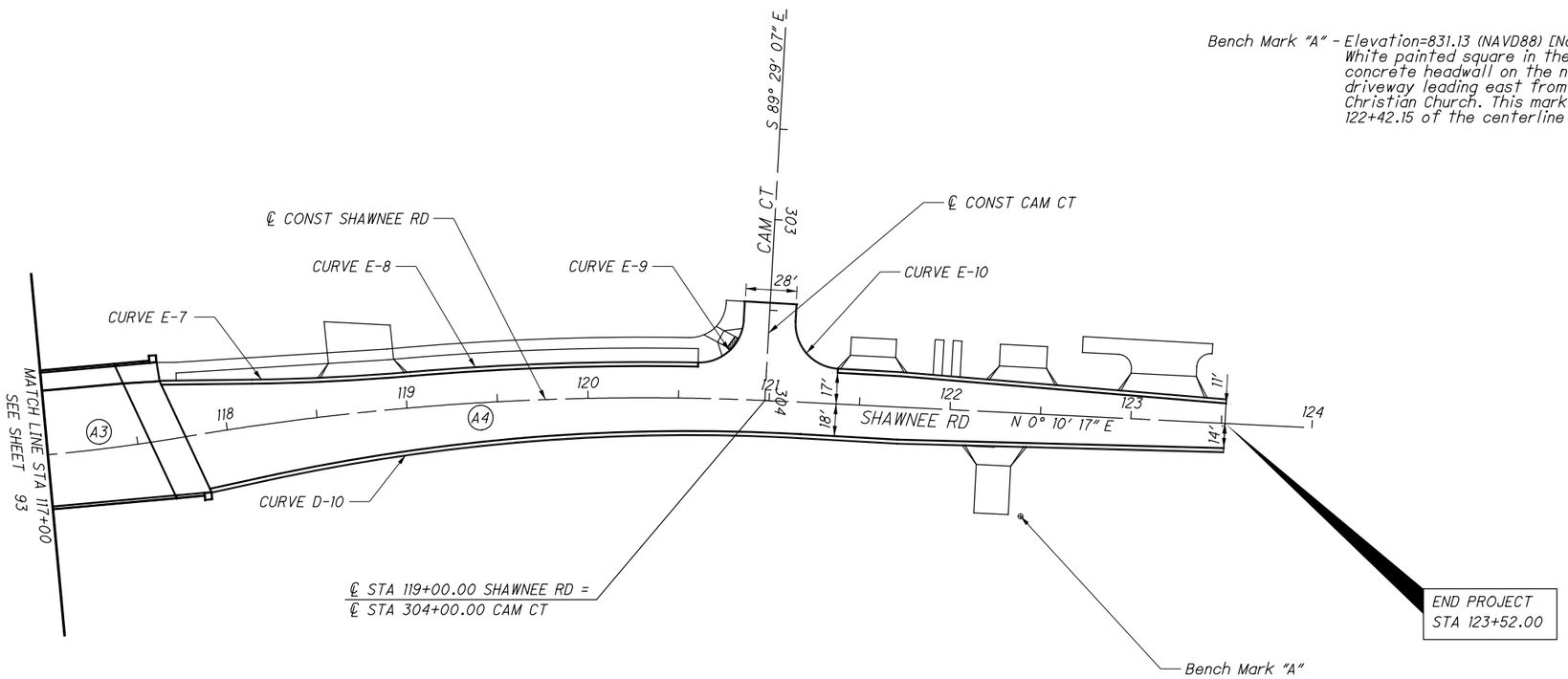

CURVE DATA										
CURVE	PI STA	PI NORTHING	PI EASTING	Dc	Δ	T (FT)	L (FT)	R (FT)	BEGIN CURVE	END CURVE
D-10	119+67.67	20547.1661	20024.388	5° 13′ 6″	15° 29′ 4″	149.28	296.74	1098.00	118+17.29	121+18.40
E-7	118+60.22	20436.2517	20005.5191	4° 46′ 29″	4° 11′ 1″	43.83	87.62	1200.00	118+17.33	119+03.47
E-8	119+81.94	20558.578	19989.3216	3° 46′ 15″	5° 59′ 41″	79.56	158.98	1519.50	119+03.47	120+60.41
E-9	120+84.22	20662.2236	19986.5204	229° 10′ 59″	87° 56′ 57″	24.12	38.38	25.00	120+60.41	120+84.69
E-10	121+12.02	20690.3047	19985.9964	229°10′ 59″	89° 0′ 13″	24.57	38.84	25.00	121+12.20	121+36.59

HORIZONTAL SCALE IN FEET
0 20 40 80

CALCULATED JEE
CHECKED JMZ

ALIGNMENT DETAIL
SHAWNEE ROAD

ALL-SHAWNEE RD

M:\Proj\1121\1001\77305\roadway\sheets\77305GI005.dgn 1/13/2014 5:30:07 PM scorcoran

(A5)

P.I. Sta. 208+54.79
Δ = 7° 16′ 17″ (LT)
Dc = 2° 51′ 53″
R = 2,000.00′
T = 127.08′
L = 253.82′
E = 4.03′
C = 253.65′
C.B. = N 82° 41′ 08″ E

Bench Mark "D" - Elevation=825.45 (NAVD88) [North 19931.12, East 19325.07]
Magnail set three inches south and three inches east from the top northwest corner of a concrete sanitary sewer chamber on the south side of Fort Amanda Road just west of the Little Ottawa River. This mark is 25.6 feet Right of Station 12+01.1 of the centerline of survey of Fort Amanda Road.

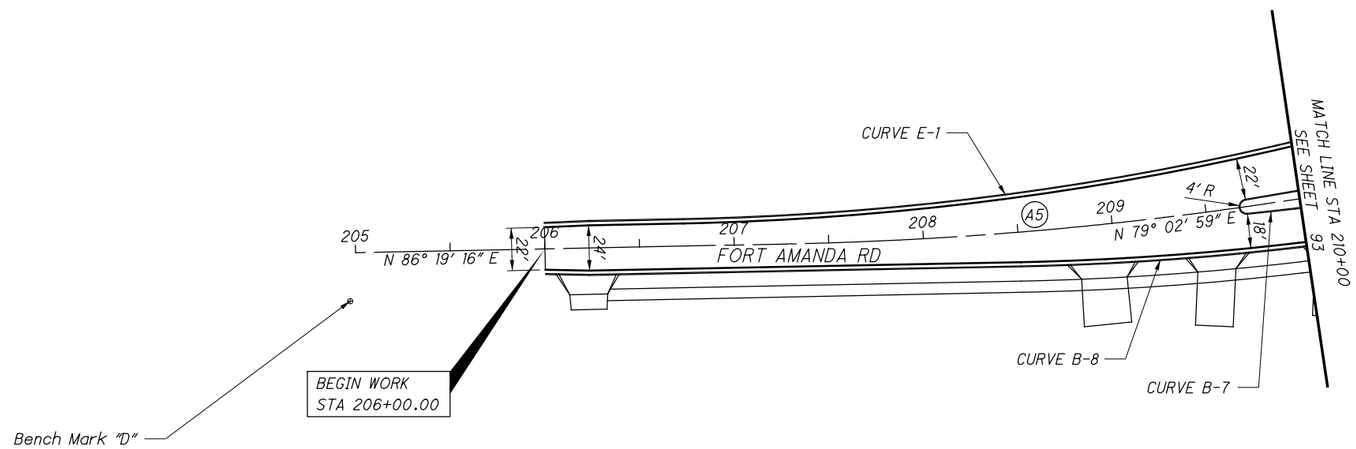

CURVE DATA										
CURVE	PI STA	PI NORTHING	PI EASTING	Dc	Δ	T (FT)	L (FT)	R (FT)	BEGIN CURVE	END CURVE
E-1	208+45.66	19992.8931	19670.1046	3° 44′ 59″	12° 48′ 35″	171.52	341.62	1528.00	206+73.45	210+17.20
B-7	209+83.98	19999.6708	19808.8484	3° 51′ 58″	0° 58′ 16″	12.56	25.12	1482.00	209+71.46	209+96.54
B-8	209+22.95	19970.0644	19751.717	3° 48′ 53″	5° 37′ 11″	73.72	147.32	1502.00	208+50.22	209+95.96

N

0 20 40 80
HORIZONTAL SCALE IN FEET

CALCULATED JEE
CHECKED JMZ

ALIGNMENT DETAIL
FORT AMANDA ROAD

ALL-SHAWNEE RD

M:\Proj\121\1001\77305\roadway\sheets\77305G1006.dgn 1/13/2014 5:30:08 PM scorcoran

(A8)

P.I. Sta. 215+32.18
Δ = 3° 48′ 17″ (RT)
Dc = 5° 43′ 46″
R = 1,000.00′
T = 33.22′
L = 66.41′
E = 0.55′
C = 66.39′
C.B. = N 87° 12′ 31″ E

Bench Mark "C" - Elevation=839.67 (NAVD88) [North 19936.50, East 20964.46]
Magnail set four inches south and four inches east from the topnorthwest corner of a concrete water meter pit on the south side of Fort Amanda Road, about 110 feet northeasterly from the northeast corner of the old grocery store complex. This mark is78.45 Right of Station 221+45.36 of the centerline of construction of Fort Amanda Road.

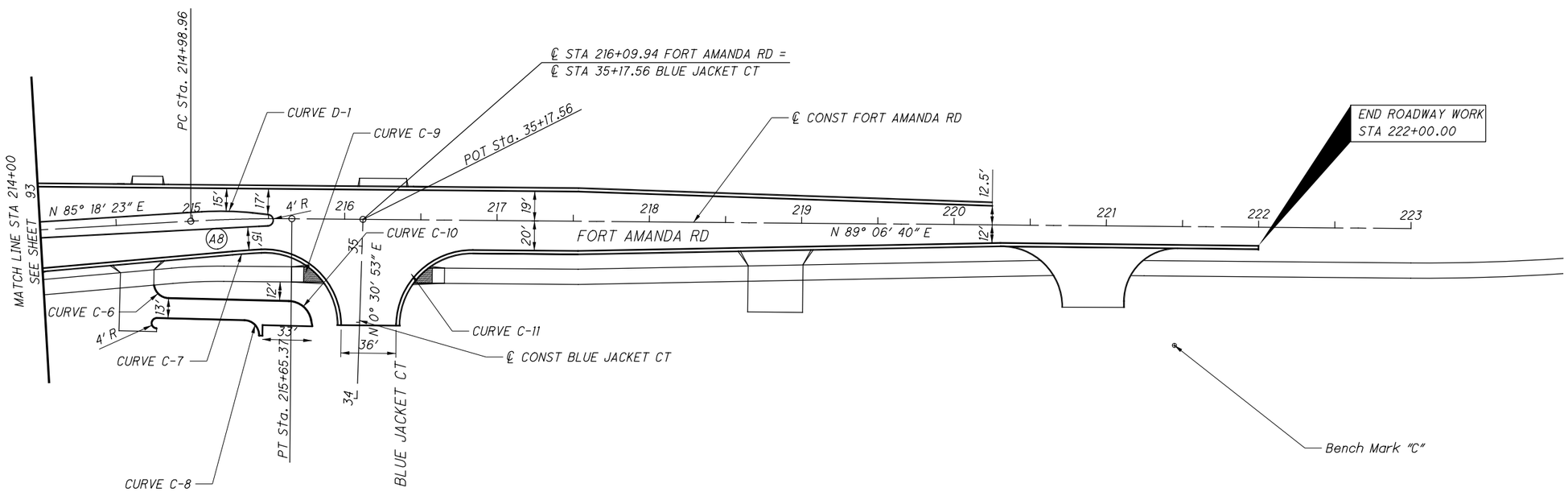

CURVE DATA										
CURVE	PI STA	PI NORTHING	PI EASTING	Dc	Δ	T (FT)	L (FT)	R (FT)	BEGIN CURVE	END CURVE
D-1	215+23.16	20010.2809	20340.7884	28° 56′ 14″	9° 42′ 41″	16.82	33.56	198.00	215+06.45	215+39.75
C-6	214+71.53	19951.3122	20293.6754	212° 57′ 28″	90° 0′ 0″	10.00	15.71	10.00	214+72.35	214+81.50
C-7	215+31.84	19981.7602	20350.9353	11° 51′ 45″	1° 24′ 28″	5.93	11.87	483.00	215+25.78	215+37.91
C-8	215+43.31	19938.3122	20363.7838	212° 57′ 28″	90° 0′ 0″	10.00	15.71	10.00	215+32.58	215+42.90
C-9	215+89.98	19986.7928	20408.2402	119° 21′ 58″	94° 7′ 46″	51.59	78.86	48.00	215+37.91	215+89.98
C-10	215+75.96	19951.3122	20394.7645	21° 58′ 19″	77° 29′ 12″	12.04	20.29	15.00	215+63.84	215+78.38
C-11	216+29.98	19984.9523	20448.2736	119° 21′ 58″	90° 0′ 0″	48.00	75.4	48.00	216+29.98	216+77.98

N

HORIZONTAL SCALE IN FEET
0 20 40 80

CALCULATED JEE
CHECKED JMZ

ALIGNMENT DETAIL
FORT AMANDA ROAD

ALL-SHAWNEE RD

M:\Proj\1121\1001\77305\roadway\sheets\77305G1007.dgn 1/13/2014 5:30:08 PM scorcoran

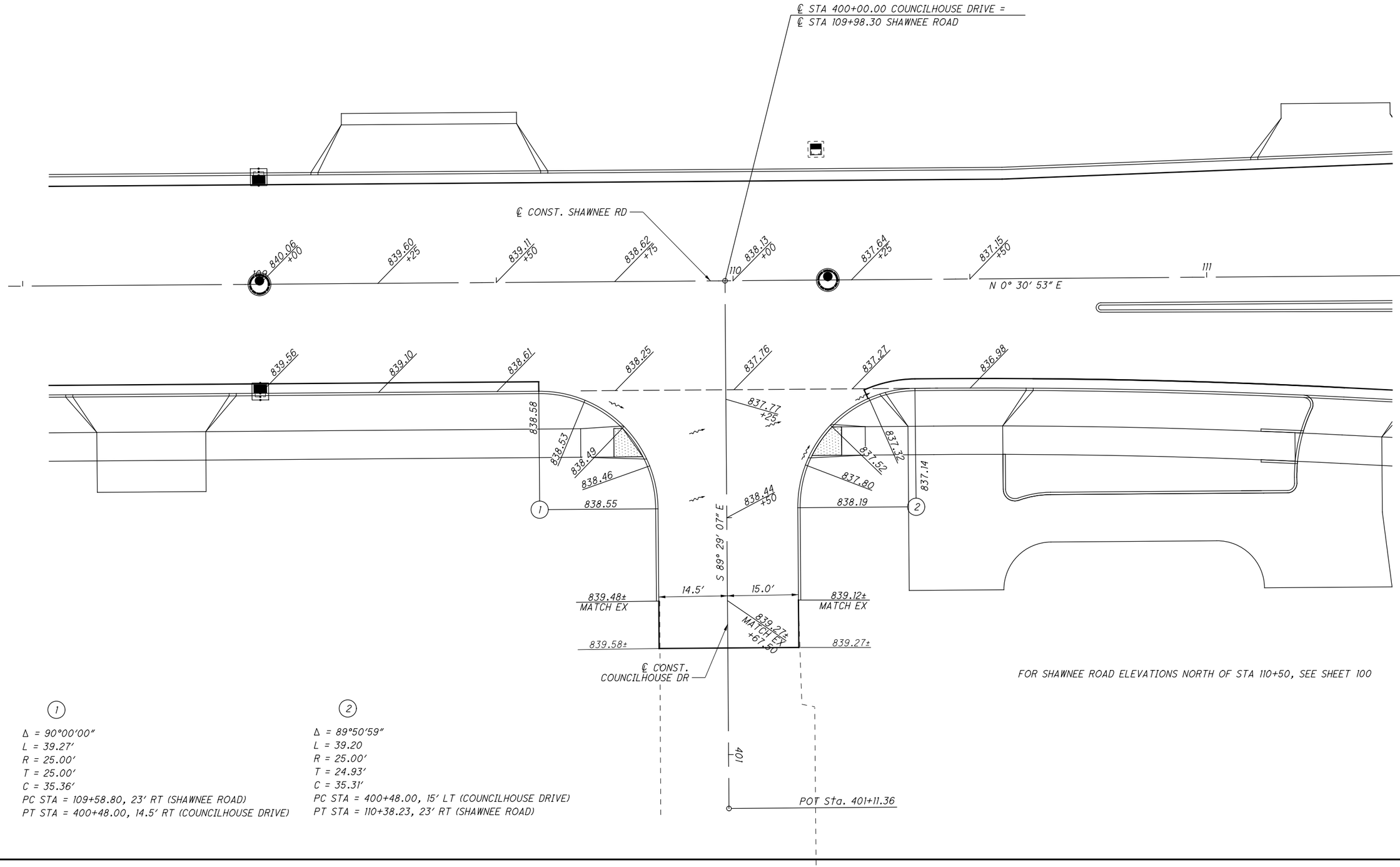

(1)

Δ = 90°00′00″
L = 39.27′
R = 25.00′
T = 25.00′
C = 35.36′
PC STA = 109+58.80, 23′ RT (SHAWNEE ROAD)
PT STA = 400+48.00, 14.5′ RT (COUNCILHOUSE DRIVE)

(2)

Δ = 89°50′59″
L = 39.20
R = 25.00′
T = 24.93′
C = 35.31′
PC STA = 400+48.00, 15′ LT (COUNCILHOUSE DRIVE)
PT STA = 110+38.23, 23′ RT (SHAWNEE ROAD)

HORIZONTAL SCALE IN FEET
0 5 10 20

CALCULATED RDC
CHECKED SJB

INTERSECTION DETAIL COUNCILHOUSE DRIVE

ALL-SHAWNEE RD

M:\Proj\112\1001\77305\roadway\sheets\77305GI009.dgn 1/13/2014 5:30:15 PM scorcoran

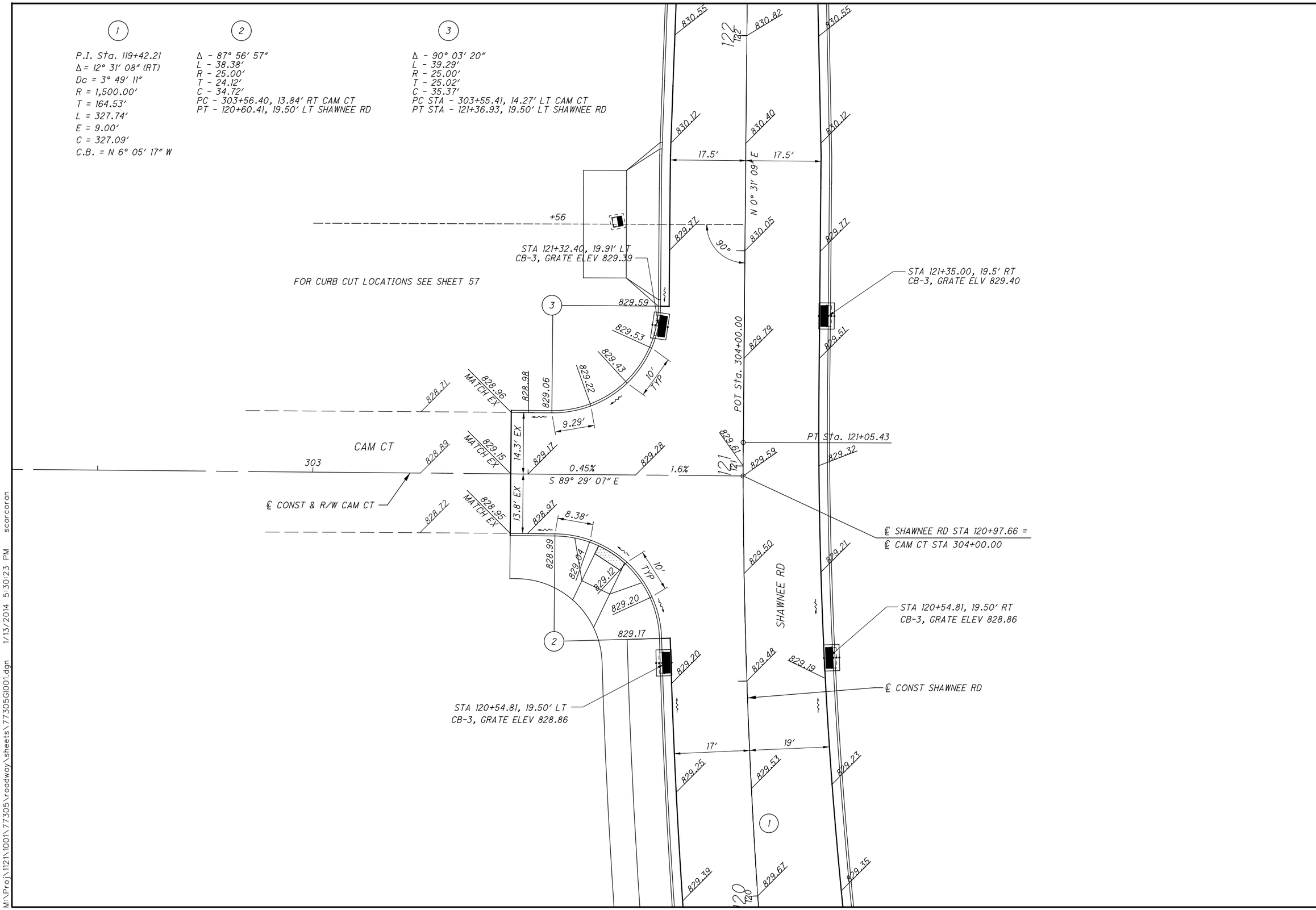

HORIZONTAL SCALE IN FEET
0 5 10 20

CALCULATED JEE
CHECKED JMZ

INTERSECTION DETAIL
SHAWNEE ROAD AND CAM COURT

ALL-SHAWNEE RD

M:\Proj\1121\1001\77305\roadway\sheets\77305GI001.dgn 1/13/2014 5:30:23 PM scorcoran

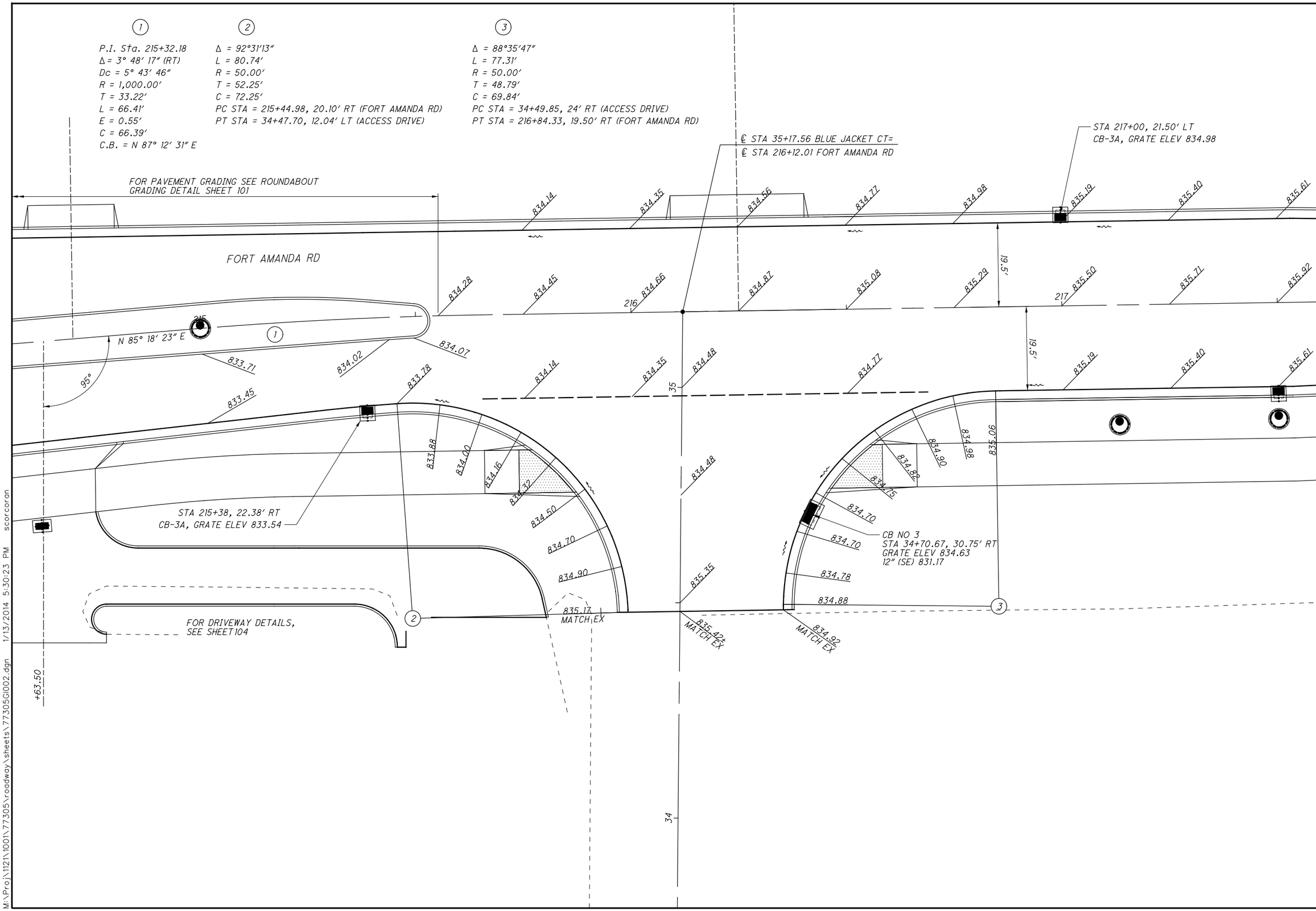

INTERSECTION DETAIL
FORT AMANDA ROAD AND BLUE JACKET COURT

ALL-SHAWNEE RD

HORIZONTAL SCALE IN FEET 0 5 10 20

CALCULATED JEE
CHECKED RDC

99
206

M:\Proj\1121\1001\77305\roadway\sheets\77305GI002.dgn 1/13/2014 5:30:23 PM scorcoran

CIRCULATING ROADWAY	ID	ELEV	NORTHING	EASTING
	101	836.02	19976.6740	20022.6719
	102	835.95	19979.0203	20016.9732
	103	835.71	19992.3526	20001.2766
	104	835.58	19992.3526	20001.2766
	105	835.43	20014.5309	19993.2549
	106	835.36	20021.0277	19993.2962
	107	835.28	20027.4441	19994.3159
	108	835.03	20046.0824	20004.0206
	109	834.90	20053.8071	20013.1027
	110	834.75	20058.8190	20024.2238
	111	834.53	20059.8888	20043.4141
	112	834.47	20058.6236	20048.7369
	113	834.40	20056.6927	20053.8559
	114	834.58	20056.6927	20053.8559
	115	834.65	20044.3706	20069.7274
	116	834.74	20038.1632	20073.8652
	117	834.86	20029.2685	20077.5118
	118	835.03	20015.5184	20079.1058
	119	835.13	20007.6819	20078.0144
	120	835.23	20000.1779	20075.5056
	121	835.36	19990.9455	20069.9677
	122	835.56	19980.6865	20058.3619
	123	835.77	19974.8770	20041.7849
	124	835.94	19975.2586	20028.1442

SUPERLOAD BY-PASS	ID	ELEV	NORTHING	EASTING
	1001	835.60	20001.5725	19996.7518
	1002	835.46	20012.3875	19993.9612
	1003	835.32	20023.5559	19994.0845
	1004	835.12	20023.8261	20036.1112
	1005	834.92	20024.0964	20078.1378
	1006	835.06	20012.9305	20078.4047
	1007	835.21	20002.0806	20075.7535
	1008	835.41	20001.6940	20036.2535

SPLITTER ISLANDS	ID	ELEV	NORTHING	EASTING
EAST	201	834.68	19987.2824	20104.7920
	202	834.56	20000.3706	20109.1678
	203	834.49	20000.3706	20109.1678
	204	834.34	20014.0389	20111.0714
	205	834.07	20007.9725	20127.5707
	206	833.29	19995.9363	20176.4443
	207	832.06	20001.1243	20235.8830
	208	833.48	20008.8183	20324.0318
	209	834.03	20008.8959	20357.5516
	210	834.20	20008.0615	20367.6519
	211	834.07	20000.0851	20367.6065
	212	834.02	19999.6770	20361.8708
	213	833.03	19989.9791	20235.8054
	214	834.61	19980.2821	20109.7516
SOUTH	301	835.54	19957.5398	20006.2690
	302	835.61	19954.0344	20014.6976
	303	835.56	19951.7072	20023.5245
	304	835.42	19946.8090	20025.2372
	305	834.74	19906.6994	20010.0831
	306	834.07	19906.6994	20010.0831
	307	834.83	19748.7954	20007.8709
	308	836.50	19669.8225	20006.7645
	309	836.60	19669.8455	20004.7647
	310	835.70	19712.7596	20005.1503
	311	834.81	19755.6737	20005.5359
	312	834.33	19781.5245	20002.4454
	313	833.87	19821.3991	19996.6220
	314	834.31	19899.2648	19998.5553
	315	835.13	19953.2626	19998.7359

SPLITTER ISLANDS	ID	ELEV	NORTHING	EASTING
WEST	401	834.73		
	402	834.79		
	403	834.85		
	404	834.90		
	405	833.93		
	406	832.93		
	407	831.69		
	408	831.06		
	409	831.04		
	410	832.79		
	411	834.37		
NORTH	501	833.82	20085.8083	20067.1332
	502	833.90	20089.2222	20058.1025
	503	833.96	20091.4290	20048.8186
	504	834.02	20091.4290	20048.8186
	505	833.55	20119.6386	20057.4483
	506	833.08	20145.1001	20063.0550
	507	833.11	20144.8508	20071.0203
	508	833.49	20117.7720	20072.5510
	509	833.89	20090.6933	20074.0817

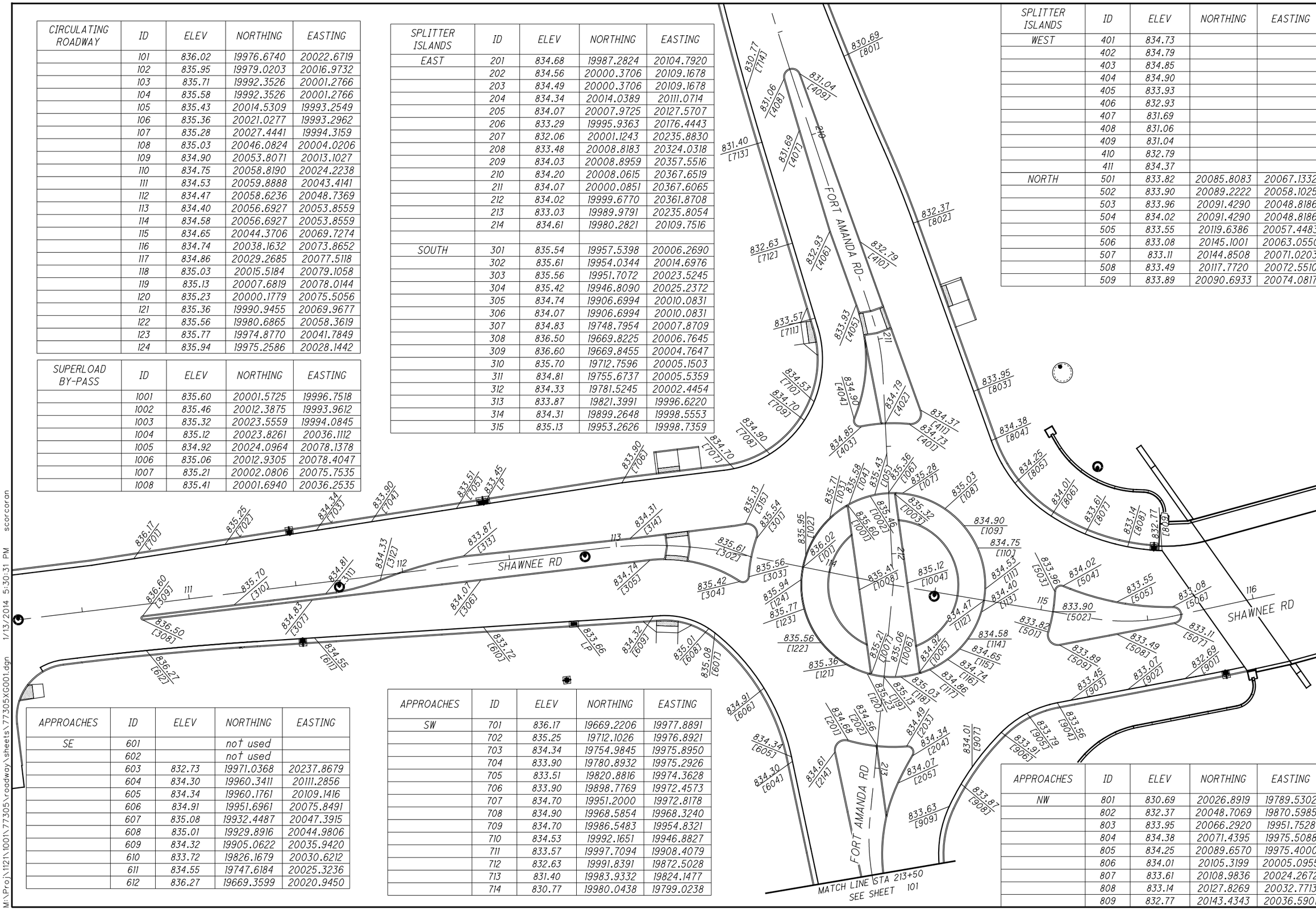

APPROACHES	ID	ELEV	NORTHING	EASTING
SE	601		not used	
	602		not used	
	603	832.73	19971.0368	20237.8679
	604	834.30	19960.3411	20111.2856
	605	834.34	19960.1761	20109.1416
	606	834.91	19951.6961	20075.8491
	607	835.08	19932.4487	20047.3915
	608	835.01	19929.8916	20044.9806
	609	834.32	19905.0622	20035.9420
	610	833.72	19826.1679	20030.6212
	611	834.55	19747.6184	20025.3236
	612	836.27	19669.3599	20020.9450

APPROACHES	ID	ELEV	NORTHING	EASTING
SW	701	836.17	19669.2206	19977.8891
	702	835.25	19712.1026	19976.8921
	703	834.34	19754.9845	19975.8950
	704	833.90	19780.8932	19975.2926
	705	833.51	19820.8816	19974.3628
	706	833.90	19898.7769	19972.4573
	707	834.70	19951.2000	19972.8178
	708	834.90	19968.5854	19968.3240
	709	834.70	19986.5483	19954.8321
	710	834.53	19992.1651	19946.8827
	711	833.57	19997.7094	19908.4079
	712	832.63	19991.8391	19872.5028
	713	831.40	19983.9332	19824.1477
	714	830.77	19980.0438	19799.0238

APPROACHES	ID	ELEV	NORTHING	EASTING
NW	801	830.69	20026.8919	19789.5302
	802	832.37	20048.7069	19870.5985
	803	833.95	20066.2920	19951.7528
	804	834.38	20071.4395	19975.5088
	805	834.25	20089.6570	19975.4000
	806	834.01	20105.3199	20005.0955
	807	833.61	20108.9836	20024.2672
	808	833.14	20127.8269	20032.7713
	809	832.77	20143.4343	20036.5901

N

HORIZONTAL SCALE IN FEET 0 10 20 40

CALCULATED SJB
CHECKED SPR

GRADING DETAIL
SHAWNEE ROAD AND FORT AMANDA ROAD

ALL-SHAWNEE RD

M:\Proj\1121\1001\77305\roadway\sheets\77305XG001.dgn 1/13/2014 5:30:31 PM scorcoran

APPROACHES	ID	ELEV	NORTHING	EASTING
NE	901	832.69	20146.3182	20096.9789
	902	833.07	20119.2394	20098.5096
	903	833.45	20092.1606	20100.0403
	904	833.56	20085.9231	20100.3929
	905	833.79	20071.3436	20103.4390
	906	833.91	20058.3082	20110.6445
	907	834.01	20042.7416	20124.8882
	908	833.87	20036.6919	20131.9998
	909	833.63	20029.8619	20141.6011
	910	832.88	20021.7314	20175.9010
	911	831.71	20022.6344	20234.1067
	912	833.24	20024.0238	20323.6529
	913	833.78	20024.5490	20357.5044
	914	833.93	20024.7054	20367.5893

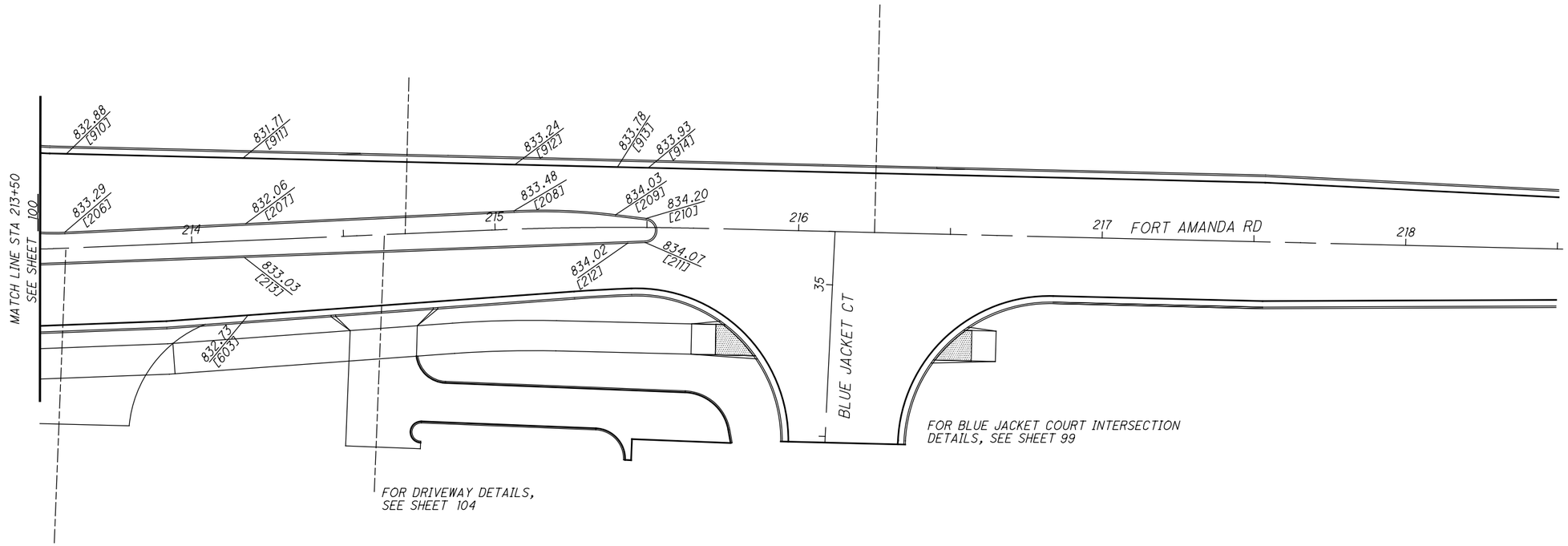

HORIZONTAL SCALE IN FEET
0 10 20 40

CALCULATED SJB
CHECKED SPR

GRADING DETAIL
FORT AMANDA ROAD

ALL-SHAWNEE RD

101
206

M:\Proj\1121\1001\77305\roadway\sheets\77305XG002.dgn 1/13/2014 5:30:31 PM scorcoran

FOR ADDITIONAL DETAILS SEE SHEET 6 .

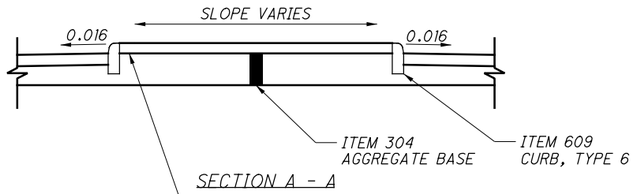

SECTION A - A

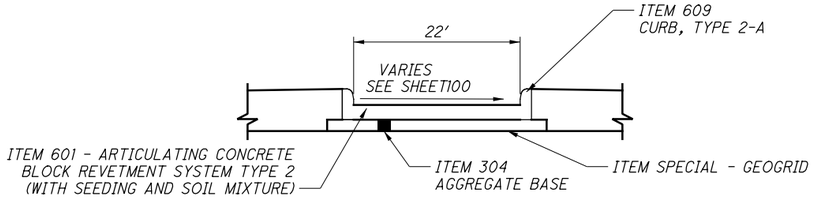

SECTION C - C #

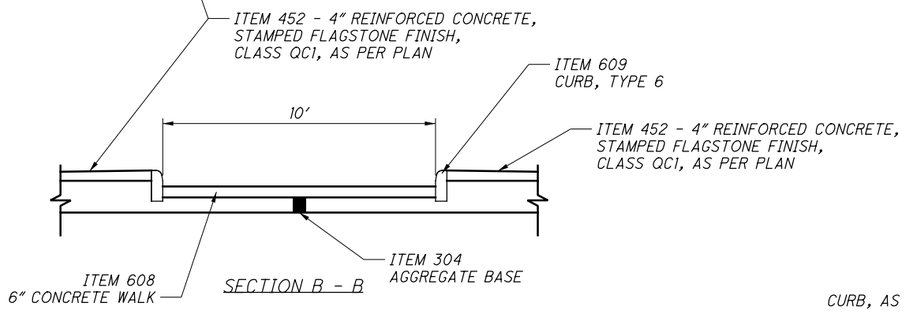

SECTION B - B

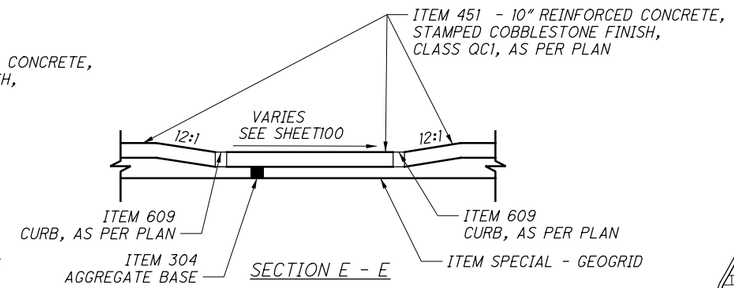

SECTION E - E

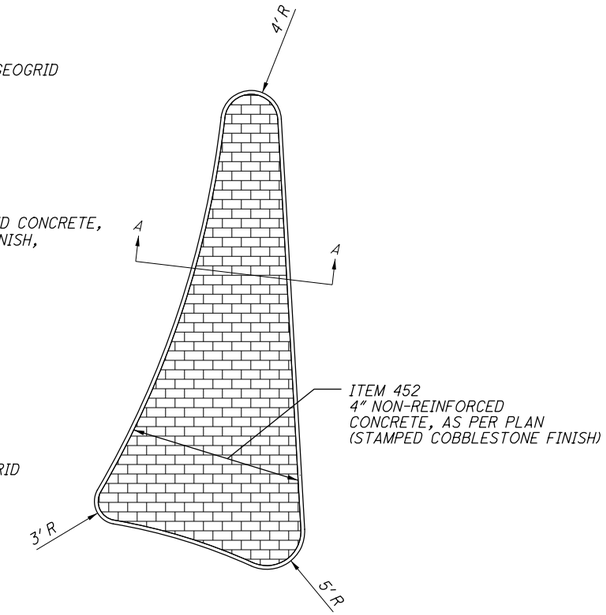

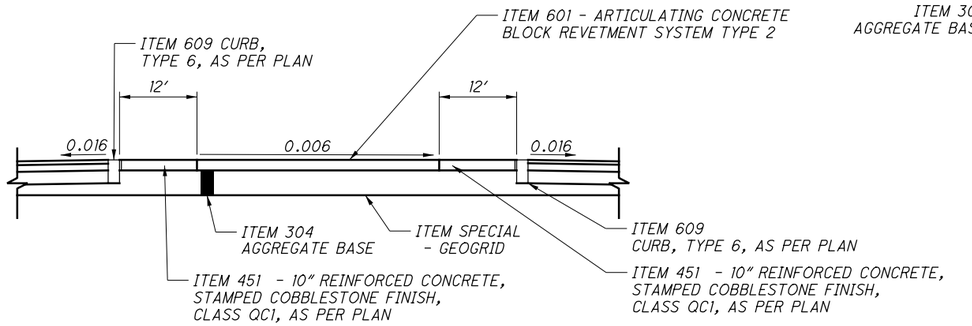

SECTION D - D

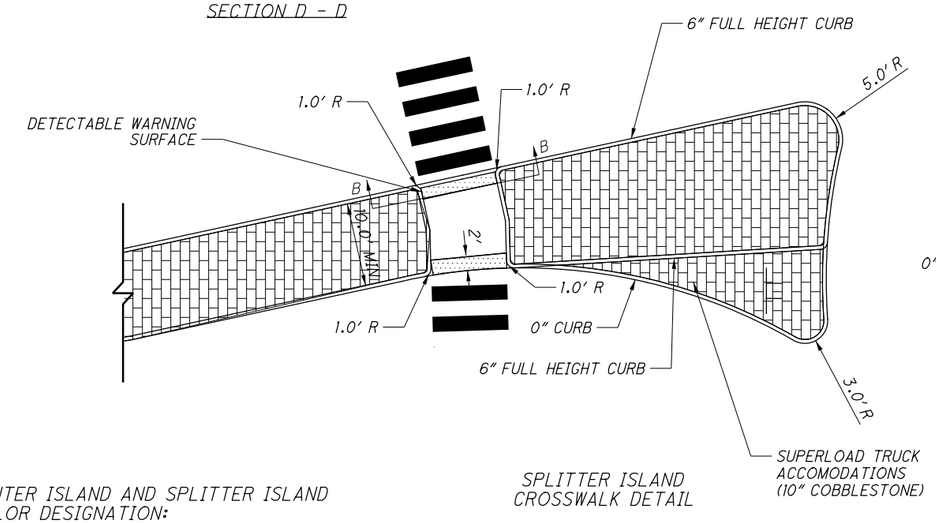

SPLITTER ISLAND
CROSSWALK DETAIL

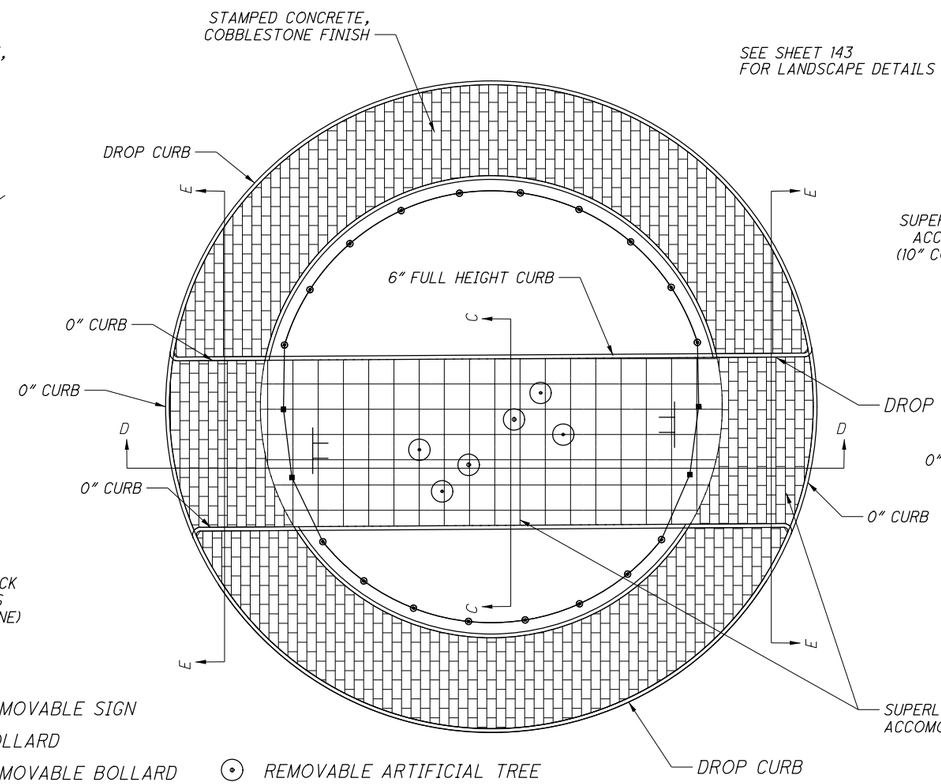

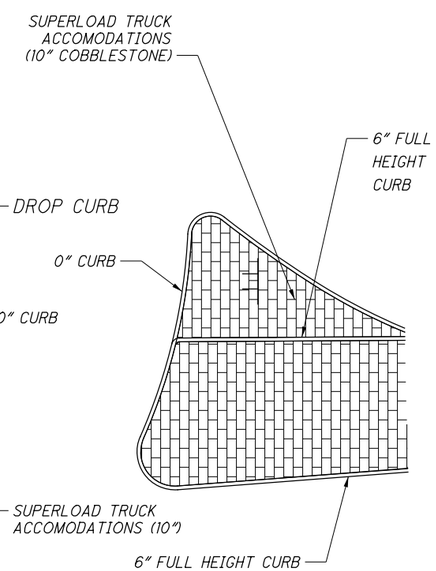

CENTER ISLAND AND SPLITTER ISLAND
COLOR DESIGNATION:

COBBLESTONE FINISH - AUTUMN BEIGE (FEDERAL COLOR ID 33522)
ARTICULATING CONCRETE BLOCK - GREEN (FEDERAL COLOR ID FS 34258)

FOR ADDITIONAL DETAILS SEE NOTES ON SHEET 10.

REMOVABLE SIGN
BOLLARD
REMOVABLE BOLLARD
REMOVABLE ARTIFICIAL TREE

HORIZONTAL SCALE IN FEET
0 5 10 20

CALCULATED SJB
CHECKED JMZ

MISCELLANEOUS DETAILS
CENTRAL ISLAND AND SPLITTER ISLAND

ALL-SHAWNEE RD

M:\Proj\1121\1001\77305\roadway\sheets\77305GM001.dgn 2/13/2014 8:41:51 AM scorcoran

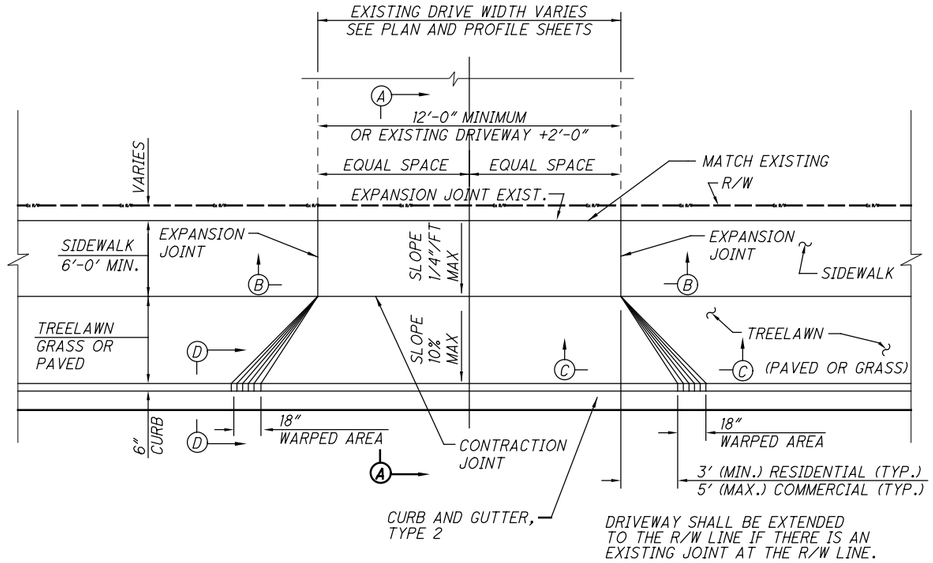

TYPE 2 DRIVEWAY PLAN VIEW (TYPICAL)
WITH DROPPED CURB

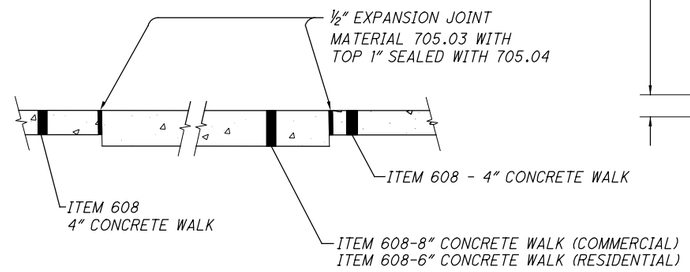

SECTION B - B
NOT TO SCALE

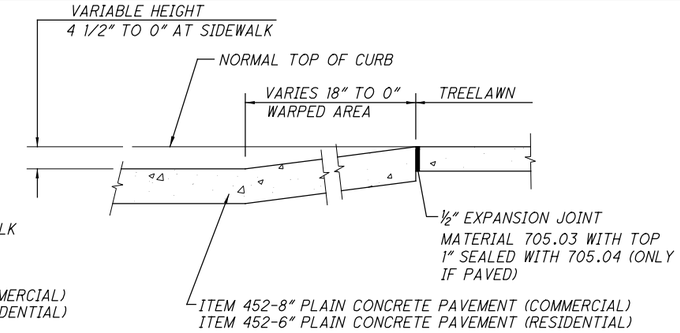

SECTION C - C
NOT TO SCALE

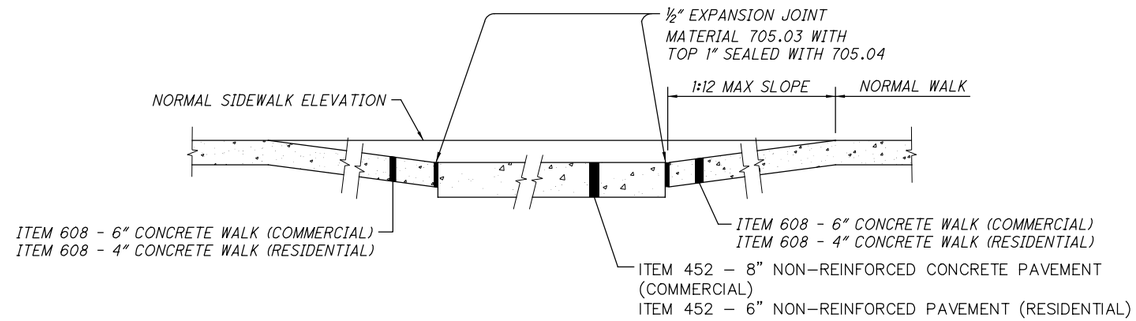

DEPRESSED WALK DRIVE
SECTION B - B
NOT TO SCALE

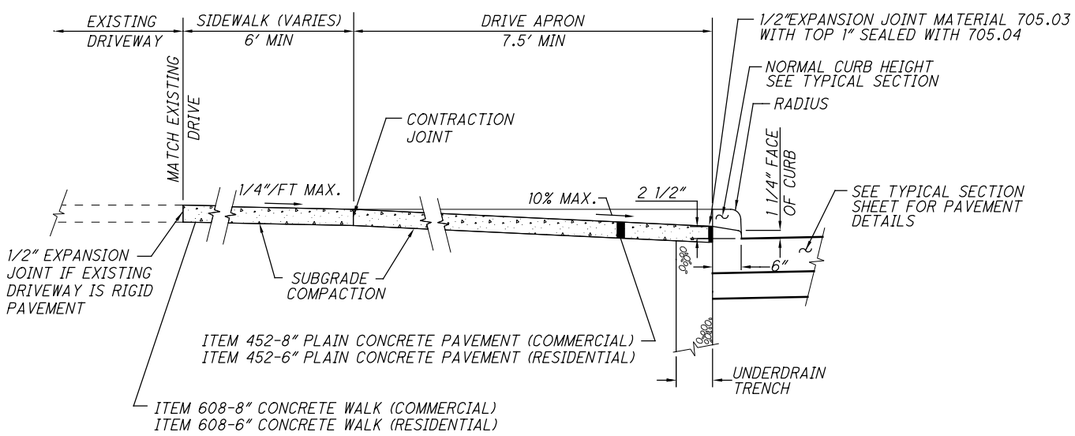

SECTION A - A
NOT TO SCALE

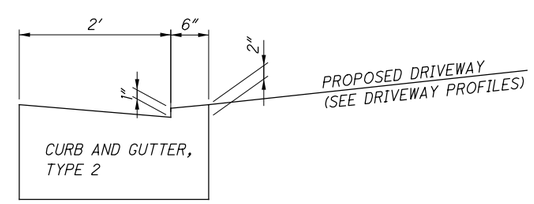

DROP CURB
SECTION D - D
NOT TO SCALE

FOR PLAN SEE SHEETS 53 TO 64
FOR DRIVE PROFILES SEE SHEETS 106 TO 113

COMMERCIAL DRIVES (PORTION BEYOND FLARED APRON OR RADIUS)

CONCRETE:
ITEM 452 - 8" NON-REINFORCED CONCRETE PAVEMENT

ASPHALT:
ITEM 448 - 1 1/4" ASPHALT CONCRETE SURFACE COURSE, TYPE 1, PG64-22 (DRIVEWAYS)
ITEM 301 - 5" ASPHALT CONCRETE BASE, PG64-22 (DRIVEWAYS)

AGGREGATE:
ITEM 304 - 10" AGGREGATE BASE

RESIDENTIAL DRIVES (PORTION BEYOND FLARED APRON OR RADIUS)

CONCRETE:
ITEM 452 - 6" NON-REINFORCED CONCRETE PAVEMENT

ASPHALT:
ITEM 448 - 1 1/4" ASPHALT CONCRETE SURFACE COURSE, TYPE 1, PG64-22 (DRIVEWAYS)
ITEM 301 - 3 1/2" ASPHALT CONCRETE BASE, PG64-22 (DRIVEWAYS)

AGGREGATE:
ITEM 304 - 8" AGGREGATE BASE

NOTE: FOR DETAILS NOT SHOWN, SEE STANDARD CONSTRUCTION DRAWING BP-4.1

CALCULATED RDC
CHECKED DES

DRIVEWAY DETAILS

ALL-SHAWNEE RD

M:\Proj\112\1001\77305\roadway\sheets\77305GD001.dgn 1/13/2014 5:30:45 PM scorcoran

MANUFACTURED SYSTEM MAINTENANCE ACCESS DRIVE DETAIL

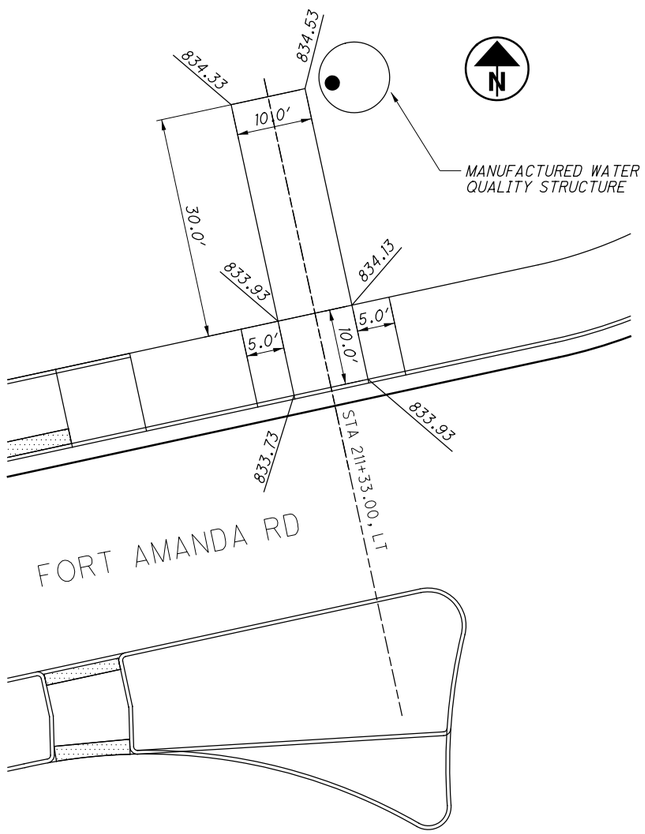

McDONALD'S BYPASS DRIVE DETAIL

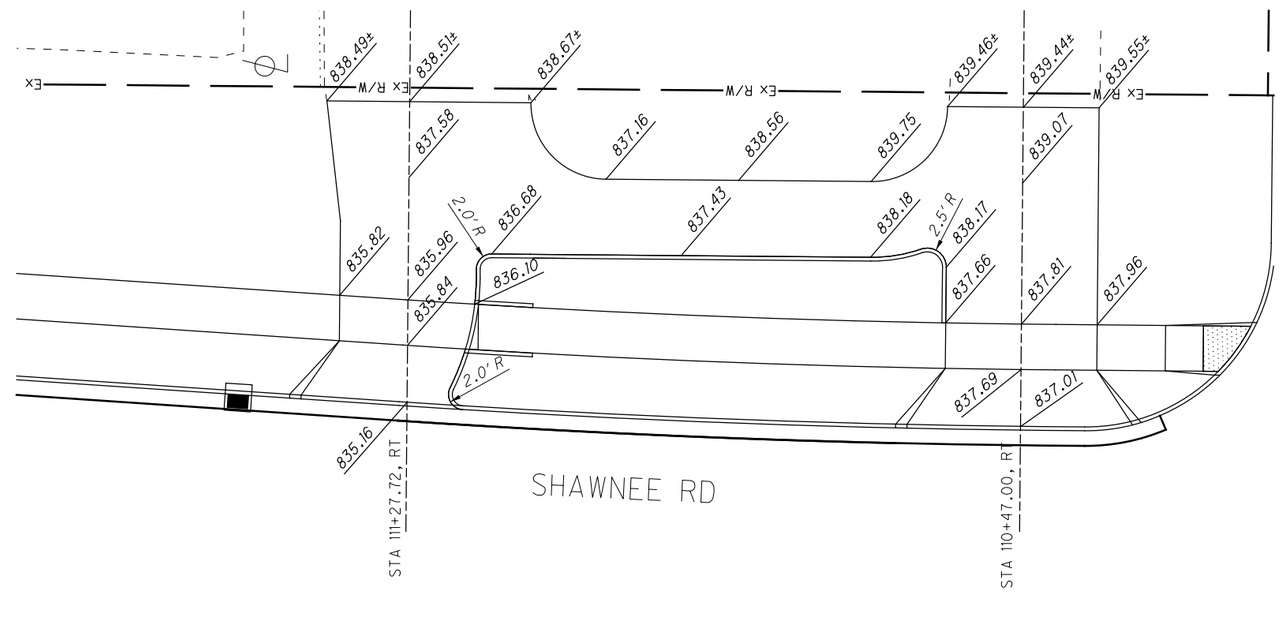

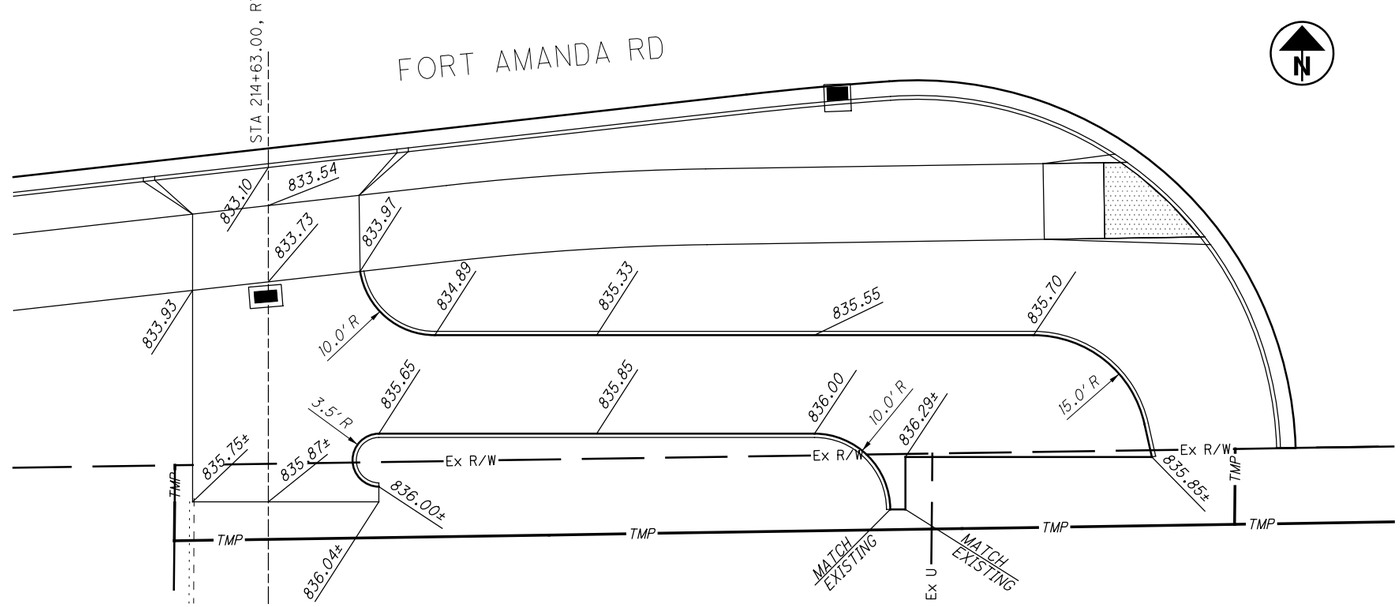

BANK BYPASS DRIVE DETAIL

HORIZONTAL SCALE IN FEET 0 5 10 20

CALCULATED SWC
CHECKED SJB

DRIVE DETAILS - ELEVATIONS

ALL-SHAWNEE RD

M:\Proj\112\1001\77305\roadway\sheets\77305GI008.dgn 1/13/2014 5:30:47 PM scorcoran

SEEDING	
END WIDTH	SQ. YDS.

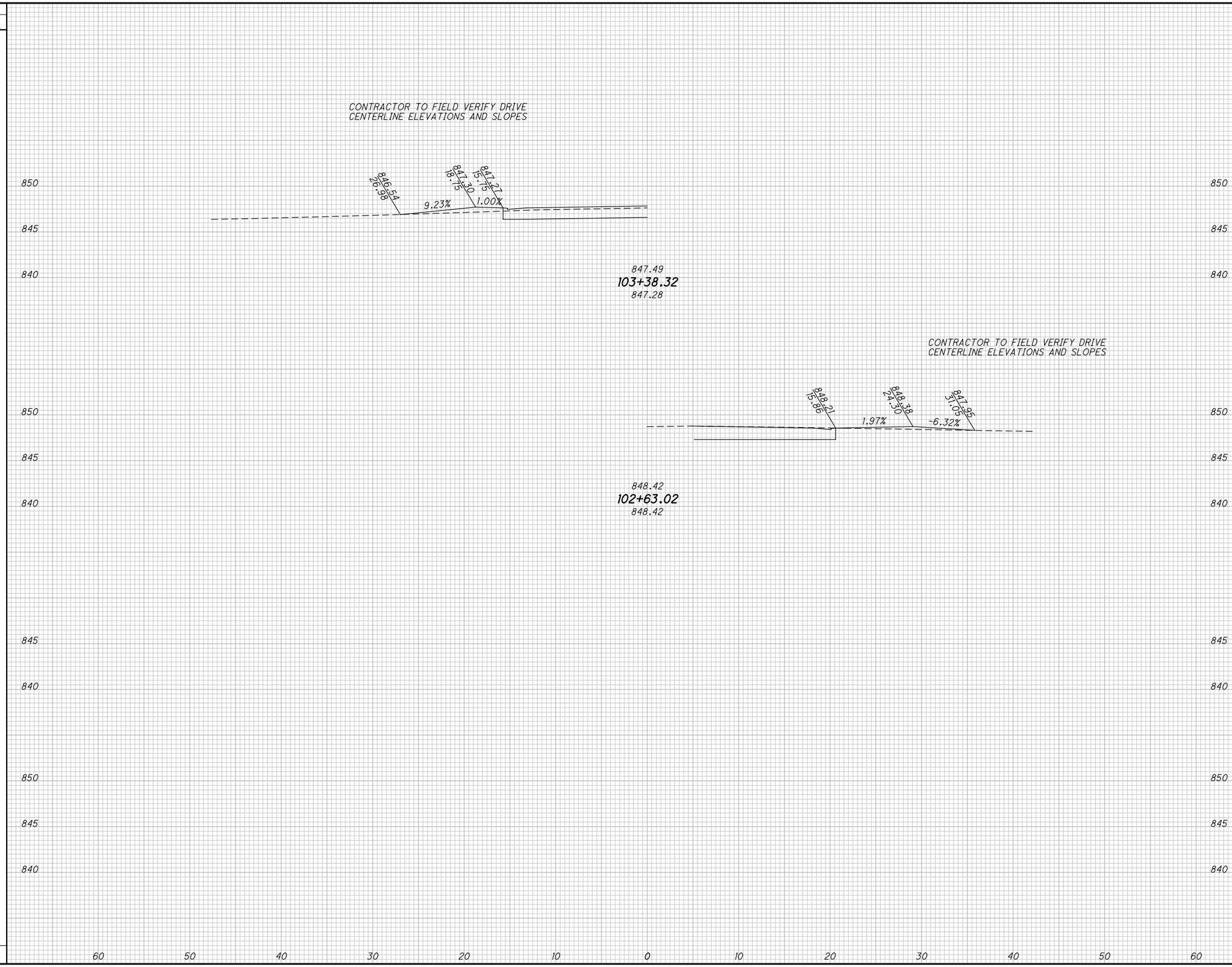

END AREA		VOLUME	
CUT	FILL	CUT	FILL

CALCULATED RDC
CHECKED JMZ

DRIVE PROFILES
STA 102+63.02 TO STA 103+38.32

ALL-SHAWNEE RD

M:\Proj\1121\1001\77305\roadway\sheets\77305GD002.dgn 1/13/2014 5:30:47 PM scorcoran

SEEDING	
END WIDTH	SQ. YDS.

END AREA		VOLUME	
CUT	FILL	CUT	FILL

CALCULATED RDC
CHECKED JMZ

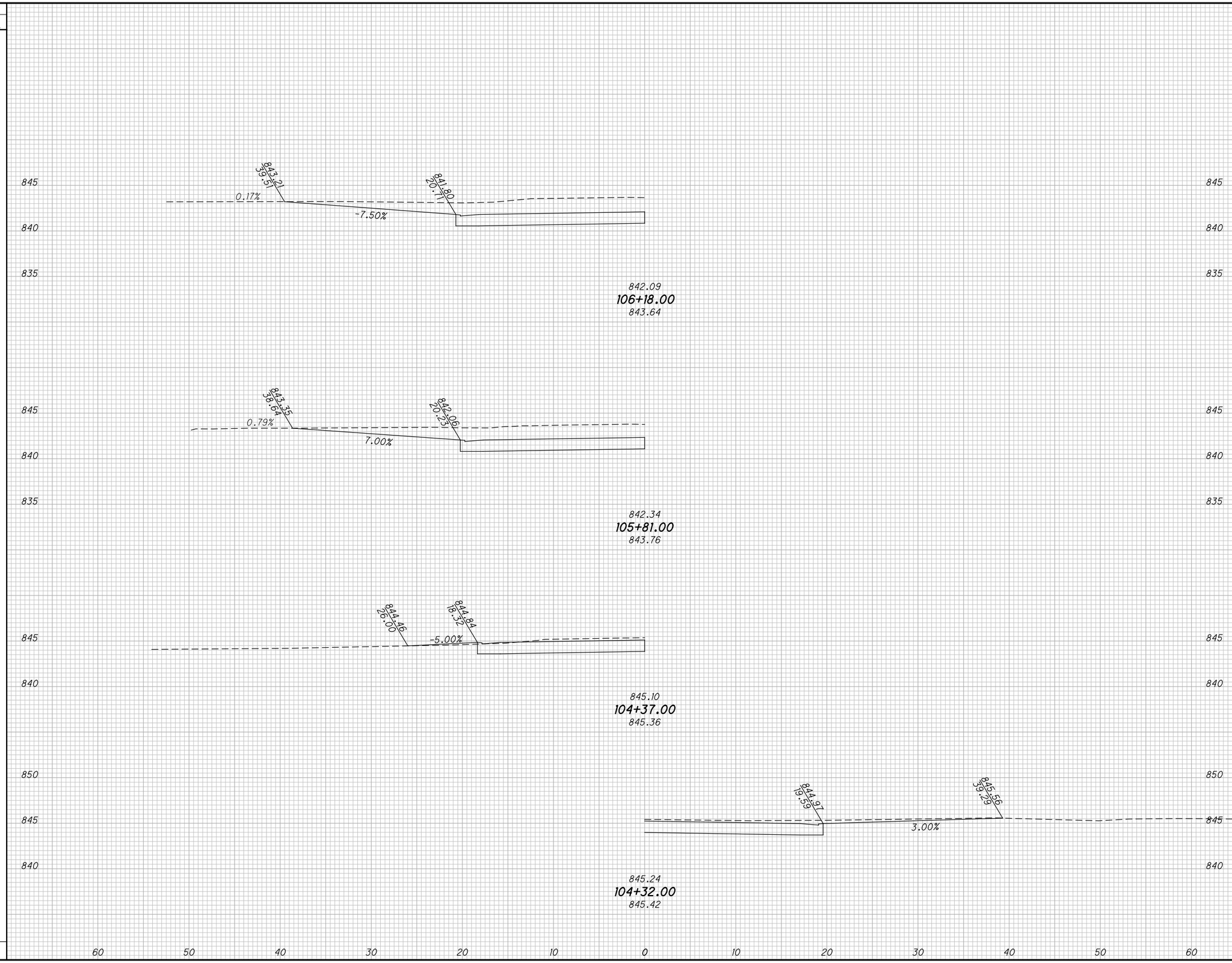

DRIVE PROFILES

STA 104+31.84 TO STA 106+18.37

ALL-SHAWNEE RD

M:\Proj\1121\1001\77305\roadway\sheets\77305GD002.dgn 1/13/2014 5:30:48 PM scorcoran

SEEDING	
END WIDTH	SQ. YDS.

END AREA		VOLUME	
CUT	FILL	CUT	FILL

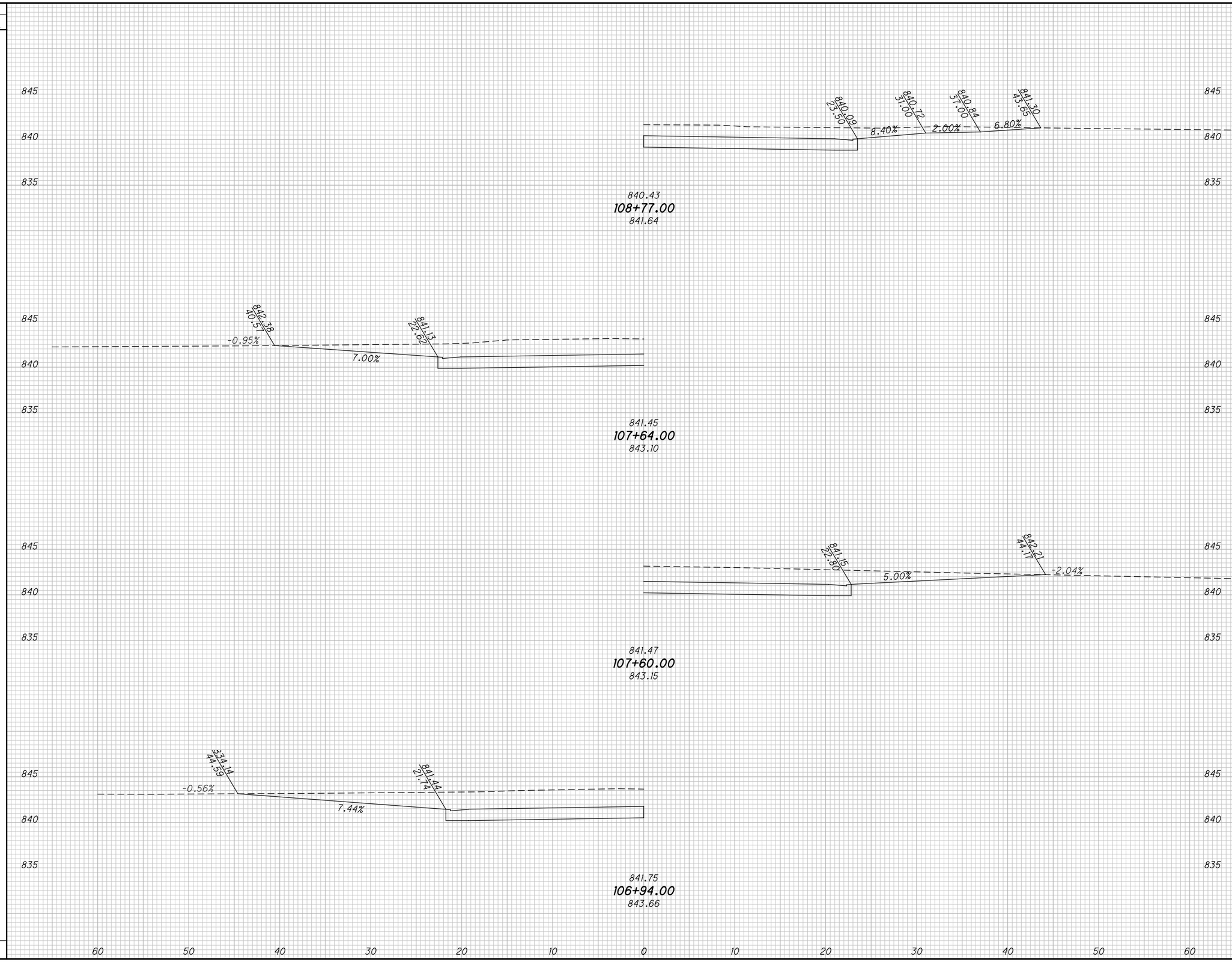

CALCULATED RDC
CHECKED JMZ

DRIVE PROFILES

STA 106+94.05 TO STA 108+76.91

ALL-SHAWNEE RD

M:\Proj\1121\1001\77305\roadway\sheets\77305GD002.dgn 1/13/2014 5:30:48 PM scorcoran

SEEDING	
END WIDTH	SQ. YDS.

END AREA		VOLUME	
CUT	FILL	CUT	FILL

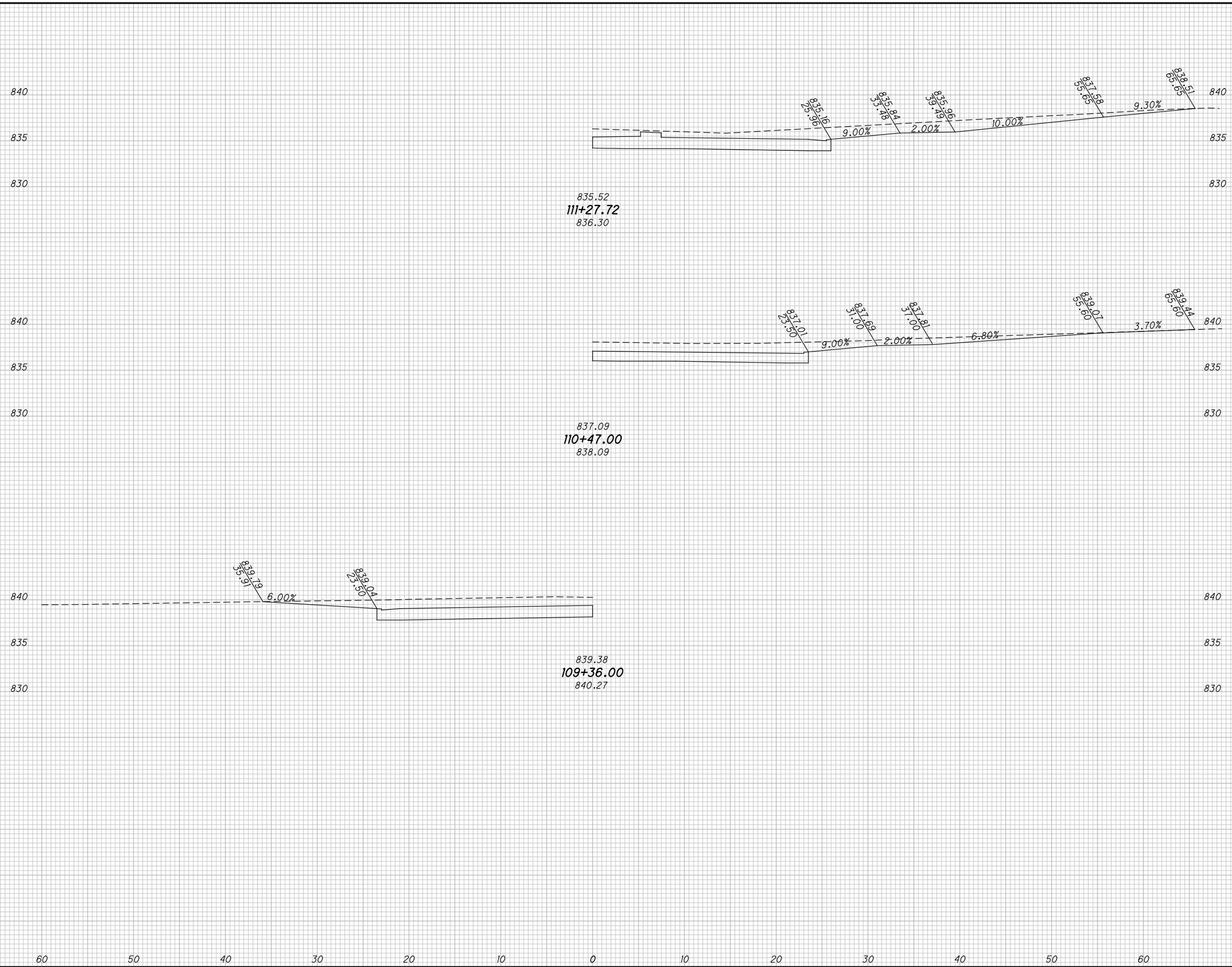

CALCULATED RDC
CHECKED JMZ

DRIVE PROFILES

STA 109+36.03 TO STA 111+24.22

ALL-SHAWNEE RD

M:\Proj\1121\1001\77305\roadway\sheets\77305GD002.dgn 1/13/2014 5:30:48 PM scorcoran

SEEDING	
END WIDTH	SQ. YDS.

END AREA		VOLUME	
CUT	FILL	CUT	FILL

CALCULATED RDC
CHECKED JMZ

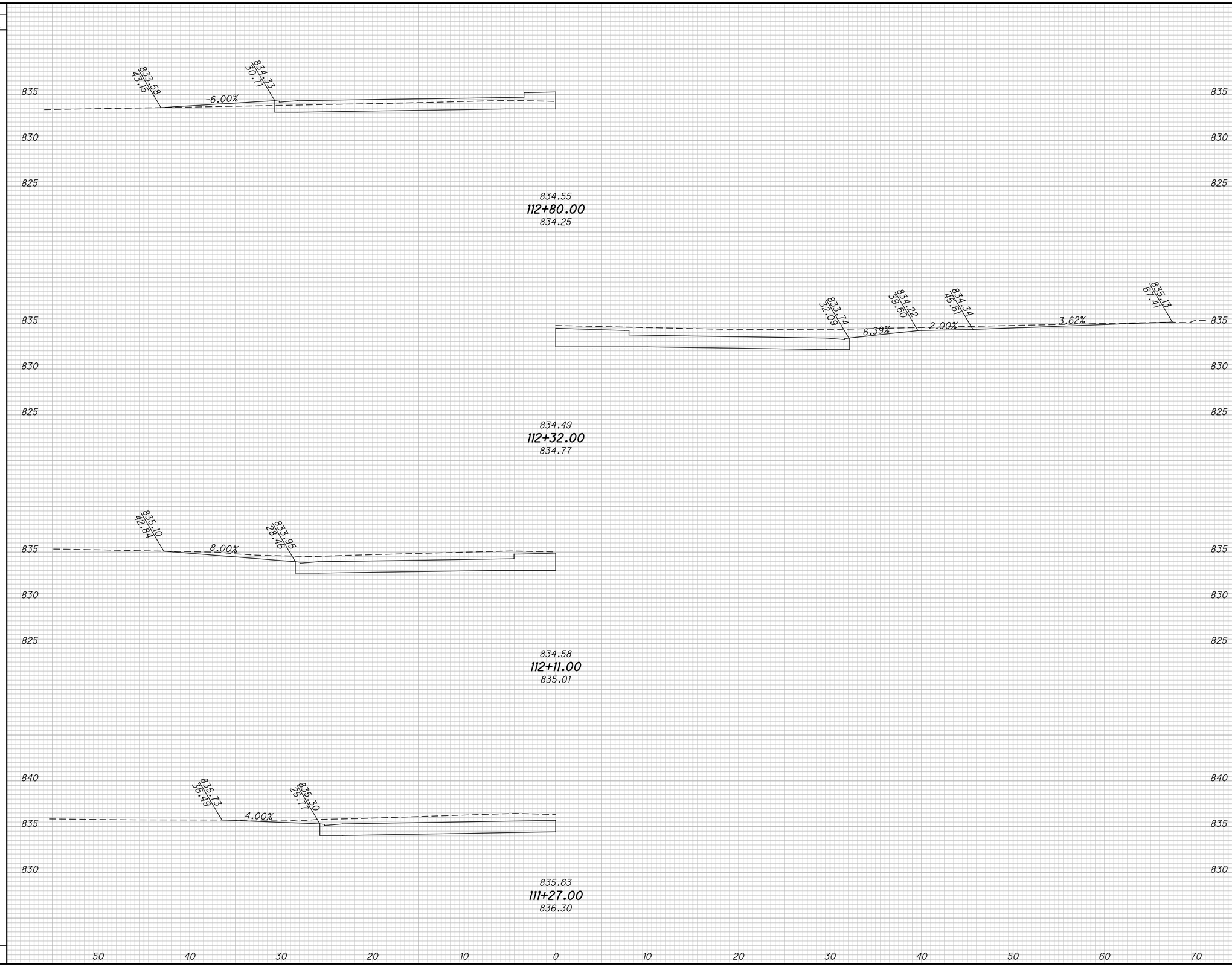

DRIVE PROFILES

STA 111+27.48 TO STA 112+80.43

ALL-SHAWNEE RD

M:\Proj\1121\1001\77305\roadway\sheets\77305GD002.dgn 1/13/2014 5:30:48 PM scorcoran

SEEDING	
END WIDTH	SQ. YDS.

END AREA		VOLUME	
CUT	FILL	CUT	FILL

CALCULATED RDC
CHECKED JMZ

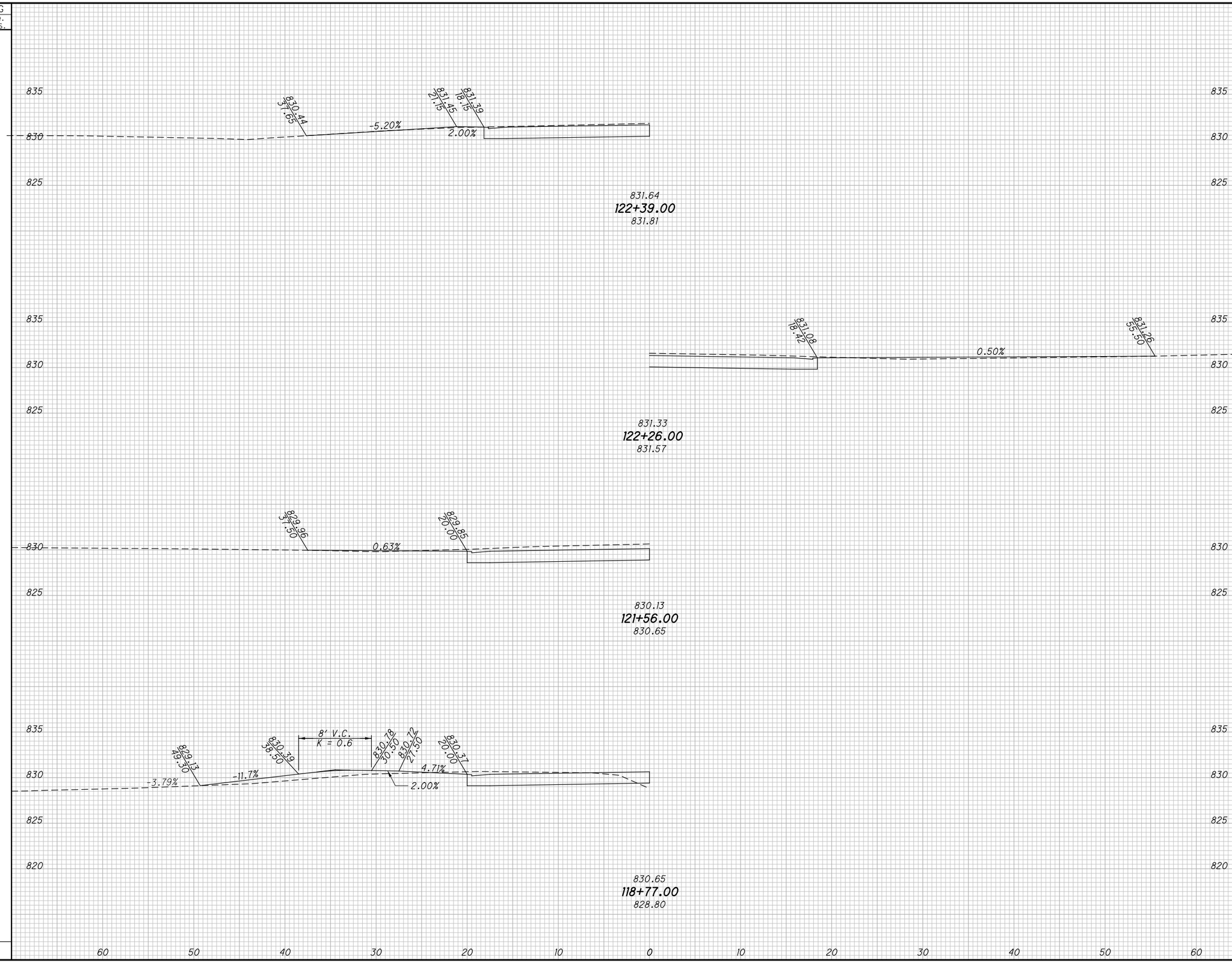

DRIVE PROFILES

STA 118+77.31 TO STA 122+39.03

ALL-SHAWNEE RD

M:\Proj\1121\1001\77305\roadway\sheets\77305GD002.dgn 1/13/2014 5:30:49 PM scorcoran

SEEDING	
END WIDTH	SQ. YDS.

END AREA		VOLUME	
CUT	FILL	CUT	FILL

CALCULATED RDC
CHECKED JMZ

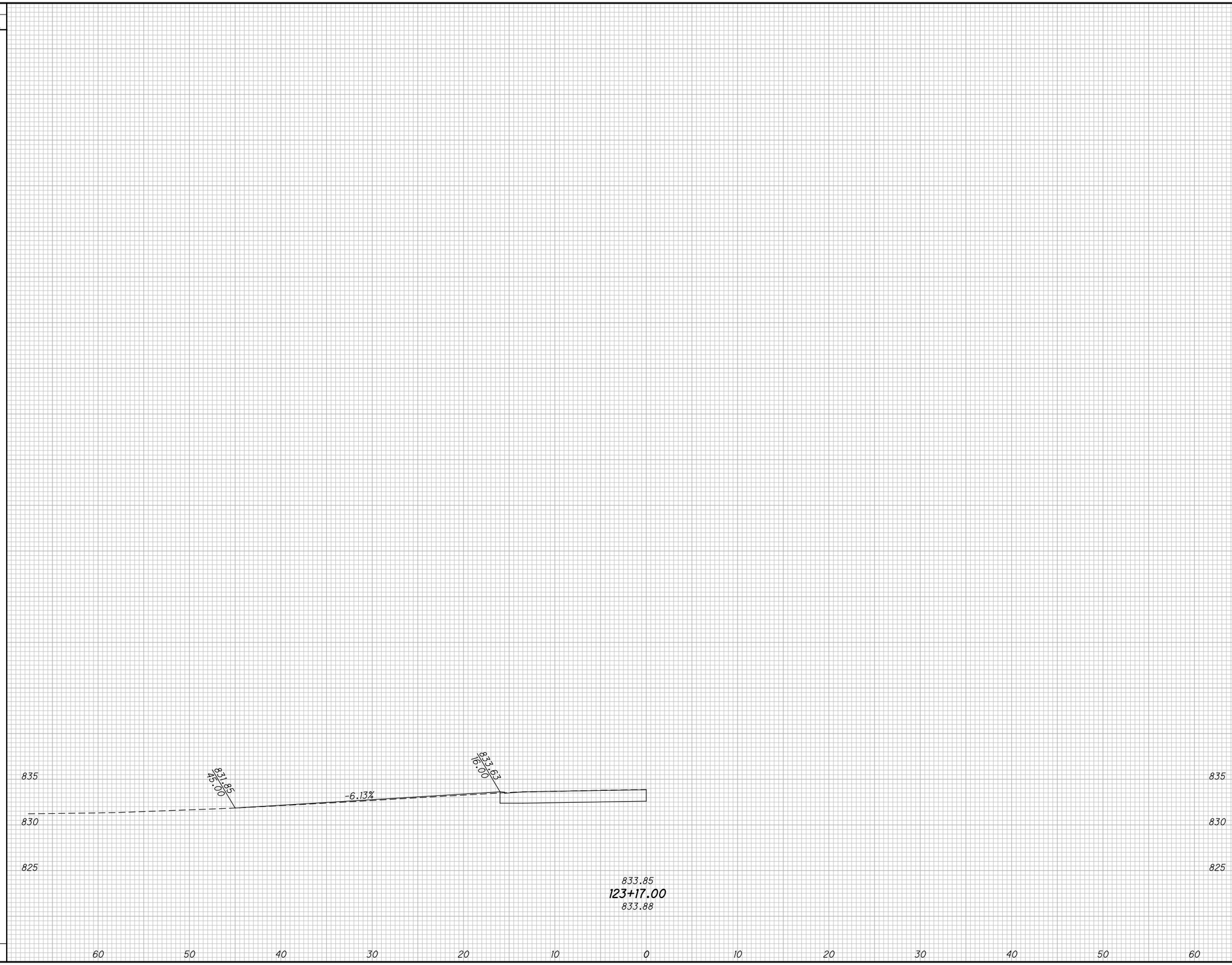

DRIVE PROFILES
STA 123+16.88

ALL-SHAWNEE RD

M:\Proj\112\1001\77305\roadway\sheets\77305GD002.dgn 1/13/2014 5:30:49 PM scorcoran

SEEDING	
END WIDTH	SQ. YDS.

END AREA		VOLUME	
CUT	FILL	CUT	FILL

CALCULATED RDC
CHECKED JMZ

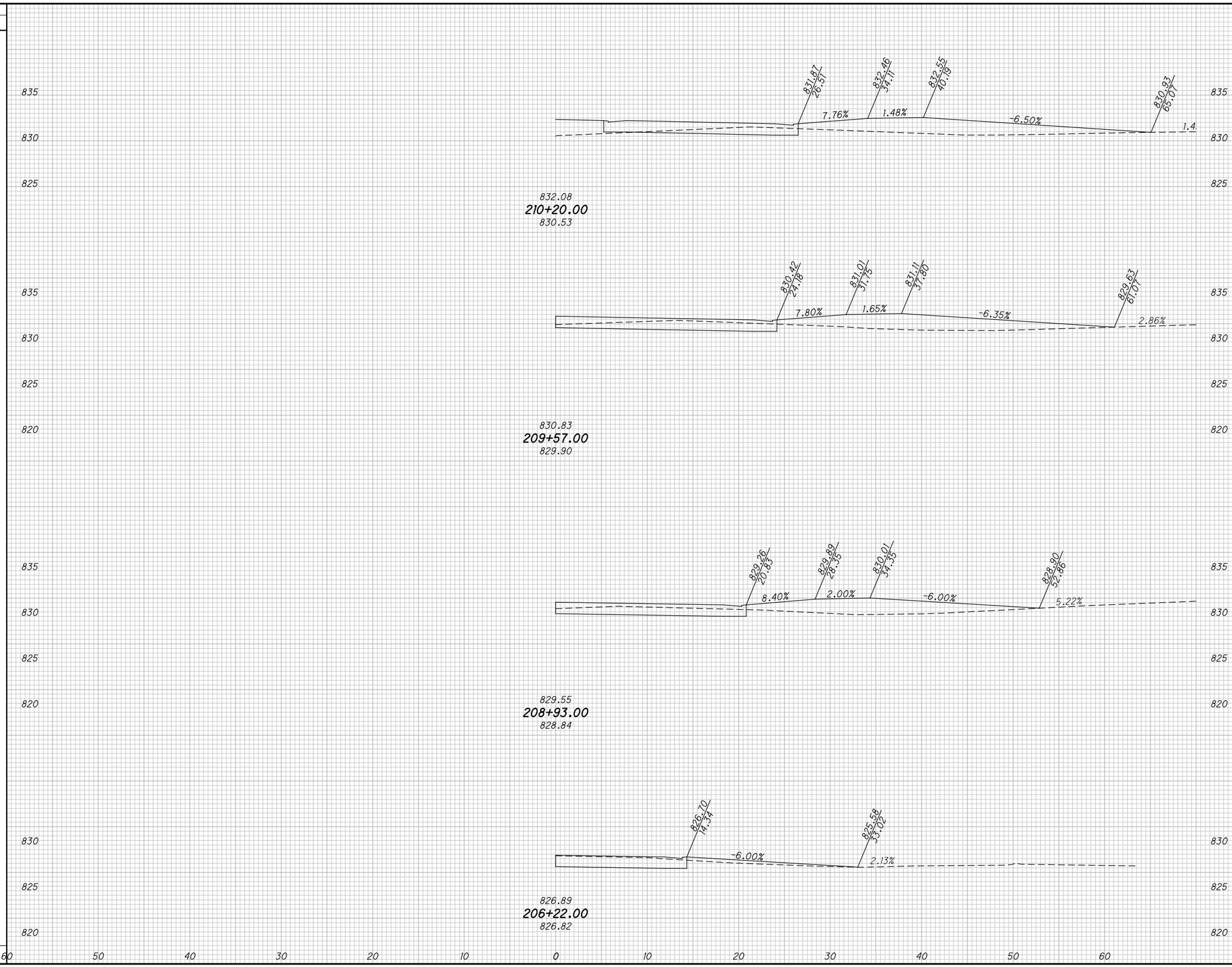

DRIVE PROFILES

STA 206+21.73 TO STA 209+57.18

ALL-SHAWNEE RD

M:\Proj\1121\1001\77305\roadway\sheets\77305GD003.dgn 1/13/2014 5:30:49 PM scorcoran

SEEDING	
END WIDTH	SQ. YDS.

END AREA		VOLUME	
CUT	FILL	CUT	FILL

CALCULATED RDC
CHECKED JMZ

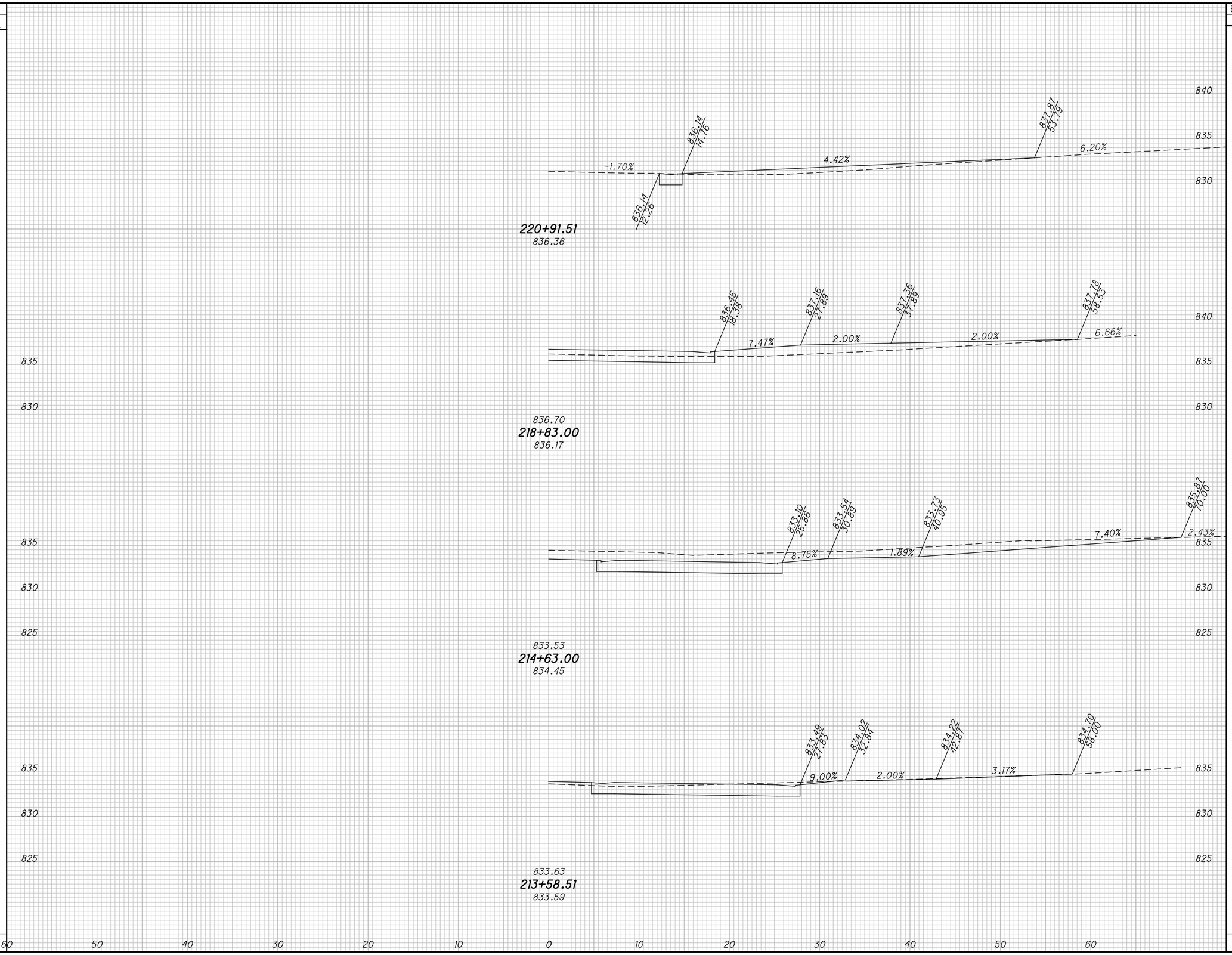

DRIVE PROFILES

STA 210+19.77 TO STA 218+83.10

ALL-SHAWNEE RD

M:\Proj\1121\1001\77305\roadway\sheets\77305GD003.dgn 1/13/2014 5:30:50 PM scorcoran

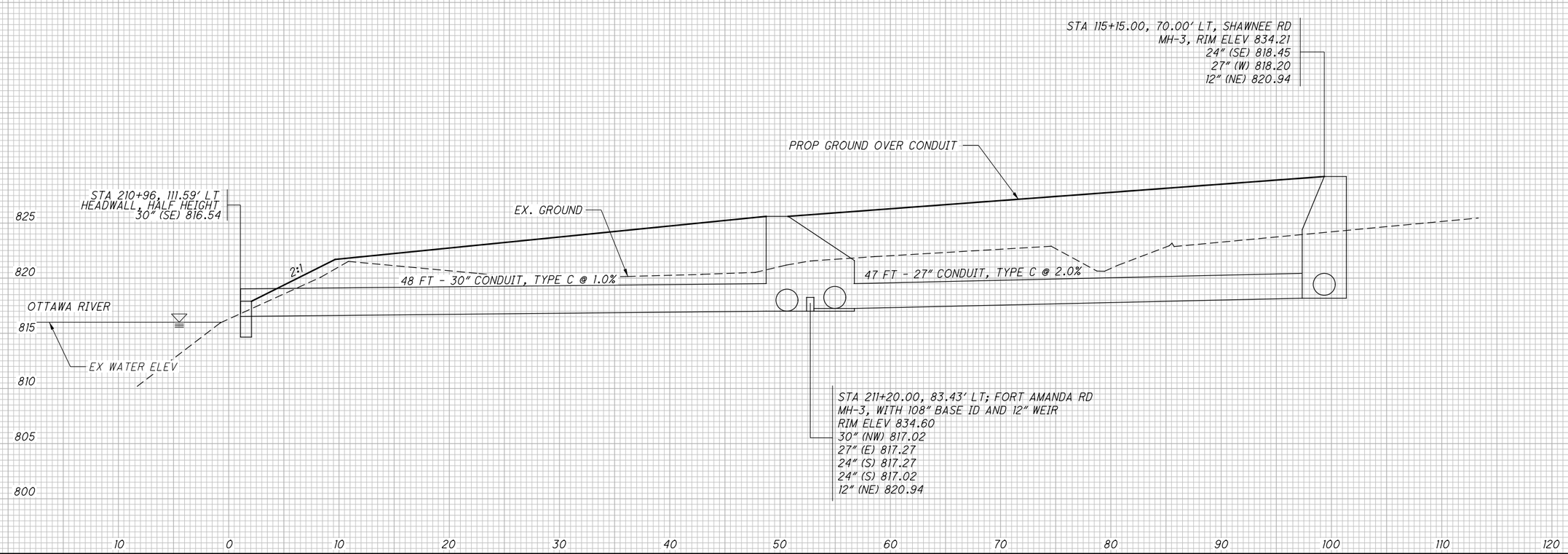

CALCULATED RDC
CHECKED JMZ

STORM SEWER PROFILES

ALL-SHAWNEE RD

M:\Proj\1121\1001\77305\drainage\sheets\77305DF001.dgn 1/13/2014 5:30:50 PM scorcoran

NOTES

1. GRADING LIMITS SHOWN ARE APPROXIMATE. ACTUAL SLOPES SHALL CONFORM TO PLAN CROSS-SECTIONS.
2. WORK POINT STATIONS AND OFFSETS ARE MEASURED TO CENTERLINE OF CONSTRUCTION OF THE SHARED USE PATH, UNLESS OTHERWISE NOTED.
3. FOR CULVERT PROFILES AND DITCH CROSS-SECTIONS, SEE SHEETS 116 AND 117 OF 206
4. CONTRACTOR SHALL ENTER FROM THE SOUTH END TO PERFORM WORK.
5. ANY MATERIAL COLLECTED DURING PIPE CLEAN OUT WILL BE DISPOSED OF IN AN APPROPRIATE UPLAND DISPOSAL SITE. NO MATERIAL WILL BE PERMITTED TO ENTER STREAM.
6. CONTRACTOR SHALL USE SANDBAGS TO DIVERT THE WATER IF NECESSARY WITHIN THE LIMITS OF THE MAXIMUM ALLOWABLE STREAM IMPACT.

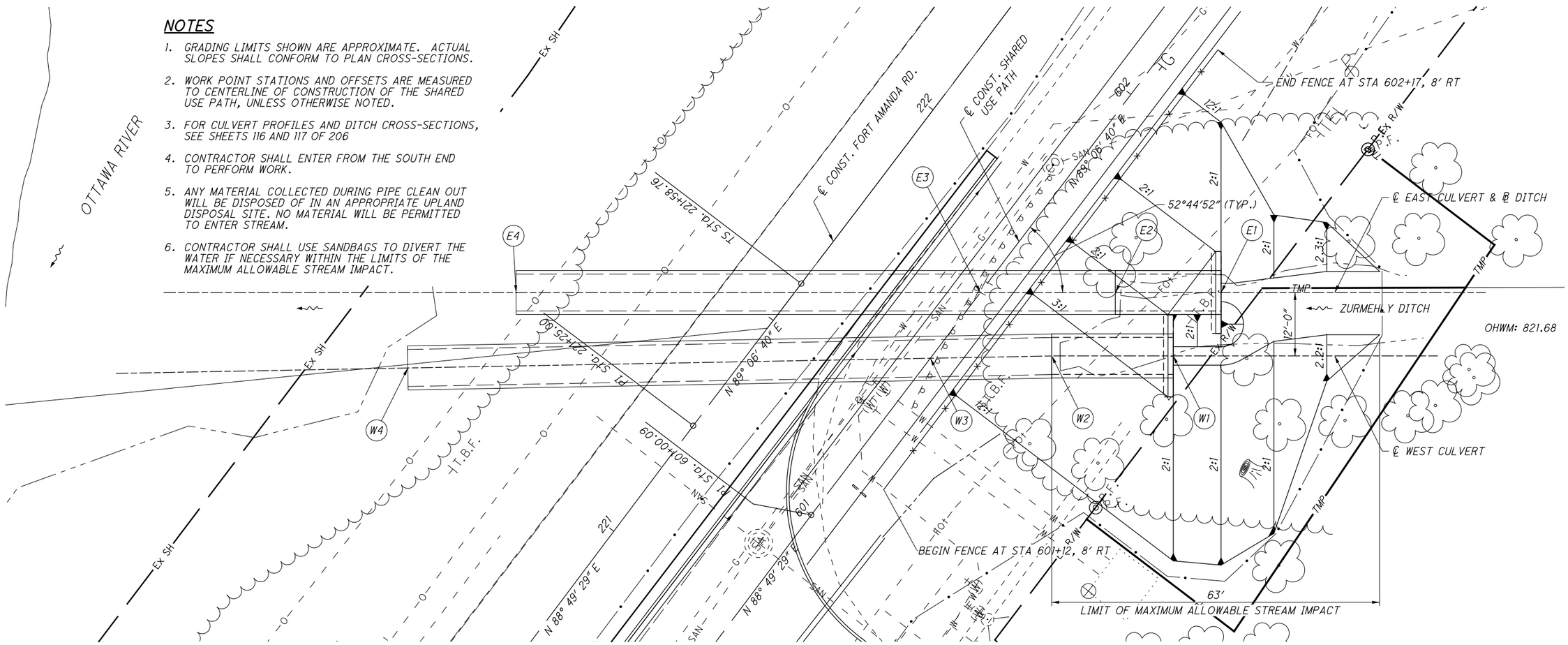

PLAN

CULVERT WORK POINTS

LOCATION	WORK POINT	STATION	OFFSET	DESCRIPTION
EAST CULVERT	E1	601+80.50	36.24' RT	PROP. INLET & PROP. HEADWALL
	E2	601+68.49	20.32' RT	EXIST. INLET & PROP. CONCRETE COLLAR
	E3	601+52.94	0.00'	℄ EXIST. CULVERT = ℄ CONST. SHARED USE PATH
	E4	601+00.07	69.92' LT	EXIST. OUTLET (TO REMAIN, NO WORK)
WEST CULVERT	W1	601+65.48	36.31' RT	PROP. INLET & PROP. HEADWALL
	W2	601+51.55	18.00' RT	EXIST. INLET & PROP. CONCRETE COLLAR
	W3	601+37.31	0.00'	℄ EXIST. CULVERT = ℄ CONST. SHARED USE PATH
	W4	600+76.30	77.71' LT	EXIST. OUTLET (TO REMAIN, NO WORK)

ESTIMATED QUANTITIES

ITEM	EXTENSION	E. CULVERT	W. CULVERT	TOTAL	UNIT	DESCRIPTION
SPECIAL	20271000	114	122	236	FT	PIPE CLEANOUT
602	20000	4.05	4.05	8.10	CU YD	CONCRETE MASONRY
611	28001	20	23	43	FT	84" CONDUIT, TYPE A, 706.02, AS PER PLAN

THE ABOVE QUANTITIES ARE CARRIED TO THE GENERAL SUMMARY

HYDRAULIC DATA

DRAINAGE AREA = 3.46 SQ. MI.
Q_{25} = 388 CFS Q_{100} = 490 CFS

OTTAWA RIVER FLOOD ELEVATIONS AT OUTLET:
HW_{10} = 826.5(±) HW_{50} = 827.5(±)
HW_{25} = 827.0(±) HW_{100} = 828.0(±)

WHEN CULVERT IS NOT INUNDATED BY OTTAWA RIVER:
V_{25} = 9.6 FPS V_{100} = 10.5 FPS
HW_{25} = 825.05 HW_{100} = 825.83

WHEN CULVERT IS INUNDATED BY OTTAWA RIVER:
V_{25} = 5.0 FPS V_{100} = 6.4 FPS
HW_{25} = 828.58 HW_{100} = 828.93

EXISTING STRUCTURE

TYPE: TWIN CONCRETE CULVERTS
SIZE: 2 x 84" DIA. RCP
ALIGNMENT: TANGENT
DATE BUILT: 1954
CONDITION: FAIR
STRUCTURE FILE NUMBER: 0249629

PROPOSED WORK

EXTEND EAST CULVERT 20'-0", EXTEND WEST CULVERT 23'-0", AND CONSTRUCT HALF-HEIGHT HEADWALLS PER HW-2.2. MINOR REGRADING OF EXISTING DITCH.

HORIZONTAL SCALE IN FEET 0 5 10 20

CALCULATED PAT
CHECKED RDC

CULVERT DETAIL
FORT AMANDA RD. - STA. 221+49

ALL-SHAWNEE RD.

M:\Proj\1121\1001\77305\drainage\sheets\77305DC001.dgn 2/10/2014 8:38:37 AM scorcoran

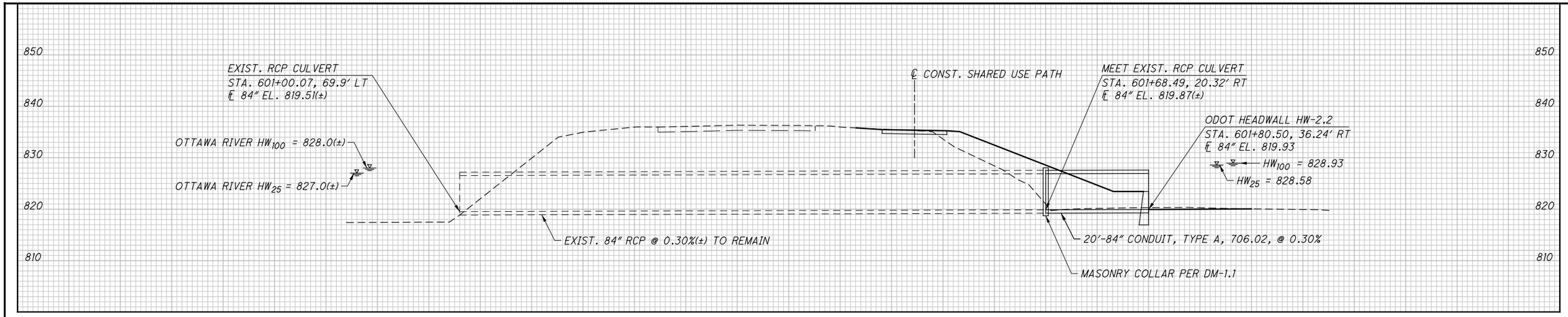

PROFILE ALONG ℄ EAST CULVERT

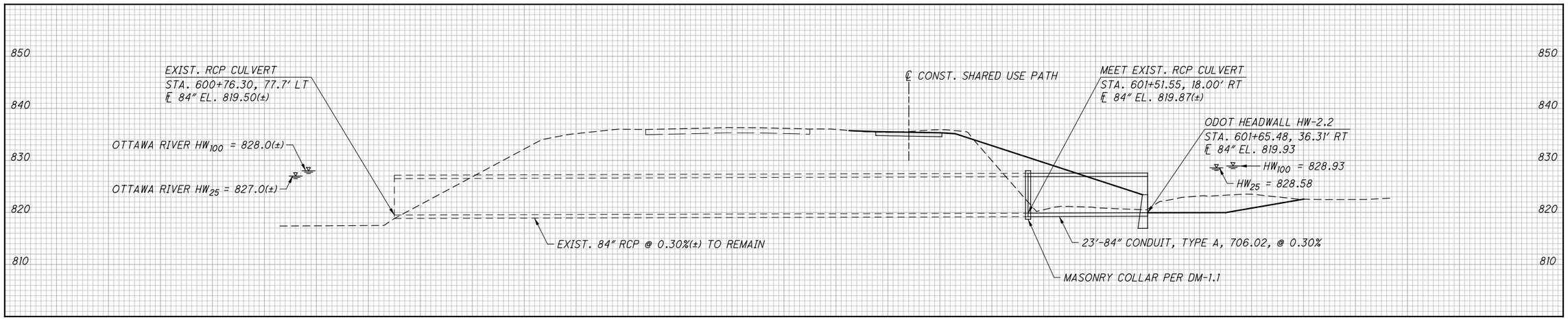

PROFILE ALONG ℄ WEST CULVERT

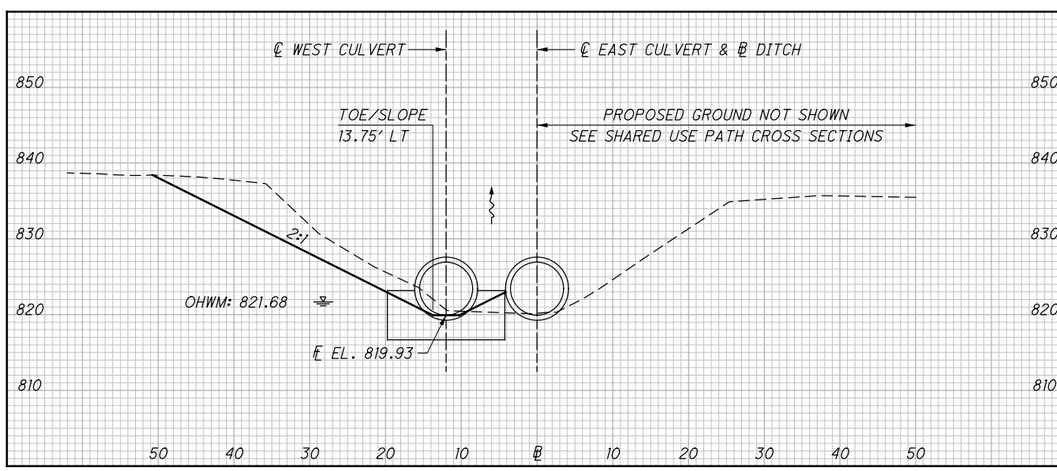

DITCH SECTION AT WEST CULVERT HEADWALL

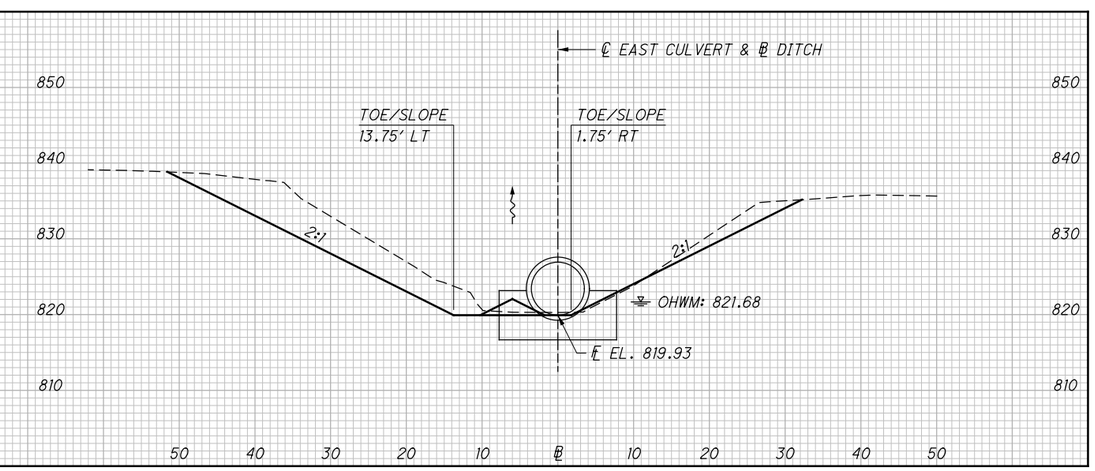

DITCH SECTION AT EAST CULVERT HEADWALL

CALCULATED PAT
CHECKED RDC

CULVERT PROFILES & DITCH CROSS SECTIONS

ALL-SHAWNEE RD.

M:\Proj\1121\1001\77305\drainage\sheets\77305DC002.dgn 1/13/2014 5:30:52 PM scorcoran

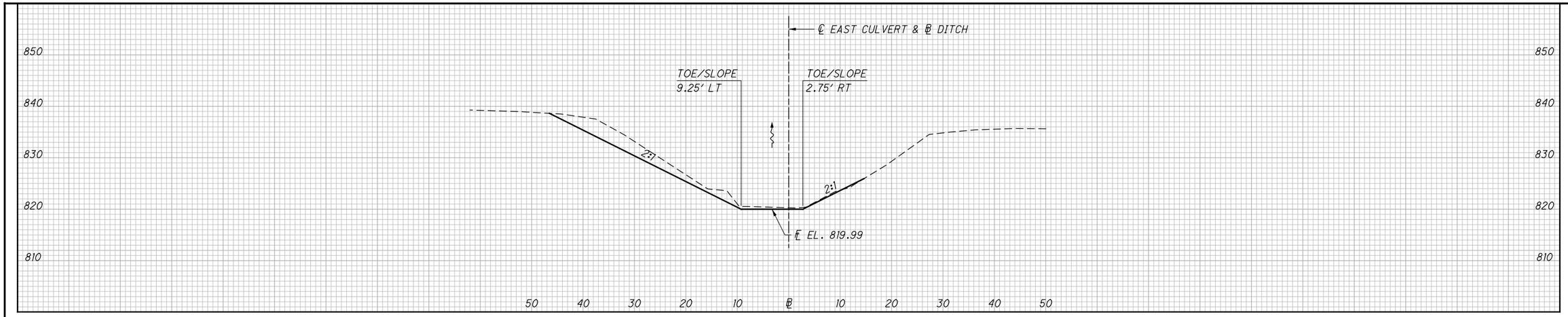

DITCH SECTION AT 10.00' UPSTREAM OF EAST CULVERT HEADWALL

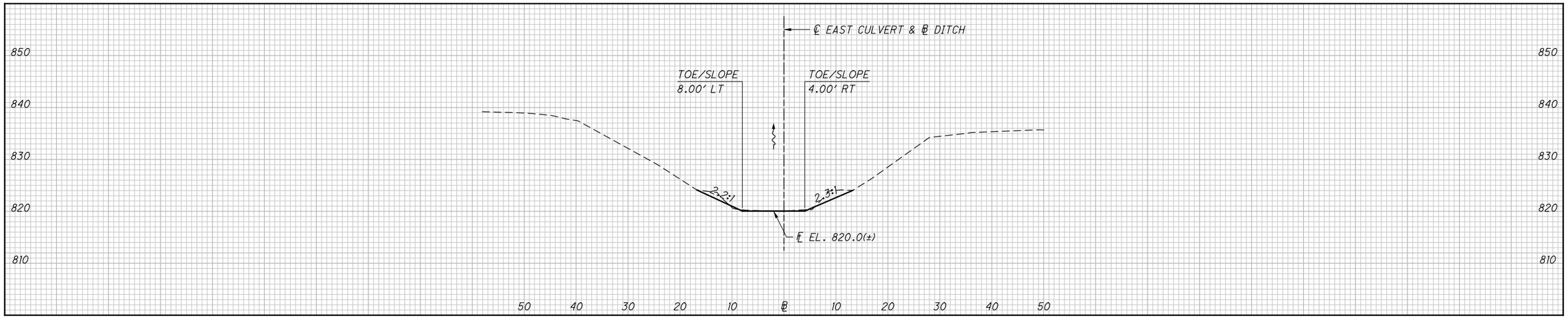

DITCH SECTION AT 20.00' UPSTREAM OF EAST CULVERT HEADWALL

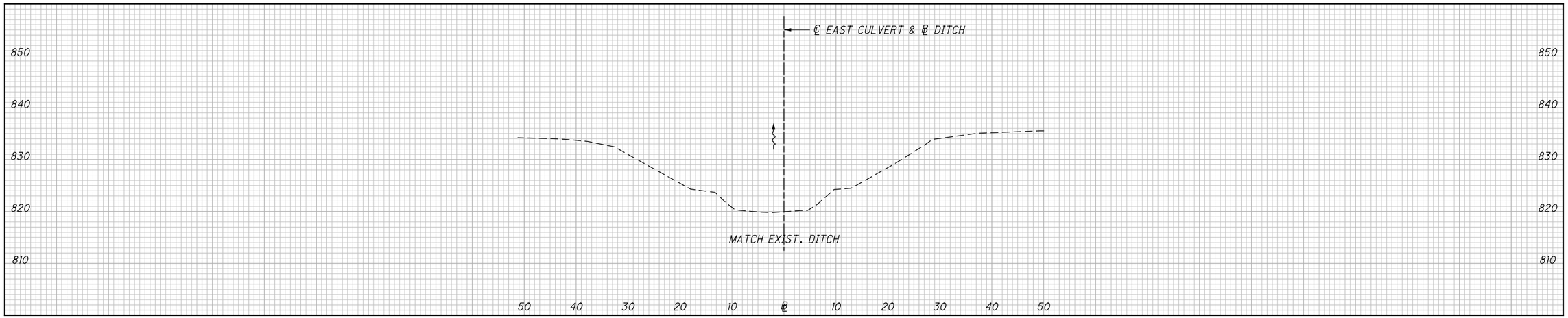

DITCH SECTION AT 30.00' UPSTREAM OF EAST CULVERT HEADWALL

CALCULATED PAT
CHECKED RDC

DITCH CROSS SECTIONS

ALL-SHAWNEE RD.

M:\Proj\1121\1001\77305\drainage\sheets\77305DC003.dgn 1/13/2014 5:30:53 PM scorcoran

SHEET NO.	REFERENCE NO.	LOCATION	STATION FROM	STATION TO	SIDE		621 RPM, 1-WAY, YELLOW, AS PER PLAN	646 EDGE LINE, 4", WHITE	646 EDGE LINE, 4", YELLOW	646 LANE LINE, 4", SOLID	646 CENTERLINE	646 CENTERLINE, BROKEN	646 CENTERLINE, 2-WAY LEFT TURN	646 CHANNELIZING LINE	646 STOP LINE	646 CROSSWALK LINE	646 TRANSVERSE / DIAGONAL LINE, WHITE	646 TRANSVERSE / DIAGONAL LINE, YELLOW	646 ISLAND MARKINGS	646 LANE ARROW	646 YIELD LINE	
							EACH	MI	MI	MI	MI	MI	MI	FT	FT	FT	FT	FT	SF	EACH	FT	
123	CL-1	SHAWNEE RD	102+40	104+37	CL						0.08											
	TLY-1		102+40	104+37	CL													100				
	LA-1		104+70		CL															2		
	LA-2		106+90		CL															2		
	CL-2		104+37	109+64	RT								0.1									
	CL-3		104+37	109+64	LT								0.1									
	LA-3		109+10		CL															2		
	IM-1		109+59	109+68	CL														127			
	LA-4		110+60		RT															1		
	XW-1		109+76	110+21	RT											78						
	SL-1		109+98	110+14	RT										16							
	CH-1		110+32	111+47	LT									115								
	ELY-1		110+65	112+00	RT				0.03													
	ELY-2		110+65	112+00	LT				0.03													
	LA-5		110+70		LT															1		
	LA-6		111+35		LT															1		
124	ELY-1	SHAWNEE RD	112+00	113+68	RT				0.04													
	ELY-2		112+00	113+68	LT				0.04													
	LA-7		112+80		RT															1		
	LA-8		112+80		RT															1		
	LL-1		112+78	113+76	RT					0.02												
	LL-2		113+10	114+41	LT					0.03												
	XW-2		113+21	113+32	RT											70						
	XW-3		113+21	113+30	LT											70						
	YL-1		113+59	113+92	LT																38	
	ELY-3		113+85	114+75	CL				0.06													
	LL-3		114+04	115+81	RT					0.04												
	ELW-1		114+12	114+59	RT			0.01														
	LA-9		114+20		RT															1		
	LA-10		114+20		RT															1		
	ELW-2		113+93	114+37	LT			0.01														
	LA-11		114+30		LT															1		
	LA-12		114+30		LT															1		
	YL-2		114+57	115+01	RT																47	
	LL-4		114+95	115+78	LT					0.02												
	ELY-4		115+00	115+63	RT				0.02													
	ELY-5		115+00	115+63	LT				0.02													
	CL-4		115+63	117+00	CL						0.06											
	TLY-2		115+63	117+00	CL													114				
	ELW-3		115+64	117+00	LT			0.03														
	TLW-1		115+64	117+00	LT												82					
	LA-13		115+70		LT															1		
	LA-14		115+70		LT															1		
	ELW-4		115+89	117+00	RT			0.03														
	TLW-2		115+89	117+00	RT												9					
	RPM-1		113+33	113+68	RT		3															
	RPM-2		115+03	115+63	LT		3															
	TOTALS CARRIED TO SHEET 119						**6**	**0.08**	**0.24**	**0.11**	**0.14**	**0.00**	**0.20**	**115**	**16**	**218**	**91**	**214**	**127**	**17**	**85**	

CALCULATED SWC
CHECKED CRP

PAVEMENT MARKING SUBSUMMARY

ALL-SHAWNEE RD

M:\Proj\1121\1001\77305\traffic\sheets\77305TS001.dgn 1/13/2014 5:30:53 PM scorcoran

SHEET NO.	REFERENCE NO.	LOCATION	STATION FROM	STATION TO	SIDE		621 RPM, 1-WAY, YELLOW, AS PER PLAN	646 EDGE LINE, 4", WHITE	646 EDGE LINE, 4", YELLOW	646 LANE LINE, 4", SOLID	646 CENTERLINE	646 CENTERLINE, BROKEN	646 CENTERLINE, 2-WAY LEFT TURN	646 CHANNELIZING LINE, 8"	646 STOP LINE	646 CROSSWALK LINE	646 TRANSVERSE / DIAGONAL LINE, WHITE	646 TRANSVERSE / DIAGONAL LINE, YELLOW	646 ISLAND MARKINGS	646 LANE ARROW	646 YIELD LINE	
							EACH	MI	MI	MI	MI	MI	MI	FT	FT	FT	FT	FT	SF	EACH	FT	
124	ELY-10	FORT AMANDA RD	210+00	211+45	LT				0.03													
	ELY-11		210+00	211+45	RT				0.03													
	LL-10		210+60	212+37	LT					0.04												
	XW-10		210+90		RT										18	50						
	XW-11		210+90		LT										26	70						
	YL-10		211+71	212+14	LT																46	
	ELW-10		211+80	212+27	RT			0.01														
	ELW-11		212+13	212+40	LT			0.01														
	LA-20		212+25		LT															1		
	LA-21		212+25		LT															1		
	YL-11		212+27	212+83	RT																60	
	LL-11		212+78	213+58	LT					0.02												
	ELY-12		212+83	214+00	RT				0.03													
	ELY-13		212+84	214+00	LT				0.03													
	LA-22		213+50		LT															1		
	LA-23		213+50		LT															1		
	RPM-10		210+96	211+44	RT		3															
	RPM-11		212+84	213+58	LT		3															
125	ELW-3	SHAWNEE RD	117+00	119+03	LT			0.04														
	TLW-1		117+00	119+03	LT												119					
	CL-4		117+00	118+27	CL						0.05											
	TLY-2		117+00	118+27	CL													92				
	ELW-4		117+00	120+57	RT			0.07														
	TLW-2		117+00	120+57	RT												191					
	CL-5		118+27	120+57	LT						0.05											
	CH-2		118+47	120+57	RT									211								
	LA-15		118+85		CL															1		
	LA-16		119+75		CL															1		
	LA-17		120+50		CL															1		
	XW-4		120+77	121+20	LT											75						
	SL-2		120+84	120+98	LT										14							
	CL-6		121+32	123+52	CL						0.09											
	TLY-3		121+32	123+52	CL													59				
126	CL-10	FORT AMANDA RD	206+00	209+68	CL						0.14											
	TLY-10		206+00	209+68	CL													57				
	ELY-10		209+68	210+00	LT				0.01													
	ELY-11		209+68	210+00	RT				0.01													
127	ELY-12	FORT AMANDA RD	214+00	215+55	RT				0.03													
	ELY-13		214+00	215+55	LT				0.03													
	XW-12		215+80	216+52	RT											126						
	SL-10		216+11	216+40	RT										30							
	CL-11		216+32	220+25	CL						0.15											
	TLY-11		217+33	220+25	CL													86				
	CH-10		216+32	217+13	LT									82								
	LA-24		216+40		CL															1		
	LA-25		217+05		CL															1		
	CL-12	BLUE JACKET CT	34+48	34+72	CL						0.01											
	LL-12		34+48	34+72	RT					0.01												
	LA-26		34+65		RT															1		
	LA-27		34+65		RT															1		
	CL-13	SHARED USE PATH	569+41	603+08	CL							0.64										
TOTALS FROM THIS SHEET							**6**	**0.13**	**0.20**	**0.07**	**0.49**	**0.64**	**0.00**	**293**	**88**	**321**	**310**	**295**	**0**	**11**	**106**	
TOTALS CARRIED FROM SHEET 118							**6**	**0.08**	**0.24**	**0.11**	**0.14**	**0.00**	**0.20**	**115**	**16**	**218**	**91**	**214**	**127**	**17**	**85**	
TOTALS CARRIED TO GENERAL SUMMARY							**12**	**0.65**		**0.18**	**1.47**			**408**	**104**	**539**	**910**		**127**	**28**	**191**	

CALCULATED SWC
CHECKED CRP

PAVEMENT MARKING SUBSUMMARY

ALL-SHAWNEE RD

M:\Proj\1121\1001\77305\traffic\sheets\77305TS002.dgn 1/13/2014 5:30:54 PM scorcoran

SHEET NO.	REFERENCE NO.	Description	STATION	SIDE	CODE	SIZE (INCHES)		630 GROUND MOUNTED SUPPORT, NO. 2 POST FT	630 GROUND MOUNTED SUPPORT, NO. 2 POST, AS PER PLAN FT	630 GROUND MOUNTED SUPPORT, NO. 3 POST FT	630 GROUND MOUNTED SUPPORT, NO. 3 POST, AS PER PLAN FT	630 GROUND MOUNTED SUPPORT, NO. 4 POST FT	630 ONE-WAY SUPPORT, NO. 2 POST FT	630 STREET NAME SIGN SUPPORT, NO. 2 POST FT	630 SIGN, FLAT SHEET SQ FT	630 SIGN, DOUBLE FACED, STREET NAME EACH	630 SIGN POST REFLECTOR EACH		
123		RAB WARNING	106+80.00	RT	W2-6	36 x 36						12			9.00		1		
		SPEED ADVISORY PLATE		RT	W13-1	18 x 18									2.25				
		SPEED LIMIT SIGN (45mph)	109+05.00	LT	R2-1	24 x 30		12							5.00				
		YIELD AHEAD SIGN	109+55.00	RT	W3-2	36 x 36				12					9.00		1		
		KEEP RIGHT	110+75.00	CL	R4-7	24 x 30		12							5.00		1		
		LANE USE CONTROL SIGN (L-T)	110+45.00	LT	R3-8ba	36 x 30				12					7.50				
		ONE WAY	111+30.00	CL	R6-1R	36 x 12							12		3.00		1		
		ONE WAY		CL	R6-1R	36 x 12									3.00		1		
		LANE USE CONTROL SIGN (L-T)	111+47.00	LT	R3-8ba	36 x 30				12					7.50				
		LANE USE CONTROL SIGN (RAB)	111+74.00	RT	R3-7 MOD	48 x 48				24					16.00				
124		ONE WAY	112+15.00	CL	R6-1R	36 x 12		12							3.00		1		
		ONE WAY	112+45.00	CL	R6-1R	36 x 12		12							3.00		1		
		ONE WAY	112+85.00	CL	R6-1R	36 x 12		12							3.00		1		
		LANE ENDS	113+05.00	LT	W4-2R	36 x 36						12			9.00		1		
		SPEED ADVISORY PLATE		LT	W13-1	18 x 18									2.25				
		PEDESTRIAN WARNING SIGN	113+10.00	RT	W11-2	36 x 36						12			9.00		1		
		SUPPLEMENTAL DIRECTIONAL ARROW			W16-7PRL	24 x 12									2.00				
		PEDESTRIAN WARNING SIGN	113+15.00	CL	W11-2	36 x 36						12			9.00		1		
		SUPPLEMENTAL DIRECTIONAL ARROW			W16-7PR	24 x 12									2.00				
		PEDESTRIAN WARNING SIGN	113+30.00	LT	W11-2	36 x 36						12			9.00		1		
		SUPPLEMENTAL DIRECTIONAL ARROW			W16-7PL	24 x 12									2.00				
		PEDESTRIAN WARNING SIGN	113+37.00	CL	W11-2	36 x 36						12			9.00		1		
		SUPPLEMENTAL DIRECTIONAL ARROW			W16-7PR	24 x 12									2.00				
		YIELD SIGN	113+60.00	CL	R1-2	48 x 48 x 48		24							6.93		2		
		STREET NAME	113+60.00	CL	D1-1d	90 x 18		24							11.25				
		YIELD SIGN	113+65.00	RT	R1-2	48 x 48 x 48		24							6.93		2		
		Roundabout Directional (4 Cheverons)	114+05.00	CL	R6-4b	60 x 24				18					10.00		2		
		ONE WAY		CL	R6-1R	36 x 12		3							3.00				
		Roundabout Directional (4 Cheverons)	114+58.00	CL	R6-4b	60 x 24				18					10.00		2		
		ONE WAY		CL	R6-1R	36 x 12		3							3.00				
		YIELD SIGN	115+00.00	LT	R1-2	48 x 48 x 48		24							6.93		2		
		STREET NAME	115+10.00	CL	D1-1d	90 x 18		24							11.25				
		YIELD SIGN	115+10.00	CL	R1-2	48 x 48 x 48		24							6.93		2		
		KEEP RIGHT	115+63.00	CL	R4-7	24 x 30		12							5.00		1		
		LANE ENDS	115+82.00	RT	W4-2R	36 x 36						12			9.00		1		
		SPEED ADVISORY PLATE		RT	W13-1	18 x 18									2.25				
		RIVER NAME	116+11.00	RT	I-3	18 x 18		12							2.25				
		LANE DESIGNATION SIGN	116+78.00	LT	R3-7 MOD	48 x 48				24					16.00				
125		RIVER NAME	117+60.00	LT	I-3	18 x 18		12							2.25				
		LANE USE CONTROL SIGN (L-T)	118+30.00	RT	R3-8ba	36 x 30				12					7.50				
		YIELD AHEAD SIGN	118+40.00	LT	W3-2	36 x 36				12					9.00		1		
		LANE USE CONTROL SIGN (L-T)	120+55.00	RT	R3-8ba	36 x 30				12					7.50				
		STOP SIGN	120+81.00	LT	R1-1	36 x 36				12					9.00		1		
		STREET NAME	121+22.00	LT	D3-1	30 x 12								12		1			
		RAB WARNING	122+75.00	LT	W2-6	36 x 36						12			9.00		1		
		SPEED ADVISORY PLATE		LT	W13-1	18 x 18									2.25				
		TOTALS CARRIED TO SHEET 122						**246**	**0**	**168**	**0**	**96**	**12**	**12**	**288.7**	**1**	**30**		

CALCULATED SWC
CHECKED CRP

SIGNING SUBSUMMARY

ALL-SHAWNEE RD

M:\Proj\121\1001\77305\traffic\sheets\77305TS003.dgn 1/13/2014 5:30:54 PM scorcoran

SHEET NO.	REFERENCE NO.	Description	STATION	SIDE	CODE	SIZE (INCHES)		630 GROUND MOUNTED SUPPORT, NO. 2 POST FT	630 GROUND MOUNTED SUPPORT, NO. 2 POST, AS PER PLAN FT	630 GROUND MOUNTED SUPPORT, NO. 3 POST FT	630 GROUND MOUNTED SUPPORT, NO. 3 POST, AS PER PLAN FT	630 GROUND MOUNTED SUPPORT, NO. 4 POST FT	630 ONE-WAY SUPPORT, NO. 2 POST FT	630 STREET NAME SIGN SUPPORT, NO. 2 POST FT	630 SIGN, FLAT SHEET SQ FT	630 SIGN, DOUBLE FACED, STREET NAME EACH	630 SIGN POST REFLECTOR EACH		
126		RAB WARNING	205+50.00	RT	W2-6	36 x 36						12			9.00		1		
		SPEED ADVISORY PLATE		RT	W13-1	18 x 18									2.25				
		LEFT REVERSE CURVE	206+75.00	LT	W1-4L	36 x 36				12					9.00		1		
		SPEED LIMIT SIGN (45mph)	208+00.00	LT	R2-1	24 x 30		12							5.00				
		YIELD AHEAD SIGN	208+05.00	RT	W3-2	36 x 36				12					9.00		1		
		KEEP RIGHT	209+70.00	CL	R4-7	24 x 30		12							5.00		1		
124		ONE WAY	210+20.00	RT	R6-1R	36 x 12		12							3.00		1		
		LANE ENDS	210+50.00	LT	W4-2R	36 x 36						12			9.00		1		
		SPEED ADVISORY PLATE		LT	W13-1	18 x 18									2.25				
		PEDESTRIAN WARNING SIGN	210+80.00	CL	W11-2	36 x 36						12			9.00		1		
		SUPPLEMENTAL DIRECTIONAL ARROW			W16-7PR	24 x 12									2.00				
		PEDESTRIAN WARNING SIGN	210+80.00	RT	W11-2	36 x 36						12			9.00		1		
		SUPPLEMENTAL DIRECTIONAL ARROW			W16-7PL	24 x 12									2.00				
		PEDESTRIAN WARNING SIGN	210+95.00	LT	W11-2	36 x 36						12			9.00		1		
		SUPPLEMENTAL DIRECTIONAL ARROW			W16-7PR	24 x 12									2.00				
		PEDESTRIAN WARNING SIGN	211+00.00	CL	W11-2	36 x 36						12			9.00		1		
		SUPPLEMENTAL DIRECTIONAL ARROW			W16-7PL	24 x 12									2.00				
		YIELD SIGN	211+30.00	RT	R1-2	48 x 48 x 48		24							6.93		2		
		STREET NAME	211+35.00	CL	D1-1d	108 x 18		24							13.50				
		YIELD SIGN	211+35.00	CL	R1-2	48 x 48 x 48			24						6.93		2		
		Roundabout Directional (4 Cheverons)	211+95.00	CL	R6-4b	60 x 24					18				10.00		2		
		ONE WAY		CL	R6-1R	36 x 12		3							3.00				
		Roundabout Directional (4 Cheverons)	212+40.00	CL	R6-4b	60 x 24					18				10.00		2		
		ONE WAY		CL	R6-1R	36 x 12		3							3.00				
		YIELD SIGN	212+90.00	LT	R1-2	48 x 48 x 48			24						6.93		2		
		STREET NAME	212+95.00	CL	D1-1d	108 x 18		24							13.50				
		YIELD SIGN	212+95.00	CL	R1-2	48 x 48 x 48		24							6.93		2		
		ONE WAY	213+60.00	RT	R6-1R	36 x 12		12							3.00		1		
127		LANE USE CONTROL SIGN (RAB)	214+25.00	LT	R3-7 MOD	48 x 48				24					16.00				
		ONE WAY	214+70.00	CL	R6-1R	36 x 12		12							3.00		1		
		KEEP RIGHT	215+48.00	CL	R4-7	24 x 30		12							5.00		1		
		YIELD AHEAD SIGN	215+75.00	LT	W3-2	36 x 36				12					9.00		1		
		LANE USE CONTROL SIGN (L-T)	216+35.00	LT	R3-H8ba	36 x 30				12					7.50				
		LANE USE CONTROL SIGN (L-T)	217+35.00	LT	R3-H8ba	36 x 30				12					7.50				
		SPEED LIMIT SIGN (45mph)	217+80.00	RT	R2-1	24 x 30		12							5.00				
		EMERGENCY VEHICLE	219+10.00	RT	W11-8	36 x 36				12					9				
		RAB WARNING	219+55.00	LT	W2-6	36 x 36						12			9.00		1		
		SPEED ADVISORY PLATE		LT	W13-1	18 x 18									2.25				
127		RIGHT CURVE	605+30.00	RT	W1-2R	18 x 18		12							2.25		1		
		LEFT CURVE	606+80.00	LT	W1-2L	18 x 18		12							2.25		1		
TOTALS CARRIED TO SHEET 122								**210**	**48**	**96**	**36**	**84**	**0**	**0**	**259.0**	**0**	**29**		

CALCULATED SWC
CHECKED CRP

SIGNING SUBSUMMARY

ALL-SHAWNEE RD

M:\Proj\121\1001\77305\traffic\sheets\77305TS004.dgn 1/13/2014 5:30:55 PM scorcoran

SHEET NO.	REFERENCE NO.	Description	SIDE	CODE	SIZE (INCHES)					630 GROUND MOUNTED SUPPORT, NO. 2 POST	630 GROUND MOUNTED SUPPORT, NO. 2 POST, AS PER PLAN	630 GROUND MOUNTED SUPPORT, NO. 3 POST	630 GROUND MOUNTED SUPPORT, NO. 3 POST, AS PER PLAN	630 GROUND MOUNTED SUPPORT, NO. 4 POST	630 ONE-WAY SUPPORT, NO. 2 POST	630 STREET NAME SIGN SUPPORT, NO. 2 POST	630 SIGN, FLAT SHEET	630 SIGN, DOUBLE FACED, STREET NAME	630 SIGN POST REFLECTOR	630 REMOVAL OF GROUND MOUNTED SIGN & DISPOSAL	630 REMOVAL OF GROUND POST SUPPORT AND DISPOSAL
										FT	FT	FT	FT	FT	FT	FT	SQ FT	EACH	EACH	EA	EA
128	R-1	FIRE STATION SYMBOL SIGN	RT	W11-8	30 x 30															1	1
	R-2	SPEED LIMIT SIGN (45mph)	LT	R2-1	24 x 30															1	1
	R-3	LANE USE CONTROL SIGN (L-T)	RT	R3-H8ba	36 x 30															1	1
129	R-4	YELLOW OBJECT MARKER	RT																	1	1
	R-5	STOP HERE ON RED (arrow)	RT	R10-6																1	1
		DETECTOR IN PAVEMENT SIGN	RT		24 x 10															1	
	R-6	STOP HERE ON RED (arrow)	LT	R10-6																1	1
		DETECTOR IN PAVEMENT SIGN	LT		24 x 10															1	
	R-7	SPEED LIMIT SIGN (45mph)	RT	R2-1	24 x 30															1	1
	R-8	RIVER SIGN	RT		18 x 18															1	1
	R-9	STOP HERE ON RED (arrow)	LT	R10-6																1	1
		DETECTOR IN PAVEMENT SIGN	LT		24 x 10															1	
	R-10	STOP HERE ON RED (arrow)	RT	R10-6																1	1
		DETECTOR IN PAVEMENT SIGN	RT		24 x 10															1	
130	R-11	RIVER SIGN	LT		18 x 18															1	1
	R-12	LANE USE CONTROL SIGN (L-TR)	RT	R3-H8bh	36 x 30															1	1
	R-13	STOP SIGN	LT	R1-1	30 x 30															1	1
	R-14	STREET NAME SIGN	LT	D3-1																2	1
	R-15	DO NOT BLOCK INTERSECTION SIGN	LT		30 x 30															1	1
131	R-16	FIRE STATION SYMBOL SIGN	RT	W11-8	30 x 30															1	1
	R-17	LEFT REVERSE CURVE	LT	W1-4L	30 x 30															1	1
	R-18	LANE USE CONTROL SIGN (L-TR)	RT	R3-H8bh	36 x 30															1	1
	R-19	YELLOW OBJECT MARKER	LT		9 x 15															1	1
	R-20	SPEED LIMIT SIGN (45mph)	LT	R2-1	24 x 30															1	1
	R-21	YELLOW OBJECT MARKER	LT		9 x 15															1	1
132	R-22	LANE USE CONTROL SIGN (L-TR)	RT	R3-H8bh	36 x 30															1	1
	R-23	SPEED LIMIT SIGN (45mph)	RT	R2-1	24 x 30															1	1
	R-24	SPEED LIMIT SIGN (45mph)	LT	R2-1	24 x 30															1	1
TOTALS CARRIED FROM THIS SHEET										0	0	0	0	0	0	0	0	0	0	29	24
TOTALS CARRIED FROM SHEET 120										246	0	168	0	96	12	12	288.7	1	30	0	0
TOTALS CARRIED FROM SHEET 121										210	48	96	36	84	0	0	259.0	0	29	0	0
TOTALS CARRIED TO GENERAL SUMMARY										456	48	264	36	180	12	12	547.7	1	59	29	24

CALCULATED SWC
CHECKED CRP

SIGNING SUBSUMMARY

ALL-SHAWNEE RD

M:\Proj\1121\1001\77305\traffic\sheets\77305TS005.dgn 1/13/2014 5:30:56 PM scorcoran

PAVEMENT MARKING LEGEND

- ELW - EDGE LINE (WHITE)
- ELY - EDGE LINE (YELLOW)
- CL - CENTER LINE
- SL - STOP LINE
- TLY - TRANSVERSE LINE (YELLOW)
- TLW - TRANSVERSE LINE (WHITE)
- LA - LANE ARROW
- XW - CROSS WALK
- LL - LANE LINE, SOLID
- CH - CHANNELIZING LINE
- YL - YIELD LINE
- RPM - RAISED PAVEMENT MARKER
- IM - ISLAND MARKER

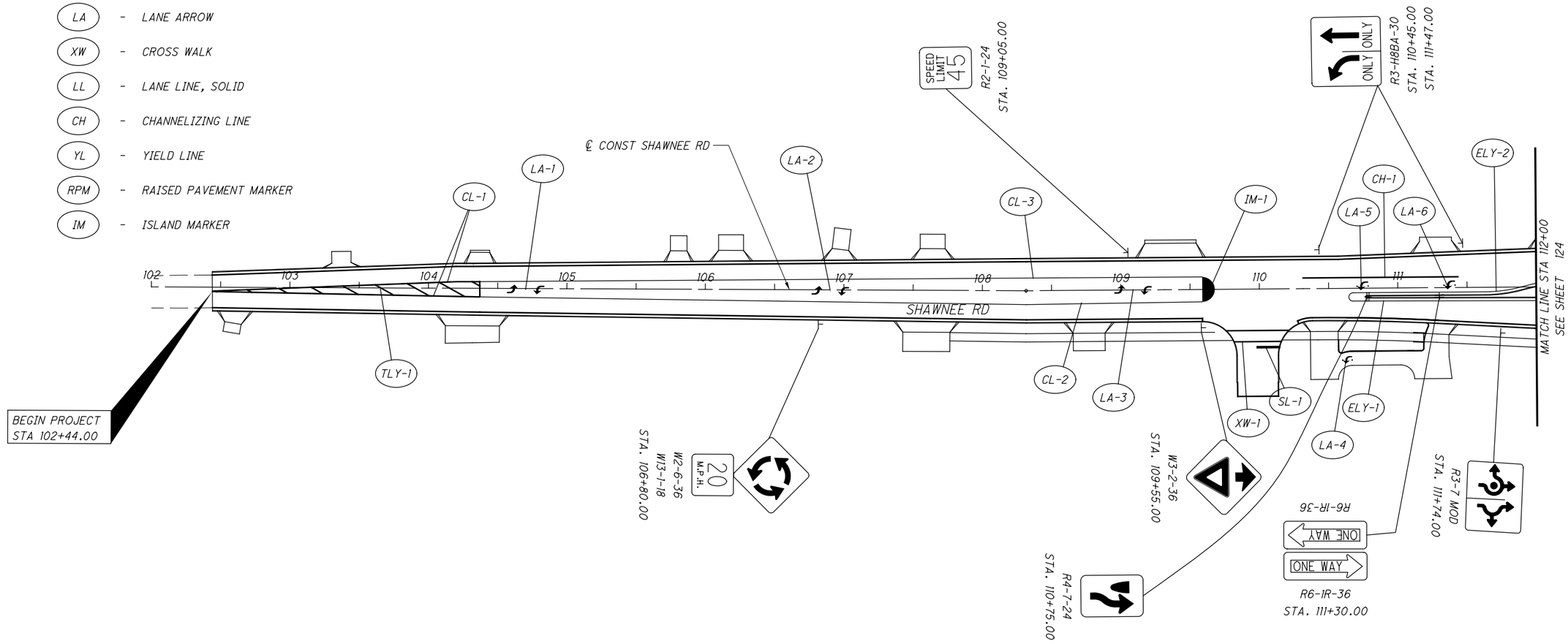

HORIZONTAL SCALE IN FEET
0 20 40 80

CALCULATED SWC
CHECKED CRP

SIGN AND PAVEMENT MARKING PLAN
SHAWNEE ROAD

ALL-SHAWNEE RD

M:\Proj\1121\1001\77305\traffic\sheets\77305TP001.dgn 1/13/2014 5:30:57 PM scorcoran

CALCULATED SWC
CHECKED CRP

HORIZONTAL SCALE IN FEET 0 10 20 40

SIGN AND PAVEMENT MARKING PLAN
SHAWNEE ROAD AND FORT AMANDA ROAD

ALL-SHAWNEE RD

M:\Proj\1121\100\773051\traffic\sheets\773051P002.dgn 1/13/2014 5:30:57 PM scorcoran

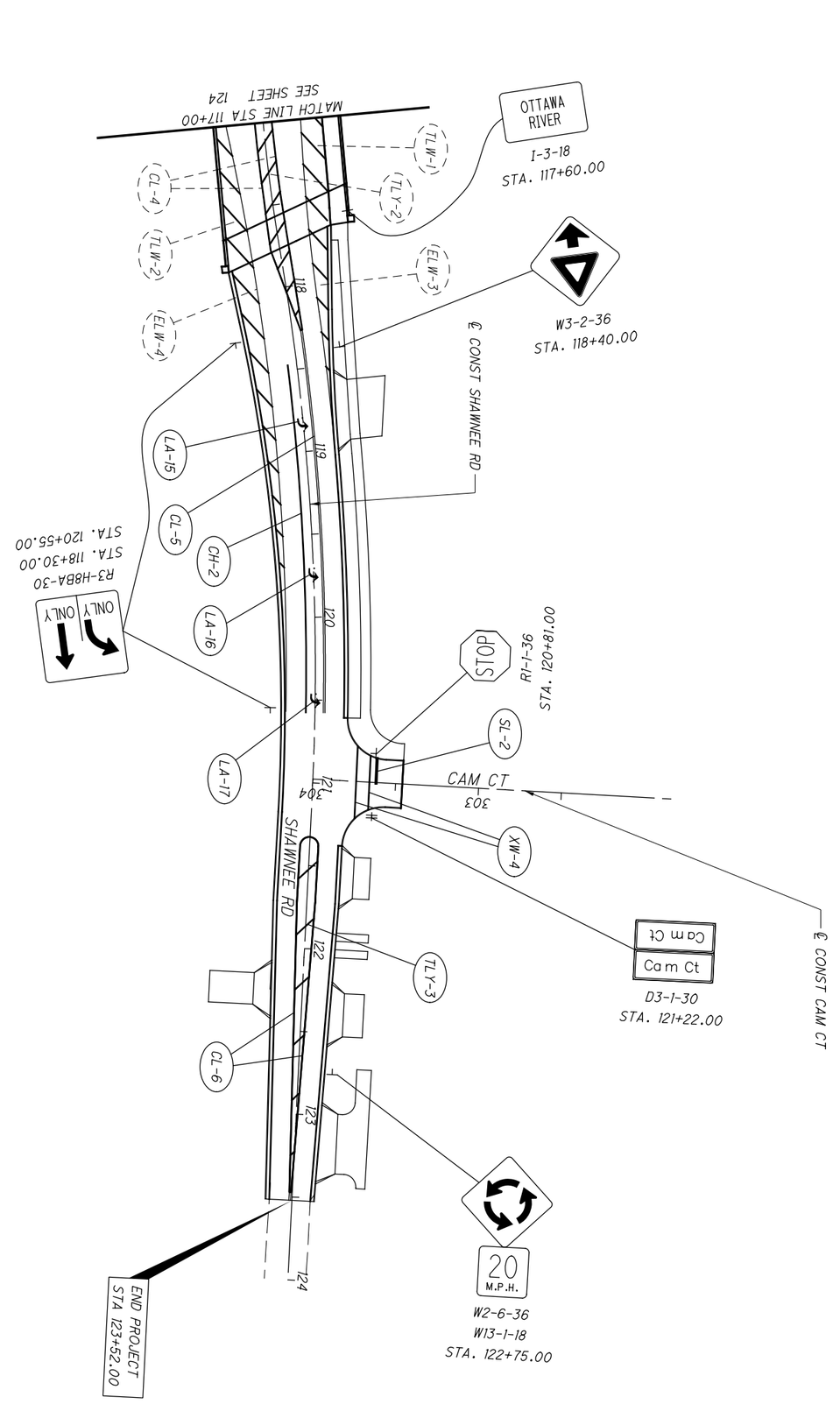

125 / 206	ALL-SHAWNEE RD	SIGN AND PAVEMENT MARKING PLAN SHAWNEE ROAD	CALCULATED SWC CHECKED CRP	0 20 40 80 HORIZONTAL SCALE IN FEET

FOR LEGEND SEE SHEET 123

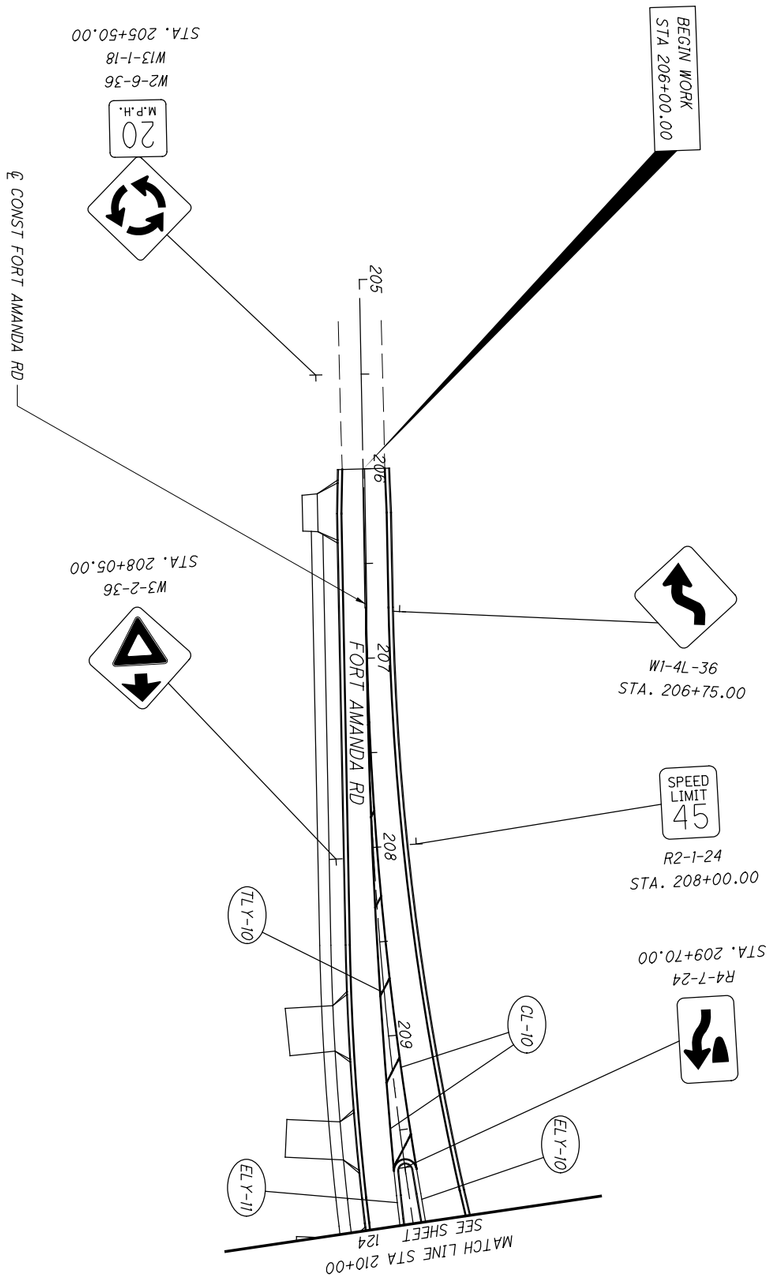

126 / 206	ALL-SHAWNEE RD	SIGN AND PAVEMENT MARKING PLAN FORT AMANDA ROAD	CALCULATED SWC CHECKED CRP	0 20 40 80 HORIZONTAL SCALE IN FEET

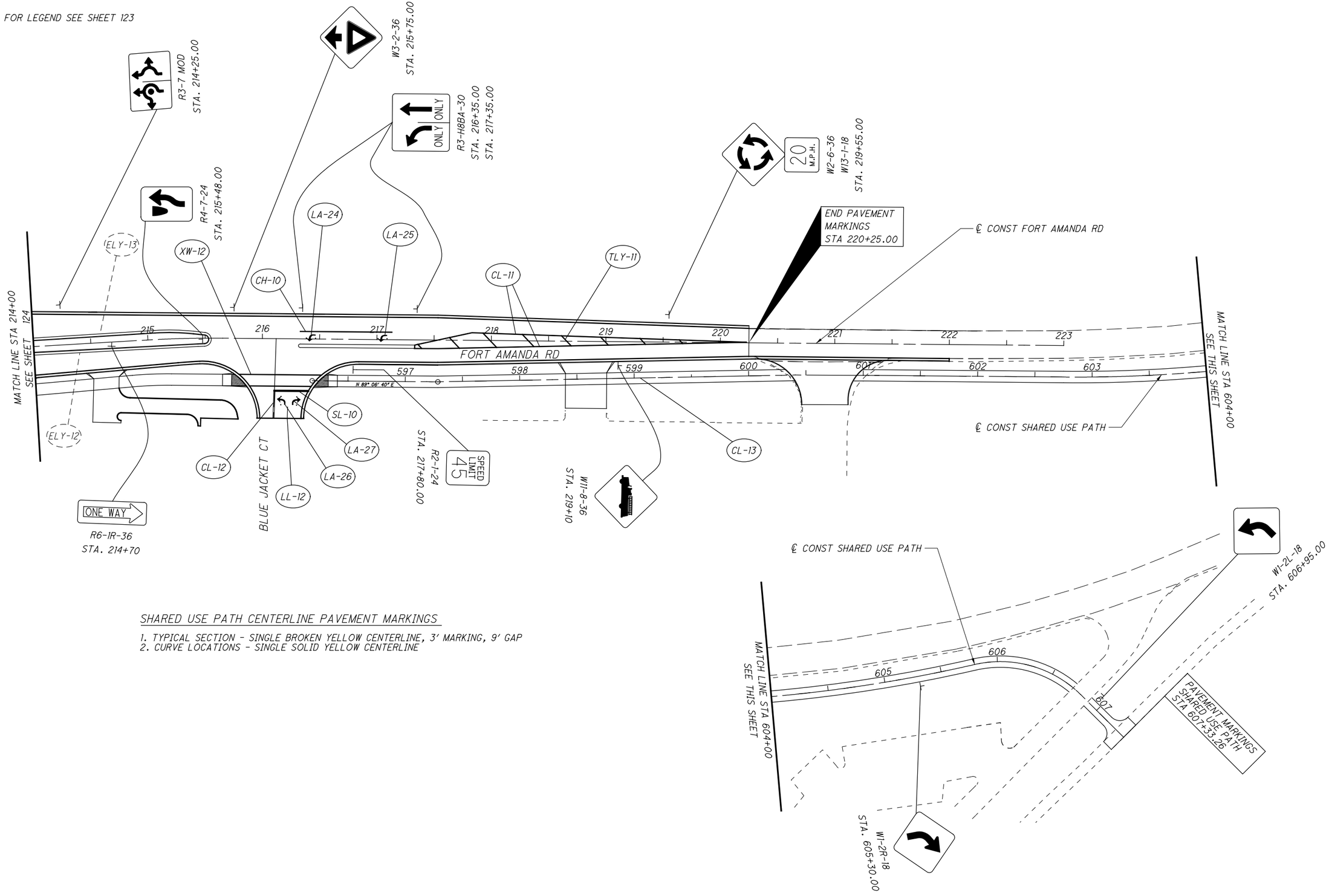

SHARED USE PATH CENTERLINE PAVEMENT MARKINGS

1. TYPICAL SECTION - SINGLE BROKEN YELLOW CENTERLINE, 3' MARKING, 9' GAP
2. CURVE LOCATIONS - SINGLE SOLID YELLOW CENTERLINE

HORIZONTAL SCALE IN FEET
0 20 40 80

CALCULATED SWC
CHECKED CRP

SIGN AND PAVEMENT MARKING PLAN
FORT AMANDA ROAD

ALL-SHAWNEE RD

M:\Proj\1121\1001\77305\traffic\sheets\77305TP005.dgn 1/13/2014 5:30:59 PM scorcoran

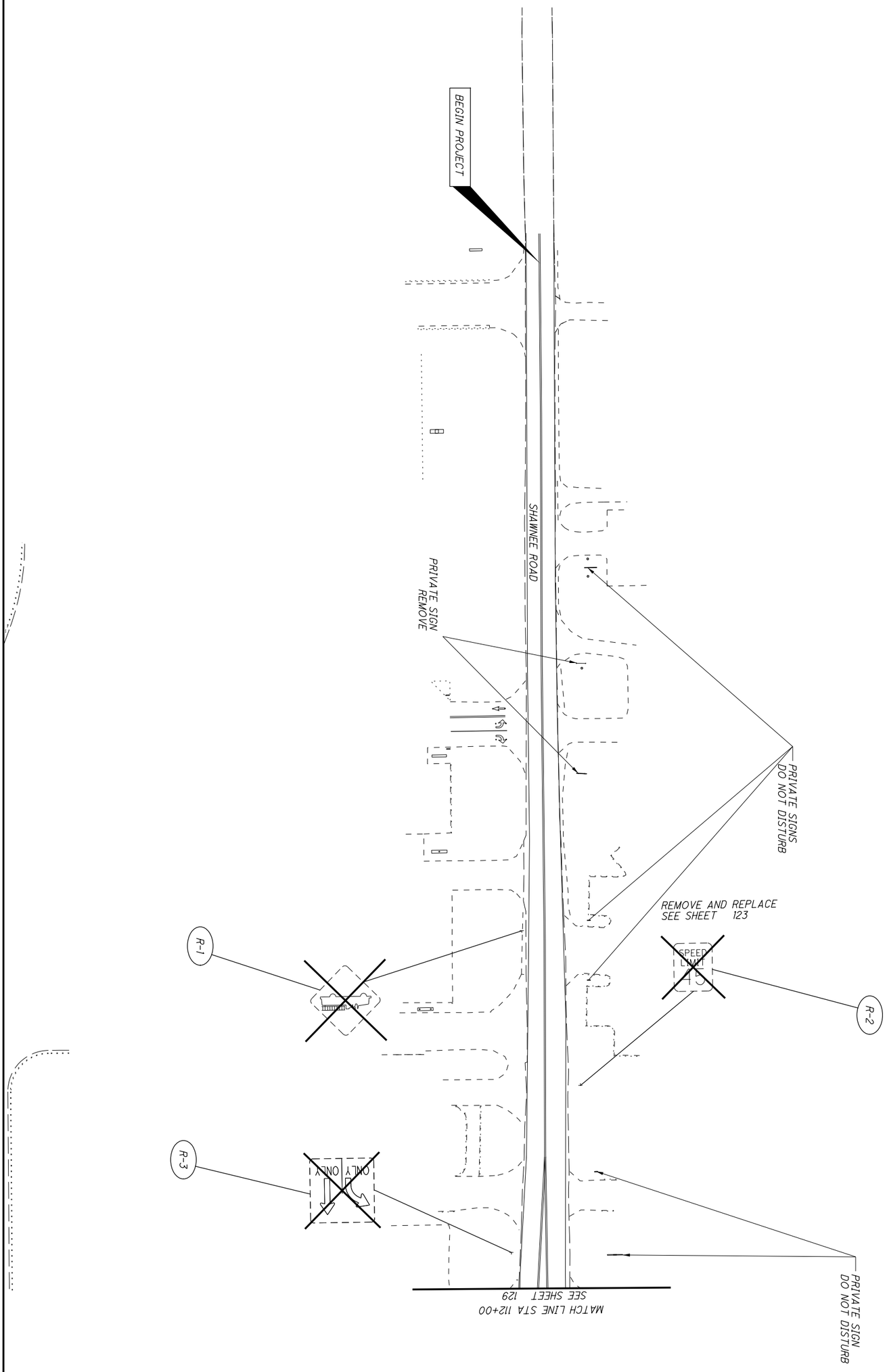

128 / 206	ALL-SHAWNEE RD	EXISTING SIGN AND PAVEMENT MARKING PLAN SHAWNEE ROAD	CALCULATED SWC CHECKED CRP	0 20 40 80 HORIZONTAL SCALE IN FEET

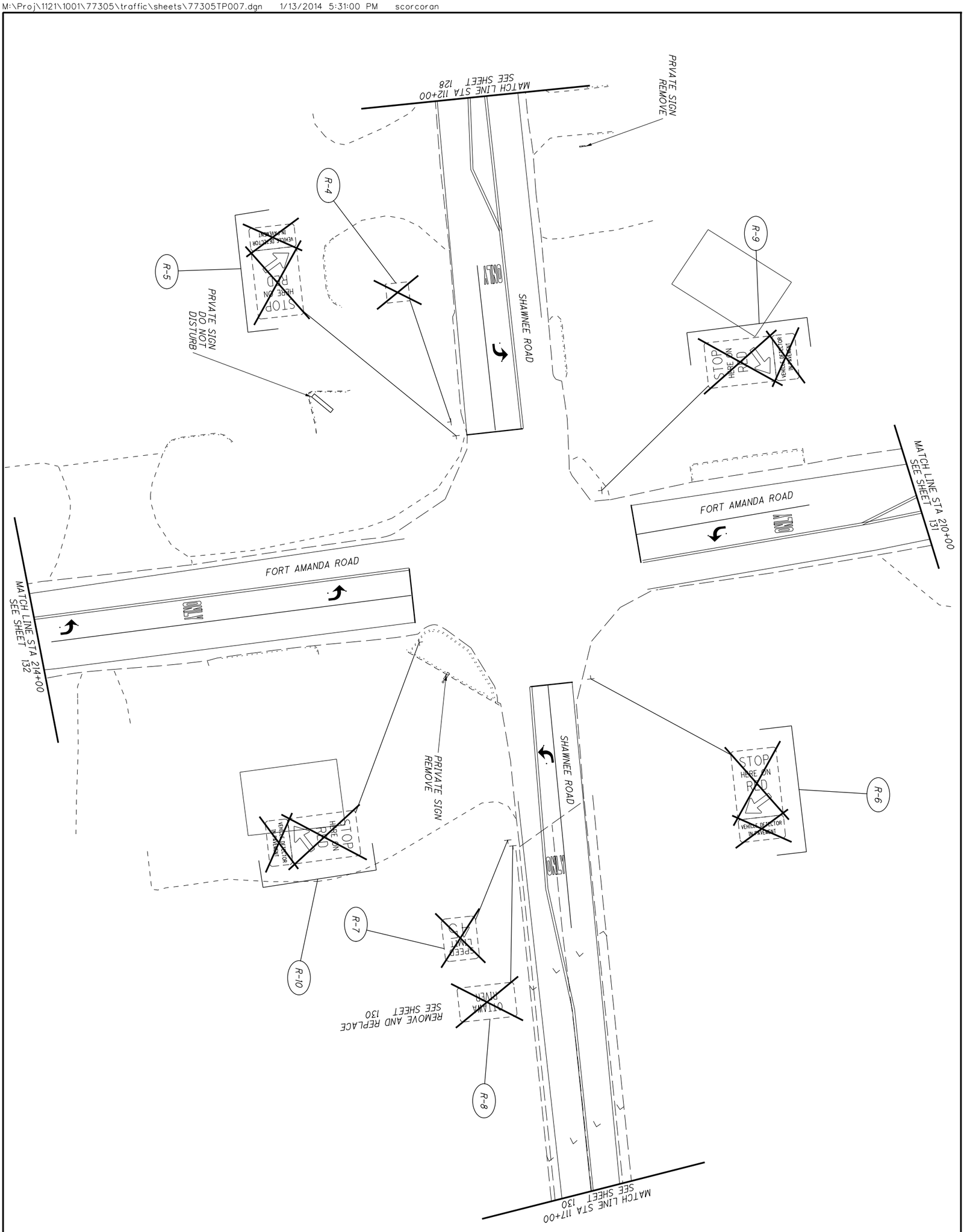

129 / 206	ALL SHAWNEE RD	EXISTING SIGN AND PAVEMENT MARKING PLAN SHAWNEE ROAD AND FORT AMANDA ROAD	CALCULATED SWC CHECKED CRP	0 10 20 40 HORIZONTAL SCALE IN FEET

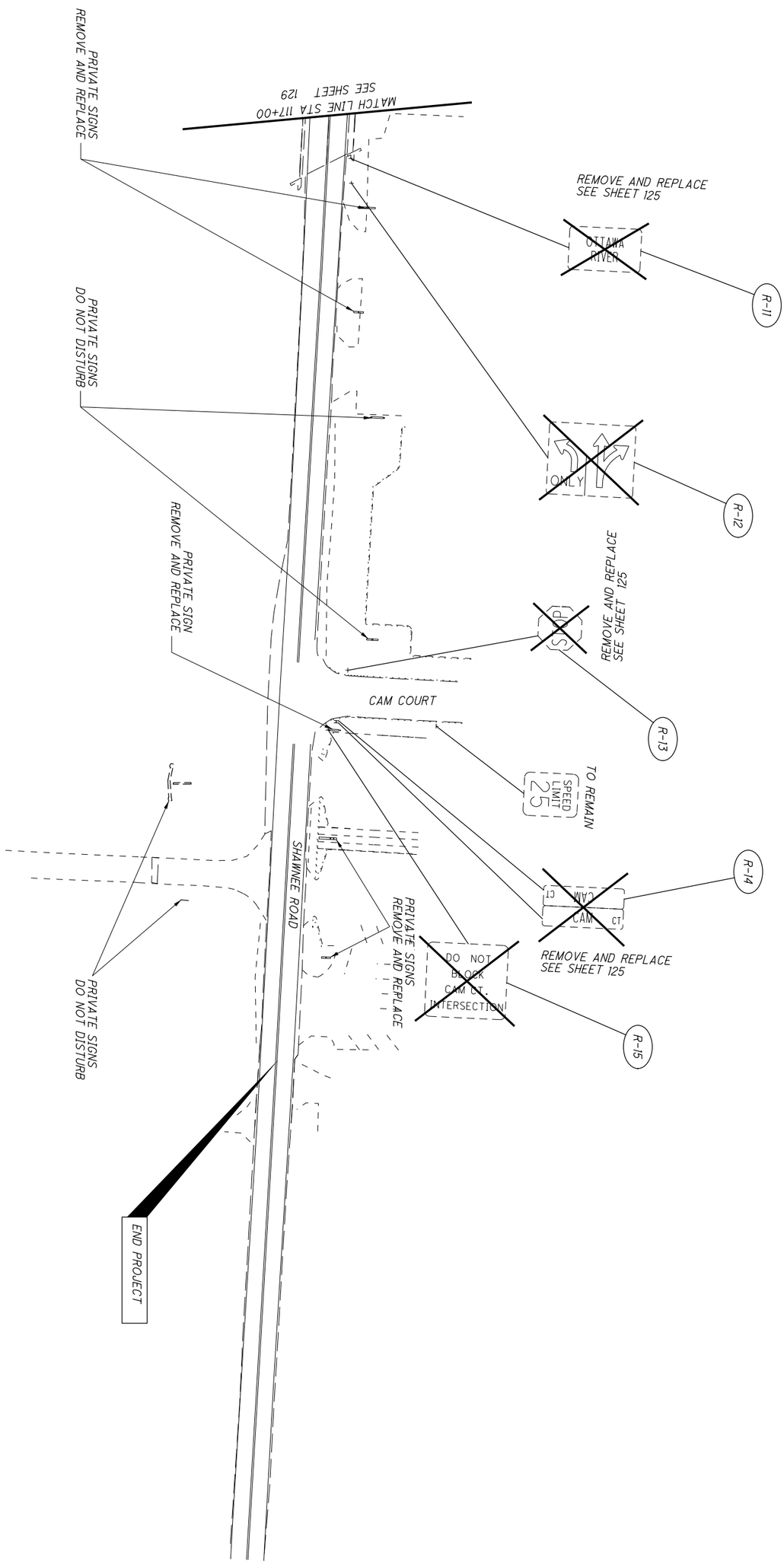

130 / 206	ALL-SHAWNEE RD	EXISTING SIGN AND PAVEMENT MARKING PLAN SHAWNEE ROAD	CALCULATED SWC CHECKED CRP	0 20 40 80 HORIZONTAL SCALE IN FEET

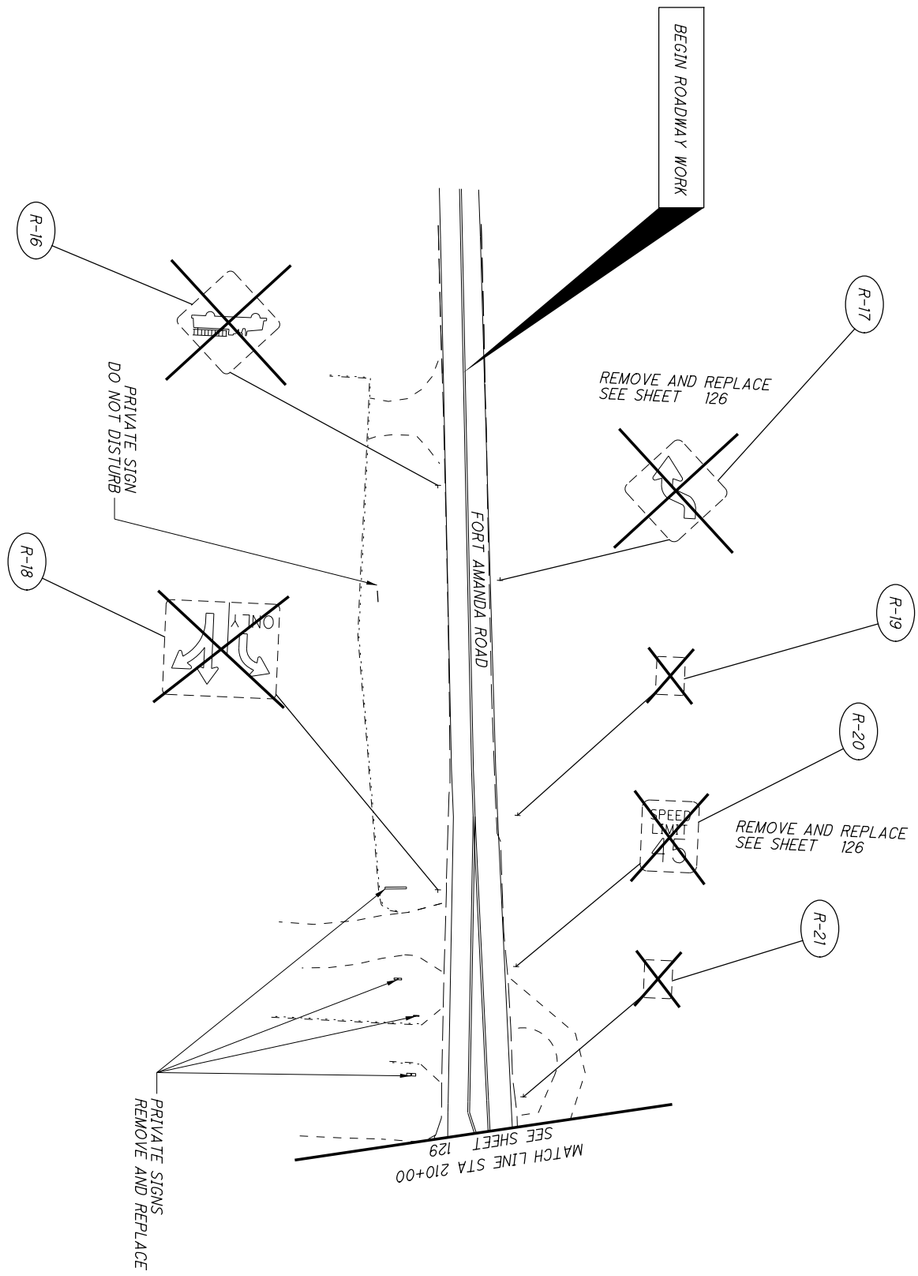

131 / 206	ALL-SHAWNEE RD	EXISTING SIGN AND PAVEMENT MARKING PLAN FORT AMANDA ROAD	CALCULATED SWC CHECKED CRP	0 20 40 80 HORIZONTAL SCALE IN FEET	N

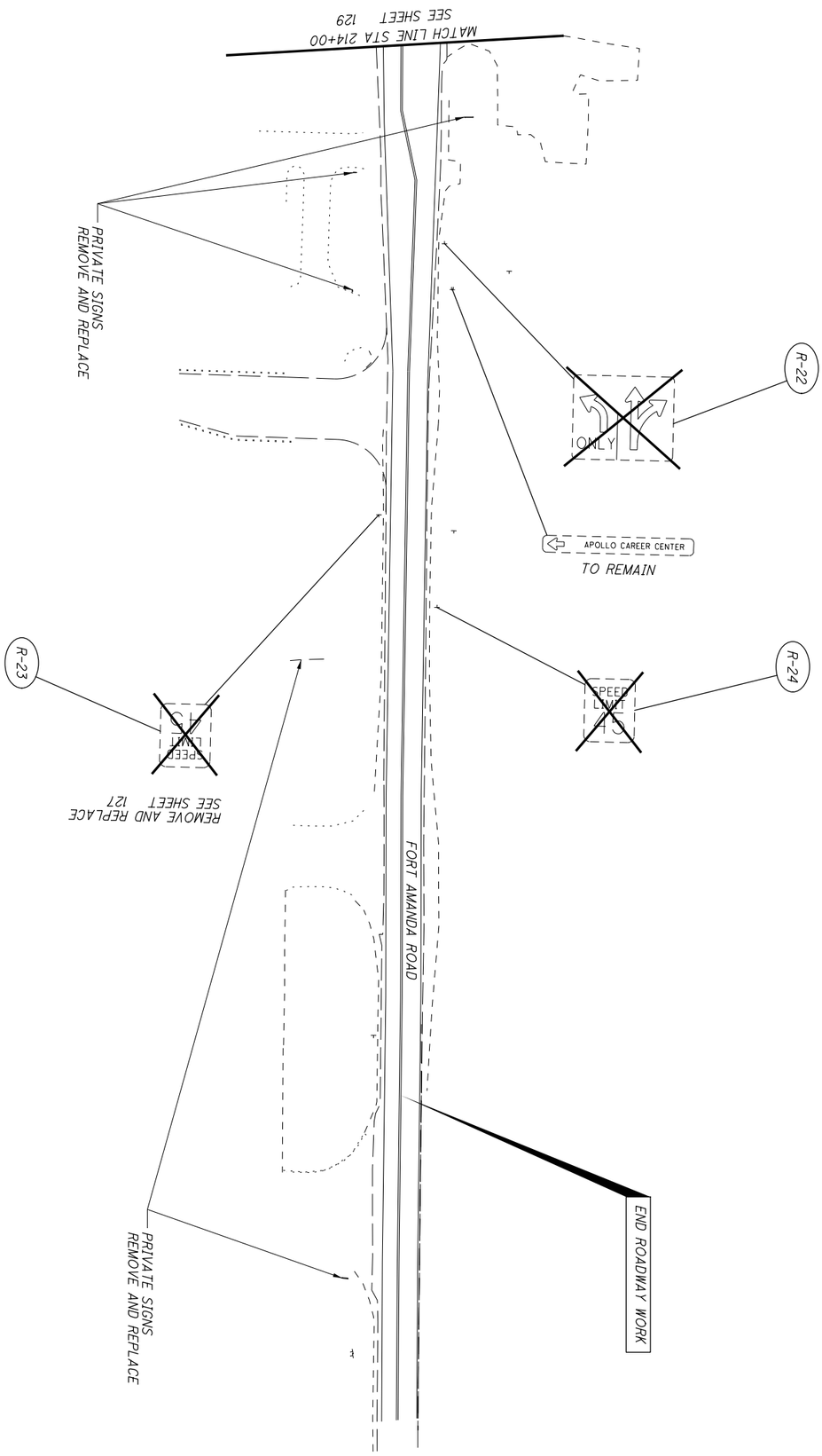

132 / 206	ALL-SHAWNEE RD	EXISTING SIGN AND PAVEMENT MARKING PLAN FORT AMANDA ROAD	CALCULATED SWC CHECKED CRP	0 20 40 80 HORIZONTAL SCALE IN FEET

625, LUMINAIRE, DECORATIVE, AS PER PLAN

IN ADDITION TO THE REQUIREMENTS OF ODOT'S CONSTRUCTION AND MATERIALS SPECIFICATIONS, LUMINAIRES FOR DECORATIVE LIGHTING UNITS SHALL BE AS FOLLOWS:

LUMINAIRES FOR DECORATIVE LIGHTING UNITS SHALL MATCH NEWLY INSTALLED LUMINAIRES ON BLUE JACKET COURT AND BE TEARDROP STYLE WITH ASSYMETRIC DISTRIBUTION, 250 WATT HIGH PRESSURE SODIUM LUMINIAIRES AND BE HOLOPHANE "ESPLANADE" WITH PHOTOMETRIC DISTRIBUTION ESU250HPS00X4.

PAYMENT WILL BE MADE AT THE UNIT PRICE BID UNDER CMS ITEM 625, "LUMINAIRE, DECORATIVE, AS PER PLAN, 250 WATT HPS, ASSYMETRIC TEARDROP" FOR EACH LUMINAIRE WHICH SHALL BE FULL COMPENSATION FOR ALL LABOR, MATERIALS AND INCIDENTALS REQUIRED TO COMPLETE THIS ITEM IN A SATISFACTORY AND WORKMANLIKE MANNER.

LIGHT POLE ANCHOR BOLTS

WHEN A LIGHT POLE IS MOUNTED ON A PILASTER ON A BRIDGE PARAPET OR ON A RETAINING WALL, THE REQUIRED ANCHOR BOLTS MAY DIFFER IN LENGTH AND/OR SHAPE FROM THOSE REQUIRED WHEN THE POLE IS MOUNTED ON A CAST-IN-PLACE DRILLED SHAFT FOUNDATION. THE COST DIFFERENTIAL FOR FURNISHING SUCH BOLTS IS INCLUDED HEREIN.

IN ADDITION, THERE IS NO FOUNDATION CONSTRUCTION ITEM IN WHICH TO INCLUDE THE SETTING OF THE ANCHOR BOLTS. THUS, THE SETTING OF THE ANCHOR BOLTS INTO THE PILASTER IS ALSO PART OF THIS WORK.

PAYMENT WILL BE MADE AT EACH SUCH POLE LOCATION AT THE UNIT PRICE BID FOR EACH CMS ITEM 625, "LIGHT POLE ANCHOR BOLTS" AND SHALL BE FULL COMPENSATION FOR FURNISHING AND PLACING THE SET OF ANCHOR BOLTS REQUIRED.

CONDUIT EXPANSION AND DEFLECTION

EXPANSION FITTINGS SHALL BE OZ TYPE AX, CROUSE HINDS TYPE XJG, APPLETON TYPE AX, OR EQUAL APPROVED BY THE ENGINEER. EACH EXPANSION FITTING SHALL PROVIDE EITHER 4 OR 8 INCHES TOTAL MOVEMENT AS SPECIFIED BY THE PLAN DETAILS AND SHALL HAVE AN EXTERNAL COPPER BONDING JUMPER, UNLESS SPECIFIED OTHERWISE BY THE PLAN DETAILS.

DEFLECTION COUPLINGS SHALL BE OZ TYPE DX, CROUSE HINDS TYPE XD, APPLETON TYPE DF, OR EQUAL APPROVED BY THE ENGINEER. EACH DEFLECTION COUPLING SHALL HAVE AN EXTERNAL COPPER BONDING JUMPER, UNLESS SPECIFIED OTHERWISE BY THE PLAN DETAILS.

PADLOCKS AND KEYS

PADLOCKS FURNISHED SHALL BE EITHER BRASS OR BRONZE, EQUAL TO MASTER NO. 4BKA OR WILSON BOHANNAN 660A, AND SHALL BE KEYED IN ACCORDANCE WITH CMS 631.06. PAYMENT SHALL BE INCLUDED IN THE BID FOR THE ITEM(S) BEING LOCKED.

625, POWER SERVICE, AS PER PLAN

IN ADDITION TO THE REQUIREMENTS OF THE SPECIFICATIONS, THE FOLLOWING IS ADDED.

THE POWER SUPPLYING AGENCY FOR THIS PROJECT IS:

AEP
369 EAST O'CONNOR AVENUE
LIMA, OHIO 45801
EMAIL: DEWILSON@AEP.COM
DAN WILSON
CUSTOMER DESIGN TECHNICIAN

POWER SERVICE: 120/240 VOLT, 3-WIRE, SINGLE PHASE. THIS PROJECT HAS BEEN DESIGNED ON THE BASIS OF 5% VOLTAGE DROP.

THE ENGINEER SHALL ENSURE THAT EACH POWER SERVICE ELECTRICAL ENERGY ACCOUNT IS IN THE NAME OF AND THAT THE BILLING ADDRESS IS TO THE MAINTAINING AGENCY NOTED IN THE PLANS. THIS SHALL BE DONE NOT ONLY FOR EACH NEW POWER SERVICE ESTABLISHED BY THIS PROJECT BUT ALSO FOR EACH EXISTING POWER SERVICE, SINCE THERE MAY BE A REASSIGNMENT OF THE RESPONSIBILITY FOR AN EXISTING SERVICE AS A RESULT OF THE WORK PERFORMED BY THIS PROJECT.

SCD HL-60.31 SHALL BE MODIFIED AS SHOWN ON SHEET141 TO INCLUDE TWO (2) SINGLE POLE 20 AMP CIRCUIT BREAKERS PRIOR TO THE PHOTO ELECTRIC CONTROL TO POWER THE IRRIGATION SYSTEM AND RECEPTACLE CIRCUITS.

PAYMENT WILL BE MADE AT THE UNIT BID PRICE FOR EACH CMS ITEM 625, "POWER SERVICE, AS PER PLAN" WHICH SHALL BE FULL COMPENSATION FOR ALL LABOR, MATERIALS AND INCIDENTALS REQUIRED TO COMPLETE THIS ITEM IN A SATISFACTORY AND WORKMANLIKE MANNER.

UNDERDRAINS FOR PULL BOXES

REFERENCE IS MADE TO THE STANDARD DRAWINGS FOR DETAILS OF DRAINING PULL BOXES. UNDERDRAINS FOR PULL BOXES SHALL BE USED AS DIRECTED BY THE ENGINEER AND SHALL BE PROVIDED WHERE THE LENGTH REQURIED FOR A SATISFACTORY OUTLET DOES NOT EXCEED APPROXIMATELY 20 FEET. AN ANIMAL GUARD SHALL BE INCLUDED AT THE OUTLET END OF THE DRAIN. AN ESTIMATED QUANTITY OF CMS ITEM 603, "4" CONDUIT, TYPE E" IS INCLUDED AT EACH PULL BOX FOR THIS PURPOSE.

625, LIGHTING, MISC.: FLOOD LIGHT FOR SIGN

FLOOD LIGHTS FOR SIGNS SHALL BE STANCHION MOUNTED ENCASED IN CONCRETE, 35 WATT HIGH PRESSURE SODIUM, WIDE BEAM COMPACT FLOODLIGHT LUMINAIRE WITH CAST METAL HOUSING, FABRICATED SPECULAR METAL REFLECTOR, CLEAR FLAT GLASS LENS IN CAST METAL DOOR FRAME. SILICONE SEALER MUST BE USED TO CREATE A WATERTIGHT SEAL AT ALL CONDUIT OR RACEWAYS THROUGH WHICH MOSITURE MAY CONTACT ENERGIZED PARTS.

ONE FLOOD LIGHT PER SIGN IS REQUIRED PLACED IN THE CENTER OF THE SIGN AND OFFSET FIVE (5) FEET FROM THE FACE OF THE SIGN.

PAYMENT WILL BE MADE AT THE UNIT PRICE BID UNDER CMS ITEM 625, "LIGHTING, MISC.: FLOOD LIGHT FOR SIGN" FOR EACH LUMINAIRE WHICH SHALL BE FULL COMPENSATION FOR ALL LABOR, MATERIALS AND INCIDENTALS REQUIRED TO COMPLETE THIS ITEM IN A SATISFACTORY AND WORKMANLIKE MANNER.

FOR ADDITIONAL DETAILS SEE SHEET 153 (BRIDGE PLANS 6/31).

625, DISCONNECT EXISTING CIRCUIT, AS PER PLAN

THIS ITEM OF WORK SHALL CONSIST OF THE DISCONNECTION OF AN EXISTING LIGHT CIRCUIT AT A PULL BOX OR TRANSFORMER BASE.

DISCONNECTION AT A PULL BOX SHALL INVOLVE CUTTING THE EXISTING CIRCUIT AND REMOVING ALL SPLICE KITS. ANY CABLE THAT IS TO BE ABANDONED SHALL BE TERMINATED FROM THE PULL BOX SO THAT NO CABLE IS LEFT IN THE BOX.

DISCONNECTION AT A TRANSFORMER BASE SHALL INVOLVE CUTTING THE EXISTING CIRCUIT AND REMOVING ALL CONNECTOR KITS. ALL DUCT-CABLE NOT TO BE REUSED SHALL BE REMOVED FROM THE TRANSFORMER BASE AND THE EXISTING CONDUIT IN THE FOUNDATION SHALL BE CLEANED OF ALL CABLE AND DEBRIS SO THAT THE NEW DUCT-CABLE CAN BE INSTALLED. ALL EXISTING CABLE TO REMAIN ACTIVE SHALL BE CUT IN A MANNER SO THAT THERE IS SUFFICIENT CABLE LEFT FOR RECONNECTION.

THOSE WIRES THAT ARE TO REMAIN ON ACTIVE CIRCUITS SHALL HAVE A WATER-RESISTANT SEAL AT THE CUT END. THE WATER-RESISTANT SEAL SHALL BE ACCOMPLISHED BY PLUGGING THE DEACTIVATED PORT OF AN EXISTING CONNECTOR KIT OR BY INSTALLING A CABLE SPLICE KIT ON THE CUT END OF THE CABLE.

PAYMENT SHALL BE MADE AT THE UNIT BID PRICE UNDER CMS ITEM 625, "DISCONNECT EXISTING CIRCUIT, AS PER PLAN" AT EACH LOCATION WHERE DISCONNECTION IS REQUIRED WHICH SHALL BE FULL COMPENSATION FOR ALL LABOR, MATERIALS AND INCIDENTALS REQUIRED TO COMPLETE THIS ITEM IN A SATISFACTORY AND WORKMANLIKE MANNER.

625, LIGHTING, MISC.: FLOOD LIGHT FOR FLAG POLE

FLOOD LIGHTS FOR FLAG POLES SHALL BE ENCASED IN CONCRETE 2" ABOVE GRADE WITH CONCRETE SLOPING AWAY FROM FIXTURE. SILICONE SEALER MUST BE USED TO CREATE A WATERTIGHT SEAL AT ALL CONDUIT OR RACEWAYS THROUGH WHICH MOSITURE MAY CONTACT ENERGIZED PARTS.

THREE 100 WATT PULSE START METAL HALIDE SPOT FLOOD LIGHTS PER FLAG POLE ARE REQUIRED SPACED 120° APART AND OFFSET FOUR (4) FEET FROM THE CENTER OF THE FLAG POLE. WIRING BETWEEN FLOOD LIGHTS SHALL USE 3-NO. 8 AWG, 600 VOLT DISTRIBUTION CABLE IN ¾", CONDUIT, 725.04.

PAYMENT WILL BE MADE AT THE UNIT PRICE BID UNDER CMS ITEM 625, "LIGHTING, MISC.: FLOOD LIGHT FOR FLAG POLE" FOR EACH LUMINAIRE WHICH SHALL BE FULL COMPENSATION FOR ALL LABOR, MATERIALS AND INCIDENTALS REQUIRED TO COMPLETE THIS ITEM IN A SATISFACTORY AND WORKMANLIKE MANNER.

FOR ADDITIONAL DETAILS SEE SHEET 145 , FLAG POLE LAYOUT.

625, LIGHTING, MISC.: DOUBLE DUPLEX GFI ON PEDESTAL

RECEPTACLES FOR LIGHTING SHALL BE IN A GREEN PAINTED GALVANIZED STEEL BOX MOUNTED ON A 17" X 5" X 3.2" STEEL POST/RACEWAY. PROVIDE TWO (2) 20A DUPLEX GFI RECEPTACLES. PROVIDE GROMMETED CORD HOLE IN POST FOR FEED TO IRRIGATION SYSTEM.

PAYMENT WILL BE MADE AT THE UNIT BID PRICE UNDER CMS ITEM 625, "LIGHTING, MISC.: DOUBLE DUPLEX GFI ON PEDESTAL" FOR EACH ASSEMBLY (OUTLET & PEDESTAL), WHICH SHALL BE FULL COMPENSATION FOR ALL LABOR, MATERIALS, AND INCIDENTALS REQUIRED TO COMPLETE THIS ITEM IN A SATISFACTORY AND WORKMANLIKE MANNER.

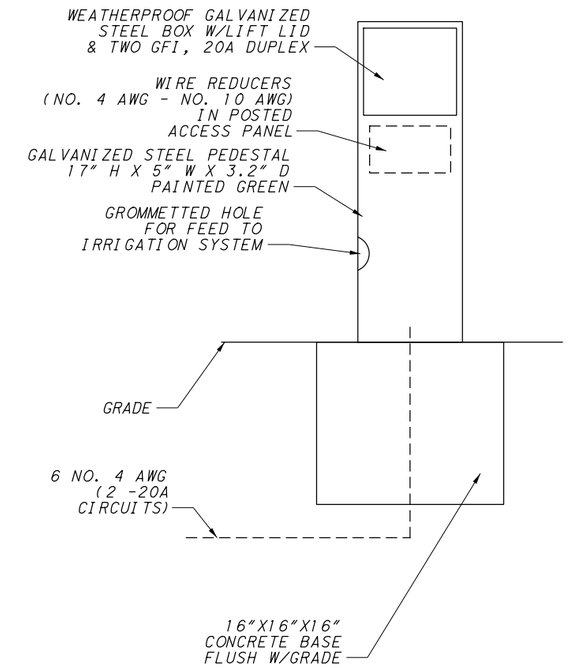

DUPLEX GFI OUTLETS AT CENTRAL ISLAND (NOT TO SCALE)

CALCULATED JMZ
CHECKED EWP

LIGHTING GENERAL NOTES

ALL-SHAWNEE RD

M:\Proj\1121\1001\77305\lighting\sheets\77305LN001.dgn 3/3/2014 9:25:15 AM scorcoran

REFERENCE NO.	SHEET NO.	STATION TO STATION		611 4" CONDUIT, TYPE E, AS PER PLAN (FT)	625 CONNECTION, FUSED PULL-APART (EA)	625 CONNECTION, UNFUSED PERMANENT (EA)	625 LIGHT POLE, DECORATIVE, AS PER PLAN (EA)	625 LIGHT POLE FOUNDATION, 24" X 6' (EA)	625 POWER SERVICE, AS PER PLAN (EA)	624 NO. 4 AWG 600 VOLT DISTRIBUTION CABLE (FT)	625 NO. 8 AWG 600 VOLT DISTRIBUTION CABLE (FT)	625 NO. 10 AWG POLE AND BRACKET CABLE (FT)	625 CONDUIT, 2", 725.04 (FT)	625 CONDUIT, 2", 725.05 (FT)	625 CONDUIT, 3", 725.04 (FT)	626 CONDUIT, 3", 725.05 (FT)	625 CONDUIT, 3/4", 725.04 (FT)	625 LUMINAIRE, DECORATIVE, AS PER PLAN, ASSYMETRIC TEARDROP, 250 WATT HPS (EA)	625 TRENCH (FT)	625 PLASTIC CAUTION TAPE (FT)
L-1	136	107+85	110+66		2		1	1			873	72		281				1	281	281
L-2	136	109+13	109+64		2		1	1			183	72		51				1	51	51
L-3	136	109+64	110+29	20							228				66				66	66
L-4	136	110+29	111+93	20							561			177					177	177
L-5	136	110+66	113+17		2		1	1			807	72		259				1	259	259
L-6	136	111+93	113+42		2		1	1			363	72		111				1	111	111
L-7	137	113+42	113+17	20		3					279				83				83	83
L-8	137	113+42	212+99								291			87					87	87
L-9	137	212+99	214+30		4		2	2			465	144		145				2	145	145
L-10	137	113+17	113+41	20		3					117			29					29	29
L-11	137	113+41	210+76		2		1	1			252	72		74				1	74	74
L-12	137	114+76	114+92		2		1	1		180	270	72				20		1	20	20
L-13	137	114+44	114+92	20		9				486	453				71		70		141	141
L-14	137	114+92	115+28	20		6					288			38					38	38
L-15	137	115+12	115+28	20		3					84			18					18	18
L-16	137	115+28	115+32	20		6					612				92				82	82
L-17	137	115+28	115+60								117			29					29	29
L-18	137	115+60	116+51	20							339		103						103	103
L-19	137	116+51	117+97		2		1	1			447	72	139					1	139	139
L-20	137	115+25	115+32								54			8					8	8
L-21	137	115+25	115+32	20							108			26					26	26
L-22	137	115+32	115+74	20		6					189			53					53	53
L-23	137	115+74	117+94	20		3					705		225						225	225
L-24	137	115+77	117+77																	
L-25	137	113+54																		
L-26	138	117+97	117+95	20		3					63			11					11	11
L-27	138	117+94	118+04	20		3					60			10					10	10
L-28	138	118+04	120+80		4		2	2			846	144		272				2	272	272
L-29	138	117+95	119+27	20	2	3	1	1			432	72		134				1	134	134
L-30	139	208+58	208+97		2		1	1			144	72		38				1	38	38
L-31	139	208+97	208+97						1	138	276					8			8	8
L-32	139	208+97	210+34	20		18				870	1740					135			135	135
L-33	139	210+34	114+76	20		15				834	1251					129			129	129
L-34	139	210+34	210+37			3					234				68				68	68
L-35	139	209+92	210+37		2	3	1	1			165	72		45				1	45	45
L-36	139	210+37	210+76	20		3					153			41					41	41
L-37	140	115+25	213+66		2		1	1			372	72		114				1	114	114
L-38	140	213+66	215+95	20	2		1	1			723	72		231				1	231	231
L-39	137	212+06	212+08							126				6					6	6
TOTALS CARRIED TO GENERAL SUMMARY				**380**	**32**	**90**	**16**	**16**	**1**	**2634**	**14544**	**1152**	**467**	**2288**	**380**	**292**	**70**	**16**	**3487**	**3487**

CALCULATED JMZ
CHECKED EWP

LIGHTING SUBSUMMARY

ALL-SHAWNEE RD

M:\Proj\1121\1001\77305\lighting\sheets\77305LS001.dgn 3/11/2014 2:50:42 PM scorcoran

REFERENCE NO.	SHEET NO.	STATION TO STATION		625 PULL BOX, 725.07, 18" EA	625 PULL BOX, 725.07, 24" EA	625 GROUND ROD EA	625 STRUCTURE JUNCTION BOX EA	625 LIGHT POLE ANCHOR BOLTS EA	625 STRUCTURE GROUNDING SYSTEM EA	625 LIGHTING, MISC.: FLOOD LIGHTS FOR FLAG POLE EA	625 DISCONNECT EXISTING CIRCUIT, AS PER PLAN EA	625 LUMINAIRE REMOVED EA	625 LIGHTING MISC.: FLOOD LIGHTS FOR SIGNS EA	625 LIGHTING MISC.: DOUBLE DUPLEX GFI ON PEDESTAL EA
L-1	136	107+85	110+66			1								
L-2	136	109+13	109+64			1								
L-3	136	109+64	110+29	1										
L-4	136	110+29	111+93	1										
L-5	136	110+66	113+17			1								
L-6	136	111+93	113+42											
						1								
L-7	137	113+42	113+17		1									
L-8	137	113+42	212+99											
L-9	137	212+99	214+30			2								
L-10	137	113+17	113+41	1										
L-11	137	113+41	210+76	1										
						1								
L-12	137	114+77	114+91			1								
L-13	137	114+44	114+92	1						9				
L-14	137	114+92	115+28		1									
L-15	137	115+12	115+28	1									1	
L-16	137	115+28	115+32		1									
L-17	137	115+28	115+60											
L-18	137	115+60	116+51	1										
L-19	137	116+51	117+97				1	4						
L-20	137	115+25	115+32											
L-21	137	115+25	115+32	1										
													1	
L-22	137	115+32	115+74		1									
L-23	137	115+74	117+94	1										
L-24	137	115+77	117+77						1					
L-25	137	113+54									1	1		
L-26	138	117+97	117+95	1										
L-27	138	117+94	118+04	1										
L-28	138	118+04	120+80			2								
L-29	138	117+95	119+27	1		1								
L-30	139	208+58	208+97			1								
L-31	139	208+97	208+97											
L-32	139	208+97	210+34		1									
L-33	139	210+34	114+77		1									
L-34	139	210+34	210+37											
L-35	139	209+92	210+37			1								
L-36	139	210+37	210+78	1										
L-37	140	115+25	213+66			1								
L-38	140	213+66	215+95	1		1								
L-39	137	212+06	212+08											1
TOTALS CARRIED TO GENERAL SUMMARY				**14**	**6**	**15**	**1**	**4**	**1**	**9**	**1**	**1**	**2**	**1**

CALCULATED JMZ
CHECKED EWP

LIGHTING SUBSUMMARY

ALL-SHAWNEE RD

M:\Proj\1121\1001\77305\lighting\sheets\77305LS002.dgn 3/11/2014 2:50:43 PM scorcoran

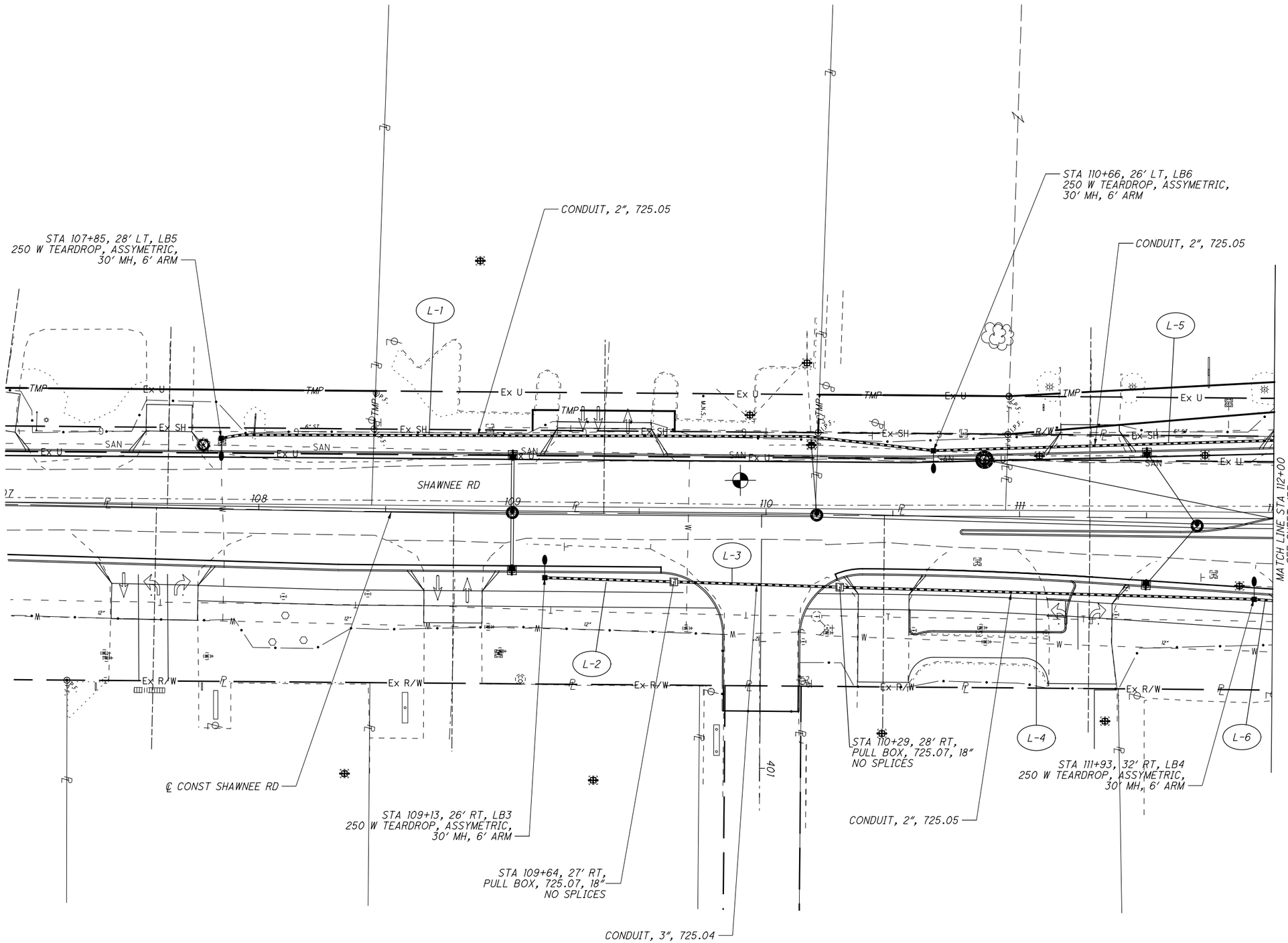

HORIZONTAL SCALE IN FEET
0 10 20 40

CALCULATED JMZ
CHECKED EWP

LIGHTING PLAN
STA 107+00.00 TO STA 112+00.00

ALL-SHAWNEE RD

M:\Proj\112\1001\77305\lighting\sheets\77305LP001.dgn 1/13/2014 5:31:05 PM scorcoran

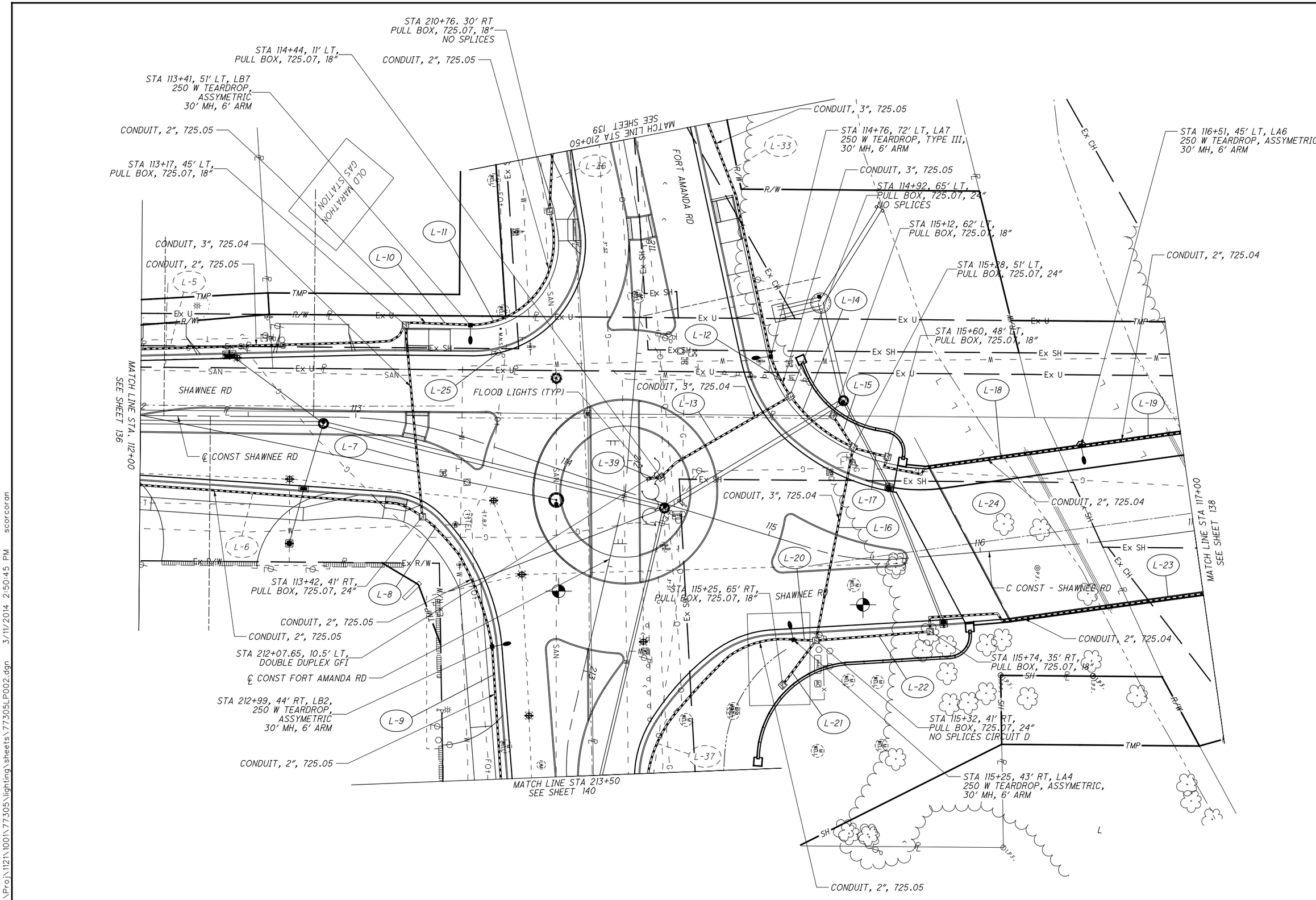

LIGHTING PLAN
STA 112+00.00 TO STA 117+00.00
ALL-SHAWNEE RD

M:\Proj\1121\1001\77305\lighting\sheets\77305LP002.dgn 3/11/2014 2:50:45 PM scorcoran

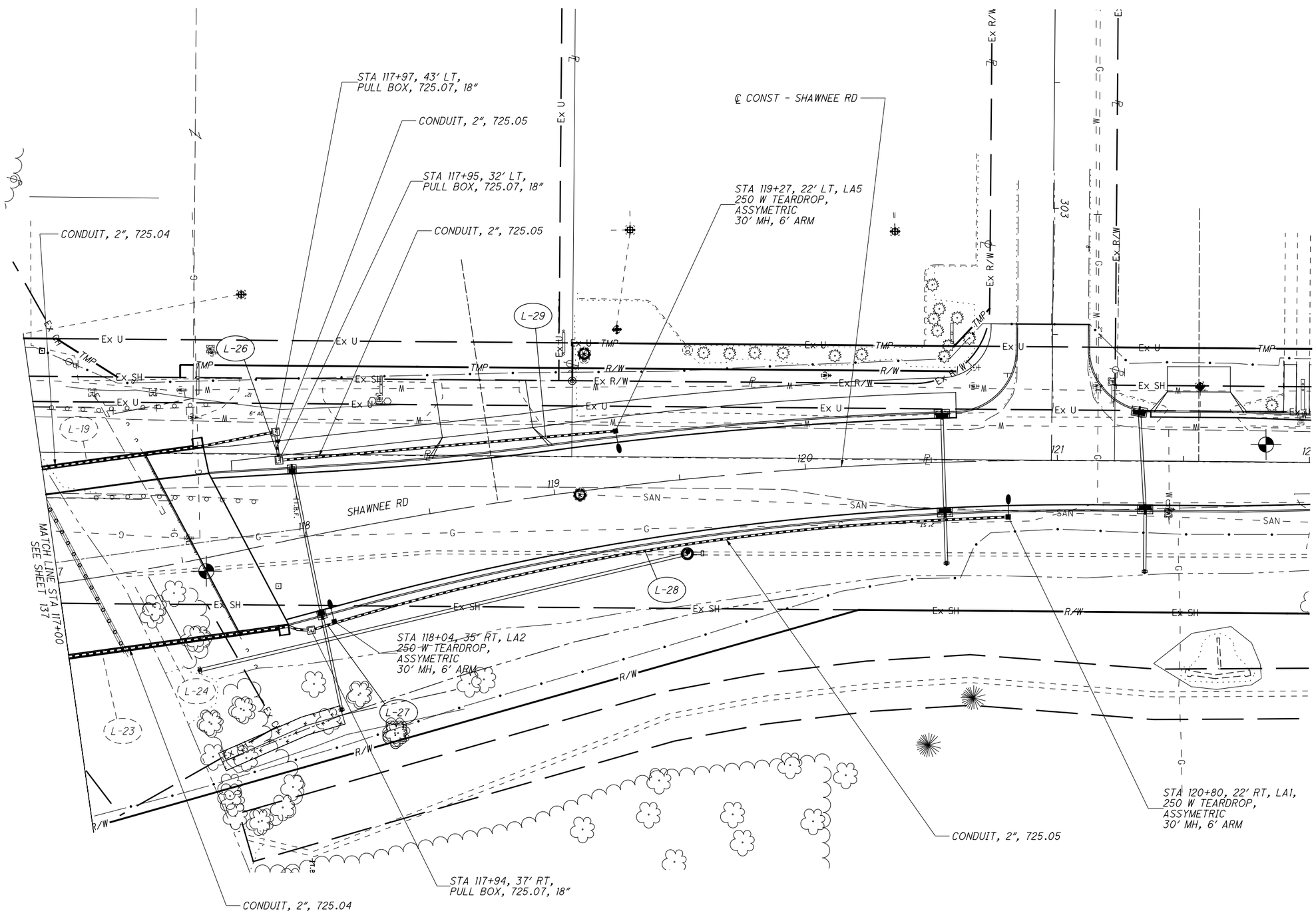

HORIZONTAL SCALE IN FEET
0 10 20 40

CALCULATED JMZ
CHECKED EWP

LIGHTING PLAN
STA 117+00.00 TO STA 122+00.00

ALL-SHAWNEE RD

M:\Proj\1121\1001\77305\lighting\sheets\77305LP003.dgn 1/13/2014 5:31:06 PM scorcoran

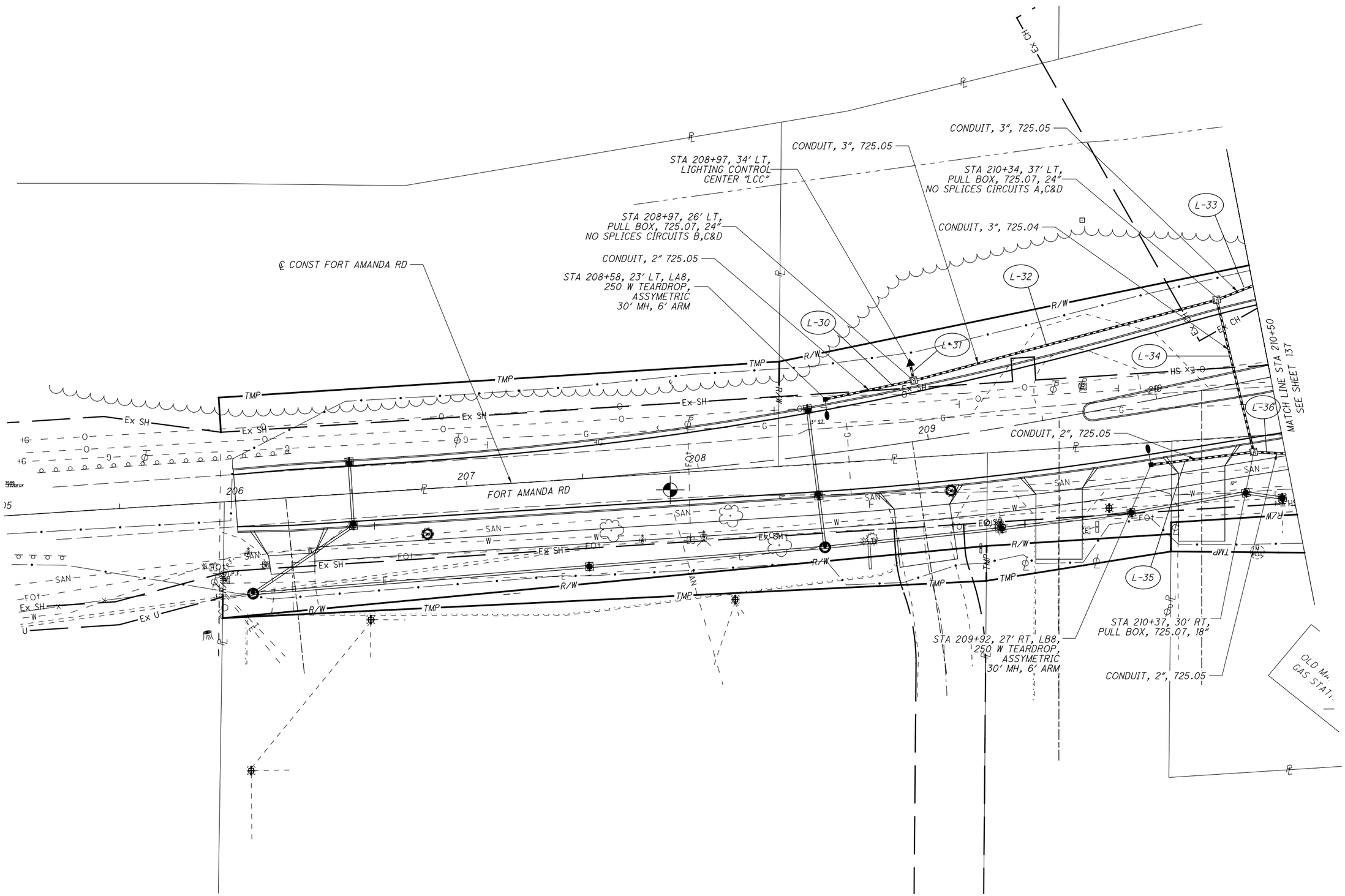

HORIZONTAL SCALE IN FEET
0 10 20 40

CALCULATED JMZ
CHECKED EWP

LIGHTING PLAN
STA 205+00.00 TO STA 210+50.00

ALL-SHAWNEE RD

139
206

M:\Proj\1121\1001\77305\lighting\sheets\77305LP004.dgn 3/2/2014 3:07:24 PM scorcoran

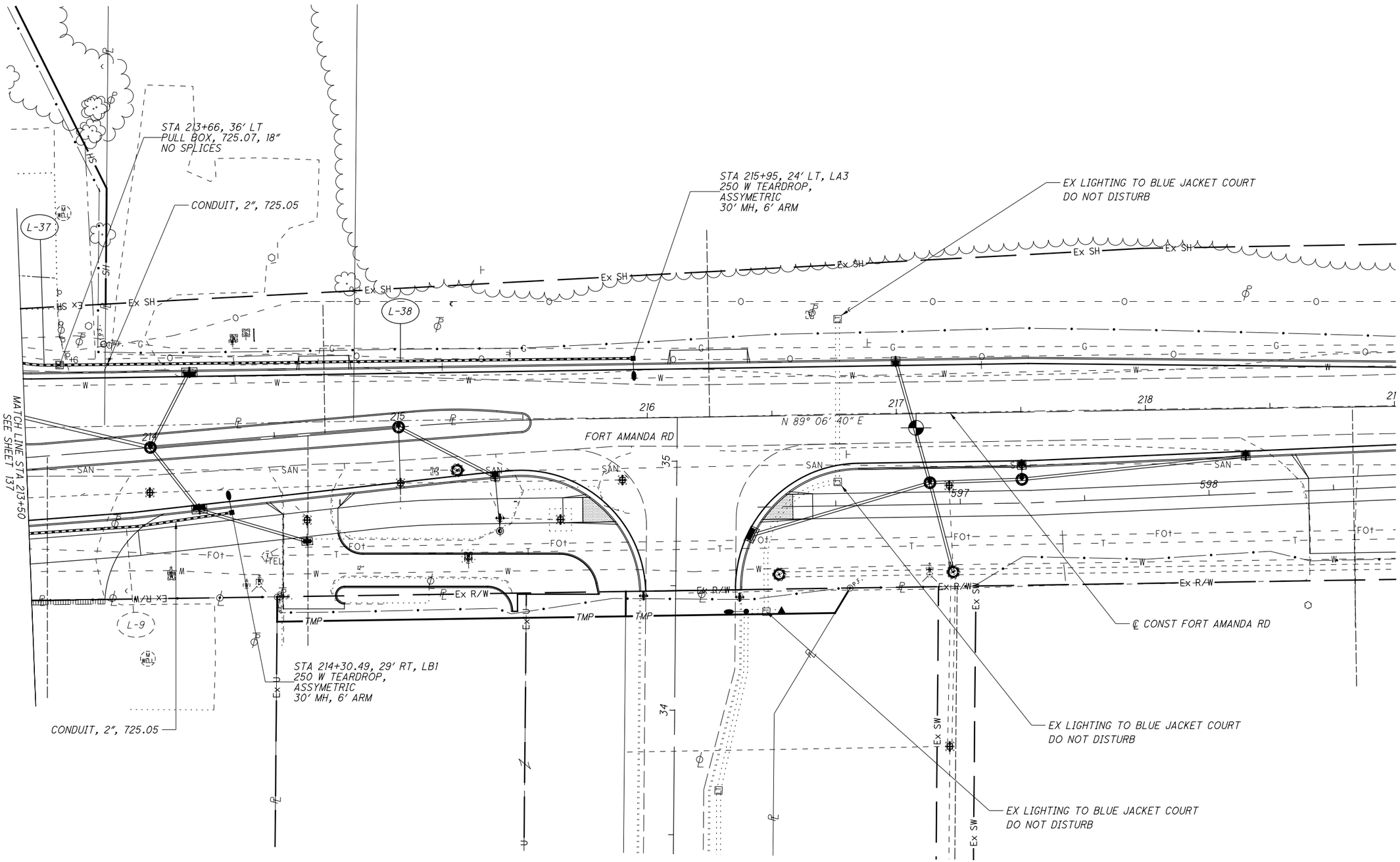

HORIZONTAL SCALE IN FEET
0 10 20 40

CALCULATED JMZ
CHECKED EWP

LIGHTING PLAN
STA 210+50.00 TO STA 216+00.00

ALL-SHAWNEE RD

140
206

M:\Proj\1121\1001\77305\lighting\sheets\77305LP005.dgn 1/13/2014 5:31:07 PM scorcoran

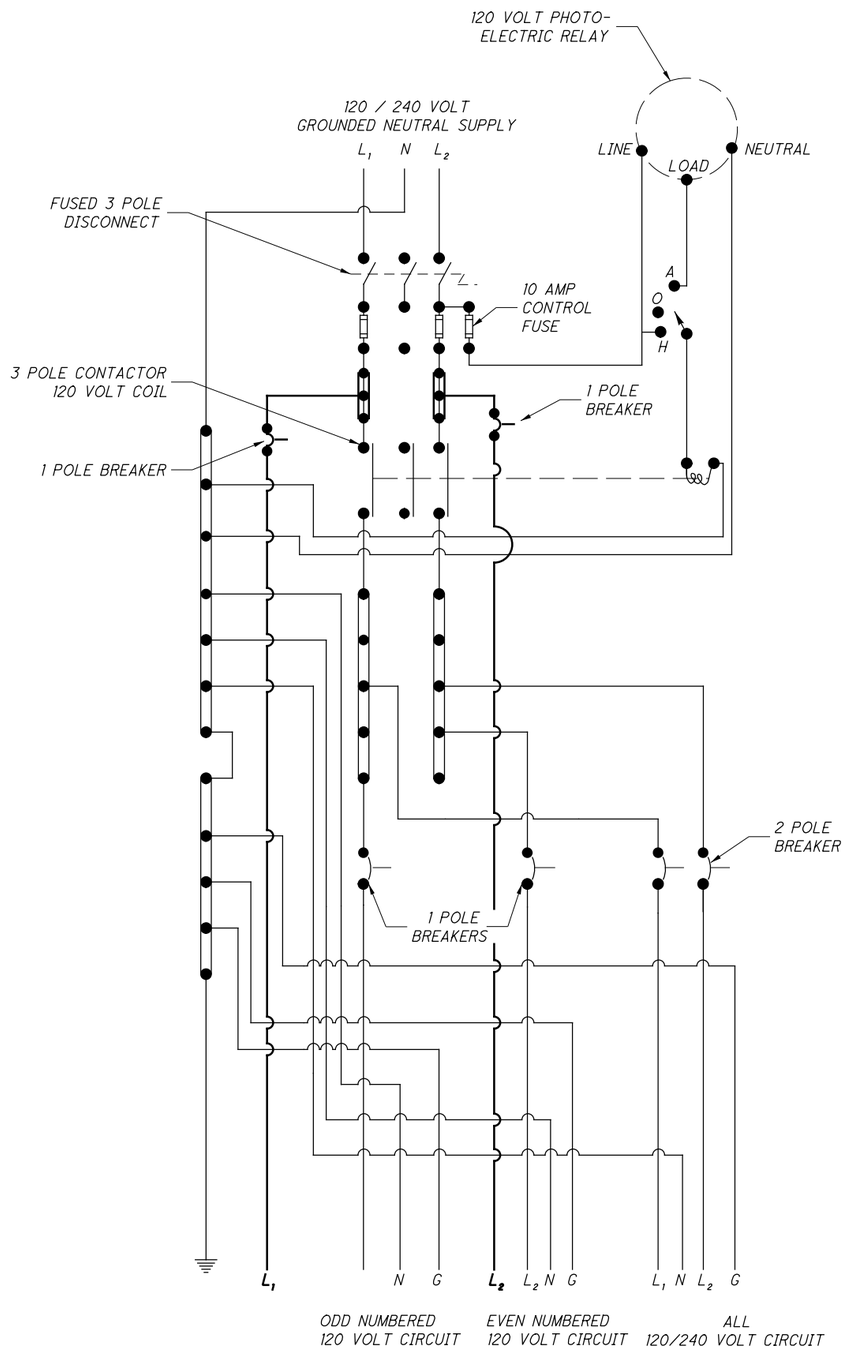

120/240 VOLT CONNECTIONS

CONTROL CENTER WIRING DETAIL (MODIFIED)

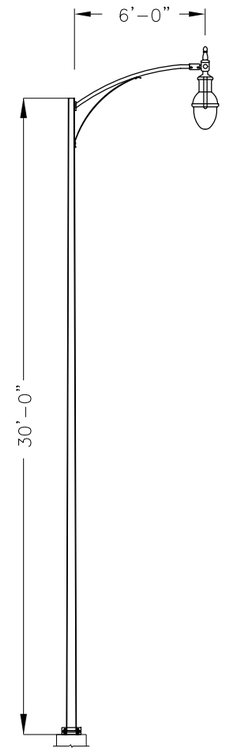

LUMINAIRE, DECORATIVE, AS PER PLAN

SEE STANDARD CONSTRUCTION DRAWINGS FOR POLE BASE DETAILS.

LIGHTING FIXTURE AND POLE SCHEDULE

SYMBOL	DESCRIPTION	NUMBER OF LAMPS	LAMP TYPE	LAMP SIZE	VOLTAGE	MANUFACTURER AND CATALOG NUMBER	POLE
	ASSYMETRIC TEARDROP STYLE, 250 WATT HIGH PRESSURE SODIUM FIXTURE ON A ROUND TAPERED ALUMINUM POLE WITH 6' ARM AND 30' MOUNTING HEIGHT	1	HIGH PRESSURE SODIUM	250W	240V MULTI-TAP BALLAST	HOLOPHANE ESU-250HP-24-B-4	30' ROUND TAPERED ALUMINUM
	CONCRETE ENCASED IN GRADE FLOOD LIGHT 100 WATT PULSE START METAL HALIDE WITH ROCK GUARD AND GROUT MASK FOR FIXTURE SUPPORT DURING CONCRETE POUR.	1	METAL HALIDE	100W	120V MULTI-TAP BALLAST	KIM LTV710SP/100PMH120/RG10/GM10 OR APPROVED EQUAL	N/A

CALCULATED JMZ
CHECKED EWP

LIGHTING DETAILS

ALL-SHAWNEE RD

M:\Proj\1121\1001\77305\lighting\sheets\77305LD001.dgn 3/3/2014 8:54:10 AM scorcoran

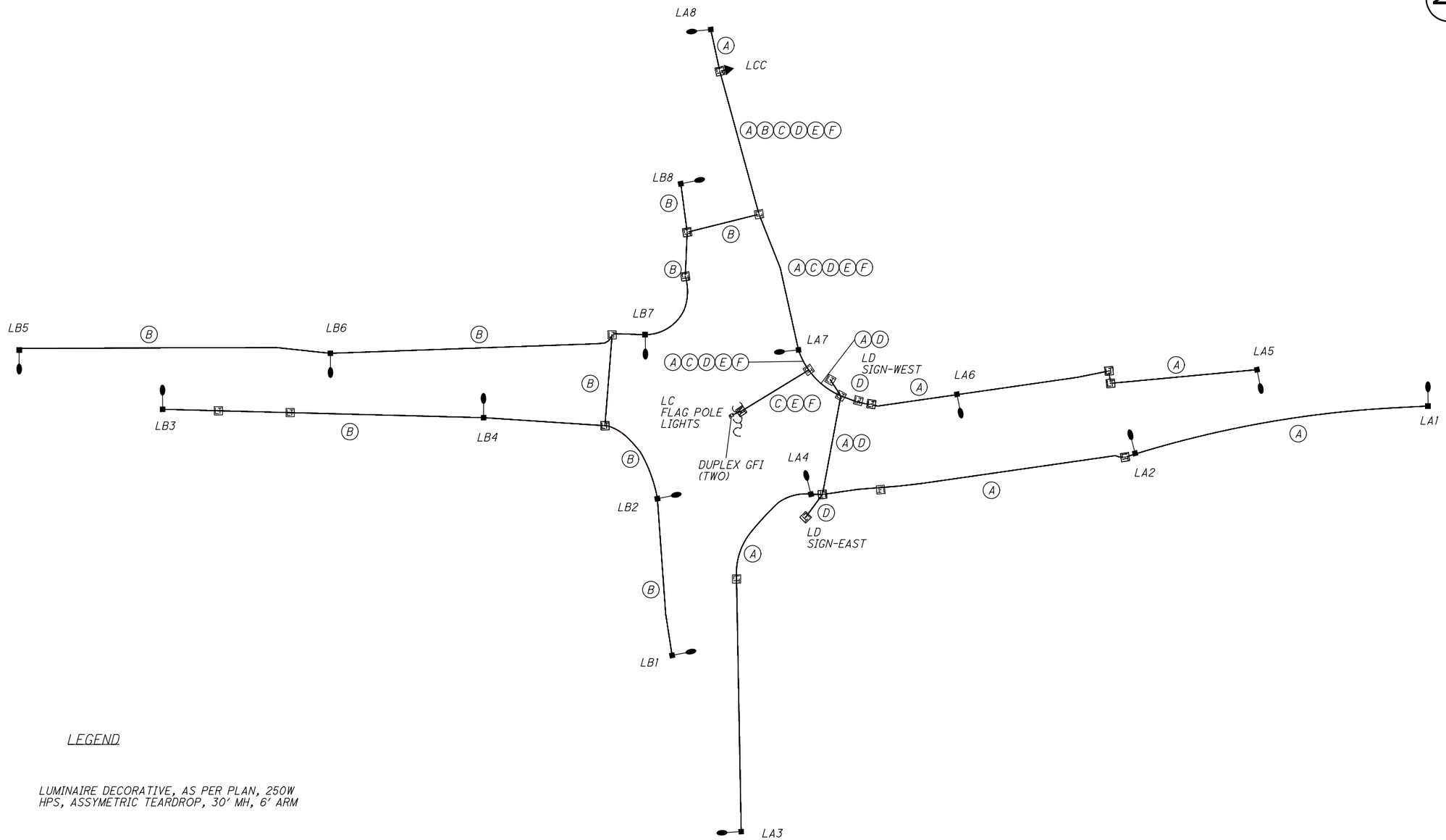

LEGEND

LUMINAIRE DECORATIVE, AS PER PLAN, 250W HPS, ASSYMETRIC TEARDROP, 30' MH, 6' ARM

LIGHTING CONTROL CENTER "LCC" 120/240 VOLT, 100 AMP, 3-WIRE, SINGLE PHASE

(X) 3-NO. 8 AWG, 600 VOLT DISTRIBUTION CABLE IN 2" CONDUIT (3" UNDER PAVEMENT) X = CIRCUIT NUMBER

LIGHTING CONTROL CENTER "LCC", 120/240 VOLT, SINGLE PHASE, 3-WIRE, 100 AMP

POWER SERVICE	LINE VOLTAGE (VOLTS)	CONNECTED LOAD (AMPS)	SERVICE ENTRANCE CABLE (AWG)	ENCLOSURE RATING (AMPS)	CIRCUIT NO.	CIRCUIT LOAD (AMPS)	CIRCUIT FUSE SIZE (AMPS)	CIRCUIT CABLE SIZE (AWG)	MAINTAINING AGENCY
LCC	240	29	BY OTHERS	100	A	9.6	20 (2-P)	8	ALLEN COUNTY
	240				B	9.6	20 (2-P)	8	
	120				C	9	20 (1-P)	8	
	120				D	1	20 (1-P)	8	
	120				E	16	20 (1-P)	4	
	120				F	16	20 (1-P)	4	

CALCULATED JMZ
CHECKED EWP

LIGHTING CIRCUIT DIAGRAM

ALL-SHAWNEE RD

M:\Proj\1121\1001\77305\lighting\sheets\77305LC001.dgn 3/11/2014 2:50:46 PM scorcoran

IRRIGATION SYSTEM NOTES:

1. CONTRACTOR TO INSTALL ONE 4" SCHEDULE 80 PVC SLEEVE UNDER CENTRAL ISLAND ROADWAY TO ACCOMMODATE IRRIGATION PIPING AND ELECTRICAL SUPPLY. SLEEVE SHALL EXTEND 18" MINIMUM BEYOND THE BACK OF CURB ON EACH END. PROVIDE ENGINEER WITH PROPOSED LOCATION AND INSTALLATION METHOD FOR SLEEVE FOR APPROVAL PRIOR TO INSTALLATION.

2. CONTRACTOR TO DESIGN AND INSTALL IRRIGATION SYSTEM TO INCLUDE ALL NECESSARY PIPING, SPRINKLER HEADS, CONTROLLER, BACKFLOW PREVENTION, FITTINGS, HOSE BID, VALVES, ETC. CONTROLLER TO BE IN A VALVE BOX. CONTRACTOR SHALL SUBMIT PROPOSED LAYOUT OF ALL COMPONENTS OF IRRIGATION SYSTEM TO INCLUDE COVERAGE OF ENTIRE CENTRAL ISLAND FOR REVIEW AND APPROVAL BY ENGINEER PRIOR TO INSTALLATION. LAYOUT SHALL INCLUDE ALL NECESSARY APPROVALS FROM LOCAL GOVERNMENT, IF METER IS REQUIRED, AS WELL AS ELECTRICAL AND WATER SUPPLY LOCATION AND LAYOUT.

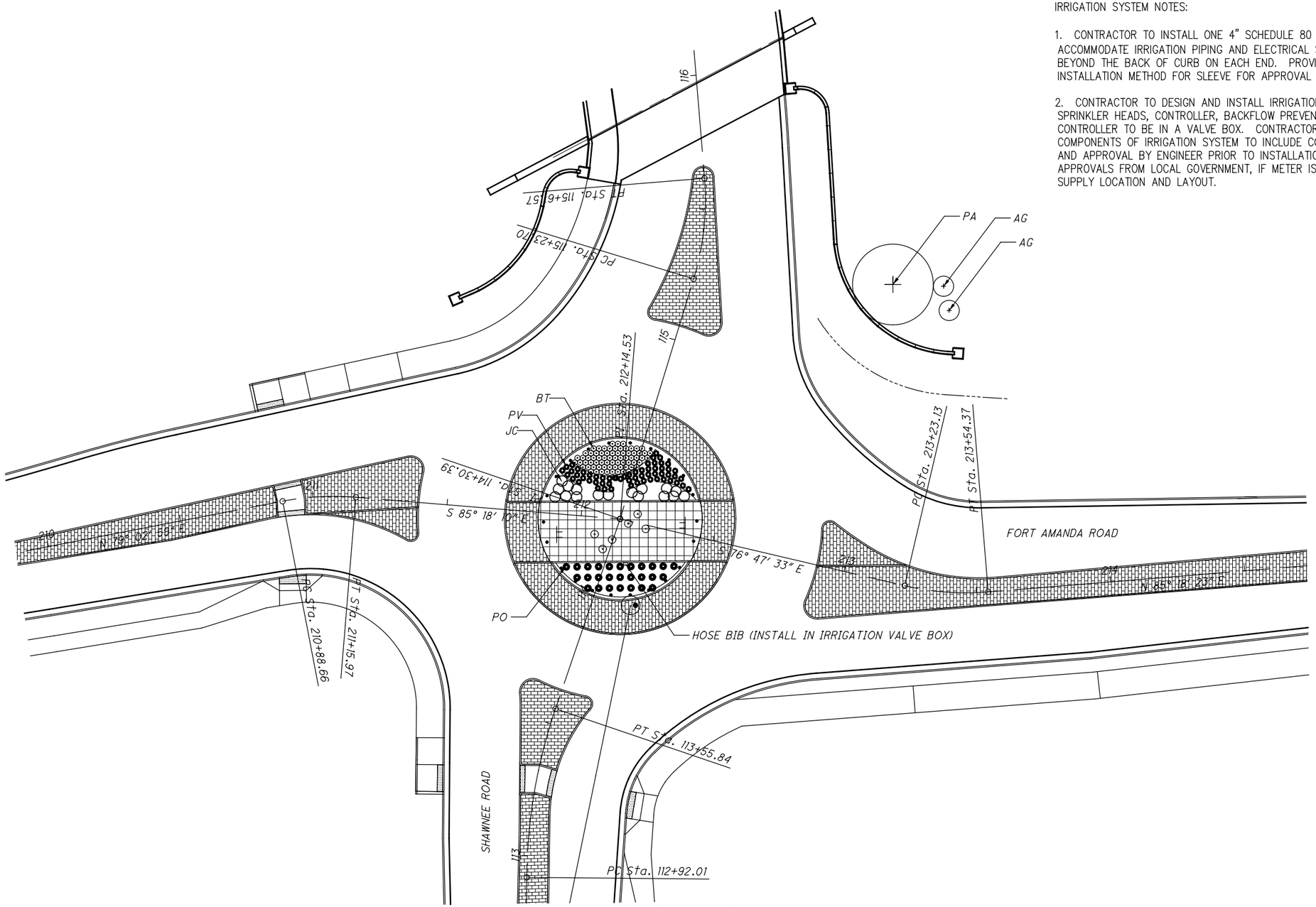

PLANTING SCHEDULE

ITEM	UNIT	DESCRIPTION	QTY.	KEY	COMMON NAME	CONDITION
661	Each	DECIDUOUS TREE, 2" CALIPER, AMELANCHIER X GRANDIFLORA	2	AG	Apple Serviceberry	
661	Each	DECIDUOUS TREE, 2-1/2" CALIPER, PLATANUS X ACERIFOLIA 'BLOODGOOD'	1	PA	Bloodgood London Planetree	
661	Each	DECIDUOUS SHRUB, 18" HEIGHT, BERBERIS THUNBERGII 'MARIA'	72	BT	Sunjoy Gold Pillar Barberry	
661	Each	EVERGREEN SHRUB, 30" HEIGHT, JUNIPERUS CHINENSIS 'SEA GREEN'	17	JC	Sea Green Juniper	
661	Each	PERENNIAL, NO. 2, PENNISETUM ORIENTALE 'KARLEY ROSE'	27	PO	Karley Rose Fountain Grass	
661	Each	PERENNIAL, NO. 3, PANICUM VIRGATUM 'HEAVY METAL'	59	PV	Blue Switch Grass	

N

0 10 20 40
HORIZONTAL SCALE IN FEET

CALCULATED JRL
CHECKED SGM

LANDSCAPE PLAN SHEET
SHAWNEE & FORT AMANDA RD

ALL- SHAWNEE RD

M:\Proj\1121\100\77305\landscape\sheets\77305PP001.dgn 3/3/2014 8:54:40 AM scorcoran

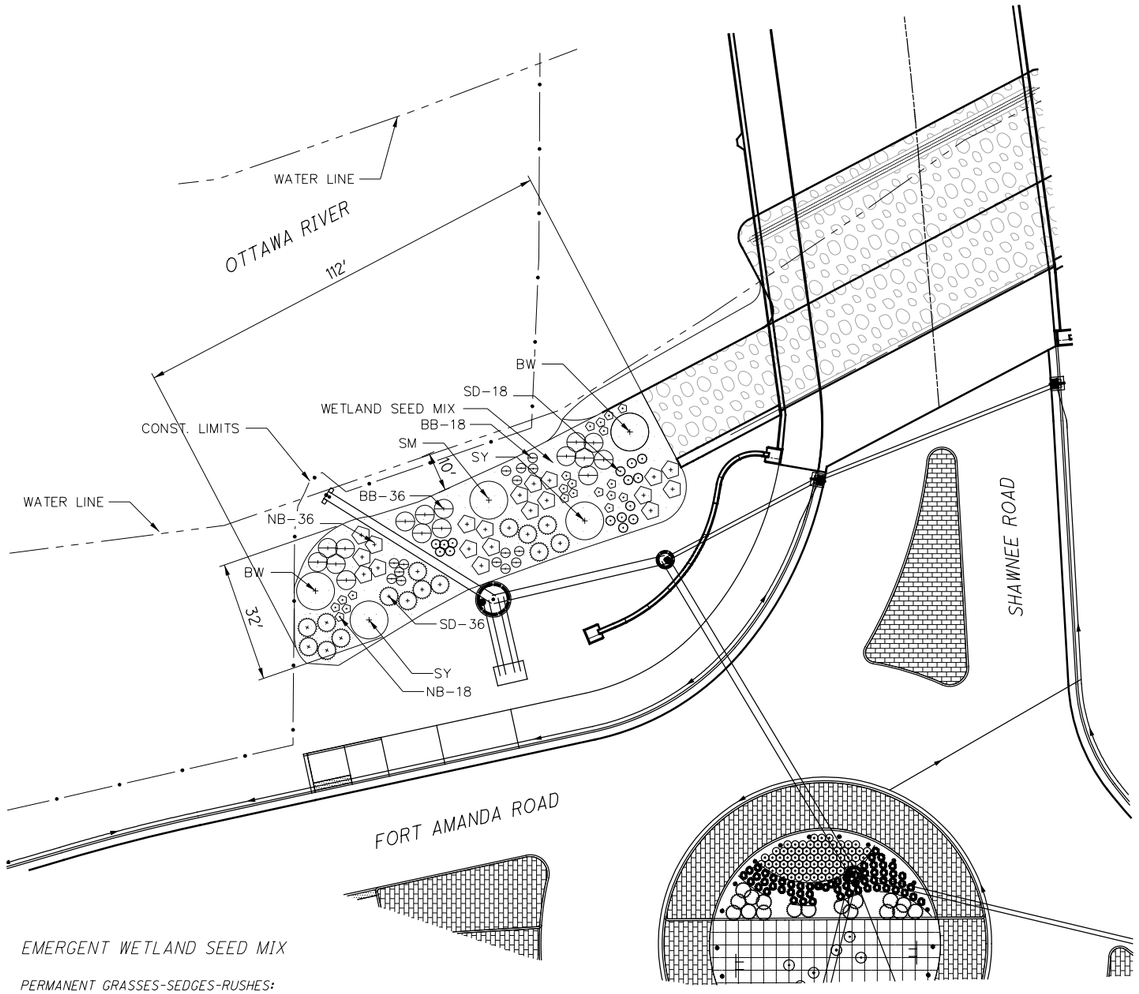

EMERGENT WETLAND SEED MIX

PERMANENT GRASSES-SEDGES-RUSHES:

SCIENTIFIC NAME	COMMON NAME	PLS OUNCE/ACRE
CAREX COMOSA	BRISTLY SEDGE	2.50
CAREX LACUSTRIS	COMMON LAKE SEDGE	0.25
CAREX LURIDA	BOTTLEBRUSH SEDGE	4.00
CAREX VULPINODEA	BROWN FOX SEDGE	6.00
ELEOCHARIS OVATA	BLUNT SPIKE SEDGE	1.00
LEERSIA ORYZOIDES	RICE CUT GRASS	3.00
JUNCUS EFFUSUS	COMMON RUSH	1.00
SCIRPUS ACUTUS	HARD-STEMMED BULRUSH	2.50
SCIRPUS PUNGENS	CHAIRMAKER'S RUSH	4.00
SCIRPUS VALIDUS	GREAT BULRUSH	6.00

FORBS:

SCIENTIFIC NAME	COMMON NAME	PLS OUNCE/ACRE
ACORUS CALAMUS	SWEET FLAG	0.50
ALISMA SPP.	WATER PLANTAIN -VARIOUS MIX-	2.00
ASCLEPIAS INCARNATA	SWAMP MILKWEED	1.50
CEPHALANTHUS OCCIDENTALIS	BUTTONBUSH	0.50
DECODON VERTICILLATUS	SWAMP LOOSESTRIFE	0.50
EUPATORIUM MACULATUM	SPOTTED JOE-PYE WEED	0.50
HIBISUS SPP.	ROSEMALLOW -VARIOUS MIX-	3.00
IRIS VIRGINICA	BLUE FLAG	6.00
LOBELIA CARDINALIS	CARDINAL FLOWER	0.25
LOBELIA SIPHILITICA	GREAT BLUE LOBELIA	1.50
LYCOPUS AMERICANUS	COMMON WATER HOREHOUND	0.25
MIMULUS RINGENS	MONKEY FLOWER	1.00
PELTANDRA VIRGINICA	ARROW ARUM	16.00
PENTHORUM SEDOIDES	DITCH STONECROP	0.50
POLYGONUM SPP.	PINKWEED -VARIOUS MIX-	0.50
PONTEDERIA CORDATA	PICKEREL WEED	10.00
SAGITTARIA LATIFOLIA	COMMON ARROWHEAD	2.00
SPARGANIUM AMERICANUM	AMERICAN BUR REED	1.00
SPARGANIUM EURYCARPUM	COMMON BUR REED	4.00
VERBENA HASTATA	BLUE VERVAIN	1.00

TEMPORARY COVER:

SCIENTIFIC NAME	COMMON NAME	PLS OUNCE/ACRE
AVENA SATIVA	COMMON OAT	360.00
LOLIUM MULTIFLORUM	ANNUAL RYE	100.00

GENERAL NOTES:

1. HAND SEED ENTIRE WETLAND SEED MIX AREA AFTER PLANTING OF TREES AND SHRUBS.

2. DO NOT SEED IF FLOODED.

3. MULCH SEEDED AREA WITH APPROVED EROSION BLANKET (BIODEGRADABLE) (SEE SHEET 52).

4. SHRUBS ARE TO BE PLANTED IN GROUPS OF FIVE AS SHOWN ON THE PLAN.

RIPARIAN BUFFER AREA RESTORATION

WORK ITEM DESCRIPTION

THIS WORK SHALL INCLUDE THE PROTECTION AND PERMANENT RESTORATION OF THE RIPARIAN HABITAT WITHIN THE LIMITS DISTURBED BY THE CONSTRUCTION OF THE PROJECT.

THE RESTORATION WILL CONSIST OF REGRADING TO PRECONSTRUCTION CONTOURS AND REESTABLISHMENT OF NATIVE VEGETATION. THIS WORK WILL ALSO REQUIRE RIPARIAN RESTORATION USING POTTED AND BARE ROOT PLANT STOCK PLANTED AND MAINTAINED THROUGHOUT THE PERIOD OF ESTABLISHMENT.

THE CONTRACTOR SHALL COORDINATE THE VARIOUS ASPECTS OF THIS PROJECT IN ORDER TO COMPLY WITH THESE LIMITATIONS AND ALL OTHER LIMITATIONS CITED HEREIN.

RESTORATION PLAN

THE RESTORATION PLAN SHALL BE PERFORMED ON ALL EXISTING FLOOD PLAIN, WETLANDS, AND JURISDICTIONAL DITCHES TEMPORARILY DISTURBED BY THE PROJECT. THE WORK IS TO FOLLOW THE OHIO DEPARTMENT OF TRANSPORTATION (ODOT) CONSTRUCTION AND MATERIAL SPECIFICATIONS OF JANUARY 1, 2010, OR ANY SUPPLEMENTAL SPECIFICATION OR PROPOSAL NOTE CITED HEREIN AND THE FOLLOWING SPECIFICATIONS:

1. UNDER NO CIRCUMSTANCES WILL THE CONTRACTOR BE PERMITTED BEYOND THE CONSTRUCTION LIMITS AS SHOWN IN THE PLANS. THE CONTRACTOR SHALL LIMIT TREE REMOVAL TO THE MAXIMUM EXTENT POSSIBLE.

2. TOPSOIL SHALL BE STRIPPED TO A DEPTH OF 6 INCHES AND STOCKPILED ON SITE PRIOR TO DEEP EXCAVATION AND/OR PLACING TEMPORARY FILL MATERIALS. TOPSOIL FROM THE IMPACTED FLOOD PLAIN AND WETLANDS SHALL BE STOCKPILED SEPARATELY FROM UPLAND SOILS. PAYMENT FOR ALL LABOR SHALL BE INCLUDED IN THE UNIT COST FOR ITEM 651 TOPSOIL STOCKPILED. (SEE NOTE ON SHEET 9)

3. ONCE CONSTRUCTION IS COMPLETE, THE TEMPORARY FILL MATERIAL WILL BE REMOVED TO THE SURFACE OF THE ORIGINAL SUBSOIL. THE SUBSOIL WILL BE DISCED AS NEEDED TO REMOVE COMPACTION. PAYMENT FOR ALL LABOR, EQUIPMENT AND MATERIALS FOR THE ABOVE SHALL BE INCLUDED IN THE UNIT COST FOR ITEM 654 RENOVATION EXISTING SOIL, AS PER PLAN. (SEE NOTES ON SHEET 9)

4. RESTORATION SHALL BEGIN AFTER ROUGH GRADING IS COMPLETE.

RESTORATION PLAN (CONTINUED)

5. FOLLOWING RESTORATION, THE TOPSOIL SHALL BE REPLACED TO MEET PRE- CONSTRUCTION CONTOURS. FOLLOWING TOPSOIL REPLACEMENT AND PRIOR TO THE ESTABLISHMENT OF VEGETATION, ALL AREAS WITHIN THE RESTORED FLOOD PLAINS, WETLANDS, AND JURISDICTIONAL DITCHES SHALL RECEIVE A 4-INCH LOOSE LAYER OF STERILIZED LEAF COMPOST. THIS MATERIAL IS TO BE DISCED INTO THE TOPSOIL LAYER TO A DEPTH OF 6 INCHES. THE FINAL, PRE-CONSTRUCTION GRADES SHOULD BE ACHIEVED FOLLOWING THIS TASK, PAYMENT FOR ALL LABOR, EQUIPMENT AND MATERIALS FOR THE ABOVE SHALL BE INCLUDED IN THE UNIT COST FOR ITEM 652 PLACING STOCKPILED TOPSOIL (SEE NOTE ON SHEET 9)

6. AS SHOWN IN THE DRAWING, A 110-X 29 -FOOT (354 SQ YD) RIPARIAN ZONE WILL BE REESTABLISHED ALONG THE SOUTH BANK OF THE OTTAWA RIVER WITHIN THE CONSTRUCTION LIMITS. THE RIPARIAN ZONE WILL BE PLANTED WITH A MIXTURE OF POTTED TREES AND BAREROOT SHRUBS OF SIMILAR COMPOSITION AS THE EXISTING RIPARIAN ZONE.

7. TREES SHALL BE INSTALLED WITHIN 14 DAYS AFTER FINAL TOPSOIL PLACEMENT AND AMENDMENT. PAYMENT FOR ALL LABOR, EQUIPMENT AND MATERIALS SHALL BE INCLUDED IN THE UNIT COST FOR ITEM 661.

CONSTRUCTION LIMITS

THE LIMITS SHOWN ON THE PLANS DEFINE THE CONSTRUCTION LIMITS FOR THE PHYSICAL CONSTRUCTION. UNDER NO CIRCUMSTANCES SHALL THE CONTRACTOR ENTER UPON THE PROPERTY OUTSIDE THE DESIGNATED LIMITS SHOWN ON THESE PLANS. THE FLOOD PLAIN, WETLANDS, JURISDICTIONAL DITCHES AND OTHER RESOURCES MAY BE IMPACTED. THEREFORE, IT IS IMPERATIVE THAT THE CONTRACTOR RESPECT THE CONSTRUCTION LIMITS AND PROHIBIT THE TRESPASS OUTSIDE OF THE CONSTRUCTION LIMITS.

ACCURACY OF SUBSURFACE INFORMATION

THE OWNER AND PROJECT ENGINEER DO NOT WARRANT OR GUARANTEE THE ACCURACY OR COMPLETENESS OF THE SUBSURFACE INFORMATION PROVIDED HEREIN. THE CONTRACTOR IS REQUIRED TO INTERPRET TEST DATA ACCORDING TO THEIR OWN JUDGMENT, AND ACKNOWLEDGES THAT THEY ARE NOT RELYING UPON THE DATA PROVIDED AS ACCURATELY DESCRIBING THE SUBSURFACE CONDITIONS THAT MAY BE FOUND TO EXIST. THE CONTRACTOR SHALL MAKE ADDITIONAL INVESTIGATIONS OF THEIR OWN TO INFORM THEMSELVES AS TO THE SURFACE AND SUBSURFACE WATER CONDITIONS, ROCK, AND OTHER MATERIALS THAT MAY BE ENCOUNTERED, PRIOR TO SUBMITTING A BID.

ITEM 203 - EXCAVATION

ANY DEWATERING REQUIRED FOR CONSTRUCTION PURPOSES SHALL BE INCLUDED IN ITEM 203 EXCAVATION.

SOIL AND EROISION CONTROL

WORK SHALL BE DONE IN ACCORDANCE WITH ODOT SUPPLEMENTAL SPECIFICATION 832 AND OHIO EPA/NPDES REQUIREMENTS. ADDITIONALLY, THESE ITEMS SHALL MEET THE REQUIREMENTS OF ODOT C&MS 108.04.

CLEARING AND GRUBBING

THE CONTRACTOR SHALL LIMIT THE SURFACE AREA OF ERODIBLE EARTH MATERIAL EXPOSED BY CLEARING AND GRUBBING, EXCAVATION, AND EMBANKMENT OPERATIONS AS DETERMINED BY THE PROJECT CONDITIONS. THE CONTRACTOR SHALL PRESERVE EXISTING VEGETATION WHERE ATTAINABLE AND TEMPORARILY SEED AND MULCH DISTURBED IDLE AREAS AS STATED.

INACTIVE CLEARED AND GRUBBED AREAS THAT ARE SCHEDULED TO REMAIN IDLE FOR MORE THAN 45 DAYS SHALL BE STABILIZED WITH VEGETATION (I.E. TEMPORARY SEED AND MULCH) WITHIN 7 DAYS FOLLOWING CLEARING AND GRUBBING OPERATIONS. IF AN AREA IS WITHIN 50 FEET OF ANY BODY OF WATER (I.E. STREAM, RIVER, POND ETC.) IT SHALL BE VEGETATED WITHIN 2 DAYS FOLLOWING CLEARING AND GRUBBING OPERATIONS.

ITEM 661 PLANTING TREES

ITEMS QUANTIFIED FOR THE RIPARIAN BUFFER AREA SHALL BE USED IN THE RIPARIAN BUFFER AREAS LOCATED ALONG THE SOUTH BANK OF THE OTTAWA RIVER AS DISCUSSED IN THE RESTORATION PLAN.

TREE PLANTING FOR THE RIPARIAN BUFFER ZONE UNDER THIS SECTION SHALL BE COMPOSED OF POTTED TREE SPECIMENS AND SHALL BE CARRIED OUT IN A MANNER THAT PREVENTS THE ROOTS FROM DRYING OUT, BURLAP AND BALLED (B&B) TREES ARE ALSO ACCEPTABLE. TREES WILL BE PLANTED ACCORDING TO DETAIL ON SHEET. THE CONTRACTOR SHALL NOT PLANT TREES WHEN THE SOIL IS FROZEN OR DRY. TREES SHALL BE PLANTED IN VERTICAL POSITION WITH THE ROOT COLLARS APPROXIMATELY AT OR SLIGHTLY BELOW GROUND LINE. IT IS IMPORTANT THAT TREES ARE RANDOMLY PLANTED THROUGHOUT THE RIPARIAN PLANTING ZONE RESTORATION AREA AND NOT PLANTED IN GROUPS OF LIKE SPECIES. NO TREES SHALL BE PLANTED WITHIN 10 FEET OF THE PROPOSED BURIED STORMSEWER OUTLET PIPE.

PLANTS IN THE RIPARIAN RESTORATION AREA SHALL BE PLACED AS PER PLAN IN ACCORDANCE WITH 661, LA-1.1 (10/15/10) AND LA-1.2 (1/16/09)

WITHIN 48 HOURS, UPON COMPLETION OF THE SOIL AMENDMENTS DESCRIBED HEREIN, THE LANDSCAPING DESCRIBED HEREIN SHALL BEGIN. THIS ITEM 661 LANDSCAPING IS TO BE PERFORMED BETWEEN SEPTEMBER 15 AND JUNE 1. IF THIS TIME PERIOD CAN NOT BE MET DUE TO NO FAULT OR NEGLECT OF THE CONTRACTOR, THE PROJECT ENGINEER MAY SPECIFY THAT THE AREA BE SOWN WITH THE TEMPORARY COVER MIX.

PLANTING SCHEDULE

ITEM	UNIT	DESCRIPTION	QTY.	KEY	COMMON NAME	CONDITION
661	EACH	DECIDUOUS TREE, 1" CALIPER, SALIX NIGRA	2	BW	BLACK WILLOW	POTTED-B&B
661	EACH	DECIDUOUS TREE, 1" CALIPER, PLATANUS OCCIDENTALIS	2	SY	SYCAMORE	POTTED-B&B
661	EACH	DECIDUOUS TREE, 1" CALIPER, ACER SACCHARINUM	1	SM	SILVER MAPLE	POTTED-B&B
661	EACH	DECIDUOUS SHRUB, 36" HEIGHT, CEPHALANTHUS OCCIDENTALIS	15	BB-36	BUTTONBUSH	BARE ROOT
661	EACH	DECIDUOUS SHRUB. 36" HEIGHT, CORNUS AMOMUM	15	SD-36	SILKY DOGWOOD	BARE ROOT
661	EACH	DECIDUOUS SHRUB, 36" HEIGHT, PHYSOCARPUS OPULIFOLIUS	20	NB-36	NINEBARK	BARE ROOT
661	EACH	DECIDUOUS SHRUB, 18" HEIGHT, CEPHALANTHUS OCCIDENTALIS	15	BB-18	BUTTONBUSH	BARE ROOT
661	EACH	DECIDUOUS SHRUB. 18" HEIGHT, CORNUS AMOMUM	15	SD-18	SILKY DOGWOOD	BARE ROOT
661	EACH	DECIDUOUS SHRUB, 18" HEIGHT, PHYSOCARPUS OPULIFOLIUS	20	NB-18	NINEBARK	BARE ROOT

N

HORIZONTAL SCALE IN FEET 0 10 20 40

CALCULATED JRL
CHECKED SGM

LANDSCAPE PLAN SHEET
SHAWNEE & FORT AMANDA RD

ALL- SHAWNEE RD

M:\Proj\112\1001\77305\landscape\sheets\77305PP005.dgn 3/3/2014 8:54:42 AM scorcoran

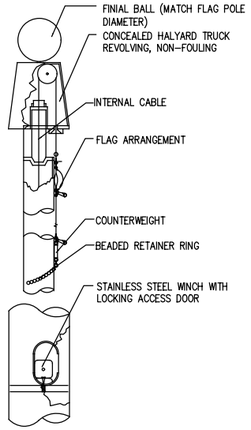

NOTES:

1. PROVIDE FLAGPOLE AS A COMPLETE UNIT PRODUCED BY A SINGLE MANUFACTURER, INCLUDING FITTINGS, ACCESSORIES, BASES, AND ANCHORAGE DEVICES. BASE SHALL BE CUSTOM AND DESIGNED TO BREAK AWAY UPON IMPACT WITH MOTOR VEHICLE.
2. ACCEPTABLE MANUFACTURERS
   A) BAARTOL COMPANY, INC. – MODEL STD–30 & STD–35
   B) EDER FLAG MANUFACTURING COMPANY, INC. – MODEL ECH–30 & ECH–35
   C) MORGAN–FRANCIS – GI SERIES
3. CONSTRUCT ALUMINUM POLE AND SHIP TO SITE IN ONE PIECE.
4. INSTALL PER MANUFACTURER'S SPECIFICATIONS. SUBMIT SHOP DRAWING OF CUSTOM BREAKAWAY BASE.
5. TALLEST FLAG POLE (35') SHALL BE INSTALLED IN THE CENTER POSITION. ADJACENT FLAG POLES (30') SHALL BE INSTALLED 12' O.C.
6. FLAG ARRANGEMENT, COUNTERWEIGHT AND BEADED RETAINER RING SHALL ACCOMMODATE ONE 6' X 10' FLAG PER POLE.
7. CONTRACTOR SHALL PROVIDE AND INSTALL FLAGS:
   A) ONE 6'X10' UNITED STATES OF AMERICA; INSTALL ON 35' POLE.
   B) ONE 6'X10' STATE OF OHIO FLAG. INSTALL ON 30' POLE.
   C) COMMUNITY FLAG BY OWNER. INSTALL ON 30' POLE.
8. POLE COLOR TO BE SELECTED BY OWNER FROM MANUFACTURER'S FULL RANGE OF COLORS. RECOMMEND CLEAR ANODIC FINISH
9. CONTRACTOR TO INSTALL 12" DEEP TEMPORARY ARTIFICIAL TREE STORAGE SLEEVES IN THE SIZE AND LOCATION AS SHOWN ON DETAIL 2 ON THIS SHEET WITHIN THE FLAGPOLE BASES. CONTRACTOR TO SUPPLY 4, 2" AND 2, 3" MECHANICAL PIPE PLUGS FOR USE WITHIN TEMPORARY ARTIFICIAL TREE STORAGE SLEEVES TO PREVENT WATER INFILTRATION. PROVIDE ENGINEER WITH SPECIFICATIONS AND MANUFACTURERS INFORMATION FOR PIPE PLUGS PRIOR TO INSTALLATION.

	POLE	A	B	C
QUANTITY	HEIGHT	DEPTH	TOP	BOTTOM
2	30'*	4'–0"	3'–0"	2'–6"
1	35'*	4'–0"	3'–0"	2'–6"

* HEIGHT MEASURED FROM FINISHED GRADE

SHAFT DESIGN CRITERIA– PROVIDE FLAGPOLE AND INSTALLATIONS CONSTRUCTED TO WITHSTAND A 100 MPH WIND VELOCITY WHEN FLYING (1) 6' x 10' FLAG.

FLAGPOLE (1)

SCALE: N.T.S.

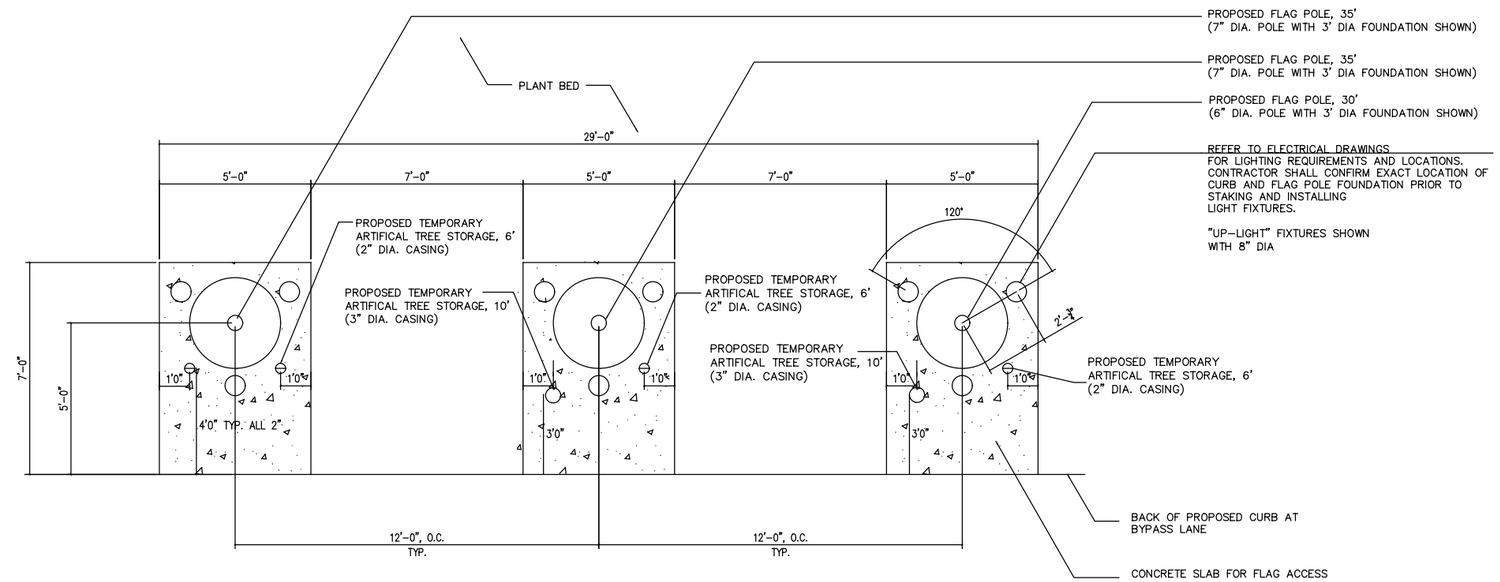

FLAG POLE LAYOUT (2)

SCALE: N.T.S.

BOLLARD SPECIFICATIONS:

1. CONTRACTOR SHALL PROVIDE AND INSTALL PERMANENT BOLLARD(S) AND REMOVABLE BOLLARDS COMPLETE FROM A SINGLE MANUFACTURER, INCLUDING BASES, ANCHORING DEVICES, AND RELATED APPURTENANCES.
2. CHAIN BARRIER (GALVANIZED, WITH POWDER COATED OR PVC FINISH) SHALL BE PROVIDED AND INSTALLED BY THE CONTRACTOR BETWEEN ALL BOLLARDS CONNECTED TO THE UPPER PORTION OF THE BOLLARD.
3. ACCEPTABLE MANUFACTURERS:
   A) RELIANCE FOUNDRY CO. LTD.; (888) 735–5680; MODEL 7589–A
   B) IRONSMITH, INC.; (800) 338–4766; MODEL 9023–2
   C) FAIR WEATHER SITE FURNISHINGS; (800) 323–1798; MODEL CB–C
4. PROVIDE BOLLARDS MADE OF ALUMINUM.
5. BOLLARD SHALL BE PERIOD STYLE WITH TAPERED SHAPE AND FLUTING, INCLUDING A ROUND FINIAL BALL TOP.
6. BOLLARD COLOR SHALL BE BLACK AND HAVE A POWDER COATED FINISH. CONFIRM COLOR SELECTION WITH OWNER PRIOR INSTALLATION.
7. REMOVABLE BOLLARDS SHALL BE LOCKABLE WITH A REMOVABLE PIN AND EXTERIOR PADLOCK, BE EASILY REMOVED, AND INSTALLED INTO A RECESSED GROUND SLEEVE/RECEIVER. WHEN BOLLARD IS TEMPORARILY REMOVED MOUNTING /GROUND HARDWARE, AND LOCKABLE HARDWARE SHALL NOT PROTRUDE ABOVE FINISH GRADE PRESENTING A HAZARD TO VEHICLE TIRES. ALL METAL HARDWARE AND FITTINGS SHALL BE GALVANIZED STEEL.
8. INSTALL PER MANUFACTURER'S SPECIFICATIONS.
9. PERMANENT BOLLARDS SHALL BE INSTALLED WITH ANCHOR BOLTS, FIT OVER PVC SLEEVE, OR OTHER MEANS PER MANUFACTURER SPECIFICATIONS TO BREAKAWAY UPON IMPACT WITH MOTOR VEHICLE. BOLLARDS ARE NOT TO BE PERMANENTLY MOUNTED INTO OR FILLED WITH CONCRETE.
10. CONTRACTOR TO PROVIDE 2" WIDE REFLECTORIZED TAPE BELOW BUT NEAR THE BALL ON EACH BOLLARD. TAPE TO BE INSTALLED AROUND THE ENTIRE CIRCUMFERENCE OF EACH BOLLARD. PROVIDE PROPOSED LOCATION OF TAPE PLACEMENT TO ENGINEER FOR APPROVAL PRIOR TO PLACEMENT.

ARTIFICIAL TREE SPECIFICATIONS:

1. Contractor to supply four (4) 6' tall and two (2) 10' tall artificial cedar trees intended for use in outdoor applications. Pre–approved supplier is Commercial Silk, International, A Division of Plantscape, Inc., 6300 Bury Drive, Minneapolis, Minnesota 55346, (800) 241–2718, Contact: Richard Wallace. Alternate sources may be considered for approval if deemed equal in quality and appearance by the engineer.
2. Artificial trees to be provided by supplier with PVC sleeves around trunk (2" for 6' tall and 3" for 10' tall) to fit into receivers to be installed by the contractor. Contractor to verify receiver is appropriate diameter prior to installation, contact artificial tree supplier for verification of diameter and depth of PVC sleeves to be provided on trees.
3. Coordinates are provided on the plans for the location of the tree receivers. Tree receivers shall be flush with top of roadway through roundabout when trees are removed.
4. Contractor responsible for ensuring that the installed artificial trees and branches have a natural appearance upon installation. Branches that are broken, bent, or misshapen will be replaced at no cost to the Owner to the satisfaction of the Owner and/or engineer.

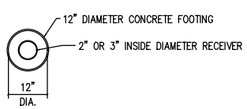

PLAN

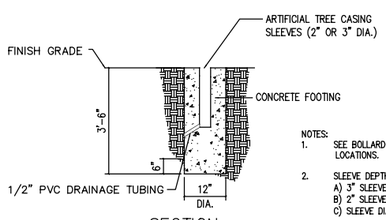

SECTION

NOTES:

1. SEE BOLLARD LAYOUT SHEET FOR COORDINATES OF ARTIFICIAL TREE SLEEVE LOCATIONS.
2. SLEEVE DEPTH:
   A) 3" SLEEVE TO BE 18" DEPTH.
   B) 2" SLEEVE TO BE 12" DEPTH.
   C) SLEEVE DIAMETERS SHOWN ARE INSIDE DIAMETER TO RECEIVE 3" OR 2" PVC.

ARTIFICIAL TREE SLEEVES, REMOVABLE (3)

SCALE: N.T.S.

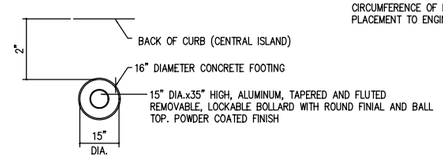

PLAN

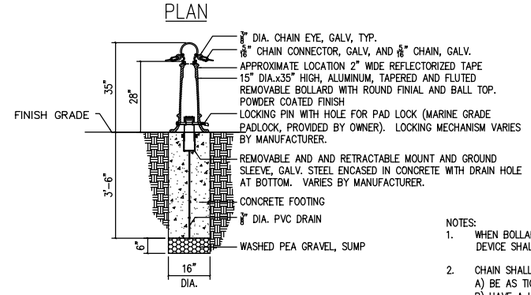

SECTION

NOTES:

1. WHEN BOLLARDS ARE REMOVED, BOLLARD MOUNTING HARDWARE AND LOCKING DEVICE SHALL NOT PROTRUDE ABOVE FINISH GRADE.
2. CHAIN SHALL:
   A) BE AS TIGHT AS POSSIBLE BETWEEN POSTS
   B) HAVE A UNIFORM SAG. LOW POINT ON CHAIN SAG SHALL BE 20" ABOVE FINISH GRADE.
   C) BE VISUALLY UNIFORM BETWEEN POSTS
3. CHAIN SHALL NOT BE TWISTED.
4. CHAIN EYES, CHAIN CONNECTORS, AND CHAIN SHALL BE POWDER COATED "BLACK".
5. POST SPACING SHALL BE UNIFORM BETWEEN END POSTS AT A 8' SPACING ± 6".
6. TOP OF BALL ON ALL BOLLARDS SHALL BE GENERALLY THE SAME ELEVATION TO PROVIDE UNIFORM APPEARANCE. THIS MAY REQUIRE REMOVABLE BOLLARDS TO BE CUSTOM HEIGHT.

BOLLARD, REMOVABLE (4)

SCALE: N.T.S.

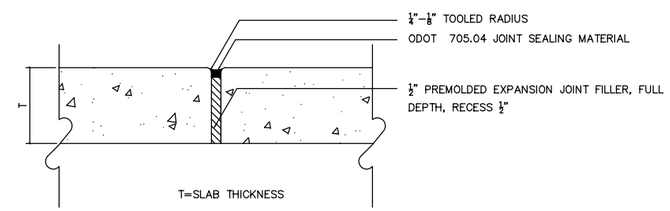

NOTE:

1. EXPANSION JOINTS SHALL BE CONSTRUCTED AT ALL PAVEMENT INTERSECTIONS AND WHERE DESIGNATED ON THE PLAN.
2. INSTALL EXPANSION JOINTS AT 40' ON CENTER UNLESS OTHERWISE NOTED.

CONCRETE EXPANSION JOINT (5)

SCALE: N.T.S.

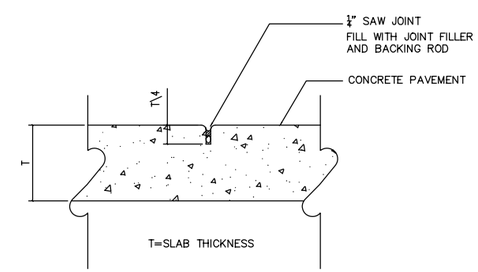

CONTRACTION JOINT (6)

SCALE: N.T.S.

N

HORIZONTAL SCALE IN FEET 0 10 20 40

CALCULATED JRL
CHECKED SGM

LANDSCAPE DETAILS - 1
SHAWNEE & FORT AMANDA RD

ALL- SHAWNEE RD

M:\Proj\1121\1001\77305\landscape\sheets\77305PP002.dgn 3/3/2014 8:54:51 AM scorcoran

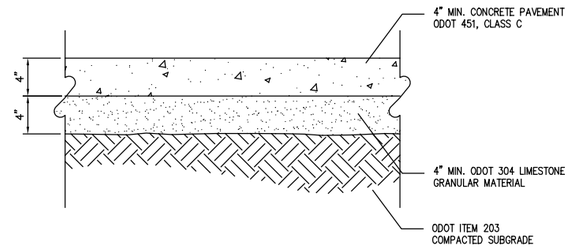

NOTE:
1. CROSS SLOPES FOR WALKS = $\frac{1}{8}$" PER FOOT ± $\frac{1}{8}$" = $\frac{1}{4}$" PER FOOT MAX.
2. WHEN ABUTTING EXISTING PAVEMENT, MATCH EXISTING GRADES AND SLOPES.
3. INSTALL CONTRACTION JOINTS AT INTERVALS EQUAL TO PAVEMENT WIDTH UNLESS NOTED OTHERWISE.
4. BROOM FINISH

CONCRETE PAVEMENT, TYPE I — 7

SCALE:

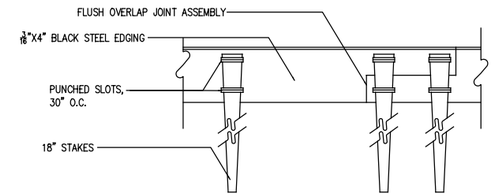

ELEVATION

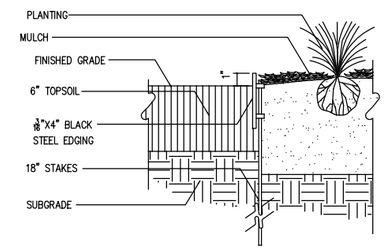

SECTION

METAL LANDSCAPE EDGING — 8

SCALE:

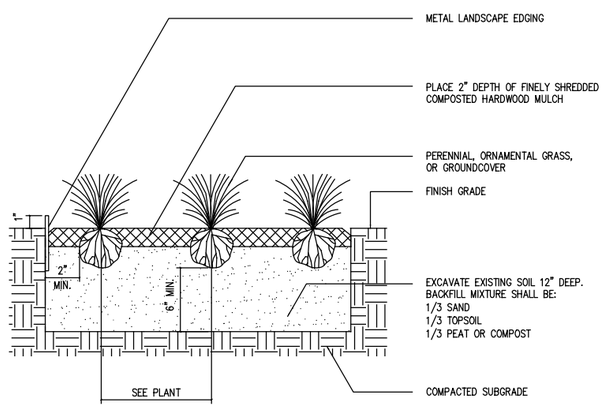

PERENNIAL/GRASSES PLANTING DETAIL — 9

SCALE:

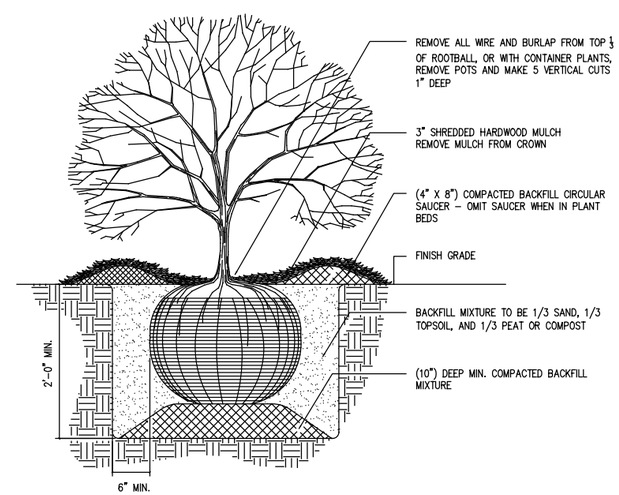

NOTES

1. SET PLANTS SO THAT TOP OF ROOT BALL IS APPROXIMATELY 2" ABOVE FINISH GRADE.
2. PLANTS SHALL BE SOAKED IMMEDIATELY FOLLOWING PLANTING.
3. ALL PLANTING BEDS SHALL BE MULCHED WITH 3" SHREDDED HARDWOOD MULCH

SHRUB INSTALLATION DETAIL — 11

SCALE:

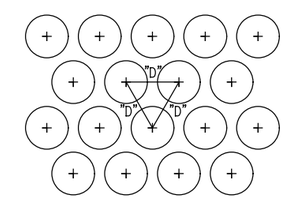

D=DIMENSION OF PLANT SPACING (SHRUB, GROUNDCOVER, OR PERENNIAL) AS INDICATED ON PLANS.

PLANT SPACING — 10

SCALE:

HORIZONTAL SCALE IN FEET: 0, 10, 20, 40

CALCULATED JRL
CHECKED SGM

LANDSCAPE DETAILS - 2
ALL- SHAWNEE RD & FORT AMANDA RD

M:\Proj\1121\1001\77305\landscape\sheets\77305PP003.dgn 3/3/2014 8:54:52 AM scorcoran

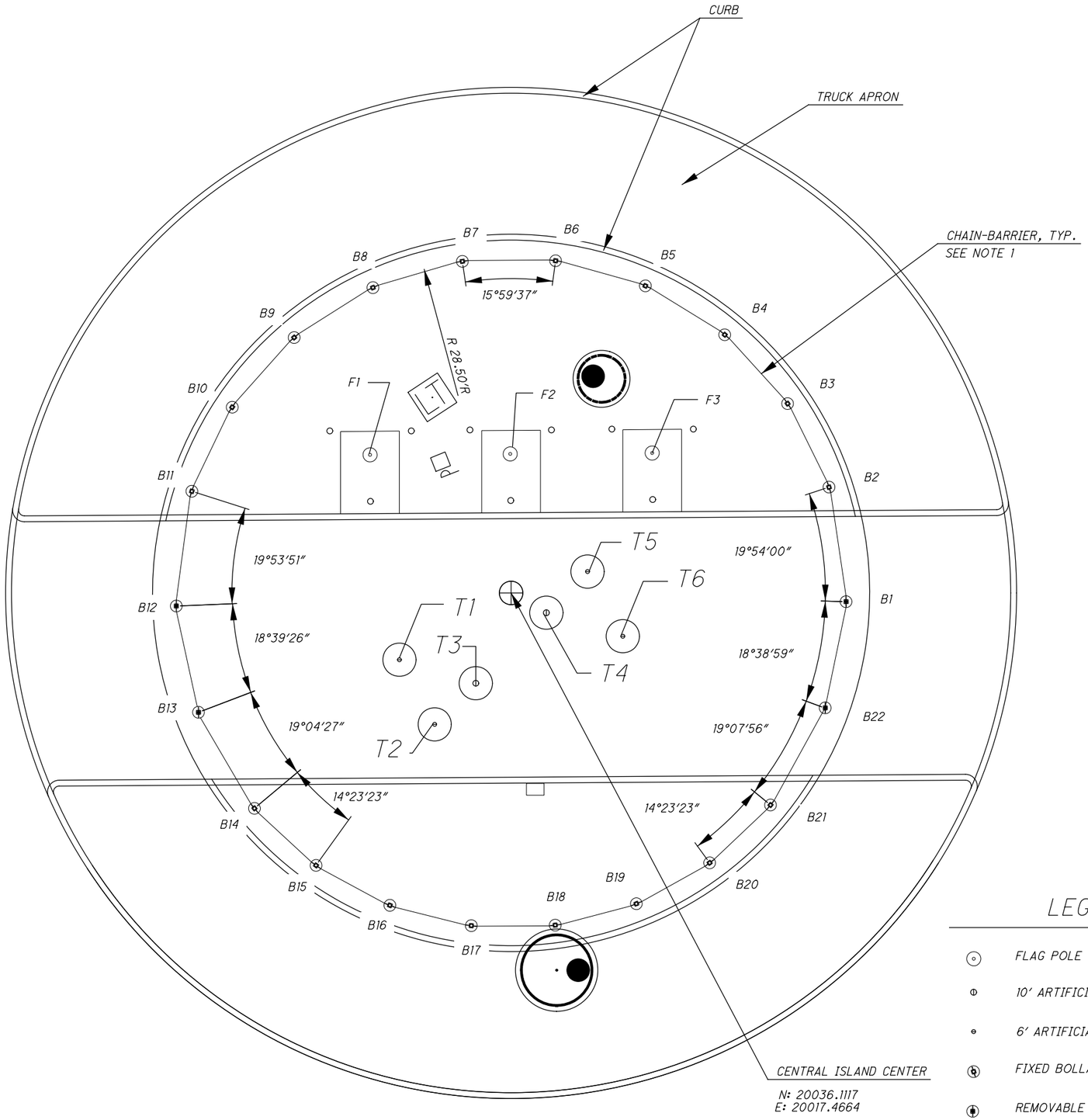

NOTE 1 : CHAIN SHALL BE REMOVABLE FROM B11 TO B14 AND FROM B2 TO B21

LEGEND

- FLAG POLE
- 10' ARTIFICIAL TREE CASING
- 6' ARTIFICIAL TREE CASING
- FIXED BOLLARD
- REMOVABLE BOLLARD
- FLOOD LIGHT
- DUPLEX GFI OUTLETS (2)

CENTRAL ISLAND BOLLARD LOCATIONS

BOLLARD NO.	NORTHING	EASTING
B1 *	20,016.72	20,064.60
B2	20,026.46	20,063.15
B3	20,033.68	20,060.07
B4	20,039.65	20,054.57
B5	20,043.58	20,047.53
B6	20,045.71	20,039.89
B7	20,045.66	20,031.96
B8	20,043.43	20,024.36
B9	20,039.19	20,017.66
B10	20,033.26	20,012.39
B11	20,026.11	20,008.95
B12*	20,016.35	20,007.63
B13*	20,007.31	20,009.52
B14	19,999.15	20,014.28
B15	19,994.29	20,019.52
B16	19,990.90	20,025.80
B17	19,989.17	20,032.72
B18	19,989.21	20,039.86
B19	19,991.03	20,046.77
B20	19,994.51	20,053.00
B21	19,999.43	20,058.18
B22*	20,007.69	20,062.83

* REMOVEABLE BOLLARD W/ SLEEVE

CENTRAL ISLAND FLAG POLE LOCATIONS

FLAG POLE NO.	NORTHING	EASTING
F1	20,029.21	20,024.11
F2	20,029.29	20,036.04
F3	20,029.36	20,048.11

CENTRAL ISLAND ARTIFICIAL TREE CASING LOCATIONS

TREE CASING NO.	NORTHING	EASTING
T1	20,011.79	20,026.61
T2	20,006.29	20,029.61
T3	20,009.79	20,033.11
T4	20,015.79	20,039.11
T5	20,019.29	20,042.61
T6	20,013.79	20,045.61

N

0 2.5 5 10
HORIZONTAL SCALE IN FEET

CALCULATED JRL
CHECKED SGM

BOLLARD LAYOUT
SHAWNEE & FORT AMANDA RD

ALL- SHAWNEE RD

M:\Proj\1121\1001\77305\landscape\sheets\77305PP004.dgn 3/3/2014 8:54:53 AM scorcoran

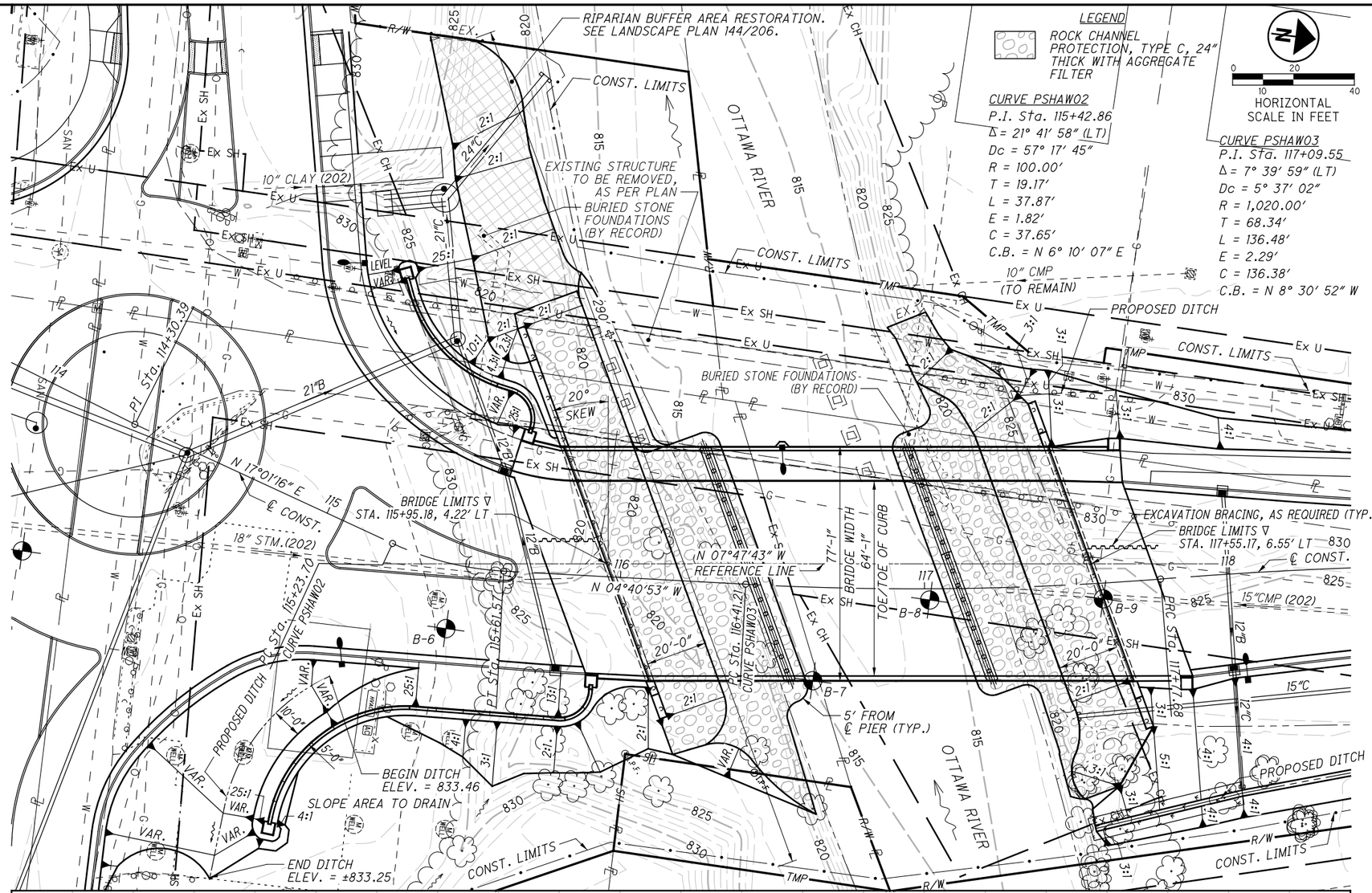

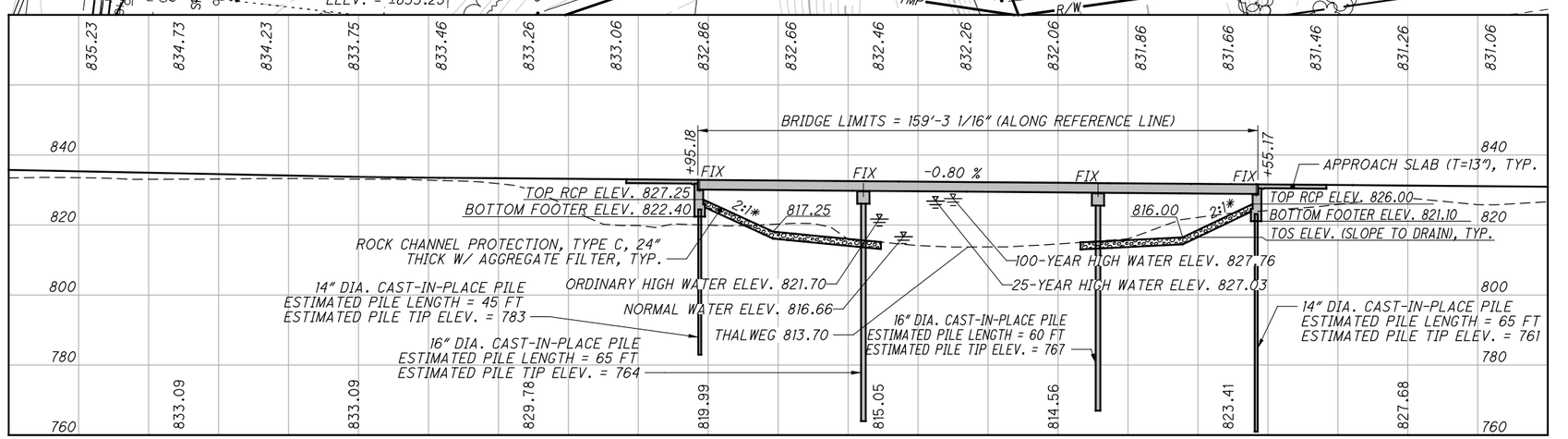

BENCHMARK DATA

BENCHMARK "O"
ELEV. 832.78 (NAVD88)
TOP CENTER OF THE CORPS OF ENGINEERS STANDARD DISK DESIGNATED "OR-1" AS FOUND AT THE TOP OF THE SOUTHEAST WINGWALL OF THE EXISTING SHAWNEE ROAD BRIDGE OVER THE OTTAWA RIVER.

NOTES

EARTHWORK LIMITS SHOWN ARE APPROXIMATE. ACTUAL SLOPES SHALL CONFORM TO PLAN CROSS SECTIONS.

NO UTILITIES WILL BE ATTACHED TO THE PROPOSED STRUCTURE.

SOIL BORINGS:

BORING	STATION	OFFSET	SURFACE ELEV.	TOP OF ROCK ELEV.
B-6	115+46.7	21.2' RT	831.82	N/A
B-7	116+64.3	30.7' RT	815.23	N/A
B-8	117+01.7	3.7' RT	815.28	N/A
B-9	117+58.5	5.2' RT	824.08	N/A

✦ BORING LOCATION

DESIGN TRAFFIC:

2010 ADT = 13590 2010 ADTT = 1359
2030 ADT = 16150 2030 ADTT = 1615
DIRECTIONAL DISTRIBUTION = 51%

HYDRAULIC DATA

DRAINAGE AREA = 134 SQ. MILES
Q (25) = 5890 CFS V (25) = 4.2 FT/S
Q (100) = 6490 CFS V (100) = 4.3 FT/S
STRUCTURE CLEARS THE 25-YEAR DESIGN HIGH WATER BY 1.13 FEET.
STRUCTURE CLEARS THE 100-YEAR DESIGN HIGH WATER BY 0.40 FEET.

✦BOUNDARY OF MAXIMUM LINEAR STREAM IMPACT IS 290 FEET. SEE THE REFERENCED WATERWAY PERMIT LISTED UNDER SPECIAL PROVISIONS ON THE TITLE SHEET 1/206 FOR DETAILS.

▽ THE PROPOSED STRUCTURE SHALL BE CONSTRUCTED STRAIGHT AND PARALLEL TO A REFERENCE LINE. ALL DISTANCES ARE FROM THIS REFERENCE LINE WITH STATION AND OFFSETS FROM THE ℄ OF CONSTRUCTION, SHAWNEE RD., UNLESS NOTED OTHERWISE. SEE GENERAL PLAN SHEET 2/31 FOR DETAILS.

EXISTING STRUCTURE

TYPE: CONTINUOUS STEEL BEAM WITH REINFORCED CONCRETE DECK AND REINFORCED CONCRETE SUBSTRUCTURE

SPANS: 60'-75'-60'± C/C BEARINGS
ROADWAY: 30.3'± F/F SIDEWALK
WEARING SURFACE: ASPHALT CONCRETE
SKEW: 30° R.F.
APPROACH SLABS: AS-1-54 (25' LONG)
SIDEWALKS: 3.9' WIDE LEFT, 1.6' WIDE RIGHT
ALIGNMENT: TANGENT
CONDITION: STRUCTURALLY DEFICIENT
STRUCTURE FILE NUMBER: 0249661
DATE BUILT: 1958
DISPOSITION: TO BE REMOVED

PROPOSED STRUCTURE

TYPE: THREE-SPAN COMPOSITE PRESTRESSED CONCRETE BOX BEAM SUPERSTRUCTURE WITH REINFORCED CONCRETE CAPPED-PILE ABUTMENTS AND PIERS

SPANS: 45'-65'-45' C/C BEARINGS
ROADWAY: 64'-1" FACE OF WALK TO FACE OF PARAPET
LOADING: HL-93 PLUS FUTURE WEARING SURFACE OF 60 PSF
SKEW: 20° R.F.
APPROACH SLABS: AS-1-81 (20' LONG)
SIDEWALK: 10'-0" WIDE, LEFT SIDE ONLY
WEARING SURFACE: 1" OF THE 6" MIN. COMPOSITE CONCRETE DECK
ALIGNMENT: REFERENCE LINE
CROWN: 0.016 FT/FT (CROWN IS AT ℄ CONST.)
COORDINATES: LATITUDE 40°42'23" N
LONGITUDE 84°09'05" W

DESIGN AGENCY
KOHLI & KALIHER ASSOCIATES, INC.
ENGINEERS AND SURVEYORS
2244 Baton Rouge Ave., Lima, Ohio 45805 419-227-1135

DESIGNED	DRAWN	REVIEWED	DATE
IMK	IMK	DGB	1-17-13
CHECKED	REVISED	STRUCTURE FILE NUMBER	
MAD		0249696	

ALLEN COUNTY
STA. 115+95.18
STA. 117+55.17

SITE PLAN
BRIDGE NO. ALL-C.R. 152-0334
OVER OTTAWA RIVER

ALL-SHAWNEE ROAD
PID No. 77305

I:\PROJECTS\ALL\77305\structures\ALL152_0334C\sheets\152_0334CSP001.dgn 2/6/2014 9:12:37 AM C

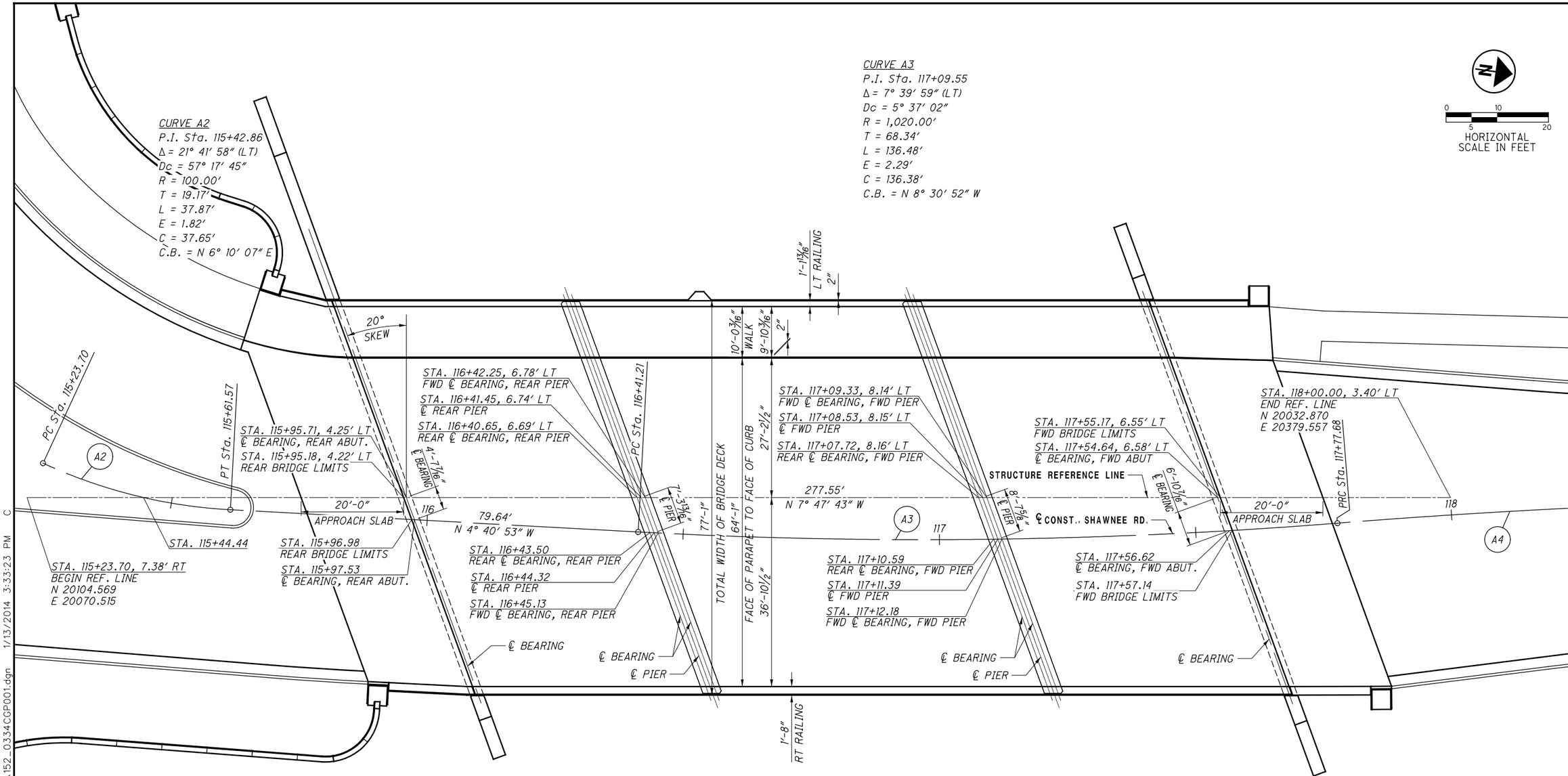

CURVE A4
P.I. Sta. 119+42.21
Δ = 12° 31′ 08″ (RT)
Dc = 3° 49′ 11″
R = 1,500.00′
T = 164.53′
L = 327.74′
E = 9.00′
C = 327.09′
C.B. = N 6° 05′ 17″ W

CROSS REFERENCE	
SHEET NO.	DESCRIPTION
9-10/31	ABUTMENT DETAILS
14/31	SUPERSTRUCTURE PLAN

DESIGN AGENCY
KOHLI & KALIHER ASSOCIATES, INC.
ENGINEERS AND SURVEYORS
2244 Baton Rouge Ave., Lima, Ohio 45805 419-227-1135

DESIGNED	DRAWN	REVIEWED	DATE
IMK	IMK	DGB	1-17-13
CHECKED	REVISED	STRUCTURE FILE NUMBER	
MAD		0249696	

GENERAL PLAN
BRIDGE NO. ALL-C.R.152-0334
OVER THE OTTAWA RIVER

ALL-SHAWNEE ROAD
PID No. 77305

I:\PROJECTS\ALL\77305\structures\ALL152_0334C\sheets\152_0334CGP001.dgn 1/13/2014 3:33:23 PM

STANDARD DRAWINGS AND SUPPLEMENTAL SPECIFICATIONS:
REFER TO THE FOLLOWING STANDARD BRIDGE DRAWINGS:

AS-1-81	REVISED	01-18-13
BR-1	REVISED	07-19-02
BR-2-98	REVISED	07-20-12
PCB-91	REVISED	01-18-13
PSBD-2-07	REVISED	01-21-11

DESIGN SPECIFICATIONS:
THIS STRUCTURE CONFORMS TO THE "LRFD BRIDGE DESIGN SPECIFICATIONS" ADOPTED BY THE AMERICAN ASSOCIATION OF STATE HIGHWAY AND TRANSPORTATION OFFICIALS, 2010, AND TO THE ODOT BRIDGE DESIGN MANUAL, 2007.

DESIGN DATA:
OPERATIONAL IMPORTANCE: A LOAD MODIFIER OF 1.00 HAS BEEN ASSUMED FOR THE DESIGN OF THIS STRUCTURE IN ACCORDANCE WITH THE AASHTO LRFD BRIDGE DESIGN SPECIFICATIONS, ARTICLE 1.3.5 AND THE ODOT BRIDGE DESIGN MANUAL, 2007.

DESIGN LOADING: HL-93 AND FUTURE WEARING SURFACE (FWS) OF 0.060 KIPS/FT^2

CONCRETE CLASS QC2: COMPRESSIVE STRENGTH 4.5 KSI (SUPERSTRUCTURE)

CONCRETE CLASS QC1: COMPRESSIVE STRENGTH 4.0 KSI (SUBSTRUCTURE)

REINFORCING STEEL: MINIMUM YIELD STRENGTH 60 KSI

CONCRETE FOR PRESTRESSED BEAMS: COMPRESSIVE STRENGTH (FINAL) = 7.0 KSI
COMPRESSIVE STRENGTH (RELEASE) = 5.0 KSI

PRESTRESSING STRAND: AREA = 0.167 SQ. IN.
ULTIMATE STRENGTH = 270 KSI
INITIAL STRESS = 202.5 KSI (LOW RELAXATION STRANDS)

DECK PROTECTION METHOD: EPOXY COATED REINFORCING STEEL, 2½" CONCRETE COVER, SEALING OF CONCRETE SURFACES (NON-EPOXY)

MONOLITHIC WEARING SURFACE IS ASSUMED, FOR DESIGN PURPOSES, TO BE 1 INCH THICK.

UTILITY LINES: ALL EXPENSE INVOLVED IN RELOCATING THE AFFECTED UTILITY LINES SHALL BE BORNE BY THE UTILITIES. THE CONTRACTOR AND UTILITIES ARE TO COOPERATE BY ARRANGING THEIR WORK IN SUCH A MANNER THAT INCONVENIENCE TO EITHER WILL BE HELD TO A MINIMUM.

REMOVAL OF EXISTING STRUCTURE: WHEN NO LONGER NEEDED TO MAINTAIN TRAFFIC, THE EXISTING STRUCTURE SHALL BE REMOVED UPON RECEIVING PERMISSION FROM THE ENGINEER. THE UNDERSIDES OF THE EXISTING BRIDGE SHALL BE CAREFULLY EXAMINED FOR PRESENCE OF BATS, ESPECIALLY FROM APRIL 1 TO SEPTEMBER 30. SEE SHEET 8/31 FOR CONSTRUCTION SEQUENCE.

ITEM 202 - STRUCTURE REMOVED, OVER 20 FOOT SPAN, AS PER PLAN (REMOVAL OVER WATER):
REASONABLE CARE SHALL BE USED BY THE CONTRACTOR TO PREVENT REMOVED MATERIALS FROM FALLING INTO THE WATER. ANY DROPPED MATERIALS SHALL BE IMMEDIATELY RECOVERED AND DISPOSED OF AWAY FROM THE SITE EXCEPT FOR APPROVED MASONRY MATERIAL WHICH MAY BE USED AS BANK PROTECTION AS DIRECTED BY THE ENGINEER. THIS WORK WILL BE PAID FOR UNDER ITEM 202 - STRUCTURE REMOVED, OVER 20 FOOT SPAN, AS PER PLAN. REFER TO SECTION 104.04 OF THE ODOT CMS FOR ADDITIONAL REQUIREMENTS.

ITEM 202 - STRUCTURE REMOVED, OVER 20 FOOT SPAN, AS PER PLAN (FOUNDATIONS BY RECORD): AT THE PROPOSED FORWARD PIER LOCATION, THE WEST END OF THE PROPOSED PIER IS LOCATED OVER THE OLD ABUTMENT FOUNDATION AS SHOWN ON THE SITE PLAN SHEET 1/31. A PORTION OF THE OLD STONE ABUTMENT MAY REQUIRE COMPLETE REMOVAL PRIOR TO INSTALLING THE PROPOSED PIER PILES.

ALL COSTS ASSOCIATED WITH THE EQUIPMENT, LABOR, AND MATERIALS NECESSARY FOR REMOVING PORTIONS OF THE OLD ABUTMENT SHALL BE INCLUDED IN THE LUMP SUM PRICE BID FOR ITEM 202 - STRUCTURE REMOVED, OVER 20 FOOT SPAN, AS PER PLAN.

ITEM 202 - STRUCTURE REMOVED, OVER 20 FOOT SPAN, AS PER PLAN (ALLEN COUNTY BENCHMARK REESTABLISHMENT):
ALLEN COUNTY SURVEY FORCES WILL TRANSFER THE CORPS OF ENGINEERS BENCH ELEVATION ON THE EXISTING BRIDGE TO A TEMPORARY BENCHMARK PRIOR TO THE DEMOLITION OF THE BRIDGE. THIS IS BENCHMARK "0" (ORIGIN) LISTED IN THE PROJECT PLANS.

THE CONTRACTOR SHALL REMOVE THE EXISTING BENCH DISK AND RETURN IT TO THE ALLEN COUNTY ENGINEER. THE CONTRACTOR SHALL SET A NEW BENCH DISK (SUPPLIED BY ALLEN COUNTY) INTO THE PROPOSED BRIDGE ACCORDING TO THE DIRECTION BY ALLEN COUNTY. ALLEN COUNTY SURVEY FORCES WILL THEN ESTABLISH THE NEW SURVEY BENCH ELEVATION.

ALL COSTS ASSOCIATED WITH THE EQUIPMENT, LABOR, AND MATERIALS NECESSARY TO PERFORM THE ABOVE BENCHMARK REESTABLISHMENT SHALL BE INCLUDED IN THE LUMP SUM PRICE BID FOR ITEM 202 - STRUCTURE REMOVED, OVER 20 FOOT SPAN, AS PER PLAN.

ITEM 203 - EMBANKMENT, AS PER PLAN: PLACE AND COMPACT EMBANKMENT MATERIAL IN 6 INCH LIFTS FOR THE CONSTRUCTION OF THE APPROACH EMBANKMENT.

ITEM 503 - UNCLASSIFIED EXCAVATION, AS PER PLAN:
UNCLASSIFIED EXCAVATION SHALL BE IN ACCORDANCE WITH ODOT CMS SECTION 503 EXCEPT THAT BACKFILL MATERIAL BEHIND THE ABUTMENTS SHALL BE TYPE B GRANULAR MATERIAL, 703.16 C., PLACED AND COMPACTED IN 6" LIFTS.

PILE DRIVING CONSTRAINTS: PRIOR TO DRIVING ABUTMENT PILES, CONSTRUCT THE SPILL THROUGH SLOPES AND THE BRIDGE APPROACH EMBANKMENT BEHIND THE ABUTMENTS UP TO THE LEVEL OF THE SUBGRADE ELEVATION FOR A MINIMUM DISTANCE OF 200 FEET BEHIND EACH ABUTMENT. DO NOT BEGIN THE EXCAVATION FOR THE ABUTMENT FOOTINGS AND THE INSTALLATION OF THE ABUTMENT PILES UNTIL AFTER THE ABOVE REQUIRED EMBANKMENT HAS BEEN CONSTRUCTED.

PILE DESIGN LOADS (ULTIMATE BEARING VALUE): THE ULTIMATE BEARING VALUE IS 345 KIPS PER PILE FOR THE REAR AND FORWARD ABUTMENT PILES. THE ULTIMATE BEARING VALUE IS 425 KIPS PER PILE FOR THE REAR AND FORWARD PIER PILES.

REAR ABUTMENT PILES:
14" DIAMETER CAST-IN-PLACE REINFORCED CONCRETE PILES
50 FEET LONG, ORDER LENGTH (REAR)
1 DYNAMIC LOAD TESTING ITEM
1 RESTRIKE ITEM (MIN. 24 HOUR ELASPED TIME)

FORWARD ABUTMENT PILES:
14" DIAMETER CAST-IN-PLACE REINFORCED CONCRETE PILES
70 FEET LONG, ORDER LENGTH (FWD.)
1 DYNAMIC LOAD TESTING ITEM
1 RESTRIKE ITEM (MIN. 24 HOUR ELASPED TIME)

PIER PILES:
16" DIAMETER CAST-IN-PLACE REINFORCED CONCRETE PILES
70 FEET LONG, ORDER LENGTH (REAR)
65 FEET LONG, ORDER LENGTH (FWD.)
1 DYNAMIC LOAD TESTING ITEM
1 RESTRIKE ITEM (MIN. 24 HOUR ELASPED TIME)

ITEM 507 - 14" CAST-IN-PLACE REINFORCED CONCRETE PILES, DRIVEN, AS PER PLAN AND ITEM 507 - 16" CAST-IN-PLACE REINFORCED CONCRETE PILES, DRIVEN, AS PER PLAN
IN ADDITION TO REQUIREMENTS OF ODOT CMS SECTION 507.04, THE CONTRACTOR SHALL DRIVE PILES UNTIL OBTAINING THE REQUIRED ULTIMATE BEARING VALUE, WAIT FOR A MINUMUM OF 24 HOURS TO ELASPE, AND REDRIVE PILES UNTIL OBTAINING THE REQUIRED ULTIMATE BEARING VALUE. THE WAIT PERIOD SHOULD ALLOW ANY EXCESS PORE PRESSURES NEAR THE PILE TIP TO ADEQUATELY DISSIPATE. FOR ADDITIONAL INFORMATION, SEE "Subsurface Exploration For Shawnee Road / Ft. Amanda Intesection Improvements", Page 4 (DATED DEC. 20, 2011).

ALL COSTS ASSOCIATED WITH THE EQUIPMENT, LABOR, AND MATERIALS NECESSARY FOR PERFORMING THE ABOVE WORK SHALL BE INCLUDED IN THE UNIT BID PRICE FOR THE RESPECTIVE BID ITEMS OF ITEM 507 - 14" CAST-IN-PLACE REINFORCED CONCRETE PILES, DRIVEN, AS PER PLAN AND ITEM 507 - 16" CAST-IN-PLACE REINFORCED CONCRETE PILES, DRIVEN, AS PER PLAN.

ITEM 511-31611 - CLASS QC2 CONCRETE, SUPERSTRUCTURE, AS PER PLAN (DECK SLAB):
THE ESTIMATED QUANTITY OF DECK SLAB CONCRETE IS BASED ON THE DECK SLAB THICKNESS SHOWN ON THE DECK CONCRETE THICKNESS DIAGRAM (SHEET 17/31) PLUS THE QUANTITY NEEDED TO MAINTAIN A MINIMUM 6" DECK THICKNESS SINCE THE CROWN IS ON A CURVED HORIZONTAL ALIGNMENT OVER BEAMS, PLUS THE QUANTITY THAT FORMS THE SIDEWALK, PLUS THE QUANTITY BETWEEN BEAM ENDS AT PIERS.

ALL EXPOSED SURFACES OF OUTER EDGES OF DECK AND SIDEWALK BETWEEN RAILING AND BEAMS SHALL HAVE A RUBBED FINISH AS PER ODOT CMS SECTION 511.18 B.

ITEM 511 - CLASS QC1 CONCRETE, PIER CAP, AS PER PLAN:
ALL VERTICAL SURFACES (ENDS OF PIER CAPS AND SIDES OF PIER CAPS FOR A HORIZONTAL DISTANCE OF 10'-0" FROM ENDS) SHALL HAVE A RUBBED FINISH AS PER ODOT CMS SECTION 511.18 B.

ITEM 511 - CLASS QC1 CONCRETE, ABUTMENT INCLUDING FOOTING, AS PER PLAN:
ALL EXPOSED SURFACES ABOVE THE ABUTMENT FOOTINGS SHALL HAVE A RUBBED FINISH AS PER ODOT CMS SECTION 511.18 B.

BEARING PAD SHIMS:
PLACE ⅛" THICK PREFORMED BEARING PAD SHIMS, PLAN AREA 7 INCHES BY 11 INCHES, UNDER THE ELASTOMERIC BEARING PADS WHERE REQUIRED FOR PROPER BEARING. FURNISH TWO SHIMS PER BEAM. THE DEPARTMENT WILL MEASURE THIS ITEM BY THE TOTAL NUMBER SUPPLIED. THE DEPARTMENT WILL PAY FOR ACCEPTED QUANTITIES AT THE CONTRACT PRICE FOR ITEM 516 - ⅛" PREFORMED BEARING PAD. ANY UNUSED SHIMS WILL BECOME THE PROPERTY OF THE COUNTY.

ITEM 517 - RAILING (CONCRETE PARAPET WITH TWIN STEEL TUBE RAILING), AS PER PLAN:
THE RAILING SHALL CONFORM TO STANDARD DRAWING BR-2-98 WITH THREE EXCEPTIONS. FIRST, THE OVERALL HEIGHT OF RAILING SHALL BE 4'-6" WITH THE CONCRETE PARAPET UNDER THE TWIN STEEL TUBE RAILING BEING 3'-0" HIGH. SECOND, THE INSIDE FACE OF THE CONCRETE PARAPET SHALL HAVE TEXTURED FORM LINERS APPLIED AS PER THE PLAN DETAILS. THIRD, ALL PORTIONS OF THE THE GALVANIZED STEEL RAILING SHALL BE PAINTED BLACK.

ALL EXPOSED CONCRETE SURFACES, EXCEPT WHERE THE TEXTURED FORM LINERS HAVE BEEN APPLIED, SHALL HAVE A RUBBED FINISH AS PER ODOT CMS SECTION 511.18 B.

ITEM 625 - STRUCTURE GROUNDING SYSTEM
A STRUCTURE GROUNDING SYSTEM SHALL BE PROVIDED AND INSTALLED BY THE CONTRACTOR AS PER STD. DWG. HL-50.21. SEE LIGHTING PLANS FOR ITEMIZED QUANTITIES AND ADDITIONAL DETAILS.

ABBREVIATIONS:
ABUT. - ABUTMENT
B/T - BETWEEN
C/C - CENTER TO CENTER
CLR - CLEARANCE
CONC. - CONCRETE
CONST. - CONSTRUCTION
CPP - CORRUGATED PLASTIC PIPE
DIA. - DIAMETER
EA. - EACH
ELEV. - ELEVATION
EQ. - EQUAL
F/F - FACE TO FACE
FF - FAR FACE
FWD. - FORWARD
MED. - MEDIUM
MIN. - MINIMUM
NF - NEAR FACE
PEJF - PREFORMED EXPANSION JOINT FILLER
PERF. - PERFORATED
RCP - ROCK CHANNEL PROTECTION
SP - SPACE
SPS - SPACES
STD. DWG. - STANDARD DRAWING
TYP. - TYPICAL

DESIGN AGENCY
KOHLI & KALIHER ASSOCIATES, INC.
ENGINEERS AND SURVEYORS
2244 Baton Rouge Ave., Lima, Ohio 45805 419-227-1135

DESIGNED	DRAWN	REVIEWED	DATE
RTH	RTH	DGB	1-17-13
CHECKED	REVISED	STRUCTURE FILE NUMBER	
MAD		0249696	

GENERAL NOTES
BRIDGE NO. ALL-C.R. 152-0334
OVER OTTAWA RIVER

ALL-SHAWNEE ROAD
PID No. 77305

I:\PROJECTS\ALL\77305\structures\ALL152_0334C\sheets\152_0334CGN001.dgn 1/13/2014 3:33:24 PM C

ITEM 511-34011, CLASS QC2 CONCRETE, SUPERSTRUCTURE, AS PER PLAN (PARAPETS)
ITEM 511, CLASS QC1 CONCRETE, AS PER PLAN
ITEM 517, RAILING (CONCRETE PARAPET WITH TWIN STEEL TUBE RAILING), AS PER PLAN

DESCRIPTION:

TEXTURED FACING CONCRETE FORM LINERS AND/OR INTEGRALLY COLORED CONCRETE SHALL BE USED AT THE FOLLOWING LOCATIONS ACCORDING TO THE DETAILS IN THE PLANS:

1. BRIDGE LEFT RAILING INCLUDED IN ITEM 517, RAILING (CONCRETE PARAPET WITH TWIN STEEL TUBE RAILING), AS PER PLAN FOR PAYMENT.
2. BRIDGE RIGHT RAILING INCLUDED IN ITEM 511-34011, CLASS QC2 CONCRETE, SUPERSTRUCTURE, AS PER PLAN FOR PAYMENT.
3. REAR APPROACH SLAB'S LEFT SIDEWALK PARAPET AND REAR APPROACH SLAB'S RIGHT PARAPET INCLUDED IN ITEM 511-34011, CLASS QC2 CONCRETE, SUPERSTRUCTURE, AS PER PLAN FOR PAYMENT.
4. FORWARD APPROACH SLAB'S LEFT SIDEWALK PARAPET, INCLUDING COLUMN AND FORWARD APPROACH SLAB'S RIGHT PARAPET, INCLUDING COLUMN INCLUDED IN ITEM 511-34011, CLASS QC2 CONCRETE, SUPERSTRUCTURE, AS PER PLAN FOR PAYMENT.
5. REAR BRIDGE END TREATMENTS, INCLUDING REAR COLUMNS INCLUDED IN ITEM 511, CLASS QC1 CONCRETE, AS PER PLAN FOR PAYMENT.

THE FORM LINERS USED SHALL MEET THE DETAILS SHOWN IN THE PLANS, INCLUDING DEPTH OF RELIEF AND SIZE OF PATTERN. FORM LINER PATTERN 1 SHALL BE AS SPECIFIED BELOW OR APPROVED EQUAL. FORM LINER PATTERN 2 SHALL BE AS SPECIFIED BELOW OR APPROVED EQUAL. HORIZONTAL AND VERTICAL JOINTS IN THE PATTERNS SHALL NOT BE USED. THE FINISHED TEXTURE OF THE CONCRETE UTILIZING FORM LINERS SHALL BE SIMILAR TO THAT SHOWN IN THE PLANS, AND BE IN ACCORDANCE WITH ODOT CMS 511.18 "SURFACE FINISH." ALL OTHER EXPOSED CONCRETE SURFACES SHALL HAVE A RUBBED FINISH AS PER ODOT CMS 511.18 B.

GENERAL REQUIREMENTS:

THE FORM LINER MANUFACTURER SHALL SUBMIT EVIDENCE OF AT LEAST TWO SIMILAR ARCHITECTURAL CONCRETE CONSTRUCTION PROJECTS WITHIN THE PAST FIVE YEARS FOR REVIEW AND APPROVAL BY THE ENGINEER. COMPLETE SHOP DRAWINGS DETAILING THE TEXTURE PATTERNS SHALL BE SUBMITTED IN ACCORDANCE WITH 501.04 FOR APPROVAL PRIOR TO PLACING ANY CONCRETE WHERE THE FORM LINERS WILL BE USED. SHOP DRAWINGS SHALL INCLUDE FORM LINER INSTALLATION AND CASTING INSTRUCTIONS AND SHALL INDICATE FORM LINER BACKUP, REVEAL, AND CHAMFER STRIP LOCATIONS. THE CONTRACTOR SHALL COORDINATE WITH THE FORM LINER MANUFACTURER TO ASSURE UNDERSTANDING OF FORM LINER USE, TEST PANEL MOCK-UP REQUIREMENTS AND FINAL CONSTRUCTION PROCEDURES.

THE FORM LINER SHALL BE FABRICATED WITH SHAPES THAT ALLOW REMOVAL OF THE FORMS WITHOUT DAMAGE OR VISUAL IMPAIRMENT OF THE CONCRETE, AND SHALL HAVE 1/8 INCH MINIMUM RADII WITH NO SHARP EDGES. THE FORM LINER SHALL BE CAPABLE OF WITHSTANDING APPLIED CONCRETE POUR PRESSURES WITHOUT LEAKAGE, PHYSICAL DEFECT OR VISUAL IMPAIRMENT.

CONSTRUCTION REQUIREMENTS:

FORM LINERS SHALL BE CLEANED BEFORE EACH USE. DAMAGED FORM LINERS WHOSE CONTINUED USE OR REPAIR WOULD NEGATIVELY IMPACT THE AESTHETICS OF THE FINISHED CONCRETE SHALL BE REPLACED. FORM LINER JOINTS SHALL BE SEALED TO PREVENT CEMENT PASTE FROM BLEEDING. FORM LINERS SHALL BE INSTALLED IN ACCORDANCE WITH THE APPROVED SHOP DRAWINGS. CHAMFERED CORNERS SHALL FORM SMOOTH, SOLID, UNBROKEN CONTINUOUS SURFACES WHICH ARE UNIFORMLY STRAIGHT. AN APPROVED COMPATIBLE FORM LINER RELEASE AGENT SHALL BE APPLIED AT A RATE RECOMMENDED BY THE MANUFACTURER.

A PRECONSTRUCTION TEST PANEL SHALL BE CONSTRUCTED BY THE CONTRACTOR FOR APPROVAL BY THE ENGINEER AND ALLEN COUNTY. IF THE TEST PANEL DOES NOT MEET THE ENGINEER'S AND ALLEN COUNTY'S APPROVAL, THE PROPOSED FORM LINERS MAY BE REJECTED. THE TEST PANEL MUST BE APPROVED BEFORE PLACING ANY CONCRETE WHERE THE FORM LINERS WILL BE USED. REJECTION OF THE TEST PANEL WILL REQUIRE CONSTRUCTION OF ANOTHER TEST PANEL UNTIL APPROVAL IS GRANTED. THE SIZE OF THE TEST PANEL SHALL BE AT LEAST 4'-0" HIGH BY 7'-2" LONG. THE TEST PANEL SHALL INCLUDE BOTH FORMLINER PATTERNS AND SIMILAR DETAILS AS SHOWN ON THE BRIDGE END TREATMENT WALL PANELS. THE MINIMUM TEST PANEL THICKNESS SHALL BE 9 INCHES, AND SHALL BE CONSTRUCTED UPRIGHT WITH THE FORM LINER VERTICAL, AS POSITIONED FOR FINAL CONSTRUCTION. THE TEST PANEL SHALL USE ACTUAL PROJECT SPECIFIC MATERIALS, METHODS, AND WORKMANSHIP, INCLUDING CONCRETE MIX (CEMENT TYPE, AGGREGATE GRADATION, SLUMP, WATER/CEMENT RATIO, PLASTICIZERS, AND ADDITIVES), FORM LINERS AND FORMWORK SYSTEMS, INSERTS, FORM RELEASE AGENTS, PLACEMENT RATE, FORM PRESSURES, AND JOINT SEALING, VIBRATING, AND STRIPPING PRACTICES. ANY INTENDED PATCHING OR REPAIR PROCEDURES FOR THE CORRECTION OF MINOR DEFECTS THAT DO NOT RESULT IN REJECTION OF THE ENTIRE PANEL SHALL BE DEMONSTRATED ON THE TEST PANEL. THE ACCEPTED TEST PANEL SHALL BE THE STANDARD BY WHICH THE FINAL CONSTRUCTION WILL BE EVALUATED FOR TECHNICAL AND AESTHETIC MERIT. THE TEST PANEL SHALL BE CONSTRUCTED AT THE PROJECT SITE, OR AT AN ALTERNATE LOCATION AGREED UPON BY THE ENGINEER AND ALLEN COUNTY. UPON COMPLETION OF THE FINAL CONSTRUCTION, THE CONTRACTOR SHALL BE RESPONSIBLE FOR REMOVAL AND DISPOSAL OF THE TEST PANEL MOCK-UP.

INTEGRALLY COLORED CONCRETE AND SEALANT:

THE CONCRETE SHALL BE INTEGRALLY COLORED USING CHROMIX ADMIXTURES AS PROVIDED BY L. M. SCOFIELD COMPANY, DOUGLASVILLE, GEORGIA, 1-800-800-9900, http://www.scofield.com, OR COLOR-CRETE AS PROVIDED BY INCRETE SYSTEMS, 1611 GUNN HIGHWAY, ODESSA, FLORIDA, 1-800-752-4626, WWW.INCRETE.COM, OR AN APPROVED EQUAL. THE COLOR OF THE SEALANT MATERIAL USED WITH CONTROL JOINTS AND PERIMETER SAWCUTS SHALL MATCH THE COLOR OF THE SURROUNDING CONCRETE. USE FEDERAL COLOR STANDARD NUMBER 33717; BEFORE ORDERING COLORED ADMIXTURE AND SEALANT, PROVIDE COLOR SAMPLES TO AND CONFIRM COLOR CHOICE WITH ALLEN COUNTY (BRION RHODES, 419-228-3196).

METHOD OF MEASUREMENT:

TEXTURED FACING FORM LINERS WILL NOT BE MEASURED INDIVIDUALLY FOR PAYMENT UNDER THIS ITEM.

BASIS OF PAYMENT:

ITEM 511-34011, CLASS QC2 CONCRETE, SUPERSTRUCTURE, AS PER PLAN AND ITEM 511, CLASS QC1 CONCRETE, AS PER PLAN WILL BE PAID FOR AT THE CONTRACT CUBIC YARD PRICE. ITEM 517, RAILING (CONCRETE PARAPET WITH TWIN STEEL TUBE RAILING), AS PER PLAN WILL BE PAID FOR AT THE CONTRACT PRICE PER FOOT. THE WORK SHALL INCLUDE FABRICATION AND ERECTION OF FORM LINERS, ALL CONCRETE SHOWN ON THE PLANS, PREPARATION OF FORM LINER SHOP DRAWINGS, CONSTRUCTION AND REMOVAL OF THE PRECONSTRUCTION TEST PANEL, INTEGRAL COLORING, AND SHALL INCLUDE ALL LABOR, MATERIALS, EQUIPMENT, AND INCIDENTALS REQUIRED TO COMPLETE THIS ITEM.

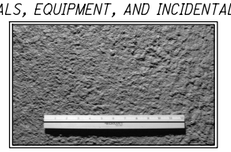

FORM LINER PATTERN NO. 1

CUSTOM ROCK PATTERN NO. T309 FRACTURED GRANITE OR FITZGERALD FORMLINERS PATTERN NO. 17032 LIGHT GRANITE RELIEF: 5/16" TO 3/8" DEPTH

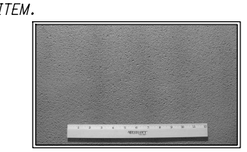

FORM LINER PATTERN NO. 2

CUSTOM ROCK PATTERN NO. T316 FINE SANDBLAST FITZGERALD FORMLINERS PATTERN NO. 16990 LIGHT SANDBLAST RELIEF: 1/16" DEPTH

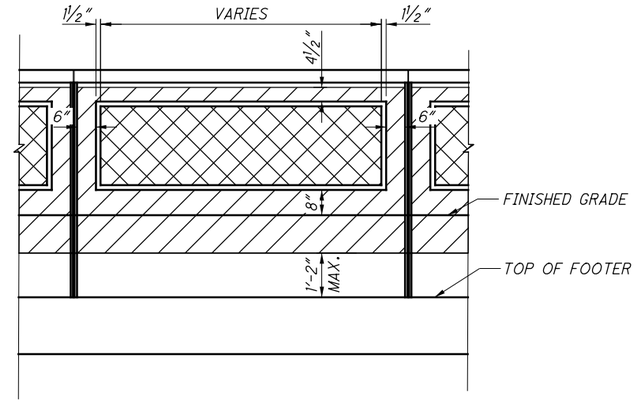

PANEL SECTION

(REAR BRIDGE END TREAMENT SHOWN, REST SIMILAR)
INTEGRALLY COLORED CONCRETE AND TEXTURED FORM LINERS

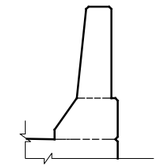

BRIDGE RIGHT RAILING

REAR & FORWARD APPROACH SLAB RIGHT PARAPET

INTEGRALLY COLORED CONCRETE ONLY

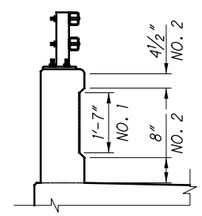

BRIDGE LEFT RAILING

INTEGRALLY COLORED CONCRETE AND TEXTURED FORM LINERS

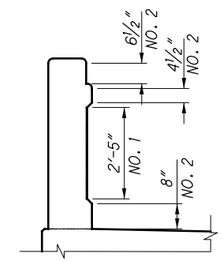

REAR & FORWARD APPROACH SLAB LEFT SIDEWALK PARAPET

INTEGRALLY COLORED CONCRETE AND TEXTURED FORM LINERS

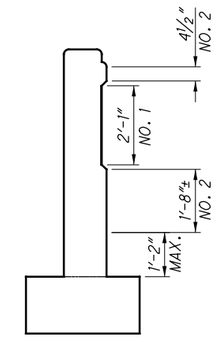

BRIDGE END TREATMENT WALL

INTEGRALLY COLORED CONCRETE AND TEXTURED FORM LINERS

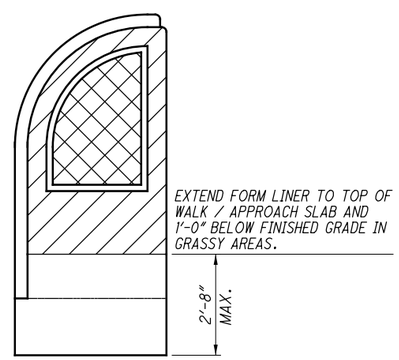

FORWARD APPROACH SLAB COLUMN
REAR BRIDGE END TREATMENT COLUMN

(CURVED SIDES)
(REAR BRIDGE END TREATMENT SHOWN, REST SIMILAR)
INTEGRALLY COLORED CONCRETE AND TEXTURED FORM LINERS

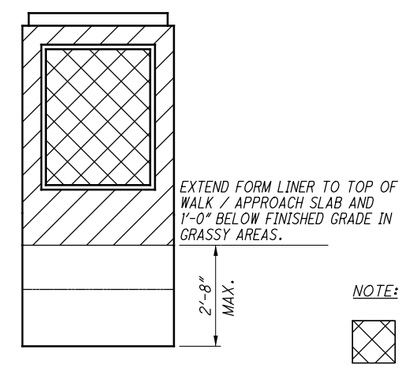

FORWARD APPROACH SLAB COLUMN
REAR BRIDGE END TREATMENT COLUMN

(FLAT SIDE)
(REAR BRIDGE END TREATMENT SHOWN, REST SIMILAR)
INTEGRALLY COLORED CONCRETE AND TEXTURED FORM LINERS

NOTE:

NO. 1 - FORM LINER PATTERN NO. 1

NO. 2 - FORM LINER PATTERN NO. 2

DESIGN AGENCY
KOHLI & KALIHER ASSOCIATES, INC.
ENGINEERS AND SURVEYORS
2244 Baton Rouge Ave., Lima, Ohio 45805 419-227-1135

DESIGNED	DRAWN	REVIEWED	DATE
IMK	IMK	DGB	1-17-13
CHECKED	REVISED	STRUCTURE FILE NUMBER	
RTH		0249696	

GENERAL NOTES - AESTHETIC CONCRETE DETAILS
BRIDGE NO. ALL-C.R. 152-0334
OVER OTTAWA RIVER

ALL-SHAWNEE ROAD
PID No. 77305

I:\PROJECTS\ALL\77305\structures\ALL152_0334C\sheets\152_0334CGN002.dgn 1/13/2014 3:33:26 PM C

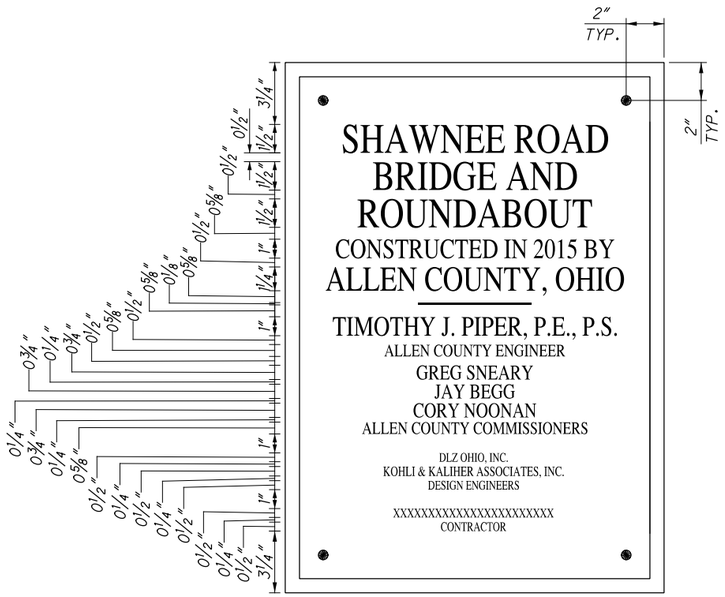

DEDICATION PLAQUE

THE DEDICATION PLAQUE SHALL BE 20 INCHES BY 28 INCHES IN SIZE AND SHALL BE OF THE COMPOSITION SHOWN ABOVE. LETTERS SHALL BE ROMAN STYLE.

ALLEN COUNTY PLAQUE

THE COUNTY PLAQUE SHALL BE 20 INCHES BY 28 INCHES IN SIZE AND SHALL BE OF THE COMPOSITION SHOWN ABOVE. LETTERS SHALL BE REXLIA FREE REGULAR STYLE. LOGO AND LETTERS SHALL BE AS PER THE STANDARDS DEVELOPED BY THE LIMA-ALLEN COUNTY CHAMBER OF COMMERCE.

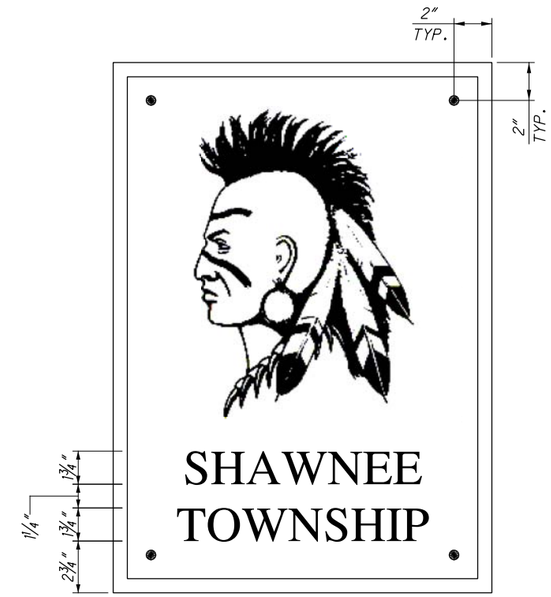

SHAWNEE TOWNSHIP PLAQUE

THE TOWNSHIP PLAQUE SHALL BE 20 INCHES BY 28 INCHES IN SIZE AND SHALL BE OF THE COMPOSITION SHOWN ABOVE. LETTERS SHALL BE ROMAN STYLE.

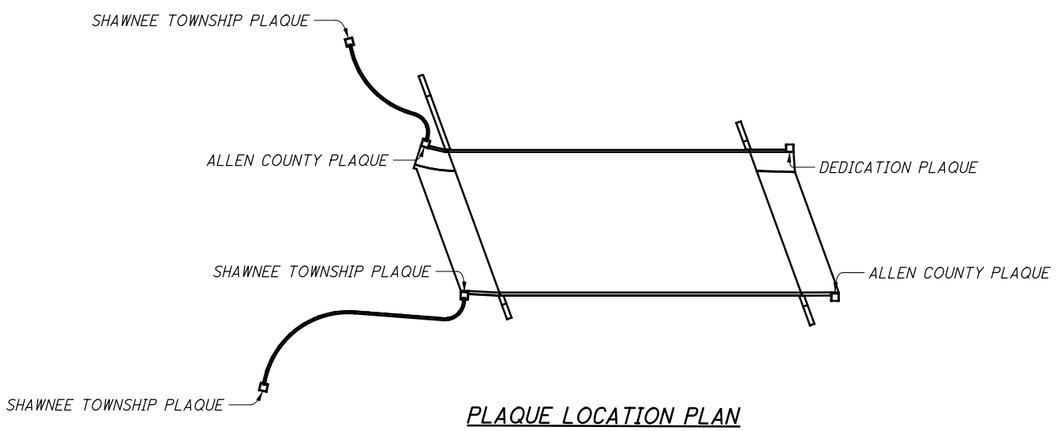

PLAQUE LOCATION PLAN

ALL PLAQUES ARE TO BE MOUNTED ON THE BRIDGE COLUMNS, CENTERED WITHIN THE FLAT SIDE'S RECESSED PANEL AT THE LOCATIONS SHOWN ABOVE.

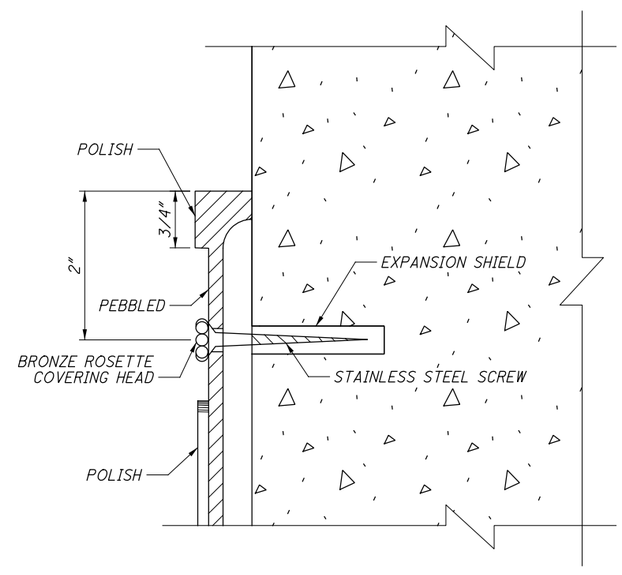

MOUNTING DETAIL

ITEM SPECIAL (53000200) - STRUCTURE, MISC.: MOUNTED PLAQUE DISPLAYS:

THIS ITEM INCLUDES MOUNTING SIX (6) PLAQUE DISPLAYS AT THE LOCATIONS DESIGNATED IN THE PLANS. THE PLAQUE DISPLAYS SHALL INCLUDE ONE (1) DEDICATION PLAQUE, TWO (2) ALLEN COUNTY PLAQUES, AND THREE (3) SHAWNEE TOWNSHIP PLAQUES. ALLEN COUNTY SHALL PROVIDE THE GRAPHIC IMAGES SHOWN AND ANY ADDITIONAL INFORMATION TO ACCURATELY REPRODUCE THE PLAQUES SHOWN ON THIS SHEET. THE PLAQUES SHALL BE BRONZE. THE LETTERS AND THE BORDERS SHALL HAVE A POLISHED FACE. BACKGROUNDS SHALL BE A PEBBLED TEXTURE AND SHALL BE ALLOWED TO OXIDIZE. THE ENTIRE PLAQUE SHALL BE GIVEN A COAT OF SPRAY-ON LACQUER.

ALL PLAQUES SHALL BE MOUNTED WITH FOUR (4) STAINLESS STEEL SCREWS IN EXPANSION SHIELDS. BRONZE ROSETTES SHALL COVER THE SCREW HEADS.

THE CONTRACTOR IN COORDINATION WITH THE PLAQUE PROVIDER SHALL PROVIDE SHOP DRAWINGS AND SAMPLES OF WORK FOR APPROVAL BY THE ENGINEER AND ALLEN COUNTY. THE CONTRACTOR AND SUPPLIER MUST COORDINATE THESE DRAWINGS. ENSURE THAT THE SHOP DRAWINGS MEET PROJECT REQUIREMENTS, INCLUDING MATERIALS, FIELD MEASUREMENTS, CONSTRUCTION SPECIFICATIONS, CONTRACT DOCUMENTS, PERFORMANCE CRITERIA, AND SIMILAR DATA.

ALLEN COUNTY WILL NOT MAKE ALLOWANCE FOR ADDITIONAL COST OR DELAYS TO THE CONTRACTOR FOR INCORRECT MANUFACTURING AS A RESULT OF FAILURE TO COORDINATE.

ALL COSTS ASSOCIATED WITH THE PLAQUES, INCLUDING ADDITIONAL WORK DESCRIBED ABOVE, AS WELL AS THE COMPLETE INSTALLATION AND ASSEMBLY OF THE PLAQUES (INCLUDING OVERHEAD AND PROFIT) SHALL BE INCLUDED IN THE LUMP SUM PRICE BID FOR ITEM SPECIAL (53000200) - STRUCTURE, MISC.: MOUNTED PLAQUE DISPLAYS.

DESIGN AGENCY
KOHLI & KALIHER ASSOCIATES, INC.
ENGINEERS AND SURVEYORS
2244 Baton Rouge Ave., Lima, Ohio 45805 419-227-1135

DESIGNED	DRAWN	REVIEWED	DATE
IMK	IMK	DGB	1-17-13
CHECKED	REVISED	STRUCTURE FILE NUMBER	
RTH		0249696	

GENERAL NOTES - AESTHETIC PLAQUE DETAILS
BRIDGE NO. ALL-C.R. 152-0334
OVER OTTAWA RIVER

ALL-SHAWNEE ROAD
PID No. 77305

I:\PROJECTS\ALL\77305\structures\ALL152_0334C\sheets\152_0334CGN003.dgn 2/10/2014 1:34:31 PM C

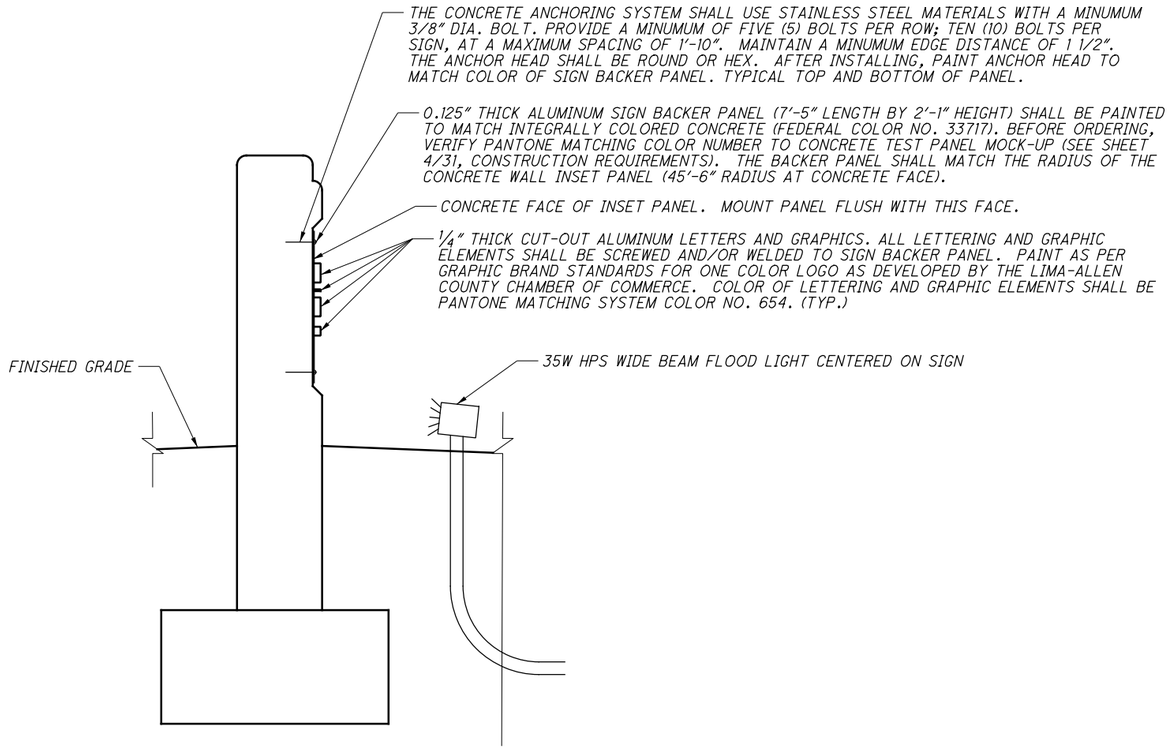

SECTION A-A

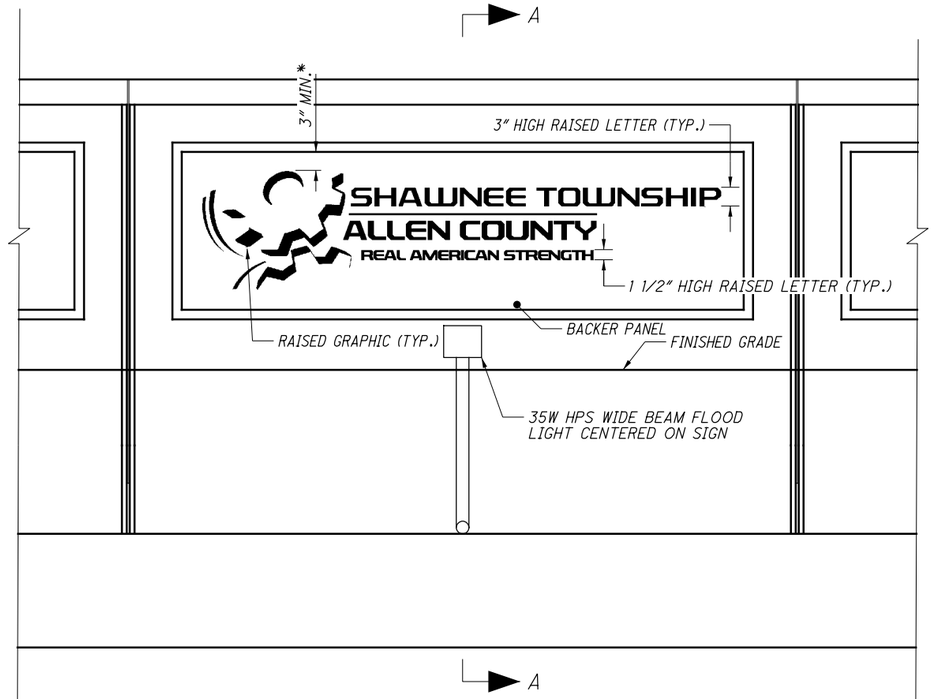

DISPLAY SIGN

LETTER SHALL BE REXLIA FREE REGULAR STYLE. LOGO AND LETTERS SHALL BE AS PER THE STANDARDS DEVELOPED BY LIMA-ALLEN COUNTY CHAMBER OF COMMERCE. CENTER DISPLAY SIGN WITHIN CONCRETE PANEL INSET

* PROVIDE 3" MIN. CLEARANCE BETWEEN GRAPHICS / LETTERING AND EDGE OF SIGN BACKER PANEL.

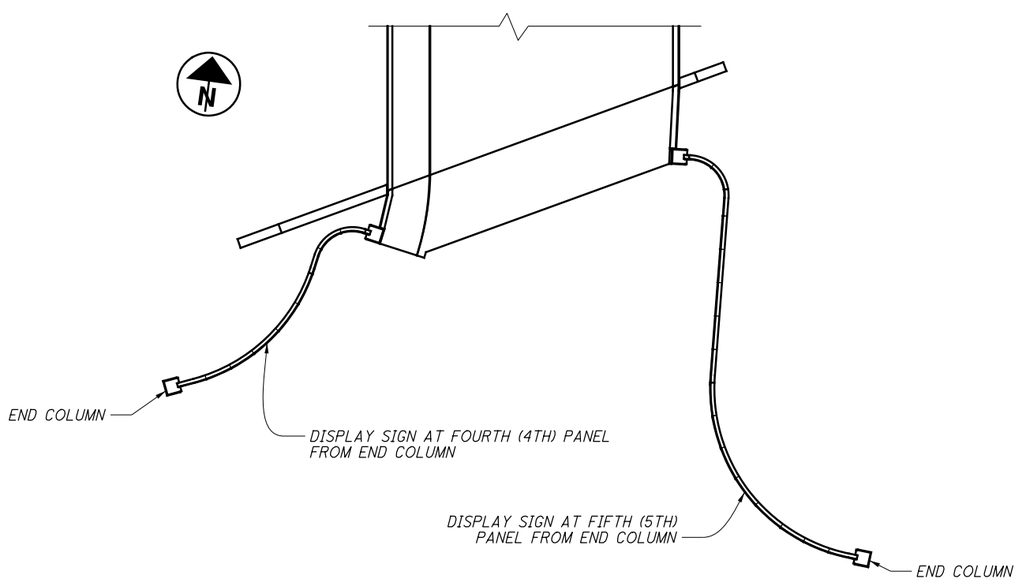

DISPLAY LOCATION PLAN

THE DISPLAYS ARE TO BE MOUNTED ON THE BRIDGE END TREATMENT WALLS, CENTERED WITHIN THE RECESSED PANEL AT THE LOCATIONS SHOWN ABOVE.

ITEM SPECIAL (53000400) - STRUCTURE, MISC.: DISPLAY SIGN:

THIS ITEM INCLUDES MOUNTING ONE (1) DISPLAY SIGN ONTO EACH PROPOSED CONCRETE BRIDGE END TREATMENT WALL AT THE LOCATIONS DESIGNATED IN THE PLANS. ALLEN COUNTY SHALL PROVIDE THE GRAPHIC IMAGES SHOWN AND ANY ADDITIONAL INFORMATION TO ACCURATELY REPRODUCE THE DISPLAY SHOWN ON THIS SHEET. THE DISPLAY SHALL BE SUPPLIED BY:

ADVANCED SIGNS	FULTZ SIGN COMPANY
2222 ASHMORE AVENUE	3497 SLABTOWN RD
CHATTANOOGA, TN 37415	LIMA, OHIO 45801-2209
PHONE 866-780-0619	PHONE (419) 225-6000

OR AN APPROVED EQUAL.

THE DISPLAY SHALL BE ATTACHED TO THE CONCRETE WITH MASONRY ANCHORS AND HARDWARE AS SHOWN ON THIS SHEET.

THE CONTRACTOR IN COORDINATION WITH THE DISPLAY PROVIDER SHALL PROVIDE SHOP DRAWINGS AND SAMPLES OF WORK FOR APPROVAL BY THE ENGINEER AND ALLEN COUNTY. THE CONTRACTOR AND SUPPLIER MUST COORDINATE THESE DRAWINGS. ENSURE THAT THE SHOP DRAWINGS MEET PROJECT REQUIREMENTS, INCLUDING MATERIALS, FIELD MEASUREMENTS, CONSTRUCTION SPECIFICATIONS, CONTRACT DOCUMENTS, PERFORMANCE CRITERIA, AND SIMILAR DATA. VERIFY AS-BUILT DIMENSIONS, BEFORE ORDERING SIGN DISPLAY TO ENSURE ADEQUATE FIT-UP.

ALLEN COUNTY WILL NOT MAKE ALLOWANCE FOR ADDITIONAL COST OR DELAYS TO THE CONTRACTOR FOR INCORRECT MANUFACTURING AS A RESULT OF FAILURE TO COORDINATE AND VERIFY PLAN DIMENSIONS.

ALL COSTS ASSOCIATED WITH THE DISPLAYS, INCLUDING ADDITIONAL WORK DESCRIBED ABOVE, AS WELL AS THE COMPLETE INSTALLATION AND ASSEMBLY OF THE DISPLAYS (INCLUDING OVERHEAD AND PROFIT) SHALL BE INCLUDED IN THE PRICE BID PER EACH FOR ITEM SPECIAL (53000400) - STRUCTURE, MISC.: DISPLAY SIGN.

DESIGN AGENCY
KOHLI & KALIHER ASSOCIATES, INC.
ENGINEERS AND SURVEYORS
2244 Baton Rouge Ave., Lima, Ohio 45805 419-227-1135

DESIGNED	DRAWN	REVIEWED	DATE
IMK	IMK	DGB	1-17-13
CHECKED	REVISED	STRUCTURE FILE NUMBER	
RTH		0249696	

GENERAL NOTES - AESTHETIC SIGN DETAILS
BRIDGE NO. ALL-C.R. 152-0334
OVER OTTAWA RIVER

ALL-SHAWNEE ROAD
PID No. 77305

I:\PROJECTS\ALL\77305\structures\ALL152_0334C\sheets\152_0334CGN004.dgn 1/13/2014 3:33:31 PM C

ESTIMATED QUANTITIES

QUANTITIES CALCULATED BY: RTH DATE: 1-16-13
QUANTITIES CHECKED BY: BLS DATE: 1-17-13

ITEM	EXTENSION	TOTAL	UNIT	DESCRIPTION	ABUTMENTS		PIERS		SUPER.		GENERAL		SEE SHEET NO.
					PHASE I	PHASE II	PHASE I	PHASE II	PHASE I	PHASE II	PHASE I	PHASE II	
202	11003	LUMP		STRUCTURE REMOVED, OVER 20 FOOT SPAN, AS PER PLAN								LUMP	3/31
202	22900	156	SQ YD	APPROACH SLAB REMOVED								156	
503	11100	LUMP		COFFERDAMS AND EXCAVATION BRACING							LUMP	LUMP	
503	21301	LUMP		UNCLASSIFIED EXCAVATION, AS PER PLAN	LUMP	LUMP					LUMP	LUMP	3/31
505	11100	LUMP		PILE DRIVING EQUIPMENT MOBILIZATION							LUMP	LUMP	
507	00601	1895	FT	14" CAST-IN-PLACE REINFORCED CONCRETE PILES, DRIVEN, AS PER PLAN	990	905							3/31
507	00650	2070	FT	14" CAST-IN-PLACE REINFORCED CONCRETE PILES, FURNISHED	1080	990							
507	00701	2000	FT	16" CAST-IN-PLACE REINFORCED CONCRETE PILES, DRIVEN, AS PER PLAN			1125	875					3/31
507	00750	2160	FT	16" CAST-IN-PLACE REINFORCED CONCRETE PILES, FURNISHED			1215	945					
507	93300	67	EACH	STEEL POINTS OR SHOES	18	17	18	14					
509	10000	107,739	POUND	EPOXY COATED REINFORCING STEEL	8207	7802	5363	3379	29,833	43,579	6028	3548	
511	31611	346	CU YD	CLASS QC2 CONCRETE, SUPERSTRUCTURE, AS PER PLAN ǂ					119	227			3/31
511	34011	36	CU YD	CLASS QC2 CONCRETE, SUPERSTRUCTURE, AS PER PLAN △					21		7	8	4/31
511	42511	81	CU YD	CLASS QC1 CONCRETE, PIER CAP, AS PER PLAN			45	36					3/31
511	43511	212	CU YD	CLASS QC1 CONCRETE, ABUTMENT INCLUDING FOOTING, AS PER PLAN	102	110							3/31
511	46211	102	CU YD	CLASS QC1 CONCRETE, AS PER PLAN							64	38	4/31
512	10050	1389	SQ YD	SEALING OF CONCRETE SURFACES (NON-EPOXY)	66	82	80	64	211	411	257	218	
512	10300	45	SQ YD	SEALING CONCRETE BRIDGE DECKS WITH HMWM RESIN						36		9	
512	33000	6	SQ YD	TYPE 2 WATERPROOFING		6							
512	44400	40	SQ YD	TYPE B WATERPROOFING					21	19			
515	12071	38	EACH	PRESTRESSED CONCRETE COMPOSITE BOX BEAM BRIDGE MEMBERS, LEVEL 1, CB27-48, AS PER PLAN (45' SPAN)					20	18			13/31
515	12071	19	EACH	PRESTRESSED CONCRETE COMPOSITE BOX BEAM BRIDGE MEMBERS, LEVEL 1, CB27-48, AS PER PLAN (65' SPAN)					10	9			13/31
516	13200	13	SQ FT	1/2" PREFORMED EXPANSION JOINT FILLER							13		
516	14000	428	SQ FT	PREFORMED EXPANSION JOINT FILLER, MISC.: 1" THICK POLYSTYRENE	246	182							
516	41100	114	EACH	1/8" PREFORMED BEARING PAD							60	54	
516	43201	228	EACH	ELASTOMERIC BEARING WITH INTERNAL LAMINATES ONLY (NEOPRENE), AS PER PLAN (2"x7"x11")	40	36	80	72					14/31
517	75121	160	FT	RAILING (CONCRETE PARAPET WITH TWIN STEEL TUBE RAILING), AS PER PLAN						160			3/31, 4/31
518	21230	LUMP		POROUS BACKFILL WITH FILTER FABRIC	LUMP	LUMP							
518	40000	251	FT	6" PERFORATED CORRUGATED PLASTIC PIPE	126	125							
518	40010	50	FT	6" NON-PERFORATED CORRUGATED PLASTIC PIPE, INCLUDING SPECIALS	25	25							
523	20000	3	EACH	DYNAMIC LOAD TESTING	2		1						
523	20500	3	EACH	RESTRIKE	2		1						
526	15001	346	SQ YD	REINFORCED CONCRETE APPROACH SLABS (T=13"), AS PER PLAN							150	196	20/31 - 25/31
SPECIAL	53000200	LUMP		STRUCTURE, MISC.: MOUNTED PLAQUE DISPLAYS								LUMP	5/31
SPECIAL	53000400	2	EACH	STRUCTURE, MISC.: DISPLAY SIGN								2	6/31

NOTE:
ITEM 601E32210 - ROCK CHANNEL PROTECTION, TYPE C WITH AGGREGATE FILTER AND ITEM 622E41020 - PORTABLE BARRIER, 32", BRIDGE MOUNTED ARE PAID FOR UNDER THE EROSION CONTROL AND MAINTENANCE OF TRAFFIC HEADINGS, RESPECTIVELY, WITHIN THE GENERAL SUMMARY.

SEE THE LIGHTING PLANS FOR ADDITIONAL DETAILS ON LIGHTING RELATED ITEMS AND QUANTITIES INCORPORATED INTO THE PROPOSED BRIDGE STRUCTURE.

ǂ DECK SLAB
△ PARAPETS

DESIGN AGENCY
KOHLI & KALIHER ASSOCIATES, INC.
ENGINEERS AND SURVEYORS
2244 Baton Rouge Ave., Lima, Ohio 45805 419-227-1135

DATE 1-17-13
REVIEWED DGB
STRUCTURE FILE NUMBER 0249696
DRAWN RTH
REVISED
DESIGNED IMK
CHECKED BLS

ESTIMATED QUANTITIES
BRIDGE NO. ALL-C.R. 152-0334
OVER OTTAWA RIVER

ALL-SHAWNEE ROAD
PID No. 77305

I:\PROJECTS\ALL\77305\structures\ALL152_0334C\sheets\152_0334CEQ001.dgn 1/13/2014 3:33:32 PM C

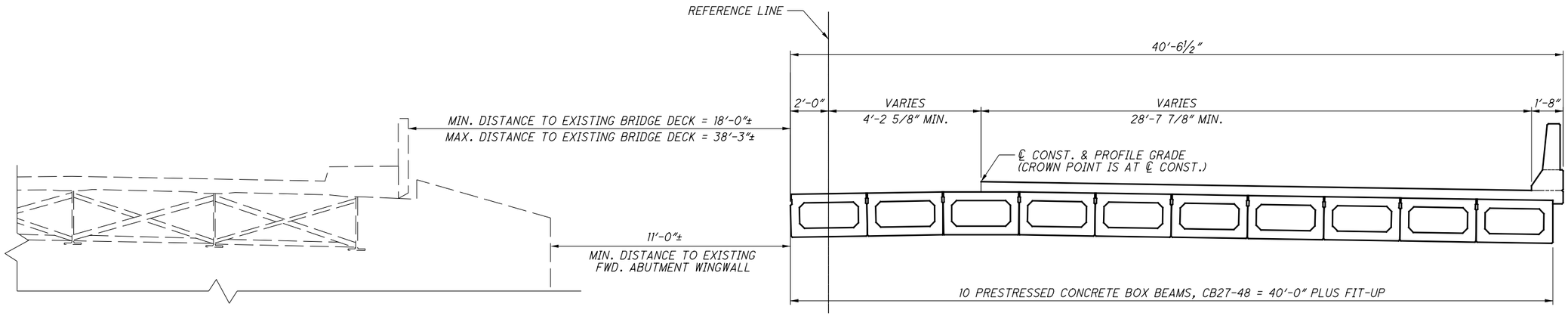

PHASE I SUPERSTRUCTURE CONSTRUCTION DETAILS

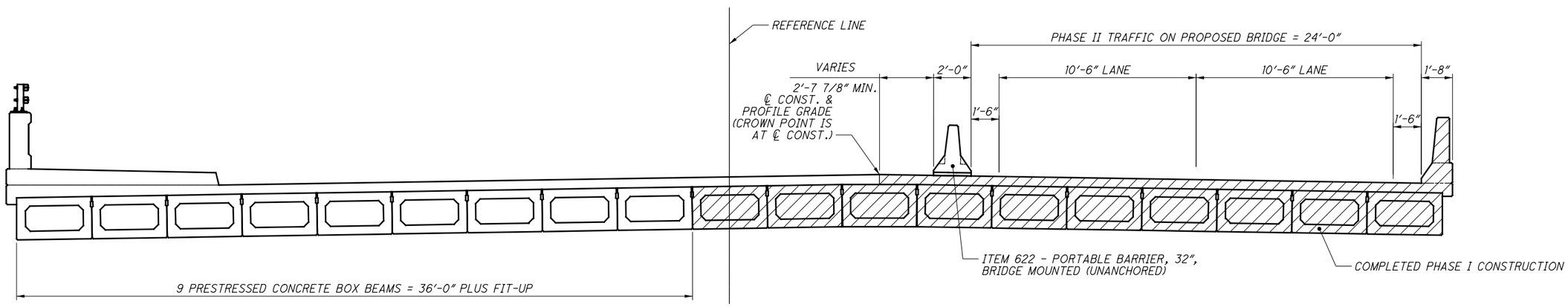

PHASE II SUPERSTRUCTURE CONSTRUCTION DETAILS

CONSTRUCTION SEQUENCE

THE CONTRACTOR SHALL COORDINATE STRUCTURE AND ROADWAY CONSTRUCTION, SO THAT TWO LANE, TWO WAY TRAFFIC CAN BE MAINTAINED AT ALL TIMES ACROSS THE OTTAWA RIVER. THE PROPOSED WORK SHALL INCLUDE, BUT NOT BE LIMITED TO:

PHASE I CONSTRUCTION

1. BEFORE WORK BEGINS, THE CONTRACTOR SHALL SUBMIT A DETAILED PLAN DESCRIBING HIS METHODS FOR COFFERDAMS AND EXCAVATION BRACING. SEE CMS 501.05. THE COST OF SHORING AND INCIDENTALS SHALL BE INCLUDED WITH ITEM 503 - COFFERDAMS AND EXCAVATION BRACING FOR PAYMENT.

2. INSTALL THE TEMPORARY SHORING AS NEEDED. CONSTRUCT PHASE I. THE CROWN POINT OF THE CONCRETE DECK IS LOCATED AT THE CENTERLINE OF CONSTRUCTION AND IS THE LONGITUDINAL PHASE CONSTRUCTION JOINT FOR THE DECK.

3. THE EXISTING BRIDGE SHALL REMAIN OPEN TO TWO LANES OF TRAFFIC (ONE LANE IN EACH DIRECTION) DURING PHASE I CONSTRUCTION.

PHASE II CONSTRUCTION

4. TRAFFIC SHALL BE DIVERTED TO THE NEWLY CONSTRUCTED RIGHT SIDE OF THE BRIDGE. THE INSTALLATION, MAINTENANCE, AND OPERATION OF ALL TRAFFIC CONTROLS AND TRAFFIC CONTROL DEVICES SHALL CONFORM TO THE REQUIREMENTS OF THE "OHIO MANUAL OF UNIFORM TRAFFIC CONTROL DEVICES".

5. THE EXISTING BRIDGE SHALL BE REMOVED, INCLUDING ANY PORTION OF AN OLD STONE ABUTMENT ENCOUNTERED NEAR THE PROPOSED FORWARD PIER THAT IS NECESSARY FOR CONSTRUCTION (SEE ITEM 202 - STRUCTURE REMOVED OVER 20 FOOT SPAN, AS PER PLAN). INSTALL THE TEMPORARY SHORING AS NEEDED. CONSTRUCT PHASE II.

6. REMOVE PORTABLE CONCRETE BARRIERS.

7. OPEN ROAD TO TRAFFIC.

CROSS REFERENCE	
SHEET NO.	DESCRIPTION
9/31	PHASE CONSTRUCTION OF REAR ABUTMENT
10/31	PHASE CONSTRUCTION OF FWD. ABUTMENT
12/31	PHASE CONSTRUCTION OF PIERS

DESIGN AGENCY
KOHLI & KALIHER ASSOCIATES, INC.
ENGINEERS AND SURVEYORS
2244 Baton Rouge Ave., Lima, Ohio 45805 419-227-1135

DESIGNED	DRAWN	REVIEWED	DATE
IMK	IMK	DGB	1-17-13
CHECKED	REVISED	STRUCTURE FILE NUMBER	
MAD		0249696	

PHASE CONSTRUCTION DETAILS
BRIDGE NO. ALL-C.R 152-0334
OVER OTTAWA RIVER

ALL-SHAWNEE ROAD
PID No. 77305

I:\PROJECTS\ALL\77305\structures\ALL152_0334C\sheets\152_0334CPC001.dgn 1/13/2014 3:33:33 PM C

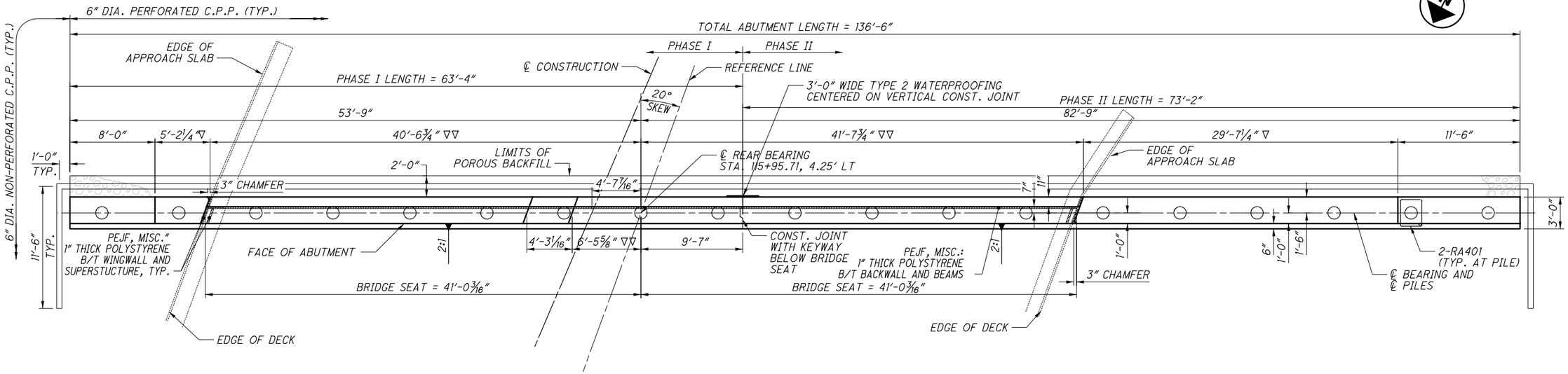

PLAN - REAR ABUTMENT

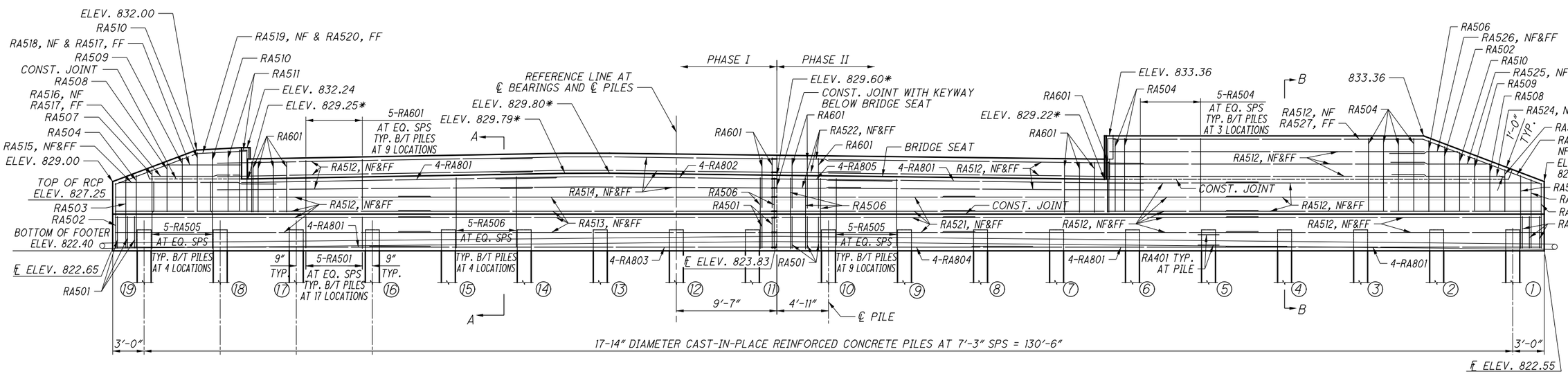

ELEVATION - REAR ABUTMENT

MINIMUM LAP LENGTH (UNLESS NOTED OTHERWISE)
NO. 5 BAR = 3'-0"
NO. 8 BAR = 5'-9"

NOTES:

BRIDGE SEAT REINFORCING, SETTING ANCHORS: ACCURATELY PLACE REINFORCING STEEL IN THE VICINITY OF THE BRIDGE SEAT TO AVOID INTERFERENCE WITH THE DRILLING OF ANCHOR BAR HOLES

ABUTMENT CONCRETE: DO NOT PLACE THE ABUTMENT CONCRETE ABOVE THE BRIDGE SEAT CONSTRUCTION JOINT UNTIL THE PRESTRESSED CONCRETE BOX BEAMS HAVE BEEN ERECTED.

* ELEVATIONS AT ℄ BEARING

▽ THESE DIMENSIONS MAY VARY. WINGWALLS ARE TO BE CAST AGAINST THE PREFORMED EXPANSION JOINT MATERIAL WHICH IS SNUG AGAINST THE BOX BEAMS.

▽▽ THIS DIMENSION INCLUDES ½" PER JOINT FIT-UP FOR THE BEAMS.

ALL EXPOSED EDGES OF THE ABUTMENT AND WINGWALL SHALL HAVE A THREE-QUARTER (3/4) INCH CHAMFER.

MINIMUM CLEARANCE BETWEEN REINFORCING STEEL AND THE FACE OF THE CONCRETE SHALL BE THREE (3) INCHES.

CROSS REFERENCE	
SHEET NO.	DESCRIPTION
11/31	SECT. A-A, B-B
14-15/31	BEARING AT ABUTMENT
18-19/31	PARAPETS
20-22/31	REAR APPROACH SLAB DETAILS
30/31	REINFORCING STEEL LIST

DESIGN AGENCY
KOHLI & KALIHER ASSOCIATES, INC.
ENGINEERS AND SURVEYORS
2244 Baton Rouge Ave., Lima, Ohio 45805 419-227-1135

DESIGNED	DRAWN	REVIEWED	DATE
BLS	BLS	DGB	1-17-13
CHECKED	REVISED	STRUCTURE FILE NUMBER	
MAD		0249696	

REAR ABUTMENT DETAILS
BRIDGE NO. ALL-C.R. 152-0334
OVER OTTAWA RIVER

ALL-SHAWNEE ROAD
PID No. 77305

I:\PROJECTS\ALL\77305\structures\ALL152_0334C\sheets\152_0334CAR002.dgn 1/13/2014 3:33:35 PM C

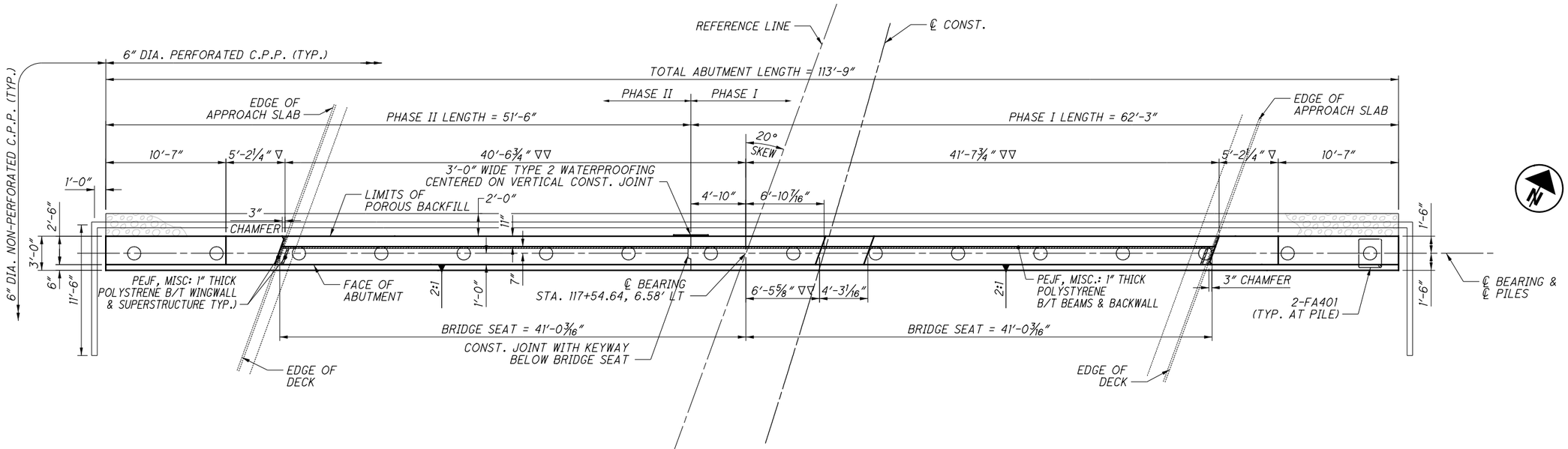

PLAN - FORWARD ABUTMENT

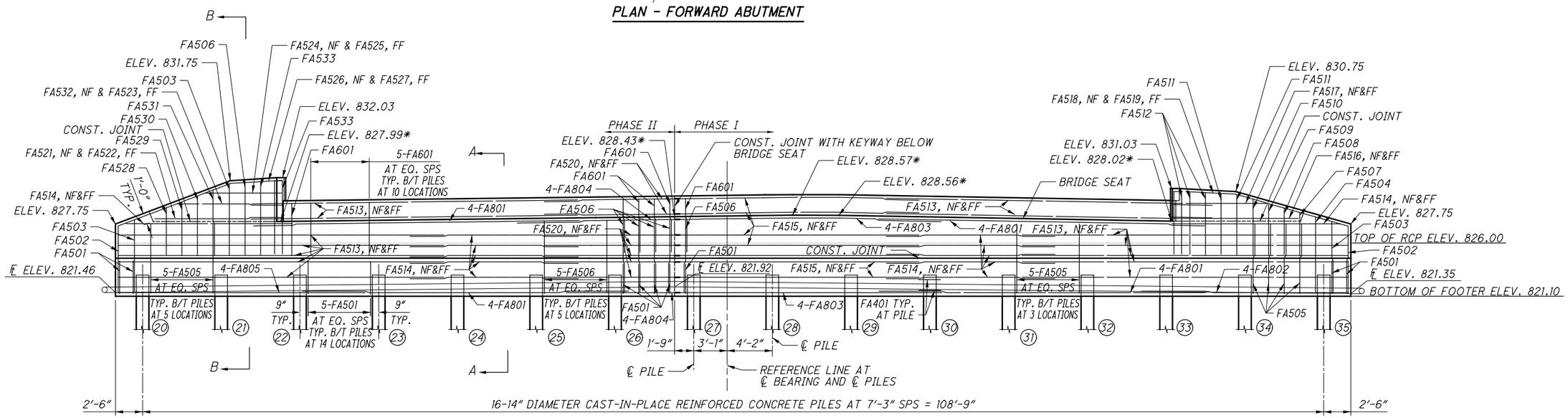

ELEVATION - FORWARD ABUTMENT

MINIMUM LAP LENGTH (UNLESS NOTED OTHERWISE)
NO. 5 BAR = 3'-0"
NO. 8 BAR = 5'-9"

NOTES:

BRIDGE SEAT REINFORCING, SETTING ANCHORS: ACCURATELY PLACE REINFORCING STEEL IN THE VICINITY OF THE BRIDGE SEAT TO AVOID INTERFERENCE WITH THE DRILLING OF ANCHOR BAR HOLES.

ABUTMENT CONCRETE: DO NOT PLACE ABUTMENT CONCRETE ABOVE THE BRIDGE SEAT CONSTRUCTION JOINT UNTIL THE PRESTRESSED CONCRETE BOX BEAMS HAVE BEEN ERECTED.

* ELEVATIONS AT ℄ BEARING

▽ THESE DIMENSIONS MAY VARY. WINGWALLS ARE TO BE CAST AGAINST THE PREFORMED EXPANSION JOINT MATERIAL WHICH IS SNUG AGAINST THE BOX BEAMS.

▽▽ THIS DIMENSION INCLUDES ½" PER JOINT FIT-UP FOR THE BEAMS.

ALL EXPOSED EDGES OF THE ABUTMENT AND WINGWALL SHALL HAVE A THREE-QUARTER (3/4) INCH CHAMFER.

MINIMUM CLEARANCE BETWEEN REINFORCING STEEL AND THE FACE OF THE CONCRETE SHALL BE THREE (3) INCHES.

CROSS REFERENCE	
SHEET NO.	DESCRIPTION
11/31	SECT. A-A, B-B
14-15/31	BEARING AT ABUTMENT
18-19/31	PARAPETS
23-25/31	FORWARD APPROACH SLAB DETAILS
30/31	REINFORCING STEEL LIST

DESIGN AGENCY
KOHLI & KALIHER ASSOCIATES, INC.
ENGINEERS AND SURVEYORS
2244 Baton Rouge Ave. Lima, Ohio 45805 419-227-1135

DESIGNED	DRAWN	REVIEWED	DATE
BLS	BLS	DGB	1-17-13
CHECKED	REVISED	STRUCTURE FILE NUMBER	
MAD		0249696	

FORWARD ABUTMENT DETAILS
BRIDGE NO. ALL-C.R. 152-0334
OVER OTTAWA RIVER

ALL-SHAWNEE ROAD
PID No. 77305

I:\PROJECTS\ALL\77305\structures\ALL152_0334C\sheets\152_0334CAF001.dgn 1/13/2014 3:33:36 PM C

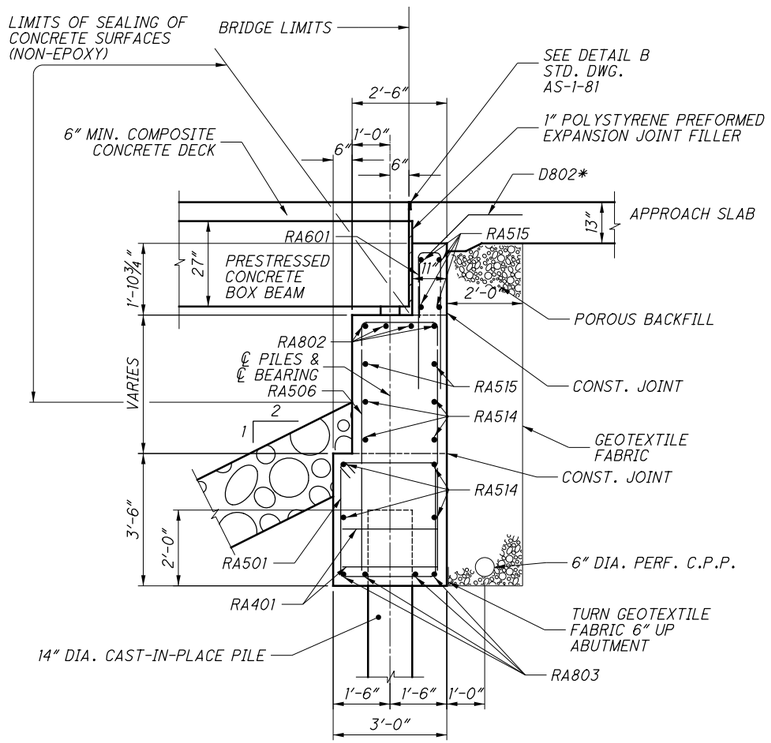

SECTION A-A

(REAR ABUTMENT SHOWN. FORWARD SIMILAR)

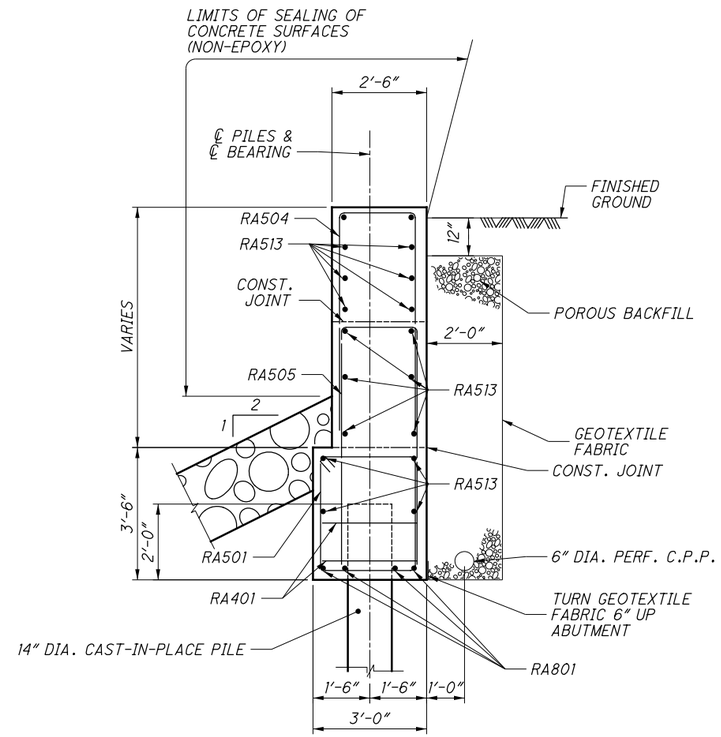

SECTION B-B

(REAR ABUTMENT SHOWN. FORWARD SIMILAR)

NOTES:

ALL EXPOSED EDGES OF THE ABUTMENT AND WINGWALL SHALL HAVE A THREE QUARTER (3/4) INCH CHAMFER.

BRIDGE SEAT REINFORCING, SETTING ANCHORS: ACCURATELY PLACE REINFORCING STEEL IN THE VICINITY OF THE BRIDGE SEAT TO AVOID INTERFERENCE WITH THE DRILLING OF ANCHOR BAR HOLES.

ABUTMENT CONCRETE: DO NOT PLACE THE ABUTMENT CONCRETE ABOVE THE BRIDGE SEAT CONSTRUCTION JOINT UNTIL THE PRESTRESSED CONCRETE BOX BEAMS HAVE BEEN ERECTED.

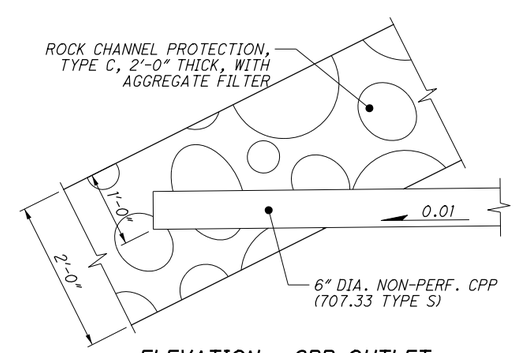

ELEVATION - CPP OUTLET

* INCLUDED WITH ITEM 526 FOR PAYMENT

CROSS REFERENCE	
SHEET NO.	DESCRIPTION
9/31	REAR ABUT. PLAN & ELEV.
10/31	FWD ABUT. PLAN & ELEV.

DESIGN AGENCY
KOHLI & KALIHER ASSOCIATES, INC.
ENGINEERS AND SURVEYORS
2244 Baton Rouge Ave., Lima, Ohio 45805 419-227-1135

DESIGNED	DRAWN	REVIEWED	DATE
BLS	BLS	DGB	1-17-13
CHECKED	REVISED	STRUCTURE FILE NUMBER	
MAD		0249696	

REAR & FORWARD ABUTMENT DETAILS
BRIDGE NO. ALL-C.R. 152-0334
OVER OTTAWA RIVER

ALL-SHAWNEE ROAD
PID No. 77305

I:\PROJECTS\ALL\77305\structures\ALL152_0334C\sheets\152_0334CAR001.dgn 1/13/2014 3:33:37 PM C

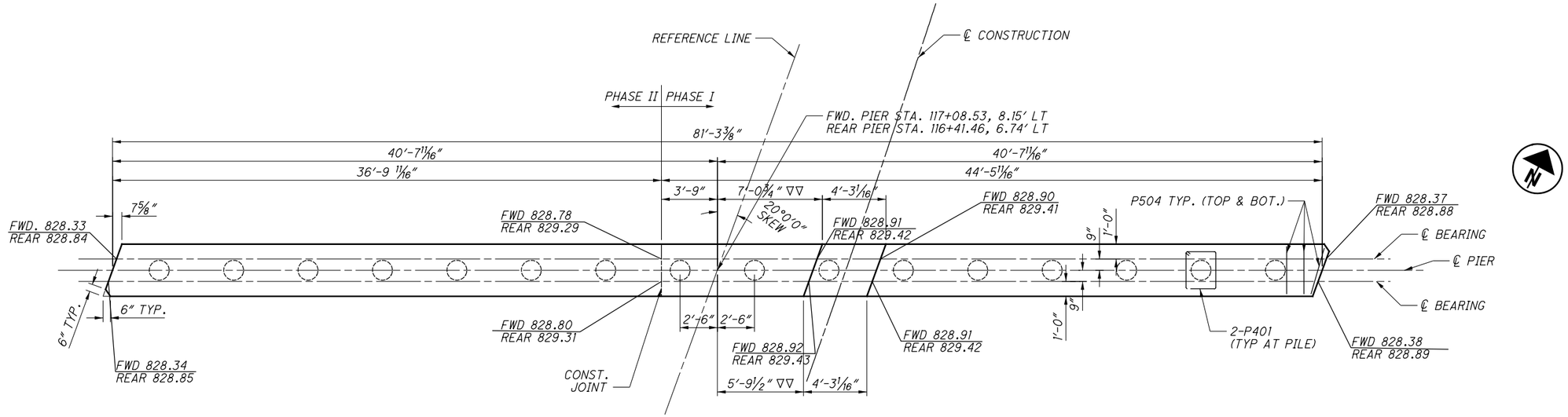

PLAN VIEW - REAR AND FORWARD PIER

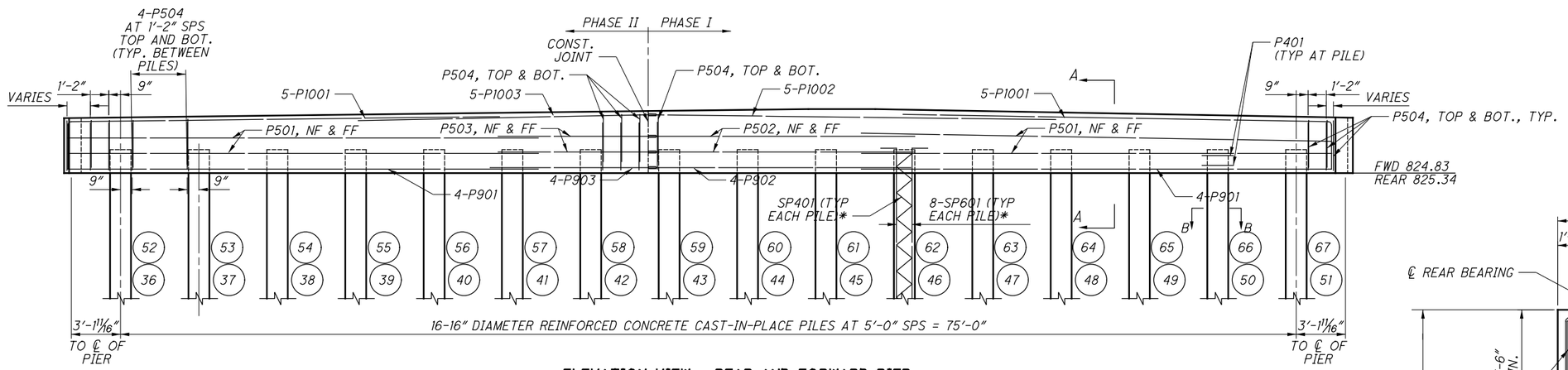

ELEVATION VIEW - REAR AND FORWARD PIER

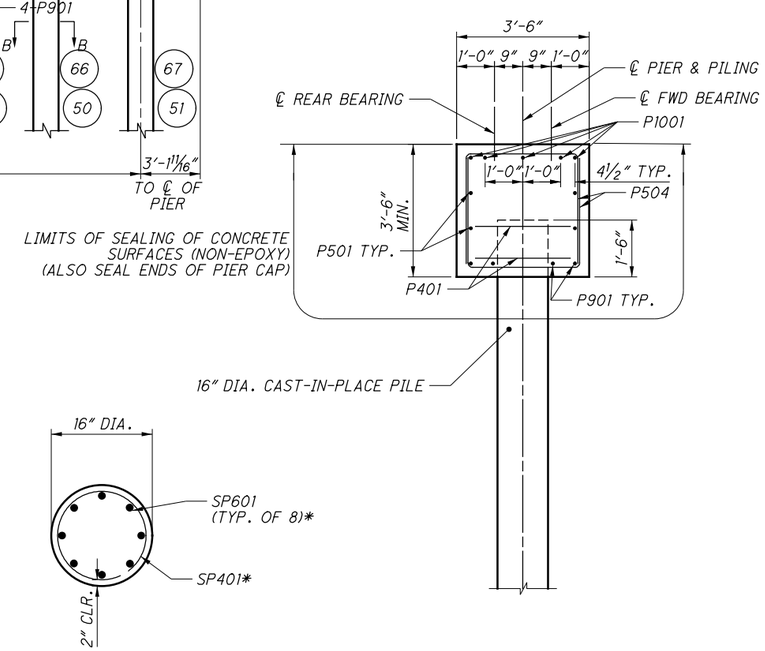

SECTION B-B

SECTION A-A

NOTES:

BRIDGE SEAT REINFORCING, SETTING ANCHORS:

ACCURATELY PLACE REINFORCING STEEL IN THE VICINITY OF THE BRIDGE SEAT TO AVOID INTERFERENCE WITH THE DRILLING OF ANCHOR BAR HOLES.

ALL EXPOSED EDGES OF THE PIER SHALL HAVE A THREE-QUARTER (3/4) INCH CHAMFER.

MINIMUM CLEARANCE BETWEEN REINFORCING STEEL AND THE FACE OF CONCRETE SHALL BE THREE (3) INCHES.

* PILE REINFORCING STEEL SHALL EXTEND A MINIMUM OF 15'-0" BELOW FINISHED GROUND ELEVATION.

PILES NO. 52 THROUGH 67 ARE AT THE FWD. PIER.

PILES NO. 36 THROUGH 51 ARE AT THE REAR PIER.

▽▽ THIS DIMENSION INCLUDES 1/4" PER JOINT FIT-UP FOR THE BEAMS (1/2" TOTAL FIT-UP).

CROSS REFERENCE	
SHEET NO.	DESCRIPTION
14-15/31	BEARING AT PIER
29-31/31	REINFORCING STEEL LIST

DESIGN AGENCY
KOHLI & KALIHER ASSOCIATES, INC.
ENGINEERS AND SURVEYORS
2244 Baton Rouge Ave., Lima, Ohio 45805 419-227-1135

DESIGNED	DRAWN	REVIEWED	DATE
BLS	BLS	DGB	1-17-13
CHECKED	REVISED	STRUCTURE FILE NUMBER	
MAD		0249696	

PIER DETAILS
BRIDGE NO. ALL-C.R. 152-0334
OVER OTTAWA RIVER

ALL-SHAWNEE ROAD
PID No. 77305

I:\PROJECTS\ALL\77305\structures\ALL152_0334C\sheets\152_0334CPI001.dgn 1/13/2014 3:33:38 PM C

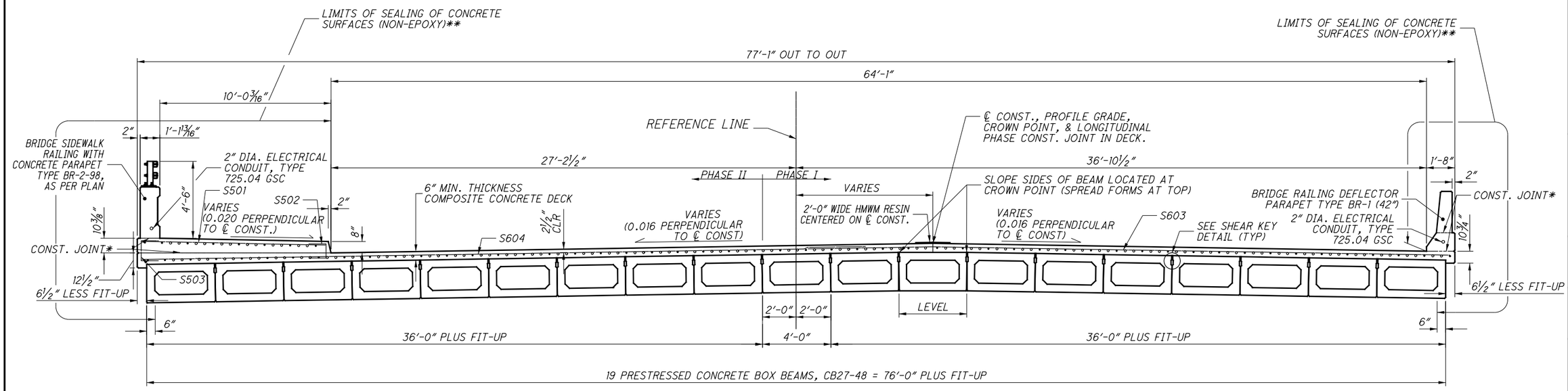

TRANSVERSE SECTION

● NO. 6 BAR

○ NO. 7 BAR OVER THE PIERS

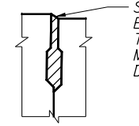

SHEAR KEYS SHALL BE MORTARED ON A SLOPE BETWEEN THE TOP EDGES OF THE ADJACENT BEAMS WHERE VERTICAL OFFSET (WITHIN TOLERANCE) OCCURS. MINIMUM COMPRESSIVE STRENGTH OF MORTAR SHALL BE 5000 PSI. REFER TO CMS 515.19 AND STD. DWG. PSBD-2-07, SHEET 1/4, MORTAR.

SHEAR KEY DETAIL

THE BEAM SUPPLIER SHALL SEAL BOTH SIDES OF EACH INTERIOR BEAM WITH ITEM 512 NON-EPOXY SEALER (CLEAR) FROM THE BOTTOM OF THE SHEAR KEY TO A POINT ON THE BOTTOM OF THE BEAM 0'-6" FROM THE SIDE OF THE BEAM AS SHOWN.

THE INTERIOR SIDE OF EACH EXTERIOR BEAM SHALL ALSO BE SEALED THIS WAY.

ALL COSTS ASSOCIATED WITH THE EQUIPMENT, LABOR, AND MATERIALS NECESSARY FOR COMPLETING THIS WORK SHALL BE INCLUDED IN THE PRICE BID PER EACH FOR ITEM 515 - PRESTRESSED CONCRETE COMPOSITE BOX BEAM BRIDGE MEMBERS, LEVEL 1, CB27-48, AS PER PLAN.

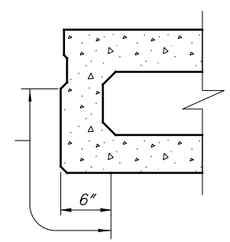

SEALING OF INTERIOR BEAMS (BOTH SIDES)
SEALING OF EXTERIOR BEAMS (INTERIOR SIDE)

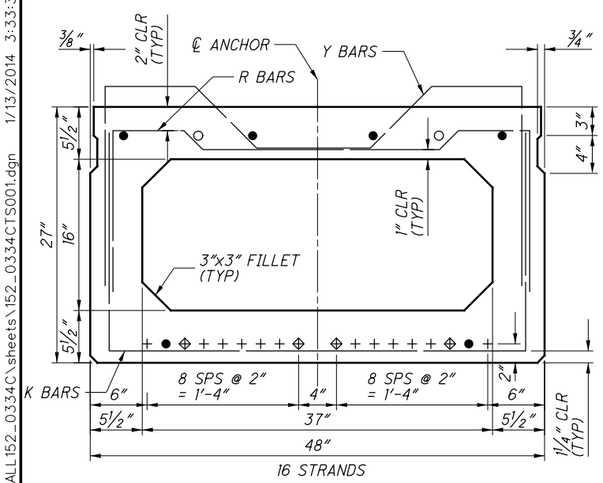

+ STRAND LOCATION

⊕ 2.50' DEBONDED LENGTH

● NO. 5 FULL-LENGTH REINFORCING BAR (2 BARS AT BOTTOM, 4 BARS AT TOP). A LAP OF 3'-3" FOR BOTTOM BARS SHOULD BE PROVIDED WITHIN THE OUTER QUARTER OF THE SPAN, IF NEEDED. A LAP OF 3'-8" FOR TOP BARS SHOULD BE PROVIDED WITHIN THE MIDDLE HALF OF THE SPAN, IF NEEDED.

○ NO. 4 ADDITIONAL TOP REINFORCING BAR, 6'-0" LONG (MEASURED FROM END OF BEAM). BARS SHALL BE PLACED SYMMETRICALLY OVER THE BEAM WIDTH AND SHALL BE PLACED MIDWAY BETWEEN FULL LENGTH BARS AT EACH END OF BEAM

DETAILS - CB27-48 (45' SPAN)

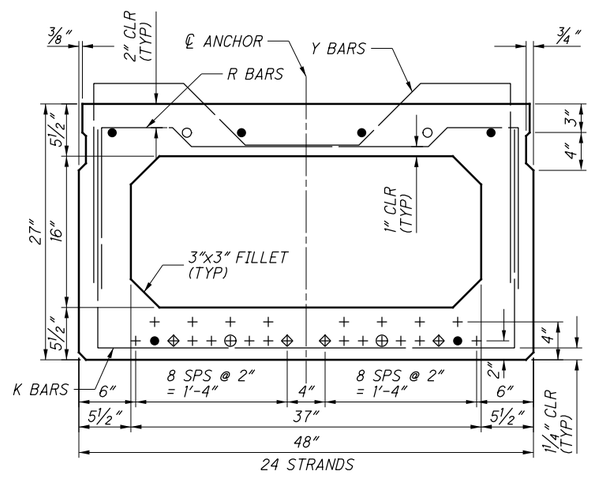

+ STRAND LOCATION

⊕ 2.00' DEBONDED LENGTH

⊕ 3.00' DEBONDED LENGTH

● NO. 5 FULL-LENGTH REINFORCING BAR (2 BARS AT BOTTOM, 4 BARS AT TOP). A LAP OF 3'-3" FOR BOTTOM BARS SHOULD BE PROVIDED WITHIN THE OUTER QUARTER OF THE SPAN, IF NEEDED. A LAP OF 3'-8" FOR TOP BARS SHOULD BE PROVIDED WITHIN THE MIDDLE HALF OF THE SPAN, IF NEEDED.

○ NO. 5 ADDITIONAL TOP REINFORCING BAR, 7'-0" LONG (MEASURED FROM END OF BEAM). BARS SHALL BE PLACED SYMMETRICALLY OVER THE BEAM WIDTH AND SHALL BE PLACED MIDWAY BETWEEN FULL LENGTH BARS AT EACH END OF BEAM

DETAILS - CB27-48 (65' SPAN)

NOTES:

1. KEYWAYS ON THE EXTERIOR SIDES OF THE EXTERIOR BEAMS SHALL BE OMITTED.
2. FABRICATOR'S SHOP DRAWINGS SHALL SHOW COMPLETE DETAILS OF BEAM REINFORCING.
3. FOR ADDITIONAL BEAM DETAILS, SEE SHEETS 13/22 AND 14/22 AND STANDARD DRAWING PSBD-2-07

* ALL CONSTRUCTION JOINTS ARE LEVEL TRANSVERSE TO THE ℄ OF ROADWAY

** FOR OUTSIDE BEAMS ONLY, CONTRACTOR SHALL APPLY SEALER TO BEAMS (AFTER BEAM ERECTION)

CROSS REFERENCE	
SHEET NO.	DESCRIPTION
8/31	PHASE CONSTRUCTION OF SUPERSTRUCTURE
2/31	GENERAL PLAN DEFINING REFERENCE LINE
14-15/31	ADDITIONAL BEAM DETAILS
128/199	LIGHTING GENERAL NOTES

DESIGN AGENCY
KOHLI & KALIHER ASSOCIATES, INC.
ENGINEERS AND SURVEYORS
2244 Baton Rouge Ave., Lima, Ohio 45805 419-227-1135

DESIGNED	DRAWN	REVIEWED	DATE
IMK	IMK	DGB	1-17-13
CHECKED	REVISED	STRUCTURE FILE NUMBER	
MAD		0249696	

SUPERSTRUCURE DETAILS
BRIDGE NO. ALL-C.R. 152-0334
OVER OTTAWA RIVER

ALL-SHAWNEE ROAD
PID No. 77305

I:\PROJECTS\ALL\77305\structures\ALL152_0334C\sheets\152_0334CTS001.dgn 1/13/2014 3:33:39 PM C

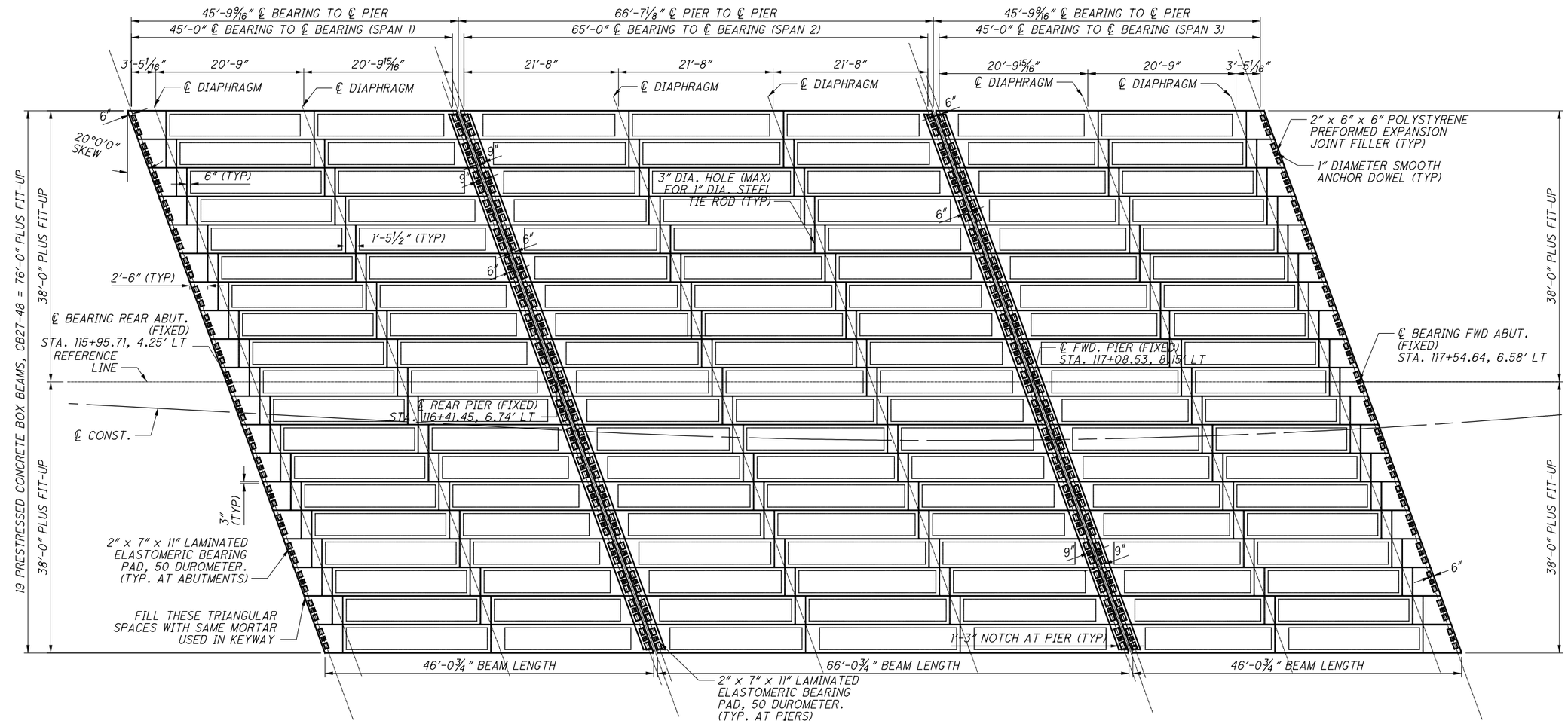

PLAN

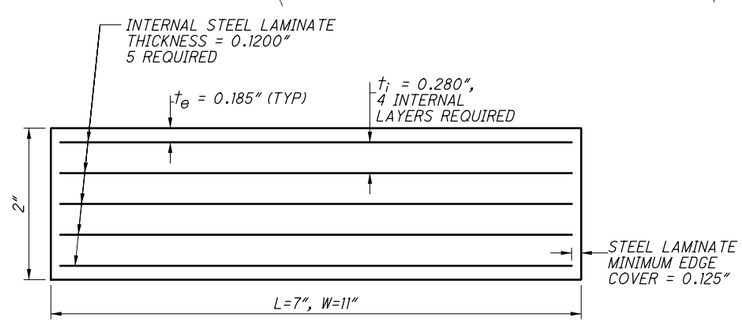

LAMINATED ELASTOMERIC FIXED BEARINGS

ABUTMENTS AND PIERS

50 DUROMETER

45′ SPAN		
DEAD LOAD REACTION	=	17.72 KIPS
LIVE LOAD REACTION	=	14.74 KIPS
MAXIMUM DESIGN LOAD	=	32.46 KIPS

65′ SPAN		
DEAD LOAD REACTION	=	24.76 KIPS
LIVE LOAD REACTION	=	17.14 KIPS
MAXIMUM DESIGN LOAD	=	41.90 KIPS

ELASTOMERIC BEARINGS: BEARINGS WERE DESIGNED BASED ON KENTUCKY DEPARTMENT OF HIGHWAYS STANDARD DRAWING BBP-003-01, PAD TYPE B2. THE ELASTOMER SHALL HAVE A HARDNESS OF 50 DUROMETER. THE BEARINGS WERE DESIGNED IN ACCORDANCE WITH SECTION 14.7.6 (METHOD A) OF THE AASHTO LRFD BRIDGE DESIGN SPECIFICATIONS. THE LONG TERM COMPRESSION PROOF LOAD TEST (AASHTO STANDARD SPECIFICATIONS FOR HIGHWAY BRIDGES, DIVISION II, SECTION 18.7.2.6) IS NOT REQUIRED.

CROSS REFERENCE	
SHEET NO.	DESCRIPTION
13, 15/31	ADDITIONAL BEAM DETAILS

DESIGN AGENCY
KOHLI & KALIHER ASSOCIATES, INC.
ENGINEERS AND SURVEYORS
2244 Baton Rouge Ave., Lima, Ohio 45805 419-227-1135

DESIGNED	DRAWN	REVIEWED	DATE
BLS	BLS	DGB	1-17-13
CHECKED	REVISED	STRUCTURE FILE NUMBER	
MAD		0249696	

SUPERSTRUCTURE DETAILS
BRIDGE NO. ALL-C.R. 152-0334
OVER OTTAWA RIVER

ALL-SHAWNEE ROAD
PID No. 77305

I:\PROJECTS\ALL\77305\structures\ALL152_0334C\sheets\152_0334CSD001.dgn 1/13/2014 3:33:40 PM C

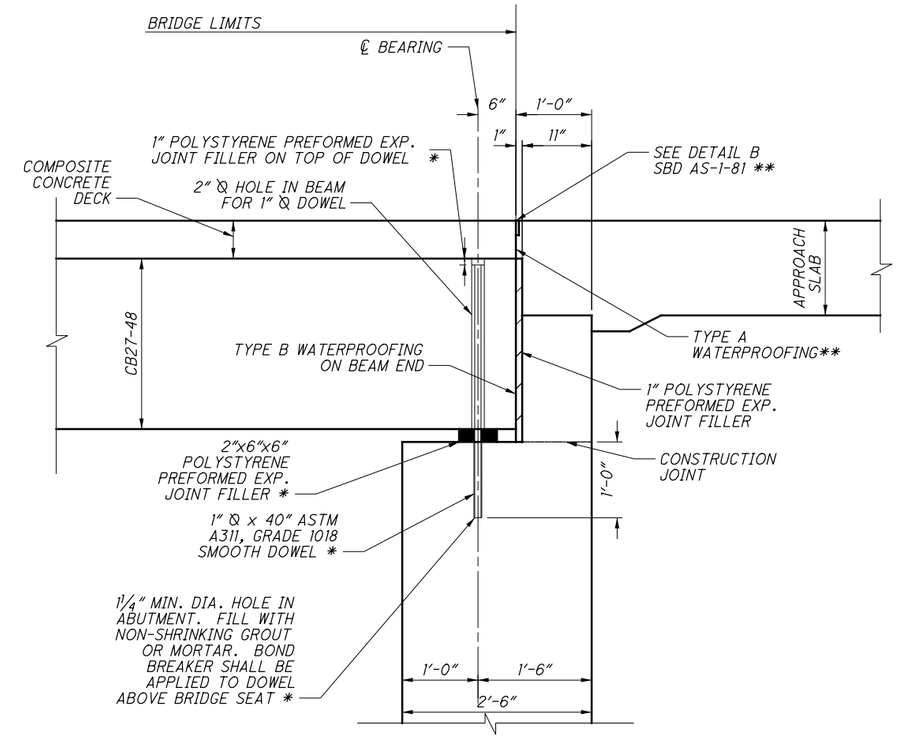

BEARING AT ABUTMENT

* - INCLUDED WITH ITEM 515 FOR PAYMENT
** - INCLUDED WITH ITEM 526 FOR PAYMENT
(SECTION IS PERPENDICULAR TO ℄ ABUTMENT)

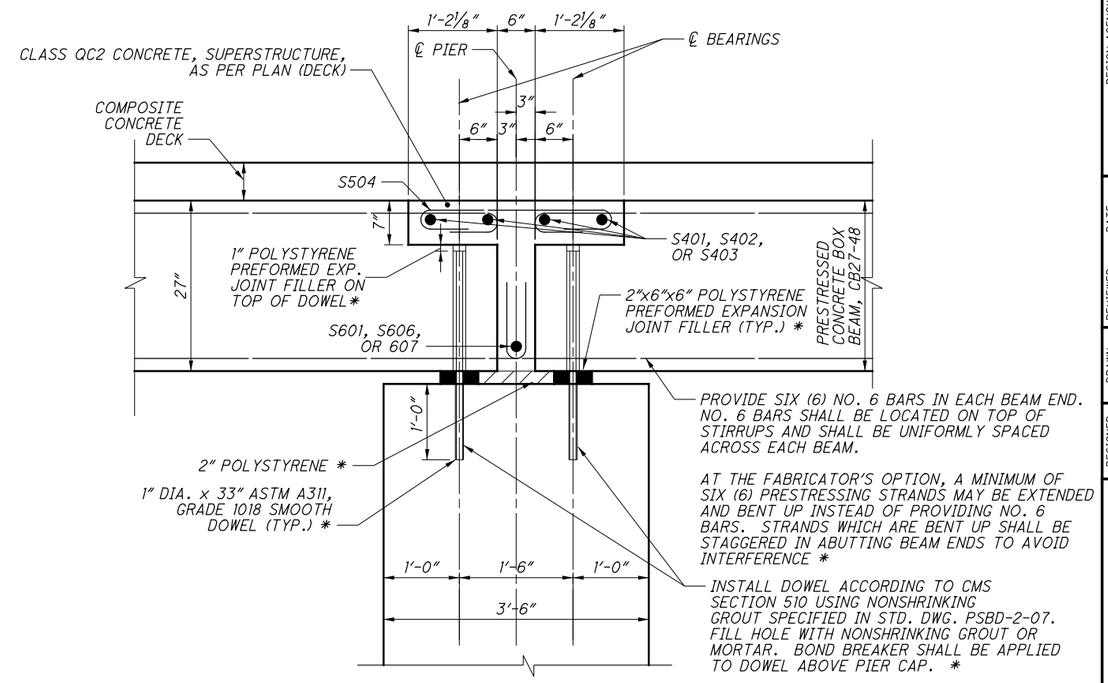

BEARING AT PIER

* - INCLUDED WITH ITEM 515 FOR PAYMENT
(SECTION IS PERPENDICULAR TO ℄ PIER)

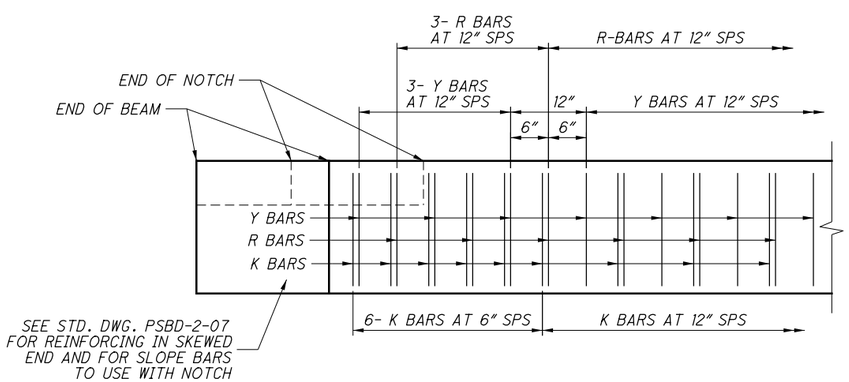

PARTIAL ELEVATION AT BEAM END

MINIMUM LAP LENGTH (UNLESS NOTED OTHERWISE)
NO. 4 BAR = 2'-3"
NO. 5 BAR = 2'-11"
NO. 6 BAR = 3'-5"

CROSS REFERENCE	
SHEET NO.	DESCRIPTION
13-14/31	ADDITIONAL BEAM DETAILS
14/31	ADDITIONAL BEARING DETAILS

DESIGN AGENCY
KOHLI & KALIHER ASSOCIATES, INC.
ENGINEERS AND SURVEYORS
2244 Baton Rouge Ave., Lima, Ohio 45805 419-227-1135

DESIGNED	CHECKED	DRAWN	REVISED	REVIEWED	DATE	STRUCTURE FILE NUMBER
BLS	MAD	BLS		DGB	1-17-13	0249696

SUPERSTRUCTURE DETAILS
BRIDGE NO. ALL-C.R. 152-0334
OVER THE OTTAWA RIVER

ALL-SHAWNEE ROAD
PID No. 77305

I:\PROJECTS\ALL\77305\structures\ALL152_0334C\sheets\152_0334CSD002.dgn 1/13/2014 3:33:41 PM C

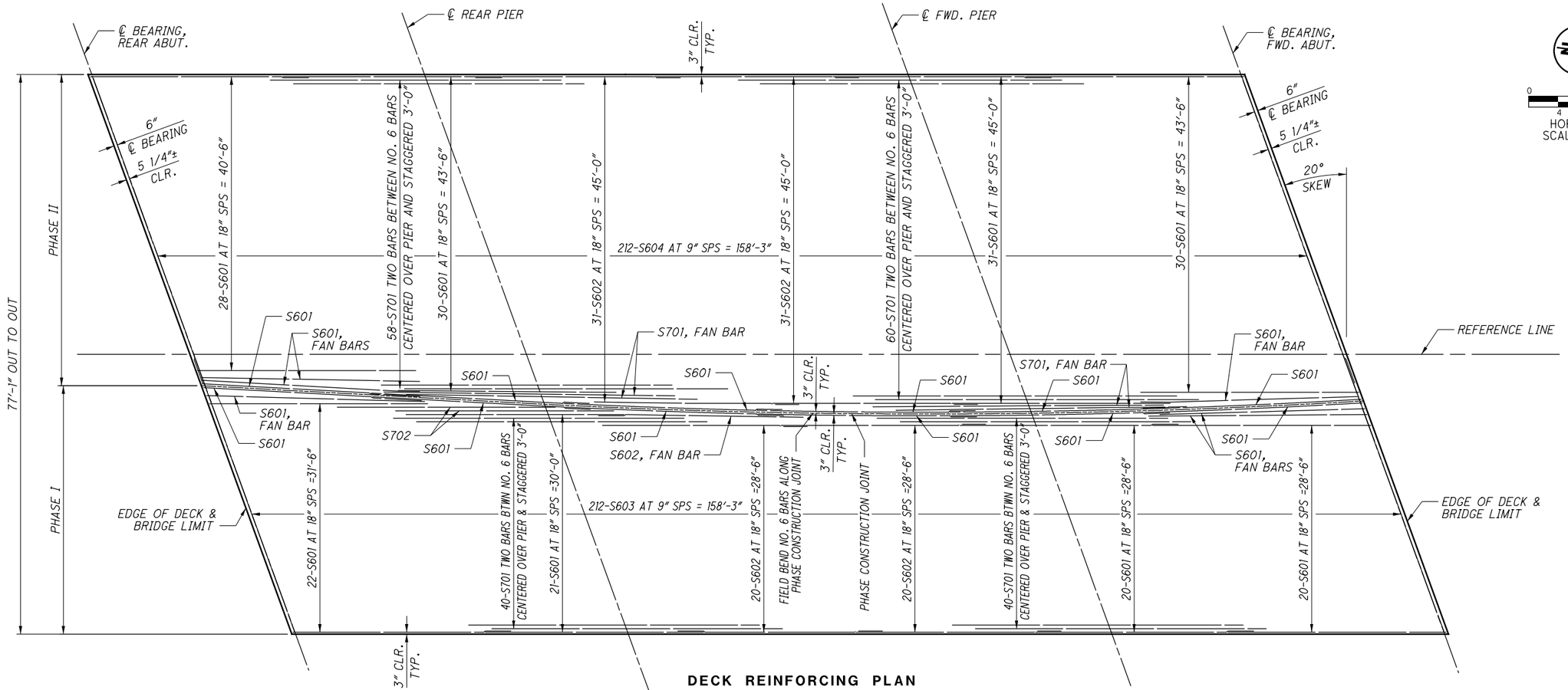

DECK REINFORCING PLAN

THE LONGITUDINAL CONSTRUCTION JOINT BETWEEN PHASE I AND PHASE II IS ALONG THE CENTERLINE OF CONSTRUCTION OF SHAWNEE RD. THIS LOCATION CORRESPONDS TO THE PROFILE GRADE LINE AND CROWN POINT OF THE ROAD.

BARS S502, S503, & R601 AND BRIDGE GROUNDING SYSTEM EXTENDING INTO DECK NOT SHOWN.

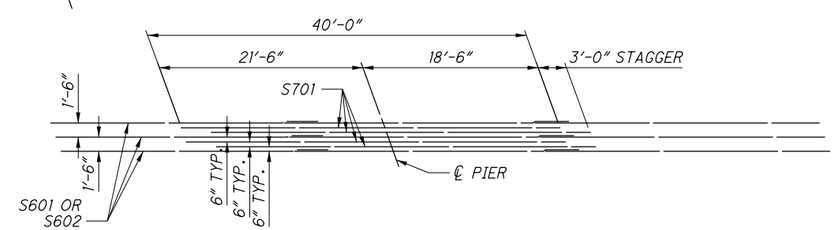

DETAIL OF ADDITIONAL REINFORCING STEEL OVER PIERS

PLACE TWO (2) S701 OR S702 BARS BETWEEN EACH LINE OF S601 AND S602 BARS. STAGGER S701 AND S702 BARS AT 3'-0".

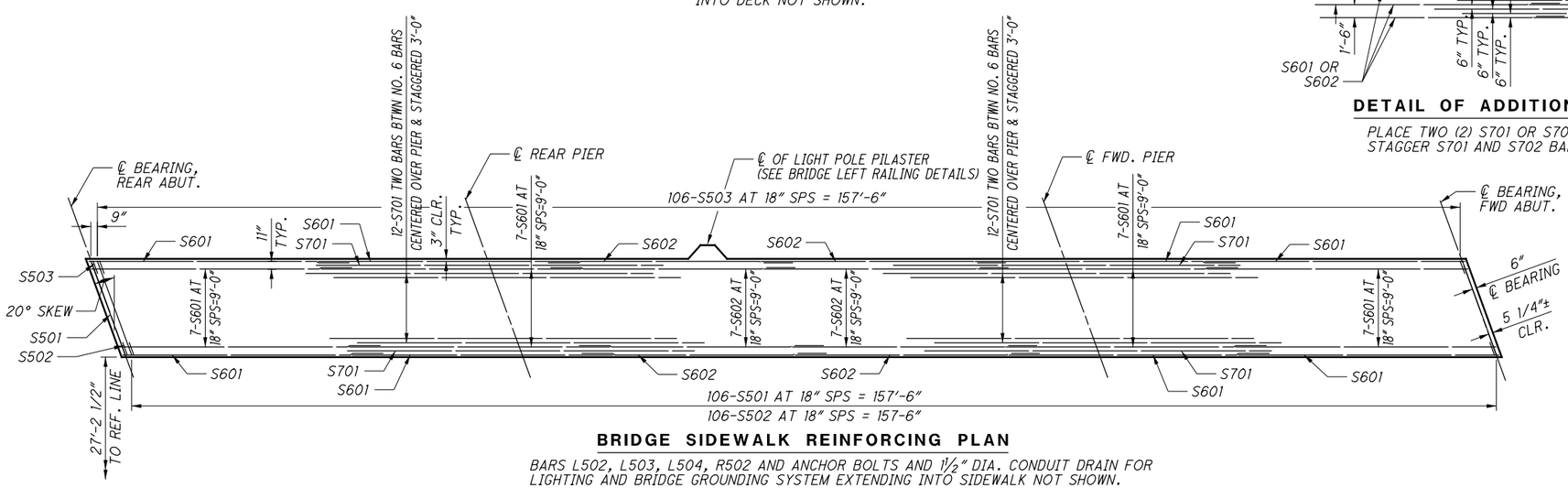

BRIDGE SIDEWALK REINFORCING PLAN

BARS L502, L503, L504, R502 AND ANCHOR BOLTS AND 1½" DIA. CONDUIT DRAIN FOR LIGHTING AND BRIDGE GROUNDING SYSTEM EXTENDING INTO SIDEWALK NOT SHOWN.

CROSS REFERENCE	
SHEET NO.	DESCRIPTION
13/31	TRANSVERSE SECTION
18/31	BRIDGE RIGHT RAILING DETAILS
19/31	BRIDGE LEFT RAILING DETAILS
29-31/31	REINFORCING STEEL LIST

DESIGN AGENCY
KOHLI & KALIHER ASSOCIATES, INC.
ENGINEERS AND SURVEYORS
2244 Baton Rouge Ave., Lima, Ohio 45805 419-227-1135

DESIGNED	DRAWN	REVIEWED	DATE
IMK	IMK	DGB	1-17-13
CHECKED	REVISED	STRUCTURE FILE NUMBER	
MAD		0246969	

SUPERSTRUCTURE DETAILS
BRIDGE NO. ALL-C.R. 152-0334
OVER THE OTTAWA RIVER

ALL-SHAWNEE ROAD
PID No. 77305

I:\PROJECTS\ALL\77305\structures\ALL152_0334C\sheets\152_0334CDP001.dgn 1/13/2014 3:33:43 PM C

COMPOSITE BOX BEAM SCREED AND FINAL DECK SURFACE ELEVATION TABLE

	SPAN 1	℄ BEARING REAR ABUT.	1/10 SPAN	2/10 SPAN	3/10 SPAN	4/10 SPAN	MIDPOINT OF SPAN	6/10 SPAN	7/10 SPAN	8/10 SPAN	9/10 SPAN	℄ BEARING REAR PIER
CURB LINE (LEFT)	STATION AND OFFSET, LT FINAL DECK SURFACE ELEVATION DEAD LOAD DEFLECTION* SCREED ELEVATION	115+84.35, 30.88′ 832.493 0.000′ 832.49	115+88.84, 31.12′ 832.453 0.003′ 832.46	115+93.33, 31.37′ 832.413 0.006′ 832.42	115+97.83, 31.61′ 832.373 0.008′ 832.38	116+02.32, 31.86′ 832.333 0.009′ 832.34	116+06.81, 32.10′ 832.294 0.010′ 832.30	116+11.31, 32.35′ 832.254 0.009′ 832.26	116+15.80, 32.59′ 832.214 0.008′ 832.22	116+20.29, 32.84′ 832.174 0.006′ 832.18	116+24.79, 33.08′ 832.134 0.003′ 832.14	116+29.28, 33.32′ 832.094 0.000′ 832.09
℄ CONST.	STATION FINAL DECK SURFACE ELEVATION DEAD LOAD DEFLECTION* SCREED ELEVATION	115+97.53 832.881 0.000′ 832.88	116+02.13 832.845 0.003′ 832.85	116+06.72 832.808 0.006′ 832.81	116+11.32 832.771 0.008′ 832.78	116+15.92 832.734 0.009′ 832.74	116+20.52 832.698 0.010′ 832.71	116+25.11 832.661 0.009′ 832.67	116+29.71 832.624 0.008′ 832.63	116+34.31 832.587 0.006′ 832.59	116+38.91 832.551 0.003′ 832.55	116+43.50 832.514 0.000′ 832.51
CURB LINE (RIGHT)	STATION AND OFFSET, RT FINAL DECK SURFACE ELEVATION DEAD LOAD DEFLECTION* SCREED ELEVATION	116+11.12, 31.84′ 832.263 0.000′ 832.26	116+15.61, 31.60′ 832.231 0.003′ 832.23	116+20.11, 31.35′ 832.199 0.006′ 832.21	116+24.60, 31.11′ 832.167 0.008′ 832.18	116+29.09, 30.87′ 832.135 0.009′ 832.14	116+33.59, 30.62′ 832.103 0.010′ 832.11	116+38.08, 30.38′ 832.071 0.009′ 832.08	116+42.53, 30.13′ 832.040 0.008′ 832.05	116+46.90, 29.90′ 832.008 0.006′ 832.01	116+51.27, 29.69′ 831.977 0.003′ 831.98	116+55.64, 29.50′ 831.945 0.000′ 831.94

	SPAN 2	℄ BEARING REAR PIER	1/10 SPAN	2/10 SPAN	3/10 SPAN	4/10 SPAN	MIDPOINT OF SPAN	6/10 SPAN	7/10 SPAN	8/10 SPAN	9/10 SPAN	℄ BEARING FWD. PIER
CURB LINE (LEFT)	STATION AND OFFSET, LT FINAL DECK SURFACE ELEVATION DEAD LOAD DEFLECTION* SCREED ELEVATION	116+30.88, 33.41′ 832.080 0.000′ 832.08	116+37.37, 33.76′ 832.023 0.013′ 832.04	116+43.95, 34.11′ 831.965 0.025′ 831.99	116+50.67, 34.43′ 831.906 0.034′ 831.94	116+57.39, 34.70′ 831.848 0.041′ 831.89	116+64.11, 34.93′ 831.790 0.043′ 831.83	116+70.84, 35.11′ 831.734 0.041′ 831.77	116+77.57, 35.26′ 831.678 0.034′ 831.71	116+84.30, 35.36′ 831.622 0.025′ 831.65	116+91.04, 35.41′ 831.567 0.013′ 831.58	116+97.77, 35.43′ 831.513 0.000′ 831.51
℄ CONST.	STATION FINAL DECK SURFACE ELEVATION DEAD LOAD DEFLECTION* SCREED ELEVATION	116+45.13 832.501 0.000′ 832.50	116+51.75 832.448 0.013′ 832.46	116+58.36 832.395 0.025′ 832.42	116+64.94 832.343 0.034′ 832.38	116+71.51 832.290 0.041′ 832.33	116+78.06 832.238 0.043′ 832.28	116+84.60 832.185 0.041′ 832.23	116+91.12 832.133 0.034′ 832.17	116+97.63 832.081 0.025′ 832.11	117+04.12 832.029 0.013′ 832.04	117+10.59 831.978 0.000′ 831.98
CURB LINE (RIGHT)	STATION AND OFFSET, RT FINAL DECK SURFACE ELEVATION DEAD LOAD DEFLECTION* SCREED ELEVATION	116+57.19, 29.44′ 831.934 0.000′ 831.93	116+63.50, 29.21′ 831.887 0.013′ 831.90	116+69.82, 29.02′ 831.839 0.025′ 831.86	116+76.14, 28.87′ 831.791 0.034′ 831.83	116+82.46, 28.76′ 831.742 0.041′ 831.78	116+88.78, 28.69′ 831.693 0.043′ 831.74	116+95.10, 28.66′ 831.643 0.041′ 831.68	117+01.42, 28.67′ 831.592 0.034′ 831.63	117+07.74, 28.72′ 831.541 0.025′ 831.57	117+14.07, 28.81′ 831.489 0.013′ 831.50	117+20.39, 28.94′ 831.436 0.000′ 831.44

	SPAN 3	℄ BEARING FWD. PIER	1/10 SPAN	2/10 SPAN	3/10 SPAN	4/10 SPAN	MIDPOINT OF SPAN	6/10 SPAN	7/10 SPAN	8/10 SPAN	9/10 SPAN	℄ BEARING FWD. ABUT.
CURB LINE (LEFT)	STATION AND OFFSET, LT FINAL DECK SURFACE ELEVATION DEAD LOAD DEFLECTION* SCREED ELEVATION	116+99.43, 35.43′ 831.500 0.000′ 831.50	117+04.09, 35.40′ 831.463 0.003′ 831.47	117+08.75, 35.36′ 831.427 0.006′ 831.43	117+13.41, 35.30′ 831.390 0.008′ 831.40	117+18.07, 35.21′ 831.355 0.009′ 831.36	117+22.73, 35.11′ 831.319 0.010′ 831.33	117+27.39, 34.98′ 831.284 0.009′ 831.29	117+32.04, 34.84′ 831.249 0.008′ 831.26	117+36.70, 34.67′ 831.214 0.006′ 831.22	117+41.35, 34.48′ 831.180 0.003′ 831.18	117+46.01, 34.27′ 831.146 0.000′ 831.15
℄ CONST.	STATION FINAL DECK SURFACE ELEVATION DEAD LOAD DEFLECTION* SCREED ELEVATION	117+12.18 831.965 0.000′ 831.97	117+16.65 831.929 0.003′ 831.93	117+21.12 831.894 0.006′ 831.90	117+25.58 831.858 0.008′ 831.87	117+30.03 831.822 0.009′ 831.83	117+34.48 831.787 0.010′ 831.80	117+38.92 831.751 0.009′ 831.76	117+43.35 831.716 0.008′ 831.72	117+47.78 831.681 0.006′ 831.69	117+52.20 831.645 0.003′ 831.65	117+56.62 831.610 0.000′ 831.61
CURB LINE (RIGHT)	STATION AND OFFSET, RT FINAL DECK SURFACE ELEVATION DEAD LOAD DEFLECTION* SCREED ELEVATION	117+21.94, 28.98′ 831.423 0.000′ 831.42	117+26.31, 29.10′ 831.387 0.003′ 831.39	117+30.68, 29.24′ 831.349 0.006′ 831.36	117+35.06, 29.40′ 831.312 0.008′ 831.32	117+39.43, 29.58′ 831.274 0.009′ 831.28	117+43.79, 29.78′ 831.236 0.010′ 831.25	117+48.16, 29.99′ 831.198 0.009′ 831.21	117+52.53, 30.23′ 831.159 0.008′ 831.17	117+56.89, 30.49′ 831.120 0.006′ 831.13	117+61.25, 30.76′ 831.081 0.003′ 831.08	117+65.61, 31.06′ 831.041 0.000′ 831.04

SCREED ELEVATIONS SHOWN REPRESENT THE THEORETICAL DECK SURFACE LOCATION PRIOR TO DEFLECTIONS CAUSED BY DECK PLACEMENT AND OTHER ANTICIPATED DEAD LOADS.

FINAL DECK SURFACE ELEVATIONS SHOWN REPRESENT THE DECK SURFACE LOCATION AFTER ALL ANTICIPATED DEAD LOAD DEFLECTIONS HAVE OCCURRED.

* DUE TO CONCRETE DECK, RAILINGS, AND SIDEWALK (NO FUTURE WEARING SURFACE)

△ SCREED ELEVATION LOCATION (TYP.)

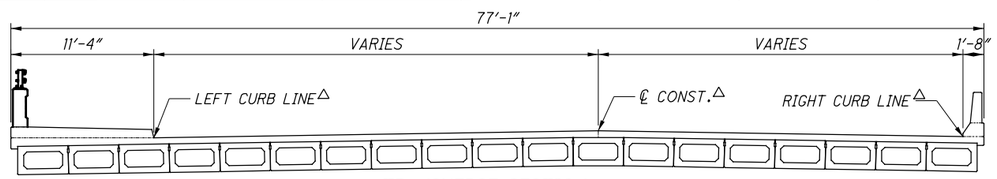

TRANSVERSE SECTION

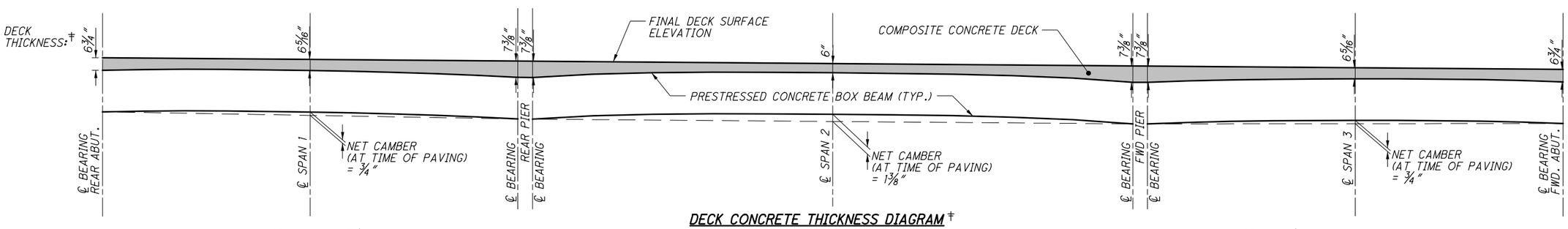

DECK CONCRETE THICKNESS DIAGRAM‡

NOT TO SCALE

SPANS 1 & 3‡

CALCULATED CAMBER AT THE TIME OF RELEASE IS ½ INCH.
CALCULATED CAMBER AT TIME OF PAVING IS ⅞ INCH.
LONG TERM CAMBER IS 1¼ INCHES.

CALCULATED DEFLECTION DUE TO DEAD LOAD APPLIED AFTER THE BEAMS ARE SET (WEIGHT OF SURFACE COURSE, RAILINGS, SIDEWALKS, ETC.) IS ⅛ INCH.

THE CONCRETE THICKNESS SHALL VARY FROM 6¾ INCHES AT THE CENTERLINE OF BEAM BEARING AT THE ABUTMENT TO 6⁵⁄₁₆ INCHES AT MIDSPAN TO 7⅜ INCHES AT THE CENTERLINE OF BEAM BEARING AT THE PIER.

‡ DECK THICKNESSES SHOWN ARE MINIMUM VALUES. ON PARTS OF THE BRIDGE DECK, DECK THICKNESS WILL BE GREATER TO MAINTAIN A MINIMUM 6″ DECK THICKNESS SINCE THE CROWN IS ON A CURVED HORIZONTAL ALIGNMENT OVER BEAMS.

SPAN 2‡

CALCULATED CAMBER AT THE TIME OF RELEASE IS 1⅛ INCHES.
CALCULATED CAMBER AT TIME OF PAVING IS 1⅛ INCHES.
LONG TERM CAMBER IS 2⅝ INCHES.

CALCULATED DEFLECTION DUE TO DEAD LOAD APPLIED AFTER THE BEAMS ARE SET (WEIGHT OF SURFACE COURSE, RAILINGS, SIDEWALKS, ETC.) IS ½ INCH.

THE CONCRETE THICKNESS SHALL VARY FROM 7⅜ INCHES AT EACH CENTERLINE OF BEAM BEARING TO 6 INCHES AT MIDSPAN.

DESIGN AGENCY
KOHLI & KALIHER ASSOCIATES, INC.
ENGINEERS AND SURVEYORS
2244 Baton Rouge Ave., Lima, Ohio 45805 419-227-1135

DESIGNED	DRAWN	REVIEWED	DATE
BLS	BLS	DGB	1-17-13
CHECKED	REVISED	STRUCTURE FILE NUMBER	
RTH		0249696	

SUPERSTRUCTURE DETAILS
BRIDGE NO. ALL-C.R. 152-0334
OVER OTTAWA RIVER

ALL-SHAWNEE ROAD
PID No. 77305

I:\PROJECTS\ALL\77305\structures\ALL152_0334C\sheets\152_0334CSD003.dgn 1/13/2014 3:33:44 PM C

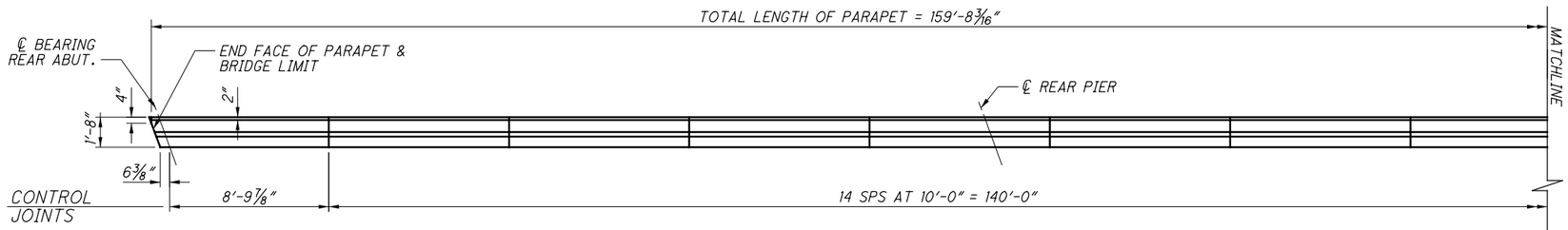

PLAN

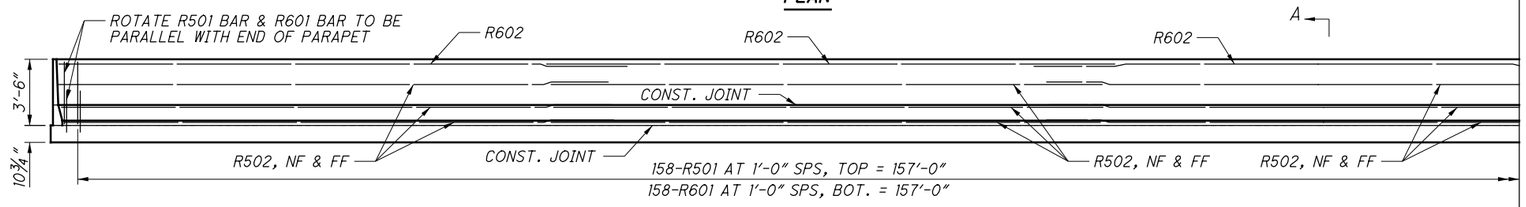

ELEVATION (LOOKING EAST)

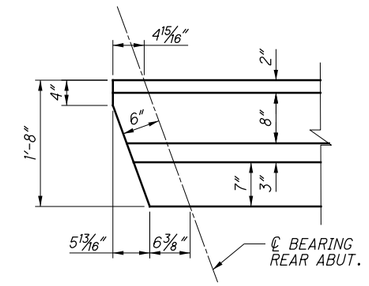

REAR PARAPET END DETAIL

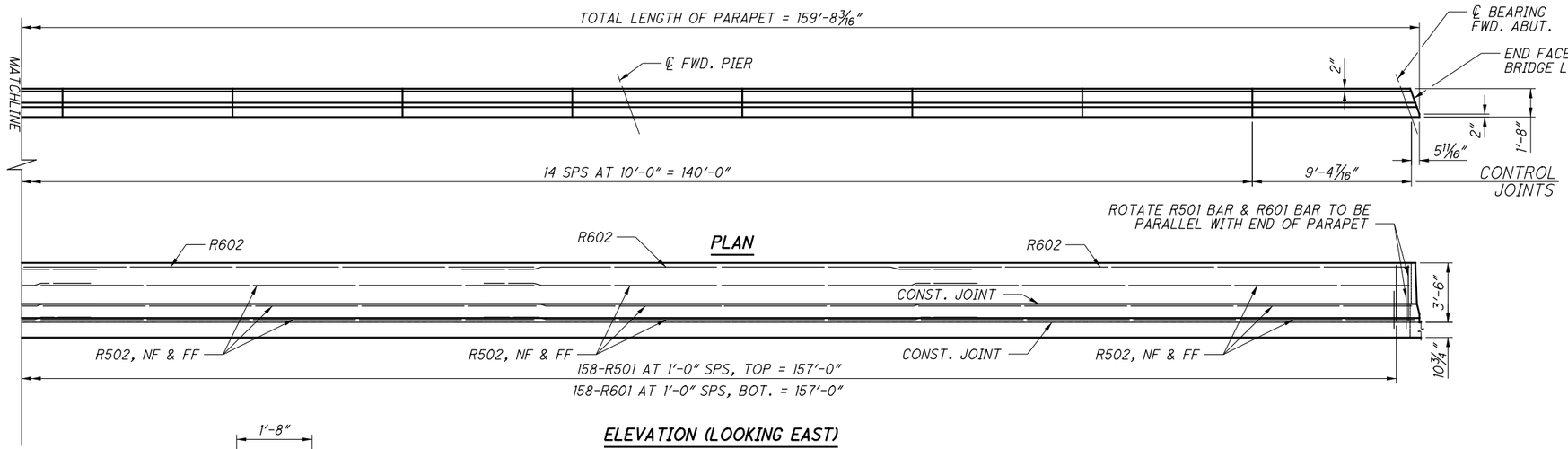

PLAN

ELEVATION (LOOKING EAST)

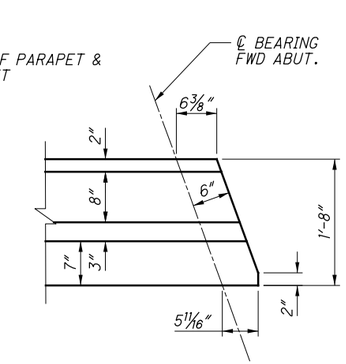

FORWARD PARAPET END DETAIL

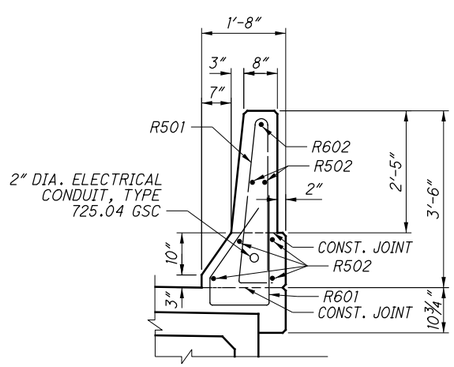

SECTION A-A

NOTES:

SEE BRIDGE STD. DWG. BR-1 (42" HEIGHT)

MINIMUM LAP LENGTH (UNLESS NOTED OTHERWISE)
NO. 5 BAR = 2'-11"
NO. 6 BAR = 3'-5"

CROSS REFERENCE	
SHEET NO.	DESCRIPTION
4/31	AESTHETIC ENHANCEMENTS
13/31	TRANSVERSE SECTION
16/31	DECK & SIDEWALK REINFORCING PLANS
20-25/31	APPROACH SLAB REINFORCING PLAN
29/31	REINFORCING STEEL LIST
128/199	LIGHTING GENERAL NOTES

DESIGN AGENCY
KOHLI & KALIHER ASSOCIATES, INC.
ENGINEERS AND SURVEYORS
2244 Baton Rouge Ave. Lima, Ohio 45805 419-227-1135

DESIGNED	DRAWN	REVIEWED	DATE
BLS	BLS	DGB	1-17-13
CHECKED	REVISED	STRUCTURE FILE NUMBER	
IMK		0249696	

BRIDGE RIGHT RAILING DETAILS
BRIDGE NO. ALL-C.R. 152-0334
OVER THE OTTAWA RIVER

ALL-SHAWNEE ROAD
PID No. 77305

I:\PROJECTS\ALL\77305\structures\ALL152_0334C\sheets\152_0334CRA001.dgn 1/13/2014 3:33:45 PM C

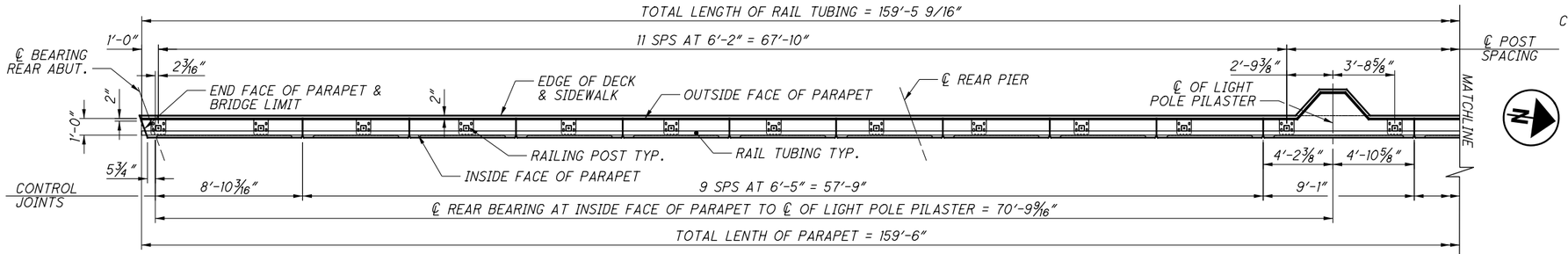

PLAN

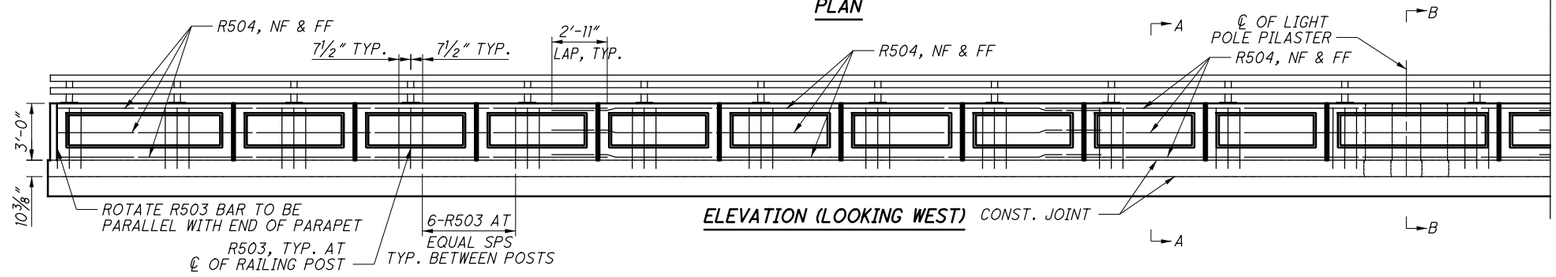

ELEVATION (LOOKING WEST)

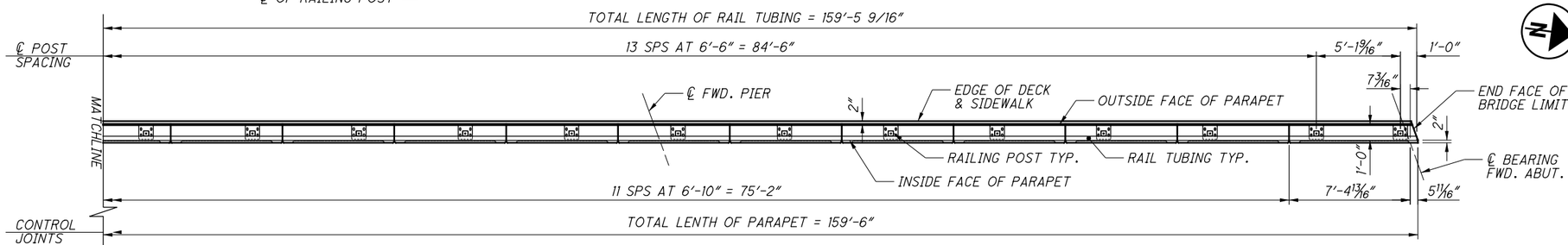

PLAN

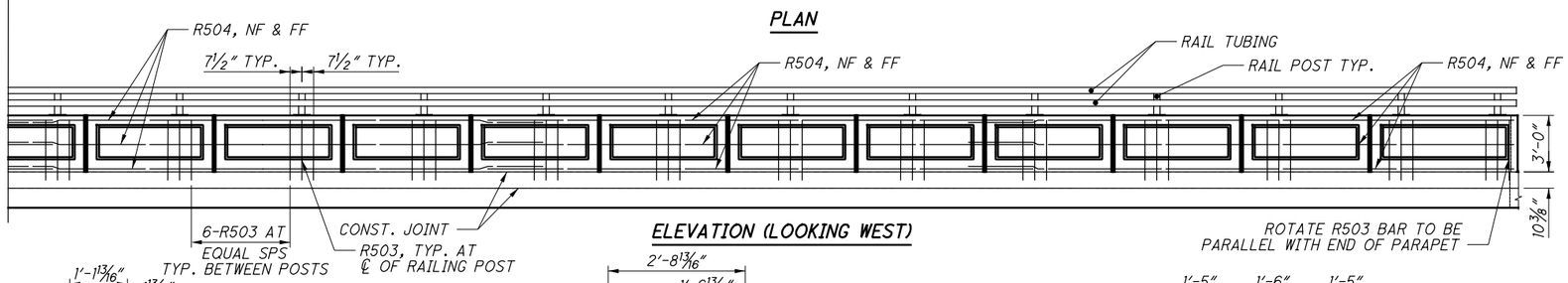

ELEVATION (LOOKING WEST)

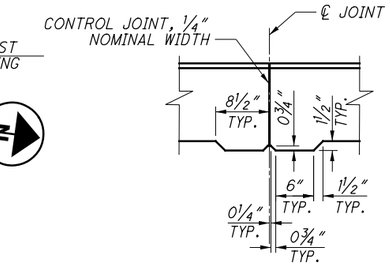

SAWCUT PANEL JOINT DETAIL

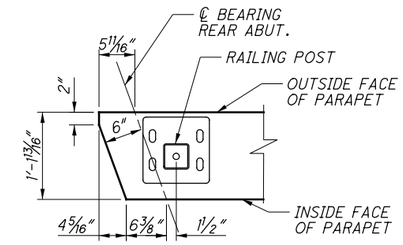

REAR PARAPET END DETAIL

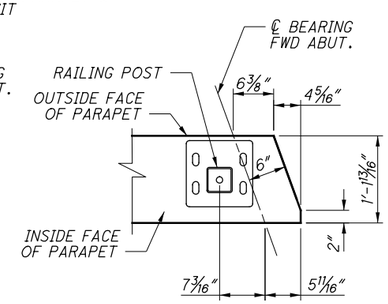

FORWARD PARAPET END DETAIL

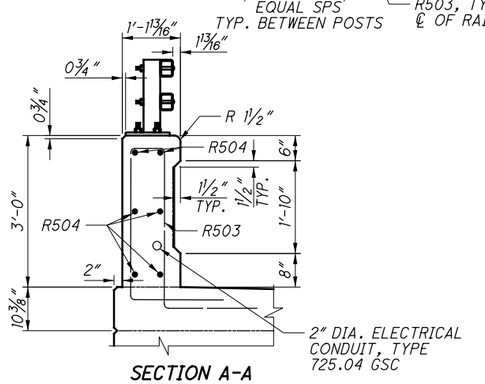

SECTION A-A

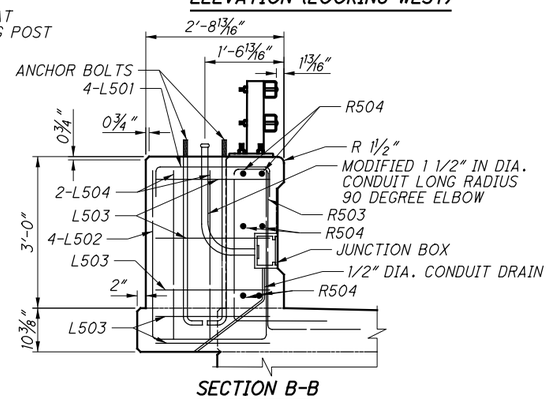

SECTION B-B

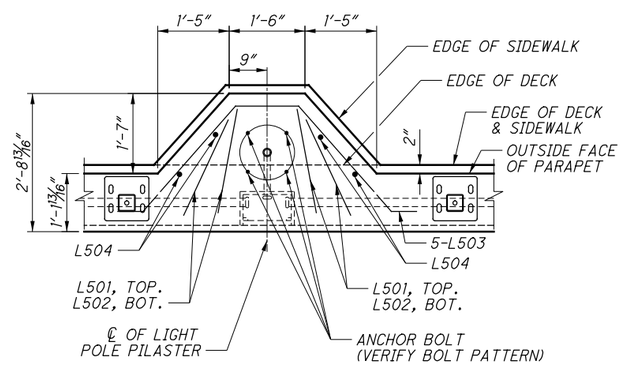

LIGHT POLE PILASTER DETAIL

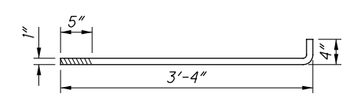

ANCHOR BOLT DETAILS

NOTES:

SEE BRIDGE STD. DWG. BR-2-98 AND TRAFFIC STD. DWG. HL-20.14 FOR DETAILS.

MINIMUM LAP LENGTH (UNLESS NOTED OTHERWISE)
NO. 5 BAR = 2'-11"

CROSS REFERENCE	
SHEET NO.	DESCRIPTION
4/31	AESTHETIC ENHANCEMENTS
13/31	TRANSVERSE SECTION
16/31	DECK & SIDEWALK REINFORCING PLANS
20-25/31	APPROACH SLAB REINFORCING PLAN
29/31	REINFORCING STEEL LIST
128/199	LIGHTING GENERAL NOTES

DESIGN AGENCY
KOHLI & KALIHER ASSOCIATES, INC.
ENGINEERS AND SURVEYORS
2244 Baton Rouge Ave., Lima, Ohio 45805 419-227-1135

DESIGNED	CHECKED	DRAWN	REVISED	REVIEWED	DATE	STRUCTURE FILE NUMBER
BLS	IMK	BLS		DGB	1-17-13	0249696

BRIDGE LEFT RAILING DETAILS
BRIDGE NO. ALL-C.R. 152-0334
OVER THE OTTAWA RIVER

ALL-SHAWNEE ROAD
PID No. 77305

I:\PROJECTS\ALL\77305\structures\ALL152_0334C\sheets\152_0334CRA002.dgn 1/13/2014 3:33:47 PM C

STA. 115+81.07, 105.10' LT, ℄ CONST. SHAWNEE RD.
STA. 211+28.53, 130.90' LT, ℄ CONST. FT. AMANDA RD.
N 20155.0114
E 19961.1630

CURVE DATA AT FACE OF CURB
Δ = 16°40'58"
R = 74.30'
L = 21.63'

REAR APPROACH SLAB

ID	DESC	ELEV	STATION, O/S	NORTHING	EASTING
RS1	E/P	832.77	115+63.38, 30.86'LT	20143.4413	20036.6034
RS2	E/P	832.80	115+61.88, 31.25'LT	20141.9175	20036.6034
RS3	GUT T/C	832.64 833.10	115+62.38, 33.19'LT	20142.2607	20034.3638
RS4	E/W	833.30	115+64.96, 43.12'LT	20144.0211	20024.2573
RS5	E/W	833.35	115+68.92, 42.09'LT	20148.0439	20024.9581
RS6	E/S	833.35	115+69.27, 43.44'LT	20148.2840	20023.5795
RS7	E/S	833.35	115+77.99, 41.88'LT	20157.0995	20024.4228
RS8	E/S	833.36	115+79.08, 41.94'LT	20158.1872	20024.2739
RS9	GUT T/C	832.49 833.16	115+83.82, 30.85'LT	20163.8112	20034.9431
RS10	CROWN	832.88	115+96.98, 0.00'RT	20179.4528	20064.6158
RS11	E/S	832.24	116+11.28, 33.50'RT	20196.4391	20096.8396
RS12	E/S	832.27	116+09.57, 33.60'RT	20194.7420	20097.0719
RS13	E/S	832.39	115+94.30, 33.65'RT	20179.5228	20098.3757
RS14	E/S	832.39	115+94.29, 32.49'RT	20179.4232	20097.2133
RS15	T/C	832.78	115+90.21, 32.50'RT	20175.3547	20097.5618
RS16	GUT	832.34	115+90.21, 32.00'RT	20175.3121	20097.0636
RS17	CROWN	833.05	115+76.55, 0.00'RT	20159.0868	20066.2835
RL1	F/P	833.35	115+68.94, 42.16'LT	20148.0572	20024.8816
RL2	F/P	833.35	115+77.90, 40.56'LT	20157.1265	20025.7491
RL3	F/P	833.36	115+79.54, 40.65'LT	20158.7532	20025.5347
RR1	F/P	832.39	115+94.29, 31.99'RT	20179.3805	20096.7151
RR2	F/P	832.27	116+09.52, 31.93'RT	20194.5577	20095.4149
RR3	F/P	832.26	116+10.50, 31.88'RT	20195.5242	20095.2826

CROWN : CROWN OF PAVEMENT
E/P : EDGE OF PAVEMENT
E/S : EDGE OF APPROACH SLAB
E/W : EDGE OF WALK
F/P : FACE OF PARAPET
GUT : GUTTER
T/C : TOP OF CURB

MINIMUM LAP LENGTH (UNLESS NOTED OTHERWISE)
NO. 5 BAR = 2'-6"
NO. 10 BAR = 9'-3"

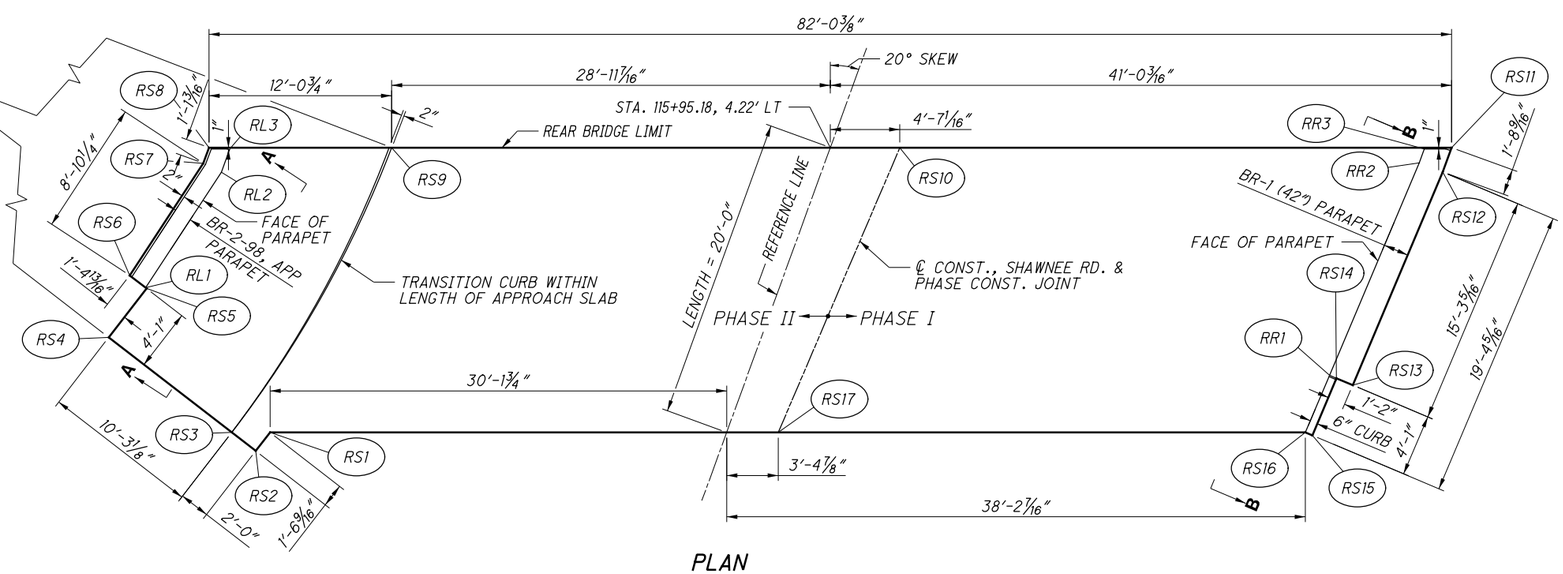

PLAN

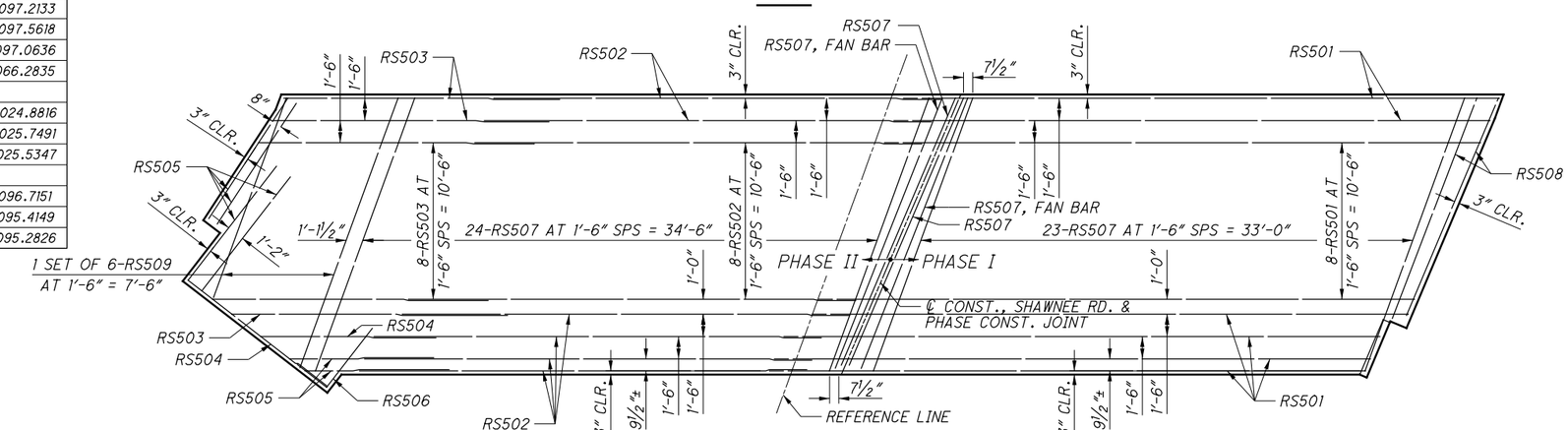

REINFORCING PLAN - TOP

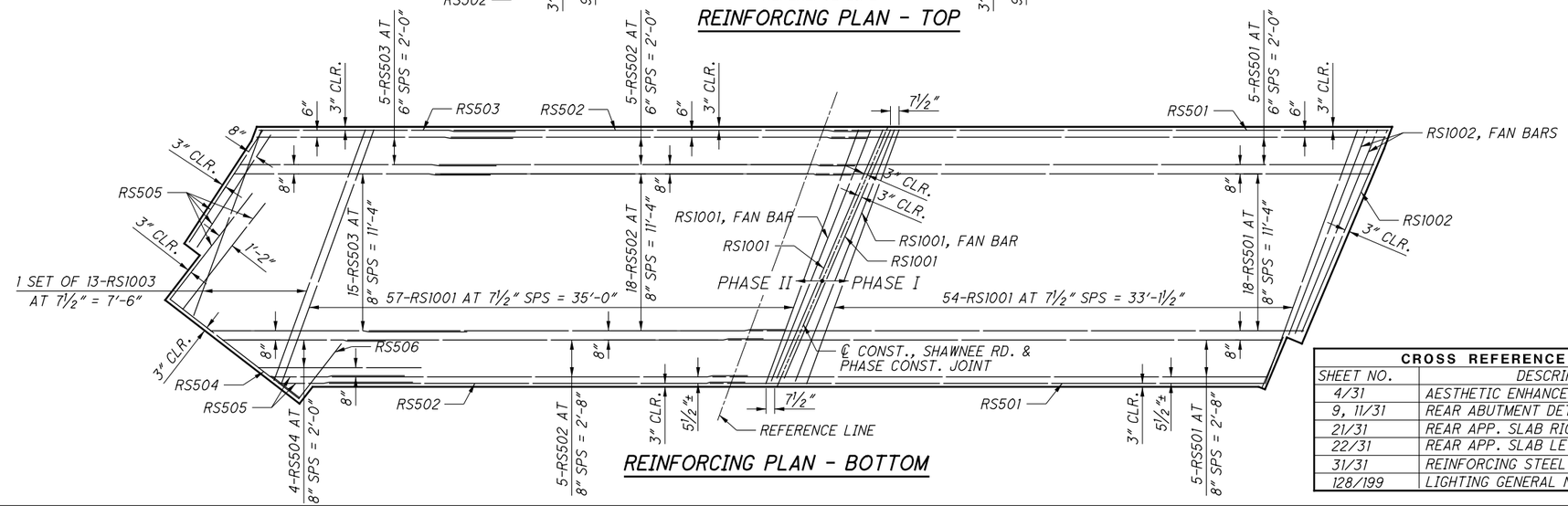

REINFORCING PLAN - BOTTOM

CROSS REFERENCE	
SHEET NO.	DESCRIPTION
4/31	AESTHETIC ENHANCEMENTS
9, 11/31	REAR ABUTMENT DETAILS
21/31	REAR APP. SLAB RIGHT PARAPET
22/31	REAR APP. SLAB LET PARAPET
31/31	REINFORCING STEEL LIST
128/199	LIGHTING GENERAL NOTES

DESIGN AGENCY
KOHLI & KALIHER ASSOCIATES, INC.
ENGINEERS AND SURVEYORS
2244 Baton Rouge Ave., Lima, Ohio 45805 419-227-1135

DESIGNED	DRAWN	REVIEWED	DATE
IMK	IMK	DGB	1-17-13
CHECKED	REVISED	STRUCTURE FILE NUMBER	
JRH		0249696	

REAR APPROACH SLAB DETAILS
BRIDGE NO. ALL-C.R. 152-0334
OVER THE OTTAWA RIVER

ALL-SHAWNEE ROAD
PID No. 77305

I:\PROJECTS\ALL\77305\structures\ALL152_0334C\sheets\152_0334CMD001.dgn 1/13/2014 3:33:48 PM C

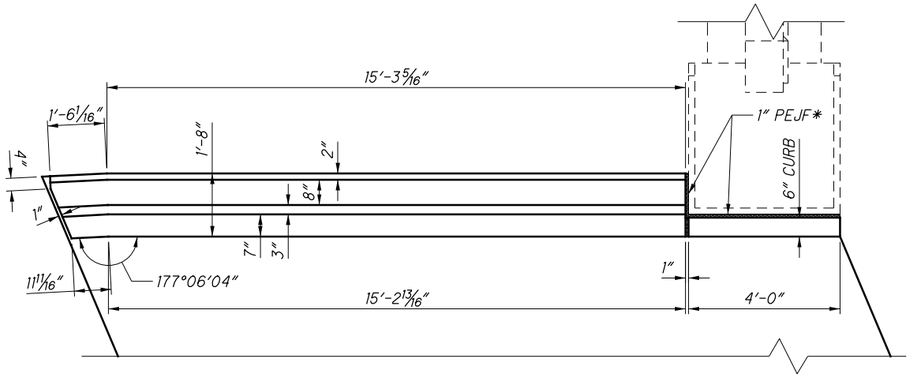

RIGHT PARAPET PLAN

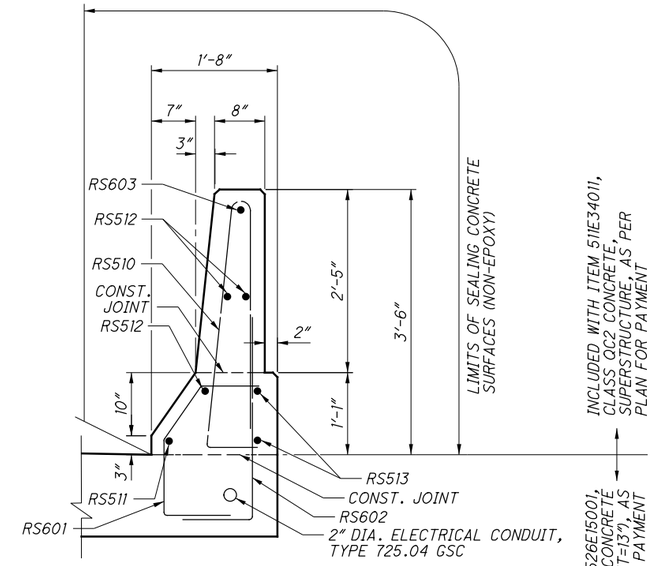

SECTION A-A

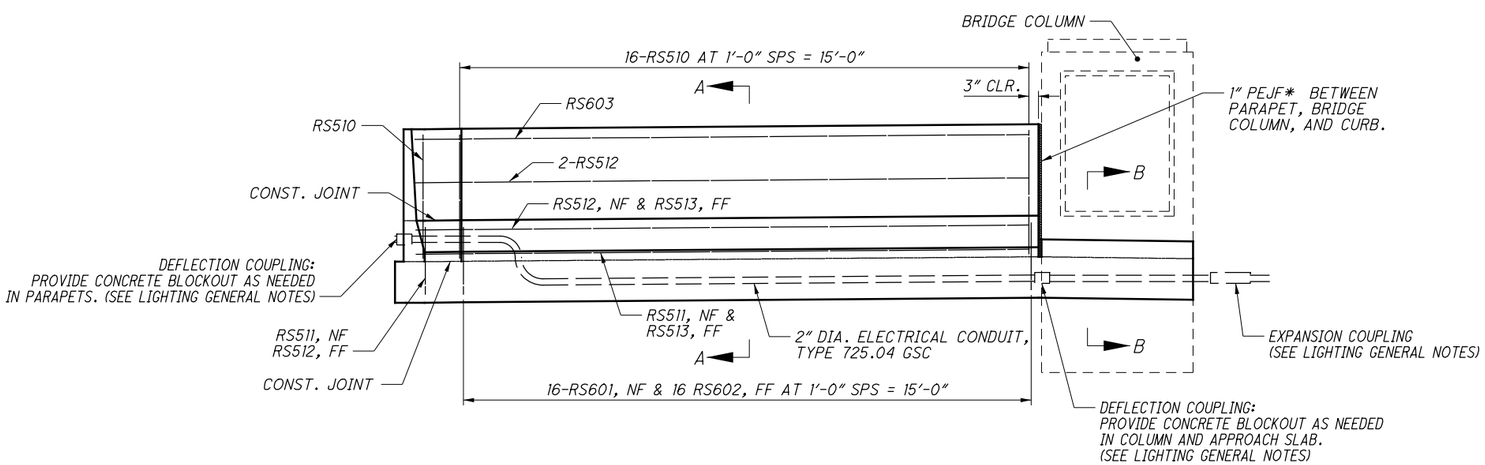

RIGHT PARAPET DEVELOPED ELEVATION

ALONG FACE OF PARAPET
(ONLY PARAPET REINFORCING STEEL SHOWN)

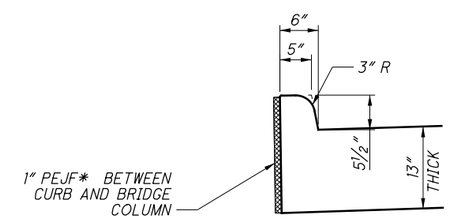

SECTION B-B

(CURB DETAIL)

* INCLUDED WITH ITEM 526 FOR PAYMENT

CROSS REFERENCE	
SHEET NO.	DESCRIPTION
4/31	AESTHETIC DETAILS
9/31	REAR ABUTMENT DETAILS
20/31	REAR APPROACH SLAB PLAN
22/31	REAR APPROACH SLAB LEFT PARAPET
26-28/31	BRIDGE COLUMN & WALL DETAILS
31/31	REINFORCING STEEL LIST
128/199	LIGHTING GENERAL NOTES

DESIGN AGENCY
KOHLI & KALIHER ASSOCIATES, INC.
ENGINEERS AND SURVEYORS
2244 Baton Rouge Ave., Lima, Ohio 45805 419-227-1135

DESIGNED	DRAWN	REVIEWED	DATE
IMK	IMK	DGB	1-17-13
CHECKED	REVISED	STRUCTURE FILE NUMBER	
JRH		0249696	

REAR APPROACH SLAB DETAILS
BRIDGE NO. ALL-C.R. 152-0334
OVER THE OTTAWA RIVER

ALL-SHAWNEE ROAD
PID No. 77305

I:\PROJECTS\ALL\77305\structures\ALL152_0334C\sheets\152_0334CMD002.dgn 1/13/2014 3:33:49 PM C

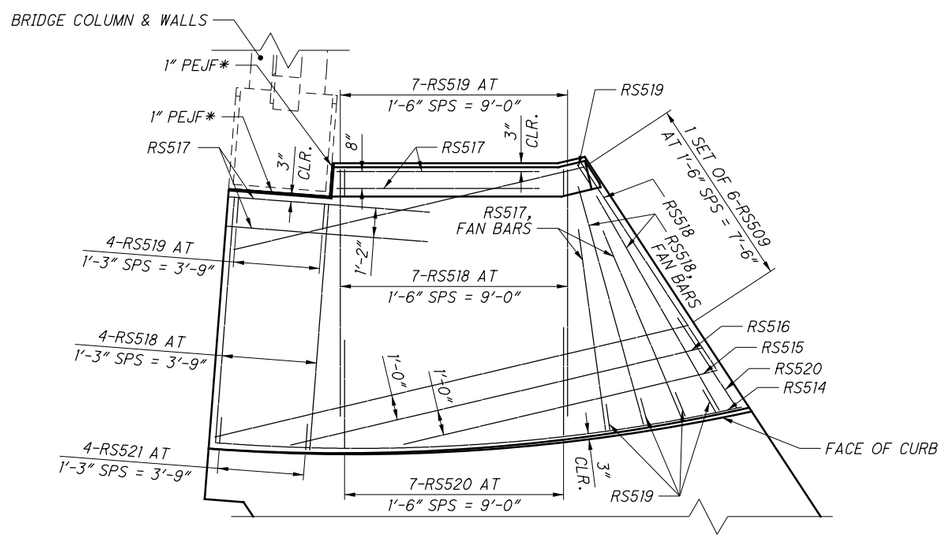

SIDEWALK REINFORCING PLAN

(ONLY SIDEWALK REINFORCING STEEL SHOWN)

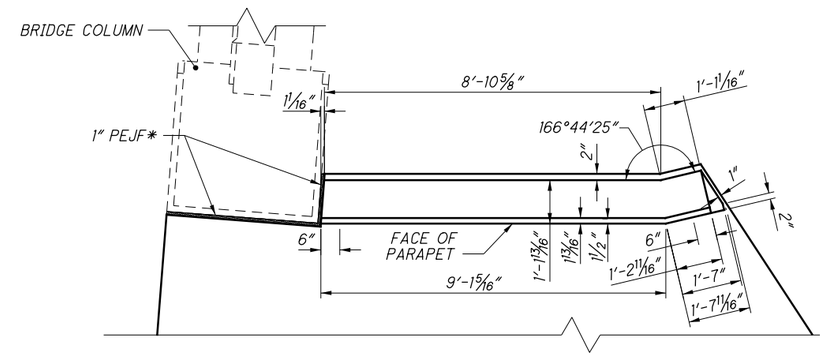

LEFT SIDEWALK PARAPET PLAN

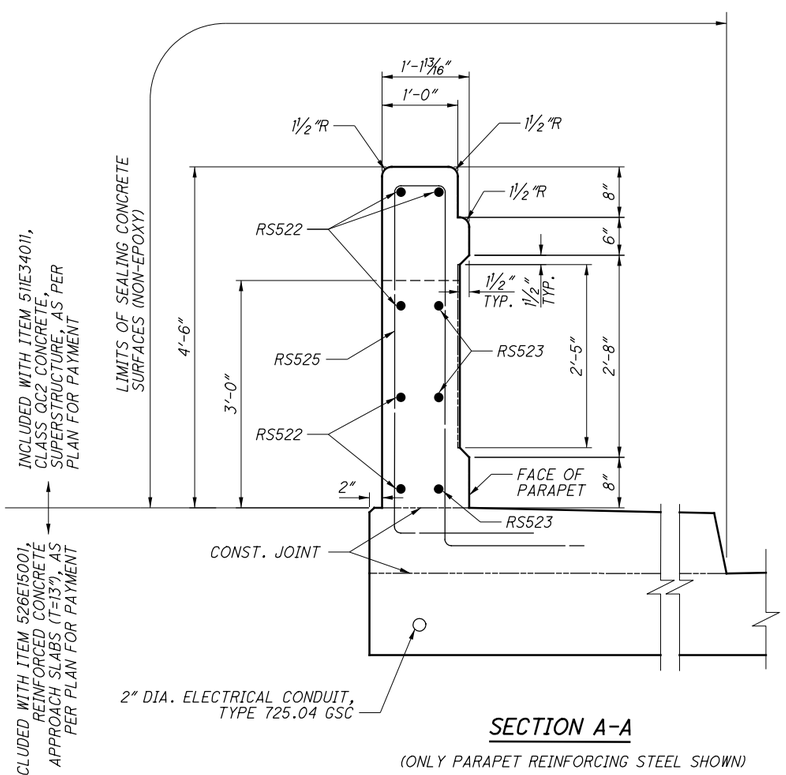

SECTION A-A

(ONLY PARAPET REINFORCING STEEL SHOWN)

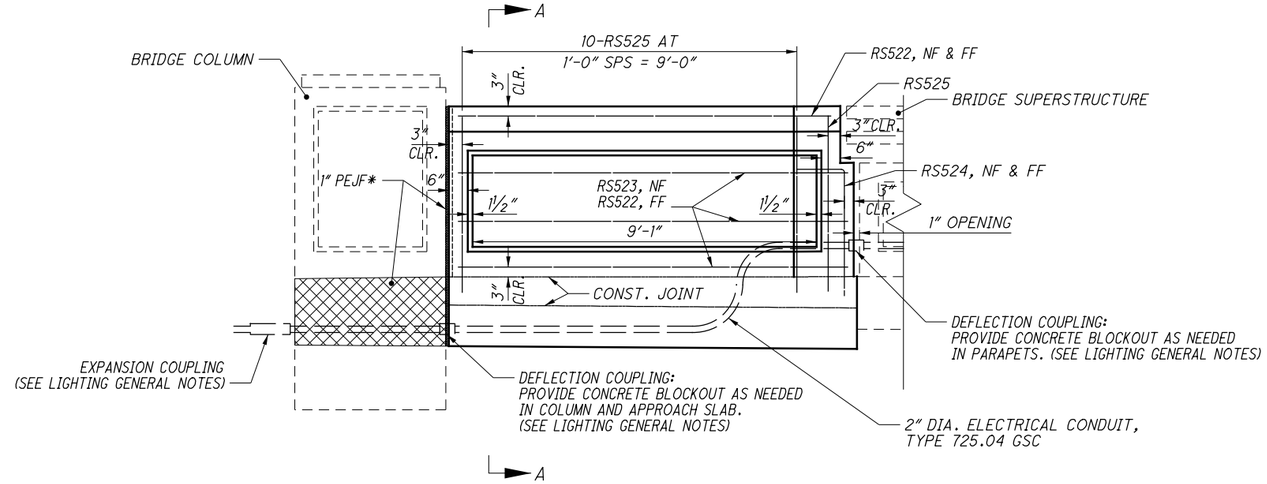

LEFT SIDEWALK PARAPET DEVELOPED ELEVATION

ALONG FACE OF PARAPET
(ONLY PARAPET REINFORCING STEEL SHOWN)

* INCLUDED WITH ITEM 526 FOR PAYMENT

CROSS REFERENCE	
SHEET NO.	DESCRIPTION
4/31	AESTHETIC DETAILS
9/31	REAR ABUTMENT DETAILS
20/31	REAR APPROACH SLAB PLAN
21/31	REAR APPROACH SLAB RIGHT PARAPET
26-28/31	BRIDGE COLUMN & WALL DETAILS
31/31	REINFORCING STEEL LIST
128/199	LIGHTING GENERAL NOTES

DESIGN AGENCY
KOHLI & KALIHER ASSOCIATES, INC.
ENGINEERS AND SURVEYORS
2244 Baton Rouge Ave., Lima, Ohio 45805 419-227-1135

DESIGNED	DRAWN	REVIEWED	DATE
IMK	IMK	DGB	1-17-13
CHECKED	REVISED	STRUCTURE FILE NUMBER	
JRH		0249696	

REAR APPROACH SLAB DETAILS
BRIDGE NO. ALL-C.R. 152-0334
OVER THE OTTAWA RIVER

ALL-SHAWNEE ROAD
PID No. 77305

I:\PROJECTS\ALL\77305\structures\ALL152_0334C\sheets\152_0334CMD003.dgn 1/13/2014 3:33:51 PM C

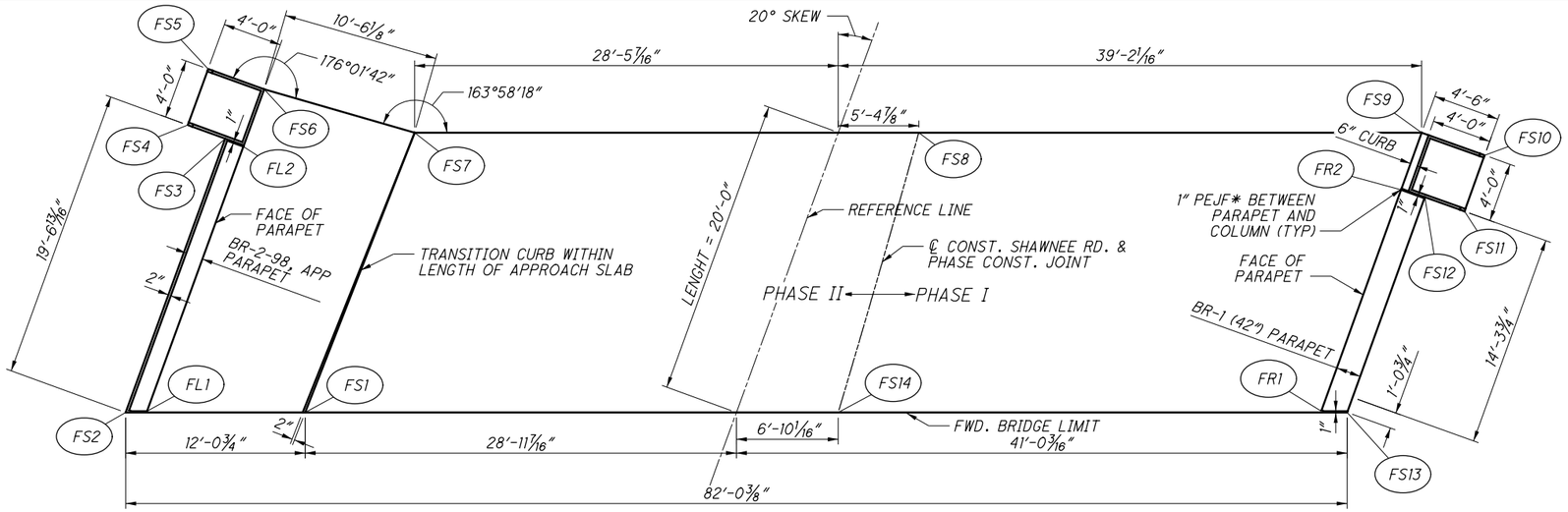

PLAN

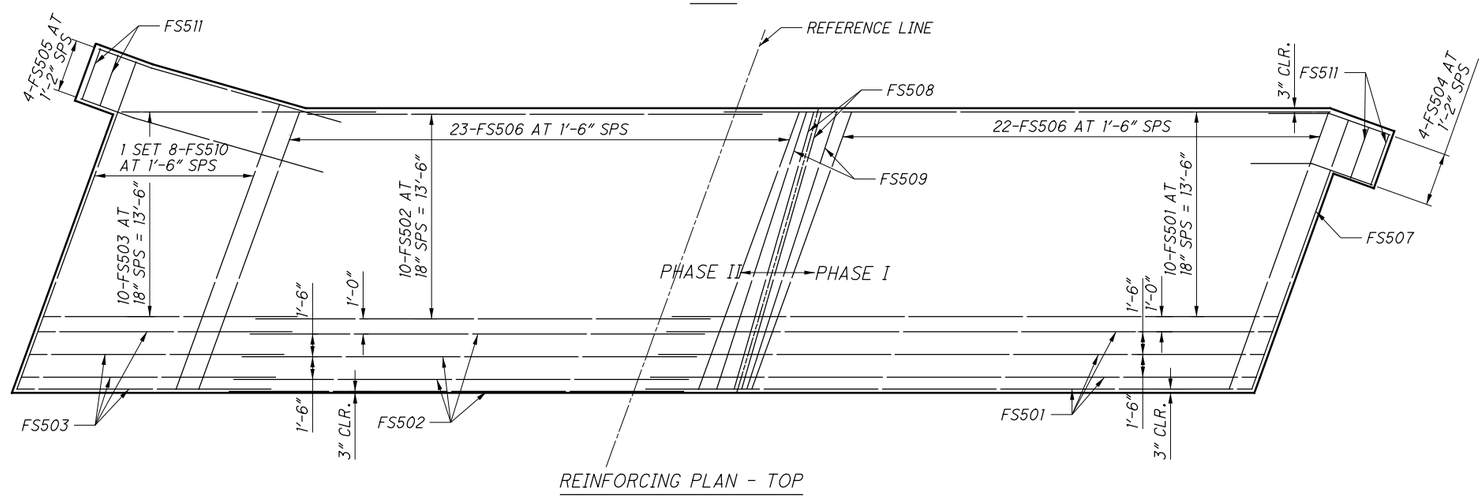

REINFORCING PLAN - TOP

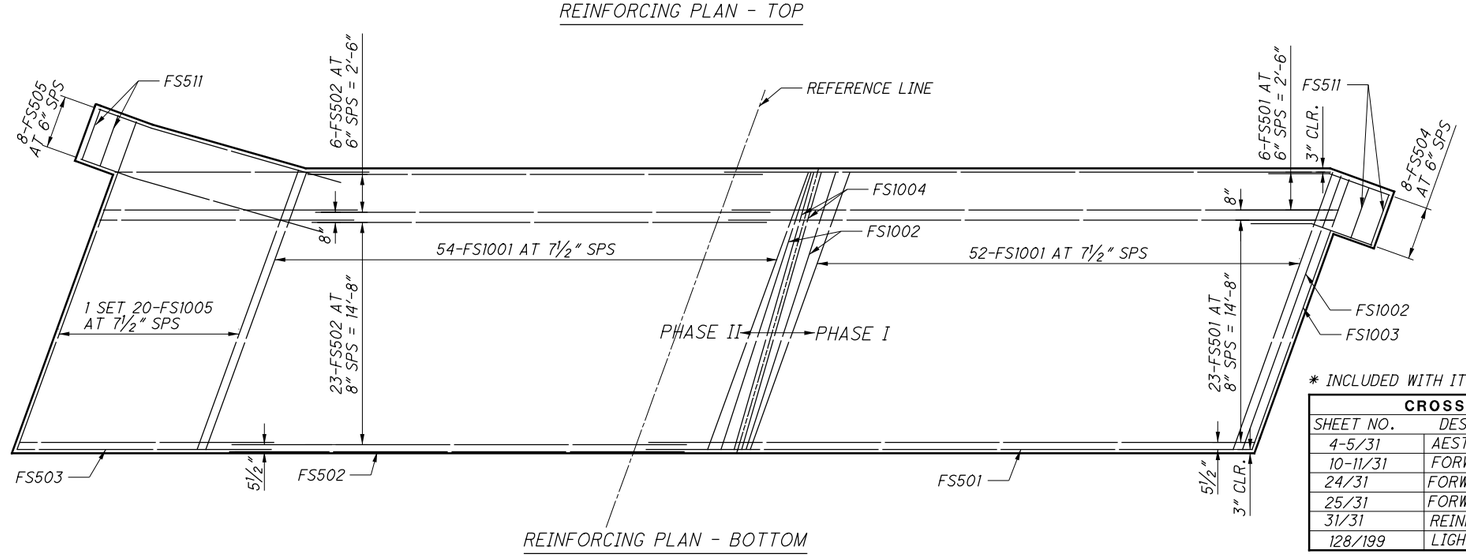

REINFORCING PLAN - BOTTOM

FORWARD APPROACH SLAB

ID	DESC	ELEV	STATION, O/S	NORTHING	EASTING
FS1	GUT T/C	831.13 831.80	117+46.56, 34.25'LT	20321.5962	20013.3424
FS2	E/S	832.03	117+42.82, 45.76'LT	20315.9722	20002.6733
FS3	E/S	831.64	117+63.27, 44.68'LT	20335.3594	20000.0192
FS4	E/S	831.64	117+63.45, 47.36'LT	20334.9956	19997.3617
FS5	E/S	831.54	117+67.64, 47.09'LT	20338.9586	19996.8191
FS6	E/W	831.54	117+67.35, 43.10'LT	20339.5011	20000.7822
FS7	GUT T/C	830.86 831.32	117+67.35, 32.59'LT	20341.6446	20011.0720
FS8	CROWN	831.44	117+76.70, 0.00'RT	20357.4344	20041.0260
FS9	GUT T/C	830.71 831.17	117+85.87, 32.52'RT	20373.1790	20070.8943
FS10	E/S	830.71	117+85.54, 37.01'RT	20373.8039	20075.3507
FS11	E/S	830.78	117+81.45, 36.72'RT	20369.8428	20075.9077
FS12	E/S	830.78	117+81.66, 33.90'RT	20369.4483	20073.1020
FS13	E/S	831.03	117+66.60, 32.79'RT	20369.1337	20071.4631
FS14	CROWN	831.60	117+57.14, 0.00'RT	20338.2873	20045.0061
FL1	F/P	832.02	117+43.35, 44.42'LT	20316.7139	20003.9017
FL2	F/P	831.64	117+63.09, 43.37'LT	20335.4451	20001.3374
FR1	F/P	831.03	117+66.21, 31.10'RT	20353.4849	20073.6579
FR2	F/P	830.78	117+81.70, 32.23'RT	20369.1337	20071.4631

CROWN : CROWN OF PAVEMENT
E/P : EDGE OF PAVEMENT
E/S : EDGE OF APPROACH SLAB
E/W : EDGE OF WALK
F/P : FACE OF PARAPET
GUT : GUTTER
T/C : TOP OF CURB

MINIMUM LAP LENGTH (UNLESS NOTED OTHERWISE)
NO. 5 BAR = 2'-6"
NO. 10 BAR = 9'-3"

* INCLUDED WITH ITEM 526 FOR PAYMENT

CROSS REFERENCE	
SHEET NO.	DESCRIPTION
4-5/31	AESTHETIC DETAILS
10-11/31	FORWARD ABUTMENT DETAILS
24/31	FORWARD APPROACH RIGHT SLAB PLAN
25/31	FORWARD APPROACH SLAB LEFT PARAPET
31/31	REINFORCING STEEL LIST
128/199	LIGHTING GENERAL NOTES

HORIZONTAL SCALE IN FEET
0 5 10

DESIGN AGENCY
KOHLI & KALIHER ASSOCIATES, INC.
ENGINEERS AND SURVEYORS
2244 Baton Rouge Ave., Lima, Ohio 45805 419-227-1135

DESIGNED	DRAWN	REVIEWED	DATE
IMK	IMK	DGB	1-17-13
CHECKED	REVISED	STRUCTURE FILE NUMBER	
JRH		0249696	

FORWARD APPROACH SLAB DETAILS
BRIDGE NO. ALL-C.R. 152-0334
OVER THE OTTAWA RIVER

ALL-SHAWNEE ROAD
PID No. 77305

I:\PROJECTS\ALL\77305\structures\ALL152_0334C\sheets\152_0334CMD004.dgn 1/13/2014 3:33:52 PM C

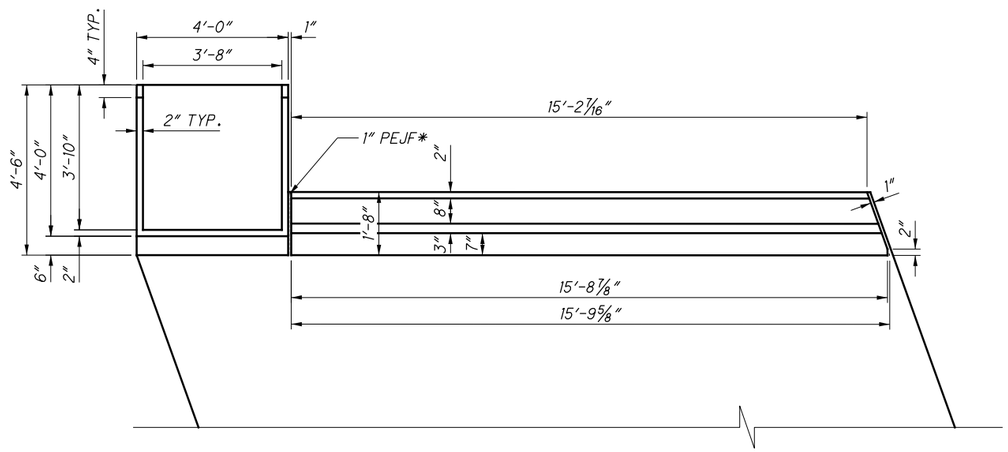

RIGHT PARAPET PLAN

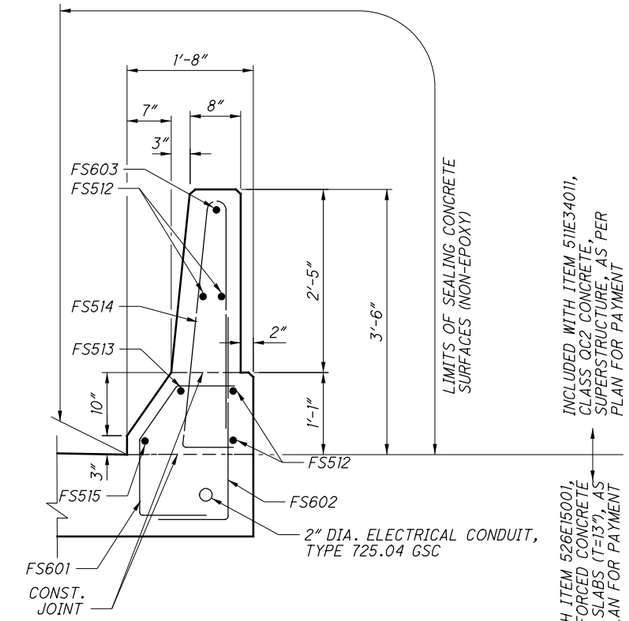

SECTION A-A

ONLY PARAPET REINFORCING STEEL SHOWN

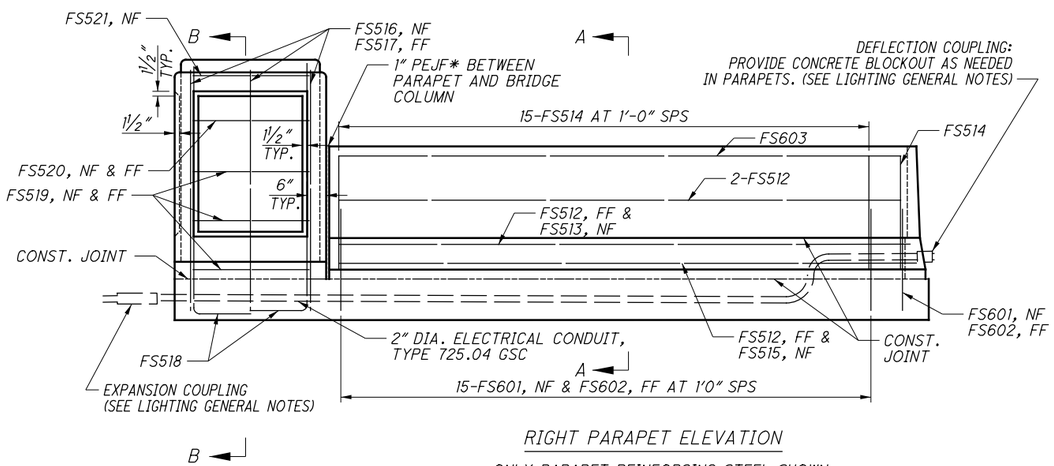

RIGHT PARAPET ELEVATION

ONLY PARAPET REINFORCING STEEL SHOWN

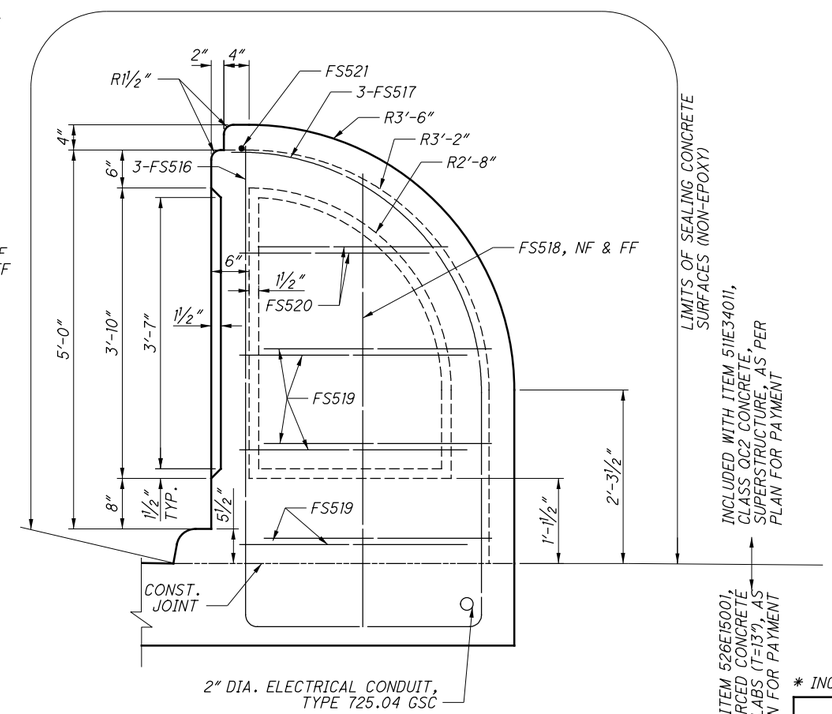

SECTION B-B

ONLY COLUMN REINFORCING STEEL SHOWN

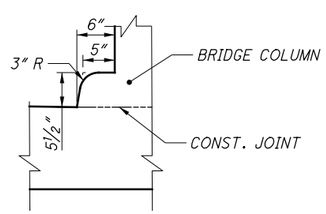

BRIDGE COLUMN CURB DETAIL

* INCLUDED WITH ITEM 526 FOR PAYMENT

CROSS REFERENCE	
SHEET NO.	DESCRIPTION
4-5/31	AESTHETIC DETAILS
10-11/31	FORWARD ABUTMENT DETAILS
23/31	FORWARD APPROACH SLAB PLAN
25/31	FORWARD APPROACH SLAB LEFT PARAPET
31/31	REINFORCING STEEL LIST
128/199	LIGHTING GENERAL NOTES

DESIGN AGENCY
KOHLI & KALIHER ASSOCIATES, INC.
ENGINEERS AND SURVEYORS
2244 Baton Rouge Ave., Lima, Ohio 45805 419-227-1135

DESIGNED	DRAWN	REVIEWED	DATE
IMK	IMK	DGB	1-17-13
CHECKED	REVISED	STRUCTURE FILE NUMBER	
JRH		0249696	

FORWARD APPROACH SLAB DETAILS
BRIDGE NO. ALL-C.R. 152-0334
OVER THE OTTAWA RIVER

ALL-SHAWNEE ROAD
PID No. 77305

I:\PROJECTS\ALL\77305\structures\ALL152_0334C\sheets\152_0334CMD005.dgn 1/13/2014 3:33:53 PM C

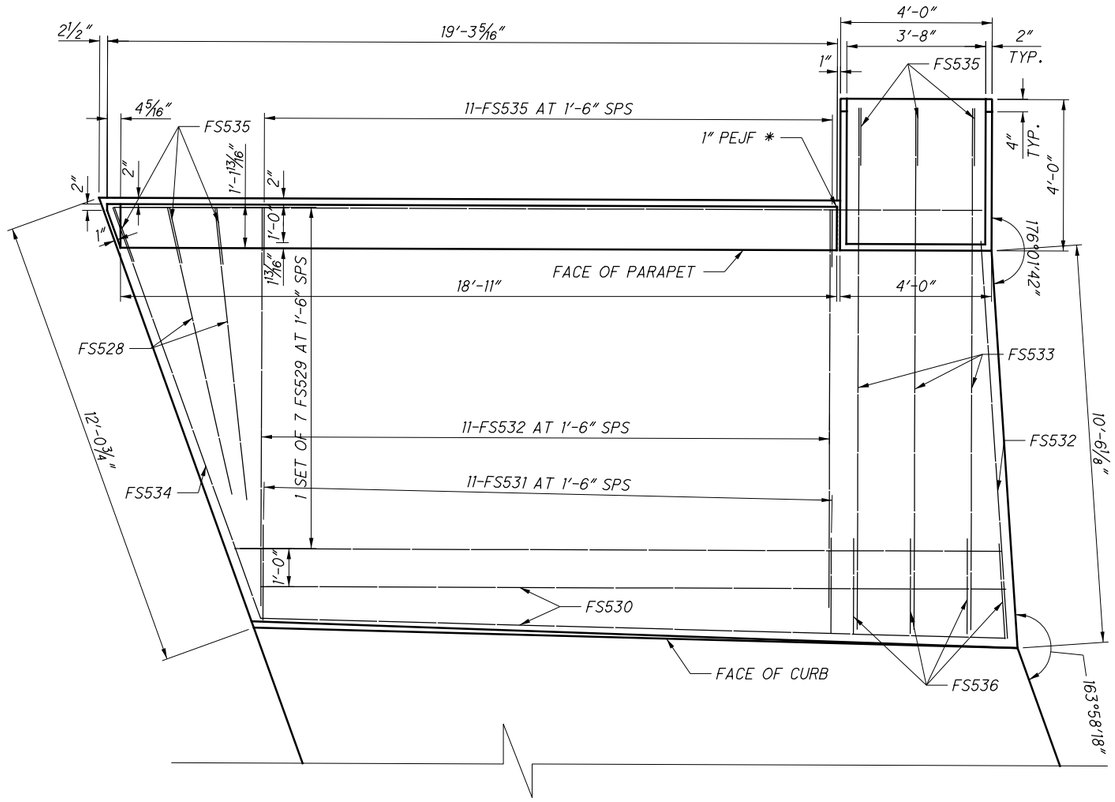

LEFT SIDEWALK AND PARAPET PLAN

ONLY SIDEWALK REINFORCING SHOWN

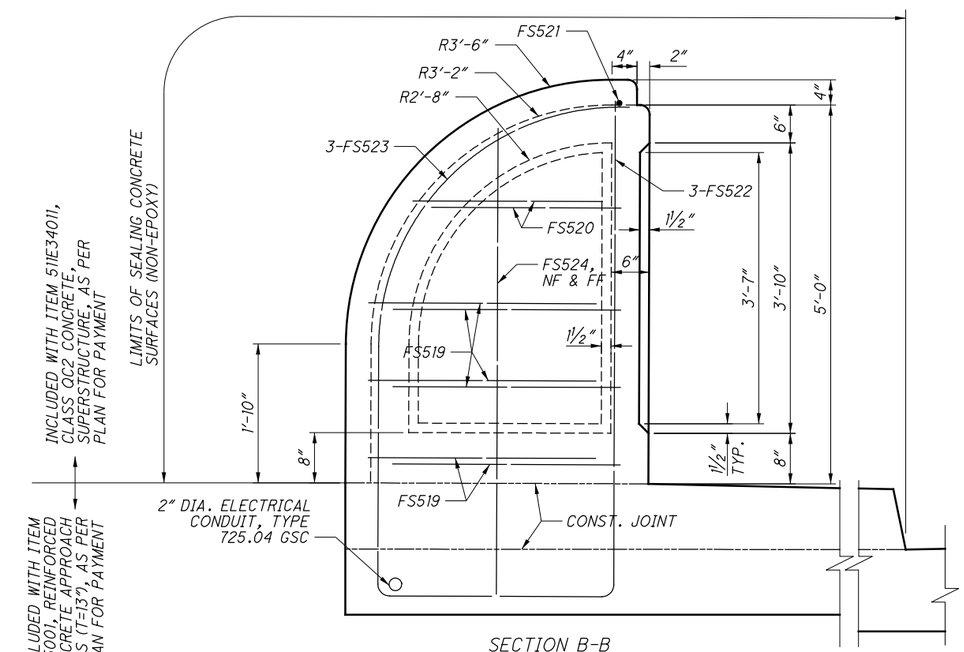

SECTION B-B

ONLY COLUMN REINFORCING SHOWN

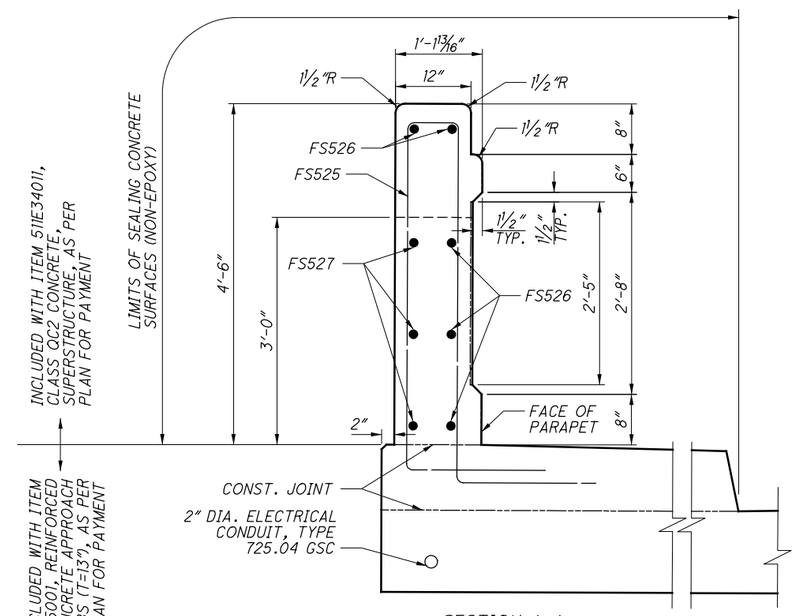

SECTION A-A

ONLY PARAPET REINFORCING SHOWN

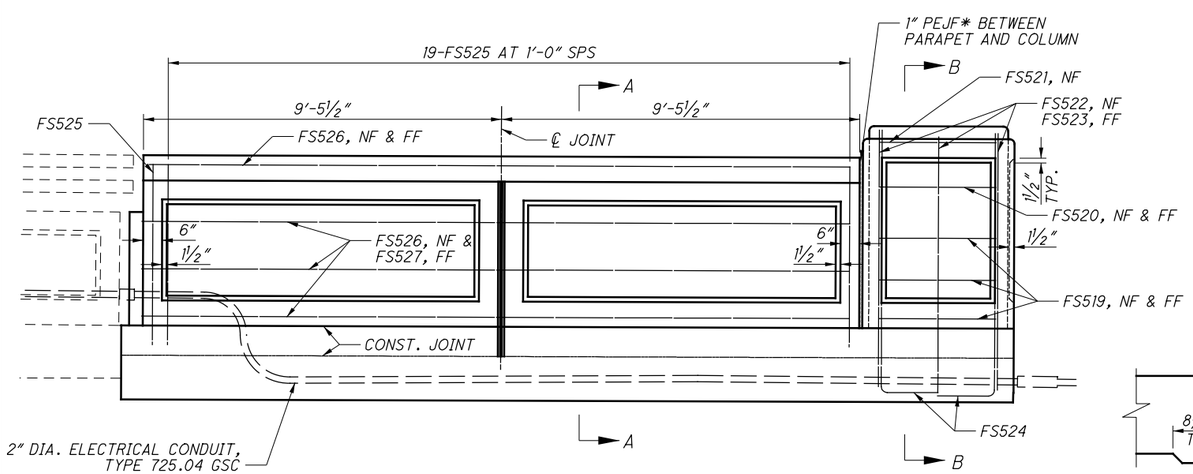

LEFT SIDEWALK AND PARAPET ELEVATION

ALONG FACE OF PARAPET

ONLY PARAPET REINFORCING SHOWN

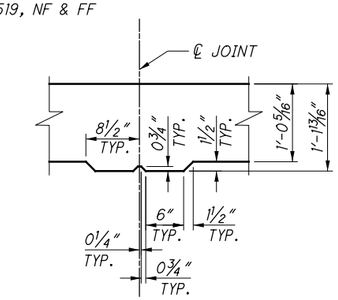

PANEL JOINT DETAIL

SAWCUT NOT REQUIRED

* INCLUDED WITH ITEM 526 FOR PAYMENT

CROSS REFERENCE	
SHEET NO.	DESCRIPTION
4-5/31	AESTHETIC DETAILS
10-11/31	FORWARD ABUTMENT DETAILS
23/31	FORWARD APPROACH SLAB PLAN
24/31	FORWARD APPROACH SLAB RIGHT PARAPET
31/31	REINFORCING STEEL LIST
128/199	LIGHTING GENERAL NOTES

DESIGN AGENCY
KOHLI & KALIHER ASSOCIATES, INC.
ENGINEERS AND SURVEYORS
2244 Baton Rouge Ave., Lima, Ohio 45805 419-227-1135

DESIGNED	DRAWN	REVIEWED	DATE
IMK	IMK	DGB	1-17-13
CHECKED	REVISED	STRUCTURE FILE NUMBER	
JRH		0249696	

FORWARD APPROACH SLAB DETAILS

BRIDGE NO. ALL-C.R. 152-0334
OVER THE OTTAWA RIVER

ALL-SHAWNEE ROAD
PID No. 77305

I:\PROJECTS\ALL\77305\structures\ALL152_0334C\sheets\152_0334CMD009.dgn 1/13/2014 3:33:54 PM C

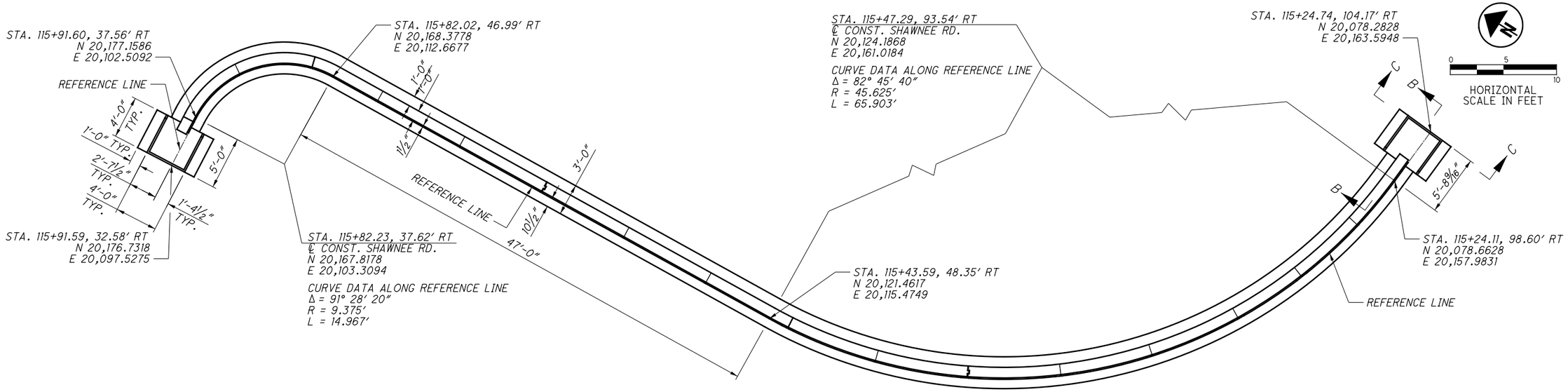

PLAN

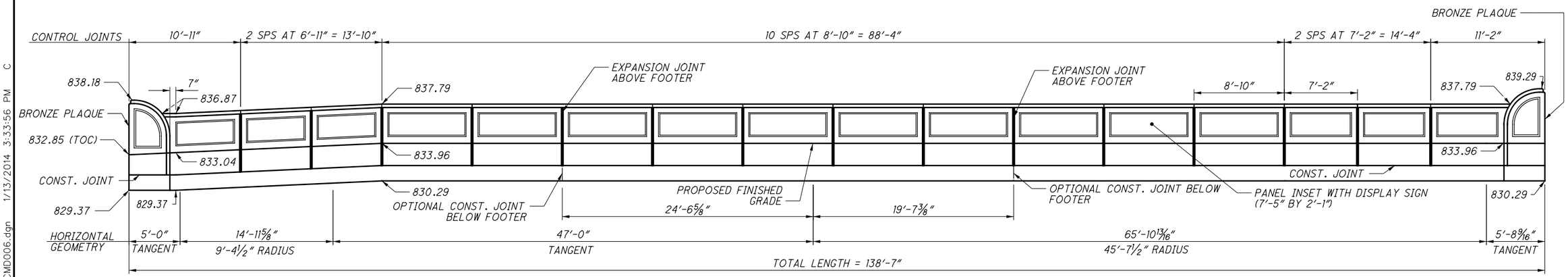

DEVELOPED ELEVATION

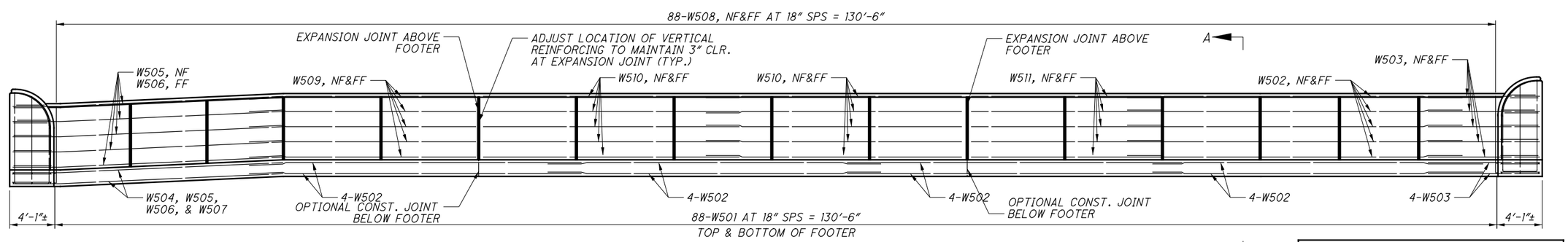

DEVELOPED ELEVATION - REINFORCING PLAN

SEE SECTIONS B-B AND C-C FOR COLUMN REINFORCING LABELS

NOTES:

ABBREVIATIONS

EOW = EDGE OF WALK
TOC = TOP OF CURB

CROSS REFERENCE	
SHEET NO.	DESCRIPTION
4-6/31	AESTHETIC DETAILS
20-22/31	REAR APPROACH SLAB
28/31	SECT. A-A, B-B, C-C
29/31	REINFORCING STEEL LIST

DESIGN AGENCY
KOHLI & KALIHER ASSOCIATES, INC.
ENGINEERS AND SURVEYORS
2244 Baton Rouge Ave., Lima, Ohio 45805 419-227-1135

DESIGNED	DRAWN	REVIEWED	DATE
IMK	IMK	DGB	1-17-13
CHECKED	REVISED	STRUCTURE FILE NUMBER	
MAD		0249696	

RIGHT REAR END TREATMENT
BRIDGE NO. ALL-C.R. 152-0334
OVER THE OTTAWA RIVER

ALL-SHAWNEE ROAD
PID No. 77305

I:\PROJECTS\ALL\77305\structures\ALL152_0334C\sheets\152_0334CMD006.dgn 1/13/2014 3:33:56 PM C

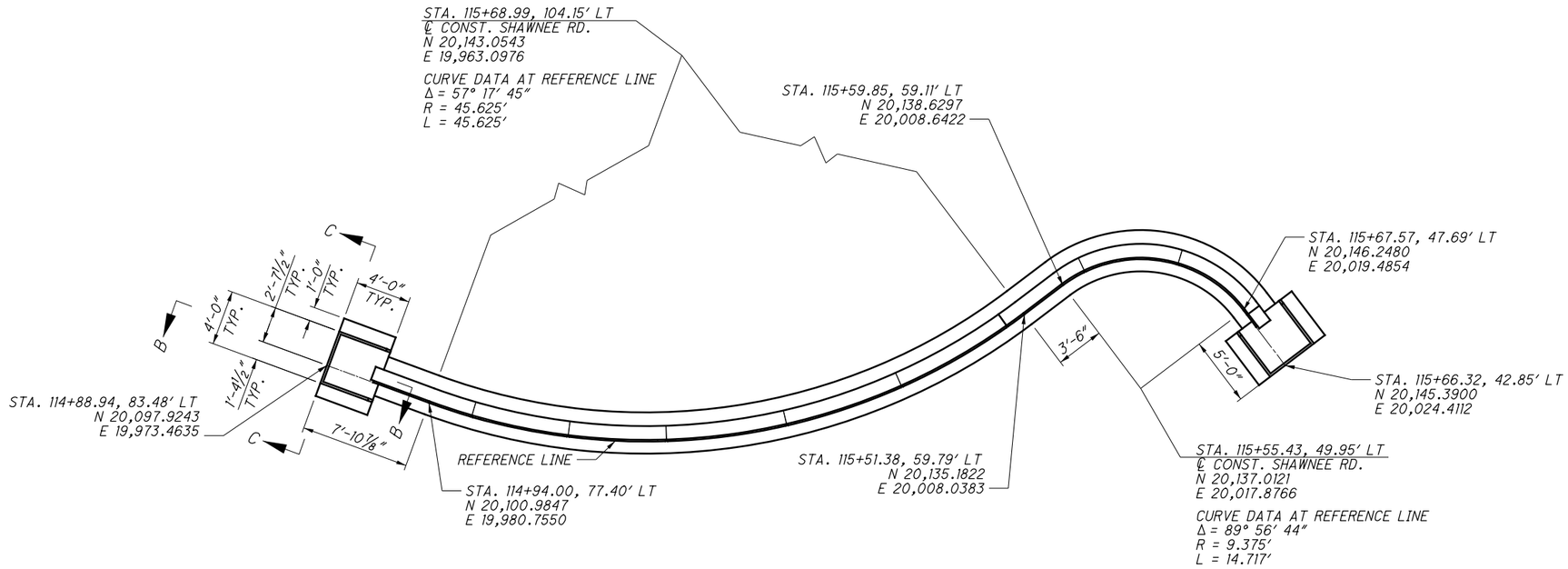

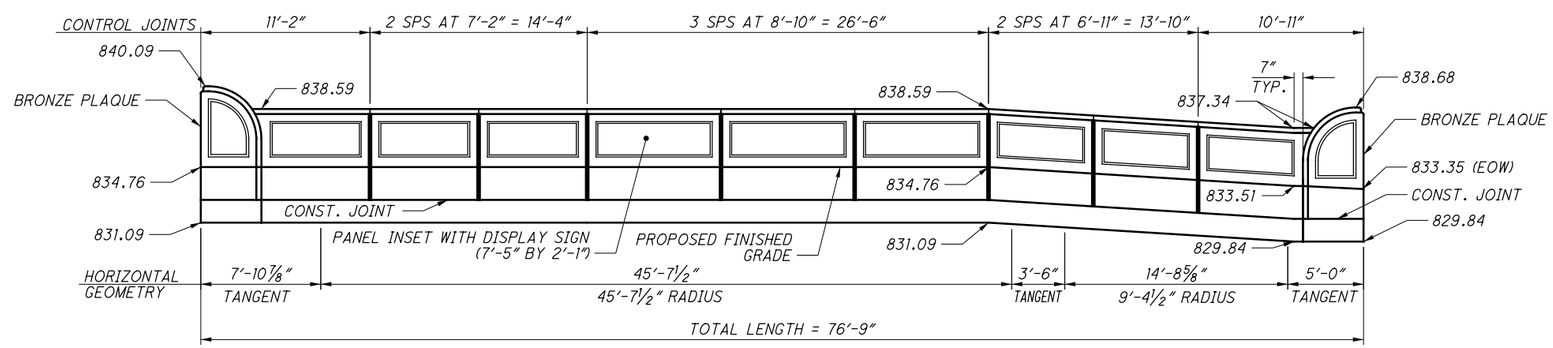

DEVELOPED ELEVATION

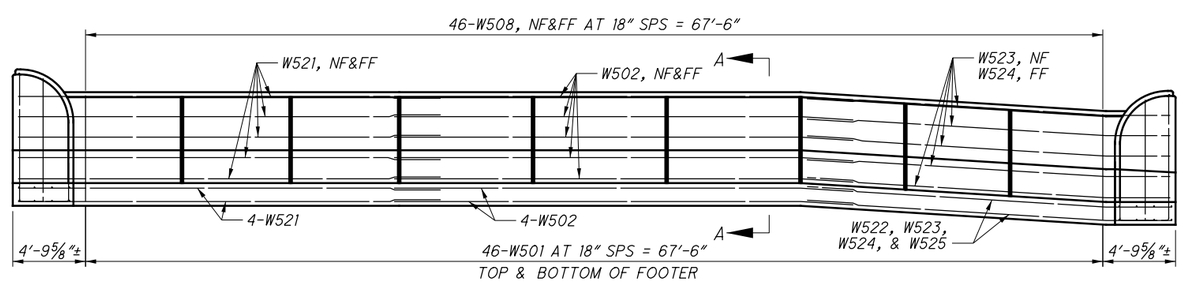

DEVELOPED ELEVATION - REINFORCING PLAN

SEE SECTIONS B-B AND C-C FOR COLUMN REINFORCING LABELS

NOTES:

ABBREVIATIONS

EOW = EDGE OF WALK
TOC = TOP OF CURB

CROSS REFERENCE	
SHEET NO.	DESCRIPTION
4-6/31	AESTHETIC DETAILS
20-22/31	REAR APPROACH SLAB
28/31	SECT. A-A. B-B. C-C
29/31	REINFORCING STEEL LIST

DESIGN AGENCY
KOHLI & KALIHER ASSOCIATES, INC.
ENGINEERS AND SURVEYORS
2244 Baton Rouge Ave., Lima, Ohio 45805 419-227-1135

DESIGNED	DRAWN	REVIEWED	DATE
IMK	IMK	DGB	1-17-13
CHECKED	REVISED	STRUCTURE FILE NUMBER	
MAD		0249696	

LEFT REAR END TREATMENT
BRIDGE NO. ALL-C.R. 152-0334
OVER THE OTTAWA RIVER

ALL-SHAWNEE ROAD
PID No. 77305

I:\PROJECTS\ALL\77305\structures\ALL152_0334C\sheets\152_0334CMD007.dgn 1/13/2014 3:33:57 PM C

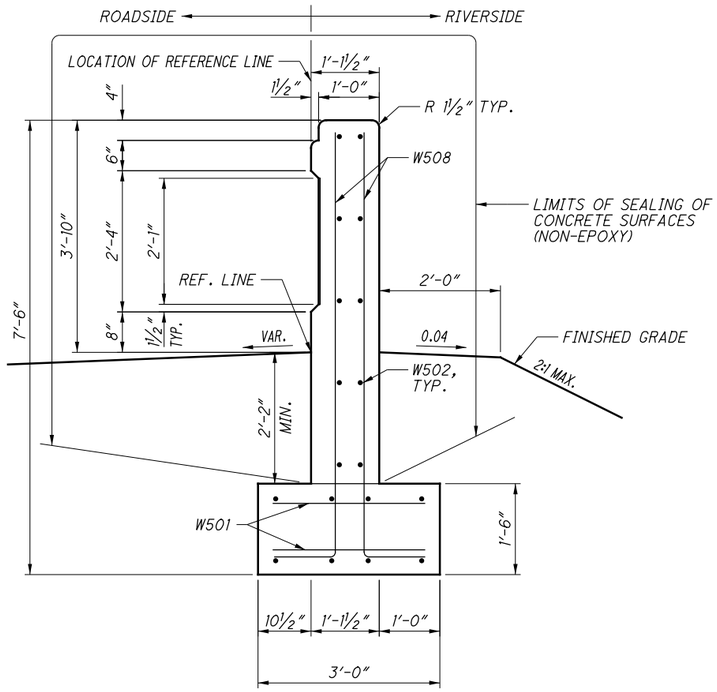

SECTION A-A

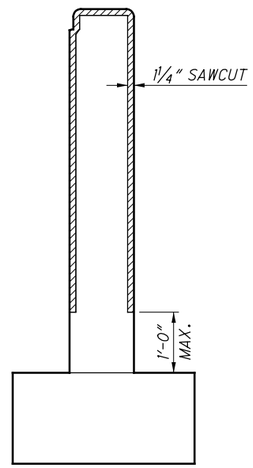

DETAIL A

SAWCUT PERIMETER = 11'-0"

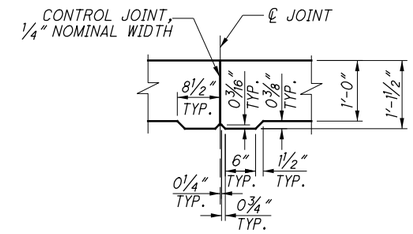

SAWCUT PANEL JOINT DETAIL

SEE DETAIL A AND NOTES FOR ADDITIONAL DETAILS

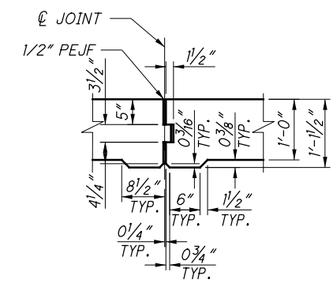

EXPANSION PANEL JOINT DETAIL

EXPANSION JOINT ABOVE TOP OF FOOTER.

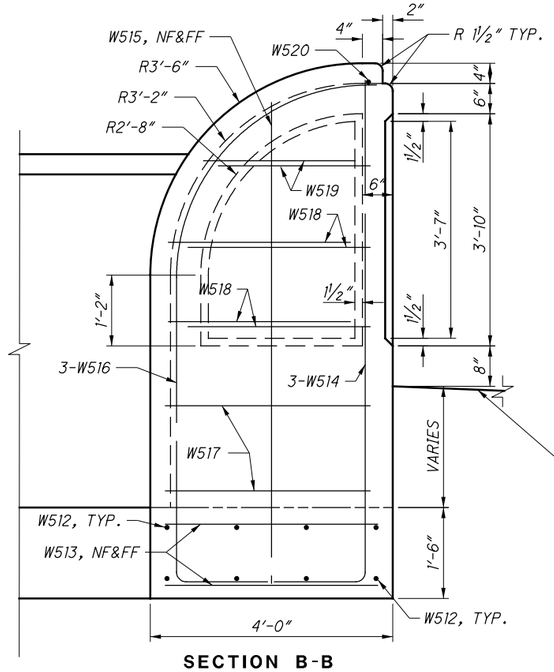

SECTION B-B

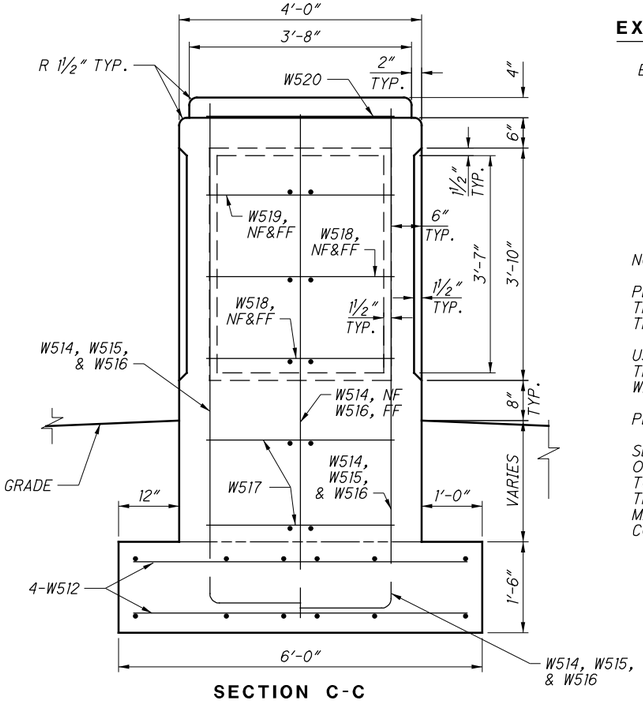

SECTION C-C

NOTES:

PERIMETER SAWCUT - SAWCUT 1¼" DEEP JOINTS ALONG THE PERIMETER OF THE WALL AS SOON AS THE SAW CAN BE OPERATED WITHOUT DAMAGING THE CONCRETE.

USE AN EDGE GUIDE OR JIG TO ENSURE THAT THE CUT JOINT IS STRAIGHT, TRUE, AND ALIGNED ON ALL FACES. THE JOINT WIDTH SHALL BE THE WIDTH OF THE SAW BLADE, A NOMINAL WIDTH OF ¼ INCH.

PLACE JOINTS AT THE LOCATIONS SHOWN.

SEAL THE PERIMETER OF THE CONTROL JOINTS TO A MINIMUM DEPTH OF ONE INCH WITH A POLYURETHANE OR POLYMERIC MATERIAL CONFORMING TO ASTM C920, TYPE S. LEAVE THE BOTTOM ONE-HALF INCH OF BOTH THE INSIDE AND OUTSIDE FACES UNSEALED TO ALLOW ANY WATER WHICH MAY ENTER THE JOINT TO ESCAPE. THE SEALANT MATERIAL SHALL BE COLORED (SEE SHEET 4/31 FOR DETAILS).

CROSS REFERENCE	
SHEET NO.	DESCRIPTION
4-6/31	AESTHETIC DETAILS
26-27/31	ADDITIONAL REAR END TREATMENT DETAILS

DESIGN AGENCY
KOHLI & KALIHER ASSOCIATES, INC.
ENGINEERS AND SURVEYORS
2244 Baton Rouge Ave., Lima, Ohio 45805 419-227-1135

DESIGNED	DRAWN	REVIEWED	DATE
IMK	IMK	DGB	1-17-13
CHECKED	REVISED	STRUCTURE FILE NUMBER	
MAD		0249696	

REAR END TREATMENT DETAILS
BRIDGE NO. ALL-C.R. 152-0334
OVER THE OTTAWA RIVER

ALL-SHAWNEE ROAD
PID No. 77305

I:\PROJECTS\ALL\77305\structures\ALL152_0334C\sheets\152_0334CMD008.dgn 1/13/2014 3:33:58 PM C

MARK	NUMBER PHASE I	NUMBER PHASE II	NUMBER TOTAL	LENGTH	WEIGHT	TYPE	DIMENSIONS A	DIMENSIONS B	DIMENSIONS C	DIMENSIONS D	DIMENSIONS E/R	DIMENSIONS INC.
SUPERSTRUCTURE RAILING AND PARAPET, INCLUDING LIGHT POLE PILASTER												
L501		4	4	3′-0″	13 **	2	0′-7″	2′-1″	0′-7″			
L502		4	4	8′-6″	35 **	2	3′-4″	2′-1″	3′-4″			
L503		5	5	7′-8″	40 **	21	1′-3″	1′-10″	0′-6″	2′-1″		
L504		4	4	3′-4″	14 **	STR						
R501	160		160	6′-0″	1001	B3	0′-8″	2′-9″	2′-6″		0′-1 ½″	
R502	36		36	29′-0″	1089	STR						
R503		178	178	9′-8″	1795 **	30	1′-6″	0′-8″	3′-4″	3′-2″		
R504		36	36	29′-0″	1089 **	STR						
R601	160		160	5′-3″	1262	12	0′-11 ½″	1′-4 ½″	0′-6 ½″	1′-2″	2′-2″	
R602	6		6	30′-0″	270	STR						
				SUB-TOTAL	3,622							
REAR END TREATMENTS												
W501	176	92	268	2′-6″	699	STR						
W502	42	18	60	30′-0″	1877	STR						
W503	18		18	10′-0″	188	STR						
W504	2		2	23′-5″	49	B4	4′-10″				8′-9″	
W505	7		7	24′-11″	182	B4	4′-10″				9′-9″	
W506	7		7	25′-9″	188	B4	4′-10″				10′-3″	
W507	2		2	27′-4″	57	B4	4′-10″				11′-3″	
W508	176	92	268	7′-9″	2167	1	1′-0″	6′-11″				
W509	10		10	20′-6″	214	STR						
W510	20		20	23′-2″	483	STR						
W511	10		10	17′-0″	177	STR						
W512	16	16	32	5′-6″	184	STR						
W513	8	8	16	3′-6″	58	STR						
W514	6	6	12	9′-7″	120	1	1′-6″	8′-3″				
W515	4	4	8	9′-3″	77	1	1′-6″	7′-11″				
W516	6	6	12	11′-4″	142	B5	1′-6″	5′-0″			3′-2″	
W517	4	4	8	14′-8″	122	3	3′-6″	3′-6″				
W518	8	8	16	9′-0″	150	2	3′-0″	3′-3″	3′-0″			
W519	4	4	8	7′-11″	66	2	2′-6″	3′-2″	2′-6″			
W520	2	2	4	3′-2″	13	STR						
W521		18	18	28′-9″	540	STR						
W522		2	2	22′-11″	48	B4	4′-7″				8′-9″	
W523		7	7	24′-6″	179	B4	4′-7″				9′-9″	
W524		7	7	25′-3″	184	B4	4′-7″				10′-3″	
W525		2	2	26′-10″	56	B4	4′-7″				11′-3″	
				SUB-TOTAL	8,220							

MARK	NUMBER PHASE I	NUMBER PHASE II	NUMBER TOTAL	LENGTH	WEIGHT	TYPE	DIMENSIONS A	DIMENSIONS B	DIMENSIONS C
SUPERSTRUCTURE									
S401	8	8	16	30′-0″	321	STR			
S402	8		8	14′-3″	76	B1	14′-3″		
S403		8	8	10′-3″	55	B2	10′-3″		
S501		106	106	11′-6″	1272	STR			
S502		106	106	3′-2″	350	2	1′-0″	1′-5″	1′-0″
S503		106	106	2′-7″	286	2	1′-0″	10 ½″	1′-0″
S504	118	106	224	3′-8″	857	17	2′-6″		
S601	94	166	260	30′-0″	11,716	STR			
S602	41	80	121	28′-2″	5119	STR			
S603	212		212	40′-0″	12,737	STR			
S604		212	212	45′-0″	14,329	STR			
S605		212	212	11′-6″	3662	STR			
S606	2		2		47	B1	15′-9″		
S607		2	2		35	B2	11′-6″		
S701	80	150	212	40′-0″	18,805	STR			
S702	2		2	30′-0″	123	STR			
				SUB-TOTAL	69,790				
PIERS									
P401	36	28	64	9′-5″	403	3	2′-0″	2′-6″	
P501	8	8	16	30′-0″	501	STR			
P502	8		8	17′-3″	144	B1			
P503		8	8	9′-7″	80	B2			
P504	144	120	264	8′-9″	2409	2	3′-0″	3′-0″	3′-0″
P901	8	8	16	30′-0″	1632	STR			
P902	8		8	21′-6″	585	B1			
P903		8	8	14′-0″	381	B2			
P1001	10	10	20	30′-0″	2582	1	27′-4″	3′-0″	
P1002	10		10	26′-3″	1130	B1			
P1003		10	10	18′-6″	796	B2			
SP401*	18	14	32	294′-0″	6285*	27	1′-0″	1′-0″	30′-0″
SP601*	144	112	256	30′-10″	11,856*	1	30′-0″	1′-0″	
				SUB-TOTAL	8,742				

*INCLUDED IN THE ITEM 507 UNIT BID PRICE FOR PILES DRIVEN
**INCLUDED WITH ITEM 517 FOR PAYMENT

ODOT STANDARD SHAPES

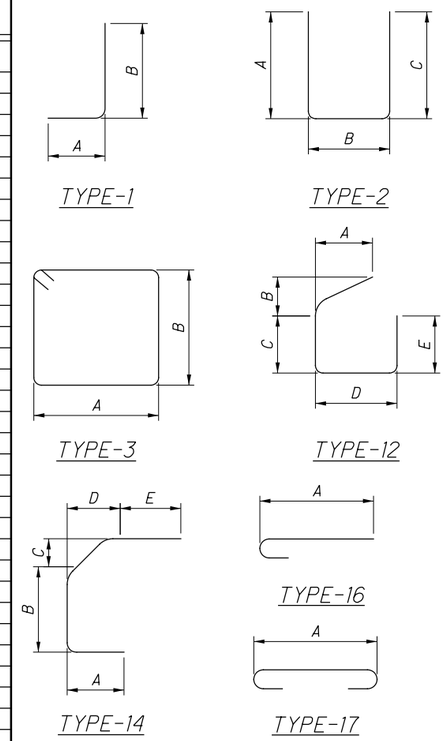

PROJECT CUSTOM SHAPES

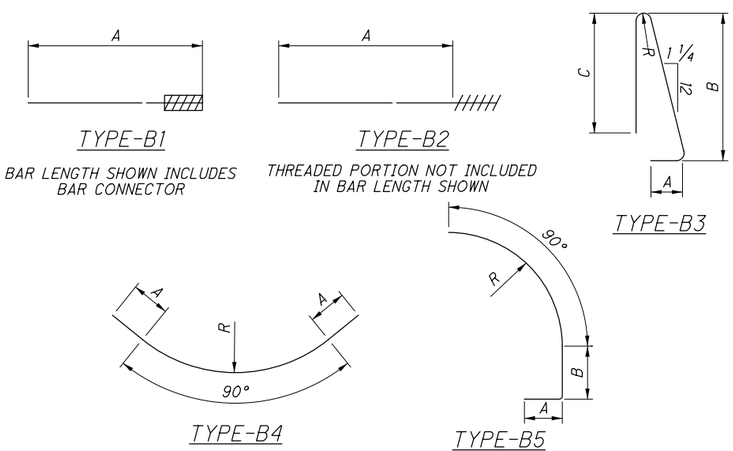

NOTES:

1. ALL DIMENSIONS ARE OUT TO OUT.
2. ALL REINFORCING STEEL SHALL BE EPOXY COATED.
3. AN "STR." IN THE "TYPE" COLUMN INDICATES STRAIGHT BARS.
4. REFER TO CMS SECTION 509.05 FOR STANDARD BEND DIMENSIONS.
5. THE BAR SIZE NUMBER IS SPECIFIED ON THE PLANS IN THE BAR MARK COLUMN. THE FIRST DIGIT WHERE THREE DIGITS ARE USED AND THE FIRST TWO DIGITS WHERE FOUR DIGITS ARE USED INDICATES THE BAR SIZE NUMBER.

REINFORCING BAR SPLICE:

REINFORCING BAR SPLICE LENGTHS SHALL CONFORM TO THE MINIMUM LENGTHS SPECIFIED BY SECTION 509.07 OF THE CONSTRUCTION AND MATERIAL SPECIFICATIONS UNLESS OTHERWISE NOTED ON THE PLANS.

DESIGN AGENCY
KOHLI & KALIHER ASSOCIATES, INC.
ENGINEERS AND SURVEYORS
2244 Baton Rouge Ave., Lima, Ohio 45805 419-227-1135

DESIGNED	DRAWN	REVIEWED	DATE
BLS	BLS	DGB	1-17-13
CHECKED	REVISED	STRUCTURE FILE NUMBER	
IMK		0249696	

REINFORCING STEEL LIST
BRIDGE NO. ALL-C.R. 152-0334
OVER THE OTTAWA RIVER

ALL-SHAWNEE ROAD
PID No. 77305

I:\PROJECTS\ALL\77305\structures\ALL152_0334C\sheets\152_0334CRL001.dgn 1/13/2014 3:33:59 PM C

MARK	NUMBER PHASE I	NUMBER PHASE II	NUMBER TOTAL	LENGTH	WEIGHT	TYPE	DIMENSIONS A	DIMENSIONS B	DIMENSIONS C	DIMENSIONS INC
REAR ABUTMENT										
RA401	18	20	38	9'-5"	239	3	2'-6"	2'-0"		
RA501	45	51	96	11'-8"	1168	3	2'-6"	3'-0"		
RA502	1	2	3	14'-1"	44	2	6'-2"	2'-0"	6'-2"	
RA503	1	1	2	14'-9"	31	2	6'-6"	2'-0"	6'-6"	
RA504	1	22	23	15'-7"	374	2	6'-11"	2'-0"	6'-11"	
RA505	20	45	65	14'-5"	977	2	6'-4"	2'-0"	6'-4"	
RA506	22	4	26	15'-3"	414	2	6'-9"	2'-0"	6'-9"	
RA507	1	1	2	9'-9"	20	2	4'-0"	2'-0"	4'-0"	
RA508	1	1	2	10'-9"	22	2	4'-6"	2'-0"	4'-6"	
RA509	1	1	2	11'-9"	25	2	5'-0"	2'-0"	5'-0"	
RA510	2	1	3	12'-11"	40	2	5'-7"	2'-0"	5'-7"	
RA511	2		2	13'-3"	28	2	5'-9"	2'-0"	5'-9"	
RA512	14	33	47	30'-0"	1471	STR				
RA513	8		8	36'-1"	301	B1	36'-1"			
RA514	6		6	26'-4"	165	B1	26'-4"			
RA515	2		2	15'-0"	31	STR				
RA516	1		1	8'-5"	9	STR				
RA517	2		2	10'-0"	21	STR				
RA518	1		1	6'-11"	7	STR				
RA519	1		1	12'-4"	13	19	8'-4"	3'-10"	1'-2"	
RA520	1		1	13'-0"	14	19	8'-4"	4'-6"	1'-5"	
RA521		8	8	18'-11"	158	B2	18'-11"			
RA522		6	6	8'-0"	50	B2	8'-0"			
RA523		2	2	12'-1"	25	STR				
RA524		2	2	10'-9"	22	STR				
RA525		2	2	9'-6"	20	STR				
RA526		2	2	6'-6"	14	STR				
RA527		1	1	29'-4"	31	STR				
RA601	36	22	58	9'-8"	842	2	4'-9"	0'-6"	4'-9"	
RA801	8	12	20	30'-0"	1602	STR				
RA802	4		4	26'-10"	287	B1	26'-10"			
RA803	4		4	38'-10"	415	B1	38'-10"			
RA804		4	4	24'-5"	261	B2	24'-5"			
RA805		4	4	11'-0"	117	B2	11'-0"			
				SUB-TOTAL	9,225					

MARK	NUMBER PHASE I	NUMBER PHASE II	NUMBER TOTAL	LENGTH	WEIGHT	TYPE	DIMENSIONS A	DIMENSIONS B	DIMENSIONS C	DIMENSIONS INC
FORWARD ABUTMENT										
FA401	18	14	32	9'-5"	201	3	2'-6"	2'-0"		
FA501	43	36	89	11'-8"	1083	3	2'-6"	3'-0"		
FA502	1	1	2	14'-1"	29	2	6'-2"	2'-0"	6'-2"	
FA503	1	2	3	14'-11"	47	2	6'-7"	2'-0"	6'-7"	
FA504		1	1	15'-9"	16	2	7'-0"	2'-0"	7'-0"	
FA505	19	25	44	14'-5"	662	2	6'-4"	2'-0"	6'-4"	
FA506	21	10	31	15'-1"	488	2	6'-8"	2'-0"	6'-8"	
FA507	1		1	9'-9"	10	2	4'-0"	2'-0"	4'-0"	
FA508	1		1	10'-3"	11	2	4'-3"	2'-0"	4'-3"	
FA509	1		1	11'-3"	12	2	4'-9"	2'-0"	4'-9"	
FA510	1		1	12'-1"	13	2	5'-2"	2'-0"	5'-2"	
FA511	2		2	12'-11"	27	2	5'-7"	2'-0"	5'-7"	
FA512	3		3	13'-3"	41	2	5'-9"	2'-0"	5'-9"	
FA513	14	14	28	30'-0"	876	STR				
FA514	12	12	24	24'-0"	601	STR				
FA515	12		12	22'-6"	282	B1	22'-6"			
FA516	2		2	11'-6"	24	STR				
FA517	2		2	8'-7"	18	STR				
FA518	1		1	16'-5"	17	19	10'-9"	5'-6"	1'-3"	
FA519	1		1	15'-8"	16	19	10'-9"	4'-10"	1'-1"	
FA520		14	14	12'-0"	175	B2	12'-0"			
FA521		1	1	10'-11"	11	STR				
FA522		1	1	11'-10"	12	STR				
FA523		1	1	9'-9"	10	STR				
FA524		1	1	6'-5"	7	STR				
FA525		1	1	7'-1"	7	STR				
FA526		1	1	15'-1"	16	19	11'-1"	3'-10"	1'-2"	
FA527		1	1	15'-9"	16	19	11'-1"	4'-6"	1'-5"	
FA528		1	1	10'-5"	11	2	4'-4"	2'-0"	4'-4"	
FA529		1	1	11'-7"	12	2	4'-11"	2'-0"	4'-11"	
FA530		1	1	12'-9"	13	2	5'-6"	2'-0"	5'-6"	
FA531		1	1	13'-9"	14	2	6'-0"	2'-0"	6'-0"	
FA532		1	1	8'-11"	9	STR				
FA533		2	2	15'-3"	32	2	6'-9"	2'-0"	6'-9"	
FA601	31	25	56	9'-10"	827	2	4'-10"	0'-6"	4'-10"	
FA801	8	8	16	30'-0"	1282	STR				
FA802	4		4	19'-0"	203	STR				
FA803	8		8	24'-7"	525	B1	24'-7"			
FA804		8	8	10'-0"	214	B2	10'-0"			
FA805		4	4	22'-9"	243	STR				
				SUB-TOTAL	8,113					

CROSS REFERENCE	
SHEET NO.	DESCRIPTION
29/31	NUMBERED BENT BAR DETAILS
29/31	REINFORCING STEEL NOTES

DESIGN AGENCY
KOHLI & KALIHER ASSOCIATES, INC.
ENGINEERS AND SURVEYORS
2244 Baton Rouge Ave., Lima, Ohio 45805 419-227-1135

DESIGNED	DRAWN	REVIEWED	DATE
BLS	BLS	DGB	1-17-13
CHECKED	REVISED	STRUCTURE FILE NUMBER	
IMK		0249696	

REINFORCING STEEL LIST

BRIDGE NO. ALL-C.R. 152-0334
OVER THE OTTAWA RIVER

ALL-SHAWNEE ROAD
PID No. 77305

I:\PROJECTS\ALL\77305\structures\ALL152_0334C\sheets\152_0334CRL002.dgn 1/13/2014 3:34:00 PM C

MARK	NUMBER PHASE I	NUMBER PHASE II	NUMBER TOTAL	LENGTH	WEIGHT	TYPE	DIMENSIONS A	B	C	D	E/R	INC.
REAR APPROACH SLAB												
RS501	44		44	40'-0"	1836	STR						
RS502		44	44	30'-0"	1377	STR						
RS503		32	32	18'-6"	617	STR						
RS504		7	7	11'-9"	86	STR						
RS505		12	12	9'-8"	121	STR						
RS506		2	2	7'-4"	15	1	2'-6"	5'-0"				
RS507	25	26	51	19'-6"	1037	STR						
RS508	2		2	15'-10"	33	STR						
		2 SR	2 SR	14'-3"								
RS509		OF	OF	TO	210	STR						1'-0"
		6	6	19'-3"								
SEE BELOW FOR RS510 THRU RS513												
RS514		1	1	20'-11"	22	STR						
RS515		1	1	12'-9"	13	STR						
RS516		1	1	16'-9"	17	STR						
RS517		6	6	8'-0"	50	STR						
RS518		14	14	9'-9"	142	STR						
RS519		16	16	3'-0"	50	2	1'-0"	1'-3"	1'-0"			
RS520		8	8	6'-3"	52	2	4'-3"	1'-3"	1'-0"			
RS521			4	2'-11"	12	2	1'-0"	1'-2"	1'-0"			
RS1001	56	59	115	20'-11"	10351	16	19'-6"					
RS1002	3		3	17'-3"	223	16	15'-10"					
		1 SR	1 SR	15'-8"			14'-3"					0'-5"
RS1003		OF	OF	TO	1016	16	TO					
		13	13	20'-8"			19'-3"					
D802	27	32	59	4'-7"	722	20	1'-0"	1'-0"	1'-10"	1'-0"	1'-0"	
				SUB-TOTAL	18,003*							
REAR APPROACH SLAB PARAPET												
RS510	17		17	6'-0"	106	B3	0'-8"	2'-9"	2'-6"		0'-1 1/2"	
RS511	1		1	15'-9"	16	STR						
RS512	3		3	16'-0"	67	STR						
RS513	2		2	16'-3"	34	STR						
SEE ABOVE FOR RS514 THRU RS521												
RS522		5	5	9'-8"	50	19	8'-8"	0'-11 1/2"	0'-2 3/4"			
RS523		3	3	10'-1"	32	19	8'-9"	1'-3 1/2"	0'-3 3/4"			
RS524		2	2	4'-5"	9	1	1'-3"	3'-4"				
RS525		11	11	12'-6"	143	30	1'-6"	0'-8"	4'-7"	4'-9"		
RS601	17		17	3'-3"	83	14	0'-10 1/2"	1'-0"	0'-8 1/2"	0'-6"	0'-9"	
RS602	17		17	3'-5"	87	1	0'-11"	2'-8"				
RS603	1		1	16'-0"	24	STR						
				SUB-TOTAL	651							

MARK	NUMBER PHASE I	NUMBER PHASE II	NUMBER TOTAL	LENGTH	WEIGHT	TYPE	DIMENSIONS A	B	C	D	E/R	INC.
FORWARD APPROACH SLAB												
FS501	44		44	40'-0"	1836	STR						
FS502		44	44	30'-0"	1377	STR						
FS503		44	44	16'-9"	769	STR						
FS504	12		12	8'-3"	103	19	4'-0"	4'-0"	1'-5"			
FS505		12	12	16'-8"	209	STR						
FS506	22	23	45	19'-5"	911	STR						
FS507	1		1	18'-10"	20	STR						
FS508	1	1	2	19'-0"	40	STR						
FS509	1	1	2	19'-2"	40	STR						
		1 SR	1 SR	20'-0"								
FS510		OF	OF	TO	179	STR						0'-5 1/4"
		8	8	23'-0"								
FS511	4	4	8	3'-6"	29	STR						
SEE BELOW FOR FS512 THRU FS527												
FS528		2	2	7'-9"	16	STR						
		1 SR	1 SR	20'-3"								
FS529		OF	OF	TO	158	STR						0'-5 1/4"
		7	7	22'-11"								
FS530		2	2	19'-8"	41	STR						
FS531		11	11	6'-0"	94	2	2'-6"	1'-3"	2'-6"			
FS532		14	14	10'-6"	153	STR						
FS533		3	3	13'-9"	43	STR						
FS534		1	1	11'-6"	12	STR						
FS535		17	17	4'-0"	71	2	1'-6"	1'-3"	1'-6"			
FS536		4	4	5'-11"	25	2	2'-6"	1'-2"	2'-6"			
FS1001	52	54	106	20'-10"	9502	16	19'-5"					
FS1002	2	1	3	20'-7"	266	16	19'-2"					
FS1003	1		1	20'-4"	87	16	18'-11"					
FS1004	1	1	2	20'-5"	176	16	19'-0"					
		1 SR	1 SR	21'-0"			19'-7"					
FS1005		OF	OF	TO	1951	16	TO					0'-2 1/4"
		20	20	24'-5"			23'-0"					
D802	25	33	58	4'-7"	710	20	1'-0"	1'-0"	1'-10"	1'-0"	1'-0"	
				SUB-TOTAL	18,818*							
FORWARD APPROACH SLAB PARAPET												
FS512	4		4	14'-10"	62	STR						
FS513	1		1	15'-1"	16	STR						
FS514	16		16	6'-0"	100	B3	0'-8"	2'-9"	2'-6"		0'-1 1/2"	
FS515	1		1	15'-3"	16	STR						
FS516		3	3	7'-3"	23	1	1'-6"	5'-11"				
FS517		3	3	9'-6"	30	B5	1'-6"	3'-1"			3'-2"	
FS518		2	2	6'-11"	14	1	1'-6"	5'-7"				
FS519	6	6	12	8'-9"	110	2	3'-0"	3'-0"	3'-0"			
FS520	2	2	4	7'-9"	32	2	2'-6"	3'-0"	2'-6"			
FS521	1	1	2	3'-2"	7	STR						
FS522	3		3	7'-6"	23	1	1'-6"	6'-2"				
FS523	3			9'-9"	30	B5	1'-6"	3'-4"			3'-2"	
FS524	2		2	7'-2"	15	1	1'-6"	5'-10"				
FS525		20	20	12'-5"	259	30	1'-6"	0'-8"	4'-7"	4'-9"		
FS526		5	5	18'-6"	96	STR						
FS527		3	3	18'-9"	59	STR						
FS601	16		16	3'-3"	78	14	0'-10 1/2"	1'-0"	0'-8 1/2"	0'-6"	0'-9"	
FS602	16		16	3'-5"	82	1	0'-11"	2'-8"				
FS603	1		1	14'-10"	22	STR						
				SUB-TOTAL	1,074							

* INCLUDED WITH ITEM 526 FOR PAYMENT

CROSS REFERENCE	
SHEET NO.	DESCRIPTION
29/31	NUMBERED BENT BAR DETAILS
29/31	REINFORCING STEEL NOTES

DESIGN AGENCY
KOHLI & KALIHER ASSOCIATES, INC.
ENGINEERS AND SURVEYORS
2244 Baton Rouge Ave., Lima, Ohio 45805 419-227-1135

DESIGNED	DRAWN	REVIEWED	DATE
BLS	BLS	DGB	1-17-13
CHECKED	REVISED	STRUCTURE FILE NUMBER	
IMK		0249696	

REINFORCING STEEL LIST
BRIDGE NO. ALL-C.R. 152-0334
OVER THE OTTAWA RIVER

ALL-SHAWNEE ROAD
PID No. 77305

I:\PROJECTS\ALL\77305\structures\ALL152_0334C\sheets\152_0334CRL003.dgn 1/13/2014 3:34:01 PM C

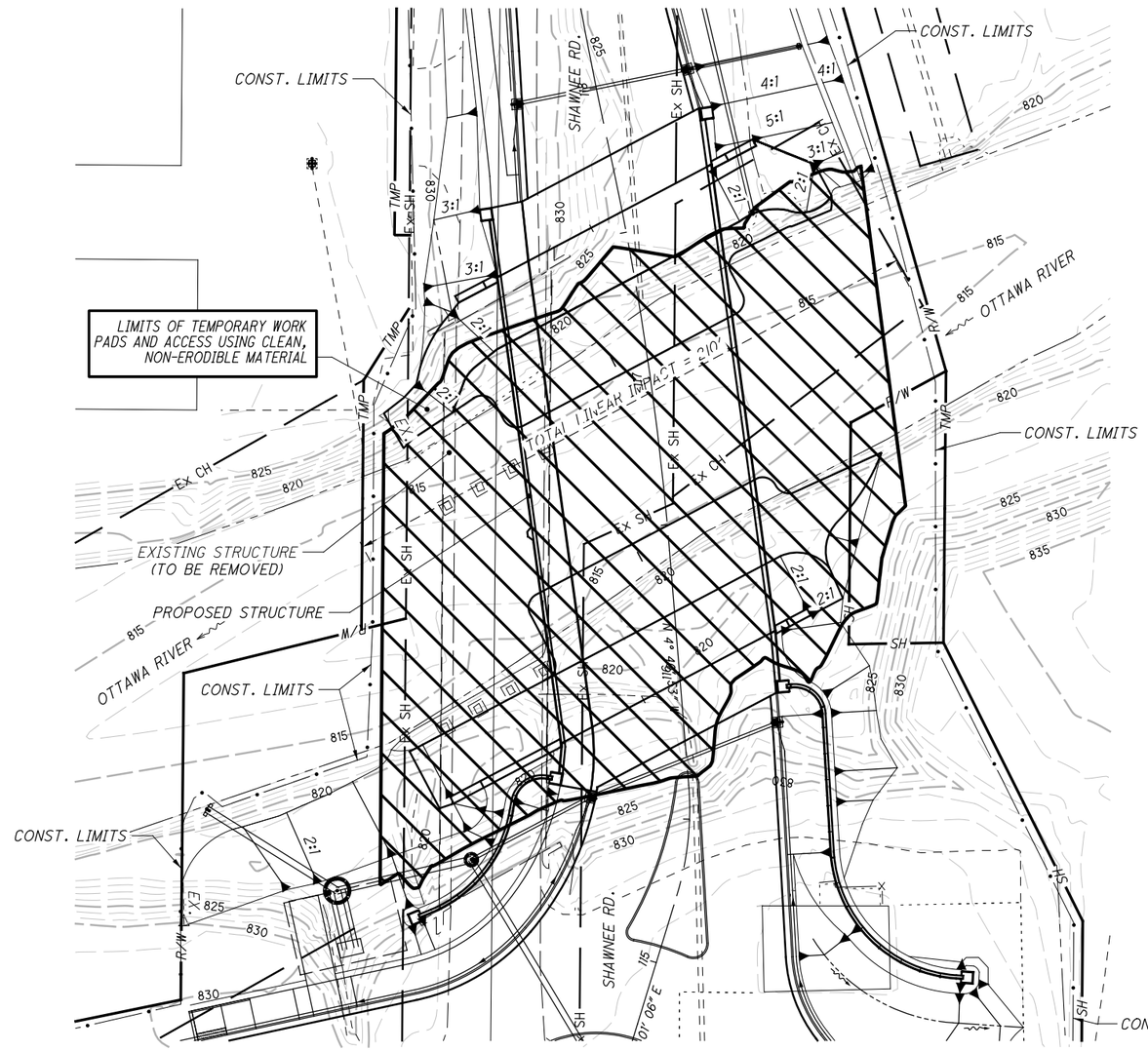

TEMPORARY FILL PLAN VIEW

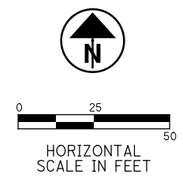

****PLAN FOR TEMPORARY FILLS**
ALL- SHAWNEE RD CORRIDOR AND FT. AMANDA- SHAWNEE RD. INTERSECTION (PID 77305)
CORPS # 2012-01322

IN-STREAM WORK (PLACEMENT OR REMOVAL OF TEMPORARY AND/OR PERMANENT FILL MATERIALS BELOW ORDINARY HIGH WATER MARK) WILL BE LIMITED WHERE PRACTICABLE AND ONLY CLEAN NON-ERODIBLE MATERIAL WILL BE USED FOR TEMPORARY CONSTRUCTION ACCESS FILLS. TEMPORARY FILLS WILL BE CONSTRUCTED SO AS TO ALLOW FOR FISH PASSAGE AND WILL NOT BACK UP WATER. TEMPORARILY PLACED MATERIAL WILL BE REMOVED AND THE STREAM BOTTOM WILL BE RESTORED TO ORIGINAL STREAM ELEVATIONS AND TO PRE-CONSTRUCTION CONDITIONS WHEN THE WORK IS COMPLETED. STREAM BANKS THAT ARE NOT IN RECEIPT OF RIP RAP WILL BE RE-VEGETATED TO PRE-CONSTRUCTION CONDITIONS TO THE MAXIMUM EXTENT POSSIBLE.

CONSTRUCTION LIMITS

THE LIMITS SHOWN ON THE PLANS DEFINE THE CONSTRUCTION LIMITS FOR THE PHYSICAL CONSTRUCTION. UNDER NO CIRCUMSTANCES SHALL THE CONTRACTOR ENTER UPON THE PROPERTY OUTSIDE THE DESIGNATED LIMITS SHOWN ON THESE PLANS. THE FLOOD PLAIN, WETLANDS, JURISDICTIONAL DITCHES, AND OTHER RESOURCES MAY BE IMPACTED. THEREFORE, IT IS IMPERATIVE THAT THE CONTRACTOR RESPECT THE CONSTRUCTION LIMITS AND PROHIBIT THE TRESPASS OUTSIDE OF THE CONSTRUCTION LIMITS.

**THE TEMPORARY ACCESS FILL SHALL ACCOMODATE A FLOW RATE (Q) EQUAL TO TWICE THE HIGHEST MEAN MONTHLY FLOW SUCH THAT THE BACKWATER ELEVATION DOES NOT EXCEED THE OHWM. Q FOR THIS LOCATION IS 462 CFS.

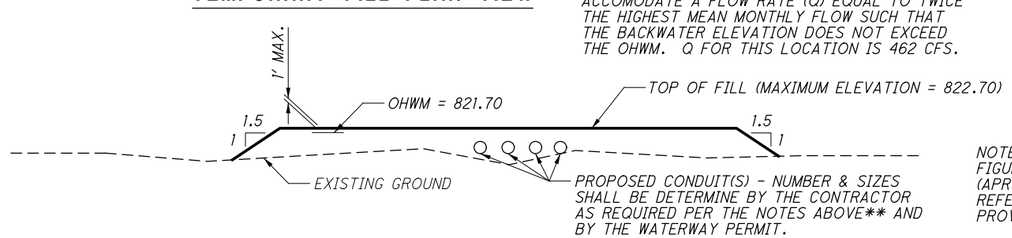

TYPICAL CROSS SECTION OF TEMP. FILL

NOTE: THIS SHEET IS A REPRODUCTION OF FIGURE 6 OF THE USACE PERMIT NO. 2012-01322 (APR. DATE: 1-23-14). SEE THE ABOVE REFERENCED WATERWAY PERMIT IN SPECIAL PROVISIONS FOR DETAILS.

DESIGN AGENCY
KOHLI & KALIHER ASSOCIATES, INC.
ENGINEERS AND SURVEYORS
2244 Baton Rouge Ave., Lima, Ohio 45805 419-227-1135

DESIGNED	DRAWN	REVIEWED	DATE
IMK	IMK	DGB	1-13-14
CHECKED	REVISED	STRUCTURE FILE NUMBER	
MAD		0249696	

TEMPORARY ACCESS FILL
BRIDGE NO. ALL-C.R. 152-0334
OVER OTTAWA RIVER

ALL-SHAWNEE ROAD
PID No. 77305

I:\PROJECTS\ALL\77305\roadway\basemaps\77305KD002.dgn 2/7/2014 2:11:15 PM C

RIGHT OF WAY LEGEND SHEET ALL-SHAWNEE RD

ALLEN COUNTY
SHAWNEE TOWNSHIP
SEC. 10 & 11, T. 4 S., R. 6 E.

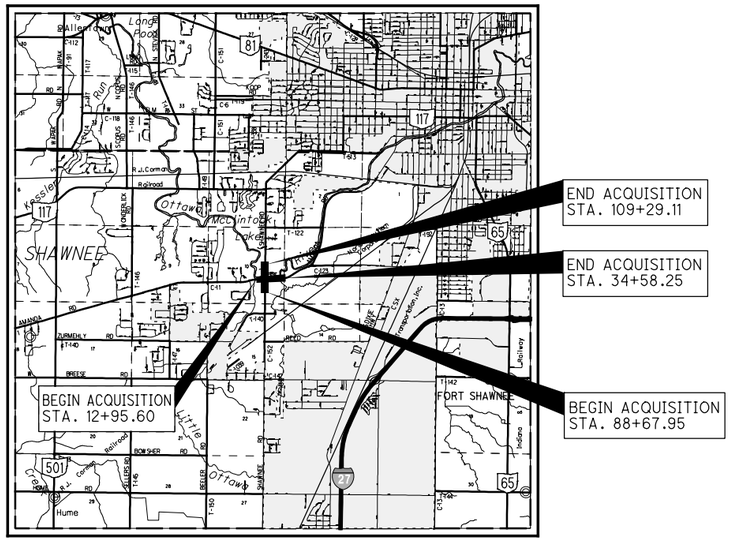

LOCATION MAP

LATITUDE: 40°42'21" N LONGITUDE: 84°09'05" W

SCALE IN MILES
0 1 2 3 4

PROJECT DESCRIPTION

RECONSTRUCTION OF A 0.35 MILE PORTION OF SHAWNEE ROAD INCLUDING REALIGNMENT OF SHAWNEE ROAD AND FORT AMANDA ROAD, NEW BRIDGE INSTALLATION OVER THE OTTAWA RIVER, REMOVAL OF THE EXISTING TRAFFIC SIGNAL AND INSTALLATION OF A ROUNDABOUT AT THE INTERSECTION OF SHAWNEE ROAD AND FORT AMANDA ROAD.

NOTES: THE LOCATION OF THE UNDERGROUND UTILITIES SHOWN ON THE PLANS ARE OBTAINED FROM THE OWNER OF THE UTILITIES AS REQUIRED BY SECTION 153.64 O.R.C.

UTILITY OWNERS

MR. CARL YARBROUGH DISTRICT MANAGER **BP OIL COMPANY (PIPELINE ONLY)** **(BP/STANDARD/SOHIO)** 4421 BRADLEY ROAD CLEVELAND, OH 44109 PHONE: 216-912-2563 E-MAIL=Carl.Yarbrough@bp.com	TRAM (NGOC) Q. TRINH ENGINEER **AEP (TRANSMISSION LINE ENGINEERING)** 700 MORRISON ROAD GAHANNA, OH 43230 PHONE: 614-552-1355 FAX: 614-552-1818 EMAIL= tqtrinh@aep.com	MR. RANDY HEINL FACILITIES MANAGER **TELEPHONE SERVICE COMPANY** 2 WILLIPIE STREET WAPAKONETA, OH 45895 419-645-2100 E-MAIL=randy@telserco.com
MR. KENT SHOEMAKER **CITY OF LIMA** **WATER DEPARTMENT** 1405 RESERVOIR ROAD LIMA, OH 45804 419-221-5175 EMAIL= kent.shoemaker@cityhall.lima.oh.us	DAN WILSON CUSTOMER DESIGN TECHNICIAN **AEP (DISTRIBUTION)** 369 E. O'CONNOR AVE LIMA, OH 45801 EMAIL= dewilson@aep.com	MR. GARY HOHENBRINK **TIME WARNER CABLE** 3100 ELIDA ROAD LIMA, OH 45805 419-996-2272 E-MAIL= gary.hohenbrink@twcable.com
MR. GLENN HASTINGS **ALLEN WATER DISTRICT** P.O. BOX 724 LIMA, OH 45801-0724 419-224-0724	MR. MARTY WHITE DISTRICT R/W AGENT **BUCKEYE PIPE LINE COMPANY** 940 BUCKEYE ROAD LIMA, OH 45804 419-223-4015 OFFICE #= 419-993-8000 E-MAIL= mwhite@buckeye.com	
MR. MIKE CAPRELLA **CITY OF LIMA** **UTILITY FIELD SERVICES** 1405 RESERVOIR ROAD LIMA, OH 45801 419-221-5294 E-MAIL=mike.caprella@cityhall.lima.oh.us	MR. TONY WILKERSON **DOMINION EAST OHIO GAS** ENGINEERING DEPARTMENT 150 SOUTH JACKSON STREET LIMA, OH 45801 419-226-4867 E-MAIL= ANTHONY.C.WILKERSON@dom.com	
MR. STEVE KAYATIN COUNTY SANITARY ENGINEER **ALLEN COUNTY SANITARY ENGINEERS** 3230 NORTH COLE STREET LIMA, OH 45801 419-996-4675 E-MAIL=skayatin@allencountyohio.com	MR. BILL PERRIN ENGINEER **CENTURY LINK** 122 SOUTH ELIZABETH STREET LIMA, OH 45801 419-226-6220 E-MAIL=william.r.perrin@centurylink.com	

INDEX OF SHEETS:

LEGEND SHEET	1
CENTERLINE PLAT	2-4
PROPERTY MAP	5
SUMMARY OF ADDITIONAL R/W	6-8
R/W SCHEMATIC FOR DETAIL SHEETS	9
R/W TOPOGRAPHIC & BOUNDARY SHEETS	10-27

PLANS PREPARED BY:

FIRM NAME : KOHLI & KALIHER ASSOC., INC.
R/W DESIGNER: IAN M. KOHLI
R/W REVIEWER: MICHAEL G. BUETTNER
FIELD REVIEWER: MICHAEL G. BUETTNER
PRELIMINARY FIELD REVIEW DATE: 6-6-2012
TRACINGS FIELD REVIEW DATE: 8-28-2012
OWNERSHIP UPDATED BY: IAN M. KOHLI
DATE COMPLETED: 8-28-2012
PLAN COMPLETION DATE: 8-28-2012

STRUCTURE KEY

RESIDENTIAL
COMMERCIAL
OUT-BUILDING

TYPES OF TITLE LEGEND:
WD = WARRANTY DEED
SH = STANDARD HIGHWAY EASEMENT
T = TEMPORARY EASEMENT

CONVENTIONAL SYMBOLS

County Line
Township Line
Section Line
Subdivision Line
Fence Line (Ex) (Pr)
Center Line
Right of Way (Ex) Ex R/W
Right of Way (Pr) R/W
Standard Highway Ease.(Ex) Ex SH
Standard Highway Ease.(Pr) SH
Temporary Right of Way TMP
Channel Ease. (Ex) Ex CH
Utility Ease. (Ex) Ex U
General Ease. (Ex)
Guardrail (Ex) (Pr)
Construction Limits
Edge of Pavement (Ex)
Edge of Pavement (Pr)
Edge of Shoulder (Ex)
Edge of Shoulder (Pr)
Ditch / Creek (Ex)
Ditch / Creek (Pr)
Tree Line (Ex)
Ownership Hook Symbol , Example
Property Line Symbol , Example
Break Line Symbol , Example
Tree (Pr) , Tree (Ex) , Shrub (Ex)
Tree (Remove) , Shrub (Remove)
Evergreen (Ex) , Stump
Evergreen (Remove) , Stump (Remove)
Wetland (Pr) , Grass (Pr) , Aerial Target
Post (Ex) , Mailbox (Ex) MB , Mailbox (Pr) MB
Light (Ex) , Telephone Marker (Ex) TEL
Fire Hydrant (Ex) , Water Meter (Ex) WM
Water Valve (Ex) , Utility Valve Unknown (Ex.)
Telephone Pole (Ex) , Power Pole (Ex)
Light Pole (Ex)

I, Michael G. Buettner, P. S. have conducted a survey of the existing conditions for the Allen County Engineer beginning on October, 2008. The results of that survey are contained herein. As a part of this project I have reestablished the locations of the existing property lines and centerline of existing Right of Way for property takes contained herein. All of my work contained herein was conducted in accordance with Ohio Administrative Code 4733-37 commonly known as "A Minimum Standards for Boundary Surveys in the State of Ohio" unless noted. The words I and my as used herein are to mean either myself or someone working under my direct supervision.

Michael G. Buettner, Professional Land Surveyor No. 6881 Date: 8-28-2012

I, Ian M. Kohli, P. S. have conducted a survey for the Allen County Engineer. The results of that survey are contained herein. The horizontal coordinates expressed herein are based on a local project datum. As a part of this project I have established the proposed property lines, calculated the Gross Take, present roadway occupied (PRO), Net Take and Net Residue; as well as prepared the legal descriptions necessary to acquire the parcels as shown herein. As a part of this work I have set right of way monuments at the property corners, property line intersection, points along the right of way and/or angle points on the right of way, Section Corners and other points as shown herein. All of my work contained herein was conducted in accordance with Ohio Administrative Code 4733-37 commonly known as "Minimum Standards for Boundary Surveys in the State of Ohio" unless noted. The words I and my as used herein are to mean either myself or someone working under my direct supervision.

Ian Kohli, Professional Land Surveyor No. 8474 Date: 8-28-2012

REV. BY	DATE	DESCRIPTION
IMK	4-22-13	ADDED PR SH SYMBOLS TO LEGENDS

SURVEYORS SEAL
STATE OF OHIO
MICHAEL G. BUETTNER
6881
REGISTERED PROFESSIONAL SURVEYOR

SURVEYORS SEAL
STATE OF OHIO
IAN M. KOHLI
8474
REGISTERED PROFESSIONAL SURVEYOR

FEDERAL PROJECT NO. E040(587)
PID NO. 77305
R/W DESIGNER IMK
R/W REVIEWER MGB

RIGHT OF WAY LEGEND SHEET
ALL-SHAWNEE RD

I:\PROJECTS\ALL\77305\row\sheets\77305RL001.dgn 1/13/2014 4:03:59 PM C

ALL-SHAWNEE RD

ALLEN COUNTY
SHAWNEE TOWNSHIP
SEC. 10 & 11, T. 4 S., R. 6 E.

CENTERLINE OF R/W MONUMENT TABLE

℄ of RIGHT-OF-WAY			PROJECT COORDINATES		MON. EXPECTED TO BE DISTURBED	
ROAD	STATION	OFFSET	NORTH (Y)	EAST (X)		DESCRIPTION
SHAWNEE RD.	82+73.90	0.00′	18273.9719	19984.4902	NO	POINT OUTSIDE OF CONSTRUCTION LIMITS
SHAWNEE RD.	100+00.00	0.00′	20000.0000	20000.0000	YES	PROPOSED MONUMENT TO BE TYPE MB-1-B
SHAWNEE RD.	109+28.86	0.00′	20928.8218	20008.3462	NO	DO NOT DISTURB (WITHIN CONSTRUCTION LIMITS)
FORT AMANDA RD.	11+68.45	0.00′	19954.5680	19290.8744	NO	POINT OUTSIDE OF CONSTRUCTION LIMITS
FORT AMANDA RD.	18+79.03	0.00′	20000.0000	20000.0000	YES	POINT SAME AS SHAWNEE RD., STA. 100+00.00
FORT AMANDA RD.	33+43.29	48.59′ RT	20022.8563	21473.1750	YES	PROPOSED MONUMENT TO BE TYPE MB-1-B
CAM COURT	1+00.00	0.00′	20679.5211	19601.0897	NO	POINT NOT MONUMENTED
CAM COURT	5+05.00	0.00′	20675.8820	20006.0733	NO	POINT NOT MONUMENTED
TOTALS CARRIED TO GENERAL SUMMARY SHEET					2 EACH	604E40900 MONUMENT, MISC.: MONUMENT ASSEMBLY IN PAVEMENT, MB-1-B

SETTING OF ALL MONUMENTS SHALL BE PERFORMED BY A SURVEYOR REGISTERED IN THE STATE OF OHIO. THE MONUMENT ASSEMBLIES WILL BE INSTALLED BY THE CONTRACTOR AT THE TIME OF CONSTRUCTION. THE CROWNED BRASS MARKER AND STEEL ROD ARE TO BE INSTALLED BY THE CONTRACTOR'S SURVEYOR.

CHANGES OR ALTERATIONS TO THE LOCATION OF ANY MONUMENTS SHOWN IN THIS TABLE, REQUIRE PRIOR APPROVAL FROM THE ALLEN COUNTY ENGINEER'S OFFICE. IN THE EVENT THAT CHANGES OR ALTERATIONS ARE APPROVED, A REVISED CENTERLINE PLAT WITH THE NEW LOCATIONS SHALL BE RECORDED IN THE APPLICABLE COUNTY RECORDS. SPECIFICATIONS FOR MONUMENT ASSEMBLIES ARE SHOWN ON THE ALLEN COUNTY ENGINEER'S OFFICE STANDARD CONSTRUCTION DRAWINGS MB-1 & MB-1-B. WITHIN THE ODOT C&MS AND OTHER APPLICABLE STANDARDS, REPLACE REFERENCES TO ODOT STANDARD CONSTRUCTION DRAWING RM-1.1 WITH THE ABOVE REFERENCED ALLEN COUNTY ENGINEER'S OFFICE STANDARD CONSTRUCTION DRAWINGS.

BASIS OF LOCAL HORIZONTAL DATUM:

ORIGIN OF LOCAL COORDINATE DATUM:
THE EXISTING MONUMENT BOX AT THE INTERSECTION OF SHAWNEE RD. AND FORT AMANDA RD.
NORTHING (Y) = 20,000
EASTING (X) = 20,000

BASIS OF LOCAL COORDINATE BEARINGS:
GRID NORTH OF THE OHIO STATE PLANE COORDINATE SYSTEM, NORTH ZONE (NAD83)

NOTE: THE EXISTING R/W WIDTH AND LOCATIONS ARE BASED ON THE FOLLOWING MATTERS OF RECORD:
1) PLANS DATED 1958 AND DESIGNATED "SHAWNEE & AMANDA ROAD BRIDGES... COUNTY ROADS NO. 152 & NO. 11" (SHEETS 4, 12, 13, 14, 15 OF 25)
2) COMMISSIONERS' RESOLUTION #401-71
JOURNAL 61, PAGE 148
DEED VOLUME 517, PAGE 594
[SHAWNEE ROAD & FORT AMANDA ROAD]
3) ROAD RECORD 3, PAGES 298-299
DEED VOLUME 792, PAGE 32
[SHAWNEE ROAD]
4) ROAD RECORD 1, PAGES 47-48
COMMISSIONERS' JOURNAL 48, PAGE 375
[FORT AMANDA ROAD]

MONUMENT LEGEND

- EXISTING ALLEN COUNTY ENGINEER'S OFFICE MONUMENT BOX
- EXISTING CONCRETE MONUMENT
- M.N.F. EXISTING MAG NAIL
- EXISTING CORNER STONE
- P.F. EXISTING IRON PIPE
- P.F.(SET BY KK) EXISTING 3/4" IRON PIPE WITH "K&K/LIMA" PLUG SET DURING PREVIOUS SURVEY WORK
- I.P.F. EXISTING IRON PIN WITH I.D. CAP
- I.P.F. EXISTING IRON PIN WITH NO I.D. CAP
- I.P.S. PROPOSED 3/4" IRON PIPE WITH "K&K/LIMA" PLUG
- M.S.F.(SET BY KK) EXISTING MAG SPIKE SET BY KK DURING PREVOIUS SURVEY WORK
- M.S.S. PROPOSED MAG SPIKE

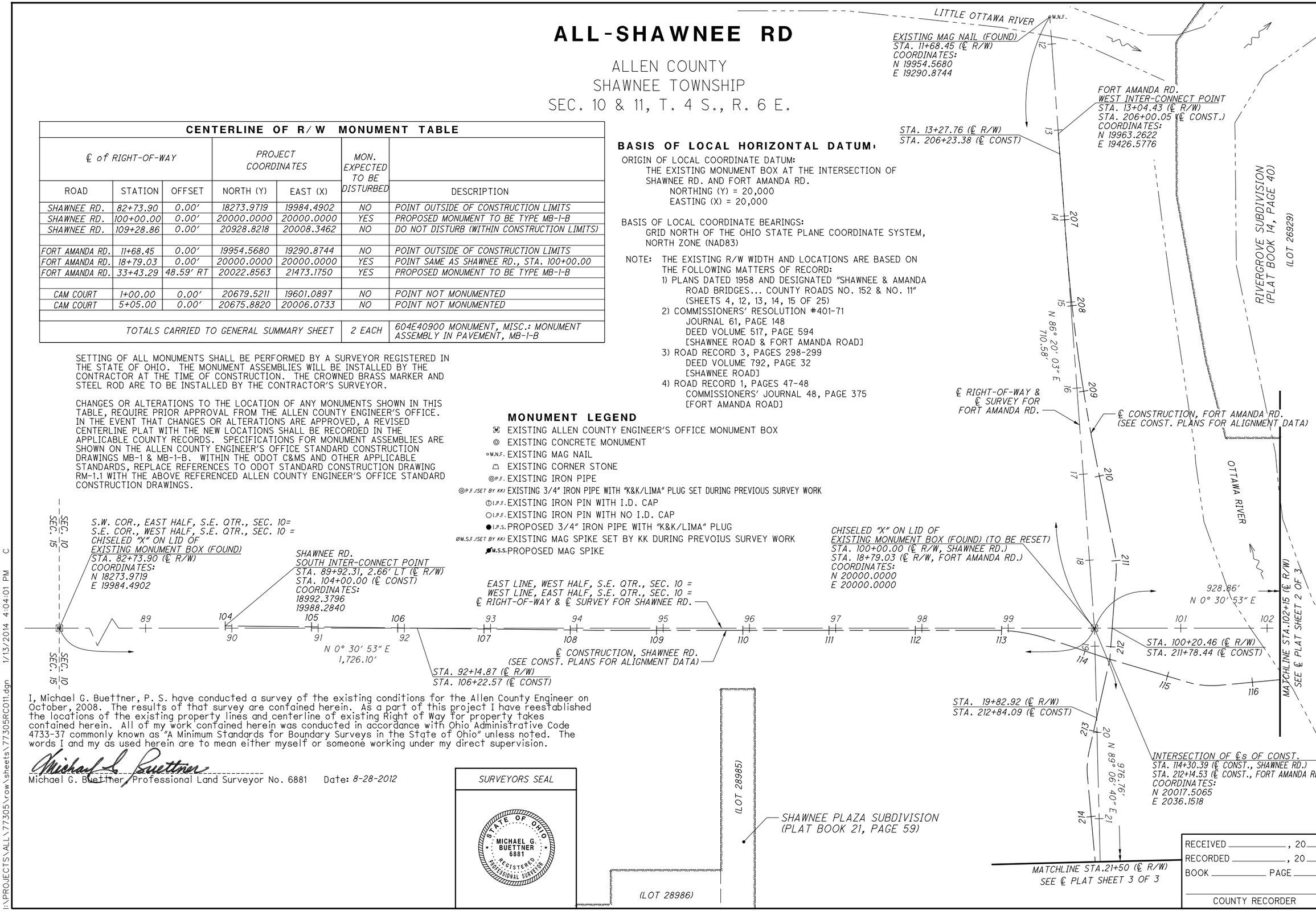

I, Michael G. Buettner, P. S. have conducted a survey of the existing conditions for the Allen County Engineer on October, 2008. The results of that survey are contained herein. As a part of this project I have reestablished the locations of the existing property lines and centerline of existing Right of Way for property takes contained herein. All of my work contained herein was conducted in accordance with Ohio Administrative Code 4733-37 commonly known as "A Minimum Standards for Boundary Surveys in the State of Ohio" unless noted. The words I and my as used herein are to mean either myself or someone working under my direct supervision.

Michael G. Buettner

Michael G. Buettner, Professional Land Surveyor No. 6881 Date: 8-28-2012

SURVEYORS SEAL

STATE OF OHIO
MICHAEL G. BUETTNER
6881
REGISTERED PROFESSIONAL SURVEYOR

RECEIVED _____, 20___
RECORDED _____, 20___
BOOK _____ PAGE _____
COUNTY RECORDER

HORIZONTAL SCALE IN FEET 0 25 50 100

PID NO. 77305

R/W DESIGNER IMK
R/W REVIEWER MGB

CENTERLINE PLAT (SHEET 1 of 3)

ALL-SHAWNEE RD

2/27

181/206

I:\PROJECTS\ALL\77305\row\sheets\77305RC011.dgn 1/13/2014 4:04:01 PM C

ALL-SHAWNEE RD

ALLEN COUNTY
SHAWNEE TOWNSHIP
SEC. 10 & 11, T. 4 S.,R. 6 E.

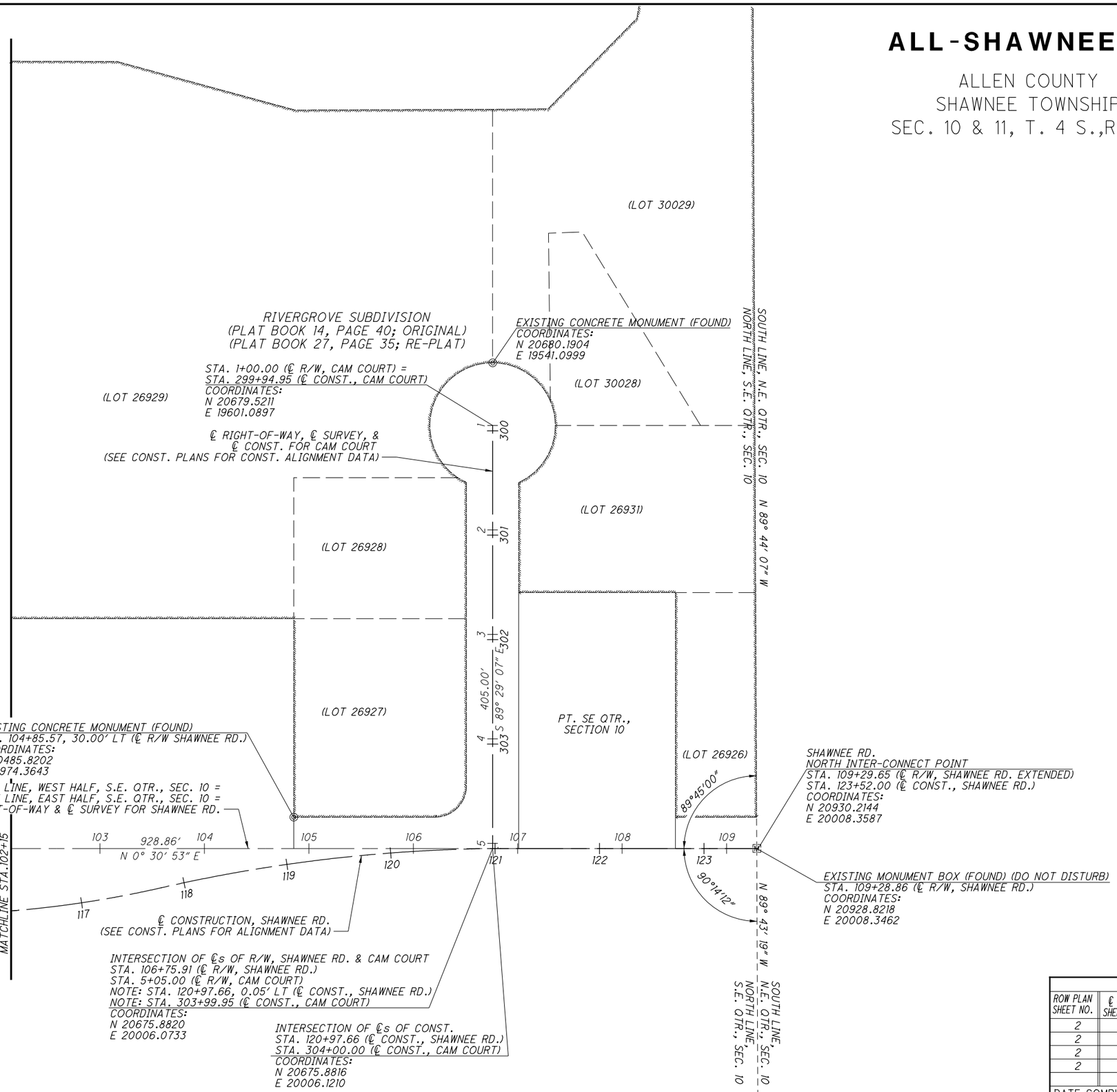

CROSS REFERENCE		
ROW PLAN SHEET NO.	℄ PLAT SHEET NO.	DESCRIPTION
2	1	BASIS OF LOCAL HORIZONTAL DATUM
2	1	℄ OF R/W MONUMENT TABLE
2	1	MONUMENT LEGEND
2	1	SURVEYOR'S CERTIFICATE AND SEAL

DATE COMPLETED 8/28/2012

RECEIVED _____, 20___
RECORDED _____, 20___
BOOK _____ PAGE _____

COUNTY RECORDER

N

HORIZONTAL SCALE IN FEET
0 25 50 100

PID NO. 77305

R/W DESIGNER IMK
R/W REVIEWER MGB

CENTERLINE PLAT
(SHEET 2 OF 3)

ALL-SHAWNEE RD

I:\PROJECTS\ALL\77305\row\sheets\77305RC012.dgn 1/13/2014 4:04:02 PM C

ALL-SHAWNEE RD

ALLEN COUNTY
SHAWNEE TOWNSHIP
SEC. 10 & 11, T. 4 S., R. 6 E.

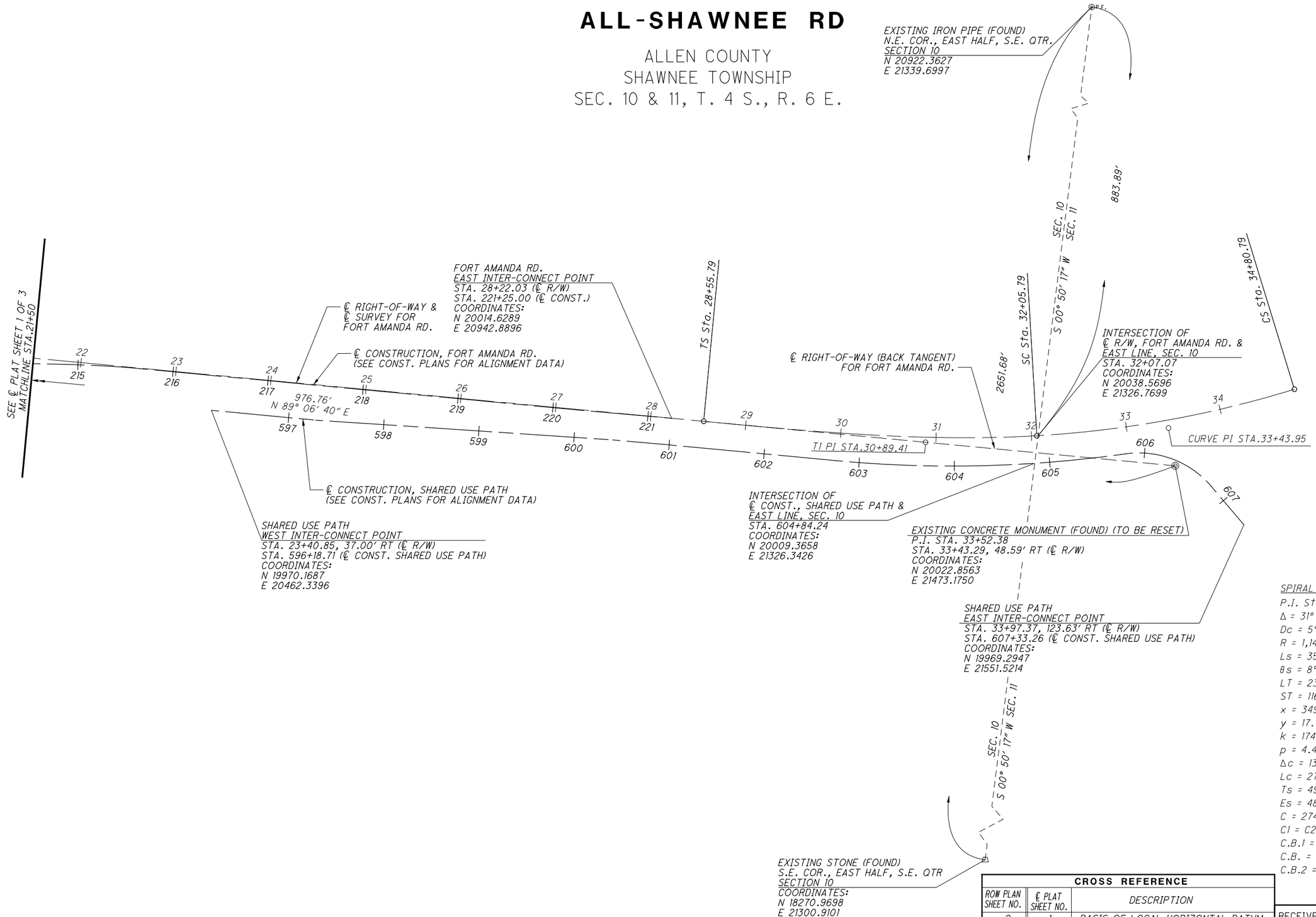

SPIRAL CURVE DATA

P.I. Sta. 33+52.38
Δ = 31° 15' 00" (LT)
Dc = 5° 00' 00"
R = 1,145.92'
Ls = 350.00'
θs = 8° 45' 00"
LT = 233.62'
ST = 116.93'
x = 349.18'
y = 17.79'
k = 174.86'
p = 4.45'
Δc = 13° 45' 00" (LT)
Lc = 275.00'
Ts = 496.59'
Es = 48.59'
C = 274.34'
C1 = C2 = 349.64'
C.B.1 = N 86° 11' 42" E
C.B. = N 73° 29' 10" E
C.B.2 = S 60° 46' 38" W

CROSS REFERENCE

ROW PLAN SHEET NO.	℄ PLAT SHEET NO.	DESCRIPTION
2	1	BASIS OF LOCAL HORIZONTAL DATUM
2	1	℄ OF R/W MONUMENT TABLE
2	1	MONUMENT LEGEND
2	1	SURVEYOR'S CERTIFICATE AND SEAL

DATE COMPLETED 8/28/2012

RECEIVED _____, 20___
RECORDED _____, 20___
BOOK _____ PAGE _____

COUNTY RECORDER

HORIZONTAL SCALE IN FEET 0 25 50 100

PID NO. 77305

R/W DESIGNER IMK
R/W REVIEWER MGB

CENTERLINE PLAT (SHEET 3 OF 3)

ALL-SHAWNEE RD

I:\PROJECTS\ALL\77305\row\sheets\77305RC021.dgn 1/13/2014 4:04:03 PM C

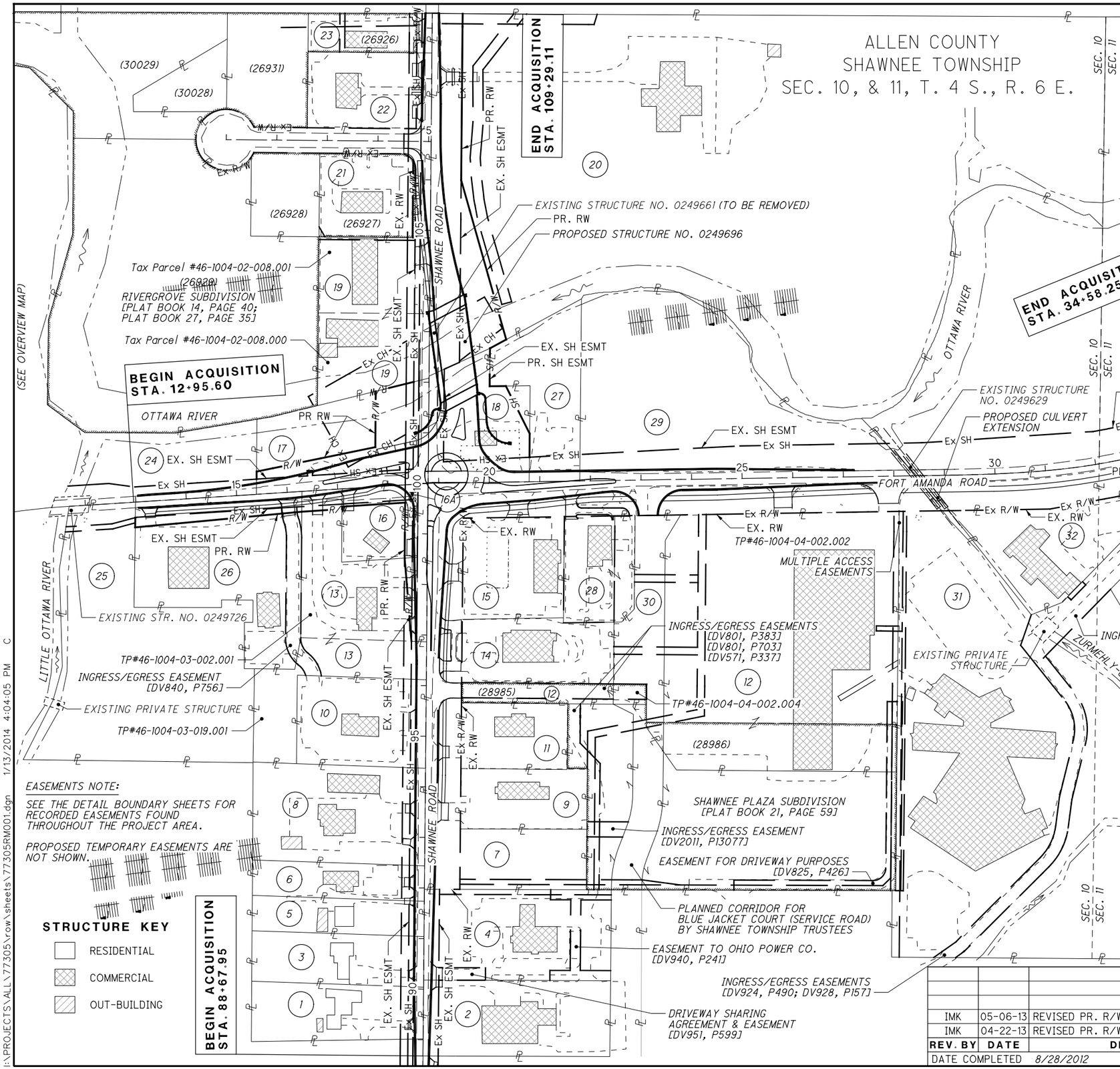

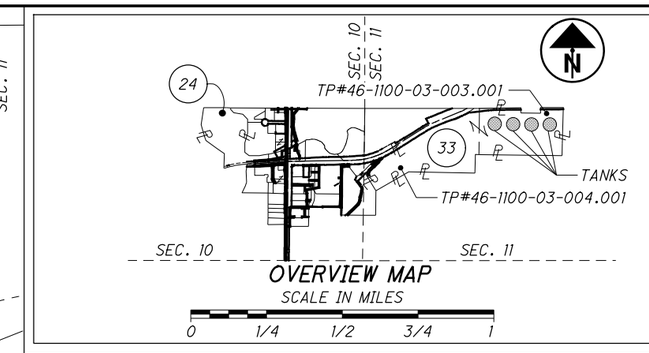

NO.	OWNERSHIP NAME
1	MELVIN D. SNIDER AND JANICE J. SNIDER, TRUSTEES
2	MARK A. HOOPS
3	GREGG L. QUERRY
4	FIRST FEDERAL BANK OF THE MIDWEST
5	RICHARD W. McPHERON AND MAUREEN A. McPHERON
6	FEE SIMPLE ENTERPRISES LLC
7	RUSH PROPERTIES LLC
8	MICHAEL E. LASOVAGE AND PATRICIA A. LASOVAGE
9	BOB RHODES COMPANY
10	SOUTHLIGHT INTERNATIONAL INC.
11	C & C PROPERTY MANAGEMENT LLC
12	HIGH TIME HABU COMPANY
13	FIFTH THIRD BANK, a.k.a. FIFTH THIRD BANK OF WESTERN OHIO
14	FRANCHISE REALTY INTERSTATE CORPORATION
15	F.W. ENGLEFIELD III, F.W. ENGLEFIELD IV, AND B.B. ENGLEFIELD
16	MARATHON ASHLAND PETROLEUM LLC
16A	MARATHON OIL COMPANY, SUCCESSOR TO OHIO OIL COMPANY
17	VIRGINIA LOUISE GUAGENTI
18	FISCA OIL INC
19	WARREN R. WHITE, TRUSTEE (1/2 INT.); KAREN WHITE RAGER, CO-TRUSTEE (1/4 INT.); LINDA WHITE PENNINGTON, CO-TRUSTEE (1/4 INT.)
20	TRUSTEES OF THE PRESBYTERY OF MAUMEE, INCORPORATED
21	SHAWNEE RD. REALTY, INC.
22	NORMA A. RICHARDSON AND KENNETH E. RICHARDSON, TRUSTEES (1/2 INT.); BETTY N. POHL (1/4 INT.); RHONDA POHL (REMAINDER-PERSON FOR FRANCES POHL, LIFE ESTATE)(1/4 INT.)
23	WRIGHT BURKHOLDER LAND HOLDINGS LLC
24	SHAWNEE COUNTRY CLUB
25	SHAWNEE CROSSING LLC
26	SHAWNEE CROSSING CONDOMINIUM
27	METZ VETZ FACILITIES, LLC
28	METROPOLITAN BANK OF LIMA, OHIO, n.k.a. BANK ONE LIMA
29	ALLEN COUNTY BOARD OF COMMISSIONERS
30	SHAWNEE TOWNSHIP TRUSTEES
31	HCF REALTY OF SHAWNEE, INC.
32	HCF COMMERCIAL REALTY, INC.
33	LIMA REFINING COMPANY c/o HUSKY ENERGY

REV. BY	DATE	DESCRIPTION
IMK	05-06-13	REVISED PR. R/W TO SH AT PARCEL 31
IMK	04-22-13	REVISED PR. R/W TO SH AT PARCEL 18

DATE COMPLETED 8/28/2012

HORIZONTAL SCALE IN FEET 0 50 100 200

PID NO. 77305

R/W DESIGNER IMK
R/W REVIEWER MGB

PROPERTY MAP

ALL-SHAWNEE RD.

I:\PROJECTS\ALL\77305\row\sheets\77305RM001.dgn 1/13/2014 4:04:05 PM C

TOTAL NUMBER OF :

25 OWNERSHIPS 1 TOTAL TAKES

34 PARCELS 1 OWNERSHIPS W/ STRUCTURES INVOLVED

NET TAKE = GROSS TAKE - PRO IN TAKE

NET RESIDUE = RECORD AREA - TOTAL PRO - NET TAKE

ALL AREAS IN ACRES

GRANTEE:

ALL RIGHT OF WAY ACQUIRED IN THE NAME OF BOARD OF COUNTY COMMISSIONERS OF ALLEN COUNTY, OHIO UNLESS OTHERWISE SHOWN.

(SHEET 1 OF 3)

PARCEL NO.	OWNER	SHEET NO.	OWNERS RECORD	AUDITOR'S PARCEL	RECORD AREA	TOTAL P.R.O.	GROSS TAKE	P.R.O. IN TAKE	NET TAKE	STRUCTURE	NET RESIDUE LEFT	NET RESIDUE RIGHT	TYPE FUND	REMARKS	AS ACQUIRED BOOK	AS ACQUIRED PAGE
1	MELVIN D. SNIDER AND															
	JANICE J. SNIDER, TRUSTEES	10, 11	DV868, P856	46-1004-03-015.000	0.781	0.069							FEDERAL	NO ADDITIONAL R/W REQUIRED		
2-T	MARK A. HOOPS	10, 11	DV916, P615	46-1004-04-006.003	1.270	0.103	0.034	0	0.034					FOR GRADING OF DRIVEWAY AND MAINTAINING TRAFFIC		
3	GREGG L. QUERRY	10, 11	DV926, P376	46-1004-03-016.000	0.781	0.069								NO ADDITIONAL R/W REQUIRED		
4-T	FIRST FEDERAL BANK OF THE MIDWEST	10, 11	DV944, P731	46-1004-04-006.000	1.520	0.124	0.062	0	0.062					FOR GRADING OF DRIVEWAY AND MAINTAINING TRAFFIC		
5-T	RICHARD W. McPHERON	10, 11	DV620, P680	46-1004-03-017.000	0.546	0.048	0.024	0	0.024					FOR GRADING OF DRIVEWAY		
	AND MAUREEN A. McPHERON															
6-T	FEE SIMPLE ENTERPRISES LLC	10, 11	ORV2007, P58	46-1004-03-018.000	0.560	0.048	0.024	0	0.024					FOR GRADING OF DRIVEWAY		
7	RUSH PROPERTIES LLC	10-13	DV954, P677	46-1004-04-002.001	0.690	0								NO ADDITIONAL R/W REQUIRED		
8-T	MICHAEL E. LASOVAGE	10-13	DV783, P597	46-1004-03-019.000	1.510	0.133	0.066	0	0.066					FOR GRADING OF DRIVEWAY		
	AND PATRICIA A. LASOVAGE													* SIGNS (2)		
														GROUND LUMINAIRE FOR SIGN		
9	BOB RHODES COMPANY	12, 13	DV801, P699	46-1004-04-002.000	0.680	0								NO ADDITIONAL R/W REQUIRED		
														* IN-GROUND SPRINKLER SYSTEM & *2.5" DIA. STEEL POSTS (3)		
10-T	SOUTHLIGHT INTERNATIONAL INC.	12, 13	ORV2010, P5907	46-1004-03-019.002	1.020	0.121	0.010	0	0.010					FOR GRADING OF DRIVEWAY		
11	C & C PROPERTY MANAGEMENT LLC	12, 13	DV953, P923	46-1004-04-002.003	0.630	0								NO ADDITIONAL R/W REQUIRED		
12	HIGH TIME HABU COMPANY	12,13,22-25	ORV2010, P855	46-1004-04-002.004	0.331	0								NO ADDITIONAL R/W REQUIRED		
			ORV2010, P855	46-1004-04-002.002	6.050	0								*SIGNS (3)		
				TOTAL	6.381	0										
13-WD1	FIFTH THIRD BANK, a.k.a.	12-15	DV790, P683	46-1004-03-002.001	1.050	0.055	0.028	0	0.028	S				"ENTER" SIGN		
13-WD2	FIFTH THIRD BANK OF WESTERN OHIO	14,15,20,21		46-1004-03-002.001			0.073	0.055	0.018	S	0.949			"ATM & DRIVE THRU" SIGN & ELECTRICAL BOX		
			ORV2006, P6896	46-1004-03-019.001	0.800	0.052	0	0	0		0.748					
				TOTAL	1.850	0.107	0.101	0.055	0.046		1.697					
13-T1		12-15				0	0.073	0	0.073					FOR GRADING OF DRIVEWAY		
13-T2		14,15,20,21				0	0.021	0	0.021					FOR GRADING OF DRIVEWAY		
14	FRANCHISE REALTY INTERSTATE CORPORATION	12, 13	DV571, P337	46-1004-04-005.000	0.860	0							FEDERAL	NO ADDITIONAL R/W REQUIRED		
														*IN-GROUND SPRINKLER SYSTEM & *LANDSCAPING		

TYPES OF TITLE LEGEND:
WD = WARRANTY DEED
T = TEMPORARY EASEMENT

NOTE: UNDER NO CIRCUMSTANCES ARE TEMPORARY EASEMENTS TO BE USED FOR STORAGE OF MATERIAL OR EQUIPMENT BY THE CONTRACTOR UNLESS NOTED OTHERWISE.

NOTE: ALL TEMPORARY PARCELS TO BE OF 24 MONTH DURATION.

NOTE: * DENOTES RIGHT OF WAY ENCROACHMENT

SUMMARY OF OVERLAP AREAS

PARCEL NO.	AREA OF OVERLAP BETWEEN NET TAKE & EXISTING EASEMENTS	PARCEL NO.	AREA OF OVERLAP BETWEEN NET TAKE & EXISTING EASEMENTS
4-T	DRIVEWAY SHARING AGREEMENT AND EASEMENT (DV951, P599) = 0.006 AC	10-T	EASEMENT FOR ELECTRIC LINES (DV219, P414) = 0.010 AC
	10 FT EASEMENT TO UTelCo. (DV952, P777) = 0.005 AC		
		13-WD1	EASEMENT FOR ELECTRIC LINES (DV219, P412) = 0.028 AC
5-T	EASEMENT FOR ELECTRIC LINES (LV44, P321) = 0.024 AC		
		13-T1	EASEMENT FOR ELECTRIC LINES (DV219, P412 & DV219, P414) = 0.054 AC
6-T	EASEMENT FOR ELECTRIC LINES (LV44, P321) = 0.024 AC		
8-T	EASEMENT FOR ELECTRIC LINES (DV219, P414) = 0.066 AC		

REV. BY	DATE	DESCRIPTION

FIELD REVIEW BY MGB DATE: 8/28/2012

OWNERSHIP VERIFIED BY IMK DATE: 8/28/2012

DATE COMPLETED 8/28/2012

FEDERAL PROJECT NO. E040(587)

PID NO. 77305

STATE JOB NO. 416364

R/W DESIGNER IMK

R/W REVIEWER MGB

SUMMARY OF ADDITIONAL RIGHT OF WAY (PARCELS 1 THRU 14)

ALL-SHAWNEE RD

I:\PROJECTS\ALL\77305\row\sheets\77305RS001.dgn 1/13/2014 4:04:07 PM C

NET TAKE = GROSS TAKE - PRO IN TAKE
NET RESIDUE = RECORD AREA - TOTAL PRO - NET TAKE

ALL AREAS IN ACRES

GRANTEE:
ALL RIGHT OF WAY ACQUIRED IN THE NAME OF
BOARD OF COUNTY COMMISSIONERS OF ALLEN COUNTY, OHIO
UNLESS OTHERWISE SHOWN.

(SHEET 2 OF 3)

PARCEL NO.	OWNER	SHEET NO.	OWNERS RECORD	AUDITOR'S PARCEL	RECORD AREA	TOTAL P.R.O.	GROSS TAKE	P.R.O. IN TAKE	NET TAKE	STRUC-TURE	NET RESIDUE LEFT	NET RESIDUE RIGHT	TYPE FUND	REMARKS	AS ACQUIRED BOOK	AS ACQUIRED PAGE
15-T	F.W. ENGLEFIELD III, F.W. ENGLEFIELD IV,	14,15,22,23	DV904, P137	46-1004-04-004.000	0.920	0	0.007	0	0.007				FEDERAL	FOR ROADSIDE GRADING		
	AND B.B. ENGLEFIELD													*3.5" DIA. UTILITY POLE, *GROUND LUMINAIRE, & *MONITORING WELL		
16-WD	MARATHON ASHLAND PETROLEUM LLC	14, 15	DV895, P583	46-1004-03-002.000	0.420	0.086	0.100	0.086	0.014	YES	0.320			SUBJECT TO ENVIRONMENTAL COVENANT (O.R. VOL.2009, P11696)		
														LIGHT POLE, 3.5" DIA. UTILITY POLE, STEEL POSTS (2), &		
														MONITORING WELLS (2)		
16-T		14, 15					0.069	0	0.069					FOR GRADING AND MAINTAINING TRAFFIC		
16A-WD	MARATHON OIL COMPANY, SUCCESSOR TO	14, 15	DV400, P262	46-1004-03-001.000	0.083(m)	0.044	0.083	0.044	0.039		0.000			COUNTY AUDITOR'S RECORD AREA = 0.080 AC		
	OHIO OIL COMPANY													TOTAL TAKE		
17-WD	VIRGINIA LOUISE GUAGENTI	14,15,20,21	DV807, P123	46-1004-02-007.000	1.379(m)	0.361	0.810	0.361	0.449	YES	0.569			EXISTING DRIVE		
17-E		14,15,20,21					0.569	0	0.569							
18-SH	FISCA OIL INC	14, 15	DV602, P1	46-1004-01-002.000	1.194	0.327	0.953	0.327	0.626	YES		0.241		*SIGN, *LIGHT POLES (2), *3.5" DIA. UTILITY POLE, *STEEL		
														POST, *MONITORING WELLS (2), & *GUARDRAIL (69 FT)		
														BUILDING, UTILITY POLE, STEEL POSTS (3),		
														CHAINLINK FENCE (30 FT), HVAC UNIT, AC UNIT,		
														SERVICE PUMPS (2), CANOPY STRUCTURE, UNDERGROUND TANKS,		
														MONITORING WELLS (5), EXISTING DRIVES (3),		
														GUARDRAIL (8 FT) & TREES (14)		
19-T1	WARREN R. WHITE, TRUSTEE (1/2 INT.);	14-17	DV800, P459	46-1004-02-008.000	0.784	0.090	0.033	0	0.033					FOR BRIDGE WORK		
	KAREN WHITE RAGER, CO-TRUSTEE (1/4 INT.);		ORV2009, P3057	46-1004-02-008.001	0.760	0.104								*PARKING SPACES (EASTERNMOST ±1 FT OF PAVEMENT)		
	LINDA WHITE PENNINGTON, CO-TRUSTEE (1/4 INT.)															
19-T2		16-17					0.018	0	0.018					FOR GRADING OF DRIVEWAY AND ROADSIDE WORK		
														*SIGNS (2)		
														EXISTING DRIVE		
20-WD	TRUSTEES OF THE PRESBYTERY	14-19	DV399, P126	46-1004-01-001.000	16.710	0.968	1.350	0.968	0.382			15.360		TREES OUTSIDE OF CHANNEL EASEMENT (3)		
	OF MAUMEE, INCORPORATED															
21-WD	SHAWNEE RD. REALTY, INC.	16-17	DV809, P613	46-1004-02-011.000	0.722	0	0.017	0	0.017		0.705					
21-T		16-17					0.038	0	0.038					FOR ROADSIDE GRADING		
														BUSHES (2)		
22-T	NORMA A. RICHARDSON AND KENNETH E. RICHARDSON,	16-19	ORV2010, P264	46-1004-02-002.000	0.850	0.103	0.052	0	0.052					FOR GRADING OF DRIVEWAYS AND ROADSIDE WORK		
	TRUSTEES (1/2 INT.); BETTY N. POHL (1/4 INT.);		DV511, P53											*SIGN & *LANDSCAPING INCLUDING BUSHES		
	RHONDA POHL (REMAINDER-PERSON FOR FRANCES		DV652, P842													
	POHL, LIFE ESTATE)(1/4 INT.)															
23-T	WRIGHT BURKHOLDER LAND HOLDINGS LLC	18, 19	ORV2008, P7860	46-1004-02-001.000	0.380	0	0.036	0	0.036				FEDERAL	FOR GRADING OF DRIVEWAY		
														*SIGN		

TYPES OF TITLE LEGEND:
WD = WARRANTY DEED
SH = STANDARD HIGHWAY EASEMENT
T = TEMPORARY EASEMENT

NOTE: UNDER NO CIRCUMSTANCES ARE TEMPORARY EASEMENTS TO BE USED FOR STORAGE OF MATERIAL OR EQUIPMENT BY THE CONTRACTOR UNLESS NOTED OTHERWISE.

NOTE: ALL TEMPORARY PARCELS TO BE OF 24 MONTH DURATION.

NOTE: FOR NOTES PERTAINING TO MAINTAINING ACCESS (PARCELS 15 & 28) AND PARKING DISRUPTION LIMITATIONS (PARCELS 19 & 23), SEE MAINTENANCE OF TRAFFIC GENERAL NOTES SHEET 11/206.

NOTE: (m) = MEASURED AREA
* DENOTES RIGHT OF WAY ENCROACHMENT

SUMMARY OF OVERLAP AREAS

PARCEL NO.	AREA OF OVERLAP BETWEEN NET TAKE & EXISTING EASEMENTS
16A-WD	EASEMENT FOR ELECTRIC LINES (DV219, P412) = 0.039 AC WITH NET TAKE
	NOTE: EASEMENT FOR ELECTRIC LINES (DV219, P412) = 0.044 AC WITHIN PRO
17-WD	CHANNEL EASEMENT (CJ48, P261) = 0.179 AC
	EASEMENT FOR ELECTRIC LINES (DV219, P412) = 0.059 AC WITH NET TAKE
	NOTE: EASEMENT FOR ELECTRIC LINES (DV219, P412) = 0.057 AC WITHIN PRO
	BLANKET EASEMENT TO BUCKEYE PIPE LINE COMPANY (DV693, P283)
17-E	CHANNEL EASEMENT (CJ48, P261) = 0.237 AC
	BLANKET EASEMENT TO BUCKEYE PIPE LINE COMPANY (DV693, P283)
18-SH	BLANKET EASEMENTS TO UTILITIES (DV693, P283; DV362, P131; DV496, P203)
19-T1	EASEMENT FOR ELECTRIC LINES (LV44, P321) = 0.033 AC

PARCEL NO.	AREA OF OVERLAP BETWEEN NET TAKE & EXISTING EASEMENTS
19-T2	EASEMENT FOR ELECTRIC LINES (LV44, P321) = 0.018 AC
	EASEMENT FOR U.TEL.CO.(DV811, P585) = 0.001 AC
20-WD	CHANNEL EASEMENT (PARCEL 9∇) = 0.141 AC
21-WD	EASEMENT FOR ELECTRIC LINES (LV44, P321) = 0.017 AC
21-T	EASEMENT FOR ELECTRIC LINES (LV44, P321) = 0.036 AC
22-T	EASEMENT FOR ELECTRIC LINES (LV44, P321) = 0.051 AC
23-T	EASEMENT FOR ELECTRIC LINES (LV44, P321) = 0.027 AC
	EASEMENT FOR SANITARY SEWER LINE (DV579, P754) = 0.014 AC

∇ BASED ON PLANS DATED 1958 AND DESIGNATED "SHAWNEE & AMANDA ROAD BRIDGES... COUNTY ROADS NO. 152 & NO. 11"

REV. BY	DATE	DESCRIPTION
IMK	01-20-14	ADDED PARCEL 17E
IMK	01-14-14	ADDED NOTE TO REFERENCE MOT NOTES
IMK	09-26-13	ADDED *SIGN TO PARCEL 18 REMARKS
IMK	04-22-13	REVISED PR. RW TO SH AT PARCEL 18

FIELD REVIEW BY *MGB* DATE: *8/28/2012*
OWNERSHIP VERIFIED BY *IMK* DATE: *8/28/2012*
DATE COMPLETED *8/28/2012*

FEDERAL PROJECT NO. E040(587)
PID NO. 77305
STATE JOB NO. 416364
R/W DESIGNER IMK
R/W REVIEWER MGB

SUMMARY OF ADDITIONAL RIGHT OF WAY (PARCELS 15 THRU 23)

ALL-SHAWNEE RD

I:\PROJECTS\ALL\77305\row\sheets\77305RS002.dgn 1/22/2014 10:24:13 AM C

NET TAKE = GROSS TAKE - PRO IN TAKE
NET RESIDUE = RECORD AREA - TOTAL PRO - NET TAKE

ALL AREAS IN ACRES

GRANTEE:
ALL RIGHT OF WAY ACQUIRED IN THE NAME OF
BOARD OF COUNTY COMMISSIONERS OF ALLEN COUNTY, OHIO
UNLESS OTHERWISE SHOWN.

(SHEET 3 OF 3)

PARCEL NO.	OWNER	SHEET NO.	OWNERS RECORD	AUDITOR'S PARCEL	RECORD AREA	TOTAL P.R.O.	GROSS TAKE	P.R.O. IN TAKE	NET TAKE	STRUC-TURE	NET RESIDUE LEFT	NET RESIDUE RIGHT	TYPE FUND	REMARKS	AS ACQUIRED BOOK	AS ACQUIRED PAGE
24-T	SHAWNEE COUNTRY CLUB	20, 21	DV766, P267	46-1004-02-005.000	14.510	0.553	0.083	0	0.083				FEDERAL	FOR ROADSIDE GRADING		
25	SHAWNEE CROSSING LLC	20, 21	ORV. 2007, P.1997	46-1004-03-003.000	3.452	0.117								NO ADDITIONAL R/W REQUIRED		
26-WD	SHAWNEE CROSSING LLC,	20, 21	ORV2006, P8035	46-1004-03-003.501	1.926	0.227	0.341	0.227	0.114	S(2)		1.585		"BURGER KING" SIGN, SIGN WITH ILLUMINATION, & A TREE		
	SHAWNEE CROSSING CONDOMINIUM ASSOCIATION		ORV2006, P8036	46-1004-03-003.502												
			ORV2007, P16242	46-1004-03-003.504												
			ORV2009, P5025	46-1004-03-003.505												
				46-1004-03-003.506												
26-T		20, 21					0.057	0	0.057					FOR GRADING OF DRIVEWAY AND ROADSIDE WORK		
27-T	METZ VETZ FACILITIES, LLC	14,15,22,23	ORV2012, P493	46-1004-01-003.000	0.940	0.116	0.061	0	0.061	YES				FOR CONSTRUCTING PROPOSED STRUCTURE		
														*POST W/ ADDRESS SIGN		
														TREES (2) & EXISTING DRIVE		
28-T	METROPOLITAN BANK OF LIMA, OHIO,	22, 23	DV626, P267	46-1004-04-003.000	0.670	0	0.032	0	0.032	YES				FOR GRADING OF DRIVEWAY		
	n.k.a. BANK ONE LIMA		DV780, P28											*SIGNS (2) & *LIGHT POLE		
														EXISTING DRIVE		
29	ALLEN COUNTY BOARD OF COMMISSIONERS	22-25	DV62, P597	46-1004-01-004.000	4.350	0.898								NO ADDITIONAL R/W REQUIRED		
			DV66, P523													
30-T	SHAWNEE TOWNSHIP TRUSTEES	22, 23	ORV2012, P3765	46-1004-04-002.007	0.743	0	0.020	0	0.020	YES				FOR GRADING OF ACCESS DRIVE		
														LIGHT POLE		
31-SH	HCF REALTY OF SHAWNEE, INC.	26, 27	DV924, P478	46-1004-04-001.002	10.370	0	0.049	0	0.049			10.321		*LIGHT POLE, *LANDSCAPING, *RETAINING WALL (26 FT),		
			DV928, P160											*SIGN WITH ILLUMINATION, *SIGN, *GROUND LUMINAIRE FOR		
														SIGN, *FLAG POLE, *GROUND LUMINAIRE FOR FLAG POLE, &		
														*BUSHES (±6)		
31-T1		24, 25					0.051	0	0.051					FOR CONSTRUCTION OF CULVERT EXTENSION		
														*SIGN		
														TREES (3) & A STUMP		
31-T2		26, 27					0.027	0	0.027					FOR GRADING OF SITE TO DRAIN		
														TREES (5)		
32-T	HCF COMMERCIAL REALTY, INC.	24, 25	DV924, P485	46-1004-04-001.000	1.160	0	0.015	0	0.015					FOR CONSTRUCTION OF CULVERT EXTENSION		
														A TREE		
33-T	LIMA REFINING COMPANY c/o HUSKY ENERGY	26, 27	ORV2007, P4672	46-1100-03-004.001	31.340	0.310	0.069	0	0.069					FOR CONSTRUCTING SHARED USE PATH AND GRADING		
			ORV2007, P4672	46-1100-03-003.001	26.687	0.840	0	0	0					A TREE		
				TOTAL	58.027	1.150	0.069	0	0.069				FEDERAL			

TYPES OF TITLE LEGEND:
WD = WARRANTY DEED
SH = STANDARD HIGHWAY EASEMENT
T = TEMPORARY EASEMENT

NOTE: UNDER NO CIRCUMSTANCES ARE TEMPORARY EASEMENTS TO BE USED FOR STORAGE OF MATERIAL OR EQUIPMENT BY THE CONTRACTOR UNLESS NOTED OTHERWISE.

NOTE: FOR NOTES PERTAINING TO MAINTAINING ACCESS (PARCELS 15 & 28) AND PARKING DISRUPTION LIMITATIONS (PARCELS 19 & 23), SEE MAINTENANCE OF TRAFFIC GENERAL NOTES SHEET 11/206.

NOTE: ALL TEMPORARY PARCELS TO BE OF 24 MONTH DURATION.

NOTE: * DENOTES RIGHT OF WAY ENCROACHMENT

SUMMARY OF OVERLAP AREAS

PARCEL NO.	AREA OF OVERLAP BETWEEN NET TAKE & EXISTING EASEMENTS	PARCEL NO.	AREA OF OVERLAP BETWEEN NET TAKE & EXISTING EASEMENTS
24-T	BLANKET EASEMENT TO BUCKEYE PIPE LINE COMPANY (DV693, P283)	31-SH	INGRESS/EGRESS EASEMENT (DV928, P160 & DV593, P825) = 0.049 AC
26-WD	INGRESS/EGRESS EASEMENT (DV840, P756) = 0.007 AC	31-T2	INGRESS/EGRESS EASEMENT (DV928, P160 & DV593, P825) = 0.027 AC
26-T	INGRESS/EGRESS EASEMENT (DV840, P756) = 0.010 AC	33-T	WALKWAY EASEMENT TO J.A.M.P.(DV782, P774) = 0.069 AC
27-T	BLANKET EASEMENTS TO UTILITIES (DV118, P148; DV362, P131; DV496, P203)		

REV. BY	DATE	DESCRIPTION
IMK	1-14-14	ADDED NOTE TO REFERENCE MOT NOTES
IMK	11-21-13	REVISED PARCELS 25 & 26-WD
IMK	05-06-13	REVISED PR. R/W TO SH AT PARCEL 31

FIELD REVIEW BY MGB DATE: 8/28/2012
OWNERSHIP VERIFIED BY IMK DATE: 8/28/2012
DATE COMPLETED 8/28/2012

FEDERAL PROJECT NO. E040(587)
PID NO. 77305
STATE JOB NO. 416364
R/W DESIGNER IMK
R/W REVIEWER MGB

SUMMARY OF ADDITIONAL RIGHT OF WAY
(PARCELS 24 THRU 33)

ALL-SHAWNEE RD

I:\PROJECTS\ALL\77305\row\sheets\77305RS003.dgn 1/14/2014 9:23:36 AM C

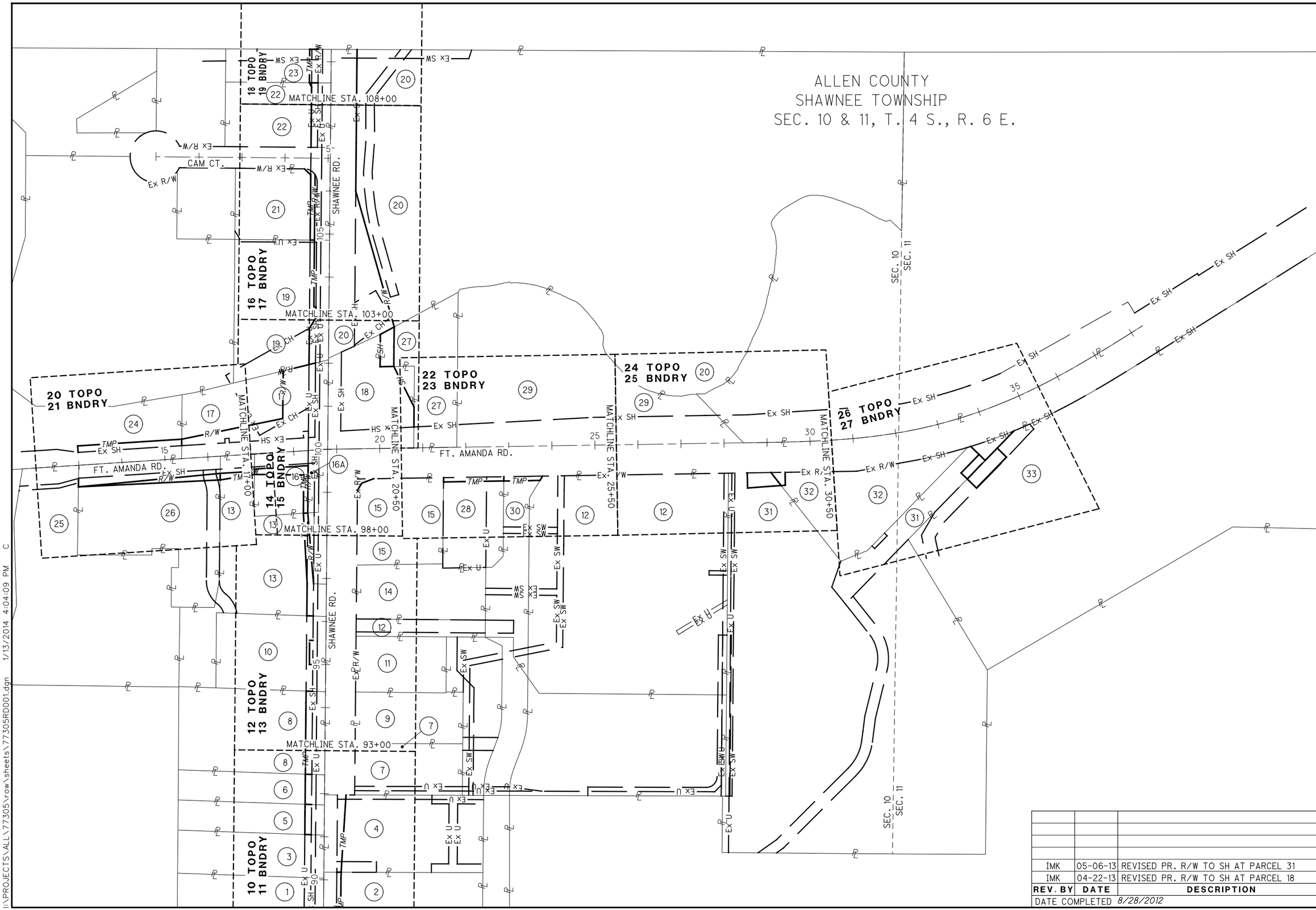

REV. BY	DATE	DESCRIPTION
IMK	05-06-13	REVISED PR. R/W TO SH AT PARCEL 31
IMK	04-22-13	REVISED PR. R/W TO SH AT PARCEL 18

DATE COMPLETED 8/28/2012

PID NO. 77305

R/W DESIGNER IMK

R/W REVIEWER MGB

RIGHT OF WAY PLAN SCHEMATIC
FOR DETAIL SHEETS

ALL-SHAWNEE RD

I:\PROJECTS\ALL\77305\row\sheets\77305RD001.dgn 1/13/2014 4:04:09 PM C

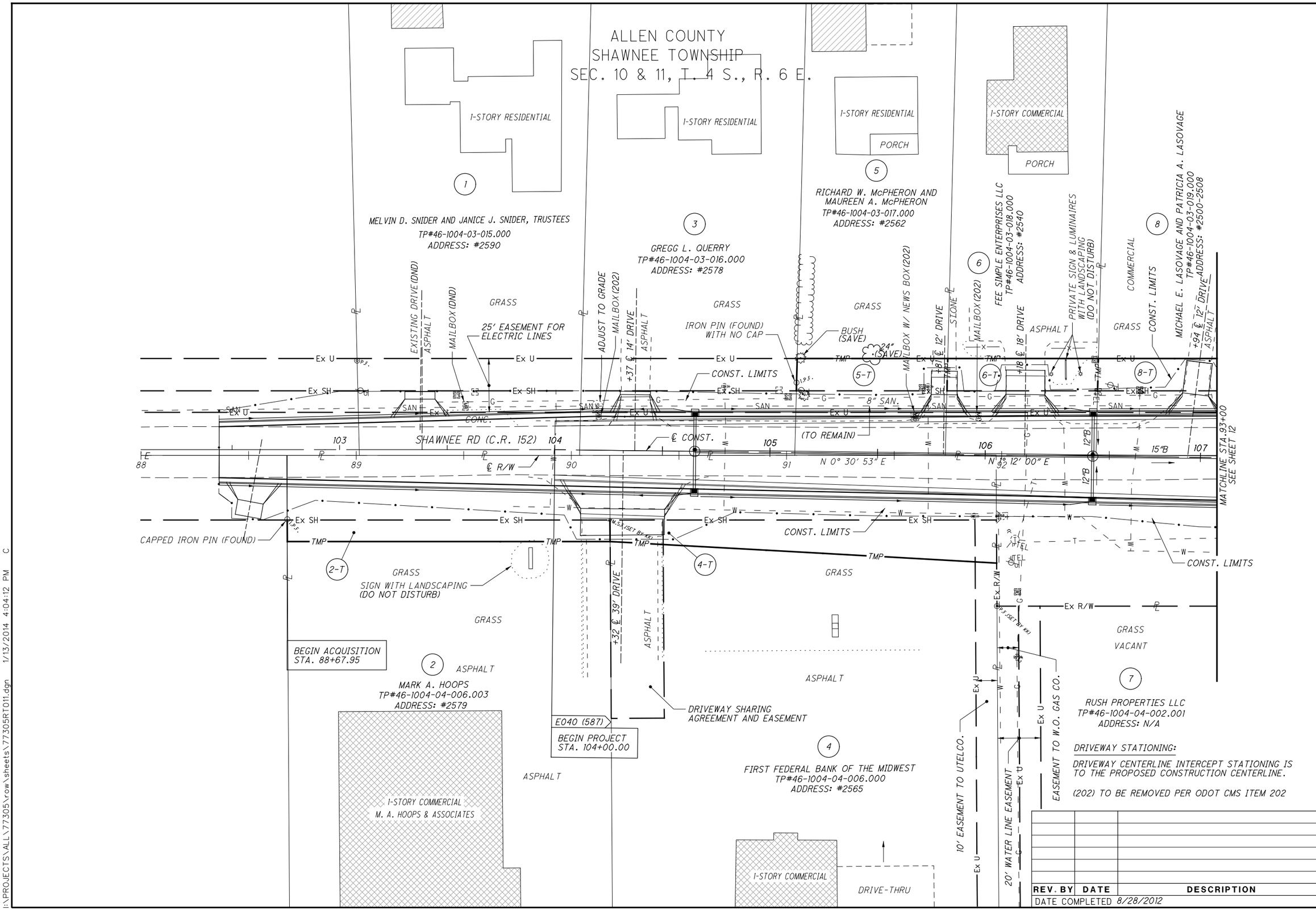

DRIVEWAY STATIONING:

DRIVEWAY CENTERLINE INTERCEPT STATIONING IS TO THE PROPOSED CONSTRUCTION CENTERLINE.

(202) TO BE REMOVED PER ODOT CMS ITEM 202

REV. BY	DATE	DESCRIPTION

DATE COMPLETED 8/28/2012

HORIZONTAL SCALE IN FEET 0 10 20 40

PID NO. 77305

R/W DESIGNER IMK
R/W REVIEWER MGB

RIGHT OF WAY TOPOGRAPHY PLAN
SHAWNEE ROAD
BEGIN ACQUISITION TO STA. 93+00

ALL-SHAWNEE RD

10/27

189/206

I:\PROJECTS\ALL\77305\row\sheets\77305RT011.dgn 1/13/2014 4:04:12 PM C

ALLEN COUNTY
SHAWNEE TOWNSHIP
SEC. 10 & 11, T. 4 S., R. 6 E.

P.O.B. SUMMARY TABLE			
REF.	PARCEL	GROSS TAKE	ROW SHEET
A	2-T	0.034 AC	11
B	4-T	0.062 AC	11
C	5-T	0.024 AC	11
D	6-T	0.024 AC	11
E	8-T	0.066 AC	11

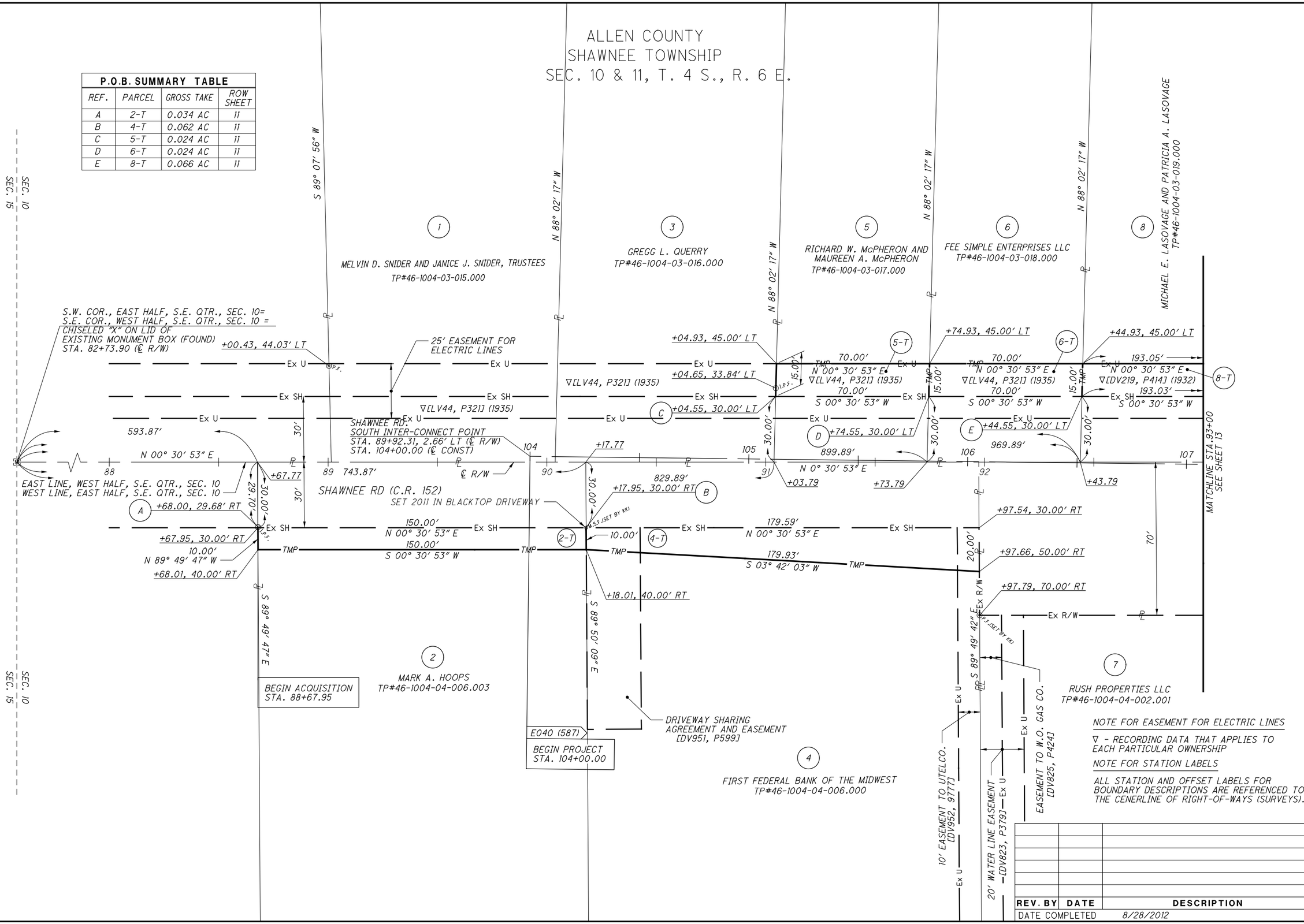

NOTE FOR EASEMENT FOR ELECTRIC LINES

▽ - RECORDING DATA THAT APPLIES TO EACH PARTICULAR OWNERSHIP

NOTE FOR STATION LABELS

ALL STATION AND OFFSET LABELS FOR BOUNDARY DESCRIPTIONS ARE REFERENCED TO THE CENERLINE OF RIGHT-OF-WAYS (SURVEYS).

REV. BY	DATE	DESCRIPTION

DATE COMPLETED 8/28/2012

HORIZONTAL SCALE IN FEET 0 10 20 40

PID NO. 77305

R/W DESIGNER IMK
R/W REVIEWER MGB

RIGHT OF WAY BOUNDARY PLAN
SHAWNEE ROAD
BEGIN ACQUISITION TO STA. 93+00

ALL-SHAWNEE RD

11 / 27

190 / 206

I:\PROJECTS\ALL\77305\row\sheets\77305RB011.dgn 1/13/2014 4:04:13 PM C

ALLEN COUNTY
SHAWNEE TOWNSHIP
SEC. 10 & 11, T. 4 S., R. 6 E.

PORCH
2 STORY COMMERCIAL
MULTIPLE BUSINESSES
1 STORY COMMERCIAL
1 STORY COMMERCIAL BURGER KING

(8)
MICHAEL E. LASOVAGE AND PATRICIA A. LASOVAGE
TP#46-1004-03-019.000
ADDRESS: #2500-#2508

(10)
SOUTHLIGHT INTERNATIONAL INC.
TP#46-1004-03-019.002
ADDRESS: #2490

(13)
FIFTH THIRD BANK, a.k.a.
FIFTH THIRD BANK OF WESTERN OHIO
ADDRESS: #2450

ROOF LINE
DRIVE-THRU
1 STORY COMMERCIAL
TP#46-1004-03-019.001
TP#46-1004-03-002.001

ASPHALT
LANDSCAPING (DO NOT DISTURB)
PRIVATE SIGN*(202)
LIGHT FOR SIGN(202)
+64 ℄ 18' DRIVE
(ADJUST TO GRADE)
PRIVATE SIGN WITH LANDSCAPING* (202)
25' EASEMENT FOR ELECTRIC LINES
1 1/2" DIA. IRON PIPE (FOUND)
PRIVATE SIGN (DO NOT DISTURB)
PRIVATE SIGN
10-T
+36 ℄ 37' DRIVE
PRIVATE SIGN (DO NOT DISTURB)
GRASS
24"
21"
PRIVATE SIGN (DO NOT DISTURB)
PRIVATE LIGHT POLE WITH LANDSCAPING (DO NOT DISTURB)
+27 ℄ 23' DRIVE
PRIVATE LIGHT POLE WITH LANDSCAPING (DO NOT DISTURB)
PRIVATE SIGN WITH LANDSCAPING (DO NOT DISTURB)
PRIVATE LIGHT POLE WITH LANDSCAPING (DO NOT DISTURB)
13-WD1
13-T1
0+19
MATCHLINE STA.98+00 SEE SHEET 14
CONST. LIMITS
8"T
TMP
Ex U
Ex SH
SAN
12" PVC
8" PVC
12" STM (202)
(ADJUST TO GRADE)
(TO REMAIN) 8" SAN.
8" SAN. (202)
8" SAN.
12" STM (202)
℄ R/W
N 0° 30' 53" E
SHAWNEE RD. (C.R.152)
℄ CONST.
15"B
18"B
12"B
2"B
10" PVC (202)
SEE SHEET 10 MATCHLINE STA.93+00
+60 ℄ 34' DRIVE
+77 ℄ 23' DRIVE
+98 ℄ 29' DRIVE
+47 ℄ 20' DRIVE
+24 ℄ 25' DRIVE
Ex R/W
SPRINKLER SYSTEM*
(202) 2.5" STEEL POST*
(202) SPRINKLER SYSTEM*
CONCRETE
LANDSCAPING*

(11)
C & C PROPERTY MANAGEMENT LLC
TP#46-1004-04-002.003
ADDRESS: #2501

(9)
BOB RHODES COMPANY
TP#46-1004-04-002.000
ADDRESS: #2535

(7)
VACANT
RUSH PROPERTIES LLC
TP#46-1004-04-002.001
ADDRESS: N/A

1 STORY COMMERCIAL ARBY'S
1 STORY COMMERCIAL FORMERLY EAST OF CHICAGO PIZZA

SHAWNEE PLAZA SUBDIVISION
(LOT 28985)
COUNCILHOUSE DRIVE (PRIVATE)

(12)
HIGH TIME HABU COMPANY
TP#46-1004-04-002.004

(14)
FRANCHISE REALTY INTERSTATE CORPORATION
TP#46-1004-04-005.000
ADDRESS: #2455

30' INGRESS/EGRESS EASEMENT FOR OWNERS 7 & 9
PARKING & INGRESS/EGRESS EASEMENT FOR OWNER 14

1 STORY COMMERCIAL McDONALD'S

(15)
F.W. ENGLEFIELD III, F.W. ENGLEFIELD IV, AND B.B. ENGLEFIELD
TP#46-1004-04-004.000
ADDRESS: #2401 SHAWNEE RD.

* DENOTES RIGHT OF WAY ENCROACHMENT

DRIVEWAY STATIONING:

DRIVEWAY CENTERLINE INTERCEPT STATIONING IS TO THE PROPOSED CONSTRUCTION CENTERLINE.

(202) TO BE REMOVED PER ODOT CMS ITEM 202

REV. BY	DATE	DESCRIPTION
IMK	12/17/12	ADDED EXISTING PRIVATE SIGNS (3) AT (10) LABELED (2) AS "DO NOT DISTURB" ON PARCEL 10-T

DATE COMPLETED 8/28/2012

HORIZONTAL SCALE IN FEET 0 10 20 40

PID NO. 77305

R/W DESIGNER IMK
R/W REVIEWER MGB

RIGHT OF WAY TOPOGRAPHY PLAN
SHAWNEE ROAD
STA. 93+00 TO STA. 98+00

ALL-SHAWNEE RD

12/27

191/206

I:\PROJECTS\ALL\77305\row\sheets\77305RT012.dgn 1/13/2014 4:04:16 PM C

P.O.B. SUMMARY TABLE			
REF.	PARCEL	GROSS TAKE	ROW SHEET
E	8-T	0.066 AC	11
F	10-T	0.010 AC	13
G	13-T1	0.073 AC	13
H	13-WD1	0.028 AC	13

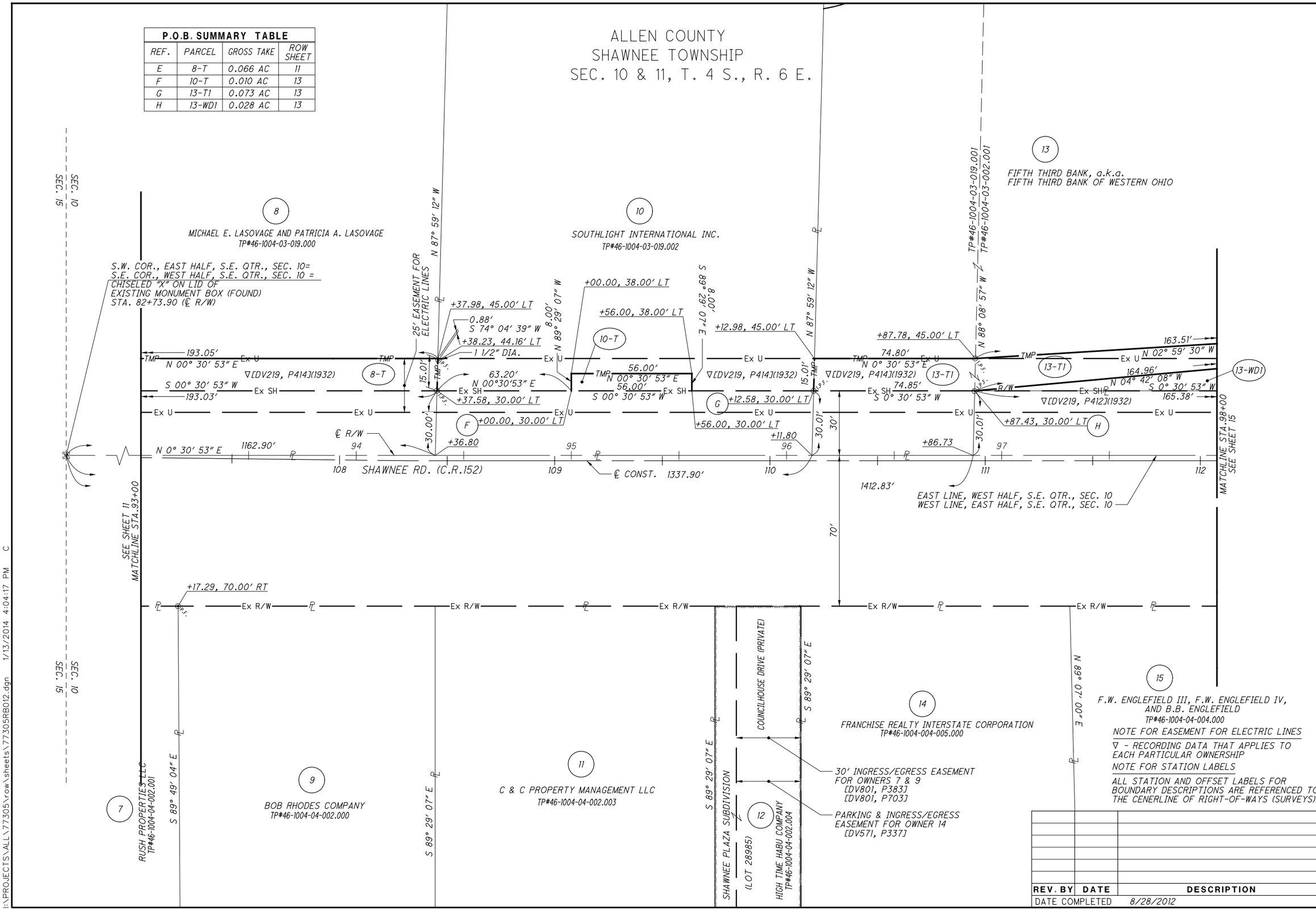

REV. BY	DATE	DESCRIPTION

DATE COMPLETED 8/28/2012

HORIZONTAL SCALE IN FEET 0 10 20 40

PID NO. 77305

R/W DESIGNER IMK
R/W REVIEWER MGB

RIGHT OF WAY BOUNDARY PLAN
SHAWNEE ROAD
STA. 93+00 TO STA. 98+00

ALL-SHAWNEE RD

13 / 27

192 / 206

I:\PROJECTS\ALL\77305\row\sheets\77305RB012.dgn 1/13/2014 4:04:17 PM C

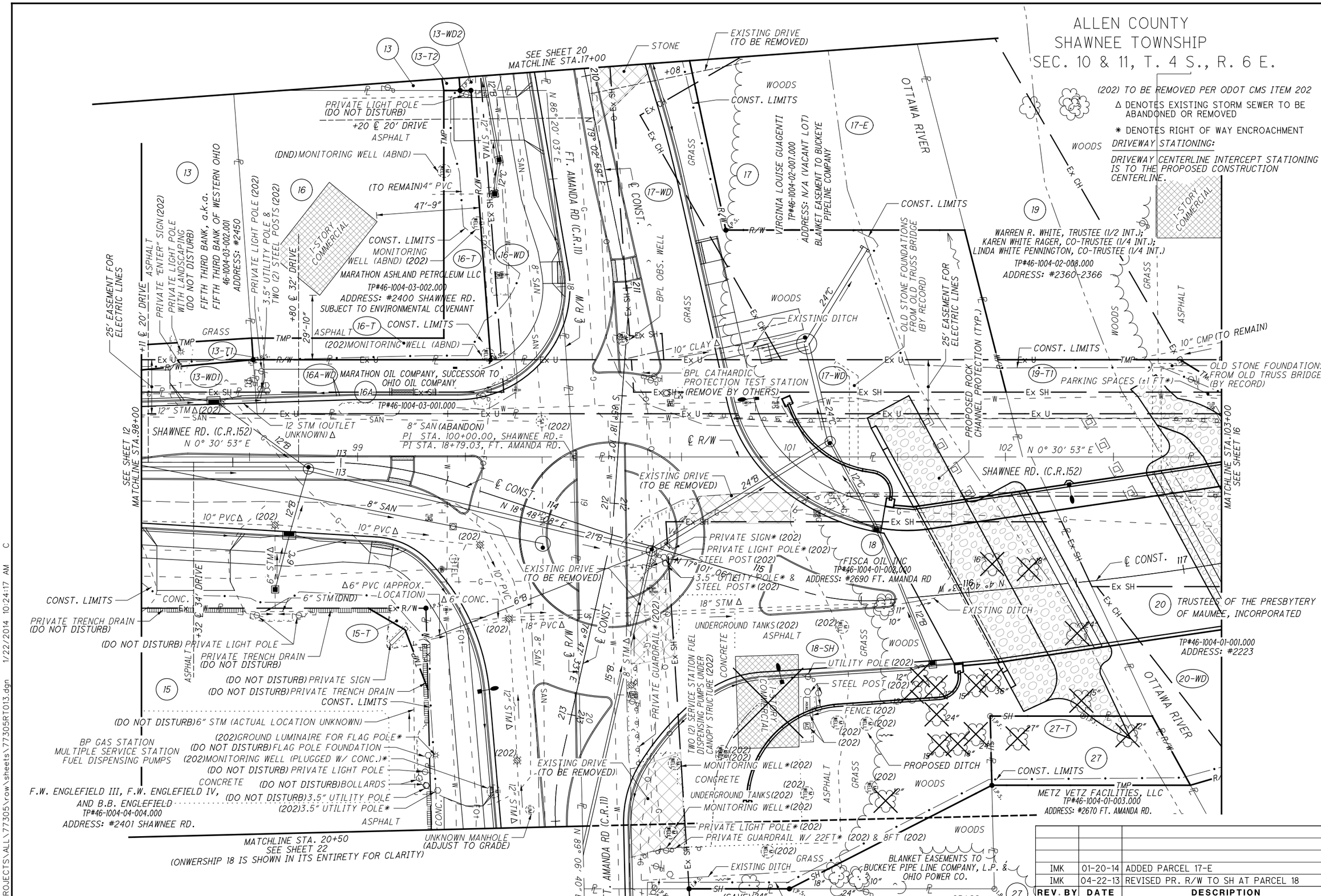
ALLEN COUNTY
SHAWNEE TOWNSHIP
SEC. 10 & 11, T. 4 S., R. 6 E.
(202) TO BE REMOVED PER ODOT CMS ITEM 202
Δ DENOTES EXISTING STORM SEWER TO BE ABANDONED OR REMOVED
✱ DENOTES RIGHT OF WAY ENCROACHMENT
DRIVEWAY STATIONING:
DRIVEWAY CENTERLINE INTERCEPT STATIONING IS TO THE PROPOSED CONSTRUCTION CENTERLINE.
HORIZONTAL SCALE IN FEET
0 10 20 40
SEE SHEET 20
MATCHLINE STA.17+00
SEE SHEET 12
MATCHLINE STA.98+00
MATCHLINE STA.103+00
SEE SHEET 16
MATCHLINE STA. 20+50
SEE SHEET 22
(ONWERSHIP 18 IS SHOWN IN ITS ENTIRETY FOR CLARITY)
SHAWNEE RD. (C.R.152)
N 0° 30' 53" E
FT. AMANDA RD (C.R.11)
N 86° 20' 03" E
N 79° 02' 59" E
N 18° 48' 38" E
N 17° 10' 06" W
S 89° 18' 10" E
N 89° 06' 40" E
OTTAWA RIVER
VIRGINIA LOUISE GUAGENTI
TP#46-1004-02-007.000
ADDRESS: N/A (VACANT LOT)
BLANKET EASEMENT TO BUCKEYE PIPELINE COMPANY
WARREN R. WHITE, TRUSTEE (1/2 INT.);
KAREN WHITE RAGER, CO-TRUSTEE (1/4 INT.);
LINDA WHITE PENNINGTON, CO-TRUSTEE (1/4 INT.)
TP#46-1004-02-008.000
ADDRESS: #2360-2366
FIFTH THIRD BANK, a.k.a.
FIFTH THIRD BANK OF WESTERN OHIO
46-1004-03-002.001
ADDRESS: #2450
MARATHON ASHLAND PETROLEUM LLC
TP#46-1004-03-002.000
ADDRESS: #2400 SHAWNEE RD.
SUBJECT TO ENVIRONMENTAL COVENANT
MARATHON OIL COMPANY, SUCCESSOR TO OHIO OIL COMPANY
TP#46-1004-03-001.000
FISCA OIL INC
TP#46-1004-01-003.000
ADDRESS: #2690 FT. AMANDA RD
TRUSTEES OF THE PRESBYTERY OF MAUMEE, INCORPORATED
TP#46-1004-01-001.000
ADDRESS: #2223
METZ VETZ FACILITIES, LLC
TP#46-1004-01-003.000
ADDRESS: #2670 FT. AMANDA RD.
F.W. ENGLEFIELD III, F.W. ENGLEFIELD IV,
AND B.B. ENGLEFIELD
TP#46-1004-04-004.000
ADDRESS: #2401 SHAWNEE RD.
BP GAS STATION
MULTIPLE SERVICE STATION
FUEL DISPENSING PUMPS
TWO (2) SERVICE STATION FUEL DISPENSING PUMPS UNDER CANOPY STRUCTURE (202)
1-STORY COMMERCIAL
CONST. LIMITS
EXISTING DRIVE (TO BE REMOVED)
EXISTING DITCH
PROPOSED DITCH
PROPOSED ROCK CHANNEL PROTECTION (TYP.)
OLD STONE FOUNDATIONS FROM OLD TRUSS BRIDGE (BY RECORD)
25' EASEMENT FOR ELECTRIC LINES
BPL CATHARDIC PROTECTION TEST STATION (REMOVE BY OTHERS)
PARKING SPACES (±1 FT.*)
10" CMP (TO REMAIN)
PRIVATE GUARDRAIL W/ 22FT* (202) & 8FT (202)
UNDERGROUND TANKS (202)
UNKNOWN MANHOLE (ADJUST TO GRADE)
BLANKET EASEMENTS TO BUCKEYE PIPE LINE COMPANY, L.P. & OHIO POWER CO.
IMK 01-20-14 ADDED PARCEL 17-E
IMK 04-22-13 REVISED PR. R/W TO SH AT PARCEL 18
REV. BY DATE DESCRIPTION
DATE COMPLETED 8/28/2012
R/W DESIGNER IMK
R/W REVIEWER MGB
PID NO. 77305
RIGHT OF WAY TOPOGRAPHY PLAN
SHAWNEE ROAD
STA. 98+00 TO STA. 103+00
ALL-SHAWNEE RD
14 / 27
193 / 206
I:\PROJECTS\ALL\77305\row\sheets\77305RT013.dgn 1/22/2014 10:24:17 AM C

P.O.B. SUMMARY TABLE			
REF.	PARCEL	GROSS TAKE	ROW SHEET
G	13-T1	0.073 AC	13
H	13-WD1	0.028 AC	13
I	16-T	0.069 AC	15
J	15-T	0.007 AC	15
K	16A-WD	0.083 AC	15
L	17-WD	0.810 AC	15
II	17-E	0.569 AC	21
M	18-SH	0.953 AC	15
N	19-T1	0.033 AC	15
O	20-WD	1.350 AC	15
P	27-T	0.061 AC	15
Y	13-T2	0.021 AC	21
Z	13-WD2	0.073 AC	21
AA	16-WD	0.100 AC	15

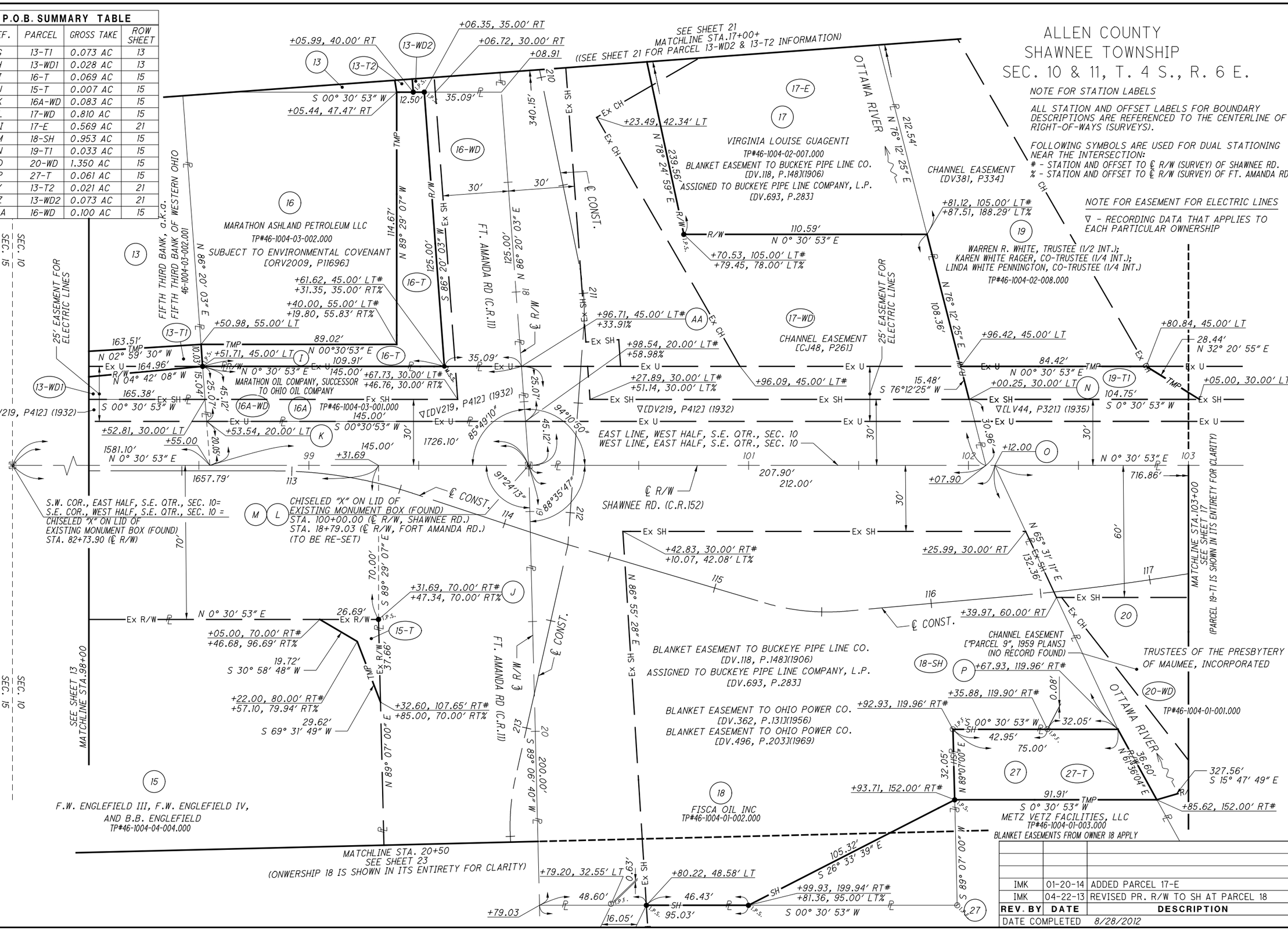

REV. BY	DATE	DESCRIPTION
IMK	01-20-14	ADDED PARCEL 17-E
IMK	04-22-13	REVISED PR. R/W TO SH AT PARCEL 18

DATE COMPLETED 8/28/2012

PID NO. 77305

R/W DESIGNER IMK
R/W REVIEWER MGB

RIGHT OF WAY BOUNDARY PLAN
SHAWNEE ROAD
STA. 98+00 TO STA. 103+00

ALL-SHAWNEE RD

I:\PROJECTS\ALL\77305\row\sheets\77305RB013.dgn 1/22/2014 10:24:18 AM C

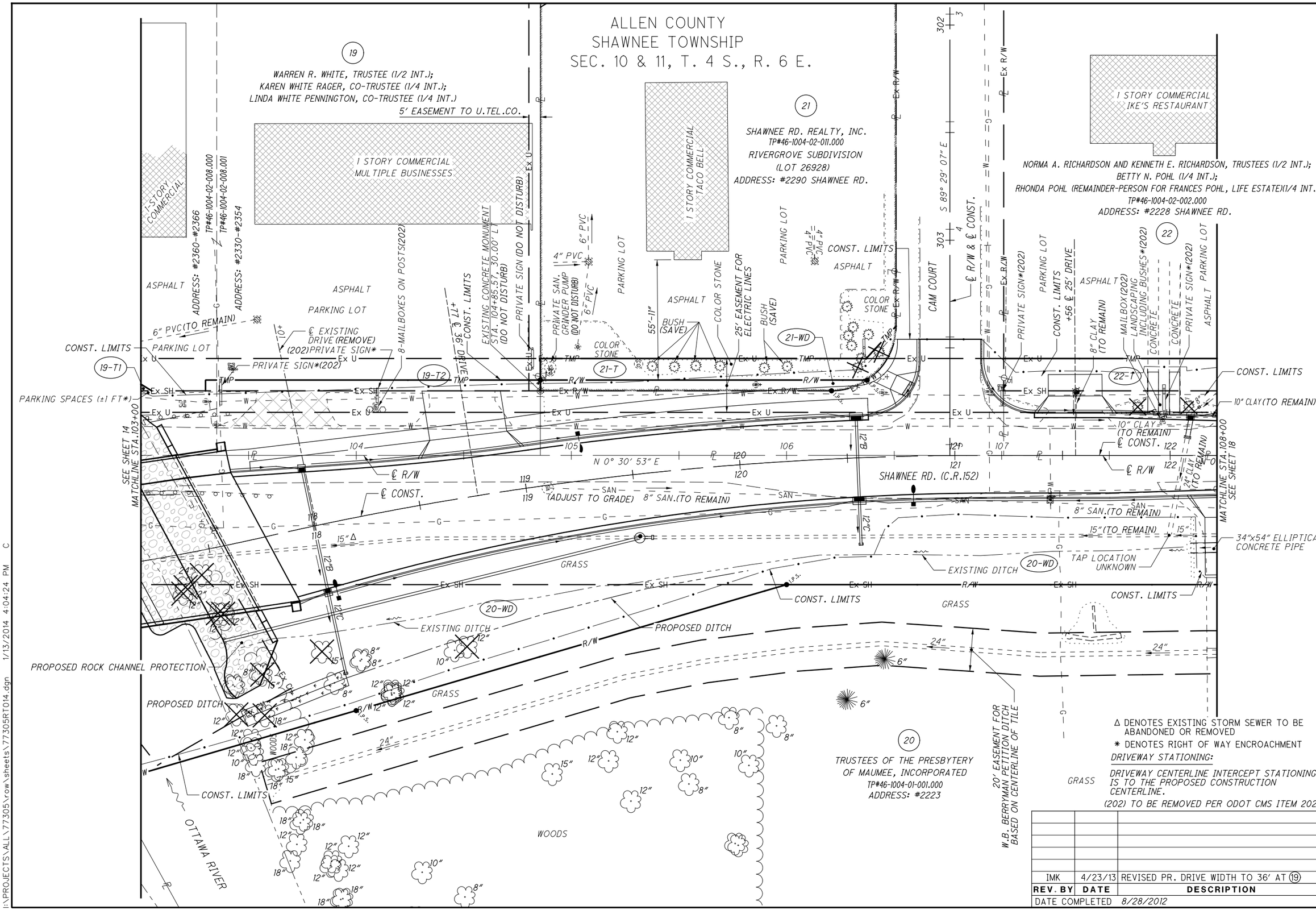

REV. BY	DATE	DESCRIPTION
IMK	4/23/13	REVISED PR. DRIVE WIDTH TO 36' AT 19

DATE COMPLETED 8/28/2012

HORIZONTAL SCALE IN FEET 0 10 20 40

PID NO. 77305

R/W DESIGNER IMK
R/W REVIEWER MGB

RIGHT OF WAY TOPOGRAPHY PLAN
SHAWNEE ROAD
STA. 103+00 TO STA. 108+00

ALL-SHAWNEE RD

16/27

195/206

I:\PROJECTS\ALL\77305\row\sheets\77305RT014.dgn 1/13/2014 4:04:24 PM C

P.O.B. SUMMARY TABLE			
REF.	PARCEL	GROSS TAKE	ROW SHEET
N	19-T1	0.033 AC	15
O	20-WD	1.350 AC	15
Q	19-T2	0.018 AC	17
R	21-WD	0.017 AC	17
S	21-T	0.038 AC	17
T	22-T	0.052 AC	17

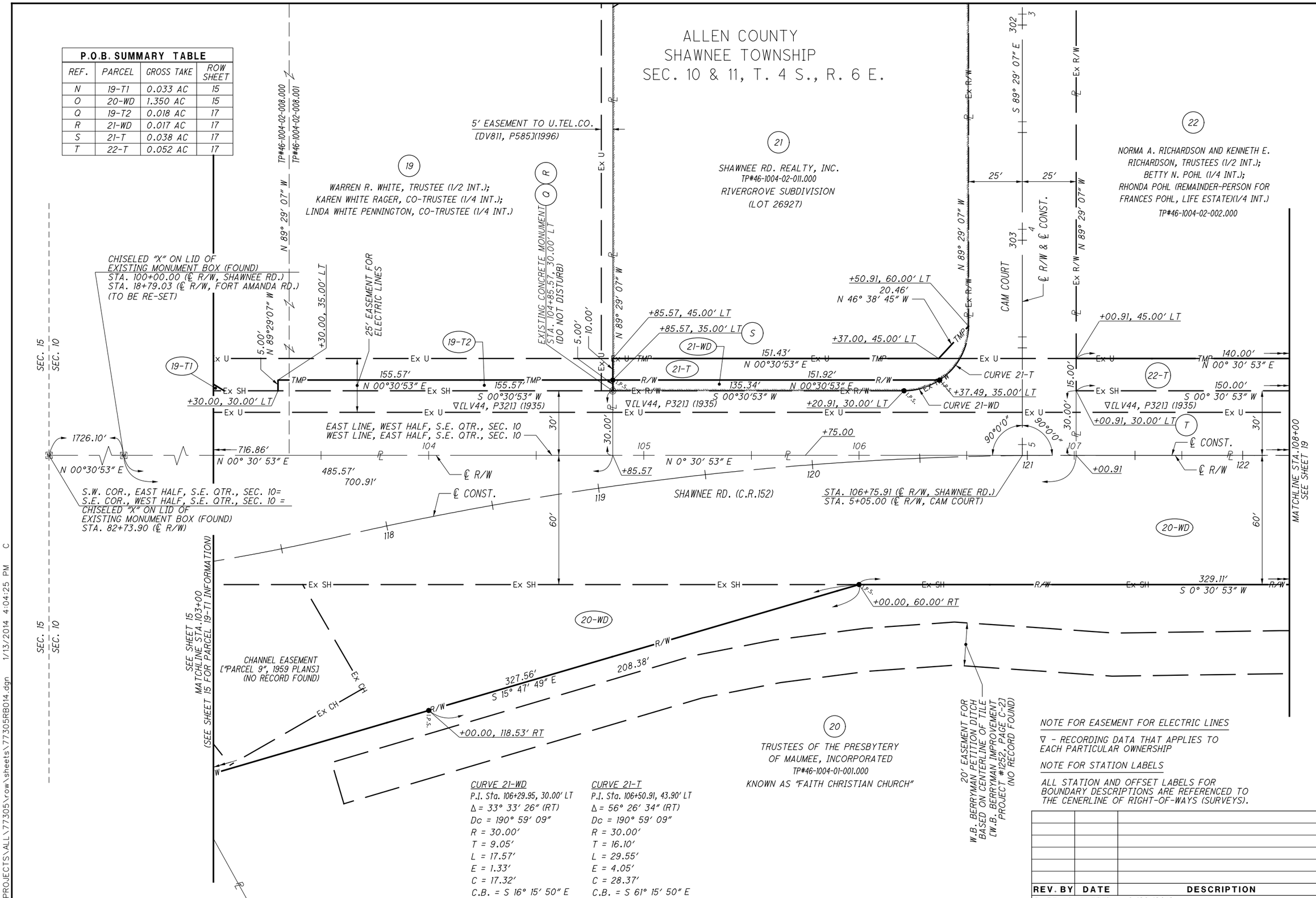

CURVE 21-WD
P.I. Sta. 106+29.95, 30.00' LT
Δ = 33° 33' 26" (RT)
Dc = 190° 59' 09"
R = 30.00'
T = 9.05'
L = 17.57'
E = 1.33'
C = 17.32'
C.B. = S 16° 15' 50" E

CURVE 21-T
P.I. Sta. 106+50.91, 43.90' LT
Δ = 56° 26' 34" (RT)
Dc = 190° 59' 09"
R = 30.00'
T = 16.10'
L = 29.55'
E = 4.05'
C = 28.37'
C.B. = S 61° 15' 50" E

NOTE FOR EASEMENT FOR ELECTRIC LINES

▽ - RECORDING DATA THAT APPLIES TO EACH PARTICULAR OWNERSHIP

NOTE FOR STATION LABELS

ALL STATION AND OFFSET LABELS FOR BOUNDARY DESCRIPTIONS ARE REFERENCED TO THE CENERLINE OF RIGHT-OF-WAYS (SURVEYS).

REV. BY	DATE	DESCRIPTION

DATE COMPLETED 8/28/2012

HORIZONTAL SCALE IN FEET 0 10 20 40

PID NO. 77305

R/W DESIGNER IMK
R/W REVIEWER MGB

RIGHT OF WAY BOUNDARY PLAN
SHAWNEE ROAD
STA. 103+00 TO STA. 108+00

ALL-SHAWNEE RD

I:\PROJECTS\ALL\77305\row\sheets\77305RB014.dgn 1/13/2014 4:04:25 PM C

ALLEN COUNTY
SHAWNEE TOWNSHIP
SEC. 10 & 11, T. 4 S., R. 6 E.

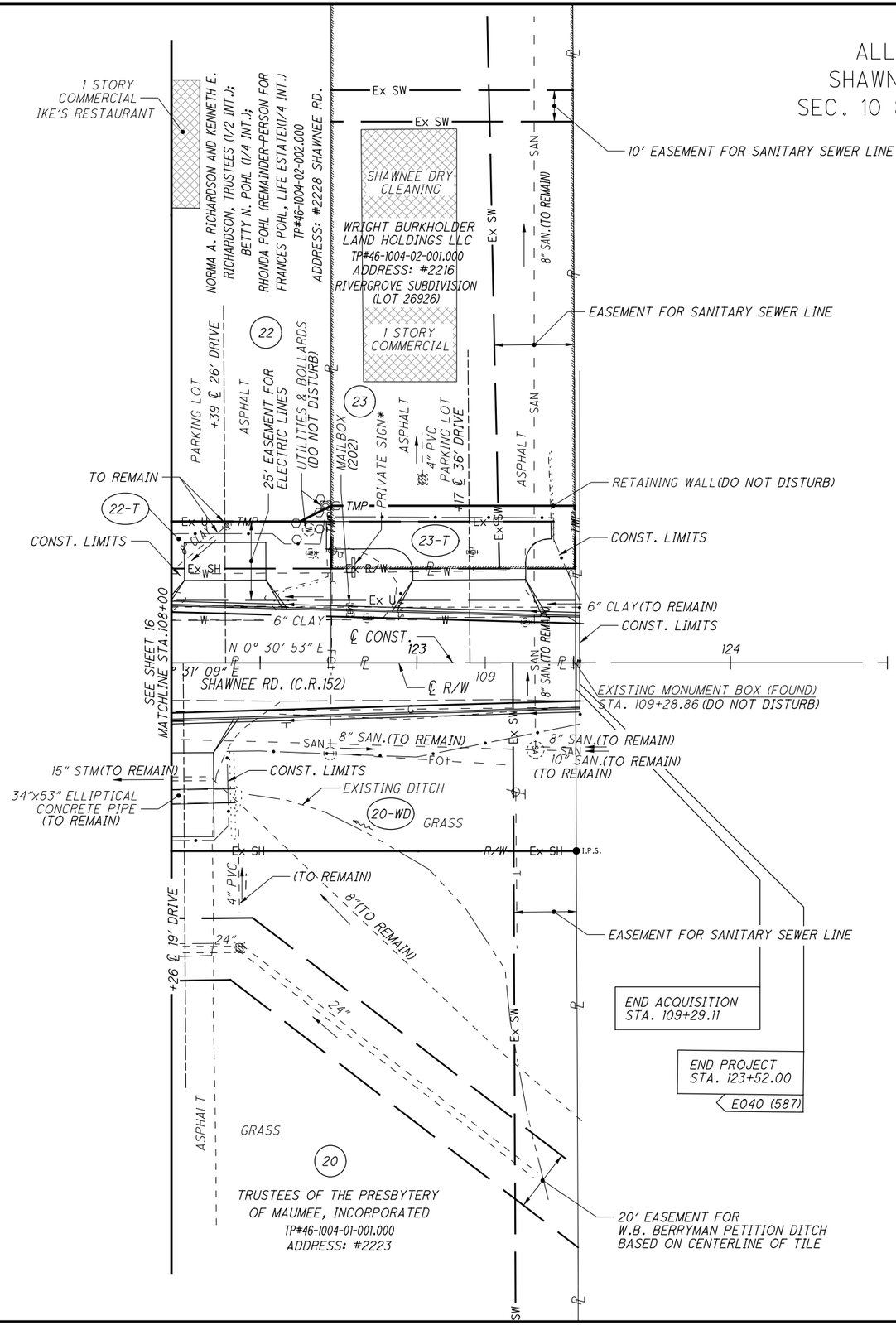

* DENOTES RIGHT OF WAY ENCROACHMENT

DRIVEWAY STATIONING:

DRIVEWAY CENTERLINE INTERCEPT STATIONING IS TO THE PROPOSED CONSTRUCTION CENTERLINE.

(202) TO BE REMOVED PER ODOT CMS ITEM 202

REV. BY	DATE	DESCRIPTION

DATE COMPLETED 8/28/2012

HORIZONTAL SCALE IN FEET 0 10 20 40

PID NO. 77305

R/W DESIGNER IMK
R/W REVIEWER MGB

RIGHT OF WAY TOPOGRAPHY PLAN
SHAWNEE ROAD
STA. 108+00 TO END ACQUISITION

ALL-SHAWNEE RD

I:\PROJECTS\ALL\77305\row\sheets\77305RT015.dgn 1/13/2014 4:04:28 PM C

P.O.B. SUMMARY TABLE			
REF.	PARCEL	GROSS TAKE	ROW SHEET
O	20-WD	1.350 AC	15
T	22-T	0.052 AC	17
U	23-T	0.036 AC	19

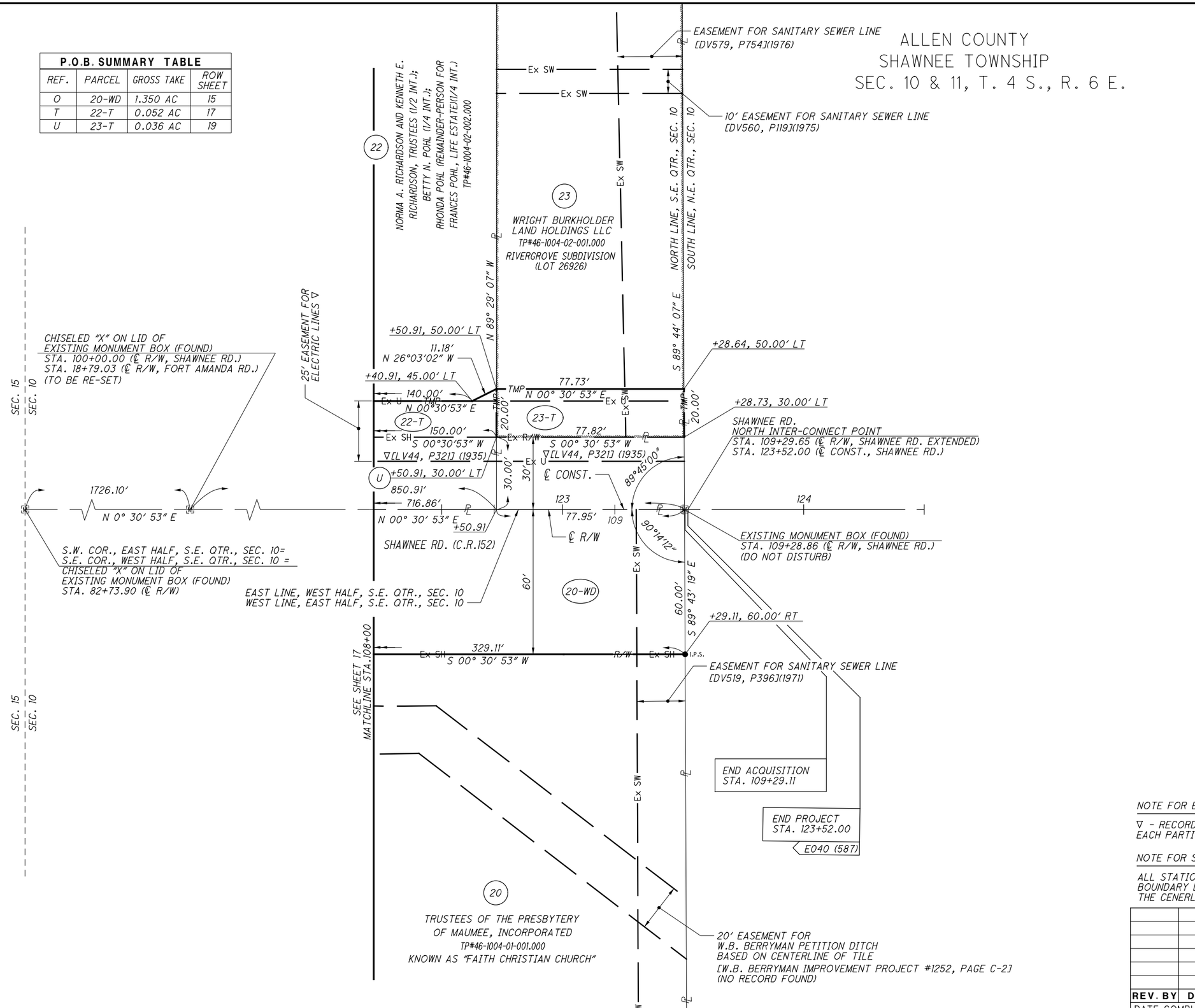

NOTE FOR EASEMENT FOR ELECTRIC LINES

▽ - RECORDING DATA THAT APPLIES TO EACH PARTICULAR OWNERSHIP

NOTE FOR STATION LABELS

ALL STATION AND OFFSET LABELS FOR BOUNDARY DESCRIPTIONS ARE REFERENCED TO THE CENERLINE OF RIGHT-OF-WAYS (SURVEYS).

REV. BY	DATE	DESCRIPTION

DATE COMPLETED 8/28/2012

HORIZONTAL SCALE IN FEET 0 10 20 40

PID NO. 77305

R/W DESIGNER IMK
R/W REVIEWER MGB

RIGHT OF WAY BOUNDARY PLAN
SHAWNEE ROAD
STA. 108+00 TO END ACQUISITION

ALL-SHAWNEE RD

I:\PROJECTS\ALL\77305\row\sheets\77305RB015.dgn 1/13/2014 4:04:29 PM C

ALLEN COUNTY
SHAWNEE TOWNSHIP
SEC. 10 & 11, T. 4 S., R. 6 E.

OTTAWA RIVER

BEGIN ACQUISITION STA. 12+95.60

BEGIN WORK STA. 206+00.00

24
SHAWNEE COUNTRY CLUB
TP#46-1004-02-005.000
ADDRESS: N/A
BLANKET EASEMENT TO BUCKEYE PIPELINE COMPANY

17
VIRGINIA LOUISE GUAGENTI
TP#46-1004-02-007.000
ADDRESS: N/A
BLANKET EASEMENT TO BUCKEYE PIPELINE COMPANY

17-E

WOODS
GRASS
CONST. LIMTS
EXISTING DRIVE (REMOVE)
R/W
ASPHALT
STONE
MATCHLINE STA.17+00 SEE SHEET 14 (PARCELS 13-SH2 & 13-T2 SHOWN IN THEIR ENTIRETY FOR CLARITY)
CONST. LIMITS
TMP
Ex SH
24-T
17-WD
+35
℄ CONST.
210
209
208
207
206
205
FT. AMANDA RD. (C.R.11)
N 86° 20' 03" E
N 86° 20' 25" E
℄ R/W
(ADJUST TO GRADE)
13-WD2
16-WD2
8" SAN. (TO REMAIN)
8" SAN. (TO REMAIN) (ADJUST TOWGRADE)
12" CONC.Δ
12"Δ
(202)
26-WD
26-T
13-T2
16-T2
14" C.I.
14" C.I.Δ
12"C
12"B
15"B
36"
18"
30"
Ex U
3" BY 6" WOOD POST (DO NOT DISTURB)
+22 ℄ 20' DRIVE
4" CPP
8" CPP
10" CPP
6" PVC
PRIVATE SIGN (DO NOT DISTURB)
PARKING LOT
1 STORY COMMERCIAL OFFICES
PRIVATE SIGN WITH ILLUMINATION (202)
+93 ℄ 25' DRIVE
"BURGER KING" SIGN (202)
"ATM & DRIVE THRU" SIGN (202)
+57 ℄ 20' DRIVE
PRIVATE LIGHT POLE (DO NOT DISTURB)
(202) PRIVATE ELECTRIC BOX (STEEL BOX WITH CAPPED WIRE)
N-00°-30'-53"-E
+20 ℄ 20' DRIVE
MARATHON ASHLAND PETROLEUM LLC
TP#46-1004-03-002.000
SUBJECT TO ENVIRONMENTAL COVENANT LOR\2009, P11696]

25
SHAWNEE CROSSING LLC
TP#46-1004-02-005.000
ADDRESS: N/A

26
SHAWNEE CROSSING LLC,
SHAWNEE CROSSING CONDOMINIUM ASSOCIATION
ADDRESS: #2745-2747
TP#46-1004-03-003.501
TP#46-1004-03-003.502
TP#46-1004-03-003.504
TP#46-1004-03-003.505
TP#46-1004-03-003.506

13
FIFTH THIRD BANK, a.k.a.
FIFTH THIRD BANK OF WESTERN OHIO
TP#46-1004-03-002.001
ADDRESS: #2450

16
MARATHON ASHLAND PETROLEUM LLC
TP#46-1004-03-002.000
SUBJECT TO ENVIRONMENTAL COVENANT LOR\2009, P11696]

30' INGRESS/EGRESS EASEMENT (ACCESS THRU TO OWNER NO. 10)

Δ DENOTES EXISTING STORM SEWER TO BE ABANDONED OR REMOVED

* DENOTES RIGHT OF WAY ENCROACHMENT

DRIVEWAY STATIONING:

DRIVEWAY CENTERLINE INTERCEPT STATIONING IS TO THE PROPOSED CONSTRUCTION CENTERLINE.

(202) TO BE REMOVED PER ODOT CMS ITEM 202

REV. BY	DATE	DESCRIPTION
IMK	01-20-14	ADDED PARCEL 17-E
IMK	11-21-13	UPDATED PARCEL 26 OWNERSHIP

DATE COMPLETED 8/28/2012

HORIZONTAL SCALE IN FEET 0 10 20 40

PID NO. 77305

R/W DESIGNER IMK
R/W REVIEWER MGB

RIGHT OF WAY TOPOGRAPHY PLAN
FORT AMANDA ROAD
BEGIN ACQUISITION TO STA. 17+00

ALL-SHAWNEE RD

20/27

199/206

I:\PROJECTS\ALL\77305\row\sheets\77305RT021.dgn 1/22/2014 10:35:09 AM C

ALLEN COUNTY
SHAWNEE TOWNSHIP
SEC. 10 & 11, T. 4 S., R. 6 E.

P.O.B. SUMMARY TABLE			
REF.	PARCEL	GROSS TAKE	ROW SHEET
I	16-T	0.069 AC	15
J	15-T	0.007 AC	15
L	17-WD	0.810 AC	15
II	17-E	0.569 AC	21
V	24-T	0.083 AC	21
W	26-WD	0.341 AC	21
X	26-T	0.057 AC	21
Y	13-T2	0.021 AC	21
Z	13-WD2	0.073 AC	21
AA	16-WD	0.100 AC	15

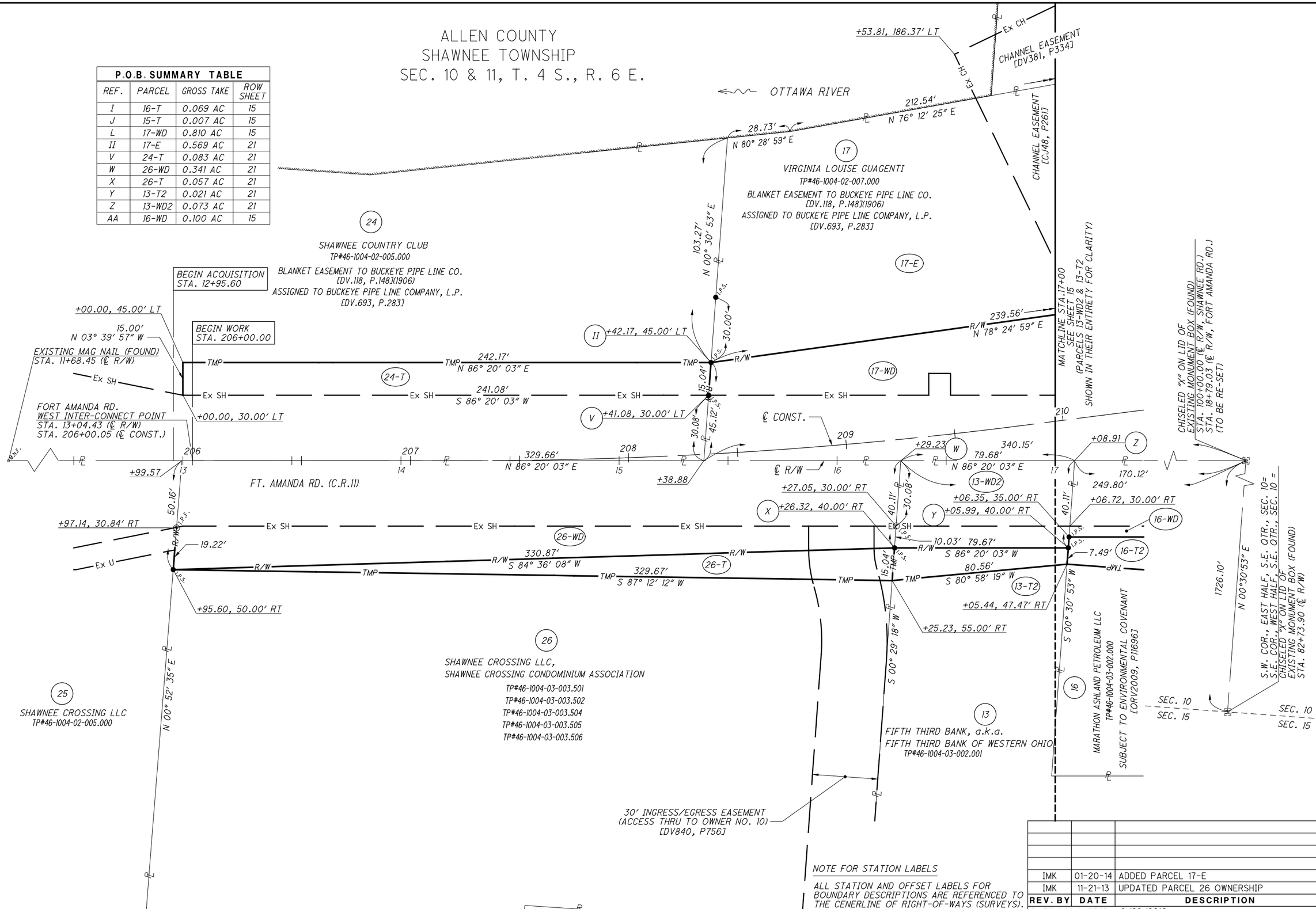

NOTE FOR STATION LABELS

ALL STATION AND OFFSET LABELS FOR BOUNDARY DESCRIPTIONS ARE REFERENCED TO THE CENERLINE OF RIGHT-OF-WAYS (SURVEYS).

REV. BY	DATE	DESCRIPTION
IMK	01-20-14	ADDED PARCEL 17-E
IMK	11-21-13	UPDATED PARCEL 26 OWNERSHIP

DATE COMPLETED 8/28/2012

HORIZONTAL SCALE IN FEET 0 10 20 40

PID NO. 77305

R/W DESIGNER IMK
R/W REVIEWER MGB

RIGHT OF WAY BOUNDARY PLAN
FORT AMANDA ROAD
BEGIN ACQUISITION TO STA. 17+00

ALL-SHAWNEE RD

21/27

200/206

I:\PROJECTS\ALL\77305\row\sheets\77305RB021.dgn 1/22/2014 10:24:25 AM C

ALLEN COUNTY
SHAWNEE TOWNSHIP
SEC. 10 & 11, T. 4 S., R. 6 E.

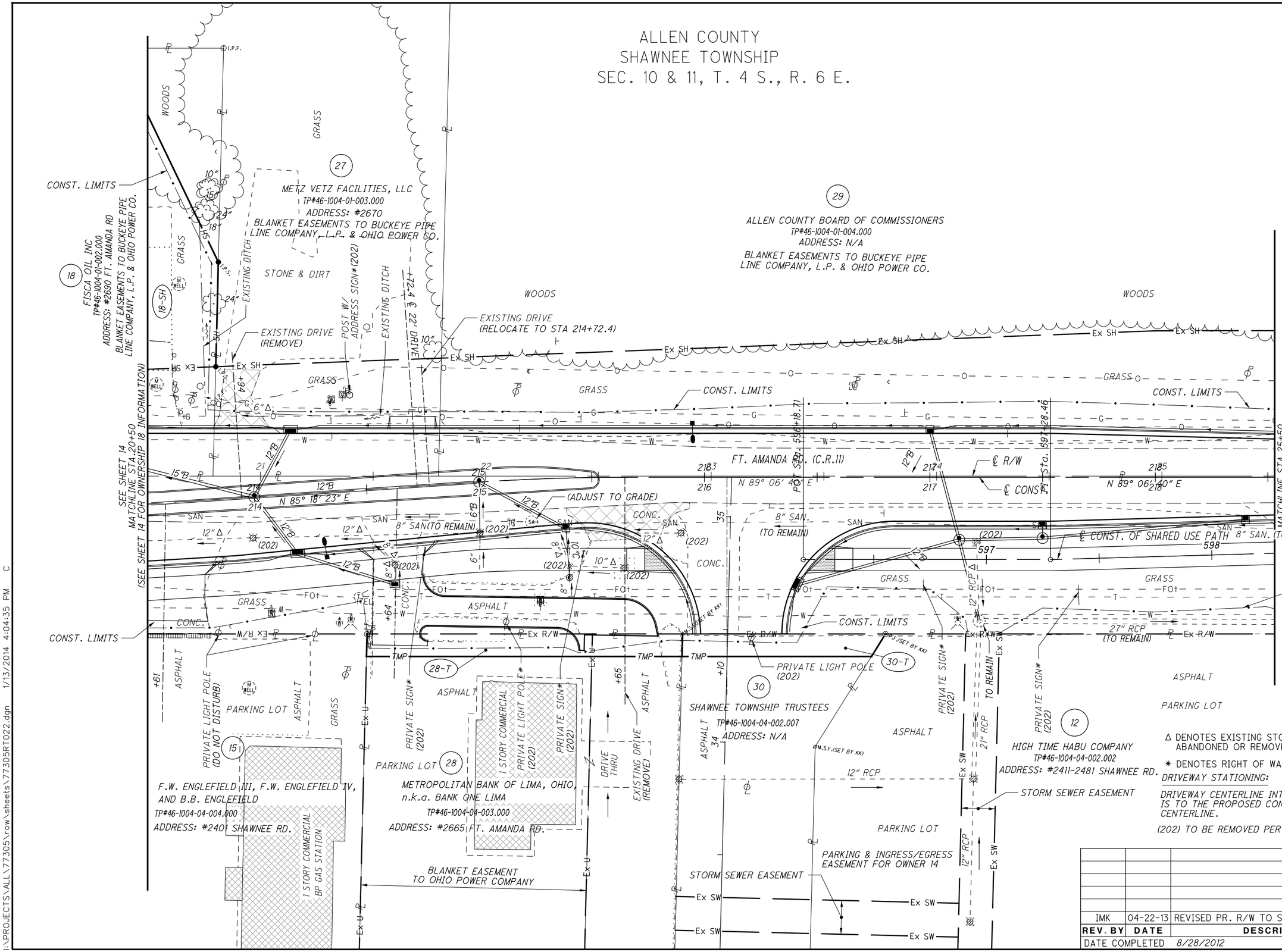

REV. BY	DATE	DESCRIPTION
IMK	04-22-13	REVISED PR. R/W TO SH AT PARCEL 18

DATE COMPLETED 8/28/2012

HORIZONTAL SCALE IN FEET 0 10 20 40

PID NO. 77305

R/W DESIGNER IMK
R/W REVIEWER MGB

RIGHT OF WAY TOPOGRAPHY PLAN
FORT AMANDA ROAD
STA. 20+50 TO STA. 25+50

ALL-SHAWNEE RD

I:\PROJECTS\ALL\77305\row\sheets\77305RT022.dgn 1/13/2014 4:04:35 PM C

ALLEN COUNTY
SHAWNEE TOWNSHIP
SEC. 10 & 11, T. 4 S., R. 6 E.

P.O.B. SUMMARY TABLE			
REF.	PARCEL	GROSS TAKE	ROW SHEET
M	18-SH	0.953 AC	15
P	27-T	0.061 AC	15
BB	28-T	0.032 AC	23
CC	30-T	0.020 AC	23

27
METZ VETZ FACILITIES, LLC
TP#46-1004-01-003.000

BLANKET EASEMENT TO BUCKEYE PIPE LINE CO.
[DV.118, P.148](1906)
ASSIGNED TO BUCKEYE PIPE LINE COMPANY, L.P.
[DV.693, P.283]

BLANKET EASEMENT TO OHIO POWER CO.
[DV.362, P.131](1956)
BLANKET EASEMENT TO OHIO POWER CO.
[DV.496, P.203](1969)

29
ALLEN COUNTY BOARD OF COMMISSIONERS
TP#46-1004-01-004.000
[DV.118, P.148](1906)

BLANKET EASEMENT TO BUCKEYE PIPE LINE CO.
[DV.118, P.148](1906)
ASSIGNED TO BUCKEYE PIPE LINE COMPANY, L.P.
[DV.693, P.283]

BLANKET EASEMENT TO OHIO POWER CO.
[DV.362, P.131](1956)
BLANKET EASEMENT TO OHIO POWER CO.
[DV.496, P.203](1969)

18
FISCA OIL INC.
TP#46-1004-01-002.000
BLANKET EASEMENTS FROM OWNER 27 APPLY

18-SH

S 89° 07′ 00″ W
S 00° 30′ 53″ W
N 00° 30′ 53″ E
N 86° 55′ 28″ E
N 89° 06′ 40″ E
S 00°53′20″ E
N 89° 07′ 00″ E
S 89° 06′ 40″ W
S 31° 06′ 18″ W

+81.36, 95.00′ LT
+80.22, 48.58′ LT
+79.20, 32.55′ LT
+80.31, 52.40′ LT
+96.86, 64.49′ LT
+79.03
408.31′
268.31′
+47.34
+87.34
FT. AMANDA RD. (C.R.11)
℄ R/W
℄ CONST.
VARIES
70.02′
70.04′
+47.34, 70.02′ RT
+87.34, 70.04′ RT
+77.35, 70.05′ RT
+47.10, 80.00′ RT
+87.10, 80.00′ RT
+71.14, 80.00′ RT
140.00′
90.02′
84.04′
9.98′
9.96′
11.73′
BB
CC
28-T
30-T
M.S.F.(SET BY KK)

CHISELED "X" ON LID OF EXISTING MONUMENT BOX (FOUND)
STA. 100+00.00 (℄ R/W, SHAWNEE RD.)
STA. 18+79.03 (℄ R/W, FORT AMANDA RD.)
(TO BE RE-SET)

1726.10′
N 00°30′53″ E
S.W. COR., EAST HALF, S.E. QTR., SEC. 10=
S.E. COR., WEST HALF, S.E. QTR., SEC. 10 =
CHISELED "X" ON LID OF EXISTING MONUMENT BOX (FOUND)
STA. 82+73.90 (℄ R/W)
SEE SHEET 15
MATCHLINE STA.20+50
(SEE SHEET 15 FOR PARCEL 18-WD INFORMATION)

SEC. 10
SEC. 15

SHARED USE PATH
WEST INTER-CONNECT POINT
STA. 23+40.85, 37.00′ RT (℄ R/W)
STA. 596+18.71 (℄ CONST. SHARED USE PATH)
℄ CONST. OF SHARED USE PATH

MATCHLINE STA.25+50
SEE SHEET 25

15
F.W. ENGLEFIELD III, F.W. ENGLEFIELD IV,
AND B.B. ENGLEFIELD
TP#46-1004-04-004.000

28
METROPOLITAN BANK OF LIMA, OHIO,
n.k.a. BANK ONE LIMA
TP#46-1004-04-003.000

30
SHAWNEE TOWNSHIP TRUSTEES
TP#46-1004-04-002.007

12
HIGH TIME HABU COMPANY
TP#46-1004-04-002.002

BLANKET EASEMENT
TO OHIO POWER COMPANY
[DV55, P496]

[DV626, P267]
[DV780, P28]

STORM SEWER EASEMENT
[DV780, P28]
[DV571, P337]
[DV801, P385]
[DV801, P705]

PARKING & INGRESS/EGRESS
EASEMENT FOR OWNER 14
[DV571, P337]

NOTE FOR STATION LABELS
ALL STATION AND OFFSET LABELS FOR BOUNDARY DESCRIPTIONS ARE REFERENCED TO THE CENERLINE OF RIGHT-OF-WAYS (SURVEYS).

REV. BY	DATE	DESCRIPTION
IMK	04-22-13	REVISED PR. R/W TO SH AT PARCEL 18
DATE COMPLETED		8/28/2012

HORIZONTAL SCALE IN FEET 0 10 20 40

PID NO. 77305

R/W DESIGNER IMK
R/W REVIEWER MGB

RIGHT OF WAY BOUNDARY PLAN
FORT AMANDA ROAD
STA. 20+50 TO 25+50

ALL-SHAWNEE RD

23/27

202/206

I:\PROJECTS\ALL\77305\row\sheets\77305RB022.dgn 1/13/2014 4:04:36 PM C

ALLEN COUNTY
SHAWNEE TOWNSHIP
SEC. 10 & 11, T. 4 S., R. 6 E.

SPIRAL CURVE DATA
P.I. Sta. 33+52.38
Δ = 31° 15′ 00″ (LT)
Dc = 5° 00′ 00″
R = 1,145.92′
Ls = 350.00′
θs = 8° 45′ 00″
LT = 233.62′
ST = 116.93′
x = 349.18′
y = 17.79′
k = 174.86′
p = 4.45′
Δc = 13° 45′ 00″ (LT)
Lc = 275.00′
Ts = 496.59′
E = 48.59′
C = 274.34′
C1 = C2 = 349.64′
C.B.1 = N 86° 11′ 42″ E
C.B. = N 73° 29′ 10″ E
C.B.2 = S 60° 46′ 38″ W

OTTAWA RIVER

SHAWNEE TOWNSHIP TRUSTEES
TP#46-1004.01-005.000

29
ALLEN COUNTY BOARD OF COMMISSIONERS
TP#46-1004-01-004.000
ADDRESS: N/A
BLANKET EASEMENTS TO BUCKEYE PIPE LINE COMPANY, L.P. & OHIO POWER CO.

Ex SH — Ex SH — Ex SH — Ex SH

WOODS — WOODS — GRASS

CONST. LIMITS

END WORK (FT. AMANDA RD.) STA. 220+25.00

EXISTING CULVERT: 2-84" RCP (SFN 0249629) (TO REMAIN)

PI Sta. 600+40.09 — PI Sta. 601+00.09 — TS Sta. 28+55.79 — PC Sta. 602+75.09

SEE SHEET 22 MATCHLINE STA. 25+50

MATCHLINE STA. 30+50 SEE SHEET 26

FT. AMANDA RD. (C.R.11) — ℄ R/W — ℄ CONST.

N 89° 06′ 40″ E — N 88° 49′ 29″ E — N 89° 06′ 40″ E

8" SAN. (TO REMAIN) — 6" SAN. (TO REMAIN) — 8" SAN. (TO REMAIN)

6" SAN. (TO REMAIN) — PROPOSED CULVERT EXTENSION

BACK TANGENT — ℄ R/W

ADJUST TO GRADE — CONST. LIMITS — (ADJUST TO GRADE) — ℄ CONST. FOR SHARED USE PATH

8" SAN. (TO REMAIN) — 8" SAN. (TO REMAIN) — 8" SAN. (TO REMAIN) — (ADJUST TO GRADE)

599 — 600 — 601 — 602 — 603

ASPHALT — GRASS — PROPOSED DITCH — 10" RCP (202) — 27" RCP (TO REMAIN) — 27" RCP (TO REMAIN) — 27" RCP (TO REMAIN) — SAN. (TO REMAIN)

Ex R/W — Ex R/W — Ex R/W

+83 ℄ 36' DRIVE — CONST. LIMITS — TO REMAIN — PRIVATE SIGN* (202) — CONST. LIMITS — TO REMAIN — 15" RCP — PRIVATE SIGN* (202)

12
HIGH TIME HABU COMPANY
TP#46-1004-04-002.002
ADDRESS: #2411-2481 SHAWNEE RD.
PARKING LOT

31
HCF REALTY OF SHAWNEE, INC.
TP#46-1004-04-001.002
ADDRESS: #2535
BLANKET EASEMENT TO TIME WARNER CABLE

32
HCF COMMERCIAL REALTY, INC.
TP#46-1004-04-001.000
ADDRESS: #2615
BLANKET EASEMENT TO TIME WARNER CABLE

31-T1 — 32-T1 — 12" (SAVE) — 4" (SAVE) — TMB — 30" — 18" — 12" — 8" — 6" — 4"

EASEMENT TO OHIO POWER COMPANY

10' EASEMENT TO BD./CO. COMM'RS — 10' STORM SEWER EASEMENT — Ex SW — Ex U

15' STORM SEWER EASEMENT

15' EASEMENT TO BD./CO. COMM'RS

TURMEHLY-G PETITION DITCH

1 STORY COMMERCIAL

1 STORY COMMERCIAL SHOPPING PLAZA

* DENOTES RIGHT OF WAY ENCROACHMENT

DRIVEWAY STATIONING:

DRIVEWAY CENTERLINE INTERCEPT STATIONING IS TO THE PROPOSED CONSTRUCTION CENTERLINE.

(202) TO BE REMOVED PER ODOT CMS ITEM 202

REV. BY	DATE	DESCRIPTION

DATE COMPLETED 8/28/2012

HORIZONTAL SCALE IN FEET 0 10 20 40

PID NO. 77305

R/W DESIGNER IMK
R/W REVIEWER MGB

RIGHT OF WAY TOPOGRAPHY PLAN
FORT AMANDA ROAD
STA. 25+50 TO STA. 30+50

ALL-SHAWNEE RD

24/27

203/206

I:\PROJECTS\ALL\77305\row\sheets\77305RT023.dgn 1/13/2014 4:04:39 PM C

ALLEN COUNTY
SHAWNEE TOWNSHIP
SEC. 10 & 11, T. 4 S., R. 6 E.

P.O.B. SUMMARY TABLE			
REF.	PARCEL	GROSS TAKE	ROW SHEET
DD	31-T1	0.051 AC	25
EE	32-T	0.015 AC	25

SPIRAL CURVE DATA
P.I. Sta. 33+52.38
Δ = 31° 15′ 00″ (LT)
Dc = 5° 00′ 00″
R = 1,145.92′
Ls = 350.00′
θs = 8° 45′ 00″
LT = 233.62′
ST = 116.93′
x = 349.18′
y = 17.79′
k = 174.86′
p = 4.45′
Δc = 13° 45′ 00″ (LT)
Lc = 275.00′
Ts = 496.59′
E = 48.59′
C = 274.34′
C1 = C2 = 349.64′
C.B.1 = N 86° 11′ 42″ E
C.B. = N 73° 29′ 10″ E
C.B.2 = S 60° 46′ 38″ W

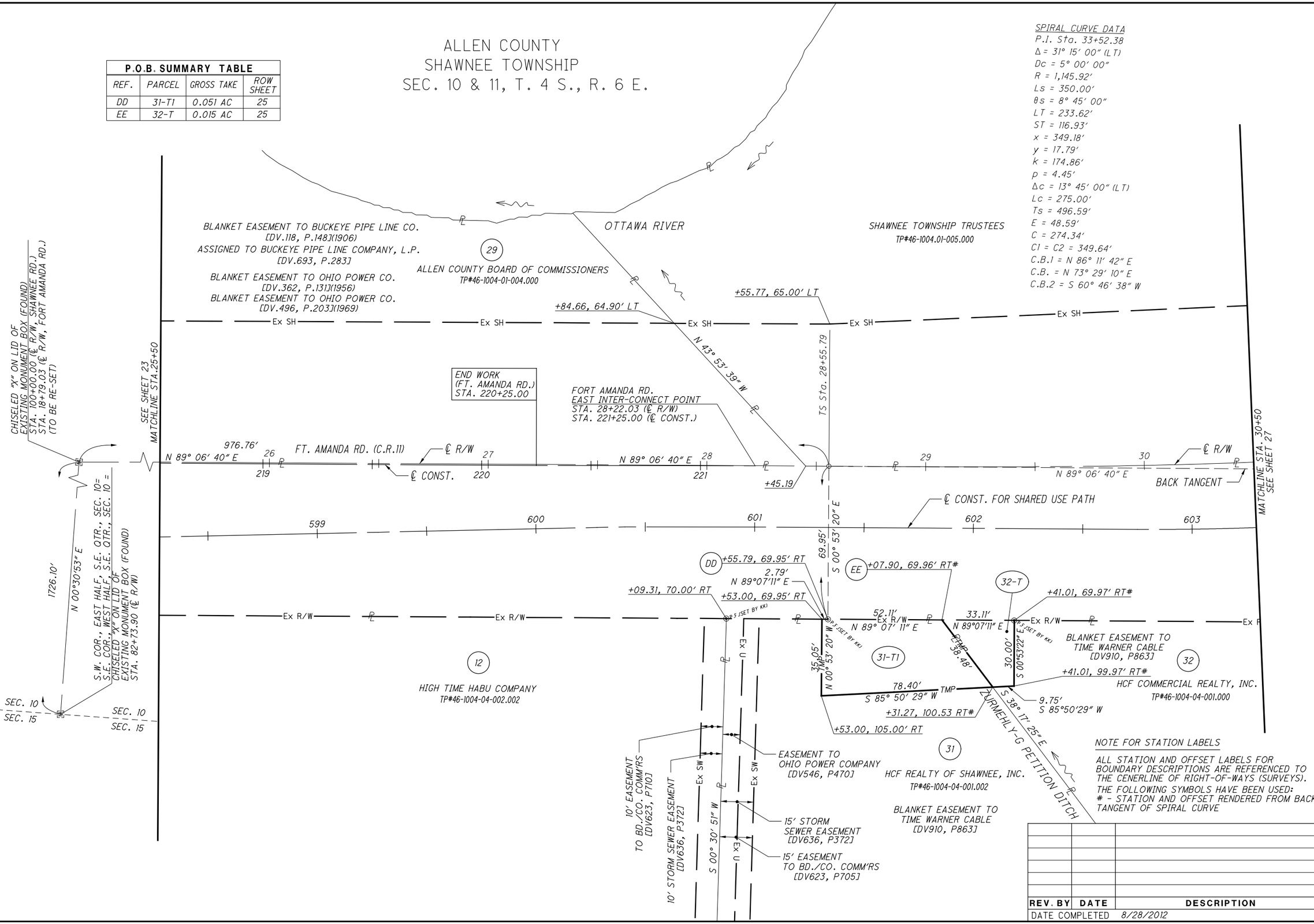

NOTE FOR STATION LABELS

ALL STATION AND OFFSET LABELS FOR BOUNDARY DESCRIPTIONS ARE REFERENCED TO THE CENERLINE OF RIGHT-OF-WAYS (SURVEYS).

THE FOLLOWING SYMBOLS HAVE BEEN USED:
- STATION AND OFFSET RENDERED FROM BACK TANGENT OF SPIRAL CURVE

REV. BY	DATE	DESCRIPTION

DATE COMPLETED 8/28/2012

HORIZONTAL SCALE IN FEET 0 10 20 40

PID NO. 77305

R/W DESIGNER IMK
R/W REVIEWER MGB

RIGHT OF WAY BOUNDARY PLAN
FORT AMANDA ROAD
STA. 25+50 TO STA. 30+50

ALL-SHAWNEE RD

I:\PROJECTS\ALL\77305\row\sheets\77305RB023.dgn 1/13/2014 4:04:40 PM C

ALLEN COUNTY
SHAWNEE TOWNSHIP
SEC. 10 & 11, T. 4 S., R. 6 E.

SHAWNEE TOWNSHIP TRUSTEES
TP#46-1004.01-005.000

END ACQUISITION STA. 34+58.25

SEE SHEET 24
MATCHLINE STA.30+50

TI PI STA.30+89.41

FT. AMANDA RD. (C.R.11)

SC Sta. 32+05.79

SEC. 10 / SEC. 11

CS Sta. 34+80.79

℄ R/W

CONST. LIMITS

℄ CONST. FOR SHARED USE PATH

N 89° 06' 40" E

BACK TANGENT

CURVE PI STA.33+43.95

EXISTING CONCRETE MONUMENT (FOUND)
PI STA. 33+52.38 (TO BE RESET)

ALLEN COUNTY BOARD OF COMMISSIONERS

ASPHALT

GRASS

PROPOSED DITCH

CONST. LIMITS
12"(SAVE)

(202)PRIVATE SIGN WITH ILLUMINATION*

PRIVATE GROUND LUMINAIRE FOR SIGN*

PRIVATE SIGN*

PRIVATE FLAG POLE* & GROUND LUMINAIRE*

BUSHES (±6)*

PARKING LOT

ASPHALT PARKING LOT

PRIVATE LIGHT POLE

(DO NOT DISTURB)PRIVATE LIGHT

SHARED USE PATH

END WORK (SHARED USE PATH) STA. 607+33.26

PRIVATE LIGHT POLE*

PRIVATE LANDSCAPING* & RETAINING WALL*

CONST. LIMITS

32

HCF COMMERCIAL REALTY, INC.
TP#46-1004-04-001.000
ADDRESS: #2615
BLANKET EASEMENT TO
TIME WARNER CABLE

I STORY COMMERCIAL

FOUNDATION EASEMENT

50' INGRESS/EGRESS EASEMENT

31

HCF REALTY OF SHAWNEE, INC.
TP#46-1004-04-001.002
ADDRESS: #2535
BLANKET EASEMENT TO
TIME WARNER CABLE

WALKWAY EASEMENT TO
JOHNNY APPLESEED METROPOLITAN PARK DISTRICT

33

LIMA REFINING COMPANY c/o HUSKY ENERGY
TP#46-1100-03-004.001
ADDRESS: N/A

SPIRAL CURVE DATA
P.I. Sta. 33+52.38
Δ = 31° 15' 00" (LT)
Dc = 5° 00' 00"
R = 1,145.92'
Ls = 350.00'
θs = 8° 45' 00"
LT = 233.62'
ST = 116.93'
x = 349.18'
y = 17.79'
k = 174.86'
p = 4.45'
Δc = 13° 45' 00" (LT)
Lc = 275.00'
Ts = 496.59'
E = 48.59'
C = 274.34'
C1 = C2 = 349.64'
C.B.1 = N 86° 11' 42" E
C.B. = N 73° 29' 10" E
C.B.2 = S 60° 46' 38" W

* DENOTES RIGHT OF WAY ENCROACHMENT

DRIVEWAY STATIONING:

DRIVEWAY CENTERLINE INTERCEPT STATIONING IS TO THE PROPOSED CONSTRUCTION CENTERLINE.

(202) TO BE REMOVED PER ODOT CMS ITEM 202

REV. BY	DATE	DESCRIPTION
IMK	05-06-13	REVISED PR. R/W TO SH AT PARCEL 31

DATE COMPLETED 8/28/2012

HORIZONTAL SCALE IN FEET 0 10 20 40

PID NO. 77305

R/W DESIGNER IMK
R/W REVIEWER MGB

RIGHT OF WAY TOPOGRAPHY PLAN
FORT AMANDA ROAD
STA. 30+50 TO END ACQUISITION

ALL-SHAWNEE RD

I:\PROJECTS\ALL\77305\row\sheets\77305RT024.dgn 1/13/2014 4:04:43 PM C

P.O.B. SUMMARY TABLE			
REF.	PARCEL	GROSS TAKE	ROW SHEET
FF	31-SH	0.049 AC	27
GG	31-T2	0.027 AC	27
HH	33-T	0.069 AC	27

ALLEN COUNTY
SHAWNEE TOWNSHIP
SEC. 10 & 11, T. 4 S., R. 6 E.

SHAWNEE TOWNSHIP TRUSTEES
TP#46-1004.01-005.000

END ACQUISITION
STA. 34+58.25

CURVE 31-SH
P.I. Sta. 34+08.13, 71.48' RT
Δ = 5° 00' 34" (LT)
Dc = 4° 42' 28"
R = 1,217.02'
T = 53.24'
L = 106.41'
E = 1.16'
C = 106.37'
C.B. = N 70° 19' 21" E

CHISELED "X" ON LID OF EXISTING MONUMENT BOX (FOUND)
STA. 100+00.00 (℄ R/W, SHAWNEE RD.)
STA. 18+19.03 (℄ R/W, FORT AMANDA RD.)
(TO BE RE-SET)

TS STA.28+55.79
976.76'
N 89°06'40" E
1726.10'
N 00°30'53" E
SEC. 10
SEC. 15
TI PI STA.30+89.41
500.24'
N 83° 16' 36" E
SC Sta. 32+05.79
S 00° 50' 17" W
SEC. 10
SEC. 11
INTERSECTION OF
℄ R/W, FORT AMANDA RD. &
EAST LINE, SEC. 10
STA. 32+07.07
FT. AMANDA RD. (C.R.11)
℄ R/W
℄ CONST. FOR SHARED USE PATH
N 89° 06' 40" E
BACK TANGENT
CURVE PI STA.33+43.95
+58.00
CS Sta. 34+80.79
70.24
S 16°55'51" E
ALLEN COUNTY BOARD OF COMMISSIONERS
+58.25, 70.39' RT
CURVE 31-SH
EXISTING CONCRETE MONUMENT (FOUND)
PI STA. 33+52.37 (TO BE RESET)
FF
+58.00, 70.24' RT
+51.63, 70.24' RT
+01.90, 76.40' RT
P.F.(SET BY KK)
+05.87, 70.02' RT
Ex R/W
Ex SH
31-SH
26.75'
N 45° 44' 59" W
46.75'
20.00'
607
40.12
95.55'
S 44° 15' 01" W
+11.24, 93.52' RT
30.00'
N 45°44'59" E
END WORK
(SHARED USE PATH)
STA. 607+33.26
+23.07, 120.59' RT
SHARED USE PATH
EAST INTER-CONNECT POINT
STA. 33+97.37, 123.63' RT (℄ R/W)
STA. 607+33.26 (℄ CONST. SHARED USE PATH)
SEE SHEET 24
MATCHLINE STA.30+50
S.W. COR., EAST HALF, S.E. QTR., SEC. 10=
S.E. COR., WEST HALF, S.E. QTR., SEC. 10 =
CHISELED "X" ON LID OF
EXISTING MONUMENT BOX (FOUND)
STA. 82+73.90 (℄ R/W)
32
HCF COMMERCIAL REALTY, INC.
TP#46-1004-04-001.000
BLANKET EASEMENT TO
TIME WARNER CABLE
[DV910, P863]
GG
+69.80, 93.82' RT
59.88'
N 44° 15' 01" E
31-T2
59.88'
S 44° 15' 01" W
TMP
+78.33, 111.53' RT
HH
33-T
100.00'
S 44° 15' 01" W
+22.00, 122.95' RT
20.00'
N 45° 44' 59" W
S 44° 15' 01" W
30.00'
N 45°44'59" W
+30.99, 140.26' RT
+44.03, 166.36' RT
FOUNDATION EASEMENT
[DV928, P160]
50' INGRESS/EGRESS EASEMENT
[DV928, P160]
(OVERLAPS 45' INGRESS/EGRESS EASEMENT)
[DV593, P825]
31
HCF REALTY OF SHAWNEE, INC.
TP#46-1004-04-001.002
BLANKET EASEMENT TO
TIME WARNER CABLE
[DV910, P863]
WALKWAY EASEMENT TO
JOHNNY APPLESEED METROPOLITAN PARK DISTRICT
[DV. 782, P.774]
33
LIMA REFINING COMPANY c/o HUSKY ENERGY
TP#46-1100-03-004.001

SPIRAL CURVE DATA
P.I. Sta. 33+52.38

Δ = 31° 15' 00" (LT)	p = 4.45'
Dc = 5° 00' 00"	Δc = 13° 45' 00" (LT)
R = 1,145.92'	Lc = 275.00'
Ls = 350.00'	Ts = 496.59'
θs = 8° 45' 00"	E = 48.59'
LT = 233.62'	C = 274.34'
ST = 116.93'	C1 = C2 = 349.64'
x = 349.18'	C.B.1 = N 86° 11' 42" E
y = 17.79'	C.B. = N 73° 29' 10" E
k = 174.86'	C.B.2 = S 60° 46' 38" W

NOTE FOR STATION LABELS

ALL STATION AND OFFSET LABELS FOR BOUNDARY DESCRIPTIONS ARE REFERENCED TO THE CENERLINE OF RIGHT-OF-WAYS (SURVEYS).

REV. BY	DATE	DESCRIPTION
IMK	05-06-13	REVISED PR. R/W TO SH AT PARCEL 31

DATE COMPLETED 8/28/2012

HORIZONTAL SCALE IN FEET 0 10 20 40

PID NO. 77305

R/W DESIGNER IMK
R/W REVIEWER MGB

RIGHT OF WAY BOUNDARY PLAN
FORT AMANDA ROAD
STA. 30+50 TO END ACQUISITION

ALL-SHAWNEE RD

27/27

206/206

I:\PROJECTS\ALL\77305\row\sheets\77305RB024.dgn 1/13/2014 4:04:44 PM C