STATE OF OHIO
DEPARTMENT OF TRANSPORTATION
ALL-75-0.21
CITY OF LIMA
SHAWNEE & PERRY TOWNSHIPS
ALLEN COUNTY

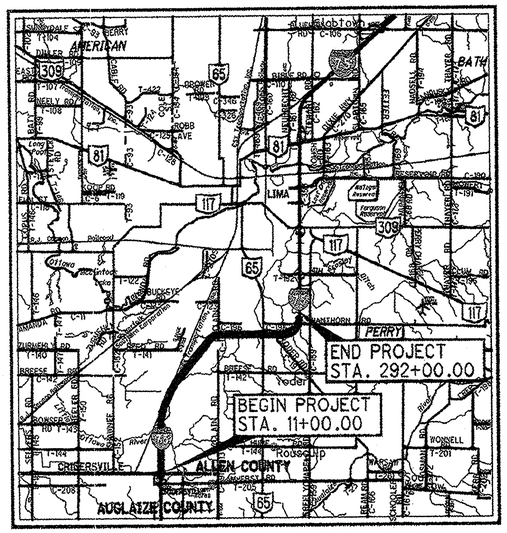

LOCATION MAP

LATITUDE: 40°43'02" LONGITUDE: 84°04'30"

SCALE IN MILES
0 1.5 3 4.5 6

PORTION TO BE IMPROVED
INTERSTATE HIGHWAY
STATE & FEDERAL ROUTES
COUNTY & TOWNSHIP ROADS
OTHER ROADS

DESIGN DESIGNATION (I-75)

CURRENT ADT (2015)	24770
DESIGN YEAR ADT (2035)	30120
DESIGN HOURLY VOLUME (2035)	2910
DIRECTIONAL DISTRIBUTION	50%
TRUCKS (24 HOUR B&C)	43%
DESIGN SPEED	70
T_D	0.35
LEGAL SPEED	65

DESIGN FUNCTIONAL CLASSIFICATION: URBAN INTERSTATE

NHS PROJECT. YES

DESIGN EXCEPTIONS - SEE SHEET 2

UNDERGROUND UTILITIES
CONTACT BOTH SERVICES
CALL TWO WORKING DAYS
BEFORE YOU DIG
CALL
1-800-362-2764
(TOLL FREE)
OHIO UTILITIES PROTECTION SERVICE
NON-MEMBERS
MUST BE CALLED DIRECTLY
OIL & GAS PRODUCERS PROTECTIVE
SERVICE CALL: **1-800-925-0988**

PLAN PREPARED BY:

DISTRICT NO. 1
OHIO DEPARTMENT OF TRANSPORTATION
PLANNING AND ENGINEERING DEPARTMENT

INDEX OF SHEETS:

TITLE	1	YODER RD. - PLAN & PROFILES	398 - 399
DESIGN DESIGNATIONS	2	YODER RD. - CROSS SECTIONS	400 - 406
BENCHMARKS	3 - 8	HANTHORN RD. - PLAN & PROFILES	407 - 410
SCHEMATIC	9 - 14	HANTHORN RD. - CROSS SECTIONS	411 - 420
TYPICAL SECTIONS	15 - 32	McCLAIN DITCH - PLAN & PROFILE	421 - 423
GENERAL NOTES	33 - 39	McCLAIN DITCH - CROSS SECTION	424 - 430
MAINTENANCE OF TRAFFIC	40 - 133	SUPERELEVATION TABLES	431 - 447
NOT USED	134	ACCELERATION RAMP DETAILS	448 - 455
GENERAL SUMMARY	135 - 142	INTERSECTION DETAILS	456 - 462
SUBSUMMARIES	143 - 168, 146A	PAVEMENT JOINT DETAILS	463 - 467
PROJECT SITE PLAN	169 - 174	MISCELLANEOUS ROADWAY DETAILS	468 - 472
I-75 MAINLINE - PLAN & PROFILES	175 - 206	NOT USED	473
I-75 MAINLINE - CROSS SECTIONS	207 - 308	CULVERT DETAILS	474 - 509
BREESE RD. - PLAN & PROFILES	309 - 311	LIGHTING	510 - 528
BREESE RD. - CROSS SECTIONS	312 - 316	TRAFFIC CONTROL	529 - 573
BREESE RD. RAMPS - PLAN & PROFILES	317 - 321	FENCE QUANTITIES	574
BREESE RD. RAMPS - CROSS SECTIONS	322 - 336	SIGNALS	575 - 588
McCLAIN RD. - PLAN & PROFILES	337 - 341	RETAINING WALLS	589 - 598
McCLAIN RD. - CROSS SECTIONS	342 - 352	STRUCTURES	599 -804, 718A
S.R. 65 - PLAN & PROFILES	353 - 360	RIGHT OF WAY	805 -907
S.R. 65 - CROSS SECTIONS	361 - 372, 370A	SOIL PROFILE/FOUNDATION INVESTIGATION	
S.R. 65 RAMPS - PLAN & PROFILES	373 - 378		
S.R. 65 RAMPS - CROSS SECTIONS	379 - 397		

PROJECT DESCRIPTION

PROJECT CONSISTS OF 5.32 MILES OF 4-LANE INTERSTATE HIGHWAY RECONSTRUCTION WITH PROVISIONS FOR A FUTURE ADDITIONAL MEDIAN LANE. INCLUDES TWO INTERCHANGES; AT BREESE ROAD AND SR 65. ALSO INCLUDED ARE VARIOUS SIDE ROAD IMPROVEMENTS AND THE RECONSTRUCTION OF THE McCLAIN ROAD AND HANTHORN ROAD OVERPASSES. THE PROJECT UPGRADES PAVEMENT, ALIGNMENT, AND VARIOUS OTHER DEFICIENCIES.

PROJECT EARTH DISTURBED AREA:	205 ACRES
ESTIMATED CONTRACTOR EARTH DISTRUBED AREA:	50 ACRES
NOTICE OF INTENT EARTH DISTURBED AREA:	255 ACRES

LIMITED ACCESS

THIS IMPROVEMENT IS ESPECIALLY DESIGNED FOR THROUGH TRAFFIC AND HAS BEEN DECLARED A LIMITED ACCESS HIGHWAY OR FREEWAY BY ACTION OF THE DIRECTOR IN ACCORDANCE WITH THE PROVISIONS OF SECTION 5511.02 OF THE OHIO REVISED CODE.

2010 SPECIFICATIONS

THE STANDARD SPECIFICATIONS OF THE STATE OF OHIO, DEPARTMENT OF TRANSPORTATION, INCLUDING CHANGES AND SUPPLEMENTAL SPECIFICATIONS LISTED IN THE PROPOSAL SHALL GOVERN THIS IMPROVEMENT.

I HEREBY APPROVE THESE PLANS AND DECLARE THAT THE MAKING OF THIS IMPROVEMENT WILL NOT REQUIRE THE CLOSING TO TRAFFIC OF THE HIGHWAY EXCEPT AS NOTED ON SHEETS 79-87 THAT PROVISIONS FOR THE MAINTENANCE AND SAFETY OF TRAFFIC WILL BE AS SET FORTH ON THE PLANS AND ESTIMATES.

UNDER AUTHORITY OF SECTION 4511.21, DIVISION (H) OF THE OHIO REVISED CODE, THE REVISED PRIMA FACIE SPEED LIMITS AS INDICATED HEREIN ARE DETERMINED TO BE REASONABLE AND SAFE, AND ARE HEREBY ESTABLISHED FOR THE DURATION OF THIS PROJECT. THE PRIMA FACIE SPEED LIMIT OR LIMITS HEREBY ESTABLISHED SHALL BECOME EFFECTIVE WHEN APPROPRIATE SIGNS GIVING NOTICE THEREOF ARE ERECTED.

APPROVED Kirk Stucker
DATE 6/25/13 DISTRICT DEPUTY DIRECTOR

APPROVED Jerry Wray Jr.
DATE 7-22-13 DIRECTOR, DEPARTMENT OF TRANSPORTATION

BRIDGE ENGINEERS SEAL:
STATE OF OHIO — ERIC B. SHERER E-66409 — REGISTERED PROFESSIONAL ENGINEER
SIGNED: Eric B Sherer
DATE: 6/24/13

ROADWAY ENGINEERS SEAL:
STATE OF OHIO — Brett D. Clark E-69393 — REGISTERED PROFESSIONAL ENGINEER
SIGNED: Brett D Clark
DATE: 6-24-13

MAINT. OF TRAFFIC ENGINEERS SEAL:
STATE OF OHIO — JARED RYAN LOVE E-75627 — REGISTERED PROFESSIONAL ENGINEER
SIGNED: Jared Ryan Love
DATE: 6-24-13

STANDARD CONSTRUCTION DRAWINGS

										SUPPLEMENTAL SPECIFICATIONS	
BP-1.1	7/28/00	DM-1.1	1/18/13	HL-20.11	1/19/07	TC-51.12	10/21/11	MT-95.30	7/20/12		
BP-2.1	7/18/08	DM-1.2	1/18/13	HL-30.11	1/18/13	TC-52.10	1/18/13	MT-95.40	7/20/12		
BP-2.2	7/18/08	DM-1.4	1/18/13	HL-30.21	10/21/11	TC-52.20	1/18/13	MT-95.70	7/20/12	800	7/19/13
BP-2.3	7/16/04	DM-2.1	1/18/13	HL-30.22	1/18/13	TC-61.10	4/20/12	MT-95.71	7/20/12	802	1/20/12
BP-3.1	4/20/12	DM-4.1	7/20/12	HL-30.31	4/17/09	TC-61.30	4/20/12	MT-95.82	7/20/12	812	1/15/10
BP-4.1	7/16/04	DM-4.2	7/20/12	HL-30.32	4/17/09	TC-65.10	4/20/12	MT-96.20	7/20/13	616	1/20/12
BP-5.1	7/28/00	DM-4.3	1/18/13	HL-30.33	4/17/09	TC-65.11	4/20/12	MT-96.26	1/16/09	621	4/20/12
BP-6.1	1/21/11	DM-4.4	7/20/12	HL-40.10	1/19/07	TC-71.10	10/19/12	MT-97.10	7/20/12	623	7/20/12
BP-7.1	10/15/10			HL-50.11	1/19/07	TC-72.20	7/20/12	MT-98.10	7/20/12	832	5/05/09
BP-8.1	7/18/08	MGS-1.1	1/18/13	HL-60.11	10/21/11	TC-73.10	4/20/12	MT-98.11	7/20/12	640	4/19/13
BP-9.1	4/15/05	MGS-2.1	1/18/13	HL-60.12	10/21/11	TC-81.21	1/18/13	MT-98.20	7/20/12	861	4/19/13
		MGS-2.3	1/18/13	HL-60.31	1/18/13	TC-83.10	1/18/13	MT-98.21	7/20/12	880	7/18/08
CB-1.1	1/18/13	MGS-3.1	1/18/13			TC-83.20	4/20/12	MT-98.22	7/20/12	884	4/18/08
CB-1.2	1/18/13	MGS-3.2	1/18/13	TC-12.30	1/21/11	TC-85.20	1/18/13	MT-98.28	7/20/12	888	10/21/11
CB-2.1	1/18/13	MGS-4.1	1/18/13	TC-21.10	1/19/07			MT-98.29	7/20/12	896	4/18/08
CB-2.2	1/18/13	MGS-4.2	1/18/13	TC-21.20	1/18/13	AS-1-81	1/18/13	MT-99.20	7/20/12	898	10/21/11
CB-3.3	1/18/13	MGS-4.3	1/18/13	TC-22.10	1/19/01	BR-1	7/19/02	MT-99.30	4/15/11	902	1/20/12
		MGS-5.2	1/18/13	TC-22.20	1/18/13	CS-1-08	7/18/08	MT-99.50	1/18/13	907	1/20/12
HW-1.1	1/18/13	MGS-5.3	1/18/13	TC-41.10	10/19/07	GSD-1-96	7/19/02	MT-100.00	7/20/12	921	4/20/12
HW-2.1	1/18/13	MGS-6.1	1/18/13	TC-41.20	1/19/01	ICD-1-82	7/19/02	MT-101.60	7/20/12		
HW-2.2	1/18/13	MGS-6.2	1/18/13	TC-41.30	1/19/07	PCB-91	1/18/13	MT-101.70	4/15/11		
MH-1.2	1/18/13			TC-41.40	7/16/04	PSID-1-99	7/18/08	MT-101.90	10/19/12	SPECIAL PROVISIONS	
		RM-1.1	1/18/13	TC-41.41	1/21/11	SICD-1-96	7/19/02	MT-102.10	1/18/13		
F-2.1	7/28/00			TC-41.50	1/18/13			MT-102.20	1/18/13		
F-3.1	4/16/10	HL-10.11	4/17/09	TC-42.10	1/19/07			MT-102.30	7/20/12		
F-3.3	7/28/00	HL-10.12	10/15/10	TC-42.20	1/21/11			MT-105.10	7/20/12		
F-3.4	7/28/00	HL-10.13	10/16/09	TC-51.11	1/21/11			MT-120.00	7/20/12		

FEDERAL PROJECT NO. E100(878)
PID NO. 89029
CONSTRUCTION PROJECT NO.
RAILROAD INVOLVEMENT INDIANA & OHIO RAILWAY
ALL-75-0.21
1 / 907

ALL-IR-75-0.21
130568 PID - 89029
Dist 1 11/15/2013

Contract Proposal Available
@ www.contracts.dot.
state.oh.us/home

I:\Pdv\89029\roadway\sheets\89029GT001.dgn 24-JUN-2013 12:16PM tbolenba

CALCULATED RP | CHECKED JB

ROADWAY DESIGN DESIGNATIONS

DESIGN DESIGNATION - BREESE RD.

CURRENT ADT (2015)	11,530
DESIGN YEAR ADT (2035)	12,840
DESIGN HOURLY VOLUME (2035)	1,190
DIRECTIONAL DISTRIBUTION	51% EB / 49% WB
TRUCKS (24 HOUR B&C) AVG.	9%
DESIGN SPEED	35 MPH
LEGAL SPEED	35 MPH

DESIGN FUNCTIONAL CLASSIFICATION - URBAN MINOR ARTERIAL

DESIGN DESIGNATION - S.R. 65

CURRENT ADT (2015)	9,900
DESIGN YEAR ADT (2035)	10,400
DESIGN HOURLY VOLUME (2035)	890
DIRECTIONAL DISTRIBUTION	50%
TRUCKS (24 HOUR B&C) AVG.	24%
DESIGN SPEED	45 MPH
LEGAL SPEED	45 MPH

DESIGN FUNCTIONAL CLASSIFICATION - URBAN PRINCIPAL & MINOR ARTERIAL

DESIGN DESIGNATION - HANTHORN RD.

CURRENT ADT (2015)	2660
DESIGN YEAR ADT (2035)	2830
DESIGN HOURLY VOLUME (2035)	283
DIRECTIONAL DISTRIBUTION	55% EB / 45% WB
TRUCKS (24 HOUR B&C) AVG.	4%
DESIGN SPEED	55 MPH
LEGAL SPEED	55 MPH

DESIGN FUNCTIONAL CLASSIFICATION - URBAN COLLECTOR

DESIGN DESIGNATION - McCLAIN RD.

CURRENT ADT (2015)	1680
DESIGN YEAR ADT (2035)	2340
DESIGN HOURLY VOLUME (2035)	234
DIRECTIONAL DISTRIBUTION	55% SB / 45% NB
TRUCKS (24 HOUR B&C) AVG.	4%
DESIGN SPEED	55 MPH
LEGAL SPEED	55 MPH

DESIGN FUNCTIONAL CLASSIFICATION - URBAN COLLECTOR

DESIGN DESIGNATION - YODER RD.

CURRENT ADT (2015)	1,370
DESIGN YEAR ADT (2035)	1,370
DESIGN HOURLY VOLUME (2035)	110
DIRECTIONAL DISTRIBUTION	50%
TRUCKS (24 HOUR B&C) AVG.	28%
DESIGN SPEED	55 MPH
LEGAL SPEED	55 MPH

DESIGN FUNCTIONAL CLASSIFICATION - URBAN LOCAL

DESIGN EXCEPTIONS

	APPROVAL DATE:	SHEET NO.
HORIZONTAL ALIGNMENT (DEGREE OF CURVATURE & SUPERELEVATION):		
BREESE RD. RAMP B - CURVE BREB-4	5/28/10	11, 319
BREESE RD. RAMP C - CURVE BREC-1	5/28/10	11, 320
YODER RD. - CURVES Y-1 & Y-2	5/28/10	13, 398, 399
STOPPING SIGHT DISTANCE:		
SR 65 RAMP C - SAG VERTICAL CURVE; STA. 224+90	5/28/10	376
SR 65 RAMP D - SAG VERTICAL CURVE; STA. 224+95	5/28/10	378

ALL-75-0.21

I:\Pd\89029\roadway\sheets\89029GM001.dgn 25-JUN-2013 6:20AM tbolenba

POINT ID	MONUMENT TYPE	NORTHING PROJECT GROUND (SURVEY FEET)	EASTING PROJECT GROUND (SURVEY FEET)	ELEVATION NAVD88 (FEET)	MAINLINE STATION/OFFSET	NORTHING OHIO STATE PLANE GRID NAD 83(95) (SURVEY FEET)	EASTING OHIO STATE PLANE GRID NAD 83(95) (SURVEY FEET)
DEFI	CORS (PID AJ7186)	592510.4063	1442696.3534	713.92		592462.4287	1442579.5333
KNTN	CORS (PID DF4052)	353137.7123	1659218.2350	987.26		353109.1175	1659083.8824
SIDN	CORS (PID AJ7196)	238997.4152	1502588.4531	1071.47		238978.0628	1502466.7833
ALL 75 00.40	NGS Monument (PID LA2473)			894.32			
ALL 75 01.10	NGS Monument (PID LA2535)			882.00			
ALL 75 01.77	NGS Monument (PID LA2536)			872.45			
ALL 75 02.27	NGS Monument (PID LA2537)	376573.5978	1518969.8899	885.80	120+88.06, 96.24' LT.	376543.1053	1518846.8937
ALL 75 03.20	NGS Monument (PID LA2538)	380073.9701	1522165.4360	884.32	167+86.35, 164.07' LT.	380043.1942	1522042.1810
ALL 75 03.40	NGS Monument (PID LA2539)	380279.6840	1523684.6924	884.00	182+68.98, 110.57' LT.	380248.8914	1523561.3144
ALL 75 03.98	NGS Monument (PID LA2474)	380033.5952	1526376.9492	898.63	209+62.99, 115.53' RT.	380002.8226	1526253.3532
ALL 75 04.48	NGS Monument (PID LA2475)	380129.3948	1529048.1707	933.32	236+33.43, 0.09' LT.	380098.6144	1528924.3584
ALL 75 0560	NGS Monument (PID LA2540)			904.80			
AUG 75 12.45	NGS Monument (PID LA2478)	364837.1369	1516115.2583	897.90		364807.5948	1515992.4932
ALL I75 001	Concrete Refusal Monument	366156.7275	1516114.5255	898.98	9+16.51, 74.20' RT.	366127.0785	1515991.7605
ALL I75 002	Concrete Refusal Monument	373966.5316	1517093.3612	872.35	88+85.37, 75.44' LT.	373936.2502	1516970.5169
ALL I75 003	Concrete Refusal Monument	377224.1283	1519562.8855	891.49	129+68.00, 73.20' LT.	377193.5832	1519439.8413
ALL I75 004	Concrete Refusal Monument	380060.4838	1525655.5467	890.83	202+41.41, 94.00' RT.	380029.7090	1525532.0091
ALL I75 005	Concrete Refusal Monument	380111.8348	1529595.1944	930.82	241+80.20, 15.46' RT.	380081.0558	1529471.3378
ALL I75 017	Concrete Refusal Monument	374742.5696	1517512.3613	871.95	97+58.88, 93.83' LT.	374712.2254	1517389.4831
ALL I75 018	Concrete Refusal Monument	370881.0028	1516115.7854	873.29	56+40.27, 8.31' LT.	370850.9713	1515993.0203
ALL I75 019	Concrete Refusal Monument	370248.2086	1516106.8591	873.78	50+07.67, 7.42' RT.	370218.2283	1515984.0947
300	3/4" Iron Pin w/Punch	375790.8697	1518420.4656	877.40	111+36.61, 0.14' RT.	375760.4206	1518297.5139
301	3/4" Iron Pin w/Punch	380125.4500	1522683.6320	883.87	172+70.32, 30.90' LT.	380094.6699	1522560.3351
302	3/4" Iron Pin w/Punch	380167.1967	1523026.7856		176+12.61, 11.96' LT.	380136.4133	1522903.4609
303	3/4" Iron Pin w/Punch	380146.1517	1527422.6691	907.42	220+07.84, 4.78' LT.	380115.3700	1527298.9884
304	3/4" Iron Pin w/Punch	380150.4728	1527897.4725	915.88	224+82.60, 12.63' LT.	380119.6907	1527773.7534
305	3/4" Iron Pin w/Punch	380748.9478	1531520.7141	912.90	261+56.04, 231.13' RT.	380718.1172	1531396.7016
306	3/4" Iron Pin w/Punch	381232.8321	1531742.1310	910.99	266+41.34, 130.06' RT.	381201.9624	1531618.1006
307	3/4" Iron Pin w/Punch	381758.0685	1531967.5618	912.20	271+82.78, 135.98' RT.	381727.1562	1531843.5131
17020	Concrete Monument w/Alum. Disk	370085.6130	1516203.0340	875.86	48+46.66, 106.24' RT.	370055.6459	1516080.2618
17021	Concrete Monument w/Alum. Disk	371074.5260	1516260.9540	877.67	58+49.96, 115.73' RT.	371044.4788	1516138.1771
17022	Concrete Monument w/Alum. Disk	375896.5974	1518854.0350	877.37	115+00.18, 258.94' RT.	375866.1598	1518731.0482
17023	Concrete Monument w/Alum. Disk	375795.3030	1517968.3700	886.53	108+50.89, 346.38' LT.	375764.8736	1517845.4549
17024	Concrete Monument w/Alum. Disk	379703.7350	1522611.1310	887.34	170+63.59, 351.76' RT.	379672.9891	1522487.8399
17025	Concrete Monument w/Alum. Disk	380671.9020	1522756.1800	890.28	174+36.40, 549.81' LT.	380641.0777	1522632.8772
17026	Concrete Monument w/Alum. Disk	381234.3960	1532633.8000	918.36	269+54.14, 936.08' RT.	381203.5261	1532509.6974
17027	Concrete Monument w/Alum. Disk	380818.7320	1527852.6540	897.69	224+32.83, 680.54' LT.	380787.8958	1527728.9385
17028	Concrete Monument w/Alum. Disk	380458.5850	1527743.7990	898.64	223+26.65, 319.59' LT.	380427.7780	1527620.0923
17029	Concrete Monument w/Alum. Disk	379871.1770	1527886.5860	904.10	224+73.79, 266.74' RT.	379840.4175	1527762.8678
17030	Concrete Monument w/Alum. Disk	379908.6750	1528408.5730	904.04	229+95.48, 225.37' RT.	379877.9125	1528284.8125
17031	Concrete Monument w/Alum. Disk	379956.1820	1528696.6320	906.27	232+83.18, 175.72' RT.	379925.4156	1528572.8482
17032	Concrete Monument w/Alum. Disk	379961.2270	1529172.3800	908.49	237+58.88, 167.15' RT.	379930.4602	1529048.5576
17033	Concrete Monument w/Alum. Disk	381058.4180	1531728.8100	912.89	264+96.01, 209.13' RT.	381027.5624	1531604.7806
17034	Concrete Monument w/Alum. Disk	381546.0610	1531951.1840	911.22	269+89.87, 186.98' RT.	381515.1659	1531827.1366
17050	X on guardrail boly (Hanthorn Rd.)	381279.5930	1532241.1520	920.59	268+71.69, 556.19' RT.	381248.7195	1532117.0812
BM 1231	3/4" Rebar	381279.1510	1532000.1060	928.58	267+87.03, 337.36' RT.	381248.2775	1531876.0547
BM 1232	3/4" Rebar	381284.3680	1531575.4340	927.75	266+03.72, 40.16' LT.	381253.4941	1531451.4171
BM 1441	X on guardrail bolt (McClain)	379818.9217	1522741.8940	893.96	172+48.07, 280.38' RT.	386537.2772	1532366.6769
BM 1442	3/4" rebar (McClain)	380296.1120	1522744.8660	902.91	173+64.46, 183.18' LT.	386551.7340	1531090.7193
BM 1918	X on MH (SR 65)	380286.9263	1527783.4076	898.13	223+67.53, 148.23' LT.	380256.1332	1527659.6977
BM 1920	Square cut on curb (SR 65)	379865.7614	1527872.2656	904.32	224+59.51, 272.26' RT.	379835.0024	1527748.5485
BM 11795	Square on base of RR signal	379963.4050	1529113.9405	911.52	237+00.43, 165.40' RT.	379932.6381	1528990.1229
BM 12004	Top of light pole base (Breese)	375822.5596	1518298.9899	896.43	110+81.13, 112.47' LT.	375792.1280	1518176.0480
BM 12005	5/8" x 12" rebar (Breese)	375815.8701	1518606.2408	895.42	112+77.04, 124.31' RT.	375785.4390	1518483.2740
BM 12275	Top of light pole base (Breese)	375821.6816	1518205.5593	893.51	110+19.35, 182.57' LT.	375791.2500	1518082.6250
BM 12276	Guardrail bolt (Breese)	375786.1137	1518124.7628	888.74	109+41.51, 220.75' LT.	375755.6850	1518001.8350

PROJECT CONTROL

NOTE: ALL MAPPING AND PLANS ARE PROJECT GROUND COORDINATES. TO OBTAIN PROJECT GROUND COORDINATES MULTIPLY EACH GRID NORTHING AND GRID EASTING BY THE P.A.F. (1.00008098).

CALCULATED HM | CHECKED CC

PRIMARY CONTROL POINTS/BENCHMARKS COORDINATE TABLE

ALL-75-0.21

I:\Pd\89029\roadway\sheets\89029GM002.dgn 25-JUN-2013 6:20AM tbolenba

AUG 75 12.45

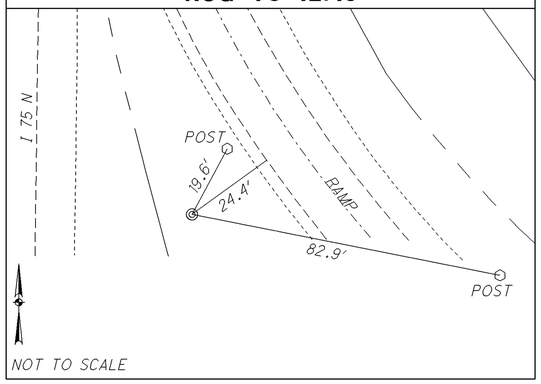

ALL I75 001 9+16.51, 74.20' RT.

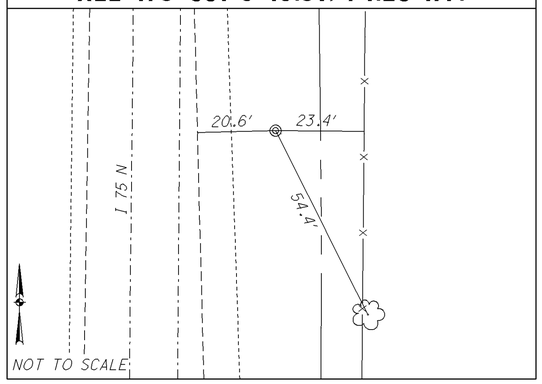

ALL 75 00.40 21+53, 199' LT.+-

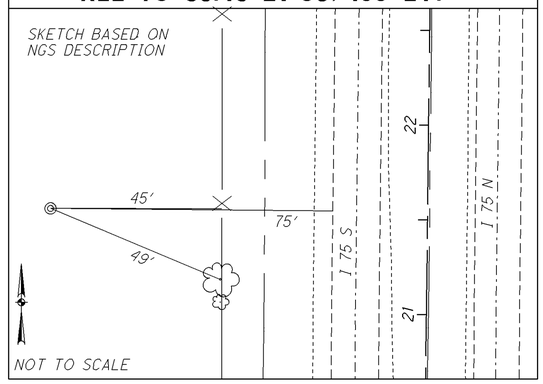

17020 48+46.66, 106.24' RT.

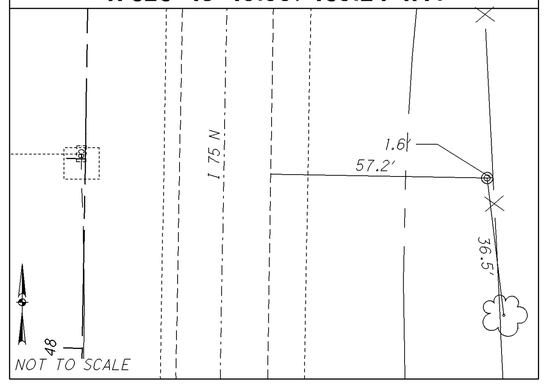

ALL I75 019 50+07.67, 7.42' RT.

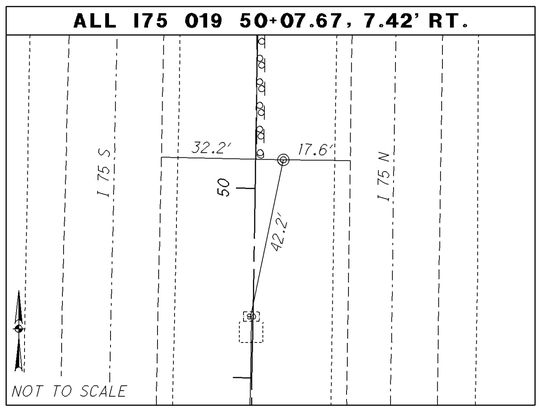

ALL I75 018 56+40.27, 8.31' LT.

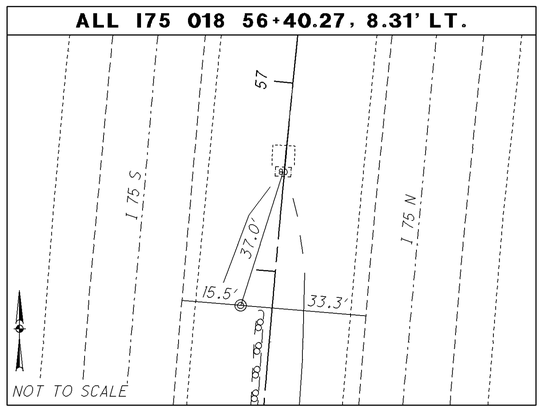

17021 58+49.96, 115.73' RT.

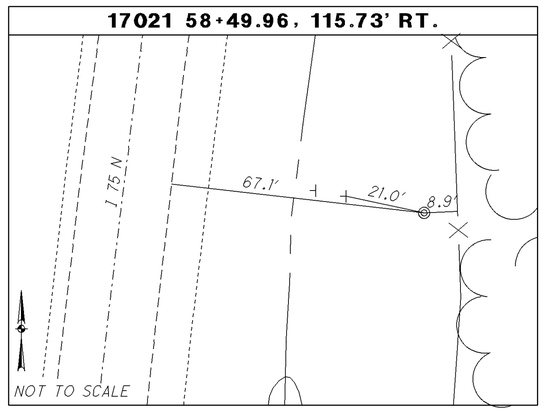

ALL 75 01.10 66+33, 103' LT.+-

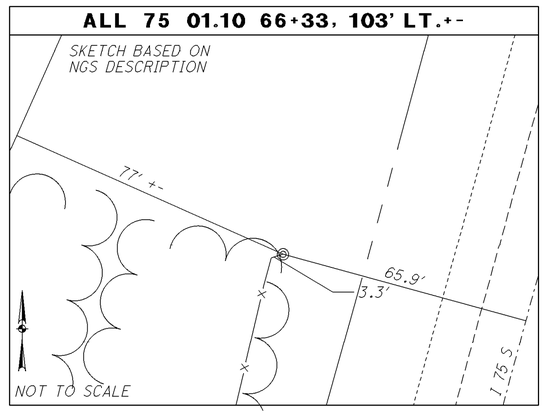

ALL I75 002 88+85.37, 75.44' LT.

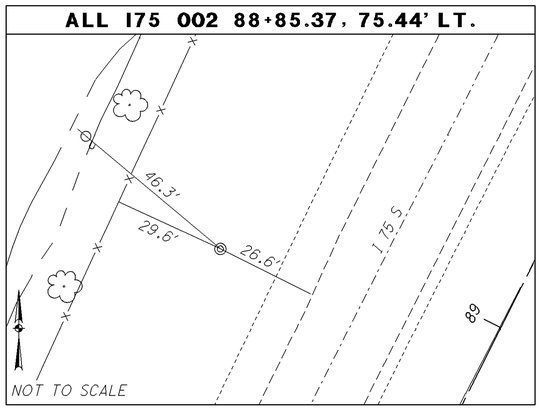

ALL 75 01.77 91+65, 114' LT+-

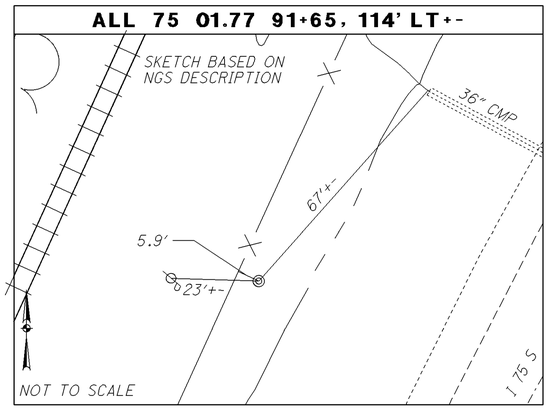

ALL I75 017 97+58.88, 93.83' LT.

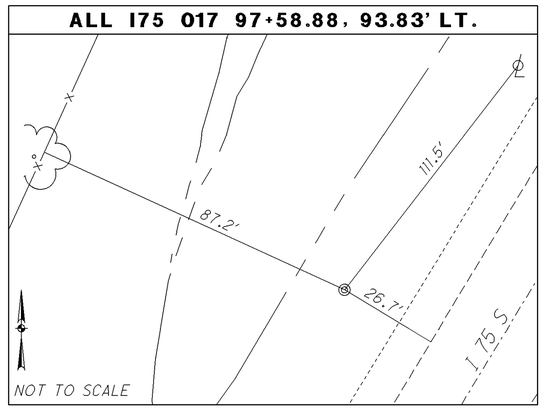

17023 108+50.89, 346.38' LT.

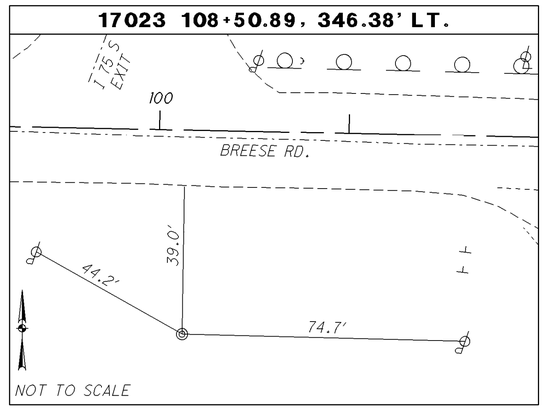

PRIMARY CONTROL POINTS/BENCHMARKS REFERENCE SKETCHES

CALCULATED HM
CHECKED CC

ALL-75-0.21

I:\Pdt\89029\roadway\sheets\89029GM003.dgn 25-JUN-2013 6:20AM tbolenba

BM 12276 109+41.51, 220.75' LT.

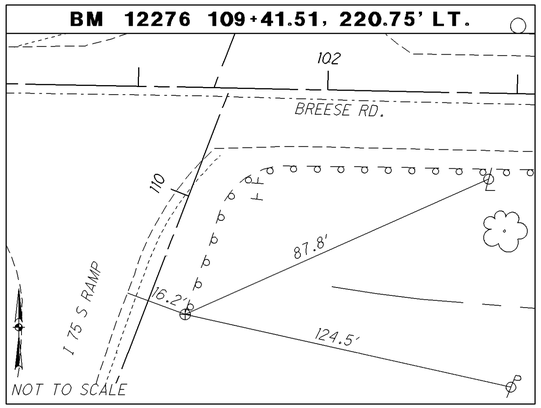

BM 12275 110+19.35, 182.57' LT.

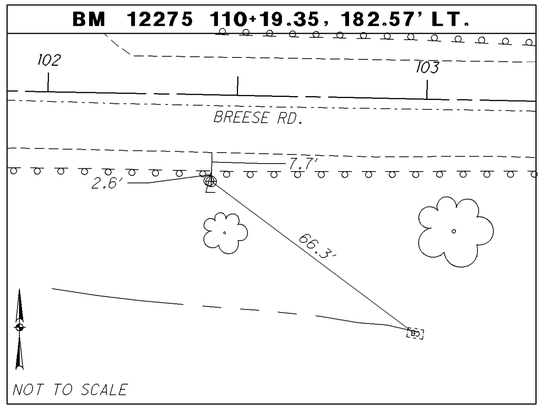

BM 12004 110+81.13, 112.47' LT.

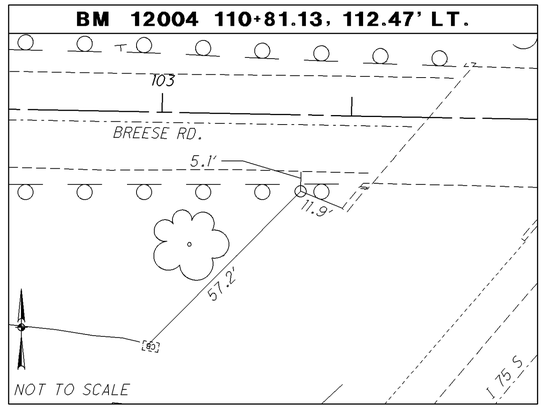

300 111+36.61, 0.14' RT.

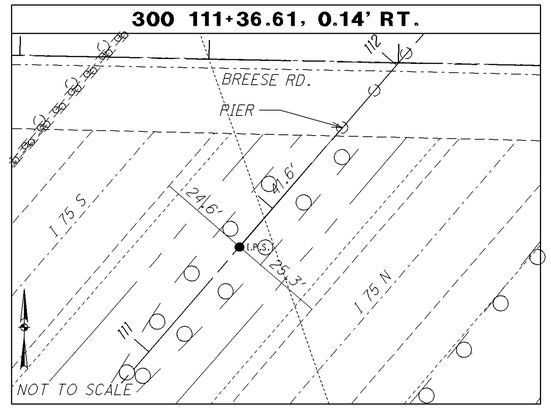

BM 12005 112+77.04, 124.31' RT.

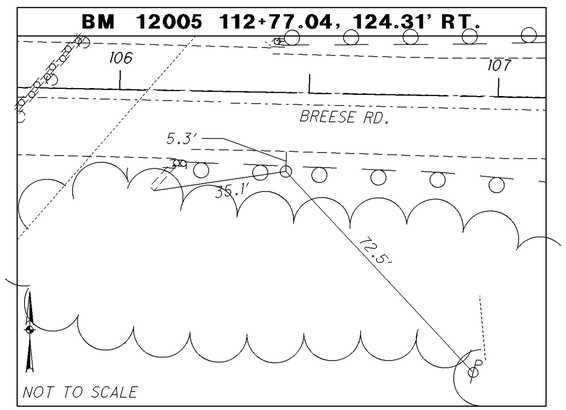

17022 115+00.18, 258.94' RT.

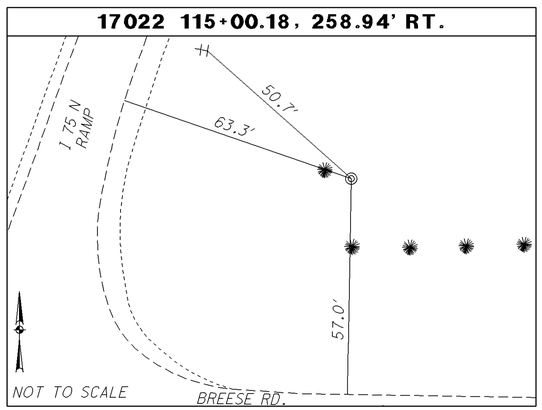

ALL 75 02.27 120+88.06, 96.24' LT.

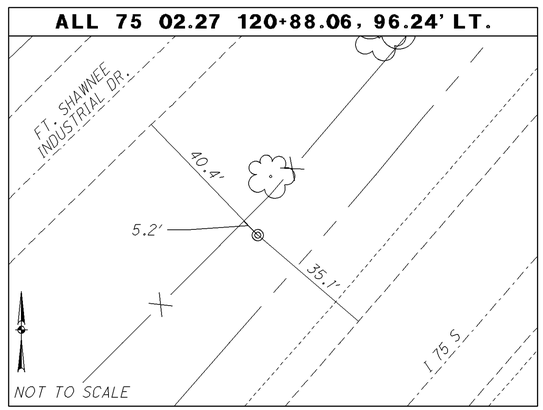

ALL I75 003 129+68.00, 73.20' LT.

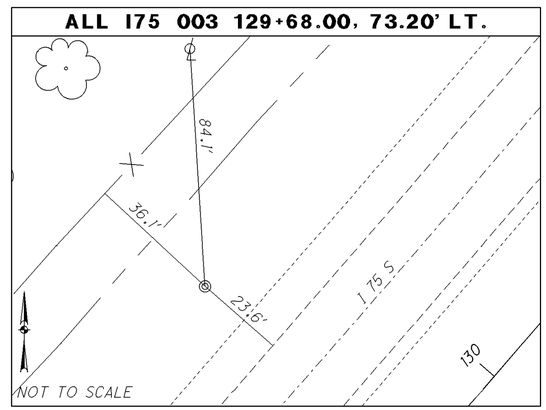

ALL 75 03.20 167+86.35, 164.07' LT.

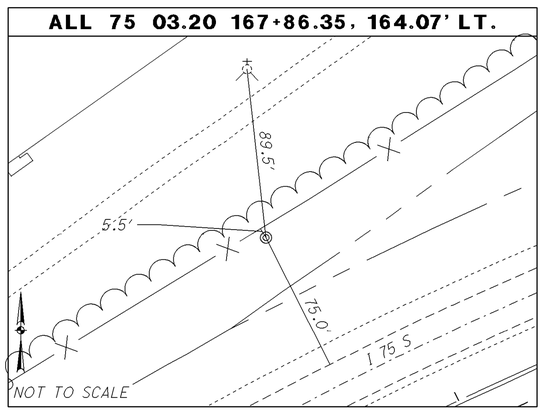

17024 170+63.59, 351.76' RT.

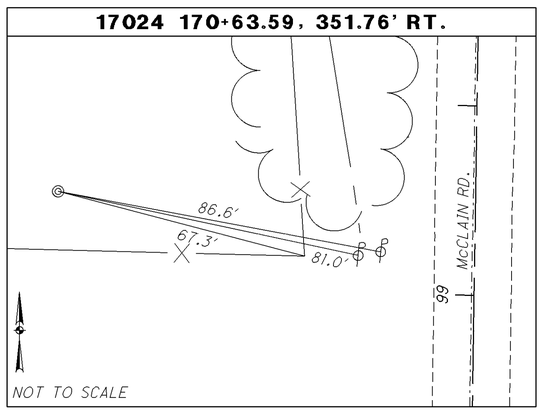

BM 1441 172+48.07, 280.38' RT.

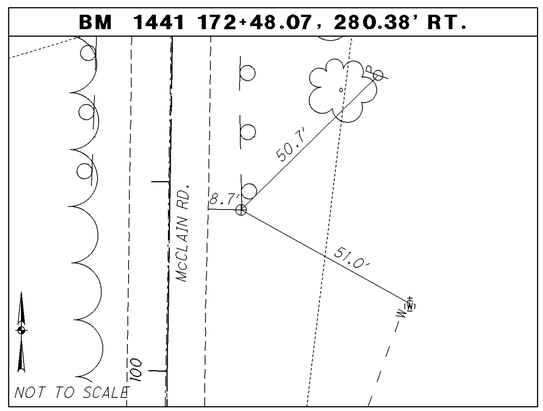

301 172+70.32, 30.90' LT.

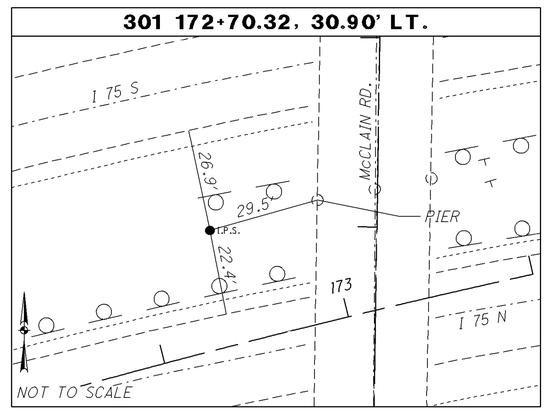

PRIMARY CONTROL POINTS/BENCHMARKS REFERENCE SKETCHES

CALCULATED HM
CHECKED CC

ALL-75-0.21

I:\Pd\89029\roadway\sheets\89029GM004.dgn 25-JUN-2013 6:20AM tbolenba

BM 1442 173+64.46, 183.18' LT.

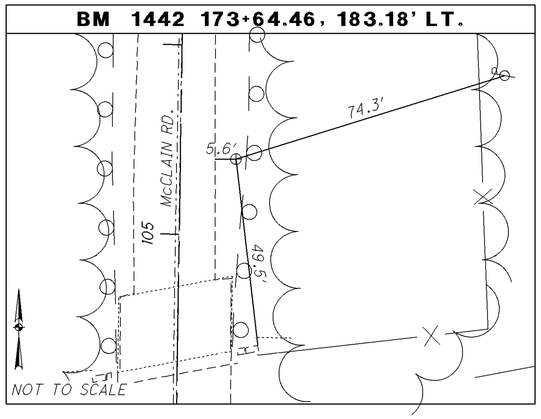

17025 174+36.40, 549.81' LT.

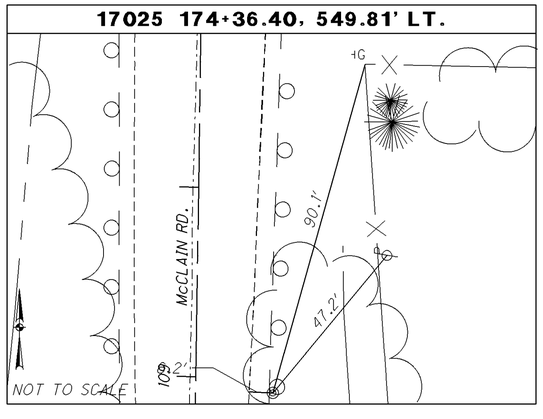

302 176+12.61, 11.96' LT.

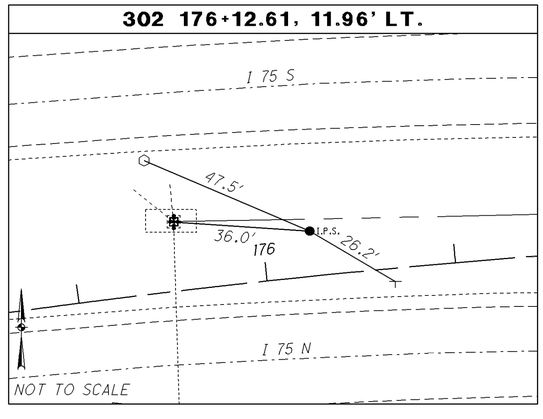

ALL 75 03.40 182+68.98, 110.57' LT.

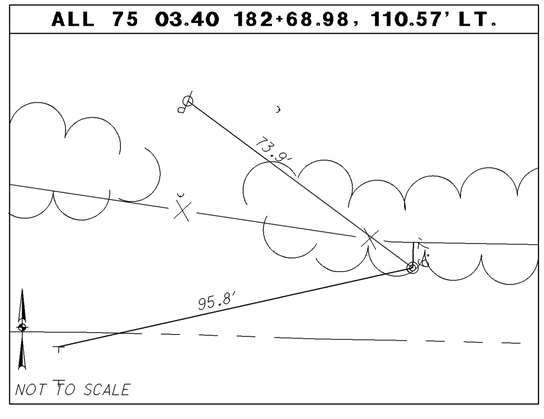

ALL I75 004 202+41.41, 94.00' RT.

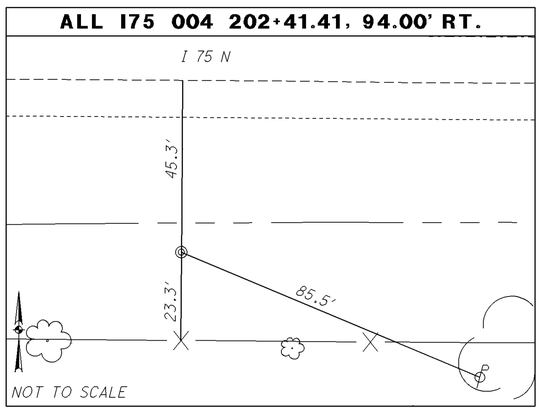

ALL I75 03.98 209+62.99, 115.53' RT.

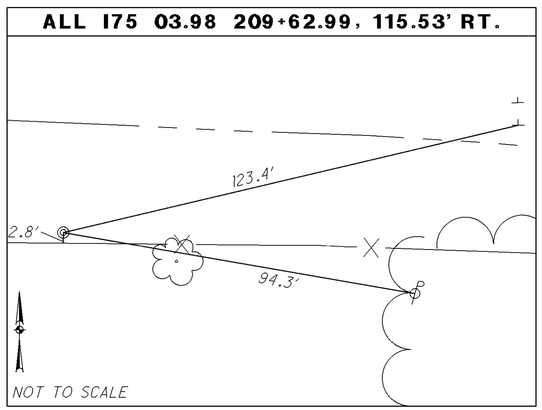

303 220+07.84, 4.78' LT.

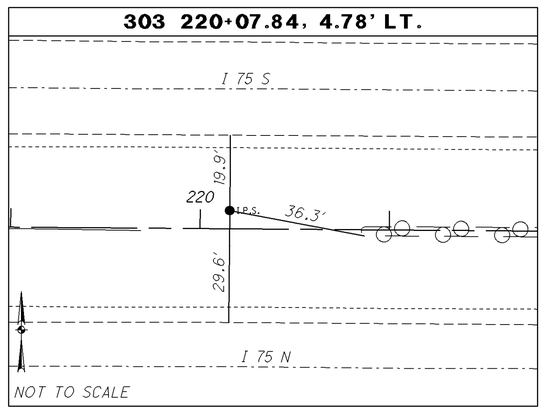

17028 223+26.65, 319.59' LT.

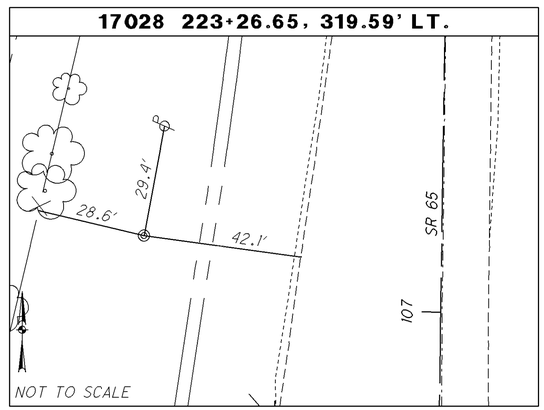

BM 1918 223+67.53, 148.23' LT.

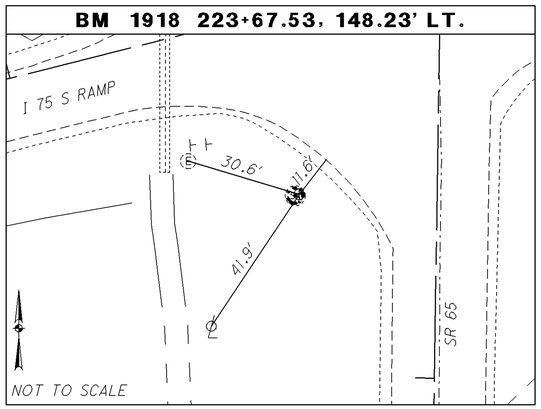

17027 224+32.83, 680.54' LT.

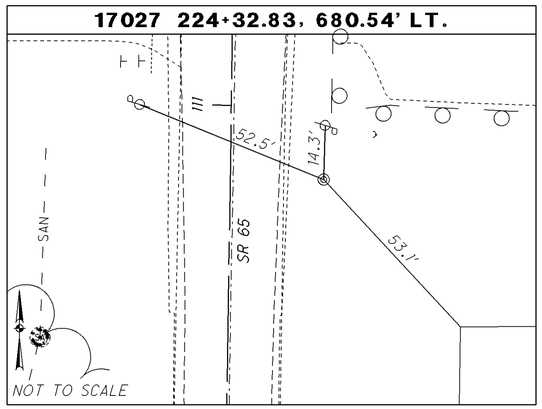

BM 1920 224+59.51, 272.26' RT.

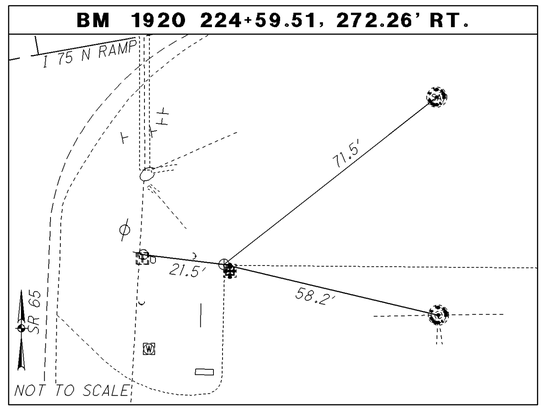

17029 224+73.79, 266.74' RT.

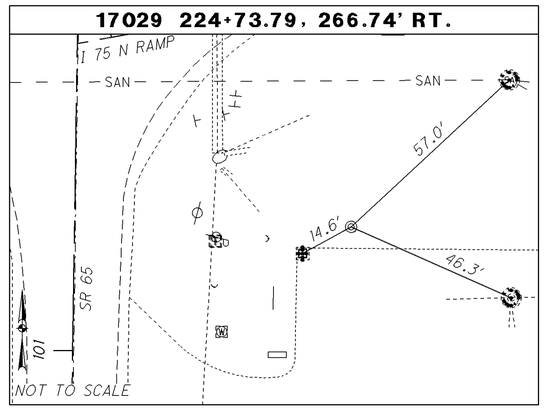

CALCULATED HM
CHECKED CC

PRIMARY CONTROL POINTS/BENCHMARKS REFERENCE SKETCHES

ALL-75-0.21

I:\Pd\89029\roadway\sheets\89029GM005.dgn 25-JUN-2013 6:20AM tbolenba

304 224+82.60, 12.63' LT.

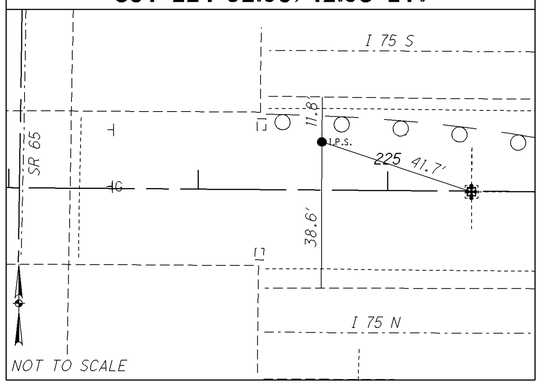

17030 229+95.48, 225.37' RT.

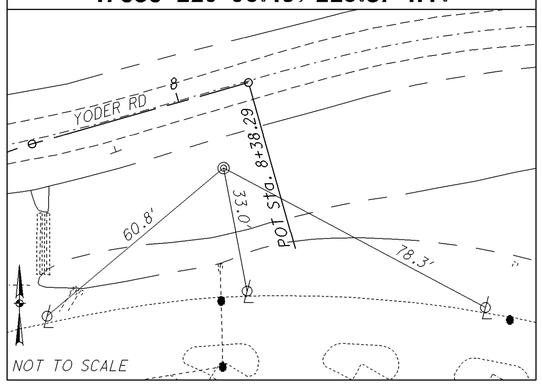

17031 232+83.18, 175.72' RT.

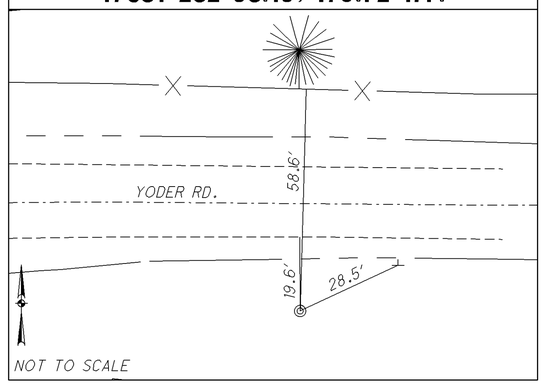

ALL 75 04.48 236+33.43, 0.09' LT.

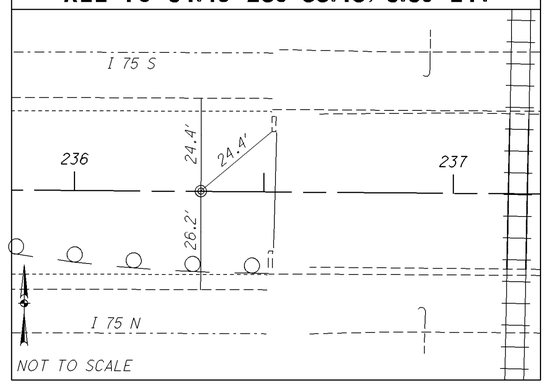

BM 11795 237+00.43, 165.40' RT.

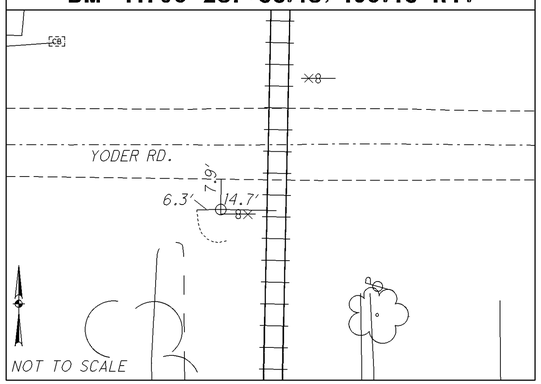

17032 237+58.88, 167.15' RT.

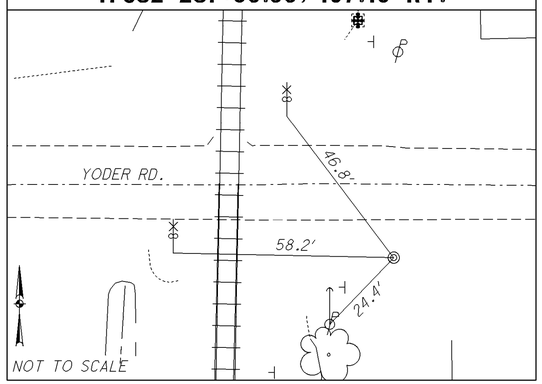

ALL I75 005 241+80.20, 15.46' RT.

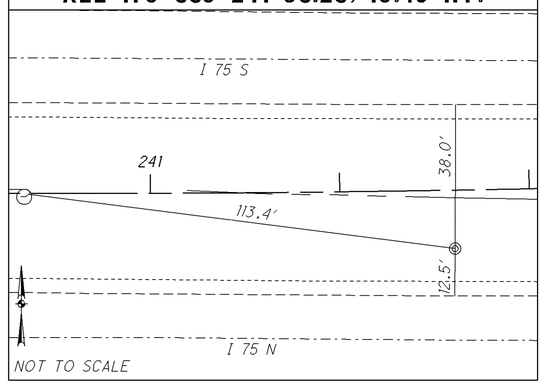

305 261+56.04, 231.13' RT.

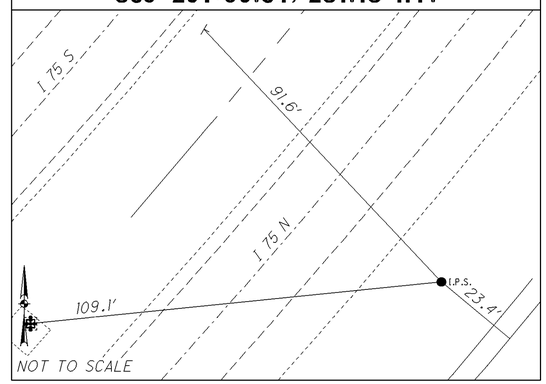

17033 264+96.01, 209.13' RT.

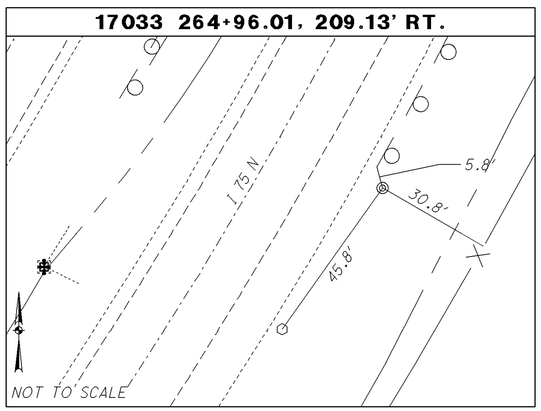

BM 1232 266+03.72, 40.16' LT.

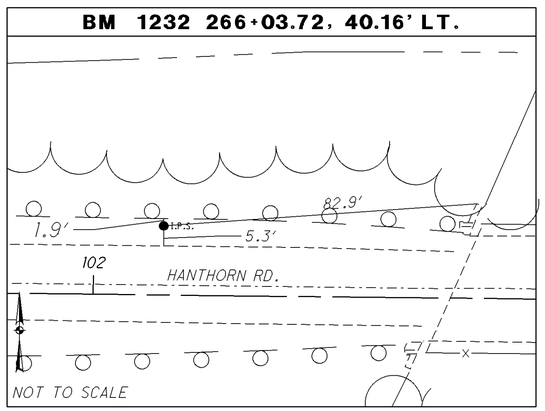

306 266+41.34, 130.06' RT.

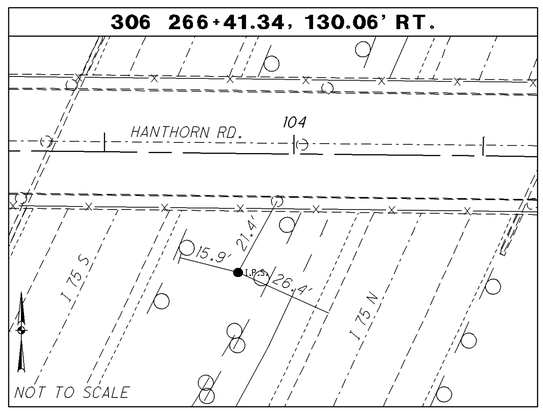

BM 1231 267+87.03, 337.36' RT.

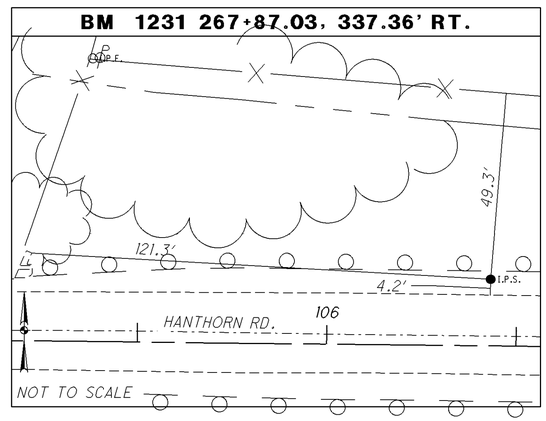

PRIMARY CONTROL POINTS/BENCHMARKS
REFERENCE SKETCHES

CALCULATED HM
CHECKED CC

ALL-75-0.21

I:\Pd\89029\roadway\sheets\89029GM006.dgn 25-JUN-2013 6:20AM tbolenba

PROPOSED MAINLINE I-75								
STATION	SET AT	DISTANCE FROM ℄	℄ REFERENCE MONUMENTS	GROUND COORDINATES		GRID COORDINATES		MONUMENT TYPE
				NORTHING	EASTING	NORTHING	EASTING	
0+00.00	COUNTY LINE	℄	1	365,241.1642	1,516,029.4355	365,211.5894	1,515,906.6774	CONC. MON.
5+00.00	POT	℄	1	365,741.1289	1,516,035.3821	365,711.5136	1,515,912.6235	CONC. MON.
11+00.00	POT	℄	1	366,341.0864	1,516,042.5180	366,311.4225	1,515,919.7588	CONC. MON.
15+00.00	POT	℄	1	366,741.0581	1,516,047.2753	366,711.3618	1,515,924.5157	CONC. MON.
20+00.00	POT	℄	1	367,241.0228	1,516,053.2218	367,211.2860	1,515,930.4618	CONC. MON.
25+00.00	POT	℄	1	367,740.9874	1,516,059.1684	367,711.2101	1,515,936.4079	CONC. MON.
26+49.46	PI *	℄	0	367,890.4375	1,516,060.9460	367,860.6481	1,515,938.1853	
26+52.15	1/4 SEC. LINE	℄	1	367,893.1228	1,516,060.9898	367,863.3332	1,515,938.2291	CONC. MON.
30+00.00	POT	℄	1	368,240.9301	1,516,066.6682	368,211.1124	1,515,943.9071	CONC. MON.
35+00.00	POT	℄	1	368,740.8635	1,516,074.8301	368,711.0053	1,515,952.0683	CONC. MON.
40+00.00	POT	℄	1	369,240.7969	1,516,082.9920	369,210.8982	1,515,960.2295	CONC. MON.
45+00.00	POT	℄	1	369,740.7303	1,516,091.1539	369,710.7911	1,515,968.3908	CONC. MON.
50+00.00	POT	℄	1	370,240.6636	1,516,099.3158	370,210.6839	1,515,976.5520	CONC. MON.
52+35.32	PC *	℄	0	370,475.9529	1,516,103.1572	370,445.9542	1,515,980.3931	
55+00.00	POC	℄	1	370,740.4031	1,516,113.5878	370,710.3830	1,515,990.8229	CONC. MON.
60+00.00	POC	℄	1	371,237.4309	1,516,166.5479	371,207.3705	1,516,043.7787	CONC. MON.
65+00.00	POC	℄	1	371,727.9516	1,516,262.6253	371,697.8515	1,516,139.8483	CONC. MON.
70+00.00	POC	℄	1	372,208.2319	1,516,401.0888	372,178.0929	1,516,278.3006	CONC. MON.
75+95.74	PT	℄	1	372,762.0392	1,516,619.9188	372,731.8554	1,516,497.1129	CONC. MON.
80+79.59	1/4 SEC. LINE	℄	1	373,200.3609	1,516,820.0390	373,170.1416	1,516,697.2169	CONC. MON.
85+69.17	PC	℄	1	373,647.5422	1,517,024.2041	373,617.2867	1,516,901.3654	CONC. MON.
90+00.00	POC	℄	1	374,034.8092	1,517,212.8830	374,004.5223	1,517,090.0290	CONC. MON.
92+91.87	SEC. LINE	℄	1	374,291.5733	1,517,351.6259	374,261.2656	1,517,228.7607	CONC. MON.
95+00.00	POC	℄	1	374,471.7253	1,517,455.8518	374,441.4030	1,517,332.9782	CONC. MON.
100+00.00	POC	℄	1	374,893.7748	1,517,723.8139	374,863.4184	1,517,600.9186	CONC. MON.
105+00.00	POC	℄	1	375,299.5297	1,518,015.8627	375,269.1404	1,517,892.9437	CONC. MON.
110+15.90	PT	℄	1	375,699.6508	1,518,341.3965	375,669.2291	1,518,218.4512	CONC. MON.
115+00.00	POT	℄	1	376,065.8328	1,518,658.0462	376,035.3815	1,518,535.0752	CONC. MON.
120+00.00	POT	℄	1	376,444.0391	1,518,985.0936	376,413.5571	1,518,862.0961	CONC. MON.
125+00.00	POT	℄	1	376,822.2454	1,519,312.1411	376,791.7328	1,519,189.1172	CONC. MON.
130+00.00	POT	℄	1	377,200.4516	1,519,639.1885	377,169.9084	1,519,516.1381	CONC. MON.
135+98.50	1/4 SEC. LINE	℄	1	377,653.1643	1,520,030.6640	377,622.5844	1,519,907.5819	CONC. MON.
140+00.00	POT	℄	1	377,956.8642	1,520,293.2833	377,926.2597	1,520,170.1799	CONC. MON.
146+52.52	1/4 SEC. LINE	℄	1	378,450.4376	1,520,720.0926	378,419.7932	1,520,596.9547	CONC. MON.
150+00.00	POT	℄	1	378,713.2767	1,520,947.3782	378,682.6110	1,520,824.2219	CONC. MON.
156+10.95	TS	℄	1	379,175.4035	1,521,346.9944	379,144.7004	1,521,223.8057	CONC. MON.
161+45.95	SC	℄	1	379,565.9316	1,521,712.1881	379,535.1968	1,521,588.9698	CONC. MON.
165+00.00	POC	℄	1	379,783.8666	1,521,990.7735	379,753.1142	1,521,867.5327	CONC. MON.
170+00.00	POC	℄	1	380,013.2017	1,522,433.9613	379,982.4307	1,522,310.6846	CONC. MON.
175+93.92	CS	℄	1	380,153.3311	1,523,009.3996	380,122.5488	1,522,886.0763	CONC. MON.
181+28.92	ST	℄	1	380,170.1594	1,523,543.8108	380,139.3757	1,523,420.4442	CONC. MON.
185+00.00	POT	℄	1	380,167.4049	1,523,914.8856	380,136.6214	1,523,791.4890	CONC. MON.
190+00.00	POT	℄	1	380,163.6936	1,524,414.8718	380,132.9104	1,524,291.4347	CONC. MON.
195+00.00	POT	℄	1	380,159.9822	1,524,914.8580	380,129.1993	1,524,791.3804	CONC. MON.
197+53.47	1/4 SEC. LINE	℄	1	380,158.1008	1,525,168.3243	380,127.3181	1,525,044.8262	CONC. MON.
200+00.00	POT	℄	1	380,156.2709	1,525,414.8442	380,125.4883	1,525,291.3261	CONC. MON.
205+00.00	POT	℄	1	380,152.5596	1,525,914.8305	380,121.7773	1,525,791.2719	CONC. MON.
210+00.00	POT	℄	1	380,148.8482	1,526,414.8167	380,118.0662	1,526,291.2176	CONC. MON.
215+00.00	POT	℄	1	380,145.1369	1,526,914.8029	380,114.3552	1,526,791.1634	CONC. MON.
220+00.00	POT	℄	1	380,141.4255	1,527,414.7891	380,110.6441	1,527,291.1091	CONC. MON.
225+00.00	POT	℄	1	380,137.7142	1,527,914.7754	380,106.9331	1,527,791.0549	CONC. MON.
230+00.00	POT	℄	1	380,134.0028	1,528,414.7616	380,103.2220	1,528,291.0006	CONC. MON.
235+00.00	POT	℄	1	380,130.2915	1,528,914.7478	380,099.5110	1,528,790.9463	CONC. MON.
239+33.16	TS	℄	1	380,127.0763	1,529,347.8979	380,096.2961	1,529,224.0613	CONC. MON.
244+68.16	SC	℄	1	380,143.9046	1,529,882.3091	380,113.1230	1,529,758.4293	CONC. MON.
250+80.91	1/4 SEC. LINE	℄	1	380,290.8876	1,530,475.2851	380,260.0941	1,530,351.3572	CONC. MON.
255+00.00	POC	℄	1	380,479.7114	1,530,848.7769	380,448.9026	1,530,724.8188	CONC. MON.
260+00.00	POC	℄	1	380,789.0424	1,531,240.3434	380,758.2086	1,531,116.3536	CONC. MON.
265+00.00	POC	℄	1	381,175.7916	1,531,555.6766	381,144.9265	1,531,431.6613	CONC. MON.
270+00.00	POC	℄	1	381,621.6239	1,531,779.8273	381,590.7227	1,531,655.7938	CONC. MON.
275+12.14	CS	℄	1	382,117.4277	1,531,903.8141	382,086.4863	1,531,779.7706	CONC. MON.
280+47.14	ST	℄	1	382,651.2806	1,531,933.4727	382,620.2960	1,531,809.4268	CONC. MON.
285+00.00	POT	℄	1	383,104.0818	1,531,940.9885	383,073.0605	1,531,816.9420	CONC. MON.
290+00.00	POT	℄	1	383,604.0129	1,531,949.2865	383,572.9512	1,531,825.2393	CONC. MON.
TOTAL			62					

PROPOSED YODER RD.								
STATION	SET AT	DISTANCE FROM ℄	℄ REFERENCE MONUMENTS	GROUND COORDINATES		GRID COORDINATES		MONUMENT TYPE
				NORTHING	EASTING	NORTHING	EASTING	
0+00.00	S.R. 65	℄	1	379,543.7918	1,527,808.5835	379,513.0588	1,527,684.8716	R/W MON. BOX
1+80.85	PC	℄	1	379,541.1066	1,527,989.4104	379,510.3738	1,527,865.6838	R/W MON. BOX
4+04.77	PT	℄	1	379,666.7928	1,528,154.9005	379,636.0499	1,528,031.1605	R/W MON. BOX
5+44.77	PC	℄	1	379,802.1994	1,528,190.4679	379,771.4455	1,528,066.7251	R/W MON. BOX
7+19.61	PT	℄	1	379,921.5075	1,528,307.4669	379,890.7439	1,528,183.7146	R/W MON. BOX
		TOTAL	5					

PROPOSED MONUMENTS TO BE SET			
LOCATION	PID	REFERENCE MONUMENTS	MONUMENT ASSEMBLIES
MAINLINE I-75	89029	62	0
YODER RD.		0	5
TOTAL (CARRIED TO GENERAL NOTES)		62	5

17050 268+71.69, 556.19' RT.

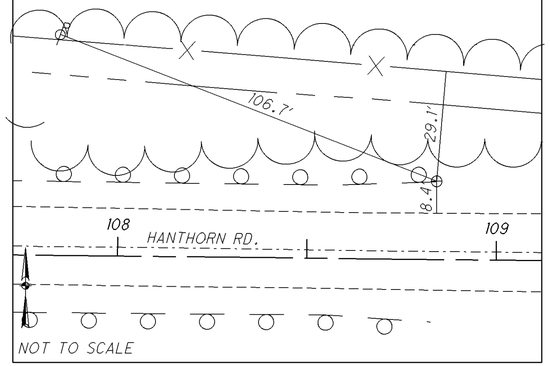

17034 269+89.87, 186.98' RT.

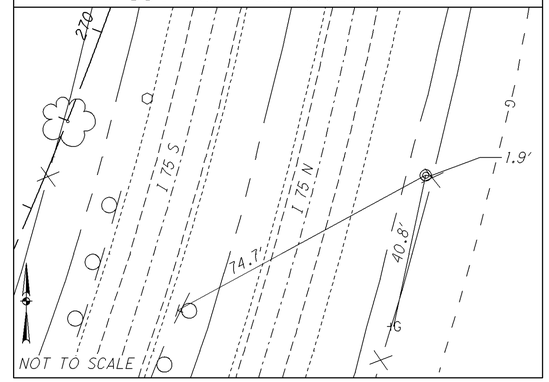

17026 269+54.14, 936.08' RT.

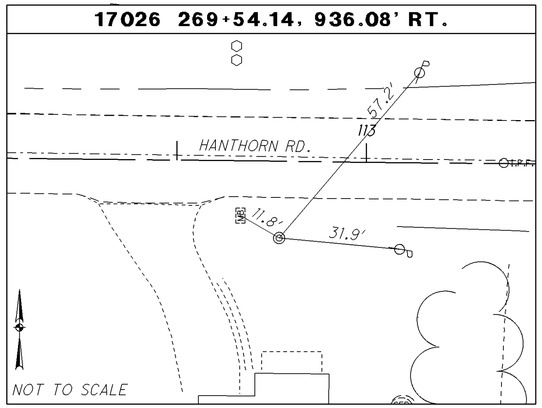

307 271+82.78, 135.98' RT.

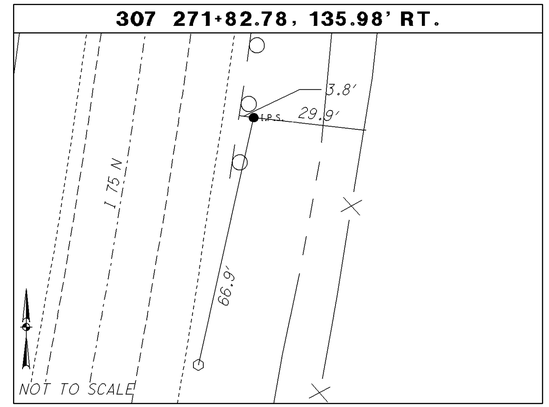

CALCULATED HM CHECKED CC

PRIMARY CONTROL POINTS/BENCHMARKS
REFERENCE SKETCHES AND PROPOSED MONUMENTS

ALL-75-0.21

I:\Pd\89029\roadway\sheets\89029GM007.dgn 25-JUN-2013 6:20AM tbolenbo

I:\Pd\89029\roadway\sheets\89029GB001.dgn 25-JUN-2013 6:21AM tbolenba

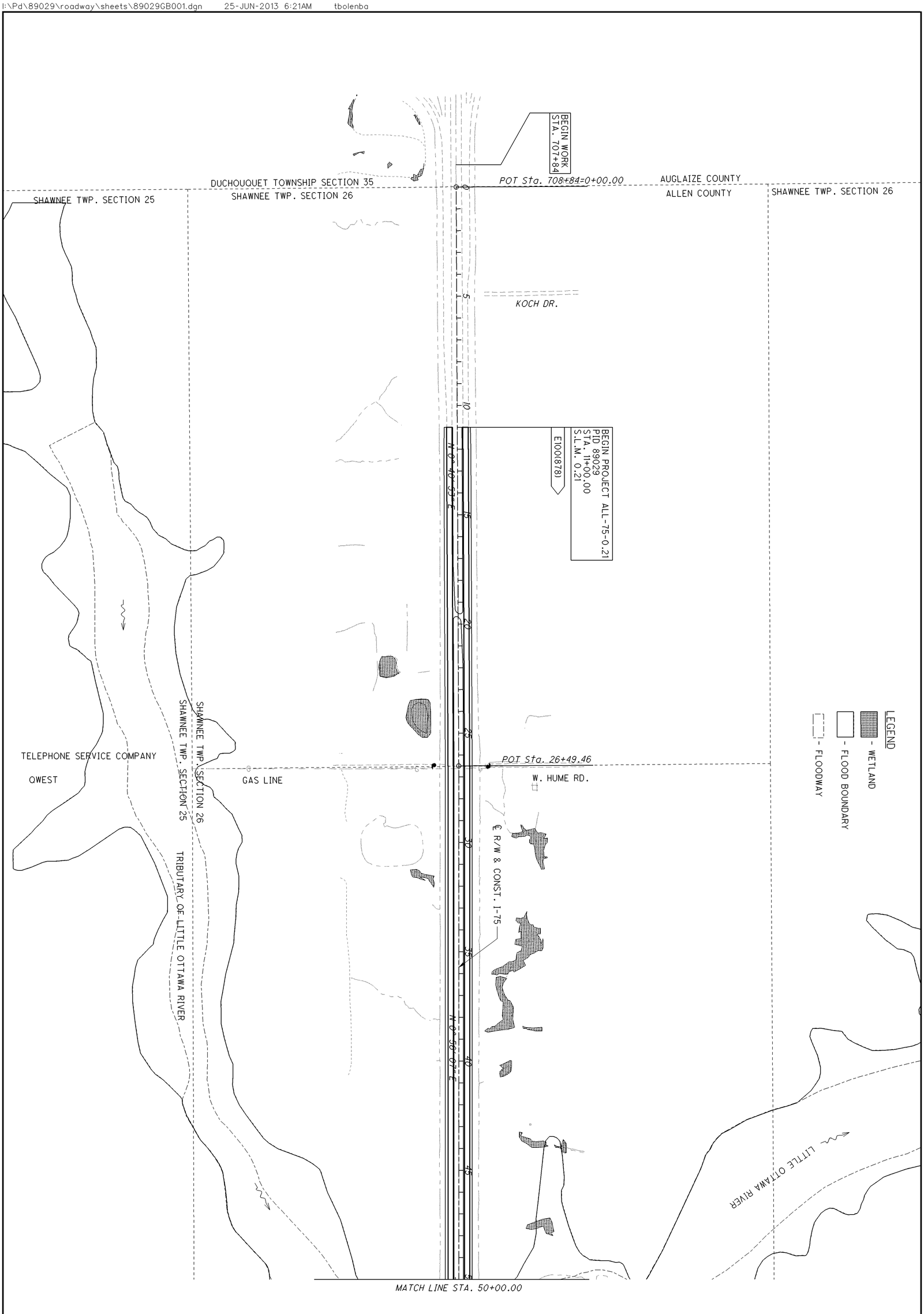

9 / 907	**ALL-75-0.21**	**SCHEMATIC PLAN**

HORIZONTAL SCALE IN FEET
0 100 200 400

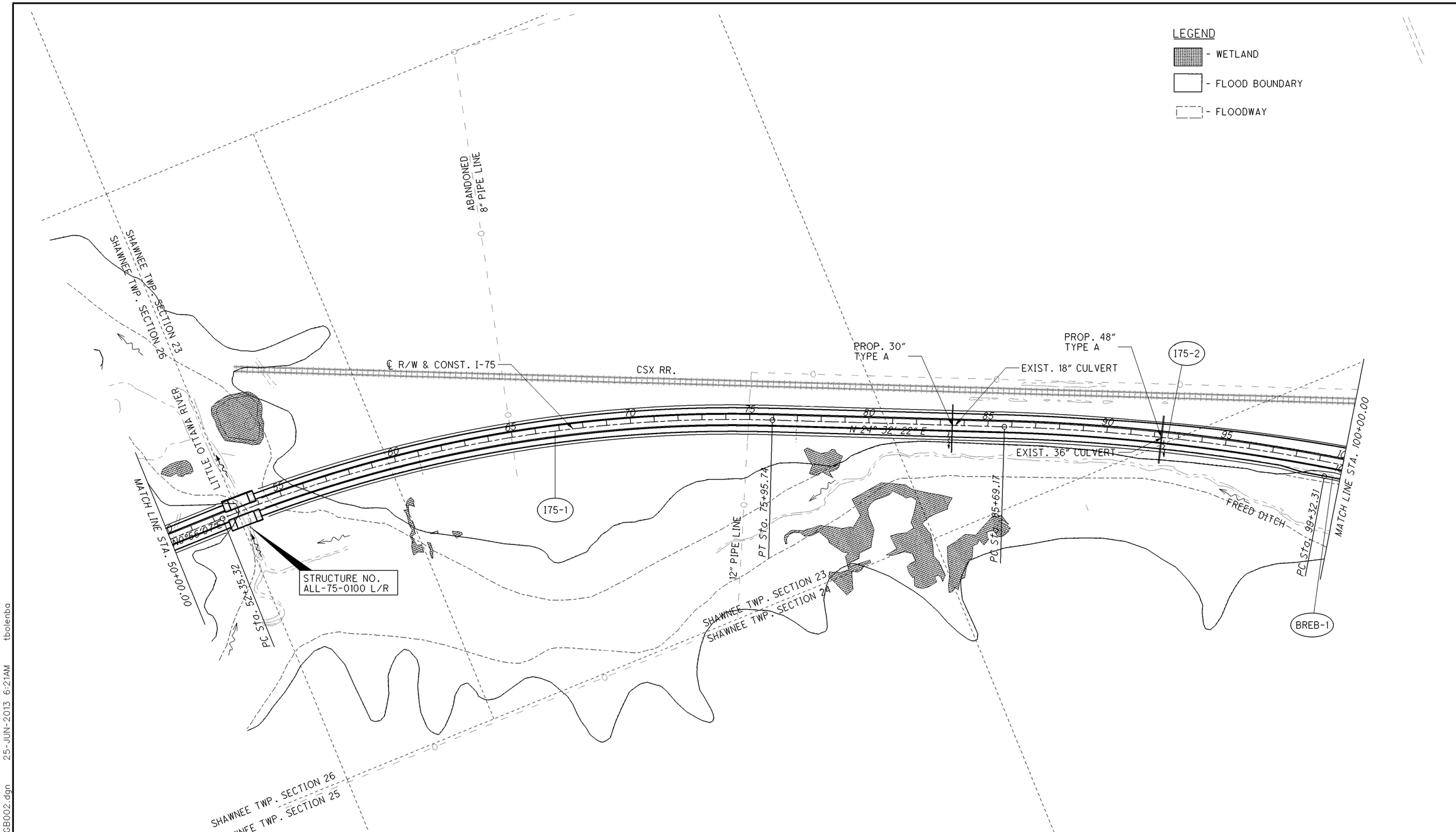

CURVE I75-1	CURVE I75-2	CURVE BREB-1
P.I.= Sta. 64+32.51	P.I.= Sta. 98+00.86	P.I.= Sta. 102+38.24
D = 23° 36′ 15″ (RT)	D = 16° 18′ 41″ (RT)	D = 9° 09′ 30″ (RT)
Dc = 1° 00′ 00″	Dc = 0° 40′ 00″	Dc = 1° 30′ 00″
R = 5,729.58′	R = 8,594.37′	R = 3,819.72′
T = 1,197.19′	T = 1,231.69′	T = 305.93′
L = 2,360.42′	L = 2,446.73′	L = 610.55′
E = 123.74′	E = 87.81′	E = 12.23′
C = 2,343.76′	C = 2,438.47′	C = 609.90′
C.B. = N 12° 44′ 15″ E	C.B. = N 32° 41′ 43″ E	C.B. = N 38° 12′ 23″ E
e_d= 0.033	e_d=0.026	e_d= 0.037

HORIZONTAL SCALE IN FEET
0 100 200 400

SCHEMATIC PLAN

ALL-75-0.21

I:\Pd\89029\roadway\sheets\89029GB002.dgn 25-JUN-2013 6:21AM tbolenba

CURVE I75-2
P.I.= Sta. 98+00.86
D = 16° 18′ 41″ (RT)
Dc = 0° 40′ 00″
R = 8,594.37′
T = 1,231.69′
L = 2,446.73′
E = 87.81′
C = 2,438.47′
C.B. = N 32° 41′ 43″ E
e_d = 0.026

LEGEND
- WETLAND
- FLOOD BOUNDARY
- FLOODWAY

1 - N 21°07′21″ E
2 - N 21°07′21″ E
3 - N 64°55′07″ E
4 - N 62°33′12″ E
5 - N 21°07′21″ E
6 - N 21°07′24″ E

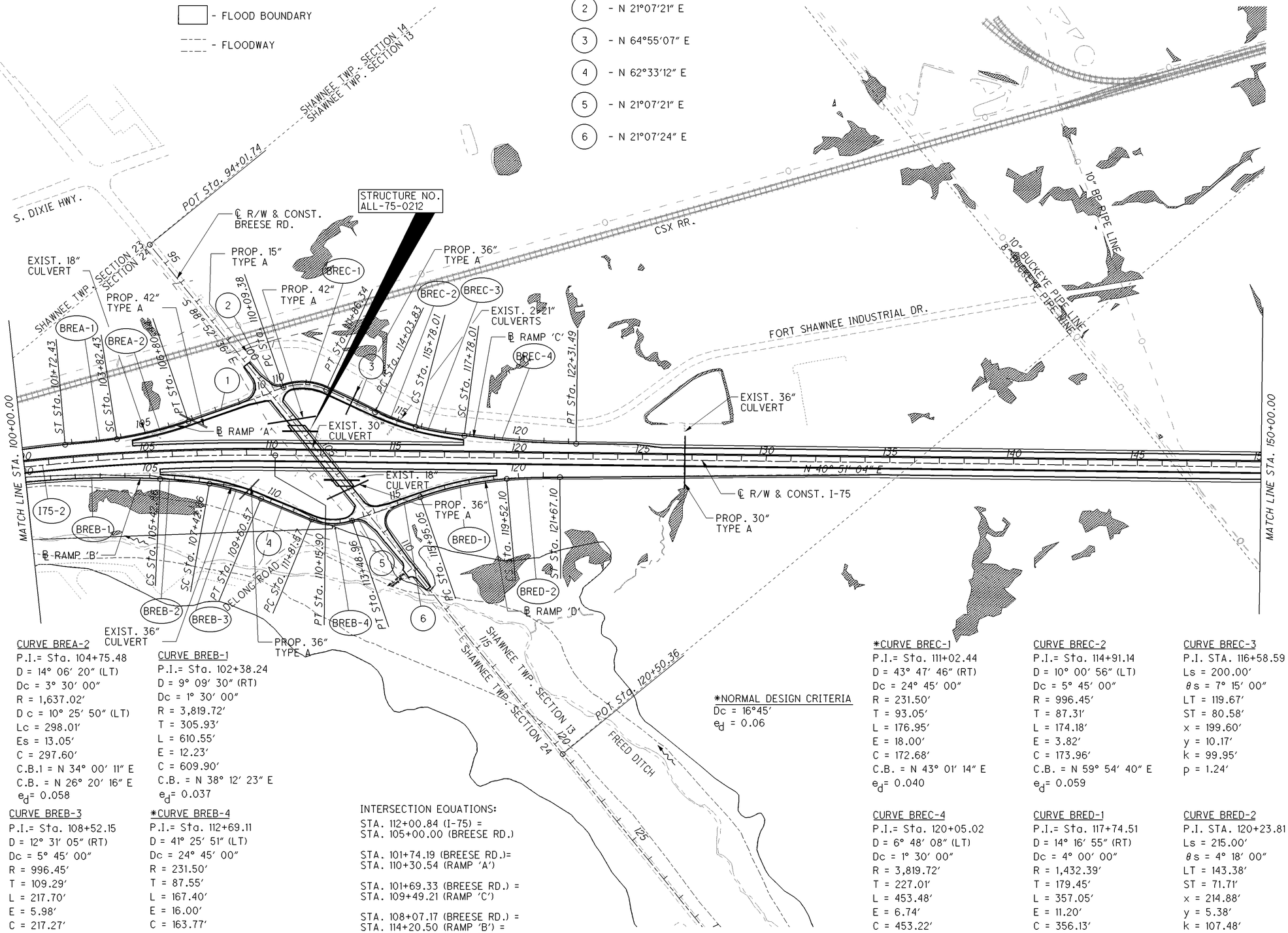

CURVE BREA-1
P.I. STA. 103+12.46
Ls = 210.00′
θs = 3° 40′ 30″
LT = 140.03′
ST = 70.03′
x = 209.91′
y = 4.49′
k = 104.99′
p = 1.12′

CURVE BREA-2
P.I.= Sta. 104+75.48
D = 14° 06′ 20″ (LT)
Dc = 3° 30′ 00″
R = 1,637.02′
D c = 10° 25′ 50″ (LT)
Lc = 298.01′
Es = 13.05′
C = 297.60′
C.B.1 = N 34° 00′ 11″ E
C.B. = N 26° 20′ 16″ E
e_d= 0.058

CURVE BREB-1
P.I.= Sta. 102+38.24
D = 9° 09′ 30″ (RT)
Dc = 1° 30′ 00″
R = 3,819.72′
T = 305.93′
L = 610.55′
E = 12.23′
C = 609.90′
C.B. = N 38° 12′ 23″ E
e_d= 0.037

CURVE BREB-2
P.I. STA. 106+62.53
Ls = 200.00′
θs = 7° 15′ 00″
LT = 119.67′
ST = 80.58′
x = 199.60′
y = 10.17′
k = 99.95′
p = 1.24′

CURVE BREB-3
P.I.= Sta. 108+52.15
D = 12° 31′ 05″ (RT)
Dc = 5° 45′ 00″
R = 996.45′
T = 109.29′
L = 217.70′
E = 5.98′
C = 217.27′
C.B. = N 56° 17′ 40″ E
e_d= 0.059

*CURVE BREB-4
P.I.= Sta. 112+69.11
D = 41° 25′ 51″ (LT)
Dc = 24° 45′ 00″
R = 231.50′
T = 87.55′
L = 167.40′
E = 16.00′
C = 163.77′
C.B. = N 41° 50′ 17″ E
e_d = 0.037

INTERSECTION EQUATIONS:
STA. 112+00.84 (I-75) =
STA. 105+00.00 (BREESE RD.)

STA. 101+74.19 (BREESE RD.)=
STA. 110+30.54 (RAMP 'A')

STA. 101+69.33 (BREESE RD.) =
STA. 109+49.21 (RAMP 'C')

STA. 108+07.17 (BREESE RD.) =
STA. 114+20.50 (RAMP 'B') =
STA. 113+74.46 (RAMP 'D')

*NORMAL DESIGN CRITERIA
Dc = 16°45′
e_d = 0.06

*CURVE BREC-1
P.I.= Sta. 111+02.44
D = 43° 47′ 46″ (RT)
Dc = 24° 45′ 00″
R = 231.50′
T = 93.05′
L = 176.95′
E = 18.00′
C = 172.68′
C.B. = N 43° 01′ 14″ E
e_d= 0.040

CURVE BREC-2
P.I.= Sta. 114+91.14
D = 10° 00′ 56″ (LT)
Dc = 5° 45′ 00″
R = 996.45′
T = 87.31′
L = 174.18′
E = 3.82′
C = 173.96′
C.B. = N 59° 54′ 40″ E
e_d= 0.059

CURVE BREC-3
P.I. STA. 116+58.59
Ls = 200.00′
θs = 7° 15′ 00″
LT = 119.67′
ST = 80.58′
x = 199.60′
y = 10.17′
k = 99.95′
p = 1.24′

CURVE BREC-4
P.I.= Sta. 120+05.02
D = 6° 48′ 08″ (LT)
Dc = 1° 30′ 00″
R = 3,819.72′
T = 227.01′
L = 453.48′
E = 6.74′
C = 453.22′
C.B. = N 44° 15′ 08″ E
e_d = 0.037

CURVE BRED-1
P.I.= Sta. 117+74.51
D = 14° 16′ 55″ (RT)
Dc = 4° 00′ 00″
R = 1,432.39′
T = 179.45′
L = 357.05′
E = 11.20′
C = 356.13′
C.B. = N 28° 15′ 52″ E
e_d= 0.060

CURVE BRED-2
P.I. STA. 120+23.81
Ls = 215.00′
θs = 4° 18′ 00″
LT = 143.38′
ST = 71.71′
x = 214.88′
y = 5.38′
k = 107.48′
p = 1.34′

HORIZONTAL SCALE IN FEET
0 100 200 400

SCHEMATIC PLAN

ALL-75-0.21

11
907

I:\Pd\89029\roadway\sheets\89029GB003.dgn 25-JUN-2013 6:21AM tbolenba

CURVE I75S-1
P.I.= Sta. 169+45.31
D = 49° 34′ 27″ (RT)
Dc = 2° 38′ 00″
R = 2,175.79′
Ls = 535.00′
θs = 7° 02′ 39″
LT = 356.95′
ST = 178.59′
x = 534.19′
y = 21.90′
k = 267.37′
p = 5.48′
D c = 35° 29′ 09″ (RT)
Lc = 1,347.57′
Ts = 1,274.66′
Es = 226.83′
C = 1,326.13′
C1=C2 = 534.64′
C.B.1 = N 43° 11′ 56″ E
C.B. = N 65° 38′ 17″ E
C.B.2 = S 88° 04′ 39″ W
e_d= 0.060

CURVE I75EX-1
P.I.= Sta. 169+39.08
D = 49° 34′ 27″ (RT)
Dc = 3° 00′ 00″
R = 1,909.86′
Ls = 300.00′
θs = 4° 30′ 00″
LT = 200.06′
ST = 100.06′
x = 299.81′
y = 7.85′
k = 149.97′
p = 1.96′
D c = 40° 34′ 27″ (RT)
Lc = 1,352.47′
Ts = 1,032.83′
Es = 195.97′
C = 1,324.39′
C1=C2 = 299.92′
C.B.1 = N 42° 21′ 04″ E
C.B. = N 65° 38′ 17″ E
C.B.2 = S 88° 55′ 31″ W

CURVE I75-3
P.I.= Sta. 169+39.08
D = 49° 34′ 27″ (RT)
Dc = 2° 30′ 00″
R = 2,291.83′
Ls = 535.00′
θs = 6° 41′ 15″
LT = 356.92′
ST = 178.57′
x = 534.27′
y = 20.79′
k = 267.38′
p = 5.20′
D c = 36° 11′ 57″ (RT)
Lc = 1,447.97′
Ts = 1,328.13′
Es = 238.30′
C = 1,424.01′
C1=C2 = 534.68′
C.B.1 = N 43° 04′ 48″ E
C.B. = N 65° 38′ 17″ E
C.B.2 = S 88° 11′ 47″ W
e_d= 0.059

INTERSECTION EQUATIONS:
STA. 173+34.78 (℄ EXISTING I-75) =
STA. 103+59.79 (McCLAIN RD.)

STA. 173+26.65
(℄ PROP. SOUTH I-75) =
STA. 103+50.41 (McCLAIN RD.)

STA. 173+06.27
(℄ R/W & CONST. I-75) =
STA. 103+26.13 (McCLAIN RD.)

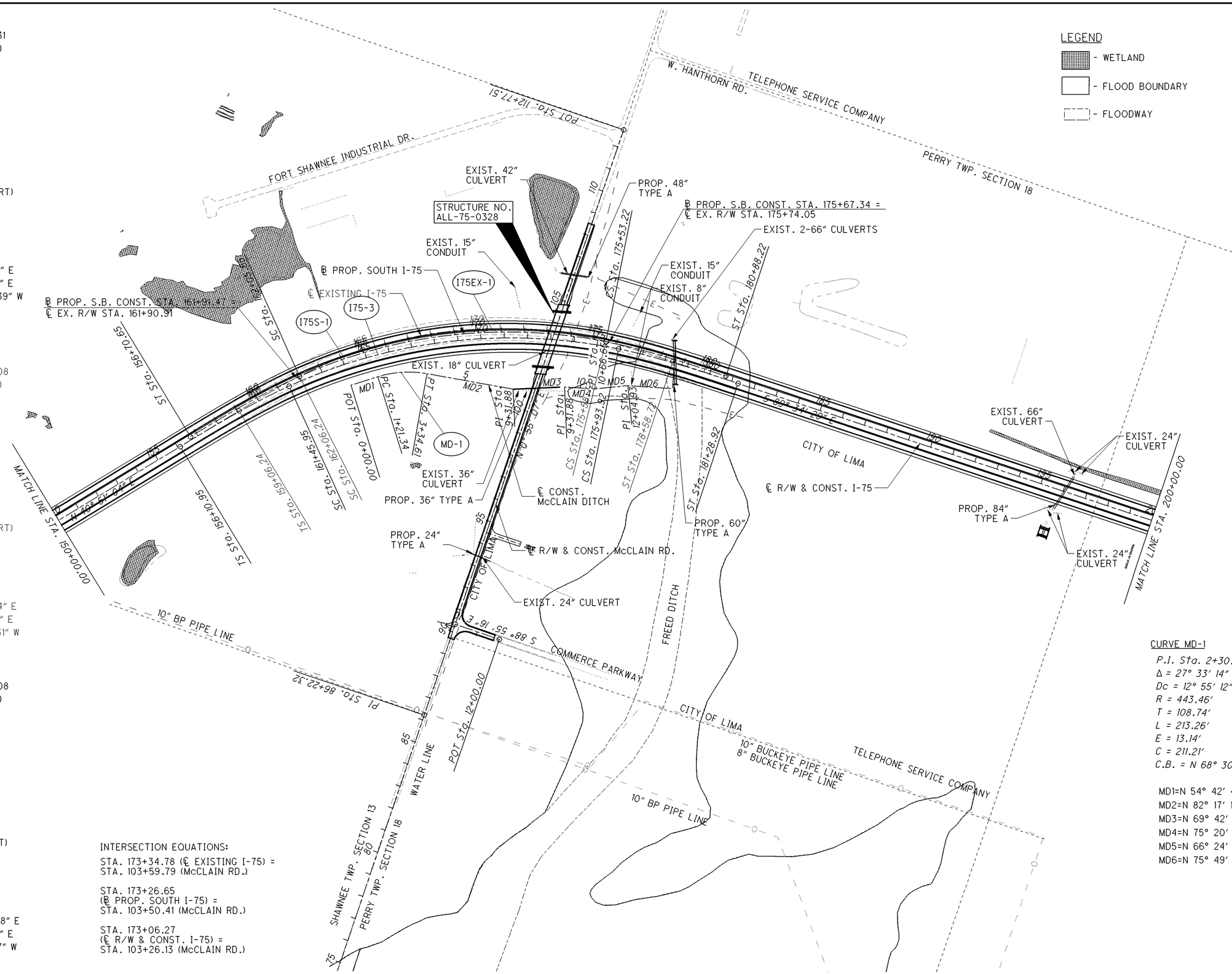

CURVE MD-1
P.I. Sta. 2+30.08
Δ = 27° 33′ 14″ (RT)
Dc = 12° 55′ 12″
R = 443.46′
T = 108.74′
L = 213.26′
E = 13.14′
C = 211.21′
C.B. = N 68° 30′ 42″ E

MD1=N 54° 42′ 40″ E
MD2=N 82° 17′ 19″ E
MD3=N 69° 42′ 47″ E
MD4=N 75° 20′ 47″ E
MD5=N 66° 24′ 34″ E
MD6=N 75° 49′ 41″ E

HORIZONTAL SCALE IN FEET
0 100 200 400

SCHEMATIC PLAN

ALL-75-0.21

I:\Pd\89029\roadway\sheets\89029GB004.dgn 25-JUN-2013 6:21AM tbolenba

CURVE I75-4
P.I.= Sta. 264+76.60
D = 89° 28′ 28″ (LT)
Dc = 2° 30′ 00″
R = 2,291.83′
Ls = 535.00′
θs = 6° 41′ 15″
LT = 356.92′
ST = 178.57′
x = 534.27′
y = 20.79′
k = 267.38′
p = 5.20′
D c = 76° 05′ 58″ (LT)
Lc = 3,043.97′
Ts = 2,543.43′
Es = 941.86′
C = 2,825.12′
C1=C2 = 534.68′
C.B.1 = N 88° 11′ 47″ E
C.B. = N 45° 41′ 17″ E
C.B.2 = S 3° 10′ 47″ W
e_d= 0.059

CURVE I75EX-2
P.I.= Sta. 265+01.69
D = 89° 28′ 28″ (LT)
Dc = 3° 00′ 00″
R = 1,909.86′
Ls = 400.00′
θs = 6° 00′ 00″
LT = 266.82′
ST = 133.47′
x = 399.56′
y = 13.95′
k = 199.93′
p = 3.49′
D c = 77° 28′ 28″ (LT)
Lc = 2,582.48′
Ts = 2,095.80′
Es = 783.70′
C = 2,390.18′
C1=C2 = 399.81′
C.B.1 = N 88° 25′ 32″ E
C.B. = N 45° 41′ 17″ E
C.B.2 = S 2° 57′ 03″ W

CURVE I75N-1
P.I.= Sta. 264+89.90
D = 89° 28′ 28″ (LT)
Dc = 2° 31′ 00″
R = 2,276.65′
Ls = 535.00′
θs = 6° 43′ 55″
LT = 356.92′
ST = 178.57′
x = 534.26′
y = 20.93′
k = 267.38′
p = 5.24′
D c = 76° 00′ 37″ (LT)
Lc = 3,020.27′
Ts = 2,528.43′
Es = 935.72′
C = 2,803.61′
C1=C2 = 534.67′
C.B.1 = N 88° 10′ 53″ E
C.B. = N 45° 41′ 17″ E
C.B.2 = S 3° 11′ 41″ W
e_d= 0.059

CURVE 65B-1
P.I. STA. 216+23.69
Ls = 200.00′
θs = 2° 00′ 00″
LT = 133.34′
ST = 66.67′
x = 199.98′
y = 2.33′
k = 100.00′
p = 0.58′

CURVE 65B-2
P.I.= Sta. 219+24.77
D = 13° 24′ 47″ (LT)
Dc = 2° 00′ 00″
R = 2,864.79′
D c = 11° 24′ 47″ (LT)
Lc = 570.66′
Es = 20.03′
C = 569.71′
C.B.1 = N 88° 36′ 46″ E
C.B. = N 81° 34′ 23″ E
e_d= 0.045

CURVE 65A-1
P.I.= Sta. 216+77.22
D = 8° 18′ 36″ (RT)
Dc = 1° 30′ 00″
R = 3,819.72′
T = 277.49′
L = 554.00′
E = 10.07′
C = 553.51′
C.B. = S 85° 25′ 11″ E
e_d= 0.037

CURVE 65A-2
P.I.= Sta. 220+30.42
D = 6° 07′ 47″ (RT)
Dc = 4° 00′ 00″
R = 1,432.39′
T = 76.69′
L = 153.24′
E = 2.05′
C = 153.17′
C.B. = S 78° 12′ 00″ E
e_d= 0.052

*CURVE Y-1
P.I.= Sta. 3+12.82
D = 76° 08′ 00″ (LT)
Dc = 34° 00′ 00″
R = 168.52′
T = 131.98′
L = 223.92′
E = 45.53′
C = 207.81′
C.B. = N 52° 47′ 03″ E
e_d= 0.025

*CURVE Y-2
P.I.= Sta. 6+40.98
D = 59° 26′ 43″ (RT)
Dc = 34° 00′ 00″
R = 168.52′
T = 96.21′
L = 174.84′
E = 25.53′
C = 167.10′
C.B. = N 44° 26′ 25″ E
e_d= 0.025

*NORMAL DESIGN CRITERIA
Dc = 6°
e_d = 0.08

CURVE 65C-1
P.I.= Sta. 234+02.39
D = 8° 41′ 28″ (LT)
Dc = 1° 30′ 00″
R = 3,819.72′
T = 290.26′
L = 579.40′
E = 11.01′
C = 578.85′
C.B. = S 85° 13′ 45″ E
e_d= 0.037

CURVE 65D-1
P.I.= Sta. 230+64.60
D = 8° 24′ 48″ (RT)
Dc = 1° 00′ 00″
R = 5,729.58′
T = 421.42′
L = 841.33′
E = 15.48′
C = 840.57′
C.B. = N 84° 04′ 22″ E
e_d= 0.027

CURVE 65D-2
P.I. STA. 235+51.17
Ls = 200.00′
θs = 1° 00′ 00″
LT = 133.34′
ST = 66.67′
x = 199.99′
y = 1.16′
k = 100.00′
p = 0.29′

LEGEND
- WETLAND
- FLOOD BOUNDARY
- FLOODWAY

HORIZONTAL SCALE IN FEET
0 100 200 400

(1) N 75°51′59″ E
(2) S 75°08′06″ E
(3) S 80°53′01″ E
(4) N 79°51′58″ E

INTERSECTION EQUATIONS:
STA. 106+07.78 (S.R. 65) = STA. 224+17.25 (RAMP 'B')
STA. 106+13.89 (S.R. 65) = STA. 223+93.98 (RAMP 'C')
STA. 224+02.80 (I-75) = STA. 104+00.00 (S.R. 65)
STA. 101+91.13 (S.R. 65) = STA. 224+15.97 (RAMP 'A')
STA. 101+81.09 (S.R. 65) = STA. 223+90.86 (RAMP 'D')

SCHEMATIC PLAN

ALL-75-0.21

I:\Pd\89029\roadway\sheets\89029GB005.dgn 25-JUN-2013 6:21AM tbolenba

CURVE I75-4
P.I.= Sta. 264+76.60
D = 89° 28′ 28″ (LT)
Dc = 2° 30′ 00″
R = 2,291.83′
Ls = 535.00′
θs = 6° 41′ 15″
LT = 356.92′
ST = 178.57′
x = 534.27′
y = 20.79′
k = 267.38′
p = 5.20′
D c = 76° 05′ 58″ (LT)
Lc = 3,043.97′
Ts = 2,543.43′
Es = 941.86′
C = 2,825.12′
C1=C2 = 534.68′
C.B.1 = N 88° 11′ 47″ E
C.B. = N 45° 41′ 17″ E
C.B.2 = S 3° 10′ 47″ W
e_d= 0.059

CURVE I75EX-2
P.I.= Sta. 265+01.69
D = 89° 28′ 28″ (LT)
Dc = 3° 00′ 00″
R = 1,909.86′
Ls = 400.00′
θs = 6° 00′ 00″
LT = 266.82′
ST = 133.47′
x = 399.56′
y = 13.95′
k = 199.93′
p = 3.49′
D c = 77° 28′ 28″ (LT)
Lc = 2,582.48′
Ts = 2,095.80′
Es = 783.70′
C = 2,390.18′
C1=C2 = 399.81′
C.B.1 = N 88° 25′ 32″ E
C.B. = N 45° 41′ 17″ E
C.B.2 = S 2° 57′ 03″ W

CURVE I75N-1
P.I.= Sta. 264+89.90
D = 89° 28′ 28″ (LT)
Dc = 2° 31′ 00″
R = 2,276.65′
Ls = 535.00′
θs = 6° 43′ 55″
LT = 356.92′
ST = 178.57′
x = 534.26′
y = 20.93′
k = 267.38′
p = 5.24′
D c = 76° 00′ 37″ (LT)
Lc = 3,020.27′
Ts = 2,528.43′
Es = 935.72′
C = 2,803.61′
C1=C2 = 534.67′
C.B.1 = N 88° 10′ 53″ E
C.B. = N 45° 41′ 17″ E
C.B.2 = S 3° 11′ 41″ W
e_d= 0.059

LEGEND
- WETLAND
- FLOOD BOUNDARY
- FLOODWAY

HORIZONTAL SCALE IN FEET
0 100 200 400

MATCH LINE STA. 250+00.00
PROP. 84" TYPE A
℄ R/W & CONST. I-75
℄ R/W & CONST. HANTHORN RD.
PROP. 30" TYPE A
EXIST. 15" CULVERT
℄ EX. I-75
EXIST. 60" CULVERT
INTERMITTENT WATERWAY
℄ PROP. NORTH I-75
EXIST. 48" CULVERT
EXIST. 18" CULVERT
PROP. 48" TYPE A
I75-4
I75N-1
I75EX-2
STRUCTURE NO. ALL-75-0508
PI Sta. 91+33.82
CITY OF LIMA
CITY OF LIMA
12" MARATHON PIPE LINE
16" COLUMBIA GAS
END PROJECT ALL-75-0.21
PID 89029
STA. 292+00.00
S.L.M. 5.53
E100(878)
END WORK STA. 293+20
EXIST. 20" CULVERT
E036(702)
BEGIN PROJECT ALL-75-5.53
PID 79961
STA. 292+00.00
S.L.M. 5.53
EXIST. 2-42" CULVERTS
CS Sta. 275+12.14
ST Sta. 280+47.14
RR SPUR
CITY OF LIMA
EXIST. 24" CULVERT
N 0° 57′ 03″ E
PROP. 42" TYPE A
20" COLUMBIA GAS
℄ R/W & CONST. I-75
CS Sta. 273+88.37
CS Sta. 275+16.74
ST Sta. 277+88.37
ST Sta. 280+51.74
INTERMITTENT WATERWAY
PROP. 8′x4′ BOX CULVERT
PERRY TWP. SECTION 8
PERRY TWP. SECTION 17
PERRY TWP. SECTION 8
POT Sta. 117+86.08
PERRY TWP. SECTION 17
GREELY CHAPEL RD.

INTERSECTION EQUATIONS:
STA. 102+54.27 (HANTHORN RD.) =
STA. 266+05.69 (℄ R/W & CONST. I-75)

STA. 102+81.41 (HANTHORN RD.) =
STA. 266+42.21 (℄ PROP. NORTH I-75)

STA. 104+00.00 (HANTHORN RD.) =
STA. 268+26.04 (℄ EXIST. I-75)

SCHEMATIC PLAN

ALL-75-0.21

14
907

I:\Pd\89029\roadway\sheets\89029GB006.dgn 25-JUN-2013 6:21AM tbolenba

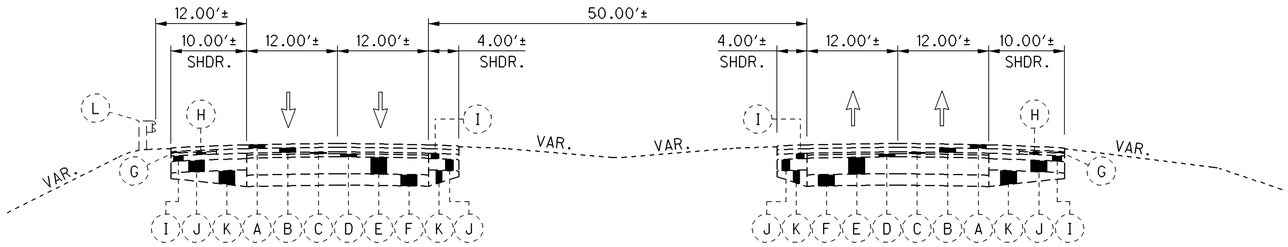

EXISTING I-75 W/GRASS MEDIAN

APPROXIMATE LIMITS:
STA. 11+00.00 TO STA. 49+66.00
STA. 56+82.00 TO STA. 108+73.50
STA. 115+18.50 TO STA. 170+42.10
STA. 176+68.35 TO STA. 219+85.75
STA. 227+89.25 TO STA. 233+39.89
STA. 241+01.39 TO STA. 263+75.23
STA. 269+51.78 TO STA. 292+00.00

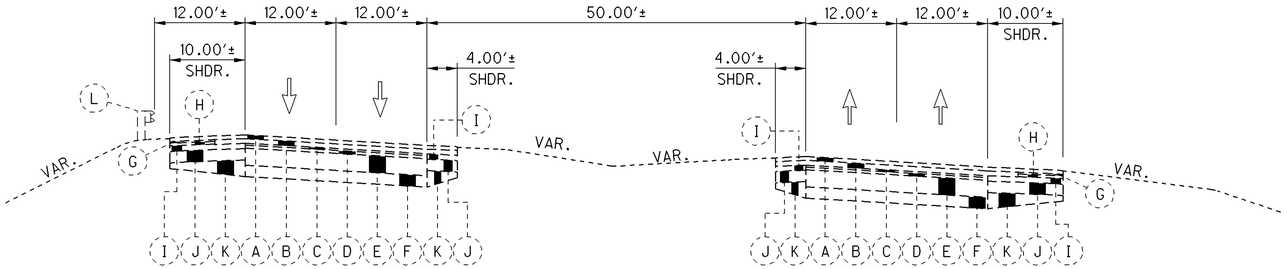

EXISTING I-75 SUPERELEVATED W/GRASS MEDIAN

APPROXIMATE LIMITS:
STA. 170+42.10 TO STA. 176+68.35
STA. 263+75.23 TO STA. 269+51.78

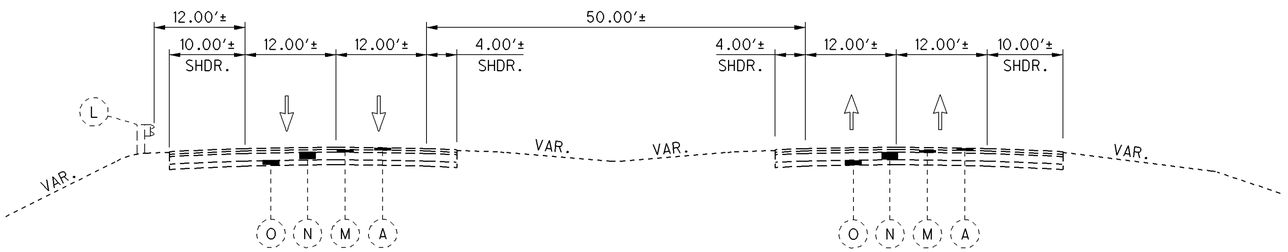

EXISTING I-75 NORMAL W/GRASS MEDIAN

APPROXIMATE LIMITS:
STA. 49+66.00 TO STA. 52+66.00
STA. 53+82.00 TO STA. 56+82.00
STA. 108+73.50 TO STA. 115+18.50
STA. 219+85.75 TO STA. 222+85.75
STA. 224+89.25 TO STA. 227+89.25
STA. 233+39.89 TO STA. 236+39.89
STA. 238+01.39 TO STA. 241+01.39

EXISTING PAVEMENT BUILDUP LEGEND:

- (A) 2"± SUPERPAVE ASPHALT SURFACE COURSE
- (B) 2½"± ASPHALT CONCRETE INTERMEDIATE COURSE
- (C) 1"± ASPHALT CONCRETE SURFACE COURSE
- (D) 1½"± ASPHALT CONCRETE INTERMEDIATE COURSE
- (E) 9"± REINFORCED PORTLAND CEMENT
- (F) 6"± STABILIZED CRUSHED AGGREGATE
- (G) ¾"± ASPHALT CONCRETE SURFACE COURSE
- (H) 1½"± ASPHALT CONCRETE INTERIOR COURSE
- (I) 3"± BITUMINOUS AGGREGATE BASE
- (J) 6"± AGGREGATE BASE
- (K) SUBBASE
- (L) GUARDRAIL
- (M) 1¼"± ASPHALT CONCRETE INTERMEDIATE COURSE
- (N) 12"± BITUMINOUS AGGREGATE BASE
- (O) 8"± AGGREGATE BASE
- (P) 1½"± ASPHALT CONCRETE SURFACE COURCE
- (Q) 1¾"± ASPHALT CONCRETE INTERMEDIATE COURSE

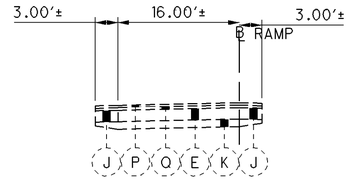

EXISTING NORMAL RAMPS

TYPICAL SECTIONS SHOWN APPLY AT:

BREESE RD.
S.R. 65

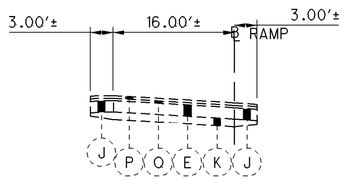

EXISTING SUPERELEVATED RAMPS

TYPICAL SECTIONS SHOWN APPLY AT:

BREESE RD.
S.R. 65

EXISTING TYPICAL SECTIONS I-75

ALL-75-0.21

I:\Pd\89029\roadway\sheets\89029GY001.dgn 25-JUN-2013 6:21AM tbolenba

EXISTING PAVEMENT BUILDUP LEGEND:

- (J) 6"± AGGREGATE BASE
- (O) 8"± AGGREGATE BASE
- (R) 5"± ASPHALT
- (S) 8"± ASPHALT
- (T) 4"± AGGREGATE BASE
- (U) 6"± ASPHALT

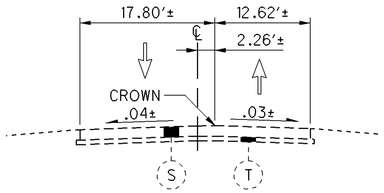

EXISTING BREESE RD.
STA. 100+25.00

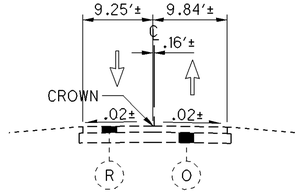

EXISTING BREESE RD.
STA. 112+00.00

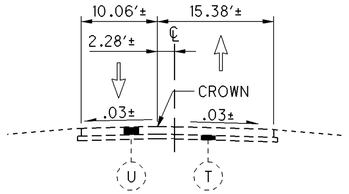

EXISTING McCLAIN RD.
STA. 89+75.00

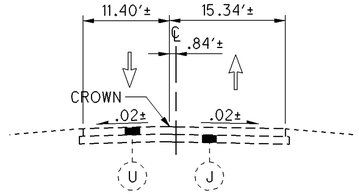

EXISTING McCLAIN RD.
STA. 108+50.00

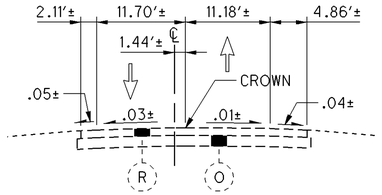

EXISTING S.R. 65
STA. 93+79.87

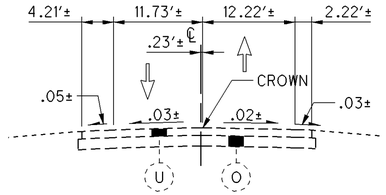

EXISTING S.R. 65
STA. 110+55.00

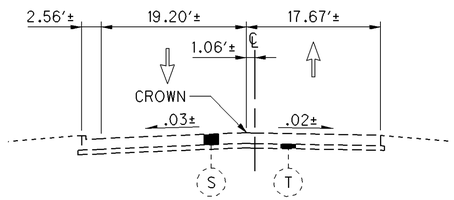

EXISTING HANTHORN RD.
STA. 93+25.00

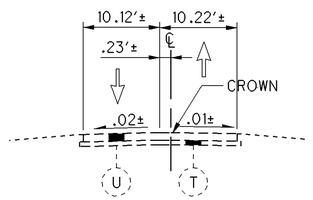

EXISTING HANTHORN RD.
STA. 110+55.00

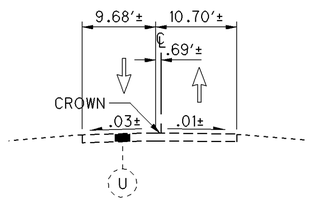

EXISTING YODER RD.
STA. 112+00.00

EXISTING TYPICAL SECTIONS SIDE ROADS

ALL-75-0.21

I:\Pd\89029\roadway\sheets\89029GY002.dgn 25-JUN-2013 6:21AM tbolenba

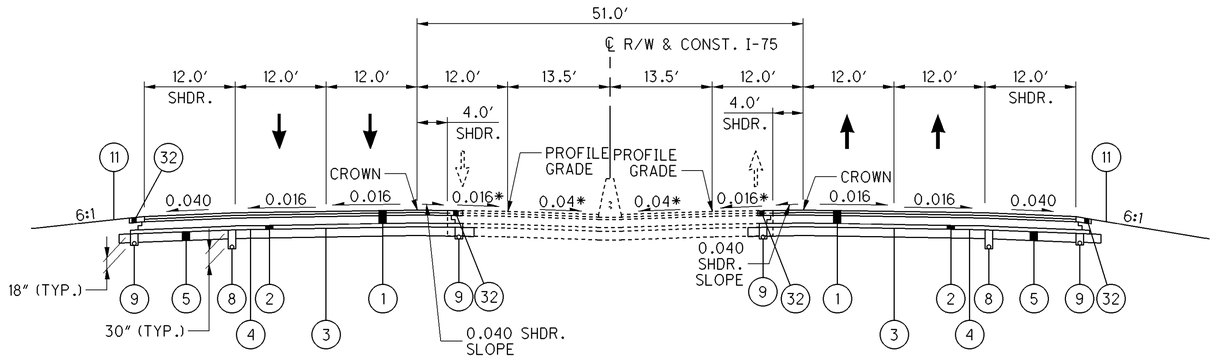

EXAMPLE I-75 NORMAL SECTION

(EXAMPLE DEPICTS P.G.L. AND CROWN LOCATIONS ALONG WITH EXAMPLE CROSS SLOPES AND FUTURE LANES; USING FLEXIBLE PAVEMENT)

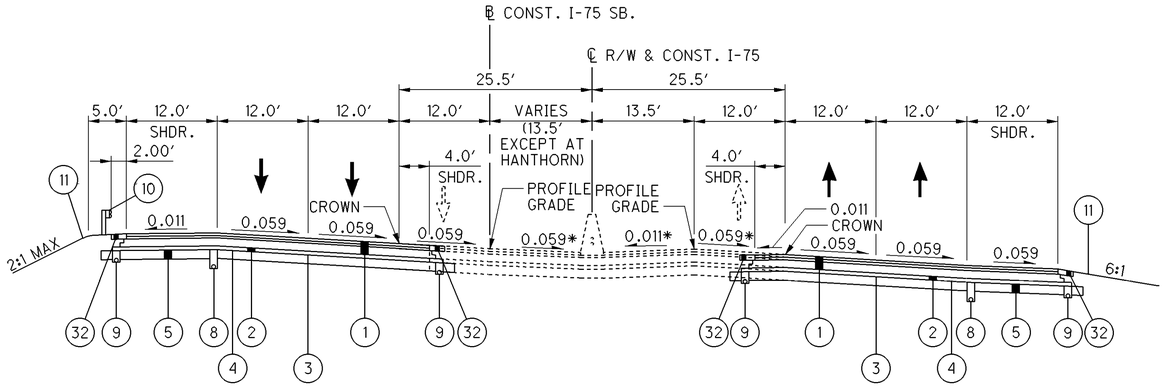

EXAMPLE I-75 (RT) SUPERELEVATED SECTION

(EXAMPLE DEPICTS P.G.L. AND CROWN LOCATIONS ALONG WITH EXAMPLE CROSS SLOPES AND FUTURE LANES; USING FLEXIBLE PAVEMENT)

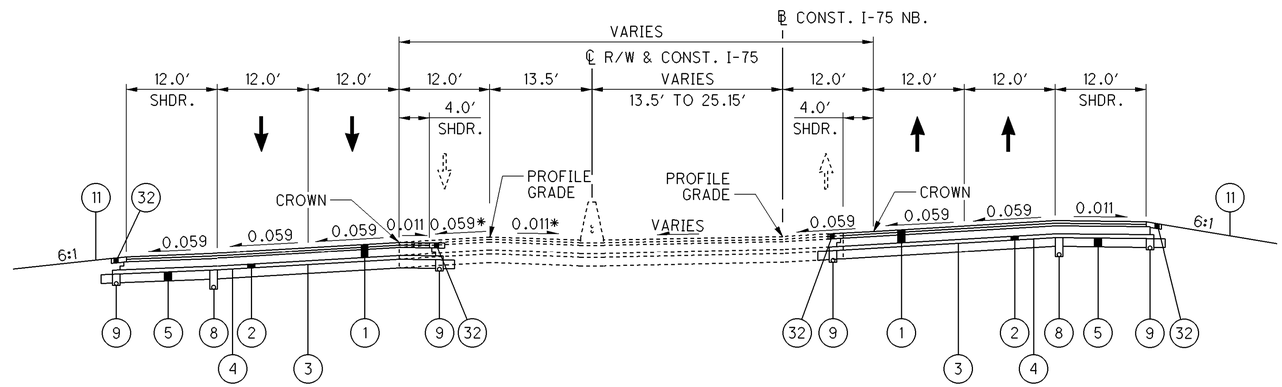

EXAMPLE I-75 (LT) SUPERELEVATED SECTION

(EXAMPLE DEPICTS P.G.L. AND CROWN LOCATIONS ALONG WITH EXAMPLE CROSS SLOPES AND FUTURE LANES; USING FLEXIBLE PAVEMENT)

NOTES:

- PROFILE GRADE IS GENERALLY 13.5′ LT/RT FROM ℄ (EXCEPTION INCLUDES AREA ALONG HANTHORN & McCLAIN CURVES)

⋮ FUTURE INSIDE LANE ADDITIONS

* FUTURE CROSS SLOPES. NOTE: 4 FT INSIDE SHOULDER WILL BE REMOVED PRIOR TO CONSTRUCTING THE FUTURE LANE

PROPOSED PAVEMENT BUILDUP LEGEND:

(1) - ITEM 880 15.75″ ASPHALT CONCRETE (7 YEAR WARRANTY)

CONVENTIONAL EQUIVALENT:
ITEM 442 1.5″ ASPHALT CONCRETE SURFACE COURSE, 12.5MM, TYPE A (446)
ITEM 407 TACK COAT FOR INTERMEDIATE COURSE (0.075 GAL./S.Y.)
ITEM 442 1.75″ ASPHALT CONCRETE INTERMEDIATE COURSE, 19 MM, TYPE A (446)
ITEM 407 TACK COAT (0.075 GAL./S.Y.)
ITEM 302 12.5″ ASPHALT CONCRETE BASE, PG64-22

(2) - ITEM 304 6″ AGGREGATE BASE
(3) - ITEM 206 CURING COAT
(4) - ITEM 204 PROOF ROLLING
(5) - ITEM 206 CEMENT STABILIZED SUBGRADE, 14 INCHES DEEP
(6) - ITEM 606 GUARDRAIL, MISC.: TENSIONED CABLE WITH CONCRETE FOUNDATION LINE POST (SOCKETED)
(7) - ITEM SPECIAL MISC.: MOW STRIP
ITEM 203 EXCAVATION
(8) - ITEM 605 6″ SHALLOW PIPE UNDERDRAINS
(9) - ITEM 605 6″ BASE PIPE UNDERDRAINS
(10) - ITEM 606 GUARDRAIL, TYPE MGS WITH LONG POSTS
(11) - ITEM 659 SEEDING AND MULCHING
(12) - ITEM 884 14″ PORTLAND CEMENT CONCRETE PAVEMENT (7 YEAR WARRANTY)
(13) - ITEM 448 1.25″ ASPHALT CONCRETE SURFACE COURSE, TYPE 1, PG64-22
(14) - ITEM 407 TACK COAT FOR INTERMEDIATE COURSE (0.075 GAL./S.Y.)
(15) - ITEM 448 1.75″ ASPHALT CONCRETE INTERMEDIATE COURSE, TYPE 2, PG64-22
(16) - ITEM 407 TACK COAT (0.075 GAL./S.Y.)
(17) - ITEM 301 4″ ASPHALT CONCRETE BASE, PG64-22
(18) - ITEM 301 6″ ASPHALT CONCRETE BASE, PG64-22
(19) - ITEM 608 4″ CONCRETE WALK
(20) - ITEM 452 10″ NON-REINFORCED CONCRETE PAVEMENT
(21) - ITEM 609 CURB, TYPE 2A
(22) - ITEM 609 CURB, TYPE 4-C
(23) - ITEM 609 COMBINATION CURB AND GUTTER, TYPE 2
(24) - ITEM 898 OC/OA CONCRETE, CLASS OSC2, SUPERSTRUCTURE (APPROACH SLABS) (T-15″), AS PER PLAN
(25) - ITEM 898 OC/OA CONCRETE, CLASS OSC2, SUPERSTRUCTURE (APPROACH SLABS) (T-17″), AS PER PLAN
(26) - ITEM 898 OC/OA CONCRETE, CLASS OSC2, SUPERSTRUCTURE (PARAPET)
(27) - ITEM 206 CEMENT STABILIZED SUBGRADE, 12 INCHES DEEP
(28) - ITEM 206 LIME STABILIZED SUBGRADE, 12 INCHES DEEP
(29) - ITEM 204 GRANULAR MATERIAL, TYPE B
(30) - ITEM 204 GEOTEXTILE FABRIC
(31) - ITEM 204 SUBGRADE COMPACTION
(32) - ITEM 617 COMPACTED AGGREGATE (THICKNESS = 3.25″)
(33) - ITEM 609 CURB, TYPE 4-A
(34) - ITEM 690 MISC.: GEOWEB
(35) - ITEM 605 AGGREGATE DRAINS

EXAMPLE PROPOSED TYPICAL SECTIONS - I-75 (PROFILE GRADE LINE IN RELATION TO CROWN LINE)

ALL-75-0.21

I:\Pd\89029\roadway\sheets\89029GY003.dgn 25-JUN-2013 6:21AM tbolenba

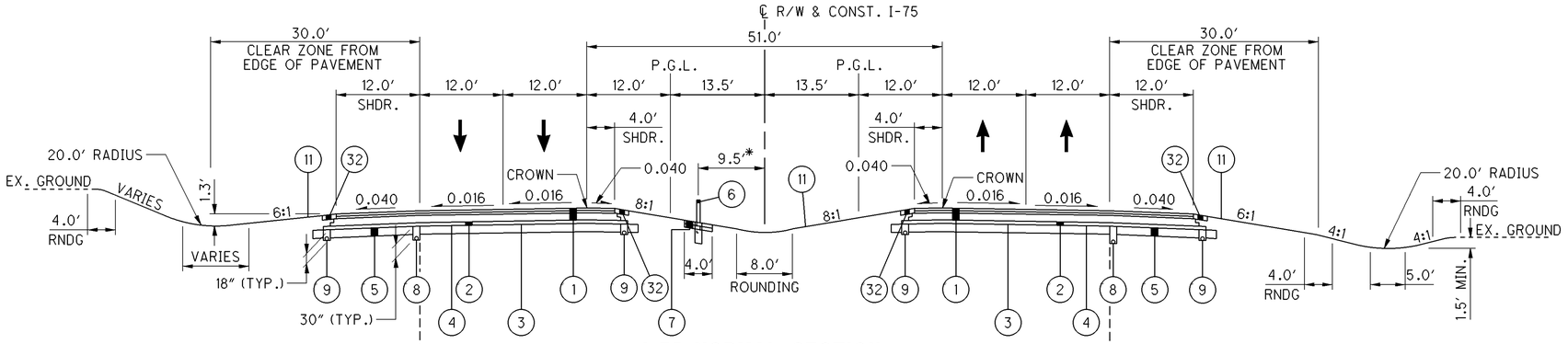

I-75 NORMAL SECTION

STA. 11+00.00 TO STA. 50+86.32
STA. 76+96.74 TO STA. 84+57.17
STA. 110+79.90 TO STA. 156+10.95 (NB)
STA. 110+79.90 TO STA. 156+70.65 (SB)
STA. 180+75.75 TO STA. 222+93.83 (NB)
STA. 180+36.05 TO STA. 222+93.83 (SB)
STA. 225+11.83 TO STA. 235+79.41 (NB)
STA. 225+11.83 TO STA. 235+79.41 (SB)
STA. 238+40.41 TO STA. 240+14.64 (NB)
STA. 238+40.41 TO STA. 239+86.33 (SB)
*CABLE RAIL MAY BE LEFT OR RIGHT OF ℄ AS LISTED IN THE ESTIMATED QUANTITIES

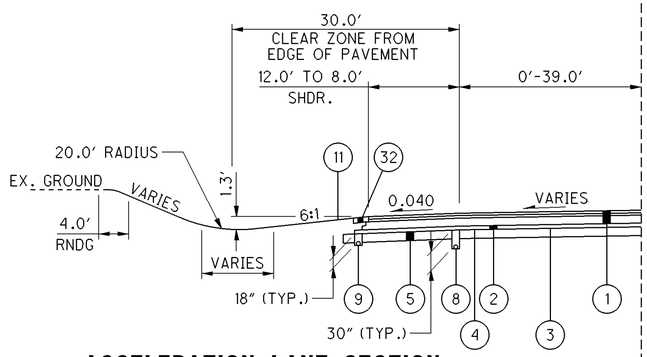

ACCELERATION LANE SECTION

STA. 202+40.35 TO STA. 217+94.54

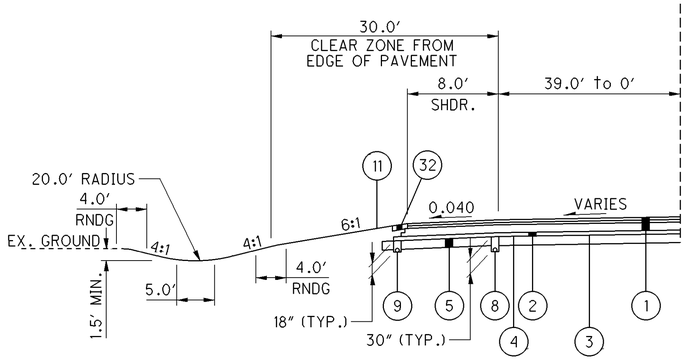

DECELERATION LANE SECTION

STA. 117+78.01 TO STA. 125+78.01
STA. 232+38.06 TO STA. 240+12.21

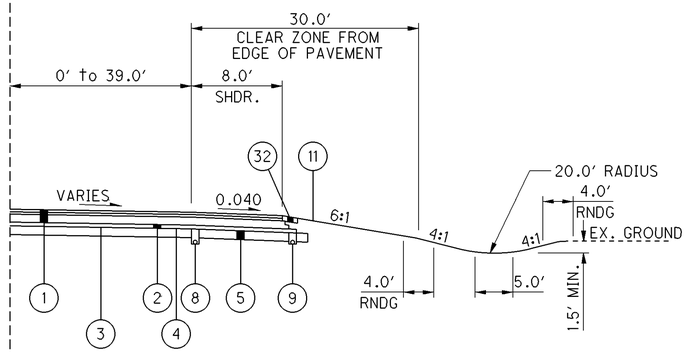

DECELERATION LANE SECTION

STA. 210+53.73 TO STA. 218+53.21

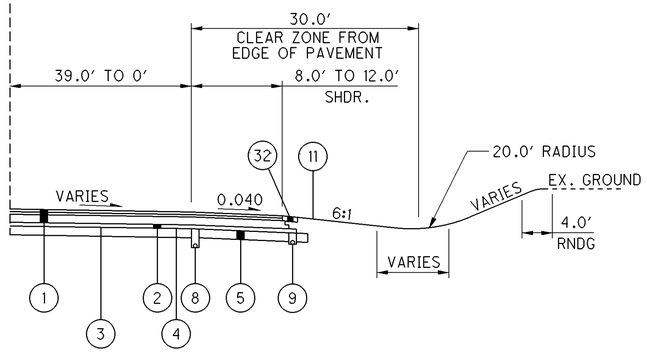

ACCELERATION LANE SECTION

STA. 119+13.27 TO STA. 134+17.16
STA. 233+15.74 TO STA. 240+14.64

NOTES:
FOR PROPOSED PAVEMENT BUILDUP LEGEND, SEE SHEET 17.

FOR CURBED SECTIONS, SEE SHEET 21.

PROPOSED TYPICAL SECTIONS I-75 (FLEXIBLE)

ALL-75-0.21

I:\Pd\89029\roadway\sheets\89029GY004.dgn 25-JUN-2013 6:21AM tbolenba

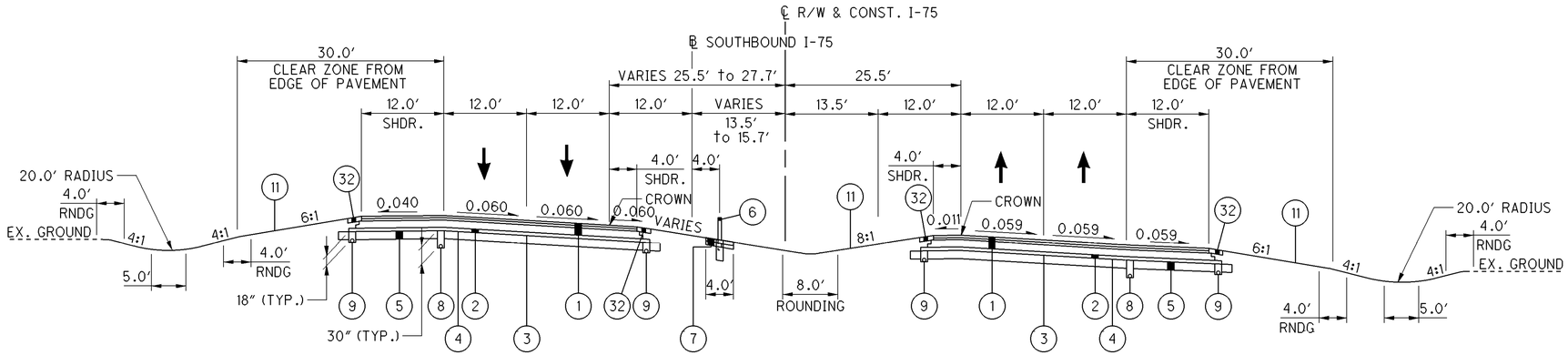

I-75 SUPERELEVATED SECTION

STA. 156+10.95 TO STA. 180+75.75 (NB)
STA. 156+70.65 TO STA. 180+36.05 (SB)

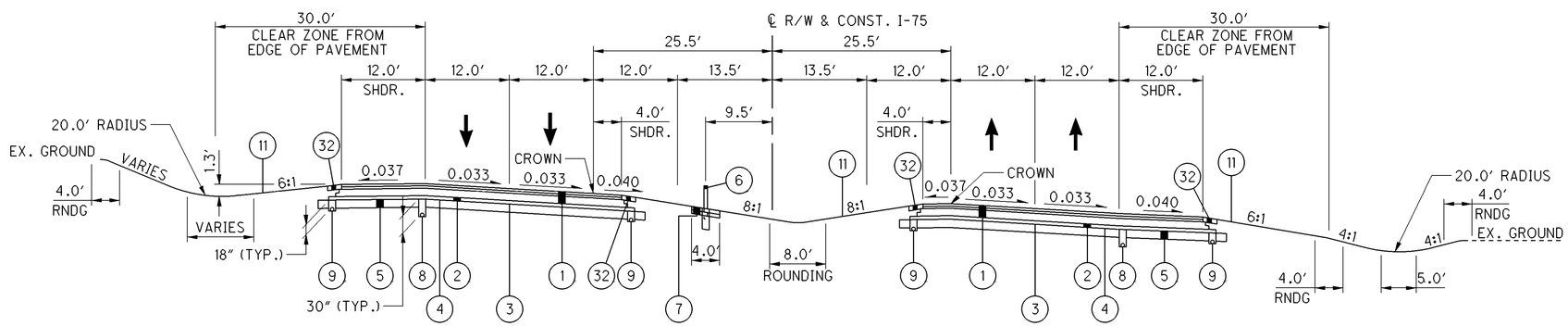

I-75 SUPERELEVATED SECTION

STA. 50+86.32 TO STA. 52+56.42
STA. 53+92.42 TO STA. 76+96.74

NOTES:
FOR PROPOSED PAVEMENT BUILDUP LEGEND, SEE SHEET 17.

FOR CURBED SECTIONS, SEE SHEET 21.

I:\Pd\89029\roadway\sheets\89029GY005.dgn 25-JUN-2013 6:21AM tbolenbo

PROPOSED TYPICAL SECTIONS I-75 (FLEXIBLE)

ALL-75-0.21

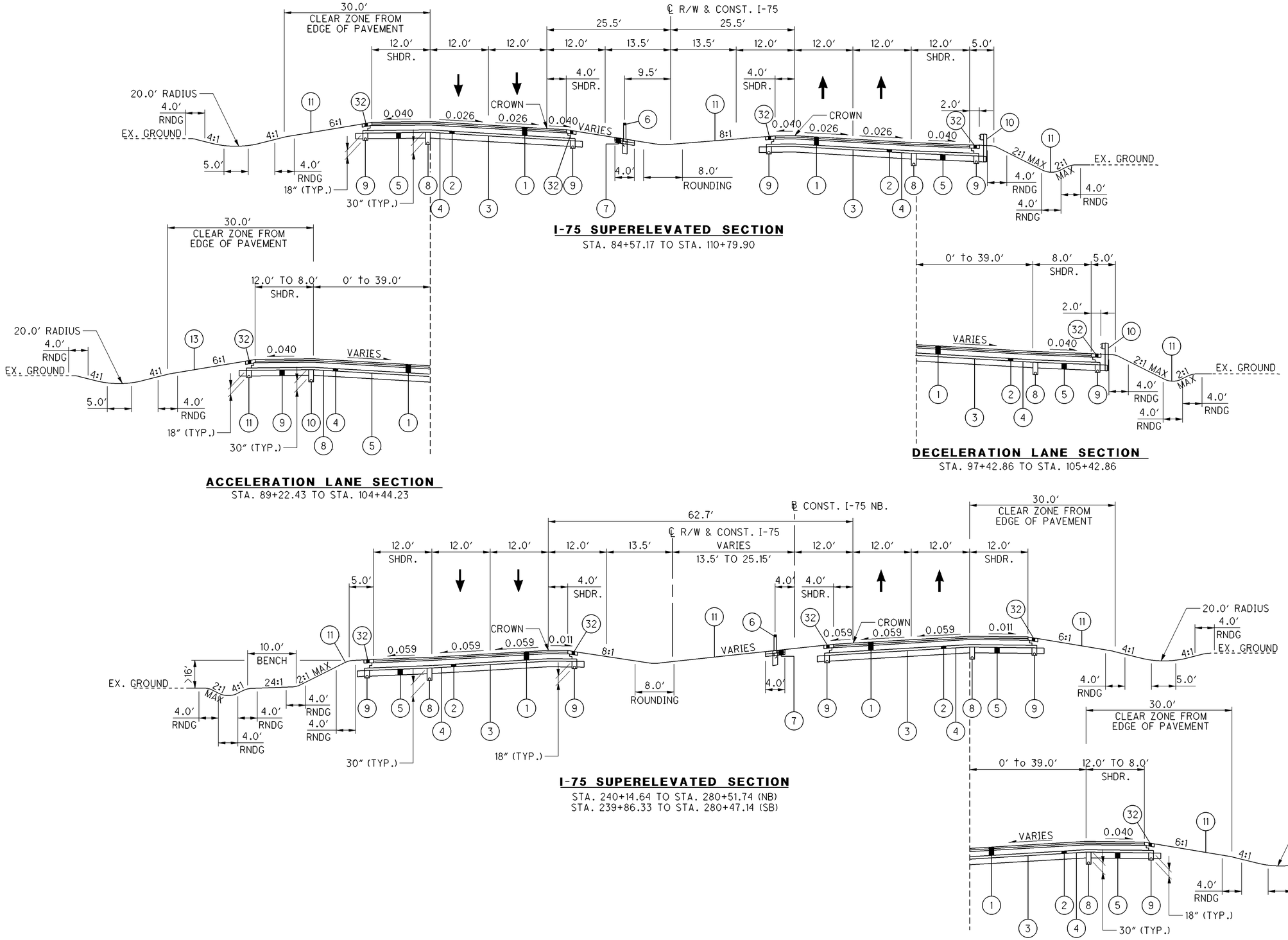

NOTE:
FOR PROPOSED PAVEMENT BUILDUP LEGEND,
SEE SHEET 17.

PROPOSED TYPICAL SECTIONS I-75 (FLEXIBLE)

ALL-75-0.21

I:\Pd\89029\roadway\sheets\89029GY006.dgn 25-JUN-2013 6:21AM tbolenba

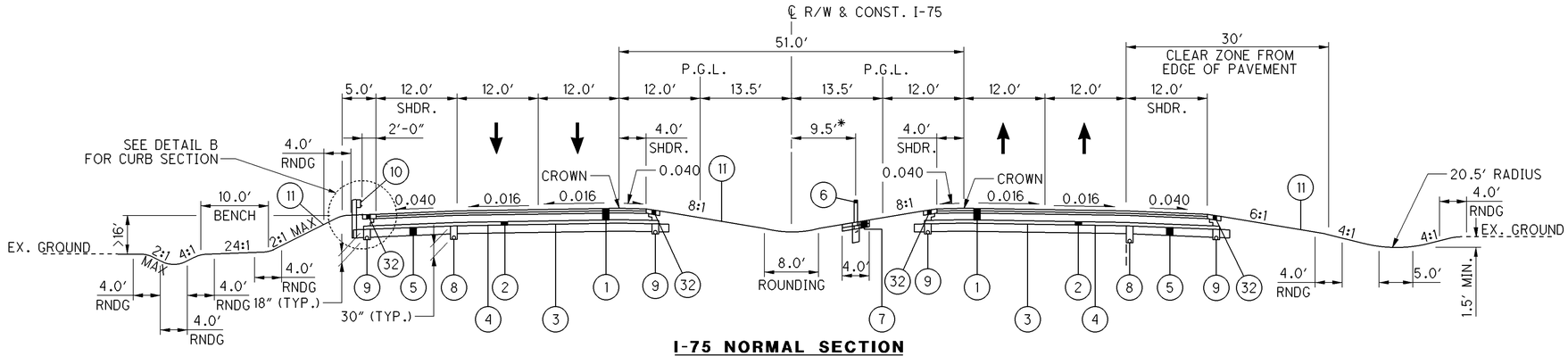

I-75 NORMAL SECTION

STA. 280+47.14 TO STA. 292+00.00 (SB)
STA. 280+18.76 TO STA. 292+00.00 (NB)
*CABLE RAIL MAY BE LT OR RT OF ℄
AS LISTED IN THE ESTIMATED QUANTITIES

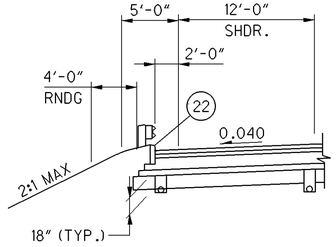

DETAIL A

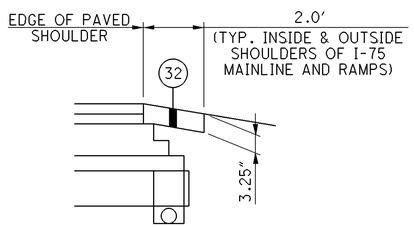

ITEM 617 - SHOULDER DETAIL
NOT TO SCALE

NOTE:

(32) - ITEM 617 COMPACTED AGGREGATE, SEE SHEET 162 FOR QUANTITIES.

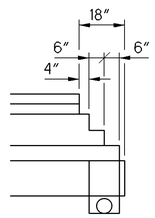

I-75 ASPHALT EDGE STEP DETAIL
NOT TO SCALE

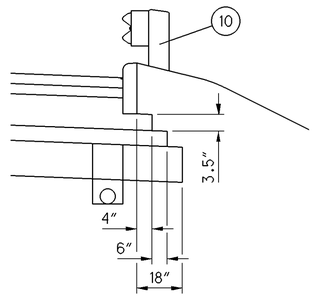

I-75 CURBED ASPHALT EDGE STEP DETAIL
NOT TO SCALE

NOTE:
FOR PROPOSED PAVEMENT BUILDUP LEGEND, SEE SHEET 17.

PROPOSED TYPICAL SECTIONS I-75 (FLEXIBLE)

ALL-75-0.21

21
907

I:\Pd\89029\roadway\sheets\89029GY007.dgn 25-JUN-2013 6:21AM tbolenbo

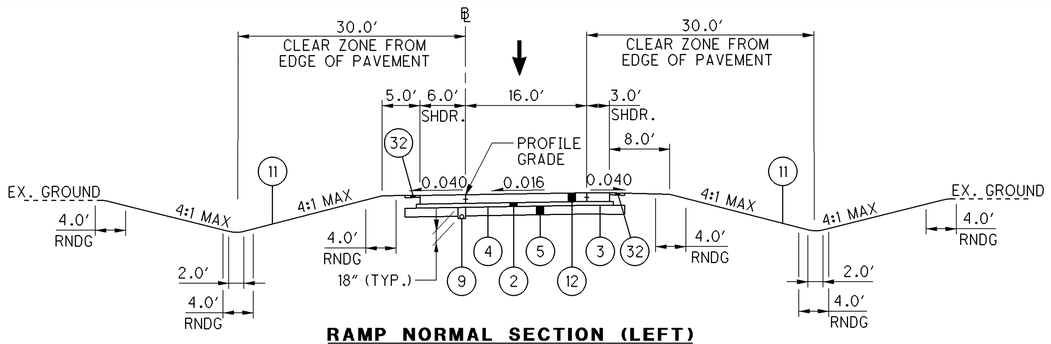

RAMP NORMAL SECTION (LEFT)

RAMP 'A'
STA. 107+68.24 TO STA. 110+12.12

RAMP 'C'
STA. 112+54.94 TO STA. 113+60.35

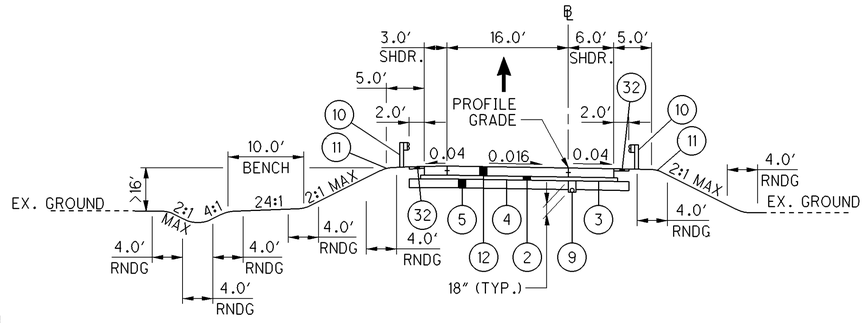

RAMP NORMAL SECTION (RIGHT)

RAMP 'B'
STA. 110+04.05 TO STA. 111+18.57

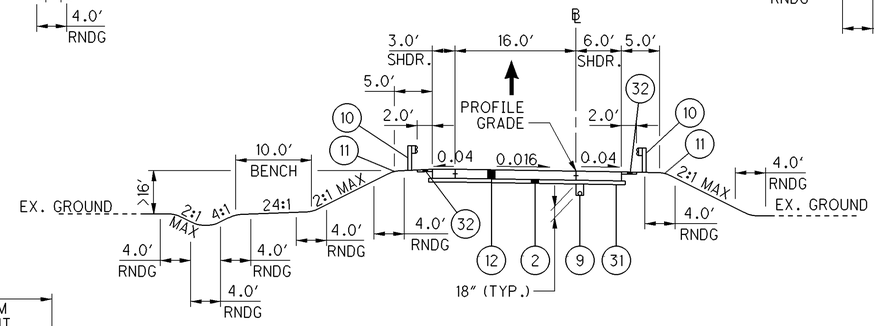

RAMP NORMAL SECTION (RIGHT)

RAMP 'D'
STA. 115+15.13 TO STA. 115+23.38

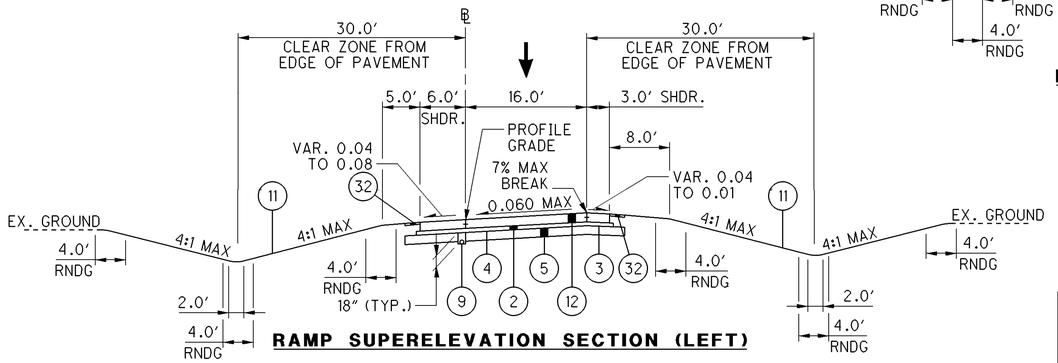

RAMP SUPERELEVATION SECTION (LEFT)

RAMP 'A'
STA. 104+44.23 TO STA. 107+68.24

RAMP 'C'
STA. 113+60.35 TO STA. 117+78.01

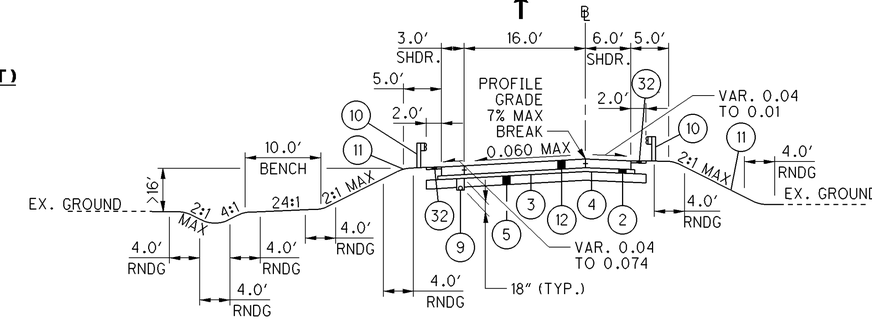

RAMP SUPERELEVATION SECTION (LEFT)

RAMP 'B'
STA. 111+18.57 TO STA. 112+89.42

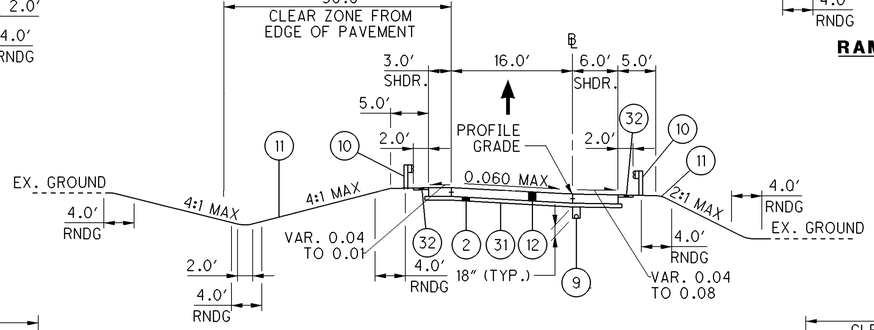

RAMP SUPERELEVATION SECTION (RIGHT)

RAMP 'D'
STA. 113+93.62 TO STA. 115+15.13
STA. 115+23.38 TO STA. 119+13.27

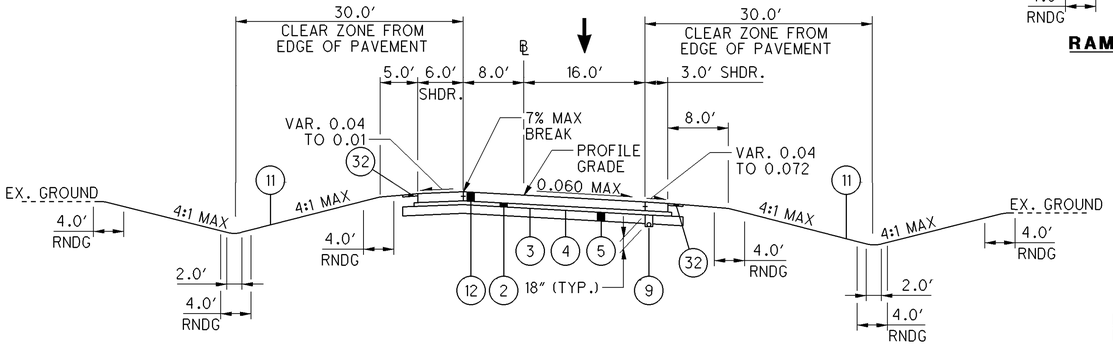

RAMP SUPERELEVATION SECTION (RIGHT)

RAMP 'C'
STA. 109+67.09 TO STA. 112+54.94

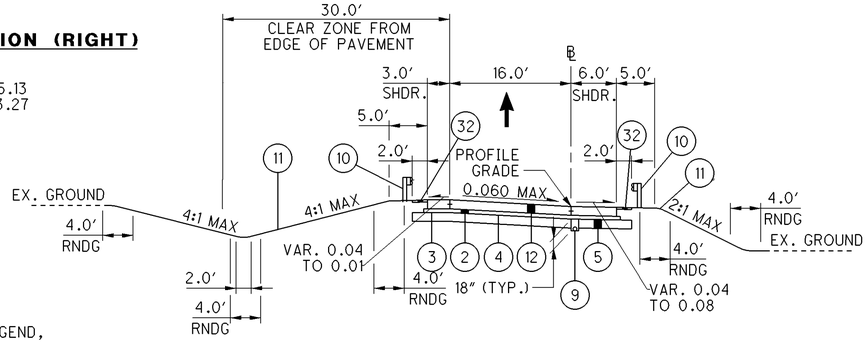

RAMP SUPERELEVATION SECTION (RIGHT)

RAMP 'B'
STA. 105+42.86 TO STA. 110+04.05
STA. 112+89.42 TO STA. 114+01.35

NOTES:
FOR PROPOSED PAVEMENT BUILDUP LEGEND, SEE SHEET 17.

+ STANDARD LONGITUDINAL JOINT

PROPOSED TYPICAL SECTIONS - BREESE RD. RAMPS

ALL-75-0.21

I:\Pd\89029\roadway\sheets\89029GY008.dgn 25-JUN-2013 6:21AM tbolenba

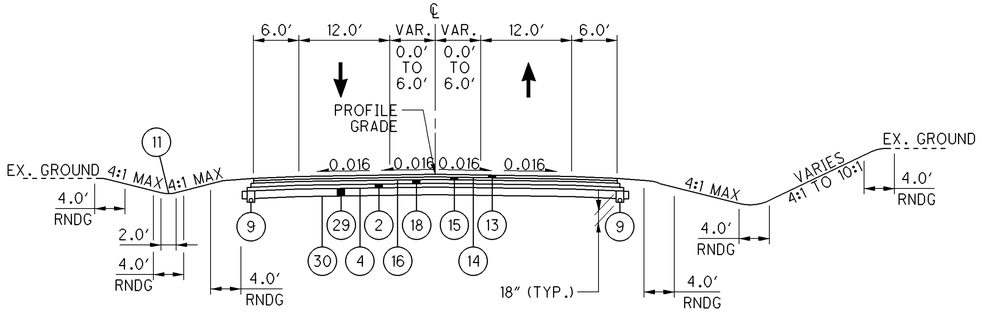

BREESE RD. NORMAL SECTION

STA. 100+25.00 TO STA. 101+74.19

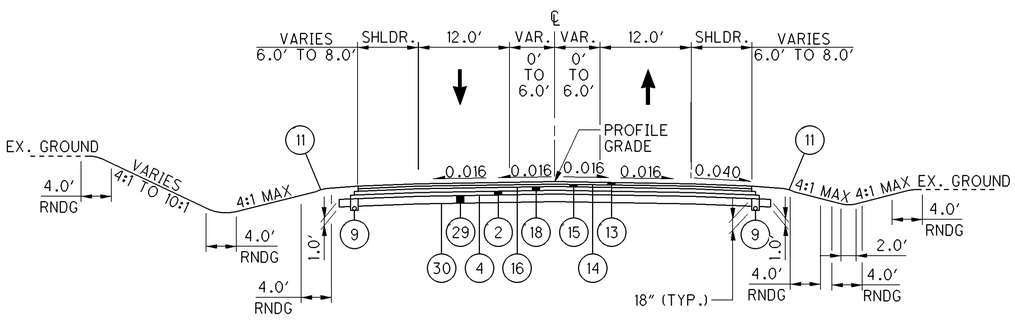

BREESE RD. NORMAL SECTION

STA. 108+07.17 TO STA. 110+61.51

BREESE RD. NORMAL SECTION

STA. 101+74.19 TO STA. 103+42.18

BREESE RD. NORMAL SECTION

STA. 110+61.51 TO STA. 111+90.00

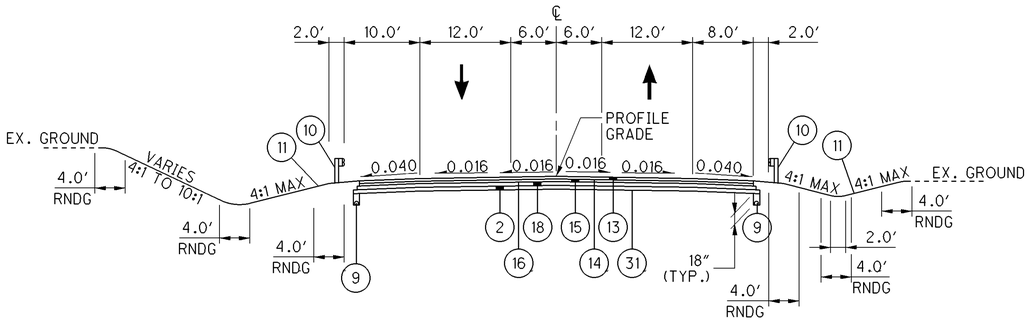

BREESE RD. NORMAL SECTION

STA. 106+57.82 TO STA. 108+07.17

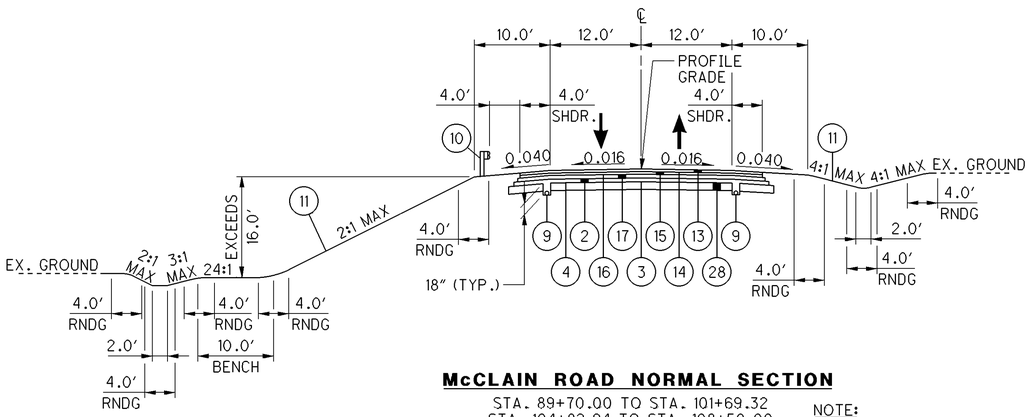

McCLAIN ROAD NORMAL SECTION

STA. 89+70.00 TO STA. 101+69.32
STA. 104+82.94 TO STA. 108+50.00

NOTE:
FOR PROPOSED PAVEMENT BUILDUP LEGEND, SEE SHEET 17.

PROPOSED TYPICAL SECTIONS
BREESE ROAD & McCLAIN ROAD

ALL-75-0.21

I:\Pdt\89029\roadway\sheets\89029GY009.dgn 25-JUN-2013 6:21AM tbolenba

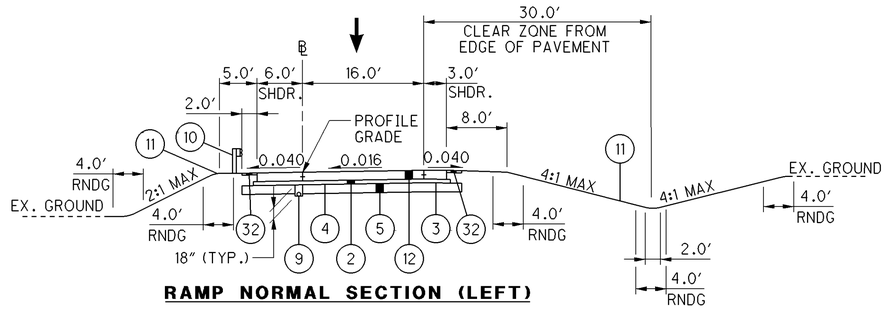

RAMP NORMAL SECTION (LEFT)

RAMP 'C'
STA. 224+23.45 TO STA. 230+76.82

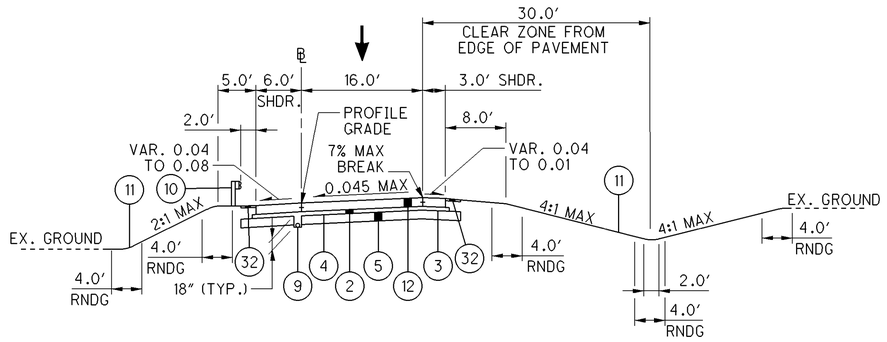

RAMP SUPERELEVATION SECTION (LEFT)

RAMP 'C'
STA. 230+76.82 TO STA. 232+38.06

RAMP NORMAL SECTION (LEFT)

RAMP 'B'
STA. 223+00.29 TO STA. 223+83.26

RAMP SUPERELEVATION SECTION (LEFT)

RAMP 'B'
STA. 217+94.54 TO STA. 223+00.29

NOTES:
FOR PROPOSED PAVEMENT BUILDUP LEGEND, SEE SHEET 17.

+ STANDARD LONGITUDINAL JOINT

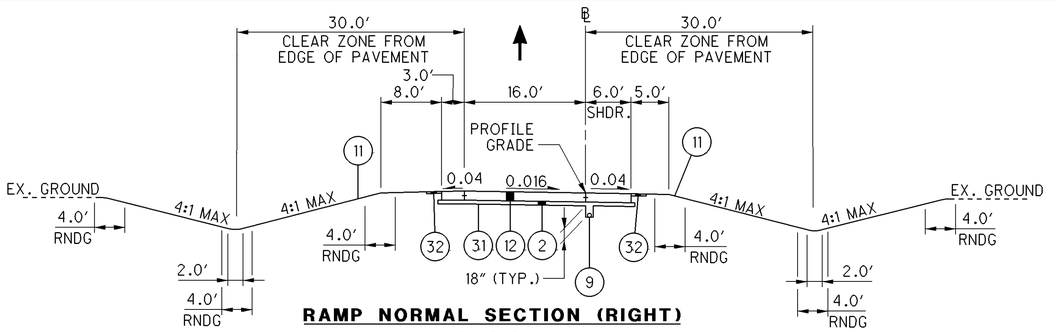

RAMP NORMAL SECTION (RIGHT)

RAMP 'D'
STA. 224+21.04 TO STA. 226+36.04

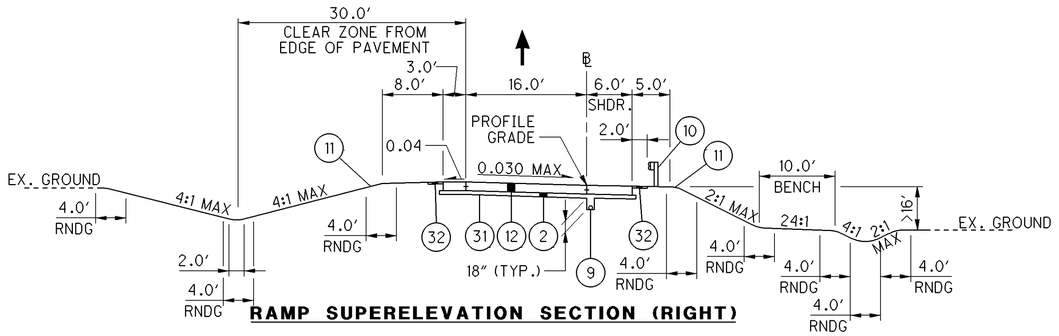

RAMP SUPERELEVATION SECTION (RIGHT)

RAMP 'D'
STA. 226+36.04 TO STA. 233+15.74

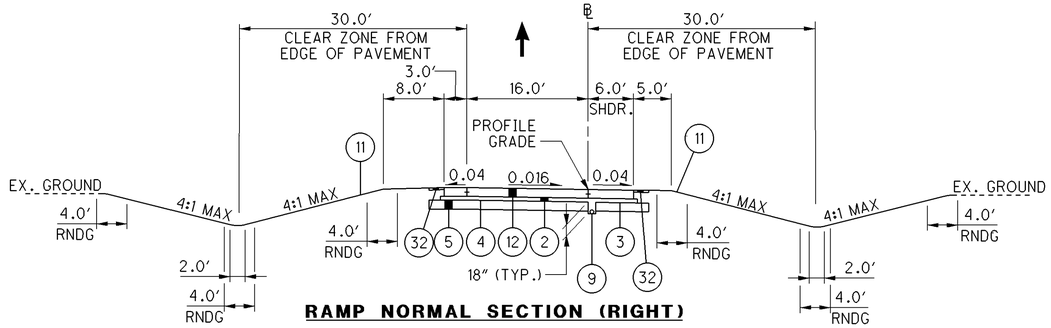

RAMP NORMAL SECTION (RIGHT)

RAMP 'A'
STA. 221+55.79 TO STA. 223+85.72

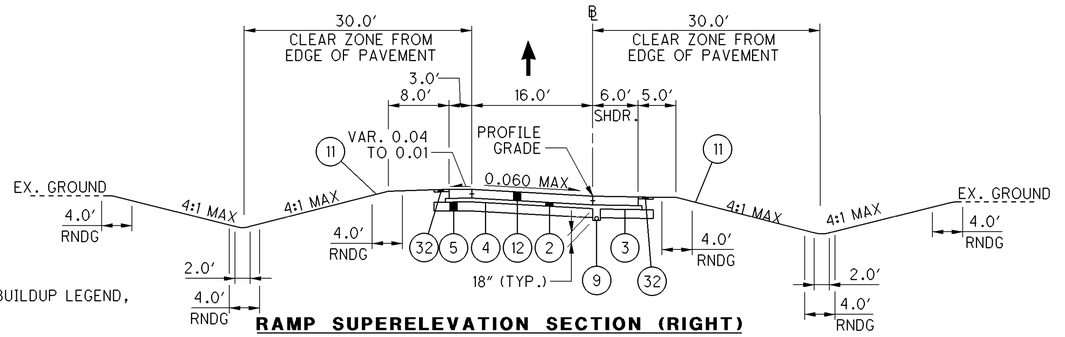

RAMP SUPERELEVATION SECTION (RIGHT)

RAMP 'A'
STA. 218+53.21 TO STA. 221+55.79

PROPOSED TYPICAL SECTIONS - S.R. 65 RAMPS

ALL-75-0.21

I:\Pd\89029\roadway\sheets\89029GY010.dgn 25-JUN-2013 6:21AM tbolenbo

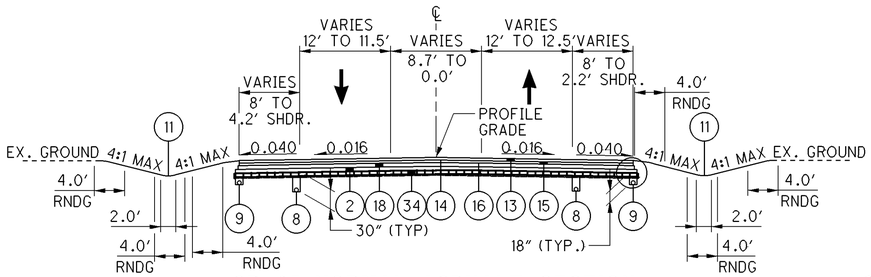

SR 65 NORMAL ASPHALT SECTION

STA. 109+00 TO STA. 110+55.00

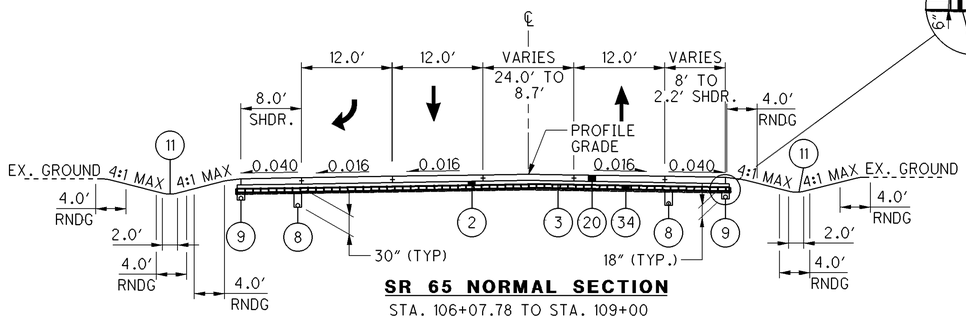

SR 65 NORMAL SECTION

STA. 106+07.78 TO STA. 109+00

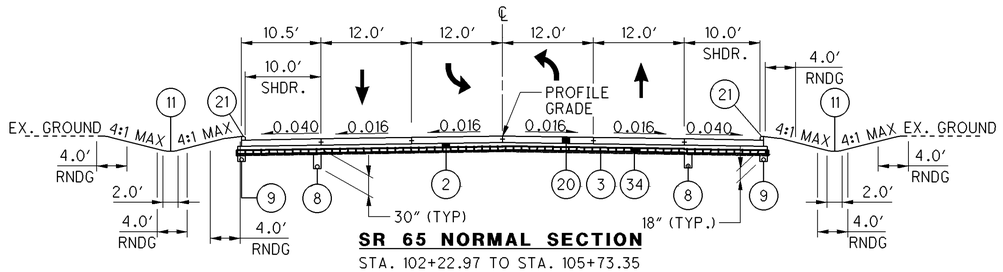

SR 65 NORMAL SECTION

STA. 102+22.97 TO STA. 105+73.35

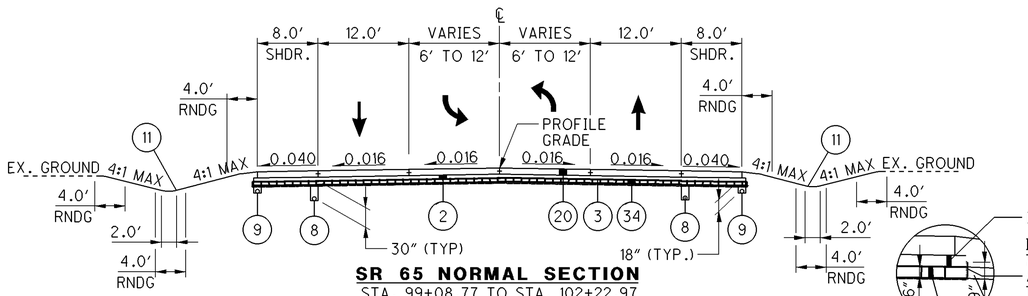

SR 65 NORMAL SECTION

STA. 99+08.77 TO STA. 102+22.97

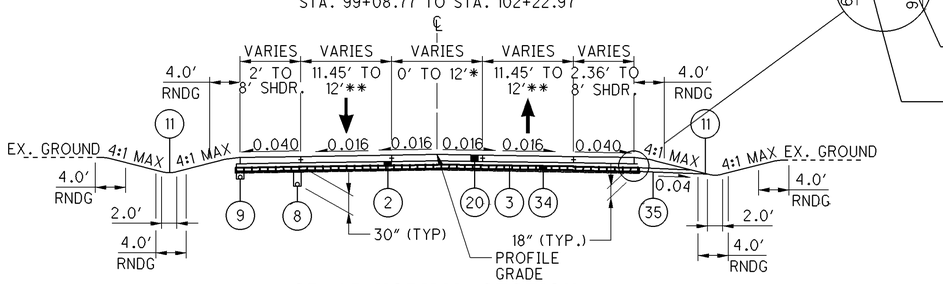

SR 65 NORMAL SECTION

STA. 93+00.00 TO STA. 99+08.77
*STA. 93+29.32 TO STA. 96+50.00
**STA. 93+00.00 TO STA. 93+29.32

SUBSURFACE DRAINAGE LEFT APPLIES
STA. 96+20.00 TO STA. 99+08.77

SUBSURFACE DRAINAGE RIGHT APPLIES
STA. 93+00.00 TO STA. 96+20

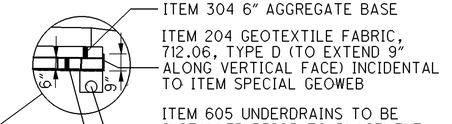

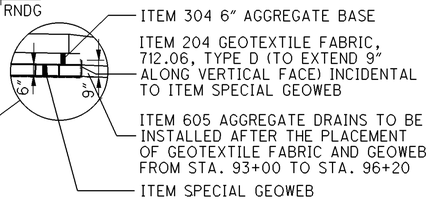

NOTES:
FOR PROPOSED PAVEMENT BUILDUP LEGEND, SEE SHEET 17.

+ STANDARD LONGITUDINAL JOINT

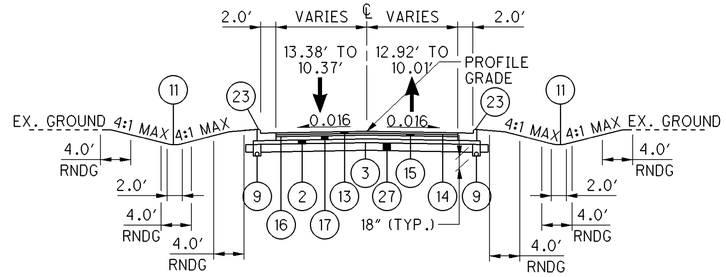

YODER ROAD NORMAL SECTION

STA. 7+61.46 TO STA. 8+25.00

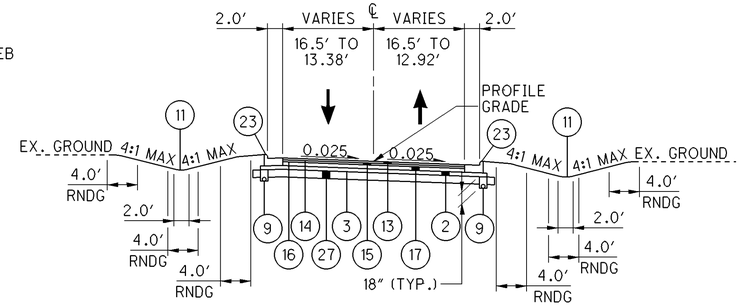

YODER ROAD SUPERELEVATION SECTION

STA. 4+74.77 TO STA. 7+61.46

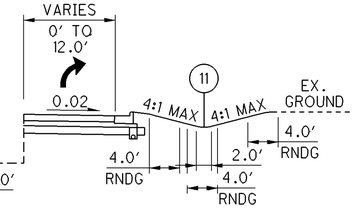

YODER ROAD TURN LANE SECTION

STA. 1+30.89 TO STA. 3+50

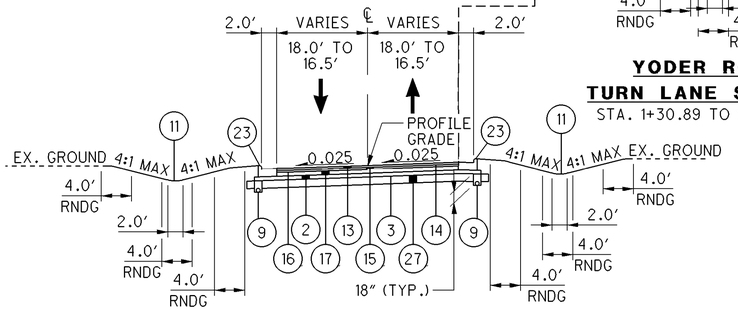

YODER ROAD SUPERELEVATION SECTION

STA. 1+38.86 TO STA. 4+74.77

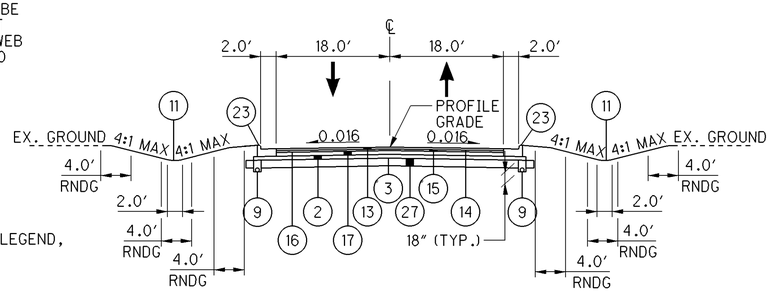

YODER ROAD NORMAL SECTION

STA. 0+00.00 TO STA. 1+38.86

PROPOSED TYPICAL SECTIONS S.R. 65 AND YODER ROAD

ALL-75-0.21

I:\Pd\89029\roadway\sheets\89029GY011.dgn 25-JUN-2013 6:21AM tbolenbo

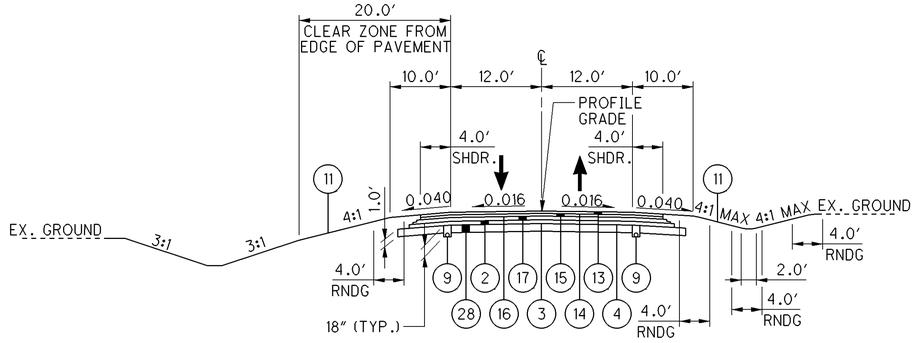

HANTHORN ROAD NORMAL SECTION

STA. 96+20.00 TO STA. 100+96.97
STA. 104+11.58 TO STA. 112+35.00

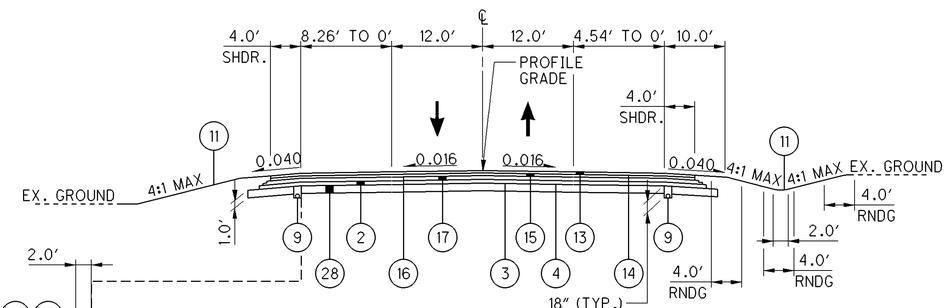

HANTHORN ROAD NORMAL SECTION

STA. 93+64.79 TO STA. 96+20.00

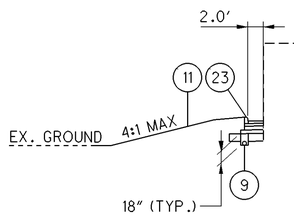

STA. 93+25.00 TO STA. 93+64.79 LT.

NOTE:
FOR PROPOSED PAVEMENT BUILDUP LEGEND,
SEE SHEET 17.

PROPOSED TYPICAL SECTIONS
HANTHORN ROAD.

ALL-75-0.21

I:\Pd\89029\roadway\sheets\89029GY012.dgn 25-JUN-2013 6:21AM tbolenba

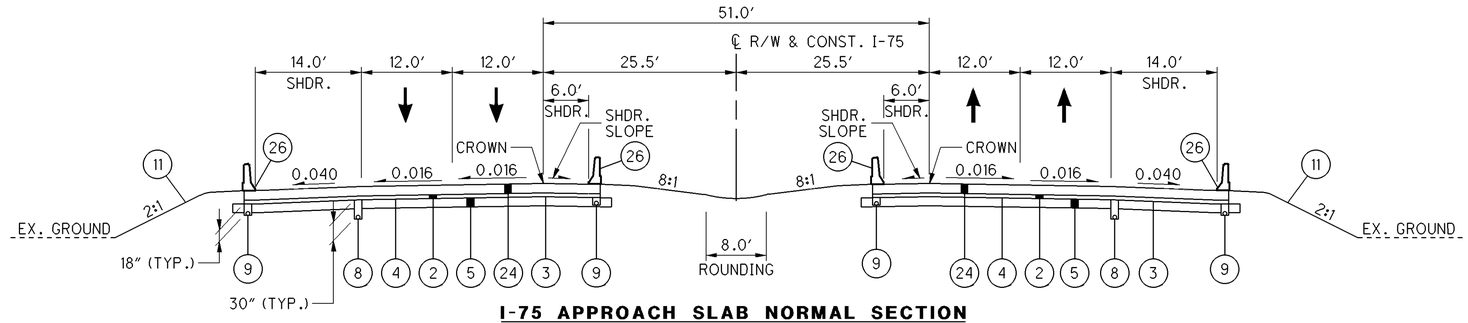

I-75 APPROACH SLAB NORMAL SECTION

(ALL-75-0423)
STA. 222+93.83 TO STA. 223+18.83
STA. 224+86.83 TO STA. 225+11.83

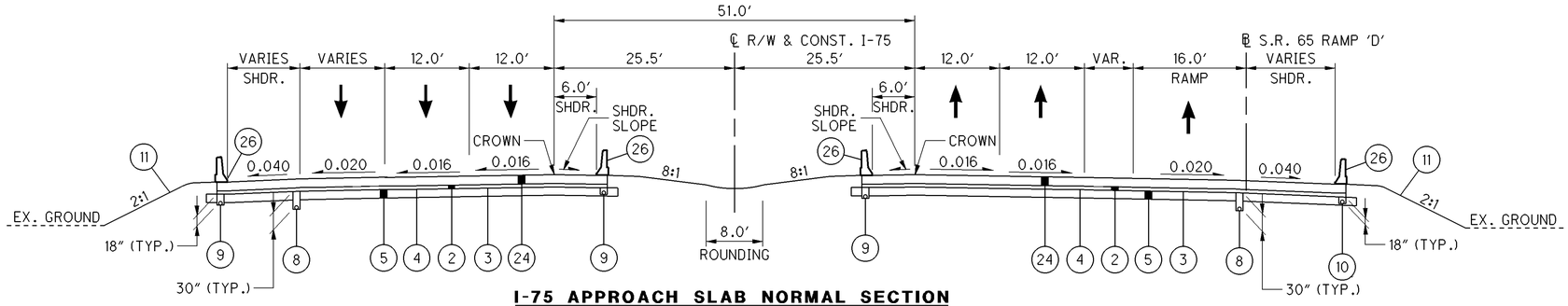

I-75 APPROACH SLAB NORMAL SECTION

(ALL-75-0448)
STA. 235+79.41 TO STA. 236+03.41
STA. 238+15.41 TO STA. 238+40.41

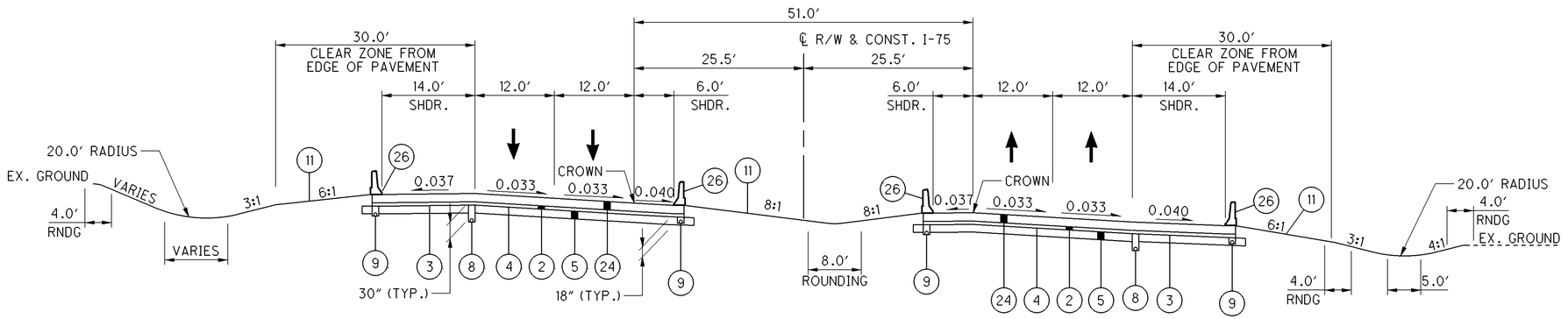

I-75 APPROACH SLAB SUPERELEVATED SECTION

(ALL-75-0100)
STA. 52+56.42 TO STA. 52+81.42
STA. 53+67.42 TO STA. 53+92.42

NOTE:
FOR PROPOSED PAVEMENT BUILDUP LEGEND, SEE SHEET 17.

PROPOSED TYPICAL SECTIONS - APPROACH SLABS

ALL-75-0.21

I:\Pd\89029\roadway\sheets\89029GY013.dgn 25-JUN-2013 6:21AM tbolenba

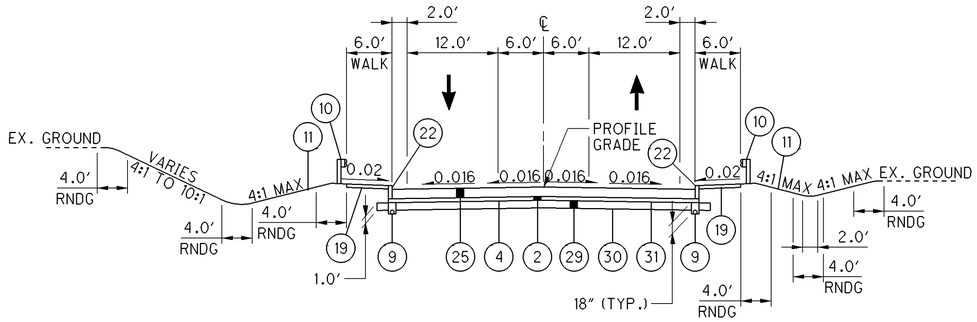

BREESE ROAD
APPROACH SLAB NORMAL SECTION
(ALL-75-0212)
STA. 103+42.18 TO STA. 103+72.18

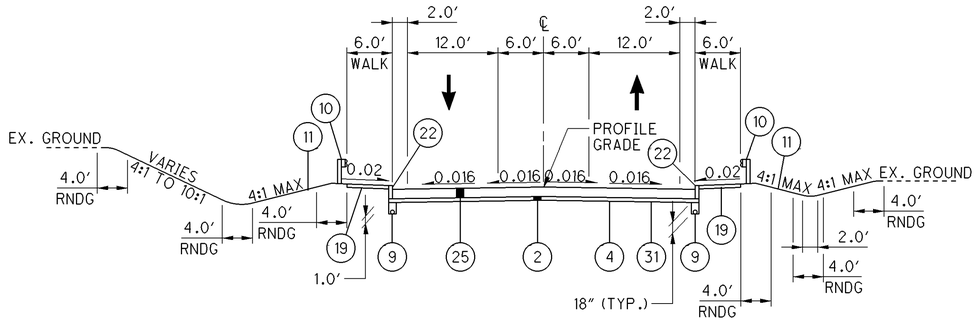

BREESE ROAD
APPROACH SLAB NORMAL SECTION
(ALL-75-0212)
STA. 106+27.82 TO STA. 106+57.82

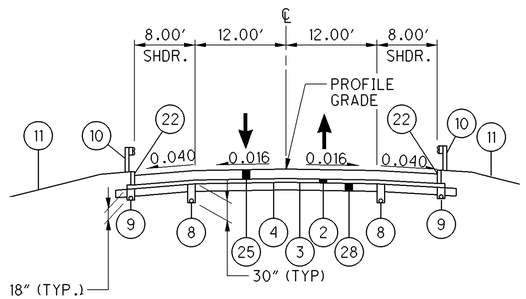

McCLAIN RD.
APPROACH SLAB NORMAL SECTION
(ALL-75-0328)
STA. 101+69.32 TO STA. 101+99.32
STA. 104+52.94 TO STA. 104+82.94

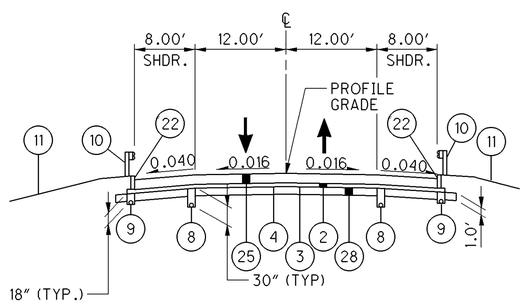

HANTHORN RD.
APPROACH SLAB NORMAL SECTION
(ALL-75-0508)
STA. 100+96.97 TO STA. 101+26.97
STA. 103+81.58 TO STA. 104+11.58

NOTE:
FOR PROPOSED PAVEMENT BUILDUP LEGEND,
SEE SHEET 17.

PROPOSED TYPICAL SECTIONS - APPROACH SLABS

ALL-75-0.21

I:\Pd\89029\roadway\sheets\89029GY014.dgn 25-JUN-2013 6:21AM tbolenba

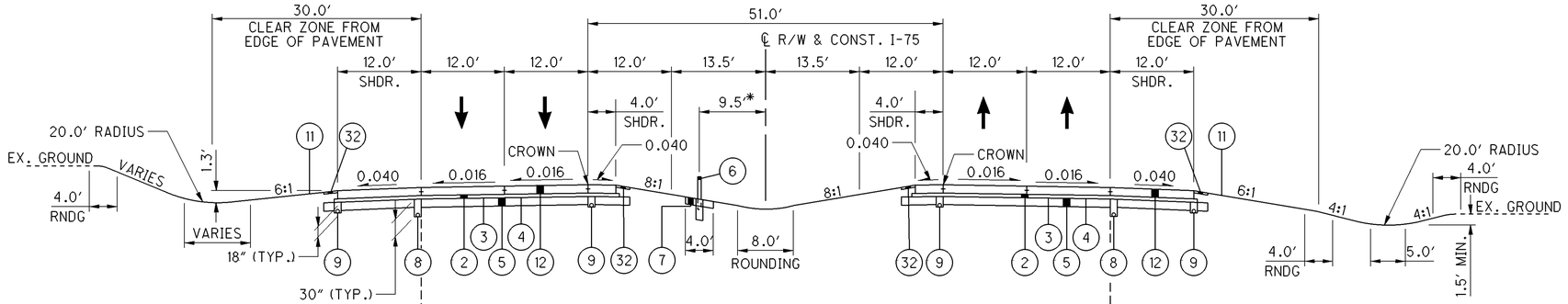

I-75 NORMAL SECTION

STA. 11+00.00 TO STA. 50+86.32
STA. 76+96.74 TO STA. 84+57.17
STA. 110+79.90 TO STA. 156+10.95 (NB)
STA. 110+79.90 TO STA. 156+70.65 (SB)
STA. 180+75.75 TO STA. 222+93.83 (NB)
STA. 180+36.05 TO STA. 222+93.83 (SB)
STA. 225+11.83 TO STA. 235+79.41 (NB)
STA. 225+11.83 TO STA. 235+79.41 (SB)
STA. 238+40.41 TO STA. 240+14.64 (NB)
STA. 238+41.41 TO STA. 239+86.33 (SB)
*CABLE RAIL MAY BE LT OR RT OF ℄
AS LISTED IN THE ESTIMATED QUANTITIES

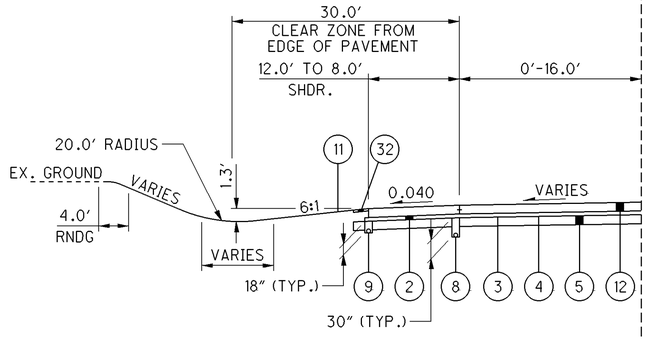

ACCELERATION LANE SECTION

STA. 202+40.35 TO STA. 217+94.54

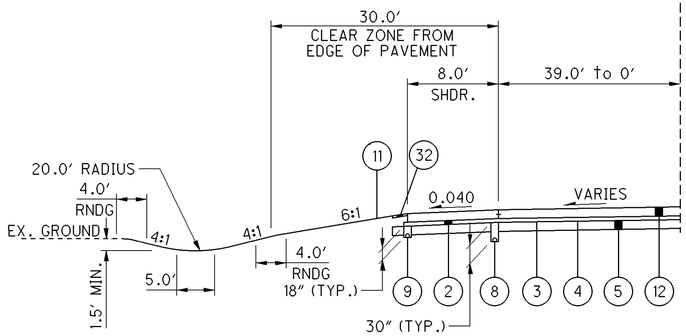

DECELERATION LANE SECTION

STA. 117+78.01 TO STA. 125+78.01
STA. 232+38.06 TO STA. 240+12.21

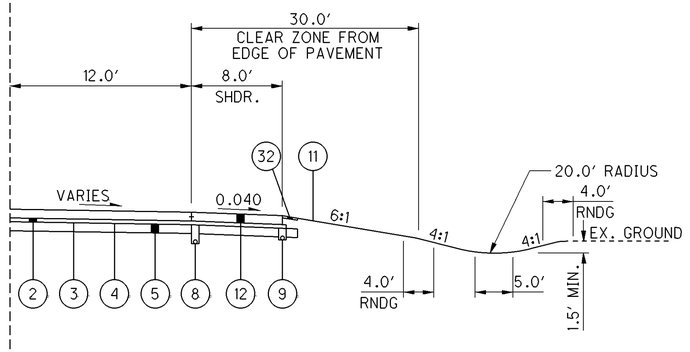

DECELERATION LANE SECTION

STA. 210+53.73 TO STA. 218+53.21

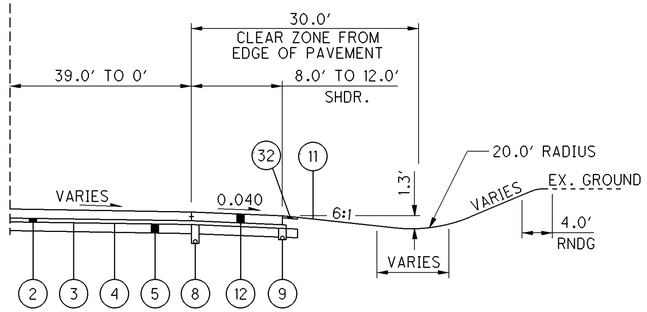

ACCELERATION LANE SECTION

STA. 119+13.27 TO STA. 134+17.16
STA. 233+15.74 TO STA. 240+14.64

NOTES:
FOR PROPOSED PAVEMENT BUILDUP LEGEND, SEE SHEET 17.

FOR CURBED SECTIONS, SEE SHEET 32.

+ STANDARD LONGITUDINAL JOINT

PROPOSED TYPICAL SECTIONS I-75 (RIGID)

ALL-75-0.21

I:\Pd\89029\roadway\sheets\89029GY015.dgn 25-JUN-2013 6:21AM tbolenba

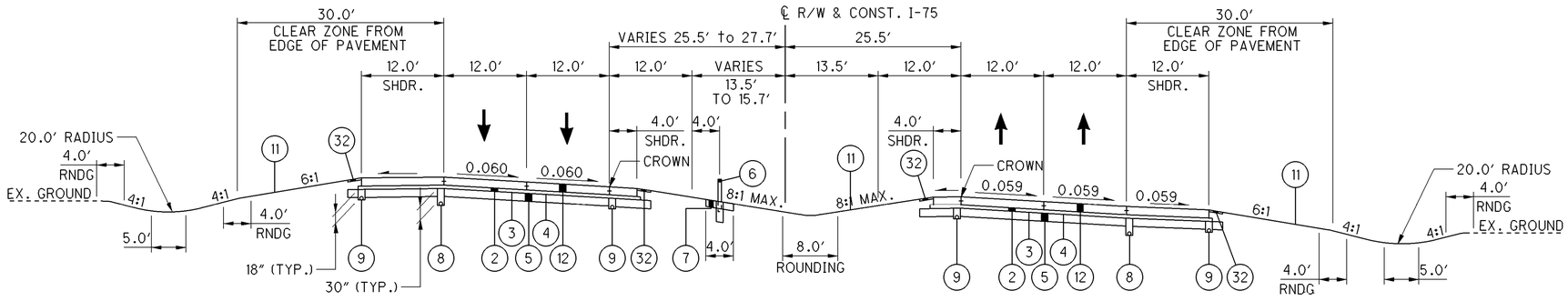

I-75 SUPERELEVATED SECTION
STA. 156+10.95 TO STA. 180+75.75 (NB)
STA. 156+70.65 TO STA. 180+36.05 (SB)

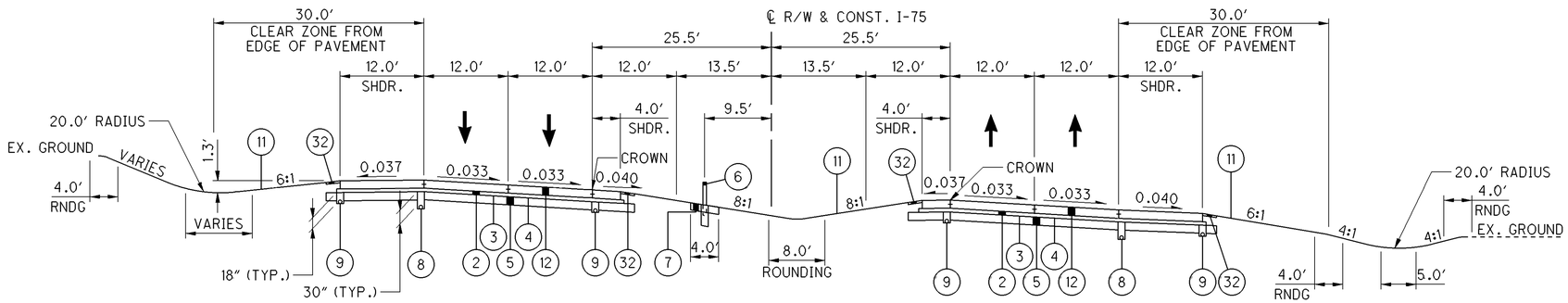

I-75 SUPERELEVATED SECTION
STA. 50+86.32 TO STA. 52+56.42
STA. 53+92.42 TO STA. 76+96.74

NOTES:
FOR PROPOSED PAVEMENT BUILDUP LEGEND, SEE SHEET 17.

FOR CURBED SECTIONS, SEE SHEET 32.

+ STANDARD LONGITUDINAL JOINT

PROPOSED TYPICAL SECTIONS I-75 (RIGID)

ALL-75-0.21

I:\Pd\89029\roadway\sheets\89029GY016.dgn 25-JUN-2013 6:21AM tbolenba

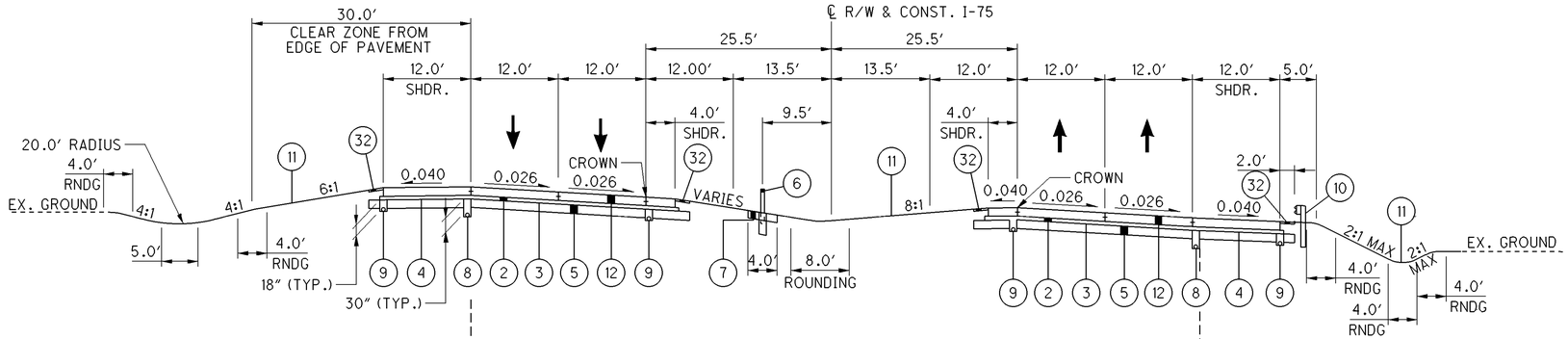

I-75 SUPERELEVATED SECTION

STA. 84+57.17 TO STA. 110+79.90

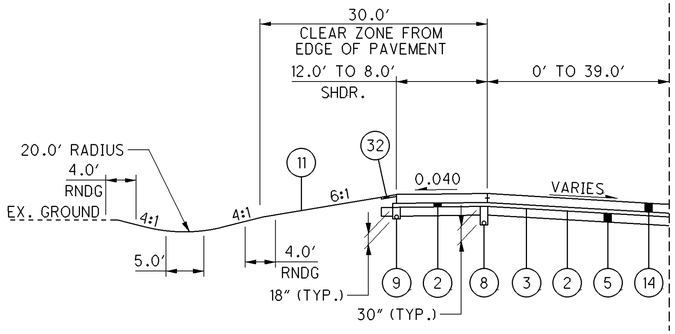

ACCELERATION LANE SECTION

STA. 89+22.43 TO STA. 104+44.23

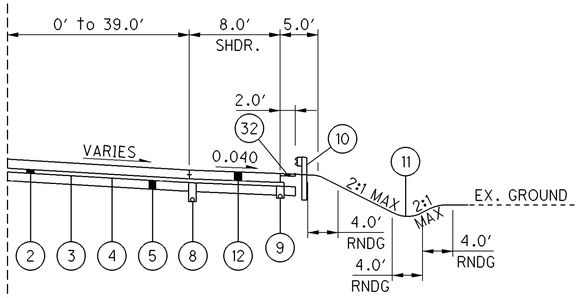

DECELERATION LANE SECTION

STA. 97+42.86 TO STA. 105+42.86

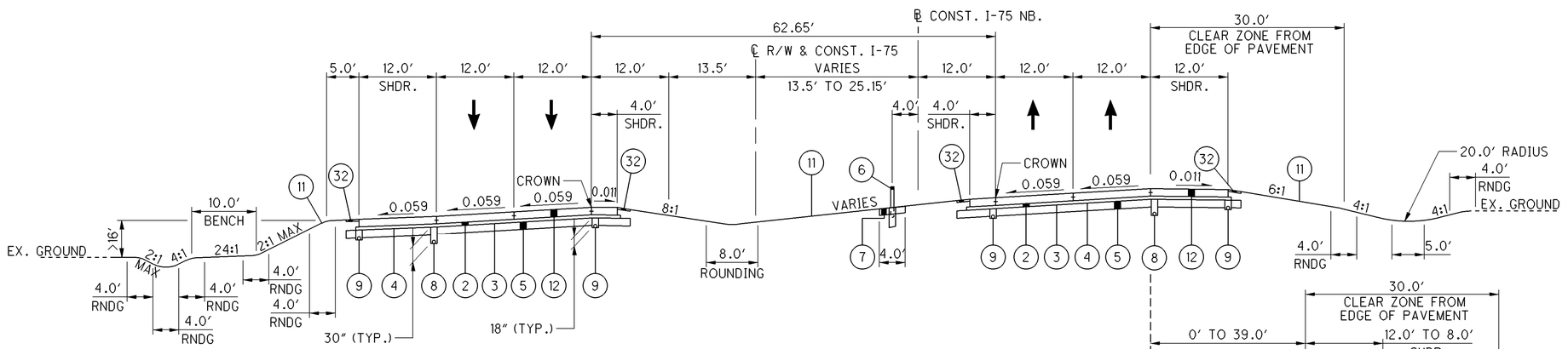

I-75 SUPERELEVATED SECTION

STA. 240+14.64 TO STA. 280+51.74 (NB)
STA. 239+86.33 TO STA. 280+47.14 (SB)

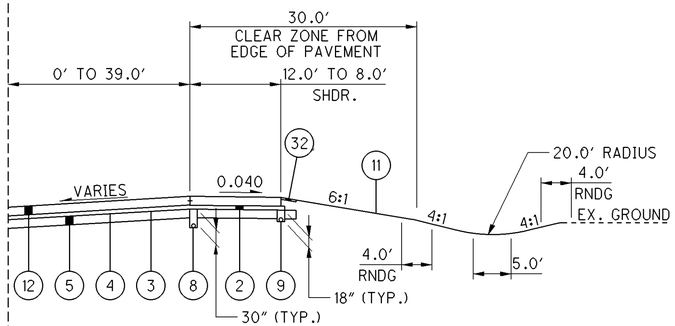

ACCELERATION LANE SECTION

STA. 240+14.64 TO STA. 249+29.19

NOTES:
FOR PROPOSED PAVEMENT BUILDUP LEGEND,
SEE SHEET 17.

+ STANDARD LONGITUDINAL JOINT

PROPOSED TYPICAL SECTIONS I-75 (RIGID)

ALL-75-0.21

I:\Pd\89029\roadway\sheets\89029GY017.dgn 25-JUN-2013 6:21AM tbolenba

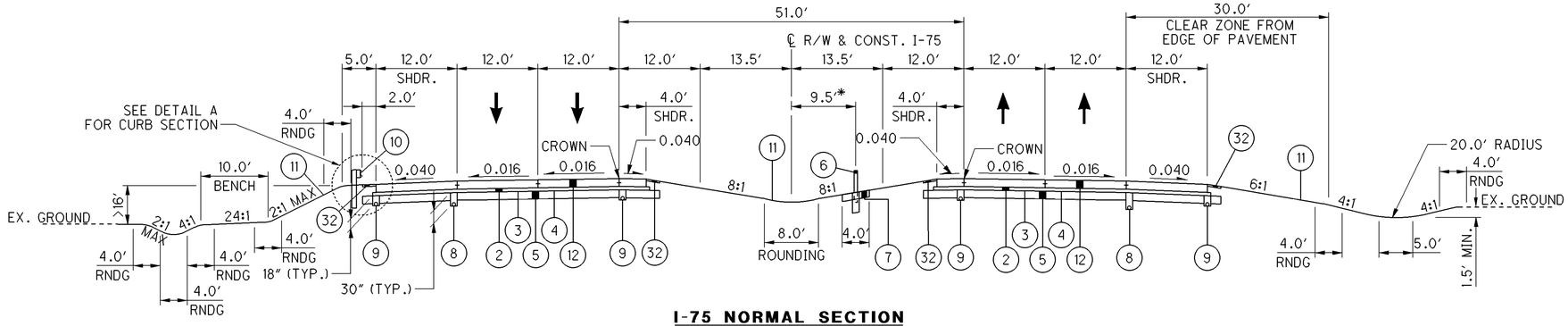

I-75 NORMAL SECTION

STA. 280+47.14 TO STA. 292+00.00 (SB)
STA. 280+18.76 TO STA. 292+00.00 (NB)
*CABLE RAIL MAY BE LT OR RT OF ℄
AS LISTED IN THE ESTIMATED QUANTITIES

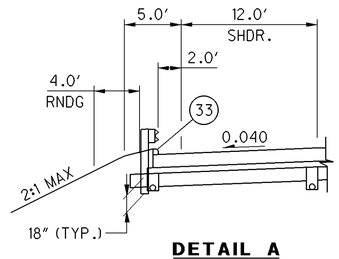

DETAIL A

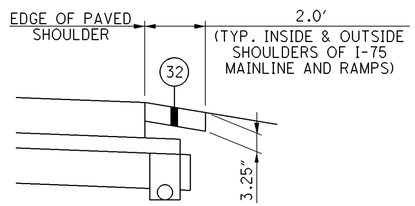

ITEM 617 - SHOULDER DETAIL
NOT TO SCALE

NOTE:
(32) - ITEM 617 COMPACTED AGGEGATE (3.25″ THICK)

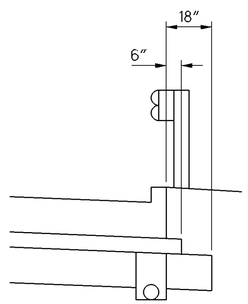

I-75 CURBED CONCRETE EDGE STEP DETAIL
NOT TO SCALE

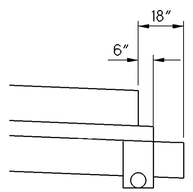

I-75 CONCRETE EDGE STEP DETAIL
NOT TO SCALE

NOTES:
FOR PROPOSED PAVEMENT BUILDUP LEGEND,
SEE SHEET 17.

+ STANDARD LONGITUDINAL JOINT

PROPOSED TYPICAL SECTIONS I-75 (RIGID)

ALL-75-0.21

32
907

I:\pd\89029\roadway\sheets\89029GY018.dgn 25-OCT-2013 10:48AM jclark1

UTILITIES

THE LOCATION OF THE UNDERGROUND UTILITIES SHOWN ON THE PLANS ARE AS OBTAINED FROM THE OWNERS AS REQUIRED BY

LISTED BELOW ARE ALL UTILITIES LOCATED WITHIN THE PROJECT CONSTRUCTION LIMITS TOGETHER WITH THEIR RESPECTIVE OWNERS:

AEP Contact:
209 N Wood,
Fostoria, Ohio 44830
Attn.: Jeff Meyers
AEP (419) 436-2008
Email: jdmeyers@aep.com

Dan Wilson
369 E. O'Connor Ave.
Lima, Ohio 45801
419-998-5103
dewilson@aep.com

Ms. Tram Trinh
AEP Transmission
700 Morrison Road
Gahanna, OH 43240

Allen County Sanitary
Engineer's Office
Brad Niemeyer,
Assistant Sanitary Engineer
(419) 228-3700
3230 N. Cole St.
Lima, Oh 45801

Mike Lerma
(419) 655-2966
Email: Michael.lerma@bp.com
12716 Tank Farm Road
Cygnet, OH 43413

BP Oil Pipeline
Adam Neu (419) 222-7221
Email: Neua1@bp.com
1771 Buckeye Rd
Lima, OH 45804

Telephone Service Company
2 Willipie St.
PO Box 408
Wapakoneta, OH 45895
ATTN: Randy Heinl
(419) 739-2241
Email: randy@telserco.com

Time Warner Cable
3100 Elida Rd
Lima, Ohio 45805
ATTN: Gary Hohenbrink

TEPPCO
2700 Hart Road
Lebanon, Ohio 45036
ATTN: Bob Sanders (513) 932-5886
cell (513) 304-0758; fax (513) 932-7077
rgsaunders@epco.com

Embarq
122 S Elizabeth Street
Lima, Ohio 45801
ATTN: Bill Perrin
(419) 226-6220
Email: William.r.perrin@embarq.com

Marathon Pipe Line LLC
539 S. Main St., Room 7642
Findlay, OH 45840
Attn: Dave Wisner
(419) 421-2211
Email: dswisner@marathonoil.com

Mid Valley Pipeline
PO 219
Cygnet, OH 43413
Or
5152 Rockridge Road
Cygnet, OH 43413
Attn: Chester Wilson
(419) 236-6887
Email: cwilson@sunocologistics.com
(888) 786-3260

Qwest Communications
2626 N. Wapak Rd.
Elida, OH 45807
Attn: Mike Adams (cell 419-392-4133
office 419-229-7355)
Email: mike.adams@qwest.com
George McElvain-Denver (303)-837-3926
for plans and legal issues

Buckeye Partners
Buckeye Pipe Line Co. LP
940 Buckeye Rd
Lima, Ohio 45802
ATTN: Marty White
(419) 236-7766
Email: mwhite@buckeye.com

City of Lima Sanitary Department
50 Town Square
Lima, Oh 45801
ATTN: Dave Schnipke,
Env. Compliance Manager
(419-221-5294)
Email: Dave.Schnipke@cityhall.lima.oh.us

City of Lima Water Department
1405 Reservoir Road
Lima, Oh 45804
ATTN: Kent Shoemaker (419-221-5283)

Columbia Gas Transmission
1804 Broad Ave.
Findlay, OH 45840
Attn: Kevin Coppes
(419) 427-3200

Dominion East Ohio Gas Company
150 S. Jackson St.
Lima, Ohio 45801
ATTN: John Downing (419) 226-4864
email: John483@dom.com
(800) 877-4715

ROUNDING

THE ROUNDING AT SLOPE BREAKPOINTS SHOWN ON THE TYPICAL SECTIONS APPLIES TO ALL CROSS-SECTIONS EVEN THOUGH OTHERWISE SHOWN.

EXISTING PLANS

EXISTING PLANS ENTITLED FOR PAST PROJECTS MAY BE INSPECTED IN THE ODOT DISTRICT 01 OFFICE IN 1885 N. McCULLOUGH ST., LIMA OHIO 45801.

SURVEYING PARAMETERS

USE THE FOLLOWING VERTICAL POSITIONING AND HORIZONTAL POSITIONING PARAMETERS FOR ALL SURVEYING:

VERTICAL POSITIONING

ORTHOMETRIC HEIGHT DATUM: NAVD88
GEOID: 03

HORIZONTAL POSITIONING

REFERENCE FRAME: NAD83(95)
ELLIPSOID: WGS84
MAP PROJECTION: LAMBERT
COORDINATE SYSTEM: OHIO STATE PLANE NORTH ZONE
COMBINED SCALE FACTOR: 0.999919027

UNITS ARE IN U.S. SURVEY FEET. USE THE FOLLOWING CONVERSION FACTOR: 1 METER = 3.280833333 U.S. SURVEY FEET.

WORK LIMITS

THE WORK LIMITS SHOWN ON THESE PLANS ARE FOR PHYSICAL CONSTRUCTION ONLY. PROVIDE THE INSTALLATION AND OPERATION OF ALL WORK ZONE TRAFFIC CONTROL AND WORK ZONE TRAFFIC CONTROL DEVICES REQUIRED BY THESE PLANS WHETHER INSIDE OR OUTSIDE THESE WORK LIMITS.

CLEARING AND GRUBBING, AS PER PLAN

ALL TREES AND STUMPS SPECIFICALLY MARKED FOR REMOVAL WITHIN THE CONSTRUCTION LIMITS SHALL BE REMOVED UNDER THE LUMP SUM BID FOR ITEM 201, CLEARING AND GRUBBING, AS PER PLAN. THESE TREES SHALL ONLY BE CUT BETWEEN SEPTEMBER 15TH AND APRIL 15TH, AS REQUIRED BY THE ENVIRONMENTAL COMMITMENTS OF THIS PROJECT. ALL COST WITH THE ABOVE DESCRIBED ACTIONS SHALL BE INCLUDED IN THE LUMP SUM PRICE BID FOR ITEM 201, CLEARING AND GRUBBING, AS PER PLAN.

SUBSURFACE UTILITY EXPLORATION (SUE)

DISTRICT 1 CONTRACTED WITH A SUE CONSULTANT TO PERFORM EXPLORATION SERVICES ALONG THE MAINLINE OF I-75. THE CONTRACTOR SHALL CONTACT THE DISTRICT 1 UTILITY COORDINATOR TO REVIEW THE PLAN, NOTES AND DATA PRIOR TO BIDDING AND CONSTRUCTION.

RAILROAD

ALL MOVEMENTS OF EQUIPMENT WITHIN RAILROAD PROPERTY MUST BE COORDINATED WITH THE RAILROAD FLAGGER.

DURING TRAIN MOVEMENTS THROUGH THE PROJECT LOCATION, VEHICLES, EQUIPMENT, AND PERSONNEL WILL NOT BE ALLOWED TO OPERATE WITHIN 25 FEET OF THE TRACK.

ANY DAMAGE CAUSED BY THE ROADWAY WORK TO THE TRACK OR RAILROAD PROPERTY WILL REQUIRE REPAIR BY THE ROADWAY AUTHORITY OR THEIR DESIGNATED CONTRACTOR IMMEDIATELY UPON NOTIFICATION FORM THE RAILROAD OR THIER DESIGNATED PERSONNEL OR CONTRACTOR.

RAILROAD COORDINATOR & FLAGGER

THE ROADWAY AUTHORITY, OR DESIGNATED CONTRACTOR, SHALL COORDINATE WITH THE RAILROAD WHENEVER CONTRACTOR'S WORK ACTIVITIES ARE LOCATED OVER, UNDER, OR WITHIN THE RAILROAD RIGHT-OF-WAY. A MINIMUM OF 72 HOURS NOTICE IN ADVANCE OF ANY WORK PERFORMED WITHIN OR ADJACENT TO THE RAILROAD RIGHT-OF-WAY. TO SCHEDULE A RAILROAD FLAGGER OR COORDINATE ALL RAILROAD ACTIVITIES, CONTACT THE FOLLOWING RAILROAD PERSONNEL:

RAILROAD FLAGGER AND PROTECTIVE SERVICES AND DEVICES WILL BE REQUIRED AND FURNISHED WHEN CONTRACTOR'S WORK ACTIVITIES ARE LOCATED OVER, UNDER, OR WITHIN THE RAILROAD RIGHT-OF-WAY. THE CONTRACTOR SHALL PROVIDE THE RAILROAD A MINIMUM OF 72 HOURS NOTICE IN ADVANCE OF ANY WORK PERFORMED WITHIN OR ADJACENT TO THE RAILROAD RIGHT-OF-WAY.

BILL KELLY - GENERAL MANAGER
INDIANA AND OHIO RAILWAY (IORY)
2856 CYPRESS WAY
CINCINNATI, OH 45212
OFFICE: 513-458-4369
MOBILE: 513-505-3157
EMAIL BILL.KELLY@OWRR.COM
OR
DON KUCHEY - ROADMASTER
INDIANA AND OHIO RAILWAY (IORY)
2856 CYPRESS WAY
CINCINNATI, OH 45212
OFFICE: 513-458-4369
MOBILE: 513-505-3156
EMAIL DON.KUCHEY@OWRR.COM

CONTRACTOR MUST SUBMIT DETAILED DEMOLITION PLANS, STAMPED AND SIGNED BY AN OHIO LICENSED PROFESSIONAL ENGINEER, TO THE IORY AT LEAST 45 DAYS PRIOR TO COMMENCING ANY WORK. THE PLANS MUST BE REVIEWED AND APPROVED BY THE IORY PRIOR TO COMMENCING WORK. THIS SHALL BE CONSIDERED INCIDENTAL TO THE EXISTING BRIDGE REMOVAL, ITEM 202.

CONTRACTOR SHALL SUBMIT TO IORY RR ANY TEMPORARY SCAFFOLDING OR TEMPORARY STRUCTURES DETAILS TO BE CONSTRUCTED WITHIN THE RAILROAD R/W FOR APPROVAL PRIOR TO BEGINNING WORK.

SEE ALL-75-0448 L/R STRUCTURE PLANS FOR ADDITIONAL RAILROAD NOTES.

CONTINGENCY QUANTITIES

THE CONTRACTOR SHALL NOT ORDER MATERIALS OR PERFORM WORK FOR ITEMS DESIGNATED BY PLAN NOTE TO BE USED "AS DIRECTED BY THE ENGINEER" UNLESS AUTHORIZED BY THE ENGINEER. THE ACTUAL WORK LOCATIONS AND QUANTITIES USED FOR SUCH ITEMS SHALL BE INCORPORATED INTO THE FINAL CHANGE ORDER GOVERNING COMPLETION OF THIS PROJECT.

MONUMENT ASSEMBLIES

CONSTRUCT MONUMENT ASSEMBLIES IN ACCORDANCE WITH THE DETAILS SHOWN ON THE STANDARD CONSTRUCTION DRAWINGS AND AT THE LOCATIONS SHOWN ON SHEET NO. 8.

ITEM 823 MONUMENT ASSEMBLY 5 EACH
ITEM 823 REFERENCE MONUMENT 62 EACH

RIGHT-OF-WAY MONUMENT RESET

CONSTRUCT RIGHT-OF-WAY MONUMENTS IN ACCORDANCE WITH THE DETAILS SHOWN ON THE STANDARD CONSTRUCTION DRAWINGS AND AT LOCATIONS AS DIRECTED BY THE ENGINEER.

ITEM 823 RIGHT-OF-WAY MONUMENT 5 EACH

PAVEMENT RESTORATION FOR MONUMENT ASSEMBLY INSTALLATIONS

THE FOLLOWING QUANTITY IS PROVIDED FOR PAVEMENT RE-STORATION FOLLOWING INSTALLATION OF ITEM 604 MONUMENT ASSEMBLIES.

ITEM 301 ASPHALT CONCRETE BASE, PG64-22 1 CU. YD.

THE ABOVE QUANTITY IS BASED ON A 301 THICKNESS OF 8 INCHES AND A WIDTH OF TWO FEET AROUND THE PERIMETER OF THE MONUMENT ASSEMBLIES.

PROVIDE ANY MATERIALS USED OUTSIDE THE LIMITS STATED ABOVE AT NO ADDITIONAL COST.

AIRWAY/HIGHWAY CLEARANCE FOR AIRPORTS AND HELIPORTS

THIS PROJECT HAS BEEN IDENTIFIED AS BEING WITHIN THE INFLUENCE AREA OF A PUBLIC USE AIRPORT OR HELIPORT. NO TEMPORARY STRUCTURES OR CONSTRUCTION EQUIPMENT AT MAXIMUM OPERATING HEIGHT SHALL EXCEED A HEIGHT OF 169 FT. IF ANY TEMPORARY STRUCTURES OR CONSTRUCTION EQUIPMENT WILL EXCEED THIS HEIGHT, FURTHER COORDINATION WITH THE FEDERAL AVIATION ADMINISTRATION (FAA), AND ODOT OFFICE OF AVIATION, WILL BE NECESSARY PRIOR TO ERECTING SUCH TEMPORARY STRUCTURES OR OPERATING SUCH EQUIPMENT ON THE PROJECT. THE CONTRACTOR WILL BE REQUIRED TO SUBMIT FORM 7460-1 TO THE FAA. A COPY OF THE SUBMISSION AND TWO COPIES OF FORM 7460-1 SHALL BE FORWARDED TO THE ODOT OFFICE OF AVIATION. NO TEMP-ORARY STRUCTURES OR CONSTRUCTION EQUIPMENT SHALL EXCEED THE PERMISSIBLE HEIGHT, UNTIL A COPY OF THE FAA APPROVAL AND ODOT OFFICE OF AVIATION PERMIT HAS BEEN FURNISHED TO THE PROJECT ENGINEER.

EXPRESS PROCESSING CENTER
THE FEDERAL AVIATION ADMINISTRATION
SOUTHWEST REGIONAL OFFICE
AIR TRAFFIC AIRSPACE BRANCH ASW-520
2601 MEACHAN BLVD.
FORT WORTH, TX 76137-4298

OHIO DEPARTMENT OF TRANSPORTATION
OFFICE OF AVIATION
2829 WEST DUBLIN-GRANVILLE ROAD
COLUMBUS, OHIO 43235
614-387-2346

CALCULATED JLG
CHECKED BDC

GENERAL NOTES

ALL-75-0.210

33
907

I:\Pd\89029\roadway\sheets\89029GN001.dgn 25-JUN-2013 6:21AM tbolenbo

REVIEW OF DRAINAGE FACILITIES

BEFORE ANY WORK IS STARTED ON THE PROJECT AND AGAIN BEFORE FINAL ACCEPTANCE BY THE STATE, REPRESENTATIVES OF THE STATE AND THE CONTRACTOR, ALONG WITH LOCAL REPRESENTATIVES, SHALL MAKE AN INSPECTION OF ALL EXISTING SEWERS WHICH ARE TO REMAIN IN SERVICE AND WHICH MAY BE AFFECTED BY THE WORK. THE CONDITION OF THE EXISTING CONDUITS AND THEIR APPURTENANCE SHALL BE DETERMINED FROM FIELD OBSERVATIONS. RECORDS OF THE INSPECTION SHALL BE KEPT IN WRITING BY THE STATE.

ALL NEW CONDUITS, INLETS, CATCH BASINS, AND MANHOLES CONSTRUCTED AS A PART OF THE PROJECT SHALL BE FREE OF ALL FOREIGN MATTER AND IN A CLEAN CONDITION BEFORE THE PROJECT WILL BE ACCEPTED BY THE STATE.

ALL EXISTING SEWERS INSPECTED INITIALLY BY THE ABOVE MENTIONED PARTIES SHALL BE MAINTAINED AND LEFT IN A CONDITION REASONABLY COMPARABLE TO THAT DETERMINED BY THE ORIGINAL INSPECTION. ANY CHANGE IN THE CONDITION RESULTING FROM THE CONTRACTOR'S OPERATIONS SHALL BE CORRECTED BY THE CONTRACTOR TO THE SATISFACTION OF THE ENGINEER.

PAYMENT FOR ALL OPERATIONS DESCRIBED ABOVE SHALL BE INCLUDED IN THE CONTRACT PRICE FOR THE PERTINENT 603 CONDUIT ITEMS.

CROSSINGS AND CONNECTIONS TO EXISTING PIPES AND UTILITIES

WHERE PLANS PROVIDE FOR A PROPOSED CONDUIT TO BE CONNECTED TO, OR CROSS OVER OR UNDER AN EXISTING SEWER OR UNDERGROUND UTILITY, THE CONTRACTOR SHALL LOCATE THE EXISTING PIPES OR UTILITIES BOTH AS TO LINE AND GRADE BEFORE STARTING TO LAY THE PROPOSED CONDUIT.

IF IT IS DETERMINED THAT THE ELEVATION OF THE EXISTING CONDUIT, OR EXISTING APPURTENANCE TO BE CONNECTED, DIFFERS FROM THE PLAN ELEVATION OR RESULTS IN A CHANGE IN THE PLAN CONDUIT SLOPE, THE ENGINEER SHALL BE NOTIFIED BEFORE STARTING CONSTRUCTION OF ANY PORTION OF THE PROPOSED CONDUIT WHICH WILL BE AFFECTED BY THE VARIANCE IN THE EXISTING ELEVATIONS.

IF IT IS DETERMINED THAT THE PROPOSED CONDUIT WILL INTERSECT AN EXISTING SEWER OR UNDERGROUND UTILITY IF CONSTRUCTED AS SHOWN ON THE PLAN, THE ENGINEER SHALL BE NOTIFIED BEFORE STARTING CONSTRUCTION OF ANY PORTION OF THE PROPOSED CONDUIT WHICH WOULD BE AFFECTED BY THE INTERFERENCE WITH AN EXISTING FACILITY.

PAYMENT FOR ALL THE OPERATIONS DESCRIBED ABOVE SHALL BE INCLUDED IN THE CONTRACT PRICE FOR THE PERTINENT 603 CONDUIT ITEM.

ITEM 603 - CONDUIT BORED OR JACKED

WHERE IT IS SPECIFIED THAT A CONDUIT BE INSTALLED BY THE METHOD OF BORING OR JACKING, NO TRENCH EXCAVATION SHALL BE CLOSER THAN 30 FEET ALONG I-75 AND 17 FEET AT ALL OTHER LOCATIONS TO THE EDGE OF PAVEMENT. PROVIDE A 0.50 INCH UNGALVANIZED CASING PIPE CONFORMING TO 748.06 THAT HAS JOINTS WITH A CIRCUMFERENTIAL FULLY PENETRATING B-U4B WELD THAT IS PERFORMED BY AN ODOT APPROVED FIELD WELDER. THE INSTALLED CASING PIPE IS THE STORM WATER CONVEYANCE CARRIER UNLESS OTHERWISE SPECIFIED IN THE PLANS. HYDROSTATIC TESTING IS NOT REQUIRED FOR THE CASING PIPE.

ITEM SPECIAL - FILL AND PLUG EXISTING CONDUIT

THIS ITEM SHALL CONSIST OF THE CONSTRUCTION OF BULKHEADS IN THE EXISTING CONDUITS DETAILED ON SHEETS 143-146A AND FILLING THE AREA THUS SEALED OFF WITH ITEM 613, SAND OR OTHER MATERIAL APPROVED BY THE ENGINEER.

BULKHEADS SHALL BE LOCATED AT THE LIMITS OF THE AREA TO BE FILLED AS INDICATED ON THE PLANS. THE BULKHEADS SHALL CONSIST OF BRICK OR CONCRETE MASONRY WITH A MINIMUM THICKNESS OF 12 INCHES.

THE FILL MATERIAL SHALL BE PUMPED INTO PLACE, OR PLACED BY OTHER MEANS APPROVED BY THE ENGINEER, SO THAT, AFTER SETTLEMENT, AT LEAST 90 PERCENT OF THE CROSS-SECTIONAL AREA OF THE CONDUIT, FOR ITS ENTIRE LENGTH, SHALL BE FILLED. THE LENGTH OF FILLED AND PLUGGED CONDUIT TO BE PAID FOR SHALL BE THE ACTUAL NUMBER OF FEET (MEASURED ALONG THE CENTERLINE OF EACH CONDUIT FROM OUTER FACE TO OUTER FACE OF BULKHEADS) FILLED AND PLUGGED AS DESCRIBED ABOVE.

IN LIEU OF FILLING AND PLUGGING THE EXISTING CONDUIT, THE PIPE MAY BE CRUSHED AND BACKFILLED IN ACCORDANCE WITH THE PROVISIONS OF 203, OR IT MAY BE REMOVED. THE LENGTH, MEASURED AS PROVIDED ABOVE, SHALL BE PAID FOR AT THE CONTRACT PRICE PER FOOT FOR, ITEM SPECIAL, FILL AND PLUG EXISTING CONDUIT.

ITEM 202 - CATCH BASIN REMOVED, AS PER PLAN

IN ADDITION TO THE CATCH BASIN, THE CONTRACTOR SHALL REMOVE THE CONCRETE APRON ATTACHED TO THE EXISTING BASIN. PAYMENT FOR REMOVAL AND DISPOSAL OF THE ADDITIONAL MATERIAL SHALL BE INCLUDED IN THE CONTRACT PRICE FOR ITEM 202 CATCH BASIN REMOVED, AS PER PLAN.

ITEM 511 WINGWALLS, HEADWALLS, AND FOOTERS FOR 603 ITEMS

FOR ITEMS 706.05, 706.051, 706.052 AND 706.053 WITH A CAST-IN-PLACE WINGWALL, HEADWALL, OR FOOTER, A PRECAST ALTERNATIVE MAY BE FURNISHED PER 602.03. THE PRECAST ALTERNATIVE WILL MEET THE CAST-IN-PLACE STRUCTURAL DESIGN LOADINGS, DESIGN HEIGHT, AND DESIGN LENGTH DIMENSIONS.

FULL COMPENSATION FOR THE PRECAST WINGWALL, HEADWALL, OR FOOTER IS THE NUMBER OF CUBIC YARDS OF ITEM 511 OR SUPPLEMENTAL SPECIFICATION 898, AND POUNDS OF ITEM 509 FOR THE CORRESPONDING CAST-IN-PLACE STRUCTURE

TEMPORARY DRAINAGE ITEMS

TEMPORARY DRAINAGE ITEMS LABELED ON THE MAINTENANCE OF TRAFFIC PLAN ARE ITEMIZED ON THE MOT PLANS. PAYMENT FOR THE TEMPORARY DRAINAGE ITEMS ARE INCLUDED IN ITEM 614 LUMP SUM.

PIPE CONNECTIONS TO CORRUGATED METAL STRUCTURES

CONNECTIONS OF PROPOSED LONGITUDINAL DRAINAGE TO CORRUGATED METAL STRUCTURES SHALL BE MADE BY MEANS OF A SHOP FABRICATED OR FIELD WELDED STUB ON THE STRUCTURE. THE STUB SHALL MEET THE REQUIREMENTS OF 707 AND HAVE A MINIMUM LENGTH OF 2 FEET AND A MINIMUM WALL THICKNESS OF 0.064 INCHES.

THE LOCATION AND ELEVATION OF THE STUB ARE TO BE CONSIDERED APPROXIMATE AND MAY BE ADJUSTED BY THE ENGINEER TO AVOID CUTTING THROUGH JOINTS IN THE STRUCTURE.

THE FIELD WELDED JOINT, IF USED, SHALL BE THOROUGHLY CLEANED AND REGALVANIZED OR OTHERWISE SUITABLY REPAIRED. WELDING SHALL MEET THE REQUIREMENTS OF 513.21.
A MASONRY COLLAR, AS PER STANDARD DRAWING DM-1.1, WILL BE REQUIRED TO CONNECT THE LONGITUDINAL DRAINAGE TO THE STUB, WHEN PIPE OTHER THAN CORRUGATED METAL IS PROVIDED FOR THE LONGITUDINAL DRAINAGE.

PAYMENT FOR CUTTING INTO THE STRUCTURE AND PROVIDING THE CONNECTION DESCRIBED, SHALL BE INCLUDED IN THE CONTRACT PRICE FOR ITEM 603 OR 522.

FARM DRAINS

ALL FARM DRAINS, WHICH ARE ENCOUNTERED DURING CONSTRUCTION, SHALL BE PROVIDED WITH UNOBSTRUCTED OUTLETS. EXISTING COLLECTORS WHICH ARE LOCATED BELOW THE ROADWAY DITCH ELEVATIONS, AND WHICH CROSS THE ROADWAY, SHALL BE REPLACED WITHIN THE (RIGHT OF WAY) (CONSTRUCTION) LIMITS BY ITEM 603 CONDUIT, TYPE B, ONE COMMERCIAL SIZE LARGER THAN THE EXISTING CONDUIT.

EXISTING COLLECTORS AND ISOLATED FARM DRAINS, WHICH ARE ENCOUNTERED ABOVE THE ELEVATION OF ROADWAY DITCHES, SHALL BE OUTLETTED INTO THE ROADWAY DITCH BY 603 TYPE F CONDUIT. THE OPTIMUM OUTLET ELEVATION SHALL BE ONE FOOT ABOVE THE FLOWLINE ELEVATION OF THE DITCH. LATERAL FIELD TILES WHICH CROSS THE ROADWAY SHALL BE INTERCEPTED BY 603, TYPE E CONDUIT, AND CARRIED IN A LONGITUDINAL DIRECTION TO AN ADEQUATE OUTLET OR ROADWAY CROSSING.

THE LOCATION, TYPE, SIZE AND GRADE OF REPLACEMENTS SHALL BE DETERMINED BY THE ENGINEER AND PAYMENT SHALL BE MADE ON FINAL MEASUREMENTS.

EROSION CONTROL PADS AND ANIMAL GUARDS SHALL BE PROVIDED AT THE OUTLET END OF ALL FARM DRAINS AS PER STANDARD CONSTRUCTION DRAWING DM-1.1, EXCEPT WHEN THEY OUTLET INTO A DRAINAGE STRUCTURE. PAYMENT FOR THE EROSION CONTROL PADS AND ANIMAL GUARDS AND ANY NECESSARY BENDS OR BRANCHES SHALL BE INCLUDED FOR PAYMENT IN THE PERTINENT CONDUIT ITEMS.

THE FOLLOWING ESTIMATED QUANTITIES HAVE BEEN INCLUDED IN THE GENERAL SUMMARY FOR THE WORK NOTED ABOVE:

603 6" CONDUIT, TYPE B	500 FT.
603 6" CONDUIT, TYPE E	1000 FT.
603 6" CONDUIT, TYPE F	500 FT.
601 ROCK CHANNEL PROTECTION, TYPE C, w/ FILTER	10 CU. YD.

UNRECORDED UNTREATED NON-STORMWATER DRAINAGE

FURNISH NO CONTINUANCE FOR ANY UNRECORDED UNTREATED NON-STORMWATER DRAINAGE SUCH AS UNTREATED SEPTIC, UNTREATED WASTEWATER, UNTREATED CURTAIN/GRADIENT DRAINS, AND UNTREATED FOUNDATION FLOOR DRAINS DISTURBED BY THE WORK. PLUG ANY UNRECORDED UNTREATED NON-STORMWATER DRAINAGE WITH CLASS C CONCRETE AT THE RIGHT OF WAY LINE. PAYMENT FOR PLUGGING SHALL BE INCLUDED IN THE CONTRACT PRICE FOR THE PERTINENT 202 OR 203 ITEM.

UNRECORDED STORM WATER DRAINAGE

FURNISH A CONTINUANCE FOR ALL UNRECORDED STORM WATER DRAINAGE, SUCH AS ROOF DRAINS, FOOTER DRAINS, OR YARD DRAINS, DISTURBED BY THE WORK. FURNISH EITHER AN OPEN CONTINUANCE OR AN UNOBSTRUCTED CONTINUANCE BY CONNECTING A CONDUIT THROUGH THE CURB OR INTO A DRAINAGE STRUCTURE. THE LOCATION, TYPE, SIZE AND GRADE OF THE NEEDED CONDUIT TO REPLACE OR EXTEND AN EXISTING DRAIN WILL BE DETERMINED BY THE ENGINEER. ALL SUCH CONTINUANCE REQUIRES A RIGHT OF WAY USE PERMIT.

THE FOLLOWING CONDUIT TYPES MAY BE USED: 707.33, 707.41 NON-PERFORATED, 707.42, 707.43, 707.45, 707.46, 707.47, 707.51, 707.52 SDR35.

THE FOLLOWING ESTIMATED QUANTITIES HAVE BEEN INCLUDED IN THE GENERAL SUMMARY FOR USE AS DIRECTED BY THE ENGINEER FOR THE WORK NOTED ABOVE:

603, 6" CONDUIT, TYPE B, FOR DRAINAGE CONNECTION 200 FT.
603, 8" CONDUIT, TYPE B, FOR DRAINAGE CONNECTION 300 FT.
603, 4" CONDUIT, TYPE C, FOR DRAINAGE CONNECTION 200 FT.
603, 6" CONDUIT, TYPE C, FOR DRAINAGE CONNECTION 200 FT.
603, 12" CONDUIT, TYPE C, FOR DRAINAGE CONNECTION 200 FT.
603, 6" CONDUIT, TYPE E, FOR DRAINAGE CONNECTION 200 FT.
603, 6" CONDUIT, TYPE F, FOR DRAINAGE CONNECTION 200 FT.

ITEM 605 - AGGREGATE DRAINS

AGGREGATE DRAINS SHALL BE PLACED AT THE LOCATIONS DETAILED ON SHEET 168.

CONSTRUCTION AND DEMOLITION DEBRIS

MATERIAL CONSIDERED TO BE CONSTRUCTION OR DEMOLITION DEBRIS MAY BE ENCOUNTERED DURING EXCAVATION OPERATIONS WITHIN THE RIGHT-OF-WAY AREA OF THE SOUTHBOUND BREESE RD. ENTRANCE RAMP TO IR 75. THE MATERIAL MAY INCLUDE, BUT IS NOT LIMITED TO, REBAR, CONCRETE, GUARDRAIL STEEL, WOOD, TREES, TREE ROOTS, ECT... THE CONTRACTOR SHALL DISPOSE OF ANY CONSTRUCTION OR DEMOLITION DEBRIS ENCOUNTERED IN ACCORDANCE WITH SECTION 105.17 OF THE C&MS.

ALL MATERIALS, LABOR AND EQUIPMENT ASSOCIATED WITH THIS WORK SHALL BE INCLUDED IN ITEM 203 EXCAVATION, AS PER PLAN.

ESTIMATED QUANTITY FOR INFORMATIONAL PURPOSES ONLY:
100 CU YD.

CALCULATED JLG
CHECKED BDC

GENERAL NOTES

ALL-75-0.21

I:\pd\89029\Final Submission\FINAL DGNS\ROADWAY\sheets\89029GN001.dgn 04-NOV-2013 12:48PM jclark1

CALCULATED JLG CHECKED BDC

GENERAL NOTES

UNRECORDED ACTIVE SANITARY SEWER CONNECTIONS

FURNISH A CONTINUANCE FOR ALL UNRECORDED ACTIVE SANITARY SEWER CONNECTIONS SUCH AS SANITARY, WASTEWATER, CURTAIN/ GRADIENT DRAINS, AND FOUNDATION FLOOR DRAINS DISTURBED BY THE WORK. FURNISH AN UNOBSTRUCTED CONTINUANCE OF THE UNRECORDED ACTIVE SANITARY SEWER CONNECTIONS TO THE SATISFACTION OF THE ENGINEER. ALL SUCH CONTINUANCE REQUIRES A RIGHT OF WAY USE PERMIT. ALL SANITARY AND SANITARY WASTEWATER CONTINUANCE MAY ALSO REQUIRE A NPDES PERMIT FROM THE OHIO ENVIRONMENTAL PROTECTION AGENCY. REPORT ALL CONTINUANCE TO THE LOCAL HEALTH DEPARTMENT.

THE FOLLOWING CONDUIT TYPES MAY BE USED: 707.42, 707.43, 707.44, 707.45, 707.46, 707.47, 707.51, 707.52 SDR35, 706.01, 706.02, OR 706.08 WITH JOINTS AS PER 706.11 OR 706.12.

THE FOLLOWING ESTIMATED QUANTITIES HAVE BEEN INCLUDED IN THE GENERAL SUMMARY FOR USE AS DIRECTED BY THE ENGINEER FOR THE WORK NOTED ABOVE:

603, 6" CONDUIT, TYPE B, FOR SANITARY	200 FT.
603, 6" CONDUIT, TYPE C, FOR SANITARY	200 FT.
603, 8" CONDUIT, TYPE B, FOR SANITARY	100 FT.
603, 8" CONDUIT, TYPE C, FOR SANITARY	100 FT.

EXISTING UNDERDRAINS

PROVIDE UNOBSTRUCTED OUTLETS FOR ALL EXISTING UNDER-DRAINS ENCOUNTERED DURING CONSTRUCTION.

PROVIDE AN OUTLET PER STANDARD CONSTRUCTION DRAWING DM-1.1 FOR ALL UNDERDRAINS THAT OUTLET TO A SLOPE.

UNDERDRAINS THAT CAN BE CONNECTED TO THE NEW OR EXISTING UNDERDRAINS AT THE END OF THE PROJECT LIMITS AS WELL AS ALL NECESSARY BENDS OR BRANCHES REQUIRED FOR CONNECTION ARE INCLUDED IN THE BASIS OF PAYMENT FOR UNCLASSIFIED PIPE UNDERDRAINS.

THE FOLLOWING ESTIMATED QUANTITIES HAVE BEEN INCLUDED IN THE GENERAL SUMMARY FOR THE WORK NOTED ABOVE:

601, TIED CONCRETE BLOCK MAT, TYPE 1	12 SQ. YD.
603 6" CONDUIT, TYPE F	360 FT.
604, PRECAST REINFORCED CONCRETE OUTLET	6 EACH
605 6" UNCLASSIFIED PIPE UNDERDRAINS	400 FT.

ADDITIONAL SOIL INFORMATION

THE SOIL PROFILE AND/OR STRUCTURE FOUNDATION INVESTI-GATIONS SHEETS CONTAIN ALL AVAILABLE SOIL AND BEDROCK INFORMATION WHICH CAN BE CONVENIENTLY SHOWN. ADDITIONAL SUBSURFACE INVESTIGATION INFORMATION IS AVAILABLE FROM 1885 N. McCULLOUGH ST., LIMA OHIO 45801.

BENCHING OF FOUNDATION SLOPES

ALTHOUGH CROSS-SECTIONS INDICATE SPECIFIC DIMENSIONS FOR PROPOSED BENCHING OF THE EMBANKMENT FOUNDATIONS IN CERTAIN AREAS, NO WAIVER OF THE SPECIFICATIONS IS INTENDED. BENCH ALL OTHER SLOPED EMBANKMENT AREAS AS SET FORTH IN 203.05. NO ADDITIONAL PAYMENT WILL BE MADE FOR BENCHING REQUIRED UNDER THE PROVISIONS OF 203.05.

SPECIAL BENCHING

ACCORDING TO ODOT GEOTECHNICAL BULLETIN GB2 (DEC. 20, 2010) SPECIAL BENCHING IS RECOMMENDED WHEN THERE WILL BE A STABILITY PROBLEM AND/OR WEAK SOILS IN AN EXISTING SLOPE. BASED ON THE STABILITY ANALYSES PERFORMED FOR THIS PROJECT, NONE OF THE SLOPES EVALUATED WILL REQUIRE SPECIAL BENCHING. HOWEVER, SPECIAL BENCHING WILL GENERALLY BE NECESSARY AT LOCATIONS OF THIN 'SLIVER' FILLS OF THREE FEET OR LESS.
AT THESE LOCATIONS, THE EXISTING SLOPE IS TO BE EXCAVATED USING BENCHES WITH A MINIMUM WIDTH OF 8 FEET AND 1 (VERTICAL) TO 1 (HORIZONTAL) BACKSLOPES. A NOTE REGARDING SPECIAL BENCHING HAS BEEN SHOWN ON THE CROSS SECTIONS IN THE FOLLOWING AREAS:

I-75
STA. 240+00 TO STA. 246+00 LT.
STA. 244+50 TO STA. 245+50 RT.

BREESE ROAD
STA. 100+50 TO 107+50

BREESE ROAD RAMP B
STA. 110+50 TO 112+50

MCCLAIN ROAD
STA. 104+75 TO STA. 108+50

HANTHORN ROAD
STA. 105+50 TO STA. 109+00

POST CONSTRUCTION STORM WATER TREATMENT

THIS PLAN UTILIZES STRUCTURAL BEST MANAGEMENT PRACTICES (BMP'S) FOR POST CONSTRUCTION STORM WATER TREATMENT.

SEEDING AND MULCHING

THE FOLLOWING QUANTITIES ARE PROVIDED TO PROMOTE GROWTH GROWTH AND CARE OF PERMANENT SEEDED AREAS:

659, SOIL ANALYSIS TEST 22 EACH

659, TOPSOIL 76212 CU. YD.

659, REPAIR SEEDING AND MULCHING 34330 SQ. YD

659, INTER-SEEDING 34330 SQ. YD.

659, COMMERCIAL FERTILIZER 100 TON

659, LIME 142 ACRES

659, WATER 3801 M. GAL.

659, MOWING 1545 M. SQ. FT.

SEEDING AND MULCHING SHALL BE APPLIED TO ALL AREAS OF EXPOSED SOIL BETWEEN THE RIGHT-OF-WAY LINES, AND WITHIN THE CONSTRUCTION LIMITS FOR AREAS OUTSIDE THE RIGHT-OF-WAY LINES COVERED BY WORK AGREEMENT OR SLOPE EASEMENT. QUANTITY CALCULATIONS FOR SEEDING AND MULCHING ARE BASED ON THESE LIMITS.

SURFACE SMOOTHNESS REQUIREMENTS FOR PAVEMENTS

THE REQUIREMENTS OF THE LATEST VERSION OF PROPOSAL NOTE 420 (PN 420) SHALL APPLY ONLY TO INTERSTATE 75.

ITEM 204 - SUBGRADE COMPACTION AND PROOF ROLLING

CONSTRUCT THE SUBGRADE AS FOLLOWS AND IN THE FOLLOWING SEQUENCE FOR BREESE ROAD:

1. SHAPE THE SUBGRADE TO WITHIN 0.2 FEET OF THE PLAN SUBGRADE ELEVATION.

2. EXCAVATE AND REPLACE UNSUITABLE SUBGRADE TO A DEPTH OF 1 FOOT BEFORE PROOF ROLLING.

   UNSUITABLE SUBGRADE INCLUDES UNSUITABLE SOIL (A-4B, A-2-5, A-5, A-7-5, AND SOIL WITH A LIQUID LIMIT GREATER THAN 65) AND ANY COAL, SHALE, OR ROCK WHICH NEEDS TO BE REMOVED ACCORDING TO 204.05.

   EXCAVATE AT LOCATIONS SHOWN IN THE BREESE ROAD CROSS SECTIONS, EXCAVATE AND REPLACE THE UNSUITABLE SUBGRADE TO A DEPTH OF 1 FOOT BEFORE CONSTRUCTING THE SHALLOW FILL AND SHAPING THE SUBGRADE. A QUANTITY OF ITEM 204 GEOTEXTILE FABRIC AND ITEM 204 GRANULAR TYPE B IS INCLUDED IN THE PLANS TO REPLACE THE EXCAVATED MATERIAL.

3. COMPACT THE SUBGRADE ACCORDING TO 204.03.

4. THE ENGINEER WILL IDENTIFY THE ACTUAL LIMITS OF EXCAVATION FOR UNSTABLE SUBGRADE BASED ON THE PROOF ROLLING RESULTS AND VISUAL OBSERVATIONS.

   PROOF ROLL THE COMPACTED SUBGRADE ACCORDING TO 204.06

5. EXCAVATE UNSTABLE SUBGRADE AS DIRECTED BY THE ENGINEER AND STABILIZE BY REPLACING WITH THE SPECIFIED MATERIALS ACCORDING TO 204.07. EXCAVA-TIONS WILL EXTEND 18 INCHES BEYOND THE EDGE OF THE SURFACE OF THE PAVEMENT, PAVED SHOULDERS, OR PAVED MEDIANS.

6. PROOF ROLL THE STABILIZED AREAS ACCORDING TO 204.06 TO VERIFY STABILITY.

7. FINE GRADE THE SUBGRADE TO THE SPECIFIED GRADE.

THE QUANTITIES FOR EXCAVATING THE UNSUITABLE SUBGRADE AND UNSTABLE SUBGRADE ARE BOTH PAID UNDER ITEM 204 EXCAVATION OF SUBGRADE.

THE FOLLOWING QUANTITIES ARE PROVIDED AS DIRECTED BY THE ENGINEER FOR UNSUITABLE SUBGRADE:

ITEM 204	520	CU. YD.	EXCAVATION OF SUBGRADE
ITEM 204	1.0	HOUR	PROOF ROLLING

ITEM 204 - PROOF ROLLING

A QUANTITY IS PROVIDED IN THE GENERAL SUMMARY TO ADDRESS LOCATIONS REQUIRING PROOF ROLLING. SEE TYPICAL SECTION SHEETS AND PAVEMENT CALCULATIONS FOR ADDITIONAL INFORMATION.

CONTRACTION AND/OR EXPANSION JOINTS

ALTHOUGH SPECIFIC LOCATIONS OF CERTAIN CONTRACTION AND EXPANSION JOINTS HAVE BEEN DETAILED ON THIS PLAN, NO WAIVER OF THE SPECIFICATIONS IS INTENDED. IN ALL CASES, THE PROVISION OF EXPANSION JOINTS AT ALL MAJOR STRUC-TURES INCLUDING THE MAXIMUM SPACING BETWEEN CONTRACTION JOINTS IS IN ACCORDANCE WITH STANDARD CONSTRUCTION DRAWING BP-2.2 AND THE SPECIFICATIONS.

PART-WIDTH CONSTRUCTION

BECAUSE OF THE NECESSITY TO BUILD THIS PROJECT UNDER TRAFFIC AND TO CONSTRUCT THE FULL PAVEMENT WIDTH IN STAGES, EXERCISE CARE TO PREVENT THE CONSTRUCTION OF A BUTT JOINT IN THE BASE COURSES. LAP LONGITUDINAL JOINTS AS SHOWN ON STANDARD CONSTRUCTION DRAWING BP-3.1.

MEDIAN AND/OR CURBING ON APPROACH SLABS

WITHIN THE LIMITS OF THE APPROACH SLAB, TRANSITION THE SHAPE OF THE MEDIAN AND/OR CURBING ON APPROACH SLABS FROM THE STANDARD SECTION ON THE APPROACHES TO THE SECTION USED ON THE BRIDGE.

ITEM SPECIAL - GEOWEB

THE GEOWEB CELLULAR CONFINEMENT SYSTEM SHALL BE INSTALLED AS PER THE TYPICAL SECTIONS AND USED FOR LOAD SUPPORT. THE CONTRACTOR SHALL INSTALL GW20V6, MANUFACTURED BY PRESTO GEOSYSTEMS, OR AN APPROVED EQUAL.

PRESTO GEOSYSTEMS,
PO BOX 2399, APPLETON, WISCONSIN 54912 2399.
TOLL FREE (800) 548 3424
PHONE (920) 738 1328
FAX (920) 738 1222.
E MAIL INFO@PRESTOGEO.COM
WEBSITE WWW.PRESTOGEO.COM

THE MANUFACTURER SHALL PROVIDE A QUALIFIED FIELD REPRESENTATIVE ON SITE AT THE START OF CONSTRUCTION TO ENSURE THE GEOWEB SYSTEM IS INSTALLED IN ACCORD-ANCE WITH THE CONTRACT DOCUMENTS. PRIOR TO INSTAL-LATION OF ANY MATERIALS, CONDUCT A PRE-INSTALLATION MEETING TO DISCUSS THE SCOPE OF WORK AND REVIEW IN-STALLATION REQUIREMENTS. THE PRE-INSTALLATION MEETING SHALL BE ATTENDED BY ALL PARTIES INVOLVED IN THE IN-STALLATION OF THE CELLULAR CONFINEMENT SYSTEM, IN-CLUDING THE DISTRICT GEOTECHNICAL ENGINEER.

THE CONTRACTOR SHALL FOLLOW THE MANUFACTURER'S SPEC-IFICATIONS INCLUDING BUT NOT LIMITEDTO DELIVERY, STORAGE, HANDLING, INFILL MATERIALS AND INSTALLATION SPECIFICATIONS.

THE CONTRACTOR SHALL INSTALL GEOTEXTILE FABRIC, 712.09, TYPE D, AS DETAILED ON SHEET 25. THE GEOTEXTILE FABRIC IS INCIDENTAL TO ITEM SPECIAL GEOWEB.

CELL INFILL MATERIALS

A. CELL INFILL MATERIAL SHALL BE CRUSHED AGGREGATE WITH A MAXIMUM PARTICLE SIZE OF 2 INCHES (75 MM) WITH A FINE CONTENT OF LESS THAN 10%.
B. INFILL MATERIAL SHALL BE FREE OF ANY FOREIGN MATERIAL.
C. CLAYS, SILTS AND ORGANICS ARE NOT ACCEPTABLE INFILL MATERIAL.
D. INFILL MATERIAL SHALL BE FREE-FLOWING AND NOT FROZEN WHEN PLACED IN THE GEOWEB SECTIONS.

ALL EQUIPMENT, MATERIALS AND LABOR REQUIRED TO PERFORM THE WORK OUTLINED ABOVE AND PER THE MANUFACTURER'S IN-STRUCTIONS SHALL BE INCLUDED FOR PAYMENT UNDER ITEM SPECIAL GEOWEB, SQ YD

ALL-75-0.21

I:\Pd\89029\roadway\sheets\89029GN001.dgn 25-JUN-2013 6:21AM tbolenba

ITEM 606 - GUARDRAIL

LOCATING THE PROPOSED GUARDRAIL AT THE FACE OF CURB WILL RESULT IN POST CONFLICTS WITH THE PROPOSED CATCH BASIN STRUCTURES IN SEVERAL LOCATIONS. WHERE THESE CONFLICTS OCCUR, THE CONTRACTOR IS TO USE DOUBLE BLOCKOUT PER STANDARD CONSTRUCTION DRAWING GR-2.3, SECTION C-C ALONG I-75 TO MAINTAIN CLEARANCE BETWEEN THE POSTS AND THE BACK OF THE STRUCTURE. THE HARDWARE, LABOR, EQUIPMENT, ETC., TO CONSTRUCT THE GUARDRAIL AS SPECIFIED SHALL BE INCLUDED IN THIS ITEM 606 FOR PAVEMENT.

CONNECTION BETWEEN EXISTING AND PROPOSED GUARDRAIL

WHEN IT IS NECESSARY TO SPLICE PROPOSED GUARDRAIL TO EXISTING GUARDRAIL, ONLY THE EXISTING GUARDRAIL SHALL BE CUT, DRILLED, OR PUNCHED. THE CONNECTION SHALL BE MADE USING A "W-BEAM RAIL SPLICE" AS SHOWN IN AASHTO M 180. PAYMENT SHALL BE INCLUDED IN THE CONTRACT PRICE FOR THE RESPECTIVE GUARDRAIL ITEMS.

ITEM 606 - ANCHOR ASSEMBLY, TYPE E

THIS ITEM SHALL CONSIST OF FURNISHING AND INSTALLING ANY OF THE GUARDRAIL END TERMINALS FOR TYPE MGS GUARDRAIL AS LISTED ON ROADWAY ENGINEERING'S WEB PAGE UNDER ROADSIDE SAFETY DEVICES FOR APPROVED GUARDRAIL END TREATMENTS. INSTALLATION SHALL BE AT THE LOCATIONS SPECIFIED IN THE PLANS, IN ACCORDANCE WITH THE MANUFACTURER'S SPECIFICATIONS.

THE FACE OF THE TYPE E IMPACT HEAD SHALL BE COVERED WITH A SHEET OF TYPE G REFLECTIVE SHEETING, PER CMS 730.19.

REFER TO THE MANUFACTURER'S INSTRUCTIONS REGARDING THE INSTALLATION OF, AND THE GRADING AROUND THE FOUNDATION TUBES AND GROUND STRUT. THE TOP OF ANY FOUNDATION TUBE SHOULD BE LESS THAN 4 INCHES ABOVE THE GROUND. THE PLACEMENT OF THE FOUNDATION TUBES SHOULD BE AN APPROPRIATE DEPTH BELOW THE LEVEL LINE IN ORDER TO MAINTAIN THE FINISHED GUARDRAIL HEIGHT OF 31 INCHES FROM THE EDGE OF THE SHOULDER.

ON-SITE GRADING IS REQUIRED IF THE TOP OF THE FOUNDATION TUBES OR TOP OF THE GROUND STRUT DOES PROJECT MORE THAN 4 INCHES ABOVE THE GROUND LINE.

PAYMENT FOR THE ABOVE WORK SHALL BE MADE AT THE UNIT PRICE BID FOR ITEM 606, ANCHOR ASSEMBLY, TYPE E, EACH, AND SHALL INCLUDE ALL LABOR, TOOLS, EQUIPMENT AND MATERIALS NECESSARY TO CONSTRUCT A COMPLETE AND FUNCTIONAL ANCHOR ASSEMBLY SYSTEM, INCLUDING ALL RELATED TRANSITIONS, REFLECTIVE SHEETING, HARDWARE, GRADING, EMBANKMENT AND EXCAVATION NOT SEPARATELY SPECIFIED, AS REQUIRED BY THE MANUFACTURER.

ITEM 607 - FENCE, TYPE 47, AS PER PLAN

TYPE 47 FENCE SHALL BE INSTALLED PER THE APPLICABLE ODOT STANDARD CONSTRUCTION DRAWINGS EXCEPT THAT THE BARBED WIRE SHALL NOT BE INSTALLED.

FENCE LENGTHS

THE LENGTHS OF FENCE SHOWN IN THE PLANS ARE HORIZONTAL DIMENSIONS. MEASUREMENTS OF THE FINAL QUANTITIES WILL BE IN ACCORDANCE WITH ITEM 607.

ITEM 202 - ANCHOR ASSEMBLY REMOVED FOR STORAGE, AS PER PLAN

CAREFULLY DISMANTLE AND STORE ALL DESIGNATED EXISTING ANCHOR ASSEMBLY TYPE E'S INCLUDING ALL RAIL ELEMENTS, STEEL POSTS, FOUNDATION TUBE SLEEVES, ETC. AT A LOCATION DESIGNATED BY THE ENGINEER. DISPOSE OF BOLTS, WASHERS, NUTS, WOOD POSTS AND OTHER MATERIALS ACCORDING TO SECTION 202.02 OF THE C&MS.

THE CONTRACTOR SHALL ARRANGE TO DELIVER AND UNLOAD THE STORED MATERIAL AT THE ODOT DISTRICT 1 GUARDRAIL STORAGE YARD BY CONTACTING DISTRICT 1 ROADWAY SERVICES AT:

OHIO DEPARTMENT OF TRANSPORTATION
123 E. CHAPMAN ROAD,
LIMA, OHIO 45801
419-999-6792 ATTN. TED FOSTER

ALL COSTS ASSOCIATED WITH REMOVING, STORING, LOADING, TRANSPORTING AND UNLOADING THE MATERIAL SHALL BE INCLUDED IN THE UNIT PRICE BID FOR EACH ITEM 202 ANCHOR ASSEMBLY REMOVED FOR STORAGE, AS PER PLAN.

ITEM 202 - REMOVAL, MISC.: IMPACT ATTENUATOR REMOVED FOR STORAGE, AS PER PLAN

CAREFULLY DISMANTLE AND STORE ALL DESIGNATED EXISTING IMPACT ATTENUATOR'S INCLUDING ALL RAIL ELEMENTS, STEEL POSTS, FOUNDATION TUBE SLEEVES, SOIL PLATES, ETC. AT A LOCATION DESIGNATED BY THE ENGINEER. DISPOSE OF BOLTS, WASHERS, NUTS, WOOD POSTS AND OTHER MATERIALS ACCORDING TO SECTION 202.02 OF THE C&MS.

THE CONTRACTOR SHALL ARRANGE TO DELIVER AND UNLOAD THE STORED MATERIAL AT THE ODOT DISTRICT 1 GUARDRAIL STORAGE YARD BY CONTACTING DISTRICT 1 ROADWAY SERVICES AT:

OHIO DEPARTMENT OF TRANSPORTATION
123 E. CHAPMAN ROAD,
LIMA, OHIO 45801
419-999-6792 ATTN. TED FOSTER

ALL COSTS ASSOCIATED WITH REMOVING, STORING, LOADING, TRANSPORTING AND UNLOADING THE MATERIAL SHALL BE INCLUDED IN THE UNIT PRICE BID FOR EACH ITEM 202 REMOVAL, MISC.: IMPACT ATTENUATOR REMOVED FOR STORAGE, AS PER PLAN.

ITEM 690 SPECIAL - MISC.: MOW STRIP

THE CONTRACTOR SHALL PROVIDE A 4 FOOT WIDE BY 4 INCH DEPTH MOW STRIP WITH MATERIALS CONFORMING TO ITEM 608 - CONCRETE WALK FOR THE MOW STRIP SHOWN IN THE TYPICAL SECTIONS.

THE MOW STRIP SHALL BE PLACED ON THE COMPACTED EARTH AND CONSTRUCTED USING CLASS C CONCRETE WITH A CURING COMPOUND MEETING THE SPECIFICATIONS OF 705.07 OF THE CMS. THE MOW STRIP SHALL BE INTEGRAL TO THE SOCKETED CONCRETE FOUNDATION.

THE MOW STRIP SHALL HAVE A TRANSVERSE JOINT EVERY EIGHT FEET AND AN EXPANSION JOINT EVERY 100 FEET. THE JOINTS AND MATERIALS TO CONSTRUCT THE JOINTS SHALL CONFORM TO 608.03 (C) OF THE CMS.

IF MATERIAL FROM THE EXCAVATION OF THE MOW STRIP AND THE SOCKETED CONCRETE FOUNDATION IS WASTED ADJACENT TO THE MOW STRIP THE AREA SHALL BE SEEDED AND MULCHED TO THE SPECIFICATIONS OF CMS 659. SEEDING WILL BE INCLUDED IN THE UNIT COST FOR ITEM 690 SPECIAL - MISC.: MOW STRIP

ITEM 606 - CABLE GUARDRAIL

THIS ITEM SHALL CONSIST OF FURNISHING AND INSTALLING EITHER NUCOR OR GIBRALTAR HIGH TENSION FOUR CABLE GUARDRAIL SYSTEMS AS LISTED ON THE OFFICE OF ROADWAY ENGINEERING'S WEB PAGE. PAYMENT FOR THE ABOVE WORK SHALL BE MADE AT THE UNIT PRICE BID FOR ITEM 606, GUARDRAIL, MISC., TENSIONED CABLE WITH CONCRETE FOUNDATION LINE POSTS (SOCKETED), AND ITEM 606, GUARDRAIL, MISC. TENSIONED CABLE ANCHOR TERMINAL AND SHALL INCLUDE ALL LABOR, TOOLS, EQUIPMENT AND MATERIALS NECESSARY TO CONSTRUCT A COMPLETE AND FUNCTIONAL HIGH TENSION CABLE GUARDRAIL SYSTEM NOT SEPARATELY SPECIFIED, AS REQUIRED BY THE MANUFACTURER.

INSTALLATION SHALL BE AT THE LOCATIONS SPECIFIED IN THE PLANS, IN ACCORDANCE WITH THE MANUFACTURER'S SPECIFICATIONS.

SYSTEMS SHALL HAVE A MAXIMUM DEFLECTION OF 8 FEET AND THE MAXIMUM LONGITUDINAL DISTANCE BETWEEN POSTS SHALL BE 15 FEET.

INSTALLATION WILL BE A FOUR CABLE HIGH TENSION SYSTEM INSTALLED IN SOCKETED POSTS FOUNDATION WITH A FOUR FOOT WIDE "NO MOW STRIP".

CONTRACTOR SHALL PROVIDE DELINEATORS ON THE POSTS AT A MINIMUM INTERVAL OF 100 FEET AND ON ALL ANCHOR TERMINALS.

TRANSITIONS TO W-BEAM GUARDRAIL ARE NOT ALLOWED.

REFER TO MANUFACTURER FOR MAXIMUM OFFSET FROM BREAK POINT.

TORPEDO OR BULLET SPLICES ARE NOT ALLOWED. ALL CABLE SPLICES SHALL BE A SWAGED OR OPEN BODY DESIGN THAT ALLOWS FOR ANNUAL INSPECTION BETWEEN THE WEDGE AND STRANDS OF CABLE.

POSTS ARE SET IN SOCKETED CONCRETE FOUNDATIONS AND SHALL NOT BE PERMANENTLY INSTALLED UNTIL THEIR RESPECTIVE RUNS OF TENSIONED CABLE GUARDRAIL ARE READY FOR FINAL CONNECTION TO THE END TERMINAL ASSEMBLY. THE CONTRACTOR SHALL REPLACE ANY POSTS DAMAGED DURING INSTALLATION AS DETERMINED BY THE ENGINEER AT NO ADDITIONAL COST TO THE STATE.

ITEM 606 - IMPACT ATTENUATOR, TYPE 1 (UNIDIRECTIONAL OR BIDIRECTIONAL)

THIS ITEM SHALL CONSIST OF FURNISHING AND INSTALLING ANY ONE OF THE TYPE 1 IMPACT ATTENUATORS AS LISTED ON THE OFFICE OF ROADWAY ENGINEERING'S WEB PAGE. INSTALLATION SHALL BE AT THE LOCATIONS SPECIFIED IN THE PLANS, IN ACCORDANCE WITH THE MANUFACTURER'S SPECIFICATIONS.

THE FACE OF THE TYPE 1 IMPACT HEAD SHALL BE COVERED WITH A SHEET OF TYPE G REFLECTIVE SHEETING, PER CMS 730.19. PAYMENT FOR THE ABOVE WORK SHALL BE MADE AT THE UNIT PRICE BID FOR ITEM 606, IMPACT ATTENUATOR, TYPE 1 [(UNIDIRECTIONAL OR BIDIRECTIONAL)], EACH, AND SHALL INCLUDE ALL LABOR, TOOLS, EQUIPMENT AND MATERIALS NECESSARY TO CONSTRUCT A COMPLETE AND FUNCTIONAL IMPACT ATTENUATOR SYSTEM INCLUDING ALL RELATED TRANSITIONS, HARDWARE, REFLECTIVE SHEETING AND GRADING, NOT SEPARATELY SPECIFIED, AS REQUIRED BY THE MANUFACTURER.

ITEM 202 - TENSIONED CABLE GUARDRAIL SYSTEM REMOVED FOR STORAGE, AS PER PLAN

FROM STA. 20+00 TO THE STA. 159+40, CAREFULLY DISMANTLE AND STORE ALL DESIGNATED EXISTING TENSIONED CABLE GUARDRAIL HARDWARE INCLUDING LINE POSTS, ANCHOR TERMINAL POSTS, PINS, ETC. AT A LOCATION DESIGNATED BY THE ENGINEER. DISPOSE OF CABLE, BOLTS, WASHERS, NUTS, AND OTHER MATERIALS ACCORDING TO SECTION 202.02 OF THE C&MS.

THE CONTRACTOR SHALL ARRANGE TO DELIVER AND UNLOAD THE STORED MATERIAL AT THE ODOT DISTRICT 1 GUARDRAIL STORAGE YARD BY CONTACTING DISTRICT 1 ROADWAY SERVICES AT:

OHIO DEPARTMENT OF TRANSPORTATION
123 E. CHAPMAN ROAD,
LIMA, OHIO 45801
419-999-6792 ATTN. TED FOSTER

ALL COSTS ASSOCIATED WITH REMOVING, STORING, LOADING, TRANSPORTING AND UNLOADING THE MATERIAL SHALL BE INCLUDED IN THE LUMP SUM PRICE BID FOR ITEM 202 TENSIONED CABLE GUARDRAIL SYSTEM REMOVED FOR STORAGE, AS PER PLAN.

PERSONAL PROTECTIVE EQUIPMENT (PPE)

THE CONTRACTOR SHALL FOLLOW ALL REQUIREMENTS OF SECTIONS III AND X OF THE OHIO DEPARTMENT OF TRANSPORTATION SAFETY & HEALTH STANDARD OPERATING PROCEDURE 220-006(SP) EFFECTIVE: JUNE 1 2009 (EXCEPT AS AMENDED BELOW) AND ALL SUBSEQUENT UPDATES POSTED AT THE FOLLOWING WEB SITE:

HTTP://WWW.DOT.STATE.OH.US/POLICY/POLICIESANDSOPs/220-006(SP).pdf

III. HEAD PROTECTION (HARD HATS)

ALL PERSONS WITHIN THE RIGHT-OF-WAY OF ANY HIGHWAY OR ANY OTHER TYPE OF ROADWAY OR CONSTRUCTION SITE WHO ARE EXPOSED TO EITHER TRAFFIC (VEHICLES USING THE HIGHWAY FOR PURPOSES OF TRAVEL) OR CONSTRUCTION EQUIPMENT WITHIN THE WORK AREA, REGARDLESS OF JOB TYPE, SHALL WEAR APPROPRIATE HEAD PROTECTION. ALL HARD HATS MUST MEET OR EXCEED ANSI Z89.1-2003 TYPE 1 CLASS E - G REQUIREMENTS.

X. HIGH VISIBILITY SAFETY APPAREL

ALL PERSONS WITHIN THE RIGHT-OF-WAY OF ANY HIGHWAY OR ANY OTHER TYPE OF ROADWAY OR CONSTRUCTION SITE WHO ARE EXPOSED TO EITHER TRAFFIC (VEHICLES USING THE HIGHWAY FOR PURPOSES OF TRAVEL) OR CONSTRUCTION EQUIPMENT WITHIN THE WORK AREA, REGARDLESS OF JOB TYPE, SHALL WEAR A HIGH-VISIBILITY SAFETY VEST THAT MEETS THE PERFORMANCE CLASS 2 OR CLASS 3 REQUIREMENTS OF THE ANSI/ISEA 107-2004 PUBLICATION ENTITLED "AMERICAN NATIONAL STANDARD FOR HIGH VISIBILITY SAFETY APPAREL AND HEADWEAR".

WORKERS MAY WEAR AN ANSI CLASS II OR ANSI CLASS III APPROVED RAIN SUIT OR JACKET WITHOUT A SAFETY VEST OVER IT. HIGH VISIBILITY T-SHIRTS, SWEATSHIRTS, OR ZIP UP HOODIES ARE NOT ACCEPTABLE. ALL WORKERS SHALL WEAR A SAFETY VEST OVER THE T-SHIRTS, SWEATSHIRTS, AND ZIP-UP HOODIES, REGARDLESS OF THE THEIR ANSI RATING.

CALCULATED JLG
CHECKED BDC

GENERAL NOTES

ALL-75-0.21

I:\Pd\89029\Prebid\SHEETS\89029GN001_revised_EJS_Nov14_2013.dgn 14-NOV-2013 10:22AM eschecke

SECTION J - ENVIRONMENTAL COMMITMENTS MADE AND RESOURCES TO BE AVOIDED

1. THE SEQUENCING OF CONSTRUCTION WILL BE PROGRAMMED TO MINIMIZE TRAFFIC DELAYS THROUGHOUT THE I-75 CORRIDOR. A MAINTENANCE OF TRAFFIC PLAN WILL BE IMPLEMENTED DURING CONSTRUCTION TO ENSURE CONTINUOUS, UNINTERUPTED TRAFFIC FLOW ON I-75. IMPACTS TO ADJACENT BUSINESSES WILL BE MINIMIZED BY MAINTAINING ACCESS TO ALL PROPERTIES DURING CONSTRUCTION.

2. THE OHIO DEPARTMENT OF TRANSPORTATION WILL BE RESPONSIBLE TO NOTIFY THE EMERGENCY RESPONSE FORCES PRIOR TO ANY TEMPORARY LANE AND RAMP CLOSURES, AND TO COORDINATE WITH THE CITY OF LIMA AND THE ALLEN COUNTY ENGINEER TO ESTABLISH APPROPRIATE LOCAL DETOUR ROUTES, AND TO ACCOMMODATE ANY LOCAL SPECIAL EVENTS OR FESTIVALS. THE GENERAL PUBLIC WILL BE INFORMED AND UPDATED ON THE PROJECT CONSTRUCTION DETAILS THROUGH THE USE OF PRESS RELEASES TO LOCAL NEWSPAPERS AND RADIO STATIONS, WELL IN ADVANCE OF DETOURS, TEMPORARY CLOSINGS, AND OTHER CONSTRUCTION RELATED ACTIVITIES THAT WOULD CAUSE INCONVENIENCES TO THE TRAVELING PUBLIC.

3. WRITTEN PERMISSION MUST BE OBTAINED FOR ANY NECESSARY IN-STREAM BLASTING FROM THE CHIEF OF O.D.N.R.'S DIVISION OF WILDLIFE IN ACCORDANCE WITH OHIO REVISED CODE (ORC) SECTION 1533.58.

4. IN-STREAM WORK FOR PERENNIAL STREAMS WILL BE LIMITED TO JUNE 30TH THROUGH APRIL 15TH TO MINIMIZE IMPACTS TO AQUATIC FAUNA AND THEIR HABITAT. NO WORK SHALL OCCUR IN THE OTTAWA RIVER BETWEEN APRIL 15TH AND JUNE 30TH EVERY YEAR.

5. TREE REMOVAL WILL TAKE PLACE BETWEEN OCTOBER 1 AND MARCH 31 TO AVOID DIRECT IMPACTS TO THE INDIANA AND NORTHERN LONG EARED BAT.

6. COORDINATION WITH THE LOCAL F.E.M.A. COORDINATOR WILL BE COMPLETED AND A FLOODPLAIN PERMIT OBTAINED PRIOR TO AWARD OF THIS PROJECT. THE LOCAL FLOODPLAIN ADMINISTRATOR WILL BE CONTACTED AND COORDINATED WITH FOR SPECIFIC DEVELOPMENT STANDARDS AND PERMIT REQUIREMENTS WHEN THE NECESSARY DETAILED DESIGN IS AVAILABLE.

7. WETLAND AND STREAM IMPACTS FOR THIS PROJECT HAVE BEEN AUTHORIZED BY USACE AND OHIO EPA THROUGH APPROPRIATE 404/401 AND ISOLATED WATERS PERMITS WHICH HAVE BEEN ADDED TO THE PLAN SET AS SPECIAL PROVISIONS. ALL CONDITIONS OF THE PERMIT SHALL BE STRICTLY ADHERED TO DURING PROJECT CONSTRUCTION.

8. A STORM WATER POLLUTION PREVENTION PLAN AND NOTICE OF INTENT WILL BE SUBMITTED TO O.E.P.A. FOR COVERAGE UNDER THE N.P.D.E.S. CONSTRUCTION STORM WATER PERMIT TO ADDRESS SEDIMENT AND EROSION CONTROLS DURING CONSTRUCTION ACTIVITIES. IN ADDITION, THE SPECIFICATIONS SET FORTH IN THE MOST CURRENT VERSION OF ODOT'S CMS, L & D MANUAL AND STANDARD DRAWINGS WILL BE USED TO ENSURE ADEQUATE EROSION AND SEDIMENT CONTROLS DURING CONSTRUCTION.

STREAM CHANNEL EXCAVATION

STREAM CHANNEL EXCAVATION WITHIN "WATERS OF THE US" IS SUBJECT TO US ARMY CORPS OF ENGINEERS (USACE)REGULATORY JURISDICTION AND WILL REQUIRE AUTHORIZATION BY THE USACE VIA THE WATERWAY PERMITTING PROCESS (404/401). IN ACCORDANCE WITH THE APPLICABLE WATERWAY PERMITS (404/401) STREAM CHANNEL EXCAVATION CAN NOT EXCEED THE QUANTITIES AND/OR SURFACE AREA THAT HAS BEEN PERMITTED. THE WATERWAY PERMITS ARE ATTACHED TO THE CONSTRUCTION PLANS AS SPECIAL PROVISIONS AND WILL BE AVAILABLE IN THE PROJECT CONSTRUCTION OFFICE.

TAKE ALL PRECAUTIONS NECESSARY TO PREVENT ANY INCIDENTAL DISCHARGES ASSOCIATED WITH THE EXCAVATION AND HAULING OF MATERIAL FROM THE STREAM CHANNEL. THIS PERTAINS TO ANY EXCAVATION OPERATIONS SUCH AS, FOUNDATION PIER OR ABUTMENT EXCAVATION, CHANNEL CLEANOUT, EXCAVATION FOR ROCK CHANNEL PROTECTION AND REMOVAL OF ANY TEMPORARY FILL ASSOCIATED WITH CONSTRUCTION OPERATIONS. ALL CONDITIONS OF THE WATERWAY PERMIT SHALL BE STRICTLY ADHERED TO.

SITE SPECIFIC HEALTH AND SAFETY PLAN

THE CONTRACTOR SHALL CERTIFY IN WRITING TO THE ENGINEER WITHIN TWO WEEKS AFTER CONTRACT EXECUTION THAT THE CONTRACTOR HAS PREPARED A SSHSP IN ACCORDANCE WITH OSHA 29 CFR PART 1910.120 FOR OPERATIONS INVOLVING HAZARDOUS SUBSTANCES WITHIN THE AFORE-MENTIONED LIMITS. THE CONTRACTOR SHALL MAKE THE SSHSP AVAILABLE AT THE PROJECT SITE. COPIES OF THE ENVIRONMENTAL STUDIES ARE AVAILABLE FOR EXAMINATION IN THE OFFICE OF CONTRACTS AND THE ODOT DISTRICT 1, OFFICE OF PLANNING. THIS INFORMATION MAY BE USED BY THE CONTRACTOR TO DEVELOP THE SSHSP.

SPECIAL REQUIREMENTS FOR PROTECTION OF ENVIRONMENTALLY SENSITIVE AREAS

THE CONTRACTOR SHALL AVOID DISTURBANCE OF ANY ENVIRONMENTALLY SENSITIVE AREAS IDENTIFIED BY ODOT DURING THE DEVELOPMENT OF THIS PROJECT. IN ACCORDANCE WITH SECTION 102.05 OF THE CONSTRUCTION MATERIALS AND SPECIFICATIONS, DOCUMENTS IDENTIFYING THE LOCATIONS OF THESE AREAS ARE AVAILABLE FOR VIEWING AT THE ODOT DISTRICT ONE OFFICE. FAILURE TO REVIEW THESE DOCUMENTS WILL BE A BAR TO ANY ADDITIONALLY SOUGHT COMPENSATION OR DAMAGES FOR WORK PERFORMED OR DAMAGES INCURRED BY THE CONTRACTOR RELATED TO THESE ENVIRONMENTALLY SENSITIVE AREAS. ENVIRONMENTALLY SENSITIVE AREAS WITHIN THE RIGHT OF WAY AS WELL AS THOSE IN CLOSE PROXIMITY TO THE RIGHT OF WAY SHOWN ON THE PROJECT SITE PLAN SHEETS 169 THROUGH 174. THE AREAS SHOWN ON THESE SHEETS DO NO REPRESENT ALL OF THE ENVIRONMENTALLY SENSITIVE AREAS IDENTIFIED DURING THE PROJECT DEVELOPMENT.

PRIOR TO THE COMMENCEMENT OF CONSTRUCTION ACTIVITIES, THE AWARDED CONTRACTOR SHALL PLACE PROTECTIVE FENCING ALONG THE PERIMETER OF ALL ENVIRONMENTALLY SENSITIVE AREAS LOCATED WITHIN THE RIGHT OF WAY AND ALONG THE RIGHT OF WAY OF AREAS LOCATED DIRECTLY OUTSIDE THE RIGHT OF WAY. SEE SHEETS 169 THROUGH 174 FOR LOCATIONS.

INCLUDED IN THE GENERAL SUMMARY IS A QUANTITY FOR ITEM 607, FENCE, MISC.: CONSTRUCTION PROTECTIVE FENCING WHICH SHALL INCLUDE ALL COSTS ASSOCIATED WITH IDENTIFYING ENVIRONMENTALLY SENSITIVE AREAS IN THE FIELD AND PROVIDING, ERECTING AND SUBSEQUENTLY REMOVING THE FENCING AS REQUIRED IN THE PLANS.

ITEM 607 FENCE, MISC,: CONSTRUCTION PROTECTIVE FENCING 500 FT.

USE OF LOW STRENGTH MORTAR BACKFILL

ENVIRONMENTAL SITE ASSESSMENTS (ESA'S) HAVE IDENTIFIED THE PRESENCE OR POTENTIAL PRESENCE OF HAZARDOUS MATERIALS AND/OR PETROLEUM WITHIN THE IDENTIFIED PROJECTS LIMITS. AS DIRECTED BY THE ENGINEER, LOW STRENGTH MORTAR BACKFILL MEETING THE SPECIFICATIONS OF ITEM 613 WILL BE USED TO BED & BACKFILL AROUND PIPES AND CONDUITS WITHIN AREAS OF IDENTIFIED HAZARDOUS MATERIALS AND/OR PETROLEUM TO PREVENT THE PIPE BEDDING FROM ACTING AS A PATHWAY FOR POSSIBLE CONTAMINANT MIGRATION. THE INSTALLATION AND USE OF LOW STRENGTH MORTAR BACKFILL WILL EXTEND FOR NOT LESS THAN 10 HORIZONTAL FEET ALONG PIPES AND CONDUITS BEYOND THE IDENTIFIED LIMITS OF HAZARDOUS MATERIALS AND/OR PETROLEUM. BACKFILL SHALL BE PUMPED, OR PLACED BY OTHER MEANS APPROVED BY THE ENGINEER, SO THAT AFTER SETTLEMENT AT LEAST 90 PERCENT OF THE CROSS-SECTIONAL AREA OF THE PIPE OR CONDUIT TRENCH SHALL BE FILLED.

ESTIMATED QUANTITIES HAVE BEEN CARRIED TO THE GENERAL SUMMARY TO ESTABLISH UNIT PRICES FOR THE ABOVE ITEM AND SHALL BE USED ONLY AS DIRECTED BY THE ENGINEER:

ITEM 613, LOW STRENGTH MORTAR BACKFILL & BEDDING
30 CU YD

ENVIRONMENTAL WORK: ALL-75-0.21 PID: 89029

ENVIRONMENTAL STUDIES HAVE SHOWN THAT THERE IS A POTENTIAL OF ENCOUNTERING PETROLEUM CONTAMINATED SOIL AND/OR OTHER REGULATED SUBSTANCES DURING EXCAVATIONS FOR CONSTRUCTION ACTIVITIES AT THE SITES LISTED IN THE TABLE BELOW.

THE ENGINEER WILL INITIALLY DETERMINE IF THE EXCAVATED MATERIAL APPEARS TO BE PETROLEUM CONTAMINATED SOIL OR GROUNDWATER BASED ON THE MATERIAL'S APPEARANCE, ODOR, AND THE ENGINEER'S PAST EXPERIENCE. THE CONTRACTOR WILL BE RESPONSIBLE FOR ANY TESTING NECESSARY TO DETERMINE IF THE MATERIAL IS IN FACT PETROLEUM CONTAMINATED. ANY POTENTIAL PETROLEUM CONTAMINATED MATERIALS SHALL BE TESTED FOR BENZENE, TOLUENE, ETHYLBENZENE, AND XYLENE (BTEX) USING USEPA SW-846, METHOD 8060 AND TOTAL PETROLEUM HYDROCARBONS (TPH) USING USEPA SW-846, METHOD 8015, PER BUSTR GUIDELINES. ANY POTENTIAL PETROLEUM CONTAMINATED GROUND WATER SHALL BE TESTED FOR BTEX AND METHYLTERT-BUTYL ETHER (MTBE) USING USEPA SW-846, METHOD 8260. ONCE LAB ANALYSIS RESULTS ARE RECEIVED FOR THE MATERIAL(S), THE CONCENTRATIONS OF THE CHEMICALS OF CONCERN SHALL BE COMPARED TO BUSTR'S RE-USE ACTION LEVELS IN TABLE I UNDER PARAGRAPH (D)(1) OF OAC 1301:7-9-16 TO DETERMINE IF THE MATERIAL IS INDEED PETROLEUM CONTAMINATED SOIL. THIS FINAL DETERMINATION SHALL BE MADE BY THE ENGINEER.

IN THE EVENT PETROLEUM-CONTAMINATED SOIL AND/OR OTHER REGULATED SUBSTANCES ARE ENCOUNTERED, THE CONTRACTOR SHALL MANAGE THIS MATERIAL ACCORDING TO THE FOLLOWING GUIDELINES. THE ESTIMATED QUANTITIES HAVE BEEN INCLUDED IN THE GENERAL SUMMARY FOR THIS WORK. ALL EXCAVATIONS AT THE AFOREMENTIONED LOCATION SHALL BE PAID FOR UNDER THE ORIGINAL PLAN BID ITEMS. ALL MATERIAL EXCAVATED BY THE CONTRACTOR AT THIS LOCATION SHALL BE SUBJECT TO TESTING BY AN INSPECTOR PROVIDED BY THE ENGINEER.

ALL POTENTIAL PETROLEUM CONTAMINATED SOIL, WITHIN THE AFOREMENTIONED LIMITS, EXCAVATED BY THE CONTRACTOR AT THIS LOCATION MAY BE STOCKPILED IN AN AREA PROVIDED BY THE CONTRACTOR AND APPROVED BY THE ENGINEER. THE ENGINEER MAY PERMIT TEMPORARY STORAGE OF THE EXCAVATED MATERIAL IN A LINED AND COVERED ROLL-OFF BOX. THE ENGINEER MAY PERMIT TEMPORARY STORAGE OF THE EXCAVATED MATERIAL ON AN IMPERMEABLE MEMBRANE. THE MEMBRANE SHALL BE SURROUNDED BY BALES OF STRAW AND SILT FENCE TO PREVENT THE SUSPECTED SOIL FROM COMING IN CONTACT WITH THE ORIGINAL SOIL. AN IMPERMEABLE MEMBRANE SHALL BE PLACED OVER THE STOCKPILE TO PREVENT CONTACT WITH PRECIPITATION AND/OR SURFACE RUN-OFF. THE ENGINEER MAY PERMIT THE CONTRACTOR TO DIRECT LOAD THE EXCAVATED CONTAMINATED MATERIAL INTO TRUCKS, SO LONG AS THERE IS AN AGREEMENT WITH THE DISPOSAL LOCATION.

IF EXCAVATIONS WITHIN THE AFOREMENTIONED LIMITS REQUIRE DEWATERING FOR CONSTRUCTION PURPOSES, THE CONTRACTOR SHALL DEWATER, CONTAINERIZE, TEST THE WATER AND DISPOSE OF BY METHODS APPROVED BY THE ENGINEER. THE CONTRACTOR SHALL OBTAIN ALL THE NECESSARY PERMITS AND/OR AUTHORIZATIONS

NEEDED TO STORE, TRANSPORT AND DISPOSE OF THE WATER IN ACCORDANCE WITH APPLICABLE LOCAL, STATE OR FEDERAL REGULATIONS. DEPENDING UPON THE TEST RESULTS, THE ENGINEER WILL CLASSIFY THE WATER AS REGULATED OR NON-REGULATED WATER. THE CONTRACTOR SHALL BE RESPONSIBLE FOR DISPOSAL OF REGULATED WATER WITH A METHOD APPROVED BY THE ENGINEER. WORK INVOLVED WITH THIS SPECIAL ITEM INCLUDES COMPLYING WITH THE HANDLING, STORAGE, AND DISPOSAL OF REGULATED AND NON-REGULATED WATER.

THIS MATERIAL SHALL BE PROPERLY TESTED, TRANSPORTED, AND DISPOSED OF IN A LICENSED (BY THE LOCAL HEALTH DEPARTMENT) AND PERMITTED (BY THE OHIO ENVIRONMENTAL PROTECTION AGENCY) SOLID WASTE FACILITY.
THE CONTRACTOR SHALL BE RESPONSIBLE FOR OBTAINING ALL NECESSARY PERMITS AND APPROVALS AND TO TRANSPORT THE MATERIAL TO A LICENSED AND PERMITTED SOLID WASTE DISPOSAL FACILITY. THE CONTRACTOR SHALL CONTACT THE FACILITY TO DETERMINE IF ANY ADDITIONAL TESTING IS REQUIRED FOR DISPOSAL AND WILL BE RESPONSIBLE FOR CONDUCTING ANY ADDITIONAL SAMPLING AND ANALYSIS OF THIS MATERIAL.

THE CONTRACTOR SHALL FURNISH ALL THE LABOR, EQUIPMENT, AND MATERIALS NECESSARY TO PROPERLY HANDLE, STORE (IF NECESSARY), TEST FOR DISPOSAL, TRANSPORT, AND DISPOSE OF REGULATED MATERIALS, INCLUDING ANY REQUIRED PERMITS, APPROVALS, OR FEES WITHIN THE LIMITS IDENTIFIED ABOVE. PAYMENT FOR THIS WORK SHALL BE MADE AT THE CONTRACT PRICE BID PER TON AND/OR GALLON. THE BASIS FOR CONVERSION FROM TONS TO CUBIC YARDS IS 1.5 TON/CUBIC YARD. ALL EXCAVATIONS WITHIN THE AFOREMENTIONED LIMITS SHALL BE PAID FOR UNDER THE ORIGINAL PLAN BID ITEMS. THE FOLLOWING ESTIMATED QUANTITIES HAVE BEEN INCLUDED IN THE GENERAL SUMMARY FOR THE WORK NOTED ABOVE:

690E65010 ITEM SPECIAL - WORK INVOLVING SOLID WASTE
30 TON
690E65016 ITEM SPECIAL - WORK INVOLVING PETROLEUM
100 TON CONTAMINATED SOIL

TABLE FROM THE REMARKS BOX IN SECTION H OF THE CE-4 ENVIRONMENTAL DOCUMENT			
PROPERTY ID FROM ESA REPORTS	PROPERTY NAME	ADDRESS	REQUIRED PLAN NOTE
11	SPICER	1220 & 1264 HANTHORN ROAD	PCS (LSM f/storm sewer backfill)
18	STATE OF OHIO (GARAGE)	EAST FOURTH STREET	PCS (LSM f/storm sewer backfill)

PCS - PETROLEUM CONTAMINATED SOIL
(LSM f/storm sewer backfill) - LOW STRENGTH MORTAR

CALCULATED JLG CHECKED BDC

GENERAL NOTES

ALL-75-0.21

I:\pd\89029\Final Submission\FINAL DGNS\ROADWAY\sheets\89029GN001.dgn 05-NOV-2013 1:35PM jclark1

ITEM SPECIAL - MAILBOX SUPPORT

THIS WORK SHALL CONSIST OF FURNISHING AND ERECTING MAILBOX SUPPORTS AND ANY ASSOCIATED MOUNTING HARDWARE IN ACCORDANCE WITH PLAN DETAILS, AND ATTACHING AN OWNER-SUPPLIED MAILBOX AT LOCATIONS SPECIFIED IN THE PLAN, OR OTHERWISE ESTABLISHED BY THE ENGINEER.

WOOD POSTS SHALL BE NOMINAL 4 INCHES BY 4 INCHES SQUARE OR 4.5 INCHES DIAMETER ROUND, AND CONFORM TO 710.14.

STEEL POSTS SHALL BE NOMINAL PIPE SIZE 2 INCHES I.D., AND CONFORM TO AASHTO M 181.

ALL HARDWARE INCLUDING BUT NOT LIMITED TO PLATES, SCREWS, BOLTS, AND ETC. SHALL BE COMMERCIAL-GRADE GALVANIZED STEEL.

POSTS SHALL BE SET PER THE FIRST PARAGRAPH OF 606.03, AND SHALL IN NO INSTANCE BE ENCASED IN CONCRETE.

SUPPORT HARDWARE SHALL ACCOMMODATE EITHER A SINGLE OR A DOUBLE MAILBOX INSTALLATION, AND NO MORE THAN TWO BOXES MAY BE MOUNTED ON A SINGLE POST.

THE MAILBOX SHALL BE SECURELY AND NEATLY ATTACHED BY THE CONTRACTOR TO THE NEW SUPPORT. THE CONTRACTOR SHALL FURNISH ALL NECESSARY ATTACHMENT HARDWARE (NUTS, BOLTS, PLATES, SPACERS, AND WASHERS) AS NECESSARY TO ACCOMMODATE THE COMPLETE INSTALLATION.

IN THE ABSENCE OF A NEW BOX SUPPLIED BY THE OWNER, THE CONTRACTOR SHALL SALVAGE THE EXISTING BOX AND PLACE IT ON THE NEW SUPPORT. DUE CARE SHALL BE EXERCISED IN SUCH AN OPERATION, AND THE CONTRACTOR SHALL BE RESPONSIBLE FOR REPAIRING OR REPLACING ANY BOX DAMAGED BY IMPROPER HANDLING ON HIS PART, AS JUDGED AND DIRECTED BY THE ENGINEER.

THE CONTRACTOR SHALL BE RESPONSIBLE FOR COORDINATING WITH THE LOCAL POST MASTER REGARDING THE TIMING OF THE MOVEMENT OF ANY MAILBOX TO A NEW LOCATION.

PAYMENT UNDER THIS ITEM SHALL BE LIMITED TO FINAL PERMANENT INSTALLATIONS. TEMPORARY INSTALLATIONS SHALL BE IN ACCORDANCE WITH 107.10. HOWEVER, THE SAME MATERIAL AND SIZE LIMITATIONS AS FOR PERMANENT INSTALLATIONS SHALL APPLY.

MAILBOX SUPPORTS, COMPLETE IN PLACE, WILL BE PAID FOR AT THE CONTRACT UNIT PRICE PER EACH, FOR ITEM SPECIAL MAILBOX SUPPORT SYSTEM, SINGLE.

ITEM SPECIAL - MAILBOX REMOVED AND RESET

THIS WORK SHALL CONSIST OF REMOVING MAILBOXES, MAILBOX SUPPORTS AND ANY ASSOCIATED MOUNTING HARDWARE IN ACCORDANCE WITH PLAN DETAILS.

IN THE ABSENCE OF A NEW BOX SUPPLIED BY THE OWNER, THE CONTRACTOR SHALL SALVAGE THE EXISTING BOX FOR PLACEMENT ON A NEW SUPPORT. DUE CARE SHALL BE EXERCISED IN SUCH AN OPERATION, AND THE CONTRACTOR SHALL BE RESPONSIBLE FOR REPAIRING OR REPLACING ANY BOX DAMAGE BY IMPROPER HANDLING ON HIS PART, AS JUDGED AND DIRECTED BY THE ENGINEER.

THE CONTRACTOR SHALL BE RESPONSIBLE FOR THE DISPOSAL OF THE REMOVED MAILBOX SUPPORTS AND ANY MAILBOXES AND ASSOCIATED MOUNTING HARDWARE THAT ARE NOT RESET.

THE ABOVE REMOVAL AND ANY SALVAGING FOR THE RESET WILL BE PAID FOR AT THE CONTRACT UNIT PRICE PER EACH, FOR ITEM SPECIAL - MAILBOX REMOVED AND RESET.

SPEEDINFO DEVICES WITHIN PROJECT LIMITS

THE CONTRACTOR SHALL TAKE MEASURES TO MAINTAIN THE PROPER OPERATION OF ANY SPEEDINFO DEVICES WITHIN THE PROJECT LIMITS. THE DEVICES ARE DOPPLER RADAR UNITS WHICH LOOK LIKE CYLINDRICAL TUBES WITH SOLAR PANELS ATTACHED TO THEM. THE SENSORS ARE IMPLEMENTED ON ALL INTERSTATES STATEWIDE AND OTHER MAJOR US AND STATE ROUTES IN URBAN AREAS, GENERALLY SPACED BETWEEN 1 TO 2 MILES APART, AND INSTALLED ON AN EXISTING ODOT INFRASTRUCTURE (TYPICALLY OVERHEAD TRUSSES, CANTILEVERS, GROUND-MOUNTED SIGN SUPPORTS, OR LIGHT POLES). ODOT WILL COORDINATE THE RELOCATION OF ANY DEVICES THAT MAY BE AFFECTED BY THE CONTRACTOR'S OPERATION. THE CONTRACTOR SHALL NOT REMOVE THE DEVICES THEMSELVES. THE CONTRACTOR SHALL NOTIFY THE PROJECT ENGINEER A MINIMUM OF TEN (10) CALENDAR DAYS PRIOR TO PERFORMING ANY WORK WHICH REQUIRES DEVICE RELOCATION. THE PROJECT ENGINEER SHALL THEN NOTIFY SPEEDINFO, INC. AND ODOT OFFICE OF TRAFFIC ENGINEERING OF ANY DEVICES THAT REQUIRE RELOCATION. THE CONTRACTOR SHOULD BE AWARE THAT SINCE SPEED DATA IS STILL DESIRABLE TO ODOT, THE PROJECT ENGINEER WILL ATTEMPT TO INFORM SPEEDINFO, INC. OF NEWLY AVAILABLE INSTALL LOCATIONS FOR THE SENSORS TO BE RELOCATED TO, WITH MINIMAL DOWNTIME.

IF IMMEDIATE ATTENTION TO A SPEEDINFO SENSOR IS REQUIRED, THE CONTRACTOR MAY DIRECTLY CONTACT THE REGIONAL INSTALLER FOR SPEEDINFO, INC. FROM THE PROVIDED CONTACT INFORMATION. THE REGIONAL INSTALLER WOULD BE ABLE TO PROVIDE THE QUICKEST POSSIBLE ATTENTION TO THE SITUATION. IF THE REGIONAL INSTALLER CANNOT BE REACHED, THE LIST OF STATEWIDE CONTACTS SHOULD BE USED IN THE ORDER IT IS PRESENTED. AN EMAIL INFORMING ALL PARTIES OF THE SITUATION SHOULD ALSO BE SENT AT THE EARLIEST CONVENIENCE.

1. Regional Contacts

Matt Slusher, Capital Electric
(937) 531-7518
mslusher@capitalelectric.com

Joe Hutsell, Capital Electric
(937) 604-5838
jhutsell@capitalelectric.com

2. Statewide Contacts

Charlie Armiger, SpeedInfo
Office: (408) 333-9960,
Cell: (408) 425-4684
carmiger@speedinfo.com

Bryan Comer, ODOT
(614) 387-1253
bryan.comer@dot.state.oh.us

Jason Yeray, ODOT
(614) 466-2168
jason.yeray@dot.state.oh.us

THE SPEEDINFO DEVICES WITHIN THE PROJECT LIMITS ARE LOCATED AT THE BELOW LOCATIONS. THE CONTRACTOR SHALL BE ADVISED THAT THESE LOCATIONS MAY HAVE CHANGED BY THE TIME OF CONSTRUCTION AND SHALL USE THE ABOVE PROCEDURE FOR ANY OTHER SPEED DETECTION DEVICES.

DESCRIPTION	MOUNTING TYPE
I-75 S @ Breese Rd on ramp light pole (3rd pole) Point- South App-N Rec-S MP 120.95	LIGHT POLE
I-75 S @ OH-65 St Johns Rd on ramp light pole (3rd pole) Point- South App-N Rec-S MP 123.05	LIGHT POLE

ITEM 619 - FIELD OFFICE, TYPE C, AS PER PLAN

THIS ITEM SHALL BE IN ACCORDANCE WITH ITEM 619 OF THE 2010 OHIO DEPARTMENT OF TRANSPORTATION CONSTRUCTION AND MATERIAL SPECIFICATIONS EXCEPT AS MODIFIED BY THE FOLLOWING:

1. A CONFERENCE ROOM SHALL BE SUPPLIED WITH A MINIMUM OF 300 SQUARE FEET OF FLOOR SPACE. THE ROOM SHALL BE SUPPLIED WITH TABLES AND CHAIRS CAPABLE OF SEATING A MINIMUM OF 20 ATTENDEES. THE ROOM SHALL INCLUDE A SEPARATE PHONE LINE WITH SPEAKER PHONE CAPABILITIES.

2. FLOOR SPACE TO BE PROVIDED SHALL BE INCREASED TO A MINIMUM OF 2500 SQUARE FEET INCLUDING THE CONFERENCE ROOM.

3. THE REQUIREMENT OF ONE SEPARATE ROOM SHALL BE INCREASED TO FOUR SEPARATE ENCLOSED ROOMS OF 150 SQUARE FEET PER ROOM.

4. THE CONTRACTOR SHALL PROVIDE A COPIER, PRINTER, FAX, AND SCANNER SYSTEM PER THE SPECIFICATIONS LISTED BELOW.

5. THE ALL-WEATHER PARKING SPACES PROVIDED SHALL BE INCREASED TO 25 AND INCLUDE SNOW REMOVAL.

6. PROVIDE BROADBAND INTERNET CONNECTION CAPABLE OF DOWNLOAD SPEEDS GREATER THAN 5 MBPS. THIS AMENDS NOTE 6 IN 619.02 OF THE ODOT C&MS.

7. SECURITY SHALL BE PROVIDED FOR THE FIELD OFFICE AND SURROUNDING PARKING FACILITIES BY ILLUMINATING ALL SIDES OF THE FIELD OFFICE.

8. PROVIDE A SEPARATE STORAGE FACILITY FOR NUCLEAR DENSITY GAUGES TO BE USED ON THE PROJECT. THIS FACILITY MUST BE A MINIMUM OF 15 FEET AWAY FROM ANY STORAGE OR WORK PROJECT. THIS FACILITY MUST BE A MINIMUM OF 15 FEET AWAY FROM ANY STORAGE OR WORK AREAS, LARGE ENOUGH TO HOLD TWO NUCLEAR GAUGE STORAGE BOXES (APPROX. 4'x3'x3') THAT CAN BE SECURED TO THE WALLS OR FLOOR, AND BE LOCKABLE. THE AREA PROVIDED FOR THE STORAGE FACILITY SHALL BE IN ADDITION TO THE SQUARE FOOT REQUIREMENTS SHOWN ABOVE AND IN 619.02-1 OF THE ODOT C&MS. ODOT EMPLOYEES WILL BE THE ONLY PERSONNEL PERMITTED IN THE FACILITY. THIS FACILITY MUST HAVE ADEQUATE ELECTRICAL OUTLETS FOR CHARGING DENSITY GAUGES AND BE ABLE TO MAINTAIN TEMPERATURES BETWEEN 50f AND 90f. THE DEPARTMENT'S RSO WILL HAVE FINAL APPROVAL OF THE GAUGE STORAGE FACILITY.

9. THE BASE RADIO WITH 4 HAND HELD UNITS WILL NOT BE REQUIRED.

NO ADDITIONAL COMPENSATION WILL BE GRANTED FOR ADDITIONAL REQUIREMENTS STATED ABOVE. THE DEPARTMENT WILL MEASURE FIELD OFFICE TYPE C APP BY THE NUMBER OF MONTHS THE OFFICE IS MAINTAINED.

10. THE CONTRACTOR SHALL PROVIDE JANITORIAL SERVICES AT A MINIMUM OF BI-WEEKLY.

COLOR COPIER, PRINTER, FAX, AND SCANNING SYSTEM SPECIFICATIONS:

- AUTOMATIC DOCUMENT FEEDER WITH 80 SHEET ARDF EQUIPPED TO HANDLE PAPER UP TO AND INCLUDING 11"x17" (ORIGINALS AND COPIES)
- REDUCTION AND ENLARGEMENT FEATURES
- UNLIMITED DUPLEXING FOR ALL SIZE ORIGINALS 8-1/2" x 11" THROUGH 11" x 17"
- MANUAL AND SELECTABLE AUTOMATIC EXPOSURE SETTINGS
- OPERATE ON STANDARD VOLTAGE WITH NO SPECIAL OR DEDICATED LINES
- STAPLER/FINISHER SUPPORT WITH THE FOLLOWING FEATURES:
  - PAPER SIZE SUPPORT FOR 5.5"x8.5" TO 11"x17"/a6 TO a3
  - PAPER WEIGHT SUPPORT FROM 6 TO 42 LB. BOND/ 60 TO 157g/m2
  - STAPLE POSITION 3 POSITIONS (1 STAPLE/2 POSITIONS; 2 STAPLES/1 POSITION)
  - STAPLE CAPACITY - 50 SHTS (8.5"x11") 30 SHTS (8.5"x14" OR LARGER)
- 99 TO 999 SORT CAPABILITY
- PAPER CAPACITY - 500 SHTS x 4 TRAYS, 50 SHT BYPASS TRAY
- PAPER WEIGHT SUPPORT - 20 TO 28 LB. BOND/64 TO 105g/m2 (TRAYS 1,2,3 & 4) /6 TO 44 LB. BOND/52 TO 163g/m2 (BYPASS) 20 TO 28 LB. BOND/64 TO 105g/m2 (DUPLEX)
- ENERGY STAR COMPLIANT
- NETWORK PRINTER CAPABILITY WITH 10BASET/100BASETX
- NETWORK CARD
- PRINT SPEED 35 PPM
- NETWORK PROTOCOL SUPPORT FOR TCP/IP
- NETWORK OPERATING SYSTEM SUPPORT FOR WINDOWS 2008
- CLIENT PRINT DRIVER SUPPORT FOR WINDOWS XP/VISTA (BOTH pcl/ps DRIVERS)
- MINIMUM PRINT RESOLUTION OF 600 X 600 DPI
- SECURE PRINTING WITH PASSWORD OR PIN
- NETWORK SCANNING THAT SUPPORTS THE FOLLOWING:
  - SCAN SPEED 52 IPM (@200 DPI)
  - SCAN AREA UP TO 11" X 17"
  - GRAYSCALE 256 LEVELS (COLOR OPTIONAL)
  - SCANNING RESOLUTION - 600 DPI
  - SCANNING PROTOCOL SUPPORT - TCP/IP, SMTP, SMB, FTP, POP3, NCP
  - SCANNING SUPPORT FOR SCAN-TO-EMAIL, HDD, FOLDER, URL, AND TWAIN
  - FILE FORMATS - SINGLE PAGE TIFF, JPEG, PDF, MULTI- PAGE TIFF, PDF
  - ADDRESS BOOK SUPPORT FOR MULTIPLE ITEMS
  - OCR SOFTWARE THAT SUPPORTS TIFF, PDF, MULTI- PAGE TIFF, AND MULTI-PAGE PDF
  - OCR SOFTWARE MUST SUPPORT BATCH WORKFLOW PROCESSING OF DOCUMENTS
- MINIMUM SHARED MEMORY CAPACITY FOR ALL OPTIONS - 384 MB HARD DISK DRIVE; 40 GB DRIVE FOR INTERNAL STORAGE AND NETWORK SCANNING
- ANALOG FAX SUPPORT FOR PSTN, PBX THAT SUPPORTS THE FOLLOWING:
  - RESOLUTION - 200 X 200//00 DPI 400 X 400 DPI (OPTIONAL)
  - 33.6 KBPS WITH AUTO FALLBACK
  - ADDRESS BOOK AND AUTO-DIAL NUMBER STORAGE

ODOT CURRENTLY HAS A FIELD OFFICE LOCATION AT 3021 HARDING HWY, LIMA, OH 45807 FOR PROJECT 13-0002. IT IS ODOT'S DESIRE TO REMAIN AT THIS LOCATION AND UTILIZE THIS FIELD OFFICE THROUGHOUT THE LIFE OF THIS PROJECT. THE CONTRACTOR SHALL ASSUME RESPONSIBILITY OF THE FIELD OFFICE LEASE AS OF SEPTEMBER 1, 2015. CONTACT THE DISTRICT CONSTRUCTION OFFICE FOR PROPERTY OWNER CONTACT INFORMATION.

THE FOLLOWING QUANTITY HAS BEEN CARRIED TO THE GENERAL SUMMARY:

ITEM 619 - FIELD OFFICE, TYPE C, AS PER PLAN 24 MONTH

CALCULATED JLG
CHECKED BDC

GENERAL NOTES

ALL-75-0.21

38
907

I:\Pd\89029\roadway\sheets\89029GN001.dgn 25-JUN-2013 6:21AM tbolenba

ITEM 823 - PROVIDING ELECTRONIC INSTRUMENTATION, AS PER PLAN

THE FOLLOWING NOTES SHALL SUPERSEDE THE PORTION OF NOTES IN THE SUPPLEMENTAL SPECIFICATIONS 823.10.

IF THE CONTRACTOR ELECTS TO PERFORM ANY PORTION OF THE PROJECTS CONSTRUCTION LAYOUT BY GLOBAL POSITIONING METHODS ACCORDING TO SS 823, THE CONTRACTOR SHALL PROVIDE THE OHIO DEPARTMENT OF TRANSPORTATION'S PROJECT ENGINEER WITH A NEW SURVEY GRADE GLOBAL POSITIONING SYSTEM (GPS) RECEIVER AND DATA COLLECTOR. THIS GPS RECEIVER WILL BE DUAL FREQUENCY AND HAVE THE ABILITY TO RECEIVE GLONASS SIGNALS AS WELL AS REAL TIME CORRECTIONS VIA RADIO TRANSMISSIONS OR VIA ODOT'S VRS (VIRTUAL REFERENCE SYSTEM). THE GPS RECEIVER MUST HAVE A MINIMUM HORIZONTAL ACCURACY SPECIFICATION OF +/- 10 MM +1 PPM RMS AND A MINIMUM VERTICAL ACCURACY OF +/- 20MM + 1 PPM RMS. THE DATA COLLECTOR'S OPERATING SYSTEM MUST BE THE MOST CURRENT STANDARD MICROSOFT MOBILE OPERATING SYSTEM CAPABLE OF PERFORMING CONSTRUCTION LAYOUT ROUTINES, REAL-TIME STATION AND OFFSET CALCULATIONS, AUTOMATED CUT AND FILL COMPUTATIONS, ABLE TO PERFORM COORDINATE GEOMETRY FUNCTIONS, STORE, DELETE AND MODIFY COLLECTED POINTS AND IMPORT INDUSTRY STANDARD FILE FORMATS AS WELL AS OPEN SOURCE ASCII FILE FORMATS. THESE REQUIREMENTS WILL PERMIT THE DEPARTMENT TO VERIFY THE CONSTRUCTION LAYOUT, PERFORM AUTOMATED CROSS SECTION VERIFICATION, DOCUMENT PAY ITEMS, AND OTHER PROJECT RELATED ITEMS SUCH AS ROADWAY PROFILES, AND CROSS SLOPE.

THE CONTRACTOR SHALL PROVIDE ALL ELECTRONIC DATA RELATED TO THE PROJECT EITHER DIRECTLY OR INDIRECTLY RELATED TO THE DESIGN, CONSTRUCTION, OR FINALIZATION OF THE SAID PROJECT. ALL ELECTRONIC FILES GENERATED BY THE CONTRACTOR WILL BE PROVIDED TO THE DEPARTMENT FOR REVIEW. THESE ELECTRONIC FILES WILL CONFORM TO ODOT STANDARDS AND SPECIFICATIONS. IF NO STANDARD EXISTS THE CONTRACTOR WILL SUBMIT THE ELECTRONIC DATA IN AN INDUSTRY STANDARD FORMAT AND PROVIDE THE SOFTWARE FOR CREATION, MANIPULATION OF THAT DATA. EXAMPLES OF THESE FILES INCLUDE BUT ARE NOT LIMITED TO 3D MODELS, SITE CALIBRATION, RAW DATA FILES FROM DATA COLLECTORS, COGO FILES, ASCII FILES DIGITAL TERRAIN MODELS, TRIANGULATED IRREGULAR NETWORKS, ETC. THE CONTRACTOR SHALL PROVIDE ALL EQUIPMENT AND SOFTWARE NECESSARY TO PERFORM THE SAID PROCESSES. ALL SAID EQUIPMENT AND SOFTWARE WILL BE APPROVED BY THE DISTRICTS INFORMATION TECHNOLOGY DEPARTMENT TO ENSURE COMPATIBILITY WITH ODOT'S EXISTING COMPUTER SYSTEMS AND SPECIFICATIONS.

THE CONTRACTOR WILL PROVIDE TECHNICAL TRAINING TO THE ENGINEER AND SUPPORT STAFF ON HOW TO USE THE PROVIDED EQUIPMENT AND SOFTWARE. TWENTY FOUR HOURS SHALL BE SPENT WITH THE AUTHORIZED TRAINING REPRESENTATIVE, THE ENGINEER, SUPPORT STAFF, AND THE CONTRACTOR BOTH IN THE CLASSROOM AND THE FIELD.

UPON COMPLETION OF THE PROJECT, THIS EQUIPMENT WILL REMAIN PROPERTY OF THE OHIO DEPARTMENT OF TRANSPORTATION TO ENSURE THE SAID PROJECT CAN BE EFFICIENTLY MAINTAINED THROUGHOUT ITS LIFE CYCLE.

THE FOLLOWING QUANTITY HAS BEEN CARRIED TO THE GENERAL SUMMARY FOR THE ABOVE MENTIONED WORK/ITEM:

ITEM 823 - PROVIDING ELECTRONIC INSTRUMENTATION,
AS PER PLAN LUMP

TEMPORARY ACCESS ROADS AND CONSTRUCTION VEHICLES CROSSING: THE CONTRACTOR SHALL CLEARLY IDENTIFY SPECIFIC CONSTRUCTION EQUIPMENT CROSSING LOCATIONS AND SHALL INCLUDE PROVISIONS IN THE PLANS TO ENSURE THAT CONSTRUCTION EQUIPMENT DOES NOT CROSS IN OTHER LOCATIONS. CONSTRUCTION VEHICLES CARRYING A MAXIMUM AXLE LOAD UP TO 15,000 POUNDS MAY CROSS THE PIPELINE ONLY AFTER THE PETROLEUM OR NATURAL GAS PIPELINE OWNER HAS CONFIRMED A MINIMUM COVER OF 48 INCHES OVER THE PIPELINE. FOR ALL OTHER CASES, EARTHEN RAMPS, SWAMP MATS, REINFORCED CONCRETE SLABS, OR STEEL PLATES MAY BE REQUIRED. THE CONTRACTOR SHALL SUBMIT A CONSTRUCTION EQUIPMENT LIST TO THE ADJACENT PETROLEUM AND NATURAL GAS COMPANIY SO THAT THE LOADING CONDITIONS CAN BE EVALUATED.

NO SEPARATE PAYMENT WILL BE MADE FOR THIS WORK. THIS WORK SHALL BE CONSIDERED INCIDENTAL TO THE COST OF CONSTRUCTION OF THE PROJECT.

LIMITS ON USE OF VIBRATORY EQUIPMENT, CHEMICAL STABILIZATION & UNDERCUT OVER AND ADJACENT TO HIGH PRESSURE PETROLEUM OR NATURAL GAS PIPELINE:

IN ADDITION TO THE REQUIREMENT OF THE PREVIOUS NOTE, THE USE OF VIBRATORY EQUIPMENT LARGER THAN WALK-BEHIND UNITS IS NOT PERMITTED WITHIN 25 FEET OF PETROLEUM OR NATURAL GAS PIPELINE. STATIC COMPACTION OF SOIL, AGGREGATE, AND ASPHALT CONCRETE IS PERMITTED WITHIN THIS 25 FEET RANGE. THERE SHALL BE NO CHEMICAL STABILIZATION OF SUBGRADE PERFORMED WITHIN THESE LIMITS. THE SUBGRADE SHALL BE UNDERCUT 1.5 FEET AND REPLACED WITH GRANULAR MATERIAL, TYPE B. PLACE GEOGRID IN THE MIDDLE OF THE GRANULAR MATERIAL AND GEOTEXTILE AT THE BOTTOM OF THE UNDERCUT IN LIEU OF THE PLAN CHEMICAL STABILIZATION, THE GRANULAR MATERIAL IN THIS UNDERCUT AND THE PLAN AGGREGATE SUBBASE MATERIAL SHALL BE PLACED IN LIFTS NOT TO EXCEED 4 INCHES AND COMPACTION SHALL MEET THE REQUIREMENTS OF SECTION 304.05 OF THE C&MS. SOIL PLACED FOR EMBANKMENT SHALL MEET ALL REQUIREMENTS OF SECTION 203.07 OF THE C&MS. THE COMPACTION OF ASPHALT CONCRETE LIFTS PLACED WITHIN THESE LIMITS (IF APPLICABLE) SHALL BE ACCOMPLISHED UTILIZING A MINIMUM OF 4 ADDITIONAL ROLLER PASSES (AS COMPARED TO COMPACTION EFFORTS IN ADJACENT AREAS WHERE VIBRATION IS UTILIZED). ONE EXTRA DENSITY CORE SHALL BE TAKEN IN THIS AREA FOR EVERY PASS OF THE ASPHALT PAVER DURING PLACEMENT OF THE INTERMEDIATE AND SURFACE COURSES FOR INFORMATION ONLY. IF A DENSITY ACCEPTANCE CORE LOCATION FALLS WITHIN THIS AREA, THE CORE WILL BE MOVED TO AN AREA OUTSIDE OF THESE NON-VIBRATORY LIMITS. NO SEPARATE PAYMENT WILL BE MADE FOR THESE COMPACTION METHOD RESTRICTIONS OR ADDITIONAL ASPHALT CORES. THIS WORK SHALL BE CONSIDERED INCIDENTAL TO THE COST OF CONSTRUCTION OF THE PROJECT, EXCEPT FOR PROPOSED UNDERCUT OPERATION DESCRIBED ABOVE.

ITEM 204 EXCAVATION FOR SUBGRADE 1499 CU. YD.
ITEM 203 GRANULAR MATERIAL, TYPE B 1499 CU. YD.
ITEM 204 GEOTEXTILE FABRIC 2999 SO. YD.
ITEM 861 GEOGRID FOR SUBGRADE STABILIZATION
2999 SO. YD.

ESTIMATED QUANTITIES

SHEET	ITEM	QUANTITY	UNIT	DESCRIPTION
33	201	LUMP		CLEARING AND GRUBBING, AS PER PLAN
33	301	1	CU. YD.	ASPHALT CONCRETE BASE, PG64-22
33	823	5	EACH	MONUMENT ASSEMBLY
33	823	62	EACH	REFERENCE MONUMENT
33	823	5	EACH	RIGHT-OF-WAY MONUMENT
34	603	200	FT.	4" CONDUIT, TYPE C, FOR DRAINAGE CONNECTION
34	603	500	FT.	6" CONDUIT, TYPE B
34	603	200	FT.	6" CONDUIT, TYPE B, FOR DRAINAGE CONNECTION
34	603	1000	FT.	6" CONDUIT, TYPE E
34	603	500	FT.	6" CONDUIT, TYPE F
34	603	200	FT.	6" CONDUIT, TYPE C, FOR DRAINAGE CONNECTION
34	603	200	FT.	6" CONDUIT, TYPE E, FOR DRAINAGE CONNECTION
34	603	200	FT.	6" CONDUIT, TYPE F, FOR DRAINAGE CONNECTION
34	603	300	FT.	8" CONDUIT, TYPE B, FOR DRAINAGE CONNECTION
34	603	200	FT.	12" CONDUIT, TYPE C, FOR DRAINAGE CONNECTION
34	601	10	CU. YD.	ROCK CHANNEL PROTECTION, TYPE C WITH FILTER
35&39	204	2019	CU. YD.	EXCAVATION OF SUBGRADE
35	601	12	SQ. YD.	TIED CONCRETE BLOCK MAT, TYPE 1
35	603	360	FT.	6" CONDUIT, TYPE F
35	603	200	FT.	6" CONDUIT, TYPE B, FOR SANITARY
35	603	200	FT.	6" CONDUIT, TYPE C, FOR SANITARY
35	603	100	FT.	8" CONDUIT, TYPE B, FOR SANITARY
35	603	100	FT.	8" CONDUIT, TYPE C, FOR SANITARY
35	604	6	EACH	PRECAST REINFORCED CONCRETE OUTLET
35	605	400	FT.	6" UNCLASSIFIED PIPE UNDERDRAINS
35	659	22	EACH	SOIL ANALYSIS TEST
35	659	76212	CU. YD.	TOPSOIL
35	659	34330	SQ. YD.	REPAIR SEEDING AND MULCHING
35	659	34330	SQ. YD.	INTER-SEEDING
35	659	100	TON	COMMERCIAL FERTILIZER
35	659	142	ACRE	LIME
35	659	3801	M. GAL.	WATER
35	659	1545	M SQ. FT.	MOWING
35	204	1	HOUR	PROOF ROLLING
37	607	500	FT.	FENCE, MISC.:CONSTRUCTION PROTECTIVE FENCING
37	613	30	CU. YD.	LOW STRENGTH MORTAR BACKFILL AND BEDDING
37	690	100	TON	SPECIAL - WORK INVOLVING PETROLEUM CONTAMINATED SOIL
37	690	30	TON	SPECIAL - WORK INVOLVING SOLID WASTE
38	619	24	MONTH	FIELD OFFICE, TYPE C, AS PER PLAN
39	823	LUMP		PROVIDING ELECTRONIC INSTRUMENTATION, AS PER PLAN
39	203	1499	CU. YD.	GRANULAR MATERIAL, TYPE B
39	204	2999	SQ. YD.	GEOTEXTILE FABRIC
39	861	2999	SQ. YD.	GEOGRID FOR SUBGRADE STABILIZATION

CARRIED TO GENERAL SUMMARY

CALCULATED JLG CHECKED BDC

GENERAL NOTES

ALL-75-0.21

39
907

I:\Pdt\89029\Final Submission\FINAL DGNS\ROADWAY\sheets\89029GN001.dgn 20-NOV-2013 10:28AM jclark1

ITEM 614, MAINTAINING TRAFFIC, AS PER PLAN

THE CONTRACTOR SHALL MAINTAIN TRAFFIC AT ALL TIMES IN ACCORDANCE WITH THE REQUIREMENTS OF ITEM 614. IT IS THE INTENTION TO PERFORM THE REQUIRED WORK WITH THE LEAST INCONVENIENCE AND THE MAXIMUM SAFETY OF, THE CONTRACTOR AND THE TRAVELING PUBLIC. ANY VARIANCES FROM THE INTENT OF THESE MAINTENANCE OF TRAFFIC NOTES MUST BE APPROVED IN ADVANCE IN WRITING BY THE ENGINEER. EXCEPT AS MODIFIED BELOW OR AS SHOWN IN THE MAINTENANCE OF TRAFFIC PLANS, THE REQUIREMENTS FOR MAINTAINING TRAFFIC AS INDICATED IN THE OHIO MANUAL OF UNIFORM TRAFFIC CONTROL DEVICES FOR STREETS AND HIGHWAYS, CURRENT EDITION, AND PERTINENT ITEMS OF THE SPECIFICATIONS AND PROPOSAL SHALL APPLY.

PAYMENT FOR ALL LABOR, EQUIPMENT, AND MATERIALS SHALL BE INCLUDED IN THE LUMP SUM CONTRACT PRICE FOR 614, MAINTAINING TRAFFIC, UNLESS SEPARATELY ITEMIZED IN THE PLAN.

LENGTH AND DURATION OF LANE CLOSURES AND RESTRICTIONS SHALL BE AT THE APPROVAL OF THE ENGINEER EXCEPT AS NOTED IN THE PLANS. IT IS THE INTENT TO MINIMIZE THE IMPACT TO THE TRAVELING PUBLIC. LANE CLOSURES OR RESTRICTIONS OVER SEGMENTS OF THE PROJECT IN WHICH NO WORK IS ANTICIPATED WITHIN A REASONABLE TIME FRAME, AS DETERMINED BY THE ENGINEER, SHALL NOT BE PERMITTED. THE LEVEL OF UTILIZATION OF MAINTENANCE OF TRAFFIC DEVICES SHALL BE COMMENSURATE WITH THE WORK IN PROGESS.

THE CONTRACTOR SHALL ADVISE THE PROJECT ENGINEER A MINIMUM OF FOURTEEN (14) DAYS PRIOR TO THE FOLLOWING: THE START OF CONSTRUCTION ACTIVITIES, LANE CLOSURES, AND ROAD CLOSURES. THE PROJECT ENGINEER WILL NOTIFY THE PROPER EMERGENCY SERVICES, SCHOOLS AND ANY IMPACTED LOCAL PUBLIC AGENCY. THE PROJECT ENGINEER WILL ALSO FORWARD THIS INFORMATION TO THE DISTRICT PUBLIC INFORMATION OFFICER (PIO) BY EMAIL. THE PIO WILL DISSEMINATE THE INFORMATION TO THE PUBLIC VIA THE LOCAL MEDIA OUTLETS. THE CONTRACTOR SHALL PROVIDE THE BELOW "NOTICE OF CLOSURE" SIGNS AND THEY SHALL BE ERECTED BY THE CONTRACTOR AT LEAST 14 DAYS IN ADVANCE OF THE SCHEDULED CLOSURE. THE SIGNS SHALL BE ERECTED ON THE RIGHT SIDE OF THE ROAD FACING TRAFFIC. THE SIGNS SHALL BE ERECTED AT THE POINT OF CLOSURE AND BE PLACED SO AS NOT TO INTERFERE WITH THE VISIBILITY OF ANY OTHER TRAFFIC CONTROL SIGNS. AFTER THE ROAD IS OPENED TO THROUGH TRAFFIC AND THE "NOTICE OF CLOSURE" SIGNS ARE NO LONGER NEEDED THE CONTRACTOR SHALL REMOVE THE SIGNS.

PAYMENT FOR THIS WORK SHALL BE INCLUDED IN THE LUMP SUM BID FOR ITEM 614 MAINTAINING TRAFFIC, AND SHALL INCLUDE FURNISHING, ERECTING, MAINTAINING AND REMOVING REMOVING THE SIGNS INCLUDING SUPPORTS.

W20-H14

* INFORMATION TO BE SUPPLIED BY THE CONTRACTOR AS APPROVED BY THE ENGINEER

THE FOLLOWING ESTIMATED QUANTITIES HAVE BEEN INCLUDED IN THE M.O.T. GENERAL SUMMARY FOR USE AS DIRECTED BY THE ENGINEER FOR THE MAINTENANCE OF TRAFFIC:

410, TRAFFIC COMPACTED SURFACE, TYPE A OR B [2000] CU. YD.
614, ASPHT. CONC. FOR MAINTAINING TRAFFIC [300] CU. YD.
616, WATER [40] M. GAL.
255, FULL DEPTH PAVEMENT SAWING [5000] FT.

THE CONTRACTOR SHALL PROVIDE, ERECT AND MAINTAIN STANDARD 48 X 30 INCH ROAD CLOSED SIGNS, SIGN SUPPORTS, BARRICADES AND LIGHTS, AS DETAILED IN SCD MT-101.60 AS DETAILED IN THE PLANS OR AS DIRECTED BY THE ENGINEER DURING PERIODS IN WHICH THE AFFECTED ROAD IS CLOSED TO TRAFFIC.

THE CONTRACTOR SHALL ALSO FURNISH, INSTALL, MAINTAIN AND REMOVE ALL ADDITIONAL SIGNS OR TRAFFIC CONTROL DEVICES DEEMED NECESSARY BY THE ENGINEER WITH ALL ASSOCIATED COSTS INCLUDED IN THE LUMP SUM PRICE BID ITEM 614 MAINTAINING TRAFFIC, AS PER PLAN.

ALL WORK AND TRAFFIC CONTROL DEVICES SHALL BE IN ACCORDANCE WITH CMS 614 AND OTHER APPLICABLE PORTIONS OF THE SPECIFICATIONS, AS WELL AS THE OHIO MANUAL OF UNIFORM TRAFFIC CONTROL DEVICES AND BE NCHRP350 COMPLIANT. PAYMENT FOR ALL LABOR, EQUIPMENT AND MATERIALS SHALL BE INCLUDED IN THE LUMP SUM CONTRACT PRICE FOR ITEM 614, MAINTAINING TRAFFIC, AS PER PLAN, UNLESS SEPARATELY ITEMIZED IN THE PLAN.

CONTRACTOR M.O.T. SCHEME:

THE MAINTENANCE OF TRAFFIC PHASING AND LAYOUT PROVIDED IN THE PLANS IS CONCEPTUAL AND CAN BE DEVELOPED FURTHER BY THE CONTRACTOR FOLLOWING THE REQUIREMENTS OF THIS NOTE SHOULD THEY FEEL THE MAINTENANCE OF TRAFFIC SCHEME WILL WORK WITH THEIR CONSTRUCTION OPERATIONS. THE CONTRACTOR SHALL FOLLOW ALL THE STIPULATIONS, GUIDELINES AND INTERIM COMPLETION DATES AS PROVIDED IN THE PLANS. SHOULD THE CONTRACTOR CHOOSE TO DO A DIFFERENT MAINTENANCE OF TRAFFIC SCHEME THEN THEY ARE TO DEVELOP A MAINTENANCE OF TRAFFIC PLAN FOLLOWING THE REQUIREMENTS OF THIS NOTE AND THE STIPULATIONS, GUIDELINES AND INTERIM COMPLETION DATES AS PROVIDED IN THE PLANS.

THE CONTRACTOR SHALL BE RESPONSIBLE FOR DESIGNING AND MAINTAINING SAFE AND EFFECTIVE TRAFFIC CONTROL 24 HOURS A DAY FOR THE DURATION OF THIS PROJECT. ALL TRAFFIC CONTROL DEVICES SHALL BE FURNISHED, ERECTED, MAINTAINED, AND REMOVED BY THE CONTRACTOR.

THE CONTRACTOR SHALL DEVISE A MAINTENANCE OF TRAFFIC SCHEME OR DEVELOP FURTHER THE SCHEME PROVIDED WHICH SHALL BE STAMPED BY A PROFESSIONAL ENGINEER, AND PRESENT IT TO THE ENGINEER FOR APPROVAL. THE MAINTENANCE OF TRAFFIC SCHEME SHALL PRESENT, IN GENERAL, THE METHOD FOR CONDUCTING THE REQUIRED WORK IN A SAFE AND EFFICIENT MANNER.

THE PLANS SHALL INCLUDE THE FOLLOWING COMPONENTS:

PLAN VIEW AT AN APPROPRIATE SCALE TO SHOW:
- WORK AREA
- BEGIN/END STATIONING OF TAPERS,
- TEMPORARY MARKINGS, ETC.
- TEMPORARY PAVEMENT
- LOCATIONS OF SIGNS (EXISTING OVERHEAD SIGNS AND ALL PROPOSED, COVERED, OR MODIFIED SIGNS)
- LOCATIONS OF TYPICAL SECTIONS
- REFERENCES TO APPLICABLE STANDARD DRAWINGS

TYPICAL SECTIONS SHOWING:
- LANE WIDTHS, PAVEMENT MARKINGS, DRUMS, PB, ETC.
- LIMITING STATIONS
- WORK AREA AND DROP-OFFS

SIGN DETAILS FOR PROPOSED SIGNS AND OVERLAYS/MODIFICATIONS

THE MAINTENANCE OF TRAFFIC SCHEME SHALL BE IN CONFORMANCE WITH THE OHIO MANUAL OF UNIFORM TRAFFIC CONTROL DEVICES, LATEST REVISION, THE REFERENCED STANDARD CONSTRUCTION DRAWINGS INCLUDING DESIGNER NOTES, THE CONSTRUCTION AND MATERIAL SPECIFICATIONS (CMS), POLICY NO. 516-003(P) TRAFFIC MANAGEMENT IN WORK ZONES INTERSTATE AND OTHER FREEWAYS, ODOT LOCATION AND DESIGN MANUAL, VOLUME 1, AND ALL REQUIREMENTS DETAILED IN THESE PLANS.

THIS SUBMITTAL SHALL CONSIST OF THREE COPIES OF THE PLANS FOR REVIEW AND DISTRIBUTION. NO WORK SHALL BEGIN AT THE LOCATION UNTIL THE MAINTENANCE OF TRAFFIC PLANS HAVE BEEN APPROVED BY OHIO DEPARTMENT OF TRANSPORTATION.

MAINTENANCE OF TRAFFIC PLANS SHALL BE PREPARED AND SUBMITTED TO THE DISTRICT FOR APPROVAL. THESE PLANS SHALL BE SEALED BY A REGISTERED PROFESSIONAL ENGINEER. THE DISTRICT SHALL HAVE 14 CALENDAR DAYS TO REVIEW AND COMMENT ON THESE PLANS. THE CONTRACTOR SHALL NOT BEGIN ANY WORK REQUIRING TRAFFIC CONTROL UNTIL THE ENGINEER HAS GIVEN APPROVAL OF THE CONTRACTOR'S SEQUENCE OF OPERATIONS AND MAINTENANCE OF TRAFFIC PLANS. THE MAINTENANCE OF TRAFFIC SCHEME SHALL TAKE INTO CONSIDERATION SNOW AND ICE OPERATIONS FROM DECEMBER 1 THROUGH MARCH 31. LANE SHIFTS, RESTRICTIONS, AND CLOSURES MAY NOT BE APPROVED IF THEY ADVERSELY AFFECT SNOW REMOVAL OPERATIONS.

IF IN THE OPINION OF THE ENGINEER, THE CONTRACTOR FAILS TO COMPLY WITH THESE REQUIREMENTS AND THE PROVISIONS OF THE APPROVED MAINTENANCE OF TRAFFIC PLAN, THE ENGINEER SHALL SUSPEND WORK UNTIL ALL REQUIREMENTS ARE MET. ANY COSTS OR DELAYS INCURRED AS A RESULT OF THE FAILURE SHALL BE THE FULL RESPONSIBILITY OF THE CONTRACTOR.

PAYMENT FOR ALL THE ITEMS REQUIRED TO MAINTAIN TRAFFIC IN ACCORDANCE WITH THESE REQUIREMENTS SHALL BE INCLUDED IN THE LUMP SUM PRICE FOR ITEM 614 - MAINTAINING TRAFFIC, AS PER PLAN.

ITEM 614, MAINTAINING TRAFFIC (SIGNS AND BARRICADES)

THE CONTRACTOR SHALL PROVIDE, ERECT AND MAINTAIN SIGNS AND SIGN SUPPORTS, AS DETAILED IN THE OHIO MANUAL OF UNIFORM TRAFFIC CONTROL DEVICES, AND TYPE III BARRICADES OF THE TYPE AND LOCATION AS SHOWN IN THE PLANS.

WORK ZONE MARKINGS AND SIGNS

THE FOLLOWING ESTIMATED QUANTITIES HAVE BEEN CARRIED TO THE M.O.T. GENERAL SUMMARY FOR USE AT LOCATIONS IDENTIFIED BY THE ENGINEER FOR WORK ZONE PAVEMENT MARKINGS AND SIGNS PER THE REQUIREMENTS OF CMS 614.04 AND 614.11.

ITEM 614 - WORKZONE LANE LINE	[12]	MILE
ITEM 614 - WORKZONE CENTER LINE	[3]	MILE
ITEM 614 - WORKZONE EDGE LINE (WHITE OR YELLOW)	[24]	MILE
ITEM 614 - WORKZONE STOP LINE	[200]	FOOT
ITEM 614 - WORKZONE CHANNELIZING LINE (WHITE)	[3000]	FOOT
ITEM 614 - WORKZONE LANE ARROW	[10]	EACH
ITEM 614 - WORKZONE MARKING SIGN	[15]	EACH
ITEM 614 - PORTABLE CHANGEABLE MESSAGE SIGN	[356]	DAY

ITEM 614, WORK ZONE SPEED LIMIT SIGN

THE CONTRACTOR SHALL FURNISH, INSTALL, MAINTAIN, COVER DURING SUSPENSION OF WORK, AND SUBSEQUENTLY REMOVE WORK ZONE SPEED LIMIT (R2-1) (55 SPEED LIMIT) SIGNS AND SUPPORTS WITHIN THE WORK LIMITS IN ACCORDANCE WITH THE FOLLOWING REQUIREMENTS:

THE CONTRACTOR SHALL COVER OR REMOVE ANY EXISTING SPEED LIMIT SIGNS WITHIN THE REDUCED SPEED ZONE(S). THESE SIGNS SHALL BE RESTORED DURING SUSPENSION OR TERMINATION OF THE REDUCED SPEED LIMIT. THE EXPENSE OF COVERING OR REMOVAL AND RESTORATION OF EXISTING SPEED LIMIT OR MINIMUM SPEED LIMIT SIGNS SHALL BE INCLUDED IN THE PAY ITEM FOR THE WORK ZONE SPEED LIMIT SIGNS.

THE WORK ZONE SPEED LIMIT SIGNS MAY BE ERECTED OR UNCOVERED NO MORE THAN FOUR HOURS BEFORE THE ACTUAL START OF WORK THAT CAUSES THE WARRANTING CONDITION(S) TO OCCUR. THE SIGNS SHALL BE REMOVED OR COVERED NO LATER THAN FOUR HOURS FOLLOWING REMOVAL OF THE WARRANTING CONDITION(S), OR SOONER AS DIRECTED BY THE ENGINEER. TEMPORARY SIGN COVERING AND UNCOVERING DUE TO TEMPORARY REMOVAL OF WARRANTING CONDITION(S) SHALL BE GUIDED BY THE FOUR-HOUR LIMITATIONS STATED ABOVE.

CONSTRUCTION AND MATERIAL SPECIFICATIONS ITEM 614, PARAGRAPH 614.02(B), INDICATES THAT THE TWO DIRECTIONS OF A DIVIDED HIGHWAY ARE CONSIDERED SEPARATE HIGHWAY SECTIONS. THEREFORE, IF THE WORK ON A MULTI-LANE DIVIDED HIGHWAY IS LIMITED TO ONLY ONE DIRECTION, A SPEED REDUCTION IN THE DIRECTION OF THE WORK DOES NOT AUTOMATICALLY CONSTITUTE A SPEED REDUCTION IN THE OPPOSITE DIRECTION. A SPEED LIMIT REDUCTION IN THE

OPPOSITE DIRECTION, IN SUCH CASE, IS APPROPRIATE ONLY IF CONDITIONS ARE EXPECTED TO HAVE AN IMPACT ON THE DIRECTIONAL TRAFFIC FLOW, AS DIRECTED BY THE ENGINEER.

THE CONTRACTOR SHALL ERECT A WORK ZONE SPEED LIMIT SIGN IN ADVANCE OF THE WARRANTING CONDITION, AS DETAILED IN THE PLANS OR AS DIRECTED BY THE ENGINEER. THE SIGN SHALL BE MOUNTED ON BOTH SIDES OF A DIRECTIONAL ROADWAY OF DIVIDED HIGHWAYS. THE FIRST WORK ZONE SPEED LIMIT SIGN SHALL BE PLACED APPROXIMATELY 500 FEET IN ADVANCE OF THE LANE REDUCTION, SHIFT TAPER, OR OTHER ROADWAY OR SHOULDER RESTRICTION THAT WARRANTED THE WORK ZONE SPEED ZONE. ON UNDIVIDED HIGHWAYS THE SIGN SHALL BE MOUNTED ON THE RIGHT SIDE, APPROXIMATELY 250 FEET IN ADVANCE OF SUCH RESTRICTIONS. THE SIGN SHALL BE REPEATED EVERY 1 MILE FOR 55 MPH ZONES AND EVERY ONE-HALF MILE FOR 50 MPH AND 45 MPH ZONES. THESE SIGNS SHALL ALSO BE ERECTED IMMEDIATELY AFTER EACH OPEN ENTRANCE RAMP WITHIN THE ZONE.

THE SPEED LIMIT REDUCTION SHALL BE LIMITED TO ONLY THE PORTION OF THE PROJECT AND THE WORK THAT WARRANTED THE WORK ZONE SPEED LIMIT REDUCTION.

SPEED REDUCTION (SPEED ZONE AHEAD SYMBOL) SIGNS (W3-5) SHALL BE ERECTED IN ADVANCE OF THE SPEED REDUCTION, APPROXIMATELY 1250 FEET ON MULTI-LANE HIGHWAYS AND 500 FEET ON TWO-LANE HIGHWAYS.

A SIGN(S) TO INDICATE THE RESUMPTION OF THE STATUTORY SPEED LIMIT SHALL BE ERECTED AT THE END OF ANY REDUCED SPEED ZONE. THE CONTRACTOR MAY USE SIGNS AND SUPPORTS IN USED, BUT GOOD CONDITION, PROVIDED THE SIGNS MEET CURRENT ODOT SPECIFICATIONS. SIGN FACES SHALL BE RETROREFLECTORIZED WITH TYPE G SHEETING COMPLYING WITH THE REQUIREMENTS OF CMS 730.19.

WORK ZONE SPEED LIMIT SIGNS SHALL BE MOUNTED ON TWO ITEM 630, GROUND MOUNTED SUPPORTS, NO. 3 POSTS, UNLESS MOUNTED ON A TEMPORARY SIGN SUPPORT PER SCD MT 105.10.

WORK ZONE SPEED LIMIT AND RELATED SIGN SIZES, PLACEMENT, SUPPORTS, ETC. SHALL BE PER THE OMUTCD, WITH TWO EXCEPTIONS: 1) EXPRESSWAY SIZE SPEED LIMIT SIGNS MAY BE USED ON FREEWAYS AND EXPRESSWAYS, IF NECESSARY; 2) THE HEIGHT OF SIGNS MOUNTED ON PORTABLE SUPPORTS SHOULD BE THE HEIGHT REQUIRED FOR GROUND-MOUNTED SIGNS BUT SHALL NOT BE MORE THAN 1 FOOT LOWER THAN THE HEIGHT REQUIRED BY THE OMUTCD, OR AS DIRECTED BY THE ENGINEER. PORTABLE SUPPORTS SHOULD NOT BE USED FOR A DURATION OF MORE THAN 3 DAYS.

WORK ZONE SPEED LIMIT SIGNS AND SUPPORTS WILL BE MEASURED AS THE NUMBER OF SIGN INSTALLATIONS, INCLUDING THE SIGNS AND NECESSARY SUPPORTS. IF A SIGN AND SUPPORT COMBINATION IS REMOVED AND REERECTED AT ANOTHER LOCATION WITHIN THE PROJECT DUE TO CHANGES IN THE SPEED ZONE AS DETAILED IN THE PLANS OR AS DIRECTED BY THE ENGINEER, IT SHALL BE CONSIDERED ANOTHER UNIT.

ITEM 614, WORK ZONE SPEED LIMIT SIGN - CONTINUED ON NEXT SHEET

CALCULATED CAC CHECKED EJC

OF TRAFFIC GENERAL NOTES

MAINTENANCE OF

ALL-75-0.21

J:\Projects\ALL\89029\mot\sheets\89029MN001.dgn 13-JUN-2013 9:29PM coffield

ITEM 614, WORK ZONE SPEED LIMIT SIGN - CONTINUED

PAYMENT FOR ACCEPTED QUANTITIES, COMPLETE IN PLACE, WILL BE MADE AT THE CONTRACT UNIT PRICE. PAYMENT SHALL BE FULL COMPENSATION FOR ALL MATERIALS, LABOR, INCIDENTALS AND EQUIPMENT FOR FURNISHING, ERECTING, MAINTAINING, COVERING DURING SUSPENSION OF WORK, AND REMOVING THE SIGNS AND SUPPORTS. SPEED LIMIT SIGNING FOR THE POINT OF RESUMPTION OF THE STATUTORY SPEED LIMIT SHALL BE PAID FOR AS WORK ZONE SPEED LIMIT SIGNS. THE FOLLOWING ESTIMATED QUANTITY HAS BEEN CARRIED TO THE M.O.T. GENERAL SUMMARY.

ITEM 614, WORK ZONE SPEED LIMIT SIGN [44] EACH
ITEM 614, SPEED ZONE AHEAD SYMBOL SIGN [12] EACH

THE FOLLOWING TABLE PROVIDES DETAILS ON WORK ZONE SPEED ZONES APPROVED FOR USE ON THIS PROJECT:

WZSZ REVISION NUMBER	COUNTY & ROUTE	SLM FROM TO	PHASE/PART & DIRECTION	APPROVED SPEED LIMIT(MPH)	SPECIFIC WARRANTING CONDITIONS & FACTORS
WZ-10087	ALL-75	0.21-5.53	ALL PHASES N.B. & S.B.	55	LANE SHIFTS & NARROWS, PCB/DROPOFFS, X-OVERS

WORK ZONE INCREASED PENALTIES SIGN (R11-H5A) (I-75 ONLY)

R11-H5A-48 SIGNS SHALL BE FURNISHED, ERECTED, AND MAINTAINED IN GOOD CONDITION AND/OR REPLACED AS NECESSARY AND SUBSEQUENTLY REMOVED BY THE CONTRACTOR ON I-75. SIGNS SHALL BE MOUNTED AT THE APPROPRIATE OFFSETS AND ELEVATIONS AS PRESCRIBED BY THE OHIO MANUAL OF UNIFORM TRAFFIC CONTROL DEVICES. THEY SHALL BE MAINTAINED ON SUPPORTS MEETING CURRENT SAFETY CRITERIA.

THE SIGNS MAY BE ERECTED OR UNCOVERED NO MORE THAN FOUR HOURS BEFORE THE ACTUAL START OF WORK. THE SIGNS SHALL BE REMOVED OR COVERED NO LATER THAN FOUR HOURS FOLLOWING RESTORATION OF ALL LANES TO TRAFFIC WITH NO RESTRICTIONS, OR SOONER AS DIRECTED BY THE ENGINEER. TEMPORARY SIGN COVERING AND UNCOVERING DUE TO TEMPORARY LANE RESTORATIONS SHALL BE GUIDED BY THE FOUR HOUR LIMITATIONS STATED ABOVE. SUCH LANE RESTORATIONS SHOULD BE EXPECTED TO REMAIN IN EFFECT FOR 30 OR MORE CONSECUTIVE CALENDAR DAYS, SUCH AS DURING WINTER SHUT DOWNS.

(THE SIGNS ON THE MAINLINE SHALL BE DUAL MOUNTED UNLESS NOT PHYSICALLY POSSIBLE. THE FIRST SIGN SHALL BE PLACED BETWEEN THE ROAD WORK AHEAD (W20-1)SIGN AND THE NEXT SIGN IN THE SEQUENCE. SIGNS SHALL BE ERECTED ON EACH ENTRANCE RAMP AND EVERY 2 MILES THROUGH THE CONSTRUCTION WORK LIMITS. SIGNS ON THE MAINLINE SHALL BE R11-H5A-48. SIGNS USED ON THE RAMPS SHALL BE R11-H5A-24. R11-H5A-24 SIGNS MAY BE USED IN THE MEDIAN IN LIEU OF R11-H5A-48 SIGNS IF IT IS NOT PHYSICALLY POSSIBLE TO PROVIDE R11-H5A-48 SIGNS IN THE MEDIAN.)

THE CONTRACTOR MAY USE SIGNS AND SUPPORTS IN USED, BUT GOOD, CONDITION PROVIDED THE SIGNS MEET CURRENT ODOT SPECIFICATIONS. SIGN FACES SHALL BE RETROREFLECTORIZED WITH TYPE G SHEETING COMPLYING WITH THE REQUIREMENTS OF CMS 730.19.

WORK ZONE INCREASED PENALITIES SIGNS AND SUPPORTS WILL BE MEASURED AS THE NUMBER OF SIGN INSTALLATIONS, INCLUDING THE SIGN AND NECESSARY SUPPORTS. IF A SIGN AND SUPPORT COMBINATION IS REMOVED AND REERECTED AT ANOTHER LOCATION AS DIRECTED BY THE ENGINEER, IT SHALL BE CONSIDERED ANOTHER UNIT.

PAYMENT FOR ACCEPTED QUANTITIES, COMPLETE, IN PLACE WILL BE MADE AT THE CONTRACT UNIT PRICE. PAYMENT SHALL BE FULL COMPENSATION FOR ALL MATERIALS, LABOR, INCIDENTALS AND EQUIPMENT FOR FURNISHING, ERECTING, MAINTAINING, COVERING DURING SUSPENSION OF WORK, AND REMOVAL OF THE SIGN AND SUPPORT.

ITEM 614, WORK ZONE INCREASED PENALITIES SIGN [24] EACH

DUST CONTROL

THE CONTRACTOR SHALL FURNISH AND APPLY WATER FOR DUST CONTROL AS DIRECTED BY THE ENGINEER. THE FOLLOWING ESTIMATED QUANTITIES HAVE BEEN INCLUDED FOR DUST CONTROL PURPOSES:

ITEM 616, WATER [2400] M. GAL

ITEM 614, WORK ZONE IMPACT ATTENUATOR FOR 24" WIDE HAZARDS (UNIDIRECTIONAL OR BIDIRECTIONAL)

THIS ITEM SHALL CONSIST OF FURNISHING AND INSTALLING A NON-GATING IMPACT ATTENUATOR. FURNISH AN IMPACT ATTENUATOR FROM THE OFFICE OF ROADWAY ENGINEERING APPROVED LIST FOR WORK ZONE IMPACT ATTENUATORS. THE APPROVED LIST IS AVAILABLE AT THE "ROADWAY STANDARDS: PROPRIETARY ROADSIDE SAFETY DEVICES" WEB PAGE ON THE OFFICE OF ROADWAY ENGINEERING WEBSITE.

INSTALLATION SHALL BE AT APPROACH ENDS OF ALL PCB RUNS WITHIN THE CLEAR ZONE AND THE LOCATIONS SPECIFIED IN THE PLANS AND STD. CONST. DWGS. IN ACCORDANCE WITH THE MANUFACTURER'S SPECIFICATIONS.

THE CONTRACTOR SHALL REPAIR OR REPLACE A DAMAGED UNIT WITHIN 24 HOURS OF A DAMAGING IMPACT.

WHEN BIDIRECTIONAL DESIGNS ARE SPECIFIED, THE CONTRACTOR SHALL SUPPLY APPROPRIATE TRANSITIONS.

WHEN GATING IMPACT ATTENUATORS ARE DESIRED, THE CONTRACTOR SHALL SUBMIT DOCUMENTATION TO THE ENGINEER FOR ACCEPTANCE.

THE COST FOR THE ADDITIONAL BARRIER REQUIRED FOR A GATING IMPACT ATTENUATOR SHALL BE INCLUDED IN THE COST OF THE GATING IMPACT ATTENUATOR.

PAYMENT FOR THE ABOVE WORK SHALL BE MADE WITH THE LUMP UNIT PRICE BID FOR ITEM 614, MAINTAINING TRAFFIC, AS PER PLAN AND SHALL INCLUDE ALL LABOR, TOOLS, EQUIPMENT AND MATERIALS NECESSARY TO CONSTRUCT AND MAINTAIN A COMPLETE AND FUNCTIONAL IMPACT ATTENUATOR SYSTEM, INCLUDING ALL RELATED BACKUPS, TRANSITIONS, LEVELING PADS, HARDWARE AND GRADING, NOT SEPARATELY SPECIFIED, AS REQUIRED BY THE MANUFACTURER.

MAINTAINING ACCESS TO ALL PROPERTIES

ACCESS TO ALL ADJACENT PROPERTIES WITHIN THE WORK LIMTS SHALL BE MAINTAINED BY THE CONTRACTOR AT ALL TIMES, AS PER 614.02(A).

RECONSTRUCTION OF THE DRIVES AT THE BUSINESSES/PARCELS LOCATED WITHIN THE PROJECT LIMITS SHALL BE PERFORMED PART-WIDTH, UNLESS ACCESS IS AVAILABLE THROUGH MULTIPLE DRIVES FOR THE PARCEL FROM THE SAME ROADWAY.

VEHICLES SHALL HAVE ACCESS TO/FROM THE PROPERTY VIA A MINIMUM 15 FT. WIDE DRIVE AT EACH LOCATION AT ALL TIMES.

CONSTRUCTION OF THE NEW DRIVES SHALL BE COMPLETED WITHIN THE MAXIMUM DURATION OF 4 DAYS FOR EACH BUSINESS/PARCEL.

NO DRIVE CAN BE CLOSED DURING THE OPEN/OPERATING HOURS OF BUSINESS WITHOUT ALTERNATE ACCESS BEING PROVIDED AND AS COORDINATED WITH THE BUSINESS OWNER.

AGGREGATE DRIVES ARE PERMITTED DURING CONSTRUCTION. IT IS PERMISSIBLE TO TEMPORARILY WIDEN A DRIVE TO EITHER SIDE OR BOTH IN ORDER TO COMPLY WITH THIS STIPULATION.

THE CONTRACTOR SHALL COORDINATE THIS WORK WITH THE RESPECTIVE PROPERTY/BUSINESS OWNER A MINIMUM OF FOURTEEN (14) DAYS PRIOR TO BEGINNING ANY WORK.

ALL COSTS RESULTING FROM THE ABOVE REQUIREMENTS SHALL BE CONSIDERED TO BE INCLUDED IN THE LUMP SUM PRICE BID FOR ITEM 614, MAINTAINING TRAFFIC, AS PER PLAN.

SHOULD THE CONTRACTOR FAIL TO MEET THE ABOVE TIME COMPLETION REQUIREMENTS FOR BUSINESS AND DRIVE ACCESS, THE CONTRACTOR SHALL BE ASSESSED LIQUIDATED DAMAGES IN ACCORDANCE WITH CMS 108.07.

ITEM 614 LONGITUDINAL CHANNELIZER

LONGITUDINAL CHANNELIZERS SHALL BE PROVIDED AS CALLED FOR IN THE PLANS. A LONGITUDINAL CHANNELIZER CONSISTS OF A COMBINATION OF VERTICAL COMPONENTS AND LONGITUDINAL BASE COMPONENTS, FIT TOGETHER TO CREATE A CONTINUOUS CHANNELIZING DEVICE, AS DETAILED IN PIS 2010180. USE OF TUBULAR MARKERS, AS IDENTIFIED IN THE OMUTCD, FIGURE 6F-7, SHALL NOT QUALIFY FOR USE AS A LONGITUDINAL CHANNELIZER.

THIS ITEM IS PROVIDE FOR USE AT LOOP STYLE ENTRANCE RAMPS OR OTHER ENTRANCE RAMPS WHERE THE ENGINEER DETERMINES THEM TO BE APPROPRIATE TO INCREASE SIGHT DISTANCE.

THE VERTICAL COMPONENT SHALL BE EQUIPPED WITH TWO 3-INCH WIDE RETROREFLECTIVE BANDS, PLACED A MAXIMUM OF 2 INCHES FROM THE TOP, WITH A MAXIMUM OF 6 INCHES BETWEEN THE BANDS. THE LONGITUDINAL BASE COMPONENTS SHALL BE EQUIPPED WITH REFLECTORS.

THE LONGITUDINAL CHANNELIZER SHALL BE NCHRP 350 COMPLIANT.

FOR INSTALLATION PROCEDURES, FOLLOW THE MANUFACTURER'S INSTRUCTIONS.

PAYMENT FOR PROVIDING, INSTALLING AND REMOVING THIS CHANNELIZER WILL BE MADE AT THE UNIT PRICE PER FOOT FOR:

ITEM 614, LONGITUDINAL CHANNELIZER [2256] FOOT

EXTRA ADVANCE WARNING SIGNS

AN EXTRA ADVANCE WARNING SIGN GROUP CONSISTS OF TWO W20-1 (ROAD WORK AHEAD) SIGNS, WITH W16-3A DISTANCE PLATES, AND TWO W3-H7 (WATCH FOR STOPPED TRAFFIC) SIGNS AND REQUIRED WARNING LIGHTS. LANE CLOSURE SIGNS WILL NOT BE NEEDED.

THE CONTRACTOR SHALL PROVIDE, ERECT, MAINTAIN AND REMOVE EXTRA ADVANCE WARNING SIGN GROUPS AS SHOWN ON SCD MT-95.50 AS DIRECTED BY THE ENGINEER.

THE DISTANCE PLATES FOR THIS GROUP SHALL BE ABLE TO BE MODIFIED IN THE FIELD TO SHOW APPROPRIATE WHOLE MILES TO THE LANE TAPER.

PAYMENT FOR PROVIDING, ERECTING, MAINTAINING AND REMOVING EXTRA ADVANCE WARNING SIGN GROUPS SHALL BE INCLUDED IN THE LUMP SUM BID FOR ITEM 614, MAINTAINING TRAFFIC, AS PER PLAN.

LIGHTING

EXISTING LIGHTING SHALL BE MAINTAINED AT RAMP TERMINI DURING CONSTRUCTION, AS DIRECTED BY THE ENGINEER.

PAYMENT FOR MAINTAINING EXISTING LIGHTING SHALL BE INCLUDED IN THE LUMP SUM PRICE BID FOR ITEM 614, MAINTAINING TRAFFIC, AS PER PLAN.

EXISTING CABLE BARRIER

EXISTING MEDIAN CABLE BARRIER EXTENDS THROUGHOUT THE PROJECT. THE CONTRACTOR SHOULD KEEP THE EXSITING CABLE BARRIER IN PLACE WHENEVER AND WHEREVER POSSIBLE. WHEN A SECTION NEEDS TO BE REMOVED FOR CONSTRUCTION ACTIVITIES, THE CONTRACTOR SHALL REMOVE THE COMPLETE SECTION FROM ANCHOR TO ANCHOR. THE CONTRACTOR IS NOT REQUIRED TO RE-ASSEMBLE THE EXISTING CABLE BARRIER BETWEEN PHASES. SEE ROADWAY PLANS FOR PROPOSED CABLE BARRIER DETAILS AND QUANTITIES.

EXISTING GUIDE SIGNS (OVERHEAD AND GROUND MOUNTED)

THE CONTRACTOR SHALL MAINTAIN EXISTING GUIDES SIGNS THROUGHOUT EACH PHASE OF CONSTRUCTION AS APPLICABLE. EXISTING OVERHEAD GUIDE SIGNS MAY BE REMOVED AND RE-ERECTED ON GROUND MOUNTS/ POSTS. EXISTING GROUND MOUNTED GUIDE SIGN MAY ALSO BE MOVED AND RE-ERECTED AS NECESSARY AND AS APPROVED BY THE ENGINEER.

TEMPORARY SIGN OVERLAYS NOT OTHERWISE DETAILED IN THE PLANS SHALL BE DETERMINED BY THE CONTRACTOR AND APPROVED BY THE ENGINEER.

WHERE AN EXISTING GUIDE SIGN CANNOT BE USED OR RE-USED, THEN AN APPROPRIATE TEMPORARY REPLACEMENT SHALL BE CONSTRUCTED.

ALL LABOR, EQUIPMENT, AND MATERIALS NECESSARY TO COMPLETE THIS WORK SHALL BE INCLUDED IN THE LUMP SUM PRICE BID FOR ITEM 614, MAINTAINING TRAFFIC, AS PER PLAN.

CALCULATED CAC CHECKED EJC

MAINTENANCE OF TRAFFIC GENERAL NOTES

ALL-75-0.21

2 / 94

41 907

J:\Projects\ALL\89029\mot\sheets\89029MN002.dgn 13-JUN-2013 9:29PM coffield

CALCULATED CAC CHECKED EJC

ITEM 614, BARRIER REFLECTORS AND/OR OBJECT MARKERS

BARRIER REFLECTORS AND/OR OBJECT MARKERS SHALL BE INSTALLED ON ALL PORTABLE CONCRETE BARRIER USED FOR TRAFFIC CONTROL. BARRIER REFLECTORS, OBJECT MARKERS AND THEIR INSTALLATION SHALL CONFORM TO CMS 626, EXCEPT THAT THE SPACING SHALL BE 50 FEET. SEE STANDARD CONSTRCUTION DRAWING MT-101.70 FOR DETAILS.

PAYMENT FOR ALL LABOR , EQUIPTMENT AND MATERIALS SHALL BE INCLUDED IN THE LUMP SUM CONTRACT PRICE FOR ITEM 614, MAINTAINING TRAFFIC, AS PER PLAN.

BARRIER DELINEATION, AS PER PLAN

INCREASED DELINEATION, AS SPECIFIED HEREIN, SHALL BE INSTALLED ON ALL PORTABLE CONCRETE OR STEEL BARRIER AND CONCRETE PERMANENT BARRIER LOCATED WITHIN 5-FEET OF THE EDGE OF THE TRAVELED LANE UNDER EITHER OF THE FOLLOWING CONDITIONS:

ALONG TAPERS AND TRANSITION AREAS

ALONG CURVES (OUTSIDE ONLY) WITH DEGREE OF CURVATURE GREATER THAN OR EQUAL TO 3 DEGREES

THE INCREASED DELINEATION SHALL CONSIST OF EITHER LINEAR DELINEATION PANELS OR THE TRIPLE STACKING OF WORK ZONE BARRIER REFLECTORS.

THE LINEAR DELINEATION PANELS SHALL CONSIST OF PANELS OF DELINEATION, APPROXIMATELY 34 INCHES LONG AND 6 INCHES WIDE AND SHALL BE "CRIMPED". PANELS SHALL BE PROVIDED AT THE RATE OF ONE PANEL EVERY 10 FEET ON PORTABLE BARRIER AND PERMANENT CONCRETE BARRIER, SPACED EVENLY ALONG THE LENGTH OF THE RUN. THE PANELS SHALL BE MOUNTED SUCH THAT THE TOPS OF THE PANELS ARE 26 INCHES ABOVE THE PAVEMENT.

TRIPLE STACKED BARRIER REFLECTORS SHALL CONSIST OF THREE BARRIER REFLECTORS STACKED VERTICALLY IN THEIR ATTACHMENT TO PORTABLE CONCRETE OR STEEL BARRIER. THERE SHALL BE NO OPEN SPACE BETWEEN THE ADJACENT BARRIER REFLECTORS. THE TOP OF THE MIDDLE BARRIER REFLECTOR SHALL BE LOCATED 26 IN ABOVE THE PAVEMENT.

PAYMENT SHALL BE FULL COMPENSATION FOR ALL MATERIAL, LABOR, INCIDENTALS AND EQUIPMENT NECESSARY FOR FURNISHING, INSTALLING, MAINTAINING AND REMOVING LINEAR DELINEATION.

PAYMENT TO BE INCLUDED IN THE LUMP SUM CONTRACT PRICE FOR ITEM 614, MAINTAINING TRAFFIC, AS PER PLAN.

ALONG RUNS OF PORTABLE CONCRETE BARRIER WHERE THIS ITEM IS PROVIDED, THE QUANTITY SHALL BE MEASURED AS THE ENTIRE LENGTH OF THE RUN BEING DELINEATED, INCLUDING THE SPACES BETWEEN THE INDIVIDUAL PANELS OR STACKS OF BARRIER REFLECTORS.

REFER TO STANDARD DRAWING MT-101.70 FOR MORE INFO.

GUARDRAIL DELINEATION

OBJECT MARKERS SHALL BE INSTALLED ON ALL GUARDRAIL LOCATED WITHIN 5 FEET OF THE EDGE OF THE ADJACENT TRAVEL LANE. GUARDRAIL-MOUNTING OF OBJECT MARKERS SHALL BE MADE BY INSTALLING THE OBJECT MARKERS ON THE EXTENSION BLOCKS RATHER THAN DIRECTLY ONTO THE GUARDRAIL ITSELF. OBJECT MARKER SPACING SHALL BE APPROXIMATELY 50 FEET.

PAYMENT SHALL BE FULL COMPENSATION FOR ALL MATERIAL, LABOR, INCIDENTALS AND EQUIPMENT NECESSARY FOR FURNISHING, INSTALLING, MAINTAINING AND REMOVING OBJECT MARKERS.

PAYMENT FOR ALL LABOR , EQUIPMENT AND MATERIALS SHALL BE INCLUDED IN THE LUMP SUM CONTRACT PRICE FOR ITEM 614, MAINTAINING TRAFFIC, AS PER PLAN.

FLOODLIGHTING

FLOODLIGHTING OF THE WORK SITE FOR OPERATIONS CONDUCTED DURING NIGHTTIME PERIODS SHALL BE ACCOMPLISHED SO THAT THE LIGHTS DO NOT CAUSE GLARE TO THE DRIVERS ON THE ROADWAY. TO ENSURE THE ADEQUACY OF THE FLOODLIGHT PLACEMENT, THE CONTRACTOR AND THE ENGINEER SHALL DRIVE THROUGH THE WORK SITE EACH NIGHT WHEN THE LIGHTING IS IN PLACE AND OPERATIVE PRIOR TO COMMENCING ANY WORK. IF GLARE IS DETECTED, THE LIGHT PLACEMENT AND SHIELDING SHALL BE ADJUSTED TO THE SATISFACTION OF THE ENGINEER BEFORE WORK PROCEEDS.

PAYMENT FOR ALL LABOR, EQUIPMENT AND MATERIALS SHALL BE INCLUDED IN THE LUMP SUM CONTRACT PRICE FOR ITEM 614, MAINTAINING TRAFFIC, AS PER PLAN (SECTION 642-2).

EARTHWORK FOR MAINTAINING TRAFFIC

THE FOLLOWING QUANTITIES HAVE BEEN INCLUDED IN THE PLAN FOR INFORMATION ONLY:

EXCAVATION FOR MAINTAINING TRAFFIC	7,531	CU. YD.
EMBANKMENT FOR MAINTAINING TRAFFIC	9,603	CU. YD.

WHEN UNDERCUTS ARE NECESSARY FOR MAINLINE PAVEMENT OR EMBANKMENT CONSTRUCTION, EVALUATE THE NEED FOR TEMPORARY ROAD UNDERCUTS IF WITHIN A CLOSE PROXIMITY TO THE MAINLINE UNDERCUTS. A GEOTECHNICAL EVALUATION SHOULD BE CONSIDERED TO DETERMINE IF THE EXISTING SOIL CONDITIONS ARE ADEQUATE TO SUPPORT THE TEMPORARY ROAD. ADDITIONAL SOIL BORINGS ALONG THE TEMPORARY ROAD ARE NOT NORMALLY REQUIRED.

PORTABLE CONCRETE BARRIER, 32"

PORTABLE CONCRETE BARRIER, 32" AS SPECIFIED IN THE PLANS OR AS DIRECTED BY THE ENGINEER, INCLUDING ALL LABOR, EQUIPTMENT AND MATERIALS SHALL BE INCLUDED WITH THE LUMP SUM BID PRICE FOR ITEM 614, MAINTAINING TRAFFIC, AS PER PLAN.

THE FOLLOWING ESTIMATED QUANTITIES HAVE BEEN INCLUDED IN THE PLAN FOR INFORMATION ONLY AND SHOULD BE ESTIMATED BY THE CONTRACTOR FOR BID:

PORTABLE CONCRETE BARRIER 217,580 FT.
(ALL ALIGNMENTS-ALL PHASES)

GLARE SCREEN

GLARE SCREEN, 18 INCHES HIGH SHALL BE INSTALLED ON ALL PORTABLE CONCRETE BARRIER (PCB) THAT IS PLACED BETWEEN OPPOSITE DIRECTION TRAFFIC. ALL LABOR, EQUIPMENT AND MATERIALS FOR THIS WORK SHALL BE INCLUDED WITH THE LUMP SUM BID PRICE FOR ITEM 614, MAINTAINING TRAFFIC, AS PER PLAN.

THE GLARE SCREEN SHALL BE CONSTRUCTED USING ONE OF THE SCREENS PROVIDED ON THE APPROVED LIST, AVAILABLE ON THE OFFICE OF MATERIALS MANAGEMENT WEB PAGE.

PADDLE OR INTERMITTENT TYPE GLARE SCREENS SHALL BE DESIGNED USING A 20 DEGREE CUT-OFF ANGLE BASED ON TANGENT ALIGNMENT. THAT SPACING SHALL BE USED THROUGHOUT THE BARRIER LENGTH WITHOUT REGARD TO BARRIER CURVATURE.

THE GLARE SCREEN SYSTEM SHALL BE SECURELY FASTENED TO THE 32-INCH PORTABLE CONCRETE BARRIER USING THE HARDWARE AND PROCEDURES SPECIFIED BY THE MANUFACTURER.

FOR DIRECTIONS ON HOW TO INSTALL THE GLARE SCREEN AND THE BARRIER, SEE THE MANUFACTURER'S INSTRUCTIONS.

PROPOSED RUMBLE STRIPS

PROPOSED RUMBLE STRIPS SHALL NOT BE INSTALLED IN ANY NEWLY PAVED SHOULDERS UNTIL SUCH TIME WHEN THE SHOULDERS WILL NO LONGER BE NEEDED TO MAINTAIN TRAFFIC.

ITEM 614 - LAW ENFORCEMENT OFFICER (WITH PATROL CAR) FOR ASSISTANCE DURING CONSTRUCTION OPERATIONS

USE OF LAW ENFORCEMENT OFFICERS (LEOS) BY CONTRACTORS OTHER THAN THE USES SPECIFIED BELOW WILL NOT BE PERMITTED AT PROJECT COST. LEOS SHOULD NOT BE USED WHERE THE OMUTCD INTENDS THAT FLAGGERS BE USED.

IN ADDITION TO THE REQUIREMENTS OF CMS 614 AND THE OMUTCD, AN UNIFORMED LEO WITH AN OFFICIAL PATROL CAR (CAR WITH TOP-MOUNTED EMERGENCY FLASHING LIGHTS AND COMPLETE MARKINGS OF THE APPROPRIATE LAW ENFORCEMENT AGENCY) SHALL BE PROVIDED FOR THE FOLLOWING TRAFFIC CONTROL TASKS:

DURING THE ENTIRE ADVANCE PREPARATION AND CLOSURE SEQUENCE WHERE COMPLETE BLOCKAGE OF TRAFFIC IS REQUIRED. (BEAM ERECTION, DEMOLITION, OR AS DIRECTED BY THE ENGINEER.)

DURING A TRAFFIC SIGNAL INSTALLATION WHEN IMPACTING THE NORMAL FUNCTION OF THE SIGNAL OR THE FLOW OF TRAFFIC OR WHEN TRAFFIC NEEDS TO BE DIRECTED THROUGH AN ENERGIZED TRAFFIC SIGNAL CONTRARY TO THE SIGNAL DISPLAY (E.G., DIRECTING MOTORISTS THROUGH A RED LIGHT).

IN ADDITION TO THE REQUIREMENT OF CMS 614 AND THE OMUTCD, A UNIFORMED LEO WITH AN OFFICIAL PATROL CAR (CAR WITH TOP-MOUNTED EMERGENCY FLASHING LIGHTS AND COMPLETE MARKINGS OF THE APPROPRIATE LAW ENFORCEMENT AGENCY) SHOULD BE PROVIDED FOR THE FOLLOWING TRAFFIC CONTROL TASKS:

FOR LANE CLOSURES: DURING INITIAL SET-UP PERIODS, TEAR DOWN PERIODS, SUBSTANTIAL SHIFTS OF A CLOSURE POINT OR WHEN NEW LANE CLOSURE ARRANGEMENTS ARE INITIATED FOR LONG-TERM LANE CLOSURES/SHIFTS (FOR THE FIRST AND LAST DAY OF MAJOR CHANGES IN TRAFFIC CONTROL SETUP). IN GENERAL, LEOS SHOULD BE POSITIONED AT THE POINT OF LANE RESTRICTION OR ROAD CLOSURE AND TO MANUALLY CONTROL TRAFFIC MOVEMENTS THROUGH INTERSECTIONS IN WORK ZONES.

WHEN CONSTRUCTION VEHICLES ARE ENTERING/EXITING THE ZONE DIRECTLY FROM/INTO AN OPEN LANE OF TRAFFIC. IF A LANE HAS BEEN CLOSED TO PROVIDE AN ACCELERATION/ DECELERATION LANE FOR THE VEHICLE, THE LEO WILL NOT BE REQUIRED.

LEOS SHOULD NOT FORGO THEIR TRAFFIC CONTROL RESPONSIBILITIES TO APPREHEND MOTORISTS FOR ROUTINE TRAFFIC VIOLATIONS. HOWEVER, IF A MOTORIST'S ACTIONS ARE CONSIDERED TO BE RECKLESS, THEN PURSUIT OF THE MOTORIST IS APPROPRIATE.

THE LEOS WORK AT THE DIRECTION OF THE CONTRACTOR. THE CONTRACTOR IS RESPONSIBLE FOR SECURING THE SERVICES OF THE LEOS WITH THE APPROPRIATE AGENCIES AND COMMUNICATING THE INTENTIONS OF THE PLANS WITH RESPECT TO DUTIES OF THE LEOS. THE ENGINEER SHALL HAVE FINAL CONTROL OVER THE LEOS' DUTIES AND PLACEMENT, AND WILL RESOLVE ANY ISSUES THAT MAY ARISE BETWEEN THE TWO PARTIES.

THE LEO SHALL REPORT IN TO THE CONTRACTOR PRIOR TO THE START OF THE SHIFT, IN ORDER TO RECEIVE INSTRUCTIONS REGARDING SPECIFIC WORK ASSIGNMENTS DURING HIS/HER SHIFT. THE LEO IS EXPECTED TO STAY AT THE PROJECT SITE FOR THE ENTIRE DURATION OF HIS/HER SHIFT. THE LEO SHALL REPORT TO THE CONTRACTOR AT THE END OF HIS/HER SHIFT. ONCE THE LEO HAS COMPLETED THE DUTIES DESCRIBED ABOVE AND STILL HAS TIME REMAINING ON HIS/HER SHIFT, THE LEO MAY BE ASKED TO PATROL THROUGH THE WORK ZONE (WITH FLASHING LIGHTS OFF) OR BE PLACED AT A LOCATION TO DETER MOTORISTS FROM SPEEDING. SHOULD IT BE NECESSARY TO LEAVE THE PROJECT SITE, THE LEO SHALL NOTIFY THE ENGINEER. THE CONTRACTOR SHALL PROVIDE THE LEO WITH A TWO-WAY COMMUNICATION DEVICE WHICH SHALL BE RETURNED TO THE CONTRACTOR AT THE END OF HIS/HER SHIFT.

LEOS (WITH PATROL CAR) REQUIRED BY THE TRAFFIC MAINTENANCE TASKS ABOVE SHALL BE PAID FOR ON A UNIT PRICE (HOURLY) BASIS UNDER ITEM 614, LAW ENFORCEMENT OFFICER (WITH PATROL CAR) FOR ASSISTANCE. THE FOLLOWING ESTIMATED QUANTITIES HAVE BEEN CARRIED TO THE M.O.T. GENERAL SUMMARY.

ITEM 614, LAW ENFORCEMENT OFFICER WITH PATROL CAR FOR ASSISTANCE 680 HOURS

THE HOURS PAID SHALL INCLUDE ANY MINIMUM SHOW-UP TIME REQUIRED BY THE LAW ENFORCEMENT AGENCY INVOLVED.

ANY ADDITIONAL COSTS (ADMINISTRATIVE OR OTHERWISE) INCURRED BY THE CONTRACTOR TO OBTAIN THE SERVICES OF AN LEO ARE INCLUDED WITH THE BID UNIT PRICE FOR ITEM 614, LAW ENFORCEMENT OFFICER WITH PATROL CAR FOR ASSISTANCE.

LEOS (WITH PATROL CAR) ARE REQUIRED TO BE STATE HIGHWAY PATROL FOR WORK ZONES ON INTERSTATE 75.

CONFLICTING PAVEMENT MARKINGS

THE CONTRACTOR SHALL, PRIOR TO PLACING TEMPORARY WORK ZONE PAVEMENT MARKINGS, REMOVE ALL EXISTING CONFLICTING PAVEMENT MARKINGS VISIBLE TO THE TRAVELLING PUBLIC DURING DAYLIGHT OR NIGHTTIME HOURS IN ACCORDANCE WITH 614.11. THE COST FOR REMOVAL OF CONFLICTING MARKINGS SHALL BE INCIDENTAL TO THE VARIOUS PAY ITEMS.

"CAUTION WHEN WET" SIGNS

CONTRACTOR SHALL PLACE "CAUTION WHEN WET" (SPECIAL-48"X48" BLK./ORG.) SIGNS ALONG I-75 DURING ANY PHASE IN WHICH TRAFFIC WILL BE USING SHOULDERS, AT THE APPROACH OF NEWLY CONSTRUCTED BRIDGES ON I-75, AND ANY OTHER LOCATIONS WHERE STORM WATER MAY COLLECT IN A LANE, OR AS DIRECTED BY THE ENGINEER.

EXISTING RUMBLE STRIPS AND SHOULDER REHAB

EXISTING SHOULDERS ON I-75 SHALL BE PLANED AND RESURFACED TO REMOVE RUMBLE STRIPS IN AREAS WHERE ACTIVE TRAVEL LANES WILL BE SHIFTED ONTO THE SHOULDERS. WHEN SHOULDERS REQUIRE WIDENING WITH ITEM 615, PAVEMENT FOR MAINTAINING TRAFFIC, THE TEMPORARY PAVEMENT SHOULD BE BUILT UP THROUGH THE INTERMEDIATE COURSE AND THEN A SURFACE COURSE OVER THE ENTIRE EXISTING SHOULDER AND THE WIDENED PORTION SHOULD BE APPLIED WITH A SINGLE PASS OR AS OTHERWISE DIRECTED OR APPROVED BY THE ENGINEER.

THE SHOULDER WORK SHALL INCLUDE PAYMENT FOR 1¼ INCH PLANING OF THE EXISTING SHOULDER, TACK COAT, AND THE 448 SURFACE COURSE OVER THE EXISTING SHOULDER AREA. ALL LABOR, EQUIPMENT, MATERIALS FOR THIS WORK SHALL BE PART OF THE ITEM 614, MAINTAINING TRAFFIC, AS PER PLAN, LUMP SUM. ANY AREA WIDENED WITH ITEM 615 PAVEMENT FOR MAINTAINING TRAFFIC SHALL BE INCLUDED IN THE BID PRICE FOR THAT ITEM.

MAINTENANCE OF TRAFFIC GENERAL NOTES

ALL-75-0.21

J:\Projects\ALL\89029\mot\sheets\89029MN003.dgn 13-JUN-2013 9:29PM coffield

WINTER PAVEMENT MARKINGS & REMOVAL

THE CONTRACTOR WILL BE REQUIRED TO INSTALL TEMPORARY PAVEMENT MARKINGS PER ALL APPLICABLE STANDARDS AND PAY ITEMS ON THE NEWLY CONSTRUCTED I-75 MAINLINE PAVEMENT (EITHER ASPHALT INTERMEDIATE COURSE OR CONCRETE SURFACE) AT THE CLOSE OF THE 1ST SEASON OF CONSTRUCTION (I-75 PHASE I). TRAFFIC WILL THEN BE SHIFTED TO THE NORMAL NORTH & SOUTH BOUND LANE LOCATIONS FOR THE WINTER MONTHS. BOTH NEW AND EXISTING PAVEMENT SHALL BE STRIPED ACCORDINGLY FOR THE WINTER SEASON.

PERMANENT PAVEMENT MARKINGS MAY BE PLACED ON NEW RAMPS UP TO THE PHYSICAL GORE AT THE COMPLETION OF THE 1ST CONSTRUCTION SEASON (I-75 PHASE I) AND SHALL BE IN ACCORDANCE WITH THE PAVEMENT MARKING PLANS.

PAVEMENT MARKING TYPE SHALL BE DETERMINED BY THE TYPE OF PAVEMENT OR AS DIRECTED BY THE ENGINEER.

PAVEMENT MARKINGS FOR ALL M.O.T. PHASES SHALL BE KEPT IN GOOD CONDITION AND MAY REQUIRE RE-STRIPING AS DIRECTED BY THE ENGINEER.

AT VARIOUS POINTS IN THE PROJECT, TEMPORARY PAVEMENT MARKINGS ON CONCRETE SURFACES WILL NEED TO BE REMOVED PRIOR TO PLACING PERMANENT MARKINGS. THE CONTRACTOR SHALL EMPLOY NON-DESTRUCTIVE WATER BLASTING METHODS FOR THE ERADICATION OF TEMPORARY MARKINGS ON NEW CONCRETE PAVEMENT. OTHER METHODS WILL BE AT THE APPROVAL OF THE ENGINEER.

PAYMENT FOR THE TEMPORARY STRIPING FOR I-75 IS MEASURED AS BEING EQUAL TO THE PERMANENT STRIPING FOR I-75 AS SHOWN IN THE PAVEMENT MARKING PLANS AND SUB-SUMMARY. ALL LABOR, EQUIPMENT, AND MATERIALS NECESSARY TO PERFORM THIS WORK SHALL BE INCLUDED WITH LUMP SUM ITEM 614, MAINTAINING TRAFFIC, AS PER PLAN.

IF THE CONTRACTOR USES A MOT SCHEME THAT DURING THE WINTER MONTHS TRAFFIC IS NOT SHIFTED BACK TO NORMAL SOUTHBOUND AND NORTHBOUND LOCATIONS, THEN ANY ADDITIONAL TEMPORARY STRIPING SHALL BE INCLUDED WITH LUMP SUM ITEM 614, MAINTAINING TRAFFIC, AS PER PLAN.

COORDINATION WITH ADJACENT PROJECTS

THE CONTRACTOR SHALL COORDINATE WORK WITH THE ADJACENT PROJECT TO THE NORTH, ALL-75-5.53 PID#76691, WHICH WILL BE IN IT'S SECOND SEASON AT THE START OF THIS PROJECT.

OVERNIGHT TRENCH CLOSING

THE BASE WIDENING SHALL BE COMPLETED TO A DEPTH OF NO MORE THAN 12 INCHES BELOW THE EXISTING PAVEMENT BY THE END OF EACH WORK DAY. NO TRENCH SHALL BE LEFT OPEN OVERNIGHT EXCEPT FOR A SHORT LENGTH (25 FEET OR LESS) OF A WORK SECTION AT THE END OF THE TRENCH. IN CASE WORK MUST BE SUSPENDED BECAUSE OF INCLEMENT WEATHER OR OTHER REASONS, THE TRENCH FOR THE UNCOMPLETED BASE WIDENING SHALL BE BACKFILLED AT THE DIRECTION OF THE ENGINEER.

TRENCH FOR WIDENING

TRENCH EXCAVATION FOR BASE WIDENING SHALL BE ONLY ON ONE SIDE OF THE PAVEMENT AT A TIME. THE OPEN TRENCH SHALL BE ADEQUATELY MAINTAINED AND PROTECTED WITH DRUMS OR BARRICADES AT ALL TIMES. PLACEMENT OF PROPOSED SUBBASE AND BASE MATERIAL SHALL FOLLOW AS CLOSELY AS POSSIBLE BEHIND EXCAVATION OPERATIONS. THE LENGTH OF WIDENING TRENCH WHICH IS OPEN AT ANY ONE TIME SHALL BE HELD TO A MINIMUM AND SHALL AT ALL TIMES BE SUBJECT TO APPROVAL OF THE ENGINEER.

ANCHORED PORTABLE CONCRETE BARRIER

PORTABLE CONCRETE BARRIER (PCB) SHALL BE PLACED AS DETAILED IN THESE PLANS AND AS SPECIFIED IN ALL APPLICABLE ODOT STANDARD DRAWINGS, TRAFFIC ENGINEERING MANUALS, AND PER THE OHIO MANUAL OF UNIFORM TRAFFIC CONTROL DEVICES. THE REQUIREMENTS OF THE "DROP-OFFS IN WORK ZONE" STANDARD DRAWING SHALL BE ADHERED TO UNLESS OTHERWISE DIRECTED BY THE ENGINEER. FURTHERMORE, THE CONTRACTOR SHALL APPLY THE PORTABLE CONCRETE BARRIER INSTALLATION GUIDELINES AND THE DETAILS OF STANDARD DRAWING PCB-91 FOR THE ANCHORING OF PCB FOR ANCHORING IN CONCRETE PAVEMENT OR BRIDGE DECKS.
FOR ANCHORING PCB IN ASPHALT, A MINIMUM OF FOUR (4) ANCHORS SHALL BE USED, ONE IN EACH CORNER. THE ASPHALT PAVEMENT SHALL BE AT LEAST 2 INCHES THICK. THE ANCHOR BOLTS SHALL BE 1 INCH HIGH-STRENGTH STEEL WITH NUT AND WASHER AND SHALL BE A MINIMUM OF 36 INCHES LONG. ALL LABOR, EQUIPMENT AND MATERIALS FOR THIS WORK SHALL BE INCLUDED WITH THE LUMP SUM BID PRICE FOR ITEM 614, MAINTAINING TRAFFIC, AS PER PLAN.

ANCHORED PCB ON BRIDGES (N.B. & S.B.):
EXISTING STR. ALL-75-01.00 - PHASE IA = 100 FT.
EXISTING STR. ALL-75-04.23 - PHASE IA = 170 FT.
EXISTING STR. ALL-75-04.48 - PHASE IA = 140 FT.
EXISTING STR. ALL-75-01.00 - PHASE IIA = 100 FT.
PROPOSED STR. ALL-75-04.23 - PHASE IB = 170 FT.
EXISTING STR. ALL-75-04.48 - PHASE IIA = 140 FT.
EXISTING STR. ALL-75-04.23 - PHASE IIA = 170 FT.
PROPOSED STR. ALL-75-04.23 - PHASE IIB = 170 FT.

FOR ADDITIONAL STRUCTURE M.O.T. DETAILS AND REQUIREMENTS, SEE BRIDGE PLANS.

ANCHORED PCB ON PAVEMENT:
THE CONTRACTOR SHALL EVALUATE THE NEED FOR ANCHORING PCB ON PAVEMENT IN AREAS OF HIGH FILL/EMBANKMENT OR ADJACENT VERTICAL DROP-OFFS NOT OTHERWISE DETAILED IN THE M.O.T. OR STRUCTURE PLANS. THIS EVALUATION AND SUBSEQUENT WORK SHALL BE COORDINATED WITH AND AS DIRECTED BY THE ENGINEER.

MAINTENANCE OF TRAFFIC CONTROL ZONES

THE CONTRACTOR SHALL BE RESPONSIBLE TO MAINTAIN THE SIGNS, DRUMS AND TEMPORARY PAVEMENT MARKINGS AT THE LOCATIONS DETAILED IN THE PLANS, SPECIFIED IN THE STANDARD DRAWINGS AND/OR THE OHIO MANUAL OF UNIFORM TRAFFIC CONTROL DEVICES. WHEN THE CONTRACTOR IS NOTIFIED OF DEFICIENCIES HE SHALL CORRECT THE DEFICIENCIES AS SOON AS POSSIBLE, PREFERABLY WITHIN 12 HOURS AND NO LATER THAN 24 HOURS. IF ANY NOTED DEFICIENCIES ARE NOT CORRECTED WITHIN THE 24 HOURS THE ENGINEER SHALL ASSESS LIQUIDATED DAMAGES AS PER CMS 108.07 FOR ITEM 614 MAINTAINING TRAFFIC, NOT AS A PENALTY BUT AS LIQUIDATED DAMAGES FOR EACH AND EVERY DAY THAT THESE PROVISIONS ARE NOT MET. ALL COSTS FOR MAINTAINING WORK ZONES AS DESCRIBED ABOVE SHALL BE INCLUDED UNDER 614 MAINTAINING TRAFFIC, A.P.P.

COVERING OF GROUND MOUNTED SIGNS-GENERAL

WHEN REQUIRED BY OTHER ITEMS OR INCIDENTALLY TO ITEM 614 MAINTAINING TRAFFIC, COVER EXISTING GROUND MOUNTED SIGNS WITH PLYWOOD OR OSB BLANKS (1/2" MINIMUM THICKNESS) COVERING 80% OF THE SIGN AREA AND ALL OF THE SIGN LEGEND. THE USE OF LOW QUALITY MATERIALS SUCH AS DUCT TAPE AND BLACK PLASTIC IS NOT PERMITTED.

SUSPENSION OF WORK

IF THE CONTRACTOR FAILS TO COMPLY WITH THE PROVISIONS FOR TRAFFIC CONTROL AS SET FORTH IN THESE PLANS OR WITH PROVISIONS OF THE OMUTCD, THE ENGINEER SHALL SUSPEND WORK UNTIL THE CONTRACTOR COMPLIES WITH THE NECESSARY REQUIREMENTS.

CONTRACTOR'S EQUIPMENT-OPERATION AND STORAGE

VEHICLES AND EQUIPMENT SHALL ALWAYS MOVE WITH, AND NOT ACROSS OR AGAINST THE FLOW OF TRAFFIC. VEHICLES AND OTHER EQUIPMENT SHALL NOT PARK OR STOP EXCEPT WITHIN THE DESIGNATED WORK AREAS; AND SHALL NOT ENTER AND LEAVE THE WORK AREAS IN A MANNER WHICH WILL BE HAZARDOUS TO, OR INTERFERE WITH THE NORMAL TRAFFIC FLOW. PERSONAL VEHICLES WILL NOT BE PERMITTED TO PARK WITHIN THE RIGHT-OF-WAY EXCEPT IN SPECIFIC AREAS DESIGNATED BY THE ENGINEER.

EQUIPMENT, VEHICLES AND MATERIALS SHALL NOT BE STORED OR PARKED WITHIN 30 FEET OF THE TRAVELED WAY UNLESS 6 FEET BEHIND PCB OR GUARDRAIL.

ALL WORK VEHICLES AND EQUIPMENT THAT ENTERS THE WORK ZONE MORE THAN ONCE A DAY MUST BE EQUIPPED WITH AT LEAST ONE FLASHING, ROTATING, OR OSCILLATING AMBER LIGHT THAT IS VISIBLE IN ALL DIRECTIONS OR TRAFFIC FOR AT LEAST ONE QUARTER OF A MILE, DAY OR NIGHT.

ANY VEHICLES FAILING TO MEET THIS REQUIREMENT ARE PROHIBITED FROM WORKING OR PARKING ON THE PROJECT. THE ENGINEER WILL SUSPEND ITEMS OF WORK INVOLVING VEHICLES WHICH FAIL TO MEET THIS REQUIREMENT.

ITEM 614, REPLACEMENT SIGN

FLATSHEET SIGNS FURNISHED BY THE CONTRACTOR IN ACCORDANCE WITH THE REQUIREMENTS OF THE PLANS, SPECIFICATIONS AND PROPOSAL WHICH BECOME DAMAGED BY TRAFFIC FOR REASONS BEYOND THE CONTROL OF THE CONTRACTOR SHALL BE REPLACED IN KIND WHEN ORDERED BY THE ENGINEER. REPLACEMENT SIGNS SHALL BE NEW. OTHER MATERIALS MAY BE IN USED, BUT GOOD, CONDITION SUBJECT TO APPROVAL BY THE ENGINEER.

PAYMENT FOR THE NEW SIGNS SHALL BE MADE AT THE CONTRACT PRICE PER EACH FOR ITEM 614, REPLACEMENT SIGN, AND SHALL INCLUDE THE COST OF REMOVING AND DISPOSING OF DAMAGED SIGNS, HARDWARE AND SUPPORTS, AND PROVIDING THE NECESSARY REPLACEMENT HARDWARE, SUPPORTS, ETC.

AN ESTIMATED QUANTITY OF [30] EACH HAS BEEN PROVIDED IN THE M.O.T. GENERAL SUMMARY.

WRECKER AND EMERGENCY VEHICLE ACCESS

THE CONTRATOR SHALL MAKE PROVISIONS TO ASSIST IN THE ACCESS OF WRECKERS AND EMERGENCY VEHICLES THROUGHOUT THE WORKZONE. THIS MAY INCLUDE, BUT NOT BE LIMITED TO, PROVIDING FLAGGERS OR REMOVING SECTIONS OF PORTABLE CONCRETE BARRIER (PCB) TO ALLOW EMERGENCY VEHICLES AND WRECKERS TO MOVE THROUGH PORTIONS OF THE WORKZONE TO REACH ACCIDENTS AND/OR BREAKDOWNS. THE INTENT IS TO MINIMIZE EXTENDED DELAYS TO THE TRAVELLING PUBLIC AND TO PROVIDE QUICKER RESPONSE TIMES FOR WRECKERS AND EMERGENCY VEHICLES. ALL AGENTS AND EMPLOYEES OF THE CONTRACTOR SHALL BE MADE AWARE OF THIS PROVISION BEFORE WORK BEGINS.

ALL ACTIVITIES ASSOCIATED WITH ACCOMMODATING WRECKER SERVICE AND EMERGENCY VEHICLE ACCESS THROUGHOUT THE WORKZONE SHALL BE COORDINATED BY THE WORKSITE TRAFFIC SUPERVISOR AND THE ENGINEER.

PAYMENT FOR ALL LABOR, EQUIPMENT, AND MATERIALS SHALL BE INCLUDED IN THE LUMP SUM CONTRACT PRICE FOR ITEM 614, MAINTAINING TRAFFIC, AS PER PLAN.

PERMITTED LANE CLOSURE NOTE

LANES CLOSURES MAY ONLY BE IMPLEMENTED AT THE TIMES PERMITTED BY THE DISTRICT 1, PERMITTED LANE CLOSURE TIMES WHICH IS LOCATED ON ODOT'S WEB SITE AT:

http://plcm.dot.state.oh.us

THE LATEST REVISION, 14 DAYS PRIOR TO THE BID DATE, WILL BE IN EFFECT FOR THIS JOB.

THE CONTRACTOR SHALL BE ASSESSED DISINCENTIVES IN ACCORDANCE WITH THE TABLE ON THIS SHEET PER EVERY FIFTEEN (15) MUNUTES THAT A LANE IS CLOSED TO TRAFFIC.

DESCRIPTION OF CRITICAL LANE TO BE MAINTAINED	RESTRICTED TIME PERIOD	TIME UNIT	DISINCENTIVE $ PER TIME UNIT
2 LANES EACH DIRECTION ON IR-75 BETWEEN AGULAIZE CO. LINE AND FOURTH STREET INTERCHANGE	TIMES DESIGNATED AS "LANE CLOSURE NOT PERMITTED" AS STATED ON THE ODOT WEBSITE	15 MIN.	$4500

DESIGNATED DETOUR ROUTES AND HAUL ROADS

DURING THE TIME THAT TRAFFIC IS DETOURED AND THAT THE CONTRACTOR IS USING THE HAUL ROADS, THE CONTRACTOR SHALL MAINTAIN THESE ROUTES IN A CONDITION WHICH IS REASONABLY SMOOTH AND FREE FROM HOLES, RUTS, RIDGES, BUMPS, DUST AND STANDING WATER. ONCE THE DETOUR IS REMOVED AND TRAFFIC RETURNED TO ITS NORMAL PATTERN, THE DESIGNATED DETOUR ROUTES AND HAUL ROADS SHALL BE RESTORED TO A CONDITION THAT IS EQUIVALENT TO THAT WHICH EXISTED PRIOR TO ITS USE FOR THIS PURPOSE. ALL SUCH WORK SHALL BE PERFORMED WHEN AND AS DETERMINED BY THE ENGINEER.

SEE SHEETS 40-48 OF 94 FOR DETOUR PLANS.

THE FOLLOWING ESTIMATED QUANTITIES ARE PROVIDED FOR USE AS DETERMINED BY THE ENGINEER TO MAINTAIN AND SUBSEQUENTLY RESTORE THE DESIGNATED DETOUR ROUTES AND HAUL ROADS.

ITEM 301, ASPHALT CONCRETE BASE, PG 64-22	[60] CU. YD.
ITEM 304, AGGREGATE BASE	[80] CU. YD.
ITEM 448, ASPHALT CONCRETE SURFACE COURSE, TYPE 1, PG 64-22	[40] CU. YD.
ITEM 407, TACK COAT	[40] GAL.
ITEM 408, PRIME COAT	[40] GAL.
ITEM 614, ASPHALT CONCRETE FOR MAINTAINING TRAFFIC	[100] CU. YD.
ITEM 616, WATER	[20] M. GAL.
ITEM 617, COMPACTED AGGREGATE	[75] CU. YD.
ITEM 617, WATER	[15] M. GAL.
ITEM 642, CENTER LINE	[15] MILE

ITEM 614, REPLACEMENT DRUM

DRUMS FURNISHED BY THE CONTRACTOR IN ACCORDANCE WITH THE REQUIREMENTS OF THE PLANS, SPECIFICATIONS AND PROPOSAL WHICH BECOME DAMAGED BY TRAFFIC FOR REASONS BEYOND THE CONTROL OF THE CONTRACTOR SHALL BE REPLACED IN KIND WHEN ORDERED BY THE ENGINEER. REPLACEMENT DRUMS SHALL BE NEW.

PAYMENT FOR THE NEW DRUMS SHALL BE MADE AT THE CONTRACT PRICE PER EACH FOR ITEM 614, REPLACEMENT DRUM, AND SHALL INCLUDE THE COST OF REMOVING AND DISPOSING OF THE DAMAGED DRUM, AND PROVIDING AND MAINTAINING THE REPLACEMENT DRUM IN ACCORDANCE WITH THE CONTRACT REQUIREMENTS FOR THE ORIGINAL DRUM.

AN ESTIMATED QUANTITY OF [100] EACH HAS BEEN PROVIDED IN THE GENERAL SUMMARY.

CALCULATED CAC CHECKED EJC

MAINTENANCE OF TRAFFIC GENERAL NOTES

ALL-75-0.21

I:\pd\89029\Final Submission\FINAL DGNS\MOT\Sheets\89029MN004.dgn 18-JUN-2013 8:15AM jclark1

MAINTENANCE OF TRAFFIC SIGNAL/FLASHER INSTALLATION

THE CONTRACTOR SHALL BE RESPONSBLE FOR MAINTAINING TRAFFIC SIGNAL/FLASHER INSTALLATIONS WITHIN THE PROJECT UNDER THE FOLLOWING CONDITIONS:

1. EXISTING SIGNAL/FLASHER INSTALLATIONS WHICH THE PLANS REQUIRE THE CONTRACTOR TO ADJUST, MODIFY, ADD ONTO OR REMOVE, OR WHICH THE CONTRACTOR ACTUALLY ADJUSTS, MODIFIES OR OTHERWISE DISTURBS. THE CONTRACTOR SHALL BE RESPONSIBLE FOR THE ENTIRE INSTALLATION (AT AN INTERSECTION) FROM THE TIME HIS OPERATIONS FIRST DISTURB THE INSTALLATION UNTIL THE INSTALLATION HAS BEEN SUBSEQUENTLY REMOVED OR MODIFIED AND THE WORK ACCEPTED.

2. NEW OR REUSED SIGNAL/FLASHER INSTALLATIONS OR DEVICES, INSTALLED BY THE CONTRACTOR. THE CONTRACTOR SHALL BE RESPONSBILE FOR MAINTENANCE OF THESE FROM THE TIME OF INSTALLATION UNTIL THE WORK IS ACCEPTED.

THE CONTRACTOR SHALL CORRECT AS QUICKLY AS POSSIBLE ALL OUTAGES OR MALFUNCTIONS. HE SHALL PROVIDE THE MAINTAINING AGENCY AND THE ENGINEER SUCH ADDRESSES AND PHONE NUMBERS WHERE HIS MAINTENANCE FORCES CAN BE CONTACTED. THE CONTRACTOR SHALL PROVIDE ONE OR MORE PERSONS TO RECEIVE ALL CALLS AND DISPATCH THE NECESSARY MAINTENANCE FORCES TO CORRECT OUTAGES. SUCH A PERSON OR PERSONS MAY BE USED TO PERFORM OTHER DUTIES AS LONG AS PROMPT ATTENTION IS GIVEN TO THESE CALLS AND A PERSON IS READILY AVAILABLE CONTINUOUSLY 24 HOURS A DAY, 7 DAYS A WEEK. ALL LAMP OUTAGES, CABLE OUTAGES, ELECTRICAL FAILURES, EQUIPMENT MALFUNCTIONS AND MISALIGNED SIGNAL HEADS SHALL BE CORRECTED TO THE SATISFACTION OF THE ENGINEER WITH THE SIGNAL BACK TO SERVICE WITHIN FOUR HOURS AFTER THE CONTRACTOR HAS BEEN NOTIFIED OF THE OUTAGE.

IN THE EVENT NEW SIGNALS ARE DAMAGED PRIOR TO ACCEPTANCE, ALL DAMAGED EQUIPMENT EXCEPT POLES AND CONTROL EQUIPMENT SHALL BE REPLACED BY THE CONTRACTOR TO THE SATISFACTION OF THE ENGINEER WITH THE SIGNAL BACK IN SERVICE WITHIN 8 HOURS AFTER THE CONTRACTOR'S NOTIFICATION OF THE OUTAGE. THE CONTRACTOR SHALL ARRANGE FOR FULL TRAFFIC CONTROL UNTIL THE SIGNAL IS BACK IN OPERATION.

IF POLES AND/OR CONTROL EQUIPMENT ARE DAMAGED AND MUST BE REPLACED, THE CONTRACTOR SHALL MAKE TEMPORARY REPAIRS AS NECESSARY TO BRING THE SIGNAL BACK INTO FULL OPERATION WITHIN THE ALLOWED 8-HOUR PERIOD, AND SHALL MAKE PERMANENT REPAIRS OR REPLACEMENT AS SOON THEREAFTER AS POSSIBLE.

NONE OF THE ABOVE SHALL BE CONSTRUED AS COLLECTIVE OR CONSECUTIVE OUTAGE TIME PERIODS AT ANY ONE LOCATION. THAT IS, WHERE MORE THAN ONE OUTAGE OCCURS AT ANY ONE LOCATION THEN THE ALLOTTED TIME LIMIT SHALL BE FOR THE WORST SINGLE OUTAGE.

WHERE OUTAGES ARE THE DIRECT RESULT OF A VEHICLE ACCIDENT, THE RESPONSE OF THE CONTRACTOR SHALL BE AS OUTLINED ABOVE. THE CONTRACTOR SHALL BE RESPONSIBLE FOR COLLECTION OF ANY COMPENSATION FOR THIS WORK FROM THOSE PARTIES RESPONSIBLE FOR THE DAMAGE.

WHERE THE CONTRACTOR HAS FAILED TO, OR CANNOT RESPOND TO, AN OUTAGE OR SIGNAL EQUIPMENT MALFUNCTION, AT THESE LOCATIONS WITHIN HIS RESPONSIBILITY, WITHIN PERIODS AS SPECIFIED ABOVE, THE ENGINEER MAY INVOKE THE PROVISIONS OF SECTION 105.15 AND ANY SUBSEQUENT BILLINGS TO THE STATE OR THE CITY OF LIMA FOR POLICE SERVICES AND MAINTENANCE SERVICES BY CITY FORCES SHALL BE DEDUCTED FROM MONIES DUE OR TO BECOME DUE THE CONTRACTOR IN ACCORDANCE WITH PROVISIONS OF SECTION 105.15.

THE CONTRACTOR SHALL PROVIDE THE MAINTENANCE SERVICE ENTIRELY WITH HIS FORCES OR HE MAY CHOOSE TO ENTER INTO A COOPERATIVE UNDERSTANDING WITH THE LOCAL MAINTAINING AGENCY TO PROVIDE THE MAINTENANCE. THE CONTRACTOR SHALL INFORM THE ENGINEER, IN WRITING, OF THE MAINTENANCE METHOD SELECTED.

THE CONTRACTOR SHALL BE RESPONSIBLE FOR ANY DAMAGE TO ANY TRAFFIC SIGNAL COMPONENTS REQUIRED TO BE HANDLED DURING THE RELOCATION OF POLES AND REVISIONS TO THE SIGNAL SYSTEM.

WHEN A TRAFFIC SIGNAL MUST BE TAKEN OUT OF SERVICE BY THE CONTRACTOR, DUE TO CONSTRUCTION PROCEDURES, THIS OUTAGE SHALL NOT EXCEED 3 HOURS AND SHALL NOT INCLUDE THE HOURS OF 7 AM TO 7 PM. ANY SIGNALIZED INTERSECTION, WHERE THE SIGNAL IS OUT OF SERVICE DUE TO CONSTRUCTION PROCEDURES, OR DUE TO AN OUTAGE OR MALFUNCTION OF EQUIPMENT AS DESCRIBED ABOVE, SHALL BE PROTECTED, BY THE CONTRACTOR, BY THE INSTALLATION OF TEMPORARY "STOP" SIGNS, EXCEPT FOR THE FOLLOWING INTERSECTIONS WHICH SHALL BE PROTECTED BY OFF-DUTY STATE HIGHWAY PATROL OFFICERS, OR LOCAL POLICE HIRED BY THE CONTRACTOR.

1. SR 65 / I-75 S.B. RAMPS

2. SR 65 / I-75 N.B. RAMPS

ANY VEHICULAR TRAFFIC SIGNAL HEAD, EITHER NEW OR EXISTING WHICH WILL BE OUT OF OPERATION SHALL BE COVERED IN THE MANNER DESCRIBED IN 632.25.

THE CONTRACTOR SHALL MAINTAIN COMPLETE RECORDS OF MALFUNCTIONS INCLUDING:

1. TIME OF NOTIFICATION OF MALFUNCTION;
2. TIME OF WORK CREWS ARRIVAL TO CORRECT THE MALFUNCTION;
3. ACTIONS TAKEN TO CORRECT THE MALFUNCTION, INCLUDING A LIST OF PARTS REPAIRED OR REPLACED;
4. A DIAGNOSIS OF REASON FOR THE MALFUNCTION AND PROBABILITY OF REOCCURRENCE;
5. TIME OF COMPLETION OF THE REPAIR AND SYSTEM RESTORED TO FULL SERVICE.

A COPY OF THESE RECORDS SHALL BE PROVIDED TO THE ENGINEER WITHIN THREE (3) WORKING DAYS FOLLOWING COMPLETION OF EACH REPAIR.

ALL COSTS RESULTING FROM THE ABOVE REQUIREMENTS SHALL BE CONSIDERED TO BE INCLUDED IN THE LUMP SUM PRICE BID PRICE FOR ITEM 614, MAINTAINING TRAFFIC, AS PER PLAN.

OVERHEAD-MOUNTED WORK ZONE SIGNALS

SIGNALS SHALL BE OVERHEAD MOUNTED IN ACCORDANCE WITH THE DETAILS SHOWN ON SCD MT-96.20.

MAINTENANCE OF EXISTING FIRE HYDRANTS

THE CONTRACTOR SHALL NOT REMOVE FROM SERVICE ANY EXISTING FIRE HYDRANTS WITHOUT FIRST HAVING INSTALLED A NEW OR RELOCATED HYDRANT. WORK INVOLVING FIRE HYDRANTS SHALL BE COORDINATED WITH THE LOCAL AUTHORITIES AND AS DIRECTED BY THE ENGINEER. THIS WORK SHALL BE CONSIDERED INCIDENTAL TO ITEM 614, MAINTAINING TRAFFIC, AS PER PLAN.

BEAM ERECTION

FOR BEAM ERECTION OVER ACTIVE ROADWAYS, THE CONTRACTOR SHALL EMPLOY THE PROVISIONS REQUIRED ON PLAN INSERT SHEET 209960. BEAM ERECTION SHALL BE COMPLETED DURING NON-PEAK PERMITTED LANE CLOSURE TIMES TO LIMIT DISRUPTION TO TRAFFIC.

SHEETING AND EXCAVATION BRACING

DUE TO THE DIFFERENCES IN PROFILE (RISE) ALONG MAINLINE I-75 AT MOST MAINLINE BRIDGE LOCATIONS, IT MAY BE NECESSARY TO CONSTRUCT LONG RUNS OF SHEETING OR OTHER SHORING & BRACING TO SEPARATE THE WORK ZONE AND THE ACTIVE TRAVEL LANES. THE CONTRACTOR MAY PROPOSE ALTERNATE METHODS OF EXCAVATION BRACING AND SHOULD REFER TO THE OPTIONS DETAILED IN THE M.O.T. PLANS. THE CONTRACTOR SHALL BE RESPONSIBLE FOR DESIGN AND PROPER INSTALLATION OF SHEETING OR ANY ALTERNATE. THIS WORK SHALL BE SUBJECT TO THE APPOVAL OF THE ENGINEER.

APPROXIMATE LOCATIONS WHERE LONGITUDINAL (PHASE CUT LINE) BRACING IS ANTICIPATED ARE SHOWN ON SHEET 19 & 20 OF 94.

THE LIMITS IN THE PLANS ARE PROVIDED AS A GUIDE AND SHOULD BE VERIFIED BASED ON THE VARIOUS FIELD CONSTRAINTS AND CONSTRUCTION METHODS AND PHASES EMPLOYED BY THE CONTRACTOR.

PAYMENTS FOR ALL LABOR, EQUIPMENT, AND MATERIALS NECESSARY TO PROVIDE REQUIRED SHORING/EXCAVATION BRACING SHALL BE INCLUDED IN THE LUMP SUM FOR ITEM 614, MAINTAINING TRAFFIC, AS PER PLAN.

ITEM 614, WORK ZONE CROSSOVER LIGHTING SYSTEM

THIS WORK SHALL CONSIST OF FURNISHING, ERECTING, OPERATING, MAINTAINING AND REMOVING A WORK ZONE LIGHTING SYSTEM FOR A SINGLE CROSSOVER, OR OVERLAPPING A PAIR OF CROSSOVERS. THE SYSTEM SHALL BE AS SHOWN ON SCD MT-100.00. THE CONTRACTOR SHALL ARRANGE FOR AND PAY FOR POWER. ALL MATERIALS AND CONSTRUCTION SHALL COMPLY WITH APPLICABLE PORTIONS OF 625 AND 725 EXCEPT: THE PERFORMANCE TEST OF 625.19F, AND CERTIFIED DRAWING REQUIREMENT OF 625.04, ARE WAIVED AND USED MATERIALS IN GOOD CONDITION ARE ACCEPTABLE.

POLES WHICH ARE NOT PROTECTED BY GUARDRAIL OR PORTABLE CONCRETE BARRIER SHALL BE LOCATED OUTSIDE THE CLEAR ZONE, AND SHOULD BE LOCATED AT LEAST 30 FT (PREFERABLY 40 FEET) FROM THE EDGE OF PAVEMENT WHEN POSSIBLE. ADDITIONAL POLE LINES, CABLES AND APPURTENANCES NECESSARY TO FURNISH POWER TO THE LIGHTING SYSTEM SHALL BE INCLUDED IN THIS ITEM. SERVICE POLES SHALL BE POSITIONED WITH THE SAME CONSTRAINTS AS THE LIGHTING POLES AS A MINIMUM.

PAYMENT WILL BE MADE AT THE UNIT PRICE PER EACH FOR ITEM 614, WORK ZONE CROSSOVER LIGHTING SYSTEM THROUGHOUT ALL PHASES OF WORK WHEN THE CROSSOVER ROADWAYS ARE USED.

THE FOLLOWING QUANTITY HAS BEEN CARRIED TO THE GENERAL SUMMARY FOR THIS WORK:

614, WORK ZONE CROSSOVER LIGHTING SYSTEM [10] EACH

CALCULATED CAC CHECKED EJC

MAINTENANCE OF TRAFFIC GENERAL NOTES

ALL-75-0.21

5 / 94

44 907

J:\Projects\ALL\89029\mot\sheets\89029MN005.dgn 13-JUN-2013 9:29PM coffield

WORKSITE TRAFFIC SUPERVISOR

SUBJECT TO APPROVAL OF THE ENGINEER, THE CONTRACTOR SHALL EMPLOY AND IDENTIFY (SOMEONE OTHER THAN THE SUPERINTENDENT) A CERTIFIED WORKSITE TRAFFIC SUPERVISOR (WTS) BEFORE STARTING WORK IN THE FIELD. THE WTS SHALL BE CERTIFIED FROM ONE OF THE FOLLOWING ORGANIZATIONS:

1. AMERICAN TRAFFIC SAFETY SERVICE ASSOCIATION (ATSSA), PHONE NUMBER 1-800-272-8772, CERTIFIED TRAFFIC CONTROL SUPERVISOR (TCS).

2. NATIONAL HIGHWAY INSTITUTE, DESIGN AND OPERATION OF WORK ZONE TRAFFIC CONTROL, PHONE NUMBER 1-703- 235-0528.

3. THE OHIO CONTRACTORS ASSOCIATION, TRAFFIC CONTROL SUPERVISOR (OCA/TCS) WORK ZONE CLASS, ONLY IF TAKEN AFTER MAY 5, 2004, PHONE NUMBER 1-800-229-1388.

4. OHIO LABORERS TRAINING, TRAFFIC CONTROL SUPERVISORS CLASS, PHONE NUMBER 1-740-599-7915.

A COPY OF EACH WTSS CERTIFICATION AND 24-HOUR CONTACT INFORMATION SHALL BE PROVIDED TO THE ENGINEER AT THE PRECONSTRUCTION CONFERENCE. IF THE DESIGNATED WTS WILL NOT BE AVAILABLE FULL TIME (24/7) THE CONTRACTOR MAY DESIGNATE AN ALTERNATE WTS TO BE AVAILABLE WHEN THE PRIMARY IS OFF DUTY. EACH WTS SHALL HAVE A CURRENT WTS CERTIFICATION (WITH AN EXPIRATION DATE NO MORE THAN 5 YEARS FROM THE DATE OF ISSUE) FROM ANY OF THE APPROVED ORGANIZATIONS.

THE WTS POSITION HAS THE RESPONSIBILITY OF MONITORING TRAFFIC CONTROL DEFICIENCIES FOR THE ENTIRE WORK ZONE. THE DUTIES OF THE WTS ARE AS FOLLOWS:

1. BE AVAILABLE ON A 24-HOUR PER DAY BASIS, AND BE ABLE TO BE ON SITE FOR ALL EMERGENCY TRAFFIC CONTROL NEEDS WITHIN ONE HOUR OF NOTIFICATION BY POLICE OR PROJECT STAFF AND BE PREPARED TO EFFECT CORRECTIVE MEASURES IMMEDIATELY ON EXISTING WORK ZONE TRAFFIC CONTROL DEVICES.

2. ATTEND PRECONSTRUCTION MEETING AND ALL PROJECT MEETINGS WHERE TRAFFIC CONTROL MANAGEMENT IS DISCUSSED.

3. BE AVAILABLE FOR MEETINGS OR DISCUSSIONS WITH THE ENGINEER UPON REQUEST OR WITHIN 36 HOURS.

4. COORDINATE A TRAFFIC INCIDENT MANAGEMENT MEETING EACH YEAR BEFORE CONSTRUCTION WORK BEGINS WITH ODOT AND THE SAFETY FORCES THAT WILL RESPOND TO INCIDENTS ON THE PROJECT. ITEMS TO BE DISCUSSED WILL BE THE:

A. TRAFFIC INCIDENT MANAGEMENT PLAN (TIMP);

B. EMERGENCY RESPONSE AND NOTIFICATION;

C. PROJECT WORK/PHASING CONCERNS (E.G., RAMP CLOSURES); AND

D. RESPONDERS CONCERNS.

5. BE AWARE OF, AND COORDINATE IF NECESSARY, ALL TRAFFIC CONTROL OPERATIONS, INCLUDING THOSE OF SUBCONTRACTORS AND SUPPLIERS.

6. COORDINATE PROJECT ACTIVITIES WITH ALL LAW ENFORCEMENT OFFICERS (LEOS). A WTS SHALL ALSO BE THE MAIN CONTACT PERSON WITH THE LEOS WHILE THEY ARE ON THE PROJECT.

7. COORDINATE MEETINGS WITH ODOT PERSONNEL, LEOS AND OTHER APPLICABLE ENTITIES BEFORE EACH PLAN PHASE SWITCH TO DISCUSS WORK ZONE TRAFFIC CONTROL.

8. ENSURE COMPLIANCE WITH THE CONTRACT DOCUMENTS FOR SIGNS, BARRICADES, TEMPORARY CONCRETE BARRIER, PAVEMENT MARKINGS, PORTABLE MESSAGE SIGNS, AND OTHER TRAFFIC CONTROL DEVICES ON A DAILY BASIS; AND FACILITATE ANY CORRECTIVE ACTION NECESSARY.

9. NOTIFY THE CONTRACTOR OF THE NEED FOR CLEANING AND MAINTENANCE OF ALL TRAFFIC CONTROL DEVICES, INCLUD- ING THE COVERING AND REMOVAL OF INAPPLICABLE SIGNS.

10. INSPECT, EVALUATE, PROPOSE NECESSARY MODIFICATIONS TO, AND DOCUMENT THE EFFECTIVENESS OF, THE TRAFFIC CONTROL DEVICES AND/OR TRAFFIC OPERATIONS ON A DAILY BASIS (7 DAYS A WEEK). IN ADDITION, A WEEKLY NIGHT INSPECTION OF THE WORK ZONE SETUP FOR DAYTIME WORK OPERATIONS; AND ONE DAYTIME INSPECTION PER WEEK FOR NIGHTTIME PROJECTS. THIS SHALL INCLUDE (BUT NOT BE LIMITED TO) DOCUMENTATION ON THE FOLLOWING PROJECT EVENTS:

A. INITIAL TRAFFIC CONTROL SETUP (DAY AND NIGHT REVIEW).

B. DAILY TRAFFIC CONTROL SETUP AND REMOVAL.

C. WHEN CONSTRUCTION STAGING CAUSES A CHANGE IN THE TRAFFIC CONTROL SETUP.

D. CRASH OCCURRENCES WITHIN THE CONSTRUCTION AREA.

E. REMOVAL OF TRAFFIC CONTROL DEVICES AT THE END OF A PHASE OR PROJECT.

F. ALL OTHER EMERGENCY TRAFFIC CONTROL NEEDS.

11. COMPLETE THE DEPARTMENT APPROVED LONG TERM INSPECTION FORM (CA-D-8) AFTER EACH INSPECTION AS REQUIRED IN # 10 AND SUBMIT IT TO THE ENGINEER THE FOLLOWING WORK DAY. THESE REPORTS SHALL INCLUDE A CHECKLIST OF ALL TRAFFIC CONTROL MAINTENANCE ITEMS TO BE REVIEWED. A COPY OF THE FORM WILL BE PROVIDED AT THE PRE-CONSTRUCTION MEETING. ANY DEFICIENCIES OBSERVED SHALL BE NOTED, ALONG WITH RECOMMENDED CORRECTIVE ACTIONS AND THE DATES BY WHICH SUCH CORRECTIONS WERE, OR WILL BE, COMPLETED. A COPY OF THIS DOCUMENT CAN BE FOUND IN CURRENT REVISION OF THE DEPARTMENT OF TRANSPORTATION CONSTRUCTION INSPECTION FORMS MANUAL.

12. VERIFY THAT ALL FLAGGING OPERATIONS ARE BEING CONDUCTED PER THE OHIO MANUAL OF UNIFORM TRAFFIC CONTROL DEVICES.

13. HAVE COPIES OF THE ODOT TEMPORARY TRAFFIC CONTROL MANUAL AND APPLICABLE STANDARDS AND SPECIFICATIONS INCLUDED IN THE CONTRACT DOCUMENTS AVAILABLE AT ALL TIMES ON THE PROJECT.

14. IDENTIFY AND CONTACT ALL POSSIBLE RESPONSE PERSONNEL; PREPLAN AND KEEP AN UPDATED ROSTER WITH PHONE NUMBERS:

A. FEDERAL, STATE, AND LOCAL TRANSPORTATION AGENCIES (TRAFFIC MANAGEMENT CENTER);

B. REGIONAL, COUNTY OR LOCAL 911 DISPATCH; AND

C. TOWING AND RECOVERY PROVIDERS.

15. COMPLY WITH THE PROVISIONS OF OMUTCD CHAPTER 6I, CONTROL OF TRAFFIC THROUGH TRAFFIC INCIDENT MANAGEMENT AREAS.

16. PROPOSE A RESPONSE/ACTION PLAN TO:

A. ESTABLISH ALTERNATE ROUTE PLANS PER THE PROVIDED ODOT PLAYBOOK;

B. REMOVE TRAFFIC DEMAND FROM IMPACTED ROADWAY(S);

C. DIVERT TRAFFIC TO ROUTES THAT CAN ACCOMMODATE DEMANDS;

D. DETOUR TRAFFIC AWAY FROM SENSITIVE AREAS (SUCH AS SCHOOLS, HOSPITALS, ETC.);

E. DISCUSS METHODS OF DETERMINING A STAGING AREA FOR RESPONDERS WITHIN OR NEAR THE CONSTRUCTION ZONE; AND

F. DISCUSS METHODS OF DEVELOPING INGRESS AND EGRESS SITES WITHIN THE CONSTRUCTION ZONE.

THE RESPONSE/ACTION PLAN SHALL BE SUBMITTED TO ODOT FOR ACCEPTANCE BEFORE THE CONTRACTOR'S FIRST DAY OF WORK.

17. PERFORM, AT A MINIMUM, THE FOLLOWING FUNCTIONS IN INCIDENT DETECTION AND VERIFICATION:

A. CALL 911/ NOTIFY TRAFFIC MANAAGEMENT CENTER AND PROVIDE THE FOLLOWING:

I. LOCATION - INCLUDING MILEPOST NUMBER AND DIRECTION OF TRAVEL.
II. NUMBER AND TYPE OF VEHICLES INVOLVED.
III. ESTIMATED EXTENT OF DAMAGE OR INJURY.
IV. ESTIMATED NUMBER OF PATIENTS INVOLVED.
V. ANY POTENTIAL HAZARDOUS CONDITIONS.
VI. THE PLACARD NUMBER ON ANY HAZARDOUS MATERIALS PLACARD FROM A SAFE DISTANCE.

B. INITIATE TRAFFIC MANAGEMENT / PROVIDE TRAFFIC CONTROL.

C. ASSIST MOTORIST WITH DISABLED VEHICLES.

D. RECOMMEND ROADWAY REPAIR NEEDS.

E. PROVIDE REPAIR RESOURCES.

18. ATTEND POST-INCIDENT DEBRIEFINGS IF REQUIRED.

THE DEPARTMENT WILL DEDUCT THE PRORATED DAILY AMOUNT OF THE UNIT PRICE BID FOR THE WTS FOR ANY DAY ON WHICH THE CONTRACTOR FAILS TO PERFORM THE DUTIES SET FORTH ABOVE. SHOULD THE CONTRACTOR'S FAILURE TO PERFORM ANY OF THE DUTIES DESCRIBED ABOVE RESULT IN A MAINTENANCE OF TRAFFIC SAFETY ISSUE, THE DEPARTMENT WILL DEDUCT THE PRORATED DAILY AMOUNT FOR ITEM 614 MAINTENANCE OF TRAFFIC FROM THE CONTRACTOR'S NEXT SCHEDULED ESTIMATE.

IF THREE OR MORE FAILURES TO PERFORM THE DUTIES SET FORTH ABOVE OCCUR, THE WTS SHALL BE IMMEDIATELY REMOVED FROM THE WORK IN ACCORDANCE WITH C&MS 108.05.

THE FOLLOWING ESTIMATED QUANTITY HAS BEEN INCLUDED FOR THE WORKSITE TRAFFIC SUPERVISOR:

ITEM 614 WORKSITE TRAFFIC SUPERVISOR [24] MONTHS

MAINTAINING DRAINAGE

THE CONTRACTOR SHALL MAINTAIN DRAINAGE DURING CONSTRUCTION AT ALL TIMES. THIS SHALL BE ACHIEVED BY USE OF THE EXISTING DRAINAGE PIPES, DITCHES, CULVERTS, ETC. WHEN AT ALL POSSIBLE, AS WELL AS TEMPORARY AND PROPOSED DRAINAGE ITEMS AND TEMPORARY COFFERDAMS AND EXCAVATION BRACING. SINCE THE BULK OF THE PROJECT WILL BE CONSTRUCTED IN PHASES IT WILL BE NECESSARY TO EMPLOY MULTIPLE CONSTRUCTION PHASES AND METHODS TO CONSTRUCT THE PROPOSED DRAINAGE ITEMS.

GENERALLY, THE EXISTING DRAINAGE DEVICES SHALL REMAIN IN PLACE AND IN OPERATION UNITL THE PROPOSED FEATURES ARE CONSTRUCTED AND OPERATIONAL. WHEN EXISTING DEVICES ARE NO LONGER NEEDED THEY SHALL BE REMOVED IF POSSIBLE OR PROPERLY PLUGGED AND FILLED. AT PROPOSED CULVERT CROSSINGS AND/OR MEDIAN STORM DRAIN CROSSINGS, THE CONTRACTOR MAY HAVE THE OPTION OF INSTALLING TEMPORARY SHEETING OR BORING AND JACKING A PORTION OF THE PIPE UNDER THE ACTIVE LANES AT THE PHASE CUT LINE FOR THE ALTERNATING PART-WIDTH CONSTRUCTION PHASES OF THE SINGLE CONTRA-FLOW LANES. THIS WILL APPLY ON THE I-75 SOUTHBOUND SIDE IN PHASE I AND THE I-75 NORTHBOUND SIDE IN PHASE II. UNLESS SEPARATELY ITEMIZED IN THE PLANS, ALL LABOR, EQUIPMENT, AND MATERIALS REQUIRED TO MAINTAIN DRAINAGE DURING CONSTRUCTION, INCLUDING SUBSEQUENT REMOVAL OF ANY TEMPORARY ITEMS, SHALL BE INCLUDED IN THE BID PRICE FOR ITEM 614, MAINTAINING TRAFFIC, AS PER PLAN, LUMP SUM. IN ADDITION TO ANY DRAINAGE ITEMS DETAILED IN THE M.O.T. PLANS, BELOW ARE CONTINGENCY QUANTITIES TO BE USED FOR MAINTAINING DRAINAGE AS DESCRIBED ABOVE AND AS DIRECTED BY THE ENGINEER:

ITEM 503	UNCLASSIFIED EXCAVATION	[LUMP]
ITEM 503	COFFERDAMS AND EXCAVATION BRACING	[LUMP]
ITEM 603	CONDUIT BORED OR JACKED, 15" TYPE B	[200] FT
ITEM 603	CONDUIT BORED OR JACKED, 18" TYPE B	[200] FT
ITEM 603	CONDUIT BORED OR JACKED, 24" TYPE B	[200] FT
ITEM 603	CONDUIT BORED OR JACKED, 30" TYPE A	[200] FT
ITEM 603	CONDUIT BORED OR JACKED, 36" TYPE B	[200] FT
ITEM 603	12" CONDUIT, TYPE B	[1000] FT
ITEM 604	CATCH BASIN, NO. 2-2B	[6] EACH
ITEM 604	CATCH BASIN ADJUSTED TO GRADE	[8] EACH
ITEM 604	CATCH BASIN RECONSTRUCTED TO GRADE	[6] EACH
ITEM 604	MANHOLE, NO. 3	[6] EACH
ITEM 604	MANHOLE ADJUSTED TO GRADE	[6] EACH

CALCULATED CAC CHECKED EJC

MAINTENANCE OF TRAFFIC GENERAL NOTES

ALL-75-0.21

I:\pd\89029\Final Submission\FINAL DGNS\MOT\Sheets\89029MN006.dgn 25-JUL-2013 8:21AM jclark1

ITEM 614, PORTABLE CHANGEABLE MESSAGE SIGNS, AS PER PLAN

THE CONTRACTOR SHALL FURNISH, INSTALL, MAINTAIN AND REMOVE, WHEN NO LONGER NEEDED, 8 CHANGEABLE MESSAGE SIGNS, ON SITE, FOR THE DURATION OF THE PROJECT. THE SIGNS SHALL BE OF A TYPE SHOWN ON A LIST OF APPROVED PCMS UNITS MAINTAINED BY THE DIRECTOR (OFFICE OF MA MATERIALS MANAGEMENT). THE APPROVED LIST OF PORTABLE CHANGEABLE MESSAGE SIGNS CAN BE FOUND ON THE ODOT WEBSITE BY CLICKING ON THE SERVICES MENU, THEN CLICKING ON MATERIALS MANAGEMENT. THE LIST CONTAINS CLASS A AND B UNITS WITH MINIMUM LEGIBILITY DISTANCES OF 650 FT. AND 475 FT., RESPECTIVELY. CLASS A SHALL BE USED ON MAJOR ROUTES AND CLASS B ON MINOR ROUTES.

EACH SIGN SHALL BE TRAILER-MOUNTED AND EQUIPPED WITH A FUNCTIONAL DIMMING MECHANISM, TO DIM THE SIGN DURING DARKNESS, AND A TAMPER AND VANDAL PROOF ENCLOSURE. EACH SIGN SHALL BE PROVIDED WITH APPROPRIATE TRAINING AND OPERATION INSTRUCTIONS TO ENABLE ON-SITE PERSONNEL TO OPERATE AND TROUBLESHOOT THE UNIT. THE SIGNS SHALL ALSO BE CAPABLE OF BEING POWERED BY AN ELECTRICAL SERVICE DROP FROM A LOCAL UTILITY COMPANY. PCMS TRAILERS SHALL BE DELINEATED ON A PERMANENT BASIS BY AFFIXING CONSPICUITY TAPE CONFORMING TO CMS 614.03, IN A CONTINUOUS LINE ON THE FACE OF THE TRAILER AS SEEN BY ONCOMING ROAD USERS.

THE PROBABLE PCMS LOCATIONS AND WORK LIMITS FOR THOSE LOCATIONS ARE SHOWN ON THE DETOUR SHEETS OF THE PLAN. PLACEMENT, OPERATION, MAINTENANCE AND ALL ACTIVATION OF THE SIGNS BY THE CONTRACTOR SHALL BE AS DIRECTED BY THE ENGINEER. THE PCMS SHALL BE LOCATED IN A HIGHLY VISIBLE POSITION YET PROTECTED FROM TRAFFIC. THE CONTRACTOR SHALL, AT THE DIRECTION OF THE ENGINEER, RELOCATE THE PCMS TO IMPROVE VISIBILITY OR ACCOMMODATE CHANGED CONDITIONS. WHEN NOT IN USE, THE PCMS SHALL BE TURNED OFF. ADDITIONALLY, WHEN NOT IN USE FOR EXTENDED PERIODS OF TIME, THE PCMS SHALL BE TURNED, FACING AWAY FROM ALL TRAFFIC, AND SHALL DISPLAY ONE OR MORE YELLOW RETROREFLECTIVE SHEETING SURFACES OF 9-INCH BY 15-INCH MINIMUM SIZE FACING TRAFFIC.

THE ENGINEER SHALL BE PROVIDED ACCESS TO EACH SIGN UNIT AND SHALL BE PROVIDED WITH APPROPRIATE TRAINING AND OPERATION INSTRUCTIONS TO ENABLE ODOT PERSONNEL TO OPERATE AND TROUBLESHOOT THE UNIT, AND TO REVISE SIGN MESSAGES, IF NECESSARY.

ALL MESSAGES TO BE DISPLAYED ON THE SIGNS SHALL BE PROVIDED TO THE ENGINEER. A LIST OF ALL REQUIRED PREPROGRAMMED MESSAGES WILL BE GIVEN TO THE CONTRACTOR AT THE PROJECT PRECONSTRUCTION CONFERENCE. THE SIGNS SHALL HAVE THE CAPABILITY TO STORE UP TO 99 MESSAGES. MESSAGE MEMORY OR PRE-PROGRAMMED DISPLAYS SHALL NOT BE LOST AS A RESULT OF POWER FAILURES TO THE ON-BOARD COMPUTER. THE SIGN LEGEND SHALL BE CAPABLE OF BEING CHANGED IN THE FIELD. THREE-LINE PRESENTATION FORMATS WITH UP TO SIX MESSAGE PHASES SHALL BE SUPPORTED. PCMS FORMAT SHALL PERMIT THE COMPLETE MESSAGE FOR EACH PHASE TO BE READ AT LEAST TWICE.

THE PCMS SHALL CONTAIN AN ACCURATE CLOCK AND PROGRAMMING LOGIC WHICH WILL ALLOW THE SIGNS TO BE ACTIVATED, DEACTIVATED OR MESSAGES CHANGED AUTOMATICALLY AT DIFFERENT TIMES OF THE DAY FOR DIFFERENT DAYS OF THE WEEK.

THE PCMS UNITS SHALL BE MAINTAINED IN GOOD WORKING ORDER BY THE CONTRACTOR IN ACCORDANCE WITH THE PROVISIONS OF CMS 614.07. THE CONTRACTOR SHALL, PRIOR TO ACTIVATING THE UNIT, MAKE ARRANGEMENTS, WITH AN AUTHORIZED SERVICE AGENT FOR THE PCMS, TO ASSURE PROMPT SERVICE IN THE EVENT OF FAILURE. ANY FAILURE SHALL NOT RESULT IN THE SIGN BEING OUT OF SERVICE FOR MORE THAN 12 HOURS, INCLUDING WEEKENDS. FAILURE TO COMPLY MAY RESULT IN AN ORDER TO STOP WORK AND OPEN ALL TRAFFIC LANES AND/OR IN THE DEPARTMENT TAKING APPROPRIATE ACTION TO SAFELY CONTROL TRAFFIC. THE ENTIRE COST TO CONTROL TRAFFIC, ACCRUED BY THE DEPARTMENT DUE TO THE CONTRACTOR'S NONCOMPLIANCE, WILL BE DEDUCTED FROM MONEYS DUE, OR TO BECOME DUE THE CONTRACTOR ON HIS CONTRACT.

THE CONTRACTOR SHALL BE RESPONSIBLE FOR 24-HOUR-PER-DAY OPERATION AND MAINTENANCE OF THESE SIGNS ON THE PROJECT FOR THE DURATION OF THE PHASES WHEN THE PLAN, AND/OR THE ENGINEER REQUIRES THEIR USE.

PAYMENT FOR THE ABOVE DESCRIBED ITEM SHALL BE AT THE CONTRACT UNIT PRICE. PAYMENT SHALL INCLUDE ALL LABOR, MATERIALS, EQUIPMENT, FUELS, LUBRICATING OILS, SOFTWARE, HARDWARE AND INCIDENTALS TO PERFORM THE ABOVE DESCRIBED WORK. THE CONTRACTOR SHALL ONLY BE PAID FOR PCMS UNITS WHEN THEY ARE IN OPERATION ON THE PROJECT AS SPECIFIED IN THE PLANS OR BY THE ENGINEER.

ITEM 614, PORTABLE CHANGEABLE MESSAGE SIGN, AS PER PLAN 5840 DAY

ITEM 630 - SPECIFIC SERVICE AND TOURIST-ORIENTED DIRECTIONAL SIGNS REMOVAL AND REINSTALLATION

IN THE EVENT THAT THIS PROJECT NECESSITATES THE REMOVAL OF ANY SPECIFIC SERVICE (LOGO) SIGNS AND/OR TOURIST ORIENTED DIRECTIONAL SIGNS (TODS) THAT ARE NOT SPECIFICALLY DESCRIBED IN OTHER ITEMS OF WORK, THE CONTRACTOR SHALL CAREFULLY REMOVE SUCH SIGNS. REMOVED LOGO SIGNS AND TODS SHALL BE IMMEDIATELY RE-ERECTED ON APPROVED TEMPORARY SUPPORTS IN THE SAME GENERAL VICINITY ALONG THE ROADWAY TO BE VIEWED BY THE MOTORING PUBLIC. UNLESS THE ORIGINAL SUPPORTS WILL BE REUSED, THE CONTRACTOR SHALL REMOVE AND DISPOSE OF THE SUPPORTS AND FOUNDATIONS IN ACCORDANCE WITH ITEM 630.12. THE CONTRACTOR SHALL NOTIFY OHIO LOGOS, INC. AT(800) 860-5646 AT LEAST 60 DAYS PRIOR TO PROJECT COMPLETION TO ALERT THEM THAT ONE OR MORE LOGO SIGNS AND/OR TODS ARE ON TEMPORARY SUPPORTS. OHIO LOGOS, INC. WILL MAKE ARRANGEMENTS TO HAVE THE SIGNS INSTALLED ON PERMANENT SUPPORTS AT THE COMPLETION OF THE PROJECT.

THIS ITEM OF WORK INCLUDES REMOVAL AND TEMPORARY REERECTION OF LOGO SIGNS AND TODS, FURNISHING AND INSTALLATION OF TEMPORARY SUPPORTS, REMOVAL AND DISPOSAL OF THE ORIGINAL SUPPORTS AND FOUNDATIONS, AND PROVIDING NOTIFICATION TO OHIO LOGOS, INC. THIS WORK WILL BE INCLUDED IN THE LUMP SUM PAYMENT FOR ITEM 614, MAINTAINING TRAFFIC, AS PER PLAN.

ITEM 614 - WORK ZONE RAISED PAVEMENT MARKER, AS PER PLAN ON ASPHALT SURFACES

WORK ZONE RAISED PAVEMENT MARKERS, AS PER PLAN, AND THEIR INSTALLATION SHALL CONFORM TO CMS 614 OR CMS 621 AS SPECIFIED HEREIN.

RAISED PAVEMENT MARKERS IN USE DURING THE SNOW-PLOWING SEASON SHALL CONFORM TO 621.

RAISED PAVEMENT MARKERS IN USE DURING THE NON-SNOW-PLOW SEASON SHALL CONFORM TO EITHER 614 OR TO 621.

THE SNOW-PLOWING SEASON SHALL RUN FROM NOVEMBER 1 THROUGH APRIL 1.

IF PROJECT DELAYS, NOT THE FAULT OF ODOT, CAUSE THE WORK TO EXTEND INTO THE SNOW-PLOWING SEASON, THE CONTRACTOR SHALL BE RESPONSIBLE FOR REPLACING WORK ZONE RAISED PAVEMENT MARKERS (WZRPMS) CONFORMING TO CMS 614, WITH RAISED PAVEMENT MARKERS CONFORMING TO 621, AS DETERMINED BY THE ENGINEER, AT THE CONTRACTOR'S EXPENSE.

THIS ITEM SHALL INCLUDE PURCHASE, INSTALLATION AND RE-MOVAL OF ITEM 614 WORK ZONE RAISED PAVEMENT MARKER, AS PER PLAN, INCLUDING FILLING OF ANY DEPRESSIONS CREATED IN THE PAVEMENT AS PER CMS 621.08.

RESURFACING OF THE TRANSITION AREAS SHALL BE PERFORMED AT THE TIME THAT THE SURFACE COURSE IS BEING APPLIED TO THE ENTIRE PROJECT. PRIOR TO APPLICATION OF THE SURFACE COURSE ON THE PROJECT, THE SURFACE COURSE OF THE EXISTING PAVEMENT WITHIN THE TRANSITION AREA SHALL BE REMOVED TO A DEPTH EQUIVALENT TO THE DEPTH OF THE PROPOSED SURFACE COURSE, AS DETERMINED BY THE ENGINEER.

THE FOLLOWING BID ITEMS ARE INCLUDED IN THE PLANS:

ITEM 254 PAVEMENT PLANING, ASPHALT CONCRETE 1685 SQUARE YARDS
ITEM 614 WORK ZONE RAISED PAVEMENT MARKER, AS PER PLAN 2550 EACH

PAYMENT FOR RESURFACING WITHIN THE TRANSITION AREA SHALL BE PAID FOR UNDER THE APPROPRIATE BID ITEMS FOR THE WORK REQUIRED, AS PROVIDED FOR IN THE PLANS.

ITEM 614 - WORK ZONE RAISED PAVEMENT MARKERS ON CONCRETE SURFACES (CONCRETE PAV'T. IS AN ALT. BID ITEM)

RAISED PAVEMENT MARKERS IN WORK ZONES, INSTALLED ON CONCRETE SURFACES, SHALL BE ITEM 614 WORK ZONE RAISED PAVEMENT MARKERS. WZRPMS ARE INTENDED FOR USE ONLY DURING THE NON-SNOW-PLOWING SEASON. WZRPMS SHALL NOT BE PROVIDED DURING THE SNOW-PLOWING SEASON.

THE SNOW-PLOWING SEASON SHALL RUN FROM NOVEMBER 1 THROUGH APRIL 1.

WHERE A TEMPORARY ALIGNMENT WILL REMAIN IN USE THROUGH THE WINTER, THE WZRPMS SHALL BE REMOVED PRIOR TO THE BEGINNING OF THE SNOW-PLOWING SEASON AND REPLACED APPROXIMATELY APRIL 1, OR AS OTHERWISE DETERMINED BY THE ENGINEER.

THIS ITEM SHALL INCLUDE PURCHASE, INSTALLATION AND REMOVAL OF ITEM 614 WORK ZONE RAISED PAVEMENT MARKERS.

AN ESTIMATED QUANTITY OF 2550 EACH OF ITEM 614 WORK ZONE RAISED PAVEMENT MARKER HAS BEEN PROVIDED AND CARRIED TO THE M.O.T. GENERAL SUMMARY.

ITEM 614 - BUSINESS ENTRANCE (M4-H15) SIGN, AS PER PLAN

THE BUSINESS ENTRANCE (M4-H15) SIGN SHOULD BE PROVIDED AT EACH TEMPORARILY RELOCATED COMMERCIAL DRIVEWAY FOR WHICH THE RELOCATION IS NOT OBVIOUS TO THE MOTORIST. THE PROJECT ENGINEER SHALL DETERMINE WHETHER OR NOT THE DRIVEWAY RELOCATION IS, OR IS NOT, OBVIOUS AND WHETHER OR NOT A SIGN SHOULD BE PROVIDED. ONLY ONE SIGN PER BUSINESS SHALL BE PERMITTED. THE SIGN SHALL BE 36 INCH X 48 INCH IN SIZE WITH TYPE G OR TYPE H ORANGE RETROREFLECTIVE SHEETING. THE SIGN LEGEND SHALL BE PLACED ON BOTH SIDES OF THE SIGN (BACK TO BACK). THE SIGN SHALL HAVE THE STANDARD M4-H15 LEGEND WITH THE WORD "BUSINESS" ON THE TOP LINE, EXCEPT UNDER UNUSUAL CIRCUMSTANCES WHERE IT MAY NOT BE INTUITIVE THAT A DRIVEWAY SERVES A SPECIFIC BUSINESS. IN SUCH UNUSUAL CASES, THE ACTUAL BUSINESS NAME MAY BE SUBSTITUTED FOR THE WORD "BUSINESS".

THE SIGN SHALL BE MOUNTED ON TWO NO. 3 POSTS OR ON TEMPORARY POSTS IN ACCORDANCE WITH SCD MT-105.10 AND IN ACCORDANCE WITH THE OHIO MANUAL OF UNIFORM TRAFFIC CONTROL DEVICES, LATEST EDITION. THE SIGN SHALL BE CLEARLY VISIBLE AND SHALL CLEARLY IDENTIFY THE LOCATION OF THE DRIVEWAY. THE SIGN SHOULD BE POSITIONED AT 90 DEGREES TO THE DIRECTION(S) OF TRAFFIC. THE SIGN MAY NEED TO BE MOVED FOR EACH PHASE OF THE MAINTENANCE OF TRAFFIC OPERATIONS.

PAYMENT FOR ALL COSTS ASSOCIATED WITH MANUFACTURING, MOUNTING, RELOCATING, AND REMOVING THE SIGN, INCLUDING ALL LABOR, MATERIALS AND EQUIPMENT SHALL BE INCLUDED IN THE CONTRACT PRICE PER EACH FOR ITEM 614-BUSINESS ENTRANCE SIGN.

THE FOLLOWING ESTIMATED QUANTITY HAS BEEN CARRIED TO THE M.O.T. GENERAL SUMMARY FOR THIS ITEM.

ITEM 614 BUSINESS ENTRANCE SIGN 6 EACH

ITEM 614, MAINTAINING TRAFFIC (TIME LIMITATION ON A DETOUR)

DURING PHASE 1 CONSTRUCTION OF THE CULVERT AT I-75 STA. 216+83.30, RAMP B CAN BE CLOSED FOR A PERIOD NOT TO EXCEED 7 CONSECUTIVE CALENDAR DAYS. A DISINCENTIVE SHALL BE ASSESSED IN THE AMOUNT OF $4,500 FOR EACH CALENDAR DAY THE RAMP REMAINS CLOSED TO TRAFFIC BEYOND THE SPECIFIED LIMIT.

DURING PHASE 2 CONSTRUCTION OF THE CULVERT AT I-75 STA. 216+83.30, RAMP B CAN BE CLOSED FOR A PERIOD NOT TO EXCEED 7 CONSECUTIVE CALENDAR DAYS. A DISINCENTIVE SHALL BE ASSESSED IN THE AMOUNT OF $4,500 FOR EACH CALENDAR DAY THE RAMP REMAINS CLOSED TO TRAFFIC BEYOND THE SPECIFIED LIMIT.

DURING PHASE 2 CONSTRUCTION OF THE CULVERT AT I-75 STA. 216+83.30, RAMP A CAN BE CLOSED FOR A PERIOD NOT TO EXCEED 7 CONSECUTIVE CALENDAR DAYS. A DISINCENTIVE SHALL BE ASSESSED IN THE AMOUNT OF $4,500 FOR EACH CALENDAR DAY THE RAMP REMAINS CLOSED TO TRAFFIC BEYOND THE SPECIFIED LIMIT.

ALL SR 65 RAMPS SHALL BE OPEN TO TRAFFIC BY OCTOBER 1, 2015. A DISINCENTIVE SHALL BE ASSESSED IN THE AMOUNT OF $4,500 FOR EACH CALENDAR DAY ANY RAMP RAMAINS CLOSED TO TRAFFIC BEYOND THE SPECIFIED LIMIT.

CALCULATED CAC CHECKED EJC

MAINTENANCE OF TRAFFIC GENERAL NOTES

ALL-75-0.21

J:\Projects\ALL\89029\mot\sheets\89029MN007.dgn 13-JUN-2013 9:29PM coffield

EMERGENCY VEHICLES ACCESS AT SR 65 DURING CONSTRUCTION

SR 65 RAMP D (NB ENTRANCE)

NOTE THAT THE SCHEDULE/SEQUENCE BELOW IS BASED ON THE THE PLANS, BUT THE CONTRACTOR MAY PROPOSE AN ALTERNATE SCHEDULE FOR ODOT'S REVIEW AND APPROVAL WHICH WILL THEN REQUIRE COORDINATION WITH ODOT AND THE AFFECTED AGENCIES.

BASED ON THE THE PLANS, THE RAMP IS SCHEDULED TO BE CLOSED DURING I-75 PHASE 1A AND 1B. THE RAMP IS CLOSED DUE TO THE SHORT ACCELERATION /MERGE DISTANCE AT I-75. HOWEVER, THERE WILL BE NO CONSTRUCTION SCHEDULED FOR THIS RAMP DURING THIS TIME. THEREFORE, THE CONTRACTOR SHALL PERMIT AND ACCOMMODATE USE BY EMERGENCY VEHICLES TO ACCESS I-75 NORTHBOUND VIA THE CLOSED RAMP. SIGNS SHALL BE PLACED ON I-75 NB 600 FT PRIOR TO THE RAMP ENTRANCE TO ALERT MOTORISTS OF THE POTENTIAL ENTRY OF EMERGENCY VEHICLES ONTO THE HIGHWAY. THE SIGN SHALL BE AS FOLLOWS: 60"X 60" BLACK ON ORANGE STATING, "EMERGENCY VEHICLE ENTRANCE AHEAD".

THE EXISTING RAMP SHALL BE ACCESSABLE DURING THE WINTER MONTHS BETWEEN I-75 PHASE 1B AND PHASE 2A. THE RAMP WILL BE CLOSED DURING PHASE 2A. THE RAMP IS SCHEDULED TO BE RECONSTRUCTED DURING THIS TIME. EMERGENCY VEHICLES WILL NOT BE ABLE TO ACCESS I-75 NORTHBOUND VIA THE CLOSED RAMP ONCE THE CONSTRUCTION IN THIS AREA OF I-75 IS UNDERWAY DUE TO THE DIFFERENCE IN VERTICAL PROFILE AND THE CONSTRUCTION OF THE OUTSIDE PORTIONS OF THE I-75 BRIDGE OVER THE I&O RAILROAD.

THE RAMP WILL REMAIN CLOSED TO THE PUBLIC DURING I-75 PHASE 2B. THE RAMP IS CLOSED DUE TO THE SHORT ACCELERATION/MERGE DISTANCE AT I-75 AND THE COMPLETION OF THE RAMP CONSTRUCTION AT SR65/YODER ROAD. THE CONTRACTOR SHALL MAKE PROVISIONS FOR EMERGENCY VEHICLES TO ACCESS I-75 NORTHBOUND VIA THE CLOSED RAMP DURING THE CONSTRUCTION OF SR 65/YODER ROAD AND AGAIN POST SIGNS ON I-75 ALERTING MOTORISTS OF THE POTENTIAL ENTRY OF EMERGENCY VEHICLES.

BASED ON THE SCHEDULE, EMERGENCY VEHICLES SHALL BE COMPLETELY RESTRICTED ONLY DURING I-75 PHASE 2A.

SR 65 RAMP C (SB EXIT)

THE RAMP IS SCHEDULED TO BE CLOSED FOR RECONSTRUCTION DURING I-75 PHASE IA. THE RAMP SHALL BE OPENED TO SB EXITING TRAFFIC WHEN THE SINGLE SB CONTRA-FLOW LANE ON THE SB SIDE OF I-75 IS SHIFTED OVER ONTO THE NEW PAVEMENT CONSTRUCTED IN PHASE IA. THEREFORE, EMERGENCY VEHICLES (AND ALL OTHER TRAFFIC) SHALL ONLY BE RESTRICTED FROM USING THE SB EXIT RAMP DURING I-75 PHASE 1A WITH A FEW SHORT-TERM EXCEPTIONS AS DESCRIBED BELOW.

THE RECONSTRUCTED SB EXIT RAMP WILL BE CLOSED FOR DEMOLITION OF THE EXISTING I-75 BRIDGES OVER SR 65 ON FOUR SEPARATE OCCASIONS, ONE TIME DURING EACH I-75 PHASE. THESE TEMPORARY DEMOLITION CLOSURES WILL BE EMPLOYED DURING NIGHTTIME HOURS AND SHALL ONLY EXTEND OVER A FEW CONSECUTIVE NIGHTS OR AS DIRECTED BY THE ENGINEER.

AN ADDITIONAL CLOSURE PERIOD FOR THE SB EXIT RAMP WILL NEED TO OCCUR DURING PHASE I CONSTRUCTION OF SR65. THE RAMP WILL BE CLOSED FOR INTERSECTION RECONSTRUCTION AT RAMP C AND SR65. THIS CLOSURE IS SCHEDULED TO OCCUR SOMETIME DURING I-75 PHASE 2B AND WILL BE NECESSARY FOR A PERIOD OF ABOUT 2 TO 3 WEEKS. THE CONTRACTOR SHALL MAKE PROVISIONS FOR EMERGENCY VEHICLES TO PASS THROUGH THE INTERSECTION DURING CLOSURE, SUCH AS PART-WIDTH CONSTRUCTION METHODS. ALL OTHER TRAFFIC SHALL BE RESTRICTED UNTIL THE INTERSECTION PAVEMENT IS COMPLETE.

GENERAL

SEQUENCE OF CONSTRUCTION

ODOT HAS MADE COMMITMENTS ABOUT CONSTRUCTION LIMITATIONS/SCHEDULES WITH LOCAL AGENCIES AND OTHER STAKEHOLDERS. THESE COMMITMENTS ARE SHOWN WITHIN THE PLANS AND ANY CHANGES MUST BE COORDINATED AND APPROVED BY ODOT DISTRICT 1.

NO CONSECUTIVE ENTRANCE RAMPS ARE TO BE CLOSED AT THE SAME TIME.

BREESE ROAD AND MCCLAIN ROAD BRIDGES CANNOT BE CLOSED AT THE SAME TIME.

THE CONTRACTOR SHALL INCLUDE PROVISIONS IN HIS SCHEDULE FOR WEATHER DAYS IN ACCORDANCE WITH THE PROPOSAL NOTES.

PRE-PHASE WORK

CONSTRUCT PAVEMENT FOR MAINTAINING TRAFFIC.

REHABILITATE, PLANE, AND OVERLAY EXISTING SHOULDERS TO REMOVE RUMBLE STRIPS.

CONSTRUCT CULVERT M.O.T. AND PROPOSED CULVERTS AT STA. 245+00 & 216+83.

WIDEN EXISTING BRIDGES BY CONSTRUCTING TEMPORARY STRUCTURE. (SEE BRIDGE PLANS FOR SR 65 AND I & O R.R. BRIDGES)

CONSTRUCT PORTIONS OF NEW I-75 SHIFTED THROUGH THE HANTHORN ROAD CURVE.

CONSTRUCT CROSSOVERS FOR I-75 PHASE 1.

I-75

PHASE 1

SEQUENCE OF CONSTRUCTION

I-75 TO BE CONSTRUCTED USING CONTRA-FLOW METHODS WITH THE SOUTHBOUND LANES BEING CONSTRUCTED IN THIS PHASE.

TOOLS AND STIPULATIONS

A SPEED LIMIT OF 55 MPH SHALL BE USED.

TEMPORARY PAVEMENT/ROAD WILL BE NEEDED FOR CROSSOVERS AT THE BEGINNING AND END OF THE PROJECT AND BEFORE AND AFTER THE McCLAIN ROAD CURVE.

TEMPORARY PAVEMENT/ROAD WILL BE NEEDED ALONG THE INSIDE AND OUTSIDE OF THE NORTHBOUND LANES, INCLUDING EXISTING SHOULDER REHAB.

TEMPORARY BRIDGES WILL BE NEEDED FOR THE OUTSIDE OF THE NORTHBOUND BRIDGES AT SR 65 AND THE I&O RAILROAD.

OPTIONS FOR SHEETING/SHORING NEEDED ALONG I-75 AT THE SR 65 BRIDGE AND THE I&O RAILROAD BRIDGE ARE DEPICTED ON SHEET 14 OF 94 IN THE PLANS.

McCLAIN ROAD

SEQUENCE OF CONSTRUCTION

McCLAIN ROAD TO BE CLOSED DURING CONSTRUCTION.

TOOLS AND STIPULATIONS

McCLAIN ROAD CANNOT BE CLOSED AT THE SAME TIME AS BREESE ROAD.

THE BRIDGE MUST BE DEMOLISHED PRIOR TO THE START OF I-75 PHASE 1B.

HANTHORN ROAD

SEQUENCE OF CONSTRUCTION

HANTHORN ROAD TO BE CLOSED DURING CONSTRUCTION.

TOOLS AND STIPULATIONS

THE BRIDGE MUST BE DEMOLISHED DURING I-75 PHASE 1, BUT THE PROPOSED BRIDGE CANNOT BE FULLY CONSTRUCTED UNTIL I-75 PHASE 2A DUE TO THE MAINLINE I-75 SHIFT.

I-75

PHASE 2

SEQUENCE OF CONSTRUCTION

I-75 TO BE CONSTRUCTED USING CONTRA-FLOW METHODS WITH THE NORTHBOUND LANES BEING CONSTRUCTED IN THIS PHASE.

TOOLS AND STIPULATIONS

A SPEED LIMIT OF 55 MPH SHALL BE USED.

OPTIONS FOR SHEETING/SHORING NEEDED ALONG I-75 AT THE SR 65 BRIDGE AND THE I&O RAILROAD BRIDGE ARE DEPICTED ON SHEET 14 OF 94 IN THE PLANS.

SR 65

SEQUENCE OF CONSTRUCTION

SR 65 TO BE CONSTRUCTED USING PART-WIDTH METHODS.

CONSTRUCTION SHALL NOT BEGIN UNTIL BOTH OF THE EXISTING I-75 BRIDGES OVER SR 65 HAVE BEEN DEMOLISHED.

TOOLS AND STIPULATIONS

THE EXISTING SPEED LIMIT OF 45 MPH SHALL BE USED IN CONJUNCTION WITH CONSTRUCTION ADVISORY SIGNS.

TEMPORARY PAVEMENT/ROAD WILL BE NEEDED UNDER THE BRIDGES DURING THE 4 BRIDGE DEMOLITION PERIODS.

TEMPORARY PAVEMENT/ROAD WILL BE NEEDED ALONG THE WEST SIDE OF SR 65 DURING PHASE 1.

TEMPORARY 42" CULVERTS WILL BE NEEDED DURING THE CONSTRUCTION OF THE BOX CULVERT AT THE NORTH END OF SR 65.

TEMPORARY SIGNALS WILL BE NEEDED AT RAMP A & C.

RAMP A TO BE CONSTRUCTED PART-WIDTH WITH THE USE OF TEMPORARY PAVEMENT/ROAD DURING I-75 PHASE 2A.

RAMP B TO BE CONSTRUCTED PART-WIDTH WITH THE USE OF TEMPORARY PAVEMENT/ROAD DURING I-75 PHASE 1A.

RAMP C TO BE CLOSED DURING I-75 PHASE 1A CONSTRUCTION AND THEN AGAIN FOR UP TO 21 DAYS DURING I-75 PHASE 2B FOR INTERSECTION WORK BEING CONSTRUCTED DURING SR 65 PHASE 1.

RAMP D TO BE CLOSED FOR THE DURATION OF THE IR75 MAINLINE PHASES WITH THE RAMP BEING COMPLETED BY OCTOBER 1, 2015. THE ONLY EXCEPTION FOR ACCESS SHALL BE FOR EMERGANCY ACCESS (SEE EMERGENCY VEHICLE ACCESS NOTES).

YODER ROAD

SEQUENCE OF CONSTRUCTION

YODER ROAD WILL BE CONSTRUCTED DURING PHASE 1 OF SR 65 AND WILL BE COMPLETED IN TWO PHASES. PART OF PROPOSED YODER RD WILL BE CONSTRUCTED PRIOR TO CLOSING EXISTING YODER RD TO FINISH THE TIE-IN.

TOOLS AND STIPULATIONS

A TEMPORARY DRIVEWAY WILL BE PROVIDED DURING PHASE 1 OF YODER ROAD. (SEE M.O.T. PLANS)

YODER ROAD MUST BE FINISHED DURING PHASE 1 OF SR 65.

BREESE ROAD

SEQUENCE OF CONSTRUCTION

RAMPS A AND C TO BE CONSTRUCTED DURING I-75 PHASE 1A. THE RAMPS ARE TO REMAIN OPEN WITH THE EXCEPTION OF A MAXIMUM 30 DAY PERIOD TO FINISH THE RAMPS AND THE ACCELERATION AND DECELERATION LANES.

PART OF RAMPS B AND D TO BE CONSTRUCTED THE DURING I-75 PHASE 2A. RAMP D IS TO REMAIN OPEN WITH THE EXCEPTION OF A MAXIMUM 30 DAY PERIOD TO CONSTRUCT THE ACCELERATION LANE AND TEMPORARY PAVEMENT TO TIE INTO THE EXISTING RAMP. RAMP B IS TO REMAIN OPEN WITH THE EXCEPTION OF A NIGHT-TIME CLOSURE TO CONSTRUCT TEMPORARY PAVEMENT TO TIE INTO THE EXISTING RAMP.

BREESE ROAD, BRIDGE, AND THE REMAINING CONSTRUCTION OF THE RAMPS TO BE COMPLETED AFTER I-75 PHASE 2B. THE BRIDGE CAN BE CLOSED FOR A MAXIMUM OF 150 DAYS. BREESE ROAD WEST OF THE BRIDGE IS TO REMAIN OPEN AND CONSTRUCTED USING NIGHT WORK WITH FLAGGER'S. BREESE ROAD EAST OF THE BRIDGE AND THE REMAINDER OF RAMPS B AND D TO BE CLOSED FOR A MAXIMUM OF 60 DAYS DUE TO PROFILE ELEVATION DIFFERENCES.

TOOLS AND STIPULATIONS

ACCESS TO FORT SHAWNEE INDUSTRIAL DRIVE AND DELONG ROAD MUST BE MAINTAINED AT ALL TIMES.

BREESE ROAD RAMPS CANNOT BE CLOSED AT THE SAME TIME AS SR 65 RAMPS A AND B.

WORK DURATIONS

ALL NOTED DURATIONS FOR WORK OR CLOSURES WILL BE ASSESSSED A DISINCENTIVE OF $4500 PER DAY THAT THE DURATION IS EXCEEDED.

CALCULATED CAC CHECKED EJC

MAINTENANCE OF TRAFFIC GENERAL NOTES

ALL-75-0.21

jclark1 31-OCT-2013 11:02AM I:\Pdv\89029\Final Submission\FINAL DGNS\MOT\Sheets\89029MN008.dgn

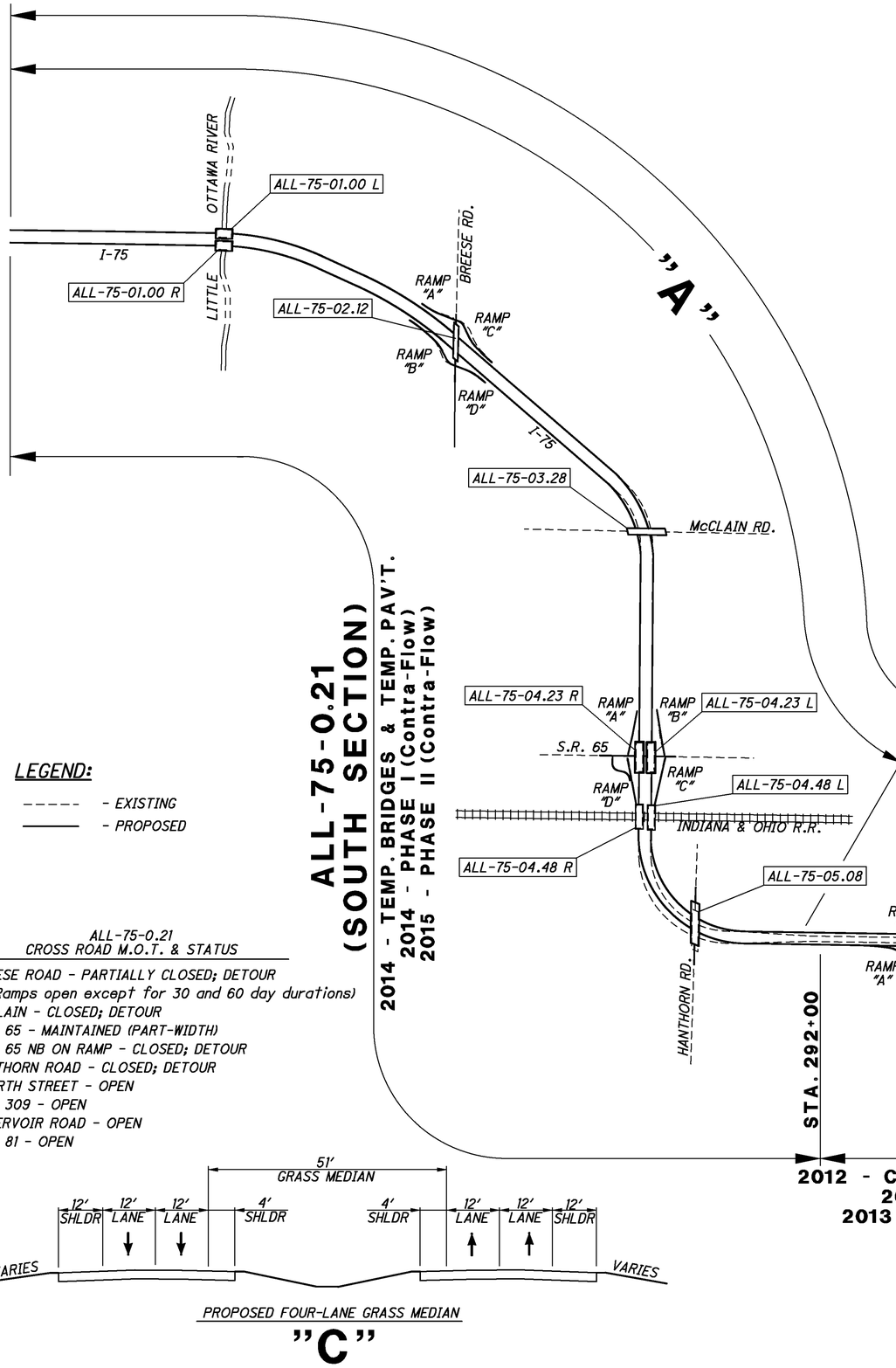

ALL-75-0.21 (SOUTH SECTION)
ALL-75-5.53 (NORTH SECTION)

2014 - TEMP. BRIDGES & TEMP. PAV'T.
2014 - PHASE I (Contra-Flow)
2015 - PHASE II (Contra-Flow)

2012 - CONSTRUCT RESERVOIR RD. & BRYN MAWR (ALL-75-6.11/7.85)
2012 - CONSTRUCT FOURTH STREET (ALL-75-6.11/7.85)
2013 - CONSTRUCT FOURTH, S.R. 309, & S.R. 81 INTERCHANGES
2013 - PHASE I (Part-Width)
2014 - PHASE II (Part-Width)
BRYN MAWR AVE./WELLESLEY DR. - CLOSED
LOST CREEK BLVD. - CLOSED

LEGEND:

- - - - - - - EXISTING
——— PROPOSED

ALL-75-0.21
CROSS ROAD M.O.T. & STATUS

BREESE ROAD - PARTIALLY CLOSED; DETOUR
(Ramps open except for 30 and 60 day durations)
McCLAIN - CLOSED; DETOUR
S.R. 65 - MAINTAINED (PART-WIDTH)
S.R. 65 NB ON RAMP - CLOSED; DETOUR
HANTHORN ROAD - CLOSED; DETOUR
FOURTH STREET - OPEN
S.R. 309 - OPEN
RESERVOIR ROAD - OPEN
S.R. 81 - OPEN

PROPOSED FOUR-LANE GRASS MEDIAN
"C"

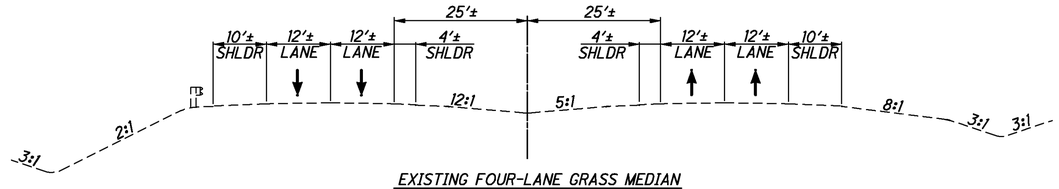

EXISTING FOUR-LANE GRASS MEDIAN
"A"

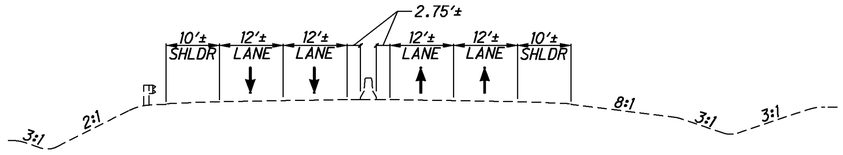

EXISTING FOUR-LANE MEDIAN BARRIER
"B"

NOTE:

CONTRACTOR TO INSTALL ADVANCED WORK ZONE WARNINIG SIGNS PER SCD MT95.50 AND PLAN INSERT SHEETS 209572 & 209573 AS APPLICABLE.

PAYMENT FOR ALL LABOR, EQUIPMENT, MATERIALS SHALL BE INCLUDED WITH THE LUMP SUM BID FOR ITEM 614, MAINTAINING TRAFFIC, AS PER PLAN.

HORIZONTAL SCALE IN FEET
0 750 1500 3000

MAINTENANCE OF TRAFFIC SCHEMATIC PLAN

ALL-75-0.21

9 / 94

48 / 907

J:\Projects\ALL\89029\mot\sheets\89029MB001.dgn 13-JUN-2013 9:29PM coffield

PHASE	ROAD	STATION FROM	STATION TO	SIDE	614 WORK ZONE LANE LINE, CLASS I	614 WORK ZONE CENTER LINE, CLASS I	614 WORK ZONE EDGE LINE, CLASS I (WHITE)	614 WORK ZONE EDGE LINE, CLASS I (YELLOW)	614 WORK ZONE CHANNELIZING LINE, CLASS I	614 WORK ZONE DOTTED LINE, CLASS I	614 WORK ZONE STOP LINE, CLASS I	614 WORK ZONE ARROW, CLASS I
					MILE	MILE	MILE	MILE	FT	FT	FT	EACH
1	I-75	2+50	296+50	RT	5.57		11.14	11.14				
1	I-75	11+00	292+00	LT			5.74	5.74				
2	I-75	11+00	295+61	RT			5.39	5.39				
2	I-75	2+54	295+61	LT	5.55		11.10	11.10				
1A	BREESE RD RAMP "A"	104+45	110+10	LT/RT			0.11	0.11	600	600		
2A	BREESE RD RAMP "B"	105+43	114+00	LT/RT			0.32	0.32	600	600	20	
1A	BREESE RD RAMP "C"	110+50	117+78	LT/RT			0.14	0.14	600	600		
2A	BREESE RD RAMP "D"	114+00	119+14	LT/RT			0.10	0.10	600	600	20	
1	BREESE RD RAMP "A"	RAMP GORE		LT					600	600		
2	BREESE RD RAMP "B"	RAMP GORE		RT					600	600		
1	BREESE RD RAMP "C"	RAMP GORE		LT					600	600		
2	BREESE RD RAMP "D"	RAMP GORE		RT					600	600		
1A	S.R. 65 RAMP "B"	219+94	223+90	LT/RT			0.11	0.11				
2A	S.R. 65 RAMP "A"	218+54	223+84	LT/RT			0.10	0.10			20	
1	S.R. 65 TEMPORARY RD	102+40	105+50	LT			0.12					
1	S.R. 65	189+34	101+27	LT		0.23					13	1
1	S.R. 65	190+20	101+58	LT			0.43					
1	S.R. 65 RAMP "A"	223+62		LT/RT							73	1
1	S.R. 65 RAMP "D"	223+93		LT/RT							44	1
1	S.R. 65	103+65	105+12	LT		0.03					22	2
1	S.R. 65	102+34	105+12	LT			0.11					
1	S.R. 65	106+73	114+00	LT		0.14					11	1
1	S.R. 65 RAMP "C"	224+40		LT/RT							33	1
1	S.R. 65	111+70	113+48	LT/RT		0.03						
1	S.R. 65	106+80	112+80	LT/RT			0.23					
1A	S.R. 65 RAMP "A"	RAMP GORE		RT					600	600		
1A	S.R. 65 RAMP "B"	RAMP GORE		RT					600	600		
1A	S.R. 65 RAMP "C"	RAMP GORE		LT					600	600		
1A	S.R. 65 RAMP "D"	RAMP GORE		LT					600	600		
1B	S.R. 65 RAMP "A"	RAMP GORE		RT					600	600		
1B	S.R. 65 RAMP "B"	RAMP GORE		RT					600	600		
1B	S.R. 65 RAMP "C"	RAMP GORE		LT					600	600		
2	S.R. 65	92+20	101+40	RT		0.14					11	
2	S.R. 65	92+20	101+40	RT			0.31					
2	S.R. 65	103+65	114+00	LT/RT		0.20					33	2
2	S.R. 65	111+50	113+50	RT		0.04						
2	S.R. 65	102+50	113+15	LT/RT			0.20					
2	S.R. 65	102+25	111+60	RT			0.18					
2	S.R. 65 RAMP "A"	224+00		LT/RT							60	1
2	S.R. 65 RAMP "D"	224+40		LT/RT							35	1
2A	S.R. 65 RAMP "A"	RAMP GORE		RT					600	600		
2A	S.R. 65 RAMP "B"	RAMP GORE		RT					600	600		
2A	S.R. 65 RAMP "C"	RAMP GORE		LT					600	600		
2B	S.R. 65 RAMP "A"	RAMP GORE		RT					600	600		
2B	S.R. 65 RAMP "B"	RAMP GORE		RT					600	600		
2B	S.R. 65 RAMP "C"	RAMP GORE		LT					600	600		
2	I-75	104+70	117+30	CENTER					1460			
		SUBTOTAL					35.99	34.41				
TOTALS CARRIED TO MOT GENERAL SUMMARY					11.12	0.81	70.40		14060	12600	395	10

SHEET NUMBER																						03/IMS/ PV/		ITEM	ITEM EXT.	GRAND TOTAL	UNIT	DESCRIPTION	SEE SHEET NO.
							40-47	49	51-57			115-119	51-133																MAINTENANCE OF TRAFFIC	
							1685															1,685		254	01000	1,685	SQ YD	PAVEMENT PLANING, ASPHALT CONCRETE	
							5000															5,000		255	20000	5,000	FT	FULL DEPTH PAVEMENT SAWING	
							60															60		301	46000	60	CU YD	ASPHALT CONCRETE BASE, PG64-22	
							80															80		304	20000	80	CU YD	AGGREGATE BASE	
							40															40		407	10000	40	GALLON	TACK COAT	
							40															40		408	10000	40	GALLON	PRIME COAT	
							2000															2,000		410	12000	2,000	CU YD	TRAFFIC COMPACTED SURFACE, TYPE A OR B	
							40															40		446	47020	40	CU YD	ASPHALT CONCRETE SURFACE COURSE, TYPE 1, PG64-22	
							LUMP						LUMP									LUMP		503	11100	LUMP		COFFERDAMS AND EXCAVATION BRACING	
							LUMP						LUMP									LUMP		503	21300	LUMP		UNCLASSIFIED EXCAVATION	
							1000															1,000		603	04400	1,000	FT	12" CONDUIT, TYPE B	
							200															200		603	96600	200	FT	CONDUIT, BORED OR JACKED: 15" TYPE B	
							200															200		603	96600	200	FT	CONDUIT, BORED OR JACKED: 18" TYPE B	
							200															200		603	96600	200	FT	CONDUIT, BORED OR JACKED: 24" TYPE B	
							200															200		603	96600	200	FT	CONDUIT, BORED OR JACKED: 30" TYPE B	
							200															200		603	96600	200	FT	CONDUIT, BORED OR JACKED: 36" TYPE B	
							6															6		604	04500	6	EACH	CATCH BASIN, NO. 2-2B	
							8															8		604	09000	8	EACH	CATCH BASIN ADJUSTED TO GRADE	
							6															6		604	09500	6	EACH	CATCH BASIN RECONSTRUCTED TO GRADE	
							6															6		604	31500	6	EACH	MANHOLE, NO. 3	
							6															6		604	34500	6	EACH	MANHOLE ADJUSTED TO GRADE	
									11													11		606	26100	11	EACH	ANCHOR ASSEMBLY, TYPE E	
									8													8		606	35000	8	EACH	BRIDGE TERMINAL ASSEMBLY, TYPE 1	
							680															680		614	11110	680	HOUR	LAW ENFORCEMENT OFFICER W/ PATROL CAR FOR ASSISTANCE	
												5										5		614	11300	5	EACH	SPECIAL - WORK ZONE TRAFFIC SIGNAL	
							24															24		614	11500	24	MONTH	WORKSITE TRAFFIC SUPERVISOR	
									2825													2,825		614	12200	2,825	FT	SPECIAL - WORK ZONE GUARDRAIL	
							12															12		614	12410	12	EACH	SPEED ZONE AHEAD SYMBOL SIGN	
							15															15		614	12460	15	EACH	WORK ZONE MARKING SIGN	
							44															44		614	12470	44	EACH	WORK ZONE SPEED LIMIT SIGN	
							24															24		614	12484	24	EACH	WORK ZONE INCREASED PENALTIES SIGN	
							30															30		614	12500	30	EACH	REPLACEMENT SIGN	
							100															100		614	12600	100	EACH	REPLACEMENT DRUM	
							10															10		614	12756	10	EACH	WORK ZONE CROSSOVER LIGHTING SYSTEM	
							2550															2,550		614	12800	2,550	EACH	WORK ZONE RAISED PAVEMENT MARKER	
							2550															2,550		614	12801	2,550	EACH	WORK ZONE RAISED PAVEMENT MARKER, AS PER PLAN	46
							400															400		614	13000	400	CU YD	ASPHALT CONCRETE FOR MAINTAINING TRAFFIC	
							356															356		614	18400	356	DAY	PORTABLE CHANGEABLE MESSAGE SIGN	
							5840															5,840		614	18401	5,840	DAY	PORTABLE CHANGEABLE MESSAGE SIGN, AS PER PLAN	46
							12.00	11.12														23.12		614	20000	23.12	MILE	WORK ZONE LANE LINE, CLASS I	
							3.00	0.81														3.81		614	21000	3.81	MILE	WORK ZONE CENTER LINE, CLASS I	
							24.00	70.40														94.40		614	22000	94.40	MILE	WORK ZONE EDGE LINE, CLASS I	
							3000	14060														17,060		614	23000	17,060	FT	WORK ZONE CHANNELIZING LINE, CLASS I	
								12600														12,600		614	24000	12,600	FT	WORK ZONE DOTTED LINE, CLASS I	
							200	395														595		614	26000	595	FT	WORK ZONE STOP LINE, CLASS I	
							10	10														20		614	30000	20	EACH	WORK ZONE ARROW, CLASS I	
							2256															2,256		614	40000	2,256	FT	LONGITUDINAL CHANNELIZER	
							6															6		614	40050	6	EACH	BUSINESS ENTRANCE SIGN	
							LUMP															LUMP		615	10000	LUMP		ROADS FOR MAINTAINING TRAFFIC	
													41592									41,592		615	20001	41,592	SQ YD	PAVEMENT FOR MAINTAINING TRAFFIC, CLASS A, AS PER PLAN	
							2460															2,460		616	10000	2,460	M GAL	WATER	
							75															75		617	10100	75	CU YD	COMPACTED AGGREGATE	
							15															15		617	25000	15	M GAL	WATER	
							15.00															15.00		642	00290	15.00	MILE	CENTER LINE	

CALCULATED EJC
CHECKED JRW

MAINTENANCE OF TRAFFIC GENERAL SUMMARY

ALL-75-0.21

I:\pd\89029\Final Submission\FINAL DGNS\MOT\Sheets\89029MS002.dgn 26-AUG-2013 2:10PM jclark1

EXISTING NORTHBOUND BRIDGE-
INSIDE NORTH CORNER: PHASE I

LITTLE OTTAWA RIVER

SOUTHBOUND

NORTHBOUND

TYPE E ANCHOR ASSEMBLY

TYPE 1 BRIDGE
TERMINAL ASSEMBLY

+47.14
16.31' RT.

+65.36
16.57' RT.

PC Sta. 52+35.32

EXISTING SOUTHBOUND BRIDGE-
INSIDE SOUTH CORNER: PHASE 2

LITTLE OTTAWA

TYPE 1
BRIDGE TERMINAL ASSEMBLY

+40.08
19.50' LT.

+58.75
19.50' LT.

TYPE E ANCHOR ASSEMBLY

SOUTHBOUND

NORTHBOUND

PC Sta. 52+35.32

EXISTING MEDIAN PIER
SOUTHBOUND SIDE, SOUTH END: PHASE II

PC Sta. 110+09.38

PT Sta. 111+86.34

TYPE E ANCHOR ASSEMBLY

SOUTHBOUND

NORTHBOUND

PT Sta. 110+15.90

+38.82, 3.50' LT.
+82.98, 3.50' LT.

+57.90, 7.00' LT.
+68.73, 7.00' LT.

PC Sta. 111+81.57

PT Sta. 113+48.96

BREESE ROAD
S 88° 52' 36" E

N21°07'24"E

EXISTING MEDIAN PIER
NORTHBOUND SIDE, EAST END: PHASE I

McCLAIN ROAD

IMPACT
ATTENUATOR

PCB

+87.91
28.97' LT.

+86.57
24.91' LT.

CS Sta. 175+53.22

CS Sta. 175+93.92

SOUTHBOUND

NORTHBOUND

HORIZONTAL
SCALE IN FEET
0 25 50 100

CALCULATED CAC
CHECKED EJC

MAINTENANCE OF TRAFFIC
TEMPORARY GUARDRAIL DETAILS
FOR REVERSE FLOW TRAFFIC

ALL-75-0.21

12 | 94

51
907

J:\Projects\ALL\89029\mot\sheets\89029MM002.dgn 13-JUN-2013 9:29PM coffield

MAINTENANCE OF TRAFFIC
TEMPORARY GUARDRAIL DETAILS
FOR REVERSE FLOW TRAFFIC

EXISTING NORTHBOUND BRIDGE-
INSIDE EAST CORNER: PHASE I

PROPOSED SOUTHBOUND BRIDGE-
INSIDE WEST CORNER: PHASE II

EXISTING NORTHBOUND BRIDGE-
INSIDE EAST CORNER: PHASE I

PROPOSED SOUTHBOUND BRIDGE-
INSIDE WEST CORNER: PHASE II

HORIZONTAL SCALE IN FEET
0 25 50 100

CALCULATED CAC
CHECKED EJC

ALL-75-0.21

13 / 94

52 / 907

13-JUN-2013 9:30PM coffield

J:\Projects\ALL\89029\mot\sheets\89029MM003.dgn

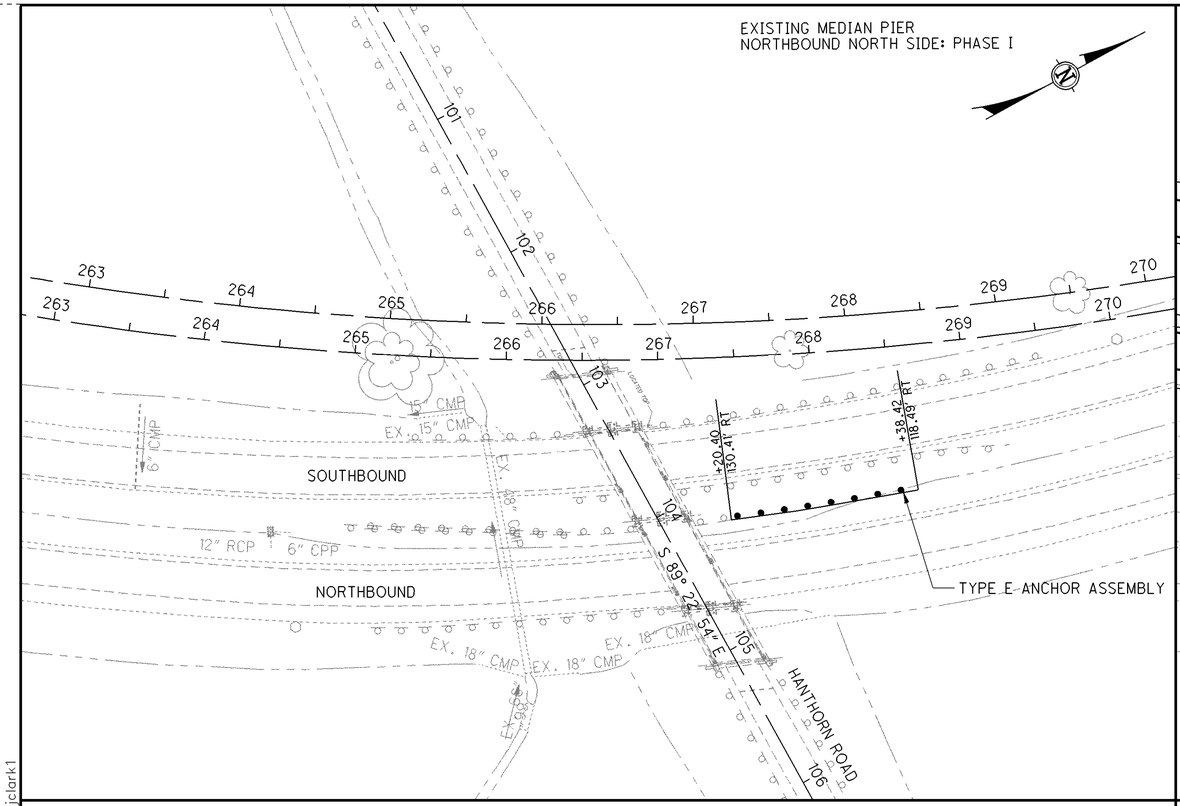

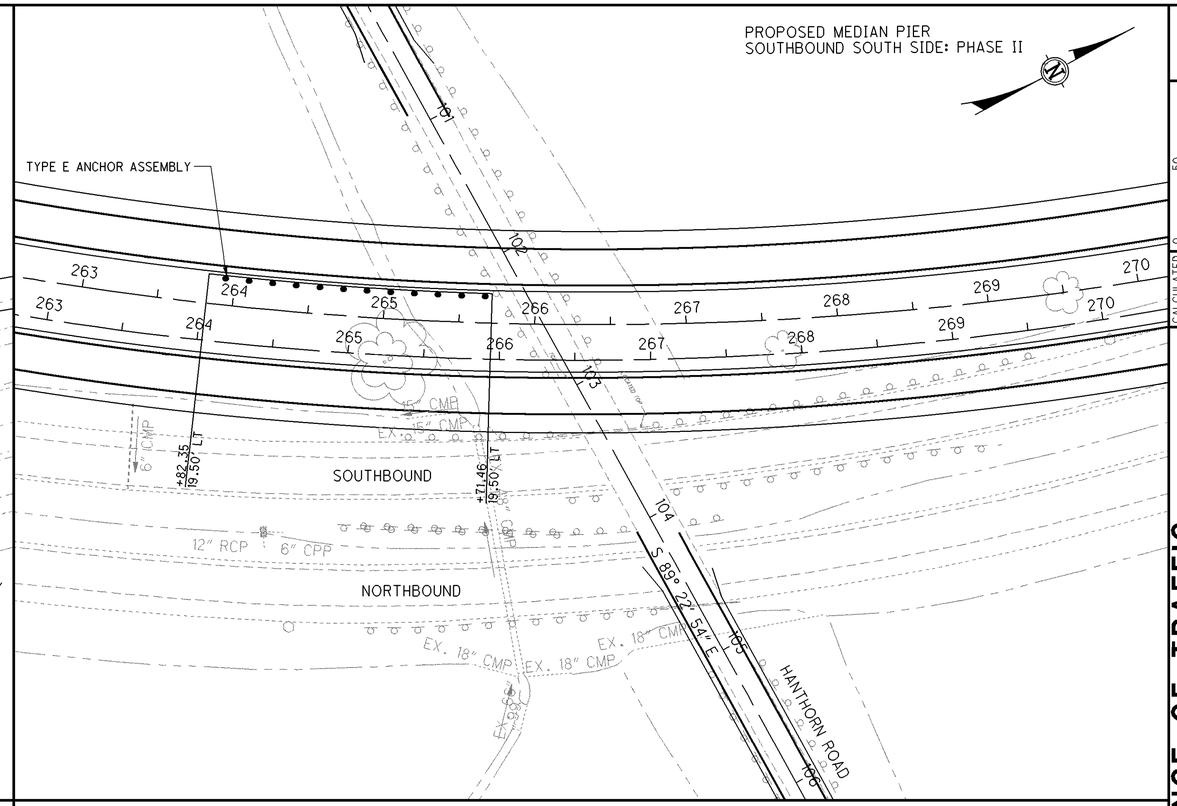

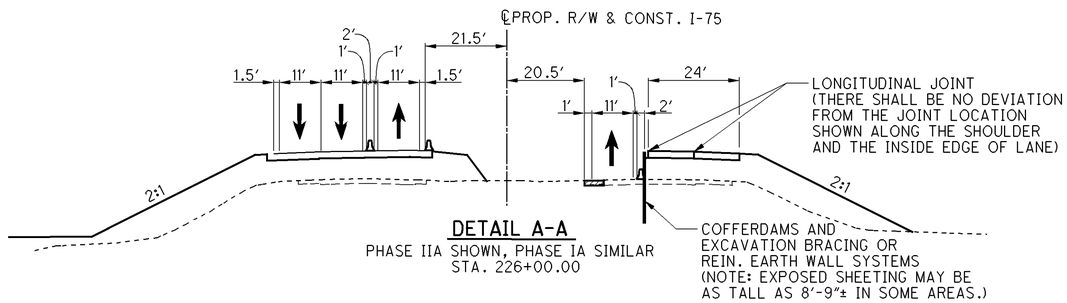

DETAIL A-A

PHASE IIA SHOWN, PHASE IA SIMILAR
STA. 226+00.00

HIGH FILL

NOTE: SEE SHEET 18 OF 94 FOR LIMITS.

HORIZONTAL SCALE IN FEET
0 25 50 100

CALCULATED CAC
CHECKED EJC

MAINTENANCE OF TRAFFIC
TEMP. GUARDRAIL DETAILS FOR REVERSE FLOW TRAFFIC, OPTIONAL BRACING & JOINT DETAILS

ALL-75-0.21

14 / 94

53
907

I:\Pdt\89029\Final Submission\FINAL DGNS\MOT\Sheets\89029MM004.dgn 20-NOV-2013 10:06AM jclark1

CONTRA-FLOW PHASE IAa

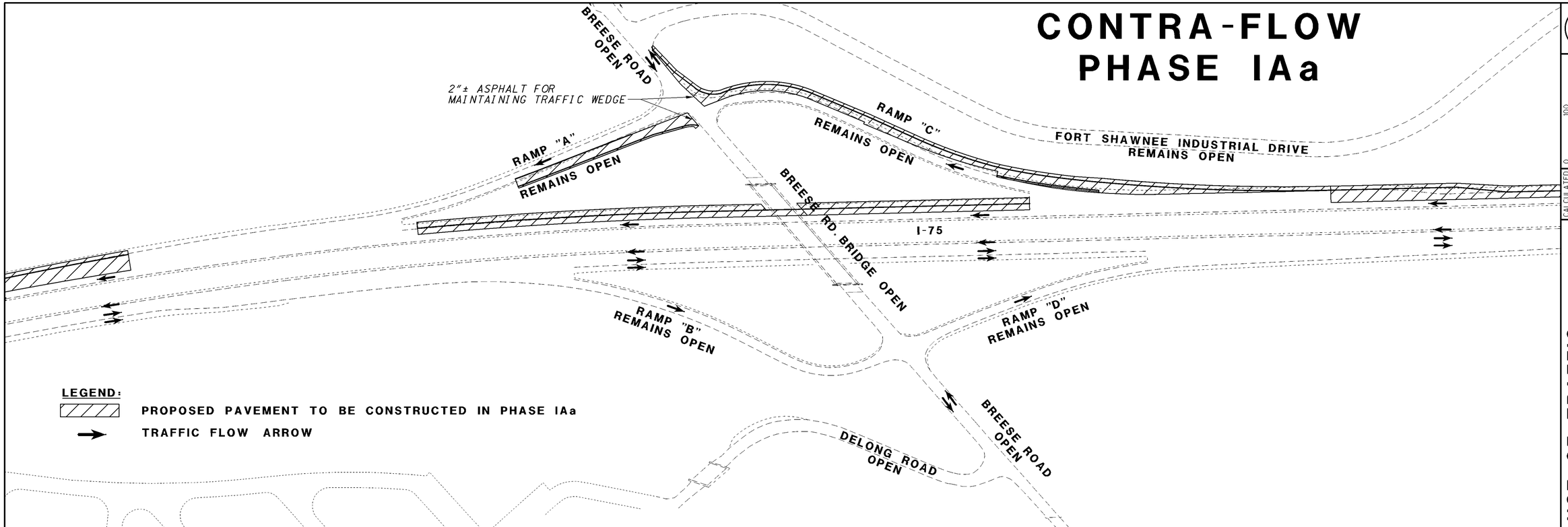

CONTRA-FLOW PHASE IAb

RAMPS MAY BE CLOSED FOR A MAXIMUM OF 30 DAYS FOR THIS WORK. SEE DETOUR PLAN ON SHEET 40 OF 94.

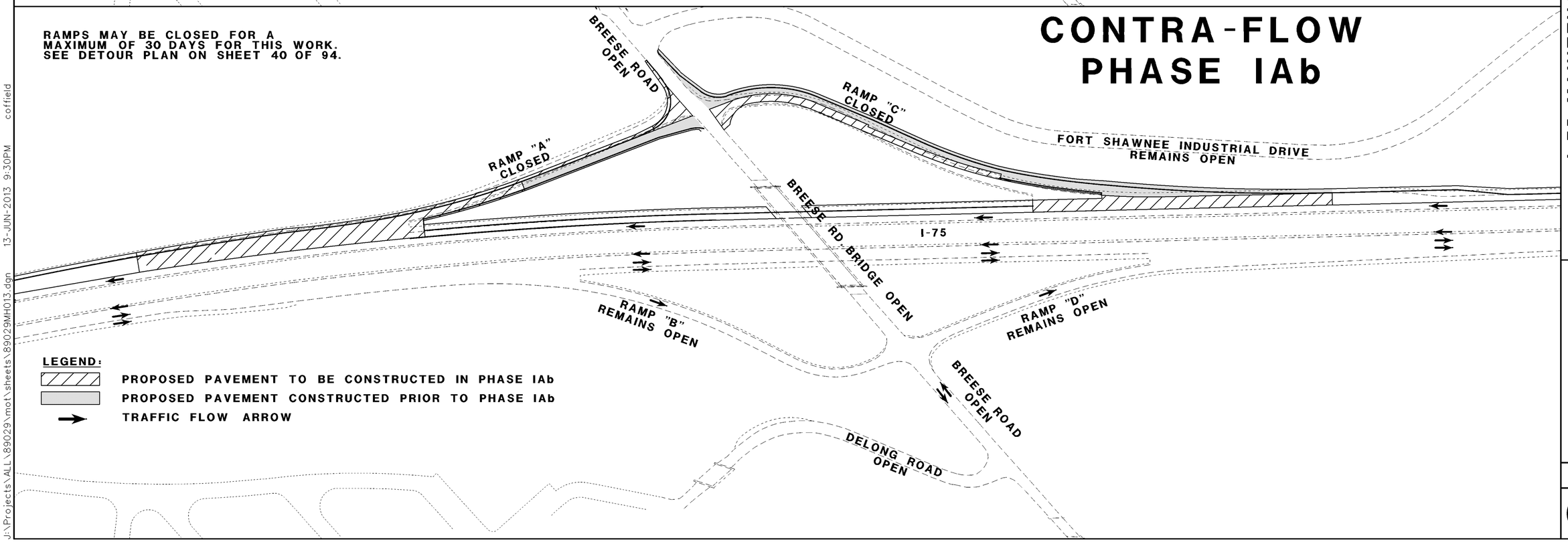

HORIZONTAL SCALE IN FEET: 0, 50, 100, 200

CALCULATED CAC | CHECKED EJC

I-75 MAINTENANCE OF TRAFFIC
CONTRA-FLOW PHASE IA, BREESE ROAD RAMPS

ALL-75-0.21

15 / 94

54 / 907

J:\Projects\ALL\89029\mot\sheets\89029MH013.dgn 13-JUN-2013 9:30PM coffield

BREESE ROAD RAMP 'B' TO REMIN OPEN WITH THE EXCEPTION OF A NIGHT TIME CLOSURE TO PLACE TEMPORARY PAVEMENT WEDGE.

CONTRA-FLOW PHASE IIAa

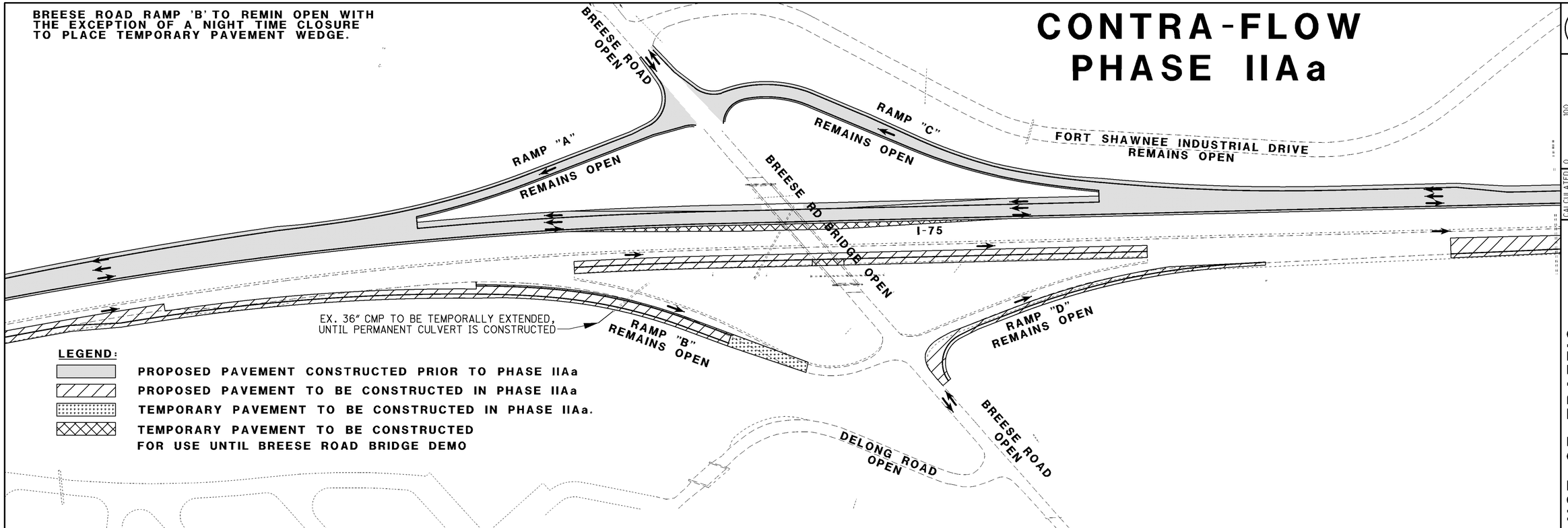

LEGEND:

- PROPOSED PAVEMENT CONSTRUCTED PRIOR TO PHASE IIAa
- PROPOSED PAVEMENT TO BE CONSTRUCTED IN PHASE IIAa
- TEMPORARY PAVEMENT TO BE CONSTRUCTED IN PHASE IIAa.
- TEMPORARY PAVEMENT TO BE CONSTRUCTED FOR USE UNTIL BREESE ROAD BRIDGE DEMO

CONTRA-FLOW PHASE IIAb

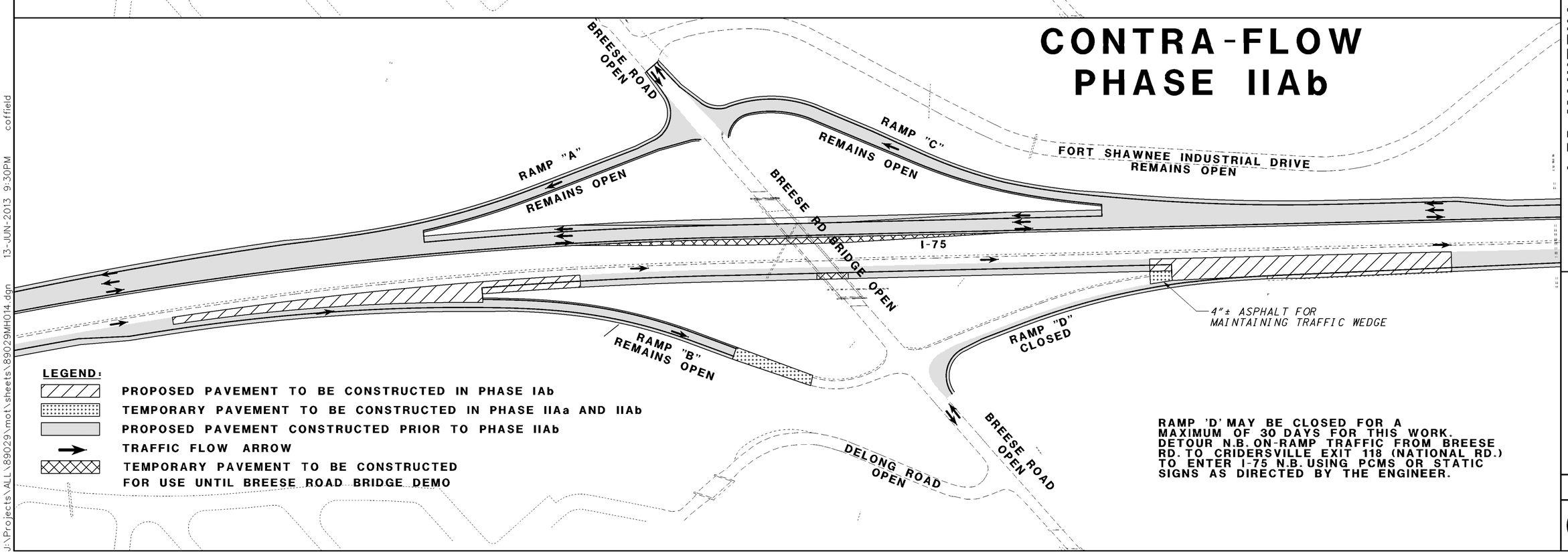

LEGEND:

- PROPOSED PAVEMENT TO BE CONSTRUCTED IN PHASE IAb
- TEMPORARY PAVEMENT TO BE CONSTRUCTED IN PHASE IIAa AND IIAb
- PROPOSED PAVEMENT CONSTRUCTED PRIOR TO PHASE IIAb
- TRAFFIC FLOW ARROW
- TEMPORARY PAVEMENT TO BE CONSTRUCTED FOR USE UNTIL BREESE ROAD BRIDGE DEMO

RAMP 'D' MAY BE CLOSED FOR A MAXIMUM OF 30 DAYS FOR THIS WORK. DETOUR N.B. ON-RAMP TRAFFIC FROM BREESE RD. TO CRIDERSVILLE EXIT 118 (NATIONAL RD.) TO ENTER I-75 N.B. USING PCMS OR STATIC SIGNS AS DIRECTED BY THE ENGINEER.

HORIZONTAL SCALE IN FEET
0 50 100 200

CALCULATED CAC
CHECKED EJC

I-75 MAINTENANCE OF TRAFFIC
CONTRA-FLOW PHASE IIA, BREESE RD. RAMPS

ALL-75-0.21

16 / 94

55 / 907

J:\Projects\ALL\89029\mot\sheets\89029MH014.dgn 13-JUN-2013 9:30PM coffield

RAMPS 'B' AND 'D' AND BREESE ROAD EAST OF I-75 MAY BE CLOSED FOR A MAXIMUM OF 60 DAYS FOR THIS WORK. ACCESS TO DELONG ROAD SHALL BE MAINTAINED.

BREESE ROAD WEST OF I-75 TO BE CONSTRUCTED USING NIGHT WORK AND FLAGGERS. ACCESS TO AND FROM RAMPS 'A' AND 'C' TO BE MAINTAINED AT ALL TIMES.

SEE DETOUR PLANS ON SHEETS 41 AND 42 OF 94.

BREESE ROAD AFTER COMPLETION OF I-75 PHASE II

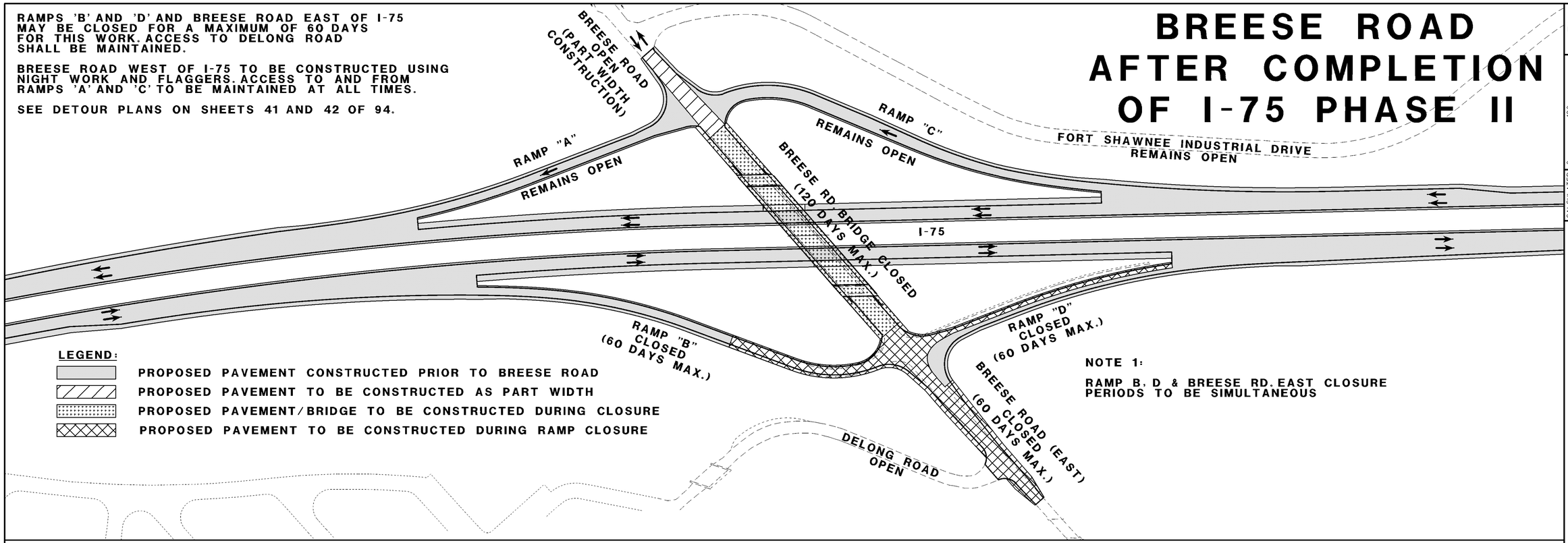

NOTE 1:

RAMP B, D & BREESE RD. EAST CLOSURE PERIODS TO BE SIMULTANEOUS

HORIZONTAL SCALE IN FEET
0 50 100 200

CALCULATED CAC
CHECKED EJC

I-75 MAINTENANCE OF TRAFFIC
BREESE RD. AFTER I-75 PHASE II

ALL-75-0.21

17 / 94

56
907

J:\Projects\ALL\89029\mot\sheets\89029MH017.dgn 13-JUN-2013 9:30PM coffield

CONTRA-FLOW
I-75 PHASE IA

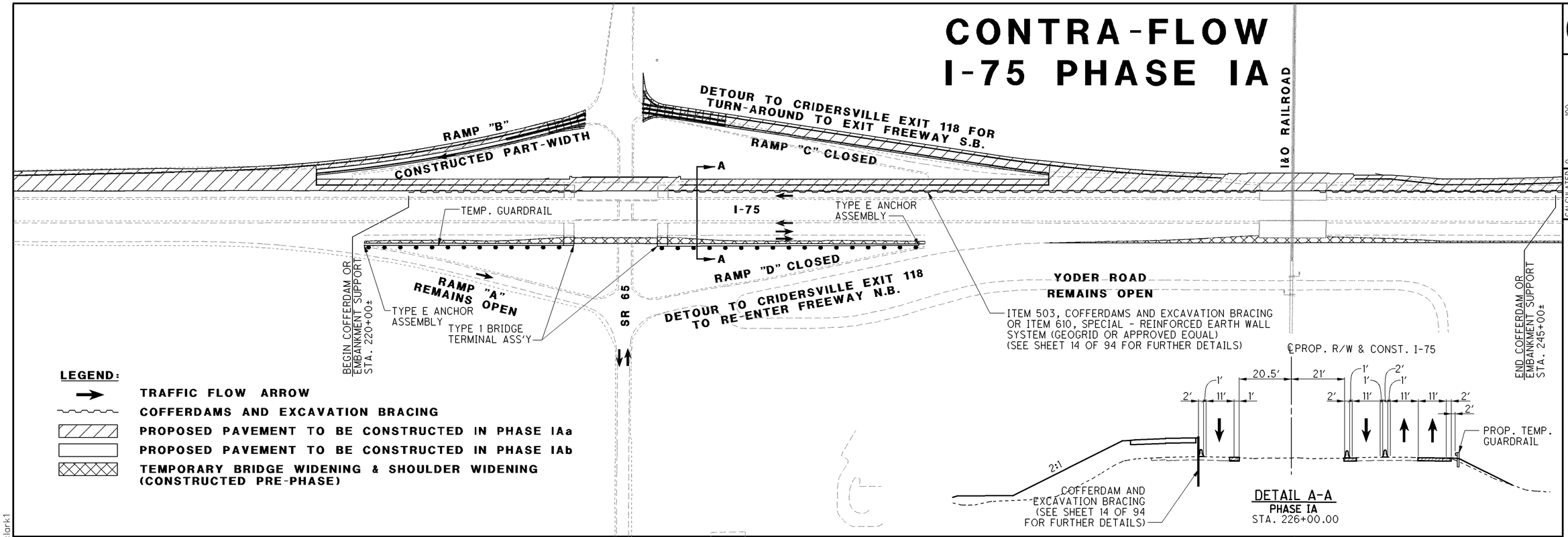

DETAIL A-A
PHASE IA
STA. 226+00.00

LEGEND:

- TRAFFIC FLOW ARROW
- COFFERDAMS AND EXCAVATION BRACING
- PROPOSED PAVEMENT TO BE CONSTRUCTED IN PHASE IAa
- PROPOSED PAVEMENT TO BE CONSTRUCTED IN PHASE IAb
- TEMPORARY BRIDGE WIDENING & SHOULDER WIDENING (CONSTRUCTED PRE-PHASE)

CONTRA-FLOW
I-75 PHASE IB

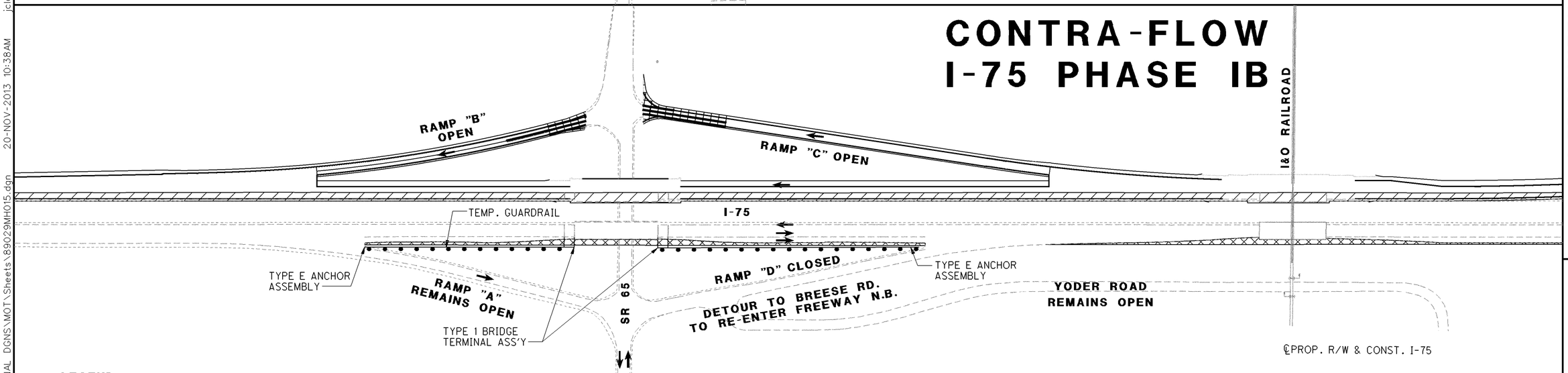

LEGEND:

- TRAFFIC FLOW ARROW
- COFFERDAMS AND EXCAVATION BRACING
- PROPOSED PAVEMENT CONSTRUCTED PRIOR TO PHASE IB
- PROPOSED PAVEMENT TO BE CONSTRUCTED IN PHASE IB
- TEMPORARY BRIDGE WIDENING & SHOULDER WIDENING (CONSTRUCTED PRE-PHASE)

HORIZONTAL SCALE IN FEET
0 50 100 200

CALCULATED CAC
CHECKED EJC

I-75 MAINTENANCE OF TRAFFIC
CONTRA-FLOW PHASE I, AT S.R.65

ALL-75-0.21

18 / 94

57 / 907

I:\pd\89029\Final Submission\FINAL DGNS\MOT\Sheets\89029MH015.dgn 20-NOV-2013 10:38AM jclark1

CONTRA-FLOW
I-75 PHASE IIA

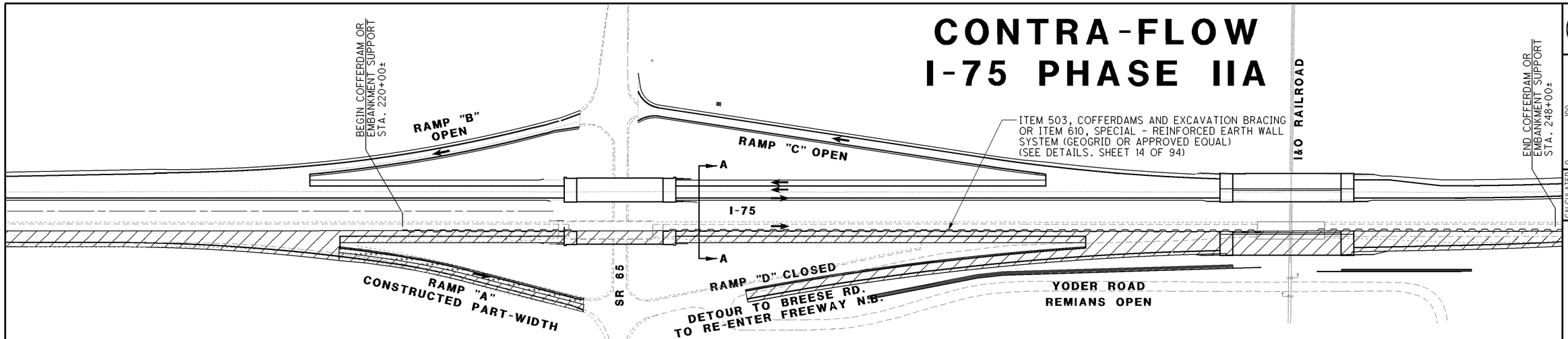

LEGEND:

- TRAFFIC FLOW ARROW
- COFFERDAMS AND EXCAVATION BRACING
- PROPOSED PAVEMENT TO BE CONSTRUCTED IN PHASE IIAa
- PROPOSED PAVEMENT TO BE CONSTRUCTED IN PHASE IIAb
- PROPOSED PAVEMENT CONSTRUCTED PRIOR TO PHASE II

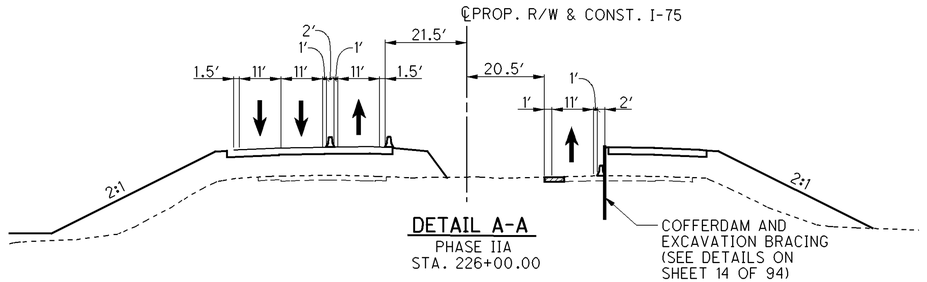

DETAIL A-A
PHASE IIA
STA. 226+00.00

COFFERDAM AND EXCAVATION BRACING (SEE DETAILS ON SHEET 14 OF 94)

CONTRA-FLOW
I-75 PHASE IIB
S.R. 65 PHASE 1 & 2

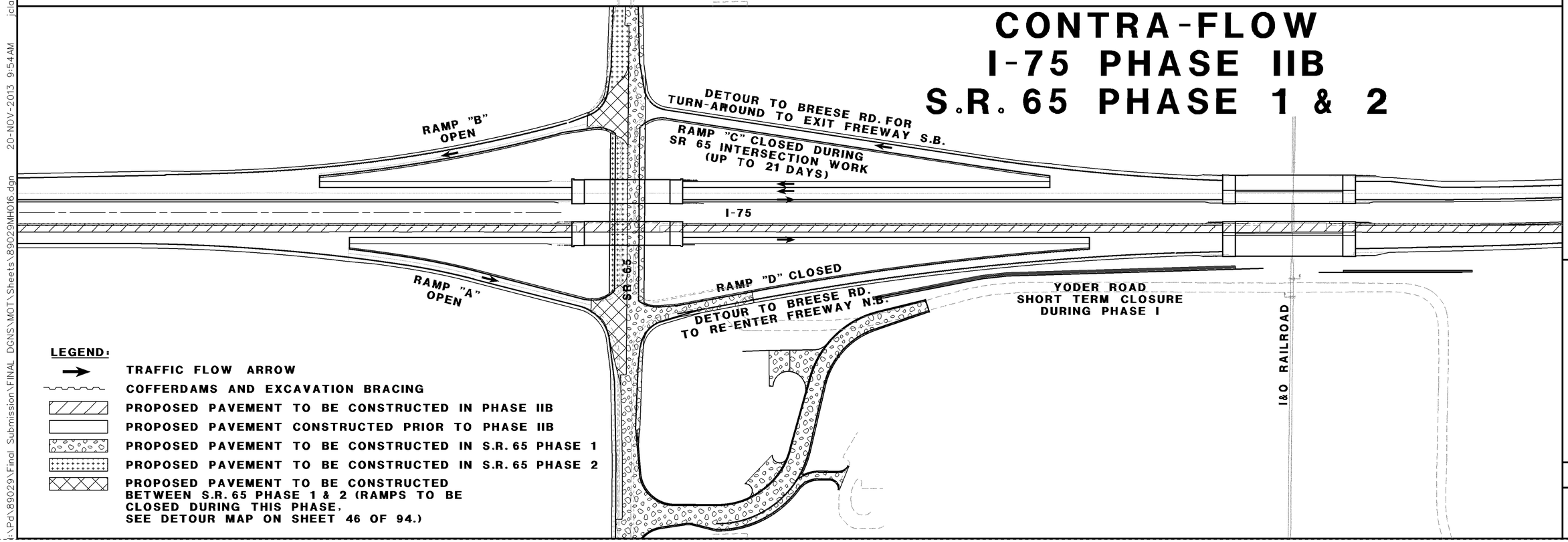

LEGEND:

- TRAFFIC FLOW ARROW
- COFFERDAMS AND EXCAVATION BRACING
- PROPOSED PAVEMENT TO BE CONSTRUCTED IN PHASE IIB
- PROPOSED PAVEMENT CONSTRUCTED PRIOR TO PHASE IIB
- PROPOSED PAVEMENT TO BE CONSTRUCTED IN S.R. 65 PHASE 1
- PROPOSED PAVEMENT TO BE CONSTRUCTED IN S.R. 65 PHASE 2
- PROPOSED PAVEMENT TO BE CONSTRUCTED BETWEEN S.R. 65 PHASE 1 & 2 (RAMPS TO BE CLOSED DURING THIS PHASE, SEE DETOUR MAP ON SHEET 46 OF 94.)

N

0 50 100 200 HORIZONTAL SCALE IN FEET

CALCULATED CAC
CHECKED EJC

I-75 MAINTENANCE OF TRAFFIC
CONTRA-FLOW PHASE II, AT S.R. 65

ALL-75-0.21

19/94

58/907

I:\Pdv\89029\Final Submission\FINAL DGNS\MOT\Sheets\89029MH016.dgn 20-NOV-2013 9:54AM jclark1

CULVERT REPLACEMENT PHASE 1
PRIOR TO I-75 PHASE 1

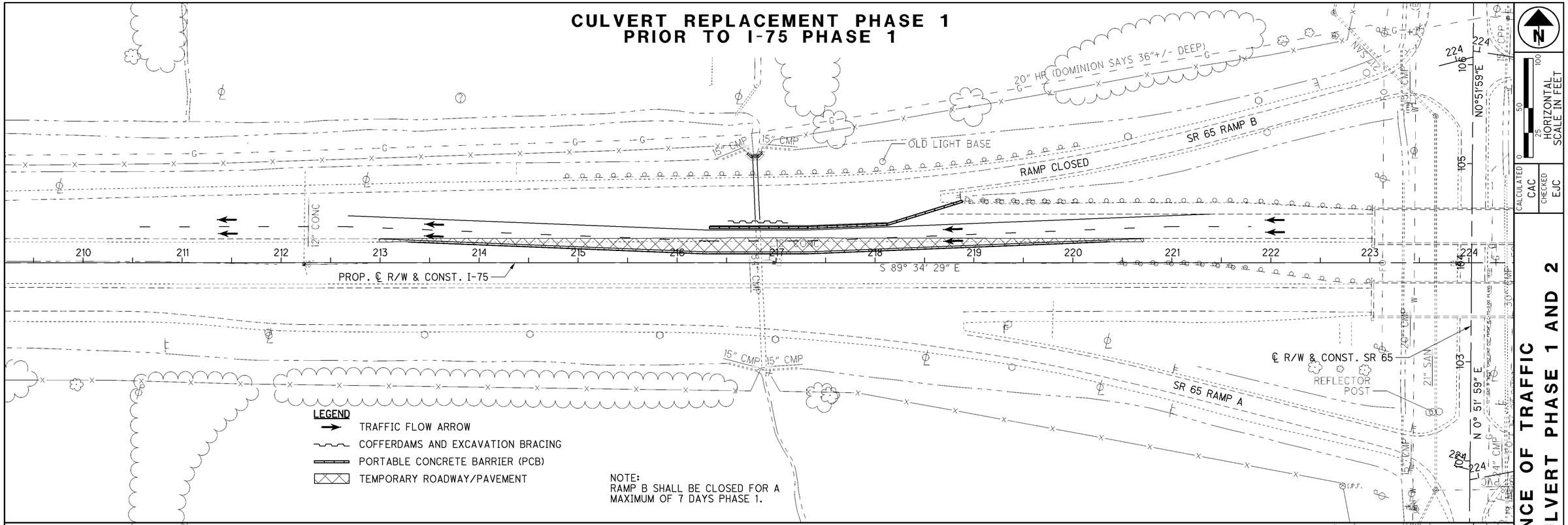

NOTE:
RAMP B SHALL BE CLOSED FOR A MAXIMUM OF 7 DAYS PHASE 1.

CULVERT REPLACEMENT PHASE 2
PRIOR TO I-75 PHASE 1

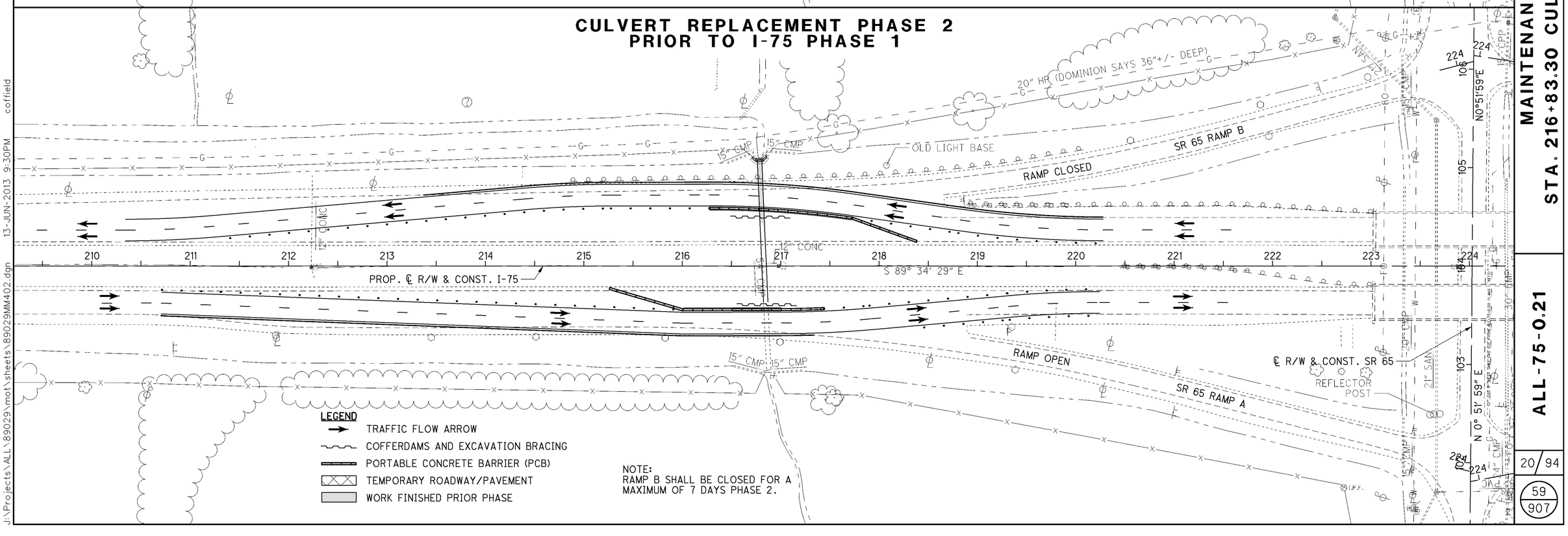

NOTE:
RAMP B SHALL BE CLOSED FOR A MAXIMUM OF 7 DAYS PHASE 2.

HORIZONTAL SCALE IN FEET
0 25 50 100

CALCULATED CAC
CHECKED EJC

MAINTENANCE OF TRAFFIC
STA. 216+83.30 CULVERT PHASE 1 AND 2
ALL-75-0.21

20/94
59/907

J:\Projects\ALL\89029\mot\sheets\89029MM402.dgn 13-JUN-2013 9:30PM coffield

CULVERT REPLACEMENT PHASE 3
PRIOR TO I-75 PHASE 1

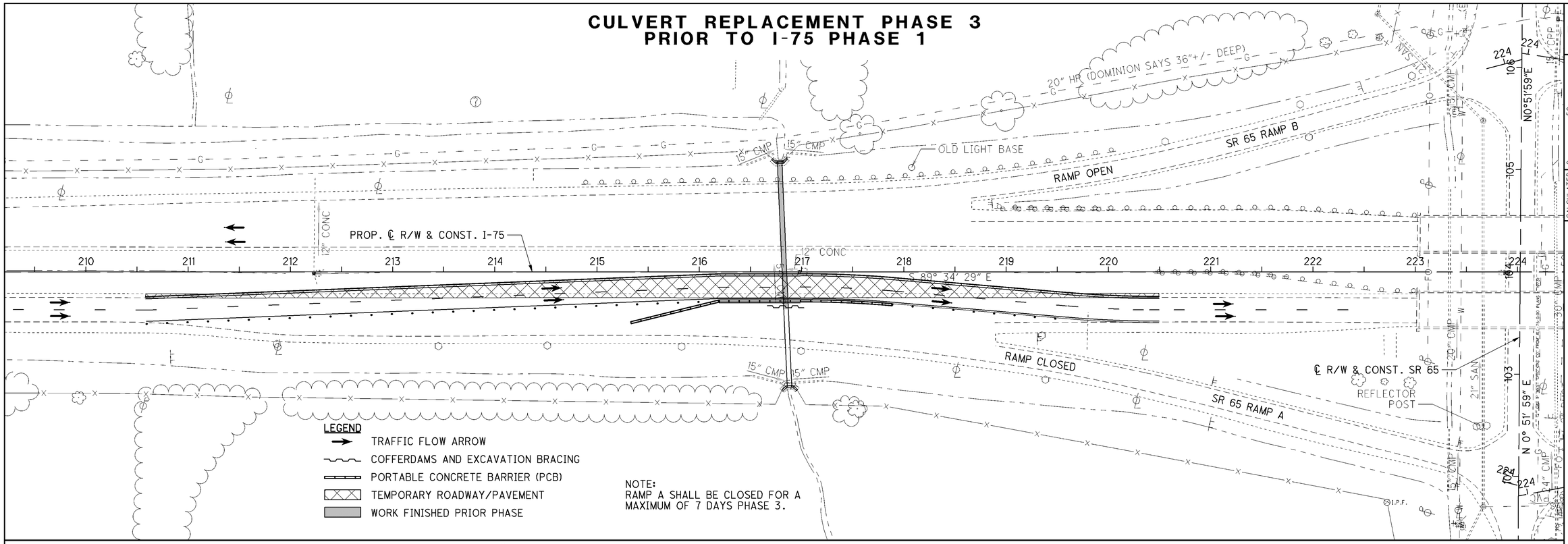

NOTE:
RAMP A SHALL BE CLOSED FOR A MAXIMUM OF 7 DAYS PHASE 3.

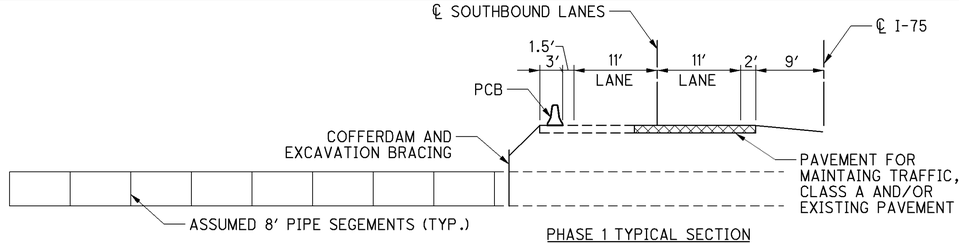

PHASE 1 TYPICAL SECTION
STA. 216+83

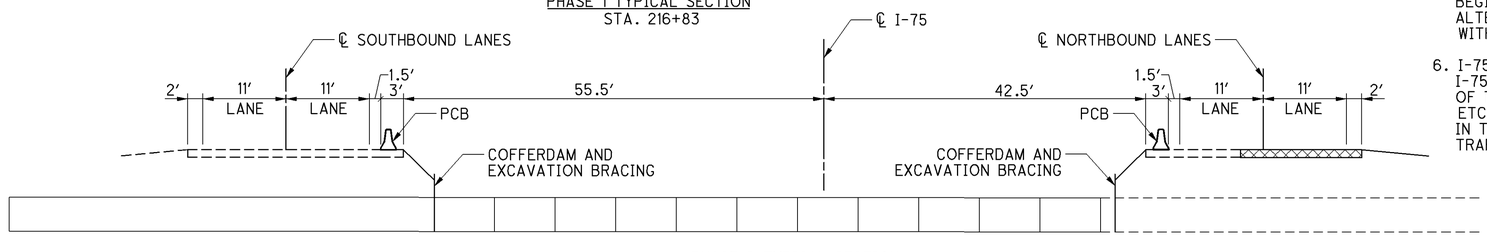

PHASE 2 TYPICAL SECTION
STA. 216+83

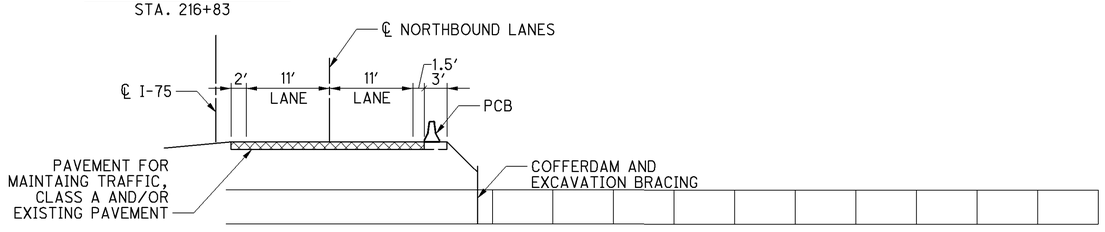

PHASE 3 TYPICAL SECTION
STA. 216+83

NOTES:

1. RELOCATE OR COVER EXISTING CONFLICTING SIGNS AS NEEDED.
2. LANE SHIFT SIGNING AND PAVEMENT MARKINGS SHALL BE PER MT-102.10 AND/OR MT-102.20;
3. SPEED LIMIT SHALL BE POSTED AT 55 MPH.
4. EMBANKMENT REQUIRED FOR THIS M.O.T. MAY REMAIN IN PLACE AS PROPOSED. SEE PROPOSED CROSS SECTIONS AND CULVERT PLAN AND PROFILE FOR MORE INFORMATION.
5. THIS WORK SHALL BE COMPLETED AS PRE-PHASE WORK AT THE BEGINNING OF THE FIRST CONSTRUCTION SEASON UNLESS AN ALTERNATE PLAN AND/OR SCHEDULE IS COORDINATED WITH AND APPROVED BY THE ENGINEER.
6. I-75 SHALL BE RESTORED TO EXISTING CONDITION SUCH THAT I-75 PHASE 1 TRAVEL LANES CAN BE MAINTAINED UPON COMPLETION OF THE CULVERT WORK. ALL LABOR, EQUIPMENT, MATERIALS, ETC. REQUIRED FOR THIS WORK AND NOT SEPARATELY ITEMIZED IN THE PLANS SHALL BE INCLUDED WITH ITEM 614, MAINTAINING TRAFFIC, AS PER PLAN, LUMP SUM.

HORIZONTAL SCALE IN FEET
0 25 50 100

CALCULATED CAC
CHECKED EJC

MAINTENANCE OF TRAFFIC
STA. 216+83.30 CULVERT PHASE 3

ALL-75-0.21

J:\Projects\ALL\89029\mot\sheets\89029MM403.dgn 13-JUN-2013 9:30PM coffield

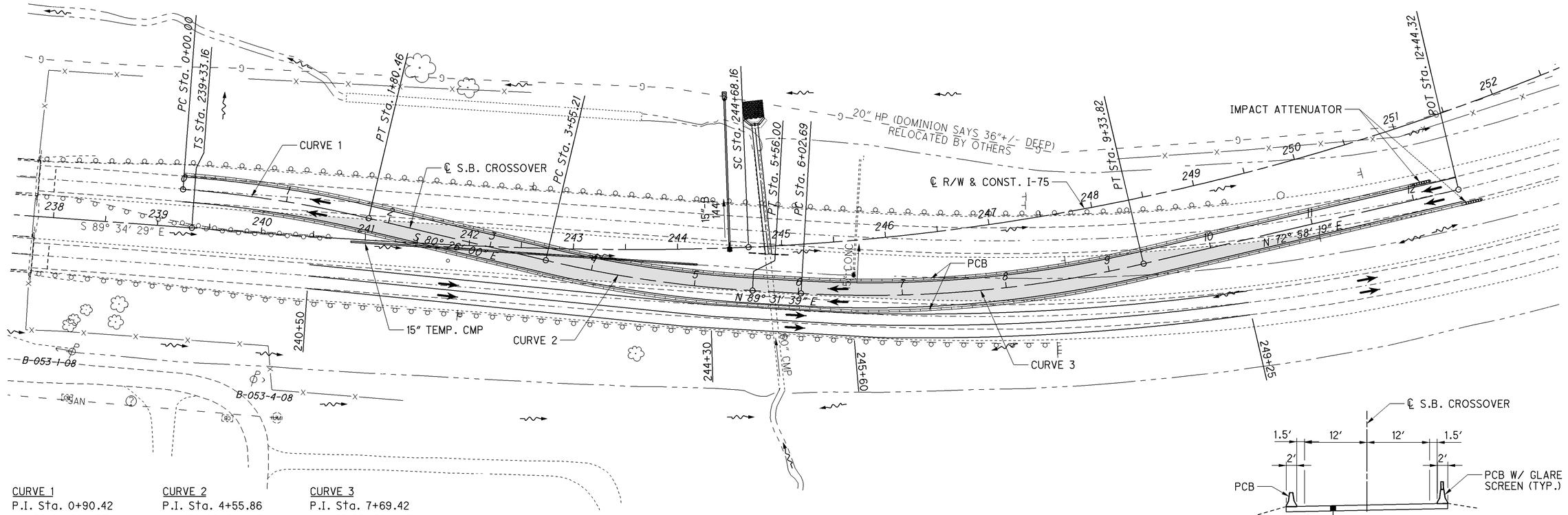

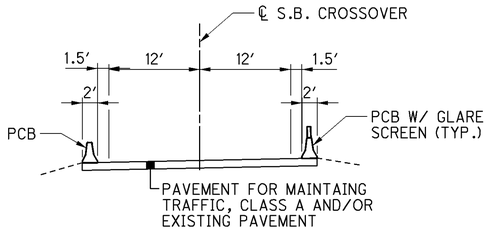

TYPICAL SECTION

APRROX. LIMITS:
STA. 1+25 TO STA. 5+25
STA. 6+50 TO STA. 12+00

CURVE 1	CURVE 2	CURVE 3
P.I. Sta. 0+90.42	P.I. Sta. 4+55.86	P.I. Sta. 7+69.42
Δ = 9° 01' 20" (RT)	Δ = 10° 02' 21" (LT)	Δ = 16° 33' 20" (LT)
Dc = 4° 59' 59"	Dc = 4° 59' 59"	Dc = 4° 59' 59"
R = 1,146.00'	R = 1,146.00'	R = 1,146.00'
T = 90.42'	T = 100.66'	T = 166.73'
L = 180.46'	L = 200.80'	L = 331.13'
E = 3.56'	E = 4.41'	E = 12.07'
C = 180.27'	C = 200.54'	C = 329.98'
C.B. = S 84° 56' 40" E	C.B. = S 85° 27' 10" E	C.B. = N 81° 14' 59" E

PHASE I

CULVERT @ STA. 245+00

▭ - PAVEMENT FOR MAINTAING TRAFFIC, CLASS A

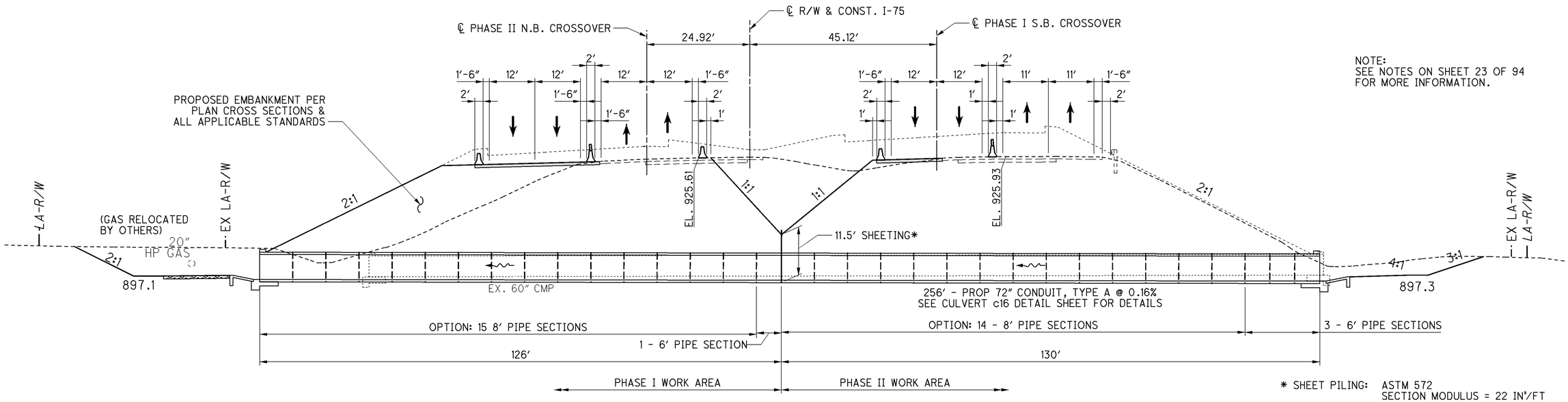

NOTE:
SEE NOTES ON SHEET 23 OF 94
FOR MORE INFORMATION.

* SHEET PILING: ASTM 572
SECTION MODULUS = 22 IN³/FT
MOMENT OF INERTIA = 215 IN⁴/FT
EMBEDMENT DEPTH = 22 FT

MAINTENANCE OF TRAFFIC
CULVERT C16 AT STA. 245+00 - PHASE I

CALCULATED EJC CHECKED CAC

HORIZONTAL SCALE IN FEET
0 25 50 100

ALL-75-0.21

22 / 94

61 / 907

J:\Projects\ALL\89029\mot\sheets\89029MM400.dgn 13-JUN-2013 9:30PM coffield

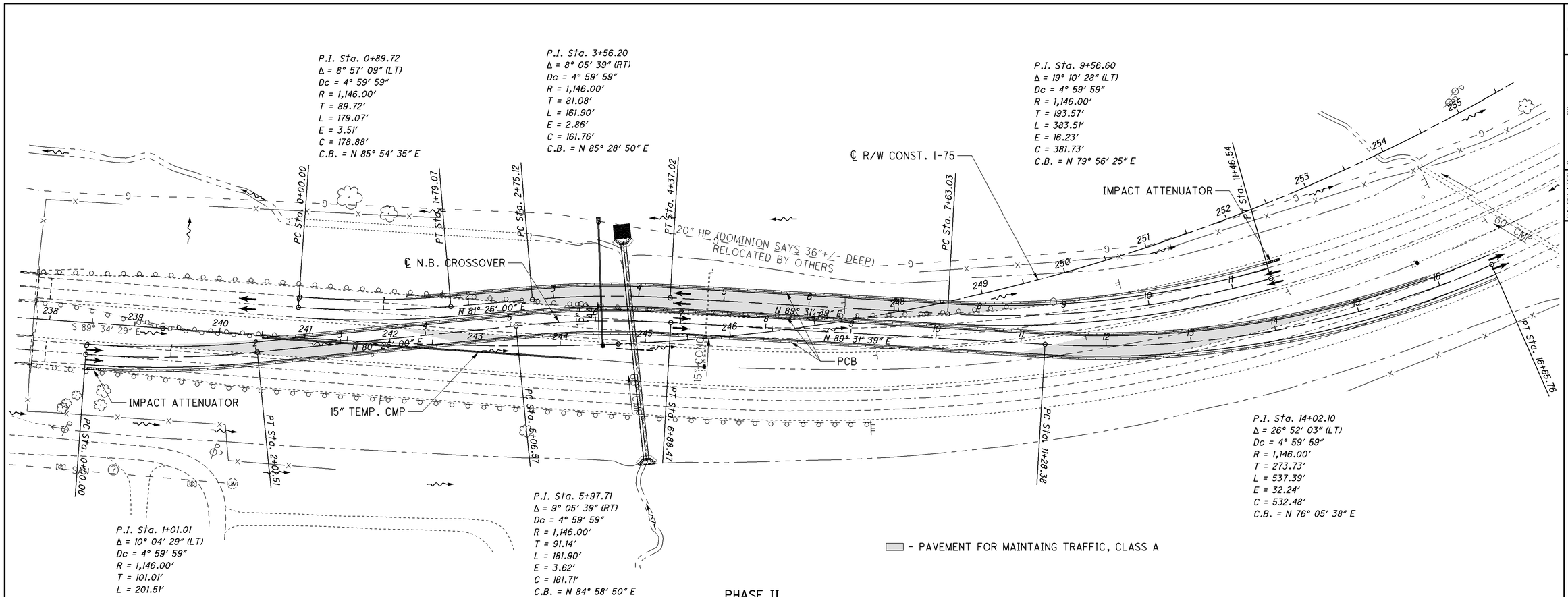

PHASE II

CULVERT @ STA. 245+00

NOTES:

1. RELOCATE OR COVER EXISTING CONFLICTING SIGNS AS NEEDED.
2. WORK ZONE CROSSOVER LIGHTING SHALL BE SUPPLIED PER STD. DWG. MT-100.00; LANE SHIFT SIGNING AND PAVEMENT MARKINGS SHALL BE PER MT-102.10 AND/OR MT-102.20; CROSSOVER SIGNING AND PAVEMENT MARKINGS SHALL BE PER STD. DWG. MT-95.71.
3. SPEED LIMIT SHALL BE POSTED AT 55 MPH.
4. EMBANKMENT REQUIRED FOR THIS M.O.T. MAY REMAIN IN PLACE AS PROPOSED. SEE PROPOSED CROSS SECTIONS AND CULVERT PLAN AND PROFILE FOR MORE INFORMATION.
5. PCB MAY BE USED IN LIEU OF RECONSTRUCTING EXISTING GUARDRAIL THAT WILL BE REMOVED FOR THIS WORK.
6. THIS WORK SHALL BE COMPLETED AS PRE-PHASE WORK AT THE BEGINNING OF THE FIRST CONSTRUCTION SEASON UNLESS AN ALTERNATE PLAN AND/OR SCHEDULE IS COORDINATED WITH AND APPROVED BY THE ENGINEER.
7. I-75 SHALL BE RESTORED TO EXISTING CONDITION SUCH THAT I-75 PHASE 1 TRAVEL LANES CAN BE MAINTAINED UPON COMPLETION OF THE CULVERT WORK. ALL LABOR, EQUIPMENT, MATERIALS, ETC. REQUIRED FOR THIS WORK AND NOT SEPARATELY ITEMIZED IN THE PLANS SHALL BE INCLUDED WITH ITEM 614, MAINTAINING TRAFFIC, AS PER PLAN, LUMP SUM.

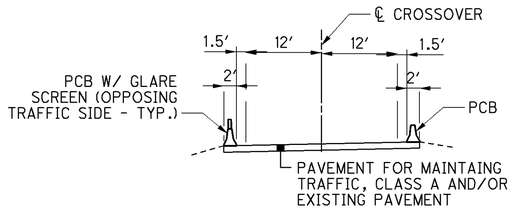

TYPICAL SECTION

NOTE:
SEE MOT CULVERT SECTION ON SHEET 22 OF 94 FOR MORE INFORMATION

HORIZONTAL SCALE IN FEET
0 30 60 120

CALCULATED EJC
CHECKED CAC

MAINTENANCE OF TRAFFIC
CULVERT C16 AT STA. 245+00 - PHASE 2

ALL-75-0.21

23/94

62/907

J:\Projects\ALL\89029\mot\sheets\89029MM401.dgn 13-JUN-2013 9:30PM coffield

TRANSITION BETWEEN SOUTH & NORTH SECTIONS

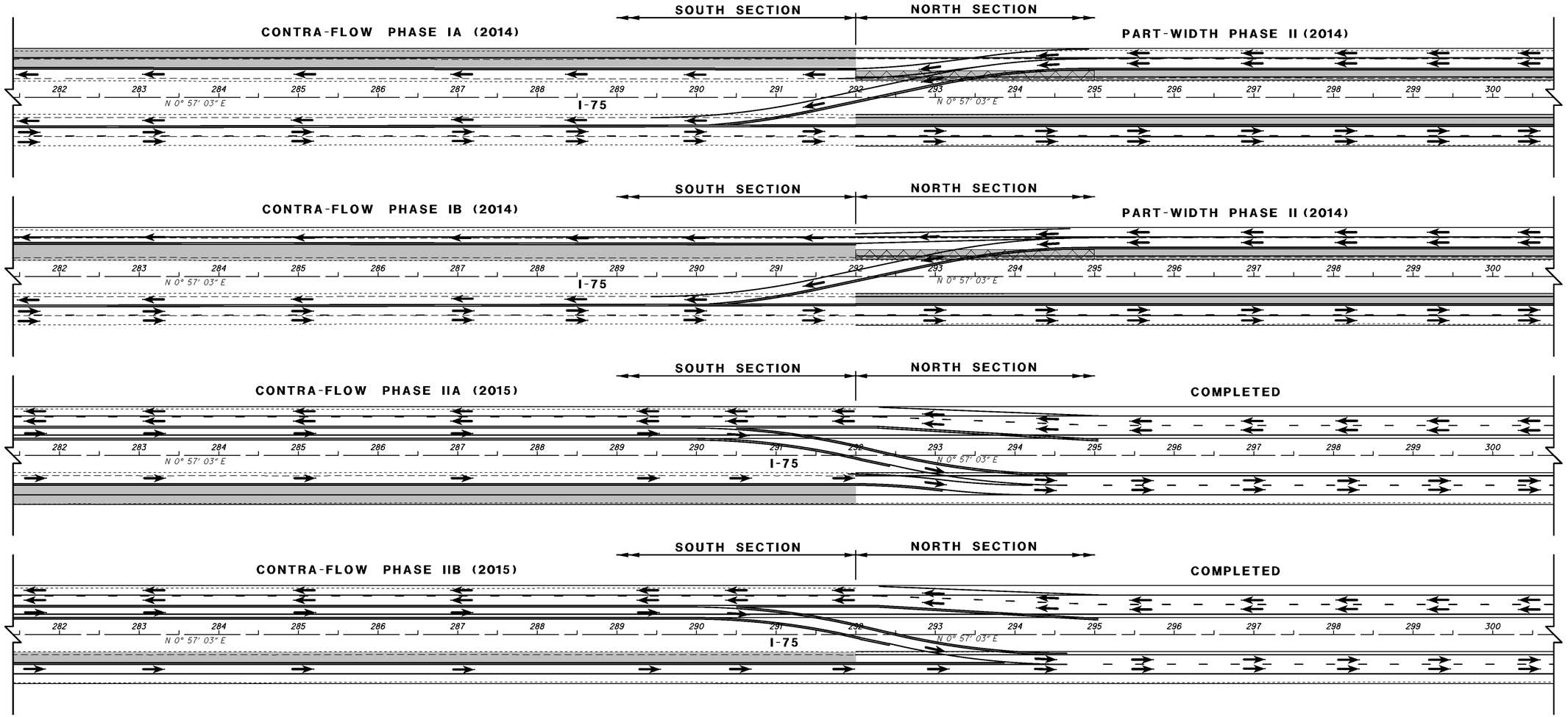

NOTE:
SOUTH SECTION IS PROJECT ALL-75-0.21 PID 89029
NORTH SECTION IS PROJECT ALL-75-5.53 PIN 76691
CROSSOVERS TO BE CONSTRUCTED WITH THE ALL-75-0.21 PROJECT.
ALL RELATED QUANTITIES SHALL BE INCLUDED IN THE ESTIMATE FOR THE ALL-75-0.21 PROJECT.

LEGEND:

- TRAVEL LANE
- LANE LINE
- PORTABLE CONCRETE BARRIER
- PROPOSED PAVEMENT TO BE CONSTRUCTED
- TO BE CONSTRUCTED WITH THE ALL-75-5.53 PROJECT IN PRE-PHASE BEFORE SOUTH SECTION BEGINS SO THAT CROSSOVER DOES NOT NEED TO SLIDE DOWN STATION

HORIZONTAL SCALE IN FEET
0 35 70 140

CALCULATED CAC
CHECKED EJC

MAINTENANCE OF TRAFFIC
TRANSITION BETWEEN SOUTH & NORTH SECTIONS

ALL-75-0.21

24/94

63/907

J:\Projects\ALL\89029\mot\sheets\89029MM001.dgn 13-JUN-2013 9:30PM coffield

CURVE MOT-1
P.I. Sta. 3+14.47
Δ = 8° 00′ 00″ (RT)
Dc = 3° 00′ 00″
R = 1,909.86′
T = 133.55′
L = 266.67′
E = 4.66′
C = 266.45′
C.B. = N 4° 40′ 53″ E

CURVE MOT-2
P.I. Sta. 7+37.97
Δ = 8° 00′ 00″ (LT)
Dc = 3° 00′ 00″
R = 1,909.86′
T = 133.55′
L = 266.67′
E = 4.66′
C = 266.45′
C.B. = N 4° 40′ 53″ E

NOTES:
SEE STD. DWG. MT-95.70 FOR ADDITIONAL CROSSOVER DETAILS AND NOTES, INCLUDING INFORMATION REGARDING USE OF PCB.

SEE STD. DWG. MT-100.00 FOR CROSSOVER LIGHTING DETAILS.

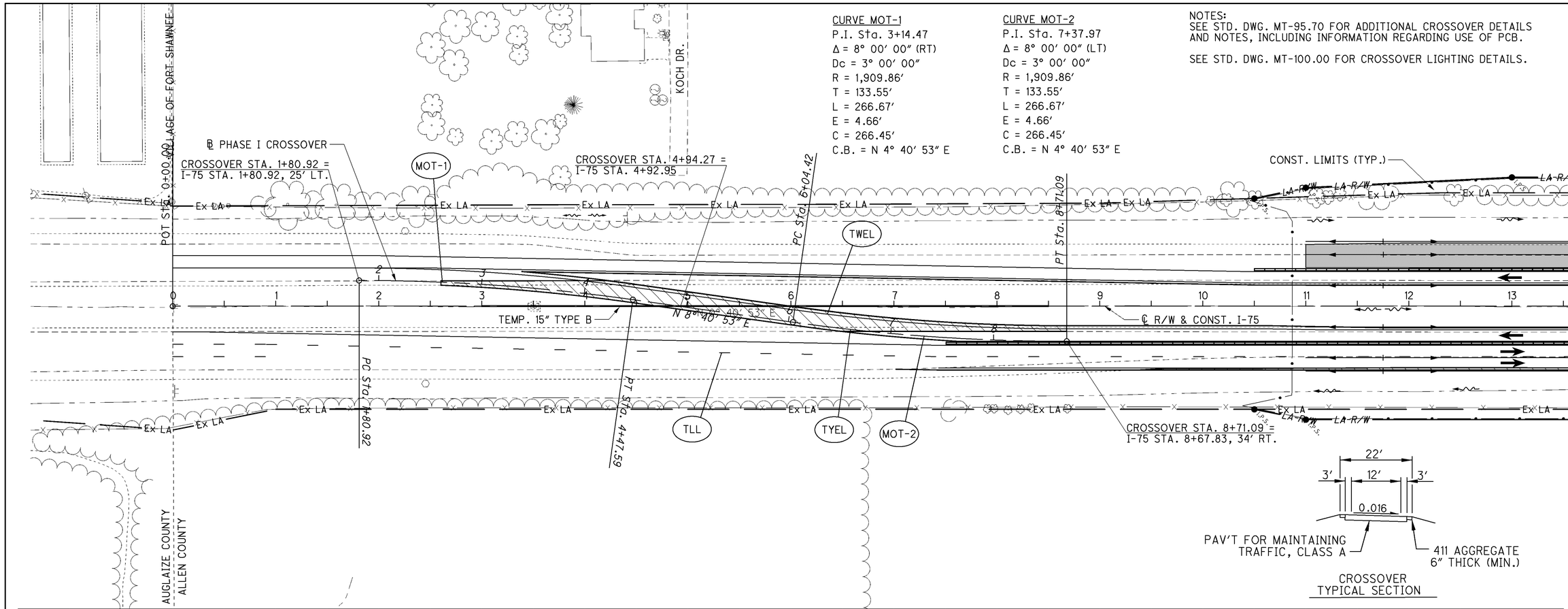

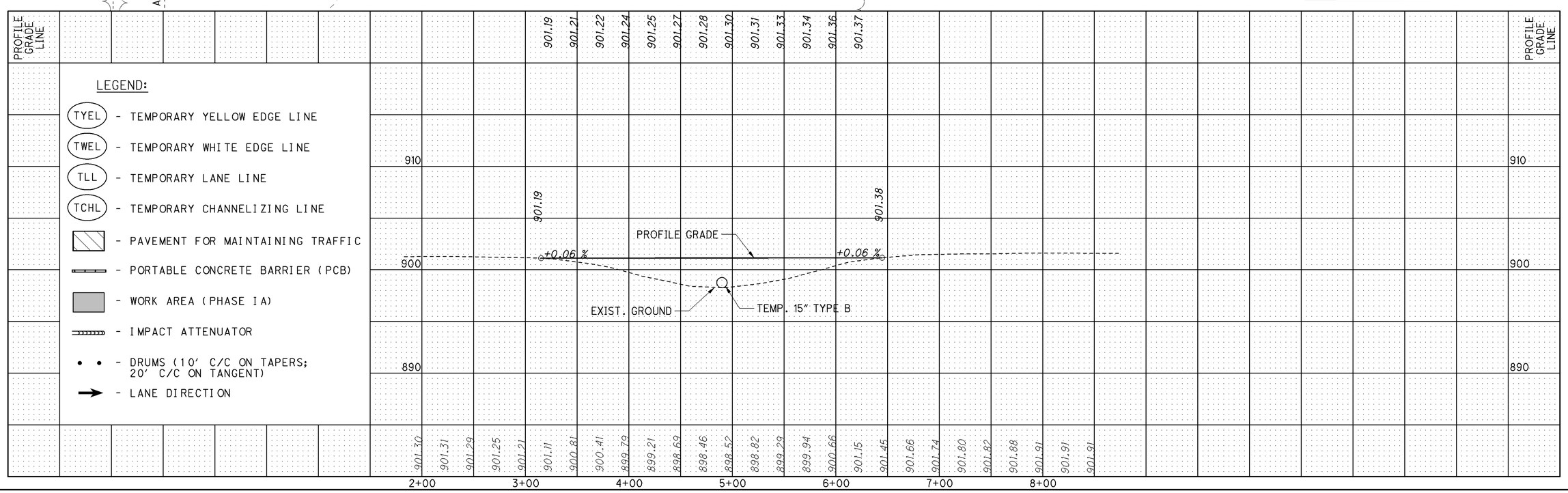

LEGEND:

- TYEL - TEMPORARY YELLOW EDGE LINE
- TWEL - TEMPORARY WHITE EDGE LINE
- TLL - TEMPORARY LANE LINE
- TCHL - TEMPORARY CHANNELIZING LINE
- PAVEMENT FOR MAINTAINING TRAFFIC
- PORTABLE CONCRETE BARRIER (PCB)
- WORK AREA (PHASE IA)
- IMPACT ATTENUATOR
- DRUMS (10′ C/C ON TAPERS; 20′ C/C ON TANGENT)
- LANE DIRECTION

HORIZONTAL SCALE IN FEET 0 25 50 100

CALCULATED CAC
CHECKED EJC

MAINTENANCE OF TRAFFIC
BEGIN PROJECT CROSSOVER PHASE I

ALL-75-0.21

J:\Projects\ALL\89029\mot\sheets\89029MP102.dgn 13-JUN-2013 9:30PM coffield

CURVE MOT-1	CURVE MOT-2	CURVE MOT-3
P.I. Sta. 290+04.75	P.I. Sta. 295+14.47	P.I. Sta. 293+07.43
Δ = 8° 00′ 00″ (LT)	Δ = 8° 00′ 00″ (RT)	Δ = 6° 48′ 22″ (LT)
Dc = 3° 00′ 00″	Dc = 3° 00′ 00″	Dc = 3° 00′ 00″
R = 1,909.86′	R = 1,909.86′	R = 1,909.86′
T = 133.55′	T = 133.55′	T = 113.57′
L = 266.67′	L = 266.67′	L = 226.87′
E = 4.66′	E = 4.66′	E = 3.37′
C = 266.45′	C = 266.45′	C = 226.74′
C.B. = N 3° 02′ 57″ W	C.B. = N 3° 02′ 57″ W	C.B. = N 2° 27′ 07″ W

NOTES:
THIS CROSSOVER IS TO BE USED BETWEEN PHASE II OF ALL-75-5.53 PROJECT AND PHASE I OF THE ALL-75-0.21 PROJECT AND IS TO BE CONSTRUCTED AS PART OF THE ALL-75-0.21 PROJECT.

SEE STD. DWG. MT-95.70 FOR ADDITIONAL CROSSOVER DETAILS AND NOTES, INCLUDING INFORMATION REGARDING USE OF PCB.

SEE STD. DWG. MT-100.00 FOR CROSSOVER LIGHTING DETAILS.

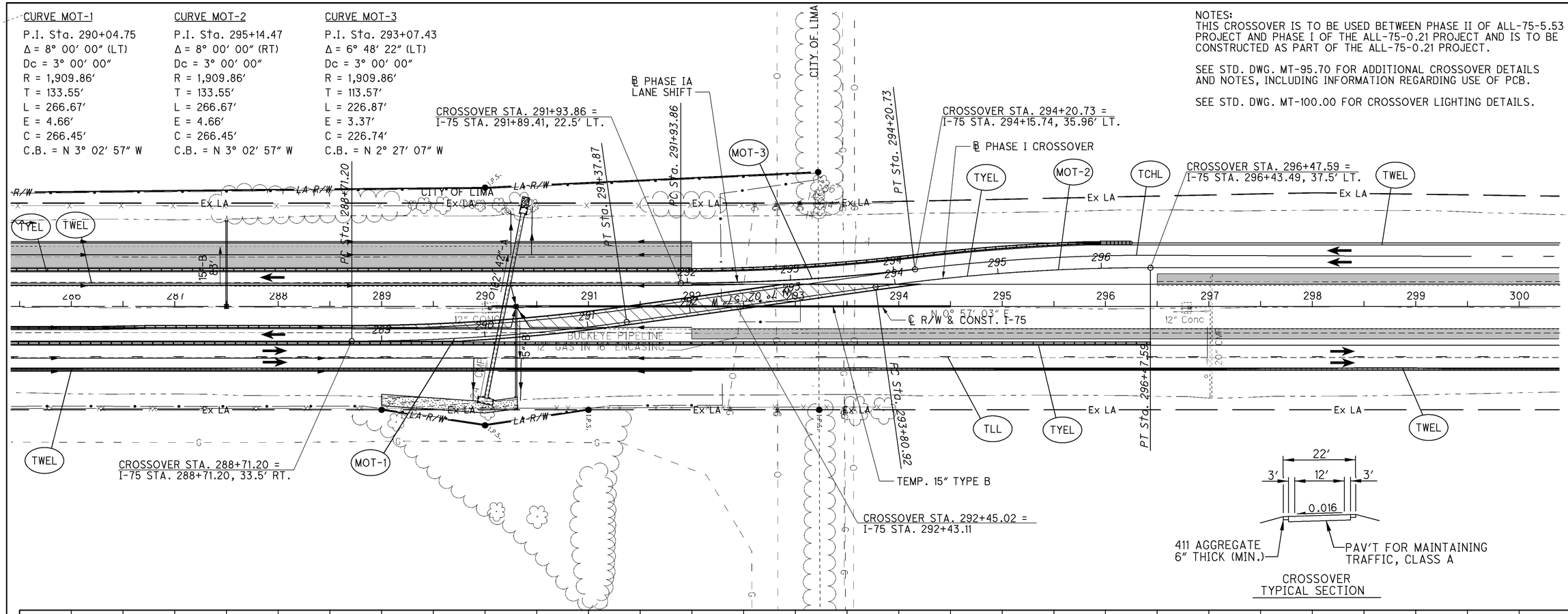

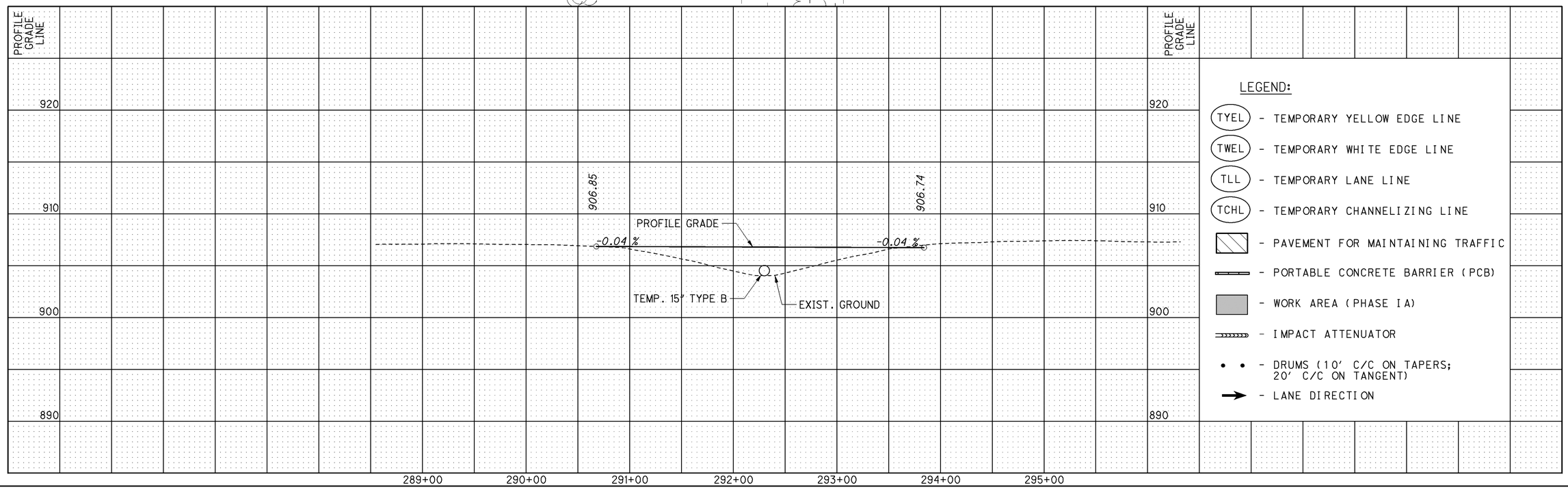

LEGEND:

- TYEL - TEMPORARY YELLOW EDGE LINE
- TWEL - TEMPORARY WHITE EDGE LINE
- TLL - TEMPORARY LANE LINE
- TCHL - TEMPORARY CHANNELIZING LINE
- PAVEMENT FOR MAINTAINING TRAFFIC
- PORTABLE CONCRETE BARRIER (PCB)
- WORK AREA (PHASE IA)
- IMPACT ATTENUATOR
- DRUMS (10′ C/C ON TAPERS; 20′ C/C ON TANGENT)
- LANE DIRECTION

HORIZONTAL SCALE IN FEET
0 25 50 100

CALCULATED CAC CHECKED EJC

MAINTENANCE OF TRAFFIC
END OF PROJECT CROSSOVER PHASE I

ALL-75-0.21

26/94

65/907

J:\Projects\ALL\89029\mot\sheets\89029MP100.dgn 13-JUN-2013 9:30PM coffield

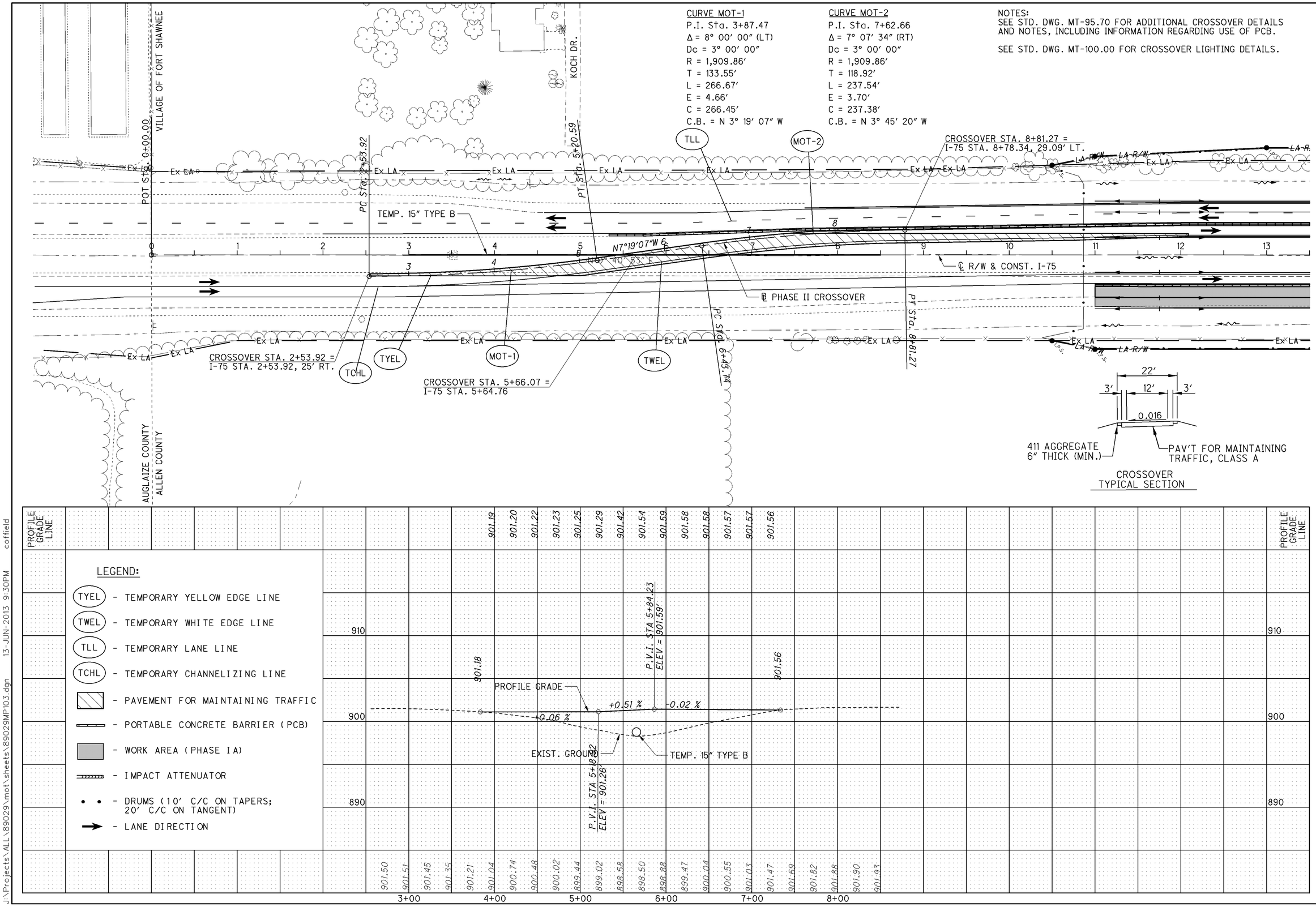

HORIZONTAL SCALE IN FEET

CALCULATED CAC CHECKED EJC

MAINTENANCE OF TRAFFIC
BEGIN PROJECT CROSSOVER PHASE II

ALL-75-0.21

27/94

66/907

J:\Projects\ALL\89029\mot\sheets\89029MP103.dgn 13-JUN-2013 9:30PM coffield

CURVE MOT-1	CURVE MOT-2	CURVE MOT-3
P.I. Sta. 290+01.19	P.I. Sta. 294+28.28	P.I. Sta. 293+07.88
Δ = 8° 00′ 00″ (RT)	Δ = 8° 00′ 00″ (LT)	Δ = 5° 04′ 17″ (RT)
Dc = 3° 00′ 00″	Dc = 3° 00′ 00″	Dc = 3° 00′ 00″
R = 1,909.86′	R = 1,909.86′	R = 1,909.86′
T = 133.55′	T = 133.55′	T = 84.58′
L = 266.67′	L = 266.67′	L = 169.05′
E = 4.66′	E = 4.66′	E = 1.87′
C = 266.45′	C = 266.45′	C = 168.99′
C.B. = N 4° 57′ 03″ E	C.B. = N 4° 57′ 03″ E	C.B. = N 3° 29′ 12″ E

NOTES:
THIS CROSSOVER IS TO BE USED BETWEEN THE COMPLETED ALL-75-5.53 PROJECT AND PHASE II OF THE ALL-75-0.21 PROJECT AND IS TO BE CONSTRUCTED AS PART OF THE ALL-75-0.21 PROJECT.

SEE STD. DWG. MT-95.70 FOR ADDITIONAL CROSSOVER DETAILS AND NOTES, INCLUDING INFORMATION REGARDING USE OF PCB.

SEE STD. DWG. MT-100.00 FOR CROSSOVER LIGHTING DETAILS.

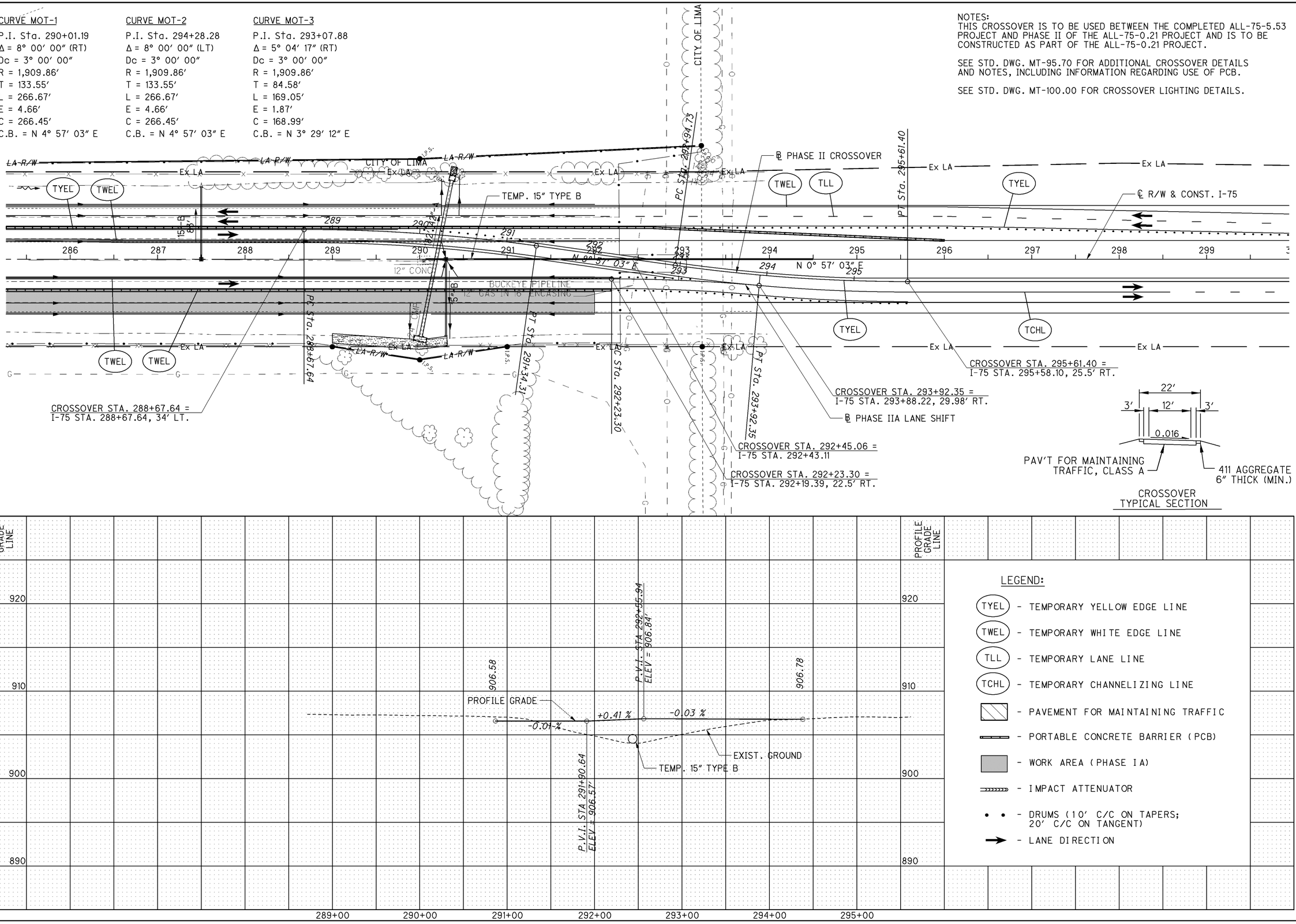

LEGEND:

- TYEL - TEMPORARY YELLOW EDGE LINE
- TWEL - TEMPORARY WHITE EDGE LINE
- TLL - TEMPORARY LANE LINE
- TCHL - TEMPORARY CHANNELIZING LINE
- PAVEMENT FOR MAINTAINING TRAFFIC
- PORTABLE CONCRETE BARRIER (PCB)
- WORK AREA (PHASE IA)
- IMPACT ATTENUATOR
- DRUMS (10′ C/C ON TAPERS; 20′ C/C ON TANGENT)
- LANE DIRECTION

HORIZONTAL SCALE IN FEET
0 25 50 100

CALCULATED CAC CHECKED EJC

MAINTENANCE OF TRAFFIC
END OF PROJECT CROSSOVER PHASE II

ALL-75-0.21

28/94

67/907

J:\Projects\ALL\89029\mot\sheets\89029MP101.dgn 13-JUN-2013 9:30PM coffield

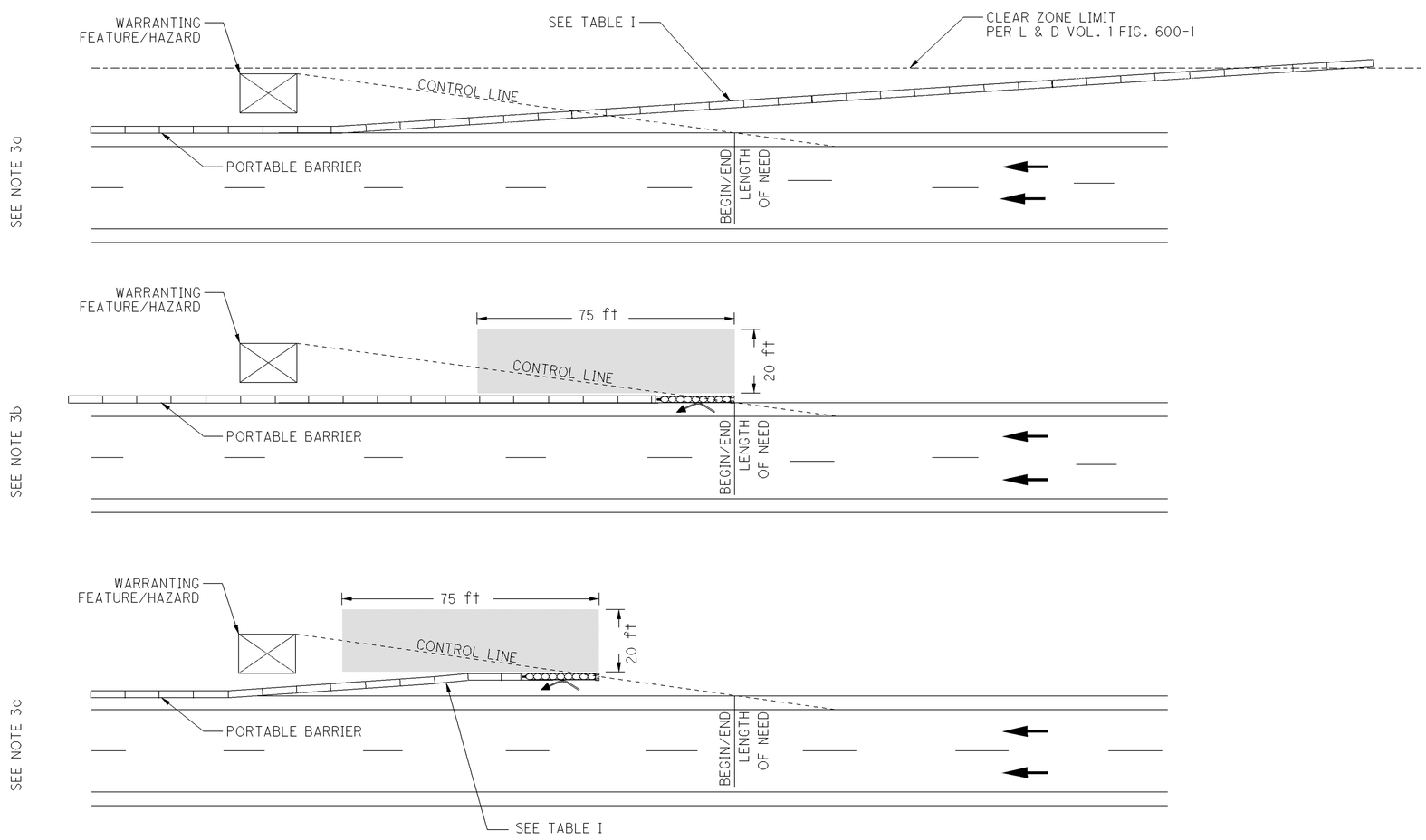

TABLE I

SPEED LIMIT (MPH)	PB FLARE RATE MINIMUM
25	8:1
30	8:1
35	10:1
40	11:1
45	13:1
50	14:1
55	16:1
60	17:1
65	19:1

NOTES

1. Attenuators shall be installed per the manufacturers' specifications.
2. Recovery area shall have slopes 3:1 or flatter and be free of workers, hazards, equipment, drop-offs, and material storage.
3. The Contractor shall select one of the three acceptable options for terminating portable barrier:
   a) Terminate flared section of portable barrier outside clear zone with tapered end only where cross slopes are 10:1 or flatter.
   b) Terminate portable barrier with an impact attenuator. A non-gating attenuator may be included in the length of need measurement.
   c) Flare a section of portable barrier to the length of need control line and terminate with an impact attenuator. A non-gating impact attenuator may be included in the flared section of portable barrier.
4. The Contractor shall submit documentation to the Engineer, 2 weeks prior to implementation, for acceptance when:
   a) Deviating from the three acceptable options for terminating portable barrier.

      Documentation shall explain any deviations and verify that the recovery area fulfills the manufacturers' specifications and Note 2.

   b) Using a gating impact attenuator in lieu of a non-gating impact attenuator.

      The gating impact attenuator length shall not be included as part of the length of need or recovery area requirements. Additional portable barrier will need to be added. The additional cost for the additional barrier required for a gating impact attenuator shall be included in the cost of the gating impact attenuator.

      Documentation shall verify that the extended recovery area fulfills the manufacturers' specifications and Note 2.
5. Gating impact attenuators shall not be used in gore locations or within the clear zone between bi-directional traffic.

LEGEND

RECOVERY AREA

PORTABLE BARRIER

NON-GATING IMPACT ATTENUATOR

DIRECTION OF TRAVEL

OFFICE OF TRAFFIC ENGINEERING

DESIGNED MER | REVIEWED

REVISION DATE 07/20/12 | CHECKED LAM

PIS NUMBER 2010175

IMPACT ATTENUATOR PLACEMENT

PLAN INSERT SHEET

ALL-75-0.21

1 / 1

29 / 94

68 / 907

J:\Projects\ALL\89029\mot\sheets\89029MM010.dgn 13-JUN-2013 9:30PM coffield

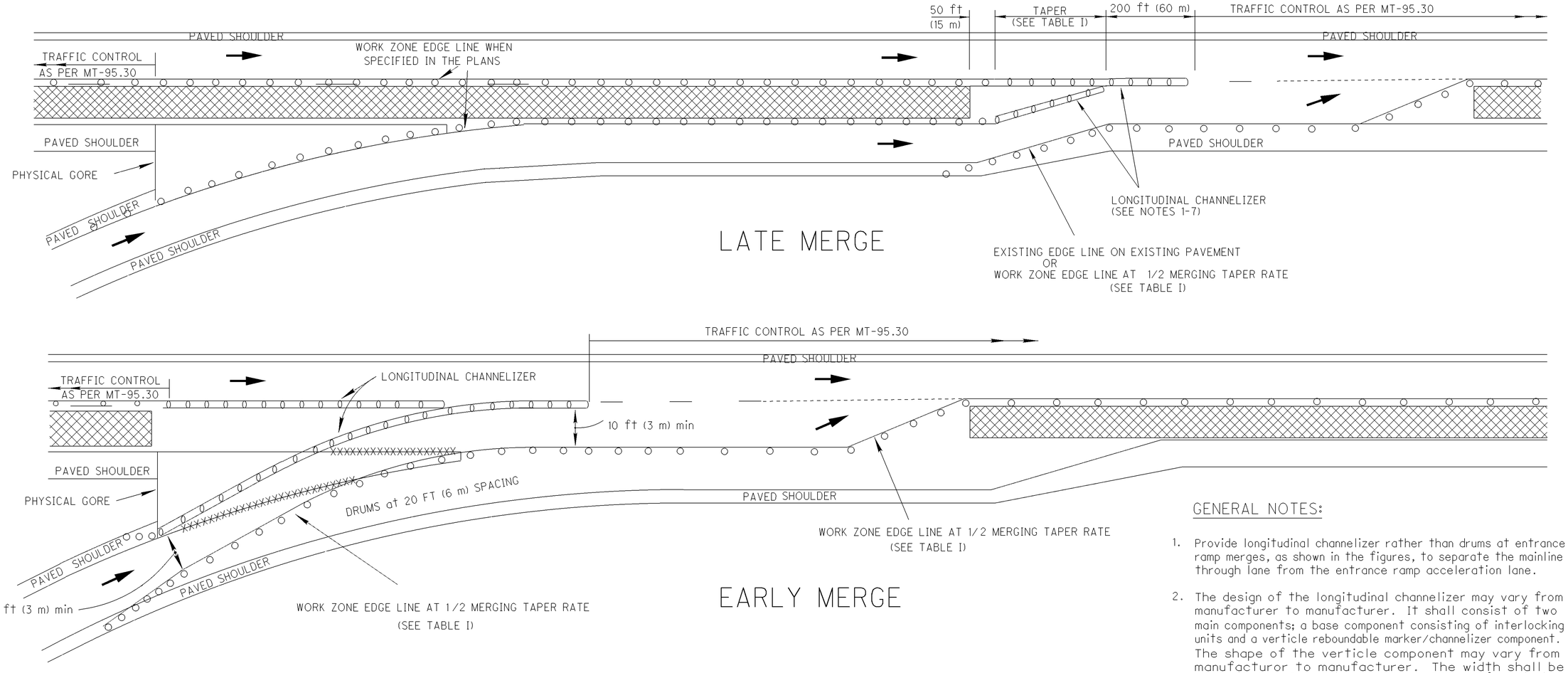

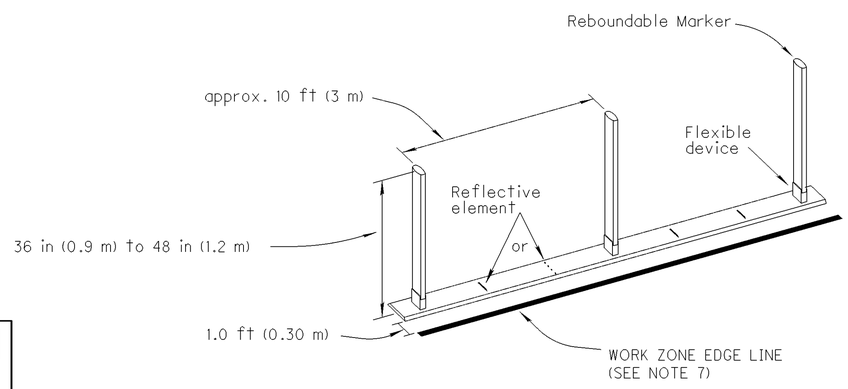

LEGEND

- WORK AREA
- DRUMS
- LONGITUDINAL CHANNELIZER
- REMOVE EXISTING MARKINGS
- DIRECTION OF TRAVEL

TABLE I

SPEED LIMIT (MPH)	MERGING TAPER RATE MINIMUM	1/2 MERGING TAPER RATE MINIMUM	SHOULDER TAPER RATE MINIMUM
25	11:1	6:1	4:1
30	15:1	8:1	5:1
35	21:1	11:1	7:1
40	27:1	14:1	9:1
45	45:1	23:1	15:1
50	50:1	25:1	17:1
55	55:1	28:1	18:1
60	60:1	30:1	20:1
65	65:1	33:1	22:1

GENERAL NOTES:

1. Provide longitudinal channelizer rather than drums at entrance ramp merges, as shown in the figures, to separate the mainline through lane from the entrance ramp acceleration lane.
2. The design of the longitudinal channelizer may vary from manufacturer to manufacturer. It shall consist of two main components; a base component consisting of interlocking units and a verticle reboundable marker/channelizer component. The shape of the verticle component may vary from manufacturor to manufacturer. The width shall be approximately 8 to 9 inches (200 to 230 mm) for eliptical designs and 4 to 6 inches (100 to 150 mm) for round (tubular) designs. The height of the vertical componant shall be within the range of 36 inches (0.9 m) minimum to 48 inches (1.2 m) maximum.
3. The longitudinal channelizer shall be NCHRP 350 compliant.
4. The vertical component shall be equipped with retro-reflective sheeting or with retro-reflective stripes. Where stripes are used, the stripes shall consist of two 3-inch wide bands placed a maximum of 2-inches from the top with a maximum of 6 inches between the bands.
5. The base component shall be equipped with reflectors.
6. The color of the base componant, including the attached reflectors, and of the retro-reflective sheeting or bands for the vertical componants shall be in conformance with the pavement marking colors established in the OMUTCD.
7. Where edge line is provided adjacent to the longitudinal channelizer, the edge line should be located 1 foot (0.30 m) from the longitudinal channelizer. The edge line should be provided if the resulting lane width would be 11 feet (3.3 m) or greater.
8. For additional information regarding traffic control at entrance ramps, see Standard Construction Drawings MT-98.10 and MT-98.11.

OFFICE OF TRAFFIC ENGINEERING

DESIGNED SHB REVIEWED SHB

REVISION DATE 04/17/09 Corrected CHECKED LAM

PID NUMBER 20101180

PLAN INSERT SHEET

LONGITUDINAL CHANNELIZER DETAIL

ALL-75-0.21

30/94

69/907

J:\Projects\ALL\89029\mot\sheets\89029MM011.dgn 13-JUN-2013 9:30PM coffield

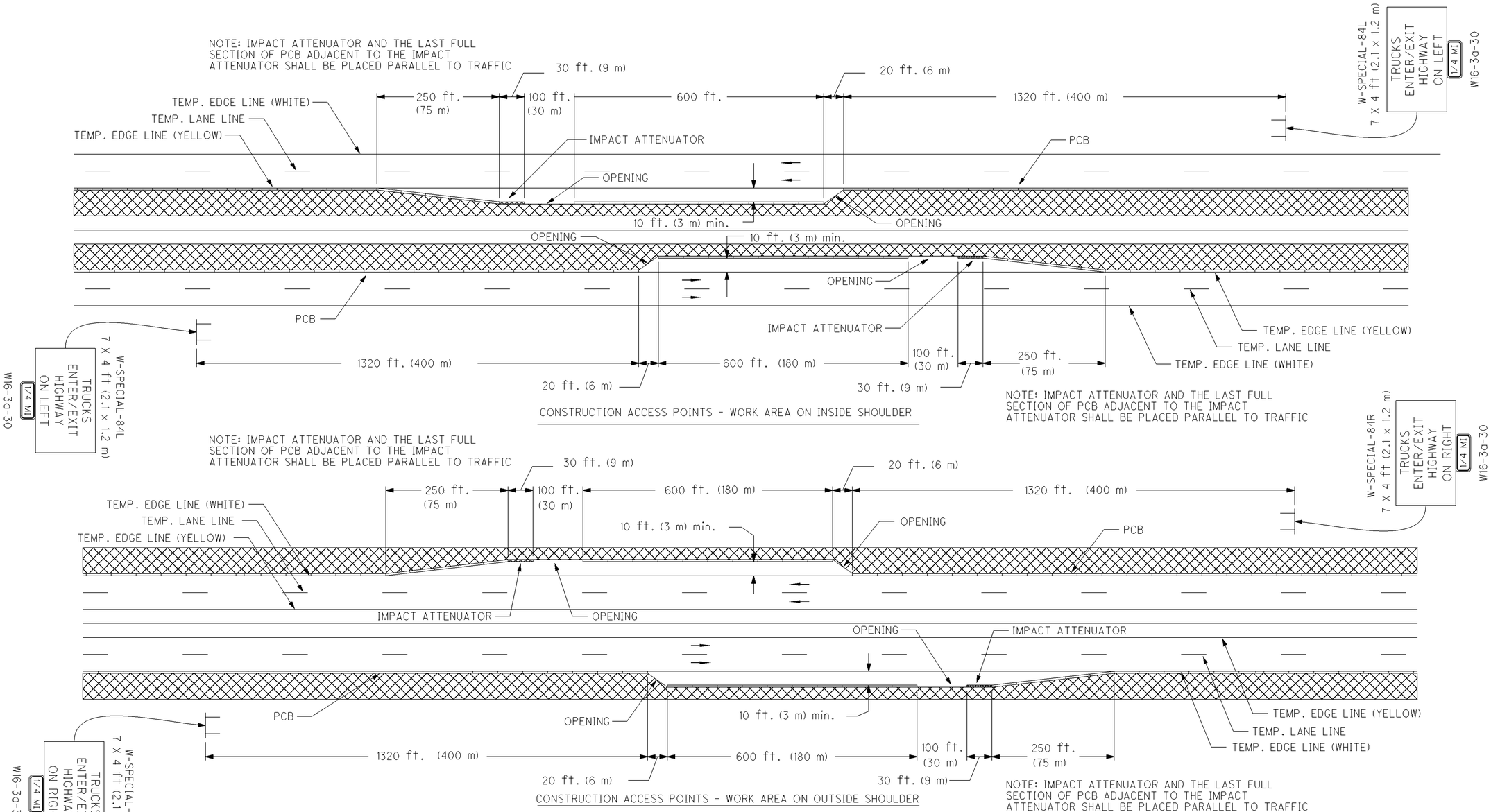

W-SPECIAL-84 (R/L)
(SIGN INFORMATION SHOWN IN ENGLISH UNITS ONLY)

TABLE OF WIDTHS AND SPACES

18.50	T 5.94	1.65	R 6.38	2.05	U 6.37	2.06	C 6.37	1.65	K 6.50	1.65	S 6.38	18.50	
6.67	E 5.94	1.65	N 6.38	1.67	T 5.94	1.65	E 5.94	1.65	R 5.94	0.55	/ 6.47	1.10	E 5.94	1.65	X 6.94	1.65	I 1.60	1.65	T 5.94	6.67
14.96	H 6.38	2.05	I 1.60	2.05	G 6.38	2.05	H 6.37	1.65	W 8.44	0.56	A 8.00	0.55	Y 8.00	14.96						
13.21	O 6.69	2.05	N 6.37	8.00	R 6.38	2.05	I 1.60	2.05	G 6.38	2.05	H 6.37	1.65	T 5.94	13.21						
15.87	O 6.69	2.05	N 6.37	8.00	L 6.38	1.65	E 5.94	1.65	F 5.94	1.65	T 5.94	15.87								

NO BORDER, BLACK ON ORANGE;E MOD FONT

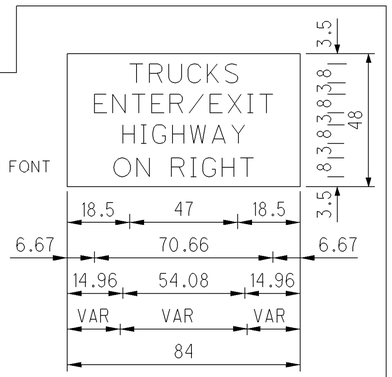

CONSTRUCTION ACCESS POINTS

Construction access point locations may be selected by the Contractor with the approval of the Engineer. The locations shall be selected for good sight distance and ease of access for entering vehicles (avoid locations just beyond crest vertical curves, on overhead structures, on upgrades, etc.). In the event that the Engineer determines that an access point does not function in a safe manner, he/she shall order it immediately closed at no cost to the State. Access points may be relocated subject to the approval of the Engineer, as necessary to accomplish construction activites.

All costs for relocation of portable concrete barrier, installation, repair, replacement and removal of impact attenuators, grading for access drives and related costs shall be included in the lump sum bid for Item 614 Maintaining Traffic.

OFFICE OF TRAFFIC ENGINEERING

DESIGNED RAS | REVIEWED LAM

REVISION DATE 04/16/10 | CHECKED

PIS NUMBER 209563

PLAN INSERT SHEET

CONSTRUCTION ACCESS POINTS

ALL-75-0.21

J:\Projects\ALL\89029\mot\sheets\89029MM012.dgn 13-JUN-2013 9:30PM coffield

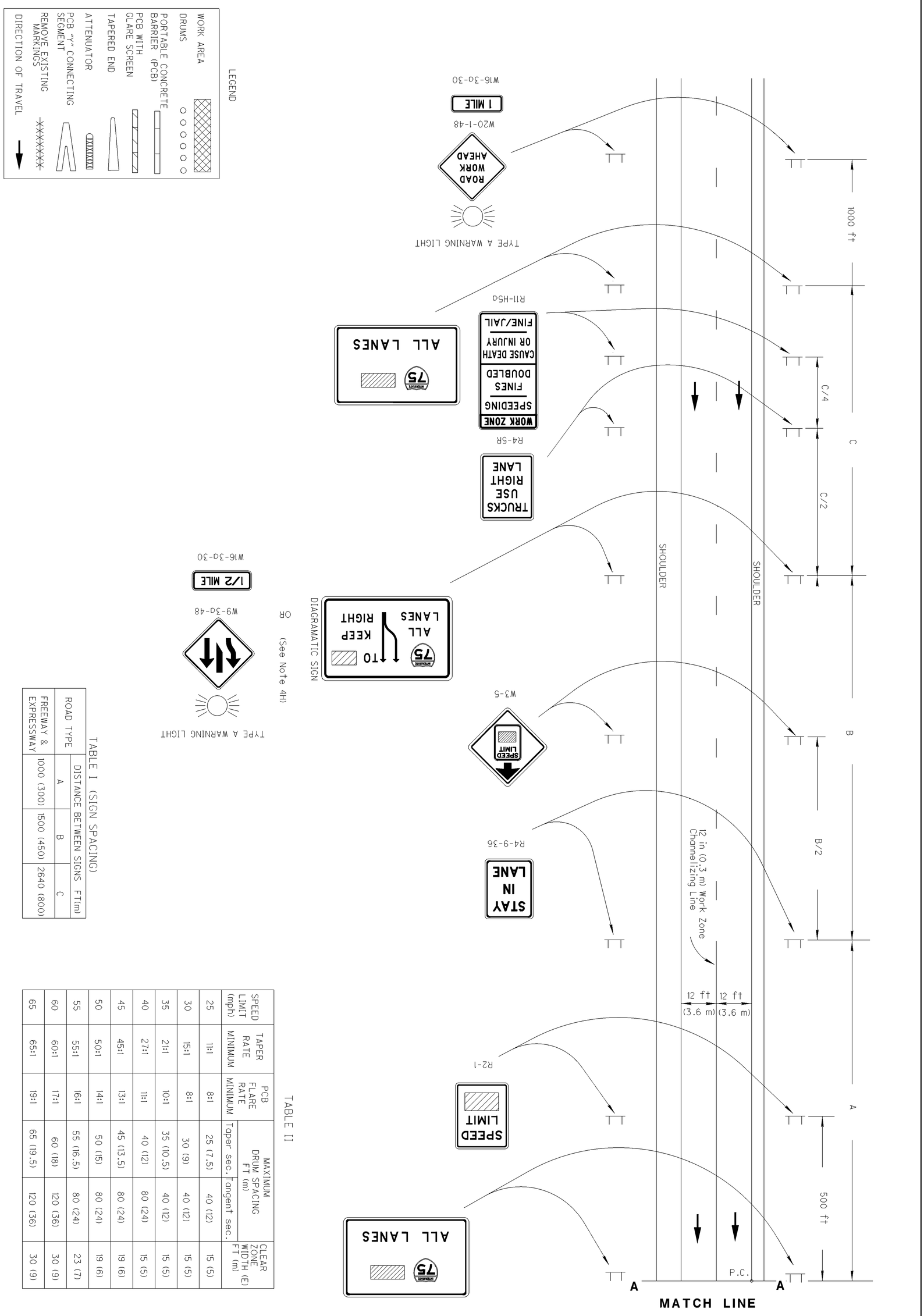

TABLE I (SIGN SPACING)

ROAD TYPE	DISTANCE BETWEEN SIGNS FT(m)		
	A	B	C
FREEWAY & EXPRESSWAY	1000 (300)	1500 (450)	2640 (800)

TABLE II

SPEED LIMIT (mph)	TAPER RATE MINIMUM	PCB FLARE RATE MINIMUM	MAXIMUM DRUM SPACING FT (m)		CLEAR ZONE WIDTH (E) FT (m)
			Taper sec.	Tangent sec.	
25	11:1	8:1	25 (7.5)	40 (12)	15 (5)
30	15:1	8:1	30 (9)	40 (12)	15 (5)
35	21:1	10:1	35 (10.5)	40 (12)	15 (5)
40	27:1	11:1	40 (12)	80 (24)	15 (5)
45	45:1	13:1	45 (13.5)	80 (24)	19 (6)
50	50:1	14:1	50 (15)	80 (24)	19 (6)
55	55:1	16:1	55 (16.5)	80 (24)	23 (7)
60	60:1	17:1	60 (18)	120 (36)	30 (9)
65	65:1	19:1	65 (19.5)	120 (36)	30 (9)

PLAN INSERT SHEET

MEDIAN CROSSOVER OF PASSING LANE SHORT DISTANCE

PIS NUMBER	REVISION DATE	DESIGNED	OFFICE OF TRAFFIC ENGINEERING
209572	10-15-10	SHB	
	CHECKED	REVIEWED LAM	

J:\Projects\ALL\89029\mot\sheets\89029MM014.dgn 13-JUN-2013 9:30PM coffield

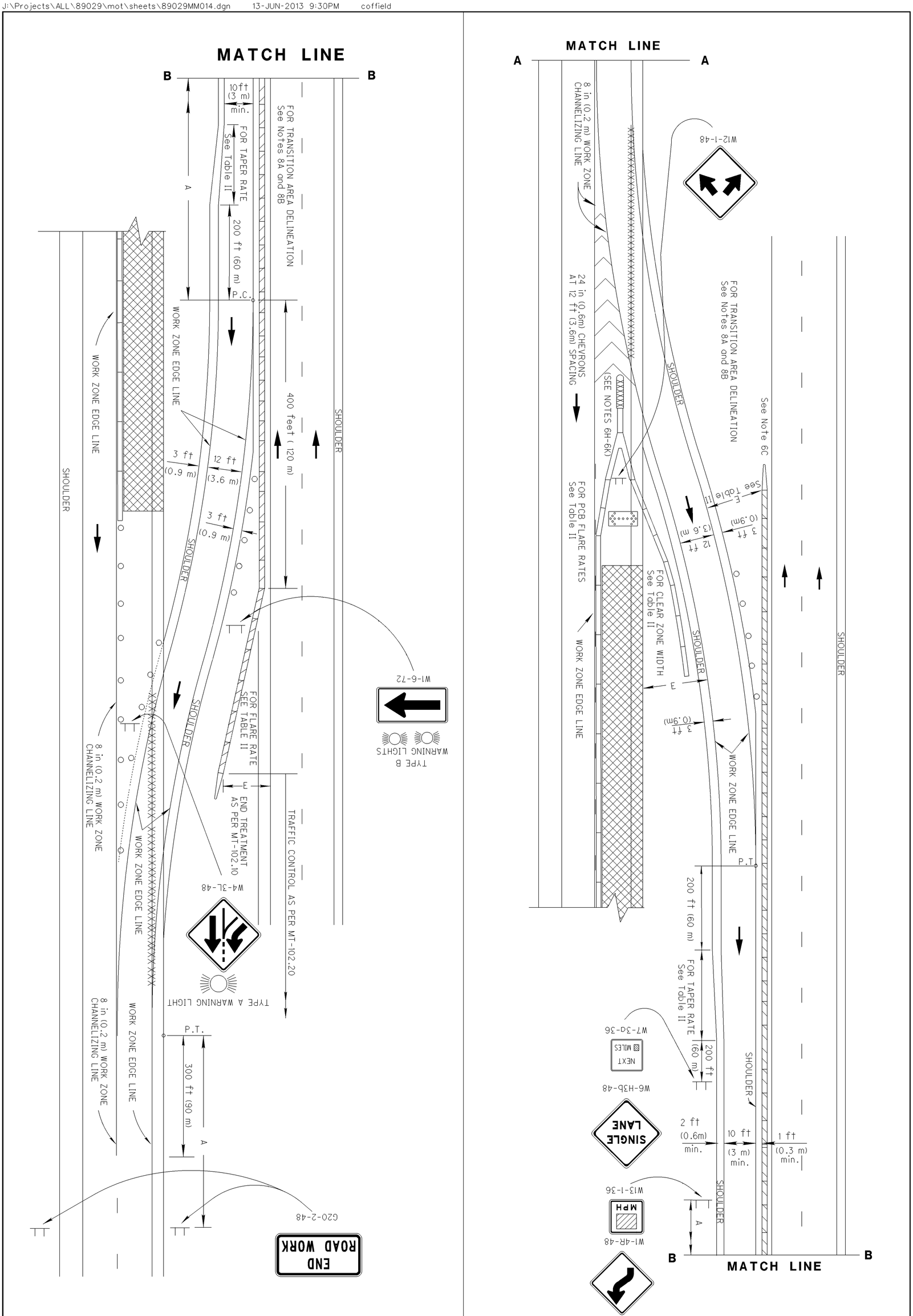

72/907	33/94	2/3	ALL-75-0.21	PLAN INSERT SHEET MEDIAN CROSSOVER OF PASSING LANE SHORT DISTANCE	PID NUMBER 209572	REVISION DATE 10-15-10 CHECKED	DESIGNED SHB REVIEWED LAM	OFFICE OF TRAFFIC ENGINEERING	

GENERAL NOTES:

GENERAL

1A. This Standard Construction Drawing presents information which is applicable to crossover design. Additional information, applicable to Maintenance of Traffic on multilane highways can be found on the MT-95.30 and MT-95.40 series drawings, on MT-95.50 and on the MT-102 series drawings.

1B. Standard Construction Drawing MT-101.70 shall be used with this drawing.

DESIGN SPEED

2. The design speed used for taper rates should typically be the permanent legal speed. However, on construction projects for which the speed limit is reduced, the reduced speed may be used in determining the taper rate when the taper is not the first active construction area within the project.

TAPERS

3. The minimum acceptable length of taper shall be determined by multiplying the width of offset by the taper rate. The taper rate is provided in Table II.

SIGNING

4A. The advisory speed plaque (W13-1) shall be used when specified in the plans.

4B. The spacing between work zone signs, as shown in Table I, are minimums. Maximum spacing should not be greater than 1.5 times the distances shown in Table I.

4C. Sign spacing should be adjusted to avoid conflict with existing signs. Minimum spacing to existing signs shall be 200 feet (60m) for speeds of 45 mph or less and a minimum of 400 feet (120m) for speeds 50 mph or greater.

4D. Sign locations should be adjusted to provide adequate sight distance for the existing vertical and horizontal roadway alignment.

4E. If the tangent distance along the temporary diversion is less than 2000 feet (600 m), place the second Reverse Curve (W1-4) sign at the mid-point of the tangent.

4F. If the tangent distance along the temporary diversion is 600 feet (180 m) or less, then the double Reverse Curve sign (W24-1) may be used in place of the first Reverse Curve sign, eliminating the need for the second Reverse Curve sign.

4G. The W6-H3b sign shall be provided along directional single-lane roadways over 3 miles (4.8 km). Spacing of the W6-H3b shall be at approximatly 1 mile (1.6 km).

4H. A diagramatic sign shall be provided when detailed in the plan. Otherwise a W9-3a sign assembly shall be provided.

4J. The ALL LANES signs and the Diagramatic sign shall have white legends on a green background, similar to the E6-2 series sign and the E4-H1 sign. However these signs shall be flat sheet signs on sign posts. The size of the signs shall be as specified in the plans.

4K. Signing for exit ramps located within the limits of the crossover lane should be as shown in the plan. Signing shall specify which exits are not accessable from the crossover lane.

4L. Additional information shall be provided in the form of fixed signs and/or changeable message boards as called for in the plans.

4M. Sign spacing on major conventional highways shall be as called for in Table I for freeway & expressway spacing unless otherwise determined by the Engineer.

PAVEMENT MARKING

5A. The existing conflicting pavement markings and reflectors from the raised pavement markers shall be removed and the appropriate color work zone edge lines shall be applied.

5B. Work zone edge lines shall be provided along the tangent section when called for in the plans.

5C. Work zone pavement markings which would conflict with the final traffic lanes shall be removable (CMS 740.06 Type I) tape unless the area will be resurfaced prior to project completion.

5D. After completion of the work, pavement markings other than CMS 740.06, Type I shall be removed in accordance with CMS 614.11I. The original markings and raised pavement marker reflectors shall be restored at no additional cost unless separately itemized in the plans.

5E. Edge lines shall be of the appropriate color for the direction of travel. If the temporary edge lines are located on the same alignment as existing lines, the temporary lines may be painted over top of the existing lines (with subsequent over painting if necessary during the life of the work stage to maintain day and night color) if other than on the final surface. If on the final surface, all marking shall be removable tape as per 5C above.

5F. A 12 inch (0.3 m) channelizing line shall be provided in between the crossover lane and the through lane in advance of the "exit" gore, as shown on sheet 1 of 3. All other channelizing lines shown on this drawing shall be of standard 8 inch (0.2 m) width.

5G. If the intended location of the beginning of the channelizing line, as called for in the detail, is on a curve, then the beginning of the channelizing line should be relocated upstream a distance of 500 feet (150 m).

5H. If the beginning of the channelizing line would be located near an exit ramp, then the beginning of the channelizing line shall be relocated upstream a distance of 1000 feet in advance of the beginning of the exit ramp deceleration lane.

PORTABLE CONCRETE BARRIER

6A. The portable concrete barrier (PCB) near the exiting crossover, shall extend straight on the permanent roadway to 400 feet (120 m) beyond the PC of the crossover. The PCB shall then be flared at the rate specified in Table II.

6B. The PCB shall be 32 inches (813 mm), fitted with glare screen, or may be 50 inches (1270 mm) high if NCHRP 350 compliant.

6C. PCB end treatment shall be by impact attenuator if located within the clear zone of approaching traffic.

6D. PCB end treatment may be by tapered ends if located beyond the clear zone of approaching traffic.

6E. When used, impact attenuators shall be installed parallel to traffic. The last full section of PCB, adjacent to the impact attenuator shall be located parallel to traffic. For installation procedures, refer to manufacturer's installation instructions.

6F. No reflectors or other channelizing devices shall be permitted on the face of the PCB facing the exiting crossover, from PC to end of barrier.

6G. Where portable concrete barrier (PCB) is provided at the gore, the impact attenuators shall be installed parallel to mainline traffic.

6H. Where the impact attenuator is intended to apply to two barriers within the gore, one from the through lane and one from the crossover, the two barriers shall be joined to form one unit using a PCB "Y" connecting segment. For the "Y" details, see Roadway Plan Insert Sheet "Portable Concrete Barrier 'Y' Connector Segment".

PCB cont.

Contractors may choose to install a wide impact attenuator in lieu of utlizing the concrete "Y" segment. For example, a wide impact attenuator at a minimum of 48 inches (1200 mm) wide and rated for the design speed of the roadway could be installed in place of the aforementioned (1) work zone impact attenuator (2) PCB "Y" connector segment and (3) one standard PCB section. However, if contractors use this connection method, the wider impact attenuator must still be crashworthy in accordance with NCHRP Report 350, or MASH-08 and installed as per manufacturer's instructions.

The contractor shall repair or replace a damaged unit within 24 hours of a damaging impact.

6J. Where a PCB "Y" connecting segment is provided, one standard section of PCB shall be provided between the "Y" connecting segment and the impact atenuator.

6K. Connection of the Impact attenuator to the PCB shall be by positive connection. Appropriate crashworthy transitions between the impact attenuator and the first PCB shall be installed.

6L. Where PCB is located beyond the edge of the paved shoulder, the cross slope within the clear zone, including the surface on which the PCB is placed, shall be graded at 10:1 or flatter. If the cross slope is steeper than 10:1, the PCB shall be terminated on the paved shoulder. The PCB shall be extended along the paved shoulder as necessary to satisfy the length of need, and then terminated using an impact attenuator.

6M. For installation procedures for the PCB and for the impact attenuator, refer to manufacturers' installation instructions.

6N. For details on delineation of Portable Concrete Barrier, see Standard Construction Drawing MT-101.70.

6O. PCB shall also be provided along the crossover where the work is within the clear zone of the crossover. The PCB within the gore, along the right side of the crossover lane should be flared as per Table II, with the upstream end of the PCB placed adjacent to the mainline PCB.

DRUMS

7A. Drums along the crossover curves shall be spaced at 20 feet (6 m) center-to-center.

7B. Drums used to close off a crossover shall be spaced at 10 feet (3 m) center-to-center.

7C. All other drum spacing shall be as per Table II.

7D. Drums located along the crossover ramps should be placed on the aggregate shoulder as much as possible in order to maximize the width of pavement open to traffic.

TRANSITION AREA DELINEATION

8A. Transition area delineation shall be provided, as called for in Standard Construction Drawing MT-99.30, or as otherwise called for in the plans.

8B. Additionally, RPMs at 20 feet (6 m) spacing shall be provided beside the channelizing line located between the crossover lane and the through lanes.

LIGHTING

9. Work zone lighting shall be provided as per Standard Construction Drawing MT-100.00.

GEOMETIRCS

10. Geometrics of the crossover shall be as called for in the plans.

EXISTING LONGITUDINAL RUMBLE STRIPS

11. Existing longitudinal rumble strips, located within the alignment of the crossover, shall be eliminated by pavement planing and resurfacing.

J:\Projects\ALL\89029\mot\sheets\89029MM015.dgn 13-JUN-2013 9:30PM coffield

OFFICE OF TRAFFIC ENGINEERING

DESIGNED SHB | REVIEWED LAM

REVISION DATE 10-15-10 | CHECKED

PID NUMBER 209572

PLAN INSERT SHEET

MEDIAN CROSSOVER OF PASSING LANE SHORT DISTANCE

ALL-75-0.21

3/3

34/94

73/907

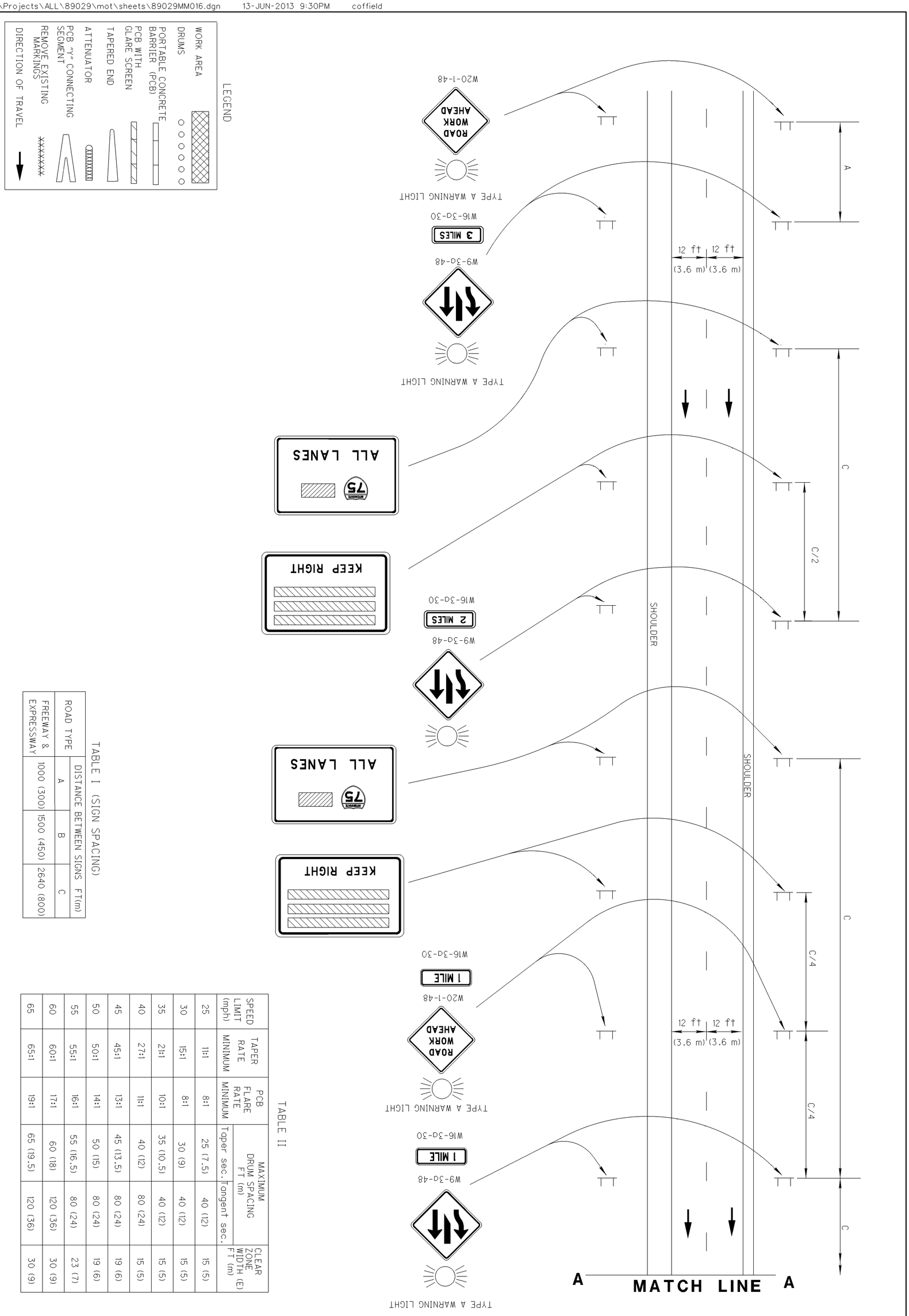

TABLE I (SIGN SPACING)

ROAD TYPE	DISTANCE BETWEEN SIGNS FT(m)		
	A	B	C
FREEWAY & EXPRESSWAY	1000 (300)	1500 (450)	2640 (800)

TABLE II

SPEED LIMIT (mph)	TAPER RATE MINIMUM	PCB FLARE RATE MINIMUM	MAXIMUM DRUM SPACING FT (m)		CLEAR ZONE WIDTH (E) FT (m)
			Taper sec.	Tangent sec.	
25	11:1	8:1	25 (7.5)	40 (12)	15 (5)
30	15:1	8:1	30 (9)	40 (12)	15 (5)
35	21:1	10:1	35 (10.5)	40 (12)	15 (5)
40	27:1	11:1	40 (12)	80 (24)	15 (5)
45	45:1	13:1	45 (13.5)	80 (24)	19 (6)
50	50:1	14:1	50 (15)	80 (24)	19 (6)
55	55:1	16:1	55 (16.5)	80 (24)	23 (7)
60	60:1	17:1	60 (18)	120 (36)	30 (9)
65	65:1	19:1	65 (19.5)	120 (36)	30 (9)

74 907	35 94	1 4	ALL-75-0.21	PLAN INSERT SHEET MEDIAN CROSSOVER OF EXPRESS LANE LONG DISTANCE	PIS NUMBER 209573	REVISION DATE 10-15-10	CHECKED	DESIGNED SHB	REVIEWED LAM	OFFICE OF TRAFFIC ENGINEERING

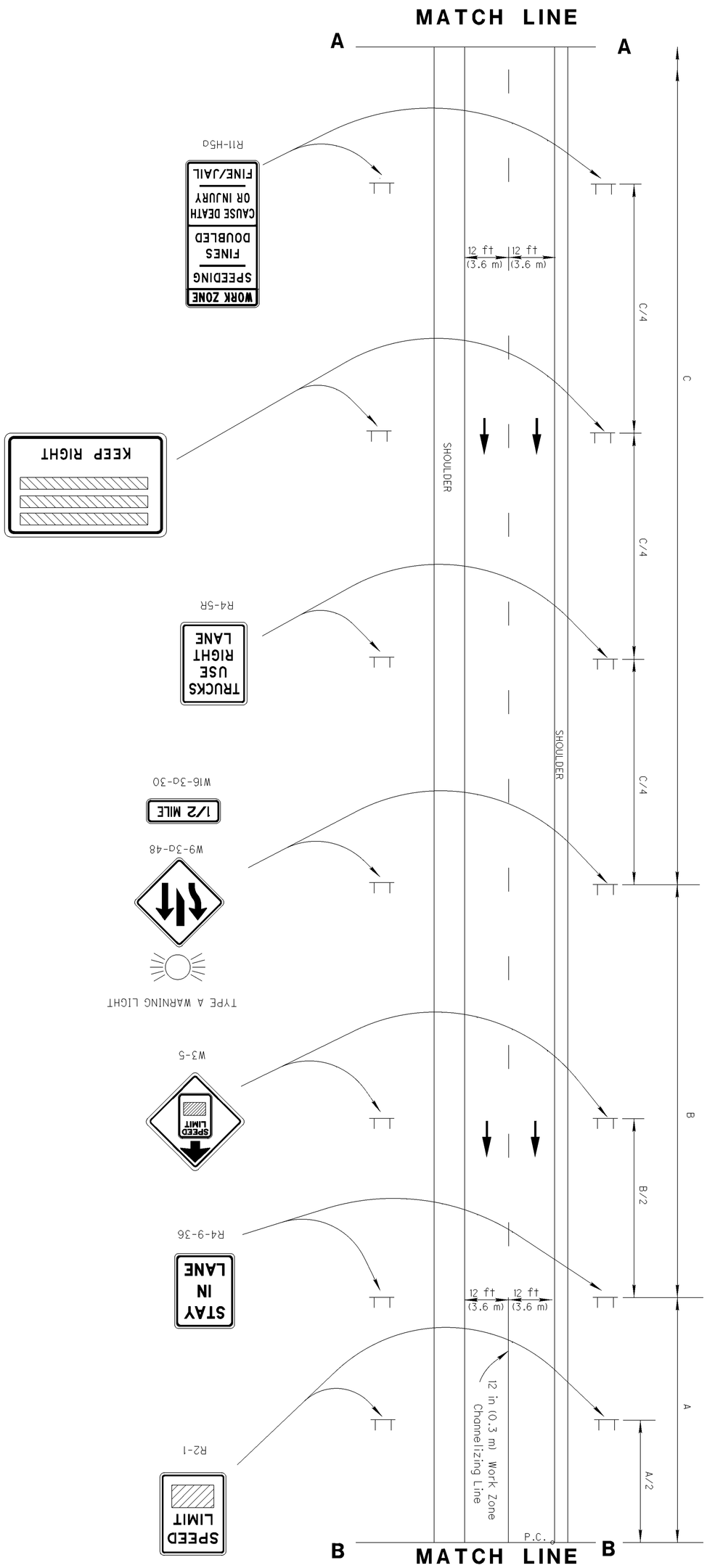

TABLE I (SIGN SPACING)

ROAD TYPE	DISTANCE BETWEEN SIGNS FT(m)		
	A	B	C
FREEWAY & EXPRESSWAY	1000 (300)	1500 (450)	2640 (800)

TABLE II

SPEED LIMIT (mph)	TAPER RATE MINIMUM	PCB FLARE RATE MINIMUM	MAXIMUM DRUM SPACING FT (m)		CLEAR ZONE WIDTH (E) FT (m)
			Taper sec.	Tangent sec.	
25	11:1	8:1	25 (7.5)	40 (12)	15 (5)
30	15:1	8:1	30 (9)	40 (12)	15 (5)
35	21:1	10:1	35 (10.5)	40 (12)	15 (5)
40	27:1	11:1	40 (12)	80 (24)	15 (5)
45	45:1	13:1	45 (13.5)	80 (24)	19 (6)
50	50:1	14:1	50 (15)	80 (24)	19 (6)
55	55:1	16:1	55 (16.5)	80 (24)	23 (7)
60	60:1	17:1	60 (18)	120 (36)	30 (9)
65	65:1	19:1	65 (19.5)	120 (36)	30 (9)

PLAN INSERT SHEET

MEDIAN CROSSOVER OF EXPRESS LANE LONG DISTANCE

PIS NUMBER	REVISION DATE	DESIGNED
209573	10-15-10	SHB
	CHECKED	REVIEWED
		LAM

OFFICE OF TRAFFIC ENGINEERING

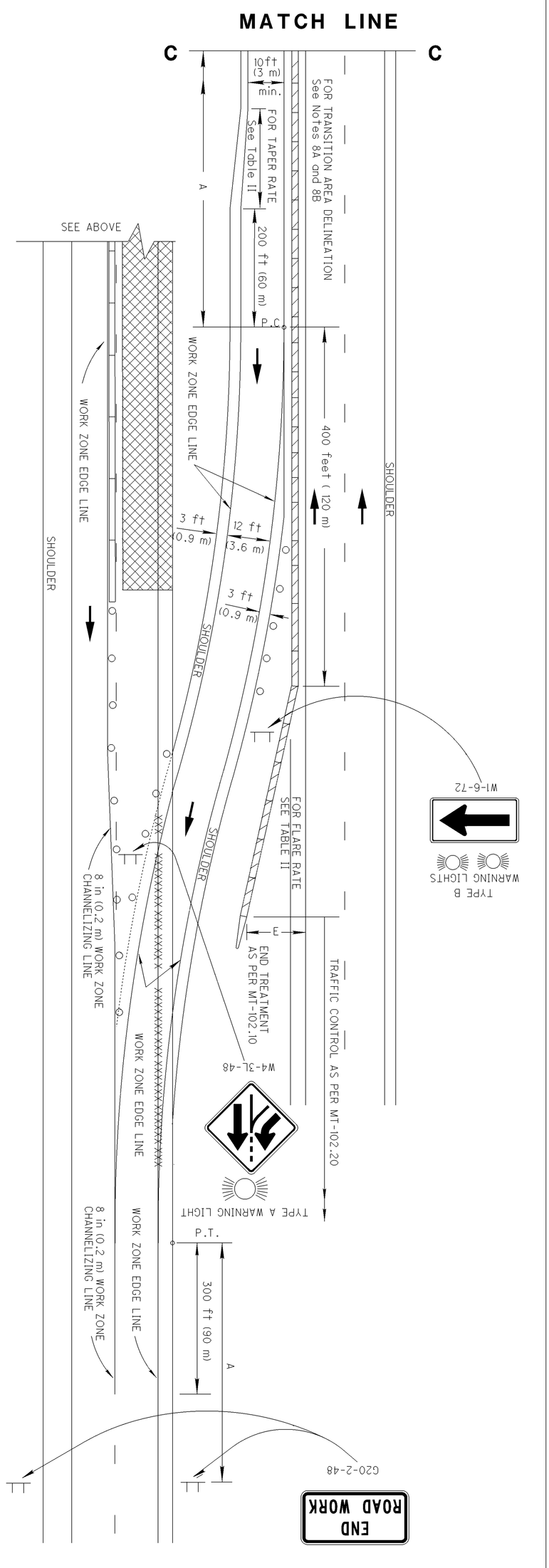

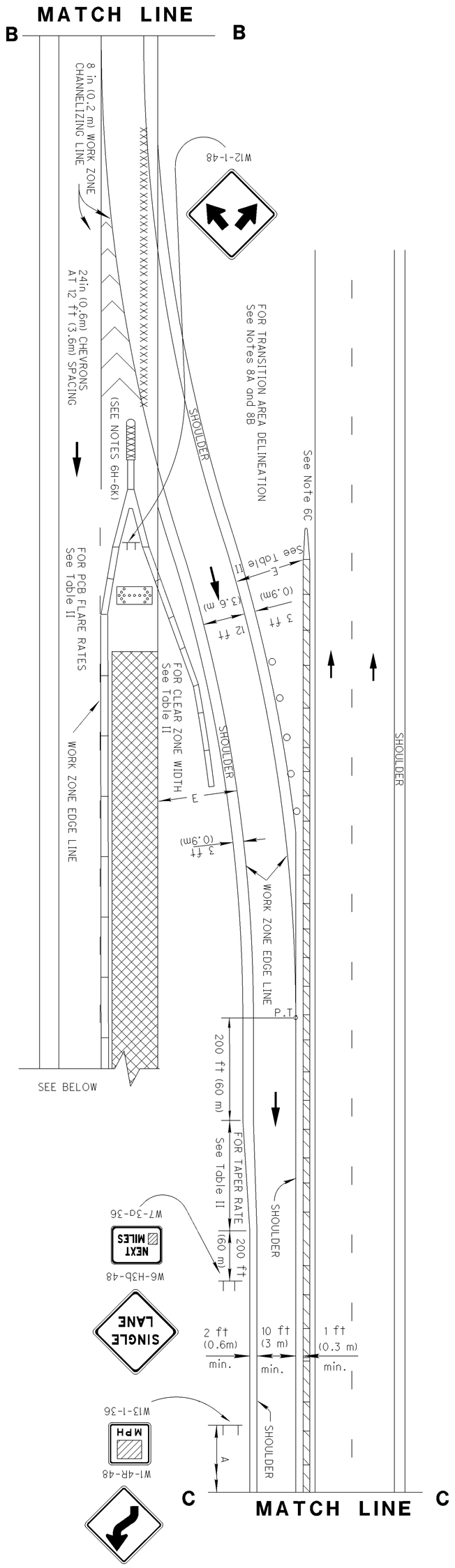

76 907	37 94	3 4	ALL-75-0.21	PLAN INSERT SHEET MEDIAN CROSSOVER OF EXPRESS LANE LONG DISTANCE	PIS NUMBER 209573	REVISION DATE 10-15-10 CHECKED	DESIGNED SHB REVIEWED LAM	OFFICE OF TRAFFIC ENGINEERING

GENERAL NOTES:

GENERAL

1A. This Standard Construction Drawing presents information which is applicable to crossover design. Additional information, applicable to Maintenance of Traffic on multilane highways can be found on the MT-95.30 and MT-95.40 series drawings, on MT-95.50 and on the MT-102 series drawings.

1B. Standard Construction Drawing MT-101.70 shall be used with this drawing.

DESIGN SPEED

2. The design speed used for taper rates should typically be the permanent legal speed. However, on construction projects for which the speed limit is reduced, the reduced speed may be used in determining the taper rate when the taper is not the first active construction area within the project.

TAPERS

3. The minimum acceptable length of taper shall be determined by multiplying the width of offset by the taper rate. The taper rate is provided in Table II.

SIGNING

4A. The advisory speed plaque (W13-1) shall be used when specified in the plans.

4B. The spacing between work zone signs, as shown in Table I, are minimums. Maximum spacing should not be greater than 1.5 times the distances shown in Table I.

4C. Sign spacing should be adjusted to avoid conflict with existing signs. Minimum spacing to existing signs shall be 200 feet (60m) for speeds of 45 mph or less and a minimum of 400 feet (120m) for speeds 50 mph or greater.

4D. Sign locations should be adjusted to provide adequate sight distance for the existing vertical and horizontal roadway alignment.

4E. If the tangent distance along the temporary diversion is less than 2000 feet (600 m), place the second Reverse Curve (W1-4) sign at the mid-point of the tangent.

4F. If the tangent distance along the temporary diversion is 600 feet (180 m) or less, then the double Reverse Curve sign (W24-1) may be used in place of the first Reverse Curve sign, eliminating the need for the second Reverse Curve sign.

4G. The W6-H3b sign shall be provided along directional single-lane roadways over 3 miles (4.8 km). Spacing of the W6-H3b shall be at approximatly 1 mile (1.6 km).

4H. Diagramatic guide signs and interchange guide signs shall be provided as detailed in the plans.

4J. The guide signs shall have white legends on green background, similar to the D2 and E6 series signs and the E4-H1 sign. However, these signs shall be flat sheet signs on sign posts. The size of the signs shall be as specified in the plans.

4K. Signing for exit ramps located within the limits of the crossover lane should be as shown in the plan. Signing shall specify which exits are not accessable from the crossover lane.

4L. Additional information shall be provided in the form of fixed signs and/or changeable message boards as called for in the plans.

4M. Sign spacing on major conventional highways shall be as called for in Table I for freeway & expressway spacing unless otherwise determined by the Engineer.

PAVEMENT MARKING

5A. The existing conflicting pavement markings and reflectors from the raised pavement markers shall be removed and the appropriate color work zone edge lines shall be applied.

5B. Work zone edge lines shall be provided along the tangent section when called for in the plans.

5C. Work zone pavement markings which would conflict with the final traffic lanes shall be removable (CMS 740.06 Type I) tape unless the area will be resurfaced prior to project completion.

5D. After completion of the work, pavement markings other than CMS 740.06, Type I shall be removed in accordance with CMS 614.11I. The original markings and raised pavement marker reflectors shall be restored at no additional cost unless separately itemized in the plans.

5E. Edge lines shall be of the appropriate color for the direction of travel. If the temporary edge lines are located on the same alignment as existing lines, the temporary lines may be painted over top of the existing lines (with subsequent over painting if necessary during the life of the work stage to maintain day and night color) if other than on the final surface. If on the final surface, all marking shall be removable tape as per 5C above.

5F. A 12 inch (0.3 m) channelizing line shall be provided in between the crossover lane and the through lane in advance of the "exit" gore, as shown on sheet 2 of 4. All other channelizing lines shown on this drawing shall be of standard 8 inch (0.2 m) width.

5G. If the intended location of the beginning of the channelizing line, as called for in the detail, is on a curve, then the beginning of the channelizing line should be relocated upstream a distance of 500 feet (150 m).

5H. If the beginning of the channelizing line would be located near an exit ramp, then the beginning of the channelizing line shall be relocated upstream a distance of 1000 feet in advance of the beginning of the exit ramp deceleration lane.

PORTABLE CONCRETE BARRIER

6A. The portable concrete barrier (PCB) near the exiting crossover, shall extend straight on the permanent roadway to 400 feet (120 m) beyond the PC of the crossover. The PCB shall then be flared at the rate specified in Table II.

6B. The PCB shall be 32 inches (813 mm), fitted with glare screen, or may be 50 inches (1270 mm) high if NCHRP 350 compliant.

6C. PCB end treatment shall be by impact attenuator if located within the clear zone of approaching traffic.

6D. PCB end treatment may be by tapered ends if located beyond the clear zone of approaching traffic.

6E. When used, impact attenuators shall be installed parallel to traffic. The last full section of PCB, adjacent to the impact attenuator shall be located parallel to traffic. For installation procedures, refer to manufacturer's installation instructions.

6F. No reflectors or other channelizing devices shall be permitted on the face of the PCB facing the exiting crossover, from PC to end of barrier.

6G. Where portable concrete barrier (PCB) is provided at the gore, the impact attenuators shall be installed parallel to mainline traffic.

6H. Where the impact attenuator is intended to apply to two barriers within the gore, one from the through lane and one from the crossover, the two barriers shall be joined to form one unit using a PCB "Y" connecting segment. For the "Y" details, see Roadway Plan Insert Sheet "Portable Concrete Barrier 'Y' Connector Segment".

PCB cont.

Contractors may choose to install a wide impact attenuator in lieu of utlizing the concrete "Y" segment. For example, a wide impact attenuator at a minimum of 48 inches (1200 mm) wide and rated for the design speed of the roadway could be installed in place of the aforementioned (1) work zone impact attenuator (2) PCB "Y" connector segment and (3) one standard PCB section. However, if contractors use this connection method, the wider impact attenuator must still be crashworthy in accordance with NCHRP Report 350, or MASH-08 and installed as per manufacturer's instructions.

The contractor shall repair or replace a damaged unit within 24 hours of a damaging impact.

6J. Where a PCB "Y" connecting segment is provided, one standard section of PCB shall be provided between the "Y" connecting segment and the impact atenuator.

6K. Connection of the Impact attenuator to the PCB shall be by positive connection. Appropriate crashworthy transitions between the impact attenuator and the first PCB shall be installed.

6L. Where PCB is located beyond the edge of the paved shoulder, the cross slope within the clear zone, including the surface on which the PCB is placed, shall be graded at 10:1 or flatter. If the cross slope is steeper than 10:1, the PCB shall be terminated on the paved shoulder. The PCB shall be extended along the paved shoulder as necessary to satisfy the length of need, and then terminated using an impact attenuator.

6M. For installation procedures for the PCB and for the impact attenuator, refer to manufacturers' installation instructions.

6N. For details on delineation of Portable Concrete Barrier, see Standard Construction Drawing MT-101.70.

6O. PCB shall also be provided along the crossover where the work is within the clear zone of the crossover. The PCB within the gore, along the right side of the crossover lane should be flared as per Table II, with the upstream end of the PCB placed adjacent to the mainline PCB.

DRUMS

7A. Drums along the crossover curves shall be spaced at 20 feet (6 m) center-to-center.

7B. Drums used to close off a crossover shall be spaced at 10 feet (3 m) center-to-center.

7C. All other drum spacing shall be as per Table II.

7D. Drums located along the crossover ramps should be placed on the aggregate shoulder as much as possible in order to maximize the width of pavement open to traffic.

TRANSITION AREA DELINEATION

8A. Transition area delineation shall be provided, as called for in Standard Construction Drawing MT-99.30, or as otherwise called for in the plans.

8B. Additionally, RPMs at 20 feet (6 m) spacing shall be provided beside the channelizing line located between the crossover lane and the through lanes.

LIGHTING

9. Work zone lighting shall be provided as per Standard Construction Drawing MT-100.00.

GEOMETIRCS

10. Geometrics of the crossover shall be as called for in the plans.

EXISTING LONGITUDINAL RUMBLE STRIPS

11. Existing longitudinal rumble strips, located within the alignment of the crossover, shall be eliminated by pavement planing and resurfacing.

J:\Projects\ALL\89029\mot\sheets\89029MM019.dgn 13-JUN-2013 9:30PM coffield

PLAN INSERT SHEET

MEDIAN CROSSOVER OF EXPRESS LANE LONG DISTANCE

OFFICE OF TRAFFIC ENGINEERING

DESIGNED SHB | REVIEWED LAM

REVISION DATE 10-15-10 | CHECKED

PID NUMBER 209573

ALL-75-0.21

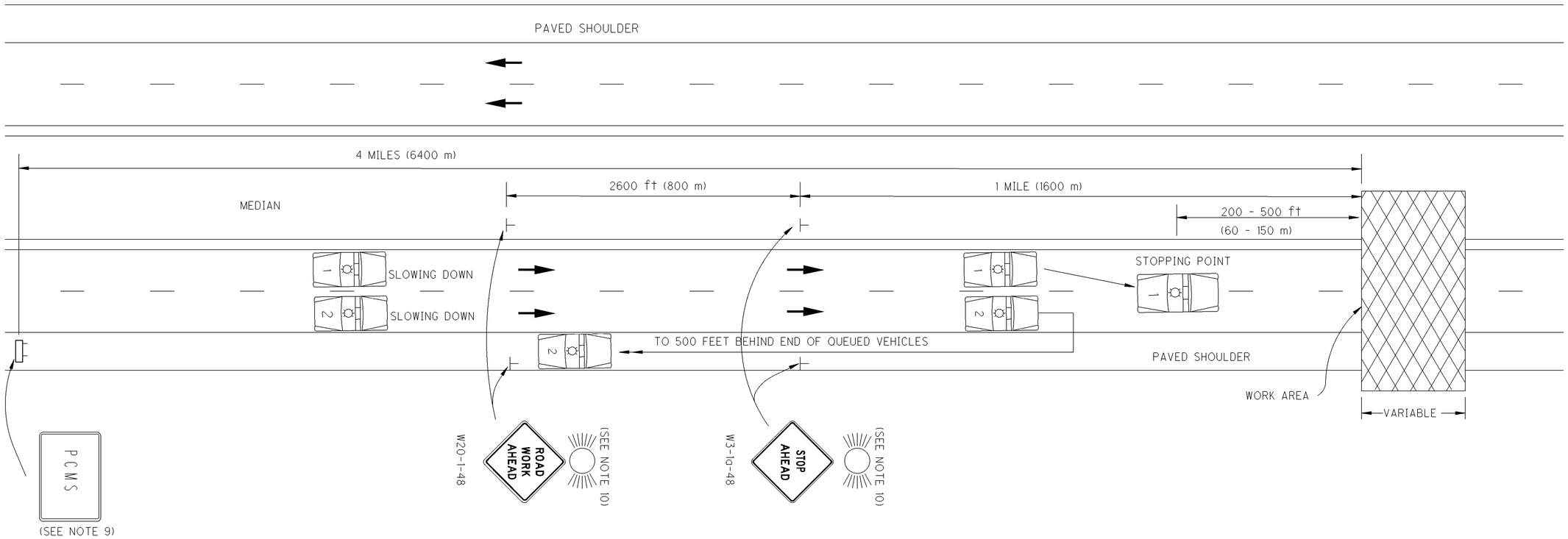

1. This type of highway closure shall be used for all construction, maintenance and utility operations when the duration of closure will not exceed 15 minutes.

2. A minimum of two Law Enforcement Officers (LEO) with patrol cars per direction shall be provided to block traffic and pace motorists to a stop. The number of patrol cars shall equal the number of lanes closed on the highway.

3. Patrol cars, with lights flashing, should enter the stream of traffic at approximately 3 miles before the point of closure. At approximately 2 miles before the point of closure, they should begin the gradual slow down. Traffic shall be brought to a complete stop a safe distance, between 200 and 500 feet (60 and 150 m), from the work area. This slowing operation shall take no more than 10 minutes. After traffic has been stopped, one patrol car shall travel along the roadway shoulder 500 feet (150 m) behind the end of the queued vehicles.

4. The Contractor shall not begin work until traffic has been brought to a complete stop.

5. All entrance ramps located between the stopped traffic and the work area shall be closed.

6. After the highway has been closed and reopened via this procedure, both of the following requirements shall have been met before implementation of another short duration closure, except with the approval of the Engineer:
   A. A minimum period of 15 minutes shall have elapsed
   B. The queued traffic shall have dissipated

7. The time frame for stopping traffic shall be specified.

8. The public shall be given advance notice of the upcoming closure by providing Portable Changeable Message signs at the site in advance of the scheduled closing. Closure information should also be provided to the Engineer.

9. An ODOT approved Portable Changeable Message Sign, Class 1, shall be provided during operation. The message sign shall be placed at approximately 4 miles (6400 meters) in advance of the closure or as directed by the Engineer. The message sign shall read "ROAD CLOSED AHEAD" (2 sec.), "PREPARE TO STOP" (2 sec.)

10. The Contractor shall erect and maintain 48 inch "ROAD WORK AHEAD" and "STOP AHEAD" signs on each side of the highway. Each sign shall be equipped with one Type A flashing warning light and one flare. There shall be one flare at each sign on both sides of the roadway. The flare shall be replaced if it burns out.

J:\Projects\ALL\89029\mot\sheets\89029MM020.dgn 13-JUN-2013 9:30PM coffield

OFFICE OF TRAFFIC ENGINEERING

DESIGNED SHB | REVIEWED LAM

REVISION DATE 10/15/10 | CHECKED

PID NUMBER 209960

PLAN INSERT SHEET

SHORT-DURATION CLOSURE OF MULTI-LANE DIVIDED HIGHWAY

ALL-75-0.21

NOTES:

DETOUR SIGNING LOCATIONS SHALL BE AS PER OMUTCD.

AFFECTED SIGNS FOR THE BREESE RD. INTERCHANGE SHALL BE OVERLAYED WITH A CLOSED PLAQUE WHEN THE DETOUR IS IN EFFECT.

DETOUR SIGNS SHALL BE UNCOVERED AND VISIBLE TO TRAFFIC ONLY WHEN THE RAMP CLOSURES ARE IN EFFECT.

CONTRACTOR TO USE PORTABLE CHANGEABLE MESSAGE SIGNS TO ALERT MOTORISTS THAT THE I-75 SOUTHBOUND RAMPS WILL BE CLOSED FROM SPECIFIED "DAY TO DAY", AND TO USE ALTERNATE ROUTES. THESE SIGNS SHALL BE ACTIVATED 2 WEEKS PRIOR TO THE CLOSURE OR AS OTHERWISE DIRECTED BY THE ENGINEER AND PLACED ON BREESE ROAD, ONE FACING EASTBOUND TRAFFIC AND ONE FACING WESTBOUND TRAFFIC, AND ONE FACING I-75 S.B. TRAFFIC.

CONTRACTOR SHALL COORDINATE THIS DETOUR WITH ANY CONFLICTING DETOUR/SIGNING OR CLOSURES IN THE AREA OR AS DIRECTED BY THE ENGINEER.

USE OF THIS DETOUR SHALL APPLY DURING THAT PERIOD FOR WHICH THE BREESE ROAD RAMPS ARE CLOSED OR AS DIRECTED BY THE ENGINEER.

BREESE ROAD "RAMP A & C" CLOSURES SHALL BE LIMITED TO THIRTY (30) CONSECUTIVE CALENDAR DAYS TO COMPLETE RAMP PAVEMENT IN THE ACCELERATION AND DECELERATION LANE TO RESTORE CONNECTION TO THE I-75 TRAVEL LANES.

DETOUR SIGNS TO BE REMOVED OR COVERED WHEN NOT IN USE.

S. DIXIE HIGHWAY

AUGLAIZE COUNTY
ALLEN COUNTY

NATIONAL RD.

RAMP CLOSED

BREESE RD. BRIDGE OPEN

"A"
"B"
"C"
"D"

FT. SHAWNEE IND. DR.

RAMP OPEN

RAMP CLOSED

RAMP OPEN

BREESE ROAD

A

R11-2 ROAD CLOSED
R11-2 ROAD CLOSED

SOLID ACROSS INTERSECTION
TYPE III BARRICADES PER MT-101.60

AUGLAIZE COUNTY
ALLEN COUNTY

AMHERST RD.

S.R. 65

McCLAIN RD.

MCCLAIN RD.
OVER I-75 - OPEN

BREESE ROAD

COMMERCE PKWY.

I-75

S.R. 65

EASTOM

B

DETOUR M4-8-30
TO M4-5-30
INTERSTATE 75 M1-1-30-2
SOUTH M3-3-36
M6-1-30

C

DETOUR M4-8-30
TO M4-5-30
INTERSTATE 75 M1-1-30-2
SOUTH M3-3-36
M6-1-30

H

DETOUR M4-8-30
TO M4-5-30
INTERSTATE 75 M1-1-30-2
SOUTH M3-3-36
M6-2-30

D

D3-H3-30
BREESE ROAD
DETOUR
M4-9L-30

E

BREESE RD DETOUR
EXIT AHEAD

SPECIAL - BLACK ON ORANGE
42" X 72"

F

BREESE RD EXIT CLOSED
USE CRIDERSVILLE EXIT 118

SPECIAL - BLACK ON ORANGE
48" X 96"

G

I-75 SOUTH RAMP CLOSED
USE I-75 NORTH TO
S.R. 65 EXIT 122

SPECIAL - BLACK ON ORANGE
48" X 96"

J

CLOSED

SPECIAL - 8' x 2' BLK/ORG
FOR USE ON GUIDE SIGNS

LEGEND:
- TRAFFIC FLOW ARROW
- SIGN
- TYPE III BARRICADE
- WARNING FLAGS

HORIZONTAL SCALE IN FEET
0 350 700 1400

CALCULATED CAC
CHECKED EJC

DETOUR PLAN
BREESE ROAD OVER I-75
(I-75 SOUNBOUND RAMPS CLOSED)

ALL-75-0.21

40/94

79/907

J:\Projects\ALL\89029\mot\sheets\89029MD204.dgn 13-JUN-2013 9:30PM coffield

NOTES:

DETOUR SIGNING LOCATIONS SHALL BE AS PER OMUTCD.

AFFECTED SIGNS FOR THE BREESE RD. INTERCHANGE SHALL BE OVERLAYED WITH A CLOSED PLAQUE WHEN THE DETOUR IS IN EFFECT.

WHENEVER THE CLOSURE OCCURS, THE TOTAL DETOUR SIGNING AS INDICATED ON THIS PLAN SHALL BE IMPLEMENTED.

DETOUR SIGNS SHALL BE UNCOVERED AND VISIBLE TO TRAFFIC ONLY WHEN THE RAMP CLOSURE IS IN EFFECT.

CONTRACTOR TO USE PORTABLE CHANGEABLE MESSAGE SIGNS TO ALERT MOTORISTS THAT BREESE RD. WILL BE CLOSED AT I-75 FROM SPECIFIED "MONTH TO MONTH", AND TO USE ALTERNATE ROUTES. THESE SIGNS SHALL BE ACTIVATED 2 WEEKS PRIOR TO THE CLOSURE AND UP THROUGH THE FIRST WEEK OF CLOSURE OR AS OTHERWISE DIRECTED BY THE ENGINEER.

CONTRACTOR SHALL COORDINATE THIS DETOUR WITH ANY CONFLICTING DETOUR/SIGNING OR CLOSURES IN THE AREA OR AS DIRECTED BY THE ENGINEER.

BEAM ERECTION WORK OVER I-75 SHALL TAKE PLACE ONLY DURING OFF-PEAK OR NIGHTTIME HOURS. BEAM ERECTION SHALL BE COMPLETED WITHIN A PERIOD NOT TO EXCEED FIVE (5) CALENDAR DAYS.

EXISTING McCLAIN ROAD OVER I-75 SHALL BE OPEN DURING THE BREESE ROAD CLOSURE.

EXISTING S.R. 65 NORTHBOUND EXIT RAMP TO BE OPEN DURING THE BREESE RD. CLOSURE.

BREESE ROAD "RAMP B & D" CLOSURES SHALL BE LIMITED TO SIXTY (60) CONSECUTIVE CALENDAR DAYS TO COMPLETE RAMP PAVEMENT AND INTERSECTION AREAS TO RESTORE CONNECTION TO THE I-75 TRAVEL LANES AND BREESE RD. A SEPARATE DETOUR PLAN HAS BEEN PROVIDED FOR THE SCENARIO WHEN BREESE RD BRIDGE IS CLOSED BUT THE RAMPS ARE OPEN, SEE SHEET 42 OF 94.

SEE M.O.T. GENERAL NOTES FOR MORE INFORMATION.

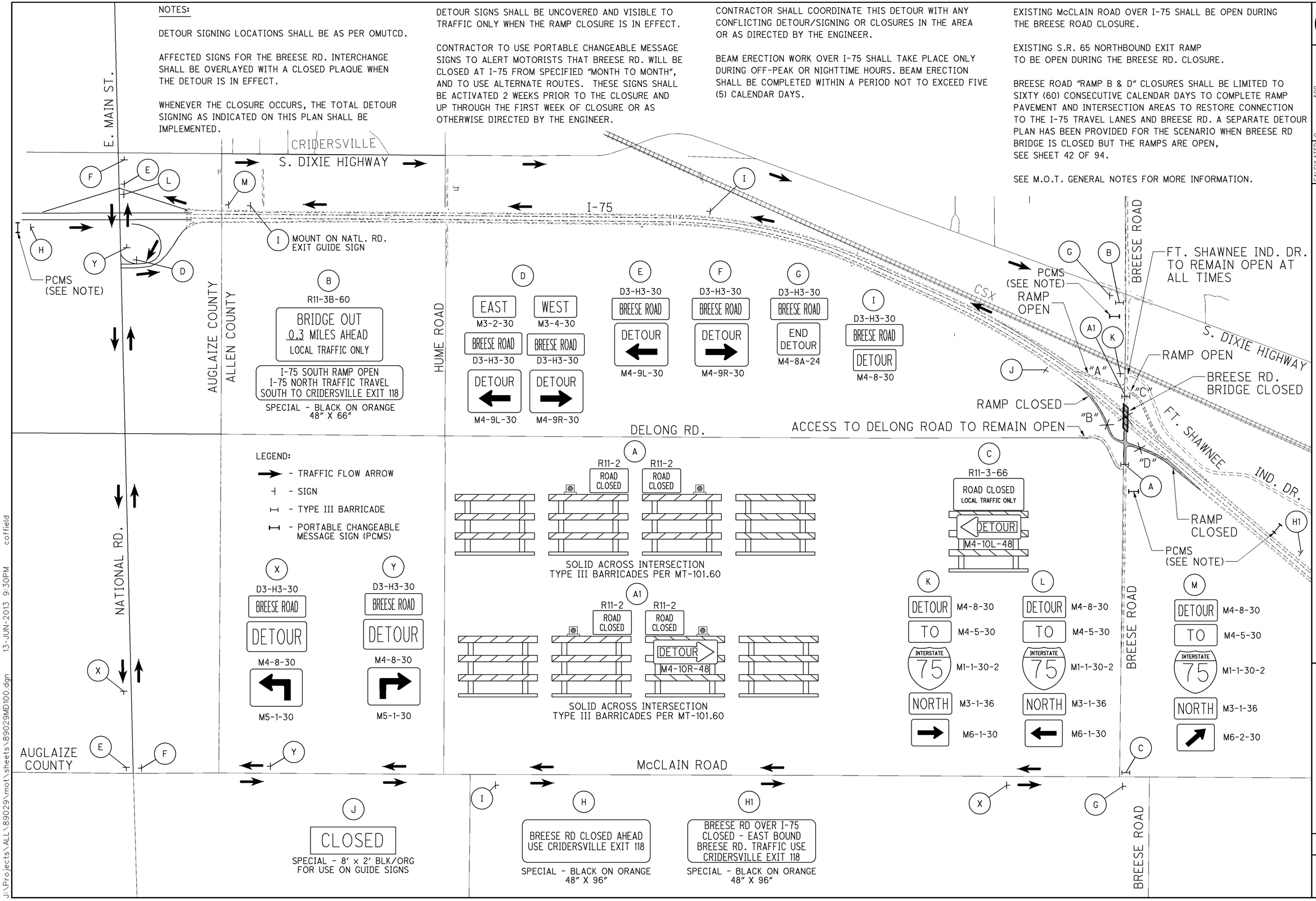

HORIZONTAL SCALE IN FEET 0 250 500 1000

CALCULATED TLP CHECKED EJC

DETOUR PLAN
BREESE ROAD CLOSURE (INCLUDING RAMPS)

ALL-75-0.21

41 / 94

80 / 907

J:\Projects\ALL\89029\mot\sheets\89029MD100.dgn 13-JUN-2013 9:30PM coffield

NOTES:

DETOUR SIGNING LOCATIONS SHALL BE AS PER OMUTCD.

WHENEVER THE CLOSURE OCCURS, BUT THE RAMPS REMAIN OPEN, THE TOTAL DETOUR SIGNING AS INDICATED ON THIS PLAN SHALL BE IMPLEMENTED.

DETOUR SIGNS SHALL BE UNCOVERED AND VISIBLE TO TRAFFIC ONLY WHEN THE ROAD CLOSURE IS IN EFFECT.

CONTRACTOR TO USE PORTABLE CHANGEABLE MESSAGE SIGNS TO ALERT MOTORISTS THAT THE BREESE ROAD BRIDGE WILL BE CLOSED AT I-75 FROM SPECIFIED "DAY TO DAY", AND TO USE ALTERNATE ROUTES. THESE SIGNS SHALL BE ACTIVATED 2 WEEKS PRIOR TO THE CLOSURE OR AS OTHERWISE DIRECTED BY THE ENGINEER AND PLACED ON BREESE ROAD, ONE FACING EASTBOUND TRAFFIC AND ONE FACING WESTBOUND TRAFFIC BETWEEN THE RAMPS AND THE BRIDGE.

CONTRACTOR SHALL COORDINATE THIS DETOUR WITH ANY CONFLICTING DETOUR/SIGNING OR CLOSURES IN THE AREA OR AS DIRECTED BY THE ENGINEER.

USE OF THIS DETOUR SHALL APPLY DURING THAT PERIOD FOR WHICH THE BREESE ROAD RAMPS REMAIN OPEN WHILE THE BRIDGE IS CLOSED OR AS DIRECTED BY THE ENGINEER.

DETOUR SIGNS TO BE REMOVED OR COVERED WHEN NOT IN USE.

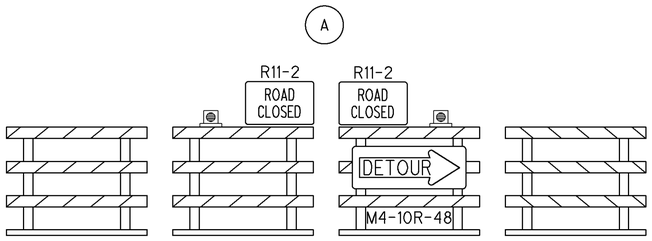

SOLID ACROSS INTERSECTION
TYPE III BARRICADES PER MT-101.60

B
DETOUR
M4-8-30
EAST
M3-2-30
BREESE ROAD
D3-H3-30

C
DETOUR
M4-8-30
WEST
M3-4-30
BREESE ROAD
D3-H3-30

D
D3-H3-30
BREESE ROAD
DETOUR
M4-9L-30

E
R11-3B-60
BRIDGE OUT
0.8 MILES AHEAD
LOCAL TRAFFIC ONLY
I-75 NORTHBOUND RAMP OPEN
SPECIAL - BLACK ON ORANGE
24" X 66"

I
R11-3B-60
BRIDGE OUT
0.3 MILES AHEAD
LOCAL TRAFFIC ONLY
I-75 SOUTHBOUND RAMP OPEN
SPECIAL - BLACK ON ORANGE
24" X 66"

F
BREESE RD DETOUR
NEXT EXIT
SPECIAL - BLACK ON ORANGE
42" X 72"

G
BREESE RD BRIDGE CLOSED
EASTBOUND BREESE TRAFFIC
USE CRIDERSVILLE EXIT 118
SPECIAL - BLACK ON ORANGE
48" X 96"

H
BREESE RD BRIDGE CLOSED
WESTBOUND BREESE TRAFFIC
USE S.R. 65 EXIT 122
SPECIAL - BLACK ON ORANGE
48" X 96"

LEGEND:
- TRAFFIC FLOW ARROW
- SIGN
- TYPE III BARRICADE
- WARNING FLAGS

HORIZONTAL SCALE IN FEET
0 350 700 1400

CALCULATED CAC
CHECKED EJC

DETOUR PLAN
BREESE ROAD OVER I-75 (RAMPS OPEN)

ALL-75-0.21

42/94

81/907

J:\Projects\ALL\89029\mot\sheets\89029MD203.dgn 13-JUN-2013 9:30PM coffield

NOTES:

DETOUR SIGNING LOCATIONS SHALL BE AS PER OMUTCD.

WHENEVER THE CLOSURE OCCURS, THE TOTAL DETOUR SIGNING AS INDICATED ON THIS PLAN SHALL BE IMPLEMENTED.

DETOUR SIGNS SHALL BE UNCOVERED AND VISIBLE TO TRAFFIC ONLY WHEN THE RAMP CLOSURE IS IN EFFECT.

CONTRACTOR TO INSTALL NOTICE OF CLOSURE SIGNS TO ALERT MOTORISTS THAT McCLAIN RD. WILL BE CLOSED AT I-75 FROM SPECIFIED "MONTH TO MONTH", PER THE M.O.T. GENERAL NOTES. THESE SIGNS SHALL BE ACTIVATED 2 WEEKS PRIOR TO THE CLOSURE OR AS OTHERWISE DIRECTED BY THE ENGINEER.

CONTRACTOR SHALL COORDINATE THIS DETOUR WITH ANY CONFLICTING DETOUR/SIGNING OR CLOSURES IN THE AREA OR AS DIRECTED BY THE ENGINEER.

BEAM ERECTION WORK OVER I-75 SHALL TAKE PLACE ONLY DURING OFF-PEAK OR NIGHTTIME HOURS.

USE OF THIS DETOUR SHALL BE AS PERMITTED ONLY AS DIRECTED BY THE ENGINEER AND BEAM ERECTION SHALL BE COMPLETED WITHIN A PERIOD NOT TO EXCEED FIVE (5) CALENDAR DAYS.

LEGEND:

- → - TRAFFIC FLOW ARROW
- ⊣ - SIGN
- ⊢ - TYPE III BARRICADE

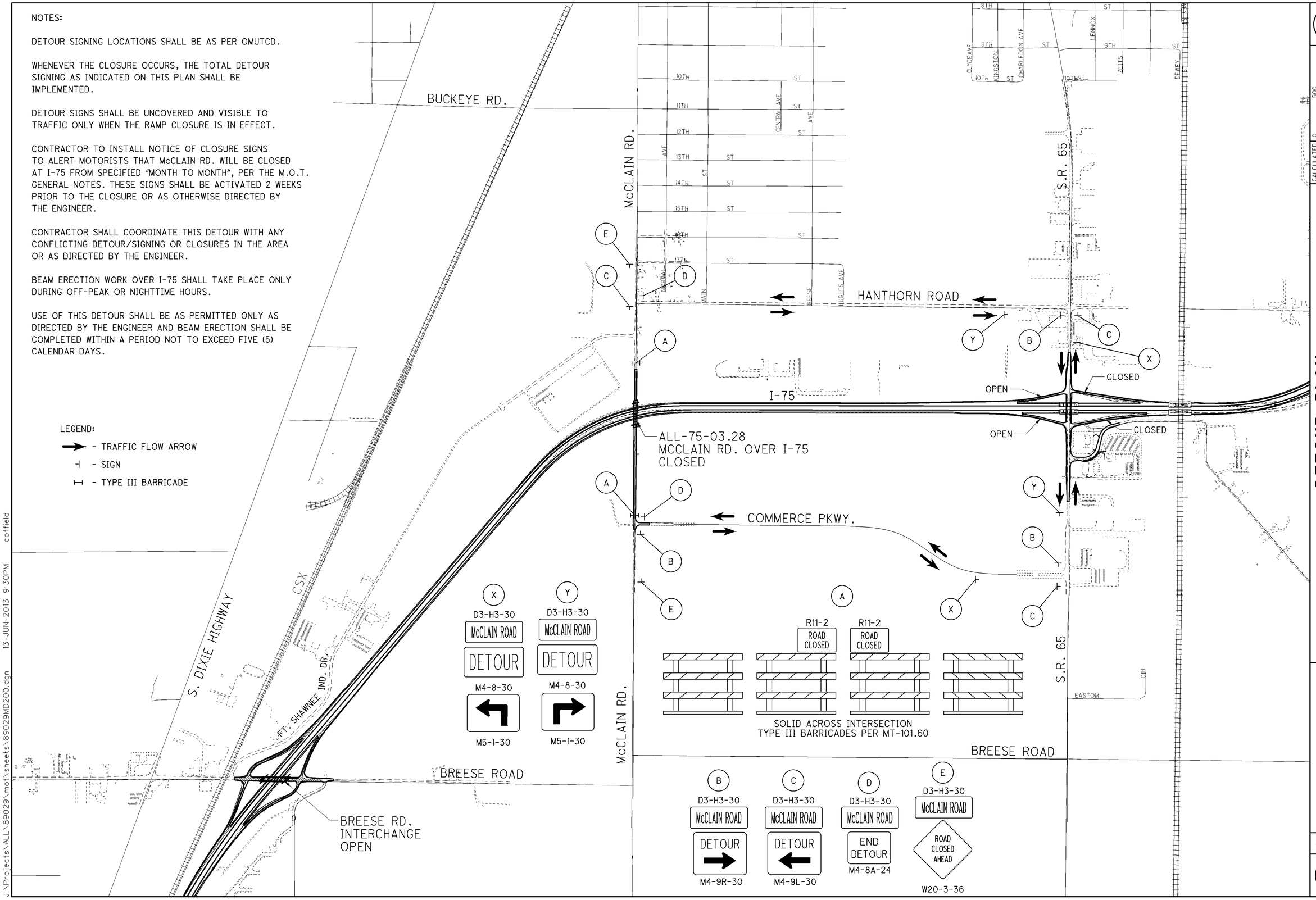

HORIZONTAL SCALE IN FEET
0 250 500 1000

CALCULATED TLP
CHECKED EJC

DETOUR PLAN
McCLAIN ROAD

ALL-75-0.21

43/94

82/907

J:\Projects\ALL\89029\mot\sheets\89029MD200.dgn 13-JUN-2013 9:30PM coffield

NOTES:

DETOUR SIGNING LOCATIONS SHALL BE AS PER OMUTCD.

SOUTHBOUND I-75 TRAFFIC TO SR 65 - DETOURED TO BREESE ROAD TO RE-ENTER I-75 NORTHBOUND TO SR 65.

SR 65 TRAFFIC TO I-75 NORTHBOUND - DETOURED TO I-75 SOUTHBOUND TO BREESE ROAD TO RE-ENTER I-75 NORTHBOUND.

WHENEVER THE CLOSURE OCCURS, THE TOTAL DETOUR SIGNING AS INDICATED ON THIS PLAN SHALL BE IMPLEMENTED.

DETOUR SIGNS SHALL BE UNCOVERED AND VISIBLE TO TRAFFIC ONLY WHEN THE RAMP CLOSURE IS IN EFFECT.

CONTRACTOR TO USE PORTABLE CHANGEABLE MESSAGE SIGNS TO ALERT MOTORISTS THAT SR 65 RAMPS WILL BE CLOSED AT I-75 FROM SPECIFIED "MONTH TO MONTH", AND TO USE ALTERNATE ROUTES. THESE SIGNS SHALL BE ACTIVATED 2 WEEKS PRIOR TO THE CLOSURE OR AS OTHERWISE DIRECTED BY THE ENGINEER. PLACE ONE ON SB I-75 JUST BEFORE THE SR 65 SB EXIT RAMP AND PLACE ONE IN THE NB & SB DIRECTIONS ON SR 65 NEAR THE INTERCHANGE.

CONTRACTOR SHALL COORDINATE THIS DETOUR WITH ANY CONFLICTING DETOUR/SIGNING OR CLOSURES IN THE AREA OR AS DIRECTED BY THE ENGINEER.

SEE M.O.T. GENERAL NOTES AND SEQUENCE OF CONSTRUCTION FOR MORE INFORMATION INCLUDING EMERGENCY VEHICLE ACCESS REQUIREMENTS FOR CLOSED RAMPS AT SR 65.

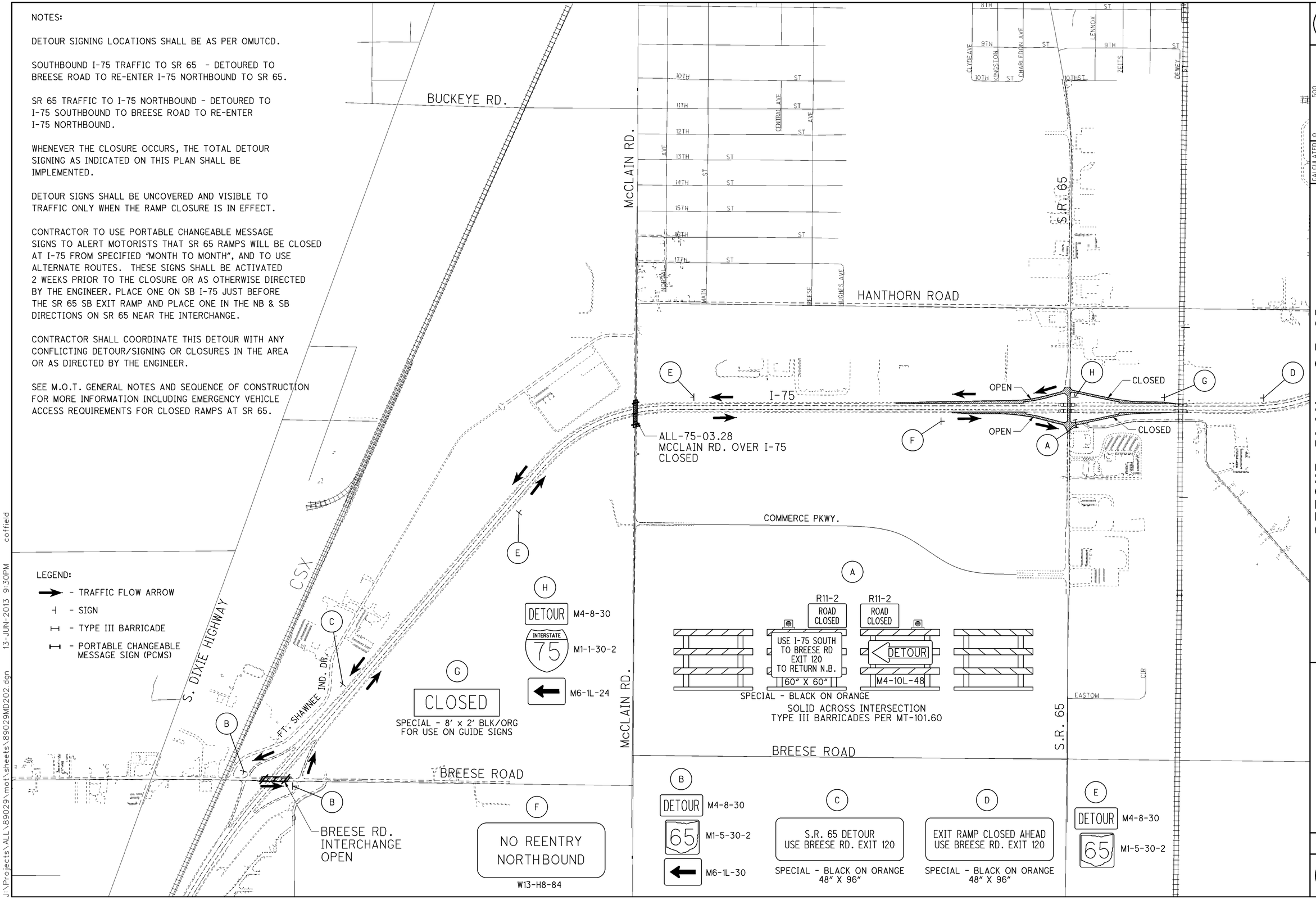

HORIZONTAL SCALE IN FEET
0 250 500 1000

CALCULATED TLP
CHECKED EJC

DETOUR PLAN - S.R. 65
SOUTHBOUND EXIT & NORTHBOUND ENTRANCE

ALL-75-0.21

44/94

83/907

J:\Projects\ALL\89029\mot\sheets\89029MD202.dgn 13-JUN-2013 9:30PM coffield

TRUCK DETOUR TO I-75 NORTHBOUND FROM WEST LIMA VIA BUCKEYE ROAD

NOTES:

DETOUR SIGNING LOCATIONS SHALL BE AS PER OMUTCD.

WHENEVER THE CLOSURE OCCURS, THE TOTAL DETOUR SIGNING AS INDICATED ON THIS PLAN SHALL BE IMPLEMENTED.

DETOUR SIGNS SHALL BE UNCOVERED AND VISIBLE TO TRAFFIC ONLY WHEN THE RAMP CLOSURE IS IN EFFECT.

CONTRACTOR TO INSTALL NOTICE OF CLOSURE SIGNS TO ALERT MOTORISTS THAT McCLAIN RD. WILL BE CLOSED AT I-75 FROM SPECIFIED "MONTH TO MONTH", PER THE M.O.T. GENERAL NOTES. THESE SIGNS SHALL BE ACTIVATED 2 WEEKS PRIOR TO THE CLOSURE OR AS OTHERWISE DIRECTED BY THE ENGINEER.

CONTRACTOR SHALL COORDINATE THIS DETOUR WITH ANY CONFLICTING DETOUR/SIGNING OR CLOSURES IN THE AREA OR AS DIRECTED BY THE ENGINEER.

THIS DETOUR IS TO DIRECT BUCKEYE ROAD TO I-75 NORTHBOUND TRAFFIC TO USE McCLAIN ROAD TO 4TH STREET INSTEAD OF SR 65 TO 4TH STREET.

A

M4-4-30 TRUCK
M4-8-30 DETOUR
M4-5-30 TO
M3-1-30 NORTH
M1-1-30-2 INTERSTATE 75
M6-1L-24

B

M4-4-30 TRUCK
M4-8-30 DETOUR
M3-1-30 NORTH
M1-1-30-2 INTERSTATE 75
M6-1R-24

C

M4-4-30 TRUCK
M4-8-30 DETOUR
M3-1-30 NORTH
M1-1-30-2 INTERSTATE 75
M6-3-24

LEGEND:

- TRAFFIC FLOW ARROW
- SIGN
- TYPE III BARRICADE
- PORTABLE CHANGEABLE MESSAGE SIGN (PCMS)

HORIZONTAL SCALE IN FEET
0 200 400 800

CALCULATED CAC
CHECKED EJC

ALL-75-0.21

45/94

84/907

J:\Projects\ALL\89029\mot\sheets\89029MD300.dgn 13-JUN-2013 9:30PM coffield

NOTES:

DETOUR SIGNING LOCATIONS SHALL BE AS PER OMUTCD.

WHENEVER THE CLOSURE OCCURS, THE TOTAL DETOUR SIGNING AS INDICATED ON THIS PLAN SHALL BE IMPLEMENTED.

DETOUR SIGNS SHALL BE UNCOVERED AND VISIBLE TO TRAFFIC ONLY WHEN THE RAMP CLOSURE IS IN EFFECT.

CONTRACTOR TO USE PORTABLE CHANGEABLE MESSAGE SIGNS TO ALERT MOTORISTS THAT S.R. 65 RAMPS WILL BE CLOSED AT I-75 FROM SPECIFIED "DAY TO DAY", AND TO USE ALTERNATE ROUTES. THESE SIGNS SHALL BE ACTIVATED 2 WEEKS PRIOR TO THE CLOSURE OR AS OTHERWISE DIRECTED BY THE ENGINEER AND PLACED ON SR 65 ONE FACING NORTHBOUND TRAFFIC AND ONE FACING SOUTHBOUND TRAFFIC IN THE VICINITY OF SR 65 RAMPS. A PCMS SHALL ALSO BE PLACED ALONG I-75 NORTHBOUND NEAR THE S.R. 65 EXIT RAMPS TO NOTIFY OF THE CLOSURE.

CONTRACTOR SHALL COORDINATE THIS DETOUR WITH ANY CONFLICTING DETOUR/SIGNING OR CLOSURES IN THE AREA OR AS DIRECTED BY THE ENGINEER.

USE OF THIS DETOUR SHALL BE PERMITTED ONLY AS DIRECTED BY THE ENGINEER AND SHALL BE FOR NIGHT TIME BRIDGE DEMOLITION ONLY.

TEMPORARY RAMP CLOSURES TO BE SIGNED & BARRICADED PER THE APPLICABLE STANDARD CONSTRUCTION DRAWINGS.

DETOUR SIGNS TO BE REMOVED OR COVERED WHEN NOT IN USE.

MOUNT ON NATIONAL ROAD EXIT GUIDE SIGN

G: M4-4-30 TRUCK; M4-8-30 DETOUR; M1-5-30-2 65

H: M4-8-30 DETOUR; M1-5-30-2 65

D: SPECIAL - BLACK ON ORANGE 60" X 60"
I-75 ACCESS AT S.R. 65 CLOSED AHEAD USE NATIONAL RD.
DETOUR M4-10L-48

A: M4-4-30 TRUCK; M4-8-30 DETOUR; M4-5-30 TO; M1-1-30-2 INTERSTATE 75; M6-3-24

B: M4-4-30 TRUCK; M4-8-30 DETOUR; M1-1-30-2 INTERSTATE 75; M6-3-24

C: M4-4-30 TRUCK; M4-8-30 DETOUR; M1-1-30-2 INTERSTATE 75; M6-1R-24

THESE INTERSECTIONS ARE TOO TIGHT FOR TRUCK TURNING. TRUCKS MUST USE SIGNED DETOUR.

E: M4-4-30 TRUCK; M4-8-30 DETOUR; M4-5-30 TO; M1-5-30-2 65; M6-1L-24

F: M4-4-30 TRUCK; M4-8-30 DETOUR; M1-5-30-2 65; M6-3-24

I: TRUCK M4-4-30; DETOUR M4-8-30
S.R. 65 ACCESS CLOSED USE CRIDERSVILLE EXIT 118
SPECIAL - BLACK ON ORANGE 48" X 96"
M6-2R-30

J: DETOUR M4-8-30
S.R. 65 ACCESS CLOSED USE BREESE RD. EXIT 120
SPECIAL - BLACK ON ORANGE 48" X 96"
M6-2R-30

K: DETOUR M4-8-30; INTERSTATE 75 M1-1-30-2; M6-1L-24

L: DETOUR M4-8-30; INTERSTATE 75 M1-1-30-2; M6-1R-24

M: M4-8-30 DETOUR; M1-5-30-2 65; M6-1L-24

N: M4-8-30 DETOUR; M1-5-30-2 65; M6-1R-24

O: S.R. 65 DETOUR
TRUCKS USE CRIDERSVILLE EXIT 118
ALL OTHERS USE BREESE RD. EXIT 120
SPECIAL - BLACK ON ORANGE 48" X 96"

X: M1-5-30-2 65; M4-8A-24 END DETOUR

Y: M4-4-30 TRUCK; M4-8-30 DETOUR; M1-1-30-2 INTERSTATE 75; M5-1-30

BREESE RD. INTERCHANGE OPEN

MOUNT ON NATIONAL ROAD EXIT GUIDE SIGN

MCCLAIN RD. OVER I-75 CLOSED

CLOSED

USE FLAGGER PER MOT-97.10 TO MAINTAIN SR 65 TRAFFIC DURING DEMOLITION OF BRIDGE. SEE SHEETS 81-82 OF 94 FOR DETAILS.

LEGEND:
- TRAFFIC FLOW ARROW
- SIGN
- TYPE III BARRICADE
- WARNING FLAGS

S. DIXIE HIGHWAY; BREESE ROAD; McCLAIN RD.; COMMERCE PKWY.; I-75; FT. SHAWNEE IND. DR.; NATIONAL RD.; AMHERST RD.; AUGLAIZE COUNTY; ALLEN COUNTY; S.R. 65; EASTOM

HORIZONTAL SCALE IN FEET: 0, 350, 700, 1400

CALCULATED CAC | CHECKED EJC

SHORT-TERM DETOUR PLAN
S.R. 65 BRIDGE DEMOLITION

ALL-75-0.21

46/94

85/907

J:\Projects\ALL\89029\mot\sheets\89029MD201.dgn 13-JUN-2013 9:30PM coffield

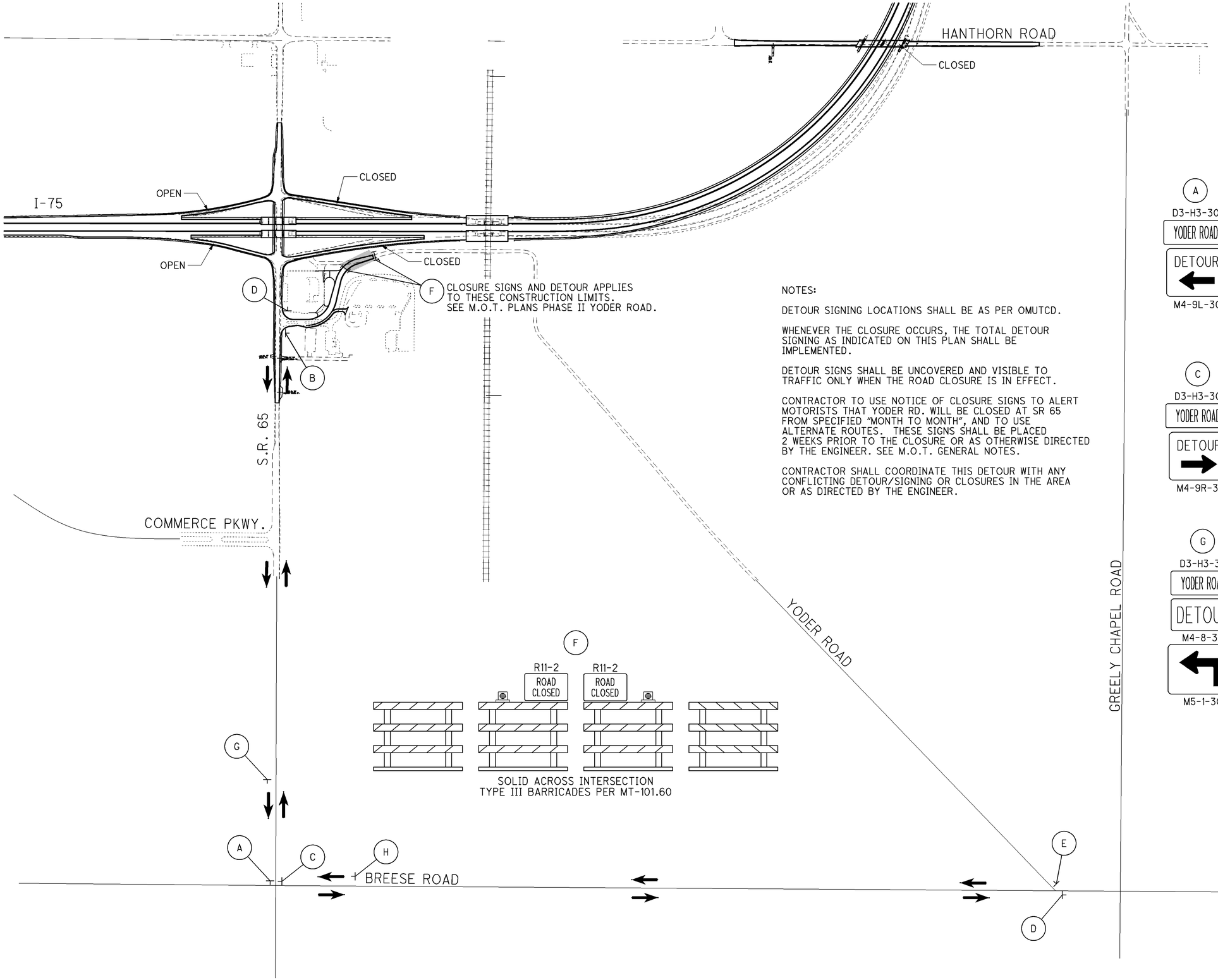

NOTES:

DETOUR SIGNING LOCATIONS SHALL BE AS PER OMUTCD.

WHENEVER THE CLOSURE OCCURS, THE TOTAL DETOUR SIGNING AS INDICATED ON THIS PLAN SHALL BE IMPLEMENTED.

DETOUR SIGNS SHALL BE UNCOVERED AND VISIBLE TO TRAFFIC ONLY WHEN THE ROAD CLOSURE IS IN EFFECT.

CONTRACTOR TO USE NOTICE OF CLOSURE SIGNS TO ALERT MOTORISTS THAT YODER RD. WILL BE CLOSED AT SR 65 FROM SPECIFIED "MONTH TO MONTH", AND TO USE ALTERNATE ROUTES. THESE SIGNS SHALL BE PLACED 2 WEEKS PRIOR TO THE CLOSURE OR AS OTHERWISE DIRECTED BY THE ENGINEER. SEE M.O.T. GENERAL NOTES.

CONTRACTOR SHALL COORDINATE THIS DETOUR WITH ANY CONFLICTING DETOUR/SIGNING OR CLOSURES IN THE AREA OR AS DIRECTED BY THE ENGINEER.

A
D3-H3-30
YODER ROAD
DETOUR
M4-9L-30

B
R11-3-66
ROAD CLOSED
LOCAL TRAFFIC ONLY
DETOUR
M4-10R-48

C
D3-H3-30
YODER ROAD
DETOUR
M4-9R-30

D
D3-H3-30
YODER ROAD
END DETOUR
M4-8A-24

G
D3-H3-30
YODER ROAD
DETOUR
M4-8-30
M5-1-30

E
R11-3A-60
ROAD CLOSED
1.2 MILES AHEAD
LOCAL TRAFFIC ONLY
DETOUR
M4-10L-48

H
D3-H3-30
YODER ROAD
DETOUR
M4-8-30
M5-1-30

LEGEND:
- TRAFFIC FLOW ARROW
- SIGN
- TYPE III BARRICADE

HORIZONTAL SCALE IN FEET
0 150 300 600

CALCULATED CAC
CHECKED EJC

DETOUR PLAN
YODER ROAD

ALL-75-0.21

47/94

86/907

J:\Projects\ALL\89029\mot\sheets\89029MD101.dgn 13-JUN-2013 9:30PM coffield

NOTES:

DETOUR SIGNING LOCATIONS SHALL BE AS PER OMUTCD.

WHENEVER THE CLOSURE OCCURS, THE TOTAL DETOUR SIGNING AS INDICATED ON THIS PLAN SHALL BE IMPLEMENTED.

DETOUR SIGNS SHALL BE UNCOVERED AND VISIBLE TO TRAFFIC ONLY WHEN THE RAMP CLOSURE IS IN EFFECT.

CONTRACTOR TO INSTALL NOTICE OF CLOSURE SIGNS TO ALERT MOTORISTS THAT HANTHORN RD. WILL BE CLOSED AT I-75 FROM SPECIFIED "MONTH TO MONTH", PER THE M.O.T. GENERAL NOTES. THESE SIGNS SHALL BE ACTIVATED 2 WEEKS PRIOR TO THE CLOSURE OR AS OTHERWISE DIRECTED BY THE ENGINEER.

CONTRACTOR SHALL COORDINATE THIS DETOUR WITH ANY CONFLICTING DETOUR/SIGNING OR CLOSURES IN THE AREA OR AS DIRECTED BY THE ENGINEER.

BEAM ERECTION WORK OVER I-75 SHALL TAKE PLACE ONLY DURING OFF-PEAK OR NIGHTTIME HOURS.

USE OF THIS DETOUR SHALL BE AS PERMITTED ONLY AS DIRECTED BY THE ENGINEER AND BEAM ERECTION SHALL BE COMPLETED WITHIN A PERIOD NOT TO EXCEED FIVE (5) CALENDAR DAYS.

LEGEND:

- → - TRAFFIC FLOW ARROW
- ⊣ - SIGN
- ⊢ - TYPE III BARRICADE

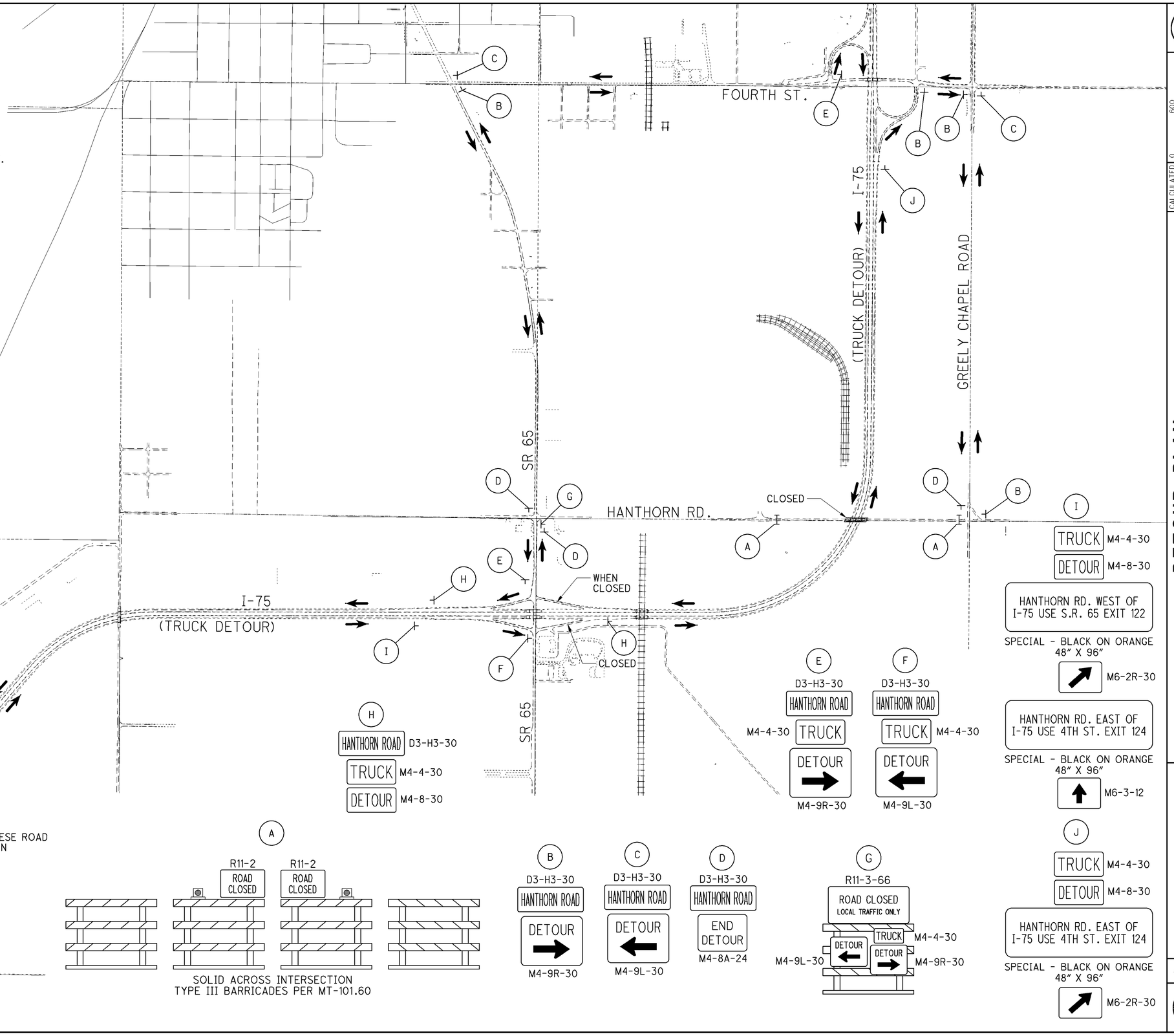

H
HANTHORN ROAD D3-H3-30
TRUCK M4-4-30
DETOUR M4-8-30

E
D3-H3-30
HANTHORN ROAD
M4-4-30 TRUCK
DETOUR
M4-9R-30

F
D3-H3-30
HANTHORN ROAD
TRUCK M4-4-30
DETOUR
M4-9L-30

A
R11-2 ROAD CLOSED
R11-2 ROAD CLOSED
SOLID ACROSS INTERSECTION
TYPE III BARRICADES PER MT-101.60

B
D3-H3-30
HANTHORN ROAD
DETOUR
M4-9R-30

C
D3-H3-30
HANTHORN ROAD
DETOUR
M4-9L-30

D
D3-H3-30
HANTHORN ROAD
END DETOUR
M4-8A-24

G
R11-3-66
ROAD CLOSED
LOCAL TRAFFIC ONLY
M4-9L-30 DETOUR
TRUCK M4-4-30
DETOUR M4-9R-30

I
TRUCK M4-4-30
DETOUR M4-8-30
HANTHORN RD. WEST OF I-75 USE S.R. 65 EXIT 122
SPECIAL - BLACK ON ORANGE 48" X 96"
M6-2R-30
HANTHORN RD. EAST OF I-75 USE 4TH ST. EXIT 124
SPECIAL - BLACK ON ORANGE 48" X 96"
M6-3-12

J
TRUCK M4-4-30
DETOUR M4-8-30
HANTHORN RD. EAST OF I-75 USE 4TH ST. EXIT 124
SPECIAL - BLACK ON ORANGE 48" X 96"
M6-2R-30

HORIZONTAL SCALE IN FEET
0 300 600 1200

CALCULATED CAC
CHECKED EJC

DETOUR PLAN
HANTHORN ROAD

ALL-75-0.21

48/94

87/907

J:\Projects\ALL\89029\mot\sheets\89029MD400.dgn 13-JUN-2013 9:31PM coffield

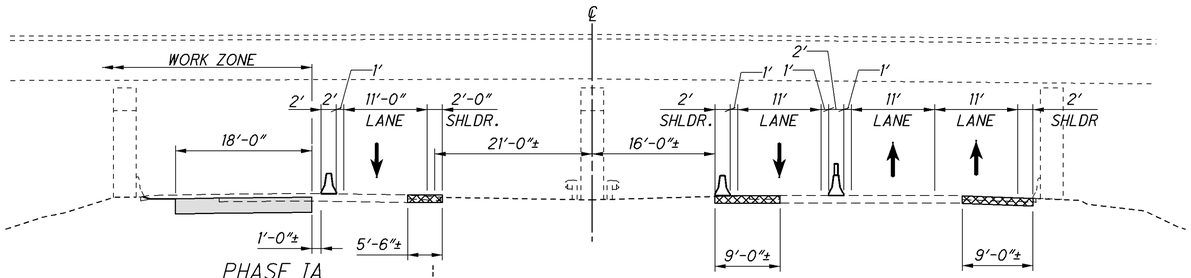

PHASE IA

SECTION C-C

BRIDGE NO. ALL-75-02.12
STA. 112+00±

NOTE: REBUILD EXISTING SHOULDERS AS NEEDED AND PLACE TEMPORARY PAVEMENT TO LIMITS SHOWN.

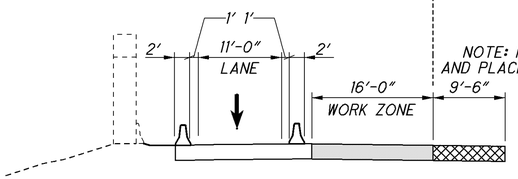

PHASE IB

NOTE: FOR PCB ANCHORING INFORMATION SEE M.O.T. GENERAL NOTES.

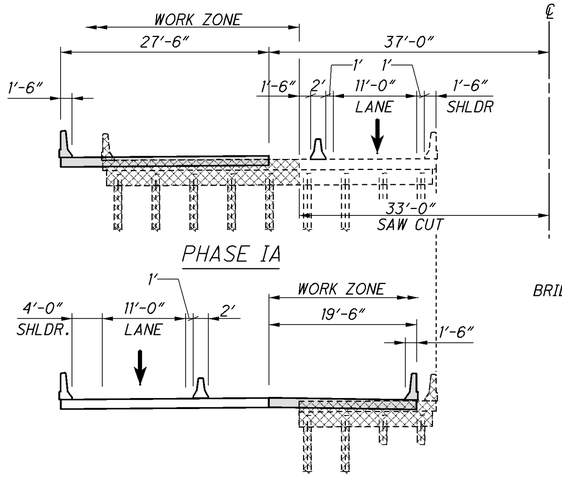

PHASE IA

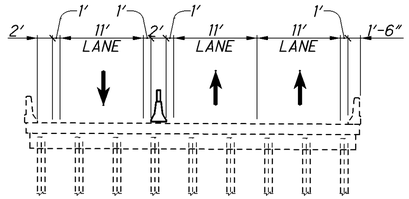

SECTION B-B

BRIDGE NO. ALL-75-01.00 L/R
STA. 53+00±

PHASE IB

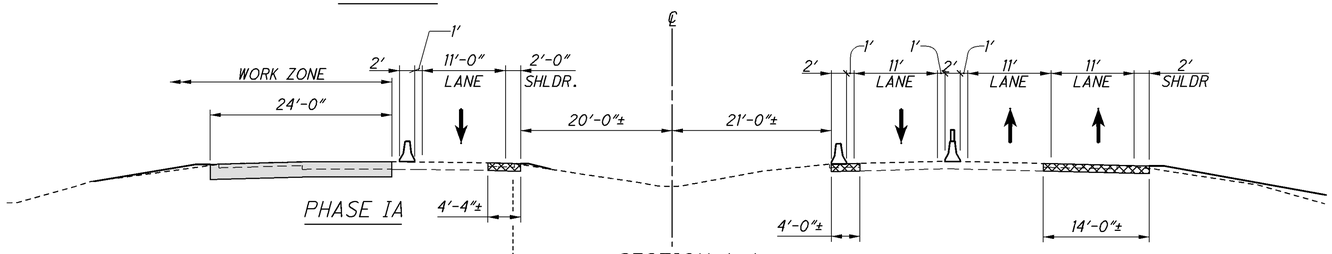

PHASE IB

SECTION A-A

STA. 45+00±
STA. 85+00±

NOTE: REBUILD EXISTING SHOULDERS AS NEEDED AND PLACE TEMPORARY PAVEMENT TO LIMITS SHOWN.

BEGIN PROJECT
STA. 11+00

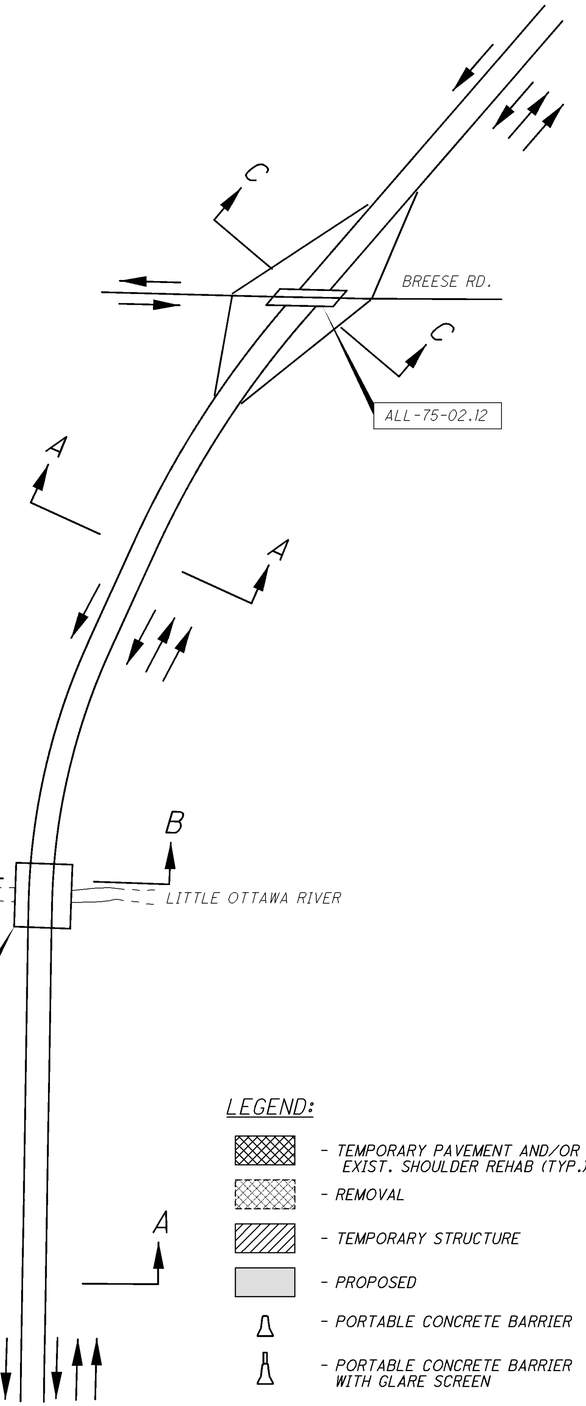

LEGEND:

- TEMPORARY PAVEMENT AND/OR EXIST. SHOULDER REHAB (TYP.)
- REMOVAL
- TEMPORARY STRUCTURE
- PROPOSED
- PORTABLE CONCRETE BARRIER
- PORTABLE CONCRETE BARRIER WITH GLARE SCREEN

HORIZONTAL SCALE IN FEET
0 5 10 20

CALCULATED JMR
CHECKED EJC

MAINTENANCE OF TRAFFIC TYPICAL SECTIONS CONTRA-FLOW, PHASE I (IA & IB)

ALL-75-0.21

49/94

88/907

J:\Projects\ALL\89029\mot\sheets\89029MOT001.dgn 13-JUN-2013 9:31PM coffield

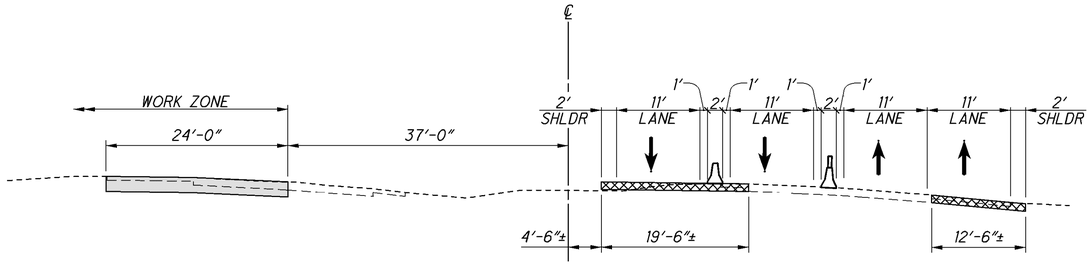

SECTION D-D PHASE IA

BRIDGE NO. ALL-75-03.28
STA. 173+00±
NOTE: REBUILD EXISTING SHOULDERS AS NEEDED AND PLACE TEMPORARY PAVEMENT TO LIMITS SHOWN.

NOTE: FOR PCB ANCHORING INFORMATION SEE M.O.T. GENERAL NOTES.

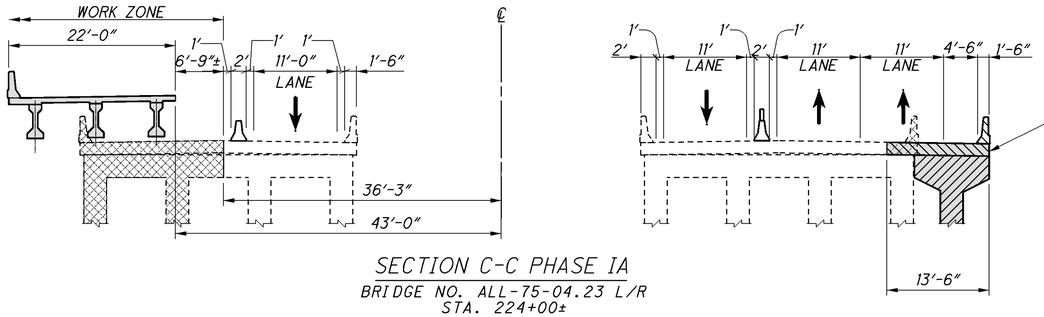

SECTION C-C PHASE IA

BRIDGE NO. ALL-75-04.23 L/R
STA. 224+00±

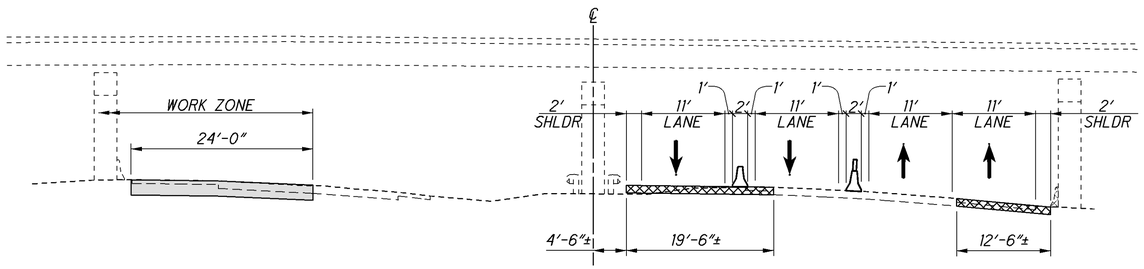

SECTION B-B PHASE IA

BRIDGE NO. ALL-75-03.28
STA. 173+00±
NOTE: REBUILD EXISTING SHOULDERS AS NEEDED AND PLACE TEMPORARY PAVEMENT TO LIMITS SHOWN.

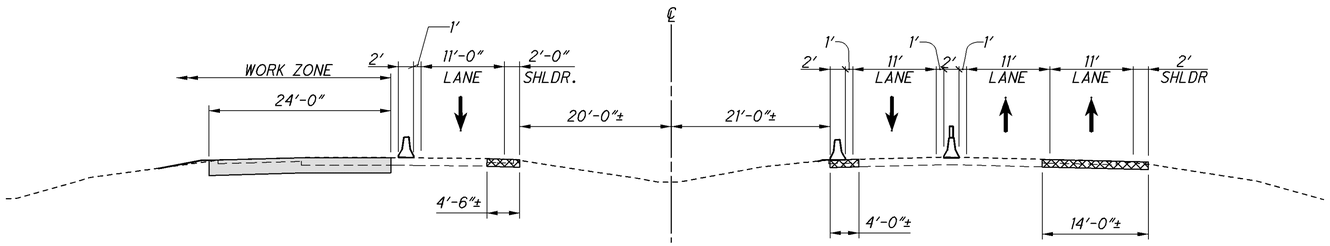

SECTION A-A PHASE IA

STA. 145+00±
STA. 200+00±
NOTE: REBUILD EXISTING SHOULDERS AS NEEDED AND PLACE TEMPORARY PAVEMENT TO LIMITS SHOWN.

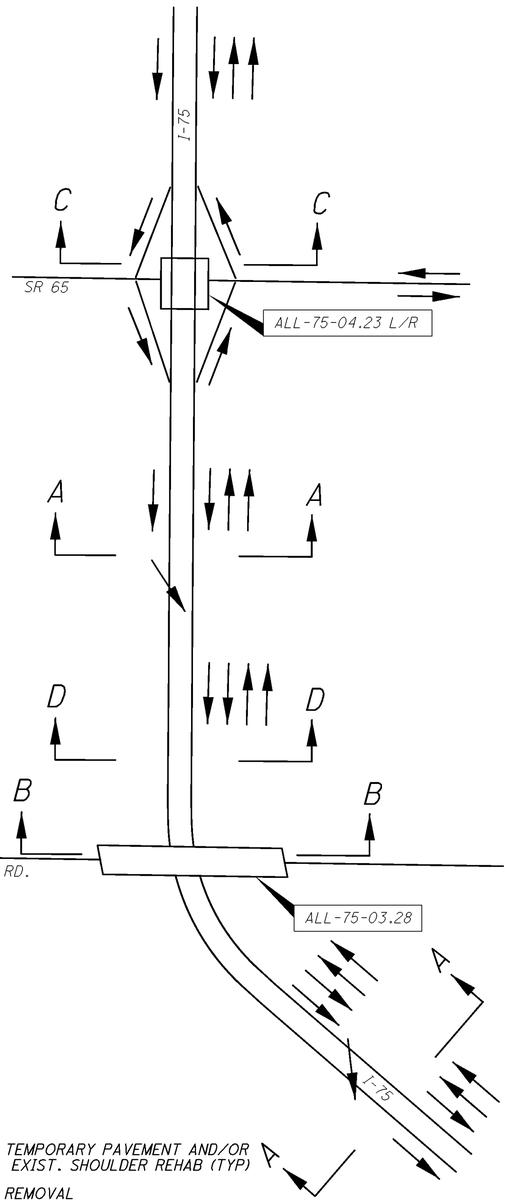

LEGEND:

- TEMPORARY PAVEMENT AND/OR EXIST. SHOULDER REHAB (TYP)
- REMOVAL
- TEMPORARY STRUCTURE
- PROPOSED
- PORTABLE CONCRETE BARRIER
- PORTABLE CONCRETE BARRIER WITH GLARE SCREEN

N

HORIZONTAL SCALE IN FEET
0 5 10 20

CALCULATED JMR
CHECKED EJC

MAINTENANCE OF TRAFFIC TYPICAL SECTIONS CONTRA-FLOW, PHASE IA

ALL-75-0.21

50/94

89/907

J:\Projects\ALL\89029\mot\sheets\89029MY003.dgn 13-JUN-2013 9:31PM coffield

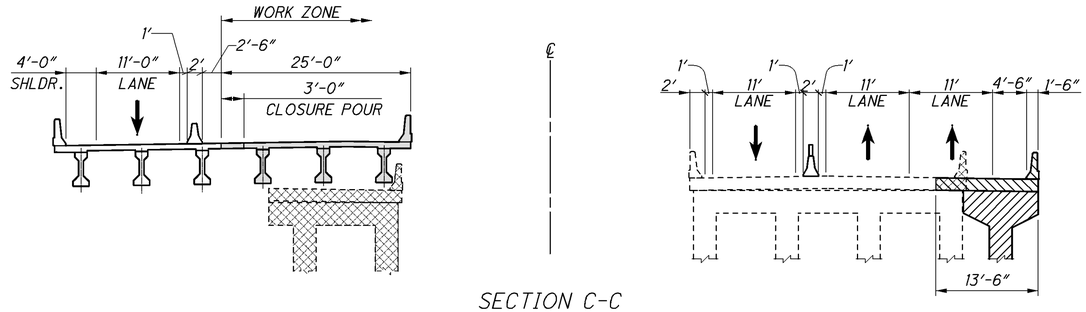

SECTION C-C
PHASE IB

BRIDGE NO. ALL-75-04.23 L/R
STA. 224+00±

NOTE: FOR PCB ANCHORING INFORMATION SEE M.O.T. GENERAL NOTES.

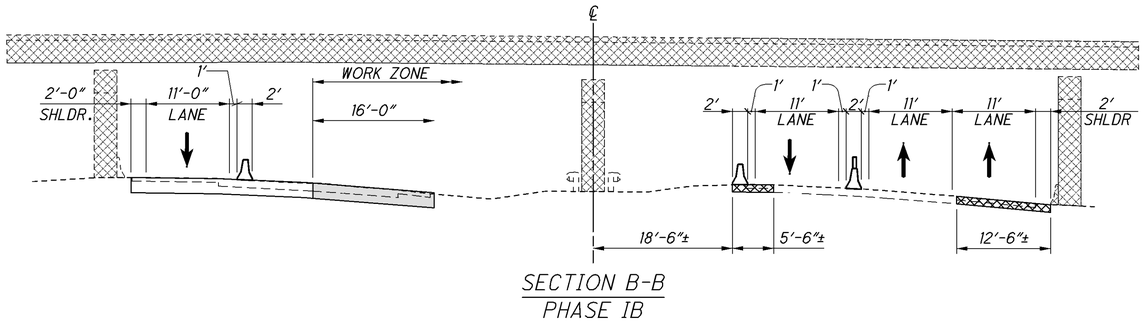

SECTION B-B
PHASE IB

BRIDGE NO. ALL-75-03.28
STA. 173+00±
NOTE: REBUILD EXISTING SHOULDERS AS NEEDED AND PLACE TEMPORARY PAVEMENT TO LIMITS SHOWN.

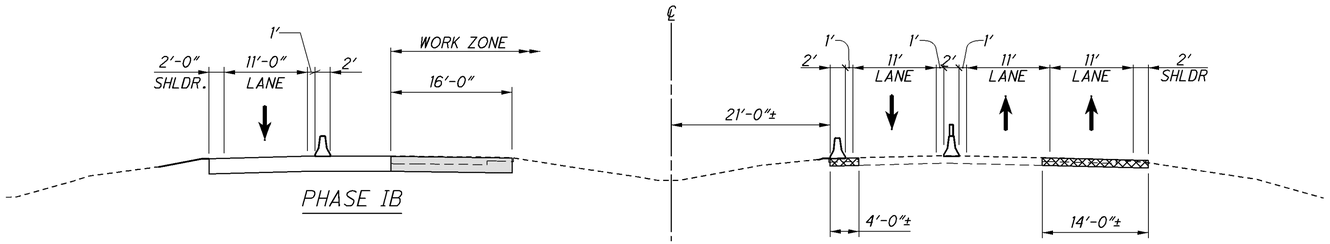

SECTION A-A
PHASE IB

STA. 145+00±
STA. 200+00±
NOTE: REBUILD EXISTING SHOULDERS AS NEEDED AND PLACE TEMPORARY PAVEMENT TO LIMITS SHOWN.

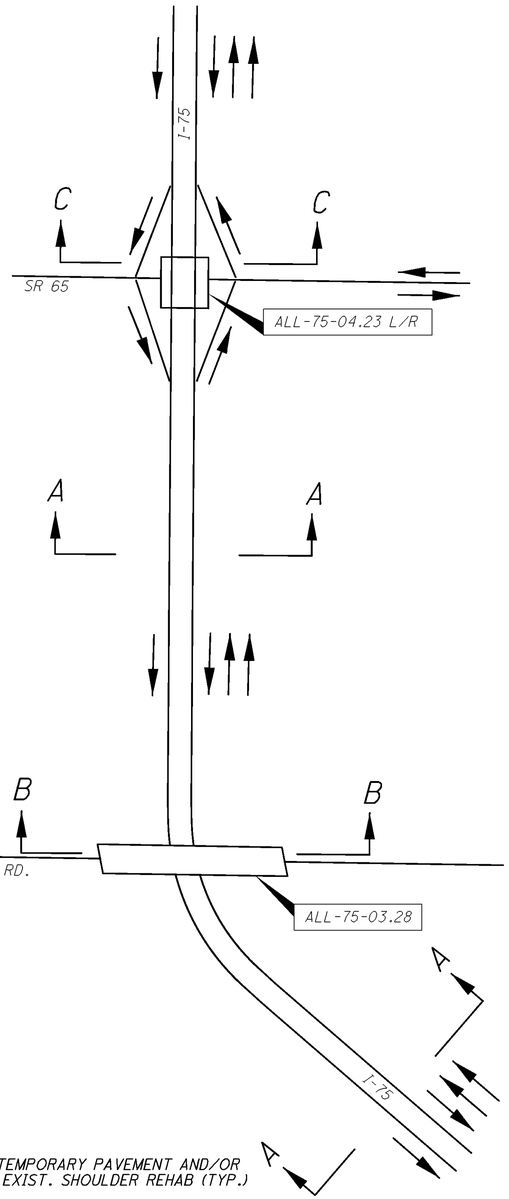

LEGEND:

- TEMPORARY PAVEMENT AND/OR EXIST. SHOULDER REHAB (TYP.)
- REMOVAL
- TEMPORARY STRUCTURE
- PROPOSED
- PORTABLE CONCRETE BARRIER
- PORTABLE CONCRETE BARRIER WITH GLARE SCREEN

HORIZONTAL SCALE IN FEET
0 5 10 20

CALCULATED JMR
CHECKED EJC

MAINTENANCE OF TRAFFIC TYPICAL SECTIONS CONTRA-FLOW, PHASE IB

ALL-75-0.21

J:\Projects\ALL\89029\mot\sheets\89029MY003A.dgn 13-JUN-2013 9:31PM coffield

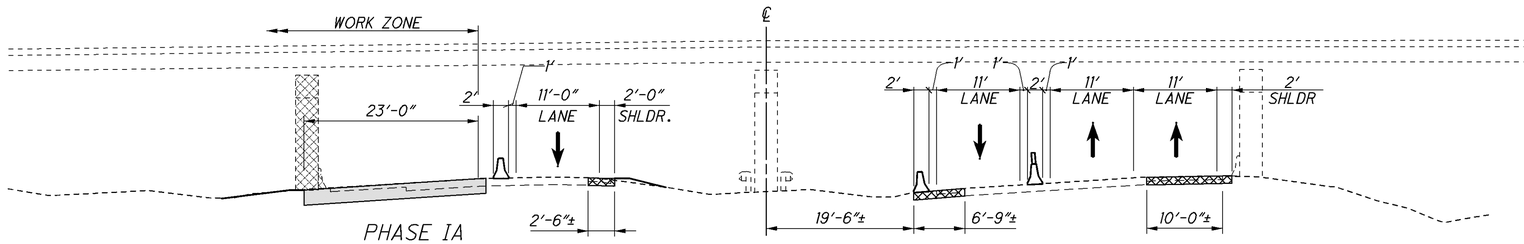

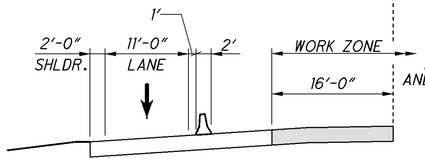

SECTION C-C
BRIDGE NO. ALL-75-05.08
STA. 268+00±
NOTE: REBUILD EXISTING SHOULDERS AS NEEDED AND PLACE TEMPORARY PAVEMENT TO LIMITS SHOWN.

NOTE: FOR PCB ANCHORING INFORMATION SEE M.O.T. GENERAL NOTES.

FOR SECTION B-B, SEE CONTRA-FLOW PHASE IA, HANTHORN CURVE DETAIL SHEETS 66-69 OF 94.

SECTION B-B
STA. 255+00±

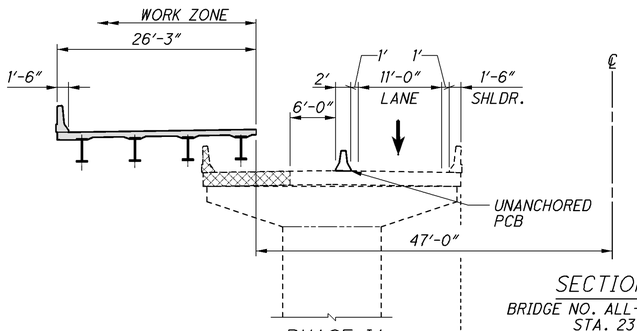

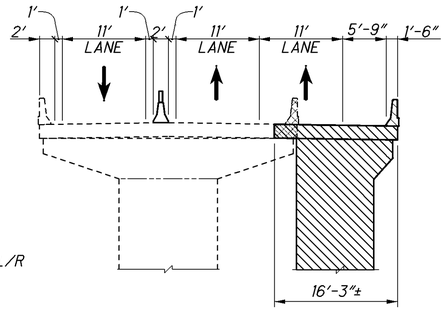

SECTION A-A
BRIDGE NO. ALL-75-04.48 L/R
STA. 237+00±

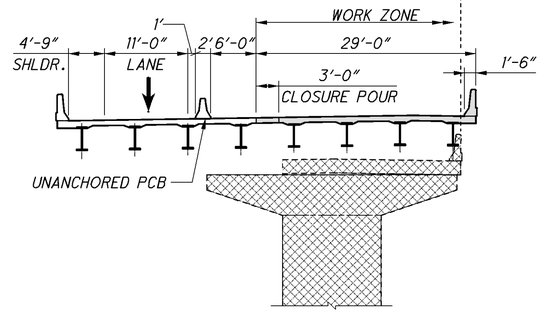

LEGEND:
- TEMPORARY PAVEMENT
- REMOVAL
- TEMPORARY STRUCTURE
- PROPOSED
- PORTABLE CONCRETE BARRIER
- PORTABLE CONCRETE BARRIER WITH GLARE SCREEN

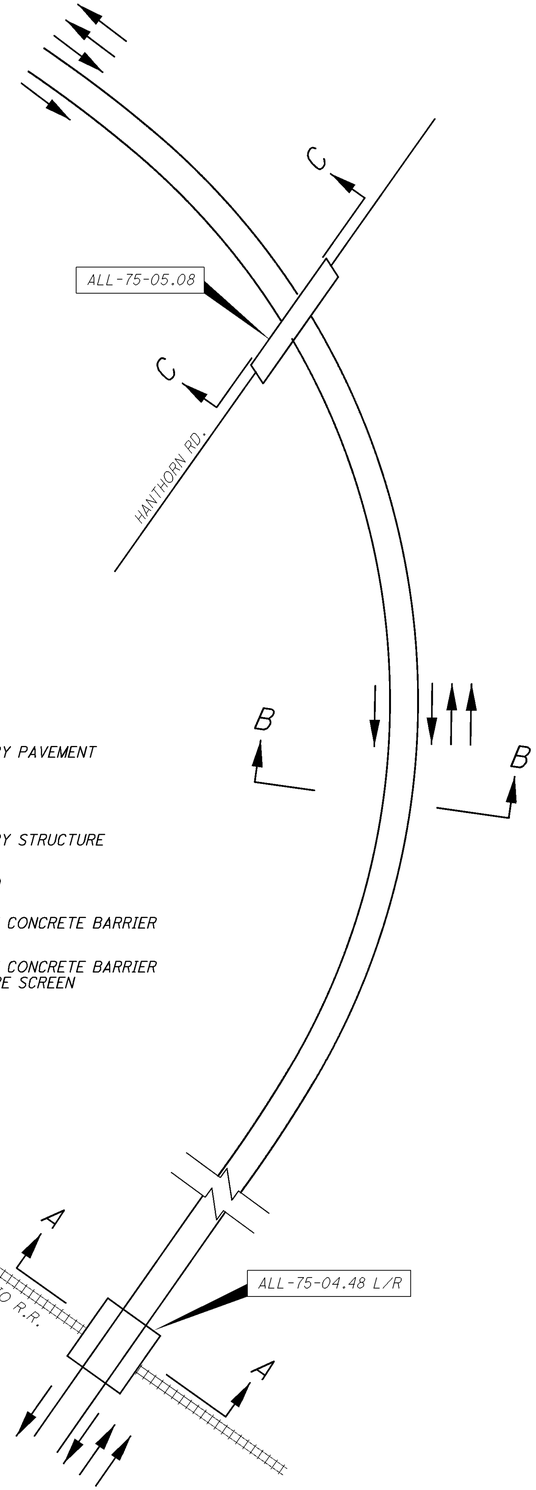

HORIZONTAL SCALE IN FEET
0 5 10 20

CALCULATED JMR
CHECKED EJC

MAINTENANCE OF TRAFFIC TYPICAL SECTIONS CONTR-FLOW, PHASE I (IA & IB)

ALL-75-0.21

52/94

91/907

J:\Projects\ALL\89029\mot\sheets\89029MY005.dgn 13-JUN-2013 9:31PM coffield

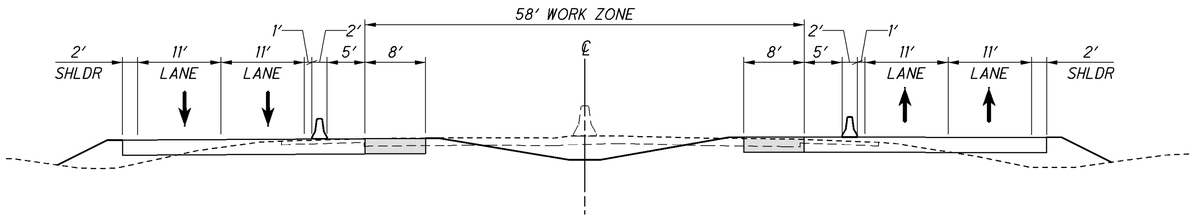

SECTION C-C
STA. 348+00±
(BY OTHERS)

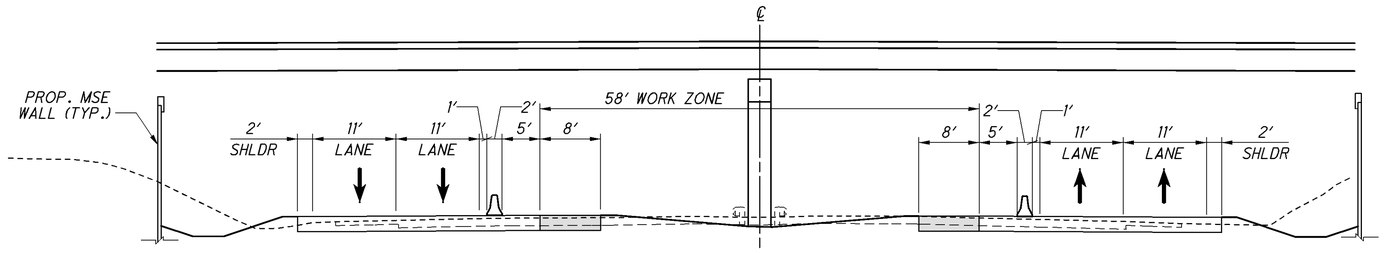

SECTION B-B
BRIDGE NO. ALL-75-06.11
STA. 322+00±
(BY OTHERS)

NOTE: FOR PCB ANCHORING INFORMATION
SEE M.O.T. GENERAL NOTES.

LEGEND:

- TEMPORARY PAVEMENT
- REMOVAL
- TEMPORARY STRUCTURE
- PROPOSED
- PORTABLE CONCRETE BARRIER
- PORTABLE CONCRETE BARRIER WITH GLARE SCREEN

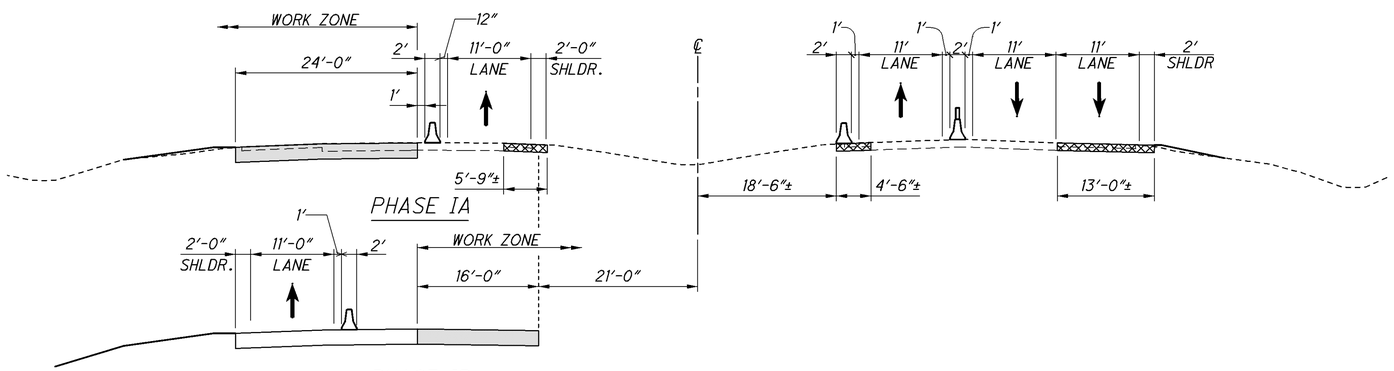

SECTION A-A
STA. 290+00±
NOTE: REBUILD EXISTING SHOULDERS AS NEEDED
AND PLACE TEMPORARY PAVEMENT TO LIMITS SHOWN.

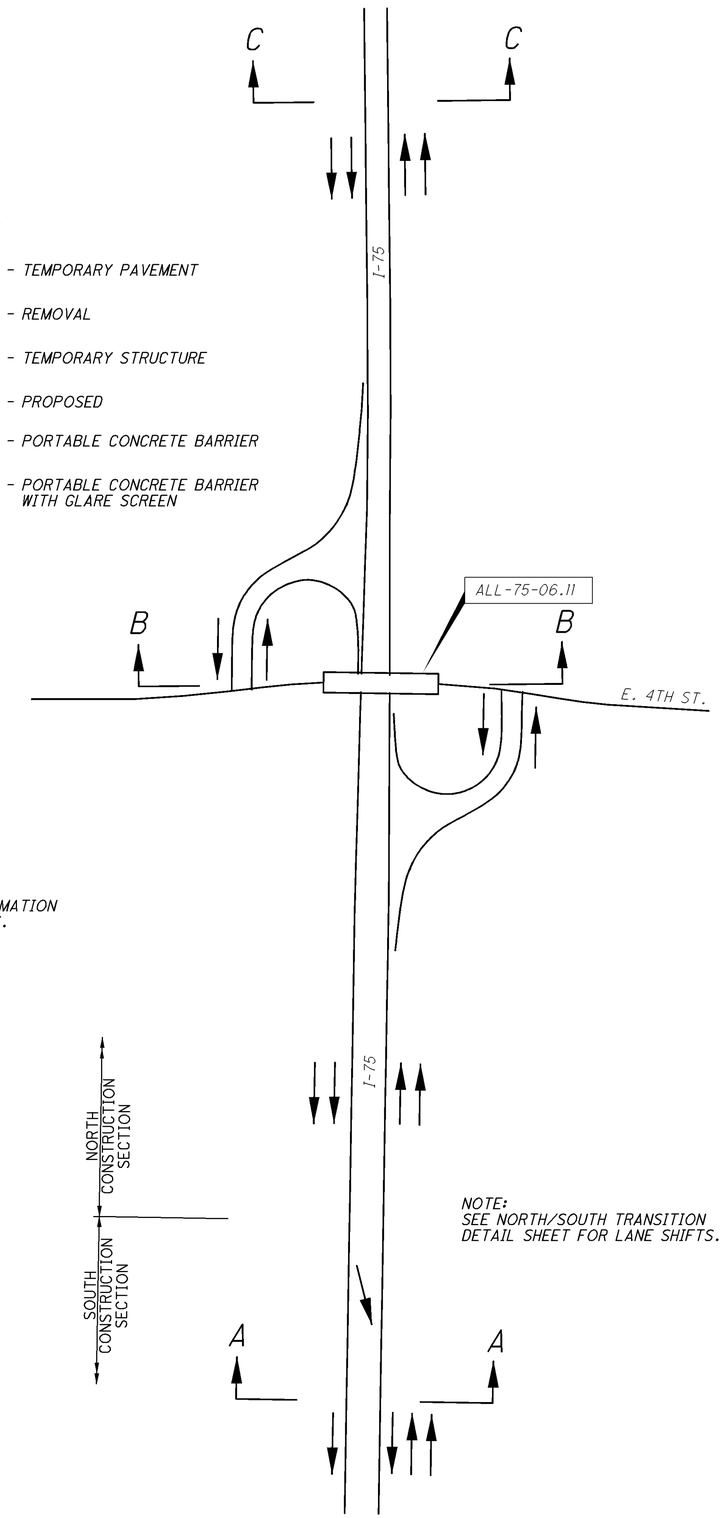

NOTE:
SEE NORTH/SOUTH TRANSITION
DETAIL SHEET FOR LANE SHIFTS.

HORIZONTAL SCALE IN FEET
0 5 10 20

CALCULATED JMR
CHECKED EJC

MAINTENANCE OF TRAFFIC TYPICAL SECTIONS CONTRA-FLOW, PHASE I (IA & IB)

ALL-75-0.21

53/94

92/907

J:\Projects\ALL\89029\mot\sheets\89029MY007.dgn 13-JUN-2013 9:31PM coffield

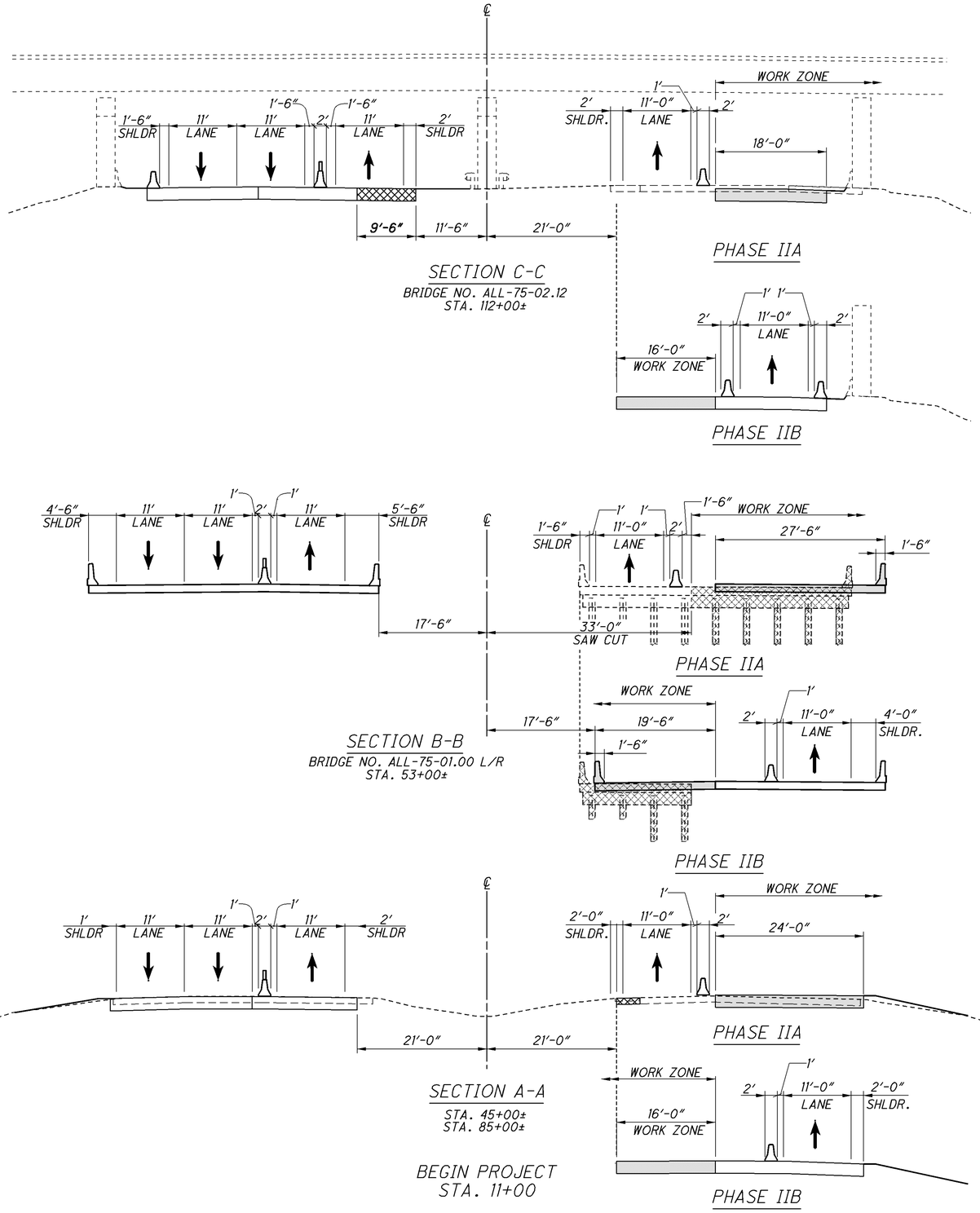

NOTE: FOR PCB ANCHORING INFORMATION SEE M.O.T. GENERAL NOTES.

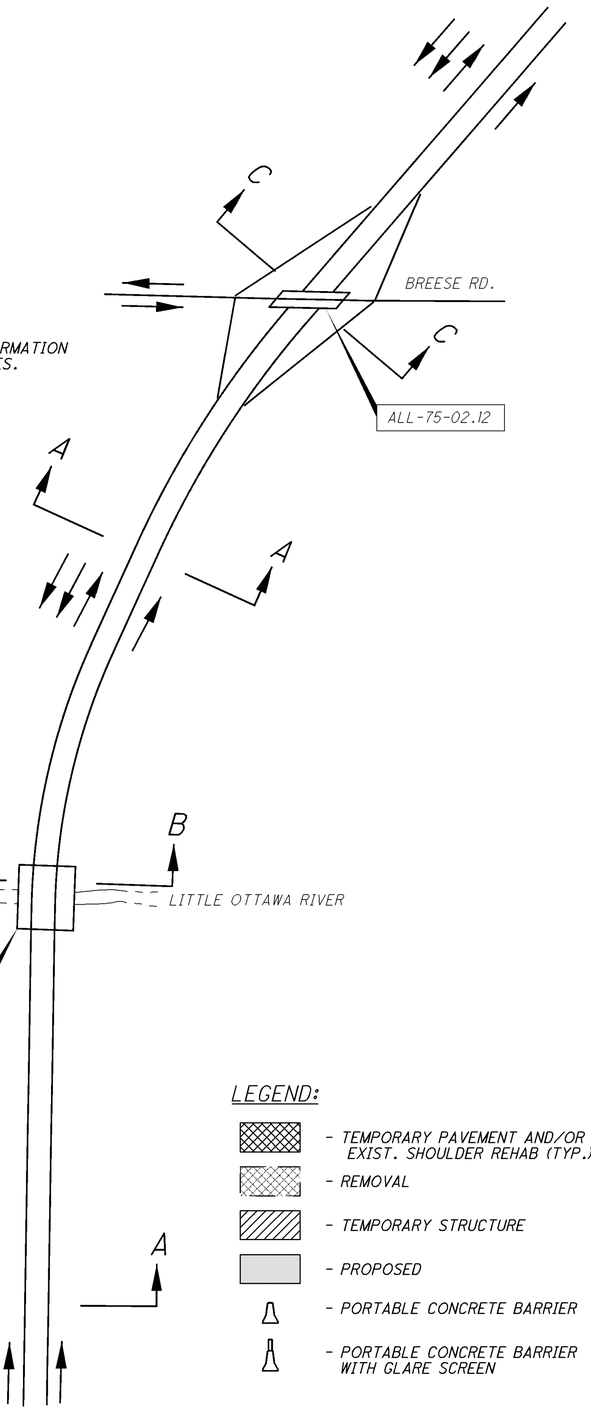

HORIZONTAL SCALE IN FEET
0 5 10 20

CALCULATED JMR
CHECKED EJC

MAINTENANCE OF TRAFFIC TYPICAL SECTIONS CONTRA-FLOW, PHASE II (IIA & IIB)

ALL-75-0.21

54/94

93/907

J:\Projects\ALL\89029\mot\sheets\89029MY002.dgn 13-JUN-2013 9:31PM coffield

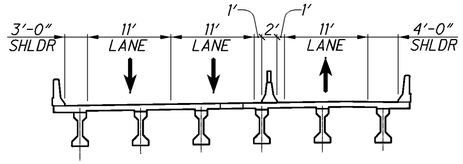

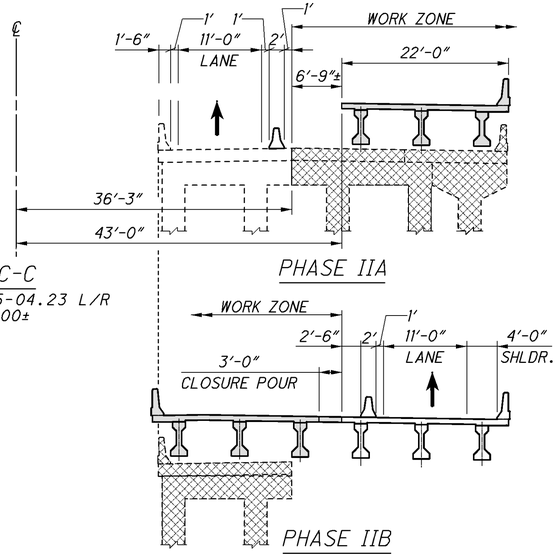

SECTION C-C
BRIDGE NO. ALL-75-04.23 L/R
STA. 224+00±

NOTE: FOR PCB ANCHORING INFORMATION SEE M.O.T. GENERAL NOTES.

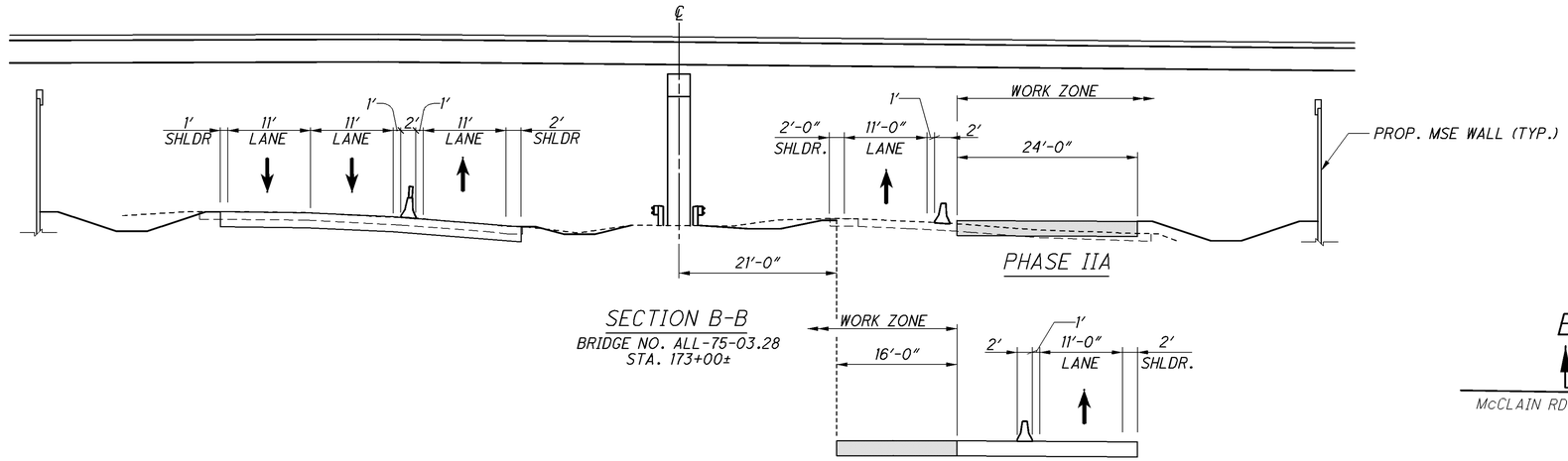

SECTION B-B
BRIDGE NO. ALL-75-03.28
STA. 173+00±

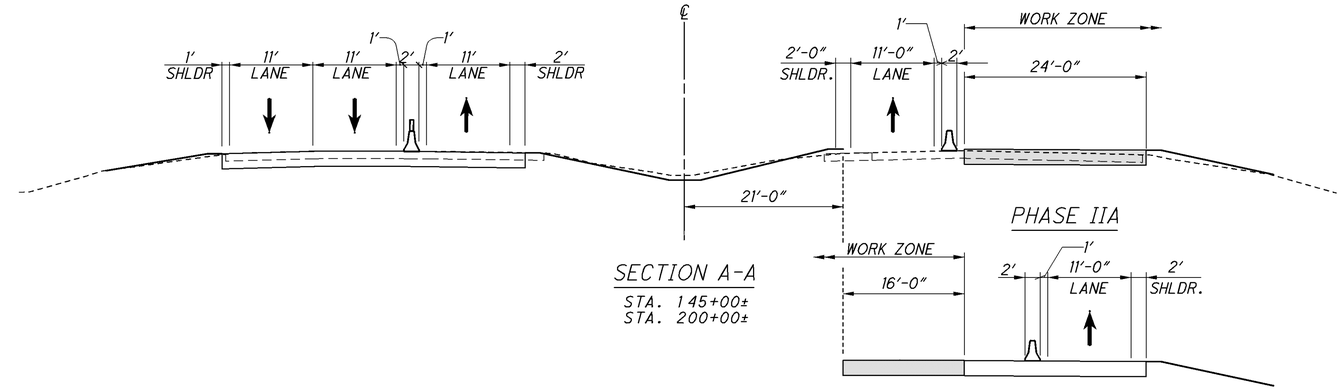

SECTION A-A
STA. 145+00±
STA. 200+00±

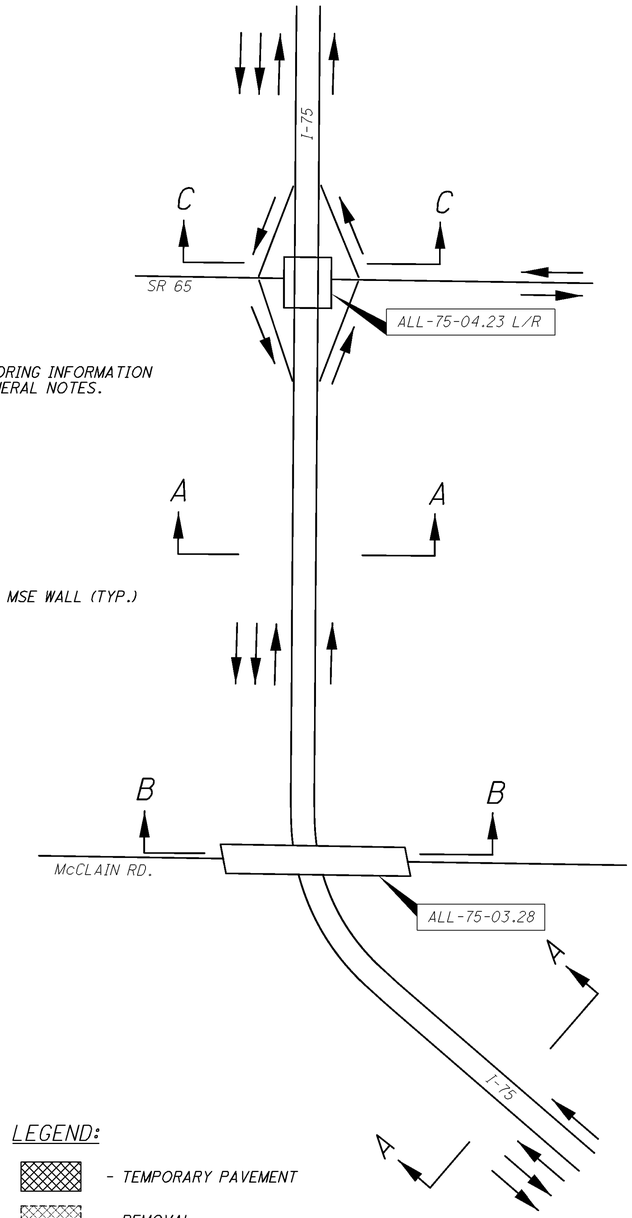

LEGEND:

- TEMPORARY PAVEMENT
- REMOVAL
- TEMPORARY STRUCTURE
- PROPOSED
- PORTABLE CONCRETE BARRIER
- PORTABLE CONCRETE BARRIER WITH GLARE SCREEN

HORIZONTAL SCALE IN FEET
0 5 10 20

CALCULATED JMR
CHECKED EJC

MAINTENANCE OF TRAFFIC TYPICAL SECTIONS CONTRA-FLOW, PHASE II (IIA & IIB)

ALL-75-0.21

55/94

94/907

J:\Projects\ALL\89029\mot\sheets\89029MY004.dgn 13-JUN-2013 9:31PM coffield

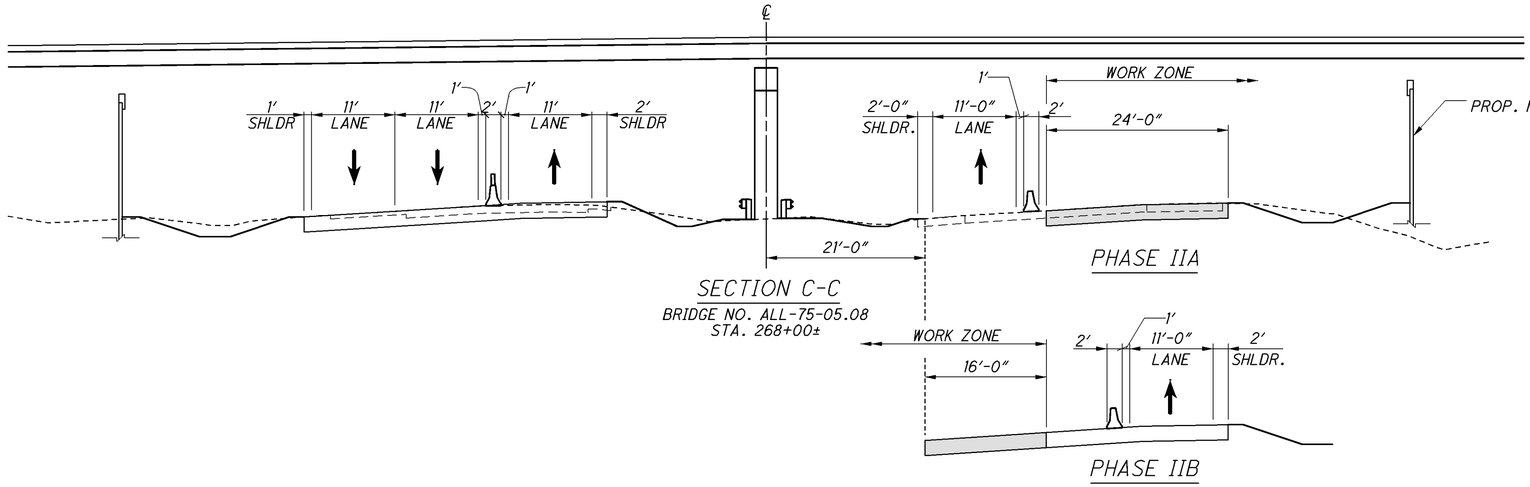

FOR SECTION B-B, SEE CONTRA-FLOW PHASE IB, HANTHORN CURVE DETAIL SHEETS 70-73 OF 94.

SECTION B-B
STA. 255+00±

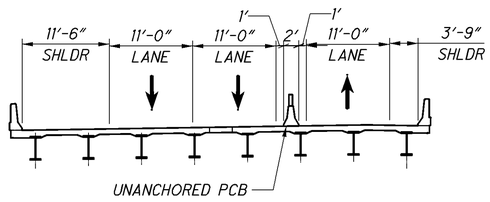

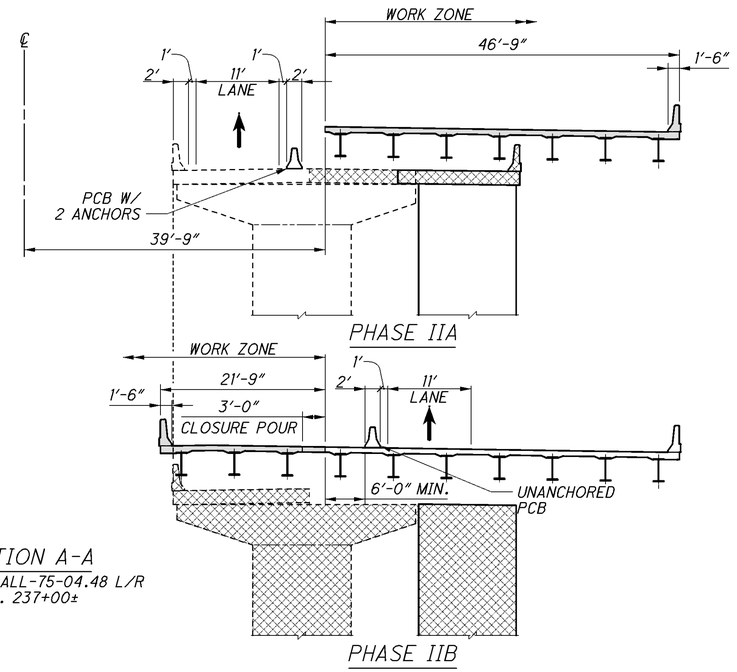

SECTION A-A
BRIDGE NO. ALL-75-04.48 L/R
STA. 237+00±

LEGEND:

- TEMPORARY PAVEMENT
- REMOVAL
- TEMPORARY STRUCTURE
- PROPOSED
- PORTABLE CONCRETE BARRIER
- PORTABLE CONCRETE BARRIER WITH GLARE SCREEN

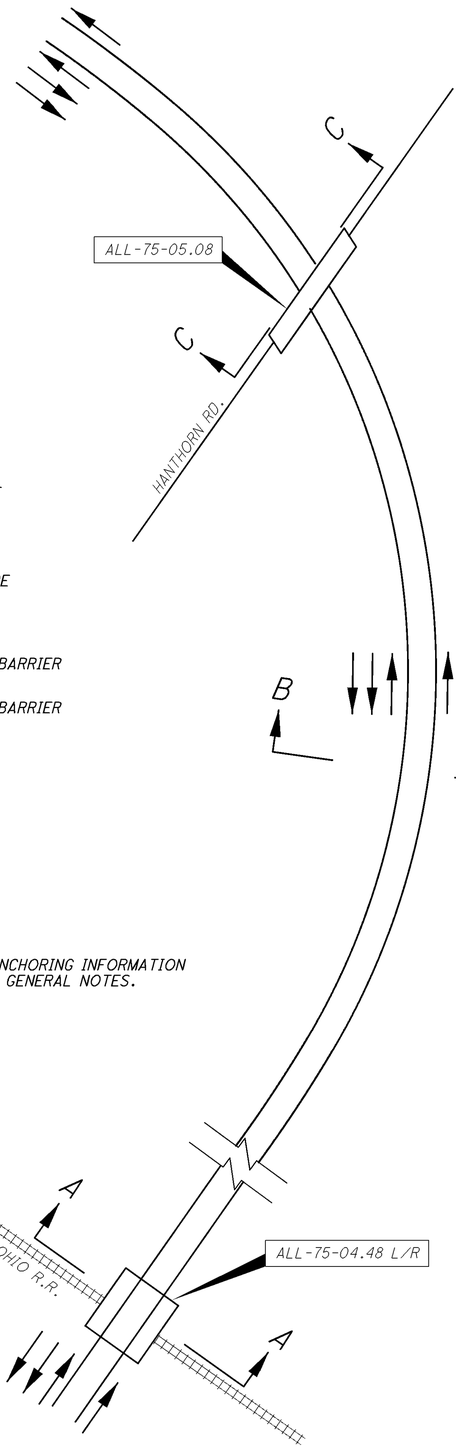

NOTE: FOR PCB ANCHORING INFORMATION SEE M.O.T. GENERAL NOTES.

HORIZONTAL SCALE IN FEET
0 5 10 20

CALCULATED JMR
CHECKED EJC

MAINTENANCE OF TRAFFIC TYPICAL SECTIONS CONTR-FLOW, PHASE II (IIA & IIB)

ALL-75-0.21

56/94

95/907

J:\Projects\ALL\89029\mot\sheets\89029MY006.dgn 13-JUN-2013 9:31PM coffield

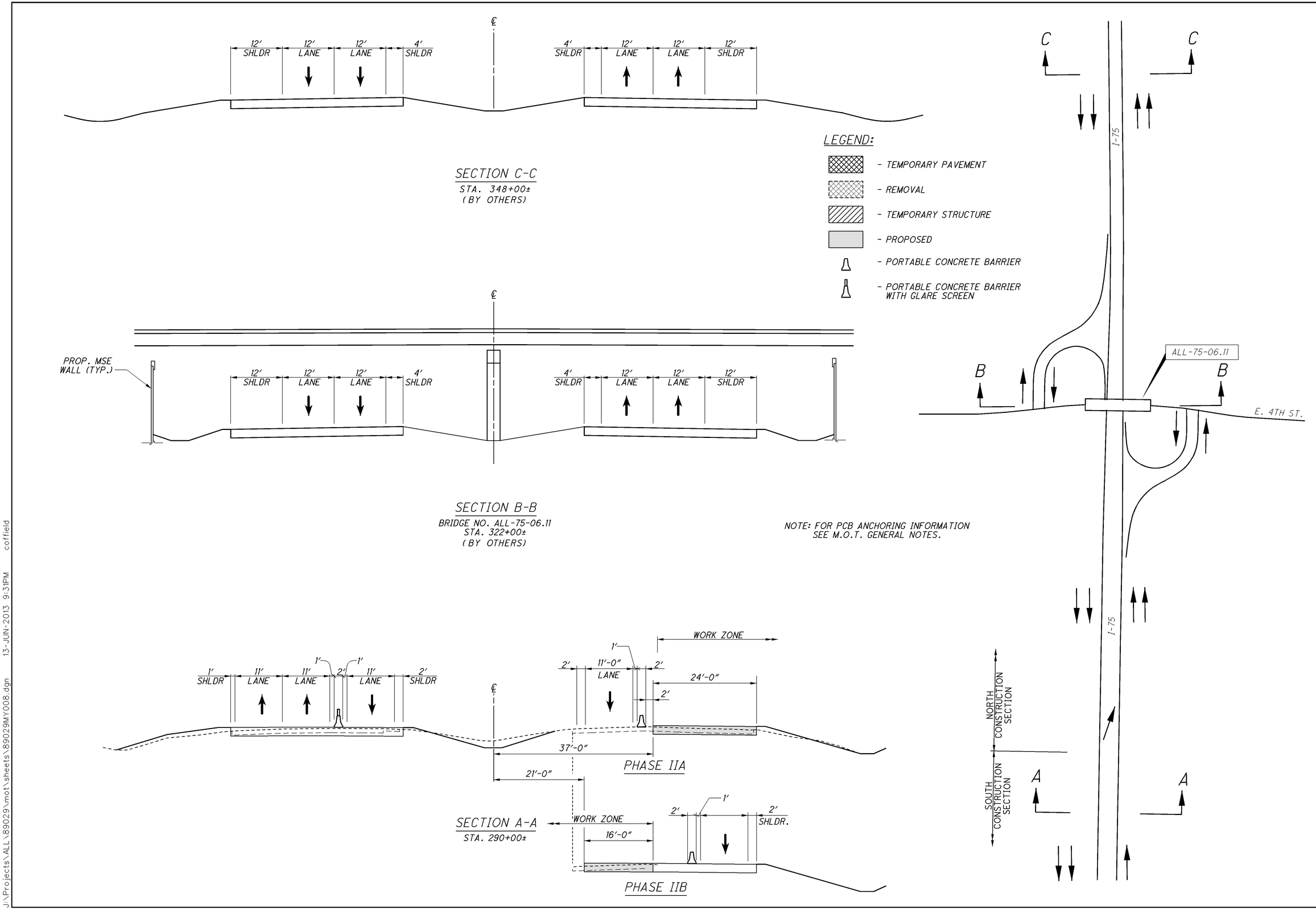

J:\Projects\ALL\89029\mot\sheets\89029MY008.dgn 13-JUN-2013 9:31PM coffield

HORIZONTAL SCALE IN FEET 0 5 10 20

CALCULATED JMR
CHECKED EJC

MAINTENANCE OF TRAFFIC TYPICAL SECTIONS CONTRA-FLOW, PHASE II (IIA & IIB)

ALL-75-0.21

CONTRA-FLOW
PHASE IA

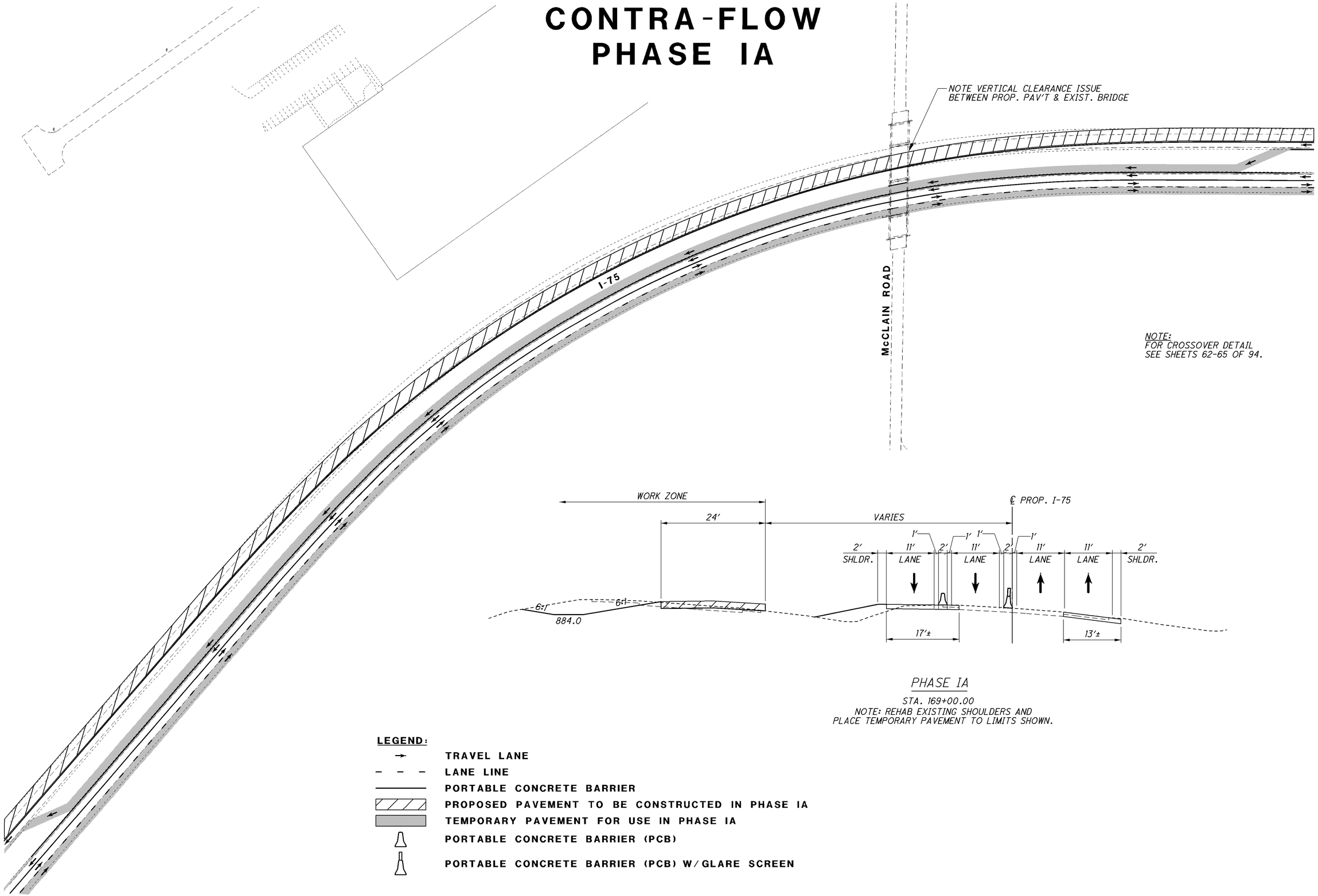

PHASE IA

STA. 169+00.00
NOTE: REHAB EXISTING SHOULDERS AND
PLACE TEMPORARY PAVEMENT TO LIMITS SHOWN.

LEGEND:

- TRAVEL LANE
- LANE LINE
- PORTABLE CONCRETE BARRIER
- PROPOSED PAVEMENT TO BE CONSTRUCTED IN PHASE IA
- TEMPORARY PAVEMENT FOR USE IN PHASE IA
- PORTABLE CONCRETE BARRIER (PCB)
- PORTABLE CONCRETE BARRIER (PCB) W/ GLARE SCREEN

HORIZONTAL SCALE IN FEET
0 40 80 160

CALCULATED CAC
CHECKED EJC

I-75 MAINTENANCE OF TRAFFIC
CONTRA-FLOW PHASE IA, McCLAIN CURVE

ALL-75-0.21

J:\Projects\ALL\89029\mot\sheets\89029MH001.dgn 13-JUN-2013 9:31PM coffield

CONTRA-FLOW PHASE IB

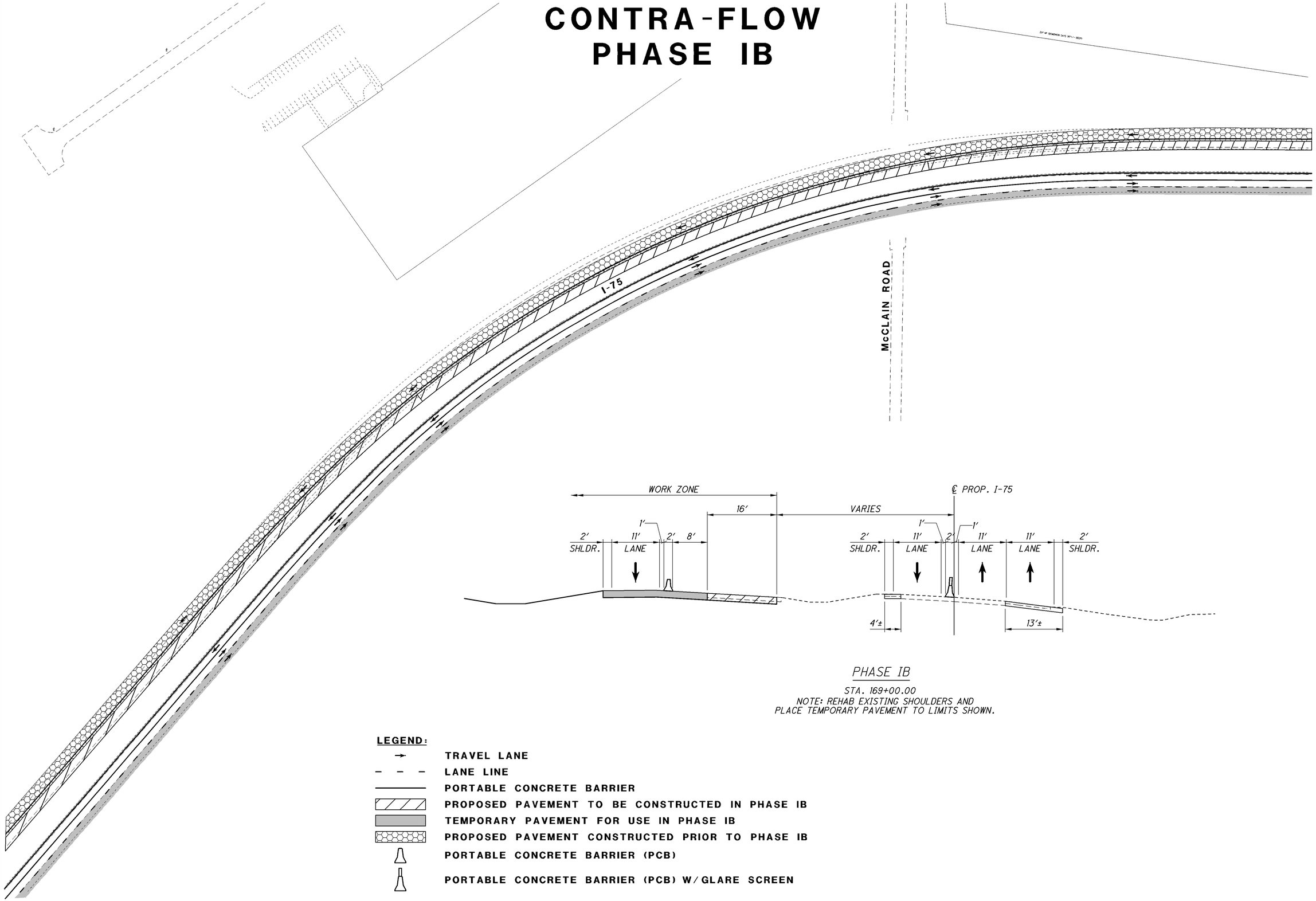

PHASE IB

STA. 169+00.00
NOTE: REHAB EXISTING SHOULDERS AND PLACE TEMPORARY PAVEMENT TO LIMITS SHOWN.

LEGEND:

- TRAVEL LANE
- LANE LINE
- PORTABLE CONCRETE BARRIER
- PROPOSED PAVEMENT TO BE CONSTRUCTED IN PHASE IB
- TEMPORARY PAVEMENT FOR USE IN PHASE IB
- PROPOSED PAVEMENT CONSTRUCTED PRIOR TO PHASE IB
- PORTABLE CONCRETE BARRIER (PCB)
- PORTABLE CONCRETE BARRIER (PCB) W/ GLARE SCREEN

HORIZONTAL SCALE IN FEET
0 40 80 160

CALCULATED CAC
CHECKED EJC

I-75 MAINTENANCE OF TRAFFIC
CONTRA-FLOW PHASE IB, McCLAIN CURVE

ALL-75-0.21

59/94

98/907

J:\Projects\ALL\89029\mot\sheets\89029MH002.dgn 13-JUN-2013 9:31PM coffield

CONTRA-FLOW
PHASE IIA

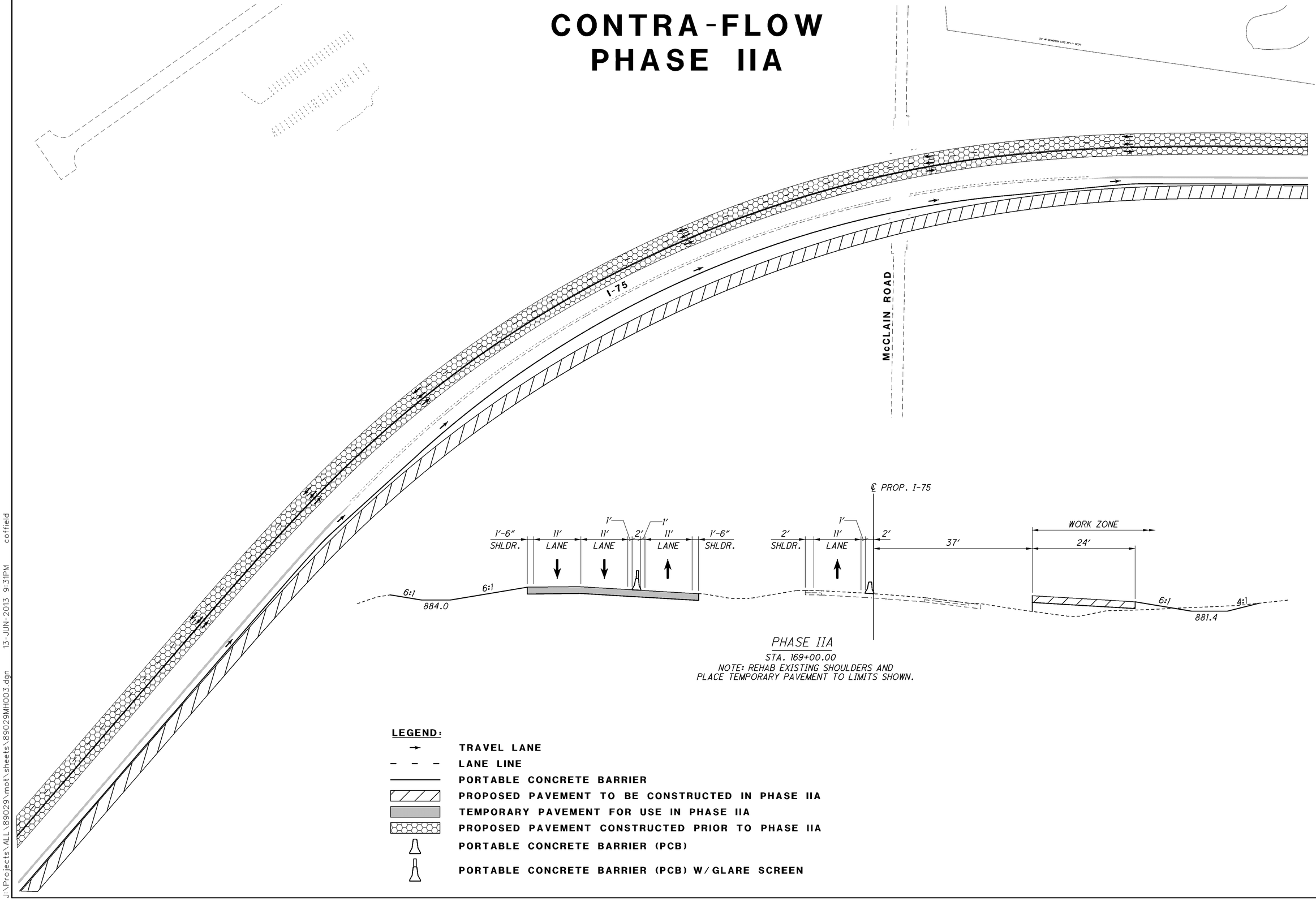

PHASE IIA

STA. 169+00.00

NOTE: REHAB EXISTING SHOULDERS AND PLACE TEMPORARY PAVEMENT TO LIMITS SHOWN.

LEGEND:

- **TRAVEL LANE**
- **LANE LINE**
- **PORTABLE CONCRETE BARRIER**
- **PROPOSED PAVEMENT TO BE CONSTRUCTED IN PHASE IIA**
- **TEMPORARY PAVEMENT FOR USE IN PHASE IIA**
- **PROPOSED PAVEMENT CONSTRUCTED PRIOR TO PHASE IIA**
- **PORTABLE CONCRETE BARRIER (PCB)**
- **PORTABLE CONCRETE BARRIER (PCB) W/GLARE SCREEN**

HORIZONTAL SCALE IN FEET
0 40 80 160

CALCULATED CAC
CHECKED EJC

I-75 MAINTENANCE OF TRAFFIC
CONTRA-FLOW PHASE IIA, McCLAIN CURVE

ALL-75-0.21

60/94

99/907

J:\Projects\ALL\89029\mot\sheets\89029MH003.dgn 13-JUN-2013 9:31PM coffield

CONTRA-FLOW
PHASE IIB

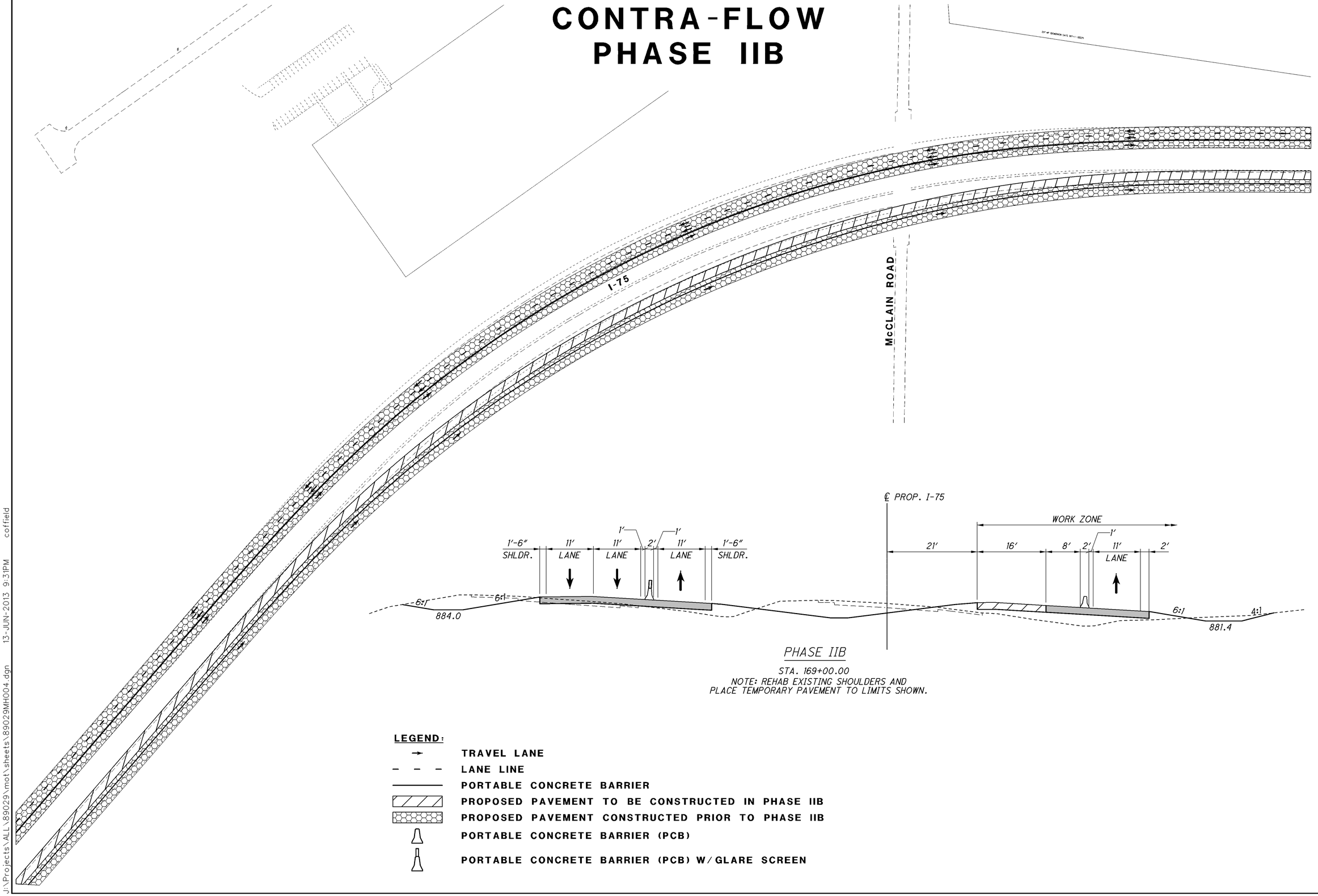

PHASE IIB

STA. 169+00.00

NOTE: REHAB EXISTING SHOULDERS AND PLACE TEMPORARY PAVEMENT TO LIMITS SHOWN.

LEGEND:

- TRAVEL LANE
- LANE LINE
- PORTABLE CONCRETE BARRIER
- PROPOSED PAVEMENT TO BE CONSTRUCTED IN PHASE IIB
- PROPOSED PAVEMENT CONSTRUCTED PRIOR TO PHASE IIB
- PORTABLE CONCRETE BARRIER (PCB)
- PORTABLE CONCRETE BARRIER (PCB) W/ GLARE SCREEN

HORIZONTAL SCALE IN FEET
0 40 80 160

CALCULATED CAC
CHECKED EJC

I-75 MAINTENANCE OF TRAFFIC
CONTRA-FLOW PHASE IIB, McCLAIN CURVE

ALL-75-0.21

61 / 94

100 / 907

J:\Projects\ALL\89029\mot\sheets\89029MH004.dgn 13-JUN-2013 9:31PM coffield

CURVE MOT-1	CURVE MOT-2
P.I. Sta. 151+14.47	P.I. Sta. 153+97.86
Δ = 8° 00′ 00″ (RT)	Δ = 8° 00′ 00″ (LT)
Dc = 3° 00′ 00″	Dc = 3° 00′ 00″
R = 1,909.86′	R = 1,909.86′
T = 133.55′	T = 133.55′
L = 266.67′	L = 266.67′
E = 4.66′	E = 4.66′
C = 266.45′	C = 266.45′
C.B. = N 44° 51′ 04″ E	C.B. = N 44° 51′ 04″ E

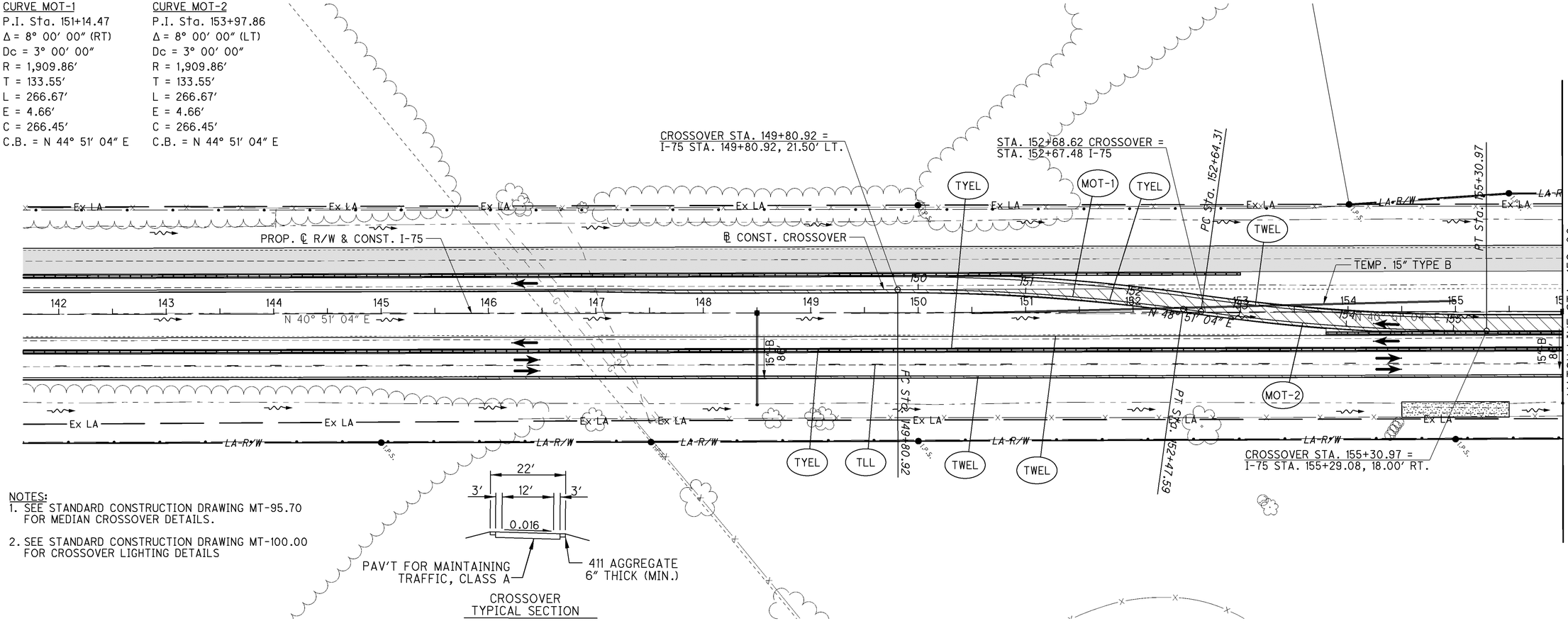

NOTES:
1. SEE STANDARD CONSTRUCTION DRAWING MT-95.70 FOR MEDIAN CROSSOVER DETAILS.
2. SEE STANDARD CONSTRUCTION DRAWING MT-100.00 FOR CROSSOVER LIGHTING DETAILS

CROSSOVER TYPICAL SECTION

LEGEND:

- (TYEL) - TEMPORARY YELLOW EDGE LINE
- (TWEL) - TEMPORARY WHITE EDGE LINE
- (TLL) - TEMPORARY LANE LINE
- - PAVEMENT FOR MAINTAINING TRAFFIC
- - PORTABLE CONCRETE BARRIER (PCB)
- - WORK AREA (PHASE IA)
- - IMPACT ATTENUATOR
- • • - DRUMS (10′ C/C ON TAPERS; 20′ C/C ON TANGENT)
- → - LANE DIRECTION

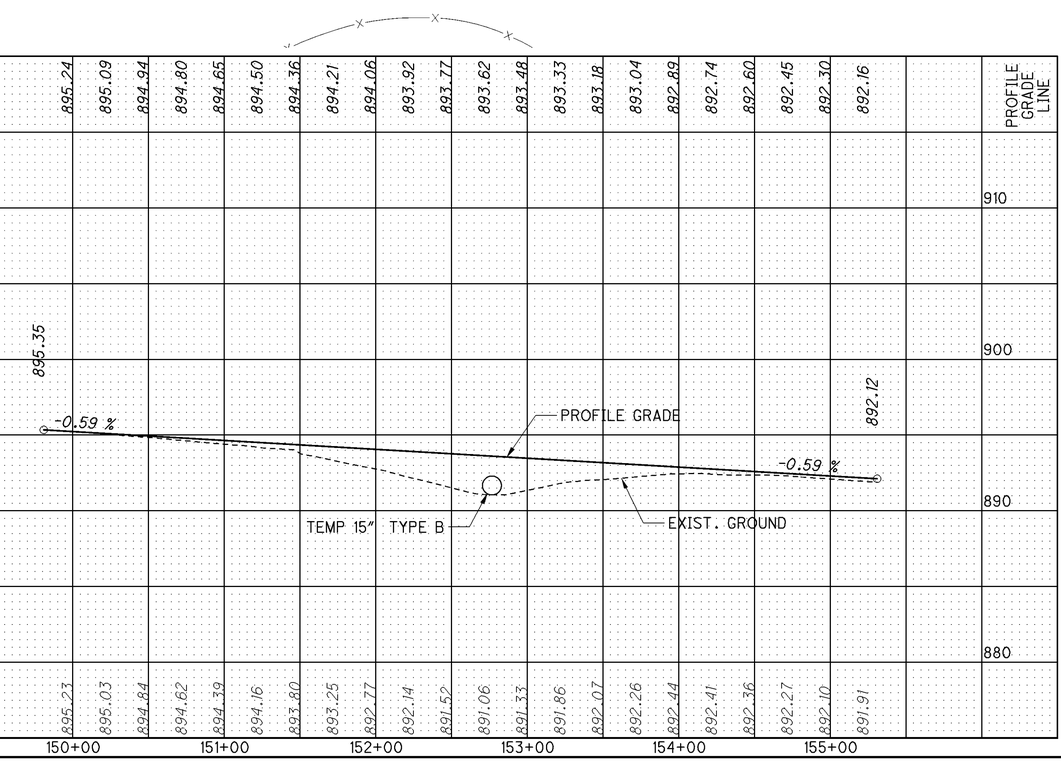

J:\Projects\ALL\89029\mot\sheets\89029MP001.dgn 13-JUN-2013 9:31PM coffield

HORIZONTAL SCALE IN FEET
0 25 50 100

CALCULATED CAC
CHECKED EJC

MAINTENANCE OF TRAFFIC - I-75 PHASE 1A
McCLAIN ROAD CURVE
STA. 145+90.00 TO STA. 156+00.00

ALL-75-0.21

62 / 94

101 / 907

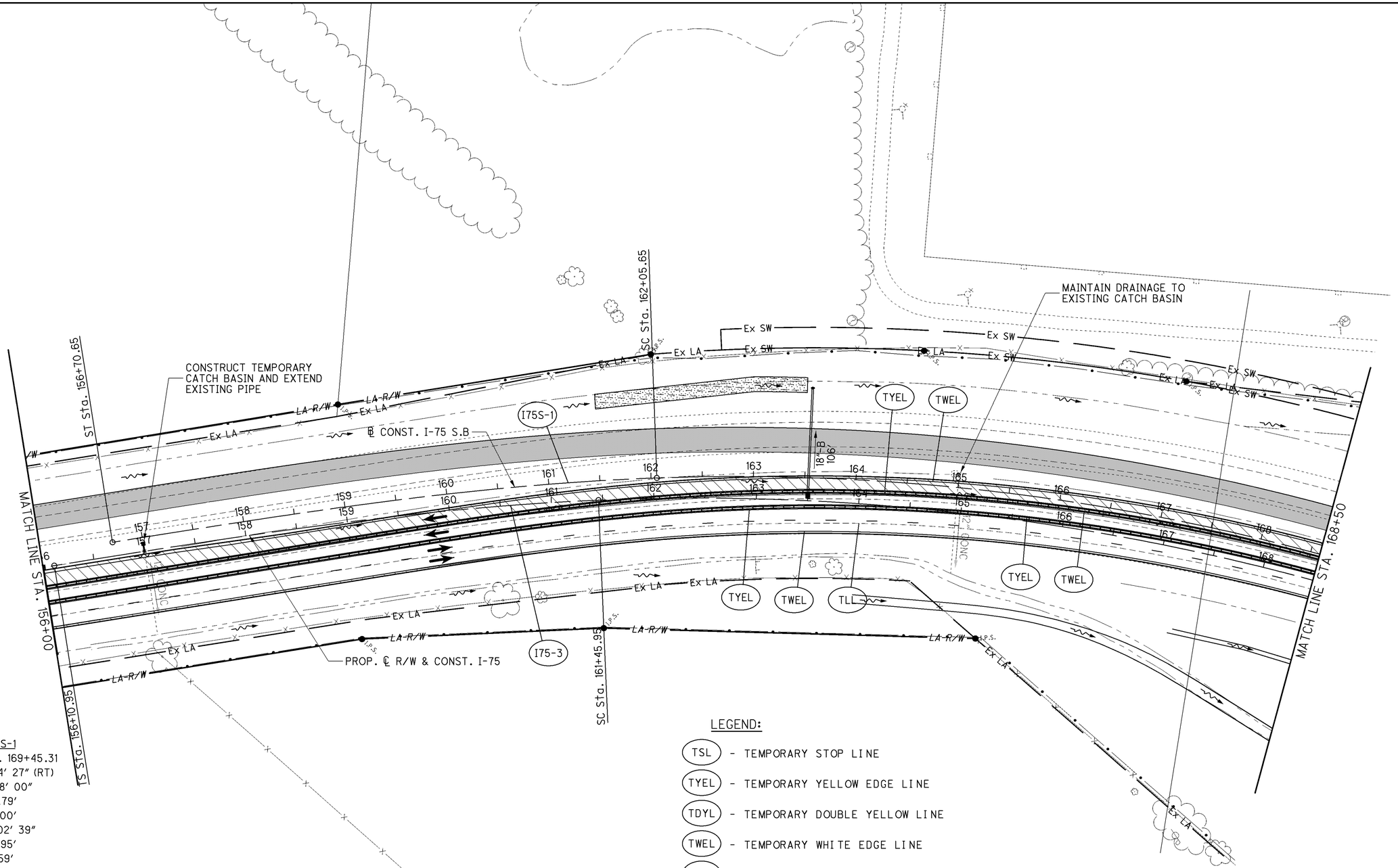

CURVE I75S-1
P.I.= Sta. 169+45.31
D = 49° 34′ 27″ (RT)
Dc = 2° 38′ 00″
R = 2,175.79′
Ls = 535.00′
θs = 7° 02′ 39″
LT = 356.95′
ST = 178.59′
x = 534.19′
y = 21.90′
k = 267.37′
p = 5.48′
D c = 35° 29′ 09″ (RT)
Lc = 1,347.57′
Ts = 1,274.66′
Es = 226.83′
C = 1,326.13′
C1=C2 = 534.64′
C.B.1 = N 43° 11′ 56″ E
C.B. = N 65° 38′ 17″ E
C.B.2 = S 88° 04′ 39″ W
e_d= 0.060

CURVE I75-3
P.I.= Sta. 169+39.08
D = 49° 34′ 27″ (RT)
Dc = 2° 30′ 00″
R = 2,291.83′
Ls = 535.00′
θs = 6° 41′ 15″
LT = 356.92′
ST = 178.57′
x = 534.27′
y = 20.79′
k = 267.38′
p = 5.20′
D c = 36° 11′ 57″ (RT)
Lc = 1,447.97′
Ts = 1,328.13′
Es = 238.30′
C = 1,424.01′
C1=C2 = 534.68′
C.B.1 = N 43° 04′ 48″ E
C.B. = N 65° 38′ 17″ E
C.B.2 = S 88° 11′ 47″ W
e_d= 0.059

LEGEND:

- TSL - TEMPORARY STOP LINE
- TYEL - TEMPORARY YELLOW EDGE LINE
- TDYL - TEMPORARY DOUBLE YELLOW LINE
- TWEL - TEMPORARY WHITE EDGE LINE
- TLL - TEMPORARY LANE LINE
- PAVEMENT FOR MAINTAINING TRAFFIC
- PORTABLE CONCRETE BARRIER (PCB)
- WORK AREA (PHASE IA)
- IMPACT ATTENUATOR
- DRUMS (10′ C/C ON TAPERS; 20′ C/C ON TANGENT)
- LANE DIRECTION

NOTES:
1. SEE STANDARD CONSTRUCTION DRAWING MT-95.70 FOR MEDIAN CROSSOVER DETAILS.
2. SEE STANDARD CONSTRUCTION DRAWING MT-100.00 FOR CROSSOVER LIGHTING DETAILS

HORIZONTAL SCALE IN FEET
0 25 50 100

CALCULATED CAC
CHECKED EJC

MAINTENANCE OF TRAFFIC - I-75 PHASE 1A
McCLAIN ROAD CURVE
STA. 156+00.00 TO STA. 168+50.00

ALL-75-0.21

63/94

102/907

J:\Projects\ALL\89029\mot\sheets\89029MP002.dgn 13-JUN-2013 9:31PM coffield

NOTES:
1. SEE STANDARD CONSTRUCTION DRAWING MT-95.70 FOR MEDIAN CROSSOVER DETAILS.

2. SEE STANDARD CONSTRUCTION DRAWING MT-100.00 FOR CROSSOVER LIGHTING DETAILS

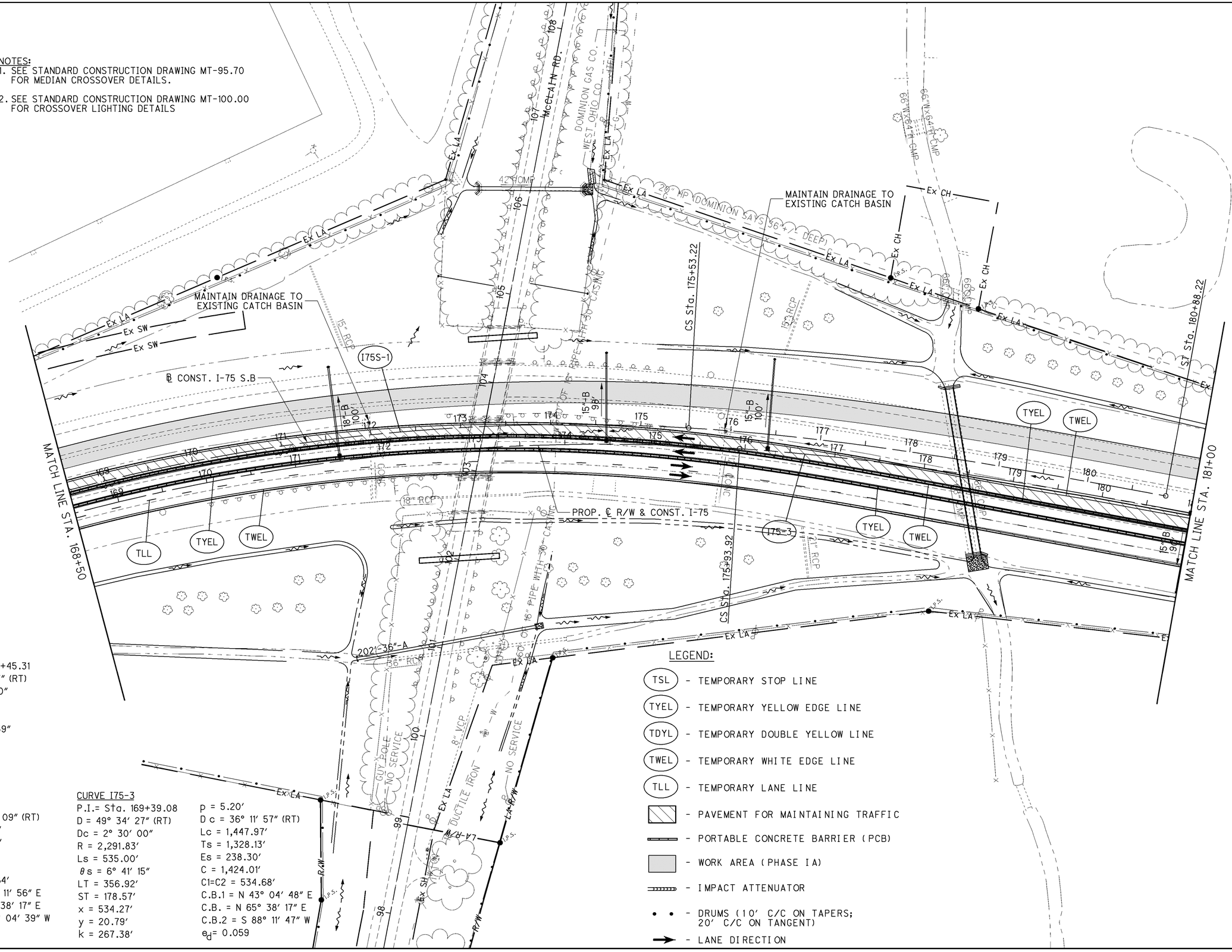

CURVE I75S-1
P.I.= Sta. 169+45.31
D = 49° 34′ 27″ (RT)
Dc = 2° 38′ 00″
R = 2,175.79′
Ls = 535.00′
θs = 7° 02′ 39″
LT = 356.95′
ST = 178.59′
x = 534.19′
y = 21.90′
k = 267.37′
p = 5.48′
D c = 35° 29′ 09″ (RT)
Lc = 1,347.57′
Ts = 1,274.66′
Es = 226.83′
C = 1,326.13′
C1=C2 = 534.64′
C.B.1 = N 43° 11′ 56″ E
C.B. = N 65° 38′ 17″ E
C.B.2 = S 88° 04′ 39″ W
e_d= 0.060

CURVE I75-3
P.I.= Sta. 169+39.08
D = 49° 34′ 27″ (RT)
Dc = 2° 30′ 00″
R = 2,291.83′
Ls = 535.00′
θs = 6° 41′ 15″
LT = 356.92′
ST = 178.57′
x = 534.27′
y = 20.79′
k = 267.38′
p = 5.20′
D c = 36° 11′ 57″ (RT)
Lc = 1,447.97′
Ts = 1,328.13′
Es = 238.30′
C = 1,424.01′
C1=C2 = 534.68′
C.B.1 = N 43° 04′ 48″ E
C.B. = N 65° 38′ 17″ E
C.B.2 = S 88° 11′ 47″ W
e_d= 0.059

LEGEND:
- TSL - TEMPORARY STOP LINE
- TYEL - TEMPORARY YELLOW EDGE LINE
- TDYL - TEMPORARY DOUBLE YELLOW LINE
- TWEL - TEMPORARY WHITE EDGE LINE
- TLL - TEMPORARY LANE LINE
- PAVEMENT FOR MAINTAINING TRAFFIC
- PORTABLE CONCRETE BARRIER (PCB)
- WORK AREA (PHASE IA)
- IMPACT ATTENUATOR
- DRUMS (10′ C/C ON TAPERS; 20′ C/C ON TANGENT)
- LANE DIRECTION

HORIZONTAL SCALE IN FEET
0 25 50 100

CALCULATED CAC
CHECKED EJC

MAINTENANCE OF TRAFFIC - I-75 PHASE 1A
McCLAIN ROAD CURVE
STA. 168+50.00 TO STA. 181+00.00

ALL-75-0.21

64/94
103/907

J:\Projects\ALL\89029\mot\sheets\89029MP003.dgn 13-JUN-2013 9:31PM coffield

NOTES:
1. SEE STANDARD CONSTRUCTION DRAWING MT-95.70 FOR MEDIAN CROSSOVER DETAILS.
2. SEE STANDARD CONSTRUCTION DRAWING MT-100.00 FOR CROSSOVER LIGHTING DETAILS

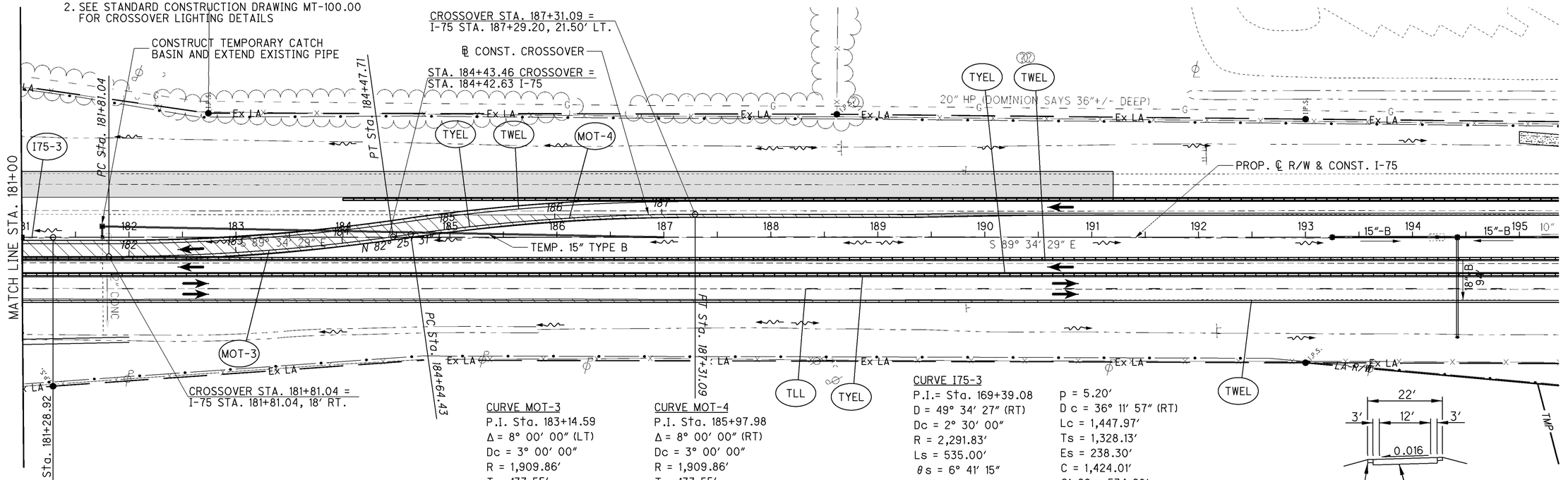

CURVE MOT-3
P.I. Sta. 183+14.59
Δ = 8° 00' 00" (LT)
Dc = 3° 00' 00"
R = 1,909.86'
T = 133.55'
L = 266.67'
E = 4.66'
C = 266.45'
C.B. = N 86° 25' 31" E

CURVE MOT-4
P.I. Sta. 185+97.98
Δ = 8° 00' 00" (RT)
Dc = 3° 00' 00"
R = 1,909.86'
T = 133.55'
L = 266.67'
E = 4.66'
C = 266.45'
C.B. = N 86° 25' 31" E

CURVE I75-3
P.I.= Sta. 169+39.08
D = 49° 34' 27" (RT)
Dc = 2° 30' 00"
R = 2,291.83'
Ls = 535.00'
θs = 6° 41' 15"
LT = 356.92'
ST = 178.57'
x = 534.27'
y = 20.79'
k = 267.38'
p = 5.20'
D c = 36° 11' 57" (RT)
Lc = 1,447.97'
Ts = 1,328.13'
Es = 238.30'
C = 1,424.01'
C1=C2 = 534.68'
C.B.1 = N 43° 04' 48" E
C.B. = N 65° 38' 17" E
C.B.2 = S 88° 11' 47" W
e_d = 0.059

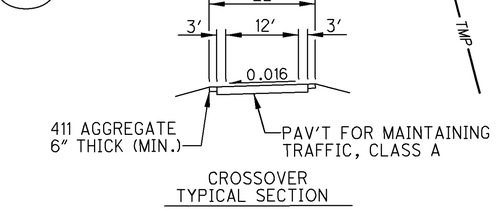

CROSSOVER TYPICAL SECTION

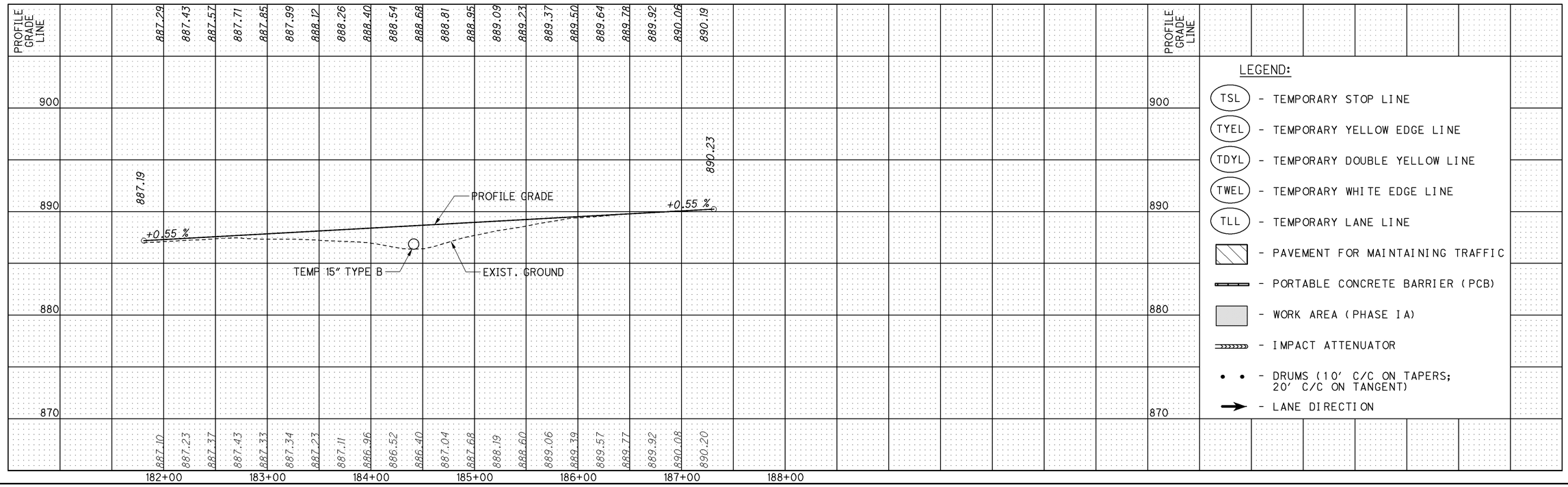

LEGEND:
- TSL - TEMPORARY STOP LINE
- TYEL - TEMPORARY YELLOW EDGE LINE
- TDYL - TEMPORARY DOUBLE YELLOW LINE
- TWEL - TEMPORARY WHITE EDGE LINE
- TLL - TEMPORARY LANE LINE
- PAVEMENT FOR MAINTAINING TRAFFIC
- PORTABLE CONCRETE BARRIER (PCB)
- WORK AREA (PHASE IA)
- IMPACT ATTENUATOR
- • • - DRUMS (10' C/C ON TAPERS; 20' C/C ON TANGENT)
- LANE DIRECTION

HORIZONTAL SCALE IN FEET
0 25 50 100
CALCULATED CAC
CHECKED EJC

MAINTENANCE OF TRAFFIC - I-75 PHASE 1A
McCLAIN ROAD CURVE
STA. 181+00.00 TO STA. 191+20.12

ALL-75-0.21

65 / 94
104 / 907

J:\Projects\ALL\89029\mot\sheets\89029MP004.dgn 13-JUN-2013 9:31PM coffield

CONTRA-FLOW
PHASE IA

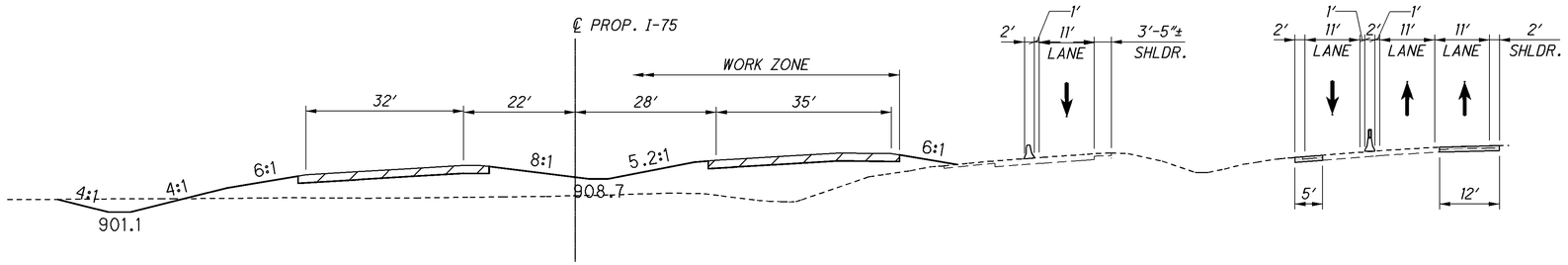

PHASE IA

STA. 255+00

NOTE: REHAB EXISTING SHOULDERS AND
PLACE TEMPORARY PAVEMENT TO LIMITS SHOWN.

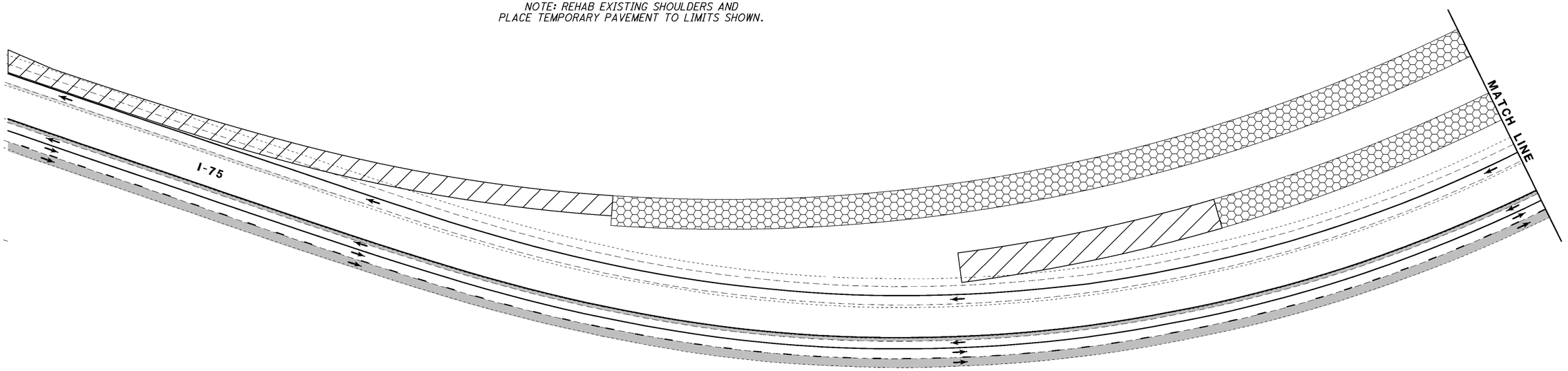

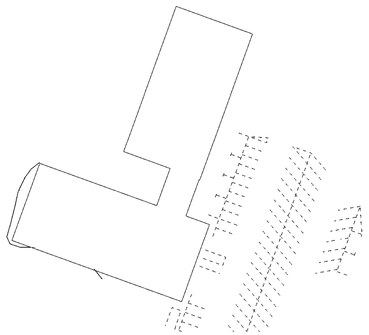

LEGEND:

- TRAVEL LANE
- LANE LINE
- PORTABLE CONCRETE BARRIER
- PROPOSED PAVEMENT TO BE CONSTRUCTED IN PHASE IA
- TEMPORARY PAVEMENT FOR USE IN PHASE IA
- PROPOSED PAVEMENT CONSTRUCTED PRIOR TO PHASE IA
- PORTABLE CONCRETE BARRIER (PCB)
- PORTABLE CONCRETE BARRIER (PCB) W/GLARE SCREEN

HORIZONTAL SCALE IN FEET
0 35 70 140

CALCULATED CAC
CHECKED EJC

I-75 MAINTENANCE OF TRAFFIC
CONTRA-FLOW PHASE IA, HANTHORN CURVE

ALL-75-0.21

66/94

105/907

J:\Projects\ALL\89029\mot\sheets\89029MH005.dgn 13-JUN-2013 9:31PM coffield

CONTRA-FLOW
PHASE IA

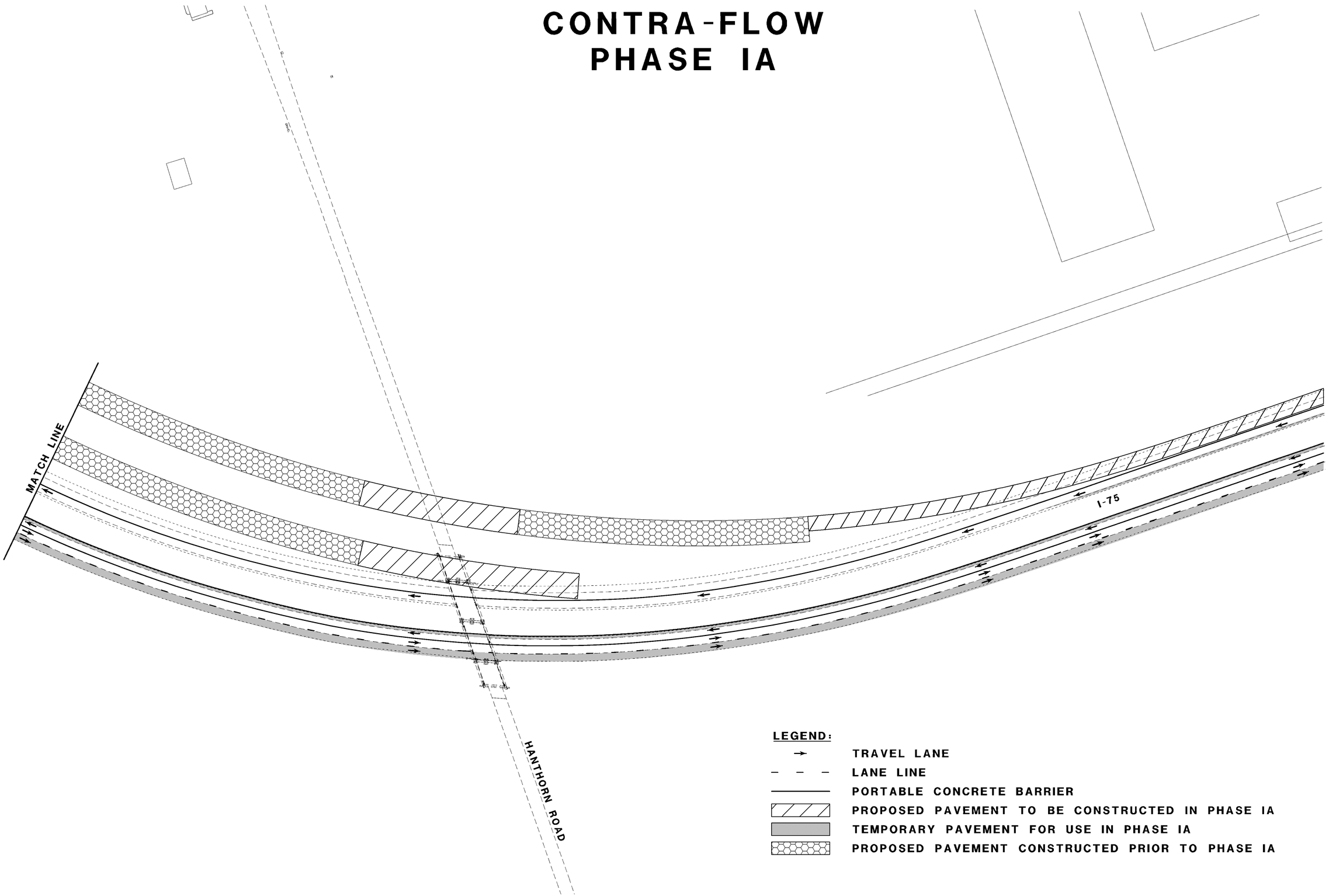

LEGEND:

- TRAVEL LANE
- LANE LINE
- PORTABLE CONCRETE BARRIER
- PROPOSED PAVEMENT TO BE CONSTRUCTED IN PHASE IA
- TEMPORARY PAVEMENT FOR USE IN PHASE IA
- PROPOSED PAVEMENT CONSTRUCTED PRIOR TO PHASE IA

0 35 70 140
HORIZONTAL SCALE IN FEET

CALCULATED CAC
CHECKED EJC

I-75 MAINTENANCE OF TRAFFIC
CONTRA-FLOW PHASE IA, HANTHORN CURVE

ALL-75-0.21

67/94

106/907

J:\Projects\ALL\89029\mot\sheets\89029MH006.dgn 13-JUN-2013 9:31PM coffield

CONTRA-FLOW
PHASE IB

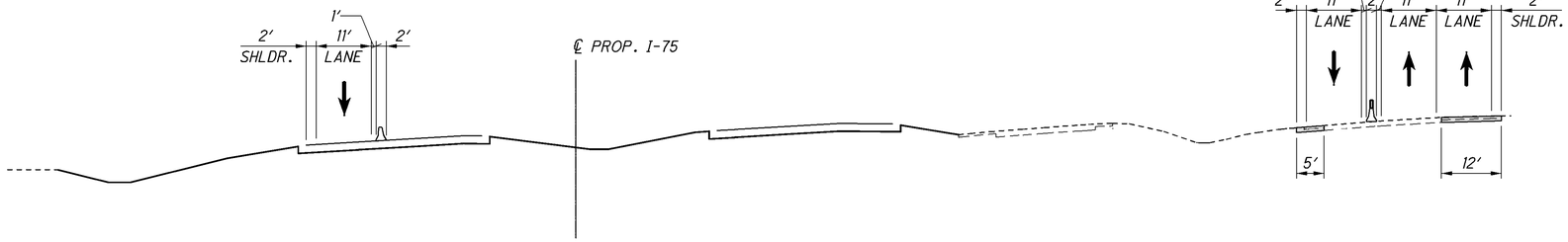

PHASE IB

STA. 255+00

NOTE: REHAB EXISTING SHOULDERS AND
PLACE TEMPORARY PAVEMENT TO LIMITS SHOWN.

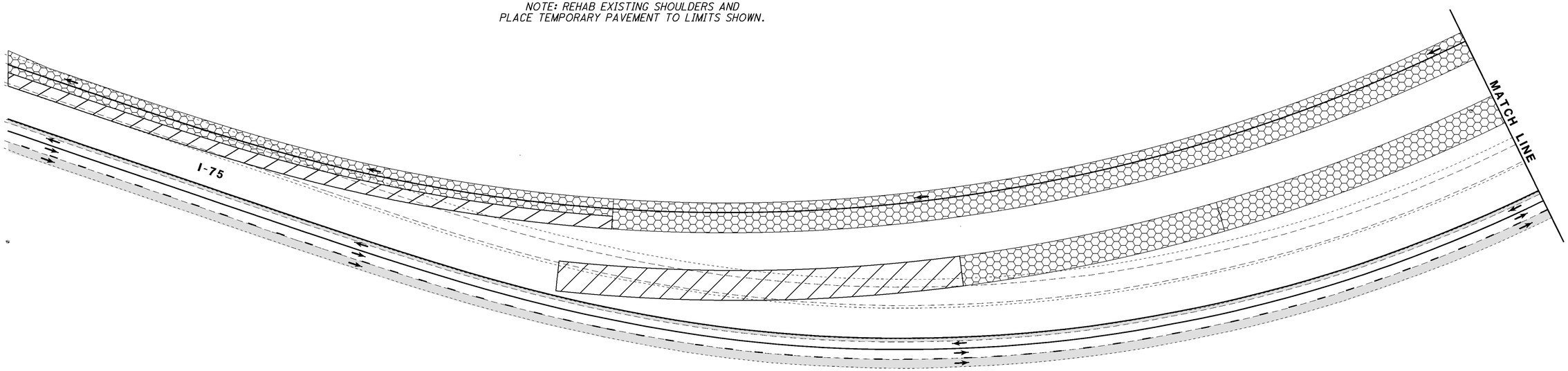

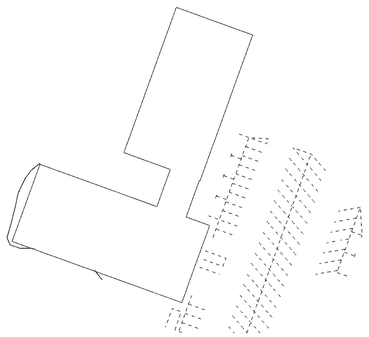

LEGEND:

- TRAVEL LANE
- LANE LINE
- PORTABLE CONCRETE BARRIER
- PROPOSED PAVEMENT TO BE CONSTRUCTED IN PHASE IB
- TEMPORARY PAVEMENT FOR USE IN PHASE IB
- PROPOSED PAVEMENT CONSTRUCTED PRIOR TO PHASE IB
- PORTABLE CONCRETE BARRIER (PCB)
- PORTABLE CONCRETE BARRIER (PCB) W/GLARE SCREEN

HANTHORN ROAD

N

0 35 70 140
HORIZONTAL
SCALE IN FEET

CALCULATED CAC
CHECKED EJC

I-75 MAINTENANCE OF TRAFFIC
CONTRA-FLOW PHASE IB, HANTHORN CURVE

ALL-75-0.21

68 / 94

107
907

J:\Projects\ALL\89029\mot\sheets\89029MH007.dgn 13-JUN-2013 9:31PM coffield

CONTRA-FLOW
PHASE IB

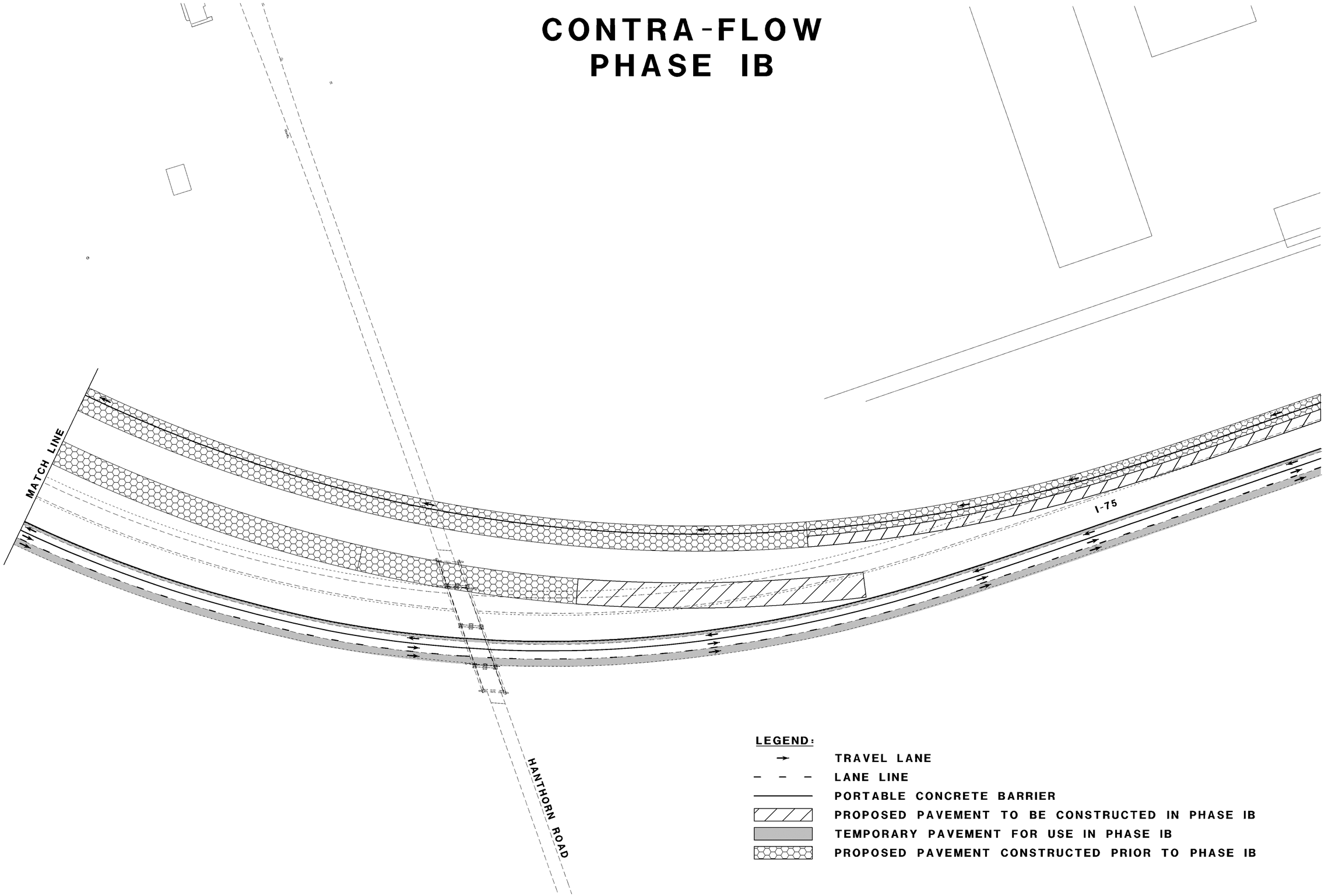

LEGEND:

- TRAVEL LANE
- LANE LINE
- PORTABLE CONCRETE BARRIER
- PROPOSED PAVEMENT TO BE CONSTRUCTED IN PHASE IB
- TEMPORARY PAVEMENT FOR USE IN PHASE IB
- PROPOSED PAVEMENT CONSTRUCTED PRIOR TO PHASE IB

0 35 70 140
HORIZONTAL SCALE IN FEET

CALCULATED CAC
CHECKED EJC

I-75 MAINTENANCE OF TRAFFIC
CONTRA-FLOW PHASE IB, HANTHORN CURVE

ALL-75-0.21

69/94

108/907

J:\Projects\ALL\89029\mot\sheets\89029MH008.dgn 13-JUN-2013 9:31PM coffield

CONTRA-FLOW
PHASE IIA

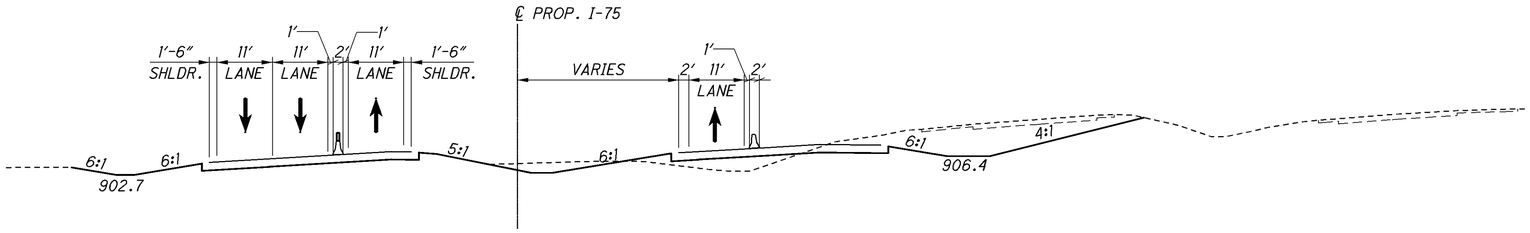

PHASE IIA

STA. 255+00

NOTE: REHAB EXISTING SHOULDERS AND PLACE TEMPORARY PAVEMENT TO LIMITS SHOWN.

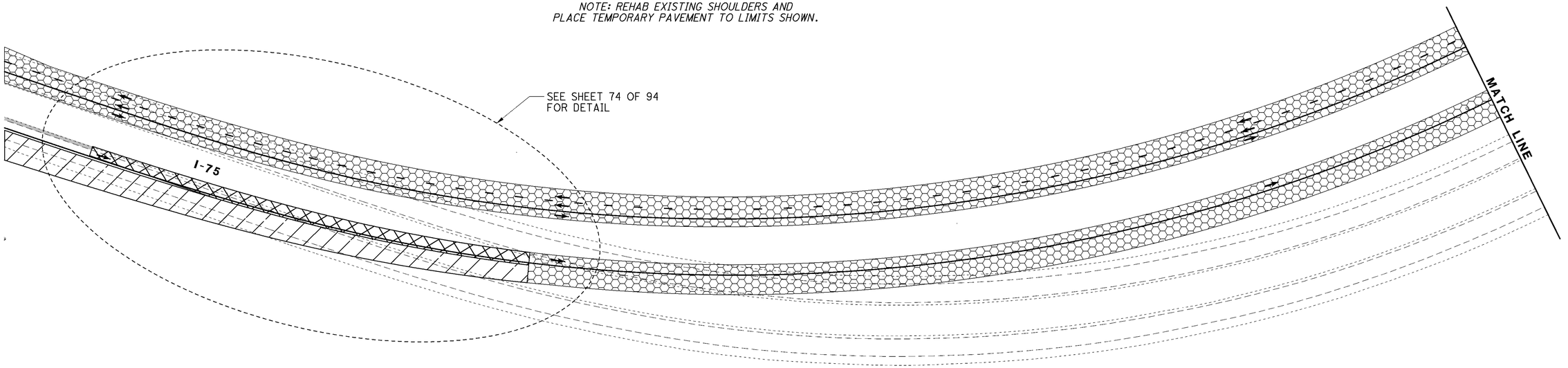

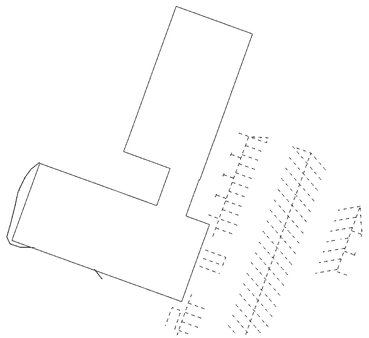

LEGEND:

- TRAVEL LANE
- LANE LINE
- PORTABLE CONCRETE BARRIER
- PROPOSED PAVEMENT TO BE CONSTRUCTED IN PHASE IIA
- TEMPORARY PAVEMENT TO BE CONSTRUCTED BETWEEN PHASE IB & IIA
- TEMPORARY PAVEMENT FOR USE IN PHASE IIA
- PROPOSED PAVEMENT CONSTRUCTED PRIOR TO PHASE IIA
- PORTABLE CONCRETE BARRIER (PCB)
- PORTABLE CONCRETE BARRIER (PCB) W/ GLARE SCREEN

HORIZONTAL SCALE IN FEET
0 35 70 140

CALCULATED CAC
CHECKED EJC

I-75 MAINTENANCE OF TRAFFIC
CONTRA-FLOW PHASE IIA, HANTHORN CURVE

ALL-75-0.21

70 / 94

109 / 907

J:\Projects\ALL\89029\mot\sheets\89029MH009.dgn 13-JUN-2013 9:31PM coffield

CONTRA-FLOW
PHASE IIA

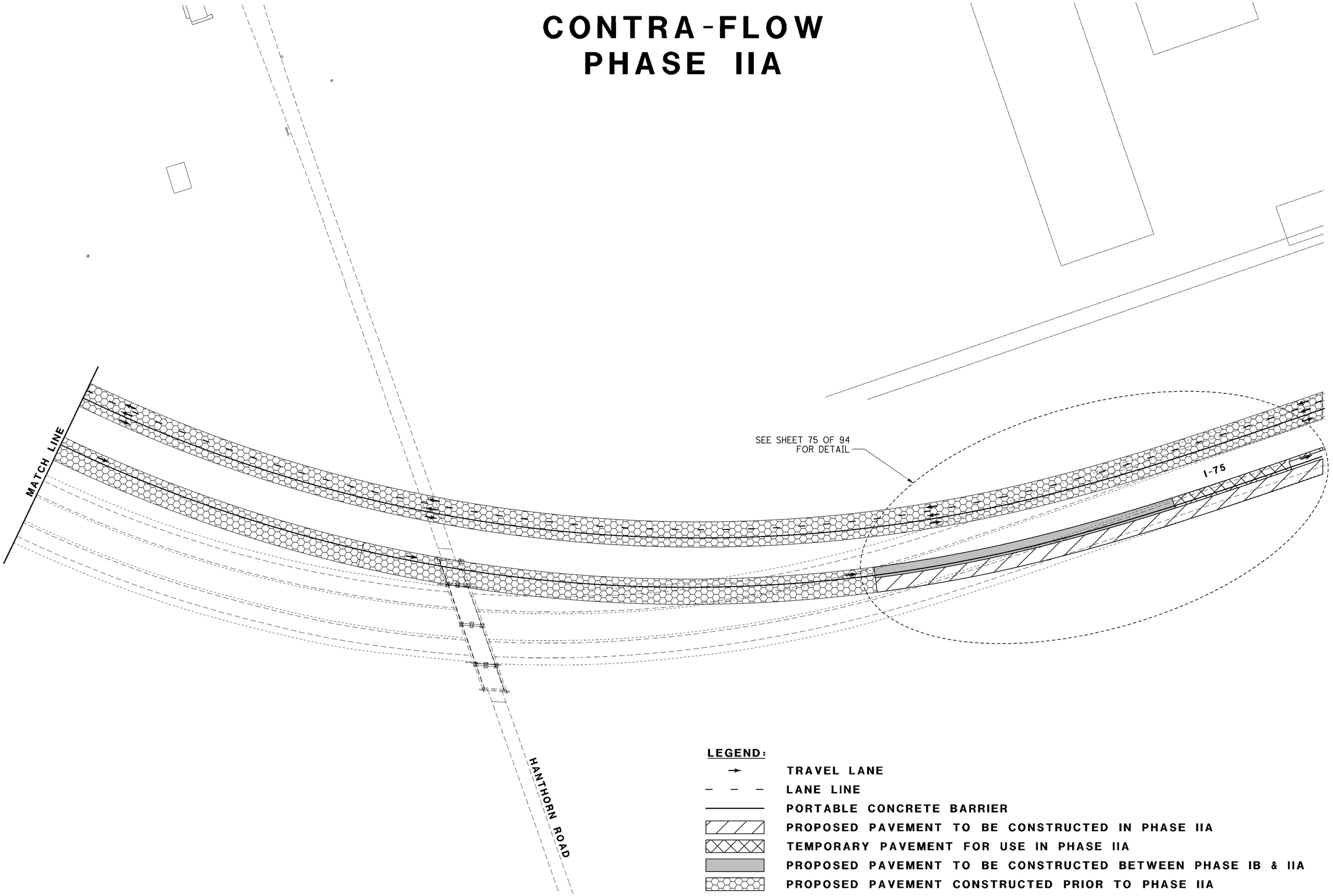

LEGEND:

- TRAVEL LANE
- LANE LINE
- PORTABLE CONCRETE BARRIER
- PROPOSED PAVEMENT TO BE CONSTRUCTED IN PHASE IIA
- TEMPORARY PAVEMENT FOR USE IN PHASE IIA
- PROPOSED PAVEMENT TO BE CONSTRUCTED BETWEEN PHASE IB & IIA
- PROPOSED PAVEMENT CONSTRUCTED PRIOR TO PHASE IIA

N

0 35 70 140
HORIZONTAL SCALE IN FEET

CALCULATED CAC
CHECKED EJC

I-75 MAINTENANCE OF TRAFFIC
CONTRA-FLOW PHASE IIA, HANTHORN CURVE

ALL-75-0.21

71/94

110/907

J:\Projects\ALL\89029\mot\sheets\89029MH010.dgn 13-JUN-2013 9:31PM coffield

CONTRA-FLOW
PHASE IIB

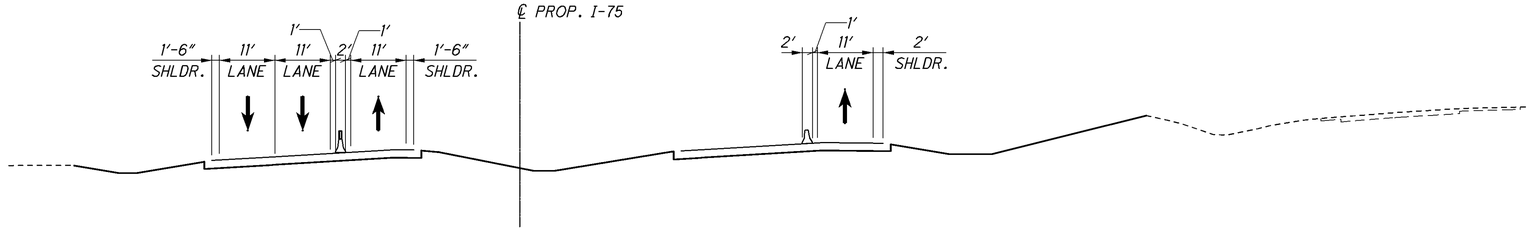

PHASE IIB

STA. 255+00
NOTE: REBUILD EXISTING SHOULDERS AND
PLACE TEMPORARY PAVEMENT TO LIMITS SHOWN.

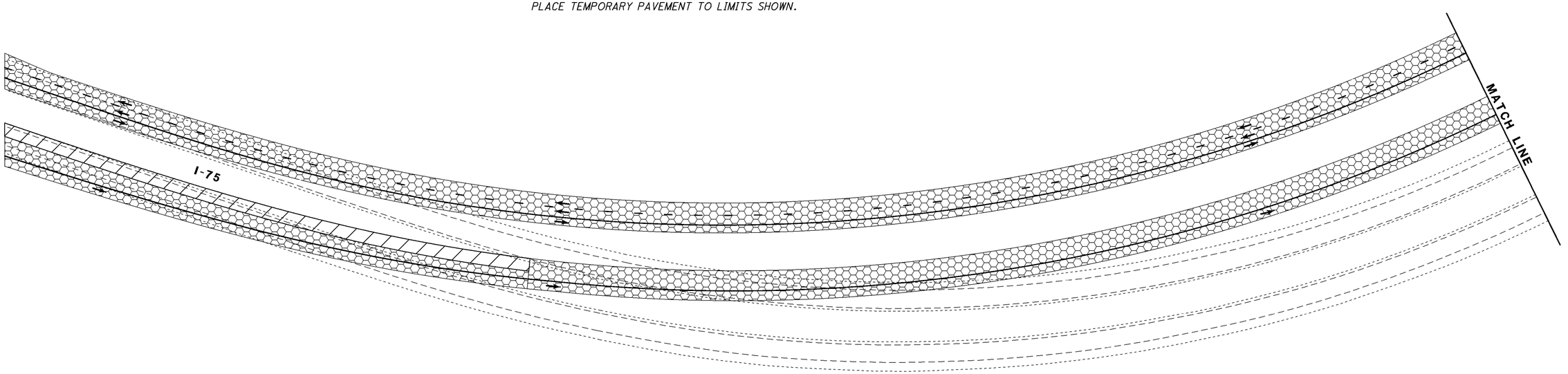

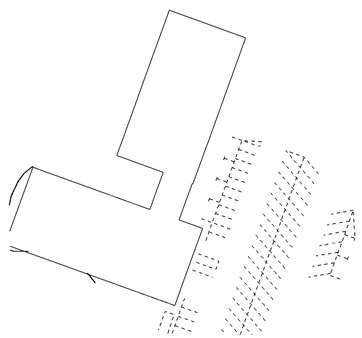

LEGEND:

- TRAVEL LANE
- LANE LINE
- PORTABLE CONCRETE BARRIER
- PROPOSED PAVEMENT TO BE CONSTRUCTED IN PHASE IIB
- TEMPORARY PAVEMENT FOR USE IN PHASE IIB
- PROPOSED PAVEMENT CONSTRUCTED PRIOR TO PHASE IIB
- PORTABLE CONCRETE BARRIER (PCB)
- PORTABLE CONCRETE BARRIER (PCB) W/ GLARE SCREEN

N

0 35 70 140 HORIZONTAL SCALE IN FEET

CALCULATED CAC | CHECKED EJC

I-75 MAINTENANCE OF TRAFFIC
CONTRA-FLOW PHASE IIB, HANTHORN CURVE

ALL-75-0.21

72 / 94

111
907

J:\Projects\ALL\89029\mot\sheets\89029MH011.dgn 13-JUN-2013 9:31PM coffield

CONTRA-FLOW
PHASE IIB

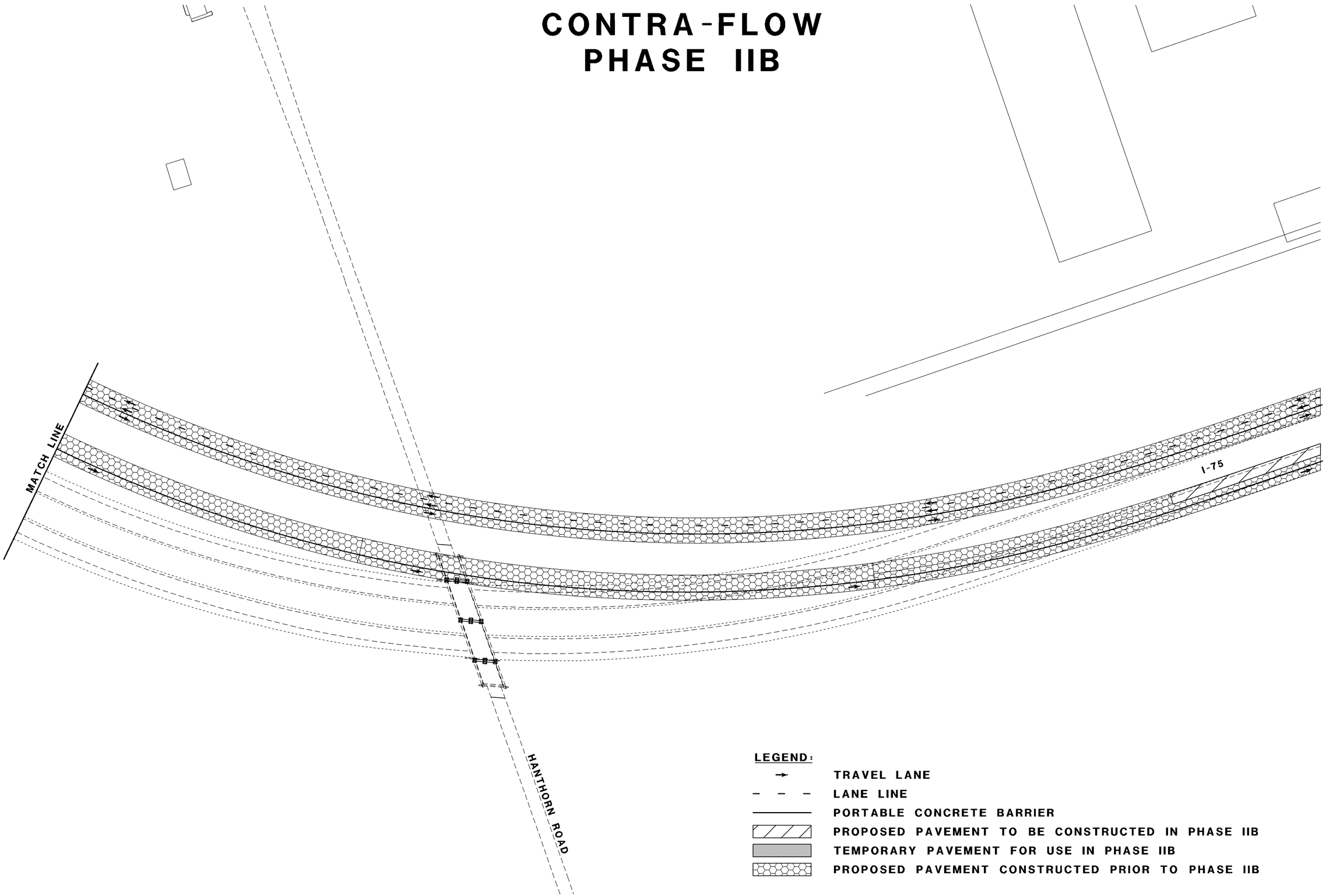

LEGEND:

- TRAVEL LANE
- LANE LINE
- PORTABLE CONCRETE BARRIER
- PROPOSED PAVEMENT TO BE CONSTRUCTED IN PHASE IIB
- TEMPORARY PAVEMENT FOR USE IN PHASE IIB
- PROPOSED PAVEMENT CONSTRUCTED PRIOR TO PHASE IIB

HORIZONTAL SCALE IN FEET
0 35 70 140

CALCULATED CAC
CHECKED EJC

I-75 MAINTENANCE OF TRAFFIC
CONTRA-FLOW PHASE IIB, HANTHORN CURVE

ALL-75-0.21

73/94

112/907

J:\Projects\ALL\89029\mot\sheets\89029MH012.dgn 13-JUN-2013 9:31PM coffield

LEGEND:

- TLL - TEMPORARY LANE LINE
- TYEL - TEMPORARY YELLOW EDGE LINE
- TWEL - TEMPORARY WHITE EDGE LINE
- PAVEMENT FOR MAINTAINING TRAFFIC
- PORTABLE CONCRETE BARRIER (PCB)
- WORK AREA (PHASE I)
- IMPACT ATTENUATOR
- DRUMS (10' C/C ON TAPERS; 20' C/C ON TANGENT)
- LANE DIRECTION

STEEL PILE
TOP OF WALL=901.64
STEEL PILE
TOP OF WALL=901.41
Ex LA
LA-R/W
I.P.S.
SC Sta. 239+33.16
SC Sta. 244+68.16
TLL
TYEL
TWEL
PROP. ℄ R/W & CONST. I-75
℄ CONST. I-75 N.B.
HIGH TENSION P
S 89° 38' 29" E
238
239
240
241
242
243
244
245
246
247
248
249
250
251
252
TEMP. PAV'T WEDGE
SEE WEDGE TRANSITION DETAIL BELOW
SE Sta. 239+61.47
256'-72"A
SC Sta. 244+96.47
MATCH EXIST. CROWN
STA. 239+61.47,
ELEV. 934.40
MATCH PROP. CROWN
STA. 244+00.00,
ELEV. 934.32
PROP. PROFILE ALONG CROWN
EXIST. GROUND LINE
7.8'

WEDGE TRANSITION DETAIL
NOT TO SCALE

N

HORIZONTAL SCALE IN FEET
0 25 50 100

CALCULATED CAC
CHECKED EJC

MAINTENANCE OF TRAFFIC - I-75
PHASE IIA - HANTHORN ROAD CURVE

ALL-75-0.21

74 / 94

113 / 907

J:\Projects\ALL\89029\mot\sheets\89029MP005.dgn 13-JUN-2013 9:31PM coffield

LEGEND:

- TLL - TEMPORARY LANE LINE
- TYEL - TEMPORARY YELLOW EDGE LINE
- TWEL - TEMPORARY WHITE EDGE LINE
- PAVEMENT FOR MAINTAINING TRAFFIC
- PORTABLE CONCRETE BARRIER (PCB)
- WORK AREA (PHASE I)
- IMPACT ATTENUATOR
- DRUMS (10' C/C ON TAPERS; 20' C/C ON TANGENT)
- LANE DIRECTION

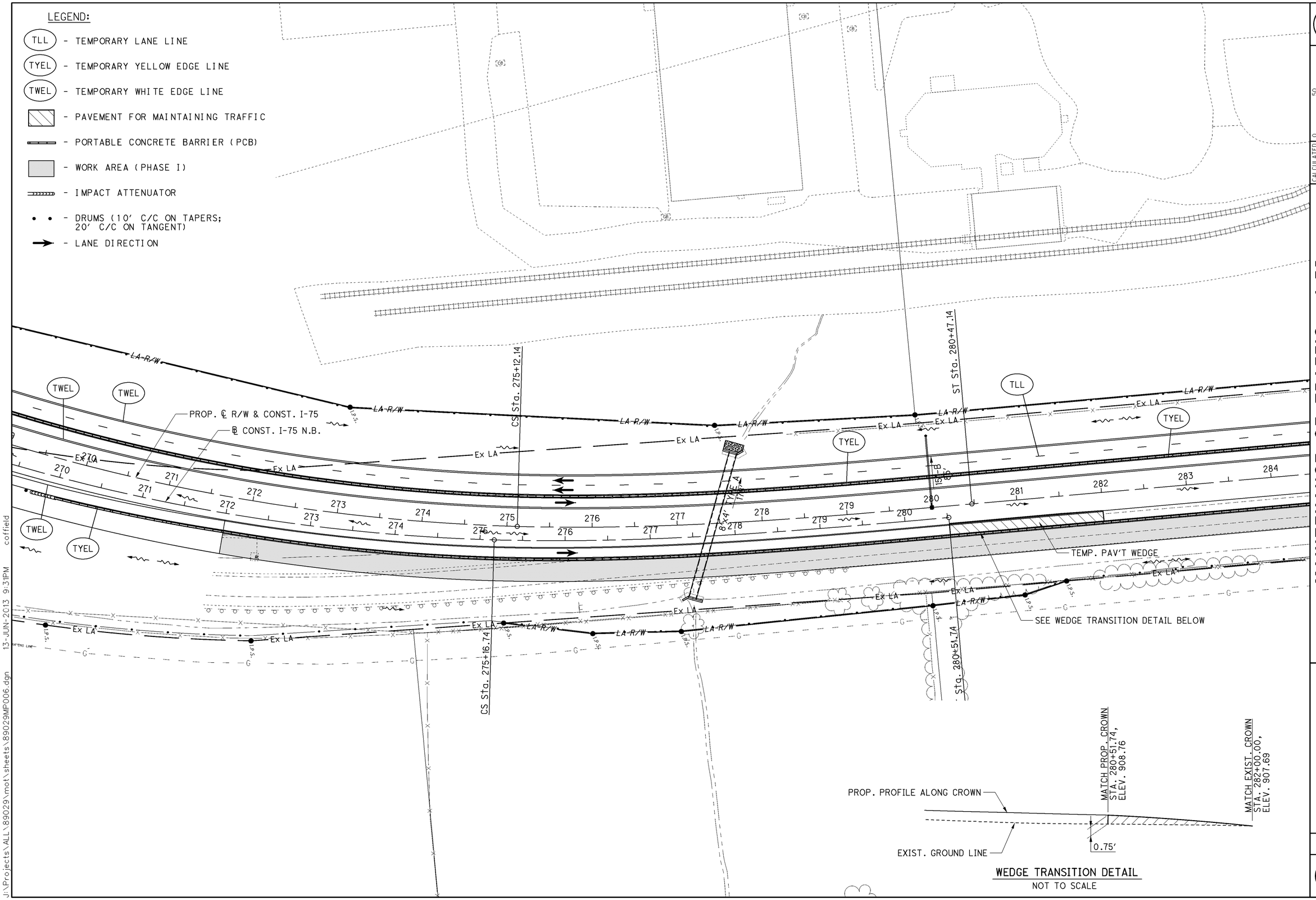

WEDGE TRANSITION DETAIL
NOT TO SCALE

HORIZONTAL SCALE IN FEET
0 25 50 100

CALCULATED CAC
CHECKED EJC

MAINTENANCE OF TRAFFIC - I-75
PHASE IIA - HANTHORN ROAD CURVE

ALL-75-0.21

75 / 94

114 / 907

J:\Projects\ALL\89029\mot\sheets\89029MP006.dgn 13-JUN-2013 9:31PM coffield

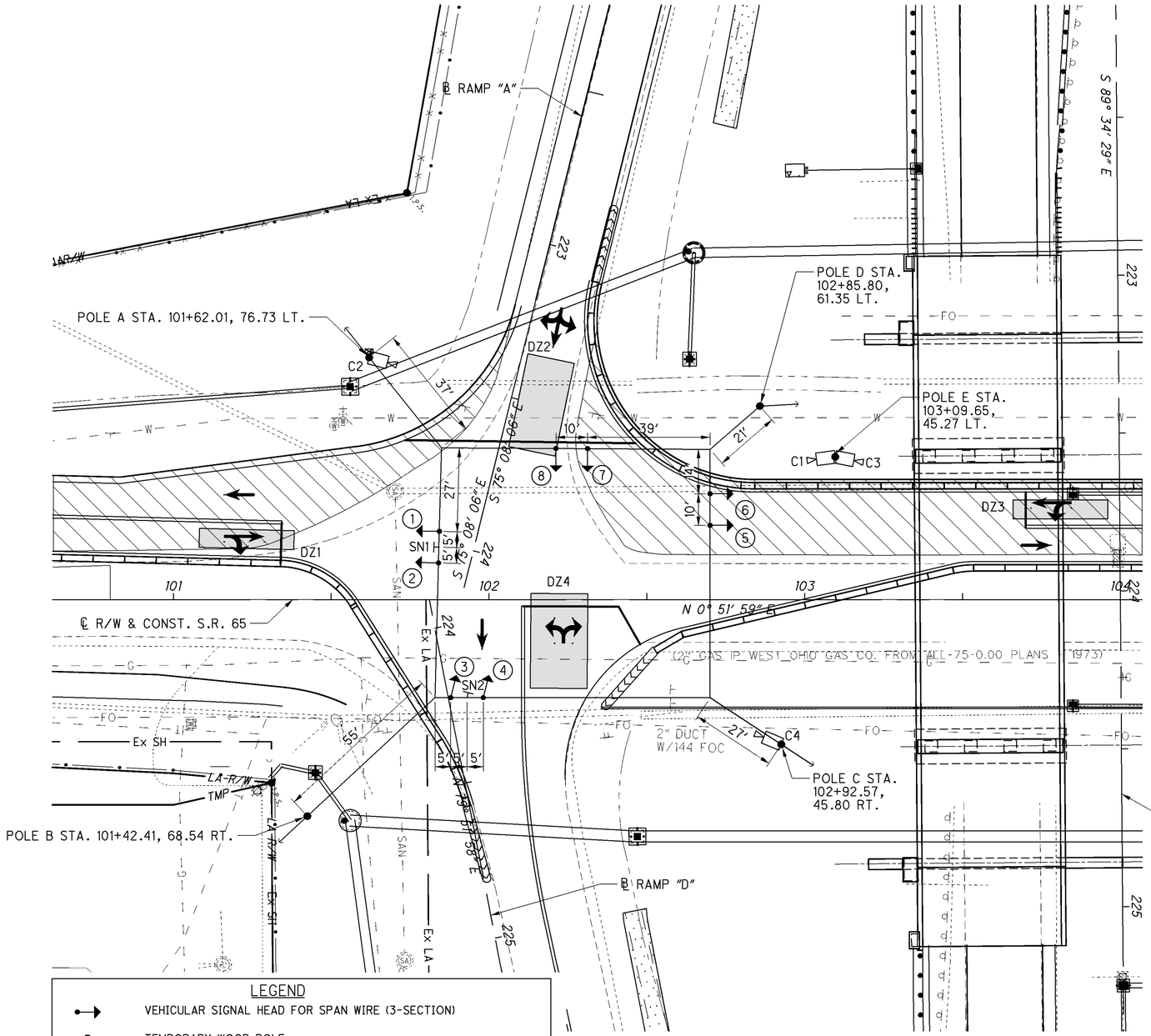

SIGNAL NOTES:

1. CONTRACTOR SHALL INSTALL NEW SIGNAL ACTIVATION SIGNS PER STANDARD CONSTRUCTION DRAWING MT-120.00.
2. CONTRACTOR SHALL INSTALL TEMPORARY TRAFFIC SIGNAL AS PER 614.10 PRIOR TO BEGINNING PHASE I S.R. 65 MAINTENANCE OF TRAFFIC. ALL EQUIPMENT, LABOR, WORK, ETC. TO CONSTRUCT, OPERATE, MAINTAIN, AND ADJUST THE TEMPORARY SIGNAL SHALL BE INCLUDED WITH ITEM 614, WORK ZONE TRAFFIC SIGNAL.
3. PHASE NUMBERS SHOWN ON THIS PLAN CORRESPOND TO AN 8 PHASE CABINET. A 4 PHASE CABINET IS PERMITTED FOR THE TEMPORARY SIGNAL. IF A 4 PHASE CABINET IS USED, THE PHASE NUMBERS SHALL BE 1 AND 2 IN THE ORDER SHOWN ON THE PHASE DIAGRAM.
4. VIDEO DETECTION SHALL BE MAINTAINED AT ALL TIMES.
5. THE CONTRACTOR IS TO ESTABLISH SIGNAL TIMING BASED ON ACTUAL FIELD CONDITIONS. MINIMUM SIGNAL TIMINGS TO MEET ODOT TRAFFIC ENGINEERING MANUAL STANDARDS SHALL BE MET. MUST INCLUDE A MINIMUM OF 4 SEC. YELLOW AND 2 SEC. ALL RED ON EACH PHASE. THE CONTRACTOR IS TO ADJUST GREEN TIMES BASED ON TRAFFIC DEMANDS WHEN APPROVED BY OR AS DIRECTED BY THE ENGINEER.
6. MINIMUM CLEARANCE FROM THE HIGHEST (CROWN) POINT ON THE PAVEMENT TO THE BOTTOM OF THE SIGNAL HEADS SHALL BE 16 FEET.
7. SIGNAL POLES SHALL BE LOCATED BEHIND DITCHES WHERE POSSIBLE. (REFER TO STANDARD CONSTRUCTION DRAWING MT-96.11 FOR CLEAR ZONE TABLE.
8. SUGGESTED CAMERA LOCATIONS ARE SHOWN ON THE PLANS. THE CONTRACTOR MAY ADJUST CAMERA LOCATIONS WHEN APPROVED BY OR AS DIRECTED BY THE ENGINEER.

SIGNAL HEAD DETAIL
12" LENSES

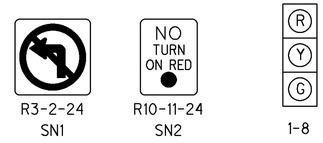

LEGEND

- VEHICULAR SIGNAL HEAD FOR SPAN WIRE (3-SECTION)
- TEMPORARY WOOD POLE
- TEMPORARY POLE MOUNTED CONTROLLER
- SPAN WIRE
- PORTABLE CONCRETE BARRIER (PCB)
- IMPACT ATTENUATOR
- DRUMS (10' C/C ON TAPERS; 20' C/C ON TANGENTS)
- VIDEO DETECTION CAMERA
- 30' X 6' VIDEO DETECTION ZONE
- PAVEMENT FOR MAINTAINING TRAFFIC

POWER SUPPLY FOR TEMPORARY SIGNAL

ELECTRICAL POWER SHALL BE OBTAINED FROM AEP. THE CONTRACTOR SHALL COORDINATE WITH AEP TO DETERMINE A SUITABLE LOCATION FOR THE POWER SOURCE. THE CONTRACTOR SHALL ESTABLISH AN ACCOUNT SET UP IN THE CONTRACTOR'S NAME. THE CONTACT INFORMATION IS AS FOLLOWS:

AEP
369 E. O'CONNOR AVENUE
LIMA, OHIO 45801
PHONE: 419-998-5103
CONTACT: MR. DAN WILSON
EMAIL: DEWILSON@AEP.COM

SIGNAL PHASING DIAGRAM

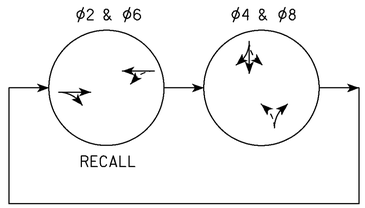

HORIZONTAL SCALE IN FEET
0 10 20 40
CALCULATED JRL
CHECKED EJC

TEMPORARY SIGNAL PLAN
PHASE I S.R. 65 & RAMP "A", PHASE I YODER RD

ALL-75-0.21

76/94
115/907

J:\Projects\ALL\89029\mot\sheets\89029MM300.dgn 13-JUN-2013 9:31PM coffield

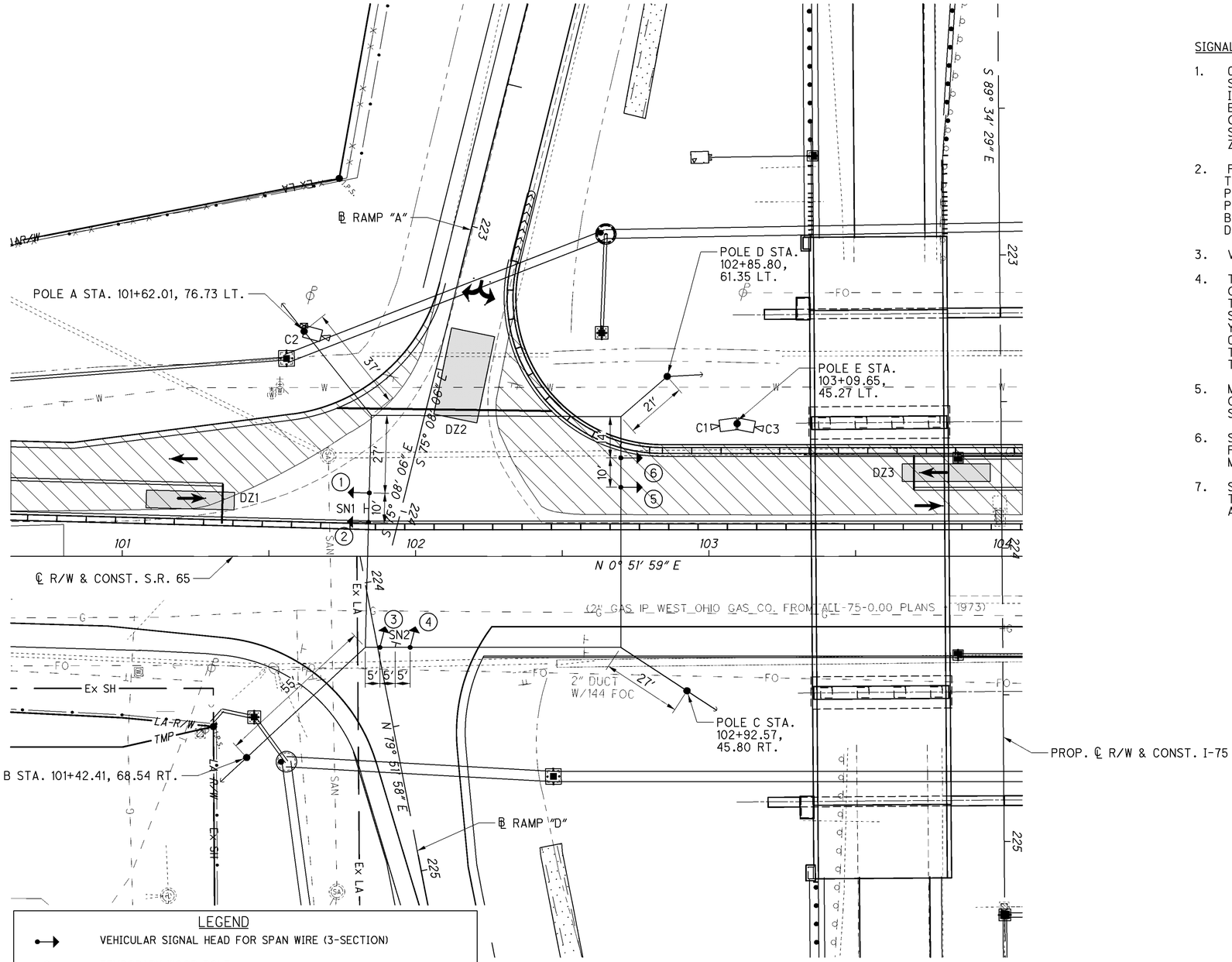

LEGEND

- VEHICULAR SIGNAL HEAD FOR SPAN WIRE (3-SECTION)
- TEMPORARY WOOD POLE
- TEMPORARY POLE MOUNTED CONTROLLER
- SPAN WIRE
- PORTABLE CONCRETE BARRIER (PCB)
- IMPACT ATTENUATOR
- DRUMS (10' C/C ON TAPERS; 20' C/C ON TANGENTS)
- VIDEO DETECTION CAMERA
- 30' X 6' VIDEO DETECTION ZONE
- PAVEMENT FOR MAINTAINING TRAFFIC

POWER SUPPLY FOR TEMPORARY SIGNAL

ELECTRICAL POWER SHALL BE OBTAINED FROM AEP. THE CONTRACTOR SHALL COORDINATE WITH AEP TO DETERMINE A SUITABLE LOCATION FOR THE POWER SOURCE. THE CONTRACTOR SHALL ESTABLISH AN ACCOUNT SET UP IN THE CONTRACTOR'S NAME. THE CONTACT INFORMATION IS AS FOLLOWS:

AEP
369 E. O'CONNOR AVENUE
LIMA, OHIO 45801
PHONE: 419-998-5103
CONTACT: MR. DAN WILSON
EMAIL: DEWILSON@AEP.COM

SIGNAL NOTES:

1. CONTRACTOR SHALL INSTALL TEMPORARY TRAFFIC SIGNAL AS PER 614.10 PRIOR TO BEGINNING PHASE II YODER ROAD MAINTENANCE OF TRAFFIC. ALL EQUIPMENT, LABOR, WORK, ETC. TO CONSTRUCT, OPERATE, MAINTAIN, AND ADJUST THE TEMPORARY SIGNAL SHALL BE INCLUDED WITH ITEM 614, WORK ZONE TRAFFIC SIGNAL.
2. PHASE NUMBERS SHOWN ON THIS PLAN CORRESPOND TO AN 8 PHASE CABINET. A 4 PHASE CABINET IS PERMITTED FOR THE TEMPORARY SIGNAL. IF A 4 PHASE CABINET IS USED, THE PHASE NUMBERS SHALL BE 1 AND 2 IN THE ORDER SHOWN ON THE PHASE DIAGRAM.
3. VIDEO DETECTION SHALL BE MAINTAINED AT ALL TIMES.
4. THE CONTRACTOR IS TO ESTABLISH SIGNAL TIMING BASED ON ACTUAL FIELD CONDITIONS. MINIMUM SIGNAL TIMINGS TO MEET ODOT TRAFFIC ENGINEERING MANUAL STANDARDS SHALL BE MET. MUST INCLUDE A MINIMUM OF 4 SEC. YELLOW AND 2 SEC. ALL RED ON EACH PHASE. THE CONTRACTOR IS TO ADJUST GREEN TIMES BASED ON TRAFFIC DEMANDS WHEN APPROVED BY OR AS DIRECTED BY THE ENGINEER.
5. MINIMUM CLEARANCE FROM THE HIGHEST (CROWN) POINT ON THE PAVEMENT TO THE BOTTOM OF THE SIGNAL HEADS SHALL BE 16 FEET.
6. SIGNAL POLES SHALL BE LOCATED BEHIND DITCHES WHERE POSSIBLE. (REFER TO STANDARD CONSTRUCTION DRAWING MT-96.11 FOR CLEAR ZONE TABLE.
7. SUGGESTED CAMERA LOCATIONS ARE SHOWN ON THE PLANS. THE CONTRACTOR MAY ADJUST CAMERA LOCATIONS WHEN APPROVED BY OR AS DIRECTED BY THE ENGINEER.

SIGNAL HEAD DETAIL 12" LENSES

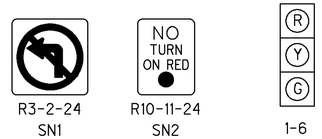

R3-2-24 SN1 | R10-11-24 SN2 | 1-6

SIGNAL PHASING DIAGRAM

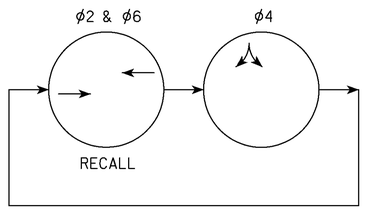

HORIZONTAL SCALE IN FEET 0 10 20 40

CALCULATED JRL CHECKED EJC

TEMPORARY SIGNAL PLAN
PHASE I S.R. 65 & RAMP "A", PHASE II YODER RD

ALL-75-0.21

77/94

116/907

J:\Projects\ALL\89029\mot\sheets\89029MM301.dgn 13-JUN-2013 9:31PM coffield

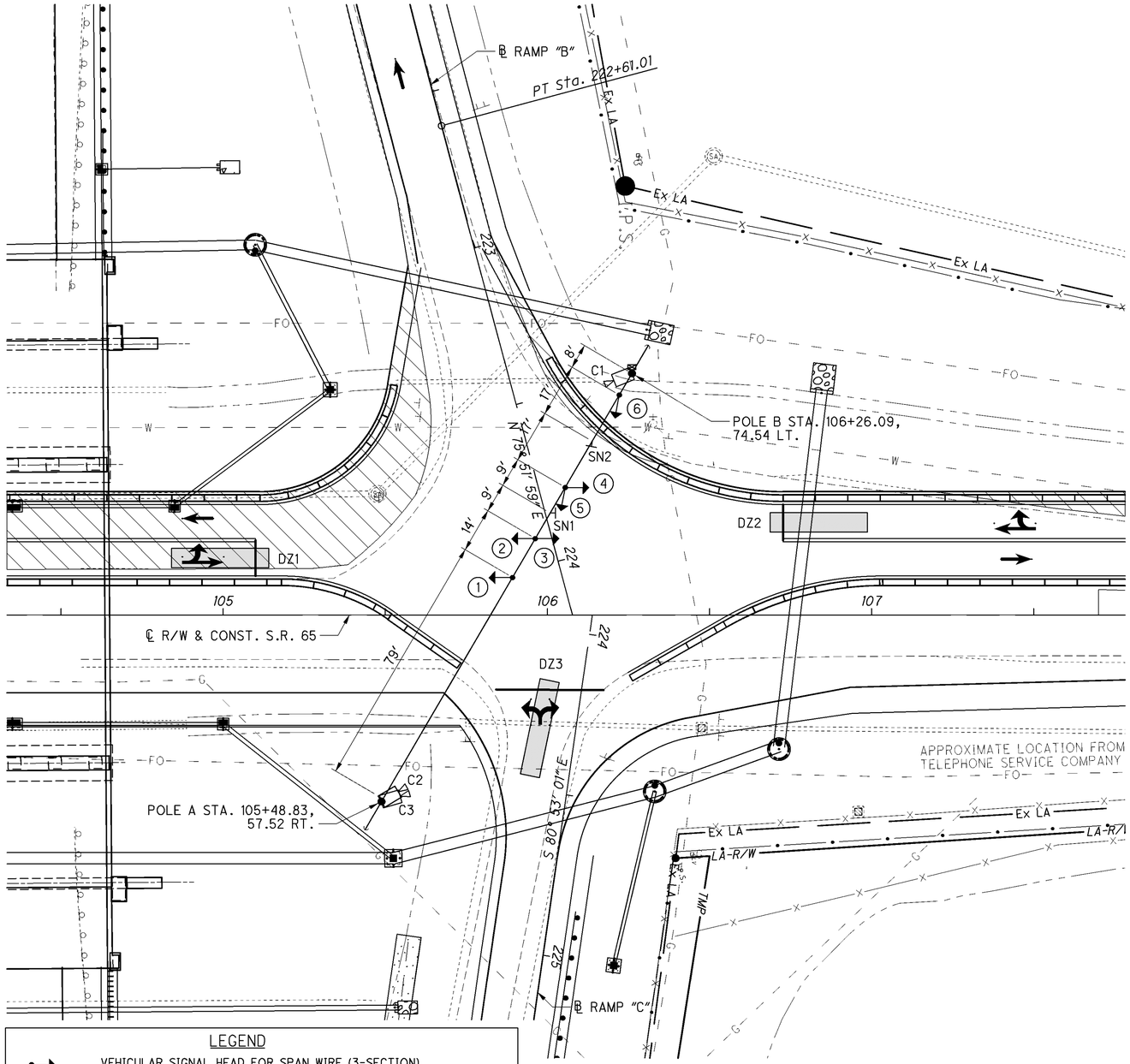

LEGEND

- VEHICULAR SIGNAL HEAD FOR SPAN WIRE (3-SECTION)
- TEMPORARY WOOD POLE
- TEMPORARY POLE MOUNTED CONTROLLER
- SPAN WIRE
- PORTABLE CONCRETE BARRIER (PCB)
- DRUMS (10' C/C ON TAPERS; 20' C/C ON TANGENTS)
- VIDEO DETECTION CAMERA
- 30' X 6' VIDEO DETECTION ZONE
- PAVEMENT FOR MAINTAINING TRAFFIC

POWER SUPPLY FOR TEMPORARY SIGNAL

ELECTRICAL POWER SHALL BE OBTAINED FROM AEP. THE CONTRACTOR SHALL COORDINATE WITH AEP TO DETERMINE A SUITABLE LOCATION FOR THE POWER SOURCE. THE CONTRACTOR SHALL ESTABLISH AN ACCOUNT SET UP IN THE CONTRACTOR'S NAME. THE CONTACT INFORMATION IS AS FOLLOWS:

AEP
369 E. O'CONNOR AVENUE
LIMA, OHIO 45801
PHONE: 419-998-5103
CONTACT: MR. DAN WILSON
EMAIL: DEWILSON@AEP.COM

SIGNAL NOTES:

1. CONTRACTOR SHALL INSTALL NEW SIGNAL ACTIVATION SIGNS PER STANDARD CONSTRUCTION DRAWING MT-120.00.
2. CONTRACTOR SHALL INSTALL TEMPORARY TRAFFIC SIGNAL AS PER 614.10 PRIOR TO BEGINNING PHASE I S.R. 65 MAINTENANCE OF TRAFFIC. ALL EQUIPMENT, LABOR, WORK, ETC. TO CONSTRUCT, OPERATE, MAINTAIN, AND ADJUST THE TEMPORARY SIGNAL SHALL BE INCLUDED WITH ITEM 614, WORK ZONE TRAFFIC SIGNAL.
3. PHASE NUMBERS SHOWN ON THIS PLAN CORRESPOND TO AN 8 PHASE CABINET. A 4 PHASE CABINET IS PERMITTED FOR THE TEMPORARY SIGNAL. IF A 4 PHASE CABINET IS USED, THE PHASE NUMBERS SHALL BE 1 AND 2 IN THE ORDER SHOWN ON THE PHASE DIAGRAM.
4. VIDEO DETECTION SHALL BE MAINTAINED AT ALL TIMES.
5. THE CONTRACTOR IS TO ESTABLISH SIGNAL TIMING BASED ON ACTUAL FIELD CONDITIONS. MINIMUM SIGNAL TIMINGS TO MEET ODOT TRAFFIC ENGINEERING MANUAL STANDARDS SHALL BE MET. MUST INCLUDE A MINIMUM OF 4 SEC. YELLOW AND 2 SEC. ALL RED ON EACH PHASE. THE CONTRACTOR IS TO ADJUST GREEN TIMES BASED ON TRAFFIC DEMANDS WHEN APPROVED BY OR AS DIRECTED BY THE ENGINEER.
6. MINIMUM CLEARANCE FROM THE HIGHEST (CROWN) POINT ON THE PAVEMENT TO THE BOTTOM OF THE SIGNAL HEADS SHALL BE 16 FEET.
7. SIGNAL POLES SHALL BE LOCATED BEHIND DITCHES WHERE POSSIBLE. (REFER TO STANDARD CONSTRUCTION DRAWING MT-96.11 FOR CLEAR ZONE TABLE.
8. SUGGESTED CAMERA LOCATIONS ARE SHOWN ON THE PLANS. THE CONTRACTOR MAY ADJUST CAMERA LOCATIONS WHEN APPROVED BY OR AS DIRECTED BY THE ENGINEER.

SIGNAL HEAD DETAIL
12" LENSES

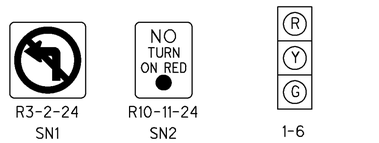

R3-2-24 SN1 | R10-11-24 SN2 | 1-6

SIGNAL PHASING DIAGRAM

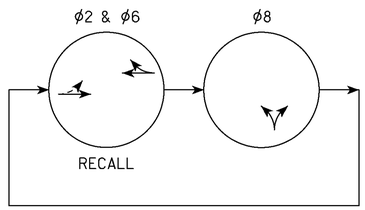

HORIZONTAL SCALE IN FEET
0 10 20 40

CALCULATED JRL
CHECKED EJC

TEMPORARY SIGNAL PLAN
PHASE I S.R. 65 & RAMPS "B" & "C"

ALL-75-0.21

78 / 94

117 / 907

J:\Projects\ALL\89029\mot\sheets\89029MM303.dgn 13-JUN-2013 9:31PM coffield

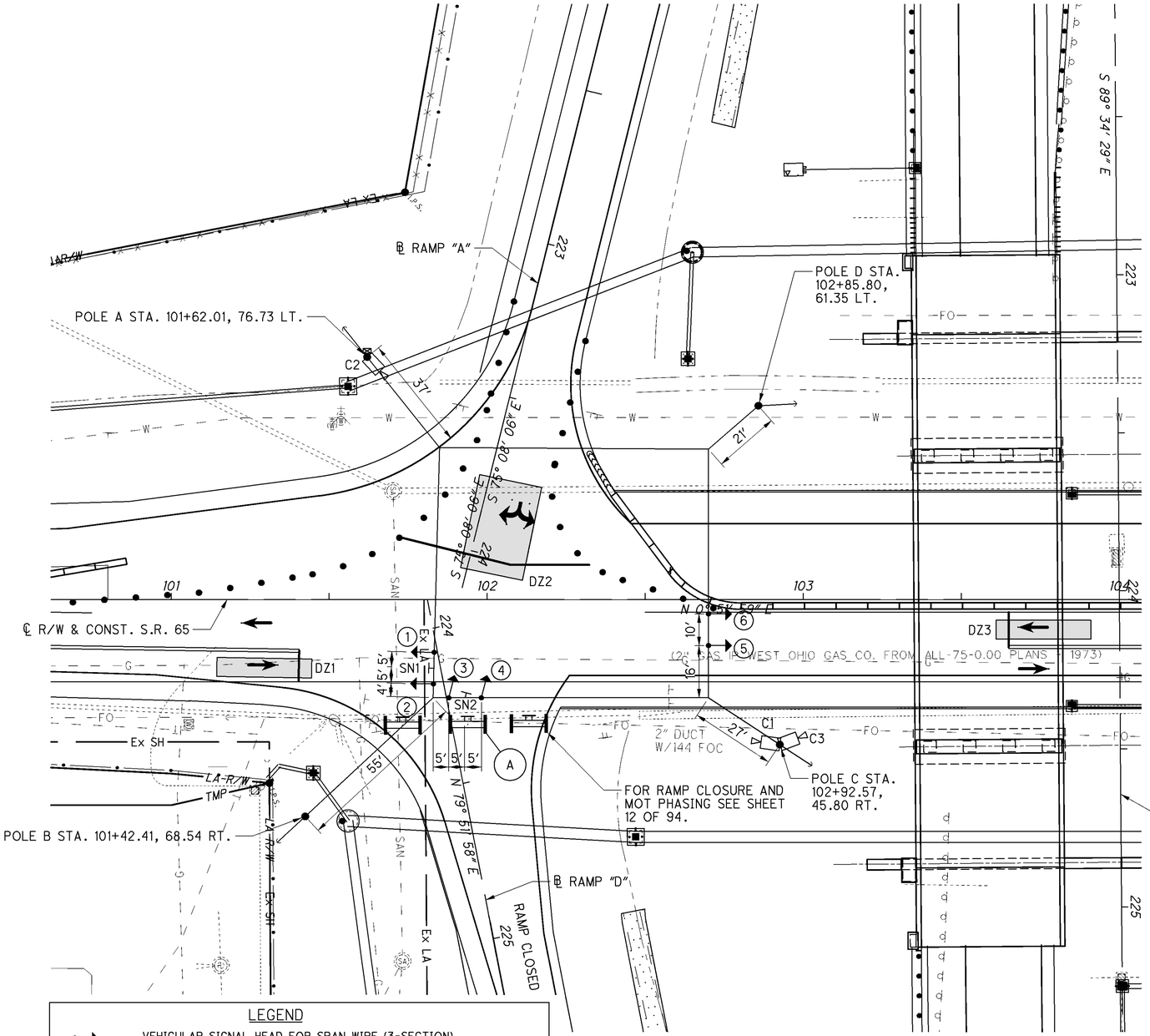

LEGEND

- VEHICULAR SIGNAL HEAD FOR SPAN WIRE (3-SECTION)
- TEMPORARY WOOD POLE
- TEMPORARY POLE MOUNTED CONTROLLER
- SPAN WIRE
- PORTABLE CONCRETE BARRIER (PCB)
- DRUMS (10' C/C ON TAPERS; 20' C/C ON TANGENTS)
- VIDEO DETECTION CAMERA
- 30' X 6' VIDEO DETECTION ZONE
- PAVEMENT FOR MAINTAINING TRAFFIC

POWER SUPPLY FOR TEMPORARY SIGNAL

ELECTRICAL POWER SHALL BE OBTAINED FROM AEP. THE CONTRACTOR SHALL COORDINATE WITH AEP TO DETERMINE A SUITABLE LOCATION FOR THE POWER SOURCE. THE CONTRACTOR SHALL ESTABLISH AN ACCOUNT SET UP IN THE CONTRACTOR'S NAME. THE CONTACT INFORMATION IS AS FOLLOWS:

AEP
369 E. O'CONNOR AVENUE
LIMA, OHIO 45801
PHONE: 419-998-5103
CONTACT: MR. DAN WILSON
EMAIL: DEWILSON@AEP.COM

SIGNAL NOTES:

1. CONTRACTOR SHALL INSTALL TEMPORARY TRAFFIC SIGNAL AS PER 614.10 PRIOR TO BEGINNING PHASE II S.R. 65 MAINTENANCE OF TRAFFIC. ALL EQUIPMENT, LABOR, WORK, ETC. TO CONSTRUCT, OPERATE, MAINTAIN, AND ADJUST THE TEMPORARY SIGNAL SHALL BE INCLUDED WITH ITEM 614, WORK ZONE TRAFFIC SIGNAL.
2. PHASE NUMBERS SHOWN ON THIS PLAN CORRESPOND TO AN 8 PHASE CABINET. A 4 PHASE CABINET IS PERMITTED FOR THE TEMPORARY SIGNAL. IF A 4 PHASE CABINET IS USED, THE PHASE NUMBERS SHALL BE 1 AND 2 IN THE ORDER SHOWN ON THE PHASE DIAGRAM.
3. VIDEO DETECTION SHALL BE MAINTAINED AT ALL TIMES.
4. THE CONTRACTOR IS TO ESTABLISH SIGNAL TIMING BASED ON ACTUAL FIELD CONDITIONS. MINIMUM SIGNAL TIMINGS TO MEET ODOT TRAFFIC ENGINEERING MANUAL STANDARDS SHALL BE MET. MUST INCLUDE A MINIMUM OF 4 SEC. YELLOW AND 2 SEC. ALL RED ON EACH PHASE. THE CONTRACTOR IS TO ADJUST GREEN TIMES BASED ON TRAFFIC DEMANDS WHEN APPROVED BY OR AS DIRECTED BY THE ENGINEER.
5. MINIMUM CLEARANCE FROM THE HIGHEST (CROWN) POINT ON THE PAVEMENT TO THE BOTTOM OF THE SIGNAL HEADS SHALL BE 16 FEET.
6. SIGNAL POLES SHALL BE LOCATED BEHIND DITCHES WHERE POSSIBLE. (REFER TO STANDARD CONSTRUCTION DRAWING MT-96.11 FOR CLEAR ZONE TABLE.
7. SUGGESTED CAMERA LOCATIONS ARE SHOWN ON THE PLANS. THE CONTRACTOR MAY ADJUST CAMERA LOCATIONS WHEN APPROVED BY OR AS DIRECTED BY THE ENGINEER.

SIGNAL HEAD DETAIL 12" LENSES

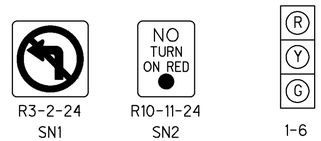

R3-2-24 SN1 | R10-11-24 SN2 | 1-6

SIGNAL PHASING DIAGRAM

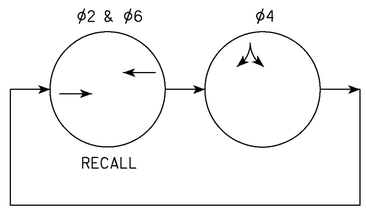

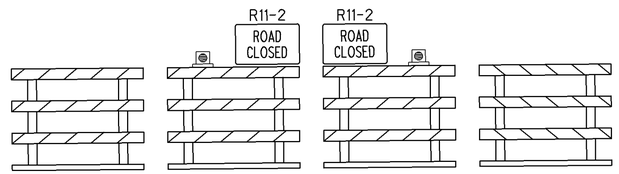

SOLID ACROSS INTERSECTION
TYPE III BARRICADES PER MT-101.60

A

HORIZONTAL SCALE IN FEET
0 10 20 40

CALCULATED JRL | CHECKED EJC

TEMPORARY SIGNAL PLAN PHASE II S.R. 65 & RAMP "A"

ALL-75-0.21

79 / 94

118 / 907

J:\Projects\ALL\89029\mot\sheets\89029MM302.dgn 13-JUN-2013 9:31PM coffield

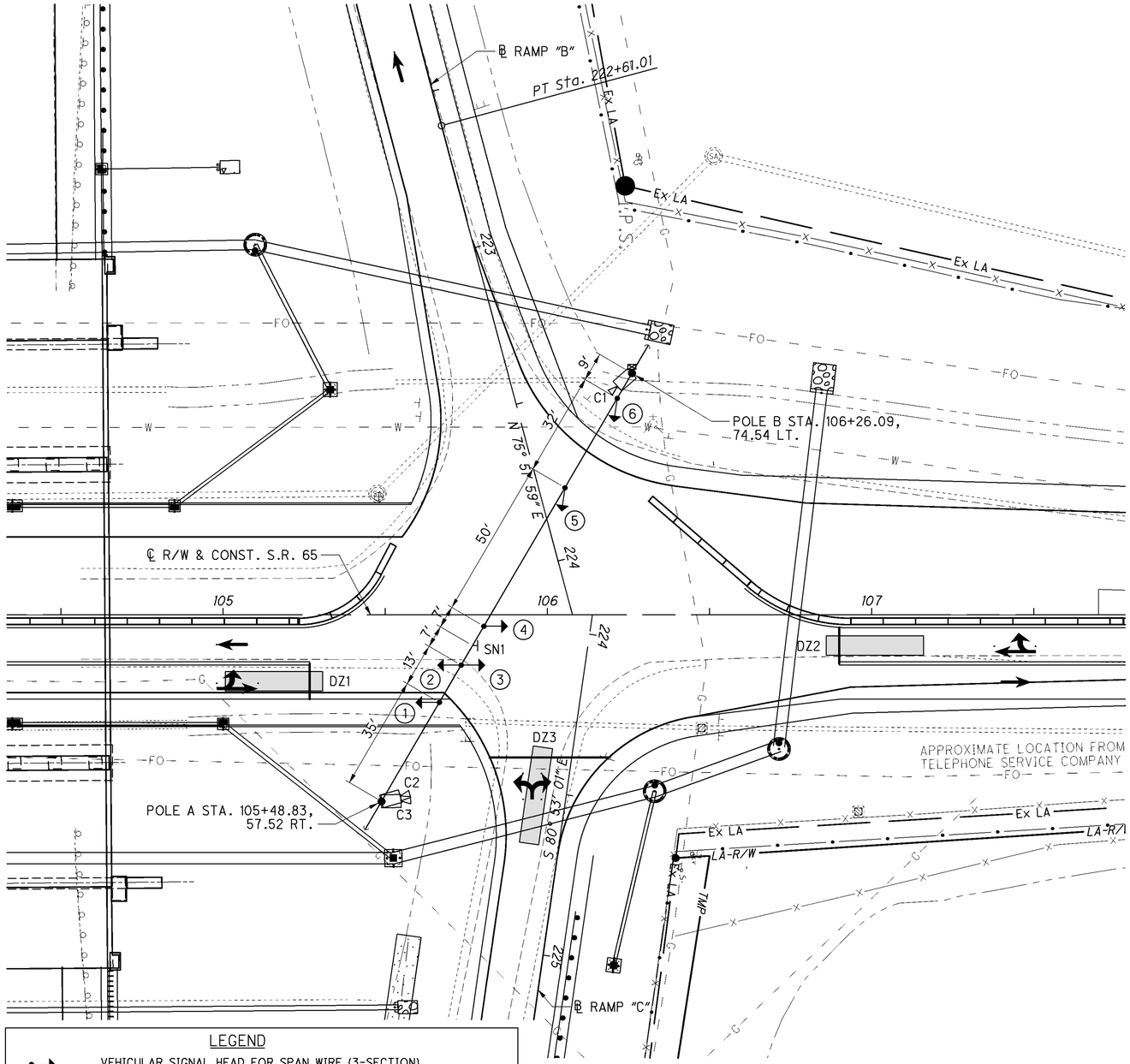

LEGEND

- VEHICULAR SIGNAL HEAD FOR SPAN WIRE (3-SECTION)
- TEMPORARY WOOD POLE
- TEMPORARY POLE MOUNTED CONTROLLER
- SPAN WIRE
- PORTABLE CONCRETE BARRIER (PCB)
- DRUMS (10' C/C ON TAPERS; 20' C/C ON TANGENTS)
- VIDEO DETECTION CAMERA
- 30' X 6' VIDEO DETECTION ZONE
- PAVEMENT FOR MAINTAINING TRAFFIC

SIGNAL NOTES:

1. CONTRACTOR SHALL INSTALL TEMPORARY TRAFFIC SIGNAL AS PER 614.10 PRIOR TO BEGINNING PHASE II S.R. 65 MAINTENANCE OF TRAFFIC. ALL EQUIPMENT, LABOR, WORK, ETC. TO CONSTRUCT, OPERATE, MAINTAIN, AND ADJUST THE TEMPORARY SIGNAL SHALL BE INCLUDED WITH ITEM 614, WORK ZONE TRAFFIC SIGNAL.
2. PHASE NUMBERS SHOWN ON THIS PLAN CORRESPOND TO AN 8 PHASE CABINET. A 4 PHASE CABINET IS PERMITTED FOR THE TEMPORARY SIGNAL. IF A 4 PHASE CABINET IS USED, THE PHASE NUMBERS SHALL BE 1 AND 2 IN THE ORDER SHOWN ON THE PHASE DIAGRAM.
3. VIDEO DETECTION SHALL BE MAINTAINED AT ALL TIMES.
4. THE CONTRACTOR IS TO ESTABLISH SIGNAL TIMING BASED ON ACTUAL FIELD CONDITIONS. MINIMUM SIGNAL TIMINGS TO MEET ODOT TRAFFIC ENGINEERING MANUAL STANDARDS SHALL BE MET. MUST INCLUDE A MINIMUM OF 4 SEC. YELLOW AND 2 SEC. ALL RED ON EACH PHASE. THE CONTRACTOR IS TO ADJUST GREEN TIMES BASED ON TRAFFIC DEMANDS WHEN APPROVED BY OR AS DIRECTED BY THE ENGINEER.
5. MINIMUM CLEARANCE FROM THE HIGHEST (CROWN) POINT ON THE PAVEMENT TO THE BOTTOM OF THE SIGNAL HEADS SHALL BE 16 FEET.
6. SIGNAL POLES SHALL BE LOCATED BEHIND DITCHES WHERE POSSIBLE. (REFER TO STANDARD CONSTRUCTION DRAWING MT-96.11 FOR CLEAR ZONE TABLE.
7. SUGGESTED CAMERA LOCATIONS ARE SHOWN ON THE PLANS. THE CONTRACTOR MAY ADJUST CAMERA LOCATIONS WHEN APPROVED BY OR AS DIRECTED BY THE ENGINEER.

SIGNAL HEAD DETAIL
12" LENSES

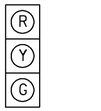

POWER SUPPLY FOR TEMPORARY SIGNAL

ELECTRICAL POWER SHALL BE OBTAINED FROM AEP. THE CONTRACTOR SHALL COORDINATE WITH AEP TO DETERMINE A SUITABLE LOCATION FOR THE POWER SOURCE. THE CONTRACTOR SHALL ESTABLISH AN ACCOUNT SET UP IN THE CONTRACTOR'S NAME. THE CONTACT INFORMATION IS AS FOLLOWS:

AEP
369 E. O'CONNOR AVENUE
LIMA, OHIO 45801
PHONE: 419-998-5103
CONTACT: MR. DAN WILSON
EMAIL: DEWILSON@AEP.COM

SIGNAL PHASING DIAGRAM

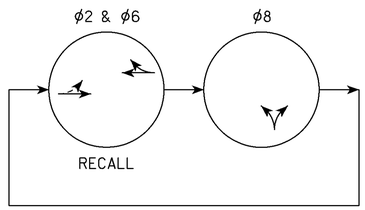

HORIZONTAL SCALE IN FEET
0 10 20 40

CALCULATED JRL
CHECKED EJC

TEMPORARY SIGNAL PLAN
PHASE II S.R. 65 & RAMPS "B" & "C"

ALL-75-0.21

80 / 94

119
907

J:\Projects\ALL\89029\mot\sheets\89029MM305.dgn 13-JUN-2013 9:31PM coffield

LEGEND:

- TYEL - TEMPORARY YELLOW EDGE LINE
- TDYL - TEMPORARY DOUBLE YELLOW LINE
- TWEL - TEMPORARY WHITE EDGE LINE
- PAVEMENT FOR MAINTAINING TRAFFIC
- PORTABLE CONCRETE BARRIER (PCB)
- WORK AREA (PHASE I)
- IMPACT ATTENUATOR
- DRUMS (10' C/C ON TAPERS; 20' C/C ON TANGENT)
- LANE DIRECTION

CURVE MOT-1
P.I. Sta. 101+05.07
Δ = 8° 00' 00" (LT)
Dc = 8° 00' 00"
R = 716.20'
T = 50.08'
L = 100.00'
E = 1.75'
C = 99.92'
C.B. = N 3° 08' 01" W

CURVE MOT-2
P.I. Sta. 102+70.80
Δ = 8° 00' 00" (RT)
Dc = 8° 00' 00"
R = 716.20'
T = 50.08'
L = 100.00'
E = 1.75'
C = 99.92'
C.B. = N 3° 08' 01" W

NOTE:
THIS PLAN IS TO BE USED IN CONJUNCTION WITH THE SHORT TERM DETOUR PLAN FOR SR 65 BRIDGE DEMOLITION. SEE STANDARD CONSTRUCTION DRAWING MT-97.10 FOR MORE DETAILS ON CLOSING 1 LANE OF A 2 LANE HIGHWAY.

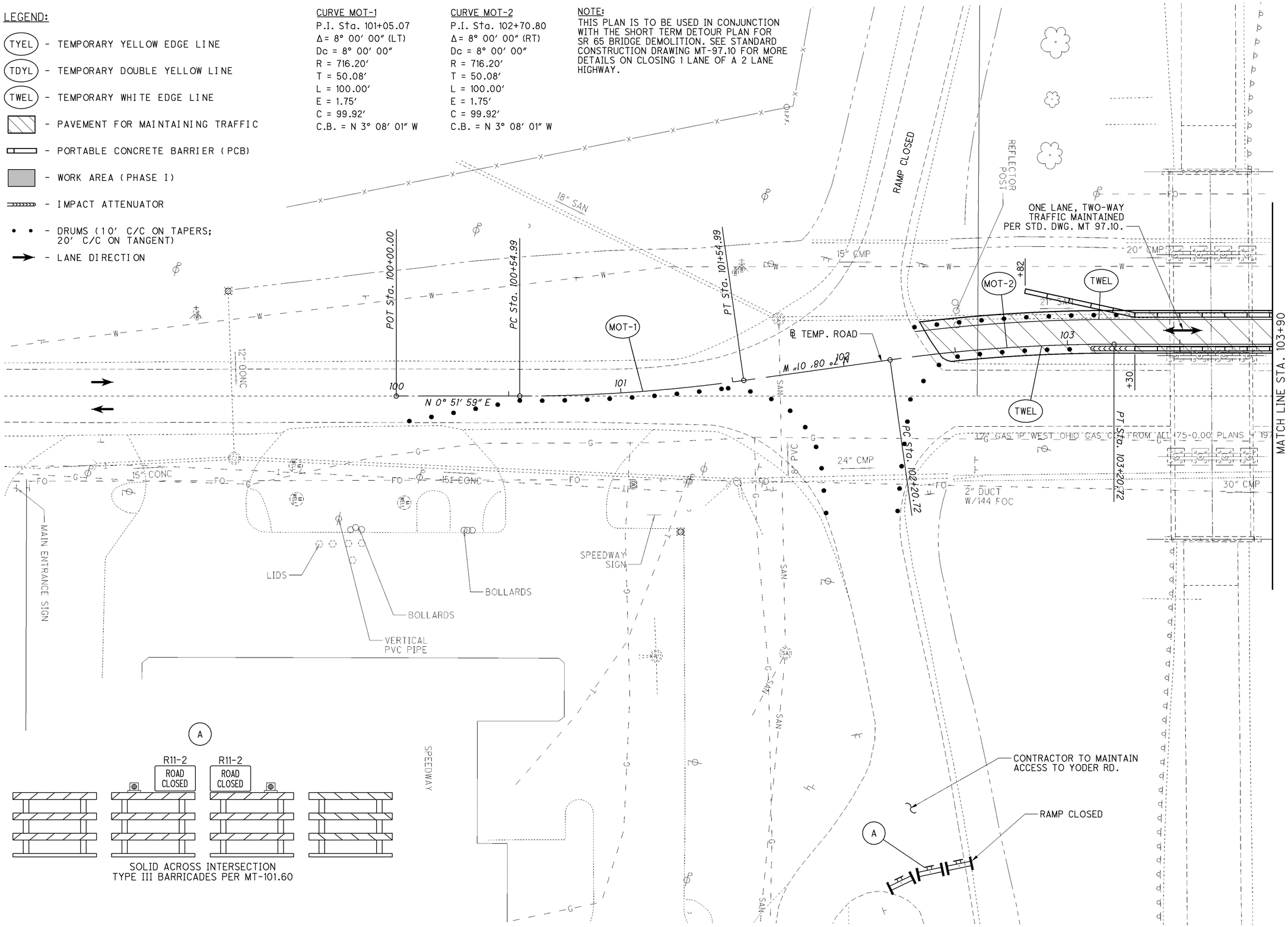

J:\Projects\ALL\89029\mot\sheets\89029MP320.dgn 13-JUN-2013 9:32PM coffield

HORIZONTAL SCALE IN FEET
0 10 20 40

CALCULATED CAC
CHECKED EJC

MAINTENANCE OF TRAFFIC - S.R. 65
TEMPORARY ROAD FOR BRIDGE DEMOLITION

ALL-75-0.21

81 / 94

120 / 907

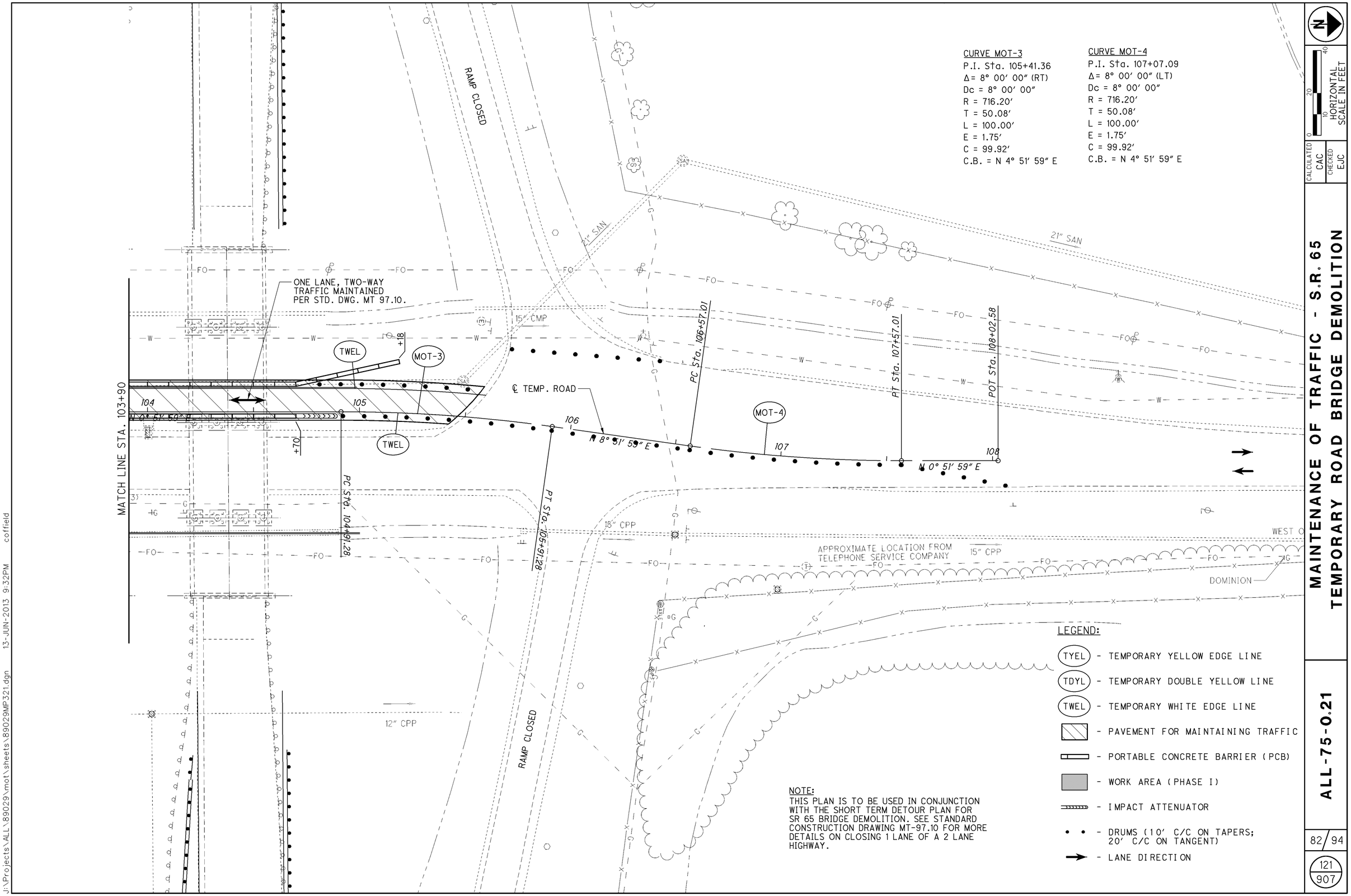

CURVE MOT-3
P.I. Sta. 105+41.36
Δ= 8° 00' 00" (RT)
Dc = 8° 00' 00"
R = 716.20'
T = 50.08'
L = 100.00'
E = 1.75'
C = 99.92'
C.B. = N 4° 51' 59" E

CURVE MOT-4
P.I. Sta. 107+07.09
Δ= 8° 00' 00" (LT)
Dc = 8° 00' 00"
R = 716.20'
T = 50.08'
L = 100.00'
E = 1.75'
C = 99.92'
C.B. = N 4° 51' 59" E

LEGEND:

- TYEL - TEMPORARY YELLOW EDGE LINE
- TDYL - TEMPORARY DOUBLE YELLOW LINE
- TWEL - TEMPORARY WHITE EDGE LINE
- PAVEMENT FOR MAINTAINING TRAFFIC
- PORTABLE CONCRETE BARRIER (PCB)
- WORK AREA (PHASE I)
- IMPACT ATTENUATOR
- DRUMS (10' C/C ON TAPERS; 20' C/C ON TANGENT)
- LANE DIRECTION

NOTE:
THIS PLAN IS TO BE USED IN CONJUNCTION WITH THE SHORT TERM DETOUR PLAN FOR SR 65 BRIDGE DEMOLITION. SEE STANDARD CONSTRUCTION DRAWING MT-97.10 FOR MORE DETAILS ON CLOSING 1 LANE OF A 2 LANE HIGHWAY.

HORIZONTAL SCALE IN FEET 0 10 20 40

CALCULATED CAC
CHECKED EJC

MAINTENANCE OF TRAFFIC - S.R. 65
TEMPORARY ROAD BRIDGE DEMOLITION

ALL-75-0.21

J:\Projects\ALL\89029\mot\sheets\89029MP321.dgn 13-JUN-2013 9:32PM coffield

LEGEND:

- TSL - TEMPORARY STOP LINE
- TYEL - TEMPORARY YELLOW EDGE LINE
- TDYL - TEMPORARY DOUBLE YELLOW LINE
- TWEL - TEMPORARY WHITE EDGE LINE
- PAVEMENT FOR MAINTAINING TRAFFIC
- PORTABLE CONCRETE BARRIER (PCB)
- WORK AREA (PHASE I)
- IMPACT ATTENUATOR
- DRUMS (10' C/C ON TAPERS; 20' C/C ON TANGENT)
- LANE DIRECTION

CURVE MOT-1
P.I. Sta. 189+92.62
Δ= 5° 29' 07" (LT)
Dc = 12° 30' 00"
R = 458.37'
T = 21.96'
L = 43.88'
E = 0.53'
C = 43.87'
C.B. = N 1° 52' 35" W

CURVE MOT-2
P.I. Sta. 192+85.94
Δ= 4° 14' 12" (RT)
Dc = 12° 30' 00"
R = 458.37'
T = 16.95'
L = 33.89'
E = 0.31'
C = 33.89'
C.B. = N 2° 30' 02" W

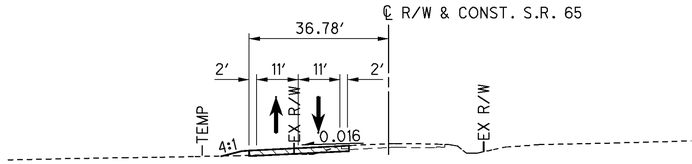

SECTION A-A
STA. 92+50.00

NOTE:
FOR ADVANCED SIGNING OF LANE SHIFT SEE STD. CONST. DWGS. MT 102.10 & MT 102.20.

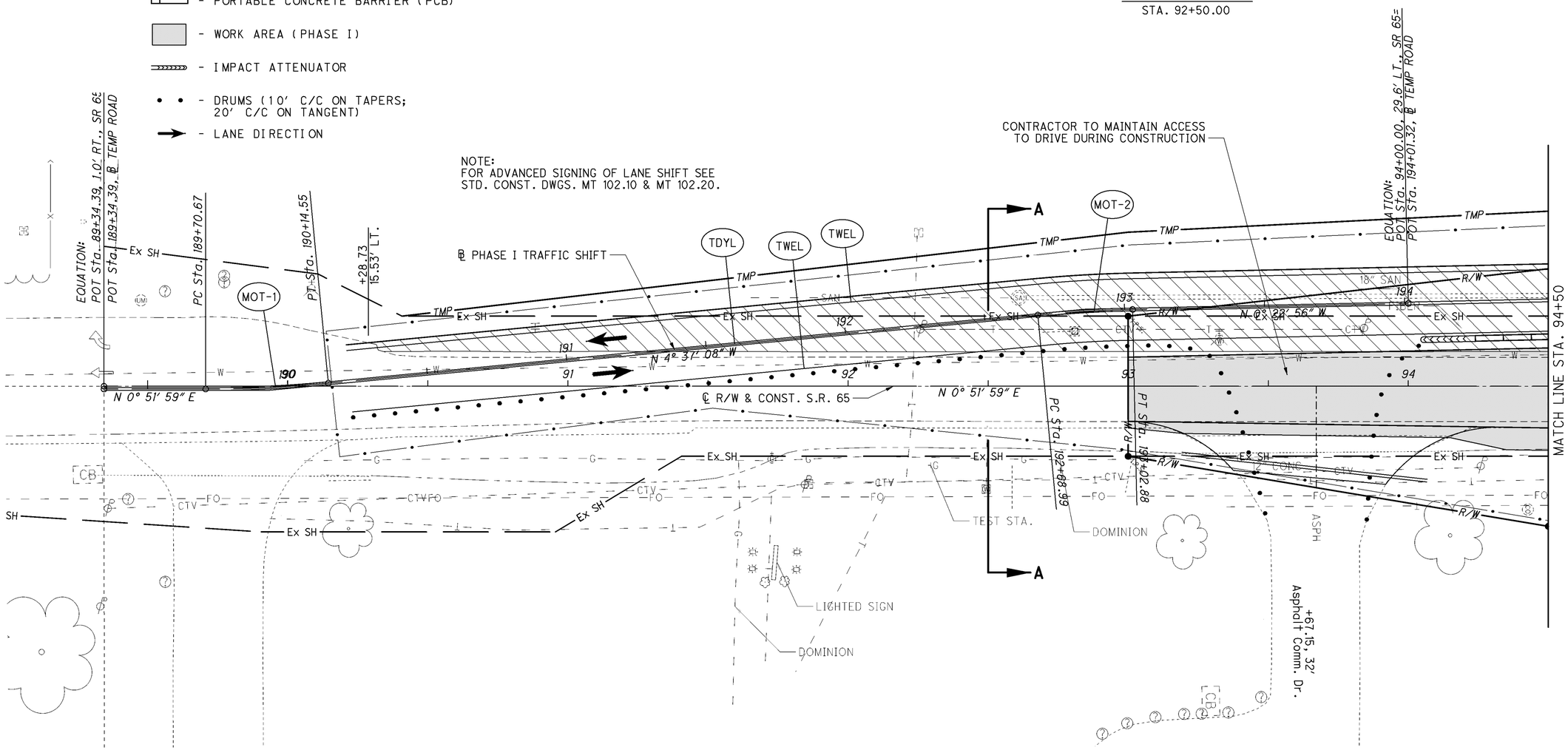

J:\Projects\ALL\89029\mot\sheets\89029MP300.dgn 13-JUN-2013 9:32PM coffield

HORIZONTAL SCALE IN FEET 0 10 20 40

CALCULATED CAC
CHECKED EJC

MAINTENANCE OF TRAFFIC - S.R. 65
PHASE I - BEGIN WORK TO STA. 94+50.00

ALL-75-0.21

LEGEND:

- (TSL) - TEMPORARY STOP LINE
- (TYEL) - TEMPORARY YELLOW EDGE LINE
- (TDYL) - TEMPORARY DOUBLE YELLOW LINE
- (TWEL) - TEMPORARY WHITE EDGE LINE
- ▨ - PAVEMENT FOR MAINTAINING TRAFFIC
- ▭ - PORTABLE CONCRETE BARRIER (PCB)
- ▭ - WORK AREA (PHASE I)
- ▭ - IMPACT ATTENUATOR
- • • - DRUMS (10′ C/C ON TAPERS; 20′ C/C ON TANGENT)
- → - LANE DIRECTION

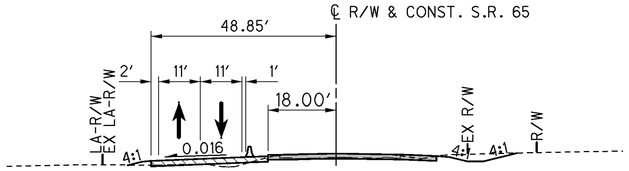

SECTION A-A
STA. 97+00.00

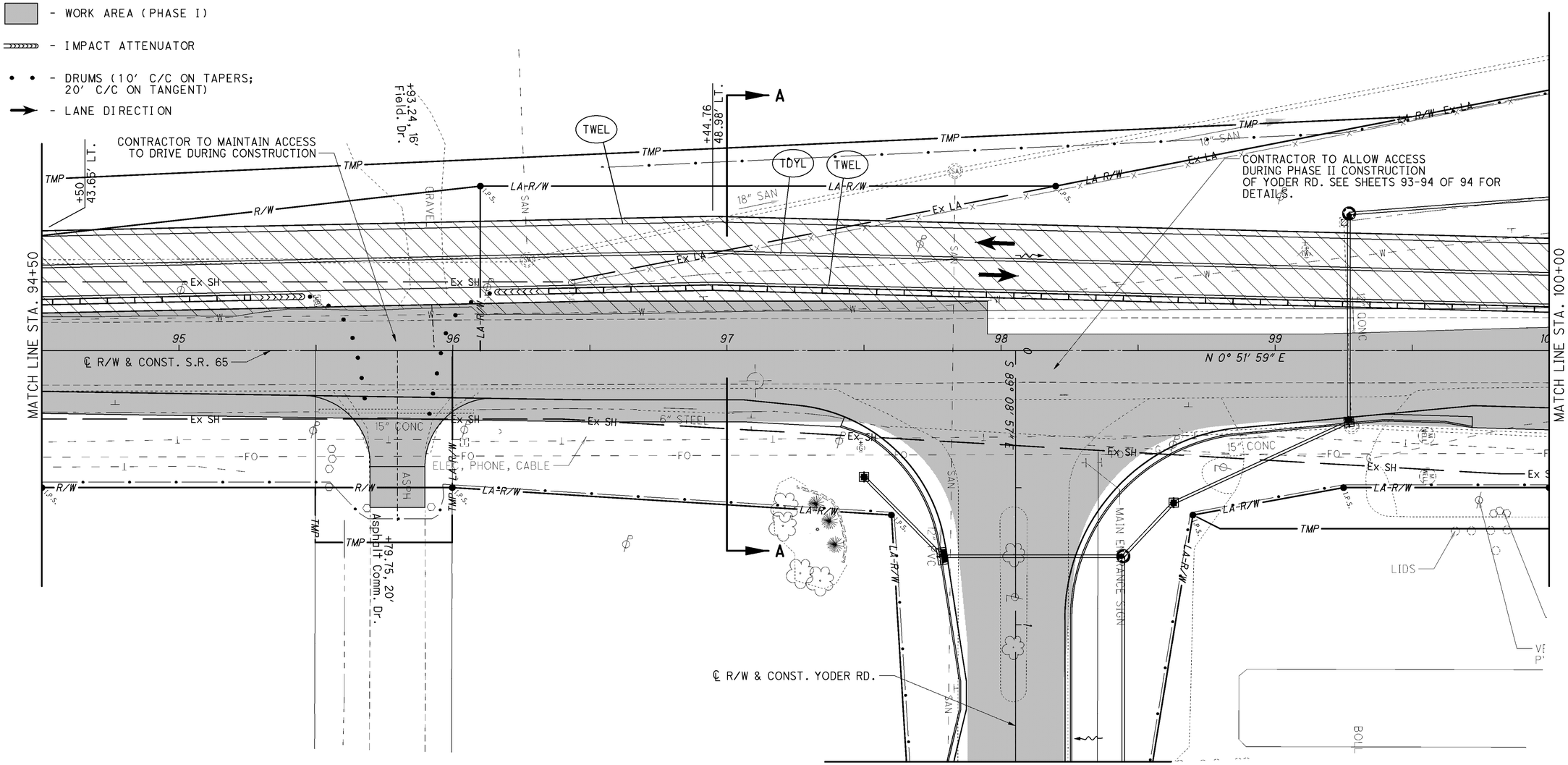

J:\Projects\ALL\89029\mot\sheets\89029MP301.dgn 13-JUN-2013 9:32PM coffield

N

HORIZONTAL SCALE IN FEET
0 10 20 40

CALCULATED CAC
CHECKED EJC

MAINTENANCE OF TRAFFIC - S.R. 65
PHASE I - STA. 94+50.00 TO STA. 100+00.00

ALL-75-0.21

84/94

123/907

LEGEND:

- (TSL) - TEMPORARY STOP LINE
- (TYEL) - TEMPORARY YELLOW EDGE LINE
- (TDYL) - TEMPORARY DOUBLE YELLOW LINE
- (TWEL) - TEMPORARY WHITE EDGE LINE
- ▨ - PAVEMENT FOR MAINTAINING TRAFFIC
- ▭ - PORTABLE CONCRETE BARRIER (PCB)
- ▭ - WORK AREA (PHASE I)
- ▭ - IMPACT ATTENUATOR
- • • - DRUMS (10' C/C ON TAPERS; 20' C/C ON TANGENT)
- → - LANE DIRECTION

NOTE:

FOR TEMPORARY SIGNAL PLANS SEE SHEETS 76-77 OF 94.

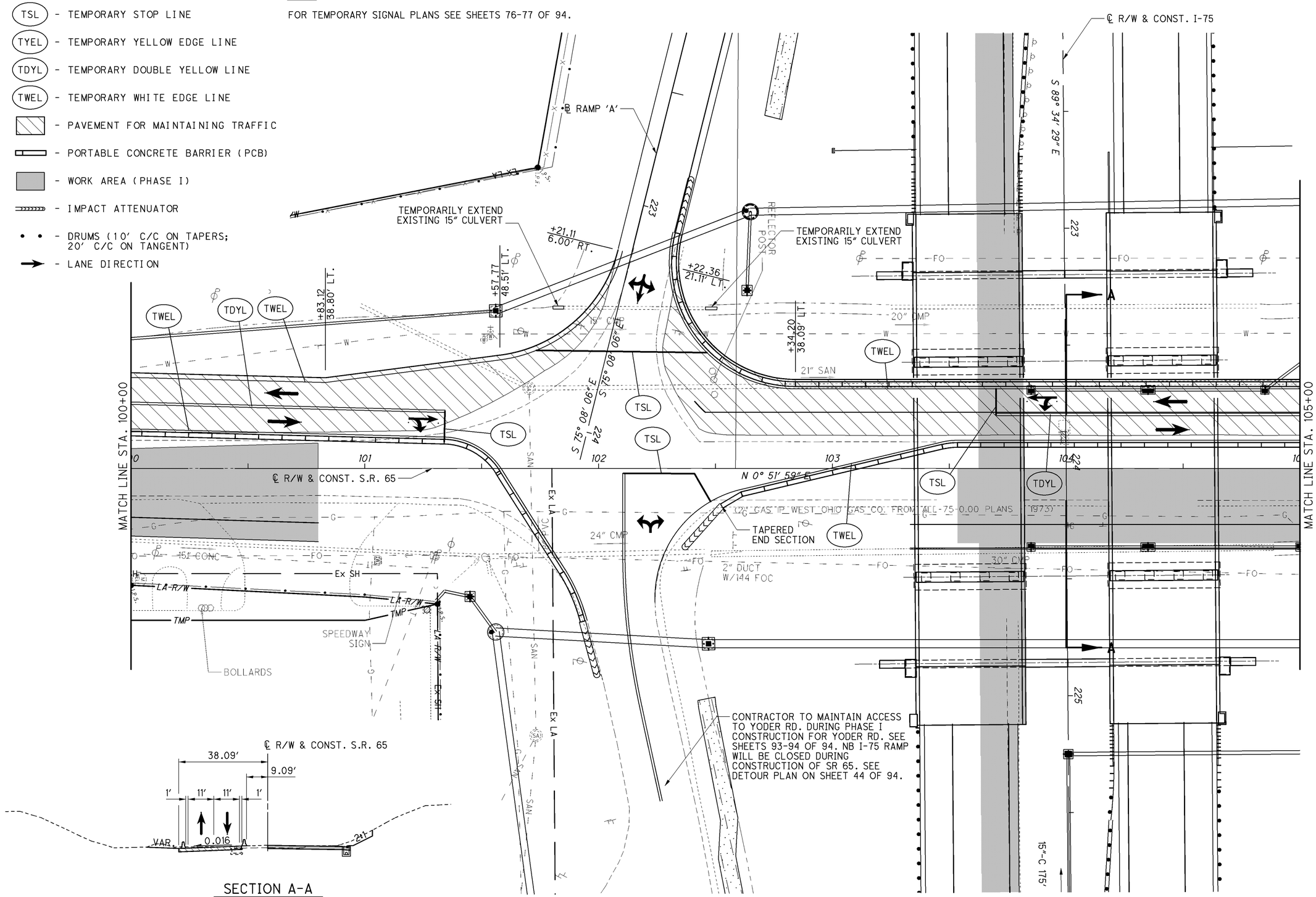

SECTION A-A
STA. 104+00.00

N

HORIZONTAL SCALE IN FEET
0 10 20 40

CALCULATED CAC
CHECKED EJC

MAINTENANCE OF TRAFFIC - S.R. 65
PHASE I - STA. 100+00.00 TO STA. 105+00.00

ALL-75-0.21

85/94

124/907

J:\Projects\ALL\89029\mot\sheets\89029MP302.dgn 13-JUN-2013 9:32PM coffield

NOTES:
FOR TEMPORARY SIGNAL PLAN SEE SHEET 78 OF 94.

CONTRACTOR TO INSTALL CURVE WARNING SIGNS (W1-4) AND 30 MPH SPEED WARNING SIGNS (W1-13P) ON EACH APPROACH TO THE CULVERT CONSTRUCTION AREA (NEAR STA.110+00) FOR EACH PHASE OR AS OTHERWISE DIRECTED BY THE ENGINEER.

CURVE MOT-3
P.I. Sta. 210+26.16
Δ= 12° 42' 16" (RT)
Dc = 26° 31' 33"
R = 216.00'
T = 24.05'
L = 47.89'
E = 1.33'
C = 47.80'
C.B. = N 7° 13' 07" E

℄ RAMP 'B'
PT Sta. 222+61.01
Ex LA
S.B.
+00 6.27' LT.
+00 21.09' RT.
TEMPORARILY EXTEND EXISTING 15" CULVERT
21" SAN
RE-GRADE EXISTING DITCH TO DRAIN.
INSTALL TWIN 42" CULVERTS, 40' LONG ±, INTO EXISTING BOX TO PAVE OVER FOR TEMPORARY LANES.
STEEL PLATES INSTALLED OVER EX. BOX & PROP. 42" TWIN PIPE UNION
A
EQUATION:
POT Sta. 94+00.00,
29.6' LT., SR 65=
POT Sta. 210+00.00,
℄ TEMP ROAD
℄ PHASE I TRAFFIC SHIFT
LA-R/W
TDYL
TWEL
TWEL
MOT-3
+11.33 38.09' LT.
15" CMP
+38 46' LT.
+19.39 38.09' LT.
+02.11 38.09' LT.
24" CMP
N 75° 51' 59" E
N 0° 51' 59" E
TSL
MATCH LINE STA. 105+00
MATCH LINE STA. 110+50
105
106
107
108
109
110
224
℄ R/W & CONST. S.R. 65
15" CPP
S 80° 53' 01" E
222
APPROXIMATE LOCATION FROM TELEPHONE SERVICE COMPANY
WEST OHIO
PC Sta. 210+02.11
PT Sta. 210+50.00
12" CPP
18"-B 56'
18"-C 27'
18"-F 65'
℄ RAMP 'C'
PROPOSED PIPE TO BE BORED & JACKED UNDER ACTIVE ROADWAY.
CLOSE RAMP C FOR A PERIOD UP TO 21 DAYS TO COMPLETE THE CONSTRUCTION OF THE INTERSECTION OF SR 65 WITH RAMP C. CONTRACTOR TO ADJUST PCB TO BLOCK OFF INTERSECTION AND COVER SIGNAL HEADS DURING THE INTERSECTION COMPLETION PHASE.
ITEM 503 COFFERDAMS & EXCAVATION BRACING AS NEEDED

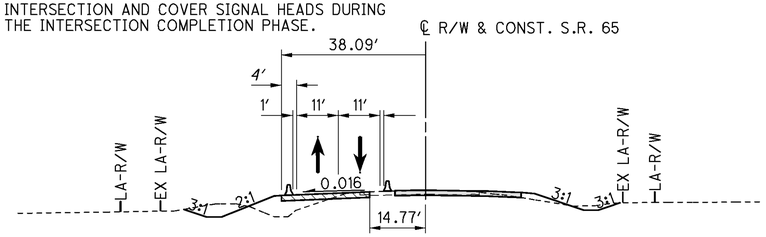

SECTION A-A
STA. 109+00.00

LEGEND:
- TSL - TEMPORARY STOP LINE
- TYEL - TEMPORARY YELLOW EDGE LINE
- TDYL - TEMPORARY DOUBLE YELLOW LINE
- TWEL - TEMPORARY WHITE EDGE LINE
- PAVEMENT FOR MAINTAINING TRAFFIC
- PORTABLE CONCRETE BARRIER (PCB)
- WORK AREA (PHASE I)
- IMPACT ATTENUATOR
- DRUMS (10' C/C ON TAPERS; 20' C/C ON TANGENT)
- LANE DIRECTION

HORIZONTAL SCALE IN FEET
0 10 20 40
CALCULATED CAC
CHECKED EJC

MAINTENANCE OF TRAFFIC - S.R. 65
PHASE I - STA. 100+00.00 TO STA. 110+50.00

ALL-75-0.21

86 / 94

125 / 907

J:\Projects\ALL\89029\mot\sheets\89029MP303.dgn 25-OCT-2013 6:41PM carmichael

NOTES:
FOR ADVANCED SIGNING OF LANE SHIFT SEE
STD. CONST. DWGS. MT 102.10 & MT 102.20.

CONTRACTOR TO INSTALL CURVE WARNING SIGNS (W1-4)
AND 30 MPH SPEED WARNING SIGNS (W1-13P) ON EACH APPROACH
TO THE CULVERT CONSTRUCTION AREA (NEAR STA.110+00)
FOR EACH PHASE OR AS OTHERWISE DIRECTED BY THE ENGINEER.

CURVE MOT-4
P.I. Sta. 211+23.12
Δ = 13° 29′ 31″ (LT)
Dc = 18° 01′ 03″
R = 318.00′
T = 37.62′
L = 74.88′
E = 2.22′
C = 74.71′
C.B. = N 6° 49′ 29″ E

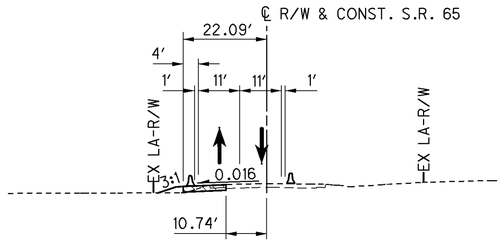

SECTION A-A
STA. 111+00.00

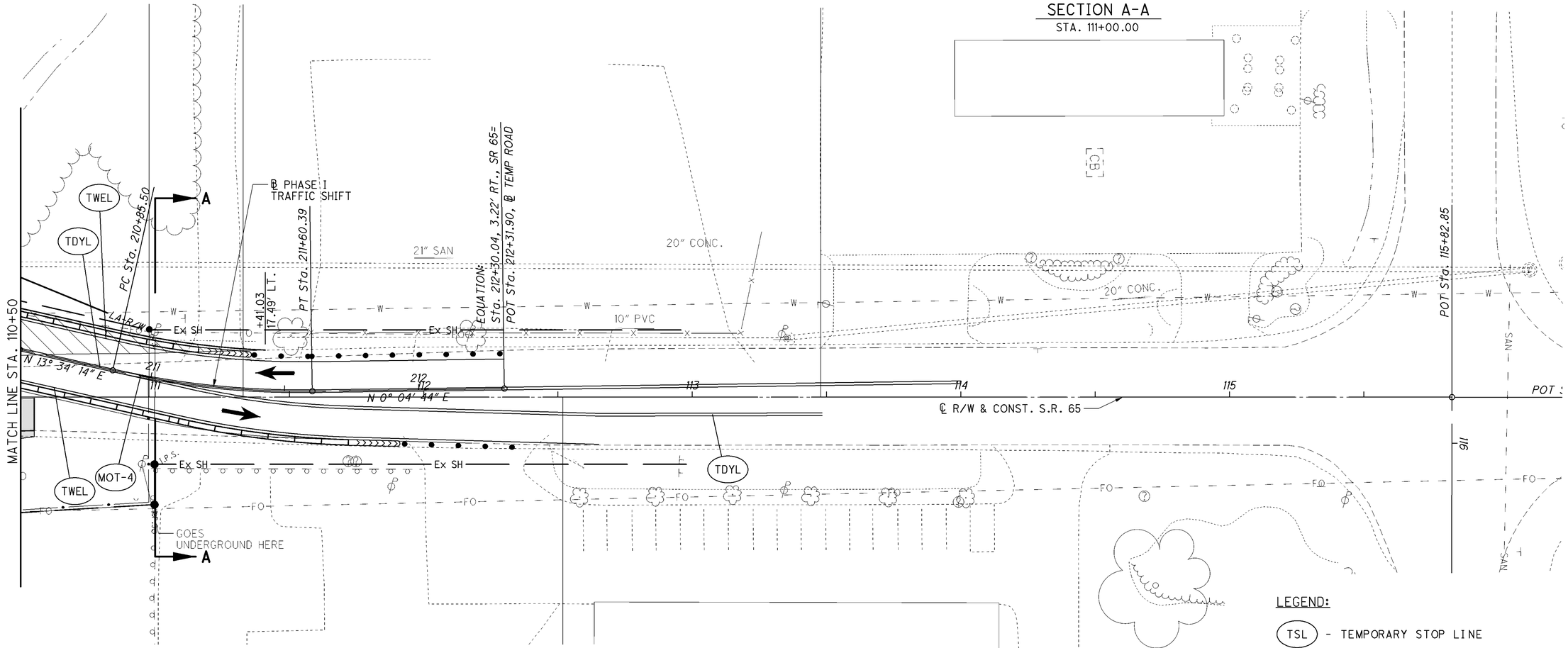

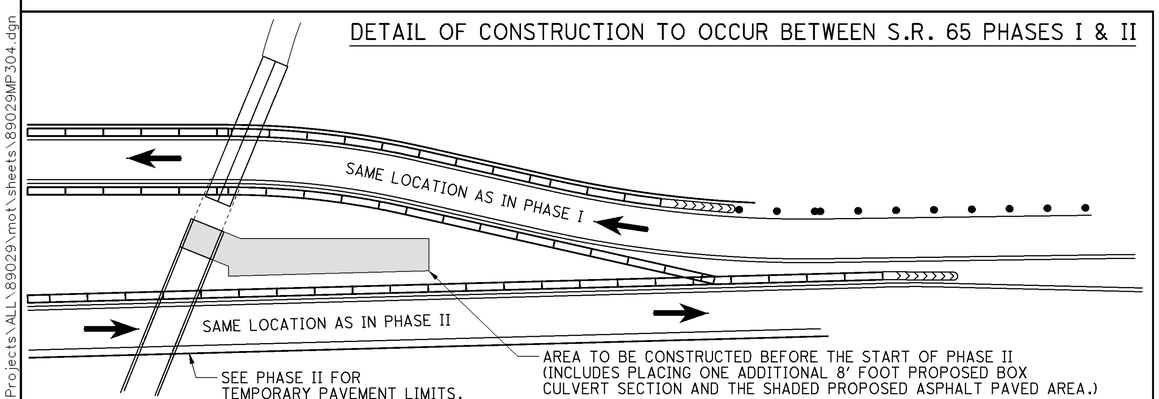

LEGEND:

- TSL - TEMPORARY STOP LINE
- TYEL - TEMPORARY YELLOW EDGE LINE
- TDYL - TEMPORARY DOUBLE YELLOW LINE
- TWEL - TEMPORARY WHITE EDGE LINE
- PAVEMENT FOR MAINTAINING TRAFFIC
- PORTABLE CONCRETE BARRIER (PCB)
- WORK AREA (PHASE I)
- IMPACT ATTENUATOR
- DRUMS (10′ C/C ON TAPERS; 20′ C/C ON TANGENT)
- LANE DIRECTION

HORIZONTAL SCALE IN FEET
0 10 20 40

CALCULATED CAC
CHECKED EJC

MAINTENANCE OF TRAFFIC - S.R. 65
PHASE I - STA. 110+50.00 TO END WORK

ALL-75-0.21

87/94

126/907

J:\Projects\ALL\89029\mot\sheets\89029MP304.dgn 25-OCT-2013 6:41PM carmichael

LEGEND:

- (TSL) - TEMPORARY STOP LINE
- (TYEL) - TEMPORARY YELLOW EDGE LINE
- (TDYL) - TEMPORARY DOUBLE YELLOW LINE
- (TWEL) - TEMPORARY WHITE EDGE LINE
- - PAVEMENT FOR MAINTAINING TRAFFIC
- - PORTABLE CONCRETE BARRIER (PCB)
- - WORK AREA (PHASE II)
- - IMPACT ATTENUATOR
- - DRUMS (10′ C/C ON TAPERS; 20′ C/C ON TANGENT)
- - LANE DIRECTION

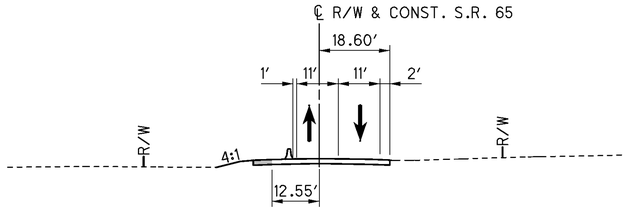

SECTION A-A
STA. 94+00.00

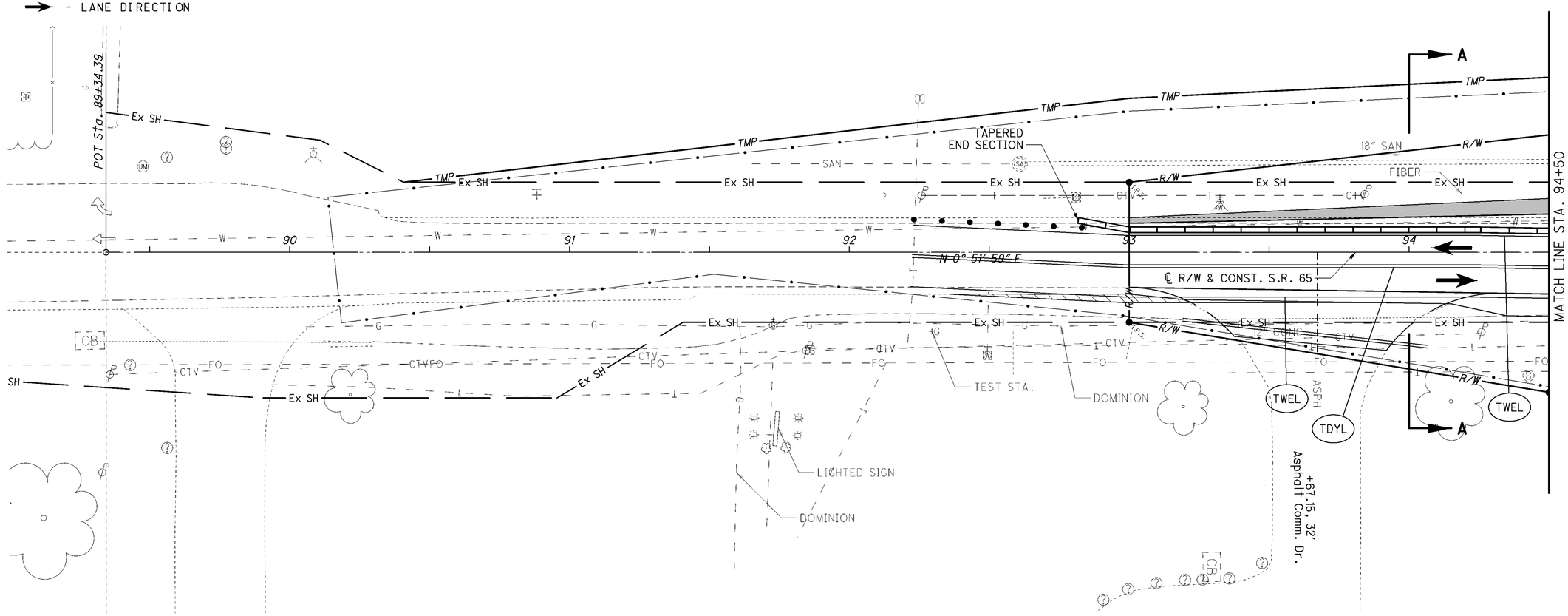

J:\Projects\ALL\89029\mot\sheets\89029MP310.dgn 13-JUN-2013 9:32PM coffield

HORIZONTAL SCALE IN FEET
0 10 20 40

CALCULATED CAC
CHECKED EJC

MAINTENANCE OF TRAFFIC - S.R. 65
PHASE II - BEGIN WORK TO STA. 94+50.00

ALL-75-0.21

88/94

127/907

LEGEND:

- (TSL) - TEMPORARY STOP LINE
- (TYEL) - TEMPORARY YELLOW EDGE LINE
- (TDYL) - TEMPORARY DOUBLE YELLOW LINE
- (TWEL) - TEMPORARY WHITE EDGE LINE
- - PAVEMENT FOR MAINTAINING TRAFFIC
- - PORTABLE CONCRETE BARRIER (PCB)
- - WORK AREA (PHASE II)
- - IMPACT ATTENUATOR
- • • - DRUMS (10′ C/C ON TAPERS; 20′ C/C ON TANGENT)
- → - LANE DIRECTION

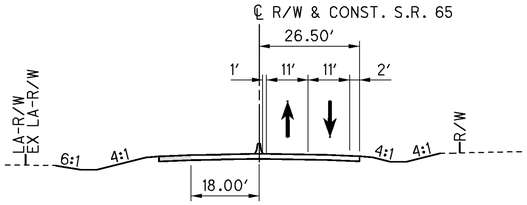

SECTION A-A
STA. 97+00.00

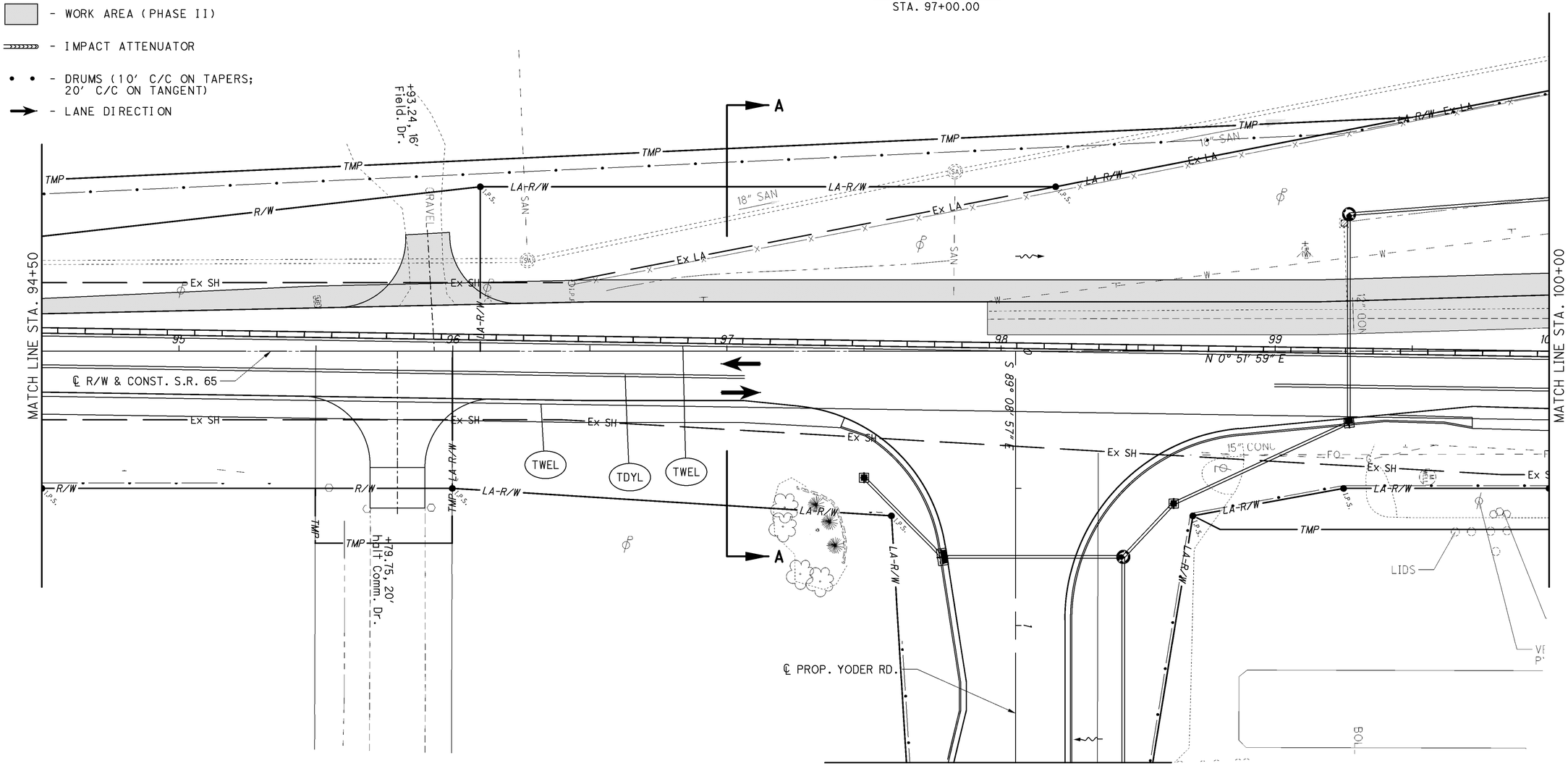

J:\Projects\ALL\89029\mot\sheets\89029MP311.dgn 13-JUN-2013 9:32PM coffield

HORIZONTAL SCALE IN FEET
0 10 20 40

CALCULATED CAC
CHECKED EJC

MAINTENANCE OF TRAFFIC - S.R. 65
PHASE II - STA. 94+50.00 TO STA. 100+00.00

ALL-75-0.21

89 / 94

128
907

LEGEND:

- (TSL) - TEMPORARY STOP LINE
- (TYEL) - TEMPORARY YELLOW EDGE LINE
- (TDYL) - TEMPORARY DOUBLE YELLOW LINE
- (TWEL) - TEMPORARY WHITE EDGE LINE
- - PAVEMENT FOR MAINTAINING TRAFFIC
- - PORTABLE CONCRETE BARRIER (PCB)
- - WORK AREA (PHASE II)
- - IMPACT ATTENUATOR
- • • - DRUMS (10' C/C ON TAPERS; 20' C/C ON TANGENT)
- → - LANE DIRECTION

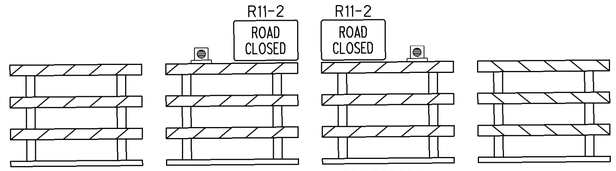

SOLID ACROSS INTERSECTION
TYPE III BARRICADES PER MT-101.60

(1)

NOTE:

FOR TEMPORARY SIGNAL PLANS SEE SHEET 79 OF 94.

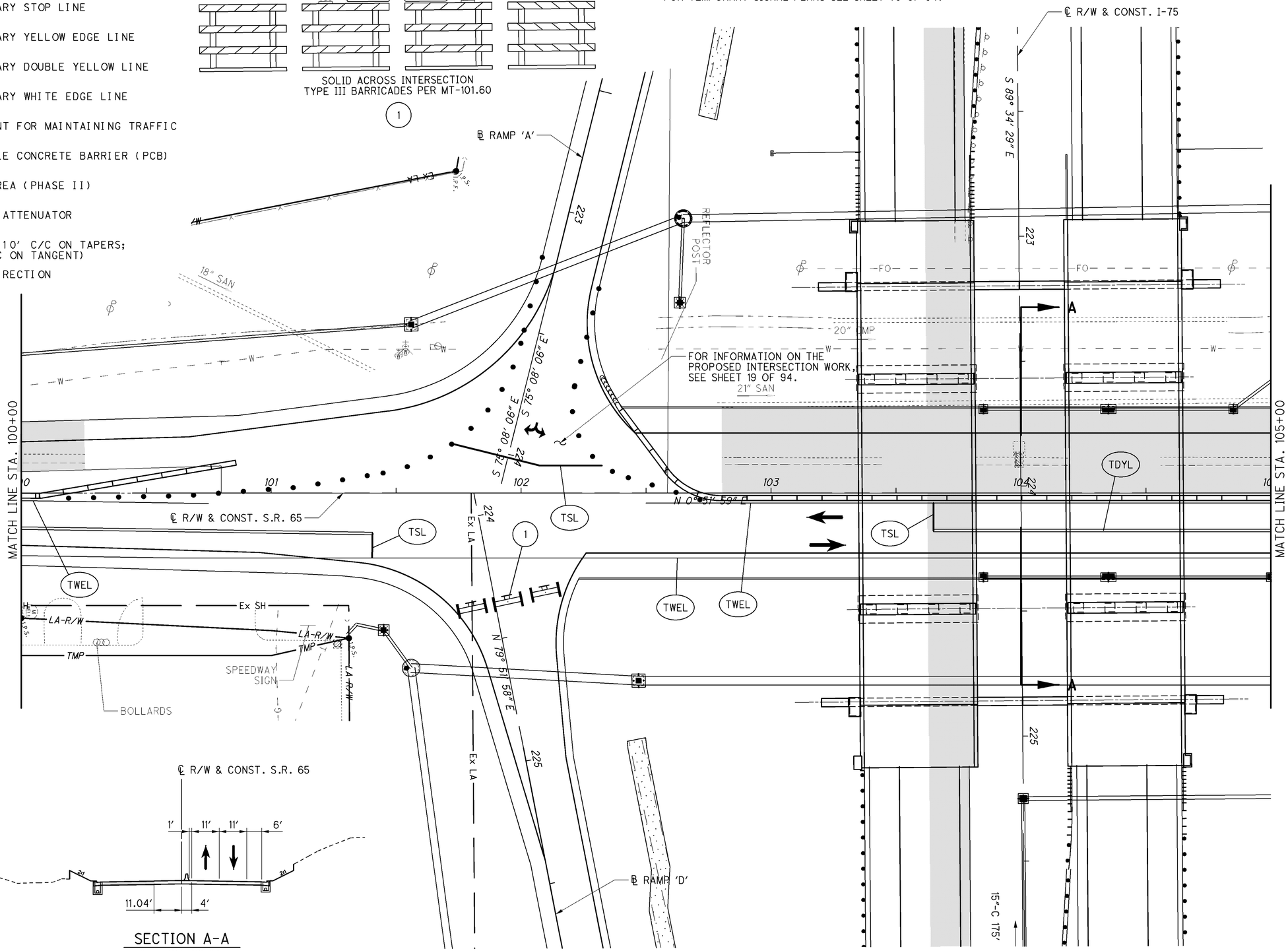

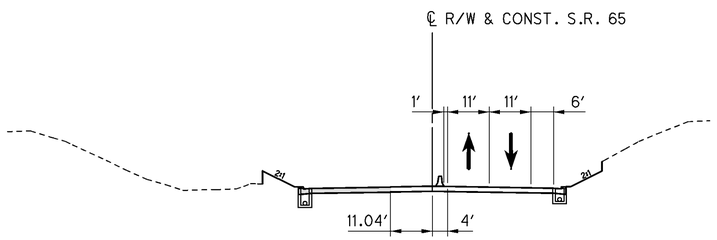

SECTION A-A
STA. 104+00.00

J:\Projects\ALL\89029\mot\sheets\89029MP312.dgn 13-JUN-2013 9:32PM coffield

HORIZONTAL SCALE IN FEET
0 10 20 40

CALCULATED CAC
CHECKED EJC

MAINTENANCE OF TRAFFIC - S.R. 65
PHASE II - STA. 100+00.00 TO STA. 105+00.00

ALL-75-0.21

90/94

129/907

NOTE:
FOR TEMPORARY SIGNAL PLAN SEE SHEET 80 OF 94.

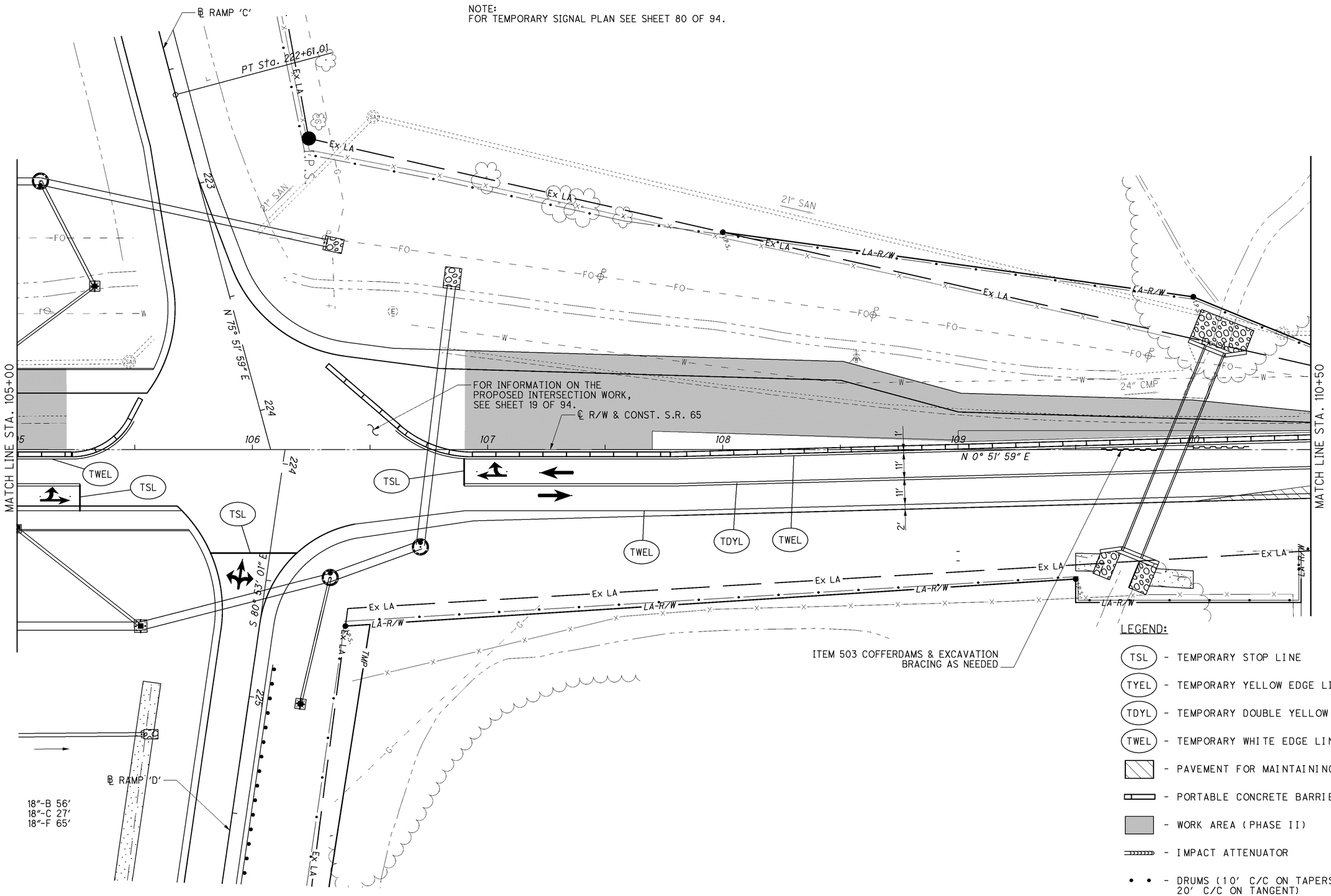

LEGEND:

- TSL - TEMPORARY STOP LINE
- TYEL - TEMPORARY YELLOW EDGE LINE
- TDYL - TEMPORARY DOUBLE YELLOW LINE
- TWEL - TEMPORARY WHITE EDGE LINE
- PAVEMENT FOR MAINTAINING TRAFFIC
- PORTABLE CONCRETE BARRIER (PCB)
- WORK AREA (PHASE II)
- IMPACT ATTENUATOR
- DRUMS (10' C/C ON TAPERS; 20' C/C ON TANGENT)
- LANE DIRECTION

HORIZONTAL SCALE IN FEET 0 10 20 40

CALCULATED CAC
CHECKED EJC

MAINTENANCE OF TRAFFIC - S.R. 65
PHASE II - STA. 100+00.00 TO STA. 110+50.0

ALL-75-0.21

J:\Projects\ALL\89029\mot\sheets\89029MP313.dgn 13-JUN-2013 9:32PM coffield

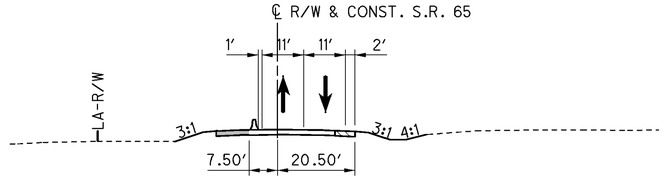

SECTION A-A
STA. 110+55.00

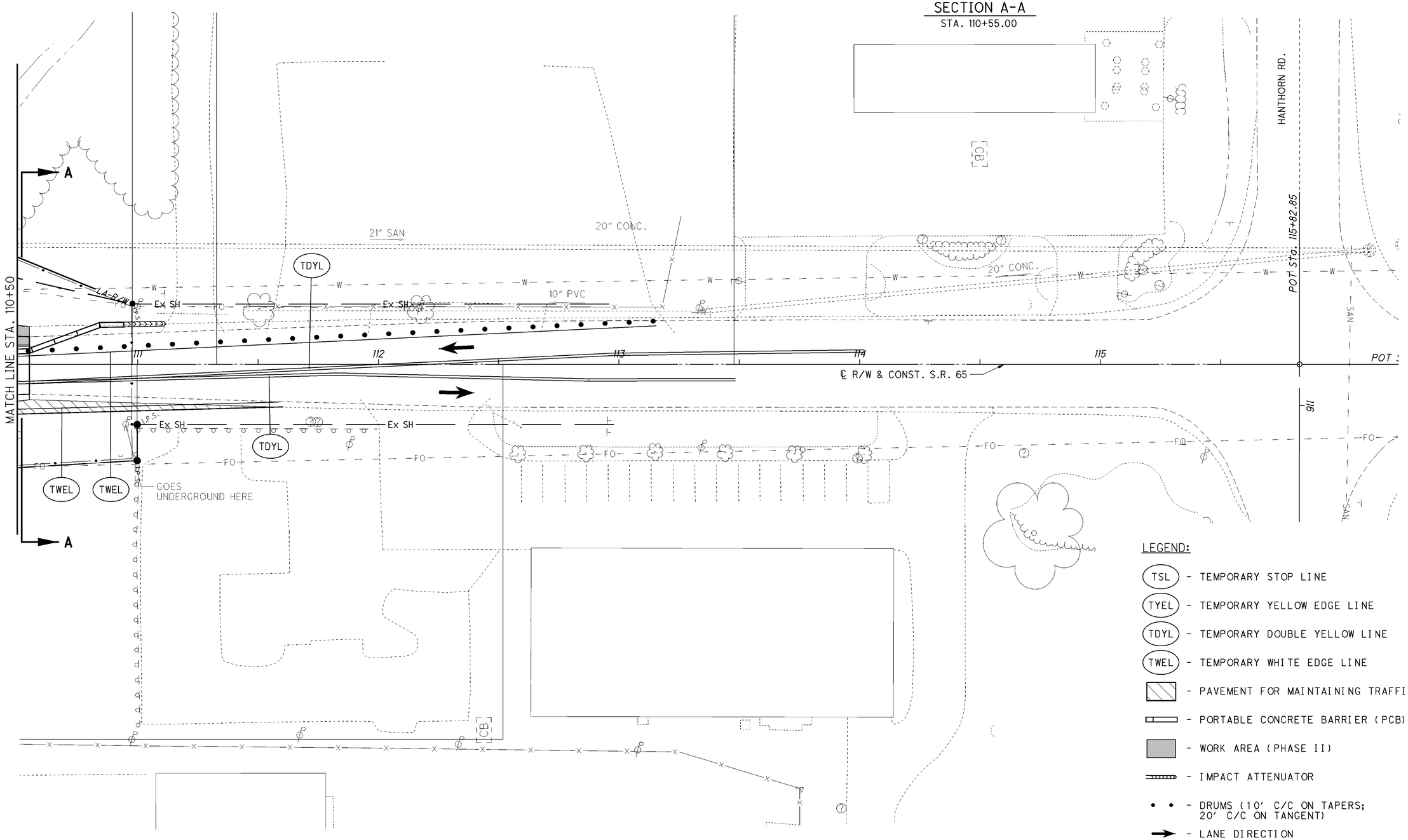

LEGEND:

- TSL - TEMPORARY STOP LINE
- TYEL - TEMPORARY YELLOW EDGE LINE
- TDYL - TEMPORARY DOUBLE YELLOW LINE
- TWEL - TEMPORARY WHITE EDGE LINE
- PAVEMENT FOR MAINTAINING TRAFFIC
- PORTABLE CONCRETE BARRIER (PCB)
- WORK AREA (PHASE II)
- IMPACT ATTENUATOR
- DRUMS (10′ C/C ON TAPERS; 20′ C/C ON TANGENT)
- LANE DIRECTION

HORIZONTAL SCALE IN FEET
0 10 20 40

CALCULATED CAC
CHECKED EJC

MAINTENANCE OF TRAFFIC - S.R. 65
PHASE II- STA. 110+50.00 TO END WORK

ALL-75-0.21

92/94

131/907

J:\Projects\ALL\89029\mot\sheets\89029MP314.dgn 13-JUN-2013 9:32PM coffield

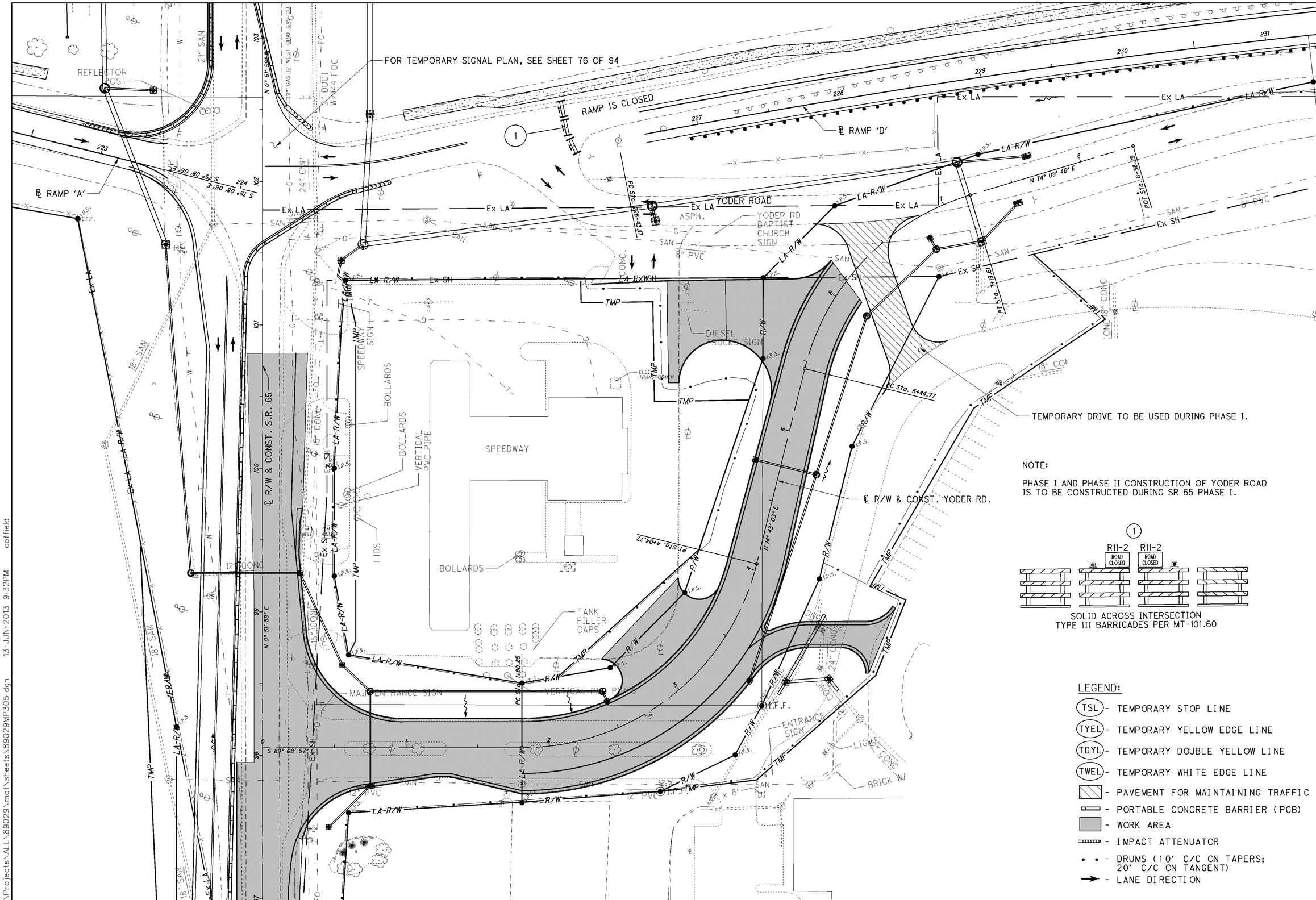

NOTE:

PHASE I AND PHASE II CONSTRUCTION OF YODER ROAD IS TO BE CONSTRUCTED DURING SR 65 PHASE I.

LEGEND:

- TSL - TEMPORARY STOP LINE
- TYEL - TEMPORARY YELLOW EDGE LINE
- TDYL - TEMPORARY DOUBLE YELLOW LINE
- TWEL - TEMPORARY WHITE EDGE LINE
- PAVEMENT FOR MAINTAINING TRAFFIC
- PORTABLE CONCRETE BARRIER (PCB)
- WORK AREA
- IMPACT ATTENUATOR
- DRUMS (10' C/C ON TAPERS; 20' C/C ON TANGENT)
- LANE DIRECTION

HORIZONTAL SCALE IN FEET 0 15 30 60

CALCULATED CAC
CHECKED EJC

MAINTENANCE OF TRAFFIC PLAN
PHASE I - YODER ROAD

ALL-75-0.21

J:\Projects\ALL\89029\mot\sheets\89029MP305.dgn 13-JUN-2013 9:32PM coffield

FOR TEMPORARY SIGNAL PLAN, SEE SHEET 77 OF 94.

FOR SHORT-TERM YODER ROAD DETOUR PLAN FOR CONSTRUCTION OF THIS AREA, SEE SHEET 47 OF 94.

NOTE:

PHASE I AND PHASE II CONSTRUCTION OF YODER ROAD IS TO BE CONSTRUCTED DURING SR 65 PHASE I.

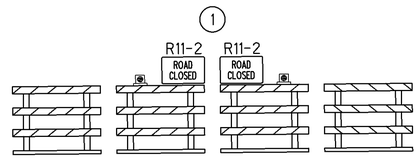

SOLID ACROSS INTERSECTION
TYPE III BARRICADES PER MT-101.60

LEGEND:

- (TSL) - TEMPORARY STOP LINE
- (TYEL) - TEMPORARY YELLOW EDGE LINE
- (TDYL) - TEMPORARY DOUBLE YELLOW LINE
- (TWEL) - TEMPORARY WHITE EDGE LINE
- - PAVEMENT FOR MAINTAINING TRAFFIC
- - PORTABLE CONCRETE BARRIER (PCB)
- - WORK AREA
- - IMPACT ATTENUATOR
- - DRUMS (10' C/C ON TAPERS; 20' C/C ON TANGENT)
- - LANE DIRECTION

HORIZONTAL SCALE IN FEET
0 15 30 60

CALCULATED CAC
CHECKED EJC

MAINTENANCE OF TRAFFIC PLAN
PHASE II - YODER ROAD

ALL-75-0.21

94 / 94

133
907

J:\Projects\ALL\89029\mot\sheets\89029MP306.dgn 13-JUN-2013 9:32PM coffield

SHEET NUMBER																OFFICE CALCS.	02/IMS/PV	ITEM	ITEM EXT.	GRAND TOTAL	UNIT	DESCRIPTION	SEE SHEET NO.
39	146A	147	157	158		160	161	162	163	164	168	514	569	572	574								
																						ROADWAY	
LUMP																	LUMP	201	11001	LUMP		CLEARING AND GRUBBING, AS PER PLAN	39
				LUMP													LUMP	202	11000	LUMP		STRUCTURE REMOVED	
	24			8													32	202	20010	32	EACH	HEADWALL REMOVED	
																167534	167534	202	23000	167,534	SQ YD	PAVEMENT REMOVED	
																118220	118220	202	23010	118,220	SQ YD	PAVEMENT REMOVED, ASPHALT	
						362											362	202	30700	362	FT	CONCRETE BARRIER REMOVED	
							2174										2174	202	32500	2,174	FT	CURB AND GUTTER REMOVED	
							48										48	202	32800	48	SQ YD	CONCRETE SLOPE PROTECTION REMOVED	
	5567																5567	202	35100	5,567	FT	PIPE REMOVED, 24" AND UNDER	
	2740																2740	202	35200	2,740	FT	PIPE REMOVED, OVER 24"	
						14986											14986	202	38000	14,986	FT	GUARDRAIL REMOVED	
						1287											1287	202	38300	1,287	FT	GUARDRAIL REMOVED, BARRIER DESIGN	
						16											16	202	42509	16	EACH	ANCHOR ASSEMBLY REMOVED FOR STORAGE, AS PER PLAN	36
	2																2	202	58000	2	EACH	MANHOLE REMOVED	
	21																21	202	58100	21	EACH	CATCH BASIN REMOVED	
	33																33	202	58101	33	EACH	CATCH BASIN REMOVED, AS PER PLAN	34
	2658																2658	SPECIAL	20270000	2,658	FT	FILL AND PLUG EXISTING CONDUIT	34
															57501		57501	202	75000	57,501	FT	FENCE REMOVED	
							2										2	202	75250	2	EACH	GATE REMOVED	
							LUMP										LUMP	202	98000	LUMP		REMOVAL MISC.: LANDSCAPING	
						9											9	202	98100	9	EACH	REMOVAL MISC.: IMPACT ATTENUATOR REMOVED FOR STORAGE, AS PER PLAN	36
							5										5	202	98100	5	EACH	REMOVAL MISC.: POSTS	
							2										2	202	98100	2	EACH	REMOVAL MISC.: LIGHTED COMMERCIAL SIGN	
							3										3	202	98100	3	EACH	REMOVAL MISC.: LIGHTED PRIVATE SIGN	
							3										3	202	98100	3	EACH	REMOVAL MISC.: MONITORING WELLS	
							5										5	202	98100	5	EACH	REMOVAL MISC.: PRIVATE LIGHT POSTS	
							1										1	202	98100	1	EACH	REMOVAL MISC.: PRIVATE SIGN FOUNDATION	
							14430										14430	202	98200	14,430	FT	REMOVAL MISC.: TENSIONED GUARDRAIL SYSTEM REMOVED	
							14150										14150	202	98200	14,150	FT	REMOVAL MISC.: TENSIONED GUARDRAIL SYSTEM REMOVED FOR STORAGE, AS PER PLAN	36
							1398		1111		33910						36419	203	10000	36,419	CU YD	EXCAVATION	
											124534						124534	203	20000	124,534	CU YD	EMBANKMENT	
1499																	1499	203	35110	1,499	CU YD	GRANULAR MATERIAL, TYPE B	
																						OPTON A: ASPHALT PAVEMENT	
											244112						244112	203	10000	244,112	CU YD	EXCAVATION	
											240051						240051	203	20000	240,051	CU YD	EMBANKMENT	
																						OPTION B: CONCRETE PAVEMENT	
											235344						235344	203	10000	235,344	CU YD	EXCAVATION	
											248011						248011	203	20000	248,011	CU YD	EMBANKMENT	
								7005	4365	1649							13019	204	10000	13,019	SQ YD	SUBGRADE COMPACTION	
2019																	2019	204	13000	2,019	CU YD	EXCAVATION OF SUBGRADE	
									1111								1111	204	30010	1,111	CU YD	GRANULAR MATERIAL, TYPE B	
1								145	20								166	204	45000	166	HOUR	PROOF ROLLING	
2999									3332								6331	204	50000	6,331	SQ YD	GEOTEXTILE FABRIC	
									13795								13795	206	10010	13,795	SQ YD	LIME STABILIZED SUBGRADE, 12" DEEP	
									327								327	206	10030	327	TON	LIME	
								10041	157								10198	206	10500	10,198	TON	CEMENT	
								289790	18339								308129	206	11000	308,129	SQ YD	CURING COAT	
									4544								4544	206	15010	4,544	SQ YD	CEMENT STABILIZED SUBGRADE, 12 INCHES DEEP	
								289790									289790	206	15020	289,790	SQ YD	CEMENT STABILIZED SUBGRADE, 14 INCHES DEEP	

CALCULATED JLG
CHECKED BDC

GENERAL SUMMARY

ALL-75-0.21

I:\Pd\89029\Final Submission\FINAL DGNS\ROADWAY\sheets\89029GG001.dgn 23-AUG-2013 6:54AM jclark1

SHEET NUMBER																	02/IMS/PV	ITEM	ITEM EXT.	GRAND TOTAL	UNIT	DESCRIPTION	SEE SHEET NO.
39	146A	147	157	158		160	161	162	163	164	168	514	569	572	573	574							
																						ROADWAY	
LUMP																	LUMP	208	14001	LUMP		VIBRATION CONTROL AND MONITORING, AS PER PLAN	*39*
						16,089											16,089	606	15100	16089	FT	GUARDRAIL, TYPE MGS WITH LONG POSTS	
						1,625											1,625	606	15550	1625	FT	GUARDRAIL, BARRIER DESIGN, TYPE MGS	
						100											100	606	17350	100	FT	GUARDRAIL, TYPE MSG, 25' LONG - SPAN	
						14											14	606	20000	14	EACH	FLARED END SECTION	
						17											17	606	26150	17	EACH	ANCHOR ASSEMBLY, MGS TYPE E	
						18											18	606	27820	18	EACH	ANCHOR ASSEMBLY, MGS TYPE T	
						24											24	606	35050	24	EACH	MGS BRIDGE TERMINAL ASSEMBLY, TYPE 1	
						6											6	606	35114	6	EACH	MGS BRIDGE TERMINAL ASSEMBLY, TYPE 2	
						9											9	606	60012	9	EACH	IMPACT ATTENUATOR, TYPE 1 (BIDIRECTIONAL)	
							28268										28,268	606	98000	28268	FT	GUARDRAIL, MISC.: TENSIONED CABLE WITH CONCRETE FOUNDATIONS LINE POST (SOCKETED)	
							22										22	606	98100	22	EACH	GUARDRAIL, MISC.: TENISION CABLE ANCHOR TERMINAL	
																61707	61,707	607	15000	61707	FT	FENCE, TYPE 47, AS PER PLAN	36
500																	500	607	98000	500	FT	FENCE, MISC.:CONSTRUCTION PROTECTIVE FENCING	
									869								869	608	10000	869	SQ FT	4" CONCRETE WALK	
							1										1	SPECIAL	69050100	1	EACH	MAILBOX SUPPORT SYSTEM, SINGLE	38
							1										1	SPECIAL	69050350	1	EACH	MAILBOX REMOVE AND RESET	38
5																	5	823	38500	5	EACH	MONUMENT ASSEMBLY	
62																	62	823	40500	62	EACH	REFERENCE MONUMENT	
5																	5	823	40520	5	EACH	RIGHT-OF-WAY MONUMENT	
2999																	2999	861	10000	2,999	SQ YD	GEOGRID FOR SUBGRADE STABILIZATION	
																						EROSION CONTROL	
				122													122	601	11000	122	SQ YD	RIPRAP USING 6" REINFORCED CONRETE SLAB	
12			173														185	601	21050	185	SQ YD	TIED CONCRETE BLOCK MAT, TYPE 1	
	523																523	601	21060	523	SQ YD	TIED CONCRETE BLOCK MAT, TYPE 2	
	131																131	601	21070	131	SQ YD	TIED CONCRETE BLOCK MAT, TYPE 3	
	14			310													324	601	32100	324	CU YD	ROCK CHANNEL PROTECTION, TYPE B WITH FILTER	
10																	10	601	32200	10	CU YD	ROCK CHANNEL PROTECTION, TYPE C WITH FILTER	
22																	22	659	00100	22	EACH	SOIL ANALYSIS TEST	
76212																	76,212	659	00300	76212	CU YD	TOPSOIL	
											686598						686,598	659	10000	686598	SQ YD	SEEDING AND MULCHING	
34330																	34,330	659	14000	34330	SQ YD	REPAIR SEEDING AND MULCHING	
34330																	34,330	659	15000	34330	SQ YD	INTER-SEEDING	
100																	100	659	20000	100	TON	COMMERCIAL FERTILIZER	
142																	142	659	31000	142	ACRE	LIME	
3801																	3,801	659	35000	3801	M GAL	WATER	
1545																	1,545	659	40000	1545	M SQ FT	MOWING	
		13931															13,931	670	00710	13931	SQ YD	DITCH EROSION PROTECTION MAT, TYPE A	
		103															103	670	00720	103	SQ YD	DITCH EROSION PROTECTION MAT, TYPE B	
		142															142	670	00730	142	SQ YD	DITCH EROSION PROTECTION MAT, TYPE C	
																	LUMP	832	15000	LUMP		STORM WATER POLLUTION PREVENTION PLAN	
																	1,000,000	832	30000	1000000	EACH	EROSION CONTROL	

CALCULATED JLG
CHECKED BDC

GENERAL SUMMARY

ALL-75-0.21

I:\pd\89029\Final Submission\FINAL DGNS\ROADWAY\sheets\89029GG002.dgn 23-AUG-2013 8:46AM jclark1

SHEET NUMBER																	02/IMS/PV	ITEM	ITEM EXT.	GRAND TOTAL	UNIT	DESCRIPTION	SEE SHEET NO.
39	146A	147	157	158		160	161	162	163	164	168	514	569	572	573	574							
																						DRAINAGE	
	24.9																24.9	602	20000	24.9	CU YD	CONCRETE MASONRY	
200																	200	603	00200	200	FT	4" CONDUIT, TYPE C	
	20																20	603	00406	20	FT	4" CONDUIT, TYPE F	
			5303														5,303	603	00510	5,303	FT	6" CONDUIT, TYPE F FOR UNDERDRAIN OUTLETS	
900			1184														2,084	603	00900	2,084	FT	6" CONDUIT, TYPE B	
400																	400	603	01100	400	FT	6" CONDUIT, TYPE C	
1200																	1,200	603	01400	1,200	FT	6" CONDUIT, TYPE E	
1060																	1,060	603	01500	1,060	FT	6" CONDUIT, TYPE F	
400																	400	603	01800	400	FT	8" CONDUIT, TYPE B	
100																	100	603	02000	100	FT	8" CONDUIT, TYPE C	
	638																638	603	04400	638	FT	12" CONDUIT, TYPE B	
200	1163																1,363	603	04600	1,363	FT	12" CONDUIT, TYPE C	
	188																188	603	04900	188	FT	12" CONDUIT, TYPE D	
	507																507	603	05200	507	FT	12" CONDUIT, TYPE F, 707.05	
	3949																3,949	603	05900	3,949	FT	15" CONDUIT, TYPE B	
	1159																1,159	603	06100	1,159	FT	15" CONDUIT, TYPE C	
	79																79	603	06400	79	FT	15" CONDUIT, TYPE D	
	70																70	603	06700	70	FT	15" CONDUIT, TYPE F	
	912																912	603	07400	912	FT	18" CONDUIT, TYPE B	
	37																37	603	07600	37	FT	18" CONDUIT, TYPE C	
	147																147	603	08200	147	FT	18" CONDUIT, TYPE F	
	54																54	603	10400	54	FT	24" CONDUIT, TYPE B	
	40																40	603	10600	40	FT	24" CONDUIT, TYPE C	
	300																300	603	16400	300	FT	36" CONDUIT, TYPE B	
	518																518	603	16600	518	FT	36" CONDUIT, TYPE C	
	591																591	603	19400	591	FT	42" CONDUIT, TYPE B	
	40																40	603	27600	40	FT	78" CONDUIT, TYPE D	
	248																248	603	96600	248	FT	CONDUIT, BORED AND JACKED: 36" TYPE B, D-LOAD 2000	
	5																5	604	00400	5	EACH	CATCH BASIN, NO. 3	
	24																24	604	00800	24	EACH	CATCH BASIN, NO. 3A	
	49																49	604	02800	49	EACH	CATCH BASIN, NO. 8	
	3																3	604	04500	3	EACH	CATCH BASIN, NO. 2-2B	
	7																7	604	04900	7	EACH	CATCH BASIN, NO. 2-3	
	3																3	604	05300	3	EACH	CATCH BASIN, NO. 2-4	
	16																16	604	31500	16	EACH	MANHOLE, NO. 3	
6			96														102	604	36600	102	EACH	PRECAST REINFORCED CONCRETE OUTLET	
			53075														53,075	605	11100	53,075	FT	6" SHALLOW PIPE UNDERDRAINS	
400			2026														2,426	605	13300	2,426	FT	6" UNCLASSIFIED PIPE UNDERDRAINS	
			124019														124,019	605	14000	124,019	FT	6" BASE PIPE UNDERDRAINS	
											96						96	605	31100	96	FT	AGGREGATE DRAINS	

CALCULATED BDC CHECKED JLG

GENERAL SUMMARY

ALL-75-0.21

137
907

I:\Pd\89029\roadway\sheets\89029GG003.dgn 25-JUN-2013 10:30AM tbolenba

SHEET NUMBER																	02/IMS/PV	ITEM	ITEM EXT.	GRAND TOTAL	UNIT	DESCRIPTION	SEE SHEET NO.
39	146A	147	157	158		160	161	162	163	164	168	514	569	572	573	574							
																						PAVEMENT	
1									2475								2,476	301	46000	2,476	CU YD	ASPHALT CONCRETE BASE, PG64-22	
								3317	5510	251							9,078	304	20000	9,078	CU YD	AGGREGATE BASE	
									1474	13							1,487	407	10000	1,487	GALLON	TACK COAT	
									1474	13							1,487	407	14000	1,487	GALLON	TACK COAT FOR INTERMEDIATE COURSE	
										9							9	448	46024	9	CU YD	ASPHALT CONCRETE INTERMEDIATE COURSE, TYPE 2, PG64-22 (DRIVEWAY)	
									955								955	448	46050	955	CU YD	ASPHALT CONCRETE INTERMEDIATE COURSE, TYPE 2, PG64-22	
									682								682	448	47020	682	CU YD	ASPHALT CONCRETE SURFACE COURSE, TYPE 1, PG64-22	
										6							6	448	48020	6	CU YD	ASPHALT CONCRETE SURFACE COURSE, TYPE 1, PG64-22 (DRIVEWAY)	
										775							775	452	12000	775	SQ YD	8" NON-REINFORCED CONCRETE PAVEMENT	
									10995								10,995	452	14000	10,995	SQ YD	10" NON-REINFORCED CONCRETE PAVEMENT	
									2319								2,319	609	12000	2,319	FT	COMBINATION CURB AND GUTTER, TYPE 2	
									668								668	609	14000	668	FT	CURB TYPE 2-A	
									429								429	609	24510	429	FT	CURB TYPE 4-C	
										359							359	609	26000	359	FT	CURB TYPE 6	
								2417									2,417	617	10100	2,417	CU YD	COMPACTED AGGREGATE	
									10432								10,432	SPECIAL	69098300	10,432	SQ YD	MISC.: GEOWEB	35
							12583										12,583	SPECIAL	69098300	12,583	SQ YD	MISC.: MOW STRIP	36
								17599									17,599	884	10300	17,599	SQ YD	14" PORTLAND CEMENT CONCRETE PAVEMENT (7 YEAR WARRANTY)	
																						OPTION A: ASPHALT PAVEMENT	
								45516									45,516	304	20000	45,516	CU YD	AGGREGATE BASE	
								549									549	609	24510	549	FT	CURB, TYPE 4-C	
															21.31		21	618	40600	21.31	MILE	RUMBLE STRIPS (ASPHALT CONCRETE)	
								114825									114,825	880	15000	114,825	CU YD	15.75" ASPHALT CONCRETE (7 YEAR WARRANTY)	
																						OPTION B: CONCRETE PAVEMENT	
								43816									43,816	304	20000	43,816	CU YD	AGGREGATE BASE	
								549									549	609	24000	549	FT	CURB, TYPE 4-A	
								634									634	SPECIAL	45130000	634	FT	PRESSURE RELIEF JOINT, TYPE A	
															21.31		21	618	40700	21.31	MILE	RUMBLE STRIPS (CONCRETE)	
								256786									256,786	884	10300	256,786	SQ YD	14" PORTLAND CEMENT CONCRETE PAVEMENT (7 YEAR WARRANTY)	
																						SANITARY SEWER	
							2										2	604	34500	2	EACH	MANHOLE ADJUSTED TO GRADE	

CALCULATED JLG
CHECKED BDC

GENERAL SUMMARY

ALL-75-0.21

I:\pd\89029\Final Submission\FINAL DGNS\ROADWAY\sheets\89029GG004.dgn 20-AUG-2013 12:31PM jclark1

SHEET NUMBER																	02/IMS/PV	ITEM	ITEM EXT.	GRAND TOTAL	UNIT	DESCRIPTION	SEE SHEET NO.
39	146A	147	157	158		160	161	162	163	164	510	514	569	572	573	574							
																						LIGHTING	
												76					76	625	00450	76	EACH	CONNECTION, FUSED PULL APART	
												84					84	625	00480	84	EACH	CONNECTION, UNFUSED PERMANENT	
												4					4	625	10490	4	EACH	LIGHT POLE, CONVENTIONAL, DESIGN AT15B40	
												26					26	625	10490	26	EACH	LIGHT POLE, CONVENTIONAL, DESIGN AT18B40	
												8					8	625	10494	8	EACH	LIGHT POLE, LOW MAST, DESIGN ATLM40	
												38					38	625	14100	38	EACH	LIGHT POLE FOUNDATION, 24" X 8' DEEP	
												7488					7488	625	23200	7488	FT	NO. 4 AWG 5000 VOLT DISTRIBUTION CABLE	
												4336					4336	625	23400	4336	FT	NO. 10 AWG POLE AND BRACKET CABLE	
												12329					12329	625	24320	12329	FT	1-1/2" DUCT CABLE WITH THREE NO. 4 AWG 5000 VOLT CABLES	
												1019					1019	625	25500	1019	FT	CONDUIT, 3", 725.04	
												220					220	625	25902	220	FT	CONDUIT, 3", JACKED OR DRILLED, 725.04	
												30					30	625	26251	30	EACH	LUMINAIRE, CONVENTIONAL, (TYPE II, 200W HPS, 480V), AS PER PLAN	510
												8					8	625	26271	8	EACH	LUMINAIRE, LOW MAST, (SYMMETRIC, 400W HPS, 480V), AS PER PLAN	510
												12667					12667	625	29002	12667	FT	TRENCH, 24" DEEP	
												14					14	625	30700	14	EACH	PULL BOX, 725.08, 18"	
												5					5	625	30706	5	EACH	PULL BOX, 725.08, 24"	
												15					15	625	31510	15	EACH	PULL BOX REMOVED	
												38	1				39	625	32000	39	EACH	GROUND ROD	
												2					2	625	34001	2	EACH	POWER SERVICE, AS PER PLAN	510
											LUMP						LUMP	SPECIAL	62540000	LUMP		MAINTAIN EXISTING LIGHTING	510
											1						1	SPECIAL	62540010	1	EACH	REPLACEMENT OF EXISTING LIGHTING UNIT	510
												38					38	625	75400	38	EACH	LIGHT POLE REMOVED	
												39					39	625	75500	39	EACH	LIGHT POLE FOUNDATION REMOVED	
												38					38	625	75506	38	EACH	LUMINAIRE REMOVED	
												2					2	625	75511	2	EACH	POWER SERVICE REMOVED, AS PER PLAN	510
												1					1	625	75800	1	EACH	DISCONNECT CIRCUIT	
															91		91	620	00500	91	EACH	TRAFFIC CONTROL DELINEATOR, POST MOUNTED	
															39		39	620	11000	39	EACH	DELINEATOR, BRACKET MOUNTED	
															44		44	621	10000	44	EACH	RPM, LOW PROFILE, YELLOW/YELLOW	
															490		490	621	10010	490	EACH	RPM, LOW PROFILE, WHITE	
															140		140	621	10020	140	EACH	RPM, LOW PROFILE, WHITE/RED	
															67		67	621	10030	67	EACH	RPM, LOW PROFILE, YELLOW/RED	
															700		700	621	54000	700	EACH	RAISED PAVEMENT MARKER REMOVED	
						272											272	626	00100	272	EACH	BARRIER REFLECTOR	
													1576				1,576	630	03100	1576	FT	GROUND MOUNTED SUPPORT, NO. 3 POST	
													288				288	630	06400	288	FT	GROUND MOUNTED STRUCTURAL BEAM SUPPORT, S4X7.7	
													424				424	630	06500	424	FT	GROUND MOUNTED STRUCTURAL BEAM SUPPORT, W6X9	
													183				183	630	07000	183	FT	GROUND MOUNTED STRUCTURAL BEAM SUPPORT, W8X18	
													347				347	630	07500	347	FT	GROUND MOUNTED STRUCTURAL BEAM SUPPORT, W10X22	
													613				613	630	07600	613	FT	GROUND MOUNTED STRUCTURAL BEAM SUPPORT, W10X12	
													190				190	630	08000	190	FT	GROUND MOUNTED STRUCTURAL BEAM SUPPORT, W12X30	
													243				243	630	08100	243	FT	ONE WAY SUPPORT, NO. 4 POST	
													87				87	630	08600	87	EACH	SIGN POST REFLECTOR	
													98				98	630	09000	98	EACH	BREAKAWAY STRUCTURAL BEAM CONNECTION	
													1				1	630	20800	1	EACH	OVERHEAD SIGN SUPPORT, TYPE TC-12.30, DESIGN 8	
													17				17	630	75000	17	EACH	SIGN ATTACHMENT ASSEMBLY	
													926				926	630	80100	926	SQ FT	SIGN, FLAT SHEET	
													3624				3,624	630	80200	3624	SQ FT	SIGN, GROUND MOUNTED EXTRUSHEET	
													180				180	630	80224	180	SQ FT	SIGN, OVERHEAD EXTRUSHEET	
													2				2	630	82000	2	EACH	SIGN BACKING ASSEMBLY	
													98				98	630	84500	98	EACH	GROUND MOUNTED STRUCTURAL BEAM SUPPORT FOUNDATION	
													1				1	630	84510	1	EACH	RIGID OVERHEAD SIGN SUPPORT FOUNDATION	

CALCULATED GLW CHECKED TAB

GENERAL SUMMARY

ALL-75-0.21

I:\Pd\89029\roadway\sheets\89029GG005.dgn 25-JUN-2013 10:30AM tbolenba

SHEET NUMBER																	02/IMS/ PV	ITEM	ITEM EXT.	GRAND TOTAL	UNIT	DESCRIPTION	SEE SHEET NO.
39	146A	147	157	158		160	161	162	163	164	168	514	569	572	573	574							
																						TRAFFIC CONTROL - CON'T	
														175			175	630	84900	175	EACH	REMOVAL OF GROUND MOUNTED SIGN AND DISPOSAL	
														49			49	630	85400	49	EACH	REMOVAL OF GROUND MOUNTED MAJOR SIGN AND DISPOSAL	
														170			170	630	86002	170	EACH	REMOVAL OF GROUND MOUNTED POST SUPPORT AND DISPOSAL	
														84			84	630	86102	84	EACH	REMOVAL OF GROUND MOUNTED STRUCTURAL BEAM SUPPORT AND DISPOSAL	
														2			2	630	87400	2	EACH	REMOVAL OF OVERHEAD MOUNTED SIGN AND DISPOSAL	
														1			1	630	89706	1	EACH	REMOVAL OF OVERHEAD SIGN SUPPORT AND DISPOSAL, TYPE TC-12.30	
														2			2	631	94200	2	EACH	REMOVAL OF LUMINAIRE AND DISPOSAL	
														1			1	631	94408	1	EACH	REMOVAL OF SIGN WIRING AND DISPOSAL	
														1			1	631	94412	1	EACH	REMOVAL OF SIGN SERVICE AND DISPOSAL	
																						TRAFFIC CONTROL - PAVEMENT MARKING	
															2.28		2.28	646	10000	2.28	MILE	EDGE LINE, 4"	
															23.57		23.57	646	10010	23.57	MILE	EDGE LINE, 6"	
															11.21		11.21	646	10110	11.21	MILE	LANE LINE, 6"	
															1.57		1.4	646	10200	1.40	MILE	CENTER LINE	
															1508		1508	646	10300	1508	FT	CHANNELIZING LINE, 8"	
															6334		6334	646	10310	6334	FT	CHANNELIZING LINE, 12"	
															616		616	646	10600	616	FT	TRANSVERSE/DIAGONAL LINE	
															333		333	647	18052	333	FT	STOP LINE, TYPE A125	
															2		2	647	20302	2	EACH	RAILROAD SYMBOL MARKING, TYPE A125	
															22		22	647	20602	22	EACH	LANE ARROW, TYPE A125	
																						TRAFFIC SIGNALS	579

CALCULATED GLW CHECKED TAB

GENERAL SUMMARY

ALL-75-0.21

140
907

I:\Pd\89029\roadway\sheets\89029GG006.dgn 25-JUN-2013 10:30AM tbolenba

SHEET NUMBER																	02/IMS/ PV	ITEM	ITEM EXT.	GRAND TOTAL	UNIT	DESCRIPTION	SEE SHEET NO.
39	146A	147	157	158		160	161	162	163	164	168	514	569	572	573	574							
																						RETAINING WALLS	
																						WALL 1	590
																						WALL 2	590
																						WALL 3	590
																						WALL 4	590
																						STRUCTURES (OVER 20')	
																						ALL-75-0100 L/R	603
																						ALL-75-0212	628
																						ALL-75-0328	660
																						ALL-75-0423 L/R	688-689
																						ALL-75-0448 L/R	732-733
																						ALL-75-0508	780
																						CULVERTS	
				LUMP													LUMP	503	11100	LUMP		COFFERDAMS AND EXCAVATION BRACING	
				7995													7,995	509	10000	7,995	POUND	EPOXY COATED REINFORCING STEEL	
				40													40	511	46001	40	CU YD	CLASS C CONCRETE, AS PER PLAN	486,493,
				69													69	511	46501	69	CU YD	CLASS C CONCRETE, FOOTING AS PER PLAN	505
				175													175	512	10100	175	SQ YD	SEALING OF CONCRETE SURFACES (EPOXY-URETHANE)	
				1237													1,237	512	33000	1,237	SQ YD	TYPE 2 WATERPROOFING	
				213													213	602	20000	213	CU YD	CONCRETE MASONRY	
				109													109	603	10200	109	FT	24" CONDUIT, TYPE A	
				526													526	603	13200	526	FT	30" CONDUIT, TYPE A	
				222													222	603	16200	222	FT	36" CONDUIT, TYPE A	
				307													307	603	19200	307	FT	42" CONDUIT, TYPE A	
				201													201	603	20700	201	FT	48" CONDUIT, TYPE A	
				224													224	603	20700	224	FT	48" CONDUIT, TYPE A D-LOAD 2250	
				221													221	603	22200	221	FT	54" CONDUIT, TYPE A	
				396													396	603	28000	396	FT	84" CONDUIT, TYPE A	
				178													178	603	94800	178	FT	8' X 4' CONDUIT, TYPE A, 706.05	
				281													281	603	94910	281	FT	8' X 6' CONDUIT, TYPE A, 706.05	
				186													186	603	96600	186	FT	CONDUIT, BORED OR JACKED: 36" TYPE A D-LOAD 2000	
				202													202	603	96600	202	FT	CONDUIT, BORED OR JACKED: 36" TYPE A D-LOAD 2250	
				198													198	603	96600	198	FT	CONDUIT, BORED OR JACKED: 42" TYPE A D-LOAD 1750	
				117													117	603	96600	117	FT	CONDUIT, BORED OR JACKED: 48" TYPE A D-LOAD 2250	
				256													256	603	96600	256	FT	CONDUIT, BORED OR JACKED: 72" TYPE A D-LOAD 2500	
				645													645	613	41200	645	CU YD	LOW STRENGTH MORTAR BACKFILL	

CALCULATED BDC CHECKED JLG

GENERAL SUMMARY

ALL-75-0.21

141
907

I:\Pd\89029\roadway\sheets\89029GG007.dgn 25-JUN-2013 10:30AM tbolenba

SHEET NUMBER																	02/IMS/PV	ITEM	ITEM EXT.	GRAND TOTAL	UNIT	DESCRIPTION	SEE SHEET NO.
39	146A	147	157	158		160	161	162	163	164	168	514	569	572	573	574							
30																	30	613	41201	30	CU YD	LOW STRENGTH MORTAR BACKFILL, AS PER PLAN	37
30																	30	SPECIAL	69065010	30	TON	WORK INVOLVING SOLID WASTE	37
100																	100	SPECIAL	69065016	100	TON	WORK IINVOLVING PETROLEUM CONTAMINATED SOIL	37
																	LUMP	SPECIAL	10000300	LUMP		PREMIUM ON RAILROAD'S PROTECTIVE PUBLIC LIABILITY	
																	LUMP	SPECIAL	10050000	LUMP		DISPUTE REVIEW BOARD	
																	LUMP	SPECIAL	11110000	LUMP		DEPARTMENTS SHARE FACILITATED PARTNERING COSTS	
																	LUMP	SPECIAL	10810000	LUMP		CPM PROGRESS SCHEDULE	
																	LUMP	614	11001	LUMP		MAINTAINING TRAFFIC, AS PER PLAN	40
24																	24	619	16021	24	MONTH	FIELD OFFICE, TYPE C, AS PER PLAN	38
																	LUMP	624	10000	LUMP		MOBILIZATION	
																	LUMP	823	10000	LUMP		CONSTRUCTION LAYOUT STAKES	
LUMP																	LUMP	823	11001	LUMP		PROVIDING ELECTRONIC INSTRUMENTATION, AS PER PLAN	39

CALCULATED JLG
CHECKED BDC

GENERAL SUMMARY

ALL-75-0.21

142
907

I:\Pd\89029\roadway\sheets\89029GG008.dgn 25-JUN-2013 10:30AM tbolenba

DRAINAGE "D"

SHEET NO.	REFERENCE NO.	STATION FROM	STATION TO	ROADWAY	SIDE	202 PIPE REMOVED, 24" AND UNDER	202 PIPE REMOVED, OVER 24"	202 CATCH BASIN REMOVED	202 HEADWALL REMOVED	202 CATCH BASIN REMOVED, AS PER PLAN	202 MANHOLE REMOVED	202 SPECIAL-PLUG AND FILL CONDUIT	601 TIED CONCRETE BLOCK MAT, TYPE 2	601 TIED CONCRETE BLOCK MAT, TYPE 3	601 ROCK CHANNEL PROTECTION, TYPE B WITH FILTER	602 CONCRETE MASONRY	603 CONDUIT TYPE B 15"	603 CONDUIT TYPE B 18"	603 CONDUIT TYPE B 18"	603 CONDUIT TYPE B 36"	603 CONDUIT TYPE C 12'	603 CONDUIT TYPE C	603 CONDUIT TYPE C 15"	603 CONDUIT TYPE C 18"	603 CONDUIT TYPE C 36"	603 CONDUIT TYPE C	603 CONDUIT TYPE C 42"	603 CONDUIT TYPE F 15"	603 CONDUIT, BORED OR JACKED, AS PER PLAN	604 CATCH BASIN, NO. 2-2B	604 CATCH BASIN, NO. 8	604 CATCH BASIN, NO. 3	604 MANHOLE, NO. 3A	604 MANHOLE, NO. 3	BENDS & BRANCHES
						FEET	FEET	EACH	EACH	EACH	EACH	FEET	SQ. YD.	SQ. YD.	CU. YD.	CU. YD.	FEET													FEET	EACH	EACH	EACH	EACH	EACH	
176	D1	18+00		I-75	LT.					1		83																						
176	D2	19+00			LT.									2.67		0.3	84														1			
176	D3	19+43	19+76		CL	33																												
177	D1	25+90		I-75	LT.					1		90																						
177	D2	27+75			LT.									2.67		0.3	99														1			
177	D3	35+00			LT.					1		90																						
177	D4	35+75			LT.									2.67		0.3	90														1			
178	D1	43+00		I-75	LT.					1		87																						
178	D2	43+75			LT.									2.67		0.3	90														1			
178	D3	48+50			LT.					1		83																						
178	D4	49+25			LT.									2.67		0.3	94														1			
178	D5	49+66.28	50+00		CL	34				1																								
179	D1	50+00	53+08.5	I-75	CL.&LT.	329		1						2.67		0.3	104														1			
179	D2	53+46	54+19.36		LT.	53		1						2.67		0.3	106														1			
179	D3	54+19.36	55+50		CL.	286		1									131														1			
179	D4	57+00			RT.									2.67		0.3	96														1			
179	D5	60+00			RT.									2.67		0.3	84														1			
179	D6	61+00			RT.					1		79																						
179	D7	54+16.42	54+25.33		LT.								48																					
179	D8	54+17.76	54+26.76		CL								39																					
179	D9	54+18.44	54+27.54		RT.								41																					
181	D1	76+00		I-75	RT.									2.67		0.3		84													1			
181	D2	77+00			RT.					1		86																						
181	D3	79+50	82+10		CL.&RT.									2.67		0.3	260	86													3			
181	D4	83+62			LT.&RT.	211			2	1																								
182	D1	90+75		I-75	RT.									2.67		0.3	111														1			
182	D2	92+18			RT.									2.67		0.3	112														1			
182	D3	93+75			RT.									2.67		0.3		89													1			
182	D4	92+31			LT.&RT.		211			1																								
182	D5	93+24	93+54		RT.		28																											
183	D1	100+75		I-75	RT.									2.67		0.3	90														1			
183	D2	103+00		I-75	RT.					1		89																						
183	D3	109+50	110+27.53	I-75	CL.&RT.									2.67		0.3	40	85													2			
183	D4	110+25.59	111+87.50	I-75	LT.			1				50																						
183	D5	111+87.50		I-75	LT.	40		1																										
183	D6	110+98.51	111+88.89	I-75	LT.&RT.		181		2																									
183	D7	112+07.87	112+50	I-75	RT.	42			1																									
183	D8	108+14.05	108+72.77	RAMP 'B'	LT.&RT.		90		2																									
183	D9	104+00	105+00	I-75	RT.										4.4	1.4									100							1		
184	D1	112+50	113+52.50	I-75	RT.	102			1																									
184	D2	114+85.40	115+10.02	RAMP 'C'	LT.&RT.	174																												
184	D3	113+44	115+00	I-75	CL.&RT.	238		2						2.67		0.3	88														1			
184	D4	114+89.57	115+04.16	I-75	RT.	23																												
184	D5	120+00		I-75	RT.									2.67		0.3	110														1			
184	D6	121+00		I-75	RT.					1		112																						
185	D1	125+50		I-75	RT.									2.67		0.3	111														1			
185	D2	126+70	127+13		CL.					1		46																						
185	D3	126+70			LT.&RT.		208			2																								
185	D4	133+00			RT.					1		86																						
185	D5	133+50			RT.									2.67		0.3	91														1			
SUBTOTAL SHEET 1						1565	718	7	8	16		981	128	53.4	4.4	7.4	1991	344	0	0	0	0	0	0	100	0	0	0		0	24	0	0	1	0

CALCULATED BDC CHECKED NJV

DRAINAGE SUBSUMMARY

ALL-75-0.21

143
907

I:\Pd\89029\drainage\sheets\89029DQ001.dgn 25-JUN-2013 10:30AM tbolenba

DRAINAGE "D"

SHEET NO.	REFERENCE NO.	STATION FROM	STATION TO	ROADWAY	SIDE	202 PIPE REMOVED, 24" AND UNDER	202 PIPE REMOVED, OVER 24"	202 CATCH BASIN REMOVED	202 HEADWALL REMOVED	202 CATCH BASIN REMOVED, AS PER PLAN	202 MANHOLE REMOVED	202 SPECIAL-PLUG AND FILL CONDUIT	601 TIED CONCRETE BLOCK MAT, TYPE 2	601 TIED CONCRETE BLOCK MAT, TYPE 3	601 ROCK CHANNEL PROTECTION, TYPE B WITH FILTER	602 CONCRETE MASONRY	603 CONDUIT TYPE B 12"	603 CONDUIT TYPE B 15"	603 CONDUIT TYPE B 18"	603 CONDUIT TYPE B 36"	603 CONDUIT TYPE B 42"	603 CONDUIT TYPE C 12"	603 CONDUIT TYPE C 15"	603 CONDUIT TYPE C 18"	603 CONDUIT TYPE D 78"	603 CONDUIT TYPE F 12"	603 CONDUIT TYPE F 15"	603 CONDUIT TYPE F 18"	603 36" CONDUIT, BORED OR JACKED, AS PER PLAN	604 CATCH BASIN, NO. 2-2B	604 CATCH BASIN, NO. 8	604 CATCH BASIN, NO. 3	604 CATCH BASIN, NO. 3A	604 MANHOLE, NO. 3	BENDS & BRANCHES
						FEET	FEET	EACH	EACH	EACH	EACH	FEET	SQ. YD.	SQ. YD.	CU. YD.	CU. YD.	FEET													FEET	EACH	EACH	EACH	EACH	EACH	
186	D1	148+50		I-75	RT.									2.67		0.3	86														1				
187	D1	156+00		I-75	RT.									2.67		0.3		86													1				
187	D2	157+00			RT.			1				79																							
189	D1	163+50		I-75	LT.									2.67		0.3			106												1				
189	D2	165+00			RT.					1		96																							
189	D3	171+50			LT.									2.67		0.3			100												1				
189	D4	171+50	171+70		LT.	95																													
189	D5	171+87.50			LT.&RT.					1		86																							
189	D6	172+22	173+48.50		RT.	125																													
189	D7	174+46.15			LT.									2.67		0.3		98													1				
191	D1	175+77.38		I-75	RT.					1		84																							
191	D2	176+25			LT.									2.67		0.3		100													1				
191	D3	176+36.44	176+59.44		LT.	87																													
191	D4	176+69.39	176+79.84		RT.	57																													
191	D5	181+90			RT.									2.67		0.3		90																	
191	D6	181+75			RT.					1		87																			1				
193	D1	194+23	196+03	I-75	CL.	180				1		180																							
193	D2	193+25	195+50		CL.&RT.									2.67		0.3		225	94												3				
193	D3	195+96	196+63		LT.	58																													
193	D4	195+44	196+22		RT.	64																													
193	D5	196+74.5			RT.		31									6.7									40									
193	D6	195+74.82	196+28.33		LT.&RT.		188		2																										
193	D7	198+75			LT.&RT.					1		165																							
194	D1	203+50		I-75	RT.									2.67		0.3		87													1				
194	D2	211+50			RT.									2.67		0.3		100													1				
194	D3	212+23.08			LT.					1		121																							
195	D1	216+46	217+15	I-75	LT.	59																													
195	D2	216+52.40	217+22.34		RT.	59																													
195	D3	216+78.54	216+97.94		LT.&RT.	12	216			1																									
195	D4	219+50			LT									2.67		0.3		144													1				
195	D5	222+65.75			LT.									2.67		0.2										41*						1		
195	D6	222+65.75			RT.									2.67		0.2										39*						1		
195	D7	222+89.5			LT&RT																								248				1	
195	D8	222+58.48	222+67.50		CL								36																						
196	D1	225+25	227+00	I-75	CL.&RT.	187		1																175							1				
196	D2	225+25			CL.&LT.							149		2.67		0.3			56						27			65							
196	D3	225+23	229+50		CL.&RT.	101				1														250							1			1	
196	D4	229+50	232+75		LT.&RT.																			325										1	
196	D5	232+75	235+52.42		LT.&RT.													157						278									2	1	
196	D6	236+57.40	236+83.84		RT.	27		1																											
196	D7	235+44.35	235+53.36		CL								36																						
198	D1	238+68.15	238+72.60	I-75	LT.&RT.									2.67		0.3		155										82					2		
198	D2	240+72	243+63		LT.		284																												
198	D3	244+50			CL.&LT.									2.67		0.3		64						14			70				1				
198	D4	244+79.11	244+95.45		LT.&RT.		231		2																										
198	D5	245+66.63	245+81.67		LT.&RT.					1		119																							
198	D6	238+65.68	238+74.68		CL								36																						
SUBTOTAL SHEET 2						1111	950	3	4	10		1166	108	42.7	0	11.3	86	1306	356	0	0	0	1042	27	40	80*	70	147	248	0	16	0	6	4	

* - 707.05, TYPE C OR 707.21

CALCULATED BDC CHECKED NJV

DRAINAGE SUBSUMMARY

ALL-75-0.21

144
907

I:\Pdt\89029\drainage\sheets\89029DQ002.dgn 25-JUN-2013 10:30AM tbolenba

DRAINAGE "D"

SHEET NO.	REFERENCE NO.	STATION FROM	STATION TO	ROADWAY	SIDE	202 PIPE REMOVED, 24" AND UNDER	202 PIPE REMOVED, OVER 24"	202 CATCH BASIN REMOVED	202 HEADWALL REMOVED	202 CATCH BASIN REMOVED, AS PER PLAN	202 MANHOLE REMOVED	202 SPECIAL-PLUG AND FILL CONDUIT	601 TIED CONCRETE BLOCK MAT, TYPE 2	601 TIED CONCRETE BLOCK MAT, TYPE 3	601 ROCK CHANNEL PROTECTION, TYPE B WITH FILTER	602 CONCRETE MASONRY	603 CONDUIT * - 707.05, TYPE C OR 707.21 TYPE B 12"	603 CONDUIT TYPE B 15"	603 CONDUIT TYPE B 18"	603 CONDUIT TYPE B 36"	603 CONDUIT TYPE B 42"	603 CONDUIT TYPE C 12'	603 CONDUIT TYPE C 15"	603 CONDUIT TYPE F 12"	604 CATCH BASIN, NO. 2-2B	604 CATCH BASIN, NO. 2-3	604	604 CATCH BASIN, NO. 2-4	604 CATCH BASIN, NO. 8	604 CATCH BASIN, NO. 3	604 CATCH BASIN, NO. 3A	604 MANHOLE, NO. 3	BENDS & BRANCHES
						FEET	FEET	EACH	EACH	EACH	EACH	FEET	SQ. YD.	SQ. YD.	CU. YD.	CU. YD.	FEET	FEET	FEET	FEET	FEET	FEET	FEET	FEET	EACH	EACH		EACH	EACH	EACH	EACH	EACH	
200	D1	252+00		I-75	LT.&RT.									2.67		0.3		109												1				
200	D2	254+48	256+72		LT.&RT.	118	255		2	1																							
200	D3	258+00			LT.&RT.									2.67		0.3		91												1				
200	D4	260+81.12			RT.	76				1																							
200	D5	262+00			RT.									2.67		0.3		107												1				
202	D1	263+11.65	264+00	I-75	RT.									2.67		0.3		89	106											2				
202	D2	263+45			RT.	59																											
202	D3	264+36			RT.	152		1																									
202	D4	265+23	265+51		RT.	29																											
202	D5	265+83.25	266+05.12		RT.		166		2																								
202	D6	268+00			CL.&RT.									2.67		0.3			106											1				
202	D7	272+14.52			LT.&RT.					1		72																					
202	D8	265+95.31	266+52.35		RT.	61																											
										1																							
204	D1	277+18.67	277+27.05	I-75	CL.	8				1																							
204	D2	280+00			CL.&LT.									2.67		0.3		85												1				
204	D3	285+02.82			CL.&LT.					1		80																					
204	D4	287+50			CL.&LT.									2.67		0.3		83												1				
206	D1	290+04.48	290+18.72	I-75	CL.	19				1																							
206	D2	290+01.08	290+34.15		LT.&RT.	176			2																								
206	D3	290+21.83			LT.			1																									
206	D4	290+30			CL.&RT.									2.67		0.3		88												1				
309	D1	100+26.5	101+56	BREESE	LT									2.67		0.2						87											30°
309	D2	103+36.04			LT									2.67		0.2						5		51 *						1		
309	D3	102+92.83			RT									2.67		0.2						16		54 *						1		
310	D1	106+97		BREESE	LT							14																					
310	D2	106+96.2	106+98		RT							20																					
310	D3	107+07.18			LT									2.67		0.2						5		45 *						1		
310	D4	106+63.96			RT									2.67		0.2						5		54 *						1		
317	D1	104+98	105+57	RAMP A	CL	78																											
SUBTOTAL SHEET 3						776	421	2	6	7	0	186	0	34.7	0	3.4	0	652	212	0	0	118	0	204*	0	0		0	9	0	4	0	

CALCULATED BDC CHECKED NJV

DRAINAGE SUBSUMMARY

ALL-75-0.21

I:\Pd\89029\drainage\sheets\89029DQ003.dgn 25-JUN-2013 10:30AM tbolenba

DRAINAGE

CALCULATED BDC CHECKED JLG

SHEET NO.	REFERENCE NO.	STATION FROM	STATION TO	ROADWAY	SIDE	202 PIPE REMOVED, 24" AND UNDER	202 PIPE REMOVED, OVER 24"	202 CATCH BASIN REMOVED	202 HEADWALL REMOVED	202 CATCH BASIN REMOVED, AS PER PLAN	202 MANHOLE REMOVED	202 SPECIAL-PLUG AND FILL CONDUIT	601 TIED CONCRETE BLOCK MAT, TYPE 2	601 TIED CONCRETE BLOCK MAT, TYPE 3	601 ROCK CHANNEL PROTECTION, TYPE B WITH FILTER	602 CONCRETE MASONRY	603 CONDUIT TYPE B 12"	B 15"	B 18"	B 24"	B 36"	B 42"	C 12"	C 15"	C 18"	C 24"	C 36"	C 42"	D 12"	D 15"	D 78"	F 4"	F 12"	F 15"	F 18"	603 36" CONDUIT BORED OR JACKED, D-LOAD 2000	604 CATCH BASIN, NO. 2-2B	604 CATCH BASIN, NO. 2-3	604 CATCH BASIN, NO. 2-4	604 CATCH BASIN, NO. 8	604 CATCH BASIN, NO. 3	604 CATCH BASIN, NO. 3A	604 MANHOLE, NO. 3	BENDS & BRANCHES
						FEET	FEET	EACH	EACH	EACH	EACH	FEET	SQ.YD.	SQ.YD.	CU.YD.	CU.YD.	FEET																			FEET	EACH	EACH	EACH	EACH	EACH	EACH	EACH	
337	D1	90+60.8	90+62.3	MCCLAIN	RT	7		1															10																			1		15°
	D2	93+24.3	93+40.9		LT	40																									10											
	D3	93+45.6			CL	45			2																																	
	D4	93+49.9	94+00		LT	52																																				
	D5	90+00	90+41.9		LT																								42													
338	D1	94+10	94+88	MCCLAIN	RT											0.5														79												
	D2	94+00	95+09.5		LT	113																									10											
	D3	98+66.2	99+00		RT	34		1																																	
339	D1	99+00	100+98.2	MCCLAIN	RT	199																																				
	D2	100+98.2	101+16.8		RT	19		1																																	
	D3	100+77.9	101+36.1		LT.&RT.		192		2																																	
	D4	101+30.14	101+39.15		LT.								70																														
	D5	101+40.40	101+49.40		RT.								72																														
341	D1	105+05.52		MCCLAIN	LT											0.2							8										60*							1		
	D2	105+15.86			RT											0.2																	56*							1		
	D3	106+07.5	106+29.6		LT.&RT.		126																																			
353	D1	93+19.2	94+06.7	S.R. 65	RT.	97																							88													
353	D2	95+51.1	96+07.5		RT.	57																																				
353	D3	96+67.7	97+03.5		RT.	36																																				
355	D1	97+50	97+78.6	S.R. 65	RT.																		41															1			1		
	D2	97+78.4	98+44.6		RT.	81											66																							1		
	D3	98+44.6	98+63		RT.																		27															1				
	D4	98+63	99+27		RT.	61			1		1												71																	1		
	D5	99+27			LT.&RT.	71		1									76																							1		
	D6	99+27	101+56		LT																		230																	1		
	D7	99+27	101+45		RT.	247																	16															1				60°
	D8	101+45	101+56		RT.	25																																				
357	D1	102+63.5	102+65	S.R. 65	LT																		35															1				
	D2	103+85	104+35		LT	158		1									50																							1		
	D3	104+35	104+85		LT												50																							1		
	D4	104+85	105+33		LT																		60																	1		
	D5	105+09.9	105+33		LT																			50															1				
	D6	105+09.9	106+46.1		LT	62									3.9	0.7						125																				
	D7	106+53.5	106+71.5		LT.&RT.										5.2	0.8						111																				
	D8	101+52.7	102+45.4		RT.	93																91															1				
	D9	103+85	104+35		RT.		240										50																							1		
	D10	104+35			RT.																																			1		
	D11	104+35	105+00		RT.												65																							1		
	D12	102+45.4	105+52.5		RT.																	306																				
	D13	105+00	105+52.5		RT.																			67																		
	D14	105+52.5	106+63.5		RT.																		55															1				
	D15	105+75.7	106+47.5		RT.	72		1														83																	1		
	D16	106+33.1	106+71.4		RT.																							41											1		
	D17	106+47.5	107+00		RT.						1	52																														
SUBTOTAL SHT. 4						1569	558	6	5	0	2	52	142	0	9.1	2.43	357	0	0	0	125	591	553	117	0	0	0	41	130	79	0	20	116*	0	0	0	3	4	2	0	3	8	4	

* - 707.05, TYPE C OR 707.21

DRAINAGE SUBSUMMARY

ALL-75-0.21

I:\Pdt\89029\drainage\sheets\89029DQ004.dgn 25-JUN-2013 10:30AM tbolenba

DRAINAGE

CALCULATED BDC CHECKED NJV

* - 707.05, TYPE C OR 707.21

SHEET NO.	REFERENCE NO.	STATION FROM	STATION TO	ROADWAY	SIDE	202 PIPE REMOVED, 24" AND UNDER	202 PIPE REMOVED, OVER 24"	202 CATCH BASIN REMOVED	202 HEADWALL REMOVED	202 CATCH BASIN REMOVED, AS PER PLAN	202 MANHOLE REMOVED	202 SPECIAL-PLUG AND FILL CONDUIT	601 TIED CONCRETE BLOCK MAT, TYPE 2	601 TIED CONCRETE BLOCK MAT, TYPE 3	601 ROCK CHANNEL PROTECTION, TYPE B WITH FILTER	602 CONCRETE MASONRY	603 CONDUIT TYPE B 12"	B 15"	B 18"	B 24"	B 36"	B 42"	C 12"	C 15"	C 18"	C 24"	C 36"	C 42"	D 12"	D 15"	D 78"	F 4"	F 12"	F 15"	F 18"	603 36" CONDUIT BORED OR JACKED, D-LOAD 2000	604 CATCH BASIN, NO. 2-2B	604 CATCH BASIN, NO. 2-3	604 CATCH BASIN, NO. 2-4	604 CATCH BASIN, NO. 8	604 CATCH BASIN, NO. 3	604 CATCH BASIN, NO. 3A	604 MANHOLE, NO. 3	BENDS & BRANCHES
		FROM	TO			FEET	FEET	EACH	EACH	EACH	EACH	FEET	SQ.YD.	SQ.YD.	CU.YD.	CU.YD.	FEET																			FEET	EACH	EACH	EACH	EACH	EACH	EACH	EACH	
359	D1	109+69.84	110+03	S.R. 65	LT	31			1																																	
	D2	107+00	109+74.15		RT							273																															
373	D1	222+91.5		RAMP A	LT																																					
	D2	222+9+1.5	223+58.9		LT&RT	61															117																					
377	D1	224+21	224+39	RAMP D	RT		93																																			
	D2	224+54.75	226+57.87		RT																		7				203												1			1	
398	D1	0+75	2+50	YODER	LT																		162																			
	D2	2+50			LT																		8																	1	1	
	D3	3+35	4+75		RT												151																							1		
	D4	3+46.37	3+87.28		RT	64		1												54																					
	D5	3+38.78	3+59		RT																				10	30													1			
	D6	3+56.47	3+79.41		RT	51		2																		10												1			
399	D1	4+75		YODER	LT&RT												44																							1	1	
	D2	4+75	6+00		RT																		116																		1	
	D3	6+00	6+80		RT																		67																		1	
	D4	6+80			RT																		9																	1		
	D5	6+80	7+17.85		RT																		32																			
	D6	7+17.85	7+50		RT																		37																			
	D7	7+17.85			RT																58																				1	
	D8	7+65	7+17.85		LT&RT																		49																			
	D9	226+57.87	7+17.85		LT																						215															
407	D1	95+74.1	96+14.8	HANTHORN	LT	41																																				
	D2	95+38	95+96		RT																							58														
408	D1	98+16.8	98+30.4	HANTHORN	RT	24																																				
	D2	98+58.9			CL	81																																				
	D3	100+82.62			LT											0.2							5																	1		
	D4	100+57.82			RT											0.2																								1		
409	D1	104+72.4	105+12.3	HANTHORN	CL	126																																				
	D2	104+48.09	104+57.07		LT.								84																													
	D3	104+25.18	104+34.19		RT.								61																													
410	D1	110+33.6	110+67.2	HANTHORN	LT	34																																				
	D2	110+35.4	110+67.3		RT	33																																				
SUBTOTAL SHT. 5						546	93	3	1	0	0	273	145	0	0	0.4	195	0	0	54	175	0	492	0	10	40	418	0	58	0	0	0 *	107	0	0	0	0	3	1	0	2	6	7	
SUBTOTAL SHT. 1						1565	718	7	8	16	0	981	128	53.4	4.4	7.4	0	1991	344	0	0	0	0	0	0	0	100	0	0	0	0	0	0	0	0	0	0	24	0	0	1	
SUBTOTAL SHT. 2						1111	950	3	4	10	0	1166	108	42.7	0	11.3	86	1306	356	0	0	0	0	1042	27	0	0	0	0	0	40	0 *	80	70	147	248	0	0	0	16	0	6	4	
SUBTOTAL SHT. 3						776	421	2	6	7	0	186	0	34.7	0	3.4	0	652	212	0	0	0	118	0	0	0	0	0	0	0	0	0 *	204	0	0	0	0	0	0	9	0	4	0	
SUBTOTAL SHT. 4						1569	558	6	5	0	2	52	142	0	9.1	2.43	357	0	0	0	125	591	553	117	0	0	0	41	130	79	0	20 *	116	0	0	0	3	4	2	0	3	8	4	
SUBTOTAL SHT. 5						546	93	3	1	0	0	273	145	0	0	0.4	195	0	0	54	175	0	492	0	10	40	418	0	58	0	0	0 *	107	0	0	0	0	3	1	0	2	6	7	
TOTALS CARRIED TO GENERAL SUMMARY						5567	2740	21	24	33	2	2658	523	131	14	24.9	638	3949	912	54	300	591	1163	1159	37	40	518	41	188	79	40	20 *	507	70	147	248	3	7	3	49	5	24	16	

DRAINAGE SUBSUMMARY

ALL-75-0.21

146A
907

I:\Pd\89029\drainage\sheets\89029D0004A.dgn 25-JUN-2013 10:30AM tbolenba

SHT. NO.	STATIONING FROM	STATIONING TO	SIDE	WIDTH (FT)	LENGTH (FT)	AREA (SY)	670 DITCH EROSION PROTECTION MAT, TYPE A SQ. YD.	670 DITCH EROSION PROTECTION MAT, TYPE B SQ. YD.	670 DITCH EROSION PROTECTION MAT, TYPE C SQ. YD.
	I-75								
176	17+50	19+00	MED	7.5	150	125	125		
176-177	24+00	27+50	LT	11.0	350	428	428		
177	25+50	27+00	RT	11.0	150	183	183		
177	*26+25	27+75	MED	7.5	150	125	125		
177	33+00	34+00	RT	11.0	100	122	122		
177	*34+25	35+75	MED	7.5	150	125	125		
178	*42+25	43+75	MED	11.0	150	183	183		
178	47+50	50+00	LT	11.0	250	306	306		
178	*48+50	50+00	MED	7.5	150	125	125		
178-179	49+00	53+00	RT	11.0	400	489	489		
179	50+00	52+50	LT	14.5	250	403	403		
179	*51+00	52+50	MED	7.5	150	125	125		
179	52+50	53+00	LT	14.5	50	81			81
179	*52+54.32	54+04.32	MED	7.5	150	125	125		
179	*54+04.32	55+50	MED	7.5	146	122	122		
179	55+50	58+00	LT	11.0	250	306	306		
179	*55+50	57+00	MED	11.0	150	183	183		
179	56+50	57+50	RT	11.0	100	122	122		
179	57+50	58+00	RT	11.0	50	61		61	
179	60+00	61+50	MED	11.0	150	183	183		
180-181	74+50	76+00	MED	11.0	150	183	183		
181	78+00	79+50	MED	7.5	150	125	125		
181	79+50	80+80	MED	7.5	130	108	108		
181	80+80	82+10	MED	7.5	130	108	108		
181	82+10	83+60	MED	7.5	150	125	125		
182	89+25	90+75	MED	11.0	150	183	183		
182	90+75	92+18	MED	7.5	143	119	119		
182	92+18	93+68	MED	7.5	150	125	125		
182	93+00	93+50	RT	14.5	25	40			40
182	*93+75	95+25	MED	11.0	150	183	183		
182	98+00	99+00	RT	14.5	100	161	161		
183	*100+75	102+25	MED	11.0	150	183	183		
183	*108+00	109+50	MED	11.0	150	183	183		
183	*109+50	110+52.77	MED	7.5	103	86	86		
183	*110+52.77	112+02.77	MED	7.5	150	125	125		
184	*114+50	116+00	MED	7.5	150	125	125		
184	*120+00	121+50	MED	7.5	150	125	125		
185	*125+50	127+00	MED	7.5	150	125	125		
185	126+70	129+00	LT	11.0	230	281	281		
185	*133+50	135+00	MED	7.5	150	125	125		
186	*147+00	148+50	MED	7.5	150	125	125		
187	*154+50	156+00	MED	7.5	150	125	125		
187	154+50	155+50	RT	14.5	100	161	161		
187,189	161+50	163+50	LT	14.5	200	322	322		
187,189	*162+00	163+50	MED	14.5	150	242	242		
189	*170+00	171+50	MED	18.0	150	300	300		
189	*172+96.15	174+46.15	MED	14.5	150	242	242		
189,191	*174+46.15	175+96.15	MED	7.5	150	125	125		
191	*176+25	177+75	MED	14.5	150	242	242		
191	*181+00	182+50	MED	7.5	150	125	125		
193	*188+96.5	190+46.50	MED	7.5	150	125	125		
193	*193+25	194+41.94	MED	7.5	117	98	98		
SUBTOTALS							8791	61	121

SHT. NO.	STATIONING FROM	STATIONING TO	SIDE	WIDTH (FT)	LENGTH (FT)	AREA (SY)	670 DITCH EROSION PROTECTION MAT, TYPE A SQ. YD.	670 DITCH EROSION PROTECTION MAT, TYPE B SQ. YD.	670 DITCH EROSION PROTECTION MAT, TYPE C SQ. YD.
193	*194+41.94	195+50	MED	7.5	108	90	90		
193	195+00	196+29	LT	11.0	129	158	158		
193	*195+50	197+00	MED	11.0	150	183	183		
193	195+81	197+00	RT	11.0	119	145	145		
193	196+29	197+00	LT	7.5	71	59	59		
194	*203+50	205+00	MED	7.5	150	125	125		
194-195	*211+50	213+00	MED	11.0	150	183	183		
195	216+50	216+79	LT	7.5	29	24	24		
195	216+85	218+00	LT	7.5	115	96	96		
195	*219+50	221+00	MED	7.5	150	125	125		
195-196	*224+50	226+00	MED	7.5	150	125	125		
196	*227+00	228+50	MED	7.5	150	125	125		
196	*229+50	231+00	MED	7.5	150	125	125		
200	*250+50	252+00	MED	7.5	150	125	125		
200	*256+50	258+00	MED	7.5	150	125	125		
200	*260+50	262+00	MED	14.5	150	242	242		
200,202	*262+00	263+11.65	MED	7.5	112	93	93		
202	*264+00	265+50	MED	7.5	150	125	125		
202	265+63	266+50	RT	11.0	102	125	125		
202	*267+75	269+25	MED	7.5	150	125	125		
204	*278+50	280+00	MED	14.5	150	242	242		
204	*286+00	287+50	MED	11.0	150	183	183		
206	*288+80	290+30	MED	11.0	150	183	183		
206	289+00	290+00	RT	11.0	100	122	122		
206	290+00	290+30	RT	11.0	30	37	37		
206	*290+30	291+80	MED	11.0	150	183	183		
	BREESE ROAD								
317	105+00 RAMP "A"	106+00 RAMP "A"	LT	7.5	100	83	83		
320	115+00 RAMP "C"	116+26 RAMP "C"	LT	7.5	126	105	105		
	S.R. 65								
359	109+50 S.R. 65	109+75 S.R. 65	RT	7.5	25	21			21
359	109+77 S.R. 65	110+00 S.R. 65	RT	7.5	23	19	19		
373	222+00 RAMP "A"	222+50 RAMP "A"	LT	7.5	50	42	42		
374	220+50 RAMP "B"	221+00 RAMP "B"	RT	7.5	50	42	42		
375	225+00 RAMP "C"	226+50 RAMP "C"	RT	7.5	150	125	125		
375	226+50 RAMP "C"	227+00 RAMP "C"	RT	7.5	50	42		42	
375	227+00 RAMP "C"	230+50 RAMP "C"	RT	7.5	350	292	292		
377	225+00 RAMP "D"	230+50 RAMP "D"	LT	7.5	550	458	458		
	HANTHORN RD.								
408	97+50 HANTHORN RD.	98+50 HANTHORN RD.	LT	7.5	100	83	83		
408	97+50 HANTHORN RD.	98+50 HANTHORN RD.	RT	7.5	100	83	83		
409	105+00 HANTHORN RD.	107+00 HANTHORN RD.	LT	7.5	200	167	167		
409	104+00 HANTHORN RD.	106+50 HANTHORN RD.	RT	7.5	250	208	167		
SUBTOTALS							5140	42	21
TOTALS TO GENERAL SUMMARY							13931	103	142

* Not shown graphically because of guardrail but quantities are paid for

CALCULATED BDC CHECKED LJM

EROSION CONTROL QUANTITIES

ALL-75-0.21

147
907

I:\Pd\89029\drainage\sheets\89029DQ005.dgn 25-JUN-2013 10:30AM tbolenba

REF NO.	SHEET	STATION RANGE		SIDE	UNDERDRAIN OUTLETS TO OUTSIDE DITCH				OUTLET INTO CATCH BASIN						601	603		604	605			BENDS & BRANCHES					REMARKS
					STATION	SIDE	OFFSET	UNDERDRAIN INVERT ELEVATION	STATION	SIDE	OFFSET	TYPE	CATCH BASIN BOTTOM ELEVATION	CATCH BASIN INVERT ELEVATION	TIED CONCRETE BLOCK MAT, TYPE 1	6" CONDUIT, TYPE B	6" CONDUIT, TYPE F FOR U.D. OUTLET	PRECAST REINFORCED CONCRETE OUTLET	6" BASE PIPE UNDERDRAIN, 707.31 OR 707.41	6" SHALLOW PIPE UNDERDRAIN, 707.31 OR 707.41	6" UNCLASSIFIED PIPE UNDERDRAIN, 707.31 OR 707.41	CAP	CROSS	TEE	BEND	WYE	
							FEET	FEET			FEET		FEET	FEET	SQ YD	FEET	FEET	EACH	FEET	FEET	FEET	EACH	EACH	EACH	EACH	EACH	
1UD	175	11+00	11+75	SB	11+00	LT	80	898.1							1.8		18	1	75					1			1' Deep
2UD		11+00	11+75	SB													11			75				1			1' Deep
3UD		11+00	11+75	SB												30			75						1		1' Deep
4UD		11+00	11+75	NB												31			75						1		1' Deep
5UD		11+00	11+75	NB													12			75				1			1' Deep
6UD		11+00	11+75	NB	11+00	RT	79	898.1							1.8		18	1	75					1			1' Deep
7UD		11+75	12+50	SB															75								TO 1UD-STA 12+50
8UD		11+75	12+50	SB																75							TO 2UD-STA 12+50
9UD		11+75	12+50	SB															75								TO 3UD-STA 12+50
10UD		11+75	12+50	NB															75								TO 4UD-STA 12+50
11UD		11+75	12+50	NB																75							TO 5UD-STA 12+50
12UD		11+75	12+50	NB															75								TO 6UD-STA 12+50
1UD	176	12+50	18+95	SB	18+95	LT	84	894.4							1.8		5	1	645						2	1	
2UD		12+50	18+95	SB													35			645					1		
3UD		12+50	19+00	SB					19+00	LT	CL	CB-8	894.2	894.8			29		630						1		
4UD		12+50	19+00	NB					19+00	RT	CL	CB-8	894.2	895.5			19		650						1		
5UD		12+50	19+00	NB													13			650					1		1' Deep
6UD		12+50	19+00	NB	19+00	RT	80	895.5							1.8		17	1	650						1	1	1' Deep
7UD		19+00	25+00	SB															600			1					TO 1UD-STA 25+00
8UD		19+00	25+00	SB																600		1					TO 2UD-STA 25+00
9UD		19+00	25+00	SB															600			1					TO 3UD-STA 25+00
10UD		19+05	25+00	NB															595			1					TO 4UD-STA 25+00
11UD		19+05	25+00	NB																595		1					TO 5UD-STA 25+00
12UD		19+05	25+00	NB															595			1					TO 6UD-STA 25+00
1UD	177	25+00	27+70	SB	27+70	LT	84	886.5							1.8		5	1	270						2	1	
2UD		25+00	27+70	SB													35			270					1		
3UD		25+00	27+75	SB					27+75	LT	CL	CB-8	886.03	886.55			29		255						1		
4UD		25+00	27+75	NB					27+75	RT	CL	CB-8	886.03	886.55			29		255						1		
5UD		25+00	27+75	NB													35			275					1		
6UD		25+00	27+75	NB	27+75	RT	84	886.5							1.8		5	1	275						2	1	
7UD		27+75	35+70	SB	35+70	LT	84	877.65							1.8		5	1	795			1			2	1	
8UD		27+75	35+70	SB													35			795		1			1		
9UD		27+75	35+75	SB					35+75	LT	CL	CB-8	877.5	878.25			29		780			1			1		
10UD		27+75	35+75	NB					35+75	RT	CL	CB-8	877.5	877.5			5		800			1			2	1	
11UD		27+80	35+75	NB												49				795		1		1			
12UD		27+80	35+75	NB													13		795			1			1		
13UD		35+75	37+50	SB															175			1					TO 1UD-STA 37+50
14UD		35+75	37+50	SB																175		1					TO 2UD-STA 37+50
15UD		35+75	37+50	SB															170			1					TO 3UD-STA 37+50
16UD		35+80	37+50	NB															170			1					TO 4UD-STA 37+50
17UD		35+80	37+50	NB																170		1					TO 5UD-STA 37+50
18UD		35+80	37+50	NB															170			1					TO 6UD-STA 37+50
1UD	178	37+50	43+70	SB	43+70	LT	84	874.15							1.8		5	1	620						2	1	
2UD		37+50	43+70	SB													35			620					1		
3UD		37+50	43+75	SB					43+75	LT	CL	CB-8	873.9	874.45			29		605						1		
4UD		37+50	43+75	NB					43+75	RT	CL	CB-8	873.9	874.45			29		605						1		
5UD		37+50	43+75	NB													35			625					1		
6UD		37+50	43+75	NB	43+75	RT	84	874.15							1.8		5	1	625						2	1	
SUBTOTAL															16.2	110	540	9	12930	6515	0	18	0	5	32	8	

CALCULATED BDC CHECKED JLG

UNDERDRAIN SUBSUMMARY

ALL-75-0.21

148
907

I:\Pd\89029\drainage\sheets\89029UD001.dgn 25-JUN-2013 10:30AM tbolenbo

REF NO.	SHEET	STATION RANGE		SIDE	UNDERDRAIN OUTLETS TO OUTSIDE DITCH				OUTLET INTO CATCH BASIN						601	603		604	605			BENDS & BRANCHES					REMARKS
					STATION	SIDE	OFFSET	UNDERDRAIN INVERT ELEVATION	STATION	SIDE	OFFSET	TYPE	CATCH BASIN BOTTOM ELEVATION	CATCH BASIN INVERT ELEVATION	TIED CONCRETE BLOCK MAT, TYPE 1	6" CONDUIT, TYPE B	6" CONDUIT, TYPE F FOR U.D. OUTLET	PRECAST REINFORCED CONCRETE OUTLET	6" BASE PIPE UNDERDRAIN, 707.31 OR 707.41	6" SHALLOW PIPE UNDERDRAIN, 707.31 OR 707.41	6" UNCLASSIFIED PIPE UNDERDRAIN, 707.31 OR 707.41	CAP	CROSS	TEE	BEND	WYE	
							FEET	FEET			FEET		FEET	FEET	SQ YD	FEET	FEET	EACH	FEET	FEET	FEET	EACH	EACH	EACH	EACH	EACH	
7UD	178	43+75	49+20	SB	49+20	LT	85	871.3							1.8		5	1	545			1			2	1	
8UD		43+75	49+20	SB													35			545		1			1		
9UD		43+75	49+25	SB					49+25	LT	CL	CB-8	869.5	871.65			29		530			1			1		
10UD		43+80	49+25	NB					49+25	RT	CL	CB-8	869.5	871.65			29		530			1			1		
11UD		43+80	49+25	NB													35			545		1			1		
12UD		43+80	49+25	NB	49+25	RT	85	871.3							1.8		5	1	545			1			2	1	
13UD		49+25	50+00	SB															75			1					TO 1UD-STA 50+00
14UD		49+25	50+00	SB																75		1					TO 2UD-STA 50+00
15UD		49+25	50+00	SB															75			1					TO 3UD-STA 50+00
16UD		49+30	50+00	NB															70			1					TO 4UD-STA 50+00
17UD		49+30	50+00	NB																70		1					TO 5UD-STA 50+00
18UD		49+30	50+00	NB															70			1					TO 6UD-STA 50+00
1UD	179	50+00	52+55	SB	52+40	LT	85	869.9							1.8		5	1	240		15	1		1		1	
2UD		50+00	52+55	SB													35			240	15	1		1			
3UD		50+00	52+55	SB					52+45	LT	CL	CB-8	864.8	869.3			29		224		31	1		1			
4UD		50+00	52+55	NB					52+45	RT	CL	CB-8	864.8	868.75			29		245		10	1				1	
5UD		50+00	52+55	NB													35			245	10	1		1			
6UD		50+00	52+55	NB	52+45	RT	85	868.2							1.8		5	1	245		10	1		1		1	
7UD		53+95	59+95	SB	54+24	LT	85	869.95							1.8		5	1	600			2		1		1	
8UD		53+95	59+95	SB													35			600		2		1			
9UD		53+95	59+95	SB					54+19.36	LT	CL	CB-8	864.75	869.1			29		600			2				1	
10UD		53+95	60+00	NB					54+19.36	RT	CL	CB-8	864.75	868.3			19		605			2		1			
11UD		53+95	60+00	NB													35			605		2		1			
12UD		53+95	60+00	NB	54+19.36	RT	85	867.55							1.8		5	1	605			2		1		1	
13UD		60+00	62+50	SB													13		250						1		TO 1UD-STA 62+50
14UD		60+00	62+50	SB												49				250				1			TO 2UD-STA 62+50
15UD		60+00	62+50	SB					60+00	LT	CL	CB-8	871.99	872.9			5		250						2	1	TO 3UD-STA 62+50
16UD		60+05	62+50	NB					60+00	RT	CL	CB-8	871.99	872.4		30			245						1		TO 4UD-STA 62+50
17UD		60+05	62+50	NB													35			245					1		TO 5UD-STA 62+50
18UD		60+05	62+50	NB	60+05	RT	84	870.65							1.8		5	1	245						2	1	TO 6UD-STA 62+50
1UD	180	62+50	68+50	SB															600								
2UD		62+50	68+50	SB																600							
3UD		62+50	68+50	SB															600								
4UD		62+50	68+50	NB															600								
5UD		62+50	68+50	NB																600							
6UD		62+50	68+50	NB															600								
7UD		68+50	75+00	SB															650								TO 1UD-STA 75+00
8UD		68+50	75+00	SB																650							TO 2UD-STA 75+00
9UD		68+50	75+00	SB															650								TO 3UD-STA 75+00
10UD		68+50	75+00	NB															650								TO 4UD-STA 75+00
11UD		68+50	75+00	NB																650							TO 5UD-STA 75+00
12UD		68+50	75+00	NB															650								TO 6UD-STA 75+00
1UD	181	75+00	76+00	SB													13		100						1		
2UD		75+00	76+00	SB					76+00	LT	CL	CB-8	871.97	873.3		49				100				1			
3UD		75+00	76+00	SB													5		100						2	1	
4UD		75+00	75+95	NB					76+00	RT	CL	CB-8	871.97	873.35		30			95						1		
5UD		75+00	75+95	NB													35			95				1			
6UD		75+00	75+95	NB	75+95	RT	85	871.9							1.8		5	1	95						2	1	
SUBTOTAL															14.4	158	520	8	12184	6115	91	30	0	13	21	12	

CALCULATED BDC CHECKED JLG

UNDERDRAIN SUBSUMMARY

ALL-75-0.21

149
907

I:\Pd\89029\drainage\sheets\89029UD001.dgn 25-JUN-2013 10:30AM tbolenba

REF NO.	SHEET	STATION RANGE		SIDE	UNDERDRAIN OUTLETS TO OUTSIDE DITCH				OUTLET INTO CATCH BASIN						601	603		604	605			BENDS & BRANCHES					REMARKS
					STATION	SIDE	OFFSET	UNDERDRAIN INVERT ELEVATION	STATION	SIDE	OFFSET	TYPE	CATCH BASIN BOTTOM ELEVATION	CATCH BASIN INVERT ELEVATION	TIED CONCRETE BLOCK MAT, TYPE 1	6" CONDUIT, TYPE B	6" CONDUIT, TYPE F FOR U.D. OUTLET	PRECAST REINFORCED CONCRETE OUTLET	6" BASE PIPE UNDERDRAIN, 707.31 OR 707.41	6" SHALLOW PIPE UNDERDRAIN, 707.31 OR 707.41	6" UNCLASSIFIED PIPE UNDERDRAIN, 707.31 OR 707.41	CAP	CROSS	TEE	BEND	WYE	
							FEET	FEET			FEET		FEET	FEET	SQ YD	FEET	FEET	EACH	FEET	FEET	FEET	EACH	EACH	EACH	EACH	EACH	
7UD	181	76+05	86+25	SB	80+80	LT	78	870.2							1.8		5	1	1020			1		1	1	1	
8UD		76+05	86+25	SB													28			1020		1		1			
9UD		76+05	86+25	SB					80+80	LT	CL	CB-8	869.25	871			19		1020			1		1			
10UD		76+05	80+80	NB					80+80	RT	CL	CB-8	869.25	871			29		455			1			1		
11UD		76+05	80+75	NB													34			470		1			1		
12UD		76+05	80+75	NB	80+75	RT	84	870.15							1.8		5	1	470			1			1	1	
13UD		80+90	86+25	NB	80+85	RT	84	870.15									29		525						2		
14UD		80+85	86+25	NB													34			540					1		
15UD		80+85	86+25	NB											1.8		5	1	540						2	1	
16UD		86+25	87+50	SB															125								TO 1UD-STA 87+50
17UD		86+25	87+50	SB																125							TO 2UD-STA 87+50
18UD		86+25	87+50	SB															125								TO 3UD-STA 87+50
19UD		86+25	87+50	NB															125								TO 4UD-STA 87+50
20UD		86+25	87+50	NB																125							TO 5UD-STA 87+50
21UD		86+25	87+50	NB															125								TO 6UD-STA 87+50
1UD	182	87+50	93+70	SB	92+18	LT	87	871.2							1.8		5	1	620			1		1		1	
2UD		87+50	93+70	SB													32			620		1		1			
3UD		87+50	93+70	SB					92+18	LT	CL	CB-8	869.13	870.5			19		620			1		1			
4UD		87+50	92+18	NB					92+18	RT	CL	CB-8	869.13	870.5			29		448						1		
5UD		87+50	92+13	NB													50			463					1		
6UD		87+50	92+13	NB	92+10	RT	100	869							1.8		5	1	463						2	1	
7UD		93+75	100+00	SB	93+75	LT	94	871.55							1.8		5	1	625						2	1	TO 1UD-STA 100+00
8UD		93+75	100+00	SB													34			625					1		TO 2UD-STA 100+00
9UD		93+75	100+00	SB					93+75	LT	CL	CB-8	867	870			29		605						1		TO 3UD-STA 100+00
10UD		92+18	100+00	NB					92+18	RT	CL	CB-8	869.13	870.5			29		762						1		TO 4UD-STA 100+00
11UD		92+40	100+00	NB													50			760					1		
12UD		92+40	99+30	NB	92+40	RT	100	869							1.8		5	1	690			1			2	1	
1UD	183	100+00	101+75	SB															175			1					
2UD		100+00	101+75	SB																175							
3UD		100+00	100+75	SB															75			1					
4UD		100+00	100+75	NB															75			1					
5UD		100+00	100+75	NB															75			1					
6UD		100+75	105+50	SB					100+75	LT	CL	CB-8	868.75	872			29		455						1		
7UD		100+75	105+50	NB					100+75	RT	CL	CB-8	868.75	872			29		455						1		
8UD		104+43	112+50	SB													13		807			1		1			TO 1UD-STA 112+50
9UD		104+43	112+50	SB												30				807		1	1				TO 2UD-STA 112+50
10UD		105+50	112+50	SB					109+90	LT	CL	CB-8	871.32	871.55			30		700				1				TO 3UD-STA 112+50
11UD		105+50	109+50	NB					109+50	RT	CL	CB-8	870.8	872.05			29		380						1		
12UD		105+50	109+45	NB													35			395		1			1		
13UD		105+50	109+45	NB	109+45	RT	84	870.5							1.8		5	1	395			1			1	1	
14UD		109+55	112+50	NB					109+90	RT	CL	CB-8	871.32	872.05			19		295			1		1			TO 4UD-STA 112+50
15UD		109+55	112+50	NB													35			295		1		1			TO 5UD-STA 112+50
16UD		109+55	112+50	NB	110+27	RT	84	870.7							1.8		5	1	295			1		1		1	TO 6UD-STA 112+50
1UD	184	112+50	114+45	SB															195			1					
2UD		112+50	114+45	SB																195		1					
3UD		112+50	114+45	SB															195			1					
4UD		112+50	114+50	NB															200			1					
SUBTOTAL															16.2	30	709	9	14135	6615	0	25	2	10	26	9	

CALCULATED BDC
CHECKED JLG

UNDERDRAIN SUBSUMMARY

ALL-75-0.21

150
907

I:\Pd\89029\drainage\sheets\89029UD001.dgn 25-JUN-2013 10:30AM tbolenba

REF NO.	SHEET	STATION RANGE		SIDE	UNDERDRAIN OUTLETS TO OUTSIDE DITCH				OUTLET INTO CATCH BASIN						601	603		604	605			BENDS & BRANCHES					REMARKS
					STATION	SIDE	OFFSET	UNDERDRAIN INVERT ELEVATION	STATION	SIDE	OFFSET	TYPE	CATCH BASIN BOTTOM ELEVATION	CATCH BASIN INVERT ELEVATION	TIED CONCRETE BLOCK MAT, TYPE 1	6" CONDUIT, TYPE B	6" CONDUIT, TYPE F FOR U.D. OUTLET	PRECAST REINFORCED CONCRETE OUTLET	6" BASE PIPE UNDERDRAIN, 707.31 OR 707.41	6" SHALLOW PIPE UNDERDRAIN, 707.31 OR 707.41	6" UNCLASSIFIED PIPE UNDERDRAIN, 707.31 OR 707.41	CAP	CROSS	TEE	BEND	WYE	
							FEET	FEET			FEET		FEET	FEET	SQ YD	FEET	FEET	EACH	FEET	FEET	FEET	EACH	EACH	EACH	EACH	EACH	
5UD	184	112+50	114+50	NB																200		1					
6UD		112+50	114+50	NB															200			1					
7UD		114+50	117+75	SB													13		325			1			1		
8UD		114+50	117+75	SB												49				325		1		1			
9UD		114+50	119+95	SB					114+50	LT	CL	CB-8	873.83	873.85			5		545			1			2	1	
10UD		114+50	119+95	NB					114+50	RT	CL	CB-8	873.83	875.00			29		525			1			1		
11UD		114+55	119+10	NB													37			455		1			1		
12UD		114+55	119+10	NB	114+55	RT	87	873.95							1.8		5	1	455			1			2	1	
13UD		122+35	125+00	SB	122+35	LT	95	884.15							1.8		5	1	265						2	1	TO 1UD-STA 125+00
14UD		122+35	125+00	SB													35			265					1		TO 2UD-STA 125+00
15UD		120+00	125+00	SB					120+00	LT	CL	CB-8	881.75	883.00			19		500						1		TO 3UD-STA 125+00
16UD		120+00	125+00	NB					120+00	RT	CL	CB-8	881.75	883.00			29		480						1		TO 4UD-STA 125+00
17UD		120+05	125+00	NB													35		495		165				1		TO 5UD-STA 125+00
18UD		120+05	125+00	NB	121+70	RT	109	882.95							1.8		5	1	330						2	1	TO 6UD-STA 125+00
																							1				
1UD	185	125+00	126+65	SB															165			1					
2UD		125+00	126+65	SB																165		1					
3UD		125+00	125+45	SB															45			1					
4UD		125+00	125+45	NB															45			1					
5UD		125+00	125+45	NB															45			1					
6UD		125+00	125+45	NB															45			1					
7UD		125+55	126+65	NB													33			110		1			1		
8UD		125+55	126+65	NB	126+65	RT	98	886.9							1.8		5	1	110			1			2	1	
9UD		126+75	133+45	SB	126+75	LT	83	887.2							1.8		5	1	670			1			2	1	
10UD		126+75	133+45	SB													33			670		1			1		
11UD		125+50	133+45	SB					125+50	LT	CL	CB-8	884.75	887.25			19		795			1			1		
12UD		125+50	133+45	NB					125+50	RT	CL	CB-8	884.75	887.25			29		775			1			1		
13UD		126+75	133+45	NB													33			670		1			1		
14UD		126+75	133+45	NB	126+75	RT	98	886.9							1.8		5	1	670			1			2	1	
15UD		133+50	137+50	SB	133+50	LT	85	891.35							1.8		5	1	400						2	1	TO 1UD-STA 137+50
16UD		133+50	137+50	SB													35			400					1		TO 2UD-STA 137+50
17UD		133+50	137+50	SB					133+50	LT	CL	CB-8	891.15	891.7			19		400						1		TO 3UD-STA 137+50
18UD		133+50	137+50	NB					133+50	RT	CL	CB-8	891.15	891.7			29		380						1		TO 4UD-STA 137+50
19UD		133+55	137+50	NB													36			395					1		TO 5UD-STA 137+50
20UD		133+55	137+50	NB	133+55	RT	87	891.35							1.8		5	1	395						2	1	TO 6UD-STA 137+50
1UD	186	137+50	141+35	SB															385								
2UD		137+50	141+35	SB																385							
3UD		137+50	141+35	SB															385								
4UD		137+50	141+35	NB															385								
5UD		137+50	141+35	NB																385							
6UD		137+50	141+35	NB															385								
7UD		141+35	148+50	SB													13		715						1		
8UD		141+35	148+50	SB												49				715				1			
9UD		141+35	148+50	SB					148+50	LT	CL	CB-8	891.45	891.5			5		715						2	1	
10UD		141+35	148+50	NB					148+50	RT	CL	CB-8	891.45	892			29		695						1		
11UD		141+35	148+45	NB													35			710					1		
12UD		141+35	148+45	NB	148+45	RT	84	891.65							1.8		5	1	710						2	1	
13UD		148+55	150+00	SB															145			1					TO 1UD-STA 150+00
SUBTOTAL															16.2	98	595	9	13580	5850	165	23	0	3	41	11	

CALCULATED BDC
CHECKED JLG

UNDERDRAIN SUBSUMMARY

ALL-75-0.21

151
907

I:\Pd\89029\drainage\sheets\89029UD001.dgn 25-JUN-2013 10:30AM tbolenba

REF NO.	SHEET	STATION RANGE		SIDE	UNDERDRAIN OUTLETS TO OUTSIDE DITCH				OUTLET INTO CATCH BASIN						601	603		604	605			BENDS & BRANCHES					REMARKS
					STATION	SIDE	OFFSET	UNDERDRAIN INVERT ELEVATION	STATION	SIDE	OFFSET	TYPE	CATCH BASIN BOTTOM ELEVATION	CATCH BASIN INVERT ELEVATION	TIED CONCRETE BLOCK MAT, TYPE 1	6" CONDUIT, TYPE B	6" CONDUIT, TYPE F FOR U.D. OUTLET	PRECAST REINFORCED CONCRETE OUTLET	6" BASE PIPE UNDERDRAIN, 707.31 OR 707.41	6" SHALLOW PIPE UNDERDRAIN, 707.31 OR 707.41	6" UNCLASSIFIED PIPE UNDERDRAIN, 707.31 OR 707.41	CAP	CROSS	TEE	BEND	WYE	
							FEET	FEET			FEET		FEET	FEET	SQ YD	FEET	FEET	EACH	FEET	FEET	FEET	EACH	EACH	EACH	EACH	EACH	
14UD	186	148+55	150+00	SB																145		1					TO 2UD-STA 150+00
15UD		148+55	150+00	SB															145			1					TO 3UD-STA 150+00
16UD		148+55	150+00	NB															145			1					TO 4UD-STA 150+00
17UD		148+55	150+00	NB																145		1					TO 5UD-STA 150+00, 1' Deep
18UD		148+55	150+00	NB															145			1					TO 6UD-STA 150+00, 1' Deep
1UD	187	150+00	156+00	SB													13		600						1		
2UD		150+00	156+00	SB												49				600				1			
3UD		150+00	156+00	SB					156+00	LT	CL	CB-8	887.15	887.2			5		600						2	1	
4UD		150+00	156+00	NB					156+00	RT	CL	CB-8	887.15	887.7			29		580						1		
5UD		150+00	155+95	NB													35			595					1		
6UD		150+00	155+95	NB	155+95	RT	85	887.35							1.8		5	1	595						2	1	
7UD		156+05	162+50	SB															645			1					TO 1UD-STA 162+50
8UD		156+05	162+50	SB																645		1					TO 2UD-STA 162+50
9UD		156+05	162+50	SB															645			1					TO 3UD-STA 162+50
10UD		156+05	162+50	NB															645			1					TO 4UD-STA 162+50
11UD		156+05	162+50	NB																645		1					TO 5UD-STA 162+50
12UD		156+05	162+50	NB															645			1					TO 6UD-STA 162+50
1UD	189	162+50	163+45	SB	163+45	LT	102	884.45							1.8		5	1	95						2	1	
2UD		162+50	163+45	SB													44			95					1		
3UD		162+50	163+50	SB					163+50	LT	4.48' LT	CB-8	883.09	883.5			29		80						1		
4UD		162+50	163+45	NB												30			95						1		
5UD		162+50	163+45	NB													13			95				1			1' Deep
6UD		162+50	163+45	NB	163+45	RT	86	881.74							1.8		23	1	95					1			1' Deep
7UD		163+50	171+45	SB	171+45	LT	99	882.2							1.8		5	1	795			1			2	1	
8UD		163+50	171+45	SB													37			795		1			1		
9UD		163+50	171+50	SB					171+50	LT	5.85' LT	CB-8	880.2	880.6			35		770			1			1		
10UD		163+50	171+50	NB												30			795			1			1		
11UD		163+50	171+50	NB													13			795		1		1			1' Deep
12UD		163+50	171+50	NB	171+50	RT	80	878.85							1.8		17	1	795			1		1			1' Deep
13UD		171+50	175+00	SB	174+16	LT	94	881.65							1.8		5	1	350			1		1	1	1	TO 1UD-STA 175+00
14UD		171+50	175+00	SB													36			350		1		1			TO 2UD-STA 175+00
15UD		171+50	174+46	SB					171+46	LT	4.01'LT	CB-8	879.75	879.9			35		271			1			1		
16UD		171+55	175+00	NB												30			345			1		1			TO 4UD-STA 175+00
17UD		171+55	175+00	NB													13			345		1	1				TO 5UD-STA 175+00, 1' Deep
18UD		171+55	175+00	NB	174+46	RT	80	878.3							1.8		17	1	345			1	1				TO 6UD-STA 175+00, 1' Deep
19UD		174+46	175+00	NB					171+46	LT	4.01'LT	CB-8	879.75	879.9			35		29						1		TO 3UD-STA 175+00
1UD	191	175+00	176+25	SB															125			1					
2UD		175+00	176+25	SB																125		1					
3UD		175+00	176+25	SB															125			1					
4UD		175+00	178+35	NB															335			1					
5UD		175+00	178+45	NB																345		1					1' Deep
6UD		175+00	178+50	NB															350			1					1' Deep
7UD		176+30	180+95	SB	176+30	LT	90	881.5							1.8		5	1	465			1			2	1	
8UD		176+30	180+95	SB													36			465		1			1		
9UD		176+25	180+95	SB					176+25	LT	2.40'LT	CB-8	879.57	880.5			33		445			1			1		
10UD		178+52	180+95	NB												30			195		48	2		1			
11UD		178+61	180+95	NB													35			195	39	2	1				
12UD		178+65	180+95	NB	179+00	RT	85	879.7							1.8		5	1	195		35	2		1	1	1	
SUBTOTAL															16.2	169	563	9	12485	6380	122	38	3	10	25	7	

CALCULATED BDC
CHECKED JLG

UNDERDRAIN SUBSUMMARY

ALL-75-0.21

152
907

tbolenba
25-JUN-2013 10:30AM
I:\Pd\89029\drainage\sheets\89029UD001.dgn

UNDERDRAIN SUBSUMMARY

CALCULATED BDC
CHECKED JLG

REF NO.	SHEET	STATION RANGE		SIDE	UNDERDRAIN OUTLETS TO OUTSIDE DITCH				OUTLET INTO CATCH BASIN						601	603		604	605			BENDS & BRANCHES					REMARKS
					STATION	SIDE	OFFSET	UNDERDRAIN INVERT ELEVATION	STATION	SIDE	OFFSET	TYPE	CATCH BASIN BOTTOM ELEVATION	CATCH BASIN INVERT ELEVATION	TIED CONCRETE BLOCK MAT, TYPE 1	6" CONDUIT, TYPE B	6" CONDUIT, TYPE F FOR U.D. OUTLET	PRECAST REINFORCED CONCRETE OUTLET	6" BASE PIPE UNDERDRAIN, 707.31 OR 707.41	6" SHALLOW PIPE UNDERDRAIN, 707.31 OR 707.41	6" UNCLASSIFIED PIPE UNDERDRAIN, 707.31 OR 707.41	CAP	CROSS	TEE	BEND	WYE	
							FEET	FEET			FEET		FEET	FEET	SQ YD	FEET	FEET	EACH	FEET	FEET	FEET	EACH	EACH	EACH	EACH	EACH	
13UD	191	181+00	187+50	SB	181+00	LT	86	882							1.8		5	1	650						2	1	TO 1UD-STA 187+50
14UD		181+00	187+50	SB													36			650					1		TO 2UD-STA 187+50
15UD		181+00	187+50	SB					181+00	LT	CL	CB-8	882.28	882.8			19		650						1		TO 3UD-STA 187+50
16UD		181+00	187+50	NB					181+05	RT	CL	CB-8	882.28	882.8			29		630						1		TO 4UD-STA 187+50
17UD		181+05	187+50	NB													34			645					1		TO 5UD-STA 187+50
18UD		181+05	187+50	NB	181+05	RT	85	881.95							1.8		5	1	645						2	1	TO 6UD-STA 187+50
1UD	193	187+50	189+00	SB															150								
2UD		187+50	189+00	SB																150							
3UD		187+50	189+00	SB															150								
4UD		187+50	189+00	NB															150								
5UD		187+50	189+00	NB																150							
6UD		187+50	189+00	NB															150								
7UD		189+00	196+13	SB	194+42	LT	85	884.55							1.8		5	1	713			1		1	1	1	
8UD		189+00	196+10	SB													35			710		1		1			
9UD		189+00	196+03	SB					194+41.94	LT	CL	CB-8	882.65	884.85			19		703			1		1			
10UD		189+00	194+42	NB					194+41.94	RT	CL	CB-8	882.65	884.85			29		522						1		
11UD		189+00	195+85	NB													35			685		1		1			
12UD		189+00	195+82	NB	194+42	RT	85	884.55							1.8		5	1	682			1		1	1	1	
13UD		194+42	195+92	NB													29		130			1					
14UD		196+30	200+00	SB	196+50	LT	74	885.35							1.8		5	1	350		20	1		1	1	1	TO 1UD-STA 200+00
15UD		196+27	200+00	SB													24			350	23	1	1				TO 2UD-STA 200+00
16UD		196+20	200+00	SB												30			350		30	1		1			TO 3UD-STA 200+00
17UD		196+10	200+00	NB												30			350		40	1		1			TO 4UD-STA 200+00
18UD		196+05	200+00	NB													38			350	45	1	1				TO 5UD-STA 200+00
19UD		195+99	200+00	NB	196+50	RT	88	885.2							1.8		5	1	350		51	1		1	1	1	TO 6UD-STA 200+00
1UD	194	200+00	203+45	SB															345			1					
2UD		200+00	203+45	SB																345		1					
3UD		200+00	203+45	SB															345			1					
4UD		200+00	203+50	NB															350			1					
5UD		200+00	203+50	NB																350		1					
6UD		200+00	203+50	NB															350			1					
7UD		203+50	211+45	SB													13		795			1			1		
8UD		203+50	211+45	SB												49				795		1		1			
9UD		203+50	211+45	SB					203+50	LT	CL	CB-8	890.6	890.65			5		795			1			2	1	
10UD		203+50	211+50	NB					203+50	RT	CL	CB-8	890.6	891.1			29		780			1			1		
11UD		203+50	211+55	NB													35			795		1			1		
12UD		203+55	211+50	NB	203+55	RT	85	890.8							1.8		5	1	795			1			2	1	
13UD		211+50	212+50	SB													10		100						1		TO 1UD-STA 212+50
14UD		211+50	212+50	SB												67				100				1			TO 2UD-STA 212+50
15UD		211+50	212+50	SB					211+50	LT	CL	CB-8	894	894			5		100						2	1	TO 3UD-STA 212+50
16UD		211+50	212+50	NB					211+50	RT	CL	CB-8	894	895			29		80						1		TO 4UD-STA 212+50
17UD		211+55	212+50	NB													35			95					1		TO 5UD-STA 212+50
18UD		211+55	212+50	NB	211+55	RT	96	894.4							1.8		5	1	95						2	1	TO 6UD-STA 212+50
1UD	195	212+50	213+85	SB															135			1					
2UD		212+50	213+85	SB																135		1					
3UD		212+50	219+45	SB															695			1					
4UD		212+50	219+45	NB															695			1					
5UD		212+50	213+95	NB																145		1					
														SUBTOTAL	14.4	176	528	8	13780	6450	209	29	2	11	27	10	

ALL-75-0.21

153
907

I:\Pd\89029\drainage\sheets\89029UD001.dgn 25-JUN-2013 10:30AM tbolenba

REF NO.	SHEET	STATION RANGE		SIDE	UNDERDRAIN OUTLETS TO OUTSIDE DITCH				OUTLET INTO CATCH BASIN						601	603		604	605			BENDS & BRANCHES					REMARKS
					STATION	SIDE	OFFSET	UNDERDRAIN INVERT ELEVATION	STATION	SIDE	OFFSET	TYPE	CATCH BASIN BOTTOM ELEVATION	CATCH BASIN INVERT ELEVATION	TIED CONCRETE BLOCK MAT, TYPE 1	6" CONDUIT, TYPE B	6" CONDUIT, TYPE F FOR U.D. OUTLET	PRECAST REINFORCED CONCRETE OUTLET	6" BASE PIPE UNDERDRAIN, 707.31 OR 707.41	6" SHALLOW PIPE UNDERDRAIN, 707.31 OR 707.41	6" UNCLASSIFIED PIPE UNDERDRAIN, 707.31 OR 707.41	CAP	CROSS	TEE	BEND	WYE	
							FEET	FEET			FEET		FEET	FEET	SQ YD	FEET	FEET	EACH	FEET	FEET	FEET	EACH	EACH	EACH	EACH	EACH	
6UD	195	212+50	213+95	NB															145			1					
7UD		214+90	218+50	SB	214+90	LT	95	896.75							1.8		25	1	360						1		BP
8UD		214+00	219+50	NB	214+00	RT	96	895.75							1.8		55	1	550						1		BP
9UD		217+96	222+93	SB													13		343		154	2		1			
10UD		217+96	222+93	SB												49				343	154	2	1				
11UD		219+50	222+93	SB					219+50	LT	CL	CB-8	903.7	905.7			5		343			1			2	1	
12UD		219+50	222+93	NB					219+50	RT	CL	CB-8	903.7	905.7			5		343			1			2	1	
13UD		218+55	222+93	NB												49				343	95	2	1				
14UD		218+55	222+93	NB													13		343		95	2		1			
1UD	196	225+12	232+37	SB	225+25	LT	74	919.9							1.8		5	1	712		13	2		1	1	1	
2UD		225+12	232+37	SB													24			712	13	2		1			
3UD		225+12	229+45	SB					225+25	LT	CL	CB-8	918.25	920.15			19		420		13	2		1			
4UD		225+12	229+45	NB					225+25	RT	7.5' RT	MH-3	918.25	921.1			11		420		13	2		1			
5UD		225+12	233+15	NB													25			790	13	2		1			
6UD		225+12	233+15	NB	225+25	RT	74	919.9							1.8		5	1	790		13	2		1	1	1	
7UD		229+50	235+78	SB					229+50	LT	CL	CB-8	924.95	928.25			19		628			1			1		
8UD		229+50	235+78	NB					229+50	RT	7.5' RT	MH-3	924.85	928.25			11		628			1			1		
1UD	198	238+41	244+45	SB	244+45	LT	74	925.25							1.8		5	1	604			1		1	1	1	
2UD		238+41	244+45	SB													24			604		1		1			
3UD		238+41	244+50	SB					244+50	LT	1.31' RT	CB-8	925.98	926.5			29		590			1			1		
4UD		238+41	244+50	NB					244+50	RT	1.31' RT	CB-8	925.98	926.45			21		609			1			1		
5UD		238+41	244+50	NB													5			609		1		1			
6UD		238+41	244+50	NB	244+50	RT	83	929.85							1.8		21	1	609			1		1	1	1	
7UD		244+50	250+00	SB															550			1					TO 1UD-STA 250+00
8UD		244+50	250+00	SB																550		1					TO 2UD-STA 250+00
9UD		244+50	250+00	SB															550			1					TO 3UD-STA 250+00
10UD		244+55	250+00	NB															545			1					TO 4UD-STA 250+00
11UD		244+55	250+00	NB																545		1					TO 5UD-STA 250+00
12UD		244+55	250+00	NB															545			1					TO 6UD-STA 250+00
1UD	200	250+00	251+95	SB	251+95	LT	84	908.3							1.8		5	1	195						2	1	
2UD		250+00	251+95	SB													34			195					1		
3UD		250+00	252+00	SB					252+00	LT	4.62' RT	CB-8	905.5	909.2			29		185						1		
4UD		250+00	252+00	NB					252+00	RT	4.62' RT	CB-8	905.5	909.2			24		200						1		
5UD		250+00	252+00	NB													37			200					1		
6UD		250+00	252+00	NB	252+00	RT	95	912.55							1.8		5	1	200						2	1	
7UD		252+00	257+95	SB	257+95	LT	84	903.25							1.8		5	1	595			1			2	1	
8UD		252+00	257+95	SB													34			595		1			1		
9UD		252+00	258+00	SB					258+00	LT	5.75' RT	CB-8	903.53	904.05			31		580			1			1		
10UD		252+05	258+00	NB					258+00	RT	5.75' RT	CB-8	903.53	904.05			25		595			1			1		
11UD		252+05	258+00	NB													36			595		1			1		
12UD		252+05	258+00	NB	258+00	RT	98	907.5							1.8		5	1	595			1			2	1	
13UD		258+00	262+50	SB															450			1					TO 1UD-STA 262+50, 1' Deep
14UD		258+00	262+50	SB																450		1					TO 2UD-STA 262+50, 1' Deep
15UD		258+00	262+50	SB															450			1					TO 3UD-STA 262+50
16UD		258+05	262+50	NB															445			1					TO 4UD-STA 262+50
17UD		258+05	262+50	NB																445		1					TO 5UD-STA 262+50
18UD		258+05	262+50	NB															445			1					TO 6UD-STA 262+50
SUBTOTAL															18	98	610	10	15562	6976	576	49	2	12	30	10	

CALCULATED BDC
CHECKED JLG

UNDERDRAIN SUBSUMMARY

ALL-75-0.21

154
907

I:\Pd\89029\drainage\sheets\89029UD001.dgn 25-JUN-2013 10:30AM tbolenba

REF NO.	SHEET	STATION RANGE		SIDE	UNDERDRAIN OUTLETS TO OUTSIDE DITCH				OUTLET INTO CATCH BASIN						601	603		604	605			BENDS & BRANCHES					REMARKS
					STATION	SIDE	OFFSET	UNDERDRAIN INVERT ELEVATION	STATION	SIDE	OFFSET	TYPE	CATCH BASIN BOTTOM ELEVATION	CATCH BASIN INVERT ELEVATION	TIED CONCRETE BLOCK MAT, TYPE 1	6" CONDUIT, TYPE B	6" CONDUIT, TYPE F FOR U.D. OUTLET	PRECAST REINFORCED CONCRETE OUTLET	6" BASE PIPE UNDERDRAIN, 707.31 OR 707.41	6" SHALLOW PIPE UNDERDRAIN, 707.31 OR 707.41	6" UNCLASSIFIED PIPE UNDERDRAIN, 707.31 OR 707.41	CAP	CROSS	TEE	BEND	WYE	
							FEET	FEET			FEET		FEET	FEET	SQ YD	FEET	FEET	EACH	FEET	FEET	FEET	EACH	EACH	EACH	EACH	EACH	
1UD	202	262+50	267+95	SB	263+12	LT	80	901.35							1.8		17	1	545			1	1				1' DEEP
2UD		262+50	267+95	SB													13			545		1		1			1' DEEP
3UD		262+50	267+95	SB					263+12	LT	5.64' RT	CB-8	902.61	902.9			25		545			1		1			
4UD		262+50	263+12	NB					263+12	RT	5.64' RT	CB-8	902.61	902.95			31		45						1		
5UD		262+50	268+00	NB													39			550		1		1			
6UD		262+50	268+00	NB	263+07	RT	101	904.6							1.8		5	1	550			1		1	1	1	
7UD		263+12	267+95	NB					263+12	RT	5.64' RT	CB-8	902.61	902.95			31		466			1			1		
8UD		268+00	275+00	SB	268+00	LT	80	902.35							1.8		17	1	700					1			1' DEEP
9UD		268+00	275+00	SB													13			700					1		1' DEEP
10UD		268+00	275+00	SB					268+00	LT	4.56' RT	CB-8	903.49	903.9			24		700						1		
11UD		268+00	275+00	NB					268+00	RT	4.56' RT	CB-8	903.49	903.9			31		682						1		
12UD		268+05	275+00	NB													39			695					1		
13UD		268+05	275+00	NB	268+05	RT	98	906.65							1.8		5	1	695						2	1	
1UD	204	275+00	277+55	SB	277+35	LT	85	903.2							1.8		5	1	235		20	1		1	1	1	
2UD		275+00	277+50	SB													35			235	15	1	1				
3UD		275+00	227+40	SB												30			235		5	1		1			
4UD		275+00	277+30	NB												30			200		30	1		1			
5UD		275+00	277+20	NB													35			200	20	1	1				
6UD		275+00	277+15	NB	277+00	RT	86	906							1.8		5	1	200		15	1		1	1	1	
7UD		277+20	279+95	SB	279+95	LT	85	903.6							1.8		5	1	225			1			2	1	
8UD		277+65	279+95	SB													35			230		1			1		
9UD		277+55	280+00	SB					280+00	LT	0.1' RT	CB-8	903.75	904.25			29		225			1			1		
10UD		277+45	280+00	NB					280+00	RT	0.1' RT	CB-8	903.75	904.05			5		255			1			2	1	
11UD		277+35	280+00	NB												49				265		1		1			
12UD		277+30	280+00	NB													13		270			1			1		
13UD		280+00	287+50	SB															750			1					TO 1UD-STA 287+50
14UD		280+00	287+50	SB																750		1					TO 2UD-STA 287+50
15UD		280+00	287+50	SB															750			1					TO 3UD-STA 287+50
16UD		280+05	287+50	NB															745			1					TO 4UD-STA 287+50
17UD		280+05	287+50	NB																745		1					TO 5UD-STA 287+50
18UD		280+05	287+50	NB															745			1					TO 6UD-STA 287+50
1UD	206	287+50	290+25	SB	290+25	LT	85	901.85							1.8		5	1	275						2	1	
2UD		287+50	290+25	SB													35			275					1		
3UD		287+50	292+00	SB					290+30	LT	CL	CB-8	901.63	902.15			19		450					1			
4UD		287+50	290+30	NB					290+30	RT	CL	CB-8	901.63	902.15			19		280						1		
5UD		287+50	290+02	NB													36			240	12			1			
6UD		287+50	292+00	NB	289+90	RT	86	901.85							1.8		5	1	240		10			1	1	1	
7UD		290+30	292+00	SB	290+45	LT	85	901.85							1.8		5	1	155		15			1	1	1	
8UD		290+30	292+00	SB													35			155	15			1			
9UD		290+30	292+00	NB					290+30	RT	CL	CB-8	9901.63	902.15			29		150						1		
10UD		290+16	292+00	NB													36			165	19			1			
11UD		290+13	292+00	NB	290+35	RT	86	901.85							1.8		5	1	165		22			1	1	1	
1UD	317	101+75	108+90	Ramp "A"	104+25	LT	22	873.95							1.8		22	1	715			2		1			
1UD	318	100+80	105+37	NB	99+30	RT	80	871.55							1.8		25	1	457			1			1		
2UD		105+44	107+00	Ramp "B"											1.8		18	1	156						1		
1UD	319	107+00	111+19	Ramp "B"	105+25	RT	18	872.45											419			1					
2UD		111+19	112+89	Ramp "B"	111+19	LT	36	882.95							1.8		20	1	170			1			1		
3UD		112+89	113+48	Ramp "B"	111+89	RT	17	885.15							1.8		17	1	59			1			1		
														SUBTOTAL	28.8	109	788	16	13454	5750	198	30	3	18	30	10	

CALCULATED BDC
CHECKED JLG

UNDERDRAIN SUBSUMMARY

ALL-75-0.21

155
907

I:\Pd\89029\drainage\sheets\89029UD001.dgn 25-JUN-2013 10:29AM tbolenba

REF NO.	SHEET	STATION RANGE		SIDE	UNDERDRAIN OUTLETS TO OUTSIDE DITCH				OUTLET INTO CATCH BASIN						601	603		604	605			BENDS & BRANCHES					REMARKS
					STATION	SIDE	OFFSET	UNDERDRAIN INVERT ELEVATION	STATION	SIDE	OFFSET	TYPE	CATCH BASIN BOTTOM ELEVATION	CATCH BASIN INVERT ELEVATION	TIED CONCRETE BLOCK MAT, TYPE 1	6" CONDUIT, TYPE B	6" CONDUIT, TYPE F FOR U.D. OUTLET	PRECAST REINFORCED CONCRETE OUTLET	6" BASE PIPE UNDERDRAIN, 707.31 OR 707.41	6" SHALLOW PIPE UNDERDRAIN, 707.31 OR 707.41	6" UNCLASSIFIED PIPE UNDERDRAIN, 707.31 OR 707.41	CAP	CROSS	TEE	BEND	WYE	
							FEET	FEET			FEET		FEET	FEET	SQ YD	FEET	FEET	EACH	FEET	FEET	FEET	EACH	EACH	EACH	EACH	EACH	
1UD	320	110+52	112+55	Ramp "C"	112+55	RT	38	884.30							1.8		21	1	203			1			1		
2UD		112+55	122+30	Ramp "C"	116+73	LT	22	879.30							1.8		22	1	975			2		1			
1UD	321	115+20	119+95	Ramp "D"	118+25	RT	22	880.65							1.8		22	1	475			2		1			
1UD	373	219+50	223+20	Ramp "A"	223+20	LT	43	897.45							1.80	42		1	370						1		
1UD	374	218+50	223+87	Ramp "B"	223+25	LT	25	894.18							1.80		25	1	552			1		1			
1UD	375	224+77	235+78	Ramp "C"					224+77	RT	50	CB-2-4	891.20	894.00		50			1101			1			1		
1UD	377	224+61	235+78	Ramp "D"					224+55	RT	38.0'	CB-2-4	893.55	896.50			37		1117			1			1		
1UD	309	100+30	103+00	RT											1.8	41	17	1	270			1			1		
2UD		100+30	103+40	LT	100+30	LT	41	884.62									5		310			1			2	1	
1UD	310	106+56	109+00	RT															244			1					
2UD		107+00	109+00	LT															200			1					
1UD	311	109+00	111+90	RT	111+90	RT	24	872.81									5		290						2	1	
2UD		109+00	111+90	LT											1.8	29	7	1	290						1		
1UD	337	89+70	94+00	RT	91+50	RT	29	888.65							1.8		17	1	430			1		1			TO 1UD-STA 94+00
2UD		89+70	94+00	LT	91+50	LT	30	888.5							1.8		13	1	430			1		1			TO 2UD-STA 94+00
1UD	338	94+00	96+45	RT															245			1					
2UD		94+00	96+45	LT															245			1					
3UD		96+50	99+00	RT	96+50	RT	24.5	898.15							1.8		12	1	250						1		TO 1UD-STA 99+00
4UD		96+50	99+00	LT	96+50	LT	24.5	898.15							1.8		12	1	250						1		TO 2UD-STA 99+00
1UD	339	99+00	101+72	RT															272			1					
2UD		99+00	101+66	LT															266			1					
1UD	341	104+80	108+50	RT	108+50	RT	25	890.3							1.8		13	1	370			1			1		
2UD		104+87	108+50	LT	108+50	LT	26	890.3							1.8		12	1	363			1			1		
1UD	353	96+20	97+00	LT															80			1					TO 1UD-STA 97+00
2UD		96+20	97+00	LT																80		1					TO 2UD-STA 97+00
3UD		96+20	97+00	RT																80		1					TO 3UD-STA 97+00
4UD		96+20	97+00	RT															80			1					TO 4UD-STA 97+00
1UD	355	97+00	101+47	LT													5		447						1	1	
2UD		97+00	101+45	LT					101+56	LT	67.5	CB 2-4	893	895			31			445					1		
3UD		97+00	101+56	RT					101+56	RT	70	CB 2-4	893.55	896.5			35			456					1		
4UD		97+00	97+50	RT													14		50						1		
5UD		99+72	101+56	RT													5		184			1			2	1	
1UD	357	102+40	103+84	LT					103+85	LT	34	CB-3A	894.4	895					144			1					
2UD		102+46	105+55	LT					104+35	LT	34	CB-3	893.92	894.75		9				309		2		1			1.5' DEEP
3UD		102+26	105+68	RT					104+35	RT	34	CB-3	893.9	894.75		9				342		2		1			1.5' DEEP
4UD		102+23	103+84	RT					103+85	RT	34	CB-3A	894.35	895					161			1					
														SUBTOTAL	23.4	180	330	13	10664	1712	0	31	0	7	20	4	

CALCULATED BDC CHECKED JLG

UNDERDRAIN SUBSUMMARY

ALL-75-0.21

I:\Pdv\89029\drainage\sheets\89029UD001.dgn 25-JUN-2013 10:29AM tbolenba

REF NO.	SHEET	STATION RANGE		SIDE	UNDERDRAIN OUTLETS TO OUTSIDE DITCH				OUTLET INTO CATCH BASIN						601	603		604	605			BENDS & BRANCHES					REMARKS
					STATION	SIDE	OFFSET	UNDERDRAIN INVERT ELEVATION	STATION	SIDE	OFFSET	TYPE	CATCH BASIN BOTTOM ELEVATION	CATCH BASIN INVERT ELEVATION	TIED CONCRETE BLOCK MAT, TYPE 1	6" CONDUIT, TYPE B	6" CONDUIT, TYPE F FOR U.D. OUTLET	PRECAST REINFORCED CONCRETE OUTLET	6" BASE PIPE UNDERDRAIN, 707.31 OR 707.41	6" SHALLOW PIPE UNDERDRAIN, 707.31 OR 707.41	6" UNCLASSIFIED PIPE UNDERDRAIN, 707.31 OR 707.41	CAP	CROSS	TEE	BEND	WYE	
							FEET	FEET			FEET		FEET	FEET	SQ YD	FEET	FEET	EACH	FEET	FEET	FEET	EACH	EACH	EACH	EACH	EACH	
5UD	357	103+91	104+33	LT					104+35	LT	34	CB-3	893.92	894.85					42			1					
6UD		103+91	104+33	RT					104+35	RT	34	CB-3	893.9	894.85					42			1					
7UD		104+37	104+79	LT					104+35	LT	34	CB-3	893.92	894.85					42			1					
8UD		104+37	104+93	RT					104+35	RT	34	CB-3	893.9	894.85					58			1					
9UD		104+86	105+58	LT					104+85	LT	34	CB-3A	893.6	894.85					72			1					
10UD		105+01	105+73	RT					104+85	RT	34	CB-3A	892.9	894.85					72			1					
1UD	359	107+00	110+55	LT													5		357			1			2	1	
2UD		107+00	110+55	LT	107+00	LT	61	893.5							1.8		27	1		357		1		1			
3UD		107+00	110+55	RT												56				355		1		1			
4UD		107+00	110+55	RT													9		356			1			1		
1UD	398	1+00	99+71	LT					99+27	RT	26.5	CB-3A	901.25	903.9					139		45	1					
2UD		97+50	0+75	RT					0+75	RT	27.1	CB-3	903.15	904.35					52			1					
3UD		1+00	2+50	LT					2+50	LT	20	CB-3A	903.5	904.09					141								
4UD		0+75	2+50	RT					0+75	RT	27.1	CB-3	903.15	904.35					187								
5UD		2+50	4+00	LT															145			1					TO 1UD-STA 4+00
6UD		2+50	3+35	RT					3+35	RT	30	CB-3A	904.25	904.65					102								
7UD		3+69	4+00	RT															35			1					TO 2UD-STA 4+00
1UD	399	4+00	4+75	LT					4+75	LT	18.5	CB-3A	903.5	904.14					75								
2UD		4+00	4+75	RT					4+75	RT	25.5	MH-3	901.4	904			8		70								
3UD		4+80	7+65	LT					7+65	LT	15.1	CB-3	900.55	901.15					304			1					
4UD		4+80	6+80	RT					6+80	RT	17	CB-3A	900.65	901.23					191			1					
5UD		6+85	7+50	RT					7+50	RT	15.4	CB-3	900.55	901.13					66			1					
6UD		7+65	8+25	LT					7+65	LT	15.1	CB-3	900.55	901.15					60			1					
7UD		7+50	8+25	RT					7+50	RT	15.4	CB-3	900.55	901.13					75			1					
1UD	407	93+25	97+50	LT	95+00	LT	33	912.75							1.8		18	1	250		175	1		1			TO 1UD-STA 97+50
2UD		93+25	97+50	RT	95+00	RT	31	912.8							1.8		18	1	250		175	1		1			TO 2UD-STA 97+50
1UD	408	97+50	101+03	LT															353			1					
2UD		97+50	100+90	RT															340								
1UD	409	104+19	107+50	LT															331			1					TO 1UD-STA 107+50
2UD		104+05	107+50	RT															345			1					TO 2UD-STA 107+50
1UD	410	107+50	112+35	LT	111+00	LT	29	917.5							1.8		17	1	353		135	1		1			
2UD		107+50	112+35	RT	111+00	RT	31	917.5							1.8		18	1	340		135	1		1			
SUBTOTAL															9	56	120	5	5245	712	665	26	0	6	3	1	
SUBTOTAL SHEET 148															16.2	110	540	9	12930	6515	0	18	0	5	32	8	
SUBTOTAL SHEET 149															14.4	158	520	8	12184	6115	91	30	0	13	21	12	
SUBTOTAL SHEET 150															16.2	30	709	9	14135	6615	0	25	2	10	26	9	
SUBTOTAL SHEET 151															16.2	98	595	9	13580	5850	165	23	0	3	41	11	
SUBTOTAL SHEET 152															16.2	169	563	9	12485	6380	122	38	3	10	25	7	
SUBTOTAL SHEET 153															14.4	176	528	8	13780	6450	209	29	2	11	27	10	
SUBTOTAL SHEET 154															18	98	610	10	15562	6976	576	49	2	12	30	10	
SUBTOTAL SHEET 155															28.8	109	788	16	13454	5750	198	30	3	18	30	10	
SUBTOTAL SHEET 156															23.4	180	330	13	10664	1712	0	31	0	7	20	4	
SUBTOTAL SHEET 157															9	56	120	5	5245	712	665	26	0	6	3	1	
TOTAL CARRIED TO GENERAL SUMMARY															172.8	1184	5303	96	124019	53075	2026	299 #	12 #	95 #	255 #	82 #	# FOR INFO ONLY

CALCULATED BDC
CHECKED JLG

UNDERDRAIN SUBSUMMARY

ALL-75-0.21

157
907

I:\Pd\89029\drainage\sheets\89029UD001.dgn 25-JUN-2013 10:29AM tbolenba

REFERENCE NO.	SHEET NO.	LOCATION	202		503	509	511		512		601		602	603															613
			STRUCTURE REMOVED	HEADWALL REMOVED	COFFERDAMS AND EXCAVATION BRACING	EPOXY COATED REINFORCING STEEL	CLASS C CONCRETE, AS PER PLAN	CLASS C CONCRETE, FOOTING, AS PER PLAN	SEALING OF CONCRETE SURFACES (EPOXY-URETHANE)	TYPE 2 WATERPROOFING	RIPRAP USING 6" REINFORCED CONCRETE SLAB	ROCK CHANNEL PROTECTION, TYPE B WITH FILTER, 30" THICK	CONCRETE MASONRY	24" CONDUIT, TYPE A	30" CONDUIT, TYPE A	36" CONDUIT, TYPE A	CONDUIT, BORED OR JACKED: 36" TYPE A, D-LOAD 2000	CONDUIT,BORED OR JACKED: 36" TYPE A, D-LOAD 2250	42" CONDUIT, TYPE A	CONDUIT, BORED OR JACKED: 42" TYPE A, D-LOAD 1750	48" CONDUIT, TYPE A	48" CONDUIT, TYPE A D-LOAD 2250	CONDUIT, BORED OR JACKED: 48" TYPE A, D-LOAD 2250	54" CONDUIT, TYPE A	CONDUIT, BORED OR JACKED: 72" TYPE A, D-LOAD 2500	84" CONDUIT, TYPE A	8'x4' CONDUIT, TYPE A, 706.05	8'x6' CONDUIT, TYPE A, 706.05	LOW STRENGTH MORTAR BACKFILL
			LUMP	EACH	LUMP	POUND	CU YD	CU YD	SQ YD	SQ YD	SQ YD	CU YD	CU YD	FT	FT	FT	FT	FT	FT	FT	FT	FT	FT	FT	FT	FT	FT	CU YD
C1	474	Sta. 83+50, I-75			LUMP							2.8	1.12		203													
C2	475	Sta. 92+30, I-75			LUMP							17.3	16.4							201								
C3	476	Sta. 106+96.78, BREESE RD. RAMP A										6.5	1.68						125									
C4	477	Sta. 108+94.40, BREESE RD. RAMP B										4.4	1.38			114												
C5	478	Sta. 103+13.40, BREESE RD.										5.8	1.68							198								
C6	479	Sta. 106+74.89, BREESE RD.										4.4	1.38				186											
C7	480	Sta. 113+00, BREESE RD. RAMP C										7.2	1.38			108												
C8	481	Sta. 126+71.23, I-75			LUMP						6.4	5.7	1.1		212													
C9	482	Sta. 93+42.11, McCLAIN RD.										3	0.86	109														
C10	483	Sta. 101+05.15, McCLAIN RD.			LUMP							4.4	1.38					202										
C11	484	Sta. 106+18.98, McCLAIN RD.			LUMP							10	16.4										117					
C12	486	Sta. 178+37.13, I-75	LUMP	2	LUMP	2687	14	24	64	537		35															187	270
C13	490	Sta. 196+05.85, I-75			LUMP						39.5	40	47.8													161		
C14	491	Sta. 216+83.31, I-75			LUMP							13	20											221				
C15	493	Sta. 109+91.92, S.R. 65	LUMP	2	LUMP	2634	15	21	64	268		43															94	200
C16	500	Sta. 244+86.60, I-75			LUMP						17	28	32.4												256			
C17	501	Sta. 254+01.05, I-75			LUMP						23.6	42	47.8													235		
C18	502	Sta. 98+50, HANTHORN RD.									6.4	4	1.1		111													
C19	503	Sta. 104+20.98, HANTHORN RD.			LUMP						15.4		17.4								224							
C20	505	Sta. 277+42.51, I-75	LUMP	4	LUMP	2674	11	24	47	432		26														178		175
C21	509	Sta. 290+18.72, I-75			LUMP						14	7	1.68						182									
TOTALS CARRIED TO GENERAL SUMMARY			LUMP	8	LUMP	7995	40	69	175	1237	122	310	212.9	109	526	222	186	202	307	198	201	224	117	221	256	396	178	281	645

CALCULATED BDC
CHECKED JLG

CULVERT SUBSUMMARY

ALL-75-0.21

158
907

I:\Pd\89029\drainage\sheets\89029DS001.dgn 25-JUN-2013 10:29AM tbolenba

REF. NO.	SHEET NO.	STATION TO STATION				202					606											626	
						GUARDRAIL REMOVED	GUARDRAIL REMOVED, BARRIER DESIGN	CONCRETE BARRIER REMOVED	ANCHOR ASSEMBLY REMOVED FOR STORAGE, AS PER PLAN	REMOVAL MISC.: IMPACT ATTENUATOR REMOVED FOR STORAGE, AS PER PLAN	IMPACT ATTENUATOR, TYPE 1 (BIDIRECTIONAL)	MGS BRIDGE TERMINAL ASSEMBLY, TYPE 1	MGS BRIDGE TERMINAL ASSEMBLY, TYPE 2	ANCHOR ASSEMBLY, MGS TYPE E	ANCHOR ASSEMBLY, MGS TYPE T	GUARDRAIL, TYPE MGS WITH LONG POSTS	GUARDRAIL, TYPE MGS WITH LONG POSTS 60' RADIUS	GUARDRAIL, TYPE MGS WITH LONG POSTS 40' RADIUS	GUARDRAIL, TYPE MGS WITH LONG POSTS 35' RADIUS	GUARDRAIL, TYPE MGS 25' LONG SPAN	GUARDRAIL, BARRIER DESIGN, TYPE MGS	FLARED END SECTION	BARRIER REFLECTORS, TYPE A	BARRIER REFLECTORS, TYPE A2
						FEET	FEET	FEET	EACH	EACH	EACH	EACH	EACH	EACH	EACH	FEET	FEET	FEET	FEET	FEET	FEET	EACH	EACH	EACH
GR-1	177	26+36.63	140' LT.	26+61.63	140' LT.	25										25						2		
GR-2	177	26+38.85	120' RT.	26+63.85	120' RT.	25										25						2		
GR-3	178-179	49+90.03	7.13' RT.	52+58.70	19.54' RT.	106.25	137.5			1	1	1				25					187.5	1	7	
GR-4	179	50+59.41	63.5' LT.	52+59.15	63.5' LT.	168.75							1		1	187.5							3	
GR-5	179	51+11.06	63.5' RT.	52+58.19	63.5' RT.	131.25			1			1		1		68.75							3	
GR-6	179	53+89.20	63.5' LT.	55+09.74	63.5' LT.	143.75			1			1		1		43.75							3	
GR-7	179	53+89.70	19.5' LT.	56+57.76	7.35' LT.	106.25	137.25			1	1	1				25					187.5	1	7	
GR-8	179	53+91.16	63.5' RT.	55+87.08	63.5' RT.	168.75							1		1	181.25							3	
GR-9	181-182	79+75	63.5' LT.	90+74.39	63.5' LT.									1	1	1037.5							11	
GR-10	181-183, 318-319	80+37.50	63.5' RT.	113+52.28 RAMP B	7.98' RT.	218.75								1	1	3243.75							34	
GR-11	183	110+02.04	CL	112+45.40	7' RT.						1				1	75					125	1	7	
GR-12	183-184	111+56.23	7' LT.	113+99.76	CL	468.75	218.75			2					1	75					125	1	7	
GR-13	183-184	109+16.84	61.9' RT.	112+85.44	59.7' RT.	243.75		73.8	1															
GR-14	183-184	111+09.96	59.6' LT.	115+27.25	61.3' LT.	293.75		73.6	1															
GR-15	189	171+20.16	CL	173+39.26	7.7' RT.	218.75		48.5	1		1				1	50					125	1	7	
GR-16	189-190	170+93	20.8' LT.	175+17.69	2' LT.	375			1															
GR-17	189-190	172+69.28	40.0' LT.	175+18.07	20.4' LT.	200			1															
GR-18	189-190	173+12.52	92.6' LT.	175+08.85	82.5' LT.	106.25		47.3	1															
GR-19	193	194+90.63	63.5' LT.	199+93.75	63.5' LT.									1	1	337.5				100			5	
GR-20	194-195	210+50	75.7' LT.	219+41.67 RAMP B	8' LT.	527.5								1	1	825							10	
GR-21	195	220+27.40	7.09 RT.	222+96.00	19.5' RT.	131.25	93.75			1	1	1				25					187.5	1	7	
GR-22	195	219+95.50	63.5' LT.	222+95.50	63.5' LT.	300	112.5						1		1	287.5							4	
GR-23	195	220+11.63	63.5' RT.	222+96.00	63.5' RT.							1		1		206.25							3	
GR-24	195-196	224+09.67	63.5' LT.	230+69.04	63.5' LT.	293.75			1			1		1		481.25							6	
GR-25	195-196	225+09.67	19.5' LT.	227+78.26	7.09' LT.	150	112.5			1	1	1				25					187.5	1	7	
GR-26	195-196	225+10.10	63.5' RT.	226+35.10	63.5' RT.	218.75							1		1	112.5							3	
GR-27	196	224+85.27 RAMP C	8' LT.	235+80.40	73.2' LT.	968.75							1		1	1081.25							12	
GR-28	196	233+12.31	7.09' RT.	235+80.91	19.5' RT.	93.5	162.5			1	1	1				25					187.5	1	7	
GR-29	196	226+88.85 RAMP D	8' RT.	235+80.91	84.93' RT.	881.25			1			1		1		812.5							9	
GR-30	198-200	238+37.91	72.48' LT.	250+06.75	63.5' LT.	1093.75			1			1		1		1068.75							12	
GR-31	198	238+37.91	19.5' LT.	241+06.58	6.38' LT.	93.5	156.25			1	1	1				25					187.5	1	7	
GR-32	198	238+38.41	85.04' RT.	248+69.54	70.3' RT.	987.5							1		1	1031.25							11	
GR-33	202	264+79.10	138.7' RT.	267+20.40	130.4' RT.	68.5	156.25			1														
GR-34	202	264+99.55	204.8' RT.	267+27.95	184.8' RT.	143.75		55	1															
GR-35	202	265+68.44	6.5' LT.	267+86.33	CL						1				1	50					125	1	7	
GR-36	202	266+21.20	21.2' RT.	269+17.52	73.4' RT.	237.5			1															
GR-37	202	265+14.37	79.7' RT.	269+26.44	40.3' RT.	462.5		63.75	1															
GR-38	202-204	271+66.65	137.3' RT.	279+01.07	62.1' RT.	712.5			1															
GR-39	204	276+95.74	55.8' LT.	279+02.33	62.3' LT.	150			1															
GR-40	309	100+27.65 BREESE RD.	16.8' LT.	111+43.80 RAMP C	3.9' LT.	306.25																		
GR-41	309	101+89.30 BREESE RD.	46.23' RT.	103+23.08 BREESE RD.	26' RT.	218.75						1			1	65.625			37.5					3
GR-42	309,320	111+62.11 RAMP C	22.18' RT.	103+66.29 BREESE RD.	26' LT.	200						1		1		112.5		87.5					2	3
GR-43	310	106+17.49 BREESE RD.	18.9' RT.	107+42.12 BREESE RD.	24.46' RT.	125																		
GR-44	310	106+76.93 BREESE RD.	26' LT.	114+34.17 RAMP D	30.96' LT.	168.75						1			1	37.5	62.5							3
GR-45	310,319	109+89.31 RAMP B	21.4' LT.	106+66.29 BREESE RD.	26' RT.	487.5						1		1		318.75		75					3	3
SUBTOTAL (CARRIED TO SHEET 160)						12020.5	1287.25	361.95	16	9	9	16	6	12	16	11990.63	62.5	162.5	37.5	100	1625	14	207	12

CALCULATED JLG
CHECKED TAB

GUARDRAIL QUANTITIES

ALL-75-0.21

159
907

I:\Pd\89029\roadway\sheets\89029GQ001.dgn 25-JUN-2013 10:29AM tbolenba

REF. NO.	SHEET NO.	STATION TO STATION				202					606											626	
						GUARDRAIL REMOVED	GUARDRAIL REMOVED, BARRIER DESIGN	CONCRETE BARRIER REMOVED	ANCHOR ASSEMBLY REMOVED FOR STORAGE, AS PER PLAN	REMOVAL MISC.: IMPACT ATTENUATOR REMOVED FOR STORAGE, AS PER PLAN	IMPACT ATTENUATOR, TYPE 1 (BIDIRECTIONAL)	MGS BRIDGE TERMINAL ASSEMBLY, TYPE 1	MGS BRIDGE TERMINAL ASSEMBLY, TYPE 2	ANCHOR ASSEMBLY, MGS TYPE E	ANCHOR ASSEMBLY, MGS TYPE T	GUARDRAIL, TYPE MGS WITH LONG POSTS	GUARDRAIL, TYPE MGS WITH LONG POSTS 60' RADIUS	GUARDRAIL, TYPE MGS WITH LONG POSTS 40' RADIUS	GUARDRAIL, TYPE MGS WITH LONG POSTS 35' RADIUS	GUARDRAIL, TYPE MGS 25' LONG SPAN	GUARDRAIL, BARRIER DESIGN, TYPE MGS	FLARED END SECTION	BARRIER REFLECTORS, TYPE A	BARRIER REFLECTORS, TYPE A2
						FEET	FEET	FEET	EACH	EACH	EACH	EACH	EACH	EACH	EACH	FEET		FEET	FEET	FEET	FEET	EACH	EACH	EACH
GR-46	311	111+08.52 BREESE RD.	57.1' RT.	112+02.39 BREESE RD.	11.8' RT.	65.86									1	63.6			37.5					3
GR-47	338-339	94+67.02 McCLAIN RD.	56.27' RT.	101+77.00 McCLAIN RD.	20' RT.	212.5						1			1	637.5			56.25					8
GR-48	338-339	95+07.28 McCLAIN RD.	20' LT.	101+66.65 McCLAIN RD.	20' LT.	200						1		1		581.25								7
GR-49	341	104+85.61 McCLAIN RD.	20' RT.	108+51.24 McCLAIN RD.	19.46' RT.	381.25						1				365.63								4
GR-50	341	104+75.27 McCLAIN RD.	20' LT.	108+50.25 McCLAIN RD.	18.71' LT.	387.5						1				350								5
GR-51	407-409	96+09.94 HANTHORN RD.	20' RT.	100+88.07 HANTHORN RD.	20' RT.	487.5						1		1		400								6
GR-52	407-409	96+45.24 HANTHORN RD.	20' LT.	101+10.87 HANTHORN RD.	20' LT.	487.5						1		1		387.5								6
GR-53	409-410	103+97.67 HANTHORN RD.	20' RT.	109+50.80 HANTHORN RD.	20' RT.	375						1		1		475								7
GR-54	409-410	104+20.47 HANTHORN RD.	20' LT.	109+79.84 HANTHORN RD.	20' LT.	368.75						1		1		481.25								7
SUBTOTAL THIS SHEET						2965.86	0	0	0	0	0	8	0	5	2	3741.73	0	0	93.75	0	0	0	0	53
SUBTOTAL SHEET 159						12020.5	1287.25	361.95	16	9	9	16	6	12	16	11990.63	62.5	162.5	37.5	100	1625	14	207	12
TOTALS CARRIED TO GENERAL SUMMARY						14986.36	1287.25	361.95	16	9	9	24	6	17	18	16088.61				100	1625	14	272	

CALCULATED JLG
CHECKED TAB

GUARDRAIL QUANTITIES

ALL-75-0.21

I:\Pd\89029\roadway\sheets\89029GQ002.dgn 25-JUN-2013 10:29AM tbolenba

ROADWAY

REF. NO.	SHEET NO.	STATION TO STATION		202 CURB AND GUTTER REMOVED FEET	202 CONCRETE SLOPE PROTECTION REMOVED SQ YD	202 GATE REMOVED EACH	202 REMOVAL MISC.: LANDSCAPING LUMP	202 REMOVAL MISC.: POSTS EACH	202 REMOVAL MISC.: PRIVATE LIGHT POST EACH	202 REMOVAL MISC.: LIGHTED COMMERCIAL SIGN EACH	202 REMOVAL MISC.: LIGHTED PRIVATE SIGN EACH	202 REMOVAL MISC.: MONITORING WELLS EACH	202 REMOVAL MISC.: PRIVATE SIGN FOUNDATION EACH	604 MANHOLE ADJUSTED TO GRADE EACH	690 ITEM SPECIAL MAILBOX REMOVED AND RESET EACH	690 ITEM SPECIAL MAILBOX SUPPORT SYSTEM, SINGLE EACH
R-1	177	35+04.25, 115.15′ LT.	35+98.75, 114.51′ LT.					2								
R-1	179	53+50, 108′ RT.	53+90, 107′ RT.		48											
R-1	187	151+51.48, 101.23′ RT.						1								
R-1	337	89+66.70, 15.72′ RT. MCCLAIN RD.	11.77.58, 12′ RT. COMMERCE	192												
R-2	337	11.77.58, 12′ LT. COMMERCE	90+97.81, 17.98′ RT. MCCLAIN RD.	188												
MB-1	353	95+50.47, 18.2′ LT. S.R. 65	95+50.47, 20.10′ LT. S.R. 65												1	1
R-1	353	95+68.55, 57.50′ RT S.R. 65	95+92.04, 57.16′ RT. S.R. 65					2								
R-1	355	97+16.50, 46′ RT. S.R. 65	97+42.00, 58.8′ RT.				LUMP									
R-2	355	98+80.20, 48.73′ RT. S.R. 65	99+38.90′, 50.60′ RT. S.R. 65								2					
R-3	355	99+55.21, 31.00′ RT. S.R. 65	100+03.50, 47.81′ RT. S.R. 65									3				
R-4	355	100+16.65, 53.10′ RT. S.R. 65								1						
R-5	355	100+44.07, 54.40′ RT. S.R. 65									1					
R-6	355	100+97.80, 52.3′ RT. S.R. 65											1			
R-7	355	101+14.75, 52.80′ RT. S.R. 65								1						
S-1	355	101+69.88, 34.65′ LT. S.R. 65												1		
R-1	398	0+56.93, CL YODER	1+28, CL YODER	153			LUMP		1							
R-2	398	0+36.12, 24.5′ RT. YODER	4+00, 47.5′ RT. YODER	411												
R-3	398	0+33, 27.5′ RT. YODER	4+00, 71.5′ RT. YODER	424												
R-4	398	1+68.50, CL YODER	2+92, 46.88′ RT. YODER	300			LUMP		1							
R-5	398	3+10.55, 30.60′ LT. YODER							1							
S-1	398	1+80.46, 25.5′ RT. YODER												1		
R-1	399	4+00, 71.5′ RT. YODER	6+81.35, 130.95′ RT. YODER	226												
R-2	399	4+00, 47.5′ RT. YODER	7+52.66, 98.25′ RT. YODER	280												
R-3	399	5+14.35, 47.5′ RT. YODER							1							
R-4	399	6+83.50, 87.95′ RT. YODER							1							
R-1	407	95+59.71, 41.00′ RT. HANTHORN	95+75.08, 42.00′ RT. HANTHORN			2										
TOTALS CARRIED TO GENERAL SUMMARY				2174	48	2	LUMP	5	5	2	3	3	1	2	1	1

CABLE RAIL

REF. NO.	SHEET NO.	STATION TO STATION				202 REMOVAL, MISC: TENSIONED GUARDRAIL SYSTEM REMOVED FEET	202 REMOVAL, MISC: TENSIONED GUARDRAIL SYSTEM REMOVED FOR STORAGE, AS PER PLAN FEET	203 4" EXCAVATION CU YD	606 GUARDRAIL, MISC. TENSIONED CABLE ANCHOR TERMINAL EACH	606 GUARDRAIL MISC. TENSIONED CABLE WITH CONCRETE FOUNDATION LINE POSTS (SOCKETED) FEET	690 SPECIAL MISC.: MOW STRIP SQ YD
1-GC	175-176	707+84*	9.5′ RT.	19+20	1.8′ RT.	2054		99.9	2	2020.1	899.6
2-GC	176-179	20+00	1.8′ LT.	50+77	9.5′ LT.		3280	152.1	2	3077.2	1369.4
3-GC	179-181	56+00	13.5′ LT.	87+00	5.5′ LT.		2640	153.4	2	3103.6	1381.2
4-GC	181-184	86+00	9.5′ LT.	117+00	5.5′ LT.		2795	153.3	2	3100.7	1379.9
5-GC	184-186	116+00	9.5′ LT.	141+45	5.5′ LT.		2795	125.9	2	2545.0	1132.9
6-GC	186-187,189	140+45	9.5′ LT.	168+20	18.3′ LT.	980	2640	137.5	2	2780.9	1237.7
7-GC	189,191,193	167+20	22′ LT.	195+00	5.5 LT.	1883		137.9	2	2789.3	1241.5
8-GC	193-195	194+00	9.5′ LT.	221+42	9.5′ LT.	3352		135.6	2	2742.0	1220.4
9-GC	196	227+20	9.5′ RT.	233+70	13.5′ RT.	1033		32.3	2	650.0	290.7
10-GC	198,200,202	239+68.5	9.5′ RT.	269+00	13.95 RT.	2740		146.0	2	2952.6	1314.0
11-GC	202,204,206	268+00	18.61′ RT.	293+00	5.5′ RT.	2388		124.0	2	2506.3	1115.7
		* = Sta. 708+84=Sta. 0+00									
TOTALS CARRIED TO GENERAL SUMMARY						14430	14150	1398	22	28268	12583

CALCULATED JLG CHECKED TAB

ROADWAY AND CABLERAIL QUANTITIES

ROADWAY

ALL-75-0.21

I:\Pd\89029\roadway\sheets\89029GQ003.dgn 25-JUN-2013 10:29AM tbolenba

LOCATION	STATION		ASPHALT OPTION											CONCRETE OPTION				
			204		206			304	617	884		304	609	880		304	609	451	884
			SUBGRADE COMPACTION	PROOF ROLLING	CURING COAT	CEMENT	CEMENT STABLIZED SUBGRADE, 14" DEEP	6" AGGREGATE BASE	COMPACTED AGGREGATE	14" PORTLAND CEMENT CONCRETE PAVEMENT (7 YEAR WARRANTY)		6" AGGREGATE BASE	CURB, TYPE 4-C	15.75" ASPHALT CONCRETE (7 YEAR WARRANTY)		6" AGGREGATE BASE	CURB, TYPE 4-A	PRESSURE RELIEF JOINT, TYPE A	14" PORTLAND CEMENT CONCRETE PAVEMENT (7 YEAR WARRANTY)
	FROM	TO	SQ. YD.	HOUR	SQ. YD.	TON	SQ. YD.	CU. YD.	CU. YD.	SQ. YD.		CU. YD.	FEET	CU. YD.		CU. YD.	FEET	FEET	SQ. YD.
IR 75	11+00	52+56.42		19.86	39716.9	1376.19	39716.9		333.54			6568.68		16539.09		6311.6			36945.96
APPROACH SLAB	52+56.42	52+81.42		0.13	266.67	9.24	266.67	41.67	-1.04*				52				52	94	
STRUCTURE NO. ALL-75-0100 #	52+81.42	53+67.42		0.02	41.47	1.44	41.47					6.91		18.14		6.91			41.47
APPROACH SLAB	53+67.42	53+92.42		0.13	266.67	9.24	266.67	41.67	-2.09*				104				104	94	
IR 75	53+92.42	222+93.83		80.75	161502.4	5596.06	161502.4		1356.29			26710.49		67253.52		25665.1			150234.8
APPROACH SLAB	222+93.83	223+18.83		0.13	266.67	9.24	266.67	41.67	-2.09*				131				131	98	
STRUCTURE NO. ALL-75-0423 #	223+18.83	224+86.83		0.02	32.94	1.14	32.94					5.49		14.41		5.49			32.94
APPROACH SLAB	224+86.83	225+11.83		0.13	266.67	9.24	266.67	41.67										98	
IR 75	225+11.83	235+79.41		5.1	10201.32	353.48	10201.32		85.67			1687.17		4248.08		1621.14			9489.6
APPROACH SLAB	235+79.41	236+03.41		0.18	359.38	12.45	359.38	55.96	-2.09*				131				131	125.25	
STRUCTURE NO. ALL-75-0448 #	236+03.41	238+15.41		0.05	97.21	3.37	97.21					16.2		42.53		16.2			97.21
APPROACH SLAB	238+15.41	238+40.41		0.18	362.5	12.56	362.5	55.47	-2.09*				130.7				130.7	124.5	
IR 75	238+40.41	292+00		25.61	51213.86	1774.56	51213.86		430.09			8470.14		21326.71		8138.64			47640.8
MEDIAN CROSSOVER	17+30	21+90		0.16	323.45	11.21	323.45					53.91		141.51		53.91			323.45
BREESE ROAD RAMP A	91+22.50	104+44.23		0.97	1933.72	67	1933.72					322.29		846		322.29			1933.72
	104+44.23	110+12.12		1.08	2165.39	75.03	2165.39	328.16	22.79	1903.32									
BREESE ROAD RAMP B	97+43.94	105+42.86		0.64	1276.98	44.25	1276.98					212.83		558.68		212.83			1276.98
	105+42.86	114+01.35		1.49	2995.78	103.8	2995.78	450.54	34.45	2605.54									
BREESE ROAD RAMP C	109+67.09	117+78.01		1.62	3248.99	112.58	3248.99	495.31	32.54	2879.33									
	117+78.01	125+78.01		0.56	1120.13	38.81	1120.13					186.69		490.06		186.69			1120.13
BREESE ROAD RAMP D	113+93.62	119+13.27	2040.31					319.3	20.85	1853.38									
	119+13.27	134+17.16		0.95	1903.25	65.95	1903.25					317.21		832.67		317.21			1903.25
SR 65 RAMP A	210+53.73	218+53.21		0.56	1119.67	38.8	1119.67					186.61		489.86		186.61			1119.67
	218+53.21	223+80.93		0.91	1818.67	63.02	1818.67	274.66	21.17	1588.37									
SR 65 RAMP B	204+40.00	217+94.54		1.02	2045.87	70.89	2045.87					340.98		895.07		340.98			2045.87
	217+94.54	223+82.05	2044.4					318.21	21.17	1841.59									
SR 65 RAMP C	224+28.34	232+38.06		1.33	2663.25	92.28	2663.25	399.76	32.49	2308.46									
	232+38.06	240+12.21		0.44	879.56	30.48	879.56					146.58		384.81		146.58			879.56
SR 65 RAMP D	224+25.39	233+15.74	2920.6					453.3	35.72	2619.25									
	233+15.74	247+25		0.85	1700.49	58.93	1700.49					283.41		743.96		283.41			1700.49
TOTALS			7005	145	289790	10041	289790	3317	2417	17599		45516	549	114825		43816	549	634	256786

* - CORRECTION FOR ITEM 617 - COMPACTED AGGREGATE AGGREGATE WILL NOT BE PLACED BEHIND ITEM 609 CURB TYPE 4-C OR ITEM 609 CURB TYPE 4-A

- CORRECTIONS FOR PAVEMENT TAPER TO APPROACH SLABS

CALCULATED JLG CHECKED ---

MAINLINE PAVEMENT CALCULATIONS

ALL-75-0.21

I:\Pd\89029\roadway\sheets\89029GQ004.dgn 25-JUN-2013 10:29AM tbolenbo

LOCATION	STATION		203	204				206					301		304	407		448		452	608	609			690
			EXCAVATION	SUBGRADE COMPACTION	GRANULAR MATERIAL, TYPE B	GEOTEXTILE FABRIC	PROOF ROLLING	CEMENT STABLIZED SUBGRADE, 12" DEEP	LIME STABLIZED SUBGRADE, 12" DEEP	LIME	CEMENT	CURING COAT	4" ASPHALT CONCRETE BASE	6" ASPHALT CONCRETE BASE	6" AGGREGATE BASE	TACK COAT FOR INTEREDIATE COURSE	TACK COAT	1.25" ASPHALT CONCRETE SURFACE COURSE, TYPE 1 PG64-22	1.75" ASPHALT CONCRETE INTERMEDIATE COURSE, TYPE 2 PG64-22	10" NON-REINFORCED CONCRETE PAVEMENT	4" CONCRETE WALK	COMBINATION CURB AND GUTTER, TYPE 2	CURB, TYPE 2A	CURB, TYPE 4-C	MISC.: GEOWEB
	FROM	TO	CU. YD.	SQ. YD.	CU. YD.	SQ. YD.	HOUR	SQ. YD.	SQ. YD.	TON	TON	SQ. YD.	CU. YD.	CU. YD.	CU. YD.	GAL.	GAL.	CU. YD.	CU. YD.	SQ. YD.	SQ. FT.	FEET	FEET	FEET	SQ. YD.
BREESE ROAD	100+25	103+42.18	483.77	1451.3	483.77	1451.3	1.45							236.91	238.56	105.49	105.49	48.84	68.37						
APPROACH SLAB	103+42.18	103+72.18	48.89	146.67	48.89	146.67	0.15								22.78						434.5			79	
ALL-75-0212	103+72.18	106+27.82																							
APPROACH SLAB	106+27.82	106+57.82		146.67			0.15								22.78						434.5			79	
BREESE ROAD *	106+57.82	111+90	577.97	2620.5	577.97	1733.91	2.62							423.23	429.03	188.71	188.71	87.36	122.31						
MCCLAIN ROAD	89+70	101+69.32					2.67		5329.9	131.91		5329.9	541.15		853.39	358.95	358.95	166.18	232.66			369			
APPROACH SLAB	101+69.32	101+99.32					0.07		146.67			146.67			22.78									60.5	
ALL-75-0328 #	101+99.32	104+52.94					0.34		76.04	1.88		76.04	8.45		12.67	5.7	5.7	2.64	3.7						
APPROACH SLAB	104+52.94	104+82.94					0.07		146.67			146.67			22.78									79	
MCCLAIN ROAD	104+82.94	108+50					0.72		1424.25	35.25		1424.25	147.66		228.31	97.64	97.64	45.2	63.29						
SR 65	93+00	110+55					5.75							124.41	1865.9	55.12	55.12	25.52	35.73	10286.9			668.2		10432
YODER ROAD	0+23.04	8+23					2.27	4543.75			157.44	4543.75	332.18		722.35	224.22	224.22	103.81	145.33	708.39		1909.62			
HANTHORN ROAD	93+25	100+96.97					1.57		3129.45	77.45		3129.45	324.06		502.27	214.57	214.57	99.34	139.07			40			
APPROACH SLAB	100+96.97	101+26.97					0.07		146.67			146.67			22.78									79	
ALL-75-0508 #	101+26.97	103+81.58					0.34		76	1.88		76	8.44		12.67	5.7	5.7	2.64	3.69						
APPROACH SLAB	103+81.58	104+11.58					0.07		146.67			146.67			22.78									52	
HANTHORN ROAD	104+11.58	112+35					1.58		3173.04	78.53		3173.04	328.89		508.57	217.47	217.47	100.68	140.95						
TOTAL			1111	4365	1111	3332	20	4544	13795	327	157	18339	2475		5510	1474	1474	682	955	10995	869	2319	668	429	10432

- CORRECTIONS FOR PAVEMENT TAPERS AT APPROACH SLABS

* - QUANTITES INCLUDE COMMERCE PARKWAY

CALCULATED JLG CHECKED

SIDE ROAD PAVEMENT CALCULATIONS

ALL-75-0.21

163
907

I:\Pd\89029\Final Submission\FINAL DGNS\ROADWAY\sheets\89029GQ005.dgn 23-AUG-2013 7:09AM jclark1

DRIVEWAY SUBSUMMARY

SHEET NO.	REFERENCE NO.	STATION	SIDE	DRIVE TYPE	DRIVE ANGLE	TOTAL AREA	204	304		407		452	448		609
							SUBGRADE COMPACTION	6" AGGREGATE BASE	8" AGGREGATE BASE	TACK COAT	TACK COAT FOR INTERMEDIATE COURSE	8" NON-REINFORCED CONCRETE PAVEMENT	ASPHALT CONCRETE INTERMEDIATE COURSE, TYPE 2, PG64-22 (T=1 3/4")	ASPHALT CONCRETE SURFACE COURSE, TYPE 1, PG64-22 (T=1 1/4")	CURB, TYPE 6
					DEG	SQ FT	SQ YD	CU YD	CU YD	GAL	GAL	SQ YD	CU YD	CU YD	FEET
McClain Road	DR1	90+21.14	LT	FIELD (STONE)	90	372.53	50.06	6.90							
	DR2	94+50.00	RT	FIELD (STONE)	90	3093.67	392.34	57.27							
S.R. 65	DR3	93+67.15	RT	COMMERCIAL (ASPHALT)	90	921.87	109.74		17.47	7.68	7.68		4.98	3.56	
	DR4	95+79.75	RT	COMMERCIAL (ASPHALT)	90	668.53	84.98		12.97	5.57	5.57		3.61	2.58	
	DR5	95+93.24	LT	FIELD (STONE)	87	321.15	41.69	5.94							
Hanthorn Rd.	DR6	95+67.00	RT	FIELD (STONE)	90	147.31	20.14	2.73							
Yoder Road	DR7	3+13.93	LT	COMMERCIAL (CONCRETE)	90	2341.72	271.33	43.35				260.19			79
	DR8	5+90.05	LT	COMMERCIAL (CONCRETE)	61	4631.53	549.50	85.73				514.61			280
I-75	DR9	195+72.78	RT	FIELD (STONE)	180	1040	128.89	19.26							
TOTALS CARRIED TO GENERAL SUMMARY							1649	221	30	13	13	775	9	6	359

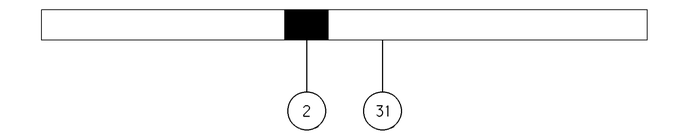

FIELD (STONE)

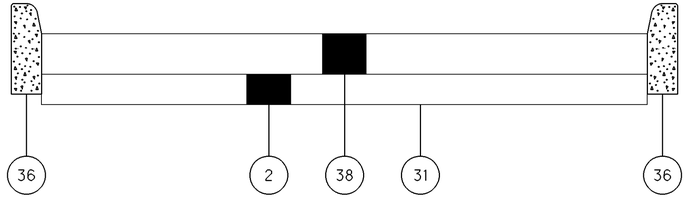

COMMERCIAL (CONCRETE)

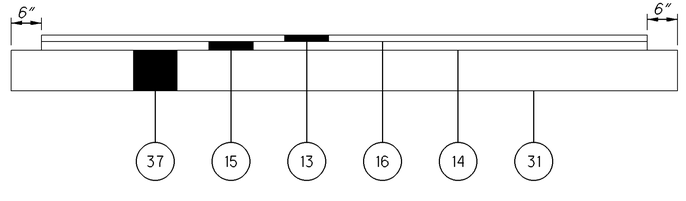

COMMERCIAL (ASPHALT)

(2) ITEM 304 - 6" AGGREGATE BASE

(13) ITEM 448 - ASPHALT CONCRETE SURFACE COURSE, TYPE 1, PG 64-22, 1 1/4" THICK

(14) ITEM 407 - TACK COAT FOR INTERMEDIATE COURSE APPLIED AT A RATE OF 0.075 GAL/SQ YD

(15) ITEM 448 - ASPHALT CONCRETE INTERMEDIATE COURSE, TYPE 2, PG 64-22, 1 3/4" THICK

(16) ITEM 407 - TACK COAT APPLIED AT A RATE OF 0.075 GAL/SQ YD

(31) ITEM 204 - SUBGRADE COMPACTION

(36) ITEM 609 - CURB, TYPE 6

(37) ITEM 304 - 8" AGGREGATE BASE

(38) ITEM 452 - 8" NON-REINFORCED CONCRETE PAVEMENT

CALCULATED JLG CHECKED TAB

DRIVEWAY DETAILS & QUANTITIES

ALL-75-0.21

164
907

I:\Pd\89029\roadway\sheets\89029GD001.dgn 25-JUN-2013 10:29AM tbolenba

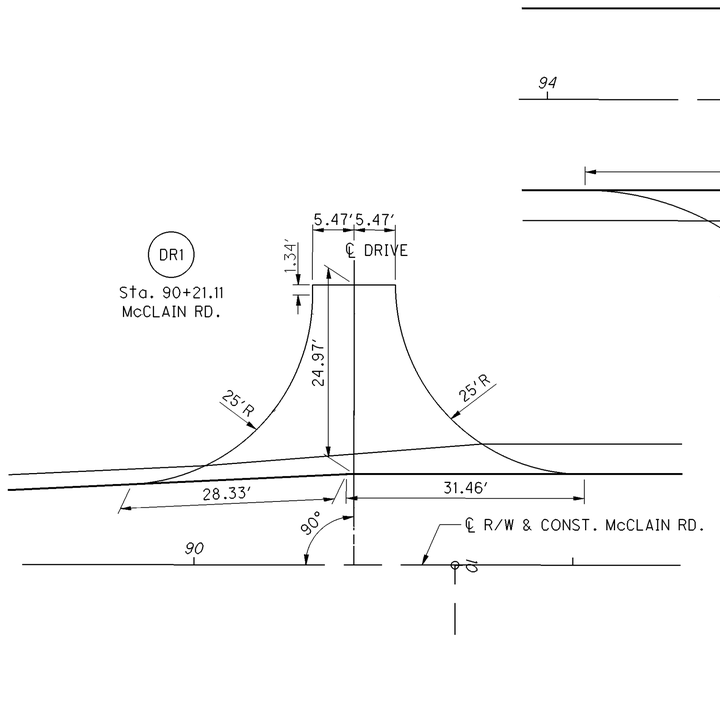

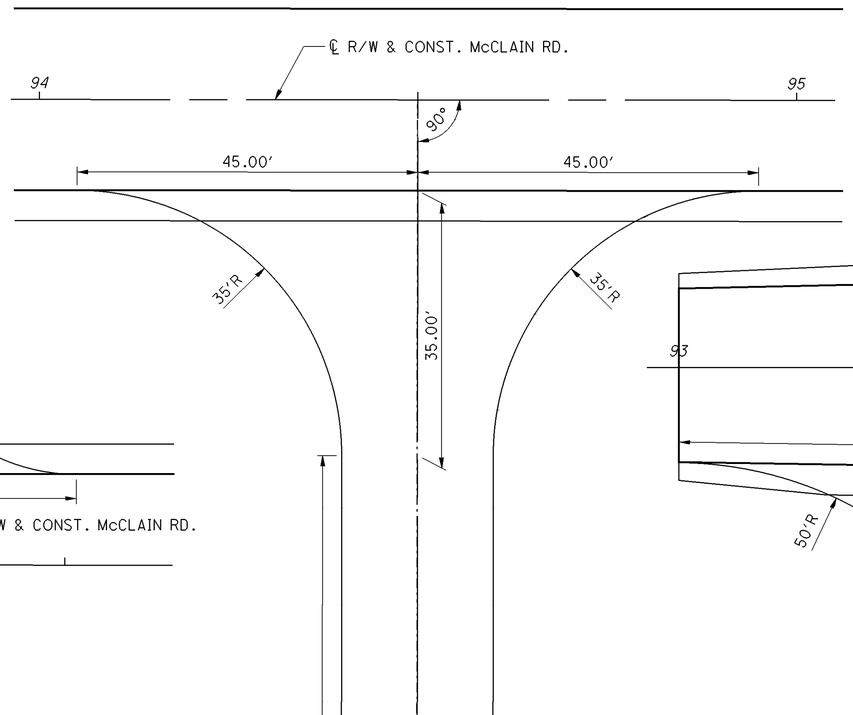

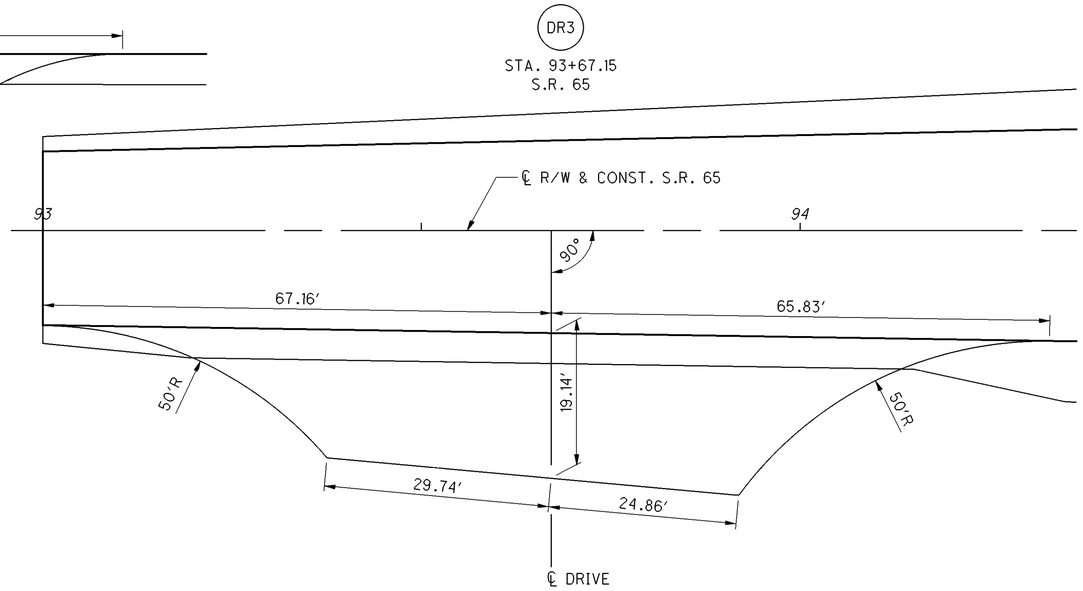

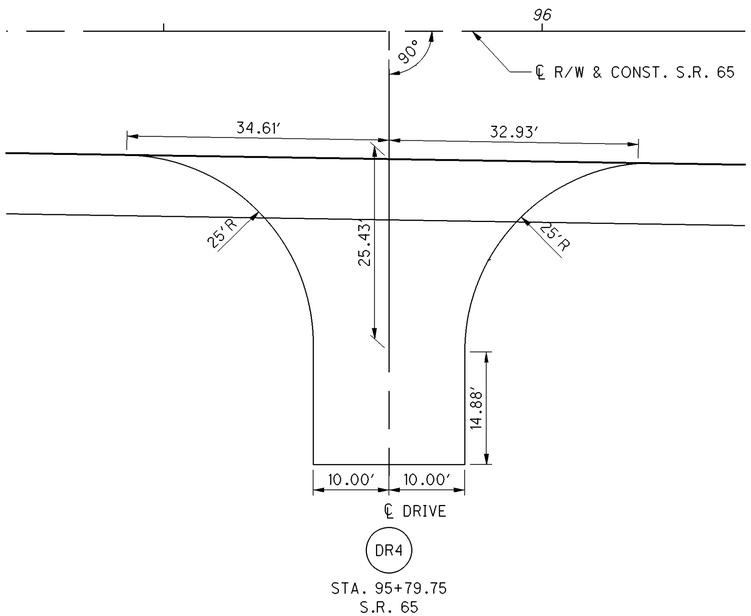

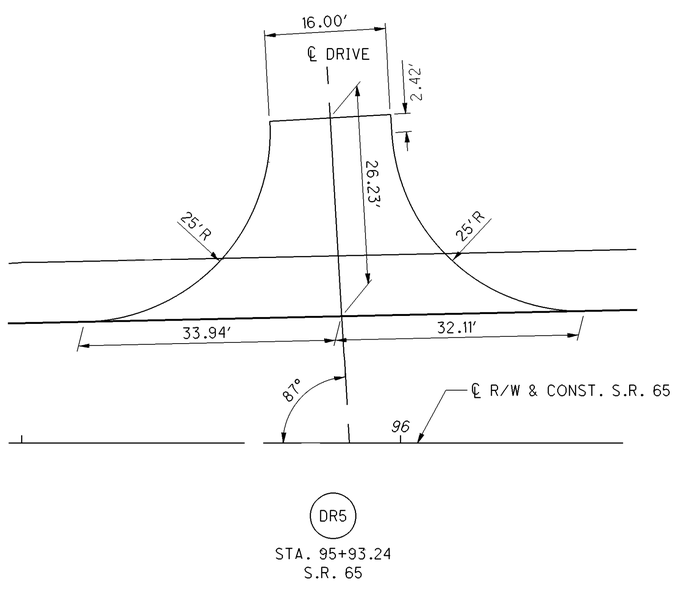

CALCULATED DTS
CHECKED JLG

DRIVEWAY DETAILS

ALL-75-0.21

165
907

I:\Pd\89029\roadway\sheets\89029GD002.dgn 25-JUN-2013 10:29AM tbolenba

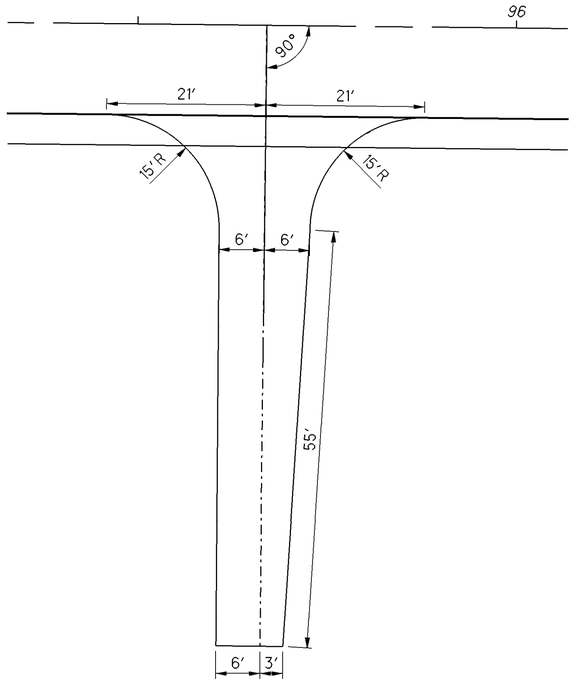

DR6

STA. 95+67.00
HANTHORN RD.

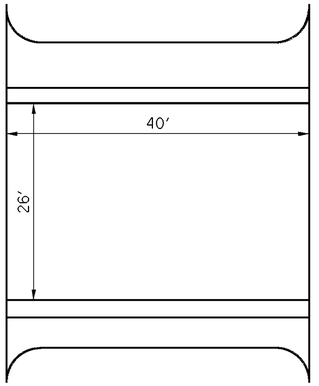

DR9

STA. 195+72.78
I-75

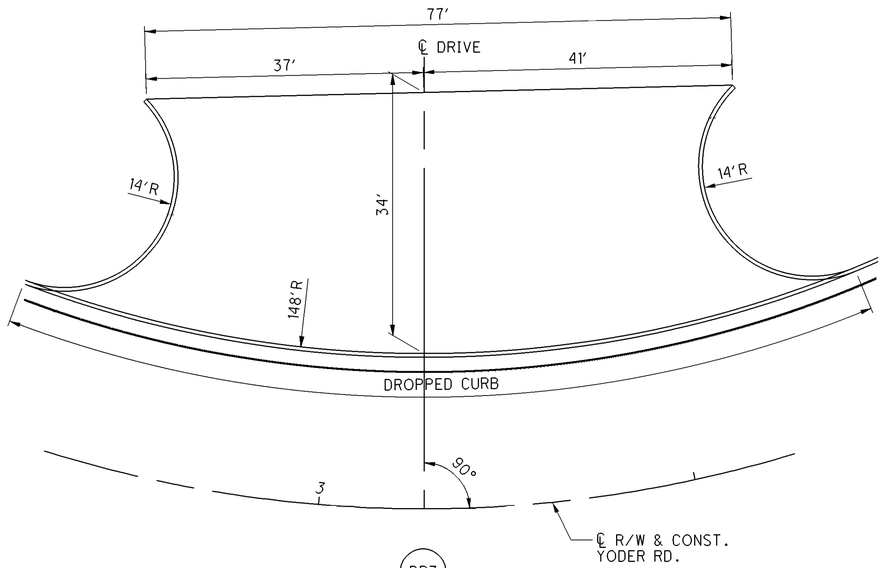

DR7

STA. 3+13.93
YODER RD.

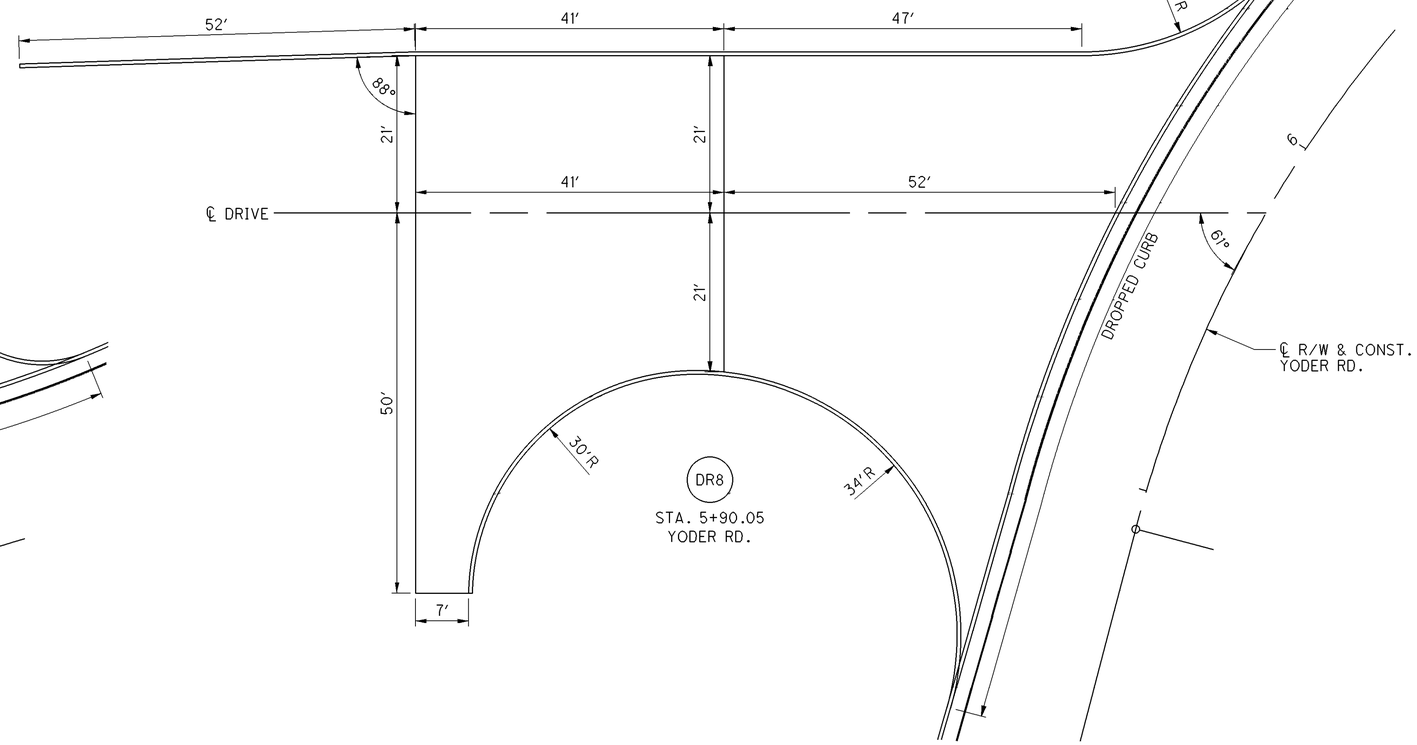

DR8

STA. 5+90.05
YODER RD.

CALCULATED DTS
CHECKED JLG

DRIVEWAY DETAILS

ALL-75-0.21

166
907

I:\Pd\89029\roadway\sheets\89029GD003.dgn 25-JUN-2013 10:29AM tbolenba

EARTHWORK				
		202		659
SHEET NO.	LOCATION	EXCAVATION	EMBANKMENT	SEEDING AND MULCHING
		CU YD	CU YD	SQ YD
	I.R.-75			
207		470	79	7656
208		1181	81	3250
209		1461	59	3300
210		1670	73	3347
211		2142	26	3383
212		2173	130	3594
213		1892	133	3703
214		1418	171	3708
215		1026	192	3559
216		1176	217	3783
217		1467	212	3894
218		1047	200	3550
219		1077	214	3519
220		876	234	3210
221		751	137	3063
222		2092	355	7111
223		3727	709	8540
224		1117	620	3975
225		800	961	3953
226		981	1595	2956
227		680	812	3166
228		1526	526	4606
229		3583	152	6673
230		2544	104	5883
231		2669	181	7601
232		2763	103	5867
233		2456	77	5855
234		1258	387	4556
235		453	951	3903
236		207	2051	5339
237		857	870	6166
238		1222	991	5530
239		1059	1551	5280
240		763	1862	4374
241		815	2509	5047
242		685	3398	5903
243		362	3701	4716
244		133	2350	2430
245		1709	3008	4775
246		2632	574	4049
SUBTOTAL "A"		56920	32556	184773

EARTHWORK				
		202		659
SHEET NO.	LOCATION	EXCAVATION	EMBANKMENT	SEEDING AND MULCHING
		CU YD	CU YD	SQ YD
	I.R.-75			
247		2665	490	4200
248		2400	1307	4756
249		1897	326	2899
250		1852	129	2927
251		1793	95	3809
252		1059	185	3489
253		832	472	3772
254		1501	575	7091
255		3105	535	8506
256		1672	271	5284
257		1992	353	5916
258		2650	198	7272
259		2044	234	5446
260		1645	215	5422
261		1650	304	6345
262		1967	731	6766
263		3668	1128	6865
264		4772	1806	8667
265		3746	2000	9928
266		2421	1225	6055
267		1912	843	7428
268		1855	456	7010
269		1730	370	8539
270		1056	226	6556
271		1007	313	6406
272		963	244	4797
273		1343	197	3627
274		1835	196	4883
275		2532	219	6221
276		1982	136	4521
277		1798	206	5800
278		1302	57	3594
279		965	366	3058
280		1045	1180	3425
281		495	2472	3321
282		10	3373	1838
283		3	7377	3689
284		20	3194	1811
285		572	6171	3380
286		540	10863	4781
SUBTOTAL "B"		68296	51038	210100

EARTHWORK				
		202		659
SHEET NO.	LOCATION	EXCAVATION	EMBANKMENT	SEEDING AND MULCHING
		CU YD	CU YD	SQ YD
	I.R.-75			
287		40	10056	3310
288		0	9646	1994
289		0	16103	3364
290		0	7908	3064
291		17686	6165	3484
292		1602	14367	6725
293		4082	20012	11209
294		5139	13636	8035
295		8856	19006	13611
296		2794	16626	9622
297		7484	7153	9900
298		8775	3655	12361
299		6876	1434	9431
300		15940	1185	6888
301		14806	352	8821
302		14872	972	9611
303		3380	1591	6133
304		1197	799	5428
305		1546	376	5711
306		1328	279	4245
307		1434	154	3727
308		1059	78	2617
SUBTOTAL "C"		118896	151553	149291
	BREESE RD			
312		441	1169	659
313		1042	2392	1847
314		775	4777	2313
315		35	266	839
316		136	159	1971
	RAMP A			
322		651	256	1208
323		2214	13	2081
324		787	131	1808
	RAMP B			
325		128	801	764
326		121	1611	1602
327		180	1779	1615
328		1521	2478	2756
329		122	430	556
SUBTOTAL "D"		8153	16262	20019

EARTHWORK				
		202		659
SHEET NO.	LOCATION	EXCAVATION	EMBANKMENT	SEEDING AND MULCHING
		CU YD	CU YD	SQ YD
	RAMP C			
330		607	1116	1659
331		381	517	1678
332		149	776	1299
333		387	136	783
	RAMP D			
334		14	341	875
335		123	200	1197
336		154	77	1058
	McCLAIN RD.			
342		113	216	874
343		209	715	1428
344		220	3466	2392
345		109	4398	1819
346		342	6203	2881
347		569	10276	3572
348		638	9395	3388
349		1484	8758	3543
350		2052	3712	2906
351		1004	1492	2050
352		412	465	1096
	SR 65			
361		88	42	1962
362		224	37	1140
363		371	52	1123
364		200	101	1111
365		183	47	1125
366		614	25	2254
367		221	33	468
368		283	30	130
369		411	56	266
370		508	17	591
370A		1045	205	1549
371		816	519	2084
372		32	42	458
	RAMP A			
379		102	577	692
380		78	794	961
381		7	570	831
382		7	242	616
	RAMP B			
383		37	428	585
384		102	384	931
385		77	229	909
386		459	62	1060
SUBTOTAL "E"		14832	56751	55344

CALCULATED JLG
CHECKED TAB

EARTHWORK SUMMARY

ALL-75-0.21

I:\Pd\89029\roadway\sheets\89029GS001.dgn 25-JUN-2013 10:29AM tbolenba

EARTHWORK				
		203		659
SHEET NO.	LOCATION	EXCAVATION	EMBANKMENT	SEEDING AND MULCHING
		CU YD	CU YD	SQ YD
	RAMP C			
387		233	7	364
388		421	736	1007
389		6	2230	644
390		421	4435	845
391		0	4907	1137
	RAMP D			
392		271	9	764
393		554	653	2106
394		77	1541	1117
395		0	2888	686
396		0	3302	550
397		0	2215	444
	YODER RD.			
400		128	8	569
401		867	171	721
402		645	20	908
403		615	27	730
404		421	133	139
405		73	353	2221
406		35	43	365
	HANTHORN RD.			
411		30	87	492
412		103	683	1221
413		219	2024	2474
414		440	4590	3025
415		472	5098	1582
416		393	8126	3345
417		481	1460	2178
418		405	2723	3539
419		436	2023	2414
420		114	482	1113
	McCLAIN DITCH			
424		0	0	0
425		257	0	528
426		624	0	1342
427		618	0	1105
428		651	0	905
429		537	0	1123
430		378	0	611
SUBTOTAL "F"		10925	50974	42314

CONCRETE PAVEMENT CORRECTION			
		203	
STATION	STATION	EXCAVATION	EMBANKMENT
		CU YD	CU YD
11+00	48+00	-1718	455
48+00	52+56.42		268
53+92.42	57+00	-71	109
57+00	82+00	-1161	307
82+00	88+50		382
88+50	97+00	-197	302
97+00	108+00		646
108+00	109+50	-35	53
109+50	157+00	-2206	584
157+00	163+00	-139	213
163+00	172+00		529
172+00	173+50	-35	53
173+50	175+00		88
175+00	215+00	-1858	492
215+00	222+93.83		466
225+11.83	235+79.41		627
238+40.41	263+00		1445
263+00	266+00	-70	107
266+00	272+50	-302	80
272+50	280+00	-174	266
280+00	292+00	-557	148
BREESE RD.			
91+22.50 Ramp A	97+00 Ramp A	-18	
97+00 Ramp A	104+44.23 Ramp A		76
97+43.94 Ramp B	105+42.86 Ramp B		62
117+78.01 Ramp C	125+78.01 Ramp C	-54	
119+13.27 Ramp D	134+17.16 Ramp D	-93	
SR 65			
210+53.73 Ramp A	215+00 Ramp A	-18	
215+00 Ramp A	218+53.21 Ramp A		37
204+40 Ramp B	215+00 Ramp B	-61	
215+00 Ramp B	217+94.54 Ramp B		39
232+38.06 Ramp C	235+79.41 Ramp C		37
238+40.41 Ramp C	240+12.21 Ramp C		6
233+15.74 Ramp D	235+79.41 Ramp D		38
238+40.41 Ramp D	247+25 Ramp D		45
TOTALS		-8768	7960

EARTHWORK			
	203		659
LOCATION	EXCAVATION	EMBANKMENT	SEEDING AND MULCHING
	CU YD	CU YD	SQ YD
GENERAL PLAN QUANTITIES			
SUBTOTAL "A"			184773
SUBTOTAL "B"			210100
SUBTOTAL "C"			149291
SUBTOTAL "D"	8153	16262	20019
SUBTOTAL "E"	14832	56751	55344
SUBTOTAL "F"	10925	50974	42314
S & M TABLE		547	24757
GRAND TOTAL TO GEN SUMM	33910	124534	686598
ASPHALT CONCRETE OPTION "A"			
SUBTOTAL "A"	56920	32556	0
SUBTOTAL "B"	68296	51038	0
SUBTOTAL "C"	118896	151553	0
S & M TABLE		4904	0
GRAND TOTAL TO GEN SUMM	244112	240051	0
CONCRETE OPTION "B"			
SUBTOTAL "A"	56920	32556	0
SUBTOTAL "B"	68296	51038	0
SUBTOTAL "C"	118896	151553	0
CORRECTION	-8768	7960	0
S & M TABLE		4904	0
GRAND TOTAL TO GEN SUMM	235344	248011	0

ITEM 605 - AGGREGATE DRAINS		
STATION	SIDE	LENGTH FEET
S.R. 65		
93+00	LT	10
93+00	RT	6.5
93+50	LT	10
94+00	LT	11.5
94+50	LT	11.5
94+75	RT	11.5
95+00	LT	11.5
95+25	RT	11.5
95+50	LT	11.5
TOTAL TO GEN. SUMMARY		96

SEEDING AND MULCHING &
GROWTH AND CARE OF SODDED AREA CALCULATIONS

(Quantities carried to General Notes)

ITEM 659 TOPSOIL (areas with slopes > 3:1)
111CY x 686598sy / 1000sy = 76,212 cy
76,212 cy

ITEM 659 SOIL ANALYSIS TEST
1 each x 76212cy / 10000cy = 8 each
1ea./10 ac. x 686598sy x 9sf/sy / 43560sf/ac. = 14 each
22 each

ITEM 659 INTERSEEDING
5% x 686598sy = 34,330sy

ITEM 659 REPAIR SEEDING AND MULCHING
5% x 686598sy = 34,330sy

ITEM 659 COMMERCIAL FERTILIZER
1 Ton / 7410sy x (686598sy) = 93 Tons
1 Ton / 4940sy x 34330sy = 6.9 Tons
100 Tons

ITEM 659 LIME
(686598sy) x 9sf/sy / 43560sf/ac. = 142 acres

ITEM 659 WATER
2x0.0027MGal/sy x 686598sy = 3708 M Gal
0.0027 MGal/sy x 34330sy = 93 M Gal
3801 M Gal

ITEM 659 MOWING
25% x 686598sy x 9sf/sy
x 1msf/1000sf = 1545 M Sq Ft

SEEDING AND MULCHING &
EMBANKMENT CORRECTIONS

(Quantities carried to Summary this sheet)

EMBANKMENT CORRECTION AT PAVEMENT EDGES-MAINLINE
ITEM 203 EMBANKMENT = 4904 CU YD
(INCLUDED IN EARTHWORK TABLE)

EMBANKMENT CORRECTION AT PAVEMENT EDGES-GENERAL
ITEM 203 EMBANKMENT = 547 CU YD
(INCLUDED IN EARTHWORK TABLE)

SEEDING AND MULCHING
ITEM 659 SEEDING AND MULCHING = 24,757 SQ YD
(INCLUDED IN EARTHWORK TABLE)

CALCULATED JLG
CHECKED TAB

EARTHWORK SUMMARY

ALL-75-0.21

168
907

I:\Pdt\89029\roadway\sheets\89029GS002.dgn 25-JUN-2013 10:29AM tbolenba

LEGEND

- WETLAND
- FLOOD BOUNDARY
- FLOODWAY

PROJECT DATA					
TOTAL AREA (RIGHT-OF-WAY)	205	ACRES	RUNOFF COEFFICIENT FOR PRE- CONSTRUCTION SITE		0.5
PROJECT EARTH DISTURBED AREA	205	ACRES	RUNOFF COEFFICIENT FOR POST CONSTRUCTION SITE		0.5
ESTIMATED CONTRACTOR EARTH DISTURBED AREA	50	ACRES	IMMEDIATE RECEIVING WATERS		LITTLE OTTAWA RIVER, LOST CREEK
NOTICE OF INTENT EARTH DISTURBED AREA	255	ACRES	SUBSEQUENT RECEIVING WATER		MAUMEE RIVER
IMPERVIOUS (PAVED) AREA FOR PRE- CONSTRUCTION SITE	63.4	ACRES			
IMPERVIOUS (PAVED) AREA FOR POST CONSTRUCTION SITE	63.4	ACRES			

USGS QUADRANT MAPS: LIMA, OHIO
CRIDERSVILLE, OHIO

LONGITUDE: 40°43'02"
LATITUDE: 84°04'30"

* LONGITUDE AND LATITUDE TO APPROX. CENTER OF PROJECT

PROPOSED VEGETATED BIOFILTER LOCATIONS SHOWN ON SHEET 147.

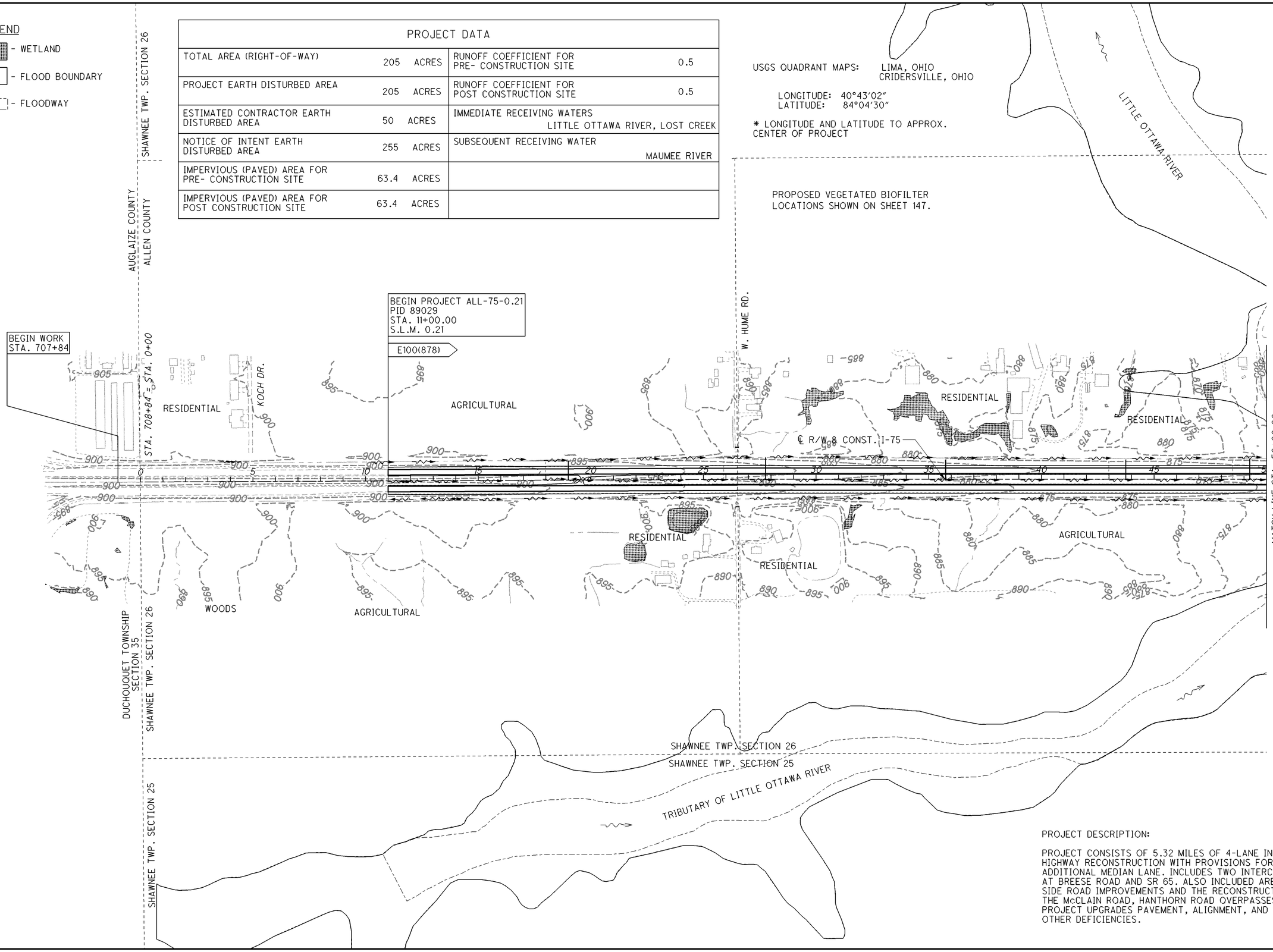

PROJECT DESCRIPTION:

PROJECT CONSISTS OF 5.32 MILES OF 4-LANE INTERSTATE HIGHWAY RECONSTRUCTION WITH PROVISIONS FOR A FUTURE ADDITIONAL MEDIAN LANE. INCLUDES TWO INTERCHANGES; AT BREESE ROAD AND SR 65. ALSO INCLUDED ARE VARIOUS SIDE ROAD IMPROVEMENTS AND THE RECONSTRUCTION OF THE McCLAIN ROAD, HANTHORN ROAD OVERPASSES. THE PROJECT UPGRADES PAVEMENT, ALIGNMENT, AND VARIOUS OTHER DEFICIENCIES.

HORIZONTAL SCALE IN FEET
0 100 200 400

PROJECT SITE PLAN

ALL-75-0.21

169
907

I:\Pd\89029\drainage\sheets\89029DE001.dgn 25-JUN-2013 10:29AM tbolenba

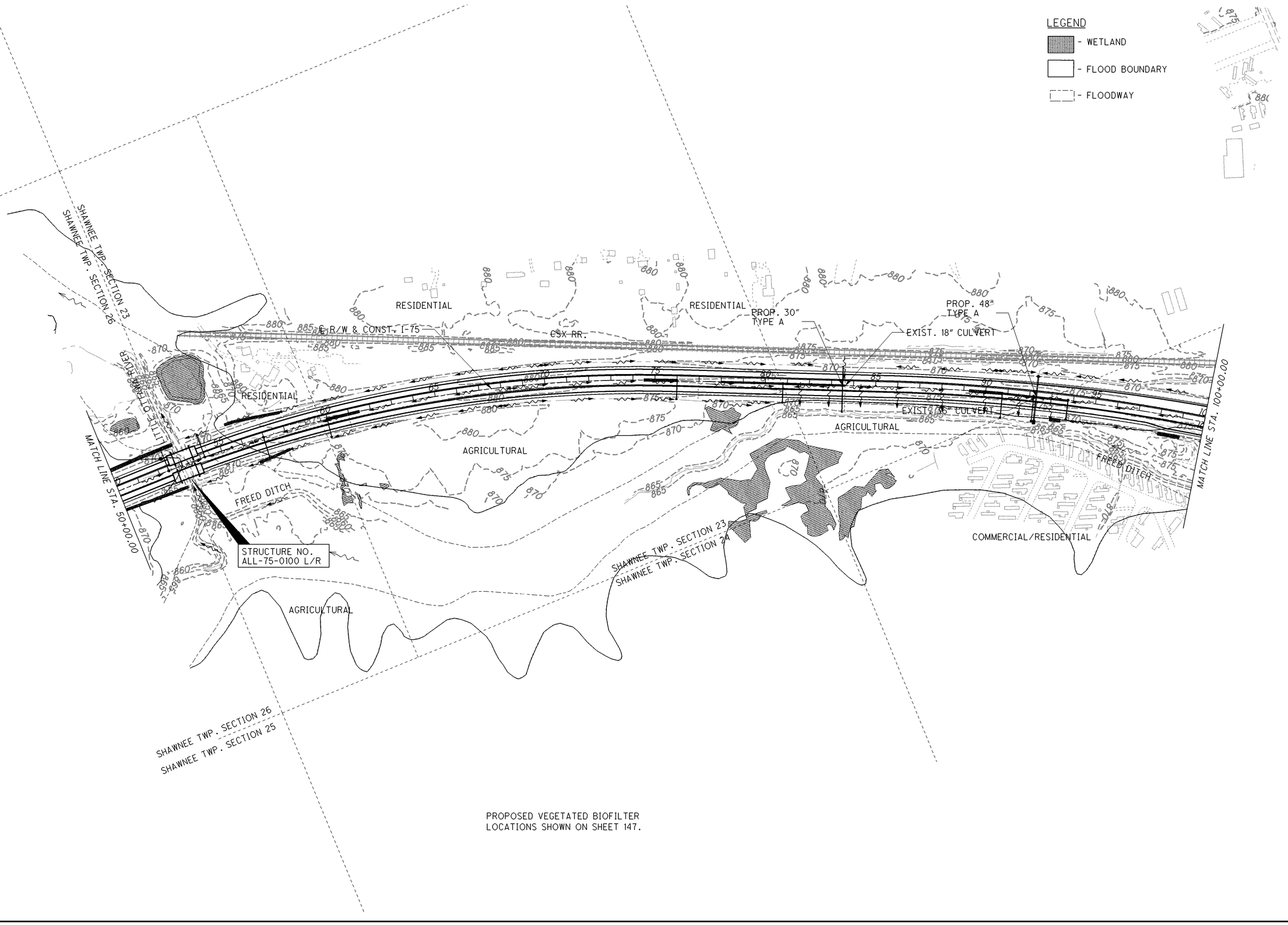

PROJECT SITE PLAN

ALL-75-0.21

170
907

I:\Pd\89029\drainage\sheets\89029DE002.dgn 25-JUN-2013 10:29AM tbolenba

LEGEND

- WETLAND
- FLOOD BOUNDARY
- FLOODWAY

S. DIXIE HWY.

SHAWNEE TWP. - SECTION 14
SHAWNEE TWP. - SECTION 13

SHAWNEE TWP. - SECTION 23
SECTION 24

℄ R/W & CONST. BREESE RD.

STRUCTURE NO. ALL-754-0212

CSX RR.

PROP. 15" TYPE A

PROP. 42" TYPE A

PROP. 42" TYPE A

PROP. 36" TYPE A

EXIST. 2-21" CULVERTS

COMMERCIAL

FORT SHAWNEE INDUSTRIAL DR.

COMMERCIAL

COMMERCIAL

EXIST. 18" CULVERT

EXIST. 18" CULVERT

EXIST. 36" CULVERT

℄ RAMP 'A'

℄ RAMP 'B'

℄ RAMP 'C'

℄ RAMP 'D'

℄ R/W & CONST. I-75

PROP. 36" TYPE A

PROP. 30" TYPE A

EXIST. 36" CULVERT

PROP. 36" TYPE A

COMMERCIAL/RESIDENTIAL

DELONG ROAD

SHAWNEE TWP. - SECTION 13
SHAWNEE TWP. - SECTION 24

FREED DITCH

COMMERCIAL

MATCH LINE STA. 100+00.00

MATCH LINE STA. 150+00.00

INTERSECTION EQUATIONS:

STA. 112+00.84 (I-75) =
STA. 105+00.00 (BREESE RD.)

STA. 101+74.19 (BREESE RD.)=
STA. 110+30.54 (RAMP 'A')

STA. 101+69.33 (BREESE RD.) =
STA. 109+49.21 (RAMP 'C')

STA. 108+07.17 (BREESE RD.) =
STA. 114+20.50 (RAMP 'B') =
STA. 113+74.46 (RAMP 'D')

PROPOSED VEGETATED BIOFILTER LOCATIONS SHOWN ON SHEET 147.

HORIZONTAL SCALE IN FEET
0 100 200 400

PROJECT SITE PLAN

ALL-75-0.21

171
907

I:\Pd\89029\drainage\sheets\89029DE003.dgn 25-JUN-2013 10:29AM tbolenba

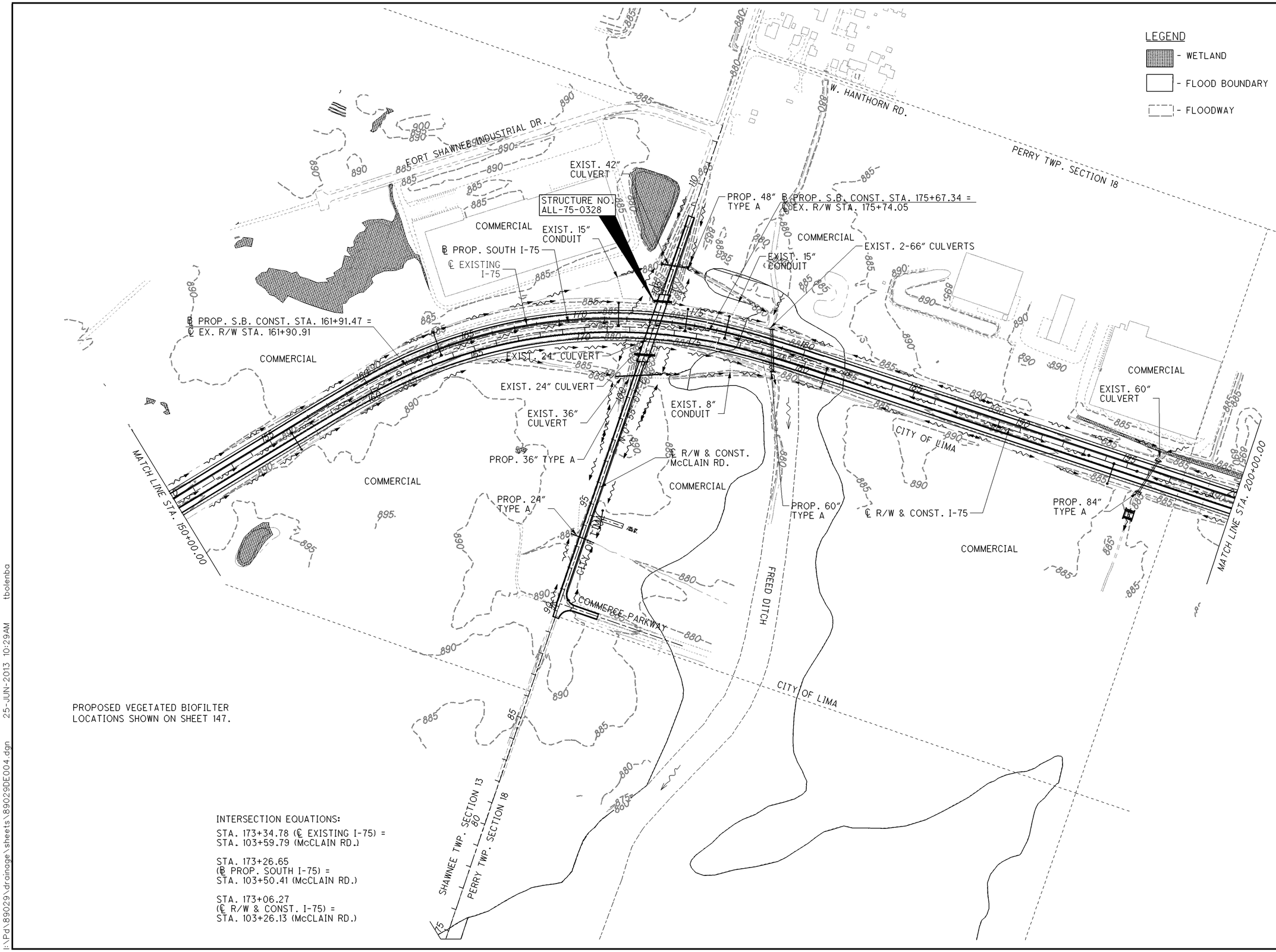

PROJECT SITE PLAN

ALL-75-0.21

172
907

I:\Pd\89029\drainage\sheets\89029DE004.dgn 25-JUN-2013 10:29AM tbolenba

LEGEND

- WETLAND
- FLOOD BOUNDARY
- FLOODWAY

NOTE:

1. INTERSTATE ROUTE 75 - CONSTRUCTION STA. 237+16.73 (0.0' RT.) = INDIANA AND OHIO RAILWAY (IORY) AAR/DOT#258615H RR MP. 135.34 SUBDIVISION: DT&I MIDDLE

HORIZONTAL SCALE IN FEET
0 100 200 400

PROJECT SITE PLAN

ALL-75-0.21

173
907

PROPOSED VEGETATED BIOFILTER LOCATIONS SHOWN ON SHEET 147.

INTERSECTION EQUATIONS:
STA. 106+07.78 (S.R. 65) = STA. 224+17.25 (RAMP 'B')

STA. 106+13.89 (S.R. 65) = STA. 223+93.98 (RAMP 'C')

STA. 224+02.80 (I-75) = STA. 104+00.00 (S.R. 65)

STA. 101+91.13 (S.R. 65) = STA. 224+15.97 (RAMP 'A')

STA. 101+81.09 (S.R. 65) = STA. 223+90.86 (RAMP 'D')

I:\Pd\89029\drainage\sheets\89029DE005.dgn 25-JUN-2013 10:29AM tbolenba

PROJECT SITE PLAN

ALL-75-0.21

LEGEND
- WETLAND
- FLOOD BOUNDARY
- FLOODWAY

HORIZONTAL SCALE IN FEET
0 100 200 400

BEGIN PROJECT ALL-75-5.53
PID 79961
STA. 292+00.00
S.L.M. 5.53
E036(702)

END PROJECT ALL-75-0.21
PID 89029
STA. 292+00.00
S.L.M. 5.53
E100(878)

END WORK STA. 293+20

MATCH LINE STA. 250+00.00

MATCH LINE STA. 300+00.00

STRUCTURE NO. ALL-75-0508

℄ EX. I-75

℄ PROP. NORTH I-75

℄ R/W & CONST. I-75

℄ R/W & CONST. HANTHORN RD.

PROP. 84" TYPE A

PROP. 30" TYPE A

PROP. 42" TYPE A

PROP. 48" TYPE A

PROP. 8'x4' BOX CULVERT

EXIST. 60" CULVERT

EXIST. 48" CULVERT

EXIST. 18" CULVERT

EXIST. 2-42" CULVERTS

EXIST. 24" CULVERT

EXIST. 20" CULVERT

12" MARATHON PIPE LINE

CITY OF LIMA

AGRICULTURAL

COMMERCIAL

RR SPUR

PERRY TWP. SECTION 8

PERRY TWP. SECTION 17

GREELY CHAPEL RD.

PROPOSED VEGETATED BIOFILTER LOCATIONS SHOWN ON SHEET 147.

INTERSECTION EQUATIONS:
STA. 102+54.27 (HANTHORN RD.) =
STA. 266+05.69 (℄ R/W & CONST. I-75)

STA. 102+81.41 (HANTHORN RD.) =
STA. 266+42.21 (℄ PROP. NORTH I-75)

STA. 104+00.00 (HANTHORN RD.) =
STA. 268+26.04 (℄ EXIST. I-75)

I:\Pd\89029\drainage\sheets\89029DE006.dgn 25-JUN-2013 10:29AM tbolenbo

I:\Pd\89029\roadway\sheets\89029GP001.dgn 25-JUN-2013 6:41AM tbolenba

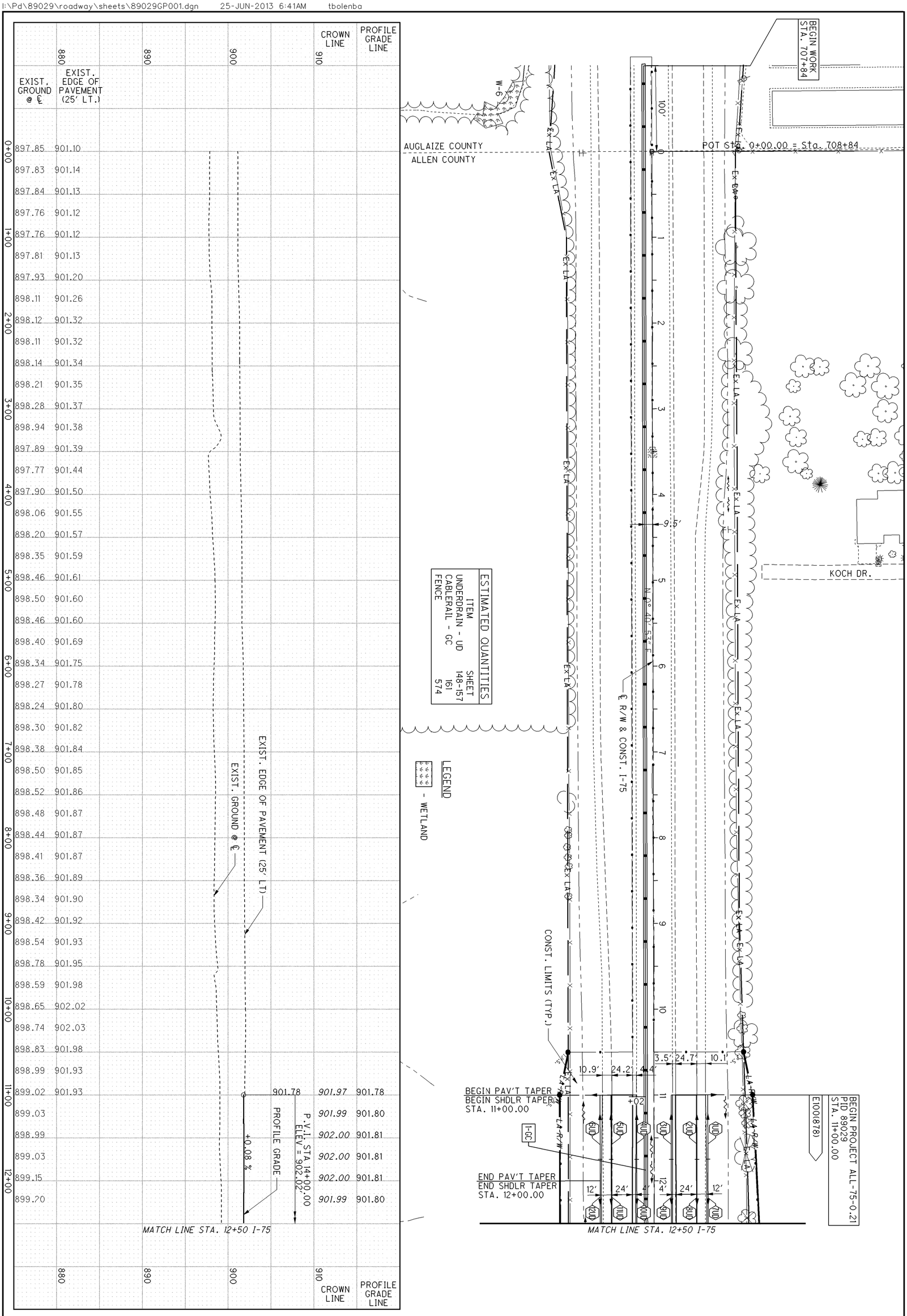

907 / 175	ALL-75-0.21	PLAN AND PROFILE - I-75 BEGIN WORK TO STA. 12+50	CALCULATED CHECKED	0 25 50 100 HORIZONTAL SCALE IN FEET	N

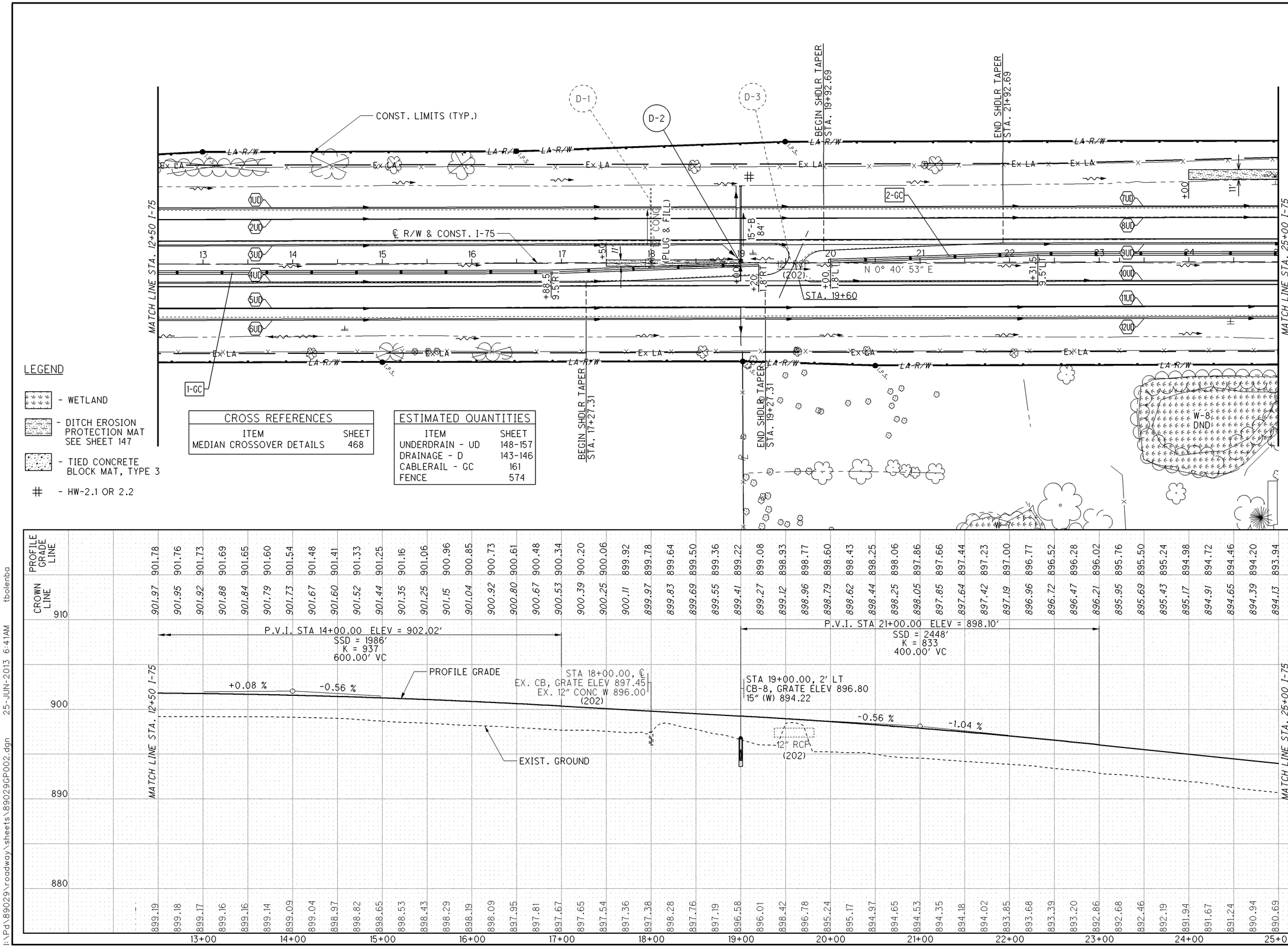

LEGEND

- WETLAND
- DITCH EROSION PROTECTION MAT SEE SHEET 147
- TIED CONCRETE BLOCK MAT, TYPE 3
- # - HW-2.1 OR 2.2

CROSS REFERENCES	
ITEM	SHEET
MEDIAN CROSSOVER DETAILS	468

ESTIMATED QUANTITIES	
ITEM	SHEET
UNDERDRAIN - UD	148-157
DRAINAGE - D	143-146
CABLERAIL - GC	161
FENCE	574

HORIZONTAL SCALE IN FEET
0 25 50 100

CALCULATED | CHECKED

PLAN AND PROFILE - I-75 STA. 12+50 TO STA. 25+00

ALL-75-0.21

I:\Pd\89029\roadway\sheets\89029GP002.dgn 25-JUN-2013 6:41AM tbolenba

I:\Pd\89029\roadway\sheets\89029GP003.dgn 25-JUN-2013 6:41AM tbolenba

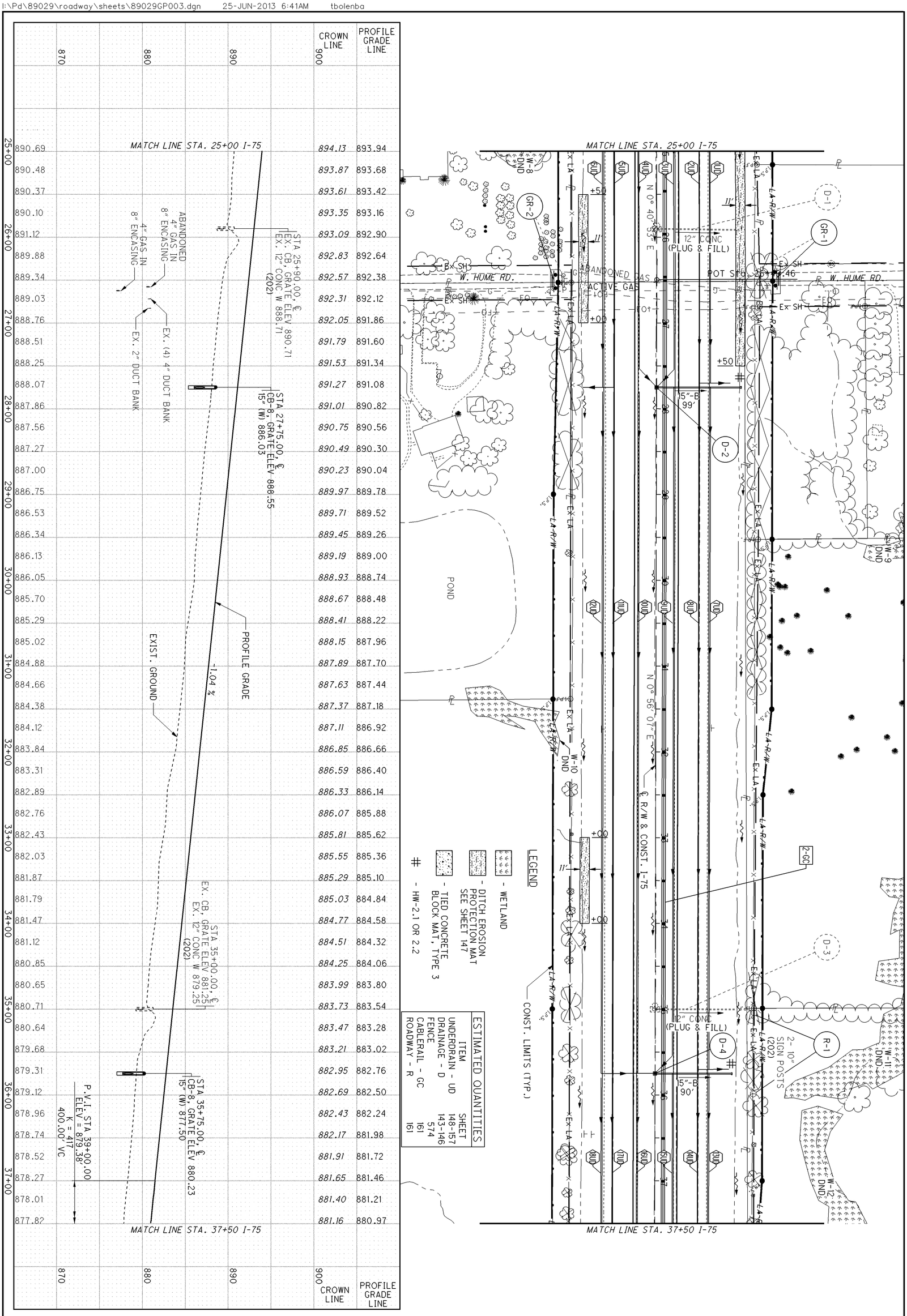

177 / 907	ALL-75-0.21	PLAN AND PROFILE - I-75 STA. 25+00 TO STA. 37+50	CALCULATED CHECKED	0 25 50 100 HORIZONTAL SCALE IN FEET	N

PLAN AND PROFILE - I-75
STA. 37+50 TO STA. 50+00

ALL-75-0.21

178
907

HORIZONTAL SCALE IN FEET
0 25 50 100

CALCULATED | CHECKED

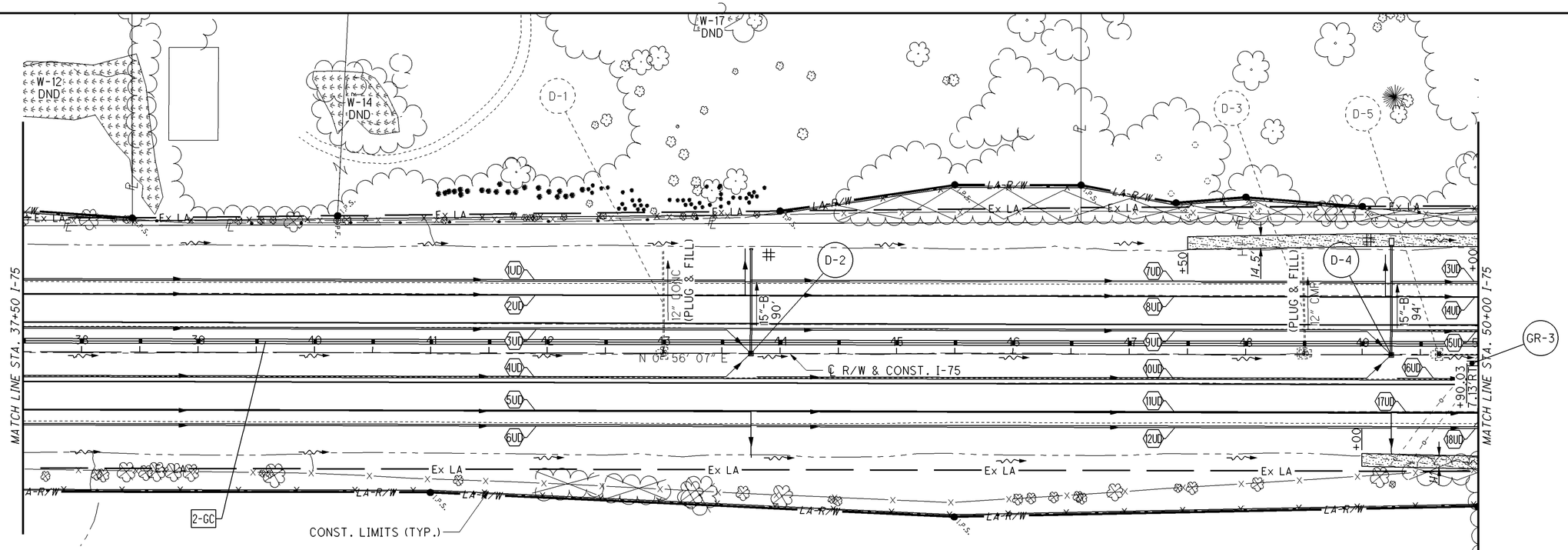

LEGEND

- WETLAND
- DITCH EROSION PROTECTION MAT SEE SHEET 147
- TIED CONCRETE BLOCK MAT, TYPE 3
- # - HW-2.1 OR 2.2

ESTIMATED QUANTITIES

ITEM	SHEET
UNDERDRAIN - UD	148-157
DRAINAGE - D	143-146
CABLERAIL- GC	161
FENCE	574

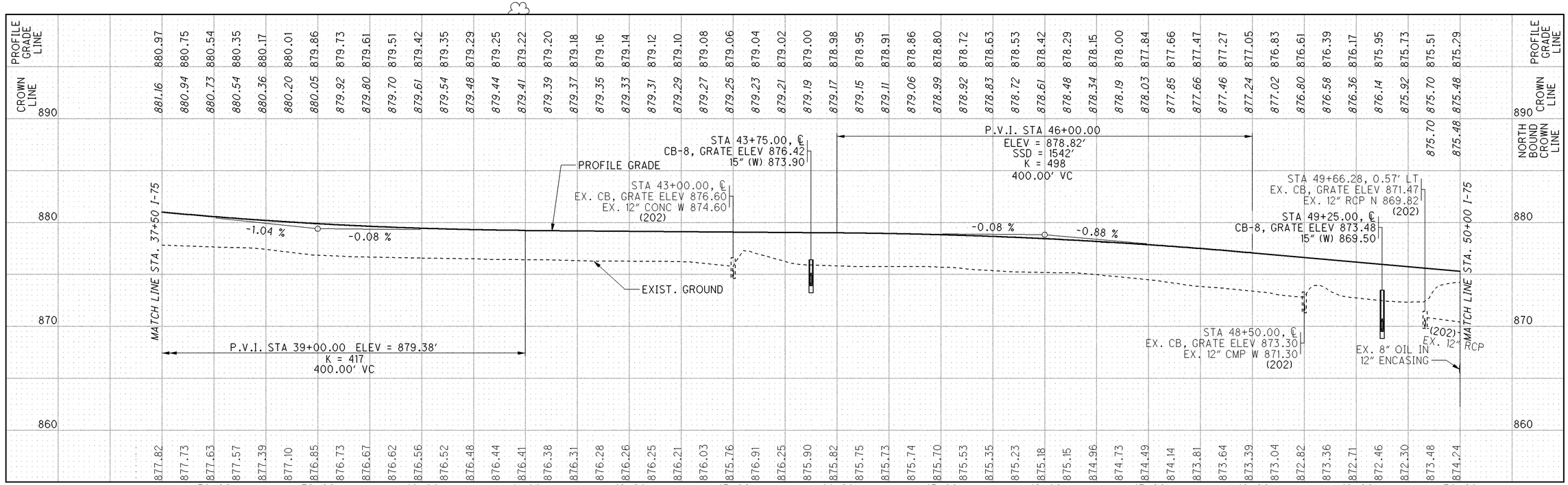

I:\pd\89029\Final Submission\FINAL DGNS\ROADWAY\sheets\89029GP004.dgn 22-NOV-2013 7:23AM jclark1

CURVE I75-1
P.I.= Sta. 64+32.51
D = 23° 36′ 15″ (RT)
Dc = 1° 00′ 00″
R = 5,729.58′
T = 1,197.19′
L = 2,360.42′
E = 123.74′
C = 2,343.76′
C.B. = N 12° 44′ 15″ E
e_d = 0.033

LEGEND
- FLOODWAY
- WETLAND
- DITCH EROSION PROTECTION MAT SEE SHEET 147
- TIED CONCRETE BLOCK MAT, TYPE 3
- HW-2.1 OR 2.2

LITTLE AUGLAIZE RIVER:
THERE WELL BE NO RCP OR PERMANENT FILL PERMITTED BELOW THE OHWM. THE TEMPORARY FILL MAY NOT EXCEED 170 LINEAR FEET OF IMPACT. THE STREAM BED MUST BE RETURNED TO PRE-CONSTRUCTION CONTOURS.

I-75 OVER LITTLE OTTAWA RIVER
BRIDGE NO. ALL-75-0100 L/R

CONST. LIMITS (TYP.)

℄ R/W & CONST. I-75

MATCH LINE STA. 50+00 I-75

MATCH LINE STA. 62+50 I-75

PC Sta. 52+35.32

LITTLE OTTAWA RIVER

FREED DITCH
DND STREAM 6

ESTIMATED QUANTITIES	
ITEM	SHEET
UNDERDRAIN - UD	148-157
DRAINAGE - D	143-146
CABLERAIL - GC	161
FENCE	574
GUARDRAIL - GR	159-160
ROADWAY - R	161

HORIZONTAL SCALE IN FEET
0 25 50 100

CALCULATED
CHECKED

PLAN AND PROFILE - I-75
STA. 50+00 TO STA. 62+50

ALL-75-0.21

179
907

I:\Pid\89029\Final Submission\FINAL DGNS\ROADWAY\sheets\89029GP005.dgn 22-NOV-2013 7:24 AM jclark1

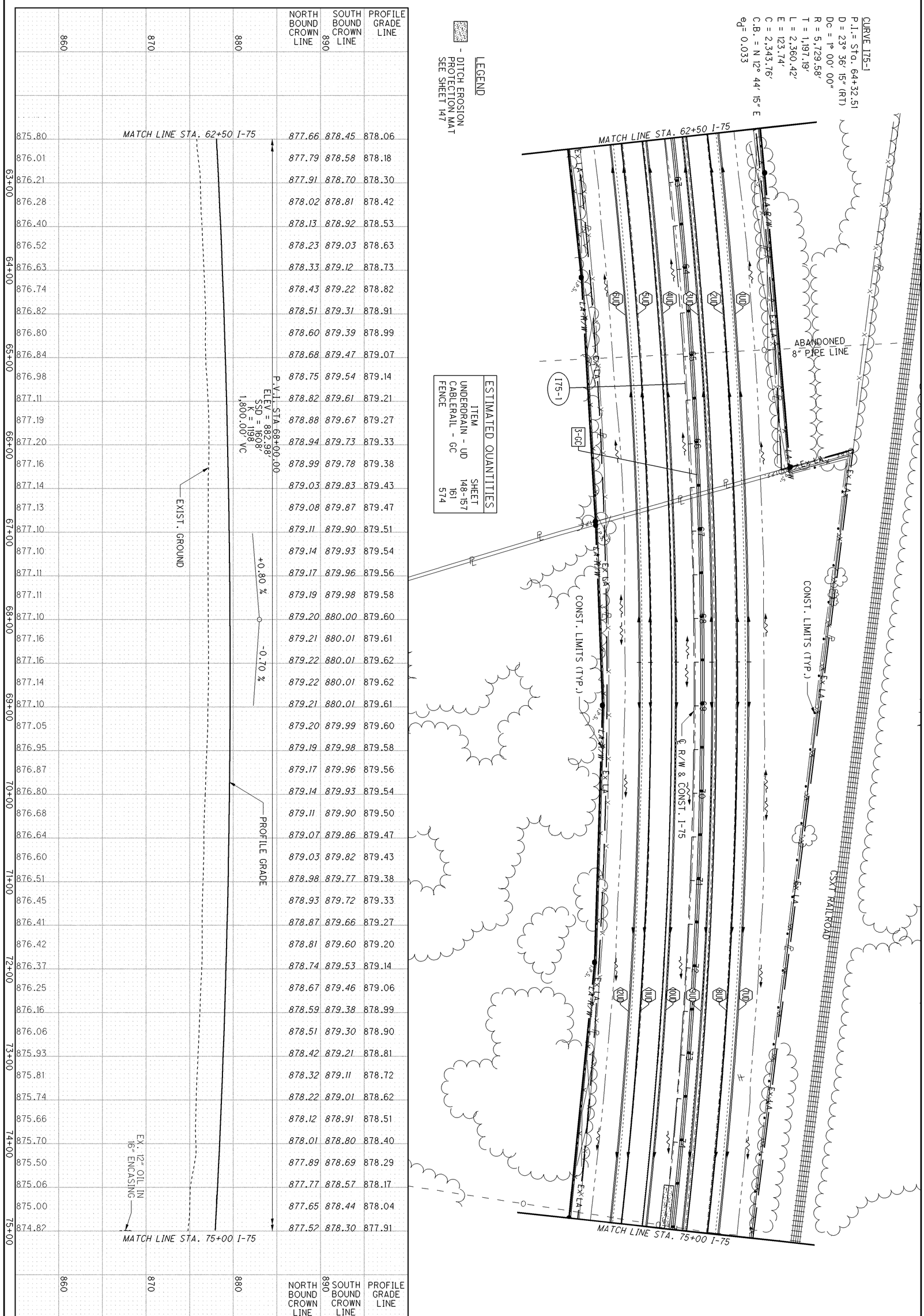

180 / 907	ALL-75-0.21	PLAN AND PROFILE - I-75 STA. 62+50 TO STA. 75+00	CALCULATED / CHECKED	0 50 / 25 100 HORIZONTAL SCALE IN FEET

CURVE I75-1
P.I.= Sta. 64+32.51
D = 23° 36′ 15″ (RT)
Dc = 1° 00′ 00″
R = 5,729.58′
T = 1,197.19′
L = 2,360.42′
E = 123.74′
C = 2,343.76′
C.B. = N 12° 44′ 15″ E
e_d= 0.033

CURVE I75-2
P.I.= Sta. 98+00.86
D = 16° 18′ 41″ (RT)
Dc = 0° 40′ 00″
R = 8,594.37′
T = 1,231.69′
L = 2,446.73′
E = 87.81′
C = 2,438.47′
C.B. = N 32° 41′ 43″ E
e_d=0.026

LEGEND
- FLOODWAY
- WETLAND
- DITCH EROSION PROTECTION MAT SEE SHEET 147
- TIED CONCRETE BLOCK MAT, TYPE 3
- ROCK CHANNEL PROTECTION

CROSS REFERENCES

ITEM	SHEET
CULVERT DETAILS	474-509

CSXT RAILROAD
CONST. LIMTS (TYP.)
MATCH LINE STA. 75+00 I-75
MATCH LINE STA. 87+50 I-75
PT Sta. 75+95.74
PC Sta. 85+69.17
℄ R/W & CONST. I-75
FREED DITCH
1/2 SEC. LINE
W-27 DND
W-26 DND
CONST. LIMTS (TYP.)
- HW-2.1 OR 2.2

ESTIMATED QUANTITIES

ITEM	SHEET
UNDERDRAIN - UD	148-157
DRAINAGE - D	143-146
FENCE	574
GUARDRAIL - GR	159-160
CABLERAIL - GC	161
CULVERT - C	158

P.V.I. STA 68+00.00
ELEV = 882.98′
SSD = 1608′
K = 1198
1,800.00′ VC

STA 77+00.00, ℄
EX. CB, GRATE ELEV 874.21
EX. 12″ CONC E 872.21
(202)

STA 79+50.00, ℄
CB-8, GRATE ELEV 872.65
15″ (NE) 869.95

STA 80+80.00, ℄
CB-8, GRATE ELEV 872.42
15″ (SW) 869.45
15″ (NE) 869.45
18″ (SE) 869.25

STA 82+10.00, ℄
CB-8, GRATE ELEV 872.64
15″ (SW) 869.95

STA 83+62.00, ℄
EX. CB, GRATE ELEV 870.34
EX. 20″ CONC SE 865.18
EX. 20″ CONC NW 865.53
(202)

P.V.I. STA 86+00.00 ELEV = 876.38′
SSD = 1998′
K = 667
400.00′ VC

PROFILE GRADE
EXIST. GROUND
EX. 12″ OIL
STA 76+00.00, ℄
CB-8, GRATE ELEV 874.34
18″ (SE) 871.97
-0.70 %
+0.30 %
+0.30 %
-0.30 %
130′-15″B @ 0.38%
130′-15″B @ 0.38%
P.V.I. STA 80+00.00 ELEV = 874.58′
K = 400
400.00′ VC
PROP. 30″ TYPE A
OHWM = 868.66

| | | |

CURVE I75-2
P.I.= Sta. 98+00.86
D = 16° 18′ 41″ (RT)
Dc = 0° 40′ 00″
R = 8,594.37′
T = 1,231.69′
L = 2,446.73′
E = 87.81′
C = 2,438.47′
C.B. = N 32° 41′ 43″ E
e_d=0.026

LEGEND
- FLOODWAY
- WETLAND
- DITCH EROSION PROTECTION MAT SEE SHEET 147
- TIED CONCRETE BLOCK MAT, TYPE 3
- ROCK CHANNEL PROTECTION
- HW-2.1 OR 2.2

CROSS REFERENCES

ITEM	SHEET
CULVERT DETAILS	474-509

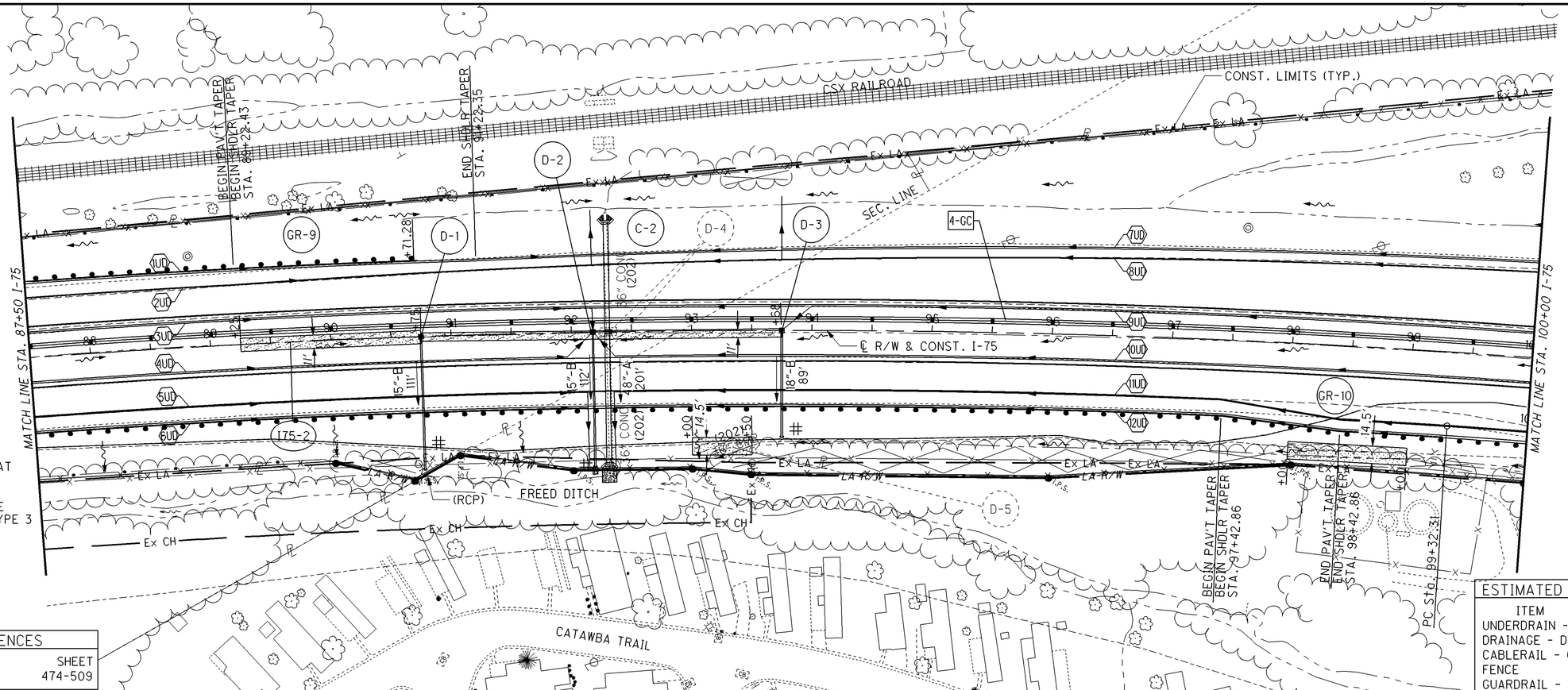

ESTIMATED QUANTITIES

ITEM	SHEET
UNDERDRAIN - UD	148-157
DRAINAGE - D	143-146
CABLERAIL - GC	161
FENCE	574
GUARDRAIL - GR	159-160
CULVERT - C	158

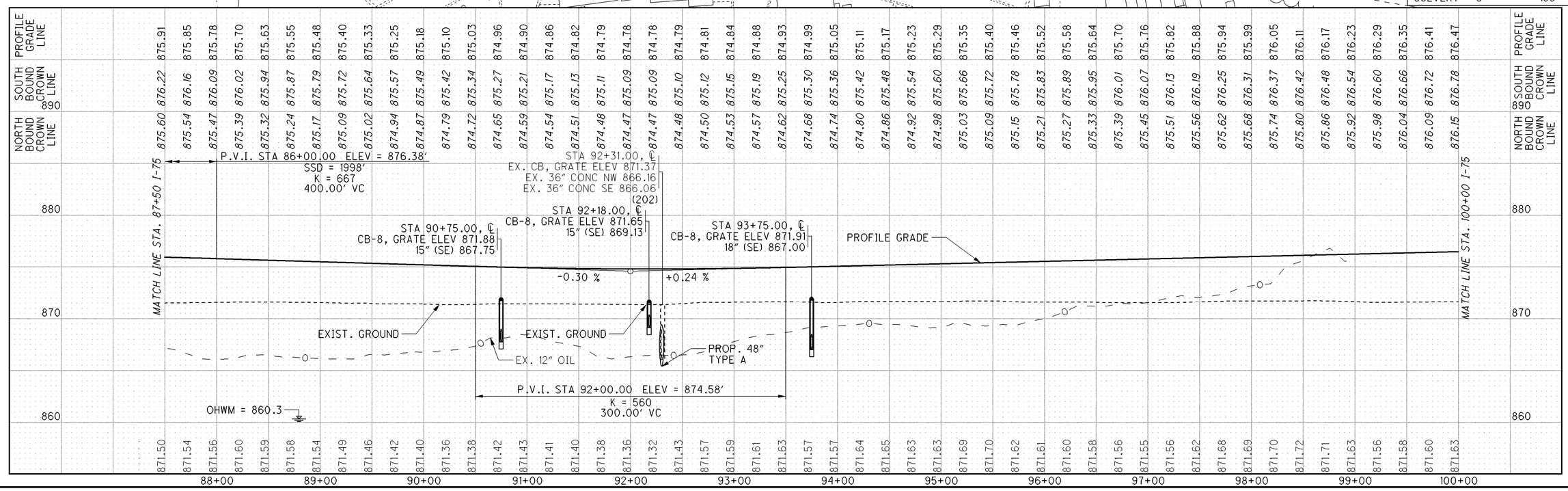

HORIZONTAL SCALE IN FEET
0 25 50 100
CALCULATED
CHECKED

PLAN AND PROFILE - I-75
STA. 87+50 TO STA. 100+00

ALL-75-0.21

182
907

I:\Pd\89029\roadway\sheets\89029GP008.dgn 25-JUN-2013 6:41AM tbolenba

CURVE I75-2
P.I.= Sta. 98+00.86
D = 16° 18′ 41″ (RT)
Dc = 0° 40′ 00″
R = 8,594.37′
T = 1,231.69′
L = 2,446.73′
E = 87.81′
C = 2,438.47′
C.B. = N 32° 41′ 43″ E
e_d=0.026

LEGEND
- FLOODWAY
- WETLAND
- DITCH EROSION PROTECTION MAT SEE SHEET 147
- TIED CONCRETE BLOCK MAT, TYPE 3
- ROCK CHANNEL PROTECTION
- HW-2.1 OR 2.2

ESTIMATED QUANTITIES	
ITEM	SHEET
UNDERDRAIN - UD	148-157
DRAINAGE - D	143-146
CABLERAIL - GC	161
FENCE	574
GUARDRAIL - GR	159-160
CULVERT - C	158

CROSS REFERENCES	
ITEM	SHEET
CULVERT DETAILS	474-509
PAVEMENT DETAILS	448-449

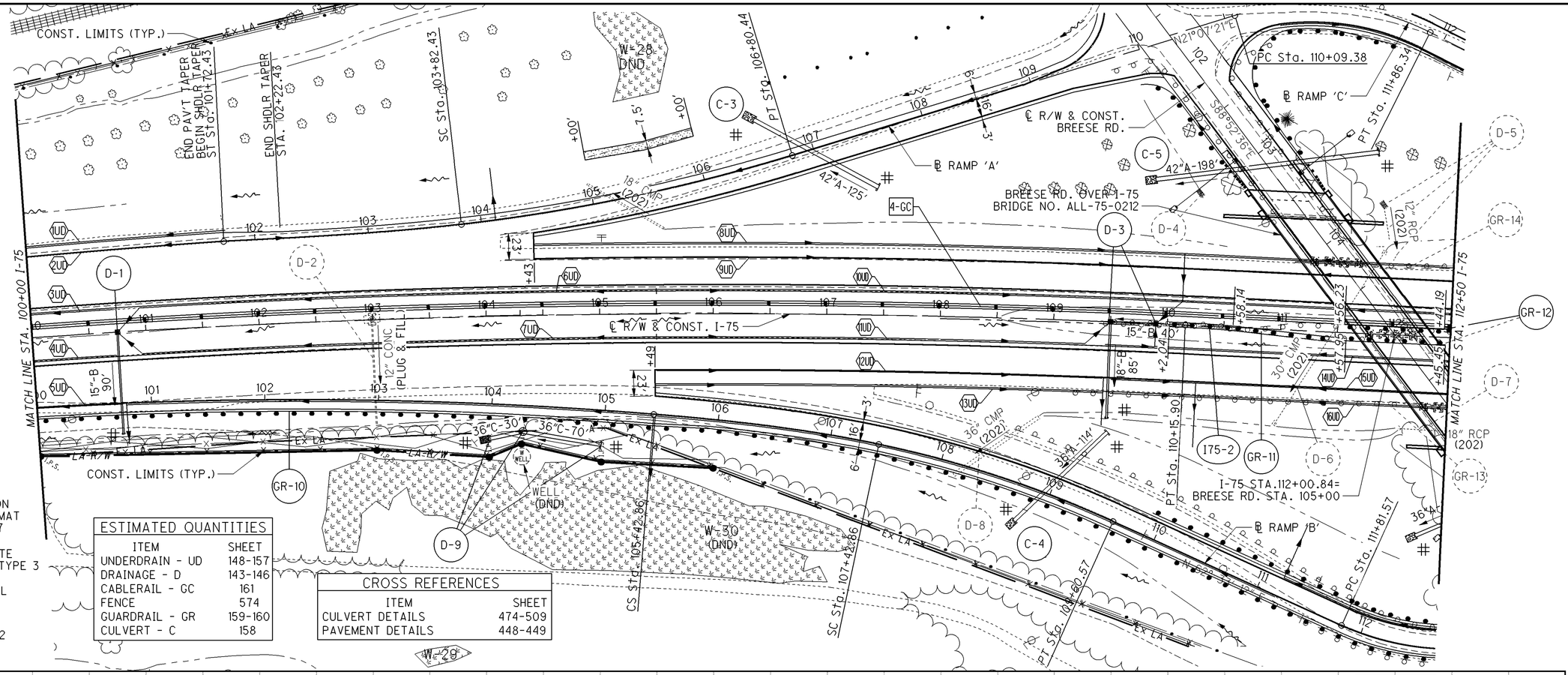

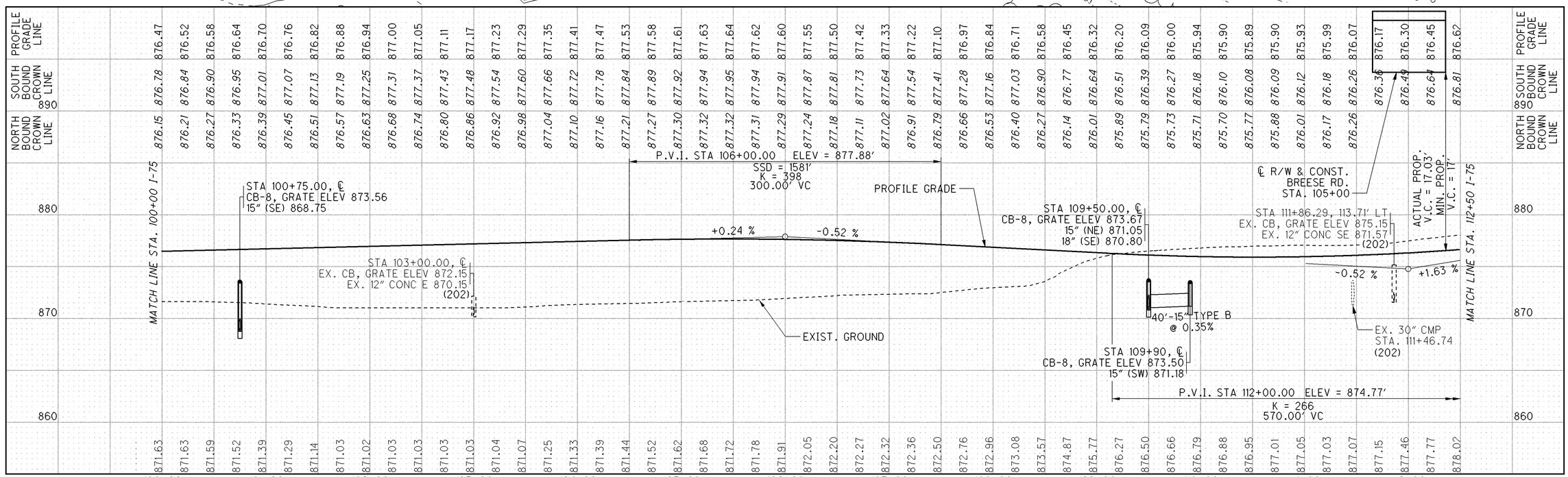

HORIZONTAL SCALE IN FEET
0 25 50 100
CALCULATED
CHECKED

PLAN AND PROFILE - I-75
STA. 100+00 TO STA. 112+50

ALL-75-0.21

183
907

I:\Pd\89029\roadway\sheets\89029GP009.dgn 25-JUN-2013 6:41AM tbolenba

LEGEND

- WETLAND
- DITCH EROSION PROTECTION MAT SEE SHEET 147
- TIED CONCRETE BLOCK MAT, TYPE 3
- ROCK CHANNEL PROTECTION
- # - HW-2.1 OR 2.2

FORT SHAWNEE INDUSTRIAL DRIVE

BREESE RD. OVER I-75
BRIDGE NO. ALL-75-0212

℄ RAMP 'C'

℄ RAMP 'D'

℄ RAMP 'B'

℄ R/W & CONST I-75 +77

℄ R/W & CONST. BREESE RD.

CONST. LIMITS (TYP.)

MATCH LINE STA. 112+50 I-75

MATCH LINE STA. 125+00 I-75

PC Sta. 114+03.83

PT Sta. 113+48.96

PC Sta. 115+95.05

ICS Sta. 115+78.01

ISC Sta. 117+78.01

PT Sta. 122+31.49

BEGIN PAV'T TAPER
BEGIN SHOLR TAPER
STA. 124+78.01

BEGIN PAV'T TAPER
END SHLR TAPER
ST Sta. 121+67.10

BEGIN SHOLR TAPER
STA. 121+17.01

S 88° 52' 36" E

N 64° 55' 07" E

N 40° 51' 04" E

N21°07'21"E

N21°07'24"E

CROSS REFERENCES	
ITEM	SHEET
CULVERT DETAILS	474-509
PAVEMENT DETAILS	450-451

ESTIMATED QUANTITIES	
ITEM	SHEET
UNDERDRAIN - UD	148-157
DRAINAGE - D	143-146
CABLERAIL - GC	161
FENCE	574
GUARDRAIL - GR	159-160
CULVERT - C	158

HORIZONTAL SCALE IN FEET
0 25 50 100

CALCULATED | CHECKED

PLAN AND PROFILE - I-75
STA. 112+50 TO STA. 125+00

ALL-75-0.21

184
907

P.V.I. STA 112+00.00 ELEV = 874.77′
K = 266
570.00′ VC

P.V.I. STA 120+00.00 ELEV = 887.78′
SSD = 1494′
K = 811
800.00′ VC

STA 115+00.00, ℄
EX. CB, GRATE ELEV 877.89
EX. 12″ CONC SW 875.34
(202)

STA 113+44.00, 5.50′ LT
EX. CB, GRATE ELEV 877.74
EX. 12″ CONC NE 873.86
EX. 12″ CONC SE 872.90
(202)

STA 114+50.00, ℄
CB-8, GRATE ELEV 876.35
15″ (SE) 873.83

STA 120+00.00, ℄
CB-8, GRATE ELEV 884.27
15″ (SE) 881.75

STA 121+01.87, 0.48′ LT
EX. CB, GRATE ELEV 885.36
EX. 12″ CONC SE 882.94
(202)

PROFILE GRADE

EXIST. GROUND

+1.63 %

+0.64 %

(202) EX. 12″ CONC

PROFILE GRADE LINE	876.62	876.82	877.04	877.28	877.55	877.84	878.16	878.50	878.86	879.24	879.65	880.06	880.46	880.87	881.27	881.68	882.07	882.46	882.84	883.21	883.58	883.93	884.28	884.62	884.96	885.28	885.60	885.91	886.21	886.51	886.79	887.07	887.34	887.61	887.87	888.11	888.35	888.59	888.81	889.03	889.24	889.44	889.64	889.83	890.02	890.20	890.37	890.53	890.69	890.85	891.01	891.17	PROFILE GRADE LINE
CROWN LINE	876.81	877.01	877.23	877.48	877.74	878.04	878.35	878.69	879.05	879.44	879.84	880.25	880.65	881.06	881.47	881.87	882.26	882.65	883.03	883.40	883.77	884.12	884.47	884.81	885.15	885.47	885.79	886.10	886.40	886.70	886.99	887.27	887.54	887.80	888.06	888.31	888.55	888.78	889.01	889.22	889.43	889.64	889.83	890.02	890.20	890.37	890.53	890.69	890.85	891.01	891.17		CROWN LINE
STATION	113+00											114+00																																										125+00
	878.02	878.25	878.60	878.69	878.81	879.16	879.49	879.62	879.87	879.11	877.97	878.03	878.58	878.99	879.36	879.70	880.00	880.26	880.59	880.96	881.13	881.33	881.68	881.94	882.14	882.38	882.62	882.92	883.10	883.31	883.70	884.03	884.38	885.59	885.47	885.28	885.50	885.70	885.84	885.96	886.02	886.15	886.32	886.48	886.59	886.80	887.03	887.21	887.32	887.47	887.64		

MATCH LINE STA. 112+50 I-75

MATCH LINE STA. 125+00 I-75

900 890 880 870

W-44 DND

W-38 DND

W-41 DND

I:\Pd\89029\roadway\sheets\89029GP010.dgn 25-JUN-2013 6:41AM tbolenba

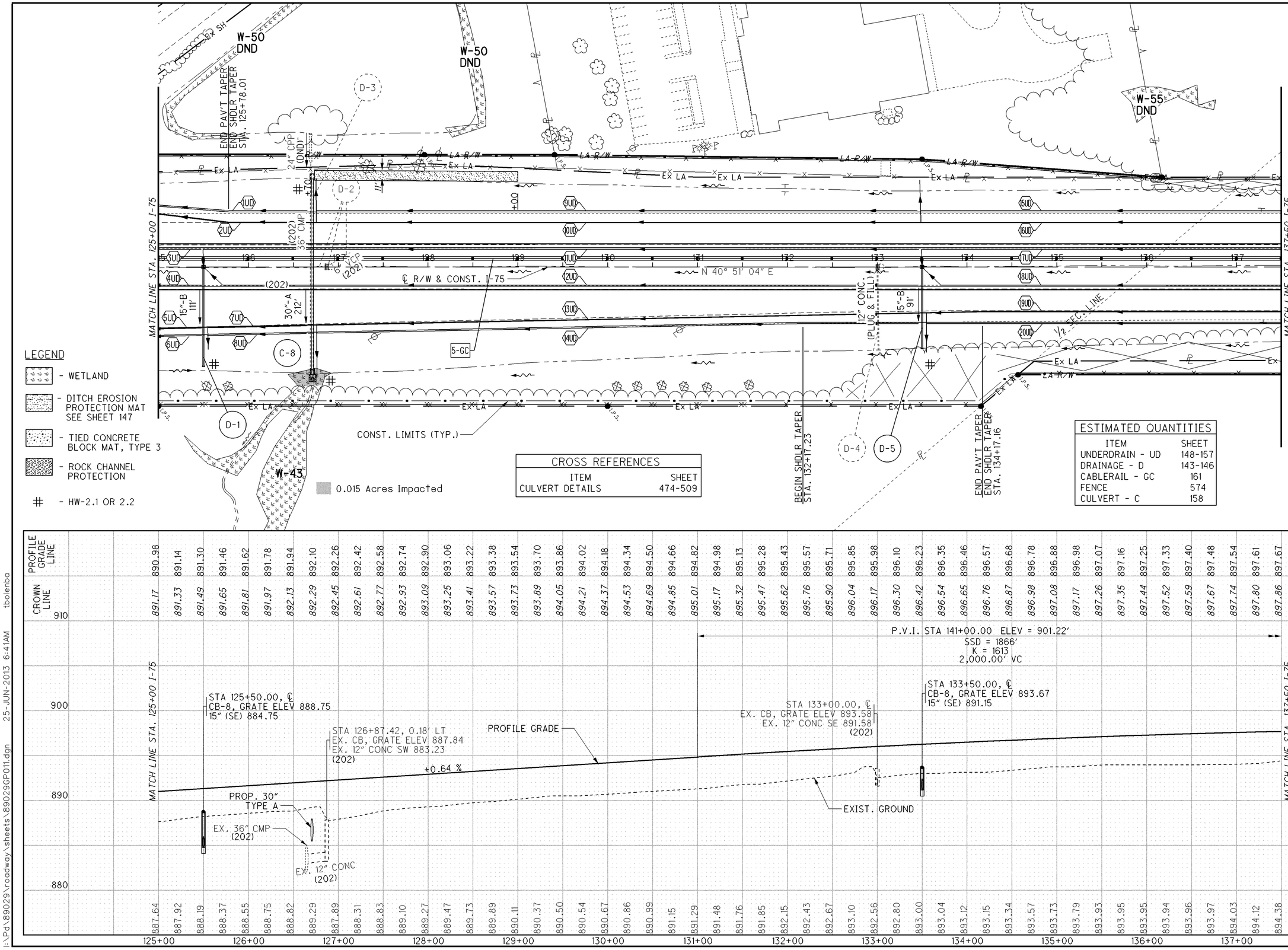

CROSS REFERENCES	
ITEM	SHEET
CULVERT DETAILS	474-509

ESTIMATED QUANTITIES	
ITEM	SHEET
UNDERDRAIN - UD	148-157
DRAINAGE - D	143-146
CABLERAIL - GC	161
FENCE	574
CULVERT - C	158

HORIZONTAL SCALE IN FEET
0 25 50 100

CALCULATED
CHECKED

PLAN AND PROFILE - I-75
STA. 125+00 TO STA. 137+50

ALL-75-0.21

185
907

I:\Pd\89029\roadway\sheets\89029GP011.dgn 25-JUN-2013 6:41AM tbolenba

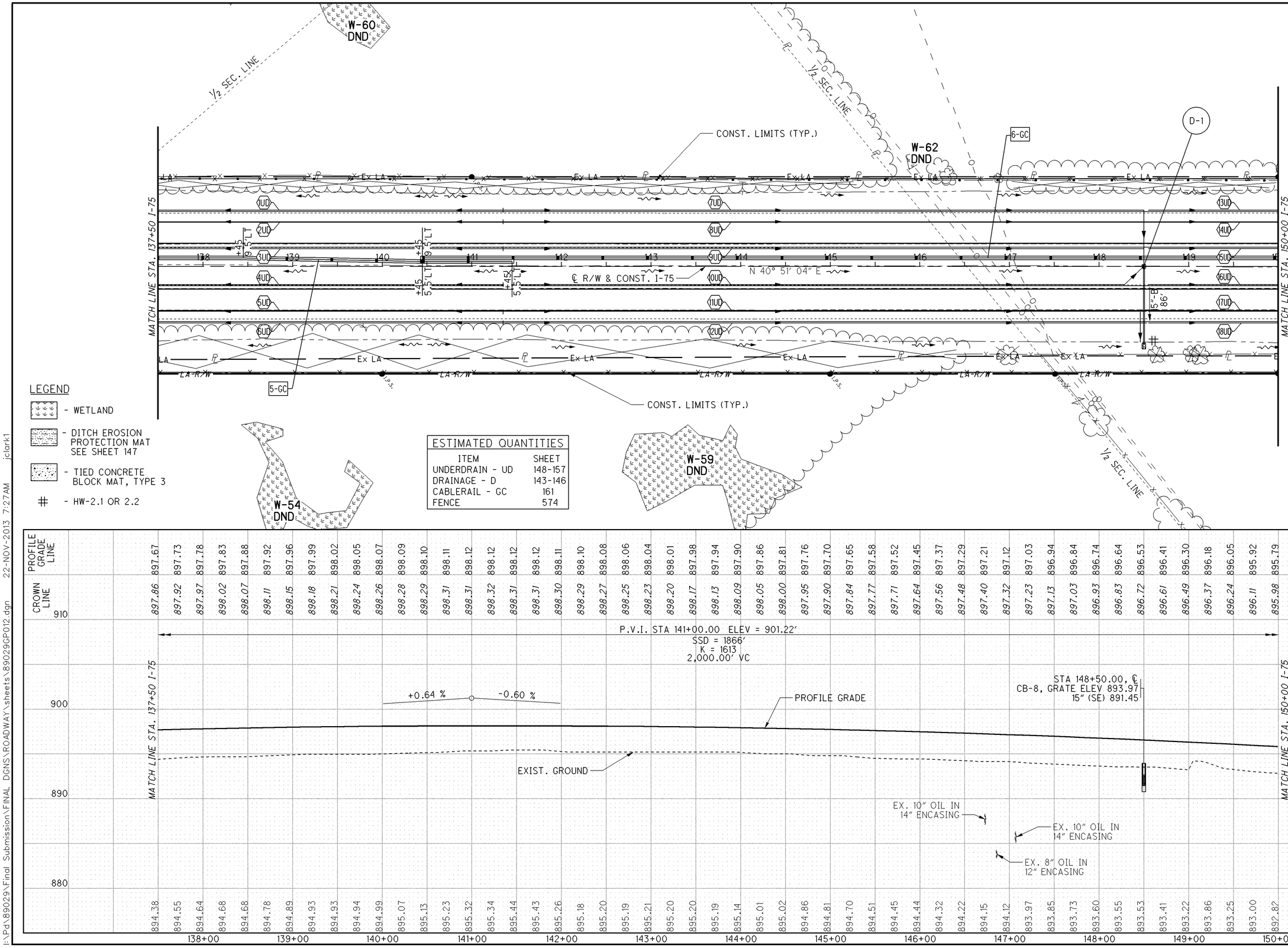

HORIZONTAL SCALE IN FEET
0 25 50 100
CALCULATED
CHECKED

PLAN AND PROFILE - I-75
STA. 137+50 TO STA. 150+00

ALL-75-0.21

186
907

I:\Pd\89029\Final Submission\FINAL DGNS\ROADWAY\sheets\89029GP012.dgn 22-NOV-2013 7:27AM jclark1

CURVE I75S-1
P.I.= Sta. 169+45.31
D = 49° 34′ 27″ (RT)
Dc = 2° 38′ 00″
R = 2,175.79′
Ls = 535.00′
θs = 7° 02′ 39″
LT = 356.95′
ST = 178.59′
x = 534.19′
y = 21.90′
k = 267.37′
p = 5.48′
D c = 35° 29′ 09″ (RT)
Lc = 1,347.57′
Ts = 1,274.66′
Es = 226.83′
C = 1,326.13′
C1=C2 = 534.64′
C.B.1 = N 43° 11′ 56″ E
C.B. = N 65° 38′ 17″ E
C.B.2 = S 88° 04′ 39″ W
e_d= 0.060

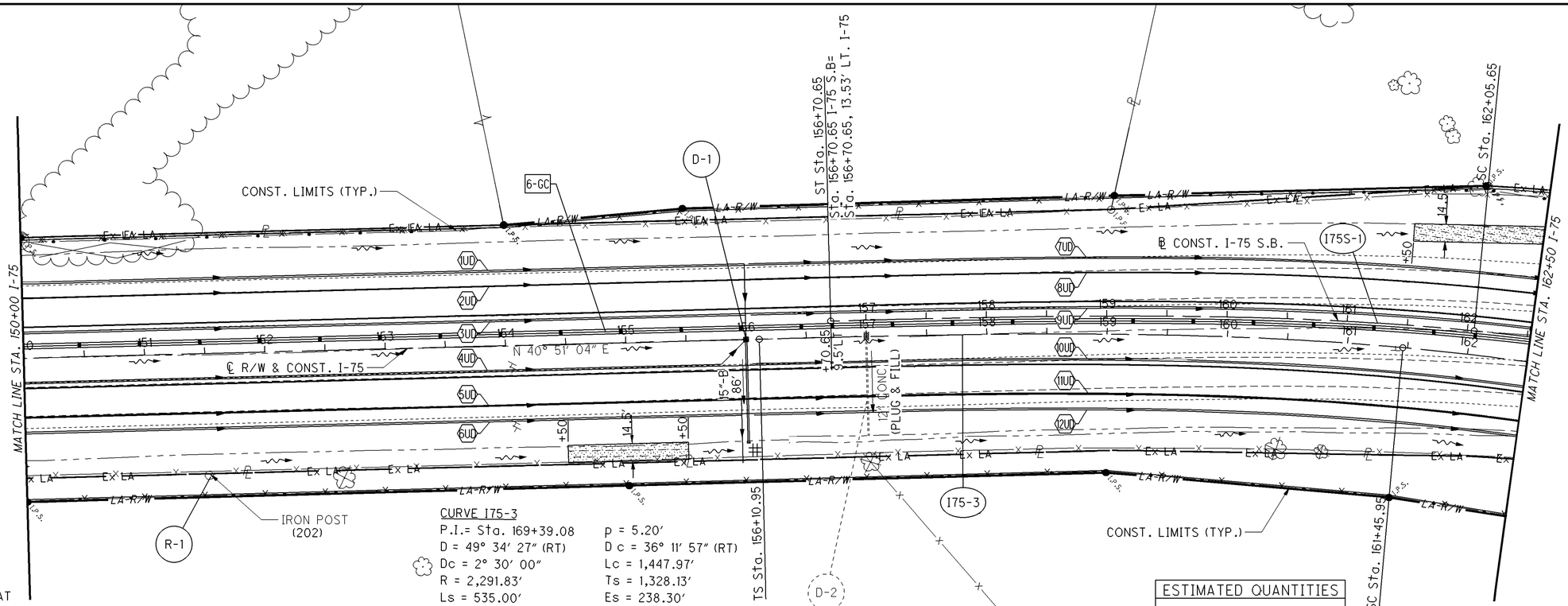

LEGEND

- WETLAND
- DITCH EROSION PROTECTION MAT SEE SHEET 147
- TIED CONCRETE BLOCK MAT, TYPE 3
- # - HW-2.1 OR 2.2

CURVE I75-3
P.I.= Sta. 169+39.08
D = 49° 34′ 27″ (RT)
Dc = 2° 30′ 00″
R = 2,291.83′
Ls = 535.00′
θs = 6° 41′ 15″
LT = 356.92′
ST = 178.57′
x = 534.27′
y = 20.79′
k = 267.38′
p = 5.20′
D c = 36° 11′ 57″ (RT)
Lc = 1,447.97′
Ts = 1,328.13′
Es = 238.30′
C = 1,424.01′
C1=C2 = 534.68′
C.B.1 = N 43° 04′ 48″ E
C.B. = N 65° 38′ 17″ E
C.B.2 = S 88° 11′ 47″ W
e_d= 0.059

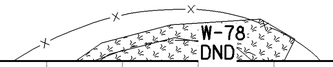

ESTIMATED QUANTITIES

ITEM	SHEET
UNDERDRAIN - UD	148-157
DRAINAGE - D	143-146
CABLERAIL - GC	161
FENCE	574
ROADWAY - R	161

FOR PROFILE SEE SHEET 188

HORIZONTAL SCALE IN FEET
0 25 50 100
CALCULATED
CHECKED

PLAN AND PROFILE - I-75
STA. 150+00 TO STA. 162+50

ALL-75-0.21

I:\Pd\89029\roadway\sheets\89029GP013.dgn 25-JUN-2013 6:41AM tbolenbo

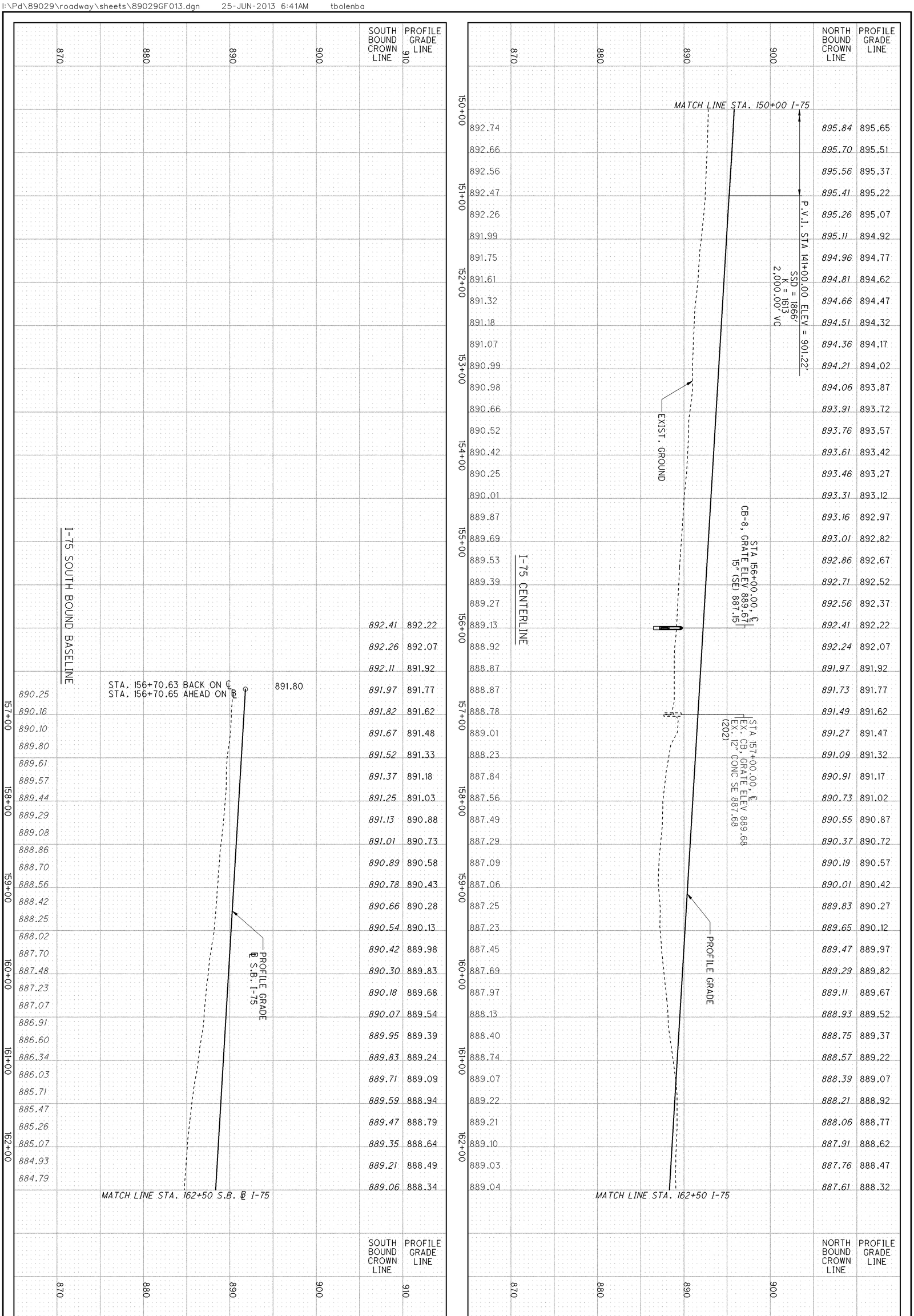

907 / 188	**ALL-75-0.21**	**PROFILE - I-75** **CENTERLINE - STA. 150+00 TO STA. 162+50** **SOUTH BOUND BASELINE - STA. 156+70.65 TO STA. 162+50**
		CALCULATED CHECKED

CURVE 175S-1
P.I.= Sta. 169+45.31
D = 49° 34′ 27″ (RT)
Dc = 2° 38′ 00″
R = 2,175.79′
Ls = 535.00′
θs = 7° 02′ 39″
LT = 356.95′
ST = 178.59′
x = 534.19′
y = 21.90′
k = 267.37′
p = 5.48′
D c = 35° 29′ 09″ (RT)
Lc = 1,347.57′
Ts = 1,274.66′
Es = 226.83′
C = 1,326.13′
C1=C2 = 534.64′
C.B.1 = N 43° 11′ 56″ E
C.B. = N 65° 38′ 17″ E
C.B.2 = S 88° 04′ 39″ W
e_d = 0.060

LEGEND

- DITCH EROSION PROTECTION MAT SEE SHEET 147
- TIED CONCRETE BLOCK MAT, TYPE 3
- ROCK CHANNEL PROTECTION
- # - HW-2.1 OR 2.2

CURVE 175-3
P.I.= Sta. 169+39.08
D = 49° 34′ 27″ (RT)
Dc = 2° 30′ 00″
R = 2,291.83′
Ls = 535.00′
θs = 6° 41′ 15″
LT = 356.92′
ST = 178.57′
x = 534.27′
y = 20.79′
k = 267.38′
p = 5.20′
D c = 36° 11′ 57″ (RT)
Lc = 1,447.97′
Ts = 1,328.13′
Es = 238.30′
C = 1,424.01′
C1=C2 = 534.68′
C.B.1 = N 43° 04′ 48″ E
C.B. = N 65° 38′ 17″ E
C.B.2 = S 88° 11′ 47″ W
e_d = 0.059

CROSS REFERENCES

ITEM	SHEET
CULVERT DETAILS	474-509

ESTIMATED QUANTITIES

ITEM	SHEET
UNDERDRAIN - UD	148-157
DRAINAGE - D	143-146
CABLERAIL - GC	161
FENCE	574
GUARDRAIL - GR	159-160
CULVERT - C	158

FOR PROFILE SEE SHEET 190

HORIZONTAL SCALE IN FEET
0 25 50 100
CALCULATED
CHECKED

PLAN AND PROFILE - I-75
STA 162+50 TO STA. 175+00

ALL-75-0.21

I:\Pd\89029\roadway\sheets\89029GP014.dgn 25-JUN-2013 6:40AM tbolenba

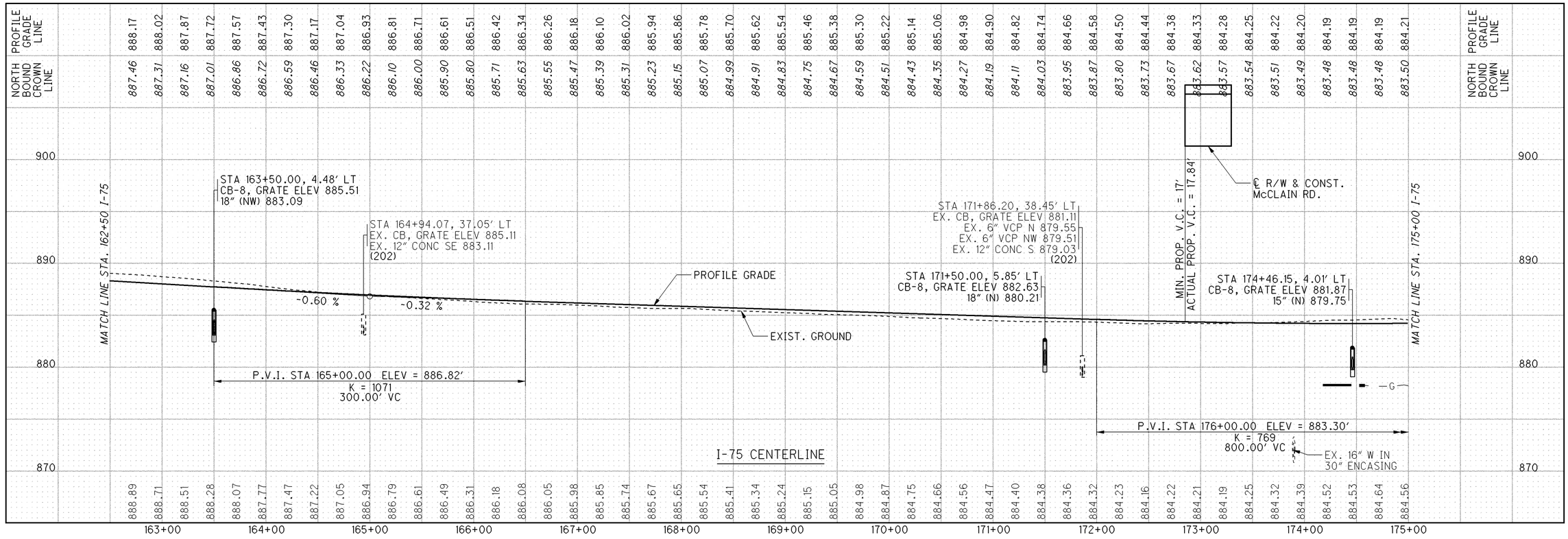

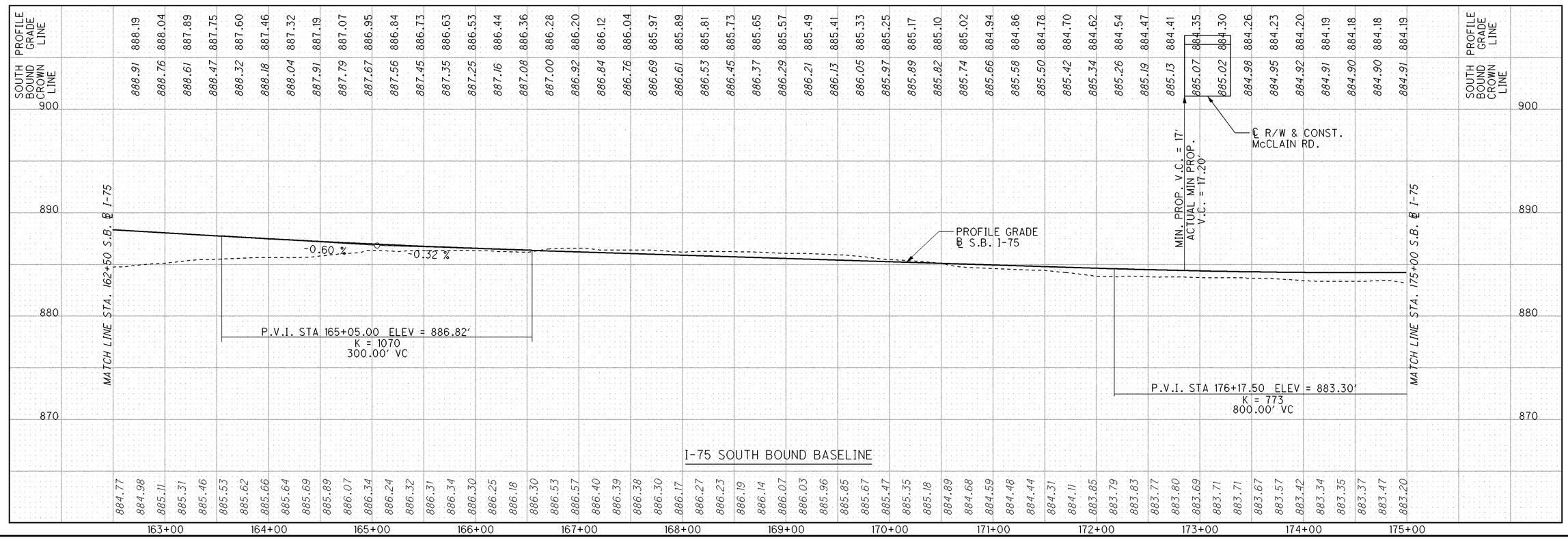

PROFILE - I-75
CENTERLINE - STA. 162+50 TO STA. 175+00
SOUTH BOUND BASELINE - STA. 162+50 TO STA. 175+00

CALCULATED

CHECKED

ALL-75-0.21

190
907

I:\Pd\89029\roadway\sheets\89029CF014.dgn 25-JUN-2013 6:40AM tbolenba

CURVE 175S-1
P.I.= Sta. 169+45.31
D = 49° 34' 27" (RT)
Dc = 2° 38' 00"
R = 2,175.79'
Ls = 535.00'
θs = 7° 02' 39"
LT = 356.95'
ST = 178.59'
x = 534.19'
y = 21.90'
k = 267.37'
p = 5.48'
D c = 35° 29' 09" (RT)
Lc = 1,347.57'
Ts = 1,274.66'
Es = 226.83'
C = 1,326.13'
C1=C2 = 534.64'
C.B.1 = N 43° 11' 56" E
C.B. = N 65° 38' 17" E
C.B.2 = S 88° 04' 39" W
e_d = 0.060

ESTIMATED QUANTITIES	
ITEM	SHEET
UNDERDRAIN - UD	148-157
DRAINAGE - D	143-146
CABLERAIL - GC	161
FENCE	574
GUARDRAIL - GR	159-160
CULVERT - C	158

LEGEND
- FLOODWAY
- WETLAND
- ROCK CHANNEL PROTECTION
- DITCH EROSION PROTECTION MAT SEE SHEET 147

- HW-2.1 OR 2.2

CROSS REFERENCES	
ITEM	SHEET
CULVERT DETAILS	474-509

CURVE 175-3
P.I.= Sta. 169+39.08
D = 49° 34' 27" (RT)
Dc = 2° 30' 00"
R = 2,291.83'
Ls = 535.00'
θs = 6° 41' 15"
LT = 356.92'
ST = 178.57'
x = 534.27'
y = 20.79'
k = 267.38'
p = 5.20'
D c = 36° 11' 57" (RT)
Lc = 1,447.97'
Ts = 1,328.13'
Es = 238.30'
C = 1,424.01'
C1=C2 = 534.68'
C.B.1 = N 43° 04' 48" E
C.B. = N 65° 38' 17" E
C.B.2 = S 88° 11' 47" W
e_d = 0.059

FOR PROFILE SEE SHEET 192

HORIZONTAL SCALE IN FEET
0 25 50 100
CALCULATED
CHECKED

PLAN AND PROFILE - I-75
STA. 175+00 TO STA. 187+50

ALL-75-0.21

191
907

I:\Pd\89029\roadway\sheets\89029GP015.dgn 25-JUN-2013 6:40AM tbolenba

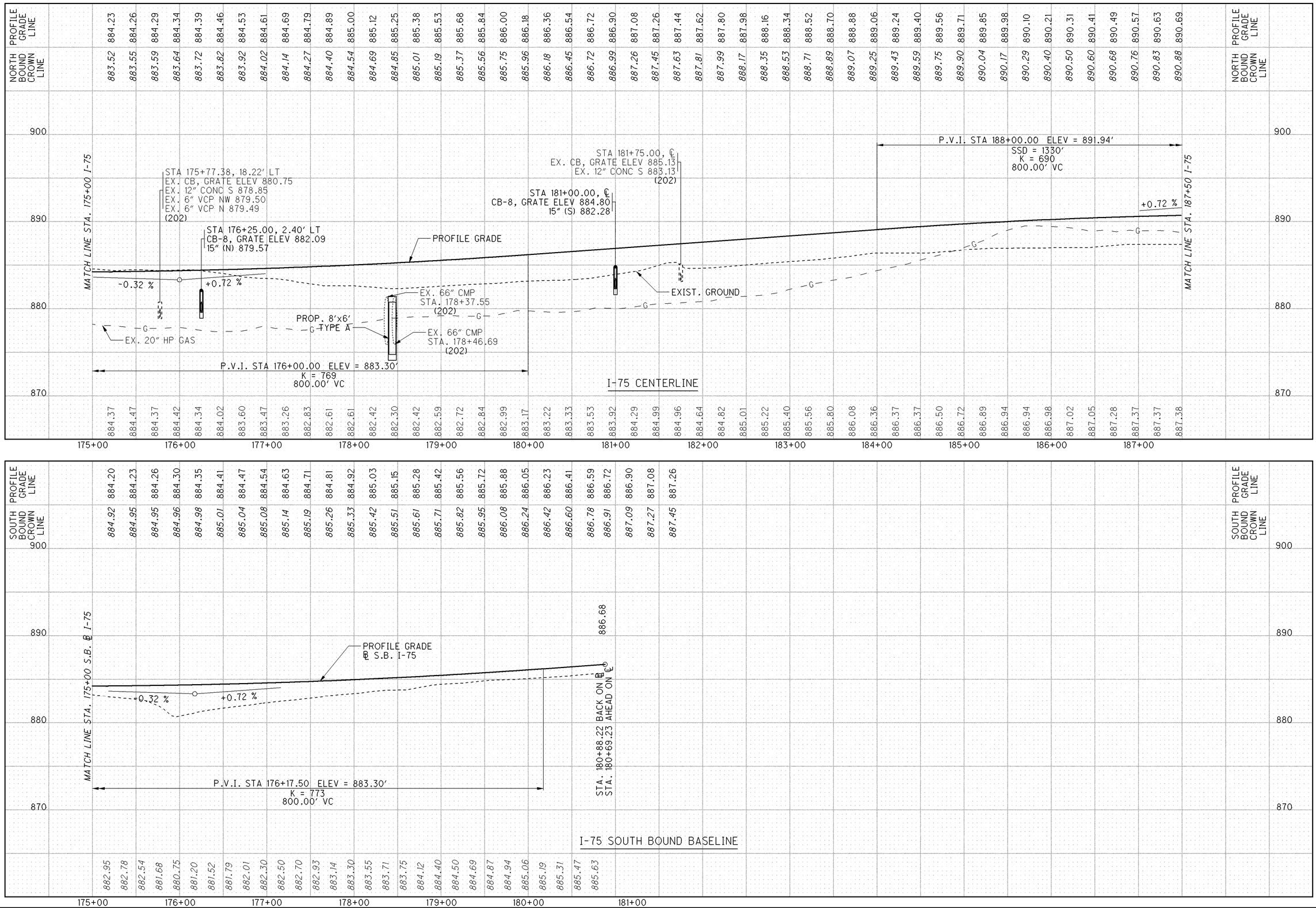

PROFILE - I-75
CENTERLINE - STA. 175+00 TO STA. 187+00
SOUTH BOUND BASELINE - STA. 175+00 TO STA. 180+88.22

CALCULATED
CHECKED

ALL-75-0.21

192
907

I:\Pd\89029\roadway\sheets\89029GF015.dgn 25-JUN-2013 6:40AM tbolenba

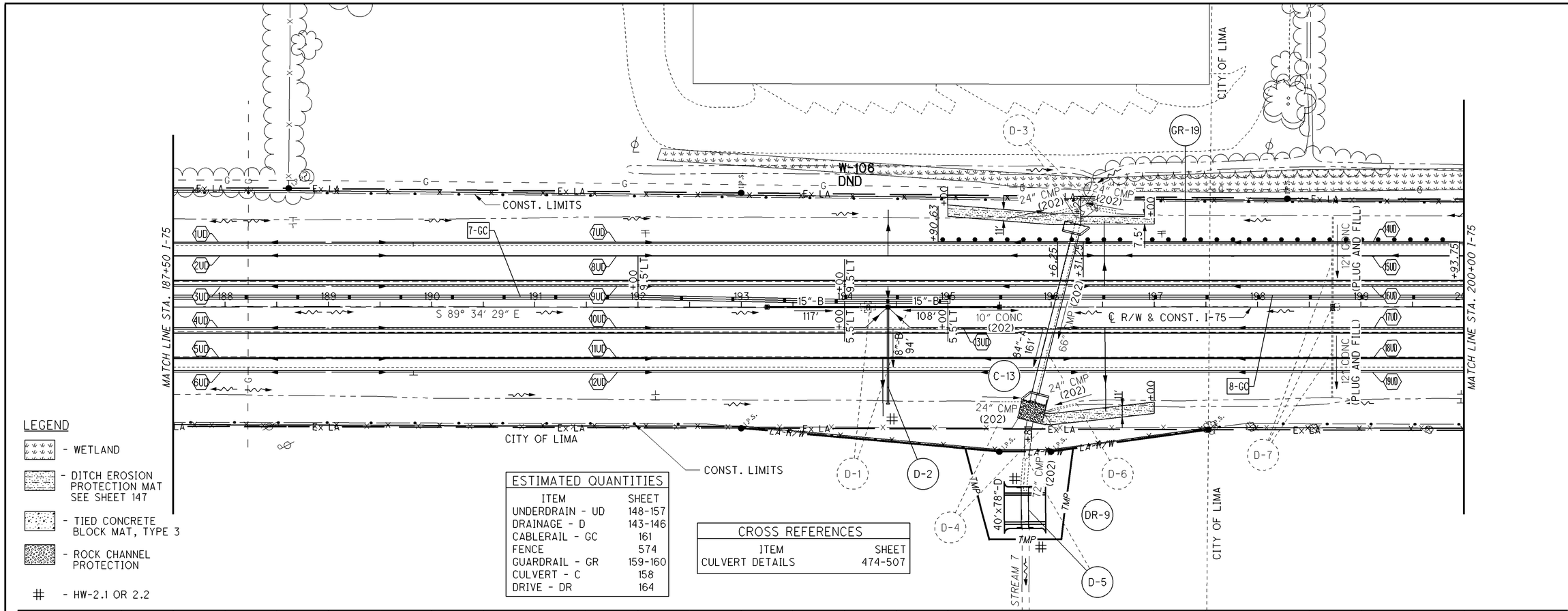

LEGEND

- WETLAND
- DITCH EROSION PROTECTION MAT SEE SHEET 147
- TIED CONCRETE BLOCK MAT, TYPE 3
- ROCK CHANNEL PROTECTION
- # - HW-2.1 OR 2.2

ESTIMATED QUANTITIES

ITEM	SHEET
UNDERDRAIN - UD	148-157
DRAINAGE - D	143-146
CABLERAIL - GC	161
FENCE	574
GUARDRAIL - GR	159-160
CULVERT - C	158
DRIVE - DR	164

CROSS REFERENCES

ITEM	SHEET
CULVERT DETAILS	474-507

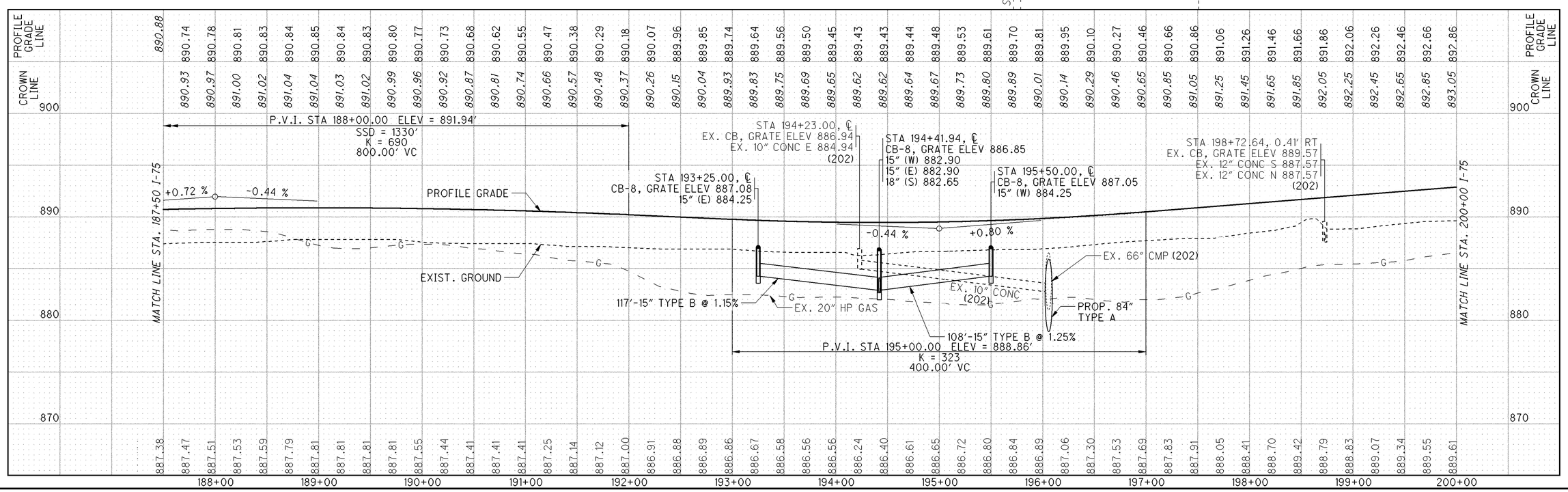

HORIZONTAL SCALE IN FEET
0 25 50 100

CALCULATED
CHECKED

PLAN AND PROFILE - I-75
STA. 187+50 TO STA. 200+00

ALL-75-0.21

I:\Pd\89029\roadway\sheets\89029GP016.dgn 25-JUN-2013 6:40AM tbolenba

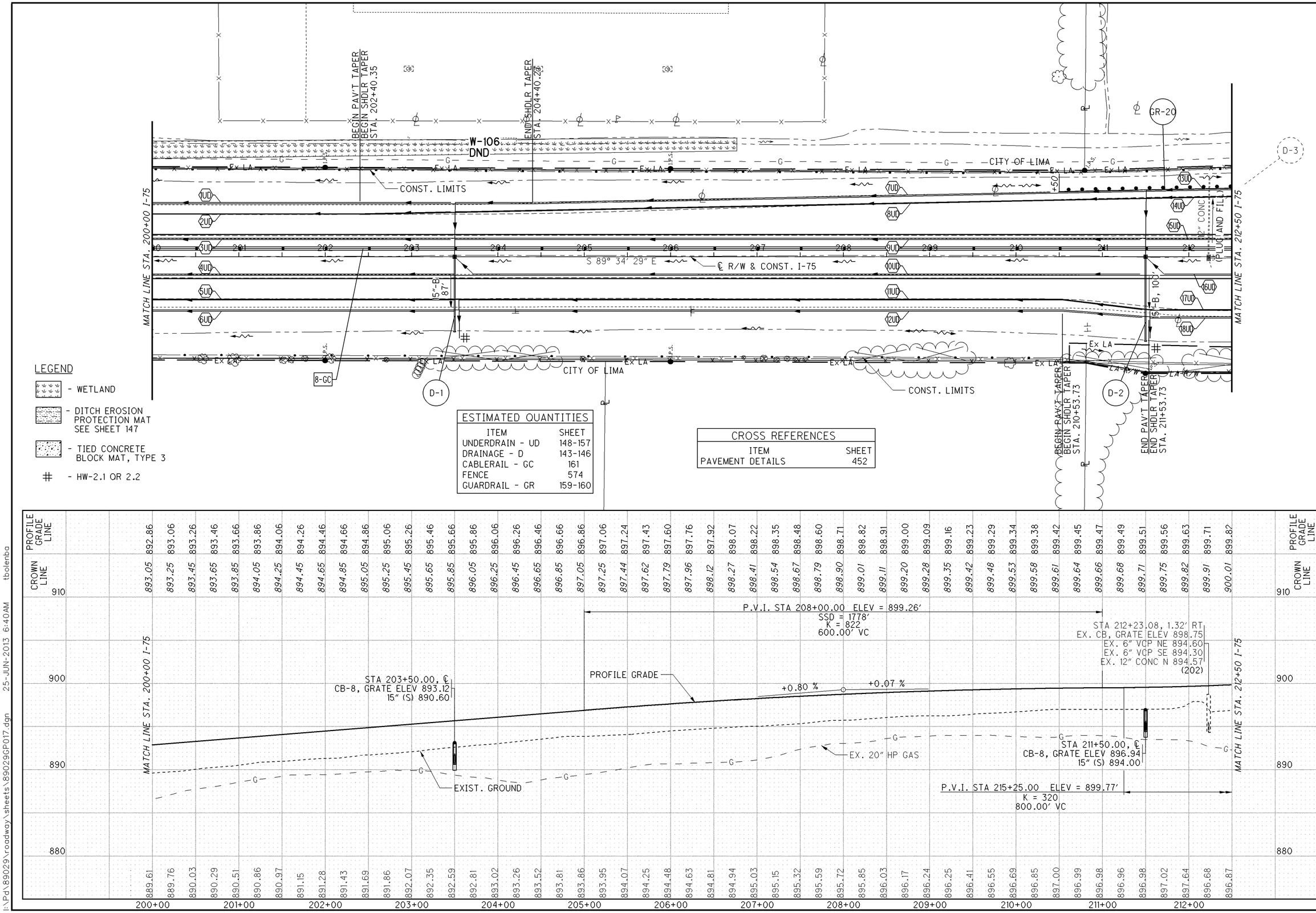

LEGEND

- WETLAND
- DITCH EROSION PROTECTION MAT SEE SHEET 147
- TIED CONCRETE BLOCK MAT, TYPE 3
- # - HW-2.1 OR 2.2

ESTIMATED QUANTITIES	
ITEM	SHEET
UNDERDRAIN - UD	148-157
DRAINAGE - D	143-146
CABLERAIL - GC	161
FENCE	574
GUARDRAIL - GR	159-160

CROSS REFERENCES	
ITEM	SHEET
PAVEMENT DETAILS	452

HORIZONTAL SCALE IN FEET
0 25 50 100

CALCULATED | CHECKED

PLAN AND PROFILE - I-75
STA. 200+00 TO STA. 212+50

ALL-75-0.21

194
907

I:\Pd\89029\roadway\sheets\89029GP017.dgn 25-JUN-2013 6:40AM tbolenba

LEGEND

- WETLAND
- DITCH EROSION PROTECTION MAT SEE SHEET 147
- TIED CONCRETE BLOCK MAT, TYPE 3
- ROCK CHANNEL PROTECTION
- # - HW-2.1 OR 2.2

ESTIMATED QUANTITIES	
ITEM	SHEET
UNDERDRAIN - UD	148-157
DRAINAGE - D	143-146
CABLERAIL - GC	161
FENCE	574
GUARDRAIL - GR	159-160
CULVERT - C	158

CROSS REFERENCES	
ITEM	SHEET
CULVERT DETAILS	474-507
LIGHTING	510-528
PAVEMENT DETAILS	452-453

NOTE: FOR DRAINAGE INFORMATION STARTING AT STA. 222+88 to STA. 226+00 GO TO S.R. 65 SHEETS 355-358.

MATCH LINE STA. 212+50 I-75

MATCH LINE STA. 225+00 I-75

PC Sta. 213+99.73

PCC Sta. 219+53.73

PT Sta. 221+06.97

CONST. LIMITS (TYP.)

END PAV'T TAPER BEGIN SHLDR TAPER ST Sta. 214+90.35

END SHLDR TAPER STA. 215+40.35

SC Sta. 216+90.35

PT Sta. 224+00.00

℄ RAMP 'A'

℄ RAMP 'B'

℄ RAMP 'C'

℄ RAMP 'D'

℄ R/W & CONST. I-75

℄ R/W & CONST. S.R. 65 (ST. JOHNS RD.)

I-75 STA. 224+02.80= S.R. 65 STA. 104+00.00

I-75 OVER S.R.65 (ST. JOHN RD.) BRIDGE NO. ALL-75-0423 L/R

CITY OF LIMA

Ex. C.B. (202) S 89° 34' 29" E

OLD LIGHT BASE (202)

20" HP (DOMINION SAYS 36"+/- DEEP)

Ex. 20" (202)

21" SAN

30" CMP

24" CMP (202)

12" CPPP (202)

2" GAS

2" FIBER OPTIC

2" FIBER DUCT

245'x36"B

307'x42"B

P.V.I. STA 215+25.00 ELEV = 899.77'
K = 320
800.00' VC

P.V.I. STA 224+00.00
ELEV = 922.25'
SSD = 1950'
K = 649
400.00' VC

STA 219+50.00, ℄ CB-8, GRATE ELEV 908.24
15" (N) 903.70

PROFILE GRADE

EXIST. GROUND

+0.07%

+2.57 %

-1.95 %

MIN. PROP. V.C. = 17'

ACTUAL PROP. V.C. = 17.14'

STA 216+97.94, 0.04' LT
EX. CB, GRATE ELEV 895.42
EX. 12" CONC W 893.42
(202)

EX. 54" CMP (202)

PROP. 54" TYPE A

12" CONC (202)

EX. 20" HP GAS

EX. WATER LINE

EX. 20" CMP STA. 223+33.54 (202)

PROFILE GRADE LINE

CROWN LINE

| | | |

LEGEND

- DITCH EROSION PROTECTION MAT SEE SHEET 147
- TIED CONCRETE BLOCK MAT, TYPE 3
- HW-2.1 OR 2.2

NOTE:
FOR DRAINAGE INFORMATION STARTING AT STA. 222+88 TO STA. 226+00 GO TO S.R. 65 SHEETS 355-358.

ESTIMATED QUANTITIES	
ITEM	SHEET
UNDERDRAIN - UD	148-157
DRAINAGE - D	143-146
CABLERAIL - GC	161
FENCE	574
GUARDRAIL - GR	159-160
CULVERT - C	158

CROSS REFERENCES	
ITEM	SHEET
CULVERT DETAILS	474-507
LIGHTING	510-528
PAVEMENT DETAILS	454-455

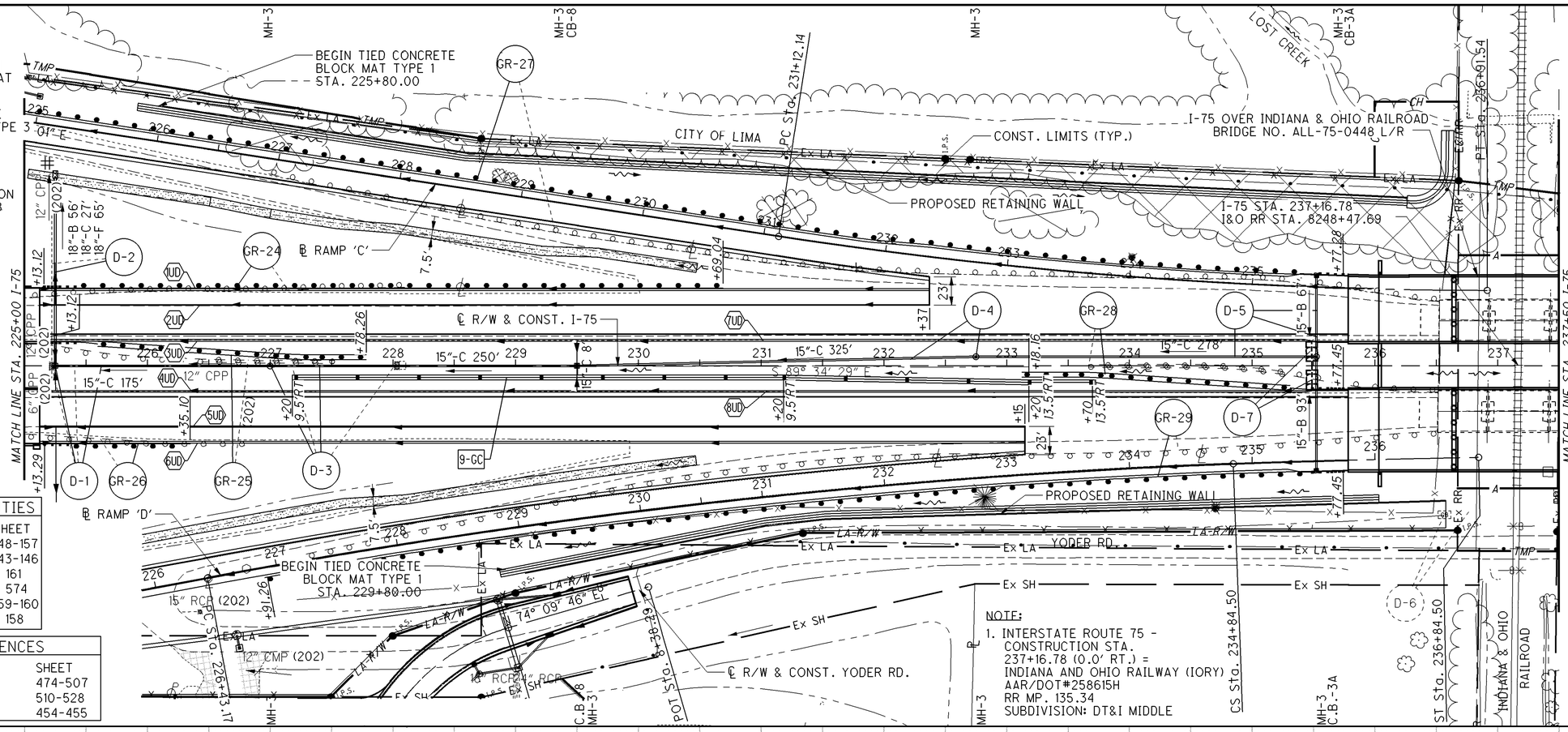

FOR PROFILE SEE SHEET 197

HORIZONTAL SCALE IN FEET
0 25 50 100

CALCULATED | CHECKED

PLAN AND PROFILE - I-75
STA. 225+00 TO STA. 237+50

ALL-75-0.21

196
907

I:\Pd\89029\roadway\sheets\89029GP019.dgn 25-JUN-2013 6:40AM tbolenba

PROFILE GRADE LINE: 924.65 925.16 925.66 926.16 926.64 927.13 927.62 928.11 928.60 929.08 929.57 930.06 930.55 931.04 931.53 932.01 932.50 932.97 933.42 933.86 934.29 934.69 935.08 935.46 935.82 936.16 936.48 936.79 937.09 937.37 937.63 937.88 938.11 938.32 938.52 938.70 938.87 939.02 939.15 939.27 939.37 939.46 939.53 939.59 939.62 939.65 939.65 939.64 939.62 939.58

CROWN LINE: 924.84 925.35 925.85 926.35 926.84 927.32 927.81 928.30 928.79 929.28 929.76 930.25 930.74 931.23 931.72 932.21 932.69 933.16 933.62 934.05 934.48 934.88 935.27 935.65 936.01 936.35 936.68 936.99 937.28 937.56 937.82 938.07 938.30 938.51 938.71 938.89 939.06 939.21 939.35 939.46 939.57 939.65 939.72 939.78 939.82 939.84 939.84 939.83 939.81 939.77

960 950 940 930 920 910 900 890

P.V.I. STA 224+00.00
ELEV = 922.25'
SSD = 1950'
K = 649
400.00' VC

P.V.I. STA 238+00.00 ELEV = 949.59'
SSD = 918'
K = 390
1,780.00' VC

MATCH LINE STA. 225+00 I-75

STA 225+25.00, 7.50' RT
MH-3, RIM ELEV 923.15
15" (E) 919.77
15" (N) 918.66

STA 225+25.00, ℄
CB-8, GRATE ELEV 922.30
15" (S) 918.52
18" (N) 918.27

STA 225+22.24, 0.23' RT
EX. CB, GRATE ELEV 915.08
EX. 6" CPP S 912.33
EX. 6" CPP N 912.13
EX. 12" CPP E 911.95
EX. 12" CPP N 911.07
(202)

EX. 12" CPP
(202)

175'-15" TYPE C @ 1.29%

STA 227+00.00, 7.50' RT
MH-3, RIM ELEV 926.47
15" (W) 921.50
15" (E) 921.50

+1.95 %

250'-15" TYPE C @ 1.34%

STA 228+00.00, ℄
EX. CB, GRATE ELEV 919.73
EX. 12" CPP W 917.69
(202)

EXIST. GROUND

STA 229+50.00, 7.50' RT
MH-3, RIM ELEV 931.33
15" (NE) 925.03
15" (W) 924.85

STA 229+50.00, ℄
CB-8, GRATE ELEV 930.48
15" (S) 924.95

PROFILE GRADE

325'-15" TYPE C @ 0.84%

STA 232+75.00, 7.50' LT
MH-3, RIM ELEV 936.03
15" (E) 927.75
15" (W) 927.75

277'-15" TYPE C @ 0.84%

STA 236+52.00, 7.50' LT
MH-3, RIM ELEV 937.83
15" (N) 930.63
15" (W) 930.08
15" (S) 930.47

STA 236+52.00, 85.96' RT
CB-3A, GRATE ELEV 938.16
15" (N) 931.63

STA 236+52.00, 74.04' LT
CB-3A, GRATE ELEV 938.34
15" (S) 931.63

+1.95 %

MIN. PROP. V.C. = 23.5'
ACTUAL PROP. V.C. = 23.68'

MATCH LINE STA. 237+50 I-75

EX. FIBER OPTIC
(QWEST)

AS
IBER OPTIC

915.34 916.56 917.73 918.31 918.73 919.24 919.65 920.02 920.51 921.03 921.36 919.82 919.68 919.93 920.46 921.00 921.41 922.10 922.34 922.73 923.13 923.55 924.05 924.51 925.09 925.55 926.11 926.60 927.06 927.59 928.06 928.79 929.95 931.13 931.77 932.20 932.30 932.55 932.65 932.89 933.27 933.19 933.49 933.78 933.82 933.22 921.71 909.97 909.21 916.36

225+00 226+00 227+00 228+00 229+00 230+00 231+00 232+00 233+00 234+00 235+00 236+00 237+00

PROFILE - I-75
STA. 225+00 TO STA. 237+50

CALCULATED | CHECKED

ALL-75-0.21

197
907

I:\Pd\89029\roadway\sheets\89029CF019.dgn 25-JUN-2013 6:40AM tbolenba

CURVE I75N-1
P.I.= Sta. 264+89.90
D = 89° 28′ 28″ (LT)
Dc = 2° 31′ 00″
R = 2,276.65′
Ls = 535.00′
θs = 6° 43′ 55″
LT = 356.92′
ST = 178.57′
x = 534.26′
y = 20.93′
k = 267.38′
p = 5.24′
D c = 76° 00′ 37″ (LT)
Lc = 3,020.27′
Ts = 2,528.43′
Es = 935.72′
C = 2,803.61′
C1=C2 = 534.67′
C.B.1 = N 88° 10′ 53″ E
C.B. = N 45° 41′ 17″ E
C.B.2 = S 3° 11′ 41″ W
e_d= 0.059

CROSS REFERENCES	
ITEM	SHEET
CULVERT DETAILS	474-509
PAVEMENT DETAILS	454-455

CURVE I75-4
P.I.= Sta. 264+76.60
D = 89° 28′ 28″ (LT)
Dc = 2° 30′ 00″
R = 2,291.83′
Ls = 535.00′
θs = 6° 41′ 15″
LT = 356.92′
ST = 178.57′
x = 534.27′
y = 20.79′
k = 267.38′
p = 5.20′
D c = 76° 05′ 58″ (LT)
Lc = 3,043.97′
Ts = 2,543.43′
Es = 941.86′
C = 2,825.12′
C1=C2 = 534.68′
C.B.1 = N 88° 11′ 47″ E
C.B. = N 45° 41′ 17″ E
C.B.2 = S 3° 10′ 47″ W
e_d= 0.059
@ - See XS

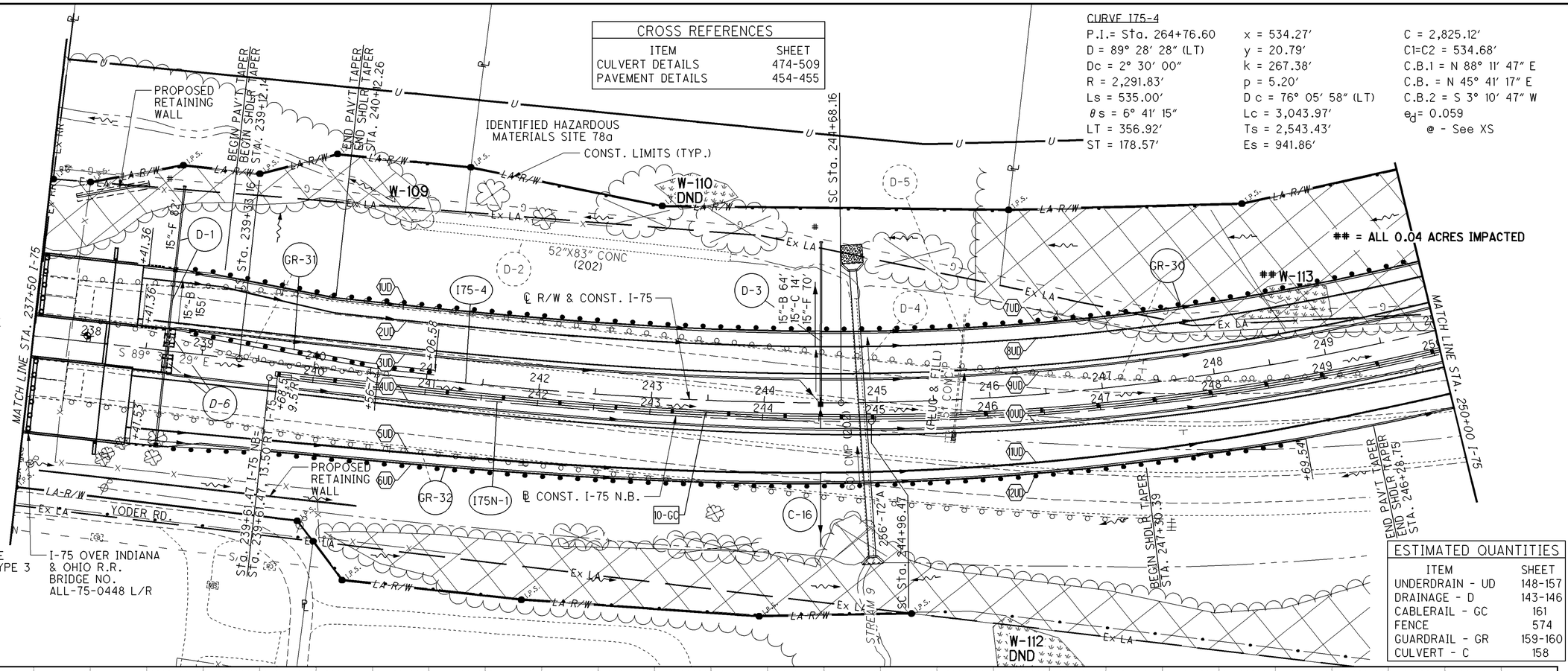

LEGEND

- WETLAND
- TIED CONCRETE BLOCK MAT, TYPE 3
- ROCK CHANNEL PROTECTION
- # - HW-2.1 OR 2.2

ESTIMATED QUANTITIES	
ITEM	SHEET
UNDERDRAIN - UD	148-157
DRAINAGE - D	143-146
CABLERAIL - GC	161
FENCE	574
GUARDRAIL - GR	159-160
CULVERT - C	158

FOR PROFILE SEE SHEET 199

HORIZONTAL SCALE IN FEET
0 25 50 100
CALCULATED
CHECKED

PLAN AND PROFILE - I-75
STA. 237+50 TO STA. 250+00

ALL-75-0.21

198
907

I:\Pd\89029\roadway\sheets\89029GP020.dgn 25-JUN-2013 6:40AM tbolenba

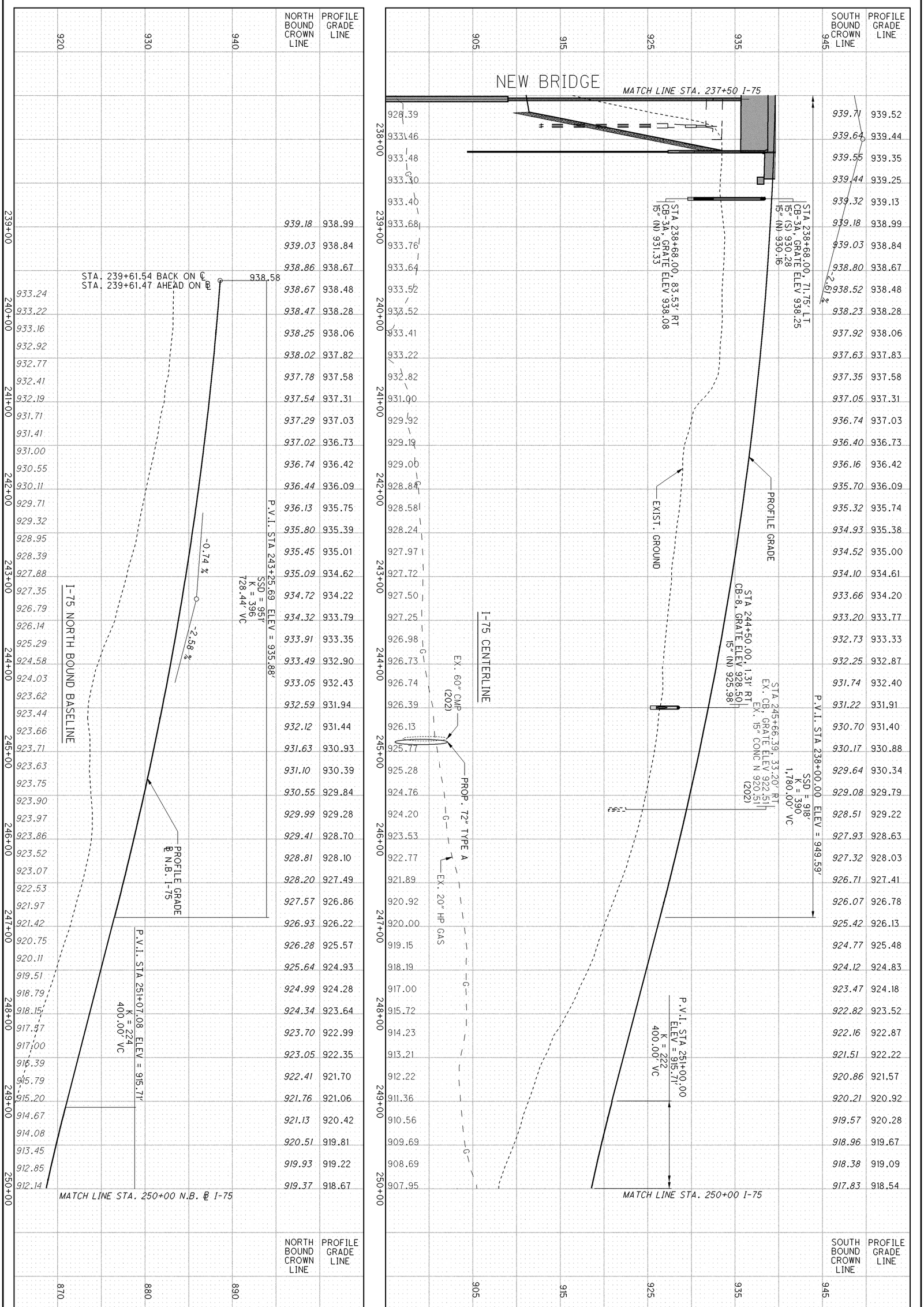

NORTH BOUND CROWN LINE	PROFILE GRADE LINE
939.18	938.99
939.03	938.84
938.86	938.67
938.67	938.48
938.47	938.28
938.25	938.06
938.02	937.82
937.78	937.58
937.54	937.31
937.29	937.03
937.02	936.73
936.74	936.42
936.44	936.09
936.13	935.75
935.80	935.39
935.45	935.01
935.09	934.62
934.72	934.22
934.32	933.79
933.91	933.35
933.49	932.90
933.05	932.43
932.59	931.94
932.12	931.44
931.63	930.93
931.10	930.39
930.55	929.84
929.99	929.28
929.41	928.70
928.81	928.10
928.20	927.49
927.57	926.86
926.93	926.22
926.28	925.57
925.64	924.93
924.99	924.28
924.34	923.64
923.70	922.99
923.05	922.35
922.41	921.70
921.76	921.06
921.13	920.42
920.51	919.81
919.93	919.22
919.37	918.67

SOUTH BOUND CROWN LINE	PROFILE GRADE LINE
939.71	939.52
939.64	939.44
939.55	939.35
939.44	939.25
939.32	939.13
939.18	938.99
939.03	938.84
938.80	938.67
938.52	938.48
938.23	938.28
937.92	938.06
937.63	937.83
937.35	937.58
937.05	937.31
936.74	937.03
936.40	936.73
936.16	936.42
935.70	936.09
935.32	935.74
934.93	935.38
934.52	935.00
934.10	934.61
933.66	934.20
933.20	933.77
932.73	933.33
932.25	932.87
931.74	932.40
931.22	931.91
930.70	931.40
930.17	930.88
929.64	930.34
929.08	929.79
928.51	929.22
927.93	928.63
927.32	928.03
926.71	927.41
926.07	926.78
925.42	926.13
924.77	925.48
924.12	924.83
923.47	924.18
922.82	923.52
922.16	922.87
921.51	922.22
920.86	921.57
920.21	920.92
919.57	920.28
918.96	919.67
918.38	919.09
917.83	918.54

199
907

ALL-75-0.21

PROFILE - I-75
CENTERLINE - STA. 237+50 TO STA. 250+00
NORTH BOUND BASELINE - STA. 239+61.47 TO STA. 250+00

CALCULATED
CHECKED

CURVE I75N-1
P.I.= Sta. 264+89.90
D = 89° 28′ 28″ (LT)
Dc = 2° 31′ 00″
R = 2,276.65′
Ls = 535.00′
θs = 6° 43′ 55″
LT = 356.92′
ST = 178.57′
x = 534.26′
y = 20.93′
k = 267.38′
p = 5.24′
D c = 76° 00′ 37″ (LT)
Lc = 3,020.27′
Ts = 2,528.43′
Es = 935.72′
C = 2,803.61′
C1=C2 = 534.67′
C.B.1 = N 88° 10′ 53″ E
C.B. = N 45° 41′ 17″ E
C.B.2 = S 3° 11′ 41″ W
e_d= 0.059

ESTIMATED QUANTITIES

ITEM	SHEET
UNDERDRAIN - UD	148-157
DRAINAGE - D	143-146
CABLERAIL - GC	161
FENCE	574
CULVERT - C	158

CROSS REFERENCES

ITEM	SHEET
CULVERT DETAILS	474-507

= 0.13 ACRES IMPACTED

CURVE I75-4
P.I.= Sta. 264+76.60
D = 89° 28′ 28″ (LT)
Dc = 2° 30′ 00″
R = 2,291.83′
Ls = 535.00′
θs = 6° 41′ 15″
LT = 356.92′
ST = 178.57′
x = 534.27′
y = 20.79′
k = 267.38′
p = 5.20′
D c = 76° 05′ 58″ (LT)
Lc = 3,043.97′
Ts = 2,543.43′
Es = 941.86′
C = 2,825.12′
C1=C2 = 534.68′
C.B.1 = N 88° 11′ 47″ E
C.B. = N 45° 41′ 17″ E
C.B.2 = S 3° 10′ 47″ W
e_d= 0.059

LEGEND
- WETLAND
- DITCH EROSION PROTECTION MAT SEE SHEET 147
- TIED CONCRETE BLOCK MAT, TYPE 3
- ROCK CHANNEL PROTECTION
- # - HW-2.1 OR 2.2
- ENVIRONMENTALLY DISTURBED AREA

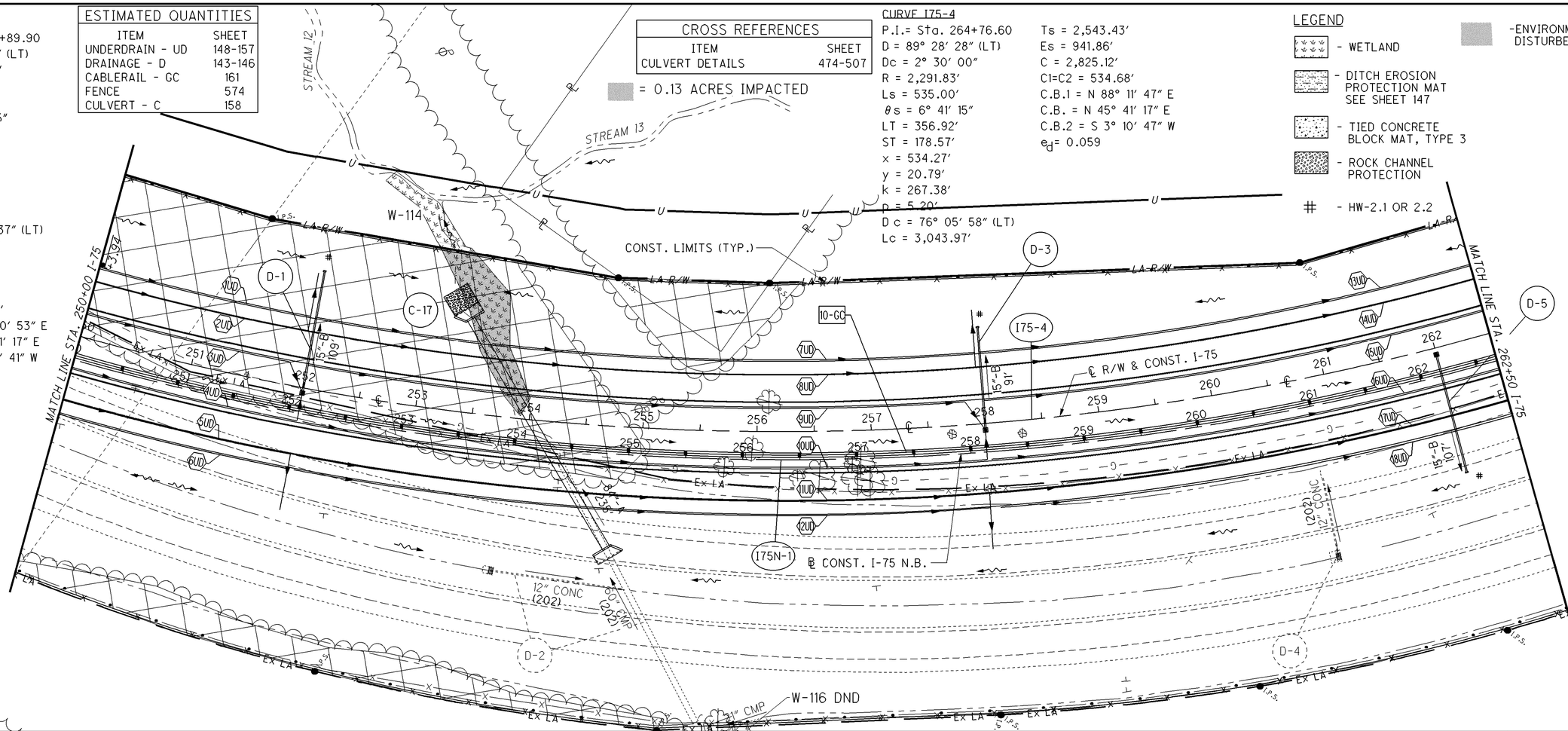

FOR PROFILE SEE SHEET 201

HORIZONTAL SCALE IN FEET 0 25 50 100

CALCULATED
CHECKED

PLAN AND PROFILE - I-75
STA. 250+00 TO STA. 262+50

ALL-75-0.21

I:\Pd\89029\roadway\sheets\89029GP021.dgn 25-JUN-2013 6:40AM tbolenba

CALCULATED

CHECKED

PROFILE - I-75
CENTERLINE - STA. 250+00 TO STA. 262+50
NORTH BOUND BASELINE - STA. 250+00 TO STA. 262+50

ALL-75-0.21

201
907

I:\Pd\89029\roadway\sheets\89029GF021.dgn 25-JUN-2013 6:40AM tbolenba

CURVE I75N-1
P.I.= Sta. 264+89.90
D = 89° 28′ 28″ (LT)
Dc = 2° 31′ 00″
R = 2,276.65′
Ls = 535.00′
θs = 6° 43′ 55″
LT = 356.92′
ST = 178.57′
x = 534.26′
y = 20.93′
k = 267.38′
p = 5.24′
D c = 76° 00′ 37″ (LT)
Lc = 3,020.27′
Ts = 2,528.43′
Es = 935.72′
C = 2,803.61′
C1=C2 = 534.67′
C.B.1 = N 88° 10′ 53″ E
C.B. = N 45° 41′ 17″ E
C.B.2 = S 3° 11′ 41″ W
e_d = 0.059

CURVE I75-4
P.I.= Sta. 264+76.60
D = 89° 28′ 28″ (LT)
Dc = 2° 30′ 00″
R = 2,291.83′
Ls = 535.00′
θs = 6° 41′ 15″
LT = 356.92′
ST = 178.57′
x = 534.27′
y = 20.79′
k = 267.38′
p = 5.20′
D c = 76° 05′ 58″ (LT)
Lc = 3,043.97′
Ts = 2,543.43′
Es = 941.86′
C = 2,825.12′
C1=C2 = 534.68′
C.B.1 = N 88° 11′ 47″ E
C.B. = N 45° 41′ 17″ E
C.B.2 = S 3° 10′ 47″ W
e_d = 0.059

CROSS REFERENCES	
ITEM	SHEET
CULVERT DETAILS	474-507

ESTIMATED QUANTITIES	
ITEM	SHEET
UNDERDRAIN - UD	148-157
DRAINAGE - D	143-146
CABLERAIL - GC	161
FENCE	574
GUARDRAIL - GR	159-160
CULVERT - C	158

℄ R/W & CONST. HANTHORN RD.
- FOR THIS AREA - SEE NOTE ON SHEET 39 FOR ITEM 208 - VIBRATION CONTROL AND MONITORING, AS PER PLAN
CONST. LIMITS (TYP.)
I-75 STA. 266+05.69= HANTHORN RD. STA. 102+54.27
HANTHORN RD. OVER I-75 BRIDGE NO. ALL-75-0508
℄ R/W & CONST. I-75
℄ CONST. I-75 N.B.
MATCH LINE STA. 262+50 I-75
MATCH LINE STA. 275+00 I-75
CITY OF LIMA
EX LA
LA R/W
D-1 D-2 D-3 D-4 D-5 D-6 D-7 D-8
I75-4
I75N-1
GR-33 GR-34 GR-35 GR-36 GR-37 GR-38
C-19
10-GC
11-GC
15"-B 89'L
18"-B 106'L
15" CMP (202)
12" RCP (202)
6" CPP (202)
18" CMP (202)
24" CMP (202)
48" CMP (202)
36" CMP (202)
48"-B 224'L
48"-B 106'L
36"-B 99'L
24"-B 89'L
24" CMP (PLUG)
8UD 9UD 10UD 2UD 3UD 4UD 5UD 6UD

LEGEND
- DITCH EROSION PROTECTION MAT SEE SHEET 147
- TIED CONCRETE BLOCK MAT, TYPE 3
- ROCK CHANNEL PROTECTION
- HW-2.1 OR 2.2

FOR PROFILE SEE SHEET 203

HORIZONTAL SCALE IN FEET
0 25 50 100
CALCULATED
CHECKED

PLAN AND PROFILE - I-75
STA. 262+50 TO STA. 275+00

ALL-75-0.21

202
907

I:\Pd\89029\roadway\sheets\89029GP022.dgn 25-JUN-2013 6:40AM tbolenba

I:\Pd\89029\roadway\sheets\89029GF022.dgn 25-JUN-2013 6:40AM tbolenba

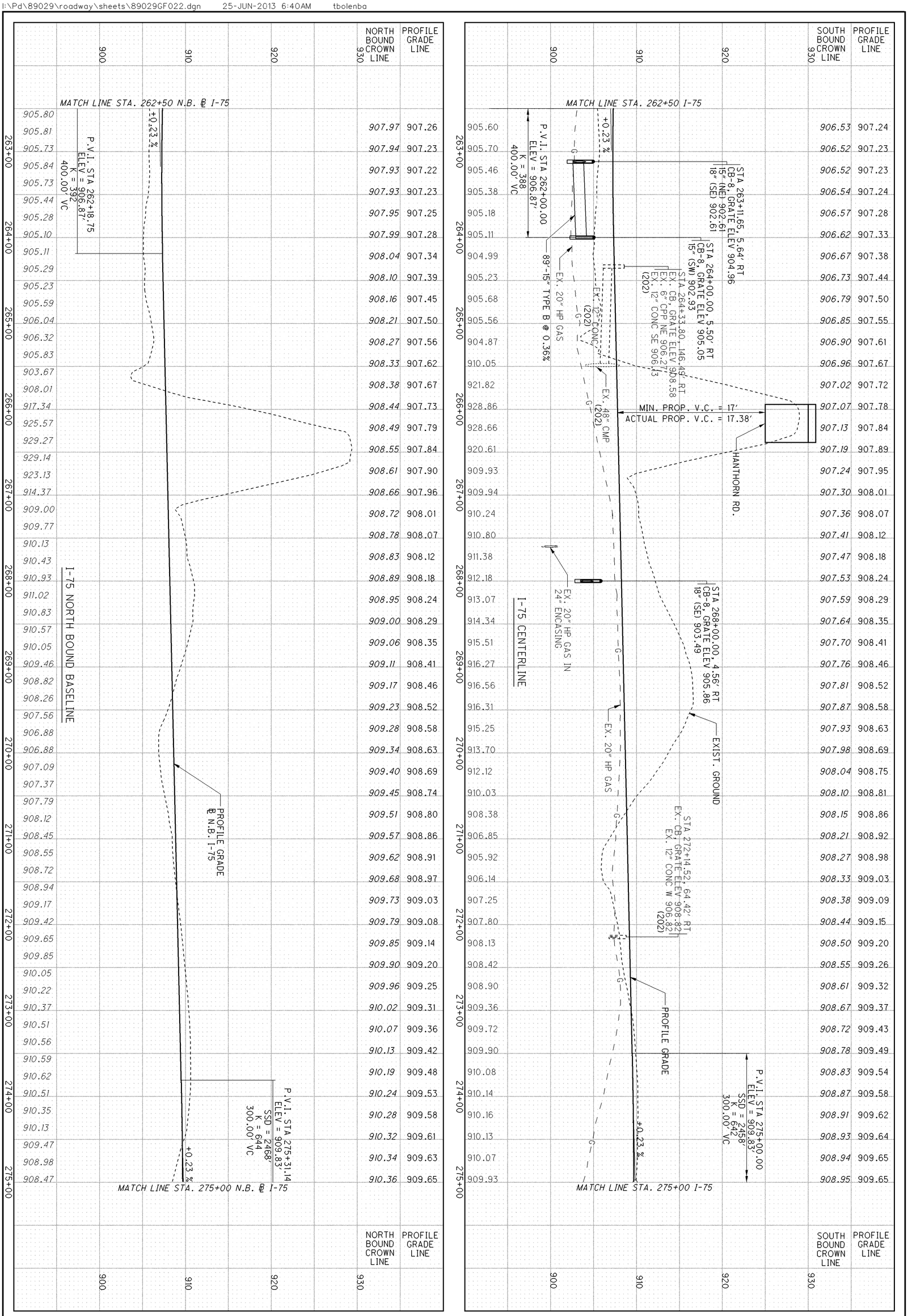

905.80	907.97	907.26	906.53	907.24
905.81	907.94	907.23	906.52	907.23
905.73	907.93	907.22	906.52	907.23
905.84	907.93	907.23	906.54	907.24
905.73	907.95	907.25	906.57	907.28
905.44	907.99	907.28	906.62	907.33
905.28	908.04	907.34	906.67	907.38
905.10	908.10	907.39	906.73	907.44
905.11	908.16	907.45	906.79	907.50
905.29	908.21	907.50	906.85	907.55
905.23	908.27	907.56	906.90	907.61
905.59	908.33	907.62	906.96	907.67
906.04	908.38	907.67	907.02	907.72
906.32	908.44	907.73	907.07	907.78
905.83	908.49	907.79	907.13	907.84
903.67	908.55	907.84	907.19	907.89
908.01	908.61	907.90	907.24	907.95
917.34	908.66	907.96	907.30	908.01
925.57	908.72	908.01	907.36	908.07
929.27	908.78	908.07	907.41	908.12
929.14	908.83	908.12	907.47	908.18
923.13	908.89	908.18	907.53	908.24
914.37	908.95	908.24	907.59	908.29
909.00	909.00	908.29	907.64	908.35
909.77	909.06	908.35	907.70	908.41
910.13	909.11	908.41	907.76	908.46
910.43	909.17	908.46	907.81	908.52
910.93	909.23	908.52	907.87	908.58
911.02	909.28	908.58	907.93	908.63
910.83	909.34	908.63	907.98	908.69
910.57	909.40	908.69	908.04	908.75
910.05	909.45	908.74	908.10	908.81
909.46	909.51	908.80	908.15	908.86
908.82	909.57	908.86	908.21	908.92
908.26	909.62	908.91	908.27	908.98
907.56	909.68	908.97	908.33	909.03
906.88	909.73	909.03	908.38	909.09
906.88	909.79	909.08	908.44	909.15
907.09	909.85	909.14	908.50	909.20
907.37	909.90	909.20	908.55	909.26
907.79	909.96	909.25	908.61	909.32
908.12	910.02	909.31	908.67	909.37
908.45	910.07	909.36	908.72	909.43
908.55	910.13	909.42	908.78	909.49
908.72	910.19	909.48	908.83	909.54
908.94	910.24	909.53	908.87	909.58
909.17	910.28	909.58	908.91	909.62
909.42	910.32	909.61	908.93	909.64
909.65	910.34	909.63	908.94	909.65
909.85	910.36	909.65	908.95	909.65
910.05				
910.22				
910.37				
910.51				
910.56				
910.59				
910.62				
910.51				
910.35				
910.13				
909.47				
908.98				
908.47				

905.60	907.24	907.26	906.53
905.70	907.23	907.23	906.52
905.46	907.23	907.23	906.52
905.38	907.24	907.24	906.54
905.18	907.28	907.28	906.57
905.11	907.33	907.33	906.62
904.99	907.38	907.38	906.67
905.23	907.44	907.44	906.73
905.68	907.50	907.50	906.79
905.56	907.55	907.55	906.85
904.87	907.61	907.61	906.90
910.05	907.67	907.67	906.96
921.82	907.72	907.72	907.02
928.86	907.78	907.78	907.07
928.66	907.84	907.84	907.13
920.61	907.89	907.89	907.19
909.93	907.95	907.95	907.24
909.94	908.01	908.01	907.30
910.24	908.07	908.07	907.36
910.80	908.12	908.12	907.41
911.38	908.18	908.18	907.47
912.18	908.24	908.24	907.53
913.07	908.29	908.29	907.59
914.34	908.35	908.35	907.64
915.51	908.41	908.41	907.70
916.27	908.46	908.46	907.76
916.56	908.52	908.52	907.81
916.31	908.58	908.58	907.87
915.25	908.63	908.63	907.93
913.70	908.69	908.69	907.98
912.12	908.75	908.75	908.04
910.03	908.81	908.81	908.10
908.38	908.86	908.86	908.15
906.85	908.92	908.92	908.21
905.92	908.98	908.98	908.27
906.14	909.03	909.03	908.33
907.25	909.09	909.09	908.38
907.80	909.15	909.15	908.44
908.13	909.20	909.20	908.50
908.42	909.26	909.26	908.55
908.90	909.32	909.32	908.61
909.36	909.37	909.37	908.67
909.72	909.43	909.43	908.72
909.90	909.49	909.49	908.78
910.08	909.54	909.54	908.83
910.14	909.58	909.58	908.87
910.16	909.62	909.62	908.91
910.13	909.64	909.64	908.93
910.07	909.65	909.65	908.94
909.93	909.65	909.65	908.95

203 / 907	ALL-75-0.21	PROFILE - I-75 CENTERLINE - STA. 262+50 TO STA. 275+00 NORTH BOUND BASELINE - STA. 262+50 TO STA. 275+00	CALCULATED CHECKED

CURVE I75N-J
P.I.= Sta. 264+89.90
D = 89° 28′ 28″ (LT)
Dc = 2° 31′ 00″
R = 2,276.65′
Ls = 535.00′
θs = 6° 43′ 55″
LT = 356.92′
ST = 178.57′
x = 534.26′
y = 20.93′
k = 267.38′
p = 5.24′
D c = 76° 00′ 37″ (LT)
Lc = 3,020.27′
Ts = 2,528.43′
Es = 935.72′
C = 2,803.61′
C1=C2 = 534.67′
C.B.1 = N 88° 10′ 53″ E
C.B. = N 45° 41′ 17″ E
C.B.2 = S 3° 11′ 41″ W
e_d= 0.059

CURVE I75-4
P.I.= Sta. 264+76.60
D = 89° 28′ 28″ (LT)
Dc = 2° 30′ 00″
R = 2,291.83′
Ls = 535.00′
θs = 6° 41′ 15″
LT = 356.92′
ST = 178.57′
x = 534.27′
y = 20.79′
k = 267.38′
p = 5.20′
D c = 76° 05′ 58″ (LT)
Lc = 3,043.97′
Ts = 2,543.43′
Es = 941.86′
C = 2,825.12′
C1=C2 = 534.68′
C.B.1 = N 88° 11′ 47″ E
C.B. = N 45° 41′ 17″ E
C.B.2 = S 3° 10′ 47″ W
e_d= 0.059

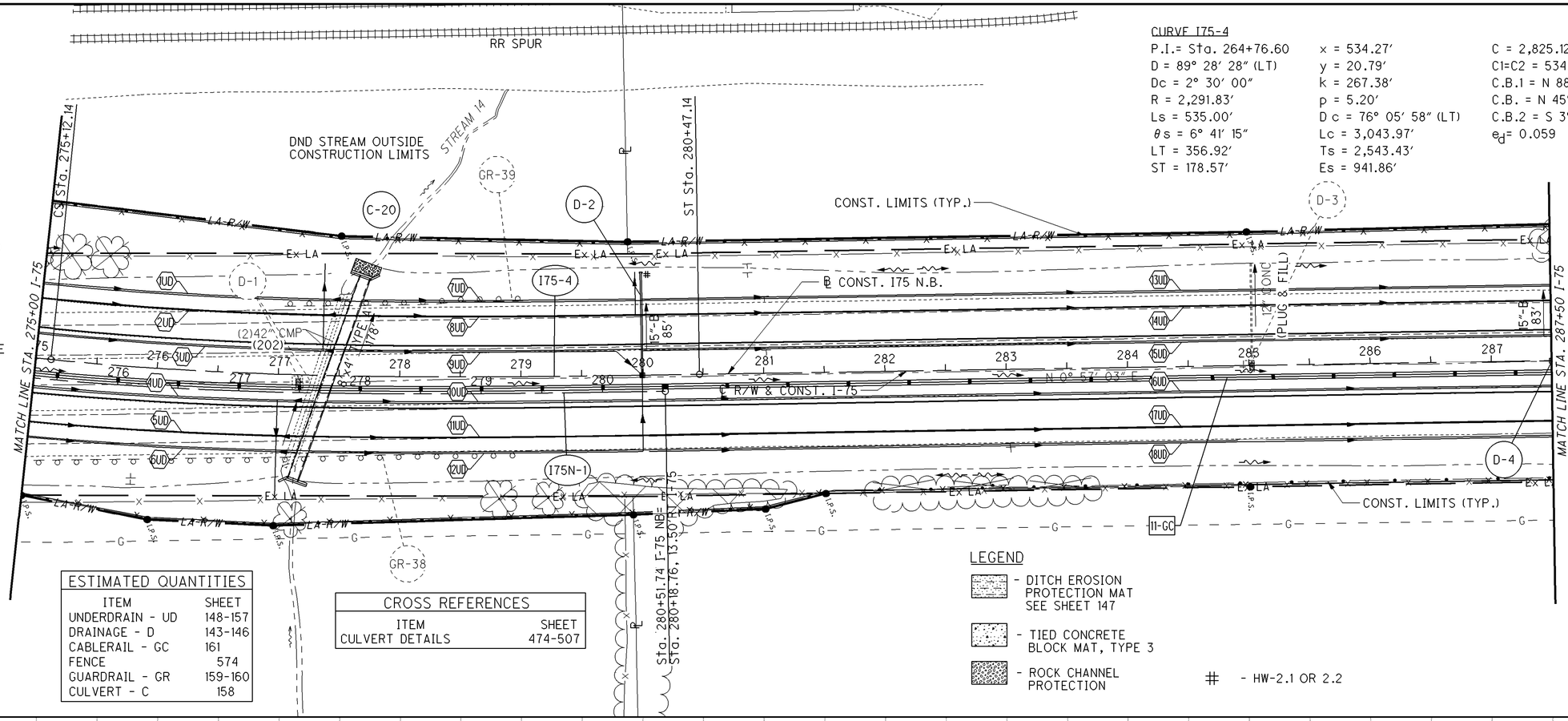

ESTIMATED QUANTITIES

ITEM	SHEET
UNDERDRAIN - UD	148-157
DRAINAGE - D	143-146
CABLERAIL - GC	161
FENCE	574
GUARDRAIL - GR	159-160
CULVERT - C	158

CROSS REFERENCES

ITEM	SHEET
CULVERT DETAILS	474-507

LEGEND

- DITCH EROSION PROTECTION MAT SEE SHEET 147
- TIED CONCRETE BLOCK MAT, TYPE 3
- ROCK CHANNEL PROTECTION
- # - HW-2.1 OR 2.2

FOR PROFILE SEE SHEET 205

PLAN AND PROFILE - I-75
STA. 275+00 TO STA. 287+50

ALL-75-0.21

204
907

HORIZONTAL SCALE IN FEET
0 25 50 100

CALCULATED
CHECKED

I:\Pd\89029\roadway\sheets\89029GP023.dgn 25-JUN-2013 6:40AM tbolenba

I:\Pd\89029\roadway\sheets\89029GF023.dgn 25-JUN-2013 6:39AM tbolenba

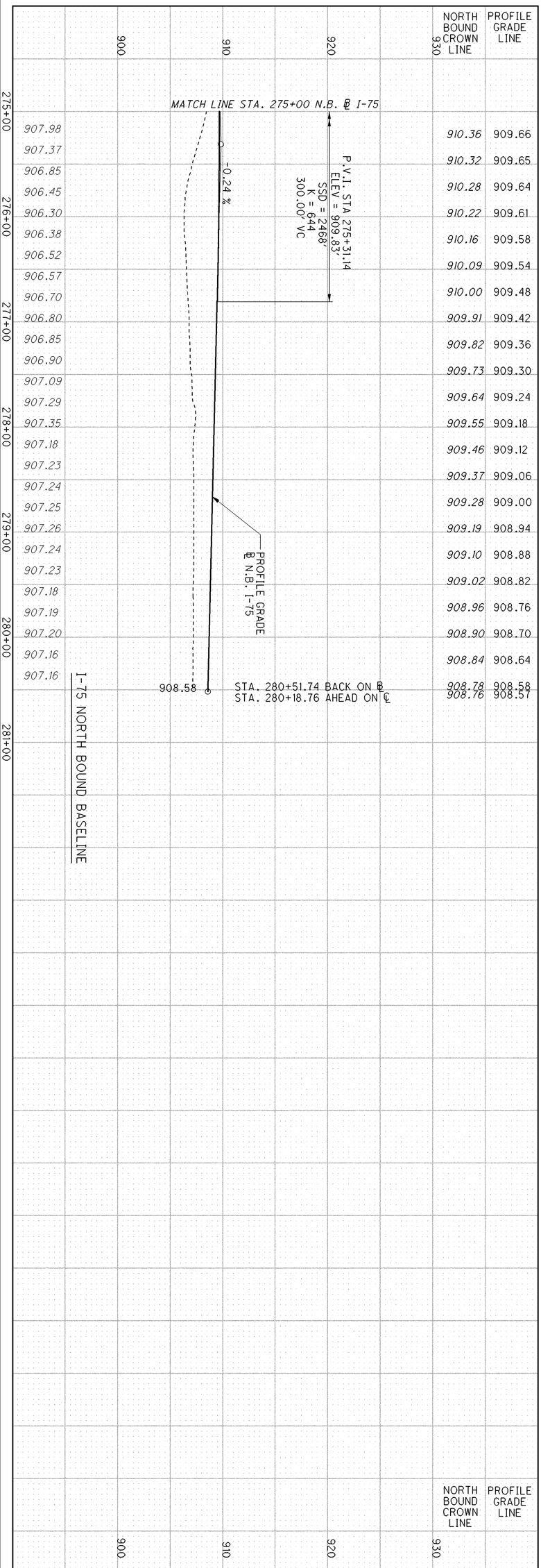

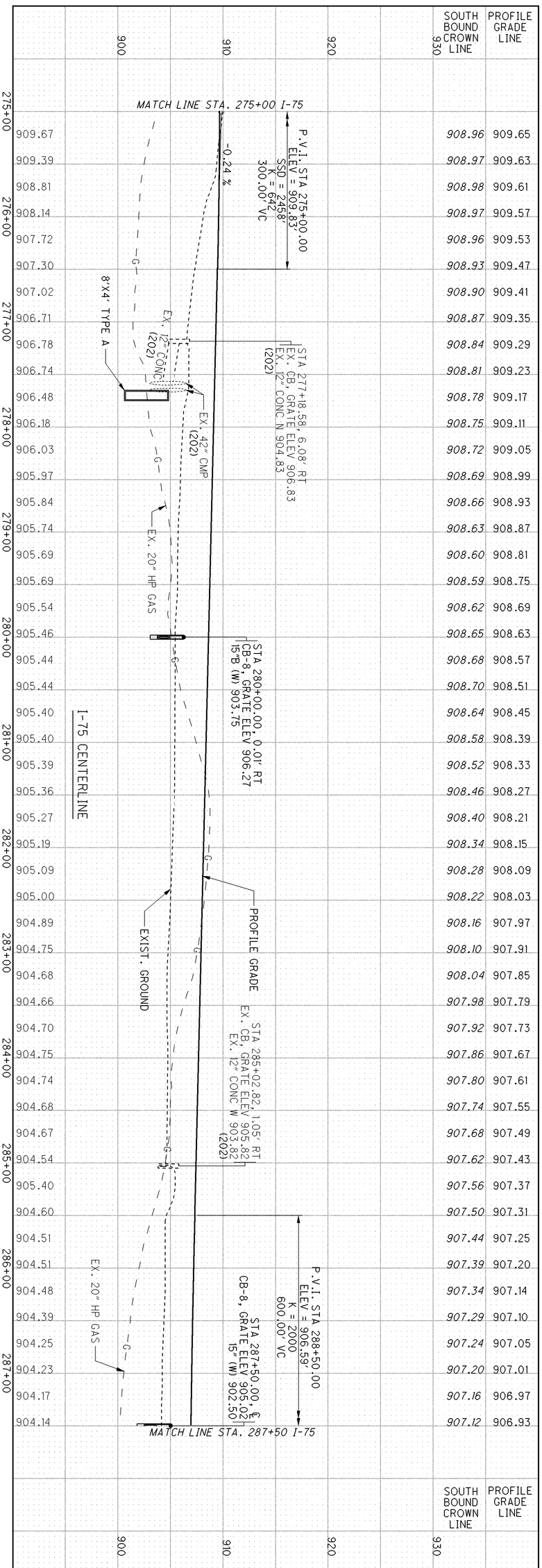

205
907

ALL-75-0.21

PROFILE - I-75
CENTERLINE - STA. 275+00 TO STA. 287+50
NORTH BOUND BASELINE - STA. 275+00 TO STA. 280+51.74

CALCULATED

CHECKED

CURVE I75N-1
P.I.= Sta. 264+89.90
D = 89° 28′ 28″ (LT)
Dc = 2° 31′ 00″
R = 2,276.65′
Ls = 535.00′
θs = 6° 43′ 55″
LT = 356.92′
ST = 178.57′
x = 534.26′
y = 20.93′
k = 267.38′
p = 5.24′
D c = 76° 00′ 37″ (LT)
Lc = 3,020.27′
Ts = 2,528.43′
Es = 935.72′
C = 2,803.61′
C1=C2 = 534.67′
C.B.1 = N 88° 10′ 53″ E
C.B. = N 45° 41′ 17″ E
C.B.2 = S 3° 11′ 41″ W
e_d = 0.059

END PROJECT ALL-75-0.21
PID 89029
STA. 292+00.00

BEGIN PROJECT ALL-75-5.53
PID 76691
STA. 292+00.00

E100(878) E036(702)

END WORK
STA. 293+00

CITY OF LIMA

CONST. LIMITS (TYP.)

MATCH LINE STA. 287+50 I-75

MATCH LINE STA. 300+00 I-75

℄ R/W & CONST. I-75

N 0° 57′ 03″ E

12" CONC (202)

24" CMP (202)

20" CMP

42" CMP (202)

5'-8" x 5'-8" CB

5.5% RT

11-GC

D-1 D-2 D-3 D-4

C-21

1UD 2UD 3UD 4UD 5UD 6UD 7UD 8UD 9UD 10UD 11UD

Ex LA

LA R/W

P.S.

288 289 290 291 292 293 294 295 296 297 298 299 300

LEGEND

- DITCH EROSION PROTECTION MAT SEE SHEET 147
- TIED CONCRETE BLOCK MAT, TYPE 3
- ROCK CHANNEL PROTECTION
- # - HW-2.1 OR 2.2

ESTIMATED QUANTITIES

ITEM	SHEET
UNDERDRAIN - UD	148-157
DRAINAGE - D	143-146
CABLERAIL - GC	161
FENCE	574
CULVERT - C	158

CROSS REFERENCES

ITEM	SHEET
CULVERT DETAILS	474-507

PROFILE GRADE LINE
CROWN LINE

907.12 907.09 906.90 907.14 904.14
907.06 906.87 907.15 904.15
907.03 906.84 907.16 904.16
907.01 906.82 907.16 904.16
906.99 906.79 907.15 904.16
906.97 906.78 907.14 904.15
906.95 906.76 907.05 904.14
906.94 906.75 907.04 904.05
906.93 906.74 907.04 904.04
906.93 906.74 903.84 904.03
906.93 906.73 903.88 903.88
906.93 906.74 903.96 903.96
906.94 906.74 903.96 903.96
906.95 906.75 903.95 903.95
906.96 906.76 903.95 903.95
906.98 906.77 903.95 903.95
906.99 906.79 903.96 903.96
907.01 906.80 904.02 904.02
907.02 906.82 904.04 904.04
907.04 906.83 904.03 904.03
907.05 906.85 904.04 904.04
907.07 906.86 904.05 904.05
907.08 906.88 904.03 904.03
907.10 906.89 904.04 904.04
907.11 906.91 904.04 904.04
907.13 906.92 904.04 904.04
907.14 906.94 904.03 904.03
907.16 906.95 904.04 904.04
907.17 906.97 904.05 904.05
907.19 906.98 904.06 904.06
907.20 907.00 904.08 904.08
907.22 907.01 904.16 904.16
907.23 907.03 904.20 904.20
907.23 907.04 904.13 904.13
907.23 907.04 903.90 903.90
907.21 907.03 903.50 903.50
907.19 907.02 904.80 904.80
907.17 907.00 904.27 904.27
907.13 906.97 904.05 904.05
907.09 906.94 904.03 904.03
907.04 906.90 904.03 904.03
906.98 906.84 903.89 903.89
906.91 906.79 903.85 903.85
906.84 906.72 903.79 903.79
906.75 906.64 903.69 903.69
906.66 906.56 903.54 903.54
906.57 906.47 903.39 903.39
906.46 906.37 903.27 903.27
906.35 906.27 903.18 903.18
906.15

288+00 289+00 290+00 291+00 292+00 293+00 294+00 295+00 296+00 297+00 298+00 299+00 300+00

910 900 890 920

MATCH LINE STA. 287+50 I-75

MATCH LINE STA. 300+00 I-75

STA 290+04.48, 1.64′ RT
EX. CB, GRATE ELEV 904.96
EX. 12" CONC IN 902.96
(202)

STA 290+30.00, ℄
CB-8, GRATE ELEV 904.15
15" (E) 901.63

PROFILE GRADE

-0.24 %

+0.06 %

EX. 24" CMP (202)

EX. 12" CONC (202)

PROP. 42" TYPE A

EX. 16" OIL IN 20" ENCASING

EX. 12" OIL IN 16" ENCASING

EX. 12" OIL IN 16" ENCASING

EX. 12" OIL IN 16" ENCASING

EXIST. GROUND

P.V.I. STA 288+50.00
ELEV = 906.59′
K = 2000
600.00′ VC

P.V.I. STA 300+00.00 ELEV = 907.28′
SSD = 1443′
K = 802
850.00′ VC

+0.06 %

HORIZONTAL SCALE IN FEET
0 25 50 100

CALCULATED CHECKED

PLAN AND PROFILE - I-75
STA. 287+50 TO STA. 300+00

ALL-75-0.21

206
907

I:\Pd\89029\roadway\sheets\89029GP024.dgn 25-JUN-2013 6:39AM tbolenba

SEEDING END WIDTH	SEEDING SQ. YDS.	END AREA CUT	END AREA FILL	VOLUME CUT	VOLUME FILL
145	800	134	13	234	29
143		119	18		
142	792	115	18	217	33
		+00, AHD			
		20	18		
		+00, BK			
132	761			19	17
43		0	0		
		+50, AHD			
40	5303				
		STA. 707+84, AHD (MEDIAN ONLY)			
	7656			470	79

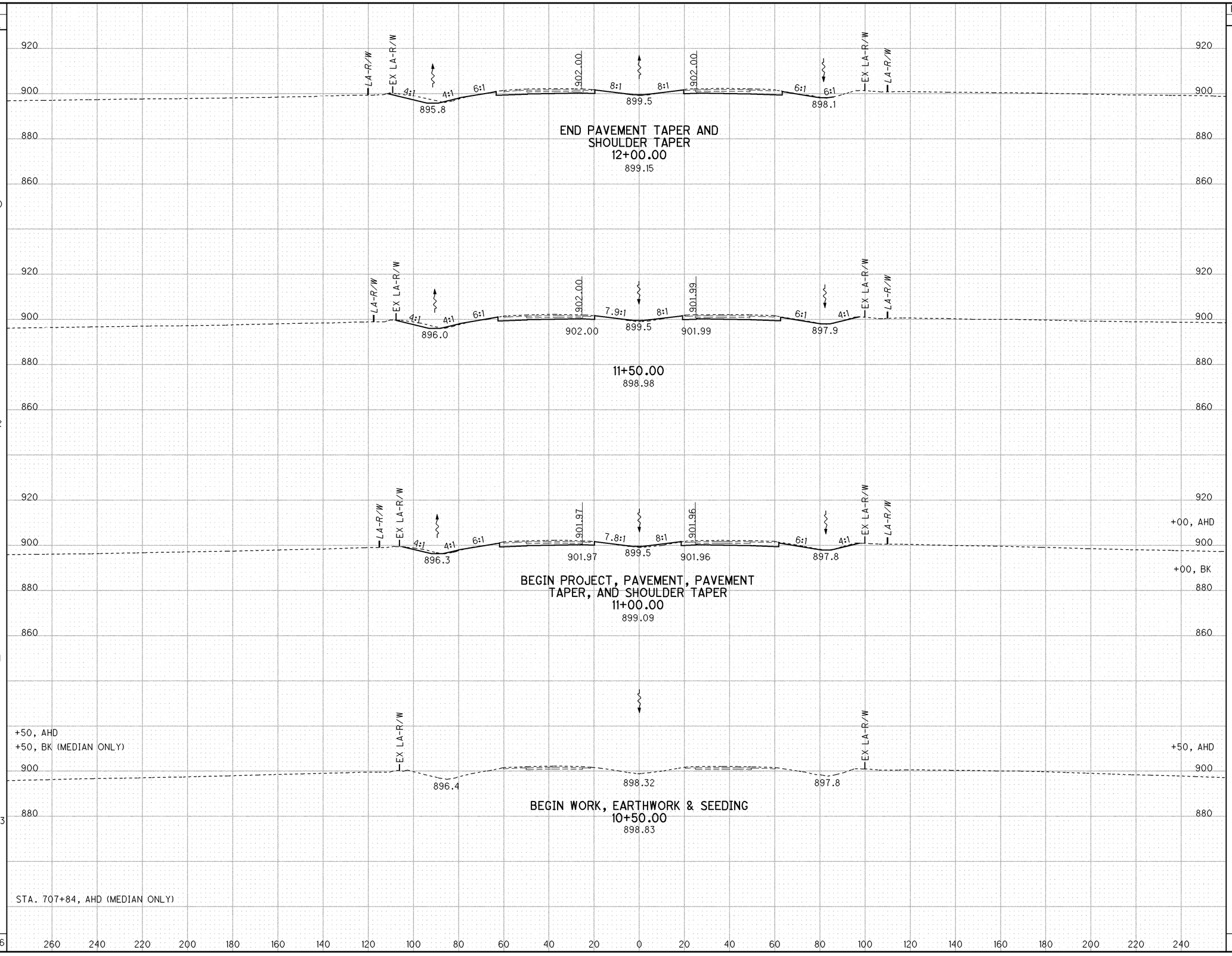

CALCULATED JMR
CHECKED ACF

CROSS SECTIONS - I-75
STA. 10+50.00 TO STA. 12+00.00

ALL-75-0.21

207
907

I:\Pd\89029\roadway\sheets\89029XS001.dgn 25-JUN-2013 3:17PM bclark

SEEDING END WIDTH	SEEDING SQ. YDS.	END AREA CUT	END AREA FILL	VOLUME CUT	VOLUME FILL
149	817	180	11	331	21
145	808	177	12	318	21
146	814	166	11	281	19
147	811	137	9	251	20
145	3250	134	13	1181	81

CALCULATED JMR
CHECKED ACF

CROSS SECTIONS - I-75
STA. 12+50.00 TO STA. 14+00.00

ALL-75-0.21

208
907

I:\Pd\89029\roadway\sheets\89029XS001.dgn 25-JUN-2013 3:16PM bclark

SEEDING	
END WIDTH	SQ. YDS.
147	825
150	825
147	822
149	828
149	
	3300

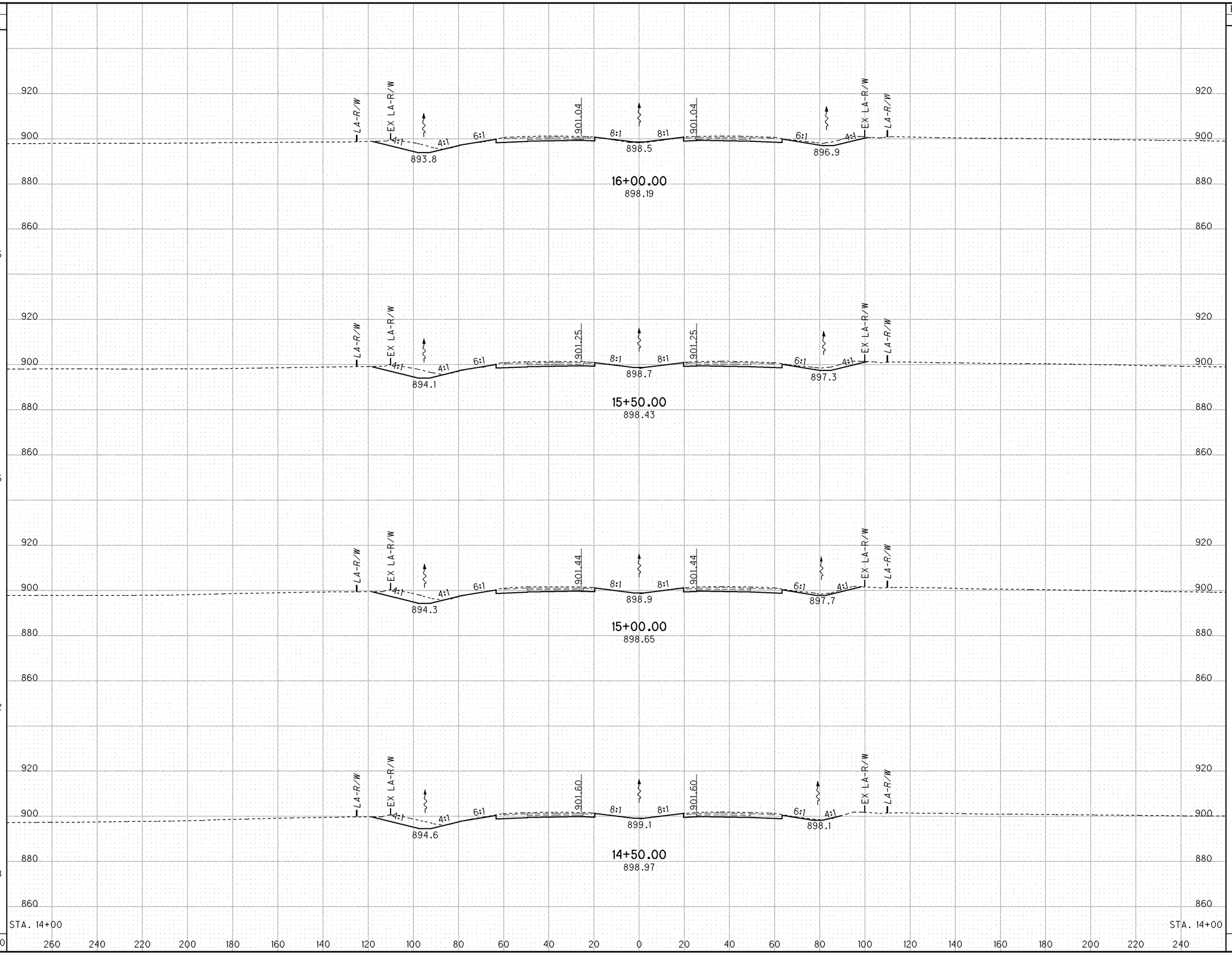

END AREA	
CUT	FILL
211	15
212	8
198	6
183	5
180	11

VOLUME	
CUT	FILL
392	21
380	13
353	10
336	15
1461	59

CALCULATED JMR
CHECKED ACF

CROSS SECTIONS - I-75
STA. 14+50.00 TO STA. 16+00.00

ALL-75-0.21

209
907

I:\Pd\89029\roadway\sheets\89029XS001.dgn 25-JUN-2013 3:16PM bclark

SEEDING END WIDTH	SEEDING SQ. YDS.
154	
	850
152	
	842
152	
	833
149	
	822
147	
	3347

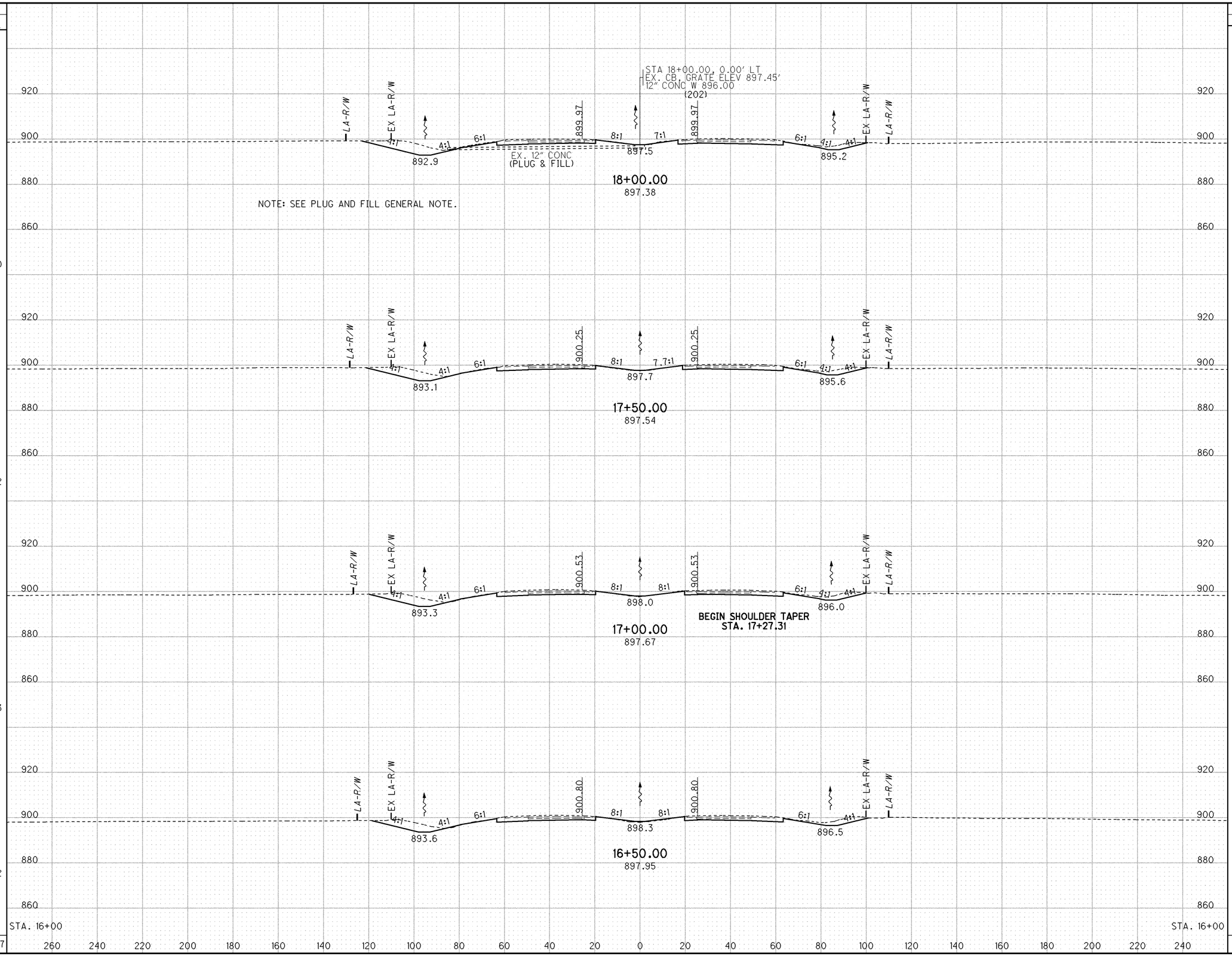

END AREA CUT	END AREA FILL	VOLUME CUT	VOLUME FILL
244	2		
		456	9
229	8		
		417	17
221	10		
		403	21
214	13		
		394	26
211	15		
		1670	73

CALCULATED JMR
CHECKED ACF

CROSS SECTIONS - I-75
STA. 16+50.00 TO STA. 18+00.00

ALL-75-0.21

210
907

I:\Pdt\89029\roadway\sheets\89029XS001.dgn 25-JUN-2013 3:16PM bclark

SEEDING END WIDTH	SEEDING SQ. YDS.		END AREA CUT	END AREA FILL	VOLUME CUT	VOLUME FILL
		+00, AHD	284	17		
		(DITCH ONLY) +00, BK	191	0		
163		+00, AHD				
		20+00.00			351	0
		895.24				
		(DITCH ONLY)	188	0		
		BEGIN SHOULDER TAPER STA. 19+92.69				
		19+50.00			331	0
		898.42				
	1641	MEDIAN CROSSOVER CORRECTION			480	19
		(DITCH ONLY) +00, AHD	170	0		
		+00, BK	275	3		
159		+00, BK				
		HW-2.1 or 2.2 STA 19+00.00, 86' LT ELEV 896.80				
		END SHOULDER TAPER STA. 19+27.31				
		19+00.00			504	4
		896.58				
	878					
157			270	1		
		18+50.00			476	3
		897.76				
154		STA. 18+00	244	2		
	3383				2142	26

CALCULATED JMR
CHECKED ACF

CROSS SECTIONS - I-75
STA. 18+50.00 TO STA. 20+00.00

ALL-75-0.21

211
907

I:\Pd\89029\roadway\sheets\89029XS001.dgn 25-JUN-2013 3:16PM bclark

SEEDING	
END WIDTH	SQ. YDS.
166	
	914
163	
	900
161	
	886
159	
	894
163	
	3594

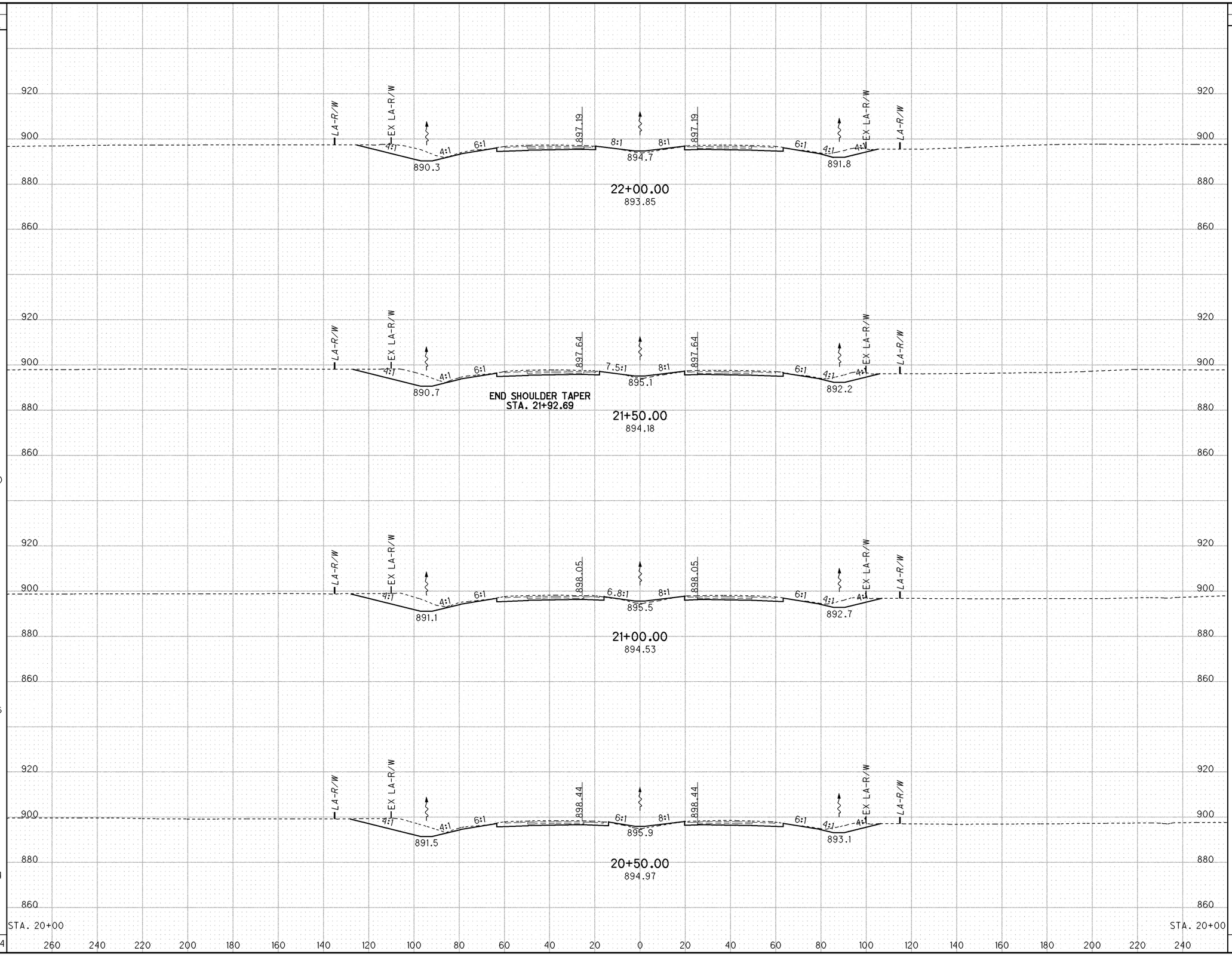

END AREA		VOLUME	
CUT	FILL	CUT	FILL
268	17		
		521	32
295	18		
		555	33
304	18		
		557	33
299	18		
		540	32
284	17		
		2173	130

CALCULATED JMR
CHECKED ACF

CROSS SECTIONS - I-75
STA. 20+50.00 TO STA. 22+00.00

ALL-75-0.21

212
907

I:\Pd\89029\roadway\sheets\89029XS001.dgn 25-JUN-2013 3:16PM bclark

SEEDING END WIDTH	SEEDING SQ. YDS.	END AREA CUT	END AREA FILL	VOLUME CUT	VOLUME FILL
167		236	20		
	936			460	37
170		261	20		
	933			470	35
166		247	18		
	917			471	31
164		247	15		
	917			491	30
166		268	17		
	3703			1892	133

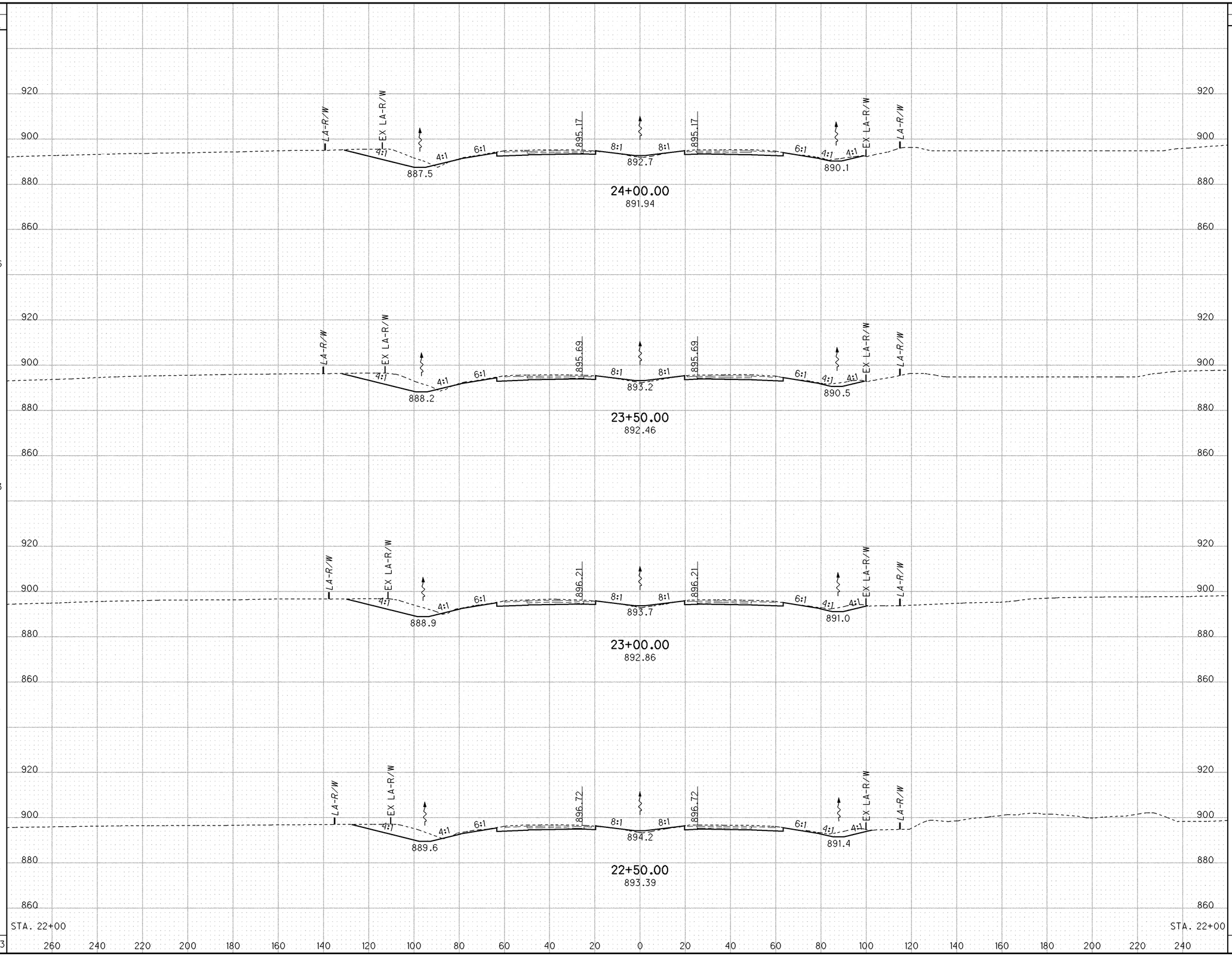

CALCULATED JMR
CHECKED ACF

CROSS SECTIONS - I-75
STA. 22+50.00 TO STA. 24+00.00

ALL-75-0.21

213
907

I:\Pd\89029\roadway\sheets\89029XS001.dgn 25-JUN-2013 3:15PM bclark

SEEDING		END AREA		VOLUME	
END WIDTH	SQ. YDS.	CUT	FILL	CUT	FILL
164	917	152	8	296	28
166		168	22	331	49
167	933	190	31	374	52
169		214	25	417	42
167	925	236	20		
	3708			1418	171

CALCULATED JMR
CHECKED ACF

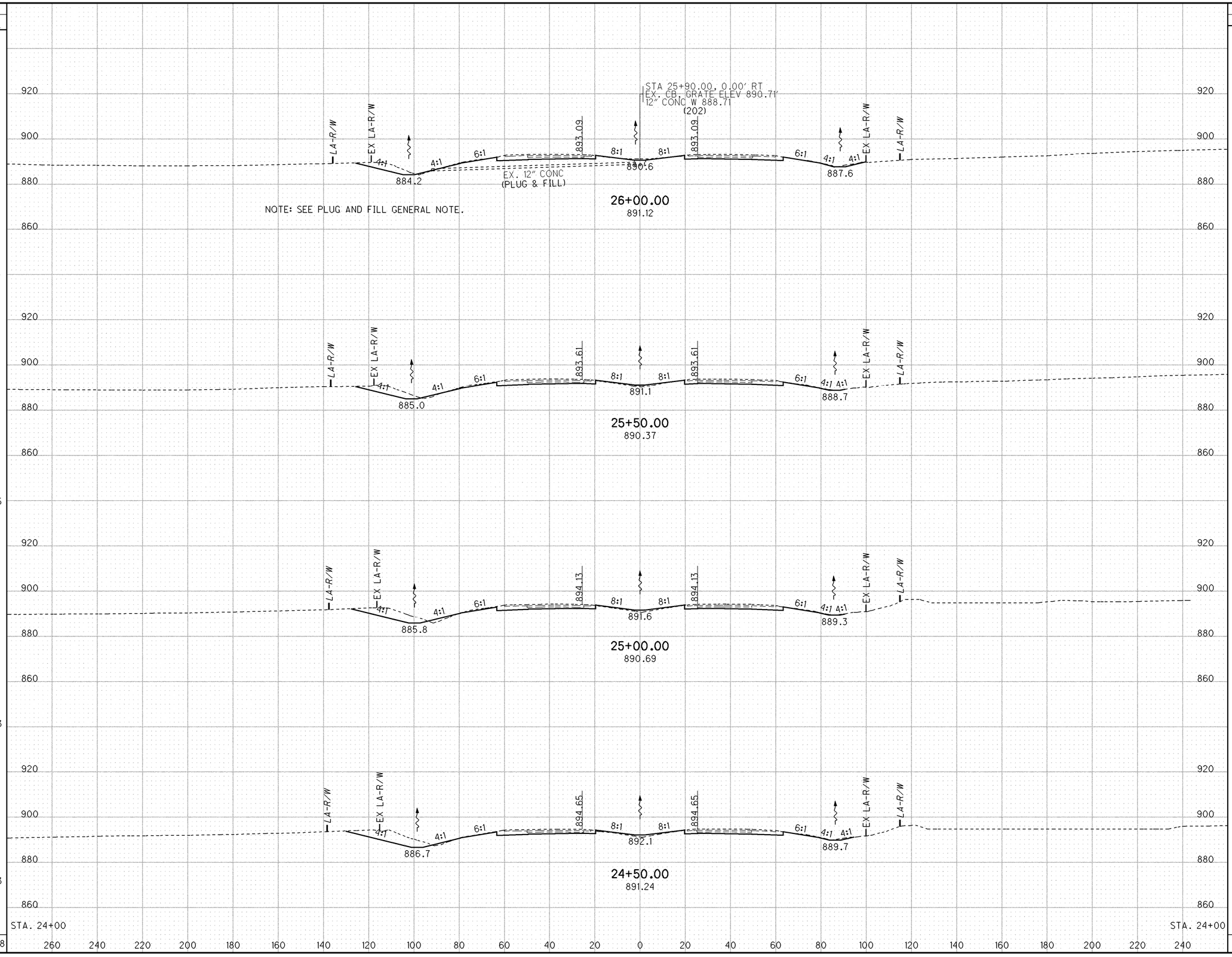

CROSS SECTIONS - I-75
STA. 24+50.00 TO STA. 26+00.00

ALL-75-0.21

214
907

I:\Pd\89029\roadway\sheets\89029XS001.dgn 25-JUN-2013 3:15PM bclark

SEEDING END WIDTH	SEEDING SQ. YDS.	END AREA CUT	END AREA FILL	VOLUME CUT	VOLUME FILL
161	892	122	31	228	57
160		124	31	234	56
161		129	29	271	49
157	883	164	24	293	30
164	892	152	8	1026	192
	3559				

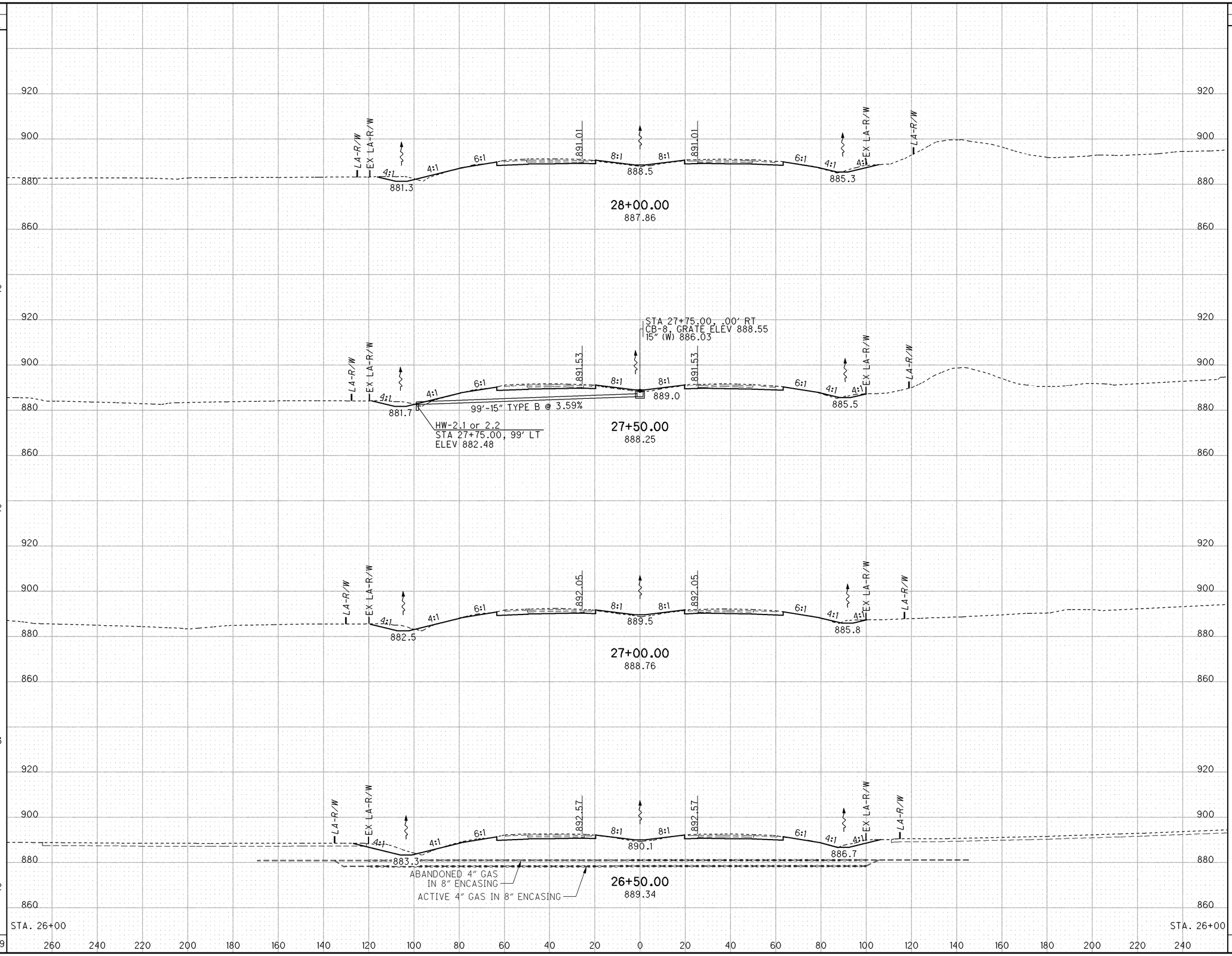

CALCULATED JMR
CHECKED ACF

CROSS SECTIONS - I-75
STA. 26+50.00 TO STA. 28+00.00

ALL-75-0.21

215
907

I:\Pd\89029\roadway\sheets\89029XS001.dgn 25-JUN-2013 3:15PM bclark

SEEDING END WIDTH	SEEDING SQ. YDS.	END AREA CUT	END AREA FILL	VOLUME CUT	VOLUME FILL
177	978	194	24	336	47
175	961	169	27	317	52
171	936	173	29	285	58
166	908	135	34	238	60
161	3783	122	31	1176	217

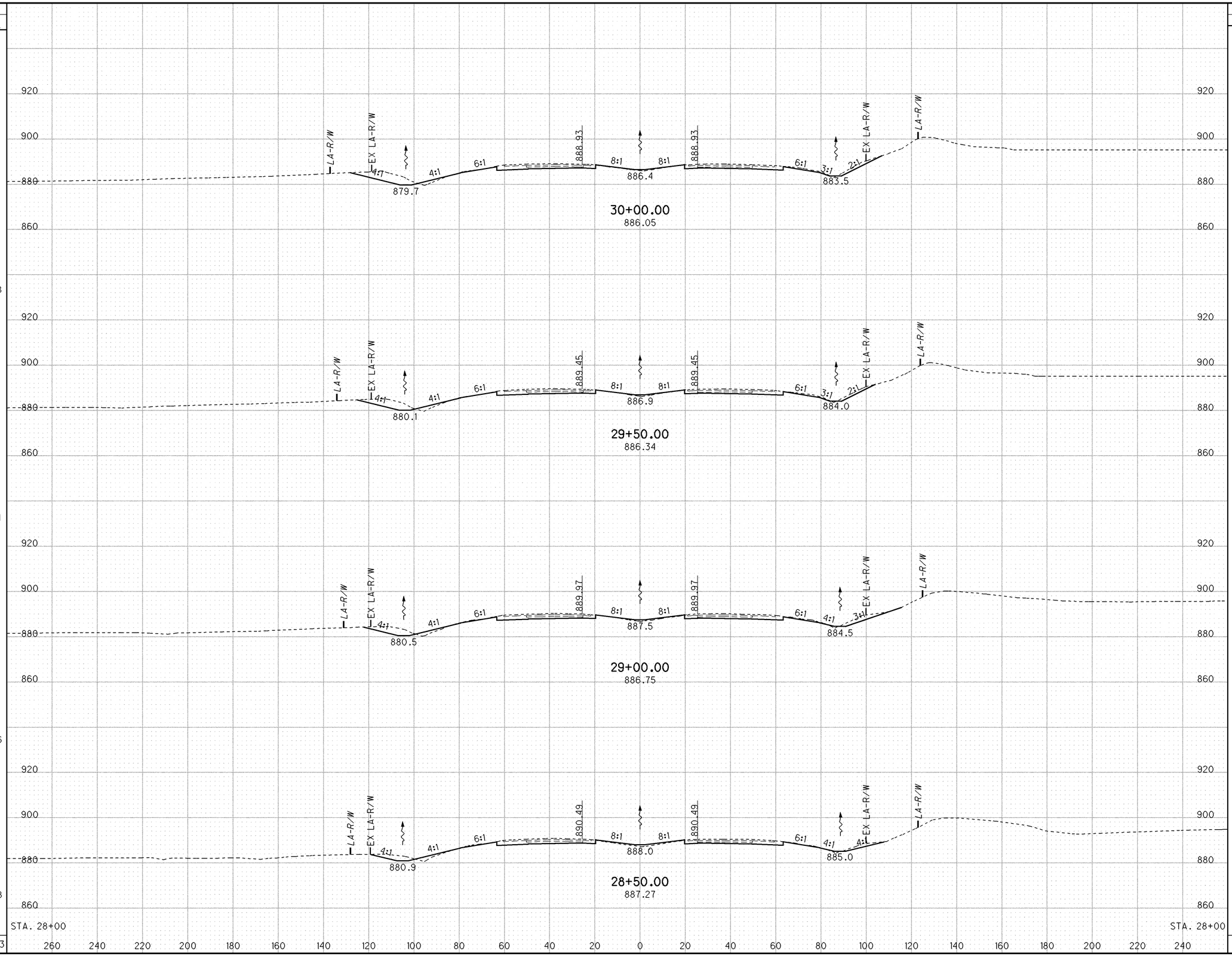

CALCULATED JMR
CHECKED BDC

CROSS SECTIONS - I-75
STA. 28+50.00 TO STA. 30+00.00

ALL-75-0.21

216
907

I:\Pd\89029\roadway\sheets\89029XS001.dgn 25-JUN-2013 3:15PM bclark

SEEDING END WIDTH	SEEDING SQ. YDS.	END AREA CUT	END AREA FILL	VOLUME CUT	VOLUME FILL
167					
	944	156	28	324	54
173					
	972	194	30	380	56
177					
	989	216	30	392	54
179					
	989	207	28	371	48
177		194	24	1467	212
	3894				

I:\Pd\89029\roadway\sheets\89029XS001.dgn 25-JUN-2013 3:15PM bclark

CALCULATED JMR
CHECKED BDC

CROSS SECTIONS - I-75
STA. 30+50.00 TO STA. 32+00.00

ALL-75-0.21

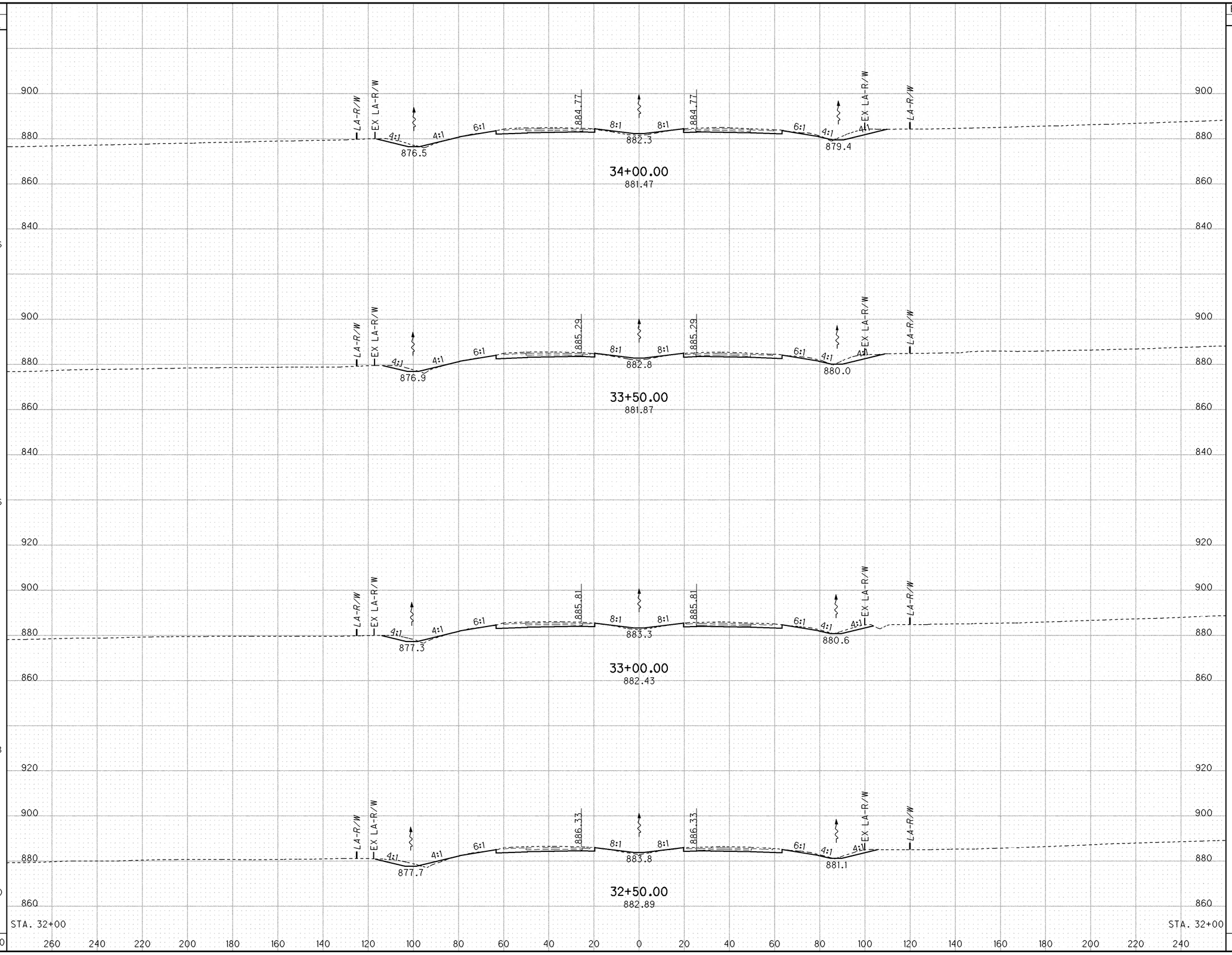

I:\Pd\89029\roadway\sheets\89029XS001.dgn 25-JUN-2013 3:14PM bclark

CROSS SECTIONS - I-75
STA. 32+50.00 TO STA. 34+00.00

ALL-75-0.21

218
907

SEEDING END WIDTH	SEEDING SQ. YDS.	END AREA CUT	END AREA FILL	VOLUME CUT	VOLUME FILL
158	875	142	35	263	62
157		142	32		
				269	49
159	878	148	21		
159				272	48
159	883	146	31		
159		149	28	273	55
	3519			1077	214

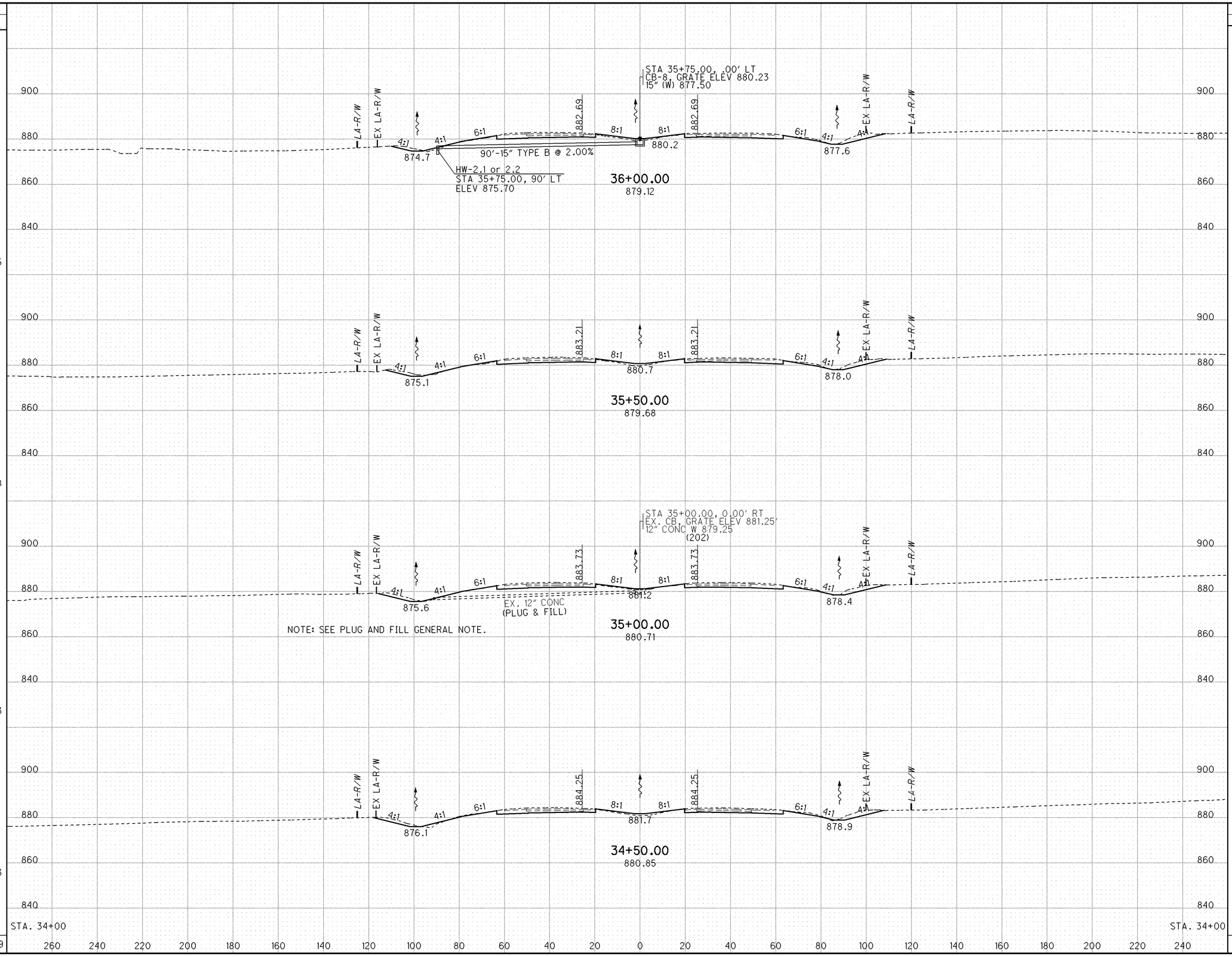

CALCULATED JMR
CHECKED BDC

CROSS SECTIONS - I-75
STA. 34+50.00 TO STA. 36+00.00

ALL-75-0.21

219
907

I:\Pd\89029\roadway\sheets\89029XS001.dgn 25-JUN-2013 3:14PM bclark

SEEDING END WIDTH	SEEDING SQ. YDS.	END AREA CUT	END AREA FILL	VOLUME CUT	VOLUME FILL
134		103	27		
	753			194	51
137		107	28		
	783			209	56
145		119	32		
	819			226	62
150		125	35		
	855			247	65
158		142	35		
	3210			876	234

CALCULATED JMR
CHECKED BDC

CROSS SECTIONS - I-75
STA. 36+50.00 TO STA. 38+00.00

ALL-75-0.21

220
907

I:\Pd\89029\roadway\sheets\89029XS001.dgn 25-JUN-2013 3:14PM bclark

SEEDING	
END WIDTH	SQ. YDS.
149	
	819
146	
	775
133	
	733
131	
	736
134	
	3063

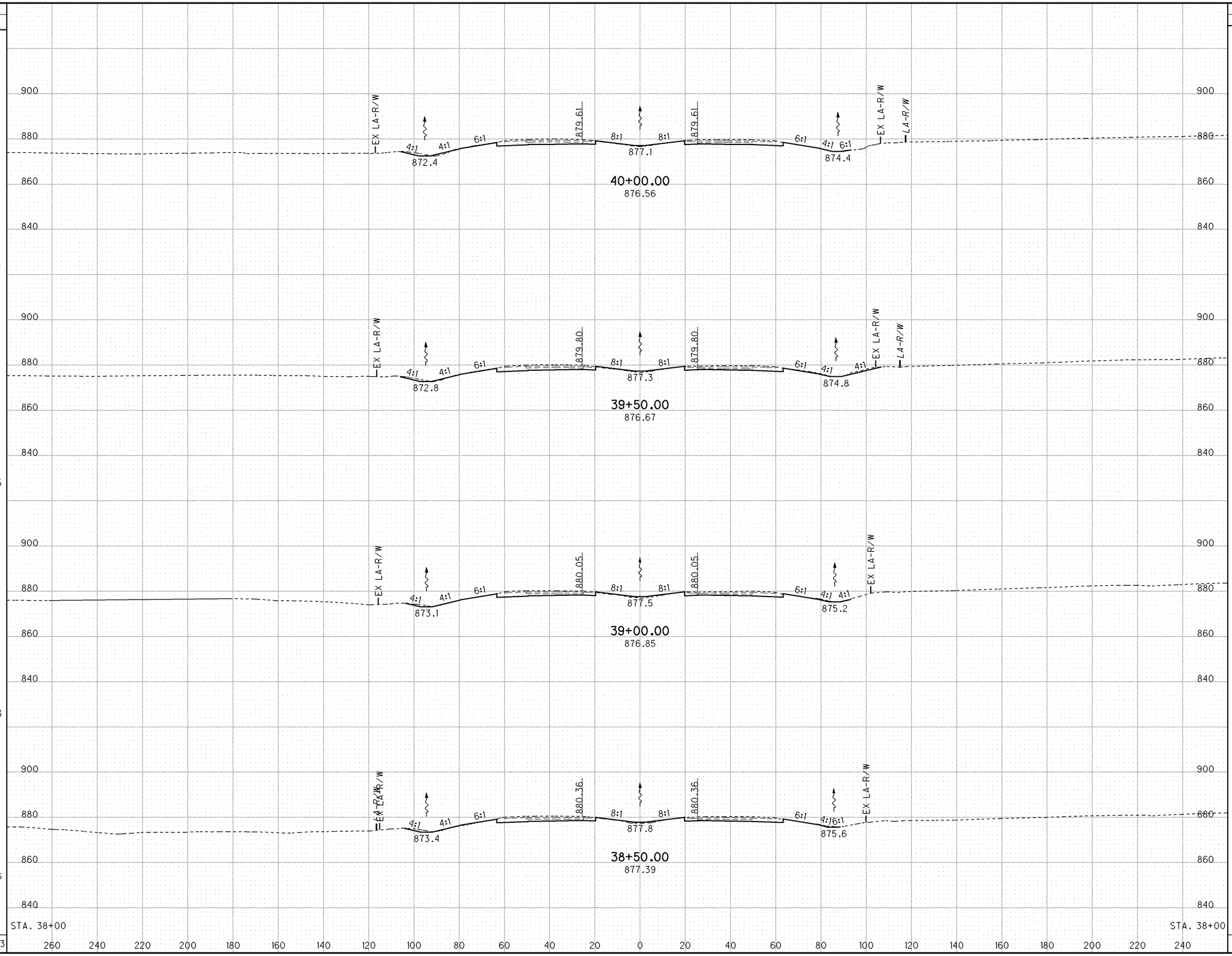

END AREA	
CUT	FILL
91	16
114	16
88	17
106	19
103	27

VOLUME	
CUT	FILL
190	30
187	31
180	33
194	43
751	137

CALCULATED JMR
CHECKED BDC

CROSS SECTIONS - I-75
STA. 38+50.00 TO STA. 40+00.00

ALL-75-0.21

221
907

I:\Pd\89029\roadway\sheets\89029XS001.dgn 25-JUN-2013 3:07PM bclark

SEEDING END WIDTH	SEEDING SQ. YDS.
167	1850
166	1811
160	1756
156	1694
149	7111

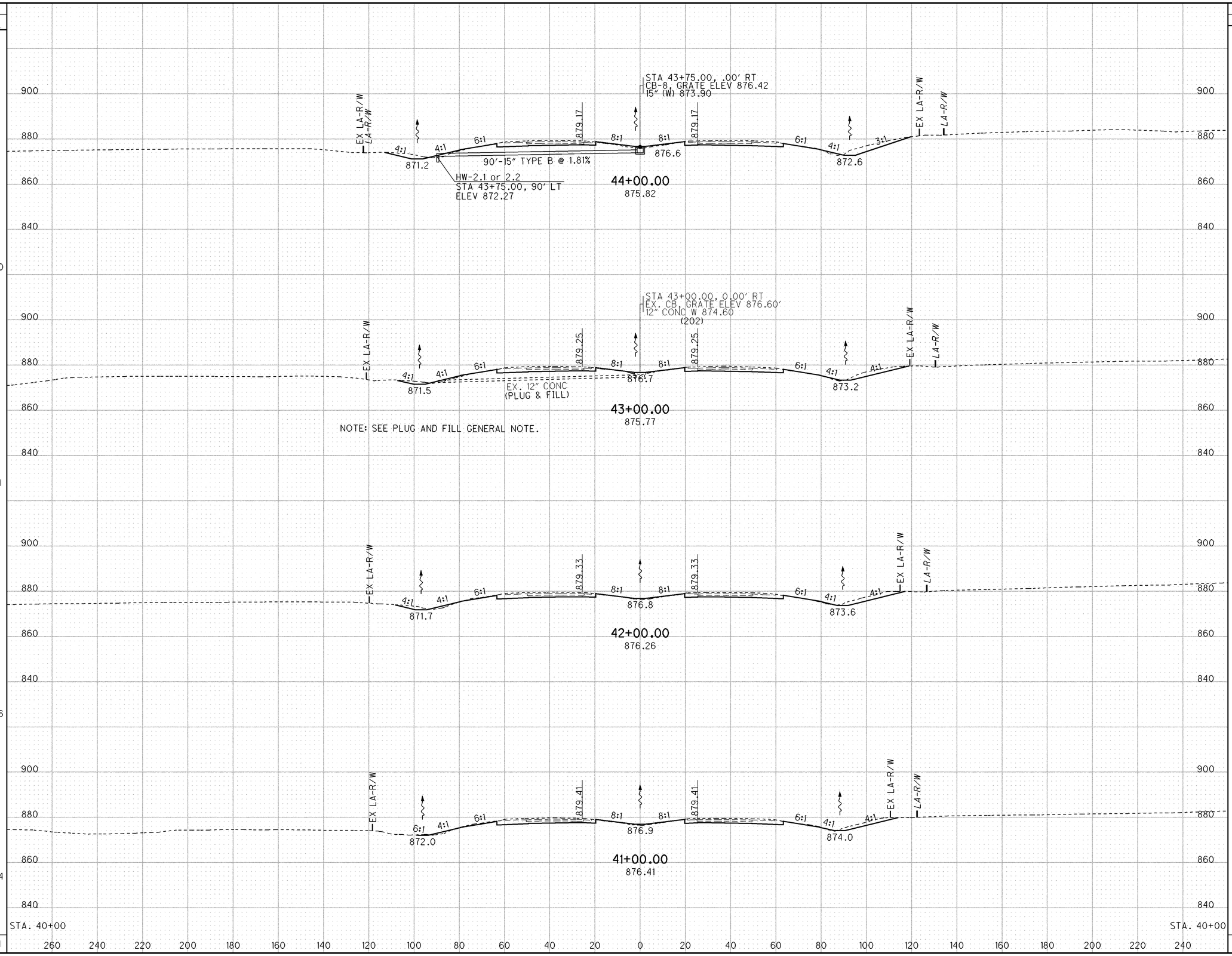

END AREA CUT	END AREA FILL	VOLUME CUT	VOLUME FILL
167	35		
		572	117
142	28		
		548	91
154	21		
		544	78
140	21		
		428	69
91	16		
		2092	355

CALCULATED JMR
CHECKED BDC

CROSS SECTIONS - I-75
STA. 40+50.00 TO STA. 44+00.00

ALL-75-0.21

222
907

I:\Pd\89029\roadway\sheets\89029XS001.dgn 25-JUN-2013 3:07PM bclark

I:\Pd\89029\roadway\sheets\89029XS001.dgn 25-JUN-2013 3:06PM bclark

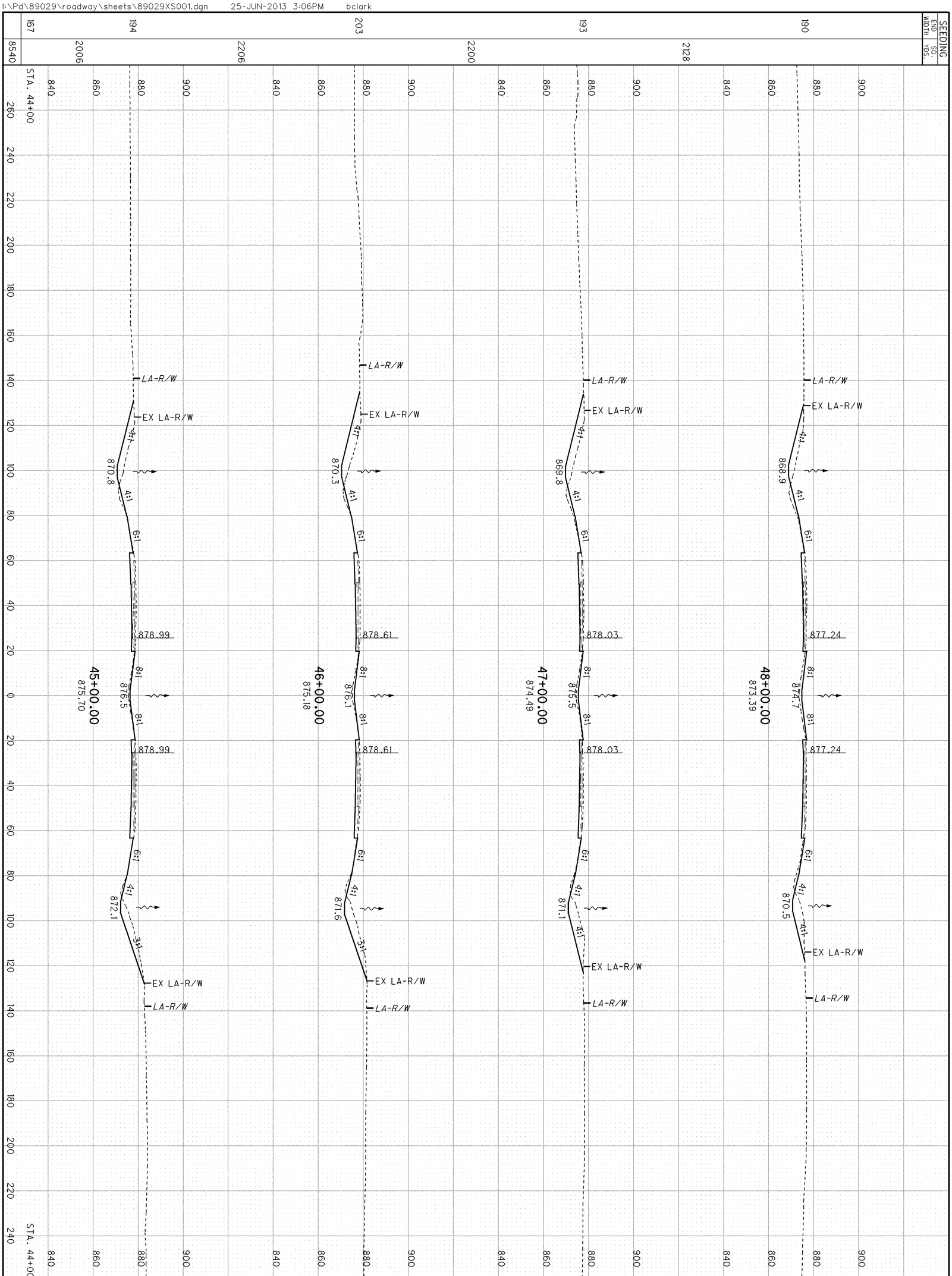

223 / 907	ALL-75-0.21	CROSS SECTIONS - I-75 STA. 45+00.00 TO STA. 48+00.00

CALCULATED JMR
CHECKED BDC

SEEDING	
END WIDTH	SQ. YDS.
175	975
176	983
178	992
179	1025
190	3975

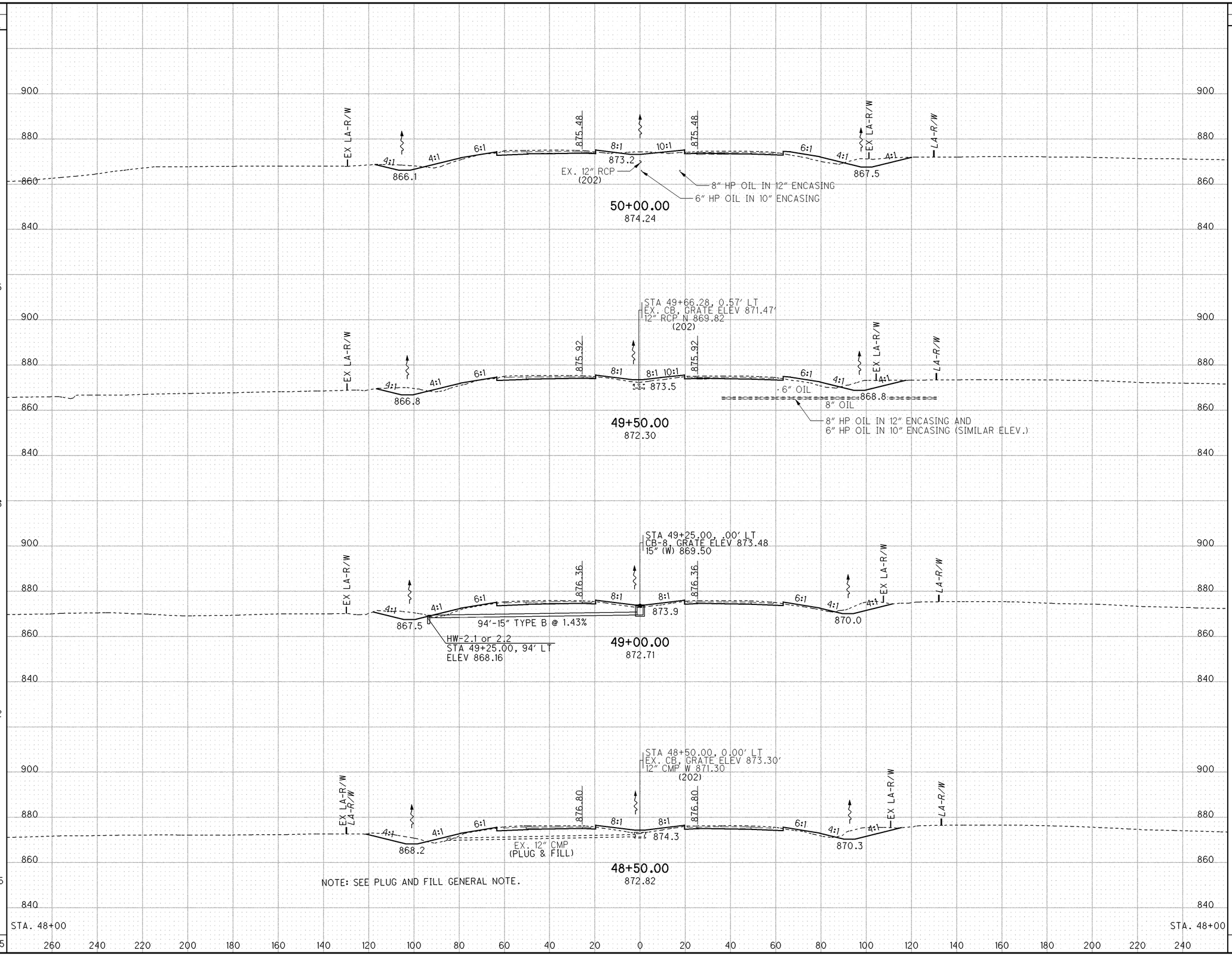

END AREA		VOLUME	
CUT	FILL	CUT	FILL
136	83		
		259	162
144	92		
		270	155
148	75		
		294	149
170	86		
		294	154
147	80		
		1117	620

CALCULATED JMR
CHECKED BDC

CROSS SECTIONS - I-75
STA. 48+50.00 TO STA. 50+00.00

ALL-75-0.21

224
907

I:\Pd\89029\roadway\sheets\89029XS001.dgn 25-JUN-2013 3:06PM bclark

SEEDING	
END WIDTH	SQ. YDS.
182	1003
179	
178	992
176	983
175	975
	3953

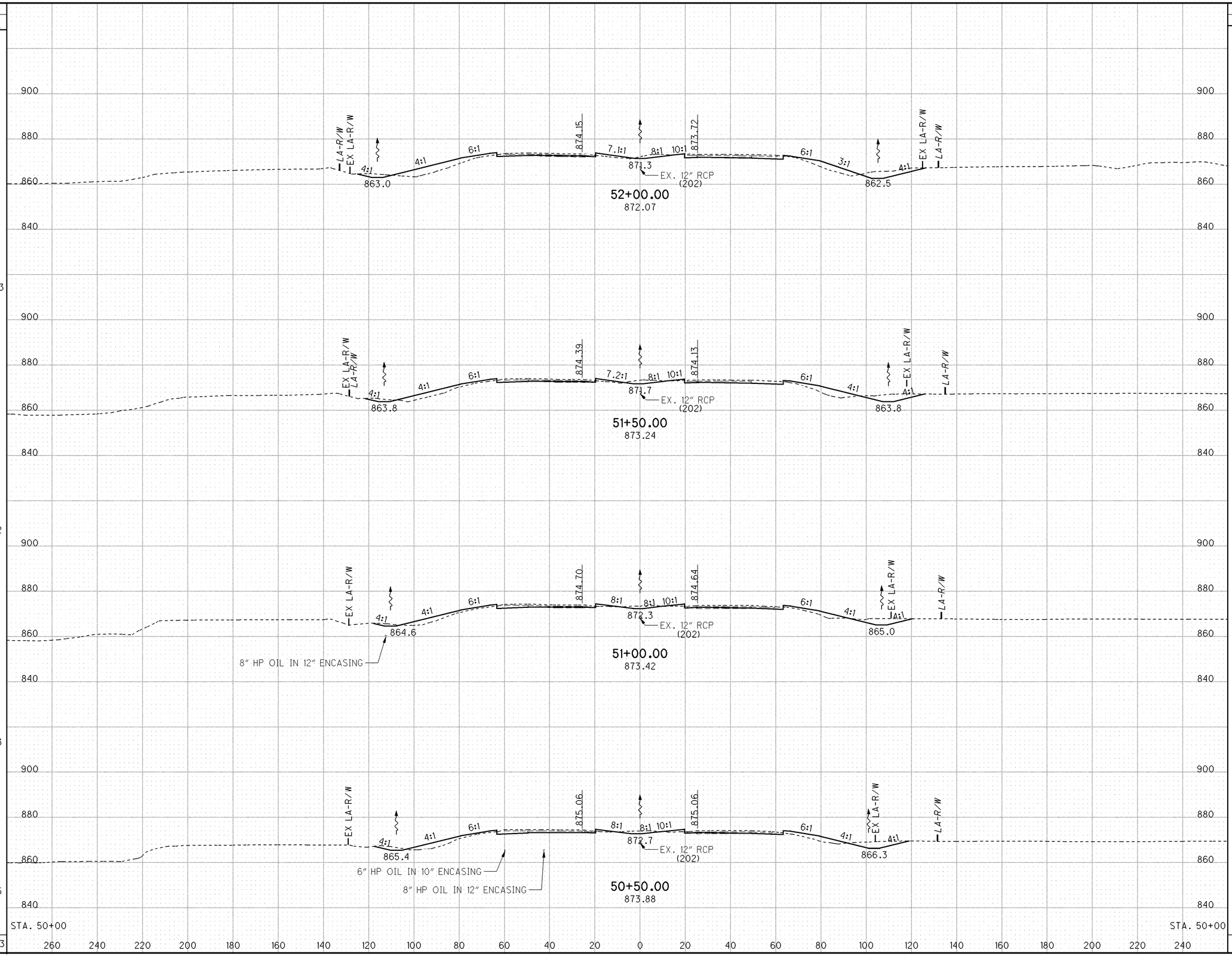

END AREA	
CUT	FILL
116	179
113	148
90	117
103	123
136	83

VOLUME	
CUT	FILL
212	303
188	245
179	222
221	191
800	961

CALCULATED JMR
CHECKED BDC

CROSS SECTIONS - I-75
STA. 50+50.00 TO STA. 52+00.00

ALL-75-0.21

225
907

I:\Pd\89029\roadway\sheets\89029XS001.dgn 25-JUN-2013 3:06PM bclark

SEEDING END WIDTH	SEEDING SQ. YDS.		END AREA CUT	END AREA FILL	VOLUME CUT	VOLUME FILL
		900				
184		+92.42 END APPROACH SLAB	83	146		
		880				
	511				79	138
		860				
184		+67.42, AHD BEGIN APPROACH SLAB	88	153		
		840				
	780	CORRECTION FOR BRIDGE — BRIDGE ALL-75-0100 L & R — CORRECTION FOR BRIDGE			597	938
185		+81.42, BK END APPROACH SLAB	104	157		
	514				92	151
185		+56.42 BEGIN APPROACH SLAB	95	170		
	132				22	41
185			90	174		
	1019				191	327
182		STA. 52+00	116	179		
	2956				981	1595

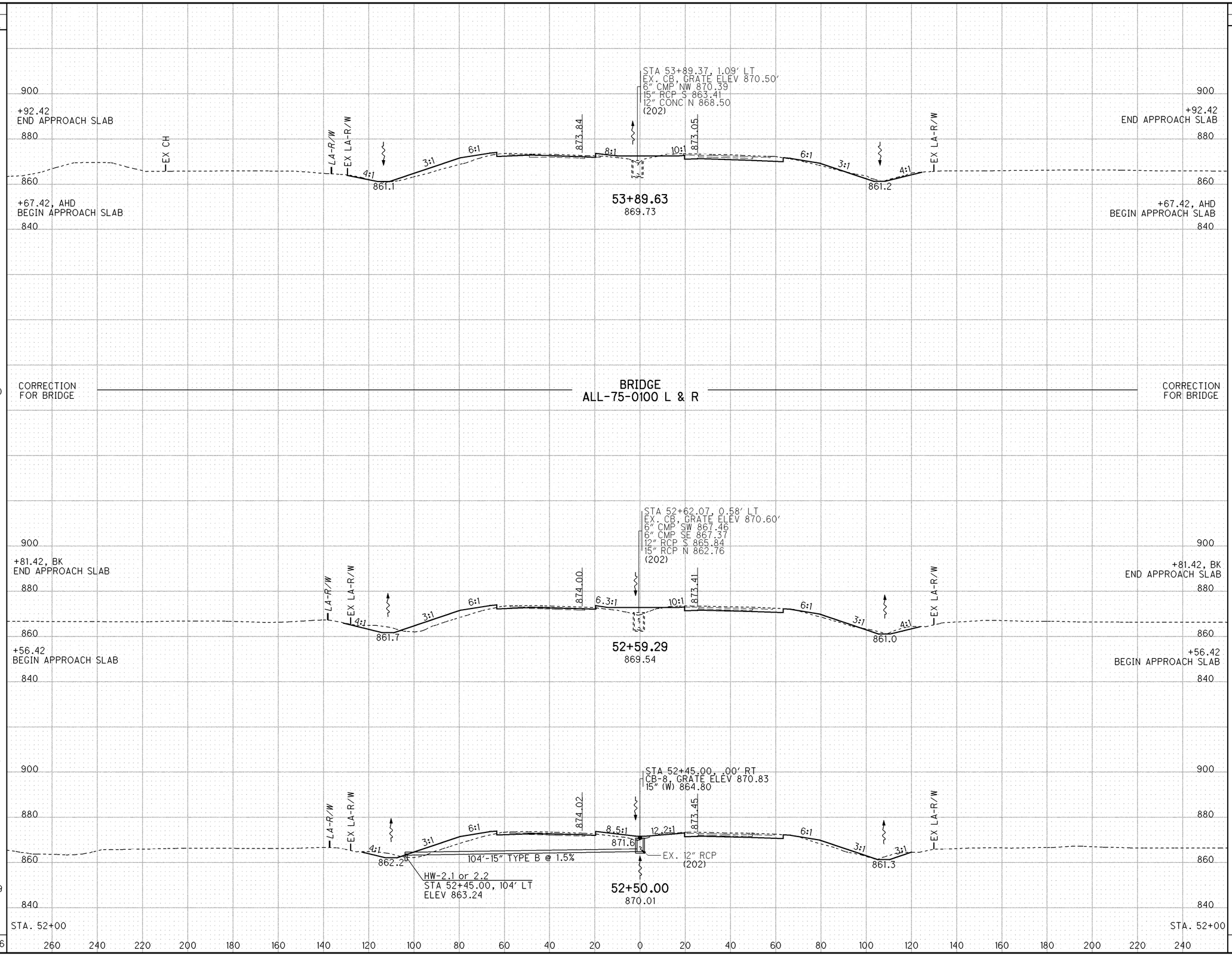

CALCULATED JMR
CHECKED BDC

CROSS SECTIONS - I-75
STA. 52+50.00 TO STA. 53+89.63

ALL-75-0.21

226
907

I:\Pd\89029\roadway\sheets\89029XS001.dgn 25-JUN-2013 3:06PM bclark

SEEDING END WIDTH	SEEDING SQ. YDS.
175	989
181	
182	1008
183	1014
184	155
	3166

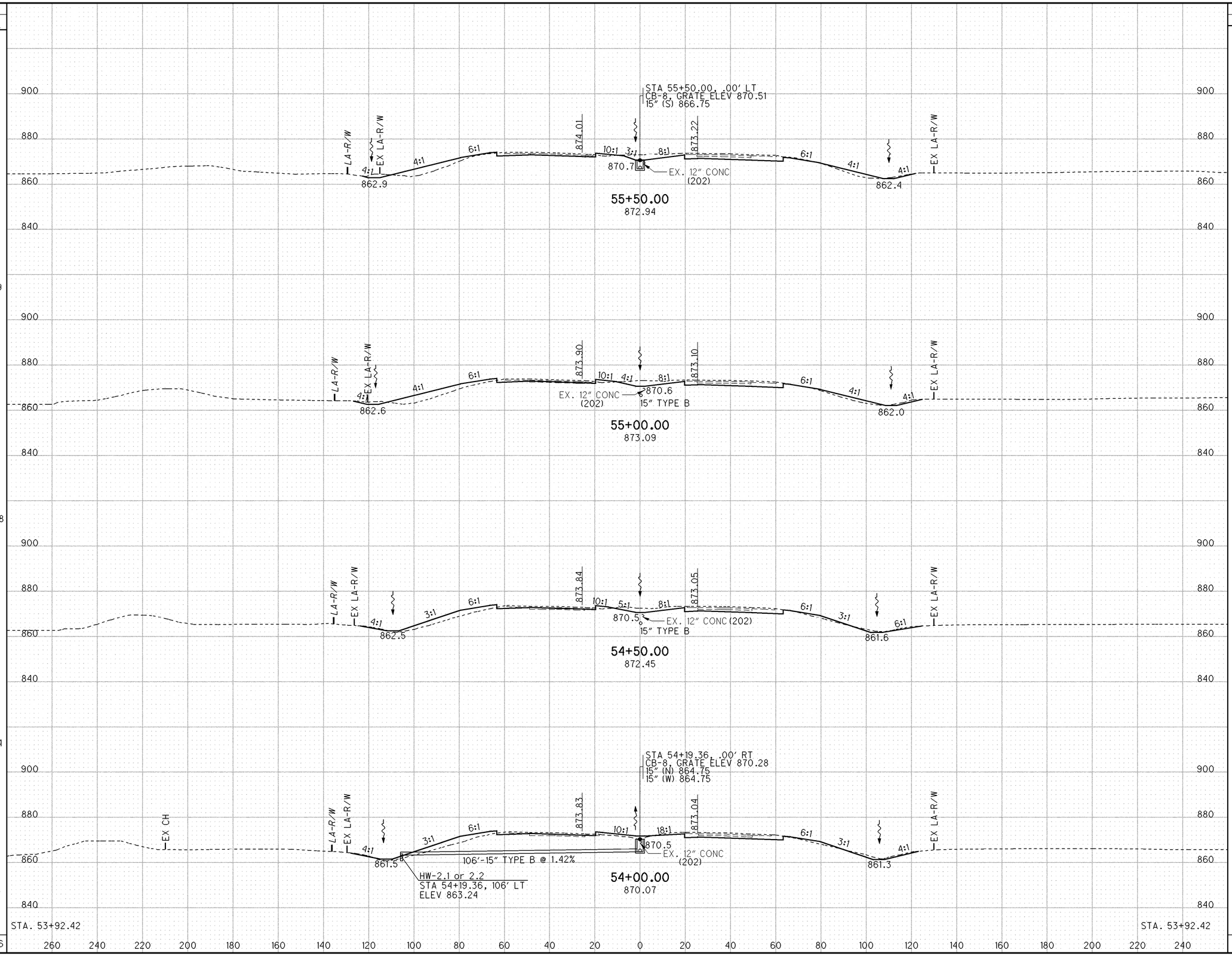

END AREA CUT	END AREA FILL	VOLUME CUT	VOLUME FILL
136	122		
		238	262
121	161		
		225	264
122	124		
		193	246
86	142		
		24	40
83	146		
		680	812

CALCULATED JMR
CHECKED BDC

CROSS SECTIONS - I-75
STA. 54+00.00 TO STA. 55+50.00

ALL-75-0.21

227
907

I:\Pd\89029\roadway\sheets\89029XS001.dgn 25-JUN-2013 3:06PM bclark

SEEDING END WIDTH	SEEDING SQ. YDS.
165	1811
161	906
165	931
170	958
175	4606

END AREA CUT	END AREA FILL	VOLUME CUT	VOLUME FILL
211	31	672	137
152	43	299	91
171	55	294	118
146	72	261	180
136	122	1526	526

CALCULATED JMR
CHECKED BDC

CROSS SECTIONS - I-75
STA. 56+00.00 TO STA. 58+00.00

ALL-75-0.21

228
907

I:\Pd\89029\roadway\sheets\89029XS001.dgn 25-JUN-2013 3:06PM bclark

SEEDING	
END WIDTH	SQ. YDS.
136	
	1539
141	
	1617
150	
	1717
159	
	1800
165	
	6673

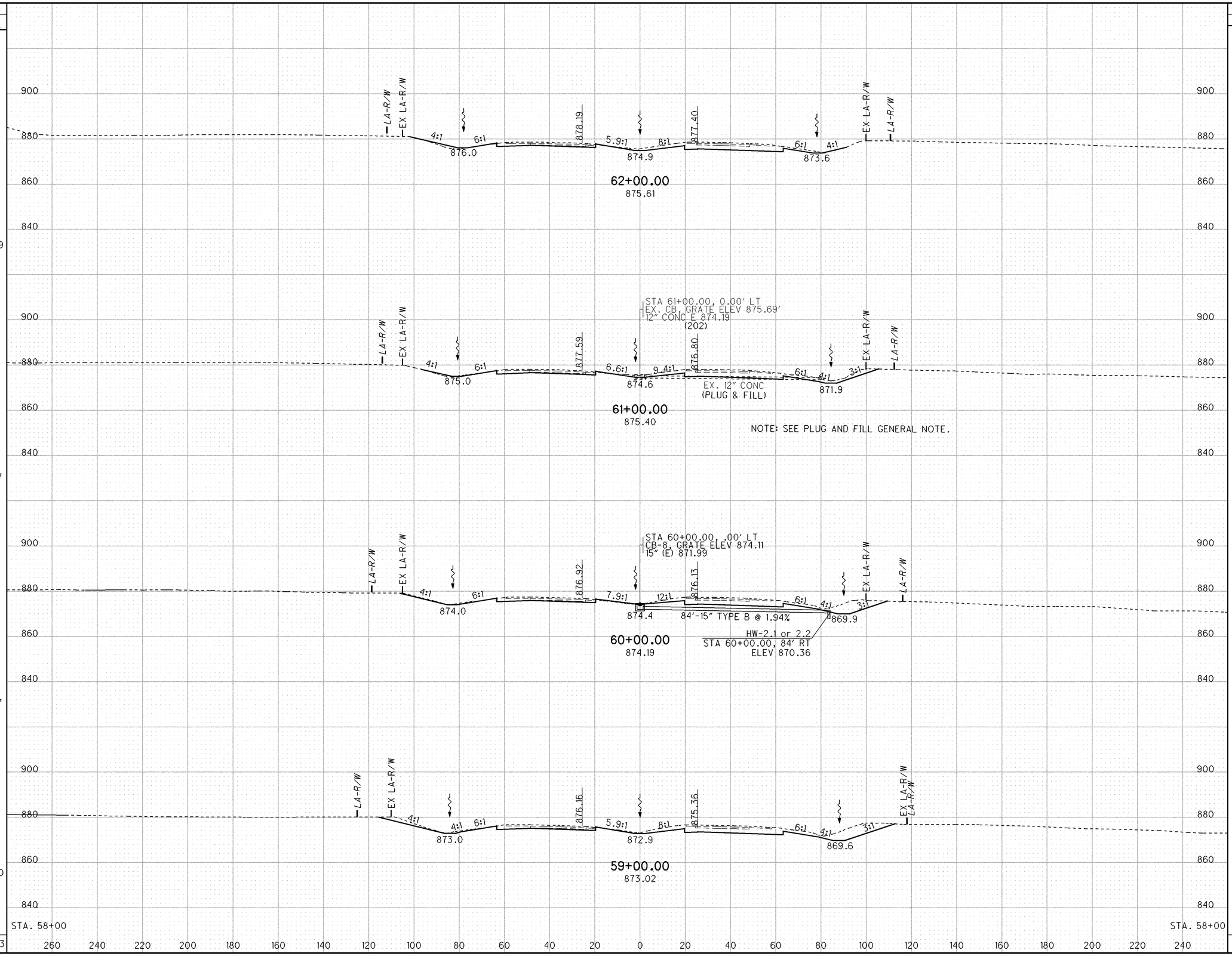

END AREA	
CUT	FILL
162	15
217	9
256	7
308	2
211	31

VOLUME	
CUT	FILL
702	44
876	30
1044	17
961	61
3583	152

CALCULATED JMR
CHECKED BDC

CROSS SECTIONS - I-75
STA. 59+00.00 TO STA. 62+00.00

ALL-75-0.21

229
907

I:\Pd\89029\roadway\sheets\89029XS001.dgn 25-JUN-2013 3:05PM bclark

I:\Pd\89029\roadway\sheets\89029XS001.dgn 25-JUN-2013 3:05PM bclark

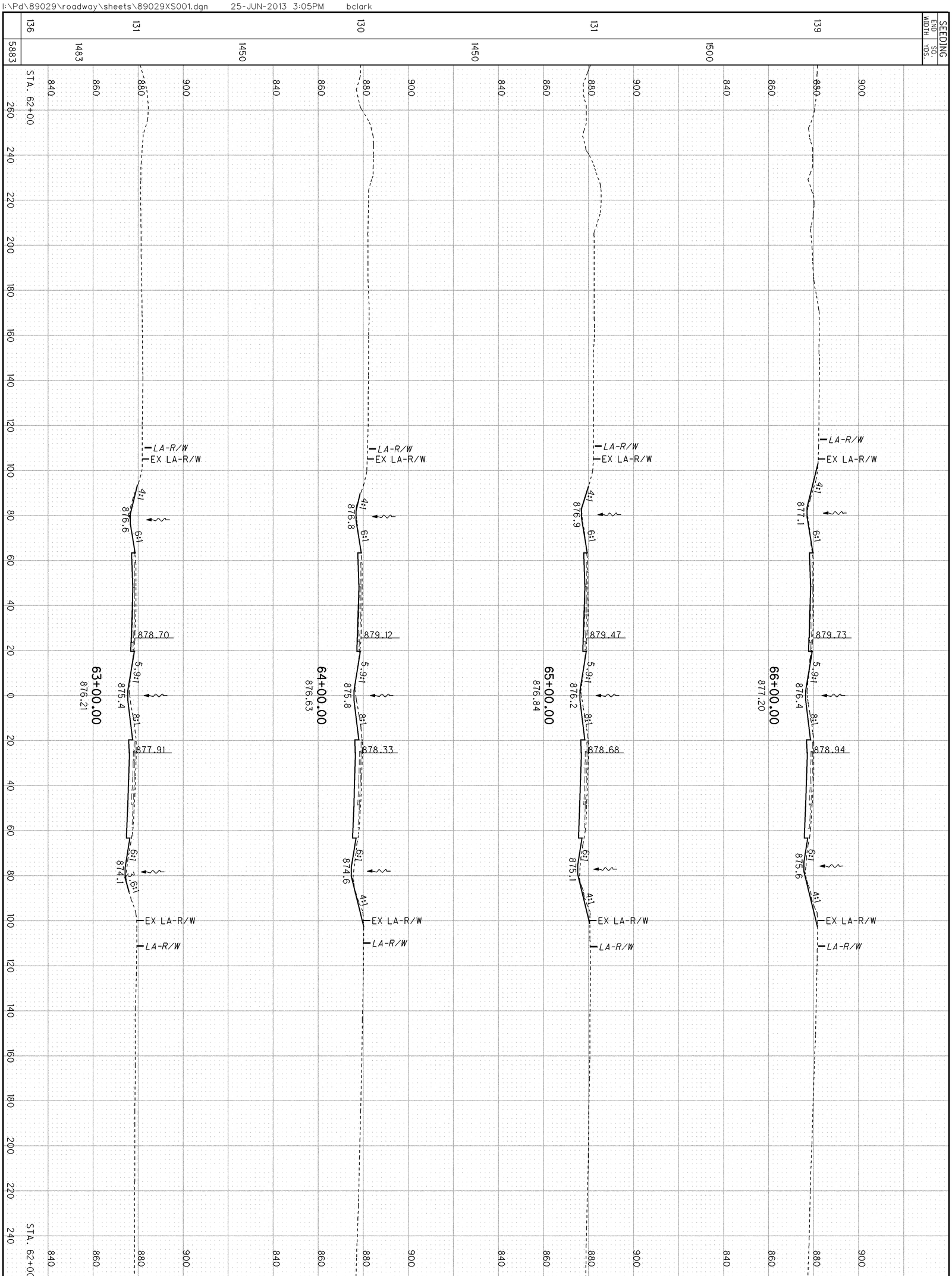

230
907

ALL-75-0.21

CROSS SECTIONS - I-75
STA. 63+00.00 TO STA. 66+00.00

CALCULATED JMR
CHECKED BDC

SEEDING	
END WIDTH	SQ. YDS.
149	
	1739
164	
	1906
179	
	2089
197	
	1867
139	
	7601

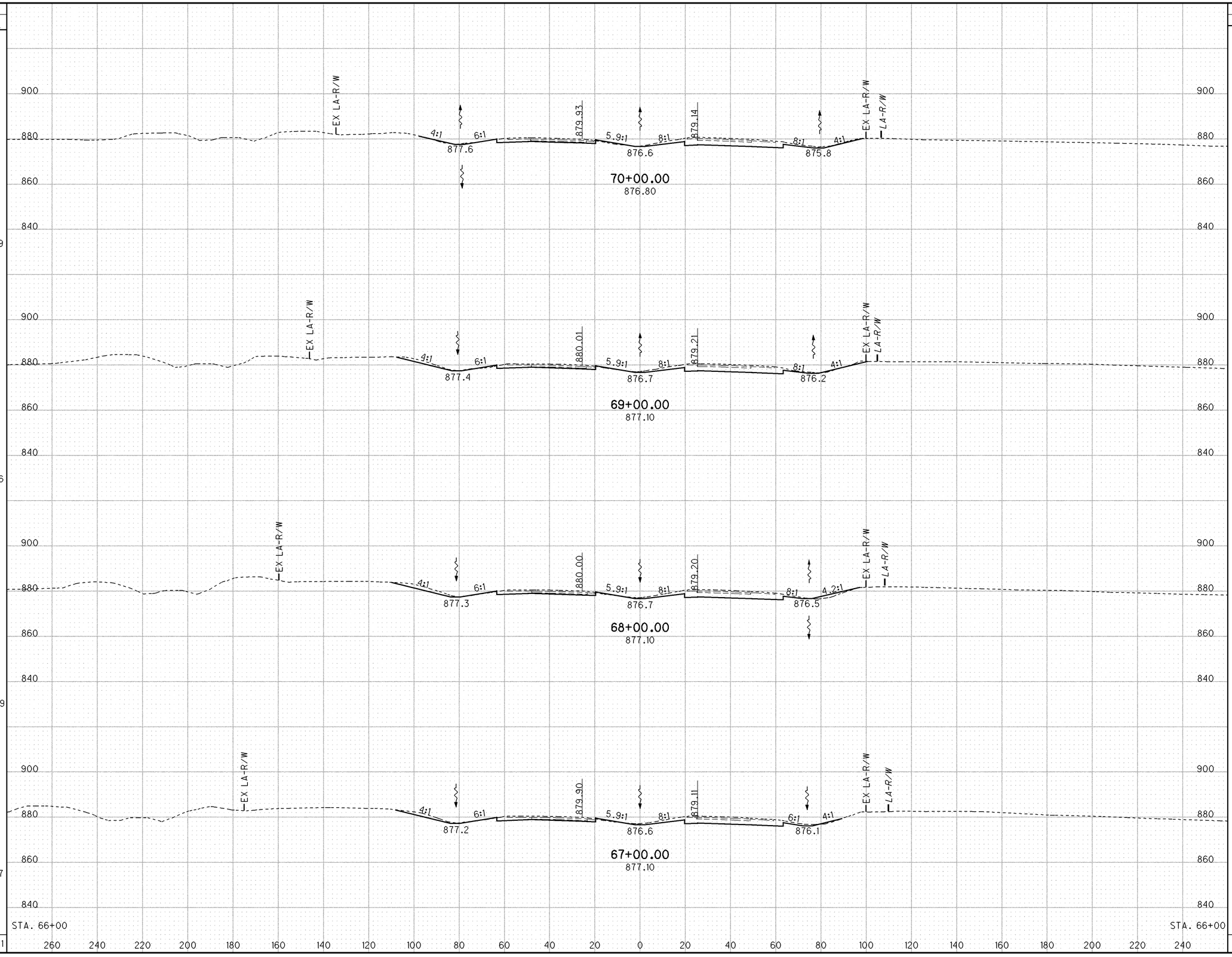

END AREA	
CUT	FILL
168	10
184	18
186	21
178	10
178	5

VOLUME	
CUT	FILL
651	52
685	72
626	67
659	28
2669	181

CALCULATED JMR
CHECKED BDC

CROSS SECTIONS - I-75
STA. 67+00.00 TO STA. 70+00.00

ALL-75-0.21

231
907

I:\Pd\89029\roadway\sheets\89029XS001.dgn 25-JUN-2013 3:05PM bclark

SEEDING	
END WIDTH	SQ. YDS.
119	
	1350
124	
	1417
131	
	1500
139	
	1600
149	
	5867

END AREA	
CUT	FILL
204	6
206	6
186	7
168	7
168	10

VOLUME	
CUT	FILL
759	22
726	24
656	26
622	31
2763	103

CALCULATED JMR
CHECKED BDC

CROSS SECTIONS - I-75
STA. 71+00.00 TO STA. 74+00.00

ALL-75-0.21

232
907

I:\Pd\89029\roadway\sheets\89029XS001.dgn 25-JUN-2013 3:05PM bclark

SEEDING END WIDTH	SEEDING SQ. YDS.
139	
	1533
137	
	1500
133	
	1450
128	
	1372
119	
	5855

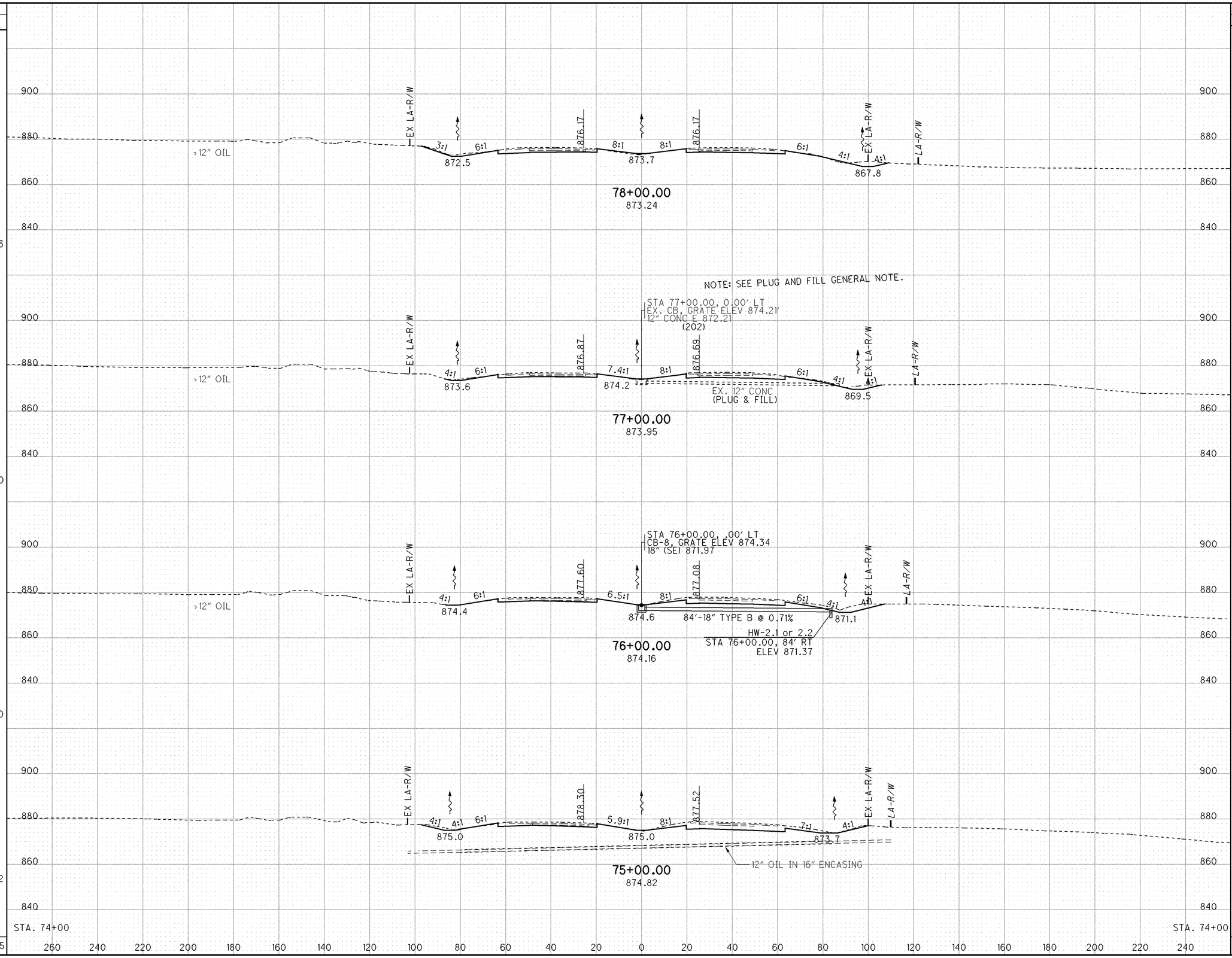

END AREA CUT	END AREA FILL	VOLUME CUT	VOLUME FILL
132	16		
		463	33
118	2		
		530	9
168	3		
		698	15
209	5		
		765	20
204	6		
		2456	77

CALCULATED JMR
CHECKED BDC

CROSS SECTIONS - I-75
STA. 75+00.00 TO STA. 78+00.00

ALL-75-0.21

233
907

I:\Pd\89029\roadway\sheets\89029XS001.dgn 25-JUN-2013 3:05PM bclark

SEEDING END WIDTH	SEEDING SQ. YDS.	END AREA CUT	END AREA FILL	VOLUME CUT	VOLUME FILL
117	1439	83	43	372	169
142	786	118	48	216	83
141	781	115	42	213	61
140	1550	115	24	457	74
139	4556	132	16	1258	387

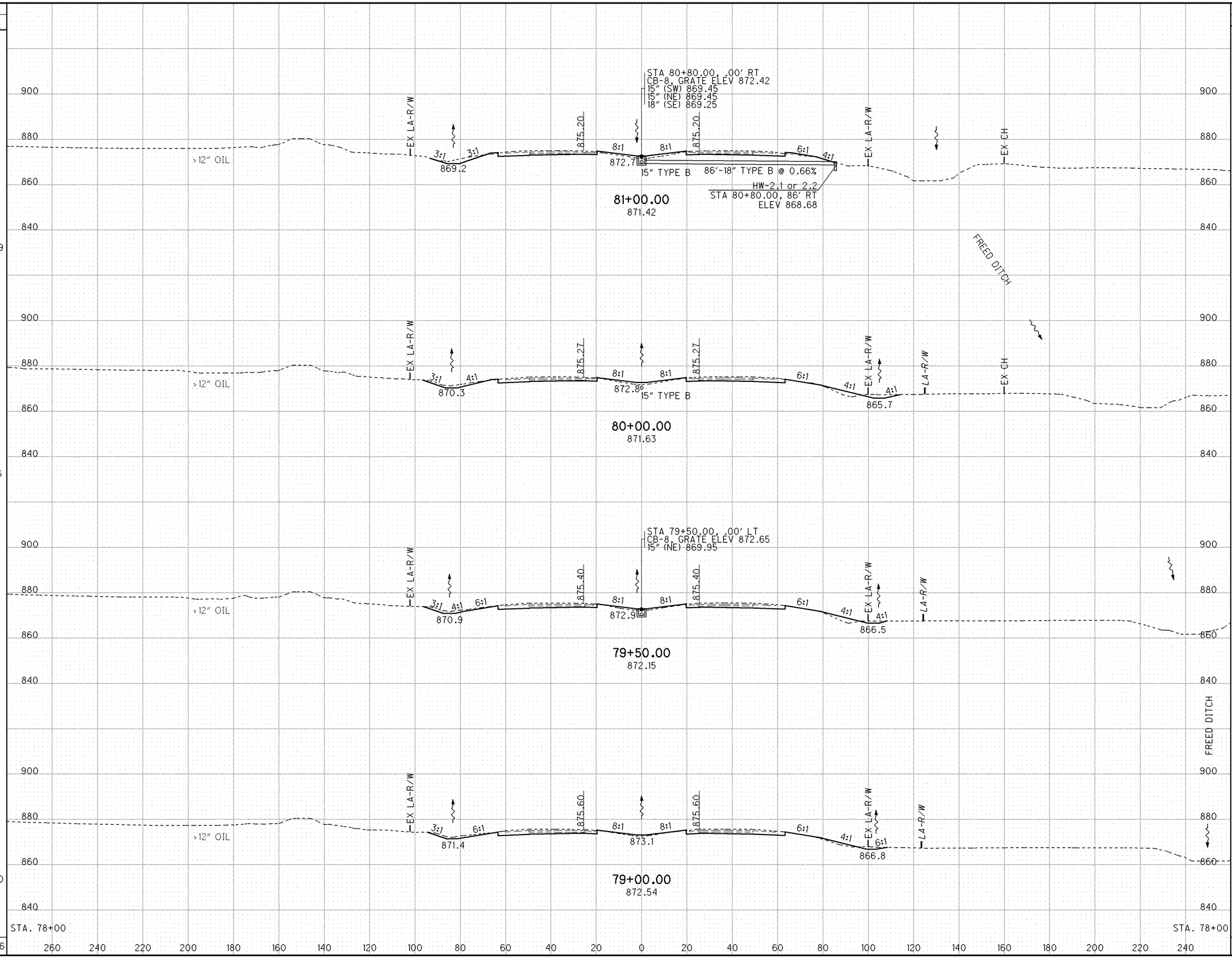

CALCULATED JMR
CHECKED BDC

CROSS SECTIONS - I-75
STA. 79+00.00 TO STA. 81+00.00

ALL-75-0.21

234
907

I:\Pd\89029\roadway\sheets\89029XS001.dgn 25-JUN-2013 3:04PM bclark

SEEDING END WIDTH	SEEDING SQ. YDS.	END AREA CUT	END AREA FILL	VOLUME CUT	VOLUME FILL
117	647	11	135	42	255
116	9	34	140	54	216
117	1300	24	93	124	285
117	1300	43	61	233	195
117	3903	83	43	453	951

CALCULATED JMR
CHECKED BDC

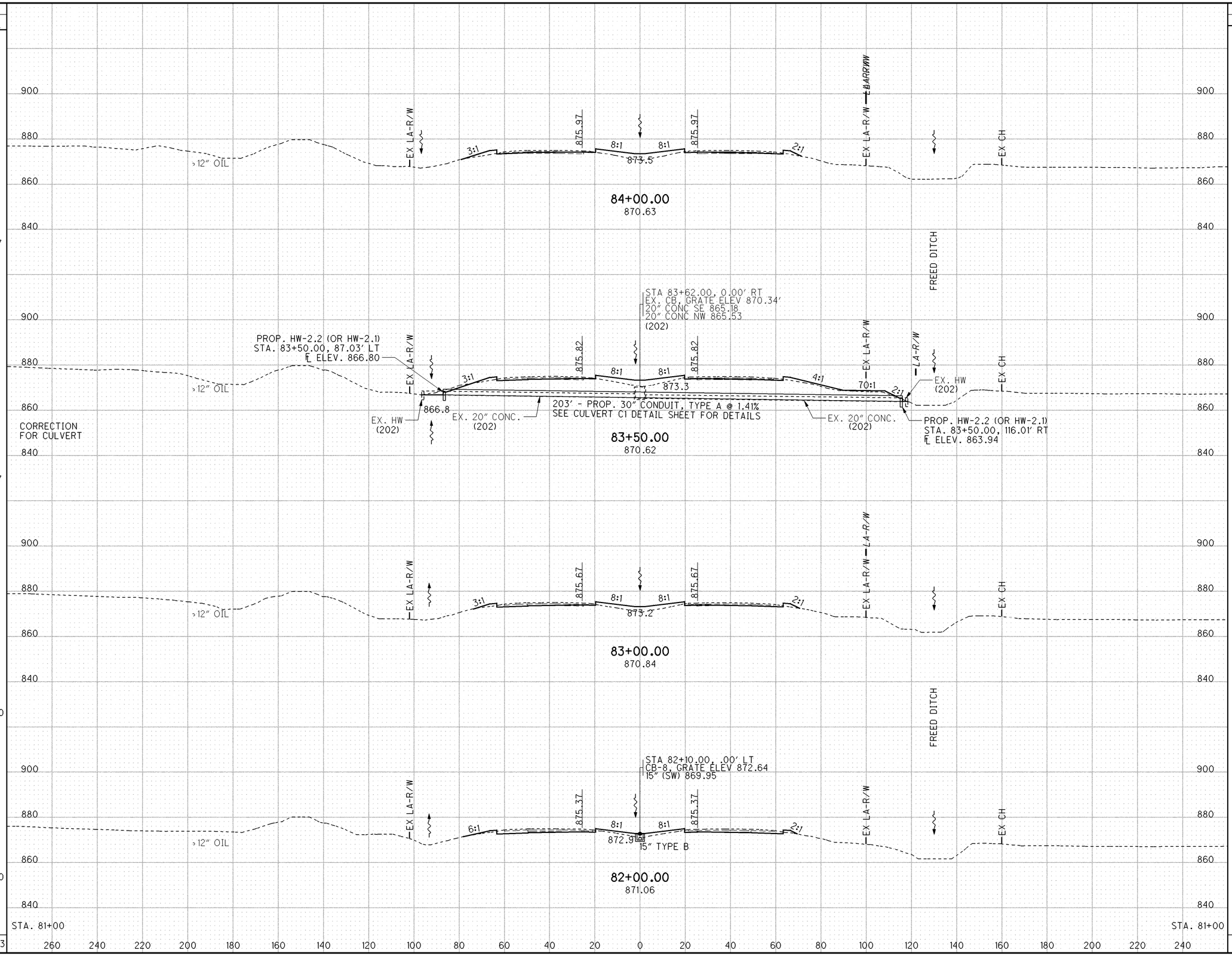

CROSS SECTIONS - I-75
STA. 82+00.00 TO STA. 84+00.00

ALL-75-0.21

235
907

I:\Pd\89029\roadway\sheets\89029XS001.dgn 25-JUN-2013 3:04PM bclark

SEEDING END WIDTH	SEEDING SQ. YDS.	END AREA CUT	END AREA FILL	VOLUME CUT	VOLUME FILL
128	1394	27	97	83	420
123	1339	18	130	59	526
118	1306	14	154	35	570
117	1300	5	154	30	535
117	5339	11	135	207	2051

CALCULATED JMR
CHECKED BDC

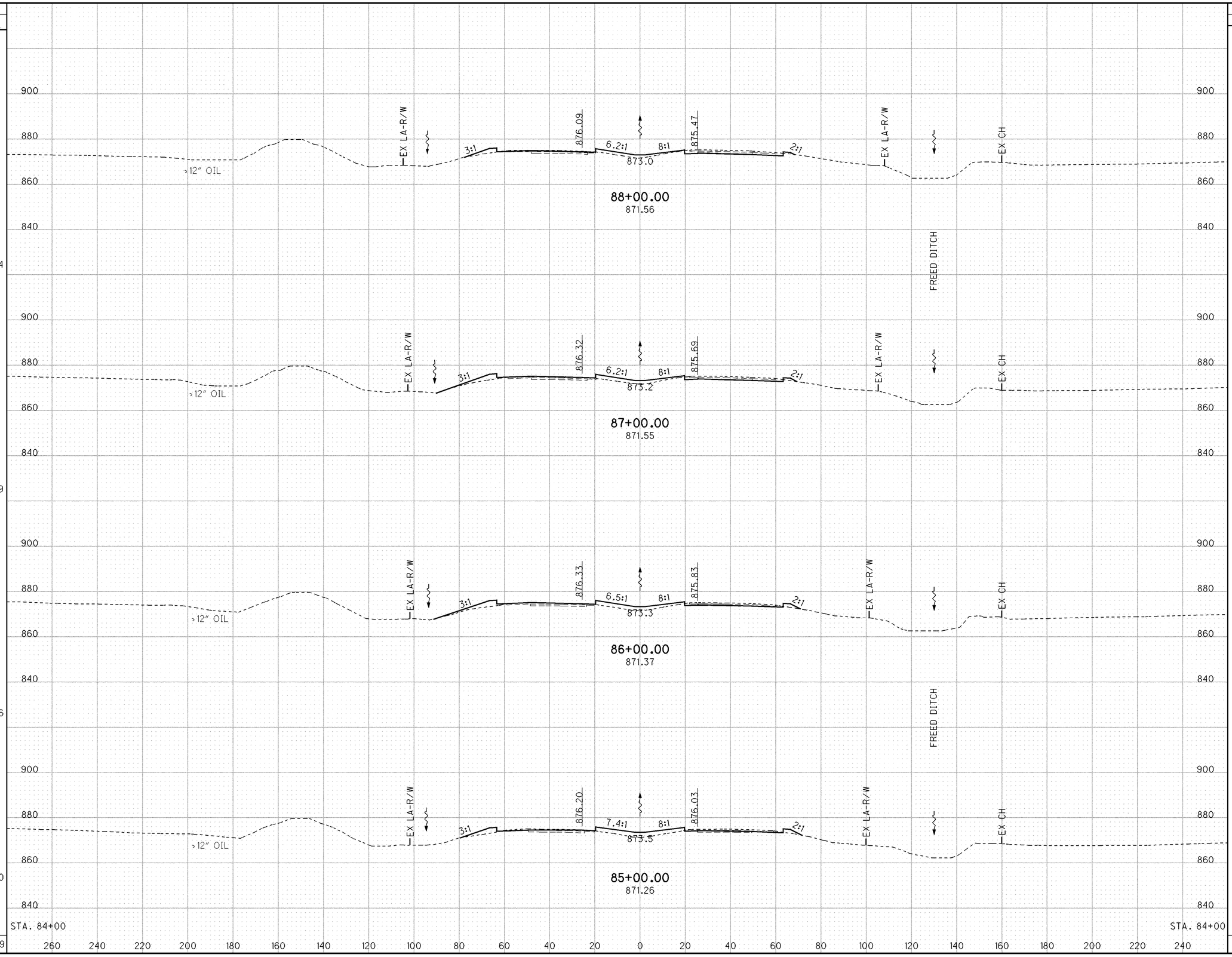

CROSS SECTIONS - I-75
STA. 85+00.00 TO STA. 88+00.00

ALL-75-0.21

236
907

I:\Pd\89029\roadway\sheets\89029XS001.dgn 25-JUN-2013 3:04PM bclark

SEEDING END WIDTH	SEEDING SQ. YDS.
150	1633
144	1572
139	1511
133	1450
128	6166

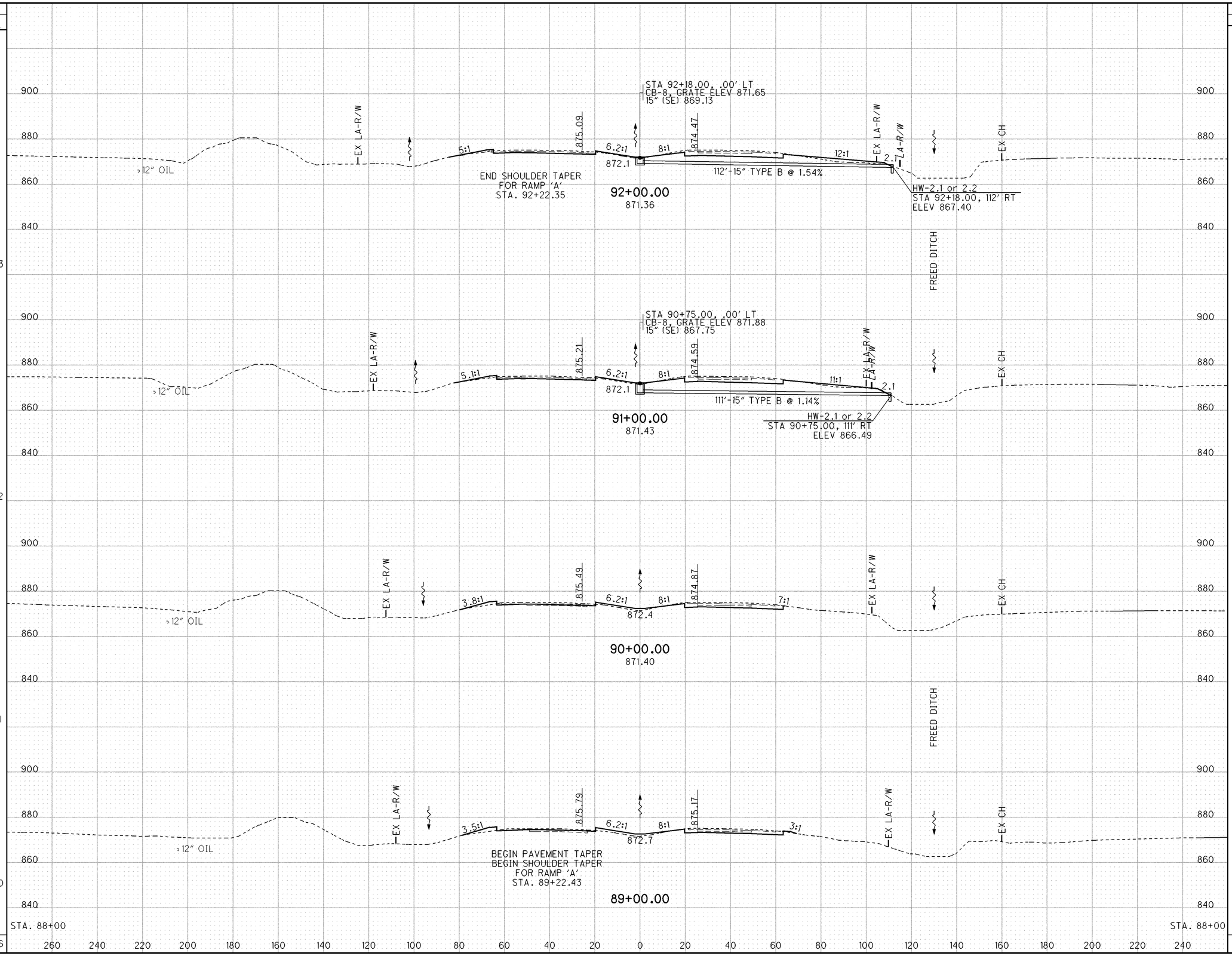

END AREA CUT	END AREA FILL	VOLUME CUT	VOLUME FILL
82	59		
		298	185
79	41		
		252	161
57	46		
		181	215
41	70		
		126	309
27	97		
		857	870

CALCULATED JMR
CHECKED BDC

CROSS SECTIONS - I-75
STA. 89+00.00 TO STA. 92+00.00

ALL-75-0.21

237
907

I:\Pd\89029\roadway\sheets\89029XS001.dgn 25-JUN-2013 3:04PM bclark

SEEDING	
END WIDTH	SQ. YDS.
182	1972
173	1822
155	875
160	861
150	5530

END AREA	
CUT	FILL
131	116
128	120
92	55
94	67
82	59

VOLUME	
CUT	FILL
480	437
407	324
172	113
163	117
1222	991

CALCULATED JMR
CHECKED BDC

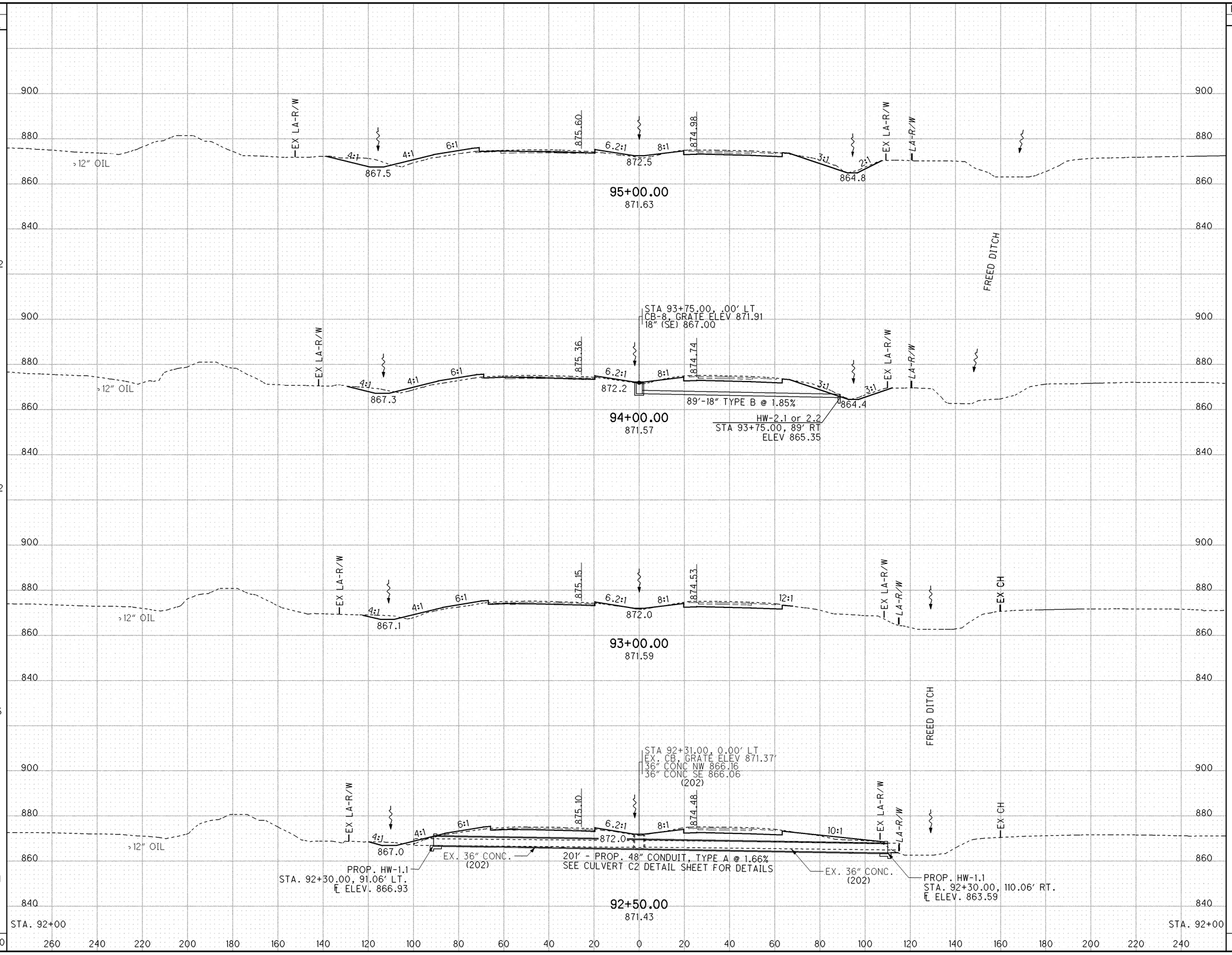

CROSS SECTIONS - I-75
STA. 92+50.00 TO STA. 95+00.00

ALL-75-0.21

238
907

I:\Pd\89029\roadway\sheets\89029XS001.dgn 25-JUN-2013 3:04PM bclark

SEEDING	
END WIDTH	SQ. YDS.
194	
	1075
193	
	1069
192	
	1064
191	
	2072
182	
	5280

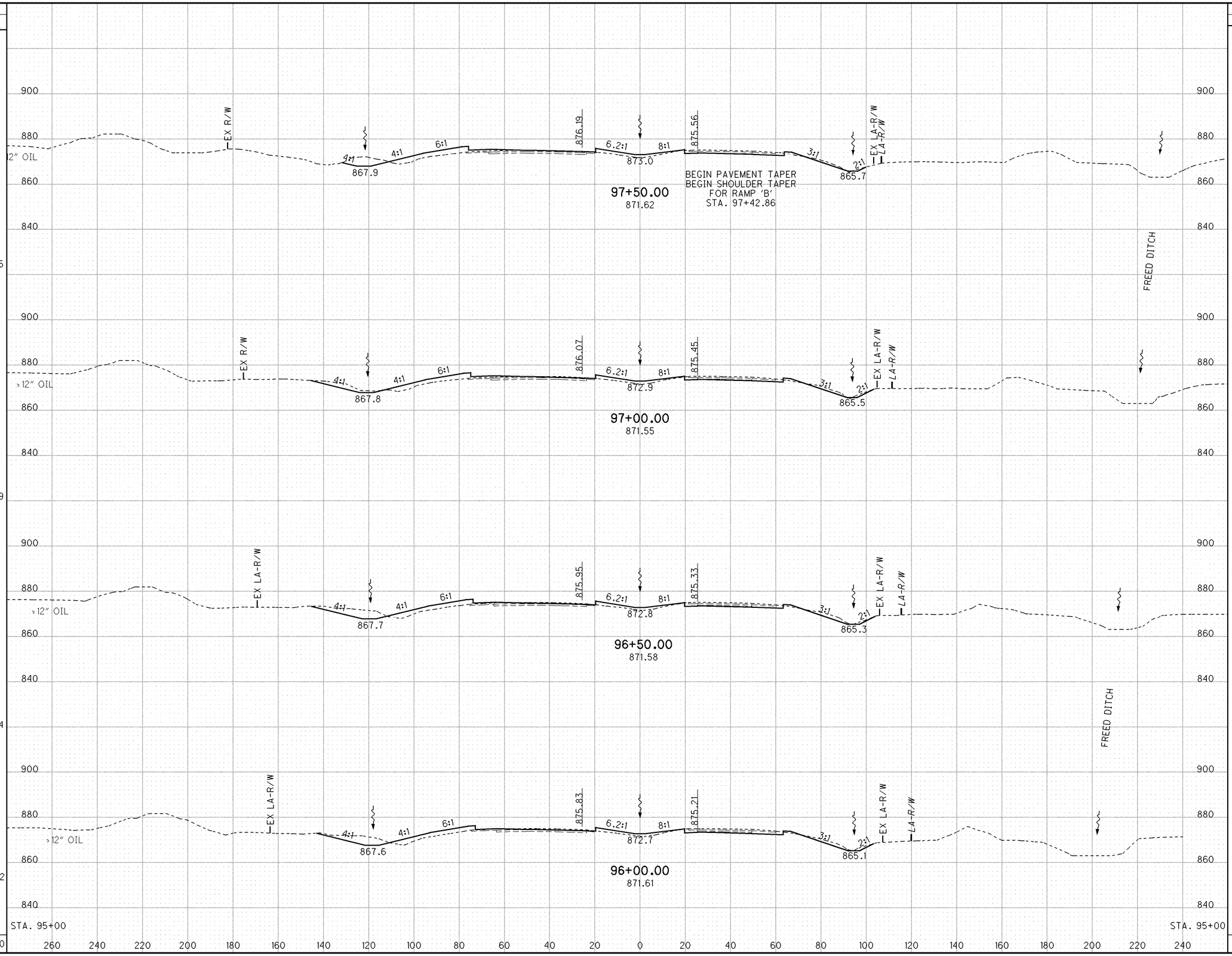

END AREA	
CUT	FILL
89	207
80	192
131	180
124	164
131	116

VOLUME	
CUT	FILL
156	369
195	344
236	319
472	519
1059	1551

CALCULATED JMR
CHECKED BDC

CROSS SECTIONS - I-75
STA. 96+00.00 TO STA. 97+50.00

ALL-75-0.21

239
907

I:\Pd\89029\roadway\sheets\89029XS001.dgn 25-JUN-2013 3:04PM bclark

SEEDING END WIDTH	SEEDING SQ. YDS.
209	1136
200	1097
193	1069
192	1072
194	4374

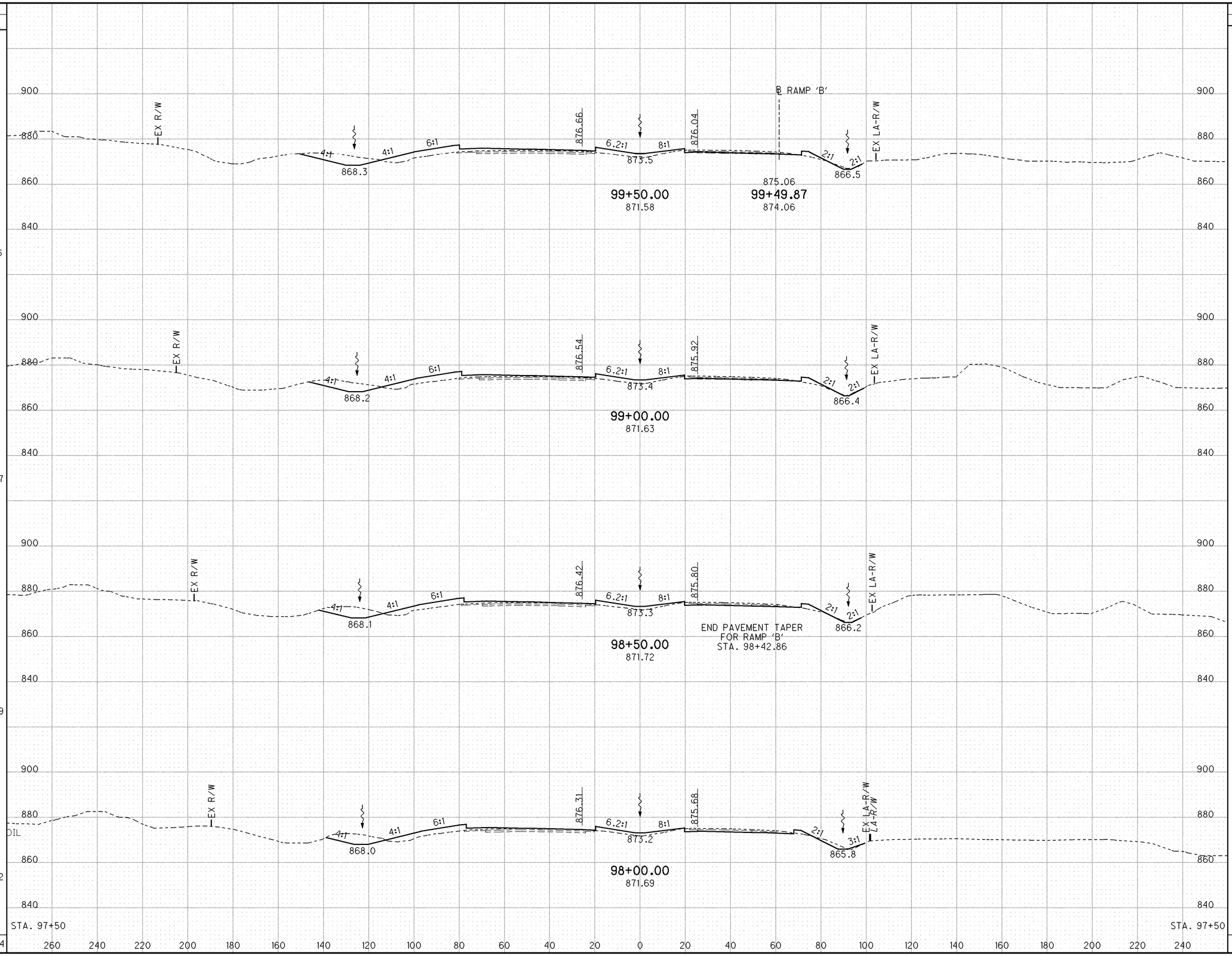

END AREA CUT	END AREA FILL	VOLUME CUT	VOLUME FILL
108	298		
98	277	191	532
103	248	186	486
112	228	199	441
89	207	186	403
		763	1862

CALCULATED JMR
CHECKED BDC

CROSS SECTIONS - I-75
STA. 98+00.00 TO STA. 99+50.00

ALL-75-0.21

240
907

I:\Pd\89029\roadway\sheets\89029XS001.dgn 25-JUN-2013 3:03PM bclark

SEEDING END WIDTH	SEEDING SQ. YDS.	END AREA CUT	END AREA FILL	VOLUME CUT	VOLUME FILL
246		102	388		
	1342			193	694
237		106	362		
	1289			202	646
227		112	336		
	1233			212	602
217		117	314		
	1183			208	567
209		108	298		
	5047			815	2509

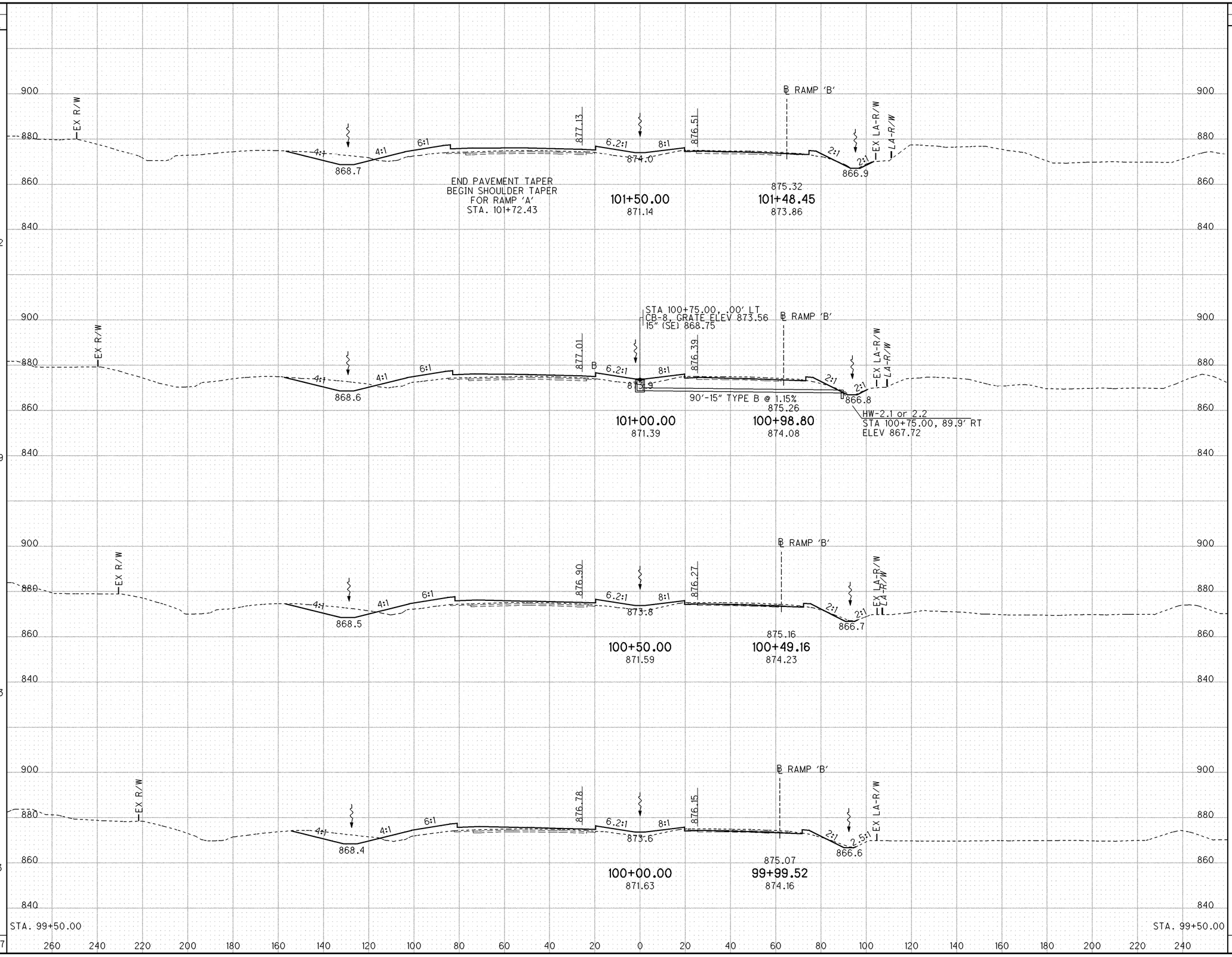

CALCULATED JMR
CHECKED BDC

CROSS SECTIONS - I-75
STA. 100+00.00 TO STA. 101+50.00

ALL-75-0.21

241
907

I:\Pd\89029\roadway\sheets\89029XS001.dgn 25-JUN-2013 3:03PM bclark

SEEDING		END AREA		VOLUME	
END WIDTH	SQ. YDS.	CUT	FILL	CUT	FILL
283	1547	83	498	156	910
274	1503	86	485	181	878
267	1456	89	463	168	840
257	1397	92	444	180	770
246	5903	102	388	685	3398

CALCULATED JMR
CHECKED BDC

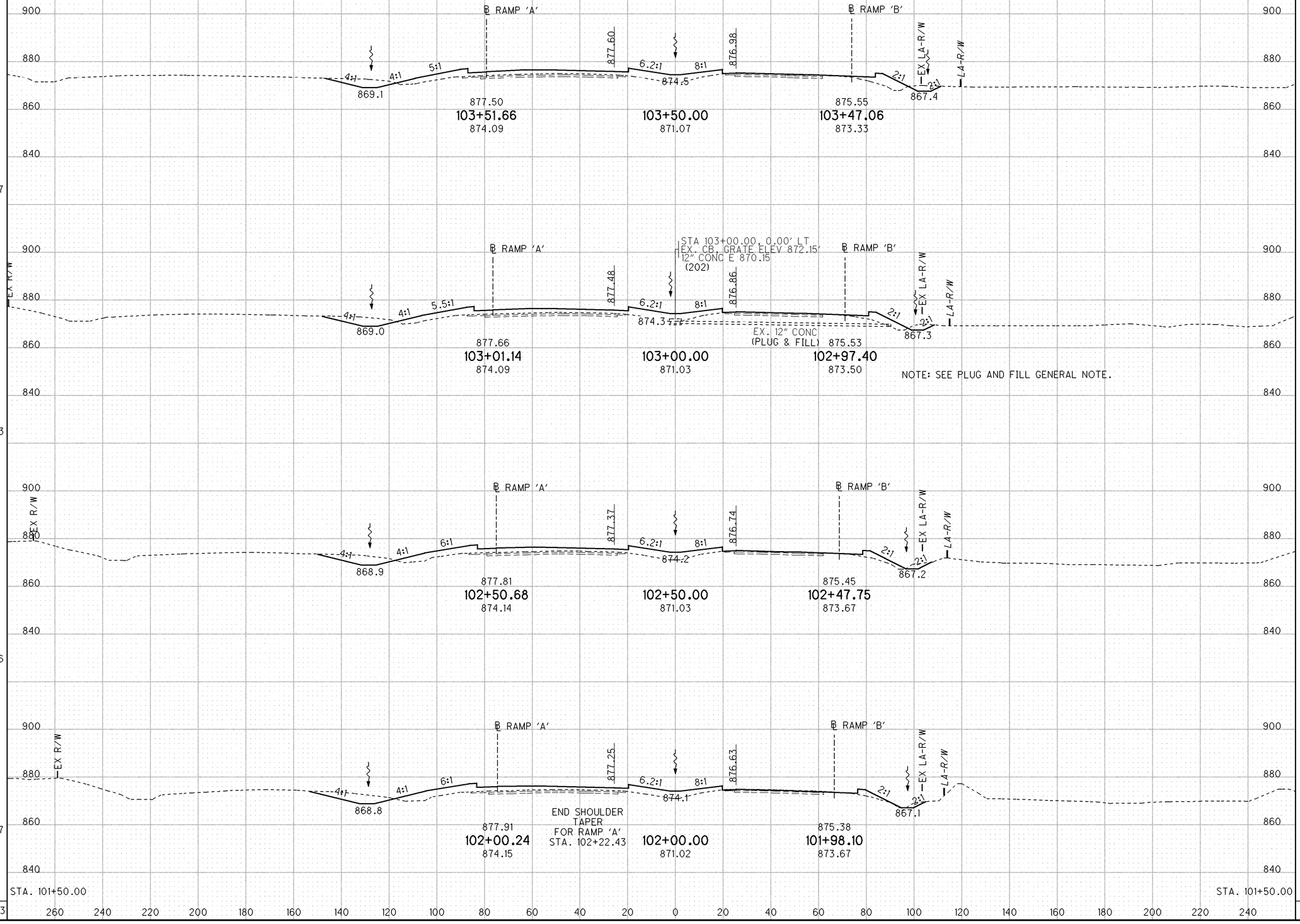

CROSS SECTIONS - I-75
STA. 102+00.00 TO STA. 103+50.00

ALL-75-0.21

242
907

I:\Pd\89029\roadway\sheets\89029XS001.dgn 25-JUN-2013 3:03PM bclark

SEEDING END WIDTH	SEEDING SQ. YDS.		END AREA CUT	END AREA FILL	VOLUME CUT	VOLUME FILL
	216	CORRECTION FOR RAMP "B"			37	155
70		+50, AHD	0	320		
108		+50, BK	28	439		
	556				44	777
92			19	401		
	492				18	789
	347	CORRECTION FOR RAMP "A"			19	67
85		+50, AHD	0	451		
137		+50, BK	30	530		
	498				21	404
311			26	561		
	1007				64	588
293			89	497		
	1600				159	921
283		STA. 103+50.00	83	498		
	4716				362	3701

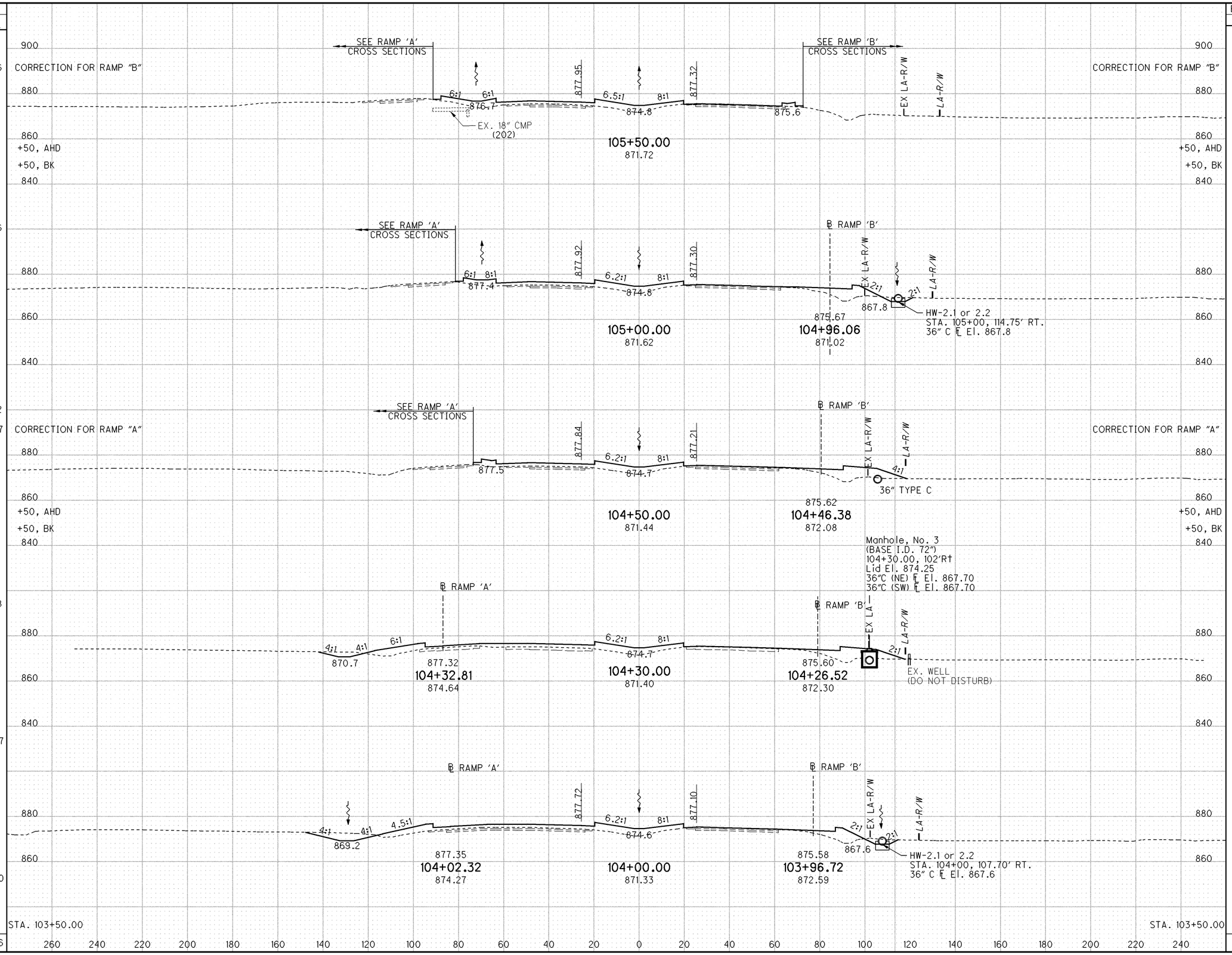

SEEDING		END AREA		VOLUME	
END WIDTH	SQ. YDS.	CUT	FILL	CUT	FILL
157	797	118	254	120	511
130	658	12	298	12	592
107	539	1	341	1	633
87	436	0	343	0	614
70	2430	0	320	133	2350

CALCULATED JMR
CHECKED BDC

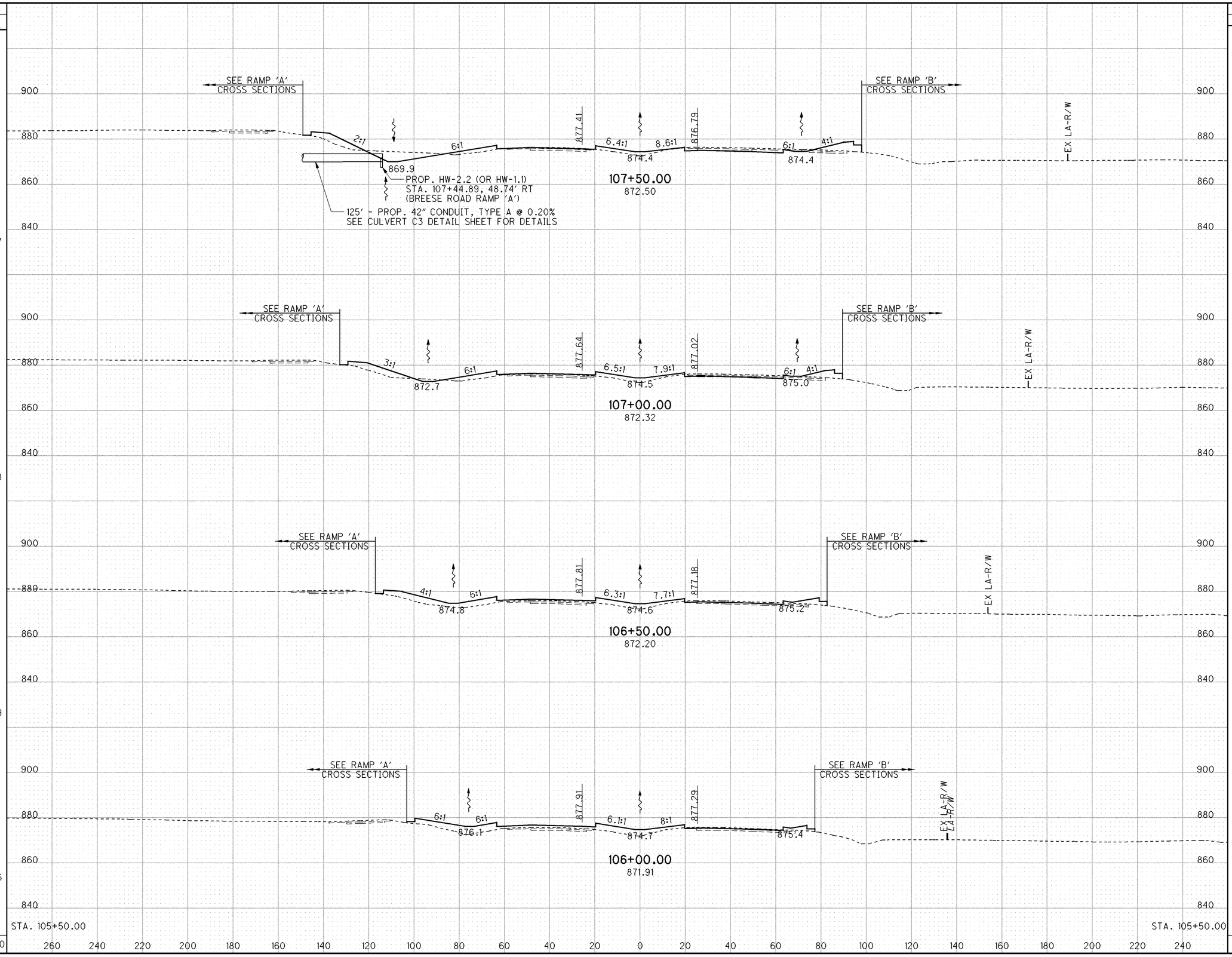

CROSS SECTIONS - I-75
STA. 106+00.00 TO STA. 107+50.00

ALL-75-0.21

244
907

I:\Pdf\89029\roadway\sheets\89029XS001.dgn 25-JUN-2013 2:53PM bclark

SEEDING		END AREA		VOLUME	
END WIDTH	SQ. YDS.	CUT	FILL	CUT	FILL
279	1461	383	550	620	992
247	1281	287	521	469	855
214	1106	220	402	357	649
184	947	166	299	263	512
157	4775	118	254	1709	3008

CALCULATED JMR
CHECKED BDC

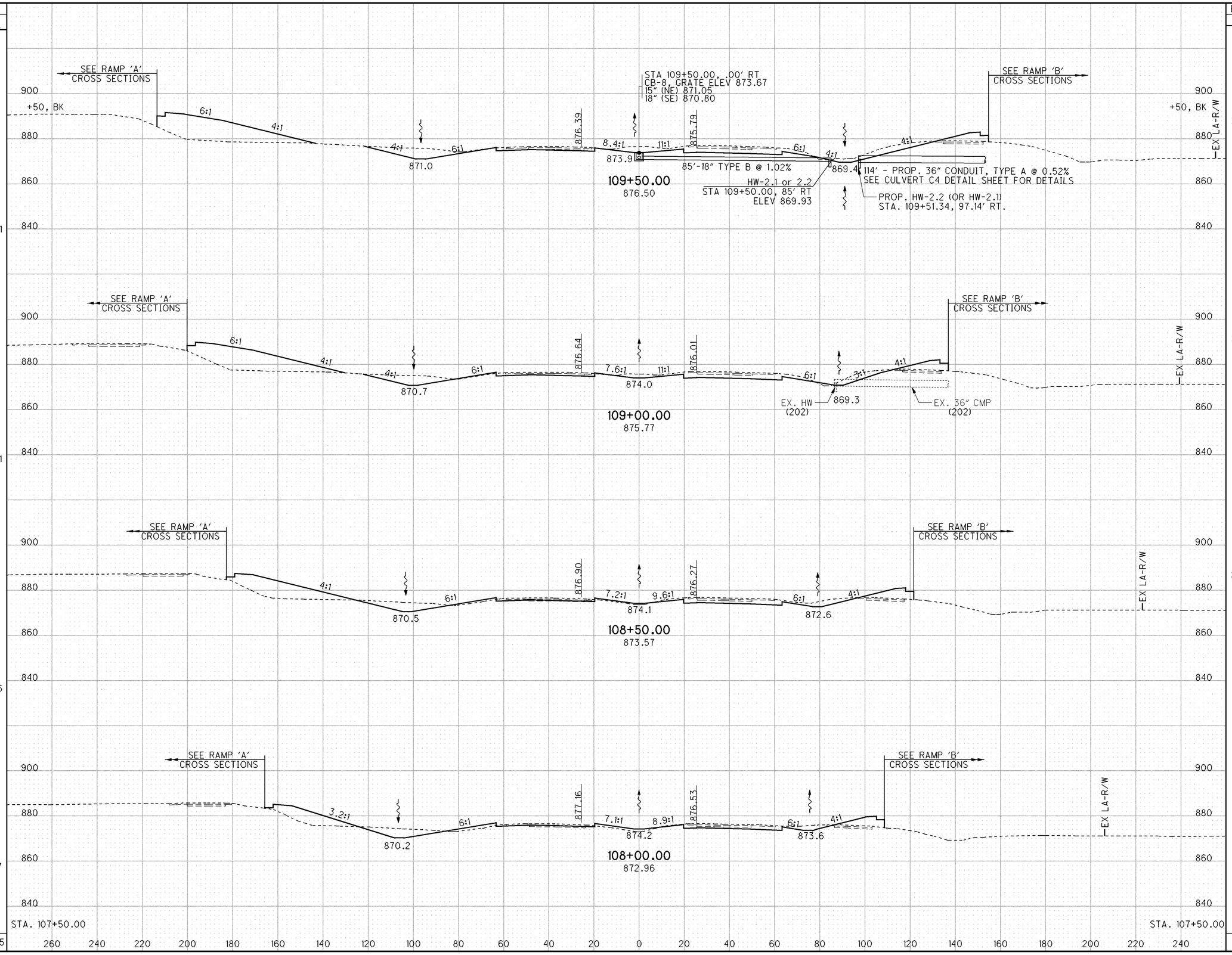

CROSS SECTIONS - I-75
STA. 108+00.00 TO STA. 109+50.00

ALL-75-0.21

245
907

I:\Pd\69029\roadway\sheets\69029XS001.dgn 25-JUN-2013 2:53PM bclark

SEEDING END WIDTH	SEEDING SQ. YDS.	END AREA CUT	END AREA FILL	VOLUME CUT	VOLUME FILL
99	617	339	0	659	6
123		373	7		
222	1186	424	95	642	189
205	1144	270	109	613	202
207	1100	392	109	718	177
189	4049	383	82	2632	574

CALCULATED JMR
CHECKED BDC

CROSS SECTIONS - I-75
STA. 110+00.00 TO STA. 111+50.00

ALL-75-0.21

246
907

I:\Pdl\89029\roadway\sheets\89029XS001.dgn 25-JUN-2013 2:53PM bclark

111+50.00
877.07
SEE STRUCTURE ALL-75-0212
2:1 3:1 8:1 6:1 4:1 6:1
876.26 876.26
875.1 875.4 875.4 871.3 871.3
+00, AHD

111+00.00
877.05
SEE STRUCTURE ALL-75-0212
SEE RAMP 'B' CROSS SECTIONS
2:1 3:1 8:1 6:1 4:1 6:1 6:1 4:1 6:1
876.12 876.01
875.0 875.2 875.2 EX. 30" CMP (202) EX. HW (202) 870.7 870.3
+00, BK

110+50.00
876.95
SEE STRUCTURE ALL-75-0212
SEE RAMP 'B' CROSS SECTIONS
2:1 3:1 6:1 6:1 4:1 A:1 4:1 4:1 6:1
876.08 875.77
874.9 875.2 875.0 869.7 870.0
+00, AHD

110+00.00
876.79
EX. CB (202)
STA 109+90. .00' LT
CB-8, GRATE ELEV 873.50
15" (SW) 871.18
SEE RAMP 'B' CROSS SECTIONS
4:1 6:1 8.5:1 1:1 6:1 4:1 4:1 6:1
876.18 875.71
872.2 873.8 869.6
+50, AHD

900 880 860 840

-260 -240 -220 -200 -180 -160 -140 -120 -100 -80 -60 -40 -20 0 20 40 60 80 100 120 140 160 180 200 220 240

SEEDING	
END WIDTH	SQ. YDS.
201	1114
200	1233
244	1397
259	65
	456
99	
	4200

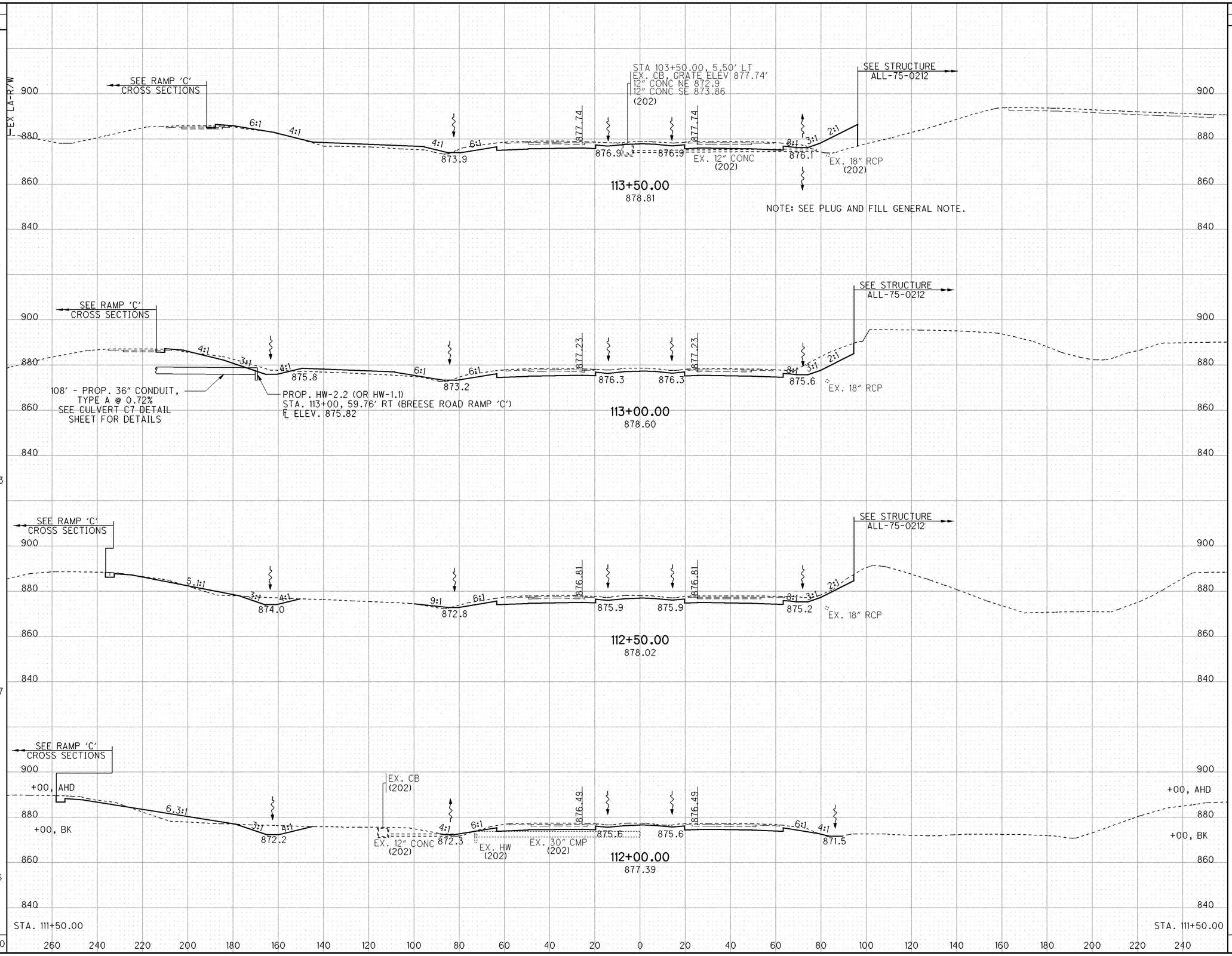

END AREA	
CUT	FILL
284	229
474	81
374	26
339	80
220	7
339	0

VOLUME	
CUT	FILL
702	287
785	99
660	98
518	6
2665	490

CALCULATED JMR
CHECKED BDC

CROSS SECTIONS - I-75
STA. 112+00.00 TO STA. 113+50.00

ALL-75-0.21

247
907

I:\Pd\89029\roadway\sheets\89029XS001.dgn 25-JUN-2013 2:53PM bclark

SEEDING	
END WIDTH	SQ. YDS.
186	1128
220	1317
254	986
171	
184	1325
201	
	4756

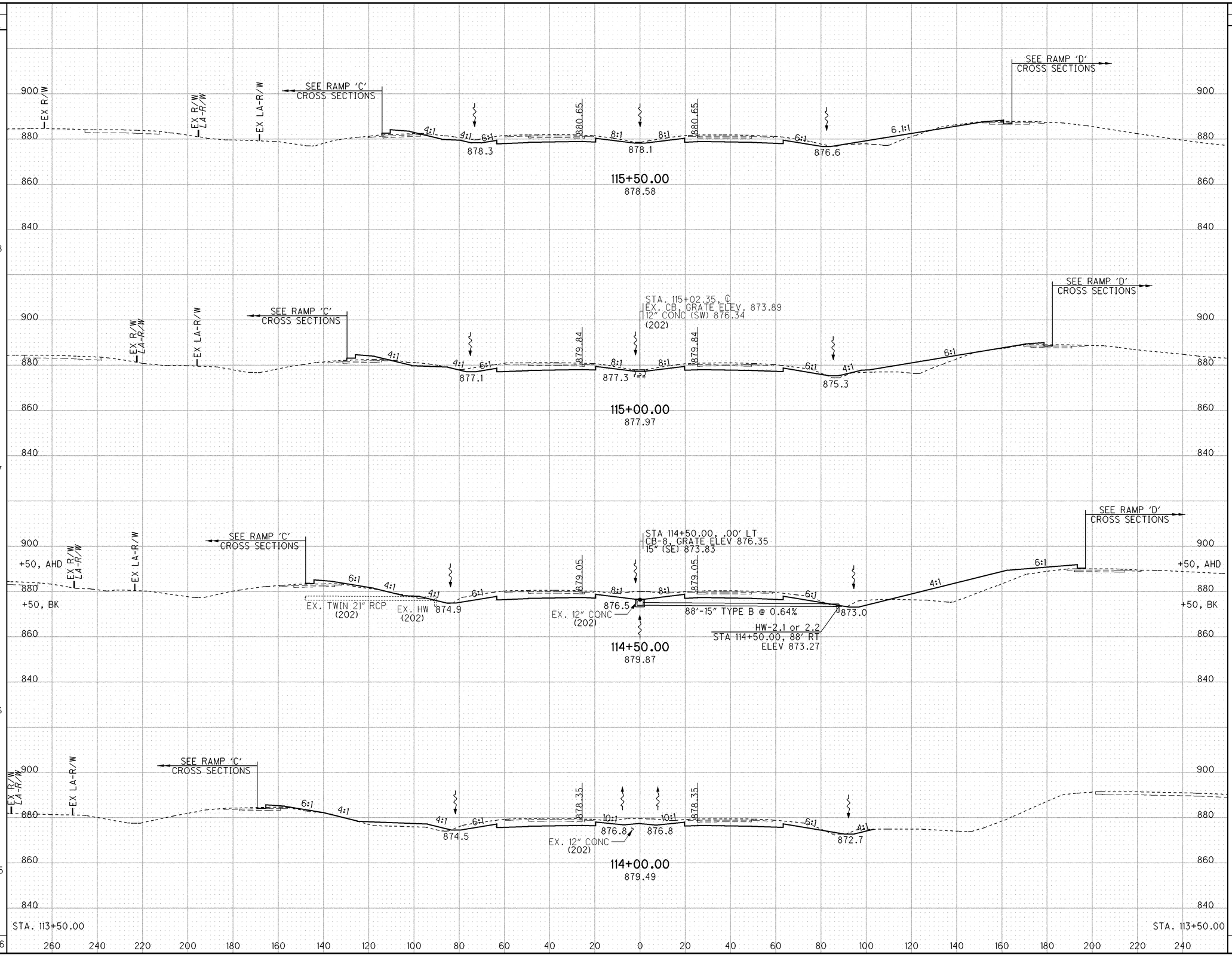

END AREA		VOLUME	
CUT	FILL	CUT	FILL
301	119		
		549	306
201	212		
		618	578
376	412		
376	51		
		659	129
336	88		
		574	294
284	229		
		2400	1307

CALCULATED JMR
CHECKED BDC

CROSS SECTIONS - I-75
STA. 114+00.00 TO STA. 115+50.00

ALL-75-0.21

248
907

I:\Pd\89029\roadway\sheets\89029XS001.dgn 25-JUN-2013 2:53PM bclark

SEEDING END WIDTH	SEEDING SQ. YDS.	END AREA CUT	END AREA FILL	VOLUME CUT	VOLUME FILL
84	522	181	19	367	39
104	644	215	23	444	47
128	786	264	28	526	78
155	947	304	56	560	162
186	2899	301	119	1897	326

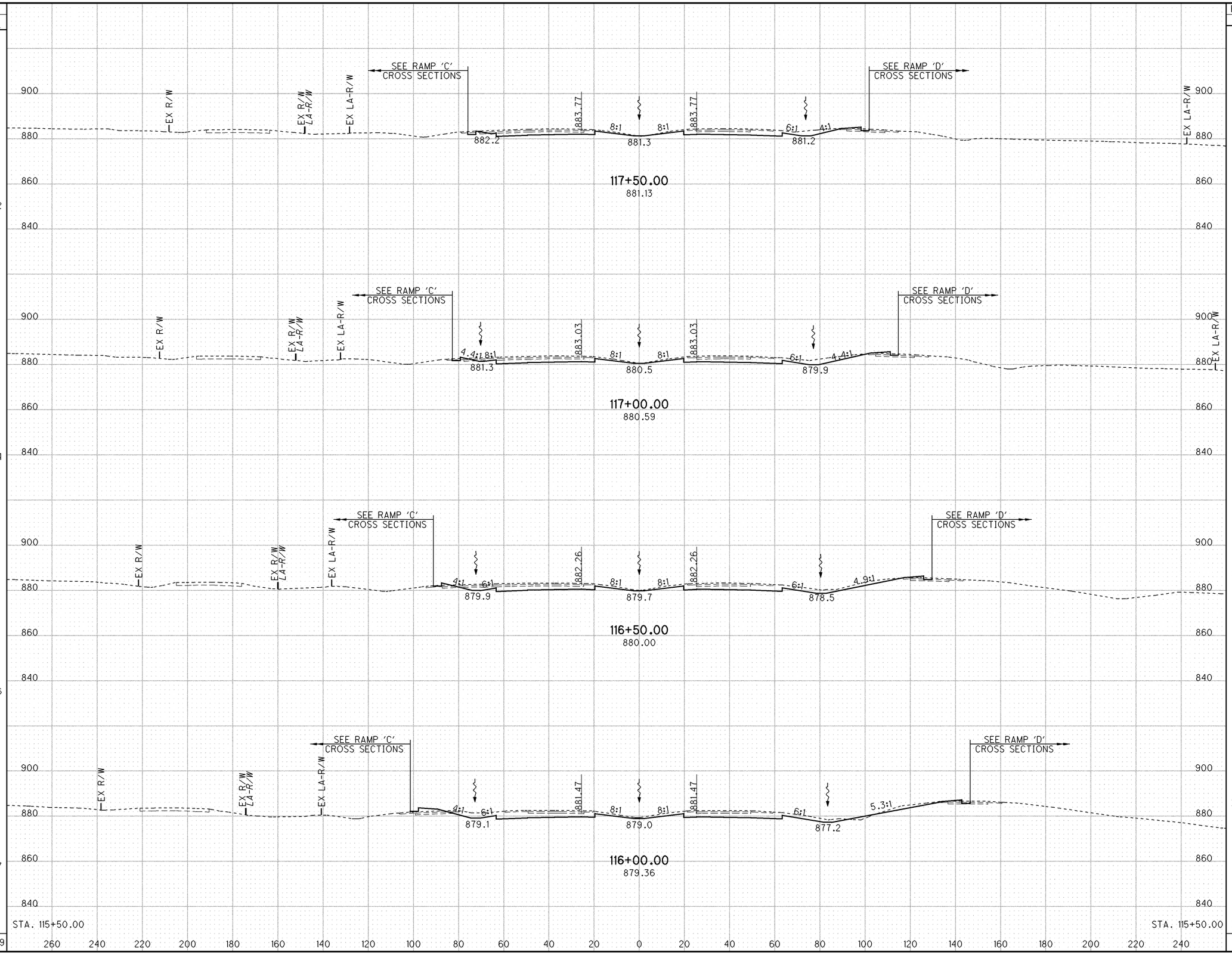

CALCULATED JMR
CHECKED BDC

CROSS SECTIONS - I-75
STA. 116+00.00 TO STA. 117+50.00

ALL-75-0.21

249
907

I:\Pdl\89029\roadway\sheets\89029XS001.dgn 25-JUN-2013 2:53PM bclark

SEEDING END WIDTH	SEEDING SQ. YDS.		END AREA CUT	END AREA FILL	VOLUME CUT	VOLUME FILL
		CORRECTION FOR RAMP "D"			52	7
191		+50, AHD	263	16		
89		+50, BK	224	15		
	517				416	31
	537	CORRECTION FOR RAMP "D"				
97			225	18		
	558				431	30
104			240	14		
	603				463	27
	273	CORRECTION FOR RAMP "C"			150	5
113		+00, AHD	260	15		
74		+00, BK	186	15		
	439				340	29
84		STA. 117+50.00	181	19		
	2927				1852	129

CALCULATED JMR
CHECKED BDC

CROSS SECTIONS - I-75
STA. 118+00.00 TO STA. 119+50.00

ALL-75-0.21

250
907

I:\Pd\89029\roadway\sheets\89029XS001.dgn 25-JUN-2013 2:52PM bclark

SEEDING END WIDTH	SEEDING SQ. YDS.
156	875
159	917
171	981
182	1036
191	3809

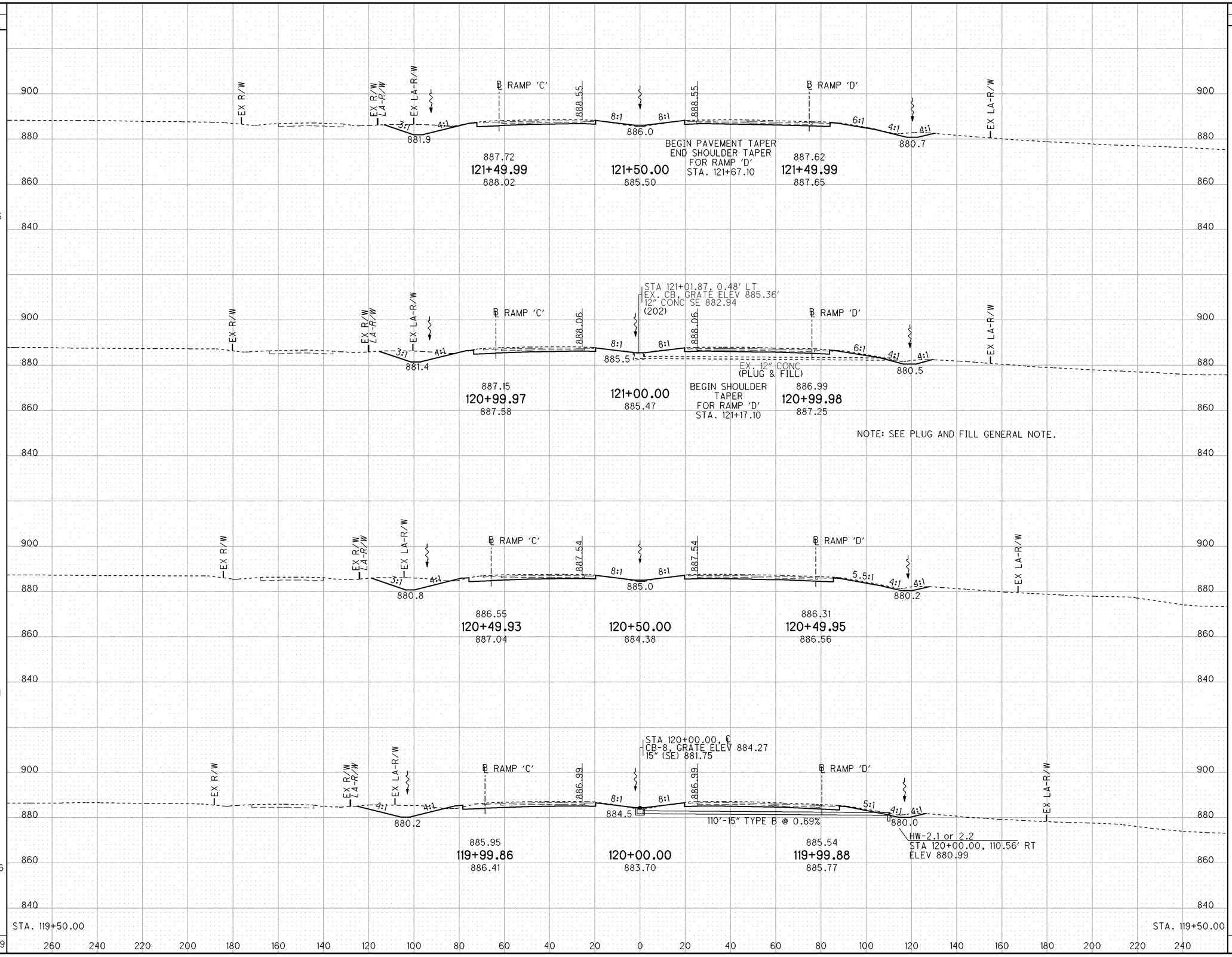

END AREA CUT	END AREA FILL	VOLUME CUT	VOLUME FILL
201	13		
		390	18
220	6		
		430	18
244	13		
		478	28
272	17		
		495	31
263	16		
		1793	95

CALCULATED JMR
CHECKED BDC

CROSS SECTIONS - I-75
STA. 120+00.00 TO STA. 121+50.00

ALL-75-0.21

251
907

I:\Pd\89029\roadway\sheets\89029XS001.dgn 25-JUN-2013 2:52PM bclark

SEEDING	
END WIDTH	SQ. YDS.
166	903
159	
155	856
153	858
156	
	3489

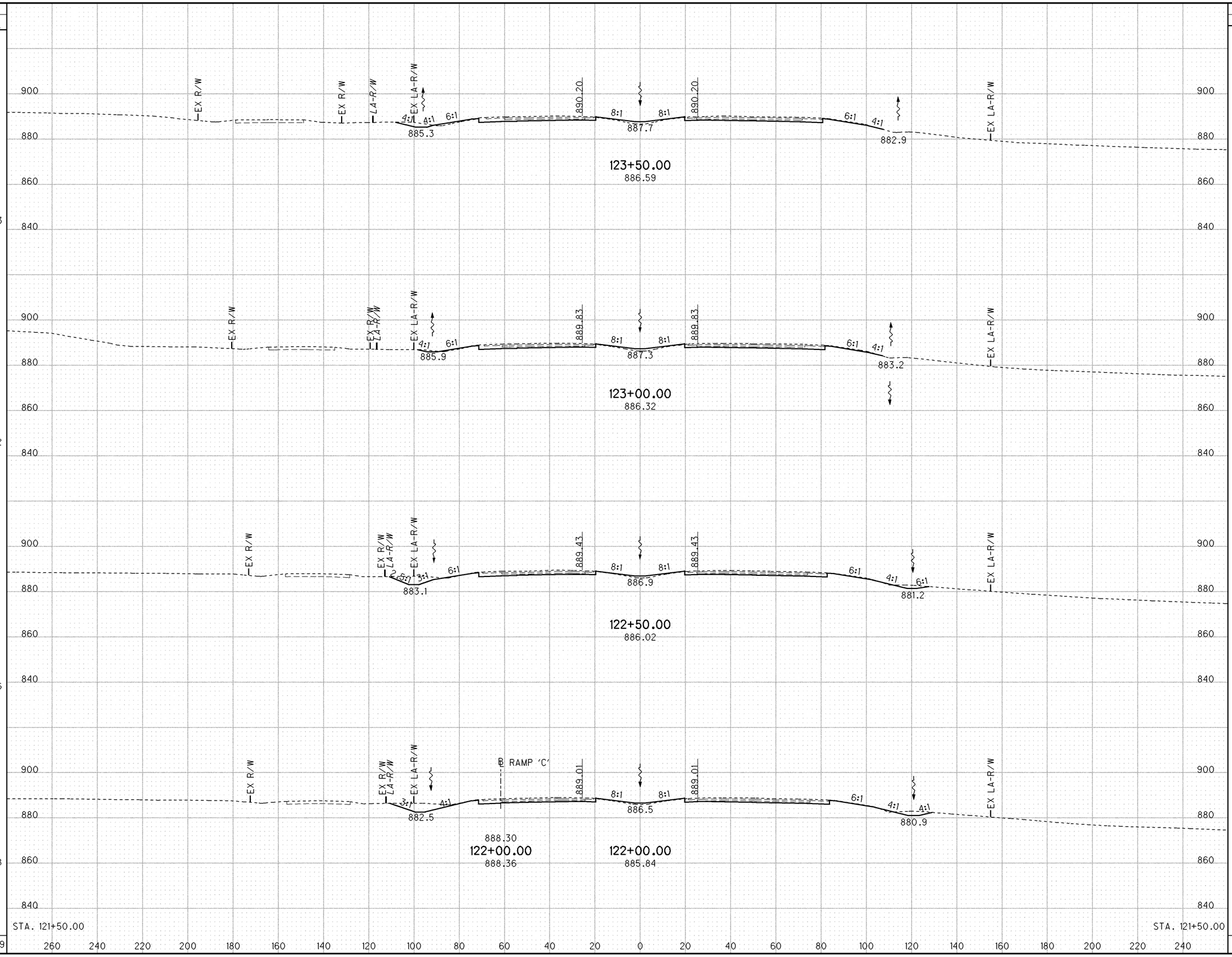

END AREA	
CUT	FILL
109	35
93	29
149	26
170	21
210	13

VOLUME	
CUT	FILL
196	59
224	51
295	44
344	31
1059	185

CALCULATED JMR

CHECKED BDC

CROSS SECTIONS - I-75
STA. 122+00.00 TO STA. 123+50.00

ALL-75-0.21

252
907

I:\Pdt\89029\roadway\sheets\89029XS001.dgn 25-JUN-2013 2:52PM bclark

SEEDING END WIDTH	SEEDING SQ. YDS.
180	981
173	947
168	925
165	919
166	3772

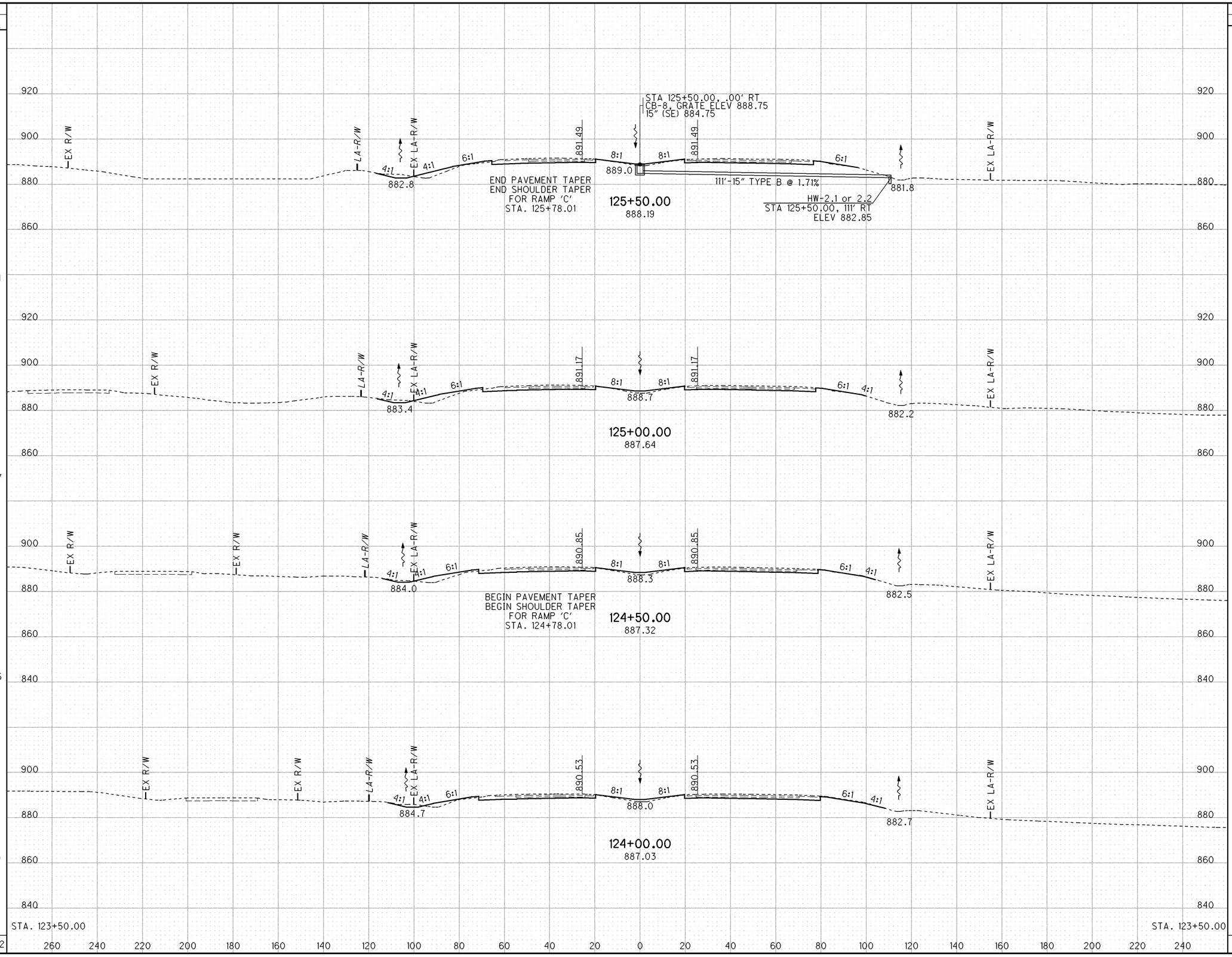

END AREA CUT	END AREA FILL	VOLUME CUT	VOLUME FILL
98	63		
		181	130
97	77		
		180	135
97	69		
		190	108
108	48		
		281	99
196	59		
		832	472

CALCULATED JMR
CHECKED BDC

CROSS SECTIONS - I-75
STA. 124+00.00 TO STA. 126+00.00

ALL-75-0.21

253
907

I:\Pd\89029\roadway\sheets\89029XS001.dgn 25-JUN-2013 2:52PM bclark

SEEDING		END AREA		VOLUME	
END WIDTH	SQ. YDS.	CUT	FILL	CUT	FILL
189	2022	205	38	620	133
175		130	34		
186	2006	84	62	396	178
186	605	80	44	89	57
183	1450	90	41	222	111
180	1008	98	63	174	96
	7091			1501	575

CALCULATED JMR
CHECKED BDC

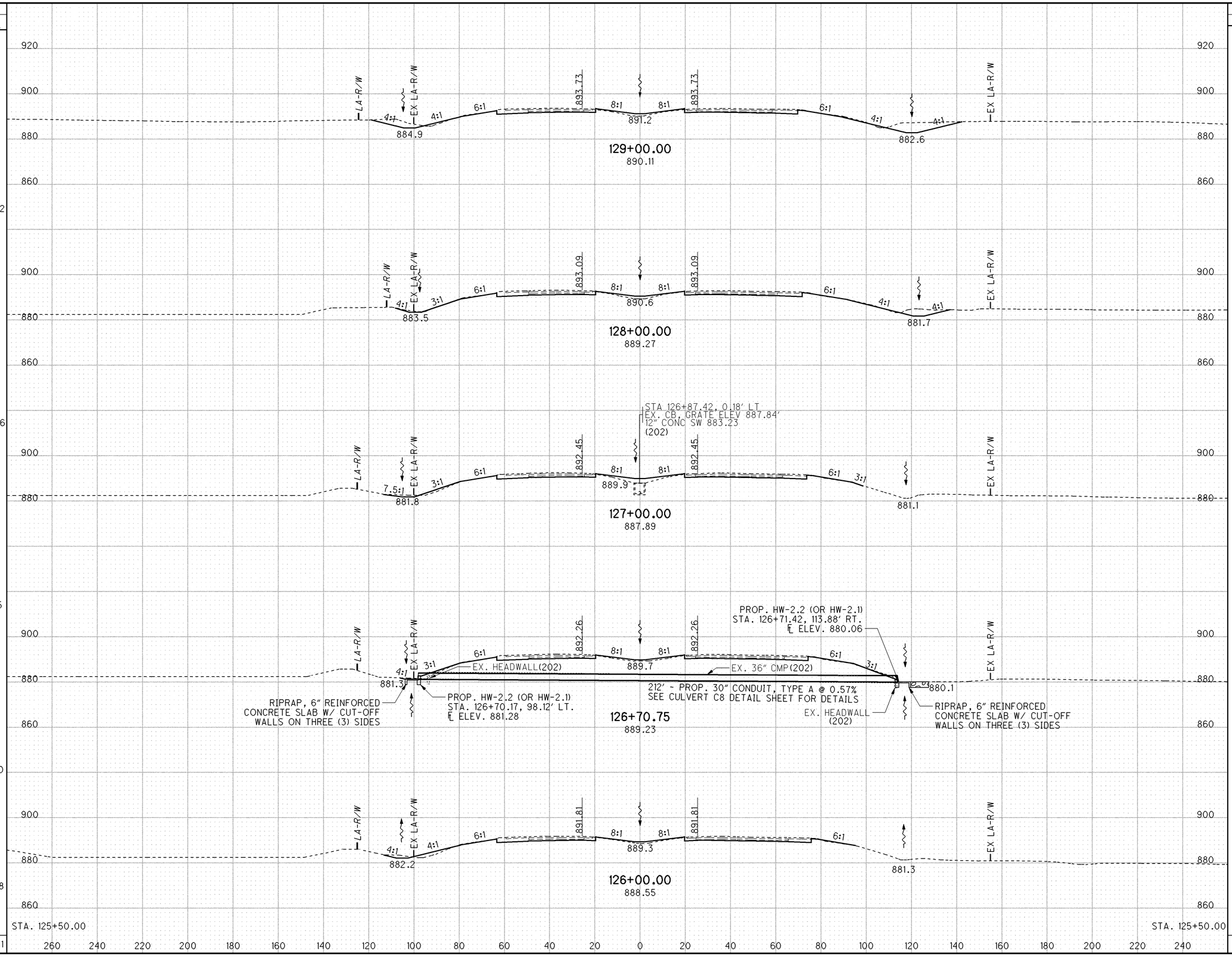

CROSS SECTIONS - I-75
STA. 126+70.75 TO STA. 129+00.00

ALL-75-0.21

I:\Pd\89029\roadway\sheets\89029XS001.dgn 25-JUN-2013 2:52PM bclark

SEEDING	
END WIDTH	SQ. YDS.
192	2139
193	2139
192	2122
190	2106
189	8506

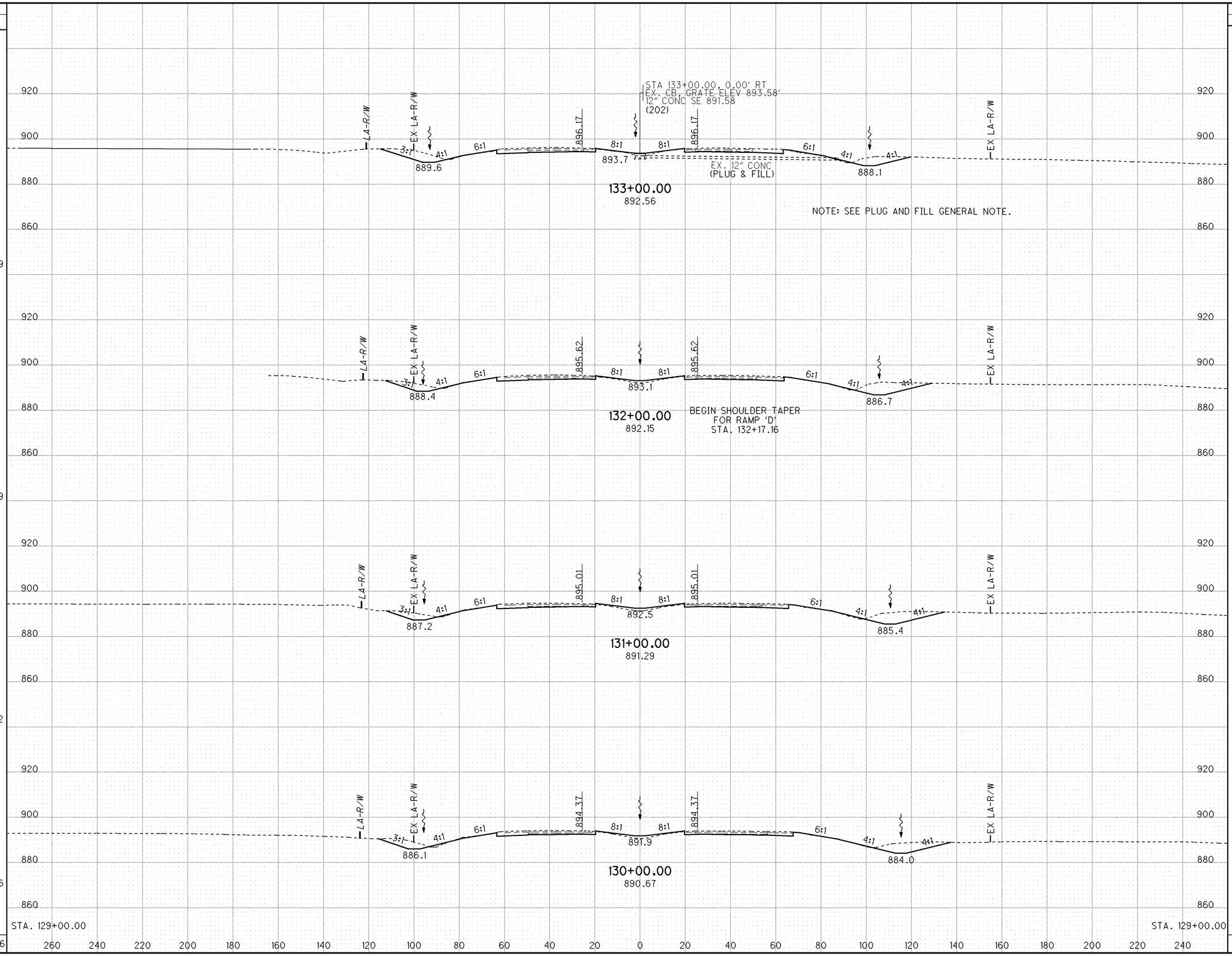

END AREA	
CUT	FILL
210	33
221	30
208	42
202	37
205	38

VOLUME	
CUT	FILL
798	117
794	133
759	146
754	139
3105	535

CALCULATED JMR
CHECKED BDC

CROSS SECTIONS - I-75
STA. 130+00.00 TO STA. 133+00.00

ALL-75-0.21

255
907

I:\Pd\89029\roadway\sheets\89029XS001.dgn 25-JUN-2013 2:52PM bclark

SEEDING	
END WIDTH	SQ. YDS.
140	1550
139	1817
188	1053
191	1064
192	5284

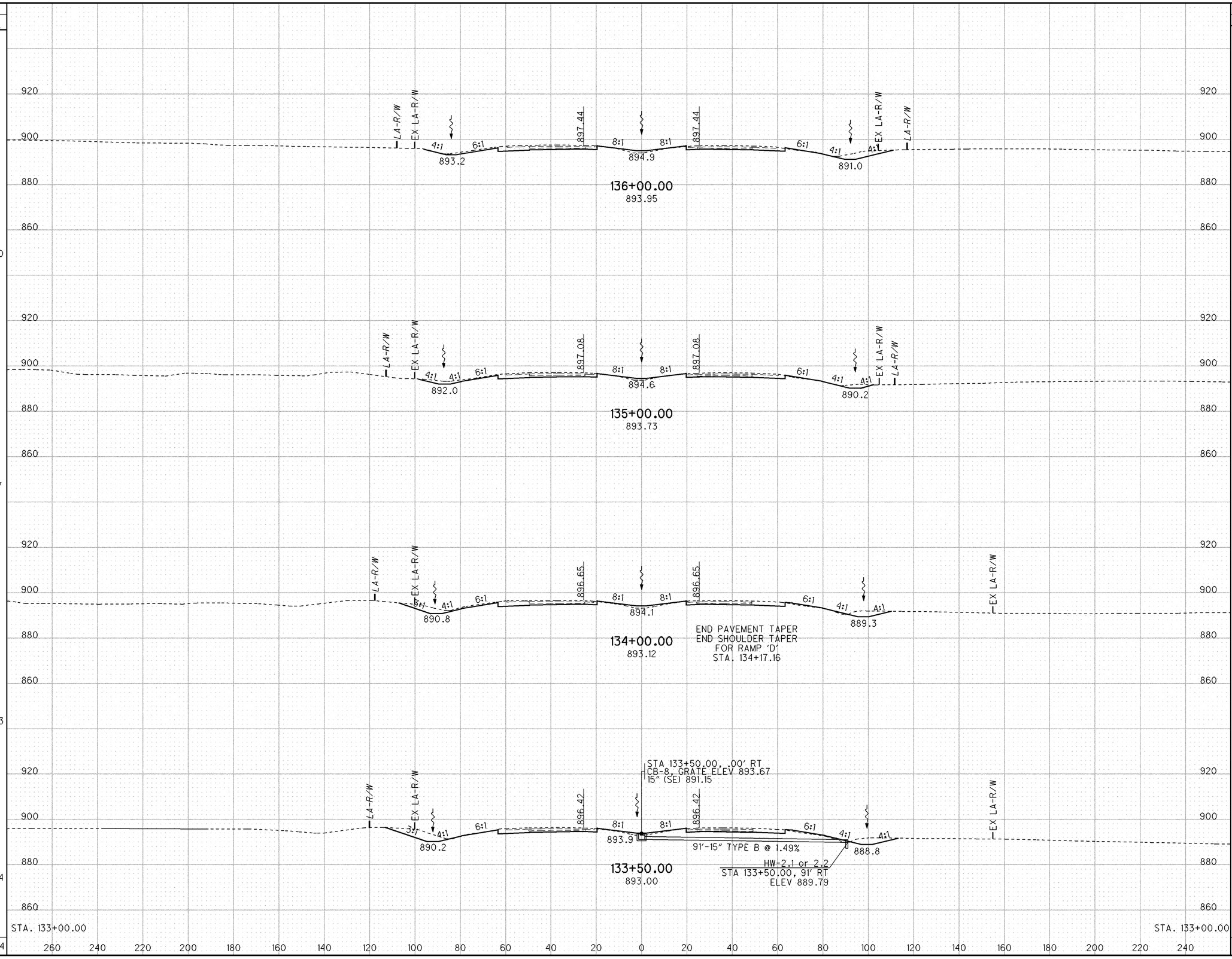

END AREA	
CUT	FILL
132	22
120	16
162	29
183	33
210	33

VOLUME	
CUT	FILL
467	70
522	83
319	57
364	61
1672	271

CALCULATED JMR
CHECKED BDC

CROSS SECTIONS - I-75
STA. 133+50.00 TO STA. 136+00.00

ALL-75-0.21

256
907

I:\Pdl\89029\roadway\sheets\89029XS001.dgn 25-JUN-2013 2:52PM bclark

SEEDING	
END WIDTH	SQ. YDS.
129	
	1444
131	
	1467
133	
	1483
134	
	1522
140	
	5916

END AREA		VOLUME	
CUT	FILL	CUT	FILL
132	13	493	70
134	25		
		502	91
137	24		
		503	98
135	29		
		494	94
132	22		
		1992	353

CALCULATED JMR
CHECKED BDC

CROSS SECTIONS - I-75
STA. 137+00.00 TO STA. 140+00.00

ALL-75-0.21

257
907

I:\Pd\89029\roadway\sheets\89029XS001.dgn 25-JUN-2013 2:51PM bclark

I:\Pd\89029\roadway\sheets\89029XS001.dgn 25-JUN-2013 2:51PM bclark

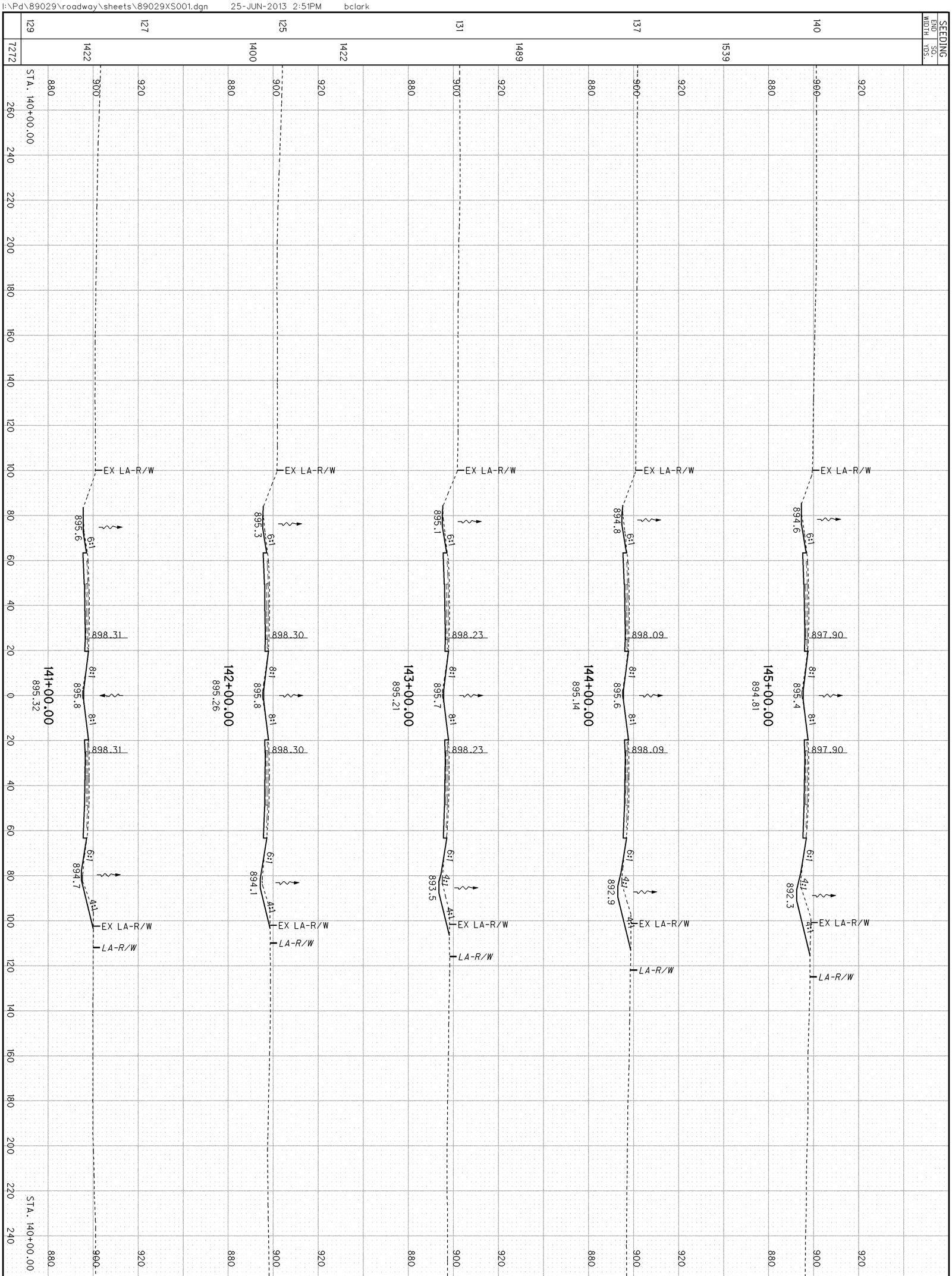

258
907

ALL-75-0.21

CROSS SECTIONS - I-75
STA. 141+00.00 TO STA. 145+00.00

CALCULATED JMR
CHECKED BDC

SEEDING END WIDTH	SEEDING SQ. YDS.	END AREA CUT	END AREA FILL	VOLUME CUT	VOLUME FILL
140	778	147	18	296	32
140	1556	173	17	596	63
140	1556	149	17	550	72
140	1556	148	22	602	67
140	5446	177	14	2044	234

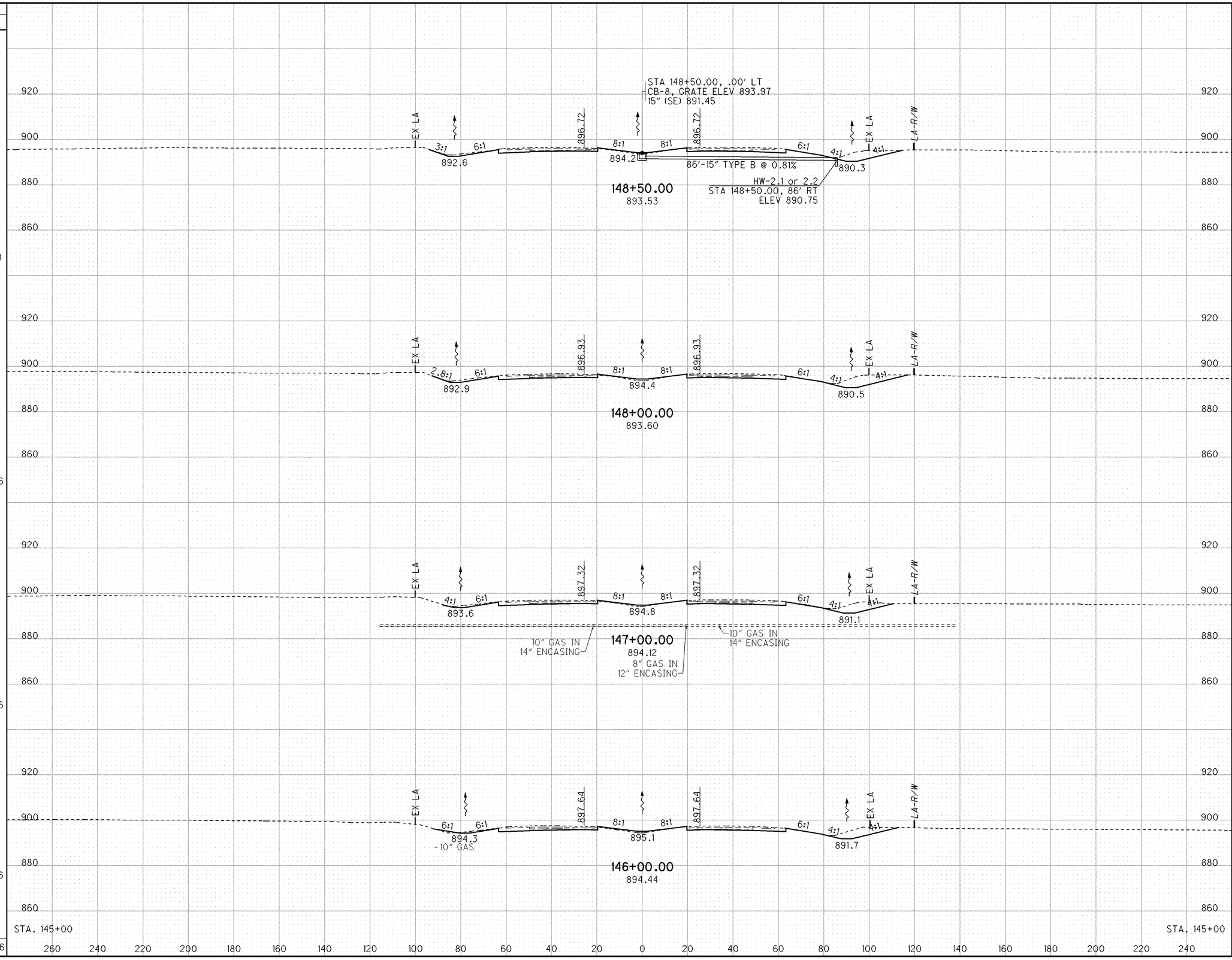

CALCULATED BDC
CHECKED TAB

CROSS SECTIONS - I-75
STA. 146+00.00 TO STA. 148+50.00

ALL-75-0.21

259
907

I:\Pd\89029\roadway\sheets\89029XS002.dgn 26-JUN-2013 6:51AM bclark

SEEDING	
END WIDTH	SQ. YDS.
140	
	1550
139	
	1544
139	
	1550
140	
	778
140	
	5422

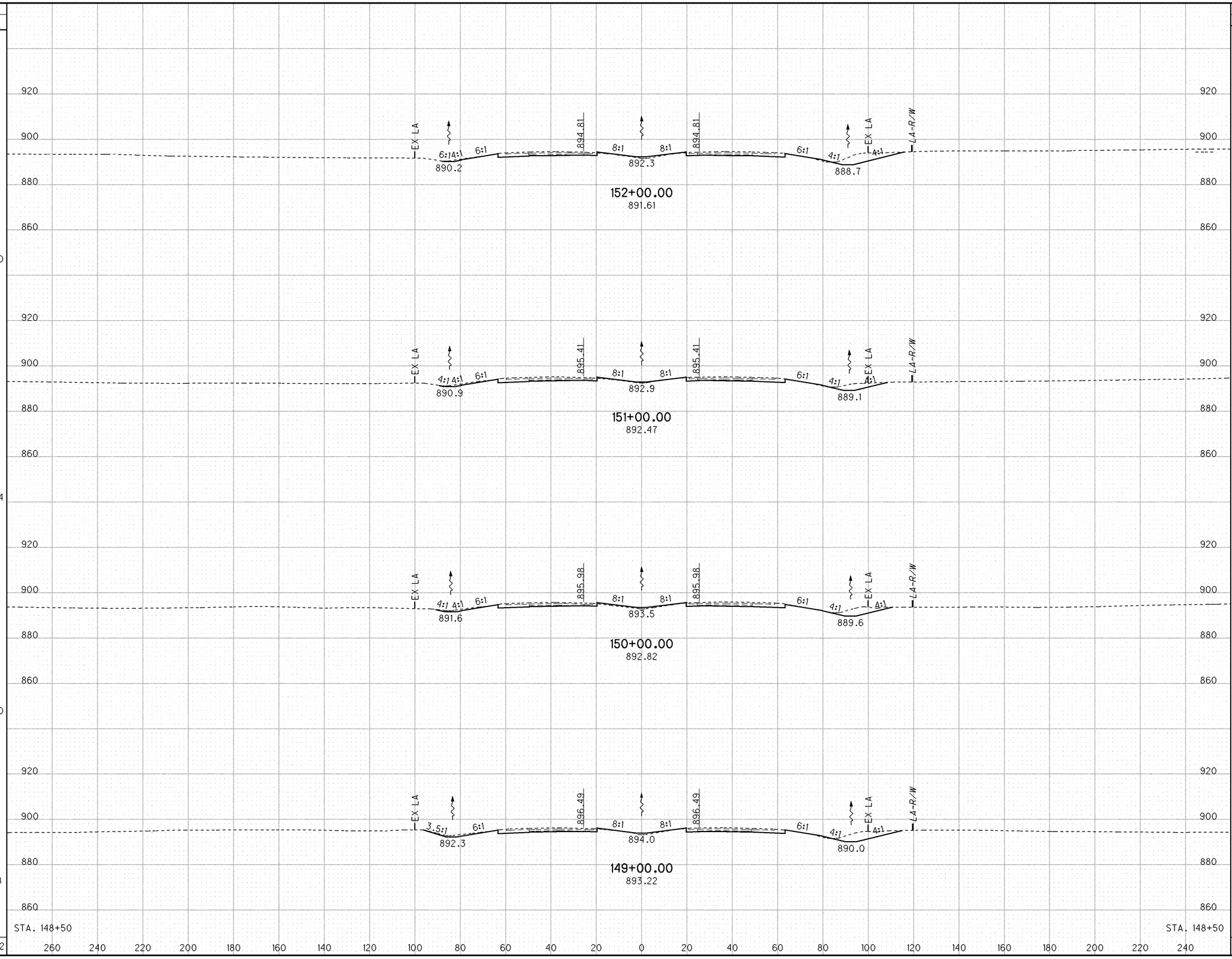

END AREA	
CUT	FILL
140	21
110	13
124	18
138	16
147	18

VOLUME	
CUT	FILL
463	63
433	57
485	63
264	31
1645	215

CALCULATED BDC
CHECKED TAB

CROSS SECTIONS - I-75
STA. 149+00.00 TO STA. 152+00.00

ALL-75-0.21

260
907

I:\Pdl\89029\roadway\sheets\89029XS002.dgn 26-JUN-2013 6:51AM bclark

SEEDING	
END WIDTH	SQ. YDS.
150	1650
147	1589
139	1550
140	1556
140	6345

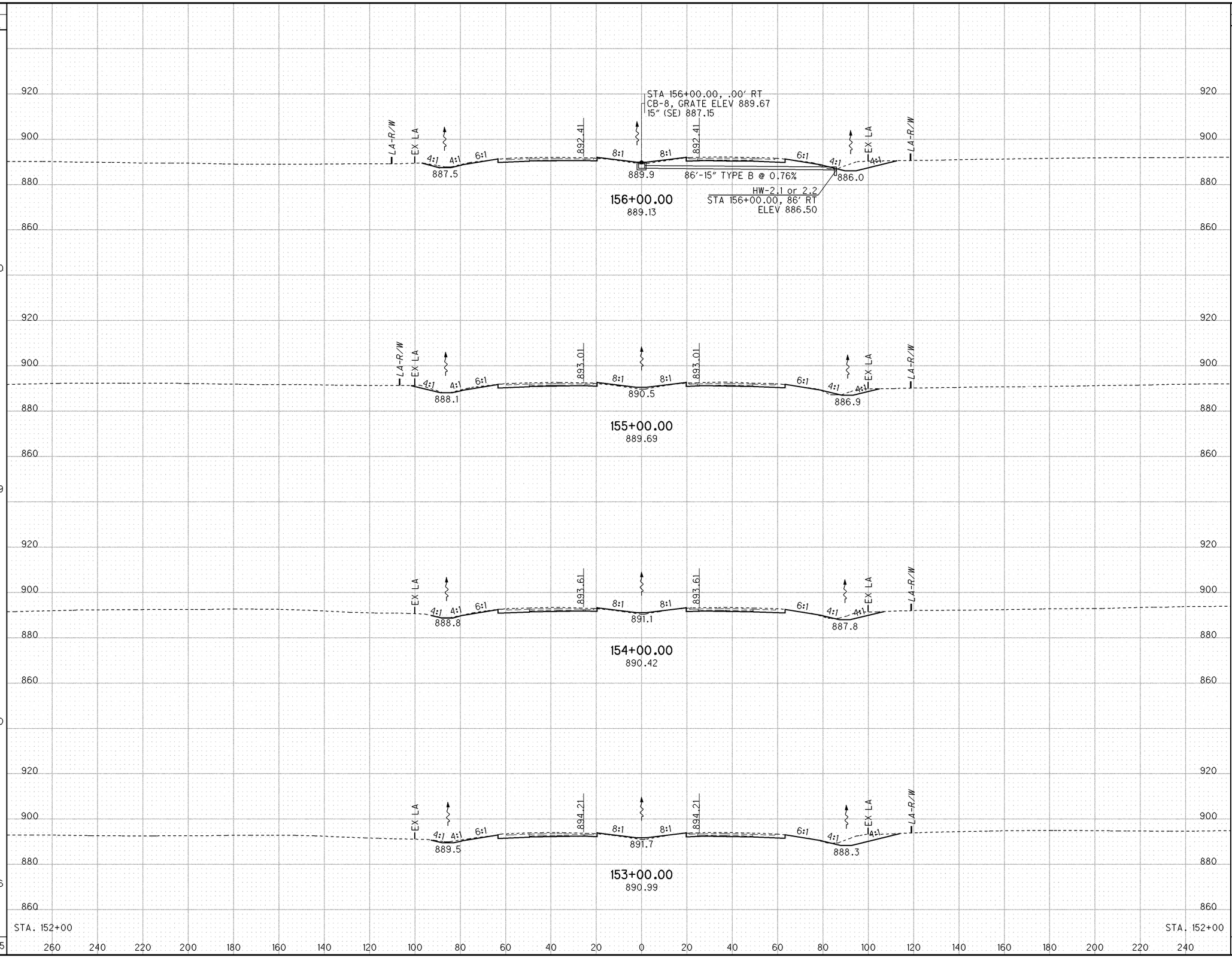

END AREA	
CUT	FILL
119	23
86	25
76	18
134	17
140	21

VOLUME	
CUT	FILL
380	89
337	80
426	65
507	70
1650	304

CALCULATED BDC
CHECKED TAB

CROSS SECTIONS - I-75
STA. 153+00.00 TO STA. 156+00.00

ALL-75-0.21

I:\Pd\89029\roadway\sheets\89029XS002.dgn 26-JUN-2013 6:50AM bclark

SEEDING		END AREA		VOLUME		CALCULATED BDC
END WIDTH	SQ. YDS.	CUT	FILL	CUT	FILL	CHECKED TAB
150	1694	187	62	631	224	
155		154	59			
153	1711	121	58	509	217	
151	1689	103	38	415	178	
150	1672	119	23	411	113	
	6766			1967	731	

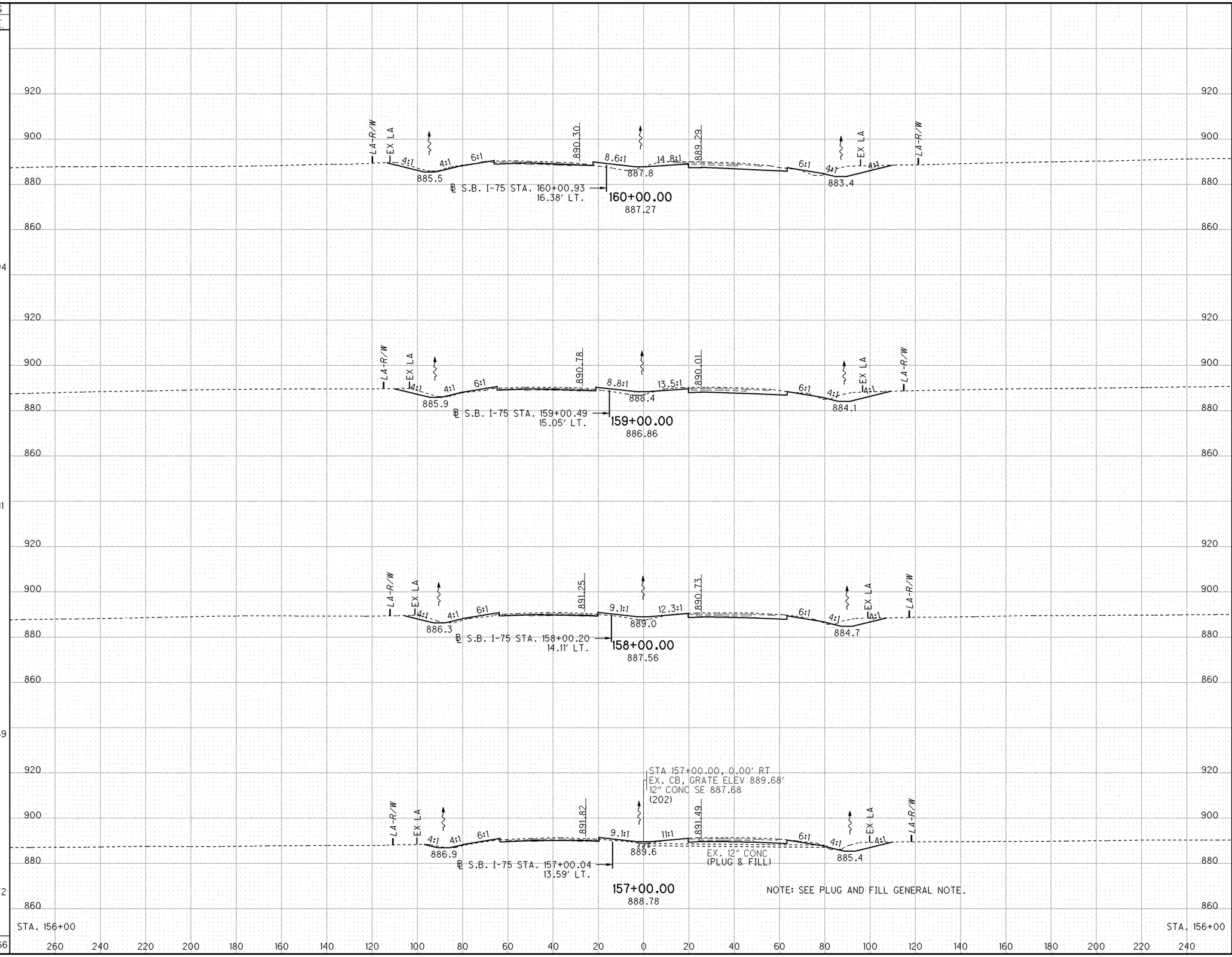

CROSS SECTIONS - I-75
STA. 157+00.00 TO STA. 160+00.00

ALL-75-0.21

262
907

I:\Pd\89029\roadway\sheets\89029XS002.dgn 26-JUN-2013 6:50AM bclark

SEEDING END WIDTH	SEEDING SQ. YDS.
196	1081
193	2106
186	1939
163	1739
150	6865

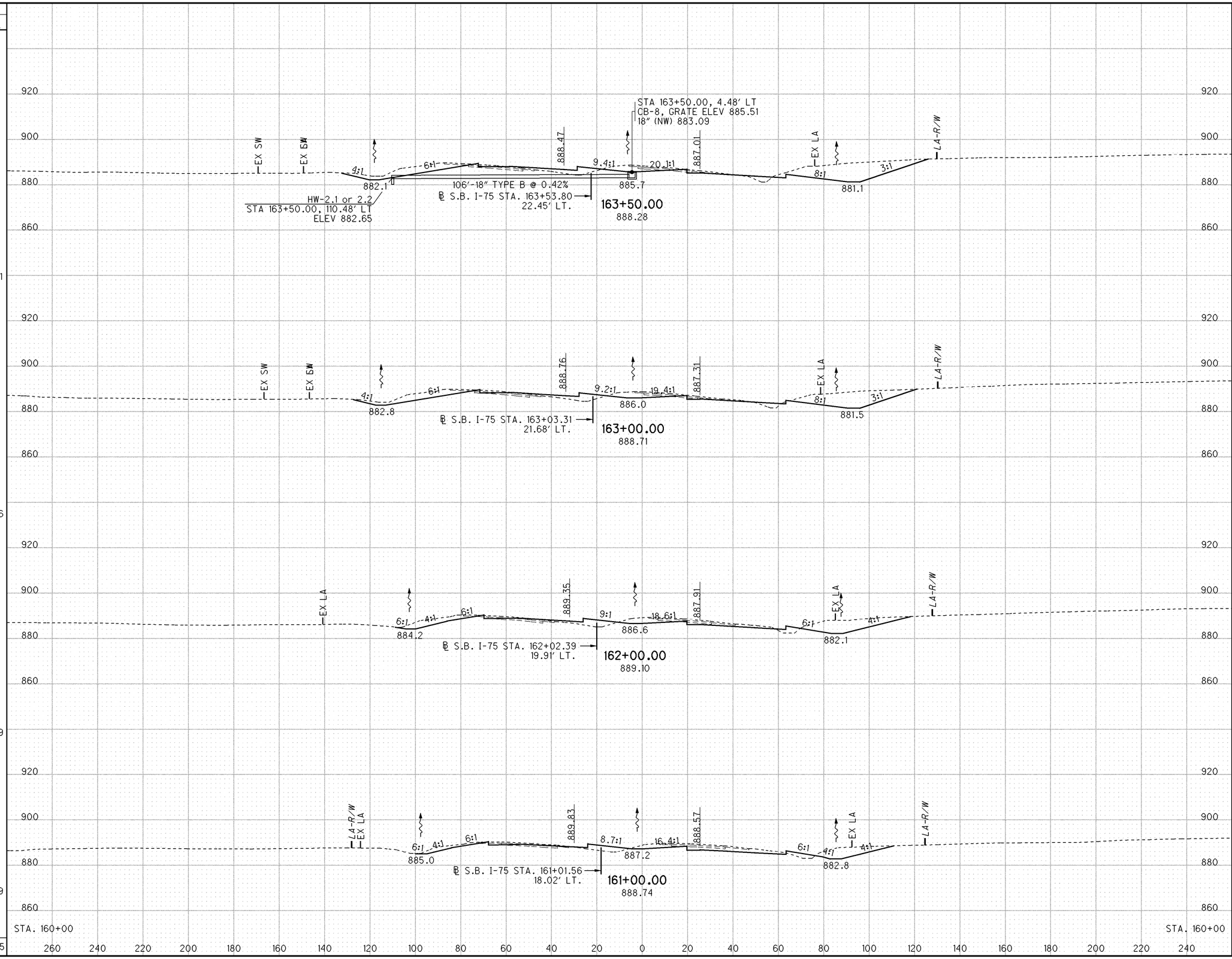

END AREA CUT	END AREA FILL	VOLUME CUT	VOLUME FILL
479	101		
		788	185
372	99		
		1226	359
290	95		
		922	322
208	79		
		731	261
187	62		
		3668	1128

CALCULATED BDC
CHECKED TAB

CROSS SECTIONS - I-75
STA. 161+00.00 TO STA. 163+50.00

ALL-75-0.21

263
907

I:\Pd\89029\roadway\sheets\89029XS002.dgn 26-JUN-2013 6:43AM bclark

SEEDING END WIDTH	SEEDING SQ. YDS.
165	
300	
	3006
241	
	2411
193	
	2161
196	
	1089
196	
	8667

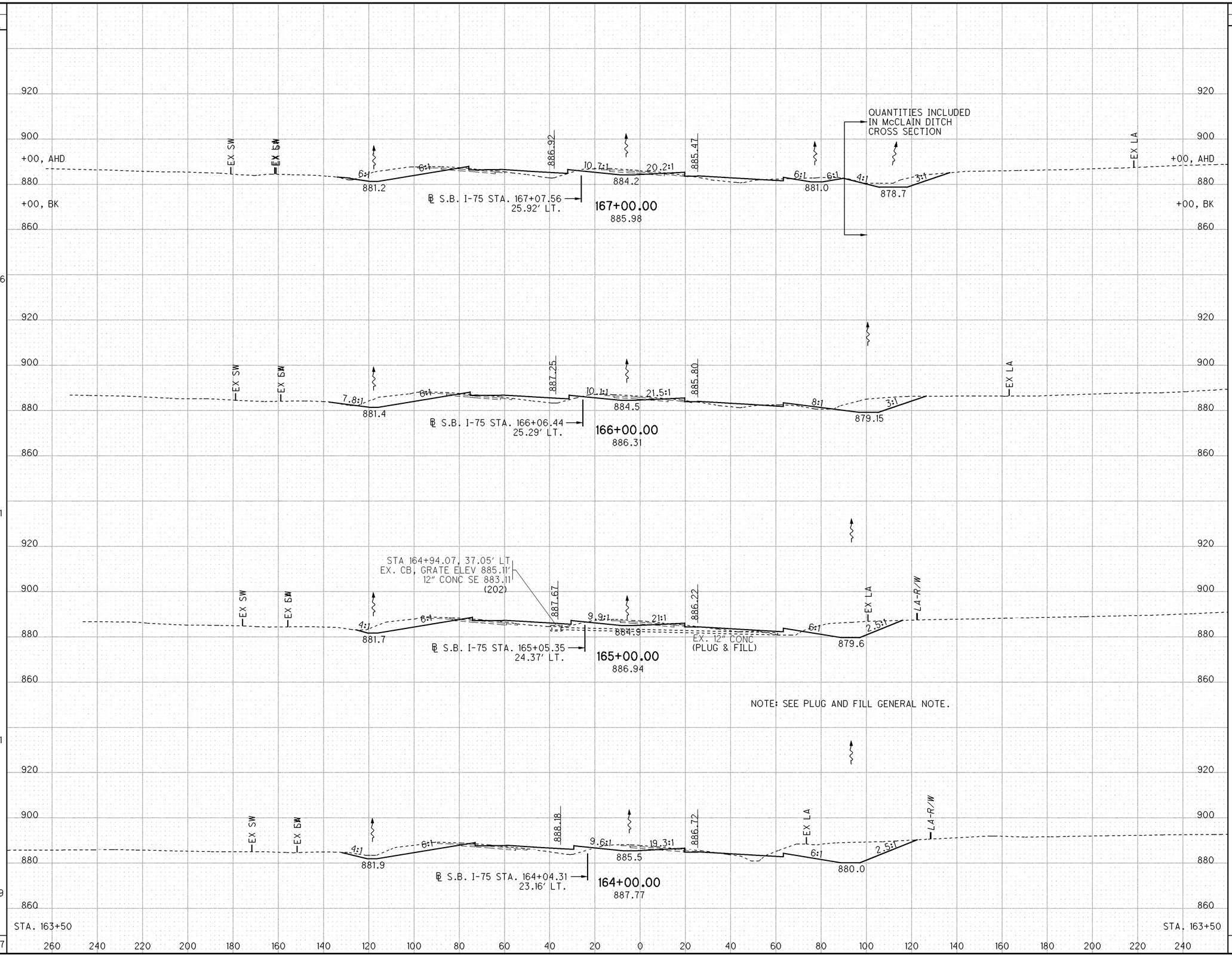

END AREA CUT	END AREA FILL	VOLUME CUT	VOLUME FILL
183	142		
261	142		
		1631	550
296	155		
		1163	543
332	138		
		1628	498
547	131		
		950	215
479	101		
		4772	1806

CALCULATED BDC
CHECKED TAB

CROSS SECTIONS - I-75
STA. 164+00.00 TO STA. 167+00.00

ALL-75-0.21

264
907

I:\Pd\89029\roadway\sheets\89029XS002.dgn 26-JUN-2013 6:43AM bclark

SEEDING END WIDTH	SEEDING SQ. YDS.	END AREA CUT	END AREA FILL	VOLUME CUT	VOLUME FILL
260	2889	318	144	1131	507
260	2711	293	130	1004	474
228	2339	249	126	867	494
193	1989	219	141	744	524
165	9928	183	142	3746	2000

CALCULATED BDC
CHECKED TAB

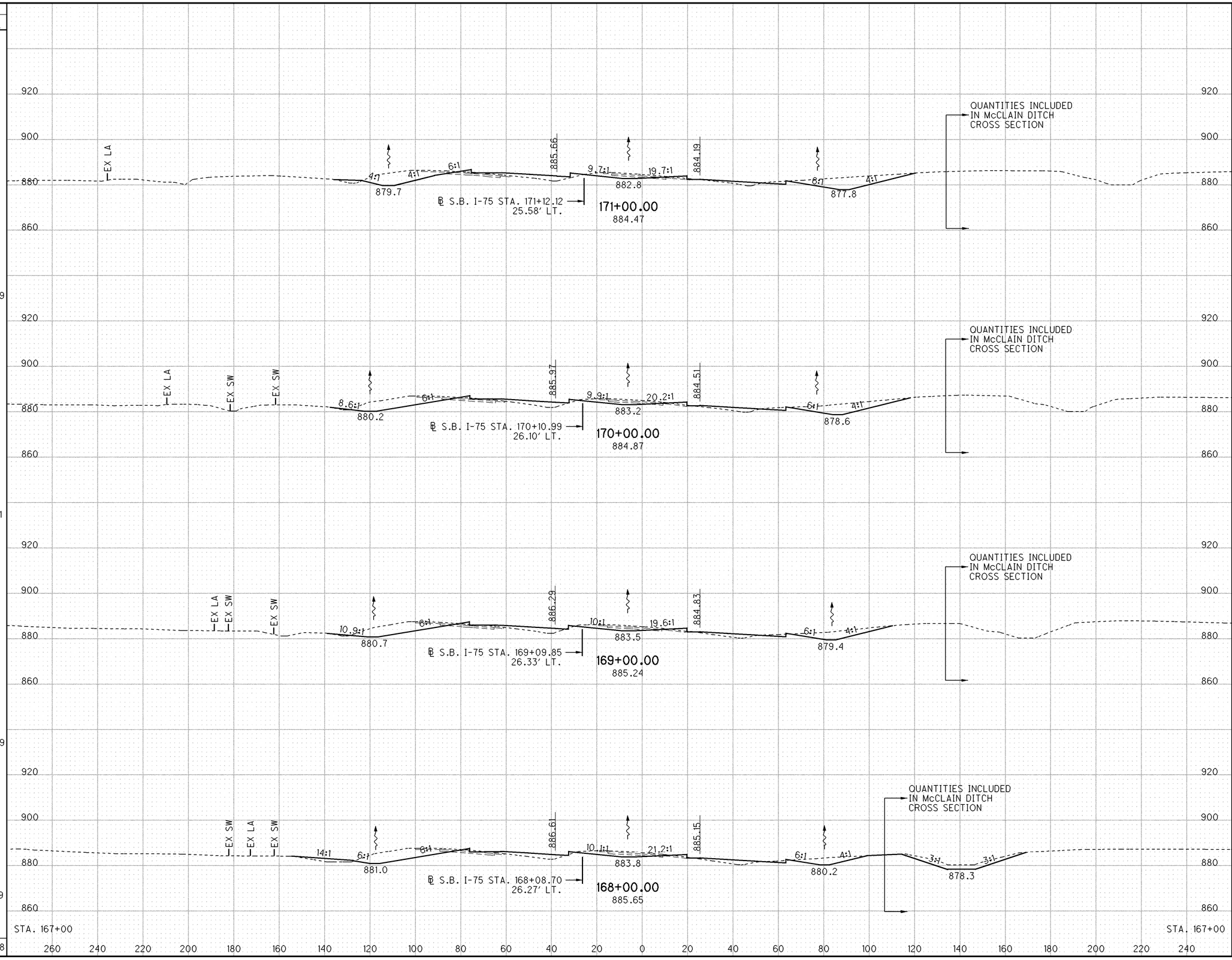

CROSS SECTIONS - I-75
STA. 168+00.00 TO STA. 171+00.00

ALL-75-0.21

265
907

I:\Pd\89029\roadway\sheets\89029XS002.dgn 26-JUN-2013 6:43AM bclark

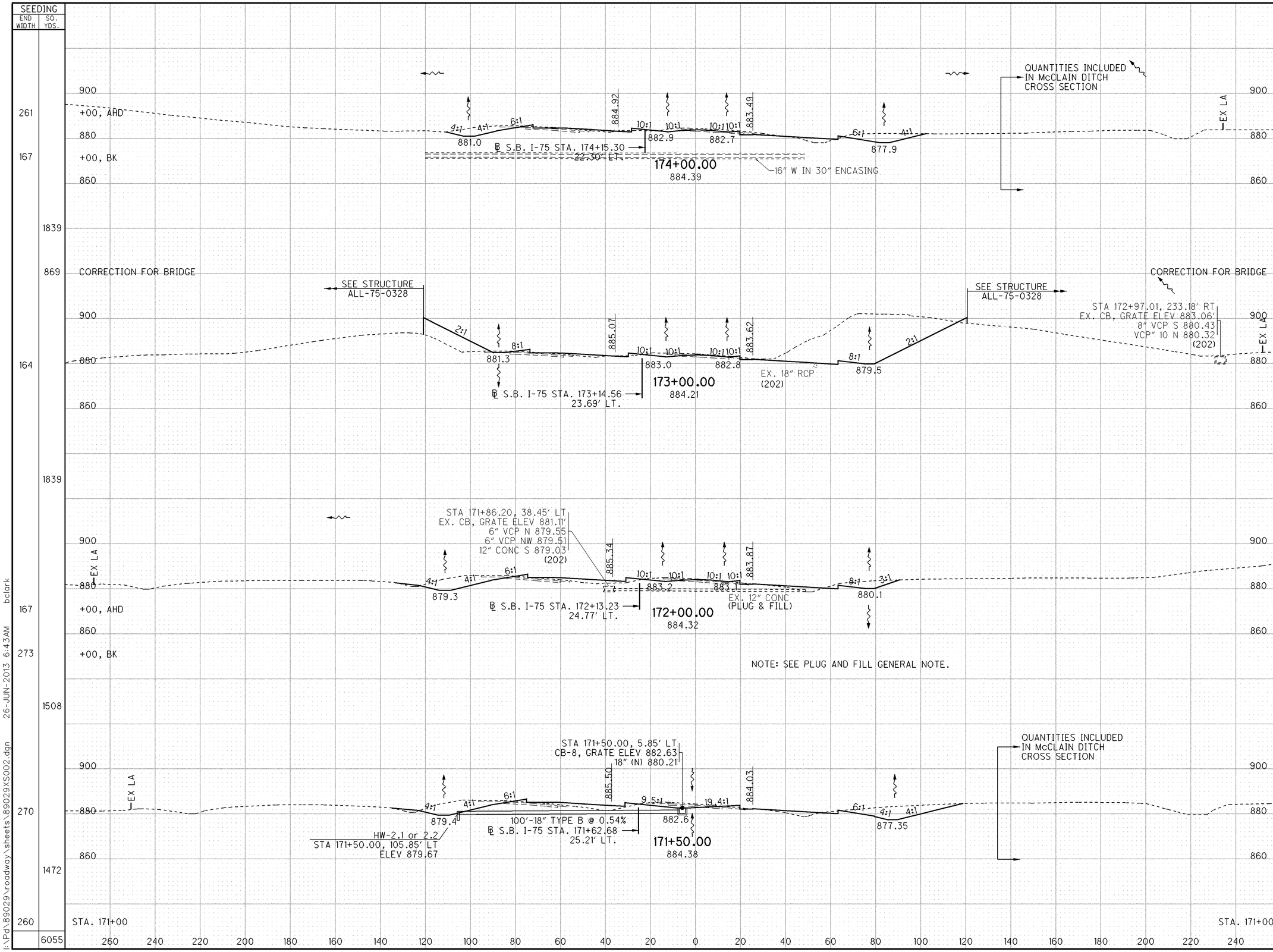

END AREA CUT	END AREA FILL	VOLUME CUT	VOLUME FILL
177	91		
		661	328
		1513	239
180	86		
		694	369
195	113		
		476	250
319	157		
		590	279
318	144		
		2421	1225

CALCULATED BDC
CHECKED TAB

CROSS SECTIONS - I-75
STA. 171+50.00 TO STA. 174+00.00

ALL-75-0.21

I:\Pd\89029\roadway\sheets\89029XS002.dgn 26-JUN-2013 6:43AM bclark

SEEDING END WIDTH	SEEDING SQ. YDS.	END AREA CUT	END AREA FILL	VOLUME CUT	VOLUME FILL
261		242	78		
	1472			411	167
269		202	102		
	2989			752	357
269		204	91		
	1494			387	159
269		214	81		
261	1472	177	91	362	159
	7428			1912	843

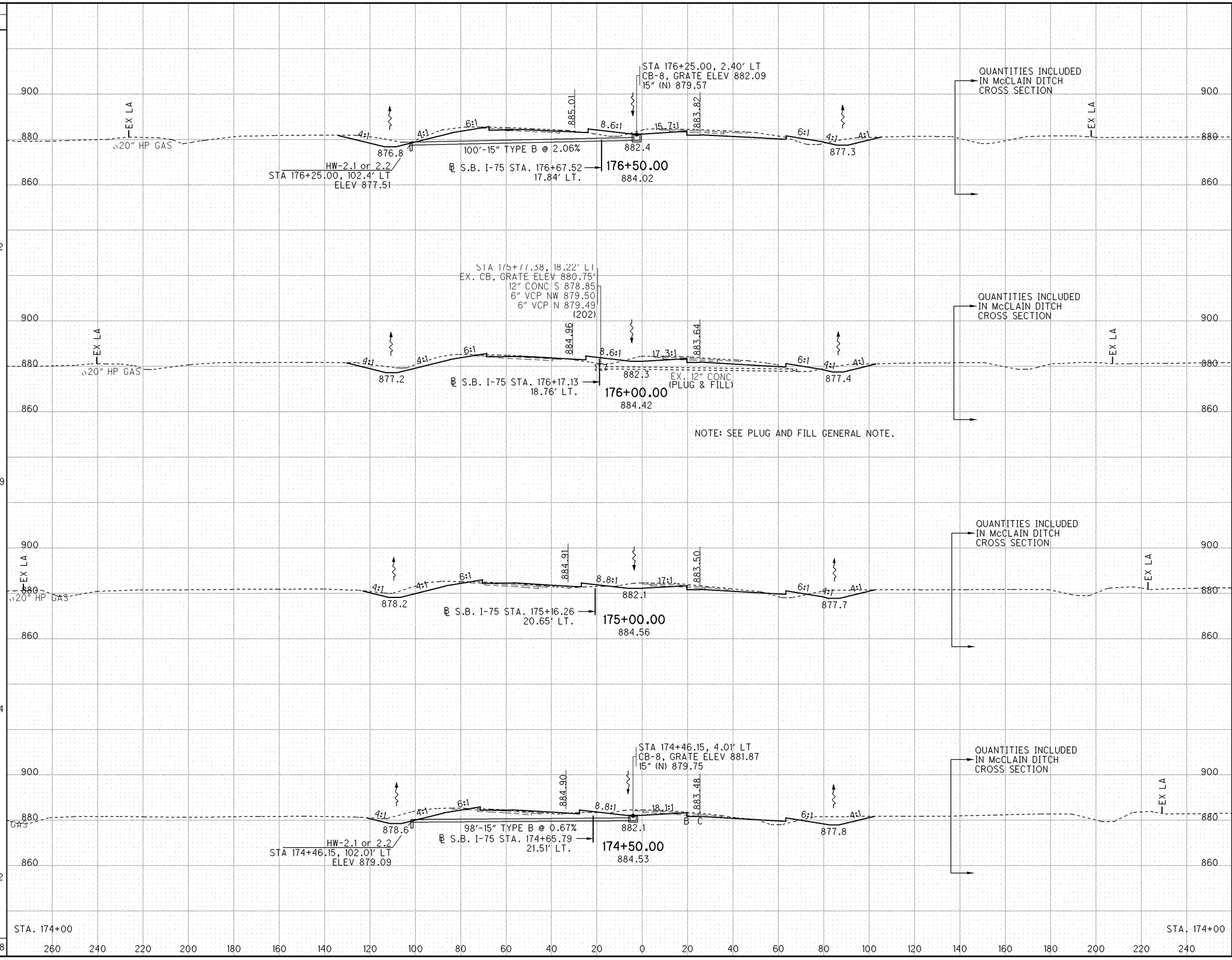

CALCULATED BDC
CHECKED TAB

CROSS SECTIONS - I-75
STA. 174+50.00 TO STA. 176+50.00

ALL-75-0.21

267
907

I:\Pd\89029\roadway\sheets\89029XS002.dgn 26-JUN-2013 6:42AM bclark

SEEDING END WIDTH	SEEDING SQ. YDS.	END AREA CUT	END AREA FILL	VOLUME CUT	VOLUME FILL
243		144	31		
	1375			269	49
	-54			26	-24
252		147	22		
	1406			302	65
254		179	48		
	2844			817	209
258		262	65		
	1442			467	132
261		242	78		
	7010			1855	456

CALCULATED BDC
CHECKED TAB

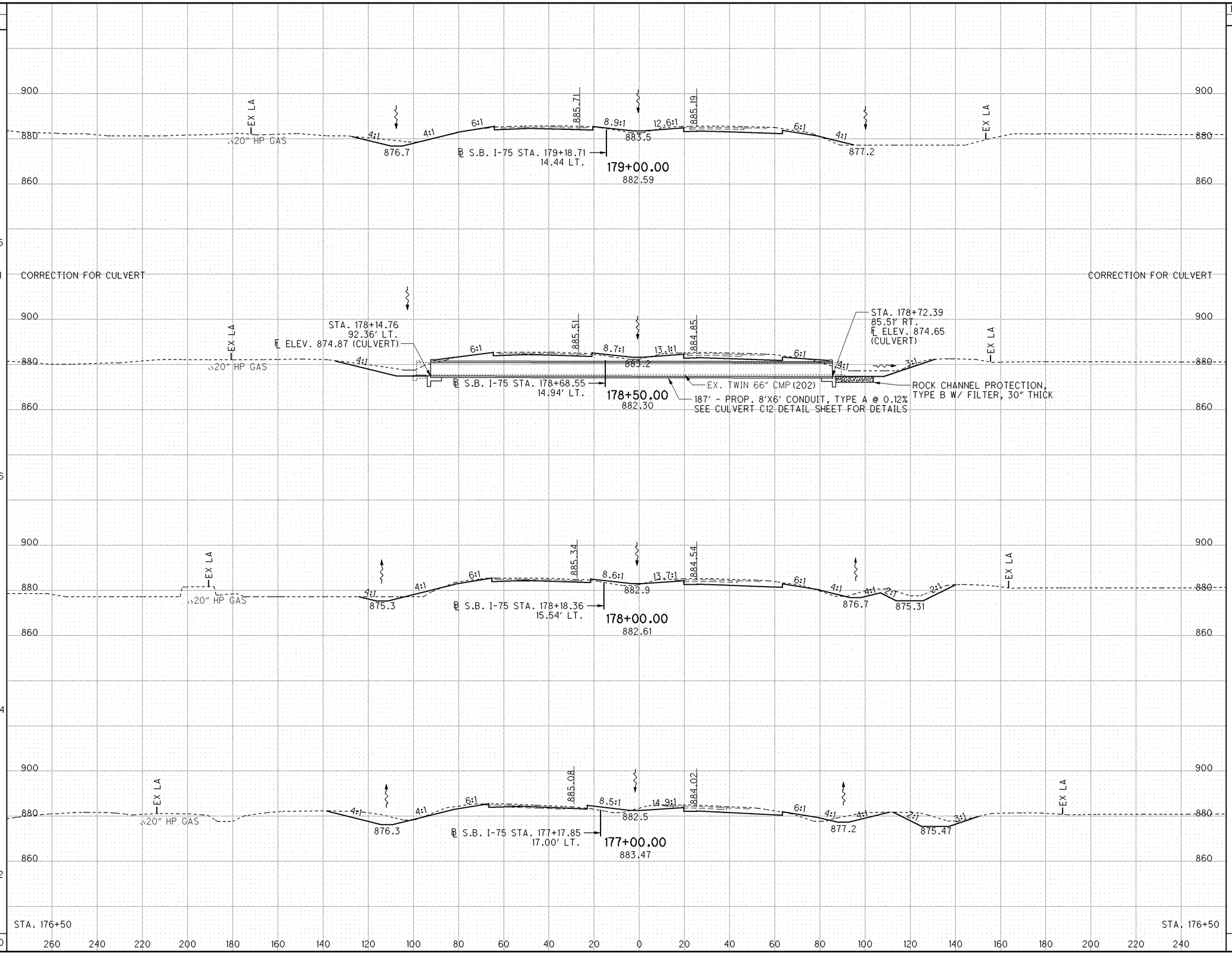

CROSS SECTIONS - I-75
STA. 177+00.00 TO STA. 179+00.00

ALL-75-0.21

268
907

I:\Pdt\89029\roadway\sheets\89029XS002.dgn 26-JUN-2013 6:42AM bclark

SEEDING END WIDTH	SEEDING SQ. YDS.
156	1839
175	1944
175	2189
219	2567
243	
	8539

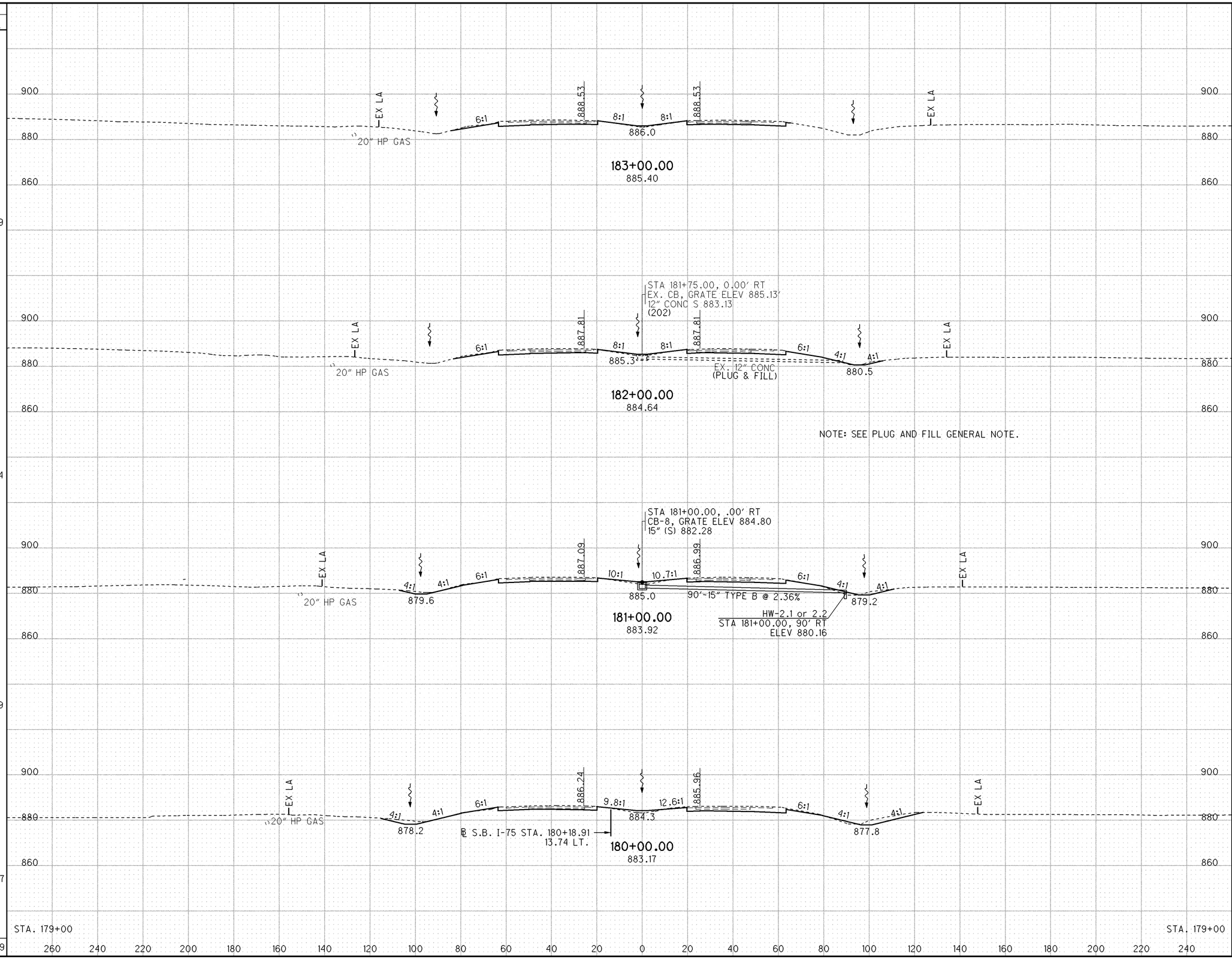

END AREA CUT	END AREA FILL	VOLUME CUT	VOLUME FILL
90	13		
		331	56
89	17		
		361	91
106	32		
		483	113
155	29		
		554	111
144	31		
		1730	370

CALCULATED BDC
CHECKED TAB

CROSS SECTIONS - I-75
STA. 180+00.00 TO STA. 183+00.00

ALL-75-0.21

269
907

I:\Pdt\89029\roadway\sheets\89029XS002.dgn 26-JUN-2013 6:42AM bclark

SEEDING		END AREA		VOLUME	
END WIDTH	SQ. YDS.	CUT	FILL	CUT	FILL
144	1606	60	23	222	81
145	1611	60	21	244	67
145	1639	72	15	278	41
150	1700	78	7	311	37
156	6556	90	13	1056	226

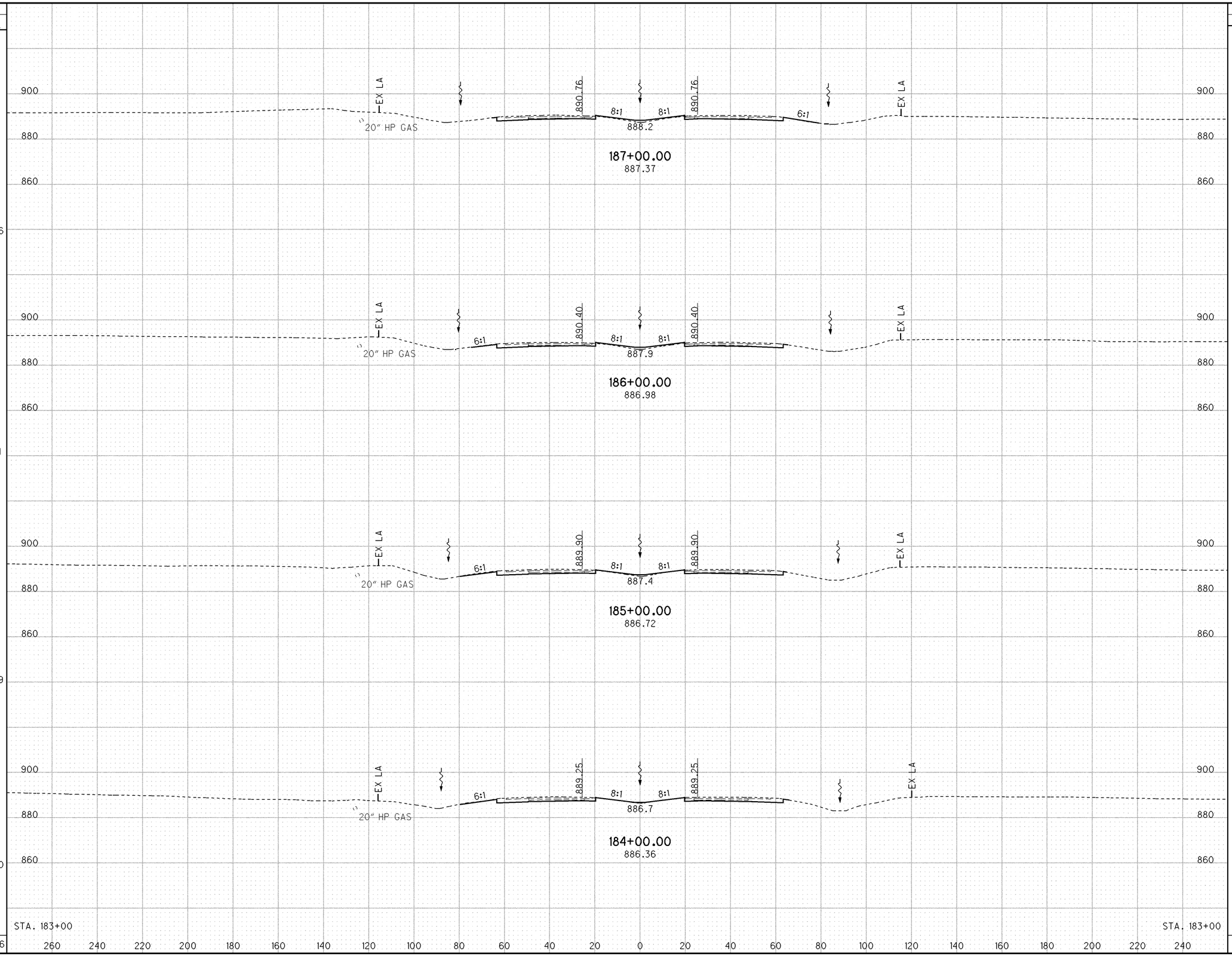

CALCULATED BDC
CHECKED TAB

CROSS SECTIONS - I-75
STA. 184+00.00 TO STA. 187+00.00

ALL-75-0.21

270
907

I:\Pdt\89029\roadway\sheets\89029XS002.dgn 26-JUN-2013 6:34AM belark

SEEDING		END AREA		VOLUME	
END WIDTH	SQ. YDS.	CUT	FILL	CUT	FILL
143	1594	82	20	304	80
144	1600	82	23	263	76
144	1606	60	18	220	74
145	1606	59	22	220	83
144		60	23		
·	6406			1007	313

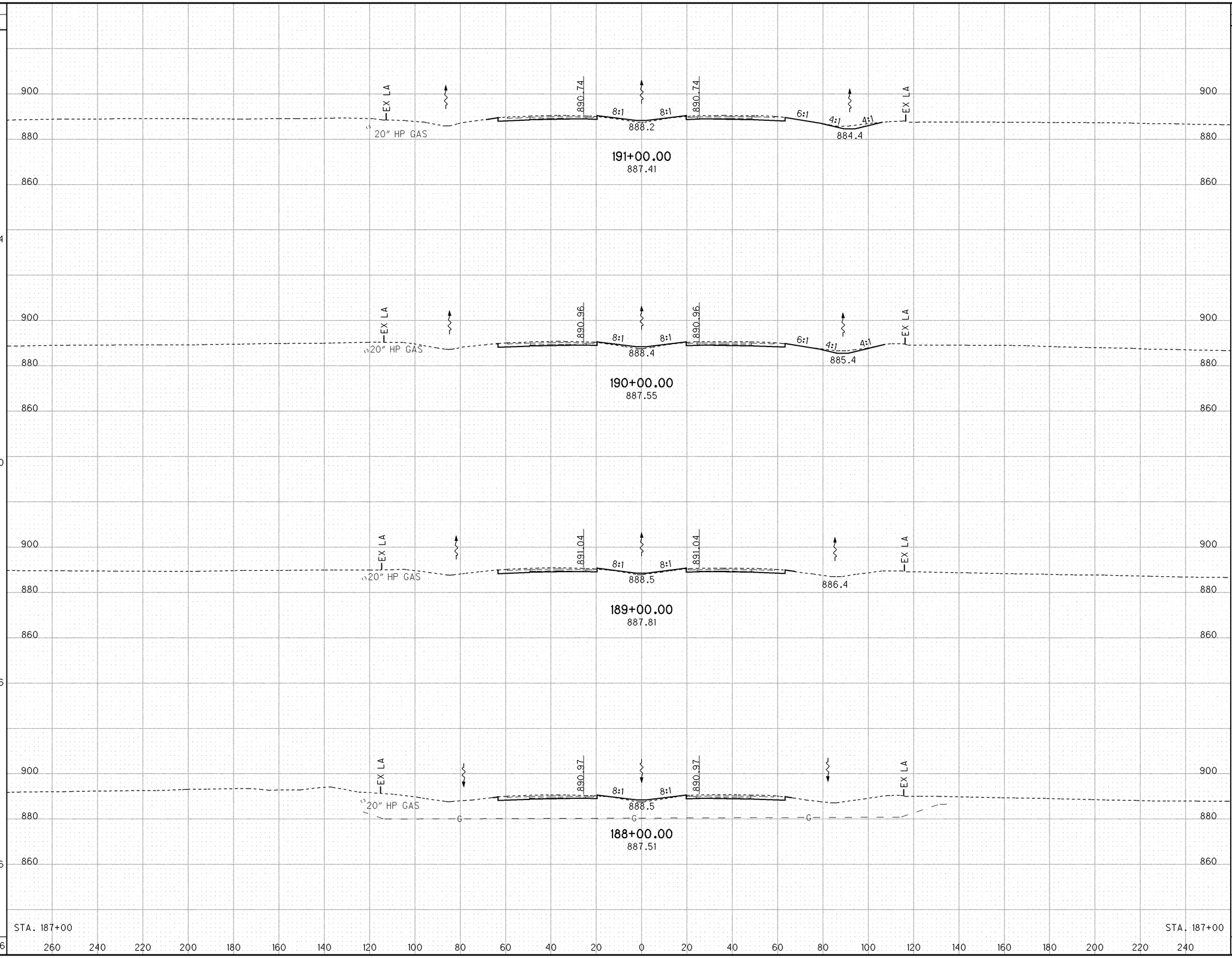

CALCULATED BDC
CHECKED TAB

CROSS SECTIONS - I-75
STA. 188+00.00 TO STA. 191+00.00

ALL-75-0.21

271
907

I:\Pd\89029\roadway\sheets\89029XS002.dgn 26-JUN-2013 6:34AM bclark

SEEDING		END AREA		VOLUME	
END WIDTH	SQ. YDS.	CUT	FILL	CUT	FILL
151	825	122	24	207	41
146		102	20		
142	1583	82	20	293	83
143		76	25		
143	1589	82	20	293	83
	4797			963	244

CALCULATED BDC
CHECKED TAB

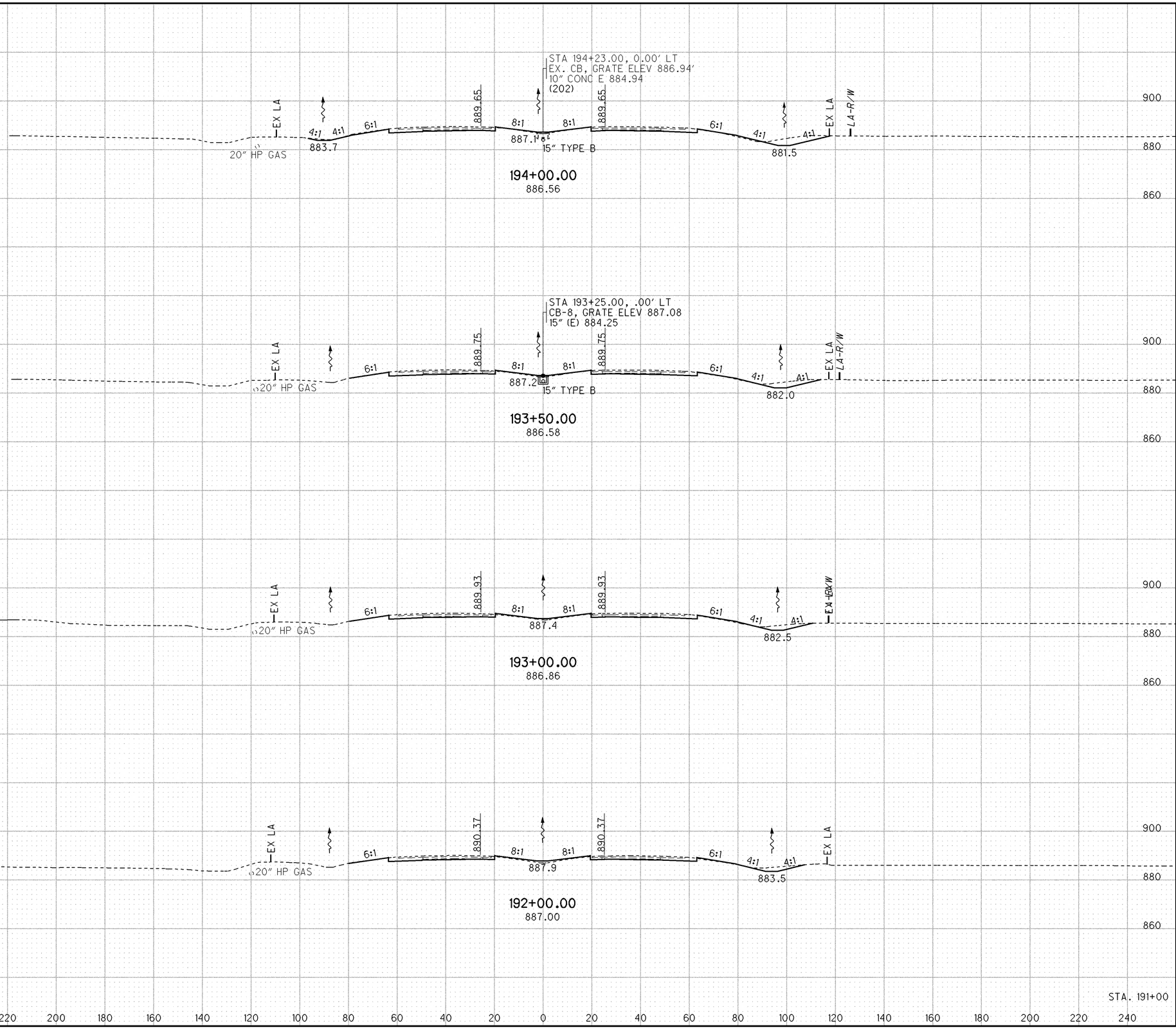

CROSS SECTIONS - I-75
STA. 192+00.00 TO STA. 194+00.00

ALL-75-0.21

272
907

I:\Pdl\89029\roadway\sheets\89029XS002.dgn 26-JUN-2013 6:34AM belark

SEEDING END WIDTH	SEEDING SQ. YDS.		END AREA CUT	END AREA FILL	VOLUME CUT	VOLUME FILL
163			302	11		
	167	CORRECTION FOR DRIVE			10	28
	-68	CORRECTION FOR CULVERT			-32	-4
	908				502	26
164			240	17		
	897				363	49
159			152	36		
	872				264	55
155			133	23		
	850				236	44
151			122	24		
	3627				1343	197

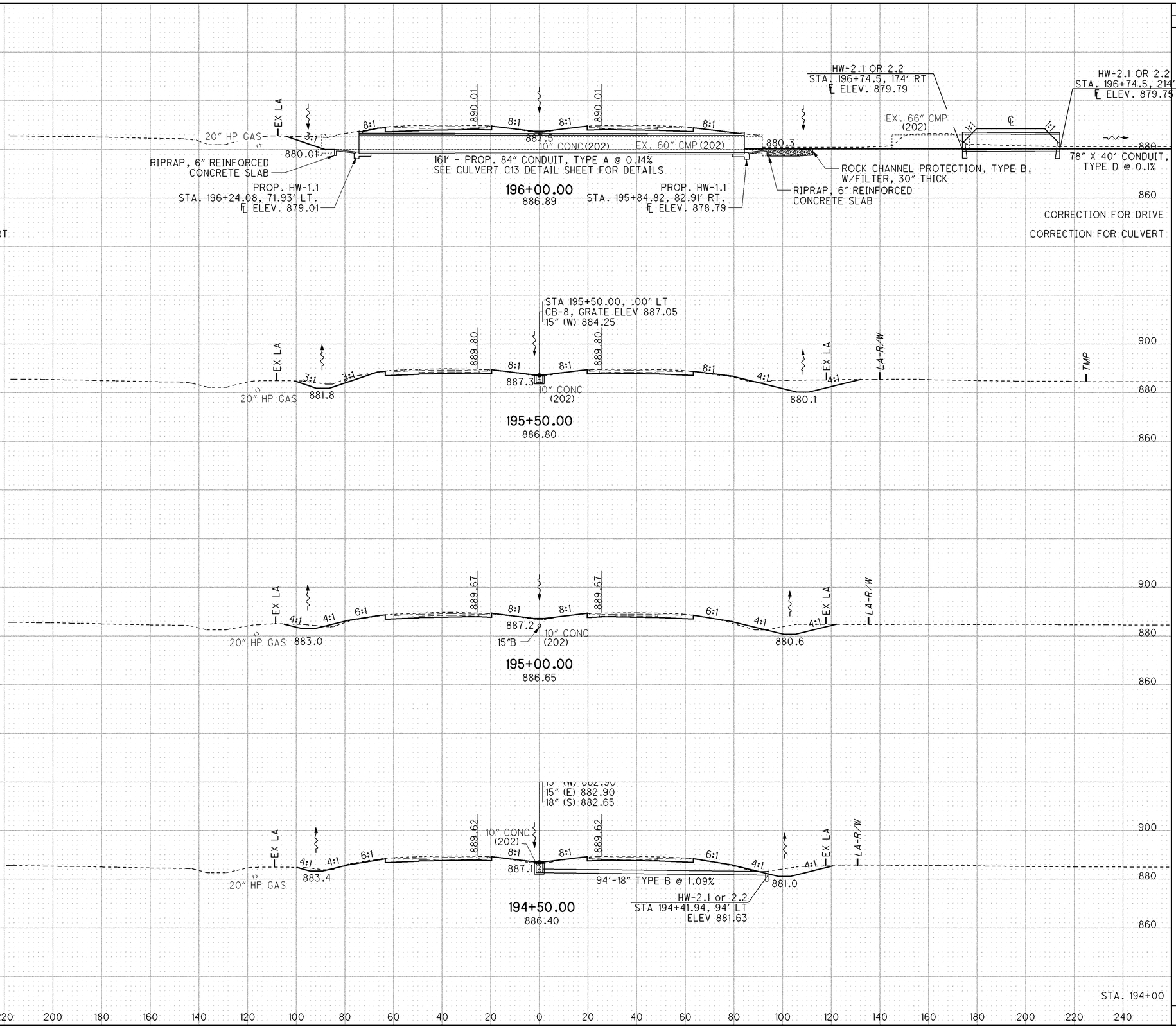

CALCULATED BDC
CHECKED TAB

CROSS SECTIONS - I-75
STA. 195+50.00 TO STA. 196+00.00

ALL-75-0.21

273
907

I:\Pd\89029\roadway\sheets\89029XS002.dgn 26-JUN-2013 6:34AM bclark

SEEDING		END AREA		VOLUME	
END WIDTH	SQ. YDS.	CUT	FILL	CUT	FILL
140	778	134	22	246	33
140	778	132	14	237	31
140	1600	124	20	511	74
148	1728	152	20	841	57
163	4883	302	11	1835	196

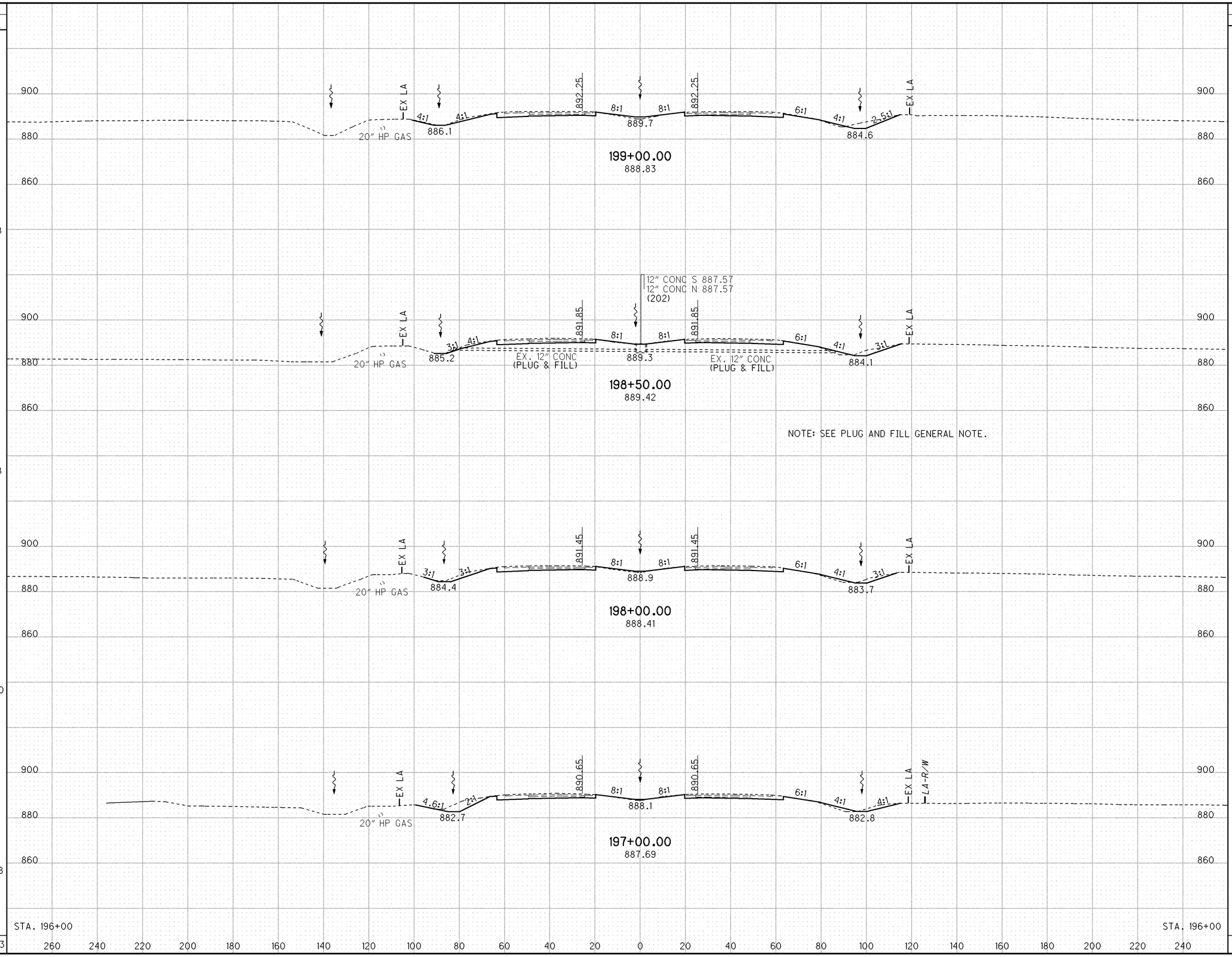

CALCULATED BDC
CHECKED TAB

CROSS SECTIONS - I-75
STA. 197+00.00 TO STA. 199+00.00

ALL-75-0.21

274
907

I:\Pdl\89029\roadway\sheets\89029XS002.dgn 26-JUN-2013 6:34AM bclark

SEEDING END WIDTH	SEEDING SQ. YDS.	END AREA CUT	END AREA FILL	VOLUME CUT	VOLUME FILL
139	775	191	16	346	26
140	2334	183	12	1019	67
140	1556	184	12	630	54
140	1556	156	17	537	72
140	6221	134	22	2532	219

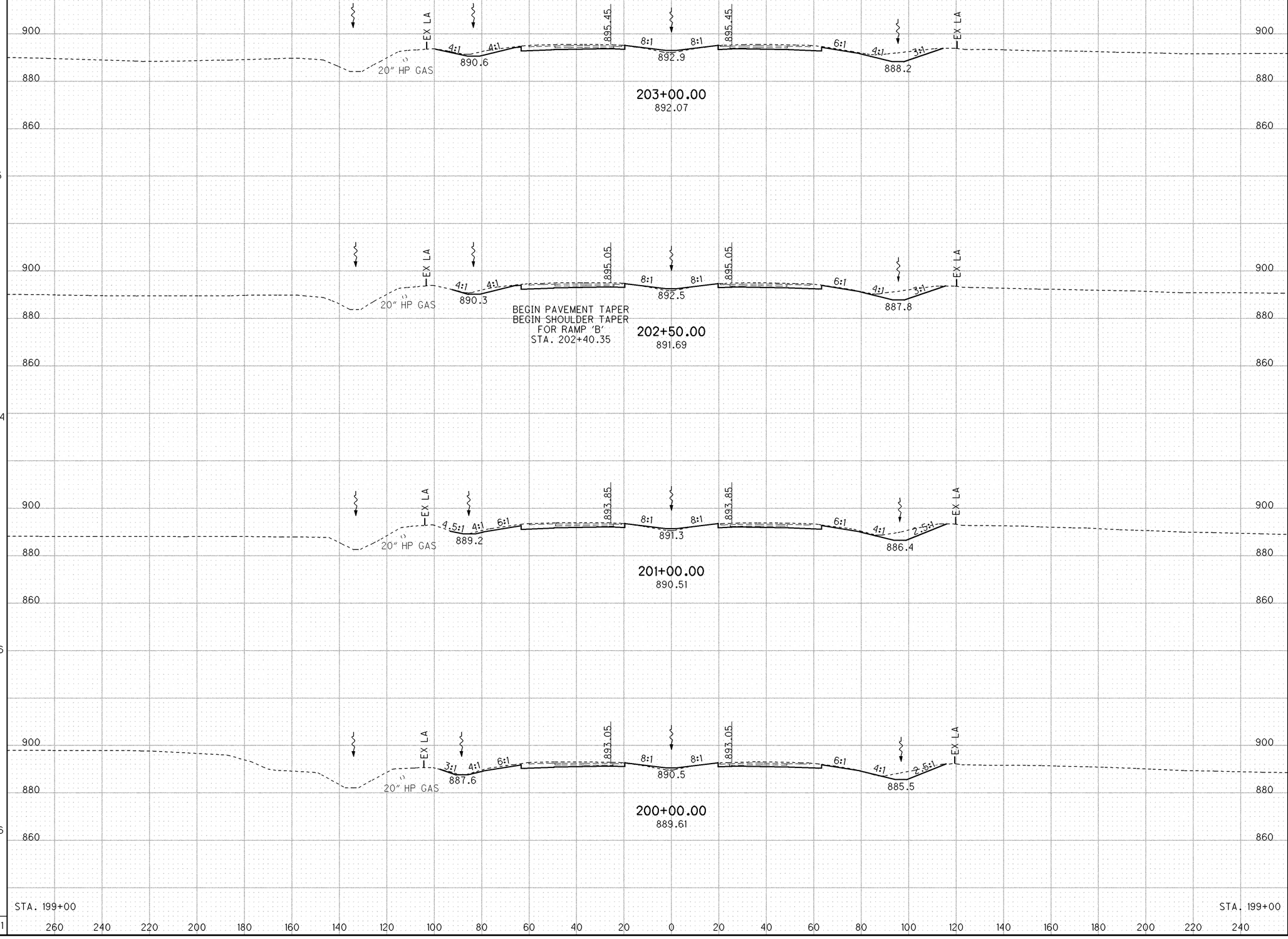

CALCULATED TAB

CHECKED BDC

CROSS SECTIONS - I-75
STA. 200+00.00 TO STA. 203+00.00

ALL-75-0.21

275
907

I:\Pdl\89029\roadway\sheets\89029XS002.dgn 26-JUN-2013 6:33AM bclark

SEEDING END WIDTH	SEEDING SQ. YDS.	END AREA CUT	END AREA FILL	VOLUME CUT	VOLUME FILL
134	1506	160	13	609	46
137		169	12		
	764			329	19
138		186	9		
	1539			693	43
139		188	14		
	712			351	28
139		191	16		
	4521			1982	136

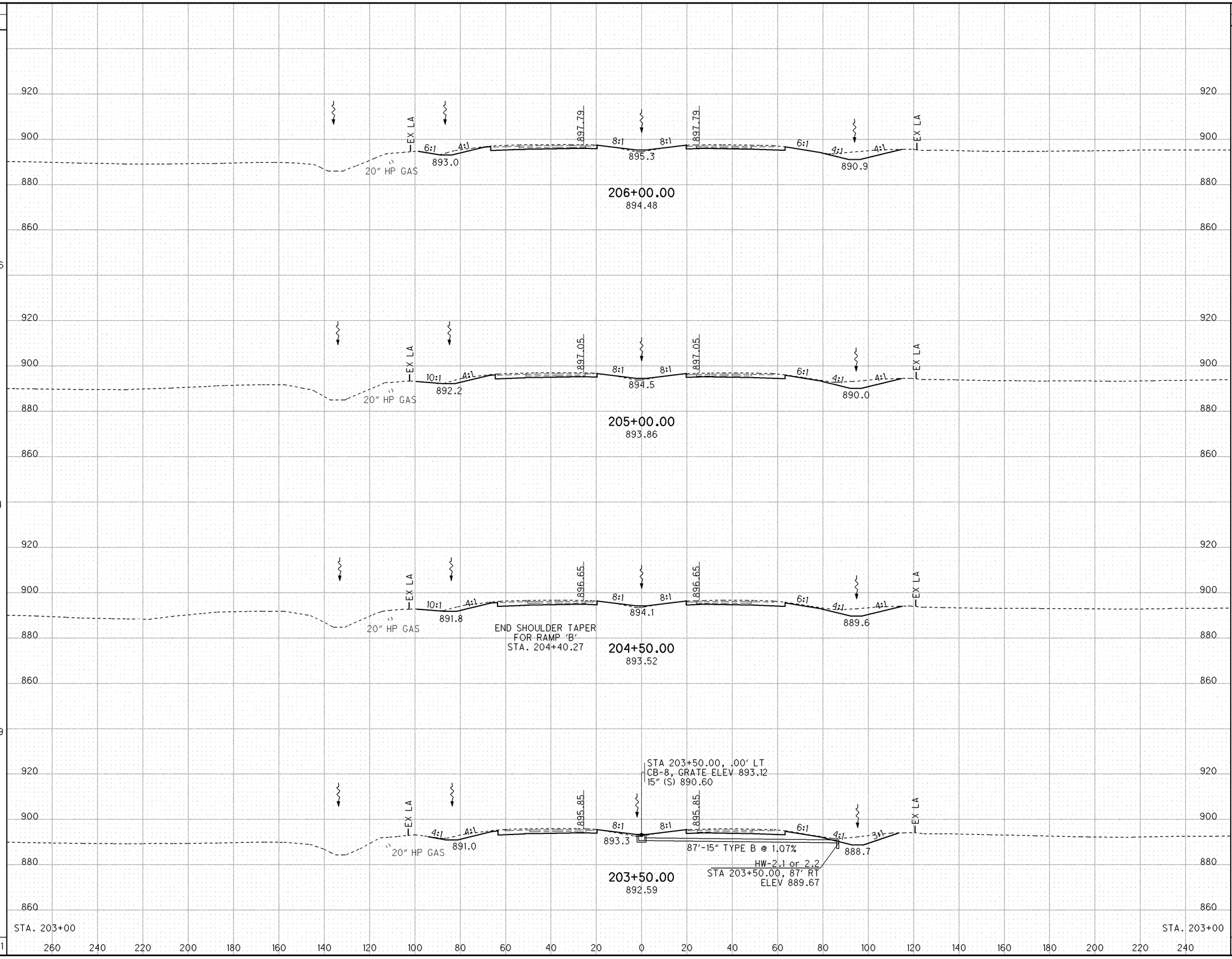

CALCULATED TAB
CHECKED BDC

CROSS SECTIONS - I-75
STA. 203+50.00 TO STA. 206+00.00

ALL-75-0.21

276
907

I:\Pd\89029\roadway\sheets\89029XS002.dgn 26-JUN-2013 6:33AM bclark

SEEDING END WIDTH	SEEDING SQ. YDS.	END AREA CUT	END AREA FILL	VOLUME CUT	VOLUME FILL
126	1411	111	8	363	35
128	1439	85	11	380	48
131	1467	120	15	491	63
133	1483	145	19	565	59
134	5800	106	13	1798	206

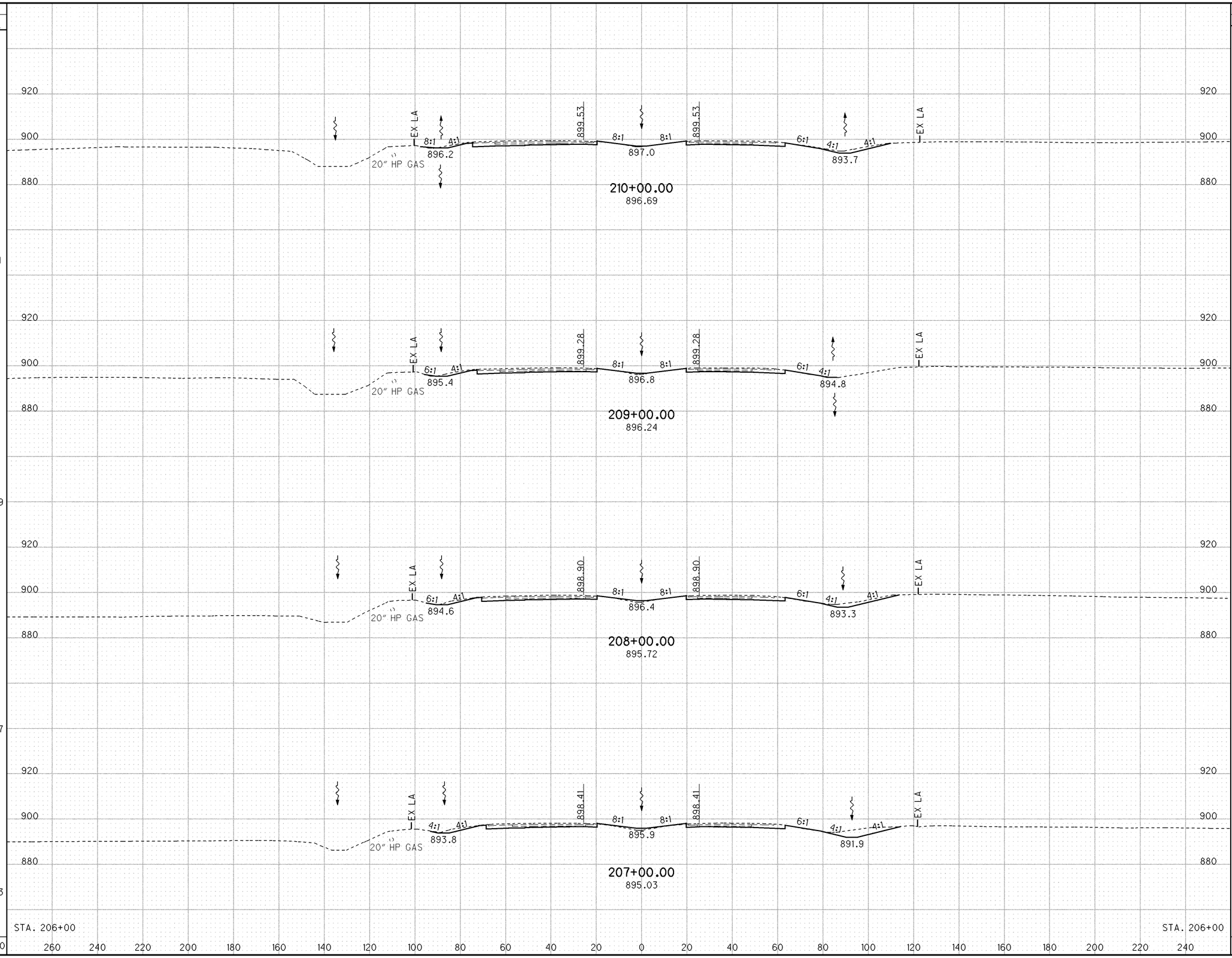

CALCULATED BDC
CHECKED TAB

CROSS SECTIONS - I-75
STA. 207+00.00 TO STA. 210+00.00

ALL-75-0.21

277
907

I:\Pd\89029\roadway\sheets\89029XS002.dgn 26-JUN-2013 6:24AM bclark

SEEDING END WIDTH	SEEDING SQ. YDS.	STA. 210+00	END AREA CUT	END AREA FILL	VOLUME CUT	VOLUME FILL
132	731	212+50.00	130	22	258	24
131	725	212+00.00	149	4	285	9
130	1433	211+50.00	159	6	535	15
128	706	210+50.00	130	2	223	9
126	3594	STA. 210+00	111	8	1302	57

212+50.00
896.87
EX LA
10:1
3:1
894.6
20" HP GAS
900.01
8:1
8:1
897.5
900.01
6:1
EX LA
4:1
3:1
892.2
LA-R/W

212+00.00
897.64
STA 212+23.08, 1.32' RT
EX. CB, GRATE ELEV 898.75'
6" VCP NE 894.60
6" VCP SE 894.30
12" CONC N 894.57
(202)
EX LA
6:1
3:1
894.9
20" HP GAS
EX. 12" CONC
(PLUG & FILL)
899.82
8:1
8:1
897.3
899.82
6:1
EX LA
4:1
3:1
892.4
LA-R/W

NOTE: SEE PLUG AND FILL GENERAL NOTE.

211+50.00
896.98
STA 211+50.00, .00' RT
CB-8, GRATE ELEV 896.94
15" (S) 894.00
EX LA
4:1
3:1
895.2
20" HP GAS
899.71
8:1
8:1
897.2
899.71
6:1
EX LA
4:1
4:1
892.5
LA-R/W
100'-15" TYPE B @ 0.94%
END PAVEMENT TAPER
END SHOULDER TAPER
FOR RAMP 'A'
STA. 211+53.73
HW-2.1 or 2.2
STA 211+50.00, 100' RT
ELEV 893.05

210+50.00
897.00
EX LA
4:1
4:1
895.9
20" HP GAS
899.61
8:1
8:1
897.1
899.61
6:1
EX LA
4:1
4:1
893.2
BEGIN PAVEMENT TAPER
BEGIN SHOULDER TAPER
FOR RAMP 'A'
STA. 210+53.73

CALCULATED BDC
CHECKED TAB

CROSS SECTIONS - I-75
STA. 210+50.00 TO STA. 212+50.00

ALL-75-0.21

278
907

I:\Pdt\89029\roadway\sheets\89029XS002.dgn 26-JUN-2013 6:24 AM bclark

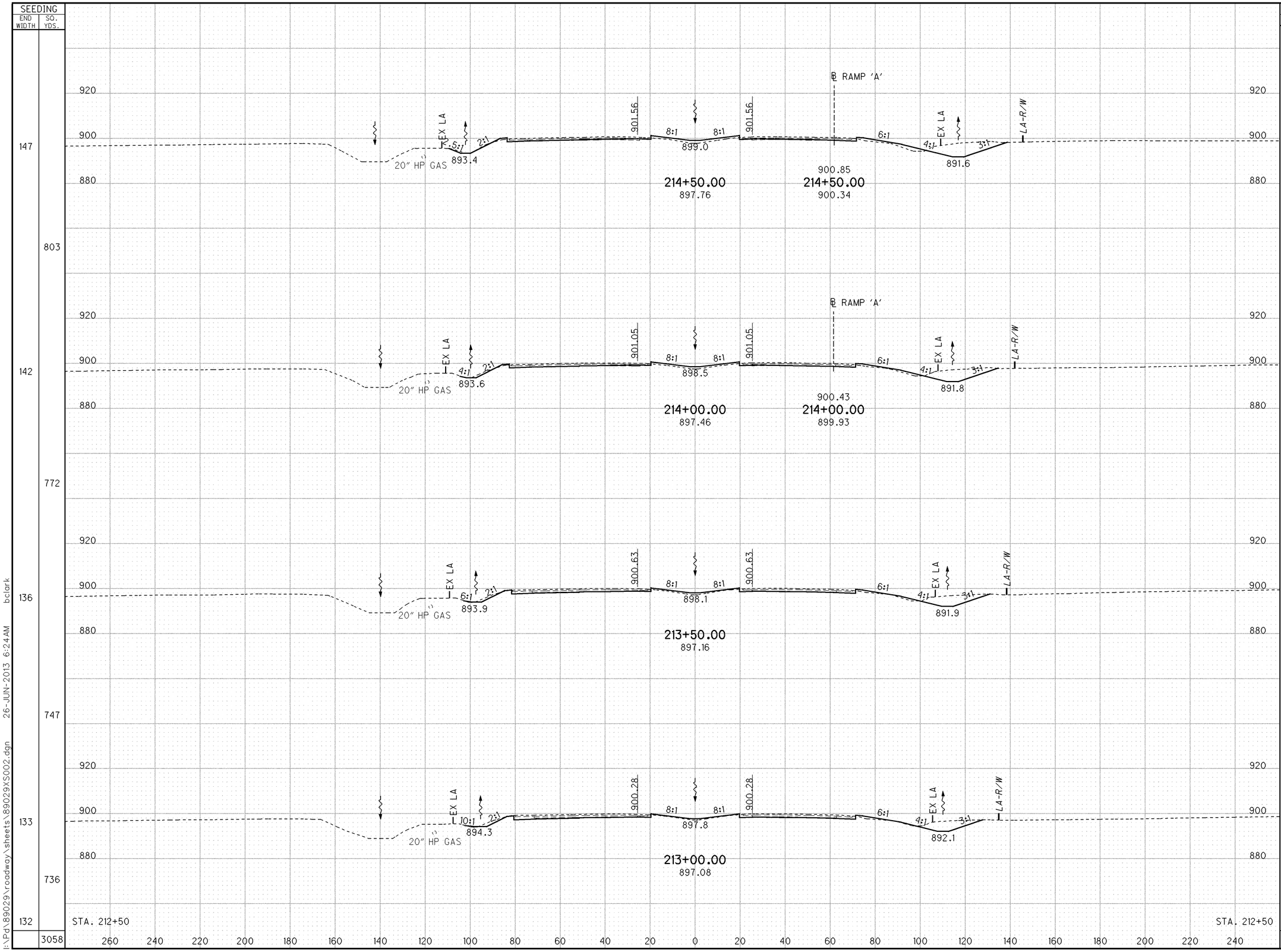
SEEDING
END WIDTH
SQ. YDS.
END AREA
CUT
FILL
VOLUME
CUT
FILL
CALCULATED BDC
CHECKED TAB
℄ RAMP 'A'
EX LA
LA-R/W
20" HP GAS
901.56
899.0
893.4
214+50.00
897.76
900.85
214+50.00
900.34
901.05
898.5
893.6
214+00.00
897.46
900.43
214+00.00
899.93
900.63
898.1
893.9
213+50.00
897.16
900.28
897.8
894.3
213+00.00
897.08
891.6
891.8
891.9
892.1
147
803
154
99
264
152
142
772
131
65
233
97
136
747
121
40
230
67
133
736
127
32
238
50
132
3058
130
22
965
366
STA. 212+50
STA. 212+50
260 240 220 200 180 160 140 120 100 80 60 40 20 0 20 40 60 80 100 120 140 160 180 200 220 240
CROSS SECTIONS - I-75
STA. 213+00.00 TO STA. 214+50.00
ALL-75-0.21
279
907
I:\Pdt\89029\roadway\sheets\89029XS002.dgn 26-JUN-2013 6:24AM bclark

SEEDING END WIDTH	SEEDING SQ. YDS.	END AREA CUT	END AREA FILL	VOLUME CUT	VOLUME FILL
158		125	234		
	878			225	391
158		118	188		
	869			251	332
155		153	171		
	850			284	262
151		154	112		
	828			285	195
147		154	99		
	3425			1045	1180

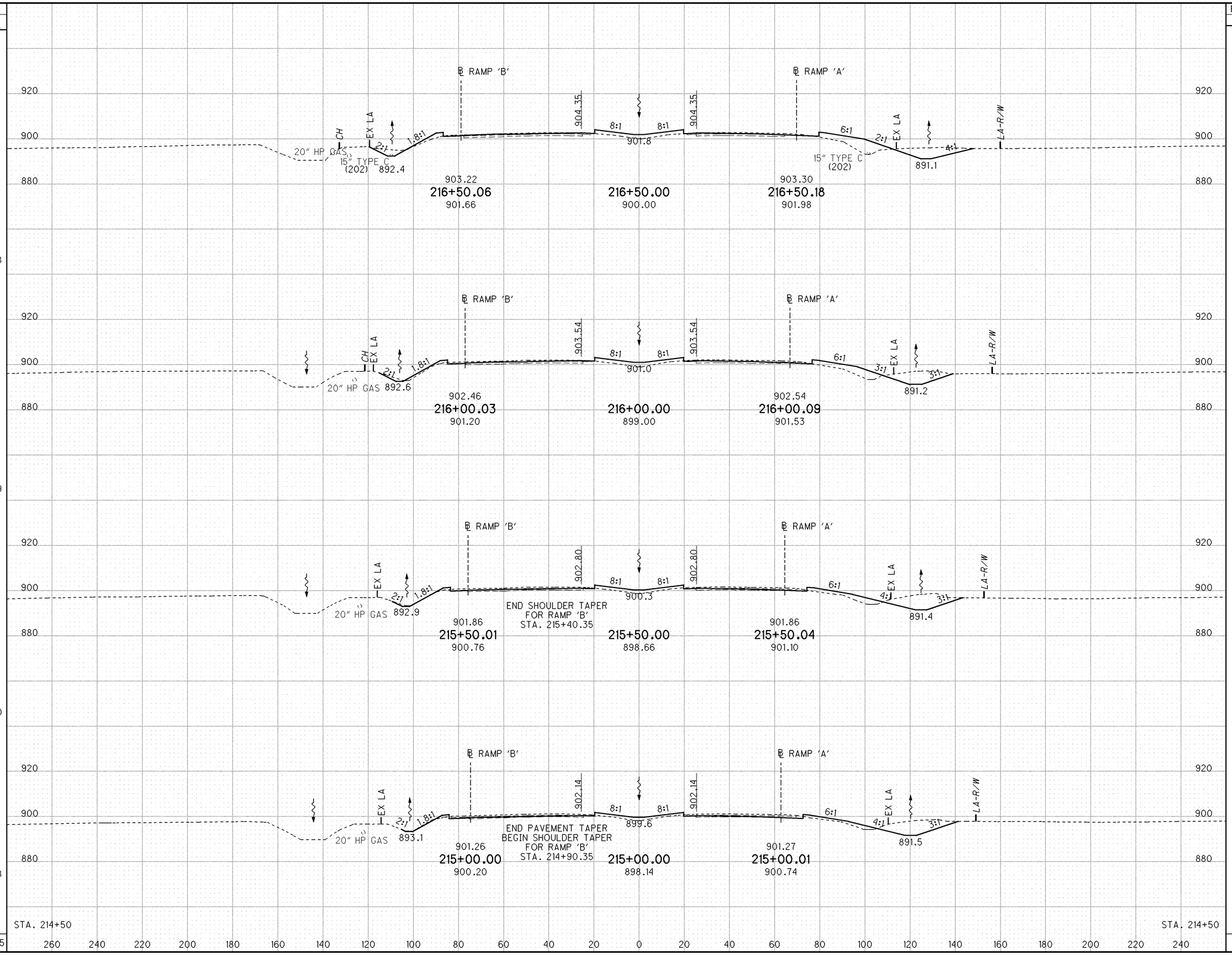

CALCULATED BDC
CHECKED TAB

CROSS SECTIONS - I-75
STA. 215+00.00 TO STA. 216+50.00

ALL-75-0.21

280
907

I:\Pdl\89029\roadway\sheets\89029XS002.dgn 26-JUN-2013 6:24 AM bclark

SEEDING END WIDTH	SEEDING SQ. YDS.		END AREA CUT	END AREA FILL	VOLUME CUT	VOLUME FILL
51		+54, AHD	1	327		
118		+54, BK	39	472		
	52				6	70
118			39	472		
	656				84	901
	52				7	64
118		+96, AHD	45	429		
160		+96, BK	59	493		
	818				119	779
160			81	422		
	883				119	697
	-18		48	331	20	66
158					160	523
	878					
158		STA. 216+50	123	234		
	3321				495	2472

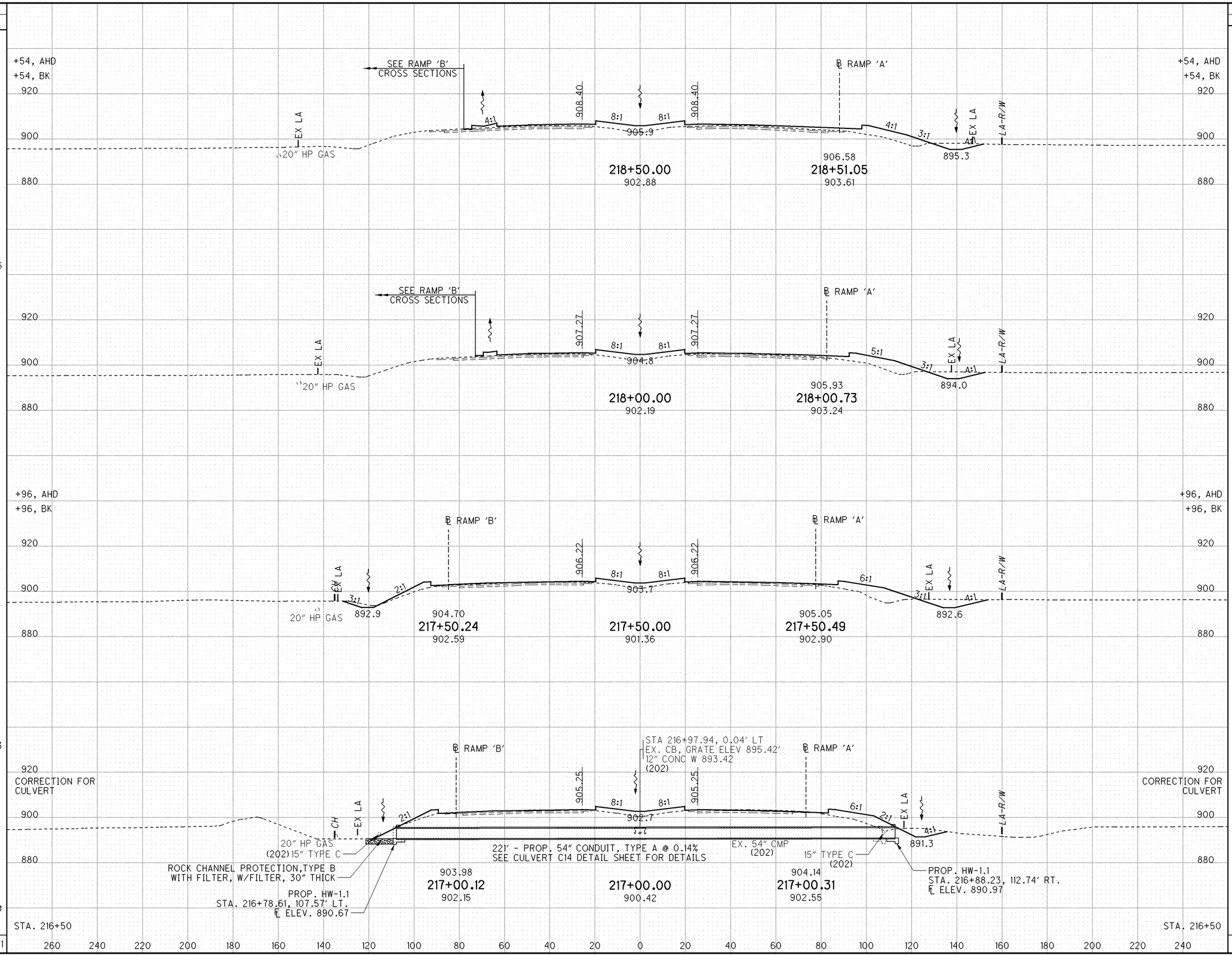

CALCULATED BDC

CHECKED TAB

CROSS SECTIONS - I-75
STA. 217+00.00 TO STA. 218+50.00

ALL-75-0.21

281
907

I:\Pdt\89029\roadway\sheets\89029XS002.dgn 26-JUN-2013 6:23AM bclark

SEEDING END WIDTH	SEEDING SQ. YDS.
118	603
99	506
83	422
69	307
51	
	1838

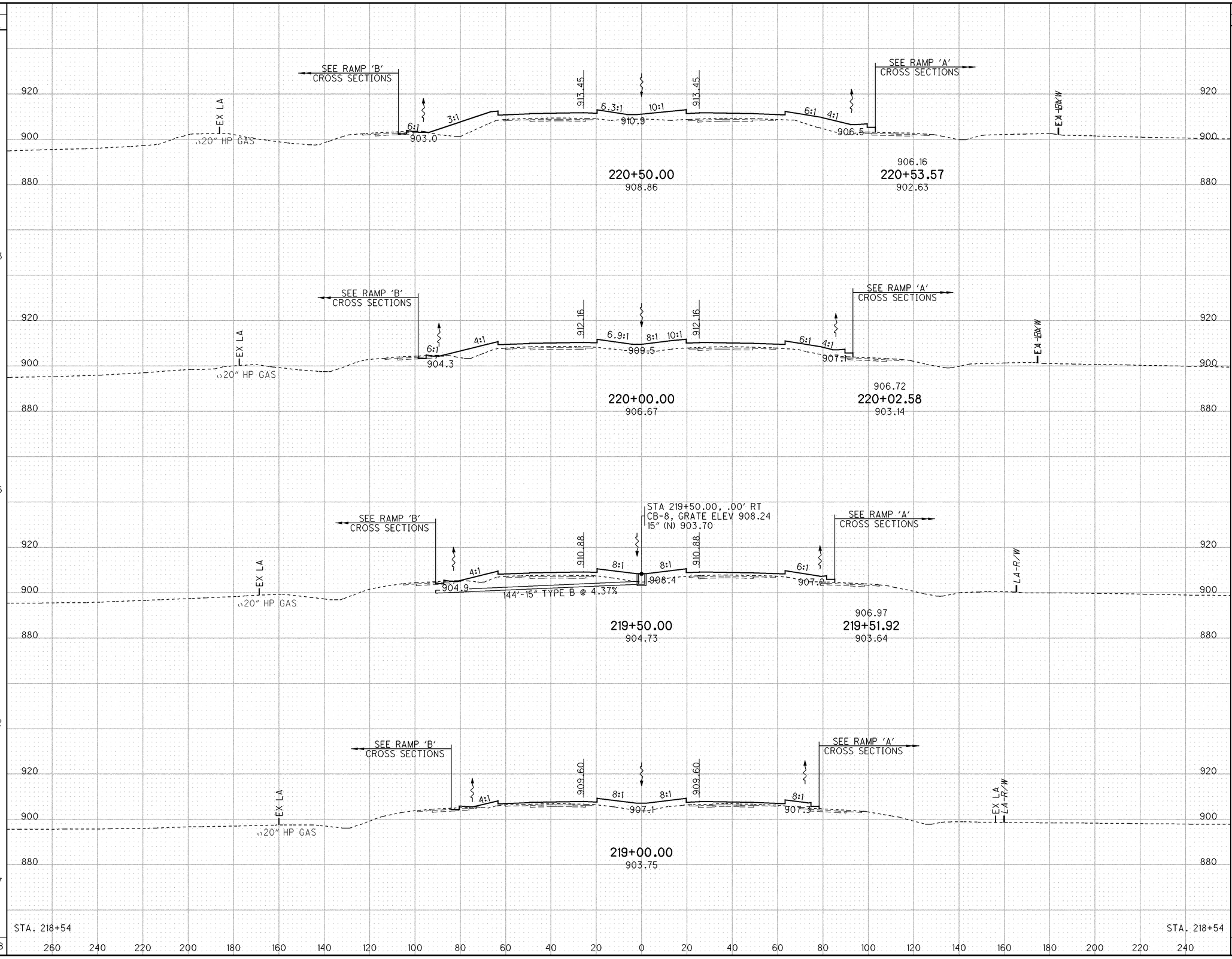

END AREA CUT	END AREA FILL	VOLUME CUT	VOLUME FILL
3	720		
		5	1171
2	545		
		3	906
1	433		
		1	722
0	347		
		1	574
1	327		
		10	3373

CALCULATED BDC
CHECKED TAB

CROSS SECTIONS - I-75
STA. 219+00.00 TO STA. 220+50.00

ALL-75-0.21

282
907

I:\Pd\89029\roadway\sheets\89029XS002.dgn 26-JUN-2013 6:23AM bclark

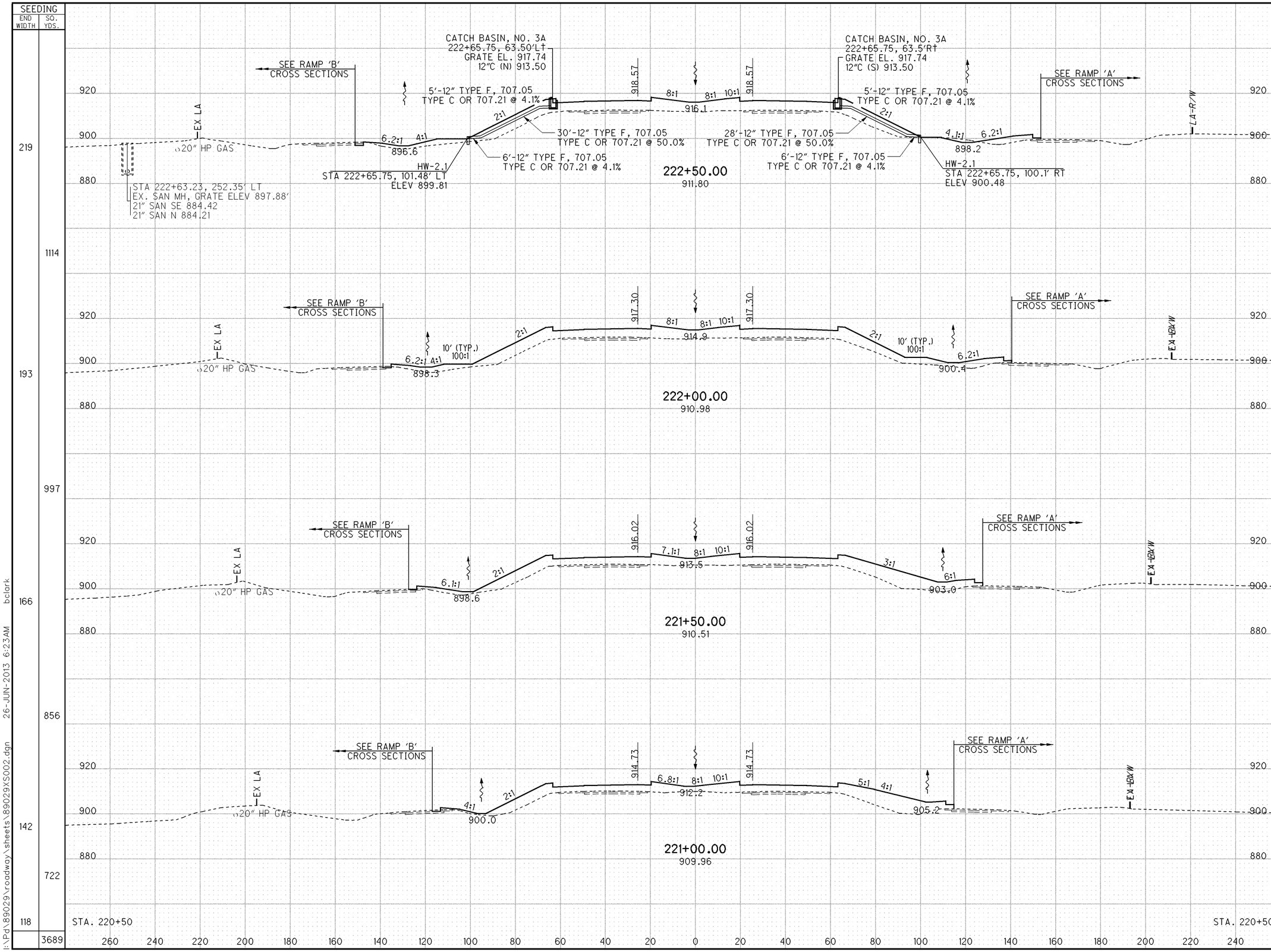

END AREA CUT	END AREA FILL	VOLUME CUT	VOLUME FILL
0	1108		
		0	2049
0	1105		
		0	2000
0	1055		
		0	1819
0	910		
		3	1509
3	720		
		3	7377

CALCULATED BDC
CHECKED TAB

CROSS SECTIONS - I-75
STA. 221+00.00 TO STA. 222+50.00

ALL-75-0.21

I:\Pd\89029\roadway\sheets\89029XS002.dgn 26-JUN-2013 6:23AM bclark

SEEDING END WIDTH	SEEDING SQ. YDS.		END AREA CUT	END AREA FILL	VOLUME CUT	VOLUME FILL
287		+87.33, AHD	89	1345		
	1694	CORRECTION FOR BRIDGE			939	2087
		CROSS SECTION INCLUDED IN BRIDGE CORRECTION				
251		+18.83, BK (END APPROACH SLAB)	13	1335		
	686				11	1227
243		+93.83 (BEGIN APPROACH SLAB)	11	1315		
	1125				9	1967
219		STA. 222+50	0	1108		
	1811				20	3194

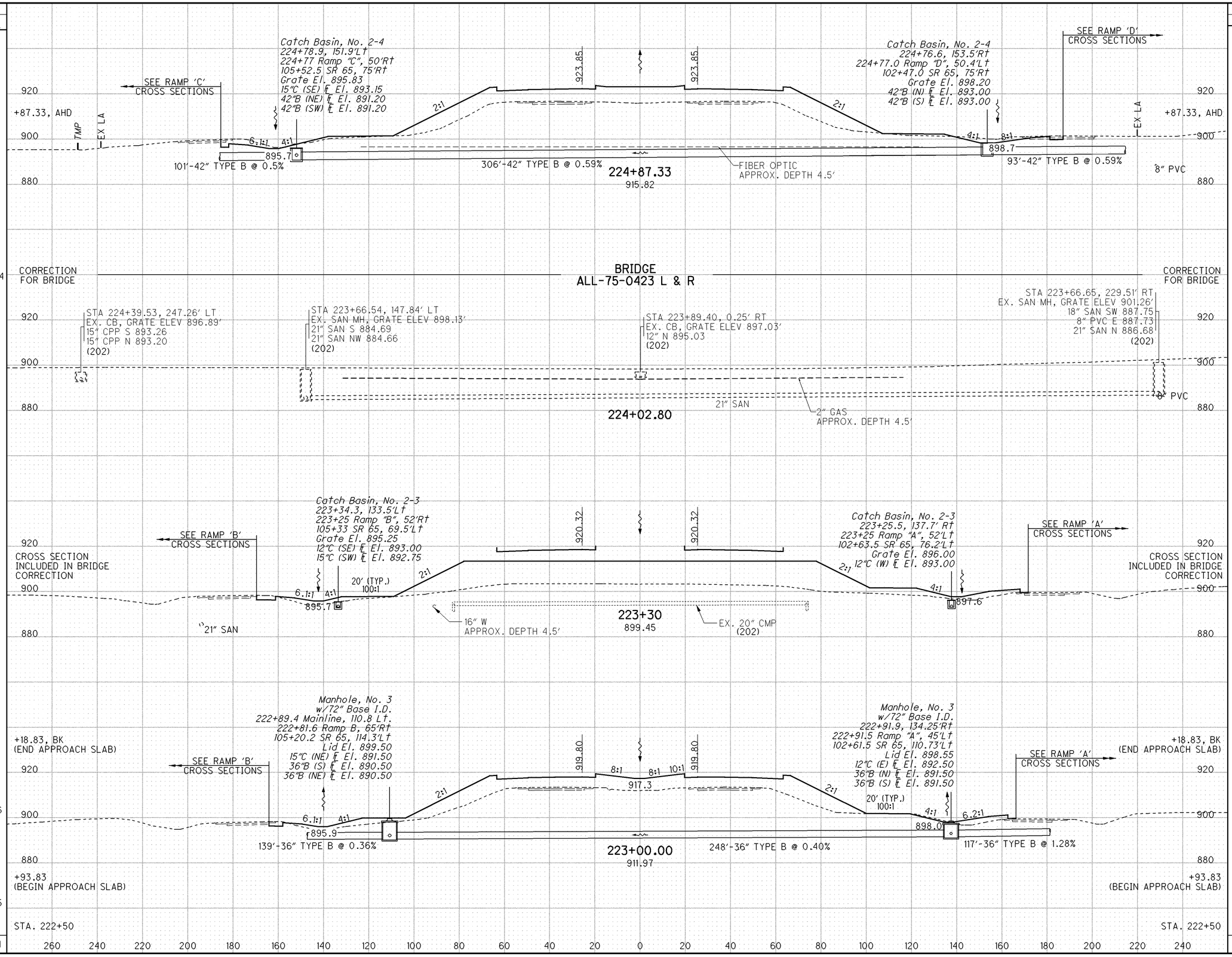

CALCULATED BDC
CHECKED TAB

CROSS SECTIONS - I-75
STA. 223+00.00 TO STA. 224+87.33

ALL-75-0.21

284
907

I:\Pd\89029\roadway\sheets\89029XS002.dgn 25-JUN-2013 5:05PM bclark

SEEDING END WIDTH	SEEDING SQ. YDS.
250	1439
268	
278	
284	
287	
	3380

END AREA CUT	END AREA FILL	VOLUME CUT	VOLUME FILL
123	1550	246	2816
143	1491	144	1358
168	1443	133	1341
119	1453	49	656
89	1345		
		572	6171

CALCULATED BDC
CHECKED TAB

CROSS SECTIONS - I-75
STA. 225+00.00 TO STA. 226+00.00

ALL-75-0.21

285
907

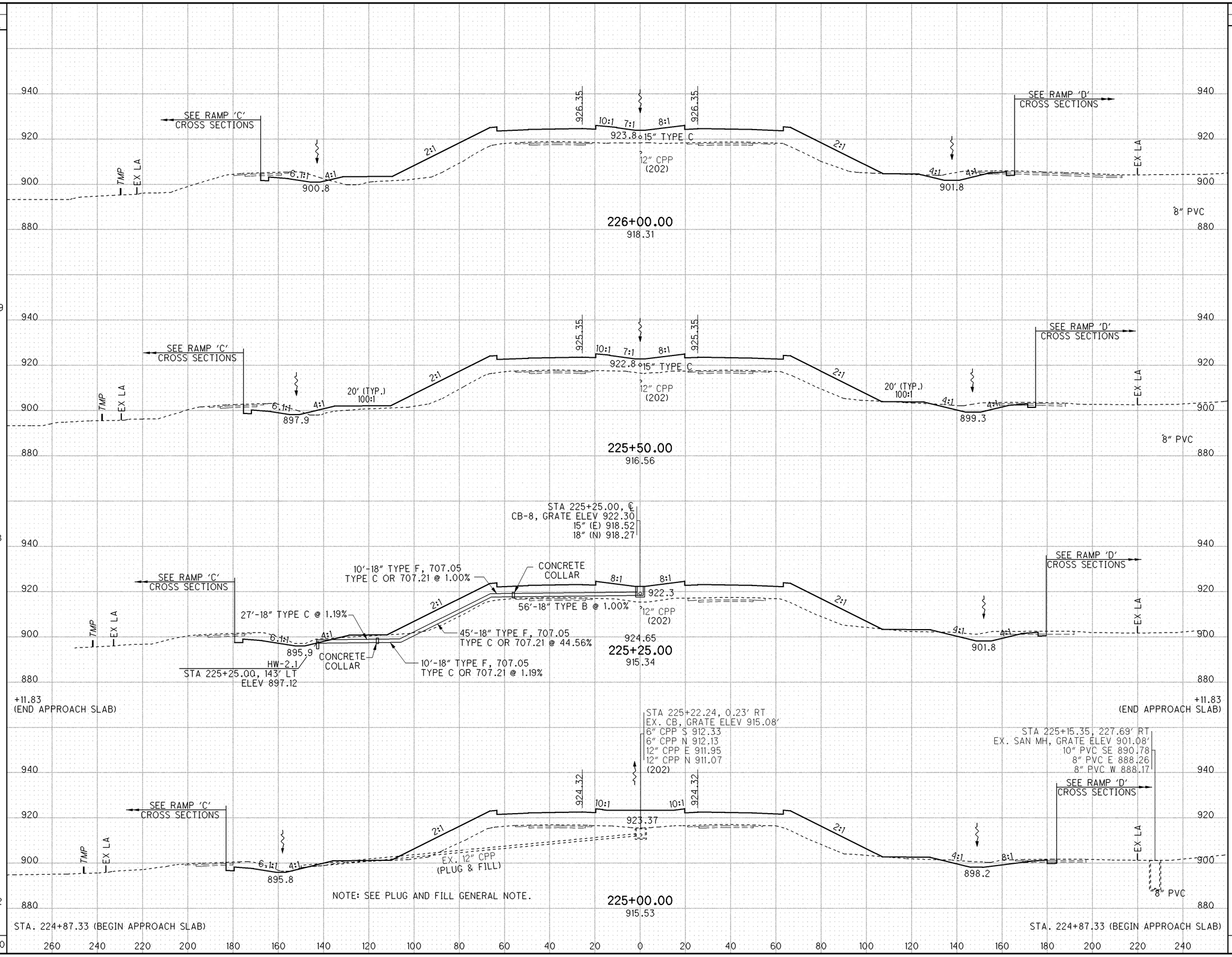

I:\Pdt\89029\roadway\sheets\89029XS002.dgn 25-JUN-2013 5:04PM bclark

SEEDING END WIDTH	SEEDING SQ. YDS.	END AREA CUT	END AREA FILL	VOLUME CUT	VOLUME FILL
181	1053	28	1251	66	2449
198		43	1394		
215	1242	61	1520	160	2844
232	1339	112	1552	218	2877
250	1147	123	1550	96	2698
	4781			540	10863

CALCULATED BDC
CHECKED TAB

CROSS SECTIONS - I-75
STA. 226+50.00 TO STA. 228+00.00

ALL-75-0.21

286
907

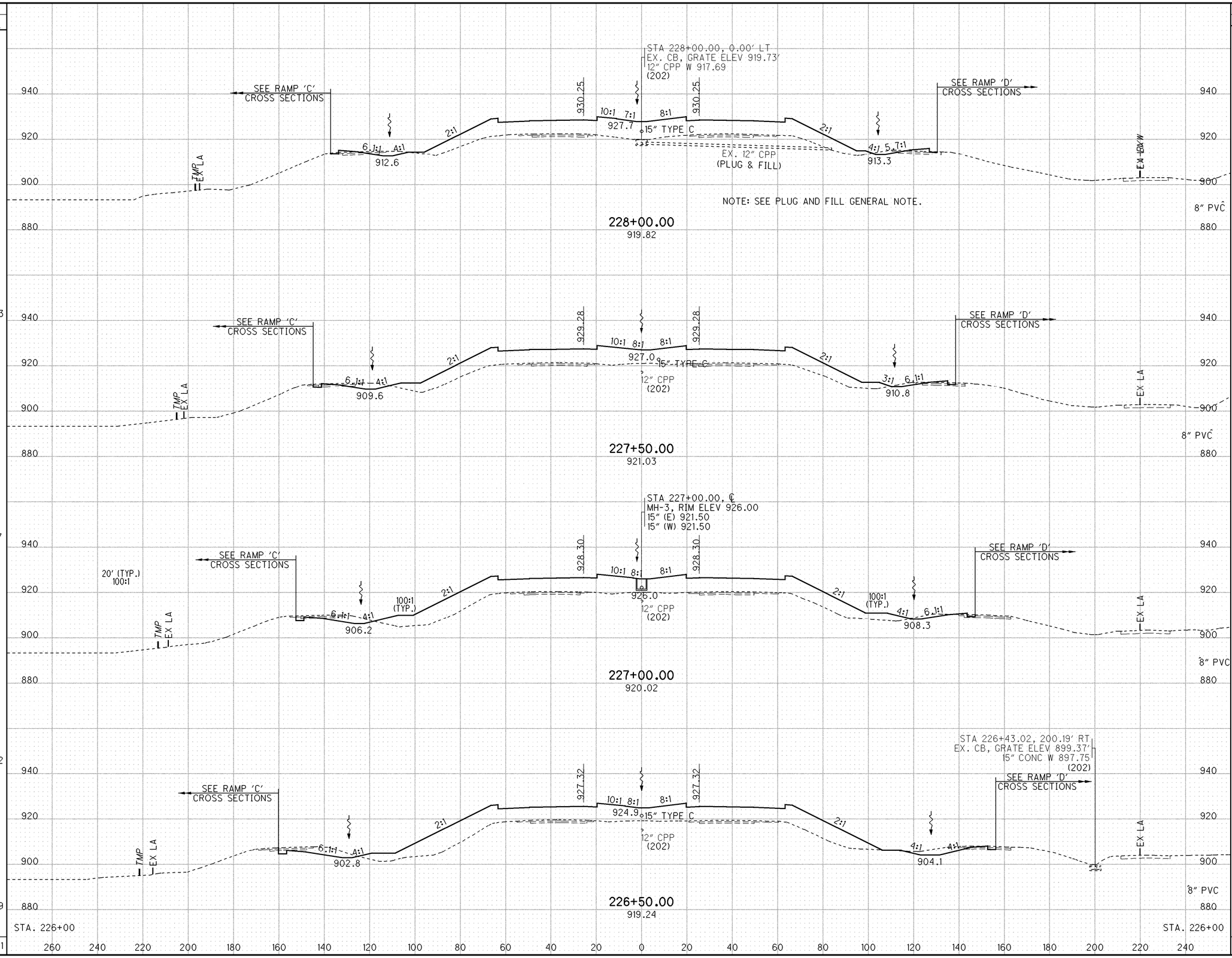

I:\Pd\89029\roadway\sheets\89029XS002.dgn 25-JUN-2013 5:04PM bclark

SEEDING END WIDTH	SEEDING SQ. YDS.
117	694
133	
149	783
165	872
181	961
	3310

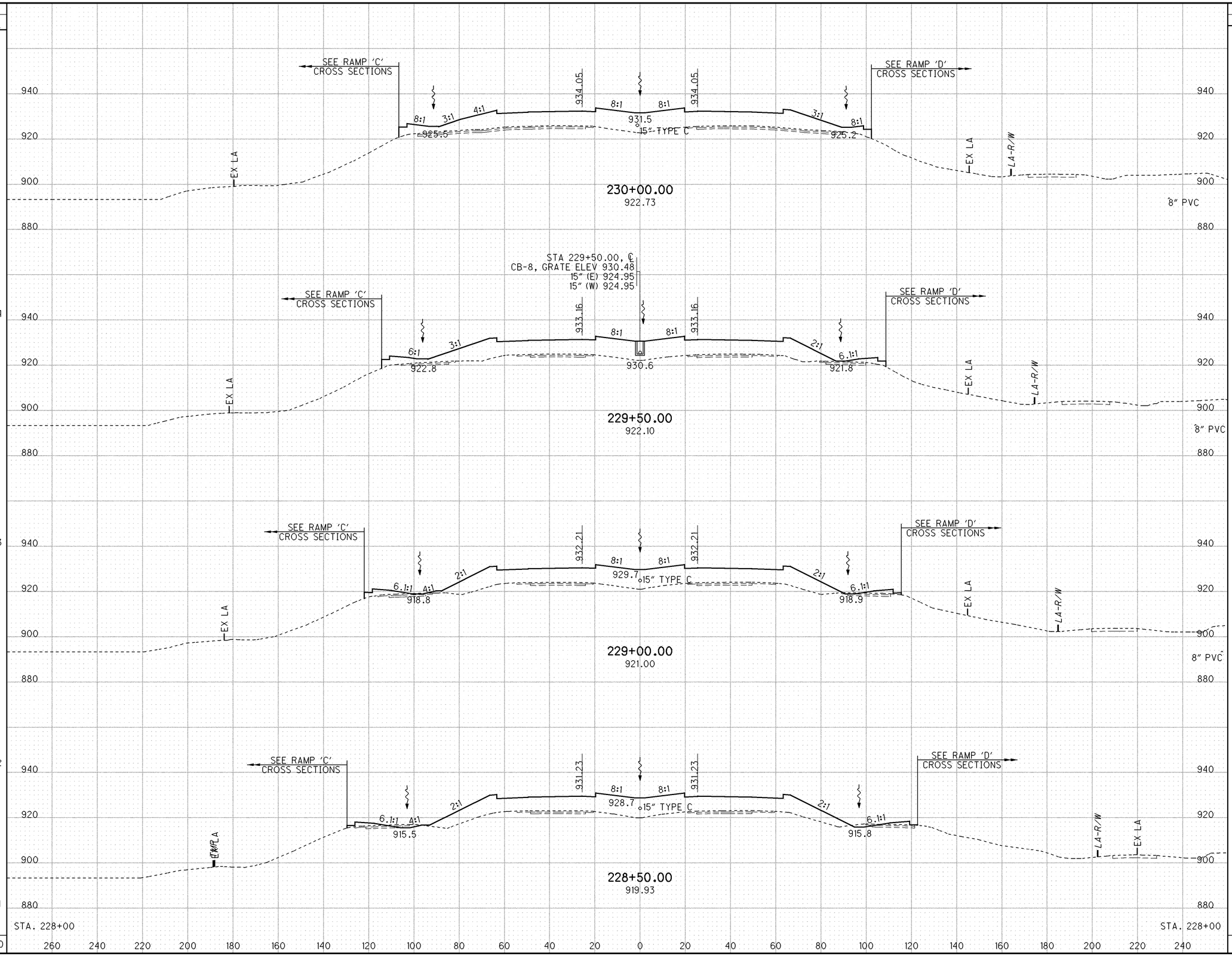

END AREA CUT	END AREA FILL	VOLUME CUT	VOLUME FILL
0	1463	0	2661
0	1411	0	2567
0	1361	13	2415
14	1355	27	2413
28	1251	40	10056

CALCULATED BDC
CHECKED TAB

CROSS SECTIONS - I-75
STA. 228+50.00 TO STA. 229+00.00

ALL-75-0.21

287
907

I:\Pdl\89029\roadway\sheets\89029XS002.dgn 25-JUN-2013 5:04PM bclark

SEEDING END WIDTH	SEEDING SQ. YDS.
65	392
76	458
89	533
103	611
117	
	1994

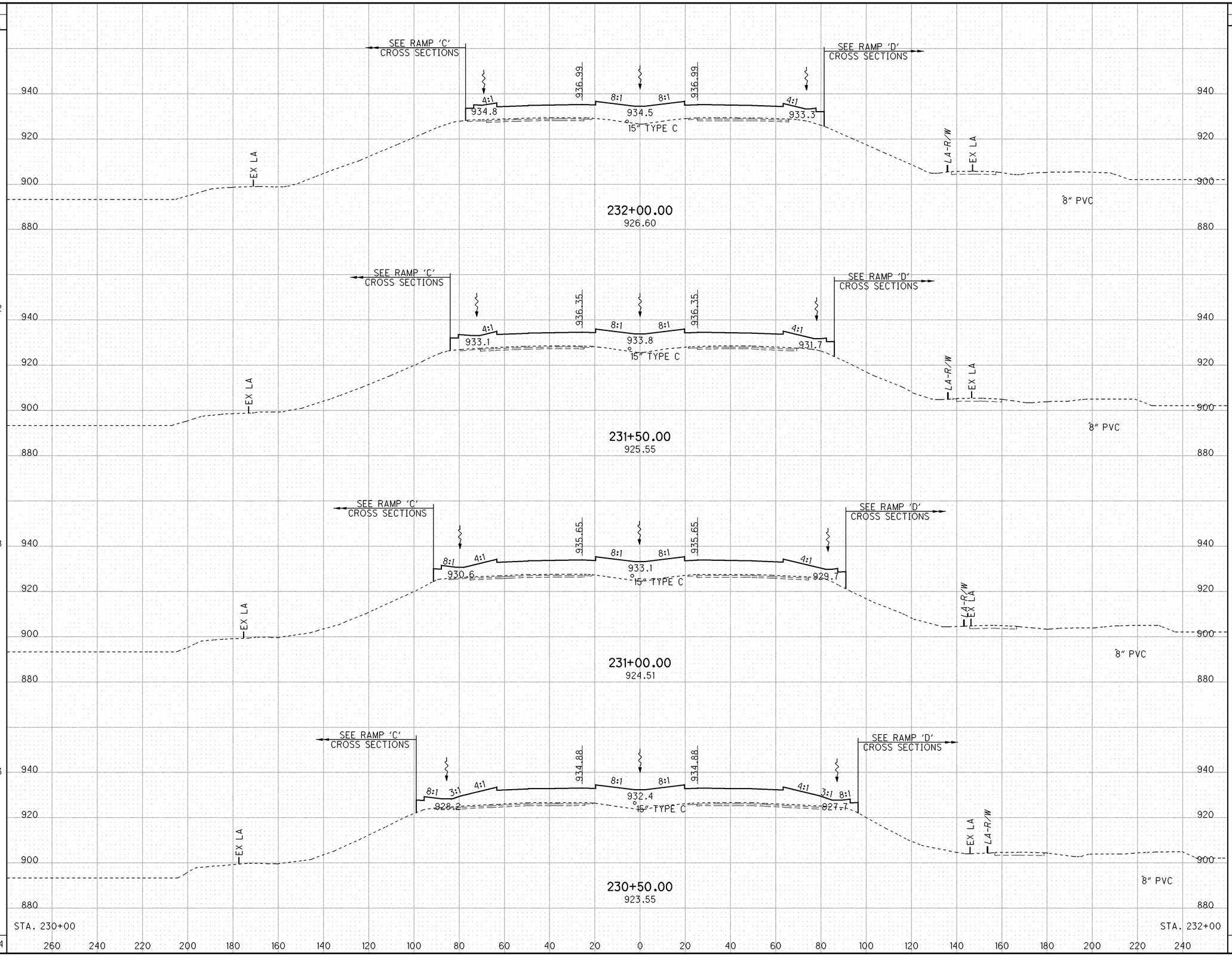

END AREA CUT	END AREA FILL	VOLUME CUT	VOLUME FILL
0	1107		
		0	2149
0	1214		
		0	2350
0	1324		
		0	2509
0	1386		
		0	2638
0	1463		
		0	9646

CALCULATED BDC
CHECKED TAB

CROSS SECTIONS - I-75
STA. 230+50.00 TO STA. 232+00.00

ALL-75-0.21

288
907

I:\Pd\89029\roadway\sheets\89029XS002.dgn 25-JUN-2013 5:04PM bclark

SEEDING END WIDTH	SEEDING SQ. YDS.
171	
	950
75	
171	
	667
172	
125	
	208
125	
	697
126	
	192
140	
65	
	267
65	
	3364

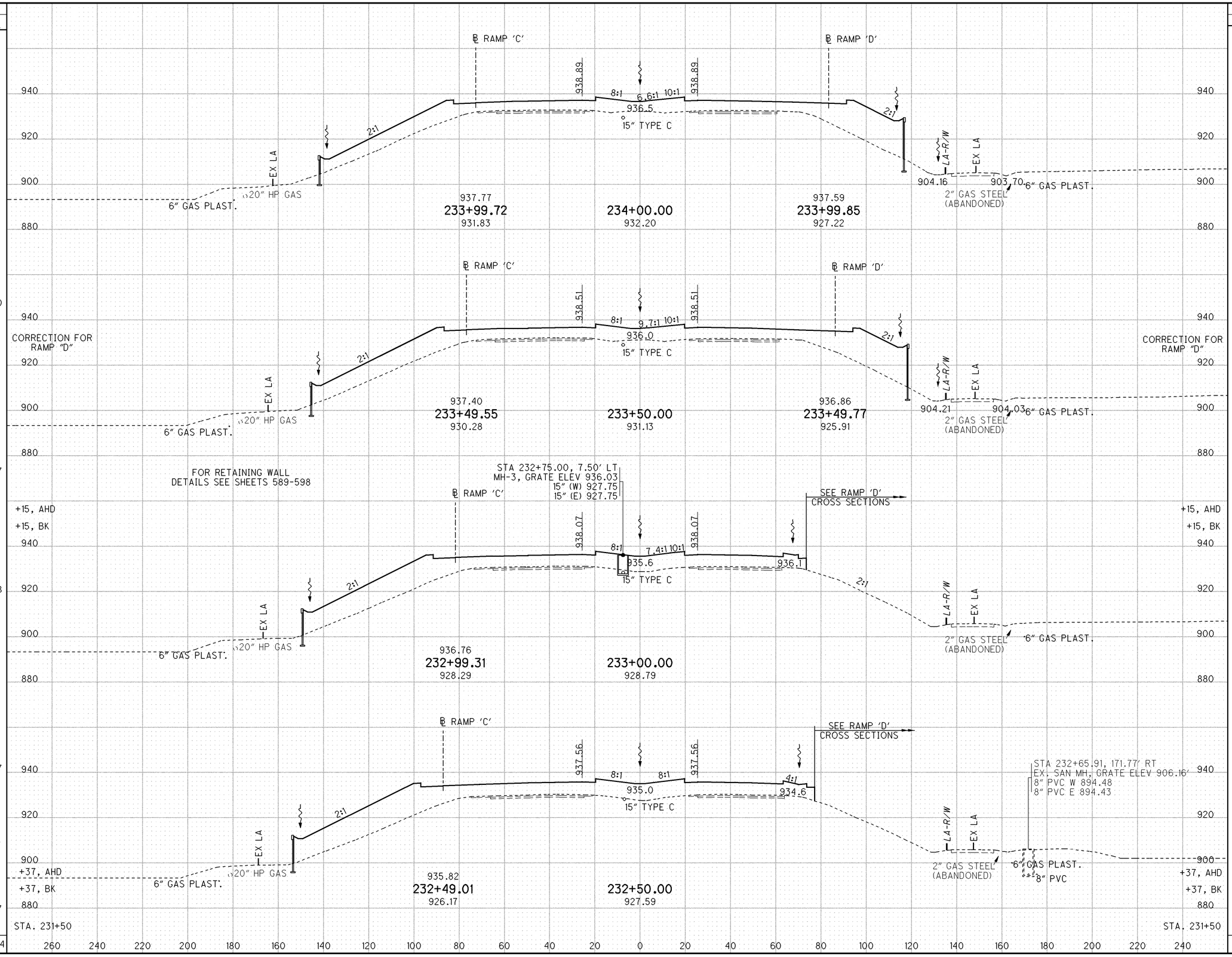

END AREA CUT	END AREA FILL	VOLUME CUT	VOLUME FILL
0	1767		
		0	3494
		0	320
0	2007		
		0	2763
		0	933
0	1680		
		0	3285
		0	2654
0	1868		
		0	1423
0	2005		
0	970		
		0	1423
0	1107		
		0	16103

CALCULATED BDC
CHECKED TAB

CROSS SECTIONS - I-75
STA. 232+50.00 TO STA. 234+00.00

ALL-75-0.21

289
907

I:\Pd\89029\roadway\sheets\89029XS002.dgn 25-JUN-2013 5:04PM bclark

SEEDING END WIDTH	SEEDING SQ. YDS.
183	50
186	
184	1028
180	1011
171	975
	3064

STA 235+52.00, 74.04' LT
CB-3A, GRATE ELEV 938.34
15" (S) 931.63

STA 235+52.00, 7.50' LT
MH-3, GRATE ELEV 937.83
15" (W) 930.08
15" (S) 930.47
15" (N) 930.63

STA 235+52.00, 85.96' RT
CB-3A, GRATE ELEV 938.16
15" (N) 931.63

65'-15" TYPE B @ 1.54%

92'-15" TYPE B @ 1.26%

938.74
235+52.39
934.18

235+52.42
933.18

938.61
235+52.39
929.39

℄ RAMP 'C'

℄ RAMP 'D'

15" TYPE C

938.73
235+49.97
934.16

235+50.00
933.19

938.60
235+49.97
929.39

FOR RETAINING WALL
DETAILS SEE SHEETS 589-598

6" GAS PLAST.

20" HP GAS

938.47
234+99.92
933.57

235+00.00
932.89

6" GAS PLAST.
IN 12" CASING

938.40
234+99.95
928.68

6" GAS PLAST.

938.16
234+49.84
932.84

234+50.00
932.55

938.11
234+49.91
927.80

2" GAS STEEL
(ABANDONED)

6" GAS PLAST.

STA. 233+50

STA. 233+50

260 240 220 200 180 160 140 120 100 80 60 40 20 0 20 40 60 80 100 120 140 160 180 200 220 240

END AREA CUT	END AREA FILL	VOLUME CUT	VOLUME FILL
0	1408	0	126
0	1405	0	2658
0	1466	0	3078
0	1858	0	3357
0	1767	0	7908

CALCULATED BDC
CHECKED TAB

CROSS SECTIONS - I-75
STA. 234+50.00 TO STA. 235+52.42

ALL-75-0.21

290
907

I:\Pdt\89029\roadway\sheets\89029XS002.dgn 25-JUN-2013 4:47PM bclark

SEEDING END WIDTH	SEEDING SQ. YDS.
194	
	207
194	
	531
188	
	1708
183	
	529
183	
	509
183	
	3484

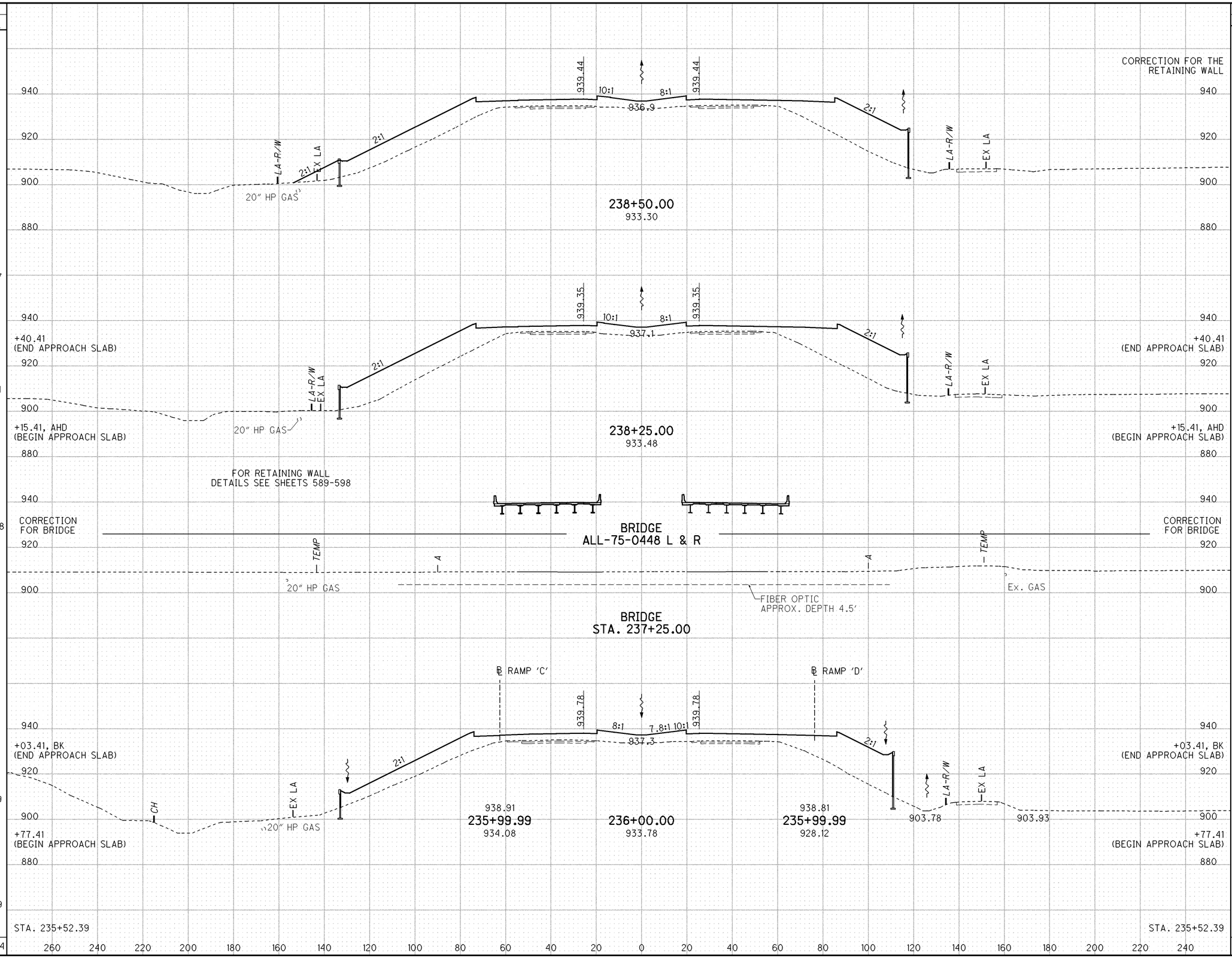

END AREA CUT	END AREA FILL	VOLUME CUT	VOLUME FILL
		0	31
0	1739		
		0	618
0	1743		
		0	1733
0	1977		
		17,686	1017
0	1550		
		0	1459
0	1480		
		0	1338
0	1408		
		17686	6165

CALCULATED BDC
CHECKED TAB

CROSS SECTIONS - I-75
STA. 236+00.00 TO STA. 238+50.00

ALL-75-0.21

291
907

I:\Pdt\89029\roadway\sheets\89029XS002.dgn 25-JUN-2013 4:47PM bclark

SEEDING END WIDTH	SEEDING SQ. YDS.
296	3061
255	2556
205	713
198	395
194	6725

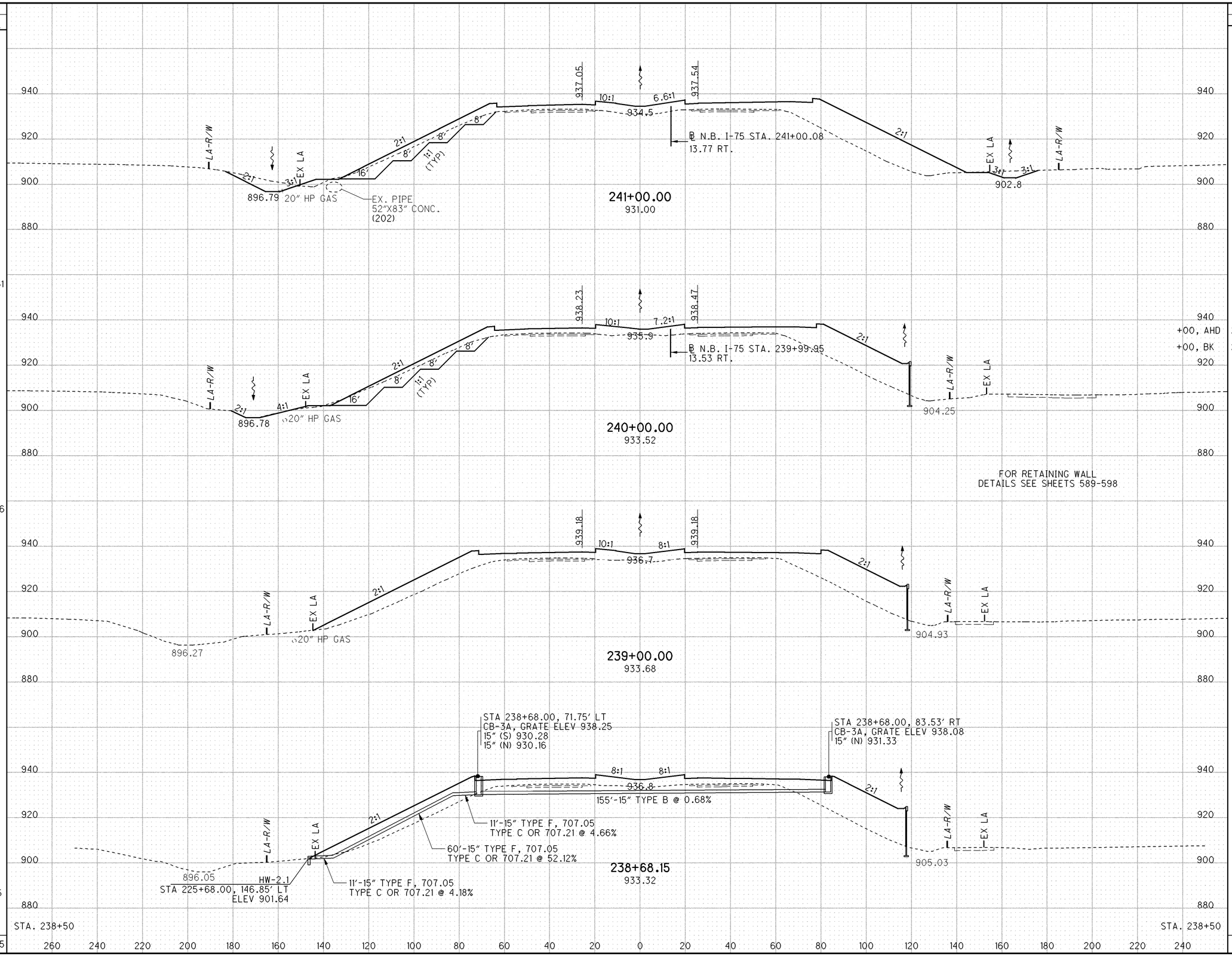

END AREA CUT	END AREA FILL	VOLUME CUT	VOLUME FILL
357	1575		
		1132	5763
+00, AHD 254	1537		
+00, BK 254	1471		
		470	5557
0	1530		
		0	1896
0	1685		
		0	1151
0	1739		
		1602	14367

CALCULATED BDC
CHECKED TAB

CROSS SECTIONS - I-75
STA. 238+68.15 TO STA. 241+00.00

ALL-75-0.21

292
907

I:\Pdl\89029\roadway\sheets\89029XS002.dgn 25-JUN-2013 4:47PM bclark

SEEDING END WIDTH	SEEDING SQ. YDS.	STA.	END AREA CUT	END AREA FILL	VOLUME CUT	VOLUME FILL
283	1575	244+50.00	392	1656	554	2938
284		244+00.00	206	1517	965	5604
279	3128	243+00.00	315	1509	1243	5674
298	3206	242+00.00	356	1555	1320	5796
296	3300	STA. 241+00	357	1575	4082	20012
	11209					

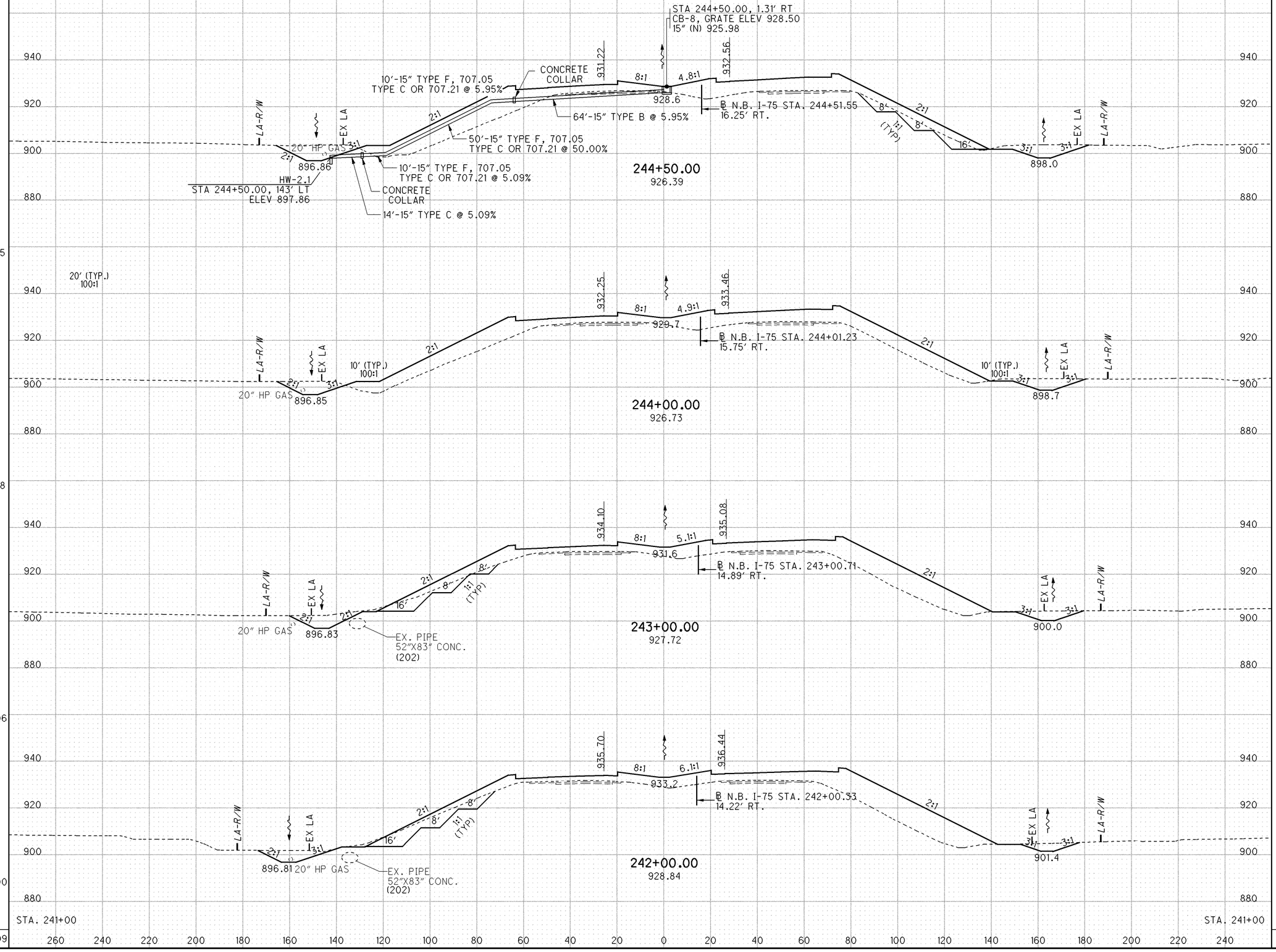

CALCULATED BDC
CHECKED TAB

CROSS SECTIONS - I-75
STA. 242+00.00 TO STA. 244+50.00

ALL-75-0.21

293
907

I:\Pdt\89029\roadway\sheets\89029XS002.dgn 25-JUN-2013 4:55PM bclark

SEEDING END WIDTH	SEEDING SQ. YDS.	STA.	CORRECTION FOR CULVERT
316	3389	247+00.00	
294	1606	246+00.00	
284	1547	245+50.00	-51
273	1544	245+00.00	
283	8035	STA. 244+50	

END AREA CUT	END AREA FILL	VOLUME CUT	VOLUME FILL
817	1438	2506	5219
536	1380	886	2516
421	1337	114	0
475	1690	830	2803
392	1656	803	3098
		5139	13636

CALCULATED BDC
CHECKED TAB

CROSS SECTIONS - I-75
STA. 245+00.00 TO STA. 247+00.00

ALL-75-0.21

294
907

I:\Pdl\89029\roadway\sheets\89029XS002.dgn 25-JUN-2013 4:55PM bclark

SEEDING END WIDTH	SEEDING SQ. YDS.	END AREA CUT	END AREA FILL	VOLUME CUT	VOLUME FILL
286	3144	77	1056	1656	4039
280	3283	817	1125	2489	4585
311	3578	527	1351	2087	5115
333	3606	600	1411	2624	5267
316	13611	817	1433	8856	19006

CALCULATED BDC
CHECKED TAB

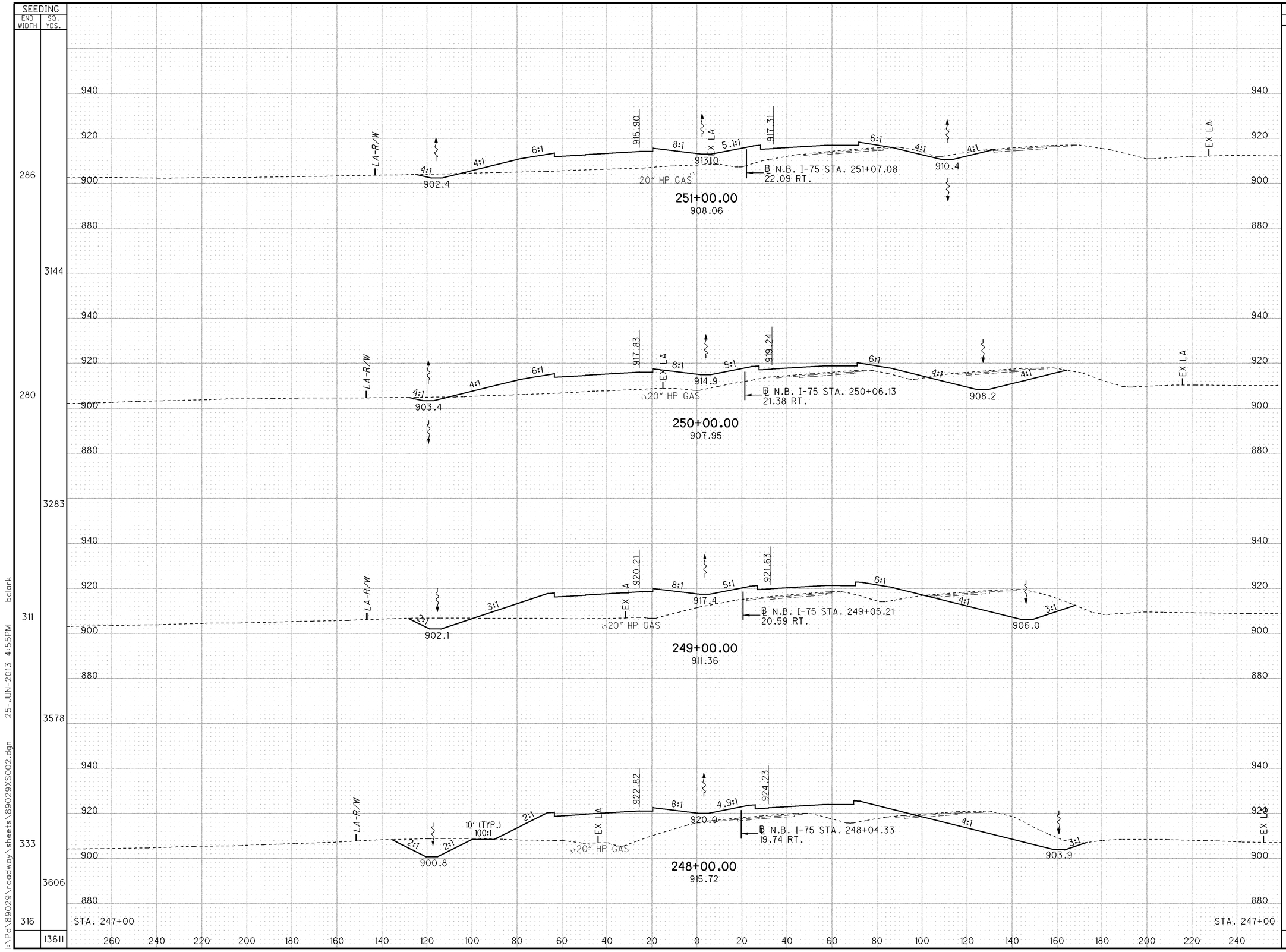

CROSS SECTIONS - I-75
STA. 248+00.00 TO STA. 251+00.00

ALL-75-0.21

295
907

I:\Pd\89029\roadway\sheets\89029XS002.dgn 25-JUN-2013 4:55PM bclark

SEEDING END WIDTH	SEEDING SQ. YDS.		END AREA CUT	END AREA FILL	VOLUME CUT	VOLUME FILL
297	-71	CORRECTION FOR CULVERT			3	-12
	1631		495	1076	784	2054
290	1617		352	1142	622	1966
292	3239		320	981	919	3752
291	3206		176	1045	469	3854
286	9622	STA. 251+00	77	1056	2794	16626

CALCULATED BDC
CHECKED TAB

CROSS SECTIONS - I-75
STA. 252+00.00 TO STA. 254+00.00

ALL-75-0.21

296
907

I:\Pdl\89029\roadway\sheets\89029XS002.dgn 25-JUN-2013 4:54PM bclark

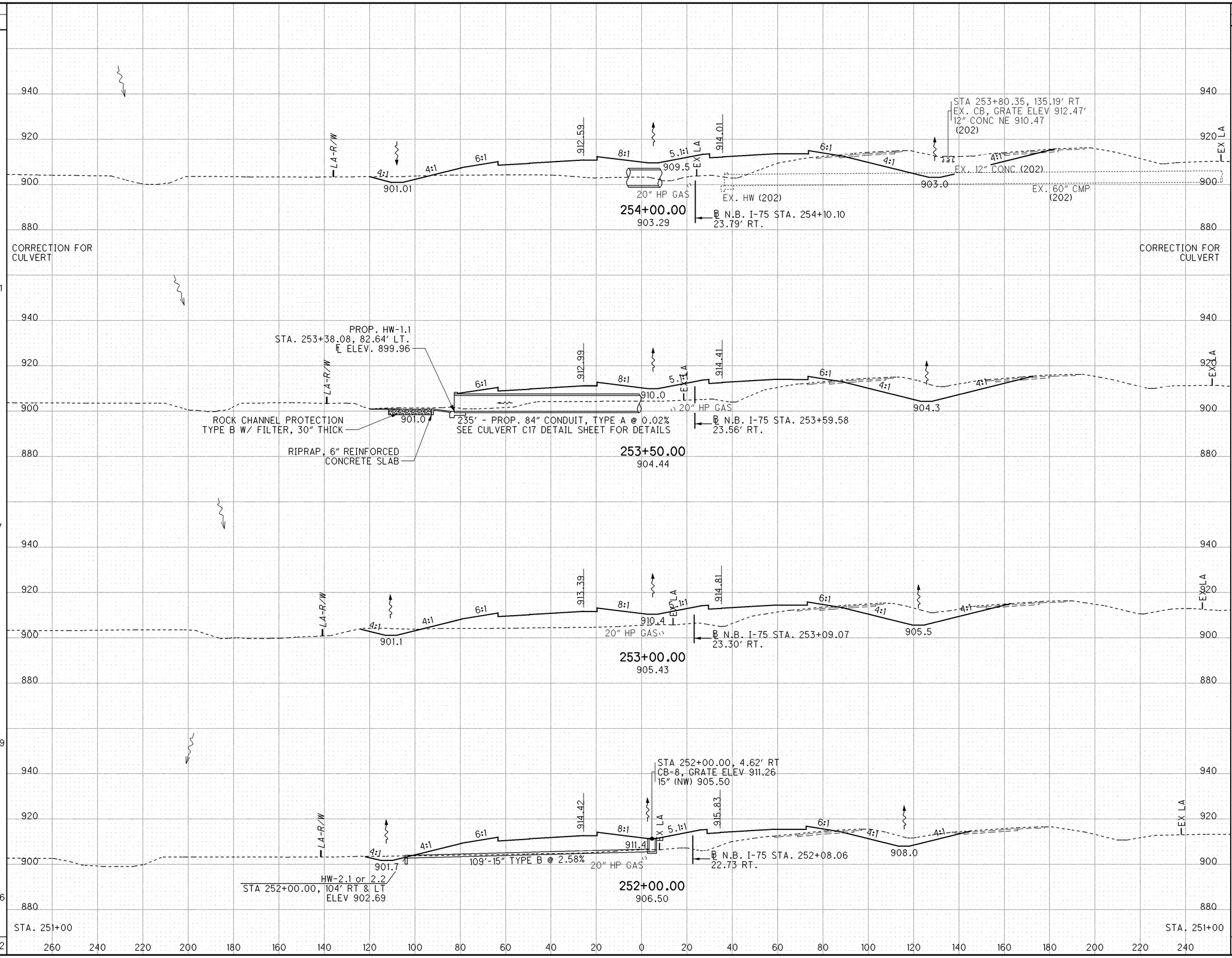

SEEDING END WIDTH	SEEDING SQ. YDS.	END AREA CUT	END AREA FILL	VOLUME CUT	VOLUME FILL
292		745	229		
	3294			2683	1243
301		704	442		
	3289			2619	2394
291		710	851		
	1650			1191	1654
-20		515	935	12	0
303					
	1667			991	1862
297		495	1076		
	9900			7484	7153

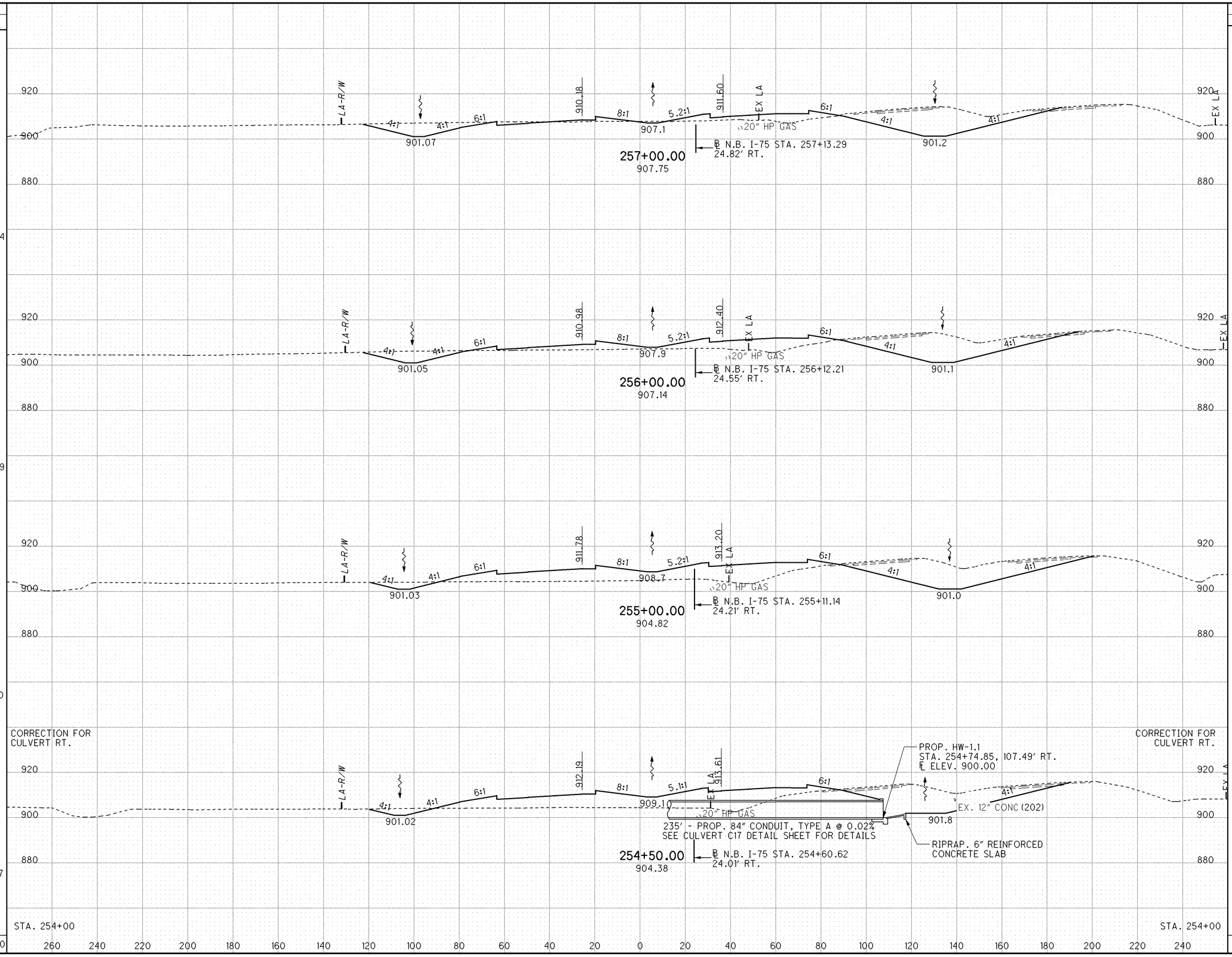

CALCULATED BDC
CHECKED TAB

CROSS SECTIONS - I-75
STA. 254+50.00 TO STA. 257+00.00

ALL-75-0.21

297
907

I:\Pdl\89029\roadway\sheets\89029XS002.dgn 25-JUN-2013 4:54PM bclark

SEEDING END WIDTH	SEEDING SQ. YDS.	END AREA CUT	END AREA FILL	VOLUME CUT	VOLUME FILL
263	2978	595	141	2082	733
273	3061	529	255	200	1074
278	3122	551	325	2167	1013
284	3200	619	222	2526	835
292	12361	745	229	8775	3655

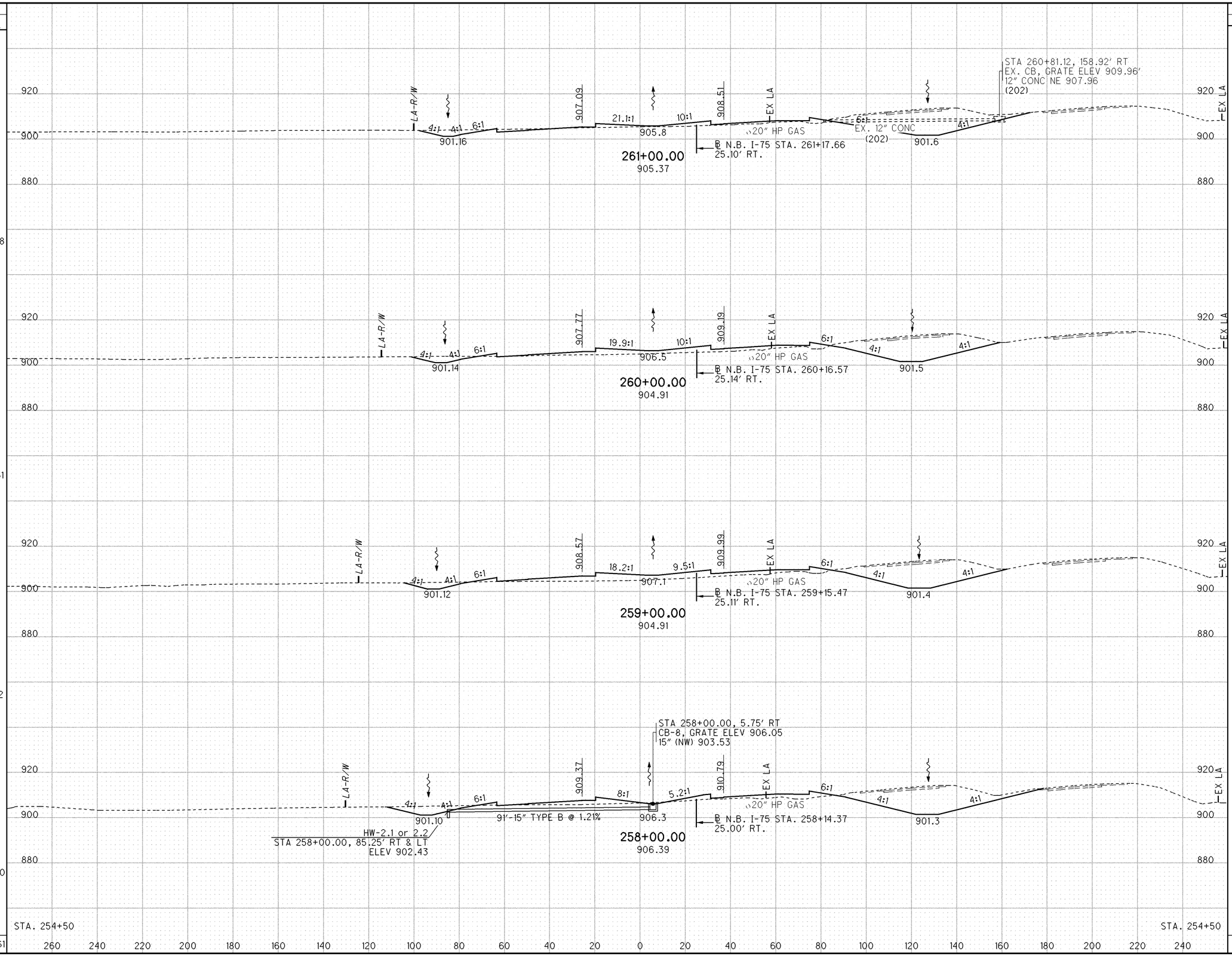

CALCULATED BDC
CHECKED TAB

CROSS SECTIONS - I-75
STA. 258+00.00 TO STA. 261+00.00

ALL-75-0.21

298
907

I:\Pdl\89029\roadway\sheets\89029XS002.dgn 25-JUN-2013 4:54PM bclark

SEEDING END WIDTH	SEEDING SQ. YDS.	END AREA CUT	END AREA FILL	VOLUME CUT	VOLUME FILL
278	736	522	152	480	136
252	2850	515	142	2052	448
261	2917	593	100	2170	387
264	2928	579	109	2174	463
263	9431	595	141	6876	1434

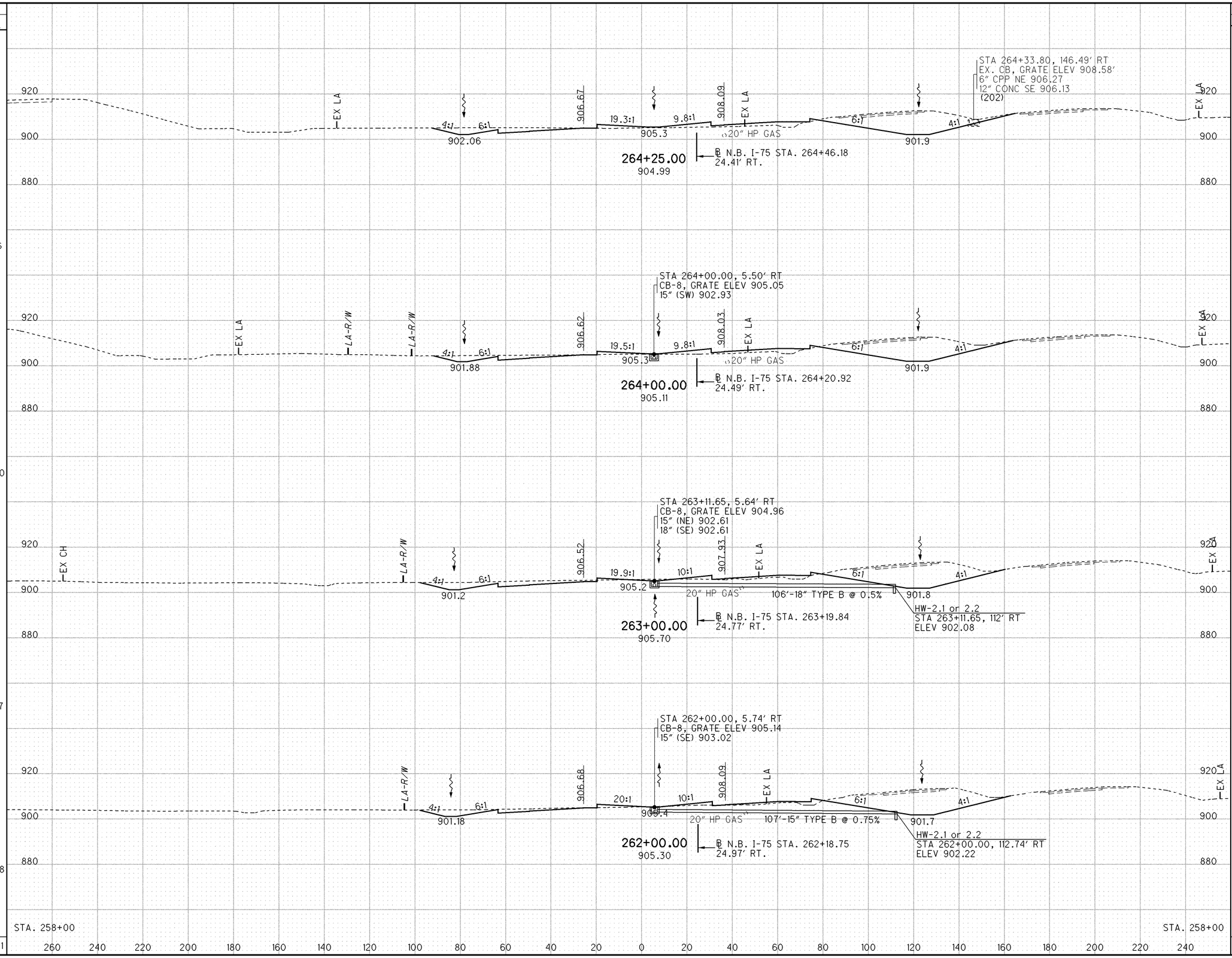

CALCULATED BDC
CHECKED TAB

CROSS SECTIONS - I-75
STA. 262+00.00 TO STA. 264+25.00

ALL-75-0.21

299
907

I:\Pd\89029\roadway\sheets\89029XS002.dgn 25-JUN-2013 4:38PM bclark

SEEDING END WIDTH	SEEDING SQ. YDS.		END AREA CUT	END AREA FILL	VOLUME CUT	VOLUME FILL
280		+00, AHD	620	50		
148		+00, BK	620	102		
	1644				6620	376
148		+00, AHD	2955	101		
	411	CORRECTION FOR BRIDGE			2756	62
263		+75, BK	2998	32		
	2200				5001	290
265 354		+00, AHD +00, BK	603	177		
	2633				1563	457
278		STA. 264+25	522	152		
·	6888				15940	1185

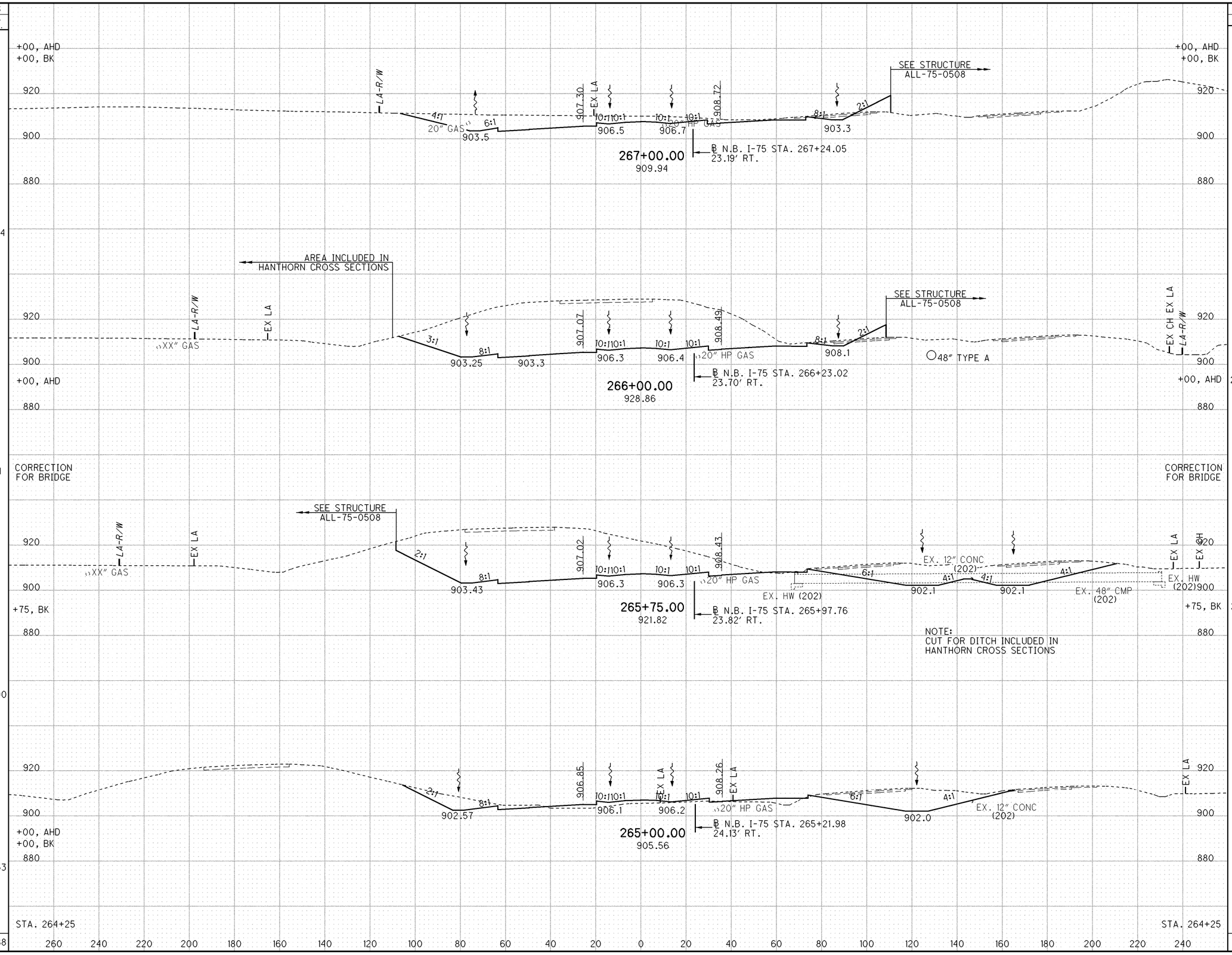

CALCULATED BDC
CHECKED TAB

CROSS SECTIONS - I-75
STA. 265+00.00 TO STA. 265+75.00

ALL-75-0.21

300
907

I:\Pdl\89029\roadway\sheets\89029XS002.dgn 25-JUN-2013 4:38PM bclark

SEEDING		END AREA		VOLUME	
END WIDTH	SQ. YDS.	CUT	FILL	CUT	FILL
253	2861	1471	52	5783	157
262		1652	33		
	2933			5694	94
				48	-40
266	1494	1423	18	2012	56
272		750	42		
	1533			1269	85
280		620	50		
	8821			14806	352

CALCULATED BDC
CHECKED TAB

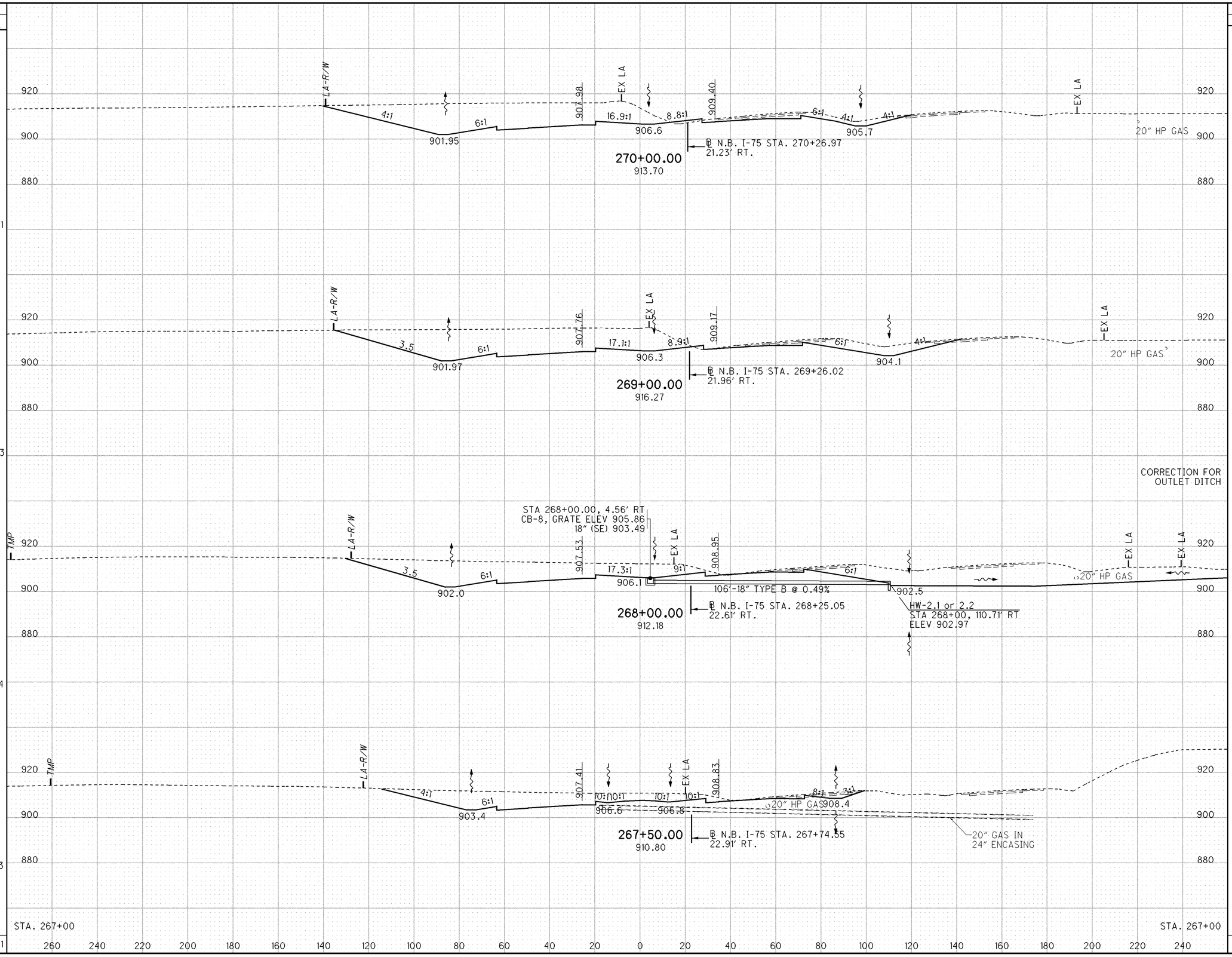

CORRECTION FOR OUTLET DITCH

CROSS SECTIONS - I-75
STA. 267+50.00 TO STA. 270+00.00

ALL-75-0.21

301
907

I:\Pd\89029\roadway\sheets\89029XS002.dgn 25-JUN-2013 4:38PM bclark

SEEDING	
END WIDTH	SQ. YDS.
173	2028
192	2294
221	2556
239	2733
253	9611

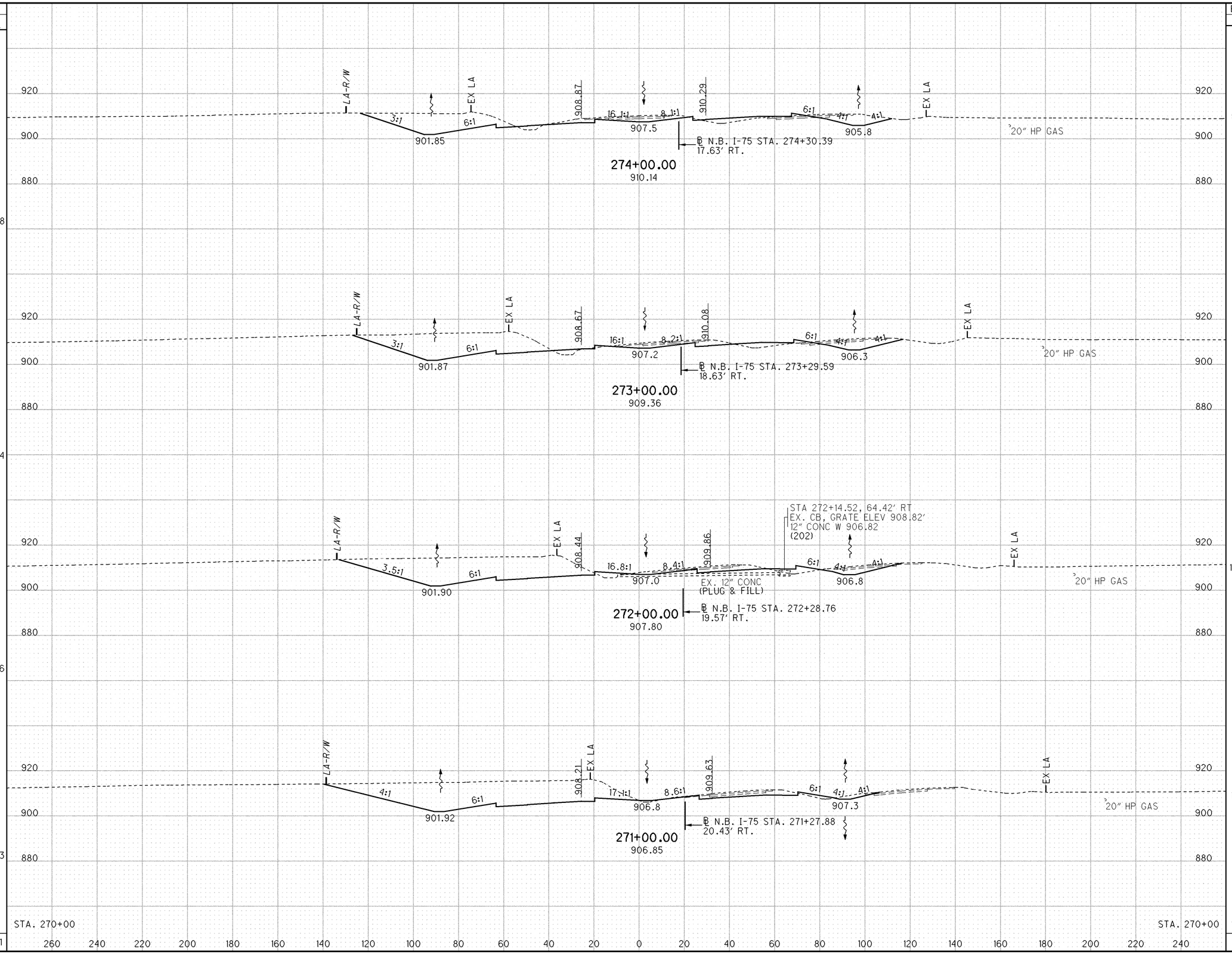

END AREA	
CUT	FILL
528	81
793	68
1009	71
1214	57
1471	52

VOLUME	
CUT	FILL
2446	276
3337	257
4117	237
4972	202
14872	972

CALCULATED BDC
CHECKED TAB

CROSS SECTIONS - I-75
STA. 271+00.00 TO STA. 274+00.00

ALL-75-0.21

302
907

I:\Pdt\89029\roadway\sheets\89029XS002.dgn 25-JUN-2013 4:37PM bclark

SEEDING END WIDTH	SEEDING SQ. YDS.		END AREA CUT	END AREA FILL	VOLUME CUT	VOLUME FILL
155			119	181		
	-62	CORRECTION FOR CULVERT			10	-17
	872				239	304
159			139	147		
	1756				626	535
157			199	142		
	1739				948	441
156			313	96		
	1828				1557	328
173		STA. 274+00	528	81		
	6133				3380	1591

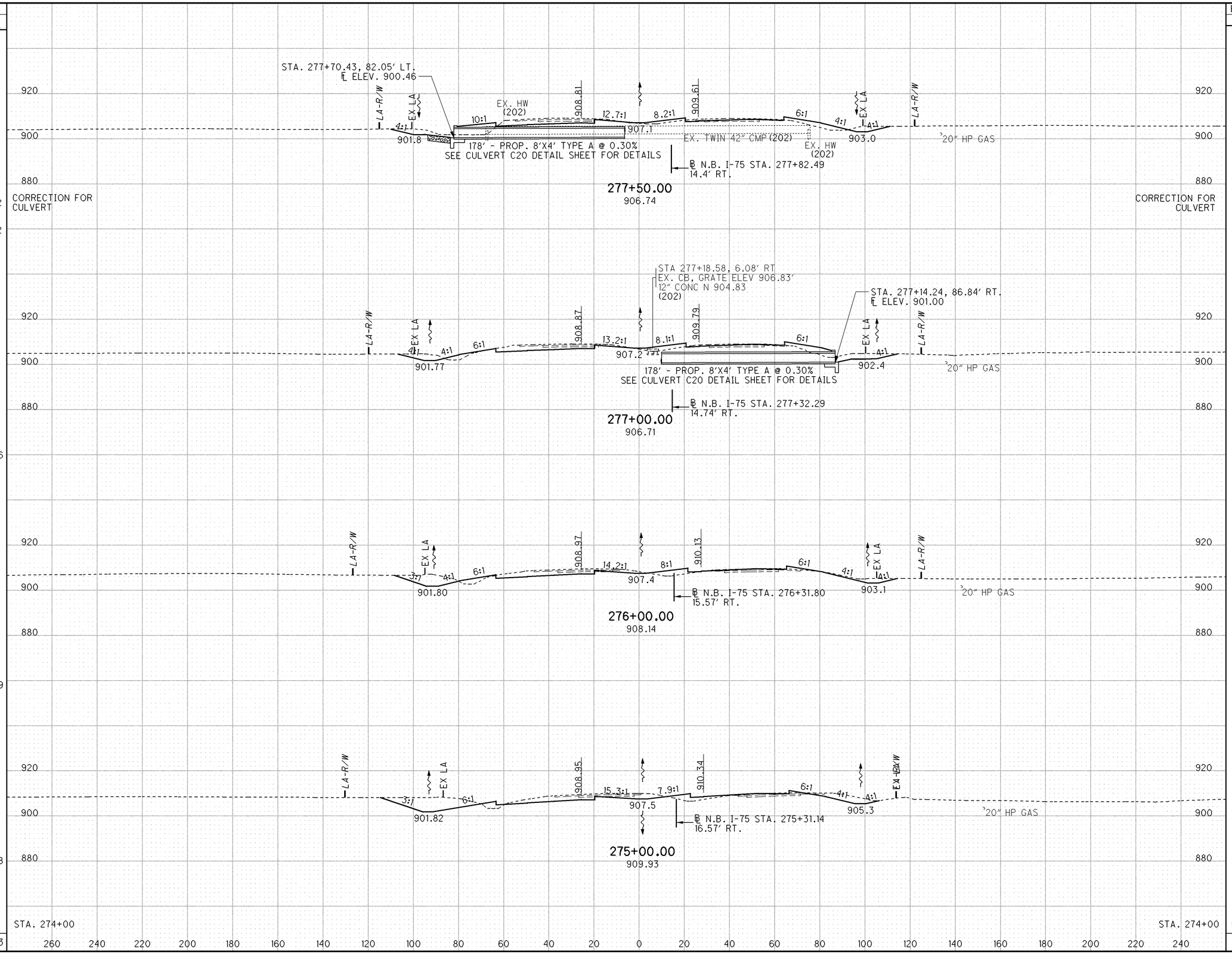

CALCULATED BDC
CHECKED TAB

CROSS SECTIONS - I-75
STA. 275+00.00 TO STA. 277+50.00

ALL-75-0.21

303
907

I:\Pdt\89029\roadway\sheets\89029XS002.dgn 25-JUN-2013 4:25PM bclark

SEEDING END WIDTH	SEEDING SQ. YDS.	END AREA CUT	END AREA FILL	VOLUME CUT	VOLUME FILL
133		83	24		
	1489			278	119
135		67	40		
	1517			291	182
138		90	58		
	1583			394	256
147		123	80		
	839			224	242
155		119	181		
	5428			1197	799

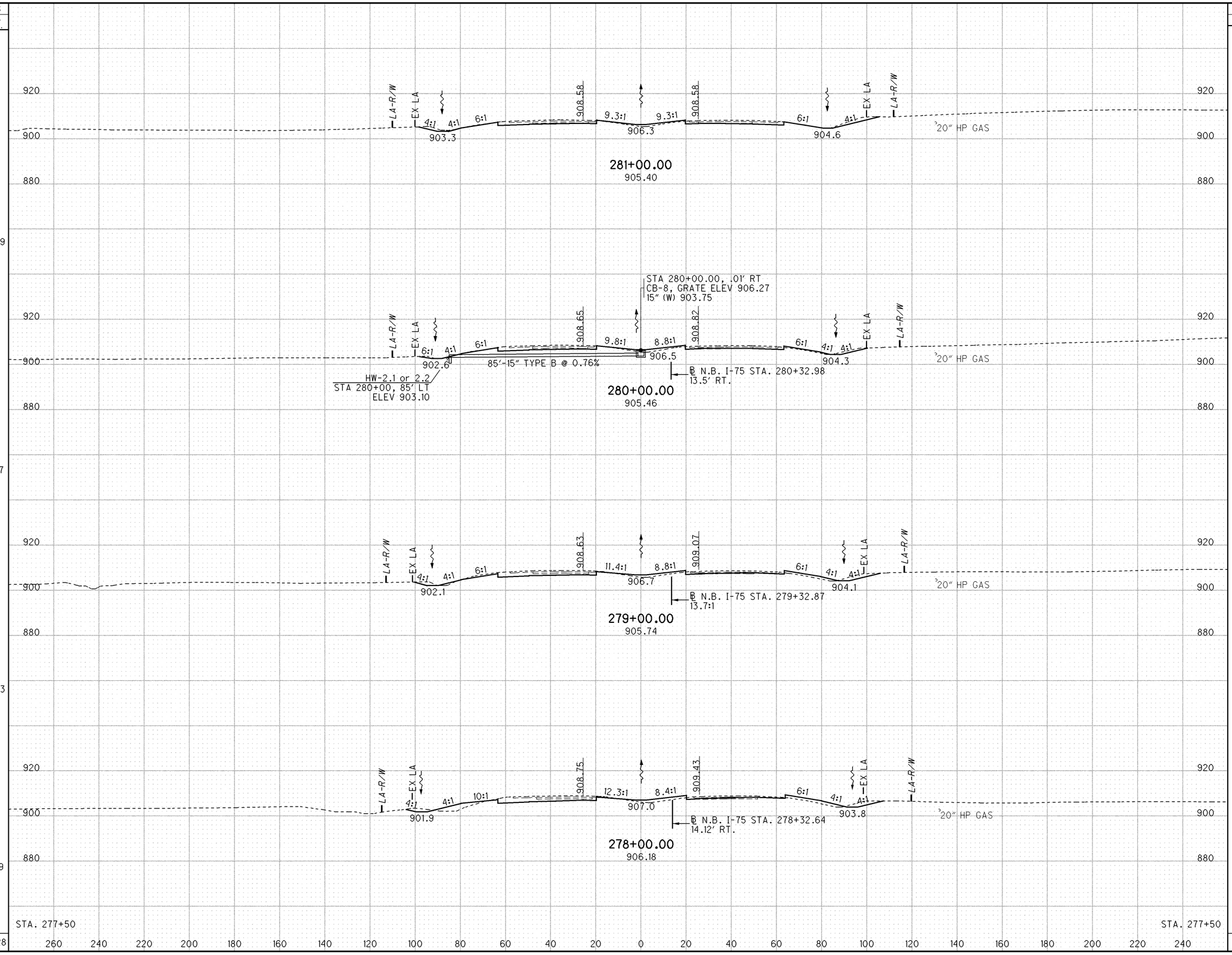

CALCULATED BDC
CHECKED TAB

CROSS SECTIONS - I-75
STA. 278+00.00 TO STA. 281+00.00

ALL-75-0.21

304
907

I:\Pd\89029\roadway\sheets\89029XS002.dgn 25-JUN-2013 4:25PM bclark

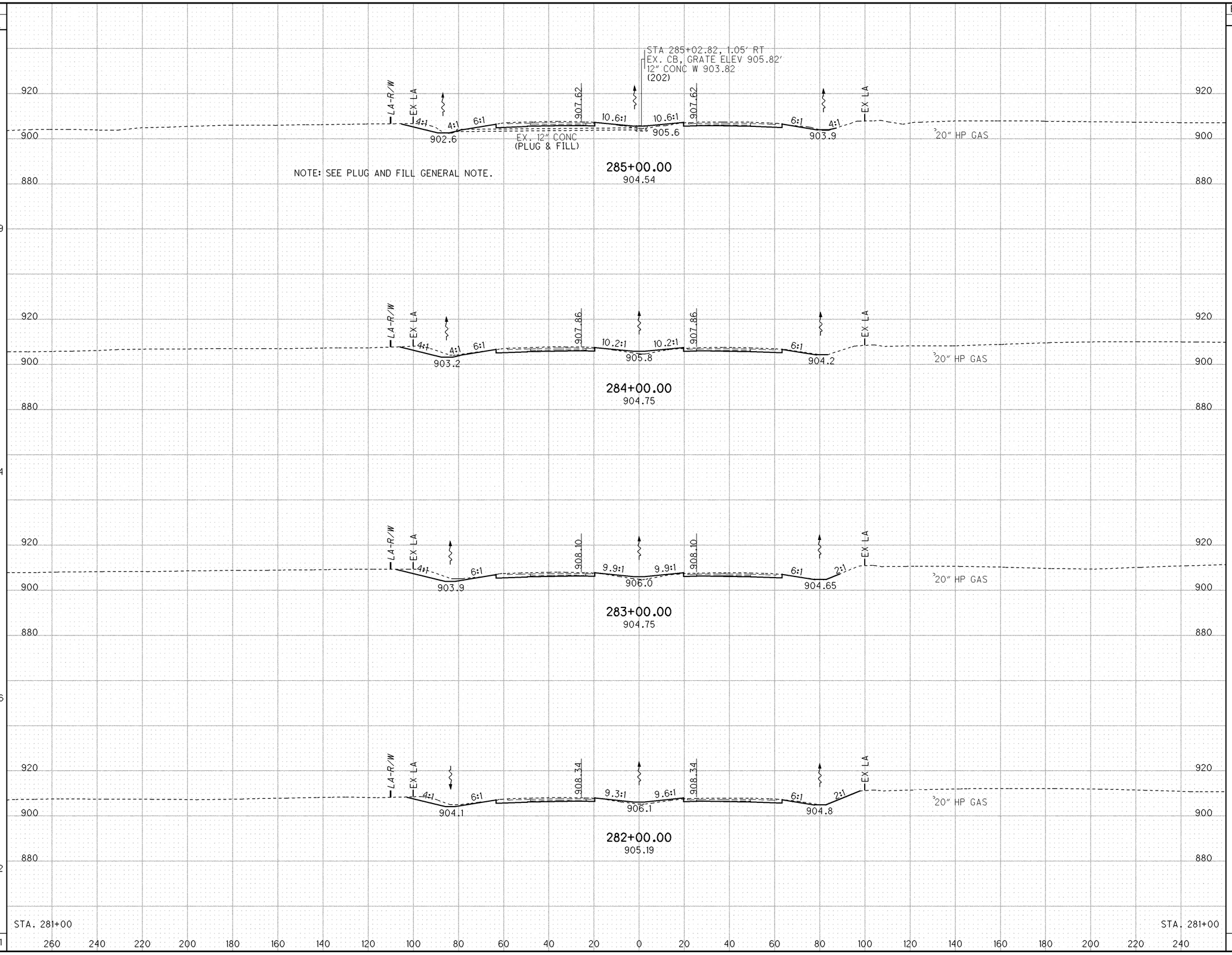

END AREA		VOLUME	
CUT	FILL	CUT	FILL
102	29		
		391	94
109	22		
		424	93
120	28		
		400	98
96	25		
		331	91
83	24		
		1546	376

CALCULATED BDC
CHECKED TAB

CROSS SECTIONS - I-75
STA. 282+00.00 TO STA. 285+00.00

ALL-75-0.21

305
907

I:\Pdt\89029\roadway\sheets\89029XS002.dgn 25-JUN-2013 4:24PM bclark

SEEDING END WIDTH	SEEDING SQ. YDS.	END AREA CUT	END AREA FILL	VOLUME CUT	VOLUME FILL
125	697	130	16	239	37
126	703	128	24	237	44
127	1417	128	24	450	94
128	1428	115	27	402	104
129	4245	102	29	1328	279

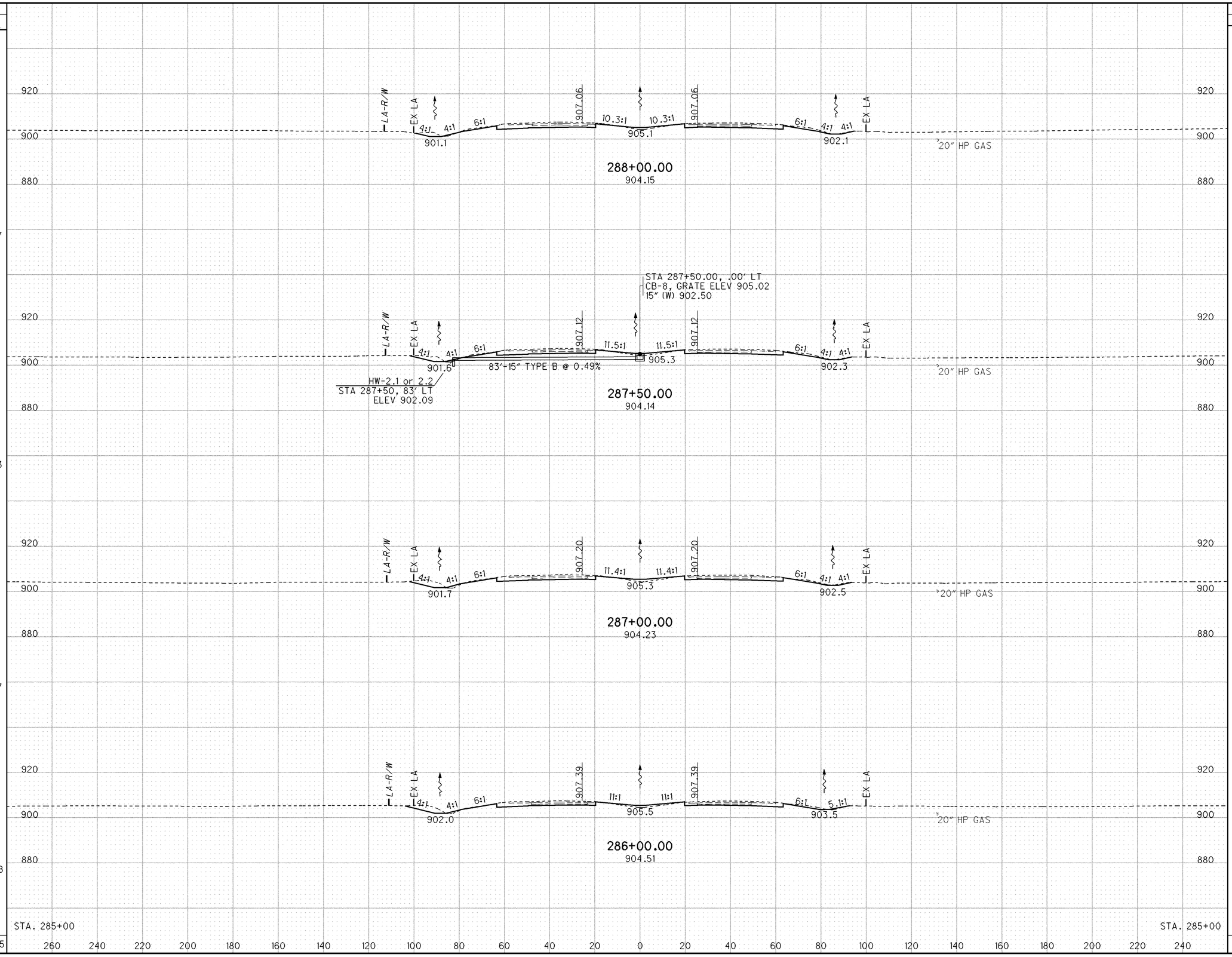

CALCULATED BDC
CHECKED TAB

CROSS SECTIONS - I-75
STA. 286+00.00 TO STA. 288+00.00

ALL-75-0.21

306
907

I:\Pdl\89029\roadway\sheets\89029XS002.dgn 25-JUN-2013 3:44PM bclark

SEEDING END WIDTH	SEEDING SQ. YDS.
144	
	507
	-22
148	
	309
149	
	1533
127	
	1400
125	
	3727

CORRECTION FOR CULVERT

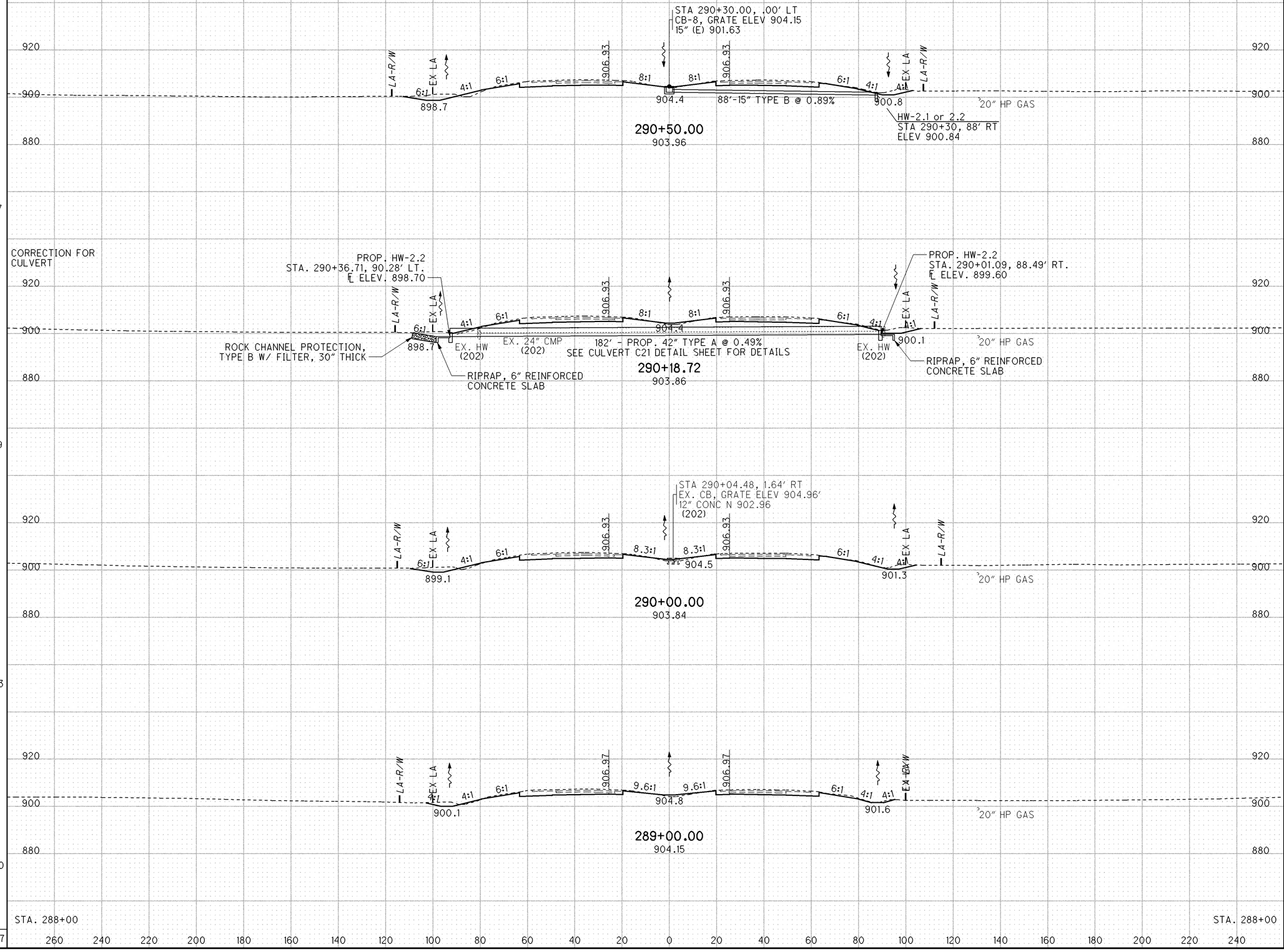

END AREA CUT	END AREA FILL	VOLUME CUT	VOLUME FILL
181	17		
		206	21
175	19		
		123	14
179	20		
		598	63
144	14		
		507	56
130	16		
		1434	154

CALCULATED BDC
CHECKED TAB

CROSS SECTIONS - I-75
STA. 289+00.00 TO STA. 290+50.00

ALL-75-0.21

307
907

I:\Pdt\89029\roadway\sheets\89029XS002.dgn 25-JUN-2013 3:44PM bclark

SEEDING			END AREA		VOLUME	
END WIDTH	SQ. YDS.		CUT	FILL	CUT	FILL
		STA. 290+50				
144		+00, BK	181	17		
172	878		167	13	322	28
		291+00.00 903.95				
141	1739		231	14	737	50
		END PROJECT END WORK, EARTHWORK & SEEDING 292+00.00 903.96				
	2617	STA. 290+50			1059	78

CALCULATED BDC
CHECKED TAB

CROSS SECTIONS - I-75
STA. 291+00.00 TO STA. 292+00.00

ALL-75-0.21

308
907

I:\Pdl\89029\roadway\sheets\89029XS002.dgn 25-JUN-2013 3:44PM bclark

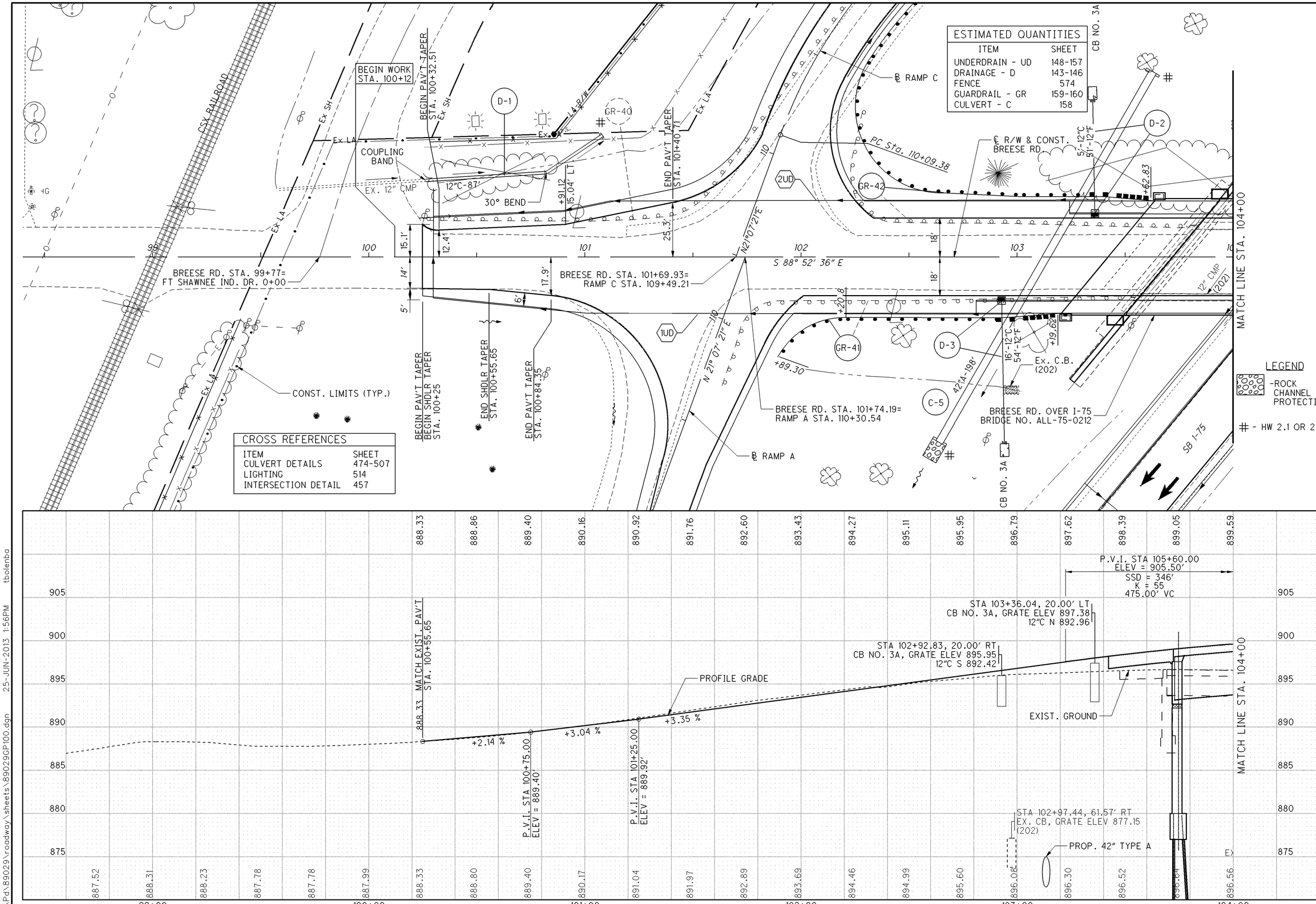

ESTIMATED QUANTITIES

ITEM	SHEET
UNDERDRAIN - UD	148-157
DRAINAGE - D	143-146
FENCE	574
GUARDRAIL - GR	159-160
CULVERT - C	158

CROSS REFERENCES

ITEM	SHEET
CULVERT DETAILS	474-507
LIGHTING	514
INTERSECTION DETAIL	457

HORIZONTAL SCALE IN FEET

CALCULATED

CHECKED

PLAN AND PROFILE - BREESE RD. BEGIN WORK TO STA. 104+00.00

ALL-75-0.21

I:\Pd\89029\roadway\sheets\89029GP100.dgn 25-JUN-2013 1:56PM tbolenba

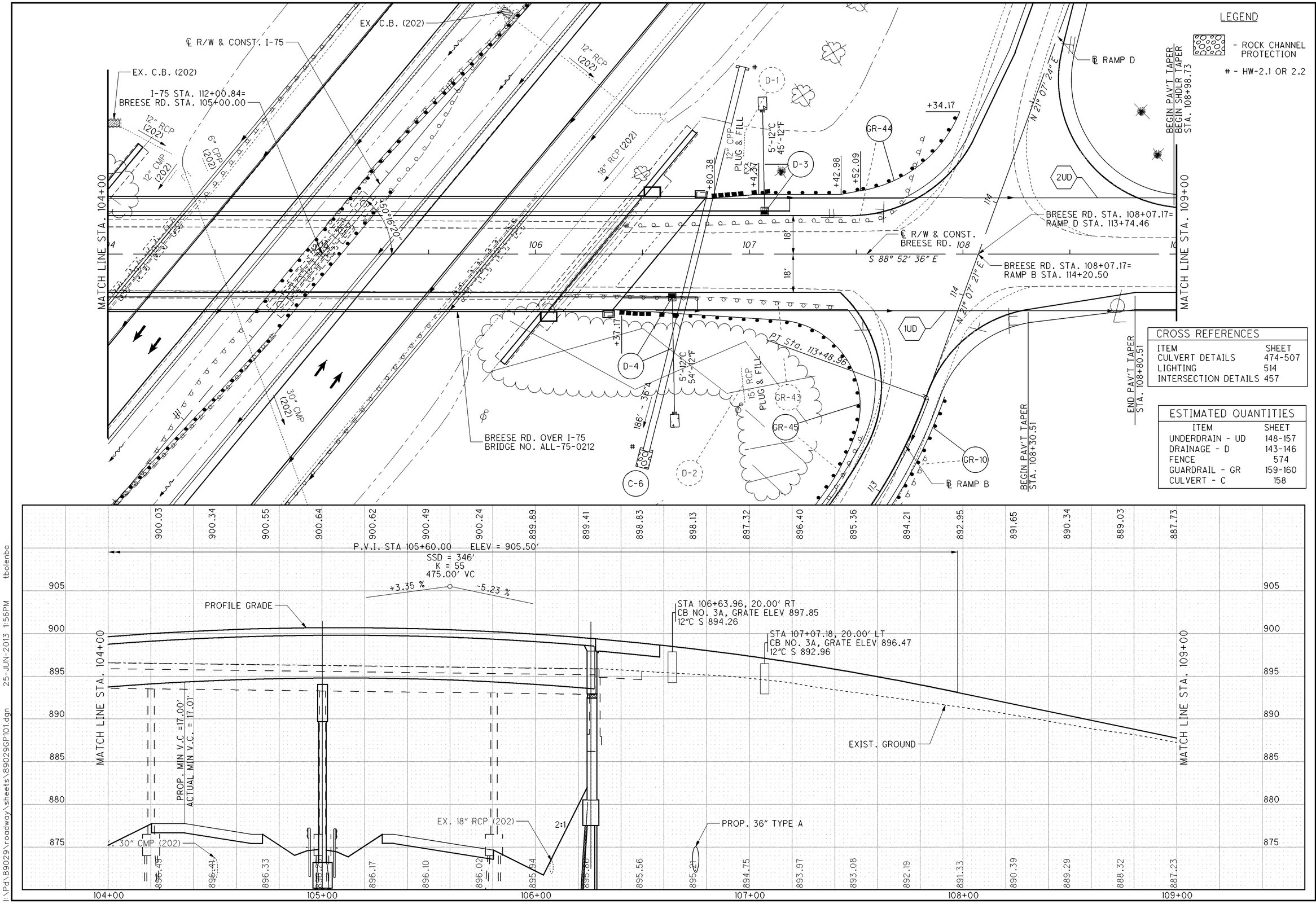

PLAN AND PROFILE - BREESE RD. STA. 104+00.00 TO STA. 109+00.00

ALL-75-0.21

310
907

i:\Pd\89029\roadway\sheets\89029GP101.dgn 25-JUN-2013 1:56PM tbolenba

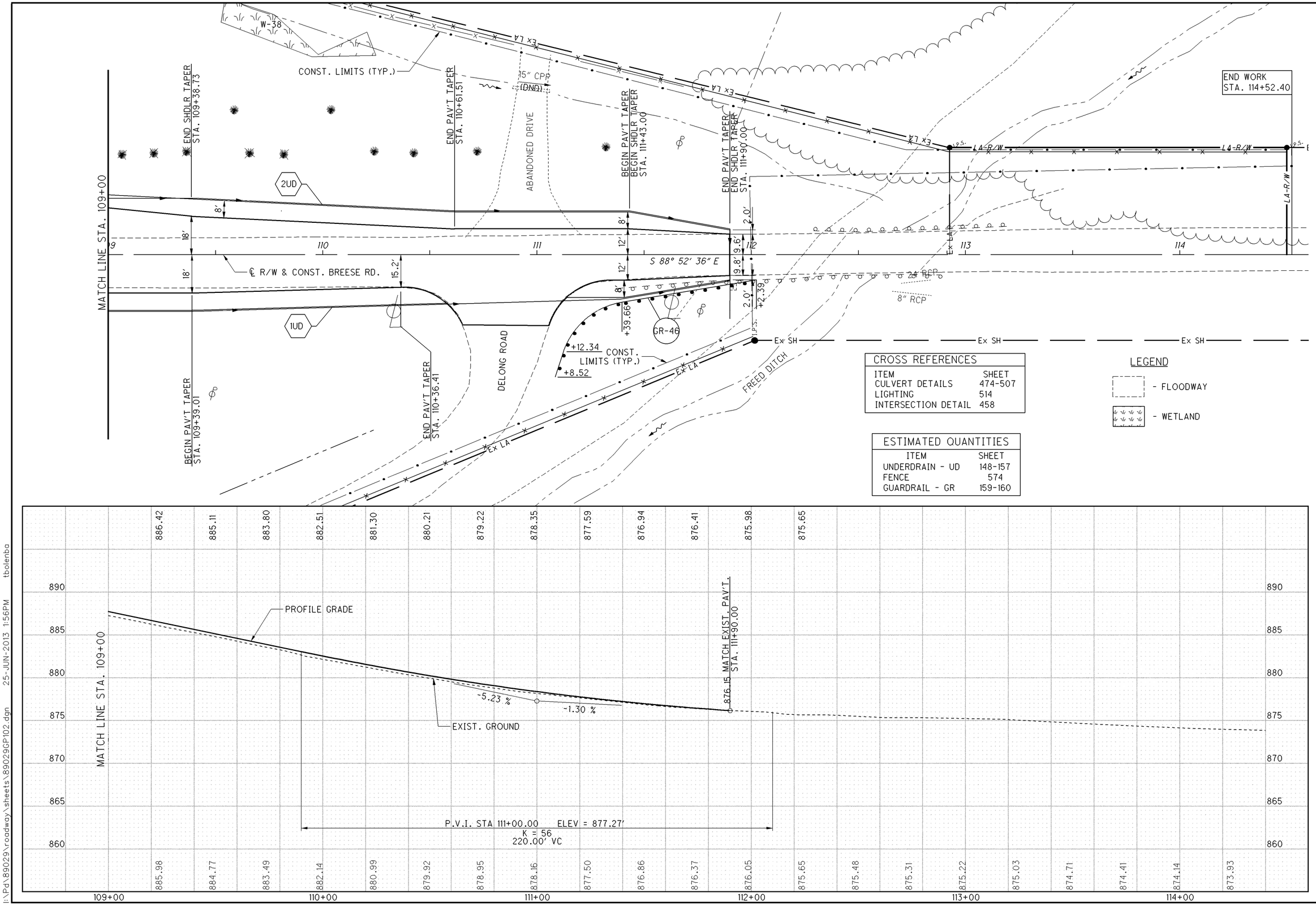

CROSS REFERENCES	
ITEM	SHEET
CULVERT DETAILS	474-507
LIGHTING	514
INTERSECTION DETAIL	458

LEGEND

- FLOODWAY
- WETLAND

ESTIMATED QUANTITIES	
ITEM	SHEET
UNDERDRAIN - UD	148-157
FENCE	574
GUARDRAIL - GR	159-160

HORIZONTAL SCALE IN FEET
0 10 20 40

CALCULATED | CHECKED

PLAN AND PROFILE - BREESE RD. STA. 109+00.00 TO END WORK

ALL-75-0.21

311
907

I:\Pd\89029\roadway\sheets\89029GP102.dgn 25-JUN-2013 1:56PM tbolenba

SEEDING END WIDTH	SEEDING SQ. YDS.
	305
38	
	211
38	
	105
38	
38	
	659

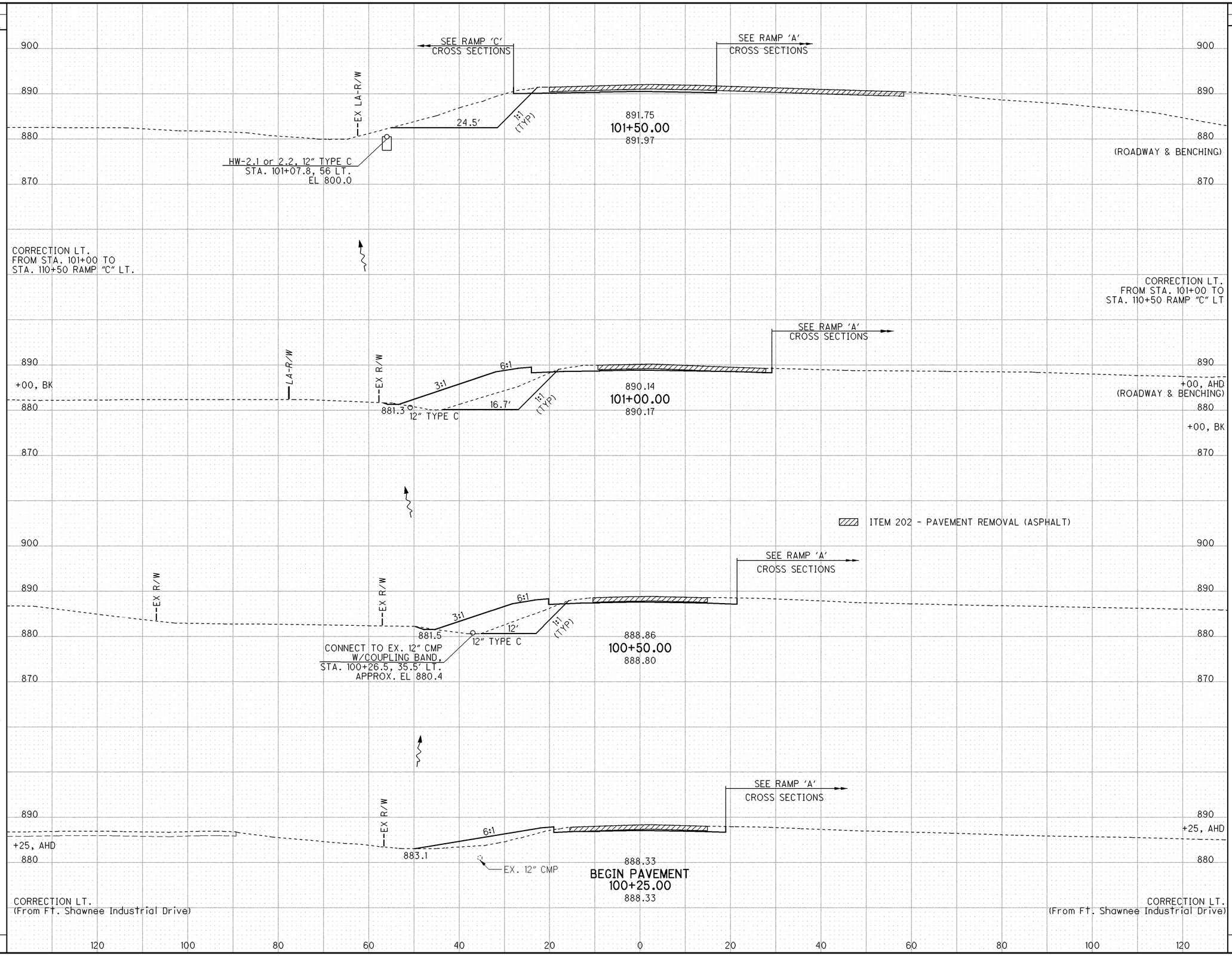

END AREA CUT	END AREA FILL	VOLUME CUT	VOLUME FILL
132	107		
		198	160
		71	649
82	66		
83	181		
		136	282
64	124		
		36	75
14	39		
		0	3
		441	1169

CALCULATED BDC
CHECKED TAB

CROSS SECTIONS - BREESE RD. STA. 100+25.00 TO STA. 101+50.00

ALL-75-0.21

312
907

I:\Pd\89029\roadway\sheets\89029XS100.dgn 25-JUN-2013 1:56PM tbolenba

SEEDING	
END WIDTH	SQ. YDS.
96	533
132	730
131	
62	347
	237
63	1847

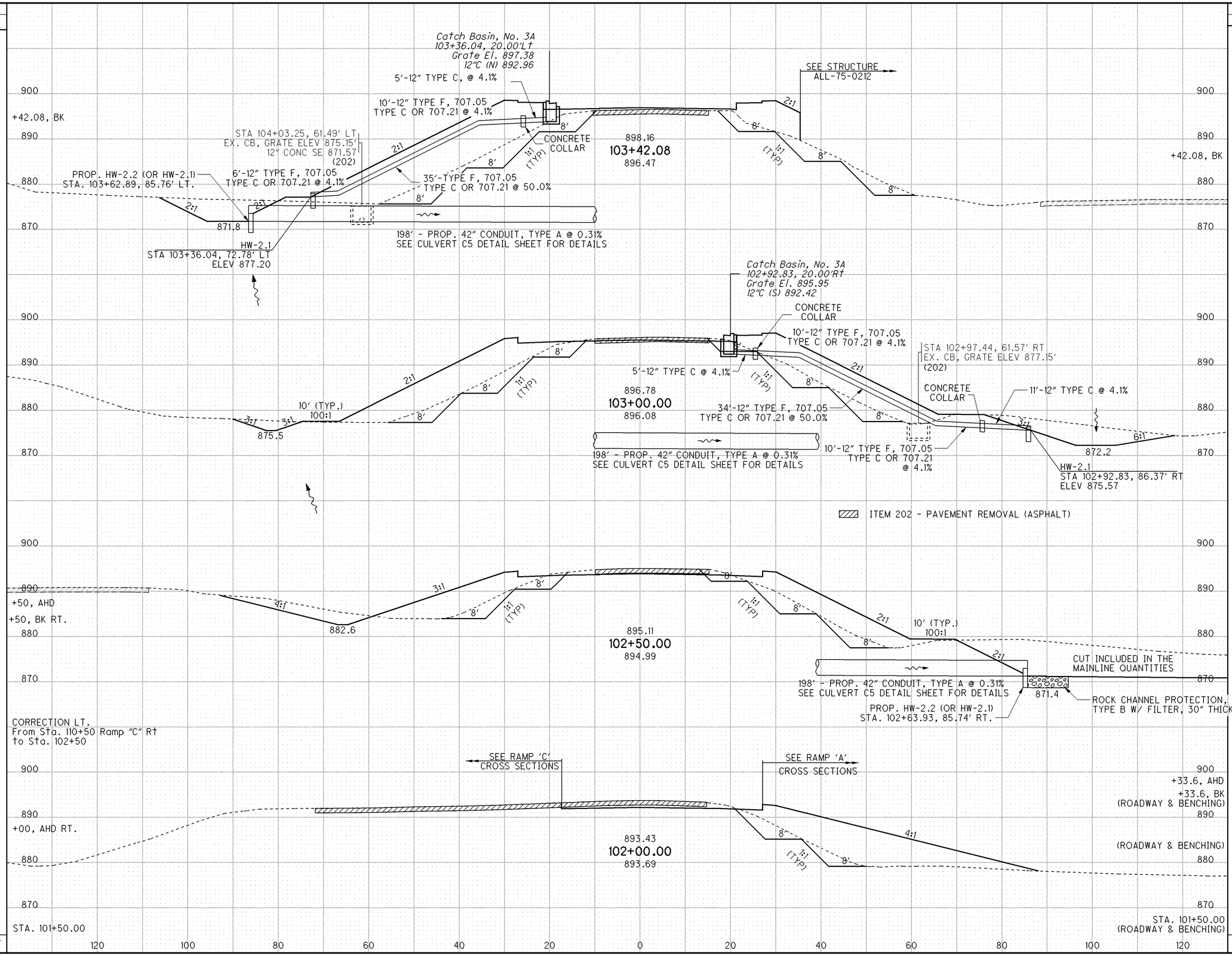

END AREA		VOLUME	
CUT	FILL	CUT	FILL
259	700		
		346	1015
185	602		
		345	943
188	416		
		80	217
76	299		
75	61		
		88	70
66	52		
		183	147
132	107		
		1042	2392

CALCULATED BDC
CHECKED TAB

CROSS SECTIONS - BREESE RD.
STA. 102+00.00 TO STA. 103+42.08

ALL-75-0.21

313
907

I:\Pd\89029\roadway\sheets\89029XS100.dgn 25-JUN-2013 1:56PM tbolenba

CROSS SECTIONS - BREESE RD.
STA. 106+57.93 TO STA. 107+50.00

CALCULATED BDC | CHECKED TAB

SEEDING END WIDTH	SEEDING SQ. YDS.	END AREA CUT	END AREA FILL	VOLUME CUT	VOLUME FILL
0	200			0	-105
121		+50, AHD 146	748		
		+50, BK 146	822		
	739			372	1870
145		256	1198		
	594			374	1570
109		+57.93, AHD 224	817		
	780			29	1442
	2313			775	4777

CORRECTION FOR RAMPS

CORRECTION FOR BRIDGE

BRIDGE ALL-75-0212

+50, BK

+50, AHD

+57.93, AHD

3:1

8:1

8′

1:1 (TYP)

26.6′

875.1

895.36
107+50.00
893.08

5′-12″ TYPE C @ 4.1%

10′-12″ TYPE F, 707.05 TYPE C OR 707.21 @ 4.1%

29′-12″ TYPE F, 707.05 TYPE C OR 707.21 @ 51.4%

2:1

HW-2.1
STA 107+07.18, 67.48′ LT
ELEV 869.01

10′ (TYP.) 100:1

CONCRETE COLLAR

6′-12″ TYPE F, 707.05 TYPE C OR 707.21 @ 4.1%

872.8

186′ - PROP. 36″ CONDUIT, TYPE A @ 0.82%
SEE CULVERT C6 DETAIL SHEET FOR DETAILS

897.32
107+00.00
894.75

PROP. HW-2.2 (OR HW-2.1)
STA. 106+96.91, 87.69′ LT.

871.5

Catch Basin, No. 3A
106+63.96, 20.00′Rt
Grate El. 897.85
12″C (S) 894.26

ITEM 202 - PAVEMENT REMOVAL (ASPHALT)

SEE STRUCTURE ALL-75-0212

STA 105+87.27, 113.62′ LT
EX. CB, GRATE ELEV 877.74′
12″ CONC NE 873.86
12″ CONC SE 872.90
(202)

EX. HW (202)

EX. 18″ RCP (202)

898.62
106+57.93
895.44

38′-12″ TYPE F, 707.05 TYPE C OR 707.21 @ 50.0%

HW-2.1
STA 106+63.96, 74.90′ RT
ELEV 876.47

6′-12″ TYPE F, 707.05 TYPE C OR 707.21 @ 4.1%

870.8

871.3

4:1

ROCK CHANNEL PROTECTION, TYPE B W/ FILTER, 30″ THICK

PROP. HW-2.2 (OR HW-2.1)
STA. 106+51.74, 92.19′ RT.

900 890 880 870 860

120 100 80 60 40 20 0 20 40 60 80 100 120

ALL-75-0.21

314
907

I:\Pd\89029\roadway\sheets\89029XS100.dgn 25-JUN-2013 1:56PM tbolenba

SEEDING END WIDTH	SEEDING SQ. YDS.	END AREA CUT	END AREA FILL	VOLUME CUT	VOLUME FILL
72	417	13	28	21	62
78		10	39		
		10	12		
				12	34
	422	3	25		
		2	18		
				0	60
		0	47		
				0	110
		0	72		
839				35	266

CALCULATED BDC
CHECKED TAB

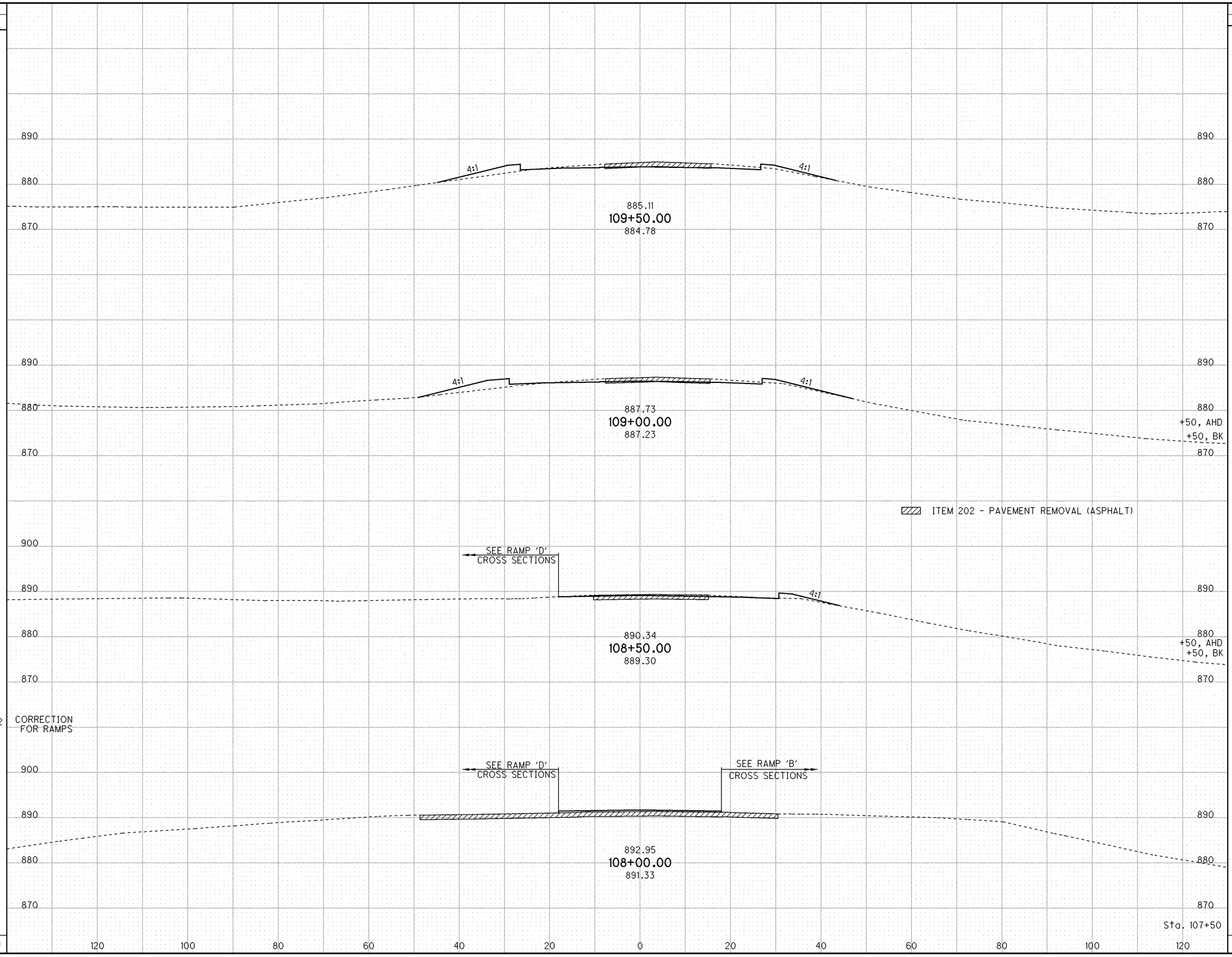

CROSS SECTIONS - BREESE RD. STA. 108+00.00 TO STA. 109+50.00

ALL-75-0.21

315
907

I:\Pd\89029\roadway\sheets\89029XS100.dgn 25-JUN-2013 1:56PM tbolenba

SEEDING END WIDTH	SEEDING SQ. YDS.
36	
	333
84	
48	
	171
	556
52	
72	
	483
82	
	428
72	
	1971

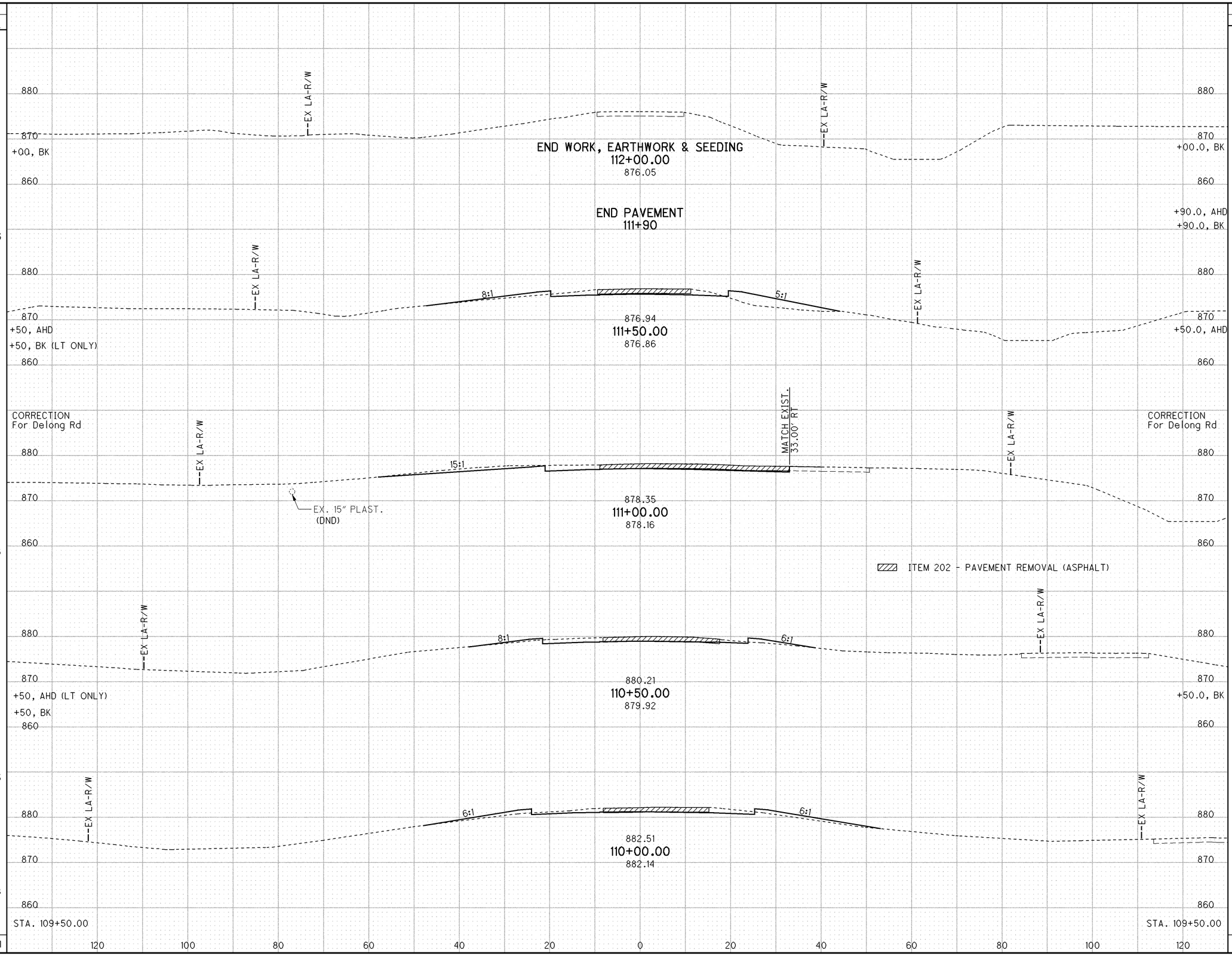

END AREA CUT	END AREA FILL	VOLUME CUT	VOLUME FILL
0	0		
		0	2
0	10		
3	10		
		16	44
18	50		
		60	26
15	12		
		31	36
18	27		
		29	51
13	28		
		136	159

CALCULATED BDC
CHECKED TAB

CROSS SECTIONS - BREESE RD. STA. 109+00.00 TO STA. 110+00.00

ALL-75-0.21

316
907

I:\Pd\89029\roadway\sheets\89029XS100.dgn 25-JUN-2013 1:56PM tbolenba

CURVE BREA-1
P.I. STA. 103+12.46
Ls = 210.00'
θs = 3° 40' 30"
LT = 140.03'
ST = 70.03'
x = 209.91'
y = 4.49'
k = 104.99'
p = 1.12'

CURVE BREA-2
P.I.= Sta. 104+75.48
D = 14° 06' 20" (LT)
Dc = 3° 30' 00"
R = 1,637.02'
D c = 10° 25' 50" (LT)
Lc = 298.01'
Es = 13.05'
C = 297.60'
C.B.1 = N 34° 00' 11" E
C.B. = N 26° 20' 16" E
e_d = 0.058

CROSS REFERENCES	
ITEM	SHEET
CULVERT DETAILS	474-507
LIGHTING	514
GRADING DETAILS	469

ESTIMATED QUANTITIES	
ITEM	SHEET
UNDERDRAIN - UD	148-157
DRAINAGE - D	143-146
FENCE	574
CULVERT - C	158

LEGEND

- FLOODWAY
- WETLAND
- DITCH EROSION PROTECTION MAT SEE SHEET 147
- ROCK CHANNEL PROTECTION
- # - HW-2.1 OR 2.2

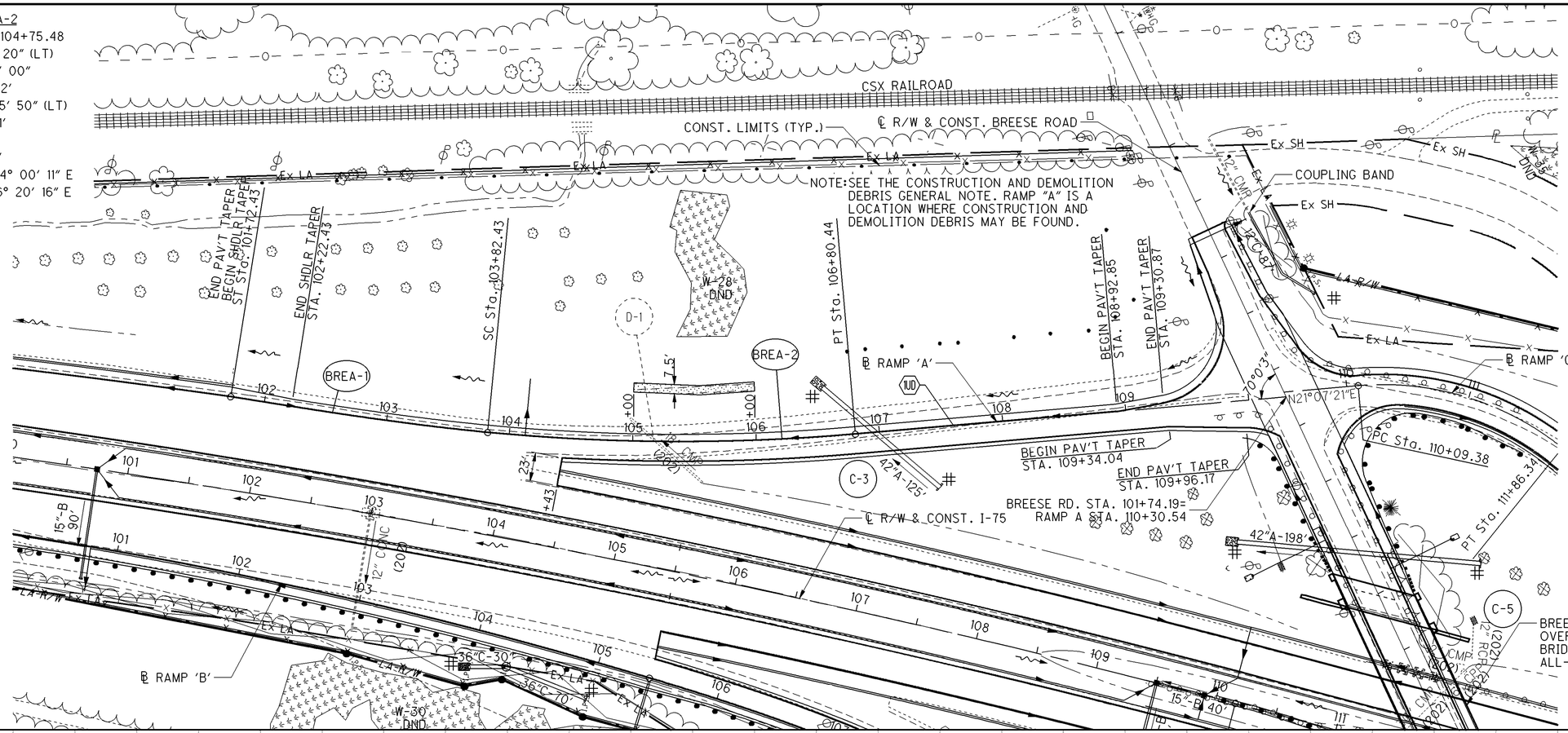

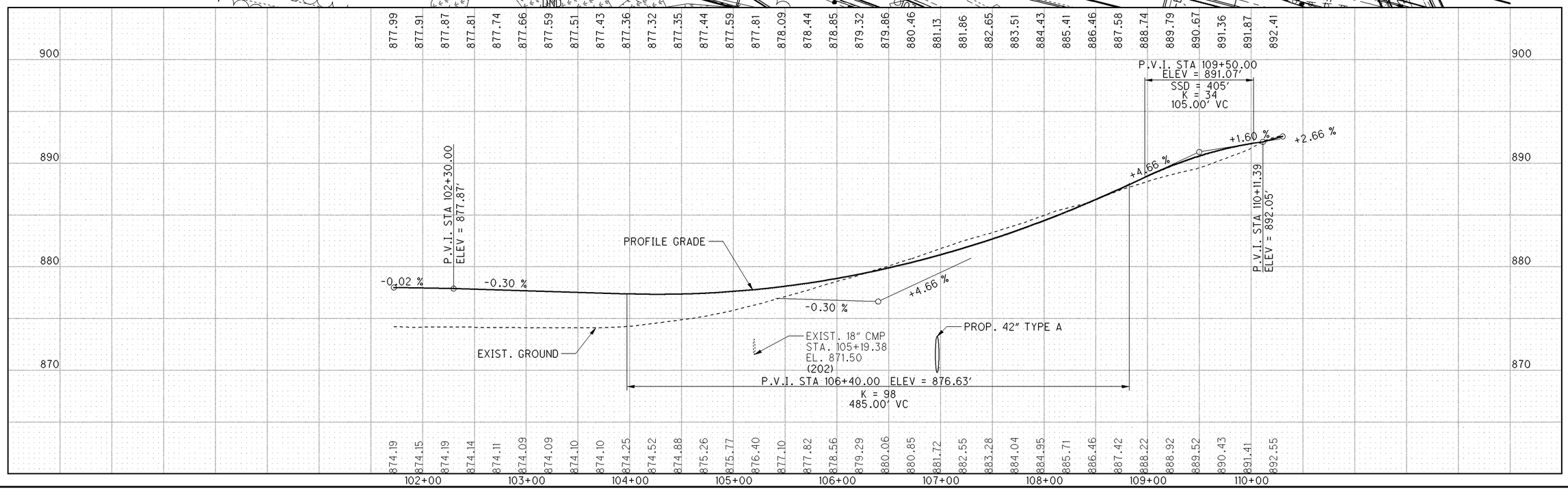

HORIZONTAL SCALE IN FEET
0 25 50 100

CALCULATED | CHECKED

PLAN AND PROFILE - BREESE ROAD RAMP 'A'
BEGIN WORK TO END WORK

ALL-75-0.21

317
907

I:\Pd\89029\roadway\sheets\89029GP105.dgn 25-JUN-2013 1:56PM tbolenba

CURVE BREB-1
P.I.= Sta. 102+38.24
D = 9° 09′ 30″ (RT)
Dc = 1° 30′ 00″
R = 3,819.72′
T = 305.93′
L = 610.55′
E = 12.23′
C = 609.90′
C.B. = N 38° 12′ 23″ E
e_d = 0.037

CURVE BREB-2
P.I. STA. 106+62.53
Ls = 200.00′
θs = 7° 15′ 00″
LT = 119.67′
ST = 80.58′
x = 199.60′
y = 10.17′
k = 99.95′
p = 1.24′

CROSS REFERENCES	
ITEM	SHEET
CULVERT DETAILS	474-507
LIGHTING	514

ESTIMATED QUANTITIES	
ITEM	SHEET
UNDERDRAIN - UD	148-157
DRAINAGE - D	143-146
FENCE	574
CULVERT - C	158

LEGEND

- FLOODWAY
- WETLAND
- DITCH EROSION PROTECTION MAT SEE SHEET 147
- ROCK CHANNEL PROTECTION
- # - HW-2.1 OR 2.2

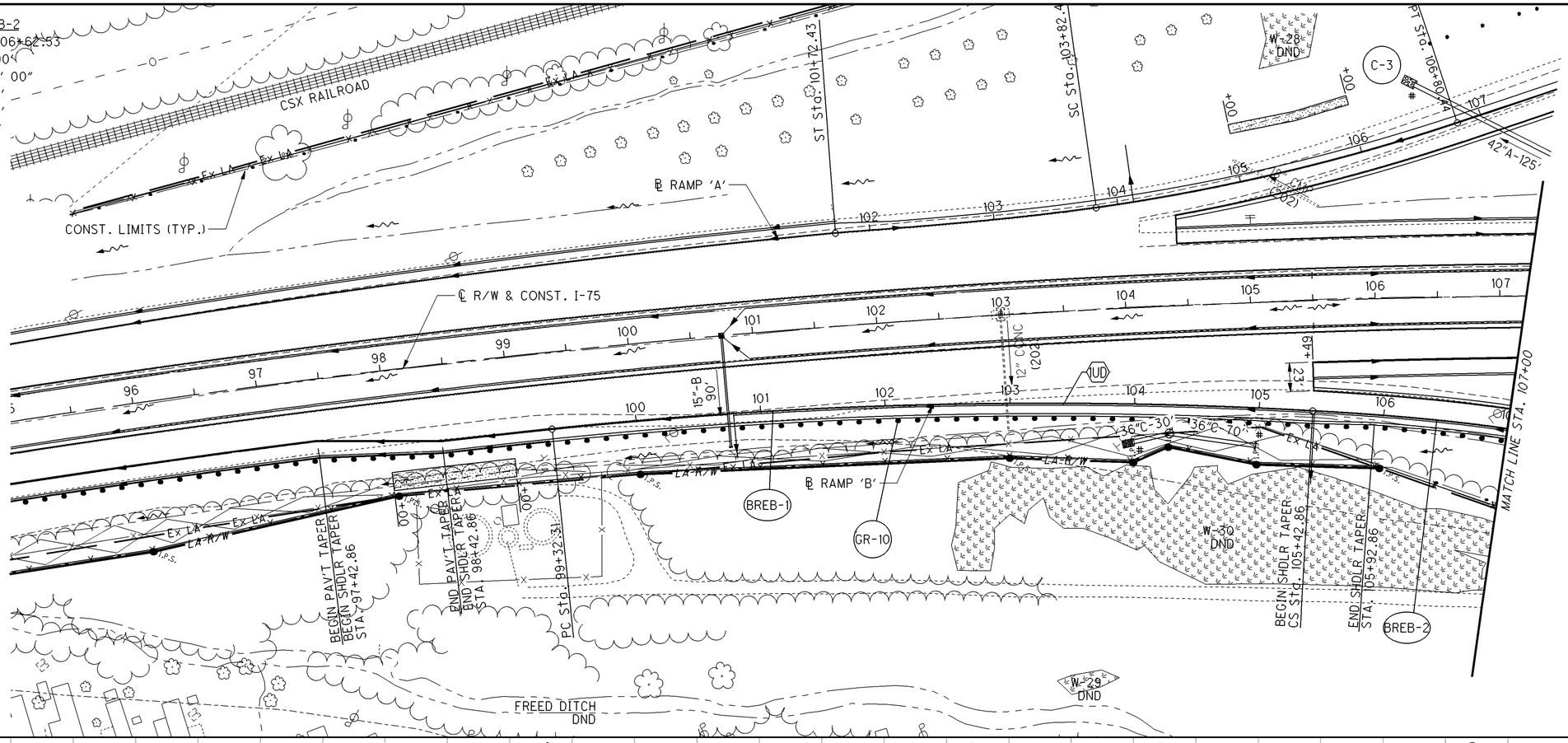

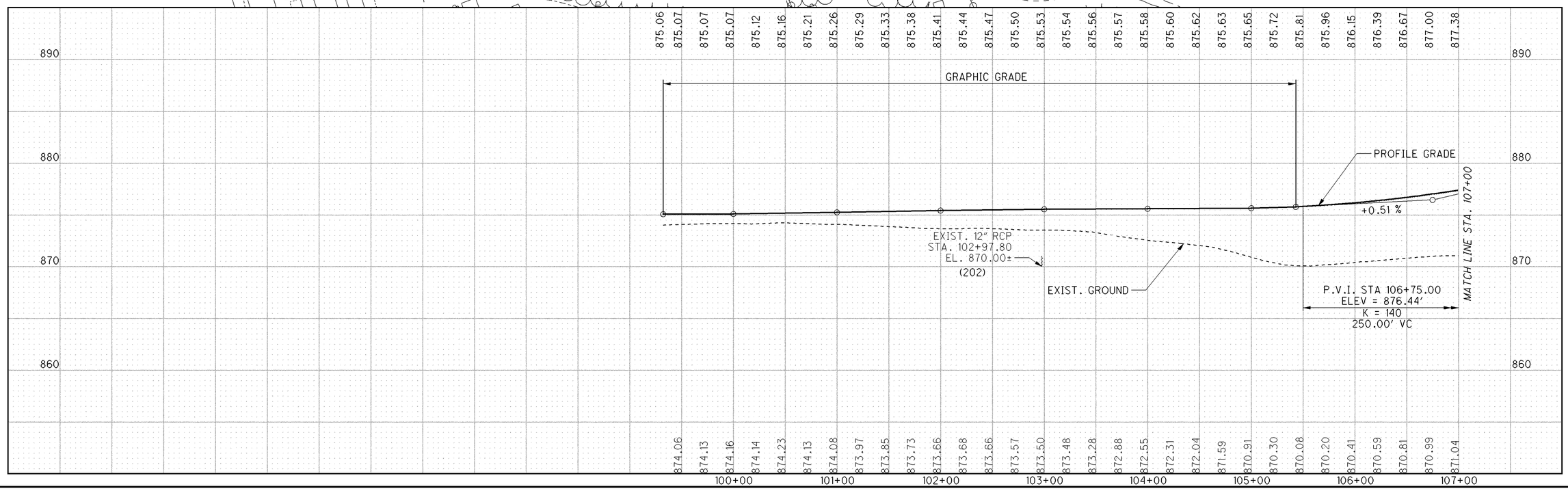

I:\Pd\89029\roadway\sheets\89029GP106.dgn 25-JUN-2013 1:56PM tbolenba

HORIZONTAL SCALE IN FEET
0 25 50 100

CALCULATED | CHECKED

PLAN AND PROFILE - BREESE ROAD RAMP 'B' BEGIN WORK TO STA. 107+00.00

ALL-75-0.21

318
907

CURVE BREB-2
P.I. STA. 106+62.53
Ls = 200.00'
θs = 7° 15' 00"
LT = 119.67'
ST = 80.58'
x = 199.60'
y = 10.17'
k = 99.95'
p = 1.24'

CURVE BREB-3
P.I.= Sta. 108+52.15
D = 12° 31' 05" (RT)
Dc = 5° 45' 00"
R = 996.45'
T = 109.29'
L = 217.70'
E = 5.98'
C = 217.27'
C.B. = N 56° 17' 40" E
e_d = 0.059

*CURVE BREB-4
P.I.= Sta. 112+69.11
D = 41° 25' 51" (LT)
Dc = 24° 45' 00"
R = 231.50'
T = 87.55'
L = 167.40'
E = 16.00'
C = 163.77'
C.B. = N 41° 50' 17" E
e_d = 0.037

*NORMAL DESIGN CRITERIA
Dc = 16°45'
e_d = 0.06

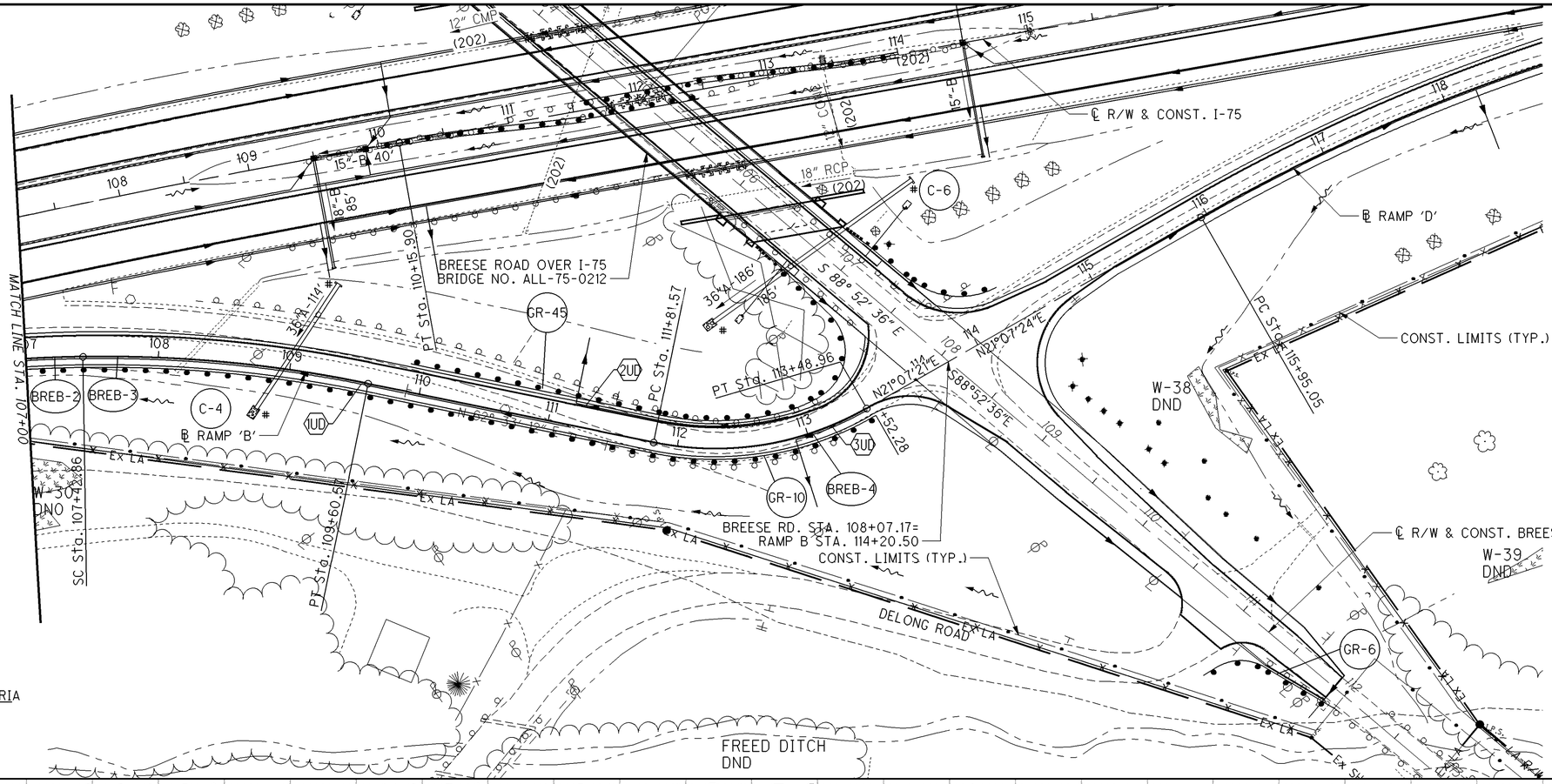

CROSS REFERENCES	
ITEM	SHEET
CULVERT DETAILS	474-507
LIGHTING	514

ESTIMATED QUANTITIES	
ITEM	SHEET
UNDERDRAIN - UD	148-157
FENCE	574
GUARDRAIL - GR	159-160
CULVERT - C	158

LEGEND
- FLOODWAY
- WETLAND
- DITCH EROSION PROTECTION MAT SEE SHEET 147
- ROCK CHANNEL PROTECTION
\# - HW-2.1 OR 2.2

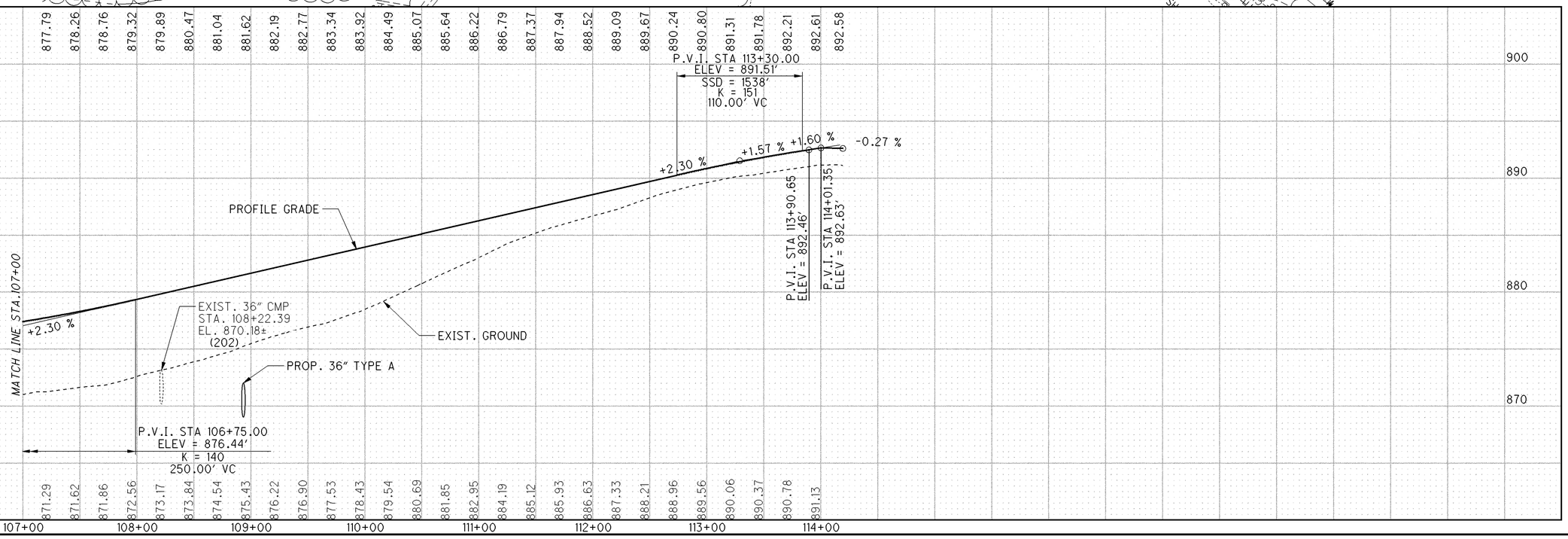

HORIZONTAL SCALE IN FEET
0 25 50 100

CALCULATED | CHECKED

PLAN AND PROFILE - BREESE ROAD RAMP 'B' STA. 107+00.00 TO STA. 114+20.50

ALL-75-0.21

319
907

I:\Pd\89029\roadway\sheets\89029GP107.dgn 25-JUN-2013 1:55PM tbolenba

*NORMAL DESIGN CRITERIA
Dc = 16°45′
e_d = 0.06

*CURVE BREC-1
P.I.= Sta. 111+02.44
D = 43° 47′ 46″ (RT)
Dc = 24° 45′ 00″
R = 231.50′
T = 93.05′
L = 176.95′
E = 18.00′
C = 172.68′
C.B. = N 43° 01′ 14″ E
e_d = 0.040

CURVE BREC-2
P.I.= Sta. 114+91.14
D = 10° 00′ 56″ (LT)
Dc = 5° 45′ 00″
R = 996.45′
T = 87.31′
L = 174.18′
E = 3.82′
C = 173.96′
C.B. = N 59° 54′ 40″ E
e_d = 0.059

CURVE BREC-3
P.I. STA. 116+58.59
Ls = 200.00′
θs = 7° 15′ 00″
LT = 119.67′
ST = 80.58′
x = 199.60′
y = 10.17′
k = 99.95′
p = 1.24′

CURVE BREC-4
P.I.= Sta. 120+05.02
D = 6° 48′ 08″ (LT)
Dc = 1° 30′ 00″
R = 3,819.72′
T = 227.01′
L = 453.48′
E = 6.74′
C = 453.22′
C.B. = N 44° 15′ 08″ E
e_d = 0.037

CROSS REFERENCES

ITEM	SHEET
CULVERT DETAILS	474-507
LIGHTING	514

ESTIMATED QUANTITIES

ITEM	SHEET
UNDERDRAIN - UD	148-157
FENCE	574
GUARDRAIL - GR	159-160
CULVERT - C	158

LEGEND
- WETLAND
- DITCH EROSION PROTECTION MAT SEE SHEET 147
- ROCK CHANNEL PROTECTION
- HW-2.1 OR 2.2

HORIZONTAL SCALE IN FEET
0 25 50 100

CALCULATED | CHECKED

PLAN AND PROFILE - BREESE ROAD RAMP 'C' BEGIN WORK TO END WORK

ALL-75-0.21

320
907

I:\Pd\89029\roadway\sheets\89029GP108.dgn 25-JUN-2013 1:55PM tbolenba

BREESE ROAD OVER I-75
BRIDGE NO. ALL-75-0212

℄ RAMP 'C'

FORT SHAWNEE INDUSTRIAL DRIVE

℄ RAMP B

℄ RAMP 'D'

℄ R/W & CONST. I-75

℄ R/W & CONST. BREESE ROAD

CONST. LIMITS (TYP.)

DELONG ROAD

BREESE RD. STA. 108+07.17=
RAMP D STA. 113+74.46

BEGIN PAV'T TAPER
STA. 114+23.24

END PAV'T TAPER
STA. 114+69.05

BEGIN PAV'T TAPER
STA. 114+78.62

END PAV'T TAPER
STA. 115+18.62

PC Sta. 115+95.05

PT Sta. 119+52.10

BEGIN SHLDR TAPER
STA. 121+17.04

END SHLDR TAPER
ST Sta. 121+67.10

PT Sta. 122+31.49

N 40° 51' 04" E

S 88° 52' 36" E

N21°07'21"E

N21°07'24"E

S88°52'36"E

CURVE BRED-1	
P.I.= Sta.	117+74.51
D =	14° 16' 55" (RT)
Dc =	4° 00' 00"
R =	1,432.39'
T =	179.45'
L =	357.05'
E =	11.20'
C =	356.13'
C.B. =	N 28° 15' 52" E
e_d =	0.060

CURVE BRED-2	
P.I. STA.	120+23.81
Ls =	215.00'
s =	4° 18' 00"
LT =	143.38'
ST =	71.71'
x =	214.88'
y =	5.38'
k =	107.48'
p =	1.34'

ESTIMATED QUANTITIES	
ITEM	SHEET
UNDERDRAIN - UD	148-157
FENCE	574
CULVERT - C	158

CROSS REFERENCES	
ITEM	SHEET
CULVERT DETAILS	474-507
LIGHTING	514

LEGEND

- FLOODWAY
- WETLAND
- DITCH EROSION PROTECTION MAT SEE SHEET 147
- ROCK CHANNEL PROTECTION
- # - HW-2.1 OR 2.2

HORIZONTAL SCALE IN FEET
0 25 50 100

CALCULATED | CHECKED

892.56 891.85 891.41 890.87 890.24 889.51 888.71 887.97 887.30 886.69 886.14 885.65 885.23 884.87 884.57 884.34 884.17 884.07 884.02 884.04 884.13 884.28 884.49 884.76 885.15 885.54 885.92 886.31 886.65 886.99 887.30 887.62

P.V.I. STA 114+55.00
ELEV = 890.97'
SSD = 668'
K = 64
105.00' VC

P.V.I. STA 113+93.62
ELEV = 891.95'

P.V.I. STA 117+30.00 ELEV = 882.07'
K = 99
440.00' VC

P.V.I. STA 119+50.00
ELEV = 884.76'

GRAPHIC GRADE

PROPOSED GRADE

EXIST. GROUND

-3.29 %
-1.60 %
-3.24 %
-3.24 %
+1.22 %

EXIST. 12' RCP
STA. 121+01.53
EL. 882.39±
(202)

900 890 880 870

891.07 890.37 889.83 889.22 888.79 888.40 887.61 886.95 886.35 885.68 885.02 884.38 883.98 883.55 883.31 883.22 883.11 883.14 883.24 883.45 883.58 883.81 884.25 884.75 885.24 885.77 886.15 886.57 886.96 887.25 887.44 887.65

114+00 115+00 116+00 117+00 118+00 119+00 120+00 121+00

I:\Pd\89029\roadway\sheets\89029GP109.dgn 25-JUN-2013 1:55PM tbolenba

PLAN AND PROFILE - BREESE ROAD RAMP 'D'
BEGIN WORK TO END WORK

ALL-75-0.21

321
907

SEEDING END WIDTH	SEEDING SQ. YDS.
80	419
71	386
68	403
77	
	1208

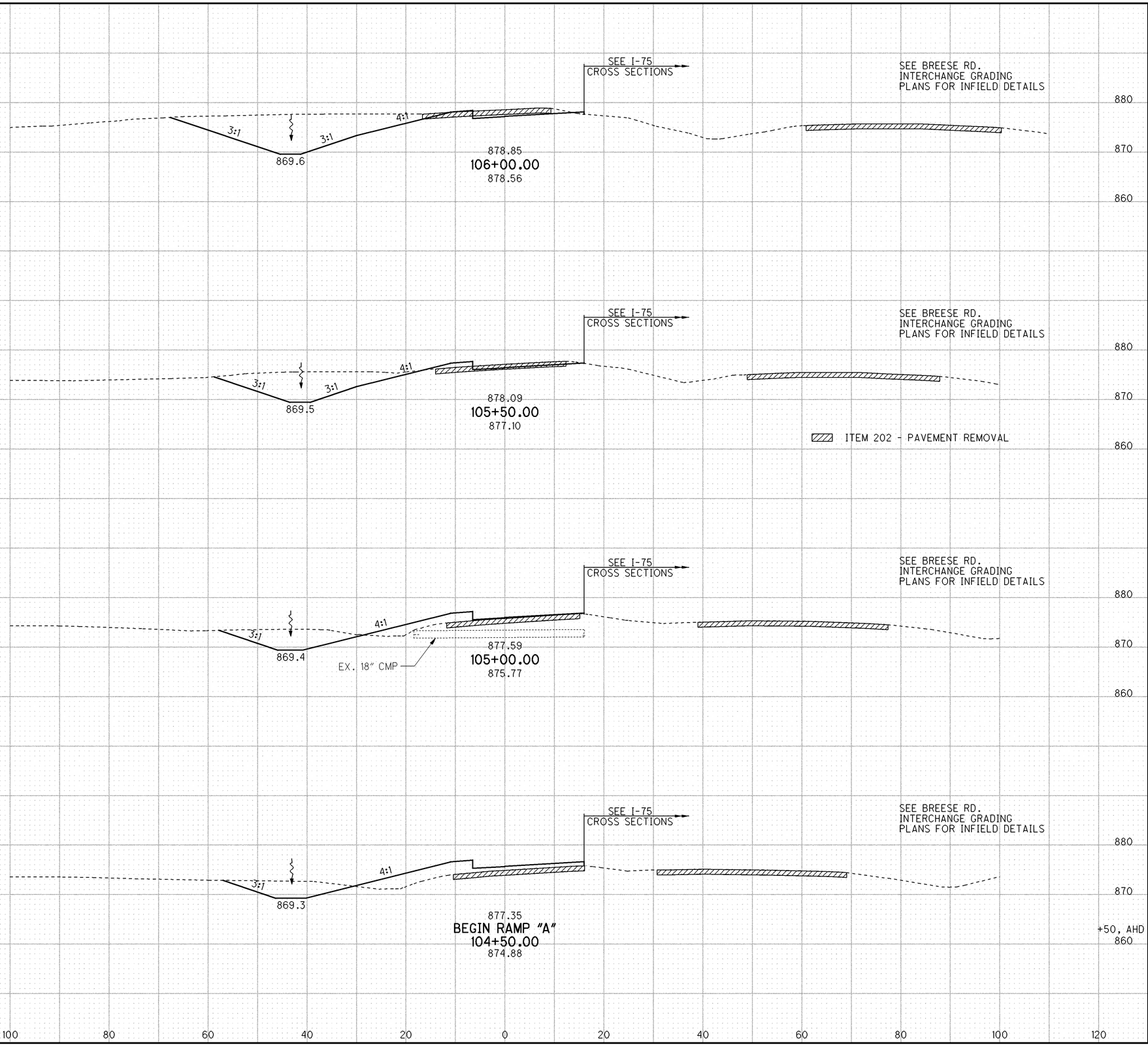

END AREA CUT	END AREA FILL	VOLUME CUT	VOLUME FILL
235	8		
		341	27
133	21		
		191	79
73	64		
		119	150
56	98		
		651	256

CALCULATED BDC
CHECKED TAB

CROSS SECTIONS - RAMP A (BREESE RD.) STA. 104+50.00 TO STA. 106+00.00

ALL-75-0.21

322
907

I:\Pd\89029\roadway\sheets\89029XS101.dgn 25-JUN-2013 1:55PM tbolenba

SEEDING	
END WIDTH	SQ. YDS.
95	528
96	531
96	533
96	489
80	2081

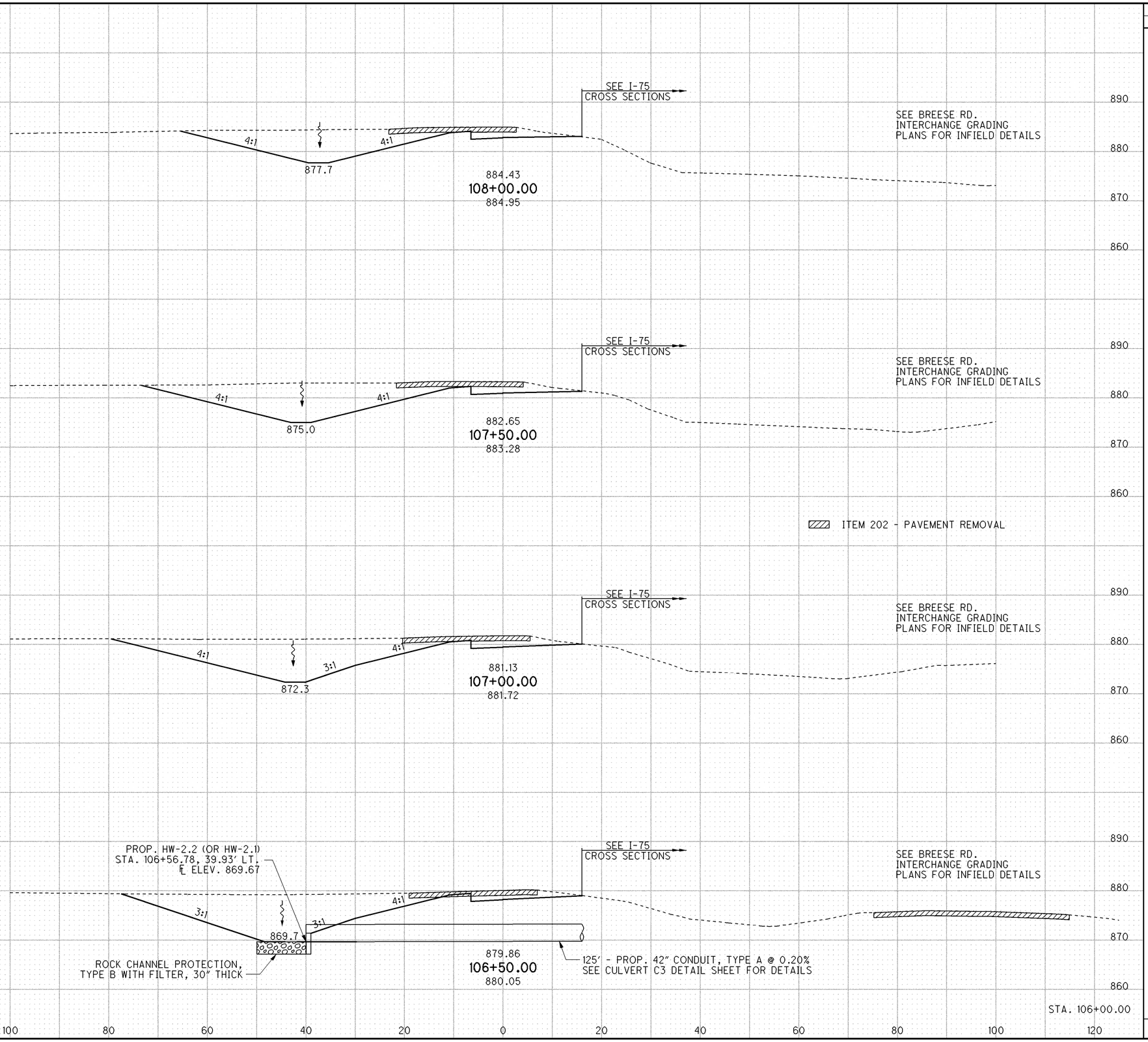

END AREA		VOLUME	
CUT	FILL	CUT	FILL
219	1	475	0
294	0	581	0
334	0	625	3
341	3	533	10
235	8	2214	13

CALCULATED BDC
CHECKED TAB

CROSS SECTIONS - RAMP A (BREESE RD.)
STA. 106+50.00 TO STA. 108+00.00

ALL-75-0.21

323
907

I:\Pd\89029\roadway\sheets\89029XS101.dgn 25-JUN-2013 1:55PM tbolenba

SEEDING END WIDTH	SEEDING SQ. YDS.
	275
85	
	494
93	
	517
93	
	522
95	
	1808

CORRECTION
FOR RAMP "A" INTERSECTION
FROM 109+50 TO BREESE RD.

INTERSECTION
RAMP "A" & BREESE RD.
STA. 110+11.43

CORRECTION
FOR RAMP "A" INTERSECTION
FROM 109+50 TO BREESE RD.

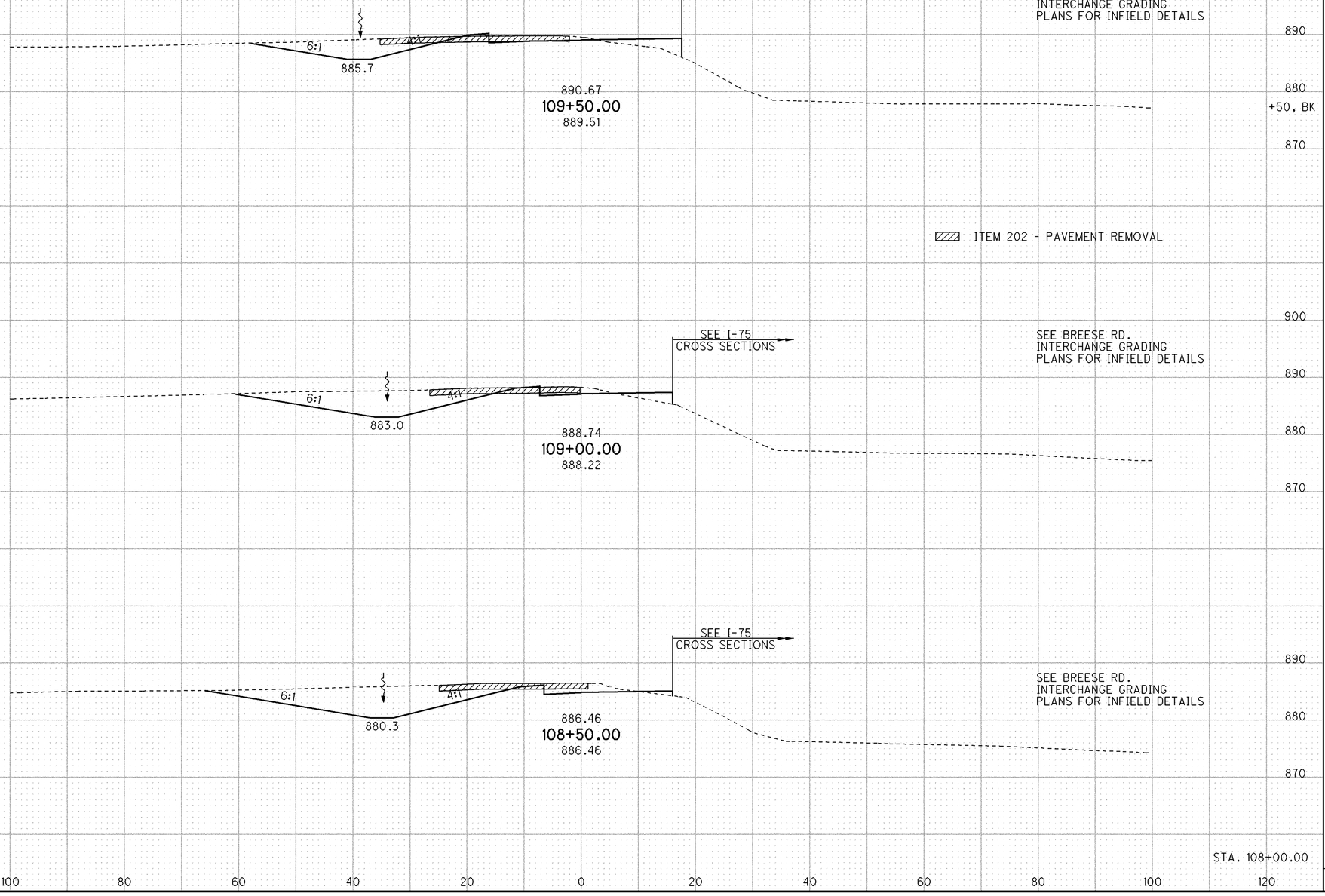

END AREA CUT	END AREA FILL	VOLUME CUT	VOLUME FILL
		3	40
60	29		
		164	54
117	29		
		263	31
167	5		
		357	6
219	1		
		787	131

CALCULATED BDC
CHECKED TAB

CROSS SECTIONS - RAMP A (BREESE RD.)
STA. 108+50.00 TO STA. 110+11.43

ALL-75-0.21

I:\Pd\89029\roadway\sheets\89029XS101.dgn 25-JUN-2013 1:55PM tbolenba

SEEDING	
END WIDTH	SQ. YDS.
38	245
50	245
38	213
38	
	764

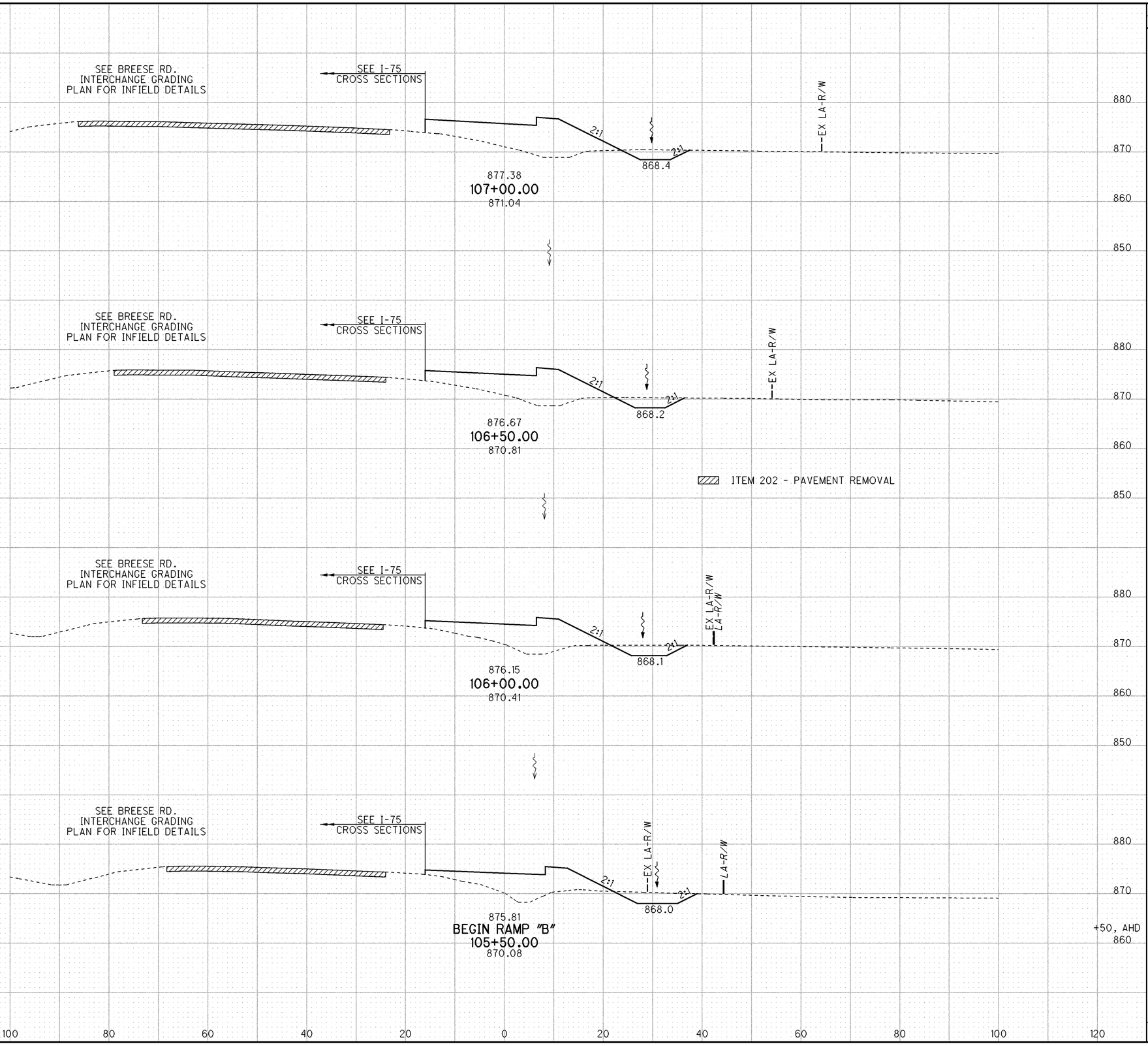

END AREA	
CUT	FILL
20	172
21	151
24	136
28	119

VOLUME	
CUT	FILL
38	299
42	266
48	236
128	801

CALCULATED BDC
CHECKED TAB

CROSS SECTIONS - RAMP B (BREESE RD.) STA. 105+50.00 TO STA. 107+00.00

ALL-75-0.21

325
907

I:\Pd\89029\roadway\sheets\89029XS102.dgn 25-JUN-2013 1:55PM tbolenba

SEEDING END WIDTH	SEEDING SQ. YDS.
78	431
77	419
74	395
68	357
60	1602

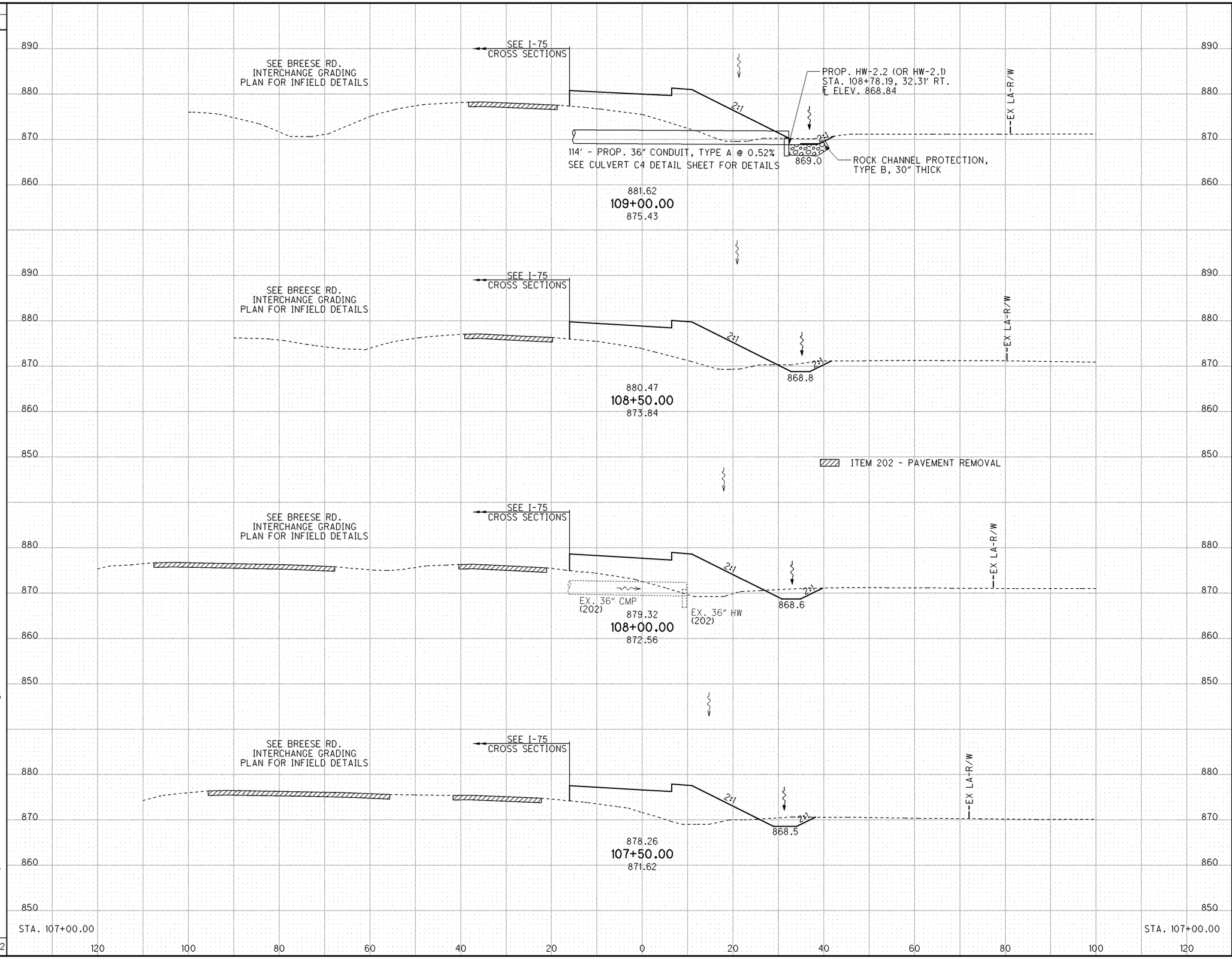

END AREA CUT	END AREA FILL	VOLUME CUT	VOLUME FILL
88	221	21	451
15	238	31	425
19	221	34	390
18	200	35	345
20	172	121	1611

CALCULATED BDC
CHECKED TAB

CROSS SECTIONS - RAMP B (BREESE RD.)
STA. 107+50.00 TO STA. 109+00.00

ALL-75-0.21

326
907

I:\Pd\89029\roadway\sheets\89029XS102.dgn 25-JUN-2013 1:55PM tbolenba

SEEDING END WIDTH	SEEDING SQ. YDS.
104	36
66	
70	396
73	414
76	429
78	1615

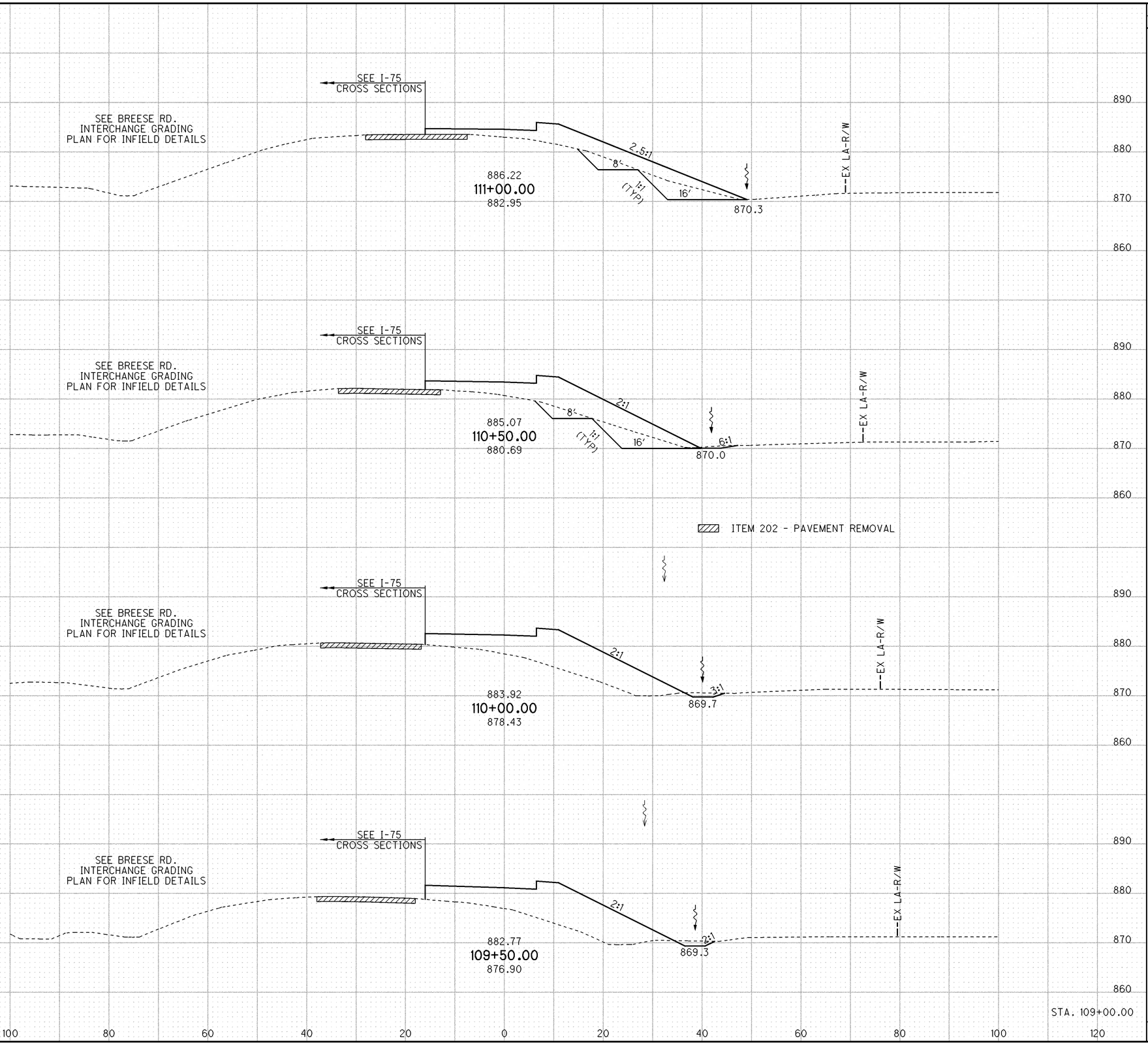

END AREA CUT	END AREA FILL	VOLUME CUT	VOLUME FILL
58	206		
		106	411
57	238		
3	235		
		56	438
		8	479
6	250		
		10	451
8	249		
		180	1779

CALCULATED BDC
CHECKED TAB

CROSS SECTIONS - RAMP B (BREESE RD.)
STA. 109+50.00 TO STA. 111+00.00

ALL-75-0.21

I:\Pd\89029\roadway\sheets\89029XS102.dgn 25-JUN-2013 1:55PM tbolenba

SEEDING END WIDTH	SEEDING SQ. YDS.
104	
	631
123	
	722
137	
	747
132	
	656
104	
	2756

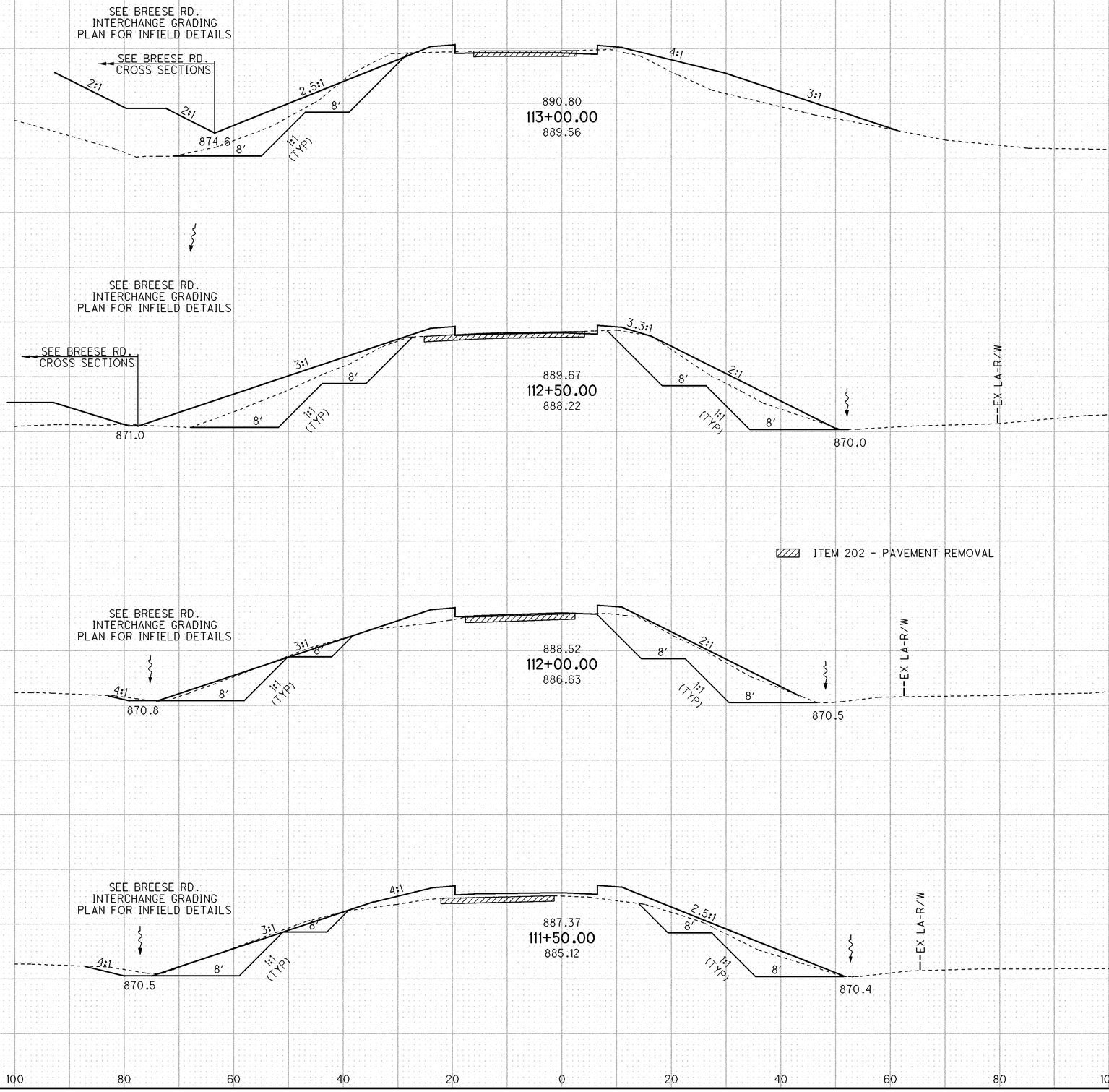

END AREA CUT	END AREA FILL	VOLUME CUT	VOLUME FILL
128	294		
		393	714
296	477		
		498	737
242	319		
		400	566
190	292		
		230	461
58	206		
		1521	2478

CALCULATED BDC
CHECKED TAB

CROSS SECTIONS - RAMP B (BREESE RD.) STA. 111+50.00 TO STA. 113+00.00

ALL-75-0.21

328
907

I:\Pd\89029\roadway\sheets\89029XS102.dgn 25-JUN-2013 1:55PM tbolenba

SEEDING	
END WIDTH	SQ. YDS.
	137
47	
	419
104	
	556

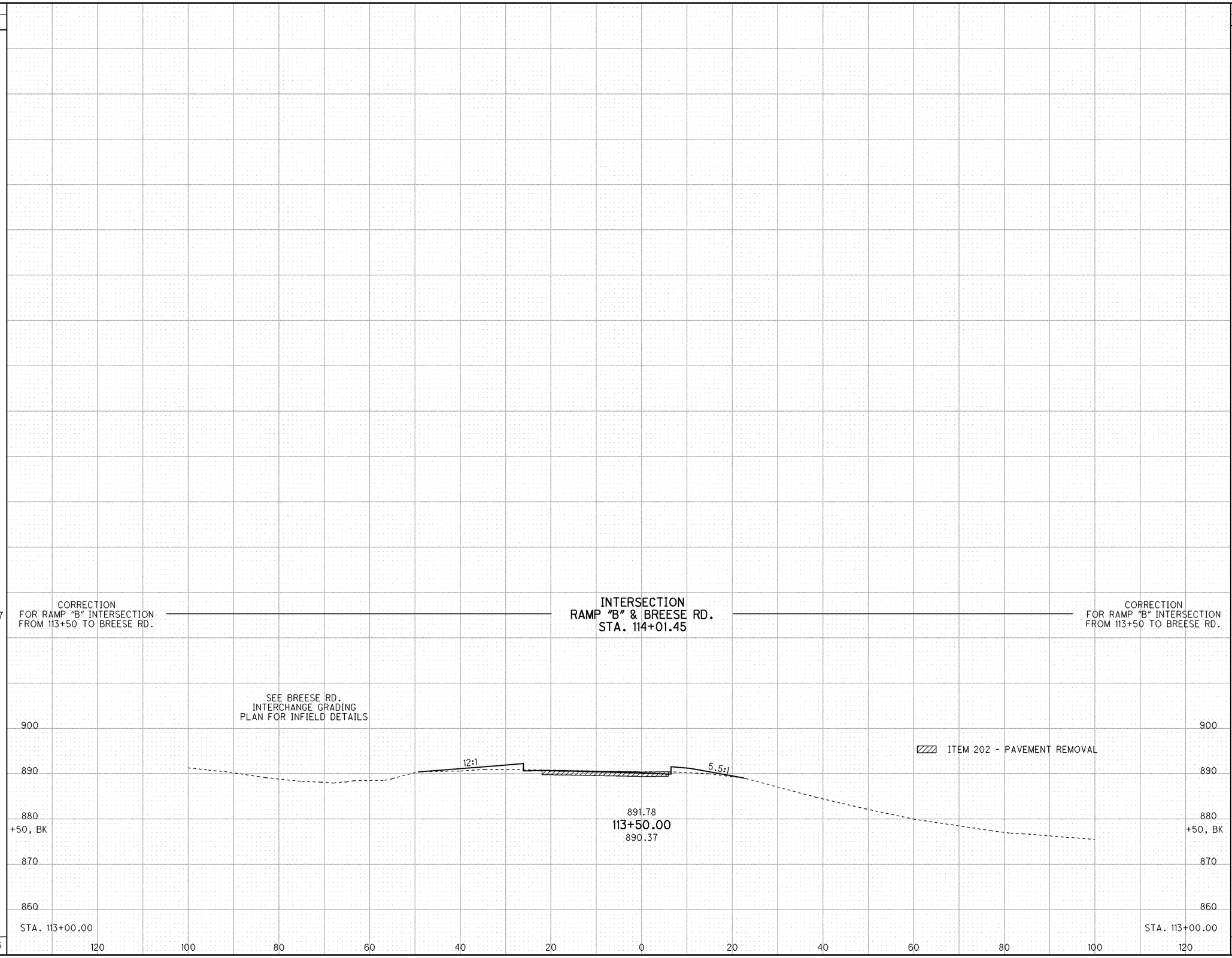

END AREA	
CUT	FILL
2	47
128	294

VOLUME	
CUT	FILL
2	114
120	316
122	430

CALCULATED BDC
CHECKED TAB

CROSS SECTIONS - RAMP B (BREESE RD.)
STA. 113+50.00 TO STA. 114+01.45

ALL-75-0.21

329
907

I:\Pd\89029\roadway\sheets\89029XS102.dgn 25-JUN-2013 1:55PM tbolenba

SEEDING		END AREA		VOLUME	
END WIDTH	SQ. YDS.	CUT	FILL	CUT	FILL
83	450	50	62	118	197
79	400	77	151	153	325
65	361	88	200	146	362
65	448	70	191	190	232
	1659			607	1116

CALCULATED JMR
CHECKED ACF

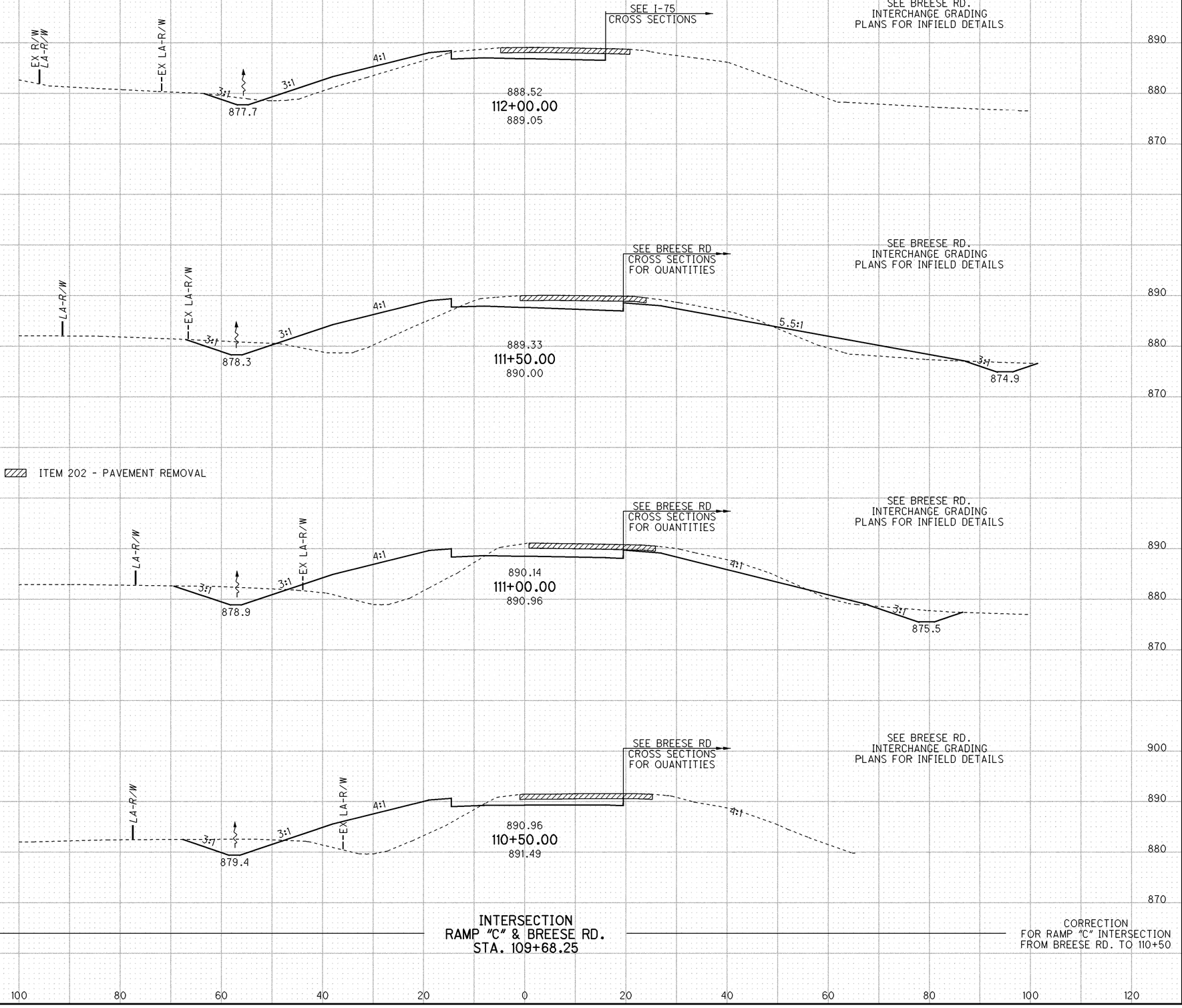

CROSS SECTIONS - RAMP C (BREESE RD.) STA. 109+68.25 TO STA. 112+00.00

ALL-75-0.21

330
907

I:\Pd\89029\roadway\sheets\89029XS103.dgn 25-JUN-2013 1:55PM tbolenba

SEEDING END WIDTH	SEEDING SQ. YDS.
69	392
72	408
75	428
79	450
83	1678

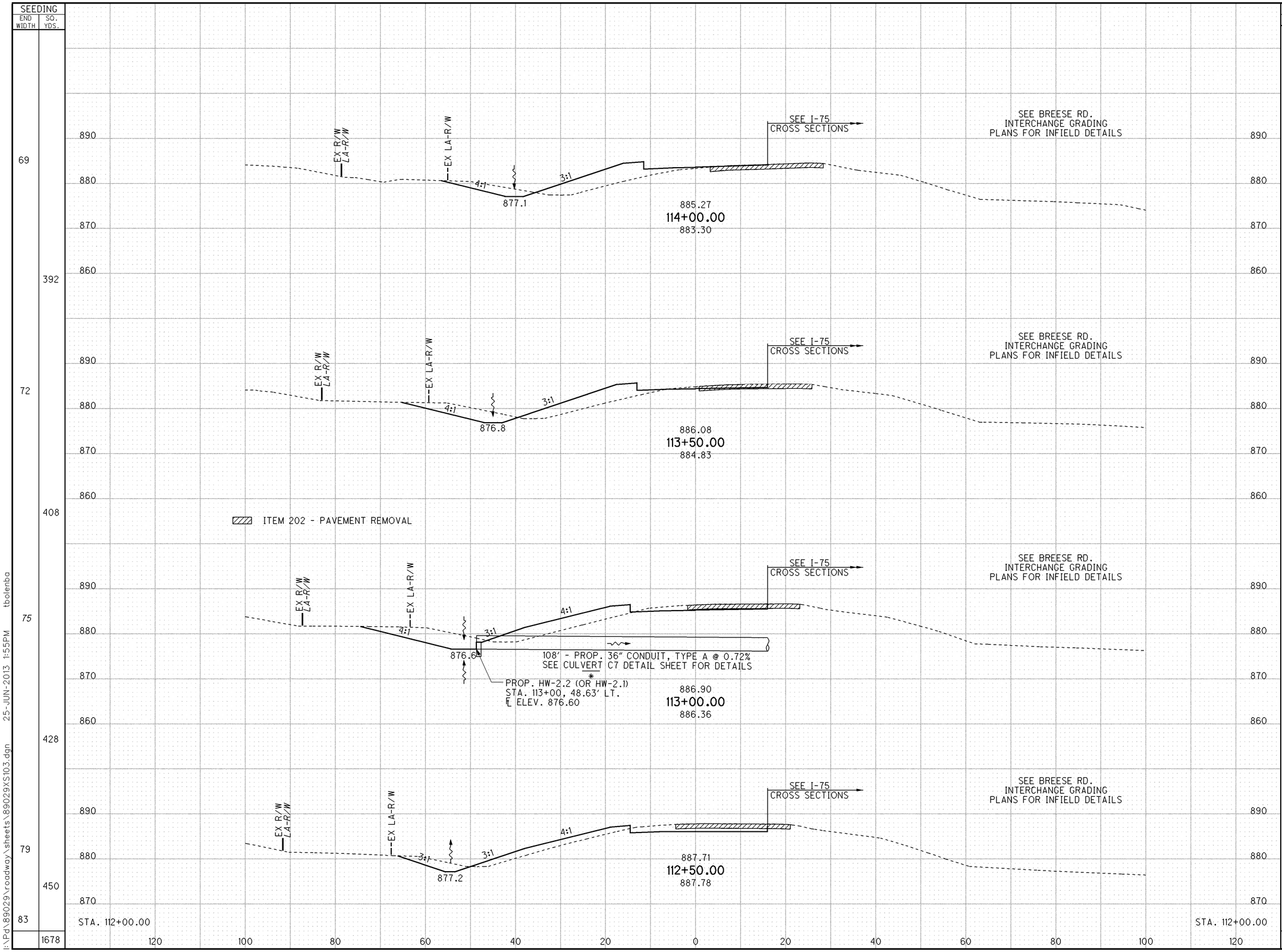

END AREA CUT	END AREA FILL	VOLUME CUT	VOLUME FILL
27	96	69	160
47	77	110	142
72	76	111	114
48	47	91	101
50	62	381	517

CALCULATED JMR
CHECKED ACF

CROSS SECTIONS - RAMP C (BREESE RD.) STA. 112+50.00 TO STA. 114+00.00

ALL-75-0.21

331
907

I:\Pd\89029\roadway\sheets\89029XS103.dgn 25-JUN-2013 1:55PM tbolenba

SEEDING	
END WIDTH	SQ. YDS.
47	276
52	308
59	343
65	372
69	
	1299

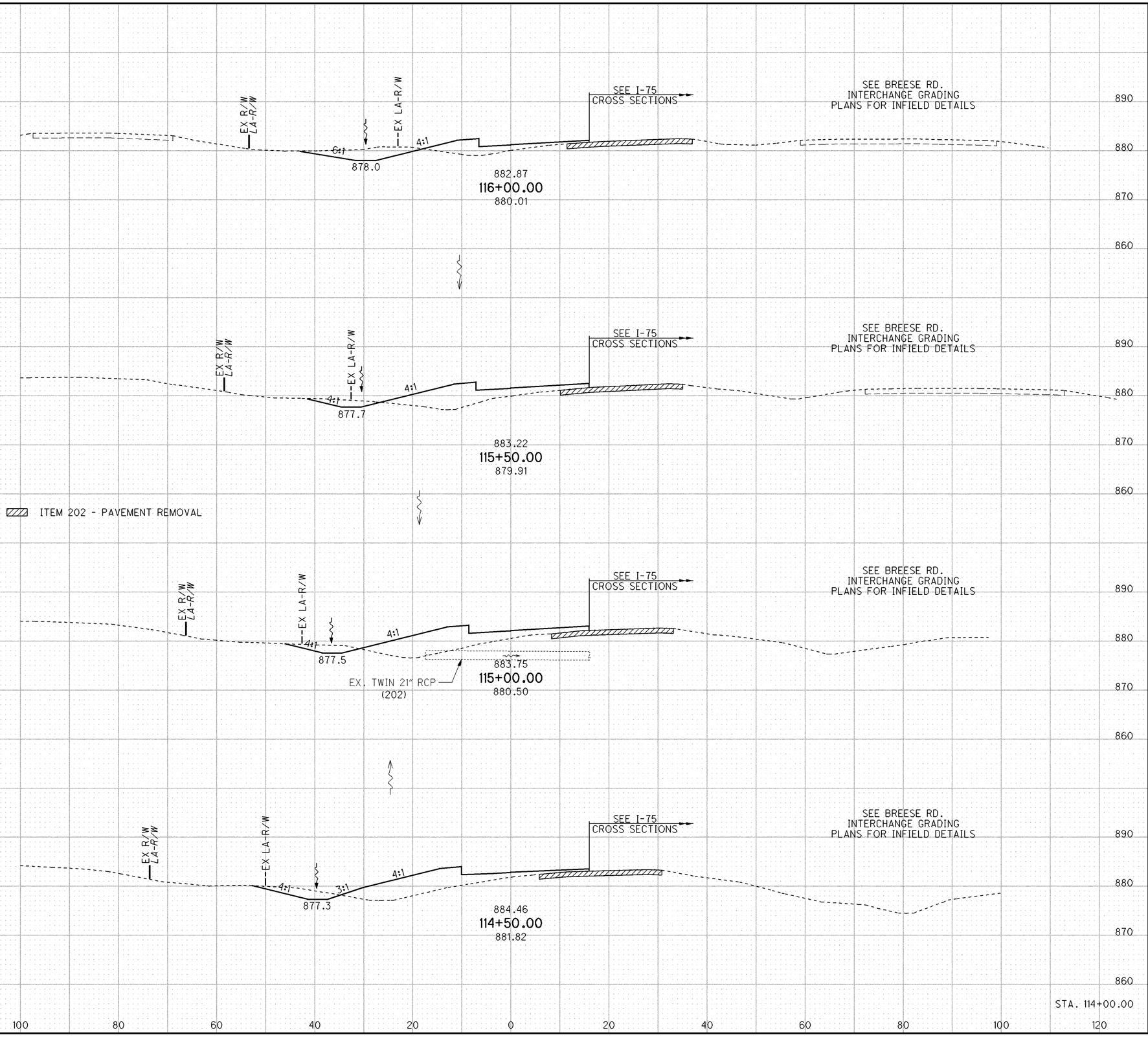

END AREA	
CUT	FILL
37	50
13	101
15	125
21	120
27	96

VOLUME	
CUT	FILL
46	140
26	209
33	227
44	200
149	776

CALCULATED JMR
CHECKED ACF

CROSS SECTIONS - RAMP C (BREESE RD.)
STA. 114+50.00 TO STA. 116+00.00

ALL-75-0.21

332
907

I:\Pdt\89029\roadway\sheets\89029XS103.dgn 25-JUN-2013 1:55PM tbolenba

SEEDING		END AREA		VOLUME	
END WIDTH	SQ. YDS.	CUT	FILL	CUT	FILL
49		97	6		
	267			166	19
47		82	14		
	258			131	42
46		60	31		
	258			90	75
47		235	50		
	783			387	136

CALCULATED JMR
CHECKED ACF

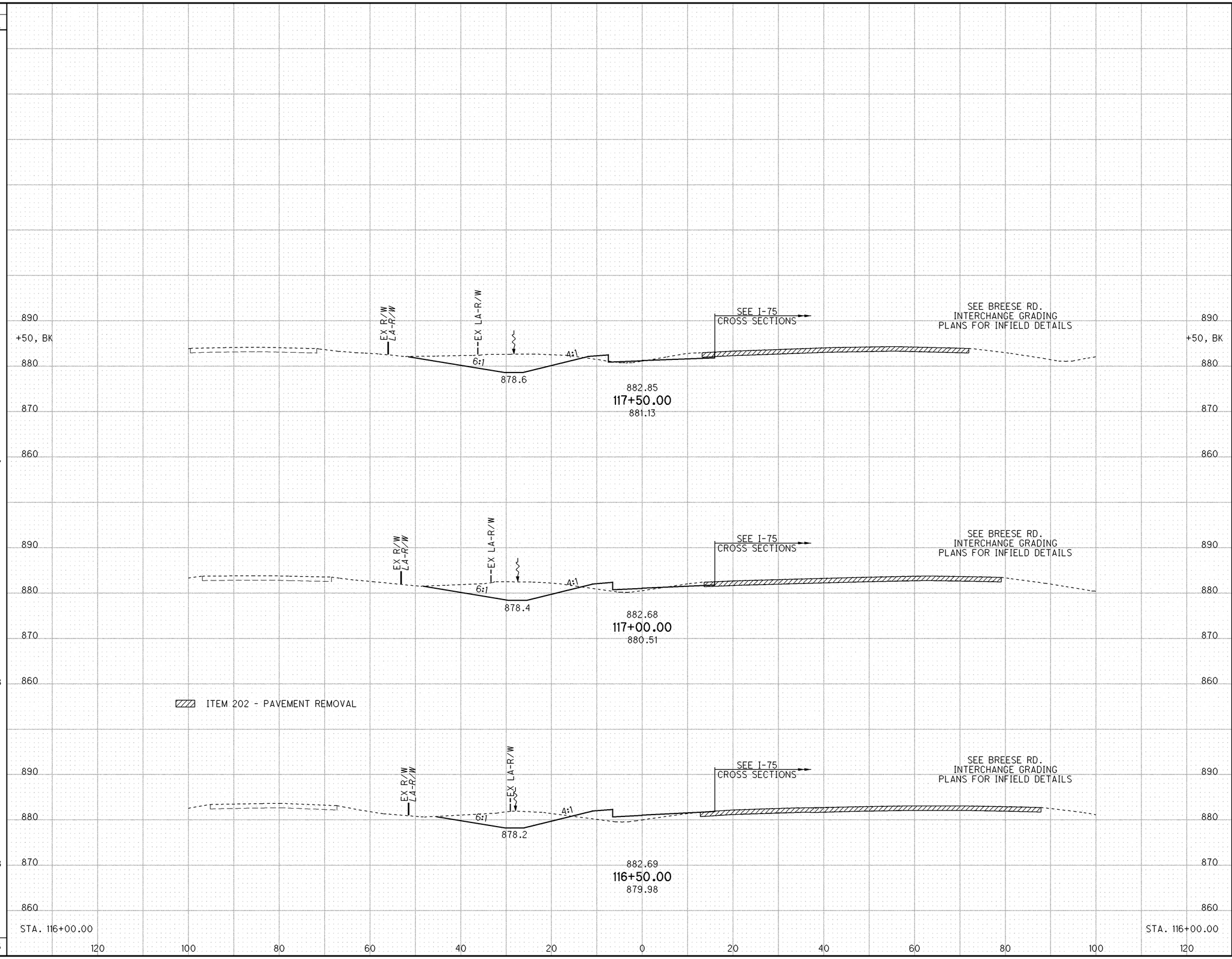

CROSS SECTIONS - RAMP C (BREESE RD.)
STA. 116+50.00 TO STA. 117+50.00

ALL-75-0.21

333
907

I:\Pd\89029\roadway\sheets\89029XS103.dgn 25-JUN-2013 1:55PM tbolenba

SEEDING	
END WIDTH	SQ. YDS.
45	300
63	
67	361
	214
	875

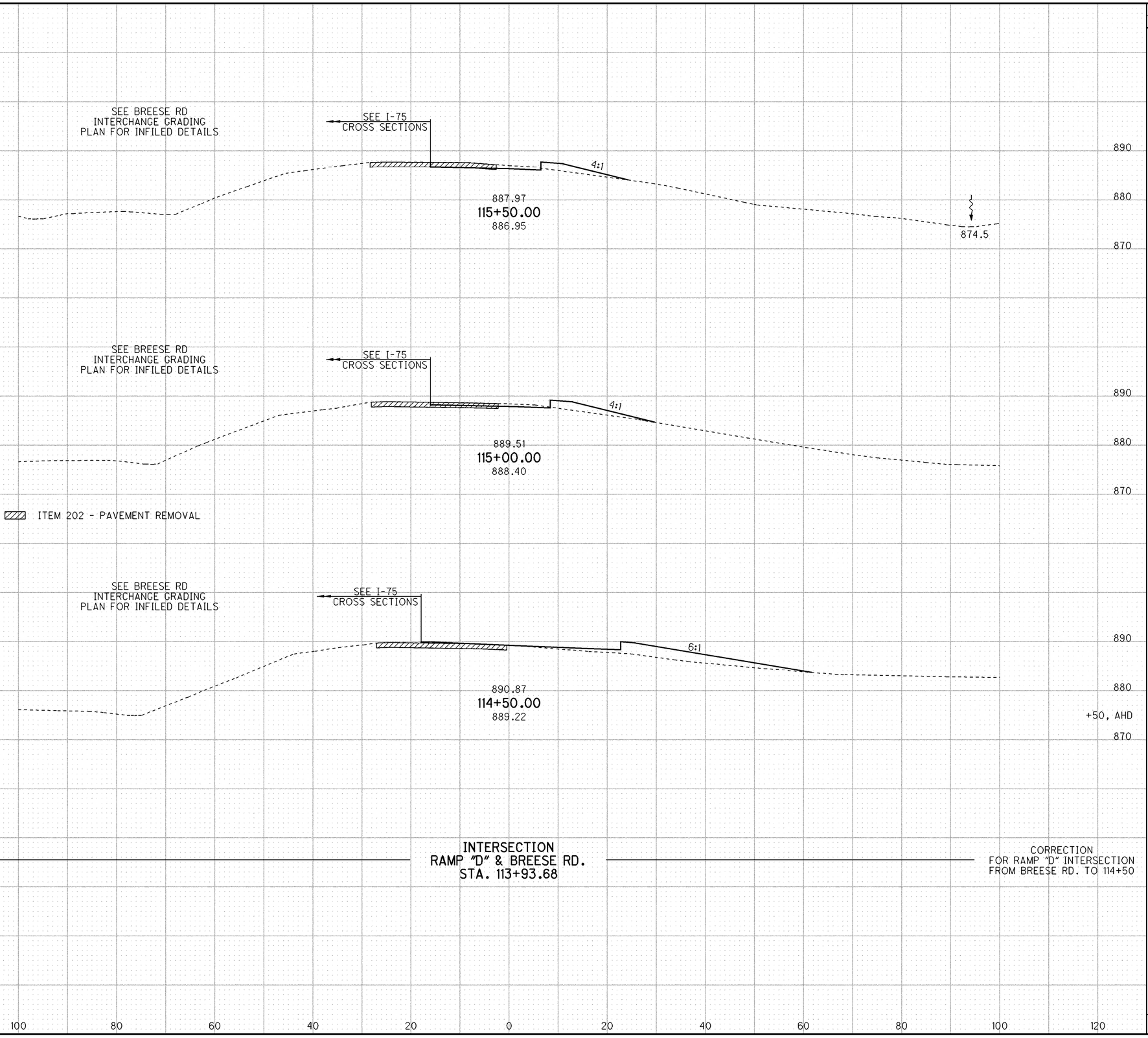

END AREA	
CUT	FILL
5	17
5	27
0	83

VOLUME	
CUT	FILL
9	41
5	102
0	198
14	341

CALCULATED BDC
CHECKED ACF

CROSS SECTIONS - RAMP D (BREESE RD.) STA. 113+93.68 TO STA. 115+50.00

ALL-75-0.21

334
907

I:\Pd\89029\roadway\sheets\89029XS104.dgn 25-JUN-2013 1:55PM tbolenba

SEEDING	
END WIDTH	SQ. YDS.
70	378
66	297
41	256
51	266
45	1197

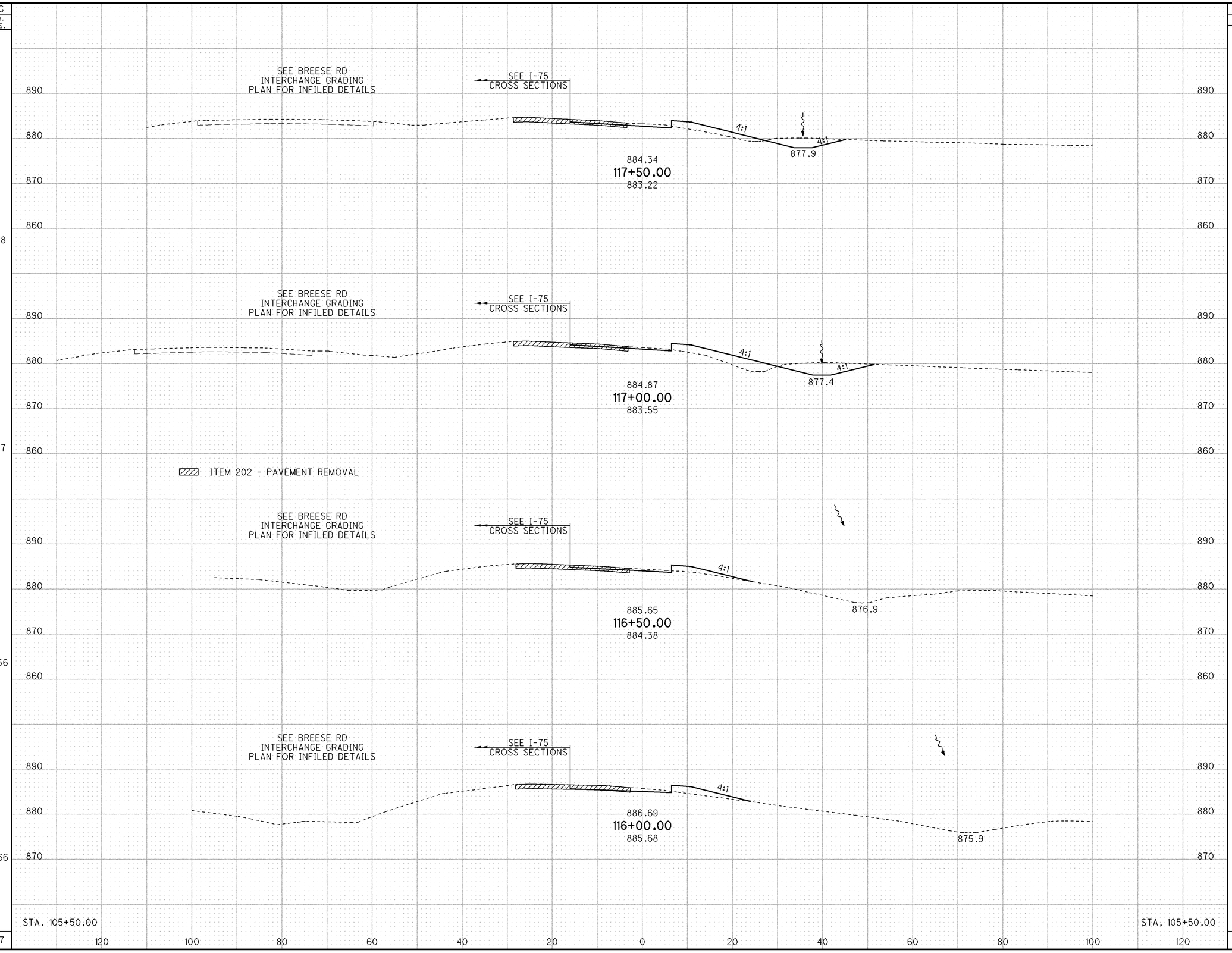

END AREA	
CUT	FILL
30	30
40	48
4	20
5	17
5	17

VOLUME	
CUT	FILL
65	72
41	63
8	34
9	31
123	200

CALCULATED JMR
CHECKED BDC

CROSS SECTIONS - RAMP D (BREESE RD.) STA. 116+00.00 TO STA. 117+50.00

ALL-75-0.21

335
907

I:\Pd\89029\roadway\sheets\89029XS104.dgn 25-JUN-2013 1:55PM tbolenba

SEEDING	
END WIDTH	SQ. YDS.
67	
	361
63	
	339
59	
	358
70	
	1058

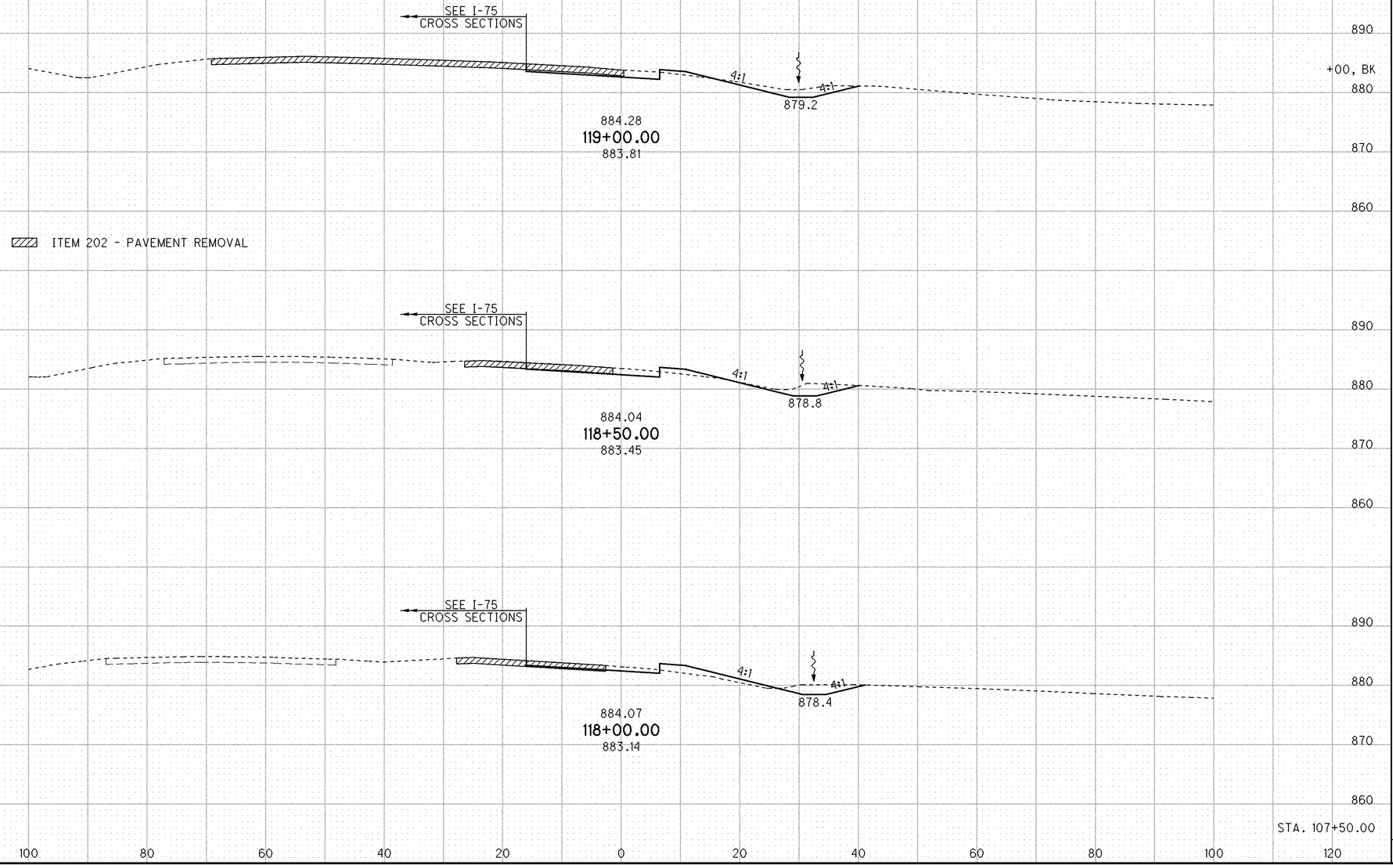

END AREA	
CUT	FILL
33	4
29	7
23	18
30	30

VOLUME	
CUT	FILL
57	10
48	23
49	44
154	77

CALCULATED BDC
CHECKED ACF

CROSS SECTIONS - RAMP D (BREESE RD.)
STA. 118+00.00 TO STA. 119+00.00

ALL-75-0.21

336
907

I:\Pd\89029\roadway\sheets\89029XS104.dgn 25-JUN-2013 1:55PM tbolenba

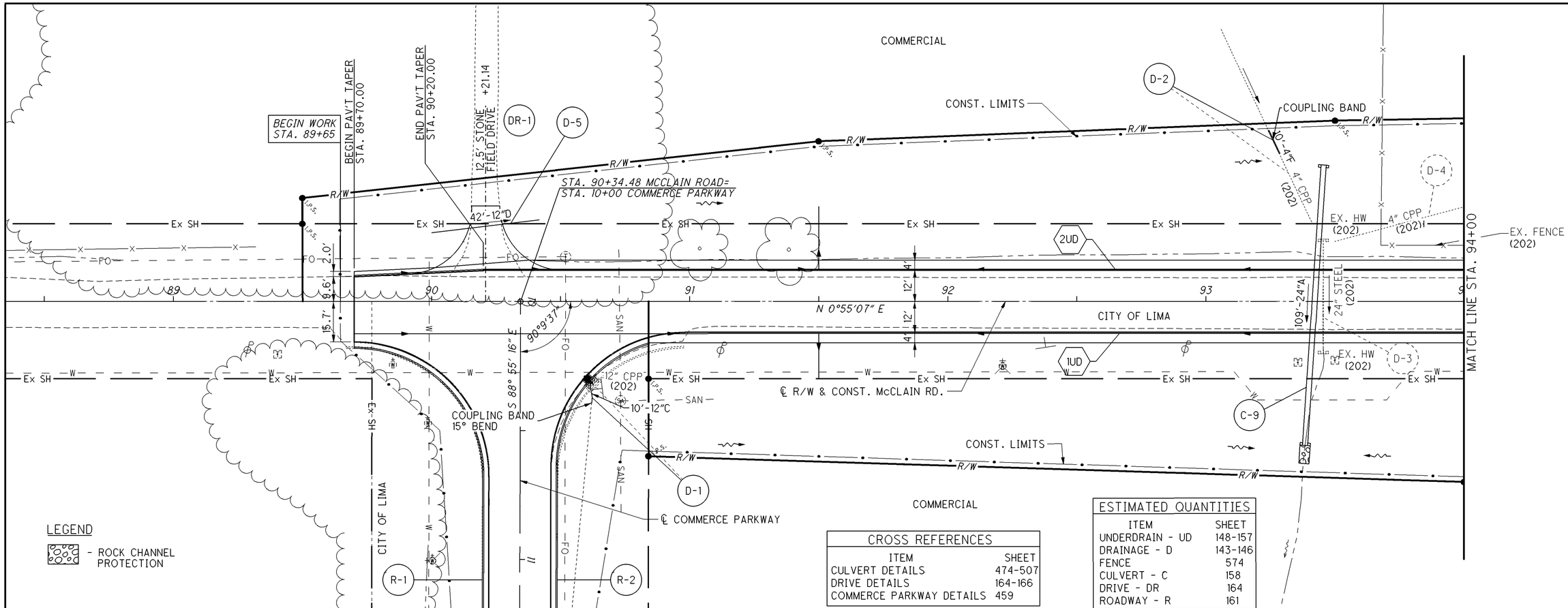

CROSS REFERENCES

ITEM	SHEET
CULVERT DETAILS	474-507
DRIVE DETAILS	164-166
COMMERCE PARKWAY DETAILS	459

ESTIMATED QUANTITIES

ITEM	SHEET
UNDERDRAIN - UD	148-157
DRAINAGE - D	143-146
FENCE	574
CULVERT - C	158
DRIVE - DR	164
ROADWAY - R	161

HORIZONTAL SCALE IN FEET 0 10 20 40

CALCULATED

CHECKED

PLAN AND PROFILE - McCLAIN RD. BEGIN WORK TO STA. 94+00.00

ALL-75-0.21

I:\Pd\89029\roadway\sheets\89029GP200.dgn 25-JUN-2013 1:55PM tbolenba

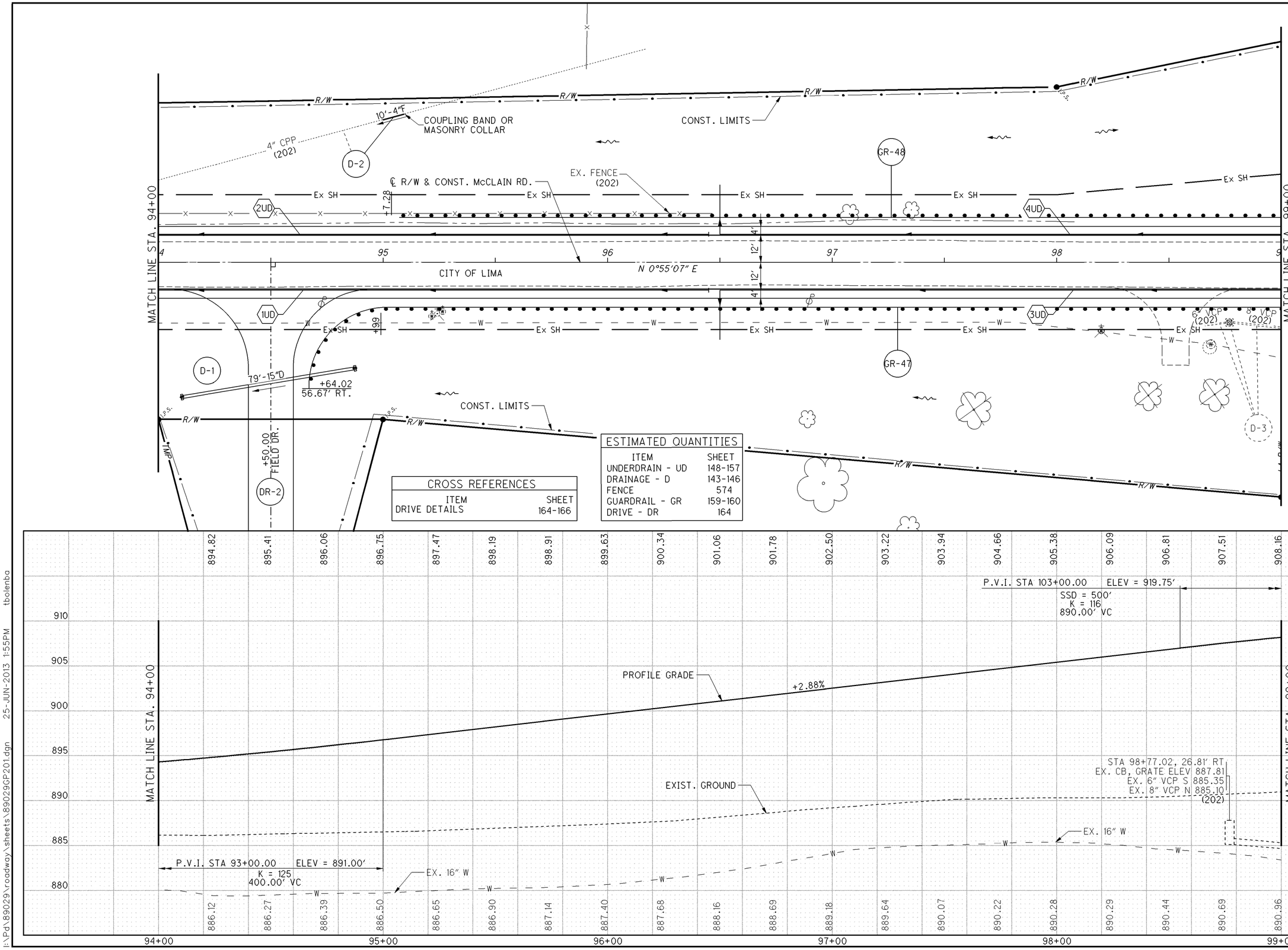

HORIZONTAL SCALE IN FEET
0 10 20 40

CALCULATED
CHECKED

PLAN AND PROFILE - McCLAIN RD.
STA. 94+00.00 TO STA. 99+00.00

ALL-75-0.21

I:\Pd\89029\roadway\sheets\89029GP201.dgn 25-JUN-2013 1:55PM tbolenba

CONST. LIMITS

℄ R/W & CONST. I-75

C-10

D-4

202-36" A

McCLAIN RD. OVER I-75
BRIDGE NO. ALL-75-0328

GR-48

D-3

EX. FENCE
(202)

2UD

℄ R/W & CONST. McCLAIN RD.

+18.15

+38.15

+63.20

8"

18" RCP

MATCH LINE STA. 99+00

MATCH LINE STA. 104+00

12'

12'

N 0° 55' 07" E

100

101

102

103

172

173

174

+28.50

+48.50

+73.54

1UD

8" VCP
(202)

GR-47

Ex LA

CITY OF LIMA

+TEL

D-1

D-2

I-75 N.B. STA. 173+06.27=
McCLAIN RD. STA. 103+26.13

EX. FENCE
(202)

I-75 S.B. ℄ STA. 173+26.65=
McCLAIN RD. STA. 103+50.41

D-5

EX. CB
(202)

15"

CONST. LIMITS

LA-R/W

CROSS REFERENCES	
ITEM	SHEET
CULVERT DETAILS	474-509

ESTIMATED QUANTITIES	
ITEM	SHEET
UNDERDRAIN - UD	148-157
DRAINAGE - D	143-146
FENCE	574
GUARDRAIL - GR	160
CULVERT - C	158

LEGEND

- ROCK CHANNEL PROTECTION

FOR PROFILE SEE SHEET 340

HORIZONTAL SCALE IN FEET
0 10 20 40

CALCULATED

CHECKED

PLAN - McCLAIN RD.
STA. 99+00.00 TO STA. 104+00.00

ALL-75-0.21

339
907

I:\Pd\89029\roadway\sheets\89029GP202.dgn 25-JUN-2013 1:54PM tbolenba

I:\Pd\89029\roadway\sheets\89029GF202.dgn 25-JUN-2013 1:54PM tbolenba

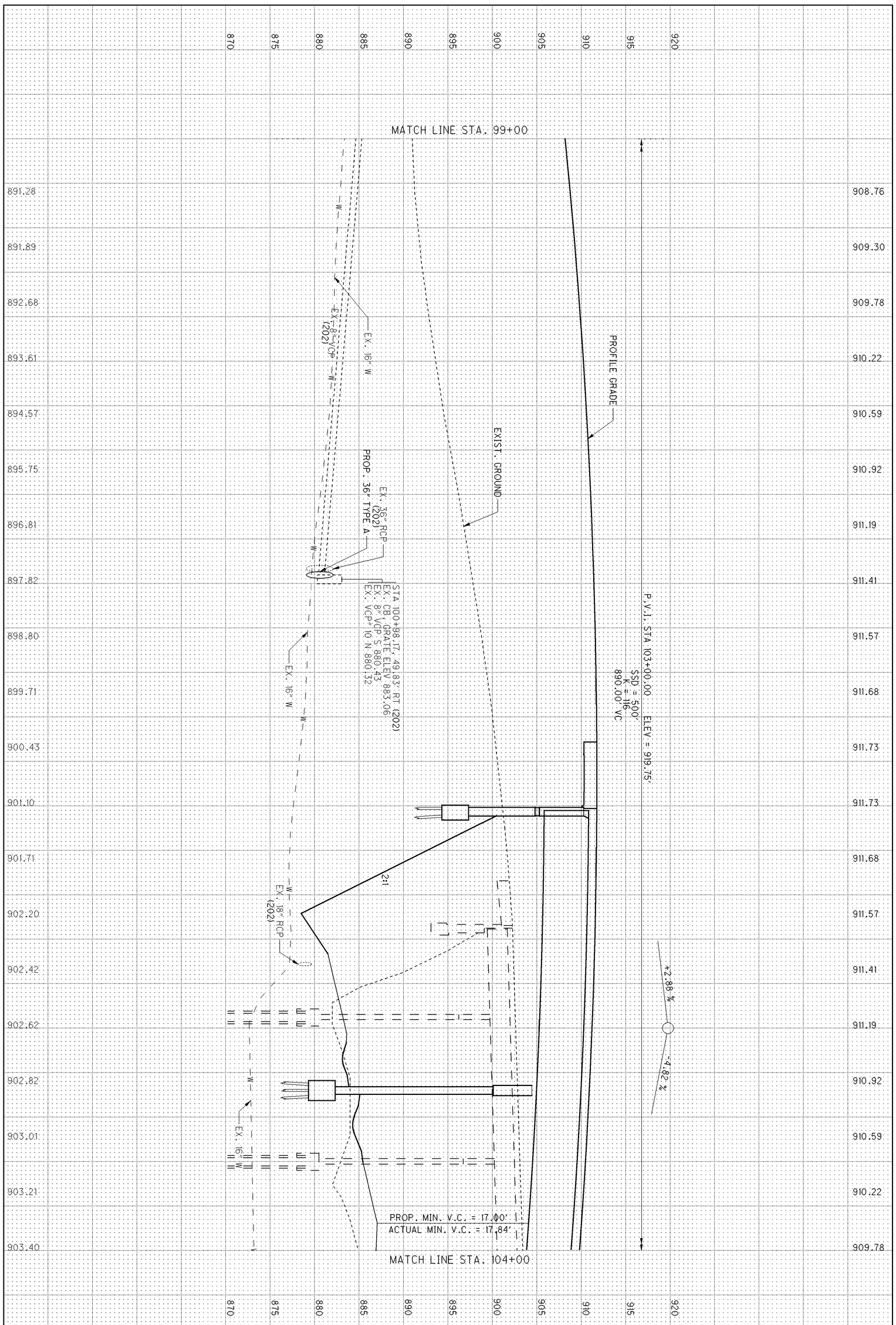

340 / 907	ALL-75-0.21	**PROFILE - McCLAIN ROAD** **STA. 99+00.00 TO STA. 104+00.00**	CALCULATED CHECKED

I:\Pd\89029\roadway\sheets\89029GP203.dgn 25-JUN-2013 1:54PM tbolenba

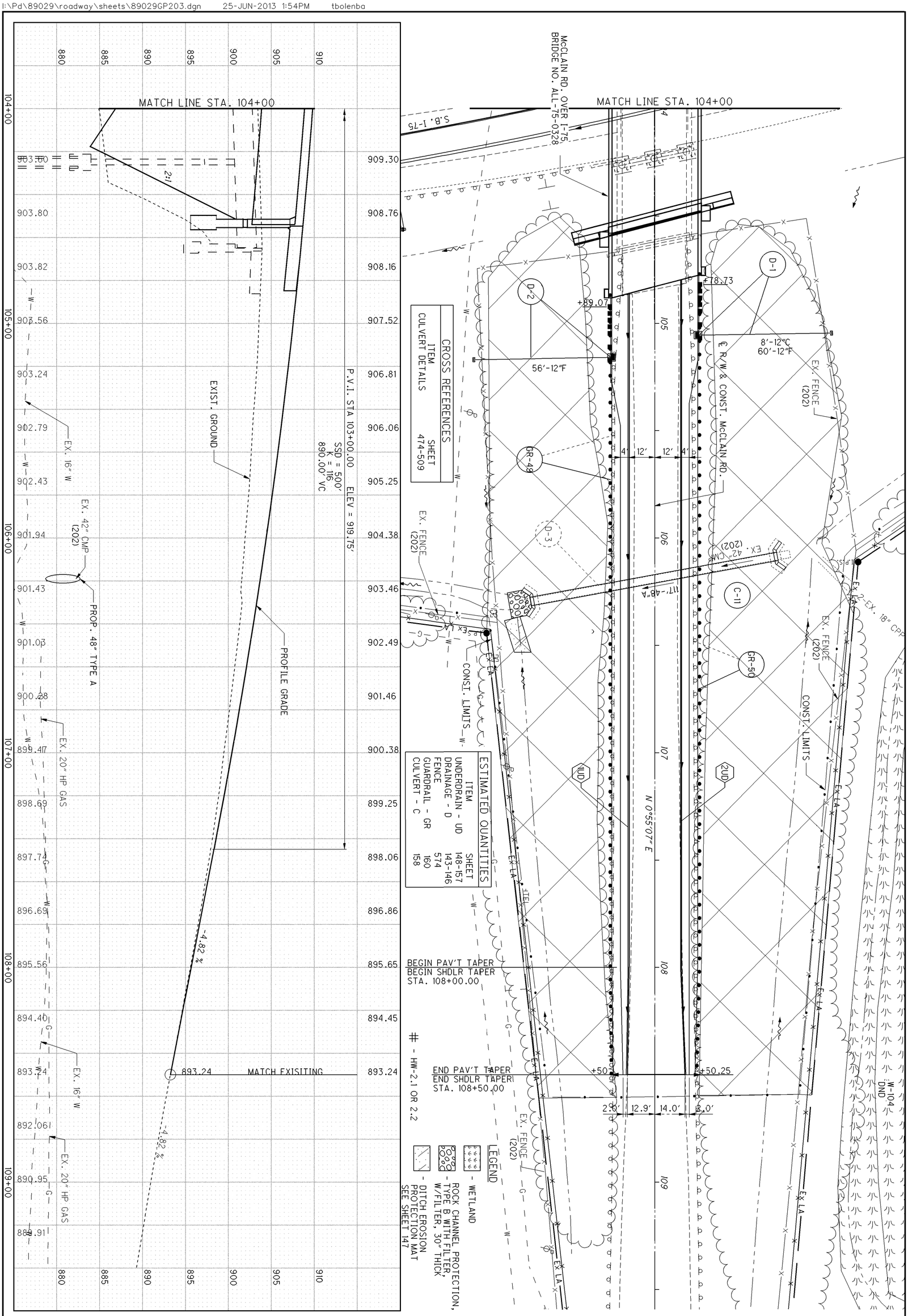

341 / 907	ALL-75-0.21	PLAN AND PROFILE - McCLAIN RD. STA. 104+00.00 TO END WORK	CALCULATED / CHECKED — HORIZONTAL SCALE IN FEET (0, 10, 20, 40)

SEEDING END WIDTH	SEEDING SQ. YDS.
48	730
	150
42	
	21
35	
	874

DR1 + 21.14 11' STONE FIELD DRIVE

CORRECTION FOR FIELD DRIVE LT.

R/W

37.00' LT MEET EXISTING

EX SH

12" D
+41.9, 31.6' LT
OUTLET EL 888.8

FIBER OPTIC

891.97
DRIVEWAY SECTION
STA. 90+21.14
891.50

ITEM 202 - CURB AND GUTTER REMOVED

6:1 4:1 12.5:1

12" D
+00.00, 26.6' LT
INLET EL 890.0

890.0

892.05
90+00.00
891.75

16" WATER

ITEM 202 - PAVEMENT REMOVAL (ASPHALT)

4:1 4:1

890.8

892.16
BEGIN PAVEMENT
89+70.00
892.16

BEGIN WORK, EATHWORK & SEEDING
89+65.00
892.19

89+50.00
892.26

+00, BK

+65, AHD

+70, BK

+70, AHD

END AREA CUT	END AREA FILL	VOLUME CUT	VOLUME FILL
21	13	95	208
		17.8	7.8
		0.4	0.1
11	1		
4	1		
0	0		
		113	216

CALCULATED BDC
CHECKED JJK

CROSS SECTIONS - McCLAIN RD.
STA. 89+50.00 TO STA. 90+21.14

ALL-75-0.21

342
907

I:\Pd\89029\roadway\sheets\89029XS200.dgn 25-JUN-2013 1:54PM tbolenba

SEEDING	
END WIDTH	SQ. YDS.
98	536
95	508
88	
41	
170	
214	
36	
	1428

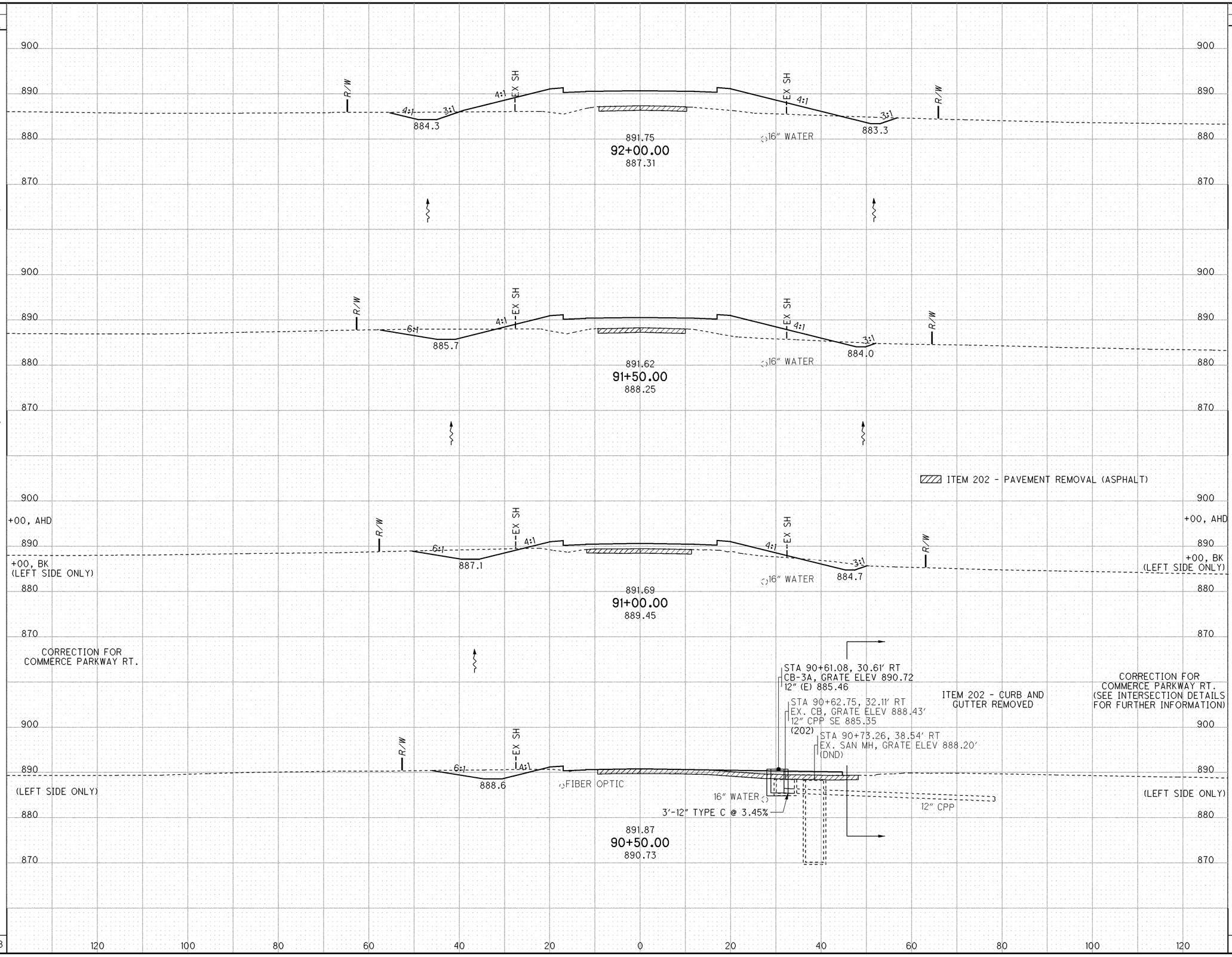

END AREA		VOLUME	
CUT	FILL	CUT	FILL
26	284		
		60	370
39	200		
		75	278
42	100		
29	43		
		52	52
		22	15
27	13		
		209	715

CALCULATED BDC
CHECKED JJK

CROSS SECTIONS - McCLAIN RD. STA. 90+50.00 TO STA. 92+00.00

ALL-75-0.21

343
907

I:\Pd\89029\roadway\sheets\89029XS200.dgn 25-JUN-2013 1:54PM tbolenba

SEEDING END WIDTH	SEEDING SQ. YDS.
119	
	644
113	
	617
109	
	581
100	
	550
98	
	2392

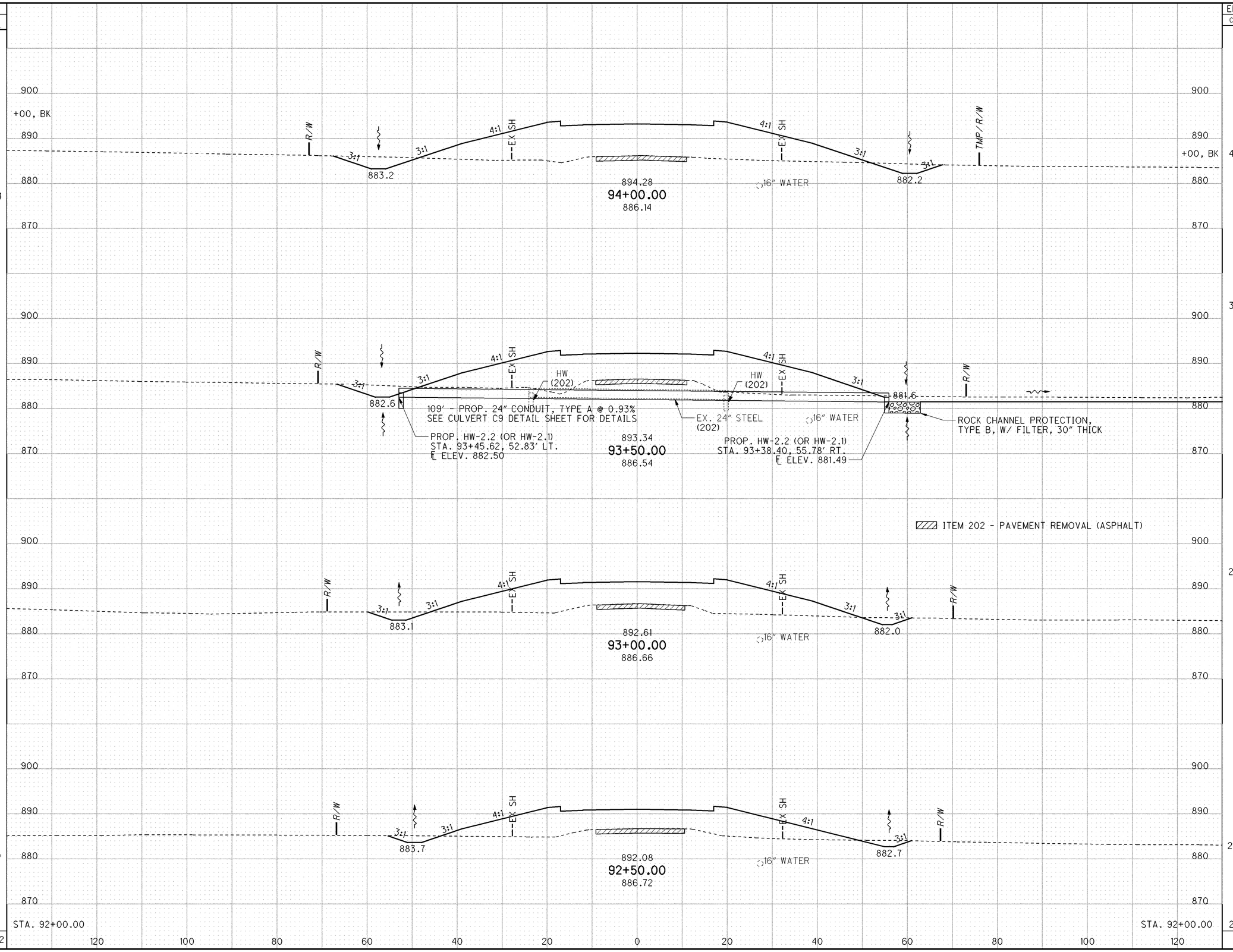

END AREA CUT	END AREA FILL	VOLUME CUT	VOLUME FILL
49	593	77	1089
34	583	56	968
26	462	43	787
20	388	43	622
26	284	220	3466

CALCULATED BDC
CHECKED JJK

CROSS SECTIONS - McCLAIN RD. STA. 92+50.00 TO STA. 94+00.00

ALL-75-0.21

344
907

I:\Pd\89029\roadway\sheets\89029XS200.dgn 25-JUN-2013 1:54PM tbolenba

SEEDING END WIDTH	SEEDING SQ. YDS.
116	
	633
112	
58	
58	
	322
	542
58	
	322
58	
	1819

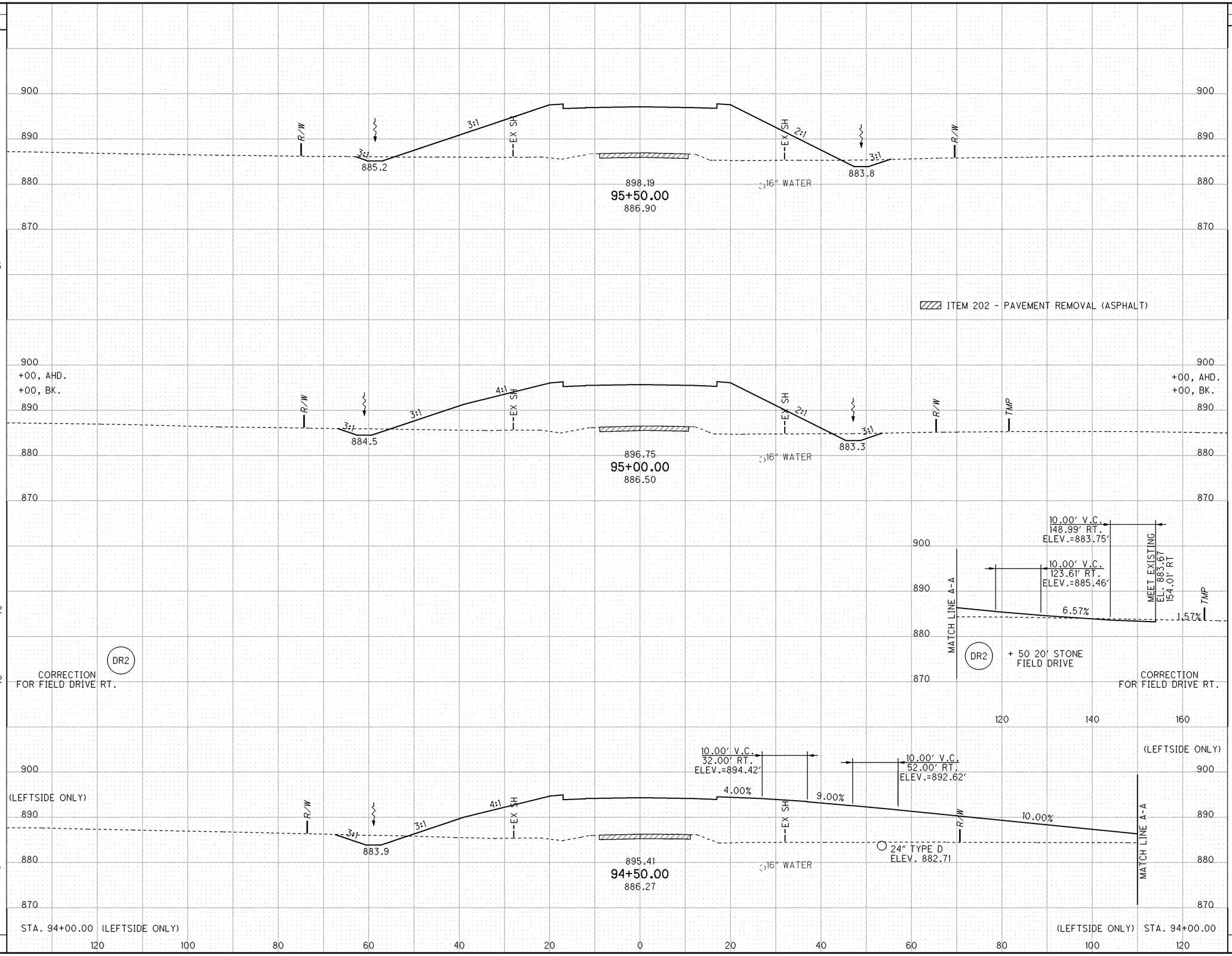

END AREA CUT	END AREA FILL	VOLUME CUT	VOLUME FILL
15	799		
		32	1424
20	739		
10	405		
		28	672
		4	1733
20	321		
		45	569
29	293		
		109	4398

CALCULATED BDC
CHECKED JJK

CROSS SECTIONS - McCLAIN RD. STA. 94+50.00 TO STA. 95+50.00

ALL-75-0.21

345
907

I:\Pd\89029\roadway\sheets\89029XS200.dgn 25-JUN-2013 1:54PM tbolenba

SEEDING		END AREA		VOLUME	
END WIDTH	SQ. YDS.	CUT	FILL	CUT	FILL
141	772	96	912	161	1631
137		78	850		
130	742	31	843	101	1568
123	703	20	801	47	1522
116	664	15	799	32	1481
	2881			342	6203

CALCULATED BDC
CHECKED JJK

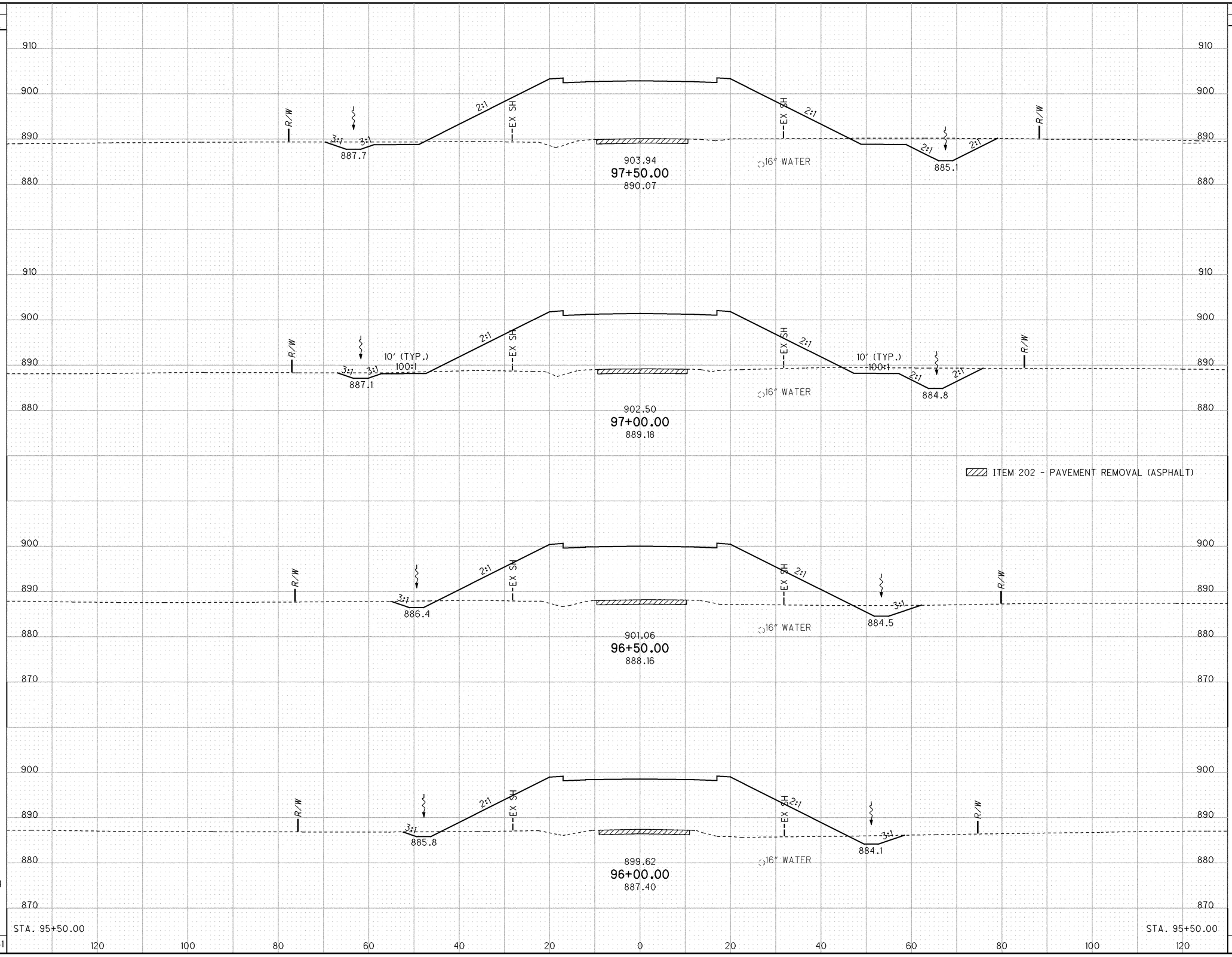

CROSS SECTIONS - McCLAIN RD. STA. 96+00.00 TO STA. 97+50.00

ALL-75-0.21

346
907

I:\Pd\89029\roadway\sheets\89029XS200.dgn 25-JUN-2013 1:54PM tbolenba

SEEDING	
END WIDTH	SQ. YDS.
187	
	1003
174	
	925
159	
	847
146	
	797
141	
	3572

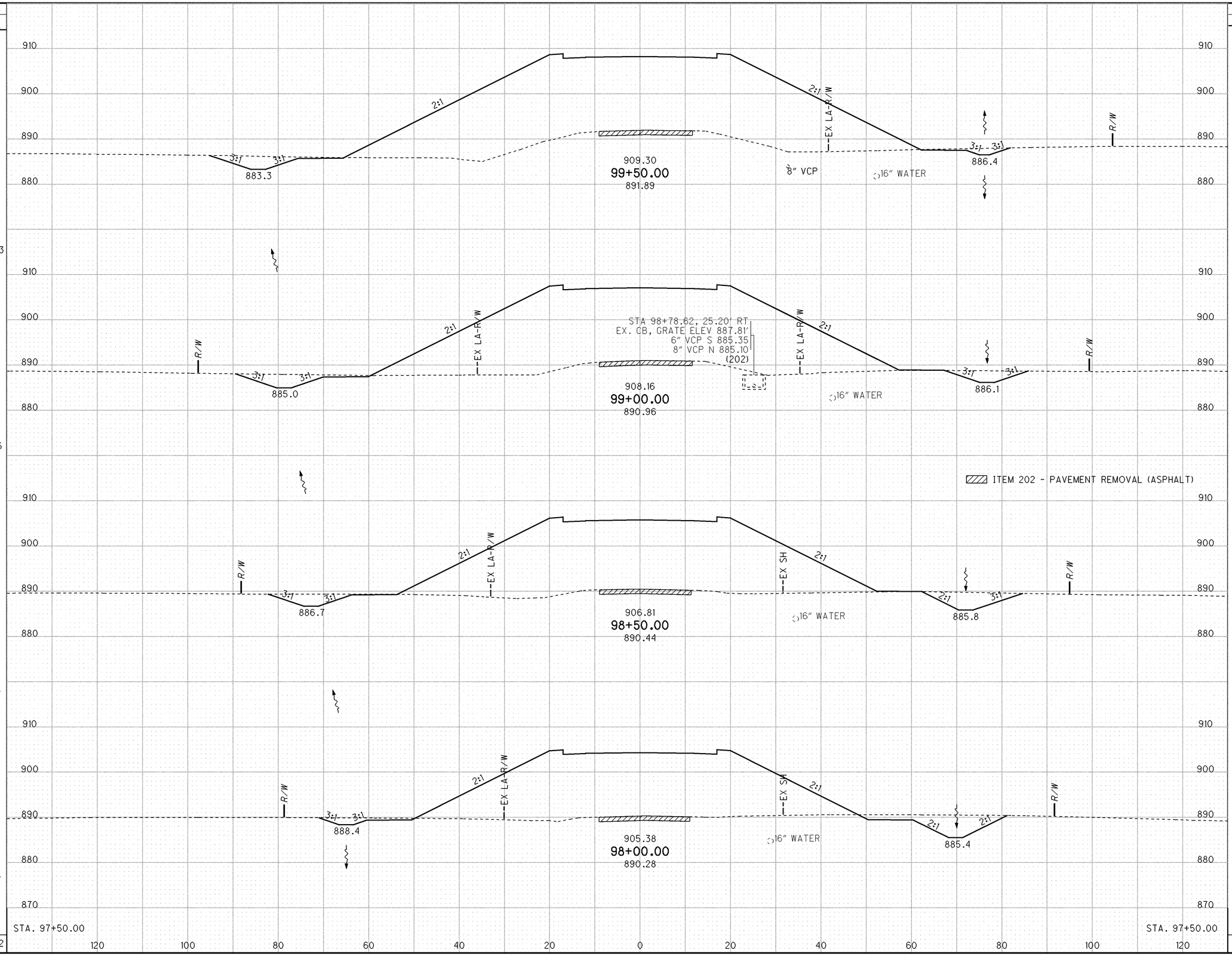

END AREA	
CUT	FILL
47	1624
66	1438
80	1219
90	1624
96	912
569	10276

VOLUME	
CUT	FILL
105	2835
135	2460
157	2632
172	2348

CALCULATED BDC
CHECKED JJK

CROSS SECTIONS - McCLAIN RD. STA. 98+00.00 TO STA. 99+50.00

ALL-75-0.21

347
907

I:\Pd\89029\roadway\sheets\89029XS200.dgn 25-JUN-2013 1:54PM tbolenba

SEEDING END WIDTH	SEEDING SQ. YDS.	END AREA CUT	END AREA FILL	VOLUME CUT	VOLUME FILL
237		312	1461		
	629			193	1507
	-8			5	-3
216	1708	104	1794	296	4829
194	1058	109	1683	144	3062
187	3388	47	1624	638	9395

CALCULATED BDC
CHECKED JJK

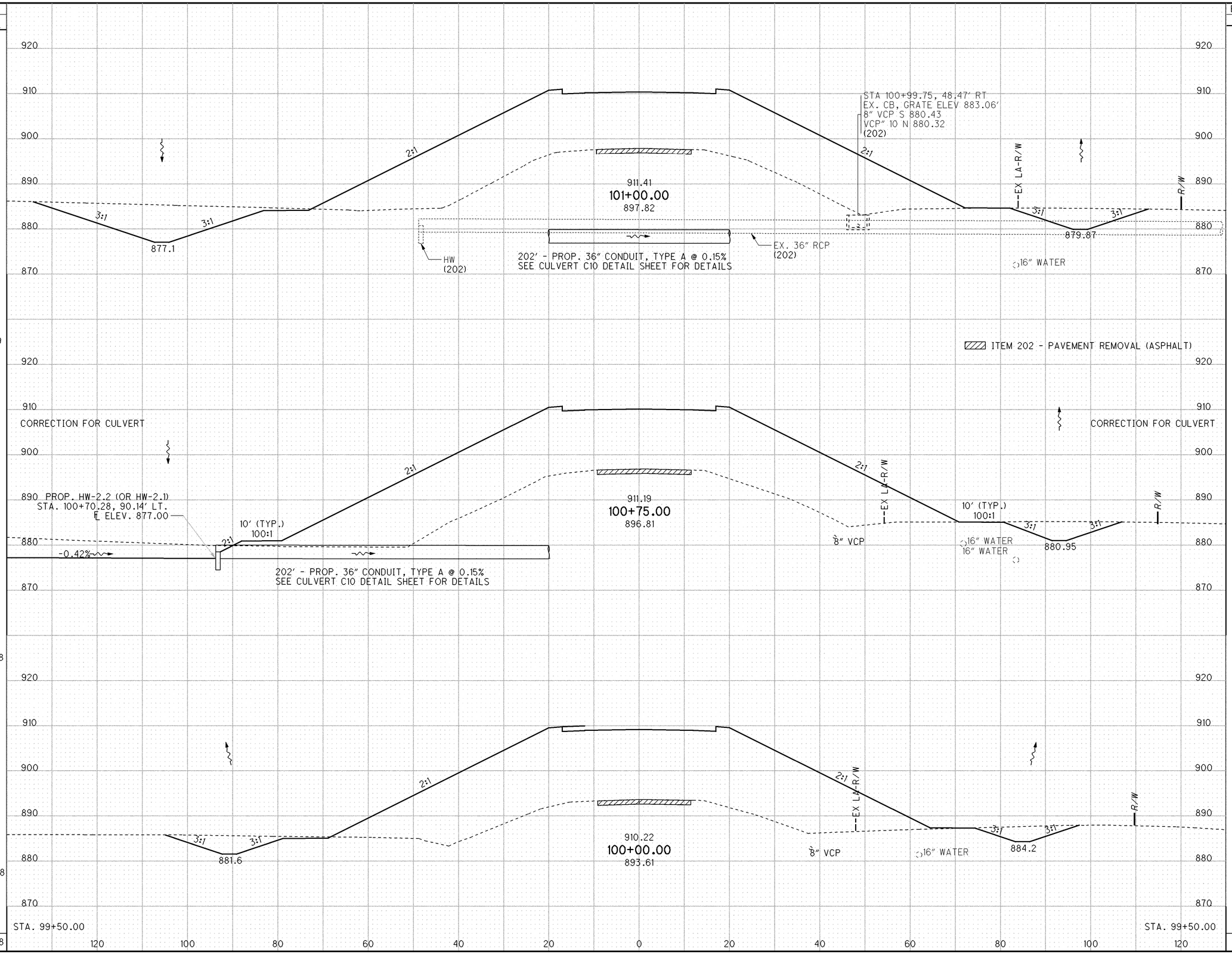

CROSS SECTIONS - McCLAIN RD. STA. 100+00.00 TO STA. 101+00.00

ALL-75-0.21

348
907

I:\Pd\89029\roadway\sheets\89029XS200.dgn 25-JUN-2013 1:54PM tbolenba

SEEDING	
END WIDTH	SQ. YDS.
190	1664
252	540
245	1339
237	3543

END AREA	
CUT	FILL
356	722
215	1404
375	1460
312	1461

VOLUME	
CUT	FILL
635	5017
213	1036
636	2705
1484	8758

CALCULATED BDC
CHECKED JJK

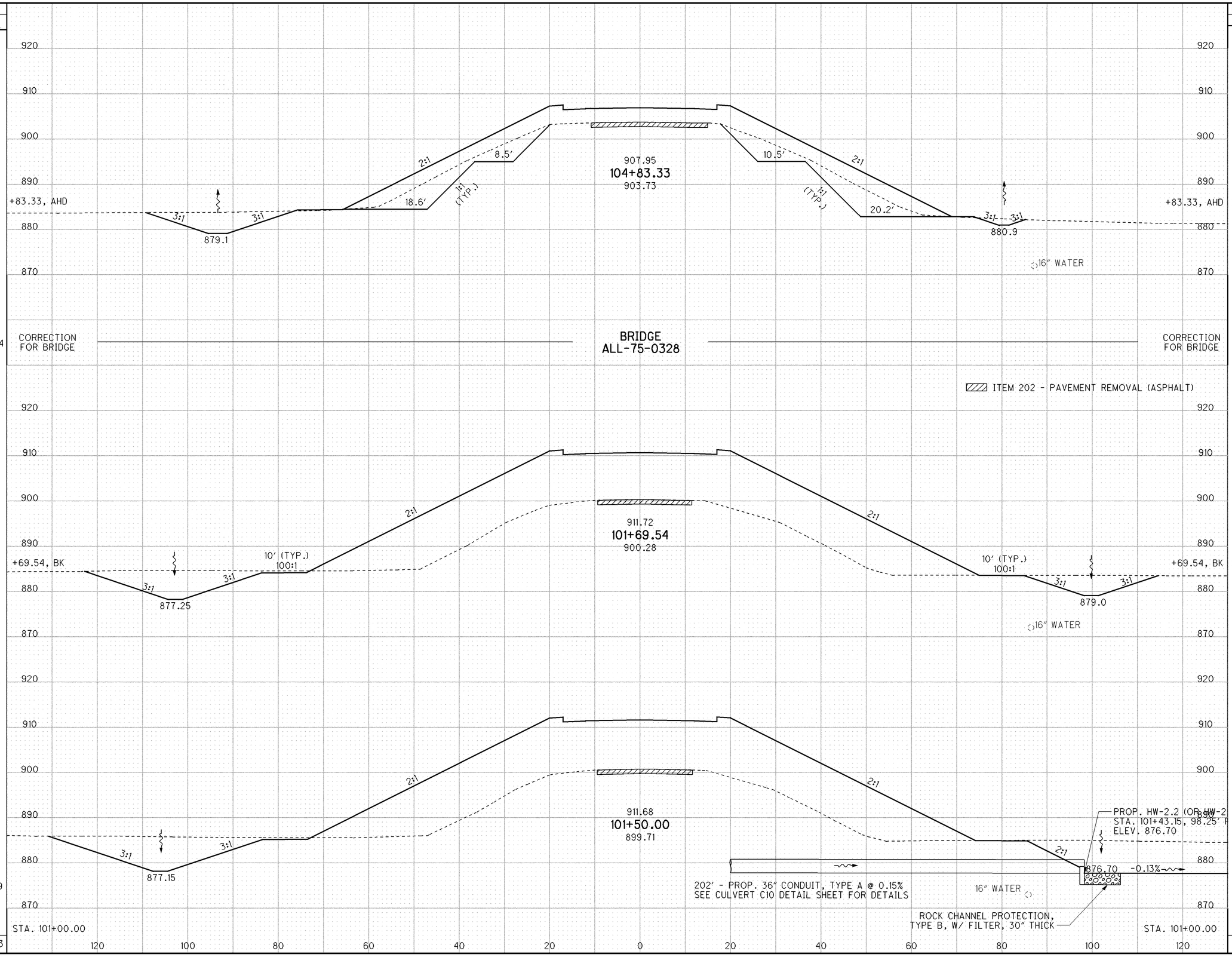

CROSS SECTIONS - McCLAIN RD.
STA. 101+50.00 TO STA. 104+83.33

ALL-75-0.21

I:\Pd\89029\roadway\sheets\89029XS200.dgn 25-JUN-2013 1:54PM tbolenba

SEEDING END WIDTH	SEEDING SQ. YDS.	END AREA CUT	END AREA FILL	VOLUME CUT	VOLUME FILL
	944			10	-3
167		375	588		
	944			691	1144
173		371	656		
	964			682	1255
174		366	699		
	1011			669	1316
190		356	722		
	2906			2052	3712

CALCULATED BDC
CHECKED JJK

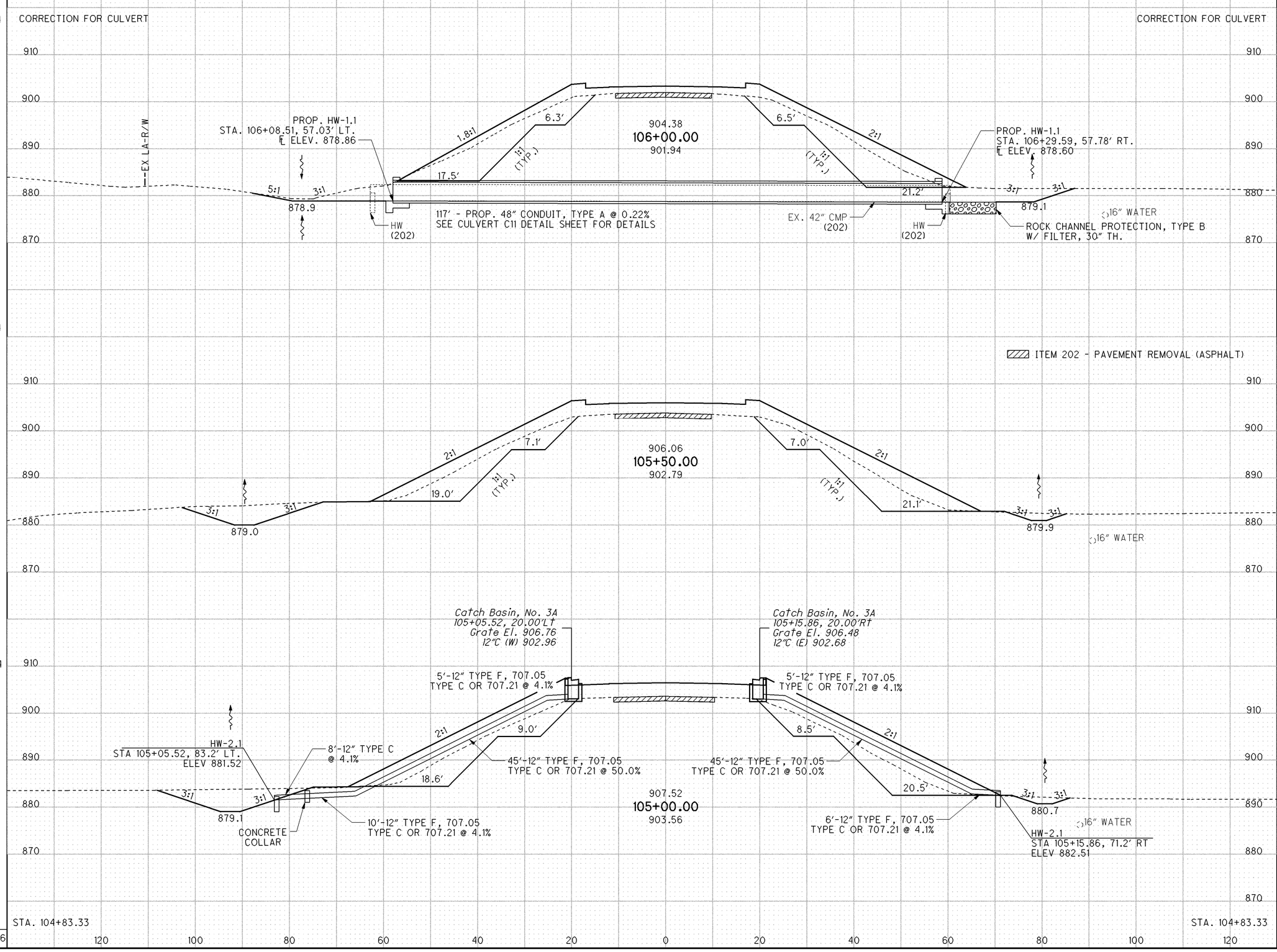

CROSS SECTIONS - McCLAIN RD. STA. 105+00.00 TO STA. 106+00.00

ALL-75-0.21

350
907

I:\Pd\89029\roadway\sheets\89029XS200.dgn 25-JUN-2013 1:54PM tbolenba

SEEDING		END AREA		VOLUME		CALCULATED BDC
END WIDTH	SQ. YDS.	CUT	FILL	CUT	FILL	CHECKED JJK
101	592	173	193	209	269	
112	653	53	97	248	387	
123	806	215	321	546	842	
167	2050	375	588	1004	1492	

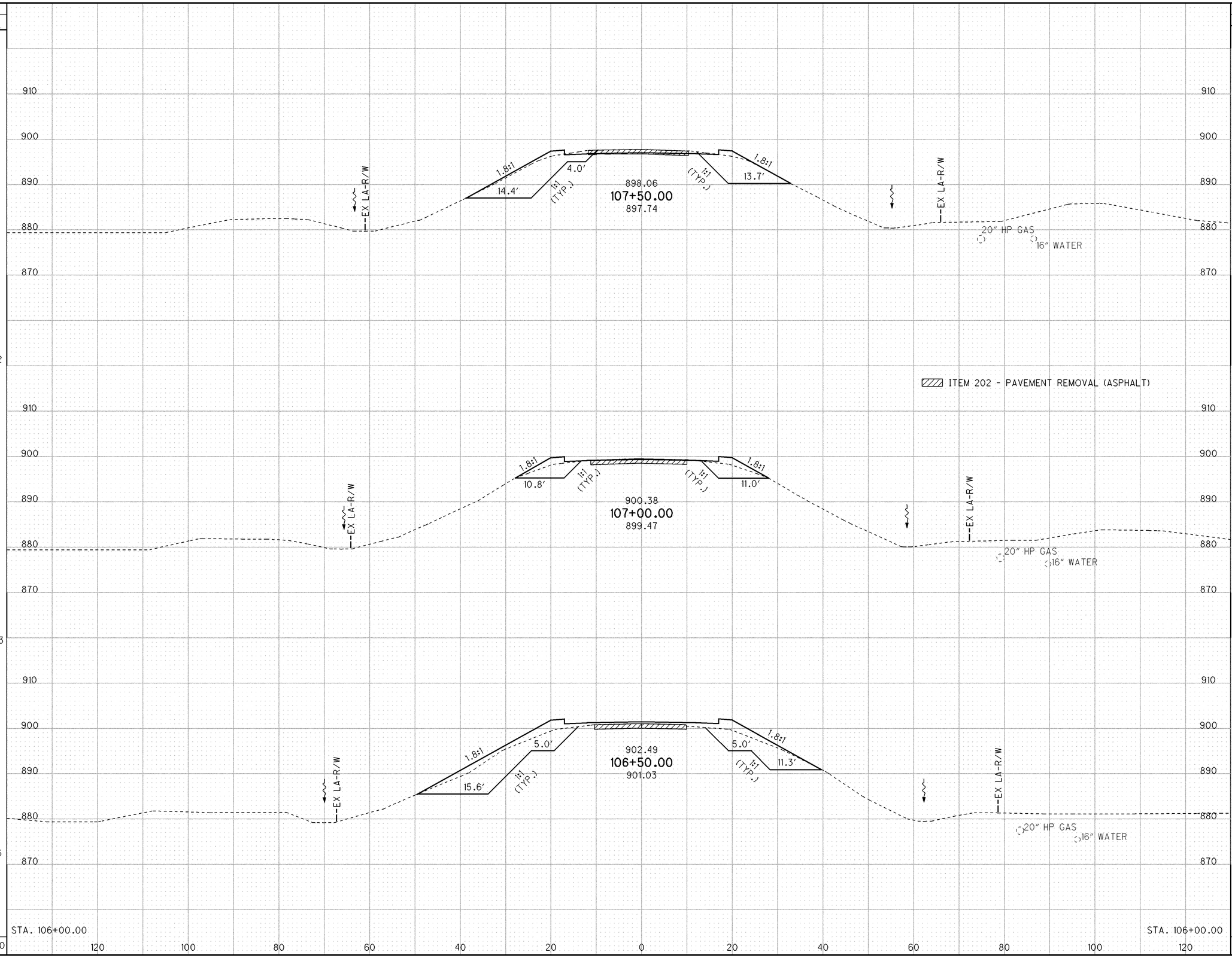

CROSS SECTIONS - McCLAIN RD.
STA. 106+50.00 TO STA. 107+50.00

ALL-75-0.21

351
907

I:\Pd\89029\roadway\sheets\89029XS200.dgn 25-JUN-2013 1:54PM tbolenba

SEEDING END WIDTH	SEEDING SQ. YDS.
72	85
81	478
91	533
101	1096

END AREA CUT	END AREA FILL	VOLUME CUT	VOLUME FILL
0	0		
85	118		
101	118	165	187
77	84	231	256
173	193	412	465

CALCULATED BDC
CHECKED JJK

CROSS SECTIONS - McCLAIN RD. STA. 108+00.00 TO STA. 109+00.00

ALL-75-0.21

352
907

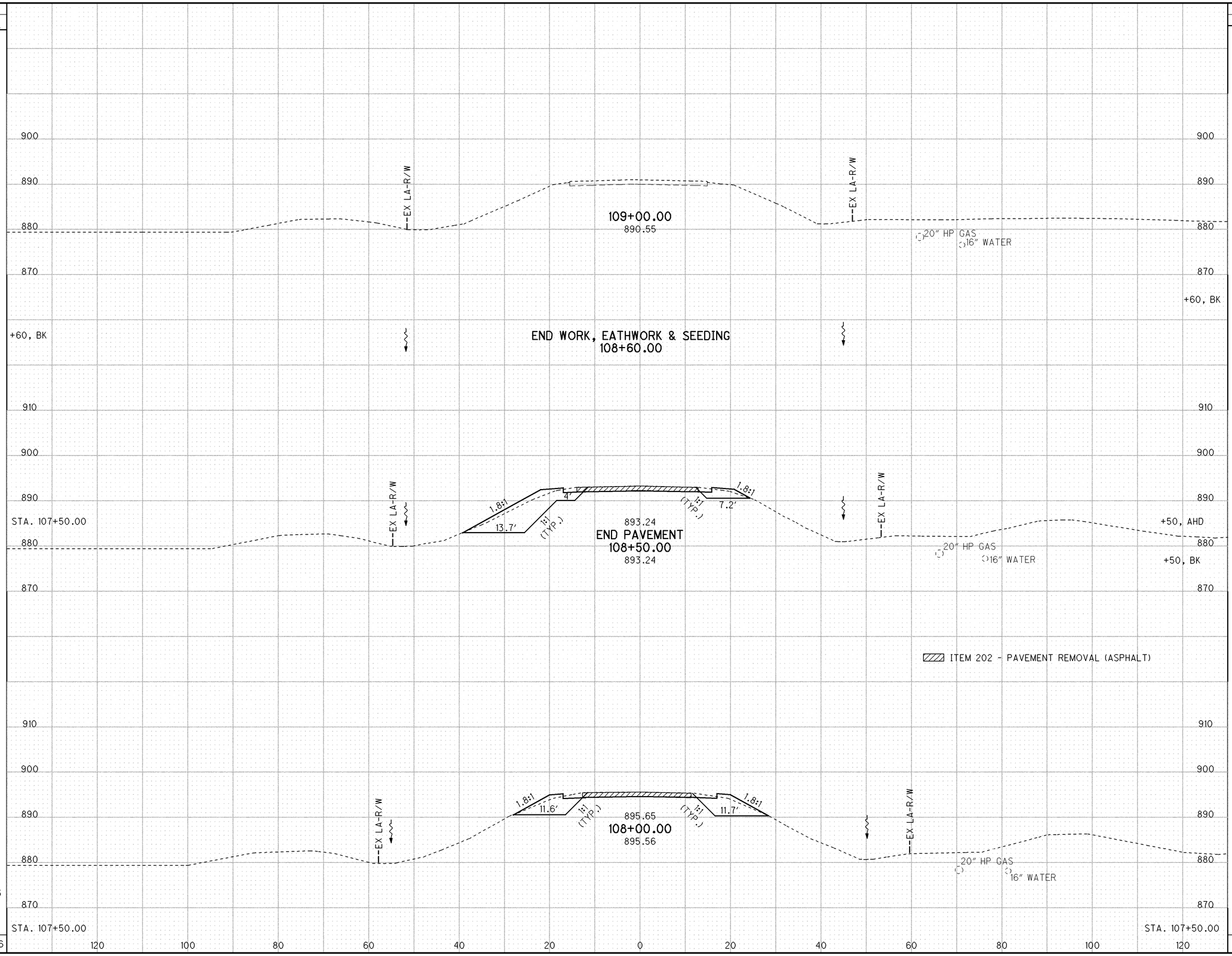

I:\Pd\89029\roadway\sheets\89029XS200.dgn 26-JUN-2013 6:57AM bclark

CROSS REFERENCES	
ITEM	SHEET
CULVERT DETAILS	474-507
LIGHTING	510-528
DRIVE DETAILS	164-166

ESTIMATED QUANTITIES	
ITEM	SHEET
UNDERDRAIN - UD	148-157
DRAINAGE - D	143-146
FENCE	574
MAILBOX - MB	161
DRIVE - DR	164
ROADWAY	161

FOR PROFILE SEE SHEET 354

92+00 93+00 94+00 95+00 96+00 97+00

HORIZONTAL SCALE IN FEET

CALCULATED CHECKED

PLAN AND PROFILE - S.R. 65
BEGIN WORK TO STA. 97+00.00

ALL-75-0.21

I:\Pd\89029\roadway\sheets\89029GP300.dgn 25-JUN-2013 1:54PM tbolenba

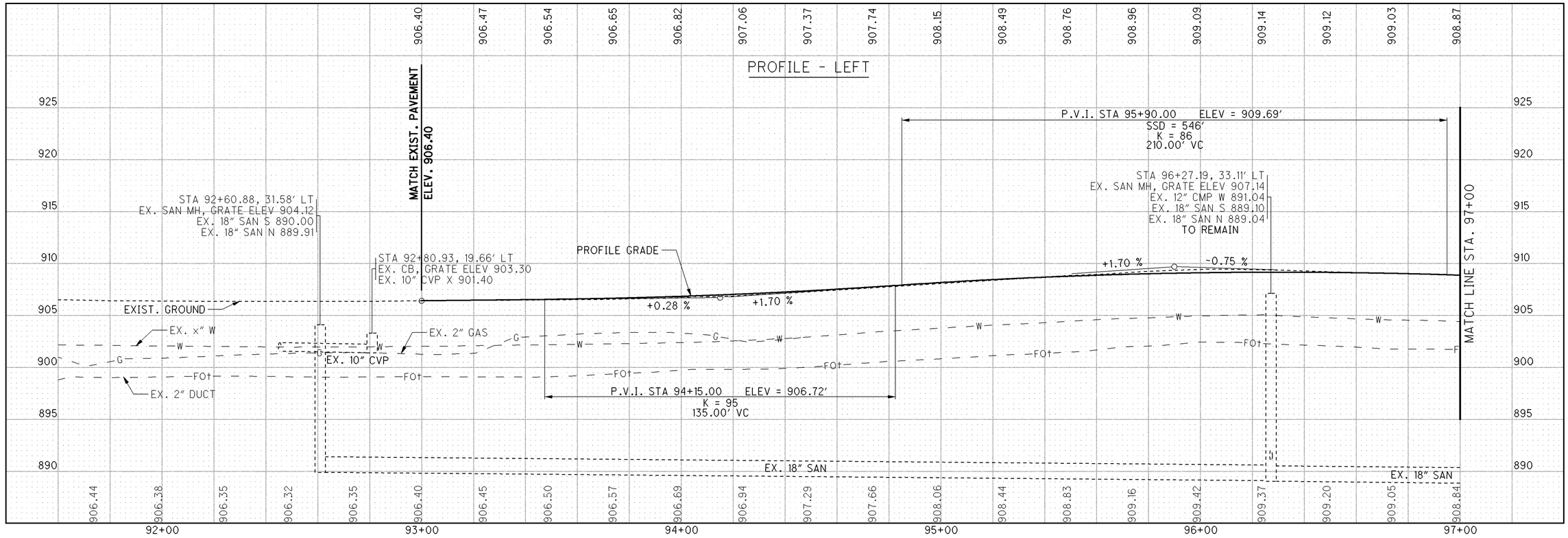

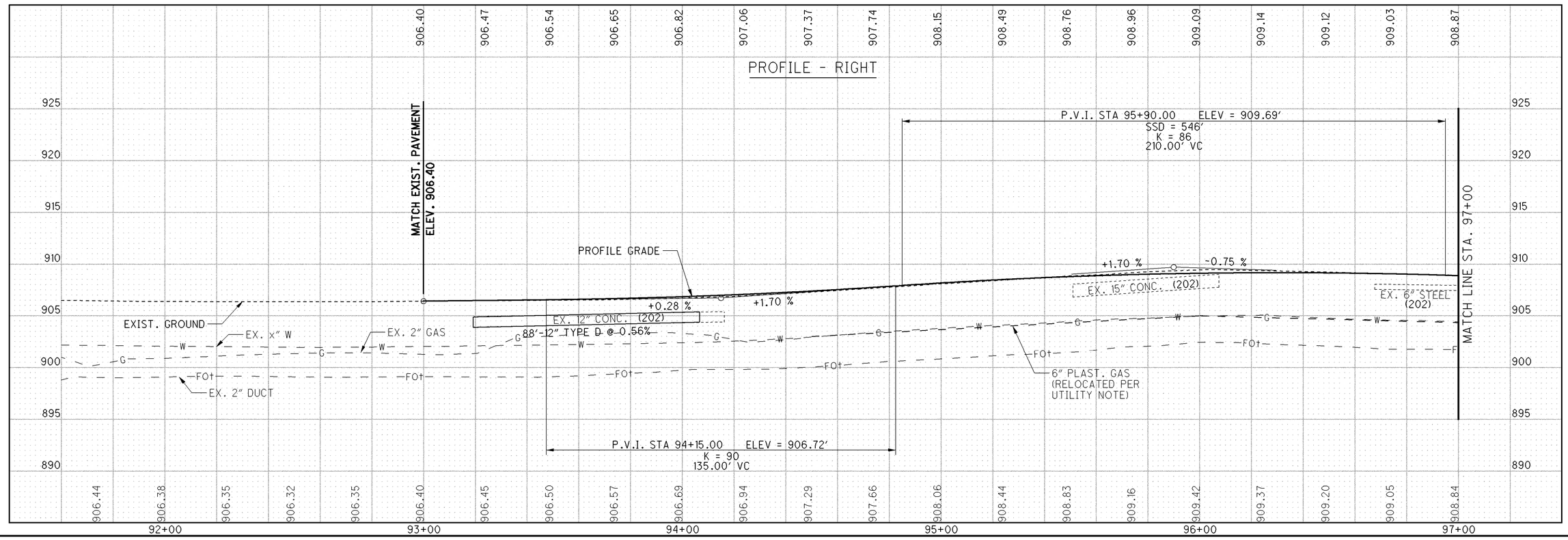

CALCULATED

CHECKED

PROFILE - S.R. 65

BEGIN WORK TO STA. 97+00.00

ALL-75-0.21

354
907

I:\Pd\89029\roadway\sheets\89029CF300.dgn 25-JUN-2013 1:54PM tbolenbo

ESTIMATED QUANTITIES	
ITEM	SHEET
DRAINAGE - D	143-146
FENCE	574
REMOVALS - R	161
SANITARY - S	161

CROSS REFERENCES	
ITEM	SHEET
LIGHTING	510-528
SIGNALS	575-588

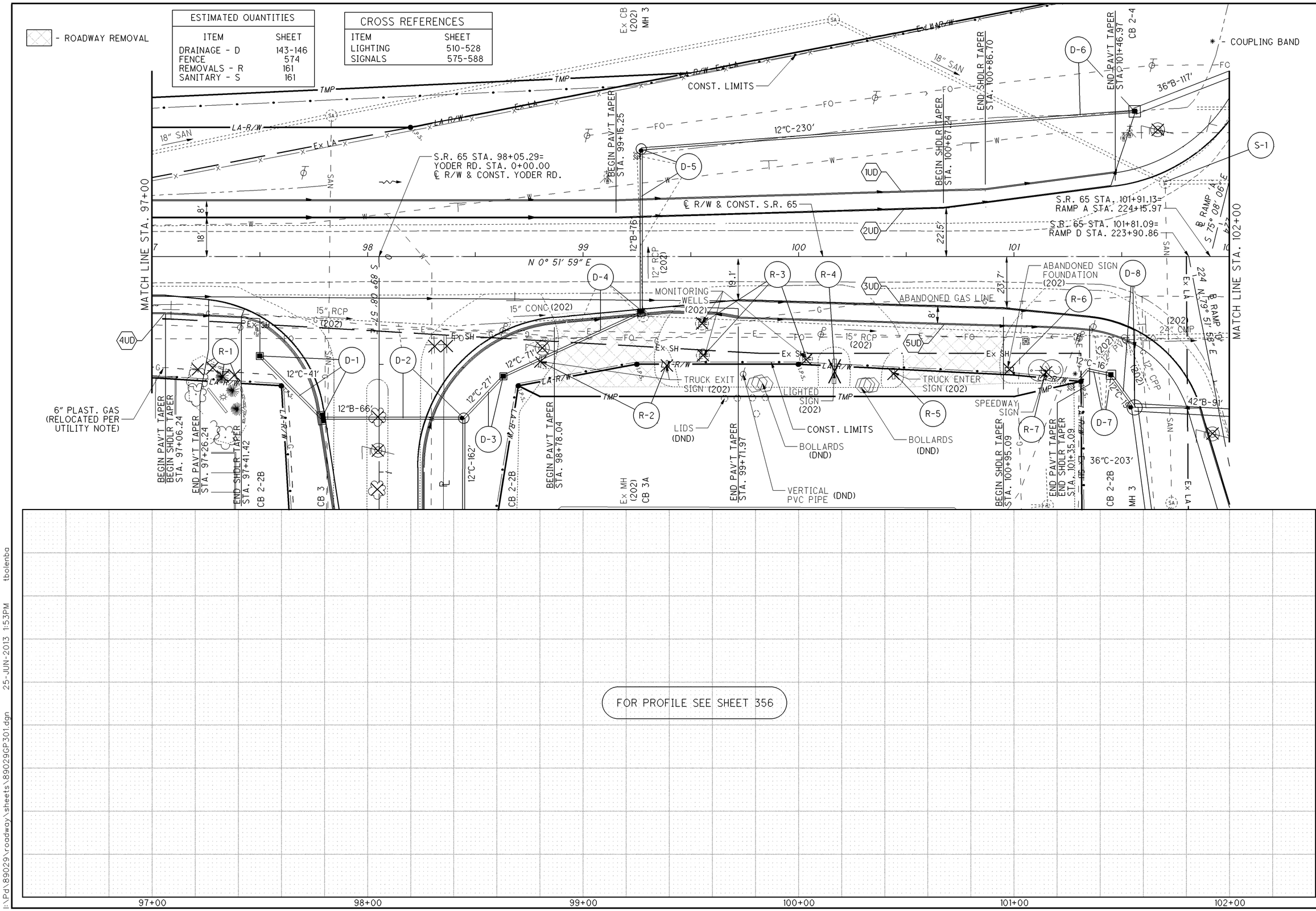

HORIZONTAL SCALE IN FEET

CALCULATED

CHECKED

PLAN AND PROFILE - S.R. 65
STA. 97+00.00 TO STA. 102+00.00

ALL-75-0.21

I:\Pd\89029\roadway\sheets\89029GP301.dgn 25-JUN-2013 1:53PM tbolenba

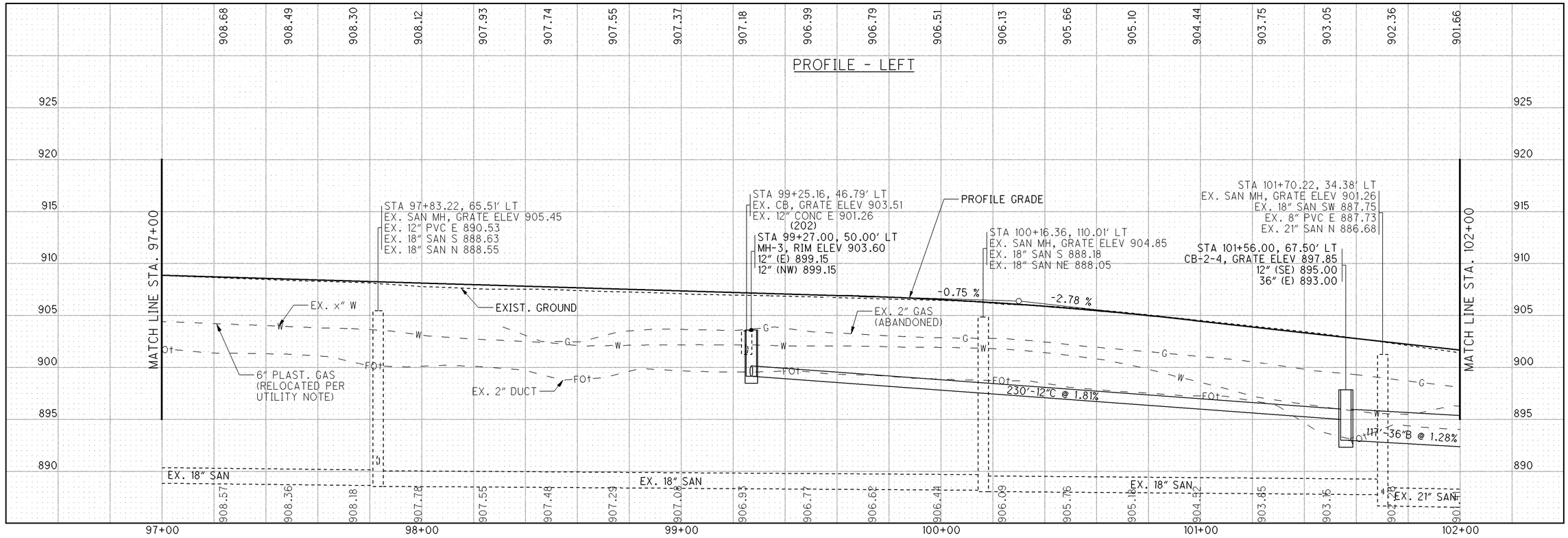

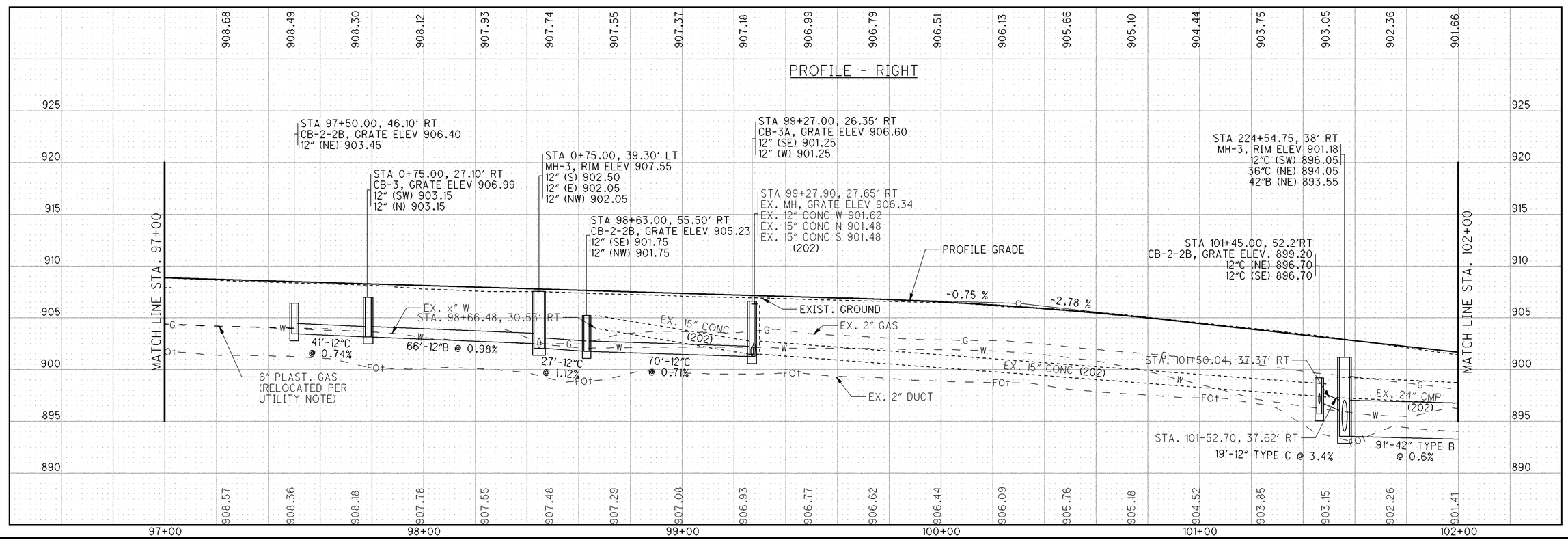

I:\Pd\89029\roadway\sheets\89029CF301.dgn 25-JUN-2013 1:53PM tbolenbo

CALCULATED | CHECKED

PROFILE - S.R. 65
STA. 97+00.00 TO STA. 102+00.00

ALL-75-0.21

356
907

CROSS REFERENCES	
ITEM	SHEET
CULVERT DETAILS	474-507
LIGHTING	510-528
SIGNALS	575-588

ESTIMATED QUANTITIES	
ITEM	SHEET
UNDERDRAIN - UD	148-157
DRAINAGE - D	143-146
FENCE	574
GUARDRAIL - GR	159-160

LEGEND

- ROCK CHANNEL PROTECTION

FOR PROFILE SEE SHEET 358

102+00 103+00 104+00 105+00 106+00 107+00

HORIZONTAL SCALE IN FEET

CALCULATED CHECKED

PLAN AND PROFILE - S.R. 65
STA. 102+00.00 TO STA. 107+00.00

ALL-75-0.21

I:\Pdt\89029\roadway\sheets\89029GP302.dgn 25-JUN-2013 1:53PM tbolenba

PROFILE - LEFT

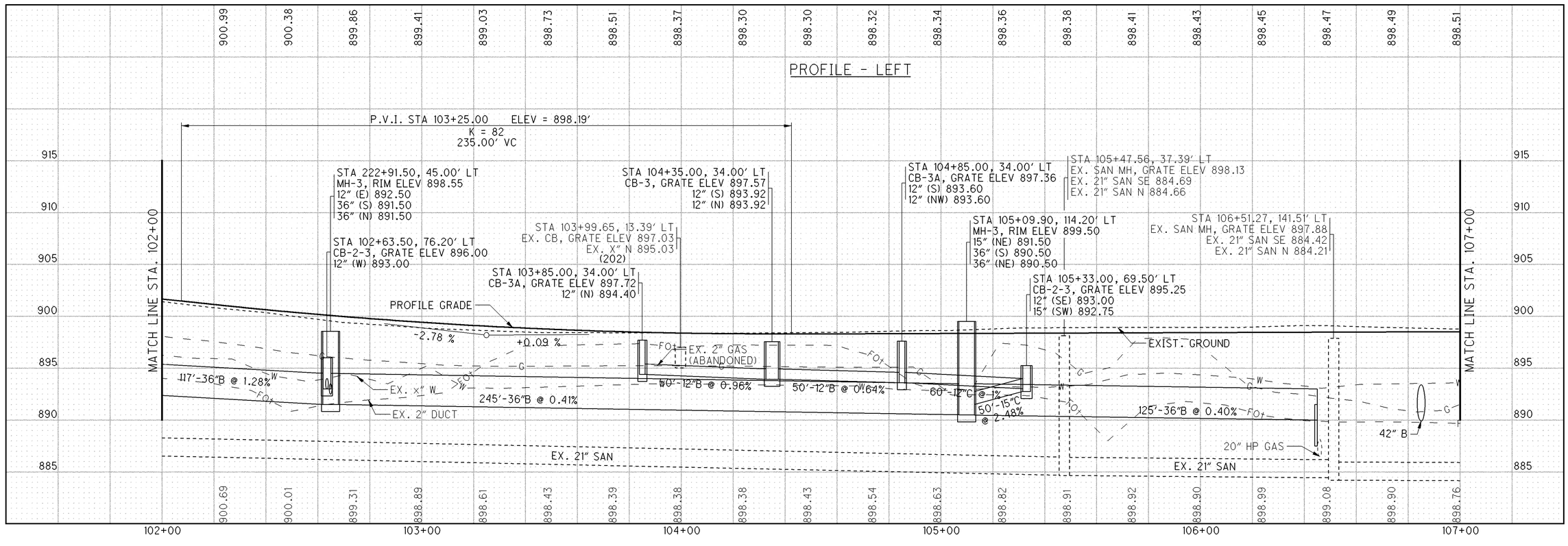

PROFILE - RIGHT

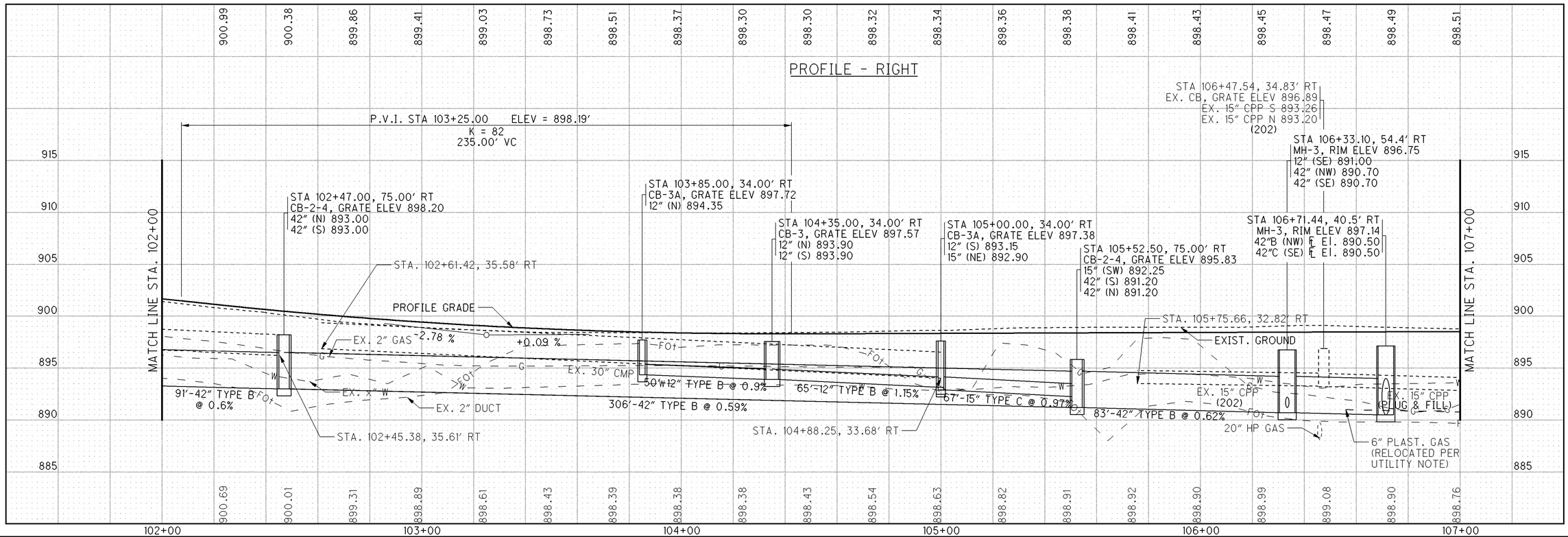

CALCULATED | CHECKED

PROFILE - S.R. 65
STA. 102+00.00 TO STA. 107+00.00

ALL-75-0.21

358
907

I:\Pd\89029\roadway\sheets\89029GF302.dgn 25-JUN-2013 1:53PM tbolenba

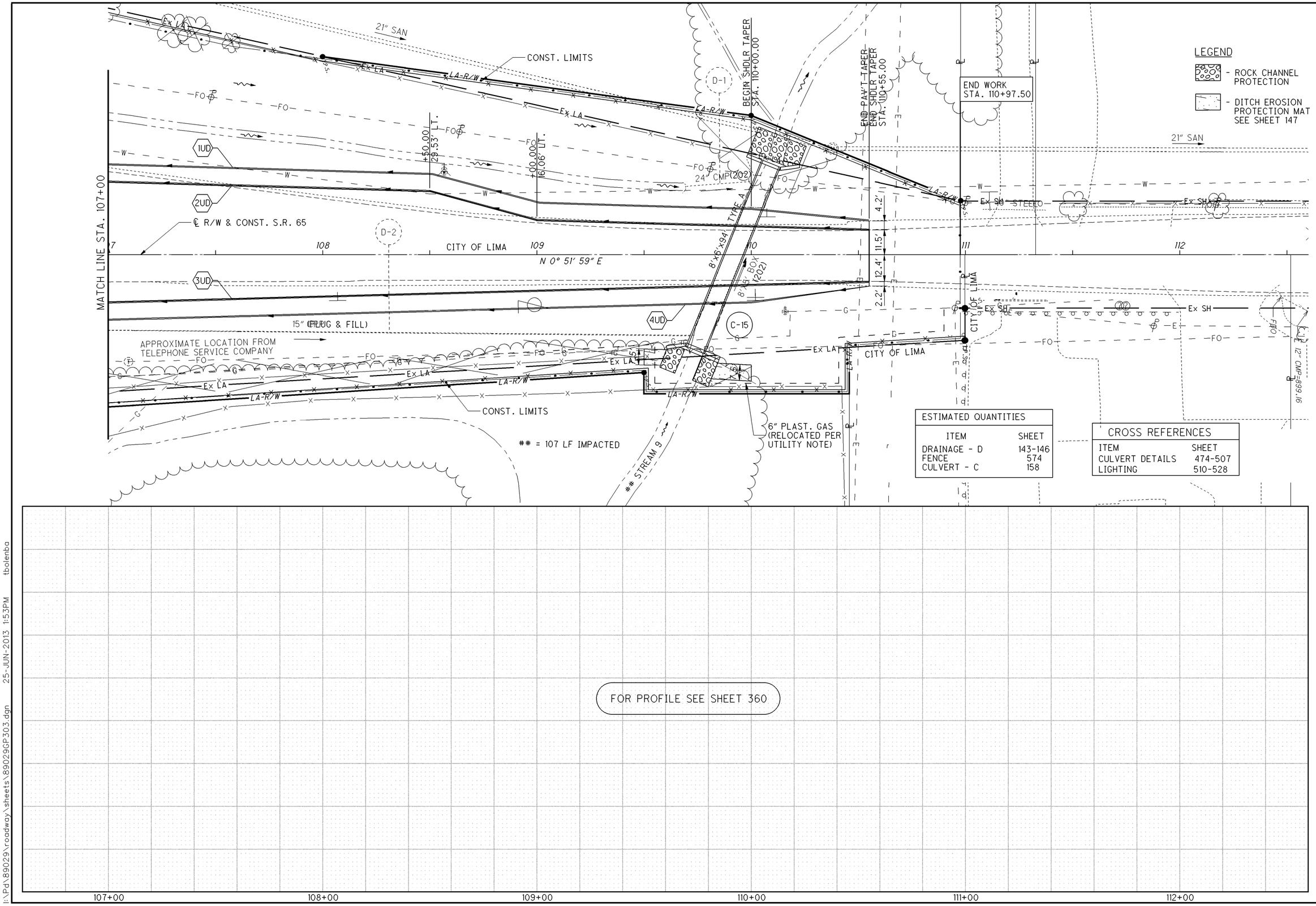

PLAN AND PROFILE - S.R. 65
STA. 107+00.00 TO END WORK

ALL-75-0.21

359
907

I:\Pd\89029\roadway\sheets\89029GP303.dgn 25-JUN-2013 1:53PM tbolenba

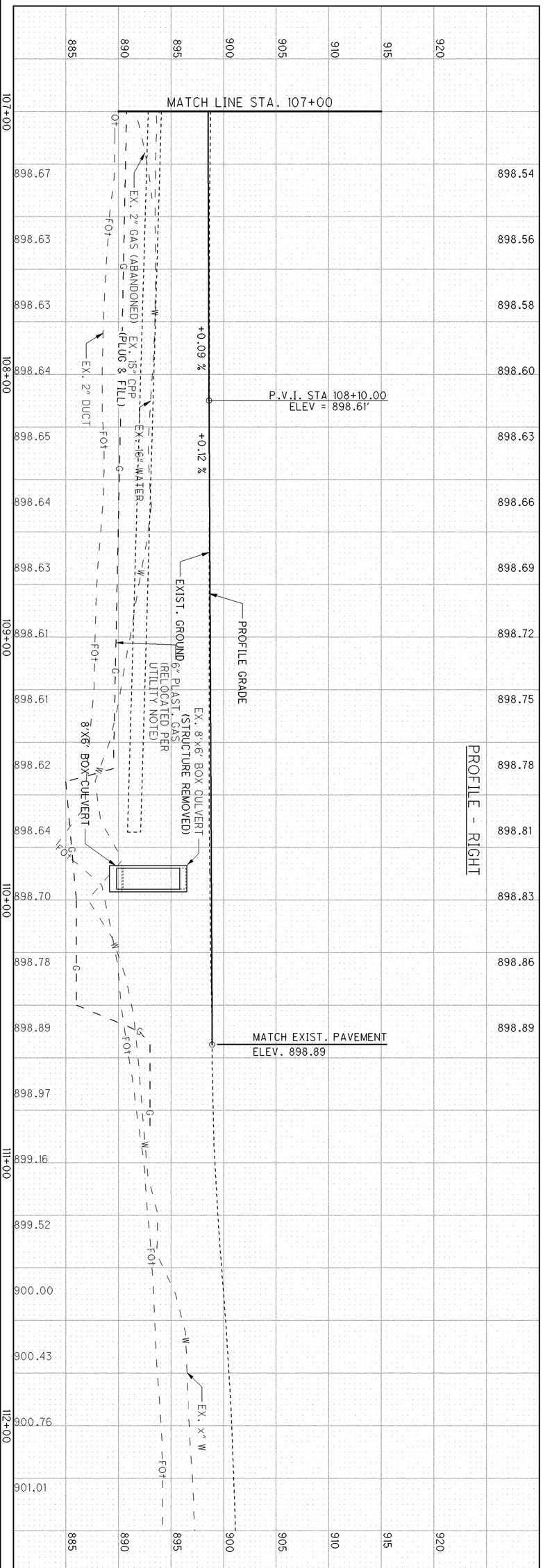
PROFILE - RIGHT
MATCH LINE STA. 107+00
P.V.I. STA 108+10.00
ELEV = 898.61'
+0.09 %
+0.12 %
EX. 2" GAS (ABANDONED)
EX. 15" CPP (PLUG & FILL)
EX. 16" WATER
EX. 2" DUCT
EXIST. GROUND
PROFILE GRADE
EX. 8'x6' BOX CULVERT (STRUCTURE REMOVED)
6" PLAST. GAS (RELOCATED PER UTILITY NOTE)
8'X6' BOX CULVERT
MATCH EXIST. PAVEMENT
ELEV. 898.89
EX. X" W
107+00
108+00
109+00
110+00
111+00
112+00
898.67
898.63
898.63
898.64
898.65
898.64
898.63
898.61
898.61
898.62
898.64
898.70
898.78
898.89
898.97
899.16
899.52
900.00
900.43
900.76
901.01
898.54
898.56
898.58
898.60
898.63
898.66
898.69
898.72
898.75
898.78
898.81
898.83
898.86
898.89
885
890
895
900
905
910
915
920

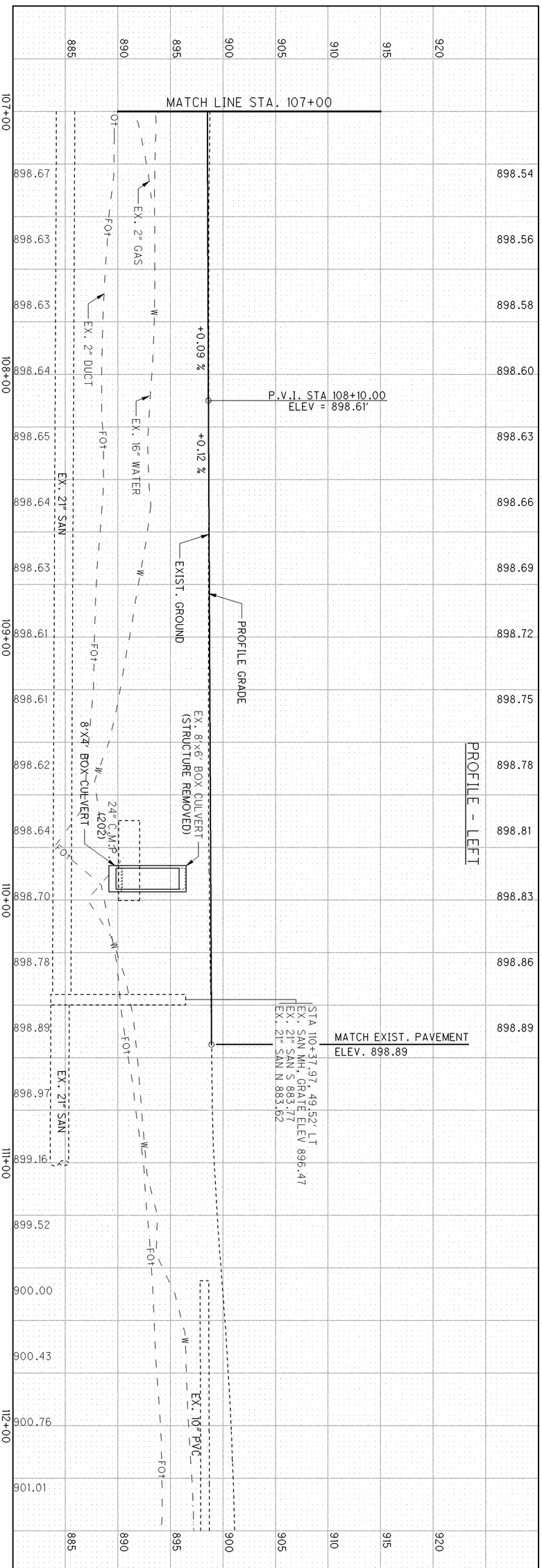
PROFILE - LEFT
MATCH LINE STA. 107+00
P.V.I. STA 108+10.00
ELEV = 898.61'
+0.09 %
+0.12 %
EX. 2" GAS
EX. 2" DUCT
EX. 16" WATER
EX. 21" SAN
EXIST. GROUND
PROFILE GRADE
EX. 8'x6' BOX CULVERT (STRUCTURE REMOVED)
8'X4' BOX CULVERT
24" C.M.P. (202)
STA 110+37.97, 49.52' LT
EX. SAN MH, GRATE ELEV 896.47
EX. 21" SAN S 883.77
EX. 21" SAN N 883.62
MATCH EXIST. PAVEMENT
ELEV. 898.89
EX. 21" SAN
EX. 10" PVC
107+00
108+00
109+00
110+00
111+00
112+00
898.67
898.63
898.63
898.64
898.65
898.64
898.63
898.61
898.61
898.62
898.64
898.70
898.78
898.89
898.97
899.16
899.52
900.00
900.43
900.76
901.01
898.54
898.56
898.58
898.60
898.63
898.66
898.69
898.72
898.75
898.78
898.81
898.83
898.86
898.89
885
890
895
900
905
910
915
920

SEEDING END WIDTH	SEEDING SQ. YDS.
66	-119
	344
58	
	306
52	
	278
48	
	1153
	1962

CORRECTION FOR DRIVE

CORRECTION FOR UTILITY RELOCATION

+50, AHD

BEGIN WORK, EARTHWORK & SEEDING
92+50.00
906.32

BEGIN PAVEMENT
93+00.00
906.40

94+00.00
906.69

93+50.00
906.50

TMP
R/W
EX SH
4:1
904.0
903.8
903.9
16" WATER
18" SAN
2" GAS STEEL
FIBER OPTIC
12" TYPE D
(202)
+0.3%
-0.5%
906.82
906.54
906.40
903.8
EX SH ELEV 906.40 26.35' RT.
EX SH ELEV 906.03 31.15' RT.
INLET, 12" TYPE D
STA. 94+07, 33.5 RT.
EL 904.10
OUTLET, 12" TYPE D
STA. 93+19, 24 RT.
EL 903.95
+67.15, 32', ASPHALT COMMERCIAL DRIVE
ITEM 202 - PAVEMENT REMOVAL (ASPHALT)

END AREA CUT	END AREA FILL	VOLUME CUT	VOLUME FILL
13	11	25	19
		40	2
14	10		
		23	14
11	7		
0	7		
		0	7
0	0		
		88	42

CALCULATED BDC
CHECKED TAB

CROSS SECTIONS - S.R. 65
STA. 92+50.00 TO STA. 94+00.00

ALL-75-0.21

361
907

I:\Pd\89029\roadway\sheets\89029XS300.dgn 25-JUN-2013 1:53PM tbolenba

SEEDING END WIDTH	SEEDING SQ. YDS.		END AREA CUT	END AREA FILL	VOLUME CUT	VOLUME FILL
	-11	CORRECTION FOR DRIVE			-17	2
68			55	4		
	381				102	7
69			55	4		
	389				89	9
71			41	8		
	381				50	19
66			13	11		
	1140				224	37

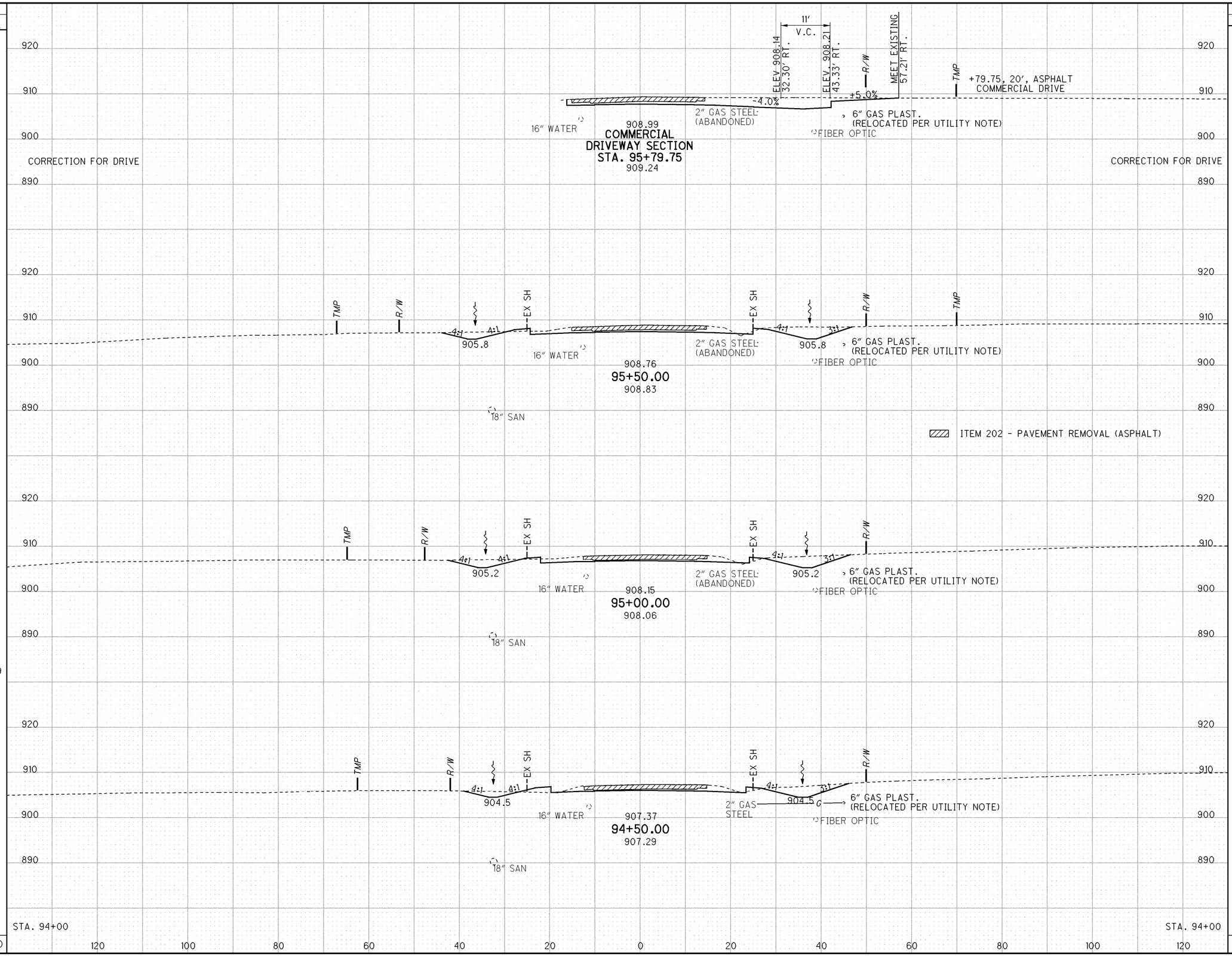

I:\Pd\89029\roadway\sheets\89029XS300.dgn 25-JUN-2013 1:53PM tbolenba

CALCULATED BDC CHECKED TAB

CROSS SECTIONS - S.R. 65
STA. 94+50.00 TO STA. 95+79.75

ALL-75-0.21

362
907

SEEDING END WIDTH	SEEDING SQ. YDS.
78	419
73	397
70	-76
68	1123

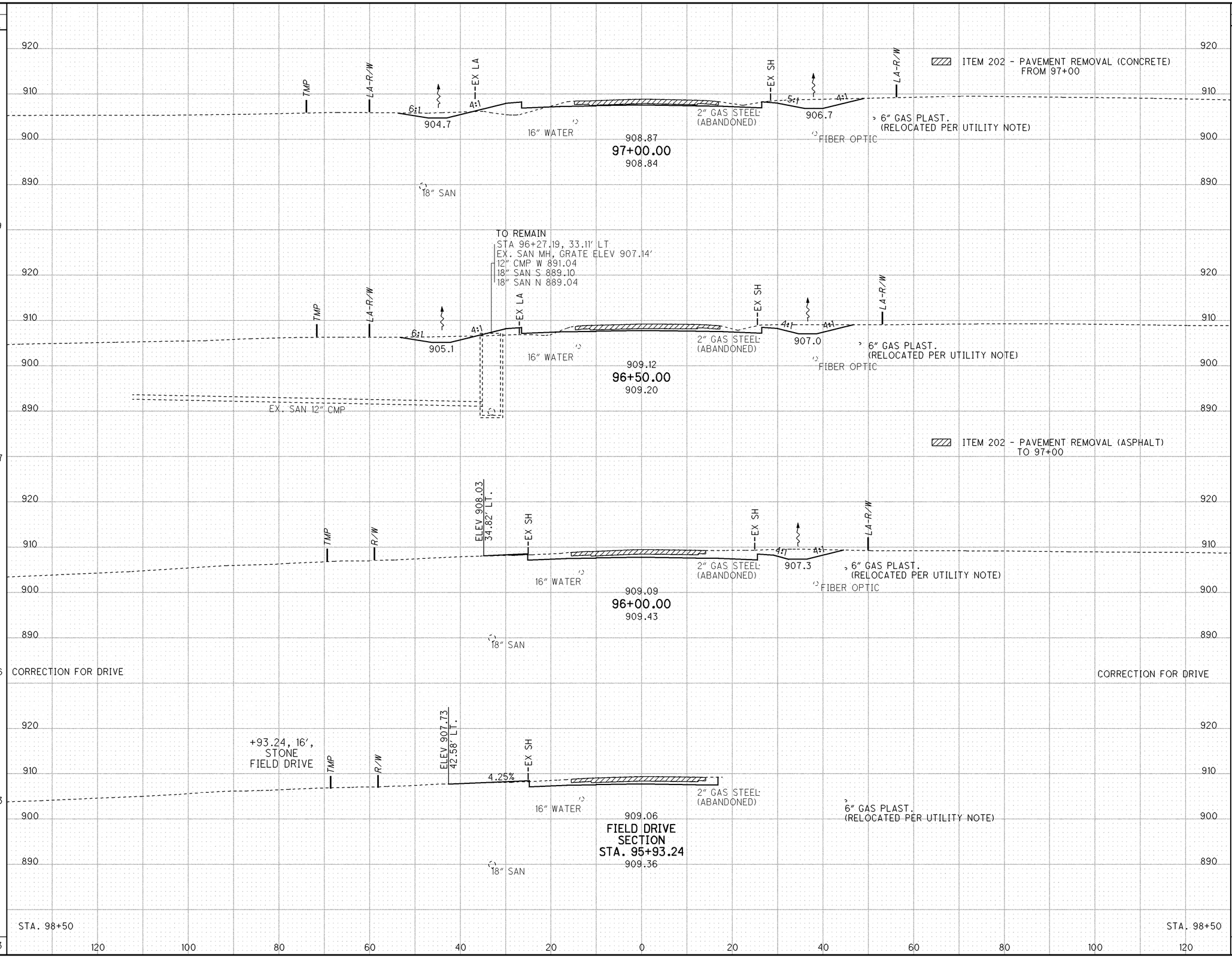

END AREA CUT	END AREA FILL	VOLUME CUT	VOLUME FILL
58	22		
		113	32
64	13		
		133	13
80	1		
		0	2
		116	5
55	4		
		371	52

CALCULATED BDC
CHECKED TAB

CROSS SECTIONS - S.R. 65
STA. 95+93.24 TO STA. 97+00.00

ALL-75-0.21

363
907

I:\Pd\89029\roadway\sheets\89029XS300.dgn 25-JUN-2013 1:53PM tbolenba

SEEDING END WIDTH	SEEDING SQ. YDS.		END AREA CUT	END AREA FILL	VOLUME CUT	VOLUME FILL
108		+50, AHD				
55		+50, BK (LEFT ONLY)	36	25		
	33				7	5
		+44.50, AHD	37	21		
54		+44.50 (LEFT ONLY)				
	97	CORRECTION FOR YODER RD			82	52
	262					
52		(LEFT ONLY)				
	283					
50		+50, AHD (LEFT ONLY)	62	25		
79		+50, BK				
	436				111	44
78		STA. 97+00.00	45	4		
	1111				200	101

903.3
907.74
98+50.00
907.48
903.4
907.78
98+44.50
907.53
903.8
908.12
98+00.00
907.78
904.2
908.49
97+50.00
908.36
906.4

TMP
EX LA
LA-R/W
EX SH
6:1
4:1
16" WATER
2" GAS STEEL (ABANDONED)
FIBER OPTIC
12" TYPE C
12" TYPE B
EX. SAN 12" PVC
18" SAN
18" 905.05
30" 904.35
2" GAS STEEL (ABANDONED)
6" GAS PLAST. (RELOCATED PER UTILITY NOTE)

Manhole, No. 3
98+44.50, 75'Rt
0+75.00, Yoder 39.3'Lt
Lid El. 907.55
12"B (S) ℄ El. 902.50
12"C (E) ℄ El. 902.05
12"C (NW) ℄ El. 902.05

27'-12" TYPE C @ 1.12%
12"Cx162'
12"Bx66'

Catch Basin, No. 2-2B
97+50.00, 46.1'Lt
Grate El. 906.40
6"F (E) ℄ El. 904.70
12"C (NE) ℄ El. 903.45

TO REMAIN
STA 97+83.22, 65.51' LT
EX. SAN MH, GRATE ELEV 905.45'
12" PVC E 890.53
18" SAN S 888.63
18" SAN N 888.55

SEE YODER RD CROSS SECTIONS

ITEM 202 - PAVEMENT REMOVAL (CONCRETE)

920 / 910 / 900 / 890

120 100 80 60 40 20 0 20 40 60 80 100 120

CALCULATED BDC
CHECKED TAB

CROSS SECTIONS - S.R. 65
STA. 97+50.00 TO STA. 98+50.00

ALL-75-0.21

364
907

I:\Pd\89029\roadway\sheets\89029XS300.dgn 25-JUN-2013 1:53PM tbolenba

SEEDING END WIDTH	SEEDING SQ. YDS.
93	242
96	282
92	436
120	165
108	1125

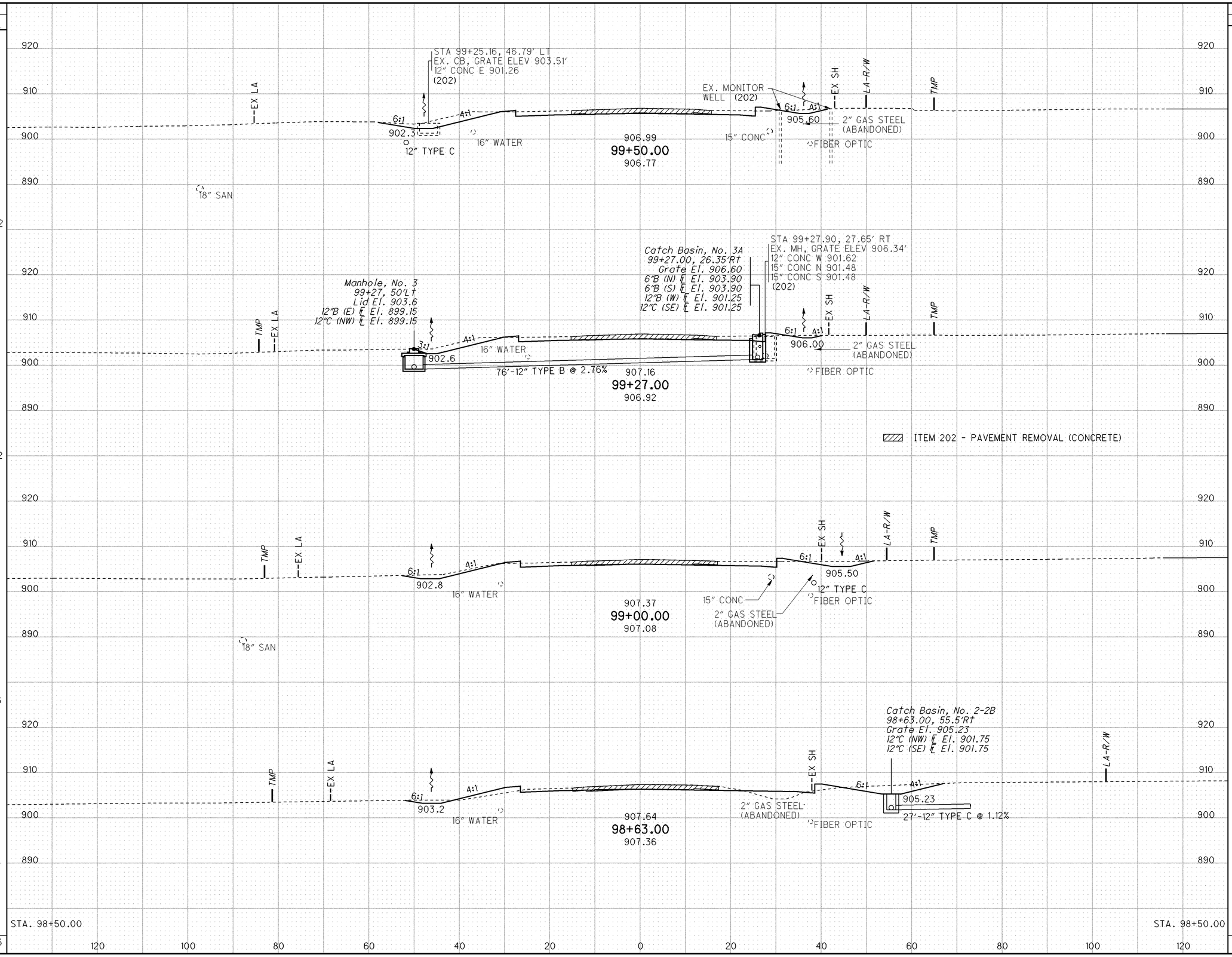

END AREA CUT	END AREA FILL	VOLUME CUT	VOLUME FILL
54	4		
		41	3
43	3		
		45	4
46	5		
		60	26
41	33		
		37	14
36	25		
		183	47

CALCULATED BDC
CHECKED TAB

CROSS SECTIONS - S.R. 65
STA. 98+63.00 TO STA. 99+50.00

ALL-75-0.21

365
907

I:\Pd\89029\roadway\sheets\89029XS300.dgn 25-JUN-2013 1:53PM tbolenba

SEEDING	
END WIDTH	SQ. YDS.
110	545
108	
109	603
98	
93	531
	2254

END AREA		VOLUME	
CUT	FILL	CUT	FILL
		0	4
81	1		
		128	13
72	4		
		152	4
92	0		
		172	0
94	0		
		137	4
54	4		
		614	25

CALCULATED BDC
CHECKED TAB

CROSS SECTIONS - S.R. 65
STA. 100+00.00 TO STA. 101+45.00

ALL-75-0.21

366
907

920
910
900
890

CORRECTION FOR DITCH RT.

Catch Basin, No. 2-2B
101+45.00, 52.2'Rt
Grate El. 899.2
12"C (NE) ℄ El. 896.70
12"C (SE) ℄ El. 896.70

LA-R/W
EX LA
3.5:1
4:1
898.5
2" GAS STEEL (ABANDONED)
903.19
101+45.00
903.30
899.2

* DIRECTION OF EXISTING PIPES NEED TO BE VERIFIED IN THE FIELD AND CONNECTED WITH A COUPLING BAND TO CB NO. 2-2B AT STA 101+45, 52.2' RT.

TO REMAIN
STA 101+15.70, 115.63' RT
EX. MH, GRATE ELEV 904.64'
10" PVC S 900.86
10" PVC S 900.86
10" PVC E 900.63
10" PVC W 900.63

TO REMAIN
STA 101+26.53, 60.39' RT
EX. CB, GRATE ELEV 903.87'
12" NW 898.27 *

EX LA
7.6:1
4:1
900.9
12" TYPE C
16" WATER
18" SAN
2" GAS STEEL (ABANDONED)
904.44
101+00.00
904.52
15" CONC
FIBER OPTIC
902.7
EX SH
LA-R/W
TMP
ABANDONED GAS SERVICE
EX. 10" PVC
EX. 10" PVC

ITEM 202 - PAVEMENT REMOVAL (CONCRETE)

EX LA
6:1
4:1
901.4
12" TYPE C
16" WATER
18" SAN
2" GAS STEEL (ABANDONED)
905.66
100+50.00
905.76
15" CONC
FIBER OPTIC
903.7
EX SH
LA-R/W
TMP

TO REMAIN
STA 100+16.36, 110.01' LT
EX. SAN MH, GRATE ELEV 904.85'
18" SAN S 888.18
18" SAN NE 888.05

EX LA
5.4:1
4:1
901.9
12" TYPE C
16" WATER
2" GAS STEEL (ABANDONED)
906.51
100+00.00
906.44
15" CONC
FIBER OPTIC
EX. MONITOR WELL (202)
904.7
EX SH
LA-R/W
TMP

STA. 99+50
120 100 80 60 40 20 0 20 40 60 80 100 120
STA. 99+50

I:\Pd\89029\roadway\sheets\89029XS300.dgn 25-JUN-2013 1:53PM tbolenba

SEEDING END WIDTH	SEEDING SQ. YDS.
0	317
	85
	66
	468

END AREA CUT	END AREA FILL	VOLUME CUT	VOLUME FILL
38	13	133	26
75	51	24	6
34	2	11	1
81	11	221	33

CALCULATED BDC
CHECKED TAB

CROSS SECTIONS - S.R. 65
STA. 101+50.00 TO STA. 102+50.00

ALL-75-0.21

367
907

I:\Pd\89029\roadway\sheets\89029XS300.dgn 25-JUN-2013 1:53PM tbolenba

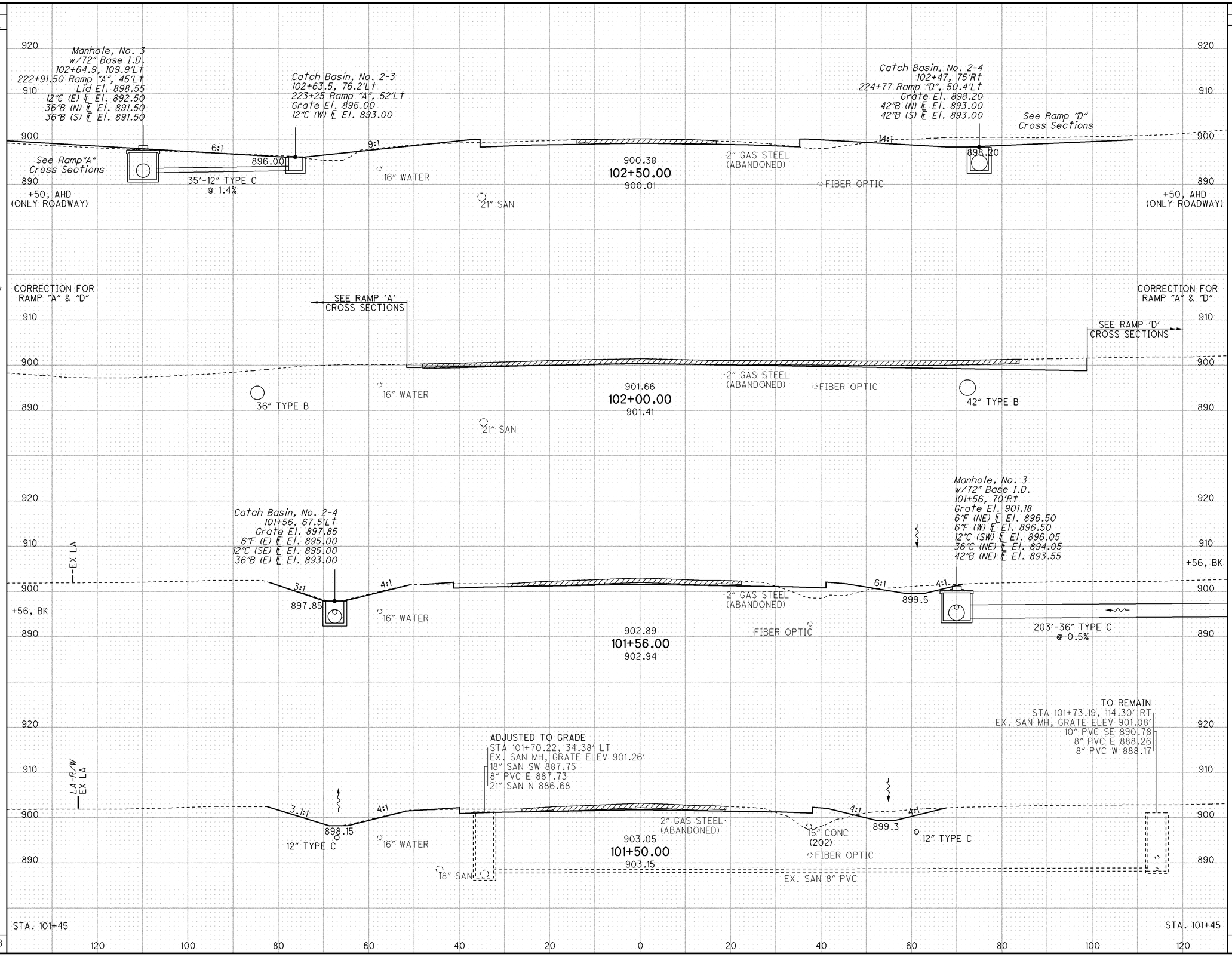

SEEDING END WIDTH	SEEDING SQ. YDS.
18	100
18	30
18	0
0	0
0	0
0	0
.	130

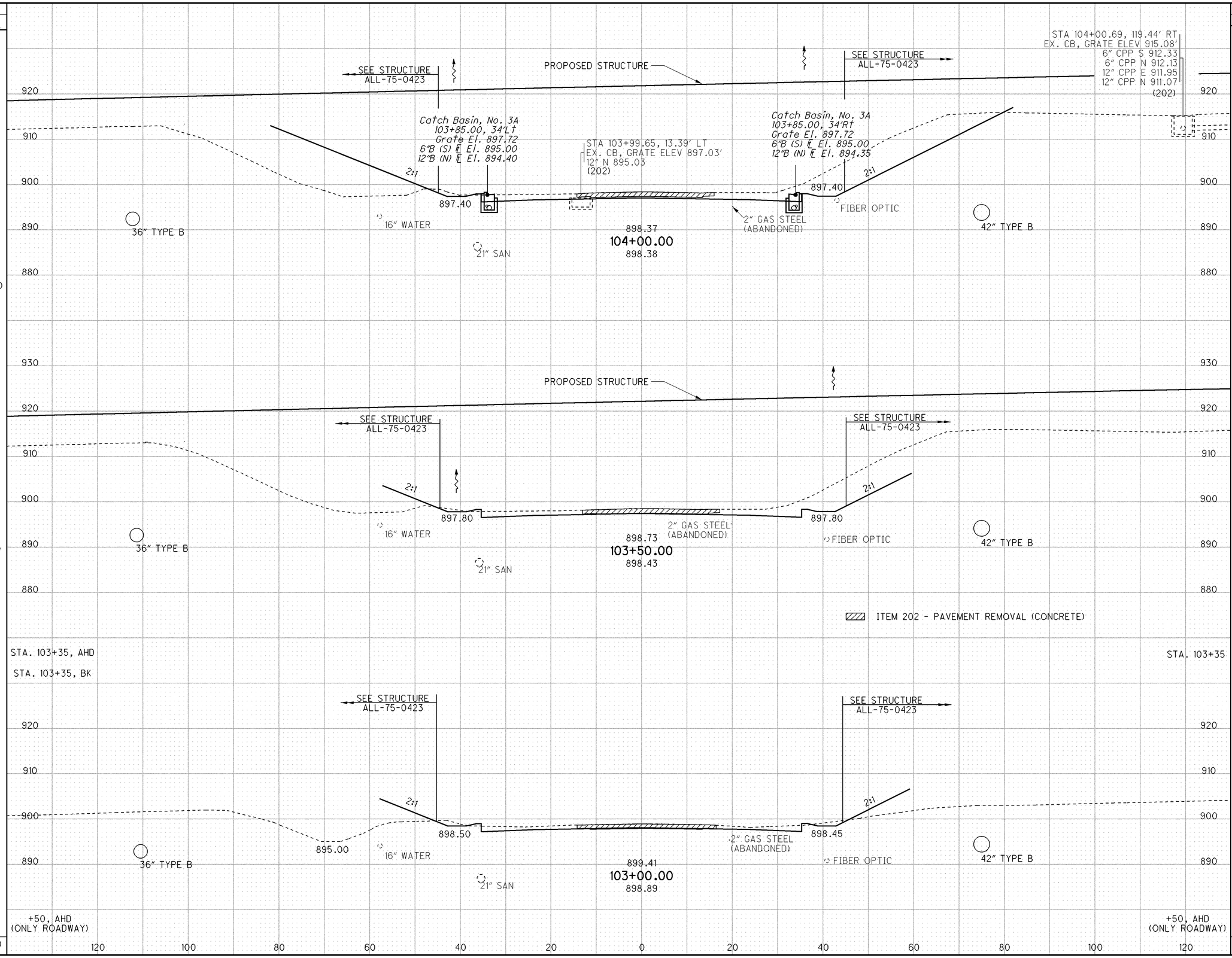

END AREA CUT	END AREA FILL	VOLUME CUT	VOLUME FILL
79	1		
60	1		
41	6	28	2
41	6	53	8
38	13	73	18
		283	30
		129	2

CALCULATED BDC
CHECKED TAB

CROSS SECTIONS - S.R. 65
STA. 103+00.00 TO STA. 104+00.00

ALL-75-0.21

368
907

I:\Pd\89029\roadway\sheets\89029XS300.dgn 25-JUN-2013 1:52PM tbolenba

SEEDING	
END WIDTH	SQ. YDS.
18	66
	18
	100
	18
	100
	18
	266

ADJUST TO GRADE
STA 105+47.56, 37.39' LT
EX. SAN MH, GRATE ELEV 898.13'
21" SAN S 884.69
21" SAN NW 884.66

Catch Basin, No. 2-4
105+52.5, 75'Rt
224+77 Ramp "C", 50'Rt
Grate El. 895.83
15"C (SW) ℄ El. 892.25
42"B (N) ℄ El. 891.20
42"B (S) ℄ El. 891.20

Catch Basin, No. 2-3
105+33, 69.5'Lt
223+30.5 Ramp "B", 55'Lt
Grate El. 895.25
12"C (SE) ℄ El. 893.00
15"C (SW) ℄ El. 892.75

Manhole, No. 3
w/72" Base I.D.
222+81.7, 65'Rt
105+09.90 SR 65, 114.2'Lt
Lid El. 899.50
15"C (NE) ℄ El. 891.50
36"B (S) ℄ El. 890.50
36"B (NE) ℄ El. 890.50

Catch Basin, No. 3A
104+85.00, 34'Lt
Grate El. 897.36
6"B (N) ℄ El. 894.85
12"B (NW) ℄ El. 893.60
12"B (S) ℄ El. 893.60

Catch Basin, No. 3A
105+00.00, 34'Rt
Grate El. 897.38
6"B (N) ℄ El. 894.85
12"B (S) ℄ El. 893.15
15"C (NE) ℄ El. 892.90

Catch Basin, No. 3
104+35.00, 34'Lt
Grate El. 897.57
6"B (N) ℄ El. 894.85
6"B (S) ℄ El. 894.85
6"B (E) ℄ El. 894.75
12"B (N) ℄ El. 893.92
12"B (S) ℄ El. 893.92

Catch Basin, No. 3
104+35.00, 34'Rt
Grate El. 897.57
6"B (N) ℄ El. 894.85
6"B (S) ℄ El. 894.85
6"B (W) ℄ El. 894.75
12"B (N) ℄ El. 893.90
12"B (S) ℄ El. 893.90

See Ramp"B" Cross Sections
See Ramp"C" Cross Sections
See Ramp"B" Cross Sections
SEE STRUCTURE ALL-75-0423
SEE STRUCTURE ALL-75-0423

24:1
15:1
10:1
2:1
2:1
2:1
2:1

895.83
895.25
897.10
897.35
897.20
897.35

36" TYPE B
36" TYPE B
36" TYPE B
42" TYPE B
42" TYPE B
42" TYPE B

16" WATER
16" WATER
16" WATER

2" GAS STEEL (ABANDONED)
ABANDONED 2" GAS
2" GAS STEEL (ABANDONED)

67'-15" TYPE C @ 0.97%
FIBER OPTIC
FIBER OPTIC
FIBER OPTIC

60'-12" TYPE C @ 1%
50'-15" TYPE C @ 2.5%
21" SAN
21" SAN
12" CPP

898.38
105+50.00
898.91

898.37
105+33.00
898.86

898.34
105+00.00
898.63

898.30
104+50.00
898.43

+50, BK
+33, BK

PROPOSED STRUCTURE

ITEM 202 - PAVEMENT REMOVAL (CONCRETE)

STA. 104+00
STA. 104+00

120 100 80 60 40 20 0 20 40 60 80 100 120

END AREA		VOLUME	
CUT	FILL	CUT	FILL
75	19		
		46	12
71	19		
		81	23
61	19		
		114	19
62	1		
		131	2
79	1		
		411	56

CALCULATED BDC
CHECKED TAB

CROSS SECTIONS - S.R. 65
STA. 104+50.00 TO STA. 105+50.00

ALL-75-0.21

369
907

I:\Pd\89029\roadway\sheets\89029XS300.dgn 25-JUN-2013 1:52PM tbolenba

SEEDING	
END WIDTH	SQ. YDS.
120	268
121	
104	260
	63
	591

END AREA	
CUT	FILL
277	4
293	5
295	17
54	2
243	12
508	17

VOLUME	
CUT	FILL
211	3

CALCULATED BDC
CHECKED TAB

CROSS SECTIONS - S.R. 65
STA. 106+00.00 TO STA. 106+70.00

ALL-75-0.21

370
907

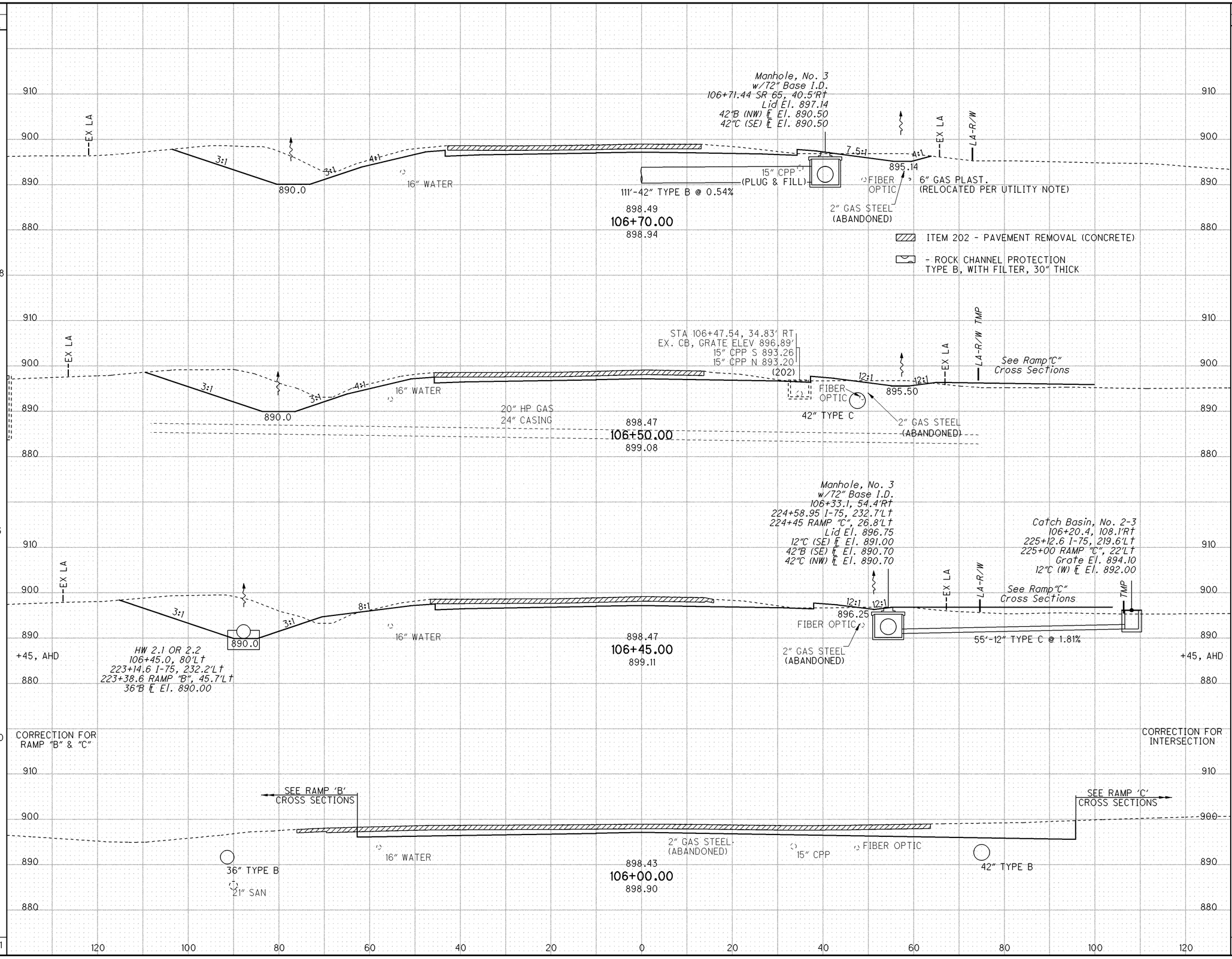

I:\Pd\89029\roadway\sheets\89029XS300.dgn 25-JUN-2013 1:52PM tbolenba

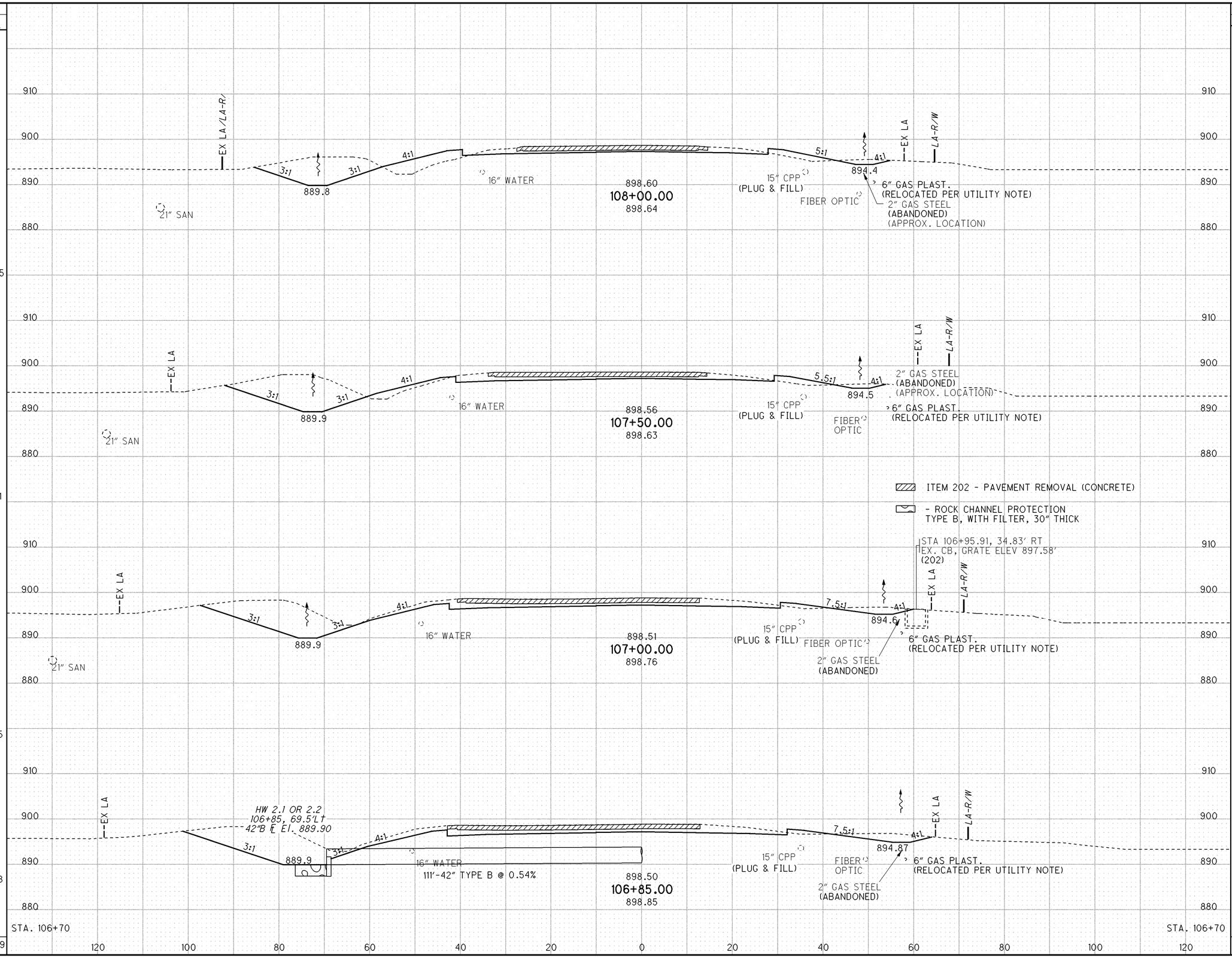

END AREA CUT	END AREA FILL	VOLUME CUT	VOLUME FILL
156	57		
		335	163
206	31		
		408	35
235	7		
		141	4
274	6		
		154	3
277	4		
		1045	205

CALCULATED BDC
CHECKED TAB

CROSS SECTIONS - S.R. 65
STA. 106+85.00 TO STA. 108+00.00

ALL-75-0.21

370A
907

I:\Pd\89029\roadway\sheets\89029XS300.dgn 25-JUN-2013 1:52PM tbolenba

SEEDING END WIDTH	SEEDING SQ. YDS.	
87		+25, AHD
	625	CORRECTION FOR CULVERT
83		+50, BK
	481	
90		
	486	
85		
	492	
92		STA. 108+00
	2084	

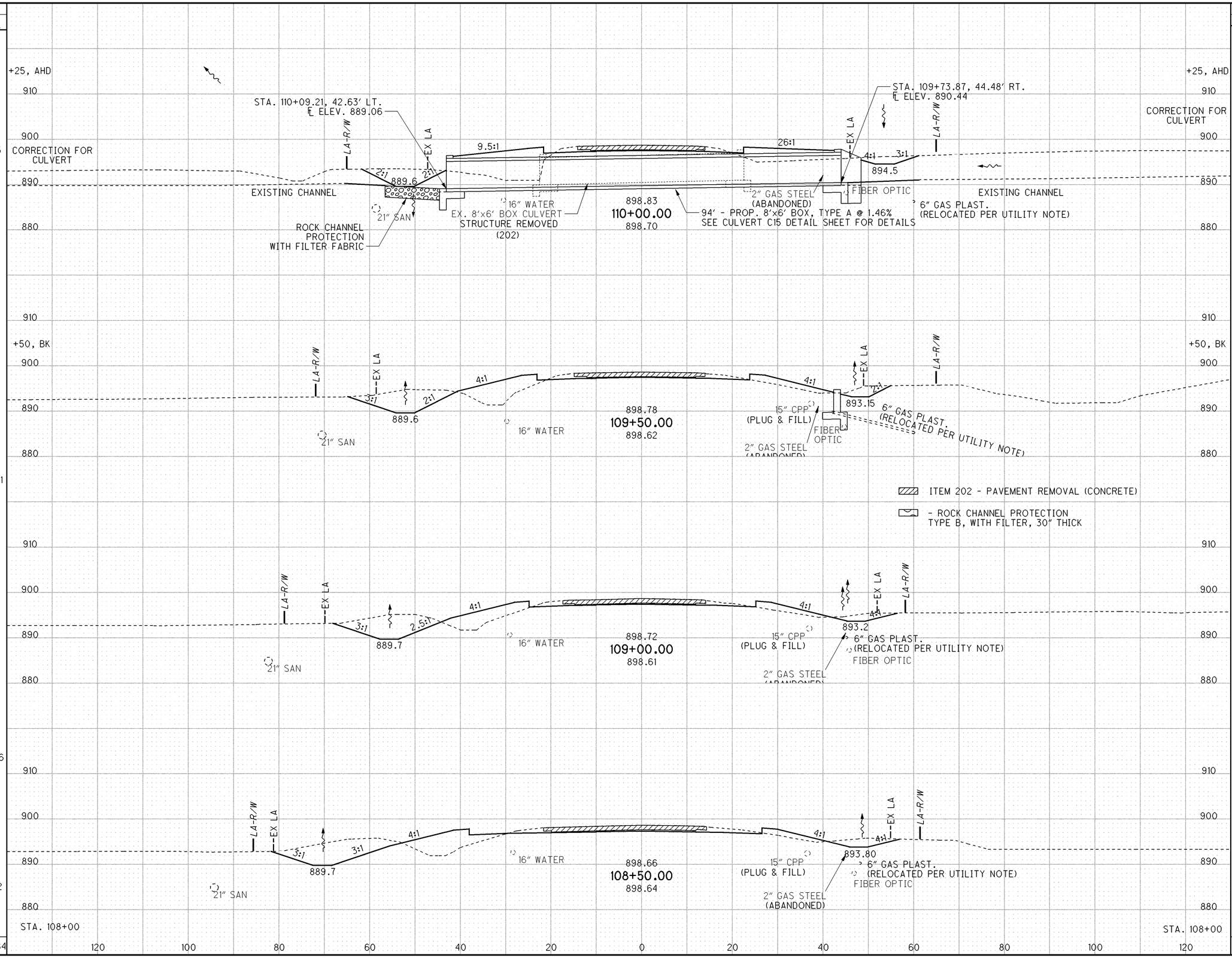

END AREA CUT	END AREA FILL	VOLUME CUT	VOLUME FILL
28	28		
		159	119
101	82		
		185	140
98	69		
		209	135
156	57		
		263	125
206	31		
		816	519

CALCULATED BDC
CHECKED TAB

CROSS SECTIONS - S.R. 65
STA. 108+50.00 TO STA. 110+00.00

ALL-75-0.21

371
907

I:\Pd\89029\roadway\sheets\89029XS300.dgn 25-JUN-2013 1:52PM tbolenba

SEEDING END WIDTH	SEEDING SQ. YDS.
10	
	80
55	
	141
55	
	237
87	
	458

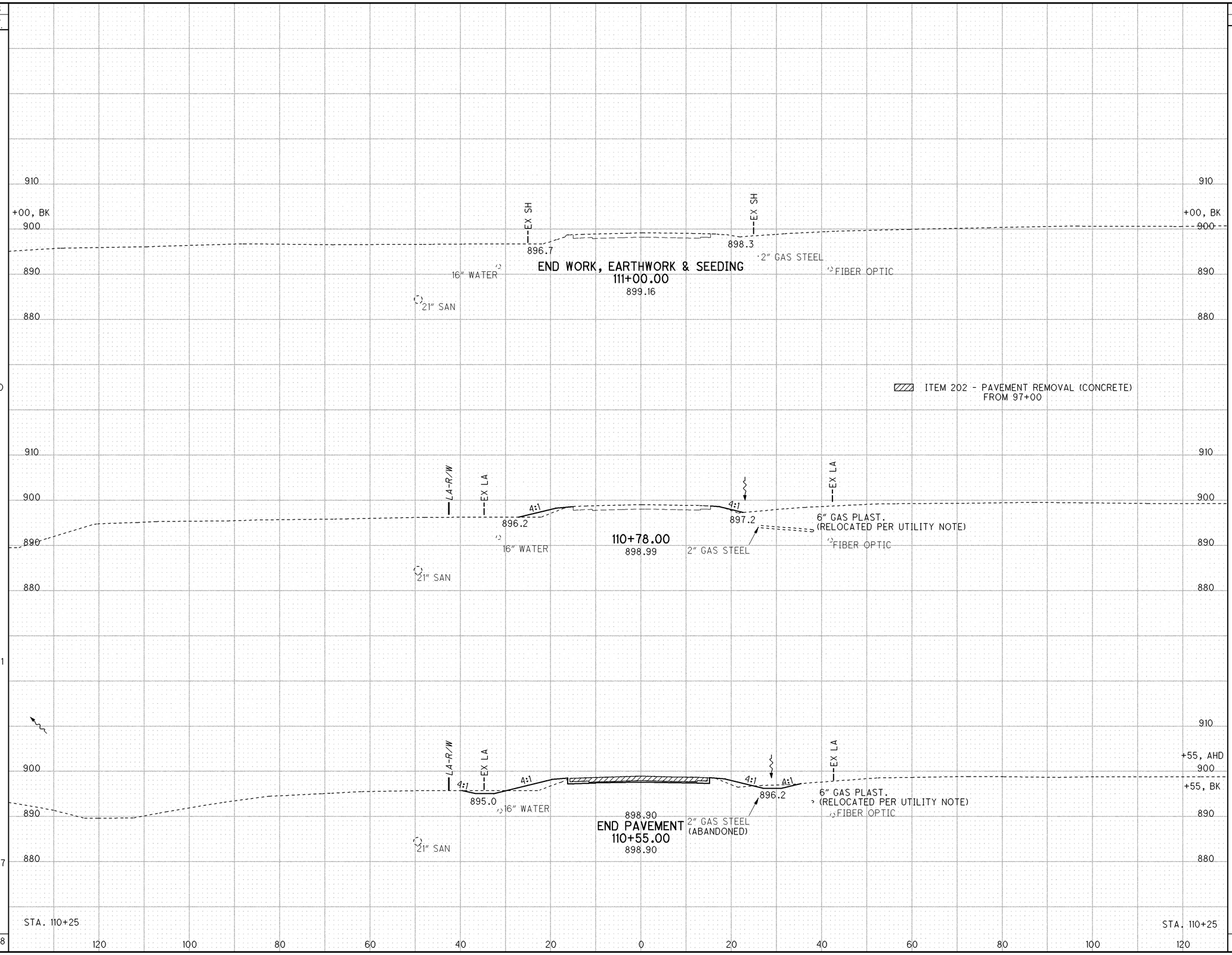

END AREA CUT	END AREA FILL	VOLUME CUT	VOLUME FILL
0	0		
		0	3
0	8		
		4	12
10	20		
22	20		
		28	27
28	28		
		32	42

CALCULATED BDC
CHECKED TAB

CROSS SECTIONS - S.R. 65
STA. 110+00.00 TO STA. 111+00.00

ALL-75-0.21

372
907

I:\Pd\89029\roadway\sheets\89029XS300.dgn 25-JUN-2013 1:52PM tbolenba

CURVE 65A-1	CURVE 65A-2
P.I.= Sta. 216+77.22	P.I.= Sta. 220+30.42
D = 8° 18′ 36″ (RT)	D = 6° 07′ 47″ (RT)
Dc = 1° 30′ 00″	Dc = 4° 00′ 00″
R = 3,819.72′	R = 1,432.39′
T = 277.49′	T = 76.69′
L = 554.00′	L = 153.24′
E = 10.07′	E = 2.05′
C = 553.51′	C = 153.17′
C.B. = S 85° 25′ 11″ E	C.B. = S 78° 12′ 00″ E
e_d = 0.037	e_d = 0.052

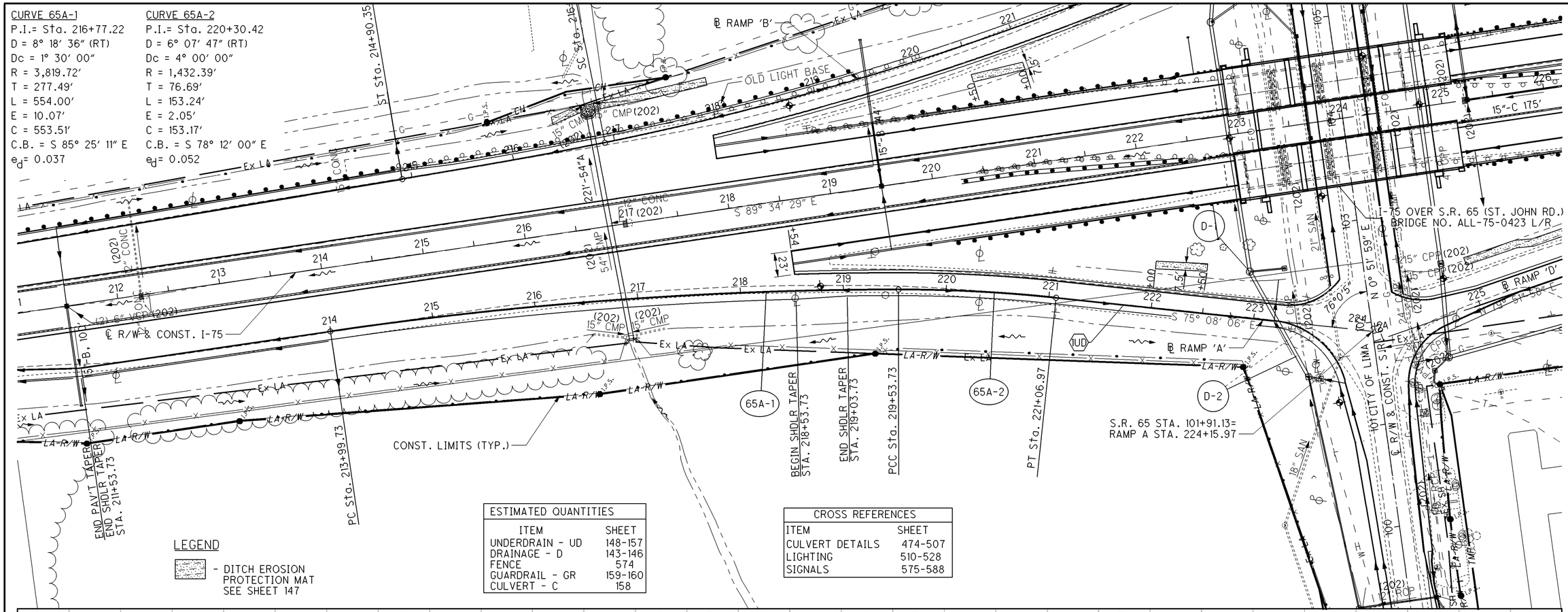

ESTIMATED QUANTITIES	
ITEM	SHEET
UNDERDRAIN - UD	148-157
DRAINAGE - D	143-146
FENCE	574
GUARDRAIL - GR	159-160
CULVERT - C	158

CROSS REFERENCES	
ITEM	SHEET
CULVERT DETAILS	474-507
LIGHTING	510-528
SIGNALS	575-588

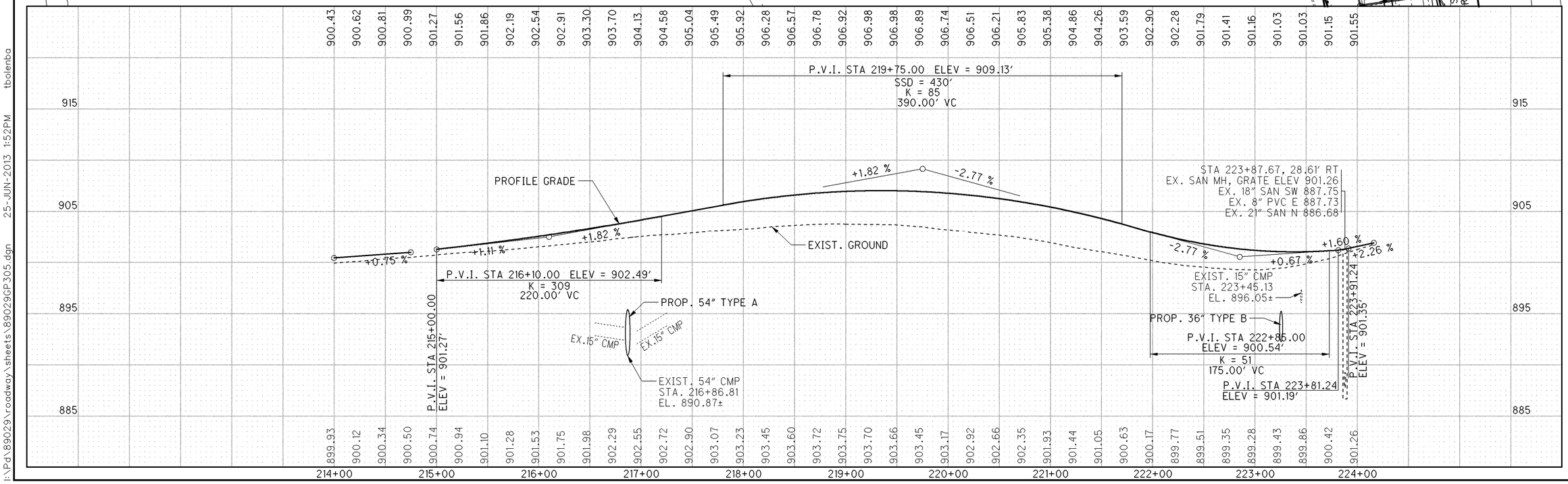

PLAN AND PROFILE - S.R. 65 RAMP 'A' STA. 213+99.73 TO STA. 224+15.97

ALL-75-0.21

373
907

HORIZONTAL SCALE IN FEET
0 25 50 100

CALCULATED | CHECKED

I:\Pd\89029\roadway\sheets\89029GP305.dgn 25-JUN-2013 1:52PM tbolenba

LEGEND

- DITCH EROSION PROTECTION MAT SEE SHEET 147
- RIPRAP W/SLAB

ESTIMATED QUANTITIES	
ITEM	SHEET
UNDERDRAIN - UD	148-157
DRAINAGE - D	143-146
FENCE	574

CROSS REFERENCES	
ITEM	SHEET
CULVERT DETAILS	474-507
LIGHTING	510-528
SIGNALS	575-588

CURVE 65B-1
P.I. STA. 216+23.69
Ls = 200.00'
θs = 2° 00' 00"
LT = 133.34'
ST = 66.67'
x = 199.98'
y = 2.33'
k = 100.00'
p = 0.58'

CURVE 65B-2
P.I.= Sta. 219+24.77
D = 13° 24' 47" (LT)
Dc = 2° 00' 00"
R = 2,864.79'
D c = 11° 24' 47" (LT)
Lc = 570.66'
Es = 20.03'
C = 569.71'
C.B.1 = N 88° 36' 46" E
C.B. = N 81° 34' 23" E
e_d = 0.045

NOTE: FOR DRAINAGE INFORMATION STARTING AT STA. 222+88 to STA. 226+00 GO TO S.R. 65 SHEETS 353-360.

END PAV'T TAPER
BEGIN SHDLR TAPER
ST Sta. 214+90.35

END SHDLR TAPER
STA. 215+40.35

SC Sta. 216+90.35

65B-1

65B-2

CONST. LIMITS (TYP.)

20" HP (DOMINION SAYS 36"+/- DEEP)

OLD LIGHT BASE

PT Sta. 222+61.01

BEGIN PAV'T TAPER
STA. 222+97.56

END PAV'T TAPER
STA. 223+37.59

107 CITY OF LIMA
℄ R/W & CONST. S.R. 65

℄ RAMP 'C'

℄ RAMP 'B'

BEGIN PAV'T TAPER
STA. 222+79.21

END PAV'T TAPER
STA. 223+39.21

S.R. 65 STA. 106+07.78±
RAMP B STA. 224+17.25

℄ RAMP 'A'

℄ R/W & CONST. I-75

EX. C.B. (202)

I-75 OVER S.R. 65 (ST. JOHN RD.)
BRIDGE NO. ALL-75-0423 L/R

PC Sta. 213+99.73

S 89° 34' 29" E

S 80° 53' 01" E

N 75° 51' 59" W

N 0° 51' 59" E

221'-54"A

15"-B 56'
18"-C 27'
18"-F 65'

15"-C 175'

P.V.I. STA 216+00.00
ELEV = 902.46'

P.V.I. STA 219+30.00 ELEV = 907.48'
SSD = 440'
K = 89
415.00' VC

P.V.I. STA 222+65.00
ELEV = 897.03'
K = 49
190.00' VC

P.V.I. STA 223+82.40
ELEV = 897.89'

P.V.I. STA 223+92.40
ELEV = 898.05'

PROFILE GRADE

EXIST. GROUND

PROP. 15" TYPE B

PROP. 54" TYPE A

EX. 15" CMP

EXIST. 54" CMP
STA. 216+79.91
EL. 890.70±

20" HP GAS

PROP. 36" TYPE B

EX. 21" SAN

STA 223+65.55, 48.49' RT
EX. SAN MH, GRATE ELEV 898.13
EX. 21" SAN S 884.69
EX. 21" SAN NW 884.66

STA 222+91.82, 78.63' LT
EX. SAN MH
GRATE ELEV 897.88
EX. 21" SAN SE 884.42
EX. 21" SAN N 884.21

EXIST. 15" CMP
STA. 223+42.50
EL. 893.84±

+1.20 %
+1.52 %
+1.52 %
-3.12 %
-3.12 %
+0.73 %
+1.60 %
+1.53 %

915
905
895
885

215+00
216+00
217+00
218+00
219+00
220+00
221+00
222+00
223+00
224+00

HORIZONTAL SCALE IN FEET
0 25 50 100

CALCULATED
CHECKED

PLAN AND PROFILE - S.R. 65 RAMP 'B' STA. 214+90.35 TO 224+17.25

ALL-75-0.21

374
907

I:\Pd\89029\roadway\sheets\89029GP306.dgn 25-JUN-2013 1:52PM tbolenba

CURVE 65C-1
P.I.= Sta. 234+02.39
D = 8° 41′ 28″ (LT)
Dc = 1° 30′ 00″
R = 3,819.72′
T = 290.26′
L = 579.40′
E = 11.01′
C = 578.85′
C.B. = S 85° 13′ 45″ E
e_d = 0.037

ESTIMATED QUANTITIES	
ITEM	SHEET
UNDERDRAIN - UD	148-157
DRAINAGE - D	143-146
FENCE	574

CROSS REFERENCES	
ITEM	SHEET
CULVERT DETAILS	474-507
LIGHTING	510-528

NOTE:
1. INTERSTATE ROUTE 75 - CONSTRUCTION STA. 237+16.78 (0.0′ RT.) = INDIANA AND OHIO RAILWAY (IORY) AAR/DOT#258615H RR MP. 135.34 SUBDIVISION: DT&I MIDDLE

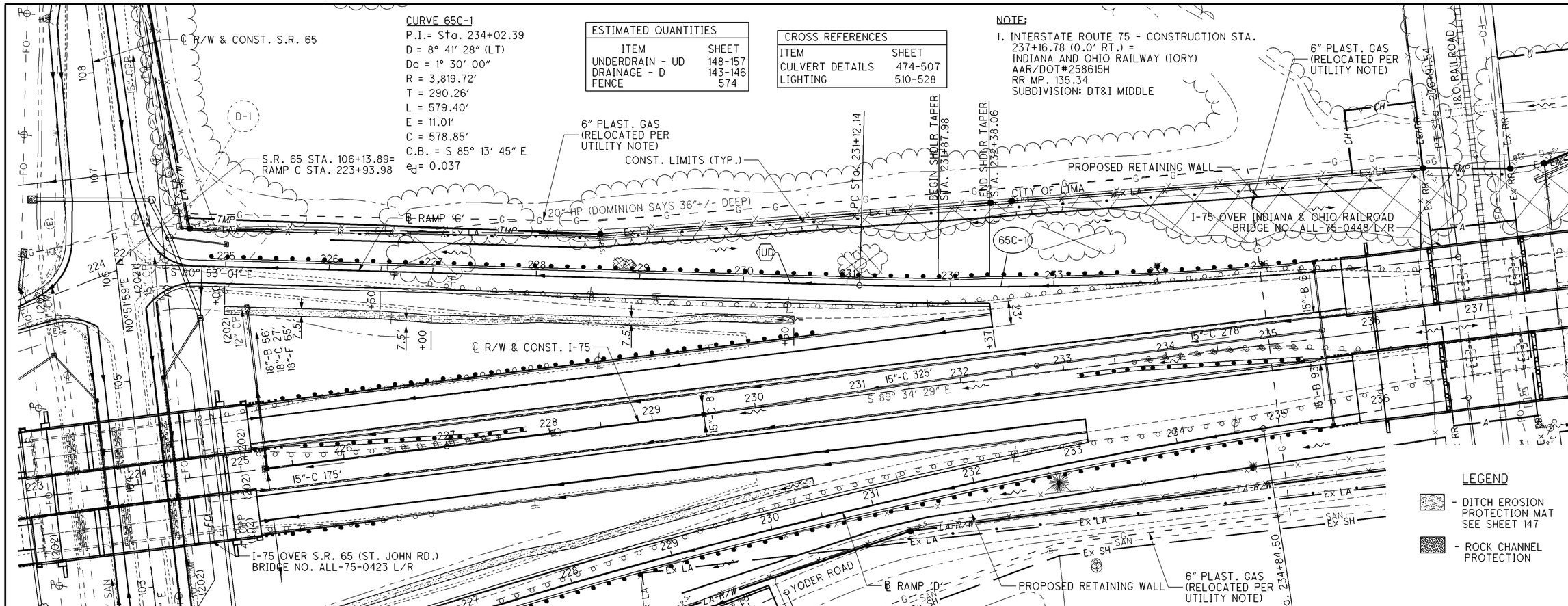

LEGEND
- DITCH EROSION PROTECTION MAT SEE SHEET 147
- ROCK CHANNEL PROTECTION

FOR PROFILE SEE SHEET 376

HORIZONTAL SCALE IN FEET 0 25 50 100

CALCULATED
CHECKED

PLAN AND PROFILE - S.R. 65 RAMP 'C' STA. 223+93.98 TO STA. 236+91.54

ALL-75-0.21

I:\Pd\89029\roadway\sheets\89029GP307.dgn 25-JUN-2013 1:52PM tbolenba

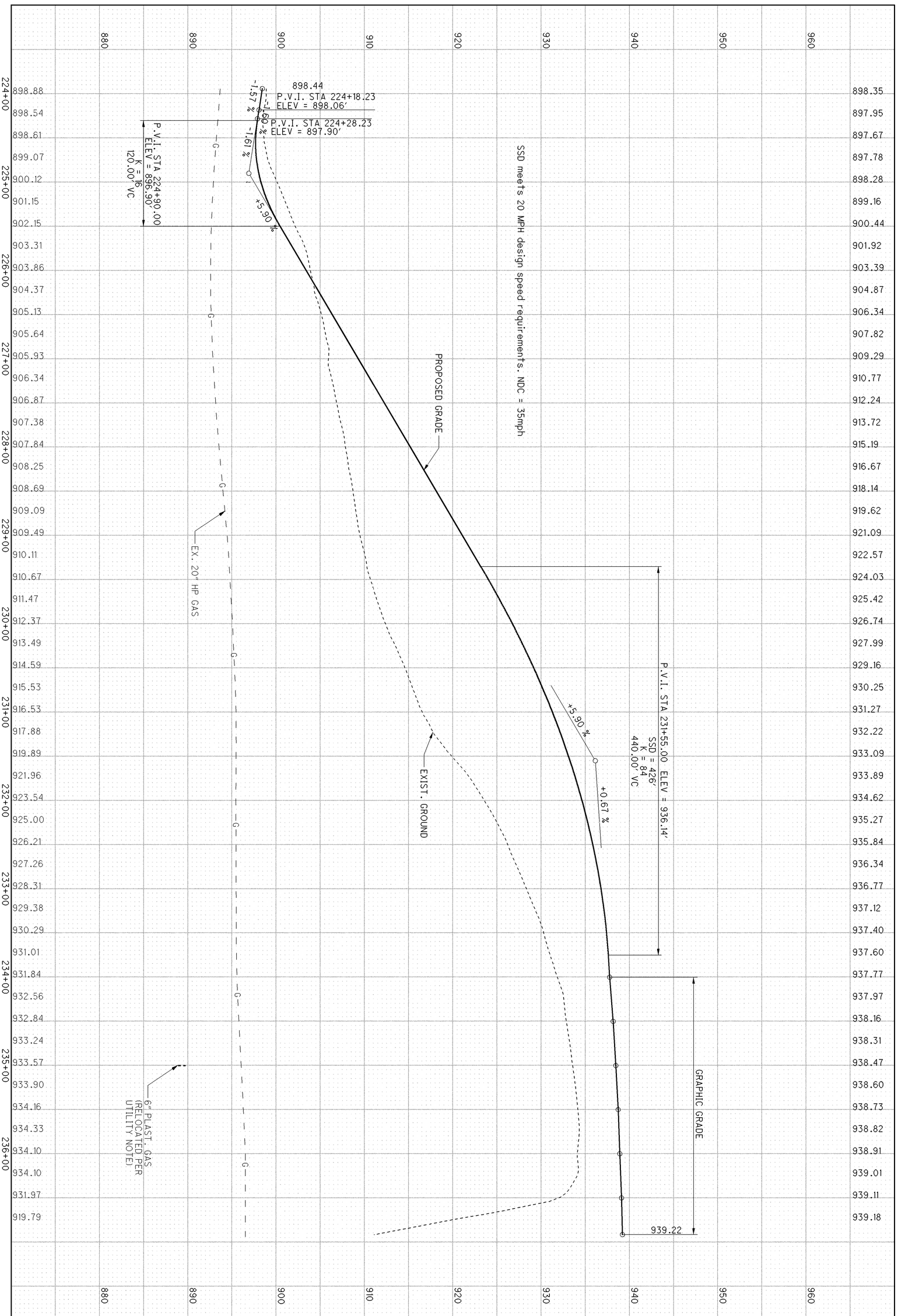

376 / 907	**ALL-75-0.21**	**PROFILE - S.R. 65 RAMP 'C'** **STA. 223+93.98 TO STA. 236+91.54**	CALCULATED CHECKED

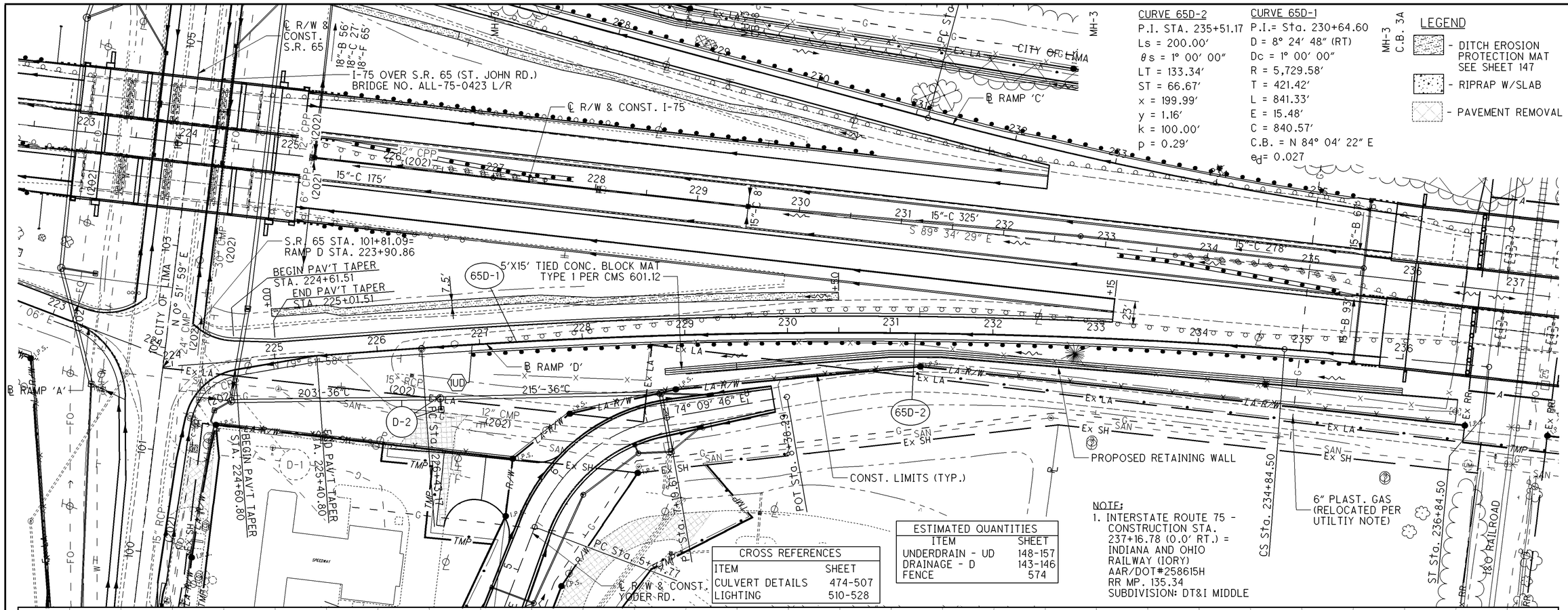

PLAN AND PROFILE - S.R. 65 RAMP 'D'
STA. 223+90.86 TO STA. 236+84.50

CALCULATED | CHECKED

ALL-75-0.21

377
907

I:\Pd\89029\roadway\sheets\89029GP308.dgn 25-JUN-2013 1:52PM tbolenbo

I:\Pd\89029\roadway\sheets\89029GF308.dgn 25-JUN-2013 1:52PM tbolenba

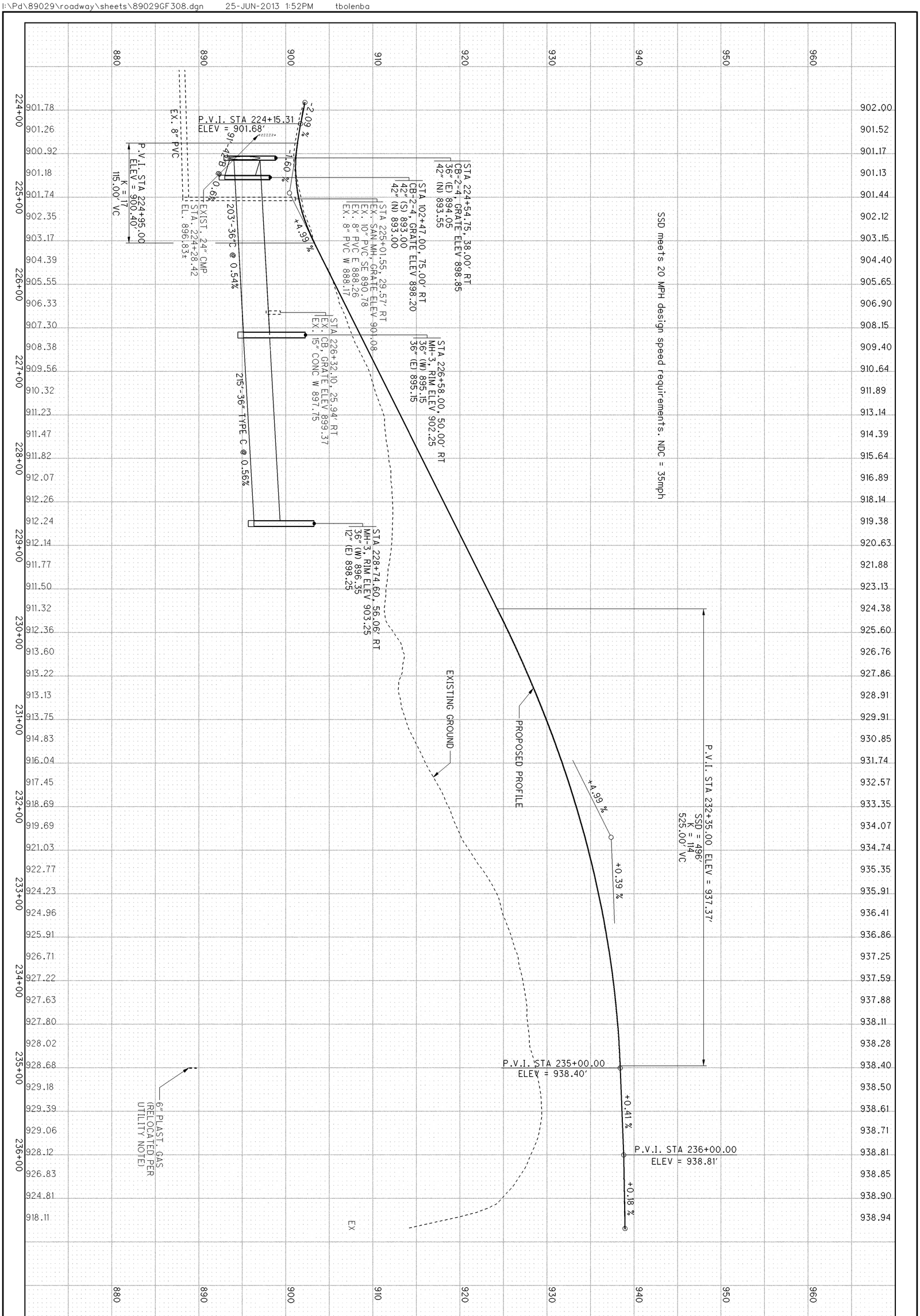

378 / 907	ALL-75-0.21	PROFILE - S.R. 65 RAMP 'D' STA. 223+90.86 TO STA. 236+84.50	CALCULATED CHECKED

SEEDING	
END WIDTH	SQ. YDS.
59	336
62	356
66	692

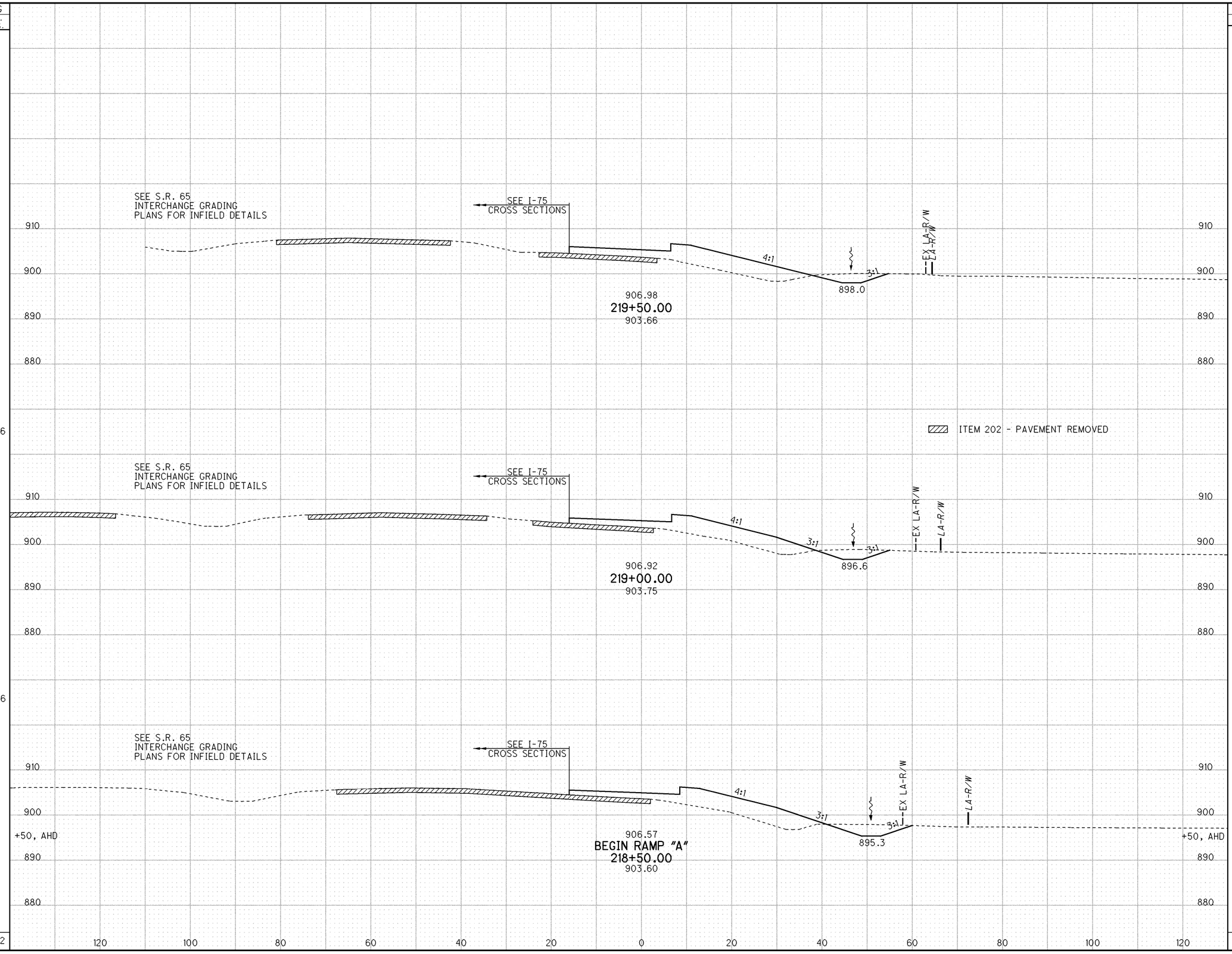

END AREA		VOLUME	
CUT	FILL	CUT	FILL
34	159	53	288
23	152	49	289
30	160	102	577

CALCULATED BDC
CHECKED TAB

CROSS SECTIONS - RAMP A (S.R. 65)
STA. 218+50.00 TO STA. 219+50.00

ALL-75-0.21

379
907

I:\Pd\89029\roadway\sheets\89029XS301.dgn 25-JUN-2013 1:52PM tbolenba

SEEDING	
END WIDTH	SQ. YDS.
55	314
58	322
58	325
59	961

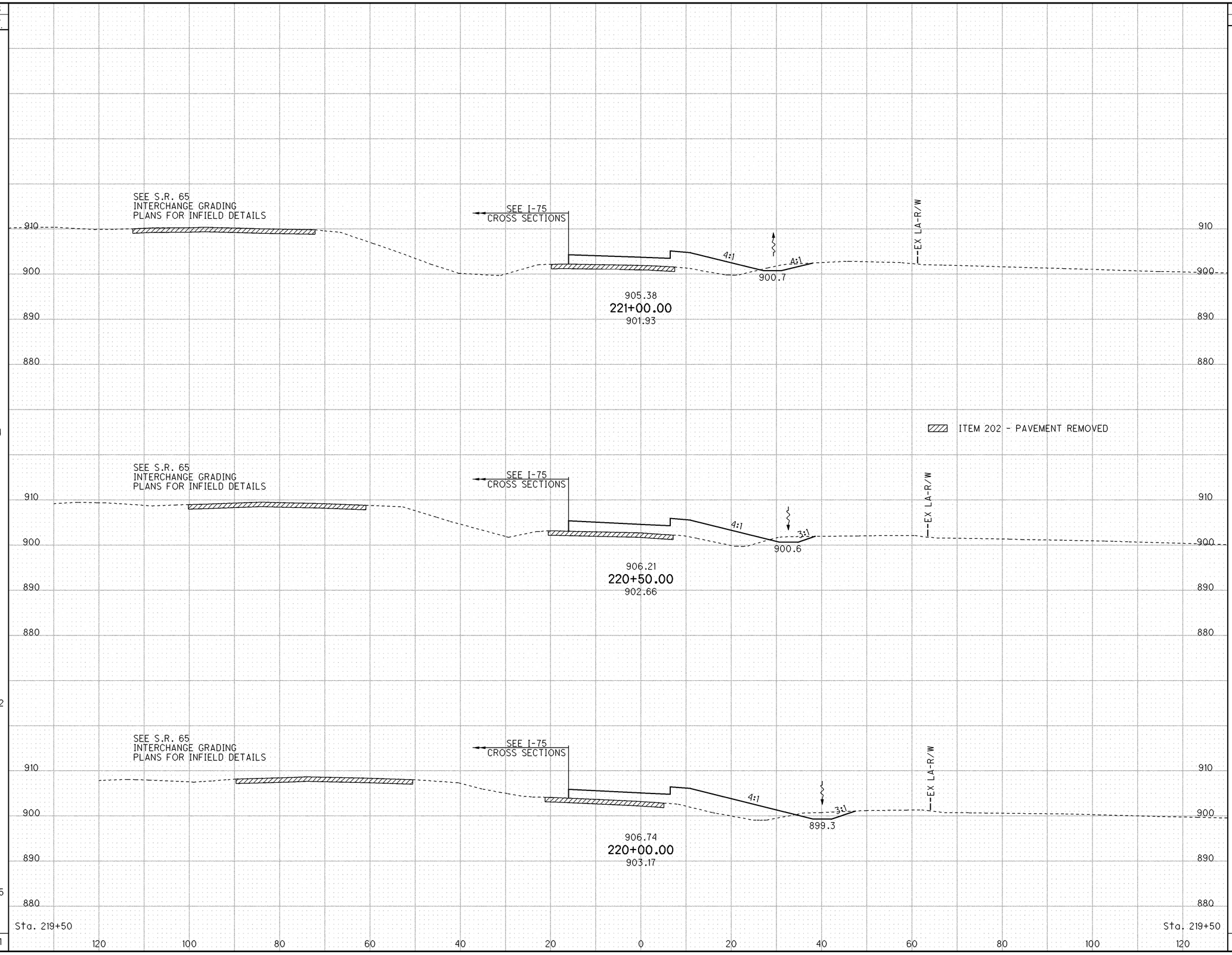

END AREA	
CUT	FILL
8	120
8	135
13	154
34	159

VOLUME	
CUT	FILL
15	236
19	268
44	290
78	794

CALCULATED BDC
CHECKED TAB

CROSS SECTIONS - RAMP A (S.R. 65)
STA. 220+00.00 TO STA. 221+00.00

ALL-75-0.21

380
907

I:\Pd\89029\roadway\sheets\89029XS301.dgn 25-JUN-2013 1:52PM tbolenba

SEEDING		END AREA		VOLUME		CALCULATED BDC / CHECKED TAB
END WIDTH	SQ. YDS.	CUT	FILL	CUT	FILL	
44	256	0	85	0	165	
48	278	0	93	0	190	
52	297	0	112	7	215	
55	831	8	120	7	570	

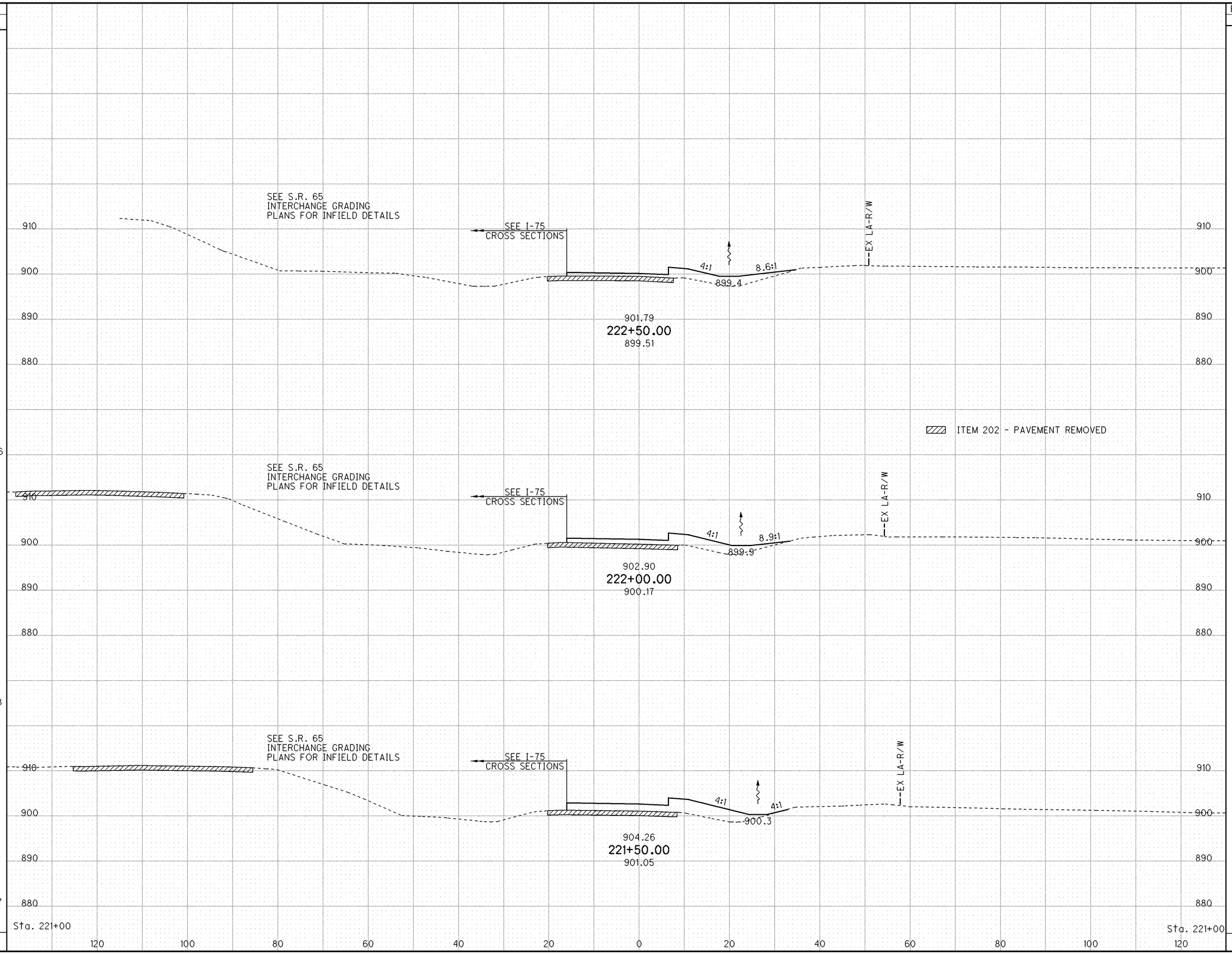

CROSS SECTIONS - RAMP A (S.R. 65)
STA. 221+50.00 TO STA. 222+50.00

ALL-75-0.21

381
907

I:\Pd\89029\roadway\sheets\89029XS301.dgn 25-JUN-2013 1:51PM tbolenba

SEEDING END WIDTH	SEEDING SQ. YDS.	END AREA CUT	END AREA FILL	VOLUME CUT	VOLUME FILL
	90			7	14
	157			0	45
	51			0	51
	173			0	70
	42			0	62
	196			0	113
62		0	47		
44		0	85		
	616			7	242

CALCULATED BDC
CHECKED TAB

CORRECTION FOR RAMP "A" INTERSECTION FROM 223+50 TO S.R. 65

INTERSECTION RAMP "A" & S.R. 65 STA. 223+91.40

CORRECTION FOR RAMP "A" INTERSECTION FROM 223+50 TO S.R. 65

SEE S.R. 65 INTERCHANGE GRADING PLANS FOR INFIELD DETAILS

SEE I-75 & SR 65 CROSS SECTIONS

Catch Basin, No. 2-4
223+58.97, 50.4'Rt
101+56 SR 65, 67.5'Lt
Grate El. 897.85
12"C (SE) ℄ El. 895.00
36"B (S) ℄ El. 893.00

10:1 6:1 897.5 6:1 10:1 897.85

EX. 15" CMP (202)

901.03
223+50.00
899.86

117'-36" TYPE B @ 1.28%

+50, Bk 21" SAN

ITEM 202 - PAVEMENT REMOVED

SEE S.R. 65 INTERCHANGE GRADING PLANS FOR INFIELD DETAILS

Catch Basin, No. 2-3
223+25, 52'Lt
223+25.55 I-75, 137.75' Rt
102+63.5 SR 65, 76.2'Lt
Grate El. 896.00
12"C (W) ℄ El. 893.00

SEE SR 65 CROSS SECTIONS

SEE I-75 CROSS SECTIONS

5:1 896.0 4:1 6:1 898.8

117'-36" TYPE B @ 1.28%

901.03
223+25.00
899.43

--EX LA-R/W

SEE S.R. 65 INTERCHANGE GRADING PLANS FOR INFIELD DETAILS

Manhole, No. 3
w/72" Base I.D.
222+91.5, 45'Lt
223+25.55 I-75, 137.75' Rt
102+64.9 SR 65, 109.9'Lt
Lid El. 898.55
12"C (E) ℄ El. 892.50
36"B (N) ℄ El. 891.50
36"B (S) ℄ El. 891.50

2:1 4:1 898.0 6.2:1 4:1 6:1 899.1

SEE I-75 CROSS SECTIONS

--EX LA-R/W

248'-36" TYPE B @ 0.40% 117'-36" TYPE B @ 1.28%

901.23
222+91.50
899.29

Sta. 222+50 Sta. 222+50

910 900 890 880

120 100 80 60 40 20 0 20 40 60 80 100 120

CROSS SECTIONS - RAMP A (S.R. 65) STA. 223+00.00 TO STA. 223+50.00

ALL-75-0.21

382
907

I:\Pd\89029\roadway\sheets\89029XS301.dgn 25-JUN-2013 1:51PM tbolenba

SEEDING END WIDTH	SEEDING SQ. YDS.
53	289
51	
48	275
48	21
48	
	585

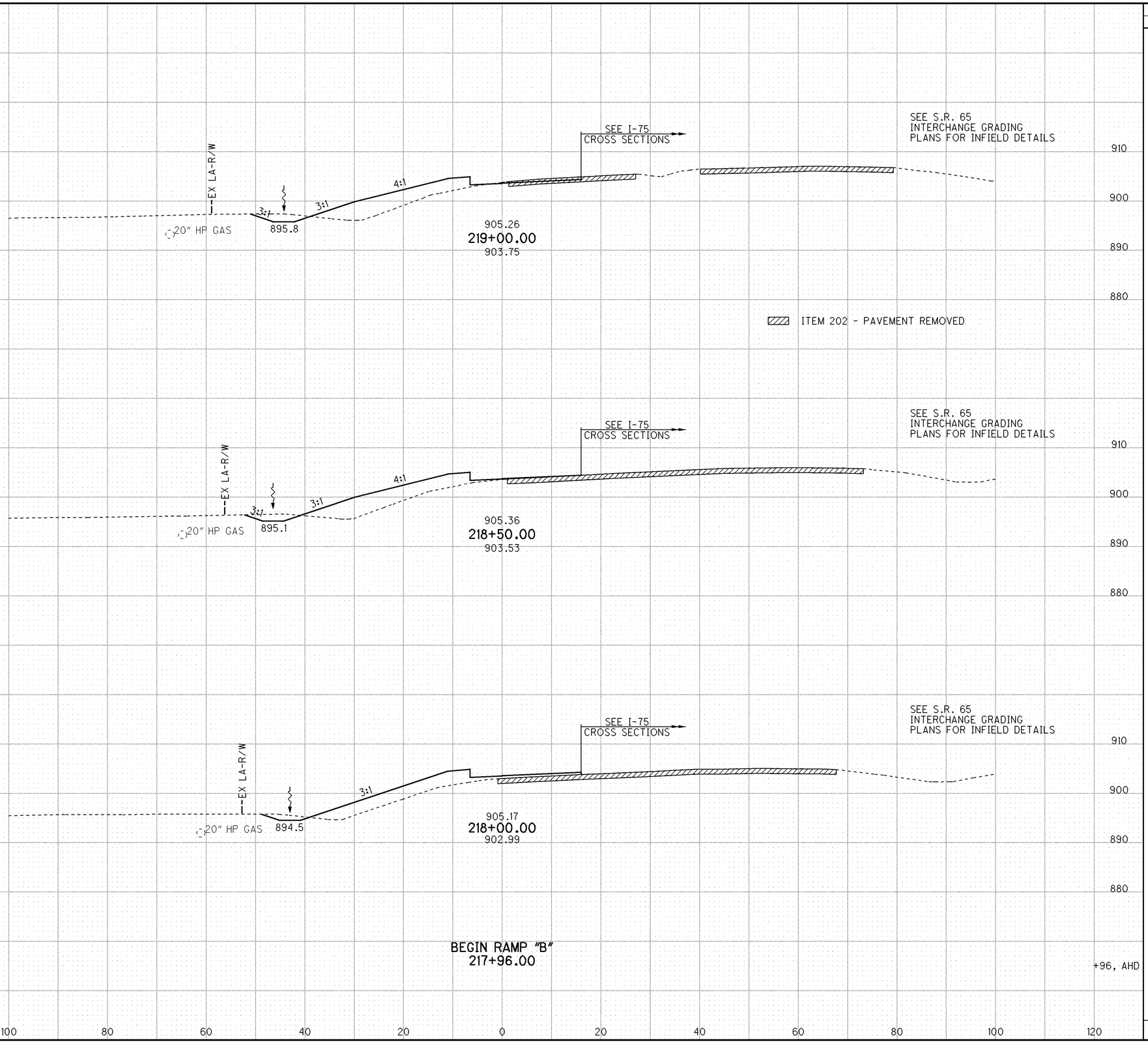

END AREA CUT	END AREA FILL	VOLUME CUT	VOLUME FILL
12	101		
		20	101
10	117		
7	110		
		16	210
7	110		
		1	16
7	110		
		37	428

CALCULATED BDC
CHECKED TAB

CROSS SECTIONS - RAMP B (S.R. 65)
STA. 217+96.00 TO STA. 219+00.00

ALL-75-0.21

383
907

I:\Pd\89029\roadway\sheets\89029XS302.dgn 25-JUN-2013 1:51PM tbolenba

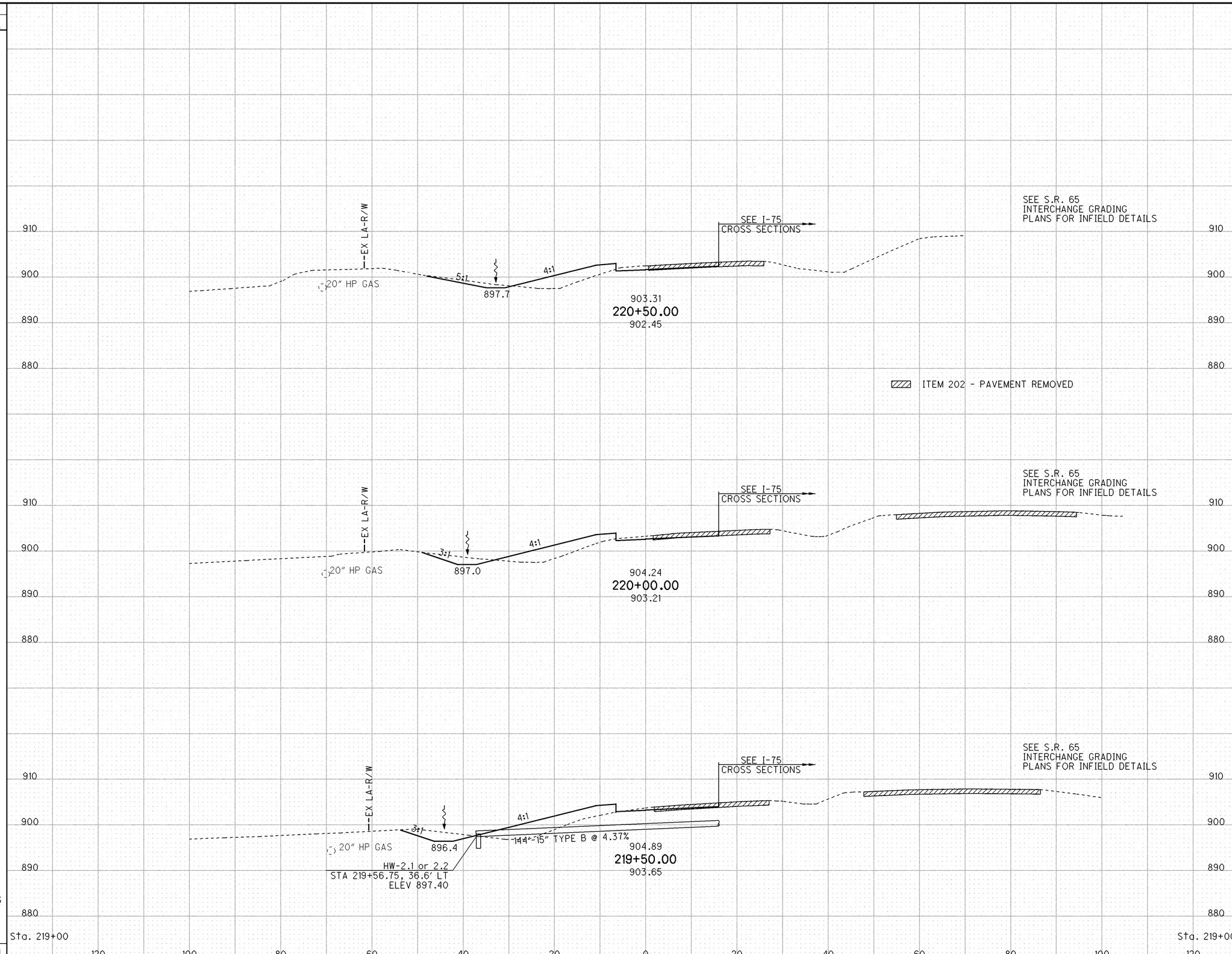

SEEDING END WIDTH	SEEDING SQ. YDS.	END AREA CUT	END AREA FILL	VOLUME CUT	VOLUME FILL
56		14	50		
	314			31	94
57		19	52		
	314			39	122
56		23	80		
	303			32	168
53		12	101		
	931			102	384

CALCULATED BDC
CHECKED TAB

CROSS SECTIONS - RAMP B (S.R. 65)
STA. 219+50.00 TO STA. 220+50.00

ALL-75-0.21

I:\Pd\89029\roadway\sheets\89029XS302.dgn 25-JUN-2013 1:51PM tbolenba

SEEDING		END AREA		VOLUME		CALCULATED BDC
END WIDTH	SQ. YDS.	CUT	FILL	CUT	FILL	CHECKED TAB
51	292	17	21	26	58	
54	306	11	42	24	82	
56	311	15	46	27	89	
56		14	50			
	909			77	229	

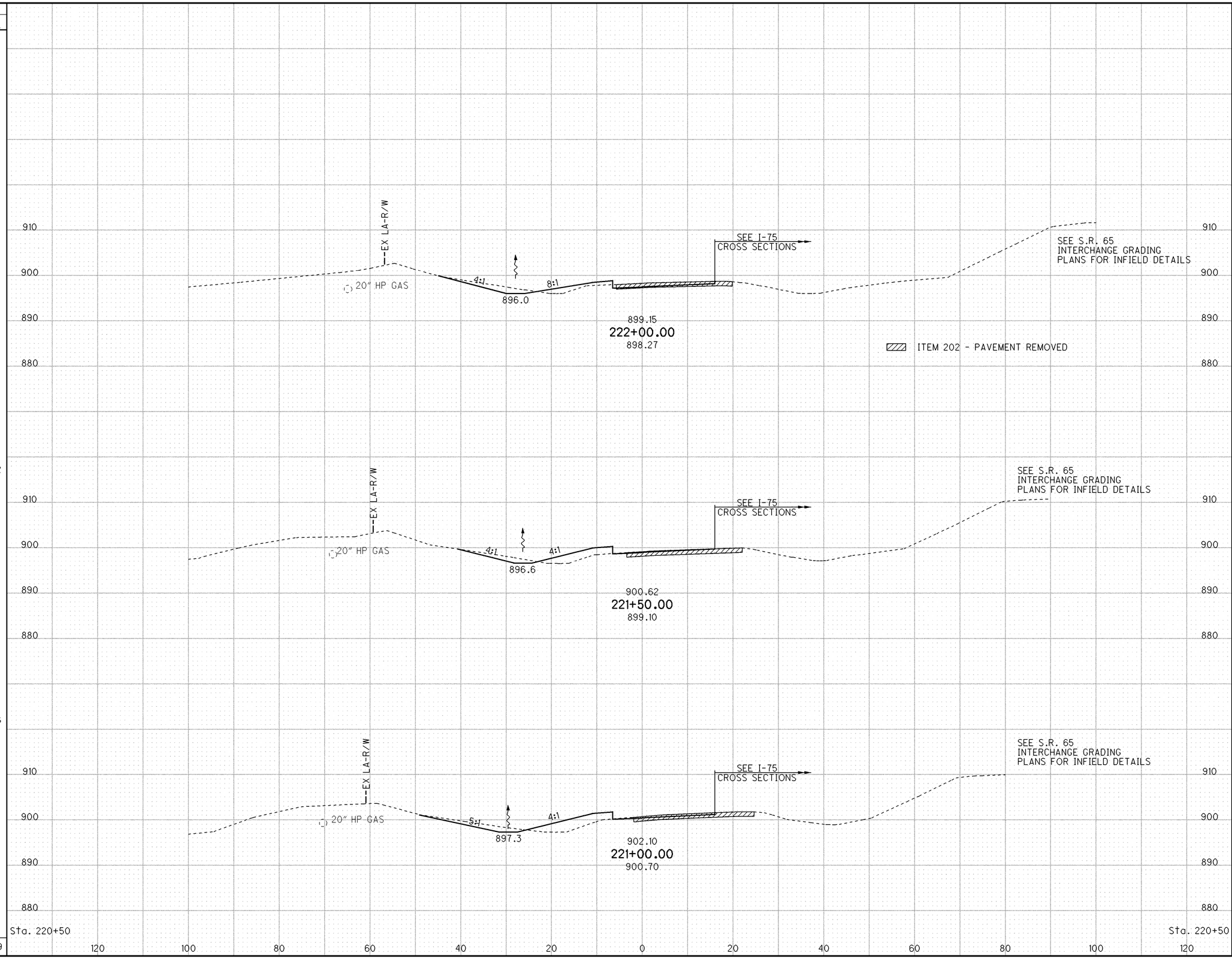

I:\Pd\89029\roadway\sheets\89029XS302.dgn 25-JUN-2013 1:51PM tbolenba

CROSS SECTIONS - RAMP B (S.R. 65)
STA. 221+00.00 TO STA. 222+00.00

ALL-75-0.21

385
907

SEEDING END WIDTH	SEEDING SQ. YDS.		END AREA CUT	END AREA FILL	VOLUME CUT	VOLUME FILL
	118	CORRECTION FOR RAMP "B" INTERSECTION FROM 223+50 TO S.R. 65			0	14
		INTERSECTION RAMP "B" & S.R. 65 STA. 223+92.37				
		CORRECTION FOR RAMP "B" INTERSECTION FROM 223+50 TO S.R. 65				
82		+50, BK	155	24		
	-11	Correction for Storm Sewer Outlet			-5	-7
		Manhole, No. 3 w/72" Base I.D. 222+86.5, 65'Rt 222+89.45 I-75, 110.7'Lt 105+09.90 SR 65, 114.3'Lt Lid El. 899.50 15"C (NE) ℄ El. 891.50 36"B (S) ℄ El. 890.50 36"B (NE) ℄ El. 890.50			272	22
	386	STA 222+91.82, 78.63' LT EX. SAN MH, GRATE ELEV 897.88' 21" SAN SE 884.42 21" SAN N 884.21				
57		223+00.00	138	0		
	292				152	7
48		222+50.00	26	7		
	275				32	168
51		Sta. 220+50	17	21		
	1060				459	62

HW 2.1 OR 2.2
223+38.6, 45.7'Lt
106+45.0 SR 65, 80'Lt
36"B ℄ El. 890.00

HW 2.1 OR 2.2
223+70.04, 92.21 RT.
106+85, 69.5'Lt
42"B ℄ El. 889.90

SEE I-75 CROSS SECTIONS

Catch Basin, No. 2-3
223+30.5, 55'Rt
223+34.32, I-75, 133.53'Lt
105+33 SR 65, 69.5'Lt
Grate El. 895.25
12"C (SE) ℄ El. 893.00
15"C (SW) ℄ El. 892.75

SEE S.R. 65 INTERCHANGE GRADING PLANS FOR INFIELD DETAILS

12:1
9:1
895.25
30" HP GAS
125'-36" TYPE B @ 0.40%
897.66
223+50.00
898.35
EX. 15" CMP (202)
EX. 21" SAN
ROCK CHANNEL PROTECTION, TYPE B, W/FILTER, 30" THICK

EX LA-R/W
20" HP GAS
2:1
4:1
891.8
EX. 21" SAN
EX. 21" SAN
8:1
4:1
2:1
895.9
125'-36" TYPE B @ 0.40%
248'-36" TYPE B @ 0.40%
897.65
223+00.00
897.81

ITEM 202 - PAVEMENT REMOVED

EX LA-R/W
20" HP GAS
3.25:1
8:1
895.5
898.15
222+50.00
897.85

SEE S.R. 65 INTERCHANGE GRADING PLANS FOR INFIELD DETAILS

910 / 900 / 890 / 880

Sta. 222+00

120 100 80 60 40 20 0 20 40 60 80 100 120

CALCULATED BDC
CHECKED TAB

CROSS SECTIONS - RAMP B (S.R. 65)
STA. 222+50.00 TO STA. 223+50.00

ALL-75-0.21

386
907

I:\Pd\89029\roadway\sheets\89029XS302.dgn 25-JUN-2013 1:51PM tbolenba

SEEDING		END AREA		VOLUME	
END WIDTH	SQ. YDS.	CUT	FILL	CUT	FILL
40	111	108	0	90	0
40		86	0		
	156			97	0
38		59	0		
97				46	7
	364			233	7

CALCULATED BDC
CHECKED TAB

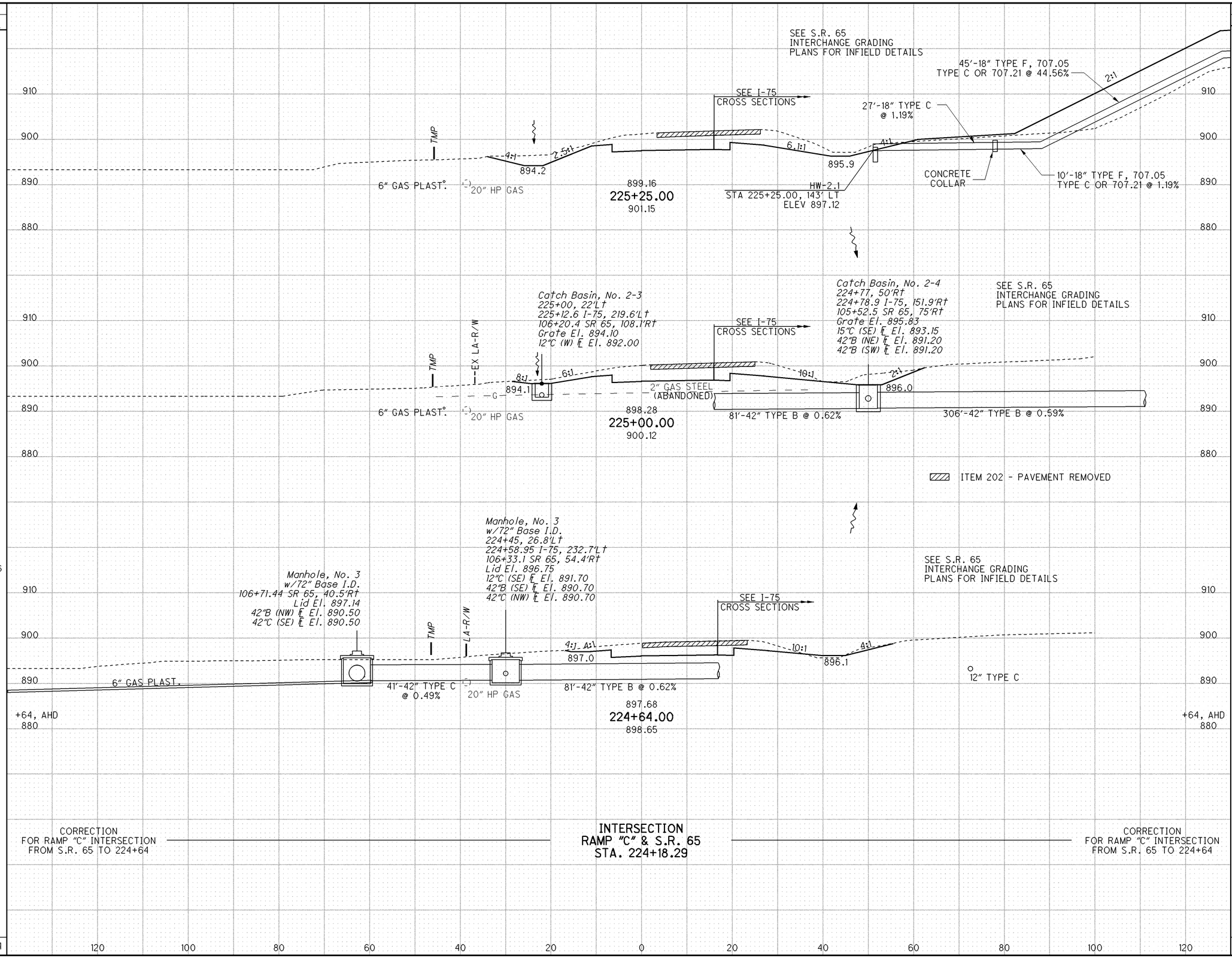

CROSS SECTIONS - RAMP C (S.R. 65)
STA. 224+64.00 TO STA. 225+25.00

ALL-75-0.21

387
907

I:\Pdl\89029\roadway\sheets\89029XS303.dgn 25-JUN-2013 1:51PM tbolenba

SEEDING END WIDTH	SEEDING SQ. YDS.
40	222
40	222
40	225
41	338
40	
	1007

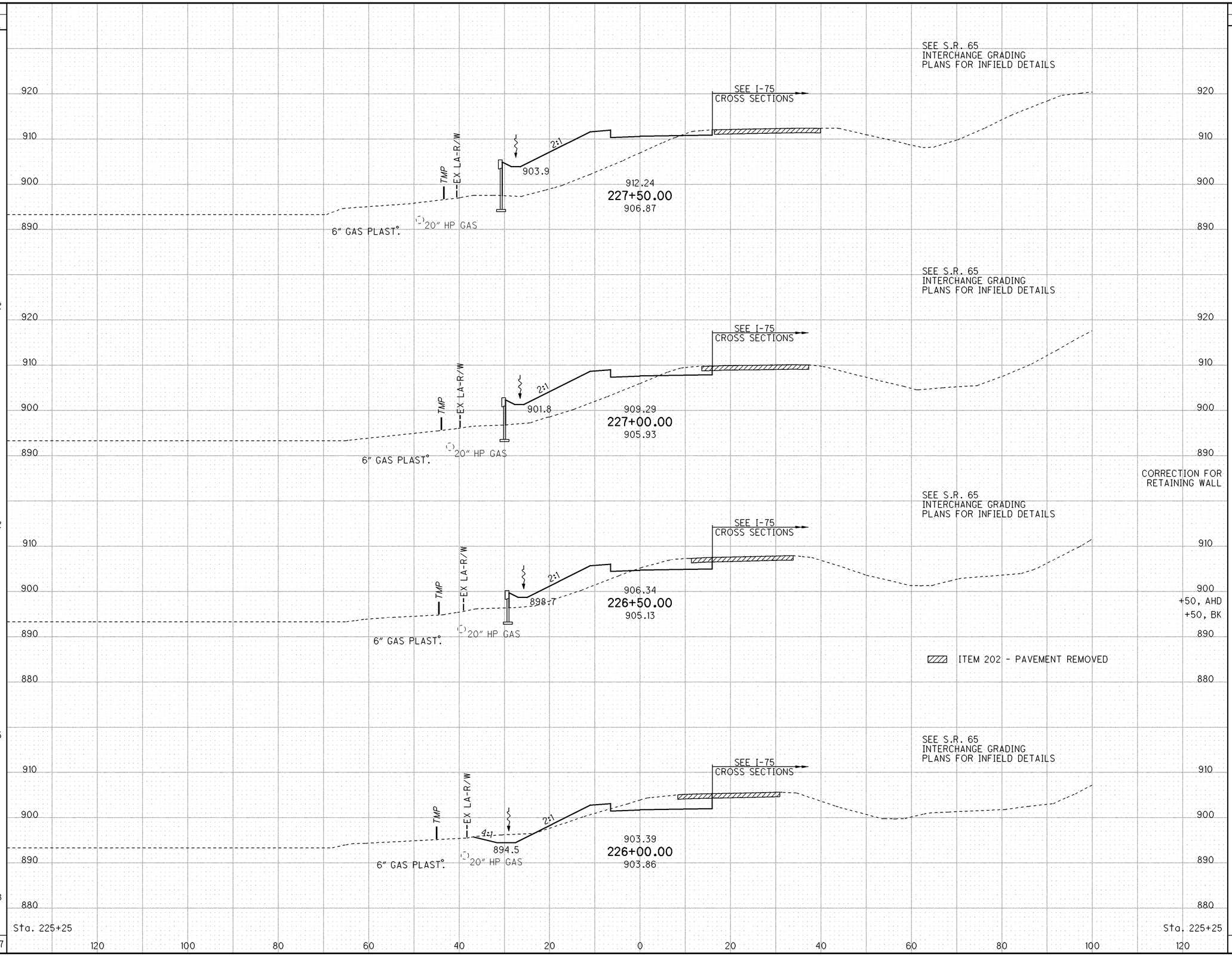

END AREA CUT	END AREA FILL	VOLUME CUT	VOLUME FILL
6	243		
		19	370
14	156		
		0	5
		58	221
49	83		
49	104		
		105	116
64	21		
		239	29
108	0		
		421	736

+50, AHD
+50, BK

CALCULATED BDC
CHECKED TAB

CROSS SECTIONS - RAMP C (S.R. 65)
STA. 226+00.00 TO STA. 227+50.00

ALL-75-0.21

388
907

I:\Pd\89029\roadway\sheets\89029XS303.dgn 25-JUN-2013 1:51PM tbolenba

SEEDING END WIDTH	SEEDING SQ. YDS.
42	219
37	208
38	217
40	
	644

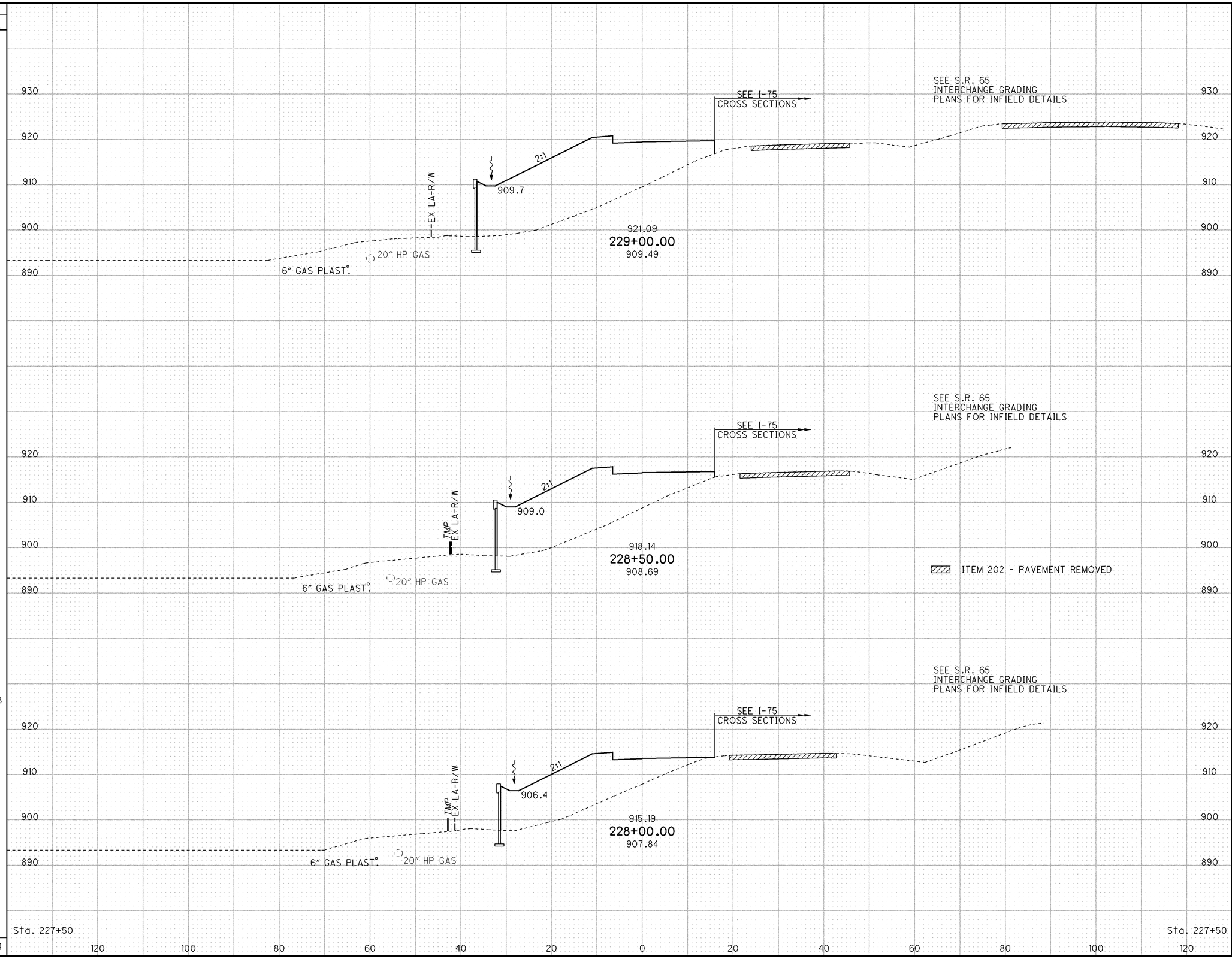

END AREA CUT	END AREA FILL	VOLUME CUT	VOLUME FILL
0	589		
		0	962
0	450		
		0	730
0	338		
		6	538
6	243		
		6	2230

CALCULATED BDC
CHECKED TAB

CROSS SECTIONS - RAMP C (S.R. 65)
STA. 228+00.00 TO STA. 229+00.00

ALL-75-0.21

389
907

I:\Pd\89029\roadway\sheets\89029XS303.dgn 25-JUN-2013 1:51PM tbolenba

SEEDING		END AREA		VOLUME	
END WIDTH	SQ. YDS.	CUT	FILL	CUT	FILL
60	317	0	961	59	1696
54	281	0	871	59	1500
47	247	0	749	59	1239
42	845	0	589	421	4435

CALCULATED BDC
CHECKED TAB

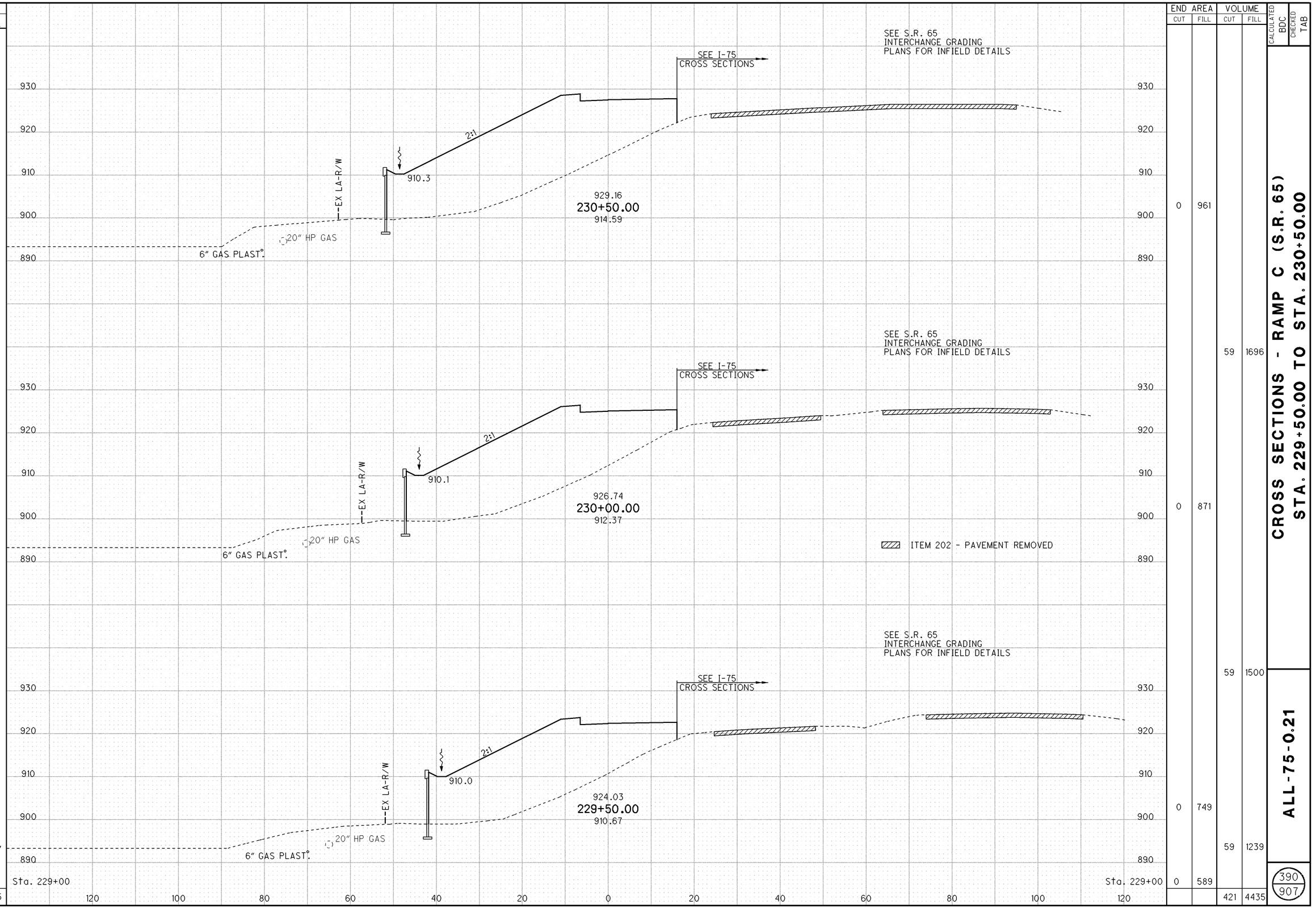

CROSS SECTIONS - RAMP C (S.R. 65)
STA. 229+50.00 TO STA. 230+50.00

ALL-75-0.21

390
907

I:\Pd\89029\roadway\sheets\89029XS303.dgn 25-JUN-2013 1:51PM tbolenba

SEEDING END WIDTH	SEEDING SQ. YDS.	END AREA CUT	END AREA FILL	VOLUME CUT	VOLUME FILL
75		0	898		
	406			0	1228
71		0	968		
	381			0	1843
66		0	1022		
	350			0	1836
60		0	961		
	1137			0	4907

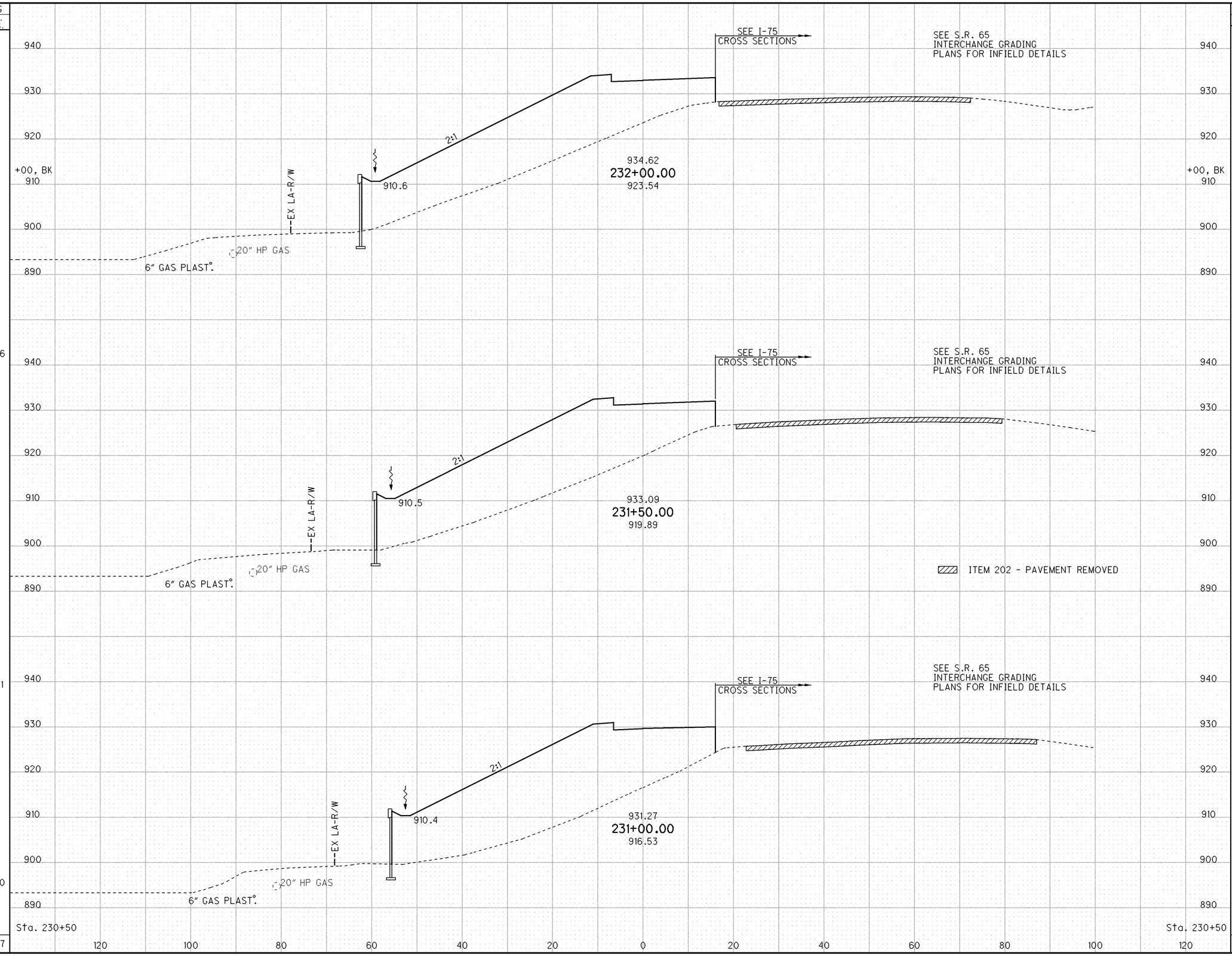

CALCULATED BDC
CHECKED TAB

CROSS SECTIONS - RAMP C (S.R. 65)
STA. 231+00.00 TO STA. 232+00.00

ALL-75-0.21

391
907

I:\Pd\89029\roadway\sheets\89029XS303.dgn 25-JUN-2013 1:51PM tbolenba

SEEDING END WIDTH	SEEDING SQ. YDS.	END AREA CUT	END AREA FILL	VOLUME CUT	VOLUME FILL
76	394	117	0	156	0
66		52	0		
	328			91	0
52		46	0		
42				24	9
	764			271	9

CALCULATED BDC
CHECKED TAB

SEE S.R. 65
INTERCHANGE GRADING
PLANS FOR INFIELD DETAILS

SEE I-75
CROSS SECTIONS

EX LA

EX SH
LA-R/W

6:1
4:1
10:1
6:1
899.3
900.0
903.15
225+50.00
903.17
36" TYPE C
8" PVC

SEE S.R. 65
INTERCHANGE GRADING
PLANS FOR INFIELD DETAILS

Catch Basin, No. 2-4
224+77.00, 50.4'Lt
102+47 SR 65, 75'Rt
Grate El. 898.20
42"B (N) ℄ El. 893.00
42"B (S) ℄ El. 893.00

SEE I-75
CROSS SECTIONS

EX LA-R/W

STA 225+01.55, 29.57' RT
EX. SAN MH, GRATE ELEV 901.08'
10" PVC SE 890.78
8" PVC E 888.26
8" PVC W 888.17

EX R/W
LA-R/W

STA 224+91.89, 86.25' RT
EX. MH, GRATE ELEV 904.64'
10" PVC S 900.86
10" PVC S 900.86
10" PVC E 900.63
10" PVC W 900.63

4:1
8:1
12:1
12:1
898.2
900.15
306'-42" TYPE B @ 0.59%
93'-42" TYPE B @ 0.59%
36" TYPE C
901.44
225+00.00
901.74

Manhole, No. 3
w/72" Base I.D.
224+54.75, 38'Rt
101+56 SR 65, 70'Rt
Grate El. 901.18
6"F (NE) ℄ El. 896.50
6"F (W) ℄ El. 896.50
12"C (SW) ℄ El. 896.05
36"C (NE) ℄ El. 894.05
42"B (NE) ℄ El. 893.55

ITEM 202 - PAVEMENT REMOVED

SEE S.R. 65
INTERCHANGE GRADING
PLANS FOR INFIELD DETAILS

SEE I-75
CROSS SECTIONS

EX LA-R/W

EX R/W
LA-R/W

12:1
8:1
10:1
5.5:1
898.5
899.5
EX. HW
(202)
EX. 24" CMP
(202)
EX. HW (202)
91'-42" TYPE B @ 0.6%
901.17
224+50.00
900.92
8" PVC

CORRECTION
FOR RAMP "D" INTERSECTION
FROM S.R. 65 TO 224+50

INTERSECTION
RAMP "D" & S.R. 65
STA. 224+15.61

CORRECTION
FOR RAMP "D" INTERSECTION
FROM S.R. 65 TO 224+50

920
910
900
890
+50, AHD

120 100 80 60 40 20 0 20 40 60 80 100 120

CROSS SECTIONS - RAMP D (S.R. 65)
STA. 224+50.00 TO STA. 225+50.00

ALL-75-0.21

392
907

I:\Pd\89029\roadway\sheets\89029XS304.dgn 25-JUN-2013 1:51PM tbolenba

SEEDING END WIDTH	SEEDING SQ. YDS.
114	606
104	
95	500
85	447
76	2106

END AREA CUT	END AREA FILL	VOLUME CUT	VOLUME FILL
50	184	110	281
69	120	78	122
72	100	0	16
72	130	54	92
75	119	83	116
75	89	54	20
73	48		
72	7	175	6
117	0	554	653

CALCULATED BDC
CHECKED TAB

CROSS SECTIONS - RAMP D (S.R. 65)
STA. 226+00.00 TO STA. 227+50.00

ALL-75-0.21

393
907

SEE S.R. 65
INTERCHANGE GRADING
PLANS FOR INFIELD DETAILS

SEE I-75
CROSS SECTIONS

913.14
227+50.00
911.23

4:1

EX LA

LA-R/W

EX SH

900.7

36" TYPE C

8" PVC

SEE S.R. 65
INTERCHANGE GRADING
PLANS FOR INFIELD DETAILS

SEE I-75
CROSS SECTIONS

910.64
227+00.00
909.57

4:1

EX LA

LA-R/W
EX SH

900.4

36" TYPE C

8" PVC

SEE S.R. 65
INTERCHANGE GRADING
PLANS FOR INFIELD DETAILS

2:1

SEE I-75
CROSS SECTIONS

STA 226+32.10, 25.94' RT
EX. CB, GRATE ELEV 899.37'
15" CONC W 897.75
(202)

Manhole, No. 3
w/72" Base I. D.
226+58.00, 50'Rt
Lid El. 902.25
12"C (SE) ℄ El. 896.70
36"C (NE) ℄ El. 895.15
36"C (SW) ℄ El. 895.15

ITEM 202 - PAVEMENT REMOVED

Catch Basin, No. 2-3
226+58.00, 61' Rt
Grate El. 900.20
12"C (NW) ℄ El. 897.20

EX LA

EX SH
LA-R/W

6:1

4:1

904.1

908.15
226+50.00
907.30

900.2

7'-12" TYPE C @ 7.1%

8" PVC

+70, AHD
+70, AHD

CORRECTION FOR
DRIVE REMOVAL

SEE S.R. 65
INTERCHANGE GRADING
PLANS FOR INFIELD DETAILS

2:1

SEE I-75
CROSS SECTIONS

6:1

4:1

8:1

901.8

905.65
226+00.00
905.55

EX LA

901.0

36" TYPE C

8" PVC

EX SH
LA-R/W

TMP

+20, AHD
+20, BK

Sta. 225+50

Sta. 225+50

120 100 80 60 40 20 0 20 40 60 80 100 120

I:\Pd\89029\roadway\sheets\89029XS304.dgn 25-JUN-2013 1:51PM tbolenba

SEEDING END WIDTH	SEEDING SQ. YDS.	END AREA CUT	END AREA FILL	VOLUME CUT	VOLUME FILL
42	275	1	330	1	603
57	342	0	321	15	532
66	500	16	254	61	406
114	1117	50	184	77	1541

CALCULATED BDC
CHECKED TAB

CROSS SECTIONS - RAMP D (S.R. 65)
STA. 228+00.00 TO STA. 229+00.00

ALL-75-0.21

394
907

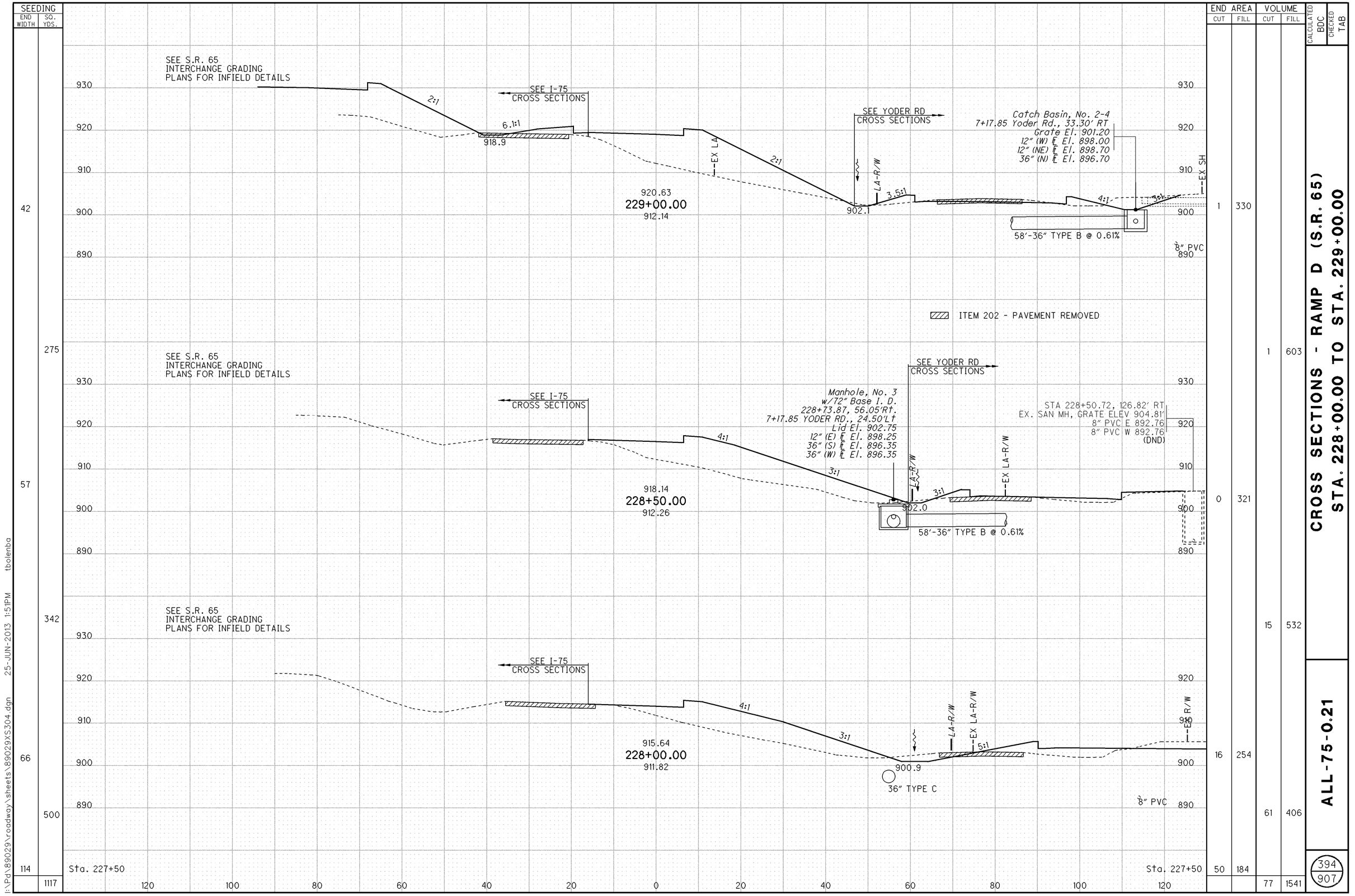

I:\Pd\89029\roadway\sheets\89029XS304.dgn 25-JUN-2013 1:51PM tbolenba

SEEDING END WIDTH	SEEDING SQ. YDS.	END AREA CUT	END AREA FILL	VOLUME CUT	VOLUME FILL
35	211	0	601	0	1121
41	236	0	610	0	1010
44	239	0	481	0	6
42	686	0	330	0	751
				0	2888

SEE S.R. 65
INTERCHANGE GRADING
PLANS FOR INFIELD DETAILS

SEE I-75
CROSS SECTIONS

6:1
4:1
924.3
2:1
921.1
EX LA
LA-R/W
EX SH
927.86
230+50.00
913.22
2" GAS STEEL
ABANDONED
6" GAS PLAST.
8" PVC

ITEM 202 - PAVEMENT REMOVED

SEE S.R. 65
INTERCHANGE GRADING
PLANS FOR INFIELD DETAILS

SEE I-75
CROSS SECTIONS

3:1
8:1
925.2
2:1
917.0
EX LA
LA-R/W
EX SH
925.60
230+00.00
912.39
2" GAS STEEL
ABANDONED
6" GAS PLAST.
8" PVC

SEE S.R. 65
INTERCHANGE GRADING
PLANS FOR INFIELD DETAILS

SEE I-75
CROSS SECTIONS

2:1
6.1:1
921.8
2:1
912.9
EX LA
LA-R/W
EX SH
923.13
229+50.00
911.49
2" GAS STEEL
ABANDONED
6" GAS PLAST.
8" PVC
CORRECTION FOR
RETAINING WALL

930
920
910
900
890

Sta. 229+00
120 100 80 60 40 20 0 20 40 60 80 100 120
Sta. 229+00

CALCULATED BDC
CHECKED TAB

CROSS SECTIONS - RAMP D (S.R. 65)
STA. 229+50.00 TO STA. 230+50.00

ALL-75-0.21

395
907

I:\Pd\89029\roadway\sheets\89029XS304.dgn 25-JUN-2013 1:51PM tbolenba

SEEDING END WIDTH	SEEDING SQ. YDS.	END AREA CUT	END AREA FILL	VOLUME CUT	VOLUME FILL
40	186	0	605	0	1095
40	178	0	578	0	1093
38	186	0	602	0	1114
35	550	0	601	0	3302

CALCULATED BDC
CHECKED TAB

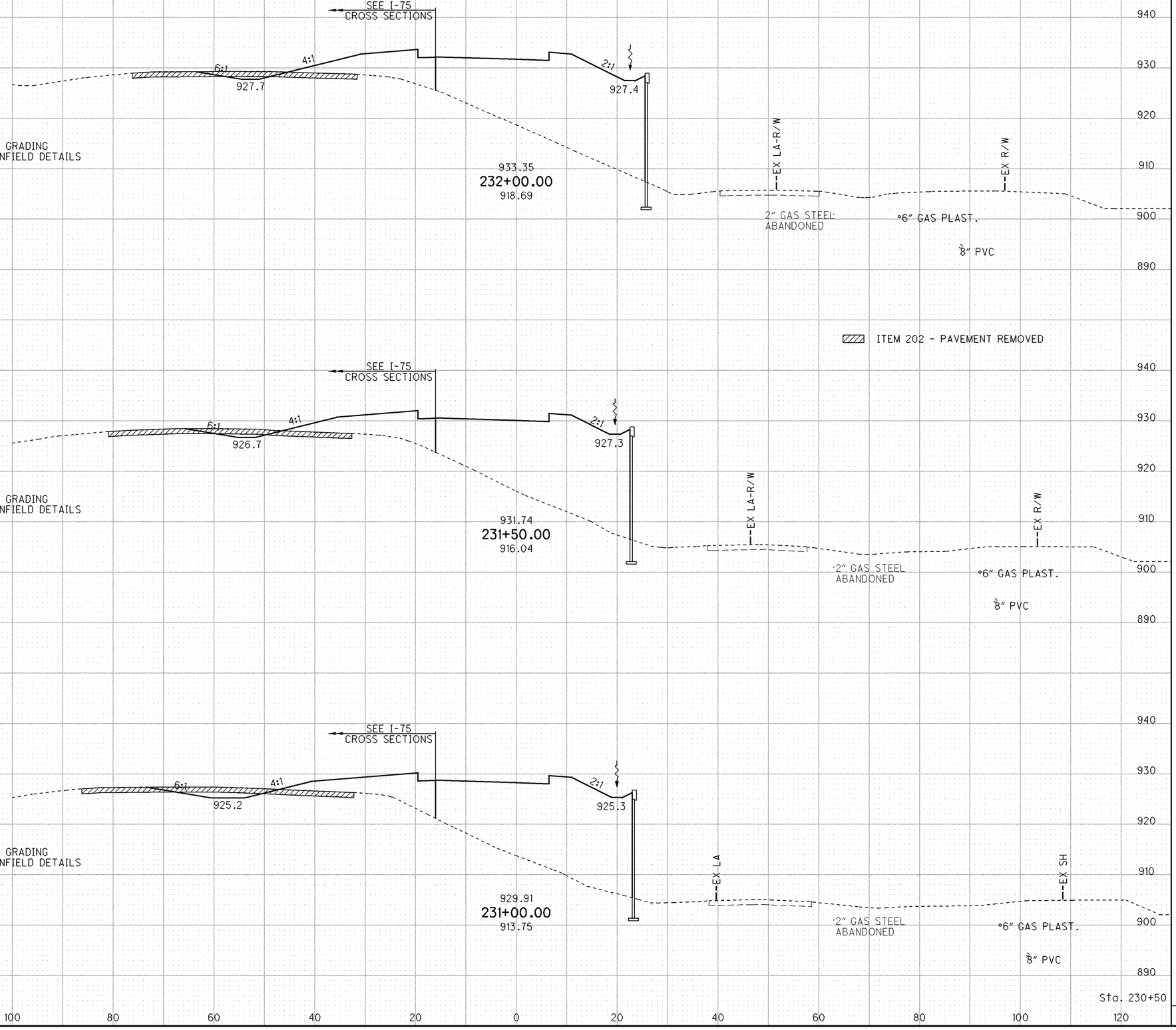

CROSS SECTIONS - RAMP D (S.R. 65) STA. 231+00.00 TO STA. 232+00.0

ALL-75-0.21

396
907

I:\Pd\89029\roadway\sheets\89029XS304.dgn 25-JUN-2013 1:51PM tbolenba

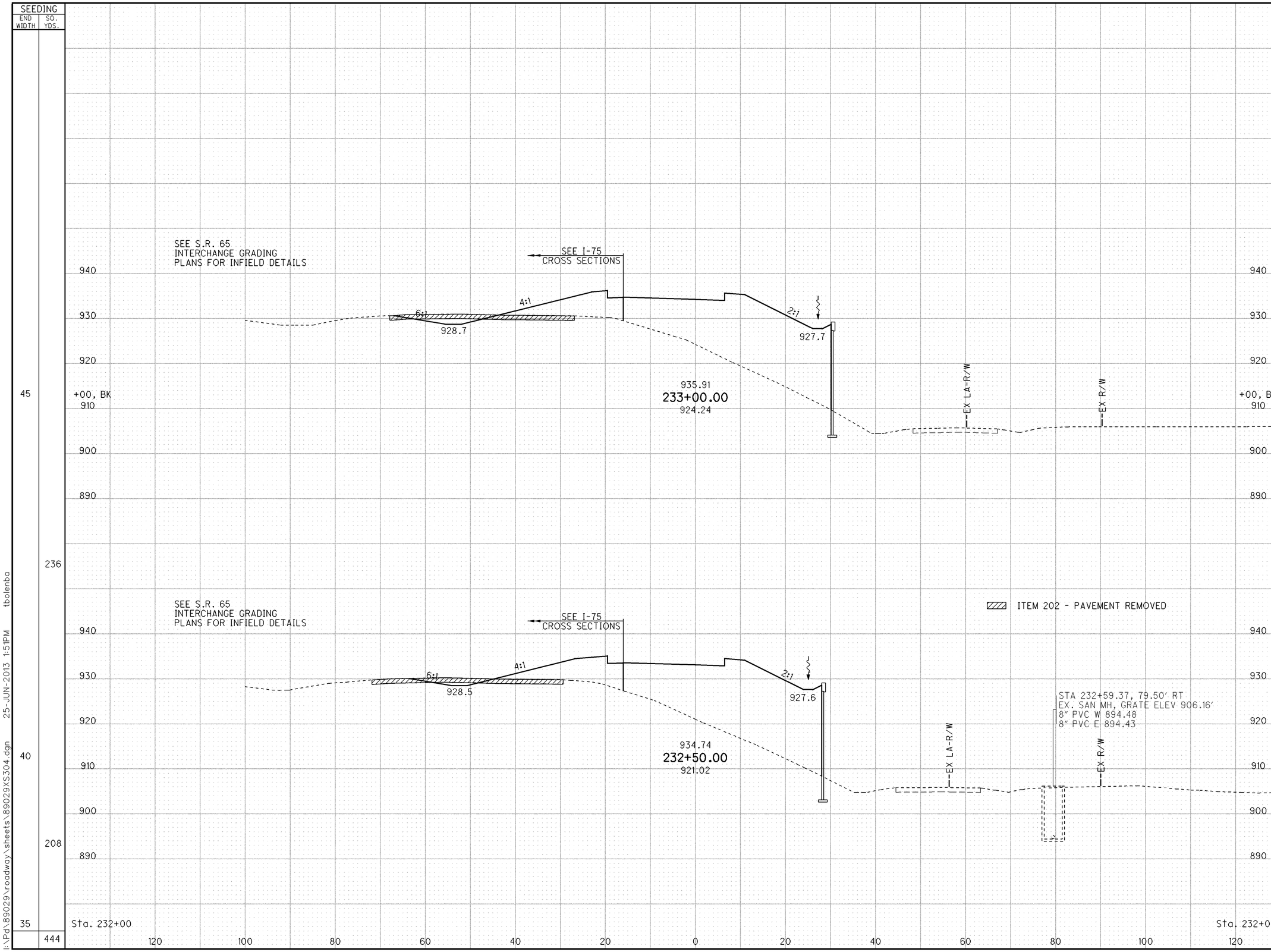

END AREA CUT	END AREA FILL	VOLUME CUT	VOLUME FILL
0	576		
		0	1094
0	606		
		0	1121
0	605		
		0	2215

CALCULATED BDC
CHECKED TAB

CROSS SECTIONS - RAMP D (S.R. 65)
STA. 232+50.00 TO STA. 233+00.00

ALL-75-0.21

I:\Pd\89029\roadway\sheets\89029XS304.dgn 25-JUN-2013 1:51PM tbolenba

CROSS REFERENCES	
ITEM	SHEET
DRIVEWAY DETAILS	164-166
LIGHTING	510-528
INTERSECTION DETAIL	462

ESTIMATED QUANTITIES	
ITEM	SHEET
DRAINAGE - D	143-146
ROADWAY - R	161
DRIVEWAY - DR	164
UNDERDRAIN - UD	148-157
SANITARY - S	161

*CURVE Y-1
P.I.= Sta. 3+12.82
D = 76° 08' 00" (LT)
Dc = 34° 00' 00"
R = 168.52'
T = 131.98'
L = 223.92'
E = 45.53'
C = 207.81'
C.B. = N 52° 47' 03" E
e_d = 0.025

LEGEND
- SODDING
- PAVEMENT REMOVAL
- TO BE REMOVED BY OTHERS
* - MASONRY COLLAR

HORIZONTAL SCALE IN FEET
0 10 20 40

CALCULATED | CHECKED

PLAN AND PROFILE - YODER RD.
BEGIN WORK TO STA. 4+00.00

ALL-75-0.21

398
907

I:\Pd\89029\roadway\sheets\89029GP309.dgn 25-JUN-2013 1:51PM tbolenba

*CURVE Y-1
P.I.= Sta. 3+12.82
D = 76° 08′ 00″ (LT)
Dc = 34° 00′ 00″
R = 168.52′
T = 131.98′
L = 223.92′
E = 45.53′
C = 207.81′
C.B. = N 52° 47′ 03″ E
e_d= 0.025

*CURVE Y-2
P.I.= Sta. 6+40.98
D = 59° 26′ 43″ (RT)
Dc = 34° 00′ 00″
R = 168.52′
T = 96.21′
L = 174.84′
E = 25.53′
C = 167.10′
C.B. = N 44° 26′ 25″ E
e_d= 0.025

*NORMAL DESIGN CRITERIA
Dc = 6°
e = 0.08

LEGEND

- DITCH EROSION PROTECTION MAT SEE SHEET 147
- ROADWAY REMOVAL

ESTIMATED QUANTITIES	
ITEM	SHEET
UNDERDRAIN - UD	148-157
DRAINAGE - D	143-146
FENCE	574
GUARDRAIL - GR	159-160
REMOVAL - R	161

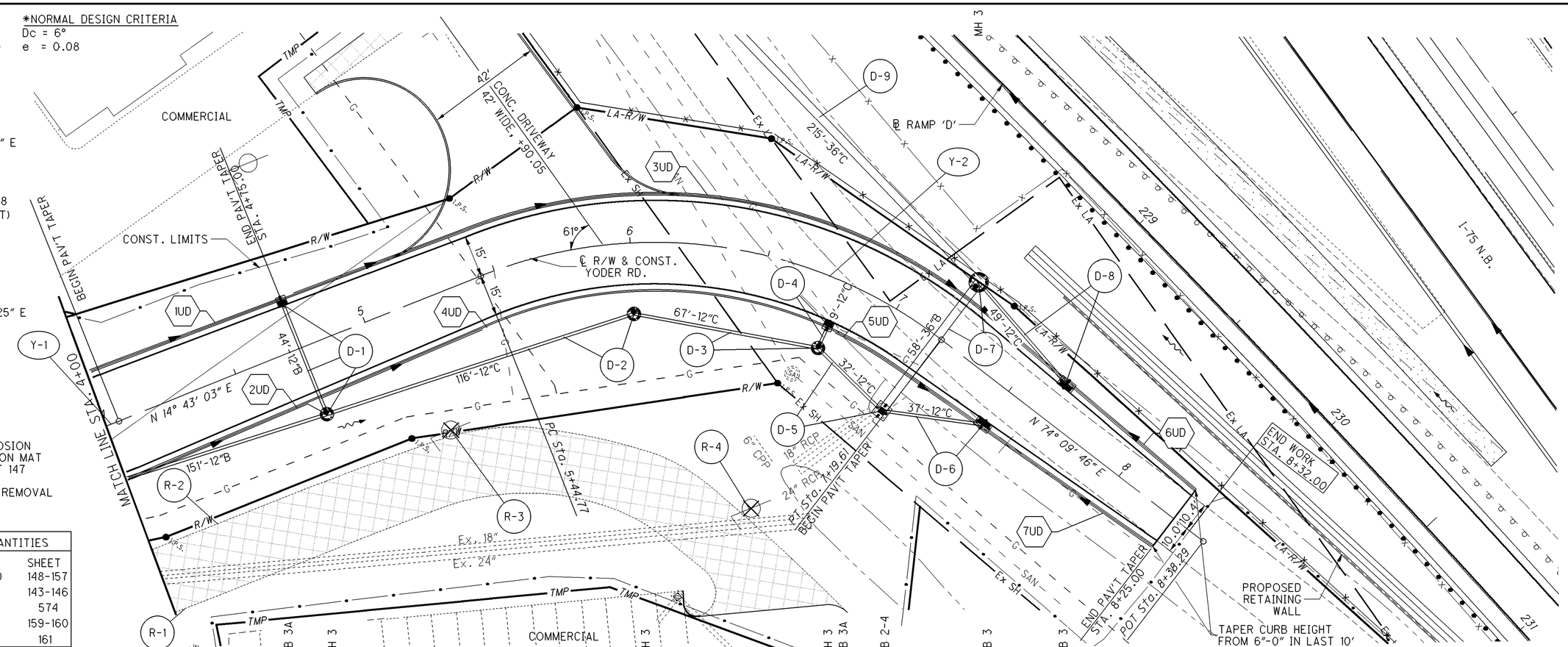

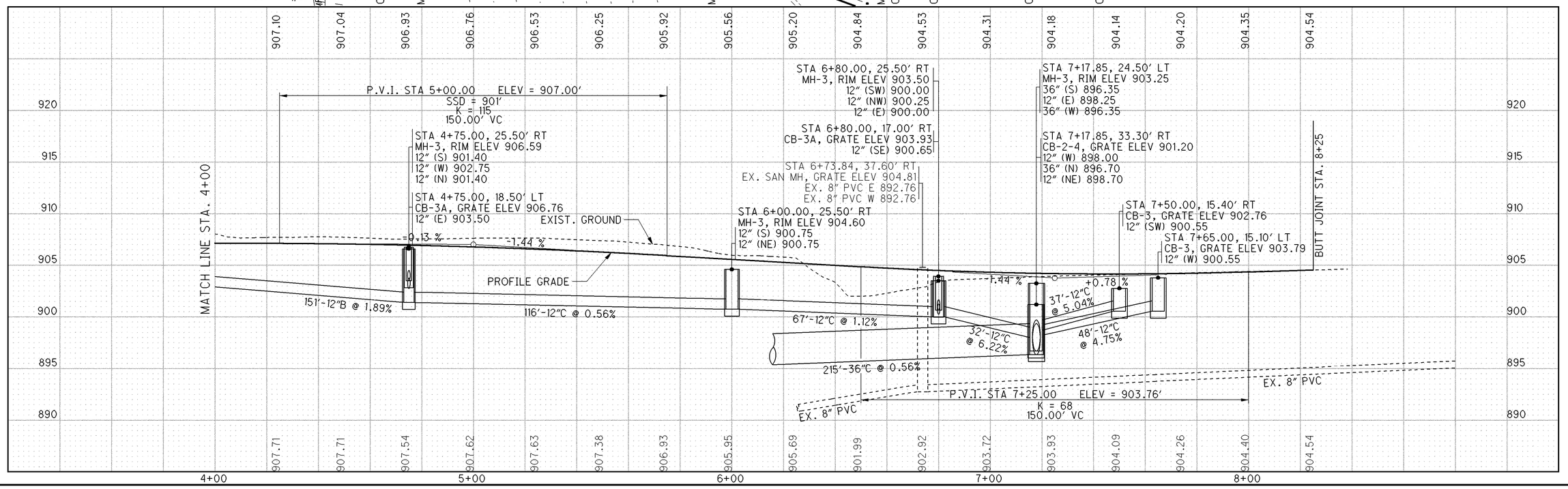

HORIZONTAL SCALE IN FEET
0 10 20 40
CALCULATED
CHECKED

PLAN AND PROFILE - YODER RD.
STA. 4+00.00 TO END WORK

ALL-75-0.21

399
907

I:\Pd\89029\roadway\sheets\89029GP310.dgn 25-JUN-2013 1:51PM tbolenba

SEEDING END WIDTH	SEEDING SQ. YDS.
43	272
55	150
53	147
53	
	569

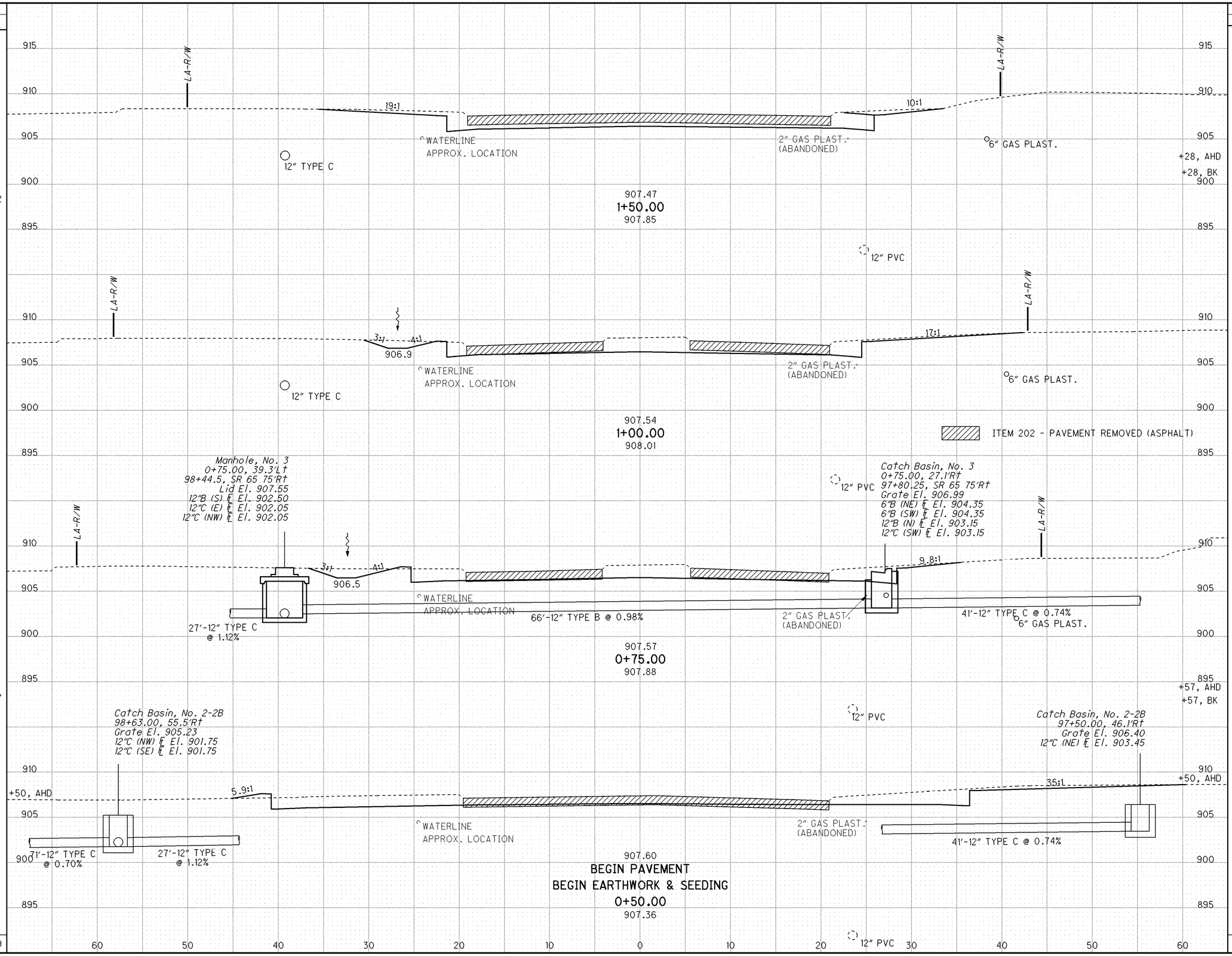

END AREA CUT	END AREA FILL	VOLUME CUT	VOLUME FILL
36	0		
		22	0
19	0		
32	0		
		34	1
34	1		
		35	2
41	3		
		25	2
35	2		
41	8		
		12	3
50	12		
		128	8

CALCULATED BDC
CHECKED JJK

CROSS SECTIONS - YODER RD. STA. 0+50.00 TO STA. 1+50.00

ALL-75-0.21

400
907

I:\Pd\89029\roadway\sheets\89029XS305.dgn 25-JUN-2013 1:51PM tbolenba

SEEDING END WIDTH	SEEDING SQ. YDS.
37	192
-277	
45	106
	302
40	195
30	203
43	
	721

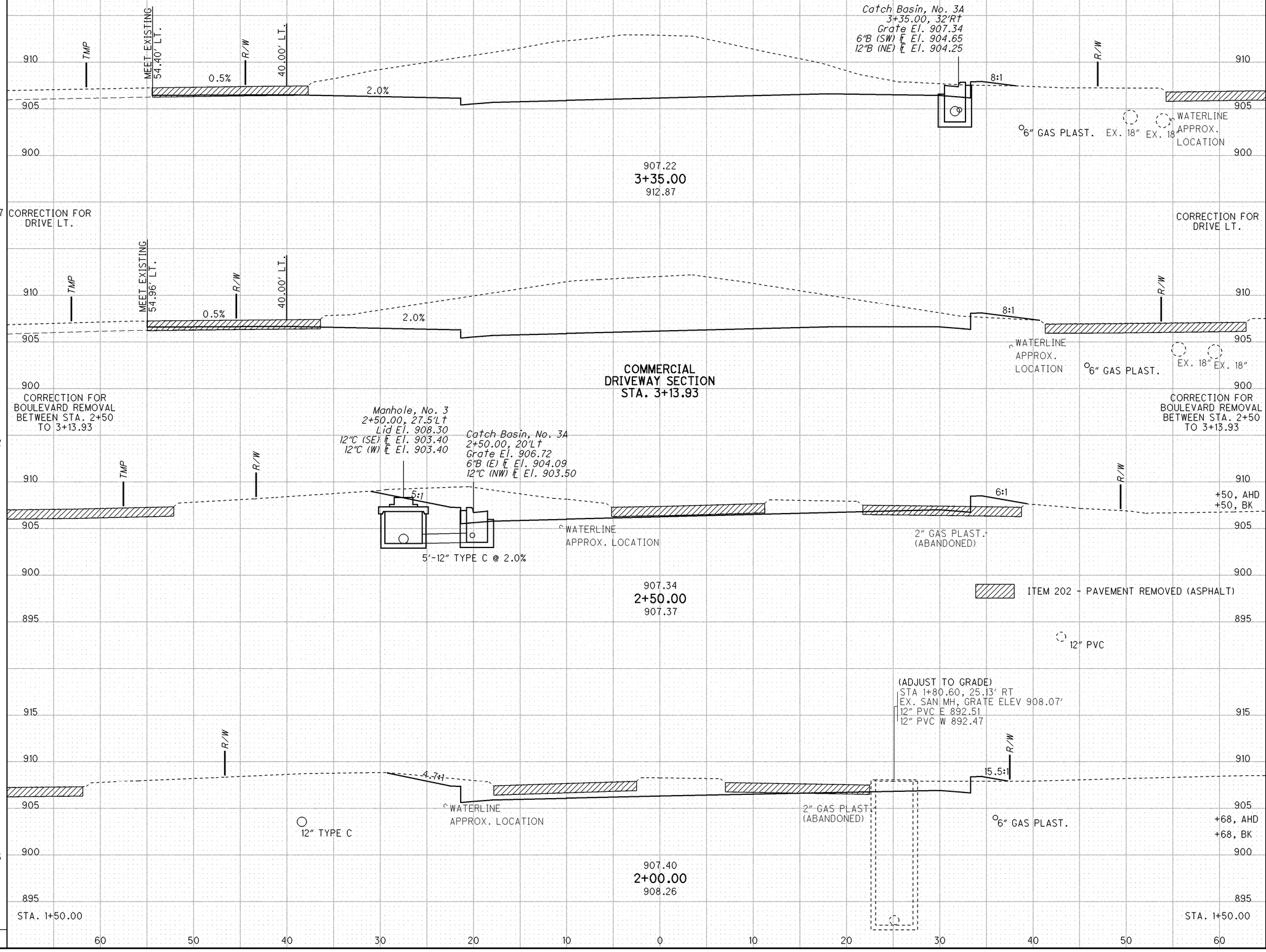

END AREA CUT	END AREA FILL	VOLUME CUT	VOLUME FILL
279	10		
		0	11
		218	15
279	28		
		13	86
		438	39
91	5		
70	16		
		113	17
52	2		
		60	2
50	2		
38	2		
		25	1
36	0		
		867	171

CALCULATED BDC
CHECKED JJK

CROSS SECTIONS - YODER RD.
STA. 2+00.00 TO STA. 3+35.00

ALL-75-0.21

401
907

I:\Pd\89029\roadway\sheets\89029XS305.dgn 25-JUN-2013 1:50PM tbolenba

CROSS SECTIONS - YODER RD.
STA. 3+50.00 TO STA. 4+00.00

ALL-75-0.21

402
907

CALCULATED BDC
CHECKED JJK

SEEDING END WIDTH	SEEDING SQ. YDS.	END AREA CUT	END AREA FILL	VOLUME CUT	VOLUME FILL
44	650	178	6	31	10
29	203	309	2	451	7
37	55	279	10	163	3
	908			645	20

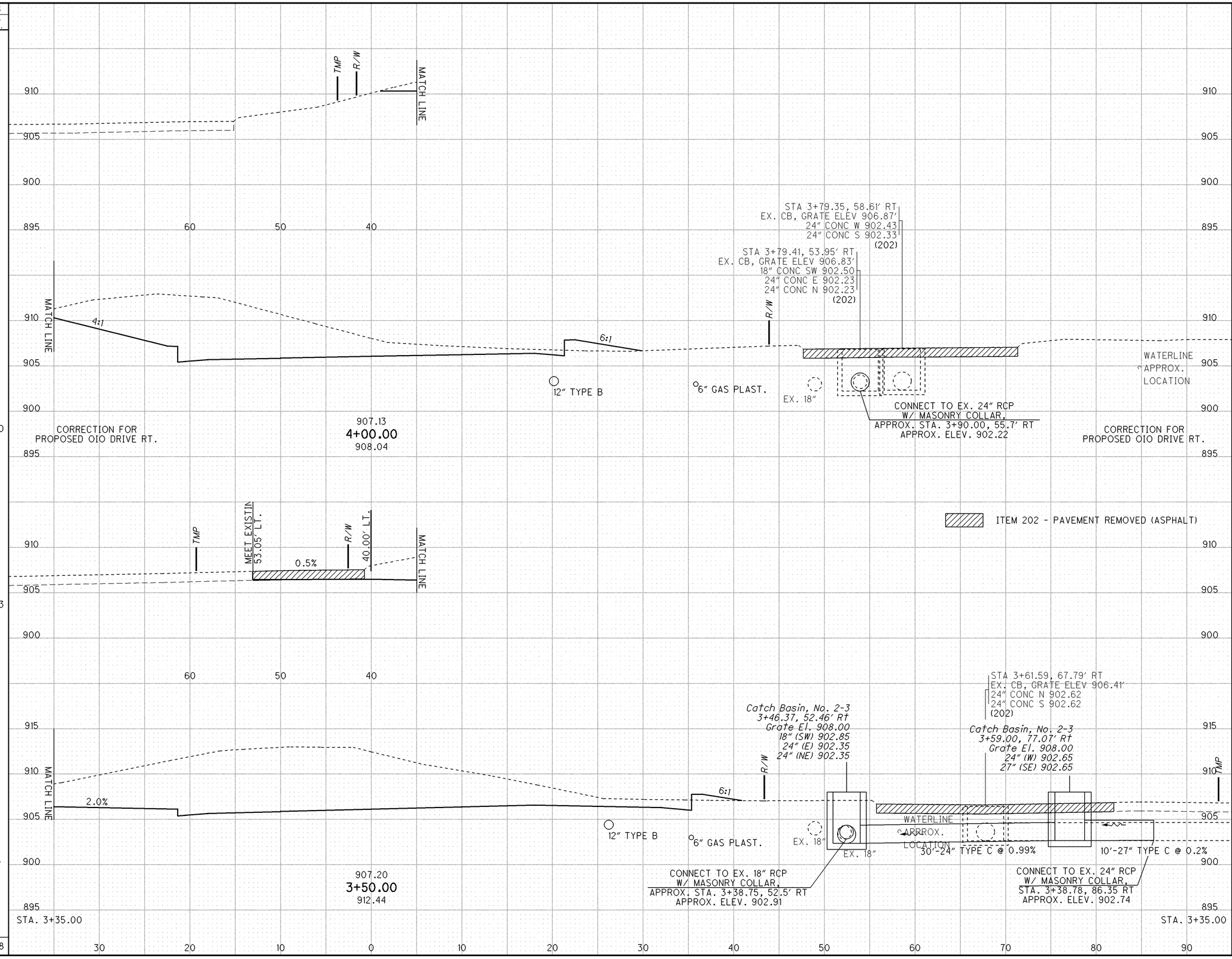

I:\Pdt\89029\roadway\sheets\89029XS305.dgn 25-JUN-2013 1:50PM tbolenba

SEEDING END WIDTH	SEEDING SQ. YDS.
51	253
40	115
43	120
43	242
44	
	730

COMMERCIAL DRIVE
SEE DRIVE SECTION
STA. 5+90.05 LT.

60.55' LT. | 55.72' LT. | 35.72' LT. | R/W

10:1 | 10:1 | 1.0% | 2.0% | 6:1 | 10:1

904.95

1-7/8" GAS SERVICE LINE TO SPEEDWAY

6" GAS PLAST.

12" TYPE C

906.25
5+50.00
907.38

R/W | 12:1 | 6:1 | 6:1

905.9

6" GAS PLAST.

12" TYPE C

906.76
5+00.00
907.62

ITEM 202 - PAVEMENT REMOVED (ASPHALT)

Catch Basin, No. 3A
4+75.00, 18.5'Lt
Grate El. 906.76
6"B (SW) ℄ El. 904.14
12"B (SE) ℄ El. 903.50

Manhole, No. 3
4+75.00, 25.5'Rt
Lid El. 906.59
6"F (SW) ℄ El. 904.00
12"B (NW) ℄ El. 902.75
12"C (NE) ℄ El. 901.40
12"C (SE) ℄ El. 901.40

R/W | 4:1 | 6:1 | 6:1

906.0

44'-12" TYPE B @ 1.16%

6" GAS PLAST.

906.93
4+75.00
907.54

R/W | 4:1 | 6:1 | 6:1

906.1

6" GAS PLAST.

12" TYPE B

907.04
4+50.00
907.71

STA. 4+00.00 — STA. 4+00.00

60 50 40 30 20 10 0 10 20 30 40 50 60

END AREA CUT	END AREA FILL	VOLUME CUT	VOLUME FILL
107	0	169	4
75	4	73	5
83	6	95	6
122	7	278	12
178	6		
		615	27

CALCULATED BDC
CHECKED JJK

CROSS SECTIONS - YODER RD.
STA. 4+50.00 TO STA. 5+50.00

ALL-75-0.21

403
907

I:\Pdt\89029\roadway\sheets\89029XS305.dgn 25-JUN-2013 1:50PM tbolenba

SEEDING	
END WIDTH	SQ. YDS.
60	350
66	
51	
	139

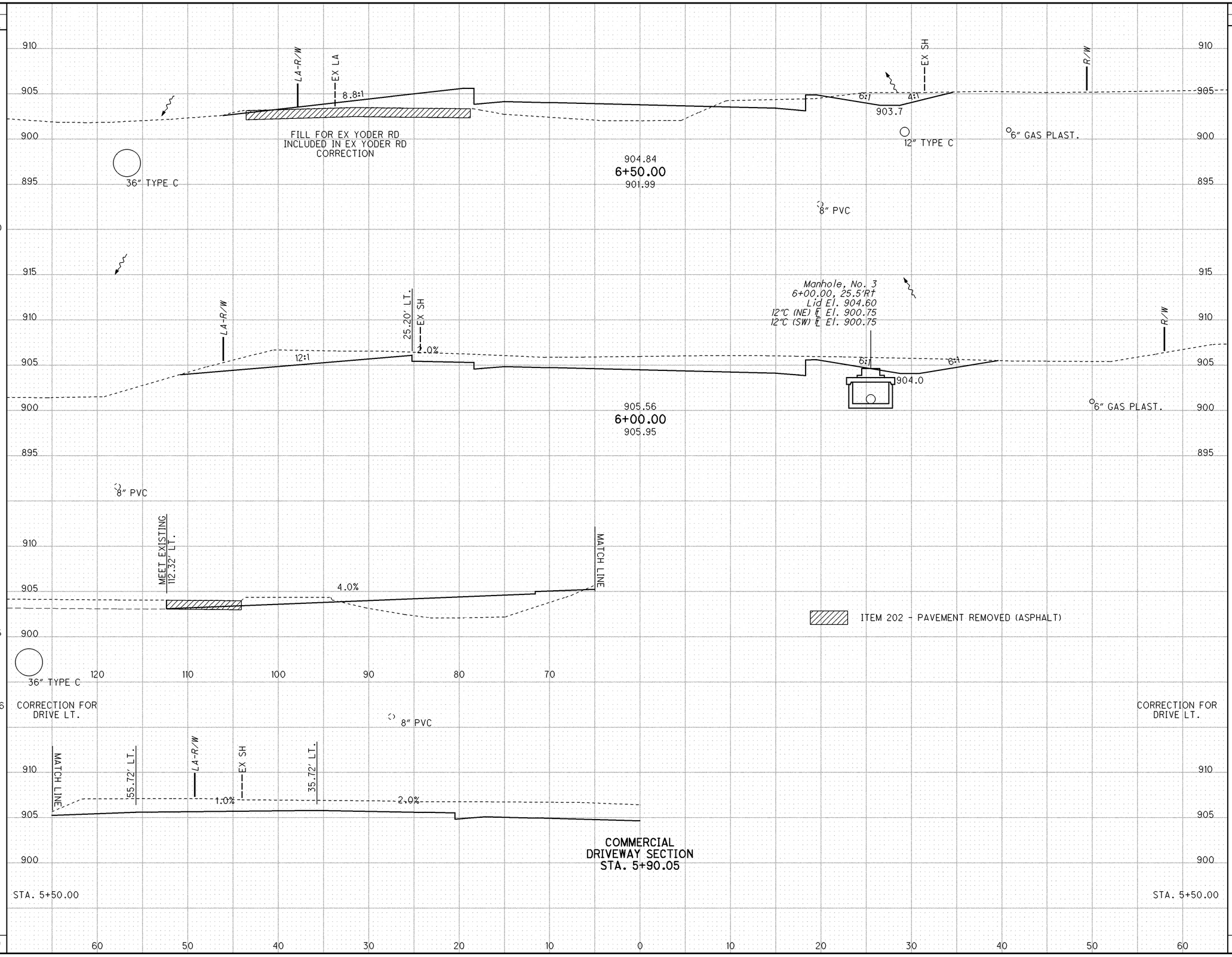

END AREA		VOLUME	
CUT	FILL	CUT	FILL
20	64		
		121	60
111	1		
		202	1
		98	72
107	0		
		421	133

CALCULATED BDC
CHECKED JJK

CROSS SECTIONS - YODER RD.
STA. 5+90.05 TO STA. 6+50.00

ALL-75-0.21

404
907

I:\Pd\89029\roadway\sheets\89029XS305.dgn 25-JUN-2013 1:50PM tbolenba

SEEDING	
END WIDTH	SQ. YDS.
43	
	153
41	
	193
52	
	187
	1688
60	
	2221

SEE MAINLINE OR RAMP "D" CROSS SECTIONS FOR DETAILS

EX LA

LA-R/W

3.5:1

4:1

902.3

12" TYPE C

904.14
7+50.00
904.09

Catch Basin, No. 3
7+50.00, 15.4'Rt
Grate El. 902.76
6"B (NE) ℄ El. 901.13
6"B (SW) ℄ El. 901.13
12"C (SW) ℄ El. 900.55

2" GAS STEEL (ABANDONED)

4:1

3:1

902.0

EX SH

6" GAS PLAST.

8" PVC

ITEM 202 - PAVEMENT REMOVED (ASPHALT)

Manhole, No. 3
7+17.85, 24.5'Lt
Lid El. 903.25
12"C (SE) ℄ El. 898.25
36"B (SE) ℄ El. 896.35
36"C (NW) ℄ El. 896.35

2:1

LA-R/W

3.5:1

902.1

Catch Basin, No. 2-4
7+17.85, 33.3'Rt
Grate El. 901.20
12"C (SW) ℄ El. 898.00
12"C (NE) ℄ El. 898.70
36"B (NW) ℄ El. 896.70

EX SH

18" RCP (DND)

3:1

4:1

24" RCP (DND)

2" GAS STEEL (ABANDONED)

901.2

6" GAS PLAST.

58'-36" TYPE B @ 0.64%

904.20
7+17.85
903.88

2:1

BENCH

3:1

901.6

36" TYPE C

LA-R/W

4:1

EX LA

Catch Basin, No. 3A
6+80.00, 17'Rt
Grate El. 903.93
6"B (NW) ℄ El. 901.23
12"C (SE) ℄ El. 900.65

2" GAS STEEL (ABANDONED)

904.48
6+80.00
903.39

6:1

4:1

903.4

6" GAS PLAST.

6'-12" TYPE C @ 6.7%

Manhole, No. 3
6+80.00, 25.5'Rt
Lid El. 903.50
12"C (NW) ℄ El. 900.25
12"C (NE) ℄ El. 900.00
12"C (SW) ℄ El. 900.00

STA 6+73.98, 37.60' RT
EX. SAN MH, GRATE ELEV 904.81'
8" PVC E 892.76
8" PVC W 892.76

EX SH

CONNECT TO EX. 24" RCP W/ MASONARY COLLAR, STA. 3+38.78, 86.35 RT APPROX. ELEV. 902.74

CORRECTIONS FOR EX. YODER ROAD

STA.6+50.00

STA.6+50.00

60 50 40 30 20 10 0 10 20 30 40 50 60

END AREA		VOLUME	
CUT	FILL	CUT	FILL
		13	20
		16	32
		15	34
		17	48
		9	54
		9	34
		16	55
		24	218
20	64	73	353

CALCULATED BDC
CHECKED JJK

CROSS SECTIONS - YODER RD. STA. 6+80.00 TO STA. 7+50.00

ALL-75-0.21

405
907

I:\Pd\89029\roadway\sheets\89029XS305.dgn 25-JUN-2013 1:50PM tbolenba

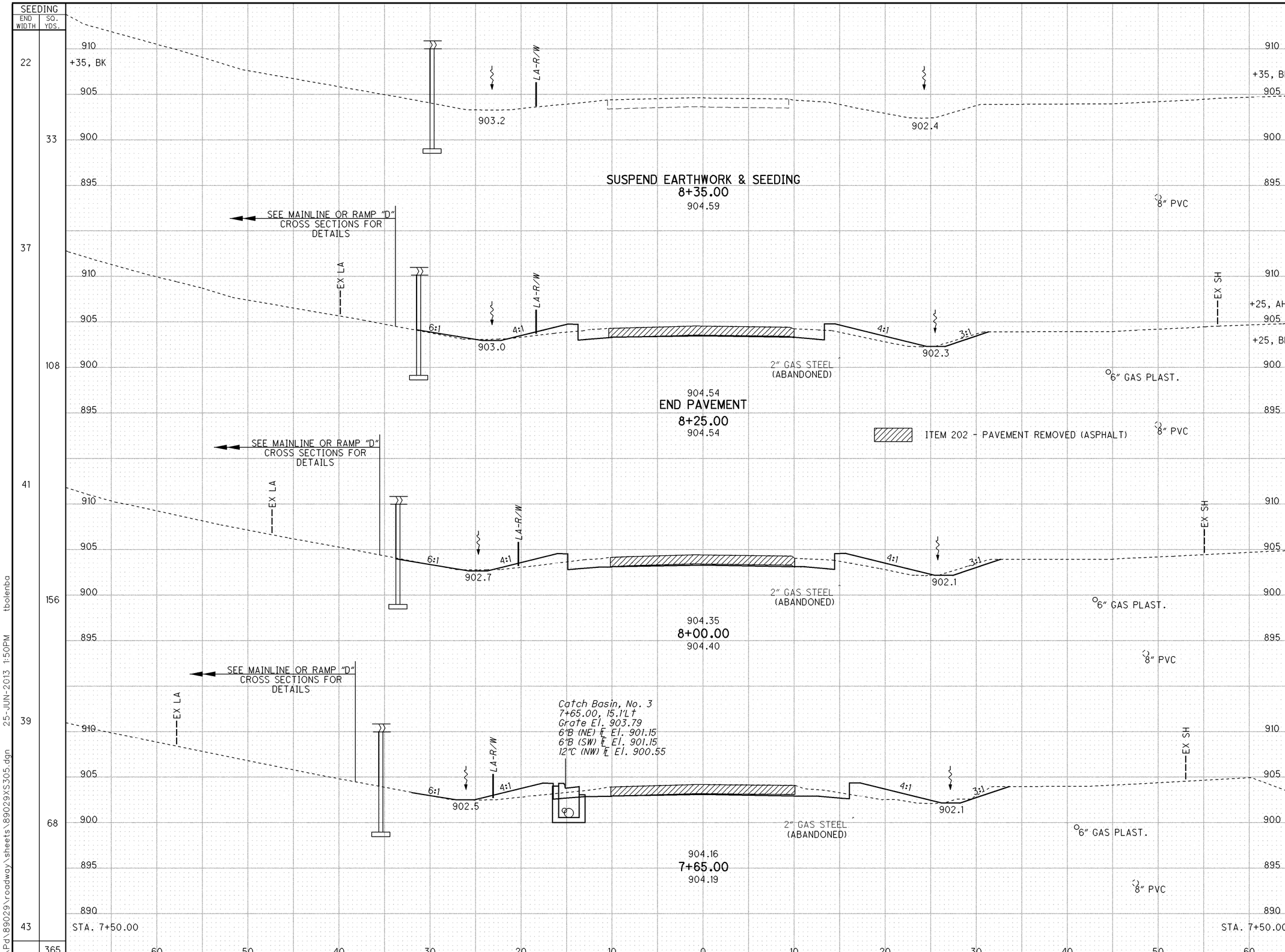

END AREA CUT	END AREA FILL	VOLUME CUT	VOLUME FILL
0	0		
		0	2
1	11		
8	11		
		10	11
14	13		
		18	20
13	17		
		7	10
13	20		
		35	43

CALCULATED BDC
CHECKED JJK

CROSS SECTIONS - YODER RD.
STA. 7+65.00 TO STA. 8+35.00

ALL-75-0.21

I:\Pd\89029\roadway\sheets\89029XS305.dgn 25-JUN-2013 1:50PM tbolenba

ESTIMATED QUANTITIES	
ITEM	SHEET
UNDERDRAIN - UD	148-157
DRAINAGE - D	143-146
FENCE	574
DRIVE - DR	164
GUARDRAIL - GR	159-160
ROADWAY - R	161

CROSS REFERENCES	
ITEM	SHEET
DRIVE DETAILS	164-166

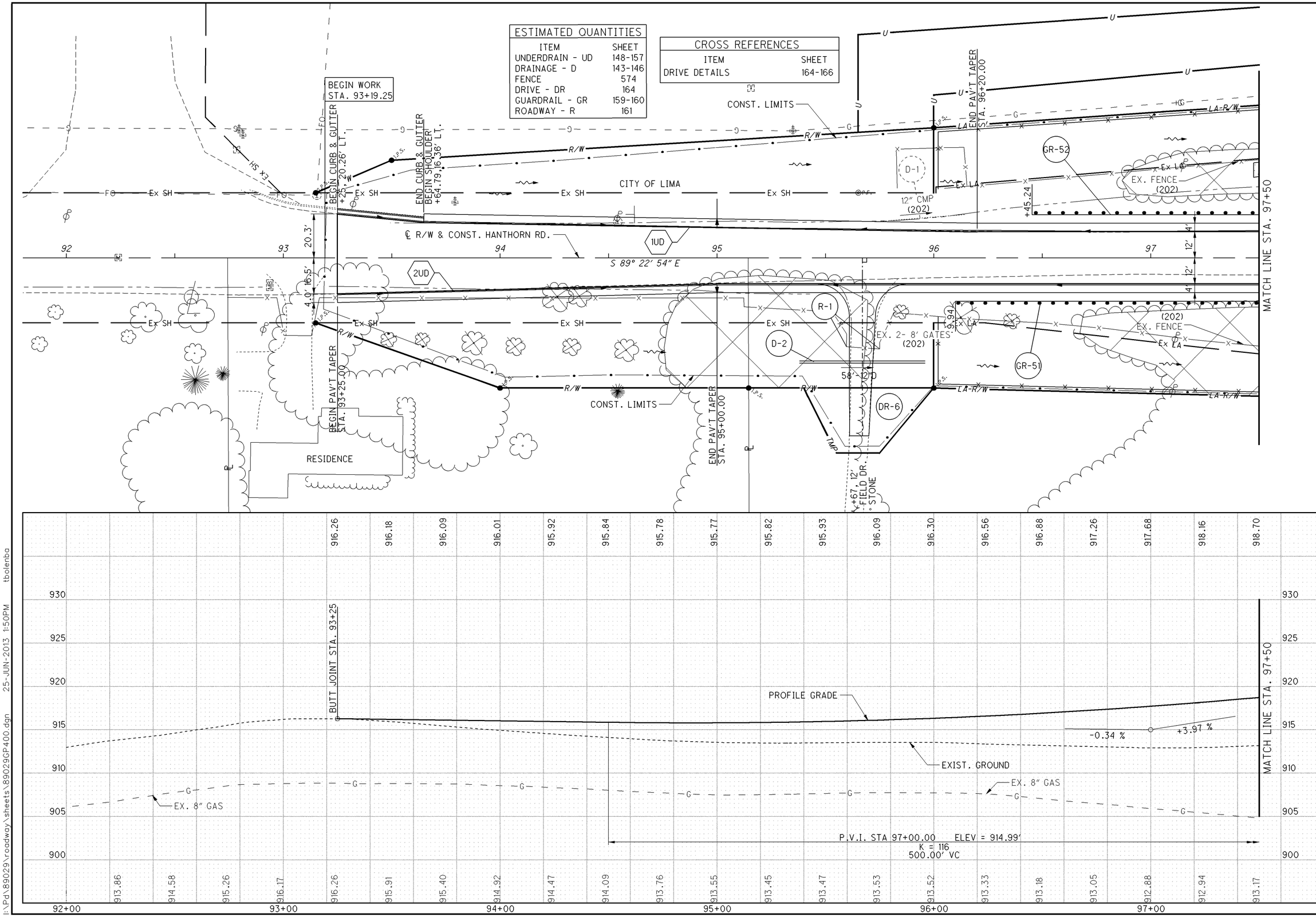

HORIZONTAL SCALE IN FEET

CALCULATED

CHECKED

PLAN AND PROFILE - HANTHORN RD.
BEGIN WORK TO STA. 97+50.00

ALL-75-0.21

I:\Pd\89029\roadway\sheets\89029GP400.dgn 25-JUN-2013 1:50PM tbolenba

CROSS REFERENCES	
ITEM	SHEET
CULVERT DETAILS	474-509

LEGEND

- WETLAND
- ROCK CHANNEL PROTECTION
- DITCH EROSION PROTECTION MAT SEE SHEET 147

- HW-2.1 OR 2.2

ESTIMATED QUANTITIES	
ITEM	SHEET
UNDERDRAIN - UD	148-157
DRAINAGE - D	143-146
FENCE	574
CULVERT - C	158
GUARDRAIL - GR	159-160

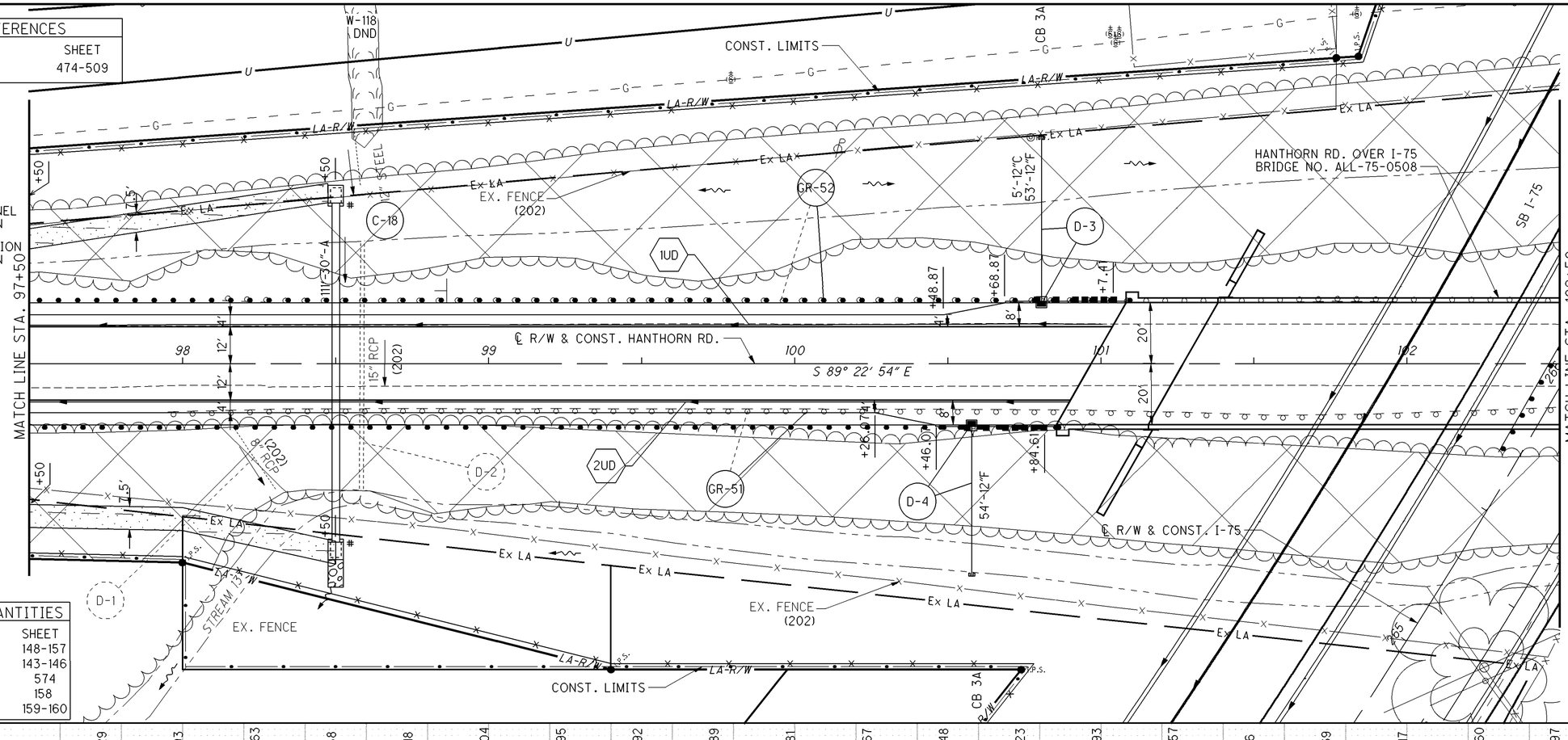

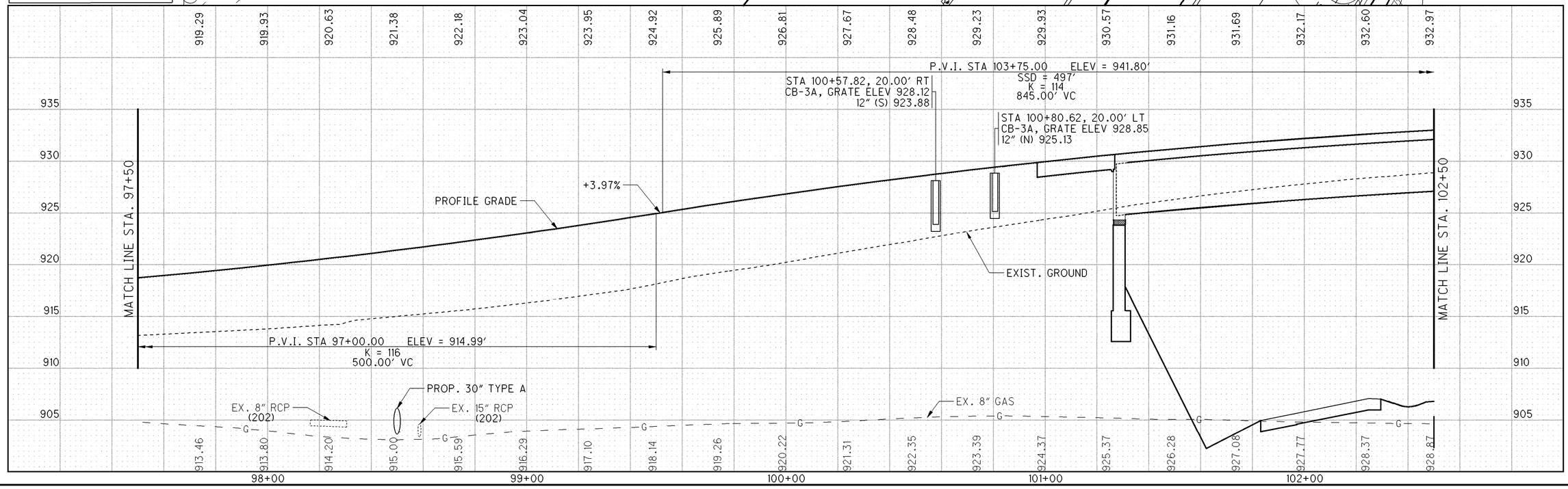

HORIZONTAL SCALE IN FEET
0 10 20 40

CALCULATED | CHECKED

PLAN AND PROFILE - HANTHORN RD.
STA. 97+50.00 TO STA. 102+50.00

ALL-75-0.21

408
907

I:\Pd\89029\roadway\sheets\89029GP401.dgn 25-JUN-2013 1:50PM tbolenba

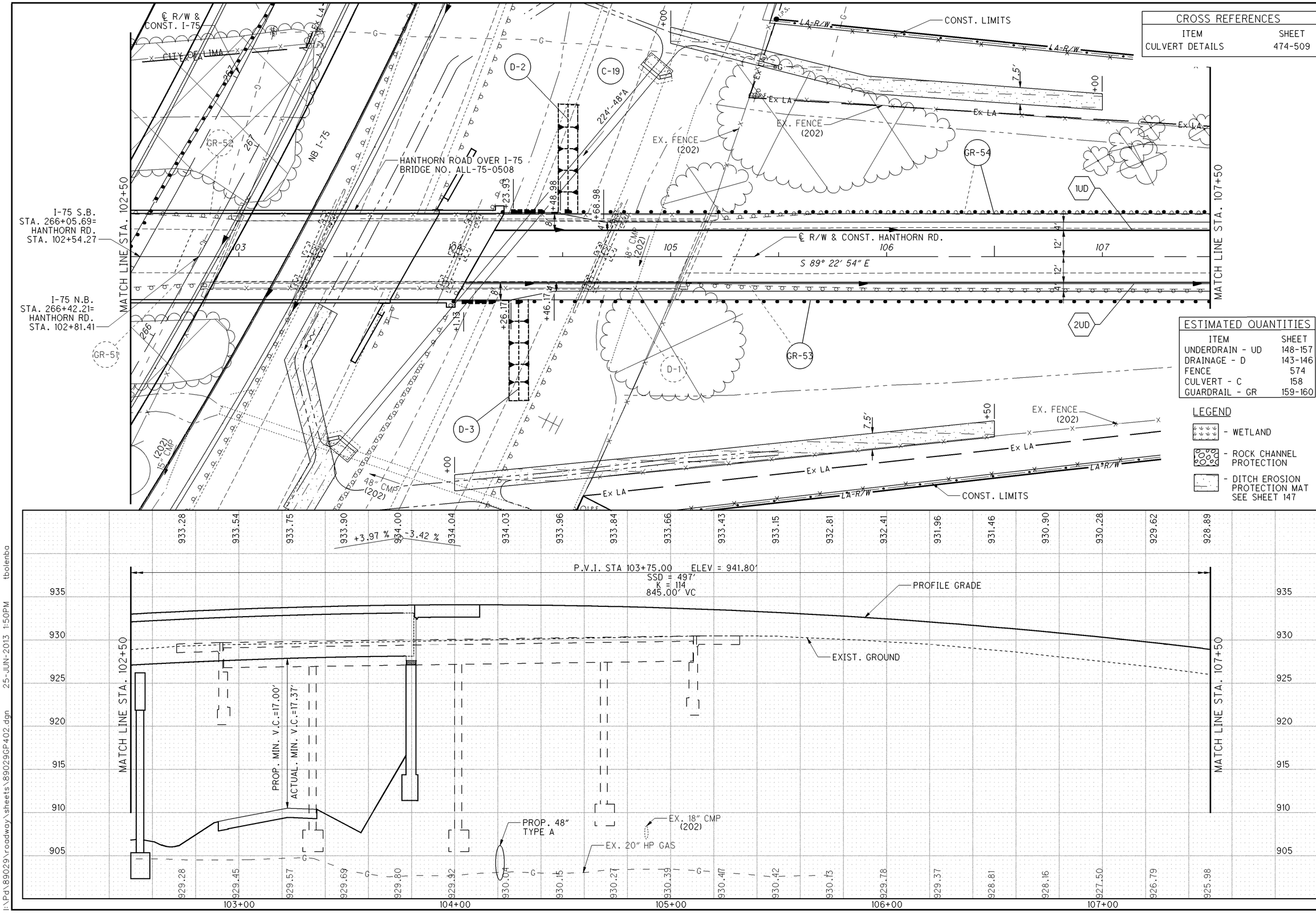

CROSS REFERENCES	
ITEM	SHEET
CULVERT DETAILS	474-509

ESTIMATED QUANTITIES	
ITEM	SHEET
UNDERDRAIN - UD	148-157
DRAINAGE - D	143-146
FENCE	574
CULVERT - C	158
GUARDRAIL - GR	159-160

LEGEND

- WETLAND
- ROCK CHANNEL PROTECTION
- DITCH EROSION PROTECTION MAT SEE SHEET 147

HORIZONTAL SCALE IN FEET 0 10 20 40

CALCULATED

CHECKED

PLAN AND PROFILE - HANTHORN RD. STA. 102+50.00 TO STA. 107+50.00

ALL-75-0.21

I:\Pd\89029\roadway\sheets\89029GP402.dgn 25-JUN-2013 1:50PM tbolenba

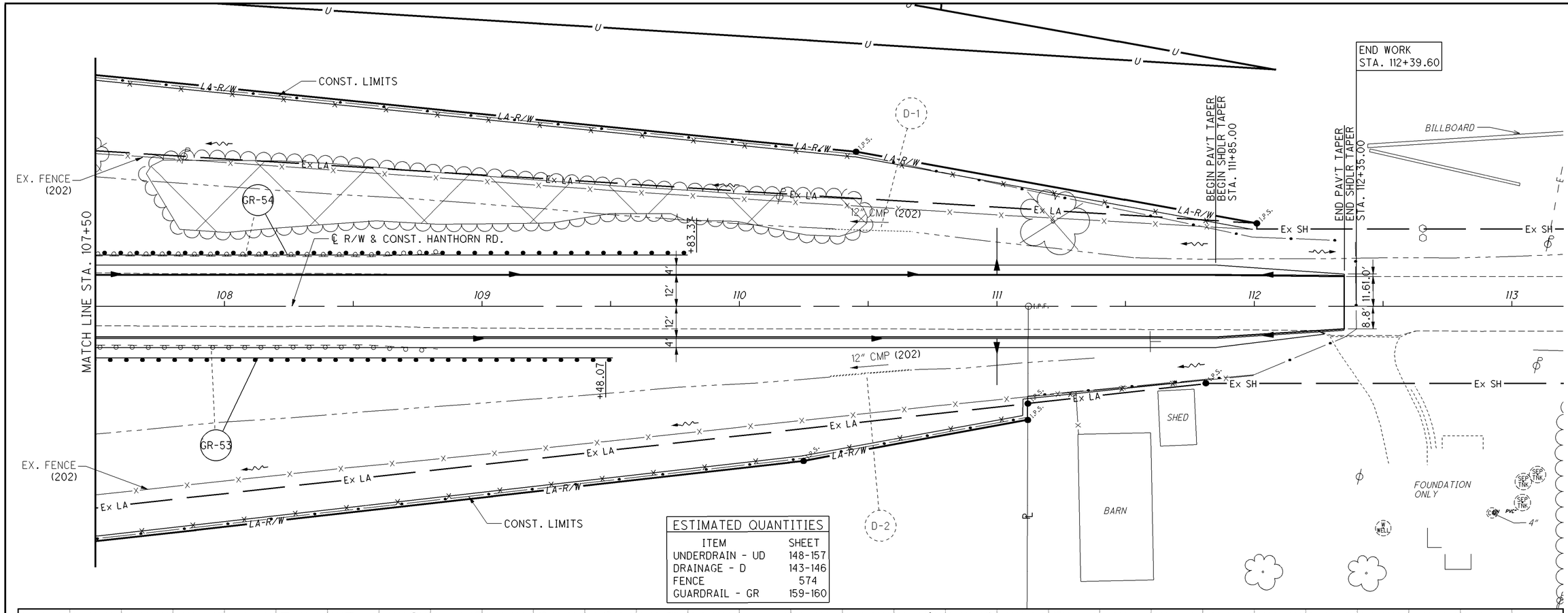

ESTIMATED QUANTITIES	
ITEM	SHEET
UNDERDRAIN - UD	148-157
DRAINAGE - D	143-146
FENCE	574
GUARDRAIL - GR	159-160

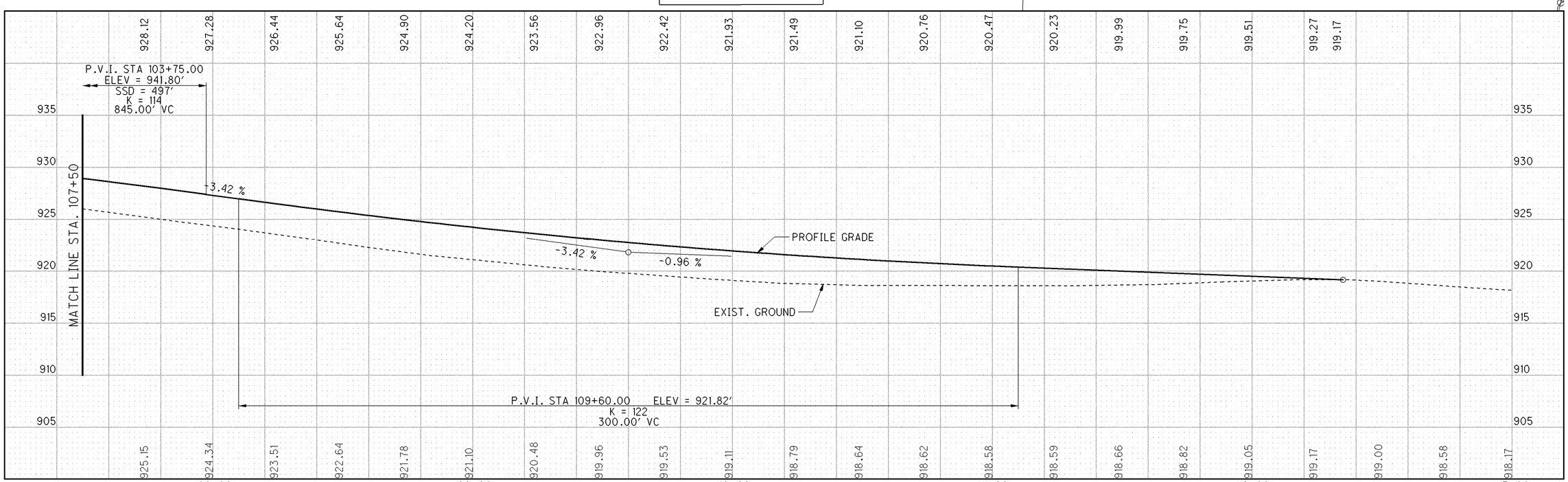

HORIZONTAL SCALE IN FEET 0 10 20 40

CALCULATED

CHECKED

PLAN AND PROFILE - HANTHORN RD.
STA. 107+50.00 TO END WORK

ALL-75-0.21

I:\Pd\89029\roadway\sheets\89029GP403.dgn 25-JUN-2013 1:50PM tbolenba

SEEDING	
END WIDTH	SQ. YDS.
59	306
51	115
32	71
19	
	492

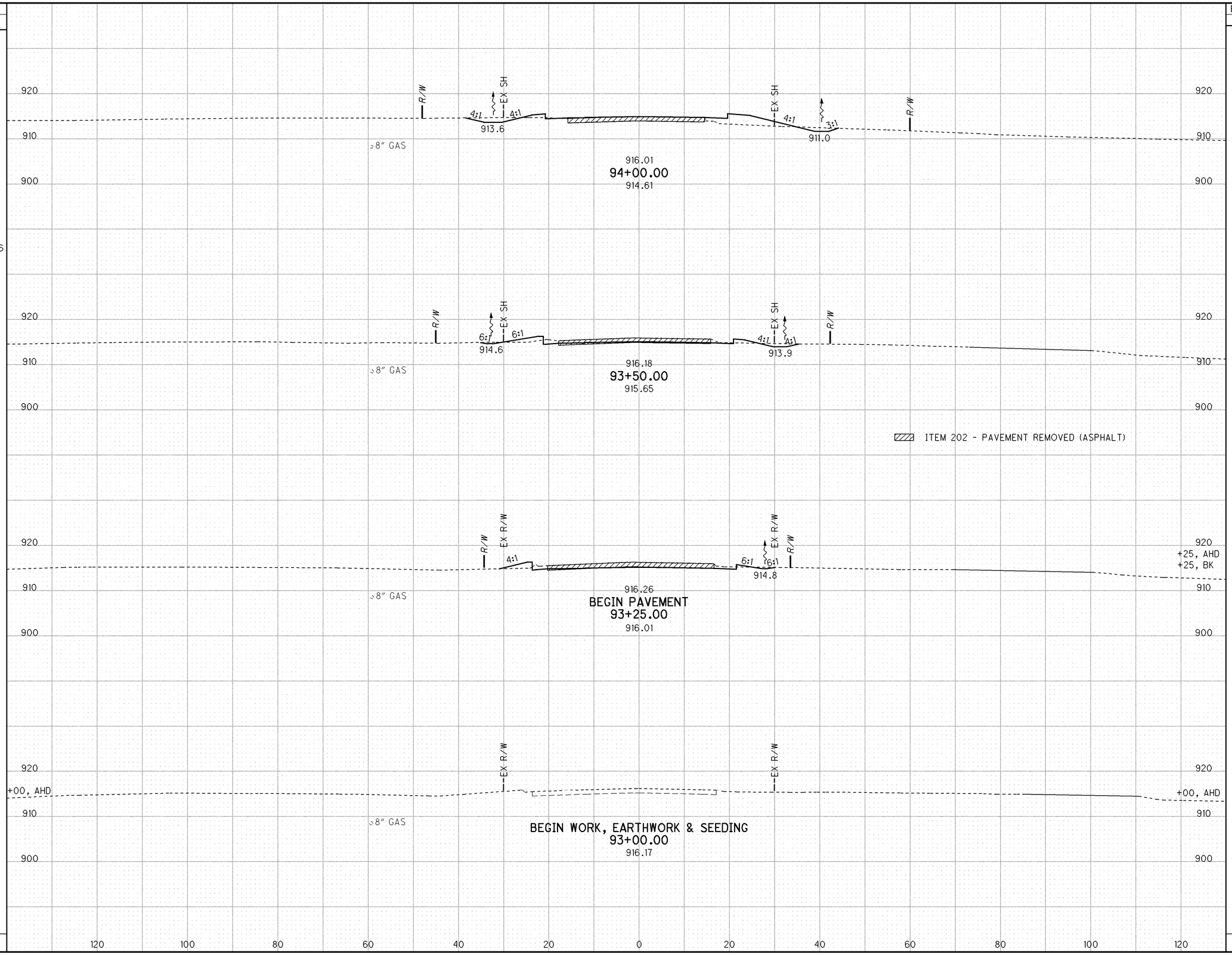

END AREA		VOLUME	
CUT	FILL	CUT	FILL
14	61	21	72
9	17		
8	9	8	12
1	7		
0	0	1	3
		30	87

CALCULATED BDC
CHECKED JJK

CROSS SECTIONS - HANTHORN RD.
STA. 93+00.00 TO STA. 94+00.00

ALL-75-0.21

411
907

I:\Pd\89029\roadway\sheets\89029XS400.dgn 25-JUN-2013 1:50PM tbolenba

SEEDING END WIDTH	SEEDING SQ. YDS.	END AREA CUT	END AREA FILL	VOLUME CUT	VOLUME FILL
	43			36	238
81		23	161		
	433			36	283
75		16	145		
	395			34	229
67		20	102		
	350			32	151
59		20	102		
	1221			103	683

CALCULATED BDC
CHECKED JJK

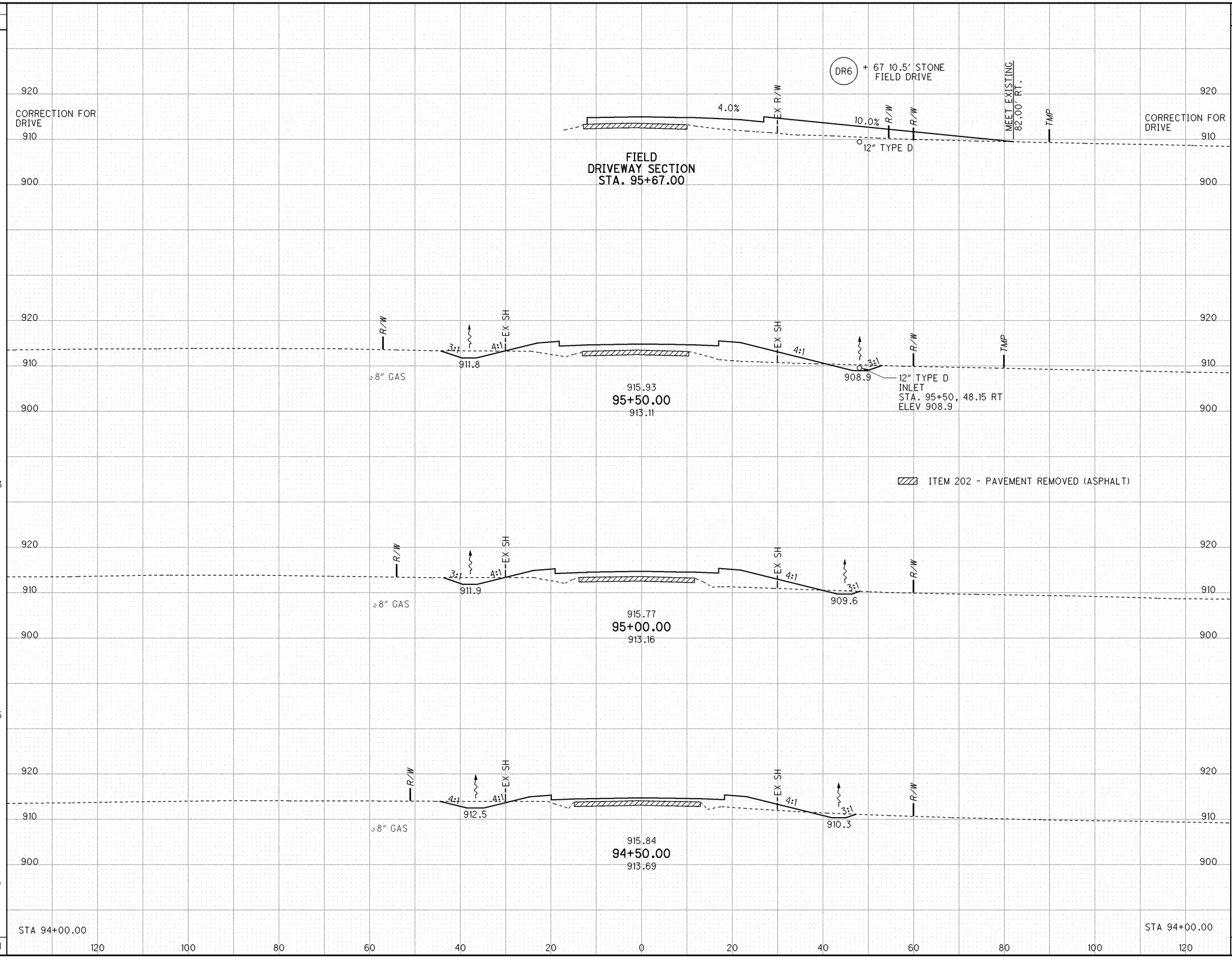

CROSS SECTIONS - HANTHORN RD. STA. 94+50.00 TO STA. 95+67.00

ALL-75-0.21

412
907

I:\Pd\89029\roadway\sheets\89029XS400.dgn 25-JUN-2013 1:50PM tbolenba

SEEDING	
END WIDTH	SQ. YDS.
102	550
96	519
91	489
85	461
81	2474

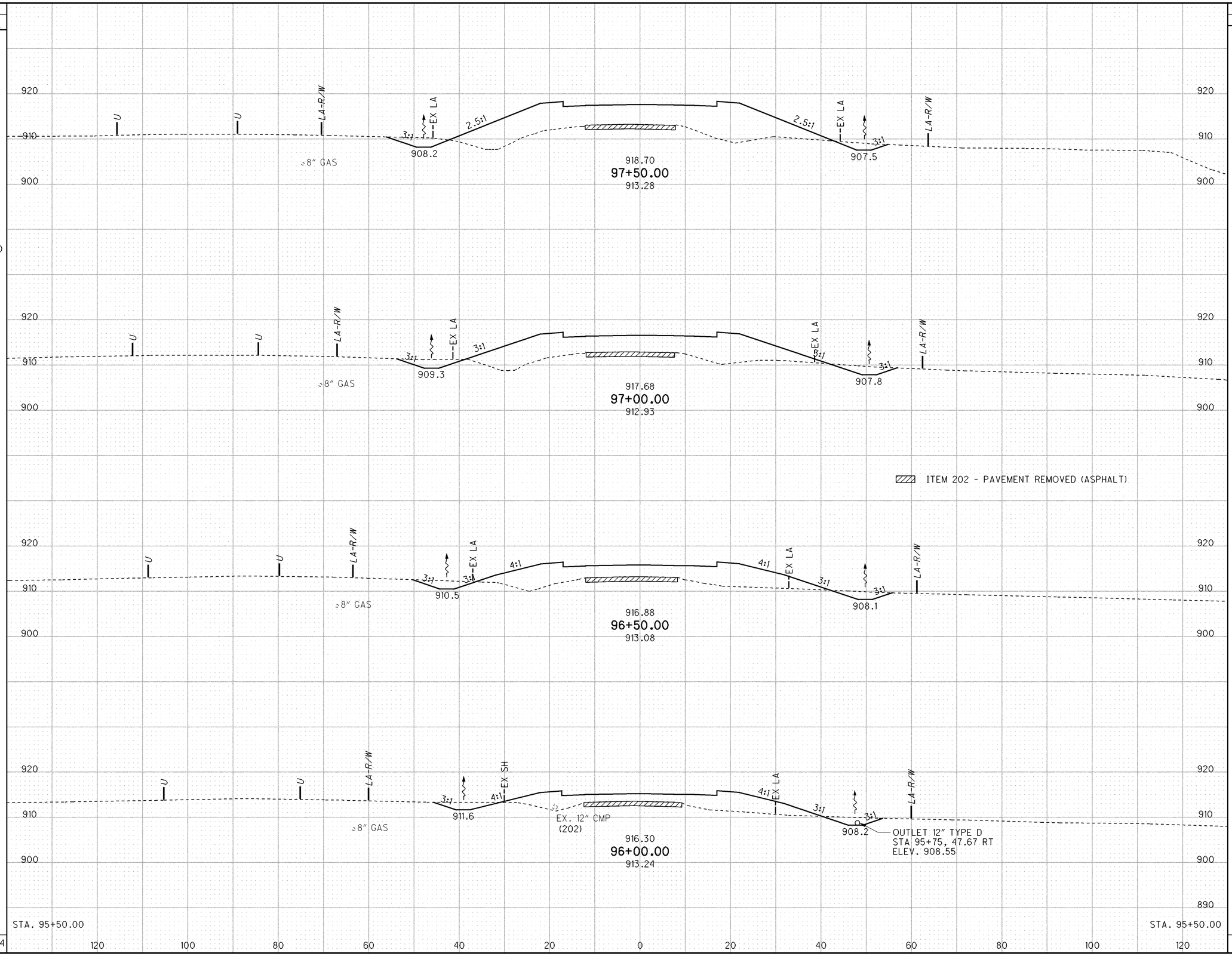

END AREA	
CUT	FILL
29	429
34	340
30	268
28	190
23	161

VOLUME	
CUT	FILL
59	712
59	563
54	424
47	325
219	2024

CALCULATED BDC
CHECKED JJK

CROSS SECTIONS - HANTHORN RD.
STA. 96+00.00 TO STA. 97+50.00

ALL-75-0.21

413
907

I:\Pd\89029\roadway\sheets\89029XS400.dgn 25-JUN-2013 1:50PM tbolenba

SEEDING END WIDTH	SEEDING SQ. YDS.
163	878
153	844
151	-11
108	720
102	583
	3025

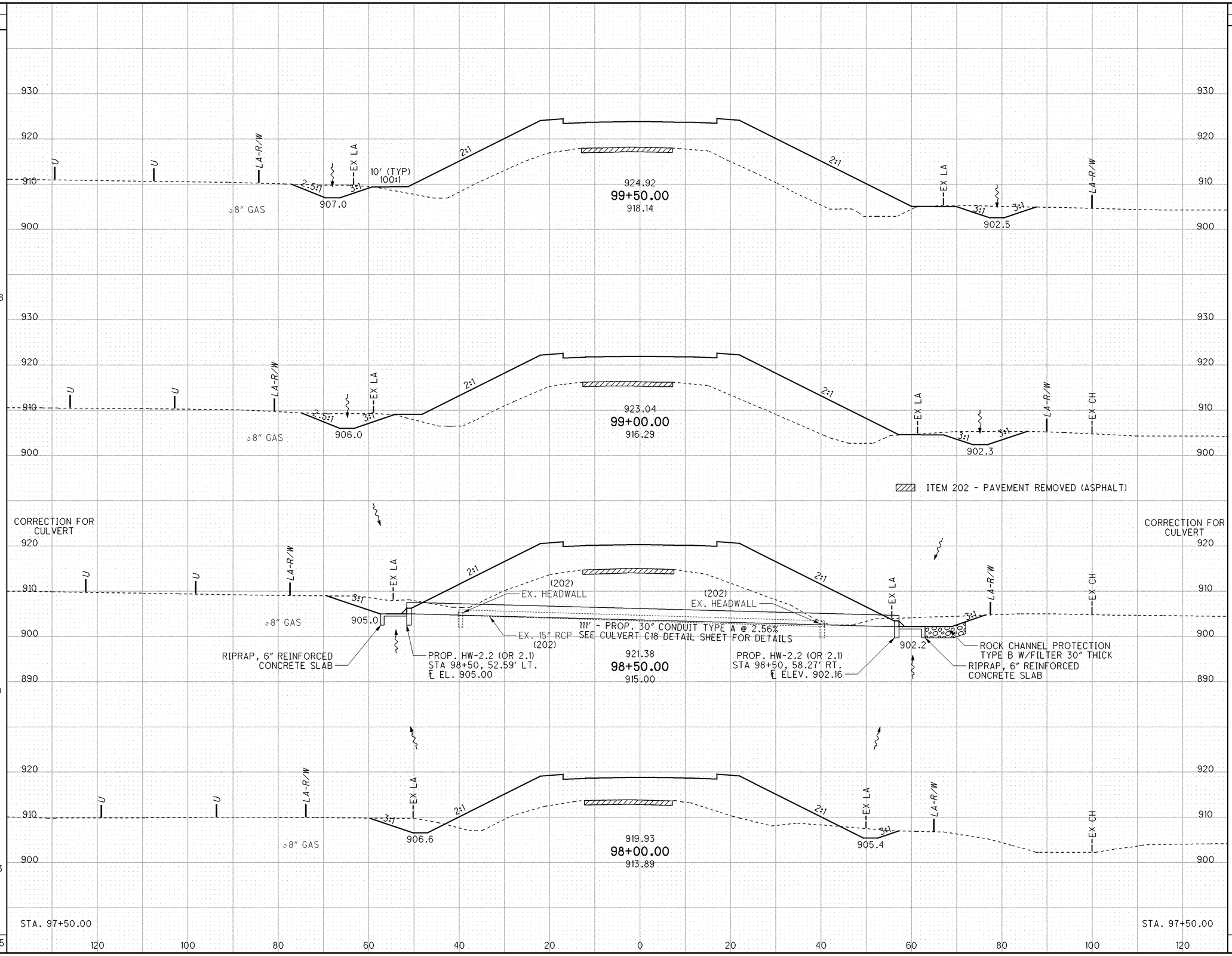

END AREA CUT	END AREA FILL	VOLUME CUT	VOLUME FILL
58	794		
		121	1408
73	727		
		138	1278
76	653	0	-3
		112	1057
45	489		
		69	850
29	429		
		440	4590

CALCULATED BDC
CHECKED JJK

CROSS SECTIONS - HANTHORN RD. STA. 98+00.00 TO STA. 99+50.00

ALL-75-0.21

414
907

I:\Pd\89029\roadway\sheets\89029XS400.dgn 25-JUN-2013 1:50PM tbolenba

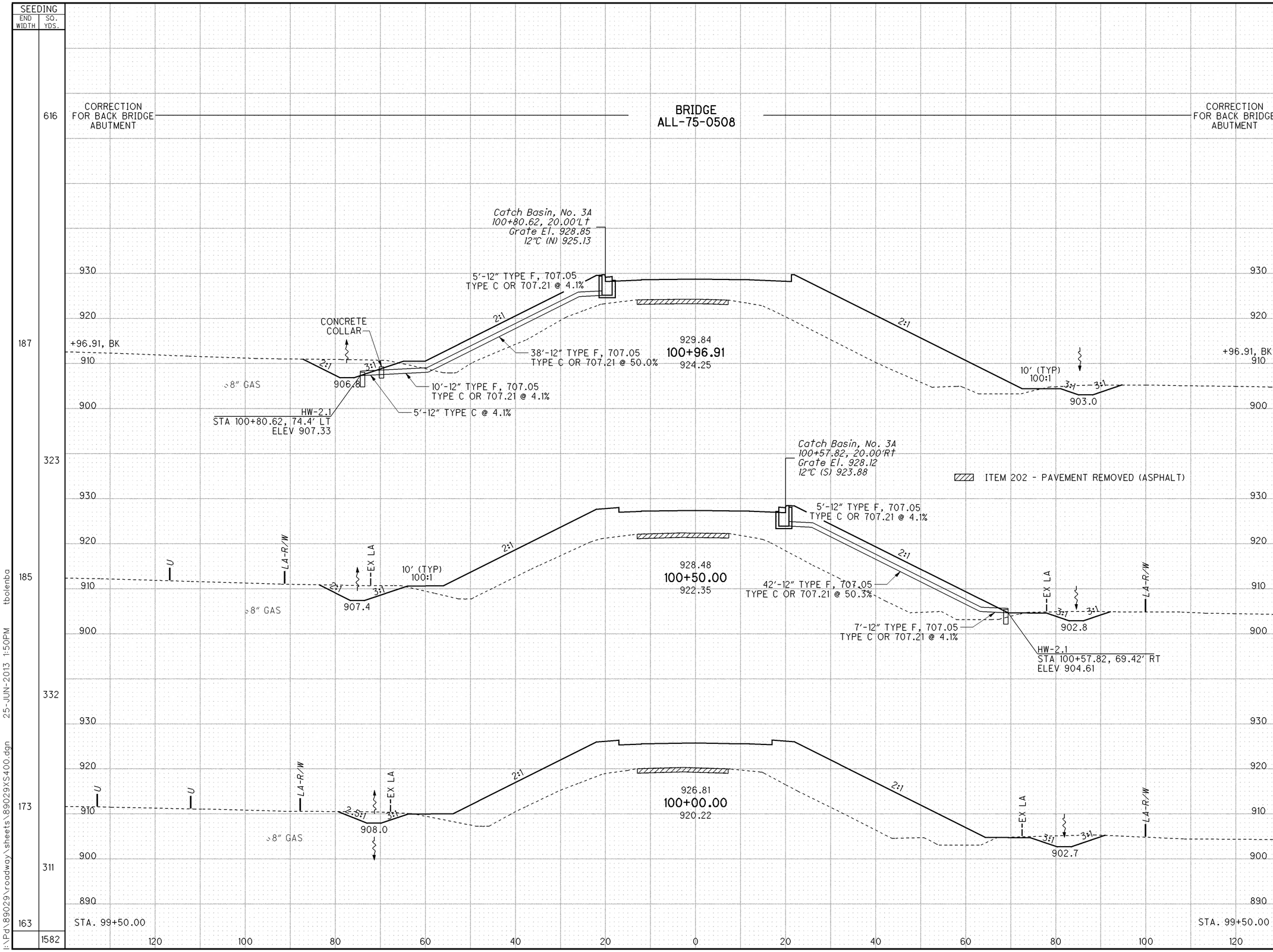

END AREA CUT	END AREA FILL	VOLUME CUT	VOLUME FILL
		157	357
70	851		
		118	1598
57	875		
		98	1609
49	863		
		99	1543
58	794		
		472	5098

CALCULATED BDC
CHECKED JJK

CROSS SECTIONS - HANTHORN RD.
STA. 100+00.00 TO STA. 100+96.91

ALL-75-0.21

415
907

I:\Pd\89029\roadway\sheets\89029XS400.dgn 25-JUN-2013 1:50PM tbolenba

SEEDING	
END WIDTH	SQ. YDS.
	-15
	3360
	3345

940 930 920 910 900 890

933.66
105+00.00
922.81

2:1 2:1 3:1 3:1 3:1 3:1

10' (TYP)
100:1

EX. HW
(202)

20" HP GAS

902.3

224' - PROP. 48" CONDUIT TYPE A @ 0.10%
SEE CULVERT C19 DETAIL SHEET FOR DETAILS

EX. 18" CMP
(202)

EX. HW
(202)

904.3

EX LA

LA-R/W

RIPRAP, 6" REINFORCED
CONCRETE SLAB

PROP. HW-1.1
STA. 104+92.86, 85.56' LT.
℄ EL. 902.30

CORRECTION FOR
CULVERT

ITEM 202 - PAVEMENT REMOVED (I-75)

933.96
104+50.00
912.29

2:1 2:1 2:1 3:1 3:1 3:1

10' (TYP)
100:1

902.5

903.2

FOR INFORMATION ONLY
CROSS SECTION INCLUDED IN
THE CORRECTION BELOW

CORRECTION FOR
FORWARD BRIDGE
ABUTMENT

CORRECTION FOR
FORWARD BRIDGE
ABUTMENT

934.04
104+11.63
910.46

2:1 2:1 3:1 3:1

BRIDGE ABUTMENT

224' - PROP. 48" CONDUIT TYPE A @ 0.10%
SEE CULVERT C19 DETAIL SHEET FOR DETAILS

PROP. HW-1.1
STA. 103+48.58, 86.18' RT.
℄ EL. 902.08

902.4 902.4

RIPRAP, 6" REINFORCED
CONCRETE SLAB

120 100 80 60 40 20 0 20 40 60 80 100 120

END AREA		VOLUME	
CUT	FILL	CUT	FILL
		393	8126
		393	8126

CALCULATED BDC
CHECKED JJK

CROSS SECTIONS - HANTHORN RD.
STA. 104+11.63 TO STA. 105+00.00

ALL-75-0.21

416
907

I:\Pd\89029\roadway\sheets\89029XS400.dgn 25-JUN-2013 1:50PM tbolenba

SEEDING	
END WIDTH	SQ. YDS.
183	1056
197	1122
207	2178

END AREA	
CUT	FILL
77	388
127	395
188	399

VOLUME	
CUT	FILL
189	725
292	735
481	1460

CALCULATED BDC
CHECKED JJK

940 930 920 910 900 890

U
LA-R/W
EX LA
3:1
2:1
908.1
931.46
106+50.00
928.81
907.6
10' (TYP)
100:1

906.1
932.41
106+00.00
929.78
906.5

+50, AHD
904.2
20" HP GAS
933.15
105+50.00
930.43
905.4

ITEM 202 - PAVEMENT REMOVED (ASPHALT)

120 100 80 60 40 20 0 20 40 60 80 100 120

CROSS SECTIONS - HANTHORN RD.
STA. 105+50.00 TO STA. 106+50.00

ALL-75-0.21

417
907

I:\Pd\89029\roadway\sheets\89029XS400.dgn 25-JUN-2013 1:50PM tbolenba

SEEDING		END AREA		VOLUME	
END WIDTH	SQ. YDS.	CUT	FILL	CUT	FILL
133	781	57	337	100	614
148		51	326		
159	853	51	376	95	650
172	919	49	406	93	724
183	986	77	388	117	735
	3539			405	2723

CALCULATED BDC
CHECKED JJK

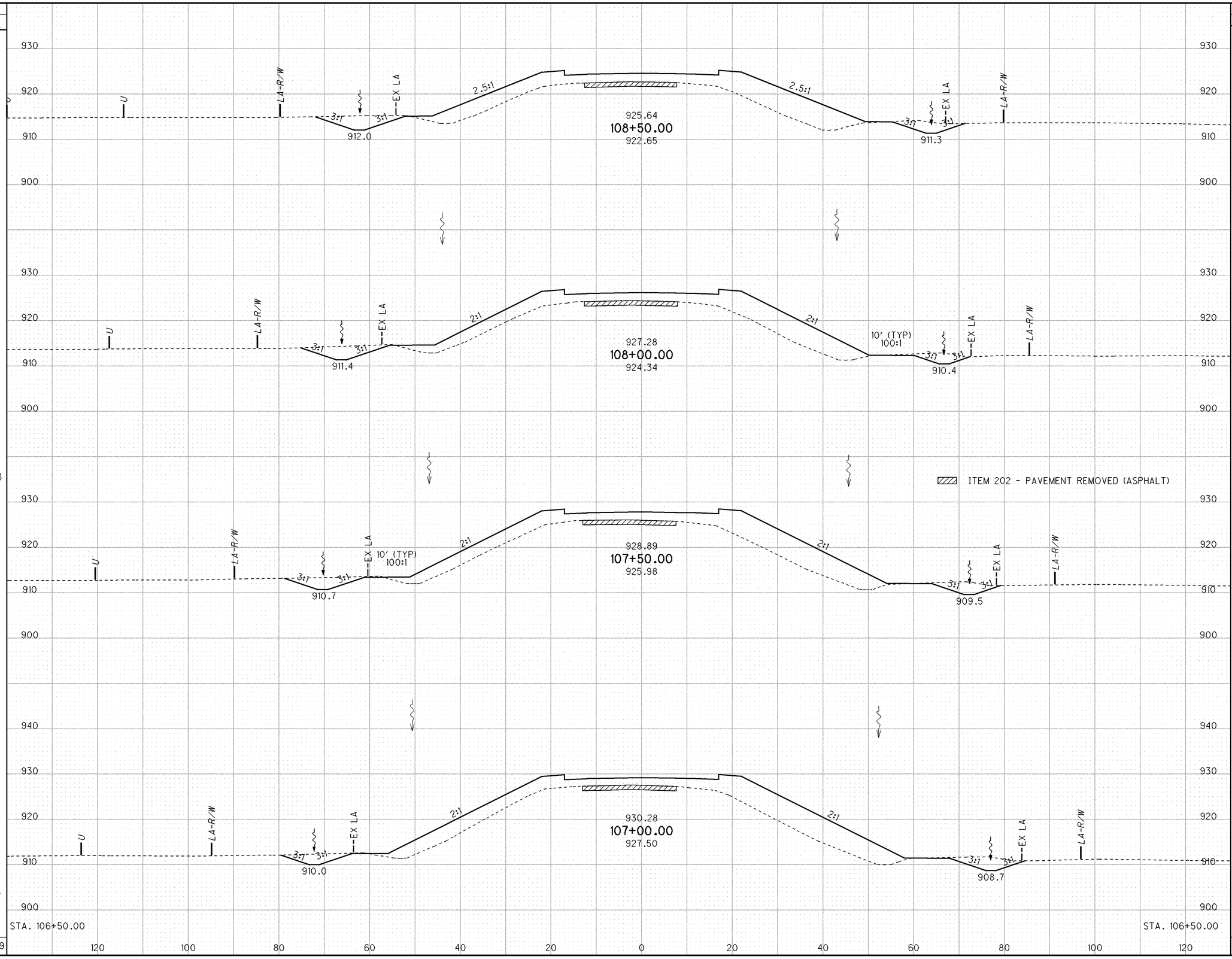

CROSS SECTIONS - HANTHORN RD. STA. 107+00.00 TO STA. 108+50.00

ALL-75-0.21

I:\Pdt\89029\roadway\sheets\89029XS400.dgn 25-JUN-2013 1:50PM tbolenba

SEEDING END WIDTH	SEEDING SQ. YDS.	END AREA CUT	END AREA FILL	VOLUME CUT	VOLUME FILL
82	497	44	144	88	351
97		51	235		
	572			104	491
109	639	61	295	124	571
121	706	73	322	120	610
133		57	337		
	2414			436	2023

CALCULATED BDC
CHECKED JJK

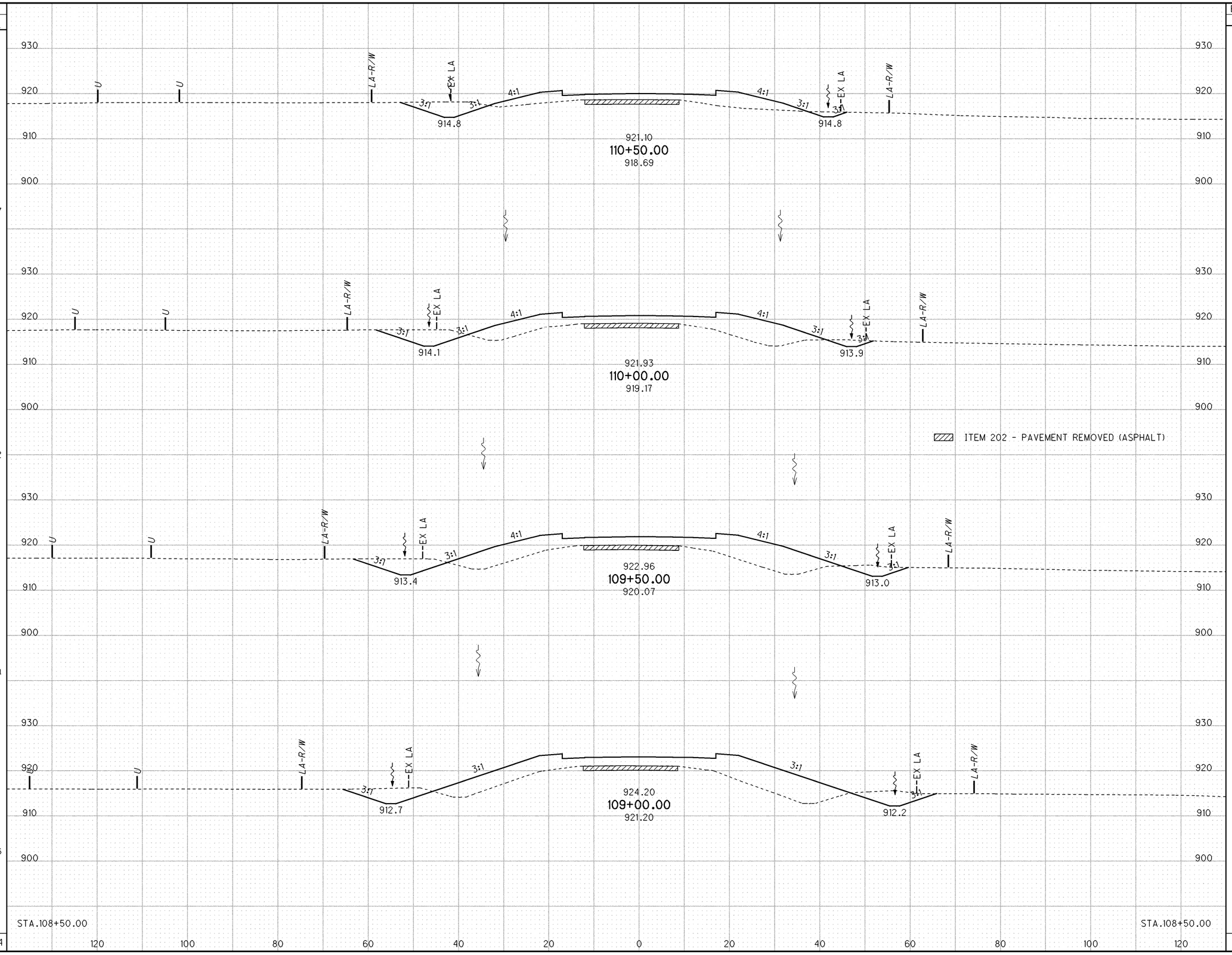

CROSS SECTIONS - HANTHORN RD. STA. 109+00.00 TO STA. 110+50.00

ALL-75-0.21

419
907

I:\Pd\89029\roadway\sheets\89029XS400.dgn 25-JUN-2013 1:49PM tbolenba

SEEDING END WIDTH	SEEDING SQ. YDS.	END AREA CUT	END AREA FILL	VOLUME CUT	VOLUME FILL
36	60	0	0	0	0
36	136	1	0	9	10
		5	1		
34		9	15		
47	225	12	60	19	70
60	297	18	115	28	162
82	395	44	144	58	240
	1113			114	482

CALCULATED BDC
CHECKED JJK

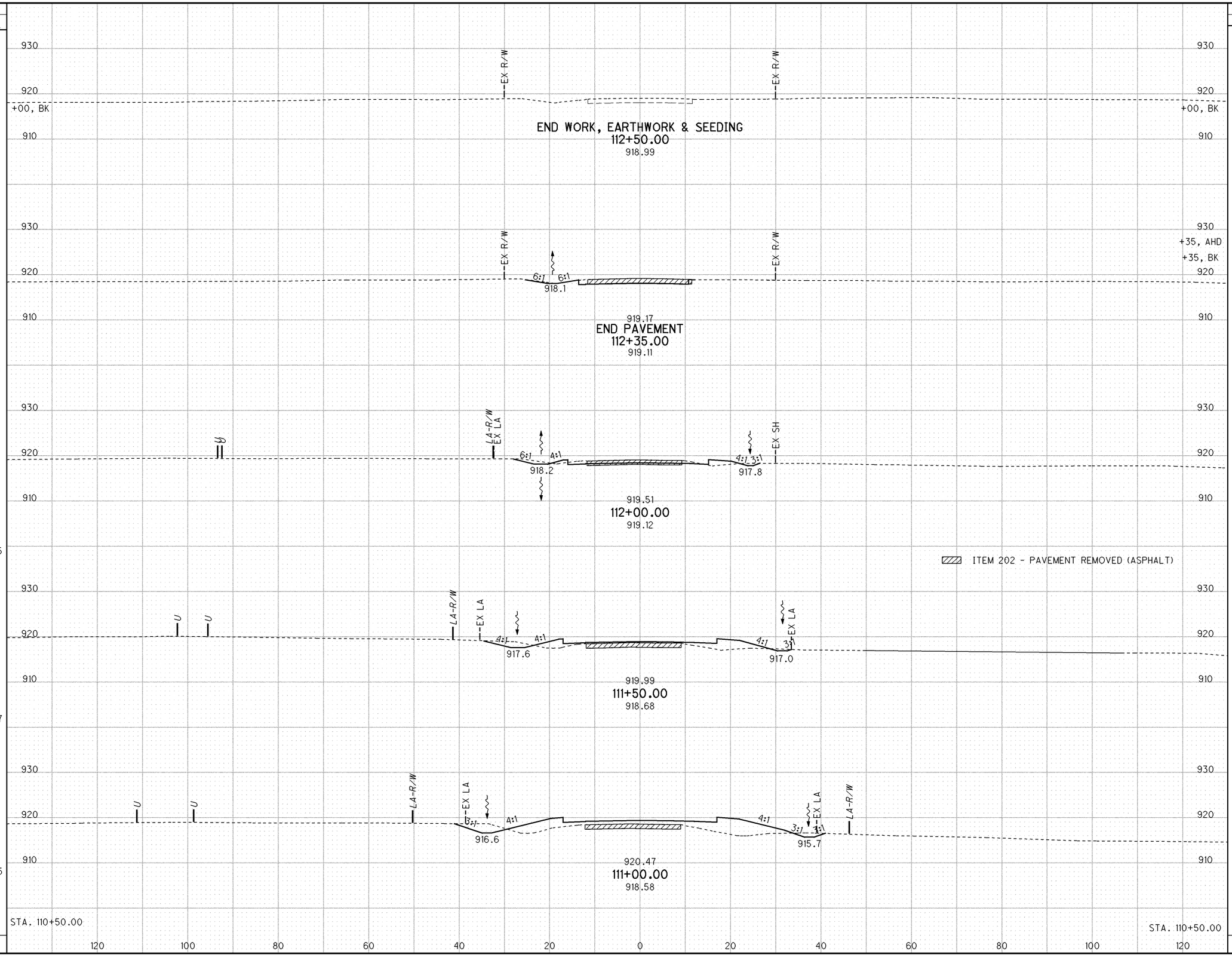

I:\Pd\89029\roadway\sheets\89029XS400.dgn 25-JUN-2013 1:49PM tbolenba

CROSS SECTIONS - HANTHORN RD. STA. 111+00.00 TO STA. 112+50.00

ALL-75-0.21

420
907

℄ SURVEY & CONST. I-75

NORTHBOUND LANES

166

165

EX. MCCLAIN DITCH

Ex LA

N 54° 42' 40" E

LA-R/W

PC Sta. 1+21.34

BEGIN SHEET STA. 0+00

<u>I.R. 75</u>
P.I. Sta. 169+39.08
Δ = 49° 34' 27" (RT) Δ
Dc = 2° 30' 00"
R = 2,291.83'
Ls = 535.00'
θs = 6° 41' 15"
LT = 356.92'
ST = 178.57'
x = 534.27'
y = 20.79'
k = 267.38'
p = 5.20'

Δc = 36° 11' 57" (RT)
Lc = 1,447.97'
Ts = 1,328.13'
E = 238.30'
C = 1,424.01'
C1 = C2 = 534.68'
C.B.1 = N 43° 04' 48" E
C.B. = N 65° 38' 17" E
C.B.2 = S 88° 11' 47" W

<u>MCCLAIN CHANNEL</u>
P.I. Sta. 2+30.08
Δ = 27° 33' 14" (RT)
Dc = 12° 55' 12"
R = 443.46'
T = 108.74'
L = 213.26'
E = 13.14'
C = 211.21'
C.B. = N 68° 30' 42" E

PT Sta. 3+24.91

℄ MCCLAIN DITCH

MATCH LINE - STA. 6+00

-0.42%

HORIZONTAL SCALE IN FEET
0 10 20 40

CALCULATED | CHECKED

PLAN AND PROFILE - MCCLAIN DITCH
STA. 0+00 TO STA. 6+00

ALL-75-0.21

421
907

I:\Pdt\89029\drainage\sheets\89029DC2200.dgn 25-JUN-2013 1:49PM tbolenba

NORTHBOUND LANES

MATCHLINE - STA. 6+00

MATCHLINE - STA. 12+00

McClain ROAD

℄ McClain Ditch

℄ McClain Ditch N 66° 24' 34" E

EX. McClain Ditch

N 75° 20' 47" E

N 00° 55' 07" E

PI Sta. 7+10.97
Δ = 12°34'32"

PI Sta. 9+31.88
Δ = 8°56'13"

PI Sta. 10+66.65
Δ = 5°38'00"

202' - 36"

EX. 36" (202)

C10

EX FENCE (202)

PROP FENCE

Ex LA

ROCK CHANNEL PROTECTION, TYPE B WITH FILTER, 30" THICK

CROSS REFERENCES	
ITEM	SHEET
CULVERT	474-509

HORIZONTAL SCALE IN FEET
0 10 20 40

CALCULATED | CHECKED

STA. 7+10.97, ℄
℄ ELEV. 877.00 (CULVERT)

P.V.I. STA 7+10.97
ELEV = 877.00'

STA. 9+12.92, ℄
℄ ELEV. 876.70 (CULVERT)

P.V.I. STA 9+31.88
ELEV = 876.70'

HW 2.2

-0.42 %

-0.15 %

-0.33 %

202' - 36" TYPE A @ 0.15%

SEE CULVERT C10 FOR DETAILS

877.38 877.30 877.22 877.13 877.05 876.99 876.96 876.93 876.91 876.88 876.85 876.82 876.80 876.77 876.74 876.72 876.67 876.61 876.54 876.47 876.41 876.34 876.27 876.21 876.14 876.07 876.01 875.94 875.87 875.81

880.05 880.02 880.00 879.89 879.78 879.67 880.38 883.32 893.67 897.74 897.96 893.28 884.86 883.98 884.15 883.97 883.54 883.36 882.47 881.20 880.42 879.41 878.81 878.71 878.70 878.70 878.69 878.68 878.31 877.97

905 900 895 890 885 880 875 870

6 7 8 9 10 11 12

PLAN AND PROFILE - MCCLAIN DITCH STA. 6+00 TO STA. 12+00

ALL-75-0.21

422
907

I:\Pd\89029\drainage\sheets\89029DC2201.dgn 25-JUN-2013 1:49PM tbolenba

LEGEND

- FLOODWAY
- ROCK CHANNEL PROTECTION

CROSS REFERENCES	
ITEM	SHEET
CULVERT	474-509

HORIZONTAL SCALE IN FEET
0 10 20 40

CALCULATED | CHECKED

PLAN AND PROFILE - MCCLAIN DITCH
STA. 12+00 TO STA. 13+97.36

ALL-75-0.21

423
907

I:\Pd\89029\drainage\sheets\89029DC2202.dgn 25-JUN-2013 1:49PM tbolenba

SEEDING	
END WIDTH	SQ. YDS.

END AREA		VOLUME	
CUT	FILL	CUT	FILL

CALCULATED BDC
CHECKED JJK

CROSS SECTIONS-McCLAIN DITCH REHABILITATION STA. 0+00.00 TO 1+50.00

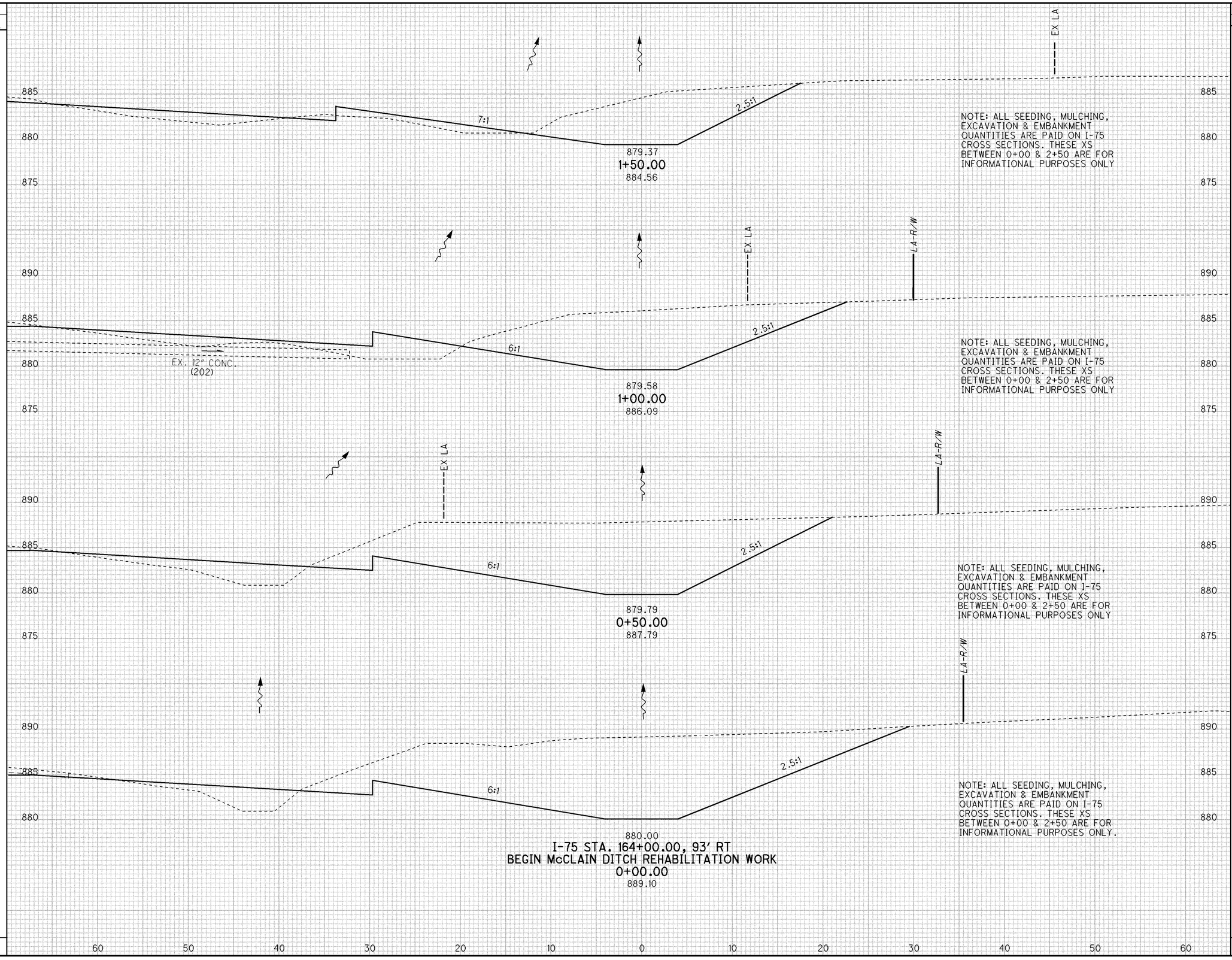

ALL-75-0.21

I:\Pdt\89029\roadway\sheets\89029XS201.dgn 25-JUN-2013 1:49PM tbolenbo

SEEDING END WIDTH	SEEDING SQ. YDS.
48	
	256
44	
	272
54	
	528

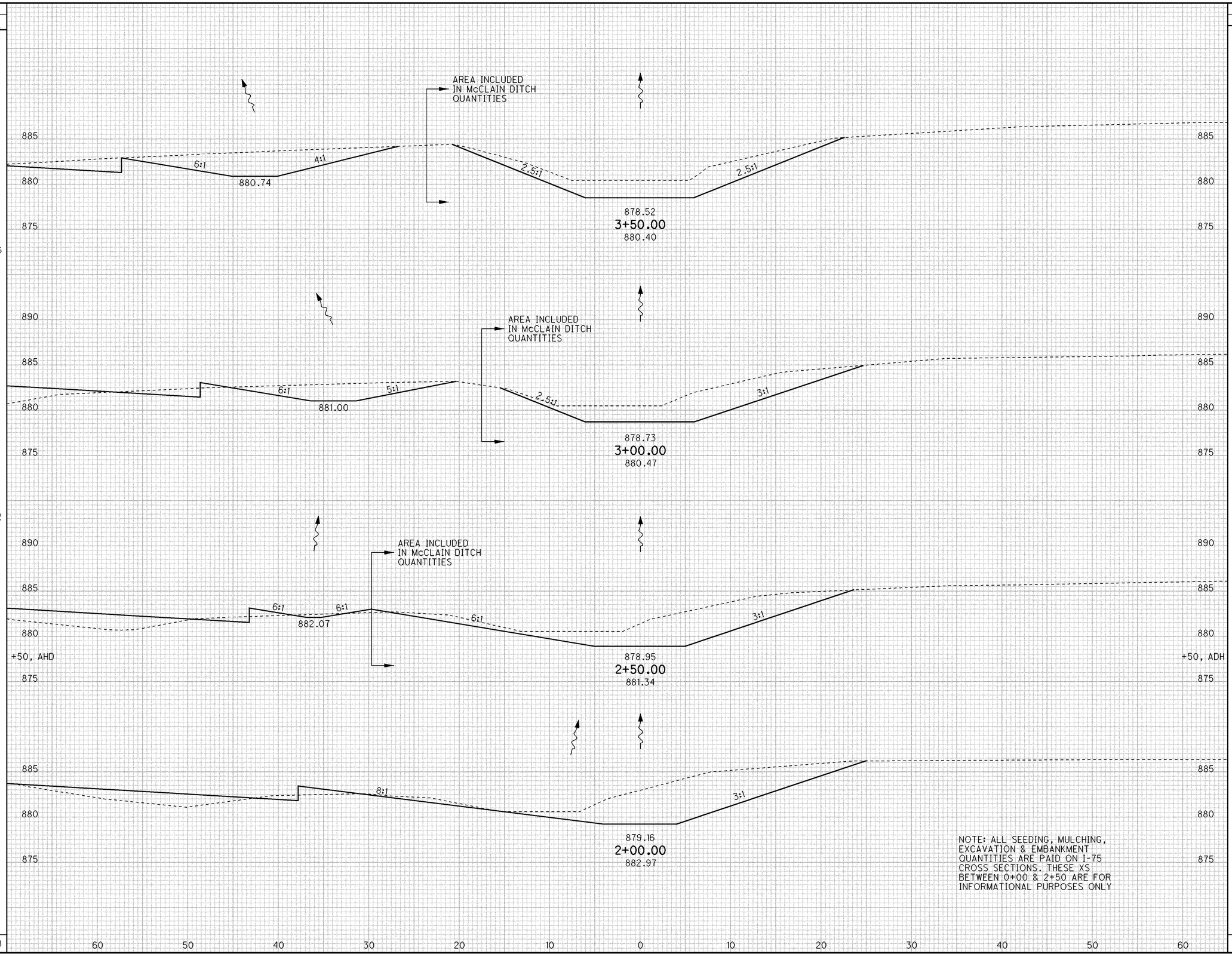

NOTE: ALL SEEDING, MULCHING, EXCAVATION & EMBANKMENT QUANTITIES ARE PAID ON I-75 CROSS SECTIONS. THESE XS BETWEEN 0+00 & 2+50 ARE FOR INFORMATIONAL PURPOSES ONLY

END AREA CUT	END AREA FILL	VOLUME CUT	VOLUME FILL
63	0		
		120	0
66	0		
		137	0
82	0		
		257	0

CALCULATED BDC
CHECKED JJK

CROSS SECTIONS-McCLAIN DITCH REHABILITATION STA. 2+00.00 TO 3+50.00

ALL-75-0.21

425
907

I:\Pd\89029\roadway\sheets\89029XS201.dgn 25-JUN-2013 1:49PM tbolenbo

SEEDING END WIDTH	SEEDING SQ. YDS.
63	
	353
64	
	350
62	
	339
60	
	300
48	
	1342

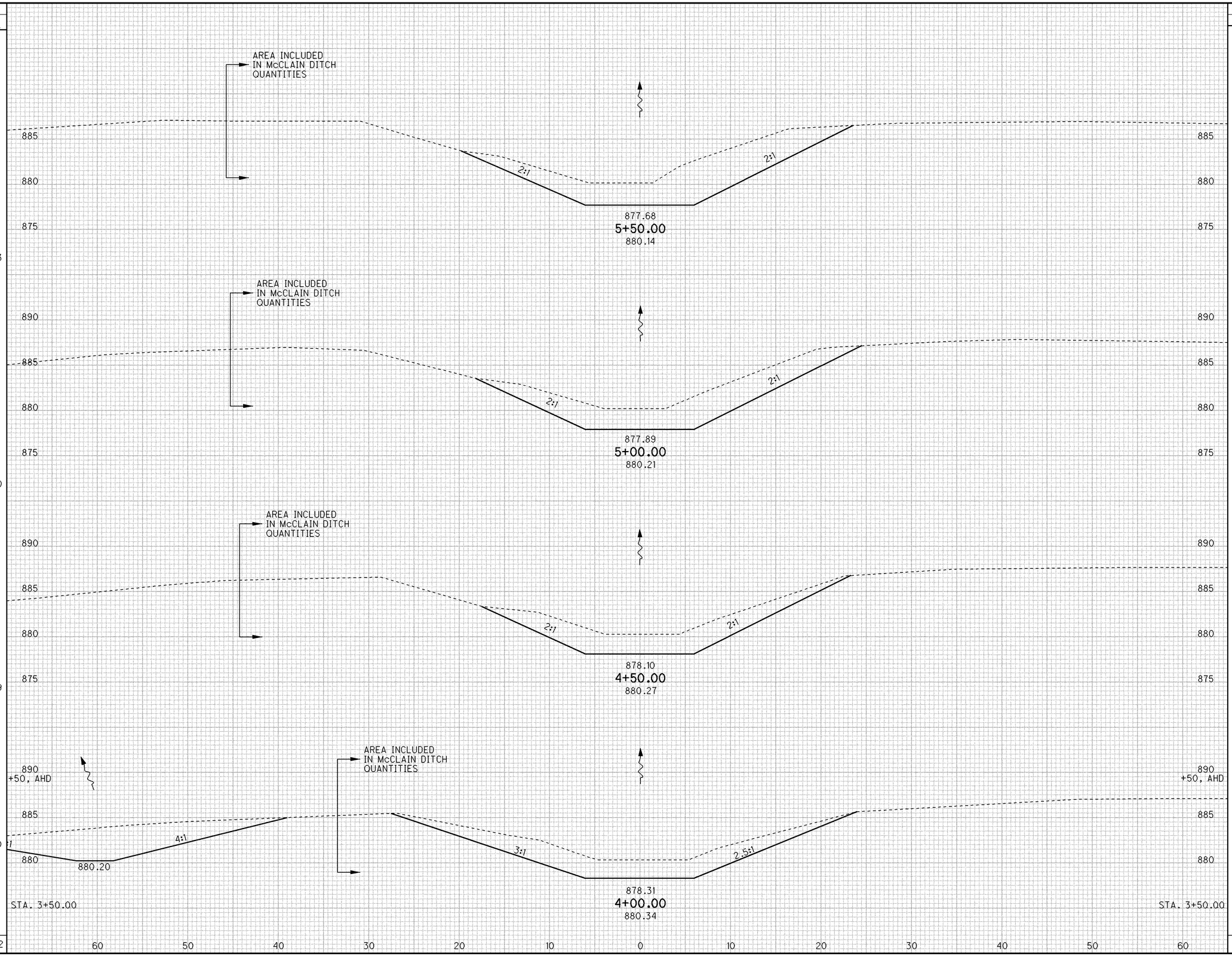

END AREA CUT	END AREA FILL	VOLUME CUT	VOLUME FILL
109	0		
		189	0
95	0		
		157	0
74	0		
		144	0
82	0		
		134	0
63	0		
		624	0

CALCULATED BDC
CHECKED JJK

CROSS SECTIONS-McCLAIN DITCH REHABILITATION STA. 4+00.00 TO 5+50.00

ALL-75-0.21

426
907

I:\Pd\89029\roadway\sheets\89029XS201.dgn 25-JUN-2013 1:49PM tbolenba

SEEDING END WIDTH	SEEDING SQ. YDS.	STA.	CORRECTION FOR CULVERT INCLUDED IN McCLAIN RD CROSS SECTIONS	END AREA CUT	END AREA FILL	VOLUME CUT	VOLUME FILL
			McCLAIN ROAD				
65		+00, BK	AREA INCLUDED IN McCLAIN DITCH QUANTITIES	107	0		
	361	7+00.00	HW-2.2 (OR HW 2.1) 36" CONDUIT TYPE A STA. 7+10.97, ℄ McCLAIN DITCH STA. 100+70.78, 90.14 LT McCLAIN RD. ELEV. 877.00 — 877.05 / 879.78 — EX. 36" RCP STA. 7+10.97, ℄ EL. 877.00 (202)			198	0
65		6+50.00	AREA INCLUDED IN McCLAIN DITCH QUANTITIES — 877.26 / 880.01	107	0		
70	375			119	0	209	0
63	369	6+00.00	AREA INCLUDED IN McCLAIN DITCH QUANTITIES — 877.47 / 880.08	109	0	211	0
		STA. 5+50.00	CORRECTION FOR CULVERT INCLUDED IN McCLAIN RD CROSS SECTIONS				
	1105					618	0

CALCULATED BDC CHECKED JJK

CROSS SECTIONS-McCLAIN DITCH REHABILITATION STA. 6+00.00 TO 7+00.00

ALL-75-0.21

427
907

I:\Pd\89029\roadway\sheets\89029XS201.dgn 25-JUN-2013 1:49PM tbolenba

I:\Pd\89029\roadway\sheets\89029XS201.dgn 25-JUN-2013 1:49PM tbolenba

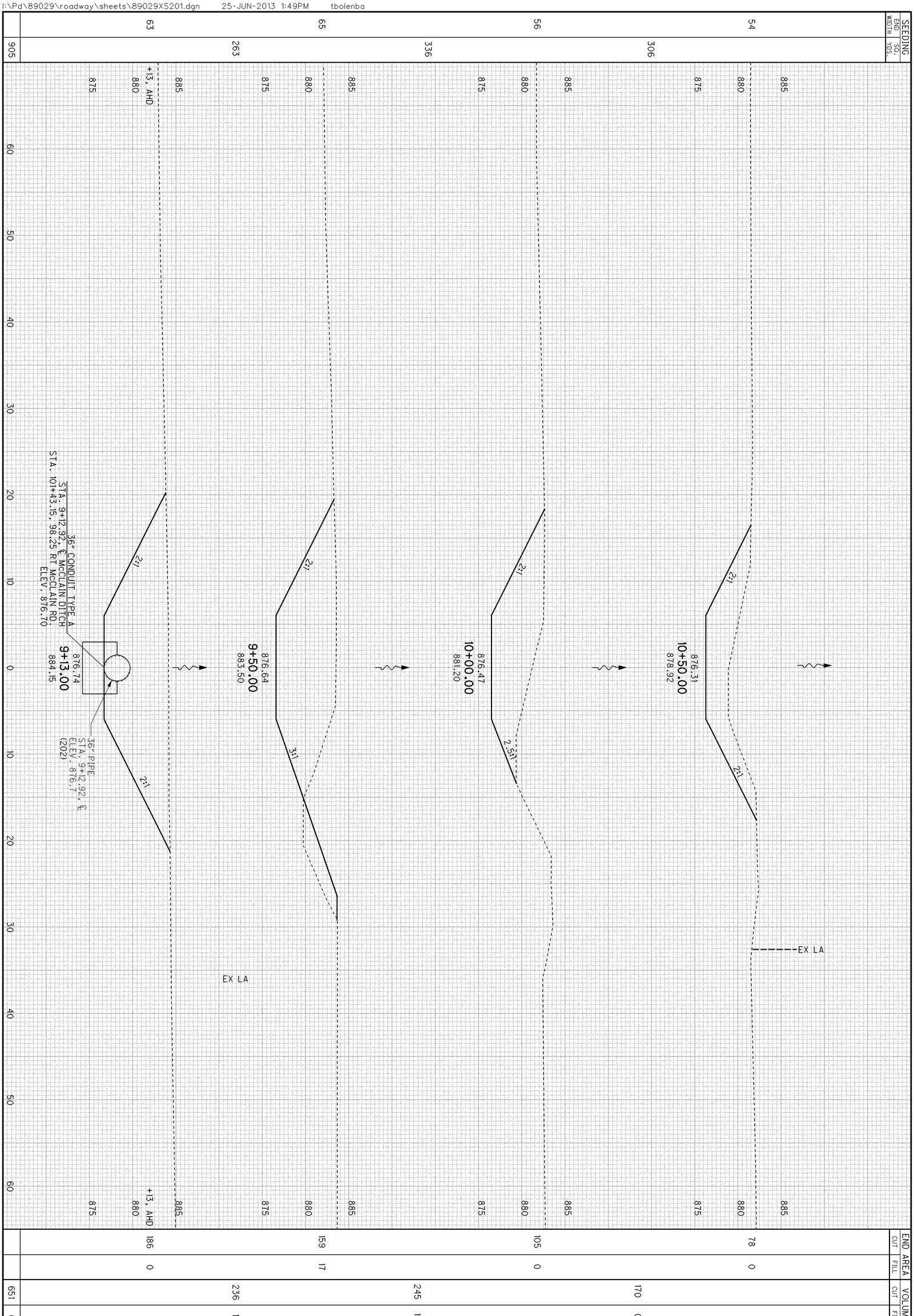

428
907

ALL-75-0.21

CROSS SECTIONS-McCLAIN DITCH REHABILITATION
STA. 9+13.00 TO 10+50.00

CALCULATED BDC
CHECKED JJK

SEEDING END WIDTH	SEEDING SQ. YDS.
50	281
51	281
50	275
49	286
54	
	1123

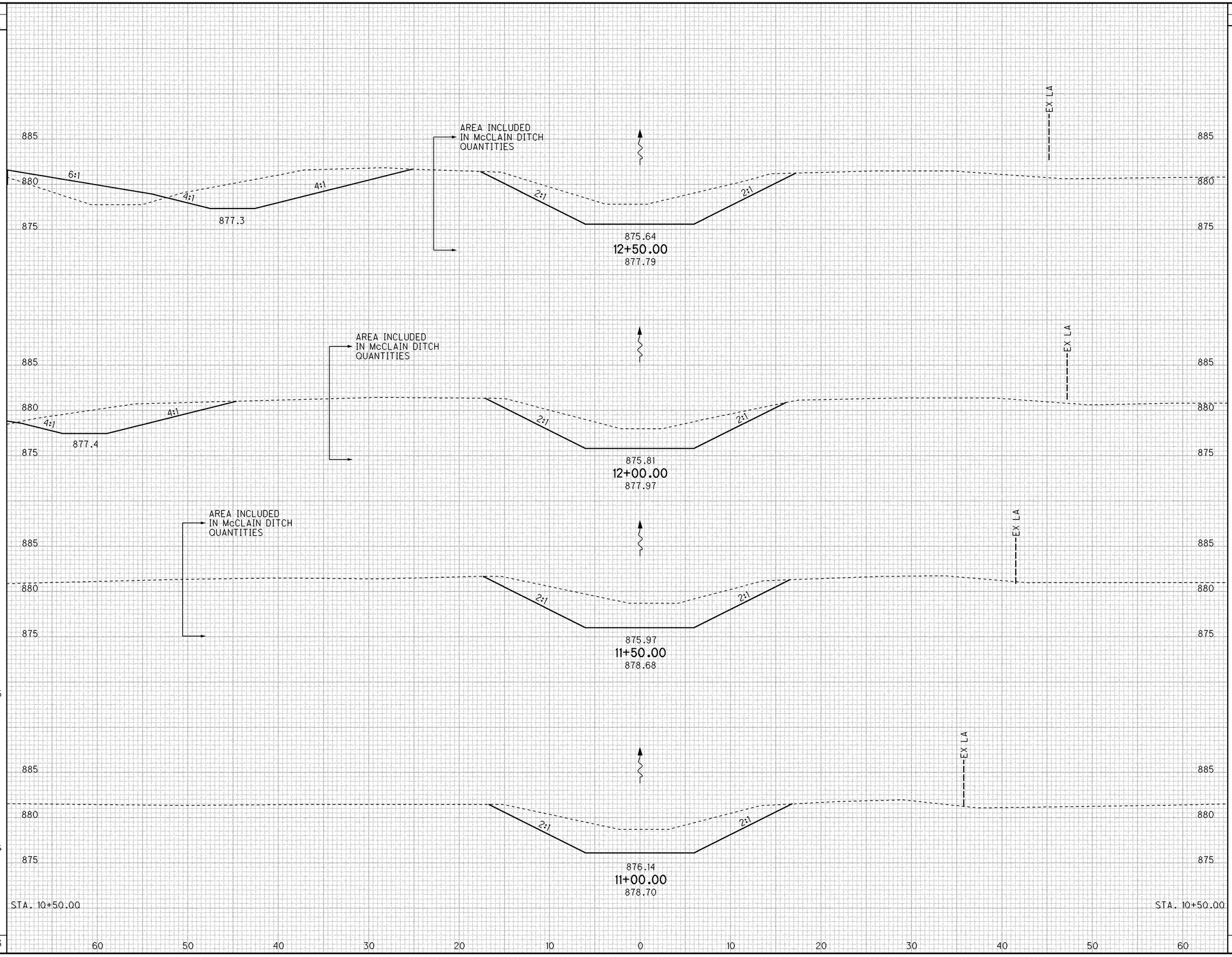

END AREA CUT	END AREA FILL	VOLUME CUT	VOLUME FILL
71	0		
		125	0
64	0		
		131	0
77	0		
		140	0
74	0		
		141	0
78	0		
		537	0

CALCULATED BDC
CHECKED JJK

CROSS SECTIONS-McCLAIN DITCH REHABILITATION STA. 11+00.00 TO 12+50.00

ALL-75-0.21

429
907

I:\Pd\89029\roadway\sheets\89029XS201.dgn 25-JUN-2013 1:49PM tbolenba

SEEDING	
END WIDTH	SQ. YDS.
42	239
44	261
50	
	611

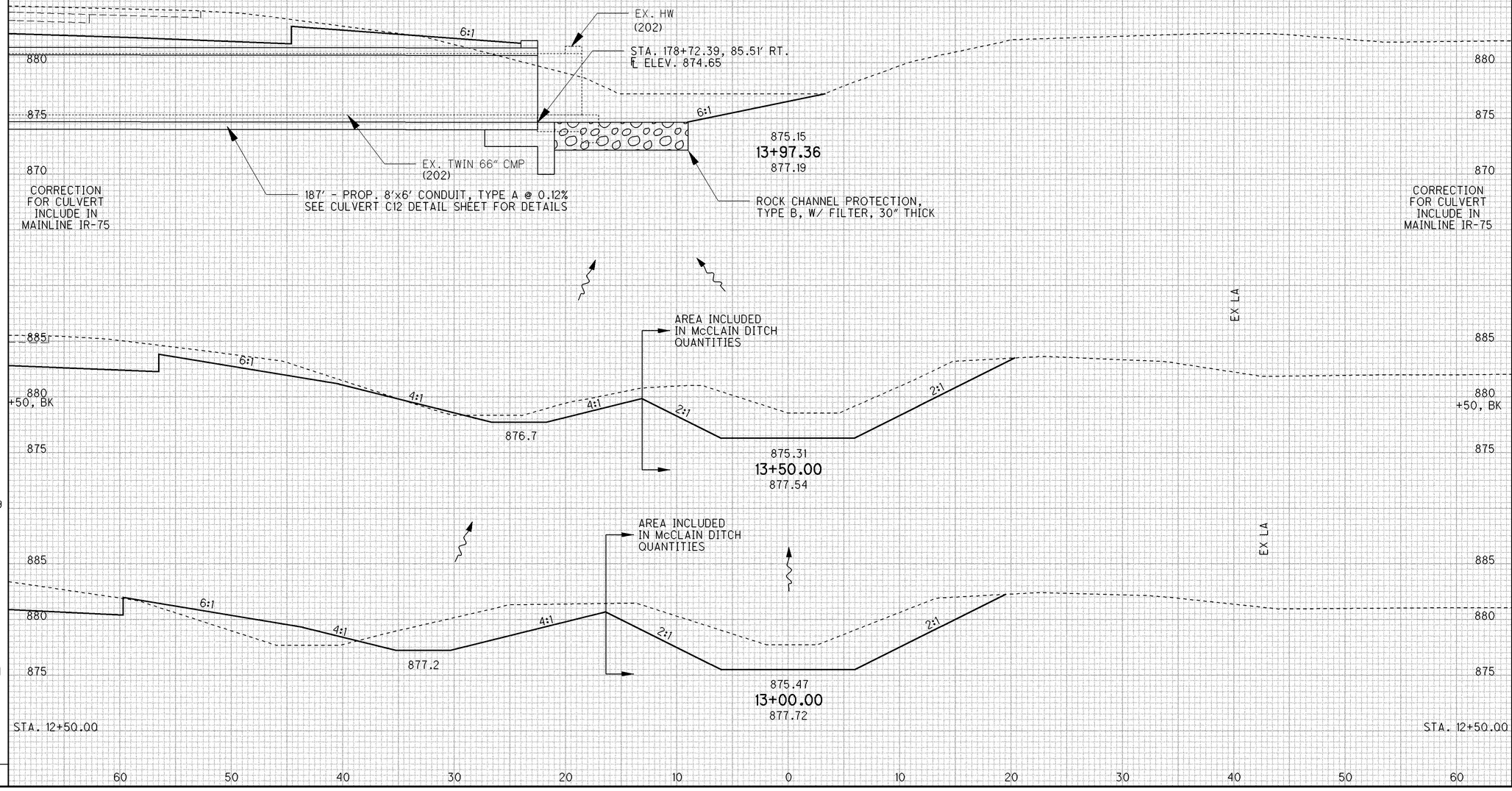

END AREA		VOLUME	
CUT	FILL	CUT	FILL
83	0		
		158	0
88	0		
		147	0
71	0		
		378	0

CALCULATED BDC
CHECKED JJK

CROSS SECTIONS-McCLAIN DITCH REHABILITATION
STA. 13+00.00 TO 13+97.36

ALL-75-0.21

430
907

I:\Pd\89029\roadway\sheets\89029XS201.dgn 25-JUN-2013 1:49PM tbolenba

SUPERELEVATION TABLE

P.I. STA. 64+32.51 | Dc = 1° 00' 00" RT.

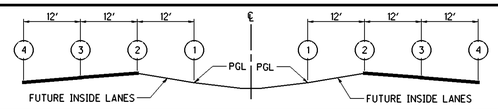

CALCULATED NAH
CHECKED ABS

REMARKS	STATION	(1) PROFILE GRADE (FUTURE INSIDE E/P)		(2) INSIDE EDGE OF INSIDE LANE					(3) OUTSIDE EDGE OF OUTSIDE LANE					(4) OUTSIDE EDGE OF OUTSIDE LANE				
		OFFSET	ELEVATION	WIDTH	TRANSITION RATE	CROSS SLOPE	ELEVATION CORRECTION	ELEVATION	WIDTH	TRANSITION RATE	CROSS SLOPE	ELEVATION CORRECTION	ELEVATION	WIDTH	TRANSITION RATE	CROSS SLOPE	ELEVATION CORRECTION	ELEVATION
	48+00		877.05	12.00		0.016	0.192	877.24	12.00		-0.016	-0.192	877.05	12.00		-0.016	-0.192	876.86
	48+25		876.83	12.00		0.016	0.192	877.02	12.00		-0.016	-0.192	876.83	12.00		-0.016	-0.192	876.64
	48+50		876.61	12.00		0.016	0.192	876.80	12.00		-0.016	-0.192	876.61	12.00		-0.016	-0.192	876.42
	48+75		876.39	12.00		0.016	0.192	876.58	12.00		-0.016	-0.192	876.39	12.00		-0.016	-0.192	876.20
	49+00		876.17	12.00		0.016	0.192	876.36	12.00		-0.016	-0.192	876.17	12.00		-0.016	-0.192	875.98
	49+25		875.95	12.00		0.016	0.192	876.14	12.00		-0.016	-0.192	875.95	12.00		-0.016	-0.192	875.76
	49+50		875.73	12.00		0.016	0.192	875.92	12.00		-0.016	-0.192	875.73	12.00		-0.016	-0.192	875.53
	49+75		875.51	12.00		0.016	0.192	875.70	12.00		-0.016	-0.192	875.51	12.00		-0.016	-0.192	875.31
	50+00		875.29	12.00		0.016	0.192	875.48	12.00		-0.016	-0.192	875.29	12.00		-0.016	-0.192	875.09
	50+25		875.07	12.00		0.016	0.192	875.26	12.00		-0.016	-0.192	875.07	12.00		-0.016	-0.192	874.88
	50+50		874.87	12.00		0.016	0.192	875.06	12.00		-0.016	-0.192	874.87	12.00		-0.016	-0.192	874.68
	50+75		874.68	12.00		0.016	0.192	874.87	12.00		-0.016	-0.192	874.68	12.00		-0.016	-0.192	874.49
	50+86.32		874.60	12.00		0.016	0.192	874.79	12.00		-0.016	-0.192	874.60	12.00		-0.016	-0.192	874.41
	51+00		874.51	12.00		0.011	0.137	874.64	12.00		-0.016	-0.192	874.45	12.00		-0.016	-0.192	874.26
	51+25		874.34	12.00		0.003	0.037	874.38	12.00		-0.016	-0.192	874.19	12.00		-0.016	-0.192	874.00
	51+50		874.20	12.00		-0.005	-0.063	874.13	12.00		-0.016	-0.192	873.94	12.00		-0.016	-0.192	873.75
	51+75		874.06	12.00		-0.014	-0.163	873.90	12.00		-0.016	-0.192	873.71	12.00		-0.016	-0.192	873.51
	51+82.32		874.02	12.00		-0.016	-0.192	873.83	12.00		-0.016	-0.192	873.64	12.00	250:1	-0.016	-0.192	873.45
	52+00		873.94	12.00		-0.018	-0.216	873.72	12.00		-0.018	-0.216	873.51	12.00	250:1	-0.018	-0.216	873.29
	52+25		873.83	12.00		-0.021	-0.249	873.58	12.00		-0.021	-0.249	873.33	12.00	250:1	-0.021	-0.249	873.08
PC	52+35.32		873.79	12.00		-0.022	-0.263	873.53	12.00		-0.022	-0.263	873.26	12.00	250:1	-0.022	-0.263	873.00
	52+50		873.73	12.00		-0.024	-0.282	873.45	12.00		-0.024	-0.282	873.17	12.00	250:1	-0.024	-0.282	872.89
	52+75		873.65	12.00		-0.026	-0.316	873.34	12.00		-0.026	-0.316	873.02	12.00	250:1	-0.026	-0.316	872.70
	53+00		873.58	12.00		-0.029	-0.349	873.23	12.00		-0.029	-0.349	872.88	12.00	250:1	-0.029	-0.349	872.54
	53+25		873.53	12.00		-0.032	-0.382	873.14	12.00		-0.032	-0.382	872.76	12.00	250:1	-0.032	-0.382	872.38
	53+35.32		873.51	12.00		-0.033	-0.396	873.11	12.00		-0.033	-0.396	872.71	12.00	250:1	-0.033	-0.396	872.32
	53+50		873.48	12.00		-0.033	-0.396	873.09	12.00		-0.033	-0.396	872.69	12.00		-0.033	-0.396	872.29
	53+75		873.45	12.00		-0.033	-0.396	873.06	12.00		-0.033	-0.396	872.66	12.00		-0.033	-0.396	872.26
	54+00		873.44	12.00		-0.033	-0.396	873.04	12.00		-0.033	-0.396	872.64	12.00		-0.033	-0.396	872.25
	54+25		873.43	12.00		-0.033	-0.396	873.04	12.00		-0.033	-0.396	872.64	12.00		-0.033	-0.396	872.24
	54+50		873.44	12.00		-0.033	-0.396	873.05	12.00		-0.033	-0.396	872.65	12.00		-0.033	-0.396	872.25
	73+50		878.62	12.00		-0.033	-0.396	878.22	12.00		-0.033	-0.396	877.83	12.00		-0.033	-0.396	877.43
	73+75		878.51	12.00		-0.033	-0.396	878.12	12.00		-0.033	-0.396	877.72	12.00		-0.033	-0.396	877.33
	74+00		878.40	12.00		-0.033	-0.396	878.01	12.00		-0.033	-0.396	877.61	12.00		-0.033	-0.396	877.22
	74+25		878.29	12.00		-0.033	-0.396	877.89	12.00		-0.033	-0.396	877.50	12.00		-0.033	-0.396	877.10
	74+50		878.17	12.00		-0.033	-0.396	877.77	12.00		-0.033	-0.396	877.38	12.00		-0.033	-0.396	876.98
	74+75		878.04	12.00		-0.033	-0.396	877.65	12.00		-0.033	-0.396	877.25	12.00		-0.033	-0.396	876.86
	74+95.74		877.94	12.00		-0.033	-0.396	877.54	12.00		-0.033	-0.396	877.14	12.00		-0.033	-0.396	876.75
	75+00		877.91	12.00		-0.033	-0.390	877.52	12.00		-0.033	-0.390	877.13	12.00	250:1	-0.033	-0.390	876.74
	75+25		877.78	12.00		-0.030	-0.357	877.42	12.00		-0.030	-0.357	877.06	12.00	250:1	-0.030	-0.357	876.71
	75+50		877.64	12.00		-0.027	-0.324	877.31	12.00		-0.027	-0.324	876.99	12.00	250:1	-0.027	-0.324	876.67
	75+75		877.49	12.00		-0.024	-0.290	877.20	12.00		-0.024	-0.290	876.91	12.00	250:1	-0.024	-0.290	876.62
PT	75+95.74		877.36	12.00		-0.022	-0.263	877.10	12.00		-0.022	-0.263	876.84	12.00	250:1	-0.022	-0.263	876.58
	76+00		877.34	12.00		-0.021	-0.257	877.08	12.00		-0.021	-0.257	876.82	12.00	250:1	-0.021	-0.257	876.57
	76+25		877.18	12.00		-0.019	-0.224	876.96	12.00		-0.019	-0.224	876.73	12.00	250:1	-0.019	-0.224	876.51
	76+48.74		877.03	12.00		-0.016	-0.192	876.84	12.00		-0.016	-0.192	876.64	12.00	250:1	-0.016	-0.192	876.45
	76+50		877.02	12.00		-0.016	-0.187	876.83	12.00		-0.016	-0.192	876.64	12.00		-0.016	-0.192	876.45
	76+75		876.85	12.00		-0.007	-0.087	876.77	12.00		-0.016	-0.192	876.57	12.00		-0.016	-0.192	876.38
	77+00		876.68	12.00		0.001	0.013	876.69	12.00		-0.016	-0.192	876.50	12.00		-0.016	-0.192	876.31
	77+25		876.51	12.00		0.009	0.113	876.62	12.00		-0.016	-0.192	876.43	12.00		-0.016	-0.192	876.23
	77+44.74		876.37	12.00		0.016	0.192	876.56	12.00		-0.016	-0.192	876.37	12.00		-0.016	-0.192	876.17
	77+50		876.33	12.00		0.016	0.192	876.52	12.00		-0.016	-0.192	876.33	12.00		-0.016	-0.192	876.14
	77+75		876.16	12.00		0.016	0.192	876.35	12.00		-0.016	-0.192	876.16	12.00		-0.016	-0.192	875.96
	78+00		875.98	12.00		0.016	0.192	876.17	12.00		-0.016	-0.192	875.98	12.00		-0.016	-0.192	875.79

SUPERELEVATION TABLE (I-75 NB)

ALL-75-0.21

431
907

I:\Pd\89029\roadway\sheets\89029GE001.dgn 25-JUN-2013 10:21AM tbolenba

SUPERELEVATION TABLE

P.I. STA. 64+32.51	Dc = 1° 00′ 00″ RT.

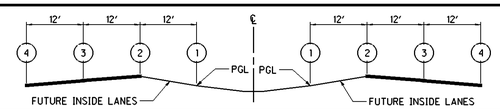

CALCULATED	CHECKED
NAH	ABS

(4) OUTSIDE EDGE OF OUTSIDE LANE					(3) OUTSIDE EDGE OF OUTSIDE LANE					(2) INSIDE EDGE OF INSIDE LANE					(1) PROFILE GRADE (FUTURE INSIDE E/P)		STATION	REMARKS
ELEVATION	ELEVATION CORRECTION	CROSS SLOPE	TRANSITION RATE	WIDTH	ELEVATION	ELEVATION CORRECTION	CROSS SLOPE	TRANSITION RATE	WIDTH	ELEVATION	ELEVATION CORRECTION	CROSS SLOPE	TRANSITION RATE	WIDTH	ELEVATION	OFFSET		
875.98	-0.192	-0.016		12.00	876.17	-0.192	-0.016		12.00	876.36	0.192	0.016		12.00	876.17	25.5	49+00	
875.76	-0.192	-0.016		12.00	875.95	-0.192	-0.016		12.00	876.14	0.192	0.016		12.00	875.95	25.5	49+25	
875.53	-0.192	-0.016		12.00	875.73	-0.192	-0.016		12.00	875.92	0.192	0.016		12.00	875.73	25.5	49+50	
875.31	-0.192	-0.016		12.00	875.51	-0.192	-0.016		12.00	875.70	0.192	0.016		12.00	875.51	25.5	49+75	
875.18	-0.192	-0.016	250:1	12.00	875.37	-0.192	-0.016		12.00	875.56	0.192	0.016		12.00	875.37	26.5	49+90.32	
875.13	-0.173	-0.014	250:1	12.00	875.30	-0.173	-0.014		12.00	875.48	0.192	0.016		12.00	875.29	25.5	50+00	
875.02	-0.123	-0.010	250:1	12.00	875.14	-0.123	-0.010		12.00	875.26	0.192	0.016		12.00	875.07	25.5	50+25	
874.92	-0.073	-0.006	250:1	12.00	874.99	-0.073	-0.006		12.00	875.06	0.192	0.016		12.00	874.87	25.5	50+50	
874.83	-0.023	-0.002	250:1	12.00	874.85	-0.023	-0.002		12.00	874.87	0.192	0.016		12.00	874.68	25.5	50+75	
874.75	0.027	0.002	250:1	12.00	874.73	0.027	0.002		12.00	874.70	0.192	0.016		12.00	874.51	25.5	51+00	
874.69	0.077	0.006	250:1	12.00	874.61	0.077	0.006		12.00	874.54	0.192	0.016		12.00	874.34	25.5	51+25	
874.64	0.127	0.011	250:1	12.00	874.52	0.127	0.011		12.00	874.39	0.192	0.016		12.00	874.20	25.5	51+50	
874.61	0.177	0.015	250:1	12.00	874.43	0.177	0.015		12.00	874.25	0.192	0.016		12.00	874.06	25.5	51+75	
874.60	0.192	0.016	250:1	12.00	874.41	0.192	0.016		12.00	874.22	0.192	0.016		12.00	874.02	25.5	51+82.32	
874.59	0.216	0.018	250:1	12.00	874.37	0.216	0.018		12.00	874.15	0.216	0.018		12.00	873.94	25.5	52+00	
874.58	0.249	0.021	250:1	12.00	874.33	0.249	0.021		12.00	874.08	0.249	0.021		12.00	873.83	25.5	52+25	
874.58	0.263	0.022	250:1	12.00	874.31	0.263	0.022		12.00	874.05	0.263	0.022		12.00	873.79	25.5	52+35.32	PC
874.58	0.282	0.024	250:1	12.00	874.30	0.282	0.024		12.00	874.02	0.282	0.024		12.00	873.73	25.5	52+50	
874.60	0.316	0.026	250:1	12.00	874.28	0.316	0.026		12.00	873.97	0.316	0.026		12.00	873.65	25.5	52+75	
874.63	0.349	0.029	250:1	12.00	874.28	0.349	0.029		12.00	873.93	0.349	0.029		12.00	873.58	25.5	53+00	
874.67	0.382	0.032	250:1	12.00	874.29	0.382	0.032		12.00	873.91	0.382	0.032		12.00	873.53	25.5	53+25	
874.69	0.396	0.033	250:1	12.00	874.30	0.396	0.033		12.00	873.90	0.396	0.033		12.00	873.51	25.5	53+35.32	
874.67	0.396	0.033		12.00	874.27	0.396	0.033		12.00	873.88	0.396	0.033		12.00	873.48	25.5	53+50	
874.64	0.396	0.033		12.00	874.24	0.396	0.033		12.00	873.85	0.396	0.033		12.00	873.45	25.5	53+75	
874.62	0.396	0.033		12.00	874.23	0.396	0.033		12.00	873.83	0.396	0.033		12.00	873.44	25.5	54+00	
874.62	0.396	0.033		12.00	874.22	0.396	0.033		12.00	873.83	0.396	0.033		12.00	873.43	25.5	54+25	
874.63	0.396	0.033		12.00	874.23	0.396	0.033		12.00	873.84	0.396	0.033		12.00	873.44	25.5	54+50	
879.81	0.396	0.033		12.00	879.41	0.396	0.033		12.00	879.01	0.396	0.033		12.00	878.62	25.5	73+50	
879.70	0.396	0.033		12.00	879.31	0.396	0.033		12.00	878.91	0.396	0.033		12.00	878.51	25.5	73+75	
879.59	0.396	0.033		12.00	879.20	0.396	0.033		12.00	878.80	0.396	0.033		12.00	878.40	25.5	74+00	
879.48	0.396	0.033		12.00	879.08	0.396	0.033		12.00	878.69	0.396	0.033		12.00	878.29	25.5	74+25	
879.36	0.396	0.033		12.00	878.96	0.396	0.033		12.00	878.57	0.396	0.033		12.00	878.17	25.5	74+50	
879.23	0.396	0.033		12.00	878.84	0.396	0.033		12.00	878.44	0.396	0.033		12.00	878.04	25.5	74+75	
879.12	0.396	0.033		12.00	878.73	0.396	0.033		12.00	878.33	0.396	0.033		12.00	877.94	25.5	74+95.74	
879.08	0.390	0.033	250:1	12.00	878.69	0.390	0.033		12.00	878.30	0.390	0.033		12.00	877.91	25.5	75+00	
878.85	0.357	0.030	250:1	12.00	878.49	0.357	0.030		12.00	878.13	0.357	0.030		12.00	877.78	25.5	75+25	
878.61	0.324	0.027	250:1	12.00	878.28	0.324	0.027		12.00	877.96	0.324	0.027		12.00	877.64	25.5	75+50	
878.36	0.290	0.024	250:1	12.00	878.07	0.290	0.024		12.00	877.78	0.290	0.024		12.00	877.49	25.5	75+75	
878.15	0.263	0.022	250:1	12.00	877.89	0.263	0.022		12.00	877.63	0.263	0.022		12.00	877.36	25.5	75+95.74	PT
878.11	0.257	0.021	250:1	12.00	877.85	0.257	0.021		12.00	877.60	0.257	0.021		12.00	877.34	25.5	76+00	
877.85	0.224	0.019	250:1	12.00	877.63	0.224	0.019		12.00	877.41	0.224	0.019		12.00	877.18	25.5	76+25	
877.60	0.192	0.016	250:1	12.00	877.41	0.192	0.016		12.00	877.22	0.192	0.016		12.00	877.03	25.5	76+48.74	
877.59	0.189	0.016	250:1	12.00	877.40	0.189	0.016		12.00	877.21	0.192	0.016		12.00	877.02	25.5	76+50	
877.32	0.139	0.012	250:1	12.00	877.18	0.139	0.012		12.00	877.04	0.192	0.016		12.00	876.85	25.5	76+75	
877.05	0.089	0.007	250:1	12.00	876.96	0.089	0.007		12.00	876.87	0.192	0.016		12.00	876.68	25.5	77+00	
876.78	0.039	0.003	250:1	12.00	876.74	0.039	0.003		12.00	876.70	0.192	0.016		12.00	876.51	25.5	77+25	
876.50	-0.011	-0.001	250:1	12.00	876.51	-0.011	-0.001		12.00	876.52	0.192	0.016		12.00	876.33	25.5	77+50	
876.23	-0.061	-0.005	250:1	12.00	876.29	-0.061	-0.005		12.00	876.35	0.192	0.016		12.00	876.16	25.5	77+75	
875.95	-0.111	-0.009	250:1	12.00	876.06	-0.111	-0.009		12.00	876.17	0.192	0.016		12.00	875.98	25.5	78+00	
875.68	-0.161	-0.013	250:1	12.00	875.84	-0.161	-0.013		12.00	876.00	0.192	0.016		12.00	875.81	25.5	78+25	
875.52	-0.192	-0.016	250:1	12.00	875.72	-0.192	-0.016		12.00	875.91	0.192	0.016		12.00	875.72	25.5	78+40.74	
875.47	-0.192	-0.016		12.00	875.66	-0.192	-0.016		12.00	875.85	0.192	0.016		12.00	875.66	25.5	78+50	
875.33	-0.192	-0.016		12.00	875.53	-0.192	-0.016		12.00	875.72	0.192	0.016		12.00	875.53	25.5	78+75	
875.21	-0.192	-0.016		12.00	875.41	-0.192	-0.016		12.00	875.60	0.192	0.016		12.00	875.41	25.5	79+00	

SUPERELEVATION TABLE (I-75 SB)

ALL-75-0.21

I:\Pdt\89029\roadway\sheets\89029GE002.dgn 25-JUN-2013 10:21AM tbolenba

SUPERELEVATION TABLE

P.I. STA. 98+00.86 | Dc = 0° 40' 00" RT.

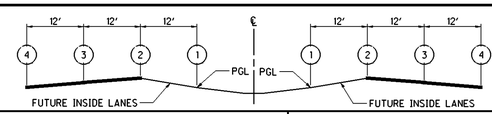

CALCULATED NAH
CHECKED ABS

REMARKS	STATION	(1) PROFILE GRADE (FUTURE INSIDE E/P)		(2) INSIDE EDGE OF INSIDE LANE					(3) OUTSIDE EDGE OF OUTSIDE LANE					(4) OUTSIDE EDGE OF OUTSIDE LANE				
		OFFSET	ELEVATION	WIDTH	TRANSITION RATE	CROSS SLOPE	ELEVATION CORRECTION	ELEVATION	WIDTH	TRANSITION RATE	CROSS SLOPE	ELEVATION CORRECTION	ELEVATION	WIDTH	TRANSITION RATE	CROSS SLOPE	ELEVATION CORRECTION	ELEVATION
	83+50	25.5	875.63	12.00		0.016	0.192	875.82	12.00		-0.016	-0.192	875.63	12.00		-0.016	-0.192	875.44
	83+75	25.5	875.71	12.00		0.016	0.192	875.90	12.00		-0.016	-0.192	875.71	12.00		-0.016	-0.192	875.51
	84+00	25.5	875.78	12.00		0.016	0.192	875.97	12.00		-0.016	-0.192	875.78	12.00		-0.016	-0.192	875.59
	84+25	25.5	875.85	12.00		0.016	0.192	876.04	12.00		-0.016	-0.192	875.85	12.00		-0.016	-0.192	875.66
	84+50	25.5	875.91	12.00		0.016	0.192	876.10	12.00		-0.016	-0.192	875.91	12.00		-0.016	-0.192	875.72
	84+57.17	25.5	875.93	12.00		0.016	0.192	876.12	12.00		-0.016	-0.192	875.93	12.00		-0.016	-0.192	875.73
	84+75	25.5	875.96	12.00		0.010	0.121	876.08	12.00		-0.016	-0.192	875.89	12.00		-0.016	-0.192	875.70
	85+00	25.5	876.01	12.00		0.002	0.021	876.03	12.00		-0.016	-0.192	875.83	12.00		-0.016	-0.192	875.64
	85+25	25.5	876.04	12.00		-0.007	-0.079	875.96	12.00		-0.016	-0.192	875.77	12.00		-0.016	-0.192	875.57
	85+50	25.5	876.06	12.00		-0.015	-0.179	875.88	12.00		-0.016	-0.192	875.69	12.00		-0.016	-0.192	875.50
	85+53.17	25.5	876.06	12.00		-0.016	-0.192	875.87	12.00		-0.016	-0.192	875.68	12.00	250:1	-0.016	-0.192	875.49
PC	85+69.17	25.5	876.07	12.00		-0.018	-0.213	875.86	12.00		-0.018	-0.213	875.65	12.00	250:1	-0.018	-0.213	875.43
	85+75	25.5	876.08	12.00		-0.018	-0.221	875.85	12.00		-0.018	-0.221	875.63	12.00	250:1	-0.018	-0.221	875.41
	86+00	25.5	876.08	12.00		-0.021	-0.254	875.83	12.00		-0.021	-0.254	875.57	12.00	250:1	-0.021	-0.254	875.32
	86+25	25.5	876.08	12.00		-0.024	-0.288	875.79	12.00		-0.024	-0.288	875.50	12.00	250:1	-0.024	-0.288	875.21
	86+43.17	25.5	876.07	12.00		-0.026	-0.312	875.75	12.00		-0.026	-0.312	875.44	12.00	250:1	-0.026	-0.312	875.13
	86+50	25.5	876.06	12.00		-0.026	-0.312	875.75	12.00		-0.026	-0.312	875.44	12.00		-0.026	-0.312	875.13
	86+75	25.5	876.04	12.00		-0.026	-0.312	875.73	12.00		-0.026	-0.312	875.41	12.00		-0.026	-0.312	875.10
	87+00	25.5	876.01	12.00		-0.026	-0.312	875.69	12.00		-0.026	-0.312	875.38	12.00		-0.026	-0.312	875.07
	87+25	25.5	875.96	12.00		-0.026	-0.312	875.65	12.00		-0.026	-0.312	875.34	12.00		-0.026	-0.312	875.03
	87+50	25.5	875.91	12.00		-0.026	-0.312	875.60	12.00		-0.026	-0.312	875.29	12.00		-0.026	-0.312	874.98
	87+75	25.5	875.85	12.00		-0.026	-0.312	875.54	12.00		-0.026	-0.312	875.23	12.00		-0.026	-0.312	874.91
	88+00	25.5	875.78	12.00		-0.026	-0.312	875.47	12.00		-0.026	-0.312	875.16	12.00		-0.026	-0.312	874.84
	108+00	25.5	876.84	12.00		-0.026	-0.312	876.53	12.00		-0.026	-0.312	876.22	12.00		-0.026	-0.312	875.91
	108+25	25.5	876.71	12.00		-0.026	-0.312	876.40	12.00		-0.026	-0.312	876.09	12.00		-0.026	-0.312	875.78
	108+50	25.5	876.58	12.00		-0.026	-0.312	876.27	12.00		-0.026	-0.312	875.96	12.00		-0.026	-0.312	875.65
	108+75	25.5	876.45	12.00		-0.026	-0.312	876.14	12.00		-0.026	-0.312	875.83	12.00		-0.026	-0.312	875.52
	109+00	25.5	876.32	12.00		-0.026	-0.312	876.01	12.00		-0.026	-0.312	875.70	12.00		-0.026	-0.312	875.39
	109+15.00	25.5	876.25	12.00		-0.026	-0.312	875.94	12.00		-0.026	-0.312	875.62	12.00		-0.026	-0.312	875.31
	109+25	25.5	876.20	12.00		-0.026	-0.312	875.89	12.00		-0.026	-0.312	875.57	12.00		-0.026	-0.312	875.26
	109+41.90	25.5	876.12	12.00		-0.026	-0.312	875.81	12.00		-0.026	-0.312	875.50	12.00	250:1	-0.026	-0.312	875.19
	109+50	25.5	876.09	12.00		-0.025	-0.301	875.79	12.00		-0.025	-0.301	875.49	12.00	250:1	-0.025	-0.301	875.19
	109+75	25.5	876.00	12.00		-0.022	-0.268	875.74	12.00		-0.022	-0.268	875.47	12.00	250:1	-0.022	-0.268	875.20
	110+00	25.5	875.94	12.00		-0.020	-0.235	875.71	12.00		-0.020	-0.235	875.47	12.00	250:1	-0.020	-0.235	875.24
PT	110+15.90	25.5	875.92	12.00		-0.018	-0.213	875.70	12.00		-0.018	-0.213	875.49	12.00	250:1	-0.018	-0.213	875.28
	110+25	25.5	875.90	12.00		-0.017	-0.201	875.70	12.00		-0.017	-0.201	875.50	12.00	250:1	-0.017	-0.201	875.30
	110+31.90	25.5	875.90	12.00		-0.016	-0.192	875.71	12.00		-0.016	-0.192	875.51	12.00	250:1	-0.016	-0.192	875.32
	110+50	25.5	875.89	12.00		-0.010	-0.120	875.77	12.00		-0.016	-0.192	875.58	12.00		-0.016	-0.192	875.39
	110+75	25.5	875.90	12.00		-0.002	-0.020	875.88	12.00		-0.016	-0.192	875.69	12.00		-0.016	-0.192	875.50
	111+00	25.5	875.93	12.00		0.007	0.080	876.01	12.00		-0.016	-0.192	875.82	12.00		-0.016	-0.192	875.63
	111+25	25.5	875.99	12.00		0.015	0.180	876.17	12.00		-0.016	-0.192	875.98	12.00		-0.016	-0.192	875.78
	111+27.90	25.5	876.00	12.00		0.016	0.192	876.19	12.00		-0.016	-0.192	876.00	12.00		-0.016	-0.192	875.80
	111+50	25.5	876.07	12.00		0.016	0.192	876.26	12.00		-0.016	-0.192	876.07	12.00		-0.016	-0.192	875.88
	111+75	25.5	876.17	12.00		0.016	0.192	876.36	12.00		-0.016	-0.192	876.17	12.00		-0.016	-0.192	875.98
	112+00	25.5	876.30	12.00		0.016	0.192	876.49	12.00		-0.016	-0.192	876.30	12.00		-0.016	-0.192	876.11
	112+25	25.5	876.45	12.00		0.016	0.192	876.64	12.00		-0.016	-0.192	876.45	12.00		-0.016	-0.192	876.26
	112+50	25.5	876.62	12.00		0.016	0.192	876.81	12.00		-0.016	-0.192	876.62	12.00		-0.016	-0.192	876.43
	112+75	25.5	876.82	12.00		0.016	0.192	877.01	12.00		-0.016	-0.192	876.82	12.00		-0.016	-0.192	876.63
	113+00	25.5	877.04	12.00		0.016	0.192	877.23	12.00		-0.016	-0.192	877.04	12.00		-0.016	-0.192	876.85

SUPERELEVATION TABLE (I-75 NB)

ALL-75-0.21

433
907

I:\Pd\89029\roadway\sheets\89029GE003.dgn 25-JUN-2013 10:21AM tbolenba

SUPERELEVATION TABLE

P.I. STA. 98+00.86 | Dc = 0° 40′ 00″ RT.

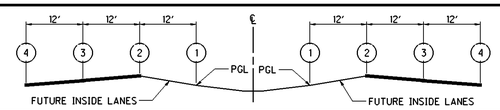

CALCULATED NAH | CHECKED ABS

(4) OUTSIDE EDGE OF OUTSIDE LANE					(3) OUTSIDE EDGE OF OUTSIDE LANE					(2) INSIDE EDGE OF INSIDE LANE					(1) PROFILE GRADE (FUTURE INSIDE E/P)		STATION	REMARKS
ELEVATION	ELEVATION CORRECTION	CROSS SLOPE	TRANSITION RATE	WIDTH	ELEVATION	ELEVATION CORRECTION	CROSS SLOPE	TRANSITION RATE	WIDTH	ELEVATION	ELEVATION CORRECTION	CROSS SLOPE	TRANSITION RATE	WIDTH	ELEVATION	OFFSET		
875.29	-0.192	-0.016		12.00	875.48	-0.192	-0.016		12.00	875.67	0.192	0.016		12.00	875.48	25.5	83+00	
875.36	-0.192	-0.016		12.00	875.56	-0.192	-0.016		12.00	875.75	0.192	0.016		12.00	875.56	25.5	83+25	
875.44	-0.192	-0.016		12.00	875.63	-0.192	-0.016		12.00	875.82	0.192	0.016		12.00	875.63	25.5	83+50	
875.47	-0.192	-0.016	250:1	12.00	875.66	-0.192	-0.016		12.00	875.86	0.192	0.016		12.00	875.66	25.5	83+61.17	
875.57	-0.164	-0.014	250:1	12.00	875.73	-0.164	-0.014		12.00	875.90	0.192	0.016		12.00	875.71	25.5	83+75	
875.74	-0.114	-0.010	250:1	12.00	875.86	-0.114	-0.010		12.00	875.97	0.192	0.016		12.00	875.78	25.5	84+00	
875.91	-0.064	-0.005	250:1	12.00	875.98	-0.064	-0.005		12.00	876.04	0.192	0.016		12.00	875.85	25.5	84+25	
876.07	-0.014	-0.001	250:1	12.00	876.09	-0.014	-0.001		12.00	876.10	0.192	0.016		12.00	875.91	25.5	84+50	
876.23	0.036	0.003	250:1	12.00	876.19	0.036	0.003		12.00	876.15	0.192	0.016		12.00	875.96	25.5	84+75	
876.37	0.086	0.007	250:1	12.00	876.28	0.086	0.007		12.00	876.20	0.192	0.016		12.00	876.01	25.5	85+00	
876.50	0.136	0.011	250:1	12.00	876.37	0.136	0.011		12.00	876.23	0.192	0.016		12.00	876.04	25.5	85+25	
876.62	0.186	0.015	250:1	12.00	876.44	0.186	0.015		12.00	876.25	0.192	0.016		12.00	876.06	25.5	85+50	
876.64	0.192	0.016	250:1	12.00	876.45	0.192	0.016		12.00	876.26	0.192	0.016		12.00	876.06	25.5	85+53.17	
876.71	0.213	0.018	250:1	12.00	876.50	0.213	0.018		12.00	876.29	0.213	0.018		12.00	876.07	25.5	85+69.17	PC
876.74	0.221	0.018	250:1	12.00	876.52	0.221	0.018		12.00	876.30	0.221	0.018		12.00	876.08	25.5	85+75	
876.84	0.254	0.021	250:1	12.00	876.59	0.254	0.021		12.00	876.33	0.254	0.021		12.00	876.08	25.5	86+00	
876.94	0.288	0.024	250:1	12.00	876.65	0.288	0.024		12.00	876.36	0.288	0.024		12.00	876.08	25.5	86+25	
877.00	0.312	0.026	250:1	12.00	876.69	0.312	0.026		12.00	876.38	0.312	0.026		12.00	876.07	25.5	86+43.17	
877.00	0.312	0.026		12.00	876.69	0.312	0.026		12.00	876.37	0.312	0.026		12.00	876.06	25.5	86+50	
876.97	0.312	0.026		12.00	876.66	0.312	0.026		12.00	876.35	0.312	0.026		12.00	876.04	25.5	86+75	
876.94	0.312	0.026		12.00	876.63	0.312	0.026		12.00	876.32	0.312	0.026		12.00	876.01	25.5	87+00	
876.90	0.312	0.026		12.00	876.59	0.312	0.026		12.00	876.27	0.312	0.026		12.00	875.96	25.5	87+25	
876.85	0.312	0.026		12.00	876.54	0.312	0.026		12.00	876.22	0.312	0.026		12.00	875.91	25.5	87+50	
876.79	0.312	0.026		12.00	876.47	0.312	0.026		12.00	876.16	0.312	0.026		12.00	875.85	25.5	87+75	
876.72	0.312	0.026		12.00	876.40	0.312	0.026		12.00	876.09	0.312	0.026		12.00	875.78	25.5	88+00	
877.78	0.312	0.026		12.00	877.47	0.312	0.026		12.00	877.16	0.312	0.026		12.00	876.84	25.5	108+00	
877.65	0.312	0.026		12.00	877.34	0.312	0.026		12.00	877.03	0.312	0.026		12.00	876.71	25.5	108+25	
877.52	0.312	0.026		12.00	877.21	0.312	0.026		12.00	876.90	0.312	0.026		12.00	876.58	25.5	108+50	
877.39	0.312	0.026		12.00	877.08	0.312	0.026		12.00	876.77	0.312	0.026		12.00	876.45	25.5	108+75	
877.26	0.312	0.026		12.00	876.95	0.312	0.026		12.00	876.64	0.312	0.026		12.00	876.32	25.5	109+00	
877.18	0.312	0.026		12.00	876.87	0.312	0.026		12.00	876.56	0.312	0.026		12.00	876.25	25.5	109+15.00	
877.13	0.312	0.026		12.00	876.82	0.312	0.026		12.00	876.51	0.312	0.026		12.00	876.20	25.5	109+25	
877.06	0.312	0.026	250:1	12.00	876.75	0.312	0.026		12.00	876.43	0.312	0.026		12.00	876.12	25.5	109+41.90	
876.99	0.301	0.025	250:1	12.00	876.69	0.301	0.025		12.00	876.39	0.301	0.025		12.00	876.09	25.5	109+50	
876.81	0.268	0.022	250:1	12.00	876.54	0.268	0.022		12.00	876.27	0.268	0.022		12.00	876.00	25.5	109+75	
876.65	0.235	0.020	250:1	12.00	876.41	0.235	0.020		12.00	876.18	0.235	0.020		12.00	875.94	25.5	110+00	
876.56	0.213	0.018	250:1	12.00	876.34	0.213	0.018		12.00	876.13	0.213	0.018		12.00	875.92	25.5	110+15.90	PT
876.51	0.201	0.017	250:1	12.00	876.31	0.201	0.017		12.00	876.11	0.201	0.017		12.00	875.90	25.5	110+25	
876.47	0.192	0.016	250:1	12.00	876.28	0.192	0.016		12.00	876.09	0.192	0.016		12.00	875.90	25.5	110+31.90	
876.39	0.156	0.013	250:1	12.00	876.24	0.156	0.013		12.00	876.08	0.192	0.016		12.00	875.89	25.5	110+50	
876.30	0.106	0.009	250:1	12.00	876.20	0.106	0.009		12.00	876.09	0.192	0.016		12.00	875.90	25.5	110+75	
876.24	0.056	0.005	250:1	12.00	876.18	0.056	0.005		12.00	876.12	0.192	0.016		12.00	875.93	25.5	111+00	
876.19	0.006	0.000	250:1	12.00	876.19	0.006	0.000		12.00	876.18	0.192	0.016		12.00	875.99	25.5	111+25	
876.17	-0.044	-0.004	250:1	12.00	876.22	-0.044	-0.004		12.00	876.26	0.192	0.016		12.00	876.07	25.5	111+50	
876.17	-0.094	-0.008	250:1	12.00	876.27	-0.094	-0.008		12.00	876.36	0.192	0.016		12.00	876.17	25.5	111+75	
876.20	-0.144	-0.012	250:1	12.00	876.35	-0.144	-0.012		12.00	876.49	0.192	0.016		12.00	876.30	25.5	112+00	
876.25	-0.192	-0.016	250:1	12.00	876.44	-0.192	-0.016		12.00	876.63	0.192	0.016		12.00	876.44	25.5	112+23.90	
876.26	-0.192	-0.016		12.00	876.45	-0.192	-0.016		12.00	876.64	0.192	0.016		12.00	876.45	25.5	112+25	
876.43	-0.192	-0.016		12.00	876.62	-0.192	-0.016		12.00	876.81	0.192	0.016		12.00	876.62	25.5	112+50	
876.63	-0.192	-0.016		12.00	876.82	-0.192	-0.016		12.00	877.01	0.192	0.016		12.00	876.82	25.5	112+75	
876.85	-0.192	-0.016		12.00	877.04	-0.192	-0.016		12.00	877.23	0.192	0.016		12.00	877.04	25.5	113+00	

SUPERELEVATION TABLE (I-75 SB)

ALL-75-0.21

I:\Pdt\89029\roadway\sheets\89029GE004.dgn 25-JUN-2013 10:21AM tbolenba

SUPERELEVATION TABLE

P.I. STA. 168+95.01 | Dc = 2° 30' 00" RT.

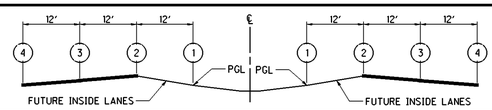

CALCULATED NAH | CHECKED ABS

REMARKS	STATION	① PROFILE GRADE (FUTURE INSIDE E/P)		② INSIDE EDGE OF INSIDE LANE					③ OUTSIDE EDGE OF OUTSIDE LANE					④ OUTSIDE EDGE OF OUTSIDE LANE				
		OFFSET	ELEVATION	WIDTH	TRANSITION RATE	CROSS SLOPE	ELEVATION CORRECTION	ELEVATION	WIDTH	TRANSITION RATE	CROSS SLOPE	ELEVATION CORRECTION	ELEVATION	WIDTH	TRANSITION RATE	CROSS SLOPE	ELEVATION CORRECTION	ELEVATION
	155+00	25.5	892.82	12.00		0.016	0.192	893.01	12.00		-0.016	-0.192	892.82	12.00		-0.016	-0.192	892.63
	155+25	25.5	892.67	12.00		0.016	0.192	892.86	12.00		-0.016	-0.192	892.67	12.00		-0.016	-0.192	892.48
	155+50	25.5	892.52	12.00		0.016	0.192	892.71	12.00		-0.016	-0.192	892.52	12.00		-0.016	-0.192	892.33
	155+75	25.5	892.37	12.00		0.016	0.192	892.56	12.00		-0.016	-0.192	892.37	12.00		-0.016	-0.192	892.18
	156+00	25.5	892.22	12.00		0.016	0.192	892.41	12.00		-0.016	-0.192	892.22	12.00		-0.016	-0.192	892.03
TS	156+10.95	25.5	892.15	12.00		0.016	0.192	892.35	12.00		-0.016	-0.192	892.15	12.00		-0.016	-0.192	891.96
	156+25	25.5	892.07	12.00		0.012	0.141	892.21	12.00		-0.016	-0.192	892.02	12.00		-0.016	-0.192	891.83
	156+50	25.5	891.92	12.00		0.004	0.051	891.97	12.00		-0.016	-0.192	891.78	12.00		-0.016	-0.192	891.59
	156+75	25.5	891.77	12.00		-0.003	-0.039	891.73	12.00		-0.016	-0.192	891.54	12.00		-0.016	-0.192	891.35
	157+00	25.5	891.62	12.00		-0.011	-0.130	891.49	12.00		-0.016	-0.192	891.30	12.00		-0.016	-0.192	891.11
	157+17.29	25.5	891.52	12.00		-0.016	-0.192	891.32	12.00		-0.016	-0.192	891.13	12.00	276:1	-0.016	-0.192	890.94
	157+25	25.5	891.47	12.00		-0.017	-0.201	891.27	12.00		-0.017	-0.201	891.07	12.00	276:1	-0.017	-0.201	890.87
	157+50	25.5	891.32	12.00		-0.019	-0.231	891.09	12.00		-0.019	-0.231	890.86	12.00	276:1	-0.019	-0.231	890.63
	157+75	25.5	891.17	12.00		-0.022	-0.261	890.91	12.00		-0.022	-0.261	890.65	12.00	276:1	-0.022	-0.261	890.39
	158+00	25.5	891.02	12.00		-0.024	-0.292	890.73	12.00		-0.024	-0.292	890.44	12.00	276:1	-0.024	-0.292	890.15
	158+25	25.5	890.87	12.00		-0.027	-0.322	890.55	12.00		-0.027	-0.322	890.23	12.00	276:1	-0.027	-0.322	889.91
	158+50	25.5	890.72	12.00		-0.029	-0.352	890.37	12.00		-0.029	-0.352	890.02	12.00	276:1	-0.029	-0.352	889.66
	158+75	25.5	890.57	12.00		-0.032	-0.382	890.19	12.00		-0.032	-0.382	889.81	12.00	276:1	-0.032	-0.382	889.42
	159+00	25.5	890.42	12.00		-0.034	-0.412	890.01	12.00		-0.034	-0.412	889.60	12.00	276:1	-0.034	-0.412	889.18
	159+25	25.5	890.27	12.00		-0.037	-0.442	889.83	12.00		-0.037	-0.442	889.39	12.00	276:1	-0.037	-0.442	888.94
	159+50	25.5	890.12	12.00		-0.039	-0.472	889.65	12.00		-0.039	-0.472	889.18	12.00	276:1	-0.039	-0.472	888.70
	159+75	25.5	889.97	12.00		-0.042	-0.502	889.47	12.00		-0.042	-0.502	888.97	12.00	276:1	-0.042	-0.502	888.46
	160+00	25.5	889.82	12.00		-0.044	-0.532	889.29	12.00		-0.044	-0.532	888.76	12.00	276:1	-0.044	-0.532	888.22
	160+25	25.5	889.67	12.00		-0.047	-0.562	889.11	12.00		-0.047	-0.562	888.55	12.00	276:1	-0.047	-0.562	887.98
	160+50	25.5	889.52	12.00		-0.049	-0.593	888.93	12.00		-0.049	-0.593	888.33	12.00	276:1	-0.049	-0.593	887.74
	160+75	25.5	889.37	12.00		-0.052	-0.623	888.75	12.00		-0.052	-0.623	888.12	12.00	276:1	-0.052	-0.623	887.50
	161+00	25.5	889.22	12.00		-0.054	-0.653	888.57	12.00		-0.054	-0.653	887.91	12.00	276:1	-0.054	-0.653	887.26
	161+25	25.5	889.07	12.00		-0.057	-0.683	888.39	12.00		-0.057	-0.683	887.70	12.00	276:1	-0.057	-0.683	887.02
SC	161+45.95	25.5	888.94	12.00		-0.059	-0.708	888.24	12.00		-0.059	-0.708	887.53	12.00	276:1	-0.059	-0.708	886.82
	161+50	25.5	888.92	12.00		-0.059	-0.708	888.21	12.00		-0.059	-0.708	887.50	12.00		-0.059	-0.708	886.80
	161+75	25.5	888.77	12.00		-0.059	-0.708	888.06	12.00		-0.059	-0.708	887.35	12.00		-0.059	-0.708	886.65
	162+00	25.5	888.62	12.00		-0.059	-0.708	887.91	12.00		-0.059	-0.708	887.20	12.00		-0.059	-0.708	886.50
	162+25	25.5	888.47	12.00		-0.059	-0.708	887.76	12.00		-0.059	-0.708	887.05	12.00		-0.059	-0.708	886.35
	162+50	25.5	888.32	12.00		-0.059	-0.708	887.61	12.00		-0.059	-0.708	886.90	12.00		-0.059	-0.708	886.20
	174+75	25.5	884.19	12.00		-0.059	-0.708	883.48	12.00		-0.059	-0.708	882.78	12.00		-0.059	-0.708	882.07
	175+00	25.5	884.21	12.00		-0.059	-0.708	883.50	12.00		-0.059	-0.708	882.79	12.00		-0.059	-0.708	882.08
	175+25	25.5	884.23	12.00		-0.059	-0.708	883.52	12.00		-0.059	-0.708	882.81	12.00		-0.059	-0.708	882.10
	175+50	25.5	884.26	12.00		-0.059	-0.708	883.55	12.00		-0.059	-0.708	882.84	12.00		-0.059	-0.708	882.13
	175+75	25.5	884.29	12.00		-0.059	-0.708	883.59	12.00		-0.059	-0.708	882.88	12.00		-0.059	-0.708	882.17
CS	175+93.92	25.5	884.33	12.00		-0.059	-0.708	883.62	12.00		-0.059	-0.708	882.91	12.00	276:1	-0.059	-0.708	882.20
	176+00	25.5	884.34	12.00		-0.058	-0.701	883.64	12.00		-0.058	-0.701	882.94	12.00	276:1	-0.058	-0.701	882.24
	176+25	25.5	884.39	12.00		-0.056	-0.671	883.72	12.00		-0.056	-0.671	883.05	12.00	276:1	-0.056	-0.671	882.38
	176+50	25.5	884.46	12.00		-0.053	-0.640	883.82	12.00		-0.053	-0.640	883.18	12.00	276:1	-0.053	-0.640	882.53
	176+75	25.5	884.53	12.00		-0.051	-0.610	883.92	12.00		-0.051	-0.610	883.31	12.00	276:1	-0.051	-0.610	882.70
	177+00	25.5	884.61	12.00		-0.048	-0.580	884.02	12.00		-0.048	-0.580	883.44	12.00	276:1	-0.048	-0.580	882.86
	177+25	25.5	884.69	12.00		-0.046	-0.550	884.14	12.00		-0.046	-0.550	883.59	12.00	276:1	-0.046	-0.550	883.04
	177+50	25.5	884.79	12.00		-0.043	-0.520	884.27	12.00		-0.043	-0.520	883.75	12.00	276:1	-0.043	-0.520	883.23
	177+75	25.5	884.89	12.00		-0.041	-0.490	884.40	12.00		-0.041	-0.490	883.91	12.00	276:1	-0.041	-0.490	883.42
	178+00	25.5	885.00	12.00		-0.038	-0.460	884.54	12.00		-0.038	-0.460	884.08	12.00	276:1	-0.038	-0.460	883.62
	178+25	25.5	885.12	12.00		-0.036	-0.430	884.69	12.00		-0.036	-0.430	884.26	12.00	276:1	-0.036	-0.430	883.83
	178+50	25.5	885.25	12.00		-0.033	-0.400	884.85	12.00		-0.033	-0.400	884.45	12.00	276:1	-0.033	-0.400	884.05
	178+75	25.5	885.38	12.00		-0.031	-0.370	885.01	12.00		-0.031	-0.370	884.64	12.00	276:1	-0.031	-0.370	884.27
	179+00	25.5	885.53	12.00		-0.028	-0.340	885.19	12.00		-0.028	-0.340	884.85	12.00	276:1	-0.028	-0.340	884.51
	179+25	25.5	885.68	12.00		-0.026	-0.309	885.37	12.00		-0.026	-0.309	885.06	12.00	276:1	-0.026	-0.309	884.75

SUPERELEVATION TABLE (I-75 NB)

ALL-75-0.21

435
907

I:\Pd\89029\roadway\sheets\89029GE005.dgn 25-JUN-2013 10:21AM tbolenba

SUPERELEVATION TABLE

P.I. STA. 169+01.83	Dc = 2° 38′ 00″ RT.

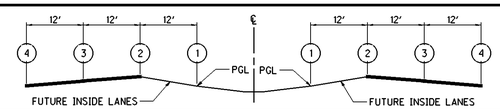

CALCULATED	CHECKED
NAH	ABS

④ OUTSIDE EDGE OF OUTSIDE LANE					③ OUTSIDE EDGE OF OUTSIDE LANE					② INSIDE EDGE OF INSIDE LANE					① PROFILE GRADE (FUTURE INSIDE E/P)		STATION	REMARKS
ELEVATION	ELEVATION CORRECTION	CROSS SLOPE	TRANSITION RATE	WIDTH	ELEVATION	ELEVATION CORRECTION	CROSS SLOPE	TRANSITION RATE	WIDTH	ELEVATION	ELEVATION CORRECTION	CROSS SLOPE	TRANSITION RATE	WIDTH	ELEVATION	OFFSET		
892.63	-0.192	-0.016		12.00	892.82	-0.192	-0.016		12.00	893.01	0.192	0.016		12.00	892.82	25.5	155+00	
892.48	-0.192	-0.016		12.00	892.67	-0.192	-0.016		12.00	892.86	0.192	0.016		12.00	892.67	25.5	155+25	
892.33	-0.192	-0.016		12.00	892.52	-0.192	-0.016		12.00	892.71	0.192	0.016		12.00	892.52	25.5	155+50	
892.23	-0.192	-0.016	271:1	12.00	892.42	-0.192	-0.016		12.00	892.61	0.192	0.016		12.00	892.42	25.5	155+66.26	
892.21	-0.176	-0.015	271:1	12.00	892.39	-0.176	-0.015		12.00	892.56	0.192	0.016		12.00	892.37	25.5	155+75	
892.15	-0.130	-0.011	271:1	12.00	892.28	-0.130	-0.011		12.00	892.41	0.192	0.016		12.00	892.22	25.5	156+00	
892.09	-0.084	-0.007	271:1	12.00	892.18	-0.084	-0.007		12.00	892.26	0.192	0.016		12.00	892.07	25.5	156+25	
892.04	-0.038	-0.003	271:1	12.00	892.07	-0.038	-0.003		12.00	892.11	0.192	0.016		12.00	891.92	25.5	156+50	
891.99	0.000	0.000	271:1	12.00	891.99	0.000	0.000		12.00	891.99	0.192	0.016		12.00	891.80	0.0	156+70.65	TS (SB BL)
891.98	0.008	0.001	271:1	12.00	891.97	0.008	0.001		12.00	891.97	0.192	0.016		12.00	891.77	0.0	156+75	
891.92	0.054	0.004	271:1	12.00	891.87	0.054	0.004		12.00	891.82	0.192	0.016		12.00	891.62	0.0	157+00	
891.87	0.100	0.008	271:1	12.00	891.77	0.100	0.008		12.00	891.67	0.192	0.016		12.00	891.48	0.0	157+25	
891.81	0.146	0.012	271:1	12.00	891.66	0.146	0.012		12.00	891.52	0.192	0.016		12.00	891.33	0.0	157+50	
891.75	0.192	0.016	271:1	12.00	891.56	0.192	0.016		12.00	891.37	0.192	0.016		12.00	891.18	0.0	157+75	
891.75	0.192	0.016	271:1	12.00	891.56	0.192	0.016		12.00	891.37	0.192	0.016		12.00	891.18	0.0	157+75	
891.70	0.223	0.019	271:1	12.00	891.47	0.223	0.019		12.00	891.25	0.223	0.019		12.00	891.03	0.0	158+00	
891.64	0.253	0.021	271:1	12.00	891.39	0.253	0.021		12.00	891.13	0.253	0.021		12.00	890.88	0.0	158+25	
891.58	0.284	0.024	271:1	12.00	891.30	0.284	0.024		12.00	891.01	0.284	0.024		12.00	890.73	0.0	158+50	
891.52	0.315	0.026	271:1	12.00	891.21	0.315	0.026		12.00	890.89	0.315	0.026		12.00	890.58	0.0	158+75	
891.47	0.345	0.029	271:1	12.00	891.12	0.345	0.029		12.00	890.78	0.345	0.029		12.00	890.43	0.0	159+00	
891.41	0.376	0.031	271:1	12.00	891.03	0.376	0.031		12.00	890.66	0.376	0.031		12.00	890.28	0.0	159+25	
891.35	0.407	0.034	271:1	12.00	890.95	0.407	0.034		12.00	890.54	0.407	0.034		12.00	890.13	0.0	159+50	
891.29	0.437	0.036	271:1	12.00	890.86	0.437	0.036		12.00	890.42	0.437	0.036		12.00	889.98	0.0	159+75	
891.24	0.468	0.039	271:1	12.00	890.77	0.468	0.039		12.00	890.30	0.468	0.039		12.00	889.83	0.0	160+00	
891.18	0.498	0.042	271:1	12.00	890.68	0.498	0.042		12.00	890.18	0.498	0.042		12.00	889.68	0.0	160+25	
891.12	0.529	0.044	271:1	12.00	890.59	0.529	0.044		12.00	890.06	0.529	0.044		12.00	889.54	0.0	160+50	
891.07	0.560	0.047	271:1	12.00	890.51	0.560	0.047		12.00	889.95	0.560	0.047		12.00	889.39	0.0	160+75	
891.01	0.590	0.049	271:1	12.00	890.42	0.590	0.049		12.00	889.83	0.590	0.049		12.00	889.24	0.0	161+00	
890.95	0.621	0.052	271:1	12.00	890.33	0.621	0.052		12.00	889.71	0.621	0.052		12.00	889.09	0.0	161+25	
890.89	0.652	0.054	271:1	12.00	890.24	0.652	0.054		12.00	889.59	0.652	0.054		12.00	888.94	0.0	161+50	
890.84	0.682	0.057	271:1	12.00	890.15	0.682	0.057		12.00	889.47	0.682	0.057		12.00	888.79	0.0	161+75	
890.78	0.713	0.059	271:1	12.00	890.07	0.713	0.059		12.00	889.35	0.713	0.059		12.00	888.64	0.0	162+00	
890.77	0.720	0.060	271:1	12.00	890.05	0.720	0.060		12.00	889.33	0.720	0.060		12.00	888.61	0.0	162+05.65	SC (SB BL)
890.65	0.720	0.060		12.00	889.93	0.720	0.060		12.00	889.21	0.720	0.060		12.00	888.49	0.0	162+25	
890.50	0.720	0.060		12.00	889.78	0.720	0.060		12.00	889.06	0.720	0.060		12.00	888.34	0.0	162+50	
890.35	0.720	0.060		12.00	889.63	0.720	0.060		12.00	888.91	0.720	0.060		12.00	888.19	0.0	162+75	
890.20	0.720	0.060		12.00	889.48	0.720	0.060		12.00	888.76	0.720	0.060		12.00	888.04	0.0	163+00	
886.34	0.720	0.060		12.00	885.62	0.720	0.060		12.00	884.90	0.720	0.060		12.00	884.18	0.0	174+75	
886.35	0.720	0.060		12.00	885.63	0.720	0.060		12.00	884.91	0.720	0.060		12.00	884.19	0.0	175+00	
886.36	0.720	0.060		12.00	885.64	0.720	0.060		12.00	884.92	0.720	0.060		12.00	884.20	0.0	175+25	
886.39	0.720	0.060		12.00	885.67	0.720	0.060		12.00	884.95	0.720	0.060		12.00	884.23	0.0	175+50	
886.39	0.720	0.060	271:1	12.00	885.67	0.720	0.060		12.00	884.95	0.720	0.060		12.00	884.23	0.0	175+53.22	CS (SB BL)
886.34	0.693	0.058	271:1	12.00	885.65	0.693	0.058		12.00	884.95	0.693	0.058		12.00	884.26	0.0	175+75	
886.29	0.663	0.055	271:1	12.00	885.63	0.663	0.055		12.00	884.96	0.663	0.055		12.00	884.30	0.0	176+00	
886.25	0.632	0.053	271:1	12.00	885.61	0.632	0.053		12.00	884.98	0.632	0.053		12.00	884.35	0.0	176+25	
886.21	0.601	0.050	271:1	12.00	885.61	0.601	0.050		12.00	885.01	0.601	0.050		12.00	884.41	0.0	176+50	
886.18	0.571	0.048	271:1	12.00	885.61	0.571	0.048		12.00	885.04	0.571	0.048		12.00	884.47	0.0	176+75	
886.16	0.540	0.045	271:1	12.00	885.62	0.540	0.045		12.00	885.08	0.540	0.045		12.00	884.54	0.0	177+00	
886.15	0.509	0.042	271:1	12.00	885.64	0.509	0.042		12.00	885.13	0.509	0.042		12.00	884.63	0.0	177+25	
886.15	0.479	0.040	271:1	12.00	885.67	0.479	0.040		12.00	885.19	0.479	0.040		12.00	884.71	0.0	177+50	
886.16	0.448	0.037	271:1	12.00	885.71	0.448	0.037		12.00	885.26	0.448	0.037		12.00	884.81	0.0	177+75	
886.17	0.417	0.035	271:1	12.00	885.75	0.417	0.035		12.00	885.33	0.417	0.035		12.00	884.92	0.0	178+00	

SUPERELEVATION TABLE (I-75 SB)

ALL-75-0.21

436
907

I:\Pdt\89029\roadway\sheets\89029GE006.dgn 25-JUN-2013 10:21AM tbolenba

SUPERELEVATION TABLE

P.I. STA. 168+95.01 | Dc = 2° 30′ 00″ RT

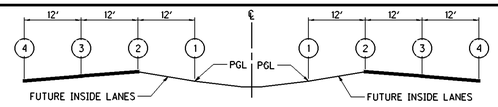

REMARKS	STATION	(1) PROFILE GRADE (FUTURE INSIDE E/P)		(2) INSIDE EDGE OF INSIDE LANE					(3) OUTSIDE EDGE OF OUTSIDE LANE					(4) OUTSIDE EDGE OF OUTSIDE LANE				
		OFFSET	ELEVATION	WIDTH	TRANSITION RATE	CROSS SLOPE	ELEVATION CORRECTION	ELEVATION	WIDTH	TRANSITION RATE	CROSS SLOPE	ELEVATION CORRECTION	ELEVATION	WIDTH	TRANSITION RATE	CROSS SLOPE	ELEVATION CORRECTION	ELEVATION
	179+50	25.5	885.84	12.00		-0.023	-0.279	885.56	12.00		-0.023	-0.279	885.28	12.00	276:1	-0.023	-0.279	885.00
	179+75	25.5	886.00	12.00		-0.021	-0.249	885.75	12.00		-0.021	-0.249	885.51	12.00	276:1	-0.021	-0.249	885.26
	180+00	25.5	886.18	12.00		-0.018	-0.219	885.96	12.00		-0.018	-0.219	885.74	12.00	276:1	-0.018	-0.219	885.52
	180+22.58	25.5	886.34	12.00		-0.016	-0.192	886.15	12.00		-0.016	-0.192	885.96	12.00	276:1	-0.016	-0.192	885.77
	180+25	25.5	886.36	12.00		-0.015	-0.183	886.18	12.00		-0.016	-0.192	885.98	12.00		-0.016	-0.192	885.79
	180+50	25.5	886.54	12.00		-0.008	-0.093	886.45	12.00		-0.016	-0.192	886.26	12.00		-0.016	-0.192	886.06
	180+75	25.5	886.72	12.00		0.000	-0.003	886.72	12.00		-0.016	-0.192	886.53	12.00		-0.016	-0.192	886.33
	181+00	25.5	886.90	12.00		0.007	0.088	886.99	12.00		-0.016	-0.192	886.80	12.00		-0.016	-0.192	886.60
	181+25	25.5	887.08	12.00		0.015	0.178	887.26	12.00		-0.016	-0.192	887.07	12.00		-0.016	-0.192	886.87
ST	181+28.92	25.5	887.11	12.00		0.016	0.192	887.30	12.00		-0.016	-0.192	887.11	12.00		-0.016	-0.192	886.92
	181+50	25.5	887.26	12.00		0.016	0.192	887.45	12.00		-0.016	-0.192	887.26	12.00		-0.016	-0.192	887.07
	181+75	25.5	887.44	12.00		0.016	0.192	887.63	12.00		-0.016	-0.192	887.44	12.00		-0.016	-0.192	887.25
	182+00	25.5	887.62	12.00		0.016	0.192	887.81	12.00		-0.016	-0.192	887.62	12.00		-0.016	-0.192	887.43
	182+25	25.5	887.80	12.00		0.016	0.192	887.99	12.00		-0.016	-0.192	887.80	12.00		-0.016	-0.192	887.61
	182+50	25.5	887.98	12.00		0.016	0.192	888.17	12.00		-0.016	-0.192	887.98	12.00		-0.016	-0.192	887.79

P.I. STA. 262+75.51 | Dc = 2° 31′ 00″ LT

	238+00	25.5	939.44	12.00		0.016	0.192	939.64	12.00		-0.016	-0.192	939.44	12.00		-0.016	-0.192	939.25
	238+25	25.5	939.35	12.00		0.016	0.192	939.55	12.00		-0.016	-0.192	939.35	12.00		-0.016	-0.192	939.16
	238+50	25.5	939.25	12.00		0.016	0.192	939.44	12.00		-0.016	-0.192	939.25	12.00		-0.016	-0.192	939.06
	238+55.13	25.5	939.23	12.00		0.016	0.192	939.42	12.00		-0.016	-0.192	939.23	12.00	276:1	-0.016	-0.192	939.03
	238+75	25.5	939.13	12.00		0.016	0.192	939.32	12.00		-0.013	-0.156	939.16	12.00	276:1	-0.013	-0.156	939.01
	239+00	25.5	938.99	12.00		0.016	0.192	939.18	12.00		-0.009	-0.111	939.07	12.00	276:1	-0.009	-0.111	938.96
	239+25	25.5	938.84	12.00		0.016	0.192	939.03	12.00		-0.005	-0.066	938.96	12.00	276:1	-0.005	-0.066	938.90
	239+50	25.5	938.67	12.00		0.016	0.192	938.86	12.00		-0.002	-0.021	938.84	12.00	276:1	-0.002	-0.021	938.82
TS (NB BL)	239+61.47	0.0	938.58	12.00		0.016	0.192	938.77	12.00		0.000	0.000	938.77	12.00	276:1	0.000	0.000	938.77
	239+75	0.0	938.48	12.00		0.016	0.192	938.67	12.00		0.002	0.024	938.69	12.00	276:1	0.002	0.024	938.72
	240+00	0.0	938.28	12.00		0.016	0.192	938.47	12.00		0.006	0.070	938.54	12.00	276:1	0.006	0.070	938.61
	240+25	0.0	938.06	12.00		0.016	0.192	938.25	12.00		0.010	0.115	938.36	12.00	276:1	0.010	0.115	938.48
	240+50	0.0	937.82	12.00		0.016	0.192	938.02	12.00		0.013	0.160	938.18	12.00	276:1	0.013	0.160	938.34
	240+67.81	0.0	937.65	12.00		0.016	0.192	937.84	12.00		0.016	0.192	938.03	12.00	276:1	0.016	0.192	938.22
	240+75	0.0	937.58	12.00		0.017	0.201	937.78	12.00		0.017	0.201	937.98	12.00	276:1	0.017	0.201	938.18
	241+00	0.0	937.31	12.00		0.019	0.231	937.54	12.00		0.019	0.231	937.77	12.00	276:1	0.019	0.231	938.00
	241+25	0.0	937.03	12.00		0.022	0.261	937.29	12.00		0.022	0.261	937.55	12.00	276:1	0.022	0.261	937.81
	241+50	0.0	936.73	12.00		0.024	0.291	937.02	12.00		0.024	0.291	937.32	12.00	276:1	0.024	0.291	937.61
	241+75	0.0	936.42	12.00		0.027	0.321	936.74	12.00		0.027	0.321	937.06	12.00	276:1	0.027	0.321	937.38
	242+00	0.0	936.09	12.00		0.029	0.351	936.44	12.00		0.029	0.351	936.80	12.00	276:1	0.029	0.351	937.15
	242+25	0.0	935.75	12.00		0.032	0.381	936.13	12.00		0.032	0.381	936.51	12.00	276:1	0.032	0.381	936.89

CALCULATED NAH
CHECKED ABS

SUPERELEVATION TABLE (I-75 NB)

ALL-75-0.21

437
907

I:\Pd\89029\roadway\sheets\89029GE007.dgn 25-JUN-2013 10:21AM tbolenba

SUPERELEVATION TABLE

P.I. STA. 169+01.83 | Dc = 2° 38′ 00″ RT.

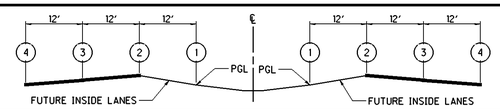

CALCULATED NAH | CHECKED ABS

(4) OUTSIDE EDGE OF OUTSIDE LANE					(3) OUTSIDE EDGE OF OUTSIDE LANE					(2) INSIDE EDGE OF INSIDE LANE					(1) PROFILE GRADE (FUTURE INSIDE E/P)		STATION	REMARKS
ELEVATION	ELEVATION CORRECTION	CROSS SLOPE	TRANSITION RATE	WIDTH	ELEVATION	ELEVATION CORRECTION	CROSS SLOPE	TRANSITION RATE	WIDTH	ELEVATION	ELEVATION CORRECTION	CROSS SLOPE	TRANSITION RATE	WIDTH	ELEVATION	OFFSET		
886.19	0.387	0.032	271:1	12.00	885.80	0.387	0.032		12.00	885.42	0.387	0.032		12.00	885.03	0.0	178+25	
886.22	0.356	0.030	271:1	12.00	885.86	0.356	0.030		12.00	885.51	0.356	0.030		12.00	885.15	0.0	178+50	
886.26	0.325	0.027	271:1	12.00	885.93	0.325	0.027		12.00	885.61	0.325	0.027		12.00	885.28	0.0	178+75	
886.30	0.295	0.025	271:1	12.00	886.01	0.295	0.025		12.00	885.71	0.295	0.025		12.00	885.42	0.0	179+00	
886.36	0.264	0.022	271:1	12.00	886.09	0.264	0.022		12.00	885.83	0.264	0.022		12.00	885.56	0.0	179+25	
886.42	0.233	0.019	271:1	12.00	886.18	0.233	0.019		12.00	885.95	0.233	0.019		12.00	885.72	0.0	179+50	
886.49	0.203	0.017	271:1	12.00	886.28	0.203	0.017		12.00	886.08	0.203	0.017		12.00	885.88	0.0	179+75	
886.51	0.192	0.016	271:1	12.00	886.32	0.192	0.016		12.00	886.13	0.192	0.016		12.00	885.94	0.0	179+83.83	
886.57	0.162	0.014	271:1	12.00	886.40	0.162	0.014		12.00	886.24	0.192	0.016		12.00	886.05	0.0	180+00	
886.62	0.130	0.011	271:1	12.00	886.49	0.130	0.011		12.00	886.36	0.192	0.016		12.00	886.17	0.0	180+17.50	
886.65	0.116	0.010	271:1	12.00	886.53	0.116	0.010		12.00	886.42	0.192	0.016		12.00	886.23	0.0	180+25	
886.74	0.070	0.006	271:1	12.00	886.67	0.070	0.006		12.00	886.60	0.192	0.016		12.00	886.41	0.0	180+50	
886.83	0.024	0.002	271:1	12.00	886.80	0.024	0.002		12.00	886.78	0.192	0.016		12.00	886.59	0.0	180+75	
886.87	0.000	0.000	271:1	12.00	886.87	0.000	0.000		12.00	886.87	0.192	0.016		12.00	886.68	0.0	180+88.22	ST (SB BL)
886.87	0.000	0.000	271:1	12.00	886.87	0.000	0.000		12.00	886.87	0.192	0.016		12.00	886.68	25.5	180+69.23	STA EQUATION
886.98	-0.057	-0.005	271:1	12.00	887.04	-0.057	-0.005		12.00	887.09	0.192	0.016		12.00	886.90	25.5	181+00	
887.07	-0.103	-0.009	271:1	12.00	887.17	-0.103	-0.009		12.00	887.27	0.192	0.016		12.00	887.08	25.5	181+25	
887.15	-0.149	-0.012	271:1	12.00	887.30	-0.149	-0.012		12.00	887.45	0.192	0.016		12.00	887.26	25.5	181+50	
887.24	-0.192	-0.016	271:1	12.00	887.43	-0.192	-0.016		12.00	887.62	0.192	0.016		12.00	887.43	25.5	181+73.62	
887.25	-0.192	-0.016		12.00	887.44	-0.192	-0.016		12.00	887.63	0.192	0.016		12.00	887.44	25.5	181+75	
887.43	-0.192	-0.016		12.00	887.62	-0.192	-0.016		12.00	887.81	0.192	0.016		12.00	887.62	25.5	182+00	
887.61	-0.192	-0.016		12.00	887.80	-0.192	-0.016		12.00	887.99	0.192	0.016		12.00	887.80	25.5	182+25	
887.79	-0.192	-0.016		12.00	887.98	-0.192	-0.016		12.00	888.17	0.192	0.016		12.00	887.98	25.5	182+50	

SUPERELEVATION TABLE (I-75 SB)

ALL-75-0.21

438
907

I:\Pd\89029\roadway\sheets\89029GE008.dgn 25-JUN-2013 10:21AM tbolenba

SUPERELEVATION TABLE

P.I. STA. 262+75.51 | Dc = 2° 31′ 00″ LT.

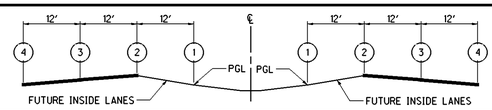

CALCULATED NAH CHECKED ABS

REMARKS	STATION	① PROFILE GRADE (FUTURE INSIDE E/P)		② INSIDE EDGE OF INSIDE LANE					③ OUTSIDE EDGE OF OUTSIDE LANE					④ OUTSIDE EDGE OF OUTSIDE LANE				
		OFFSET	ELEVATION	WIDTH	TRANSITION RATE	CROSS SLOPE	ELEVATION CORRECTION	ELEVATION	WIDTH	TRANSITION RATE	CROSS SLOPE	ELEVATION CORRECTION	ELEVATION	WIDTH	TRANSITION RATE	CROSS SLOPE	ELEVATION CORRECTION	ELEVATION
	242+50	0.0	935.39	12.00		0.034	0.411	935.80	12.00		0.034	0.411	936.21	12.00	276:1	0.034	0.411	936.62
	242+75	0.0	935.01	12.00		0.037	0.441	935.46	12.00		0.037	0.441	935.90	12.00	276:1	0.037	0.441	936.34
	243+00	0.0	934.62	12.00		0.039	0.471	935.09	12.00		0.039	0.471	935.57	12.00	276:1	0.039	0.471	936.04
	243+25	0.0	934.22	12.00		0.042	0.502	934.72	12.00		0.042	0.502	935.22	12.00	276:1	0.042	0.502	935.72
	243+50	0.0	933.79	12.00		0.044	0.532	934.32	12.00		0.044	0.532	934.86	12.00	276:1	0.044	0.532	935.39
	243+75	0.0	933.35	12.00		0.047	0.562	933.92	12.00		0.047	0.562	934.48	12.00	276:1	0.047	0.562	935.04
	244+00	0.0	932.90	12.00		0.049	0.592	933.49	12.00		0.049	0.592	934.08	12.00	276:1	0.049	0.592	934.68
	244+25	0.0	932.43	12.00		0.052	0.622	933.05	12.00		0.052	0.622	933.67	12.00	276:1	0.052	0.622	934.30
	244+50	0.0	931.94	12.00		0.054	0.652	932.60	12.00		0.054	0.652	933.25	12.00	276:1	0.054	0.652	933.90
	244+75	0.0	931.44	12.00		0.057	0.682	932.12	12.00		0.057	0.682	932.81	12.00	276:1	0.057	0.682	933.49
SC (NB BL)	244+96.47	0.0	931.00	12.00		0.059	0.708	931.71	12.00		0.059	0.708	932.42	12.00	276:1	0.059	0.708	933.12
	245+00	0.0	930.93	12.00		0.059	0.708	931.63	12.00		0.059	0.708	932.34	12.00		0.059	0.708	933.05
	245+25	0.0	930.39	12.00		0.059	0.708	931.10	12.00		0.059	0.708	931.81	12.00		0.059	0.708	932.52
	245+50	0.0	929.84	12.00		0.059	0.708	930.55	12.00		0.059	0.708	931.26	12.00		0.059	0.708	931.97
	274+50	0.0	909.61	12.00		0.059	0.708	910.32	12.00		0.059	0.708	911.03	12.00		0.059	0.708	911.73
	274+75	0.0	909.63	12.00		0.059	0.708	910.34	12.00		0.059	0.708	911.05	12.00		0.059	0.708	911.76
	275+00	0.0	909.65	12.00		0.059	0.708	910.36	12.00		0.059	0.708	911.07	12.00		0.059	0.708	911.77
CS (NB BL)	275+16.74	0.0	909.65	12.00		0.059	0.708	910.36	12.00		0.059	0.708	911.07	12.00	276:1	0.059	0.708	911.78
	275+25	0.0	909.66	12.00		0.058	0.698	910.35	12.00		0.058	0.698	911.05	12.00	276:1	0.058	0.698	911.75
	275+50	0.0	909.65	12.00		0.056	0.668	910.32	12.00		0.056	0.668	910.99	12.00	276:1	0.056	0.668	911.65
	275+75	0.0	909.64	12.00		0.053	0.638	910.27	12.00		0.053	0.638	910.91	12.00	276:1	0.053	0.638	911.55
	276+00	0.0	909.61	12.00		0.051	0.608	910.22	12.00		0.051	0.608	910.83	12.00	276:1	0.051	0.608	911.44
	276+25	0.0	909.58	12.00		0.048	0.578	910.16	12.00		0.048	0.578	910.74	12.00	276:1	0.048	0.578	911.31
	276+50	0.0	909.54	12.00		0.046	0.548	910.08	12.00		0.046	0.548	910.63	12.00	276:1	0.046	0.548	911.18
	276+75	0.0	909.48	12.00		0.043	0.517	910.00	12.00		0.043	0.517	910.52	12.00	276:1	0.043	0.517	911.04
	276+81.14	0.0	909.47	12.00		0.043	0.510	909.98	12.00		0.043	0.510	910.49	12.00	276:1	0.043	0.510	911.00
	277+00	0.0	909.42	12.00		0.041	0.487	909.91	12.00		0.041	0.487	910.40	12.00	276:1	0.041	0.487	910.89
	277+25	0.0	909.36	12.00		0.038	0.457	909.82	12.00		0.038	0.457	910.28	12.00	276:1	0.038	0.457	910.74
	277+50	0.0	909.30	12.00		0.036	0.427	909.73	12.00		0.036	0.427	910.16	12.00	276:1	0.036	0.427	910.59
	277+75	0.0	909.24	12.00		0.033	0.397	909.64	12.00		0.033	0.397	910.04	12.00	276:1	0.033	0.397	910.44
	278+00	0.0	909.18	12.00		0.031	0.367	909.55	12.00		0.031	0.367	909.92	12.00	276:1	0.031	0.367	910.29
	278+25	0.0	909.12	12.00		0.028	0.337	909.46	12.00		0.028	0.337	909.80	12.00	276:1	0.028	0.337	910.14
	278+50	0.0	909.06	12.00		0.026	0.307	909.37	12.00		0.026	0.307	909.68	12.00	276:1	0.026	0.307	909.98
	278+75	0.0	909.00	12.00		0.023	0.277	909.28	12.00		0.023	0.277	909.56	12.00	276:1	0.023	0.277	909.83
	279+00	0.0	908.94	12.00		0.021	0.247	909.19	12.00		0.021	0.247	909.44	12.00	276:1	0.021	0.247	909.68
	279+25	0.0	908.88	12.00		0.018	0.217	909.10	12.00		0.018	0.217	909.32	12.00	276:1	0.018	0.217	909.53
	279+45.40	0.0	908.84	12.00		0.016	0.192	909.03	12.00		0.016	0.192	909.22	12.00	276:1	0.016	0.192	909.41
	279+50	0.0	908.82	12.00		0.016	0.192	909.02	12.00		0.015	0.184	909.20	12.00	276:1	0.015	0.184	909.38
	279+75	0.0	908.76	12.00		0.016	0.192	908.96	12.00		0.012	0.139	909.09	12.00	276:1	0.012	0.139	909.23
	280+00	0.0	908.70	12.00		0.016	0.192	908.90	12.00		0.008	0.093	908.99	12.00	276:1	0.008	0.093	909.08
	280+25	0.0	908.64	12.00		0.016	0.192	908.84	12.00		0.004	0.048	908.88	12.00	276:1	0.004	0.048	908.93
	280+50	0.0	908.58	12.00		0.016	0.192	908.78	12.00		0.000	0.003	908.78	12.00	276:1	0.000	0.003	908.78
ST (NB BL)	280+51.74	0.0	908.58	12.00		0.016	0.192	908.77	12.00		0.000	0.000	908.77	12.00	276:1	0.000	0.000	908.77
STA EQUATION	280+18.76	25.5	908.58	12.00		0.016	0.192	908.78	12.00		0.000	0.000	908.78	12.00	276:1	0.000	0.000	908.78
	280+25	25.5	908.57	12.00		0.016	0.192	908.76	12.00		-0.001	-0.011	908.75	12.00	276:1	-0.001	-0.011	908.74
	280+50	25.5	908.51	12.00		0.016	0.192	908.70	12.00		-0.005	-0.056	908.65	12.00	276:1	-0.005	-0.056	908.59
	280+75	25.5	908.45	12.00		0.016	0.192	908.64	12.00		-0.008	-0.102	908.54	12.00	276:1	-0.008	-0.102	908.44
	281+00	25.5	908.39	12.00		0.016	0.192	908.58	12.00		-0.012	-0.147	908.44	12.00	276:1	-0.012	-0.147	908.29
	281+25	25.5	908.33	12.00		0.016	0.192	908.52	12.00		-0.016	-0.192	908.33	12.00	276:1	-0.016	-0.192	908.14
	281+25.10	25.5	908.33	12.00		0.016	0.192	908.52	12.00		-0.016	-0.192	908.33	12.00		-0.016	-0.192	908.14
	281+50	25.5	908.27	12.00		0.016	0.192	908.46	12.00		-0.016	-0.192	908.27	12.00		-0.016	-0.192	908.08
	281+75	25.5	908.21	12.00		0.016	0.192	908.40	12.00		-0.016	-0.192	908.21	12.00		-0.016	-0.192	908.02
	282+00	25.5	908.15	12.00		0.016	0.192	908.34	12.00		-0.016	-0.192	908.15	12.00		-0.016	-0.192	907.96

SUPERELEVATION TABLE (I-75 NB)

ALL-75-0.21

439
907

I:\Pd\89029\roadway\sheets\89029GE009.dgn 25-JUN-2013 10:21AM tbolenba

SUPERELEVATION TABLE

P.I. STA. 262+61.94 | Dc = 2° 30′ 00″ LT.

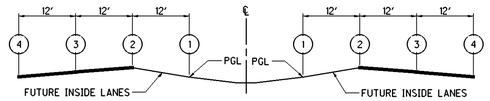

CALCULATED NAH
CHECKED ABS

(4) OUTSIDE EDGE OF OUTSIDE LANE					(3) OUTSIDE EDGE OF OUTSIDE LANE					(2) INSIDE EDGE OF INSIDE LANE					(1) PROFILE GRADE (FUTURE INSIDE E/P)		STATION	REMARKS
ELEVATION	ELEVATION CORRECTION	CROSS SLOPE	TRANSITION RATE	WIDTH	ELEVATION	ELEVATION CORRECTION	CROSS SLOPE	TRANSITION RATE	WIDTH	ELEVATION	ELEVATION CORRECTION	CROSS SLOPE	TRANSITION RATE	WIDTH	ELEVATION	OFFSET		
938.80	-0.192	-0.016		12.00	938.99	-0.192	-0.016		12.00	939.18	0.192	0.016		12.00	938.99	25.5	239+00	
938.64	-0.192	-0.016		12.00	938.84	-0.192	-0.016		12.00	939.03	0.192	0.016		12.00	938.84	25.5	239+25	
938.59	-0.192	-0.016		12.00	938.78	-0.192	-0.016		12.00	938.97	0.192	0.016		12.00	938.78	25.5	239+33.16	TS
938.41	-0.192	-0.016		12.00	938.61	-0.192	-0.016		12.00	938.80	0.131	0.011		12.00	938.67	25.5	239+50	
938.14	-0.192	-0.016		12.00	938.33	-0.192	-0.016		12.00	938.52	0.041	0.003		12.00	938.48	25.5	239+75	
937.84	-0.192	-0.016		12.00	938.04	-0.192	-0.016		12.00	938.23	-0.049	-0.004		12.00	938.28	25.5	240+00	
937.54	-0.192	-0.016		12.00	937.73	-0.192	-0.016		12.00	937.92	-0.140	-0.012		12.00	938.06	25.5	240+25	
937.35	-0.192	-0.016	276:1	12.00	937.54	-0.192	-0.016		12.00	937.73	-0.192	-0.016		12.00	937.93	25.5	240+39.50	
937.21	-0.205	-0.017	276:1	12.00	937.42	-0.205	-0.017		12.00	937.62	-0.205	-0.017		12.00	937.83	25.5	240+50	
936.87	-0.235	-0.020	276:1	12.00	937.11	-0.235	-0.020		12.00	937.34	-0.235	-0.020		12.00	937.58	25.5	240+75	
936.52	-0.265	-0.022	276:1	12.00	936.78	-0.265	-0.022		12.00	937.05	-0.265	-0.022		12.00	937.31	25.5	241+00	
936.14	-0.295	-0.025	276:1	12.00	936.44	-0.295	-0.025		12.00	936.73	-0.295	-0.025		12.00	937.03	25.5	241+25	
935.76	-0.325	-0.027	276:1	12.00	936.08	-0.325	-0.027		12.00	936.41	-0.325	-0.027		12.00	936.73	25.5	241+50	
935.35	-0.355	-0.030	276:1	12.00	935.71	-0.355	-0.030		12.00	936.06	-0.355	-0.030		12.00	936.42	25.5	241+75	
934.93	-0.385	-0.032	276:1	12.00	935.32	-0.385	-0.032		12.00	935.70	-0.385	-0.032		12.00	936.09	25.5	242+00	
934.50	-0.415	-0.035	276:1	12.00	934.91	-0.415	-0.035		12.00	935.33	-0.415	-0.035		12.00	935.74	25.5	242+25	
934.04	-0.445	-0.037	276:1	12.00	934.49	-0.445	-0.037		12.00	934.93	-0.445	-0.037		12.00	935.38	25.5	242+50	
933.58	-0.475	-0.040	276:1	12.00	934.05	-0.475	-0.040		12.00	934.53	-0.475	-0.040		12.00	935.00	25.5	242+75	
933.09	-0.506	-0.042	276:1	12.00	933.60	-0.506	-0.042		12.00	934.10	-0.506	-0.042		12.00	934.61	25.5	243+00	
932.59	-0.536	-0.045	276:1	12.00	933.13	-0.536	-0.045		12.00	933.66	-0.536	-0.045		12.00	934.20	25.5	243+25	
932.08	-0.566	-0.047	276:1	12.00	932.64	-0.566	-0.047		12.00	933.21	-0.566	-0.047		12.00	933.77	25.5	243+50	
931.54	-0.596	-0.050	276:1	12.00	932.14	-0.596	-0.050		12.00	932.74	-0.596	-0.050		12.00	933.33	25.5	243+75	
931.00	-0.626	-0.052	276:1	12.00	931.62	-0.626	-0.052		12.00	932.25	-0.626	-0.052		12.00	932.87	25.5	244+00	
930.43	-0.656	-0.055	276:1	12.00	931.09	-0.656	-0.055		12.00	931.74	-0.656	-0.055		12.00	932.40	25.5	244+25	
929.85	-0.686	-0.057	276:1	12.00	930.54	-0.686	-0.057		12.00	931.22	-0.686	-0.057		12.00	931.91	25.5	244+50	
929.42	-0.708	-0.059	276:1	12.00	930.13	-0.708	-0.059		12.00	930.84	-0.708	-0.059		12.00	931.54	25.5	244+68.16	SC
929.28	-0.708	-0.059		12.00	929.99	-0.708	-0.059		12.00	930.70	-0.708	-0.059		12.00	931.40	25.5	244+75	
928.76	-0.708	-0.059		12.00	929.47	-0.708	-0.059		12.00	930.17	-0.708	-0.059		12.00	930.88	25.5	245+00	
907.51	-0.708	-0.059		12.00	908.22	-0.708	-0.059		12.00	908.93	-0.708	-0.059		12.00	909.64	25.5	274+50	
907.53	-0.708	-0.059		12.00	908.24	-0.708	-0.059		12.00	908.94	-0.708	-0.059		12.00	909.65	25.5	274+75	
907.53	-0.708	-0.059		12.00	908.24	-0.708	-0.059		12.00	908.95	-0.708	-0.059		12.00	909.65	25.5	275+00	
907.53	-0.708	-0.059	276:1	12.00	908.24	-0.708	-0.059		12.00	908.94	-0.708	-0.059		12.00	909.65	25.5	275+12.14	CS
907.57	-0.693	-0.058	276:1	12.00	908.26	-0.693	-0.058		12.00	908.96	-0.693	-0.058		12.00	909.65	25.5	275+25	
907.64	-0.662	-0.055	276:1	12.00	908.31	-0.662	-0.055		12.00	908.97	-0.662	-0.055		12.00	909.63	25.5	275+50	
907.71	-0.632	-0.053	276:1	12.00	908.34	-0.632	-0.053		12.00	908.97	-0.632	-0.053		12.00	909.61	25.5	275+75	
907.76	-0.602	-0.050	276:1	12.00	908.37	-0.602	-0.050		12.00	908.97	-0.602	-0.050		12.00	909.57	25.5	276+00	
907.81	-0.572	-0.048	276:1	12.00	908.38	-0.572	-0.048		12.00	908.95	-0.572	-0.048		12.00	909.53	25.5	276+25	
907.84	-0.542	-0.045	276:1	12.00	908.39	-0.542	-0.045		12.00	908.93	-0.542	-0.045		12.00	909.47	25.5	276+50	
907.87	-0.512	-0.043	276:1	12.00	908.39	-0.512	-0.043		12.00	908.90	-0.512	-0.043		12.00	909.41	25.5	276+75	
907.90	-0.482	-0.040	276:1	12.00	908.39	-0.482	-0.040		12.00	908.87	-0.482	-0.040		12.00	909.35	25.5	277+00	
907.93	-0.452	-0.038	276:1	12.00	908.39	-0.452	-0.038		12.00	908.84	-0.452	-0.038		12.00	909.29	25.5	277+25	
907.96	-0.422	-0.035	276:1	12.00	908.39	-0.422	-0.035		12.00	908.81	-0.422	-0.035		12.00	909.23	25.5	277+50	
908.00	-0.392	-0.033	276:1	12.00	908.39	-0.392	-0.033		12.00	908.78	-0.392	-0.033		12.00	909.17	25.5	277+75	
908.03	-0.361	-0.030	276:1	12.00	908.39	-0.361	-0.030		12.00	908.75	-0.361	-0.030		12.00	909.11	25.5	278+00	
908.06	-0.331	-0.028	276:1	12.00	908.39	-0.331	-0.028		12.00	908.72	-0.331	-0.028		12.00	909.05	25.5	278+25	
908.09	-0.301	-0.025	276:1	12.00	908.39	-0.301	-0.025		12.00	908.69	-0.301	-0.025		12.00	908.99	25.5	278+50	
908.12	-0.271	-0.023	276:1	12.00	908.39	-0.271	-0.023		12.00	908.66	-0.271	-0.023		12.00	908.93	25.5	278+75	
908.15	-0.241	-0.020	276:1	12.00	908.39	-0.241	-0.020		12.00	908.63	-0.241	-0.020		12.00	908.87	25.5	279+00	
908.18	-0.211	-0.018	276:1	12.00	908.39	-0.211	-0.018		12.00	908.60	-0.211	-0.018		12.00	908.81	25.5	279+25	
908.20	-0.192	-0.016	276:1	12.00	908.39	-0.192	-0.016		12.00	908.58	-0.192	-0.016		12.00	908.77	25.5	279+40.80	
908.21	-0.192	-0.016		12.00	908.40	-0.192	-0.016		12.00	908.59	-0.159	-0.013		12.00	908.75	25.5	279+50	
908.24	-0.192	-0.016		12.00	908.43	-0.192	-0.016		12.00	908.62	-0.069	-0.006		12.00	908.69	25.5	279+75	
908.27	-0.192	-0.016		12.00	908.46	-0.192	-0.016		12.00	908.65	0.022	0.002		12.00	908.63	25.5	280+00	
908.30	-0.192	-0.016		12.00	908.49	-0.192	-0.016		12.00	908.68	0.112	0.009		12.00	908.57	25.5	280+25	
908.32	-0.192	-0.016		12.00	908.52	-0.192	-0.016		12.00	908.71	0.192	0.016		12.00	908.52	25.5	280+47.14	ST
908.32	-0.192	-0.016		12.00	908.51	-0.192	-0.016		12.00	908.70	0.192	0.016		12.00	908.51	25.5	280+50	
908.26	-0.192	-0.016		12.00	908.45	-0.192	-0.016		12.00	908.64	0.192	0.016		12.00	908.45	25.5	280+75	

SUPERELEVATION TABLE (I-75 SB)

ALL-75-0.21

440
907

I:\Pdt\89029\roadway\sheets\89029GE010.dgn 25-JUN-2013 10:21AM tbolenba

SUPERELEVATION TABLE RAMP A

P.I. STA. 105+31.85 | Dc = 3° 30′ 00″

LEFT SIDE					CENTERLINE CONTROL		RIGHT SIDE					REMARKS
EDGE ELEVATION	TRANSITION RATE	ELEVATION CORRECTION	CROSS SLOPE	WIDTH	STATION	PROFILE GRADE	WIDTH	CROSS SLOPE	ELEVATION CORRECTION	TRANSITION RATE	EDGE ELEVATION	
					101+72.43	877.99	16.0	0.000	0.000	234:1	877.99	TS
					101+75	877.99	16.0	0.001	0.011	234:1	877.99	
					102+00	877.91	16.0	0.008	0.122	234:1	878.04	
					102+22.43	877.88	16.0	0.014	0.221	234:1	878.10	
					102+25	877.87	16.0	0.015	0.232	234:1	878.10	
					102+30.00	877.87	16.0	0.016	0.254	234:1	878.13	
					102+50	877.81	16.0	0.021	0.343	234:1	878.15	
					102+75	877.73	16.0	0.028	0.453	234:1	878.19	
					103+00	877.66	16.0	0.035	0.564	234:1	878.22	
					103+25	877.58	16.0	0.042	0.674	234:1	878.26	
					103+50	877.51	16.0	0.049	0.785	234:1	878.29	
					103+75	877.43	16.0	0.056	0.895	234:1	878.33	
					103+82.43	877.41	16.0	0.058	0.928	234:1	878.34	SC
					103+97.50	877.37	16.0	0.058	0.928		878.29	
					104+00	877.36	16.0	0.058	0.928		878.29	
					104+25	877.32	16.0	0.058	0.928		878.25	
					104+44.23	877.33	16.0	0.058	0.928		878.26	
					104+50	877.35	16.0	0.058	0.928		878.27	
					104+75	877.44	16.0	0.058	0.928		878.36	
					105+00	877.59	16.0	0.058	0.928		878.52	
					105+25	877.81	16.0	0.058	0.928		878.74	
					105+50	878.09	16.0	0.058	0.928		879.02	
					105+75	878.44	16.0	0.058	0.928		879.37	
					106+00	878.85	16.0	0.058	0.928		879.78	
					106+18.34	879.19	16.0	0.058	0.928	223:1	880.12	
					106+25	879.32	16.0	0.056	0.898	223:1	880.22	
					106+50	879.86	16.0	0.049	0.786	223:1	880.65	
					106+75	880.46	16.0	0.042	0.674	223:1	881.14	
					106+80.44	880.60	16.0	0.041	0.650	223:1	881.25	PT
					107+00	881.13	16.0	0.035	0.562	223:1	881.69	
					107+25	881.86	16.0	0.028	0.450	223:1	882.31	
					107+50	882.65	16.0	0.021	0.338	223:1	882.99	
					107+68.24	883.27	16.0	0.016	0.256	223:1	883.53	
					107+75	883.51	16.0	0.016	0.256		883.76	
					108+00	884.43	16.0	0.016	0.256		884.69	
					108+25	885.41	16.0	0.016	0.256		885.67	
					108+50	886.46	16.0	0.016	0.256		886.72	
					108+75	887.58	16.0	0.016	0.256		887.83	
					108+82.50	887.92	16.0	0.016	0.256		888.18	
888.41		0.000	-0.016	0.00	108+92.85	888.41	16.0	0.016	0.256		888.66	
888.61		-0.007	-0.016	0.46	108+97.50	888.62	16.0	0.016	0.256		888.88	
888.73		-0.011	-0.016	0.71	109+00	888.74	16.0	0.016	0.256		888.99	
889.74		-0.051	-0.016	3.21	109+25	889.79	16.0	0.016	0.256		890.05	
889.95		-0.061	-0.016	3.80	109+30.87	890.01	16.0	0.016	0.256		890.27	
					109+34.04	890.13	16.00	0.016	0.256		890.39	
					109+50	890.67	17.60	0.016	0.282		890.95	
					109+75	891.36	20.09	0.016	0.322		891.68	
					109+82.07	891.52	21.05	0.016	0.337	161:1	891.86	
					109+96.17	891.80	22.21	0.021	0.477	161:1	892.28	

SUPERELEVATION TABLE RAMP D

P.I. STA. 117+74.51 | Dc = 4° 00′ 00″

LEFT SIDE					CENTERLINE CONTROL		RIGHT SIDE					REMARKS
EDGE ELEVATION	TRANSITION RATE	ELEVATION CORRECTION	CROSS SLOPE	WIDTH	STATION	PROFILE GRADE	WIDTH	CROSS SLOPE	ELEVATION CORRECTION	TRANSITION RATE	EDGE ELEVATION	
					113+74.46	892.58						
					113+75	892.56						
					113+93.62	891.95						
					114+00	891.85						
					114+02.50	891.81						
					114+25	891.41						
892.20	161:1	0.810	0.051	16.0	114+26.00	891.39						
891.53	161:1	0.661	0.041	16.0	114+50	890.87						
890.74	161:1	0.505	0.032	16.0	114+75	890.24						
889.86	161:1	0.350	0.022	16.0	115+00	889.51						
889.57	161:1	0.303	0.019	16.0	115+07.50	889.27						
889.48	161:1	0.288	0.018	16.0	115+10.00	889.19						
889.28	161:1	0.256	0.016	16.0	115+15.13	889.02						
889.02		0.256	0.016	16.0	115+23.38	888.76						
888.98	224:1	0.263	0.016	16.0	115+25	888.71						
888.35	224:1	0.375	0.023	16.0	115+50	887.97						
887.79	224:1	0.486	0.030	16.0	115+75	887.30						
887.38	224:1	0.576	0.036	16.0	115+95.05	886.80						PC
887.28	224:1	0.598	0.037	16.0	116+00	886.69						
886.85	224:1	0.710	0.044	16.0	116+25	886.14						
886.47	224:1	0.821	0.051	16.0	116+50	885.65						
886.16	224:1	0.933	0.058	16.0	116+75	885.23						
886.10	224:1	0.960	0.060	16.0	116+81.05	885.14						
885.83		0.960	0.060	16.0	117+00	884.87						
885.53		0.960	0.060	16.0	117+25	884.57						
885.30		0.960	0.060	16.0	117+50	884.34						
885.13		0.960	0.060	16.0	117+75	884.17						
885.03		0.960	0.060	16.0	118+00	884.07						
884.98		0.960	0.060	16.0	118+25	884.02						
885.00		0.960	0.060	16.0	118+50	884.04						
885.09		0.960	0.060	16.0	118+75	884.13						
885.24		0.960	0.060	16.0	119+00	884.28						
885.45		0.960	0.060	16.0	119+25	884.49						
885.72		0.960	0.060	16.0	119+50	884.76						
885.75	336:1	0.960	0.060	16.0	119+52.10	884.79						CS
886.04	336:1	0.892	0.056	16.0	119+75	885.15						
886.36	336:1	0.817	0.051	16.0	120+00	885.54						
886.67	336:1	0.743	0.046	16.0	120+25	885.93						
886.98	336:1	0.669	0.042	16.0	120+50	886.31						
887.24	336:1	0.594	0.037	16.0	120+75	886.65						
887.51	336:1	0.520	0.032	16.0	121+00	886.99						
887.75	336:1	0.445	0.028	16.0	121+25	887.30						
887.99	336:1	0.371	0.023	16.0	121+50	887.62						
888.15	336:1	0.320	0.020	16.0	121+67.10	887.83						ST

CALCULATED ACF CHECKED JLG

SUPERELEVATION TABLE (BREESE RD. RAMP A & D)

ALL-75-0.21

441
907

I:\Pd\89029\roadway\sheets\89029GE100.dgn 25-JUN-2013 10:21AM tbolenba

SUPERELEVATION TABLE

P.I. STA. 102+38.24 | Dc = 1° 30′ 00″

LEFT SIDE					CENTERLINE CONTROL		RIGHT SIDE					REMARKS
EDGE ELEVATION	TRANSITION RATE	ELEVATION CORRECTION	CROSS SLOPE	WIDTH	STATION	PROFILE GRADE	WIDTH	CROSS SLOPE	ELEVATION CORRECTION	TRANSITION RATE	EDGE ELEVATION	
875.37	223:1	0.312	0.026	12.00	99+32.31	875.06						PC
875.38	223:1	0.313	0.026	12.03	99+50	875.06						
875.38	223:1	0.313	0.026	12.05	99+59.07	875.07						
875.44	223:1	0.370	0.030	12.16	99+75	875.07						
875.54	223:1	0.456	0.037	12.32	99+98.31	875.07						
875.54		0.457	0.037	12.36	100+00	875.07						
875.60		0.477	0.037	12.89	100+25	875.12						
875.66		0.497	0.037	13.43	100+50	875.17						
875.73		0.517	0.037	13.96	100+75	875.21						
875.80		0.536	0.037	14.50	101+00	875.26						
875.85		0.556	0.037	15.04	101+25	875.29						
875.90		0.576	0.037	15.57	101+50	875.32						
875.94		0.592	0.037	16.00	101+70.00	875.36						
875.94		0.592	0.037	16.00	101+75	875.35						
876.00		0.592	0.037	16.00	102+00	875.38						
876.01		0.592	0.037	16.00	102+25	875.42						
876.05		0.592	0.037	16.00	102+50	875.46						
876.09		0.592	0.037	16.00	102+75	875.49						
876.12		0.592	0.037	16.00	103+00	875.53						
876.13		0.592	0.037	16.00	103+25	875.54						
876.15		0.592	0.037	16.00	103+50	875.55						
876.16		0.592	0.037	16.00	103+75	875.57						
876.17		0.592	0.037	16.00	104+00	875.58						
876.20		0.592	0.037	16.00	104+25	875.60						
876.21		0.592	0.037	16.00	104+50	875.62						
876.22		0.592	0.037	16.00	104+75	875.63						
876.24		0.592	0.037	16.00	105+00	875.65						
876.32		0.592	0.037	16.00	105+25	875.73						
876.36	568:1	0.592	0.037	16.00	105+42.86	875.77						CS
876.41	568:1	0.605	0.038	16.00	105+50	875.81						
876.60	568:1	0.649	0.041	16.00	105+75	875.96						
876.84	568:1	0.693	0.043	16.00	106+00	876.15						
877.13	568:1	0.737	0.046	16.00	106+25	876.39						
877.45	568:1	0.781	0.049	16.00	106+50	876.67						
877.83	568:1	0.825	0.052	16.00	106+75	877.00						
878.24	568:1	0.869	0.054	16.00	107+00	877.38						
878.71	568:1	0.913	0.057	16.00	107+25	877.79						
879.06	568:1	0.944	0.059	16.00	107+42.86	878.12						SC

SUPERELEVATION TABLE

P.I. STA. 108+52.15 | Dc = 5° 45′ 00″

LEFT SIDE					CENTERLINE CONTROL		RIGHT SIDE					REMARKS
EDGE ELEVATION	TRANSITION RATE	ELEVATION CORRECTION	CROSS SLOPE	WIDTH	STATION	PROFILE GRADE	WIDTH	CROSS SLOPE	ELEVATION CORRECTION	TRANSITION RATE	EDGE ELEVATION	
879.064	568:1	0.944	0.059	16.0	107+42.86	878.12						SC
879.201	568:1	0.944	0.059	16.0	107+50	878.26						
879.708	568:1	0.944	0.059	16.0	107+75	878.76						
880.261	568:1	0.944	0.059	16.0	108+00	879.32						
880.836		0.944	0.059	16.0	108+25	879.89						
881.411		0.944	0.059	16.0	108+50	880.47						
881.769		0.944	0.059	16.0	108+65.57	880.83						
881.939		0.897	0.056	16.0	108+75	881.04						
882.390		0.773	0.048	16.0	109+00	881.62						
882.841	201:1	0.649	0.041	16.0	109+25	882.19						
883.292	201:1	0.525	0.033	16.0	109+50	882.77						
883.482	201:1	0.472	0.030	16.0	109+60.57	883.01						PT
883.742	201:1	0.400	0.025	16.0	109+75	883.34						
884.193	201:1	0.276	0.017	16.0	110+00	883.92						
884.266	201:1	0.256	0.016	16.0	110+04.05	884.01						
884.748	201:1	0.256	0.016	16.0	110+25	884.49						
885.323	201:1	0.256	0.016	16.0	110+50	885.07						
885.898	201:1	0.256	0.016	16.0	110+75	885.64						

P.I. STA. 112+69.11 | Dc = 24° 45′ 00″

885.90		0.256	0.016	16.0	110+75	885.64						
886.00	152:1	0.256	0.016	16.0	110+79.65	885.75						
886.34	152:1	0.122	0.008	16.0	111+00	886.22						
886.64	152:1	0.000	0.000	16.0	111+18.57	886.64						
886.75	152:1	-0.042	-0.003	16.0	111+25	886.79						
887.16	152:1	-0.207	-0.013	16.0	111+50	887.37						
887.28	152:1	-0.256	-0.016	16.0	111+57.49	887.54						
887.57	152:1	-0.371	-0.023	16.0	111+75	887.94						
887.68	152:1	-0.414	-0.026	16.0	111+81.57	888.09						PC
887.98	152:1	-0.536	-0.033	16.0	112+00	888.52						
888.12	152:1	-0.592	-0.037	16.0	112+08.57	888.71						
888.62	136:1	-0.472	-0.029	16.0	112+25	889.09						
889.38	136:1	-0.289	-0.018	16.0	112+50	889.67						
890.14	136:1	-0.106	-0.007	16.0	112+75	890.24						
890.57	136:1	0.000	0.000	16.0	112+89.42	890.57						
890.87	136:1	0.077	0.005	16.0	113+00	890.80						
891.30	136:1	0.188	0.012	16.0	113+15.04	891.11						
					113+25	891.31						
					113+48.96	891.76						PT
					113+50	891.78						
					113+51.62	891.81						

CALCULATED ACF
CHECKED JLG

SUPERELEVATION TABLE (BREESE RD. RAMP B)

ALL-75-0.21

442
907

I:\Pdt\89029\roadway\sheets\89029GE101.dgn 25-JUN-2013 10:21AM tbolenba

SUPERELEVATION TABLE

P.I. STA. 111+02.44 | Dc = 24° 45′ 00″

LEFT SIDE					CENTERLINE CONTROL		RIGHT SIDE					
EDGE ELEVATION	TRANSITION RATE	ELEVATION CORRECTION	CROSS SLOPE	WIDTH	STATION	PROFILE GRADE	WIDTH	CROSS SLOPE	ELEVATION CORRECTION	TRANSITION RATE	EDGE ELEVATION	REMARKS
					109+49.21	892.42						
					109+50	892.41						
					109+68.37	892.28						
					109+75	892.17						
					109+78.37	892.12						
					110+00	891.77						
					110+09.38	891.62						PC
					110+25	891.36						
891.02	152:1	0.002	0.000	8.0	110+46.50	891.01	16.0	0.000	-0.005	152:1	891.01	
890.97	152:1	0.014	0.002	8.0	110+50	890.96	16.0	-0.002	-0.028	152:1	890.93	
890.95	152:1	0.020	0.003	8.0	110+51.91	890.93	16.0	-0.003	-0.040	152:1	890.89	
890.65	152:1	0.096	0.012	8.0	110+75	890.55	16.0	-0.012	-0.192	152:1	890.36	
890.32	152:1	0.178	0.022	8.0	111+00	890.14	16.0	-0.022	-0.357	152:1	889.79	
890.00	152:1	0.260	0.033	8.0	111+25	889.74	16.0	-0.033	-0.521	152:1	889.22	
889.76	152:1	0.320	0.040	8.0	111+43.09	889.44	16.0	-0.040	-0.640	152:1	888.80	
889.65	153:1	0.320	0.040	8.0	111+50	889.33	16.0	-0.040	-0.640	153:1	888.69	
889.54	153:1	0.320	0.040	8.0	111+56.94	889.22	16.0	-0.040	-0.640	153:1	888.58	
889.19	153:1	0.261	0.033	8.0	111+75	888.93	16.0	-0.033	-0.522	153:1	888.40	
888.97	153:1	0.224	0.028	8.0	111+86	888.74	16.0	-0.028	-0.448	153:1	888.29	PT
888.70	153:1	0.179	0.022	8.0	112+00	888.52	16.0	-0.022	-0.359	153:1	888.16	
888.39	153:1	0.128	0.016	8.0	112+16	888.26	16.0	-0.016	-0.256	153:1	888.01	
888.21	153:1	0.098	0.012	8.0	112+25	888.11	16.0	-0.012	-0.196	153:1	887.92	
887.72	153:1	0.016	0.002	8.0	112+50	887.71	16.0	-0.002	-0.032	153:1	887.68	
887.63	153:1	0.000	0.000	8.0	112+55	887.63	16.0	0.000	0.000	153:1	887.63	
887.24	153:1	-0.066	-0.008	8.0	112+75	887.30	16.0	0.008	0.131	153:1	887.43	
886.86	153:1	-0.128	-0.016	8.0	112+94	886.99	16.0	0.016	0.256		887.25	
886.77		-0.128	-0.016	8.0	113+00	886.90	16.0	0.016	0.256		887.15	
886.37		-0.116	-0.016	7.26	113+25	886.49	16.0	0.016	0.256		886.75	

P.I. STA. 114+91.14 | Dc = 5° 45′ 00″

886.37		-0.116	-0.016	7.26	113+25	886.49	16.0	0.016	0.256		886.75	
885.98		-0.104	-0.016	6.52	113+50	886.08	16.0	0.016	0.256		886.34	
885.82	201:1	-0.099	-0.016	6.21	113+60.35	885.92	16.0	0.016	0.256	201:1	886.17	
885.56	201:1	-0.119	-0.021	5.78	113+75	885.68	16.0	0.021	0.329	201:1	886.01	
885.13	201:1	-0.143	-0.028	5.04	114+00	885.27	16.0	0.028	0.453	201:1	885.73	
885.06	201:1	-0.145	-0.030	4.92	114+03.83	885.21	16.0	0.030	0.472	201:1	885.68	
884.71	201:1	-0.155	-0.036	4.30	114+25	884.87	16.0	0.036	0.577	201:1	885.44	
884.38	201:1	-0.157	-0.042	3.70	114+45.00	884.54	16.0	0.042	0.677	201:1	885.22	CS
884.31	201:1	-0.156	-0.044	3.56	114+50	884.46	16.0	0.044	0.701	201:1	885.16	
883.94	201:1	-0.145	-0.052	2.81	114+75	884.09	16.0	0.052	0.826	201:1	884.91	
883.64	201:1	-0.124	-0.059	2.11	114+98.83	883.77	16.0	0.059	0.944	201:1	884.71	
883.63		-0.122	-0.059	2.07	115+00	883.75	16.0	0.059	0.944		884.70	
883.39		-0.079	-0.059	1.33	115+25	883.47	16.0	0.059	0.944		884.41	
883.19		-0.035	-0.059	0.59	115+50	883.22	16.0	0.059	0.944		884.17	
883.06		0.000	-0.059	0.00	115+70.00	883.06	16.0	0.059	0.944		884.00	
					115+75	883.02	16.0	0.059	0.944		883.97	
					115+78.01	883.00	16.0	0.059	0.944	568:1	883.95	SC
					116+00	882.87	16.0	0.057	0.905	568:1	883.77	
					116+25	882.76	16.0	0.054	0.861	568:1	883.62	
					116+50	882.69	16.0	0.051	0.817	568:1	883.51	
					116+75	882.66	16.0	0.048	0.773	568:1	883.44	
					117+00	882.68	16.0	0.046	0.729	568:1	883.41	

SUPERELEVATION TABLE

P.I. STA. 120+05.02 | Dc = 1° 30′ 00″

LEFT SIDE					CENTERLINE CONTROL		RIGHT SIDE					
EDGE ELEVATION	TRANSITION RATE	ELEVATION CORRECTION	CROSS SLOPE	WIDTH	STATION	PROFILE GRADE	WIDTH	CROSS SLOPE	ELEVATION CORRECTION	TRANSITION RATE	EDGE ELEVATION	REMARKS
					117+25	882.75	16.0	0.043	0.685	568:1	883.43	
					117+50	882.85	16.0	0.040	0.641	568:1	883.50	
					117+75	883.01	16.0	0.037	0.597	568:1	883.60	
					117+78.01	883.03	16.0	0.037	0.592		883.62	SC
					118+00	883.20	16.0	0.037	0.592		883.79	
					118+25	883.44	16.0	0.037	0.592		884.03	
					118+50	883.72	16.0	0.037	0.592		884.32	
					118+75	884.05	16.0	0.037	0.592		884.64	
					118+95.00	884.34	16.0	0.037	0.592		884.94	
					119+00	884.42	16.0	0.037	0.592		885.01	
					119+25	884.80	16.0	0.037	0.592		885.40	
					119+50	885.19	16.0	0.037	0.592		885.78	
					119+75	885.57	16.0	0.037	0.592		886.16	
					120+00	885.96	16.0	0.037	0.592		886.55	
					120+25	886.25	16.0	0.037	0.592		886.85	
					120+50	886.55	16.0	0.037	0.592		887.15	
					120+55.00	886.61	16.0	0.037	0.592		887.20	
					120+75	886.85	16.00	0.037	0.592		887.44	
					121+00	887.15	14.27	0.037	0.528		887.68	
					121+25	887.44	13.49	0.037	0.499		887.94	
					121+50	887.72	12.87	0.037	0.476		888.19	
					121+65.49	887.90	12.57	0.037	0.465	223:1	888.37	
					121+75	888.01	12.42	0.034	0.426	223:1	888.43	
					122+00	888.30	12.13	0.027	0.331	223:1	888.63	
					122+25	888.59	12.00	0.020	0.244	223:1	888.83	
					122+26.14	888.60	12.00	0.020	0.240		888.84	
					122+31.49	888.66	12.00	0.020	0.240		888.90	PT

CALCULATED ACF
CHECKED JLG

SUPERELEVATION TABLE (BREESE RD. RAMP C)

ALL-75-0.21

443
907

I:\Pdt\89029\roadway\sheets\89029GE102.dgn 25-JUN-2013 10:21AM tbolenba

SUPERELEVATION TABLE

P.I. STA. 216+77.22 | Dc = 1° 30′ 00″

LEFT SIDE					CENTERLINE CONTROL		RIGHT SIDE					REMARKS
EDGE ELEVATION	TRANSITION RATE	ELEVATION CORRECTION	CROSS SLOPE	WIDTH	STATION	PROFILE GRADE	WIDTH	CROSS SLOPE	ELEVATION CORRECTION	TRANSITION RATE	EDGE ELEVATION	
900.65	223:1	0.223	0.0186	12.00	213+99.73	900.43						PC
900.66	223:1	0.223	0.0186	12.00	214+00	900.43						
900.72	223:1	0.241	0.0200	12.05	214+05.08	900.47						
900.93	223:1	0.309	0.0256	12.08	214+25	900.62						
901.21	223:1	0.402	0.0326	12.33	214+50	900.81						
901.39	223:1	0.465	0.0370	12.57	214+65.73	900.92						
901.46		0.471	0.0370	12.74	214+75	900.99						
901.77		0.505	0.0370	13.65	215+00	901.27						
902.09		0.534	0.0370	14.43	215+25	901.56						
902.43		0.563	0.0370	15.22	215+50	901.86						
902.78		0.592	0.0370	16.00	215+75	902.19						
903.13		0.592	0.0370	16.00	216+00	902.54						
903.50		0.592	0.0370	16.00	216+25	902.91						
903.89		0.592	0.0370	16.00	216+50	903.30						
904.30		0.592	0.0370	16.00	216+75	903.70						
904.73		0.592	0.0370	16.00	217+00	904.13						
905.08		0.592	0.0370	16.00	217+20.00	904.49						
905.17		0.592	0.0370	16.00	217+25	904.58						
905.63		0.592	0.0370	16.00	217+50	905.04						
906.08		0.592	0.0370	16.00	217+75	905.49						
906.17		0.592	0.0370	16.00	217+80.00	905.58						
906.52		0.592	0.0370	16.00	218+00	905.92						
906.87		0.592	0.0370	16.00	218+25	906.28						
907.16		0.592	0.0370	16.00	218+50	906.57						
907.37		0.592	0.0370	16.00	218+75	906.78						
907.45	623:1	0.592	0.0370	16.00	218+87.73	906.86						
907.53	623:1	0.612	0.0382	16.00	219+00	906.92						
907.64	623:1	0.652	0.0407	16.00	219+25	906.98						
907.67	623:1	0.692	0.0432	16.00	219+50	906.98						
907.67	623:1	0.698	0.0436	16.00	219+53.73	906.97						PCC

SUPERELEVATION TABLE

P.I. STA. 220+30.42 | Dc = 4° 00′ 00″

LEFT SIDE					CENTERLINE CONTROL		RIGHT SIDE					REMARKS
EDGE ELEVATION	TRANSITION RATE	ELEVATION CORRECTION	CROSS SLOPE	WIDTH	STATION	PROFILE GRADE	WIDTH	CROSS SLOPE	ELEVATION CORRECTION	TRANSITION RATE	EDGE ELEVATION	
907.67	623:1	0.698	0.0436	16.0	219+53.73	906.97						PCC
907.63	623:1	0.732	0.0458	16.0	219+75	906.89						
907.51	623:1	0.772	0.0483	16.0	220+00	906.74						
907.32	623:1	0.812	0.0508	16.0	220+25	906.51						
907.20	623:1	0.832	0.0520	16.0	220+37.23	906.37						
907.17	200:1	0.832	0.0520	16.0	220+40.17	906.33						
906.99	200:1	0.783	0.0489	16.0	220+50	906.21						
906.49	200:1	0.658	0.0412	16.0	220+75	905.83						
905.91	200:1	0.534	0.0334	16.0	221+00	905.38						
905.74	200:1	0.499	0.0312	16.0	221+06.97	905.24						PT
905.27	200:1	0.409	0.0256	16.0	221+25	904.86						
904.55	200:1	0.285	0.0178	16.0	221+50	904.26						
904.37	200:1	0.256	0.0160	16.0	221+55.79	904.11						
903.99		0.256	0.0160	16.0	221+70.00	903.73						
903.85		0.256	0.0160	16.0	221+75	903.59						
903.22		0.256	0.0160	16.0	221+97.50	902.97						
903.16		0.256	0.0160	16.0	222+00	902.90						
902.54		0.256	0.0160	16.0	222+25	902.28						
902.04		0.256	0.0160	16.0	222+50	901.79						
901.67		0.256	0.0160	16.0	222+75	901.41						
901.42		0.256	0.0160	16.0	223+00	901.16						
901.29		0.256	0.0160	16.0	223+25	901.03						
901.29		0.256	0.0160	16.0	223+26.94	901.03						
901.28		0.256	0.0160	16.0	223+44.57	901.02						

CALCULATED ACF | CHECKED JLG

SUPERELEVATION TABLE (S.R. 65 RAMP A)

ALL-75-0.21

444
907

I:\Pd\89029\roadway\sheets\89029GE300.dgn 25-JUN-2013 10:21AM tbolenba

SUPERELEVATION TABLE RAMP B

P.I. STA. 219+76.62 (RAMP B) | Dc = 2° 00′ 00″

LEFT SIDE					CENTERLINE CONTROL		RIGHT SIDE					REMARKS
EDGE ELEVATION	TRANSITION RATE	ELEVATION CORRECTION	CROSS SLOPE	WIDTH	STATION	PROFILE GRADE	WIDTH	CROSS SLOPE	ELEVATION CORRECTION	TRANSITION RATE	EDGE ELEVATION	
					214+90.35	901.14	16.0	0.0200	0.320	500:1	901.46	TS
					215+00	901.26	16.0	0.0212	0.339	500:1	901.60	
					215+25	901.56	16.0	0.0243	0.389	500:1	901.95	
					215+50	901.86	16.0	0.0275	0.439	500:1	902.30	
					215+75	902.16	16.0	0.0306	0.489	500:1	902.65	
					216+00	902.46	16.0	0.0337	0.539	500:1	903.00	
					216+25	902.84	16.0	0.0368	0.589	500:1	903.43	
					216+50	903.22	16.0	0.0400	0.639	500:1	903.86	
					216+75	903.60	16.0	0.0431	0.689	500:1	904.29	
					216+90.35	903.84	16.0	0.0450	0.720	500:1	904.56	SC
					217+00	903.98	16.0	0.0450	0.720		904.70	
					217+22.50	904.32	16.0	0.0450	0.720		905.04	
					217+25	904.36	16.0	0.0450	0.720		905.08	
					217+50	904.70	16.0	0.0450	0.720		905.42	
					217+75	904.97	16.0	0.0450	0.720		905.69	
					218+00	905.17	16.0	0.0450	0.720		905.89	
					218+25	905.30	16.0	0.0450	0.720		906.02	
					218+50	905.36	16.0	0.0450	0.720		906.08	
					218+75	905.35	16.0	0.0450	0.720		906.07	
					219+00	905.26	16.0	0.0450	0.720		905.98	
					219+25	905.11	16.0	0.0450	0.720		905.83	
					219+50	904.89	16.0	0.0450	0.720		905.61	
					219+75	904.60	16.0	0.0450	0.720		905.32	
					220+00	904.24	16.0	0.0450	0.720		904.96	
					220+25	903.81	16.0	0.0450	0.720		904.53	
					220+50	903.31	16.0	0.0450	0.720		904.03	
					220+75	902.74	16.0	0.0450	0.720		903.46	
					221+00	902.10	16.0	0.0450	0.720		902.82	
					221+25	901.39	16.0	0.0450	0.720		902.11	
					221+37.50	901.01	16.0	0.0450	0.720		901.73	
					221+50	900.62	16.0	0.0450	0.720		901.34	
					221+70.00	900.00	16.0	0.0450	0.720		900.72	
					221+75	899.84	16.0	0.0450	0.720		900.56	
					221+97.01	899.23	16.0	0.0450	0.720	222:1	899.95	
					222+00	899.15	16.0	0.0442	0.707	222:1	899.86	
					222+25	898.59	16.0	0.0371	0.594	222:1	899.18	
					222+50	898.15	16.0	0.0301	0.482	222:1	898.63	
					222+61.01	898.00	16.0	0.0270	0.432	222:1	898.43	PT
					222+75	897.84	16.0	0.0231	0.369	222:1	898.21	
					222+79.21	897.80	16.00	0.0219	0.350	222:1	898.15	
					222+91.37	897.70	17.22	0.0185	0.318	222:1	898.02	
					223+00	897.65	18.08	0.0160	0.290	222:1	897.94	
					223+00.12	897.65	18.09	0.0160	0.289		897.94	
					223+25	897.59	20.58	0.0160	0.329		897.92	
					223+31.37	897.60	21.22	0.0160	0.339		897.94	
					223+39.21	897.62	22.00	0.0160	0.352		897.97	

SUPERELEVATION TABLE RAMP C

P.I. STA. 234+02.39 (RAMP C) | Dc = 1° 30′ 00″

LEFT SIDE					CENTERLINE CONTROL		RIGHT SIDE					REMARKS
EDGE ELEVATION	TRANSITION RATE	ELEVATION CORRECTION	CROSS SLOPE	WIDTH	STATION	PROFILE GRADE	WIDTH	CROSS SLOPE	ELEVATION CORRECTION	TRANSITION RATE	EDGE ELEVATION	
					229+00	921.09	16.0	0.016	0.256		921.35	
					229+25	922.57	16.0	0.016	0.256		922.82	
					229+35.00	923.16	16.0	0.016	0.256		923.41	
					229+50	924.03	16.0	0.016	0.256		924.29	
					229+75	925.42	16.0	0.016	0.256		925.68	
					230+00	926.74	16.0	0.016	0.256		927.00	
					230+25	927.99	16.0	0.016	0.256		928.24	
					230+50	929.16	16.0	0.016	0.256		929.41	
					230+75	930.25	16.0	0.016	0.256		930.51	
					230+76.82	930.33	16.0	0.016	0.256	222:1	930.59	
					231+00	931.27	16.0	0.022	0.360	222:1	931.63	
					231+12.14	931.74	16.0	0.037	0.592	222:1	932.34	PC
					231+25	932.22	16.0	0.030	0.472	222:1	932.69	
					231+50	933.09	16.0	0.037	0.584	222:1	933.68	
					231+51.74	933.15	16.0	0.037	0.592		933.74	
					231+75	933.89	16.0	0.037	0.592		934.48	
					232+00	934.62	16.0	0.037	0.592		935.21	
					232+25	935.27	16.0	0.037	0.592		935.86	
					232+50	935.84	16.0	0.037	0.592		936.43	
					232+75	936.34	16.0	0.037	0.592		936.93	
					233+00	936.77	16.0	0.037	0.592		937.36	
					233+25	937.12	16.0	0.037	0.592		937.71	
					233+50	937.40	16.0	0.037	0.592		937.99	
					233+75	937.60	16.0	0.037	0.592		938.20	
					234+00	937.77	16.0	0.037	0.592		938.36	
					234+25	937.97	16.0	0.037	0.592		938.56	
					234+50	938.16	16.0	0.037	0.592		938.75	
					234+75	938.32	16.0	0.037	0.592		938.91	
					235+00	938.47	16.0	0.037	0.592		939.06	
					235+15.00	938.55	16.00	0.037	0.592		939.14	
					235+25	938.60	15.68	0.037	0.580		939.18	
					235+50	938.73	14.88	0.037	0.551		939.28	
					235+75	938.82	14.08	0.037	0.521		939.34	
					236+00	938.91	13.28	0.037	0.491		939.40	
					236+17.04	938.98	12.73	0.037	0.471	251:1	939.45	
					236+25	939.01	12.65	0.035	0.443	251:1	939.45	
					236+50	939.11	12.38	0.029	0.357	251:1	939.46	
					236+75	939.18	12.11	0.023	0.274	251:1	939.45	
					236+85.50	939.20	12.00	0.020	0.240	251:1	939.44	
					236+91.54	939.22	12.00	0.020	0.240		939.46	PT

CALCULATED ACF | CHECKED JLG

SUPERELEVATION TABLE (S.R. 65 RAMP B & C)

ALL-75-0.21

I:\Pd\89029\roadway\sheets\89029GE301.dgn 25-JUN-2013 10:21AM tbolenba

SUPERELEVATION TABLE

P.I. STA. 230+64.60	Dc = 1° 00′ 00″

LEFT SIDE					CENTERLINE CONTROL		RIGHT SIDE					REMARKS
EDGE ELEVATION	TRANSITION RATE	ELEVATION CORRECTION	CROSS SLOPE	WIDTH	STATION	PROFILE GRADE	WIDTH	CROSS SLOPE	ELEVATION CORRECTION	TRANSITION RATE	EDGE ELEVATION	
					223+90.86	902.19						
					224+00	902.00						
					224+15.31	901.68						
					224+25	901.52						
					224+37.50	901.32						
					224+50	901.17						
					224+54.64	901.13	4.00	0.0163	0.065	161:1	901.20	
					224+55.40	901.13	3.92	0.0160	0.063		901.19	
901.43		0.320	0.0160	20.00	224+61.51	901.11	3.31	0.0160	0.053		901.16	
901.43		0.298	0.0160	18.65	224+75	901.13	1.96	0.0160	0.031		901.16	
901.61		0.267	0.0160	16.69	224+94.64	901.35	0.00	0.0160	0.000		901.35	
901.70		0.258	0.0160	16.15	225+00	901.44						
901.73		0.256	0.0160	16.00	225+01.51	901.48						
902.38		0.256	0.0160	16.0	225+25	902.12						
903.41		0.256	0.0160	16.0	225+50	903.15						
903.53		0.256	0.0160	16.0	225+52.50	903.28						
904.66		0.256	0.0160	16.0	225+75	904.40						
905.91		0.256	0.0160	16.0	226+00	905.65						
907.15		0.256	0.0160	16.0	226+25	906.90						
907.71		0.256	0.0160	16.0	226+36.04	907.45						
908.09	223:1	0.288	0.0180	16.0	226+43.17	907.81						PC

SUPERELEVATION TABLE

P.I. STA. 230+64.60	Dc = 1° 00′ 00″

LEFT SIDE					CENTERLINE CONTROL		RIGHT SIDE					REMARKS
EDGE ELEVATION	TRANSITION RATE	ELEVATION CORRECTION	CROSS SLOPE	WIDTH	STATION	PROFILE GRADE	WIDTH	CROSS SLOPE	ELEVATION CORRECTION	TRANSITION RATE	EDGE ELEVATION	
908.09	223:1	0.288	0.0180	16.0	226+43	907.81						PC
908.47	223:1	0.319	0.0199	16.0	226+50	908.15						
909.83	223:1	0.431	0.0269	16.0	226+75	909.40						
910.42	223:1	0.480	0.0300	16.0	226+86	909.94						
911.12		0.480	0.0300	16.0	227+00	910.64						
912.37		0.480	0.0300	16.0	227+25	911.89						
913.62		0.480	0.0300	16.0	227+50	913.14						
914.87		0.480	0.0300	16.0	227+75	914.39						
916.12		0.480	0.0300	16.0	228+00	915.64						
917.37		0.480	0.0300	16.0	228+25	916.89						
918.62		0.480	0.0300	16.0	228+50	918.14						
919.86		0.480	0.0300	16.0	228+75	919.38						
921.11		0.480	0.0300	16.0	229+00	920.63						
922.36		0.480	0.0300	16.0	229+25	921.88						
923.61		0.480	0.0300	16.0	229+50	923.13						
924.73		0.480	0.0300	16.0	229+73	924.25						
924.86		0.480	0.0300	16.0	229+75	924.38						
926.08		0.480	0.0300	16.0	230+00	925.60						
927.24		0.480	0.0300	16.0	230+25	926.76						
928.34		0.480	0.0300	16.0	230+50	927.86						
929.39		0.480	0.0300	16.0	230+75	928.91						
930.39		0.480	0.0300	16.0	231+00	929.91						
931.33		0.480	0.0300	16.0	231+25	930.85						
932.22		0.480	0.0300	16.0	231+50	931.74						
933.05		0.480	0.0300	16.0	231+75	932.57						
933.83		0.480	0.0300	16.0	232+00	933.35						
934.55		0.480	0.0300	16.0	232+25	934.07						
935.22		0.480	0.0300	16.0	232+50	934.74						
935.83		0.480	0.0300	16.0	232+75	935.35						
936.39		0.480	0.0300	16.0	233+00	935.91						
936.89		0.480	0.0300	16.0	233+25	936.41						
937.34		0.480	0.0300	16.0	233+50	936.86						
937.73		0.480	0.0300	16.0	233+75	937.25						
938.07		0.480	0.0300	16.0	234+00	937.59						
938.36		0.480	0.0300	16.0	234+25	937.88						
938.59		0.480	0.0300	16.0	234+50	938.11						
938.76		0.480	0.0300	16.0	234+75	938.28						
938.81	534:1	0.480	0.0300	16.0	234+84.50	938.33						CS
938.85	534:1	0.461	0.0284	16.0	234+98	938.39						
938.86	534:1	0.457	0.0286	16.0	235+00	938.40						
938.92	534:1	0.419	0.0252	16.0	235+25	938.50						
938.99	534:1	0.382	0.0223	16.0	235+50	938.61						
939.05	534:1	0.345	0.0200	16.0	235+70	938.71						
939.10		0.320	0.0200	16.0	235+75	938.78						
939.13		0.320	0.0200	16.0	236+00	938.81						
939.17		0.320	0.0200	16.0	236+25	938.85						
939.22		0.320	0.0200	16.0	236+50	938.90						
939.26		0.320	0.0200	16.0	236+75	938.94						
939.28		0.320	0.0200	16.0	236+85	938.96						SC

CALCULATED ACF
CHECKED JLG

SUPERELEVATION TABLE (S.R. 65 RAMP D)

ALL-75-0.21

446
907

I:\Pd\89029\roadway\sheets\89029GE302.dgn 25-JUN-2013 10:21AM tbolenba

SUPERELEVATION TABLE

P.I. STA. 3+12.82 | Dc = 34° 00′ 00″

LEFT SIDE				CENTERLINE CONTROL		RIGHT SIDE								REMARKS
EDGE ELEVATION	ELEVATION CORRECTION	CROSS SLOPE	WIDTH	STATION	PROFILE GRADE	WIDTH	CROSS SLOPE	ELEVATION CORRECTION	EDGE ELEVATION	TURN LANE WIDTH	CROSS SLOPE	ELEVATION CORRECTION	EDGE ELEVATION	
907.61	-0.018	-0.0010	18.00	0+30	907.63	18.00	-0.001	-0.014	907.62					
907.46	-0.144	-0.0080	18.00	0+50	907.60	18.00	-0.008	-0.147	907.46					
907.29	-0.288	-0.0160	18.00	0+71	907.57	25.67	-0.016	-0.411	907.16					
907.28	-0.288	-0.016	18.00	0+75	907.57	25.05	-0.016	-0.401	907.17					
907.28	-0.288	-0.016	18.00	0+78.83	907.56	24.46	-0.016	-0.391	907.17					
907.25	-0.288	-0.016	18.00	1+00	907.54	21.18	-0.016	-0.339	907.20					
907.24	-0.288	-0.016	18.00	1+06.93	907.53	20.10	-0.016	-0.322	907.20					
907.22	-0.288	-0.016	18.00	1+18.96	907.51	18.24	-0.016	-0.292	907.22					
907.21	-0.288	-0.016	18.00	1+25	907.50	18.00	-0.016	-0.288	907.21					
907.20	-0.288	-0.016	18.00	1+38.86	907.48	18.00	-0.016	-0.288	907.20	1.91	-0.016	-0.031	907.17	
907.18	-0.288	-0.016	18.00	1+50	907.47	18.00	-0.010	-0.171	907.30	4.59	-0.010	-0.046	907.25	
907.16	-0.288	-0.016	18.00	1+66.38	907.45	18.00	0.000	0.000	907.45	8.52	0.000	0.000	907.45	
907.12	-0.320	-0.018	18.00	1+75	907.44	18.00	0.005	0.090	907.53	10.59	0.005	0.053	907.58	
907.09	-0.343	-0.019	18.00	1+80.85	907.43	18.00	0.008	0.151	907.58	12.00	0.008	0.096	907.68	PC
907.02	-0.392	-0.022	18.00	1+93.90	907.41	18.00	0.016	0.288	907.70	12.00	0.016	0.192	907.89	
906.99	-0.415	-0.023	18.00	2+00	907.40	18.00	0.020	0.352	907.75	12.00	0.020	0.240	907.99	
906.94	-0.450	-0.025	18.00	2+09.38	907.39	18.00	0.025	0.450	907.84	12.00	0.025	0.300	908.14	
906.92	-0.450	-0.025	18.00	2+25	907.37	18.00	0.025	0.450	907.82	12.00	0.025	0.300	908.12	
906.89	-0.450	-0.025	18.00	2+50	907.34	18.00	0.025	0.450	907.79	12.00	0.025	0.300	908.09	
906.85	-0.450	-0.025	18.00	2+75	907.30	18.00	0.025	0.450	907.75	12.00	0.023	0.276	908.03	
906.82	-0.450	-0.025	18.00	3+00	907.27	18.00	0.025	0.450	907.72	12.00	0.006	0.072	907.79	
906.79	-0.450	-0.025	18.00	3+25	907.24	18.00	0.025	0.450	907.69	12.00	-0.010	-0.120	907.57	
906.75	-0.450	-0.025	18.00	3+50	907.20	18.00	0.025	0.450	907.65	12.00	-0.020	-0.240	907.41	
906.72	-0.450	-0.025	18.00	3+75	907.17	18.00	0.025	0.450	907.62					
906.72	-0.450	-0.025	18.00	3+76.10	907.17	18.00	0.025	0.450	907.62					
906.79	-0.341	-0.019	18.00	4+00	907.13	18.00	0.019	0.341	907.48					
906.81	-0.319	-0.018	18.00	4+04.77	907.13	18.00	0.018	0.319	907.45					PT
906.88	-0.221	-0.013	17.56	4+25	907.10	17.56	0.013	0.221	907.32					
906.93	-0.107	-0.006	17.03	4+50	907.04	17.03	0.006	0.107	907.15					
906.93	0.000	0.000	16.50	4+74.77	906.93	16.50	0.000	0.000	906.93					

SUPERELEVATION TABLE

P.I. STA. 6+40.98 | Dc = 34° 00′ 00″

LEFT SIDE				CENTERLINE CONTROL		RIGHT SIDE				REMARKS
EDGE ELEVATION	ELEVATION CORRECTION	CROSS SLOPE	WIDTH	STATION	PROFILE GRADE	WIDTH	CROSS SLOPE	ELEVATION CORRECTION	EDGE ELEVATION	
906.93	0.000	0.000	16.50	4+74.77	906.93	16.50	0.000	0.000	906.93	
906.93	0.001	0.000	16.50	4+75	906.93	16.50	0.000	-0.001	906.92	
906.86	0.102	0.006	15.96	5+00	906.76	15.96	-0.006	-0.102	906.65	
906.73	0.196	0.013	15.42	5+25	906.53	15.42	-0.013	-0.196	906.34	
906.58	0.266	0.018	15.00	5+44.77	906.32	15.00	-0.018	-0.266	906.05	PC
906.54	0.286	0.019	15.00	5+50	906.25	15.00	-0.019	-0.286	905.97	
906.32	0.375	0.025	15.00	5+73.44	905.94	15.00	-0.025	-0.375	905.57	
906.30	0.375	0.025	15.00	5+75	905.92	15.00	-0.025	-0.375	905.55	
905.94	0.375	0.025	15.00	6+00	905.56	15.00	-0.025	-0.375	905.19	
905.58	0.375	0.025	15.00	6+25	905.20	15.00	-0.025	-0.375	904.83	
905.22	0.375	0.025	15.00	6+50	904.84	15.00	-0.025	-0.375	904.47	
904.90	0.375	0.025	15.00	6+75	904.53	15.00	-0.025	-0.375	904.15	
904.75	0.375	0.025	15.00	6+90.94	904.38	15.00	-0.025	-0.375	904.00	
904.60	0.296	0.020	15.00	7+00	904.31	15.00	-0.023	-0.347	903.96	
904.32	0.125	0.008	15.00	7+19.61	904.20	14.84	-0.019	-0.282	903.92	PT
904.25	0.078	0.005	14.92	7+25	904.18	14.59	-0.018	-0.261	903.92	
904.15	0.000	0.000	14.54	7+33.94	904.15	14.18	-0.016	-0.227	903.93	
904.01	-0.129	-0.009	13.80	7+50	904.14	13.45	-0.016	-0.215	903.93	
903.94	-0.212	-0.016	13.28	7+61.46	904.16	12.92	-0.016	-0.207	903.95	
903.99	-0.203	-0.016	12.66	7+75	904.20	12.30	-0.016	-0.197	904.00	
904.16	-0.184	-0.016	11.51	8+00	904.35	11.16	-0.016	-0.179	904.17	
904.37	-0.166	-0.016	10.37	8+25	904.54	10.01	-0.016	-0.160	904.38	

CALCULATED JLG | CHECKED RLS

SUPERELEVATION TABLE YODER RD.

ALL-75-0.21

447
907

I:\Pdt\89029\roadway\sheets\89029GE303.dgn 25-JUN-2013 10:21AM tbolenba

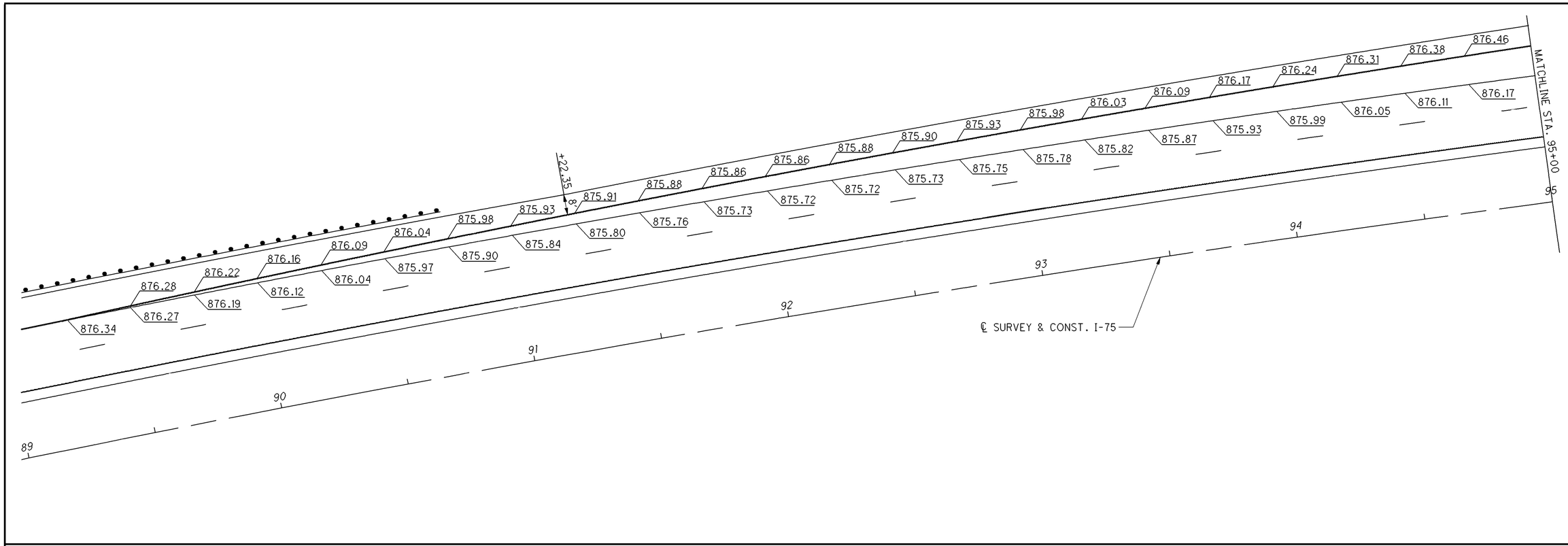

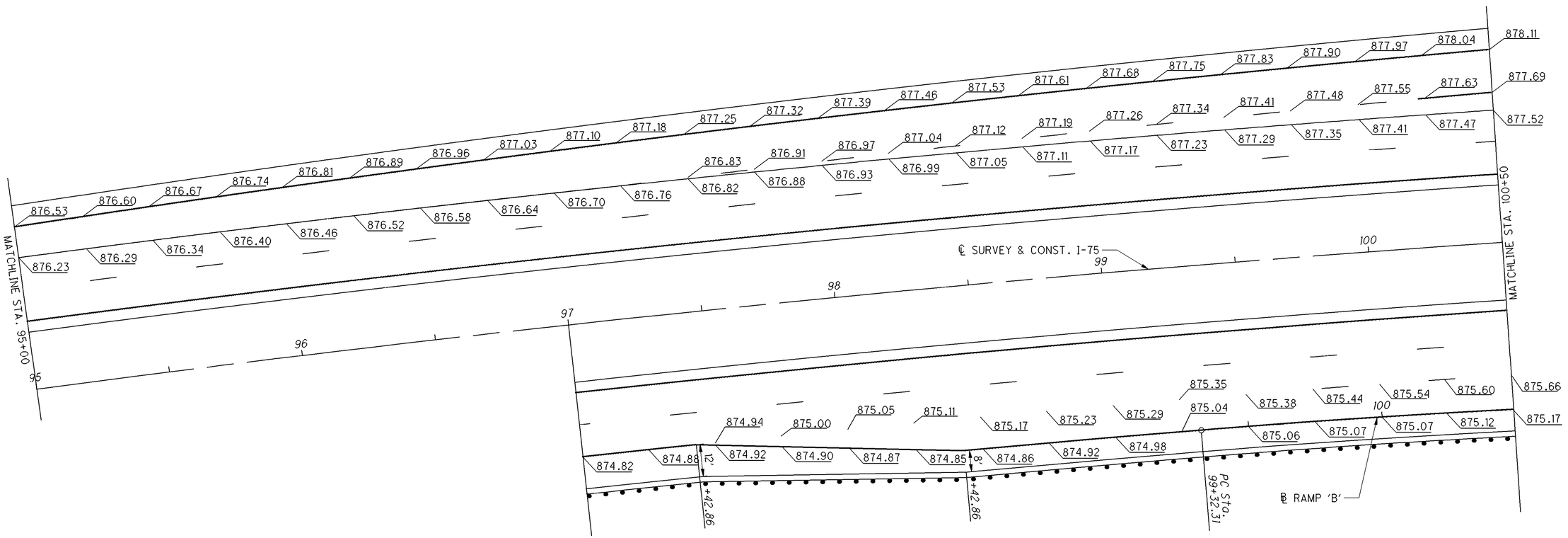

HORIZONTAL SCALE IN FEET
0 10 20 40

CALCULATED JLG
CHECKED RLS

PAVEMENT DETAILS
BREESE ROAD - RAMP 'A' AND RAMP 'B'

ALL-75-0.21

448
907

I:\Pd\89029\roadway\sheets\89029GA001AB.dgn 25-JUN-2013 10:21AM tbolenbo

I:\Pd\89029\roadway\sheets\89029GA002AB.dgn 25-JUN-2013 10:21AM tbolenba

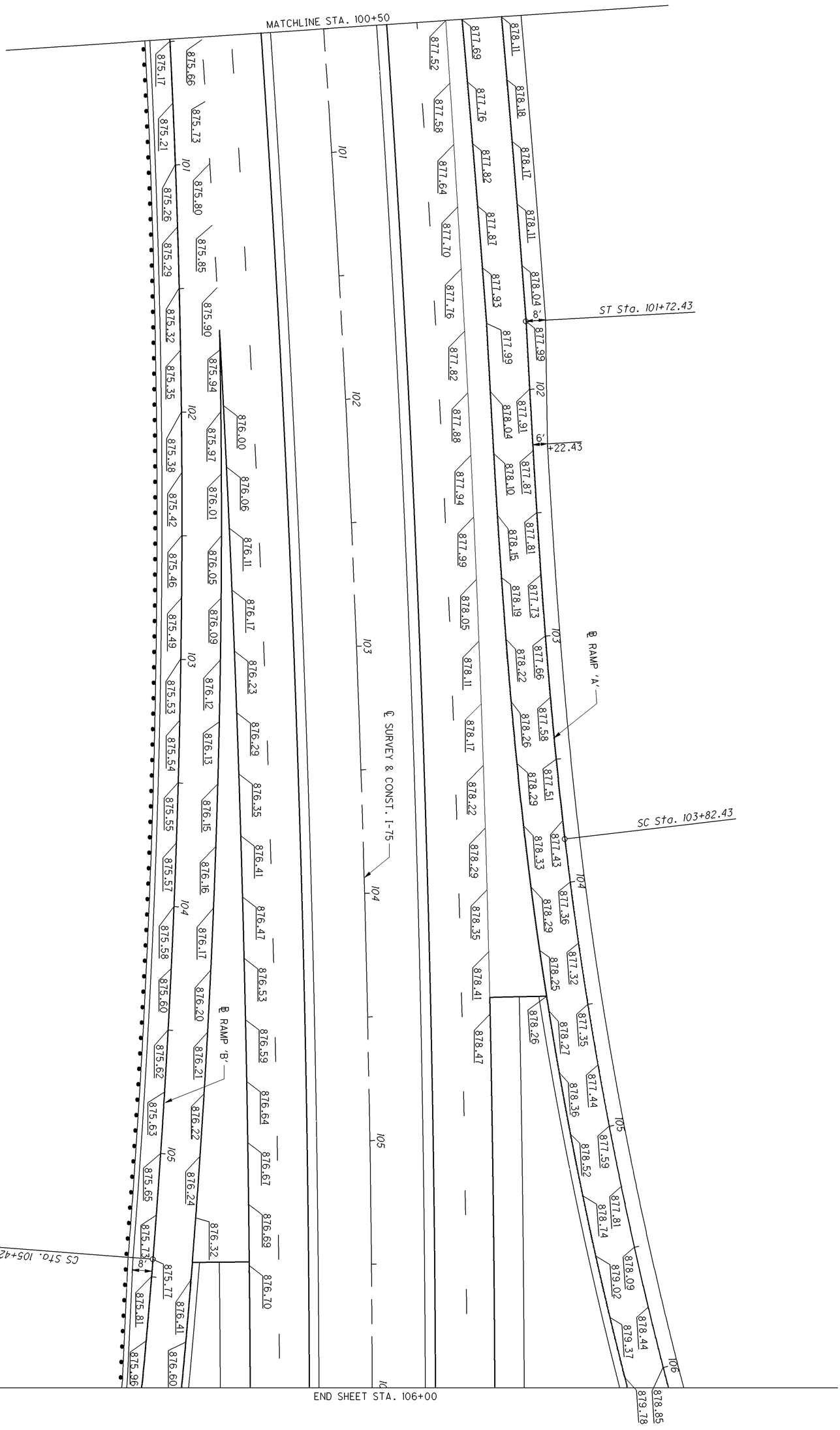

907 / 449	ALL-75-0.21	PAVEMENT DETAILS BREESE ROAD - RAMP 'A' AND RAMP 'B'	CALCULATED JLG CHECKED RLS	0 10 20 40 HORIZONTAL SCALE IN FEET

PAVEMENT DETAILS
BREESE ROAD - RAMP 'C' AND RAMP 'D'

HORIZONTAL SCALE IN FEET
0 10 20 40

CALCULATED JLG
CHECKED RLS

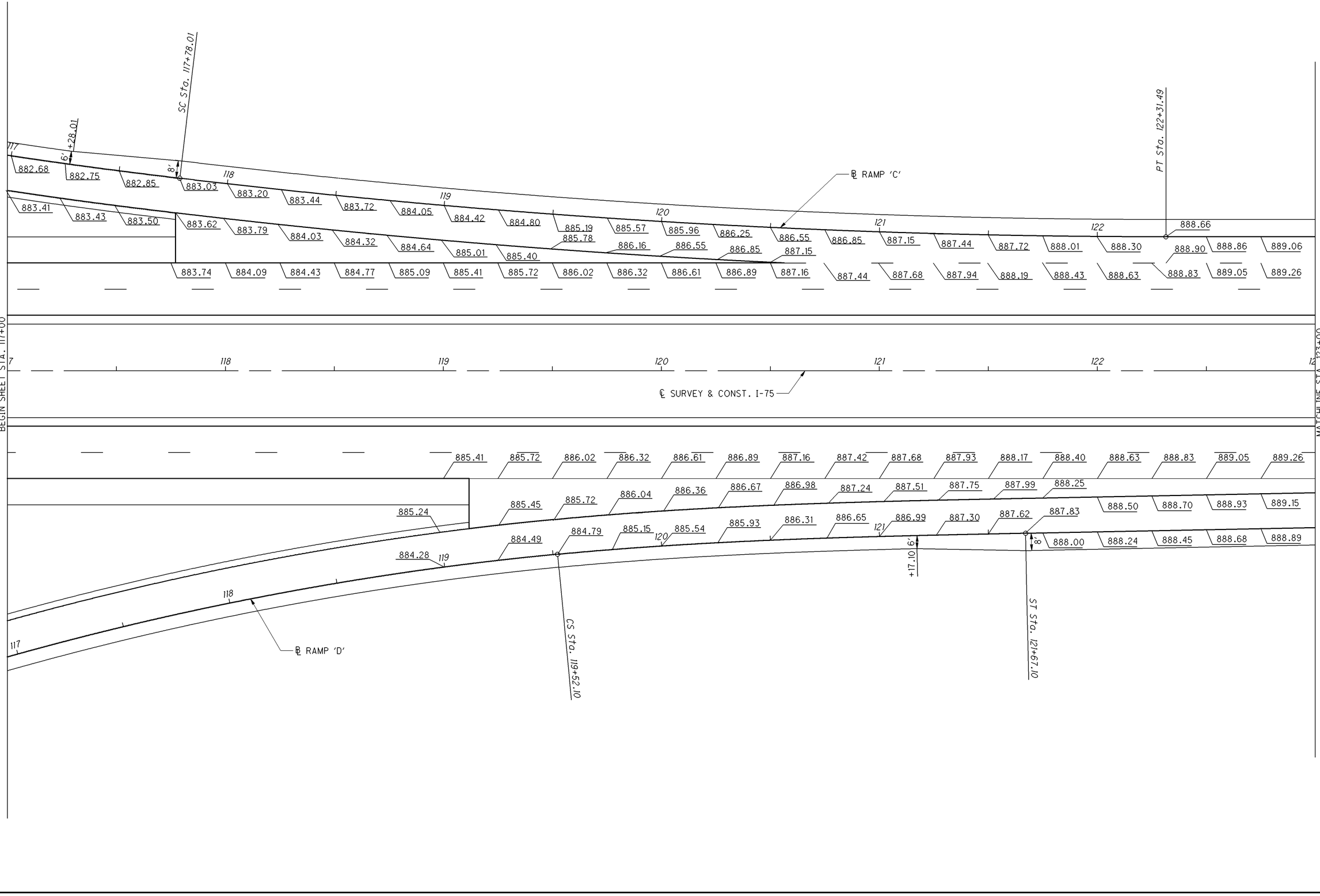

I:\Pd\89029\roadway\sheets\89029GA003CD.dgn 25-JUN-2013 10:21AM tbolenba

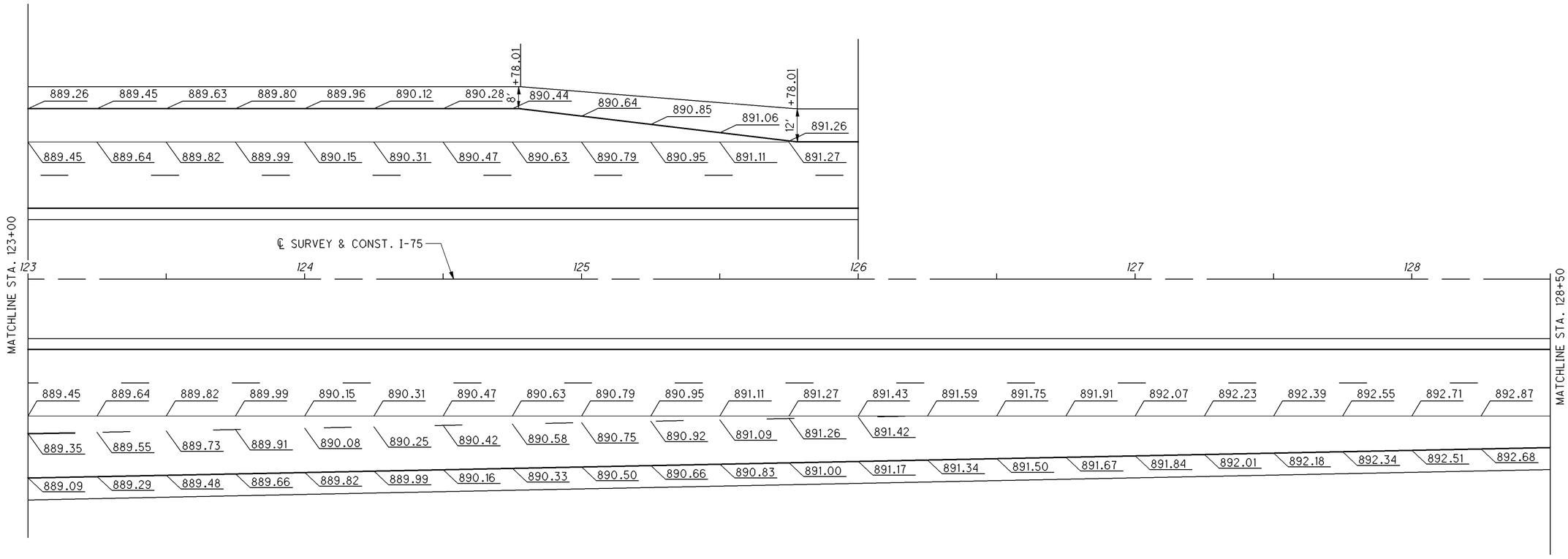

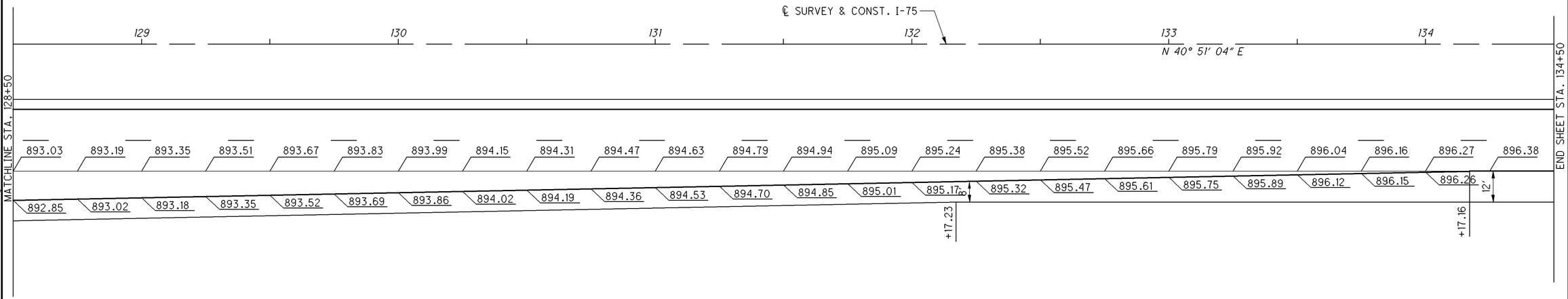

CALCULATED JLG
CHECKED RLS

HORIZONTAL SCALE IN FEET
0 10 20 40

PAVEMENT DETAILS
BREESE ROAD - RAMP 'C' AND RAMP 'D'

ALL-75-0.21

451
907

I:\Pd\89029\roadway\sheets\89029GA004CD.dgn 25-JUN-2013 10:21AM tbolenba

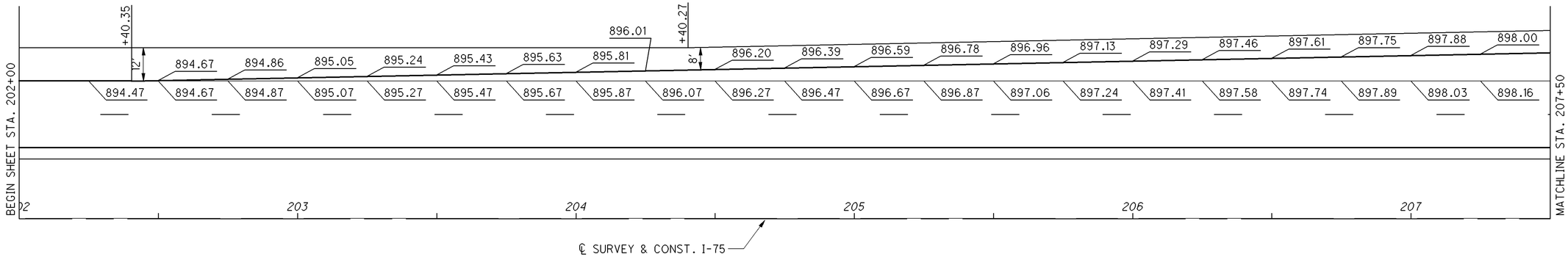

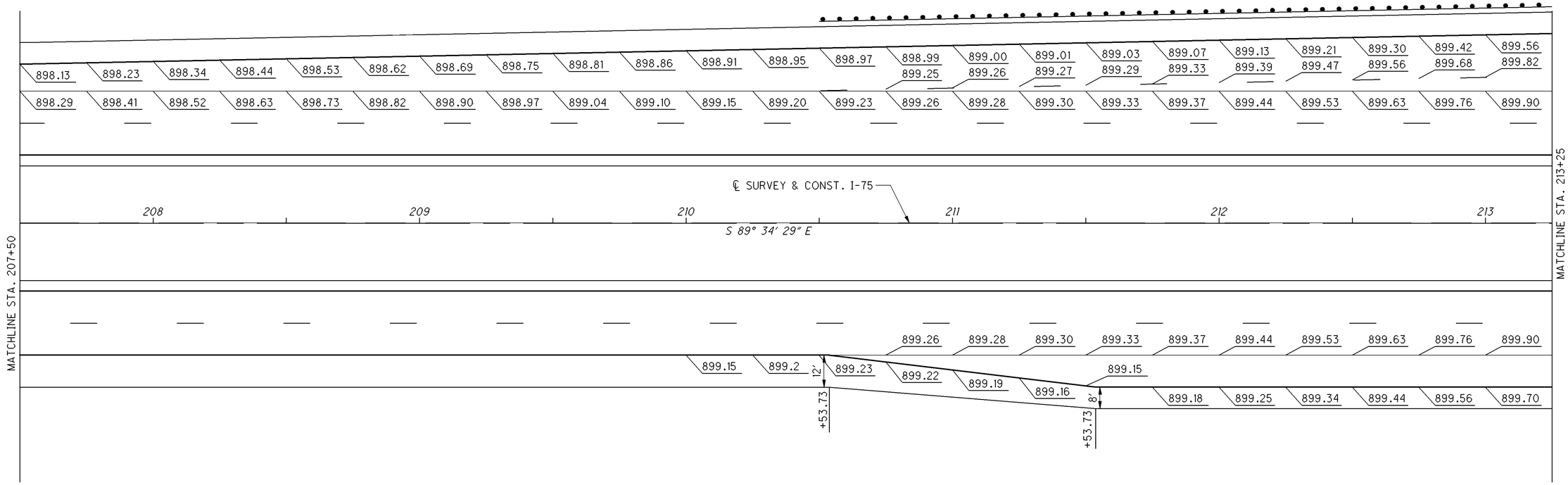

HORIZONTAL SCALE IN FEET
0 10 20 40

CALCULATED JLG
CHECKED RLS

PAVEMENT DETAILS
S.R. 65 - RAMP 'A' AND RAMP 'B'

ALL-75-0.21

452
907

I:\Pd\89029\roadway\sheets\89029GA005AB.dgn 25-JUN-2013 10:21AM tbolenba

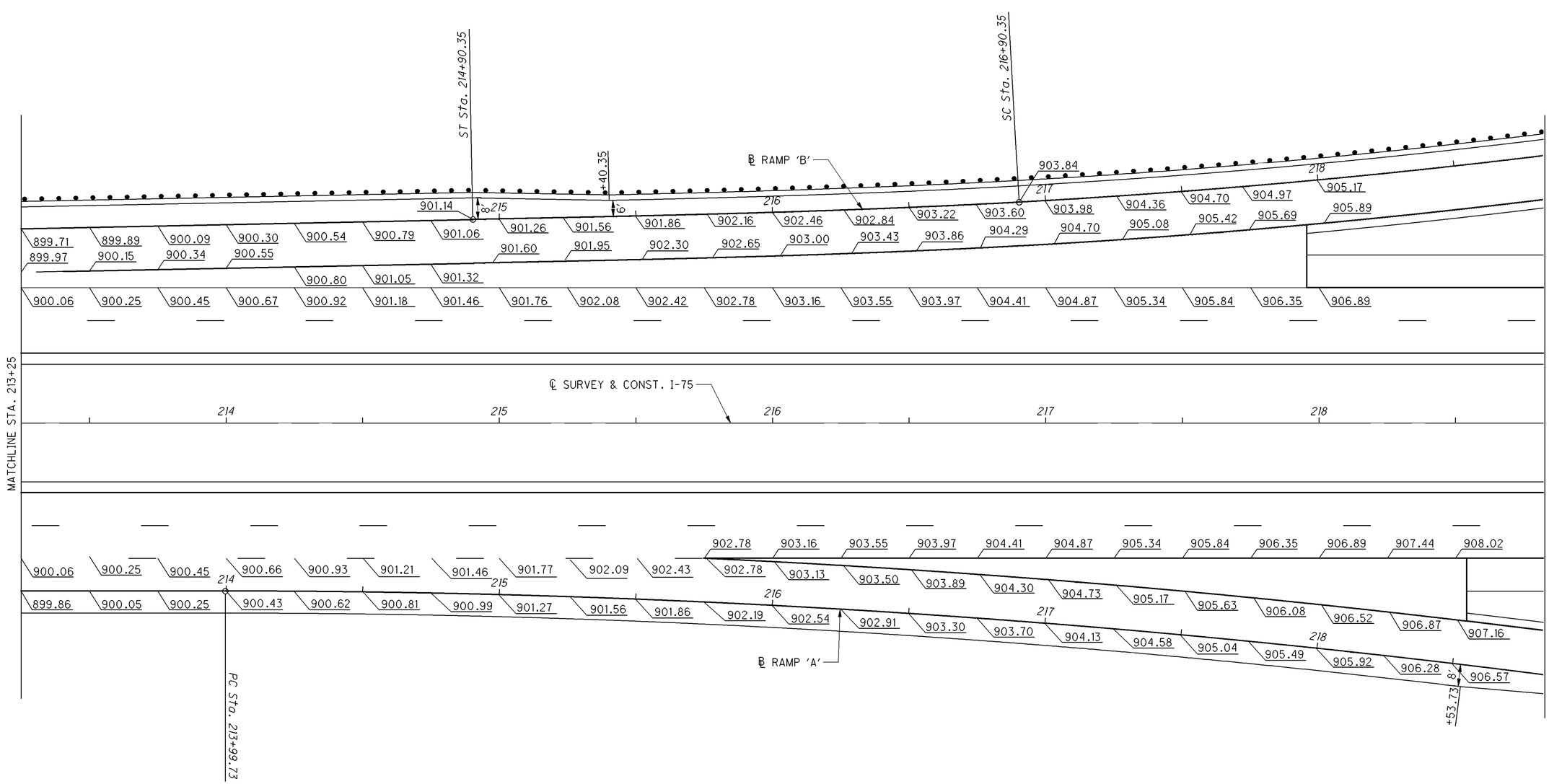

I:\Pd\89029\roadway\sheets\89029GA006AB.dgn 25-JUN-2013 10:21AM tbolenba

CALCULATED JLG
CHECKED RLS

HORIZONTAL SCALE IN FEET
0 10 20 40

PAVEMENT DETAILS
S.R. 65 - RAMP 'A' AND RAMP 'B'

ALL-75-0.21

453
907

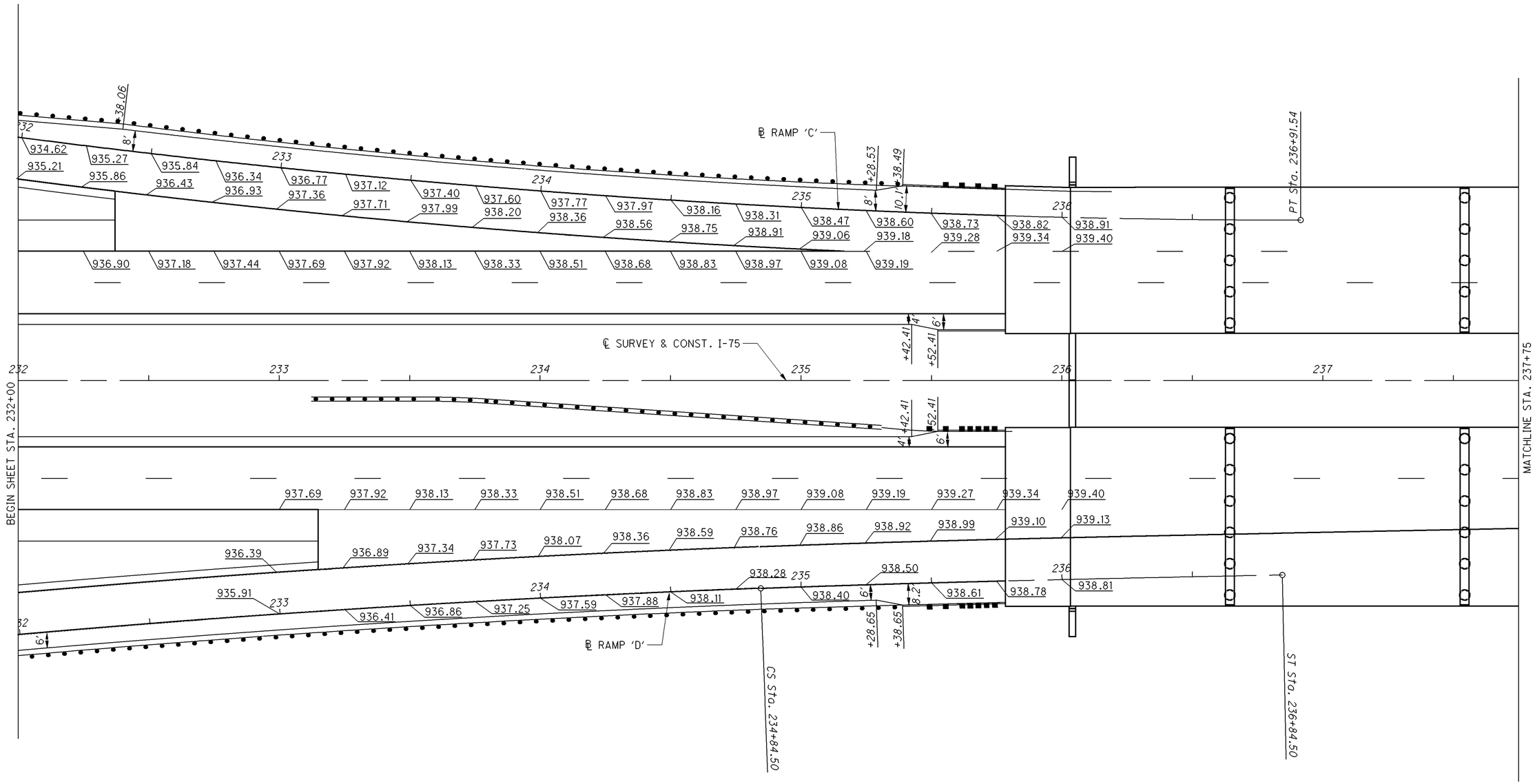

NOTE:

1. INTERSTATE ROUTE 75 - CONSTRUCTION STA. 237+16.78 (0.0' RT.) = INDIANA AND OHIO RAILWAY (IORY) AAR/DOT#258615H RR MP. 135.34 SUBDIVISION: DT&I MIDDLE

HORIZONTAL SCALE IN FEET
0 10 20 40

CALCULATED JLG
CHECKED RLS

PAVEMENT DETAILS
S.R. 65 - RAMP 'C' AND RAMP 'D'

ALL-75-0.21

454
907

I:\Pd\89029\roadway\sheets\89029GA007CD.dgn 25-JUN-2013 10:21AM tbolenba

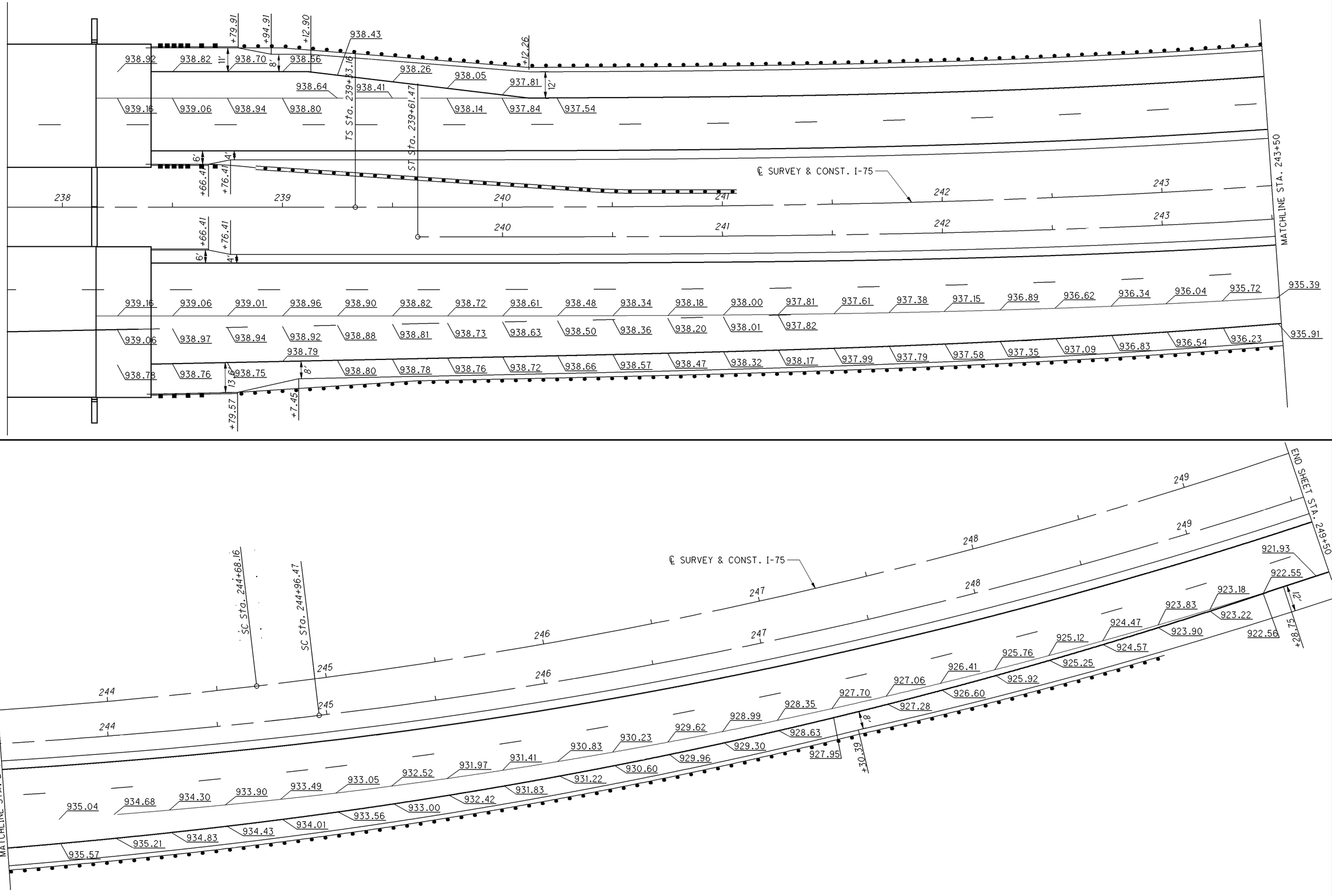

N

HORIZONTAL SCALE IN FEET
0 10 20 40

CALCULATED JLG
CHECKED RLS

PAVEMENT DETAILS
S.R. 65 - RAMP 'C' AND RAMP 'D'

ALL-75-0.21

455
907

I:\Pd\89029\roadway\sheets\89029GA008CD.dgn 25-JUN-2013 10:21AM tbolenba

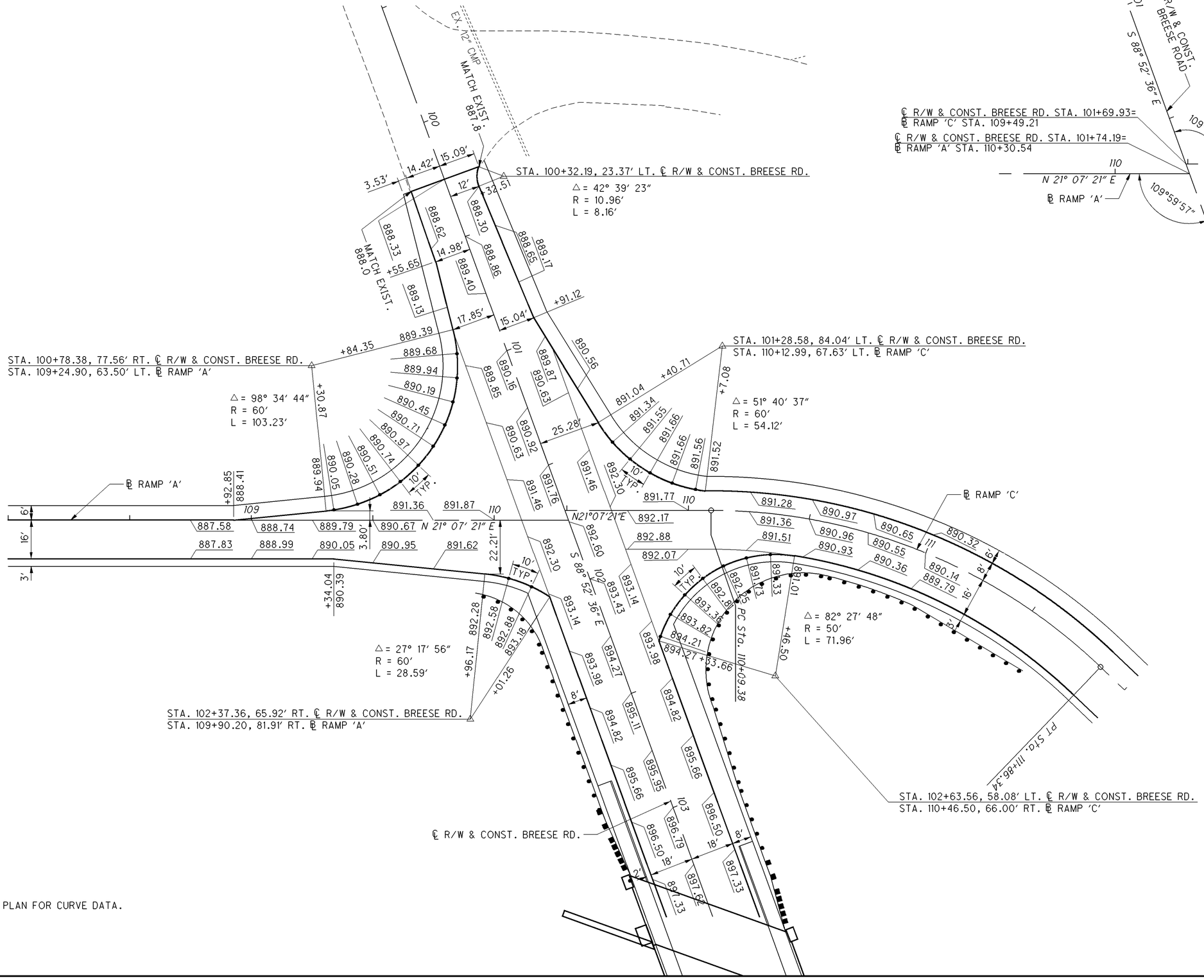

NOTES

SEE SCHEMATIC PLAN FOR CURVE DATA.

HORIZONTAL SCALE IN FEET
0 10 20 40

CALCULATED JLG
CHECKED BDC

INTERSECTION DETAIL
BREESE ROAD, RAMP 'A' AND RAMP 'C'

ALL-75-0.21

456
907

I:\Pd\89029\roadway\sheets\89029ci001.dgn 25-JUN-2013 10:21AM tbolenbo

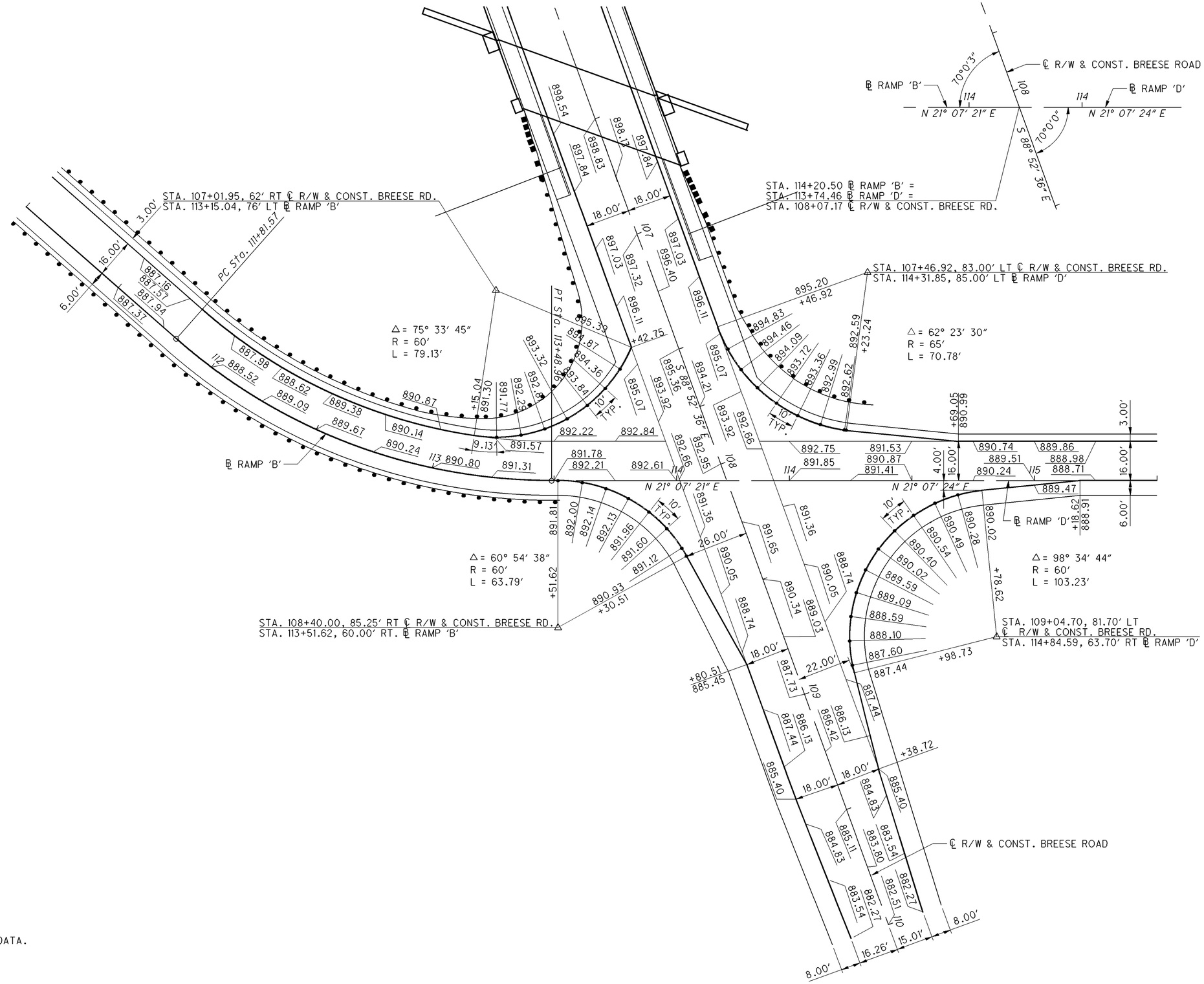

NOTES

SEE SCHEMATIC PLAN FOR CURVE DATA.

I:\Pd\89029\roadway\sheets\89029GI002.dgn 25-JUN-2013 10:21AM tbolenbo

HORIZONTAL SCALE IN FEET

CALCULATED JLG CHECKED BDC

INTERSECTION DETAIL
BREESE ROAD, RAMP 'B' AND RAMP 'D'

ALL-75-0.21

457
907

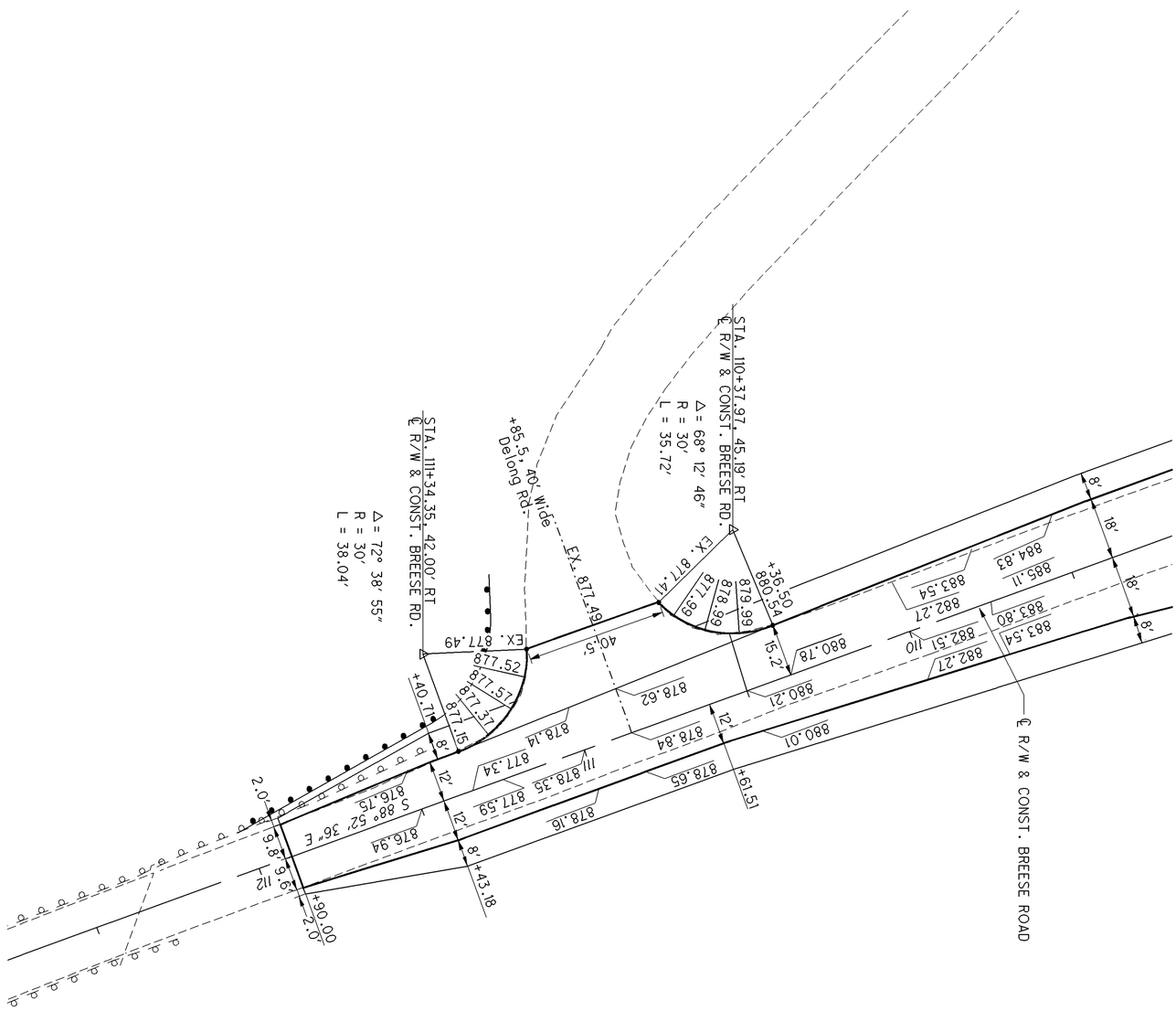

907 / 458	ALL-75-0.21	INTERSECTION DETAIL BREESE ROAD, DELONG ROAD	CALCULATED JLG CHECKED BDC	0 10 20 40 HORIZONTAL SCALE IN FEET

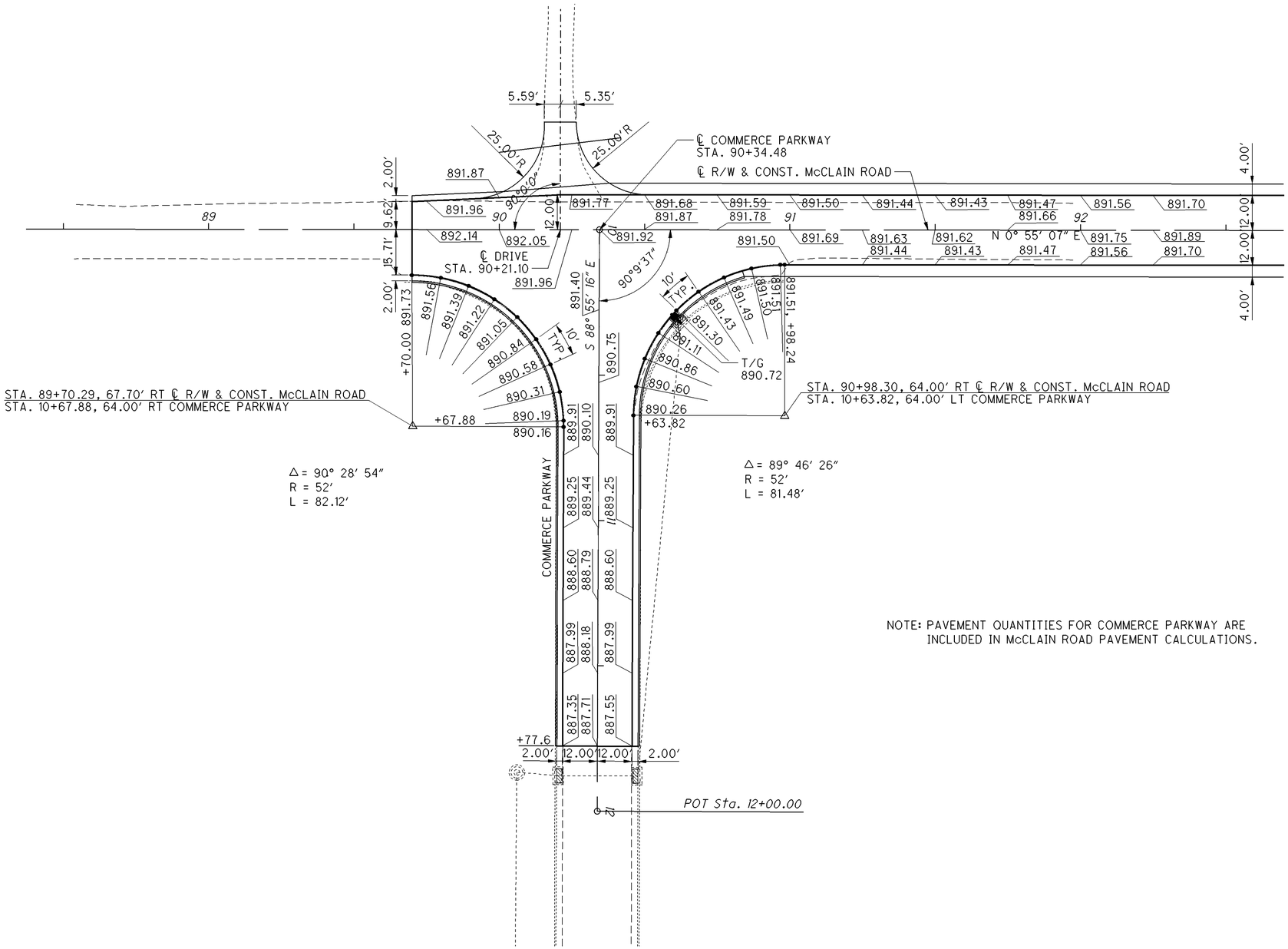

NOTE: PAVEMENT QUANTITIES FOR COMMERCE PARKWAY ARE INCLUDED IN McCLAIN ROAD PAVEMENT CALCULATIONS.

I:\Pd\89029\roadway\sheets\89029ci004.dgn 25-JUN-2013 10:21AM tbolenbo

HORIZONTAL SCALE IN FEET
0 10 20 40

CALCULATED JLG
CHECKED BDC

INTERSECTION DETAIL
COMMERCE PARKWAY AND McCLAIN RD.

ALL-75-0.21

459
907

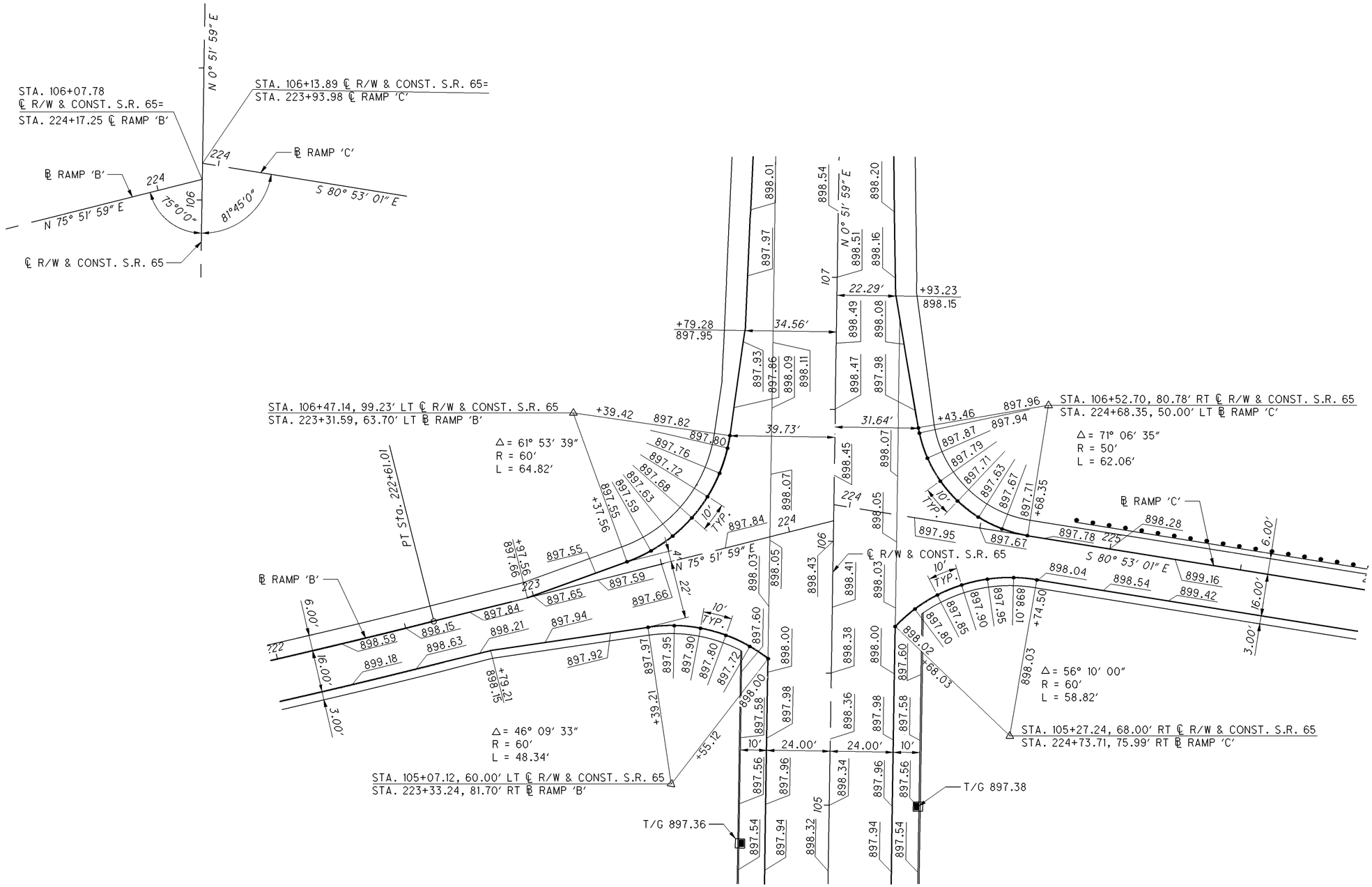

NOTES

SEE SCHEMATIC PLAN FOR CURVE DATA.

LEGEND

▣ CATCH BASIN, NO. 3A

HORIZONTAL SCALE IN FEET
0 10 20 40

CALCULATED JLG
CHECKED BDC

INTERSECTION DETAIL S.R. 65, RAMP 'B' AND RAMP 'C'

ALL-75-0.21

460
907

I:\Pd\89029\roadway\sheets\89029gl005.dgn 25-JUN-2013 10:21AM tbolenba

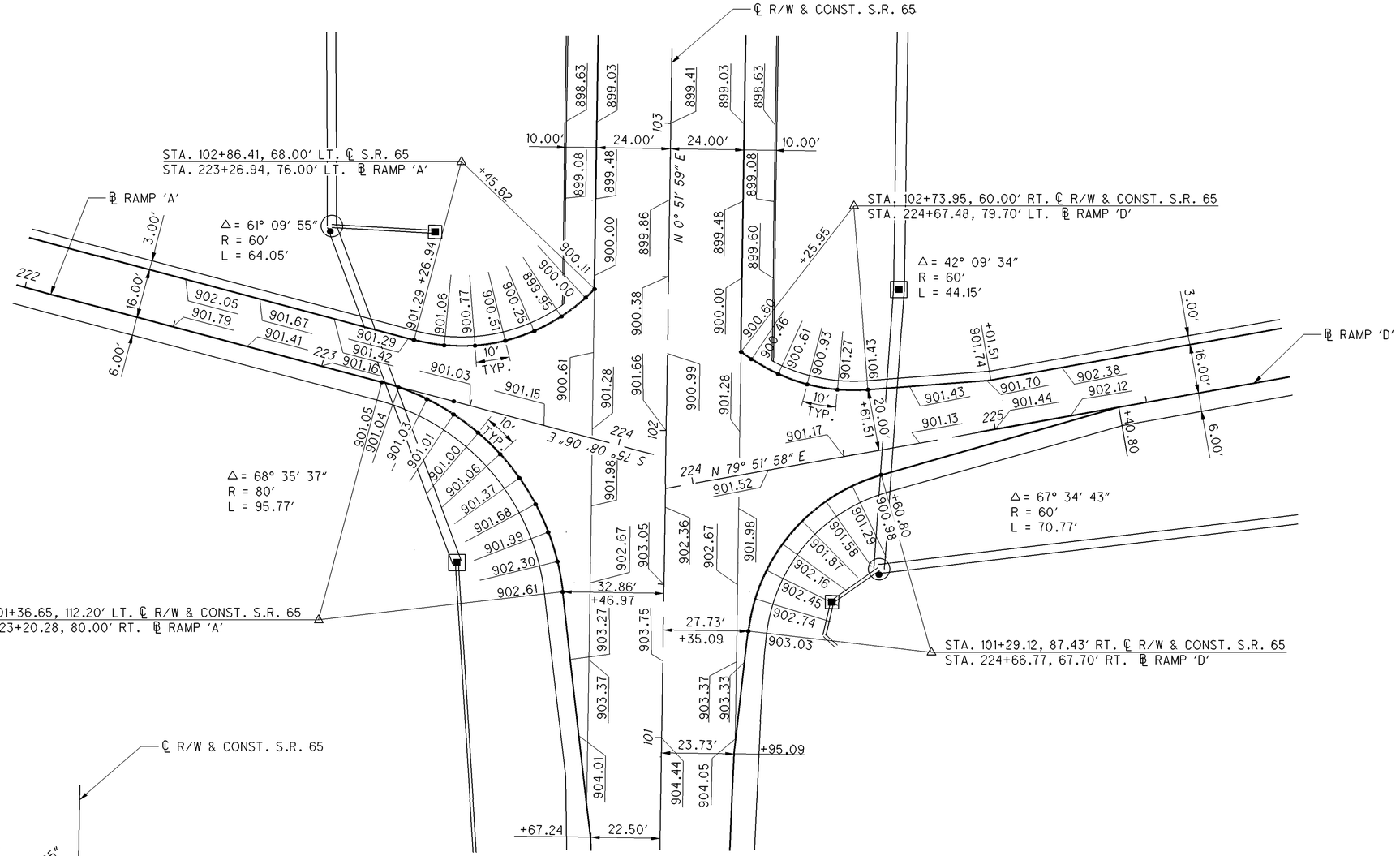

INTERSECTION DETAIL S.R. 65, RAMP 'A' AND RAMP 'D'

HORIZONTAL SCALE IN FEET
0 10 20 40

CALCULATED JLG
CHECKED BDC

ALL-75-0.21

461
907

I:\Pd\89029\roadway\sheets\89029GI006.dgn 25-JUN-2013 10:21AM tbolenba

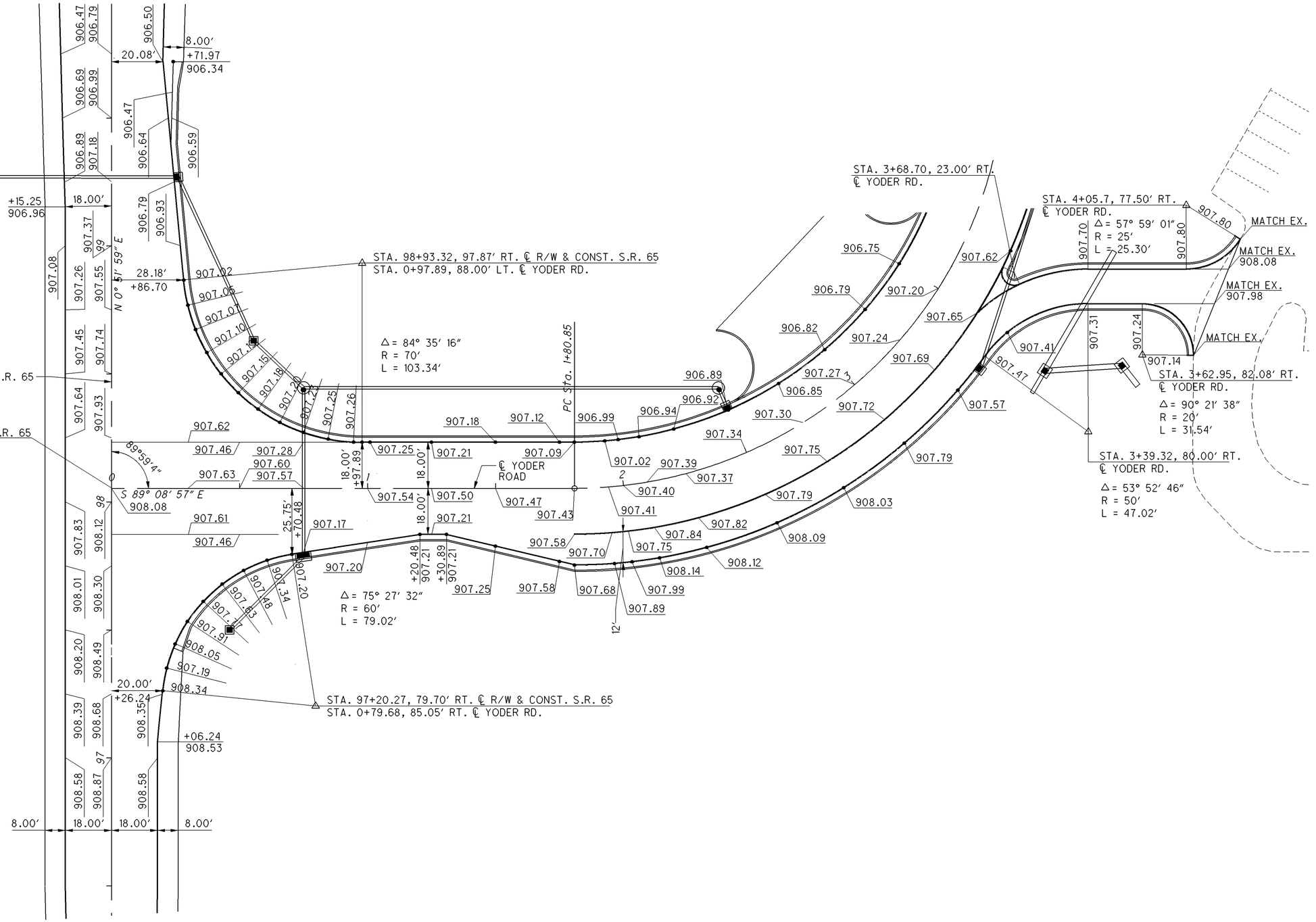

LEGEND

- CATCH BASIN, NO. 3A
- CATCH BASIN, NO. 2-2A
- MANHOLE, NO. 3

NOTE

SEE SCHEMATIC PLAN FOR CURVE DATA.

HORIZONTAL SCALE IN FEET
0 10 20 40

CALCULATED JLG
CHECKED BDC

INTERSECTION DETAIL S.R. 65 AND YODER ROAD

ALL-75-0.21

462
907

I:\Pd\89029\roadway\sheets\89029GI007.dgn 25-JUN-2013 10:21AM tbolenba

I:\Pd\89029\roadway\sheets\89029GA011.dgn 25-JUN-2013 10:20AM tbolenba

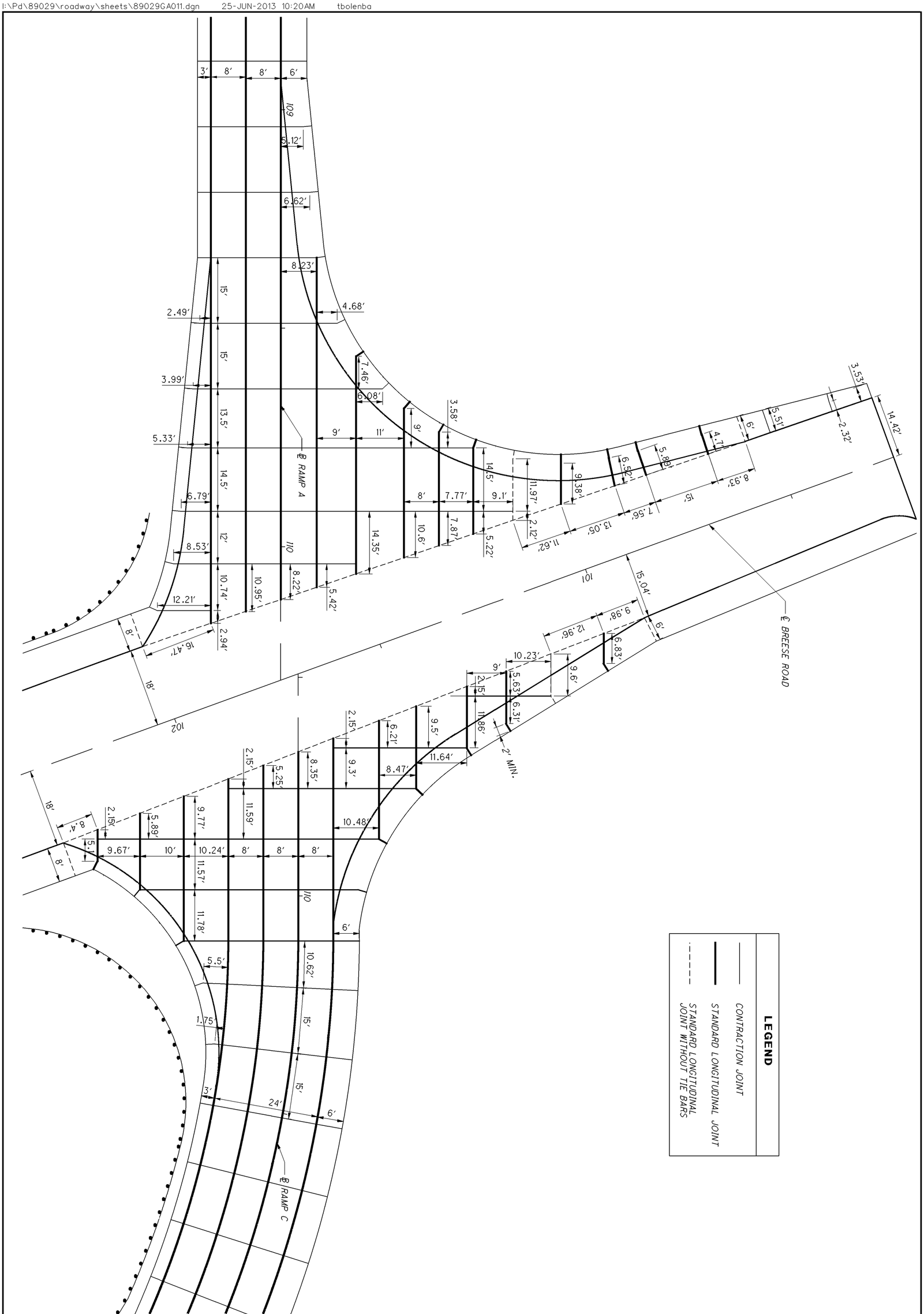

907 / 463	ALL-75-0.21	PAVEMENT JOINT DETAIL BREESE ROAD, RAMP 'A' AND RAMP 'C'	CALCULATED RLS CHECKED JLG	0 10 5 20 HORIZONTAL SCALE IN FEET

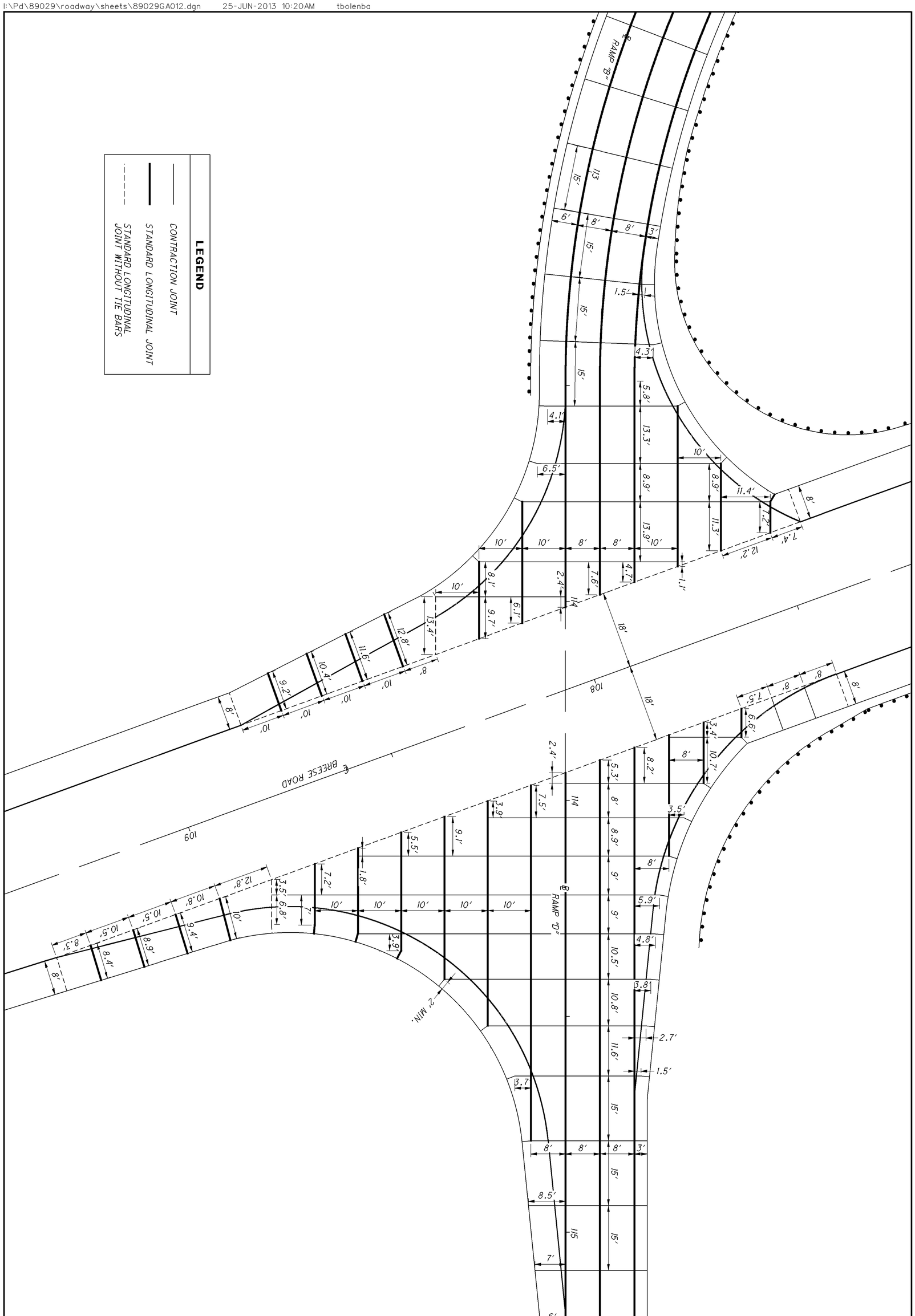

464 / 907	ALL-75-0.21	PAVEMENT JOINT DETAIL BREESE ROAD, RAMP 'B' AND RAMP 'D'	CALCULATED JLG CHECKED RLS	0 5 10 20 HORIZONTAL SCALE IN FEET

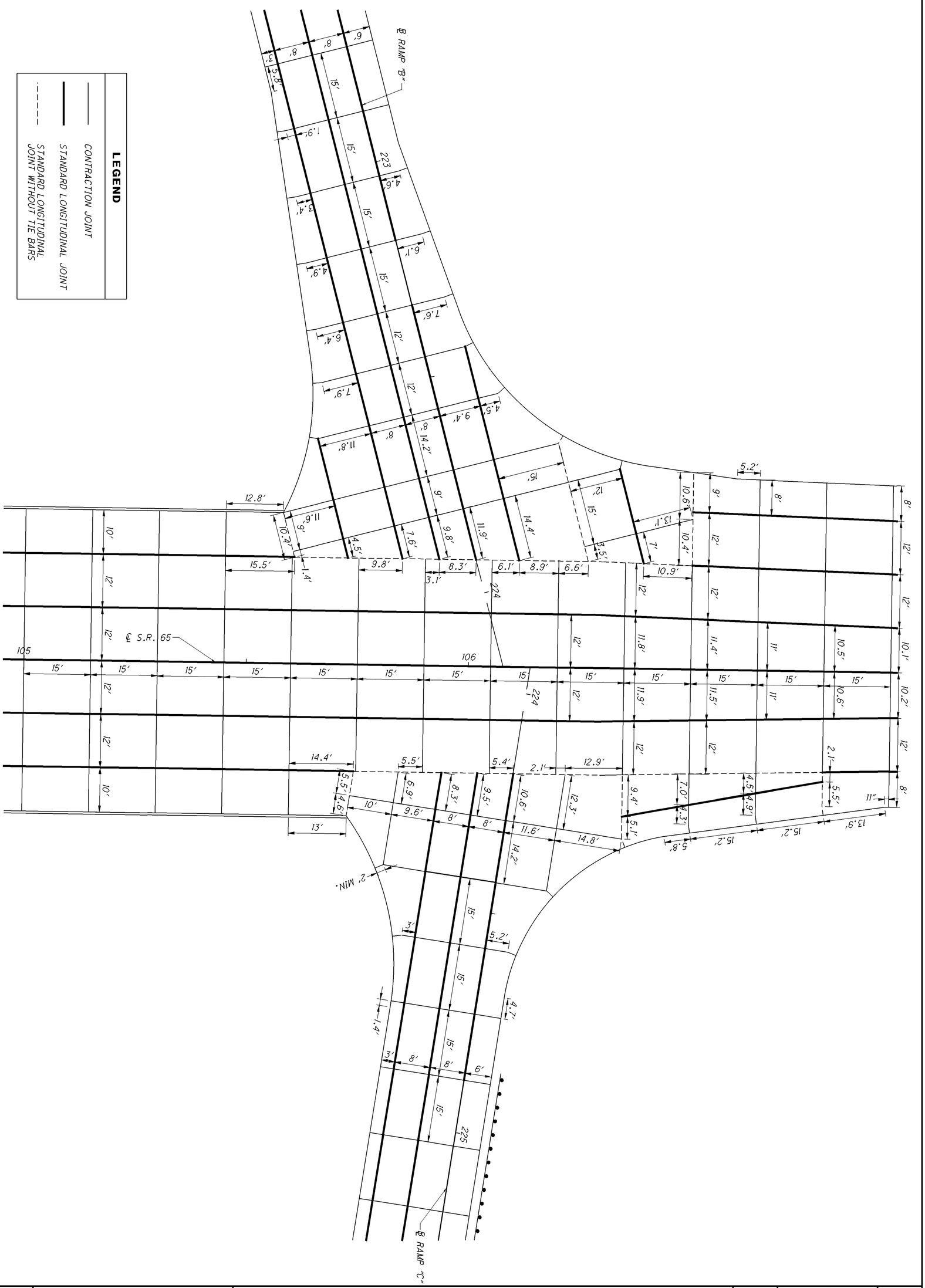

907 / 465	ALL-75-0.21	PAVEMENT JOINT DETAIL S.R. 65, RAMP 'B' AND RAMP 'C'	CALCULATED RLS CHECKED JLG	0 5 10 20 HORIZONTAL SCALE IN FEET	N

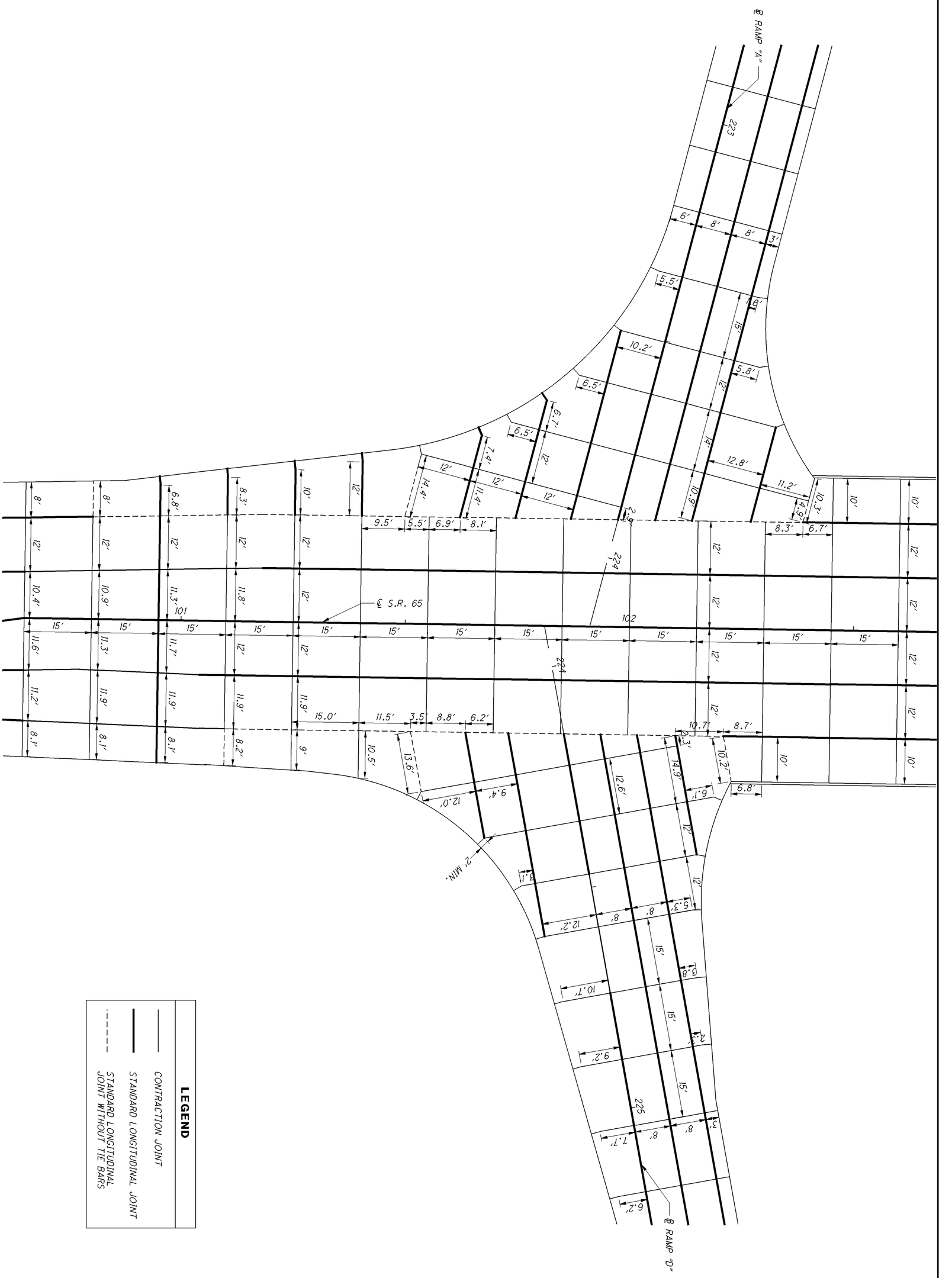

ALL-75-0.21

PAVEMENT JOINT DETAIL
S.R. 65, RAMP 'A' AND RAMP 'D'

CALCULATED RLS
CHECKED JLG

0 5 10 20
HORIZONTAL SCALE IN FEET

N

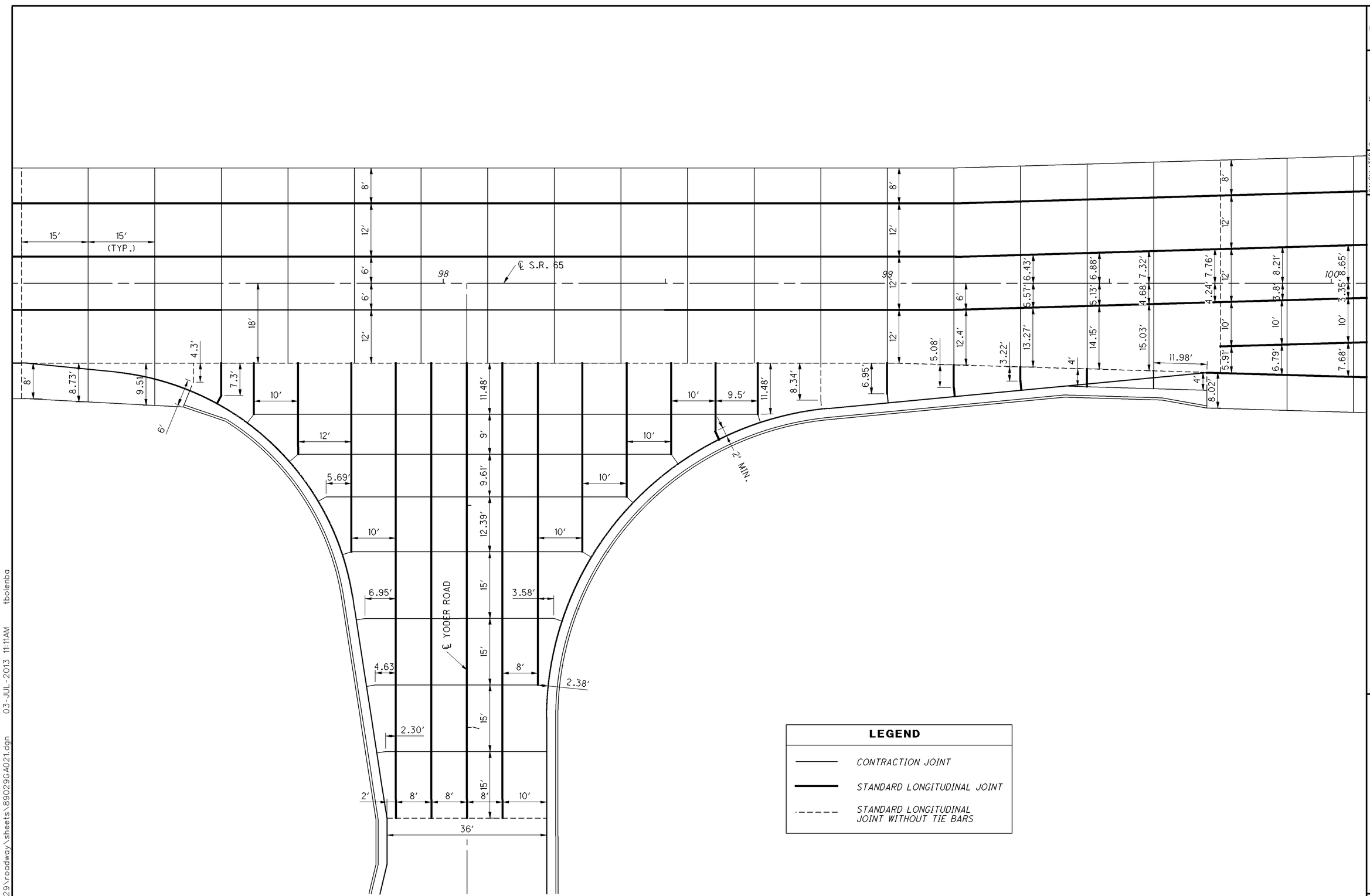

LEGEND	
———	CONTRACTION JOINT
▬▬▬	STANDARD LONGITUDINAL JOINT
- - - - -	STANDARD LONGITUDINAL JOINT WITHOUT TIE BARS

HORIZONTAL SCALE IN FEET
0 5 10 20

CALCULATED JLG
CHECKED RLS

PAVEMENT JOINT DETAIL
S.R. 65 AND YODER ROAD

ALL-75-0.21

467
907

I:\Pdt\89029\roadway\sheets\89029GA021.dgn 03-JUL-2013 11:11AM tbolenba

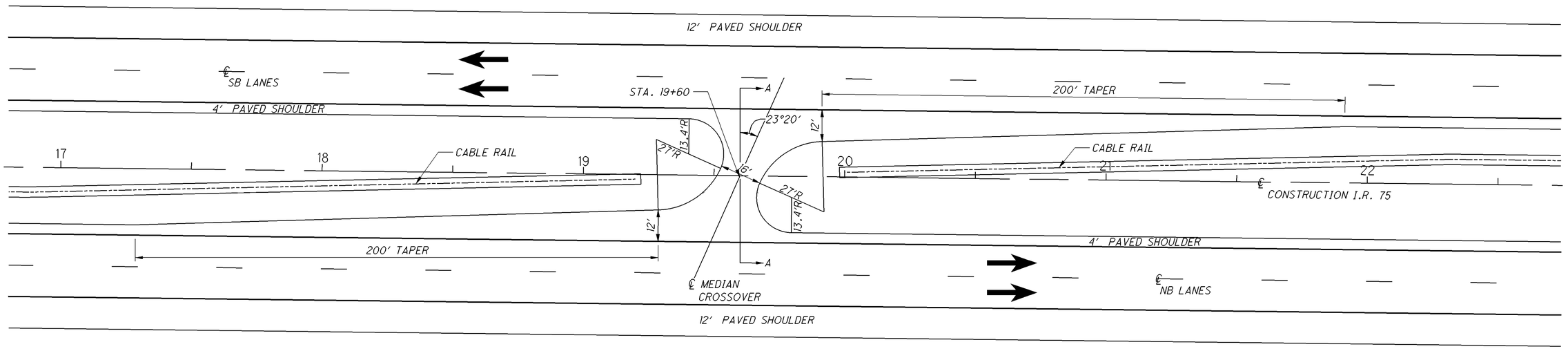

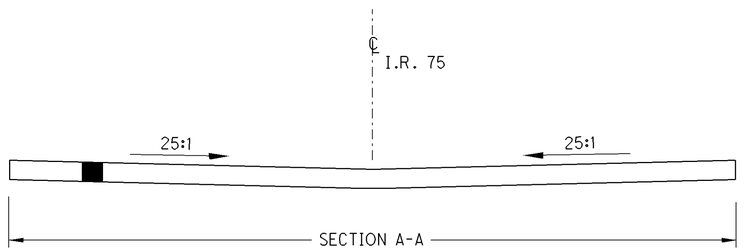

MATERIAL SELECTION AND PAVEMENT BUILD-UP SHALL MATCH MAINLINE I.R. 75 (SEE TYPICAL SECTIONS FOR DETAILS)

PAVEMENT QUANTITIES ARE INCLUDED WITH THE MAINLINE PAVEMENT CALCULATIONS AND ARE CALLED OUT AS "MEDIAN CROSSOVER".

CALCULATED JLG
CHECKED BDC

MEDIAN CROSSOVER DETAIL

ALL-75-0.21

I:\Pd\89029\roadway\sheets\89029GM008.dgn 25-JUN-2013 10:20AM tbolenba

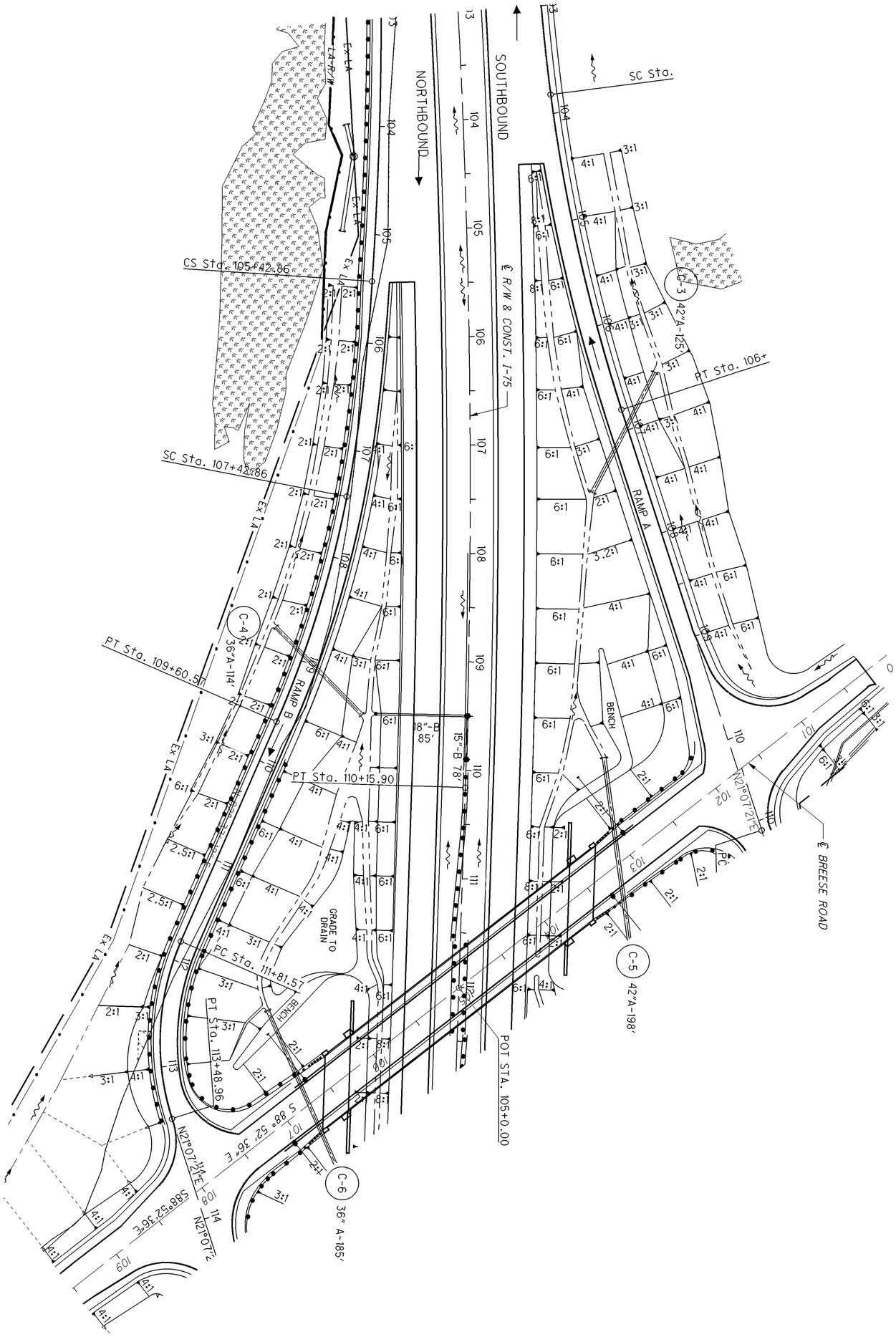

907 / 469	**ALL-75-0.21**	**GRADING DETAIL** **RAMP A & B - BREESE RD.**	CALCULATED JJK CHECKED BDC	0 50 25 100 HORIZONTAL SCALE IN FEET

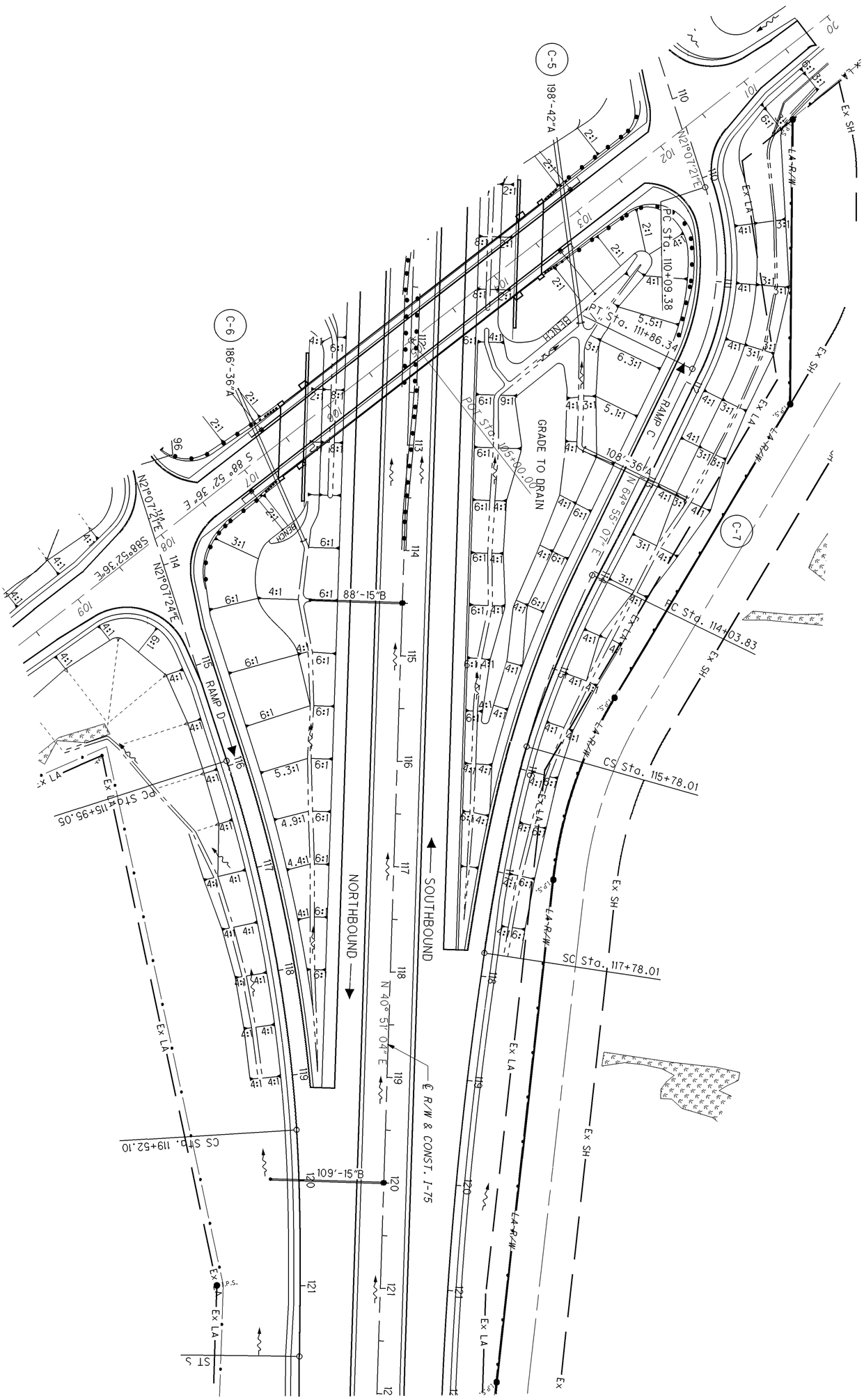

907 / 470	ALL-75-0.21	GRADING DETAIL RAMPS C & D - BREESE RD.	CALCULATED JJK CHECKED JLG	0 50 25 100 HORIZONTAL SCALE IN FEET

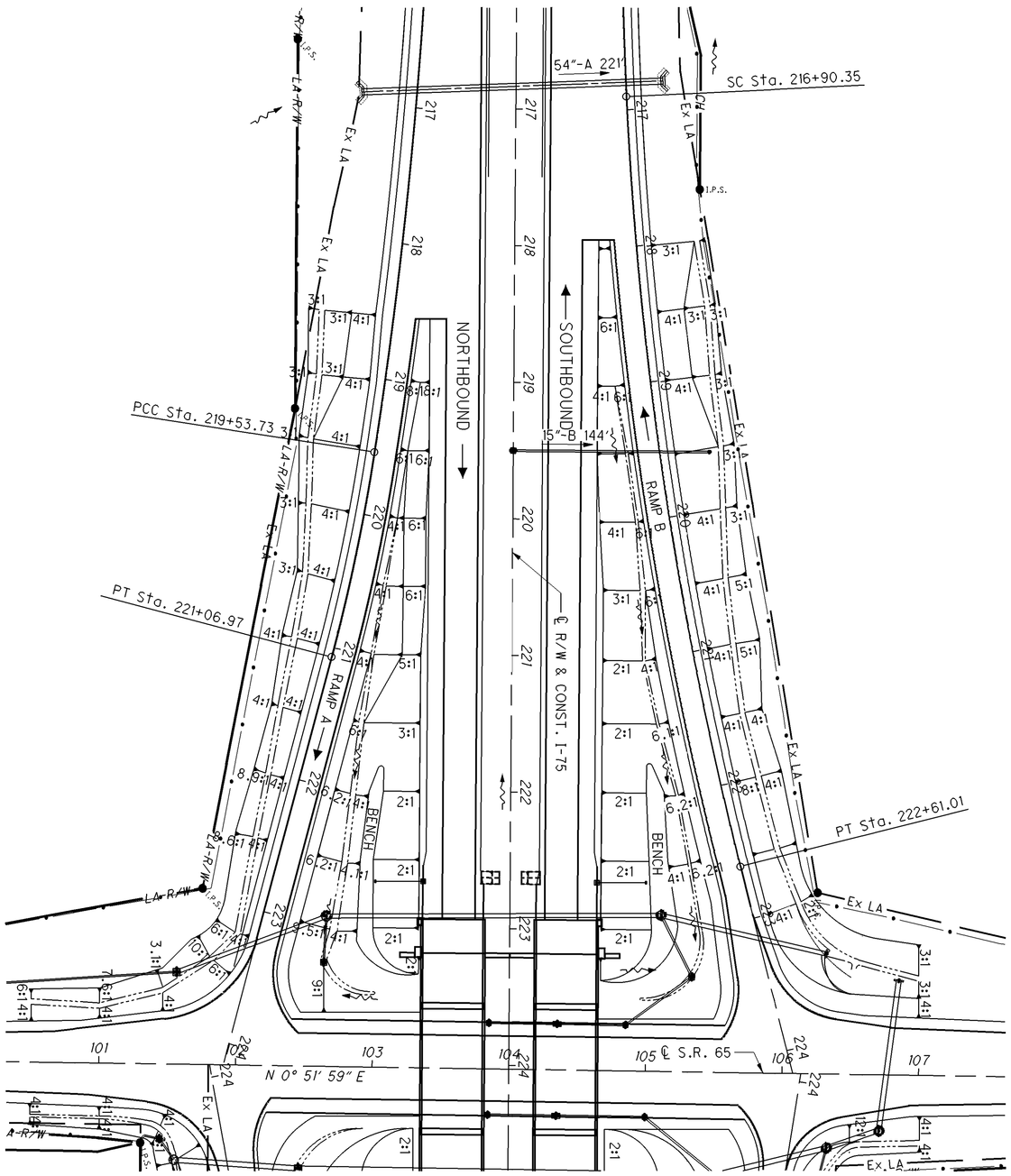

471 / 607	ALL-75-0.21	GRADING DETAIL RAMPS A & B - S.R. 65	CALCULATED JJK CHECKED JLG	0 50 25 100 HORIZONTAL SCALE IN FEET

I:\Pd\89029\roadway\sheets\89029GL004.dgn 25-JUN-2013 10:20AM tbolenba

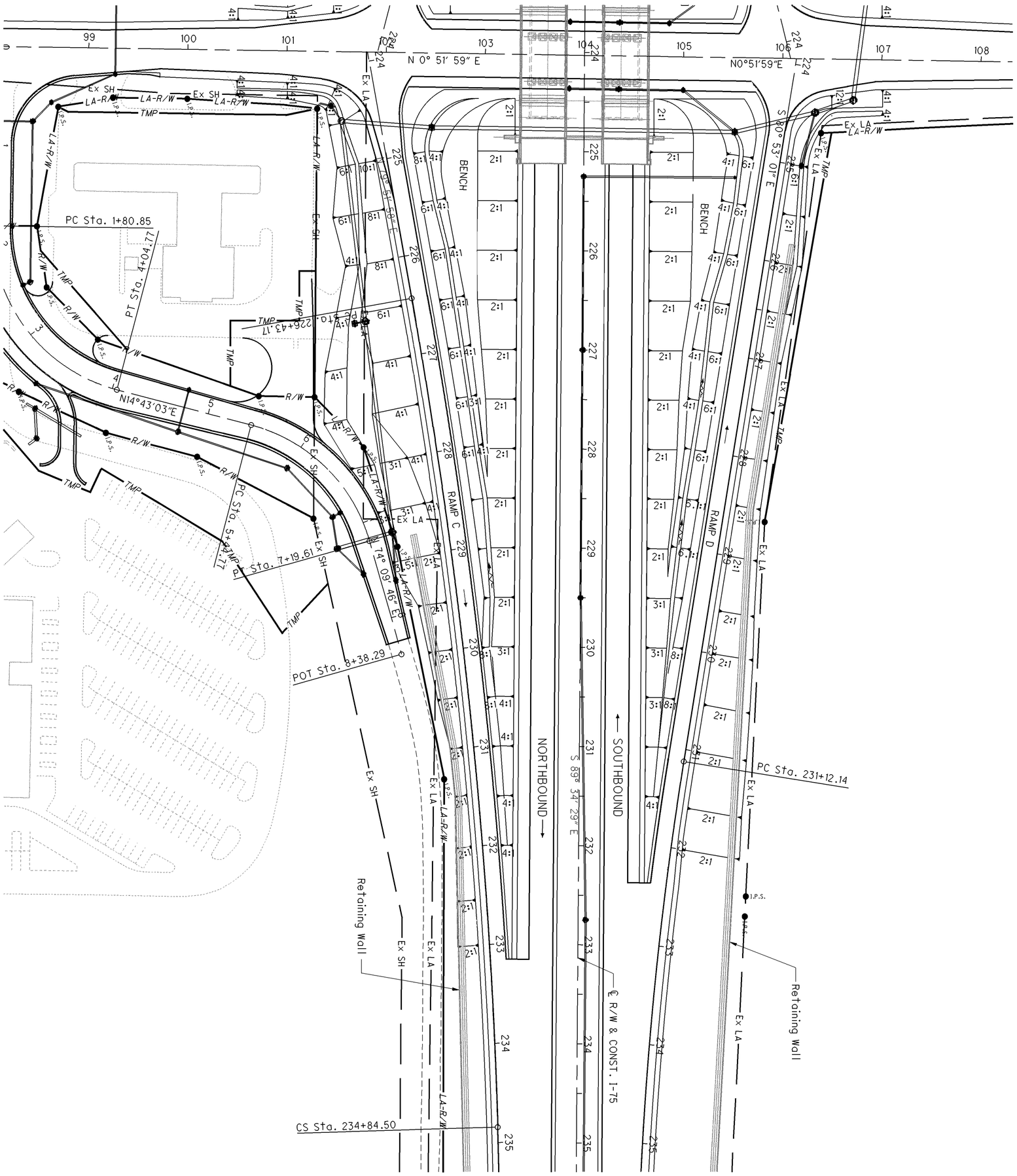

472 / 907	ALL-75-0.21	GRADING DETAIL RAMPS C & D - S.R. 65	CALCULATED JJK CHECKED JLG	0 50 25 100 HORIZONTAL SCALE IN FEET

ESTIMATED QUANTITIES

503	COFFERDAMS AND EXCAVATION BRACING	= LUMP
601	ROCK CHANNEL PROTECTION, TYPE B WITH FILTER, 30" THICK	= 2.8 C.Y.
602	CONCRETE MASONRY	= 1.12 C.Y.
603	30" CONDUIT, TYPE A, 706.02 or 30" 707.01 (0.138), 707.02 (0.138), 707.04, 707.05 (0.109), 707.07 (0.109), 707.21, 707.22	= 203 FT.

CARRIED TO CULVERT SUBSUMMARY SHEET 158

EXISTING STRUCTURE

TYPE = 20" CONC.

LENGTH = 208'

DATE BUILT = 1955

HYDRAULIC DATA

DRAINAGE AREA =	5	AC.
Q50 =	15	cfs
Q100 =	17	cfs
HWE50 =	869.20	FT.
HWE100 =	869.34	FT.
V50 =	3.0	fps
V100 =	3.5	fps

ROCK CHANNEL PROTECTION, TYPE B WITH FILTER, 30" THICK

HORIZONTAL SCALE IN FEET (0, 5, 10, 20)

CALCULATED BDC CHECKED JLG

CULVERT DETAIL FOR No. C1 I-75 AT STA. 83+50.00

ALL-75-0.21

474 907

I:\Pd\89029\drainage\sheets\89029DC001.dgn 27-JUN-2013 11:22AM tbolenba

ESTIMATED QUANTITIES

503	COFFERDAMS AND EXCAVATION BRACING	= LUMP
601	ROCK CHANNEL PROTECTION, TYPE B WITH FILTER, 30" THICK	= 17.3 C.Y.
602	CONCRETE MASONRY	= 16.4 C.Y.
603	48" CONDUIT, TYPE A, 706.02	= 201 FT.

CARRIED TO CULVERT SUBSUMMARY SHEET 158

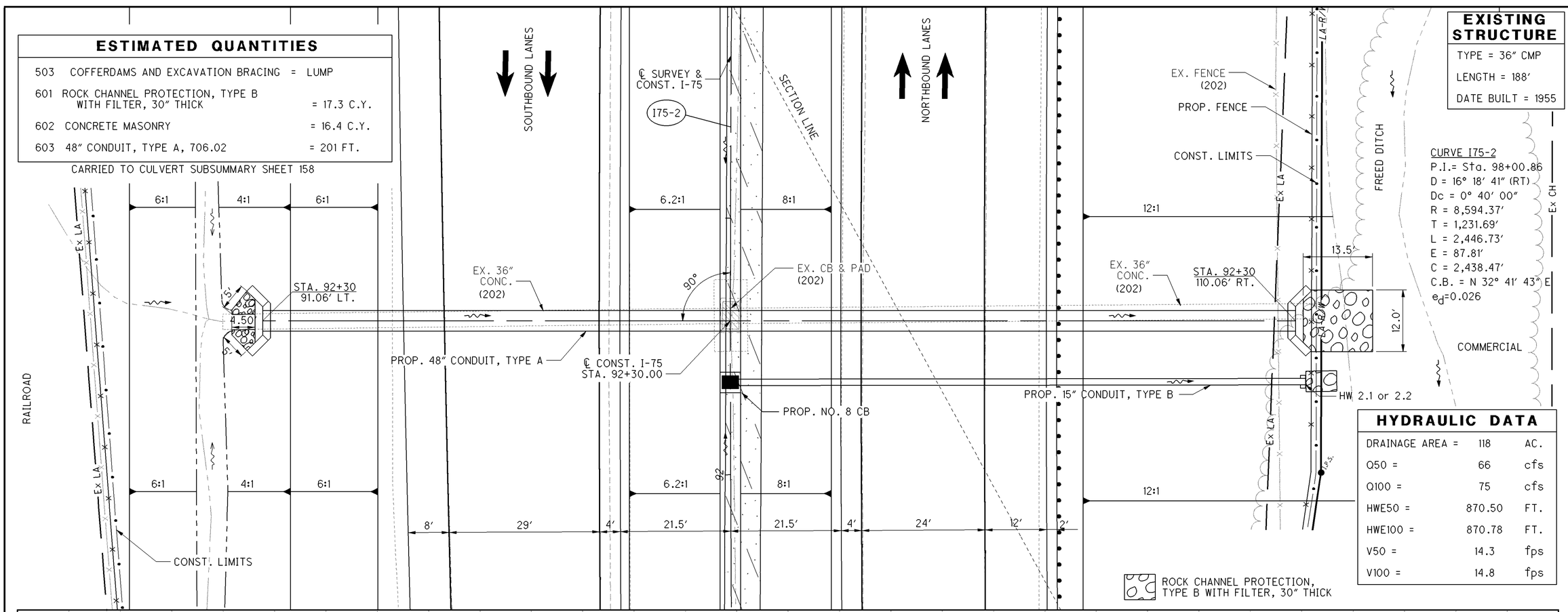

EXISTING STRUCTURE

TYPE = 36" CMP

LENGTH = 188'

DATE BUILT = 1955

CURVE I75-2
P.I.= Sta. 98+00.86
D = 16° 18' 41" (RT)
Dc = 0° 40' 00"
R = 8,594.37'
T = 1,231.69'
L = 2,446.73'
E = 87.81'
C = 2,438.47'
C.B. = N 32° 41' 43" E
e_d=0.026

HYDRAULIC DATA

DRAINAGE AREA =	118	AC.
Q50 =	66	cfs
Q100 =	75	cfs
HWE50 =	870.50	FT.
HWE100 =	870.78	FT.
V50 =	14.3	fps
V100 =	14.8	fps

ROCK CHANNEL PROTECTION, TYPE B WITH FILTER, 30" THICK

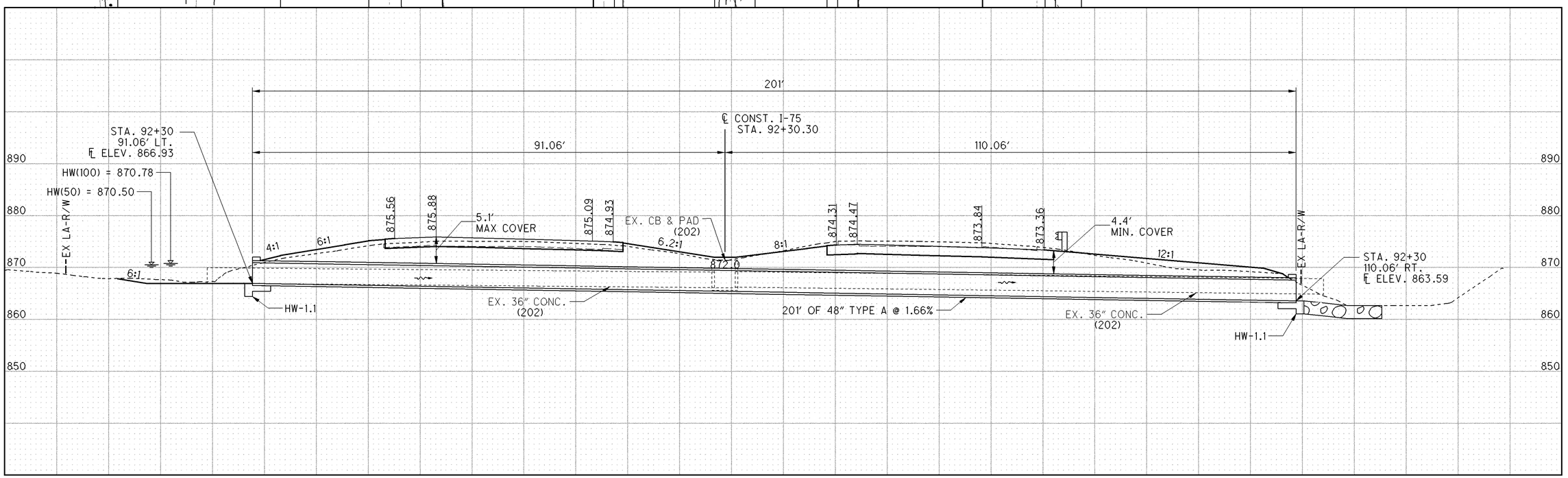

HORIZONTAL SCALE IN FEET (0, 5, 10, 20)

CALCULATED BDC CHECKED JLG

CULVERT DETAIL FOR No. C2
I-75 AT STA. 92+30.00

ALL-75-0.21

475
907

I:\Pd\89029\drainage\sheets\89029DC002.dgn 27-JUN-2013 11:22AM tbolenba

ESTIMATED QUANTITIES

601 ROCK CHANNEL PROTECTION, TYPE B WITH FILTER, 30" THICK	= 6.5 C.Y.
602 CONCRETE MASONRY	= 1.68 C.Y.
603 42" CONDUIT, TYPE A, 706.02, or 42" 707.01 (0.138), 707.02 (0.138), 707.04, 707.05 (0.109), 707.07 (.109), 707.21, 707.22	= 125 FT.

CARRIED TO CULVERT SUBSUMMARY SHEET 158

CURVE BREA-2
P.I.= Sta. 104+75.48
D = 14° 06′ 20″ (LT)
Dc = 3° 30′ 00″
R = 1,637.02′
D c = 10° 25′ 50″ (LT)
Lc = 298.01′
Es = 13.05′
C = 297.60′
C.B.1 = N 34° 00′ 11″ E
C.B. = N 26° 20′ 16″ E

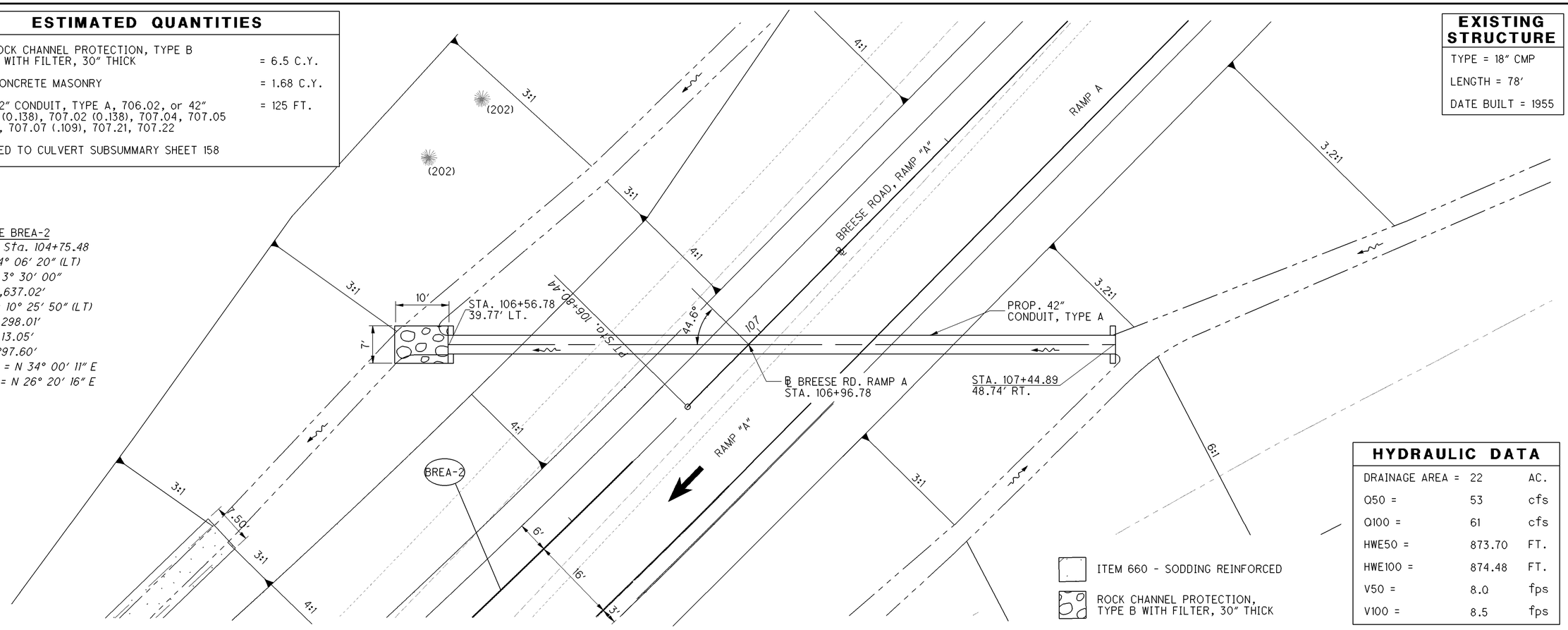

EXISTING STRUCTURE

TYPE = 18" CMP
LENGTH = 78′
DATE BUILT = 1955

HYDRAULIC DATA

DRAINAGE AREA =	22	AC.
Q50 =	53	cfs
Q100 =	61	cfs
HWE50 =	873.70	FT.
HWE100 =	874.48	FT.
V50 =	8.0	fps
V100 =	8.5	fps

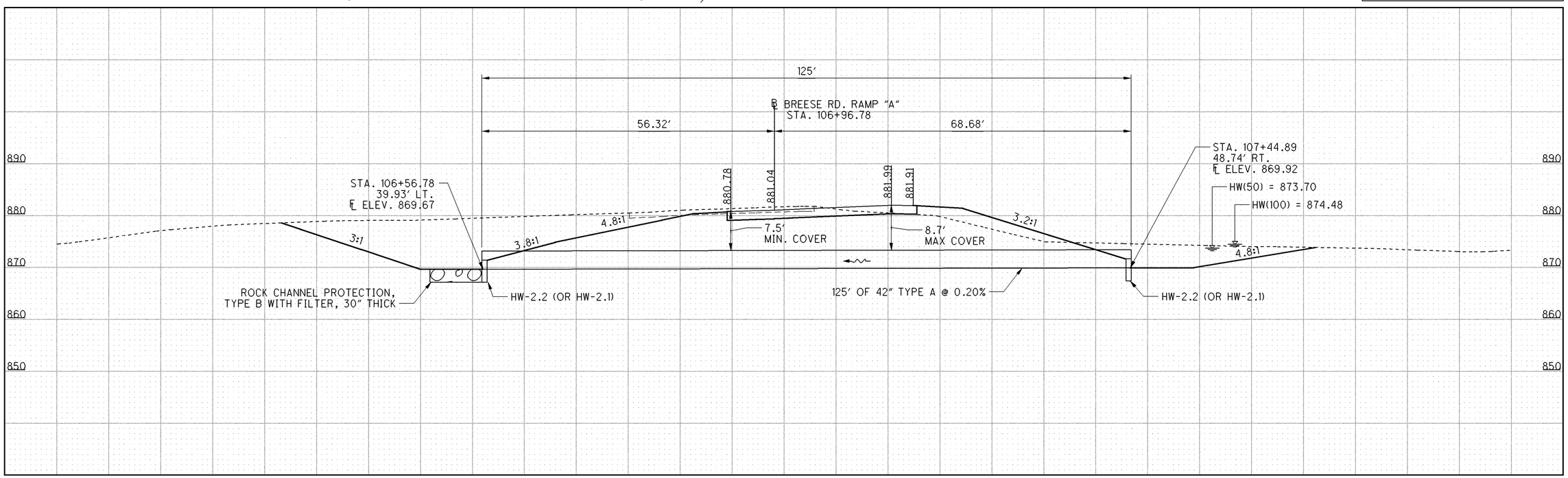

HORIZONTAL SCALE IN FEET
0 5 10 20

CALCULATED BDC
CHECKED JLG

CULVERT DETAIL FOR No. C3
BREESE RD. RAMP A AT STA. 106+96.78

ALL-75-0.21

476
907

I:\Pd\89029\drainage\sheets\89029DC003.dgn 27-JUN-2013 11:22AM tbolenba

ESTIMATED QUANTITIES

601 ROCK CHANNEL PROTECTION, TYPE B WITH FILTER, 30" THICK	= 4.4 C.Y.
602 CONCRETE MASONRY	= 1.38 C.Y.
603 36" CONDUIT, TYPE A, 706.02, or 42" 707.01 (0.138), 707.02 (0.138), 707.04, 707.05 (0.109), 707.07 (.109), 707.21, 707.22	= 114 FT.

CARRIED TO CULVERT SUBSUMMARY SHEET 158

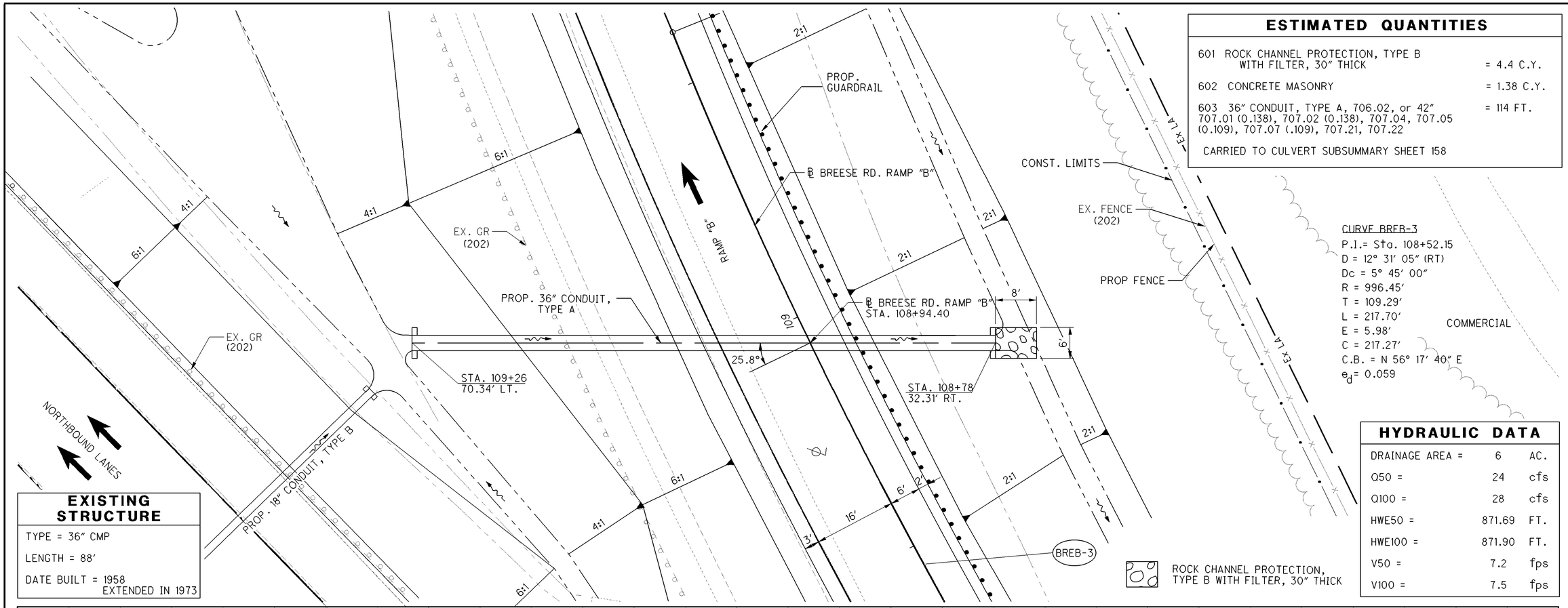

HYDRAULIC DATA

DRAINAGE AREA =	6	AC.
Q50 =	24	cfs
Q100 =	28	cfs
HWE50 =	871.69	FT.
HWE100 =	871.90	FT.
V50 =	7.2	fps
V100 =	7.5	fps

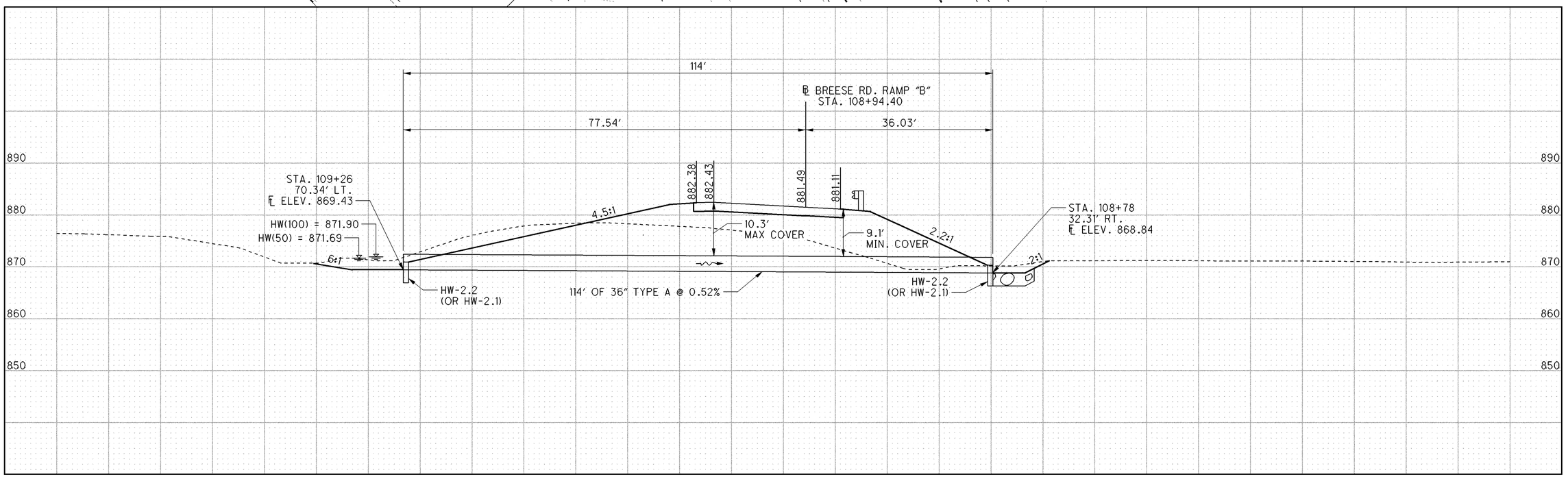

HORIZONTAL SCALE IN FEET
0 5 10 20

CALCULATED BDC
CHECKED JLG

CULVERT DETAIL FOR No. C4
BREESE RD. RAMP B AT STA. 108+94.40

ALL-75-0.21

477
907

I:\Pd\89029\drainage\sheets\89029DC004.dgn 27-JUN-2013 11:22AM tbolenba

ESTIMATED QUANTITIES

601	ROCK CHANNEL PROTECTION, TYPE B WITH FILTER, 30" THICK	= 5.8 C.Y.
602	CONCRETE MASONRY	= 1.68 C.Y.
603	CONDUIT, BORED AND JACKED: 42" TYPE A, D-LOAD 1750	= 198 FT.

CARRIED TO CULVERT SUBSUMMARY SHEET 158

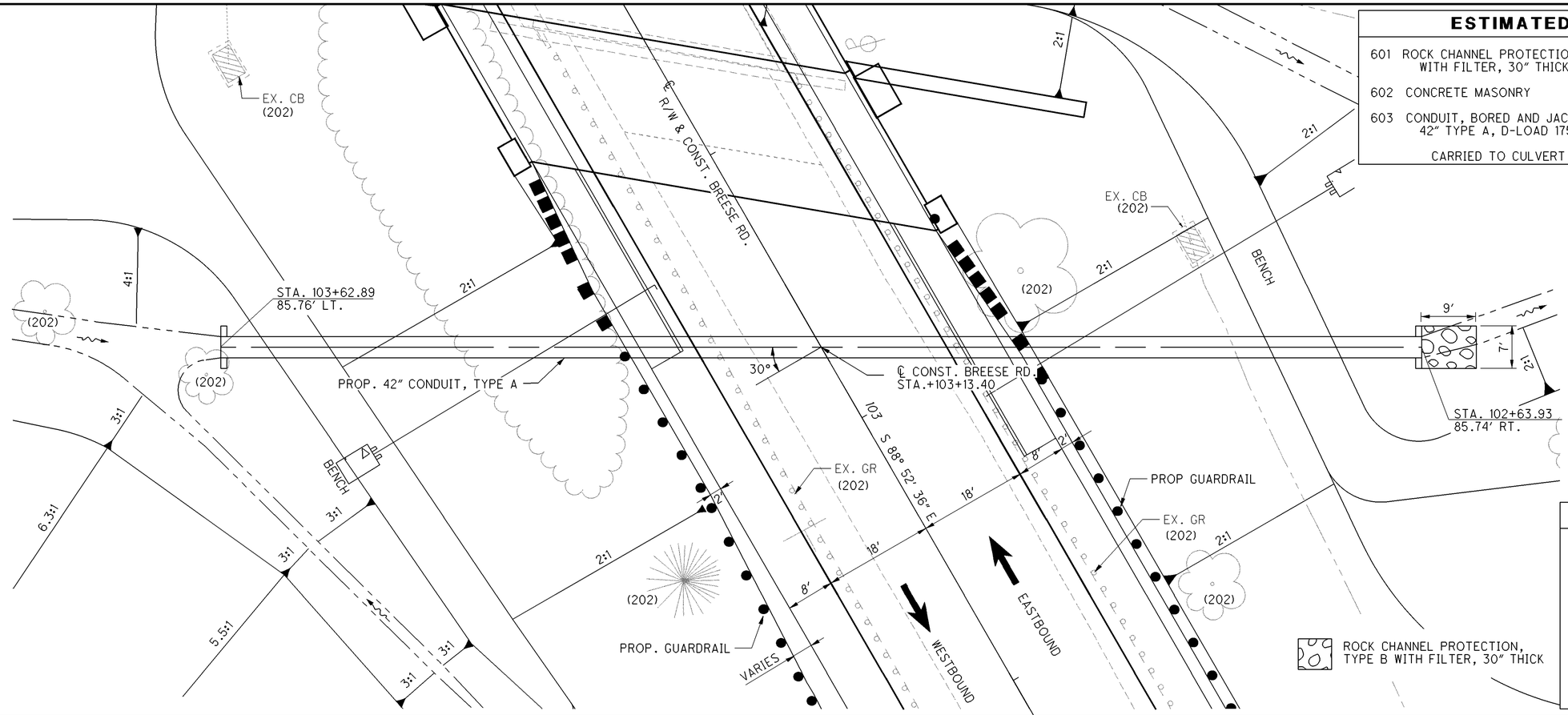

HYDRAULIC DATA

DRAINAGE AREA =	20	AC.
Q50 =	51.32	cfs
Q100 =	59.62	cfs
HWE50 =	875.10	FT.
HWE100 =	875.61	FT.
V50 =	7.01	fps
V100 =	7.04	fps

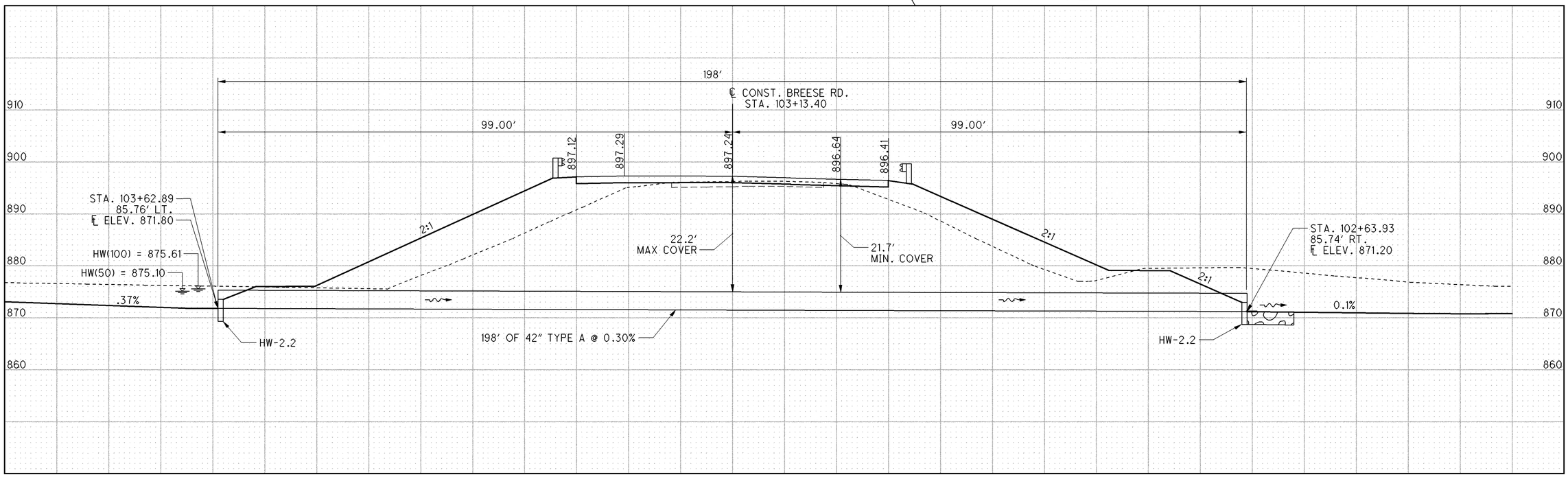

HORIZONTAL SCALE IN FEET (0, 5, 10, 20)

CALCULATED BDC CHECKED JLG

CULVERT DETAIL FOR No. C5
BREESE RD. AT STA. 103+13.40

ALL-75-0.21

478
907

I:\Pd\89029\drainage\sheets\89029DC005.dgn 27-JUN-2013 11:22AM tbolenba

CULVERT DETAIL FOR No. C6
BREESE RD. AT STA. 106+74.89

EXISTING STRUCTURE

TYPE = 18" RCP

LENGTH = 80'

DATE BUILT = 1955

HORIZONTAL SCALE IN FEET (0, 5, 10, 20)

CALCULATED BDC CHECKED JLG

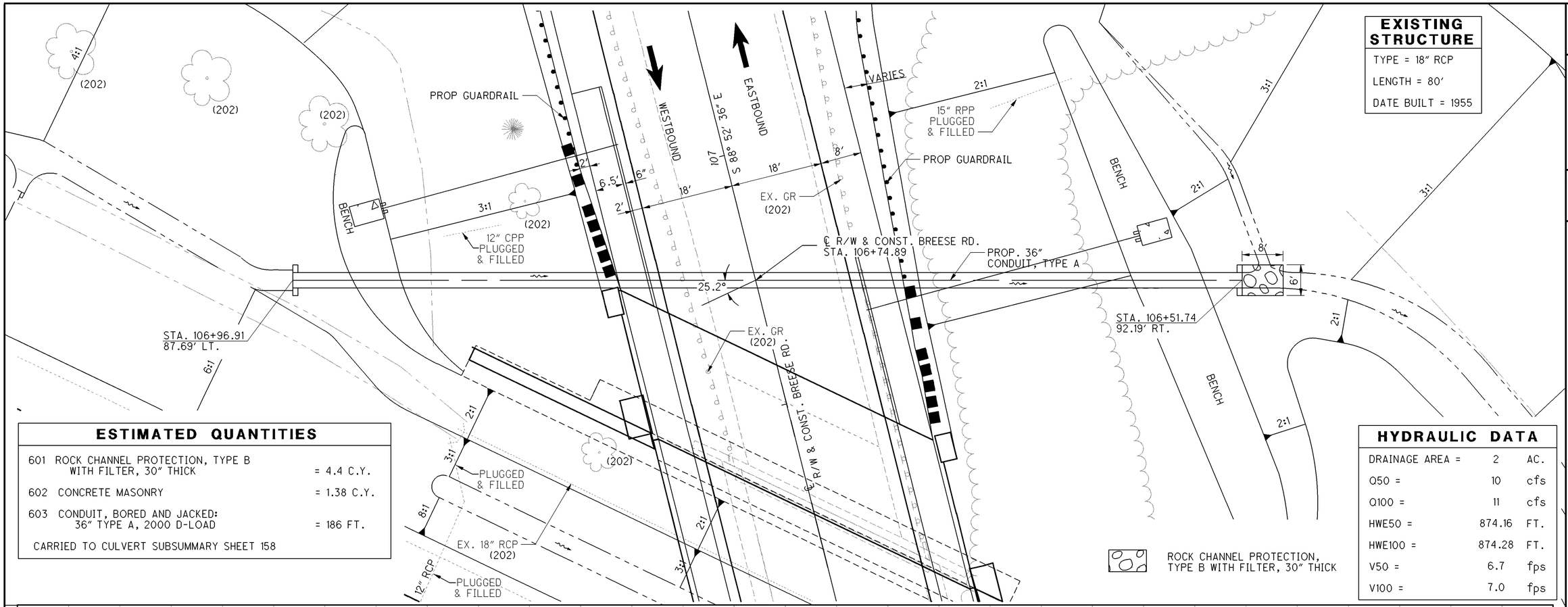

ESTIMATED QUANTITIES

601	ROCK CHANNEL PROTECTION, TYPE B WITH FILTER, 30" THICK	= 4.4 C.Y.
602	CONCRETE MASONRY	= 1.38 C.Y.
603	CONDUIT, BORED AND JACKED: 36" TYPE A, 2000 D-LOAD	= 186 FT.

CARRIED TO CULVERT SUBSUMMARY SHEET 158

HYDRAULIC DATA

DRAINAGE AREA =	2	AC.
Q50 =	10	cfs
Q100 =	11	cfs
HWE50 =	874.16	FT.
HWE100 =	874.28	FT.
V50 =	6.7	fps
V100 =	7.0	fps

ROCK CHANNEL PROTECTION, TYPE B WITH FILTER, 30" THICK

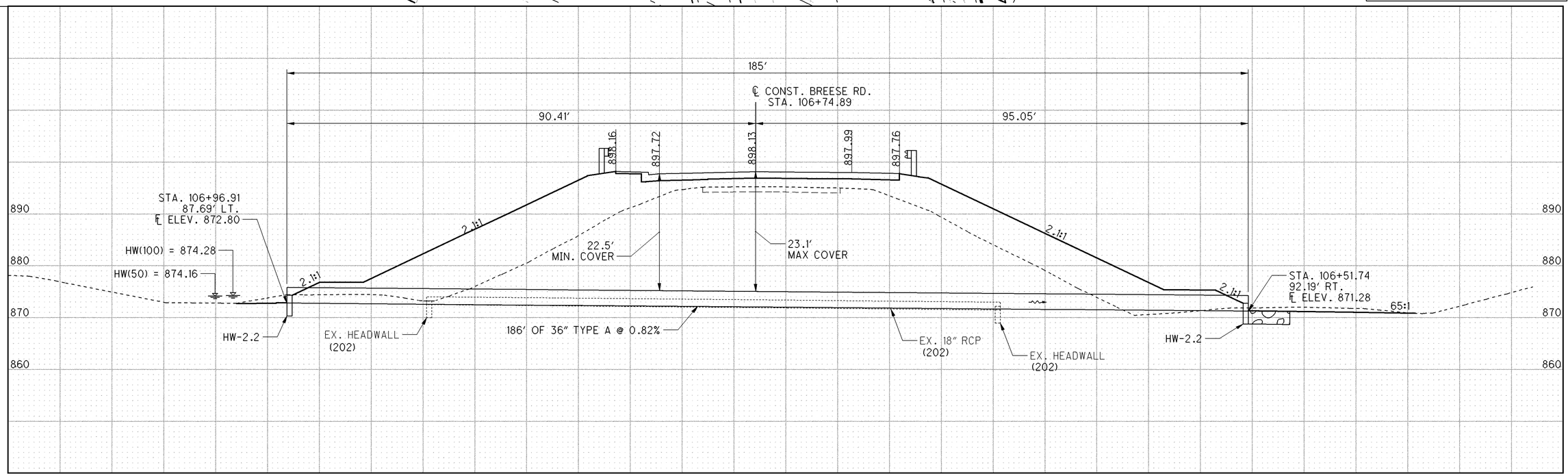

ALL-75-0.21

I:\Pd\89029\drainage\sheets\89029DC006.dgn 27-JUN-2013 11:22AM tbolenba

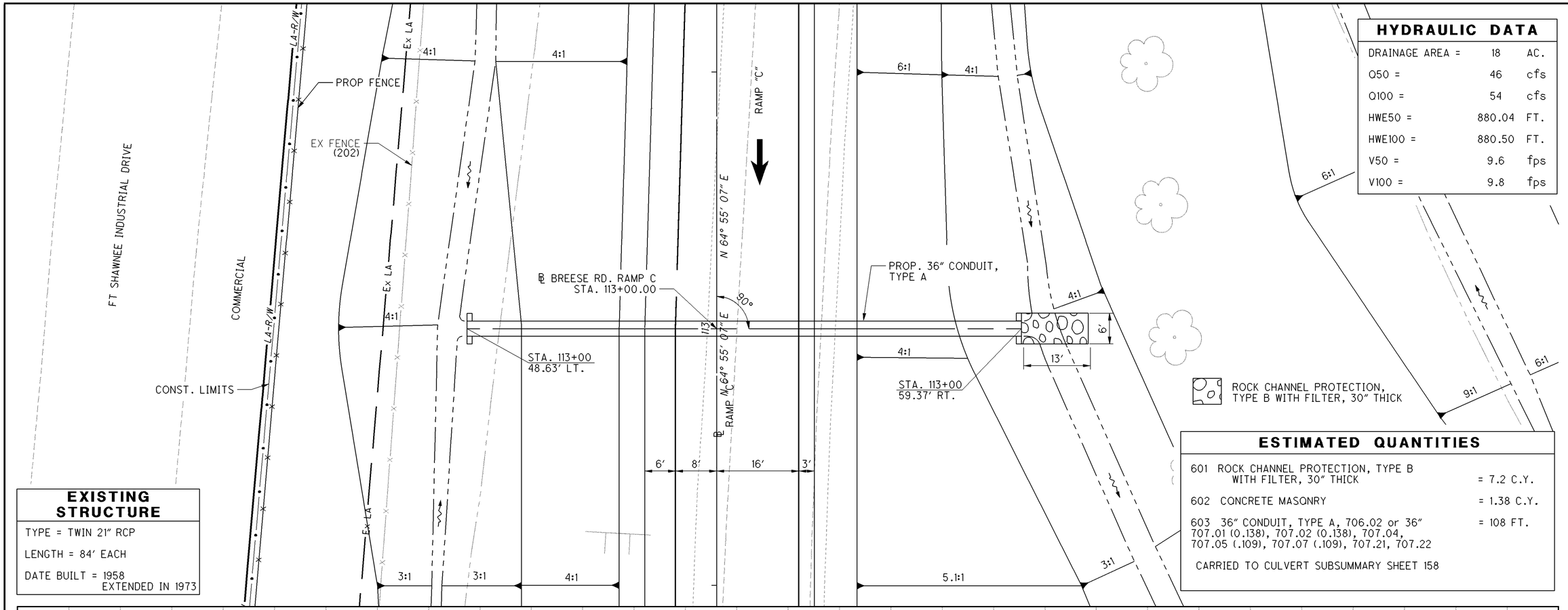

HYDRAULIC DATA

DRAINAGE AREA =	18	AC.
Q50 =	46	cfs
Q100 =	54	cfs
HWE50 =	880.04	FT.
HWE100 =	880.50	FT.
V50 =	9.6	fps
V100 =	9.8	fps

ESTIMATED QUANTITIES

601	ROCK CHANNEL PROTECTION, TYPE B WITH FILTER, 30" THICK	= 7.2 C.Y.
602	CONCRETE MASONRY	= 1.38 C.Y.
603	36" CONDUIT, TYPE A, 706.02 or 36" 707.01 (0.138), 707.02 (0.138), 707.04, 707.05 (.109), 707.07 (.109), 707.21, 707.22	= 108 FT.

CARRIED TO CULVERT SUBSUMMARY SHEET 158

EXISTING STRUCTURE

TYPE = TWIN 21" RCP

LENGTH = 84' EACH

DATE BUILT = 1958
EXTENDED IN 1973

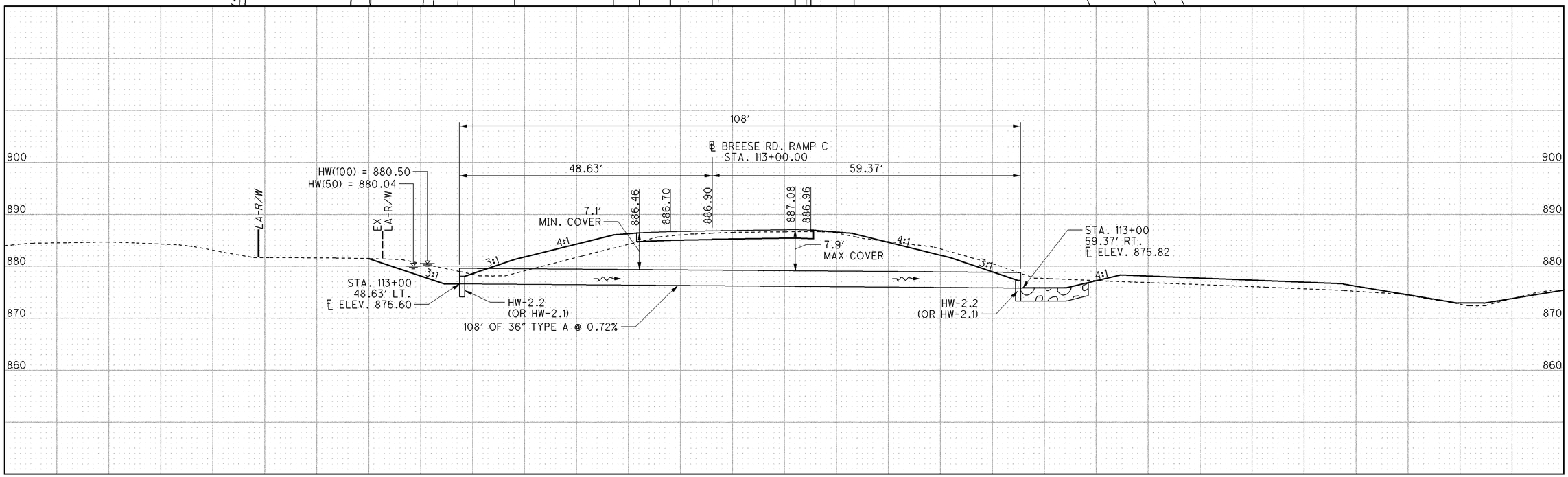

HORIZONTAL SCALE IN FEET
0 5 10 20

CALCULATED BDC
CHECKED JLG

CULVERT DETAIL FOR No. C7
BREESE RD. RAMP C AT STA. 113+00.00

ALL-75-0.21

I:\Pd\89029\drainage\sheets\89029DC007.dgn 27-JUN-2013 11:22AM tbolenba

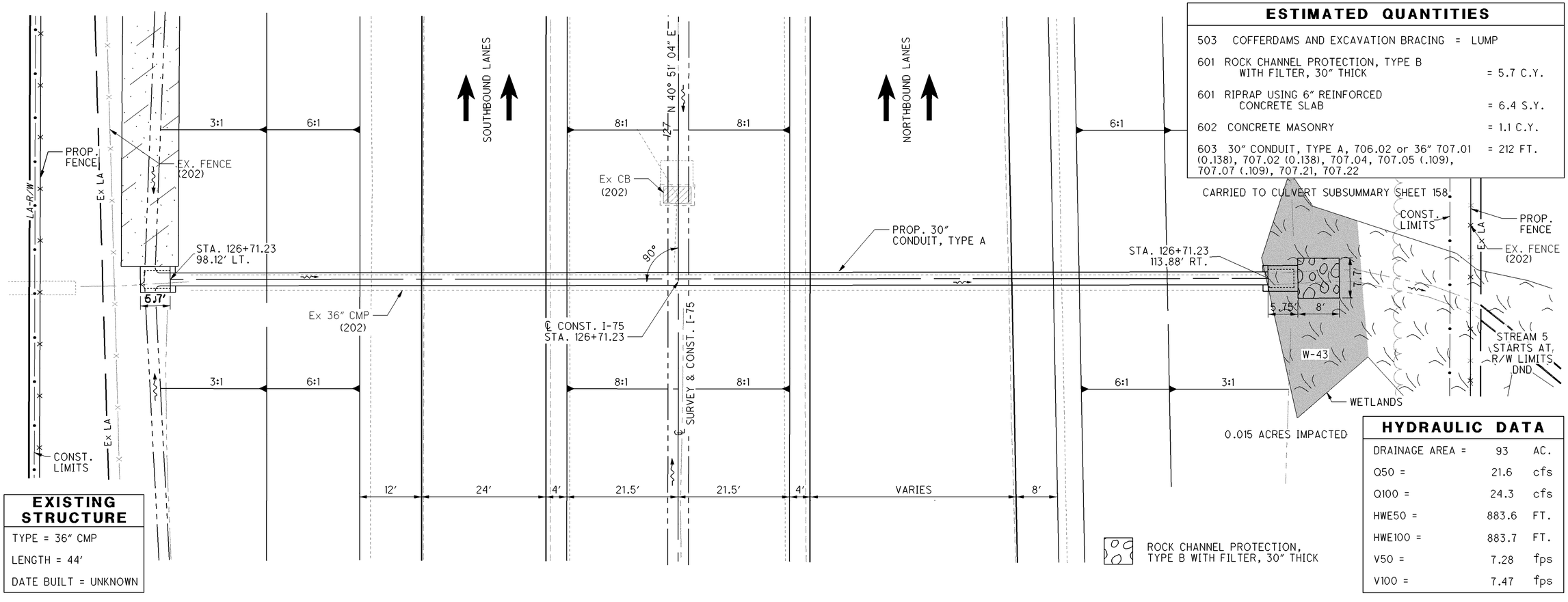

ESTIMATED QUANTITIES

503 COFFERDAMS AND EXCAVATION BRACING = LUMP

601 ROCK CHANNEL PROTECTION, TYPE B WITH FILTER, 30" THICK = 5.7 C.Y.

601 RIPRAP USING 6" REINFORCED CONCRETE SLAB = 6.4 S.Y.

602 CONCRETE MASONRY = 1.1 C.Y.

603 30" CONDUIT, TYPE A, 706.02 or 36" 707.01 (.138), 707.02 (.138), 707.04, 707.05 (.109), 707.07 (.109), 707.21, 707.22 = 212 FT.

EXISTING STRUCTURE

TYPE = 36" CMP

LENGTH = 44'

DATE BUILT = UNKNOWN

HYDRAULIC DATA

DRAINAGE AREA =	93	AC.
Q50 =	21.6	cfs
Q100 =	24.3	cfs
HWE50 =	883.6	FT.
HWE100 =	883.7	FT.
V50 =	7.28	fps
V100 =	7.47	fps

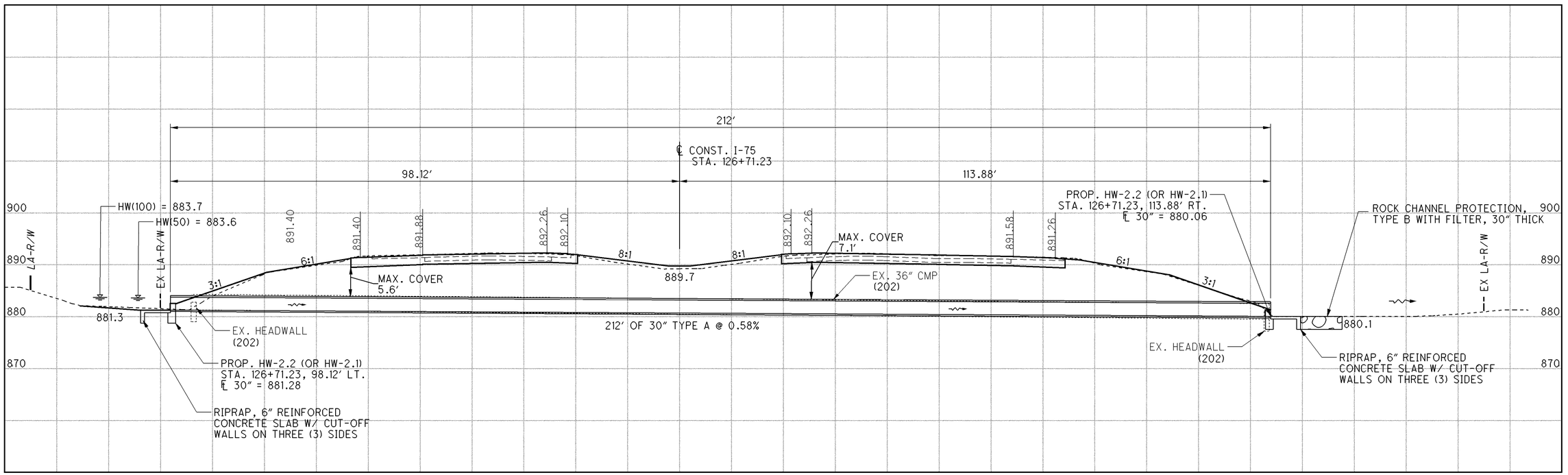

HORIZONTAL SCALE IN FEET 0 5 10 20

CALCULATED BDC CHECKED JLG

CULVERT DETAIL FOR No. C8
I.R. 75 AT STA. 126+71.23

ALL-75-0.21

481
907

I:\Pdv\89029\drainage\sheets\89029DC008.dgn 27-JUN-2013 11:22AM tbolenba

ESTIMATED QUANTITIES

601 ROCK CHANNEL PROTECTION, TYPE B WITH FILTER, 30" THICK	= 3 C.Y.
602 CONCRETE MASONRY	= 0.86 C.Y.
603 24" CONDUIT, TYPE A, 706.02 or 27" 707.01 (0.138), 707.02 (0.138), 707.04, 707.05 (.109), 707.07 (.109), 707.21, 707.22	= 109 FT.

CARRIED TO CULVERT SUBSUMMARY SHEET 158

HORIZONTAL SCALE IN FEET 0 5 10 20

CALCULATED BDC CHECKED JLG

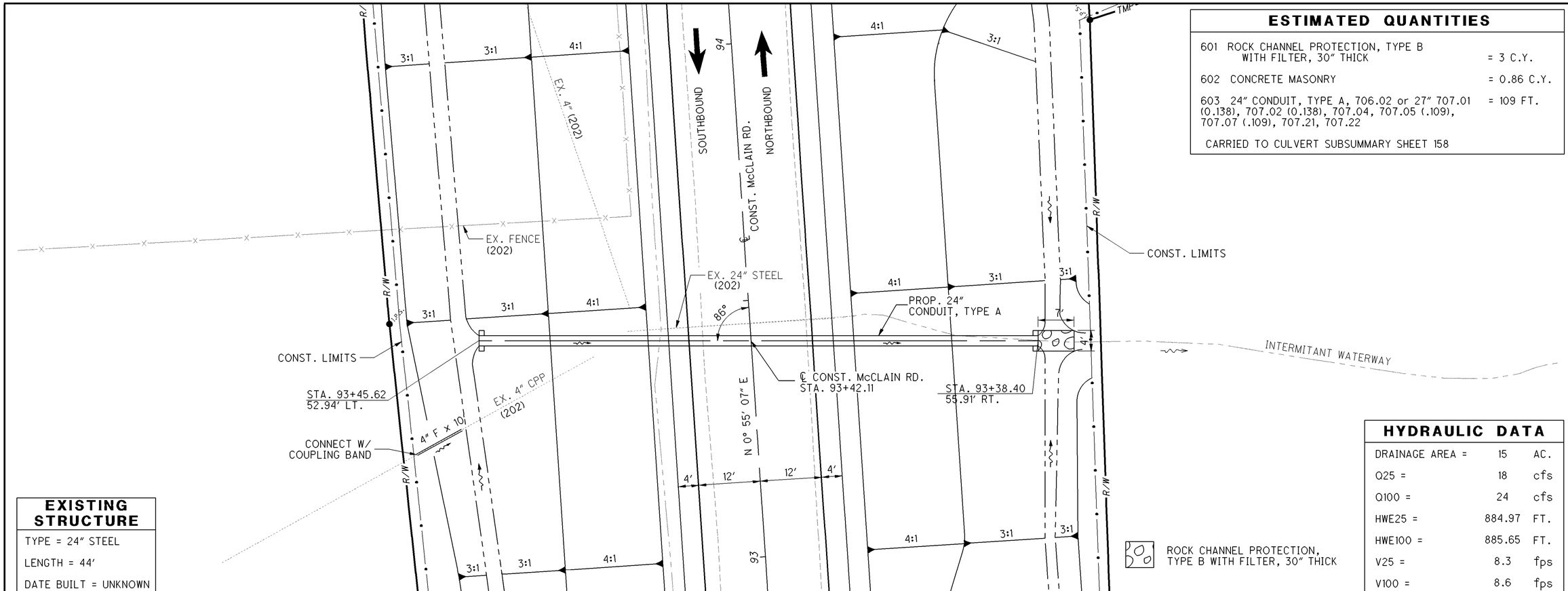

EXISTING STRUCTURE

TYPE = 24" STEEL

LENGTH = 44'

DATE BUILT = UNKNOWN

ROCK CHANNEL PROTECTION, TYPE B WITH FILTER, 30" THICK

HYDRAULIC DATA

DRAINAGE AREA =	15	AC.
Q25 =	18	cfs
Q100 =	24	cfs
HWE25 =	884.97	FT.
HWE100 =	885.65	FT.
V25 =	8.3	fps
V100 =	8.6	fps

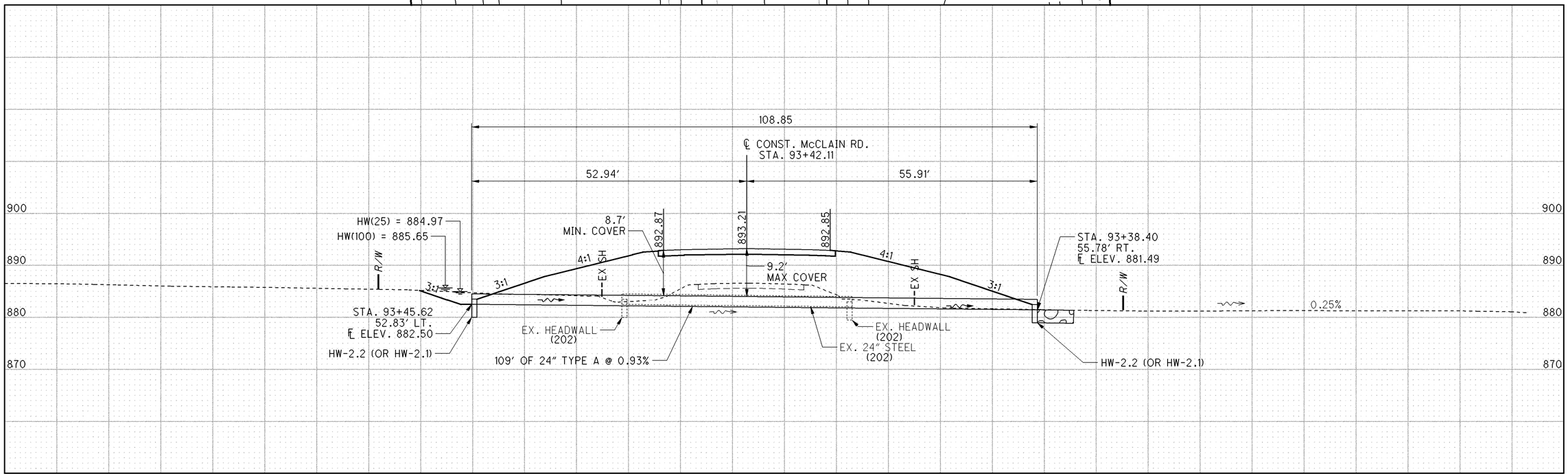

CULVERT DETAIL FOR No. C9
McCLAIN RD. AT STA. 93+42.11

ALL-75-0.21

482
907

i:\Pd\89029\drainage\sheets\89029DC009.dgn 27-JUN-2013 11:22AM tbolenba

ESTIMATED QUANTITIES

503	COFFERDAMS AND EXCAVATION BRACING	= LUMP
601	ROCK CHANNEL PROTECTION, TYPE B WITH FILTER, 30" THICK	= 4.4 C.Y.
602	CONCRETE MASONRY	= 1.38 C.Y.
603	CONDUIT, BORED AND JACKED: 36" TYPE A, 2250 D-LOAD	= 202 FT.

CARRIED TO CULVERT SUBSUMMARY SHEET 158

EXISTING STRUCTURE

TYPE = 36" RCP

LENGTH = 120'

DATE BUILT = 1958

HYDRAULIC DATA

DRAINAGE AREA =	42	AC.
Q50 =	24	cfs
Q100 =	27	cfs
HWE50 =	881.67	FT.
HWE100 =	881.84	FT.
V50 =	6.4	fps
V100 =	6.7	fps

ROCK CHANNEL PROTECTION, TYPE B WITH FILTER, 30" THICK

HORIZONTAL SCALE IN FEET (0, 5, 10, 20)

CALCULATED BDC CHECKED JLG

CULVERT DETAIL FOR No. C10
McCLAIN RD. AT STA. 101+05.15

ALL-75-0.21

483
907

I:\Pdt 89029\drainage\sheets\89029DC010.dgn 27-JUN-2013 11:22AM tbolenba

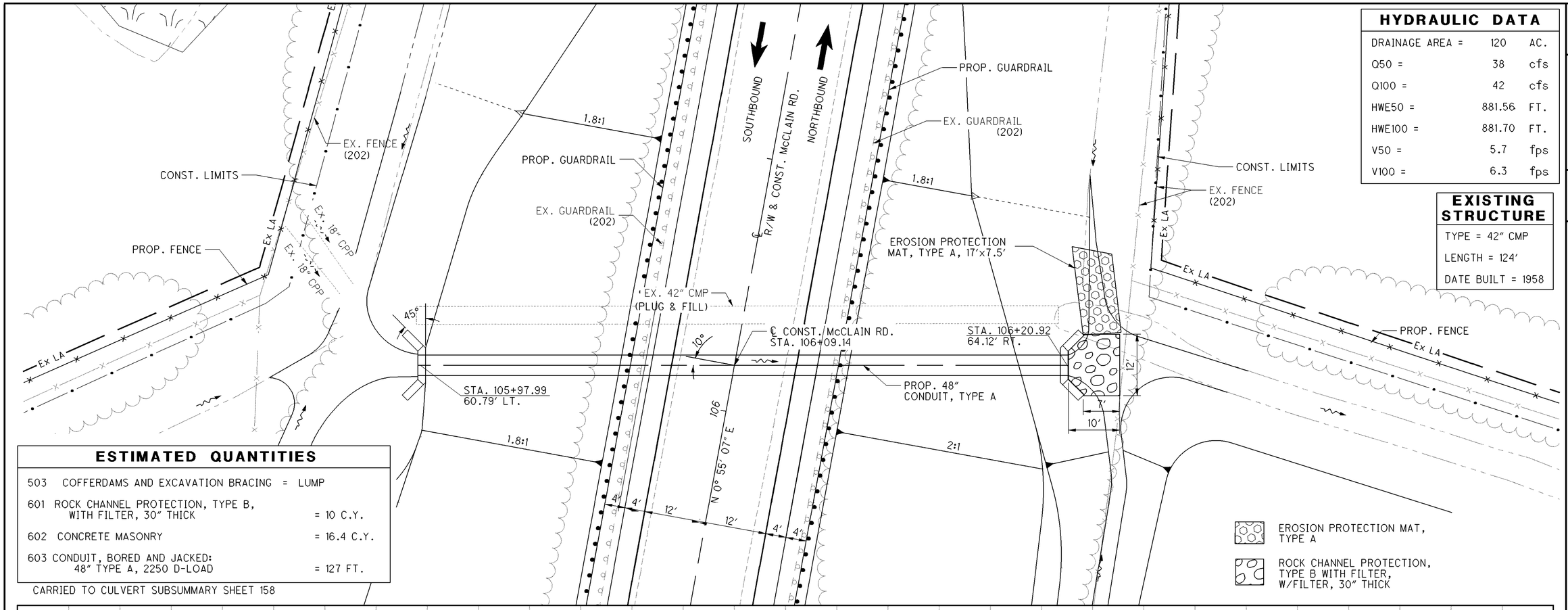

HYDRAULIC DATA

DRAINAGE AREA =	120	AC.
Q50 =	38	cfs
Q100 =	42	cfs
HWE50 =	881.56	FT.
HWE100 =	881.70	FT.
V50 =	5.7	fps
V100 =	6.3	fps

EXISTING STRUCTURE

TYPE = 42" CMP
LENGTH = 124'
DATE BUILT = 1958

ESTIMATED QUANTITIES

503 COFFERDAMS AND EXCAVATION BRACING = LUMP

601 ROCK CHANNEL PROTECTION, TYPE B, WITH FILTER, 30" THICK = 10 C.Y.

602 CONCRETE MASONRY = 16.4 C.Y.

603 CONDUIT, BORED AND JACKED: 48" TYPE A, 2250 D-LOAD = 127 FT.

CARRIED TO CULVERT SUBSUMMARY SHEET 158

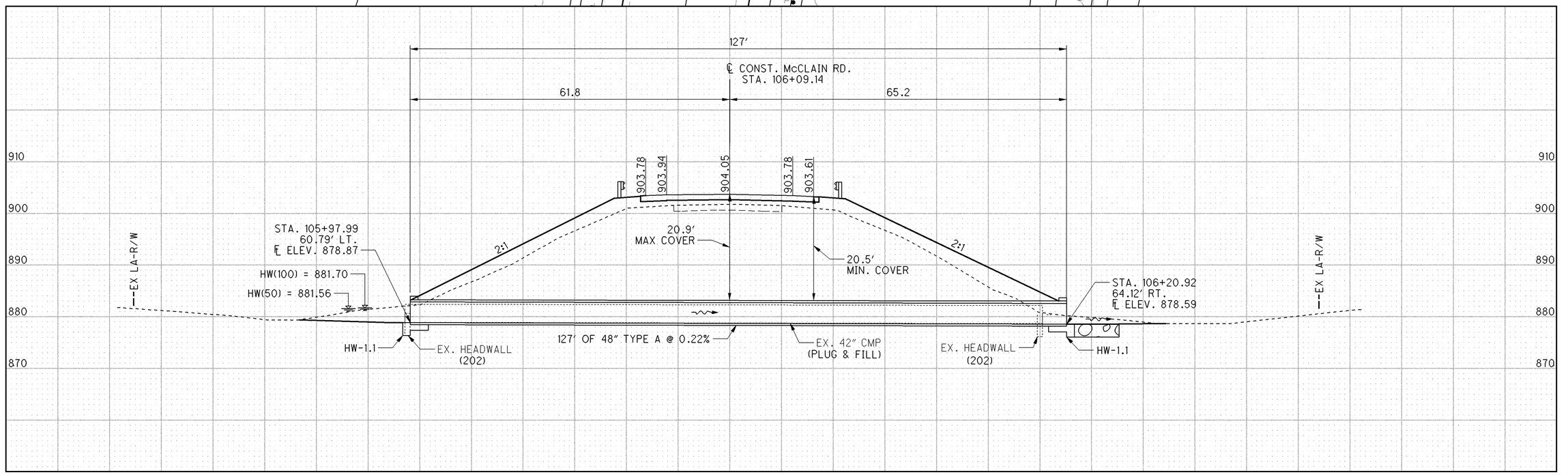

HORIZONTAL SCALE IN FEET
0 5 10 20

CALCULATED JRL CHECKED ACF

CULVERT DETAIL FOR No. C11
McCLAIN RD. AT STA. 106+09.14

ALL-75-0.21

484
907

I:\pd\89029\drainage\sheets\89029DC011_new.dgn 05-NOV-2013 12:34PM jclark1

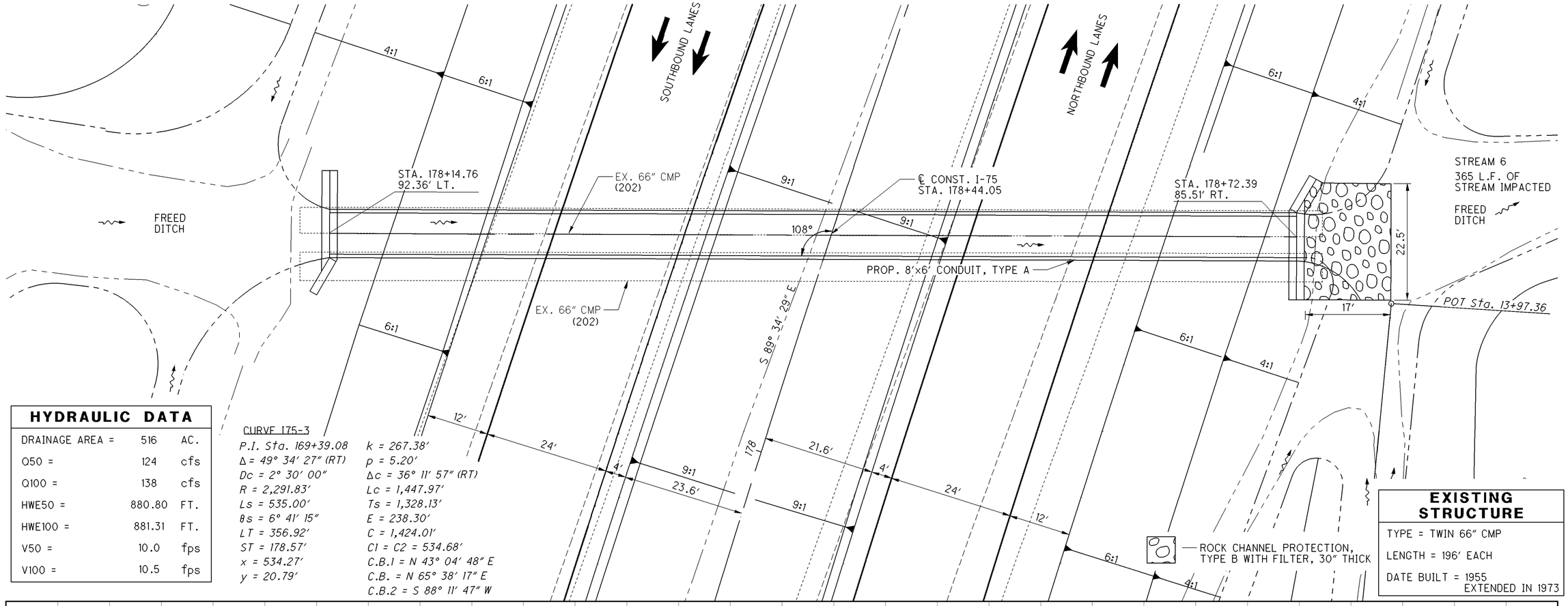

HYDRAULIC DATA

DRAINAGE AREA =	516	AC.
Q50 =	124	cfs
Q100 =	138	cfs
HWE50 =	880.80	FT.
HWE100 =	881.31	FT.
V50 =	10.0	fps
V100 =	10.5	fps

CURVE 175-3

P.I. Sta. 169+39.08
Δ = 49° 34' 27" (RT)
Dc = 2° 30' 00"
R = 2,291.83'
Ls = 535.00'
θs = 6° 41' 15"
LT = 356.92'
ST = 178.57'
x = 534.27'
y = 20.79'
k = 267.38'
p = 5.20'
Δc = 36° 11' 57" (RT)
Lc = 1,447.97'
Ts = 1,328.13'
E = 238.30'
C = 1,424.01'
C1 = C2 = 534.68'
C.B.1 = N 43° 04' 48" E
C.B. = N 65° 38' 17" E
C.B.2 = S 88° 11' 47" W

EXISTING STRUCTURE

TYPE = TWIN 66" CMP

LENGTH = 196' EACH

DATE BUILT = 1955
EXTENDED IN 1973

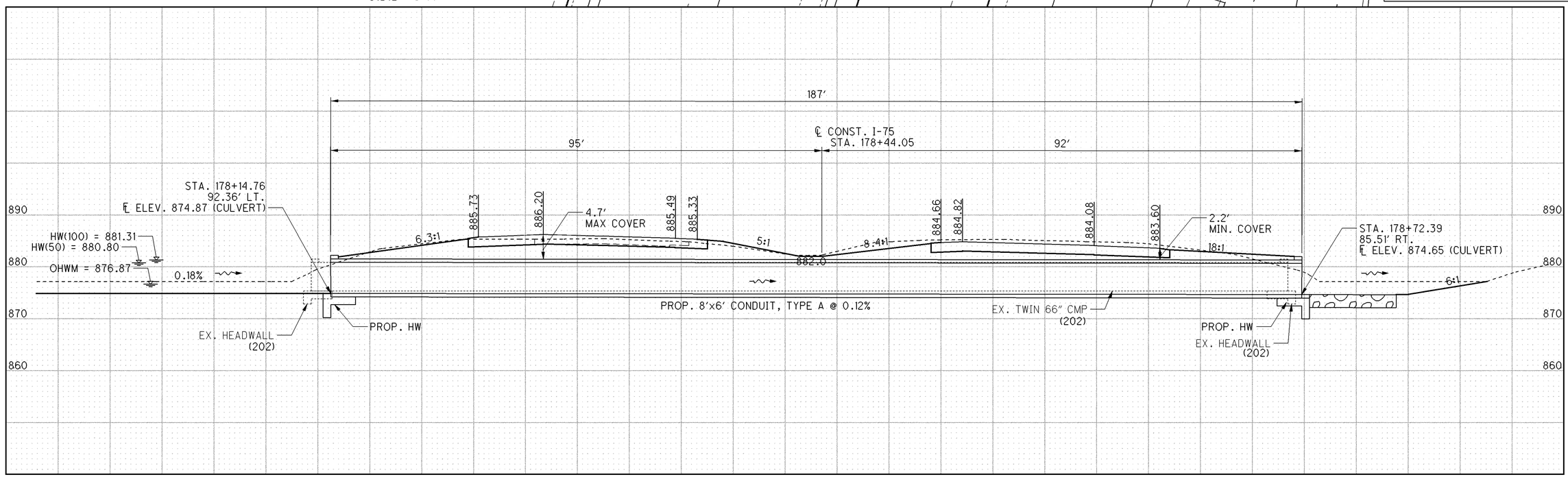

CALCULATED BDC
CHECKED JLG

HORIZONTAL SCALE IN FEET
0 5 10 20

CULVERT DETAIL FOR No. C12
I-75 AT STA. 178+44.05

ALL-75-0.21

1 / 5

485
907

I:\Pd\89029\drainage\sheets\89029DC012.dgn 27-JUN-2013 11:22AM tbolenbo

CULVERT NOTES

DESIGN SPECIFICATIONS

THE STRUCTURE CONFORMS TO "STANDARD SPECIFICATIONS FOR HIGHWAY BRIDGES" ADOPTED BY THE AMERICAN ASSOCIATION OF STATE HIGHWAY AND TRANSPORTATION OFFICIALS, 17TH EDITION, AND THE ODOT BRIDGE MANUAL.

DESIGN STRESSES

CAST-IN-PLACE STRUCTURES

CONCRETE CLASS "C" - F'C = COMPRESSIVE STRENGTH 4000 PSI SUBSTURCTURE

REINFORCING STEEL - ASTM A615 OR A996
FY = GRADE 60 - MINIMUM YEILD STRENGTH 60,000 PSI

PRECAST STRUCTURE: PIPE CULVERTS SEE CMS 603.

CONDUIT FABRICATION AND APPROVAL

PRIOR TO CLOSING THE ROADWAY TO TRAFFIC, THE CONTRACTOR SHALL HAVE THE ITEM 603 TYPE A CONDUIT SPECIFIED IN THESE PLANS FABRICATED AND APPROVED. ALL COSTS ASSOCIATED WITH THESE REQUIREMENTS SHALL BE CONSIDERED INCIDENTAL TO THE COST OF THE PERTINENT CONDUIT.

ITEM 511 CLASS C CONCRETE, AS PER PLAN

IN ADDITION TO THE SPECIFICATIONS SHOWN FOR ITEM 511 IN THE CMS, THIS ITEM SHALL INCLUDE ANY AND ALL EXCAVATION AND EMBANKMENT NEEDED TO CONSTRUCT THE WINGWALLS. THE EXCAVATION AND EMBANKMENT SHALL FOLLOW THE SPECIFICATIONS OUTLINED IN THE CMS FOR ITEM 203 EXCAVATION, NOT INCLUDING EMBANKMENT CONSTRUCTION AND ITEM 203 EMBANKMENT.

PAYMENT WILL BE AT THE CONTRACT BID PRICE PER CUBIC YARD FOR ITEM

ITEM 511, CLASS C CONCRETE, AS PER PLAN. = 14 CU. YD.

ITEM 511 CLASS C CONCRETE, FOOTING, AS PER PLAN

IN ADDITION TO THE SPECIFICATIONS SHOWN FOR ITEM 511 IN THE CMS, THIS ITEM SHALL ALSO INCLUDE ANY AND ALL EXCAVATION AND EMBANKMENT NECESSARY TO CONSTRUCT THE FOOTING. THE EXCAVATION AND EMBANKMENT SHALL FOLLOW THE SPECIFICATIONS OUTLINED IN THE CMS FOR ITEM 203 EXCAVATION, NOT INCLUDING EMBANKMENT CONSTRUCTION AND ITEM 203 EMBANKMENT.

PAYMENT WILL BE AT THE CONTRACT BID PRICE PER CUBIC YARD FOR ITEM

ITEM 511, CLASS C CONCRETE, FOOTING, AS PER PLAN. = 24 CU. YD.

EXISTING STRUCTURE VERIFICATION

DETAILS AND DIMENSIONS SHOWN ON THESE PLANS PERTAINING TO THE EXISTING STRUCTURE HAVE BEEN OBTAINED FROM PLANS OF THE EXISTING STRUCTURE AND/OR FROM FIELD OBSERVATIONS AND MEASUREMENTS. CONSEQUENTLY, THEY ARE INDICATIVE OF THE EXISTING STRUCTURE AND THE PROPOSED WORK BUT THEY SHALL BE CONSIDERED APPROXIMATE. THE CONTRACTOR IS REFERRED TO CMS SECTION 102.05 AND 105.02.

CONTRACT BID PRICES SHALL BE BASED UPON A RECOGNITION OF THE UNCERTAINTIES DESCRIBED ABOVE AND UPON A PRE-BID EXAMINATION OF THE EXISTING STRUCTURE BY THE CONTRACTOR. HOWEVER, ALL PROJECT WORK SHALL BE BASED ON ACTUAL DETAILS AND DIMENSIONS WHICH HAVE BEEN VERIFIED BY THE CONTRACTOR IN THE FIELD.

ITEM 512 WATERPROOFING

TYPE 2 WATERPROOFING SHALL BE APPLIED TO THE TOP SURFACE OF THE PRECAST CULVERT SECTIONS AND SHALL EXTEND VERTICALLY DOWN ALL SIDES FOR THE PORTIONS OF THE CULVERT WHICH SHALL BE IN CONTACT WITH THE BACKFILL.

THE EXTERIOR JOINT GAP ON THE TOP AND SIDES BETWEEN THE PRECAST CULVERT SECTIONS SHALL BE FILLED WITH PORTLAND CEMENT MORTAR PRIOR TO INSTALLING THE WATERPROOFING.

JOINT WRAP AS SPECIFIED IN 603.08 & 603.09 AND CONCRETE SEALING AS SPECIFIED IN 603.08 ARE NOT REQUIRED UNDER THE LIMITS OF THE WATERPROOFING.

PAYMENT FOR THE TYPE 2 WATERPROOFING SHALL BE AT THE CONTRACT PRICE BID PER SQ YD FOR ITEM 512 - TYPE 2 WATERPROOFING.

ITEM 512 TYPE 2 WATERPROOFING = 537 SQ. YD.

ITEM 613 LOW STRENGTH MORTAR BACKFILL

LOW STRENGTH MORTAR BACKFILL SHALL BE PLACED AS SHOWN AND LATERALLY TO THE EDGE OF PAVEMENT. PAYMENT FOR LOW STRENGTH MORTAR BACKFILL SHALL BE MADE ONLY FOR BACKFILL PLACED TO THE LIMITS SHOWN.

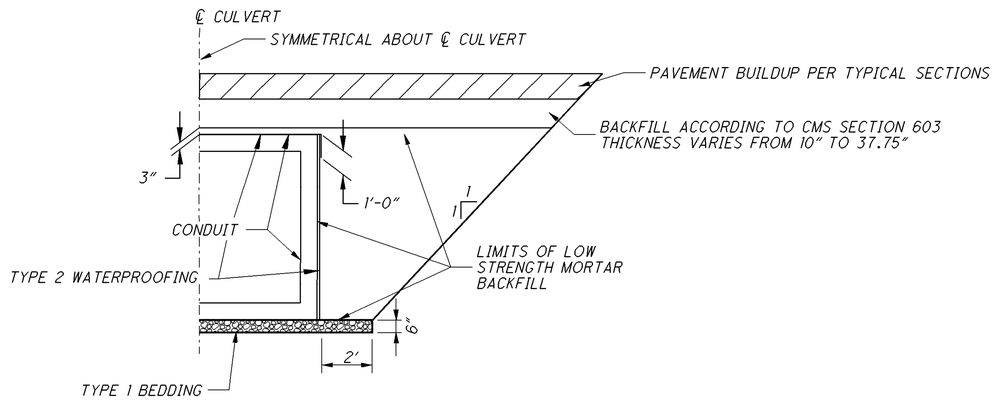

CULVERT ESTIMATED QUANTITIES

ITEM	ITEM EXT	TOTAL	UNIT	DESCRIPTION	SEE SHEET NO.
202	11000	LUMP		STRUCTURE REMOVED	
202	20010	2	EACH	HEADWALL REMOVED	
503	11100	LUMP		COFFERDAMS AND EXCAVATION BRACING	
509	10000	2687	POUND	EPOXY COATED REINFORCING STEEL	
511	46001	14	CU YD	CLASS C CONCRETE, AS PER PLAN	2/5
511	46501	24	CU YD	CLASS C CONCRETE, FOOTING, AS PER PLAN	2/5
512	10100	64	SQ YD	SEALING OF CONCRETE SURFACES (EPOXY-URETHANE)	
512	33000	537	SQ YD	TYPE 2 WATERPROOFING	
601	32100	35	CU YD	ROCK CHANNEL PROTECTION, TYPE B WITH FILTER, 30" Thick	
603	94910	187	FT	8' x 6' CONDUIT, TYPE A, 706.05 (DESIGN EARTH COVER = 2.2')	
613	41200	270	CU YD	LOW STRENGTH MORTAR BACKFILL	

QUANTITIES CARRIED TO CULVERT SUBSUMMARY, SHEET 158

CALCULATED BDC CHECKED JLG

CULVERT NOTES & ESTIMATED QUANTITES FOR CULVERT C12
I-75 AT STA. 178+44.05

ALL-75-0.21

2 / 5

486
907

I:\Pd\89029\drainage\sheets\89029DN012.dgn 27-JUN-2013 11:22AM tbolenba

OUTLET - PLAN VIEW

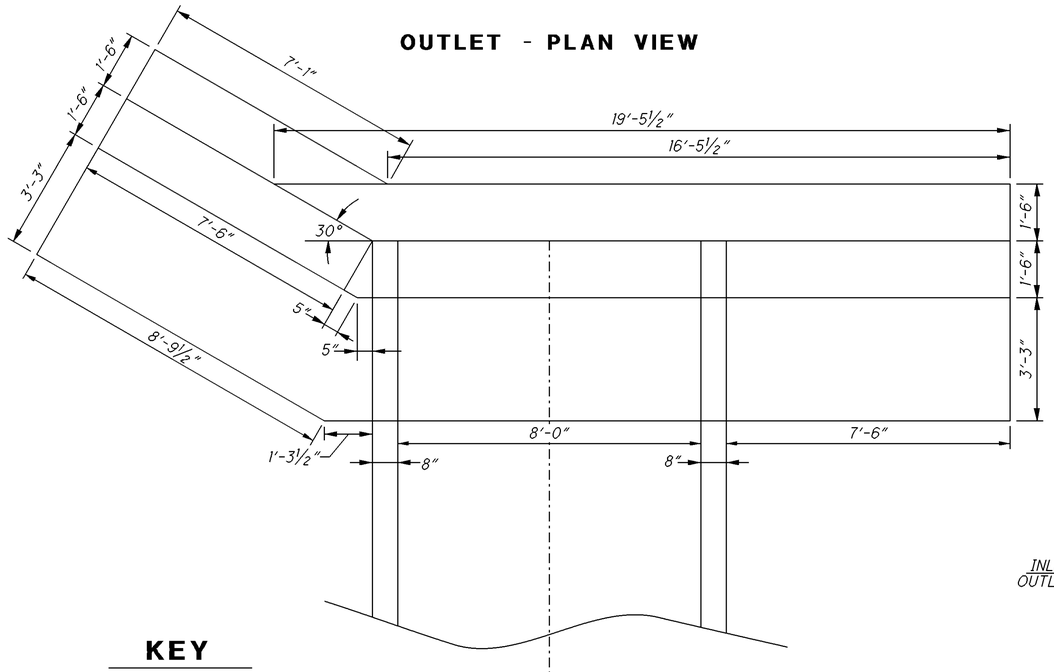

KEY

E.F. - EACH FACE
N.F. - NEAR FACE
F.F. - FAR FACE
T. - TOP
B. - BOTTOM
M. - MIDDLE

℄ Culvert

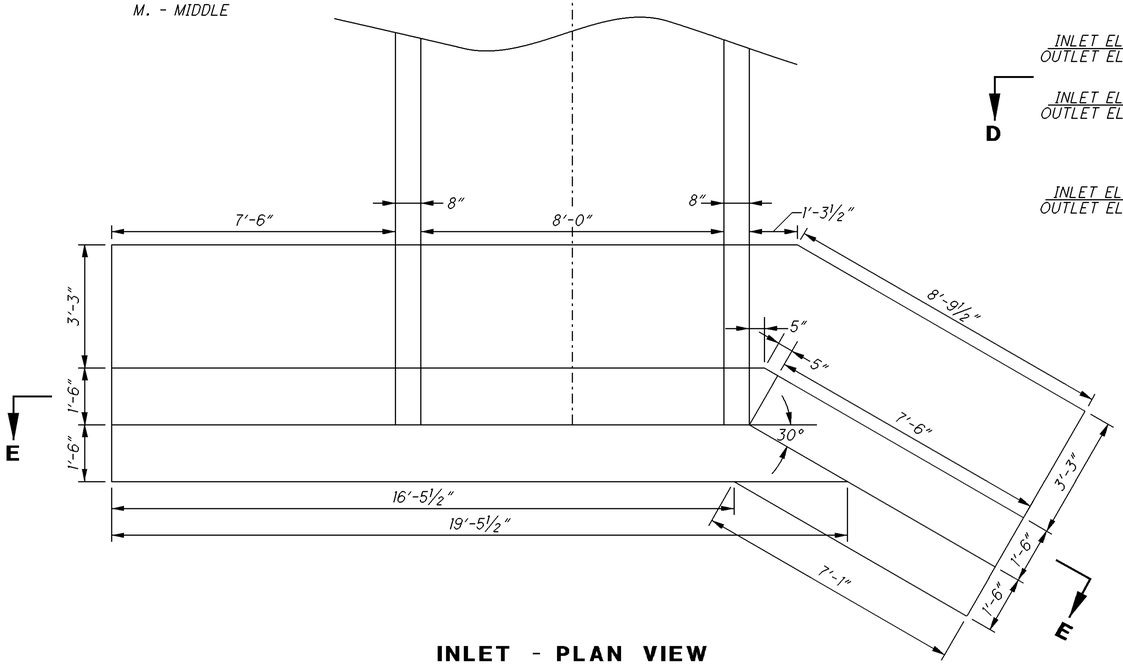

INLET - PLAN VIEW

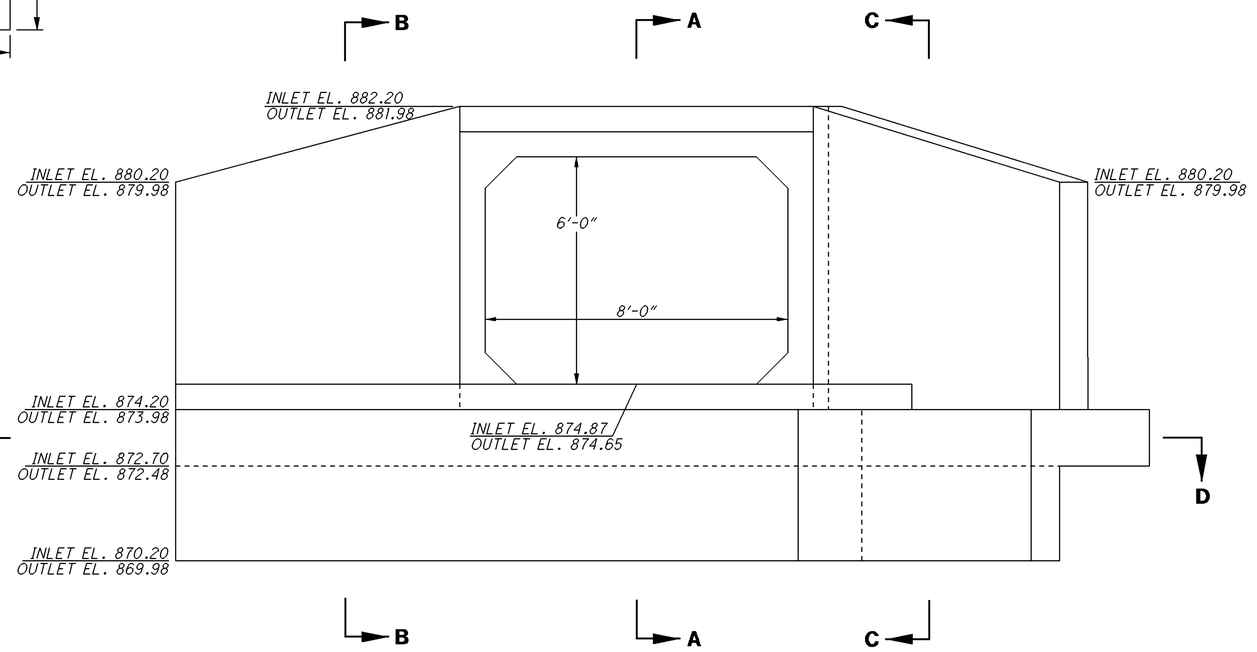

INLET/OUTLET ELEVATION VIEW

I:\Pd\89029\drainage\sheets\89029DC012a.dgn 27-JUN-2013 11:22AM tbolenba

CALCULATED BDC
CHECKED JLG

HEADWALL DETAILS FOR CULVERT C12
I.R. 75 AT STA. 178+44.05

ALL-75-0.21

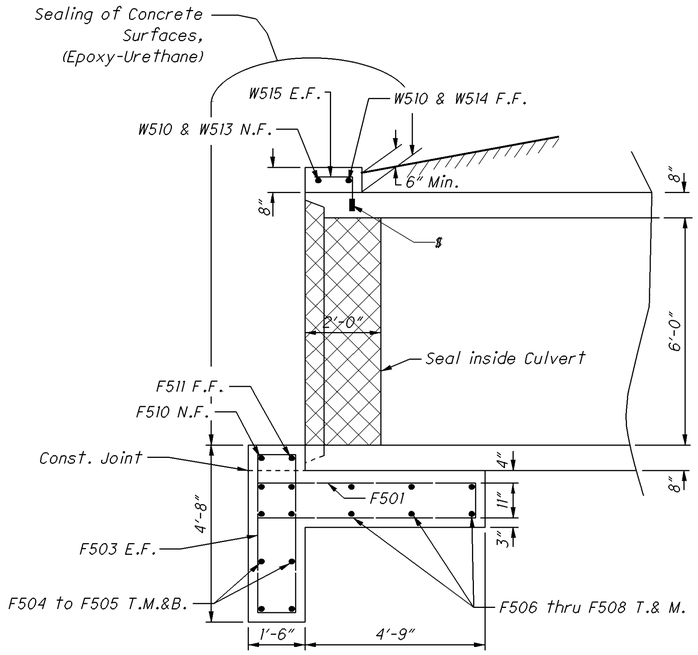

SECTION A-A
INLET

$ - Anchor Methods

1. Mechanical connector embedded into precast box culvert.
2. Partial depth resin-bonded anchoring system may be used as per GR-2.2
3. Threaded inserts 66 ksi.

KEY

E.F. - Each Face
N.F. - Near Face
F.F. - Far Face
T. - Top
B. - Bottom
M. - Middle

- Lap Length = 2'-6"

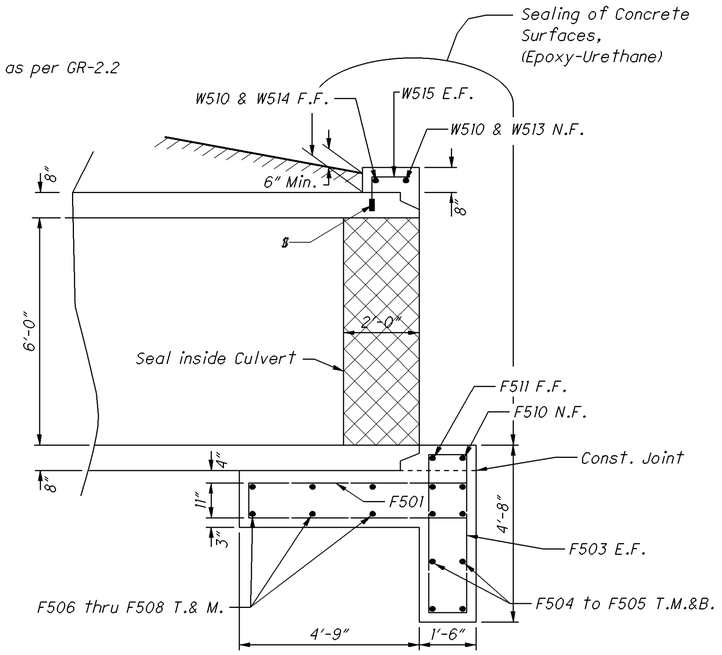

SECTION A-A
OUTLET

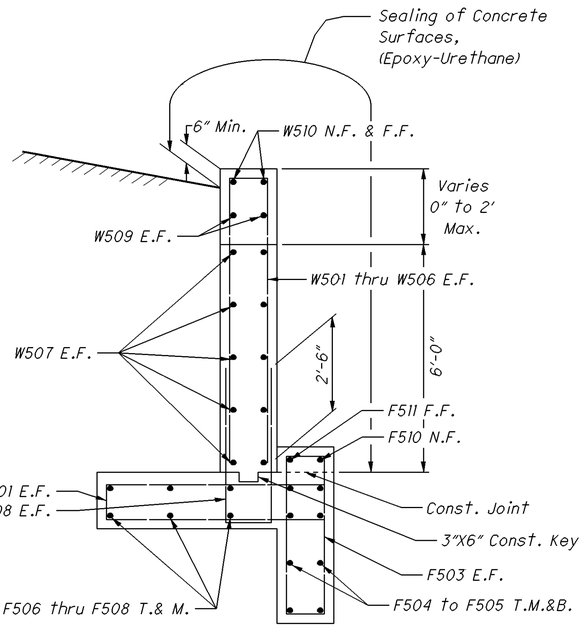

SECTION B-B
INLET / OUTLET

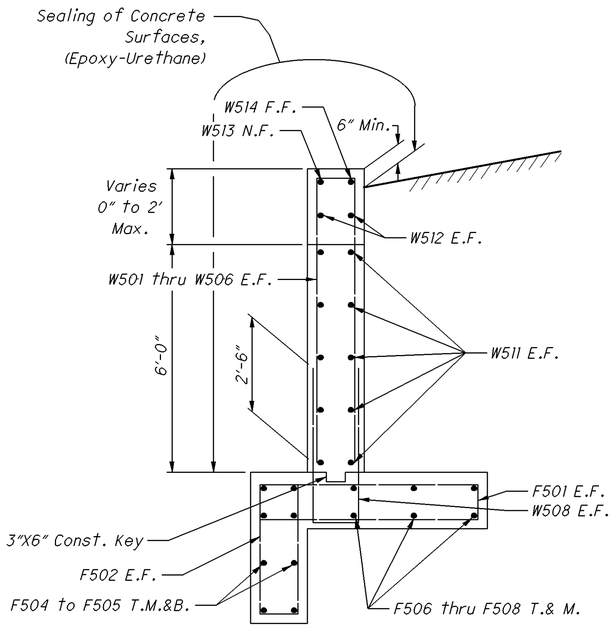

SECTION C-C
INLET / OUTLET

CALCULATED BDC CHECKED JLG

HEADWALL DETAILS FOR CULVERT C12
S.R. 75 AT STA. 178+44.06

ALL-75-0.21

4 / 5

488
907

I:\Pd\89029\drainage\sheets\89029DC012b.dgn 27-JUN-2013 11:22AM tbolenba

SECTION E-E
INLET/OUTLET
ELEVATION VIEW

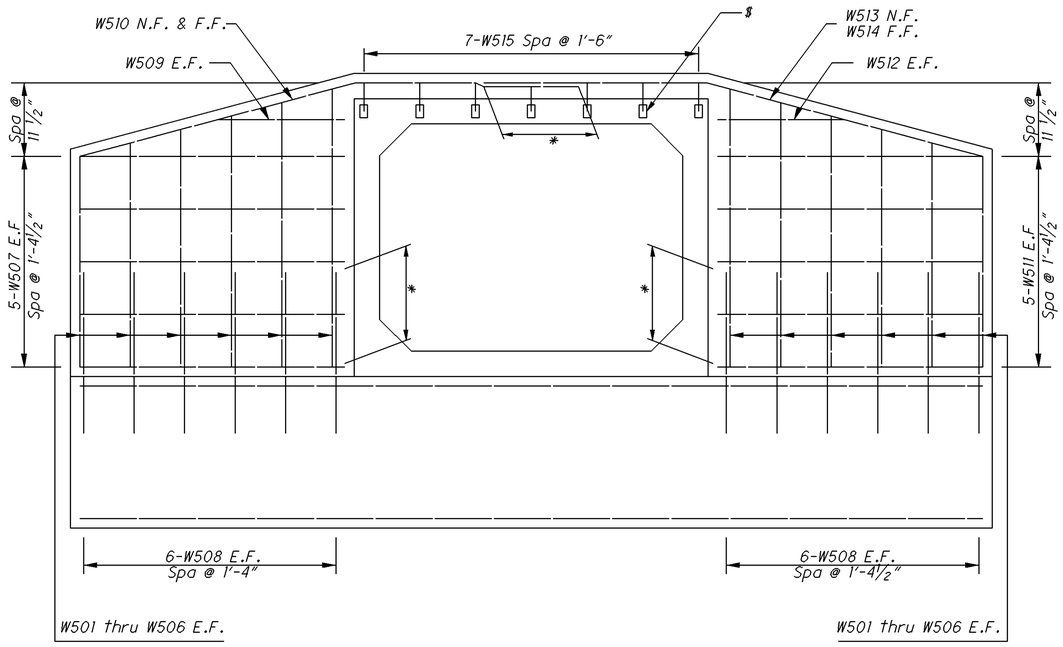

REINFORCING STEEL LIST

MARK	No.	LOCATION	LENGTH	SHAPE	WEIGHT
W501	4	E.F.	8' - 0"	BT.	33.3
W502	4	E.F.	8' - 8 1/2"	BT.	36.3
W503	4	E.F.	9' - 5"	BT.	39.2
W504	4	E.F.	10' - 1 1/2"	BT.	42.2
W505	4	E.F.	10' - 10"	BT.	45.1
W506	4	E.F.	11' - 6 1/2"	BT.	48.1
W507	8	E.F.	14' - 10 1/2"	BT.	123.8
W508	24	E.F.	9' - 4 1/2"	BT.	234.0
W509	2	E.F.	7' - 7"	BT.	15.8
W510	4	N.F.&F.F.	12' - 5"	BT.	51.7
W511	8	E.F.	16' - 0"	BT.	133.2
W512	2	E.F.	8' - 7 1/2"	BT.	18.0
W513	2	N.F.	13' - 10 1/2"	BT.	28.9
W514	2	F.F.	14' - 8"	BT.	30.6
W515	14	E.F.	1' - 9"	BT.	25.5
W516	2	F.F.	5' - 6"	ST.	11.5
F501	38	E.F.	13' - 1"	BT.	517.1
F502	12	E.F.	7' - 8 1/2"	BT.	96.2
F503	26	E.F.	10' - 1"	BT.	272.9
F504	8	T.,M.&B.	23' - 1/2"	BT.	191.6
F505	8	T.,M.&B.	23' - 10 1/2"	BT.	198.5
F506	4	T.&M.	25' - 2"	BT.	104.7
F507	4	T.&M.	26' - 6"	BT.	110.2
F508	4	T.&M.	24' - 11"	BT.	103.6
F509	2	E.F.	13' - 3"	BT.	27.6
F510	4	E.F.	18' - 1"	BT.	75.3
F511	2	N.F.	17' - 7 1/2"	ST.	36.7
F512	2	F.F.	16' - 9 1/2"	ST.	35.0
			TOTAL: (Carried to Culvert Estimated Quantites)		2687

BEND TABLE

MARK	TYPE	"A"	"B"	"C"
W501	2	3' - 6 3/4"	1' - 0"	3' - 6 3/4"
W502	2	3' - 11"	1' - 0"	3' - 11"
W503	2	4' - 3 1/4"	1' - 0"	4' - 3 1/4"
W504	2	4' - 7 1/2"	1' - 0"	4' - 7 1/2"
W505	2	4' - 11 3/4"	1' - 0"	4' - 11 3/4"
W506	2	5' - 4"	1' - 0"	5' - 4"
W507	2	7' - 0"	1' - 0"	7' - 0"
W508	2	4' - 3"	1' - 0"	4' - 3"
W509	2	3' - 4 1/4"	1' - 0"	3' - 4 1/4"
W510	5	6' - 6"	5' - 11"	
W511	2	7' - 4 1/4"	1' - 0"	7' - 9 1/4"
W512	2	3' - 8"	1' - 0"	4' - 1"
W513	3	7' - 7 1/4"	6' - 3"	
W514	3	8' - 0"	6' - 8"	
W515	4	0' - 9"	1' - 0"	
F501	1	5' - 9"	0' - 11"	
F502	2	3' - 5"	1' - 0"	3' - 5"
F503	1	4' - 2"	1' - 0"	
F504	6	16' - 3 1/2"	6' - 8 3/4"	
F505	6	16' - 8 1/2"	7' - 1 3/4"	
F506	6	17' - 4 1/4"	7' - 9 1/2"	
F507	6	18' - 1/4"	8' - 5 1/2"	
F508	6	18' - 8"	6' - 2 3/4"	
F509	2	6' - 2 3/4"	0' - 11"	6' - 2 3/4"
F510	2	3' - 2 3/4"	0' - 11"	3' - 2 3/4"

SECTION D-D
INLET/OUTLET
PLAN VIEW

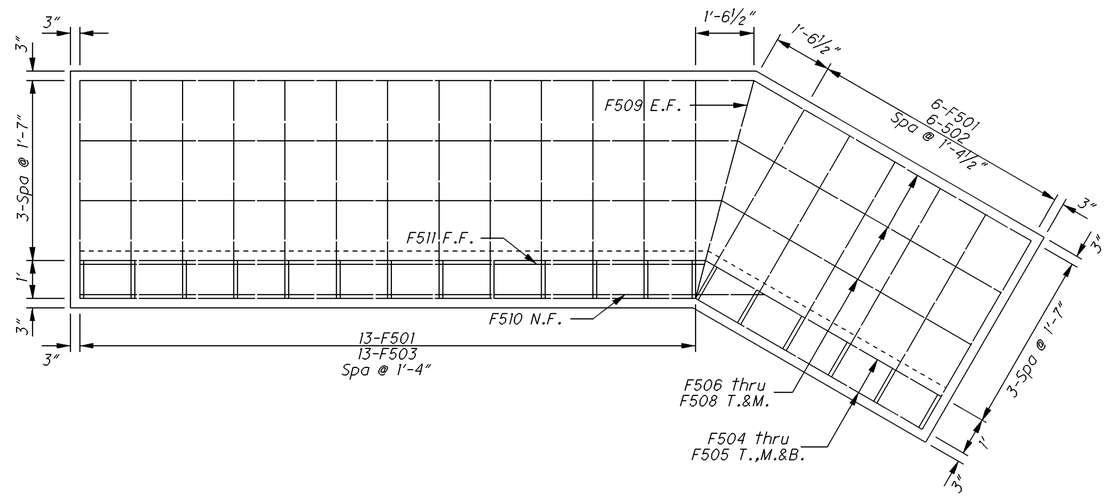

KEY

E.F. - Each Face
N.F. - Near Face
F.F. - Far Face
T. - Top
B. - Bottom
M. - Middle

* - Lap Length = 2'-6"

NOTES:

ALL REINFORCING STEEL TO BE EPOXY COATED.

ALL DIMENSIONS ARE OUT-TO-OUT

"ST" MEANS STRAIGHT
"BT" MEANS BENT

$ - Anchor Methods

1. Mechanical connector embedded into precast elliptical culvert.
2. Partial depth resin-bonded anchoring system may be used as per GR-2.2
3. Threaded inserts 66 ksi.

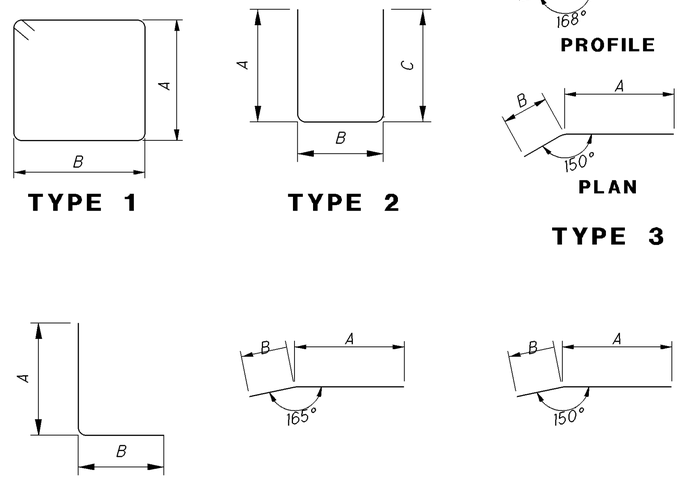

BENDING DIAGRAMS

CALCULATED BDC
CHECKED JLG

HEADWALL DETAILS FOR CULVERT C12
I-75 AT STA. 178+44.05

ALL-75-0.21

5 / 5

489
907

i:\Pd\890290\drainage\sheets\890290DC012c.dgn 27-JUN-2013 11:22:AM tholeiha

EXISTING STRUCTURE

TYPE = 66" CMP

LENGTH = 186'

DATE BUILT = 1955
EXTENDED IN 1973

HYDRAULIC DATA

DRAINAGE AREA =	221	AC.
Q50 =	97	cfs
Q100 =	110	cfs
HWE50 =	883.90	FT.
HWE100 =	884.16	FT.
V50 =	7.7	fps
V100 =	8.4	fps

ESTIMATED QUANTITIES

503	COFFERDAMS AND EXCAVATION BRACING =	LUMP
601	ROCK CHANNEL PROTECTION, TYPE B WITH FILTER, 30" THICK	= 40 C.Y.
601	RIPRAP USING 6" REINFORCED CONCRETE SLAB	= 39.5 S.Y.
602	CONCRETE MASONRY	= 47.8 C.Y.
603	84" CONDUIT, TYPE A, 706.02	= 161 FT.

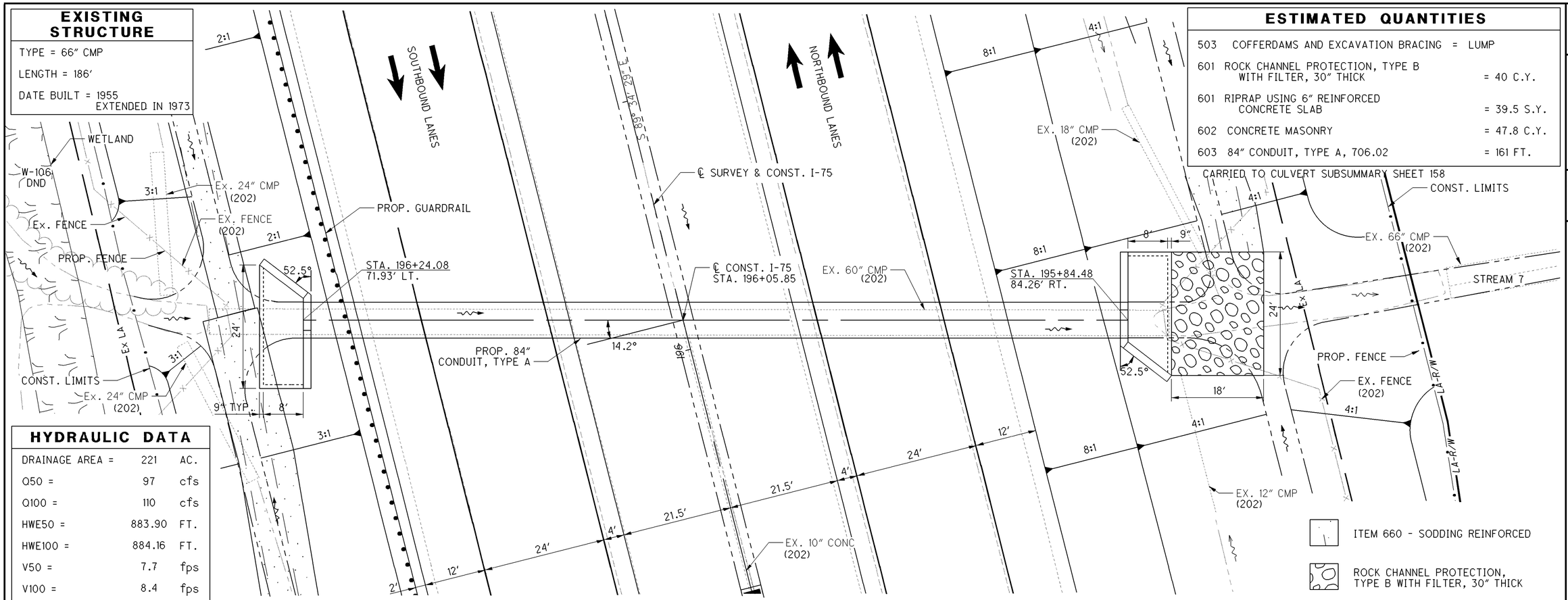

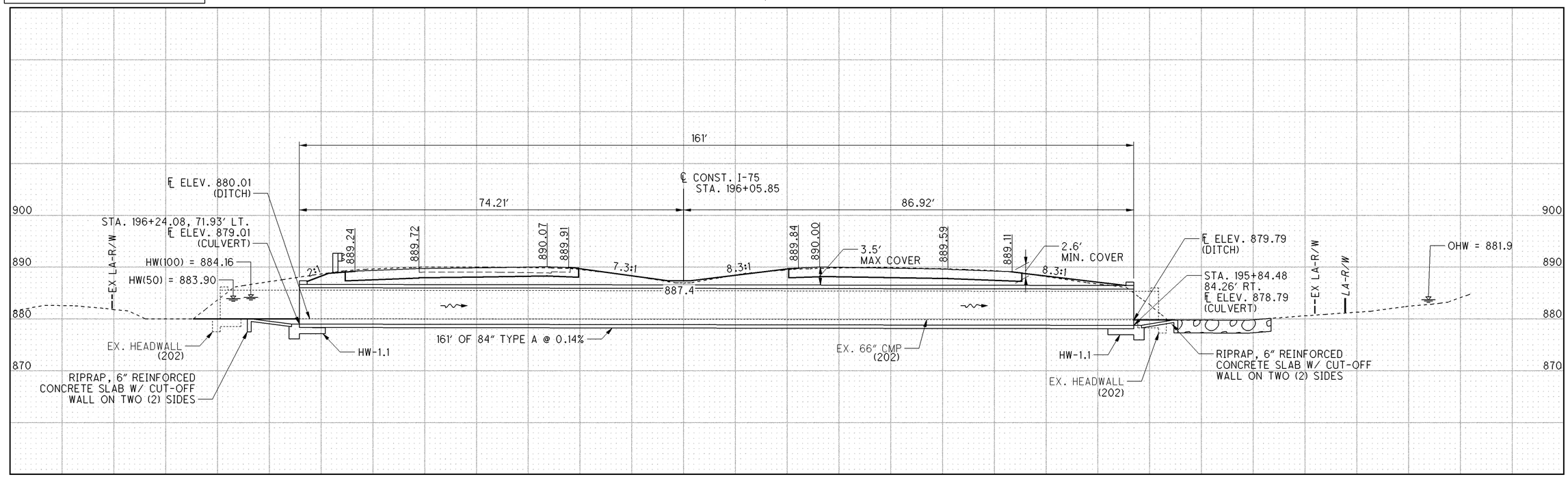

HORIZONTAL SCALE IN FEET (0, 5, 10, 20)

CALCULATED JRL CHECKED ACF

CULVERT DETAIL FOR No. C13
I-75 AT STA. 196+05.85

ALL-75-0.21

490
907

I:\Pdt\89029\drainage\sheets\89029DC013.dgn 27-JUN-2013 11:21AM tbolenba

ESTIMATED QUANTITIES

503	COFFERDAMS AND EXCAVATION BRACING	= LUMP
601	ROCK CHANNEL PROTECTION, TYPE B WITH FILTER, 30" THICK	= 13 C.Y.
602	CONCRETE MASONRY	= 20.0 C.Y.
603	54" CONDUIT, TYPE A, 706.02 or 72" 707.01 (0.138), 707.02 (0.138), 707.04, 707.05 (.109), 707.07 (.109), 707.21, 707.22	= 221 FT.

HYDRAULIC DATA

DRAINAGE AREA =	128	AC.
Q50 =	64	cfs
Q100 =	73	cfs
HWE50 =	894.49	FT.
HWE100 =	894.76	FT.
V50 =	7.7	fps
V100 =	8.1	fps

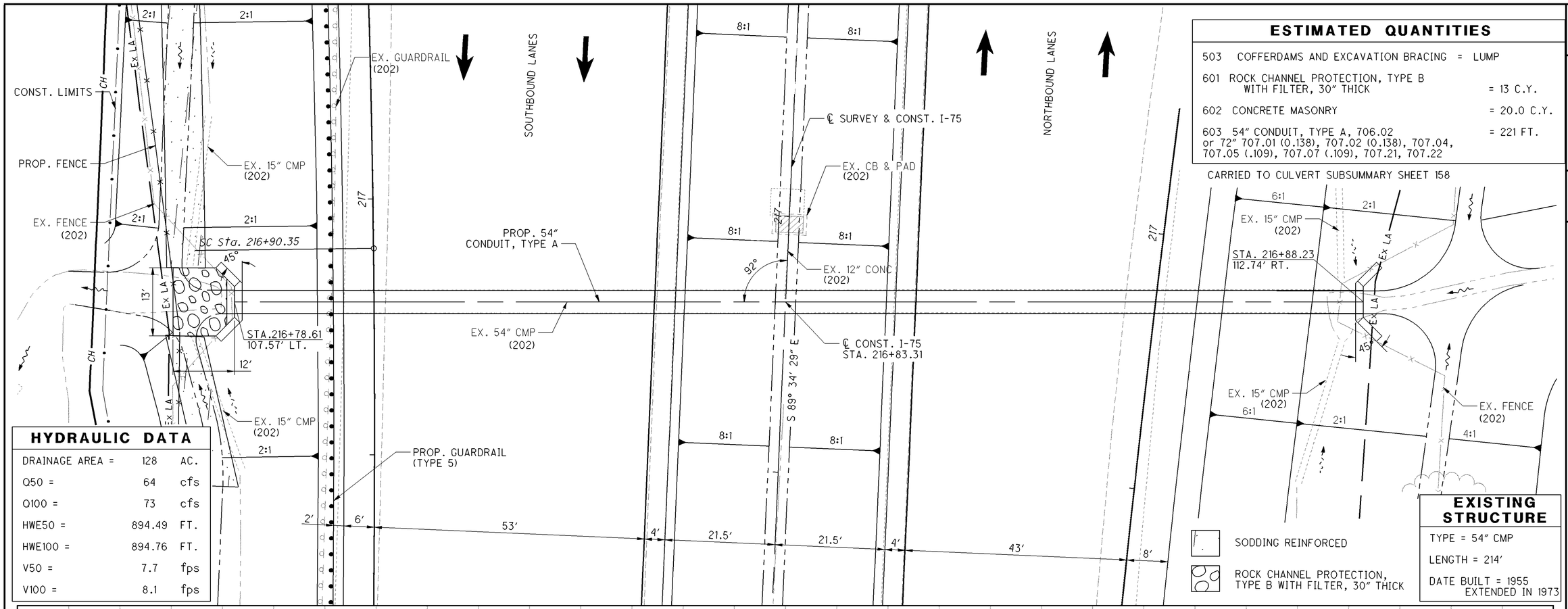

EXISTING STRUCTURE

TYPE = 54" CMP

LENGTH = 214'

DATE BUILT = 1955
EXTENDED IN 1973

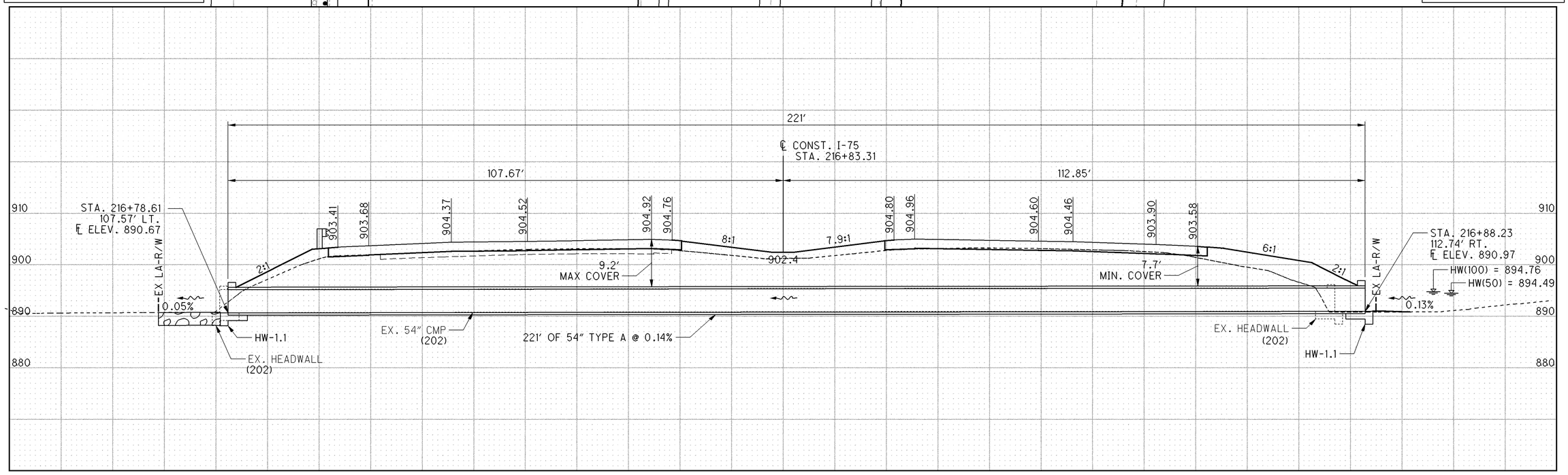

CULVERT DETAIL FOR No. C14
I-75 AT STA. 216+83.31
ALL-75-0.21

CALCULATED JRL CHECKED ACF

HORIZONTAL SCALE IN FEET

491
907

I:\Pd\89029\drainage\sheets\89029DC014.dgn 27-JUN-2013 11:21AM tbolenba

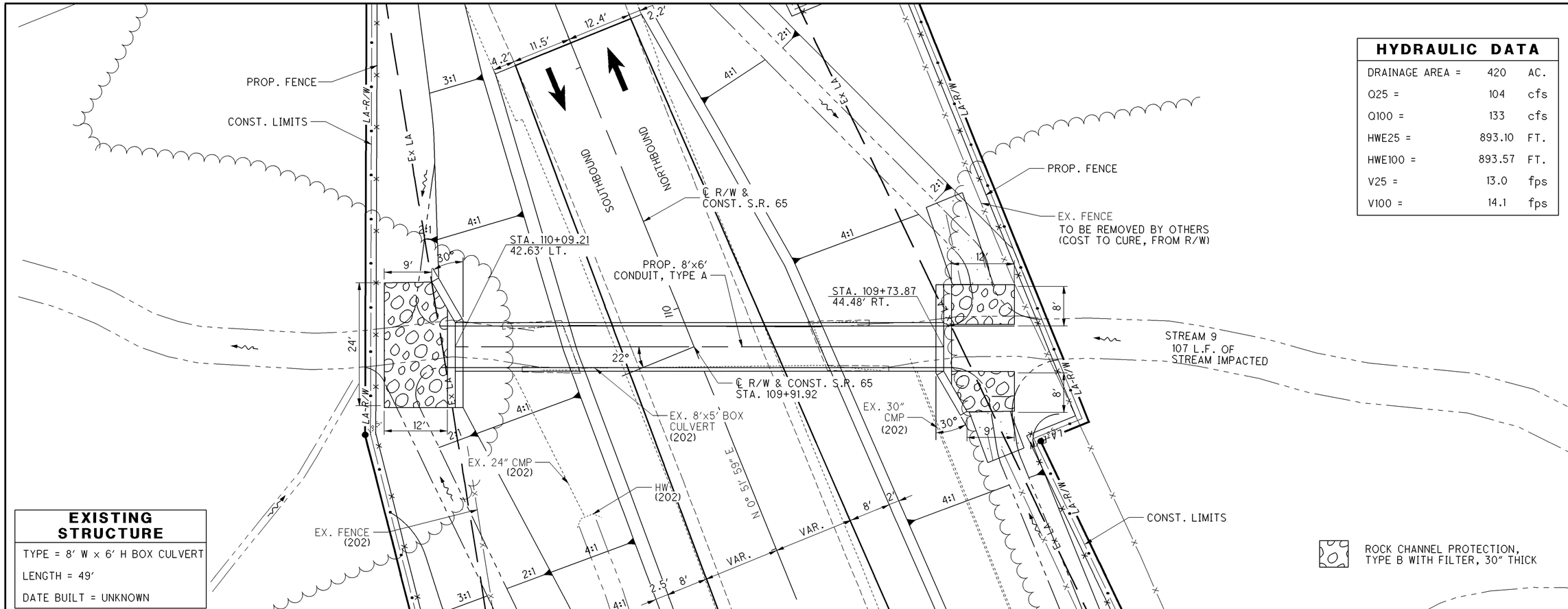

HYDRAULIC DATA

DRAINAGE AREA =	420	AC.
Q25 =	104	cfs
Q100 =	133	cfs
HWE25 =	893.10	FT.
HWE100 =	893.57	FT.
V25 =	13.0	fps
V100 =	14.1	fps

EXISTING STRUCTURE

TYPE = 8' W x 6' H BOX CULVERT

LENGTH = 49'

DATE BUILT = UNKNOWN

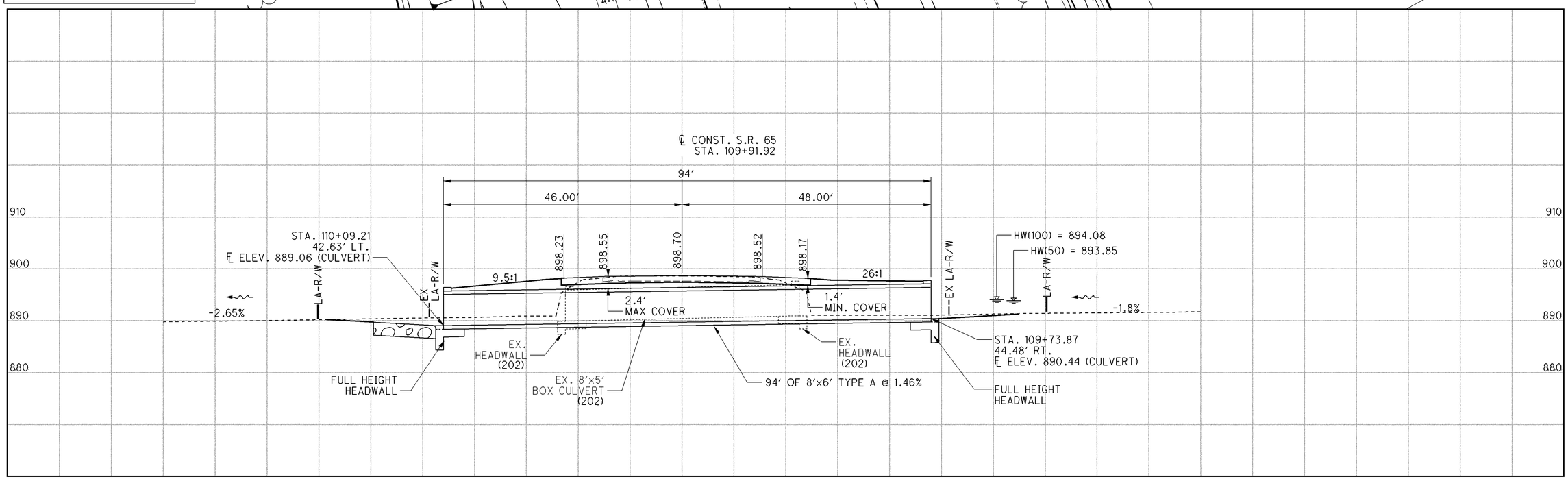

HORIZONTAL SCALE IN FEET 0 5 10 20

CALCULATED BDC
CHECKED JLG

CULVERT DETAIL FOR No. C15
S.R. 65 AT STA. 109+91.92

ALL-75-0.21

I:\Pd\89029\drainage\sheets\89029DC015.dgn 27-JUN-2013 11:21AM tbolenba

CULVERT NOTES

DESIGN SPECIFICATIONS

THE STRUCTURE CONFORMS TO "STANDARD SPECIFICATIONS FOR HIGHWAY BRIDGES" ADOPTED BY THE AMERICAN ASSOCIATION OF STATE HIGHWAY AND TRANSPORTATION OFFICIALS, 17TH EDITION, AND THE ODOT BRIDGE MANUAL.

DESIGN STRESSES

CAST-IN-PLACE STRUCTURES

CONCRETE CLASS "C" - F'C = COMPRESSIVE STRENGTH 4000 PSI SUBSTURCTURE

REINFORCING STEEL - ASTM A615 OR A996
FY = GRADE 60 - MINIMUM YEILD STRENGTH 60,000 PSI

PRECAST STRUCTURE: PIPE CULVERTS SEE CMS 603.

CONDUIT FABRICATION AND APPROVAL

PRIOR TO CLOSING THE ROADWAY TO TRAFFIC, THE CONTRACTOR SHALL HAVE THE ITEM 603 TYPE A CONDUIT SPECIFIED IN THESE PLANS FABRICATED AND APPROVED. ALL COSTS ASSOCIATED WITH THESE REQUIREMENTS SHALL BE CONSIDERED INCIDENTAL TO THE COST OF THE PERTINENT CONDUIT.

ITEM 511 CLASS C CONCRETE, AS PER PLAN

IN ADDITION TO THE SPECIFICATIONS SHOWN FOR ITEM 511 IN THE CMS, THIS ITEM SHALL INCLUDE ANY AND ALL EXCAVATION AND EMBANKMENT NEEDED TO CONSTRUCT THE WINGWALLS. THE EXCAVATION AND EMBANKMENT SHALL FOLLOW THE SPECIFICATIONS OUTLINED IN THE CMS FOR ITEM 203 EXCAVATION, NOT INCLUDING EMBANKMENT CONSTRUCTION AND ITEM 203 EMBANKMENT.

PAYMENT WILL BE AT THE CONTRACT BID PRICE PER CUBIC YARD FOR ITEM

ITEM 511, CLASS C CONCRETE, AS PER PLAN. = 15 CU. YD.

ITEM 511 CLASS C CONCRETE, FOOTING, AS PER PLAN

IN ADDITION TO THE SPECIFICATIONS SHOWN FOR ITEM 511 IN THE CMS, THIS ITEM SHALL ALSO INCLUDE ANY AND ALL EXCAVATION AND EMBANKMENT NECESSARY TO CONSTRUCT THE FOOTING. THE EXCAVATION AND EMBANKMENT SHALL FOLLOW THE SPECIFICATIONS OUTLINED IN THE CMS FOR ITEM 203 EXCAVATION, NOT INCLUDING EMBANKMENT CONSTRUCTION AND ITEM 203 EMBANKMENT.

PAYMENT WILL BE AT THE CONTRACT BID PRICE PER CUBIC YARD FOR ITEM

ITEM 511, CLASS C CONCRETE, FOOTING, AS PER PLAN. = 21 CU. YD.

EXISTING STRUCTURE VERIFICATION

DETAILS AND DIMENSIONS SHOWN ON THESE PLANS PERTAINING TO THE EXISTING STRUCTURE HAVE BEEN OBTAINED FROM PLANS OF THE EXISTING STRUCTURE AND/OR FROM FIELD OBSERVATIONS AND MEASUREMENTS. CONSEQUENTLY, THEY ARE INDICATIVE OF THE EXISTING STRUCTURE AND THE PROPOSED WORK BUT THEY SHALL BE CONSIDERED APPROXIMATE. THE CONTRACTOR IS REFERRED TO CMS SECTION 102.05 AND 105.02.

CONTRACT BID PRICES SHALL BE BASED UPON A RECOGNITION OF THE UNCERTAINTIES DESCRIBED ABOVE AND UPON A PRE-BID EXAMINATION OF THE EXISTING STRUCTURE BY THE CONTRACTOR. HOWEVER, ALL PROJECT WORK SHALL BE BASED ON ACTUAL DETAILS AND DIMENSIONS WHICH HAVE BEEN VERIFIED BY THE CONTRACTOR IN THE FIELD.

ITEM 512 WATERPROOFING

TYPE 2 WATERPROOFING SHALL BE APPLIED TO THE TOP SURFACE OF THE PRECAST CULVERT SECTIONS AND SHALL EXTEND VERTICALLY DOWN ALL SIDES FOR THE PORTIONS OF THE CULVERT WHICH SHALL BE IN CONTACT WITH THE BACKFILL.

THE EXTERIOR JOINT GAP ON THE TOP AND SIDES BETWEEN THE PRECAST CULVERT SECTIONS SHALL BE FILLED WITH PORTLAND CEMENT MORTAR PRIOR TO INSTALLING THE WATERPROOFING.

JOINT WRAP AS SPECIFIED IN 603.08 & 603.09 AND CONCRETE SEALING AS SPECIFIED IN 603.08 ARE NOT REQUIRED UNDER THE LIMITS OF THE WATERPROOFING.

PAYMENT FOR THE TYPE 2 WATERPROOFING SHALL BE AT THE CONTRACT PRICE BID PER SQ YD FOR ITEM 512 - TYPE 2 WATERPROOFING.

ITEM 512 TYPE 2 WATERPROOFING = 268 SQ. YD.

ITEM 613 LOW STRENGTH MORTAR BACKFILL

LOW STRENGTH MORTAR BACKFILL SHALL BE PLACED AS SHOWN AND LATERALLY TO THE EDGE OF PAVEMENT. PAYMENT FOR LOW STRENGTH MORTAR BACKFILL SHALL BE MADE ONLY FOR BACKFILL PLACED TO THE LIMITS SHOWN.

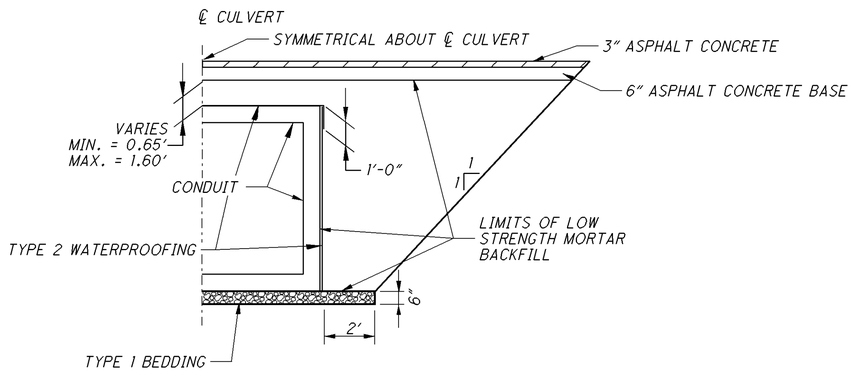

CULVERT ESTIMATED QUANTITIES

ITEM	ITEM EXT	TOTAL	UNIT	DESCRIPTION	SEE SHEET NO.
202	11000	LUMP		STRUCTURE REMOVED	
202	20010	2	EACH	HEADWALL REMOVED	
503	11100	LUMP		COFFERDAMS AND EXCAVATION BRACING	
509	10000	2634	POUND	EPOXY COATED REINFORCING STEEL	
511	46001	15	CU YD	CLASS C CONCRETE, AS PER PLAN	2/8
511	46501	21	CU YD	CLASS C CONCRETE, FOOTING, AS PER PLAN	2/8
512	10100	64	SQ YD	SEALING OF CONCRETE SURFACES (EPOXY-URETHANE)	
512	33000	268	SQ YD	TYPE 2 WATERPROOFING	
601	32100	43	CU YD	ROCK CHANNEL PROTECTION, TYPE B WITH FILTER, 30" Thick	
603	94910	94	FT	8' x 6' CONDUIT, TYPE A, 706.05 (DESIGN EARTH COVER = 1.4')	
613	41200	200	CU YD	LOW STRENGTH MORTAR BACKFILL	

QUANTITIES CARRIED TO CULVERT SUBSUMMARY, SHEET 158

CALCULATED BDC CHECKED JLG

C15 NOTES & ESTIMATED QUANTITIES
S.R. 65 AT STA. 109+91.92

CULVERT C15

ALL-75-0.21

2 / 8

493
907

I:\Pdt\89029\drainage\sheets\89029DN015.dgn 27-JUN-2013 11:21AM tbolenba

INLET - PLAN VIEW

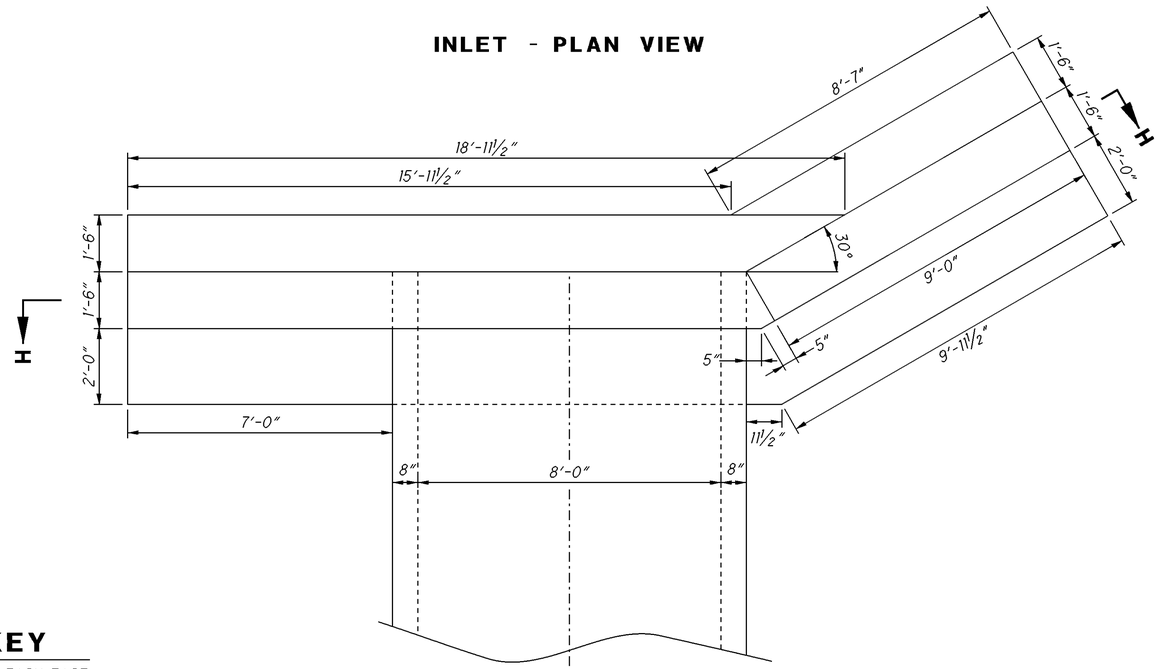

KEY

E.F. - EACH FACE
N.F. - NEAR FACE
F.F. - FAR FACE
T. - TOP
B. - BOTTOM
M. - MIDDLE

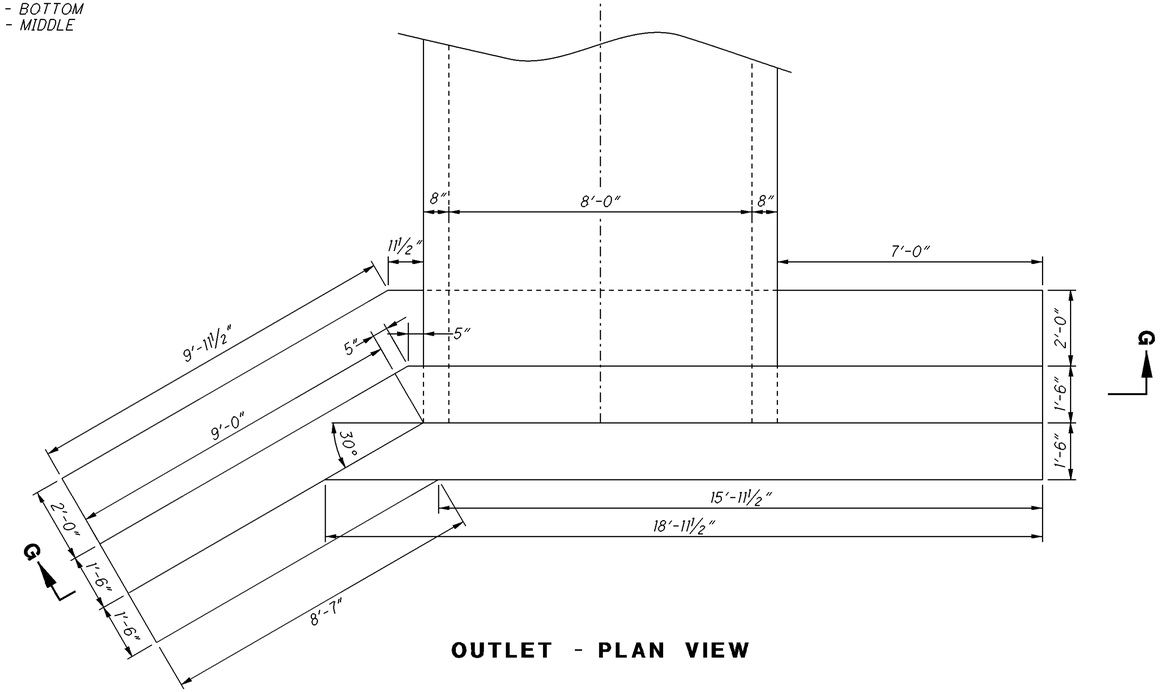

OUTLET - PLAN VIEW

CALCULATED BDC
CHECKED JLG

HEADWALL DETAILS FOR CULVERT C15
S.R. 65 AT STA. 109+91.92

ALL-75-0.21

3 / 8

494
907

I:\Pd\89029\drainage\sheets\89029DC015a.dgn 27-JUN-2013 11:21AM tbolenba

INLET - ELEVATION VIEW

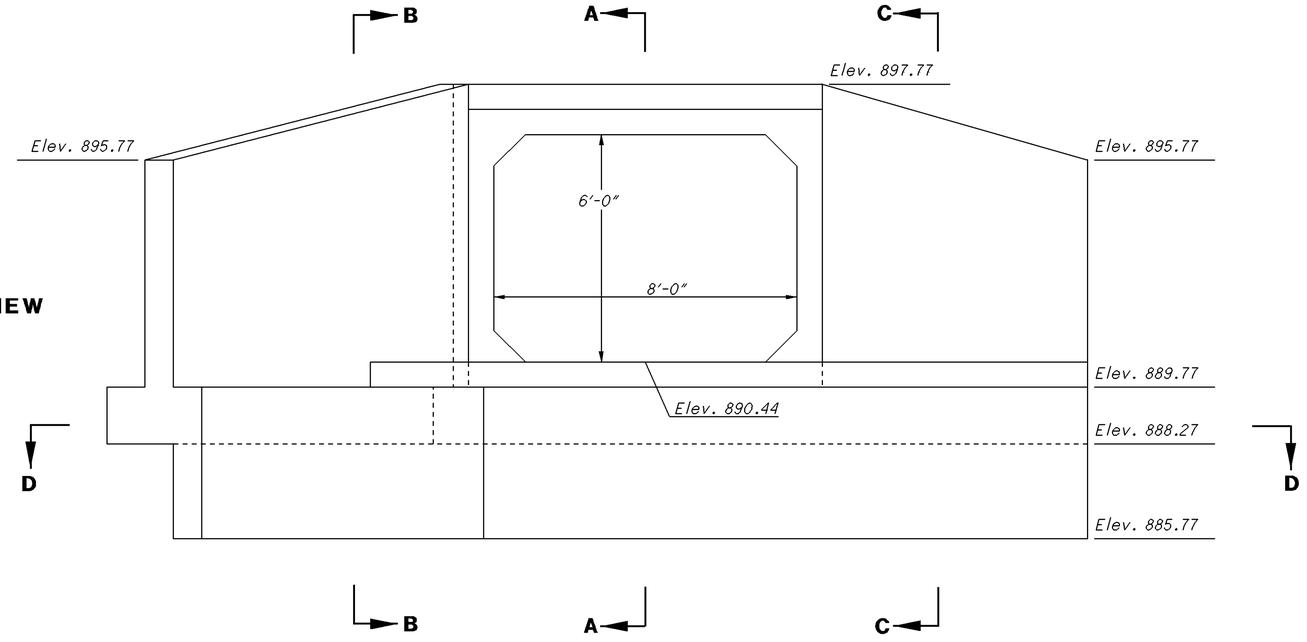

KEY

E.F. - EACH FACE
N.F. - NEAR FACE
F.F. - FAR FACE
T. - TOP
B. - BOTTOM
M. - MIDDLE

OUTLET - ELEVATION VIEW

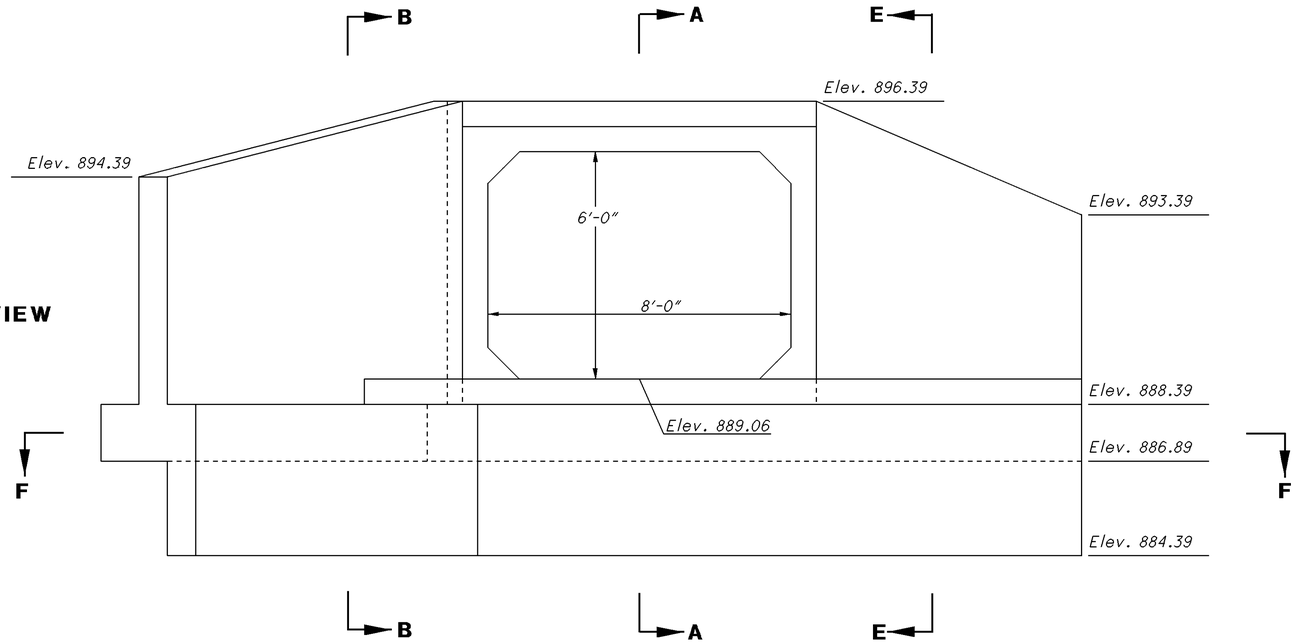

CALCULATED BDC
CHECKED JLG

HEADWALL DETAILS FOR CULVERT C15
S.R. 65 AT STA. 109+91.92

ALL-75-0.21

4 / 8

495
907

I:\Pd\89029\drainage\sheets\89029DC015b.dgn 27-JUN-2013 11:21AM tbolenba

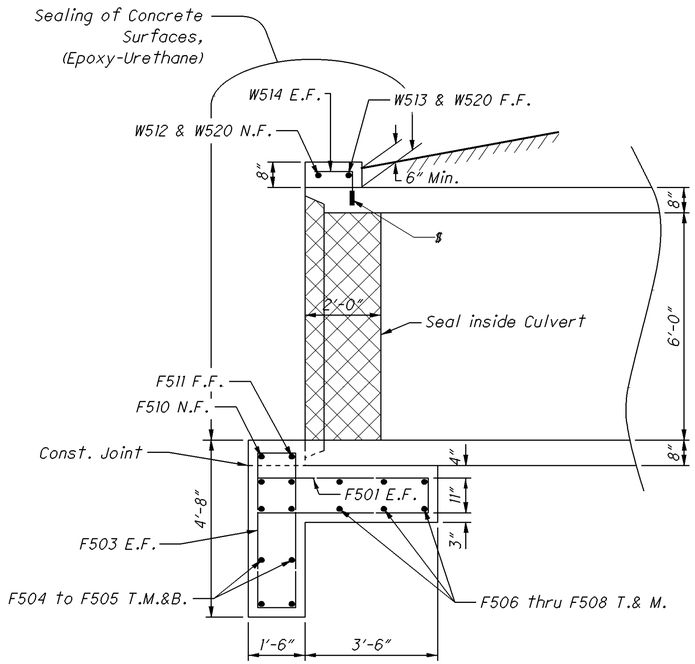

SECTION A-A
INLET

$ - Anchor Methods

1. Mechanical connector embedded into precast box culvert.
2. Partial depth resin-bonded anchoring system may be used as per GR-2.2
3. Threaded inserts 66 ksi.

KEY

E.F. - Each Face
N.F. - Near Face
F.F. - Far Face
T. - Top
B. - Bottom
M. - Middle

- Lap Length = 2'-6"

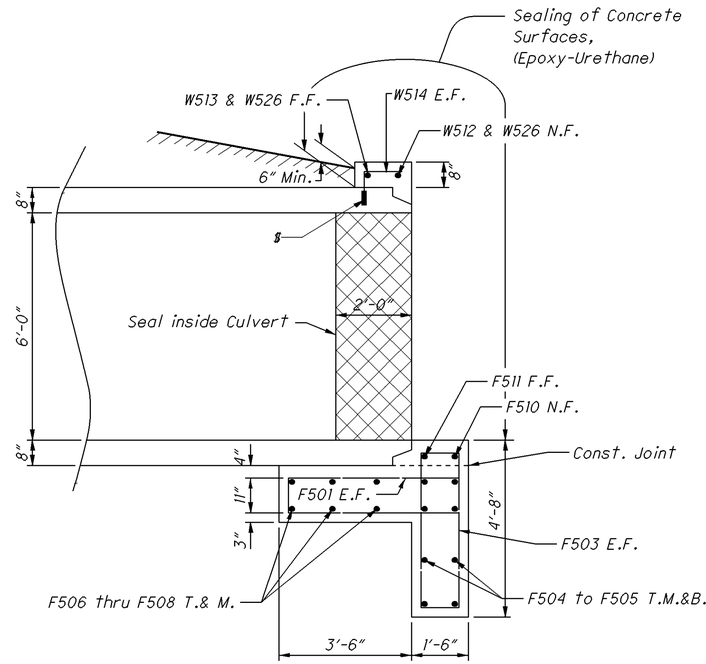

SECTION A-A
OUTLET

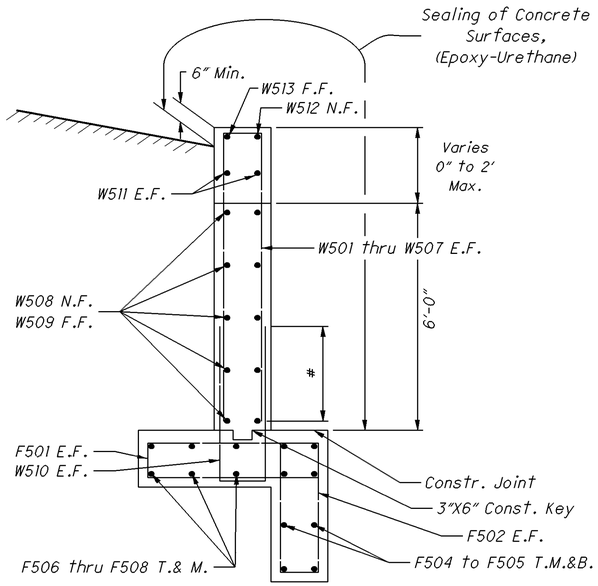

SECTION B-B
INLET & OUTLET

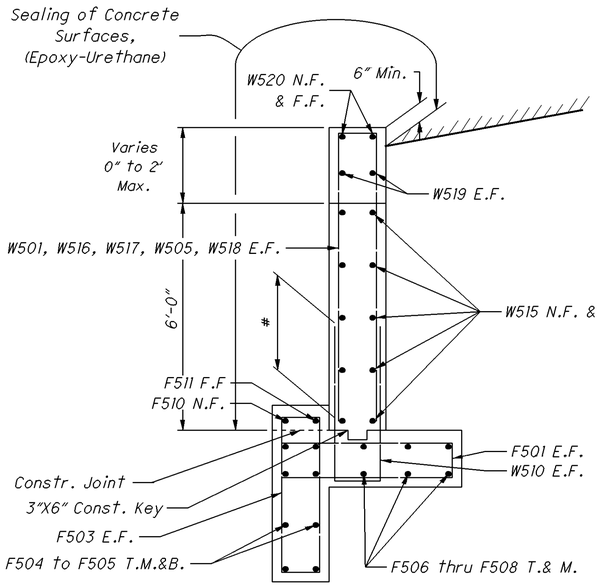

SECTION C-C
INLET

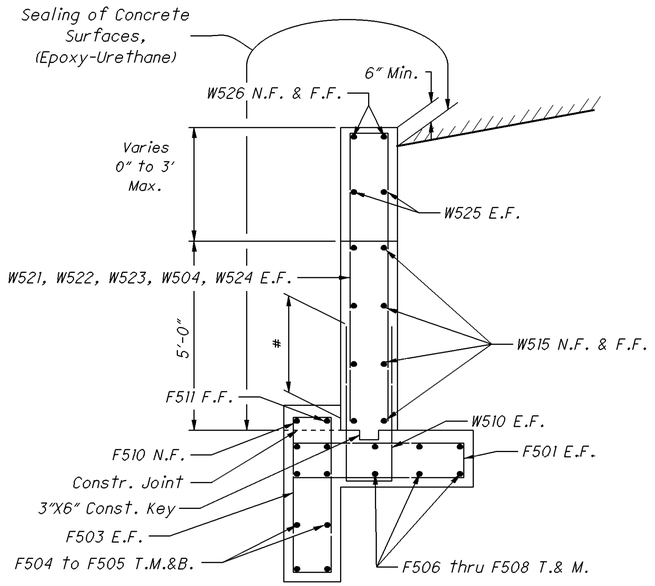

SECTION E-E
OUTLET

CALCULATED BDC
CHECKED JLG

HEADWALL DETAILS FOR CULVERT C15
S.R. 65 AT STA. 109+91.92

ALL-75-0.21

I:\Pd\89029\drainage\sheets\89029DC015c.dgn 27-JUN-2013 11:21AM tbolenba

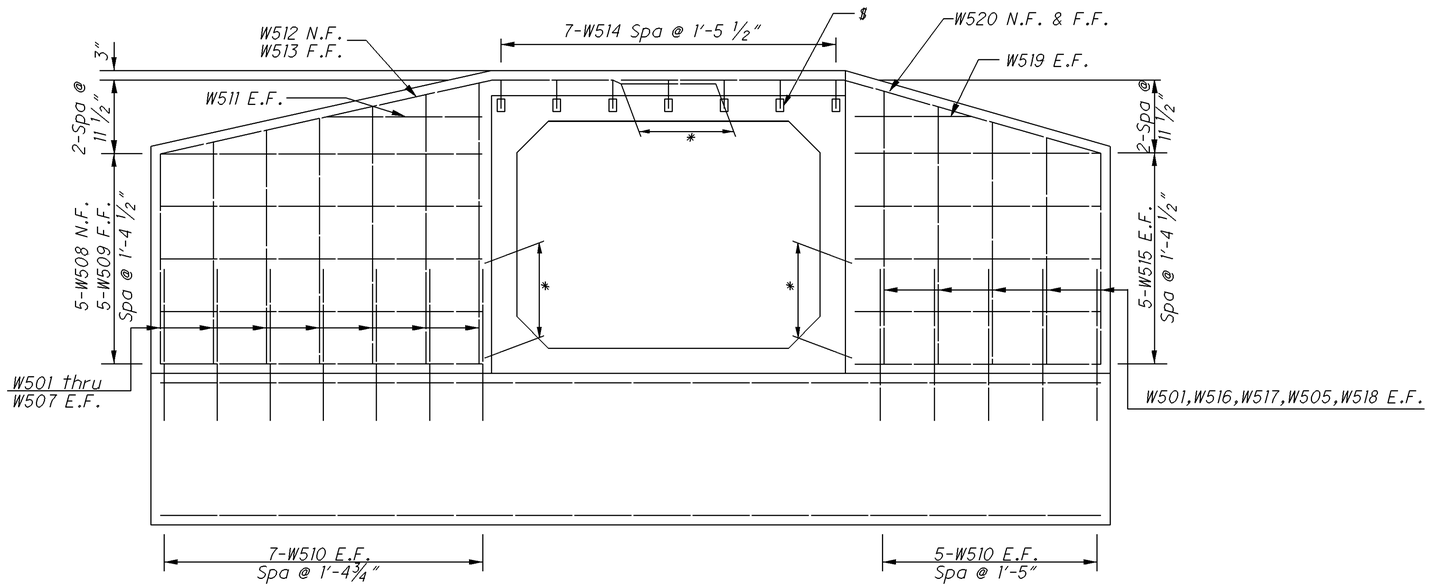

SECTION H-H
INLET - ELEVATION VIEW

KEY

E.F. - Each Face
N.F. - Near Face
F.F. - Far Face
T. - Top
B. - Bottom
M. - Middle

* - Lap Length = 2'-6"

$ - Anchor Methods

1. Mechanical connector embedded into precast elliptical culvert.
2. Partial depth resin-bonded anchoring system may be used as per GR-2.2
3. Threaded inserts 66 ksi.

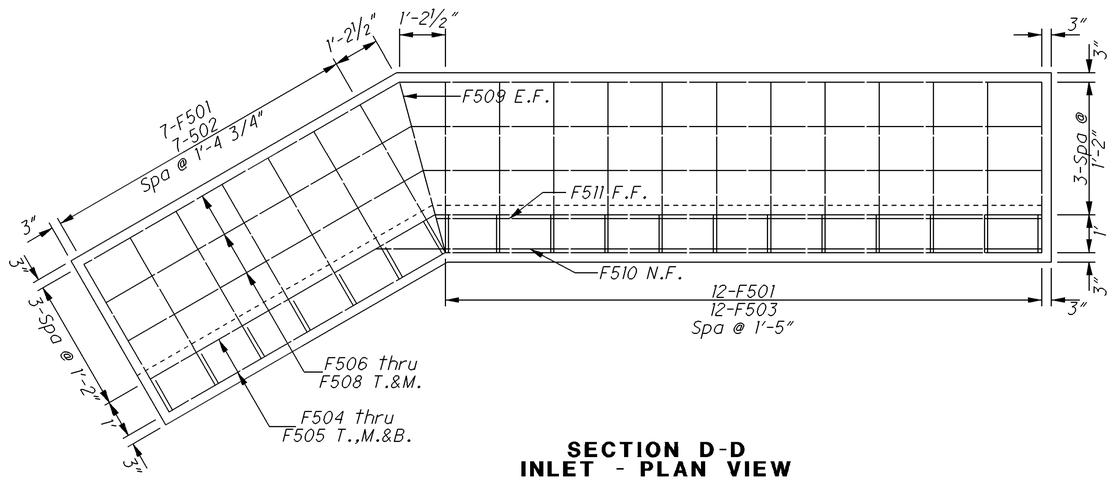

SECTION D-D
INLET - PLAN VIEW

CALCULATED BDC
CHECKED JLG

HEADWALL DETAILS FOR CULVERT C15
S.R. 65 AT STA. 109+91.92

ALL-75-0.21

P:\89029\drainage\sheets\89029DIC015d.dgn 27-JUN-2013 11:21AM tbaleshp

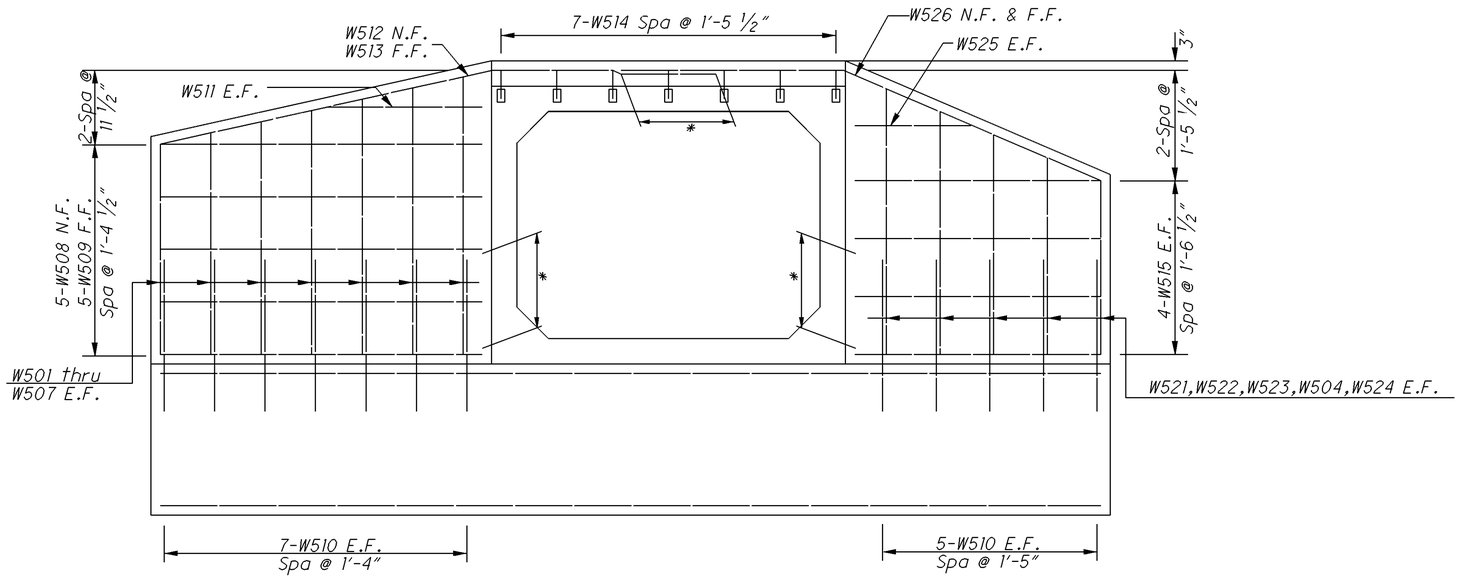

SECTION G-G
OUTLET - ELEVATION VIEW

KEY

E.F. - Each Face
N.F. - Near Face
F.F. - Far Face
T. - Top
B. - Bottom
M. - Middle

* - Lap Length = 2'-6"

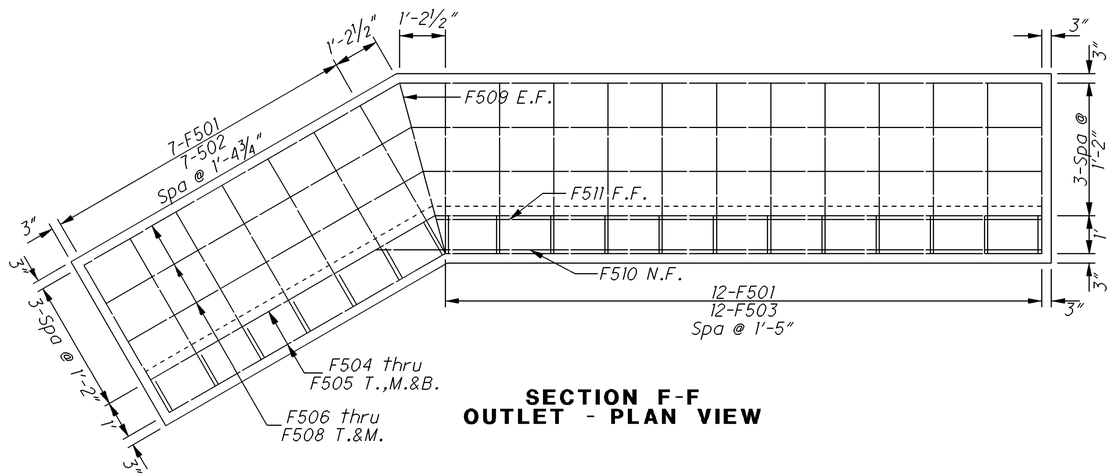

SECTION F-F
OUTLET - PLAN VIEW

HEADWALL DETAILS FOR CULVERT C15
S.R. 65 AT STA. 109+91.92

CALCULATED BDC
CHECKED JLG

ALL-75-0.21

7 / 8

498
907

J:\Prj\89029\drainage\sheets\89029DC015e.dgn 27-JUN-2013 11:21AM tbolenbo

REINFORCING STEEL LIST INLET

MARK	No.	LOCATION	LENGTH	SHAPE	WEIGHT
W501	2	E.F.	11′ - 11 1/2″	BT.	24.9
W502	1	E.F.	12′ - 7″	BT.	13.1
W503	1	E.F.	13′ - 2 1/2″	BT.	13.8
W504	1	E.F.	13′ - 10″	BT.	14.4
W505	2	E.F.	14′ - 5 1/2″	BT.	30.1
W506	1	E.F.	15′ - 1″	BT.	15.7
W507	1	E.F.	15′ - 8 1/2″	BT.	16.4
W508	5	N.F.	8′ - 10″	ST.	45.9
W509	5	F.F.	9′ - 1″	ST.	47.3
W510	12	E.F.	8′ - 10 1/2″	BT.	110.8
W511	1	E.F.	9′ - 8 1/2″	BT.	10.1
W512	1	E.F.	15′ - 1/2″	BT.	15.7
W513	1	N.F.	15′ - 6 1/2″	BT.	16.2
W514	7	N.F.	1′ - 9″	BT.	12.8
W515	5	F.F.	10′ - 1/2″	BT.	52.3
W516	1	N.F.	12′ - 10″	BT.	13.4
W517	1	F.F.	13′ - 8″	BT.	14.3
W518	1	N.F.&F.F.	15′ - 3 1/2″	BT.	16.0
W519	1	N.F.&F.F.	7′ - 1″	BT.	7.4
W520	2	E.F.	12′ - 11″	BT.	26.9
F501	19	E.F.	10′ - 10 1/2″	BT.	214.9
F502	7	E.F.	7′ - 6″	BT.	54.6
F503	12	E.F.	9′ - 9″	BT.	121.7
F504	4	T.,M.&B.	24′ - 2″	BT.	100.6
F505	4	T.,M.&B.	24′ - 8″	BT.	102.7
F506	2	T.&M.	25′ - 4″	BT.	52.7
F507	2	T.&M.	25′ - 11 1/2″	BT.	54.0
F508	2	T.&M.	26′ - 7″	BT.	55.3
F509	1	E.F.	10′ - 1 1/2″	BT.	10.6
F510	1	N.F.	17′ - 7″	ST.	18.3
F511	1	F.F.	16′ - 0″	ST.	16.7
			TOTAL: (Carried to Culvert Estimated Quantities)		1320

REINFORCING STEEL LIST OUTLET

MARK	No.	LOCATION	LENGTH	SHAPE	WEIGHT
W501	1	E.F.	11′ - 11 1/2″	BT.	12.5
W502	1	E.F.	12′ - 7″	BT.	13.1
W503	1	E.F.	13′ - 2 1/2″	BT.	13.8
W504	2	E.F.	13′ - 10″	BT.	28.8
W505	1	E.F.	14′ - 5 1/2″	BT.	15.1
W506	1	E.F.	15′ - 1″	BT.	15.7
W507	1	E.F.	15′ - 8 1/2″	BT.	16.4
W508	5	N.F.	8′ - 10″	ST.	45.9
W509	5	F.F.	9′ - 1″	ST.	47.3
W510	12	E.F.	8′ - 10 1/2″	BT.	110.8
W511	1	E.F.	9′ - 8 1/2″	BT.	10.1
W512	1	N.F.	15′ - 1/2″	BT.	15.7
W513	1	F.F.	15′ - 6 1/2″	BT.	16.2
W514	7	E.F.	1′ - 9″	BT.	12.8
W515	5	F.F.	10′ - 1/2″	BT.	52.3
W521	1	E.F.	10′ - 1/2″	BT.	10.5
W522	1	E.F.	11′ - 3″	BT.	11.7
W523	1	E.F.	12′ - 5 1/2″	BT.	13.0
W524	1	E.F.	14′ - 10 1/2″	BT.	15.5
W525	1	E.F.	7′ - 1″	BT.	7.4
W526	2	N.F.&F.F.	13′ - 3 1/2″	BT.	27.7
F501	19	E.F.	10′ - 10 1/2″	BT.	214.9
F502	7	E.F.	7′ - 6″	BT.	54.6
F503	12	E.F.	9′ - 9″	BT.	121.7
F504	4	T.,M.&B.	24′ - 2″	BT.	100.6
F505	4	T.,M.&B.	24′ - 8″	BT.	102.7
F506	2	T.&M.	25′ - 4″	BT.	52.7
F507	2	T.&M.	25′ - 11 1/2″	BT.	54.0
F508	2	T.&M.	26′ - 7″	BT.	55.3
F509	1	E.F.	10′ - 1 1/2″	BT.	10.6
F510	1	N.F.	17′ - 7″	ST.	18.3
F511	1	F.F.	16′ - 0″	ST.	16.7
			TOTAL: (Carried to Culvert Estimated Quantities)		1314

BEND TABLE

MARK	TYPE	"A"	"B"	"C"
W501	2	5′ - 6 1/2″	1′ - 0″	5′ - 6 1/2″
W502	2	5′ - 10 1/4″	1′ - 0″	5′ - 10 1/4″
W503	2	6′ - 2″	1′ - 0″	6′ - 2″
W504	2	6′ - 5 3/4″	1′ - 0″	6′ - 5 3/4″
W505	2	6′ - 9 1/2″	1′ - 0″	6′ - 9 1/2″
W506	2	7′ - 1 1/4″	1′ - 0″	7′ - 1 1/4″
W507	2	7′ - 5″	1′ - 0″	7′ - 5″
W510	2	4′ - 0″	1′ - 0″	4′ - 0″
W511	2	4′ - 5″	1′ - 0″	4′ - 5″
W512	3	9′ - 1/4″	6′ - 0″	
W513	3	9′ - 3 1/2″	6′ - 3″	
W514	4	0′ - 9″	1′ - 0″	
W515	2	6′ - 6″	1′ - 0″	6′ - 6″
W516	2	5′ - 11 3/4″	1′ - 0″	5′ - 11 3/4″
W517	2	6′ - 4 3/4″	1′ - 0″	6′ - 4 3/4″
W518	2	7′ - 2 1/2″	1′ - 0″	7′ - 2 1/2″
W519	2	3′ - 1 1/4″	1′ - 0″	3′ - 1 1/4″
W520	5	7′ - 1/2″	5′ - 10 1/2″	
W521	2	4′ - 7″	1′ - 0″	4′ - 7″
W522	2	5′ - 2 1/4″	1′ - 0″	5′ - 2 1/4″
W523	2	5′ - 9 1/2″	1′ - 0″	5′ - 9 1/2″
W524	2	7′ - 0″	1′ - 0″	7′ - 0″
W525	2	3′ - 1 1/4″	1′ - 0″	3′ - 1 1/4″
W526	6	7′ - 4 3/4″	5′ - 10 1/2″	
F501	1	4′ - 6″	1′ - 0″	
F502	2	3′ - 5″	0′ - 11″	3′ - 5″
F503	1	4′ - 1″	0′ - 11″	
F504	7	8′ - 5″	15′ - 9″	
F505	7	8′ - 8″	16′ - 0″	
F506	7	9′ - 0″	16′ - 4″	
F507	7	9′ - 3 1/2″	16′ - 7 3/4″	
F508	7	9′ - 7 1/2″	16′ - 11 1/2″	
F509	2	4′ - 8″	0′ - 11″	4′ - 8″

NOTES:

ALL REINFORCING STEEL TO BE EPOXY COATED.

ALL DIMENSIONS ARE OUT-TO-OUT

"ST" MEANS STRAIGHT
"BT" MEANS BENT

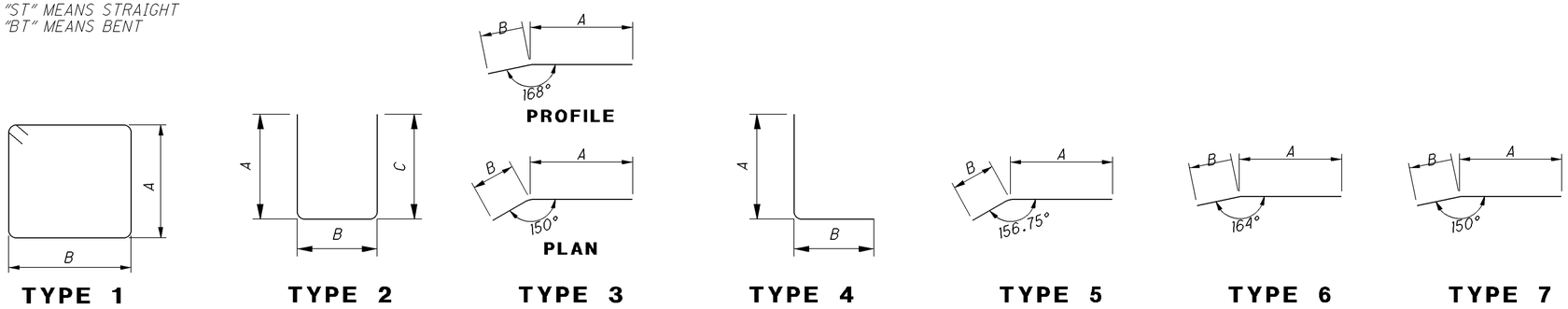

BENDING DIAGRAMS

CALCULATED BDC CHECKED JLG

HEADWALL DETAILS FOR CULVERT C15 S.R. 65 AT STA. 109+91.92

ALL-75-0.21

8 / 8

499
907

J:\Pdt\89029\drainage\sheets\89029DC0151.dgn 27-JUN-2013 11:21AM tholepho

EXISTING STRUCTURE

TYPE = 60" CMP

LENGTH = 230'

DATE BUILT = 1955

HYDRAULIC DATA

DRAINAGE AREA =	372	AC.
Q50 =	133	cfs
Q100 =	150	cfs
HWE50 =	903.05	FT.
HWE100 =	903.43	FT.
V50 =	6.9	fps
V100 =	7.8	fps

ESTIMATED QUANTITIES

503 COFFERDAMS AND EXCAVATION BRACING = LUMP

601 ROCK CHANNEL PROTECTION, TYPE B WITH FILTER, 30" THICK = 28 C.Y.

601 RIPRAP USING 6" REINFORCED CONCRETE SLAB = 17.0 S.Y.

602 CONCRETE MASONRY = 32.4 C.Y.

603 72" CONDUIT, TYPE A, 2500 D-LOAD BORE & JACK = 256 FT.

CARRIED TO CULVERT SUBSUMMARY SHEET 158

ROCK CHANNEL PROTECTION, TYPE B WITH FILTER, 30" THICK

CULVERT DETAIL FOR No. C16
I-75 AT STA. 245+00.00
ALL-75-0.21

CALCULATED BDC CHECKED JJK

HORIZONTAL SCALE IN FEET

500/907

I:\Pd\89029\drainage\sheets\89029DC016_new.dgn 05-NOV-2013 12:35PM jclark1

CULVERT DETAIL FOR No. C17
I-75 AT STA. 254+01.05
ALL-75-0.21

CALCULATED BDC
CHECKED JJK

HORIZONTAL SCALE IN FEET
0 5 10 20

ESTIMATED QUANTITIES

503 COFFERDAMS AND EXCAVATION BRACING = LUMP

601 ROCK CHANNEL PROTECTION, TYPE B WITH FILTER, 30" THICK = 42 C.Y.

601 RIPRAP USING 6" REINFORCED CONCRETE SLAB = 23.6 S.Y.

602 CONCRETE MASONRY = 47.8 C.Y.

603 84" CONDUIT, TYPE A, 706.02 = 235 FT.

CARRIED TO CULVERT SUBSUMMARY SHEET 158

HYDRAULIC DATA

DRAINAGE AREA =	322	AC.
Q50 =	150	cfs
Q100 =	170	cfs
HWE50 =	906.18	FT.
HWE100 =	906.59	FT.
V50 =	9.3	fps
V100 =	9.8	fps

EXISTING STRUCTURE

TYPE = 60" CMP

LENGTH = 254'

DATE BUILT = 1955
EXTENDED IN 1973

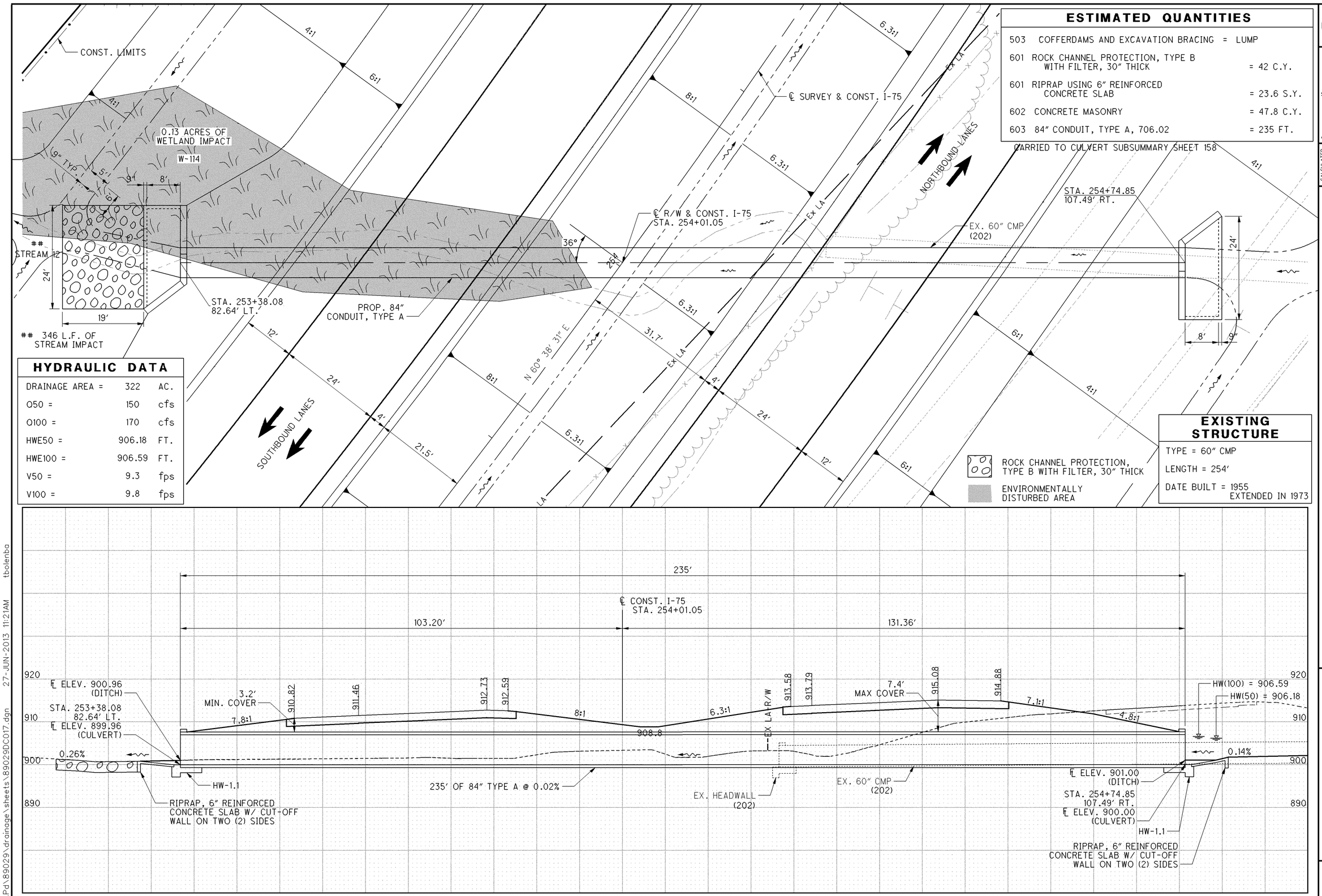

I:\Pd\89029\drainage\sheets\89029DC017.dgn 27-JUN-2013 11:21AM tbolenba

HYDRAULIC DATA		
DRAINAGE AREA =	7	AC.
Q25 =	13	cfs
Q100 =	17	cfs
HWE25 =	906.75	FT.
HWE100 =	907.00	FT.
V25 =	11.1	fps
V100 =	11.8	fps

HORIZONTAL SCALE IN FEET (0, 5, 10, 20)

CALCULATED JRL CHECKED ACF

SODDING REINFORCED

ROCK CHANNEL PROTECTION, TYPE B WITH FILTER, W/FILTER, 30" THICK

CONST. LIMIT

EXISTING STRUCTURE

TYPE = 15" RCP

LENGTH = 81'

DATE BUILT = 19??

ESTIMATED QUANTITIES	
601 ROCK CHANNEL PROTECTION, TYPE B WITH FILTER, 30" THICK	= 4 C.Y.
601 RIPRAP USING 6" REINFORCED CONCRETE SLAB	= 6.4 S.Y.
602 CONCRETE MASONRY	= 1.1 C.Y.
603 30" CONDUIT, TYPE A, 706.02	= 111 FT.

CARRIED TO CULVERT SUBSUMMARY SHEET 158

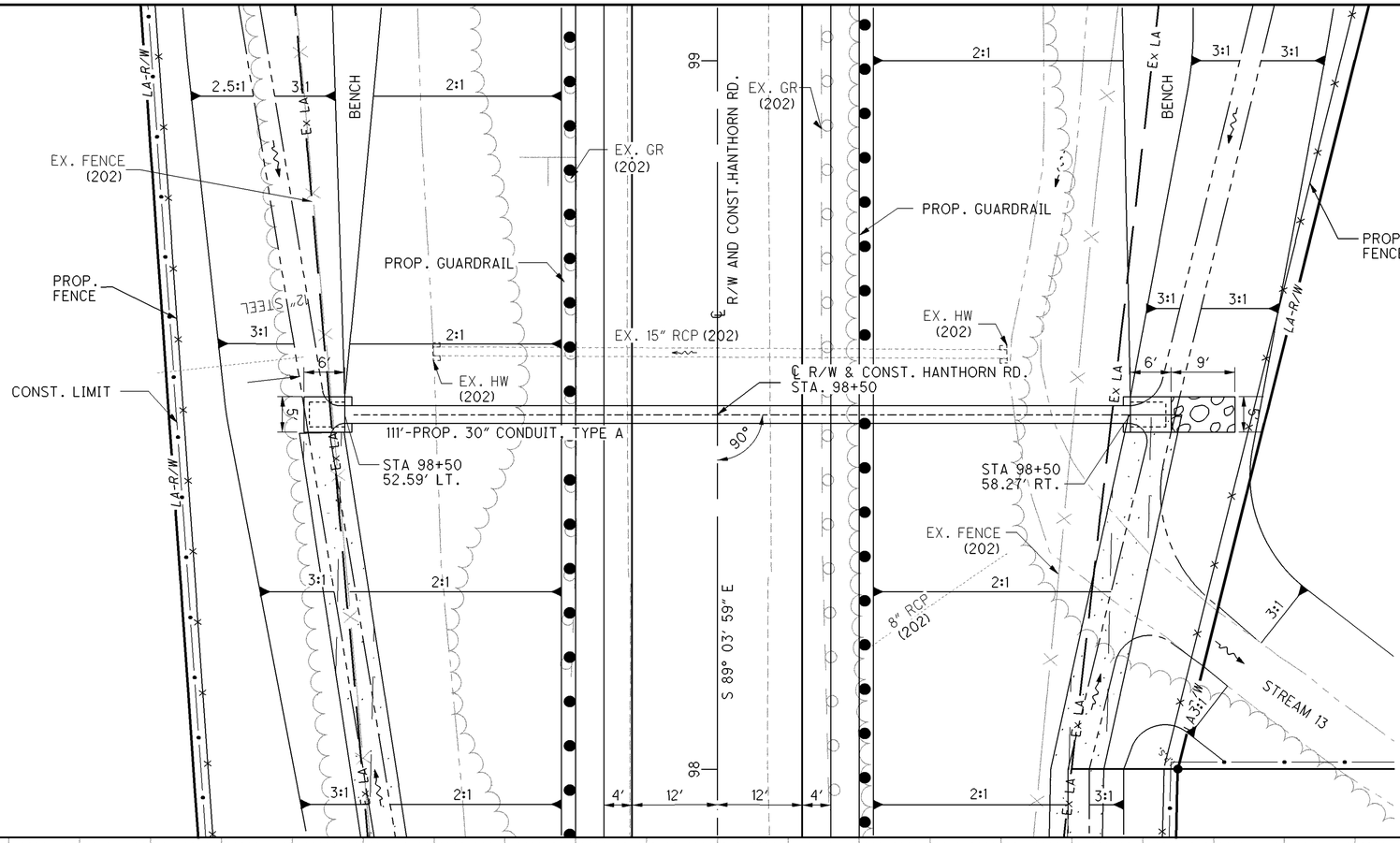

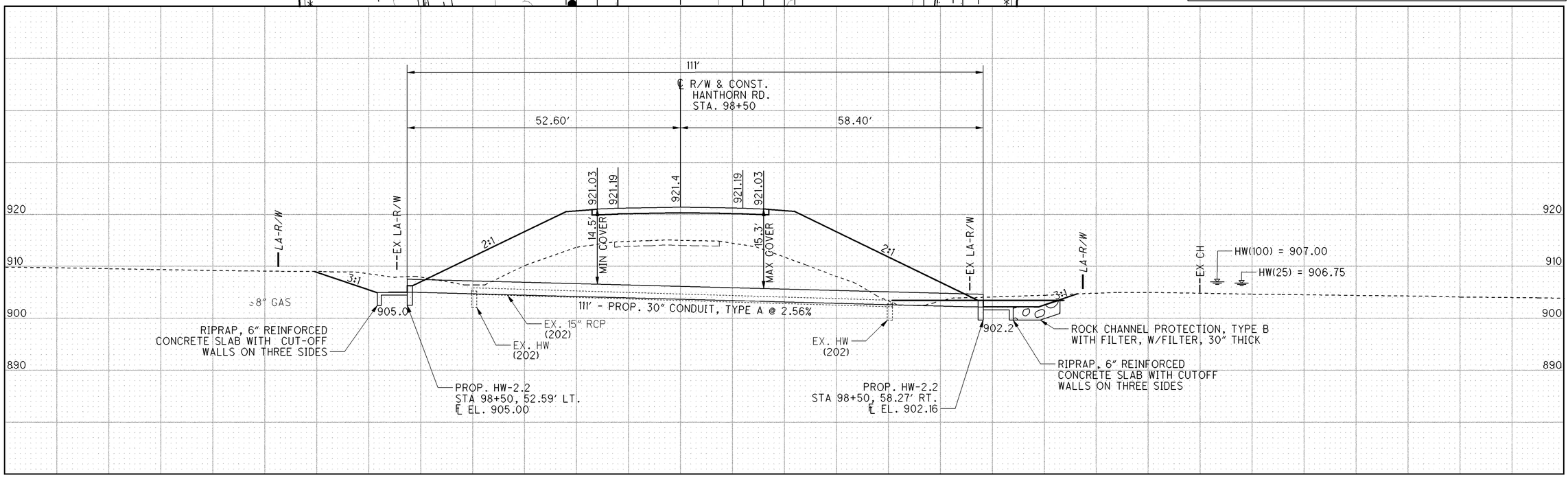

CULVERT DETAIL FOR No. C18
HANTHORN RD. AT STA. 98+50

ALL-75-0.21

502
907

I:\Pd\89029\drainage\sheets\89029DC018.dgn 27-JUN-2013 11:21AM tbolenbo

ESTIMATED QUANTITIES

503	COFFERDAMS AND EXCAVATION BRACING	= LUMP
601	RIPRAP USING 6″ REINFORCED CONCRETE SLAB	= 15.4 S.Y.
602	CONCRETE MASONRY	= 17.4 C.Y.
603	48″ CONDUIT, TYPE A, 706.02 2250 D-LOAD	= 224 FT.

CARRIED TO CULVERT SUBSUMMARY SHEET 158

SODDING REINFORCED

HORIZONTAL SCALE IN FEET (0, 5, 10, 20)

CALCULATED BDC CHECKED JJK

EXISTING STRUCTURE

TYPE = 18″ CMP

LENGTH = 126′

DATE BUILT = 1955

HYDRAULIC DATA

DRAINAGE AREA =	6	AC.
Q50 =	12	cfs
Q100 =	13	cfs
HWE50 =	906.24	ft
HWE100 =	906.64	ft
V50 =	0.9	fps
V100 =	1.1	fps

EX. FENCE (202)

EX. LA

EX. 18″ CMP (202)

3:1

2:1

BENCH

PROP. GUARDRAIL

4′

12′

WESTBOUND LANE

EASTBOUND LANE

EX. GR (202)

℄ R/W & CONST. HANTHORN RD. STA. 104+20.98

STA. 104+92.86, 85.56′ LT.

STA. 103+48.58, 86.18′ RT.

2′

13′

6′

9″ TYP.

PROP. 48″ CONDUIT, TYPE A

40°

℄ R/W & CONST. HANTHORN RD.

EX. 48″ CMP (202)

EX. FENCE (202)

S 89° 22′ 54″ E

EX. 15″ CMP (202)

224′

111.74′

112.56′

933.66

933.82

934.03

933.85

933.64

2.6:1

27.4′ MAX COVER

STA. 104+92.86
85.56′ LT.
℄ ELEV. 902.30

HW(100) = 906.64
HW(50) = 906.24

EX. HEADWALL (202)

EX. 18″ CMP (202)

3.3′ MIN. COVER

0.03%

0.01%

HW-1.1

224′ OF 48″ TYPE A @ 0.10%

RIPRAP, 6″ REINFORCED CONCRETE SLAB W/ CUT-OFF WALL ON THREE (3) SIDES

STA. 103+48.58
86.18′ RT.
℄ ELEV. 902.08

940
930
920
910
900
890

CULVERT DETAIL FOR No. C19
HANTHORN RD. AT STA. 104+20.98

ALL-75-0.21

503
907

I:\Pd\89029\drainage\sheets\89029DC019.dgn 27-JUN-2013 11:21AM tbolenba

CULVERT DETAIL FOR No. C20
I-75 AT STA. 277+42.51

HYDRAULIC DATA

DRAINAGE AREA =	170	AC.
Q50 =	97	cfs
Q100 =	110	cfs
HWE50 =	905.30	FT.
HWE100 =	905.73	FT.
V50 =	4.8	fps
V100 =	5.2	fps

HORIZONTAL SCALE IN FEET (0, 5, 10, 20)

CALCULATED JRL
CHECKED ACF

EXISTING STRUCTURE

TYPE = TWIN 42" CMP
LENGTH = 148' EACH
DATE BUILT = 1955

ROCK CHANNEL PROTECTION, TYPE B WITH FILTER, W/FILTER, 30" THICK

SOUTHBOUND LANES
NORTHBOUND LANES
℄ R/W & CONST. I-75
STA. 277+70.43
82.05' LT.
STA. 277+14.24
86.84' RT.
PROP. 8'x4' CONDUIT, TYPE A
℄ R/W & CONST. I-75
STA. 277+42.51
18.4°
STREAM 14
DND
EX LA
EX. GR (202)
EX. FENCE (202)
EX. 42" CMP (202)
EX. 42" CMP (202)
EX. 12" CMP (202)
EX. CB & PAD (202)
CONST. LIMITS
LA-R/W
6.14'
22.33'
10.00'
3.60'
8.39'
21.6'
22.7'
2.7'
4'
12'
24'
6:1
4:1
8:1

178'
86.59'
91.43'
℄ ELEV. 901.76 (DITCH)
STA. 277+70.43
82.05' LT.
℄ ELEV. 900.46 (CULVERT)
℄ ELEV. 902.30 (DITCH)
STA. 277+14.24
86.84' RT.
℄ ELEV. 901.00 (CULVERT)
℄ R/W & CONST. I-75
STA. 277+42.51
2.3' MIN. COVER
5.0' MAX COVER
907.50
907.97
908.81
908.66
909.50
909.67
910.54
910.09
900.1
10:1
8:1
5.9:1
6:1
4:1
HW(50) = 905.30
HW(100) = 905.73
PROP. HW
EX. HEADWALL (202)
178' OF 8'x4" TYPE A @ 0.30%
EX. TWIN 42" CMP (202)
EX. HEADWALL (202)
PROP. HW
920
910
900
890

ALL-75-0.21

1 / 5

504
907

I:\Pdt\89029\drainage\sheets\89029DC020.dgn 27-JUN-2013 11:21AM tbolenba

CULVERT NOTES

DESIGN SPECIFICATIONS

THE STRUCTURE CONFORMS TO "STANDARD SPECIFICATIONS FOR HIGHWAY BRIDGES" ADOPTED BY THE AMERICAN ASSOCIATION OF STATE HIGHWAY AND TRANSPORTATION OFFICIALS, 17TH EDITION, AND THE ODOT BRIDGE MANUAL.

DESIGN STRESSES

CAST-IN-PLACE STRUCTURES

CONCRETE CLASS "C" - F'C = COMPRESSIVE STRENGTH 4000 PSI SUBSTURCTURE

REINFORCING STEEL - ASTM A615 OR A996
FY = GRADE 60 - MINIMUM YEILD STRENGTH 60,000 PSI

PRECAST STRUCTURE: PIPE CULVERTS SEE CMS 603.

CONDUIT FABRICATION AND APPROVAL

PRIOR TO CLOSING THE ROADWAY TO TRAFFIC, THE CONTRACTOR SHALL HAVE THE ITEM 603 TYPE A CONDUIT SPECIFIED IN THESE PLANS FABRICATED AND APPROVED. ALL COSTS ASSOCIATED WITH THESE REQUIREMENTS SHALL BE CONSIDERED INCIDENTAL TO THE COST OF THE PERTINENT CONDUIT.

ITEM 511 CLASS C CONCRETE, AS PER PLAN

IN ADDITION TO THE SPECIFICATIONS SHOWN FOR ITEM 511 IN THE CMS, THIS ITEM SHALL INCLUDE ANY AND ALL EXCAVATION AND EMBANKMENT NEEDED TO CONSTRUCT THE WINGWALLS. THE EXCAVATION AND EMBANKMENT SHALL FOLLOW THE SPECIFICATIONS OUTLINED IN THE CMS FOR ITEM 203 EXCAVATION, NOT INCLUDING EMBANKMENT CONSTRUCTION AND ITEM 203 EMBANKMENT.

PAYMENT WILL BE AT THE CONTRACT BID PRICE PER CUBIC YARD FOR ITEM

ITEM 511, CLASS C CONCRETE, AS PER PLAN. = 11 CU. YD.

ITEM 511 CLASS C CONCRETE, FOOTING, AS PER PLAN

IN ADDITION TO THE SPECIFICATIONS SHOWN FOR ITEM 511 IN THE CMS, THIS ITEM SHALL ALSO INCLUDE ANY AND ALL EXCAVATION AND EMBANKMENT NECESSARY TO CONSTRUCT THE FOOTING. THE EXCAVATION AND EMBANKMENT SHALL FOLLOW THE SPECIFICATIONS OUTLINED IN THE CMS FOR ITEM 203 EXCAVATION, NOT INCLUDING EMBANKMENT CONSTRUCTION AND ITEM 203 EMBANKMENT.

PAYMENT WILL BE AT THE CONTRACT BID PRICE PER CUBIC YARD FOR ITEM

ITEM 511, CLASS C CONCRETE, FOOTING, AS PER PLAN. = 24 CU. YD.

EXISTING STRUCTURE VERIFICATION

DETAILS AND DIMENSIONS SHOWN ON THESE PLANS PERTAINING TO THE EXISTING STRUCTURE HAVE BEEN OBTAINED FROM PLANS OF THE EXISTING STRUCTURE AND/OR FROM FIELD OBSERVATIONS AND MEASUREMENTS. CONSEQUENTLY, THEY ARE INDICATIVE OF THE EXISTING STRUCTURE AND THE PROPOSED WORK BUT THEY SHALL BE CONSIDERED APPROXIMATE. THE CONTRACTOR IS REFERRED TO CMS SECTION 102.05 AND 105.02.

CONTRACT BID PRICES SHALL BE BASED UPON A RECOGNITION OF THE UNCERTAINTIES DESCRIBED ABOVE AND UPON A PRE-BID EXAMINATION OF THE EXISTING STRUCTURE BY THE CONTRACTOR. HOWEVER, ALL PROJECT WORK SHALL BE BASED ON ACTUAL DETAILS AND DIMENSIONS WHICH HAVE BEEN VERIFIED BY THE CONTRACTOR IN THE FIELD.

ITEM 512 WATERPROOFING

TYPE 2 WATERPROOFING SHALL EXTEND VERTICALLY DOWN ALL SIDES FOR THE PORTIONS OF THE CULVERT WHICH SHALL BE IN CONTACT WITH THE BACKFILL.

THE EXTERIOR JOINT GAP ON THE TOP AND SIDES BETWEEN THE PRECAST CULVERT SECTIONS SHALL BE FILLED WITH PORTLAND CEMENT MORTAR PRIOR TO INSTALLING THE WATERPROOFING.

JOINT WRAP AS SPECIFIED IN 603.08 & 603.09 AND CONCRETE SEALING AS SPECIFIED IN 603.08 ARE NOT REQUIRED UNDER THE LIMITS OF THE WATERPROOFING.

PAYMENT FOR THE TYPE 2 WATERPROOFING SHALL BE AT THE CONTRACT PRICE BID PER SQ YD FOR ITEM 512 - TYPE 2 WATERPROOFING.

ITEM 512 TYPE 2 WATERPROOFING = 432 SQ. YD.

ITEM 613 LOW STRENGTH MORTAR BACKFILL

LOW STRENGTH MORTAR BACKFILL SHALL BE PLACED AS SHOWN AND LATERALLY TO THE EDGE OF PAVEMENT. PAYMENT FOR LOW STRENGTH MORTAR BACKFILL SHALL BE MADE ONLY FOR BACKFILL PLACED TO THE LIMITS SHOWN.

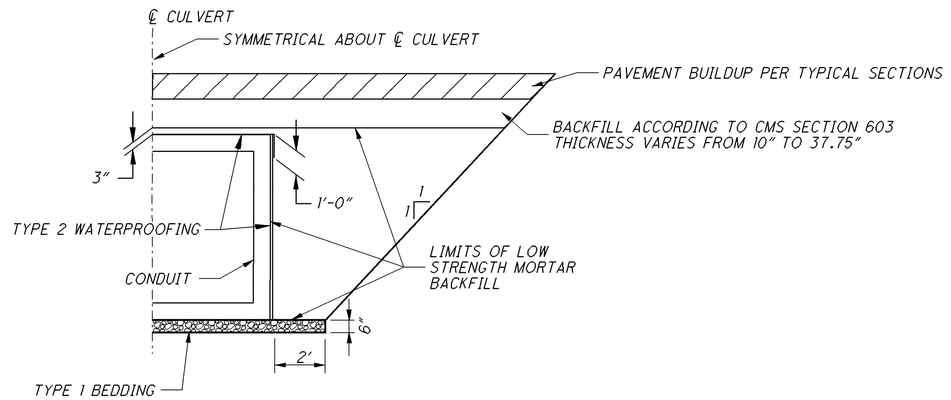

CULVERT ESTIMATED QUANTITES

ITEM	ITEM EXT	TOTAL	UNIT	DESCRIPTION	SEE SHEET NO.
202	11000	LUMP		STRUCTURE REMOVED	
202	20010	4	EACH	HEADWALL REMOVED	
503	11100	LUMP		COFFERDAMS AND EXCAVATION BRACING	
509	10000	2674	POUND	EPOXY COATED REINFORCING STEEL	
511	46001	11	CU YD	CLASS C CONCRETE, AS PER PLAN	2/5
511	46501	24	CU YD	CLASS C CONCRETE, FOOTING, AS PER PLAN	2/5
512	10100	47	SQ YD	SEALING OF CONCRETE SURFACES (EPOXY-URETHANE)	
512	33000	432	SQ YD	TYPE 2 WATERPROOFING	
601	32100	26	CU YD	ROCK CHANNEL PROTECTION, TYPE B WITH FILTER, 30" Thick	
603	94810	178	FT	8' x 4' CONDUIT, TYPE A, 706.05 (DESIGN EARTH COVER = 2.3')	
613	41200	175	CU YD	LOW STRENGTH MORTAR BACKFILL	

QUANTITIES CARRIED TO CULVERT SUBSUMMARY, SHEET 158

CALCULATED BDC CHECKED JLG

CULVERT NOTES & ESTIMATED QUANTITES FOR CULVERT C20
I-75 AT STA. 277+42.51

ALL-75-0.21

I:\Pd\89029\drainage\sheets\89029DN020.dgn 27-JUN-2013 11:21AM tbolenba

OUTLET - PLAN VIEW

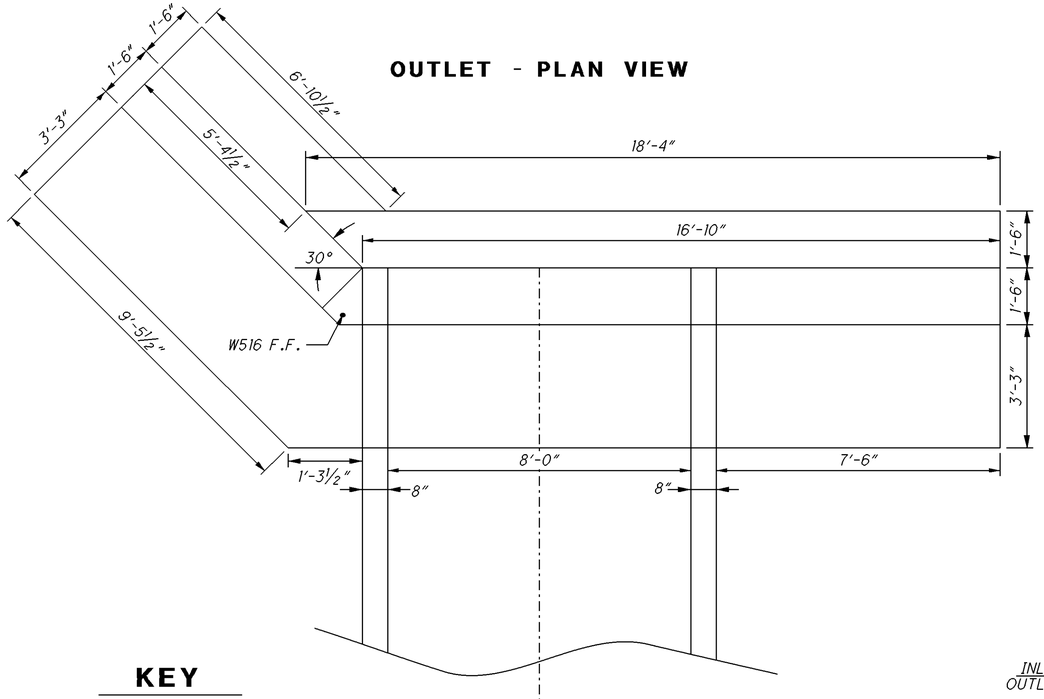

KEY

E.F. - EACH FACE
N.F. - NEAR FACE
F.F. - FAR FACE
T. - TOP
B. - BOTTOM
M. - MIDDLE

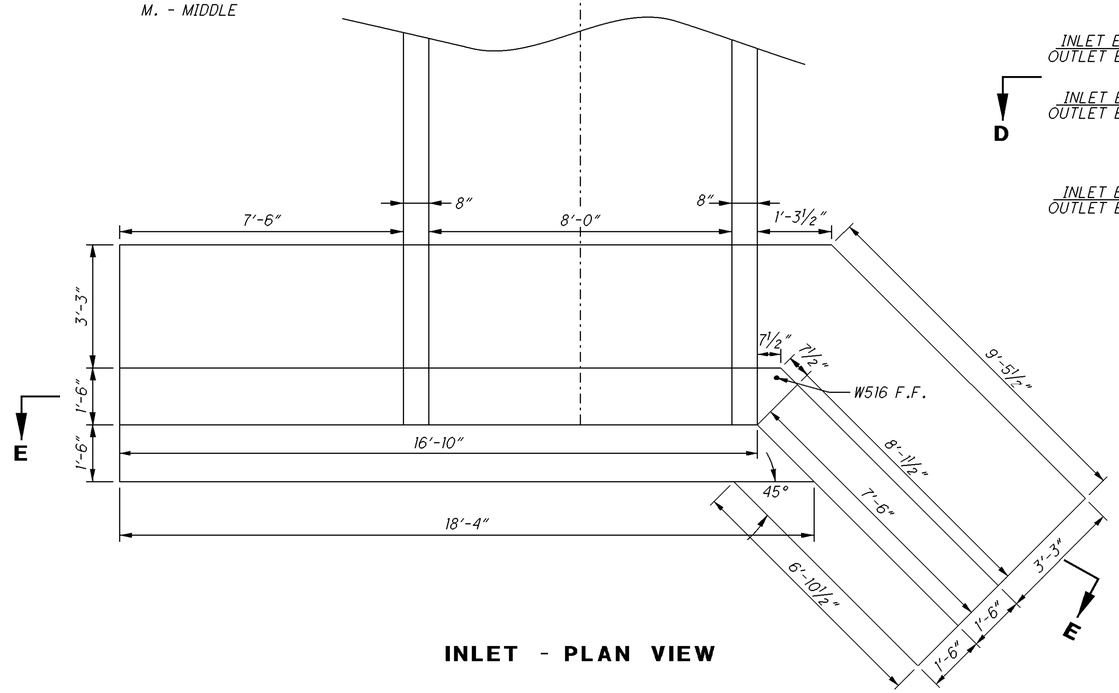

INLET - PLAN VIEW

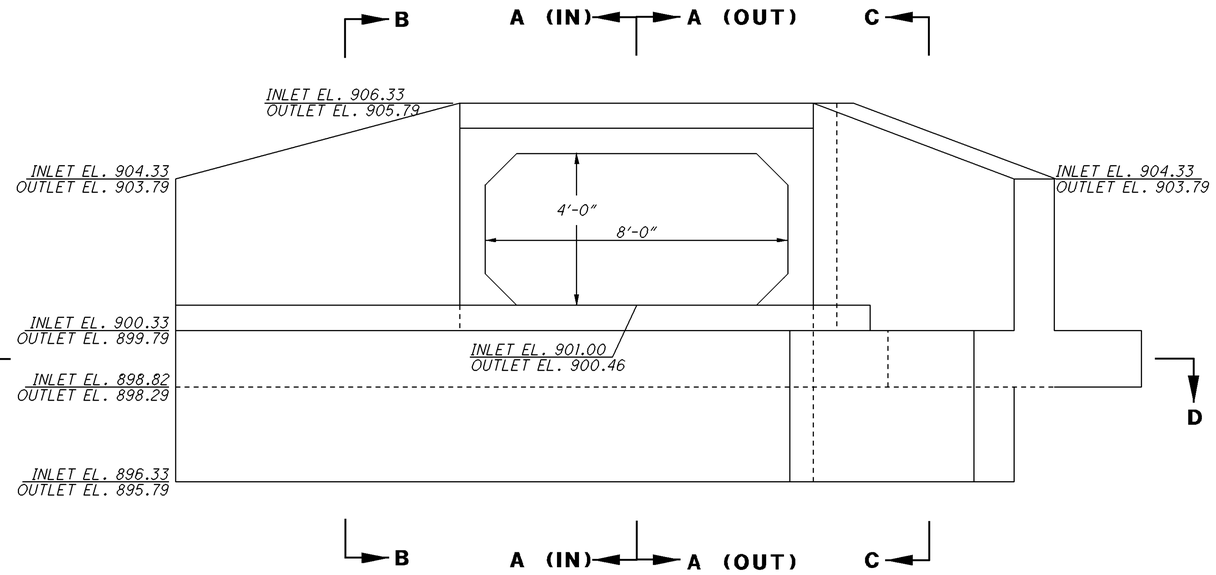

INLET/OUTLET ELEVATION VIEW

CALCULATED BDC
CHECKED JLG

HEADWALL DETAILS FOR CULVERT C20
I.R. 75 AT STA. 277+42.51

ALL-75-0.21

3 / 5

506
907

I:\Pdt\89029\drainage\sheets\89029DC020a.dgn 27-JUN-2013 11:21AM tbolenba

$ - Anchor Methods

1. Mechanical connector embedded into precast box culvert.
2. Partial depth resin-bonded anchoring system may be used as per GR-2.2
3. Threaded inserts 66 ksi.

KEY

E.F. - Each Face
N.F. - Near Face
F.F. - Far Face
T. - Top
B. - Bottom
M. - Middle

- Lap Length = 2'-6"

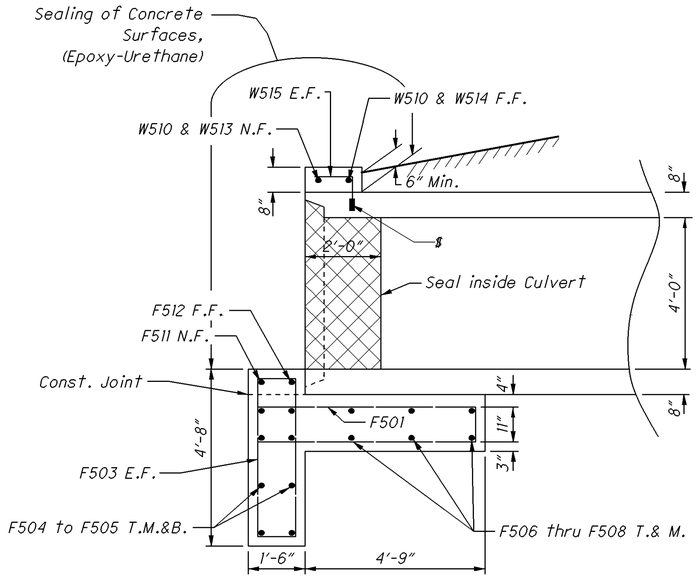

SECTION A-A
INLET

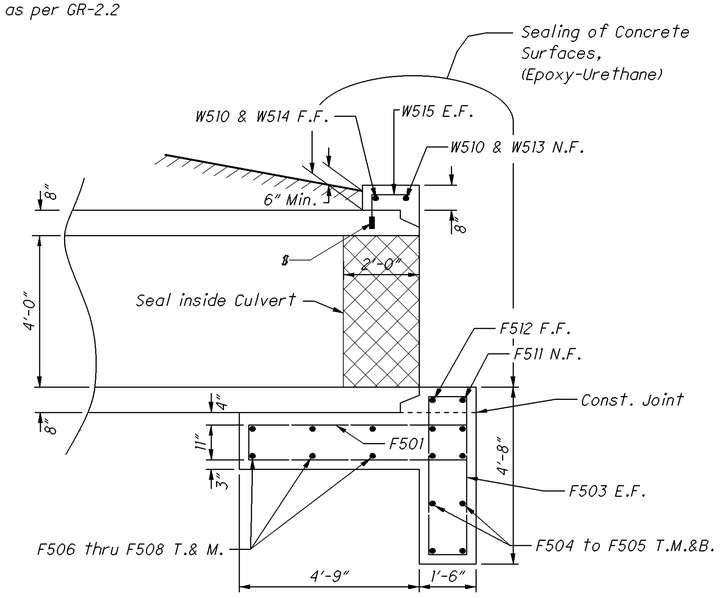

SECTION A-A
OUTLET

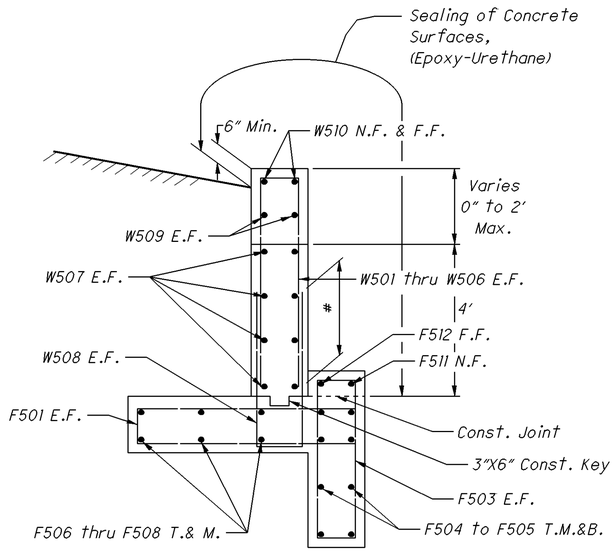

SECTION B-B
INLET / OUTLET

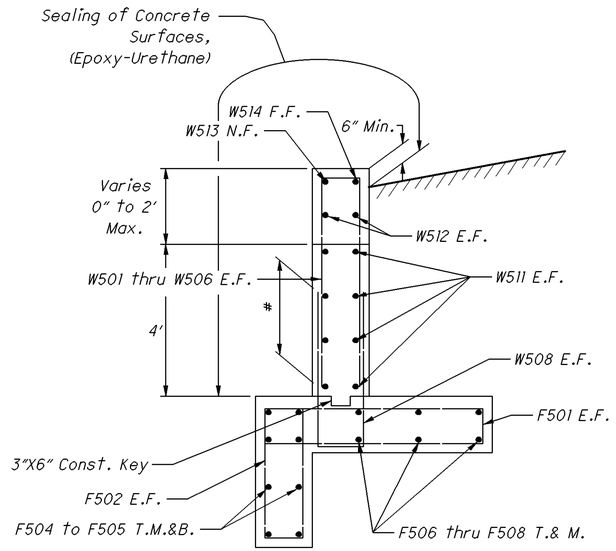

SECTION C-C
INLET / OUTLET

CALCULATED BDC
CHECKED JLG

HEADWALL DETAILS FOR CULVERT C20
S.R. 75 AT STA. 277+42.51

ALL-75-0.21

4 / 5

507
907

I:\Pd\89029\drainage\sheets\89029DC020b.dgn 27-JUN-2013 11:21AM tbolenba

SECTION E-E
INLET/OUTLET
ELEVATION VIEW

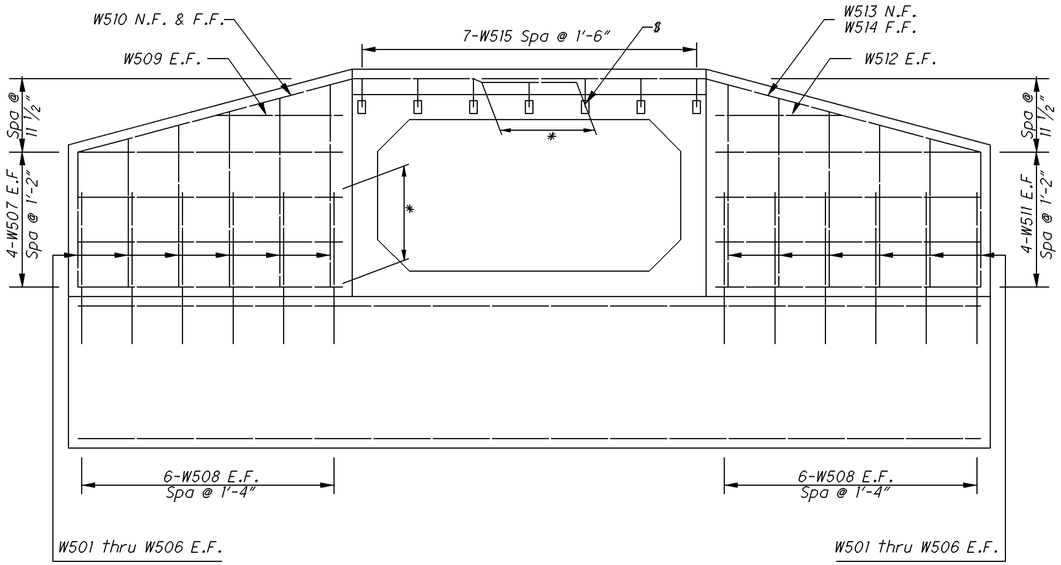

$ - Anchor Methods

1. Mechanical connector embedded into precast box culvert.
2. Partial depth resin-bonded anchoring system may be used as per GR-2.2
3. Threaded inserts 66 ksi.

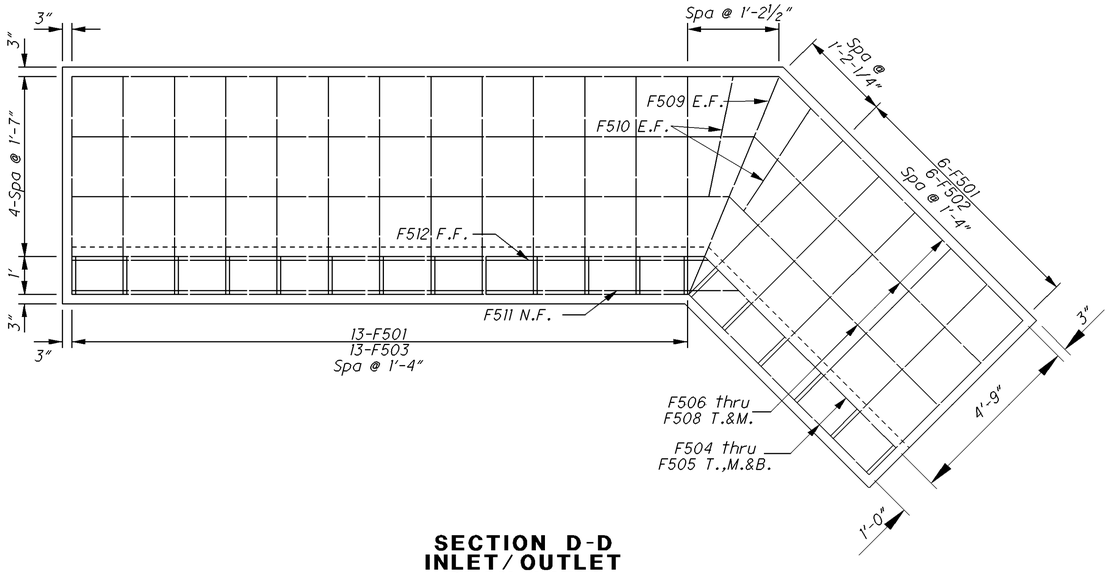

SECTION D-D
INLET/OUTLET
PLAN VIEW

REINFORCING STEEL LIST					
MARK	No.	LOCATION	LENGTH	SHAPE	WEIGHT
W501	4	E.F.	8' - 0"	BT.	33.3
W502	4	E.F.	8' - 8 1/2"	BT.	36.3
W503	4	E.F.	9' - 5"	BT.	39.2
W504	4	E.F.	10' - 1 1/2"	BT.	42.2
W505	4	E.F.	10' - 10"	BT.	45.1
W506	4	E.F.	11' - 6 1/2"	BT.	48.1
W507	8	E.F.	14' - 10 1/2"	BT.	123.8
W508	24	E.F.	9' - 4 1/2"	BT.	234.0
W509	2	E.F.	7' - 7"	BT.	15.8
W510	4	N.F.&F.F.	12' - 5"	BT.	51.7
W511	8	E.F.	16' - 0"	BT.	133.2
W512	2	E.F.	8' - 7 1/2"	BT.	18.0
W513	2	N.F.	13' - 10 1/2"	BT.	28.9
W514	2	F.F.	14' - 8"	BT.	30.6
W515	14	E.F.	1' - 9"	BT.	25.5
W516	2	F.F.	5' - 6"	ST.	11.5
F501	38	E.F.	13' - 1"	BT.	517.1
F502	12	E.F.	7' - 8 1/2"	BT.	96.2
F503	26	E.F.	10' - 1"	BT.	272.9
F504	8	T.,M.&B.	23' - 1/2"	BT.	191.6
F505	8	T.,M.&B.	23' - 10 1/2"	BT.	198.5
F506	4	T.&M.	25' - 2"	BT.	104.7
F507	4	T.&M.	26' - 6"	BT.	110.2
F508	4	T.&M.	24' - 11"	BT.	103.6
F509	2	E.F.	13' - 3"	BT.	27.6
F510	4	E.F.	18' - 1"	BT.	75.3
F511	2	N.F.	17' - 7 1/2"	ST.	36.7
F512	2	F.F.	16' - 9 1/2"	ST.	35.0
			TOTAL: (Carried to Culvert Estimated Quantites)		2687

BEND TABLE				
MARK	TYPE	"A"	"B"	"C"
W501	2	3' - 6 3/4"	1' - 0"	3' - 6 3/4"
W502	2	3' - 11"	1' - 0"	3' - 11"
W503	2	4' - 3 1/4"	1' - 0"	4' - 3 1/4"
W504	2	4' - 7 1/2"	1' - 0"	4' - 7 1/2"
W505	2	4' - 11 3/4"	1' - 0"	4' - 11 3/4"
W506	2	5' - 4"	1' - 0"	5' - 4"
W507	2	7' - 0"	1' - 0"	7' - 0"
W508	2	4' - 0"	1' - 0"	4' - 0"
W509	2	3' - 4 1/4"	1' - 0"	3' - 4 1/4"
W510	5	6' - 6"	5' - 11"	
W511	2	7' - 4 1/4"	1' - 0"	7' - 9 1/4"
W512	2	3' - 8"	1' - 0"	4' - 1"
W513	3	7' - 7 1/4"	6' - 3"	
W514	3	8' - 0"	6' - 8"	
W515	4	0' - 9"	1' - 0"	
F501	1	5' - 9"	0' - 11"	
F502	2	3' - 5"	1' - 0"	3' - 5"
F503	1	4' - 2"	1' - 0"	
F504	6	16' - 3 1/2"	6' - 8 3/4"	
F505	6	16' - 8 1/2"	7' - 1 3/4"	
F506	6	17' - 4 1/4"	7' - 9 1/2"	
F507	6	18' - 1/4"	8' - 5 1/2"	
F508	6	18' - 8"	6' - 2 3/4"	
F509	2	6' - 2 3/4"	0' - 11"	6' - 2 3/4"
F510	2	3' - 2 3/4"	0' - 11"	3' - 2 3/4"

KEY

E.F. - Each Face
N.F. - Near Face
F.F. - Far Face
T. - Top
B. - Bottom
M. - Middle

* - Lap Length = 2'-6"

NOTES:

ALL REINFORCING STEEL TO BE EPOXY COATED.

ALL DIMENSIONS ARE OUT-TO-OUT

"ST" MEANS STRAIGHT
"BT" MEANS BENT

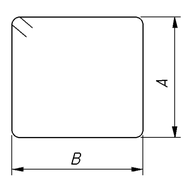

TYPE 1

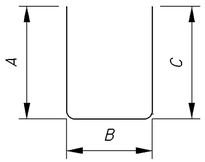

TYPE 2

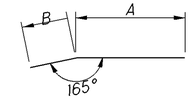

PROFILE

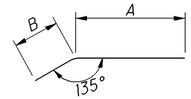

PLAN

TYPE 3

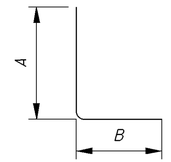

TYPE 4

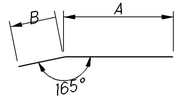

TYPE 5

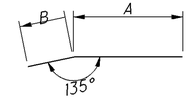

TYPE 6

BENDING DIAGRAMS

CALCULATED BDC CHECKED JLG

HEADWALL DETAILS FOR CULVERT C20
I-75 AT STA. 277+42.51

ALL-75-0.21

5/5

508/907

P:\89029\drainage\sheets\89029DC020c.dgn 27-JUN-2013 11:21AM tholenbo

ESTIMATED QUANTITIES

503	COFFERDAMS AND EXCAVATION BRACING	= LUMP
601	ROCK CHANNEL PROTECTION, TYPE B WITH FILTER, 30" THICK	= 7 C.Y.
601	RIPRAP USING 6" REINFORCED CONCRETE SLAB	= 14 S.Y.
602	CONCRETE MASONRY	= 1.68 C.Y.
603	42" CONDUIT, TYPE A, 706.02	= 182 FT.

CARRIED TO CULVERT SUBSUMMARY SHEET 158

HORIZONTAL SCALE IN FEET 0 5 10 20

CALCULATED BDC CHECKED JJK

EXISTING STRUCTURE

TYPE = 24" CMP

LENGTH = 174'

DATE BUILT = 1955
EXTENDED IN 1973

EX. CB (202)

EX LA

LA-R/W

12' 24' 4' 21.5' 21.5' 4' 24' 12'

℄ R/W & CONST. I-75

PROP. CB NO. 8

15" B - 88'

EX. FENCE (202)

9" TYP.

PROP. 42" CONDUIT, TYPE A

STA. 209+01.09
88.49' RT.

5'

15'

I.P.S.

11.3°

STA. 290+36.71
90.28' LT.

10'

5'

EX. 12" CONC (202)

EX. CB (202)

EX. 24" CMP (202)

CONST. LIMITS

290

S 20° 75' 43" E

SOUTHBOUND LANES

NORTHBOUND LANES

SODDING REINFORCED

ROCK CHANNEL PROTECTION, TYPE B WITH FILTER, 30" THICK

HYDRAULIC DATA

DRAINAGE AREA =	41	AC.
Q50 =	41	cfs
Q100 =	47	cfs
HWE50 =	902.48	FT.
HWE100 =	902.73	FT.
V50 =	8.1	fps
V100 =	8.4	fps

182'

STA. 290+36.71
90.28' LT.
℄ ELEV. 898.70

℄ R/W & CONST. I-75
STA. 290+18.72

92.05'

90.23'

920
910
900
890

LA-R/W

EX LA-R/W

4:1 6:1 8:1 8:1 6:1 4:1

906.06 906.55 906.93 906.76 906.76 906.93 906.55 906.06

4.4' MAX COVER

3.1' MIN. COVER

904.4

HW(100) = 902.73
HW(50) = 902.48

EX. HEADWALL (202)

182' OF 42" TYPE A @ 0.49%

EX. 24" CMP (202)

STA. 209+01.09
88.49' RT.
℄ ELEV. 899.60

HW-2.2

RIPRAP, 6" REINFORCED CONCRETE SLAB W/ CUT-OFF WALL ON THREE (3) SIDES

RIPRAP, 6" REINFORCED CONCRETE SLAB W/ CUT-OFF WALL ON THREE (3) SIDES

CULVERT DETAIL FOR No. C21
I-75 AT STA. 290+18.72

ALL-75-0.21

509
907

I:\Pd\89029\drainage\sheets\89029DC021.dgn 27-JUN-2013 11:21AM tbolenba

CONDUIT EXPANSION AND DEFLECTION

EXPANSION FITTINGS SHALL BE OZ TYPE AX, CROUSE HINDS TYPE XJG, APPLETON TYPE AX, OR EQUAL APPROVED BY THE ENGINEER. EACH EXPANSION FITTING SHALL PROVIDE EITHER 4 OR 8 INCHES TOTAL MOVEMENT AS SPECIFIED BY THE PLAN DETAILS AND SHALL HAVE AN EXTERNAL COPPER BONDING JUMPER, UNLESS SPECIFIED OTHERWISE BY THE PLAN DETAILS.

DEFLECTION COUPLINGS SHALL BE OZ TYPE DX, CROUSE HINDS TYPE XD, APPLETON TYPE DF, OR EQUAL APPROVED BY THE ENGINEER. EACH DEFLECTION COUPLING SHALL HAVE AN EXTERNAL COPPER BONDING JUMPER, UNLESS SPECIFIED OTHERWISE BY THE PLAN DETAILS.

LAMPS

HIGH PRESSURE SODIUM LAMPS SHALL BE GENERAL ELECTRIC "LUCALOX," OSRAM SYLVANIA "LUMALUX," PHILIPS "CERAMALUX," OR EQUAL APPROVED BY THE ENGINEER.

ITEM 625, LUMINAIRE, CONVENTIONAL, AS PER PLAN

IN ADDITION TO THE REQUIREMENTS OF ODOT'S CONSTRUCTION AND MATERIAL SPECIFICATIONS, LUMINAIRES FOR CONVENTIONAL LIGHTING UNITS SHALL BE AS FOLLOWS:

LUMINAIRES FOR CONVENTIONAL LIGHTING UNITS WITH AN IES II-M-SC DISTRIBUTION AND 200 WATT HIGH PRESSURE SODIUM LAMPS SHALL BE AMERICAN ELECTRIC "SERIES 125" WITH PHOTOMETRIC DISTRIBUTION 20SR2, COOPER "OVD" WITH PHOTOMETRIC DISTRIBUTION OVD2S2F, GENERAL ELECTRIC "M-400" WITH PHOTOMETRIC DISTRIBUTION 450390, OR EQUAL AS APPROVED BY THE ENGINEER.

PAYMENT WILL BE MADE AT THE UNIT BID PRICE FOR EACH CMS ITEM 625, "LUMINAIRE, CONVENTIONAL, TYPE II, 200W HPS, 480 V, AS PER PLAN" FOR EACH LUMINAIRE WHICH SHALL BE FULL COMPENSATION FOR ALL LABOR, MATERIALS AND INCIDENTALS REQUIRED TO COMPLETE THIS ITEM IN A SATISFACTORY AND WORKMANLIKE MANNER.

ITEM 625, LUMINAIRE, LOW MAST, AS PER PLAN

IN ADDITION TO THE REQUIREMENTS OF ODOT'S CONSTRUCTION AND MATERIAL SPECIFICATIONS, LUMINAIRES FOR CONVENTIONAL LIGHTING UNITS SHALL BE AS FOLLOWS:

LUMINAIRES FOR LOW-MAST LIGHTING UNITS WITH SYMMETRIC DISTRIBUTION SHALL BE HOLOPHANE "HMST" WITH PHOTOMETRIC DISTRIBUTION 36383, GENERAL ELECTRIC "HM" WITH PHOTOMETRIC DISTRIBUTION 6312, OR COOPER "HMX" WITH PHOTOMETRIC DISTRIBUTION HMX4SDW, OR EQUAL AS APPROVED BY THE ENGINEER.

PAYMENT WILL BE MADE AT THE UNIT BID PRICE FOR EACH CMS ITEM 625, "LUMINAIRE, LOW MAST, (SYMMETRIC, 400W HPS, 480 V), AS PER PLAN" FOR EACH LUMINAIRE WHICH SHALL BE FULL COMPENSATION FOR ALL LABOR, MATERIALS AND INCIDENTALS REQUIRED TO COMPLETE THIS ITEM IN A SATISFACTORY AND WORKMANLIKE MANNER.

SPECIAL, MAINTAIN EXISTING LIGHTING

EXISTING ROADWAYS WHICH ARE TO REMAIN OPEN TO TRAFFIC DURING CONSTRUCTION OF THIS PROJECT AND WHICH ARE LIGHTED SHALL HAVE THE LIGHTING MAINTAINED AS DESCRIBED HEREIN.

BEFORE ANY WORK IS STARTED IN THE IMMEDIATE VICINITY OF THE EXISTING LIGHTING CIRCUITS, REPRESENTATIVES OF ODOT, THE MAINTAINING AGENCY AND THE CONTRACTOR SHALL MAKE A VISUAL INSPECTION OF THE EXISTING ROADWAY LIGHTING CIRCUITS TO BE MAINTAINED. DURING THIS INSPECTION, A WRITTEN RECORD OF THE CONDITION OF EXISTING LIGHTING SHALL BE MADE BY ODOT'S REPRESENTATIVE. THIS WRITTEN REPORT SHALL NOTE INDIVIDUAL LUMINAIRES WHICH ARE NOT IN WORKING ORDER, INDIVIDUAL POLES WHICH ARE STANDING, AND INDIVIDUAL CIRCUITS WHICH ARE NOT IN WORKING ORDER. THE COMPLETED REPORT SHALL BE SIGNED BY THE REPRESENTATIVES OF ODOT, THE MAINTAINING AGENCY AND THE CONTRACTOR.

IF, AS A RESULT OF THIS INSPECTION, IT IS DETERMINED THAT THE CONDITION OF THE EXISTING SYSTEM IS BELOW THAT REQUIRED FOR THE SAFETY OF THE TRAVELING PUBLIC, THEN THE MAINTAINING AGENCY SHALL MAKE THE REPAIRS NECESSARY TO RETURN THE SYSTEM TO AN ACCEPTABLE CONDITION. FOLLOWING THESE REPAIRS, THE SYSTEM SHALL AGAIN BE INSPECTED AND A REPORT SHALL BE MADE AND SIGNED AS OUTLINED HEREIN.

WHEN THE EXISTING SYSTEM IS IN AN ACCEPTABLE CONDITION, IT SHALL BE TURNED OVER TO THE CONTRACTOR WHO SHALL THEN BE REQUIRED TO MAINTAIN THE EXISTING LIGHTING TO THE CONDITION OUTLINED IN THIS REPORT WITH THE EXCEPTION OF KNOCKDOWNS DUE TO TRAFFIC ACCIDENTS.

REPLACEMENT OF KNOCKED DOWNED UNITS SHALL BE DONE ONLY WHEN THE ENGINEER HAS DETERMINED THAT THE REPLACEMENT OF THE KNOCKED DOWN UNIT IS NECESSARY AND SHALL BE PAID SEPARATELY ON A UNIT BASIS.

BETTERMENTS SHALL BE COVERED IN ITEMS OF WORK PERTAINING TO THE CONSTRUCTION OF PERMANENT IMPROVEMENT.

WHEN THE SEQUENCE OF CONSTRUCTION ACTIVITIES REQUIRES, OR SHOULD THE CONTRACTOR DESIRE, THE REMOVAL OF THE EXISTING LIGHTING BEFORE THE NEW LIGHTING IS OPERATIONAL, THE CONTRACTOR SHALL BE RESPONSIBLE FOR PROVIDING TEMPORARY LIGHTING OF THIS PORTION OF THE ROADWAY.

MOUNTING HEIGHT OF TEMPORARY LUMINAIRES SHALL NOT BE LESS THAN 30 FEET, AND THE MINIMUM OVERHEAD CONDUCTOR CLEARANCE SHALL BE 20 FEET. TEMPORARY OVERHEAD CONSTRUCTION SHALL NOT BE LESS THAN GRADE "A" FOR STRENGTH REQUIREMENTS AS DEFINED BY THE NATIONAL ELECTRIC SAFETY CODE. WOOD POLES WITH OVERHEAD WIRING MAY BE USED. HOWEVER, TEMPORARY LIGHTING SHALL MEET FEDERAL AND STATE SAFETY CRITERIA. IF BREAKAWAY POLES ARE USED TO MEET THESE CRITERIA, THEN UNDERGROUND WIRING SHALL BE USED. RECONDITIONED OR USED MATERIALS MAY BE FURNISHED FOR TEMPORARY LIGHTING.

ALL MATERIALS NECESSARY TO COMPLETE THE TEMPORARY LIGHTING SHALL BE FURNISHED AND INSTALLED BY THE CONTRACTOR. WHEN NO LONGER NEEDED, THE TEMPORARY LIGHTING INSTALLATION SHALL BE REMOVED AND PROPERLY DISPOSED OF BY THE CONTRACTOR.

THE MAINTAINING AGENCY WILL PAY FOR ELECTRICAL ENERGY CONSUMED BY EXISTING POWER SERVICES AND BY PROPOSED PERMANENT POWER SERVICES AFTER ACCEPTANCE OF THE LIGHTING WORK. THE CONTRACTOR WILL PAY FOR ELECTRICAL ENERGY, INSTALLATION, REMOVAL AND MAINTENANCE OF ANY TEMPORARY POWER SERVICES.

THE LUMP SUM PRICE BID FOR ITEM SPECIAL "MAINTAIN EXISTING LIGHTING" SHALL INCLUDE PAYMENT FOR ALL LABOR, EQUIPMENT, MATERIALS AND INCIDENTALS NECESSARY TO MAINTAIN THE EXISTING LIGHTING AS SPECIFIED HEREIN.

THE UNIT PRICE BID FOR ITEM SPECIAL "REPLACEMENT OF EXISTING LIGHTING UNIT" SHALL BE FULL PAYMENT FOR THE REPLACEMENT OF AN EXISTING LIGHTING UNIT WHICH HAS BEEN KNOCKED DOWN AFTER THE AFOREMENTIONED INSPECTION AND SHALL INCLUDE ALL LABOR, EQUIPMENT, MATERIALS AND INCIDENTALS NECESSARY TO PROVIDE A REPLACEMENT FOR SUCH UNIT.

ITEM 625	MAINTAIN EXISTING LIGHTING	LUMP
ITEM 625	REPLACEMENT OF EXISTING LIGHTING UNIT	1 EACH

ITEM 625 - POWER SERVICE, AS PER PLAN

IN ADDITION TO THE REQUIREMENTS OF THE SPECIFICATIONS, THE FOLLOWING IS ADDED:

THE POWER SUPPLYING AGENCY FOR THIS PROJECT IS:

AMERICAN ELECTRIC POWER
369 EAST O'CONNOR AVE.
LIMA, OH 45801
CONTACT: DAN WILSON
TELEPHONE NO. (419) 998-5103

THE ENGINEER SHALL ENSURE THAT EACH POWER ELECTRICAL ENERGY ACCOUNT IS IN THE NAME OF AND THAT THE BILLING ADDRESS IS TO THE MAINTAINING AGENCY NOTED IN THE PLANS. THIS SHALL BE DONE NOT ONLY FOR EACH NEW POWER SERVICE ESTABLISHED BY THIS PROJECT BUT ALSO FOR EACH EXISTING POWER SERVICE, SINCE THERE MAY BE A RE-ASSIGNMENT OF THE RESPONSIBILITY FOR AN EXISTING SERVICE AS A RESULT OF THE WORK PERFORMED BY THIS PROJECT.

PAYMENT WILL BE MADE AT THE UNIT BID PRICE FOR EACH CMS ITEM 625, "POWER SERVICE, AS PER PLAN" WHICH SHALL BE FULL COMPENSATION FOR ALL LABOR, MATERIALS AND INCIDENTALS REQUIRED TO COMPLETE THIS ITEM IN A SATISFACTORY AND WORKMANLIKE MANNER.

CALCULATED MCR
CHECKED MLF

LIGHTING GENERAL NOTES

ALL-75-0.21

510
907

I:\Pd\89029\lighting\sheets\89029LN001.dgn 25-JUN-2013 10:47AM tbolenba

SHEET NO.	SIDE	ROADWAY	STATION TO STATION	Circuit Nodes * = MATCH LINE	625 CONNECTION, FUSED PULL APART EACH	625 CONNECTION, UNFUSED PERMANENT EACH	625 LIGHT POLE, CONVENTIONAL, DESIGN AT15B40 EACH	625 LIGHT POLE, CONVENTIONAL, DESIGN AT18B40 EACH	625 LIGHT POLE, LOW MAST, DESIGN ATLM40 EACH	625 LIGHT POLE FOUNDATION, 24" X 8' DEEP EACH	625 NO. 4 AWG 5000V DISTRIBUTION CABLE FT	625 NO. 10 AWG POLE AND BRACKET CABLE FT	625 1-1/2" DUCT CABLE WITH THREE NO. 4 AWG 5000v CABLES FT	625 CONDUIT, 3", 725.04 FT	625 CONDUIT, 3", JACKED OR DRILLED, 725.04 FT	625 LUMINAIRE, CONV, (TYPE II, 200W HPS, 480 V), APP EACH	625 LUMINAIRE, LOW MAST (SYMMETRIC, 400W HPS, 480 V), APP EACH	625 TRENCH, 24" DEEP FT	625 PULL BOX, 725.08, 18" EACH	625 PULL BOX, 725.08, 24" EACH	625 PULL BOX REMOVED EACH	625 GROUND ROD EACH	625 POWER SERVICE, AS PER PLAN EACH		625 LIGHT POLE REMOVED EACH	625 LIGHT POLE FOUNDATION REMOVED EACH	625 LUMINAIRE REMOVED EACH	625 POWER SERVICE REMOVED, AS PER PLAN EACH	625 DISCONNECT CIRCUIT EACH	
522	LT	I.R. 75	STA. 97+13	AA-1	2			1		1		116					1						1							
522	LT	I.R. 75	STA. 97+13 TO STA. 100+13	AA-1 TO AA-2									313					303												
522	LT	I.R. 75	STA. 100+13	AA-2	2			1		1		116					1						1							
522	LT	I.R. 75	STA. 100+13 TO STA. 103+04	AA-2 TO AA-3									302					292												
522	LT	I.R. 75	STA. 103+04	AA-3	2			1		1		116					1						1							
522	LT	I.R. 75	STA. 103+04 TO 106+00	AA-3 TO *									298					293												
522	RT	I.R. 75	STA. 98+43	AB-1	2			1		1		116					1						1							
522	RT	I.R. 75	STA. 98+43 TO STA. 105+03	AB-1 TO AB-2									667					657												
522	RT	I.R. 75	STA. 105+03	AB-2	2			1		1		116					1						1							
522	RT	I.R. 75/ RAMP B	STA. 105+03 TO STA. 106+00	AB-2 TO *									102					97												
523	RT	RAMP B	STA. 106+00 TO 106+46	* TO PB-6									51					46												
523	RT	RAMP B	106+46	PB-6		3													1											
523	RT	RAMP B/I.R. 75	STA. 106+46 TO STA. 106+54	PB-6 TO AB-3									54					44												
523	RT	I.R. 75	STA. 106+54	AB-3	2			1		1		116					1						1							
523	RT	RAMP B	STA. 106+46 TO STA. 107+05	PB-6 TO AB-4									68					58												
523	RT	RAMP B	STA. 107+05	AB-4	2		1			1		110					1						1							
523	RT	RAMP B	STA. 107+05 TO STA. 113+71	AB-4 TO PB-7									684					674												
523	RT	RAMP B	STA. 113+71	PB-7		3													1											
523	RT	BREESE RD	STA. 111+60	AB-7	2			1		1		116					1						1							
523	RT	BREESE RD	STA. 111+60 TO STA. 109+90	AB-7 TO AB-6							540			170				170												
523	RT	BREESE RD	STA. 110+05	AB-6	2			1		1		116					1						1							
523	RT	BREESE RD	STA. 109+90 TO STA. 108+55	AB-6 TO AB-5									145					135												
523	RT	BREESE RD	STA. 108+55	AB-5	2				1	1		110					1						1							
523	RT	BREE/RAMP B	STA. 108+55 TO STA. 113+71	AB-5 TO PB-7									60					50												
523	RT	RAMP B/BREE	STA. 113+71 TO STA. 107+28	PB-7 TO PB-8							276			82				82												
523	RT	BREESE RD	STA. 107+28	PB-8		3													1											
523	RT	BREESE RD	STA. 107+28 TO PB-9	PB-8 TO PB-5		3							95					85												
523	RT	BREESE RD	STRUCTURE ALL-75-2.12	PB-5 TO PB-3							1050																			
523	RT	BREE/RAMP A	PB-3 TO STA. 109+80	PB-3 TO PB-2		3							142					132												
523	RT	BREESE RD	STA. 102+25	AA-4	2				1	1		110					1						1							
523	RT	BREE/RAMP A	STA. 102+25 TO STA. 109+80	AA-4 TO PB-2									55					45												
523	RT	BREESE RD	STA. 109+80	PB-2		6														1										
523	RT	RAMP A/BREE	STA. 109+80 TO STA. 100+94	PB-2 TO PB-1							678			103				103												
523	LT/RT	RAMP A/BREE	STA. 106+00 TO STA. 100+94	* TO PB-1									400					395												
523	RT	BREESE RD	STA. 100+94	PB-1		6														1										
523	RT	BREESE RD	STA. 100+94 TO STA. 101+00	PB-1 TO PS 'A'									270					120												
523	RT	BREESE RD	STA. 101+00	PWR SVC 'A'																				1						
523	LT/RT	BREESE RD	STA. 100+94 TO STA. 10+90	PB-1 TO AA-5							270			80				80												
523	LT	BREESE RD	STA. 100+90	AA-5	2				1	1		110					1						1							
523	LT	RAMP C	STA. 110+55 TO STA. 116+22	AA-5 TO AA-6									726					716												
523	LT	RAMP C	STA. 116+22	AA-6	2		1			1		110					1						1							
523	LT	RAMP C	STA. 116+22 TO STA. 116+75	AA-6 TO PB-4									62					52												
523	LT	RAMP C	STA. 116+75	PB-4		3													1											
523	LT	I.R. 75	STA. 116+72	AA-7	2			1		1		116					1						1							
523	LT/RT	I.R. 75/RAMP C	STA. 116+72 TO STA. 116+75	AA-7 TO PB-4									57					47												
523	LT	RAMP C	STA. 116+75 TO STA. 118+19	PB-4 TO AA-8									154					144												
523	LT	RAMP C	STA. 118+19	AA-8	2			1		1		116					1						1							
523	LT	RAMP C	STA. 118+19 TO 120+00	AA-8 TO *									185					180												
SUB-TOTALS					*30*	*30*	*2*	*10*	*3*	*15*	*2814*	*1710*	*4890*	*435*	*0*	*12*	*3*	*5000*	*4*	*2*	*0*	*15*	*1*		*0*	*0*	*0*	*0*	*0*	

CALCULATED MCR
CHECKED NJV

LIGHTING SUBSUMMARY

ALL-75-0.21

511
907

I:\Pdv\89029\lighting\sheets\89029LS001.dgn 25-JUN-2013 10:47AM tbolenba

SHEET NO.	SIDE	ROADWAY	STATION TO STATION	Circuit Nodes	625	625	625	625	625	625	625	625	625	625	625	625	625	625	625	625	625	625		625	625	625	625	625	
				* = MATCH LINE	CONNECTION, FUSED PULL APART	CONNECTION, UNFUSED PERMANENT	LIGHT POLE, CONVENTIONAL, DESIGN AT15B40	LIGHT POLE, CONVENTIONAL, DESIGN AT18B40	LIGHT POLE, LOW MAST, DESIGN ATLM40	LIGHT POLE FOUNDATION, 24" X 8' DEEP	NO. 4 AWG 5000V DISTRIBUTION CABLE	NO. 10 AWG POLE AND BRACKET CABLE	1-1/2" DUCT CABLE WITH THREE NO. 4 AWG 5000v CABLES	CONDUIT, 3", 725.04	CONDUIT, 3", JACKED OR DRILLED, 725.04	LUMINAIRE, CONV, (TYPE II, 200W HPS, 480 V), APP	LUMINAIRE, LOW MAST (SYMMETRIC, 400W HPS, 480 V), APP	TRENCH, 24" DEEP	PULL BOX, 725.08, 18"	PULL BOX, 725.08, 24"	PULL BOX REMOVED	GROUND ROD	POWER SERVICE, AS PER PLAN		LIGHT POLE REMOVED	LIGHT POLE FOUNDATION REMOVED	LUMINAIRE REMOVED	POWER SERVICE REMOVED, AS PER PLAN	DISCONNECT CIRCUIT	
					EACH	EACH	EACH	EACH	EACH	EACH	FT	FT	FT	FT	FT	FT	EACH	EACH	FT	EACH	EACH	EACH	EACH	EACH		EACH	EACH	EACH	EACH	EACH	
523	LT	BREESE RD	STA. 107+35	AB-8	2				1	1		110					1					1								
523	LT	BREE/RAMP D	STA. 107+35 STA. TO STA. 114+80	AB-8 TO PB-9									131					121											
523	LT	RAMP D	STA. 114+80	PB-9		3													1										
523	LT/RT	RAMP D	STA. 114+80 TO STA. 114+85	PB-9 TO PB-10							180			50				50											
523	RT	RAMP D	STA. 114+85	PB-10		3													1										
523	RT	RAMP D	STA. 114+85 TO STA. 120+00	PB-10 TO *									516					511											
524	RT	RAMP D	STA. 120+00 TO STA. 120+45	* TO AB-9									50					45											
524	RT	RAMP D	STA. 120+45	AB-9	2			1		1		116				1						1							
524	RT	RAMP D/I.R. 75	STA. 120+45 TO STA. 123+42	AB-9 TO AB-10									306					296											
524	RT	I.R. 75	STA. 123+42	AB-10	2			1		1		116				1						1							
524	RT	I.R. 75	STA. 123+42 TO STA. 126+42	AB-10 TO AB-11									310					300											
524	RT	I.R. 75	STA. 126+42	AB-11	2			1		1		116				1						1							
524	LT	RAMP C/I.R. 75	STA. 120+00 TO STA. 120+45	* TO AA-9									482					477											
524	LT	RAMP C	STA. 120+45	AA-9	2			1		1		116				1						1							
525	LT	I.R. 75	STA. 210+65	BB-1	2			1		1		116				1						1							
525	LT	I.R. 75	STA. 210+65 TO STA. 213+65	BB-1 TO BB-2									310					300											
525	LT	I.R. 75	STA. 213+65	BB-2	2			1		1		116				1						1							
525	LT	I.R. 75/RAMP B	STA. 213+65 TO STA. 216+62	BB-2 TO BB-3									306					296											
525	LT	RAMP B	STA. 216+62	BB-3	2			1		1		116				1						1							
525	LT	RAMP B	STA. 216+62 TO STA. 217+00	BB-3 TO *									43					38											
525	RT	I.R. 75	STA. 211+62	BA-1	2			1		1		116				1						1							
525	RT	I.R. 75/RAMP A	STA. 211+65 TO STA. 217+00	BA-1 TO *									539					534											
526	RT	RAMP A	STA. 217+00 TO STA. 218+05	* TO BA-2									110					105											
526	RT	RAMP A	STA. 218+05	BA-2	2			1		1		116				1						1							
526	RT	RAMP A	STA. 218+05 TO STA. 219+56	BA-2 TO PB-11									160					150											
526	RT	RAMP A	STA. 219+56	PB-11		3													1										
526	RT	I.R. 75	STA. 219+59	BA-3	2			1		1		116				1						1							
526	RT	I.R. 75/RAMP A	STA. 219+59 TO STA. 219+56	BA-3 TO PB-11							174			48				48											
526	RT	RAMP A	STA. 219+56 TO STA. 220+05	PB-11 TO BA-4									59					49											
526	RT	RAMP A	STA. 220+05	BA-4	2		1			1		110				1						1							
526	RT	RAMP A	STA. 220+05 TO STA. 223+02	BA-4 TO PB-13									306					296											
526	LT	RAMP A	STA. 223+02	PB-13		6														1									
526	RT/LT	RAMP A/S.R. 65	STA. 233+02 TO STA. 101+25	PB-13 TO PB-12									132					56											
526	LT	S.R. 65	STA 101+55	PB-12		3														1									
526	LT	S.R. 65	101+30	BA-5	2				1	1		110					1					1							
526	LT	S.R. 65	STA. 101+30 TO STA. 101+55	BA-5 TO PB-12									70					60											
526	LT	S.R. 65	STA. 101+55 TO STA. 101+55	PB-12 TO PS "B"									35					10											
526	LT	S.R. 65	STA. 101+55	PWR SVC "B"																			1						
526	LT	S.R. 65	STA. 223+02 TO STA. 102+34.5	PB-13 TO PB-14							384			54				54											
526	LT	S.R. 65	STA. 102+34.5	PB-14		6														1									
526	LT	S.R. 65	STA. 102+34.5 TO STA. 105+55	PB-14 TO PB 15							993			101	220			101											
526	RT	S.R. 65	STA. 105+55	PB-15		3													1										
526	RT	S.R. 65	STA. 105+44	BB-4	2				1	1		110					1					1							
526	RT	S.R. 65	STA. 105+44 TO STA. 105+55	BB-4 TO PB-15									21					11											
526	LT	RAMP B	STA. 105+55 TO STA. 106+20	PB-15 TO PB-16							225			65				65											
526	LT	RAMP B	STA. 106+20	PB-16		3													1										
			SUB-TOTALS		*28*	*27*	*1*	*10*	*3*	*14*	*1731*	*1600*	*3886*	*253*	*220*	*11*	*3*	*3908*	*5*	*3*	*0*	*14*	*1*		*0*	*0*	*0*	*0*	*0*	

CALCULATED MCR
CHECKED NJV

LIGHTING SUBSUMMARY

ALL-75-0.21

512
907

I:\Pd\89029\lighting\sheets\89029LS002.dgn 25-JUN-2013 10:47AM tbolenba

SHEET NO.	SIDE	ROADWAY	STATION TO STATION	Circuit Nodes	625 CONNECTION, FUSED PULL APART	625 CONNECTION, UNFUSED PERMANENT	625 LIGHT POLE, CONVENTIONAL, DESIGN AT15B40	625 LIGHT POLE, CONVENTIONAL, DESIGN AT18B40	625 LIGHT POLE, LOW MAST, DESIGN ATLM40	625 LIGHT POLE FOUNDATION, 24" X 8' DEEP	625 NO. 4 AWG 5000V DISTRIBUTION CABLE	625 NO. 10 AWG POLE AND BRACKET CABLE	625 1-1/2" DUCT CABLE WITH THREE NO. 4 AWG 5000v CABLES	625 CONDUIT, 3", 725.04	625 CONDUIT, 3", JACKED OR DRILLED, 725.04	625 LUMINAIRE, CONV, (TYPE II, 200W HPS, 480 V), APP	625 LUMINAIRE, LOW MAST (SYMMETRIC, 400W HPS, 480 V), APP	625 TRENCH, 24" DEEP	625 PULL BOX, 725.08, 18"	625 PULL BOX, 725.08, 24"	625 PULL BOX REMOVED	625 GROUND ROD	625 POWER SERVICE, AS PER PLAN		625 LIGHT POLE REMOVED	625 LIGHT POLE FOUNDATION REMOVED	625 LUMINAIRE REMOVED	625 POWER SERVICE REMOVED, AS PER PLAN	625 DISCONNECT CIRCUIT	
				* = MATCH LINE	EACH	EACH	EACH	EACH	EACH	EACH	FT	FT	FT	FT	FT	EACH	EACH	FT	EACH	EACH	EACH	EACH	EACH		EACH	EACH	EACH	EACH	EACH	
526	LT	RAMP B/S.R. 65	STA. 217+00 TO STA 106+20	* TO PB-16									664					659												
526	LT/RT	S.R. 65	STA. 106+20 TO STA. 106+73	PB-16 TO PB-17							432			134				134												
526	RT	S.R. 65	STA. 106+20	PB-17		3													1											
526	RT	S.R. 65	STA. 106+95	BB-5	2				1	1		110					1					1								
526	RT	S.R. 65	STA. 106+73 TO STA. 106+24	BB-5 TO PB-17									97					87												
526	LT	S.R. 65/RAMP C	STA. 106+24 TO STA. 230+80	PB-17 TO BB-6									627					617												
526	LT	RAMP C	STA. 230+80	BB-6	2		1			1		110				1						1								
526	LT	RAMP C	STA. 230+80 TO STA. 231+00	BB-6 TO *									25					20												
526	LT/RT	S.R. 65	STA. 102+34.5 TO STA. 102+30	PB-14 TO PB-18							360			110				110												
526	RT	S.R. 65	STA. 102+30	PB-18		3													1											
526	RT	S.R. 65	STA. 102+50	BA-6	2				1	1		110					1					1								
526	RT	S.R. 65	STA. 102+50 TO STA. 102+30	BA-6 TO PB-18									30					20												
526	RT/LT	S.R. 65/RAMP D	STA. 102+30 TO STA. 225+50	PB-18 TO PB-19									124					114												
526	LT/RT	RAMP D	STA. 225+50	PB-19		3													1											
526	LT/RT	RAMP D	STA. 225+50 TO STA. 225+50	PB-19 TO PB-20							147			39				39												
526	RT	RAMP D	STA. 225+50	PB-20		3													1											
526	RT	RAMP D	STA. 225+50 TO STA. 231+00	PB-20 TO *									554					549												
527	RT	RAMP D	STA. 231+00 TO STA. 234+85	* TO BA-7									388					383												
527	RT	RAMP D	STA. 234+85	BA-7	2			1		1		116				1						1								
527	RT	RAMP D	STA. 234+85 TO STA. PB-29	BA-7 TO PB-24		3							93					83												
527	RT	RAMP D/I.R. 75	STRUCTURE ALL-75-4.48 RT	PB-24 TO PB-25							915																			
527	RT	I.R. 75	PB-30 TO STA. 238+55	PB-25 TO BA-8		3							20					10												
527	RT	I.R. 75	STA. 238+60	BA-8	2			1		1		116				1						1								
527	RT	I.R. 75	STA. 238+60 TO STA. 242+15	BA-8 TO BA-9									368					358												
527	RT	I.R. 75	STA. 242+15	BA-9	2			1		1		116				1						1								
527	LT	RAMP C	STA. 231+00 TO STA. 231+34	* TO PB-21									39					34												
527	LT	RAMP C	STA. 231+32	BB-7	2			1		1		116				1						1								
527	LT	RAMP C	STA. 231+32 TO STA. 231+34	BB-7 TO PB-21							174			48				48												
527	LT	RAMP C	STA. 231+34	PB-21		3													1											
527	LT	RAMP C	STA. 231+34 TO STA. 234+85	PB-21 TO BB-8									152					142												
527	LT	RAMP C	STA. 234+85	BB-8	2			1		1		116				1						1								
527	LT	RAMP C	STA. 234+85 TO PB-27	BB-8 TO PB-22		3							300					290												
527	LT	RAMP C/I.R. 75	STRUCTURE ALL-75-4.48 LT	PB-22 TO PB-23							915																			
527	LT	I.R. 75	PB-28 TO STA. 239+12	PB-23 TO BB-9		3							72					62												
527	LT	I.R. 75	STA. 239+12	BB-9	2			1		1		116				1						1								
SUB-TOTALS					18	27	1	6	2	9	2943	1026	3553	331	0	7	2	3759	5	0	0	9	0		0	0	0	0	0	

CALCULATED MCR
CHECKED NJV

LIGHTING SUBSUMMARY

ALL-75-0.21

513
907

I:\Pd\89029\lighting\sheets\89029LSS003.dgn 25-JUN-2013 10:47AM tbolenba

LIGHTING SUBSUMMARY

CALCULATED MCR | CHECKED NJV

SHEET NO.	SIDE	ROADWAY	STATION TO STATION	REMOVAL REFERENCE	625 CONNECTION, FUSED PULL APART EACH	625 CONNECTION, UNFUSED PERMANENT EACH	625 LIGHT POLE, CONVENTIONAL, DESIGN AT15B40 EACH	625 LIGHT POLE, CONVENTIONAL, DESIGN AT18B40 EACH	625 LIGHT POLE, LOW MAST, DESIGN ATLM40 EACH	625 LIGHT POLE FOUNDATION, 24" X 8' DEEP EACH	625 NO. 4 AWG 5000V DISTRIBUTION CABLE FT	625 NO. 10 AWG POLE AND BRACKET CABLE FT	625 1-1/2" DUCT CABLE WITH THREE NO. 4 AWG 5000v CABLES FT	625 CONDUIT, 3", 725.04 FT	625 CONDUIT, 3", JACKED OR DRILLED, 725.04 FT	625 LUMINAIRE, CONV, (TYPE II, 200W HPS, 480 V), APP EACH	625 LUMINAIRE, LOW MAST (SYMMETRIC, 400W HPS, 480 V), APP EACH	625 TRENCH, 24" DEEP FT	625 PULL BOX, 725.08, 18" EACH	625 PULL BOX, 725.08, 24" EACH	625 PULL BOX REMOVED EACH	625 GROUND ROD EACH	625 POWER SERVICE, AS PER PLAN EACH		625 LIGHT POLE REMOVED EACH	625 LIGHT POLE FOUNDATION REMOVED EACH	625 LUMINAIRE REMOVED EACH	625 POWER SERVICE REMOVED, AS PER PLAN EACH	625 DISCONNECT CIRCUIT EACH	
516	LT	I.R. 75		R-1																						1	1	1			
516	LT	I.R. 75		R-2																						1	1	1			
516	LT	I.R. 75		R-3																						1	1	1			
516	RT	I.R. 75		R-4																						1	1	1			
516	LT/RT	I.R. 75		R-5																		2									
517	RT	RAMP B		R-6																						1	1	1			
517	RT	RAMP B		R-7																						1	1	1			
517	RT	I.R. 75		R-8																						1	1	1			
517	RT	BREESE RD		R-9																									1		
517	RT	BREESE RD		R-10																		3									
517	LT	BREESE RD		R-11																						1	1	1			
517	RT	BREESE RD		R-12																						1	1	1			
517	RT/LT	BREESE RD		R-13																		1				1	1	1			
517	RT	BREESE RD		R-14																						1	1	1			
517	RT	BREESE RD		R-15																						1	1	1			
517	LT	I.R. 75		R-16																						1	1	1			
517	LT	RAMP C		R-17																						1	1	1			
517	LT	RAMP C		R-18																						1	1	1			
518	LT	I.R. 75		R-19																		1				1	1	1			
518	RT	I.R. 75		R-20																		1				1	1	1			
518	RT	I.R. 75		R-21																						1	1	1			
518	RT	I.R. 75		R-22																						1	1	1			
519	LT	I.R. 75		R-23																						1	1	1			
519	LT	I.R. 75		R-24																						1	1	1			
519	RT	I.R. 75		R-25																						1	1	1			
519	LT	I.R. 75		R-26																						1	1	1			
520	RT	RAMP A		R-27																						1	1	1			
520	RT	RAMP A		R-28																						1	1	1			
520	RT	I.R. 75		R-29																						1	1	1			
520	RT	S.R. 65		R-30																						1	1	1			
520	LT	S.R. 65		R-31																		2									
520	RT	S.R. 65		R-32																		2				1	1	1			
520	LT	S.R. 65		R-33																		1				1	1	1			
520	RT	S.R. 65		R-34																		1				1	1	1			
520	LT	S.R. 65		R-35																						1	1	1			
520	RT	S.R. 65		R-36																		1				1	1	1			
520	RT	S.R. 65		R-37																									1		
520	RT	I.R. 75		R-38																						1	1	1			
520	LT	RAMP D		R-39																						1	1	1			
520	RT	RAMP C		R-40																						1	1	1			
520	RT	RAMP C		R-41																						1	1	1			
520	LT	RAMP B		R-42																							1				
521	LT	I.R. 75		R-43																										1	
521	RT	I.R. 75		R-44																						1	1	1			
521	RT	I.R. 75		R-45																						1	1	1			
SUB-TOTALS					0	0	0	0	0	0	0	0	0	0	0	0	0	0	0	0	0	15	0	0		38	39	38	2	1	
SHEET 511 SUB-TOTALS					30	30	2	10	3	15	2814	1710	4890	435	0	12	3	5000	4	2	0	15	1			0	0	0	0	0	
SHEET 512 SUB-TOTALS					28	27	1	10	3	14	1731	1600	3886	253	220	11	3	3908	5	3	0	14	1			0	0	0	0	0	
SHEET 513 SUB-TOTALS					18	27	1	6	2	9	2943	1026	3553	331	0	7	2	3759	5	0	0	9	0			0	0	0	0	0	
TOTALS CARRIED TO GENERAL SUMMARY					*76*	*84*	*4*	*26*	*8*	*38*	*7488*	*4336*	*12329*	*1019*	*220*	*30*	*8*	*12667*	*14*	*5*	*15*	*38*	*2*			*38*	*39*	*38*	*2*	*1*	

ALL-75-0.21

514
907

I:\Pd\89029\lighting\sheets\89029LS004.dgn 25-JUN-2013 10:47AM tbolenba

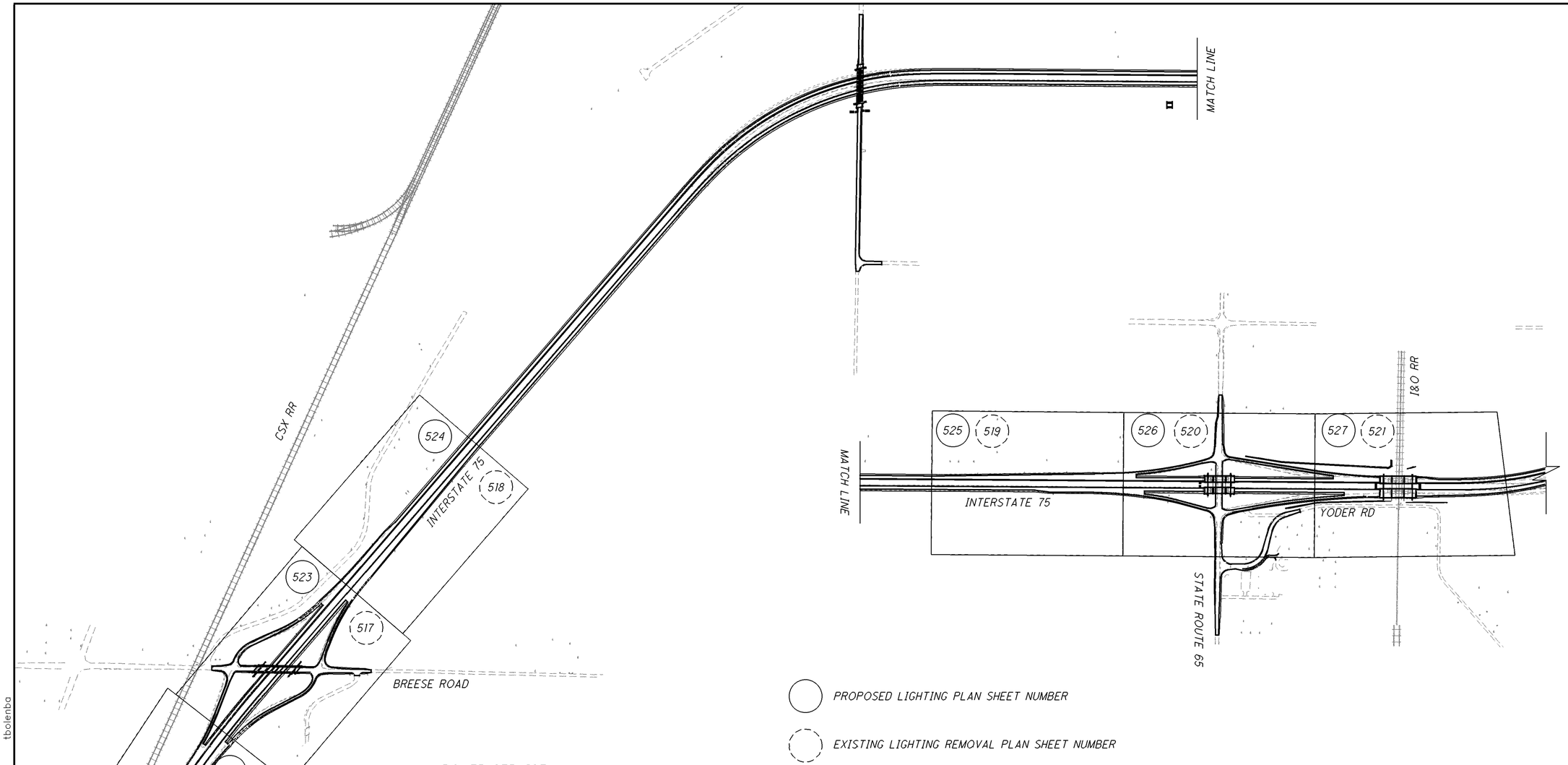

HORIZONTAL SCALE IN FEET
0 200 400 800

PROPOSED LIGHTING PLAN SHEET NUMBER

EXISTING LIGHTING REMOVAL PLAN SHEET NUMBER

POWER SERVICE INFORMATION

A B
CIRCUIT NAME
POWER SERVICE NAME

LIGHT POLE INFORMATION

BASE TYPE
A = ANCHOR
AT = ALUMINUM TRANSFORMER

BRACKET ARMS
'B' = SINGLE ARM
'BB' = DOUBLE ARM
(IF UNEQUAL ARMS, EX. 10B15B)
'LM' = LOW MAST
'ON' = POST TOP

AT 18B 40
POLE HEIGHT

LEGEND	
NEW LOW MAST LIGHT POLE, SYMMETRIC DISTRIBUTION, WITH 400W HPS LUMINAIRE, 480V	EXISTING LIGHTING CIRCUIT
NEW CONVENTIONAL LIGHT POLE WITH TYPE II DISTRIBUTION, WITH 200W HPS LUMINAIRES, 480V	EXISTING LIGHTING CONDUIT
EXISTING HIGH MAST LIGHT TOWER WITH HPS LUMINAIRES, 480V	AB No. 2 — NEW LIGHTING CIRCUIT, NUMBER OF CONDUCTORS (HASHES), CIRCUIT NAME AND CONDUCTOR SIZE.
EXISTING CONVENTIONAL LIGHT POLE	1-1/2" DUCT CABLE IN 24" DEEP TRENCH
NEW POWER SERVICE, 240/480V, 1 PHASE, 3 WIRE	PROPOSED LIGHTING CONDUIT, 3", 725.04 (UNLESS NOTED OTHERWISE)
EXISTING POWER SERVICE, TYPE AS NOTED	PROPOSED LIGHTING CONDUIT, 3", 725.04 (UNLESS NOTED OTHERWISE), JACKED OR DRILLED UNDER PAVEMENT.
	STRUCTURE GROUNDING SYSTEM
PB-1 — NEW LIGHTING PULL BOX OR JUNCTION BOX WITH IDENTIFICATION NUMBER (PB=PULL BOX, MJB=MEDIAN JUNCTION BOX, TJB=TRANSITION JUNCTION BOX, SJB=STRUCTURE JUNCTION BOX)	AB-1 — POLE IDENTIFICATION NUMBER (NEW)
PB-1 — EXISTING LIGHTING PULL BOX OR JUNCTION BOX WITH IDENTIFICATION NUMBER (PB=PULL BOX, MJB=MEDIAN JUNCTION BOX, TJB=TRANSITION JUNCTION BOX, SJB=STRUCTURE JUNCTION BOX)	AB-1 — POLE IDENTIFICATION NUMBER (EXISTING)

LIGHTING SCHEMATIC PLAN

ALL-75-0.21

515
907

I:\Pd\89029\lighting\sheets\89029LB001.dgn 25-JUN-2013 10:47AM tbolenba

CROSS REFERENCES	
ITEM	SHEET
LIGHTING SUBSUMMARY	514
LIGHTING LEGEND	515

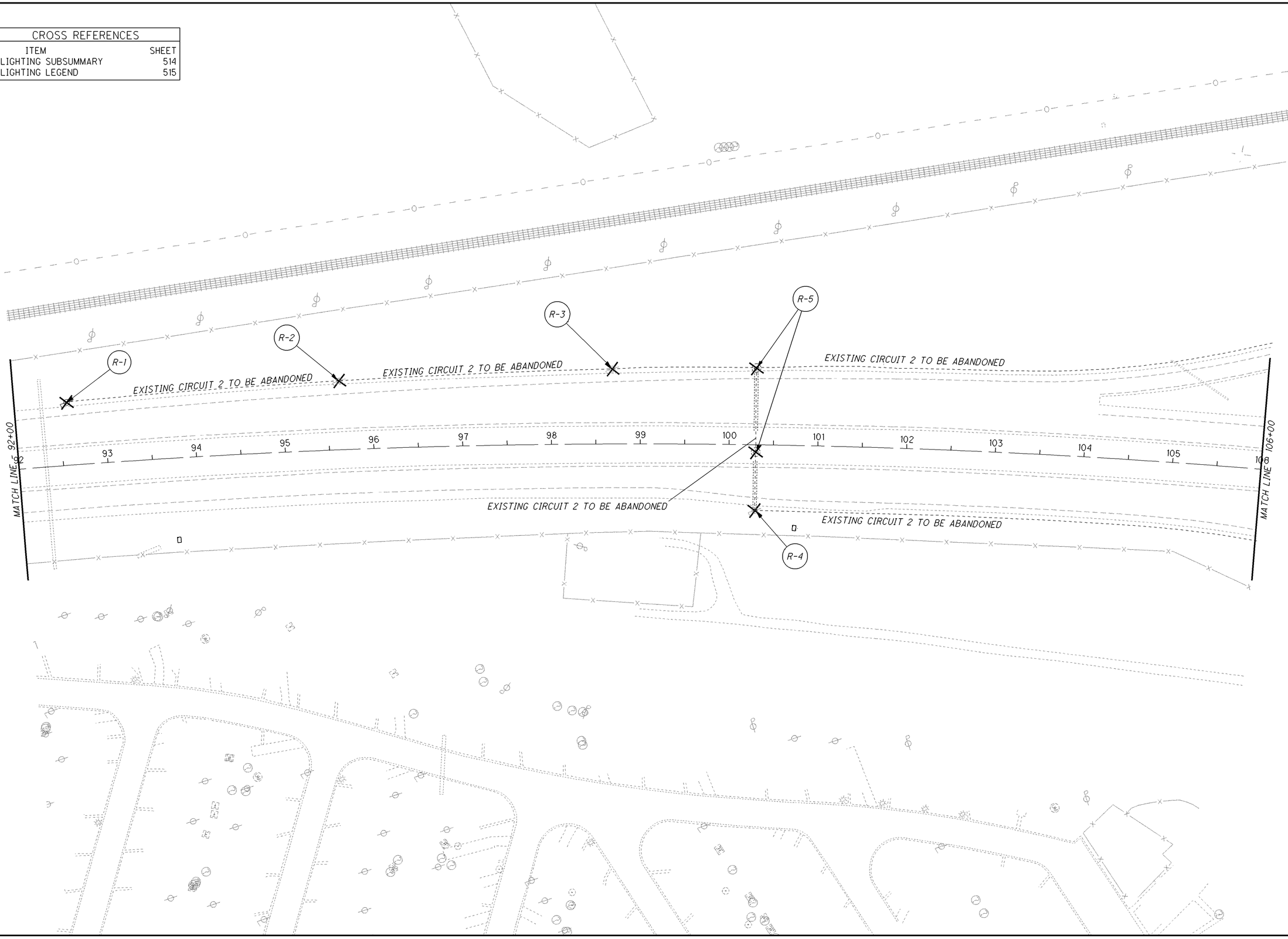

HORIZONTAL SCALE IN FEET
0 25 50 100

CALCULATED MCR
CHECKED MLF

LIGHTING REMOVAL PLAN-I.R. 75 & BREESE RD
I.R. 75 STA. 92+00 TO STA. 106+00

ALL-75-0.21

516
907

I:\Pd\89029\lighting\sheets\89029LX001.dgn 25-JUN-2013 10:47AM tbolenba

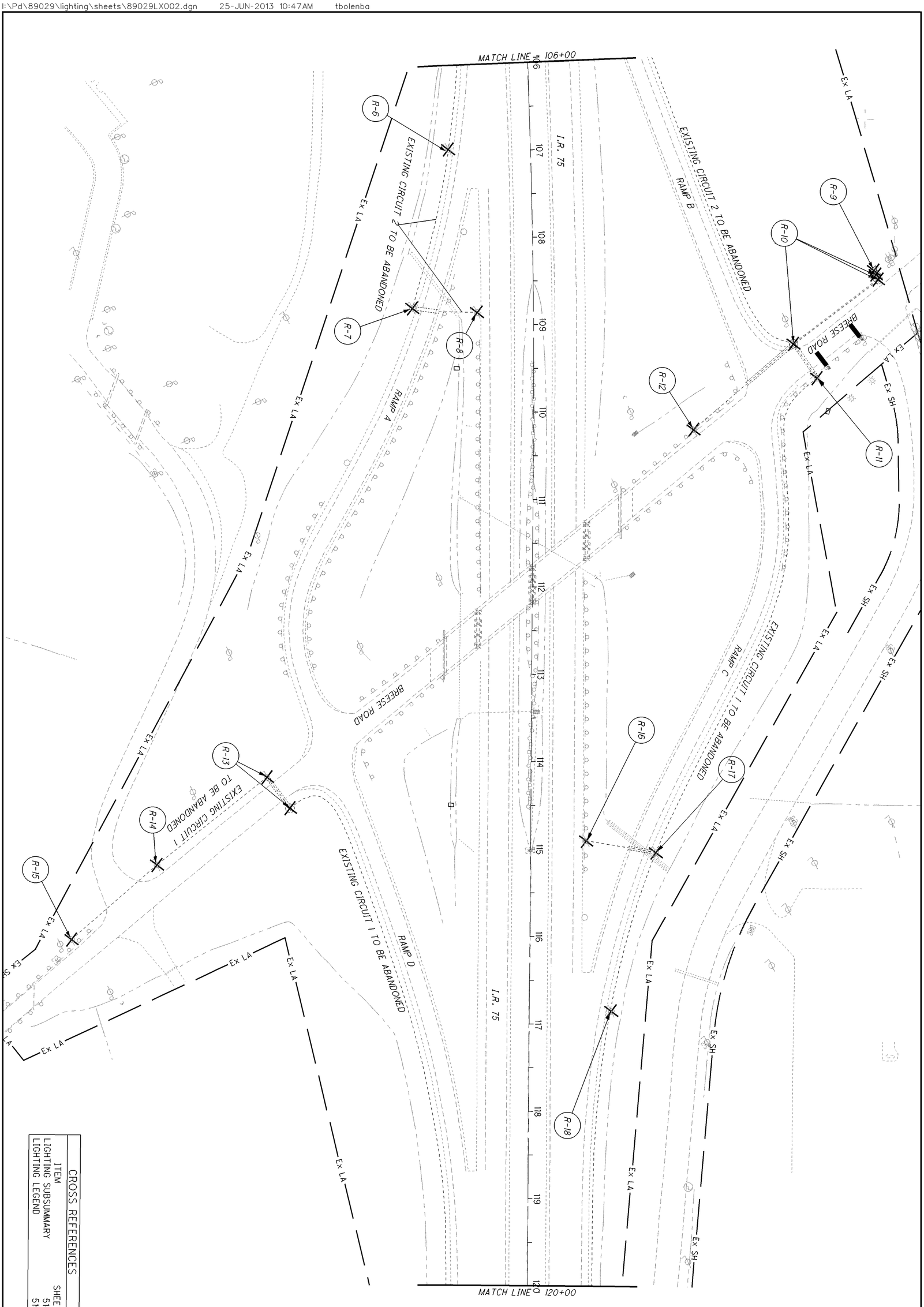

CROSS REFERENCES

ITEM	SHEET
LIGHTING SUBSUMMARY	514
LIGHTING LEGEND	515

907 / 517	ALL-75-0.21	LIGHTING REMOVAL PLAN-I. R. 75 & BREESE RD I.R. 75 STA. 106+00 TO STA. 120+00	CALCULATED MCR CHECKED MLF	0 50 25 100 HORIZONTAL SCALE IN FEET	

CROSS REFERENCES	
ITEM	SHEET
LIGHTING SUBSUMMARY	514
LIGHTING LEGEND	515

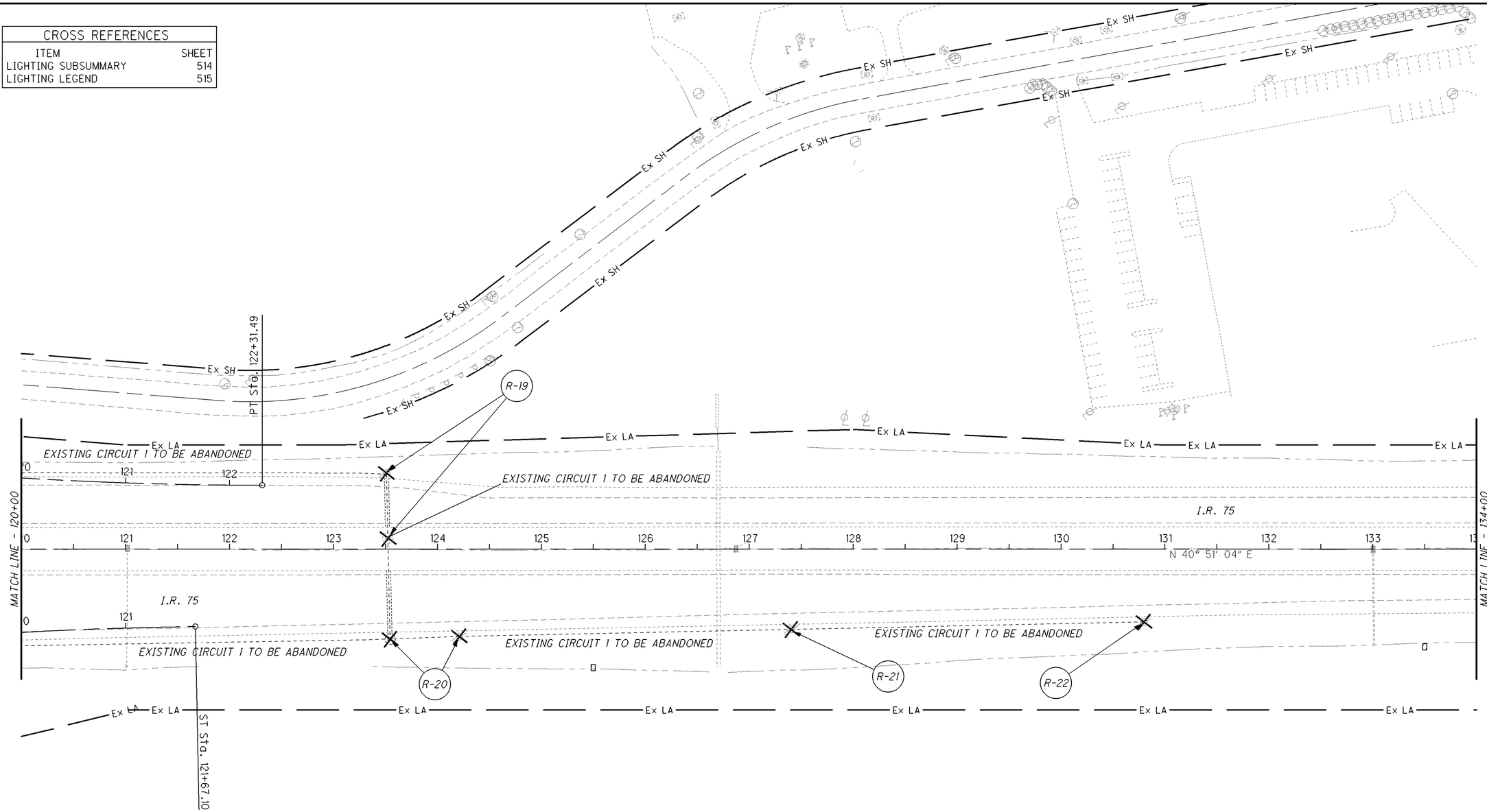

HORIZONTAL SCALE IN FEET
0 25 50 100

CALCULATED MCR
CHECKED MLF

LIGHTING REMOVAL PLAN-I.R. 75 & BREESE RD
BREESE ROAD INTERCHANGE

ALL-75-0.21

518
907

I:\Pd\89029\lighting\sheets\89029LX003.dgn 25-JUN-2013 10:47AM tbolenba

CROSS REFERENCES	
ITEM	SHEET
LIGHTING SUBSUMMARY	514
LIGHTING LEGEND	515

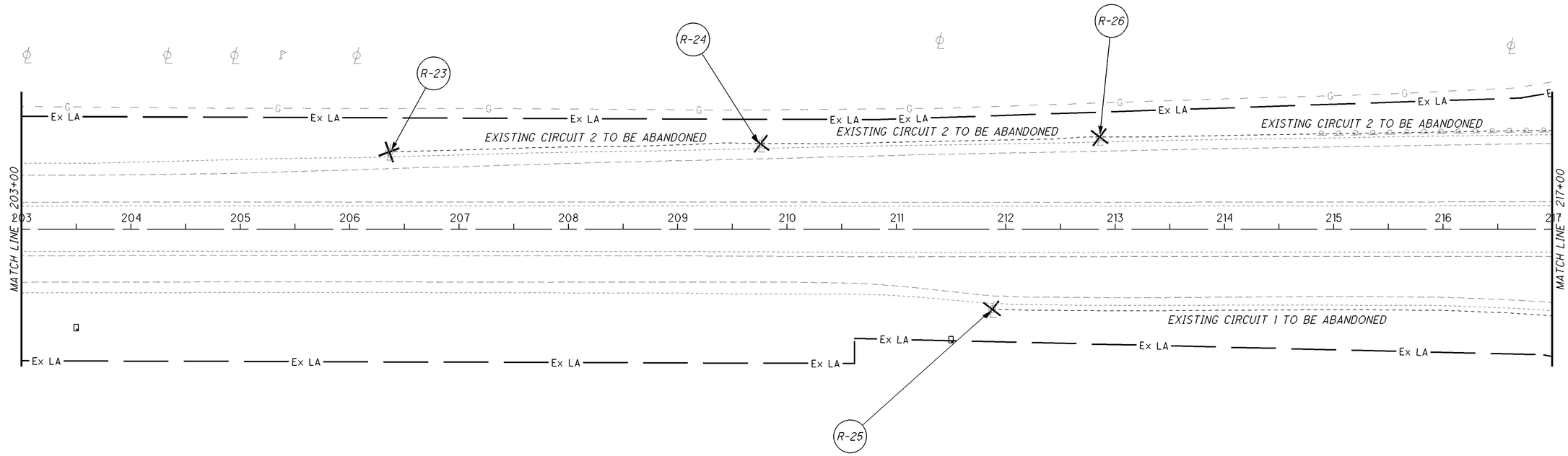

N

HORIZONTAL SCALE IN FEET
0 25 50 100

CALCULATED MCR
CHECKED MLF

LIGHTING REMOVAL PLAN - I.R. 75 & S.R. 65
I.R. 75 STA. 203+00 TO STA. 217+00

ALL-75-2.21

519
907

I:\Pdv\89029\lighting\sheets\89029LX004.dgn 25-JUN-2013 10:47AM tbolenba

CROSS REFERENCES	
ITEM	SHEET
LIGHTING SUBSUMMARY	514
LIGHTING LEGEND	515

R-30 R-31 R-32 R-33 R-34 R-35 R-36 R-37 R-38 R-39 R-40 R-41 R-42 R-27 R-28 R-29

EXISTING CIRCUIT 2 TO BE ABANDONED

EXISTING CIRCUIT 1 TO BE ABANDONED

OLD LIGHT BASE

RAMP A RAMP B RAMP C RAMP D

Ex LA Ex SH SAN G FO W

MATCH LINE - 217+00 MATCH LINE 231+00

217 218 219 220 221 222 223 224 225 226 227 228 229 230 231

HORIZONTAL SCALE IN FEET
0 25 50 100

CALCULATED MCR
CHECKED MLF

LIGHTING REMOVAL PLAN - I.R. 75 & S.R. 65
I.R. 75 STA. 217+00 TO STA. 231+00

ALL-75-0.21

520
907

I:\Pd\89029\lighting\sheets\89029LX005.dgn 25-JUN-2013 10:47AM tbolenba

CROSS REFERENCES	
ITEM	SHEET
LIGHTING SUBSUMMARY	514
LIGHTING LEGEND	515

DISCONNECT CIRCUIT FROM EXISTING OVERHEAD SIGN

R-43

EXISTING CIRCUIT 2 TO BE ABANDONED

MATCH LINE - 231+00

231 232 233 234 235 236 237 238 239 240 241 242 243 244

MATCH LINE - 245+00

EXISTING CIRCUIT 1 TO BE ABANDONED

EXISTING CIRCUIT 1 TO BE ABANDONED

R-44

R-45

Ex RR

FO

SAN

W

HORIZONTAL SCALE IN FEET
0 25 50 100

CALCULATED MCR
CHECKED MLF

LIGHTING REMOVAL PLAN - I.R. 75 & S.R. 65
I.R. 75 STA. 231+00 TO STA. 245+00

ALL-75-0.21

521
907

I:\Pd\89029\lighting\sheets\89029LX006.dgn 25-JUN-2013 10:47AM tbolenba

CROSS REFERENCES	
ITEM	SHEET
LIGHTING SUBSUMMARY	514
LIGHTING LEGEND	511

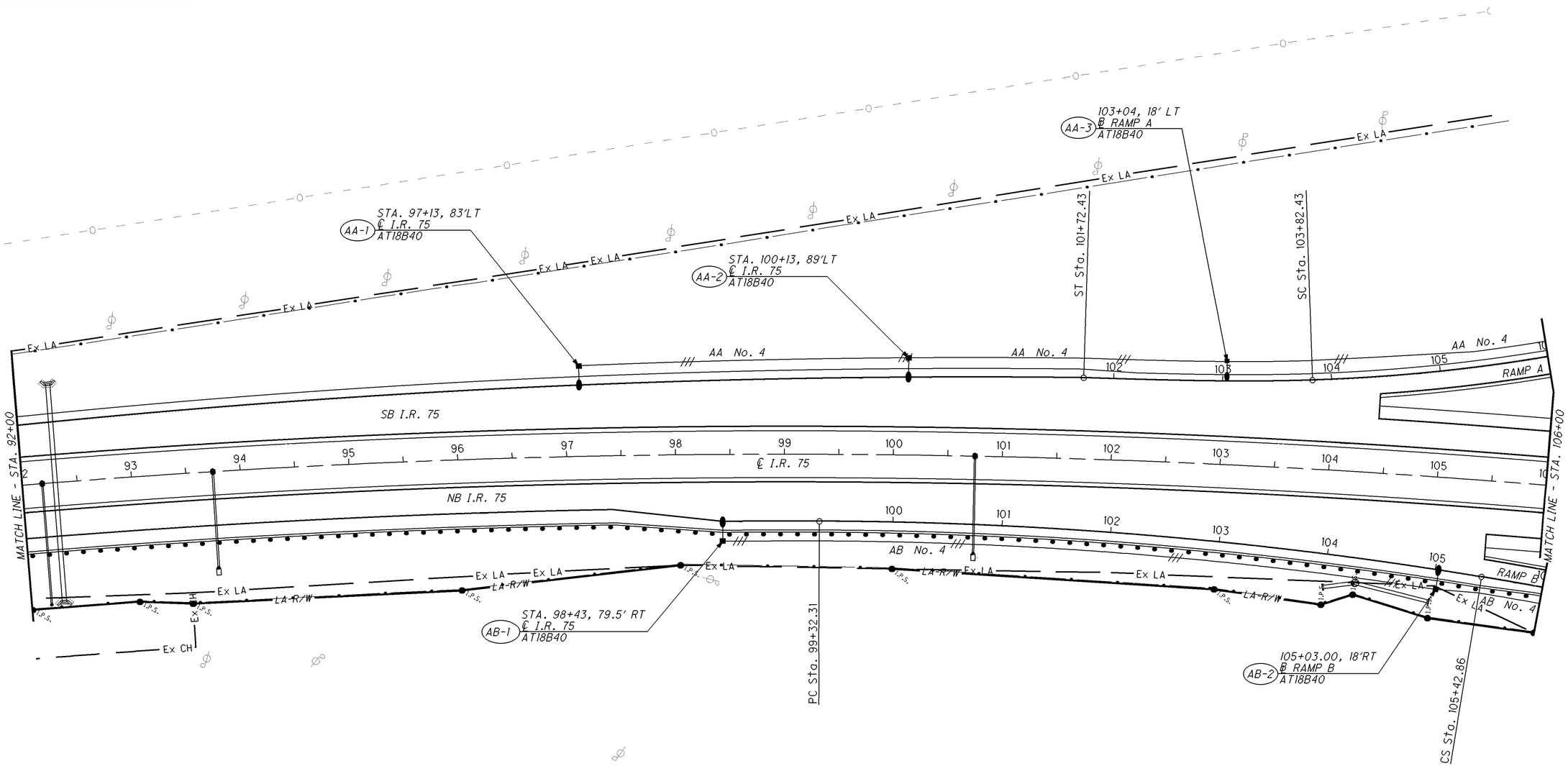

HORIZONTAL SCALE IN FEET
0 25 50 100

CALCULATED MCR
CHECKED MLF

LIGHTING PLAN - I.R. 75 & BREESE ROAD
STA. 92+00 TO STA. 106+00

ALL-75-0.21

522
907

I:\Pd\89029\lighting\sheets\89029LP001.dgn 25-JUN-2013 10:47AM tbolenba

POWER SERVICE "A"
240/480, 1 PH, 3W
SEE NOTE 1
STA. 101+00, 25' RT
℄ BREESE RD

STA. 100+90, 33' LT
℄ BREESE RD
ATLM40
AA-5

STA. 100+94, 35' RT
℄ BREESE RD
24" PULL BOX
PB-1

STA. 109+80, 39' RT
℄ RAMP A
24" PULL BOX
PB-2

STA. 102+25, 36' RT
℄ BREESE RD
ATLM40
AA-4

PB-3

BREESE RD OVER I.R. 75
BRIDGE NO. ALL-75-0212

STA. 116+72, 70' LT
℄ I.R. 75
AT18B40
AA-7

STA. 116+22, 15' LT
℄ RAMP C
AT15B40
AA-6

STA. 116+75, 15' LT
℄ RAMP C
18" PULL BOX
PB-4

STA. 118+19, 18' LT
℄ RAMP C
AT18B40
AA-8

STA. 107+05, 15' RT
℄ RAMP B
AT15B40
AB-4

STA. 107+28, 45' RT
℄ BREESE RD
18" PULL BOX
PB-8

PB-5

STA. 107+35, 36' LT
℄ BREESE RD
ATLM40
AB-8

STA. 106+54, 70' RT
℄ I.R. 75
AT18B40
AB-3

STA. 106+46, 15' RT
℄ RAMP B
18" PULL BOX
PB-6

STA. 113+71, 19.5' RT
℄ RAMP B
18" PULL BOX
PB-7

STA. 108+55, 40' RT
℄ BREESE RD
ATLM40
AB-5

STA. 110+05, 34' RT
℄ BREESE RD
AT18B40
AB-6

STA. 111+60, 30' RT
℄ BREESE RD
AT18B40
AB-7

STA. 114+80, 31' LT
℄ RAMP D
18" PULL BOX
PB-9

STA. 114+85, 18' RT
℄ RAMP D
18" PULL BOX
PB-10

PC Sta. 110+09.38
PT Sta. 111+86.34
PT Sta. 106+80.44
PT Sta. 110+15.90
PC Sta. 111+81.57
PT Sta. 113+48.96
PT Sta. 109+60.50
POT Sta. 105+00.00
CS Sta. 114+03.83
CS Sta. 115+78.01
SC Sta. 117+78.01
SC Sta. 107+42.86
CS Sta. 119+52.10
PC Sta. 115+95.05

N21°07'21"E
N 64° 55' 07" E
S88°52'36"E
N 40° 51' 04" E

AA No. 4
AB No. 4
RAMP A
RAMP B
RAMP C
RAMP D
BREESE RD
SB I.R. 75
NB I.R. 75
℄ I.R. 75
Ex LA
Ex SH
LA R/W
MATCH LINE - STA. 106+00
MATCH LINE - STA. 120+00

CROSS REFERENCES	
ITEM	SHEET
LIGHTING SUBSUMMARY	511-512
LIGHTING LEGEND	515

NOTES:
1. PROVIDE NEW POWER SERVICE MOUNTED ON A NEW POLE. COORDINATE WITH POWER COMPANY FOR EXACT SERVICE LOCATION.
2. SEE STRUCTURE ALL-75-0212 FOR BRIDGE LIGHTING QUANTITIES AND DETAILS

HORIZONTAL SCALE IN FEET
0 25 50 100

CALCULATED MCR
CHECKED MLF

LIGHTING PLAN - I.R. 75 & BREESE ROAD
STA. 106+00 TO STA. 120+00

ALL-75-0.21

523
907

I:\Pd\89029\lighting\sheets\89029LP002.dgn 25-JUN-2013 10:47AM tbolenba

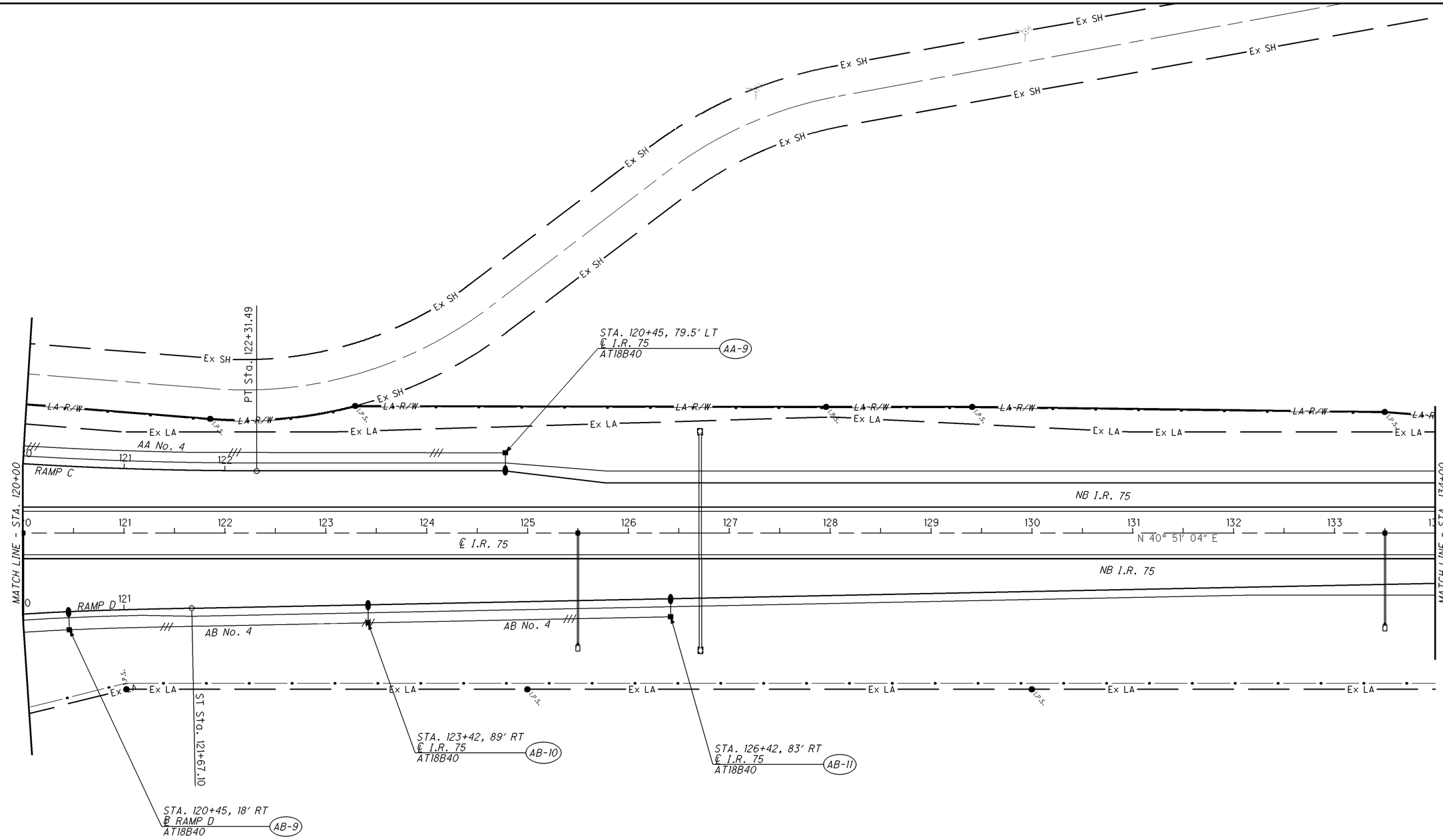

CROSS REFERENCES	
ITEM	SHEET
LIGHTING SUBSUMMARY	512
LIGHTING LEGEND	515

HORIZONTAL SCALE IN FEET
0 25 50 100

CALCULATED MCR
CHECKED MLF

LIGHTING PLAN I.R. 75 & BREESE ROAD
STA. 120+00 TO STA. 134+00

ALL-75-0.21

524
907

I:\Pd\89029\lighting\sheets\89029LP003.dgn 25-JUN-2013 10:47AM tbolenba

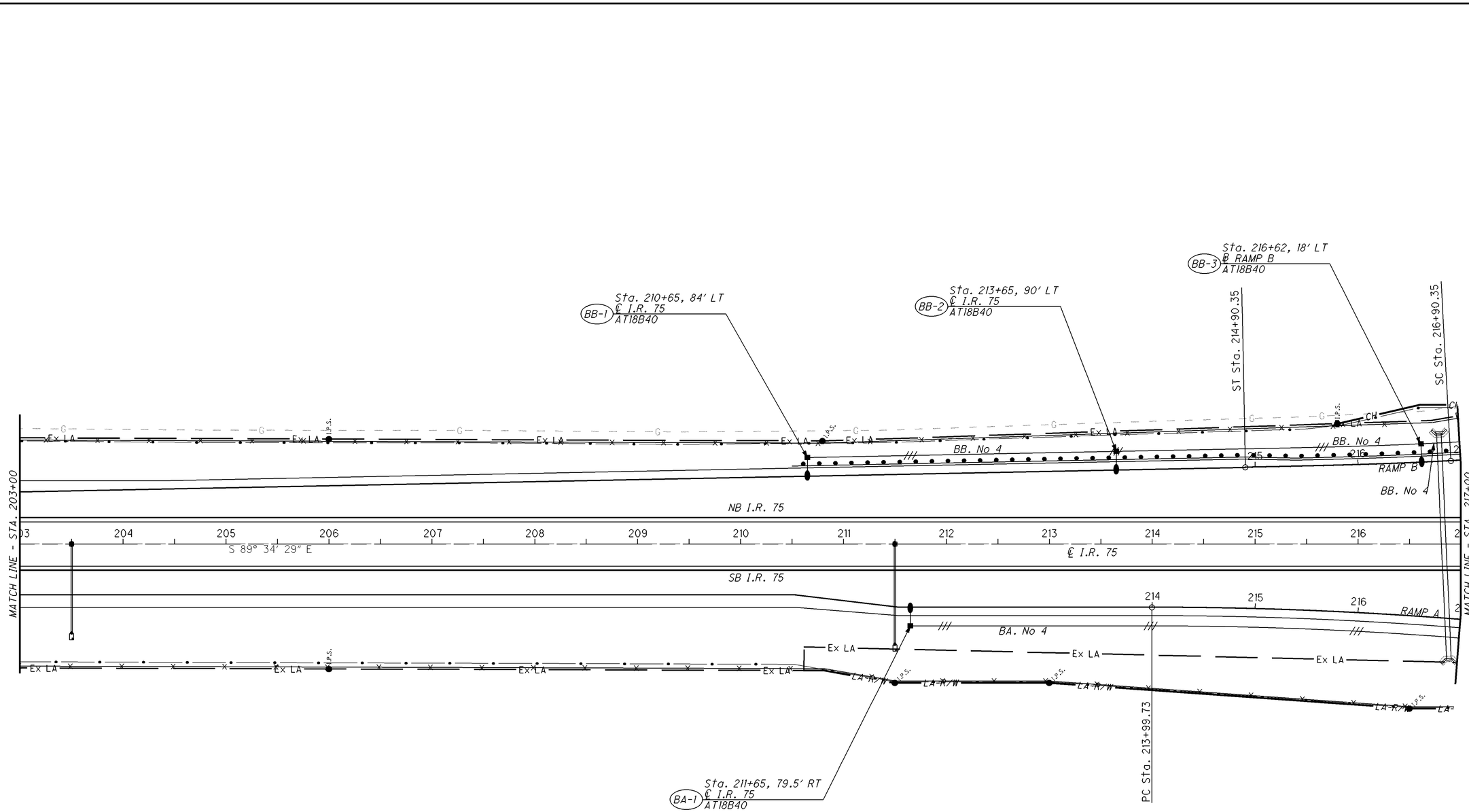

CROSS REFERENCES	
ITEM	SHEET
LIGHTING SUBSUMMARY	512
LIGHTING LEGEND	515

HORIZONTAL SCALE IN FEET
0 25 50 100

CALCULATED MCR
CHECKED MLF

LIGHTING PLAN - I.R. 75 & S.R. 65
STA. 203+00 TO STA. 217+00

ALL-75-0.21

525
907

I:\Pdt\89029\lighting\sheets\89029LP004.dgn 25-JUN-2013 10:47AM tbolenba

CROSS REFERENCES	
ITEM	SHEET
LIGHTING SUBSUMMARY	512-513
LIGHTING LEGEND	515

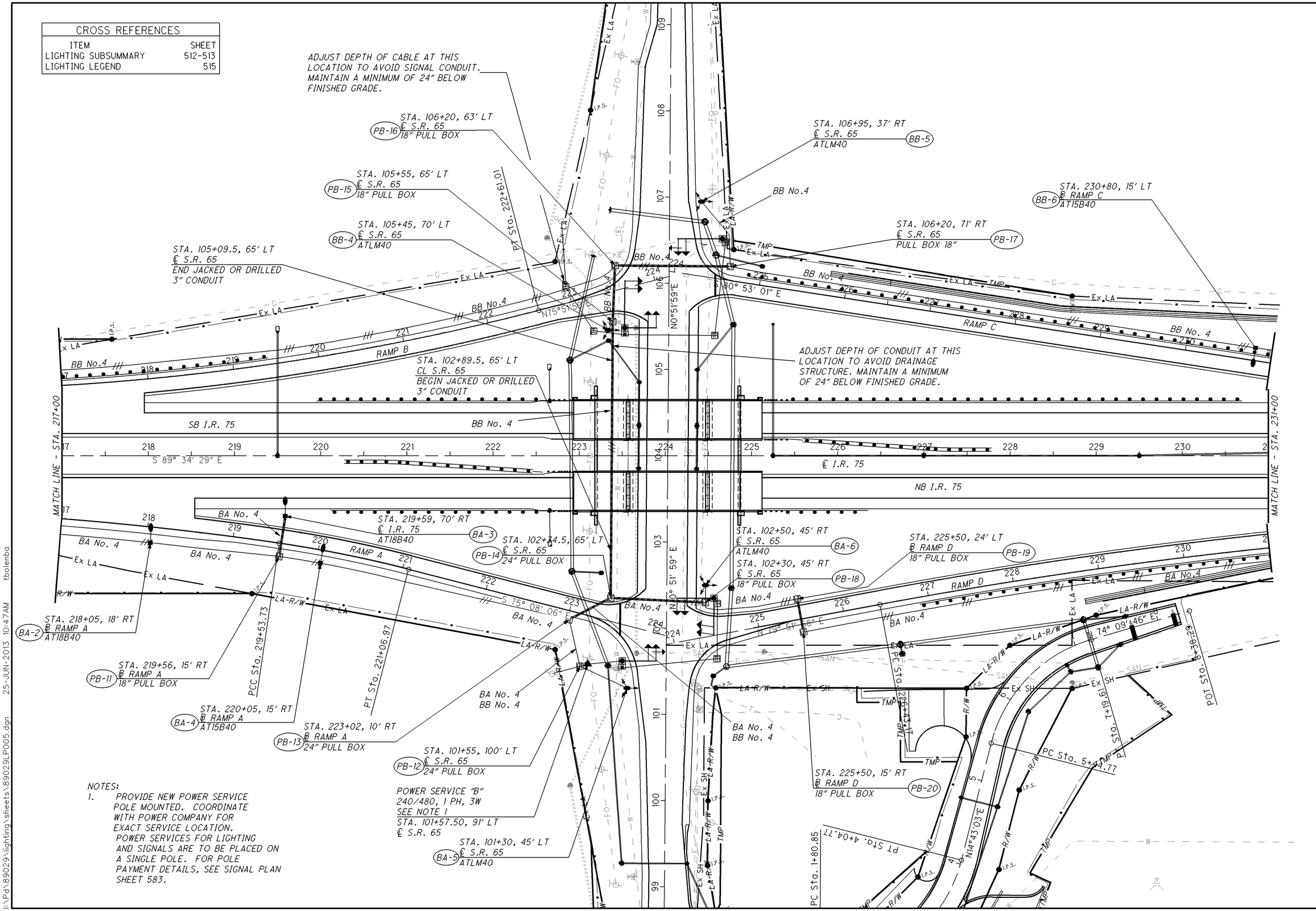

NOTES:

1. PROVIDE NEW POWER SERVICE POLE MOUNTED. COORDINATE WITH POWER COMPANY FOR EXACT SERVICE LOCATION. POWER SERVICES FOR LIGHTING AND SIGNALS ARE TO BE PLACED ON A SINGLE POLE. FOR POLE PAYMENT DETAILS, SEE SIGNAL PLAN SHEET 583.

HORIZONTAL SCALE IN FEET 0 25 50 100

CALCULATED MCR
CHECKED MLF

LIGHTING PLAN - I.R. 75 & S.R. 65
STA. 217+00 TO STA. 231+00

ALL-75-0.21

I:\Pd\89029\lighting\sheets\89029LP005.dgn 25-JUN-2013 10:47AM tbolenba

I:\Pd\89029\lighting\sheets\89029LP006.dgn 25-JUN-2013 10:47AM tbolenba

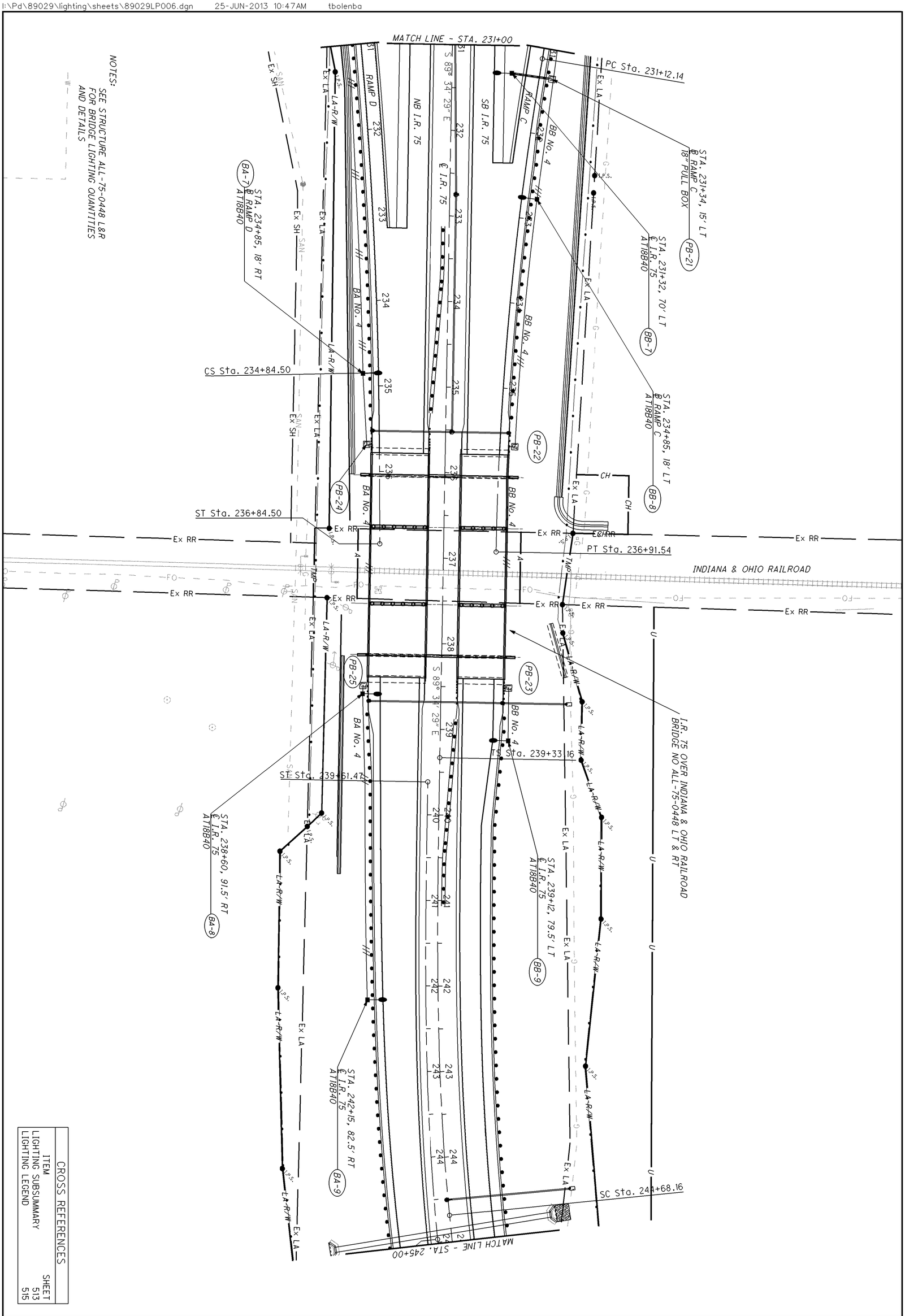

CROSS REFERENCES

ITEM	SHEET
LIGHTING SUBSUMMARY	513
LIGHTING LEGEND	515

527 / 907	ALL-75-0.21	LIGHTING PLAN - I.R. 75 & S.R 65 STA. 231+00 TO STA. 245+00	CALCULATED MCR CHECKED MLF	0 25 50 100 HORIZONTAL SCALE IN FEET

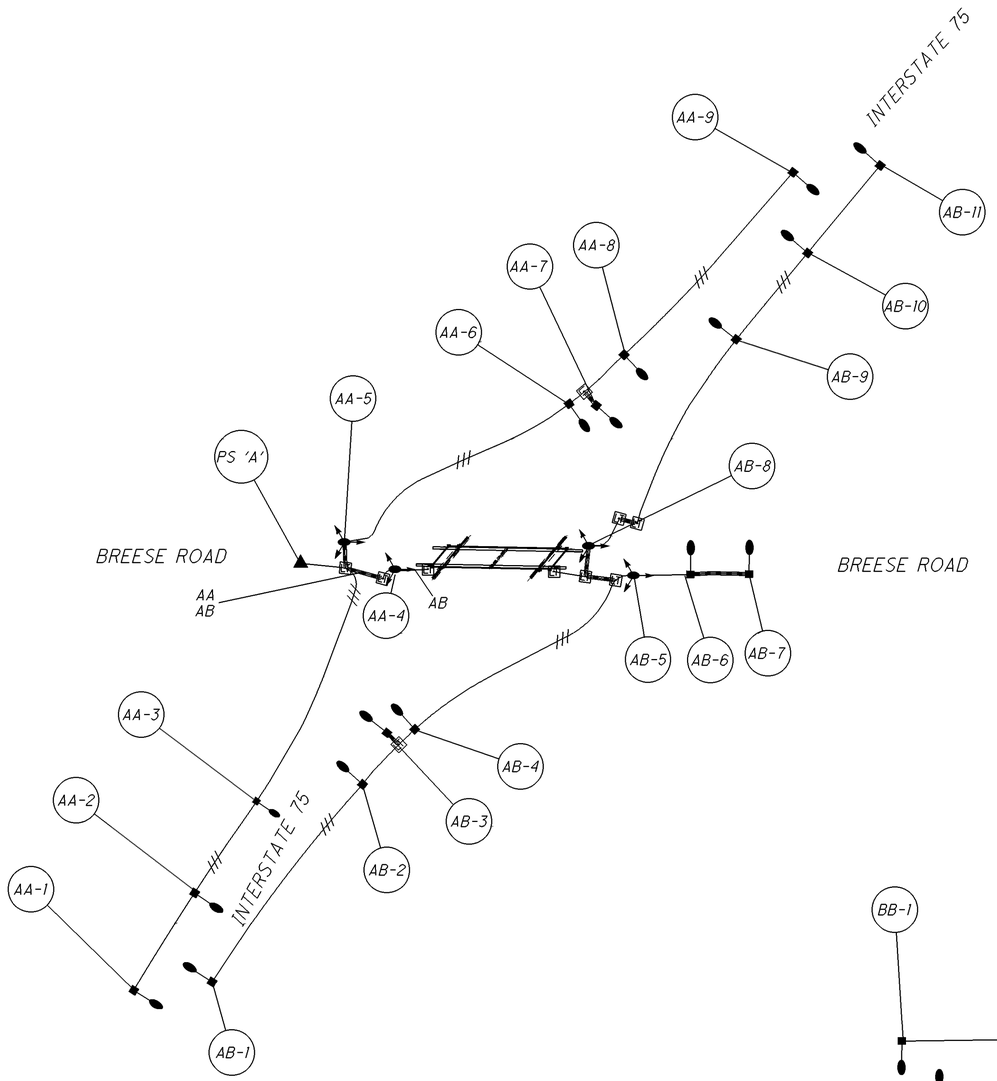

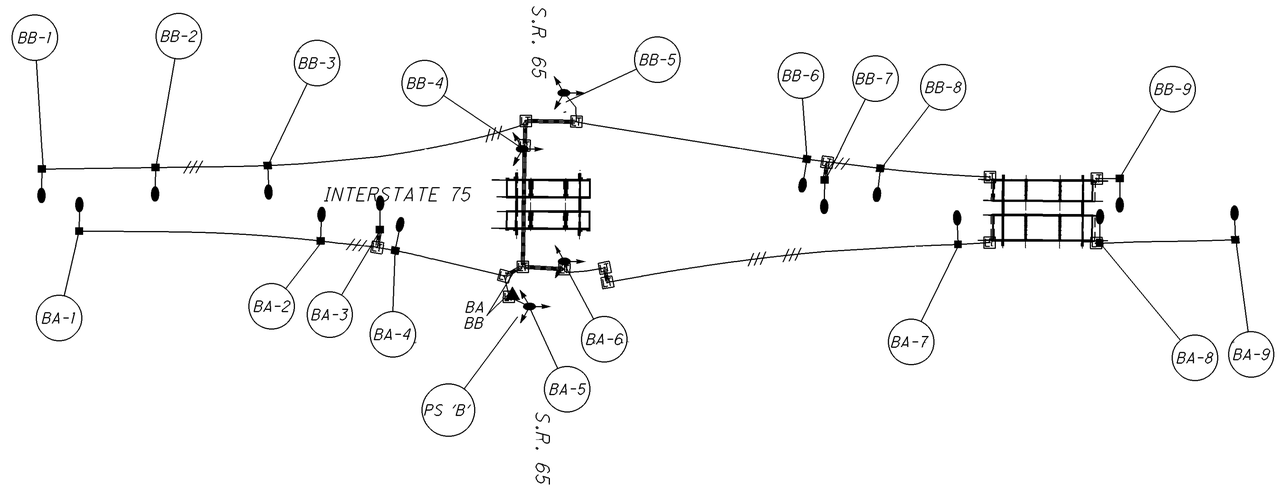

CONTROL CENTER DATA

CONTROL CENTER	LINE VOLTS	CONNECTED LOAD (KVA)	SERVICE ENTRANCE CONDUCTOR SIZE - AWG	ENCOLSURE RATING (AMPS)	CIRCUIT NAME	CIRCUIT LOAD (AMPS)	CIRCUIT FUSE SIZE (AMPS)	CIRCUIT CABLE SIZE AWG	MAINTAINING AGENCY
PS 'A'	240/480V 1 PHASE 3 WIRE	5.18	2	60	A	4.86	30	4	ODOT
					B	5.94	30	4	ODOT
PS 'B'	240/480V 1 PHASE 3 WIRE	5.74	2	60	A	5.98	30	4	ODOT
					B	5.98	30	4	ODOT

NOTE: FOR ADDITIONAL CONTROL CENTER DETAILS, SEE STANDARD DRAWINGS

HORIZONTAL SCALE IN FEET
0 100 200 400

CALCULATED MCR
CHECKED MLF

LIGHTING CIRCUIT DIAGRAMS

ALL-75-0.21

528
907

I:\Pd\89029\lighting\sheets\89029LC001.dgn 25-JUN-2013 10:47AM tbolenba

FENCE LEGEND:
E.A.P.A. - END ANCHOR POST ASSEMBLY
I.A.P.A. - INTERMEDIATE ANCHOR POST ASSEMBLY
C.A.P.A. - CORNER ANCHOR POST ASSEMBLY
L.P. - STEEL LINE POST SET IN CONCRETE OR WOODEN POST
A.C. - ABUTMENT CONNECTION

SIGN LEGEND

- NEW
- EXISTING, TO REMAIN
- EXISTING, TO BE REMOVED AND REERECTED
- EXISTING, TO BE REMOVED

PAVEMENT MARKING LEGEND - ITEM 644

WW-	4" WHITE EDGE LINE	SL-	24" WHITE STOP LINE
YY-	4" YELLOW EDGE LINE	XL-	12" CROSSWALK LINE
WL-	6" WHITE EDGE LINE	CL-	CHANNELIZING LINE 12"INTERSTATE & RAMPS 8" SIDE ROADS
YL-	6" YELLOW EDGE LINE	WT-	24" WHITE TRANSVERSE LINE
LL-	6" WHITE LANE LINE	YT-	24" YELLOW TRANSVERSE LINE
DL-	4" DOUBLE YELLOW		
LA-	LANE ARROW		
*	6" INTERSTATE & RAMPS 4" SIDEROADS		

RPM's		DELINEATORS	
▭	1-WAY	□	YELLOW
▮	2-WAY	□	WHITE

NOTE: LANE WIDTH IS 12 FT. UNLESS OTHERWISE NOTED.

\$\$ - PRIVATE FENCE TO BE REMOVED

I:\Pdt\89029\traffic\sheets\89029TP001.dgn 25-JUN-2013 10:58AM tbolenba

HORIZONTAL SCALE IN FEET: 0, 25, 50, 100

CALCULATED GLW CHECKED TAB

SIGN, FENCE AND PAVE'T MARKING PLAN STA. 5+00.00 TO STA. 30+00.00

ALL-75-0.21

SIGN LEGEND

- NEW
- EXISTING, TO REMAIN
- EXISTING, TO BE REMOVED AND REERECTED
- EXISTING, TO BE REMOVED

FENCE LEGEND:

E.A.P.A. - END ANCHOR POST ASSEMBLY
I.A.P.A. - INTERMEDIATE ANCHOR POST ASSEMBLY
C.A.P.A. - CORNER ANCHOR POST ASSEMBLY
L.P. - STEEL LINE POST SET IN CONCRETE OR WOODEN POST
A.C. - ABUTMENT CONNECTION

PAVEMENT MARKING LEGEND - ITEM 644

- WW- 4" WHITE EDGE LINE
- YY- 4" YELLOW EDGE LINE
- WL- 6" WHITE EDGE LINE
- YL- 6" YELLOW EDGE LINE
- LL- 6" WHITE LANE LINE
- DL- 4" DOUBLE YELLOW
- LA- LANE ARROW
- SL- 24" WHITE STOP LINE
- XL- 12" CROSSWALK LINE
- CL- CHANNELIZING LINE 12"INTERSTATE & RAMPS 8" SIDE ROADS
- WT- 24" WHITE TRANSVERSE LINE
- YT- 24" YELLOW TRANSVERSE LINE

✳ 6" INTERSTATE & RAMPS
4" SIDEROADS
NOTE: LANE WIDTH IS 12 FT. UNLESS OTHERWISE NOTED.

RPM's: 1-WAY, 2-WAY
DELINEATORS: YELLOW, WHITE

HORIZONTAL SCALE IN FEET: 0, 25, 50, 100

CALCULATED GLW
CHECKED TAB

SIGN, FENCE AND PAVEMENT MARKING PLAN
STA. 30+00.00 TO STA. 55+00.00
ALL-75-0.21

2 / 46

530 / 907

I:\Pd\89029\traffic\sheets\89029TP002.dgn 25-JUN-2013 10:58AM tbolenba

FENCE LEGEND:
E.A.P.A. - END ANCHOR POST ASSEMBLY
I.A.P.A. - INTERMEDIATE ANCHOR POST ASSEMBLY
C.A.P.A. - CORNER ANCHOR POST ASSEMBLY
L.P. - STEEL LINE POST SET IN CONCRETE OR WOODEN POST
A.C. - ABUTMENT CONNECTION

$$ - PRIVATE FENCE TO BE REMOVED

SIGN LEGEND
- NEW
- EXISTING, TO REMAIN
- EXISTING, TO BE REMOVED AND REERECTED
- EXISTING, TO BE REMOVED

PAVEMENT MARKING LEGEND - ITEM 644

WW-	4" WHITE EDGE LINE	SL-	24" WHITE STOP LINE
YY-	4" YELLOW EDGE LINE	XL-	12" CROSSWALK LINE
WL-	6" WHITE EDGE LINE	CL-	CHANNELIZING LINE 12"INTERSTATE & RAMPS 8" SIDE ROADS
YL-	6" YELLOW EDGE LINE		
LL-	6" WHITE LANE LINE	WT-	24" WHITE TRANSVERSE LINE
DL-	4" DOUBLE YELLOW	YT-	24" YELLOW TRANSVERSE LINE
LA-	LANE ARROW		
*	6" INTERSTATE & RAMPS 4" SIDEROADS	RPM's: 1-WAY, 2-WAY	DELINEATORS: YELLOW, WHITE

NOTE: LANE WIDTH IS 12 FT. UNLESS OTHERWISE NOTED.

MATCH LINE STA. 55+00
MATCH LINE STA. 67+50
MATCH LINE STA. 80+00
℄ R/W & CONST. I-75
Ex LA
LA-R/W
I.P.S.
R-15
R-14
R-16
R-17
14
15
16
17
LL-1250
WL-1250
YL-1250
I.A.P.A. Sta 59+02 123.00' LT
I.A.P.A. Sta 63+00 108.00' LT
I.A.P.A. Sta 59+00 115.00' RT
I.A.P.A. Sta 57+27.9 128.00' RT
I.A.P.A. Sta 61+49 108.00' RT
I.A.P.A. Sta 64+00 108.00' RT
I.A.P.A. Sta 72+50 109.35' RT
I.A.P.A. Sta 69+00 103.00' RT
I.A.P.A. Sta 72+00 103.00' RT
I.A.P.A. Sta 75+00 108.00' RT
I.A.P.A. Sta 76+50 118.00' RT
I.A.P.A. Sta 79+00 97.7' RT
C.A.P.A. Sta 66+23.67 182.3' LT
C.A.P.A. Sta 66+38.5 113.3' LT
L.P. Sta 66+84.7 108.00' RT
TYPE 47 FENCE, APP
Ex CH
NEXT RIGHT
Apollo Career Center
EXIT 120
LEVEL 2
E3-H1 15' X 7' STA. 55+88
Cridersville Wapakoneta Cincinnati 2 9 119
Cridersville Wapakoneta Dayton 2 9 65
LEVEL 2
E7-H1-192 16' X 7' STA. 64+00
PREEMPT LOOP
M3-3-36 SOUTH INTERSTATE 75
M1-1-36-2 STA. 74+00
Breese Rd. ½ MILE
Fort Shawnee ½ MILE
EXIT 120
E1-2 14'x6' STA. 76+00 LEVEL 1
E1-H5P-96 8' X 2.5'

N
HORIZONTAL SCALE IN FEET 0 25 50 100
CALCULATED GLW CHECKED TAB

SIGN, FENCE AND PAVEMENT MARKING PLAN
STA. 55+00.00 TO STA. 80+00.00
ALL-75+0.21

3 / 46
531 / 907

I:\Pd\89029\traffic\sheets\89029TP003.dgn 25-JUN-2013 10:58AM tbolenba

FENCE LEGEND:

E.A.P.A. - END ANCHOR POST ASSEMBLY
I.A.P.A. - INTERMEDIATE ANCHOR POST ASSEMBLY
C.A.P.A. - CORNER ANCHOR POST ASSEMBLY
L.P. - STEEL LINE POST SET IN CONCRETE OR WOODEN POST
A.C. - ABUTMENT CONNECTION

SIGN LEGEND

- NEW
- EXISTING, TO REMAIN
- EXISTING, TO BE REMOVED AND REERECTED
- EXISTING, TO BE REMOVED

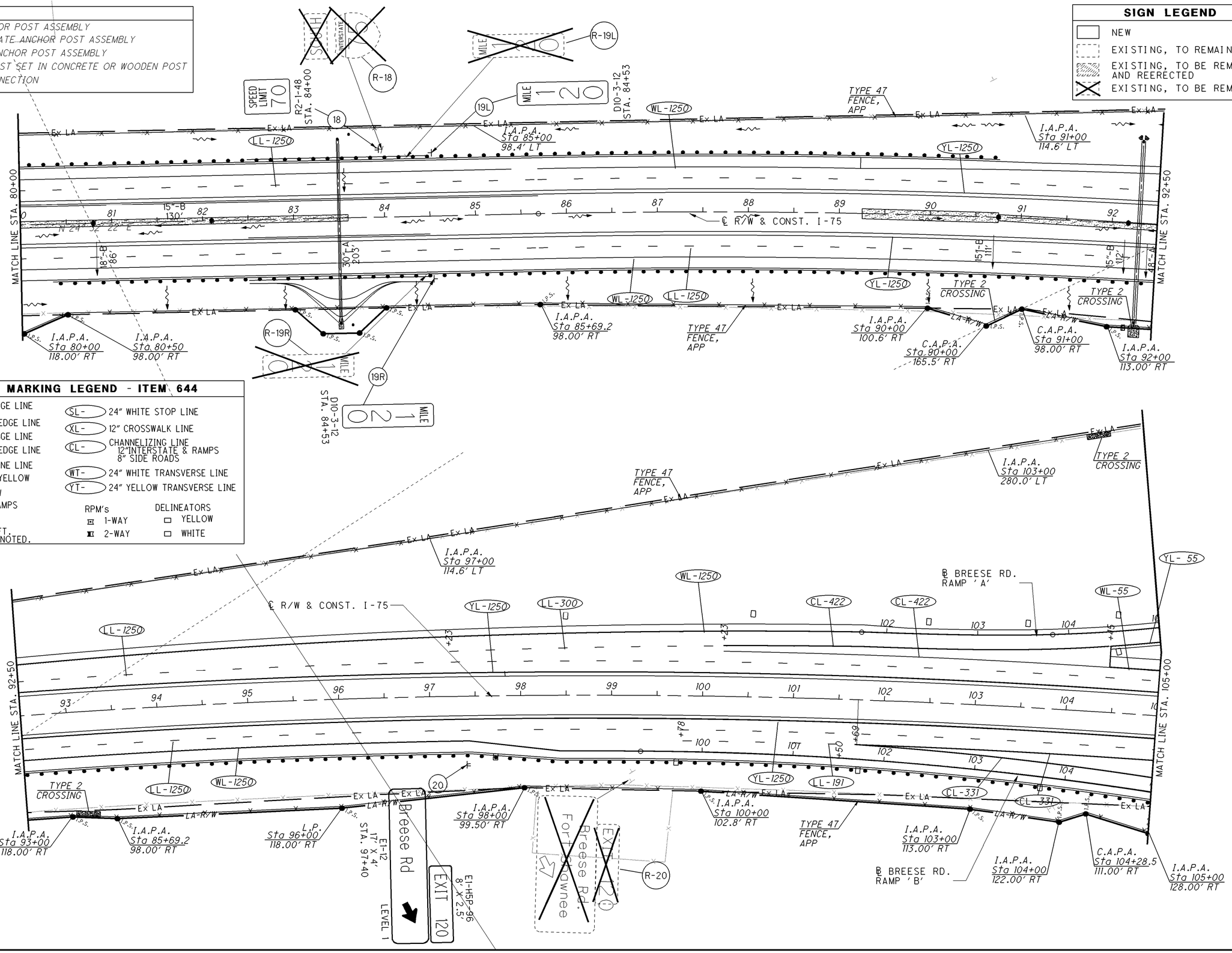

PAVEMENT MARKING LEGEND - ITEM 644

WW- 4" WHITE EDGE LINE	SL- 24" WHITE STOP LINE
YY- 4" YELLOW EDGE LINE	XL- 12" CROSSWALK LINE
WL- 6" WHITE EDGE LINE	CL- CHANNELIZING LINE 12" INTERSTATE & RAMPS 8" SIDE ROADS
YL- 6" YELLOW EDGE LINE	WT- 24" WHITE TRANSVERSE LINE
LL- 6" WHITE LANE LINE	YT- 24" YELLOW TRANSVERSE LINE
DL- 4" DOUBLE YELLOW	
LA- LANE ARROW	
* 6" INTERSTATE & RAMPS 4" SIDEROADS	

RPM's: 1-WAY, 2-WAY

DELINEATORS: YELLOW, WHITE

NOTE: LANE WIDTH IS 12 FT. UNLESS OTHERWISE NOTED.

HORIZONTAL SCALE IN FEET 0 25 50 100

CALCULATED GLW
CHECKED TAB

SIGN, FENCE AND PAVEMENT MARKING PLAN
STA. 80+00.00 TO STA. 105+00.00

ALL-75-0.21

I:\Pd\89029\traffic\sheets\89029TP004.dgn 25-JUN-2013 10:58AM tbolenba

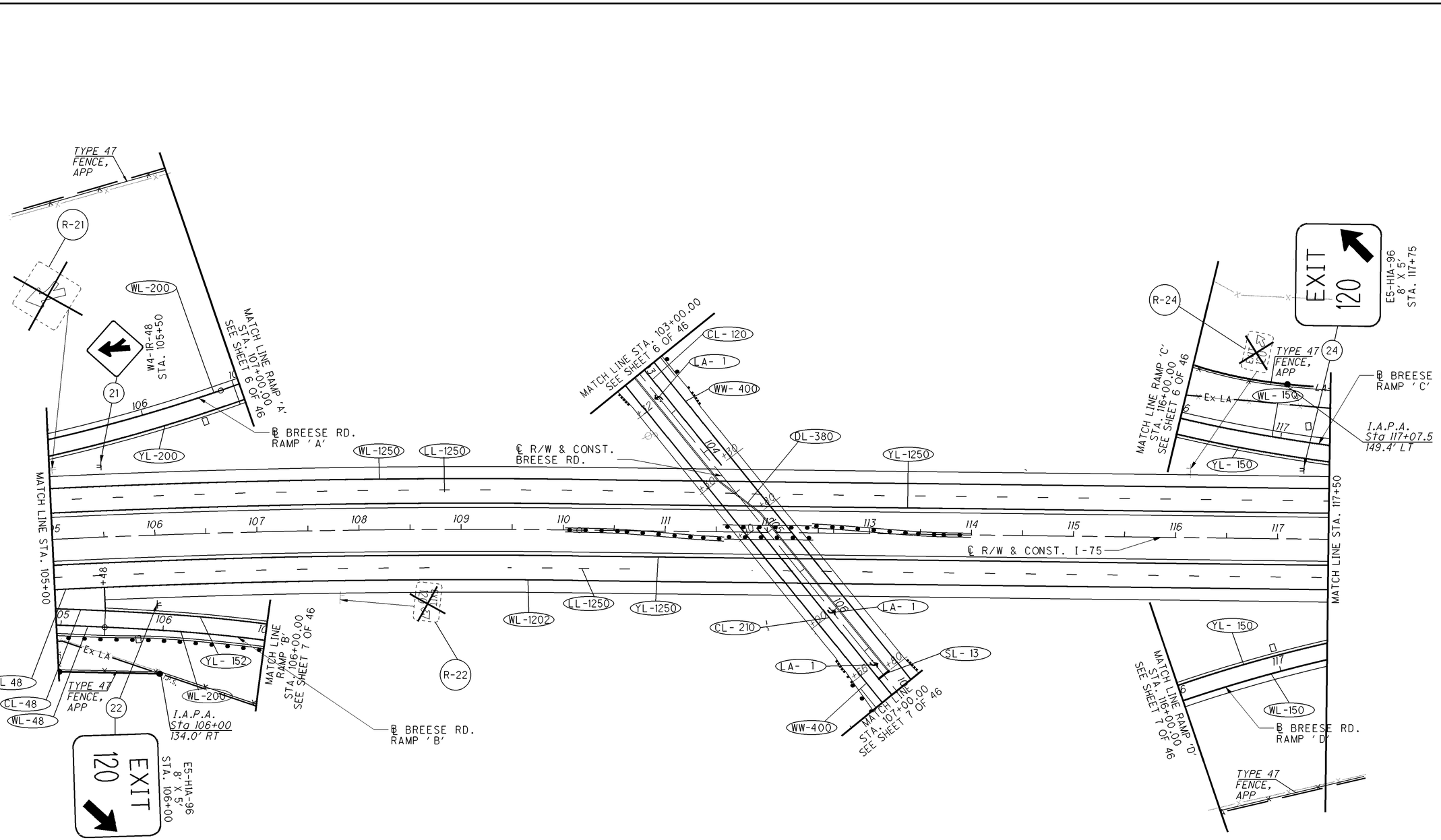

FENCE LEGEND:
E.A.P.A. - END ANCHOR POST ASSEMBLY
I.A.P.A. - INTERMEDIATE ANCHOR POST ASSEMBLY
C.A.P.A. - CORNER ANCHOR POST ASSEMBLY
L.P. - STEEL LINE POST SET IN CONCRETE OR WOODEN POST
A.C. - ABUTMENT CONNECTION

PAVEMENT MARKING LEGEND - ITEM 644

WW-	4" WHITE EDGE LINE	SL-	24" WHITE STOP LINE
YY-	4" YELLOW EDGE LINE	XL-	12" CROSSWALK LINE
WL-	6" WHITE EDGE LINE	CL-	CHANNELIZING LINE 12"INTERSTATE & RAMPS 8" SIDE ROADS
YL-	6" YELLOW EDGE LINE	WT-	24" WHITE TRANSVERSE LINE
LL-	6" WHITE LANE LINE	YT-	24" YELLOW TRANSVERSE LINE
DL-	4" DOUBLE YELLOW		
LA-	LANE ARROW		

✳ 6" INTERSTATE & RAMPS 4" SIDEROADS

NOTE: LANE WIDTH IS 12 FT. UNLESS OTHERWISE NOTED.

RPM's: 1-WAY, 2-WAY — DELINEATORS: YELLOW, WHITE

SIGN LEGEND

- NEW
- EXISTING, TO REMAIN
- EXISTING, TO BE REMOVED AND REERECTED
- EXISTING, TO BE REMOVED

HORIZONTAL SCALE IN FEET: 0, 25, 50, 100

CALCULATED GLW — CHECKED TAB

SIGN, FENCE AND PAVEMENT MARKING PLAN STA. 105+00.00 TO STA. 117+50.00

ALL-75-0.21

5 / 46

533 / 907

I:\Pd\89029\traffic\sheets\89029TP005.dgn 25-JUN-2013 10:58AM tbolenbo

PAVEMENT MARKING LEGEND - ITEM 644

WW-	4" WHITE EDGE LINE	SL-	24" WHITE STOP LINE
YY-	4" YELLOW EDGE LINE	XL-	12" CROSSWALK LINE
WL-	6" WHITE EDGE LINE	CL-	CHANNELIZING LINE 12"INTERSTATE & RAMPS 8" SIDE ROADS
YL-	6" YELLOW EDGE LINE	WT-	24" WHITE TRANSVERSE LINE
LL-	6" WHITE LANE LINE	YT-	24" YELLOW TRANSVERSE LINE
DL-	4" DOUBLE YELLOW	RR-	RAILROAD SYMBOL
LA-	LANE ARROW		
*	6" INTERSTATE & RAMPS 4" SIDEROADS		

NOTE: LANE WIDTH IS 12 FT. UNLESS OTHERWISE NOTED.

RPM's: 1-WAY, 2-WAY

DELINEATORS: YELLOW, WHITE

HORIZONTAL SCALE IN FEET: 0, 25, 50, 100

CALCULATED GLW | CHECKED TAB

PAVEMENT MARKING PLAN
SIGN, FENCE AND PAVEMENT MARKING WORK TO STA. 103+00.00
BREESE RD. BEGIN WORK

ALL-75-0.21

6 / 46

534 / 907

SIGN LEGEND

- NEW
- EXISTING, TO REMAIN
- EXISTING, TO BE REMOVED AND REERECTED
- EXISTING, TO BE REMOVED

FENCE LEGEND:

- E.A.P.A. - END ANCHOR POST ASSEMBLY
- I.A.P.A. - INTERMEDIATE ANCHOR POST ASSEMBLY
- C.A.P.A. - CORNER ANCHOR POST ASSEMBLY
- L.P. - STEEL LINE POST SET IN CONCRETE OR WOODEN POST
- A.C. - ABUTMENT CONNECTION

I:\Pd\89029\traffic\sheets\89029TP101.dgn 25-JUN-2013 10:58AM tbolenba

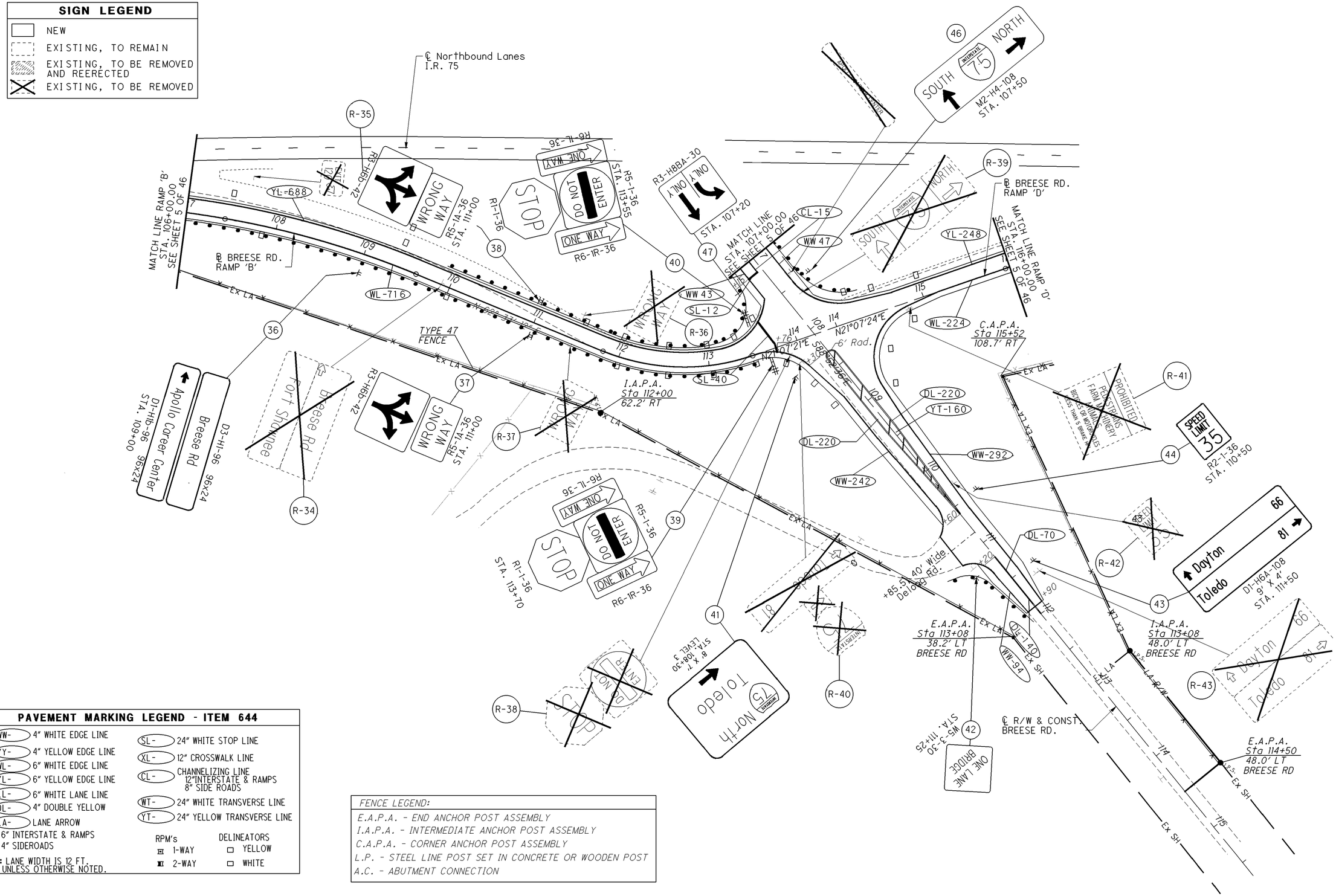

PAVEMENT MARKING LEGEND - ITEM 644

WW-	4" WHITE EDGE LINE	SL-	24" WHITE STOP LINE
YY-	4" YELLOW EDGE LINE	XL-	12" CROSSWALK LINE
WL-	6" WHITE EDGE LINE	CL-	CHANNELIZING LINE 12"INTERSTATE & RAMPS 8" SIDE ROADS
YL-	6" YELLOW EDGE LINE	WT-	24" WHITE TRANSVERSE LINE
LL-	6" WHITE LANE LINE	YT-	24" YELLOW TRANSVERSE LINE
DL-	4" DOUBLE YELLOW		
LA-	LANE ARROW		

* 6" INTERSTATE & RAMPS 4" SIDEROADS

NOTE: LANE WIDTH IS 12 FT. UNLESS OTHERWISE NOTED.

RPM's: 1-WAY, 2-WAY

DELINEATORS: YELLOW, WHITE

FENCE LEGEND:

E.A.P.A. - END ANCHOR POST ASSEMBLY
I.A.P.A. - INTERMEDIATE ANCHOR POST ASSEMBLY
C.A.P.A. - CORNER ANCHOR POST ASSEMBLY
L.P. - STEEL LINE POST SET IN CONCRETE OR WOODEN POST
A.C. - ABUTMENT CONNECTION

HORIZONTAL SCALE IN FEET 0 25 50 100

CALCULATED GLW
CHECKED TAB

SIGN AND PAVEMENT MARKING PLAN
BREESE RD. STA. 109+50.00 TO END WORK

ALL-75-0.21

i:\Pd\89029\traffic\sheets\89029TP102.dgn 25-JUN-2013 10:58AM tbolenba

FENCE LEGEND:

E.A.P.A. - END ANCHOR POST ASSEMBLY
I.A.P.A. - INTERMEDIATE ANCHOR POST ASSEMBLY
C.A.P.A. - CORNER ANCHOR POST ASSEMBLY
L.P. - STEEL LINE POST SET IN CONCRETE OR WOODEN POST
A.C. - ABUTMENT CONNECTION

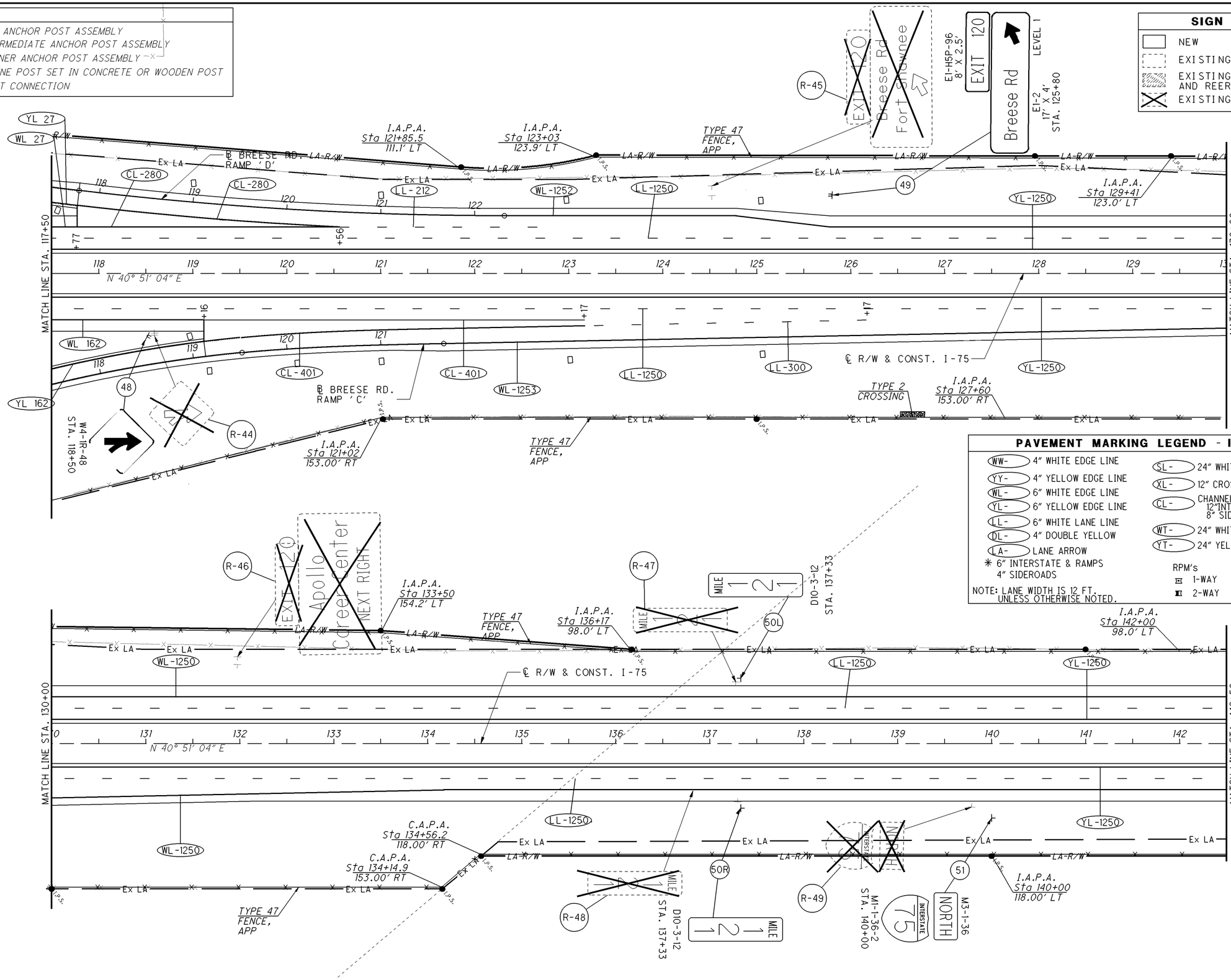

PAVEMENT MARKING LEGEND - ITEM 644

WW-	4" WHITE EDGE LINE	SL-	24" WHITE STOP LINE
YY-	4" YELLOW EDGE LINE	XL-	12" CROSSWALK LINE
WL-	6" WHITE EDGE LINE	CL-	CHANNELIZING LINE 12"INTERSTATE & RAMPS 8" SIDE ROADS
YL-	6" YELLOW EDGE LINE	WT-	24" WHITE TRANSVERSE LINE
LL-	6" WHITE LANE LINE	YT-	24" YELLOW TRANSVERSE LINE
DL-	4" DOUBLE YELLOW		
LA-	LANE ARROW		
*	6" INTERSTATE & RAMPS 4" SIDEROADS		

RPM's: 1-WAY, 2-WAY
DELINEATORS: YELLOW, WHITE

NOTE: LANE WIDTH IS 12 FT. UNLESS OTHERWISE NOTED.

HORIZONTAL SCALE IN FEET 0 25 50 100

CALCULATED GLW
CHECKED TAB

SIGN, FENCE AND PAVEMENT MARKING PLAN
STA. 117+50.00 TO STA. 142+50.00

ALL-75-0.21

I:\Pd\89029\traffic\sheets\89029TP006.dgn 25-JUN-2013 10:58AM tbolenba

FENCE LEGEND:

E.A.P.A. - END ANCHOR POST ASSEMBLY
I.A.P.A. - INTERMEDIATE ANCHOR POST ASSEMBLY
C.A.P.A. - CORNER ANCHOR POST ASSEMBLY
L.P. - STEEL LINE POST SET IN CONCRETE OR WOODEN POST
A.C. - ABUTMENT CONNECTION

PAVEMENT MARKING LEGEND - ITEM 644

WW- 4" WHITE EDGE LINE	SL- 24" WHITE STOP LINE
YY- 4" YELLOW EDGE LINE	XL- 12" CROSSWALK LINE
WL- 6" WHITE EDGE LINE	CL- CHANNELIZING LINE 12"INTERSTATE & RAMPS 8" SIDE ROADS
YL- 6" YELLOW EDGE LINE	WT- 24" WHITE TRANSVERSE LINE
LL- 6" WHITE LANE LINE	YT- 24" YELLOW TRANSVERSE LINE
DL- 4" DOUBLE YELLOW	
LA- LANE ARROW	
* 6" INTERSTATE & RAMPS 4" SIDEROADS	

RPM's: 1-WAY, 2-WAY
DELINEATORS: YELLOW, WHITE

NOTE: LANE WIDTH IS 12 FT. UNLESS OTHERWISE NOTED.

SIGN LEGEND

- NEW
- EXISTING, TO REMAIN
- EXISTING, TO BE REMOVED AND REERECTED
- EXISTING, TO BE REMOVED

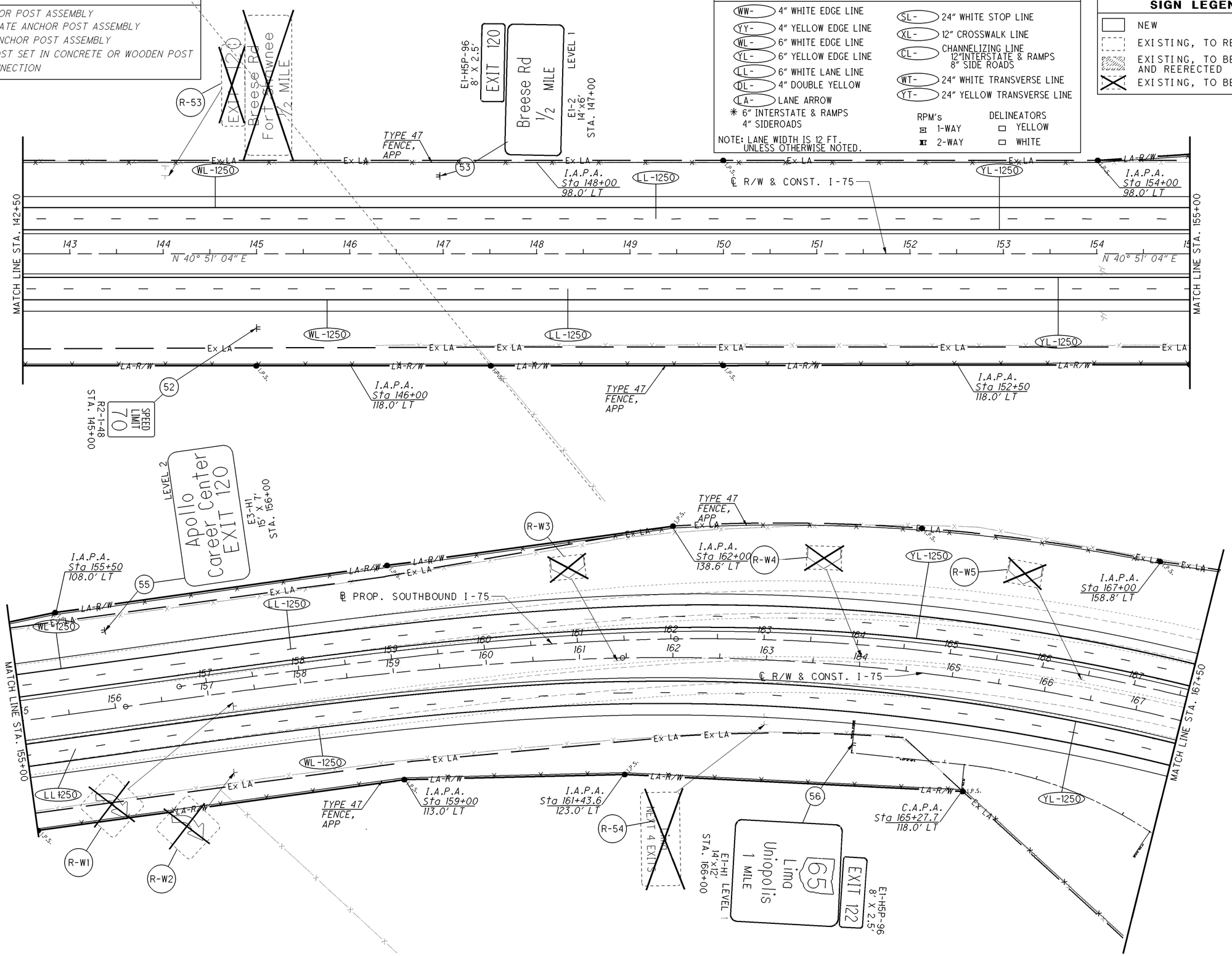

HORIZONTAL SCALE IN FEET: 0, 25, 50, 100

CALCULATED GLW
CHECKED TAB

SIGN, FENCE AND PAVEMENT MARKING PLAN
STA. 142+50.00 TO STA. 167+50.00

ALL-75-0.21

9 / 46

537
907

I:\Pd\89029\traffic\sheets\89029TP007.dgn 25-JUN-2013 10:58AM tbolenbo

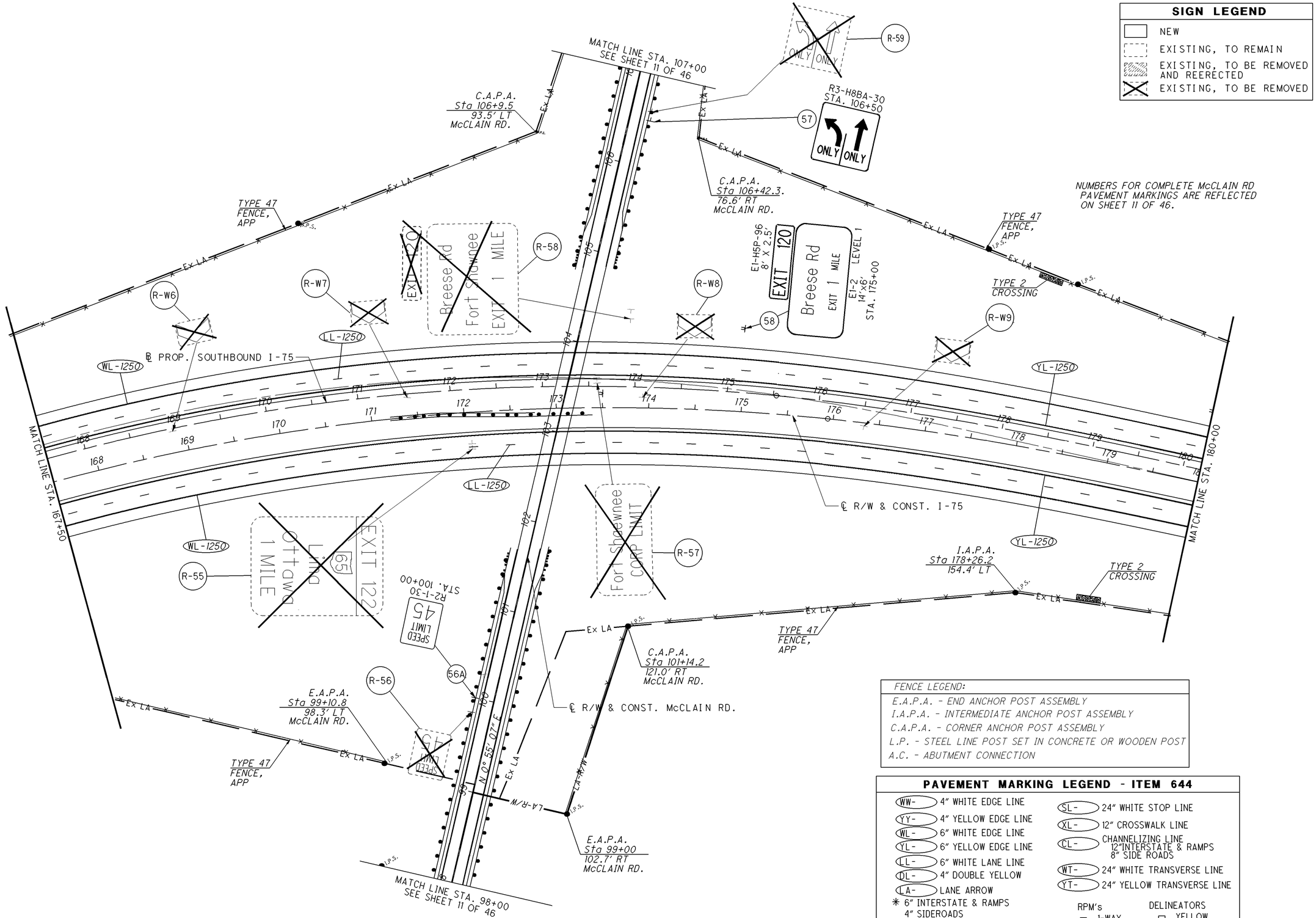

FENCE LEGEND:

E.A.P.A. - END ANCHOR POST ASSEMBLY
I.A.P.A. - INTERMEDIATE ANCHOR POST ASSEMBLY
C.A.P.A. - CORNER ANCHOR POST ASSEMBLY
L.P. - STEEL LINE POST SET IN CONCRETE OR WOODEN POST
A.C. - ABUTMENT CONNECTION

PAVEMENT MARKING LEGEND - ITEM 644

WW-	4" WHITE EDGE LINE	SL-	24" WHITE STOP LINE
YY-	4" YELLOW EDGE LINE	XL-	12" CROSSWALK LINE
WL-	6" WHITE EDGE LINE	CL-	CHANNELIZING LINE 12"INTERSTATE & RAMPS 8" SIDE ROADS
YL-	6" YELLOW EDGE LINE		
LL-	6" WHITE LANE LINE	WT-	24" WHITE TRANSVERSE LINE
DL-	4" DOUBLE YELLOW	YT-	24" YELLOW TRANSVERSE LINE
LA-	LANE ARROW		

✳ 6" INTERSTATE & RAMPS 4" SIDEROADS

RPM's: 1-WAY, 2-WAY

DELINEATORS: YELLOW, WHITE

NOTE: LANE WIDTH IS 12 FT. UNLESS OTHERWISE NOTED.

HORIZONTAL SCALE IN FEET: 0, 25, 50, 100

CALCULATED GLW CHECKED TAB

SIGNS, FENC AND PAVEMENT MARKING PLAN STA. 167+50.00 TO STA. 180+00.00

ALL-75-0.21

10 / 46

538 / 907

I:\Pd\89029\traffic\sheets\89029TP008.dgn 25-JUN-2013 10:58AM tbolenba

SIGN LEGEND

- NEW
- EXISTING, TO REMAIN
- EXISTING, TO BE REMOVED AND REERECTED
- EXISTING, TO BE REMOVED

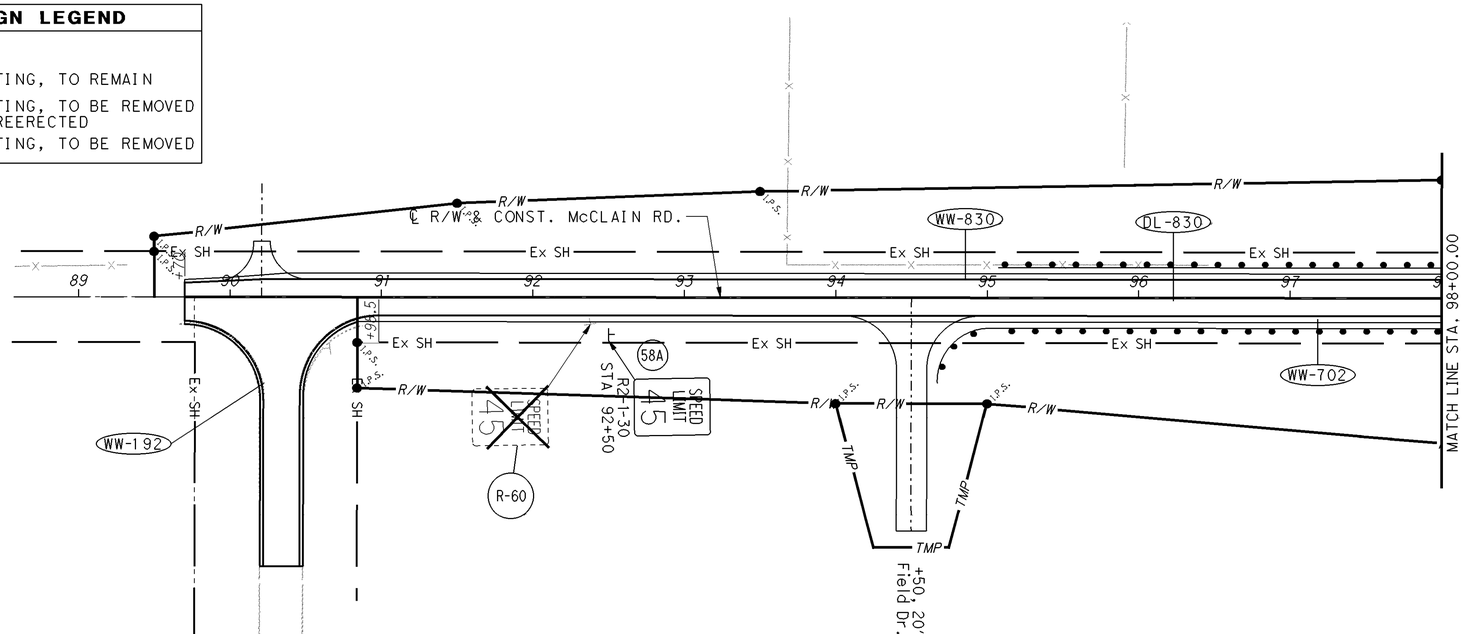

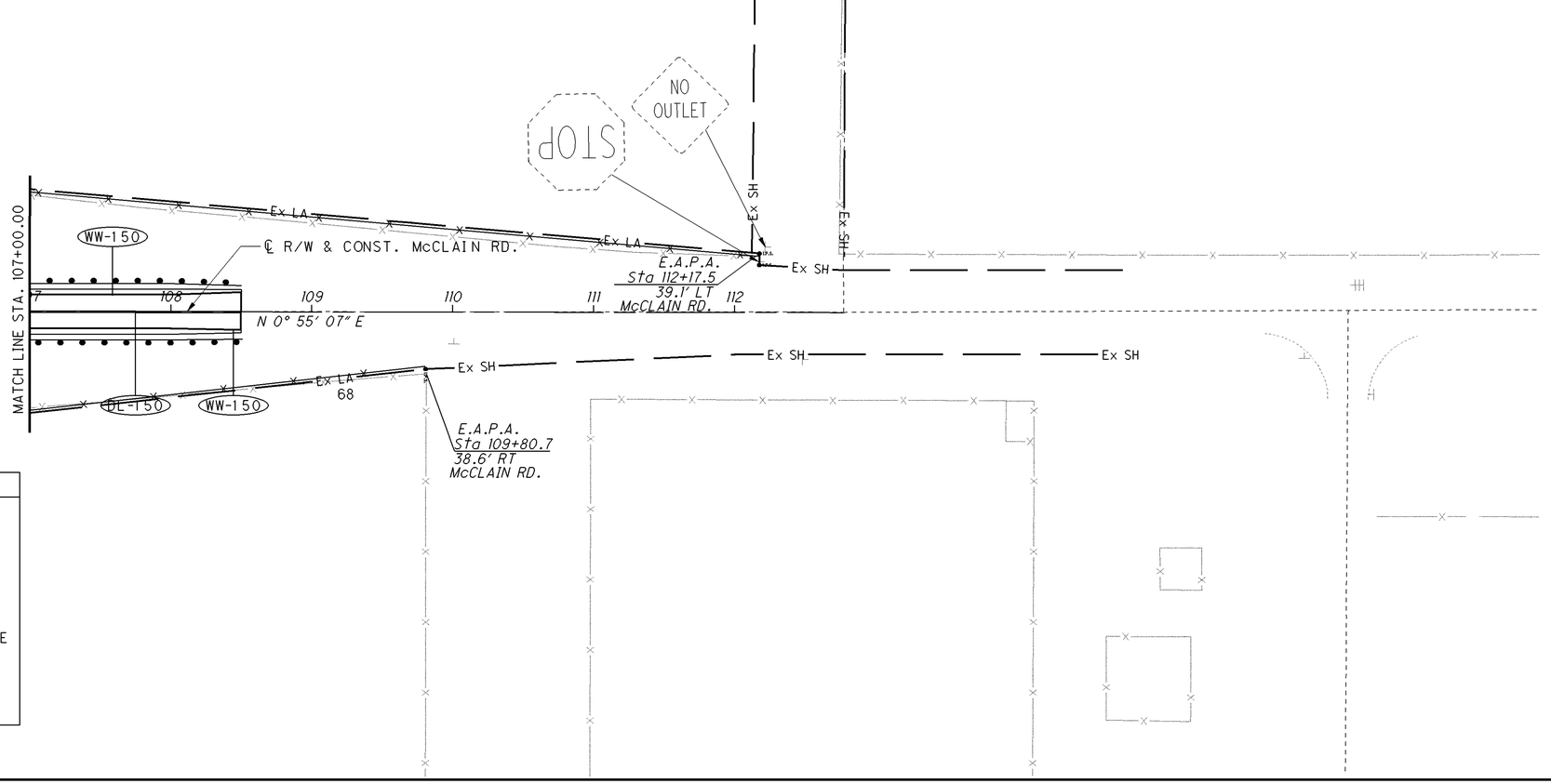

FENCE LEGEND:

E.A.P.A. - END ANCHOR POST ASSEMBLY
I.A.P.A. - INTERMEDIATE ANCHOR POST ASSEMBLY
C.A.P.A. - CORNER ANCHOR POST ASSEMBLY
L.P. - STEEL LINE POST SET IN CONCRETE OR WOODEN POST
A.C. - ABUTMENT CONNECTION

PAVEMENT MARKING LEGEND - ITEM 644

WW-	4" WHITE EDGE LINE
YY-	4" YELLOW EDGE LINE
WL-	6" WHITE EDGE LINE
YL-	6" YELLOW EDGE LINE
LL-	6" WHITE LANE LINE
DL-	4" DOUBLE YELLOW
LA-	LANE ARROW
✳	6" INTERSTATE & RAMPS 4" SIDEROADS
SL-	24" WHITE STOP LINE
XL-	12" CROSSWALK LINE
CL-	CHANNELIZING LINE 12"INTERSTATE & RAMPS 8" SIDE ROADS
WT-	24" WHITE TRANSVERSE LINE
YT-	24" YELLOW TRANSVERSE LINE

NOTE: LANE WIDTH IS 12 FT. UNLESS OTHERWISE NOTED.

RPM's: 1-WAY, 2-WAY
DELINEATORS: YELLOW, WHITE

HORIZONTAL SCALE IN FEET
0 25 50 100

CALCULATED GLW
CHECKED TAB

SIGN, FENCE AND PAVEMENT MARKING PLAN
STA. 5+00.00 TO STA. 30+00.00

ALL-75-0.21

11 / 46

539
907

I:\Pd\89029\traffic\sheets\89029TP200.dgn 25-JUN-2013 10:58AM tbolenba

PAVEMENT MARKING LEGEND - ITEM 644

WW-	4" WHITE EDGE LINE
YY-	4" YELLOW EDGE LINE
WL-	6" WHITE EDGE LINE
YL-	6" YELLOW EDGE LINE
LL-	6" WHITE LANE LINE
DL-	4" DOUBLE YELLOW
LA-	LANE ARROW
✳	6" INTERSTATE & RAMPS 4" SIDEROADS
SL-	24" WHITE STOP LINE
XL-	12" CROSSWALK LINE
CL-	CHANNELIZING LINE 12"INTERSTATE & RAMPS 8" SIDE ROADS
WT-	24" WHITE TRANSVERSE LINE
YT-	24" YELLOW TRANSVERSE LINE

RPM's: 1-WAY, 2-WAY

DELINEATORS: YELLOW, WHITE

NOTE: LANE WIDTH IS 12 FT. UNLESS OTHERWISE NOTED.

FENCE LEGEND:

E.A.P.A. - END ANCHOR POST ASSEMBLY
I.A.P.A. - INTERMEDIATE ANCHOR POST ASSEMBLY
C.A.P.A. - CORNER ANCHOR POST ASSEMBLY
L.P. - STEEL LINE POST SET IN CONCRETE OR WOODEN POST
A.C. - ABUTMENT CONNECTION

SIGN LEGEND

- NEW
- EXISTING, TO REMAIN
- EXISTING, TO BE REMOVED AND REERECTED
- EXISTING, TO BE REMOVED

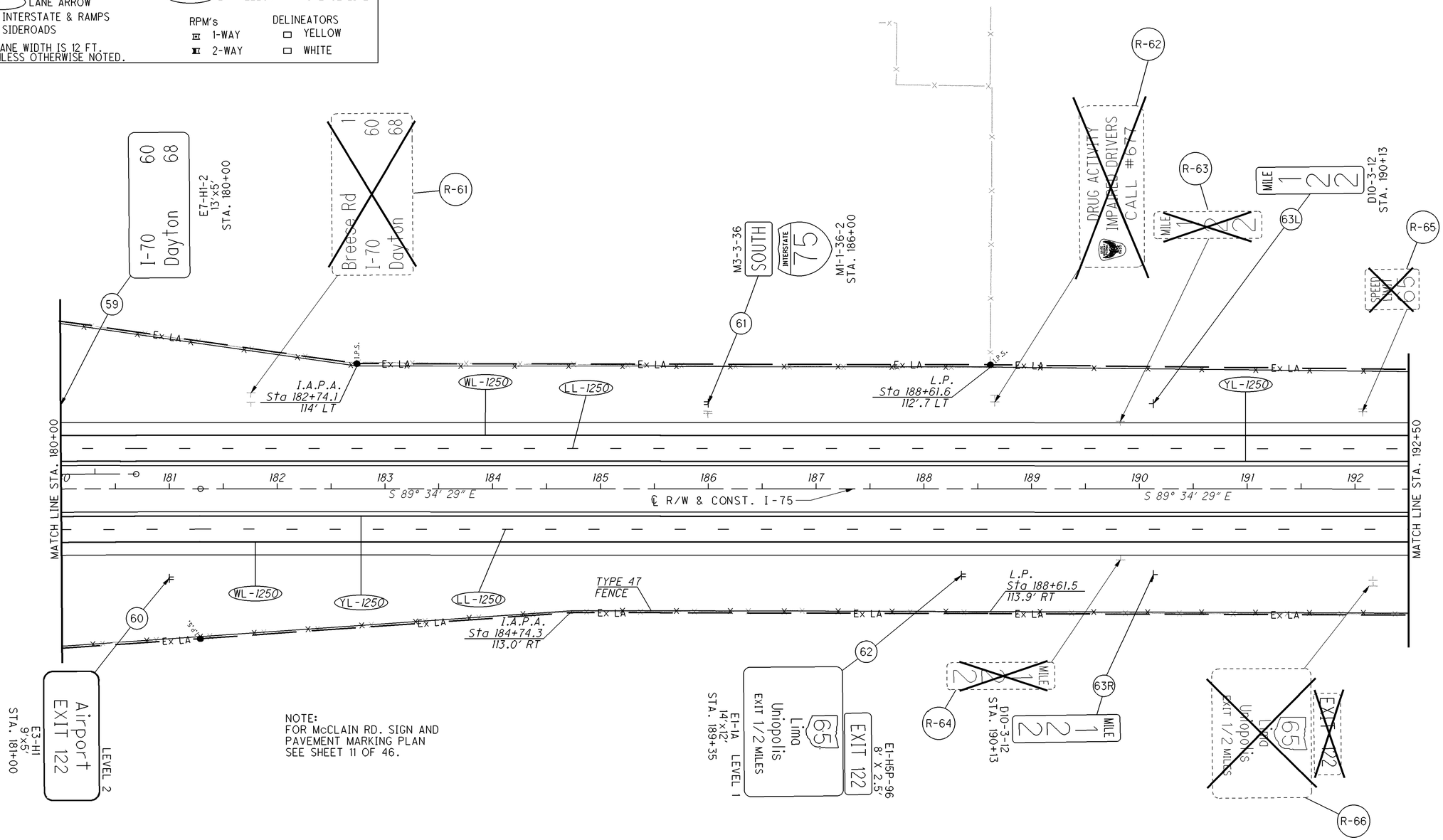

NOTE:
FOR McCLAIN RD. SIGN AND PAVEMENT MARKING PLAN SEE SHEET 11 OF 46.

HORIZONTAL SCALE IN FEET
0 25 50 100

CALCULATED GLW
CHECKED TAB

SIGN, FENCE AND PAVEMENT MARKING PLAN
STA. 180+00.00 TO STA. 192+50.00

ALL-75-0.21

I:\Pd\89029\traffic\sheets\89029TP009.dgn 25-JUN-2013 10:58AM tbolenba

FENCE LEGEND:
E.A.P.A. - END ANCHOR POST ASSEMBLY
I.A.P.A. - INTERMEDIATE ANCHOR POST ASSEMBLY
C.A.P.A. - CORNER ANCHOR POST ASSEMBLY
L.P. - STEEL LINE POST SET IN CONCRETE OR WOODEN POST
A.C. - ABUTMENT CONNECTION

SPEED LIMIT 70
R2-1-48
STA. 195+00
R-67
DRUG ACTIVITY IMPAIRED DRIVERS CALL #677
D12-H22-120
STA. 199+25
12'x4'
64
65
TYPE 47 FENCE, APP
I.A.P.A. Sta 193+00 107.0' LT
WL-1250
I.A.P.A. Sta 198+29 103.9' LT
LL-1250
I.A.P.A. Sta 202+00 103.0' LT
YL-1250
MATCH LINE STA. 192+50
MATCH LINE STA. 205+00
193 194 195 196 197 198 199 200 201 202 203 204
℄ R/W & CONST. I-75
I.A.P.A. Sta 193+00 115.3' RT
I.A.P.A. Sta 195+50 138.0' RT
I.A.P.A. Sta 196+00 138.0' RT
I.A.P.A. Sta 197+50 116.8' RT
I.A.P.A. Sta 204+00 118.8' RT
TYPE 2 CROSSING
T-2
GAS EXIT 122
REMOVED BY OTHERS'
TYPE 47 FENCE, APP
TO BE RELOCATED BY OTHERS
66
R-70
WATCH FOR ICE ON BRIDGES
BRIDGE ICES BEFORE ROAD
W8-13-48
STA. 204+50

PAVEMENT MARKING LEGEND - ITEM 644

WW-	4" WHITE EDGE LINE	SL-	24" WHITE STOP LINE
YY-	4" YELLOW EDGE LINE	XL-	12" CROSSWALK LINE
WL-	6" WHITE EDGE LINE	CL-	CHANNELIZING LINE 12"INTERSTATE & RAMPS 8" SIDE ROADS
YL-	6" YELLOW EDGE LINE	WT-	24" WHITE TRANSVERSE LINE
LL-	6" WHITE LANE LINE	YT-	24" YELLOW TRANSVERSE LINE
DL-	4" DOUBLE YELLOW		
LA-	LANE ARROW		

* 6" INTERSTATE & RAMPS 4" SIDEROADS

NOTE: LANE WIDTH IS 12 FT. UNLESS OTHERWISE NOTED.

RPM's: 1-WAY, 2-WAY
DELINEATORS: YELLOW, WHITE

SIGN LEGEND

- NEW
- EXISTING, TO REMAIN
- EXISTING, TO BE REMOVED AND REERECTED
- EXISTING, TO BE REMOVED

I.A.P.A. Sta 206+00 100.0' LT
TYPE 47 FENCE, APP
I.A.P.A. Sta 210+79.6 98.0' LT
LL-300
YL-1250
CL-410
I.A.P.A. Sta 216+72.5 118.0' LT
CL-410
MATCH LINE STA. 205+00
MATCH LINE STA. 217+50
205 206 207 208 209 210 211 212 213 214 215 216 217
S 89° 34' 29" E
℄ R/W & CONST. I-75
℄ S.R. 65 RAMP 'B'
℄ S.R. 65 RAMP 'A'
+40
+64
+76
67
R-71
WATCH FOR ICE ON BRIDGES
TYPE 47 FENCE, APP
E1-H3 16'x10' STA. 210+54 LEVEL 1
65 Lima Uniopolis
EXIT 122
E1-H5P-96 8' X 2.5'
I.A.P.A. Sta 210+81.5 121.00' RT
I.A.P.A. Sta 211+50 133.00' RT
I.A.P.A. Sta 213+00 133.00' RT
LL-211
CL-175
CL 175
I.A.P.A. Sta 216+50 158.00' RT
R-72
65 Lima Ottawa
EXIT 122

HORIZONTAL SCALE IN FEET
0 25 50 100

CALCULATED GLW
CHECKED TAB

SIGN, FENCE AND PAVEMENT MARKING PLAN
STA. 192+50.00 TO STA. 207+50.00
ALL-75-0.21

13 / 46
541 907

I:\Pd\89029\traffic\sheets\89029TP010.dgn 25-JUN-2013 10:58AM tbolenba

PAVEMENT MARKING LEGEND - ITEM 644

WW- 4" WHITE EDGE LINE	SL- 24" WHITE STOP LINE
YY- 4" YELLOW EDGE LINE	XL- 12" CROSSWALK LINE
WL- 6" WHITE EDGE LINE	CL- CHANNELIZING LINE 12"INTERSTATE & RAMPS 8" SIDE ROADS
YL- 6" YELLOW EDGE LINE	WT- 24" WHITE TRANSVERSE LINE
LL- 6" WHITE LANE LINE	YT- 24" YELLOW TRANSVERSE LINE
DL- 4" DOUBLE YELLOW	
LA- LANE ARROW	
* 6" INTERSTATE & RAMPS 4" SIDEROADS	

RPM's: 1-WAY, 2-WAY

DELINEATORS: YELLOW, WHITE

NOTE: LANE WIDTH IS 12 FT. UNLESS OTHERWISE NOTED.

SIGN LEGEND

- NEW
- EXISTING, TO REMAIN
- EXISTING, TO BE REMOVED AND REERECTED
- EXISTING, TO BE REMOVED

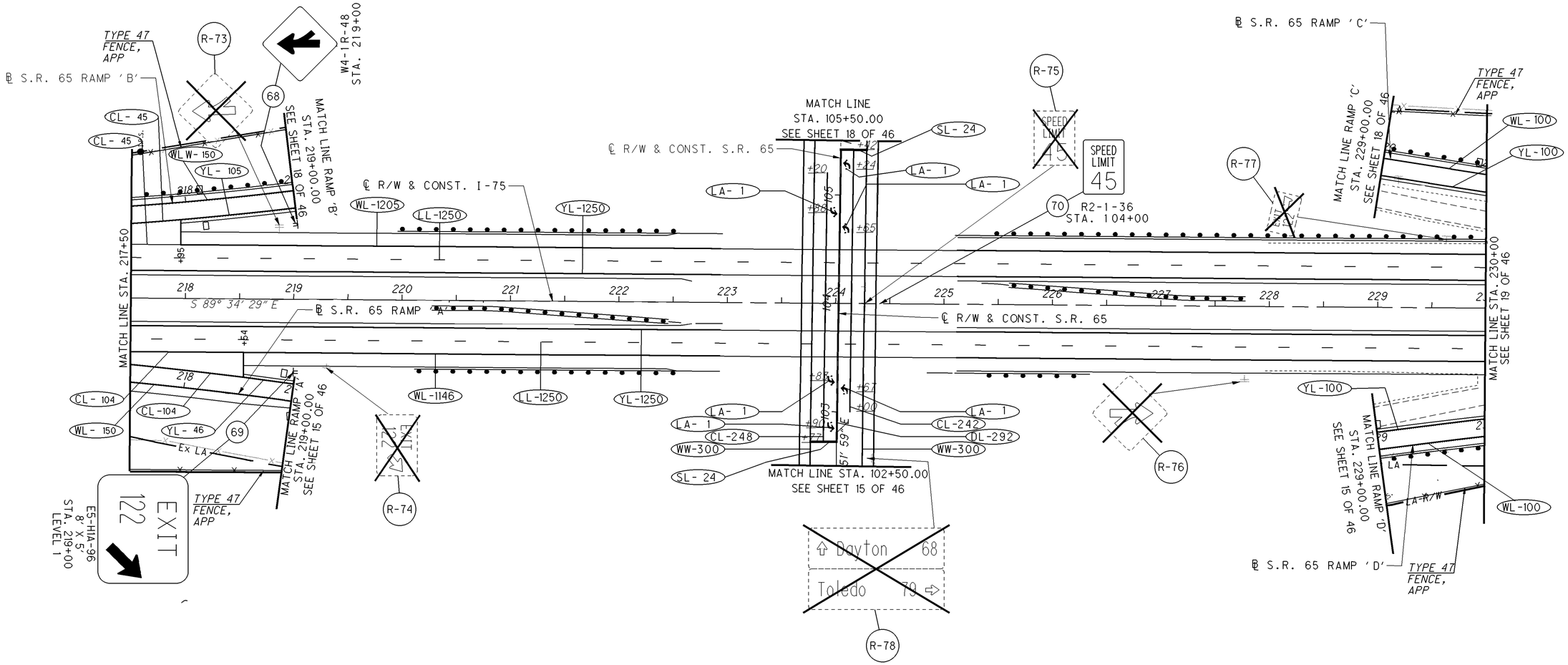

FENCE LEGEND:
E.A.P.A. - END ANCHOR POST ASSEMBLY
I.A.P.A. - INTERMEDIATE ANCHOR POST ASSEMBLY
C.A.P.A. - CORNER ANCHOR POST ASSEMBLY
L.P. - STEEL LINE POST SET IN CONCRETE OR WOODEN POST
A.C. - ABUTMENT CONNECTION

HORIZONTAL SCALE IN FEET: 0, 25, 50, 100

CALCULATED GLW CHECKED TAB

SIGN, FENCE AND PAVEMENT MARKING PLAN
STA. 217+50.00 TO STA. 230+00.00

ALL-75-0.21

14 / 46

542 / 907

I:\Pd\89029\traffic\sheets\89029TP011.dgn 25-JUN-2013 10:58AM tbolenba

SIGN LEGEND

- NEW
- EXISTING, TO REMAIN
- EXISTING, TO BE REMOVED AND REERECTED
- EXISTING, TO BE REMOVED

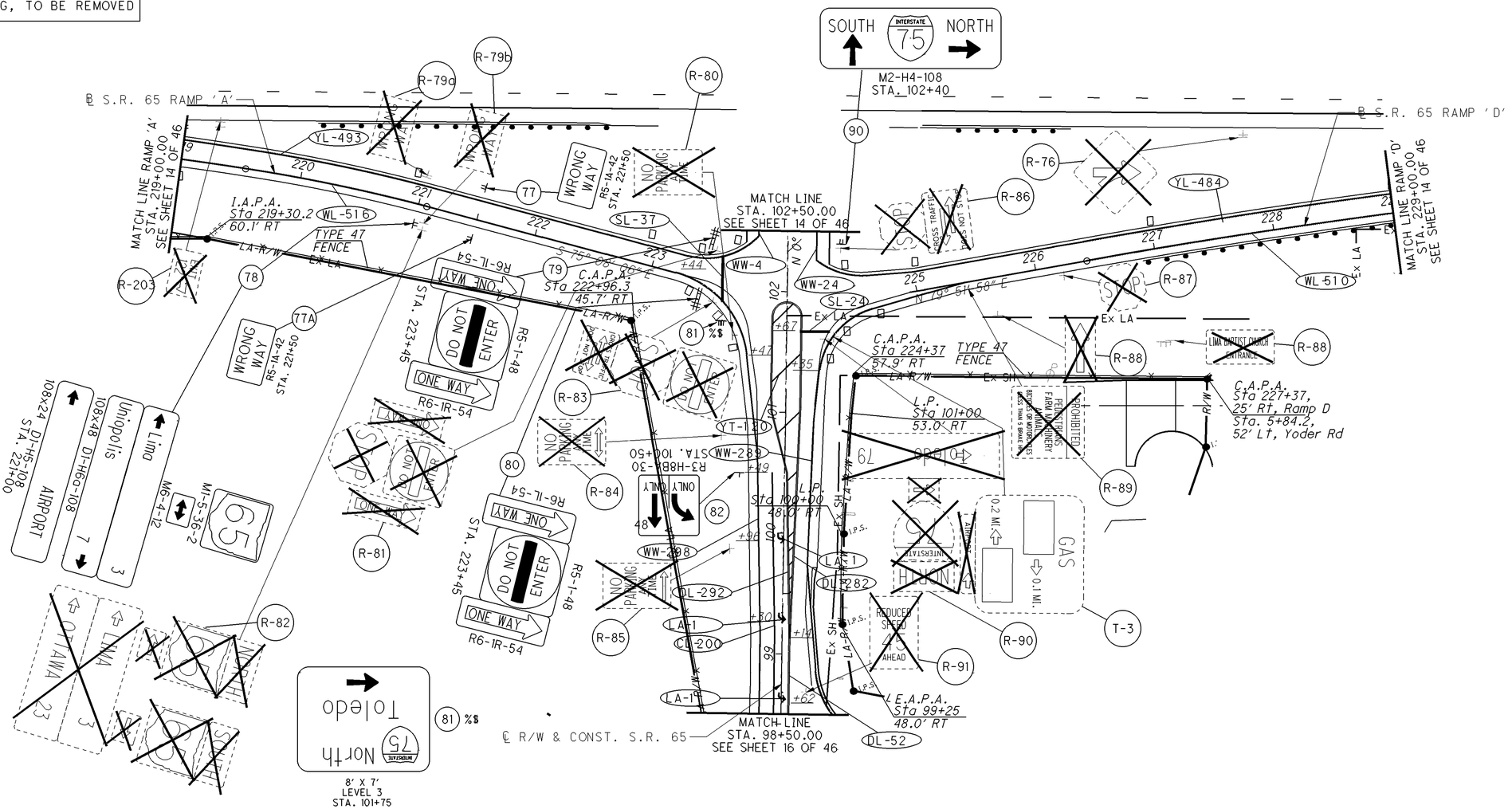

PAVEMENT MARKING LEGEND - ITEM 644

- (WW-) 4" WHITE EDGE LINE
- (YY-) 4" YELLOW EDGE LINE
- (WL-) 6" WHITE EDGE LINE
- (YL-) 6" YELLOW EDGE LINE
- (LL-) 6" WHITE LANE LINE
- (DL-) 4" DOUBLE YELLOW
- (LA-) LANE ARROW
- * 6" INTERSTATE & RAMPS 4" SIDEROADS

NOTE: LANE WIDTH IS 12 FT. UNLESS OTHERWISE NOTED.

- (SL-) 24" WHITE STOP LINE
- (XL-) 12" CROSSWALK LINE
- (CL-) CHANNELIZING LINE 12"INTERSTATE & RAMPS 8" SIDE ROADS
- (WT-) 24" WHITE TRANSVERSE LINE
- (YT-) 24" YELLOW TRANSVERSE LINE

RPM's: 1-WAY, 2-WAY
DELINEATORS: YELLOW, WHITE

FENCE LEGEND:

E.A.P.A. - END ANCHOR POST ASSEMBLY
I.A.P.A. - INTERMEDIATE ANCHOR POST ASSEMBLY
C.A.P.A. - CORNER ANCHOR POST ASSEMBLY
L.P. - STEEL LINE POST SET IN CONCRETE OR WOODEN POST
A.C. - ABUTMENT CONNECTION

HORIZONTAL SCALE IN FEET: 0, 25, 50, 100

CALCULATED GLW CHECKED TAB

SIGN, FENCE AND PAVEMENT MARKING PLAN
S.R. 65 BEGIN WORK TO STA. 99+00.00

ALL-75-0.21

15 / 46

543 907

I:\Pd\89029\traffic\sheets\89029TP301.dgn 25-JUN-2013 10:58AM tbolenba

SIGN LEGEND

- NEW
- EXISTING, TO REMAIN
- EXISTING, TO BE REMOVED AND REERECTED
- EXISTING, TO BE REMOVED

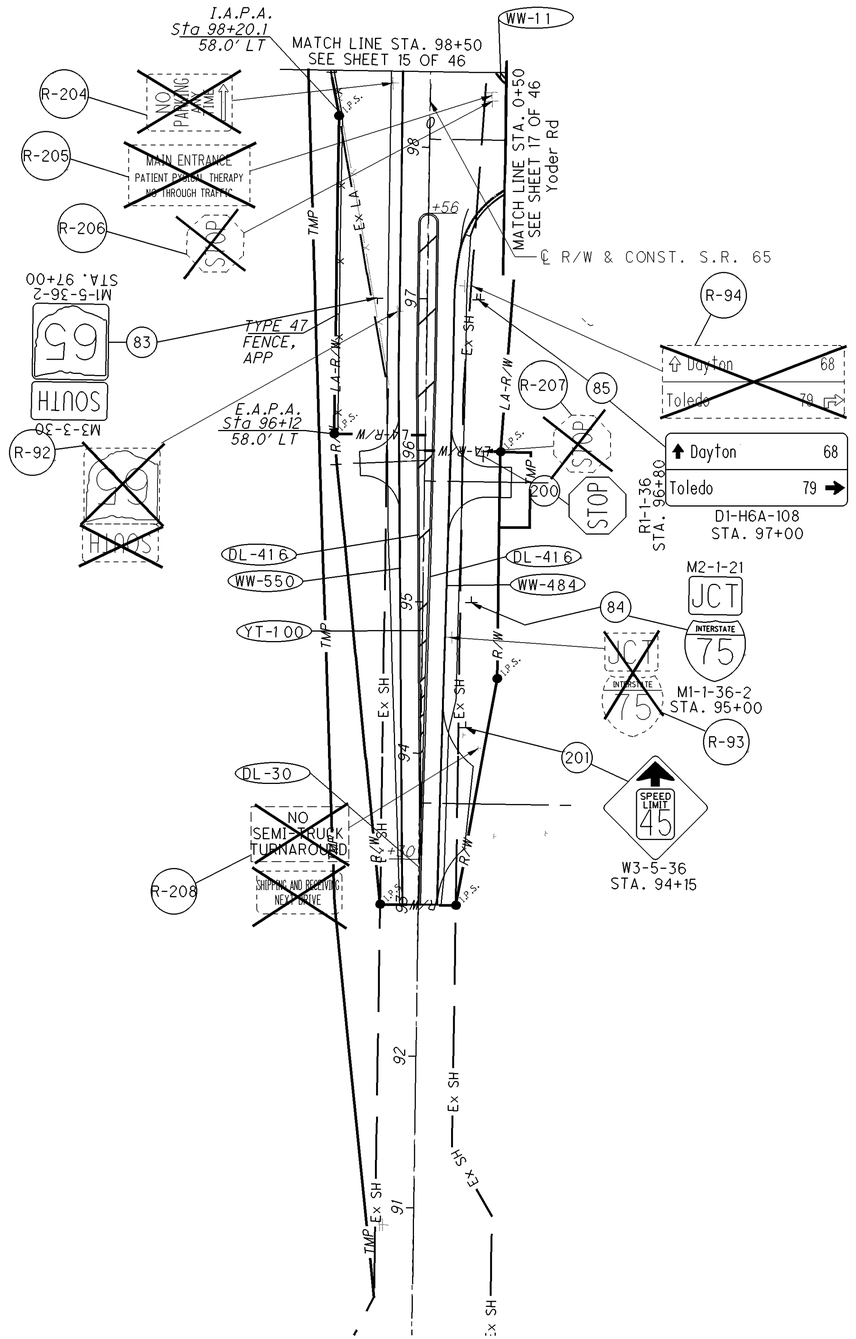

FENCE LEGEND:

E.A.P.A. - END ANCHOR POST ASSEMBLY
I.A.P.A. - INTERMEDIATE ANCHOR POST ASSEMBLY
C.A.P.A. - CORNER ANCHOR POST ASSEMBLY
L.P. - STEEL LINE POST SET IN CONCRETE OR WOODEN POST
A.C. - ABUTMENT CONNECTION

PAVEMENT MARKING LEGEND - ITEM 644

WW- 4" WHITE EDGE LINE	SL- 24" WHITE STOP LINE
YY- 4" YELLOW EDGE LINE	XL- 12" CROSSWALK LINE
WL- 6" WHITE EDGE LINE	CL- CHANNELIZING LINE 12"INTERSTATE & RAMPS 8" SIDE ROADS
YL- 6" YELLOW EDGE LINE	WT- 24" WHITE TRANSVERSE LINE
LL- 6" WHITE LANE LINE	YT- 24" YELLOW TRANSVERSE LINE
DL- 4" DOUBLE YELLOW	
LA- LANE ARROW	
✳ 6" INTERSTATE & RAMPS 4" SIDEROADS	

RPM's: 1-WAY, 2-WAY
DELINEATORS: YELLOW, WHITE

NOTE: LANE WIDTH IS 12 FT. UNLESS OTHERWISE NOTED.

HORIZONTAL SCALE IN FEET: 0, 25, 50, 100

CALCULATED GLW
CHECKED TAB

SIGN, FENCE AND PAVEMENT MARKING PLAN
S.R. 65 BEGIN WORK TO STA. 99+00.00

ALL-75-0.21

16 / 46

544
907

I:\Pdv\89029\traffic\sheets\89029TP302.dgn 25-JUN-2013 10:58AM tbolenbo

SIGN LEGEND	
	NEW
	EXISTING, TO REMAIN
	EXISTING, TO BE REMOVED AND REERECTED
	EXISTING, TO BE REMOVED

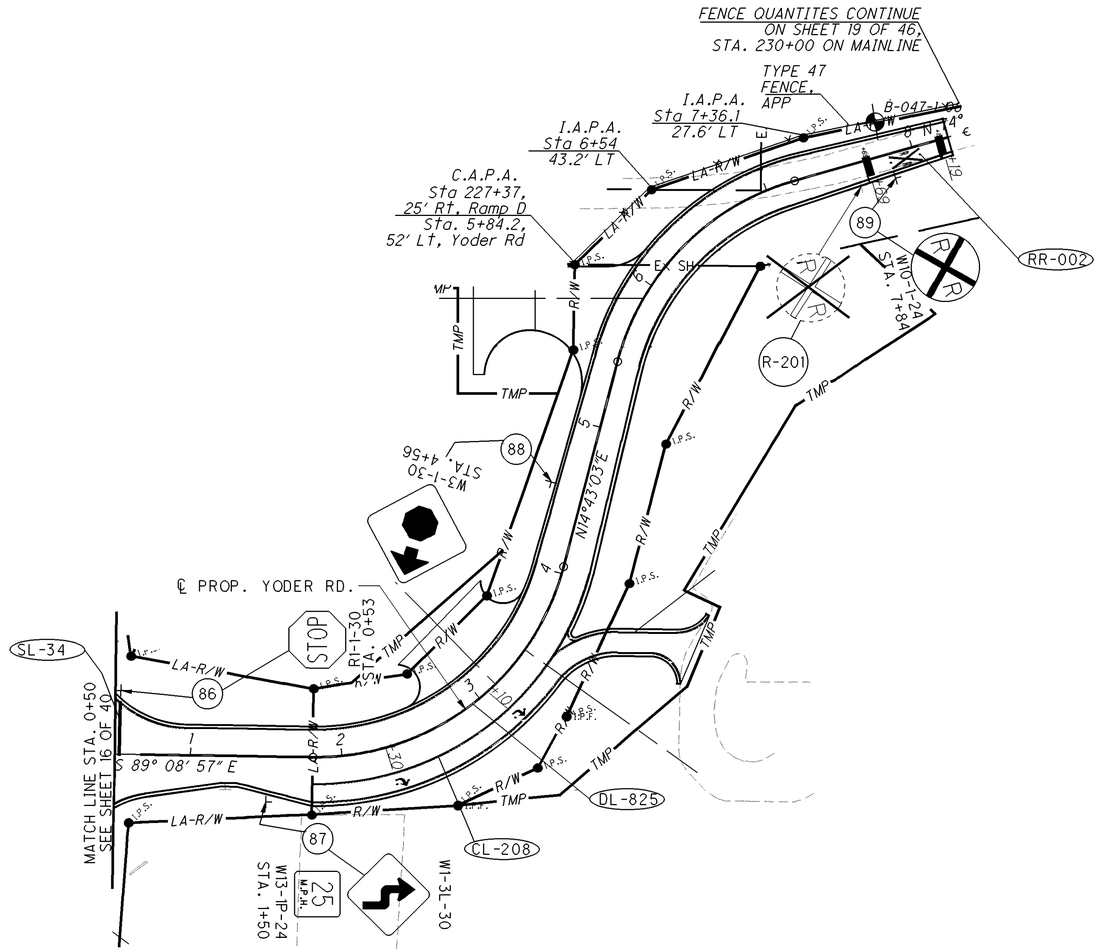

FENCE LEGEND:
E.A.P.A. - END ANCHOR POST ASSEMBLY
I.A.P.A. - INTERMEDIATE ANCHOR POST ASSEMBLY
C.A.P.A. - CORNER ANCHOR POST ASSEMBLY
L.P. - STEEL LINE POST SET IN CONCRETE OR WOODEN POST
A.C. - ABUTMENT CONNECTION

PAVEMENT MARKING LEGEND - ITEM 644			
WW-	4" WHITE EDGE LINE	SL-	24" WHITE STOP LINE
YY-	4" YELLOW EDGE LINE	XL-	12" CROSSWALK LINE
WL-	6" WHITE EDGE LINE	CL-	CHANNELIZING LINE 12"INTERSTATE & RAMPS 8" SIDE ROADS
YL-	6" YELLOW EDGE LINE	WT-	24" WHITE TRANSVERSE LINE
LL-	6" WHITE LANE LINE	YT-	24" YELLOW TRANSVERSE LINE
DL-	4" DOUBLE YELLOW		
LA-	LANE ARROW		
*	6" INTERSTATE & RAMPS 4" SIDEROADS		

RPM's: 1-WAY, 2-WAY

DELINEATORS: YELLOW, WHITE

NOTE: LANE WIDTH IS 12 FT. UNLESS OTHERWISE NOTED.

HORIZONTAL SCALE IN FEET: 0, 25, 50, 100

CALCULATED GLW

CHECKED TAB

SIGN, FENCE AND PAVEMENT MARKING PLAN YODER RD. STA 0+50 TO STA. 8+50

ALL-75-0.21

17 / 46

545 / 907

I:\Pd\89029\traffic\sheets\89029TP303.dgn 25-JUN-2013 10:58AM tbolenba

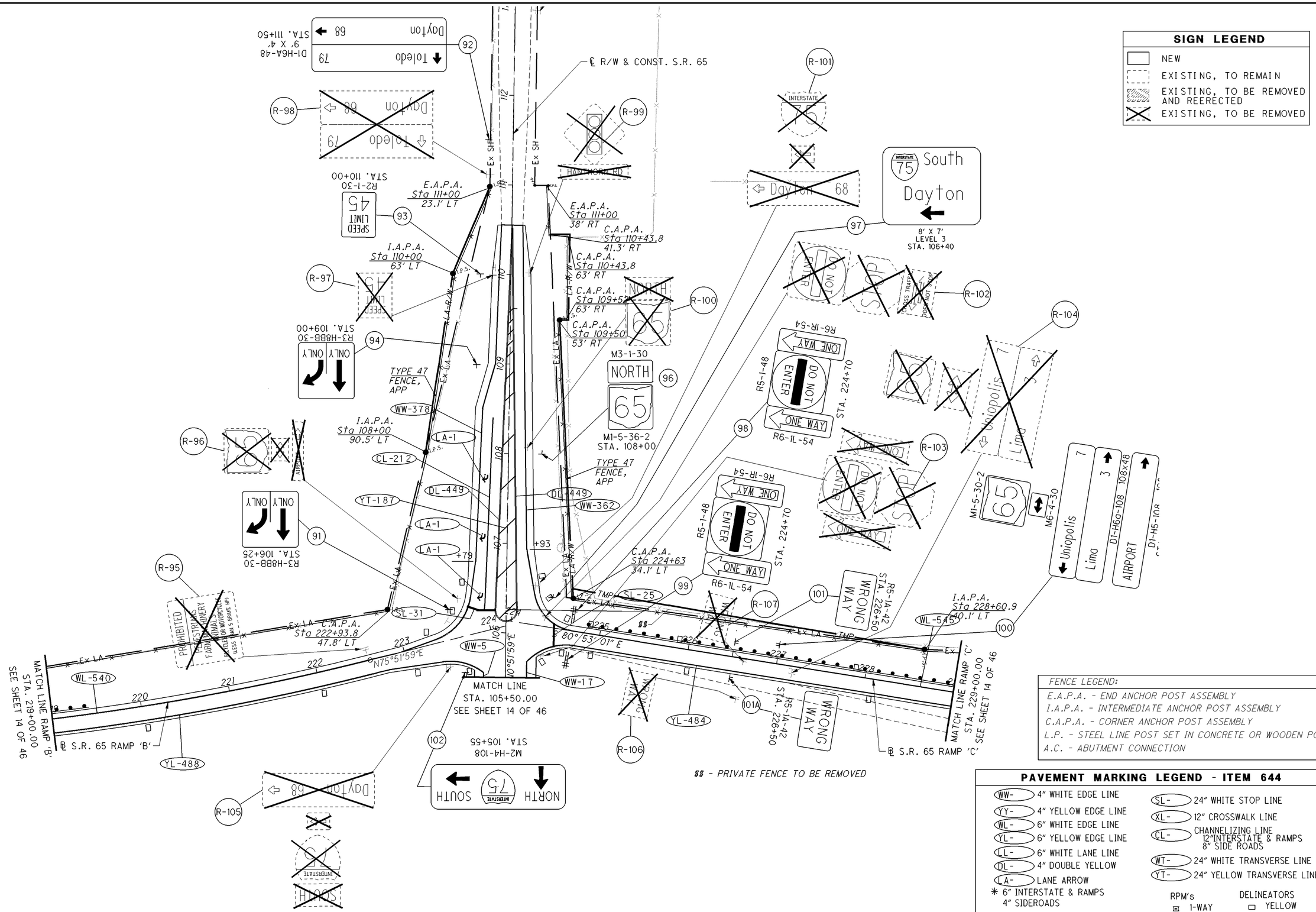

SIGN LEGEND

- NEW
- EXISTING, TO REMAIN
- EXISTING, TO BE REMOVED AND REERECTED
- EXISTING, TO BE REMOVED

HORIZONTAL SCALE IN FEET: 0, 25, 50, 100

CALCULATED GLW CHECKED TAB

FENCE LEGEND:

E.A.P.A. - END ANCHOR POST ASSEMBLY
I.A.P.A. - INTERMEDIATE ANCHOR POST ASSEMBLY
C.A.P.A. - CORNER ANCHOR POST ASSEMBLY
L.P. - STEEL LINE POST SET IN CONCRETE OR WOODEN POST
A.C. - ABUTMENT CONNECTION

PAVEMENT MARKING LEGEND - ITEM 644

WW-	4" WHITE EDGE LINE	SL-	24" WHITE STOP LINE
YY-	4" YELLOW EDGE LINE	XL-	12" CROSSWALK LINE
WL-	6" WHITE EDGE LINE	CL-	CHANNELIZING LINE 12"INTERSTATE & RAMPS 8" SIDE ROADS
YL-	6" YELLOW EDGE LINE	WT-	24" WHITE TRANSVERSE LINE
LL-	6" WHITE LANE LINE	YT-	24" YELLOW TRANSVERSE LINE
DL-	4" DOUBLE YELLOW		
LA-	LANE ARROW		

✳ 6" INTERSTATE & RAMPS 4" SIDEROADS

NOTE: LANE WIDTH IS 12 FT. UNLESS OTHERWISE NOTED.

RPM's: 1-WAY, 2-WAY — DELINEATORS: YELLOW, WHITE

SIGN, FENCE AND PAVEMENT MARKING PLAN
S.R. 65 sta. 109+00.00 TO END WORK

ALL-75-0.21

18 / 46

546 / 907

I:\Pd\89029\traffic\sheets\89029TP304.dgn 25-JUN-2013 10:58AM tbolenba

PAVEMENT MARKING LEGEND - ITEM 644

WW-	4" WHITE EDGE LINE
YY-	4" YELLOW EDGE LINE
WL-	6" WHITE EDGE LINE
YL-	6" YELLOW EDGE LINE
LL-	6" WHITE LANE LINE
DL-	4" DOUBLE YELLOW
LA-	LANE ARROW
*	6" INTERSTATE & RAMPS 4" SIDEROADS
SL-	24" WHITE STOP LINE
XL-	12" CROSSWALK LINE
CL-	CHANNELIZING LINE 12"INTERSTATE & RAMPS 8" SIDE ROADS
WT-	24" WHITE TRANSVERSE LINE
YT-	24" YELLOW TRANSVERSE LINE

RPM's: 1-WAY, 2-WAY

DELINEATORS: YELLOW, WHITE

NOTE: LANE WIDTH IS 12 FT. UNLESS OTHERWISE NOTED.

SIGN LEGEND

- NEW
- EXISTING, TO REMAIN
- EXISTING, TO BE REMOVED AND REERECTED
- EXISTING, TO BE REMOVED

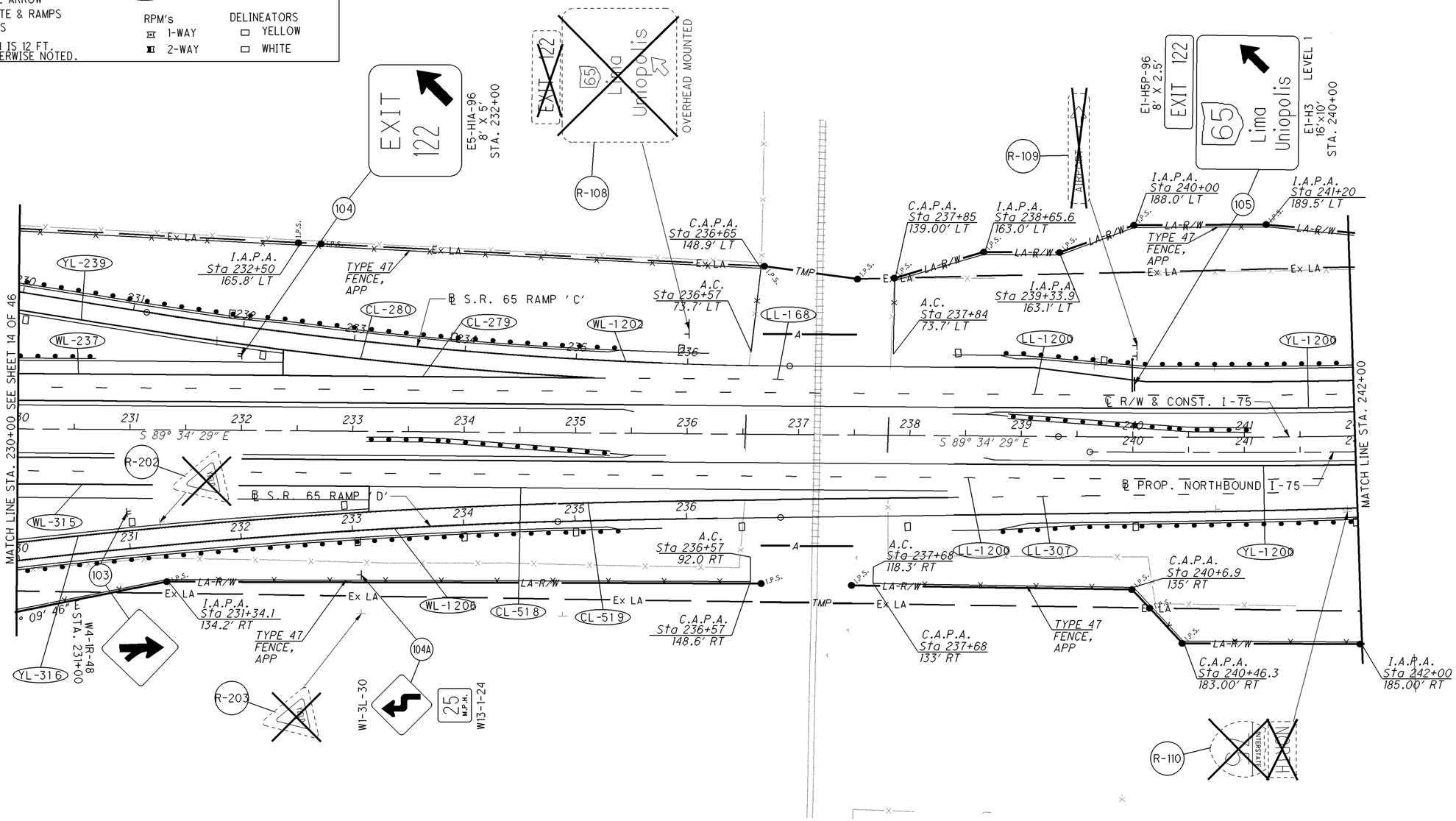

FENCE LEGEND:
E.A.P.A. - END ANCHOR POST ASSEMBLY
I.A.P.A. - INTERMEDIATE ANCHOR POST ASSEMBLY
C.A.P.A. - CORNER ANCHOR POST ASSEMBLY
L.P. - STEEL LINE POST SET IN CONCRETE OR WOODEN POST
A.C. - ABUTMENT CONNECTION

NOTE:

1. INTERSTATE ROUTE 75 - CONSTRUCTION STA. 237+16.78 (0.0' RT.) = INDIANA AND OHIO RAILWAY (IORY) AAR/DOT#258615H RR MP. 135.34 SUBDIVISION: DT&I MIDDLE

HORIZONTAL SCALE IN FEET: 0, 25, 50, 100

CALCULATED GLW CHECKED TAB

SIGN, FENCE AND PAVEMENT MARKING PLAN
STA. 230+00.00 TO STA. 242+00.00

ALL-75-0.21

19 / 46

547 / 907

I:\Pdt\89029\traffic\sheets\89029TP012.dgn 25-JUN-2013 10:58AM tbolenba

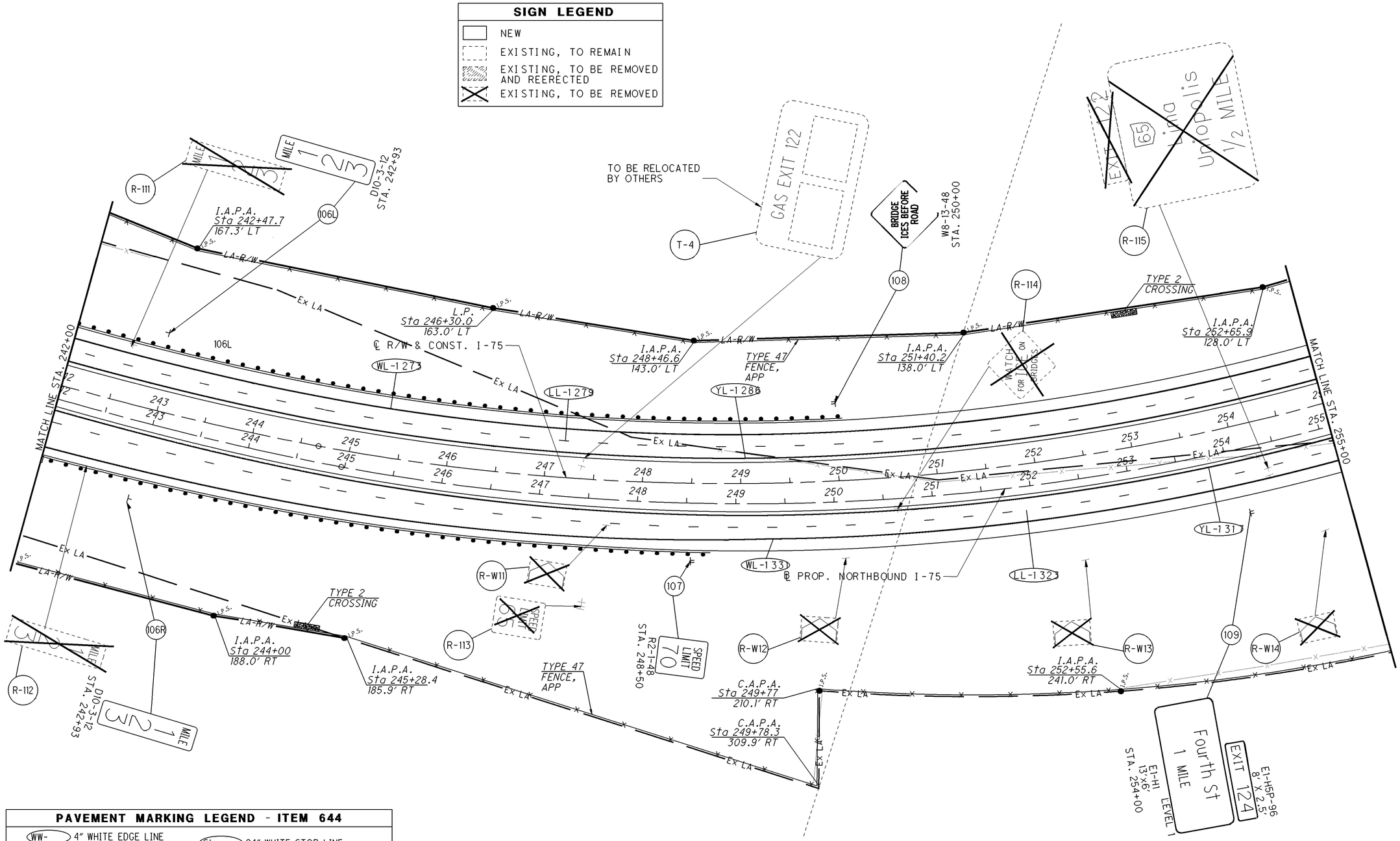

PAVEMENT MARKING LEGEND - ITEM 644

WW-	4" WHITE EDGE LINE
YY-	4" YELLOW EDGE LINE
WL-	6" WHITE EDGE LINE
YL-	6" YELLOW EDGE LINE
LL-	6" WHITE LANE LINE
DL-	4" DOUBLE YELLOW
LA-	LANE ARROW
*	6" INTERSTATE & RAMPS 4" SIDEROADS
SL-	24" WHITE STOP LINE
XL-	12" CROSSWALK LINE
CL-	CHANNELIZING LINE 12"INTERSTATE & RAMPS 8" SIDE ROADS
WT-	24" WHITE TRANSVERSE LINE
YT-	24" YELLOW TRANSVERSE LINE

RPM's: 1-WAY, 2-WAY

DELINEATORS: YELLOW, WHITE

NOTE: LANE WIDTH IS 12 FT. UNLESS OTHERWISE NOTED.

FENCE LEGEND:

E.A.P.A. - END ANCHOR POST ASSEMBLY
I.A.P.A. - INTERMEDIATE ANCHOR POST ASSEMBLY
C.A.P.A. - CORNER ANCHOR POST ASSEMBLY
L.P. - STEEL LINE POST SET IN CONCRETE OR WOODEN POST
A.C. - ABUTMENT CONNECTION

HORIZONTAL SCALE IN FEET 0 25 50 100

CALCULATED GLW
CHECKED TAB

SIGN, FENCE AND PAVEMENT MARKING PLAN
STA. 230+00.00 TO STA. 255+00.00

ALL-75-0.21

I:\Pd\89029\traffic\sheets\89029TP013.dgn 25-JUN-2013 10:58AM tbolenba

SIGN LEGEND

- NEW
- EXISTING, TO REMAIN
- EXISTING, TO BE REMOVED AND REERECTED
- EXISTING, TO BE REMOVED

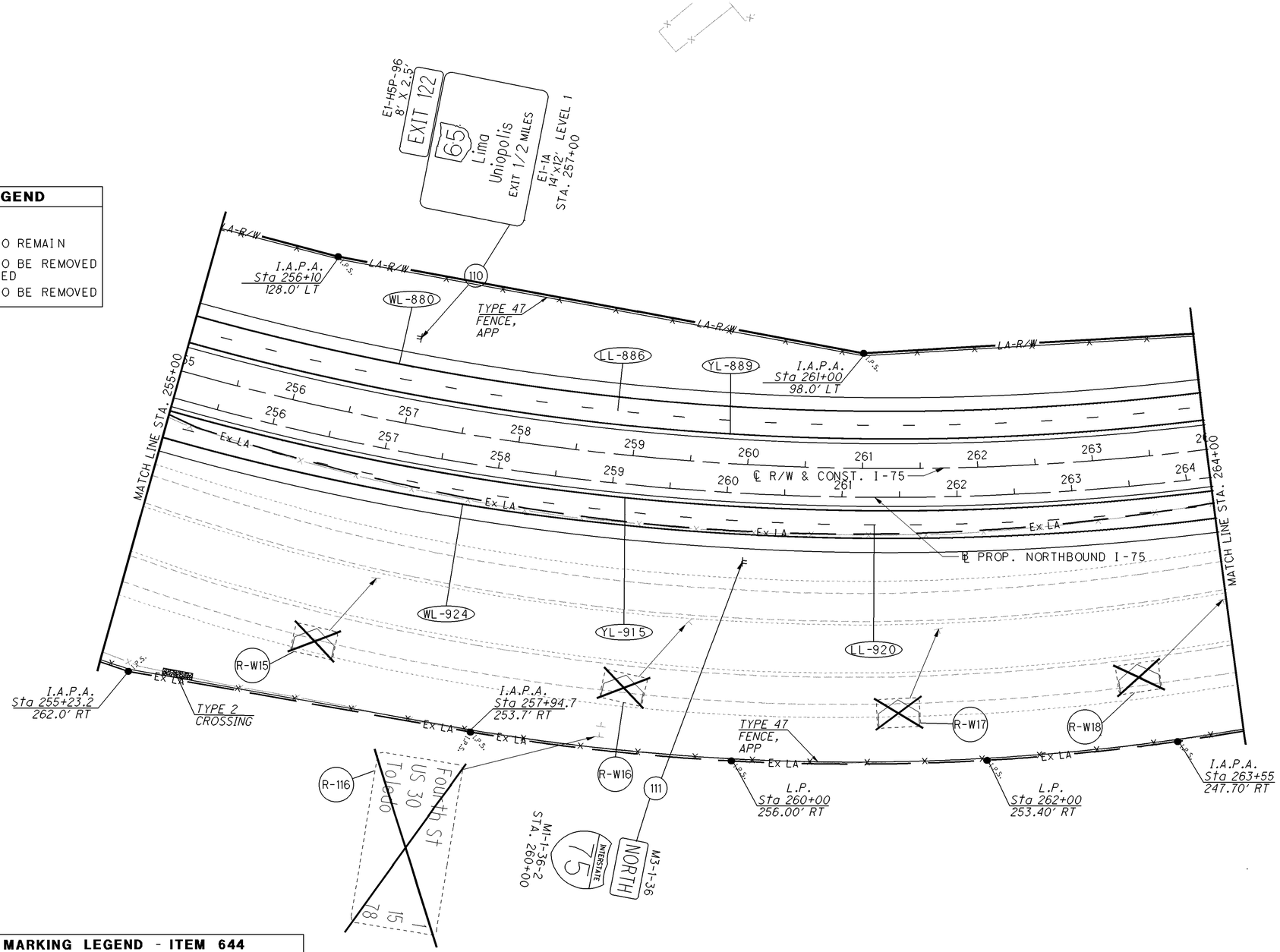

PAVEMENT MARKING LEGEND - ITEM 644

WW- 4" WHITE EDGE LINE	SL- 24" WHITE STOP LINE
YY- 4" YELLOW EDGE LINE	XL- 12" CROSSWALK LINE
WL- 6" WHITE EDGE LINE	CL- CHANNELIZING LINE 12"INTERSTATE & RAMPS 8" SIDE ROADS
YL- 6" YELLOW EDGE LINE	WT- 24" WHITE TRANSVERSE LINE
LL- 6" WHITE LANE LINE	YT- 24" YELLOW TRANSVERSE LINE
DL- 4" DOUBLE YELLOW	
LA- LANE ARROW	
* 6" INTERSTATE & RAMPS 4" SIDEROADS	

NOTE: LANE WIDTH IS 12 FT. UNLESS OTHERWISE NOTED.

RPM's	DELINEATORS
1-WAY	YELLOW
2-WAY	WHITE

FENCE LEGEND:

E.A.P.A. - END ANCHOR POST ASSEMBLY
I.A.P.A. - INTERMEDIATE ANCHOR POST ASSEMBLY
C.A.P.A. - CORNER ANCHOR POST ASSEMBLY
L.P. - STEEL LINE POST SET IN CONCRETE OR WOODEN POST
A.C. - ABUTMENT CONNECTION

HORIZONTAL SCALE IN FEET
0 25 50 100

CALCULATED GLW
CHECKED TAB

SIGN, FENCE AND PAVEMENT MARKING PLAN
STA. 255+00.00 TO STA. 264+00.00

ALL-75-0.21

21 / 46

549
907

I:\Pd\89029\traffic\sheets\89029TP014.dgn 25-JUN-2013 10:58AM tbolenba

PAVEMENT MARKING LEGEND - ITEM 644

WW-	4" WHITE EDGE LINE	SL-	24" WHITE STOP LINE
YY-	4" YELLOW EDGE LINE	XL-	12" CROSSWALK LINE
WL-	6" WHITE EDGE LINE	CL-	CHANNELIZING LINE 12"INTERSTATE & RAMPS 8" SIDE ROADS
YL-	6" YELLOW EDGE LINE	WT-	24" WHITE TRANSVERSE LINE
LL-	6" WHITE LANE LINE	YT-	24" YELLOW TRANSVERSE LINE
DL-	4" DOUBLE YELLOW		
LA-	LANE ARROW		

* 6" INTERSTATE & RAMPS
4" SIDEROADS

RPM's		DELINEATORS	
	1-WAY		YELLOW
	2-WAY		WHITE

NOTE: LANE WIDTH IS 12 FT. UNLESS OTHERWISE NOTED.

SIGN LEGEND

- NEW
- EXISTING, TO REMAIN
- EXISTING, TO BE REMOVED AND REERECTED
- EXISTING, TO BE REMOVED

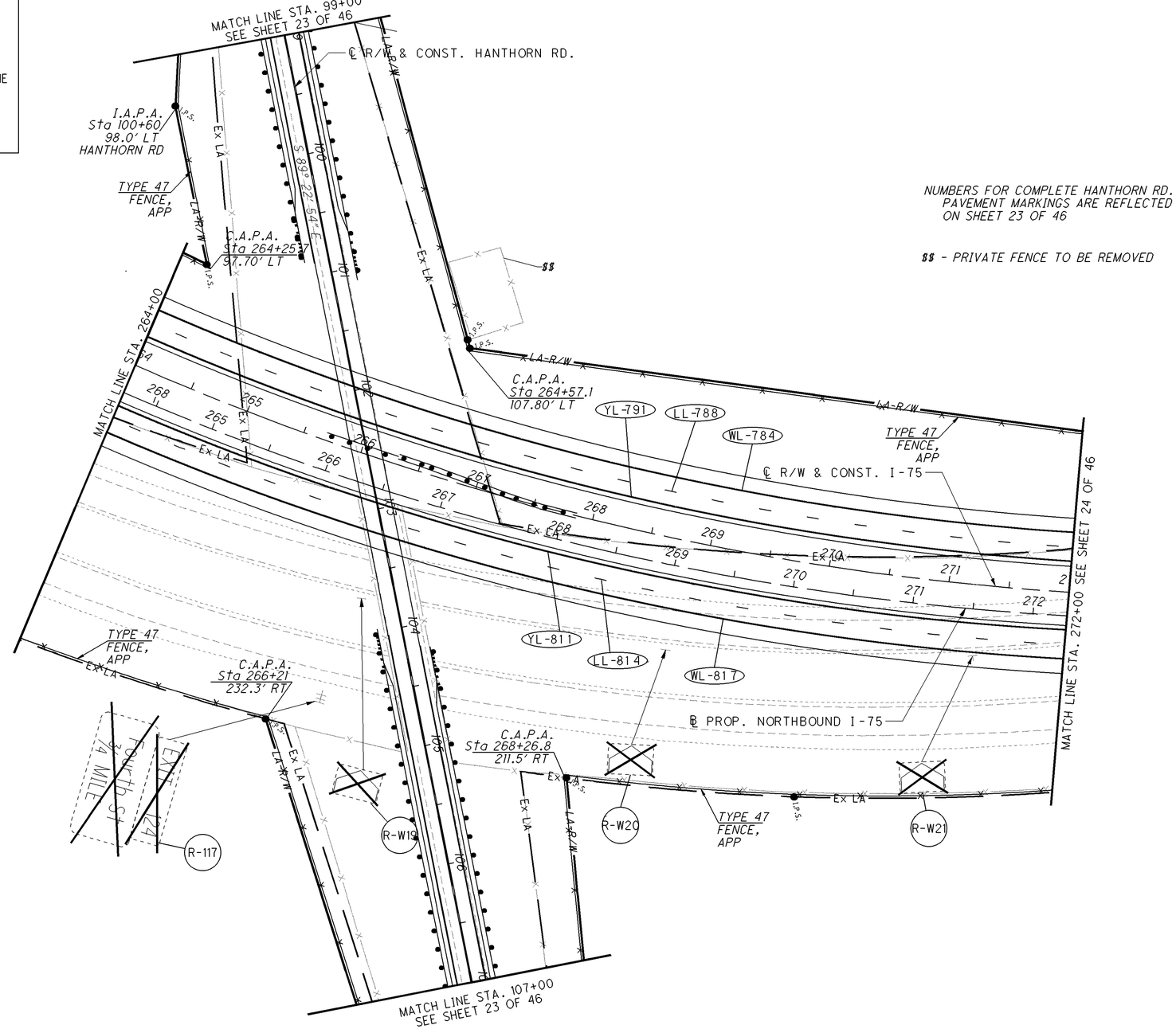

NUMBERS FOR COMPLETE HANTHORN RD. PAVEMENT MARKINGS ARE REFLECTED ON SHEET 23 OF 46

$$ - PRIVATE FENCE TO BE REMOVED

FENCE LEGEND:

E.A.P.A. - END ANCHOR POST ASSEMBLY
I.A.P.A. - INTERMEDIATE ANCHOR POST ASSEMBLY
C.A.P.A. - CORNER ANCHOR POST ASSEMBLY
L.P. - STEEL LINE POST SET IN CONCRETE OR WOODEN POST
A.C. - ABUTMENT CONNECTION

SIGN, FENCE AND PAVEMENT MARKING PLAN STA. 264+00.00 TO STA. 272+00.00

ALL-75-0.21

22/46

550/907

HORIZONTAL SCALE IN FEET 0 25 50 100

CALCULATED GLW CHECKED TAB

I:\Pd\89029\traffic\sheets\89029TP015.dgn 25-JUN-2013 10:58AM tbolenba

PAVEMENT MARKING LEGEND - ITEM 644

WW- 4" WHITE EDGE LINE	SL- 24" WHITE STOP LINE
YY- 4" YELLOW EDGE LINE	XL- 12" CROSSWALK LINE
WL- 6" WHITE EDGE LINE	CL- CHANNELIZING LINE 12"INTERSTATE & RAMPS 8" SIDE ROADS
YL- 6" YELLOW EDGE LINE	WT- 24" WHITE TRANSVERSE LINE
LL- 6" WHITE LANE LINE	YT- 24" YELLOW TRANSVERSE LINE
DL- 4" DOUBLE YELLOW	
LA- LANE ARROW	
* 6" INTERSTATE & RAMPS 4" SIDEROADS	

RPM's: 1-WAY, 2-WAY — DELINEATORS: YELLOW, WHITE

NOTE: LANE WIDTH IS 12 FT. UNLESS OTHERWISE NOTED.

SIGN LEGEND

- NEW
- EXISTING, TO REMAIN
- EXISTING, TO BE REMOVED AND REERECTED
- EXISTING, TO BE REMOVED

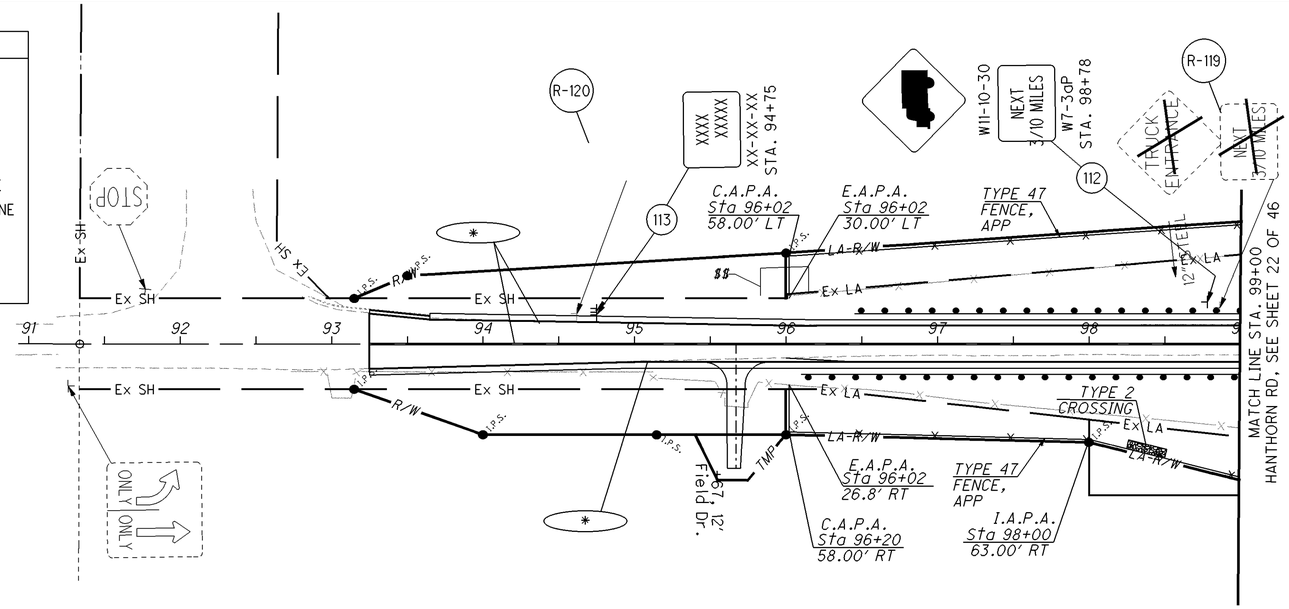

$$ - PRIVATE FENCE TO BE REMOVED

*

WW-1 635

WW-1 635

DL-1 635

NUMBERS ARE TOTALS FOR COMPLETE HANTHORN RD. PAVEMENT MARKINGS

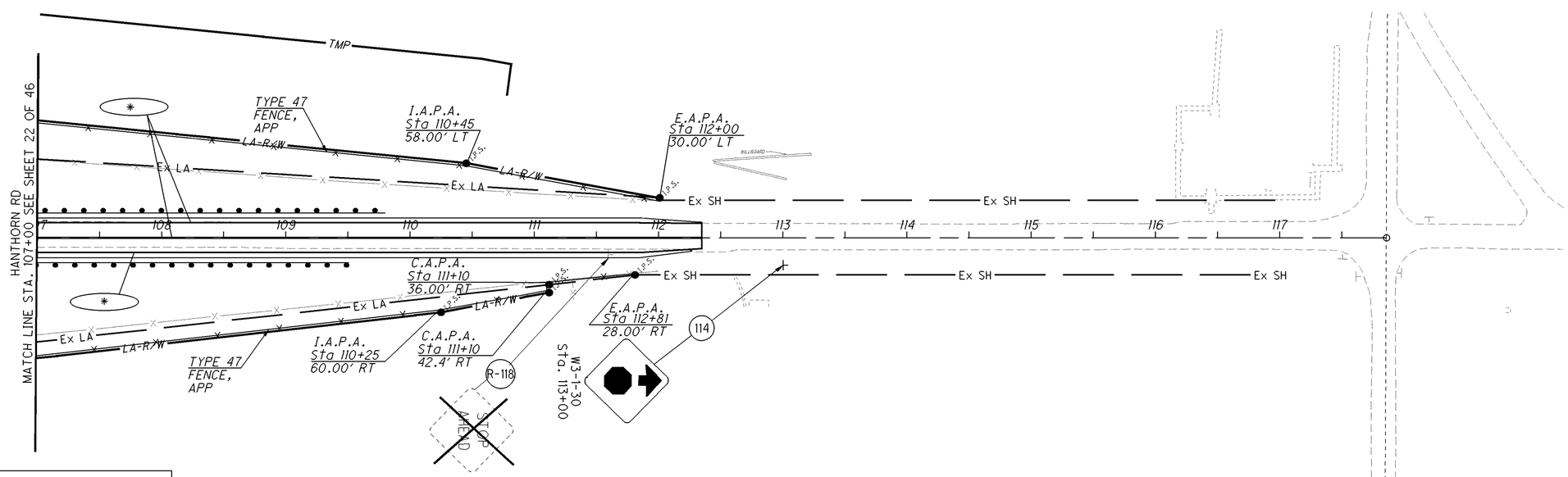

FENCE LEGEND:
E.A.P.A. - END ANCHOR POST ASSEMBLY
I.A.P.A. - INTERMEDIATE ANCHOR POST ASSEMBLY
C.A.P.A. - CORNER ANCHOR POST ASSEMBLY
L.P. - STEEL LINE POST SET IN CONCRETE OR WOODEN POST
A.C. - ABUTMENT CONNECTION

HORIZONTAL SCALE IN FEET: 0, 25, 50, 100

CALCULATED GLW — CHECKED TAB

SIGN, FENCE AND PAVEMENT MARKING PLAN
STA. 91+00.00 TO STA. 118+00.00

ALL-75-0.21

23 / 46

551 907

I:\Pd\89029\traffic\sheets\89029TP016.dgn 25-JUN-2013 10:58AM tbolenba

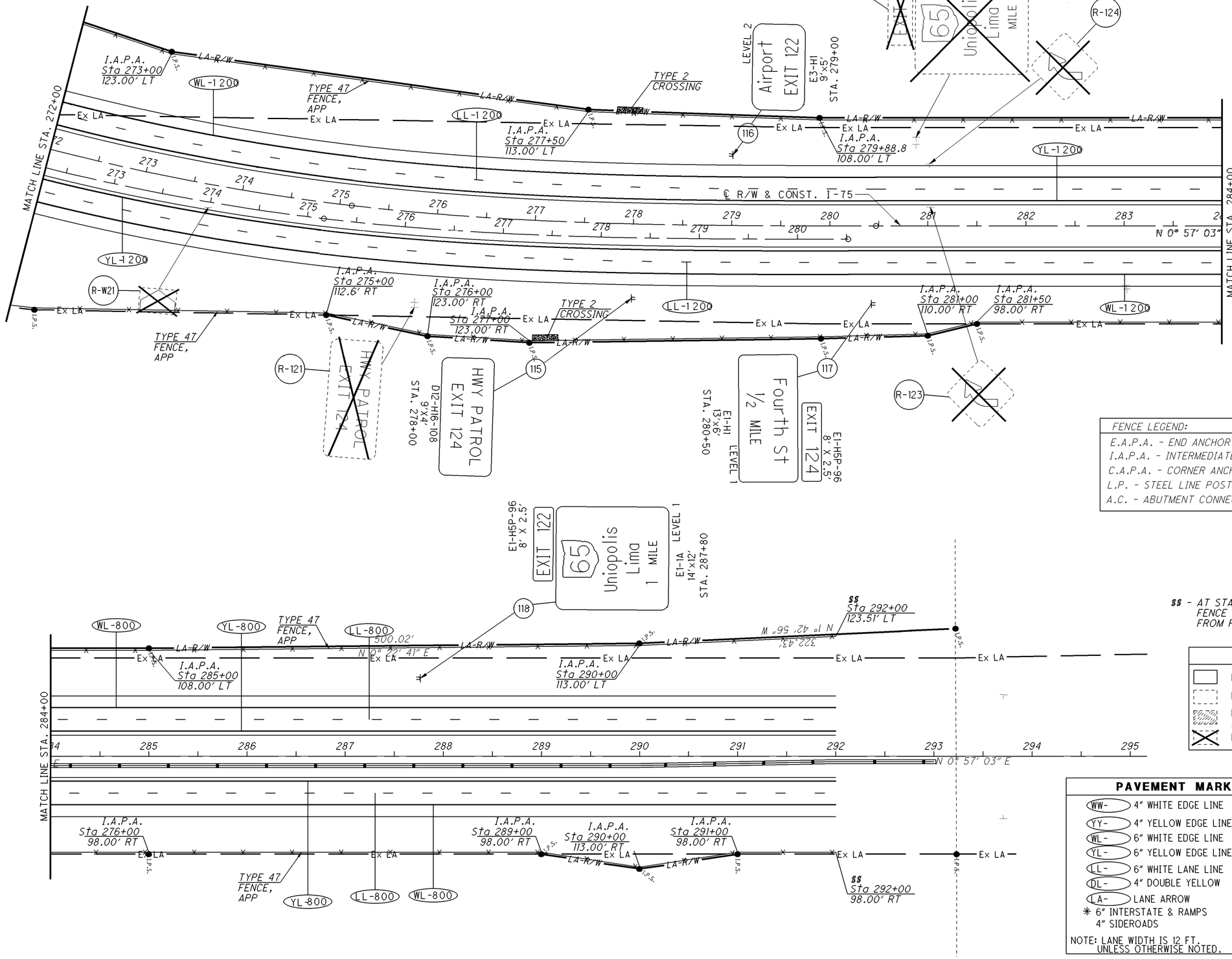

$$ - AT STA. 292+00 TIE PROPOSED FENCE INTO EXISTING I.A.P.A. FROM PROJECT 76691 , ALL-75-5.53

FENCE LEGEND:

E.A.P.A. - END ANCHOR POST ASSEMBLY
I.A.P.A. - INTERMEDIATE ANCHOR POST ASSEMBLY
C.A.P.A. - CORNER ANCHOR POST ASSEMBLY
L.P. - STEEL LINE POST SET IN CONCRETE OR WOODEN POST
A.C. - ABUTMENT CONNECTION

SIGN LEGEND

- NEW
- EXISTING, TO REMAIN
- EXISTING, TO BE REMOVED AND REERECTED
- EXISTING, TO BE REMOVED

PAVEMENT MARKING LEGEND - ITEM 644

WW-	4" WHITE EDGE LINE	SL-	24" WHITE STOP LINE
YY-	4" YELLOW EDGE LINE	XL-	12" CROSSWALK LINE
WL-	6" WHITE EDGE LINE	CL-	CHANNELIZING LINE 12"INTERSTATE & RAMPS 8" SIDE ROADS
YL-	6" YELLOW EDGE LINE	WT-	24" WHITE TRANSVERSE LINE
LL-	6" WHITE LANE LINE	YT-	24" YELLOW TRANSVERSE LINE
DL-	4" DOUBLE YELLOW		
LA-	LANE ARROW		

✳ 6" INTERSTATE & RAMPS 4" SIDEROADS

NOTE: LANE WIDTH IS 12 FT. UNLESS OTHERWISE NOTED.

RPM's: 1-WAY, 2-WAY
DELINEATORS: YELLOW, WHITE

HORIZONTAL SCALE IN FEET: 0, 25, 50, 100

CALCULATED GLW
CHECKED TAB

SIGN, FENCE AND PAVEMENT MARKING PLAN
STA. 272+00.00 TO STA. 292+00.00

ALL-75-0.21

24/46

552/907

I:\Pd\89029\traffic\sheets\89029TP017.dgn 25-JUN-2013 10:58AM tbolenba

SIGN #1 E1-H1, E1-H5P

STA. 4+50, 81' Lt. I.R. 75
SIGN AREA - 19' x 6' = 114 SQ.FT.
8' x 2.5' = 20 SQ.FT.

BEAM SUPPORTS
2 - W10x12
L = 18' & 20'
FOUNDATION 2.5'x6'

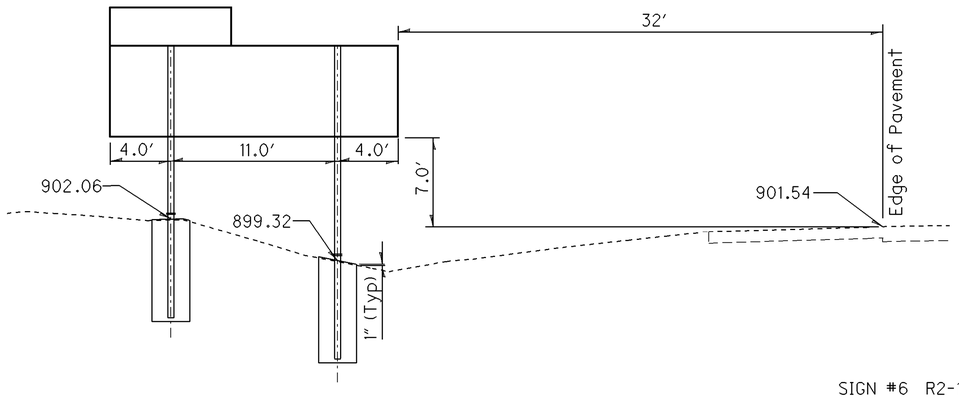

SIGN #5 E1-H1, E1-H5P

STA. 25+00, 79.4' Lt. I.R. 75
SIGN AREA - 16.0' x 8' = 128 SQ.FT.
8' x 2.5' = 20 SQ.FT.

BEAM SUPPORTS
2 - W10x22
L = 28.0' & 25.8'
FOUNDATION 2.5'x6.75'

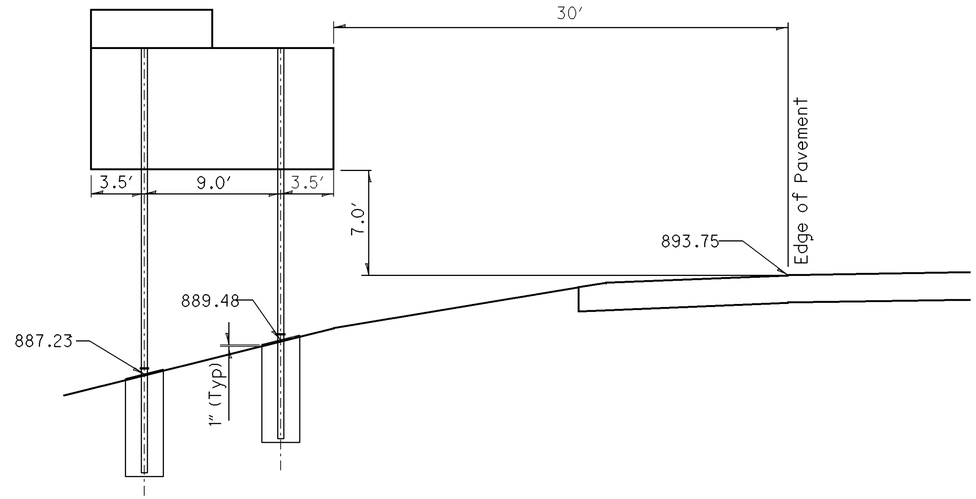

SIGN #6 R2-1-48

STA. 25+00, 79.5' Rt. I.R. 75
SIGN AREA - 4' x 5' = 20 SQ.FT.

BREAKAWAY SUPPORTS
2 - S4x7.7
L = 19.3' & 20.0'
FOUNDATION 1.5'x4'

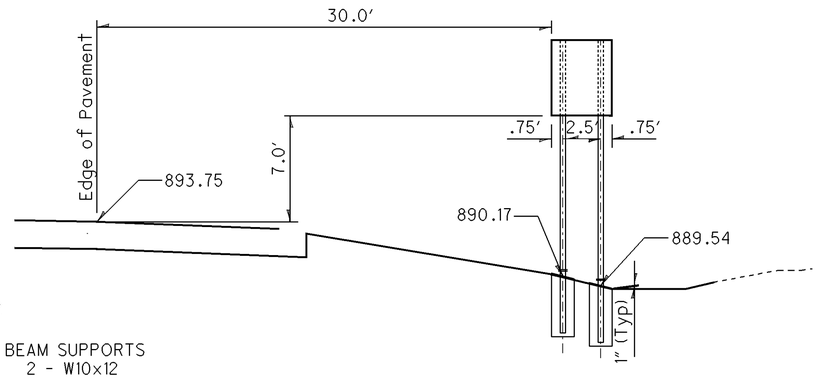

SIGN #9 E7-H1-2

STA. 35+00, 81.6' Rt. I.R. 75
SIGN AREA - 13' x 5' = 65 SQ.FT.

BEAM SUPPORTS
2 - W10x12
L = 22.3' & 22.3'
FOUNDATION 2.5'x6'

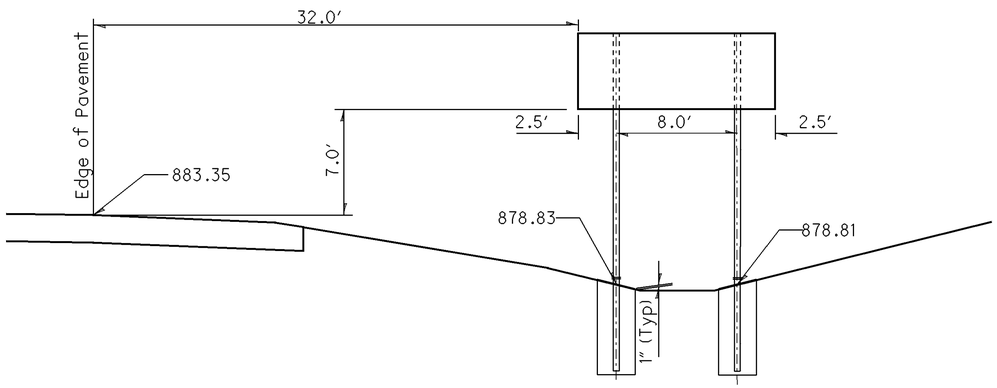

SIGN #10 E1-H1, E1-H5P

STA. 50+50, 68.5' Lt. I.R. 75
SIGN AREA - 16.0' x 8' = 128 SQ.FT.
8' x 2.5' = 20 SQ.FT.

BEAM SUPPORTS
2 - W8x18
L = 24.3' & 22.6'
FOUNDATION 2.5'x6'

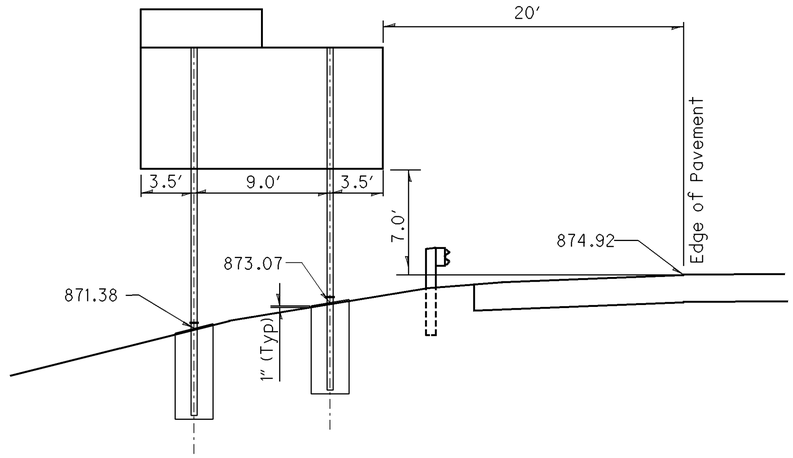

CALCULATED GLW
CHECKED TAB

SIGN DETAILS
MAINLINE I.R. 75

ALL-75-0.21

25/46

553/907

I:\Pd\89029\traffic\sheets\89029Txs001.dgn 25-JUN-2013 10:57AM tbolenba

SIGN #11 E1-2 E1-H5P

STA. 51+25, 81' Rt. I.R. 75
SIGN AREA - 14' x 6' = 84 SQ.FT.
8' x 2.5' = 20 SQ.FT.

BEAM SUPPORTS
2 - W8x18
L = 20.4' & 21.9'
FOUNDATION 2.5'x6'

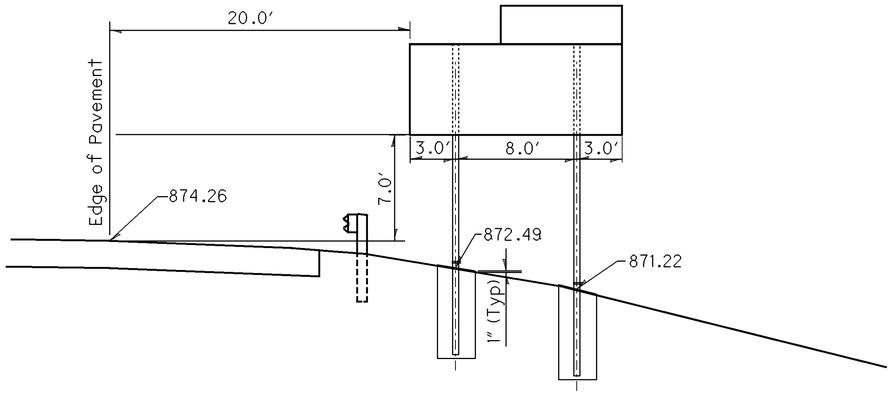

SIGN #12 E8-H4

STA. 52+50, 74' Rt. I.R. 75
SIGN AREA - 8' x 3' = 24 SQ.FT.

BREAKAWAY SUPPORTS
2 - S4x7.7
L = 15.3' & 16.1'
FOUNDATION 1.5'x4'

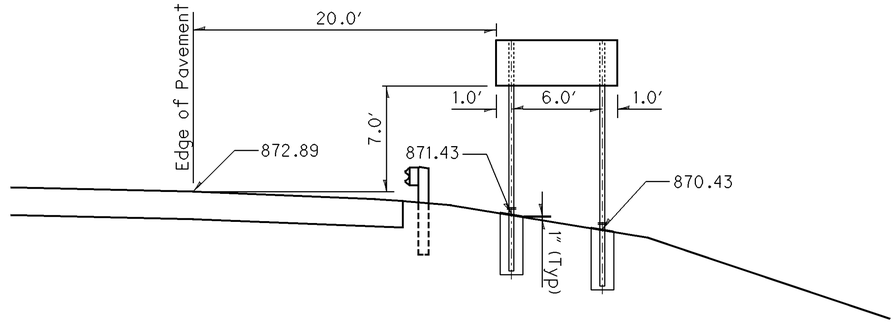

SIGN #13 E8-H4

STA. 54+00, 69.5' Lt. I.R. 75
SIGN AREA - 8' x 3' = 24 SQ.FT.

BREAKAWAY SUPPORTS
2 - S4x7.7
L = 15.3' & 16.1'
FOUNDATION 1.5'x4'

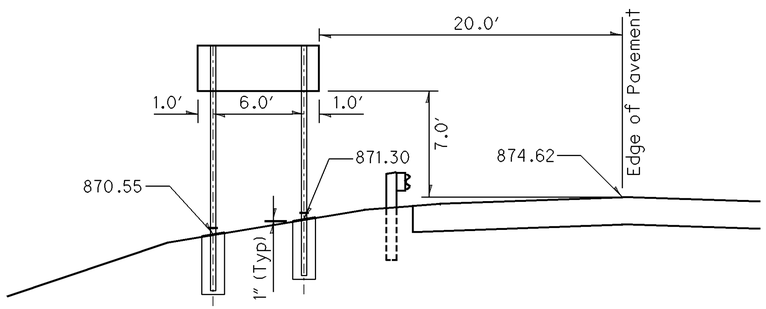

SIGN #14 E3-H1

STA. 55+88, 69.5' Lt. I.R. 75
SIGN AREA - 15' x 7' = 105 SQ.FT.

BREAKAWAY SUPPORTS
2 - W8x18
L = 22.0' & 23.6'
FOUNDATION 2.5'x6'

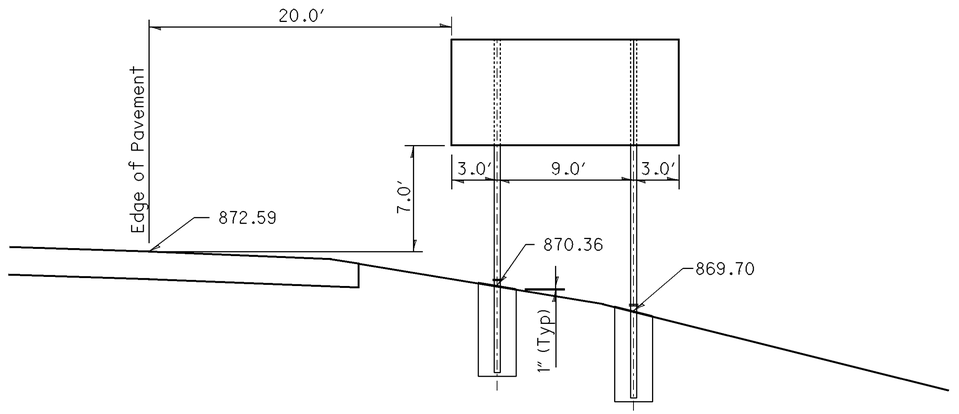

I:\Pd\89029\traffic\sheets\89029Txs001.dgn 25-JUN-2013 10:57AM tbolenba

CALCULATED GLW
CHECKED TAB

SIGNS DETAILS
MAINLINE I.R. 75

ALL-75-0.21

SIGN #15 E7-H1

STA. 64+00, 83.5' Lt. I.R. 75
SIGN AREA - 16' x 7' = 112 SQ.FT.

BREAKAWAY SUPPORTS
2 - W10x22
L = 22.3' & 19.6'
FOUNDATION 2.5'x6.75'

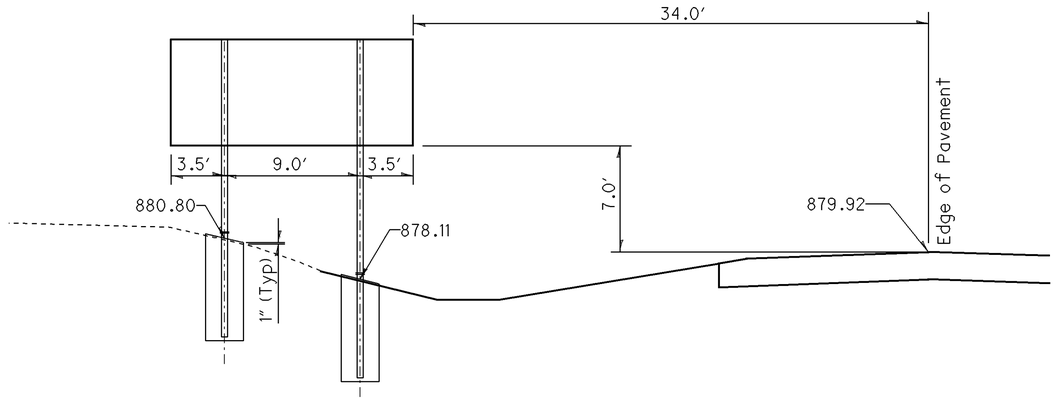

SIGN #17 E1-2 E1-H5P

STA. 77+50, 82' Rt. I.R. 75
SIGN AREA - 14' x 6' = 84 SQ.FT.
8' x 2.5' = 20 SQ.FT.

BEAM SUPPORTS
2 - W8x18
L = 23.2' & 25.2'
FOUNDATION 2.5'x6'

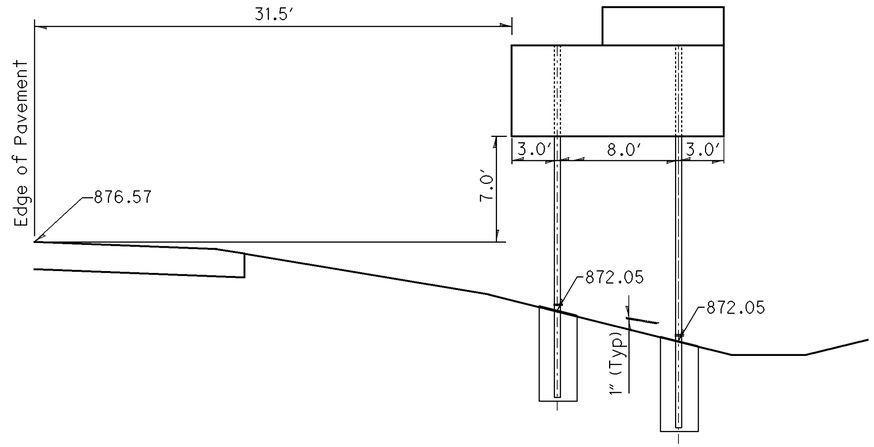

SIGN #20 E1-2 E1-H5P

STA. 97+40, 71.5' Rt. I.R. 75
SIGN AREA - 17.0' x 4' = 68 SQ.FT.
8' x 2.5' = 20 SQ.FT.

BEAM SUPPORTS
2 - W10x12
L = 19.7' & 23.0
FOUNDATION 2.5'x6'

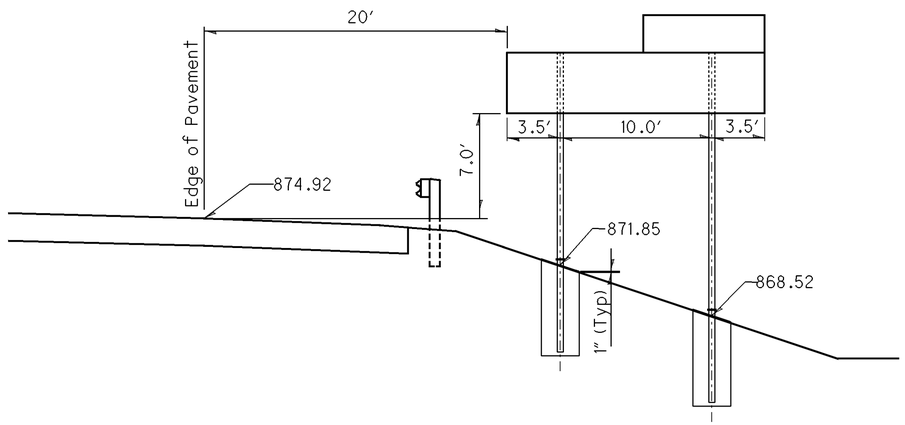

SIGN #22 E5-H1A

STA. 106+00, 14.4' Rt. I.R. 75
SIGN AREA - 8' x 5' = 40 SQ.FT.

BREAKAWAY SUPPORTS
2 - W6x9
L = 17.2' & 17.7'
FOUNDATION 1.5'x5'

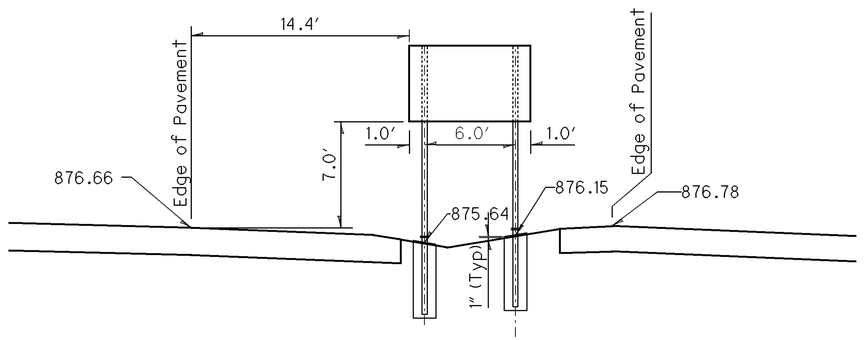

CALCULATED GLW
CHECKED TAB

SIGNS DETAILS
MAINLINE I.R. 75

ALL-75-0.21

I:\Pdv\89029\traffic\sheets\89029Txs001.dgn 25-JUN-2013 10:57AM tbolenba

SIGN #24 E5-H1A

STA. 117+75, 14.4′ Lt. I.R. 75
SIGN AREA - 8′ x 5′ = 40 SQ.FT.

BREAKAWAY SUPPORTS
2 - W6x9
L = 17.2′ & 17.7′
FOUNDATION 1.5′x5′

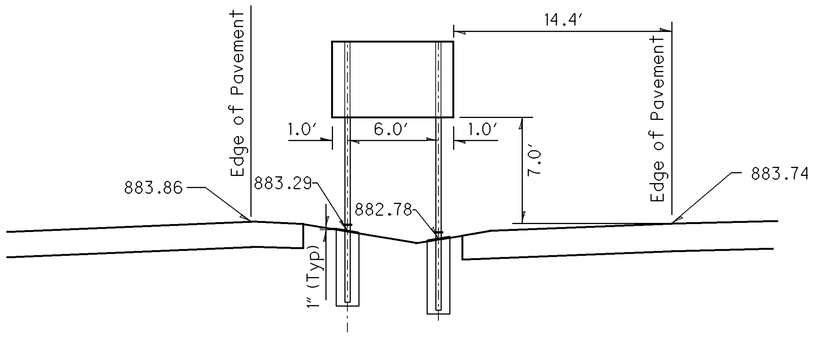

SIGN #49 E1-2 E1-H5P

STA. 125+80, 79.5′ Lt. I.R. 75
SIGN AREA - 17.0′ x 4′ = 68 SQ.FT.
8′ x 2.5′ = 20 SQ.FT.

BEAM SUPPORTS
2 - W10x12
L = 23.5′ & 21.0
FOUNDATION 2.5′x6′

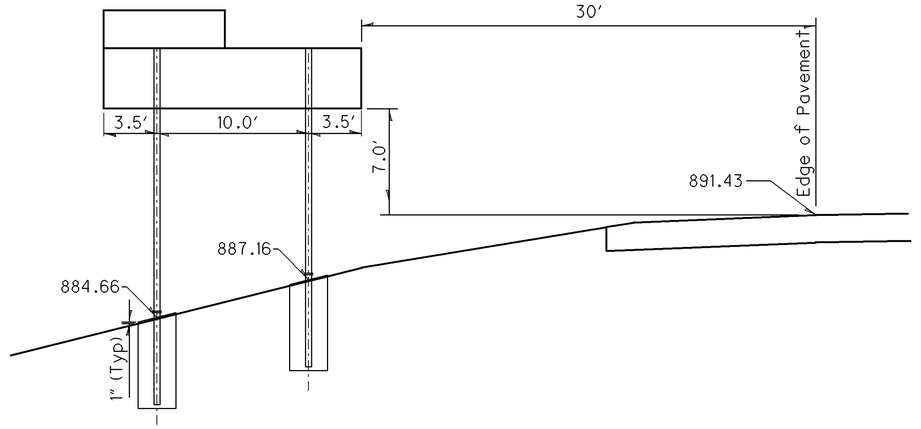

SIGN #52 R2-1-48

STA. 145+00, 79.5′ Rt. I.R. 75
SIGN AREA - 4′ x 5′ = 20 SQ.FT.

BREAKAWAY SUPPORTS
2 - S4x7.7
L = 19.3′ & 20.0′
FOUNDATION 1.5′x4′

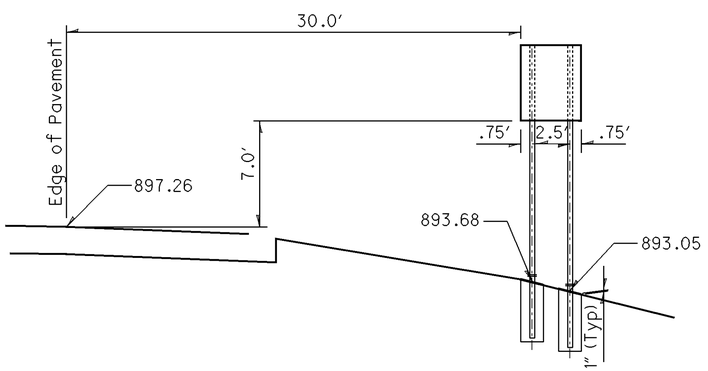

SIGN #53 E1-2, E1-H5P

STA. 147+00, 79.5′ LT. I.R. 75
SIGN AREA - 14′ x 6′ = 84 SQ.FT.
8′ x 2.5′ = 20 SQ.FT.

BEAM SUPPORTS
2 - W10x12
L = 19.5′ & 21.7′
FOUNDATION 2.5′x6′

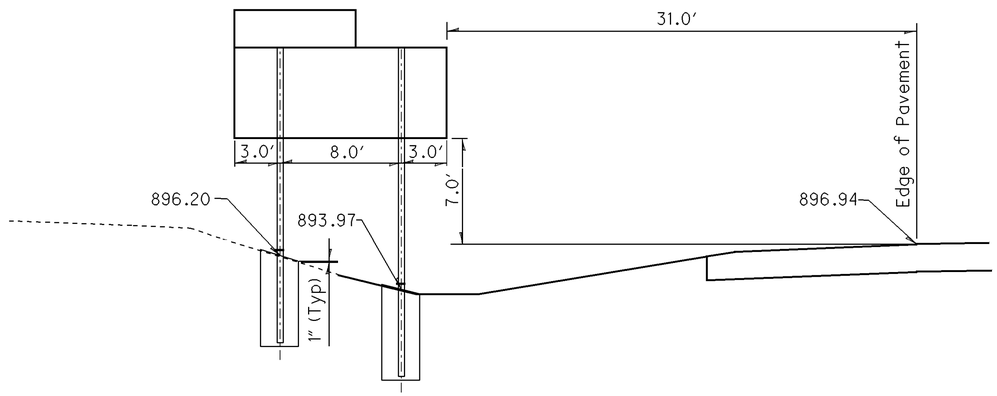

CALCULATED GLW
CHECKED TAB

SIGNS DETAILS
MAINLINE I.R. 75

ALL-75-0.21

28/46

556
907

I:\Pdv\89029\traffic\sheets\89029Txs001.dgn 25-JUN-2013 10:57AM tbolenba

SIGN #55 E3-H1

STA. 156+00, 79.5' LT. I.R. 75
SIGN AREA - 15' x 7' = 105 SQ.FT.

BREAKAWAY SUPPORTS
2 - W8x18
L = 23.5' & 23.7'
FOUNDATION 2.5'x6'

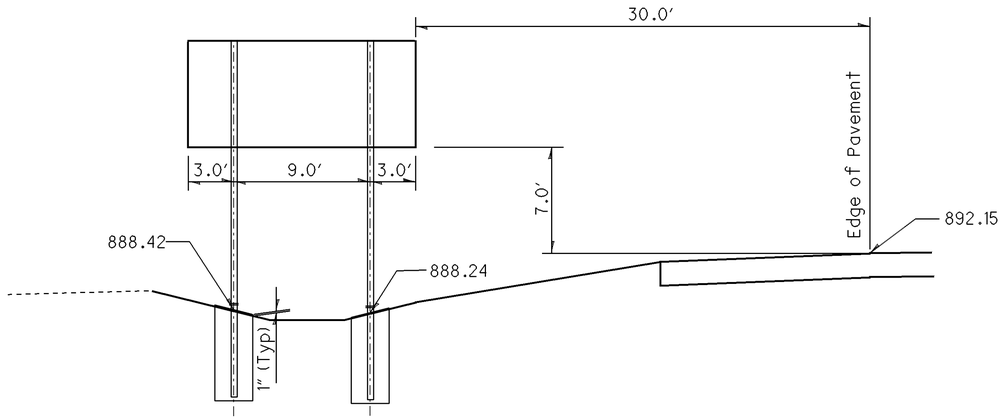

SIGN #56 E1-H1, E1-H5P

STA. 166+00, 84.5' RT. I.R. 75
SIGN AREA - 14.0' x 12' = 168 SQ.FT.
8' x 2.5' = 20 SQ.FT.

BEAM SUPPORTS
2 - W10x22
L = 29.3', 26.0'
FOUNDATION 2.5'x6.75'

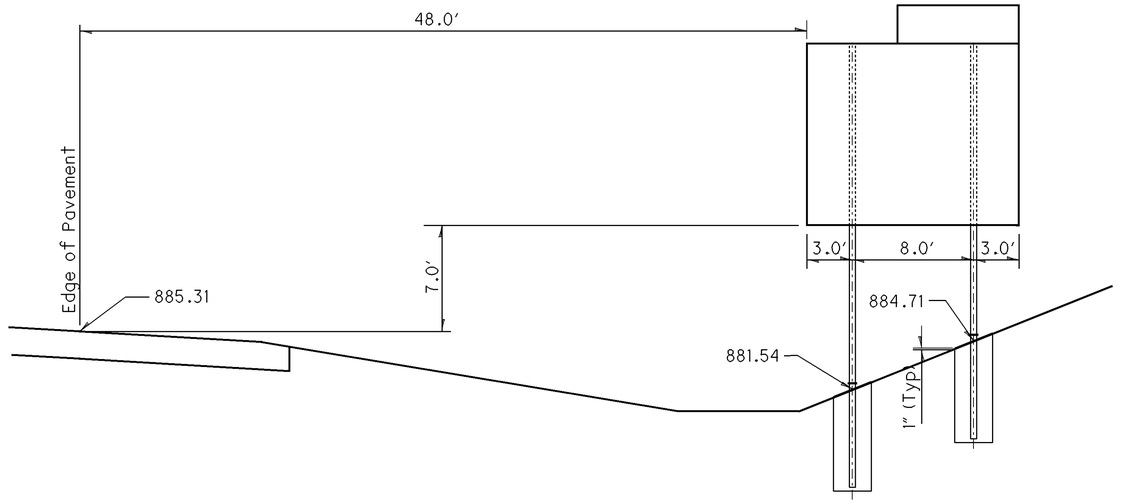

SIGN #58 E1-2 E1-H5P

STA. 175+00, 79.5' LT. I.R. 75
SIGN AREA - 14' x 6' = 84 SQ.FT.
8' x 2.5' = 20 SQ.FT.

BEAM SUPPORTS
2 - W10x22
L = 25.1' & 23'
FOUNDATION 2.5'x6.75'

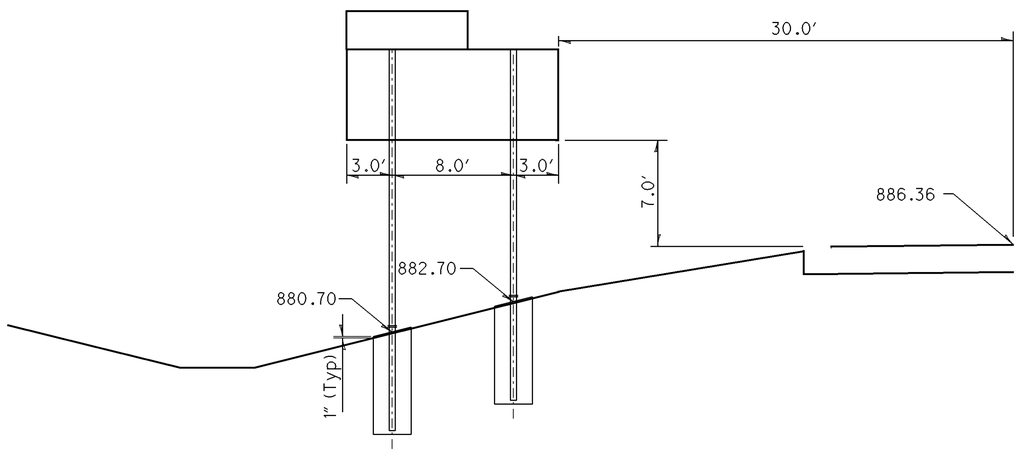

SIGN #59 E7-H1-2

STA. 180+00, 79.5' LT. Lt. I.R. 75
SIGN AREA - 13' x 5' = 65 SQ.FT.

BREAKAWAY SUPPORTS
2 - W10x12
L = 23.7' & 21.7'
FOUNDATION 2.5'x6'

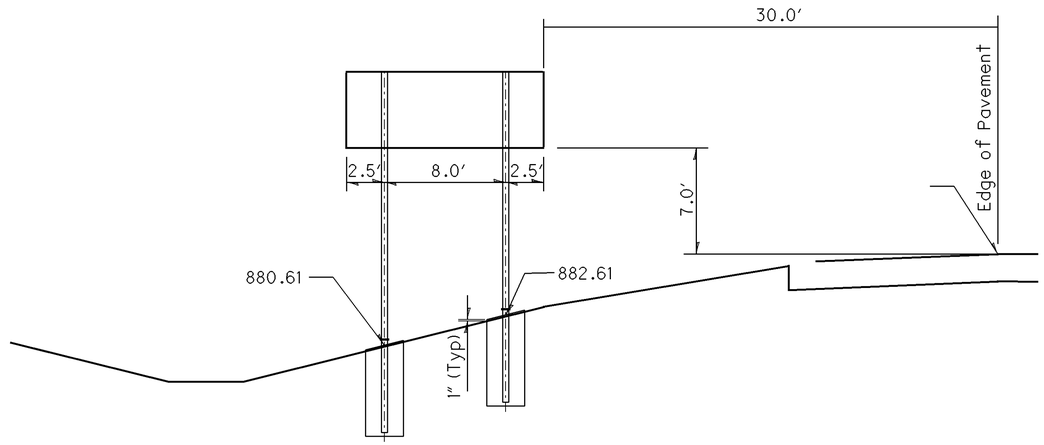

CALCULATED GLW
CHECKED TAB

SIGNS DETAILS
MAINLINE I.R. 75

ALL-75-0.21

I:\Pdv\89029\traffic\sheets\89029Txs001.dgn 25-JUN-2013 10:57AM tbolenba

SIGN #60 E3-H1

STA. 181+00, 79.5' RT. I.R. 75
SIGN AREA - 9' x 5' = 45 SQ.FT.

BEAM SUPPORTS
2 - W6x9
L = 20.4' & 22.0'
FOUNDATION 1.5'x5'

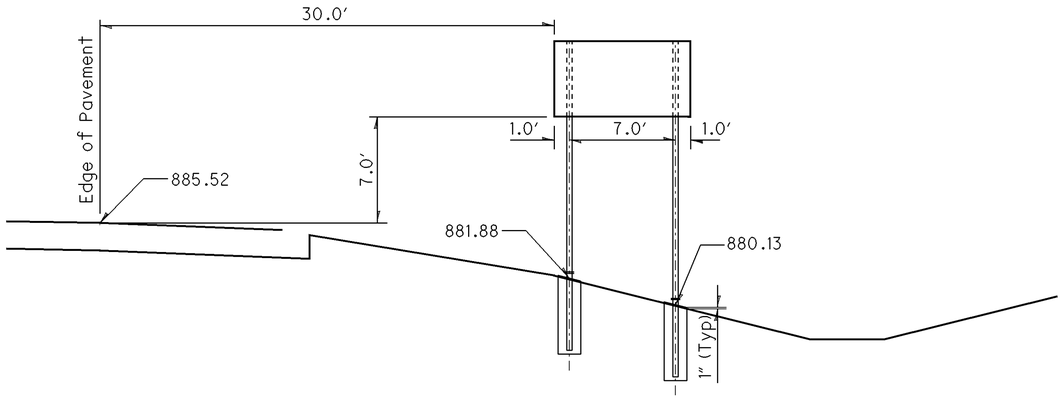

SIGN #62 E1-1A E1-H5P

STA. 189+35, 79.5' Rt. I.R. 75
SIGN AREA - 14.0' x 12' = 168 SQ.FT.
8' x 2.5' = 20 SQ.FT.

BEAM SUPPORTS
2 - W10x22
L = 29.0' & 29.0'
FOUNDATION 2.5'x6.75'

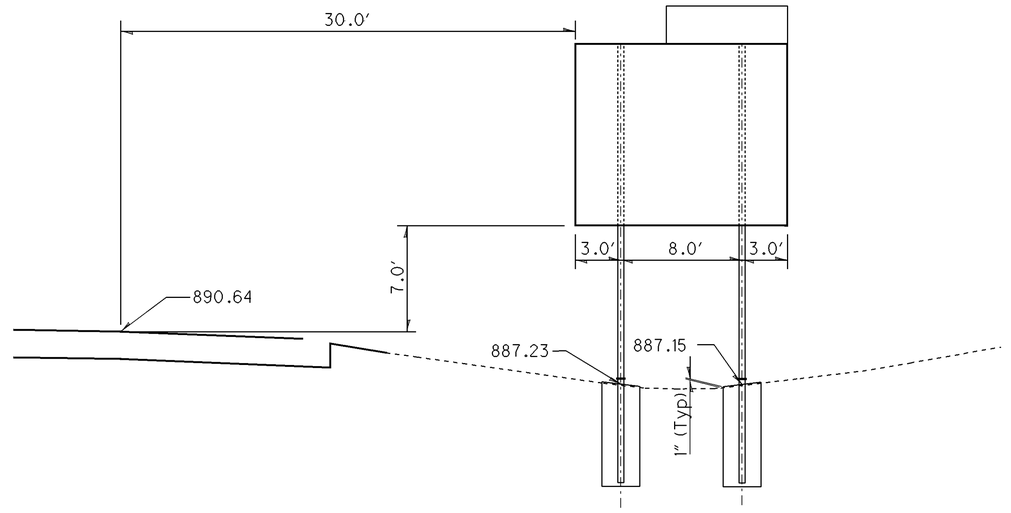

SIGN #65 D12-H22-120

STA. 199+25, 83.5' Rt. I.R. 75
SIGN AREA - 10' x 4' = 40 SQ.FT.

BEAM SUPPORTS
2 - W6x9
L = 21.0' & 21.0'
FOUNDATION 1.5'x5'

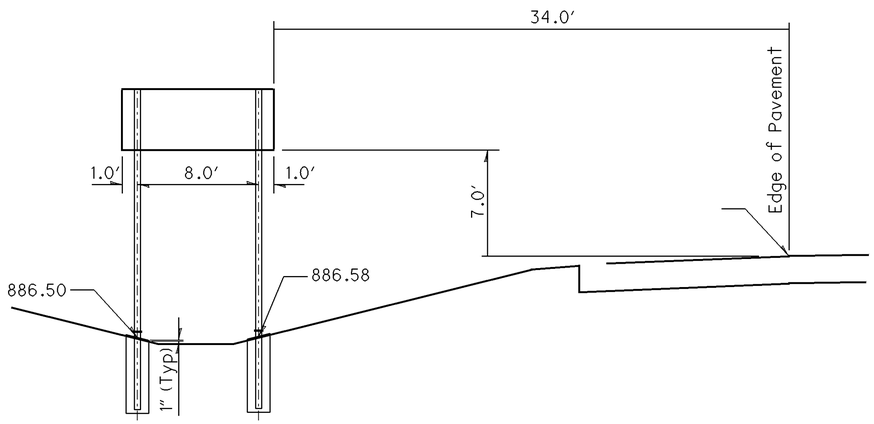

SIGN #67 E1-H3 E1-H5P

STA. 210+54, 84.5' RT. I.R. 75
SIGN AREA - 16.0' x 10' = 160 SQ.FT.
8' x 2.5' = 20 SQ.FT.

BEAM SUPPORTS
2 - W12x30
L = 30.6', 30.5'
FOUNDATION 2.5'x8.25'

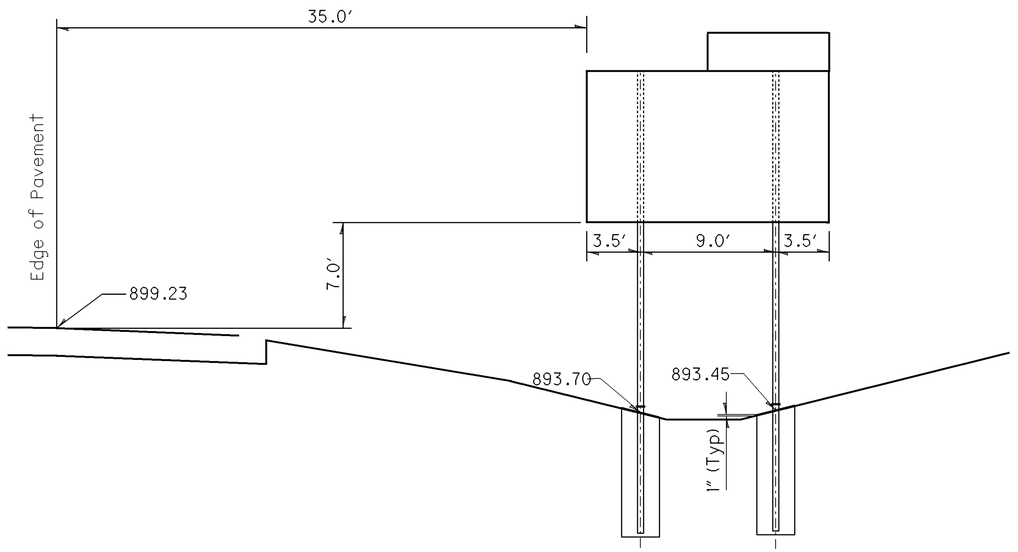

SIGNS DETAILS
MAINLINE I.R. 75

ALL-75-0.21

30/46

558
907

CALCULATED GLW
CHECKED TAB

I:\Pdv\89029\traffic\sheets\89029Txs001.dgn 25-JUN-2013 10:57AM tbolenba

SIGN #69 E5-H1A-96

STA. 219+00, 64.5' Rt. I.R. 75
SIGN AREA - 8' x 5' = 40 SQ.FT.

BEAM SUPPORTS
2 - W6X9
L = 17.6', 18.4'
FOUNDATION 1.5'x5'

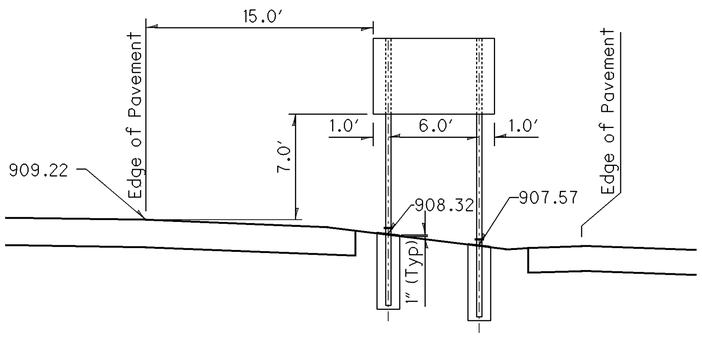

SIGN # 105 OVERHEAD SIGN SUPPORT
TYPE TC-12.30, DESIGN 8
E1-H3, E1-H5P, SOUTHBOUND IR 75
Sta. 240+00, 43.2'Lt
SIGN AREA - 16.0'x10' = 160 SQ.FT.
8'x2.5' = 20 SQ.FT.

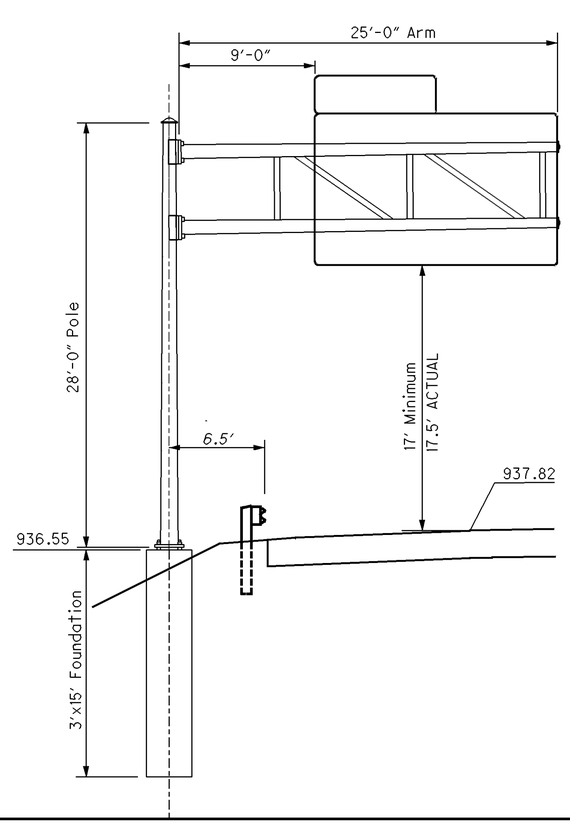

SIGN #104 E5-H1A-96

STA. 232+00, 81' Lt. I.R. 75
SIGN AREA - 8' x 5' = 40 SQ.FT.

BEAM SUPPORTS
2 - W6X9
L = 17.6', 18.4'
FOUNDATION 1.5'x5'

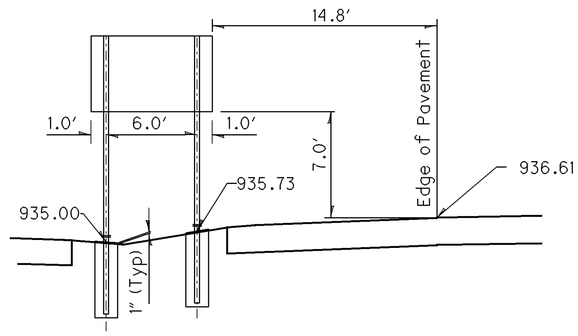

SIGN #109 E1-H1, E1-H5P

STA. 254+00, 79.5' Rt. I.R. 75
SIGN AREA - 13.0' x 6' = 78 SQ.FT.
8' x 2.5' = 20 SQ.FT.

BEAM SUPPORTS
2 - W10x12
L = 22.2' & 23.5'
FOUNDATION 2.5'x6'

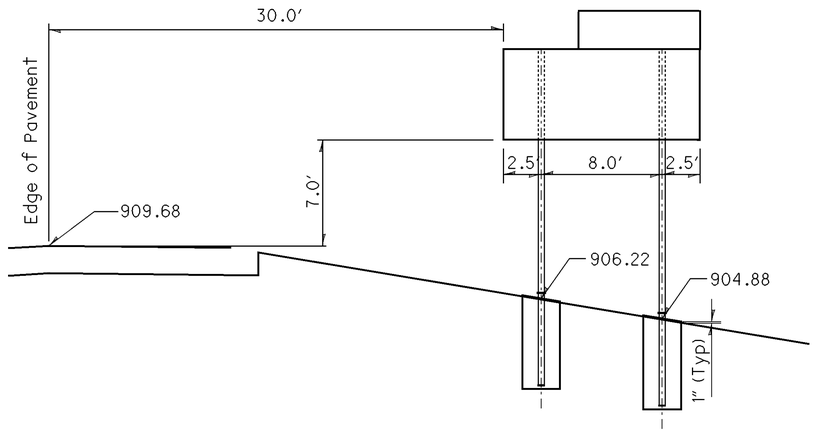

CALCULATED GLW
CHECKED TAB

SIGNS DETAILS
MAINLINE I.R. 75

ALL-75-0.21

31/46

559
907

I:\Pd\89029\traffic\sheets\89029Txs001.dgn 25-JUN-2013 10:57AM tbolenba

SIGN #110 E1-1A E1-H5P

STA. 257+00, 75.5′ Lt. I.R. 75
SIGN AREA - 14.0′ x 12′ = 168 SQ.FT.
8′ x 2.5′ = 20 SQ.FT.

BEAM SUPPORTS
2 - W12x30
L = 31.3′, 33.4′
FOUNDATION 2.5′x8.25′

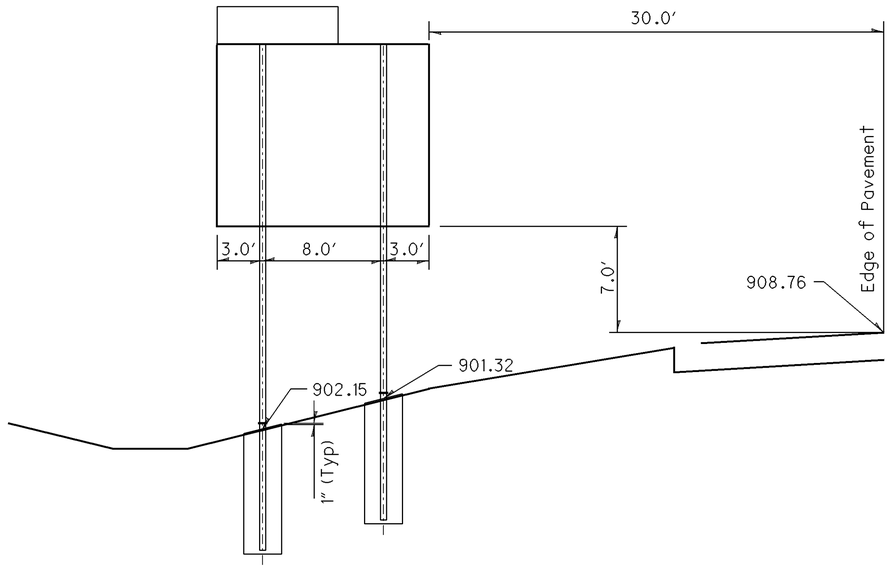

SIGN #115 D12-H16-108

STA. 278+00, 79.5′ Rt. I.R. 75
SIGN AREA - 9.0′ x 4′ = 36 SQ.FT.

BEAM SUPPORTS
2 - W6x9
L = 19.4′ & 21.2′
FOUNDATION 1.5′x5′

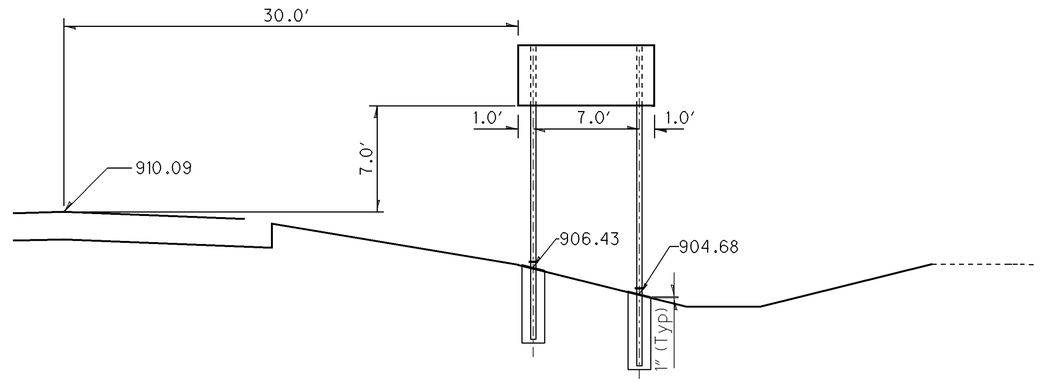

SIGN #116 E3-H1

STA. 279+00, 79.5′ Lt. I.R. 75
SIGN AREA - 9.0′ x 5′ = 45 SQ.FT.

BEAM SUPPORTS
2 - W6x9
L = 20.4′ & 22.1′
FOUNDATION 1.5′x5′

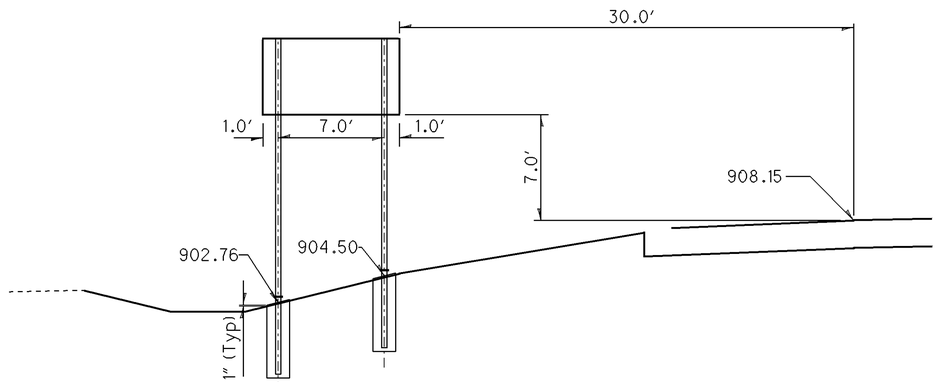

SIGN #117 E1-H1 E1-H5P

STA. 280+50, 86.5′ Rt. I.R. 75
SIGN AREA - 13.0′ x 6′ = 78 SQ.FT.
8′ x 2.5′ = 20 SQ.FT.

BEAM SUPPORTS
2 - W10x12
L = 22.3′ & 20.3′
FOUNDATION 2.5′x6′

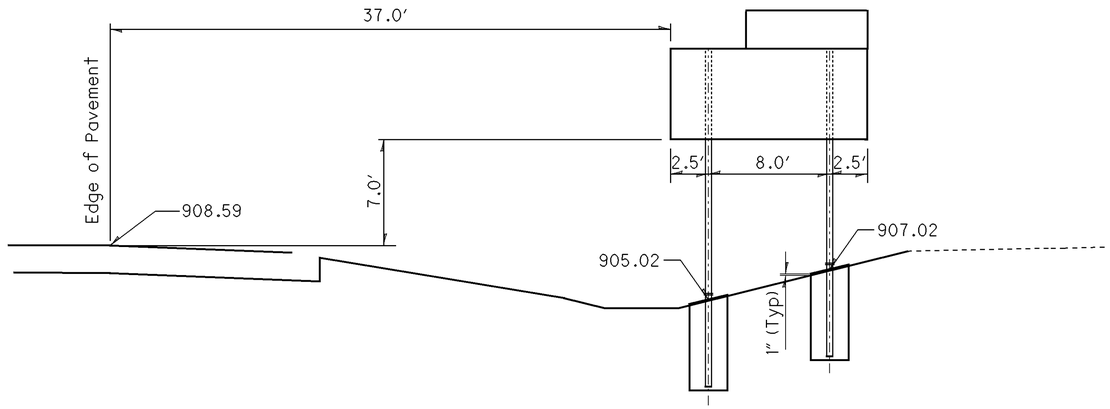

CALCULATED GLW
CHECKED TAB

SIGN DETAILS
MAINLINE I.R. 75

ALL-75-0.21

32/46

560/907

I:\Pd\89029\traffic\sheets\89029Txs001.dgn 25-JUN-2013 10:57AM tbolenba

SIGN #118 E1-1A E1-H5P

STA. 287+80, 83.5' Lt. I.R. 75
SIGN AREA - 14.0' x 12' = 168 SQ.FT.
8' x 2.5' = 20 SQ.FT.

BEAM SUPPORTS
2 - W12x30
L = 32.0', 32.0'
FOUNDATION 2.5'x8.25'

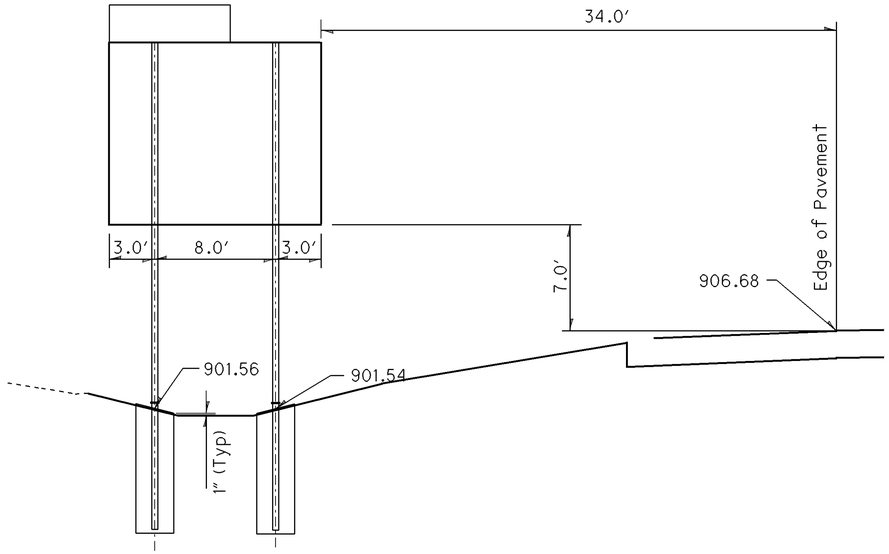

SIGN #25 D1-H6A-48

STA. 100+50, 30.9' Rt. BREESE RD.
SIGN AREA - 9' x 4' = 36 SQ.FT.

BREAKAWAY SUPPORTS
2 - S4x7.7
L = 15.2' & 15.4'
FOUNDATION 1.5'x4'

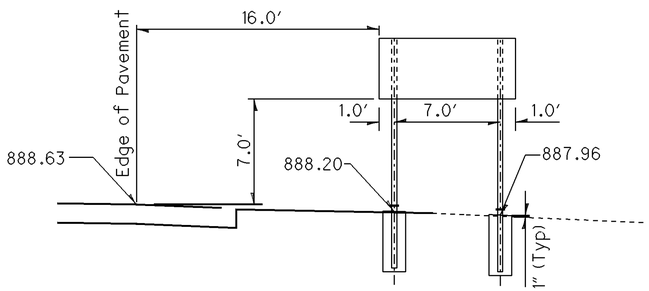

SIGN #26 M2-H4-108

STA. 102+00, 33.0' Rt. BREESE RD.
SIGN AREA - 9' x 3' = 27 SQ.FT.

BREAKAWAY SUPPORTS
2 - S4x7.7
L = 15.0' & 16.8'
FOUNDATION 1.5'x4'

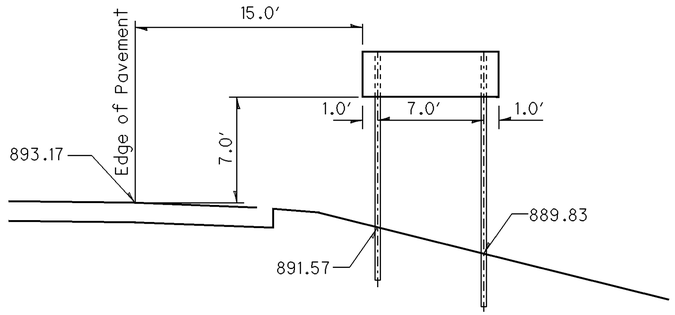

CALCULATED GLW
CHECKED TAB

SIGNS DETAILS
BREESE RD INTERCHANGE MAINLINE I.R. 75

ALL-75-0.21

SIGN #28

STA. 101+40, 37′ Lt. BREESE RD.
SIGN AREA - 8′ x 7′ = 56 SQ.FT.

BEAM SUPPORTS
2 - W10x12
L = 25.3′ & 27.0′
FOUNDATION 2.5′x6′

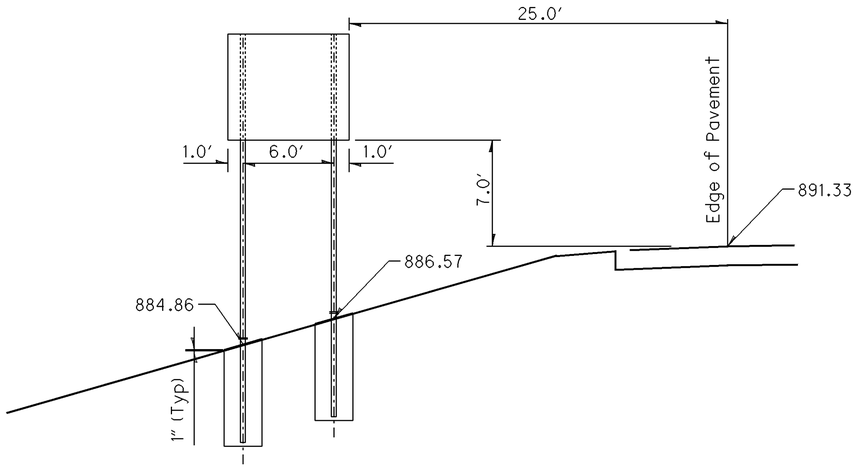

SIGN #35 RAMP C D3-H1-96
D1-H1B-96

STA. 115+00, 15.0′ Lt. RAMP C
SIGN AREA - 8′ x 2′ = 16 SQ.FT.
SIGN AREA - 8′ x 2′ = 16 SQ.FT.

BREAKAWAY SUPPORTS
2 - W10x12
L = 20′ & 22′
FOUNDATION 2.5′x6′

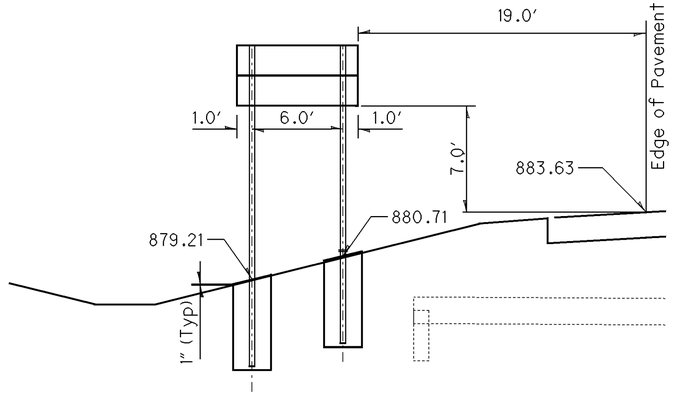

SIGN #36 RAMP B D3-H1-96
D1-H1B-96

STA. 109+00, 15.0′ Rt. RAMP B
SIGN AREA - 8′ x 2′ = 16 SQ.FT.
SIGN AREA - 8′ x 2′ = 16 SQ.FT.

BREAKAWAY SUPPORTS
2 - W10x12
L = 19.9′ & 22.9′
FOUNDATION 2.5′x6′

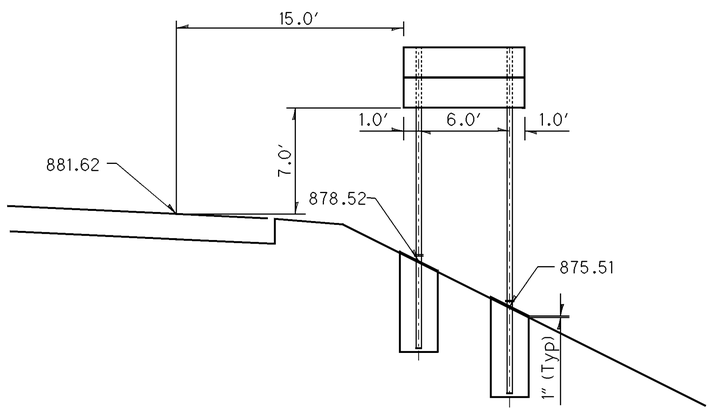

SIGN #41

STA. 108+30, 42′ Rt. BREESE RD.
SIGN AREA - 8′ x 7′ = 56 SQ.FT.

BEAM SUPPORTS
2 - W10x12
L = 21.8′ & 23.2′
FOUNDATION 2.5′x6′

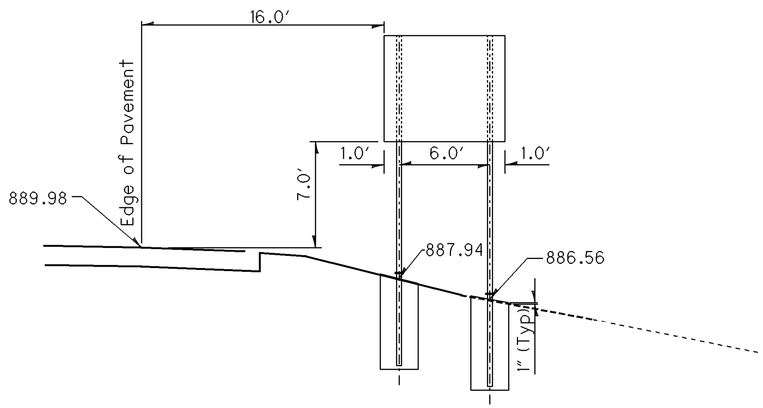

CALCULATED GLW
CHECKED TAB

SIGNS DETAILS
BREESE RD INTERCHANGE

ALL-75-0.21

34/46

562
907

I:\Pd\89029\traffic\sheets\89029Txs001.dgn 25-JUN-2013 10:56AM tbolenba

SIGN #43 D1-H6A-108

STA. 111+50, 28.0′ Lt. BREESE RD.
SIGN AREA - 9′ x 4′ = 36 SQ.FT.

BREAKAWAY SUPPORTS
2 - S4x7.7
L = 16.0′ & 16.9′
FOUNDATION 1.5′x4′

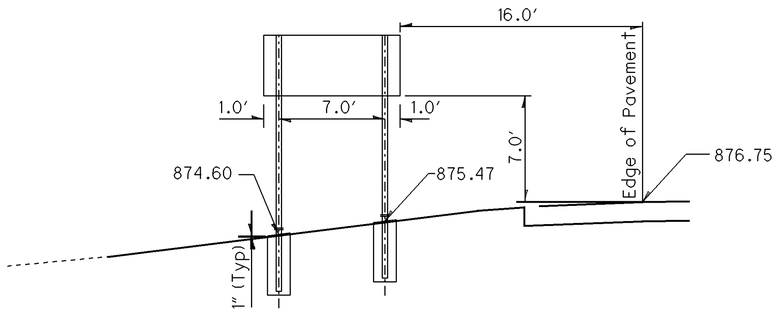

SIGN #46 M2-H4-108

STA. 107+50, 33.0′ Lt. BREESE RD.
SIGN AREA - 9′ x 3′ = 27 SQ.FT.

BREAKAWAY SUPPORTS
2 - S4x7.7
L = 15.7′ & 18.0′
FOUNDATION 1.5′x4′

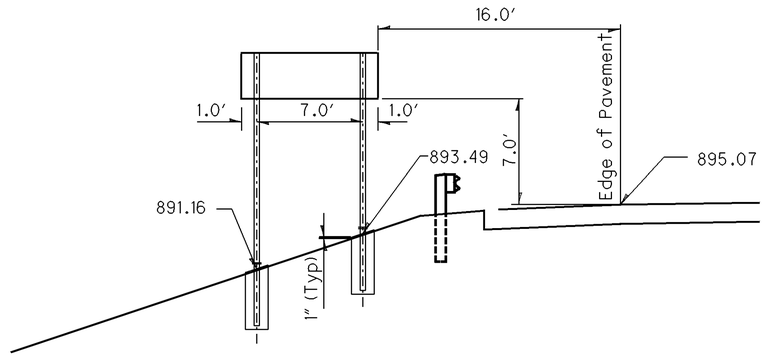

SIGN #81

STA. 101+75, 54′ Lt. S.R. 65
SIGN AREA - 8′ x 7′ = 56 SQ.FT.

BEAM SUPPORTS
2 - W10x12
L = 20.4′ & 20.8′
FOUNDATION 2.5′x6′

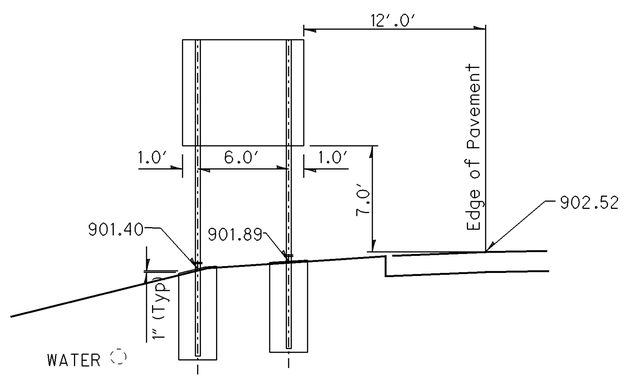

SIGN #85 D1-H6A-108

STA. 97+00, 33.5′ Rt. S.R. 65
SIGN AREA - 9′ x 4′ = 36 SQ.FT.

BREAKAWAY SUPPORTS
2 - W6X9
L = 17.0′ & 17.0′
FOUNDATION 1.5′x5′

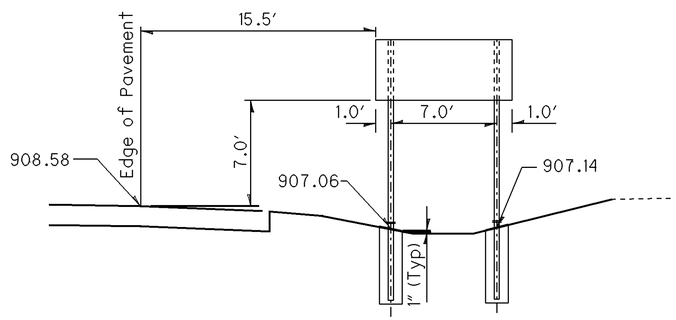

SIGN #90 M2-H4-108

STA. 102+40, 44.0′ Rt. S.R. 65
SIGN AREA - 9′ x 3′ = 27 SQ.FT.

BREAKAWAY SUPPORTS
2 - S4x7.7
L = 14.0′ & 14.6′
FOUNDATION 1.5′x4′

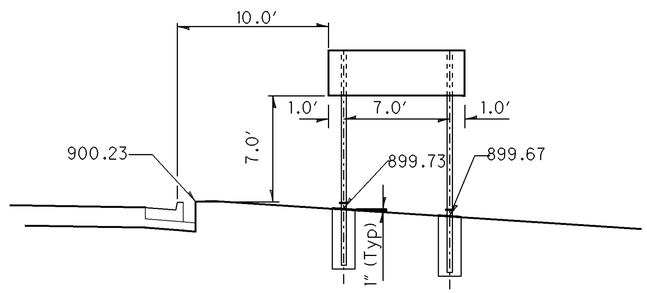

FIBER OPTIC

CALCULATED GLW
CHECKED TAB

SIGNS DETAILS
SR 65 AND BREESE RD. INTERCHANGE

ALL-75-0.21

35/46

563/907

I:\Pd\89029\traffic\sheets\89029Txs001.dgn 25-JUN-2013 10:56AM tbolenba

SIGN #92 D1-H6A-48

STA. 111+50, 26.6′ Rt. S.R. 65
SIGN AREA - 9′ x 4′ = 36 SQ.FT.

BREAKAWAY SUPPORTS
2 - W6X9
L = 18.0′ & 18.8′
FOUNDATION 1.5′x5′

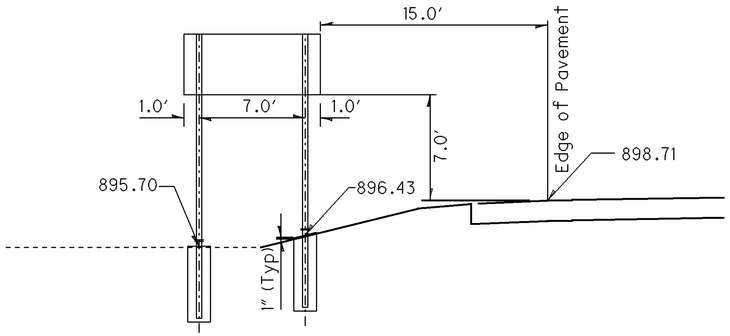

SIGN #97

STA. 106+40, 47.4′ Rt. S.R. 65
SIGN AREA - 8′ x 7′ = 56 SQ.FT.

BEAM SUPPORTS
2 - W10x12
L = 20.9′ & 21.7′
FOUNDATION 2.5′x6′

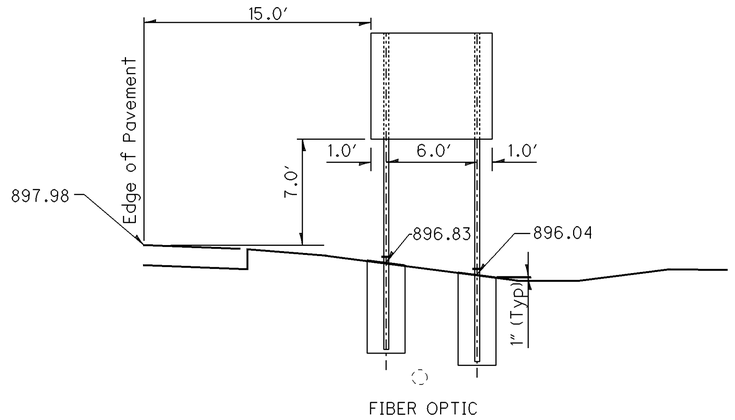

FIBER OPTIC

SIGN #102 M2-H4-108

STA. 105+55, 44.0′ Lt. S.R. 65
SIGN AREA - 9′ x 3′ = 27 SQ.FT.

BREAKAWAY SUPPORTS
2 - S4x7.7
L = 14.0′ & 14.3′
FOUNDATION 1.5′x4′

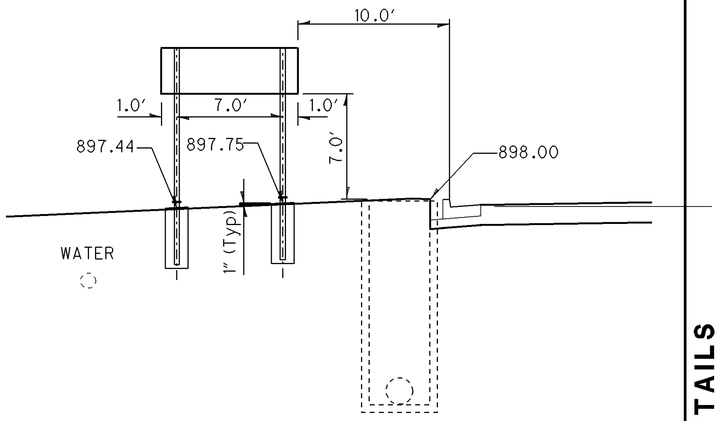

SIGN #78 RAMP A D1-H6A-108, D1-H5-108,
M1-5-36-2, M6-4-30

STA. 219+22, 20.0′ Lt. RAMP A
SIGN AREA - 9′ x 4′ = 36 SQ.FT.
SIGN AREA - 9′ x 2′ = 18 SQ.FT.
SIGN AREA - 2.5′ x 1.75′ = 4.375′ SQ.FT.
SIGN AREA - 3′ x 3′ = 9 SQ.FT.

BREAKAWAY SUPPORTS
2 - W10x12
L = 21.8′ & 23.6′
FOUNDATION 1.5′x5′

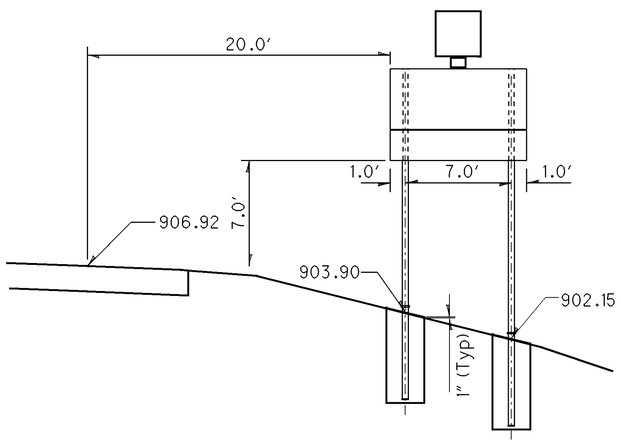

SIGN #100 RAMP C D1-H6A-108, D1-H5-108,
M1-5-36-2, M6-4-30

STA. 227+00, 15.0′ Lt. RAMP C
SIGN AREA - 9′ x 4′ = 36 SQ.FT.
SIGN AREA - 9′ x 2′ = 18 SQ.FT.
SIGN AREA - 2.5′ x 1.75′ = 4.375′ SQ.FT.
SIGN AREA - 3′ x 3′ = 9 SQ.FT.

BREAKAWAY SUPPORTS
2 - W10x12
L = 23.8′ & 20.3′
FOUNDATION 1.5′x5′

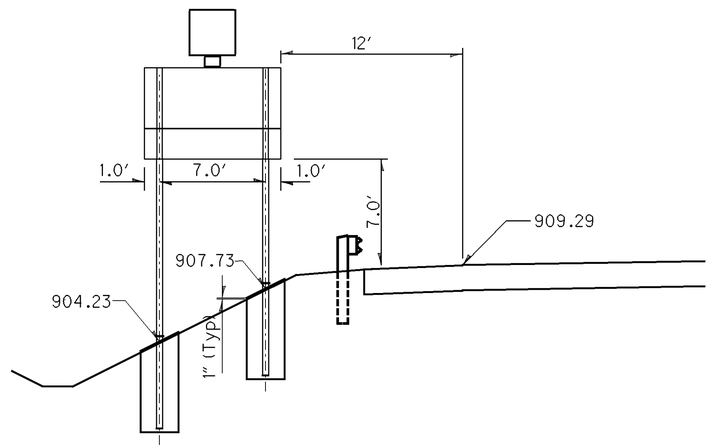

I:\Pdv\89029\traffic\sheets\89029Txs001.dgn 25-JUN-2013 10:56AM tbolenba

CALCULATED GLW
CHECKED TAB

SIGNS DETAILS
S.R. 65 INTERCHANGE

ALL-75-0.21

SIGNS

SHEET NO.	REFERENCE NO.	STATION	SIDE	CODE	SIZE	LEVEL	630 SIGNS: FLAT SHEET TYPE "G"	630 SIGNS: EXTRU SHEET TYPE "G"	630 SIGNS: EXTRU SHEET TYPE "G" YELLOW	630 SIGNS: ERECTED FLAT SHEET	630 Sign Attachment Assembly	630 Sign Backing Assembly	630 GROUND MOUNTED SUPPORT, NO. 3 POST	630 ONE WAY SUPPORT, NO. 4 POST	630 SIGN POST REFLECTOR	630 GROUND MOUNTED SIGN SUPPORTS: S4x7.7	W6x9	W10x12	W8x18	W10x22	W12x30	630 Ground Mounted Beam Support Foundation	630 BREAKAWAY BEAM CONNECTION	630 OVERHEAD SIGN SUPPORTS: OVERHEAD SIGN SUPPORT TC-12.30 DESIGN 8	630 OVERHEAD SIGN SUPPORTS: RIGID OVERHEAD SIGN SUPPORT FOUNDATION	625 GROUND ROD
					Inches		SQ. FT.	SQ. FT.	SQ. FT.	SQ. FT.	EACH	EACH	FT	FT	EACH	FT	FT	FT	FT	FT	FT	EACH	EACH	EACH	EACH	EACH
		I.R. 75																								
1/46	1	4+50	Lt.	E1-H1	228x72	1		114.0			1							18 20				2	2			
				E1-H5P-96	96X30			20.0																		
	2	15+00	Rt.	M1-1-36	36x36		9.0						15.0 15.0													
				M3-1-36	36x18		4.5																			
	3	19+36	Lt.	R3-4-48	48x48		12.0						15.0 15.0													
				R5-H11-24	24x30		5.0																			
	4	19+84	Rt.	R3-4-48	48x48		12.0						15.0 15.0													
				R5-H11-24	24x30		5.0																			
	5	25+00	Lt.	E1-H1	192x96	1		128.0			1									28 25.8		2	2			
				E1-H5P-96	96X30			20.0																		
	5A	Hume Rd.(West)	Rt.	W14-2-30	30x30		6.25						15.0		1											
	5B	Hume Rd.(West)		OM4-1-18	18x18		2.25						15.0		1											
				OM4-1-18	18x18		2.25						15.0		1											
				OM4-1	18x18		2.25						15.0		1											
	6	25+00	Rt.	R2-1-48	48x60		20.0									19.3 20						2	2			
	6A	Hume Rd.(East)	Rt.	W14-2-30	30x30		6.25						15.0		1											
	6B	Hume Rd.(East)		OM4-1-18	18x18		2.25						15.0		1											
				OM4-1-18	18x18		2.25						15.0		1											
				OM4-1-18	18x18		2.25						15.0		1											
2/46	7	31+73	Rt.	D10-3-12	12x48		4.0						13													
	8	31+73	Lt.	D10-3-12	12x48		4.0						13													
	9	35+00	Rt.	E7-H1	156x60	2		65.0										22.3 22.3				2	2			
	10	50+50	Lt.	E1-H1	192x96	1		128.0			1								24.3 22.6			2	2			
				E1-H5P-96	96X30			20.0																		
	11	51+25	Rt.	E1-H1	168x72	1		84.0			1									20.4 21.9		2	2			
				E1-H5P-96	96X30			20.0																		
	12	52+50	Rt.	E8-H4-96	96x36	1		24.0								15.3 16.1						2	2			
	13	54+00	Lt.	E8-H4-96	96x36	1		24.0								15.3 16.1						2	2			
3/46	14	56+88	Rt.	E3-H1	180x84	2		105.0											22 23.6			2	2			
	15	64+00	Lt.	E7-H1	192x84	2		112.0												22.3 19.6		2	2			
	16	74+00	Lt.	M1-1-36-2	36x36		9.0						15 15													
				M3-3-36	36x18		4.5																			
	17	77+50	Rt.	E1-H1	168x72	1		84.0			1									23.2 25.2		2	2			
				E1-H5P-96	96X30			20.0																		
4/46	18	84+00	Lt.	R2-1-48	48x60		20.0						15.5 15.5													
	19L	84+53	Lt.	D10-3-12	12x48		4.0						13													
	19R	84+53	Rt.	D10-3-12	12x48		4.0						13													
	20	97+40	Rt.	E1-H1	204x48	1		68.0			1							19.7 23				2	2			
				E1-H5P-96	96X30			20.0																		
5/46	21	105+50	Lt.	W4-1R-48	48x48		16.0						15 15		2											
	22	106+00	Rt.	E5-H1A-96	96x60			40.0									17.2 17.7					2	2			
	24	117+75	Lt.	E5-H1A-96	96x60			40.0									17.2 17.7					2	2			
							159.0	1,136.0					262.5 90.5			49.9 52.2	34.4 35.4	60.0 65.3	46.3 46.2	93.9 92.5						
SUB-TOTALS to Sheet 41/46							159	1,136			6		353		10	102	70	125	93	186		28	28			

CALCULATED GLW
CHECKED TEB

SIGN QUANTITIES

ALL-75-0.21

565/907

I:\Pd\89029\traffic\sheets\89029TS001.dgn 25-JUN-2013 10:56AM tbolenbo

SIGNS

SHEET NO.	REFERENCE NO.	STATION	SIDE	CODE	SIZE	LEVEL	630 SIGNS: FLAT SHEET TYPE "G"	630 SIGNS: EXTRU SHEET TYPE "G"	630 SIGNS: EXTRU SHEET TYPE "G" YELLOW	630 SIGNS: ERECTED FLAT SHEET	630 Sign Attachment Assembly	630 Sign Backing Assembly	630 GROUND MOUNTED SUPPORT, NO. 3 POST	630 ONE WAY SUPPORT, NO. 4 POST	630 SIGN POST REFLECTOR	630 GROUND MOUNTED SIGN SUPPORTS: S4x7.7	W6x9	W10x12	W8x18	W10x22	W12x30	630 Ground Mounted Beam Support Foundation	630 BREAKAWAY BEAM CONNECTION	630 OVERHEAD SIGN SUPPORTS: OVERHEAD SIGN SUPPORT TC-12.30 DESIGN 8	630 OVERHEAD SIGN SUPPORTS: RIGID OVERHEAD SIGN SUPPORT FOUNDATION	625 GROUND ROD
					Inches		SQ. FT.	SQ. FT.	SQ. FT.	SQ. FT.	EACH	EACH	FT	FT	EACH	FT	FT	FT	FT	FT	FT	EACH	EACH	EACH	EACH	EACH
		Breese Rd including Ramps																								
6/46	25	100+50	Rt.	D1-H6A-108	108x48			36.0								15.2 15.4						2	2			
6/46	26	102+00	Rt.	M2-H4-108	108x36			27.0								15 16.8						2	2			
6/46	27	100+42	Lt.	W10-1-36	36x36		9.0						15 16.8		2											
6/46	28	101+40	Lt.		96x84	3		56.0										25.3 27				2	2			
6/46	29	110+00	Lt.	R1-1-48	48x48		9.0							15 15.5	4											
				R5-1-48	48x48		9.0																			
				R6-1L-48	54x18		6.75																			
				R6-1R-48	54x18		6.75																			
6/46	30	110+00	Rt.	R1-1-48	48x48		9.0							15 15.5	4											
				R5-1-48	48x48		9.0																			
				R6-1L-48	54x18		6.75																			
				R6-1R-48	54x18		6.75																			
6/46	31	102+45	Rt.	R3-H8BA-30	30x30		6.25						14 14.5													
6/46	32	111+00	Lt.	R3-H8BJ-36	36x30		7.5						14 14.5													
6/46	33	113+00	Lt.	R3-H8BJ-36	36x30		7.5						14 14.5		2											
				R5-1A-36	36x24		6.0																			
6/46	34	113+00	Rt.	R3-H8BJ-36	36x30		7.5						14 14.5		2											
				R5-1A-36	36x24		6.0																			
6/46	35	115+00	Lt.	D3-H1-96	96x24			16										21.2 19.7				2	2			
				D3-H1b-96	96x24			16																		
7/46	36	109+00	Rt.	D3-H1-96	96x24			16										19.9 22.9				2	2			
				D3-H1b-96	96x24			16																		
7/46	37	111+00	Rt.	R3-H6b-42	42x36		10.5						14 14.5		2											
				R5-1A-36	36x24		6.0																			
7/46	38	111+00	Lt.	R3-H6b-42	42x36		10.5						14 14.5		2											
				R5-1A-36	36x24		6.0																			
7/46	39	113+70	Rt.	R1-1-48	48x48		9.0							15 15.5	4											
				R5-1-48	48x48		9.0																			
				R6-1L-48	54x18		6.75																			
				R6-1R-48	54x18		6.75																			
7/46	40	113+55	Lt.	R1-1-48	48x48		9.0							15 15.5	4											
				R5-1-48	48x48		9.0																			
				R6-1L-48	54x18		6.75																			
				R6-1R-48	54x18		6.75																			
7/46	41	108+30	Rt.		96x84	3		56.0										21.8 23.2				2	2			
7/46	42	111+25	Rt.	W5-3-30	30x30		6.25						14		1											
7/46	43	111+50	Lt.	D1-H6A-108	108x48			36.0								16 16.9						2	2			
7/46	44	110+50	Lt.	R2-1-36	36x48		12.0						14.5 14.5													
	45	DID NOT USE																								
7/46	46	107+50	Lt.	M2-H4-108	108x36			27.0								15.7 18						2	2			
7/46	47	107+20	Rt.	R3-H8BA-30	30x30		6.25						13.5													
		I.R. 75																								
8/46	48	118+50	Rt.	W4-1R-48	48x48		16.0						15 15		2											
8/46	49	125+80	Lt.	E1-H1	204x48	1		68				1						23.5 21				2	2			
				E1-H5P-96	96x30			20.0																		
		SUB-TOTALS to Sheet 41/46					249	390				1	156 133	60 62	29	129		226				18	18			

CALCULATED GLW
CHECKED TEB

SIGN QUANTITIES

ALL-75-0.21

I:\Pd\89029\traffic\sheets\89029TS001.dgn 25-JUN-2013 10:56AM tbolenba

SIGNS

SHEET NO.	REFERENCE NO.	STATION	SIDE	CODE	SIZE	LEVEL	630 SIGNS: FLAT SHEET TYPE "G"	630 SIGNS: EXTRU SHEET TYPE "G"	630 SIGNS: EXTRU SHEET TYPE "G" YELLOW	630 SIGNS: ERECTED FLAT SHEET	630 Sign Attachment Assembly	630 Sign Backing Assembly	630 GROUND MOUNTED SUPPORT, NO. 3 POST	630 ONE WAY SUPPORT, NO. 4 POST	630 SIGN POST REFLECTOR	630 GROUND MOUNTED SIGN SUPPORTS: S4x7.7	W6x9	W10x12	W8x18	W10x22	W12x30	630 Ground Mounted Beam Support Foundation	630 BREAKAWAY BEAM CONNECTION	630 OVERHEAD SIGN SUPPORTS: OVERHEAD SIGN SUPPORT TC-12.30 DESIGN 8	630 OVERHEAD SIGN SUPPORTS: RIGID OVERHEAD SIGN SUPPORT FOUNDATION	625 GROUND ROD
					Inches		SQ. FT.	SQ. FT.	SQ. FT.	SQ. FT.	EACH	EACH	FT	FT	EACH	FT	FT	FT	FT	FT	FT	EACH	EACH	EACH	EACH	EACH
		I.R. 75																								
8/46	50L	137+33	Lt.	D10-3-12	12x48		4.0						13													
8/46	50R	137+33	Rt.	D10-3-12	12x48		4.0						13													
8/46	51	140+00	Rt.	M1-1-36-2	36x36		9.0						15 15													
				M3-1-36	36x18		4.5																			
9/46	52	145+00	Rt.	R2-1-48	48x60		20.0															2	2			
9/46	53	147+00	Lt.	E1-H1	168x72	1		84			1							19.5 21.7				2	2			
				E1-H5P-96	96x30			20.0																		
9/46	54	DNU																								
9/46	55	156+00	Lt.	E3-H1	180x84	2		105.0											23.5 23.7			2	2			
9/46	56	166+00	Rt.	E1-H1	168x144	1		168.0			1									29.3 26.0		2	2			
				E1-H5P-96	96x30			20.0																		
10/46	56A	100+00(McClain Rd.)	Lt.	R2-1-30	30x36		7.5						14.5													
10/46	57	107+20 (McClain Rd)	Rt.	R3-H8BA-30	30x30		6.25						13.5									2	2			
10/46	58	175+00	Rt.	E1-2	168x72	1		84			1									25.1 23		2	2			
				E1-H5P-96	96x30			20.0																		
11/46	58A	92+50 (McClain Rd)	Rt.	R2-1-30	30x36		7.5						15													
12/46	59	180+00	Lt.	E7-H1	156x60	2		65.0										23.7 21.7				2	2			
12/46	60	181+00	Rt.	E3-H1	108x60	2		45.0									20.4 22					2	2			
12/46	61	186+00	Lt.	M1-1-36-2	36x36		9.0						15 15													
				M3-3-36	36x18		4.5																			
12/46	62	189+35	Rt.	E1-1A	168x144	1		168.0			1									29 29		2	2			
				E1-H5P-96	96x30			20.0																		
12/46	63L	190+13	Lt.	D10-3-12	12x48		4.0						12													
12/46	63R	190+13	Rt.	D10-3-12	12x48		4.0						12													
13/46	64	195+00	Lt.	R2-1-48	48x60		20.0						16 16													
13/46	65	199+25	Lt.	D12-H22-120	120x48			40.0									21 21					2	2			
13/46	66	204+50	Rt.	W8-13-48	48x48		16.0						15 15		2											
13/46	67	210+54	Rt.	E1-H3	192x120	1		160.0			1										30.6 30.5	2	2			
				E1-H5P-96	96x30			20.0																		
14/46	68	219+00	Lt.	W4-1R-48	48x48		16.0						15 15		2											
14/46	69	219+00	Rt.	E5-H1A-96	96x60	1		40.0									17.6 18.4					2	2			
		S.R.65																								
		INCLUDING RAMPS																								
14/46	70	104+00	Rt.	R2-1-36	36x48		12.0						15 15													
	71-76	DID NOT USE																								
		Ramp "A"																								
15/46	77	221+50	Lt.	R5-1A-42	42x30		8.75						13.5 13.5		2											
15/46	77A	221+50	Rt.	R5-1A-42	42x30		8.75						13.5 13.5		2											
15/46	78	221+00	Rt.	D1-H6A-108	108x48			36				1						21.8 23.6				2	2			
				D1-H5-108	108x24			18																		
				M1-5-36-2	30x30		5																			
				M6-4-30	30x21		4.375																			
													211.0 118.0			59.0 61.4		65.0 67.0	23.5 23.7	83.4 78.0	30.6 30.5				
SUB-TOTALS to Sheet 41/46							175	1,113			5	1	329		8	0	120	132	47	161	61	26	26			

CALCULATED GLW
CHECKED TEB

SIGN QUANTITIES

ALL-75-0.21

39/46

567/907

I:\Pdv\89029\traffic\sheets\89029TS001.dgn 25-JUN-2013 10:56AM tbolenba

SIGNS

SHEET NO.	REFERENCE NO.	STATION	SIDE	CODE	SIZE	LEVEL	630 SIGNS: FLAT SHEET TYPE "G"	EXTRU SHEET TYPE "G"	EXTRU SHEET TYPE "G" YELLOW	ERECTED FLAT SHEET	Sign Attachment Assembly	Sign Backing Assembly	GROUND MOUNTED SUPPORT, NO. 3 POST	ONE WAY SUPPORT, NO. 4 POST	SIGN POST REFLECTOR	630 GROUND MOUNTED SIGN SUPPORTS: S4x7.7	W6x9	W10x12	W8x18	W10x22	W12x30	Ground Mounted Beam Support Foundation	BREAKAWAY BEAM CONNECTION	630 OVERHEAD SIGN SUPPORTS: OVERHEAD SIGN SUPPORT TC-12.30 DESIGN 8	RIGID OVERHEAD SIGN SUPPORT FOUNDATION	625 GROUND ROD
					Inches		SQ. FT.	SQ. FT.	SQ. FT.	SQ. FT.	EACH	EACH	FT		EACH	FT	FT	FT	FT	FT	FT	EACH	EACH	EACH	EACH	EACH
		S.R.65 (CONT.)																								
15/46	79	223+45	Lt.	R1-1-48	48x48		9.0							15 15.5	4											
				R5-1-48	48x48		9.0																			
				R6-1L-48	54x18		6.75																			
				R6-1R-48	54x18		6.75																			
15/46	80	223+45	Rt.	R1-1-48	48x48		9.0							15 15.5	4											
				R5-1-48	48x48		9.0																			
				R6-1L-48	54x18		6.75																			
				R6-1R-48	54x18		6.75																			
15/46	81	101+75	Rt.		96x84	3		56.0											20.4 20.8			2	2			
15/46	82	100+50	Lt.	R3-H8BA-30	30x30		6.25						13.5 13.5													
16/46	83	97+00	Lt.	M3-3-30	30x15		3.125						15													
				M1-5-30-2	30x30		5																			
16/46	84	95+00	Rt.	M2-1-30	30x21		2.19						15													
				M1-1-30-2	30x30		6.25																			
16/46	85	97+00	Rt.	D1-H6A-48	108x48			36.0									17 17					2	2			
		YODER RD.																								
17/46	86	0+53	Lt.	R1-1-30	30x30		6.25						13.5 13.5		2											
17/46	87	1+50	Rt.	W1-3L-30	30x30		6.25						15.5 15.5		2											
				W13-1P-24	24x24		4.0																			
17/46	88	4+56	Lt.	W3-1-30	30x30		6.25						14 14		2											
17/46	89	7+84	Rt.	W10-1-24	24x24		4						14 14		2											
		S.R.65																								
15/46	90	102+40	Rt.	M2-H4-108	108x36			27.0								14 14.6						2	2			
18/46	91	106+25	Lt.	R3-H8BB-30	30x30		5						13.5													
18/46	92	111+50	Lt.	D1-H6A-108	108x48			36.0									18 18.8					2	2			
18/46	93	110+00	Lt.	R2-1-30	30x36		7.5						15													
18/46	94	109+00	Lt.	R3-H8BB-30	30x30		5						13.5													
	95	DO NOT USE																								
18/46	96	108+00	Rt.	M3-1-30	30x15		3.125						15													
				M1-5-30-2	30x30		5																			
18/46	97	106+40	Rt.		96x84	3		56.0											20.9 21.7			2	2			
		Ramp "C"																								
18/46	98	224+70	Lt.	R5-1-48	48x48		16							15 15	2											
				R6-1L-54	54x18		6.75																			
				R6-1R-54	54x18		6.75																			
18/46	99	224+70	Rt.	R5-1-48	48x48		16							15 15	2											
				R6-1L-54	54x18		6.75																			
				R6-1R-54	54x18		6.75																			
18/46	100	227+00	Lt.	D1-H6A-108	108x48			36				1					23.8 20.3					2	2			
				D1-H5-108	108x24			18																		
				M1-5-36-2	30x30		5																			
				M6-4-30	30x21		4.375																			
18/46	101	226+50	Lt.	R5-1A-42	42x30		8.75						13.5 13.5		2											
18/46	101A	226+50	Rt.	R5-1A-42	42x30		8.75						13.5 13.5		2											
													184.5 97.5	60 61		14 14.6	58.8 56.1	39.3 40.5				12	12			
SUB-TOTALS to Sheet 41/46							224	265				1	282	121	24	29	115	84				12	12			

CALCULATED GLW
CHECKED TEB

SIGN QUANTITIES

ALL-75-0.21

I:\Pd\89029\traffic\sheets\89029TS001.dgn 25-JUN-2013 10:56AM tbolenba

SIGNS

SHEET NO.	REFERENCE NO.	STATION	SIDE	CODE	SIZE	LEVEL	630 SIGNS: FLAT SHEET TYPE "C"	630 SIGNS: EXTRU SHEET TYPE "G"	630 SIGNS:	630 SIGN, OVERHEAD EXTRU SHEET	630 Sign Attachment Assembly	630 Sign Backing Assembly	630 GROUND MOUNTED SUPPORT, NO. 3 POST	630 ONE WAY SUPPORT, NO. 4 POST	630 SIGN POST REFLECTOR	630 GROUND MOUNTED SIGN SUPPORTS: S4x7.7		630 GROUND MOUNTED SIGN SUPPORTS: W6x9		630 GROUND MOUNTED SIGN SUPPORTS: W10x12		630 GROUND MOUNTED SIGN SUPPORTS: W8x18	630 GROUND MOUNTED SIGN SUPPORTS: W10x22	630 GROUND MOUNTED SIGN SUPPORTS: W12x30		630 Ground Mounted Beam Support Foundation	630 BREAKAWAY BEAM CONNECTION	630 OVERHEAD SIGN SUPPORTS: OVERHEAD SIGN SUPPORT TC-12.30 DESIGN 8	630 OVERHEAD SIGN SUPPORTS: RIGID OVERHEAD SIGN SUPPORT FOUNDATION	625 GROUND ROD
					Inches		SQ. FT.	SQ. FT.	SQ. FT.		EACH	EACH	FT		FT		EACH	FT		FT		FT		FT		FT		EACH	EACH	EACH	EACH	EACH
		Ramp "C"																													
16/46	200	96+80	Rt.	R1-1-36	36x36		9.0						13.5	13.5		2															
16/46	201	94+15	Rt.	W3-5-36	36x36		9.0						13.5	13.5		2															
18/46	102	105+55	Lt.	M2-H4-108	108x36			27.0									14	14.3													
		Ramp "D"																													
19/46	103	231+00	Rt.	W4-1R-48	48x48		16.0						16.0	16.0		2															
		I.R. 75																													
19/46	104	232+00	Lt.	E5-H1A-96	96x60			40.0											17.6	18.4						2	2				
19/46	104A	Yoder Rd.	Lt.	W1-3L-30	30X30		6.25						15	15		2															
				W13-1-24	24X24		4.0																								
19/46	105	240+00	Lt.	E1-H3	192x120	1				160.0	1																		1	1	1
				E1-H5P-96	96x30					20.0																					
20/46	106L	242+93	Lt.	D10-3-12	12x48		4.0						12																		
20/46	106R	242+93	Rt.	D10-3-12	12x48		4.0						12																		
20/46	107	248+50	Rt.	R2-1-48	48x60		20.0						16	16.5																	
20/46	108	250+00	Lt.	W8-13-48	48x48		16.0						16.0	16.0		2															
20/46	109	254+00	Rt.	E1-H1	156x72	1		78.0			1										22.2	23.5					2	2			
				E1-H5P-96	96x30			20.0																							
21/46	110	258+00	Lt.	E1-1A	168x144	1		168.0			1															31.3	33.4	2	2			
				E1-H5P-96	96x30			20.0																							
21/46	111	260+00	Rt.	M1-1-36-2	36x36		9.0						15	15																	
				M3-1-36	36x18		4.5																								
		HANTHORN RD.																													
23/46	112	98+78	Lt.	W11-10	30x30		6.25						15.5	15.5		2															
				W7-3aP	30x24		5.0																								
23/46	113	00+00	Lt.	XXXXX	XXxXXX		0.00						14	14		2															
23/46	114	113+00	Lt.	W3-1-30	30x30		6.25						14	14		2															
		I.R. 75																													
24/46	115	278+00	Rt.	D12-H16-108	108x48			36.0											19.4	21.2						2	2				
24/46	116	279+00	Lt.	E1-H1	108x60	1		45											20.4	22.1						2	2				
24/46	117	280+50	Rt.	E1-H1	156x72	1		78.0			1												22.3	20.3		2	2				
				E1-H5P-96	96x30			20.0																							
24/46	118	287+80	Lt.	E1-1A	168x144	1		168.0			1															32	32	2	2			
				E1-H5P-96	96x30			20.0																							
													172.5	149			14	14.3	57.4	61.7	22.2	23.5	22.3	20.3		63.3	65.4					
SUB-TOTALS 41							119	720		180	5		322			16	28		119		46		43			129		14	14	1	1	1
SUB-TOTALS 37							159	1,136			6		353			10	102	70		125		93		186			28	28			
SUB-TOTALS 38							249	390			1		290	122		29	129			226							18	18			
SUB-TOTALS 39							175	1,113			5	1	329			8	0	120		132		47		161		61	26	26			
SUB-TOTALS 40							224	265				1	282	121		24	29	115		84							12	12			
TOTALS CARRIED TO GENERAL SUMMARY							926	3,624		180	17	2	1576	243		87	288	424		613		183		347		190	98	98	1	1	1

CALCULATED GLW
CHECKED TEB

SIGN QUANTITIES

ALL-75-0.21

41 / 46

569
907

I:\Pd\89029\traffic\sheets\89029TS001.dgn 25-JUN-2013 10:56AM tbolenba

SIGNS

630

SHEET NO.	REFERENCE NO.	STATION	SIDE	CODE	SIZE	LEVEL		REMOVAL OF GROUND MOUNTED SIGN AND DISPOSAL	REMOVAL OF GROUND MOUNTED SIGN AND REERECTION	REMOVAL OF GROUND MTD. MAJOR SIGN AND DISPOSAL	REMOVAL OF GROUND MOUNTED POST SUPPORT AND DISPOSAL	REMOVAL OF GROUND MOUNTED BEAM SUPPORT AND DISPOSAL		REMOVAL OF OVERHEAD MOUNTED SIGN AND DISPOSAL							
					Inches			EACH	EACH	EACH	EACH	EACH		EACH							
1/46	R-1							1		1		2									
	T-1	DND																			
	R-2							2			2										
	R-3							2			2										
	R-4							2			2										
	R-5							1		1		2									
	R-5A							1			1										
	R-5B							1			1										
	R-6							1			2										
	R-6A							1			1										
	R-6B							1			1										
	R-6C							1			1										
2/46	R-7							1			1										
	R-8							1			1										
	R-9									1		2									
	R-10							1		1		2									
	R-11							1		1		2									
	R-12,13	DID NOT USE																			
3/46	R-14									1		2									
	R-15									1		2									
	R-16							1			2										
	R-17							1		1		2									
4/46	R-18							2			2										
	R-19L							1			1										
	R-19R							1			1										
	R-20							1		1		2									
5/46	R-21							1			2										
	R-22									1		2									
	R-23	DID NOT USE																			
	R-24									1		2									
		Breese Rd including Ramps																			
6/46	R-25									1		2									
	R-26									1		2									
	R-27							1			1										
	R-28							2		1		2									
	R-29							4			2										
	R-30							4			2										
	R-31							1			2										
	R-32							1			2										
	R-33a									1		2									
	R-33b							1			2										
7/46	R-34									1		2									
	R-35							1			2										
	R-36							1			1										
	R-37							1			1										
	R-38							2			2										
	R-39									1		2									
	R-40							2		1		2									
	R-41							1			2										
	R-42							1			1										
	R-43									1		2									
8/46	R-44							1			2										
	R-45							1		1		2									
	R-46							1		1		2									
	R-47							1			1										
	R-48							1			1										
	R-49							2			2										
	R-50	DNU																			
	R-51	DNU																			
	R-52	DNU																			
SUB-TOTALS		to Sheet 44/46						56		21	49	42									

CALCULATED GLW
CHECKED TEB

SIGN QUANTITIES

ALL-75-0.21

42 / 46

570 / 907

I:\Pd\89029\traffic\sheets\89029TS001.dgn 25-JUN-2013 10:56AM tbolenba

SHEET NO.	REFERENCE NO.	STATION	SIDE	CODE	SIZE	LEVEL	630															
								REMOVAL OF GROUND MOUNTED SIGN AND DISPOSAL	REMOVAL OF GROUND MOUNTED SIGN AND REERECTION	REMOVAL OF GROUND MTD. MAJOR SIGN AND DISPOSAL	REMOVAL OF GROUND MOUNTED POST SUPPORT AND DISPOSAL	REMOVAL OF GROUND MOUNTED BEAM SUPPORT AND DISPOSAL		REMOVAL OF OVERHEAD MOUNTED SIGN AND DISPOSAL								
					Inches																	
		I.R. 75																				
9/46	R-53							1		1		2										
	R-54									1		2										
	R-W1							1			2											
	R-W2							1			2											
	R-W3							1			1											
	R-W4							1			1											
10/46	R-W5							1			1											
	R-W6							1			1											
	R-W7							1			1											
	R-W8							1			1											
	R-W9							1			1											
	R-55									1		2										
	R-56							1			1											
	R-57									1		2										
	R-58							1		1		2										
	R-59							1			2											
11/46	R-60							1			1											
12/46	R-61									1		2										
	R-62							1				2										
	R-63							1			1											
	R-64							1			1											
	R-65							1			2											
	R-66							1		1		2										
13/46	R-67							2			2											
	T-2	DND																				
	R-68	DID NOT USE																				
	R-69	DID NOT USE																				
	R-70							1			2											
	R-71							1			2											
	R-72							1		1		2										
14/46	R-73							1			2											
	R-74									1		2										
	R-75							1			1											
	R-76							1			2											
	R-77							1			2											
	R-78									1		2										
15/46	R-79a							1			2											
	R-79b							1			2											
	R-203							1			2											
	R-80							1			1											
	R-81							4			2											
	R-82							6		1		2										
	R-83							3			2											
	R-84							1			1											
	R-85							1			1											
	R-86							2			2											
	R-87							1			2											
	R-88							1			2											
	R-89							1			2											
	R-90							3		1	2											
	T-3	DND																				
	R-91							1			2											
16/46	R-92							2			2											
	R-93							2			2											
	R-94									1		2										
	R-204							1			1											
	R-205							1			1											
	R-206							1			1											
	R-207							1			1											
	R-208							2			2											
SUB-TOTALS		to Sheet 44/46						67		13	67	26										

CALCULATED GLW
CHECKED TEB

SIGN QUANTITIES

ALL-75-0.21

571
907

I:\Pd\89029\traffic\sheets\89029TS001.dgn 25-JUN-2013 10:56AM tbolenba

SIGNS

SHEET NO.	REFERENCE NO.	STATION	SIDE	CODE	SIZE	LEVEL	630											631			
								REMOVAL OF GROUND MOUNTED SIGN AND DISPOSAL	REMOVAL OF GROUND MOUNTED SIGN AND REERECTION	REMOVAL OF GROUND MTD. MAJOR SIGN AND DISPOSAL	REMOVAL OF GROUND MOUNTED POST SUPPORT AND DISPOSAL	REMOVAL OF GROUND MOUNTED BEAM SUPPORT AND DISPOSAL		REMOVAL OF OVERHEAD MOUNTED SIGN AND DISPOSAL	REMOVAL OF OVERHEAD SIGN SUPPORT AND DISPOSAL, TYPE TC-12.30			REMOVAL OF LUMINAIRE AND DISPOSAL	REMOVAL OF SIGN WIRING AND DISPOSAL	REMOVAL OF SIGN SERVICE AND DISPOSAL
					Inches																
		I.R. 75																			
17/46	R-201							1			2										
18/46	R-95							1			2										
	R-96							3			2										
	R-97							1			1										
	R-98									1		2									
	R-99							2			2										
18/46	R-100							2			2										
	R-101							2		1		2									
	R-102							3			2										
	R-103							4			2										
	R-104							2		2	2										
	R-105							3		1		2									
	R-106							2			2										
	R-107							2			2										
19/46	R-202							1			2										
	R-203							1			2										
	R-108													2	1			2	1	1	
	R-109									1	2										
	R-110							2			2										
20/46	R-111							1			1										
	R-112							1			1										
	T-4	DND																			
	R-113							1			2										
	R-114							1			1										
	R-115									2		2									
	R-W11							1			1										
	R-W12							1			1										
	R-W13							1			1										
	R-W14							1			1										
21/46	R-116									1		2									
	R-W15							1			1										
	R-W16							1			1										
	R-W17							1			1										
	R-W18							1			1										
22/46	R-117									2		2									
	R-W19							1			1										
	R-W20							1			1										
	R-W21							1			1										
23/46	R-118							1			2										
	R-119							1			2										
	R-120																				
24/46	R-W22							1			1										
	R-121									2		2									
	R-122									2		2									
	R-123							1			2										
	R-124							1			2										
SUB-TOTALS SHEET 572								52		15	54	16		2	1			2	1	1	
SUB-TOTALS SHEET 570								56		21	49	42									
SUB-TOTALS SHEET 571								67		13	67	26									
TOTALS CARRIED TO GENERAL SUMMARY to Sheet 41 thru 46								175		49	170	84		2	1			2	1	1	

ITEM 631 - REMOVAL OF SIGN SERVICE AND DISPOSAL

ANY PULLBOXES, CONDUIT OR CIRCUITRY ENCOUNTERED IN THE REMOVAL OF THE EXISTING OVERHEAD SIGN LIGHTING SHALL BE CONSIDERED INCIDENTAL TO ITEM 631 - REMOVAL OF SIGN SERVICE AND DISPOSAL. THIS INCLUDES ALL ITEMS TO ENSURE THE SAFE DISCONNECTION OF THE POWER SERVICE TO THE SATISFACTION OF THE ENGINEER.

CALCULATED GLW
CHECKED TEB

SIGN QUANTITIES

ALL-75-0.21

I:\Pd\89029\traffic\sheets\89029TS001.dgn 26-JUN-2013 2:56PM tbolenba

SHT. NO.		STATION FROM	STATION TO	SIDE		618 RUMBLE STRIPS	620 DELINEATORS, POST MOUNTED	620 DELINEATORS, BRACKET MOUNTED		621 RPM 2-WAY (YELLOW/YELLOW)	621 RPM 2-WAY (WHITE/RED)	621 RPM 2-WAY (YELLOW/RED)	621 RPM 1-WAY (WHITE)	621 RAISED PAVEMENT MARKER REMOVED		646 4" WHITE EDGE LINE WW	646 4" YELLOW EDGE LINE YY	646 6" WHITE EDGE LINE WL	646 6" YELLOW EDGE LINE YL	646 6" WHITE LANE LINE LL	646 4" DOUBLE CENTER LINE DL	646 8" CHANNELIZING LINE CL	646 12" CHANNELIZING LINE CL 12	646 24" TRANSVERSE/ DIAGONAL LINE YT		647 24" STOP LINE, TYPE A125 SL	647 RAILROAD SYMBOL MARKING, TYPE A125 RR	647 LANE ARROW, TYPE A125 LA
						FT	EACH	EACH		EACH	EACH	EACH	EACH	EACH		FT	FT	FT	FT	FT	FT	FT	FT	FT		FT	EACH	EACH
1	IR 75	11+00	30+00	Lt		3800												1900	1900	1900								
				Rt		3800												1900	1900	1900								
2	IR 75	30+00	55+00	Lt		4864												2500	2500	2500								
				Rt		4864												2500	2500	2500								
3	IR 75	55+00	80+00	Lt		5000												2500	2500	2500								
				Rt		5000												2500	2500	2500								
4	IR 75	80+00	105+00	Lt		5000	6				11	1				55	55	2555	2555	2800			844					
				Rt		5000		4			17							2500	2500	2691			662					
5	IR 75	105+00	117+50	Lt		2500	2			2	4	4				315		1600	1600	1250	380	120						1
				Rt		2500	1	1		3	5	4				315		1600	1552	1250		210	96			13		2
		BREESE RD RAMP A C																										
6		107+00	116+00	Lt			16	5		5	1	11				292		1031	941		312	50	306	49		69	1	5
		BREESE RD RAMP B D																										
7		107+00	116+00	Rt			12	11				11				718		940	936		510	15		160		52		
8	IR 75	117+50	142+50	Lt		5000	5				15					29	27	2502	2527	2712			560					
				Rt		5000	5				11	2				166	162	2665	2662	2800			802					
9	IR 75	142+50	167+50	Lt		5000												2500	2500	2500								
				Rt		5000												2500	2500	2500								
10	IR 75	167+50	180+00	Lt		2500												1250	1250	1250								
				Rt		2500												1250	1250	1250								
		McCLAIN RD																										
11		89+00	113+00	Lt												1880					1980							
				Rt												1752												
12	IR 75	180+00	192+50	Lt		2500												1250	1250	1250								
				Rt		2500												1250	1250	1250								
13	IR 75	192+50	217+50	Lt		5000	1	4			11							2500	2500	2800			820					
				Rt		5000	4				9							2500	2500	2711			350					
14	IR 75	217+50	230+00	Lt		2500	1	2		2	8	2				300		1455	1455	1250			90			48		3
				Rt		2500	2			2	13	2				300		1390	1396	1250	292	490	208					3
		S.R. 65 & RAMPS A & D																										
15		219+00	229+00	Rt			14			8		12				507		1026	977		626	200		120		61		3
		S.R. 65																										
16		90+00	99+00	Lt						11						1111					862			100				
		YODER RD																										
17		0+50	8+25	Lt																	777	208				34	1	2
		S.R. 65 & RAMPS B & C																										
18		219+00	229+00	Lt			15	3		11	6	12				762		1085	972	972	898	215		187		56		3
19	IR 75	230+00	242+00	Lt		2400	5	2			15	3						1939	1439	1368			559					
				Rt		2400	2	7			14	3						1521	1516	1507			1037					
20	IR 75	242+00	255+00	Lt		2600												1273	1286	1279								
				Rt		2600												1331	1317	1323								
21	IR 75	255+00	264+00	Lt		1800												880	889	886								
				Rt		1800												924	915	920								
22	IR 75	264+00	272+00	Lt		1600												784	791	788								
				Rt		1600												817	811	814								
		HANTHORN RD																										
23		91+00	117+00	Lt												1635					1635							
				Rt												1635												
24	IR 75	272+00	292+00	Lt		4000												2000	2000	2000								
				Rt		4000												2000	2000	2000								
						112128										11772	244	62618	61837	59171	8272							
						21.236 *				44	140	67	490	700		2.230 *	0.046 *	11.859 *	11.71 *	11.21 *	1.57 *	1508	6334	616		333	2	22
		TO GENERAL SUMMARY		Tot		21.31	91	39		44	140	67	490	700		2.28		23.57		11.21	1.57	1508	6334	616		333	2	22

* TOTALS CONVERTED FROM FEET TO MILES

CALCULATED GLW
CHECKED TEB

PAVEMENT MARKING QUANTITIES
RUMBLE STRIPS & DELINEATORS

ALL-75-0.21

45 / 46

573
907

i:\Pd\89029\traffic\sheets\89029TS002.dgn 25-JUN-2013 10:56AM tbolenba

						FENCE															
						202		607													
SHEET NUMBER		STATION		SIDE		FENCE REMOVED	FENCE REMOVED (PRIVATE)	FENCE, TYPE 47 AS PER PLAN	END ANCHOR POST ASSEMBLY	INTERMEDIATE ANCHOR POST ASSEMBLY	CORNER ANCHOR POST ASSEMBLY	LINE POST	ABUTEMENT CONNECTION	FENCE POST TERMINAL, TYPE A	FENCE POST TERMINAL, TYPE B	FENCE POST TERMINAL, TYPE D	FENCE CROSSING, TYPE 1	FENCE CROSSING, TYPE 2	GATE, TYPE 47		
		FROM	TO			FEET		FEET	EACH	EACH	EACH	EACH	EACH	EACH	EACH	EACH	EACH	EACH	EACH		
1	I.R. 75	10+48	30+00	Lt		1948		1952	1	3	1	1									
				Rt		1948	10	1952	1	4	1	1									
2	I.R. 75	30+00	55+00	Lt		1471		2577		12	2		2								
				Rt		2562		2574		4	2		2								
3	I.R. 75	55+00	80+00	Lt		2690	45	2641		4	2										
				Rt		2465		2460		8		1									
4	I.R. 75	80+00	105+00	Lt		2509		2518		4								1			
				Rt		2475		2493		12	3	1						3			
5	I.R. 75	105+00	117+50	Lt		419		307		1											
				Rt		350		304		1											
6		BREESE RD RAMP A C																			
		107+00	116+00	Lt		970		969	2	1	2										
7		BREESE RD RAMP B D																			
		107+00	116+00	Rt		479		1381	2	1	1										
8	I.R. 75	117+50	142+50	Lt		2500		2500		6											
				Rt		1455		2524		3	2							1			
9	I.R. 75	142+50	167+50	Lt		2556		2556		5											
				Rt		2152		2483		4	1										
10	I.R. 75	167+50	180+00	Lt		1812		1369			2							1			
				Rt		1821		1106	2	1	1							1			
11		McCLAIN RD																			
		89+00	113+00	Lt		489		498	1												
				Rt		262		261	1												
12	I.R. 75	180+00	192+50	Lt		1254		1254		1		1									
				Rt		1250		1251		1		1									
13	I.R. 75	192+50	217+50	Lt		2527		2500		6											
				Rt		2554		2505		9								1			
14	I.R. 75	217+50	230+00	Lt		236		233													
				Rt		240		233													
15		S.R. 65 & RAMPS A & D																			
		219+00	229+00	Rt		712	122	712		1	1										
				Rt		219		588	1	1	2	2									
16		S.R. 65																			
		90+00	99+00	Lt		211		238	1	1											
17		YODER RD																			
		0+50	8+25	Lt		262		281		2	1										
18		S.R. 65 & RAMPS B & C																			
		219+00	229+00	Lt		766	445	1802	2	3	6										
				Rt.		932															
19	I.R. 75	230+00	242+00	Lt		1220		1223		5	2		2								
				Rt		1163		1157		2	4		2								
20	I.R. 75	242+00	255+00	Lt		727		1220		4		1						1			
				Rt		365		1534		3	2							1			
21	I.R. 75	255+00	264+00	Lt		922		859		2											
				Rt		1003		1001		3		2						1			
22	I.R. 75	264+00	272+00	Lt		1461	220	1004		1	2										
				Rt		1223		1025			2										
		HANTHORN RD																			
23		91+00	117+00	Lt		800		829	2	1	1										
				Rt		781		823	2	2	3							1			
		I.R. 75																			
24	I.R. 75	272+00	292+00	Lt		1074	175	1970		6								1			
				Rt		1249		2040		10								1			
		TOTALS				56484	1017	61707	* 18	* 138	* 46	* 11	* 8	* 0	* 0			* 14			
		TO GENERAL SUMMARY				57501		61707	* - INCLUDED IN 607 FENCE QUANTITIES. (FOR INFORMATIONAL PURPOSES ONLY)												

I:\Pd\89029\traffic\sheets\89029TS003.dgn 25-JUN-2013 10:56AM tbolenba

CALCULATED ___ CHECKED ___

FENCE QUANTITIES

ALL-75-0.21

COORDINATION OF ACTIVITIES

ALL WORK SHALL BE COORDINATED WITH THE OHIO DEPARTMENT OF TRANSPORTATION (ODOT) AND AMERICAN ELECTRIC POWER FOR ALL TRAFFIC CONTROL PRODUCTS AND ANY OTHER UTILITIES IMPACTED ON THE PROJECT. NOTIFICATION SHALL BE GIVEN TO ODOT AT LEAST 24 HOURS PRIOR TO ANY AND ALL SCHEDULED WORK AND TESTING ON THIS PROJECT REQUIRING THEIR INSPECTION. IT SHALL BE THE RESPONSIBILITY OF THE CONTRACTOR TO COORDINATE THE UNDERGROUND CONSTRUCTION ACTIVITIES ON A CONTINUING BASIS WITH EACH OF THE UTILITY AGENCIES THAT HAVE FACILITIES IN THE IMMEDIATE VICINITY OF THE PROJECT AREA. ODOT SHALL BE CONTACTED REGARDING COORDINATION OF EXISTING SIGNAL REMOVALS AND PROPOSED SIGNAL INSTALLATIONS.

MISCELLANEOUS CONSTRUCTION NOTES

1) ALL PULL BOXES AND DRAINAGE CONDUIT SHALL DRAIN TOWARD THE ROADWAY RIGHT-OF-WAY, AS APPROPRIATE OR AS INDICATED IN THE PLANS.

2) CONTRACTOR SHALL HAVE AN IMSA LEVEL 2 CERTIFIED TRAFFIC SIGNAL TECHNICIAN ON THE JOB SITE DURING PERFORMANCE OF ANY SIGNAL RELATED CONSTRUCTION OPERATIONS.

ALTERNATE BIDS

THE CONTRACTOR WILL IDENTIFY WHAT THE GENERIC BID IS BEFORE THE ALTERNATE BID CAN BE ADWARDED.

INSPECTION

THE SIGNALS SHALL BE INSPECTED JUST PRIOR TO THE START OF THE TEN (10) DAY PERFORMANCE TEST SPECIFIED IN CMS 632.28(G). ALL OTHER CONSTRUCTION PAY ITEMS SHALL BE COMPLETED INCLUDING THE ELECTRICAL TESTS SPECIFIED IN 632.28(A-E) AND FUNCTIONAL TEST SPECIFIED IN 632.28(F).

THE PROJECT ENGINEER SHALL NOTIFY THE APPROPRIATE ROADWAY SERVICES PERSONNEL AT ODOT DISTRICT ONE (1) OF THE COMPLETION OF SIGNAL CONSTRUCTION PRIOR TO THE TEN DAY (10) PERFORMANCE TEST. TWO (2) WEEKS NOTICE SHOULD BE GIVEN. THE DISTRICT ONE (1) CONSTRUCTION DEPARTMENT SHALL FOLLOW ALL PROCEDURES SET FORTH IN THE STANDARD OPERATING PROCEDURE OPS-211 SECTION D, PARAGRAPH 3 AND THE DIVISION OF CONSTRUCTION STANDARD OPERATING PROCEDURE PH-C-104. ALL DEFICIENCIES FOUND DURING THE FINAL INSPECTION SHALL BE CORRECTED BEFORE THE COMPLETION OF THE TEN DAY (10) BURN TEST. ANY MAJOR DEFICIENCIES WHICH MAY EFFECT THE OPERATION OF THE SYSTEM SHALL CONSTITUTE A RE-START OF THE TEN (10) DAY BURN TEST AFTER CORRECTIONS ARE COMPLETED. THE TEN (10) DAY BURN TEST MUST BE SUCCESSFULLY COMPLETED BEFORE THE SYSTEM WILL BE ACCEPTED.

GUARANTEE

THE CONTRACTOR SHALL GUARANTEE THAT THE TRAFFIC CONTROL SYSTEM INSTALLED AS PART OF THIS CONTRACT SHALL OPERATE SATISFACTORILY FOR A PERIOD OF 180 DAYS FOLLOWING COMPLETION OF THE 10-DAY PERFORMANCE TEST. IN THE EVENT OF UNSATISFACTORY OPERATION THE CONTRACTOR SHALL CORRECT FAULTY INSTALLATIONS, MAKE REPAIRS AND REPLACE DEFECTIVE PARTS WITH NEW PARTS OF EQUAL OR BETTER QUALITY. EQUIPMENT, MATERIAL AND LABOR COSTS INCURRED IN CORRECTING AN UNSATISFACTORY OPERATION SHALL BE BORNE BY THE CONTRACTOR.

THE GUARANTEE SHALL COVER THE FOLLOWING ITEMS OF THE TRAFFIC CONTROL SYSTEM: CONTROLLERS AND ASSOCIATED EQUIPMENT, DETECTOR UNITS, INTERCONNECT ITEMS (RADIO COMMUNICATION), AND VIDEO DETECTORS AND THEIR SATISFACTORY OPERATION IN BOTH SUMMER AND WINTER MONTHS.

CUSTOMARY MANUFACTURER'S GUARANTEES FOR THE FOREGOING ITEMS SHALL BE TURNED OVER TO THE THE MAINTAINING AGENCY FOLLOWING ACCEPTANCE OF THE EQUIPMENT.

THE COST OF GUARANTEEING THE TRAFFIC CONTROL EQUIPMENT WILL BE INCIDENTAL TO AND INCLUDED IN THE CONTRACT UNIT PRICE OF THE VARIOUS ITEMS MAKING UP THE SYSTEM.

ITEM 632 - SIGNAL SUPPORT, TYPE TC-81.21, (ALL DESIGNS)

IN ADDITION TO ODOT C&MS 632.15 AND 732.11, FURNISH AND INSTALL SIGNAL POLES AS SPECIFIED ON THE TRAFFIC SIGNAL PLAN AND DETAIL SHEETS.

THE SIGNAL POLE DESIGNER SHALL PROVIDE DRAWINGS OF A STEEL TAPERED TUBE SIGNAL POLE WITH STRUCTURAL ASPECTS OF THE DESIGN AND MATERIALS IN COMPLIANCE WITH THE 2001 AASHTO STANDARD SPECIFICATIONS, WITH 2006 INTERIM REVISIONS, FOR STRUCTURAL SUPPORTS FOR HIGHWAY SIGNS, LUMINAIRES AND TRAFFIC SIGNALS. THE SIGNAL POLE SHALL BE ASTM A595 GRADE A WITH A MINIMUM YIELD STRENGTH OF 55 KSI . THE FOLLOWING DESIGN PARAMETERS SHALL BE USED:

1. BASIC WIND SPEED = 90 MPH
2. DESIGN LIFE = 25 YEARS
3. FATIGUE CATEGORY = III
4. GALLOPING: NO
5. TRUCK INDUCED GUST: NO

SUBMIT, TO THE ENGINEER PRIOR TO INCORPORATION: TWO COPIES OF THE SIGNAL POLE DRAWINGS AND SHOP DRAWINGS, WHICH IDENTIFY AND DESCRIBE EACH MANUFACTURED SIGNAL POLE AND SIGNAL POLE ITEM WHICH IS BEING INCORPORATED INTO THE CONSTRUCTION. THE SIGNAL POLE DRAWINGS AND SHOP DRAWINGS SHALL EACH BE REVIEWED, SEALED, STAMPED AND DATED BY TWO OHIO REGISTERED PROFESSIONAL ENGINEERS. PAYMENT WILL BE MADE AT THE CONTRACT UNIT PRICE BID PER EACH OF ITEM 632, SIGNAL SUPPORT, TYPE TC-81.21, DESIGN (ALL), AS PER PLAN.

ITEM 632 - SIGNAL SUPPORT, TYPE TC-81.21, (ALL DESIGNS), AS PER PLAN

ALL NEW POLES AND ARMS SHALL BE FACTORY PAINTED GLOSSY BLACK. ALL ATTACHMENTS ON NEW POLES SUCH AS MOUNTING BRACKETS, BANDING, WEATHERHEADS, AND RISERS ON POLES SHALL BE PAINTED GLOSSY BLACK TO MATCH POLES AND ARMS.

THIS SUPPORT SHALL CONSIST OF A TC-81.21 DESIGN MAST ARM AS SPECIFIED IN THE PLANS. ALL SIGNAL SUPPORT ITEMS REQUIRED BY CMS ITEM 632 SHALL BE INCLUDED AS PART OF THIS SUPPORT. SUPPORT POLES SHALL BE DESIGNED IN ACCORDANCE WITH ODOT STANDARD DRAWING TC-81.21. DESIGN CALCULATIONS AND SHOP DRAWINGS OF THE PROPOSED MAST ARMS SHALL BE STAMPED BY TWO ENGINEERS AND SUBMITTED TO ODOT FOR REVIEW PRIOR TO DESIGN ACCEPTANCE AND ORDERING.

PAYMENT WILL BE AT THE CONTRACT UNIT PRICE FOR ITEM 632 - SIGNAL SUPPORT, TYPE TC-81.21, DESIGN (ALL), AS PER PLAN AND WILL BE FULL COMPENSATION FOR ALL LABOR, MATERIALS, TOOLS, EQUIPMENT AND OTHER INCIDENTALS NECESSARY FOR EACH SUPPORT FURNISHED, IN PLACE, COMPLETE AND ACCEPTED.

ITEM 632 - SIGNAL SUPPORT, TYPE TC-12.30, DESIGN 6 POLE, WITH MAST ARMS TC-81.21 DESIGN 11 AND DESIGN 11, AS PER PLAN

ALL NEW POLES AND ARMS SHALL BE FACTORY PAINTED GLOSSY BLACK. ALL ATTACHMENTS ON NEW POLES SUCH AS DAMPERS, MOUNTING BRACKETS, BANDING, WEATHERHEADS AND RISERS ON POLES SHALL BE PAINTED GLOSSY BLACK TO MATCH POLES AND ARMS. THIS SUPPORT SHALL CONSIST OF A TC-12.30 DESIGN 6 POLE WITH MAST ARMS TC-81.21 DESIGN 11 AND DESIGN 11, AS PER PLAN. ALL SIGNAL SUPPORT ITEMS REQUIRED BY CMS ITEM 632 SHALL BE INCLUDED AS PART OF THIS SUPPORT.

SUPPORT POLES WITH ARM SHALL BE DESIGNED IN ACCORDANCE WITH ODOT STANDARD DRAWINGS TC-12.30 AND TC-81.21. DESIGN CALCULATIONS AND SHOP DRAWINGS OF THE PROPOSED MAST ARMS SHALL BE STAMPED BY TWO ENGINEERS AND SUBMITTED TO ODOT FOR REVIEW AND PRIOR TO DESIGN ACCEPTANCE AND ORDERING.

PAYMENT WILL BE AT THE CONTRACT UNIT PRICE FOR ITEM 632 - SIGNAL SUPPORT, TYPE TC-12.30, DESIGN 6 POLE, WITH MAST ARMS TC-81.21 DESIGN 11 AND DESIGN 11, AS PER PLAN AND WILL BE FULL COMPENSATION FOR ALL LABOR, MATERIALS, TOOLS, EQUIPMENT AND OTHER INCIDENTALS NECESSARY FOR EACH SUPPORT FURNISHED, IN PLACE, COMPLETE & ACCEPTED.

ITEM 632 - SIGNAL SUPPORT, TYPE TC-12.30, DESIGN 7 POLE, WITH MAST ARMS TC-81.21 DESIGN 13 AND DESIGN 3, AS PER PLAN

ALL NEW POLES AND ARMS SHALL BE FACTORY PAINTED GLOSSY BLACK. ALL ATTACHMENTS ON NEW POLES SUCH AS DAMPERS, MOUNTING BRACKETS, BANDING, WEATHERHEADS AND RISERS ON POLES SHALL BE PAINTED GLOSSY BLACK TO MATCH POLES AND ARMS. THIS SUPPORT SHALL CONSIST OF A TC-12.30 DESIGN 7 POLE WITH MAST ARMS TC-81.21 DESIGN 13 AND DESIGN 3, AS PER PLAN. ALL SIGNAL SUPPORT ITEMS REQUIRED BY CMS ITEM 632 SHALL BE INCLUDED AS PART OF THIS SUPPORT.

SUPPORT POLES WITH ARM SHALL BE DESIGNED IN ACCORDANCE WITH ODOT STANDARD DRAWINGS TC-12.30 AND TC-81.21. DESIGN CALCULATIONS AND SHOP DRAWINGS OF THE PROPOSED MAST ARMS SHALL BE STAMPED BY TWO ENGINEERS AND SUBMITTED TO ODOT FOR REVIEW AND PRIOR TO DESIGN ACCEPTANCE AND ORDERING.

PAYMENT WILL BE AT THE CONTRACT UNIT PRICE FOR ITEM 632 - SIGNAL SUPPORT, TYPE TC-12.30, DESIGN 7 POLE, WITH MAST ARMS TC-81.21 DESIGN 13 AND DESIGN 3, AS PER PLAN AND WILL BE FULL COMPENSATION FOR ALL LABOR, MATERIALS, TOOLS, EQUIPMENT AND OTHER INCIDENTALS NECESSARY FOR EACH SUPPORT FURNISHED, IN PLACE, COMPLETE & ACCEPTED.

ITEM 632 SIGNAL SUPPORT LOCATIONS

PRIOR TO ORDERING THE SIGNAL SUPPORTS THE CONTRACTOR SHALL CONTACT OUPS TO HAVE ALL THE UTILITIES LOCATED IN THE FIELD THEN MEET WITH THE PROJECT ENGINEER TO LOCATE THE PROPOSED SUPPORT LOCATIONS TO INSURE THERE ARE NO CONFLICTS WITH UTILITIES. IF THERE ARE ISSUES THE PROJECT ENGINEER SHALL CONTACT THE DISTRICT ONE PLANNING AND ENGINEERING DEPARTMENT TO RELOCATE THE SUPPORT POLES.

ITEM 632 - VEHICULAR SIGNAL HEAD, (LED), BLACK, BY TYPE, WITH BACKPLATE, AS PER PLAN

IN ADDITION TO THE REQUIREMENTS OF CMS 632 AND 732 FOR 3, 4, AND 5 SECTION SIGNAL HEADS, THE FOLLOWING REQUIREMENTS SHALL ALSO APPLY:

LAMPS:
LED, LIGHT EMITTING DIODE, SIGNAL LAMP UNITS SHALL MEET THE REQUIREMENTS OF CMS 732.04(C). ALL LAMP UNITS SHALL BE THE 12 INCH SIZE. LED SIGNAL LAMP UNITS SHALL BE PROVIDED FOR ALL SIGNAL LENS TYPES.

SIGNAL SECTIONS:
1) SIGNAL HEADS & VISORS SHALL BE CONSTRUCTED OF BLACK POLYCARBONATE PLASTIC AND MEET ITE SPECIFICATIONS.

2) PIPE, SPACERS AND FITTINGS CONSTRUCTED OF BLACK POLYCARBONATE PLASTIC MAY BE USED IN LIEU OF GALVANIZED STEEL OR ALUMINUM.

3) BLACK EXTERIOR COLOR SHALL BE OBTAINED BY USE OF COLORED PLASTIC MATERIAL RATHER THAN PAINTING.

4) REFLECTIVE BACKPLATES PER CMS 732.22.

MOUNTING HARDWARE:
1) ALL SIGNAL HEADS SHALL BE RIGIDLY MOUNTED TO THE MAST ARM WITH THE RED LENS CENTERED ON OR NEAR THE MAST ARM. THE BOTTOMS OF EACH SIGNAL HEAD SHALL BE LEVEL TO WITHIN 6 INCHES OF OTHER WHILE MAINTAINING A CLEARANCE OF 16'-18' ABOVE THE PAVEMENT.

2) ALL UPPER SIGNAL SUPPORT HARDWARE AND PIPING UP TO AND INCLUDING THE WIRE INLET FITTING SHALL BE FERROUS METAL FOR SIGNAL DISPLAYS OF TWO OR MORE SECTIONS.

3) THE ENTRANCE FITTING SHALL BE OF THE TRI-STUD DESIGN WITH SERRATED RINGS IN ORDER TO ACHIEVE POSITIVE LOCKING.

THE CONTRACTOR SHALL PROVIDE TO ODOT, IN WRITING, THE LED MANUFACTURER'S NAME, SERIAL NUMBER, PART NUMBER, DESCRIPTION OF LAMP, AND DATE OF MANUFACTURE FOR ALL LED UNITS TO BE USED IN THE TRAFFIC SIGNAL HEADS PRIOR TO INSTALLATION, FOR ACCEPTANCE AND WARRANTY PURPOSES. THE INFORMATION SHALL BE SENT TO THE OHIO DEPARTMENT OF TRANSPORTATION (ATTN: CURT SYBERT) AT 2000 N. WEST STREET, LIMA, OHIO 45801.

ODOT WILL MEASURE ITEM 632 - VEHICULAR SIGNAL HEAD,(LED), BLACK, BY TYPE, WITH BACKPLATE, AS PER PLAN BY THE NUMBER OF COMPLETE UNITS FURNISHED AND INSTALLED, WHICH SHALL INCLUDE ALL SUPPORT & MOUNTING HARDWARE, DISCONNECT HANGERS, CLOSURE CAPS, DIMMERS, AND LAMPS AS SPECIFIED.

STRAIN POLE FOUNDATION ELEVATIONS

ELEVATIONS SHOWN IN THE PLANS FOR STRAIN POLE FOUNDATIONS ARE FOR COMPUTATIONAL PURPOSES ONLY. THE ACTUAL ELEVATION OF THE FOUNDATION SHALL BE IN ACCORDANCE WITH SCD TC-21.20 PROVIDED THE EXISTING SLOPE IS LESS THAN 6:1.

AT LOCATIONS WHERE THE EXISTING SLOPE IS 6:1 OR GREATER, THE BURIED DEPTH OF FOUNDATION, AS SHOWN IN SCD TC-21.20 SHALL APPLY TO THE LOW SIDE OF THE SLOPE. THE TOP OF THE FOUNDATION SHALL BE SET 2 INCHES ABOVE THE EXISTING SURFACE ON THE HIGH SIDE OF THE SLOPE. THE ADDITIONAL DEPTH OF FOUNDATION NECESSARY TO MEET THESE REQUIREMENTS SHALL BE ADDED TO THE FORMED TOP.

POWER SUPPLY FOR TRAFFIC SIGNALS

ELECTRIC POWER SHALL BE OBTAINED FROM THE AMERICAN ELECTRIC POWER CO. AT THE LOCATION INDICATED ON THE PLANS. POWER SUPPLIED SHALL BE 120 VOLTS.

CALCULATED | CHECKED

TRAFFIC SIGNAL GENERAL NOTES

ALL-75-0.21

575
907

I:\Pdt\89029\signals\sheets\89029CN001.dgn 25-JUN-2013 11:11AM tbolenbo

GROUNDING AND BONDING

THE REQUIREMENTS OF THE CONSTRUCTION AND MATERIAL SPECIFICATIONS (CMS) AND THE HL AND TC SERIES OF STANDARD CONSTRUCTION DRAWINGS ARE MODIFIED AS FOLLOWS:

1) ALL METALLIC PARTS CONTAINING ELECTRICAL CONDUCTORS SHALL BE PERMANENTLY JOINED TO FORM AN EFFECTIVE GROUND FAULT CURRENT PATH BACK TO THE GROUNDED CONDUCTOR IN THE POWER SERVICE DISCONNECT SWITCH.

A. PROVIDE AN EQUIPMENT GROUNDING CONDUCTOR IN METALLIC CONDUITS (725.04) IN ADDITION TO THE CONDUCTORS SPECIFIED AND BOND THE CONDUIT TO THIS GROUNDING CONDUCTOR.

B. WHEN AN EQUIPMENT GROUNDING CONDUCTOR IS REQUIRED IN PLASTIC CONDUIT (725.05), THE INSTALLATION SHALL INCLUDE A SEPARATE EQUIPMENT GROUNDING CONDUCTOR IN ADDITION TO THE CONDUCTORS SPECIFIED.

C. METALLIC CONDUIT CARRYING THE LOOP WIRES FROM IN THE PAVEMENT TO THE PULL BOX SPLICE LOCATION WILL ONLY BE BONDED AT THE PULL BOX END, AND WILL NOT CONTAIN AN EQUIPMENT GROUNDING CONDUCTOR.

D. METAL PULL BOX LIDS SHALL BE BONDED BY ATTACHMENT OF THE EQUIPMENT GROUNDING CONDUCTOR TO THE FRAME DIAGONAL AS PROVIDED ON HL-30.11.

E. IF MULTIPLE CONDUIT RUNS BEGIN AND END AT THE SAME POINTS, ONLY ONE EQUIPMENT GROUNDING CONDUCTOR IS REQUIRED.

F. IF AN EQUIPMENT GROUNDING CONDUCTOR IS NEEDED IN CONDUIT BETWEEN SIGNALIZED INTERSECTIONS FOR UNDERGROUND INTERCONNECT CABLE, THE GROUNDING SYSTEM FOR EACH SIGNALIZED INTERSECTION WILL BE SEPARATED ABOUT MIDWAY BETWEEN THE INTERSECTIONS.

G. THE MESSENGER WIRE AT SIGNALIZED INTERSECTIONS WILL BE USED AS THE CONDUCTIVE PATH FROM CORNER TO CORNER IF CONDUIT IS NOT PROVIDED UNDER THE ROADWAY. WHEN CONDUIT CONNECTS THE CORNERS OF AN INTERSECTION, AN EQUIPMENT GROUNDING CONDUCTOR SHALL BE USED IN THE CONDUIT.

2) CONDUITS.
A. THE 725.04 CONDUIT SHALL HAVE GROUNDING BUSHINGS INSTALLED AT ALL TERMINATION POINTS. THE BUSHING MATERIAL SHALL BE COMPATIBLE WITH GALVANIZED STEEL CONDUIT AND THE GROUNDING LUG MATERIAL SHALL BE COMPATIBLE FOR USE WITH COPPER WIRE. THREADED OR COMPRESSION TYPE BUSHINGS MAY BE USED.

B. THE 725.05 CONDUIT SHALL HAVE THE INSIDE AND OUTSIDE DIAMETERS OF THE CONDUIT DEBURRED AT ALL TERMINATION POINTS.

C. BOTH ENDS OF METALLIC CONDUIT SHALL BE BONDED TO THE EQUIPMENT GROUNDING CONDUCTOR.

D. METALLIC CONDUIT MAY BE BONDED TO METALLIC BOXES THROUGH THE USE OF CONDUIT FITTINGS UL APPROVED FOR THIS TYPE OF CONNECTION, WITH THE BOX BONDED TO THE EQUIPMENT GROUNDING CONDUCTOR.

3) WIRE FOR GROUNDING AND BONDING.
A. USE INSULATED, COPPER WIRE FOR THE EQUIPMENT GROUNDING CONDUCTOR. BONDING JUMPERS IN BOXES AND ENCLOSURES MAY BE BARE OR INSULATED COPPER WIRE. WIRE SIZE SHALL BE AS FOLLOWS:

I. USE 4 AWG BETWEEN THE POWER SERVICE AND SUPPORTS, POLES, PEDESTALS, CONTROLLER OR FLASHER CABINETS.

II. USE A MINIMUM 8 AWG BETWEEN LOOP DETECTOR PULL BOXES AND THE FIRST CONDUIT THAT REQUIRES A LARGER SIZE AS SPECIFIED IN 3.A.I ABOVE.

III. USE A MINIMUM 8 AWG BETWEEN THE "PREPARE TO STOP WHEN FLASHING" INSTALLATION (INCLUDING SUPPORT) AND THE FIRST CONDUIT THAT REQUIRES A LARGER SIZE AS SPECIFIED IN 3.A.I ABOVE.

GROUNDING AND BONDING (CONT'D)

IV. THE INSULATION SHALL BE GREEN OR GREEN WITH YELLOW STRIPE(S). FOR 4 AWG OR LARGER, INSULATION MAY ALSO BE BLACK WITH GREEN TAPE/LABELS INSTALLED AT ALL ACCESS POINTS.

B. IN A HIGHWAY LIGHTING SYSTEM, THE EQUIPMENT GROUNDING CONDUCTOR SHALL BE THE SAME WIRE SIZE AS THE DUCT CABLE OR DISTRIBUTION CABLE CIRCUIT CONDUCTORS, WITH THE MINIMUM CONDUCTOR SIZE OF 4 AWG. BONDING JUMPERS WILL BE MINIMUM SIZE 4 AWG.

4) GROUND ROD.
A. A ¾" SCHEDULE 40 PVC CONDUIT WILL BE USED IN FOUNDATIONS AND CONCRETE WALLS FOR THE GROUNDING CONDUCTOR (GROUND WIRE) RACEWAY TO THE GROUND ROD. SHOULD METALLIC CONDUIT BE USED, BOTH ENDS OF THE CONDUIT SHALL BE BONDED TO THE GROUNDING CONDUCTOR.

B. THE TYPICAL GROUNDING CONDUCTOR (GROUND WIRE) SHALL BE 4 AWG INSULATED, COPPER.

5) THE GREEN CONDUCTOR IN SIGNAL CABLES (CONDUCTOR #4) SHALL NOT BE USED TO SUPPLY POWER TO A SIGNAL INDICATION. IT WILL BE CONNECTED TO THE SIGNAL BODY AS AN EQUIPMENT GROUND IN ALUMINUM HEADS AND IT WILL BE UNUSED IN PLASTIC HEADS. UNUSED CONDUCTORS SHALL BE GROUNDED IN THE CABINET. TYPICAL USE OF CONDUCTORS IS AS FOLLOWS:

COND.	COLOR	VEHICLE SIGNAL	PEDESTRIAN SIGNAL
1	BLACK	GREEN BALL #1	WALK
2	WHITE	AC NEUTRAL	AC NEUTRAL
3	RED	RED BALL #1	DW/FDW
4	GREEN	EQUIP. GROUND	EQUIP. GROUND
5	ORANGE	YELLOW BALL #2	DW/FDW
6	BLUE	GREEN ARROW #2	WALK
7	WHITE/BLACK STRIPE	YELLOW ARROW	NOT USED

6) POWER SERVICE AND DISCONNECT SWITCH.
A. AT THE POWER SERVICE LOCATION, THE GROUNDING CONDUCTOR (GROUND WIRE) FROM THE DISCONNECT SWITCH NEUTRAL (AC-) BAR TO THE GROUND ROD SHALL BE A CONTINUOUS, UNSPLICED CONDUCTOR. IF SPLICED, IT SHALL BE AN EXOTHERMIC WELD BUTT SPLICE.

B. THE SERVICE NEUTRAL (AC-) SHALL ONLY BE CONNECTED TO GROUND AT THE PRIMARY POWER SERVICE DISCONNECT SWITCH.

I. NEMA CONTROLLER CABINETS: IF A POWER SERVICE DISCONNECT SWITCH IS LOCATED BEFORE THE CONTROLLER CABINET, THE NEUTRAL (AC-) AND THE GROUNDING BARS IN THE CONTROLLER CABINET SHALL NOT BE CONNECTED TOGETHER AS SHOWN IN NEMA TS-2, FIGURE 5-4.

II. IF SECONDARY DISCONNECT SWITCHES ARE CONNECTED AFTER THE PRIMARY DISCONNECT SWITCH, THE NEUTRAL (AC-) SHALL ONLY BE GROUNDED AT THE PRIMARY SWITCH. EQUIPMENT GROUNDING CONDUCTORS SHALL BE BROUGHT TO THE PRIMARY SWITCH, BUT SHALL BE GROUNDED AT BOTH SECONDARY AND PRIMARY SWITCHES.

7) STRUCTURE GROUNDING: HL-50.21 SHOWS A 1/0 AWG STRANDED COPPER CABLE USED FOR STRUCTURE GROUNDING. ADDITIONALLY, THIS SAME CABLE SHALL BE INSULATED AND ANY CONNECTIONS AND BARE COPPER STRANDS EXPOSED TO CONCRETE SHALL BE COVERED WITH MASTIC TO PREVENT CONTACT WITH THE CONCRETE.

8) PAYMENT.
A. ALL MATERIALS AND WORK REQUIRED TO COMPLETE THE EFFECTIVE GROUND FAULT CURRENT PATH SYSTEM ARE INCIDENTAL TO THE CONDUCTORS INSTALLED BY CONTRACT.

B. WORK ON BRIDGES MAY BE INCLUDED IN THE BID ITEM FOR "ITEM 625, STRUCTURE GROUNDING."

C. IN A 3-WIRE HIGHWAY LIGHTING SYSTEM, THE THIRD CONDUCTOR OF THE DUCT CABLE OR DISTRIBUTION CABLE WILL BE USED AS THE EQUIPMENT GROUNDING CONDUCTOR AND MAY AS SUCH BE PART OF THE CABLE BID ITEM.

ITEM 633 - CONTROLLER UNIT, TYPE 2070L, WITH CABINET, TYPE 332, AS PER PLAN

THE CONTROLLER UNIT SHALL BE EQUIPMENT MANUFACTURED IN CONFORMANCE TO THE CALIFORNIA DEPARTMENT OF TRANSPORTATION (CALTRANS) SPECIFICATIONS TITLES "TRANSPORTATION ELECTRICAL EQUIPMENT SPECIFICATIONS (TEES)." THE CONTROLLER UNIT, MODEL 2070L, SHALL BE AN ECONOLITE MODEL 2070L, BUILD: 1.01.08.02B, SIEMENS MODEL 2070L, BUILD: 6.2.0.0.0.81, OR APPROVED EQUAL.

THE 2070L CONTROLLER UNIT SHALL INCLUDE THE FOLLOWING:
1. UNIT CHASSIS
2. 2070-1B CPU MODULE
3. 2070-2A FIELD I/O MODULE
4. 2070-3B FRONT PANEL
5. 2070-4A POWER SUPPLY
6. 2070-7A SERIAL COMMUNICATION MODULE

THE CONTROLLER SHALL BE SUPPLIED WITHOUT TRAFFIC SIGNAL INTERSECTION CONTROL SOFTWARE. THE CONTROLLER SHALL BE SUPPLIED WITH MICROWARE EMBEDDED OS-9 RELEASE 1.3 OR LATER WITH KERNEL EDITION #376 OR LATER, AS REQUIRED BY CALTRANS TEES. FOR WARRANTY PURPOSES, A VENDOR-SPECIFIC DECAL, AS PER ODOT CMS 733.02 SHALL BE APPLIED TO EACH CONTROLLER UNIT AT TIME OF DELIVERY TO THE PROJECT.

CONTROLLERS SHALL BE SHIPPED TO THE ODOT SIGNAL SHOP, 1606 WEST BROAD STREET, COLUMBUS, OHIO 43223, EITHER DIRECTLY OR VIA THE ODOT DISTRICT OFFICE A MINIMUM OF 14 DAYS IN ADVANCE OF WHEN THE SOFTWARE IS NEEDED. ODOT WILL INSTALL THE LOCAL INTERSECTION CONTROL SOFTWARE. THE CONTROLLER WILL THEN BE PERFORMANCE TESTED BY THE ODOT SIGNAL SHOP. EVERY EFFORT SHALL BE MADE TO HAVE LOADING AND PERFORMANCE TESTING COMPLETED BY THE ODOT SIGNAL SHOP WITHIN 2 WEEKS OF RECEIPT OF AN INDIVIDUAL CONTROLLER; LARGER GROUPS OF CONTROLLERS SUBMITTED AT THE SAME TIME MAY TAKE LONGER. SHOULD ANY CONTROLLER FAIL THIS PERFORMANCE TEST AFTER BEING LOADED WITH ODOT-LICENSED SOFTWARE, THE SOFTWARE WILL BE REMOVED BY THE ODOT SIGNAL SHOP AND THE CONTROLLER REJECTED. REJECTED CONTROLLERS WILL BE RETURNED, EITHER DIRECTLY TO THE CONTRACTOR OR TO THE ODOT DISTRICT OFFICE.

AFTER THE SOFTWARE IS INSTALLED AND TESTED BY ODOT, THE CONTRACTOR SHALL PICK UP THE CONTROLLER UNIT FROM THE ODOT SIGNAL SHOP. IT SHALL BE THE CONTRACTOR'S RESPONSIBILITY TO PROGRAM THE TYPE 2070L SIGNAL CONTROLLER AS PER THE PLANS.

CONTROLLERS PASSING THE PERFORMANCE TEST WILL BE LABELED BY THE ODOT SIGNAL SHOP WITH THE OS IMAGE NUMBER, CPU SERIAL NUMBER, SOFTWARE REVISION NUMBER, & UPLOAD DATE. THIS LABEL IS NOT TO BE REMOVED BY THE CONTRACTOR AND SERVES AS PROOF THAT THE CONTROLLER HAS BEEN LOADED, TESTED AND APPROVED FOR INITIAL INSTALLATION ON THE PROJECT. SUCH PROOF DOES NOT ALTER THE REQUIRED 10-DAY PERFORMANCE TEST OUTLINED IN CMS SECTIONS 632 AND 633.

THE CONTRACTOR SHALL NOT REASSIGN THE CABINET DETECTOR INPUTS IN ORDER TO REDUCE THE NUMBER OF 2-CHANNEL DETECTOR UNITS SUPPLIED, BUT SHALL USE THE STANDARD CALTRANS INPUT FILE DESIGNATIONS.

ITEM 633 - CONTROLLER UNIT, TYPE 2070L- WITH CABINET TYPE 332, AS PER PLAN (EAGLE) - ALTERNATIVE BID

THE CONTROLLER SHALL BE A MODEL AS MANUFACTURED BY EAGLE TRAFFIC CONTROL SYSTEMS, AND SHALL INCORPORATE OR BE FURNISHED WITH ALL THE DESIGN FEATURES, AUXILIARY EQUIPMENT, ACCESSORIES, AND PREWIRED CABINET FEATURES AS REQUIRED IN THE STANDARD BID ITEM.

PAYMENT WILL BE AT THE CONTRACT UNIT PRICE FOR EACH, IN PLACE. ALL CONNECTIONS MADE AND WIRING COMPLETED, TESTED AND ACCEPTED.

ITEM 633 - CABINET RISER, AS PER PLAN (UPS)

THIS ITEM OF WORK SHALL BE IN CONFORMANCE WITH ODOT SPECIFICATION 633.09 EXCEPT IT SHALL BE INSTALLED FOR THE UPS CABINET. USE A TYPE (SIZE AND SHAPE) OF CABINET RISER COMPATIBLE WITH THE TYPE OF UPS CABINET SPECIFIED FOR THE PROJECT. THE DEPARTMENT WILL MEASURE ITEM 633 - CABINET RISER, AS PER PLAN (UPS) BY THE NUMBER OF EACH UNIT AND WILL INCLUDE MATERIALS, MOUNTING HARDWARE AND INSTALLATION.

PAINTING REQUIREMENTS

ALL POLES, MAST ARMS, PEDESTALS AND ASSOCIATED ITEMS SPECIFIED IN THESE PLANS TO BE FACTORY PAINTED GLOSSY BLACK SHALL BE COATED IN CONCORDANCE WITH THE REQUIREMENTS SHOWN ON SHEET 577.

ITEM 632 - POWER SERVICE, AS PER PLAN

ELECTRIC POWER SHALL BE OBTAINED FROM THE AMERICAN ELECTRIC COMPANY (800-672-2231) AT THE LOCATIONS INDICATED IN THE PLANS. POWER SUPPLIED SHALL BE 120/240 VOLTS.

POWER SERVICE SHALL BE AS PER CMS ITEM 632 AND SCD TC-83.10 WITH THE FOLLOWING EXCEPTIONS:

1) THE METER BASE MOUNTING HEIGHT SHALL BE NO MORE THAN 5 FEET HIGH TO THE CENTER OF THE METER BASE FROM THE GROUND.

2) THE CONTRACTOR SHALL SUPPLY THE NECESSARY METER BASES.

3) ALL POWER SERVICES SHALL BE METERED. THE METER SHALL HAVE A LEVER OPERATED BYPASS.

4) ALL METER BASE HARDWARE (INCLUDING RISER AND BANDING) SHALL BE PAINTED GLOSSY BLACK TO MATCH POLES.

5) USE TWO SEPARATE DISCONNECTS, ONE FOR SIGNALS AND ONE FOR LIGHTING LABELLED ACCORDINGLY.

DISCONNECT SWITCH ENCLOSURES FURNISHED IN ACCORDANCE WITH CMS ITEM 632 - POWER SERVICE, AS PER PLAN, SHALL INCLUDE A PADLOCK EQUAL TO MASTER NO. 4BKA OR WILSON BOHANNON 660, WITH LOCK BODY OF BRONZE OR BRASS AND KEYING SHALL BE TO THE STATE MASTER.

THE CONTRACTOR SHALL CONTACT THE METER SECTION OF THE POWER COMPANY FOR INFORMATION REGARDING THE METER BASE INSTALLATION PRIOR TO ORDERING POLES. THE CONTRACTOR WILL BE RESPONSIBLE FOR REQUESTING AND SCHEDULING ANY INSPECTIONS THE POWER COMPANY MAY REQUIRE FOR THE POWER SERVICE HOOK UP. THE CONTRACTOR SHALL BE RESPONSIBLE TO CONTACT THE POWER COMPANY FOR THE ELECTRICAL SERVICE CONNECTION. UNDER NO CIRCUMSTANCES SHALL THE CONTRACTOR SPLICE POWER CABLE INTO THE POWER COMPANY'S CIRCUITS. THE VOLTAGE SUPPLIED SHALL BE NOMINALLY 120/240 VOLTS. THE CONTRACTOR IS RESPONSIBLE FOR OBTAINING ANY NECESSARY PERMITS AND THE PAYING OF ALL FEES. THE CONTRACTOR SHALL PAY ALL POWER CHARGES UNTIL THE SIGNAL IS ACCEPTED BY THE MAINTAINING AGENCY.

CALCULATED | CHECKED

TRAFFIC SIGNAL GENERAL NOTES

ALL-75-0.21

I:\Pd\89029\signals\sheets\89029GN002.dgn 25-JUN-2013 11:11AM tbolenba

GENERAL

OVERHEAD SIGN SUPPORTS CAN BE SEPARATED INTO MAJOR SECTIONS SUCH AS END FRAMES, TRUSSES, VERTICAL POLES AND CANTILEVER ARMS. FOR THE IMPLEMENTATION OF THIS WORK ITEM IT WILL BE BENEFICIAL TO REFER TO THE MAJOR SECTIONS OF THE OVERHEAD SIGN SUPPORTS RATHER THAN THE WHOLE SUPPORT. MORE SPECIFIC INSTRUCTIONS AND FLEXIBILITY CAN BE GIVEN BASED UPON THE UNIT OF MEASURE AND PAYMENT PER MAJOR SUPPORT SECTION.

THE PROTECTIVE COATING OF OVERHEAD SIGN SUPPORT SECTIONS SHALL BE A FOUR PART PROCESS TO INCLUDE SURFACE PREPARATION FOLLOWED BY A THREE COAT PAINT SYSTEM. THIS THREE COAT SYSTEM SHALL CONSIST OF AN ORGANIC ZINC PRIME COAT, AN EPOXY INTERMEDIATE COAT AND A URETHANE FINISH COAT, WITH EACH COAT BEING A DIFFERENT COLOR. THE PURPOSE OF THIS COATING IS TO PROVIDE PROTECTION FOR NEW (UNWEATHERED) AND OLDER (WEATHERED) GALVANIZED STEEL SUPPORT SECTIONS FROM CORROSIVE ELEMENTS IN THE ATMOSPHERE. COATING AND SURFACE PREPARATION OF NEW GALVANIZED SUPPORT SECTIONS SHOULD BE DONE BY THE MANUFACTURER.

IN THE FIELD, THE CONTRACTOR SHALL TAKE ALL NECESSARY PRECAUTIONS TO COMPLY WITH POLLUTION LAWS, RULES OR REGULATIONS OF FEDERAL, STATE OR LOCAL AGENCIES. THE COATING MATERIALS SPECIFIED FOR THE WORK CAN BE HAZARDOUS TO THE HEALTH OF THE APPLICATOR IF NOT APPLIED AS PER MANUFACTURER'S INSTRUCTION. THE CONTRACTOR SHALL FOLLOW THE DATA SHEET AND THE LABEL ON THE PAINT CONTAINERS. THESE PRECAUTIONS SHALL INCLUDE THE USE OF RESPIRATORS AND EYE AND SKIN PROTECTION AS SPECIFIED. THE CONTRACTOR SHALL ALSO INSURE THAT HIS PAINTING OPERATIONS AND LOCATIONS WILL NOT ENDANGER OR ADVERSELY AFFECT THE PUBLIC IN GENERAL.

THE PROPOSED CLEANING AND COATING OPERATIONS SHALL BE PERFORMED ONLY WHEN THE AMBIENT TEMPERATURE IS 50 DEGREES F (10° C) OR ABOVE.

PAINT SHALL NOT BE APPLIED DURING RAIN, FOG OR MIST, OR WHEN THE STEEL SURFACE TEMPERATURE IS LESS THAN 5 DEGREES F (3° C) ABOVE THE DEW POINT. PAINT SHALL NOT BE APPLIED TO WET OR DAMP SURFACES OR ON FROSTED OR ICE-COATED SURFACES. PAINT SHALL NOT BE APPLIED WHEN THE RELATIVE HUMIDITY IS GREATER THAN 85%. ALL STEEL SURFACES OF TRUSSES AND END FRAMES INCLUDING THE WELDED AREAS, BALLAST ENCLOSURE MOUNTING BRACKET AND BASE PLATES ARE TO BE CLEANED AND COATED. BEFORE EACH COATING IS APPLIED, IT SHALL BE MIXED WITH AN APPROVED POWER MECHANICAL MIXER TO A UNIFORM CONSISTENCY WHICH SHALL BE MAINTAINED DURING ITS APPLICATION. EACH COAT SHALL BE APPLIED IN A WORKMANLIKE MANNER AS A CONTINUOUS FILM OF UNIFORM THICKNESS WHICH IS FREE OF HOLIDAYS, PORES, RUNS OR SAGS. ALL COATS SHALL BE APPLIED BY BRUSH OR ROLLER. THINNING OF PAINT IS STRICTLY PROHIBITED. PAINT NOT CAPABLE OF BEING APPLIED AS SPECIFIED SHALL NOT BE USED. THE COATING SHALL PENETRATE ALL JOINTS AND CONNECTIONS. THE ENGINEER SHALL BE NOTIFIED 24 HOURS PRIOR TO ANY CLEANING OR COATING OPERATIONS SO THAT INSPECTION SERVICES CAN BE PROVIDED.

COATING SYSTEM

THE COATING SYSTEM SHALL BE A THREE COAT PAINT SYSTEM CONFORMING TO 708.02. SUPPLY THE PRIMER, INTERMEDIATE AND TOP COATS FROM THE SAME MANUFACTURER.

SURFACE PREPARATION, EXISTING SUPPORT SECTIONS

EXISTING, WEATHERED GALVANIZED SUPPORT SECTIONS SHOULD HAVE THEIR SURFACE PREPARATION AS WELL AS THEIR PROTECTIVE COATING DONE UNDER CONDITIONS OF TEMPERATURE AND HUMIDITY WITHIN THE SAME RANGE AS SPECIFIED BY THE MANUFACTURER OF THE ORGANIC ZINC PRIME COAT MATERIAL TO BE USED IMMEDIATELY AFTER THIS CLEANING OPERATION. THE SUPPORT SECTIONS SHALL BE PREPARED FOR COATING BY SSPC-SP1 (SOLVENT CLEANING) FOLLOWED BY SSPC-SP10 (NEAR WHITE BLAST CLEANING). BEFORE THE PREPARED SURFACE DEGRADES FROM THE PRESCRIBED STANDARDS, THE PRIME COAT SHALL BE APPLIED. IN EVERY CASE, THE SURFACE SHALL BE COATED WITH ORGANIC ZINC PRIME COAT ON THE SAME DAY AS THE SURFACE PREPARATION. CAREFUL HANDLING AND STORAGE WILL BE REQUIRED TO PREVENT ANY SCRAPING, MARRING, OR OTHER DAMAGE TO THE PREPARED SURFACE.
PAYMENT SHALL INCLUDE ALL LABOR, EQUIPMENT, HANDLING, TRANSPORTATION COSTS AND MATERIALS NECESSARY TO ACCOMPLISH THIS ITEM OF WORK PER MAJOR SUPPORT SECTION.

BASIS OF PAYMENT WILL BE AS FOLLOWS:

ITEM 630 SURFACE PREPARATION, EXISTING SUPPORT SECTION AT CONTRACT BID PRICE PER EACH MAJOR SUPPORT SECTION.

SURFACE PREPARATION, NEW SUPPORT SECTIONS

NEW, UNWEATHERED GALVANIZED SUPPORT SECTIONS SHOULD HAVE THEIR SURFACE PREPARATION AS WELL AS THEIR PROTECTIVE COATING DONE AT THE MANUFACTURER OF THE SUPPORT SECTIONS.

THE SUPPORT SECTIONS SHALL BE PREPARED FOR COATING BY SSPC-SP1 (SOLVENT CLEANING) DO NOT USE ALKALINE CLEANERS FOLLOWED BY SSPC-SP7 (100% BRUSH-OFF BLAST OF SURFACE).

BEFORE THE PREPARED SURFACE DEGRADES FROM THE PRESCRIBED STANDARDS, THE PRIME COAT SHALL BE APPLIED. IN EVERY CASE, THE SURFACE SHALL BE COATED WITH THE ORGANIC ZINC PRIME COAT ON THE SAME DAY OF SURFACE PREPARATION. CAREFUL HANDLING AND STORAGE WILL BE REQUIRED TO PREVENT ANY SCRAPING, MARRING, OR OTHER DAMAGE TO THE PREPARED SURFACE.

PAYMENT SHALL INCLUDE ALL LABOR, EQUIPMENT, HANDLING, TRANSPORTATION COSTS AND MATERIALS NECESSARY TO ACCOMPLISH THIS ITEM OF WORK PER MAJOR SUPPORT SECTION.
BASIS OF PAYMENT WILL BE AS FOLLOWS:

ITEM 630 SURFACE PREPARATION, NEW SUPPORT SECTION AT CONTRACT BID PRICE PER EACH MAJOR SUPPORT SECTION.

COATING, ORGANIC ZINC PRIME COAT, SUPPORT SECTIONS

THIS ITEM SHALL CONSIST OF THE APPLICATION OF ONE (1) COAT OF AN ORGANIC ZINC PRIMER TO SUPPORT SECTIONS. THE TOTAL DRY FILM THICKNESS OF THIS COAT SHALL BE BETWEEN 1.5 TO 2.0 MILS (38 TO 51 MICROMETERS). IF MORE THAN ONE PASS IS NECESSARY TO OBTAIN THE REQUIRED THICKNESS, THAT COST SHALL BE BORNE BY THE CONTRACTOR.

THE COLOR OF THIS COAT SHALL BE NOTICEABLY DIFFERENT FROM THE BASE MATERIAL AND OTHER PROPOSED COATS.

THIS COAT SHALL IN ALL CASES BE APPLIED OVER SURFACES THAT WERE PREPARED EARLIER THAT SAME DAY. THE THINNING OF THE MATERIAL IS STRICTLY PROHIBITED. MATERIAL NOT CAPABLE OF BEING APPLIED AS SPECIFIED SHALL NOT BE USED.

WHEN THE AVERAGE DRY FILM THICKNESS OF THIS COAT OVER THE ENTIRE SUPPORT SECTION IS LESS THAN THE SPECIFIED 1.5 TO 2.0 MILS (38 TO 51 MICROMETERS) BUT IS AT LEAST 1.25 MILS (32 MICROMETERS), THE CONTRACT BID PRICE FOR THIS ITEM SHALL BE REDUCED IN DIRECT PROPORTION TO THE PERCENT DEFICIENCY OF COATING UP TO 16-2/3%. IF THE DEFICIENCY OF COATING IS MORE THAN THAT 16-2/3% [I.E., THE AVERAGE DRY FILM THICKNESS IS LESS THAN 1.25 MILS (32 MICROMETERS)] THE WORK FOR THIS ITEM SHALL BE CONSIDERED UNSATISFACTORY AND SHALL BE RECOATED AT THE FULL EXPENSE OF THE CONTRACTOR, INCLUDING ALL LABOR, EQUIPMENT AND MATERIAL.

FOR NEW SUPPORT SECTIONS THE PRIME COAT SHOULD BE DONE AT THE MANUFACTURER OF THE SUPPORT SECTIONS. VERIFICATION BY THE MANUFACTURER OF THE COATING MATERIAL FOR THE PRIME COAT WILL BE REQUIRED. CAREFUL HANDLING AND STORAGE WILL BE REQUIRED TO PREVENT ANY SCRAPING, MARRING OR OTHER SURFACE DAMAGE TO THE PRIME COAT.

PAYMENT SHALL INCLUDE ALL LABOR, EQUIPMENT, HANDLING COSTS AND MATERIALS NECESSARY TO ACCOMPLISH THIS ITEM OF WORK. THIS PRIME COAT SHALL BE MANUFACTURED BY THE SAME COMPANY SUPPLYING THE INTERMEDIATE AND TOP COATS. A PROPERLY CALIBRATED DRY FILM THICKNESS INSTRUMENT WILL BE USED TO CHECK THE COATING.

BASIS OF PAYMENT WILL BE AS FOLLOWS:

ITEM 630 COATING, ORGANIC ZINC PRIME COAT, SUPPORT SECTION AT CONTRACT BID PRICE PER EACH MAJOR SUPPORT SECTION.

COATING, EPOXY INTERMEDIATE COAT, SUPPORT SECTIONS

THIS ITEM SHALL CONSIST OF THE APPLICATION OF ONE (1) COAT OF EPOXY TO SUPPORT SECTIONS. THE TOTAL DRY FILM THICKNESS OF THIS COAT SHALL NOT BE LESS THAN SIX (6.0) MILS (152 MICROMETERS). IF MORE THAN ONE PASS IS NECESSARY TO OBTAIN THE REQUIRED THICKNESS, THAT COST SHALL BE BORNE BY THE CONTRACTOR. THINNING OF THE MATERIAL IS STRICTLY PROHIBITED. MATERIAL NOT CAPABLE OF BEING APPLIED AS SPECIFIED SHALL NOT BE USED.

WHEN THE AVERAGE DRY FILM THICKNESS OF THIS COAT OVER THE ENTIRE SUPPORT SECTION IS LESS THAN THE SPECIFIED 6.0 MILS (152 MICROMETERS), BUT IS AT LEAST 5.0 MILS (127 MICROMETERS), THE CONTRACT PRICE FOR THIS ITEM SHALL BE REDUCED IN DIRECT PROPORTION TO THE PERCENT DEFICIENCY OF COATING UP TO 16-2/3%. IF THE DEFICIENCY OF COATING IS MORE THAN 16-2/3%, [I.E. THE AVERAGE DRY FILM THICKNESS IS LESS THAN 5.0 MILS (127 MICROMETERS)], THE WORK FOR THIS ITEM SHALL BE CONSIDERED UNSATISFACTORY AND SHALL BE RECOATED AT THE FULL EXPENSE OF THE CONTRACTOR, INCLUDING ALL LABOR, EQUIPMENT AND MATERIAL.

AT LEAST 24 HOURS BUT NO MORE THAN THREE (3) DAYS SHALL ELAPSE AFTER THE APPLICATION OF THE ORGANIC ZINC PRIME COAT AND BEFORE THE APPLICATION OF THE EPOXY INTERMEDIATE COAT. SURFACES SHALL IN ALL CASES BE CLEAN BEFORE THE INTERMEDIATE COAT IS APPLIED.

FOR NEW SUPPORT SECTIONS, THIS INTERMEDIATE COAT SHOULD BE DONE AT THE MANUFACTURER OF THE SUPPORT SECTIONS. VERIFICATION BY THE MANUFACTURER FOR THE INTERMEDIATE COAT WILL BE REQUIRED. CAREFUL HANDLING AND STORAGE WILL BE REQUIRED TO PREVENT ANY SCRAPING, MARRING OR OTHER SURFACE DAMAGE TO THE INTERMEDIATE COAT.

PAYMENT SHALL INCLUDE ALL LABOR, EQUIPMENT, HANDLING COST AND MATERIAL NECESSARY TO ACCOMPLISH THIS ITEM OF WORK. THIS INTERMEDIATE COAT SHALL BE MANUFACTURED BY THE SAME COMPANY SUPPLYING THE PRIME AND TOP COATS. A PROPERLY CALIBRATED DRY FILM THICKNESS INSTRUMENT WILL BE USED TO CHECK THE COATING.

BASIS OF PAYMENT WILL BE AS FOLLOWS:

ITEM 630 COATING, EPOXY INTERMEDIATE COAT, SUPPORT SECTION AT CONTRACT BID PRICE PER EACH MAJOR SUPPORT SECTION.

COATING, URETHANE TOP COAT, SUPPORT SECTIONS

THIS ITEM SHALL CONSIST OF THE APPLICATION OF ONE (1) COAT OF URETHANE TO SUPPORT SECTIONS. THE TOTAL DRY FILM THICKNESS OF THIS COAT SHALL NOT BE LESS THAN 1.5 MILS (38 MICROMETERS). IF MORE THAN ONE PASS IS NECESSARY TO OBTAIN THE REQUIRED THICKNESS, THAT COST SHALL BE BORNE BY THE CONTRACTOR. THINNING OF THE MATERIAL IS STRICTLY PROHIBITED. MATERIAL NOT CAPABLE OF BEING APPLIED AS SPECIFIED SHALL NOT BE USED.THE COLOR OF THIS COAT SHALL BE MEDIUM GREY.

WHEN THE AVERAGE DRY FILM THICKNESS OF THIS COAT OVER THE ENTIRE SUPPORT SECTION IS LESS THAN THE SPECIFIED 1.5 MILS(38 MICROMETERS) BUT IS AT LEAST 1.0 MIL (25 MICROMETERS), THE CONTRACT PRICE FOR THIS ITEM SHALL BE REDUCED IN DIRECT PROPORTION TO THE PERCENT DEFICIENCY OF COATING UP TO 33-1/3%. IF THE DEFICIENCY OF COATING IS MORE THAN 33-1/3%, [I.E. THE AVERAGE DRY FILM THICKNESS IS LESS THAN 1.0 MIL(25 MICROMETERS)], THE WORK FOR THIS ITEM SHALL BE CONSIDERED UNSATISFACTORY AND SHALL BE RECOATED AT THE FULL EXPENSE OF THE CONTRACTOR, INCLUDING ALL LABOR, EQUIPMENT AND MATERIAL.

AT LEAST 24 HOURS BUT NO MORE THAN THREE (3) DAYS SHALL ELAPSE AFTER THE APPLICATION OF THE EPOXY INTERMEDIATE COAT AND BEFORE THE APPLICATION OF THE URETHANE FINISH COAT. SURFACES SHALL IN ALL CASES BE CLEAN BEFORE THE FINISH COAT IS APPLIED.

FOR NEW SUPPORT SECTIONS, THIS FINISH COAT SHOULD BE DONE BY THE MANUFACTURER OF THE SUPPORT SECTIONS. VERIFICATION BY THE MANUFACTURER FOR THE FINISH COAT WILL BE REQUIRED. CAREFUL HANDLING AND STORAGE WILL BE REQUIRED TO PREVENT ANY SCRAPING, MARRING OR OTHER SURFACE DAMAGE TO THE FINISH COAT.

PAYMENT SHALL INCLUDE ALL LABOR, EQUIPMENT, HANDLING COST AND MATERIALS NECESSARY TO ACCOMPLISH THIS ITEM OF WORK. THIS FINISH COAT SHALL BE MANUFACTURED BY THE SAME COMPANY SUPPLYING THE PRIME AND INTERMEDIATE COATS. A PROPERLY CALIBRATED, DRY FILM THICKNESS INSTRUMENT WILL BE USED TO CHECK THE COATING.

BASIS OF PAYMENT WILL BE AS FOLLOWS:

ITEM 630 COATING, URETHANE TOP COAT, SUPPORT SECTION AT CONTRACT BID PRICE PER EACH MAJOR SUPPORT SECTION.

CALCULATED ___ CHECKED ___

TRAFFIC SIGNAL GENERAL NOTES

ALL-75-0.21

I:\Pdt\89029\signals\sheets\89029GN003.dgn 25-JUN-2013 11:11AM tbolenbo

633 UNINTERRUPTIBLE POWER SUPPLY, AS PER PLAN

IN ADDITION TO THE REQUIREMENTS OF CMS 633 AND 733, THE CONTRACTOR SHALL FURNISH, INSTALL AND TEST UNINTERRUPTIBLE POWER SUPPLY (UPS) STATUS INDICATOR LAMPS THAT ALLOW MAINTENANCE PERSONNEL AND LAW ENFORCEMENT TO QUICKLY ASSESS WHETHER A TRAFFIC SIGNAL CABINET IS BEING POWERED BY A UPS. A 1-INCH WATERPROOF NEMA 4X OR IP66 LAMP WITH A DOMED RED LENS SHALL BE USED TO INDICATE THE CABINET IS OPERATING UNDER UPS BACKUP POWER (THE "BACKUP" OPERATING CONDITION). THIS LAMP SHALL BE WIRED USING MINIMUM 20GA STRANDED, INSULATED HOOKUP WIRE TO THE STATUS RELAY OUTPUTS OF THE UPS. THE WIRES SHALL BE TERMINATED BY LUGS AT THE DISPLAY END AND PERMANENTLY LABELED "BACKUP POWER STATUS DISPLAY," WITH WIRE POLARITY INDICATED. THIS ITEM INCLUDES PROGRAMMING THE UPS STATUS RELAY OUTPUTS TO PRODUCE THE LAMP STATUS DISPLAYS. THE STATUS DISPLAY SHALL BE SOLID 100% DUTY CYCLE (NOT FLASHING). THE LAMP SHALL BE PLACED IN THE UPS CABINET WALL (NOT THE ROOF) IN SUCH A MANNER AS TO BE SEALED FROM WATER INTRUSION AND VISIBLE FROM A VEHICLE AT THE STOP LINE IN THE CLOSEST LANE OF AT LEAST ONE APPROACH TO THE SIGNALIZED INTERSECTION. THE OPERATING VOLTAGE OF THE LED LAMP SHALL BE 120V AC.

ITEM 816 - VIDEO DETECTION SYSTEM

THIS ITEM CONSISTS OF FURNISHING AND INSTALLING VIDEO DETECTION CAMERA(S) SYSTEM IN CONFORMANCE WITH SUPPLEMENTAL SPECIFICATION 816 & 907 FOR USE IN LIEU OF A CONVENTIONAL VEHICLE DETECTOR LOOP INSTALLATION. THE CAMERA SYSTEM SHALL INCLUDE THE CAMERA, ALL CABINET HARDWARE COMPONENTS, THE COMMUNICATION CABLES, CONNECTORS, MOUNTING HARDWARE, PC SOFTWARE AND ALL OTHER NECESSARY COMPONENTS TO INSTALL A VIDEO DETECTION CAMERA COMPLETE IN PLACE, THAT IS FULLY FUNCTIONAL WITH THE TRAFFIC SIGNAL CONTROLLER. THE VIDEO DETECTION CABINET HARDWARE SHALL BE CAPABLE OF RUNNING ALL THE DESIGNATED CAMERAS SHOWN IN THE PLANS AT THE INTERSECTION. THE CAMERAS SHALL BE CONFIGURED TO PERFORM VEHICLE COUNTS AND CLASSIFICATIONS AT EACH DETECTION LOCATION SPECIFIED IN THE PLANS.

TEN (10) BUSINESS DAYS PRIOR TO INSTALLATION OF THE VIDEO DETECTION CABINET SYSTEM, THE CONTRACTOR SHALL CONTACT ODOT IN THE EVENT THAT A REPRESENTATIVE WISHES TO BE PRESENT DURING THE INSTALLATION AND CONFIGURATION OF THE VIDEO DETECTION SYSTEM.

INSTALLATION OF THE VIDEO DETECTION SYSTEM SHALL INCLUDE TESTING AND VERIFICATION OF THE DETECTION FIELD TO ASSURE DETECTION NEEDS ARE MET. SHOULD THE DETECTION FIELD BE INADEQUATELY COVERED DUE TO OCCLUSION OR OTHER REASONS, AN ALTERNATIVE CAMERA MOUNTING ON THE MAST ARM OR LUMINAIRE BRACKET SHALL BE EMPLOYED. A MAST ARM ALTERNATE MOUNTING LOCATION SHOULD INCLUDE A FOUR (4) FOOT EXTENSION. THE FINAL CAMERA MOUNTING LOCATION SHALL BE APPROVED BY ODOT.

PAYMENT SHALL BE FULL COMPENSATION FOR ALL LABOR, MATERIALS, TOOLS, EQUIPMENT, CABINET AND MOUNTING HARDWARE, AND OTHER INCIDENTALS NECESSARY FOR EACH VIDEO DETECTION SYSTEM, COMPLETE IN PLACE, ALL CONNECTIONS MADE AND WIRING COMPLETED, TESTED, AND ACCEPTED.

ITEM 816 - VIDEO DETECTION SYSTEM (ITERIS) - ALTERNATE BID

THIS ITEM OF WORK SHALL BE IN CONFORMANCE WITH ODOT SPECIFICATION 816 EXCEPT THE DETECTION SYSTEM SHALL BE AN ITERIS "VANTAGE" MODEL AND SHALL BE THE MOST CURRENT VERSION MANUFACTURED, INCLUDING THE VANTAGE EDGE 2 PROCESSOR AND RZ-4 ADVANCED CAMERA.

ITEM 630 - OVERHEAD SIGN SUPPORT, MISC.: MECHANICAL DAMPER

THIS ITEM SHALL CONSIST OF THE CONTRACTOR INSTALLING A MASS-SPRING TYPE DAMPER ON A MAST ARM SIGNAL SUPPORT TO REDUCE THE POSSIBILITY OF HARMONIC VIBRATIONS CAUSED BY WIND LOADS. A MECHANICAL DAMPER SHALL BE APPLIED TO ALL MAST ARMS OVER FORTY-EIGHT (48) FEET IN LENGTH. MAST ARMS FORTY-EIGHT (48) FEET OR LESS SHALL REQUIRE A MECHANICAL DAMPER ONLY IF REQUIRED BY THE ENGINEER OR PLANS, OR IF THE OBSERVED VERTICAL OSCILLATION OF THE LOADED ARM IS GREATER THAN EIGHT INCHES (8") MEASURED FROM THE HIGHEST TO THE LOWEST POINT OF DEFLECTION AT WIND SPEEDS OF FIVE TO TWENTY MILES-PER-HOUR (5-20 MPH). THE INSTALLED DAMPER SHALL BE CAPABLE OF REDUCING THE LOADED MAXIMUM VERTICAL MOVEMENT AT THE TIP OF THE ARM TO EIGHT INCHES (8") MEASURED FROM THE HIGHEST TO THE LOWEST POINT OF DEFLECTION AT WIND SPEEDS OF FIVE TO TWENTY MILES-PER-HOUR (5-20 MPH).

ALL ATTACHMENT HARDWARE CONNECTIONS SHALL BE STAINLESS STEEL. THE DAMPER SHALL BE ATTACHED TO THE ARM WITHIN EIGHT FEET (8') OF MAST ARM TIP. INSTALLATION SHALL BE PER THE MANUFACTURER'S GUIDELINES. ACCEPTABLE DEVICES INCLUDE THE FOLLOWING OR APPROVED EQUAL:

1. FLORIDA DOT SPRING-MASS DAMPER - DWG. INDEX NO. 17749

THE DAMPER AND MOUNTING HARDWARE SHALL BE FACTORY PAINTED GLOSSY BLACK TO MATCH THE POLE AND MAST ARM.

PAYMENT FOR THIS ITEM WILL BE AT THE CONTRACT PRICE BID PER EACH COMPLETE AND IN PLACE AND INCLUDE ALL LABOR, MATERIALS & EQUIPMENT NECESSARY TO COMPLETE THE WORK.

CALCULATED | CHECKED

TRAFFIC SIGNAL GENERAL NOTES

ALL-75-0.21

578
907

I:\Pd\89029\signals\sheets\89029GN004.dgn 25-JUN-2013 11:11AM tbolenba

SHEET NUMBER														ITEM	ITEM EXT.	GRAND TOTAL 02/IMS/PV	UNIT	DESCRIPTION	SEE SHEET NO.
580	581																		
																		TRAFFIC SIGNALS	
268														625	25400	268	FT	CONDUIT, 2", 725.04	
35														625	25500	35	FT	CONDUIT, 3", 725.04	
275														625	25902	275	FT	CONDUIT, JACKED OR DRILLED, 725.04, 2"	
175														625	25902	175	FT	CONDUIT, JACKED OR DRILLED, 725.04, 3"	
69														625	29002	69	FT	TRENCH, 24" DEEP	
8														625	30706	8	EACH	PULL BOX, 725.08, 24"	
8														625	32000	8	EACH	GROUND ROD	
4														630	09102	4	EACH	SURFACE PREPARATION, NEW SUPPORT SECTION	577
4														630	09106	4	EACH	COATING, EPOXY INTERMEDIATE COAT, SUPPORT SECTION	577
4														630	09108	4	EACH	COATING, URETHANE TOP COAT, SUPPORT SECTION	577
4														630	09120	4	EACH	COATING, ORGANIC ZINC PRIME COAT, SUPPORT SECTION	577
10														632	05007	10	EACH	VEHICULAR SIGNAL HEAD, (LED), BLACK, 3-SECTION, 12" LENS, 1-WAY, POLYCARBONATE,	
																		WITH BACKPLATE, AS PER PLAN	575
2														632	05087	2	EACH	VEHICULAR SIGNAL HEAD, (LED), BLACK, 5-SECTION, 12" LENS, 1-WAY, POLYCARBONATE,	
																		WITH BACKPLATE, AS PER PLAN	575
12														632	25000	12	EACH	COVERING OF VEHICULAR SIGNAL HEAD	
462														632	40500	462	FT	SIGNAL CABLE, 5 CONDUCTOR, NO. 14 AWG	
853														632	40700	853	FT	SIGNAL CABLE, 7 CONDUCTOR, NO. 14 AWG	
4														632	64010	4	EACH	SIGNAL SUPPORT FOUNDATION	
	283													632	68300	283	FT	POWER CABLE, 3 CONDUCTOR, NO. 6 AWG	
	134													632	69800	134	FT	SERVICE CABLE, 3 CONDUCTOR, NO. 6 AWG	
	2													632	70001	2	EACH	POWER SERVICE, AS PER PLAN	576
	2													632	70200	2	EACH	CONDUIT RISER, 1" DIAMETER	
	1													632	75173	1	EACH	SIGNAL SUPPORT, TYPE TC-12.30 DESIGN 6 POLE, WITH MAST ARMS TC-81.21 DESIGN 11	
																		AND DESIGN 11, AS PER PLAN	575
	1													632	75209	1	EACH	SIGNAL SUPPORT, TYPE TC-12.30 DESIGN 7 POLE, WITH MAST ARMS TC-81.21 DESIGN 13	
																		AND DESIGN 3, AS PER PLAN	575
	1													632	80503	1	EACH	SIGNAL SUPPORT, TYPE TC-81.21, DESIGN 11, AS PER PLAN	575
	1													632	80621	1	EACH	SIGNAL SUPPORT, TYPE TC-81.21, DESIGN 13, AS PER PLAN	575
	2													632	89300	2	EACH	WOOD POLE	
	1													632	80621	1	EACH	SIGNAL SUPPORT, TYPE TC-81.21, DESIGN 13, AS PER PLAN	575
	2													633	01681	2	EACH	CONTROLLER UNIT, TYPE 2070L, WITH CABINET, TYPE 332, AS PER PLAN	576
	2													633	67000	2	EACH	CABINET RISER	
	2													633	67001	2	EACH	CABINET RISER, AS PER PLAN	576
	2													633	67100	2	EACH	CABINET FOUNDATION	
	2													633	67200	2	EACH	CONTROLLER WORK PAD	
	2													633	75001	2	EACH	UNINTERRUPTIBLE POWER SUPPLY (UPS), **1000 WATT**, AS PER PLAN	578
	2													816	30000	2	EACH	VIDEO DETECTION SYSTEM	
																		ALTERNATE BID ITEMS	
	2													633	01681	2	EACH	CONTROLLER UNIT, TYPE 2070L, WITH CABINET, TYPE 332, AS PER PLAN (EAGLE)	
																		ALTERNATE BID	576
	2													816	30000	2	EACH	VIDEO DETECTION SYSTEM (ITERIS)	578

CALCULATED MLF
CHECKED ERP

SIGNALS GENERAL SUMMARY

ALL-75-0.21

579
907

I:\Pd\89029\signals\sheets\89029CG001.dgn 25-JUN-2013 11:11AM tbolenbo

REF. NO.	SHEET NO.	STATION TO STATION		625 CONDUIT, 2", 725.04 FEET	625 CONDUIT, 3", 725.04 FEET		625 CONDUIT, JACKED OR DRILLED, 725.04, 2" EACH	625 CONDUIT, JACKED OR DRILLED, 725.04, 3" FEET	625 TRENCH, 24" DEEP EACH	625 GROUND ROD EACH	625 PULL BOX, 725.08, 24" EACH	625 SURPHACE PREPARATION, NEW SUPPORT SECTION EACH	630 COATING, ORGANIC ZINC PRIME COAT, SUPPORT SECTION EACH	630 COATING, EPOXY INTERMEDIATE COAT, SUPPORT SECTION EACH	630 COATING, URRTHANE TOP COAT, SUPPORT SECTION EACH	632 WOOD POLE EACH	632 VEHICULAR SIGNAL HEAD, (LED), BLACK, 3-SECTION, 12" LENS, 1-WAY, POLYCARBONATE, WITH BACKPLATE, APP EACH	632 VEHICULAR SIGNAL HEAD, (LED), BLACK, 5-SECTION, 12" LENS, 1-WAY, POLYCARBONATE, WITH BACKPLATE, APP FEET	632 COVERING OF VEHICULAR SIGNAL HEAD FEET	632 SIGNAL CABLE, 5 CONDUCTOR, NO. 14 AWG EACH	632 SIGNAL CABLE, 7 CONDUCTOR, NO. 14 AWG FEET	632 SIGNAL SUPPORT FOUNDATION EACH
		NB IR-75 (Ramps A & D) / SR-65																					
C1	583							111															
C2	583			8					8														
C3	583				7				7														
C4	583							64															
PB1	583										1												
PB2	583										1												
PB3	583										1												
SP1	583									1		1	1	1	1								1
SP2	583									1		1	1	1	1								1
P1	583									1						1							
H1	583																	1	1		100		
H2	583																1		1		19		
H3	583																1		1	20			
H4	583																1		1	279			
H5	583																1		1	19			
H6	583																1		1		287		
CC1	583				10					1													
		SB IR-75 (Ramps B & C) / SR-65																					
C5	586				8				8														
C6	586			105			105																
C7	586			109			109																
C8	586			5					5														
C9	586			5					5														
C10	586						61																
C11	586			36					36														
PB4	586										1												
PB5	586										1												
PB6	586										1												
PB7	586										1												
PB8	586										1												
SP3	586									1		1	1	1	1								1
SP4	586									1		1	1	1	1								1
P2	586									1						1							
H7	586																1		1	19			
H8	586																1		1	87			
H9	586																1		1	19			
H10	586																1		1		114		
H11	586																	1	1		333		
H12	586																1		1	19			
CC2	586				10					1													
TOTALS CARRIED TO GENERAL SUMMARY				268	35		275	175	69	8	8	4	4	4	4	2	10	2	12	462	853	4	

CALCULATED MLF
CHECKED

TRAFFIC SIGNAL SUBSUMMARY

ALL-75-0.21

580
907

I:\Pd\89029\signals\sheets\89029CQ001.dgn 25-JUN-2013 11:11AM tbolenba

REF. NO.	SHEET NO.	STATION TO STATION	632 POWER CABLE, 3 CONDUCTOR, NO. 6 AWG EACH	632 SERVICE CABLE, 3 CONDUCTOR, NO. 6 AWG EACH	632 POWER SERVICE, AS PER PLAN EACH	632 CONDUIT RISER, 1" DIAMETER EACH	632 SIGNAL SUPPORT, TYPE TC-12.30, DESIGN 7 POLE, WITH MAST ARMS TYPE TC-81.21 DESIGN 13 AND DESIGN 3, AS PER PLAN EACH	632 SIGNAL SUPPORT, TYPE TC-12.30, DESIGN 6 POLE, WITH MAST ARMS TYPE TC-81.21 DESIGN 11, AS PER PLAN EACH	632 SIGNAL SUPPORT, TYPE TC-81.21, DESIGN 11, APP EACH	632 SIGNAL SUPPORT, TYPE TC-81.21, DESIGN 13, APP EACH	633 CONTROLLER UNIT, TYPE 2070L, WITH CABINET, TYPE 332, AS PER PLAN EACH	633 CABINET RISER EACH	633 CABINET RISER, AS PER PLAN EACH	633 CABINET FOUNDATION EACH	633 CONTROLLER WORK PAD EACH	633 UNINTERRUPTIBLE POWER SUPPLY (UPS), AS PER PLAN EACH	816 VIDEO DETECTION SYSTEM EACH
		NB IR-75 (Ramps A & D) / SR-65															
SP1	583					1			1								
SP2	583							1									
P1	583		50	53													
CC1	583		56		1						1	1	1	1	1	1	1
		SB IR-75 (Ramps B & C) / SR-65															
SP3	586						1										
SP4	586									1							
P2	586		25	81		1											
C9	586		10														
C10	586		71														
C11	586		46														
CC2	586		25		1						1	1	1	1	1	1	1
TOTALS CARRIED TO GENERAL SUMMARY			283	134	2	2	1	1	1	1	2	2	2	2	2	2	2

CALCULATED MLF CHECKED

TRAFFIC SIGNAL SUBSUMMARY

ALL-75-0.21

581 907

I:\Pdv\89029\signals\sheets\89029CQ002.dgn 25-JUN-2013 11:11AM tbolenba

SIGNAL SUPPORT ORIENTATION DATA

POLE LOCATION				POLE SIZE				ARM(s) SIZE			ORIENTATION ANGLES (DEG.)				
INTERSECTION	SHEET	STATION & OFFSET	POLE NO.	TC DESIGN NO.	DESIGN NO.	TOP OF FOUND EL.	POLE HEIGHT	ARM DESIGN	ARM HEIGHT	ARM LENGTH	INDEX ANGLE	CABLE ENTRANCE	POWER SERVICE	HANDHOLE /DOOR	CONDUIT ELL.
NB IR-75 Ramps-A&D/ SR 65	583	101+61.50, 51.00'Lt	1	81.21	11	901.29	22'6"	11	21'	41'	0	-	174	180	90
	583	102+35.00, 55.00'Rt	2	12.30	6	901.11	22'	11	20'6"	44'	0	-	-	180	231
								11	20'6"	43'	270	-	-	-	-
SB IR-75 Ramps-B&C/ SR 65	586	105+48.00, 51.00'Lt	3	12.30	7	897.90	21'6"	3	20'	37'	0	-	-	180	90
								13	20'	55'	270	-	-	-	180
	586	106+52.00, 61.50'Rt	4	81.21	13	896.80	22'6"	13	21'	53'	0	-	-	180	228

ORIENTATION PLAN

1. All Angles measured clockwise from the Index Line.
2. Index Line goes through the center of the Mast Arm on Signal Supports.
3. When Pedestrian Signals are located on new steel poles, 1-½" Blind Half Couplings shall be provided in the pole as per TC-85.10 and the orientation noted in the table.
4. 1-½" B.H.C. located 27" above base of pole.
5. Cable Entrance for Power Service shall be located 12" above center line of Mast Arm.

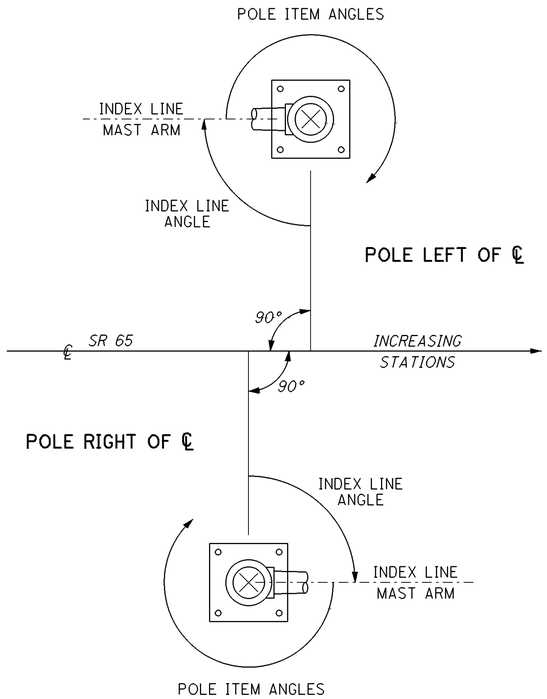

CALCULATED | CHECKED

SIGNAL SUPPORT ORIENTATION & COORDINATION DATA

ALL-75-0.21

582
907

I:\Pd\89029\signals\sheets\89029PD001.dgn 25-JUN-2013 11:11AM tbolenba

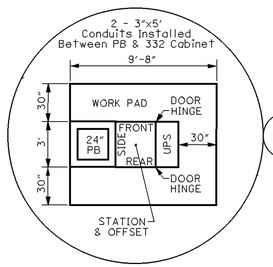

PB1 CC1 CONTROLLER & 332 Cabinet, UPS, PULLBOX AND WORK PAD
Sta.101+53.50, 51.00 LT

AEP - POWER POLE

P1 Sta.101+57.50 91.00 LT

C2 8"x2" CONDUIT

SIGNAL SUPPORT SP1
TYPE TC-81.21, DESIGN 11 POLE, WITH 41' MAST ARM
Sta. 101+61.50, 51.00' LT

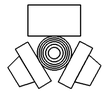

P1 - POWER SERVICE POLE SCHEDULE
2 - METER BASES (LIGHTING & SIGNAL)
2 - DISCONNECT SWITCHES (LIGHTING & SIGNAL)
1 - LIGHTING CONTROLLER ENCLOSURE
SEE SCD TC-83.10 & HL-40.10 FOR DETAILS

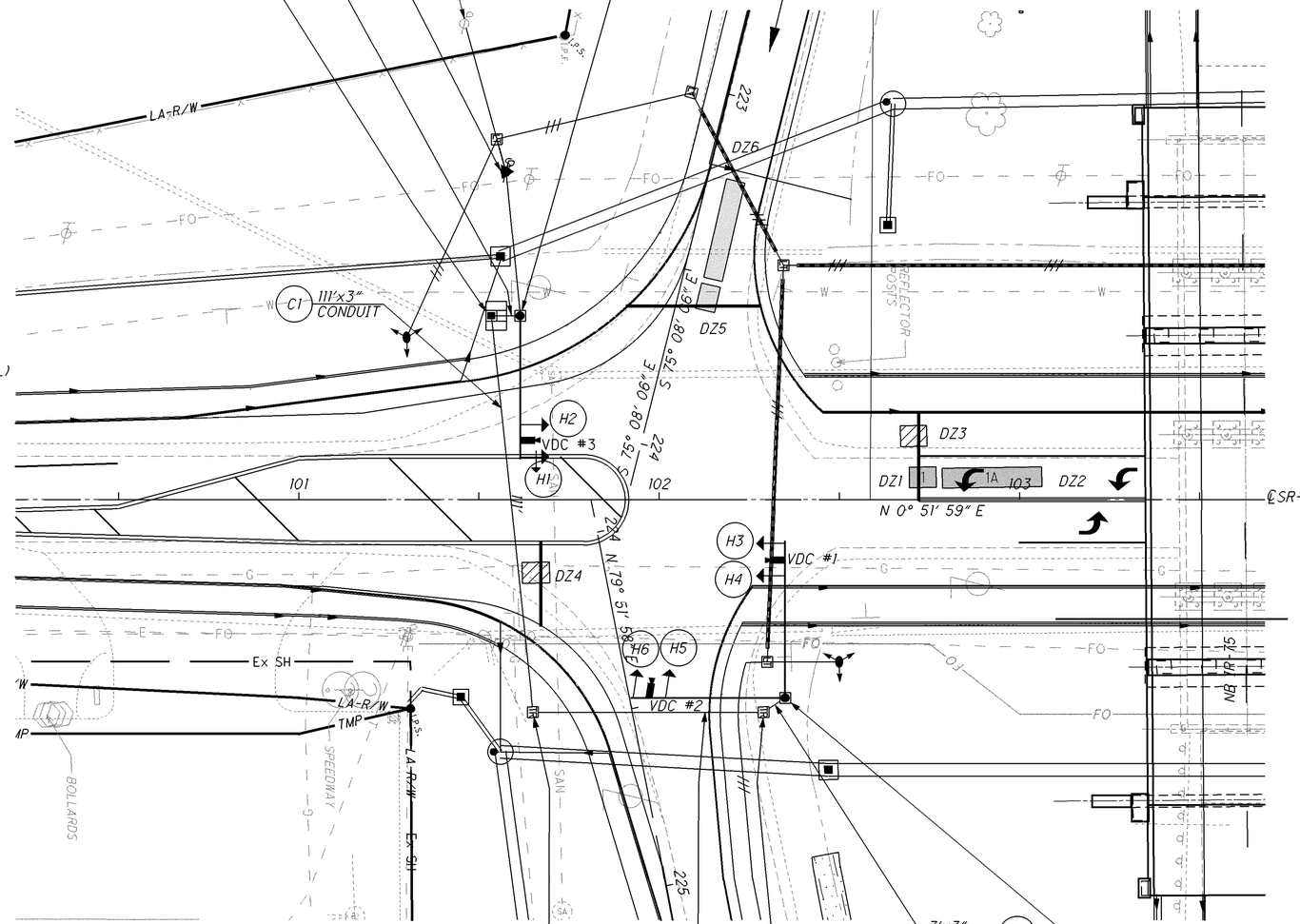

PROPOSED LEGEND

- 3-SECTION VEHICULAR SIGNAL HEAD
- 4 OR 5-SECTION VEH. SIGNAL HEAD
- CONTROLLER WITH PULLBOX & WORK PAD
- STRAIN POLE
- TRAFFIC PULLBOX
- VIDEO DETECTION CAMERA (VDC)
- LEFT TURN VIDEO DETECTION ZONE
- APPROACH VIDEO DETECTION ZONE
- COUNT VIDEO DETECTION ZONE

SIGNAL HEADS

12" LED VEHICULAR SIGNAL DISPLAY

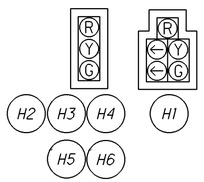

HORIZONTAL SCALE IN FEET
0 10 20 40
CALCULATED
CHECKED

TRAFFIC SIGNAL PLAN
NB IR-75 (Ramps A&D) / SR-65

ALL-75-0.21

583
907

I:\Pd\89029\signals\sheets\89029CP001.dgn 25-JUN-2013 11:11AM tbolenba

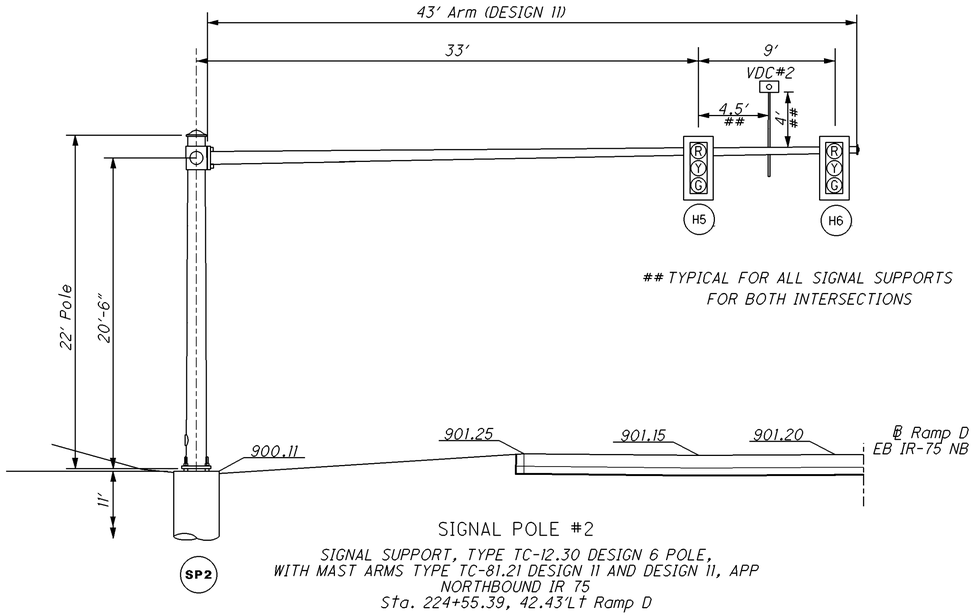

TYPICAL FOR ALL SIGNAL SUPPORTS FOR BOTH INTERSECTIONS

SIGNAL POLE #2

SIGNAL SUPPORT, TYPE TC-12.30 DESIGN 6 POLE, WITH MAST ARMS TYPE TC-81.21 DESIGN 11 AND DESIGN 11, APP NORTHBOUND IR 75
Sta. 224+55.39, 42.43'Lt Ramp D

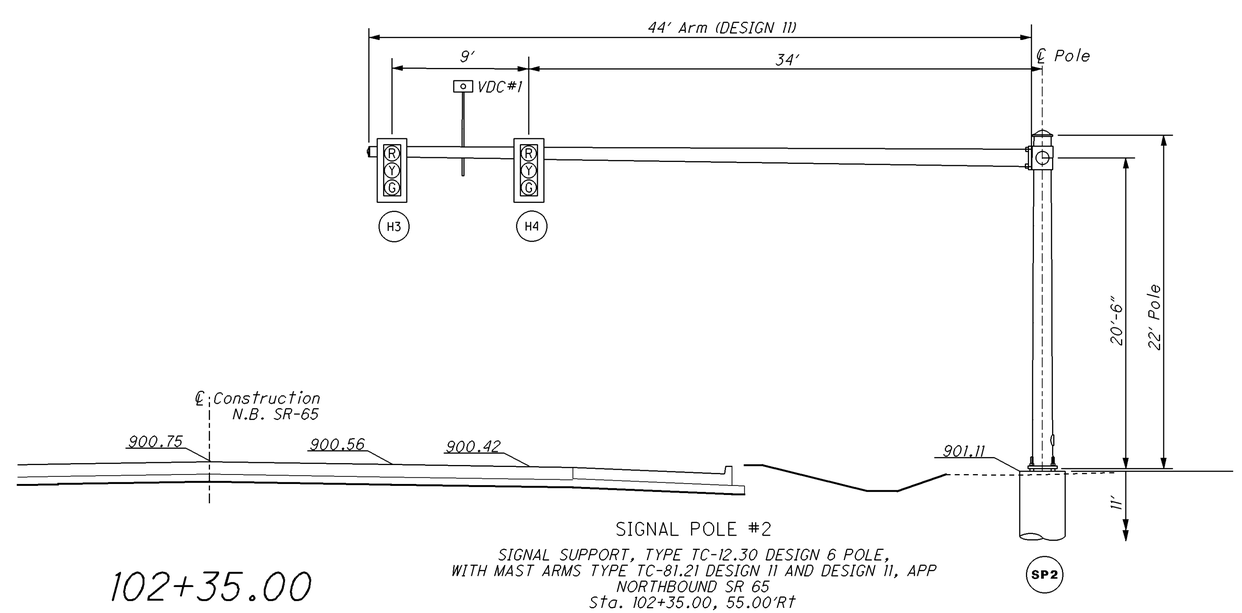

102+35.00

SIGNAL POLE #2

SIGNAL SUPPORT, TYPE TC-12.30 DESIGN 6 POLE, WITH MAST ARMS TYPE TC-81.21 DESIGN 11 AND DESIGN 11, APP NORTHBOUND SR 65
Sta. 102+35.00, 55.00'Rt

NOTE: VEHICULAR SIGNAL HEADS shall be mounted vertically as shown on this Sheet.

COORDINATION TIMING CHART

Plan (cycle-sec.)	Splits (G + Y + AR) in seconds								Offset*	
	Phase									
	1	2	3	4	5	6	7	8	#1	#2
Cycle 1 (75 sec.) Split 1	14	39		22		53			0	-
Cycle 2 (85 sec.) Split 1	17	47		21		64			0	-

Notes:
* Offsets measured from coordinated *2 & *6 end of green/beginning of yellow.

TBC Plan Events	Hours	Cycle / Split / Offset
Plan 1 - (Mon - Fri)	0000 - 0500	FREE
Plan 1 - (Mon - Fri)	0500 - 1400	1/1/1
Plan 1 - (Mon - Fri)	1400 - 2000	2/1/1
Plan 1 - (Mon - Fri)	2000 - 2400	FREE
Plan 2 - (Sat - Sun)	0000 - 2400	FREE

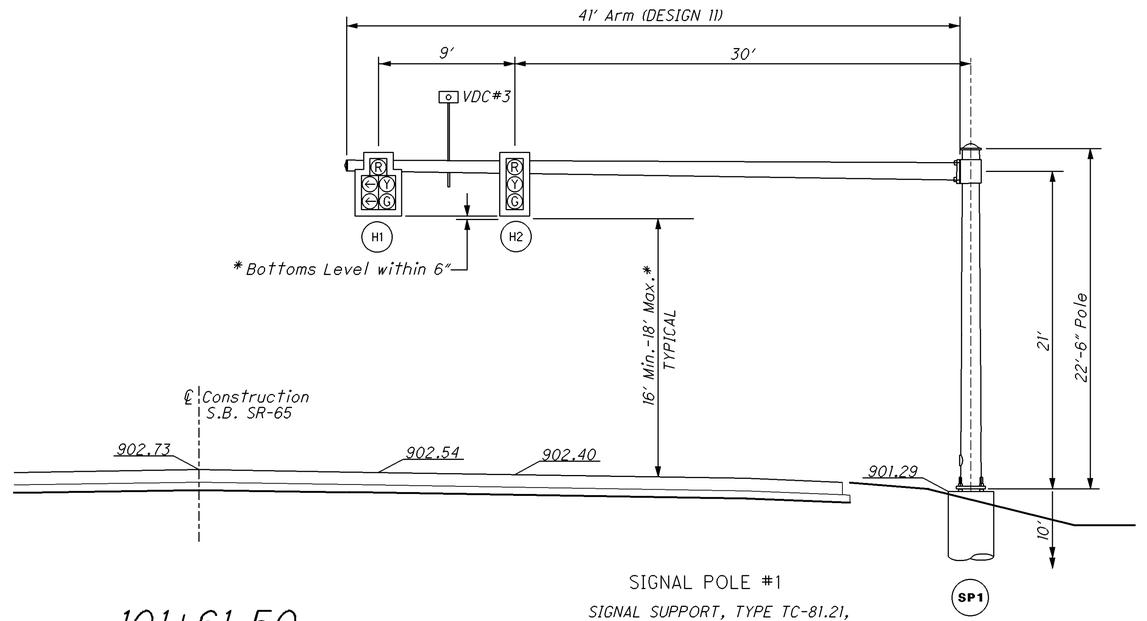

101+61.50

SIGNAL POLE #1

SIGNAL SUPPORT, TYPE TC-81.21, DESIGN 11, 41' Arm, APP SOUTHBOUND SR 65
Sta. 101+61.50, 51.00'Lt

HORIZONTAL SCALE IN FEET
0 2.5 5 10

CALCULATED MLF CHECKED

SIGNAL SUPPORT DETAILS NB IR-75 (Ramps A&D) & SR-65

ALL-75-0.21

584
907

I:\Pdv\89029\signals\sheets\89029CE001.dgn 25-JUN-2013 11:11AM tbolenba

SIGNAL TIMING CHART

START UP
START IN: *ALL YELLOW/RED FLASH*
TIME FOR FLASH OR ALL RED: *5 SEC.*
FIRST PHASE(S): *2 & 6*
COLOR DISPLAYED: *GREEN*

DUAL ENTRY: *YES ϕ2 & ϕ6*
REST IN RED: *RING 1*

OVERLAP					
PHASES					

INTERVAL OR FEATURE			CONTROLLER PHASE							
INTERSECTION MOVEMENT (PHASE)			1	2	3	4	5	6	7	8
			SBL	NB		EB		SB		
MINIMUM GREEN (INITIAL)		(SEC.)	7	20		10		20		
ADDED INITIAL		(SEC./ACTUATION)								
MAXIMUM INITIAL		(SEC.)								
PASSAGE TIME (PRESET GAP)		(SEC.)	3	4		4		4		
TIME BEFORE REDUCTION		(SEC.)								
MINIMUM GAP		(SEC.)								
TIME TO REDUCE		(SEC.)								
MAXIMUM GREEN 1		(SEC.)	25	60		45		65		
MAXIMUM GREEN 2		(SEC.)	25	60		45		65		
YELLOW CHANGE		(SEC.)	3	4.5		3		4.5		
ALL RED CLEARANCE		(SEC.)	3	2		3		2		
WALK		(SEC.)								
PEDESTRIAN CLEARANCE		(SEC.)								
RECALL	MAXIMUM	(ON/OFF)	OFF	OFF		OFF		OFF		
	MINIMUM	(ON/OFF)	OFF	ON		OFF		ON		
	PEDESTRIAN	(ON/OFF)	OFF	OFF		OFF		OFF		
MEMORY		(ON/OFF)	OFF	OFF		OFF		OFF		
CALL FOR NON-ACTUATED		NO. 1		X				X		
		NO. 2								

VIDEO DETECTION CHART

VIDEO DETECTION CAMERA NO.	VIDEO DETECTION ZONE NUMBER	MOVEMENT	PULSE OR PRESENCE	SIZE	DELAY (SEC.) CAMERA	DELAY (SEC.) SIGNAL CONTROLLER	DELAY INHIBIT (SEC.)	ASSOCIATED CONTROLLER PHASE	OVERRIDE PHASE	INPUT FILE*	TERMINAL NO.
C3	DZ1	SBL	COUNT	8'X6'	0			ϕ1		I	1-D,E
C3	DZ2	SBL	PRES	30'X6'	0			ϕ1		I	1-J,K
C3	DZ3	SB	COUNT	8'X6'	0			ϕ6		J	2-D,E
C1	DZ4	NB	COUNT	8'X6'	0			ϕ2		I	2-D,E
C2	DZ5	EB	COUNT	8'X6'	0			ϕ4		I	6-D,E
C2	DZ6	EB	PRES	30'X6'	0	10		ϕ4		I	6-J,K

EB = NB IR-75 (Ramp A) *1 = UPPER INPUT FILE; J = LOWER INPUT FILE

VIDEO DETECTION NOTES:

1. THE CONTRACTOR IS RESPONSIBLE FOR PROGRAMMING VIDEO DETECTORS IN THE CAMERA & CONTROLLER.

2. IT IS ODOT'S INTENTION THAT LANE COUNT DATA WILL BE COLLECTED THROUGH THE USE OF THE 24 AVAILABLE VOLUME DETECTOR ASSIGNMENTS.

SIGNAL LEGEND

- (5) 5/C #12 AWG
- (7) 7/C #12 AWG
- (PC) POWER CABLE, 2/C, NO. 6 AWG
- (SC) SERVICE CABLE, 3/C NO. 6 AWG
- VEHICULAR SIGNAL HEAD
- VEHICULAR SIGNAL HEAD WITH TURN ARROW (5-SECTION)
- (VC) VIDEO CABLE
- VIDEO DETECTION CAMERA
- • SPLICE
- (MB) METER BASE
- [DS] DISCONNECT SWITCH

WIRING DIAGRAM

Note: When wiring signal heads with a 7/c signal cable always connect the far head first before connecting to the close head.

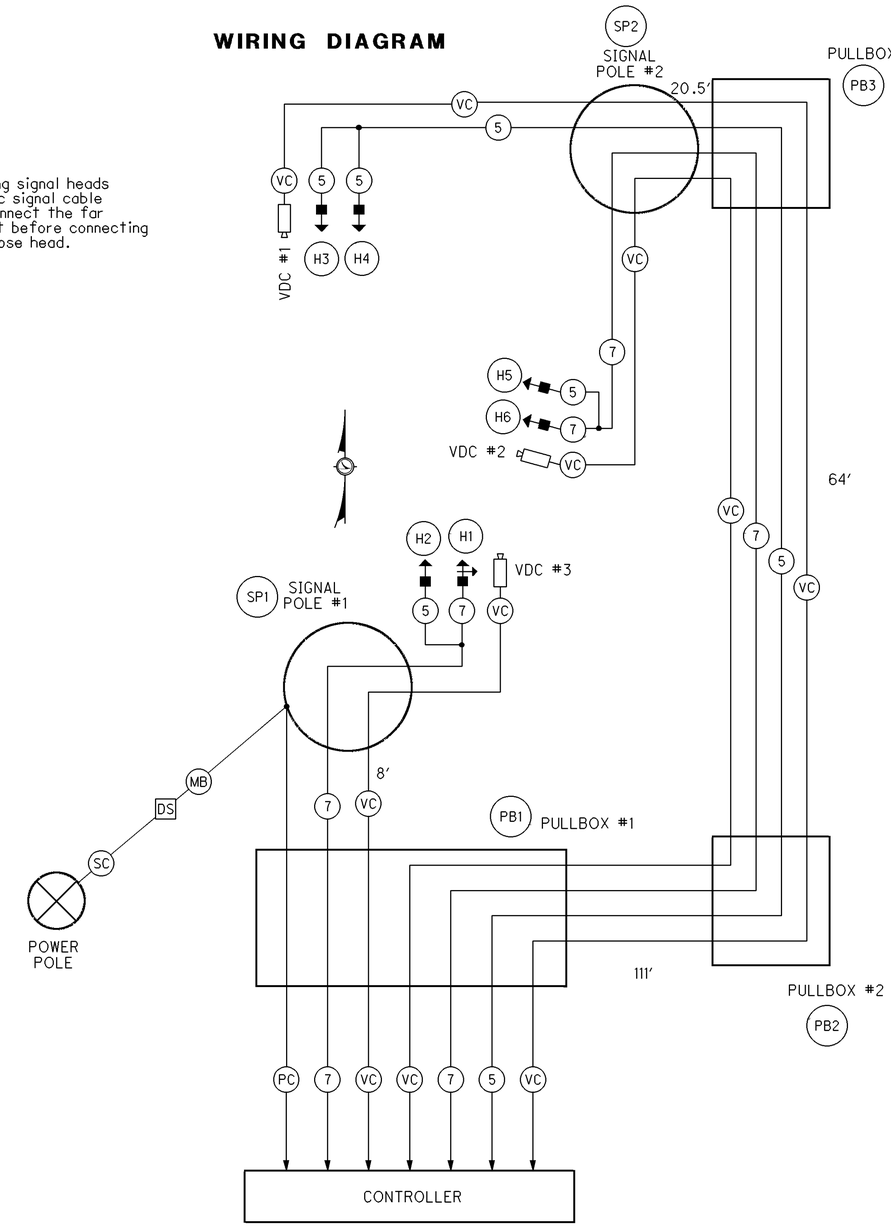

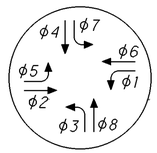

ϕ6 = SB SR-65 THRU
ϕ1 = SB SR-65 LEFT TURN
ϕ2 = NB SR-65 THRU
ϕ4 = EB RAMP A (NB IR-75)

SIGNAL PHASING

PHASING NOTES:
1. *OMIT CALLS TO ϕ1 DURING ϕ2 GREEN.*
2. *ϕ1 AND ϕ4 ARE ACTUATED.*
3. *ϕ2 & ϕ6 ARE COORDINATED.*

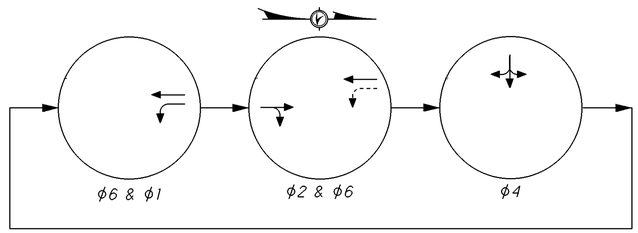

CALCULATED | CHECKED

SIGNAL WIRING DETAIL
NB IR-75 (Ramps A&D)/SR-65

D01 SIGNALS

585
907

I:\Pd\89029\signals\sheets\89029CD001.dgn 25-JUN-2013 11:11AM tbolenba

Attention:
This sheet shows three locations where the proposed lighting & signal circuits cross, at a depth of 24".

(See balloons (A), (B) & (C)).

C10 61'x2" CONDUIT

PB7 Sta. 105+44 87' LT.

C11 36'x2" CONDUIT

C5 8'x3" CONDUIT

SB IR-75 Ramp B

A

SIGNAL SUPPORT, TYPE TC-12.30, DESIGN 7 POLE WITH MAST ARMS 55' TC-81.21 DESIGN 13, & 37' Arm TC-81.21 DESIGN 3 Sta.105+48.00, 51.00 LT — SP3

5'x2" CONDUIT C9

Sta. 106+00 120' LT. P2

AEP - POWER POLE

Ex LA

Sta. 105+95 120' LT. PB8

CC2 CONTROLLER & 332 Cabinet, UPS, PULLBOX & WORK PAD Sta.105+40.00, 51.00' LT (See Detail Below)

PB4

B

VDC #3

H9 H10

DZ5

DZ4

H8

VDC #2

H7

105 106 107 ℄SR-65

DZ2 DZ1

DZ3

H11

H12

VDC #1

DZ6

C6 105'x2" CONDUIT

℄IR-75

PB5 TRAFFIC PULLBOX Sta.105+40.00 53.50 RT

DZ7

C

CITY OF LIMA

R/W

TMP

CONST. LIMITS

C7 109'x2" CONDUIT

TRAFFIC PULLBOX Sta.106+48.00 65.00' RT. PB6

SIGNAL SUPPORT, TYPE TC-81.21, DESIGN 13, 53' Arm Sta.106+52.00, 61.50' RT. SP4

5'x2" CONDUIT C8

Ramp C

PROPOSED LEGEND

- 3-SECTION VEHICULAR SIGNAL HEAD
- 4 OR 5-SECTION VEH. SIGNAL HEAD
- CONTROLLER WITH PULLBOX & WORK PAD
- STRAIN POLE
- TRAFFIC PULLBOX
- VIDEO DETECTION CAMERA (VDC)
- X APPROACH VIDEO DETECTION ZONE
- X LEFT TURN VIDEO DETECTION ZONE
- COUNT VIDEO DETECTION ZONE

SIGNAL HEADS

12" LED VEHICULAR SIGNAL DISPLAY

H7 H8 H9 H11 H10 H12

2 - 3"x5' Conduits Installed Between PB & 332 Cabinet

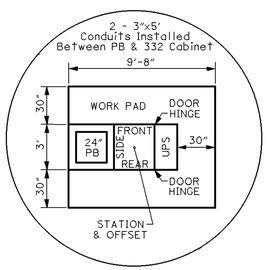

HORIZONTAL SCALE IN FEET 0 10 20 40

CALCULATED CHECKED

TRAFFIC SIGNAL PLAN
SB IR-75 (Ramps B&C) / SR-65

ALL-75-0.21

586 907

I:\Pid\89029\signals\sheets\89029CP002.dgn 25-JUN-2013 11:11AM tbolenba

COORDINATION TIMING CHART										
Plan (cycle-sec.)	Splits (G + Y + AR) in seconds Phase								Offset*	
	1	2	3	4	5	6	7	8	#1	#2
Cycle 1 (75 sec.) Split 1		48			13	35		27	10	-
Cycle 2 (75 sec.) Split 1		59			13	46		26	9	-

Notes:
* Offsets measured from coordinated *2 & *6 end of green/beginning of yellow.

TBC Plan Events	Hours	Cycle / Split / Offset
Plan 1 - (Mon - Fri)	0000 - 0500	FREE
Plan 1 - (Mon - Fri)	0500 - 1400	1/1/1
Plan 1 - (Mon - Fri)	1400 - 2000	2/1/1
Plan 1 - (Mon - Fri)	2000 - 2400	FREE
Plan 2 - (Sat - Sun)	0000 - 2400	FREE

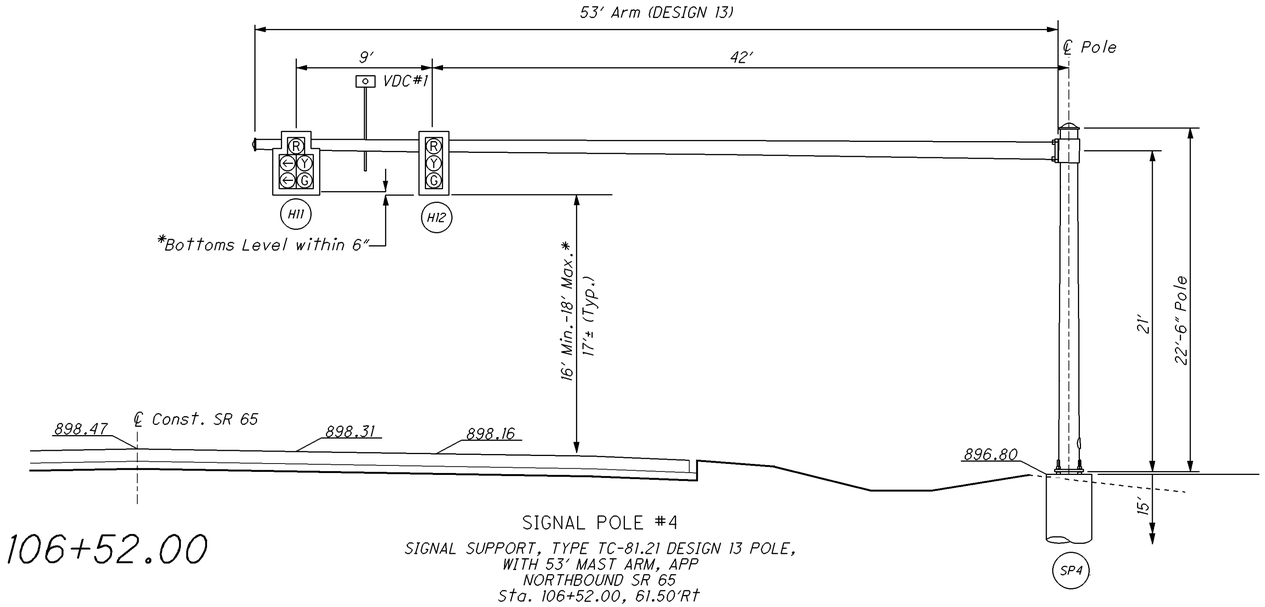

106+52.00

SIGNAL POLE #4

SIGNAL SUPPORT, TYPE TC-81.21 DESIGN 13 POLE, WITH 53' MAST ARM, APP NORTHBOUND SR 65 Sta. 106+52.00, 61.50'Rt

NOTE: VEHICULAR SIGNAL HEADS shall be mounted vertically as shown on this Sheet.

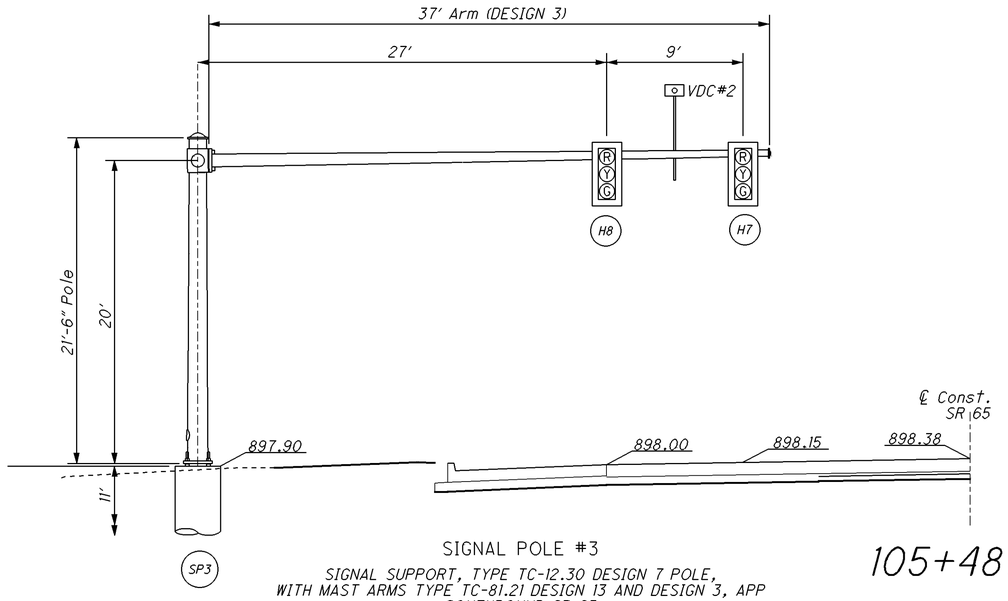

105+48.00

SIGNAL POLE #3

SIGNAL SUPPORT, TYPE TC-12.30 DESIGN 7 POLE, WITH MAST ARMS TYPE TC-81.21 DESIGN 13 AND DESIGN 3, APP SOUTHBOUND SR 65 Sta. 105+48, 51.00'Lt

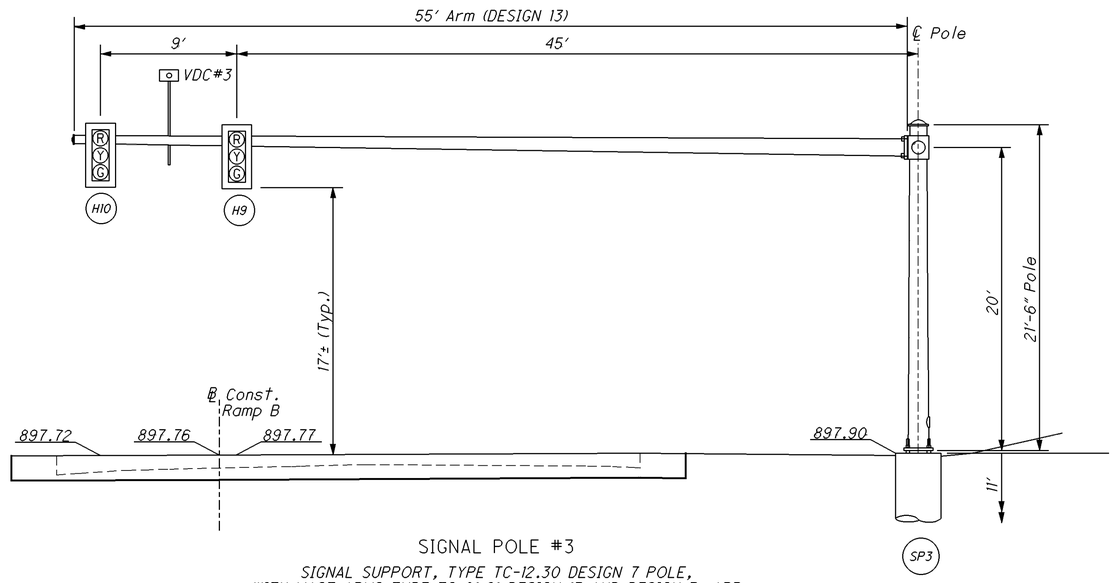

SIGNAL POLE #3

SIGNAL SUPPORT, TYPE TC-12.30 DESIGN 7 POLE, WITH MAST ARMS TYPE TC-81.21 DESIGN 13 AND DESIGN 3, APP SOUTHBOUND IR-75 Sta. 223+52.67, 44.56'Rt

HORIZONTAL SCALE IN FEET
0 2.5 5 10

CALCULATED MLF CHECKED

SIGNAL SUPPORT DETAILS SB IR-75 (Ramps B&C) & SR-65

ALL-75-0.21

587
907

I:\Pd\89029\signals\sheets\89029CE002.dgn 25-JUN-2013 11:10AM tbolenba

SIGNAL TIMING CHART

START UP
START IN: *ALL YELLOW/RED FLASH*
TIME FOR FLASH OR ALL RED: *5 SEC.*
FIRST PHASE(S): *2 & 6*
COLOR DISPLAYED: *GREEN*

DUAL ENTRY: *YES* *ϕ2 & ϕ6*
REST IN RED: *RING 1*

OVERLAP					
PHASES					

INTERVAL OR FEATURE			CONTROLLER PHASE							
INTERSECTION MOVEMENT (PHASE)			1	2	3	4	5	6	7	8
				NB			NBL	SB		WB
MINIMUM GREEN (INITIAL)		(SEC.)		20			7	20		10
ADDED INITIAL		(SEC./ACTUATION)								
MAXIMUM INITIAL		(SEC.)								
PASSAGE TIME (PRESET GAP)		(SEC.)		4			3	4		4
TIME BEFORE REDUCTION		(SEC.)								
MINIMUM GAP		(SEC.)								
TIME TO REDUCE		(SEC.)								
MAXIMUM GREEN 1		(SEC.)		65			25	60		45
MAXIMUM GREEN 2		(SEC.)		65			25	60		45
YELLOW CHANGE		(SEC.)		4			3.5	4		4.5
ALL RED CLEARANCE		(SEC.)		1.5			1.5	1.5		2
WALK		(SEC.)								
PEDESTRIAN CLEARANCE		(SEC.)								
RECALL	MAXIMUM	(ON/OFF)		OFF			OFF	OFF		OFF
	MINIMUM	(ON/OFF)		ON			OFF	ON		OFF
	PEDESTRIAN	(ON/OFF)		OFF			OFF	OFF		OFF
MEMORY		(ON/OFF)		OFF			OFF	OFF		OFF
CALL FOR NON-ACTUATED		NO. 1		X				X		
		NO. 2								

VIDEO DETECTION CHART

VIDEO DETECTION CAMERA NO.	VIDEO DETECTION SONE NUMBER	MOVEMENT	PULSE OR PRESENCE	SIZE	DELAY (SEC.) CAMERA	DELAY (SEC.) SIGNAL CONTROLLER	DELAY INHIBIT (SEC.)	ASSOCIATED CONTROLLER PHASE	OVERRIDE PHASE	INPUT FILE*	TERMINAL NO.
C1	DZ1	NBL	COUNT	8'X6'	0			ϕ5		J	1-D,E
C1	DZ2	NBL	PRES	30'X6'	0			ϕ5		J	1-J,K
C1	DZ3	NB	COUNT	8'X6'	0			ϕ2		I	2-D,E
C2	DZ4	SB	COUNT	8'X6'	0			ϕ6		J	2-D,E
C2	DZ5	SBR	COUNT	8'X6'	0			ϕ6		J	2-J,K
C3	DZ6	WB	COUNT	8'X6'	0			ϕ8		J	6-D,E
C3	DZ7	WB	PRES	30'X6'	0	10		ϕ8		J	6-J,K

WB = SB IR-75 (Ramp C)

*1 = UPPER INPUT FILE; J = LOWER INPUT FILE

VIDEO DETECTION NOTES:

1. THE CONTRACTOR IS RESPONSIBLE FOR PROGRAMMING VIDEO DETECTORS IN THE CAMERA & CONTROLLER.

2. IT IS ODOT'S INTENTION THAT LANE COUNT DATA WILL BE COLLECTED THROUGH THE USE OF THE 24 AVAILABLE VOLUME DETECTOR ASSIGNMENTS.

ϕ2 = NB SR-65 THRU
ϕ5 = NB SR-65 LEFT TURN
ϕ6 = SB SR-65 THRU
ϕ8 = WB RAMP C (SB IR-75)

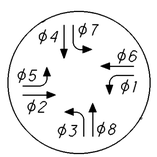

SIGNAL PHASING

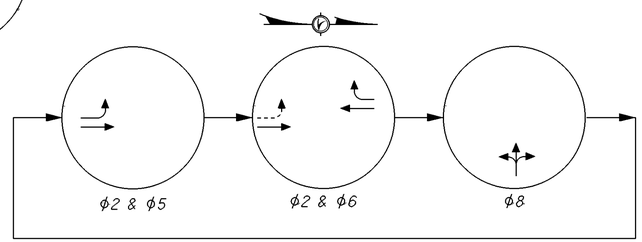

PHASING NOTES:
1. *OMIT CALLS TO ϕ5 DURING ϕ6 GREEN.*
2. *ϕ5 AND ϕ8 ARE ACTUATED.*
3. *ϕ2 & ϕ6 ARE COORINATED.*

WIRING DIAGRAM

Note: When wiring signal heads with a 7/c signal cable always connect the far head first before connecting to the close head.

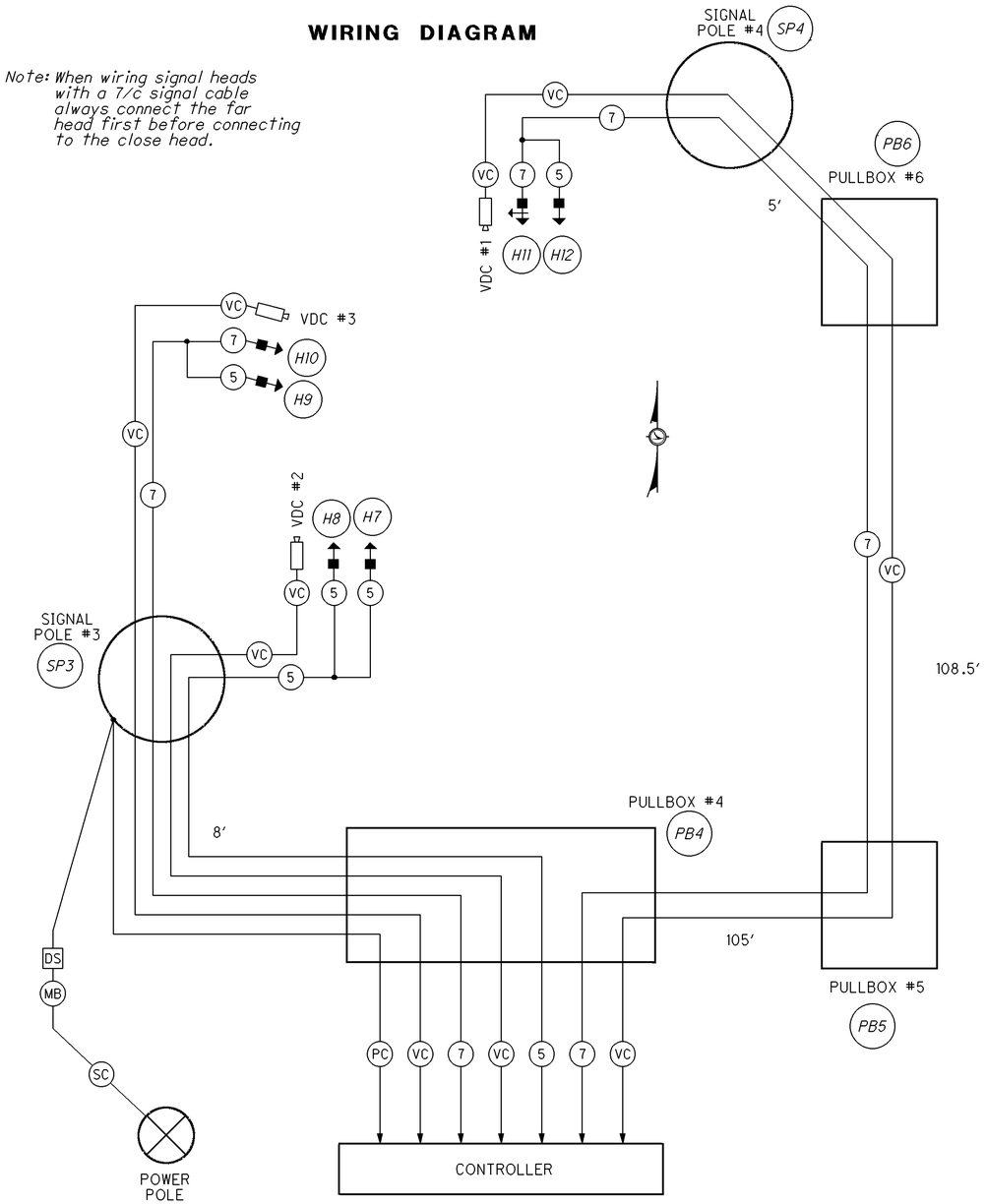

SIGNAL LEGEND

(5) 5/C #12 AWG	VEHICULAR SIGNAL HEAD	• SPLICE
(7) 7/C #12 AWG	VEHICULAR SIGNAL HEAD WITH TURN ARROW (5-SECTION)	(MB) METER BASE
(PC) POWER CABLE, 2/C, NO. 6 AWG	(VC) VIDEO CABLE	[DS] DISCONNECT SWITCH
(SC) SERVICE CABLE, 3/C NO. 6 AWG	VIDEO DETECTION CAMERA	

CALCULATED | CHECKED

SIGNAL WIRING DETAIL
SB IR-75 (Ramps B&C)/SR-65

ALL-75-0.21

588
907

I:\Pd\89029\signals\sheets\89029CD002.dgn 25-JUN-2013 11:10AM tbolenba

℄ SURVEY & CONST. I-75

BORE LOG LOCATIONS		
BORE LOG	STA., OFFSET	TOP OF ROCK EL.
B-045-1-08	226+57, 202' LT	N/A
B-045-2-08	228+14, 177' LT	N/A
B-045-3-08	229+57, 162' LT	N/A
B-047-3-08	231+02, 156' LT	N/A
B-047-5-08	232+59, 156' LT	N/A
B-047-7-08	233+98, 148' LT	N/A
B-047-1-08	229+47, 174' RT	N/A
B-047-2-08	231+04, 136' RT	N/A
B-047-4-08	232+47, 131' RT	N/A
B-047-6-08	233+99, 131' RT	N/A
B-047-8-08	235+61, 143' RT	N/A
B-053-1-08	237+70, 129' RT	N/A
B-053-4-08	240+43, 139' RT	N/A

NOTES:

1. ALL WALL STATIONS AND OFFSETS ARE MEASURED TO ℄ OF WALL.
2. ALL STATIONS AND OFFSETS ALONG WALL 1 ARE MEASURED FROM ℄ S.R. 65 RAMP "C". ALL STATIONS AND OFFSETS ALONG WALLS 2 AND 4 ARE MEASURED FROM ℄ R/W & CONST. I-75. ALL STATIONS AND OFFSETS ALONG WALL 3 ARE MEASURED FROM ℄ S.R. 65 RAMP "D".
3. SEE SHEET 3/10 FOR SECTIONS A-A, B-B AND C-C.

BEGIN TIED CONCRETE BLOCK MAT TYPE 1
STA. 225+80.00

BEGIN WALL 1
STA.226+00.00
29.00' LT.

B-045-1-08

B-045-2-08

BEND POINT
STA.228+50.00
29.00' LT. (DIMENSION SAYS 38'+/- DELTA)

B-045-3-08

PC Sta. 231+12.14

B-047-3-08

B-047-5-08

CONST. LIMITS

B-047-7-08

℄ S.R. 65 RAMP "C"

WALL 1

END TIED
CONCRETE BLOCK
MAT TYPE 1
STA. 236+58
130.00' LT.

END WALL 1
STA. 236+25.00
75.00' LT.

PT Sta. 236+91.54

INDIANA & OHIO R.R.

BEGIN WALL 2
STA. 237+74.17
127.32' LT.

END WALL 2
STA. 238+36.43
145.99' LT.

ST Sta. 239+33.16

S 89° 34' 29" E

℄ R/W & CONST. I-75

℄ S.R. 65 RAMP "D"

BEGIN TIED CONCRETE
BLOCK MAT TYPE 1
STA. 229+80.00

B-047-1-08

BEGIN WALL 3
STA. 229+00.00
37.72' RT.

N 74° 09' 46" E

PC Sta. 226+43.17

PT Sta. 8+38.29

PC Sta. 7+19.91

PC Sta. 5+44.77

PT Sta. 4+04.77

N14°43'03"E

B-047-2-08

BEND POINT
STA. 231+00.00
23.46' RT.

B-047-4-08

BEND POINT
STA.231+50.00
23.03' RT.

B-047-6-08

WALL 3

CONST. LIMITS

CS Sta. 234+84.50

B-047-8-08

END TIED
CONCRETE BLOCK
MAT TYPE 1
STA. 236+02.50

END WALL 3
STA.236+57.00
34.78' RT.

ST Sta. 236+84.50

B-053-1-08

WALL 4

ST Sta. 239+61.47

B-053-4-08

BEGIN TIED
CONCRETE BLOCK
MAT TYPE 1
STA. 238+15.91

BEGIN WALL 4
STA. 237+68.00
118.00' RT.

END WALL 4
STA. 240+50.00
118.22' RT.

END TIED CONCRETE
BLOCK MAT TYPE 1
STA. 240+70.00

WALLS 1, 2, 3, AND 4 SITE PLAN

DESIGN AGENCY
PARSONS BRINCKERHOFF
2545 FARMERS DRIVE
SUITE 350
COLUMBUS, OHIO 43235

DESIGNED	DRAWN	REVIEWED	DATE
SAP	LEL	EBS	02/04/13
CHECKED	REVISED	STRUCTURE FILE NUMBER	
PJL			

ALL-75-0.21
PID No. 89029

1/10

589/907

J:\Projects\ALL\89029\structures\WALL_001\sheets\76691_001wp001.dgn 09-MAY-2013 3:05PM jint

WALL 1								
LOCATION	STATION	OFFSET (FT)	ELEVATION BEHIND WALL	ELEVATION IN FRONT OF WALL	TOP OF COPING	TOP OF LEVELING PAD	ESTIMATED STRAP LENGTH (FT)	WALL HEIGHT (FT)
A	226+00.00	29.00	896.98	896.40	897.48	893.00	8.0	4.48
B	226+50.00	29.00	899.93	896.36	900.43	893.00	8.0	7.43
C	227+00.00	29.00	902.88	896.81	903.38	893.00	8.0	10.38
D	227+50.00	29.00	905.83	897.39	906.33	893.00	9.6	13.33
						894.00	8.9	12.33
E	228+00.00	29.00	908.78	897.61	909.28	894.00	11.0	15.28
F	228+50.00	29.00	911.73	898.07	912.23	894.00	13.1	18.23
						895.00	12.4	17.23
G	229+00.00	34.22	912.18	898.67	912.68	895.00	12.7	17.68
H	229+50.00	39.44	912.63	898.96	913.13	895.00	13.1	18.13
I	230+00.00	44.66	913.08	899.44	913.58	895.00	13.4	18.58
J	230+50.00	49.88	912.83	899.58	913.33	895.00	13.2	18.33
						896.00	12.5	17.33
K	231+00.00	55.10	912.58	899.61	913.08	896.00	12.3	17.08
L	231+50.00	60.07	912.33	899.10	912.83	896.00	12.1	16.83
M	232+00.00	64.39	912.08	899.26	912.58	896.00	11.9	16.58
N	232+50.00	68.06	911.84	899.32	912.34	896.00	11.8	16.34
O	233+00.00	71.08	911.59	899.67	912.09	896.00	11.6	16.09
P	233+50.00	73.45	911.35	900.85	911.85	896.00	11.4	15.85
Q	234+00.00	75.17	911.10	902.47	911.60	896.00	11.2	15.60
						898.00	9.8	13.60
R	234+50.00	76.26	910.86	903.54	911.36	898.00	9.6	13.36
S	235+00.00	76.70	910.61	904.17	911.11	898.00	9.4	13.11
T	235+50.00	76.50	910.37	904.42	910.87	898.00	9.3	12.87
U	236+00.00	75.66	910.12	903.06	910.62	898.00	9.1	12.62
V	236+02.37	75.61	910.11	902.89	910.61	898.00	9.1	12.61
W	236+25.00	75.00	905.12	901.69	905.62	898.00	8.0	7.62

WALL 3								
LOCATION	STATION	OFFSET (FT)	ELEVATION BEHIND WALL	ELEVATION IN FRONT OF WALL	TOP OF COPING	TOP OF LEVELING PAD	ESTIMATED STRAP LENGTH (FT)	WALL HEIGHT (FT)
A	229+00.00	37.72	909.87	904.50	910.37	900.00	8.2	10.37
B	229+50.00	34.80	913.98	904.15	914.48	900.00	11.4	14.48
C	230+00.00	31.45	918.07	904.20	918.57	900.00	14.7	18.57
D	230+50.00	27.68	922.17	904.48	922.67	900.00	17.9	22.67
E	231+00.00	23.46	926.27	905.28	926.77	900.00	21.1	26.77
F	231+50.00	23.03	928.32	906.36	928.82	900.00	22.8	28.82
						902.00	21.2	26.82
G	232+00.00	26.10	928.57	907.18	929.07	902.00	21.4	27.07
H	232+50.00	28.74	928.82	908.03	929.32	902.00	21.6	27.32
I	233+00.00	30.94	929.07	909.20	929.57	902.00	21.8	27.57
J	233+50.00	32.71	929.32	909.96	929.82	902.00	22.0	27.82
						904.50	20.0	25.32
K	234+00.00	34.04	929.57	910.83	930.07	904.50	20.2	25.57
L	234+50.00	34.94	929.82	911.29	930.32	904.50	20.4	25.82
M	235+00.00	35.40	930.07	910.97	930.57	904.50	20.6	26.07
N	235+50.00	35.47	930.31	910.47	930.81	904.50	20.8	26.31
O	236+00.00	35.25	930.56	909.68	931.06	904.50	21.0	26.56
P	236+01.99	35.24	930.57	909.67	931.07	904.50	21.0	26.57
						903.50	21.8	27.57
Q	236+50.00	34.84	910.90	908.26	911.40	903.50	8.0	7.90
R	236+57.00	34.78	908.02	908.02	908.52	903.50	8.0	5.02

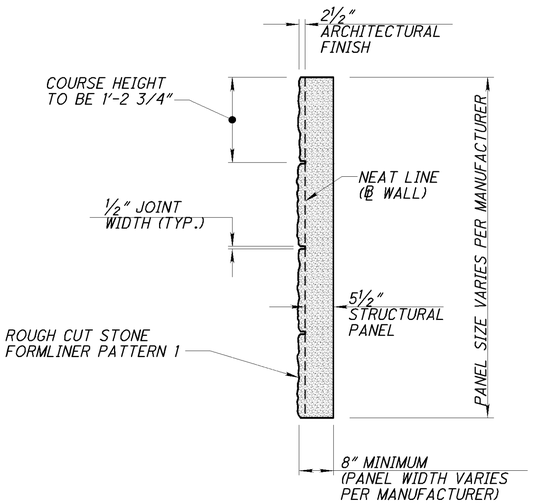

MSE PANEL SECTION

ITEM 840-MECHANICALLY STABILIZED EARTH WALL, AS PER PLAN

THIS ITEM 840 SHALL CONTAIN INTEGRALLY COLORED CONCRETE USING CHROMIX ADMIXTURES AS PROVIDED BY L. M. SCOFIELD COMPANY, DOUGLASVILLE, GEORGIA (800) 800-9000 OR AN APPROVED EQUAL. USE FEDERAL COLOR NUMBER 36373.

DESCRIPTION;
CONCRETE FORMLINERS SHALL BE USED ON THE MSE WALL PANELS ACCORDING TO THE DETAILS IN THE PLANS:

THE FORMLINER USED SHALL MEET THE DETAILS SHOWN IN THE PLANS FOR STAGGERED (INTERLOCKING) PATTERNS, INCLUDING DEPTH OF RELIEF AND SIZE OF STONE PATTERN. HORIZONTAL JOINTS IN THE STONE PATTERN SHALL BE ALIGNED AND AT THE SAME ELEVATION. THE FINISHED TEXTURE OF THE ROUGH CUT STONE SHALL BE SIMILAR TO THAT OF RUBBED CONCRETE.

FORMLINERS FOR PATTERN 1 SHALL MATCH THE DIMENSIONAL SPECIFICATIONS OF THE FOLLOWING MANUFACTURER OR APPROVED EQUAL:

PATTERN #1104-R2 (RANDOM CUT STONE)
CUSTOM ROCK
2020 WEST 7TH STREET
ST. PAUL, MN 55116
651-699-1345
WWW.CUSTOM-ROCK.COM

THE FORMLINER MANUFACTURER SHALL SUBMIT EVIDENCE OF AT LEAST TWO SIMILAR ARCHITECTURAL CONCRETE CONSTRUCTION PROJECTS WITHIN THE PAST FIVE YEARS FOR A REVIEW AND APPROVAL BY THE ENGINEER. COMPLETE SHOP DRAWINGS DETAILING THE STONE PATTERNS SHALL BE SUBMITTED IN ACCORDANCE WITH 501.04 FOR APPROVAL PRIOR TO PLACING ANY CONCRETE WHERE THE FORMLINERS WILL BE USED. SHOP DRAWINGS SHALL INCLUDE FORMLINER INSTALLATION AND CASTING INSTRUCTIONS, AND INDICATE FORMLINER BACKUP, REVEAL, AND CHAMFER STRIP LOCATIONS. THE CONTRACTOR SHALL COORDINATE WITH THE FORMLINER MANUFACTURER TO ASSURE UNDERSTANDING OF FORMLINER USE, TEST PANEL MOCK-UP REQUIREMENTS, AND FINAL CONSTRUCTION PROCEDURES.

MATERIALS:
THE FORMLINER SHALL BE FABRICATED WITH SHAPES THAT ALLOW REMOVAL OF THE FORMS WITHOUT DAMAGE OR VISUAL IMPAIRMENT OF THE CONCRETE, AND SHALL HAVE ⅛" MINIMUM RADII WITH NO SHARP EDGES. THE FORMLINER SHALL BE CAPABLE OF WITHSTANDING APPLIED CONCRETE POUR PRESSURE WITHOUT LEAKAGE, PHYSICAL DEFECT, OR VISUAL IMPAIRMENT.

CONSTRUCTION REQUIREMENTS:
FORMLINERS SHALL BE CLEANED BEFORE EACH USE. DAMAGED FORMLINERS WHOSE CONTINUED USE OR REPAIR WOULD NEGATIVELY IMPACT THE AESTHETICS OF THE FINISHED CONCRETE SHALL BE REPLACED. FORMLINER JOINTS SHALL BE SEALED TO PREVENT CEMENT PASTE FROM BLEEDING. FORMLINERS SHALL BE INSTALLED IN ACCORDANCE WITH THE APPROVED SHOP DRAWINGS. CHAMFERED CORNERS SHALL FORM SMOOTH, SOLID UNBROKEN CONTINUOUS SURFACES WHICH ARE UNIFORMLY STRAIGHT. AN APPROVED COMPATIBLE FORMLINER RELEASE AGENT SHALL BE APPLIED AT A RATE RECOMMENDED BY THE MANUFACTURER.

BASIS OF PAYMENT:
ITEM 840-MECHANICALLY STABILIZED EARTH WALL, AS PER PLAN, WILL BE PAID FOR AT THE CONTRACT SQ. FT. PRICE. THE WORK SHALL INCLUDE ALL LABOR AND MATERIALS NECESSARY FOR INTEGRALLY COLORING THE CONCRETE IN THE MSE WALL PANELS AND THE CONCRETE COPING.

ESTIMATED QUANTITIES											
02/IMS/PV/	03/ENH/OT/	ITEM	EXTENSION	GRAND TOTAL	STRUCTURE TOTAL WALL 1	WALL 2	WALL 3	WALL 4	UNIT	DESCRIPTION	SEE SHEET
3,799		203	20000	3,799	961		2,337	501	CU YD	EMBANKMENT	
LUMP		503	11100	LUMP	LUMP		LUMP	LUMP		COFFERDAMS AND EXCAVATION BRACING	
5,591		509	10000	5,591		5,591			POUND	EPOXY COATED REINFORCING STEEL	
		512	10050	20,670			15,674	4,996	SQ YD	SEALING OF CONCRETE SURFACES (NON-EPOXY)	
12,027		512	10100	12,027	11,960	67			SQ YD	SEALING OF CONCRETE SURFACES (EPOXY-URETHANE)	
21		518	21200	21		21			CU YD	POROUS BACKFILL WITH FILTER FABRIC	
166		518	40011	166	100		37	29	FT	6" NON-PERFORATED CORRUGATED PLASTIC PIPE, INCLUDING SPECIALS, AS PER PLAN	2/10
1,494		601	21050	1,494	854		520	120	SQ YD	TIED CONCRETE BLOCK MAT, TYPE 1	
15,013		840	20000	15,013	15,013				SQ FT	MECHANICALLY STABILIZED EARTH WALL	
23,779		840	20001	23,779			17,938	5,842	SQ FT	MECHANICALLY STABILIZED EARTH WALL, AS PER PLAN	2/10
14,442		840	21000	14,442	4,751		7,728	1,963	CU YD	WALL EXCAVATION	
4,189		840	22000	4,189	1,687		1,917	585	SQ YD	FOUNDATION PREPARATION	
22,964		840	23000	22,964	6,410		13,204	3,350	CU YD	SELECT GRANULAR BACKFILL	
2,794		840	23050	2,794	1,096		1,309	389	CU YD	NATURAL SOIL	
4,076		840	25010	4,076	2,022		1,511	543	FT	6" DRAINAGE PIPE, PERFORATED	
2,054		840	26000	2,054	1,018		754	282	FT	CONCRETE COPING	
	2,644	840	26050	2,644			1,994	650	SQ FT	AESTHETIC SURFACE TREATMENT	
15		840	27000	15	5		5	5	DAY	ON-SITE ASSISTANCE	
LUMP		840	28000	LUMP	LUMP		LUMP	LUMP		SGB INSPECTION AND COMPACTION TESTING	
34		898	20000	34		34			CU YD	QC/QA CONCRETE, CLASS QSC1, SUBSTRUCTURE	
36		898	20300	36		36			CU YD	QC/QA CONCRETE, CLASS QSC1, SUBSTRUCTURE (FOOTING)	

MSE RETAINING WALL GENERAL NOTES

SUPPLEMENTAL SPECIFICATIONS:

REFER TO THE FOLLOWING SUPPLEMENTAL SPECIFICATION:
SS 840 DATE: OCTOBER 19, 2012

ITEM 518 - 6" NON-PERFORATED CORRUGATED PLASTIC PIPE, INCLUDING SPECIALS, AS PER PLAN

ANIMAL GUARDS SHALL BE PROVIDED AT THE OUTLET OF THE DRAINAGE PIPES WHEN TERMINATING WITHIN CRUSHED AGGREGATE SLOPE PROTECTION STEEL BOLTS OR RODS FOR THE ANIMAL GUARDS SHALL BE GALVANIZED PER CMS 711.02. SEE STD DWG. DM 1.1 FOR ADDITIONAL DETAILS AND NOTES. THE ANIMAL GUARDS AND CRUSHED AGGREGATE SLOPE PROTECTION ARE INCIDENTAL TO ITEM 518 - 6" NON-PERFORATED CORRUGATED PLASTIC PIPE, INCLUDING SPECIALS, AS PER PLAN.

CALC BY: SAP DATE: 3/16/2012
CHCK BY: EBS DATE: 1/10/2013

DESIGN AGENCY
PB AMERICAS, INC.
312 ELM STREET
SUITE 2500
CINCINNATI, OHIO 45202

DESIGNED SAP | DRAWN LEL | REVIEWED EBS | DATE 02/04/13
CHECKED PJL | REVISED | STRUCTURE FILE NUMBER

QUANTITIES AND MSE WALL GENERAL NOTES

ALL-75-0.21
PID No. 89029

2 / 10

590
907

J:\Projects\ALL\89029\structures\WALL_003\sheets\76691_003wy001.dgn 11-OCT-2013 4:32PM lint

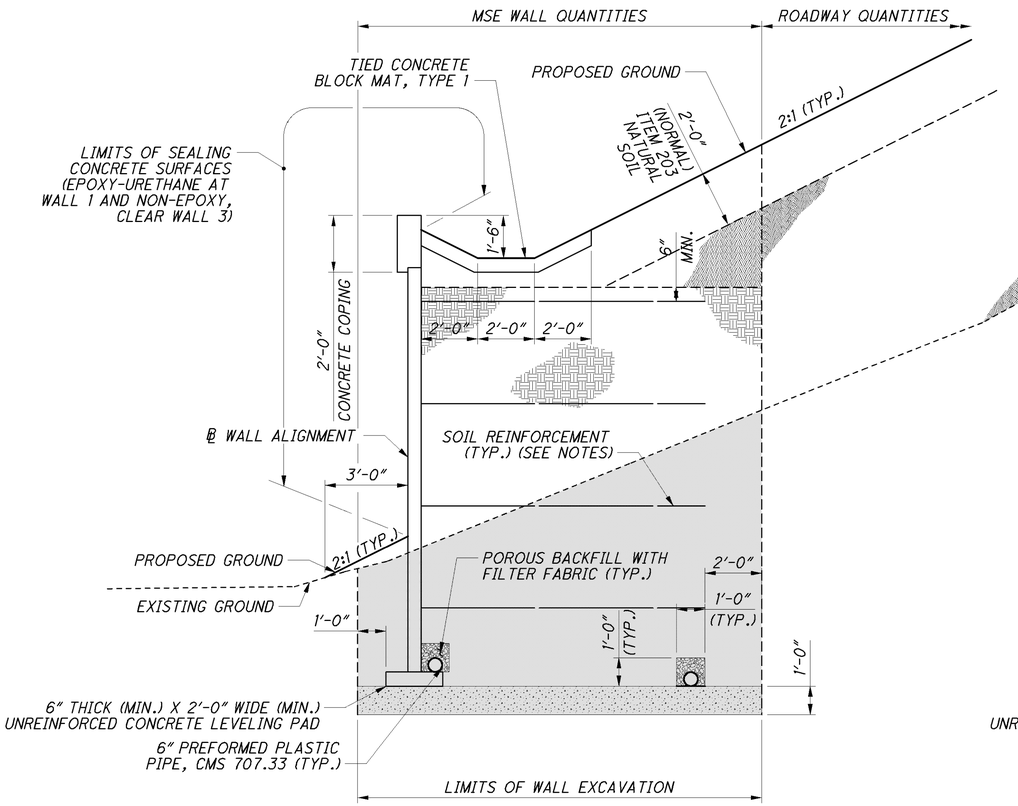

SECTION A-A
(WALL 1 & WALL 3)

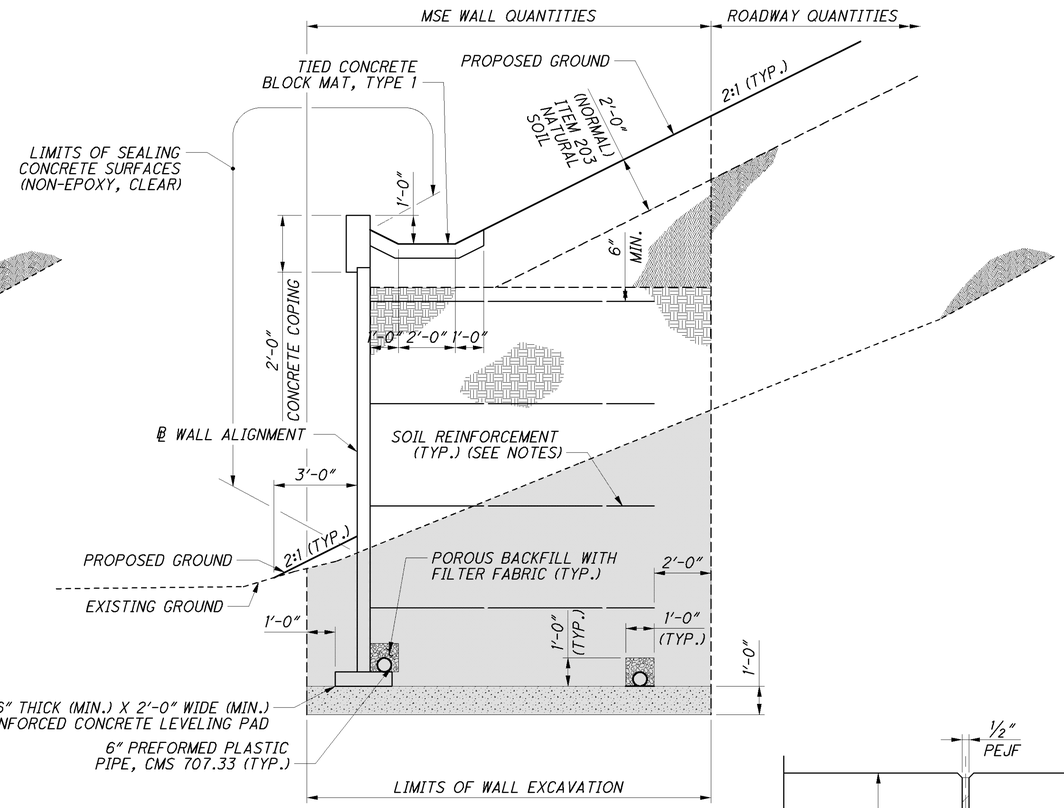

SECTION B-B
(WALL 4)

LEGEND:

- ITEM 840 SELECT GRANULAR BACKFILL (SGB)
- ITEM 840 WALL EXCAVATION
- ITEM 203 EMBANKMENT TO BE INCLUDED WITH ROADWAY QUANTITIES
- ITEM 203 GRANULAR MATERIAL, TYPE C
- ITEM 203 EMBANKMENT TO BE INCLUDED WITH WALL QUANTITIES

WALL SECTION NOTES:

1. THE LINE WHICH DEFINES THE LIMIT OF THE SELECT GRANULAR BACKFILL IS NOT AN ALLOWABLE SLOPE FOR EXCAVATION. CUT THE SIDES OF ALL EXCAVATIONS TO PREVENT CAVING, OR PROTECT THE EXCAVATION FROM CAVING.
2. DESIGN THE INTERNAL STABILITY OF A MECHANICALLY STABILIZED EARTH (MSE) WALL IN ACCORDANCE WITH SUPPLEMENTAL SPECIFICATION 840. FOR WALLS 1 & 4, THE ALLOWABLE BEARING PRESSURE AT THE BASE OF THE REINFORCED SOIL MASS IS 8.4 KSF. FOR WALL 3, THE ALLOWABLE BEARING PRESSURE AT THE BASE OF THE REINFORCED MASS IS 10.0 KSF. CONTACT THE ENGINEER IF THE ACTUAL BEARING PRESSURE WILL EXCEED THE ALLOWABLE BEARING PRESSURE.
3. SOIL REINFORCEMENT LENGTH TO BE DETERMINED BY WALL SUPPLIER. THIS DESIGN ASSUMES THE SOIL REINFORCEMENT LENGTH IS EQUAL TO 72% OF WALL HEIGHT FOR WALL 1, 79% OF WALL HEIGHT FOR WALL 3 AND 70% OF WALL HEIGHT FOR WALL 4. FOR ESTIMATED SOIL REINFORCEMENT LENGTHS SEE SHEETS 2/10 & 8/10
4. THICKNESS OF MSE WALL PANELS IS ASSUMED. ACTUAL THICKNESS DEPENDS ON THE APPROVED WALL SYSTEM.
5. STATIONS AND OFFSETS PROVIDED FOR THE MSE WALLS ARE MEASURED TO THE ℄ WALL. FOR WALL STATIONS AND OFFSETS SEE SHEETS 2/10 & 8/10

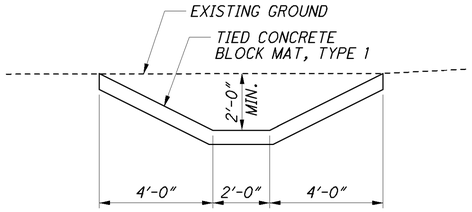

SECTION C-C
(OUTLET DITCH)

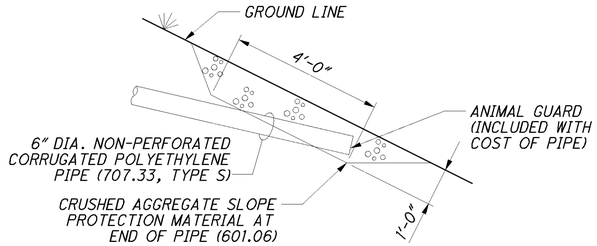

TERMINATION OF 6" NON-PERFORATED CORRUGATED PLASTIC PIPE (NPCPP)

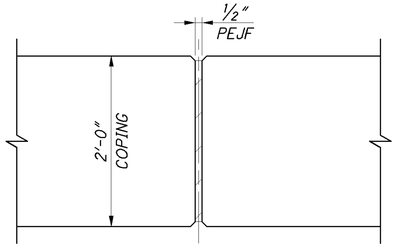

COPING EXPANSION JOINT

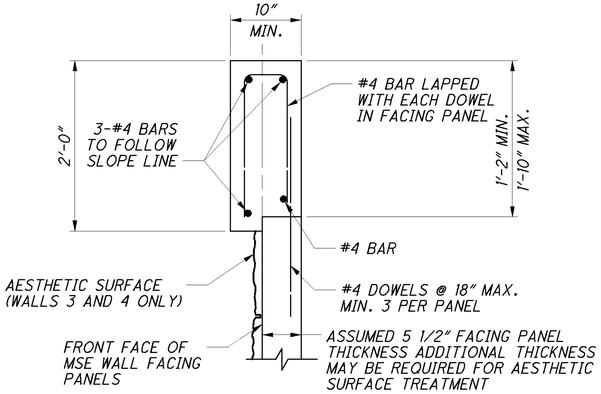

MSE WALL COPING
ALL REINFORCING TO BE EPOXY COATED

DESIGN AGENCY
PB AMERICAS, INC.
312 ELM STREET
SUITE 2500
CINCINNATI, OHIO 45202

DESIGNED	DRAWN	REVIEWED	DATE
SAP	LEL	EBS	02/04/13
CHECKED	REVISED	STRUCTURE FILE NUMBER	
PJL			

WALLS 1, 3, & 4 SECTION DETAILS

ALL-75-0.21
PID No. 89029

3 / 10

591
907

J:\Projects\ALL 89029\structures\WALL_001\sheets\76691_001wy001.dgn 09-MAY-2013 3:05PM jint

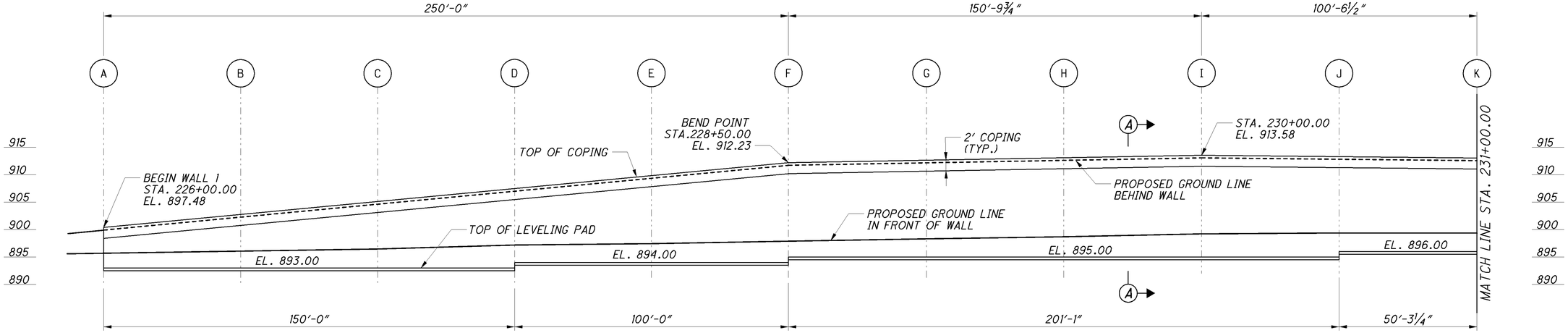

WALL 1 ELEVATION

NOTES:

1. WALL STATIONS AND OFFSETS ARE MEASURED AT THE BASE LINE OF THE WALL FROM @ SR. 65 RAMP 'C'.

2. ALL TOP OF WALL ELEVATIONS ARE MEASURED TO TOP OF MSE WALL COPING.

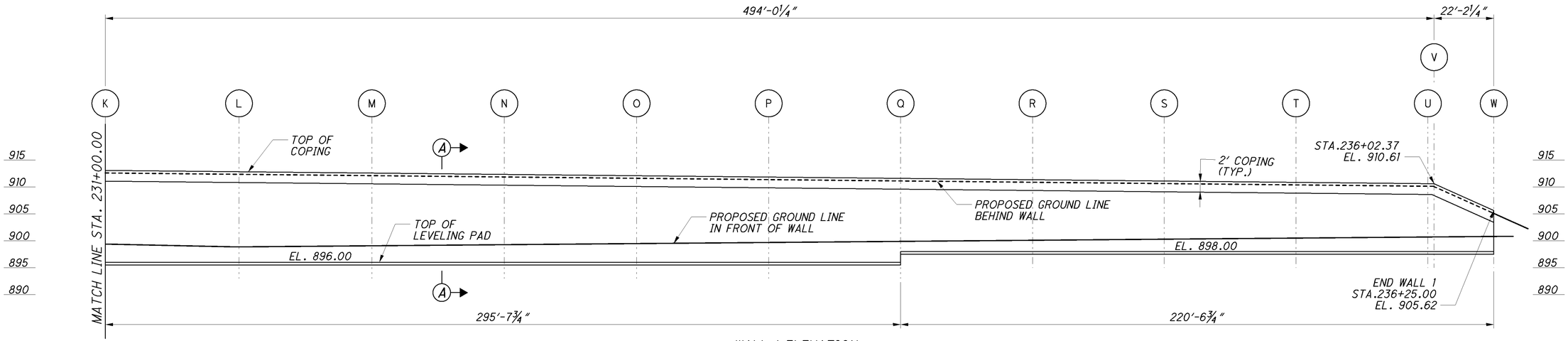

WALL 1 ELEVATION

DESIGN AGENCY
PARSONS BRINCKERHOFF
2545 FARMERS DRIVE
SUITE 350
COLUMBUS, OHIO 43235

DESIGNED SAP | DRAWN LEL | REVIEWED EBS | DATE 2/04/13
CHECKED PJL | REVISED | STRUCTURE FILE NUMBER

WALL 1 ELEVATION

ALL-75-0.21
PID No. 89029

J:\Projects\ALL\89029\structures\WALL_001\sheets\76691_001WE001.dgn 09-MAY-2013 3:05PM lint

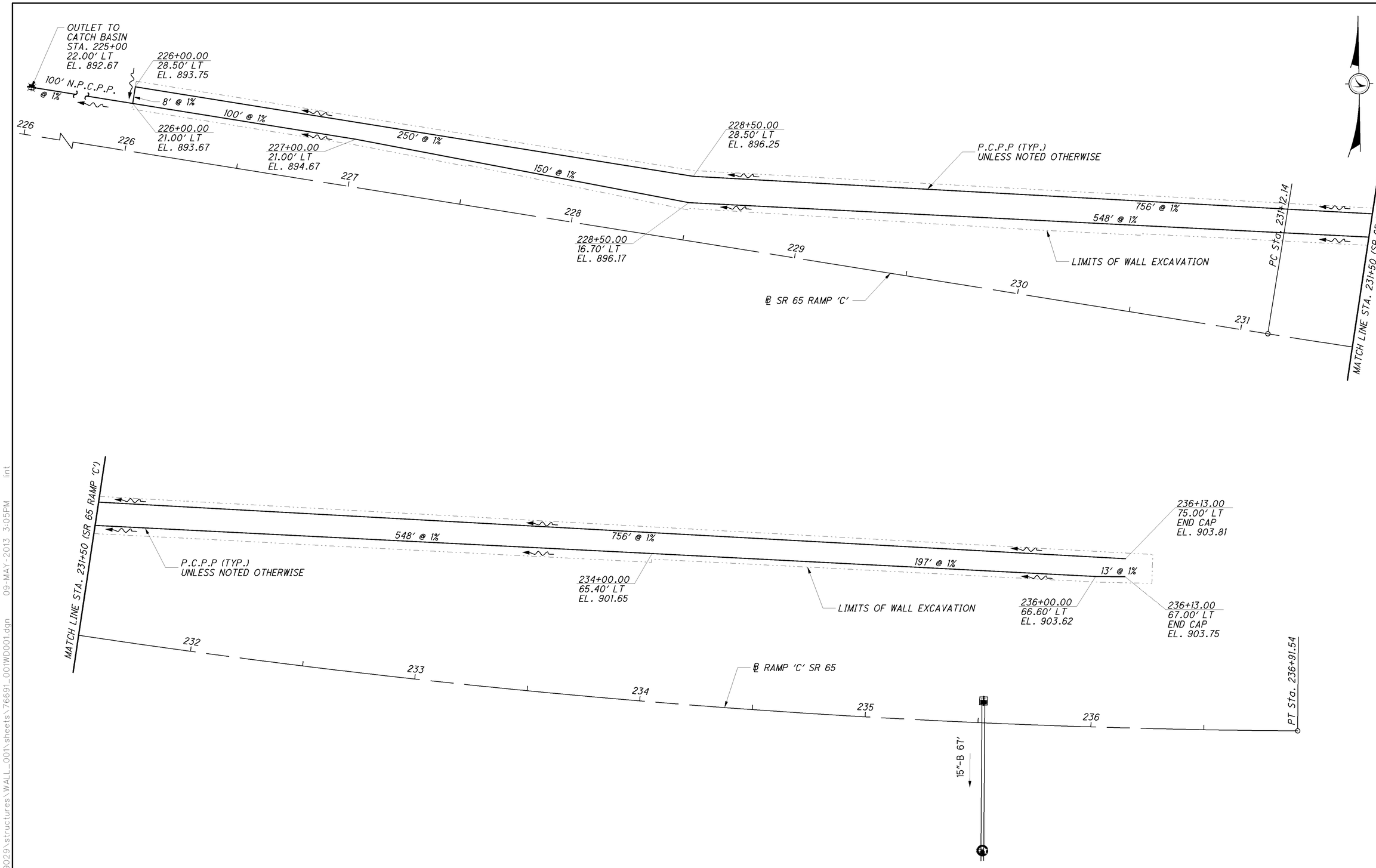

NOTES:

1. ALL STATIONS AND OFFSETS ARE MEASURED FROM ℄ S.R. 65 RAMP 'C' TO ℄ PIPE.

J:\Projects\ALL\89029\structures\WALL_001\sheets\76691_001WD001.dgn 09-MAY-2013 3:05PM lint

DESIGN AGENCY
PARSONS BRINCKERHOFF
2545 FARMERS DRIVE
SUITE 350
COLUMBUS, OHIO 43235

DESIGNED	DRAWN	REVIEWED	DATE
SAP	BKJ	EBS	02/04/13
CHECKED	REVISED	STRUCTURE FILE NUMBER	
PJL			

WALL 1 DRAINAGE SCHEMATIC PLAN

ALL-75-0.21
PID No. 89029

5 / 10

593
907

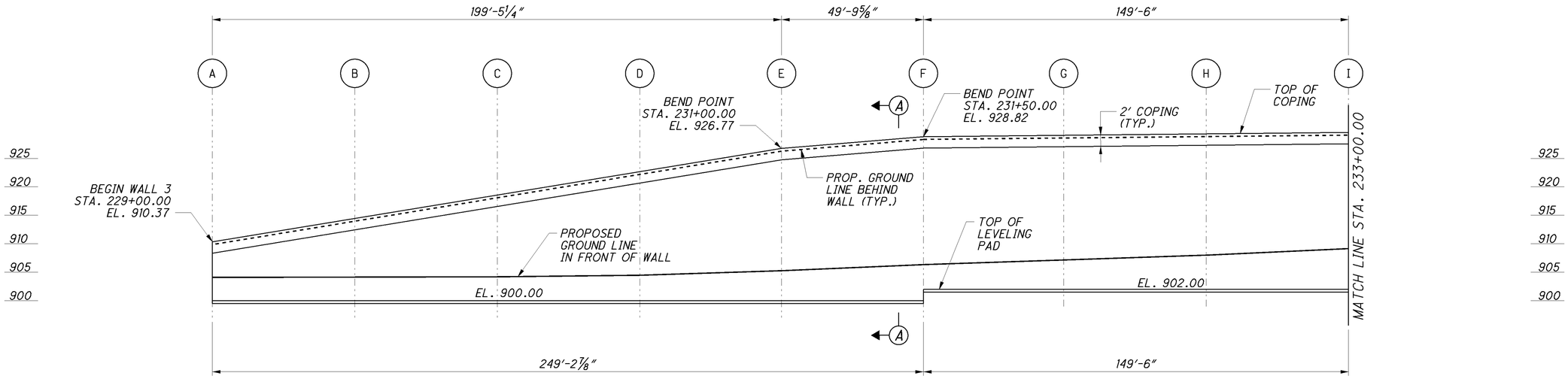

WALL 3 ELEVATION

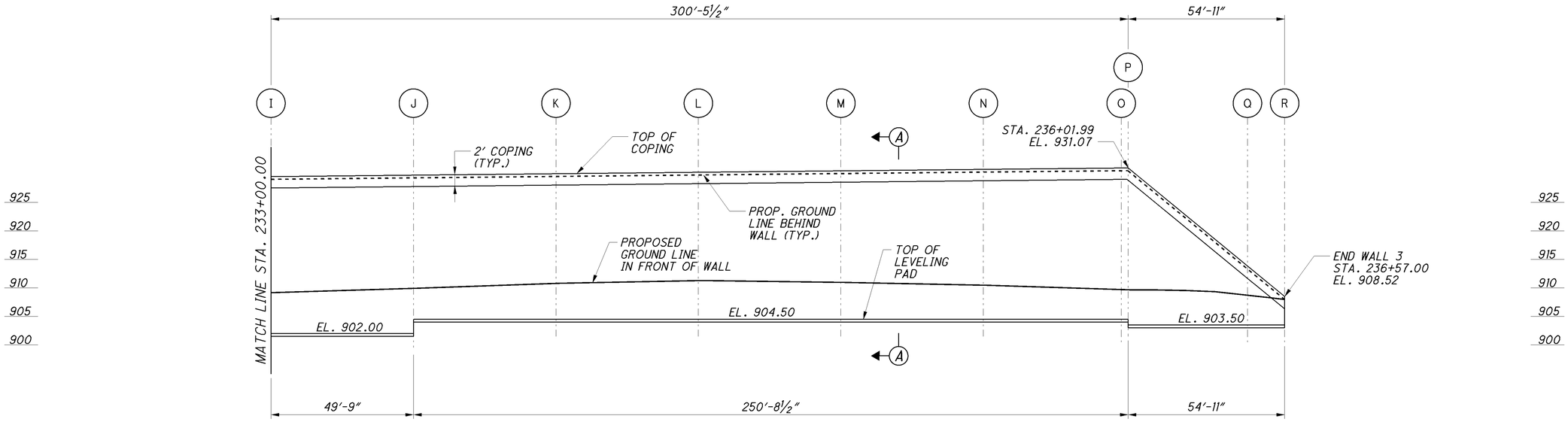

WALL 3 ELEVATION

NOTES:

1. WALL STATIONS AND OFFSETS ARE MEASURED AT THE NEAT LINE OF THE WALL FROM ℄ SR. 65 RAMP 'D'.

2. ALL TOP OF WALL ELEVATIONS ARE MEASURED TO TOP OF MSE WALL COPING.

DESIGN AGENCY
PARSONS BRINCKERHOFF
2545 FARMERS DRIVE
SUITE 350
COLUMBUS, OHIO 43235

DESIGNED	DRAWN	REVIEWED	DATE
SAP	LEL	EBS	02/04/13
CHECKED	REVISED	STRUCTURE FILE NUMBER	
PJL			

WALL 3 ELEVATION

ALL-75-5.53
PID No. 89029

J:\Projects\ALL\89029\structures\WALL_003\sheets\76691_003WE001.dgn 14-OCT-2013 4:24PM jint

PC Sta. 231+12.14

PT Sta. 236+91.54

℄ SR 65 RAMP 'C'

℄ R/W & CONST. I-75

S 89° 34' 29" E

℄ SR 65 RAMP 'D'

℄ YODER RD.

OUTLET TO MANHOLE
STA. 228+73.87
56.00' RT
EL. 899.00

229+00.00
27.73' RT
EL. 900.00

229+00.00
36.71' RT
EL. 900.09

230+03.77
21.56' RT
EL. 901.13

231+34.51
2.26' RT
EL. 902.48

231+51.59
2.05' RT
EL. 902.65

231+52.98
22.07' RT
EL. 902.58

231+03.43
22.50' RT
EL. 902.08

235+81.14
14.41' RT
EL. 906.95

236+30.25
27.07' RT
EL. 907.45

236+45.00
26.93' RT
END CAP
EL. 907.60

236+45.00
33.93' RT
END CAP
EL. 907.51

37' @ 2.7%

9' @ 1%

113' @ 1%

199' @ 1%

135' @ 1%

17' @ 1%

50' @ 1%

430' @ 1%

493' @ 1%

50' @ 1%

15' @ 1%

P.C.P.P. (TYP.) UNLESS NOTED OTHERWISE

LIMITS OF WALL EXCAVATION

CS Sta. 234+84.50

ST Sta. 236+84.50

NOTE:
1. ALL STATIONS AND OFFSETS ARE MEASURED FROM ℄ SR 65 RAMP 'D'.

DESIGN AGENCY
PARSONS BRINCKERHOFF
2545 FARMERS DRIVE
SUITE 350
COLUMBUS, OHIO 43235

DESIGNED	DRAWN	REVIEWED	DATE
SAP	LEL	EBS	02/04/13
CHECKED	REVISED	STRUCTURE FILE NUMBER	
PJL			

WALL 3 DRAINAGE SCHEMATIC PLAN

ALL-75-
PID No. 89029

7 / 10

595
907

J:\Projects\ALL\89029\structures\WALL_003\sheets\76691_003WD001.dgn 09-MAY-2013 3:05PM lint

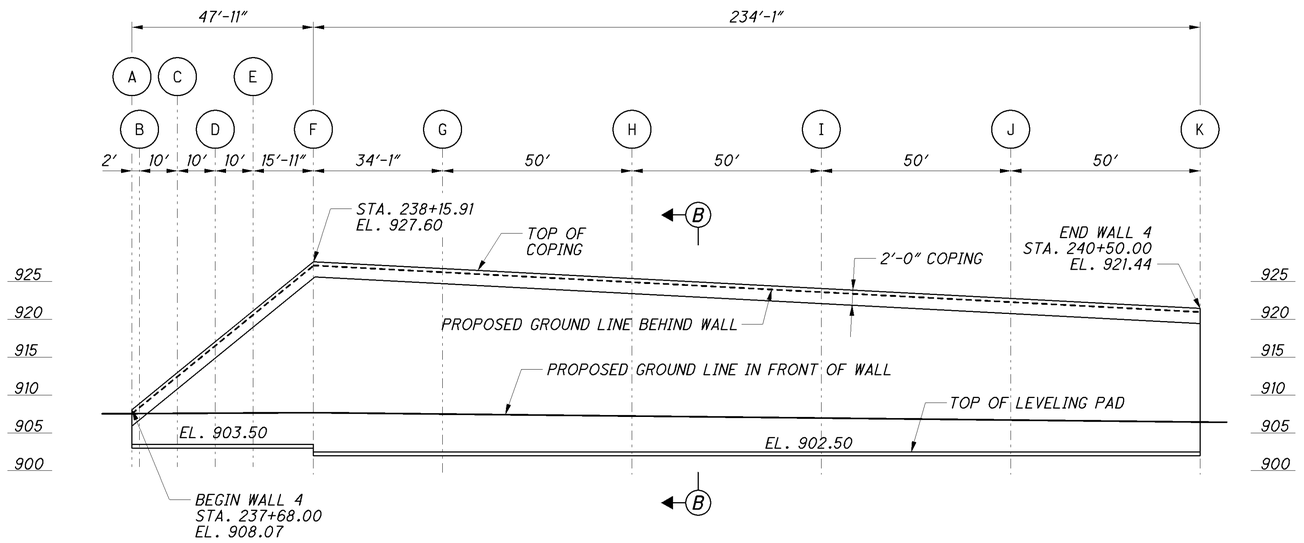

WALL 4 ELEVATION

WALL 4								
LOCATION	STATION	OFFSET (FT)	ELEVATION BEHIND WALL	ELEVATION IN FRONT OF WALL	TOP OF COPING	TOP OF LEVELING PAD	ESTIMATED STRAP LENGTH (FT)	WALL HEIGHT (FT)
A	237+68.00	118.00	907.57	907.57	908.07	903.50	8.0	4.57
B	237+70.00	118.00	908.39	907.54	908.89	903.50	8.0	5.39
C	237+80.00	118.00	912.46	907.58	912.96	903.50	8.0	9.46
D	237+90.00	118.00	916.54	907.90	917.04	903.50	9.5	13.54
E	238+00.00	118.00	920.61	907.77	921.11	903.50	12.3	17.61
F	238+15.91	118.00	927.10	907.70	927.60	903.50	16.9	24.10
							17.6	25.10
G	238+50.00	118.00	926.20	907.12	926.70	902.50	16.9	24.20
H	239+00.00	118.00	924.89	907.56	925.39	902.50	16.0	22.89
I	239+50.00	118.00	923.57	907.88	924.07	902.50	15.1	21.57
J	240+00.00	118.05	922.26	907.40	922.76	902.50	14.2	20.26
K	240+50.00	118.22	920.94	906.71	921.44	902.50	13.3	18.94

NOTES:

1. WALL STATIONS AND OFFSETS ARE MEASURED AT THE NEAT LINE OF THE WALL FROM ℄ R/W & CONST. I-75.

2. ALL TOP OF WALL ELEVATIONS ARE MEASURED TO TOP OF MSE WALL COPING.

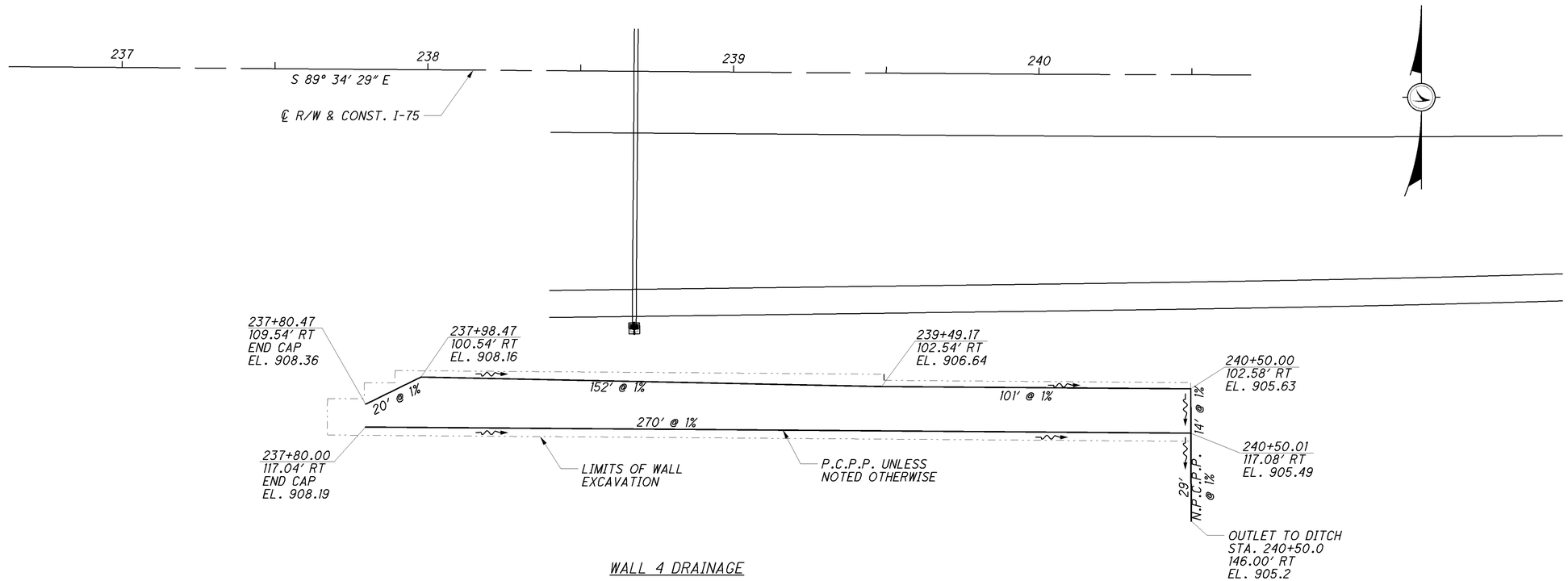

WALL 4 DRAINAGE

DESIGN AGENCY
PARSONS BRINCKERHOFF
2545 FARMERS DRIVE
SUITE 350
COLUMBUS, OHIO 43235

DESIGNED	DRAWN	REVIEWED	DATE
SAP	LEL	EBS	02/04/13
CHECKED	REVISED	STRUCTURE FILE NUMBER	
PJL			

WALL 4 ELEVATION AND DRAINAGE

ALL-75-0.21
PID No. 89029

J:\Projects\ALL\89029\structures\WALL_004\sheets\20082_004WE001.dgn 09-MAY-2013 3:05PM lint

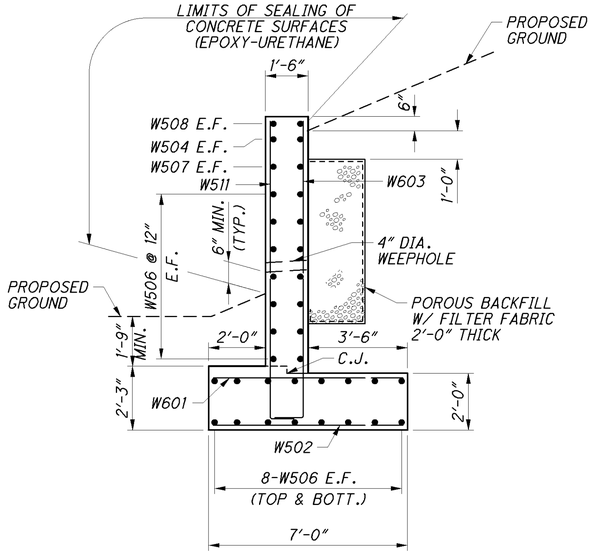

SECTION B-B

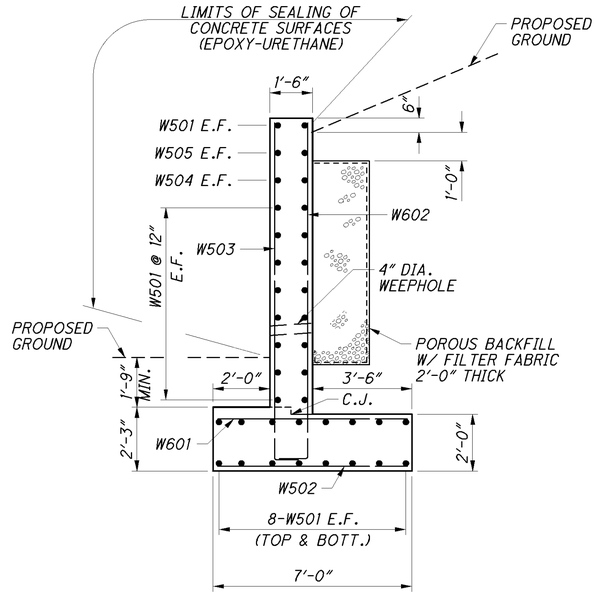

SECTION A-A

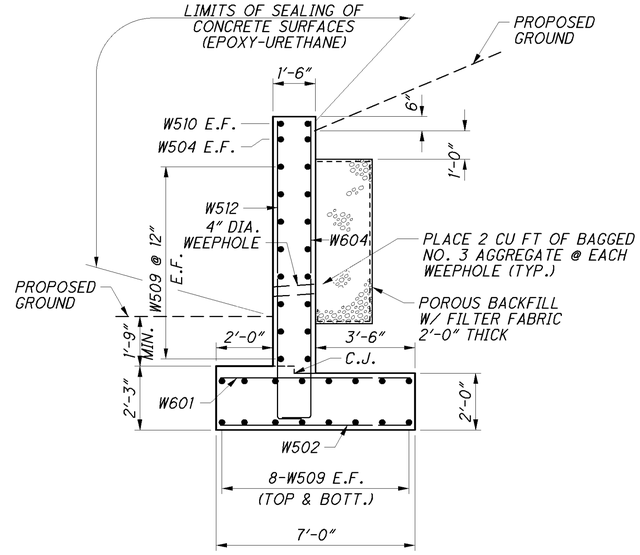

SECTION C-C

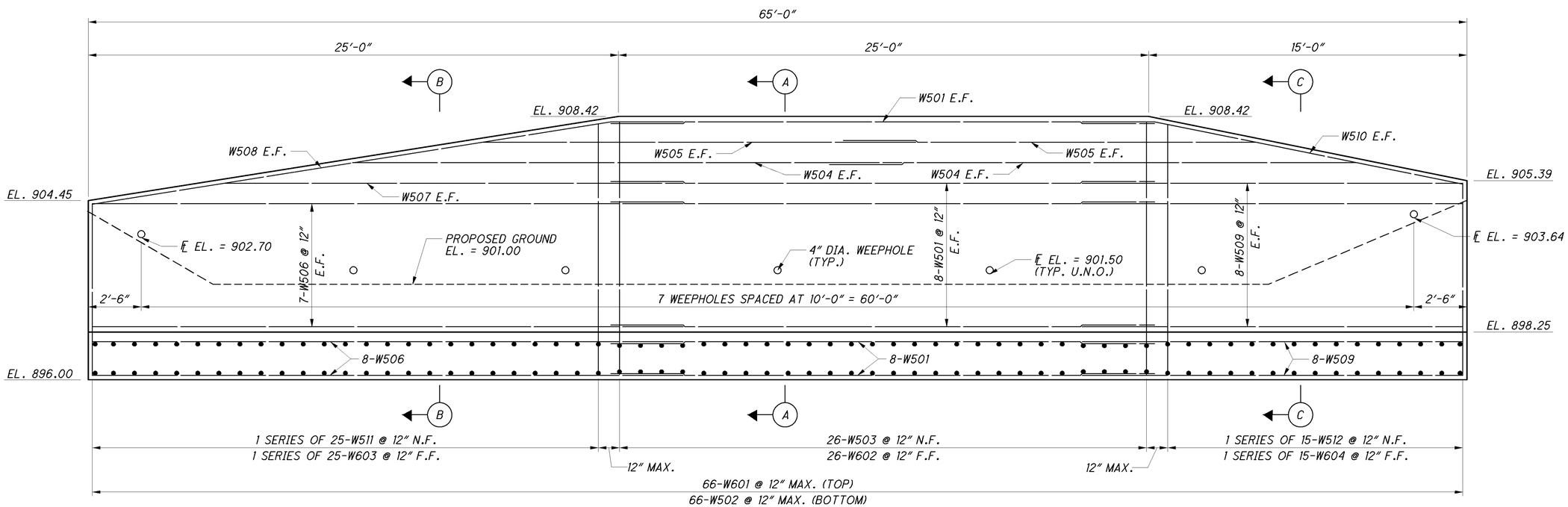

ELEVATION

NOTES:
1. FOR GENERAL NOTES AND DETAILS SEE SHEET 2/10
2. ALL LAPS TO BE 3'-5"

DESIGN AGENCY
PARSONS BRINCKERHOFF
2945 FARMERS DRIVE
SUITE 350
COLUMBUS, OHIO 43235

DESIGNED	DRAWN	REVIEWED	DATE
BKJ	BKJ	EBS	02/01/13
CHECKED	REVISED	STRUCTURE FILE NUMBER	
SAP			

WALL 2 SECTION DETAILS

ALL-75-0.21
PID No. 76691

J:\Projects\ALL\69029\structures\WALL_002\sheets\76691_002WD001.dgn 09-MAY-2013 3:05PM lint

REINFORCED CONCRETE RETAINING WALL GENERAL NOTES

DESIGN SPECIFICATIONS: THIS STANDARD DRAWING CONFORMS TO "LRFD BRIDGE DESIGN SPECIFICATIONS" ADOPTED BY THE AMERICAN ASSOCIATION OF STATE HIGHWAY AND TRANSPORTATION OFFICIALS, FIFTH EDITION, INCLUDING THE 2010 ITERIM SPECIFICATIONS AND THE ODOT BRIDGE DESIGN MANUAL, 2007.

DESIGN DATA: THE FOLLOWING DESIGN DATA IS ASSUMED:

INTERNAL ANGLE OF FRICTION (ϕ) = 28 DEGREES
UNIT WEIGHT OF SOIL = 120 PCF
UNIT WEIGHT OF CONCRETE = 150 PCF
SLOPE OF BACKFILL = 2:1

CONCRETE CLASS QSC1 - COMPRESSIVE STRENGTH 4.0 KSI (SUBSTRUCTURE)

REINFORCING STEEL - MINIMUM YIELD STRENGTH 60 KSI

FOUNDATION BEARING RESISTANCE:
WALL FOOTINGS, AS DESIGNED, PRODUCE A MAXIMUM SERVICE LOAD PRESSURE OF 2.01 KIPS PER SQUARE FOOT AND A MAXIMUM STRENGTH LOAD PRESSURE OF 2.83 KIPS PER SQUARE FOOT. THE FACTORED BEARING RESISTANCE IS 5.9 KIPS PER SQUARE FOOT.

MARK	NUMBER TOTAL	LENGTH	WEIGHT	TYPE	DIMENSIONS A	B	C	D	E	R	INC
WALL 2 - REINFORCING SCHEDULE											
W501	34	25'- 07"	908	STR.							
W502	66	6'- 08"	459	STR.							
W503	26	11'- 06"	312	1	10"	10'-9"					
W504	4	25'- 05"	107	STR.							
W505	4	20'- 00"	84	STR.							
W506	30	27'- 11"	874	STR.							
W507	2	21'- 09"	46	STR.							
W508	2	28'- 02"	59	19	24'-9"	3'-4"	6"				
W509	32	18'- 00"	601	STR.							
W510	2	18'- 03"	39	19	14'-10"	3'-4"	8"				
	1	7'- 07"				6'-10"					
W511	SER. OF	TO	247	1	10"	TO					2"
	25	11'- 04"				10'-7"					
	1	8'- 06"				7'-9"					
W512	SER. OF	TO	156	1	10"	TO					2.5"
	15	11'- 04"				10'-7"					
W601	66	6'- 08"	661	STR.							
W602	26	11'- 07"	453	1	12"	10'-9"					
	1	7'- 08"				6'-10"					
W603	SER. OF	TO	359	1	12	TO					2"
	25	11'- 05"				10'-7"					
	1	8'- 07"				7'-9"					
W604	SER. OF	TO	226	1	12"	TO					2.5"
	15	11'- 05"				10'-7"					
WALL 2 TOTAL			5,591								

ABBREVIATIONS:

APPRX. = APPROXIMATE	N.F. = NEAR FACE
(B) = BOTTOM	P.E.J.F. = PREFORMED EXPANSION JOINT FILLER
BM = BENCH MARK	PROP. = PROPOSED
C.J. = CONSTRUCTION JOINT	P.V.I. = POINT OF VERTICAL INTERSECTION
CLR. = CLEAR	RT. = RIGHT
CONST. = CONSTRUCTION	SHLDR = SHOULDER
C/C = CENTER ON CENTER	SER. = SERIES
DIA. = DIAMETER	S.R. = STATE ROUTE
E.B. = EASTBOUND	STA. = STATION
E.F. = EACH FACE	STR. = STRAIGHT
EL. = ELEVATION	STM = STORM
EX. = EXISTING	(T) = TOP
ELEV. = ELEVATION	T&B = TOP AND BOTTOM
F.F. = FAR FACE	TYP. = TYPICAL
INC. = INCREMENT	U.N.O. = UNLESS NOTED OTHERWISE
LF. = LEFT	VC = VERTICAL CURVE
MAX. = MAXIMUN	W.B. = WESTBOUND
MIN. = MINIMUM	YR. = YEAR
M.O.T. = MAINTENACE OF TRAFFIC	

NOTES:

1. THE BAR SIZE NUMBER IS SPECIFIED ON THE PLANS IN THE BAR MARK COLUMN. THE FIRST DIGIT WHERE THREE DIGITS ARE USED, AND THE FIRST TWO DIGITS WHERE FOUR ARE USED, INDICATES THE BAR SIZE NUMBER. FOR EXAMPLE, P601 IS A NO. 6 BAR. BAR DIMENSIONS SHOWN ARE OUT TO OUT UNLESS OTHERWISE INDICATED. R INDICATES INSIDE RADIUS, UNLESS OTHERWISE NOTED. "STD." WRITTEN IN PLACE OF A DIMENSION INDICATES A STANDARD BEND AT THE END OF THE BAR.
2. ALL REINFORCEMENT IS TO BE EPOXY COATED.

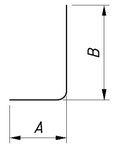

TYPE-1

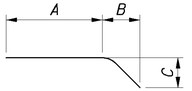

TYPE-19

DESIGN AGENCY
PARSONS BRINCKERHOFF
2945 FARMERS DRIVE
SUITE 350
COLUMBUS, OHIO 43235

DESIGNED SAP | DRAWN LEL | REVIEWED EBS | DATE 02/01/13
CHECKED PJL | REVISED | STRUCTURE FILE NUMBER

WALL 2 GENERAL NOTES AND REINFORCING STEEL LIST

ALL-75-0.21
PID No. 89029

10 / 10

598
656

J:\Projects\ALL\89029\structures\WALL_002\sheets\76691_002WD002.dgn 09-MAY-2013 3:05PM lint

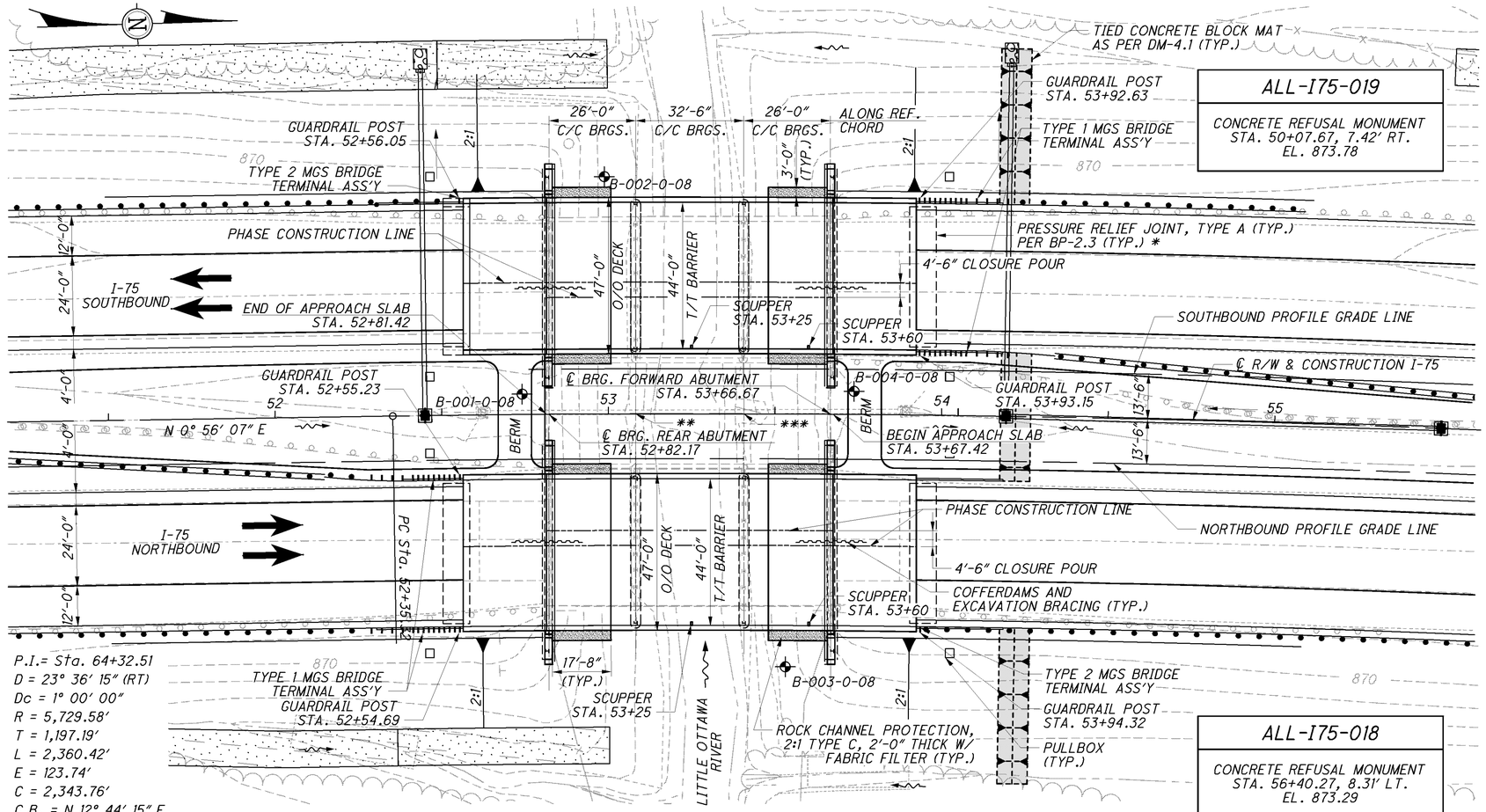

PLAN

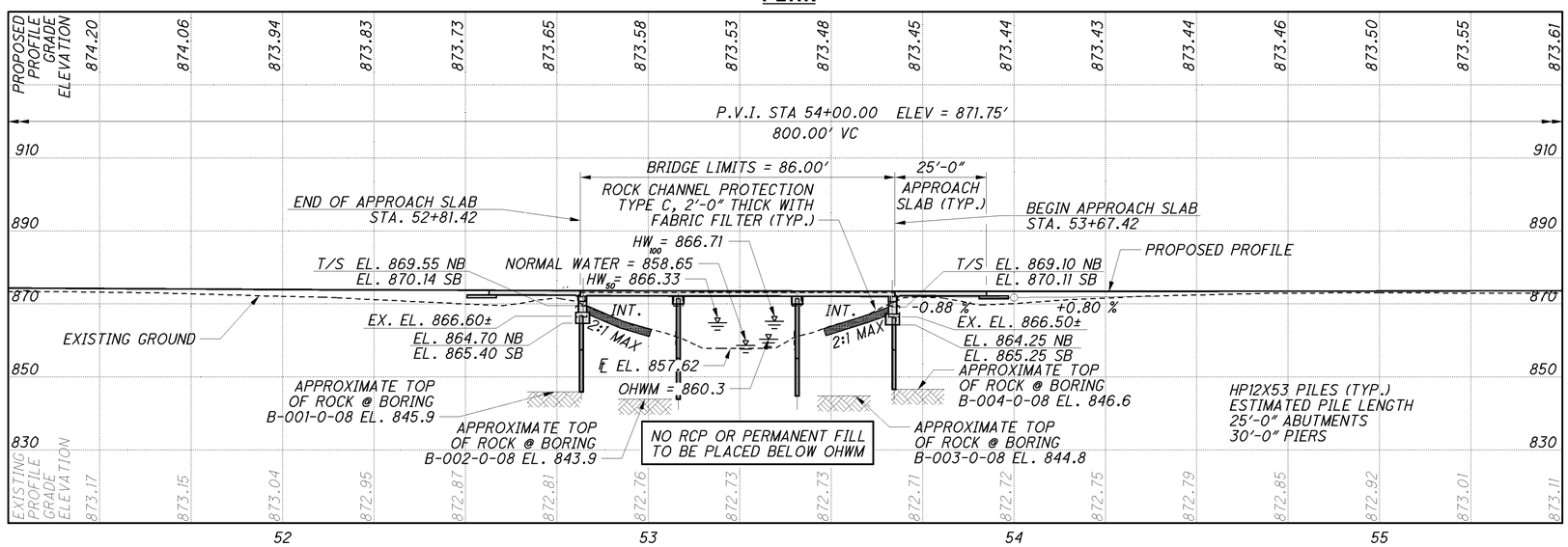

PROFILE

ALONG NORTHBOUND PROFILE GRADE LINE

NOTES

PROPOSED WORK: REPLACE AND WIDEN EXISTING REINFORCED CONCRETE STRUCTURES USING PART-WIDTH CONSTRUCTION BY REMOVING EXISTING SUBSTRUCTURES AND SUPERSTRUCTURES IN PHASES WHILE LEAVING EXISTING STEEL H-PILING IN PLACE FOR RE-USE. DRIVE NEW PILING AND TRIM EXISTING STEEL PILES AS NECESSARY FOR PLACEMENT OF NEW SUBSTRUCTURES. CONSTRUCT NEW REINFORCED CONCRETE SUBSTRUCTURES AND SUPERSTRUCTURES IN PHASES AS SHOWN ON THE MOT PLANS.

NO RCP OR PERMANENT FILL TO BE PLACED BELOW OHWM.

TEMP. FILL CANNOT EXCEED 170 LF (0.12 ACRE).

STREAMBED MUST BE RETURNED TO PRE-CONSTRUCTION CONTOURS.

EARTHWORK LIMITS SHOWN ARE APPROXIMATE. ACTUAL SLOPES SHALL CONFORM TO PLAN CROSS SECTIONS.

DESIGN TRAFFIC:
2015 ADT = 41,710 2015 ADTT = 19,604
2035 ADT = 50,820 2035 ADTT = 23,885
DIRECTIONAL DISTRIBUTION = 0.51

LEGEND

⌖ *BORING LOCATION*

* *USE RELIEF JOINT FOR RIGID PAVEMENT ONLY.*
** *℄ BRG. PIER 1 STA. 53+08.17*
*** *℄ BRG. PIER 2 STA. 53+40.67*

HYDRAULIC DATA

DRAINAGE AREA = 10.8 SQ. MILES
Q (50) = 1,250 CFS V (50) = 3.18 FT/S
Q (100) = 1,400 CFS V (100) = 3.36 FT/S
STRUCTURE CLEARS THE 50 YEAR DESIGN HW BY 4.8 FEET.
OHWM = 860.3

SOIL BORING LOCATIONS

BORING	STATION, OFFSET	APPROX. TOP OF ROCK
B-001-0-08	STA. 52+74.2, 6.1' LT.	845.9
B-002-0-08	STA. 52+99.1, 71.2' LT.	843.9
B-003-0-08	STA. 53+53.5, 75.9' RT.	844.8
B-004-0-08	STA. 53+73.7, 6.9' LT.	846.6

EXISTING STRUCTURE

TYPE: CONTINUOUS 3- SPAN REINFORCED CONCRETE SLAB WITH REINFORCED CONCRETE CAPPED PILE SUBSTRUCTURES
SPANS: 26'± - 32.5'± - 26'± c/c BRGS.
ROADWAY: 41'-0"± TOE/TOE PARAPETS
LOADING: CF-2000(51)
SKEW: NONE
APPROACH SLABS: AS-1-54 (L=15')
ALIGNMENT: 1° CURVE RT
CROWN: SUPERELEVATION 0.032 FT./FT.
STRUCTURE FILE NUMBER: 0201626 (L), 0201650 (R)
DATE BUILT: 1957
WEARING SURFACE: MICROSILICA MODIFIED CONCRETE

PROPOSED STRUCTURE

PROPOSED WORK: CONTINUOUS 3- SPAN REINFORCED CONCRETE SLAB ON CAPPED PILE SUBSTRUCTURE ON EXISTING AND NEW PILES.
SPANS: 26'-0" - 32'-6" - 26'-0" C/C BEARINGS ALONG REFERENCE CHORD
ROADWAY: 44'-0" TOE/TOE PARAPET
LOADING: HL-93 FUTURE WEARING SURFACE (FWS) OF 0.060 kips/ft²
SKEW: NONE
APPROACH SLABS: 25'-0" LONG (AS-1-81) (MODIFIED)
WEARING SURFACE: 1" MONOLITHIC
ALIGNMENT: 1° CURVE RT
SUPERELEVATION: VARIES, 0.033 FT/FT MAX.
COORDINATES: LATITUDE 40°40'18" LONGITUDE 84°07'54"

DESIGN AGENCY
PARSONS BRINCKERHOFF
2945 FARMERS DRIVE
SUITE 350
COLUMBUS, OHIO 43235

DESIGNED PJL | DRAWN LEL | REVIEWED EBS | DATE 12/17/12
CHECKED SAP | REVISED
STRUCTURE FILE NUMBER LEFT: 0201634 RIGHT:0201669

ALLEN COUNTY
STA. 52+81.42
STA. 53+67.42

SITE PLAN
ALL-75-0100 L&R
I-75 OVER LITTLE OTTAWA RIVER

ALL-75-0.21
PID No. 89029

1 / 26

599
907

J:\Projects\ALL\89029\structures\ALL075_0100C\sheets\075_0100CSP001.dgn 21-JUN-2013 1:27PM jint

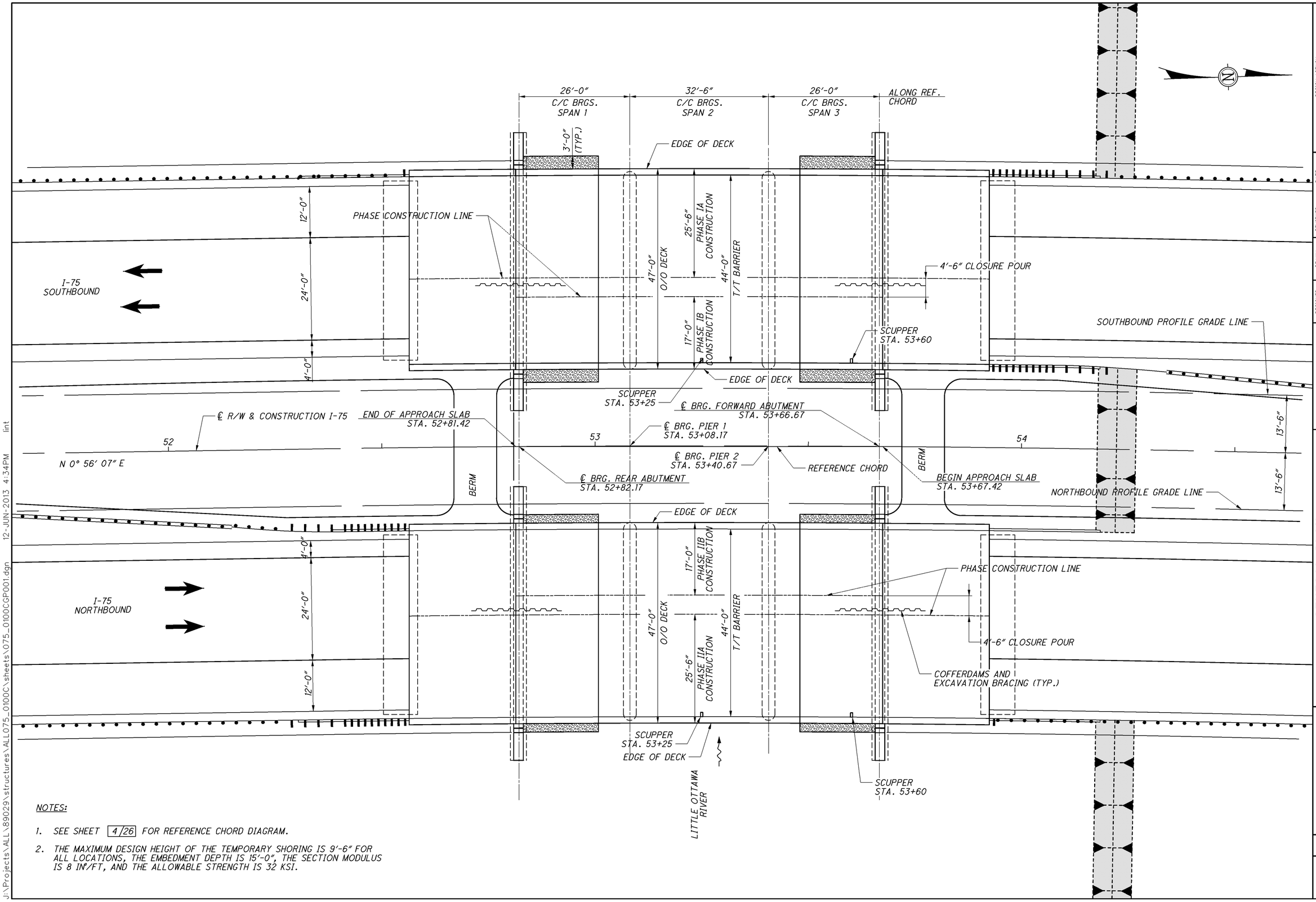

NOTES:

1. SEE SHEET 4/26 FOR REFERENCE CHORD DIAGRAM.
2. THE MAXIMUM DESIGN HEIGHT OF THE TEMPORARY SHORING IS 9'-6" FOR ALL LOCATIONS, THE EMBEDMENT DEPTH IS 15'-0", THE SECTION MODULUS IS 8 IN³/FT, AND THE ALLOWABLE STRENGTH IS 32 KSI.

J:\Projects\ALL\89029\structures\ALL075_0100C\sheets\075_0100CGP001.dgn 12-JUN-2013 4:34PM jint

DESIGN AGENCY
PARSONS BRINCKERHOFF
2545 FARMERS DRIVE
SUITE 350
COLUMBUS, OHIO 43235

DESIGNED PJL | DRAWN LEL | REVIEWED EBS | DATE 12/17/12
CHECKED SAP | REVISED | STRUCTURE FILE NUMBER LEFT: 0201634 RIGHT: 0201669

ALLEN COUNTY
STA. 52+81.42
STA. 53+67.42

GENERAL PLAN
ALL-75-0100 L&R
I-75 OVER LITTLE OTTAWA RIVER

ALL-75-0.21
PID No. 89029

2 / 26

600
907

STANDARD DRAWINGS AND SUPPLEMENTAL SPECIFICATIONS

REFER TO THE FOLLOWING STANDARD BRIDGE DRAWING(S):

AS-1-81	REVISED	07-19-02
BR-1	REVISED	07-19-02
CPA-1-08	DATED	07-18-08
CPP-1-08	DATED	07-18-08
CS-1-08	DATED	07-18-08
PCB-91	REVISED	07-19-02

AND TO THE FOLLOWING SUPPLEMENTAL SPECIFICATION(S):

800	DATED	07-19-13
832	DATED	05-05-09
898	DATED	10-21-11

DESIGN SPECIFICATIONS

DESIGN SPECIFICATIONS: THIS STRUCTURE CONFORMS TO THE "LRFD BRIDGE DESIGN SPECIFICATIONS" ADOPTED BY THE AMERICAN ASSOCIATION OF STATE HIGHWAY AND TRANSPORTATION OFFICIALS, FIFTH EDITION, INCLUDING THE 2010 INTERIM SPECIFICATIONS, AND THE ODOT BRIDGE DESIGN MANUAL, 2007 EXCEPT AS NOTED ELESWHERE IN THE PLANS.

DESIGN DATA

DESIGN DATA:
CONCRETE CLASS QSC2 - COMPRESSIVE STRENGTH 4.5 KSI (SUPERSTRUCTURE)
CONCRETE CLASS QSC1 - COMPRESSIVE STRENGTH 4.0 KSI (SUBSTRUCTURE)
REINFORCING STEEL - MINIMUM YIELD STRENGTH 60 KSI

LOAD MODIFIER FOR OPERATIONAL IMPORTANCE

OPERATIONAL IMPORTANCE: A LOAD MODIFIER OF 1.00 HAS BEEN ASSUMED FOR THE DESIGN OF THIS STRUCTURE IN ACCORDANCE WITH THE AASHTO LRFD BRIDGE DESIGN SPECIFICATIONS, ARTICLE 1.3.5 AND THE ODOT BRIDGE DESIGN MANUAL, 2007.

DESIGN LOADING

DESIGN LOADING: HL-93

FUTURE WEARING SURFACE (FWS) OF 0.060 KIPS/SQ.FT.

DECK PROTECTION METHOD

EPOXY COATED REINFORCING STEEL

2.5" CONCRETE COVER

SEALING OF CONCRETE SURFACES

MONOLITHIC WEARING SURFACE

MONOLITHIC WEARING SURFACE IS ASSUMED, FOR DESIGN PURPOSES, TO BE 1 INCH THICK.

EXISTING STRUCTURE PLANS:

CONSTRUCTION PLANS FOR THE EXISTING BRIDGE ARE ON FILE AT THE OHIO DEPARTMENT OF TRANSPORTATION, DISTRICT ONE OFFICE, 1885 NORTH MCCULLOUGH ST., LIMA, OHIO 45801 AND ARE AVAILABLE FOR REFERENCE.

ITEM 202, PORTIONS OF STRUCTURE REMOVED, AS PER PLAN

ITEM 202, PORTIONS OF STRUCTURE REMOVED, AS PER PLAN: REMOVE ALL EXISTING CONCRETE TO THE LIMITS SHOWN IN THE PLANS. ALL EXISTING PILING SHALL REMAIN IN PLACE AND USED FOR THE PROPOSED STRUCTURES.

PILES TO BEDROCK

PILES TO BEDROCK: DRIVE PILES TO REFUSAL ON BEDROCK. THE DEPARTMENT WILL CONSIDER REFUSAL TO BE OBTAINED BY PENETRATING WEAK BEDROCK FOR SEVERAL INCHES TO A MINIMUM RESISTANCE OF 20 BLOWS PER INCH OR BY CONTACTING STRONG BEDROCK AND THE PILE RECEIVING AT LEAST 20 BLOWS. SELECT THE HAMMER SIZE TO ACHIEVE THE REQUIRED DEPTH TO BEDROCK AND REFUSAL. INSTEAD OF DRIVING TO REFUSAL, THE CONTRACTOR MAY PERFORM DYNAMIC LOAD TESTING ACCORDING TO C&MS 523 TO ESTABLISH A DRIVING CRITERIA FOR EACH PILE TYPE AND CAPACITY. ESTABLISH THE DRIVING CRITERIA TO ACHIEVE AN ULTIMATE BEARING VALUE THAT IS 1.5 TIMES THE TOTAL FACTORED LOAD GIVEN BELOW FOR THE PILES. PAYMENT FOR DYNAMIC LOAD TESTING PERFORMED AT THE CONTRACTOR'S OPTION IS INCLUDED IN THE UNIT PRICE PAY ITEM FOR PILES DRIVEN.

THE TOTAL FACTORED LOAD IS 123 KIPS PER PILE FOR THE REAR AND FORWARD ABUTMENT PILES. THE TOTAL FACTORED LOAD IS 141 KIPS PER PILE FOR THE PIER 1 AND PIER 2 PILES.

ABUTMENT PILES:
HP12X53 PILES 30 FEET LONG, ORDER LENGTH
PIER PILES:
HP12X53 PILES 35 FEET LONG, ORDER LENGTH

PILE SPLICES

PILE SPLICES: IN LIEU OF USING THE FULL PENETRATION BUTT WELDS SPECIFIED IN CMS 507.09 TO SPLICE STEEL H-PILES, THE CONTRACTOR MAY USE A MANUFACTURED H-PILE SPLICER. FURNISH SPLICERS FROM THE FOLLOWING MANUFACTURER:

ASSOCIATED PILE AND FITTING CORPORATION
8 WOOD HOLLOW RD. PLAZA 1
PARSIPPANY, NEW JERSEY 07054

INSTALL AND WELD THE SPLICER TO THE PILE SECTIONS IN ACCORDANCE WITH THE MANUFACTURER'S WRITTEN ASSEMBLY PROCEDURE SUPPLIED TO THE ENGINEER BEFORE THE WELDING IS PERFORMED.

PILE DRIVING CONSTRAINTS

PILE DRIVING CONSTRAINTS: PRIOR TO DRIVING PILES, CONSTRUCT THE SPILL THROUGH SLOPES AND THE BRIDGE APPROACH EMBANKMENT BEHIND THE ABUTMENTS UP TO THE LEVEL OF THE SUBGRADE ELEVATION FOR A MINIMUM DISTANCE OF 200 FEET BEHIND EACH ABUTMENT. DO NOT BEGIN THE EXCAVATION FOR THE ABUTMENT FOOTINGS AND THE INSTALLATION OF THE ABUTMENT PILES UNTIL AFTER THE ABOVE REQUIRED EMBANKMENT HAS BEEN CONSTRUCTED.

ITEM SPECIAL - PILE ENCASEMENT

ITEM SPECIAL - PILE ENCASEMENT: ENCASE ALL STEEL H-PILES FOR THE CAPPED PILE PIERS IN CLASS C CONCRETE. PROVIDE A CONCRETE SLUMP BETWEEN 6 TO 8 INCHES WITH THE USE OF A SUPERPLASTICIZER. PLACE THE CONCRETE WITHIN A FORM THAT CONSISTS OF POLYETHYLENE PIPE (707.33), OR PVC PIPE (707.42). THE ENCASEMENT SHALL EXTEND FROM 3 FEET BELOW THE FINISHED GROUND SURFACE UP TO THE CONCRETE PIER CAP. POSITION THE PIPE SO THAT AT LEAST 3 INCHES OF CONCRETE COVER IS PROVIDED AROUND THE EXTERIOR OF THE PILE.

IN LIEU OF ENCASING THE PILE IN CONCRETE, GALVANIZE THE PILES ACCORDING TO 711.02. THE GALVANIZING SHALL BE CONTINUOUS FROM A MINIMUM OF 3 FEET BELOW THE FINISH GROUND SURFACE UP TO THE CONCRETE PIER CAP. THE GALVANIZED COATING THICKNESS SHALL BE A MINIMUM OF 4 MILS. REPAIR ALL GOUGES, SCRAPES, SCRATCHES OR OTHER SURFACE IMPERFECTIONS CAUSED BY THE HANDLING OR THE DRIVING OF THE PILE TO THE SATISFACTION OF THE ENGINEER.

THE DEPARTMENT WILL MEASURE PILE ENCASEMENT BY THE NUMBER OF FEET. THE DEPARTMENT WILL DETERMINE THE SUM AS THE LENGTH MEASURED ALONG THE AXIS OF EACH PILE FROM THE BOTTOM OF THE ENCASEMENT TO THE BOTTOM OF THE PIER CAP. THE DEPARTMENT WILL NOT PAY FOR GALVANIZING PROVIDED BEYOND THE PROJECT REQUIREMENTS. THE DEPARTMENT WILL PAY FOR ACCEPTED QUANTITIES AT THE CONTRACT PRICE FOR: ITEM - SPECIAL, PILE ENCASEMENT.

ITEM 518 - 6" NON-PERFORATED CORRUGATED PLASTIC PIPE, INCLUDING SPECIALS, AS PER PLAN

ANIMAL GUARDS SHALL BE PROVIDED AT THE OUTLET OF THE DRAINAGE PIPES. STEEL BOLTS OR RODS FOR THE ANIMAL GUARDS SHALL BE GALVANIZED PER CMS 711.02. SEE STD DWG. DM 1.1 FOR ADDITIONAL DETAILS AND NOTES. THE ANIMAL GUARDS AND CRUSHED AGGREGATE SLOPE PROTECTION ARE INCIDENTAL TO ITEM 518 - 6" NON-PERFORATED CORRUGATED PLASTIC PIPE, INCLUDING SPECIALS, AS PER PLAN.

ITEM 503, COFFERDAMS AND EXCAVATION BRACING, AS PER PLAN:

ITEM 503, COFFERDAMS AND EXCAVATION BRACING, AS PER PLAN: THE DESIGN SHOWN ON THE PLANS FOR TEMPORARY SUPPORT OF EXCAVATION IS ONE REPRESENTATIVE DESIGN THAT MAY BE USED TO CONSTRUCT THE PROJECT. THE CONTRACTOR MAY CONSTRUCT THE DESIGN SHOWN ON THE PLANS OR PREPARE AN ALTERNATE DESIGN TO SUPPORT THE SIDES OF EXCAVATIONS. IF CONSTRUCTING AN ALTERNATE DESIGN FOR TEMPORARY SUPPORT OF EXCAVATION, PREPARE AND PROVIDE PLANS IN ACCORDANCE WITH C&MS 501.05. THE DEPARTMENT WILL PAY FOR THE TEMPORARY SUPPORT OF EXCAVATION AT THE CONTRACT LUMP SUM PRICE FOR COFFERDAMS, CRIBS, AND SHEETING. NO ADDITIONAL PAYMENT WILL BE MADE FOR PROVIDING AN ALTERNATE DESIGN.

ITEM 898 - QC/QA CONCRETE, CLASS QSC2, SUPERSTRUCTURE (APPROACH SLAB), AS PER PLAN

THE ACCEPTED QUANTITIES SHALL INCLUDE: CONCRETE, CONCRETE BARRIER, REINFORCING STEEL, JOINT FILLERS, JOINT SEALERS, JOINT SEALS, AND WATERPROOFING.

ABBREVIATIONS:

ABUT. = ABUTMENT
APPROX. = APPROXIMATE
ASS'Y = ASSEMBLY
BRG. = BEARING
C/C = CENTER TO CENTER
C.J. = CONSTRUCTION JOINT
CLR. = CLEAR
CONST. = CONSTRUCTION
DIA. = DIAMETER
DWG. = DRAWING
E.F. = EACH FACE
EL. = ELEVATION
EST. = ESTIMATE
EX. = EXISTING
F.A. = FORWARD ABUTMENT
F.F. = FAR FACE
FWD. = FORWARD
LT. = LEFT
MAX. = MAXIMUM
MIN. = MINIMUM
N.F. = NEAR FACE
N.P.C.P.P. = NON-PERFORATED CORRUGATED PLASTIC PIPE
O/O = OUT TO OUT
P.C.P.P. = PERFORATED CORRUGATED PLASTIC PIPE
P.E.J.F. = PREFORMED EXPANSION JOINT FILLER
P.F.J. = PRECOMPRESSED FOAM JOINT
PROP. = PROPOSED
R.A. = REAR ABUTMENT
RT. = RIGHT
SCD = STANDARD CONSTRUCTION DRAWING
SER. = SERIES
SPA. = SPACES
STA. = STATION
STD. = STANDARD
T/T = TOE TO TOE
T/S = TOP OF SLOPE
TYP. = TYPICAL
D.S. = DOWN STATION
U.S. = UP STATION

DESIGN AGENCY
PARSONS BRINCKERHOFF
2945 FARMERS DRIVE
SUITE 350
COLUMBUS, OHIO 43235

DESIGNED	DRAWN	REVIEWED	DATE
PJL	LEL	EBS	12/17/12
CHECKED	REVISED	STRUCTURE NUMBER	
SAP		LEFT: 0201634 RIGHT: 0201669	

GENERAL NOTES
BRIDGE NO. ALL-75-0100 L&R
I-75 OVER LITTLE OTTAWA RIVER

ALL-75-0.21
PID No. 89029

601
907

J:\Projects\ALL\89029\structures\ALL075_0100\sheets\075_0100CGN001.dgn 23-MAY-2013 10:20AM jint

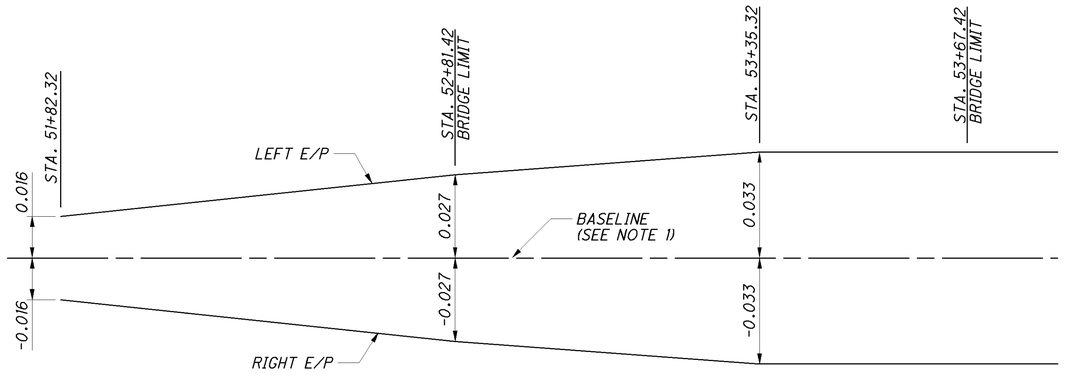

PAVEMENT TRANSITION DETAIL

NOTE:

1. THE BASELINE IS ESTABLISHED BETWEEN THE PROPOSED LANES.

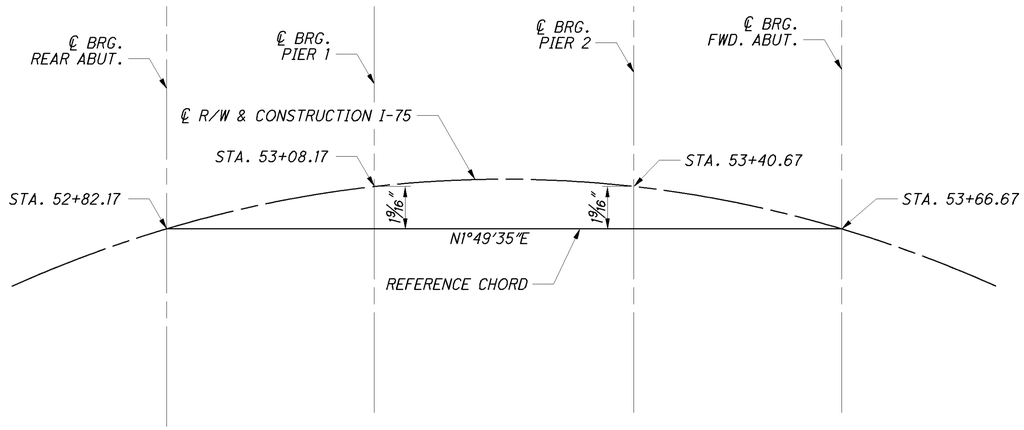

REFERENCE CHORD DIAGRAM

SUPPLEMENTAL REINFORCEMENT: REINFORCE THE CONCRETE DECK AT THE TWO SCUPPER CORNERS OPPOSITE THE CURB LINE WITH ONE #4 BAR, 3'-0" LONG ORIENTED AT 45° TO THE LONG AXIS OF THE SCUPPER AND LOCATED JUST BELOW THE TRANSVERSE BARS IN THE TOP MAT OF STEEL.

MATERIAL: FURNISH STRUCTURAL STEEL TUBING ACCORDING TO 707.10. TOUGHNESS TESTING IN ACCORDANCE WITH ASTM E436 IS NOT REQUIRED. ALL OTHER MATERIAL SHALL BE ASTM A709 GRADE 36, 50 OR 50W. GALVANIZE SUPPORT ANGLES, BARS, BOLTS, NUTS AND WASHERS IN ACCORDANCE WITH 711.02

DECK CROWN/SUPERELEVATION: CUT THE TOP OF THE STEEL TUBING SQUARE FOR CROSS SLOPES ½" PER FOOT AND LESS. CUT THE TOP OF THE TUBING PARALLEL TO THE DECK SURFACE FOR CROSS SLOPES GREATER THAN ½" PER FOOT.

BASIS OF PAYMENT: THE DEPARTMENT WILL PAY FOR THE SUPPLEMENTAL REINFORCEMENT DESCRIBED ABOVE SEPARATELY UNDER ITEM 509.

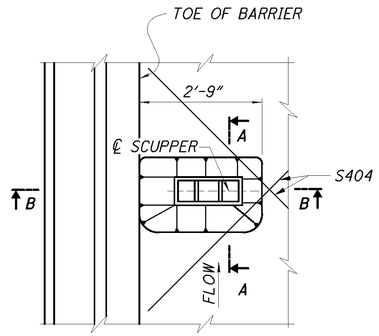

PLAN

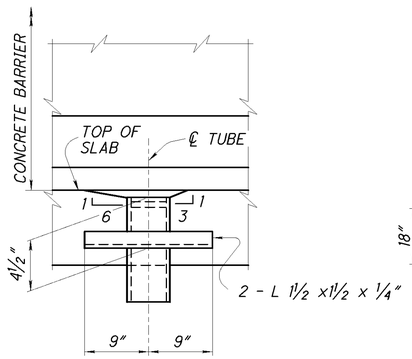

SECTION A-A

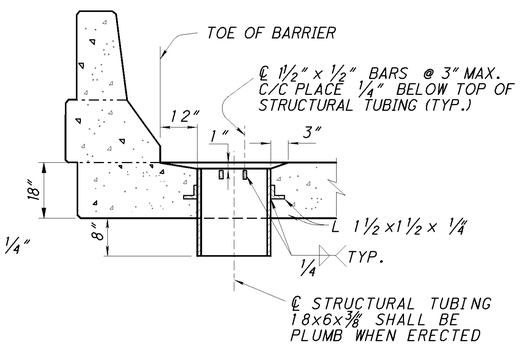

SECTION B-B

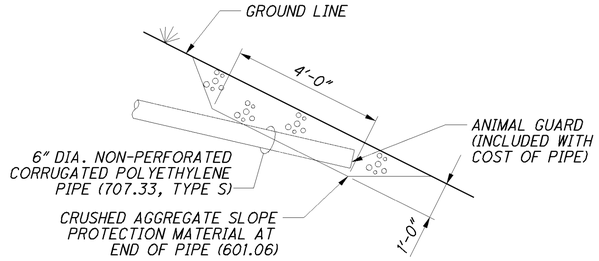

TERMINATION OF 6" NON-PERFORATED CORRUGATED PLASTIC PIPE (NPCPP)

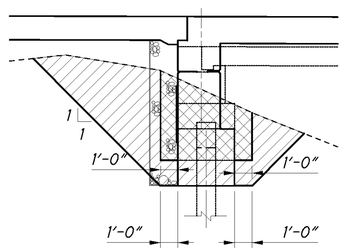

UNCLASSIFIED EXCAVATION AT ABUTMENT

- LIMITS OF UNCLASSIFIED EXCAVATION, AS PER PLAN
- INCLUDED WITH ITEM 202 FOR PAYMENT

DESIGN AGENCY
PARSONS BRINCKERHOFF
2945 FARMERS DRIVE
SUITE 350
COLUMBUS, OHIO 43235

DESIGNED	DRAWN	REVIEWED	DATE
PJL	LEL	EBS	12/17/12
CHECKED	REVISED	STRUCTURE NUMBER	
SAP		LEFT: 0201634 RIGHT: 0201669	

GENERAL NOTES & MISCELLANEOUS DETAILS
BRIDGE NO. ALL-75-0100 L&R
I-75 OVER LITTLE OTTAWA RIVER

ALL-75-0.21
PID No. 89029

J:\Projects\ALL\89029\structures\ALL075_0100C\sheets\075_0100CMD002.dgn 09-MAY-2013 3:05PM jint

01/IMS/BR/		ITEM	EXTENSION	TOTAL	UNIT	ESTIMATED QUANTITIES ALL-75-0100L DESCRIPTION	ALL-75-0100 L ABUT.	PIER	SUPER.	GEN.	SEE SHEET NO.
LUMP		202	11203	LUMP		PORTIONS OF STRUCTURE REMOVED, OVER 20 FOOT SPAN, AS PER PLAN				LUMP	3/26
79		202	22900	79	SQ YD	APPROACH SLAB REMOVED				79	
LUMP		503	11101	LUMP		COFFERDAMS AND EXCAVATION BRACING, AS PER PLAN				LUMP	2/26
LUMP		503	21301	LUMP		UNCLASSIFIED EXCAVATION, AS PER PLAN				LUMP	4/26
LUMP		505	11100	LUMP		PILE DRIVING EQUIPMENT MOBILIZATION				LUMP	
190		507	00201	190	FT	STEEL PILES HP12X53, FURNISHED, AS PER PLAN	120	70			14&15/26
160		507	00250	160	FT	STEEL PILES HP12X53, DRIVEN	100	60			
30		507	71200	30	FT	SPECIAL - PILE ENCASEMENT		30			
6		507	93300	6	EACH	STEEL POINTS OR SHOES	4	2			
71,554		509	10000	71,554	POUND	EPOXY COATED REINFORCING STEEL	8,027	3,891	59,636		
441		512	10100	441	SQ YD	SEALING OF CONCRETE SURFACES (EPOXY-URETHANE)	37	99	215	90	
38		512	10300	38	SQ YD	SEALING CONCRETE BRIDGE DECKS WITH HMWM RESIN			38		
9		512	33000	9	SQ YD	TYPE 2 WATERPROOFING	9				
74		516	13200	74	SQ FT	1/2" PREFORMED EXPANSION JOINT FILLER	74				
116		516	13600	116	SQ FT	1" PREFORMED EXPANSION JOINT FILLER	102		14		
94		516	14014	94	FT	INTEGRAL ABUTMENT EXPANSION JOINT SEAL	94				
2		518	12500	2	EACH	SCUPPER, MISC.:MODIFIED SCUPPERS FOR CONCRETE SLAB BRIDGES			2		4/26
67		518	21200	67	CU YD	POROUS BACKFILL WITH FILTER FABRIC	67				
130		518	40000	130	FT	6" PERFORATED CORRUGATED PLASTIC PIPE	130				
34		518	40011	34	FT	6" NON-PERFORATED CORRUGATED PLASTIC PIPE, INCLUDING SPECIALS, AS PER PLAN	34				3/26
139		601	32204	139	CU YD	ROCK CHANNEL PROTECTION, TYPE C WITH FABRIC FILTER				139	
332		625	25400	332	FT	CONDUIT, 2", 725.04			212	120	
4		625	29920	4	EACH	STRUCTURE JUNCTION BOX				4	
4		625	30700	4	EACH	PULL BOX, 725.08, 18"				4	
248		898	10220	248	CU YD	QC/QA CONCRETE, CLASS QSC2, SUPERSTRUCTURE (DECK)			248		
262		898	10705	262	SQ YD	QC/QA CONCRETE, CLASS QSC2, SUPERSTRUCTURE (APPROACH SLAB), (T=15"), AS PER PLAN				262	3/26
23		898	11000	23	CU YD	QC/QA CONCRETE, CLASS QSC2, SUPERSTRUCTURE (PARAPET)			23		
32		898	20130	32	CU YD	QC/QA CONCRETE, CLASS QSC2, SUBSTRUCTURE (CAPPED PILE PIER)		32			
86		898	20160	86	CU YD	QC/QA CONCRETE, CLASS QSC1, SUBSTRUCTURE (ABUTMENT INCLUDING FOOTING)	86				

CALC BY: JMW DATE: 6/25/2012
CHCK BY: BKJ DATE: 8/21/2012

01/IMS/BR/		ITEM	EXTENSION	TOTAL	UNIT	ESTIMATED QUANTITIES ALL-75-0100R DESCRIPTION	ALL-75-0100 R ABUT.	PIER	SUPER.	GEN.	SEE SHEET NO.
LUMP		202	11203	LUMP		PORTIONS OF STRUCTURE REMOVED, OVER 20 FOOT SPAN, AS PER PLAN				LUMP	3/26
79		202	22900	79	SQ YD	APPROACH SLAB REMOVED				79	
LUMP		503	11101	LUMP		COFFERDAMS AND EXCAVATION BRACING, AS PER PLAN				LUMP	2/26
LUMP		503	21301	LUMP		UNCLASSIFIED EXCAVATION, AS PER PLAN				LUMP	4/26
LUMP		505	11100	LUMP		PILE DRIVING EQUIPMENT MOBILIZATION				LUMP	
190		507	00201	190	FT	STEEL PILES HP12X53, FURNISHED, AS PER PLAN	120	70			14&15/26
160		507	00250	160	FT	STEEL PILES HP12X53, DRIVEN	100	60			
30		507	71200	30	FT	SPECIAL - PILE ENCASEMENT		30			
6		507	93300	6	EACH	STEEL POINTS OR SHOES	4	2			
71,564		509	10000	71,564	POUND	EPOXY COATED REINFORCING STEEL	8,058	3,837	59,669		
441		512	10100	441	SQ YD	SEALING OF CONCRETE SURFACES (EPOXY-URETHANE)	37	99	215	90	
38		512	10300	38	SQ YD	SEALING CONCRETE BRIDGE DECKS WITH HMWM RESIN			38		
9		512	33000	9	SQ YD	TYPE 2 WATERPROOFING	9				
74		516	13200	74	SQ FT	1/2" PREFORMED EXPANSION JOINT FILLER	74				
116		516	13600	116	SQ FT	1" PREFORMED EXPANSION JOINT FILLER	102		14		
94		516	14014	94	FT	INTEGRAL ABUTMENT EXPANSION JOINT SEAL	94				
2		518	12500	2	EACH	SCUPPER, MISC.:MODIFIED SCUPPERS FOR CONCRETE SLAB BRIDGES			2		4/26
72		518	21200	72	CU YD	POROUS BACKFILL WITH FILTER FABRIC	72				
130		518	40000	130	FT	6" PERFORATED CORRUGATED PLASTIC PIPE	130				
46		518	40011	46	FT	6" NON-PERFORATED CORRUGATED PLASTIC PIPE, INCLUDING SPECIALS, AS PER PLAN	46				3/26
139		601	32204	139	CU YD	ROCK CHANNEL PROTECTION, TYPE C WITH FABRIC FILTER				139	
332		625	25400	332	FT	CONDUIT, 2", 725.04			212	120	
4		625	29920	4	EACH	STRUCTURE JUNCTION BOX				4	
4		625	30700	4	EACH	PULL BOX, 725.08, 18"				4	
248		898	10220	248	CU YD	QC/QA CONCRETE, CLASS QSC2, SUPERSTRUCTURE (DECK)			248		
262		898	10705	262	SQ YD	QC/QA CONCRETE, CLASS QSC2, SUPERSTRUCTURE (APPROACH SLAB), (T=15"), AS PER PLAN				262	3/26
23		898	11000	23	CU YD	QC/QA CONCRETE, CLASS QSC2, SUPERSTRUCTURE (PARAPET)			23		
32		898	20130	32	CU YD	QC/QA CONCRETE, CLASS QSC2, SUBSTRUCTURE (CAPPED PILE PIER)		32			
86		898	20160	86	CU YD	QC/QA CONCRETE, CLASS QSC1, SUBSTRUCTURE (ABUTMENT INCLUDING FOOTING)	86				

CALC BY: JMW DATE: 6/25/2012
CHCK BY: BKJ DATE: 8/21/2012

DESIGN AGENCY
PARSONS BRINCKERHOFF
2545 FARMERS DRIVE
SUITE 350
COLUMBUS, OHIO 43235

REVIEWED EBS DATE 12/17/12
STAMPING FILE NUMBER
LEFT: 0201634
RIGHT: 0201669

DRAWN LEL REVISED
DESIGNED PJL CHECKED SAP

ESTIMATED QUANTITIES
BRIDGE NO. ALL-75-0100 L&R
I-75 OVER LITTLE OTTAWA RIVER

ALL-75-0.21
PID No. 89029

603
907

J:\Projects\ALL\89029\structures\ALL075_0100C\sheets\075_0100CEQ001.dgn 23-MAY-2013 10:20AM jint

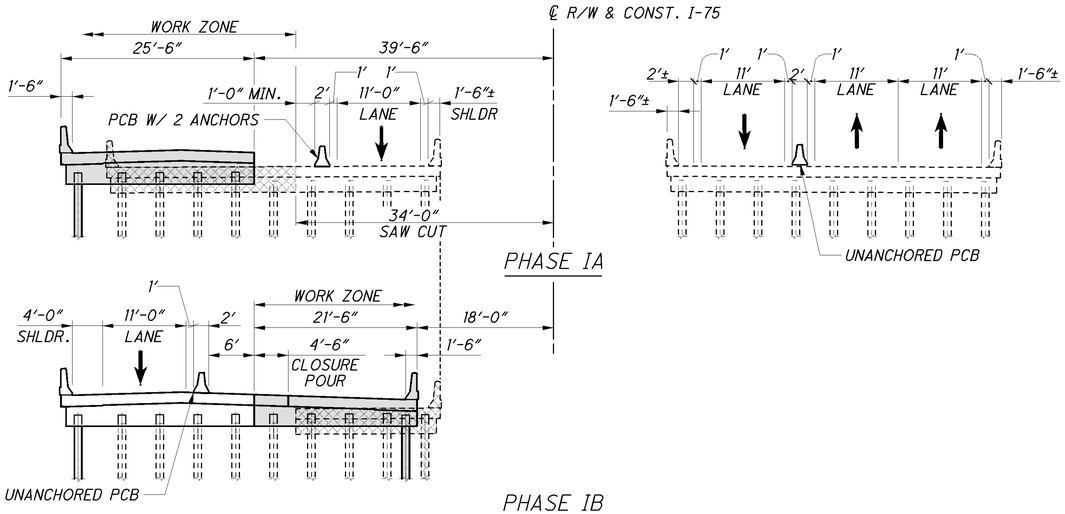

SECTION A-A

BRIDGE NO. ALL-75-0100 L&R

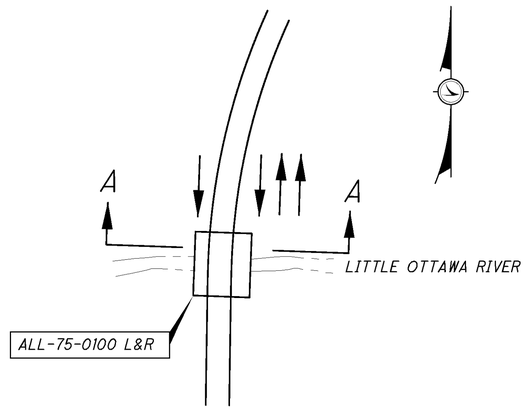

LEGEND:

- REMOVAL
- PROPOSED
- PORTABLE CONCRETE BARRIER (PCB) (TO BE ANCHORED ON BRIDGES AS SHOWN)

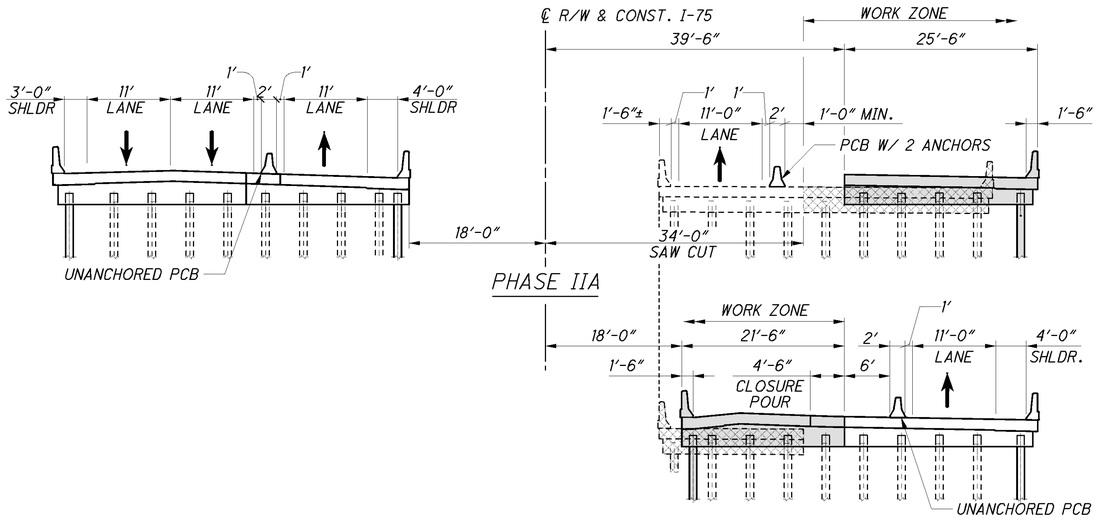

SECTION B-B

BRIDGE NO. ALL-75-0100 L&R

SEQUENCE OF CONSTRUCTION

PHASE IA

1. INSTALL PORTABLE CONCRETE BARRIER ON BOTH EXISTING STRUCTURES AND SHIFT THE TRAFFIC.
2. REMOVE THE WESTERN PORTION OF THE SOUTHBOUND STRUCTURE TO THE LIMITS SHOWN. THE EXISTING PILING IS TO REMAIN IN PLACE.
3. INSTALL SHEETING TO SUPPORT THE PROPOSED ABUTMENT FILL. CONSTRUCT THE PROPOSED WESTERN PORTION OF THE SOUTHBOUND BRIDGE TO THE LIMITS SHOWN.

PHASE IB

4. ADJUST PCB AND SHIFT TRAFFIC ONTO THE NEWLY BUILT SOUTHBOUND STRUCTURE.
5. REMOVE THE REMAINDER OF THE SOUTHBOUND BRIDGE. ALL EXISTING PILING IS TO REMAIN IN PLACE, EXCEPT FOR THE MOST INTERIOR PIER PILES.
6. CONSTRUCT THE REMAINDER OF THE SOUTHBOUND BRIDGE TO THE LIMITS SHOWN, NOT INCLUDING THE CLOSURE POUR.
7. COMPLETE THE SOUTHBOUND CLOSURE POUR.

PHASE IIA

8. ADJUST PORTABLE CONCRETE BARRIER AND SHIFT THE TRAFFIC.
9. REMOVE THE EASTERN PORTION OF THE NORTHBOUND STRUCTURE TO THE LIMITS SHOWN. THE EXISTING PILING IS TO REMAIN IN PLACE.
10. INSTALL SHEETING TO SUPPORT THE PROPOSED ABUTMENT FILL. CONSTRUCT THE PROPOSED EASTERN PORTION OF THE NORTHBOUND BRIDGE TO THE LIMITS SHOWN.

PHASE IIB

11. ADJUST PCB AND SHIFT TRAFFIC ONTO THE NEWLY BUILT NORTHBOUND STRUCTURE.
12. REMOVE THE REMAINDER OF THE NORTHBOUND BRIDGE. ALL EXISTING PILING IS TO REMAIN IN PLACE, EXCEPT FOR THE MOST INTERIOR PIER PILES.
13. CONSTRUCT THE REMAINDER OF THE NORTHBOUND BRIDGE TO THE LIMITS SHOWN, NOT INCLUDING THE CLOSURE POUR.
14. COMPLETE THE NORTHBOUND CLOSURE POUR.

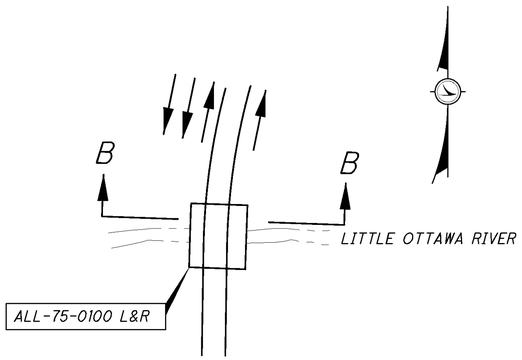

DESIGN AGENCY
PARSONS BRINCKERHOFF
2545 FARMERS DRIVE
SUITE 350
COLUMBUS, OHIO 43235

DESIGNED	DRAWN	REVIEWED	DATE
PJL	LEL	EBS	12/17/12
CHECKED	REVISED	STRUCTURE FILE NUMBER	
SAP		LEFT: 0201634 RIGHT: 0201669	

MAINTENANCE OF TRAFFIC
BRIDGE NO. ALL-75-0100 L&R
I-75 OVER LITTLE OTTAWA RIVER

ALL-75-0.21
PID No. 76691

J:\Projects\ALL\69029\structures\ALL075_0100\C\sheets\075_0100CPC001.dgn 09-MAY-2013 3:05PM jint

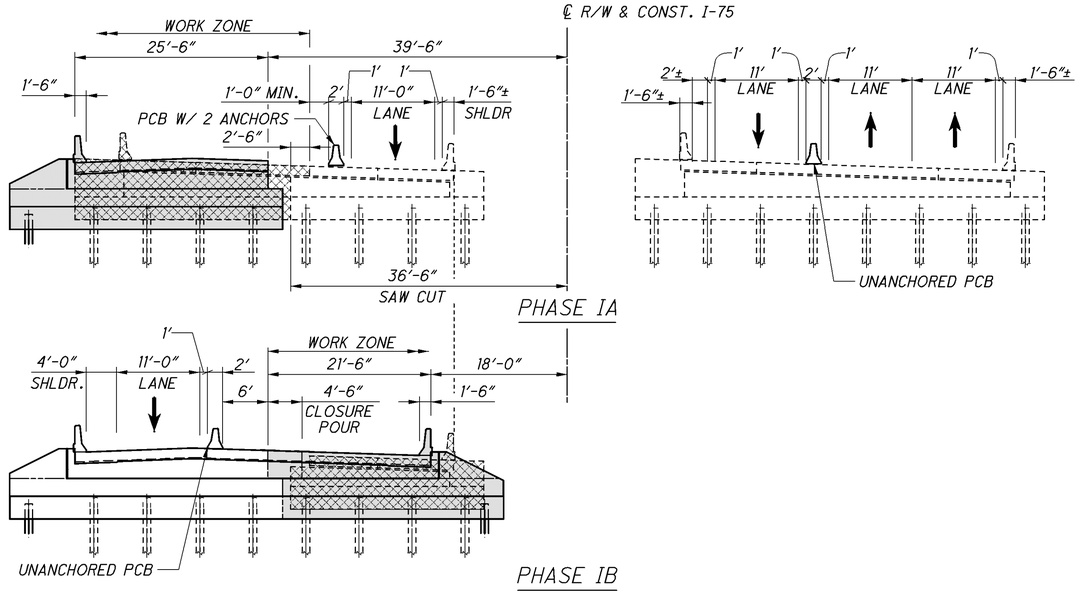

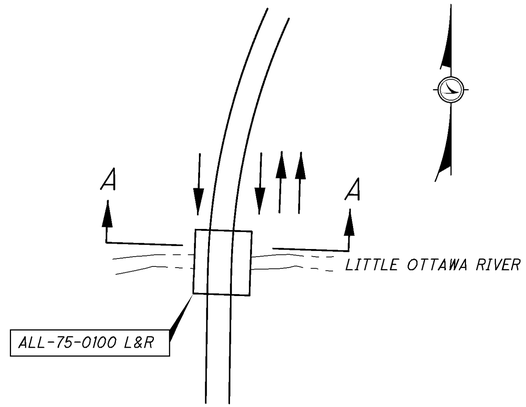

LEGEND:

- REMOVAL
- PROPOSED
- PORTABLE CONCRETE BARRIER (PCB) (TO BE ANCHORED ON BRIDGES AS SHOWN)

SECTION A-A

BRIDGE NO. ALL-75-0100 L&R

NOTES:

1. SEE SHEET 6/26 FOR NOTES.
2. SEE SECTION A-A FOR PHASES IA AND IB CONFIGURATION. SEE SECTION B-B FOR PHASES IIA AND IIB CONFIGURATION.

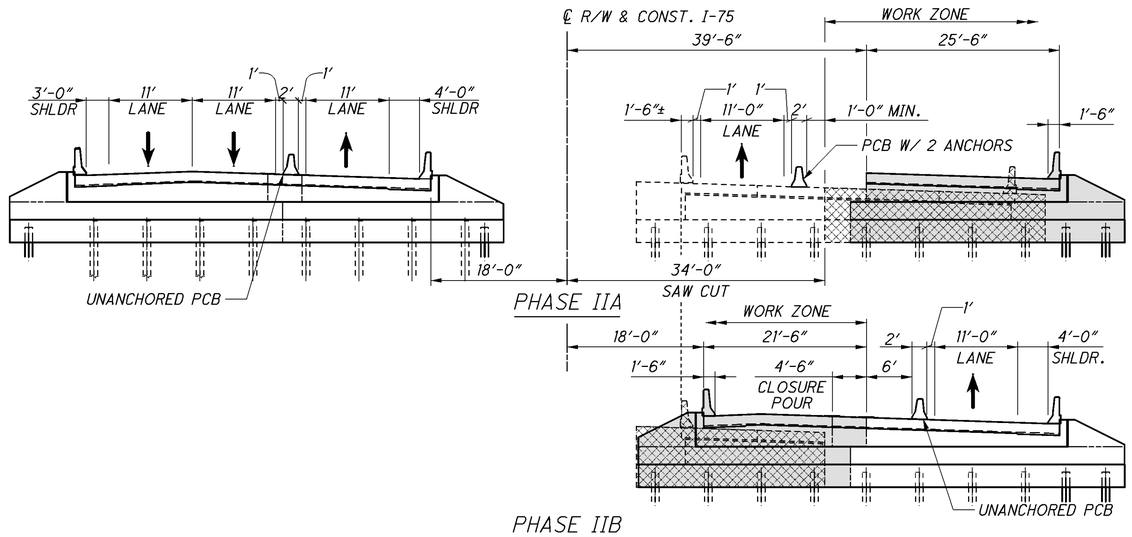

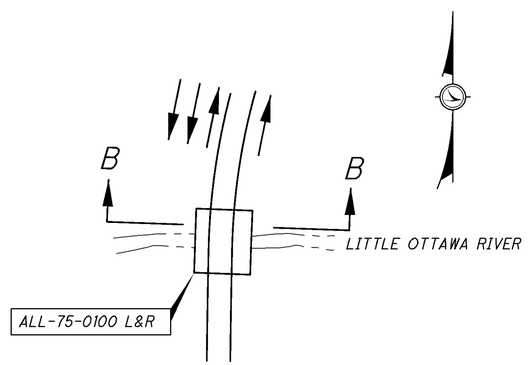

SECTION B-B

BRIDGE NO. ALL-75-0100 L&R

DESIGN AGENCY
PARSONS BRINCKERHOFF
2945 FARMERS DRIVE
SUITE 350
COLUMBUS, OHIO 43235

DESIGNED PJL | DRAWN LEL | REVIEWED EBS | DATE 12/17/12
CHECKED SAP | REVISED
STRUCTURE FILE NUMBER LEFT: 0201664 RIGHT: 0201669

MAINTENANCE OF TRAFFIC
BRIDGE NO. ALL-75-0100 L&R
I-75 OVER LITTLE OTTAWA RIVER

ALL-75-0.21
PID No. 76691

7 / 26

605
907

J:\Projects\ALL\89029\structures\ALL075_0100C\sheets\075_0100CPC002.dgn 09-MAY-2013 3:05PM lint

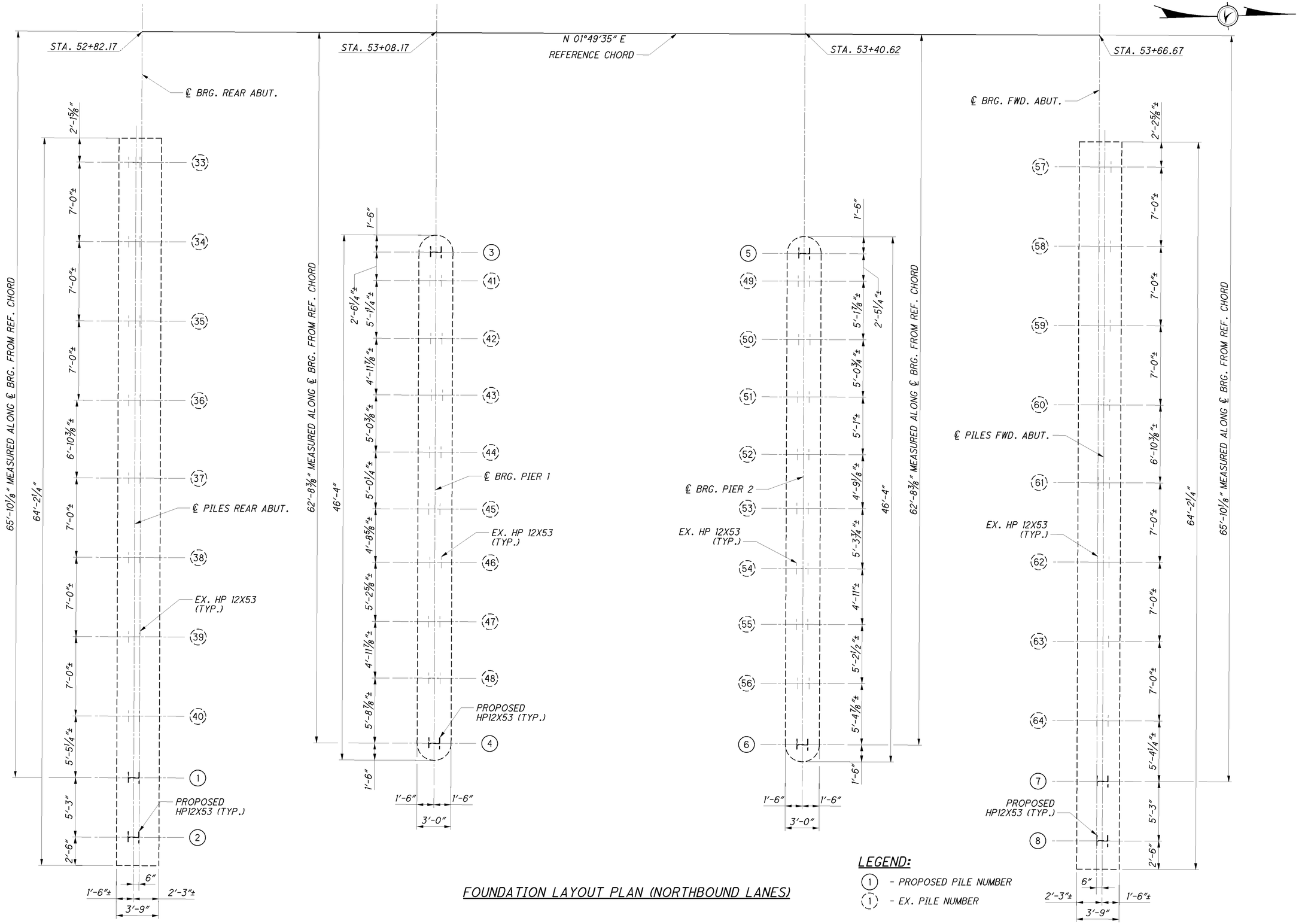

FOUNDATION LAYOUT PLAN (NORTHBOUND LANES)

LEGEND:

(1) - PROPOSED PILE NUMBER

(1) - EX. PILE NUMBER

DESIGN AGENCY
PARSONS BRINCKERHOFF
2945 FARMERS DRIVE
SUITE 350
COLUMBUS, OHIO 43235

DESIGNED	DRAWN	REVIEWED	DATE
PJL	LEL	EBS	12/17/12
CHECKED	REVISED	STRUCTURE NUMBER	
SAP		LEFT: 0201634 RIGHT: 0201669	

FOUNDATION PLAN NORTHBOUND
BRIDGE NO. ALL-75-0100 L&R
I-75 OVER LITTLE OTTAWA RIVER

ALL-75-0.21
PID No. 89029

8 / 26

606
907

J:\Projects\ALL\89029\structures\ALL075_0100\sheets\075_0100CFP002.dgn 09-MAY-2013 3:06PM lint

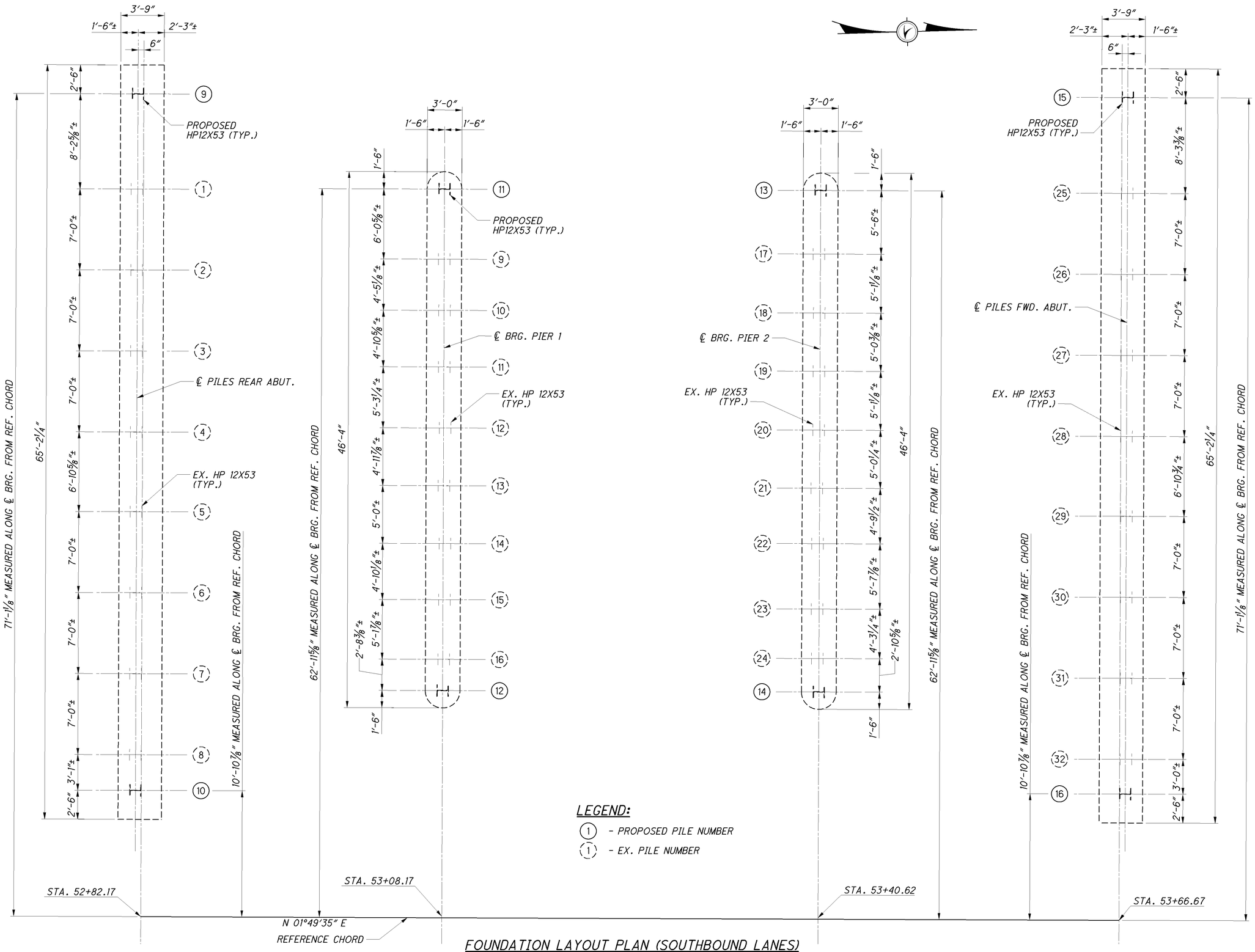

LEGEND:

(1) - PROPOSED PILE NUMBER

(1) - EX. PILE NUMBER

FOUNDATION LAYOUT PLAN (SOUTHBOUND LANES)

DESIGN AGENCY
PARSONS BRINCKERHOFF
2945 FARMERS DRIVE
SUITE 350
COLUMBUS, OHIO 43235

DESIGNED	DRAWN	REVIEWED	DATE
PJL	LEL	EBS	12/17/12
CHECKED	REVISED	STRUCTURE NUMBER	
SAP		LEFT: 0201634 RIGHT: 0201669	

FOUNDATION PLAN SOUTHBOUND
BRIDGE NO. ALL-75-0100 L&R
I-75 OVER LITTLE OTTAWA RIVER

ALL-75-0.21
PID No. 89029

J:\Projects\ALL\89029\structures\ALL075_0100C\sheets\075_0100CFP001.dgn 09-MAY-2013 3:06PM jint

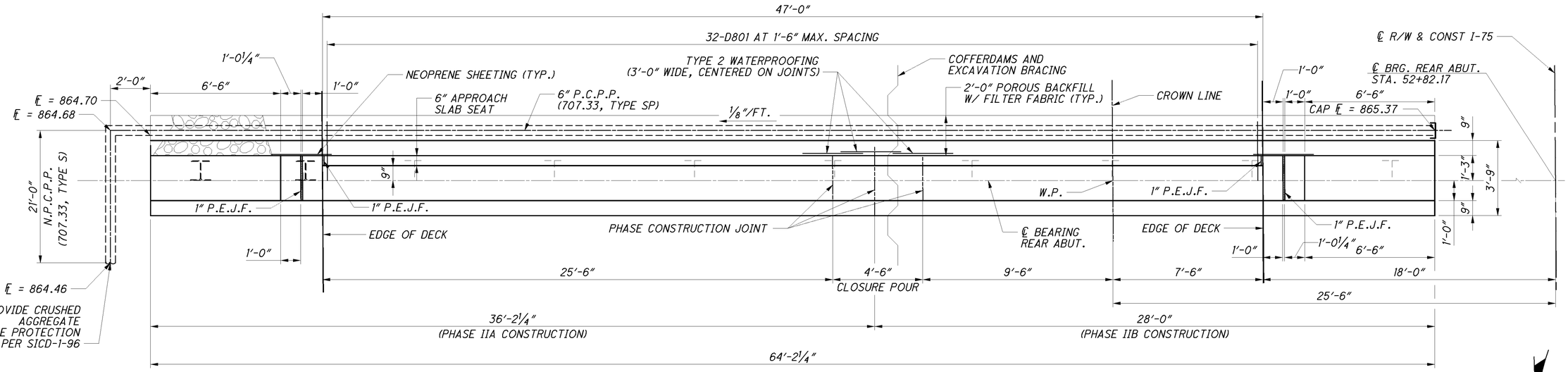

PLAN

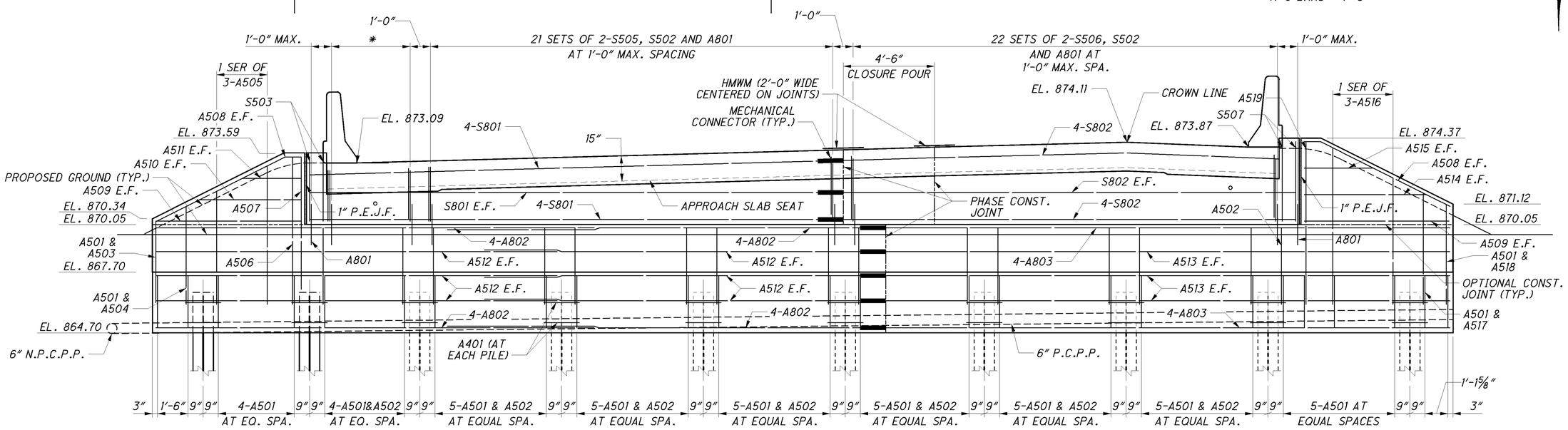

ELEVATION

MINIMUM LAPS:

A#5 BARS = 3'-5" S#5 BARS = 2'-5"
A#8 BARS = 7'-3"

NOTES:

1. ALL HORIZONTAL DIMENSIONS ARE MEASURED ALONG THE CENTERLINE OF BEARING.
2. FOR SECTIONS A-A & B-B & NOTES SEE SHEET 14/26 .

DESIGN AGENCY
PARSONS BRINCKERHOFF
2945 FARMERS DRIVE
SUITE 350
COLUMBUS, OHIO 43235

DESIGNED	DRAWN	REVIEWED	DATE
PJL	LEL	EBS	12/17/12
CHECKED	REVISED	STRUCTURE NUMBER	
SAP		LEFT: 0201634 RIGHT: 0201669	

NORTHBOUND REAR ABUTMENT DETAILS
BRIDGE NO. ALL-75-0100 L&R
I-75 OVER LITTLE OTTAWA RIVER

ALL-75-0.21
PID No. 89029

10 / 26

608
907

J:\Projects\ALL\89029\structures\ALL075_0100C\sheets\075_0100CAR001.dgn 09-MAY-2013 3:06PM jlint

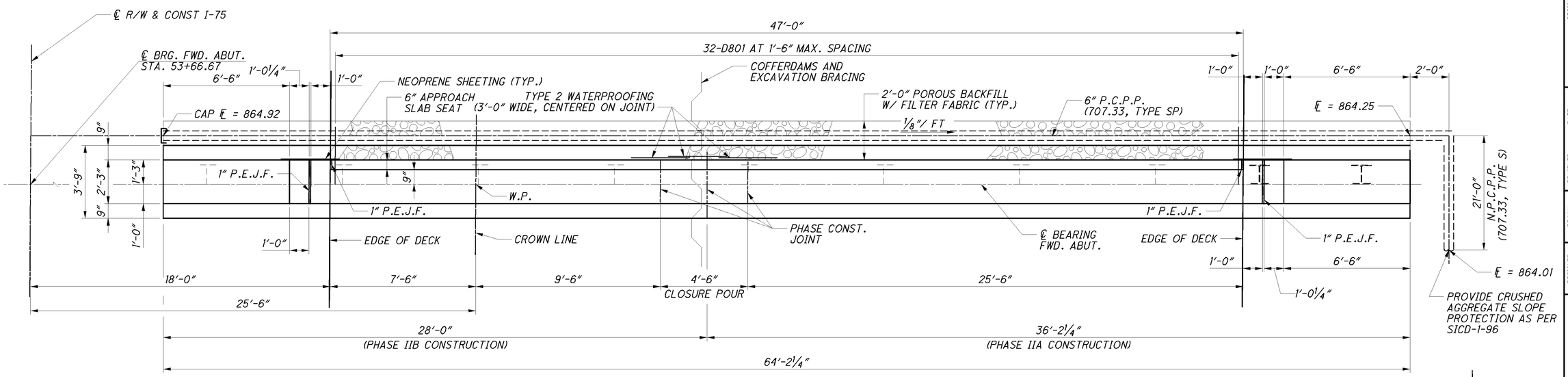

PLAN

MINIMUM LAPS:

A#5 BARS = 3'-5" S#5 BARS = 2'-5"
A#8 BARS = 7'-3"

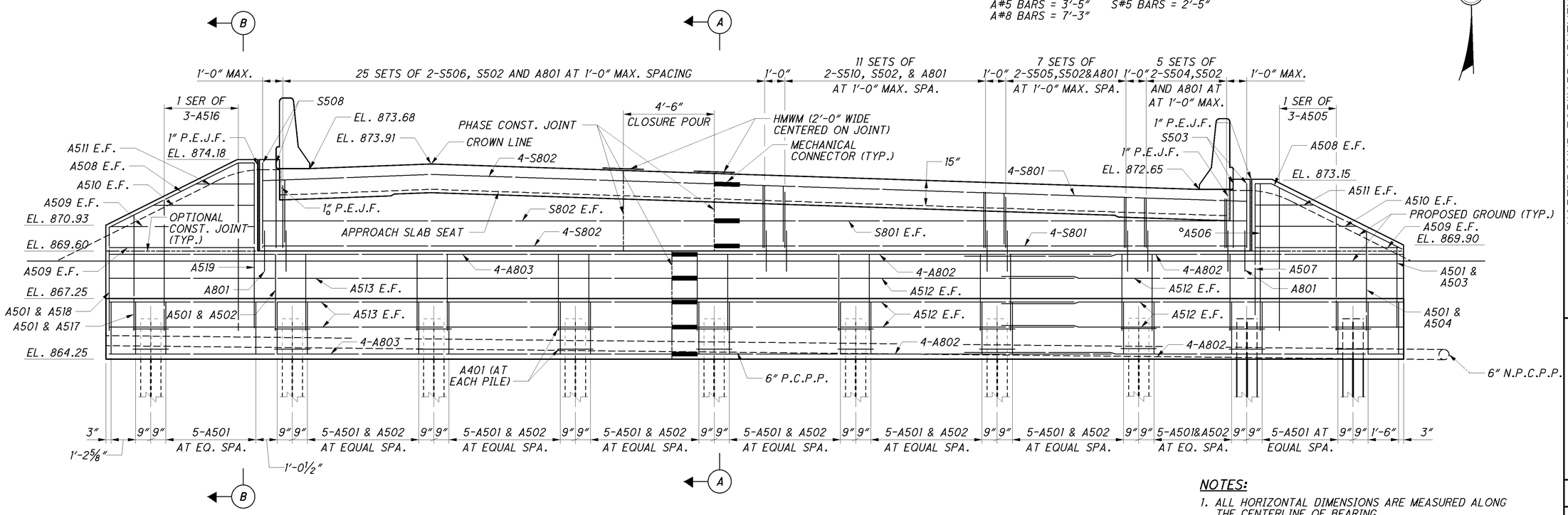

ELEVATION

NOTES:

1. ALL HORIZONTAL DIMENSIONS ARE MEASURED ALONG THE CENTERLINE OF BEARING.
2. FOR SECTIONS A-A & B-B & NOTES SEE SHEET 14/26 .

DESIGN AGENCY
PARSONS BRINCKERHOFF
2945 FARMERS DRIVE
SUITE 350
COLUMBUS, OHIO 43235

DESIGNED	DRAWN	REVIEWED	DATE
PJL	LEL	EBS	12/17/12
CHECKED	REVISED	STRUCTURE NUMBER	
SAP		LEFT: 0201634 RIGHT: 0201669	

NORTHBOUND FORWARD ABUTMENT DETAILS
BRIDGE NO. ALL-75-0100 L&R
I-75 OVER LITTLE OTTAWA RIVER

ALL-75-0.21
PID No. 89029

11 / 26

609
907

J:\Projects\ALL\89029\structures\ALL075_0100C\sheets\075_0100CAF002.dgn 09-MAY-2013 3:06PM lint

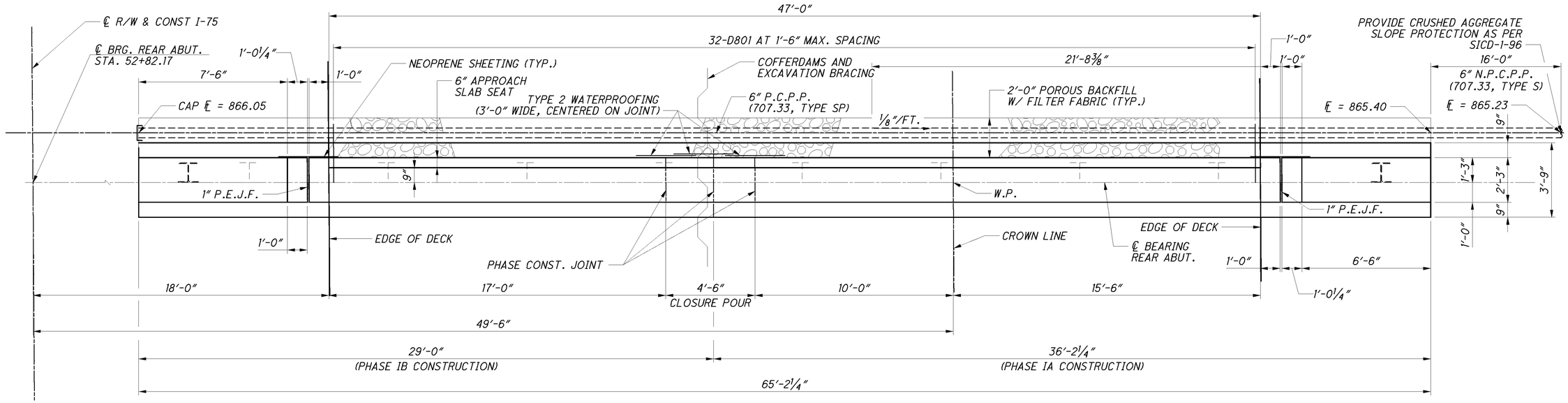

PLAN

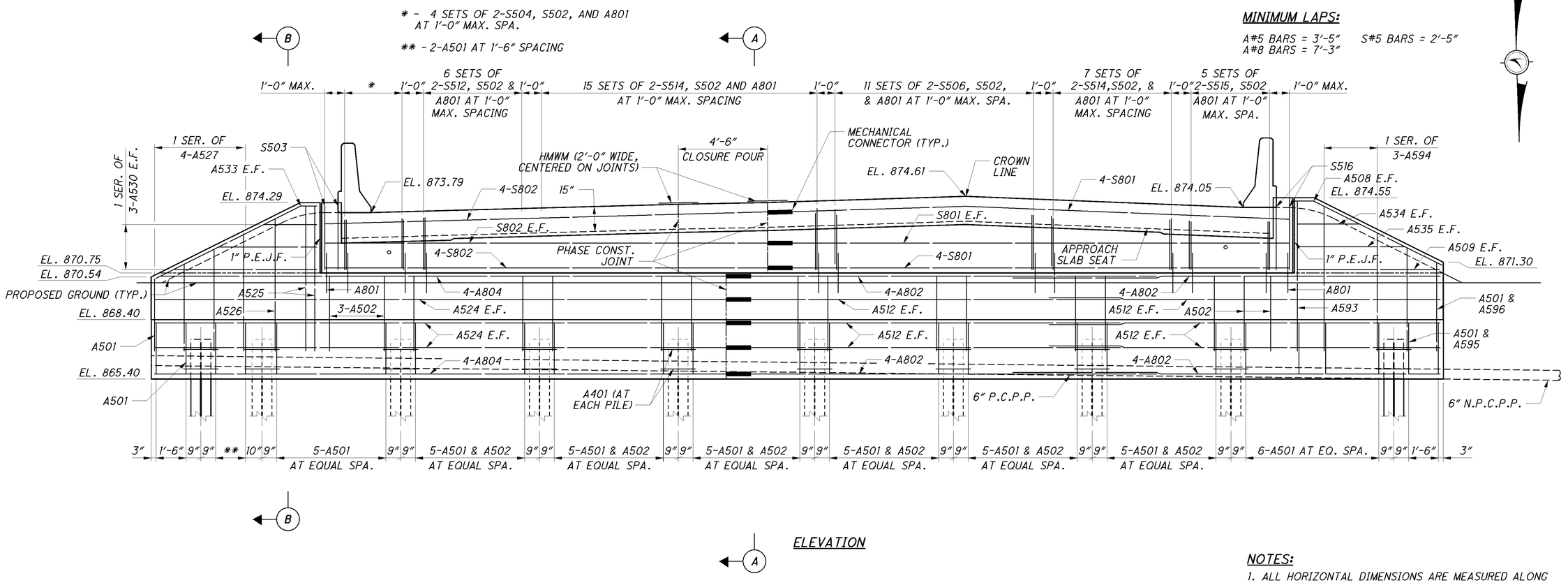

ELEVATION

MINIMUM LAPS:

A#5 BARS = 3'-5" S#5 BARS = 2'-5"
A#8 BARS = 7'-3"

NOTES:

1. ALL HORIZONTAL DIMENSIONS ARE MEASURED ALONG THE CENTERLINE OF BEARING.
2. FOR SECTIONS A-A & B-B & NOTES SEE SHEET 14/26 .

SOUTHBOUND REAR ABUTMENT DETAILS

BRIDGE NO. ALL-75-0100 L&R
I-75 OVER LITTLE OTTAWA RIVER

ALL-75-0.21
PID No. 89029

12/26

610
907

DESIGN AGENCY
PARSONS BRINCKERHOFF
2945 FARMERS DRIVE
SUITE 350
COLUMBUS, OHIO 43235

DESIGNED	DRAWN	REVIEWED	DATE
PJL	LEL	EBS	12/17/12
CHECKED	REVISED	STRUCTURE NUMBER	
SAP		LEFT: 0201634 RIGHT: 0201669	

J:\Projects\ALL\89029\structures\ALL075_0100C\sheets\075_0100CAR002.dgn 09-MAY-2013 3:06PM lint

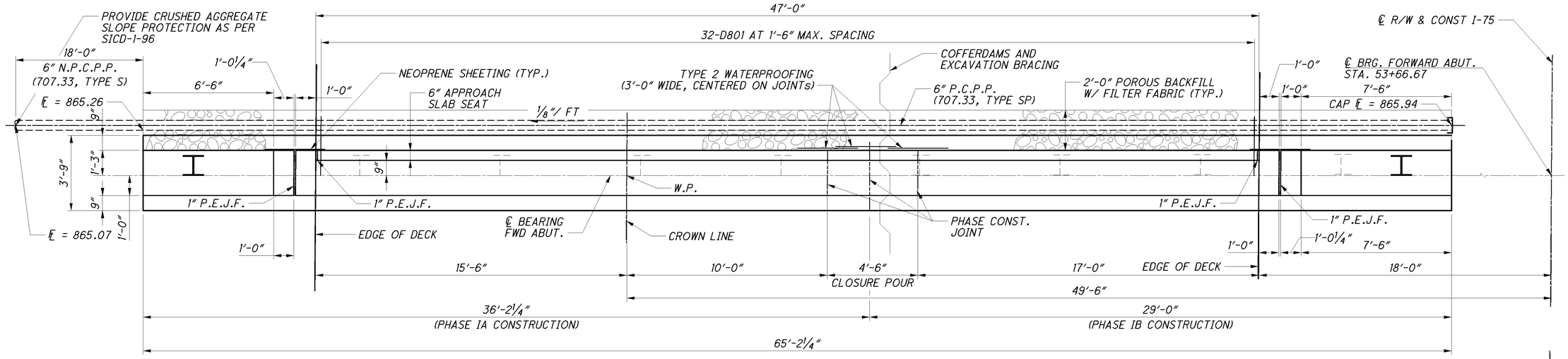

PLAN

MINIMUM LAPS:

A#5 BARS = 3'-5" S#5 BARS = 2'-5"
A#8 BARS = 7'-3"

** -2-A501 AT 1'-6" SPACING

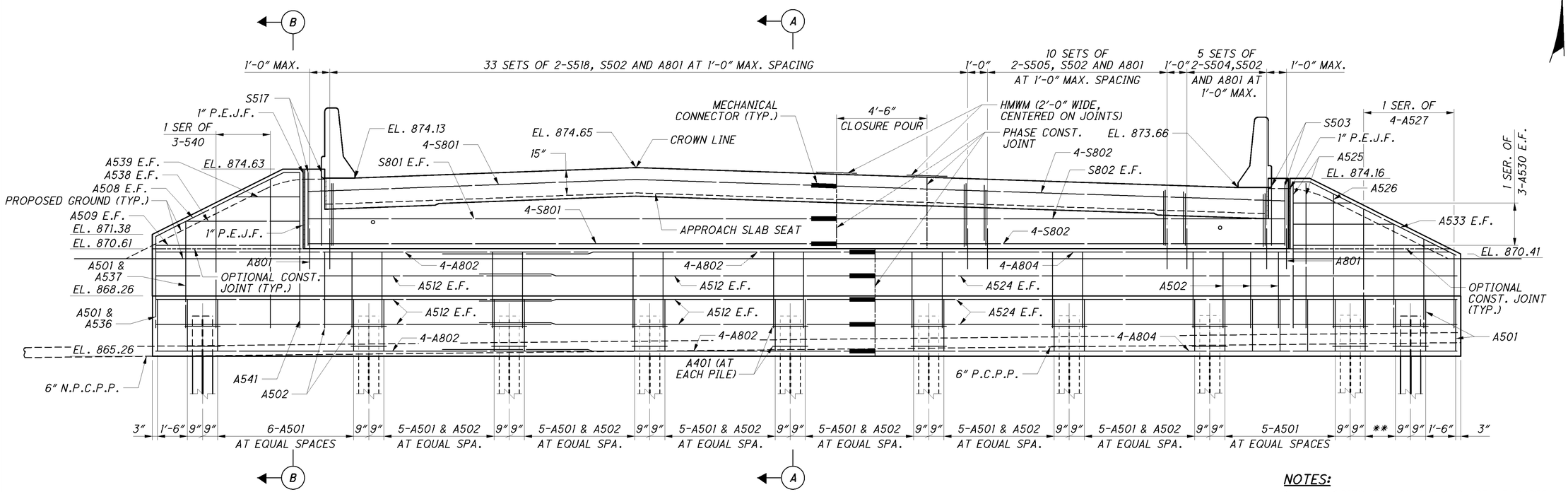

ELEVATION

NOTES:

1. ALL HORIZONTAL DIMENSIONS ARE MEASURED ALONG THE CENTERLINE OF BEARING.
2. FOR SECTIONS A-A & B-B & NOTES SEE SHEET 14/26 .

DESIGN AGENCY
PARSONS BRINCKERHOFF
2545 FARMERS DRIVE
SUITE 350
COLUMBUS, OHIO 43235

DESIGNED PJL | DRAWN LEL | REVIEWED EBS | DATE 12/17/12
CHECKED SAP | REVISED | STRUCTURE NUMBER LEFT: 0201634 RIGHT: 0201669

SOUTHBOUND FORWARD ABUTMENT DETAILS

BRIDGE NO. ALL-75-0100 L&R
I-75 OVER LITTLE OTTAWA RIVER

ALL-75-0.21
PID No. 89029

13 / 26

611
907

J:\Projects\ALL\89029\structures\ALL075_0100C\sheets\075_0100CAF001.dgn 09-MAY-2013 3:06PM jint

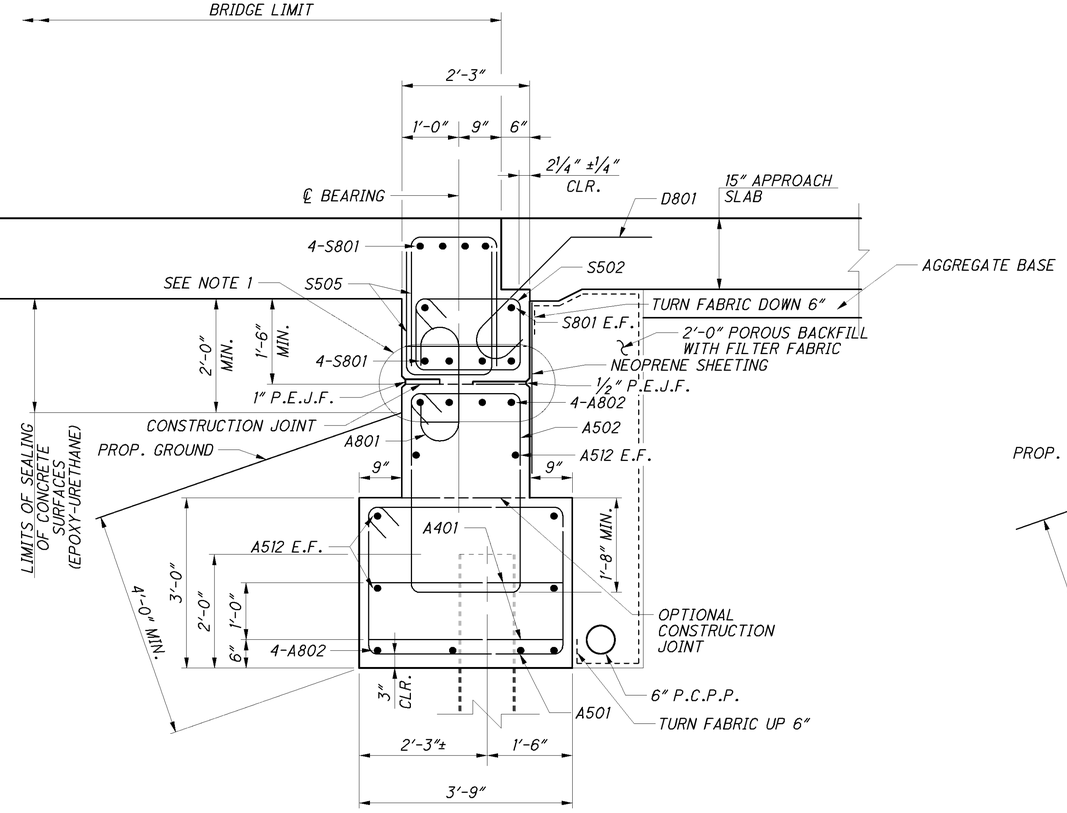

SECTION A-A

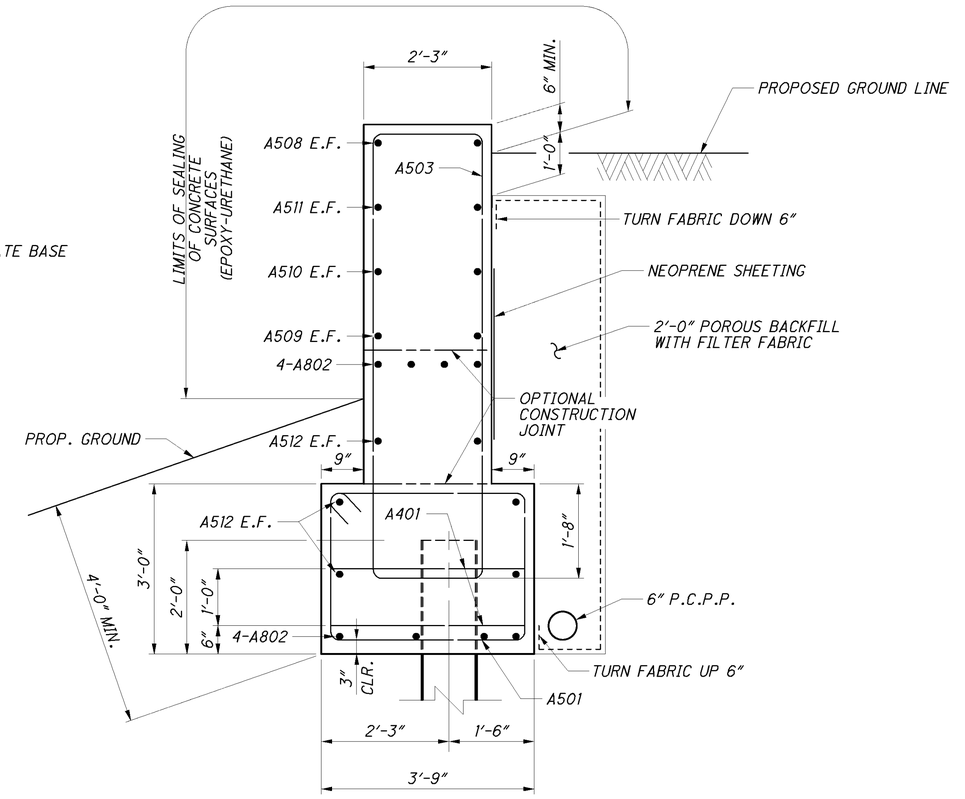

SECTION B-B

(NORTHBOUND REAR SHOWN OTHERS SIMILAR)

NOTES:

1. SEE SCD CPA-1-08 FOR CONSTRUCTION JOINT NOTES AND DETAILS.
2. SEE SCD CPA-1-08 FOR NEOPRENE SHEETING NOTES AND DETAILS.
3. POROUS BACKFILL WITH FILTER FABRIC, 2 FEET THICK SHALL EXTEND UP TO THE PLANE OF THE SUBGRADE, TO 1 FOOT BELOW THE EMBANKMENT SURFACE, AND LATERALLY TO THE ENDS OF THE WINGWALLS.
4. ALL PILES SHALL BE TRIMMED AS NECESSARY TO PROVIDE 2'-0" EMBEDMENT INTO THE PROPOSED FOOTING. THIS WORK SHALL BE INCLUDED WITH ITEM 507-STEEL PILES HP12X53, FURNISHED FOR PAYMENT.
5. FOR LOCATION(S) OF SECTIONS A-A AND B-B SEE SHEETS 10 THRU 13 OF 26.

DESIGN AGENCY
PARSONS BRINCKERHOFF
2945 FARMERS DRIVE
SUITE 350
COLUMBUS, OHIO 43235

DESIGNED	DRAWN	REVIEWED	DATE
PJL	LEL	EBS	12/17/12
CHECKED	REVISED	STRUCTURE FILE NUMBER	
SAP		LEFT: 0201634 RIGHT: 0201669	

ABUTMENT DETAILS
BRIDGE NO. ALL-75-0100 L&R
I-75 OVER LITTLE OTTAWA RIVER

ALL-75-0.21
PID No. 89029

14 / 26

612
907

J:\Projects\ALL\89029\structures\ALL075_0100C\sheets\075_0100CAP003.dgn 09-MAY-2013 3:06PM lint

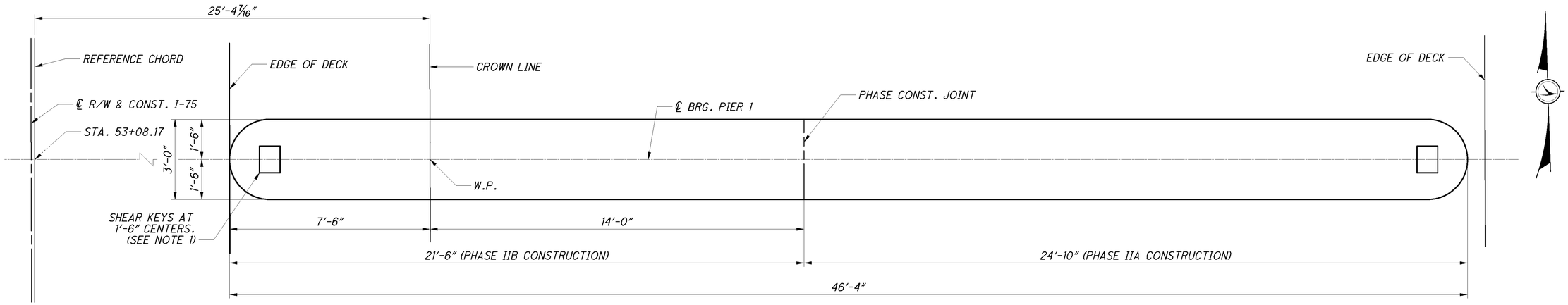

PLAN

(PILES NOT SHOWN FOR CLARITY)

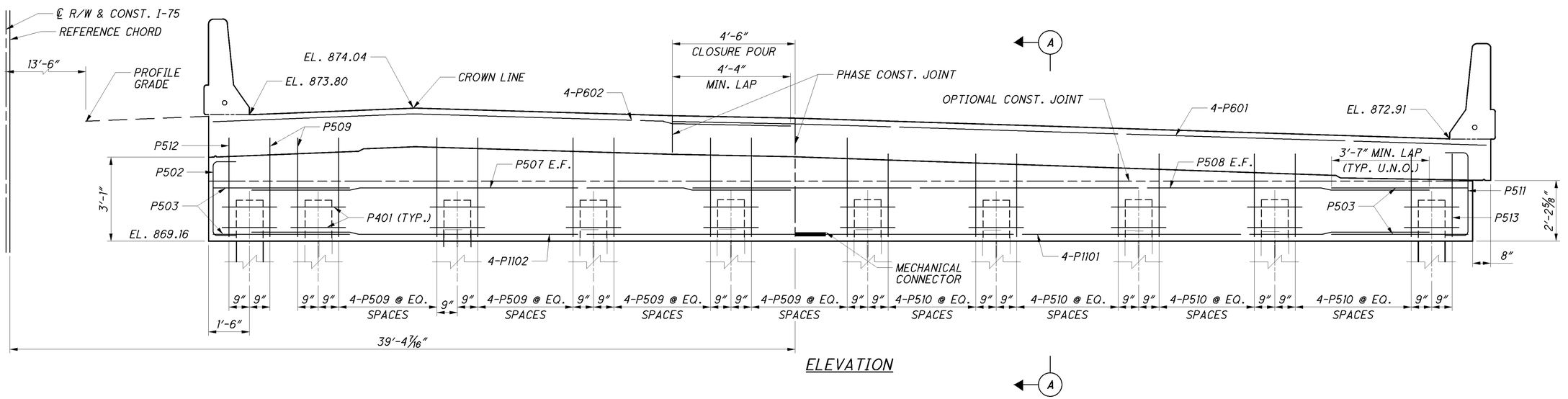

ELEVATION

NOTES:

1. SHEAR KEYS MAY BE FORMED WITH 12″ LENGTHS OF 3″X10″ PLANK.
2. SEE SCD CPP-1-08 FOR ADDITIONAL NOTES AND DETAILS.
3. ALL PILES SHALL BE TRIMMED AS NECESSARY TO PROVIDE 1′-6″ EMBEDMENT INTO THE PROPOSED PILE CAP. THIS WORK SHALL BE INCLUDED WITH ITEM 507-STEEL PILES HP12X53, FURNISHED FOR PAYMENT.
4. ALL HORIZONTAL DIMENSIONS ARE MEASURED ALONG THE CENTERLINE OF BEARING.

MINIMUM LAPS:

#5 BARS = 3′-7″
#6 BARS = 4′-4″

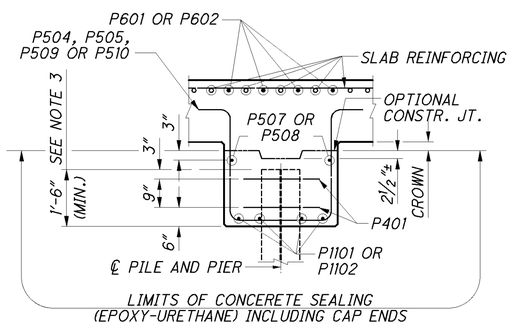

SECTION A-A

DESIGN AGENCY
PARSONS BRINCKERHOFF
2945 FARMERS DRIVE
SUITE 350
COLUMBUS, OHIO 43235

DESIGNED	DRAWN	REVIEWED	DATE
PJL	LEL	EBS	12/17/12
CHECKED	REVISED	STRUCTURE NUMBER	
SAP		LEFT: 0201634 RIGHT: 0201669	

NORTHBOUND PIER 1 DETAIL
BRIDGE NO. ALL-75-0100 L&R
I-75 OVER LITTLE OTTAWA RIVER

ALL-75-0.21
PID No. 76691

J:\Projects\ALL\89029\structures\ALL075_0100C\sheets\075_0100CPI002.dgn 09-MAY-2013 3:06PM jint

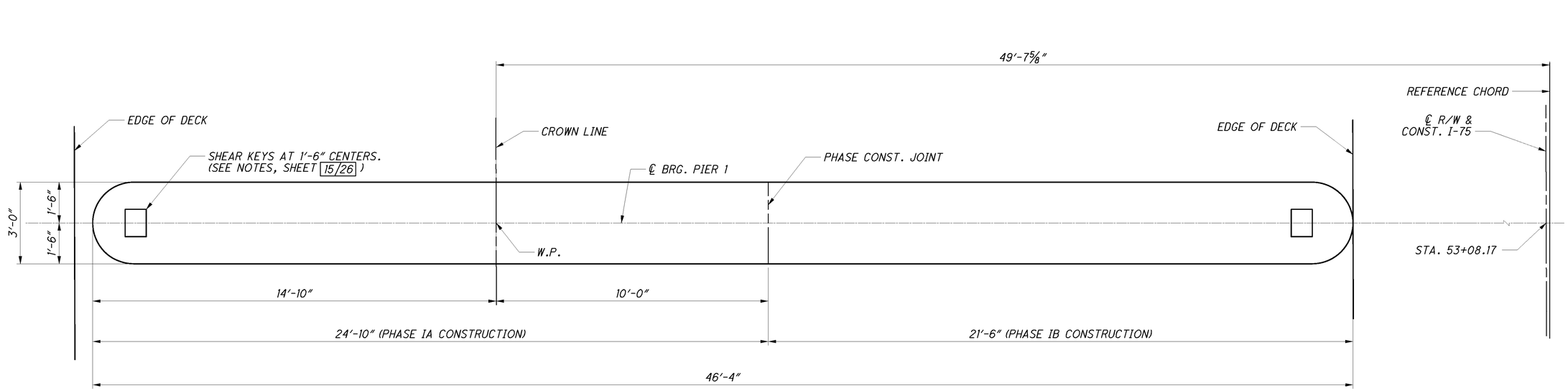

PLAN

(PILES NOT SHOWN FOR CLARITY)

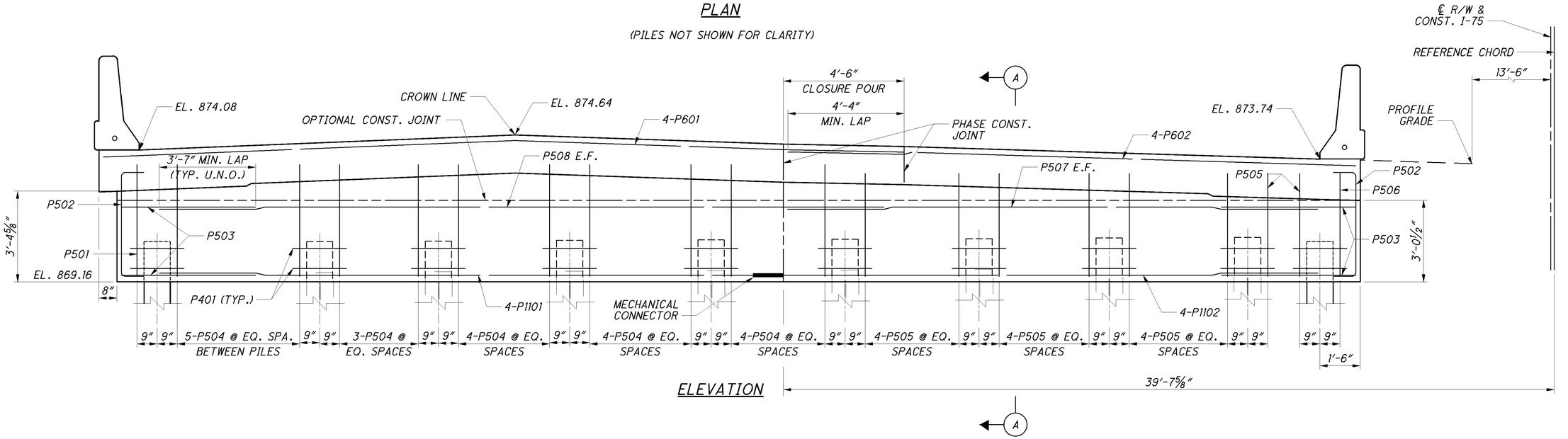

ELEVATION

NOTES:

1. ALL HORIZONTAL DIMENSIONS ARE MEASURED ALONG THE CENTERLINE OF BEARING.
2. FOR NOTES AND SECTION A-A SEE SHEET 15/26 .

MINIMUM LAPS:

#5 BARS = 3′-7″
#6 BARS = 4′-4″

DESIGN AGENCY
PARSONS BRINCKERHOFF
2545 FARMERS DRIVE
SUITE 350
COLUMBUS, OHIO 43235

DESIGNED	DRAWN	REVIEWED	DATE
PJL	LEL	EBS	12/17/12
CHECKED	REVISED	STRUCTURE NUMBER	
SAP		LEFT: 0201634 RIGHT: 0201669	

SOUTHBOUND PIER 1 DETAIL

BRIDGE NO. ALL-75-0100 L&R
I-75 OVER LITTLE OTTAWA RIVER

ALL-75-0.21
PID No. 76691

16 / 26

614
907

J:\Projects\ALL\89029\structures\ALL075_0100C\sheets\075_0100CPI001.dgn 09-MAY-2013 3:06PM jint

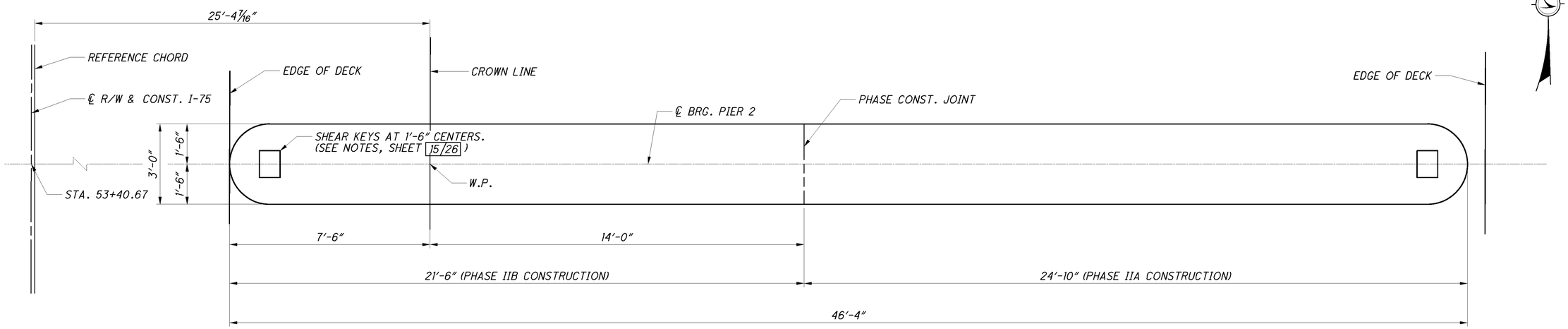

PLAN

(PILES NOT SHOWN FOR CLARITY)

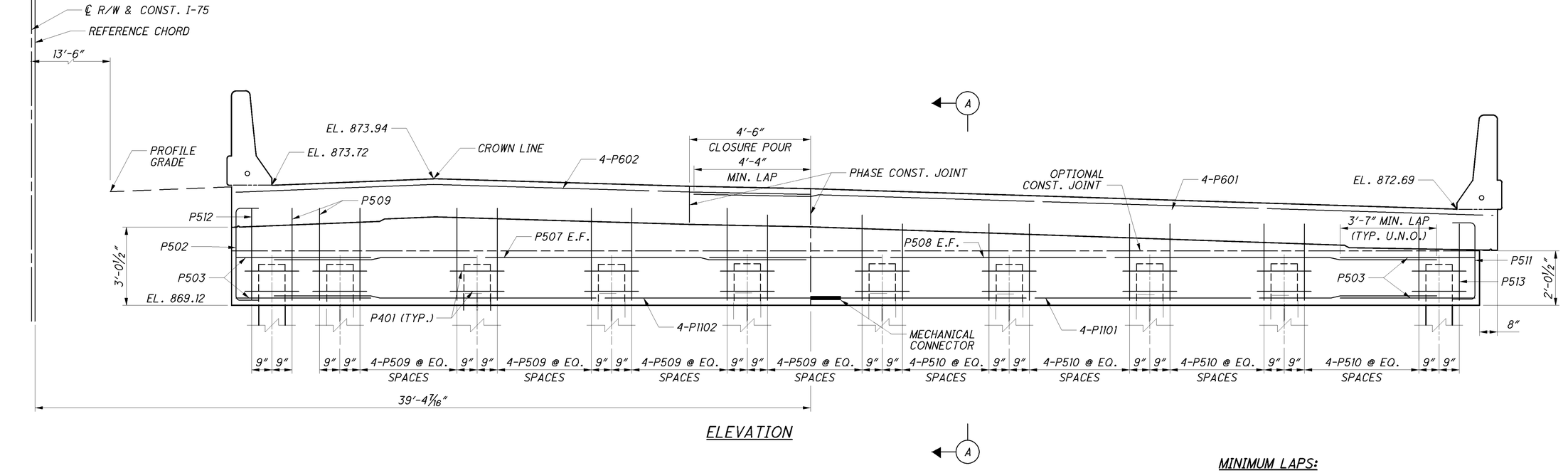

ELEVATION

MINIMUM LAPS:

#5 BARS = 3′-7″
#6 BARS = 4′-4″

NOTES:

1. ALL HORIZONTAL DIMENSIONS ARE MEASURED ALONG THE CENTERLINE OF BEARING.
2. FOR NOTES AND SECTION A-A SEE SHEET 15/26 .

DESIGN AGENCY
PARSONS BRINCKERHOFF
2545 FARMERS DRIVE
SUITE 350
COLUMBUS, OHIO 43235

DESIGNED	DRAWN	REVIEWED	DATE
PJL	LEL	EBS	12/17/12
CHECKED	REVISED	STRUCTURE NUMBER	
SAP		LEFT: 0201634 RIGHT: 0201669	

NORTHBOUND PIER 2 DETAIL
BRIDGE NO. ALL-75-0100 L&R
I-75 OVER LITTLE OTTAWA RIVER

ALL-75-0.21
PID No. 76691

17 / 26

615
907

J:\Projects\ALL\89029\structures\ALL075_0100C\sheets\075_0100CPI004.dgn 09-MAY-2013 3:06PM lint

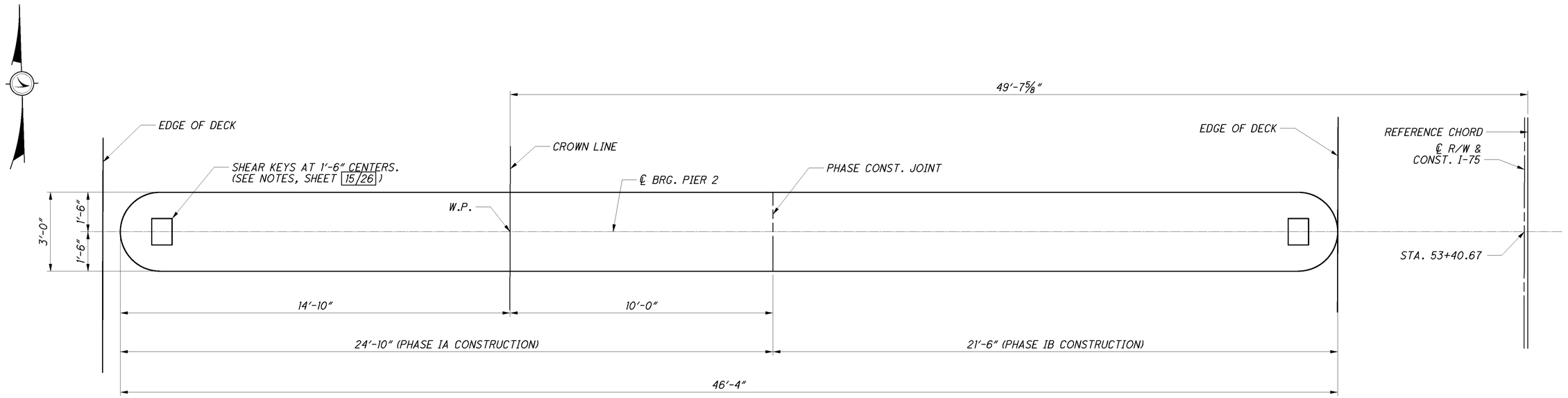

PLAN

(PILES NOT SHOWN FOR CLARITY)

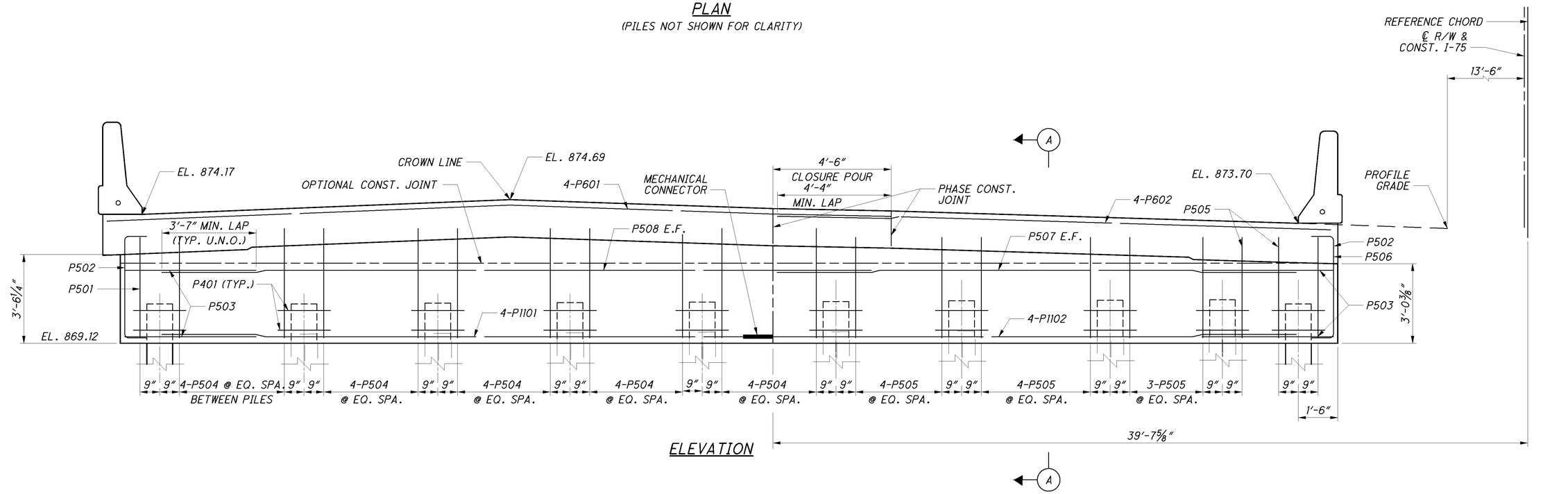

ELEVATION

NOTES:

1. ALL HORIZONTAL DIMENSIONS ARE MEASURED ALONG THE CENTERLINE OF BEARING.
2. FOR NOTES AND SECTION A-A SEE SHEET 15/26 .

MINIMUM LAPS:

#5 BARS = 3'-7"
#6 BARS = 4'-4"

DESIGN AGENCY
PARSONS BRINCKERHOFF
2545 FARMERS DRIVE
SUITE 350
COLUMBUS, OHIO 43235

DESIGNED	DRAWN	REVIEWED	DATE
PJL	LEL	EBS	12/17/12
CHECKED	REVISED	STRUCTURE NUMBER	
SAP		LEFT: 0201634 RIGHT: 0201669	

SOUTHBOUND PIER 2 DETAIL
BRIDGE NO. ALL-75-0100 L&R
I-75 OVER LITTLE OTTAWA RIVER

ALL-75-0.21
PID No. 76691

18 / 26

616
907

J:\Projects\ALL\89029\structures\ALL075_0100C\sheets\075_0100CP1003.dgn 09-MAY-2013 3:06PM jint

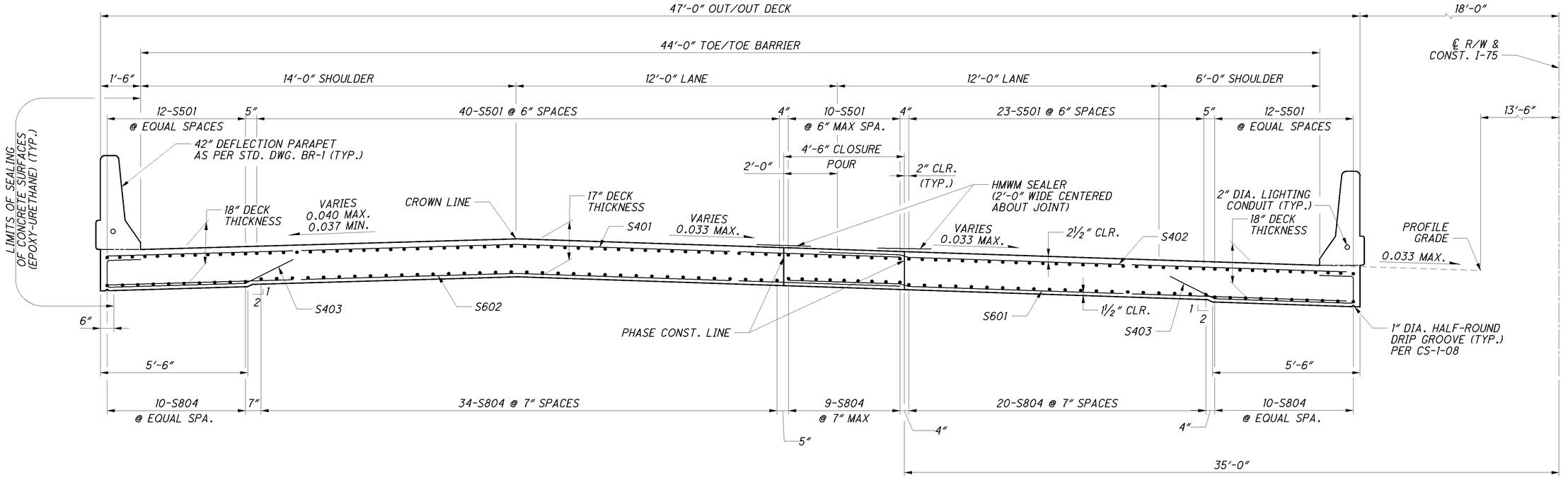

TYPICAL TRANSVERSE SECTION

SOUTHBOUND SHOWN

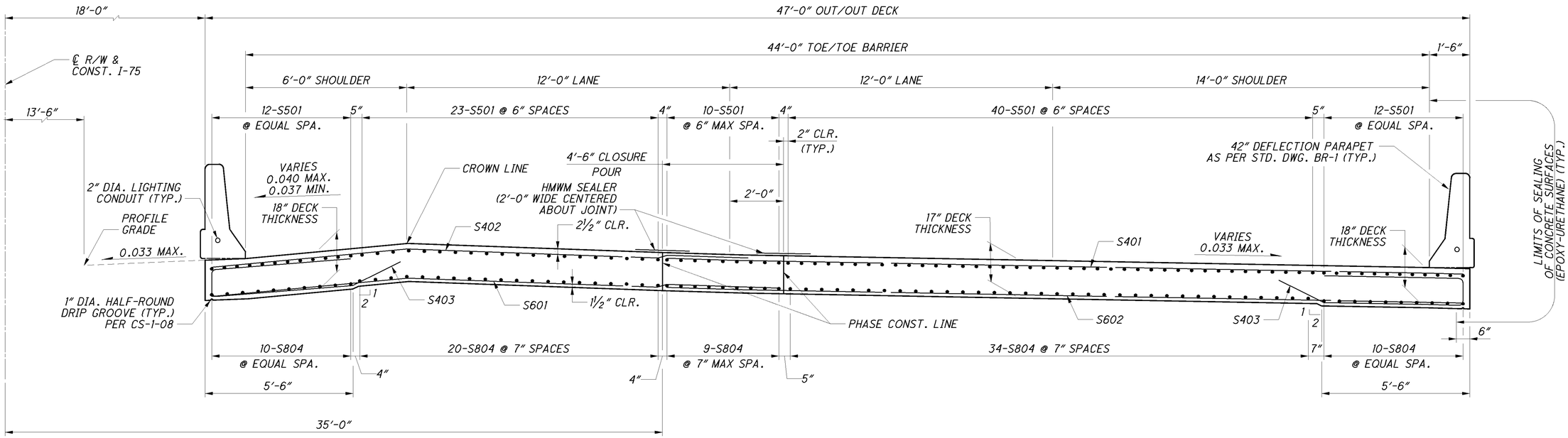

TYPICAL TRANSVERSE SECTION

NORTHBOUND SHOWN

NOTE:
FOR ADDITIONAL NOTES AND DETAILS NOT SHOWN SEE STD DWG CS-1-08.

DESIGN AGENCY
PARSONS BRINCKERHOFF
2945 FARMERS DRIVE
SUITE 350
COLUMBUS, OHIO 43235

DESIGNED	DRAWN	REVIEWED	DATE
PJL	LEL	EBS	12/17/12
CHECKED	REVISED	STRUCTURE NUMBER	
SAP		LEFT: 0201634 RIGHT: 0201669	

DECK TYPICAL SECTIONS
BRIDGE NO. ALL-75-0100 L&R
I-75 OVER LITTLE OTTAWA RIVER

ALL-75-0.21
PID No. 76691

617
907

J:\Projects\ALL\69029\structures\ALL075_0100\sheets\075_0100CTS001.dgn 09-MAY-2013 3:06PM jint

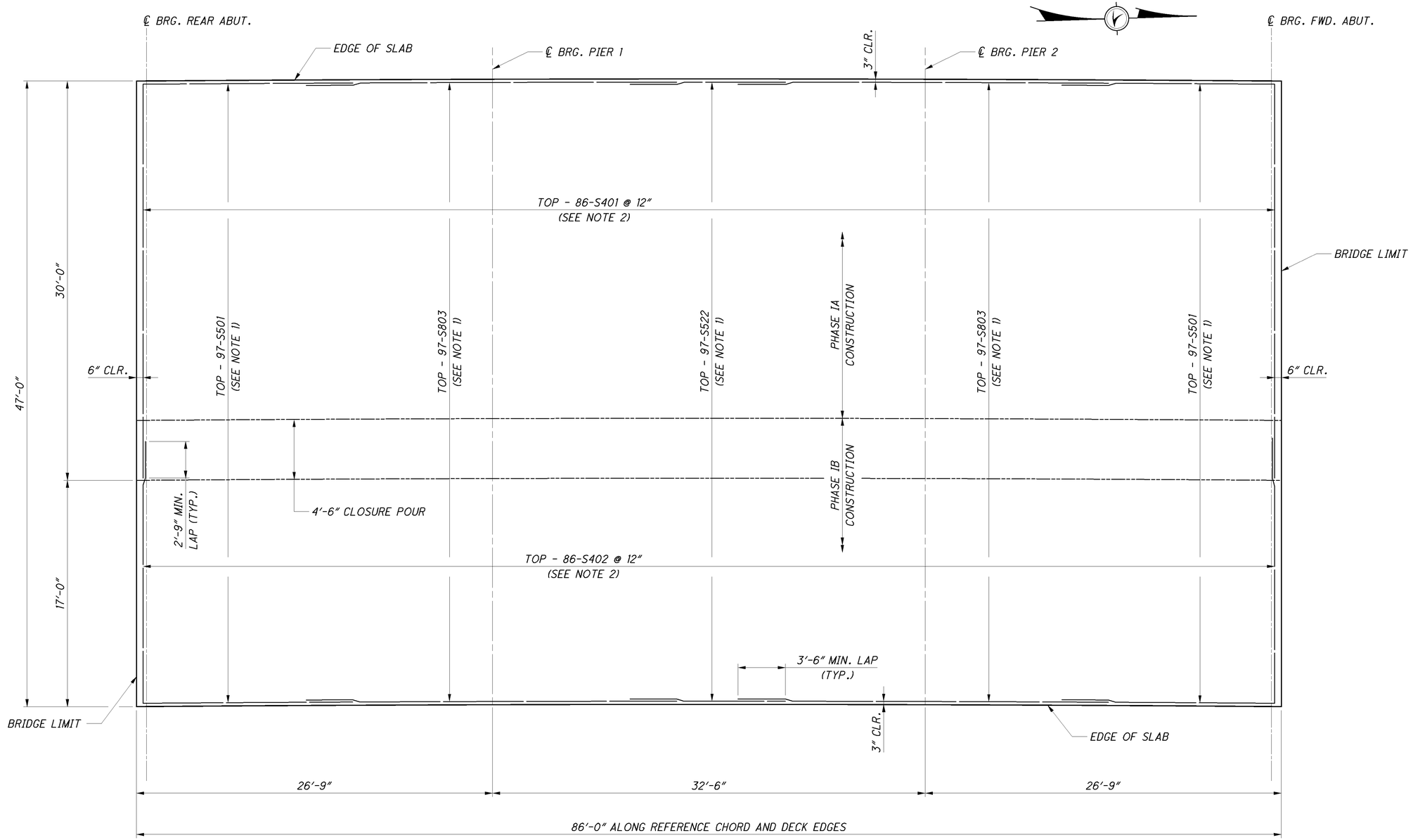

NOTES:

1. SEE TRANSVERSE SECTION FOR LONGITUDINAL BARS SPACING, SHEET 19/26 .
2. SEE SCD CS-1-08 FOR TRANSVERSE BAR SPACING.

℄ R/W & CONST. I-75

53

DECK SLAB PLAN (TOP)

SOUTHBOUND SHOWN NORTHBOUND SIMILAR

DESIGN AGENCY
PARSONS BRINCKERHOFF
2945 FARMERS DRIVE
SUITE 350
COLUMBUS, OHIO 43235

DESIGNED	DRAWN	REVIEWED	DATE
PJL	LEL	EBS	12/17/12
CHECKED	REVISED	STRUCTURE FILE NUMBER	
SAP		LEFT: 0201634 RIGHT: 0201669	

DECK PLAN - TOP MAT
BRIDGE NO. ALL-75-0100 L&R
I-75 OVER LITTLE OTTAWA RIVER

ALL-75-0.21
PID No. 89029

20 / 26

618
907

J:\Projects\ALL\89029\structures\ALL075_0100C\sheets\075_0100CDP001.dgn 09-MAY-2013 3:06PM lint

53

℄ R/W & CONST. I-75

NOTES:

1. SEE TRANSVERSE SECTION FOR LONGITUDINAL BARS SPACING, SHEET 19/26 .
2. SEE SCD CS-1-08 FOR TRANSVERSE BARS SPACING.

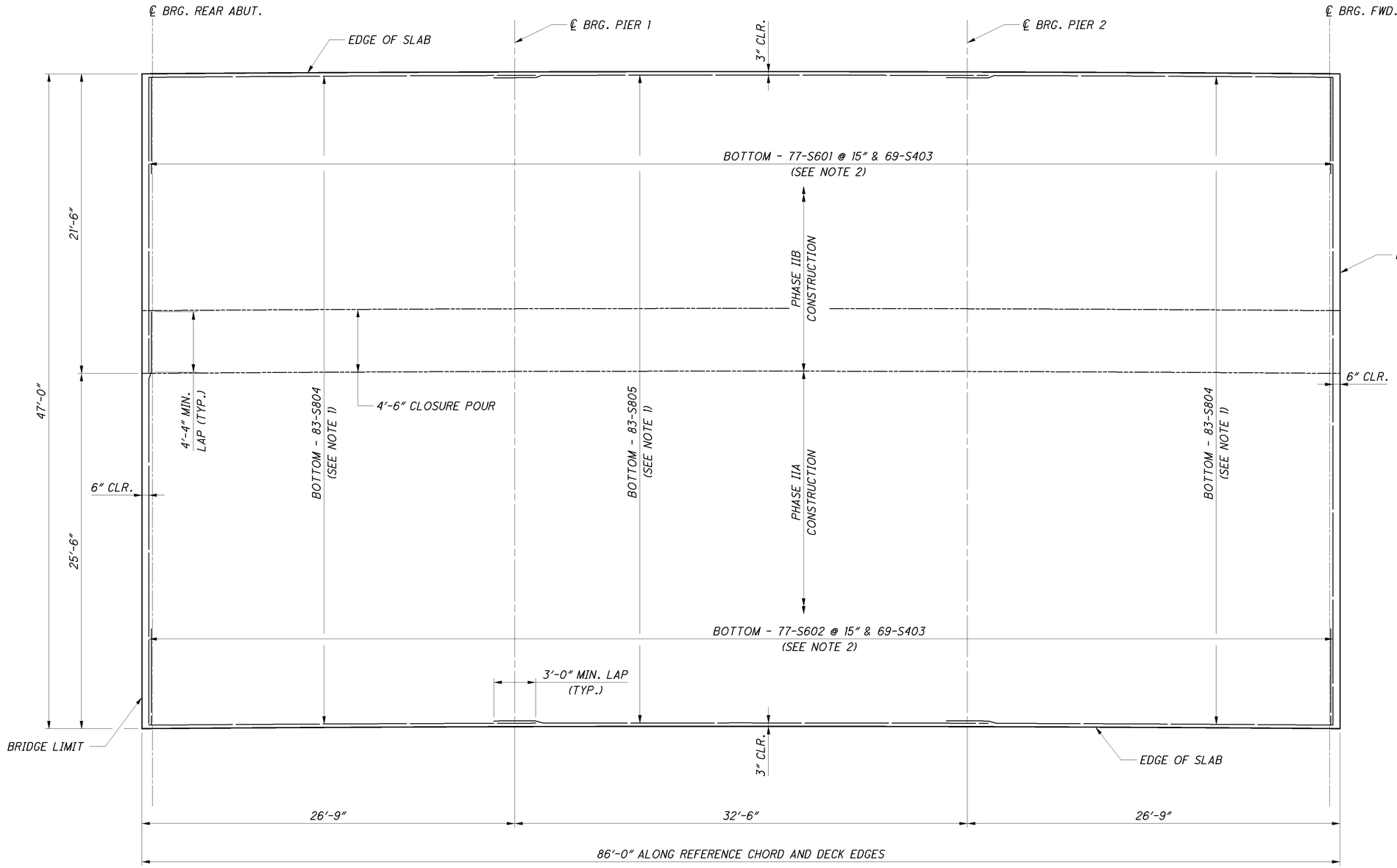

DECK SLAB PLAN (BOTTOM)

NORTHBOUND SHOWN SOUTHBOUND SIMILAR

J:\Projects\ALL\89029\structures\ALL075_0100\sheets\075_0100CDP002.dgn 09-MAY-2013 3:06PM jint

DESIGN AGENCY
PARSONS BRINCKERHOFF
2545 FARMERS DRIVE
SUITE 350
COLUMBUS, OHIO 43235

DESIGNED	DRAWN	REVIEWED	DATE
PJL	LEL	EBS	12/17/12
CHECKED	REVISED	STRUCTURE NUMBER	
SAP		LEFT: 0201634 RIGHT: 0201669	

DECK PLAN - BOTTOM MAT
BRIDGE NO. ALL-75-0100 L&R
I-75 OVER LITTLE OTTAWA RIVER

ALL-75-0.21
PID No. 89029

21/26

619
907

SOUTHBOUND

FINAL DECK SURFACE ELEVATIONS

FINAL DECK SURFACE ELEVATION TABLE														
	LOCATION	CL BRG. REAR ABUT.	1/4	1/2	3/4	CL BRG. PIER 1	1/4	1/2	3/4	CL BRG. PIER 2	1/4	1/2	3/4	CL BRG. FWD. ABUT.
LEFT EDGE OF DECK	STATION	52+82.65	52+89.07	52+95.50	53+01.93	53+08.35	53+16.39	53+24.24	53+32.46	53+40.49	53+46.92	53+53.34	53+59.77	53+66.20
	FINAL DECK SURFACE EL.	873.99	874.00	874.00	874.01	874.02	874.05	874.08	874.11	874.11	874.10	874.09	874.09	874.08
LEFT TOE OF BARRIER	STATION	52+82.64	52+89.06	52+95.49	53+01.92	53+08.35	53+16.39	53+24.42	53+32.46	53+40.49	53+46.92	53+53.35	53+59.78	53+66.21
	FINAL DECK SURFACE EL.	874.05	874.06	874.06	874.07	874.08	874.11	874.14	874.17	874.17	874.16	874.15	874.14	874.13
CROWN LINE	STATION	52+82.53	52+88.98	52+95.42	53+01.87	53+08.31	53+16.37	53+24.42	53+32.48	53+40.53	53+46.98	53+53.42	53+59.87	53+66.31
	FINAL DECK SURFACE EL.	874.61	874.62	874.62	874.63	874.64	874.66	874.67	874.69	874.69	874.68	874.67	874.66	874.65
PHASE CONST. JOINT	STATION	52+82.46	52+88.92	52+95.37	53+01.83	53+08.28	53+16.35	53+24.42	53+32.49	53+40.56	53+47.02	53+53.47	53+59.93	53+66.38
	FINAL DECK SURFACE EL.	874.34	874.34	874.34	874.34	874.34	874.35	874.36	874.36	874.36	874.35	874.34	874.33	874.32
PHASE CONST. JOINT	STATION	52+82.43	52+88.89	52+95.35	53+01.81	53+08.27	53+16.35	53+24.42	53+32.50	53+40.57	53+47.03	53+53.49	53+59.96	53+66.42
	FINAL DECK SURFACE EL.	874.21	874.21	874.21	874.21	874.21	874.21	874.21	874.22	874.21	874.20	874.19	874.18	874.17
RIGHT TOE OF BARRIER	STATION	52+82.32	52+88.79	52+95.27	53+01.75	53+08.23	53+16.32	53+24.42	53+32.52	53+40.62	53+47.10	53+53.57	53+60.05	53+66.53
	FINAL DECK SURFACE EL.	873.79	873.78	873.77	873.76	873.74	873.73	873.72	873.71	873.70	873.69	873.68	873.67	873.66
RIGHT EDGE OF DECK	STATION	52+82.30	52+88.78	52+95.26	53+01.74	53+08.22	53+16.32	53+24.42	53+32.52	53+40.62	53+47.10	53+53.58	53+60.06	53+66.54
	FINAL DECK SURFACE EL.	873.75	873.74	873.72	873.71	873.70	873.68	873.67	873.66	873.65	873.64	873.63	873.62	873.61

NOTE:
FINAL DECK ELEVATIONS SHOWN REPRESENT THE DECK SURFACE LOCATION AFTER ALL ANTICIPATED DEAD LOAD DEFLECTIONS HAVE OCCURRED.

NORTHBOUND

FINAL DECK SURFACE ELEVATIONS

FINAL DECK SURFACE ELEVATION TABLE														
	LOCATION	CL BRG. REAR ABUT.	1/4	1/2	3/4	CL BRG. PIER 1	1/4	1/2	3/4	CL BRG. PIER 2	1/4	1/2	3/4	CL BRG. FWD. ABUT.
LEFT EDGE OF DECK	STATION	52+82.04	52+88.56	52+95.08	53+01.60	53+08.12	53+16.27	53+24.42	53+32.57	53+40.72	53+47.24	53+53.76	53+60.29	53+66.81
	FINAL DECK SURFACE EL.	873.81	873.79	873.78	873.76	873.74	873.72	873.70	873.68	873.67	873.66	873.65	873.64	873.63
LEFT TOE OF BARRIER	STATION	52+82.03	52+88.55	52+95.07	53+01.59	53+08.12	53+16.27	53+24.42	53+32.58	53+40.73	53+47.25	53+53.77	53+60.29	53+66.82
	FINAL DECK SURFACE EL.	873.87	873.85	873.84	873.82	873.80	873.78	873.76	873.74	873.72	873.71	873.70	873.69	873.68
CROWN LINE	STATION	52+81.98	52+88.51	52+95.04	53+01.57	53+08.10	53+16.26	53+24.42	53+32.58	53+40.75	53+47.27	53+53.80	53+60.33	53+66.86
	FINAL DECK SURFACE EL.	874.11	874.09	874.08	874.06	874.04	874.02	873.99	873.96	873.94	873.93	873.92	873.91	873.91
PHASE CONST. JOINT	STATION	52+81.91	52+88.45	52+94.99	53+01.53	53+08.08	53+16.25	53+24.42	53+32.60	53+40.77	53+47.31	53+53.85	53+60.39	53+66.93
	FINAL DECK SURFACE EL.	873.86	873.83	873.81	873.78	873.76	873.72	873.69	873.65	873.63	873.62	873.61	873.60	873.59
PHASE CONST. JOINT	STATION	52+81.88	52+88.42	52+94.97	53+01.51	53+08.06	53+16.24	53+24.42	53+32.60	53+40.79	53+47.33	53+53.88	53+60.42	53+66.97
	FINAL DECK SURFACE EL.	873.73	873.71	873.68	873.65	873.62	873.58	873.54	873.50	873.48	873.47	873.46	873.45	873.44
RIGHT TOE OF BARRIER	STATION	52+81.70	52+88.27	52+94.84	53+01.42	53+07.99	53+16.21	53+24.42	53+32.64	53+40.85	53+47.43	53+54.00	53+60.57	53+67.15
	FINAL DECK SURFACE EL.	873.09	873.04	872.99	872.95	872.91	872.84	872.78	872.72	872.69	872.68	872.67	872.66	872.65
RIGHT EDGE OF DECK	STATION	52+81.69	52+88.26	52+94.84	53+01.41	53+07.99	53+16.20	53+24.42	53+32.64	53+40.86	53+47.43	53+54.01	53+60.58	53+67.16
	FINAL DECK SURFACE EL.	873.05	873.00	872.95	872.91	872.86	872.80	872.73	872.67	872.64	872.63	872.62	872.61	872.60

NOTE:
FINAL DECK ELEVATIONS SHOWN REPRESENT THE DECK SURFACE LOCATION AFTER ALL ANTICIPATED DEAD LOAD DEFLECTIONS HAVE OCCURRED.

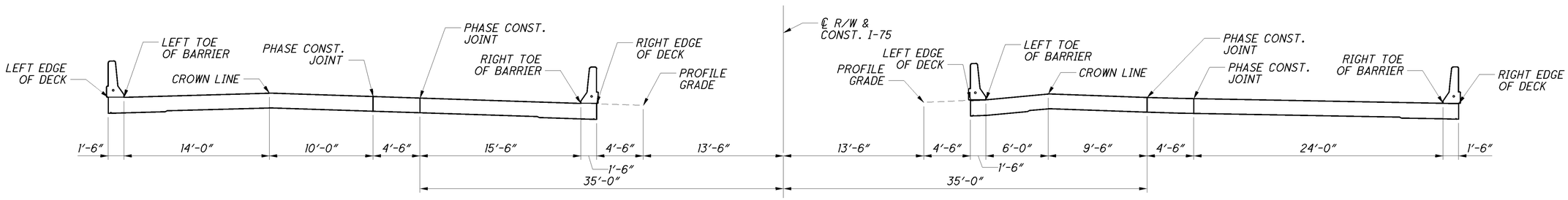

DECK SURFACE SECTION

DESIGN AGENCY
PARSONS BRINCKERHOFF
2545 FARMERS DRIVE
SUITE 350
COLUMBUS, OHIO 43235

DESIGNED	DRAWN	REVIEWED	DATE
PJL	LEL	EBS	12/17/12
CHECKED	REVISED	STRUCTURE NUMBER	
SAP		LEFT: 0201634 RIGHT: 0201669	

FINAL DECK SURFACE ELEVATIONS
BRIDGE NO. ALL-75-0100 L&R
I-75 OVER LITTLE OTTAWA RIVER

ALL-75-0.21
PID No. 89029

620
907

J:\Projects\ALL\89029\structures\ALL075_0100C\sheets\075_0100CSD001.dgn 09-MAY-2013 3:06PM lint

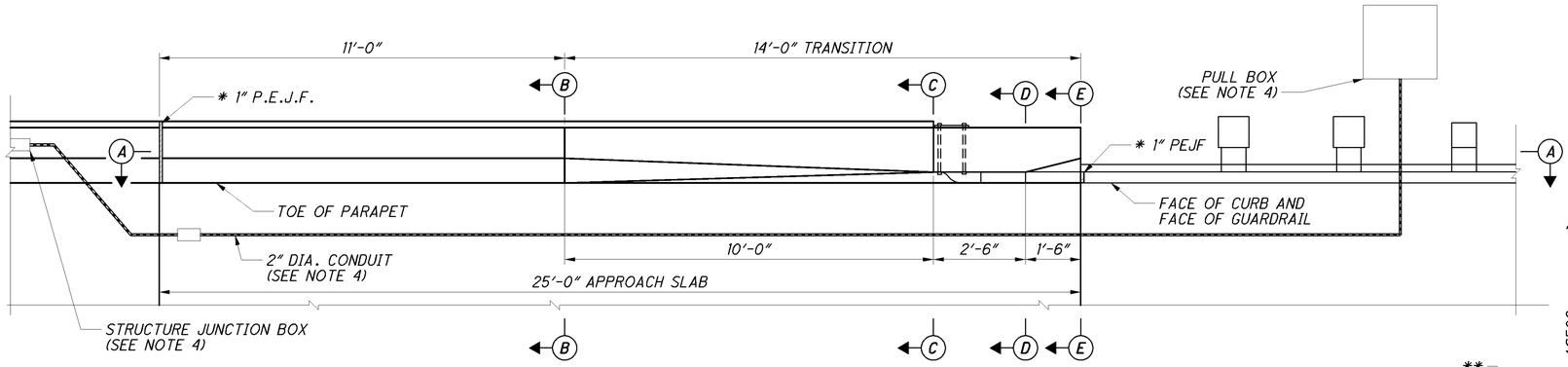

PART PLAN ON APPROACH SLABS

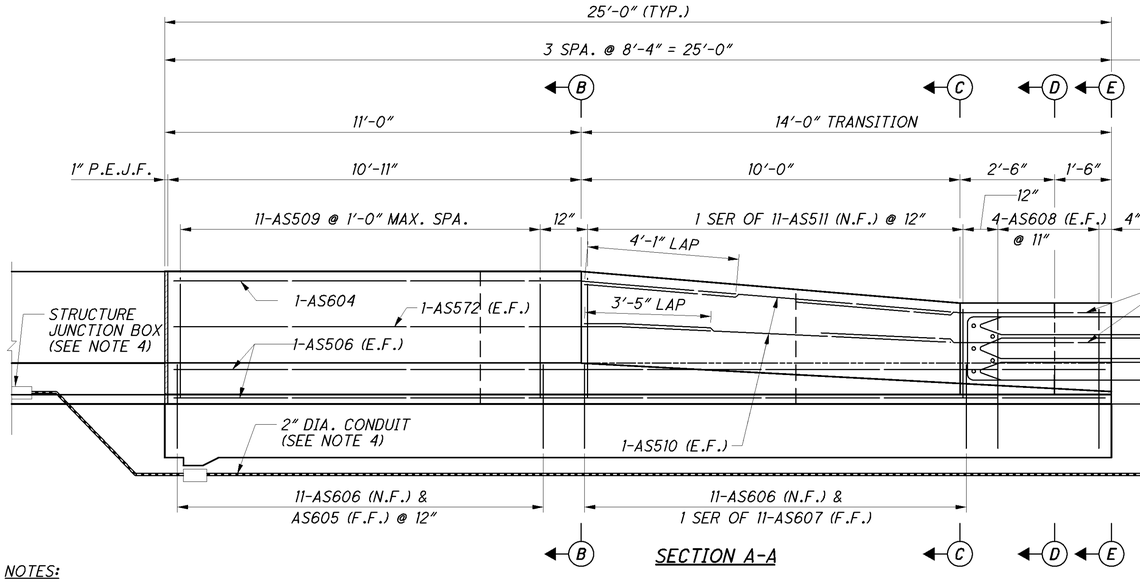

SECTION A-A

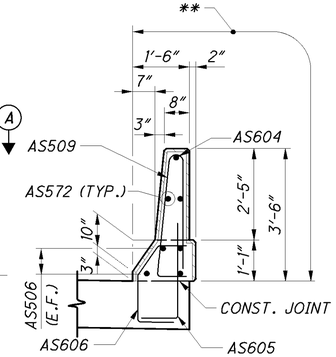

SECTION B-B

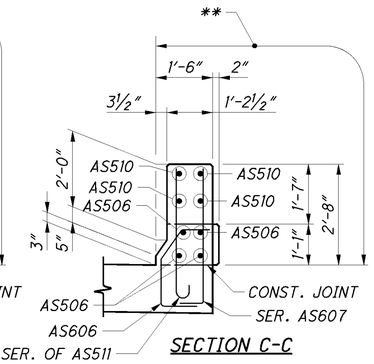

SECTION C-C

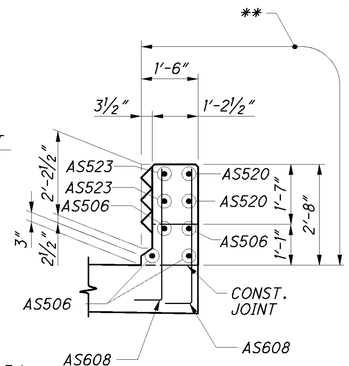

SECTION D-D

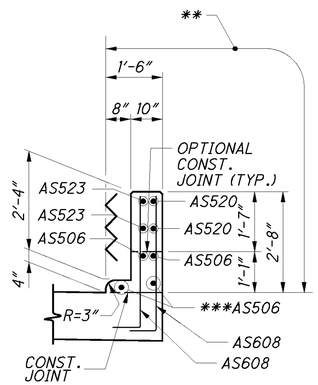

SECTION E-E

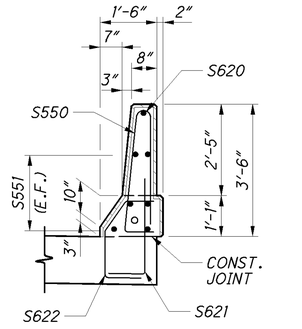

SECTION F-F

FOR SEALING DETAILS SEE SHEET 19/26

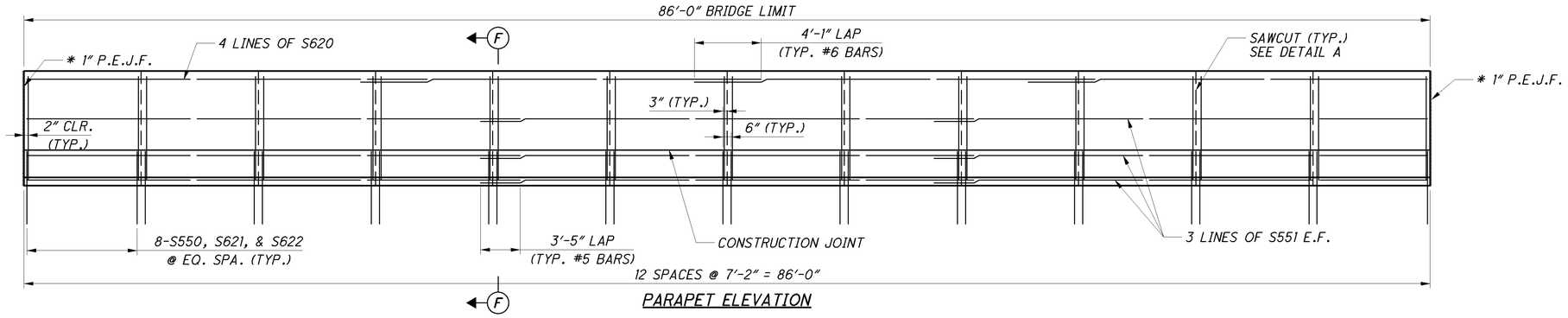

PARAPET ELEVATION

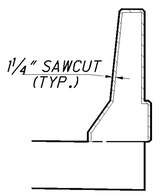

DETAIL A

(SECTION THROUGH SAWCUT)
SAWCUT PERIMETER = 8'-1"

NOTES:

1. FOR ADDITIONAL NOTES AND DETAILS, SEE STANDARD CONSTRUCTION DRAWING BR-1.
2. THE COST OF THE APPROACH SLAB PARAPET, EXCLUDING SEALING, SHALL BE INCLUDED WITH ITEM 898, QC/QA CONCRETE, CLASS QSC 2, SUPERSTRUCTURE (APPROACH SLAB), (T=15"), AS PER PLAN.
3. FOR BRIDGE TERMINAL ASSEMBLIES SEE ROADWAY STANDARD DRAWINGS GR-3.1 AND GR-3.2. SEE ROADWAY PLANS FOR DETAILS AND PAYMENT.
4. FOR ADDITIONAL NOTES AND DETAILS OF PULL BOXES, STRUCTURE JUNCTION BOXES, AND CONDUIT, SEE STANDARD CONSTRUCTION DRAWING HL-30.11, HL-30.31, HL-30.32. SEE SHEET 5/26 FOR QUANTITIES FOR THESE ITEMS.

* COST INCLUDED WITH APPROACH SLAB FOR PAYMENT.

** LIMITS OF CONCRETE SEALING (EPOXY URETHANE)

*** FIELD BEND IF NECESSARY

DESIGN AGENCY
PARSONS BRINCKERHOFF
2945 FARMERS DRIVE
SUITE 350
COLUMBUS, OHIO 43235

DESIGNED	DRAWN	REVIEWED	DATE
PJL	LEL	EBS	12/17/12
CHECKED	REVISED	STRIPPING QUANTITIES	LEFT: 0201634 RIGHT: 0201669
SAP			

PARAPET DETAILS

BRIDGE NO. ALL-75-0100 L&R
I-75 OVER LITTLE OTTAWA RIVER

ALL-75-0.21
PID No. 89029

23/26

621
907

J:\Projects\ALL\89029\structures\ALL075_0100C\sheets\075_0100CRA001.dgn 09-MAY-2013 3:06PM jlint

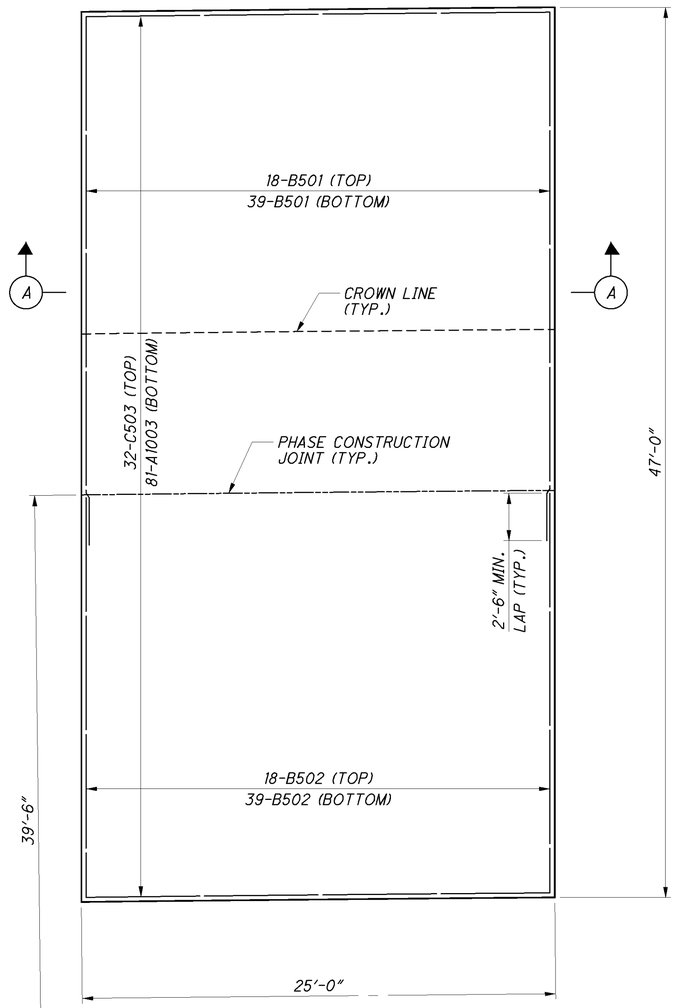

REAR APPROACH SLAB PLAN

(SEE SECTIONS A-A & B-B FOR SPACING)
(SOUTHBOUND SHOWN, NORTHBOUND SIMILAR)

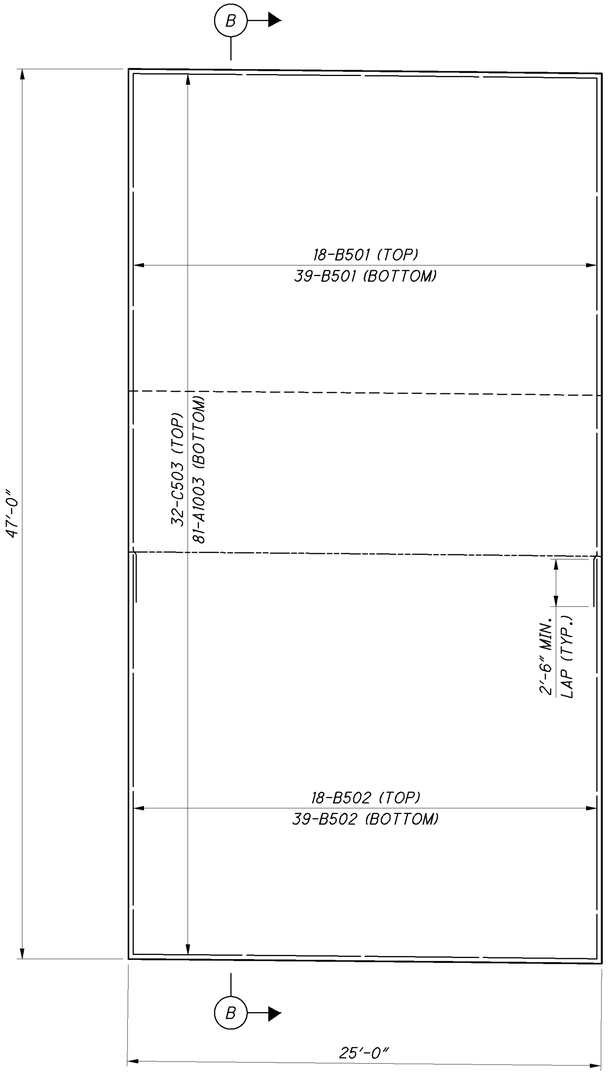

FORWARD APPROACH SLAB PLAN

(SEE SECTIONS A-A & B-B FOR SPACING)
(SOUTHBOUND SHOWN, NORTHBOUND SIMILAR)

SLAB CORNER ELEVATIONS				
		STATION	OFFSET	ELEVATION
SOUTHBOUND	RA	52+57.18	65.00' LT	873.97
		52+56.89	39.50' LT	874.34
		52+56.63	18.00' LT	873.82
		52+81.90	65.00' LT	873.99
		52+81.72	39.50' LT	874.34
		52+81.56	18.00' LT	873.76
	FA	53+66.94	65.00' LT	874.08
		53+67.13	39.50' LT	874.32
		53+67.29	18.00' LT	873.61
		53+91.66	65.00' LT	874.06
		53+91.96	39.50' LT	874.30
		53+92.21	18.00' LT	873.59
NORTHBOUND	RA	52+56.21	18.00' RT	873.89
		52+55.95	39.50' RT	873.86
		52+55.64	65.00' RT	873.24
		52+81.29	18.00' RT	873.82
		52+81.12	39.50' RT	873.74
		52+80.93	65.00' RT	873.05
	FA	53+67.56	18.00' RT	873.63
		53+67.72	39.50' RT	873.44
		53+67.92	65.00' RT	872.60
		53+92.64	18.00' RT	873.61
		53+92.89	39.50' RT	873.42
		53+93.20	65.00' RT	872.58

CROWN ELEVATIONS				
		STATION	OFFSET	ELEVATION
SOUTHBOUND	RA	52+57.00	49.50' LT	874.58
		52+81.79	49.50' LT	874.61
	FA	53+67.05	49.50' LT	874.65
		53+91.84	49.50' LT	874.63
NORTHBOUND	RA	52+56.12	25.50' RT	874.19
		52+81.23	25.50' RT	874.11
	FA	53+67.62	25.50' RT	873.90
		53+92.73	25.50' RT	873.88

NOTES:

1. 6" AGGREGATE BASE INCLUDED WITH ROADWAY QUANTITIES FOR PAYMENT.
2. SUBGRADE COMPACTION INCLUDED WITH ROADWAY QUANTITIES FOR PAYMENT.
3. ADJUST LOCATION OF LONGITUDINAL REINFORCEMENT TO CLEAR THE CONSTRUCTION JOINT BY 2".

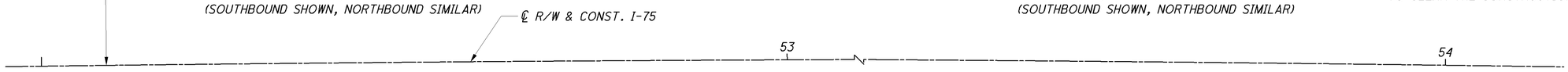

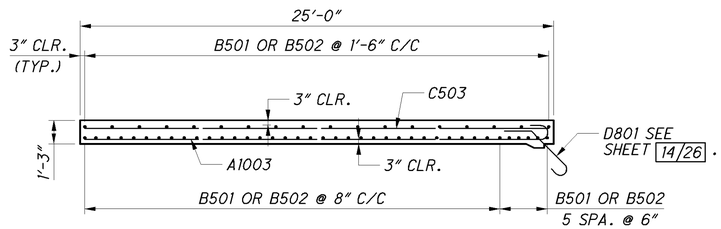

SECTION A-A

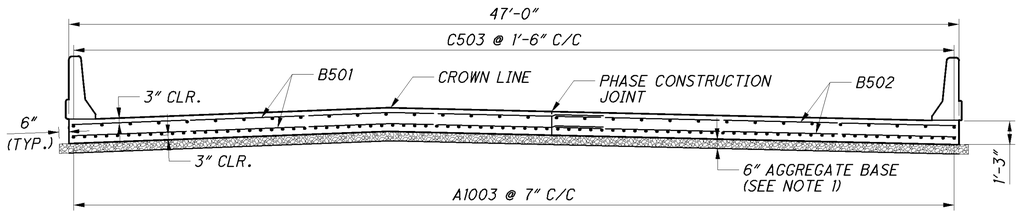

SECTION B-B

DESIGN AGENCY
PARSONS BRINCKERHOFF
2545 FARMERS DRIVE
SUITE 350
COLUMBUS, OHIO 43235

DESIGNED P.JL
DRAWN LEL
REVIEWED EBS
DATE 12/17/12
CHECKED SAP
REVISED
STRIPPING QUANTITIES
LEFT: 0201634
RIGHT: 0201669

MODIFIED APPROACH SLAB DEATILS

BRIDGE NO. ALL-75-0100 L&R
I-75 OVER LITTLE OTTAWA RIVER

ALL-75-0.21
PID No. 89029

24 / 26

622
907

J:\Projects\ALL\89029\structures\ALL075_0100C\sheets\075_0100CMD001.dgn 09-MAY-2013 3:06PM jint

MARK	NUMBER TOTAL	LENGTH	WEIGHT	TYPE	DIMENSIONS A	B	C	D	E	R	INC
				SUPERSTRUCTURE							
S401	172	29'- 08"	3,410	STR.							
S402	172	19'- 09"	2,270	STR.							
S403	276	9'- 01"	1,676	12	10"	1'-8"	5'-2"	1'-0"	1'-3"		
S404	8	3'- 00"	18	STR.							
S501	388	16'- 01"	6,510	STR.							
S502	192	6'- 07"	1,320	3	1'-11"	1'-1"					
S503	8	10'- 09"	90	3	1'-11"	3'-2"					
S504	38	6'- 02"	245	2	2'-6"	1'-5"	2'-6"				
S505	76	6'- 06"	516	2	2'-8"	1'-5"	2'-8"				
S506	116	7'- 06"	909	2	3'-2"	1'-5"	3'-2"				
S507	2	12'- 03"	26	3	1'-11"	3'-11"					
S508	2	12'- 11"	27	3	1'-11"	4'-3"					
S510	36	7'- 00"	264	2	2'-11"	1'-5"	2'-11"				
S512	22	6'- 04"	146	2	2'-7"	1'-5"	2'-7"				
S514	30	6'- 08"	209	2	2'-9"	1'-5"	2'-9"				
S516	2	11'- 03"	24	3	1'-11"	3'-5"					
S517	2	11'- 07"	25	3	1'-11"	3'-7'					
S518	66	7'- 02"	494	2	3'-0"	1'-5"	3'-0"				
S522	194	11'- 08"	2,362	STR.							
S550	384	7'- 01"	2,838	23	8"	3'-3"	3'-0"			1 1/2"	
S551	72	30'- 10"	2,316	STR.							
S601	154	21'- 04"	4,936	STR.							
S602	154	29'- 08"	6,864	STR.							
S620	16	24'- 06"	590	STR.							
S621	384	3'- 10"	2,212	1	11"	3'-1"					
S622	384	3'- 06"	2,020	14	10 1/2"	1'-4"	8 1/2"	6"	9"		
S801	40	25'- 04"	2,706	STR.							
S802	40	21'- 04"	2,280	STR.							
S803	388	27'- 10"	28,836	STR.							
S804	332	28'- 11"	25,634	16	28'-0"						
S805	166	35'- 06"	15,736	STR.							
D801	128	5'- 03"	1,796	18	2'-11"	1'-0"	1'-0"				
SUPERSTRUCTURE TOTAL			119,305								

MARK	NUMBER REAR	FWD.	TOTAL	LENGTH	WEIGHT	TYPE	DIMENSIONS A	B	C	D	E	R	INC
					ABUTMENTS								
A401	40	40	80	10'- 06"	564	3	1'-9"	3'-3"					
A501	94	97	191	12'- 07"	2,508	3	3'-5"	2'-7"					
A502	70	71	141	12'- 01"	1,780	3	1'-11"	3'-10"					
A503	1	1	2	12'- 09"	28	3	1'-11"	4'-2"					
A504	1	1	2	14'- 03"	30	3	1'-11"	4'-11"					
	1	1	2	15'- 09"				5'-8"					
A505	SER. OF	SER. OF	SER. OF	TO	108	3	1'-11"	TO					1'-3"
	3	3	3	18'- 03"				6'-11"					
A506	1	1	2	19'- 01"	40	3	1'-11"	7'-4"					
A507	1	1	2	17'- 05"	38	3	1'-11"	6'-6"					
A508	6	6	12	8'- 00"	102	19	7'-2"	9"	4"				
A509	6	8	14	7'- 02"	105	STR.							
A510	2	4	6	5'- 00"	32	STR.							
A511	2	4	6	2'- 11"	20	STR.							
A512	24	24	48	19'- 09"	992	STR.							
A513	6	6	12	27'- 10"	350	STR.							
A514	2		2	6'- 00"	13	STR.							
A515	2		2	3'- 05"	8	STR.							
	1	1	2	17'- 07"				6'-7"					
A516	SER. OF	SER. OF	SER. OF	TO	122	3	1'-11"	TO					1'-10"
	3	3	3	21'- 03"				8'-5"					
A517	2		2	16'- 01"	34	3	1'-11"	5'-10"					
A518	1	1	2	14'- 11"	32	3	1'-11"	5'-3"					
A519	1	1	2	21'- 03"	46	3	1'-11"	8'-5"					
A524	6	6	12	28'- 10"	362	STR.							
A525	2	2	4	19'- 03"	82	3	1'-11"	7'-5"					
A526	1	1	2	17'- 11"	38	3	1'-11"	6'-9'					
	1	1	2	11'- 09"				3'-8"					
A527	SER. OF	SER. OF	SER. OF	TO	118	3	1'-11"	TO					1'-7"
	4	4	4	16'- 05"				6'-0"					
	2	2	4	2'- 10"									
A530	SER. OF	SER. OF	SER. OF	TO	64	STR.							2'-2"
	3	3	3	7'- 02"									
A533	2	2	4	9'- 01"	38	19	8'-3"	9"	4"				
A534	2		2	3'- 01"	7	STR.							
A535	2		2	5'- 05"	12	STR.							
A536		1	1	13'- 09"	15	3	1'-11"	4'-8"					
A537		1	1	15'- 03"	16	3	1'-11"	5'-5"					
A538		2	2	5'- 08"	12	STR.							
A539		2	2	3'- 03"	7	STR.							
		1	1	16'- 09"				6'-2"					
A540		SER. OF	SER. OF	TO	57	3	1'-11"	TO					1'-4"
		3	3	19'- 05"				7'-6'					
A541		1	1	20'- 03"	22	3	1'-11"	7'-11"					
A593	1		1	19'- 09"	21	3	1'-11"	7'-8"					
	1		1	16'- 07"				6'-1"					
A594	SER. OF		SER. OF	To	57	3	1'-11"	TO					1'-4"
	3		3	19'- 03"				7'-5"					
A595	1		1	15'- 01"	16	3	1'-11"	5'-4"					
A596	1		1	13'- 07"	15	3	1'-11"	4'-7"					
A801	100	100	200	3'- 10"	2,048	17	2'-0"						
A802	32	32	64	21'- 08"	3,704	STR.							
A803	8	8	16	27'- 10"	1,190	STR.							
A804	8	8	16	28'- 10"	1,232	STR.							
ABUTMENT TOTAL					16,085								

NOTES:

1. THE BAR SIZE NUMBER IS SPECIFIED ON THE PLANS IN THE BAR MARK COLUMN. THE FIRST DIGIT WHERE THREE DIGITS ARE USED, AND THE FIRST TWO DIGITS WHERE FOUR ARE USED, INDICATES THE BAR SIZE NUMBER. FOR EXAMPLE, P601 IS A NO. 6 BAR. BAR DIMENSIONS SHOWN ARE OUT TO OUT UNLESS OTHERWISE INDICATED. R INDICATES INSIDE RADIUS, UNLESS OTHERWISE NOTED. "STD." WRITTEN IN PLACE OF A DIMENSION INDICATES A STANDARD BEND AT THE END OF THE BAR.

2. ALL REINFORCEMENT IS TO BE EPOXY COATED.

DESIGN AGENCY
PARSONS BRINCKERHOFF
2545 FARMERS DRIVE
SUITE 350
COLUMBUS, OHIO 43235

DESIGNED PJL | DRAWN LEL | CHECKED SAP | REVIEWED EBS | DATE 12/17/12

STRUCTURE NUMBER
LEFT: 0201634
RIGHT: 0201669

REVISED

REINFORCING STEEL LIST
BRIDGE NO. ALL-75-0100 L&R
I-75 OVER LITTLE OTTAWA RIVER

ALL-75-0.21
PID No. 89029

623
907

J:\Projects\ALL\89029\structures\ALL075_0100C\sheets\075_0100CRL001.dgn 09-MAY-2013 3:06PM lint

MARK	NUMBER TOTAL	LENGTH	WEIGHT	TYPE	DIMENSIONS A	B	C	D	E	R	INC
PIER											
P401	80	8'- 00''	428	3	2'-6"	2'-0"					
P502	4	5'- 00''	21	2	10'	3'-7"					
P503	16	10'- 09''	180	24	2'6"	3'-5"				1'-3"	
P504	37	12'- 04''	476	6	2'-8"	4'-3"	10"				
P505	34	11'- 00''	391	6	2'-8"	3'-7"	10"				
P506	5	11'- 03''	59	3	2'-8"	2'-8"					
P507	8	22'- 10''	191	STR.							
P508	8	27'- 05''	229	STR.							
P509	40	11'- 10''	494	6	2'-8"	4'-0"	10"				
P510	34	10'- 04''	367	6	2'-8"	3'-3"	10"				
P511	2	4'- 00''	9	2	10"	2'-7"					
P512	2	11'- 00''	23	3	2'-8"	2'-7"					
P513	2	4'- 02''	9	2	10"	2'-7"					
P601	16	29'- 10''	717	STR.							
P602	16	21'- 02''	509	STR.							
P1101	16	23'- 08''	2,012	STR.							
P1102	16	23'- 00''	1,956	STR.							
PIER TOTAL			8,071								

MARK	NUMBER TOTAL	LENGTH	WEIGHT	TYPE	DIMENSIONS A	B	C	D	E	R	INC
APPROACH SLABS											
B501	228	27'- 11''	6,640	STR.							
B502	228	21'- 01''	5,014	STR.							
C503	128	24'- 06''	3,272	STR.							
AS506	32	24'- 07''	822	STR.							
AS509	88	7'- 01''	652	23	8"	3'-3"	3'-0"			1 1/2"	
AS510	32	10'- 00''	334	STR.							
	8	4'- 01''			2'-5"						
AS511	SER. OF	TO	414	16	TO						1"
	11	4'- 11''			3'-3"						
AS520	16	5'- 08''	96	STR.							
AS523	16	5'- 08''	96	25	1'-10"	2'-5"	1'-5"	1 1/2"	5"		
AS572	16	14'- 03''	238		6'-9"	1'-4"	4"				
AS604	8	15'- 00''	182	STR.							
AS605	88	3'- 09''	496	1	11"	3'-0"					
AS606	176	3'- 04''	882	14	10 1/2"	1'-2"	8 1/2"	6"	9"		
	8	4'- 03''				3'-6"					
AS607	SER. OF		618	16	11"	TO					1"
	11	5'- 01''				4'-4"					
AS608	64	4'- 03''	410	1	11"	3'-8"					
A1003	324	25'- 11''	36,134	16	24'-6"						
APPROACH SLAB TOTAL			56,300								
FOR INFORMATION ONLY. NOT INCLUDED WITH ITEM 509.											

NOTES:

1. THE BAR SIZE NUMBER IS SPECIFIED ON THE PLANS IN THE BAR MARK COLUMN. THE FIRST DIGIT WHERE THREE DIGITS ARE USED, AND THE FIRST TWO DIGITS WHERE FOUR ARE USED, INDICATES THE BAR SIZE NUMBER. FOR EXAMPLE, P601 IS A NO. 6 BAR. BAR DIMENSIONS SHOWN ARE OUT TO OUT UNLESS OTHERWISE INDICATED. R INDICATES INSIDE RADIUS, UNLESS OTHERWISE NOTED. "STD." WRITTEN IN PLACE OF A DIMENSION INDICATES A STANDARD BEND AT THE END OF THE BAR.

2. ALL REINFORCEMENT IS TO BE EPOXY COATED.

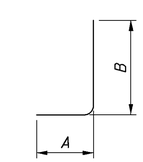

TYPE-1

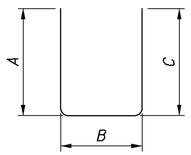

TYPE-2

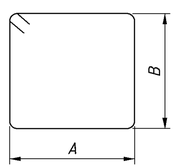

TYPE-3

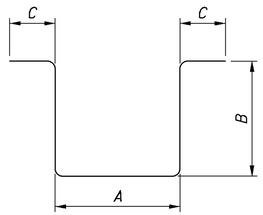

TYPE-6

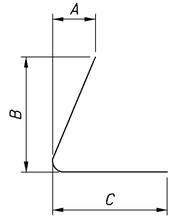

TYPE-11

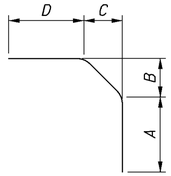

TYPE-13

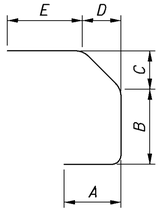

TYPE-14

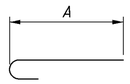

TYPE-16

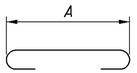

TYPE-17

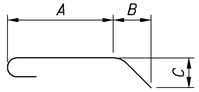

TYPE-18

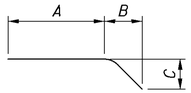

TYPE-19

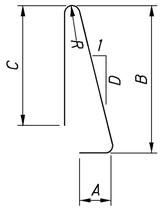

TYPE-23

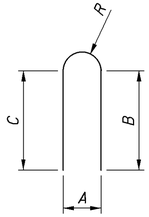

TYPE-24

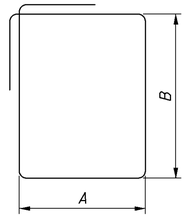

TYPE-33

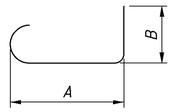

TYPE-34

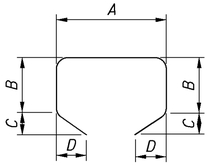

TYPE-36

DESIGN AGENCY
PARSONS BRINCKERHOFF
2945 FARMERS DRIVE
SUITE 350
COLUMBUS, OHIO 43235

DESIGNED	DRAWN	REVIEWED	DATE
PJL	LEL	EBS	12/17/12
CHECKED	REVISED	STRUCTURE FILE NUMBER	
SAP		LEFT: 0201634 RIGHT: 0201669	

REINFORCING STEEL LIST
BRIDGE NO. ALL-75-0100 L&R
I-75 OVER LITTLE OTTAWA RIVER

ALL-75-0.21
PID No. 89029

J:\Projects\ALL\89029\structures\ALL075_0100C\sheets\075_0100CRL002.dgn 09-MAY-2013 3:06PM lint

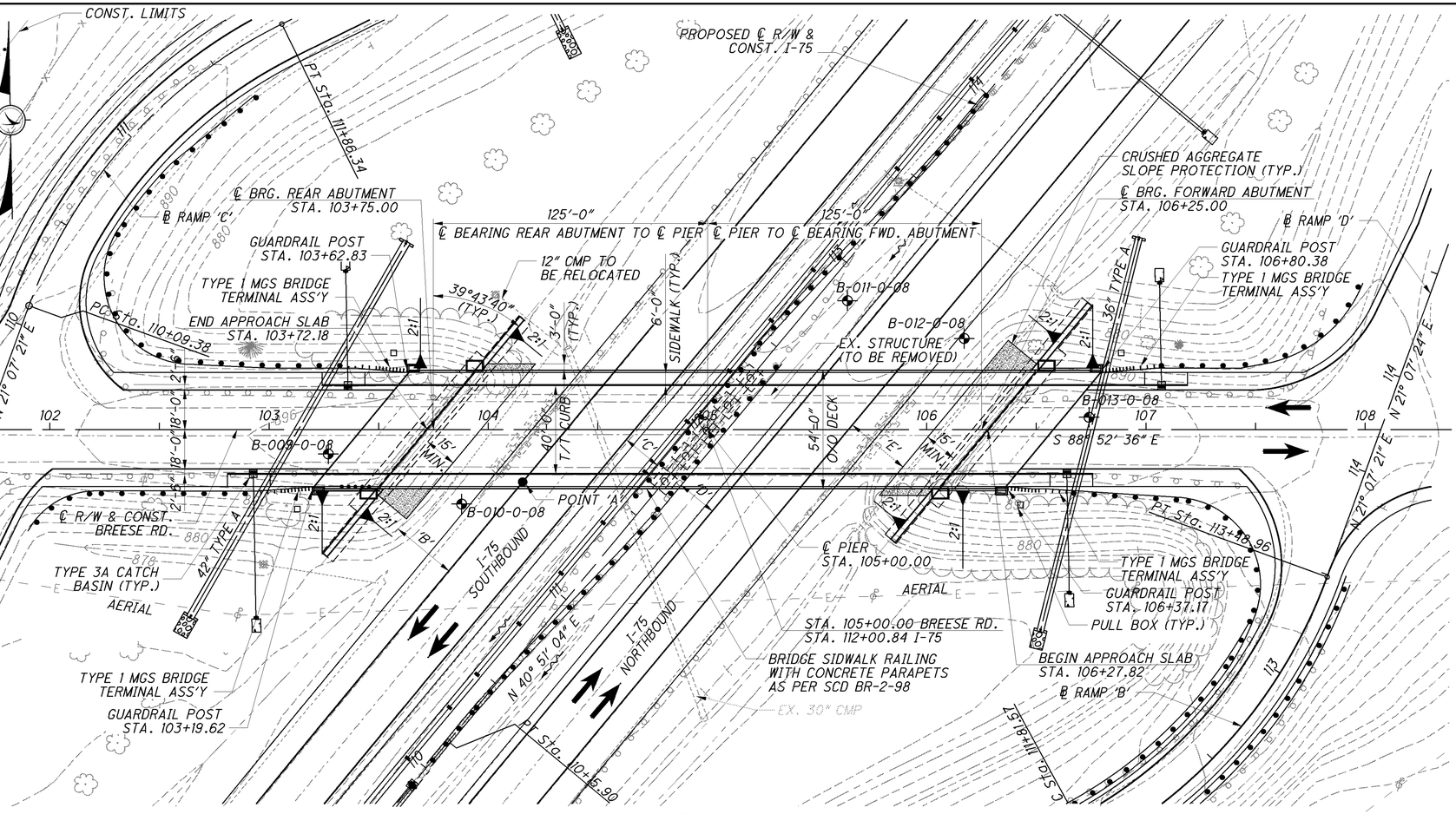

PLAN

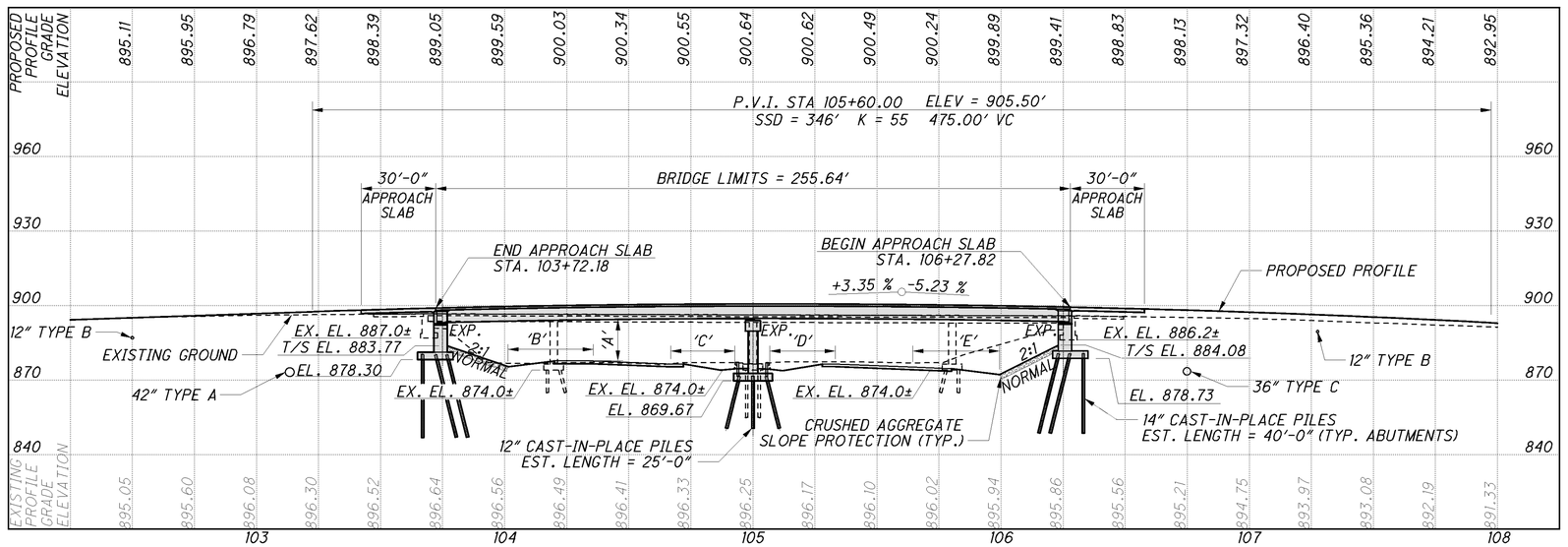

PROFILE
ALONG ℄ R/W & CONSTRUCTION

NOTES

EARTHWORK LIMITS SHOWN ARE APPROXIMATE. ACTUAL SLOPES SHALL CONFORM TO PLAN CROSS SECTIONS.

DESIGN TRAFFIC:
2015 ADT = 11,530 2015 ADTT = 1,038
2035 ADT = 12,840 2035 ADTT = 1,156
DIRECTIONAL DISTRIBUTION = 0.51

LEGEND

⌖ BORING LOCATION

● 17.00' REQUIRED MINIMUM VERTICAL CLEARANCE
POINT 'A' - 17.03' ACTUAL MINIMUM VERTICAL CLEARANCE

30.00' REQUIRED MINIMUM HORIZONTAL CLEARANCE
POINT 'B' - 30.00' ACTUAL MINIMUM HORIZONTAL CLEARANCE
POINT 'C' - 18.50' ACTUAL MINIMUM HORIZONTAL CLEARANCE
POINT 'D' - 18.50' ACTUAL MINIMUM HORIZONTAL CLEARANCE
POINT 'E' - 30.00' ACTUAL MINIMUM HORIZONTAL CLEARANCE

SOIL BORING LOCATIONS

BORING	STATION, OFFSET	APPROX. TOP OF ROCK
B-009-0-08	STA. 103+27.0, 11.1' RT.	** TERMINATED AT 820.0
B-010-0-08	STA. 103+87.9, 34.0' RT.	** TERMINATED AT 819.6
B-011-0-08	STA. 105+63.9, 58.8' LT.	** TERMINATED AT 815.9
B-012-0-08	STA. 106+17.1, 41.6' LT.	** TERMINATED AT 816.4
B-013-0-08	STA. 106+74.1, 5.6' LT.	** TERMINATED AT 818.8

** INDICATES BOTTOM OF BORING ELEVATION (ROCK NOT FOUND)

EXISTING STRUCTURE

TYPE: CONTINUOUS 4-SPAN STEEL BEAM WITH REINFORCED CONCRETE DECK AND SUBSTRUCTURE

SPANS: 48'± - 80'± - 80'± - 48'± C/C BRGS.
ROADWAY: 30'-0"± TOE/TOE PARAPETS
LOADING: CF-130 (51)
SKEW: 39°31' LF ±
APPROACH SLABS: AS-1-54 (L=20')
ALIGNMENT: TANGENT
CROWN: NORMAL 3/16"/FT.
STRUCTURE FILE NUMBER: 0201685
DATE BUILT: 1959
WEARING SURFACE: LATEX MODIFIED CONCRETE

PROPOSED STRUCTURE

TYPE: 2-SPAN, DRAPED STRAND CONCRETE I-BEAMS WITH REINFORCED CONCRETE DECK, CAP AND COLUMN PIER, AND PARTIAL HEIGHT SEMI-INTEGRAL ABUTMENTS.

SPANS: 125'-0" AND 125'-0" ℄ BRG. ABUTMENTS TO ℄ PIER
ROADWAY: 40'-0" TOE/TOE CURB W/ 6'-0" SIDEWALKS BOTH SIDES
LOADING: HL-93
FUTURE WEARING SURFACE (FWS) OF 0.060 kips/ft^2
SKEW: 39°43'40" LEFT FORWARD
APPROACH SLABS: AS-1-81, 30'-0" LONG (MODIFIED)
WEARING SURFACE: 1" MONOLITHIC
ALIGNMENT: TANGENT
CROWN: 0.016 FT/FT
COORDINATES: LATITUDE 40°41'12"
LONGITUDE 84°7'24"

DESIGN AGENCY
PARSONS BRINCKERHOFF
2545 FARMERS DRIVE
SUITE 350
COLUMBUS, OHIO 43235

DESIGNED PJL | DRAWN BKJ | REVIEWED EBS | DATE 01/07/13
CHECKED SAP | REVISED | STRUCTURE FILE NUMBER 0201693

ALLEN COUNTY
STA. 103+72.18
STA. 106+27.82

SITE PLAN

BRIDGE NO. ALL-75-0212
BREESE RD. OVER I-75

ALL-75-0.21
PID No. 89029

J:\Projects\ALL\89029\structures\ALL075_0212C\sheets\075_0212CSP001.dgn 12-JUN-2013 1:45PM jint

STANDARD DRAWINGS AND SUPPLEMENTAL SPECIFICATIONS

REFER TO THE FOLLOWING STANDARD BRIDGE DRAWING(S):

AS-1-81 REVISED 07-19-02
BR-2-98 REVISED 07-20-12
PSID-1-99 REVISED 07-18-08
SICD-1-96 REVISED 07-19-02
VPF-1-90 REVISED 04-15-11

AND TO THE FOLLOWING SUPPLEMENTAL SPECIFICATION(S):

800 DATED 07-19-13
832 DATED 05-05-09
898 DATED 10-21-11

DESIGN SPECIFICATIONS

DESIGN SPECIFICATIONS: THIS STRUCTURE CONFORMS TO THE "LRFD BRIDGE DESIGN SPECIFICATIONS" ADOPTED BY THE AMERICAN ASSOCIATION OF STATE HIGHWAY AND TRANSPORTATION OFFICIALS, 2010 AND THE ODOT BRIDGE DESIGN MANUAL, 2007 EXCEPT AS NOTED ELSEWHERE IN THE PLANS.

DESIGN DATA

DESIGN DATA:
CONCRETE CLASS QSC2 - COMPRESSIVE STRENGTH 4.5 KSI (SUPERSTRUCTURE)
CONCRETE CLASS QSC1 - COMPRESSIVE STRENGTH 4.0 KSI (SUBSTRUCTURE)

REINFORCING STEEL - MINIMUM YIELD STRENGTH 60 KSI
STRUCTURAL STEEL - ASTM A709 GRADE 50 - YIELD STRENGTH 50 KSI

CONCRETE FOR PRESTRESSED BEAMS:
COMPRESSIVE STRENGTH (FINAL) - 10.0 KSI
COMPRESSIVE STRENGTH (RELEASE) - 7.0 KSI
PRESTRESSING STRAND:
AREA = 0.167 SQ.IN.
ULTIMATE STRENGTH = 270 KSI
INITIAL STRESS = 202.5 KSI (LOW RELAXATION STRANDS)

LOAD MODIFIER FOR OPERATIONAL IMPORTANCE

OPERATIONAL IMPORTANCE: A LOAD MODIFIER OF 1.00 HAS BEEN ASSUMED FOR THE DESIGN OF THIS STRUCTURE IN ACCORDANCE WITH THE AASHTO LRFD BRIDGE DESIGN SPECIFICATIONS, ARTICLE 1.3.5 AND THE ODOT BRIDGE DESIGN MANUAL, 2007.

DESIGN LOADING

DESIGN LOADING: HL-93

FUTURE WEARING SURFACE (FWS) OF 0.060 KIPS/SQ.FT.

DECK PROTECTION METHOD

EPOXY COATED REINFORCING STEEL

2.5" CONCRETE COVER

SEALING OF CONCRETE SURFACES

MONOLITHIC WEARING SURFACE

MONOLITHIC WEARING SURFACE IS ASSUMED, FOR DESIGN PURPOSES, TO BE 1 INCH THICK.

ABUTMENT CONSTRUCTION

EXCAVATION FOR THE ABUTMENT CONSTRUCTION SHALL BE AS SHOWN ON THE PLANS. AFTER THE FOOTING AND THE BREASTWALL HAVE BEEN CONSTRUCTED, CONSTRUCT THE EMBANKMENT IMMEDIATELY BEHIND THE ABUTMENTS UP TO THE BEAM SEAT ELEVATION AND ON A 1:1 SLOPE UP TO THE SUBGRADE ELEVATION PRIOR TO SETTING THE BEAMS ON THE ABUTMENTS.

EXISTING STRUCTURE PLANS:

CONSTRUCTION PLANS FOR THE EXISTING BRIDGE ARE ON FILE AT THE OHIO DEPARTMENT OF TRANSPORTATION, DISTRICT ONE OFFICE, 1885 NORTH MCCULLOUGH ST., LIMA, OHIO 45801 AND ARE AVAILABLE FOR REFERENCE.

PILE DESIGN LOADS (ULTIMATE BEARING VALUE)

PILE DESIGN LOADS (ULTIMATE BEARING VALUE):
THE ULTIMATE BEARING VALUE IS 339 KIPS PER PILE FOR THE 164 ABUTMENT PILES. THE ULTIMATE BEARING VALUE IS 322 KIPS PER PILE FOR THE 32 PIER PILES.

REAR ABUTMENT PILES:
14 INCH DIAMETER PILES 45 FEET LONG, ORDER LENGTH
1 DYNAMIC LOAD TESTING ITEM

FORWARD ABUTMENT PILES:
14 INCH DIAMETER PILES 45 FEET LONG, ORDER LENGTH

PIER PILES:
12 INCH DIAMETER PILES 30 FEET LONG, ORDER LENGTH
1 DYNAMIC LOAD TESTING ITEM

DECK PLACEMENT DESIGN ASSUMPTIONS:

DECK PLACEMENT DESIGN ASSUMPTIONS:
THE FOLLOWING ASSUMPTIONS OF CONSTRUCTION MEANS AND METHODS WERE MADE FOR THE ANALYSIS AND DESIGN OF THE SUPERSTRUCTURE. THE CONTRACTOR IS RESPONSIBLE FOR THE DESIGN OF THE FALSEWORK SUPPORT SYSTEM WITHIN THESE PARAMETERS AND WILL ASSUME RESPONSIBILITY FOR SUPERSTRUCTURE ANALYSIS FOR DEVIATION FROM THESE DESIGN ASSUMPTIONS.

AN EIGHT WHEEL FINISHING MACHINE WITH A MAXIMUM WHEEL LOAD OF 1.44 KIPS FOR A TOTAL MACHINE LOAD OF 11.6 KIPS.

A MINIMUM OUT-TO-OUT WHEEL SPACING AT EACH END OF THE MACHINE OF 103".

A MAXIMUM SPACING OF OVERHANG FALSEWORK BRACKETS OF 48 IN.

A MAXIMUM DISTANCE FROM THE CENTERLINE OF THE FASCIA GIRDER TO THE FACE OF THE SAFETY HANDRAIL OF 65".

ITEM 202 STRUCTURE REMOVED, OVER 20 FOOT SPAN, AS PER PLAN

STRUCTURE REMOVAL SHALL BE IN ACCORDANCE WITH 202 EXCEPT THAT THE OUTER SHOULDER PIERS SHALL BE COMPLETELY REMOVED TO THE EXISTING BOTTOM OF FOOTING ELEVATIONS (874.0±) INCLUDING AND THE PILING SHALL BE REMOVED TO EL. 871.0. THE EXISTING CENTER PIER SHALL BE COMPLETELY REMOVED TO BOTTOM OF EXISTING FOOTING (874.0±) AND THE PILING SHALL BE REMOVED TO EL.868.67 OR 1 FOOT BELOW THE PROPOSED FOOTING ELEVATION, WHICHEVER IS LOWER.

ITEM 511-CONCRETE, MISC.: FORMING OF ROUGH CUT STONE FINISH USING FORMLINERS

DESCRIPTION;
CONCRETE FORMLINERS SHALL BE USED ON THE FOLLOWING SURFACES ACCORDING TO THE DETAILS IN PLANS:

1.ABUTMENT AND WINGWALL FACES.
2.PARAPETS.
3.TOWER FACES.
4. PIER COLUMNS

THE FORMLINER USED SHALL MEET THE DETAILS SHOWN IN THE PLANS FOR STAGGERED (INTERLOCKING) PATTERNS, INCLUDING DEPTH OF RELIEF AND SIZE OF STONE PATTERN. HORIZONTAL JOINTS IN THE STONE PATTERN SHALL BE ALIGNED AND AT THE SAME ELEVATION. THE FINISHED TEXTURE OF THE ROUGH CUT STONE SHALL BE SIMILAR TO THAT OF RUBBED CONCRETE.

FORMLINERS FOR PATTERN 1 SHALL MATCH THE DIMENSIONAL SPECIFICATIONS OF THE FOLLOWING MANUFACTURER OR APPROVED EQUAL:

PATTERN #1104-R2 (RANDOM CUT STONE)
CUSTOM ROCK
2020 WEST 7TH STREET
ST. PAUL, MN 55116
651-699-1345
WWW.CUSTOM-ROCK.COM

FORMLINERS FOR PATTERN 2 SHALL MATCH THE DIMENSIONAL SPECIFICATIONS OF THE FOLLOWING MANUFACTURER OR APPROVED EQUAL:

PATTERN #1599 (RANDOM CUT STONE)
SPEC FORMLINERS, INC.
530 E. DYER RD.
SANTA ANA, CA 92707
888-429-9550
WWW.SPECFORMLINERS.COM

THE FORMLINER MANUFACTURER SHALL SUBMIT EVIDENCE OF AT LEAST TWO SIMILAR ARCHITECTURAL CONCRETE CONSTRUCTION PROJECTS WITHIN THE PAST FIVE YEARS FOR A REVIEW AND APPROVAL BY THE ENGINEER. COMPLETE SHOP DRAWINGS DETAILING THE STONE PATTERNS SHALL BE SUBMITTED IN ACCORDANCE WITH 501.04 FOR APPROVAL PRIOR TO PLACING ANY CONCRETE WHERE THE FORMLINERS WILL BE USED. SHOP DRAWINGS SHALL INCLUDE FORMLINER INSTALLATION AND CASTING INSTRUCTIONS, AND INDICATE FORMLINER BACKUP, REVEAL, AND CHAMFER STRIP LOCATIONS. THE CONTRACTOR SHALL COORDINATE WITH THE FORMLINER MANUFACTURER TO ASSURE UNDERSTANDING OF FORMLINER USE, TEST PANEL MOCK-UP REQUIREMENTS, AND FINAL CONSTRUCTION PROCEDURES.

MATERIALS:
THE FORMLINER SHALL BE FABRICATED WITH SHAPES THAT ALLOW REMOVAL OF THE FORMS WITHOUT DAMAGE OR VISUAL IMPAIRMENT OF THE CONCRETE, AND SHALL HAVE 1/8" MINIMUM RADII WITH NO SHARP EDGES. THE FORMLINER SHALL BE CAPABLE OF WITHSTANDING APPLIED CONCRETE POUR PRESSURE WITHOUT LEAKAGE, PHYSICAL DEFECT, OR VISUAL IMPAIRMENT.

CONSTRUCTION REQUIREMENTS:
FORMLINERS SHALL BE CLEANED BEFORE EACH USE. DAMAGED FORMLINERS WHOSE CONTINUED USE OR REPAIR WOULD NEGATIVELY IMPACT THE AESTHETICS OF THE FINISHED CONCRETE SHALL BE REPLACED. FORMLINER JOINTS SHALL BE SEALED TO PREVENT CEMENT PASTE FROM BLEEDING. FORMLINERS SHALL BE INSTALLED IN ACCORDANCE WITH THE APPROVED SHOP DRAWINGS. CHAMFERED CORNERS SHALL FORM SMOOTH, SOLID UNBROKEN CONTINUOUS SURFACES WHICH ARE UNIFORMLY STRAIGHT. AN APPROVED COMPATIBLE FORMLINER RELEASE AGENT SHALL BE APPLIED AT A RATE RECOMMENDED BY THE MANUFACTURER.

THE CONCRETE COPING SHALL BE CAST WITH NO FORMLINER USED.

AS PART OF THIS ITEM, A 7 FEET BY 3 FEET SECTION OF WALL THAT COMPRISES A MINIMUM OF ONE COMPLETE STONE BLOCK WILL BE CAST BY THE CONTRACTOR FOR EACH PATTERN USED FOR APPROVAL BY THE ENGINEER. IF THE SECTION DOES NOT MEET THE ENGINEER'S APPROVAL, THE PROPOSED FORMLINER MAY BE REJECTED. THE SECTION MUST BE APPROVED BEFORE PLACINGANY CONCRETE WHERE THE FORMLINERS WILL BE USED. REJECTION OF THE SECTION WILL REQUIRE CONSTRUCTION OF ANOTHER SECTION UNTIL APPROVAL IS GRANTED. THE WALL SECTION SHALL USE ACTUAL PROJECT SPECIFIC MATERIALS, METHODS, AND WORKMANSHIP, INCLUDING CONCRETE MIX (CEMENT TYPE, AGGREGATE GRADATION, SLUMP, WATER/CEMENT RATIO, PLASTICIZERS, AND ADDITIVES), FORMLINER AND FORMWORK SYSTEMS, INSERTS, FORM RELEASE AGENTS, PLACEMENT RATE, FORM PRESSURES, AND JOINT SEALING, VIBRATING, AND STRIPPING PRACTICES. ANY INTENDED PATCHING OR REPAIR PROCEDURES FOR THE CORRECTION OF MINOR DEFECTS THAT DO NOT RESULT IN REJECTION OF THE ENTIRE WALL SECTION SHALL BE DEMONSTRATED ON THE SECTION.
THE ACCEPTED WALL SECTION SHALL BE THE STANDARD BY WHICH THE FINAL CONSTRUCTION WILL BE EVALUATED FOR TECHNICAL AND AESTHETIC MERIT. THE WALL SECTION SHALL BE CONSTRUCTED AT THE CONSTRUCTION SITE, OR AT AN ALTERNATIVE LOCATION AGREED UPON BY THE ENGINEER. UPON COMPLETION OF THE FINAL CONSTRUCTION, THE CONTRACTOR SHALL BE RESPONSIBLE FOR REMOVAL AND DISPOSAL OF THE WALL SECTION MOCK-UP.

PORTIONS OF THE STRUCTURE DETAILED IN THE PLAN SET SHALL BE CAST WITH STONE FACING FORMLINER TEXTURE AND BE SEALED WITH ITEM 512 - SEALING OF CONCRETE SURFACES (NON-EPOXY (CLEAR)).

METHOD OF MEASUREMENT:
ROUGH CUT STONE FORMLINERS WILL NOT BE MEASURED INDIVIDUALLY FOR PAYMENT UNDER THIS ITEM.

BASIS OF PAYMENT:
ITEM 511-CONCRETE, MISC.: FORMING OF ROUGH CUT STONE FINISH USING FORMLINERS WILL BE PAID FOR AT THE CONTRACT SQ. FT. PRICE. THE WORK SHALL INCLUDE FABRICATION AND ERECTION OF FORMLINERS, PREPARATION OF FORMLINER SHOP DRAWINGS, AND CONSTRUCTION AND REMOVAL OF THE PRE-CONSTRUCTION WALL SECTION, AND SHALL INCLUDE ALL LABOR, MATERIALS, EQUIPMENT, AND INCIDENTALS REQUIRED TO COMPLETE THIS ITEM.

THE DEPARTMENT WILL PAY FOR SEALING OF CONCRETE SURFACES SEPARATELY UNDER ITEM 512-SEALING OF CONCRETE SURFACES (NON-EPOXY (CLEAR)). SEE THE GENERAL SEALING OF CONCRETE SURFACES PLAN NOTE FOR REQUIREMENTS FOR THE NON-EPOXY (CLEAR) SEALER.

ITEM 512-SEALING OF CONCRETE SURFACES (EPOXY-URETHANE), AS PER PLAN

EPOXY-URETHANE FOR THE BEAMS SHALL BE FEDERAL COLOR STANDARD NUMBER 25095. EPOXY-URETHANE FOR THE WINGWALL COPING, PIER CAP, ABUTMENT DIAPHRAGM, PARAPET ACCENTS AND TOWER CAPS SHALL BE FEDERAL COLOR STANDARD NUMBER 37875. EPOXY-URETHANE FOR DECK EDGE BELOW PARAPET SHALL BE FEDERAL COLOR STANDARD NUMBER 36373. ALL CONCRETE SHALL BE SEALED AS PER PLAN DETAILS.

ITEM 512 - SEALING OF CONCRETE SURFACES (NON-EPOXY CLEAR), AS PER PLAN

THE NON-EPOXY (CLEAR) SEALER SHALL BE USED ON THE FOLLOWING SURFACES ACCORDING TO THE DETAILS IN PLANS:

1. ABUTMENT AND WINGWALL FACES.
2. PIER COLUMNS.
3. PARAPETS.
4. TOWER FACES.

PAYMENT FOR SEALING SURFACES OF ITEMS 1, 2, 3, AND 4 SHALL BE INCLUDED IN THIS ITEM 512.

DESIGN AGENCY
PARSONS BRINCKERHOFF
2945 FARMERS DRIVE
SUITE 350
COLUMBUS, OHIO 43235

DESIGNED PJL | DRAWN LEL | REVIEWED EBS | DATE 01/07/13
CHECKED SAP | REVISED | STRUCTURE FILE NUMBER 0201693

GENERAL NOTES
BRIDGE NO. ALL-75-0212
BREESE RD. OVER I-75

ALL-75-0.21
PID No. 89029

626
907

I:\Projects\ALL\89029\structures\ALL075_0212C\sheets\075_0212CGN001.dgn 09-MAY-2013 3:06PM jint

ITEM 517 - RAILING (CONCRETE PARAPET WITH TWIN STEEL TUBE RAILING), AS PER PLAN

THIS ITEM 517 SHALL CONTAIN INTEGRALLY COLORED CONCRETE USING CHROMIX ADMIXTURES AS PROVIDED BY L. M. SCOFIELD COMPANY, DOUGLASVILLE, GEORGIA (800) 800-9900 OR AN APPROVED EQUAL. USE FEDERAL COLOR NUMBER 36373.

ALL MATERIALS NECESSARY FOR THE INSTALLATION OF THE RAILING SHALL BE 27038, BLACK. ALL LABOR AND MATERIALS FOR COATING SHALL BE INCLUDED WITH THIS ITEM FOR PAYMENT.

ITEM 518 - 6" NON-PERFORATED CORRUGATED PLASTIC PIPE, INCLUDING SPECIALS, AS PER PLAN

ANIMAL GUARDS SHALL BE PROVIDED AT THE OUTLET OF THE DRAINAGE PIPES, STEEL BOLTS OR RODS FOR THE ANIMAL GUARDS SHALL BE GALVANIZED PER CMS 711.02. SEE STD DWG. DM 1.1 FOR ADDITIONAL DETAILS AND NOTES. THE ANIMAL GUARDS AND CRUSHED AGGREGATE SLOPE PROTECTION ARE INCIDENTAL TO ITEM 518 - 6" NON-PERFORATED CORRUGATED PLASTIC PIPE, INCLUDING SPECIALS, AS PER PLAN.

ITEM 607 - VANDAL PROTECTION FENCE, AS PER PLAN

ALL MATERIALS NECESSARY FOR THE INSTALLATION OF THE VANDAL PROTECTION FENCING, INCLUDING ALL POSTS AND RAILS SHALL BE FEDERAL COLOR NUMBER 27038, BLACK. THE PVC COATING FOR THE FABRIC SHALL BE BLACK IN COLOR CLOSELY APPROACHING FEDERAL COLOR NUMBER 27038. ALL LABOR AND MATERIALS FOR COATING SHALL BE INCLUDED WITH THIS ITEM FOR PAYMENT.

ITEM 898 - QC/QA CONCRETE, CLASS QSC2, SUPERSTRUCTURE (APPROACH SLAB), AS PER PLAN

ITEM 898 - QC/QA CONCRETE, CLASS QSC2, SUPERSTRUCTURE (APPROACH SLAB), AS PER PLAN FURNISH APPROACH SLABS CONFORMING TO CMS 526 EXCEPT CONCRETE SHALL BE IN ACCORDANCE WITH SUPPLEMENTAL SPECIFICATION 898, QC/QA CONCRETE, CLASS QSC2. THE ACCEPTED QUANTITIES SHALL INCLUDE: CONCRETE, SIDEWALKS, CONCRETE RAILING, TWIN STEEL TUBE RAILING, END TOWER INCLUDING CAP, REINFORCING STEEL, JOINT FILLERS, JOINT SEALERS, JOINT SEALS, AND WATERPROOFING. THE DEPARTMENT WILL MEASURE APPROACH SLABS BY THE NUMBER OF SQUARE YARDS. THE DEPARTMENT WILL INITIALLY PAY THE FULL BID PRICE TO THE CONTRACTOR UPON COMPLETING THE WORK. THE DEPARTMENT WILL CALCULATE THE FINAL ADJUSTED PAYMENT ACCORDING TO 898.17 AND INCLUDE APPROACH SLAB CONCRETE AND DECK CONCRETE IN THE SAME LOT TO DETERMINE FINAL PAY FACTORS.

THIS ITEM 898 SHALL CONTAIN INTEGRALLY COLORED CONCRETE FOR THE CONCRETE RAILING, TOWERS, AND SIDEWALKS USING CHROMIX ADMIXTURES AS PROVIDED BY L. M. SCOFIELD COMPANY, DOUGLASVILLE, GEORGIA (800) 800-9900 OR AN APPROVED EQUAL. USE FEDERAL COLOR NUMBER 36373.

ITEM 898 - QC/QA CONCRETE, CLASS QSC2, SUBSTRUCTURE (PIER ABOVE FOOTING), AS PER PLAN

ITEM 898 - QC/QA CONCRETE, CLASS QSC2, SUBSTRUCTURE (ABUTMENT INCLUDING FOOTING), AS PER PLAN

THIS ITEM 898 SHALL CONTAIN INTEGRALLY COLORED CONCRETE USING CHROMIX ADMIXTURES AS PROVIDED BY L.M. SCOFIELD COMPANY, DOUGLASVILLE, GEORGIA (800) 800-9900 OR AN APPROVED EQUAL MATCHING FEDERAL COLOR NO. 36373.

IT IS NOT NECESSARY FOR THE CONTRACTOR TO PROVIDE INTEGRAL COLORING IN THE LARGE AND SMALL TOWER CAPS, ABUTMENT FOOTING, OR PIER CAP.

ITEM 898 - QC/QA CONCRETE, CLASS QSC2, SUPERSTRUCTURE (DECK), AS PER PLAN

THIS ITEM 898 SHALL CONTAIN INTEGRALLY COLORED CONCRETE FOR THE SIDEWALKS USING CHROMIX ADMIXTURES AS PROVIDED BY L. M. SCOFIELD COMPANY, DOUGLASVILLE, GEORGIA (800) 800-9000 OR AN APPROVED EQUAL. USE FEDERAL COLOR NUMBER 36373.

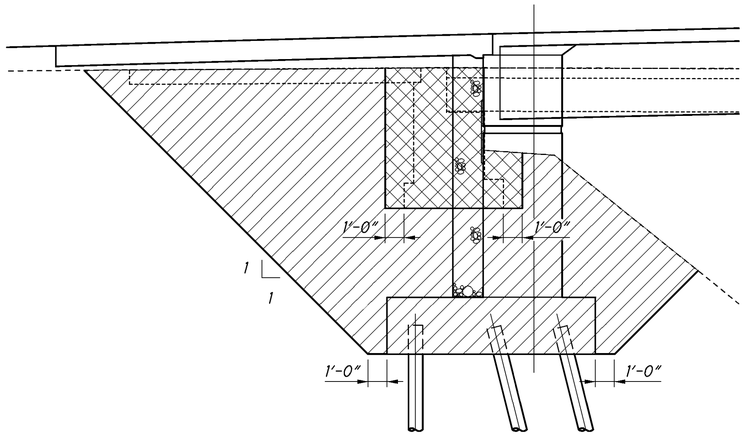

UNCLASSIFIED EXCAVATION AT ABUTMENT

- LIMITS OF UNCLASSIFIED EXCAVATION, AS PER PLAN
- INCLUDED WITH ITEM 202 FOR PAYMENT

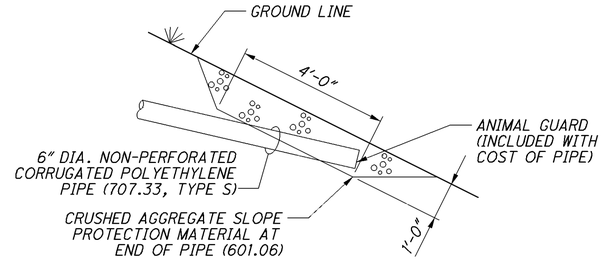

TERMINATION OF 6" NON-PERFORATED CORRUGATED PLASTIC PIPE (NPCPP)

ABBREVIATIONS:

ABUT. = ABUTMENT
APPROX. = APPROXIMATE
ASS'Y. = ASSEMBLY
BRG. = BEARING
C/C = CENTER TO CENTER
C.J. = CONSTRUCTION JOINT
CLR. = CLEAR
CONST. = CONSTRUCTION
DIA. = DIAMETER
DWG. = DRAWING
E.F. = EACH FACE
EL. = ELEVATION
EST. = ESTIMATE
EX. = EXISTING
F.A. = FORWARD ABUTMENT
F.F. = FAR FACE
FWD. = FORWARD
LT. = LEFT
MAX. = MAXIMUM
MIN. = MINIMUM
N.F. = NEAR FACE
N.P.C.P.P. = NON-PERFORATED CORRUGATED PLASTIC PIPE
O/O = OUT TO OUT
P.C.P.P. = PERFORATED CORRUGATED PLASTIC PIPE
P.E.J.F. = PREFORMED EXPANSION JOINT FILLER
P.F.J. = PRECOMPRESSED FOAM JOINT
PROP. = PROPOSED
R.A. = REAR ABUTMENT
RT. = RIGHT
SER. = SERIES
SPA. = SPACES
STA. = STATION
STD. = STANDARD
T/T = TOE TO TOE
T/S = TOP OF SLOPE
TYP. = TYPICAL
D.S. = DOWN STATION
U.S. = UP STATION

DESIGN AGENCY
PARSONS BRINCKERHOFF
2945 FARMERS DRIVE
SUITE 350
COLUMBUS, OHIO 43235

DESIGNED	DRAWN	REVIEWED	DATE
PJL	LEL	EBS	01/07/13
CHECKED	REVISED	STRUCTURE FILE NUMBER	
SAP		0201693	

GENERAL NOTES
BRIDGE NO. ALL-75-0212
BREESE RD. OVER I-75

ALL-75-0.21
PID No. 89029

J:\Projects\ALL\89029\structures\ALL075_0212C\sheets\075_0212CGN002.dgn 29-OCT-2013 4:55PM lint

01/IMS/BR/	03/ENH/OT/	ITEM	EXTENSION	TOTAL	UNIT	ESTIMATED QUANTITIES DESCRIPTION	ALL-75-0212 ABUT.	 PIER	 SUPER.	 GEN.	SEE SHEET NO.
LUMP		202	11003	LUMP		STRUCTURE REMOVED, OVER 20 FOOT SPAN, AS PER PLAN				LUMP	2/32
112		202	22900	112	SQ YD	APPROACH SLAB REMOVED				112	
LUMP		503	11100	LUMP		COFFERDAMS AND EXCAVATION BRACING				LUMP	
LUMP		503	21301	LUMP		UNCLASSIFIED EXCAVATION, AS PER PLAN				LUMP	3/32
LUMP		505	11100	LUMP		PILE DRIVING EQUIPMENT MOBILIZATION				LUMP	
800		507	00500	800	FT	12" CAST-IN-PLACE REINFORCED CONCRETE PILES, DRIVEN		800			
960		507	00550	960	FT	12" CAST-IN-PLACE REINFORCED CONCRETE PILES, FURNISHED		960			
6,560		507	00600	6,560	FT	14" CAST-IN-PLACE REINFORCED CONCRETE PILES, DRIVEN	6,560				
7,380		507	00650	7,380	FT	14" CAST-IN-PLACE REINFORCED CONCRETE PILES, FURNISHED	7,380				
269,749	7,230	509	10000	276,979	POUND	EPOXY COATED REINFORCING STEEL	71,508	58,706	146,765		
	5,934	511	71200	5,934	SQ FT	CONCRETE, MISC.: FORMING OF ROUGH CUT STONE FINISH USING FORMLINERS	3,924	1,008	755	247	2/32
1,208	39	512	10051	1,247	SQ YD	SEALING OF CONCRETE SURFACES (NON-EPOXY), AS PER PLAN	480	112	627	28	2/32
1,017	31	512	10101	1,048	SQ YD	SEALING OF CONCRETE SURFACES (EPOXY-URETHANE), AS PER PLAN	40	119	871	18	2/32
26		512	33000	26	SQ YD	TYPE 2 WATERPROOFING	26				
14		515	15030	14	EACH	DRAPED STRAND PRESTRESSED CONCRETE BRIDGE I-BEAM MEMBERS, LEVEL 3, TYPE 4 MOD. (60 IN.)	14				
36		515	20000	36	EACH	INTERMEDIATE DIAPHRAMS	36				
206		516	13600	206	SQ FT	1" PREFORMED EXPANSION JOINT FILLER	206				
95	59	516	13900	154	SQ FT	2" PREFORMED EXPANSION JOINT FILLER	154				
140		516	14020	140	FT	SEMI-INTEGRAL ABUTMENT EXPANSION JOINT SEAL	140				
28		516	44101	28	EACH	ELASTOMERIC BEARING WITH INTERNAL LAMINATES AND LOAD PLATE (NEOPRENE), AS PER PLAN: 14 1/2" X 24 1/2" X 4.05" WITH 15 1/2" X 25 1/2" X 1 1/2" (MIN.) LOAD PLATES	28				13/32
512		517	75121	512	FT	RAILING (CONCRETE PARAPET WITH TWIN STEEL TUBE RAILING), AS PER PLAN			512		3/32
291		518	21200	291	CU YD	POROUS BACKFILL WITH FILTER FABRIC	291				
281		518	40000	281	FT	6" PERFORATED CORRUGATED PLASTIC PIPE	281				
58		518	40011	58	FT	6" NON-PERFORATED CORRUGATED PLASTIC PIPE, INCLUDING SPECIALS, AS PER PLAN	58				3/32
2		523	20000	2	EACH	DYNAMIC LOAD TESTING	2				
	LUMP	530	00200	LUMP		SPECIAL - STRUCTURE, MISC.: BRIDGE MOUNTED DISPLAY	LUMP				
284		601	20000	284	SQ YD	CRUSHED AGGREGATE SLOPE PROTECTION				284	
494		607	39911	494	FT	VANDAL PROTECTION FENCE, 8' STRAIGHT, COATED FABRIC, AS PER PLAN			494		3/32
672		625	25400	672	FT	CONDUIT, 2", 725.04			512	160	
4		625	29920	4	EACH	STRUCTURE JUNCTION BOX				4	
4		625	30700	4	EACH	PULL BOX, 725.08, 18"				4	
712		898	10211	712	CU YD	QC/QA CONCRETE, CLASS QSC2, SUPERSTRUCTURE (DECK), AS PER PLAN			712		3/32
360		898	10709	360	SQ YD	QC/QA CONCRETE, CLASS QSC2, SUPERSTRUCTURE (APPROACH SLAB), (T=17"), AS PER PLAN			360		3/32
99	7	898	20101	106	CU YD	QC/QA CONCRETE, CLASS QSC1, SUBSTRUCTURE (PIER ABOVE FOOTING), AS PER PLAN		106			3/32
376	43	898	20151	419	CU YD	QC/QA CONCRETE, CLASS QSC1, SUBSTRUCTURE (ABUTMENT), AS PER PLAN	419				3/32
395		898	20300	395	CU YD	QC/QA CONCRETE, CLASS QSC1, SUBSTRUCTURE (FOOTING)	294	101			

CALC. BY: JMW DATE: 6/29/2012
CHECK BY: SAP DATE: 1/7/2013

DESIGN AGENCY
PARSONS BRINCKERHOFF
2945 FARMERS DRIVE
SUITE 350
COLUMBUS, OHIO 43235

DESIGNED	DRAWN	REVIEWED	DATE
PJL	LEL	EBS	01/07/13
CHECKED	REVISED	STRUCTURE FILE NUMBER	
SAP		0201693	

ESTIMATED QUANTITIES
BRIDGE NO. ALL-75-0212
BREESE RD. OVER I-75

ALL-75-0.21
PID No. 89029

628
907

J:\Projects\ALL\89029\structures\ALL075_0212C\sheets\075_0212CEQ001.dgn 29-OCT-2013 4:33PM jint

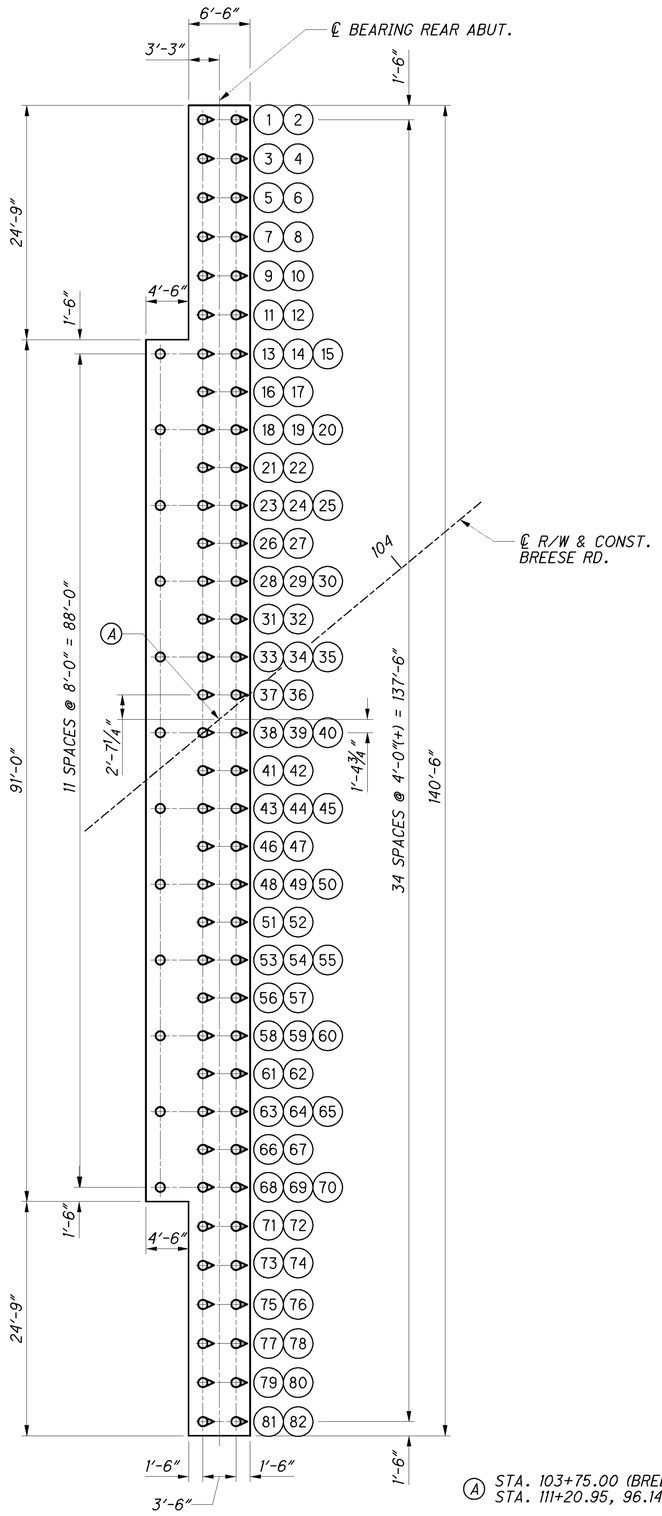

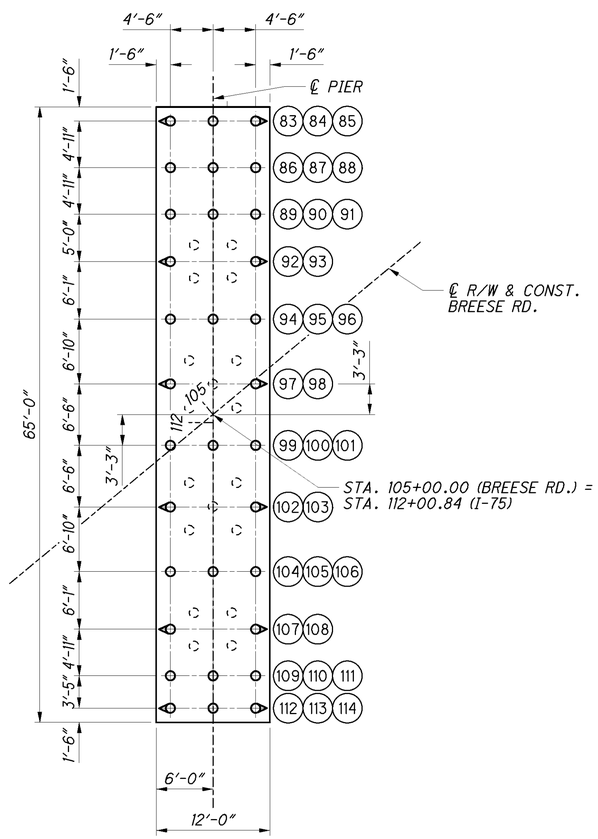

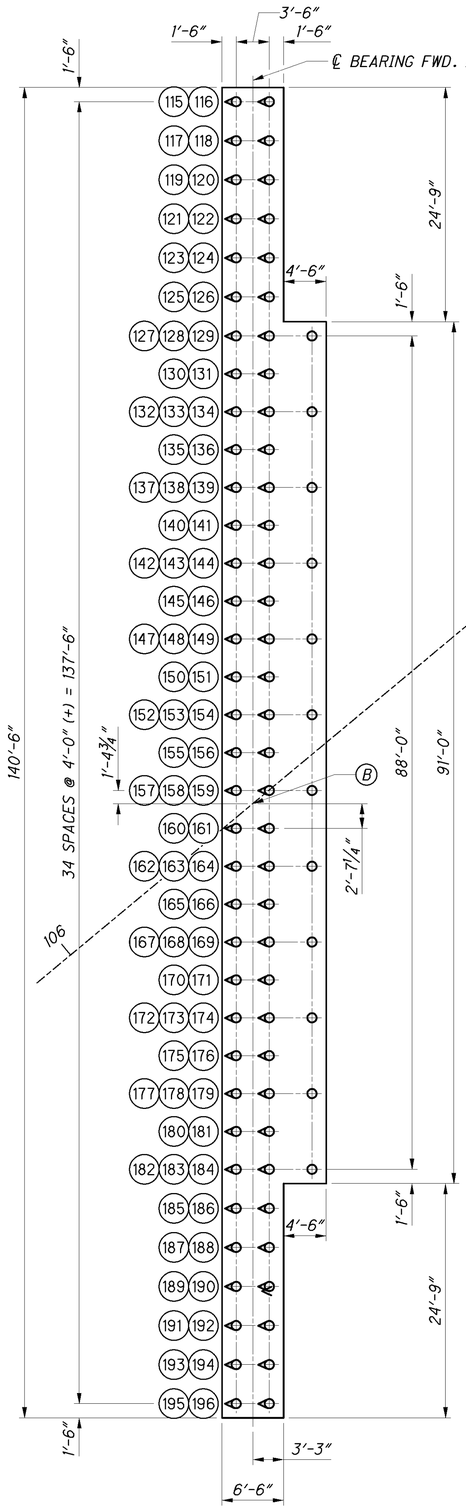

FOUNDATION LAYOUT PLAN

LEGEND:

(1) - PILE NUMBER

o - PROPOSED CAST-IN-PLACE PILE

- BATTER PILE (1H:4V)

- EXISTING CAST IN PLACE PILE.
CUT OFF PILE 1 FOOT BELOW PROPOSED FOOTING.

NOTES:

1. ALL ABUTMENT PILES ARE 14" DIAMETER CIP PILES.
ALL PIER PILES ARE 12" DIAMETER CIP PILES.
2. FOR ABUTMENT AND WINGWALL DETAILS,
SEE SHEETS 6/32 THRU 10/32.
3. FOR PIER DETAILS, SEE SHEET 11/32 AND 12/32.

(A) STA. 103+75.00 (BREESE RD.) =
STA. 111+20.95, 96.14' RT (I-75)

(B) STA. 106+25.00 (BREESE RD.) =
STA. 112+80.73, 96.14' RT (I-75)

DESIGN AGENCY
PARSONS BRINCKERHOFF
2945 FARMERS DRIVE
SUITE 350
COLUMBUS, OHIO 43235

DESIGNED	DRAWN	REVIEWED	DATE
PJL	BKJ	EBS	01/07/13
CHECKED	REVISED	STRUCTURE FILE NUMBER	
SAP	LEL	0201693	

FOUNDATION PLAN
BRIDGE NO. ALL-75-0212
BREESE RD. OVER I-75

ALL-75-0.21
PID No. 89029

J:\Projects\ALL\89029\structures\ALL075_0212C\sheets\075_0212CFP001.dgn 09-MAY-2013 3:06PM jint

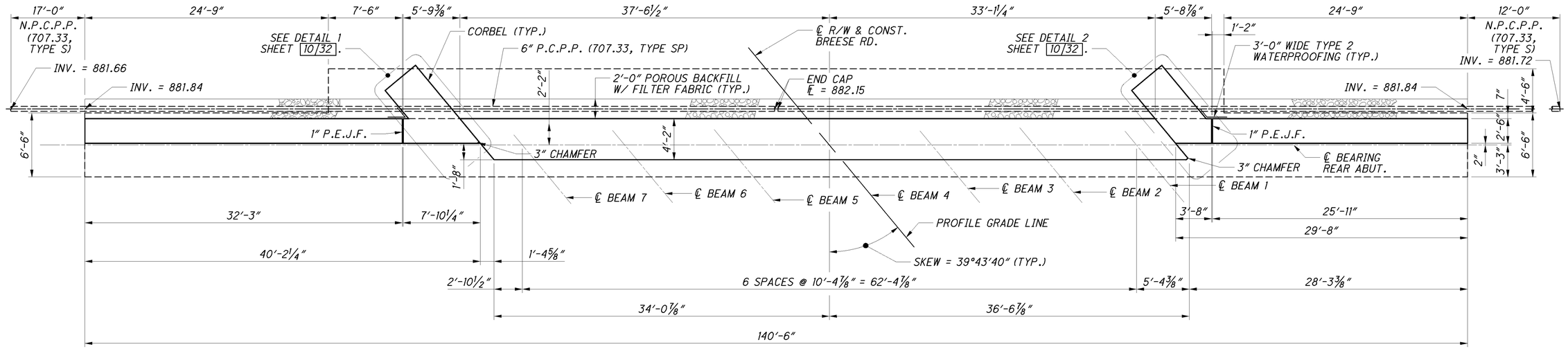

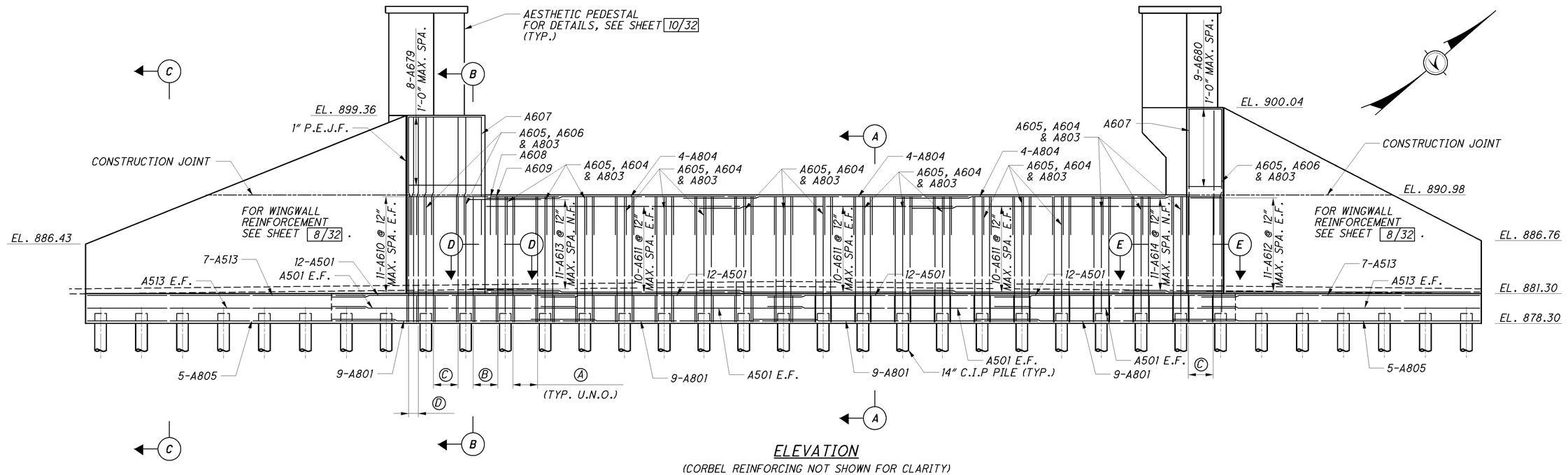

ELEVATION

(CORBEL REINFORCING NOT SHOWN FOR CLARITY)

Ⓐ - 7-A802 @ 6" MAX. SPACES
4-A601, A603, A604 @ 12" SPACES

Ⓑ - 7-A802 @ 6" MAX. SPACES
4-A601 & A603 @ 12" SPACES

Ⓒ - 7-A802 @ 6" MAX. SPACES
4-A601, A603, A606 @ 12" SPACES

Ⓓ - 3-A802 @ 6" MAX. SPACES
2-A601, A603, A606 @ 12" SPACES

NOTES:

1. FOR SECTIONS A-A, B-B, C-C, D-D, & E-E SEE SHEET 9/32.
2. FOR FOUNDATION LAYOUT PLAN, SEE SHEET 5/32.
3. FOR AESTHETIC DETAILS, SEE SHEET 29/32.

MINIMUM LAP:

A501 = 3'-5"
A611 = 4'-1"
A801 = 4'-11"
A804 = 7'-3"

DESIGN AGENCY
PARSONS BRINCKERHOFF
2545 FARMERS DRIVE
SUITE 350
COLUMBUS, OHIO 43235

DESIGNED	DRAWN	REVIEWED	DATE
PJL	LEL	EBS	01/07/13
CHECKED	REVISED	STRUCTURE FILE NUMBER	
SAP		0201693	

REAR ABUTMENT DETAILS

BRIDGE NO. ALL-75-0212
BREESE RD. OVER I-75

ALL-75-0.21
PID No. 89029

6 / 32

630
907

J:\Projects\ALL\89029\structures\ALL075_0212C\sheets\075_0212CAR001.dgn 09-MAY-2013 3:06PM lint

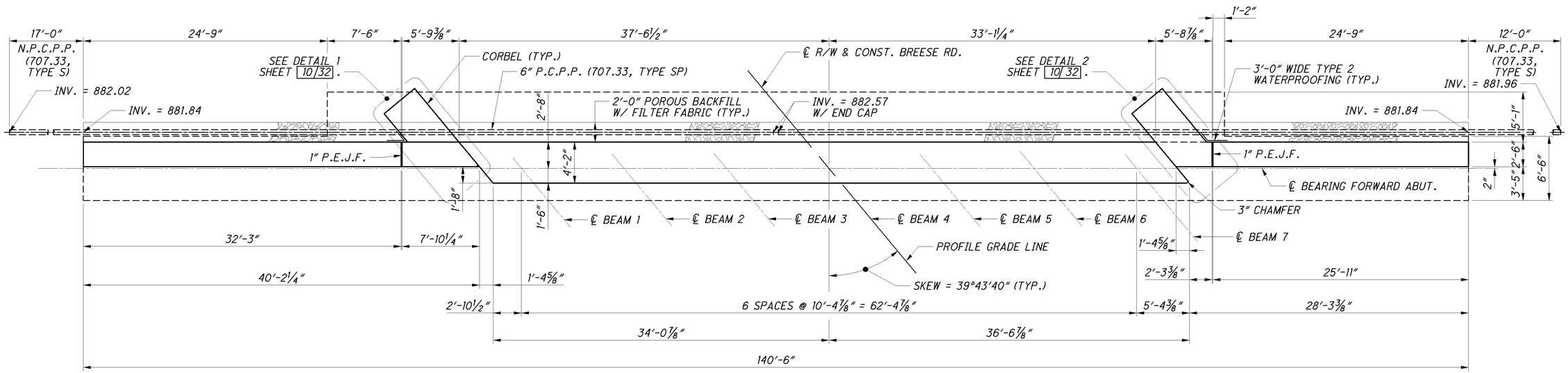

PLAN

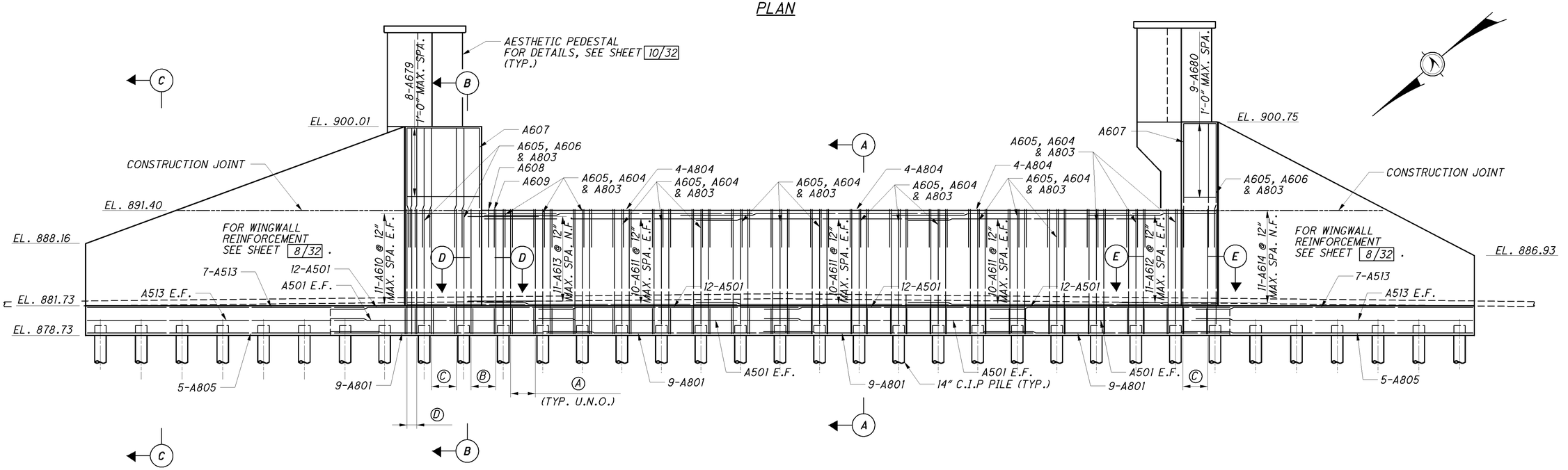

ELEVATION

(CORBEL REINFORCING NOT SHOWN FOR CLARITY)

Ⓐ - 7-A802 @ 6" MAX. SPACES
4-A601, A603, A604 @ 12" SPACES

Ⓑ - 7-A802 @ 6" MAX. SPACES
4-A601 & A603 @ 12" SPACES

Ⓒ - 7-A802 @ 6" MAX. SPACES
4-A601, A603, A606 @ 12" SPACES

Ⓓ - 3-A802 @ 6" MAX. SPACES
2-A601, A603, A606 @ 12" SPACES

NOTES:
1. FOR SECTIONS A-A, B-B, C-C, D-D, & E-E SEE SHEET 9/32 .
2. FOR FOUNDATION LAYOUT PLAN, SEE SHEET 5/32 .
3. FOR AESTHETIC DETAILS, SEE SHEET 29/32 .

MINIMUM LAP:
A501 = 3'-5"
A611 = 4'-1"
A801 = 4'-11"
A804 = 7'-3"

DESIGN AGENCY
PARSONS BRINCKERHOFF
2945 FARMERS DRIVE
SUITE 350
COLUMBUS, OHIO 43235

DESIGNED PJL | DRAWN LEL | REVIEWED EBS | DATE 01/07/13
CHECKED SAP | REVISED | STRUCTURE FILE NUMBER 0201693

FORWARD ABUTMENT DETAILS
BRIDGE NO. ALL-75-0212
BREESE RD. OVER I-75

ALL-75-0.21
PID No. 89029

7 / 32

631
907

J:\Projects\ALL\89029\structures\ALL075_0212C\sheets\075_0212CAF001.dgn 09-MAY-2013 3:06PM lint

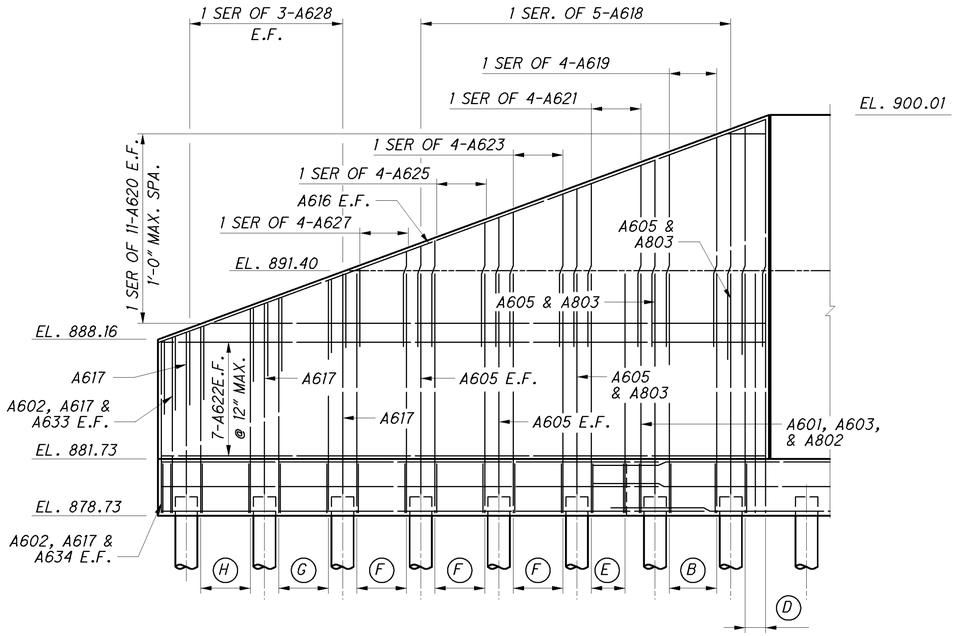

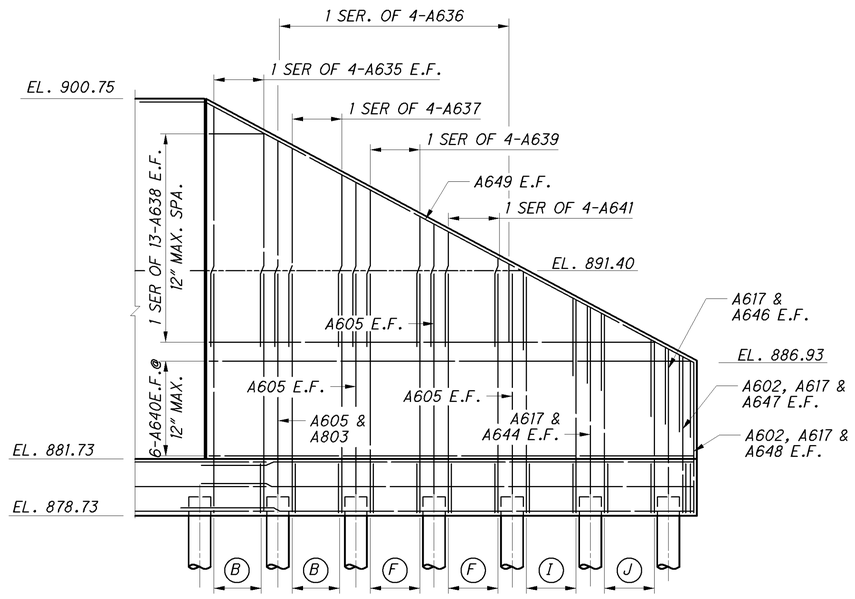

FORWARD WINGWALL ELEVATION

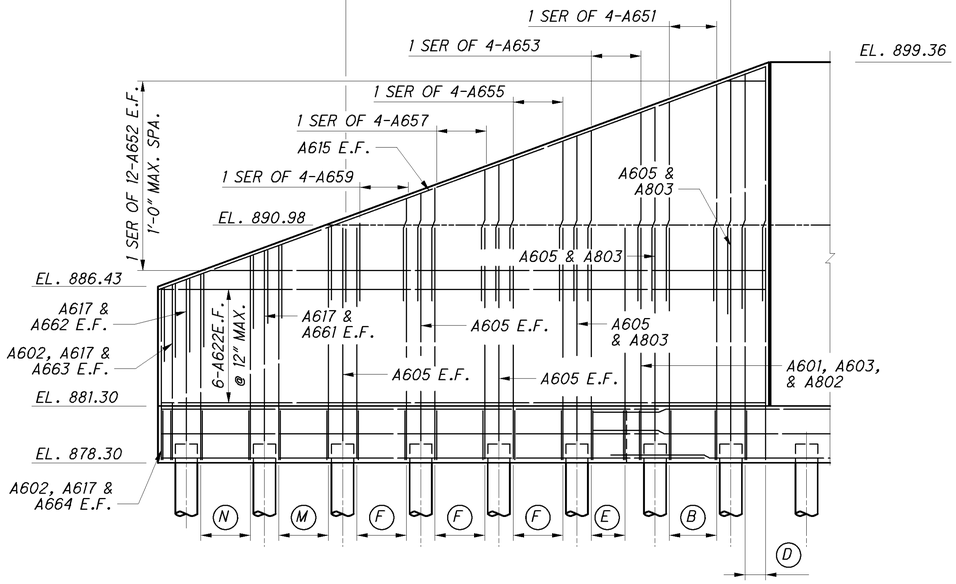

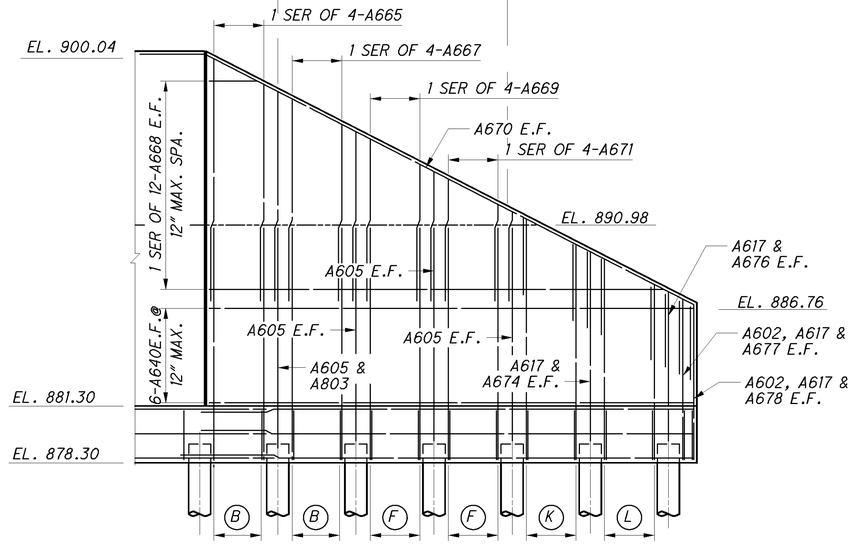

REAR WINGWALL ELEVATION

Ⓑ - 7-A802 @ 6" MAX. SPACES
4-A601 & A603 @ 12" SPACES

Ⓓ - 3-A802 @ 6" MAX. SPACES
2-A601, A603, A606 @ 12" SPACES

Ⓔ - 5-A802 @ 6" MAX. SPACES
3-A602 & A603 @ 12" SPACES

Ⓕ - 4-A602 & A603 E.F. @ 12" MAX. SPA.

Ⓖ - 4-A602, A617, & 1 SER. OF 4-A629 E.F.
@ 12" MAX. SPA.

Ⓗ - 4-A602, A617, & 1 SER. OF 4-A631 E.F.
@ 12" MAX. SPA.

Ⓘ - 4-A602, A617, & 1 SER. OF 4-A643 E.F.
@ 12" MAX. SPA.

Ⓙ - 4-A602, A617, & 1 SER. OF 4-A645 E.F.
@ 12" MAX. SPA.

Ⓚ - 4-A602, A617, & 1 SER. OF 4-A673 E.F.
@ 12" MAX. SPA.

Ⓛ - 4-A602, A617, & 1 SER. OF 4-A675 E.F.
@ 12" MAX. SPA.

Ⓜ - 4-A602, A617, & 1 SER. OF 4-A656 E.F.
@ 12" MAX. SPA.

Ⓝ - 4-A602, A617, & 1 SER. OF 4-A654 E.F.
@ 12" MAX. SPA.

MINIMUM LAP:
A501 = 3'-5"
A611 = 4'-1"
A801 = 4'-11"

DESIGN AGENCY
PARSONS BRINCKERHOFF
2545 FARMERS DRIVE
SUITE 350
COLUMBUS, OHIO 43235

DESIGNED	DRAWN	REVIEWED	DATE
PJL	LEL	EBS	01/07/13
CHECKED	REVISED	STRUCTURE FILE NUMBER	
SAP		0201693	

WINGWALL DETAILS
BRIDGE NO. ALL-75-0212
BREESE RD. OVER I-75

ALL-75-0.21
PID No. 89029

J:\Projects\ALL\89029\structures\ALL075_0212C\sheets\075_0212CAF003.dgn 09-MAY-2013 3:06PM lint

NOTES:

1. FOR AESTHETIC DETAILS, SEE SHEET 29/32.
2. FOR LOCATIONS OF SECTIONS, SEE SHEET 6/32 AND 7/32 .

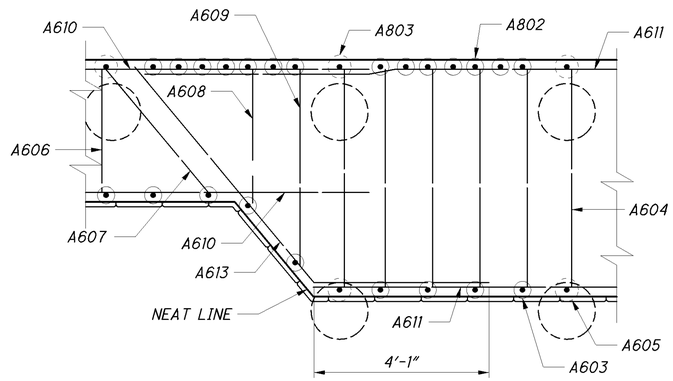

SECTION D-D

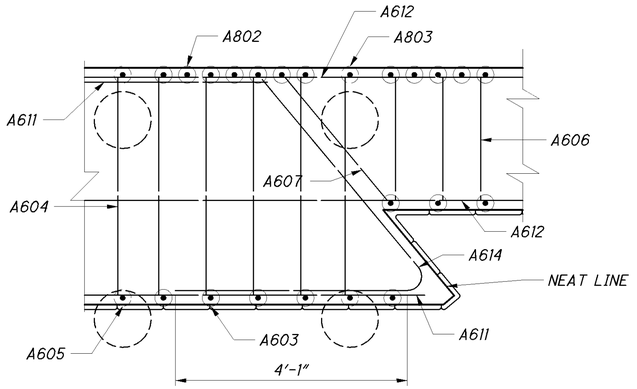

SECTION E-E

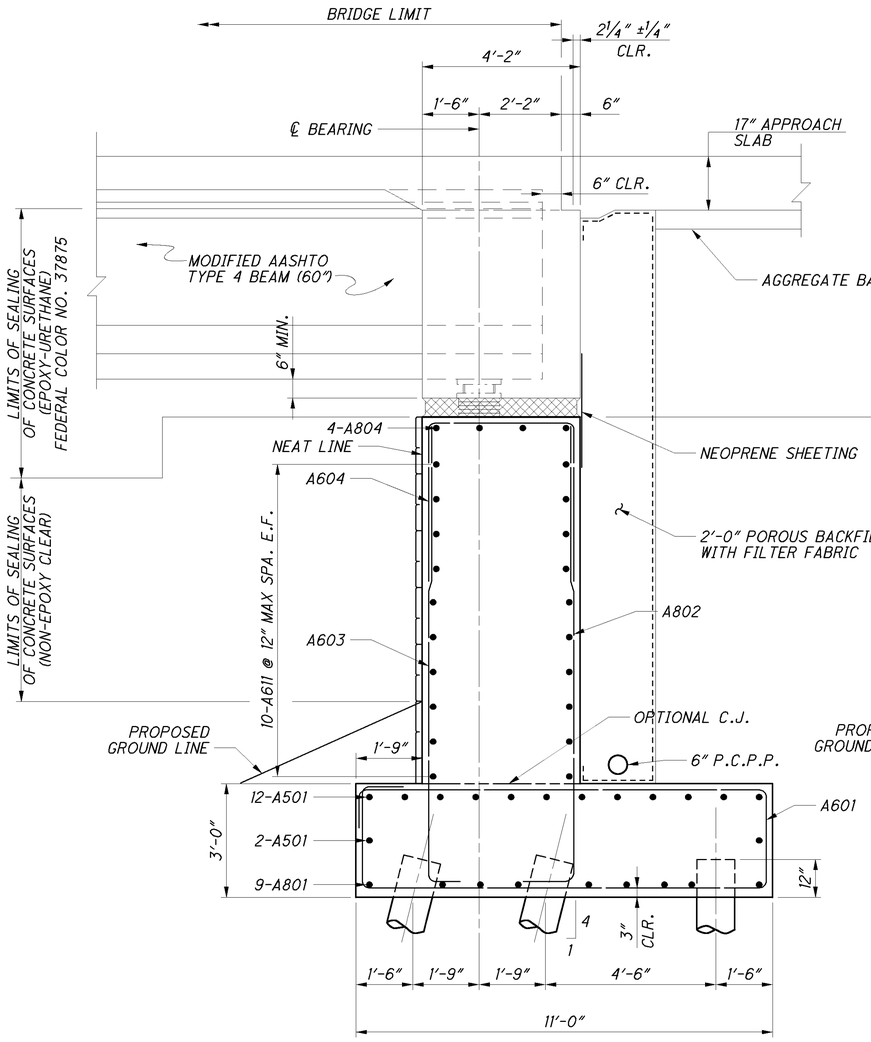

SECTION A-A

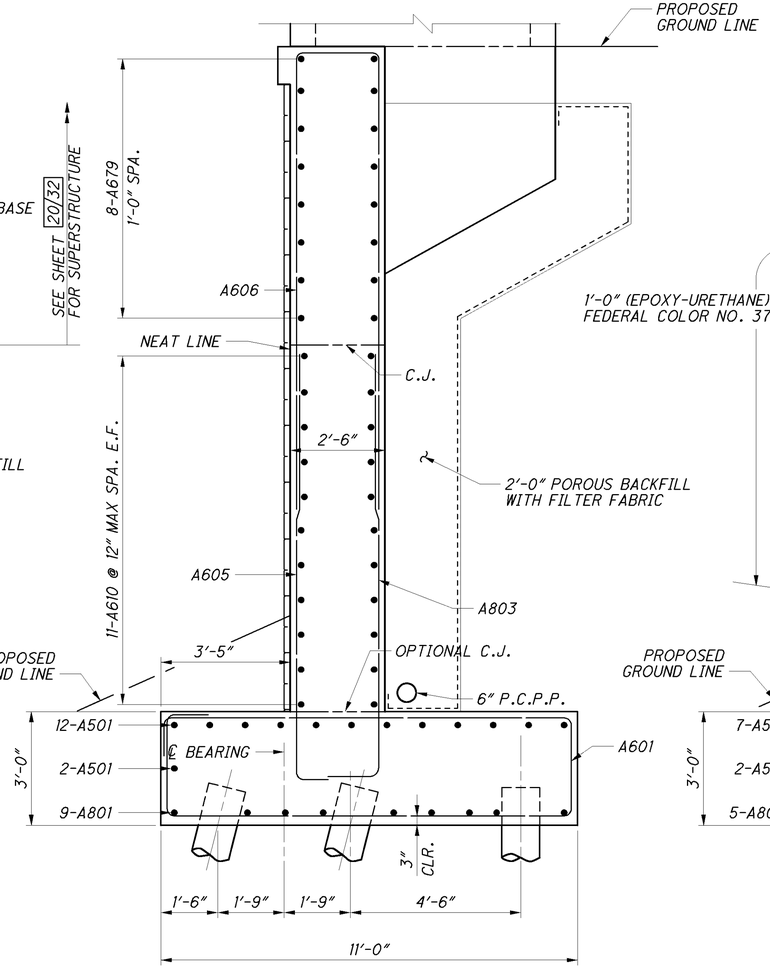

SECTION B-B

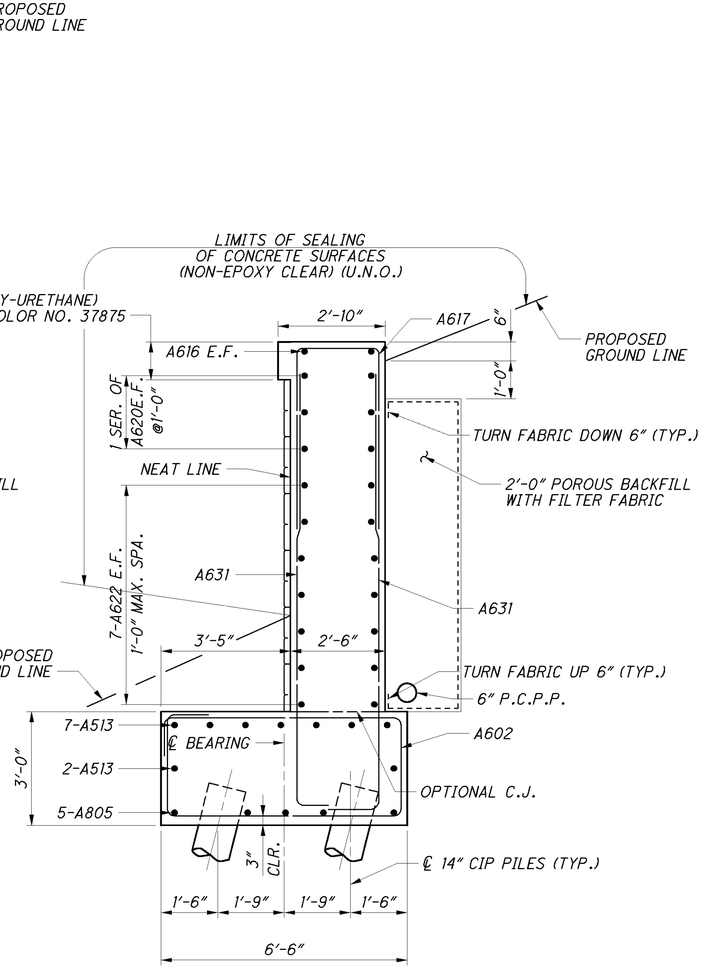

SECTION C-C

DESIGN AGENCY
PARSONS BRINCKERHOFF
2945 FARMERS DRIVE
SUITE 350
COLUMBUS, OHIO 43235

DESIGNED	DRAWN	REVIEWED	DATE
PJL	LEL	EBS	01/07/13
CHECKED	REVISED	STRUCTURE FILE NUMBER	
SAP		0201693	

ABUTMENT DETAILS

BRIDGE NO. ALL-75-0212
BREESE RD. OVER I-75

ALL-75-0.21
PID No. 89029

9 / 32

633
907

J:\Projects\ALL\89029\structures\ALL075_0212C\sheets\075_0212CAF002.dgn 09-MAY-2013 3:06PM lint

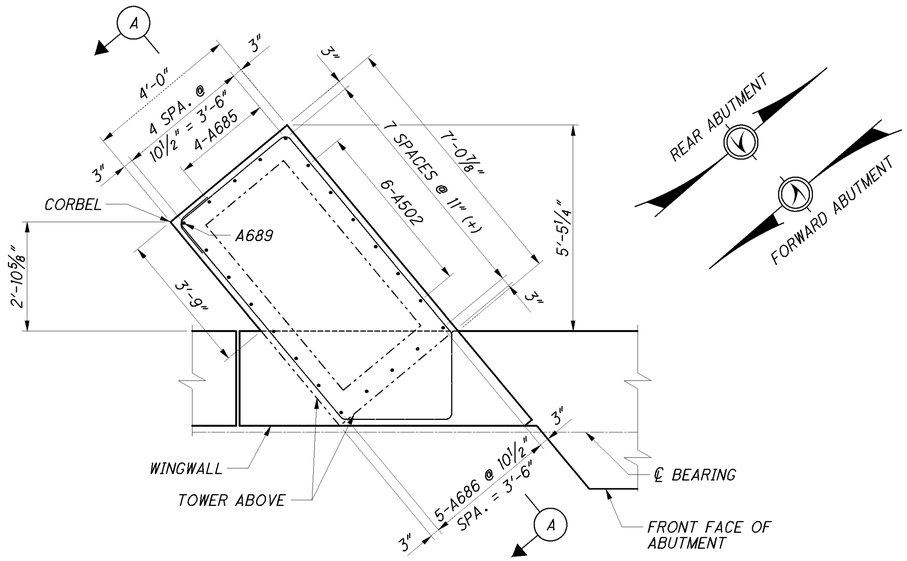

CORBEL DETAIL 1

DETAIL 2

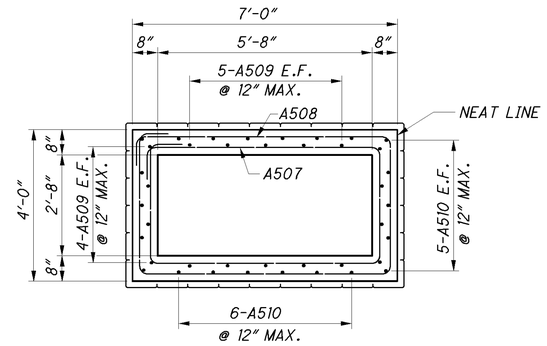

SECTION B-B

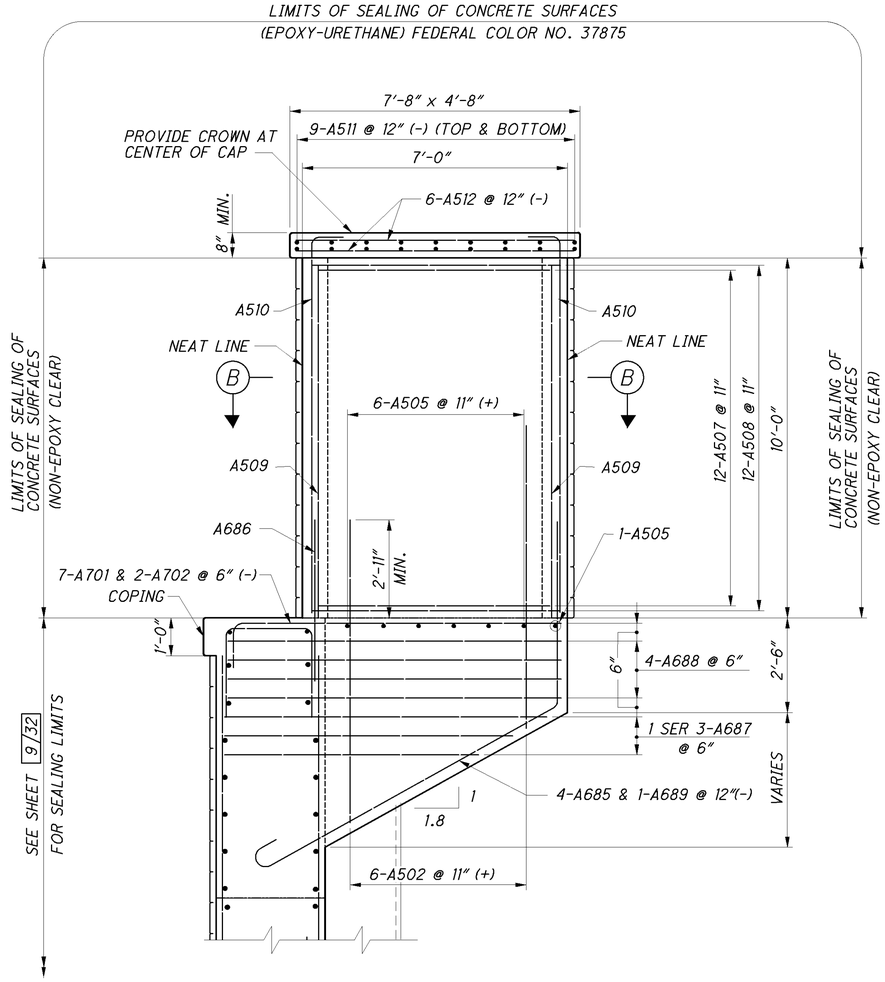

SECTION A-A

DESIGN AGENCY
PARSONS BRINCKERHOFF
2545 FARMERS DRIVE
SUITE 350
COLUMBUS, OHIO 43235

DESIGNED PJL | DRAWN LEL | REVIEWED EBS | DATE 01/07/13
CHECKED SAP | REVISED | STRUCTURE FILE NUMBER 0201693

ABUTMENT CORBEL AND TOWER DETAILS

BRIDGE NO. ALL-75-0212
BREESE RD. OVER I-75

ALL-75-0.21
PID No. 89029

J:\Projects\ALL\89029\structures\ALL075_0212C\sheets\075_0212CAR002.dgn 09-MAY-2013 3:06PM lint

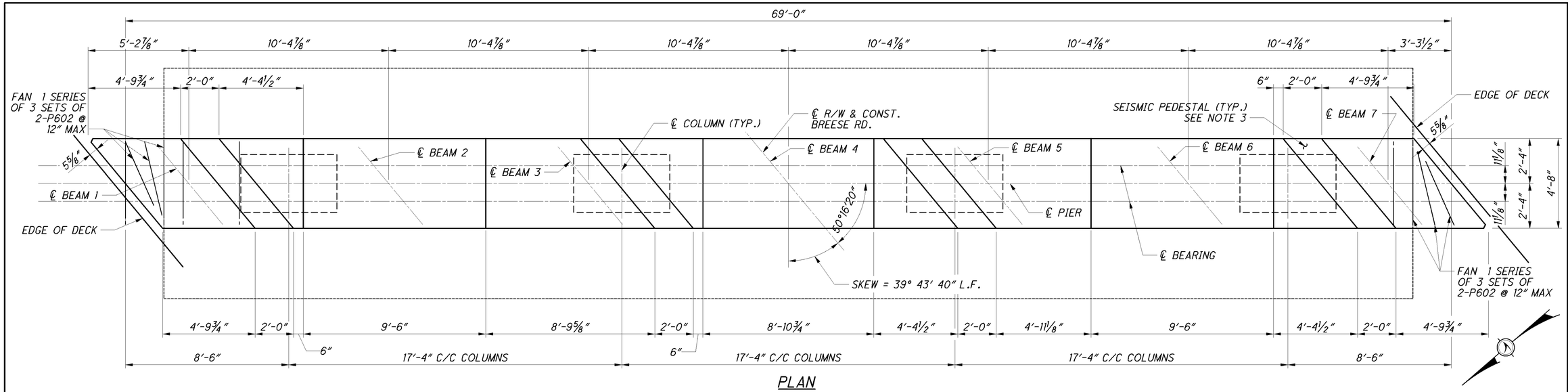

PLAN

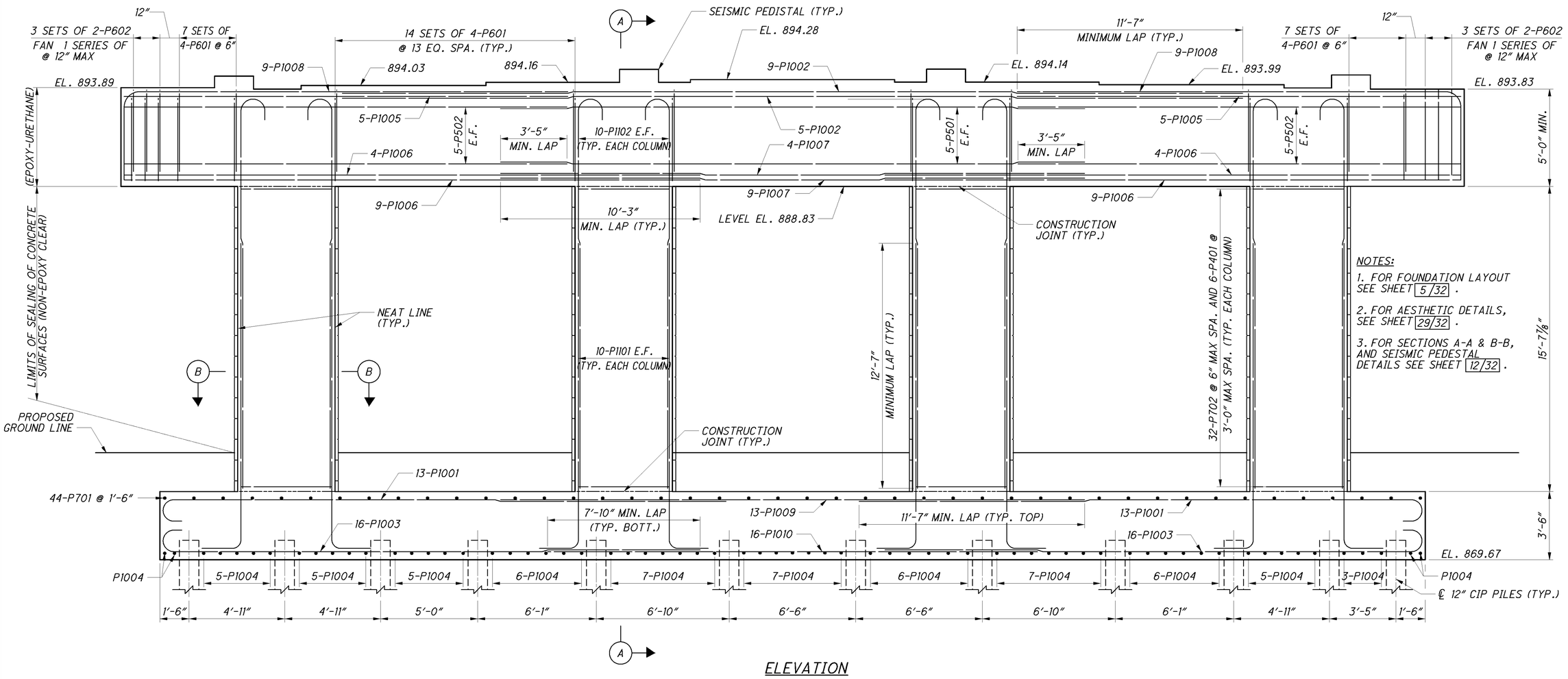

ELEVATION

NOTES:

1. FOR FOUNDATION LAYOUT SEE SHEET 5/32 .
2. FOR AESTHETIC DETAILS, SEE SHEET 29/32 .
3. FOR SECTIONS A-A & B-B, AND SEISMIC PEDESTAL DETAILS SEE SHEET 12/32 .

DESIGN AGENCY
PARSONS BRINCKERHOFF
2545 FARMERS DRIVE
SUITE 350
COLUMBUS, OHIO 43235

DESIGNED	DRAWN	REVIEWED	DATE
PJL	BKJ	EBS	01/07/13
CHECKED	REVISED	STRUCTURE FILE NUMBER	
SAP		0201693	

PIER DETAILS
BRIDGE NO. ALL-75-0212
BREESE RD. OVER I-75

ALL-75-0.21
PID No. 89029

11 / 32

635
907

J:\Projects\ALL\89029\structures\ALL075_0212C\sheets\075_0212CP1001.dgn 09-MAY-2013 3:06PM jint

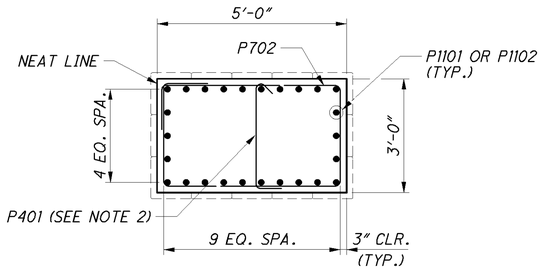

SECTION B-B

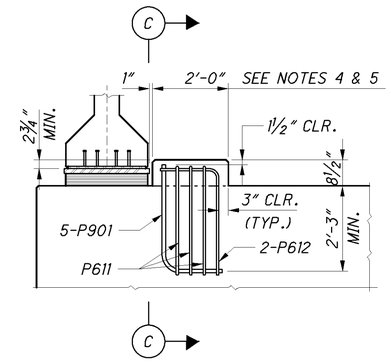

FRONT VIEW OF SEISMIC PEDESTAL

NOTES:

1. FOR LOCATION OF SECTION A-A & B-B, SEE SHEET 11/32 .
2. THE PLACEMENT OF P401 BARS SHALL ALTERNATE TO STAGGER THE 90° HOOKS.
3. ALL VERTICAL REINFORCEMENT IN THE PIER DIAPHRAGM IS TO BE PLACED PARALLEL TO BEAMS.
4. THE SURFACE OF THE BEAM SEAT IN THIS AREA SHALL BE FINISHED WITH A SERRATED TROWEL. THE SERRATIONS SHALL BE ¼" DEEP MINIMUM.
5. THE 2'-0" WIDTH OF PEDESTAL SHALL BE MEASURED PARALLEL TO THE CENTERLINE OF BEARING. THE P901 AND P612 BARS SHALL BE PLACED PARALLEL TO THE CENTERLINE OF BEARING. THE P611 BARS SHALL BE PLACED PARALLEL TO THE BEAMS.
6. SEE PSID-1-99 FOR ADDITIONAL NOTES AND DETAILS.
7. SEE SHEET 5/32 FOR PILE LAYOUT AND BATTER. NOTE SOME PILES ARE BATTERED 1V:4H.

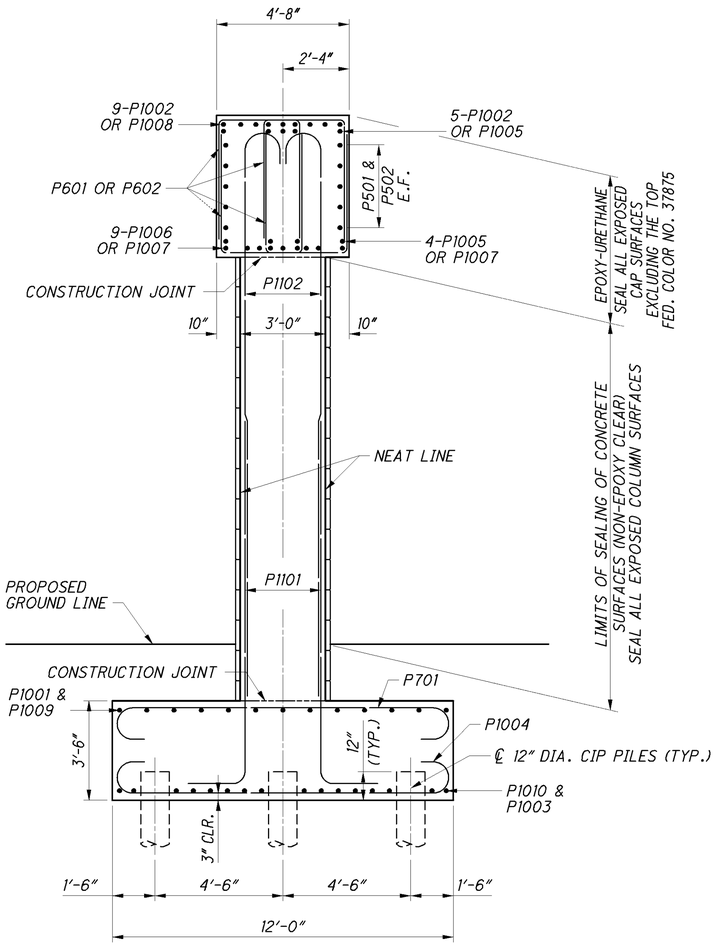

SECTION A-A

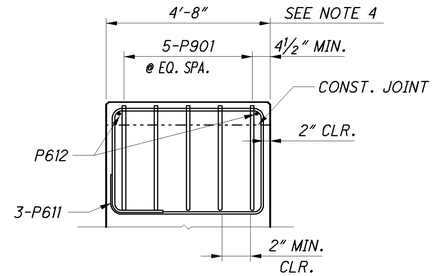

SECTION C-C

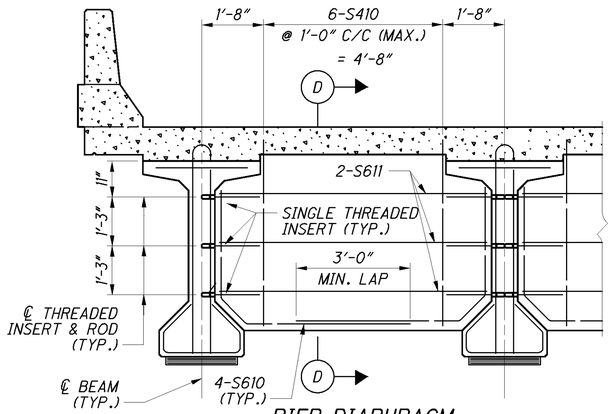

PIER DIAPHRAGM

MODIFIED AASHTO TYPE 4 (60")
(SEE NOTE 3)

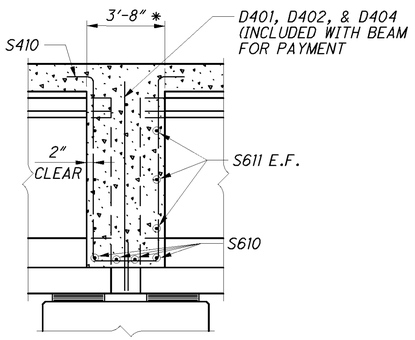

SECTION D-D
(SEE NOTE 3)

* MEASURED PERPENDICULAR TO CENTERLINE OF BEARING

J:\Projects\ALL\89029\structures\ALL075_0212C\sheets\075_0212CPI002.dgn 09-MAY-2013 3:06PM jint

DESIGN AGENCY
PARSONS BRINCKERHOFF
2945 FARMERS DRIVE
SUITE 350
COLUMBUS, OHIO 43235

DESIGNED	DRAWN	REVIEWED	DATE
PJL	BKJ	EBS	01/07/13
CHECKED	REVISED	STRUCTURE FILE NUMBER	
SAP		0201693	

PIER DETAILS
BRIDGE NO. ALL-75-0212
BREESE RD. OVER I-75

ALL-75-0.21
PID No. 89029

12 / 32

636
907

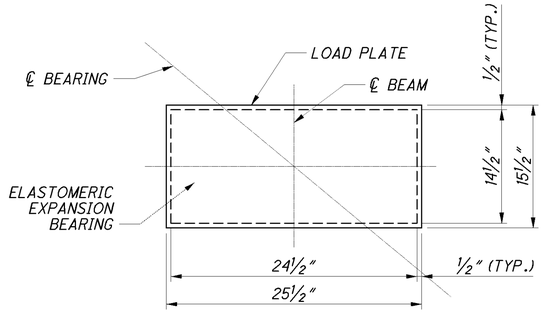

PLAN VIEW - ABUTMENT BEARING

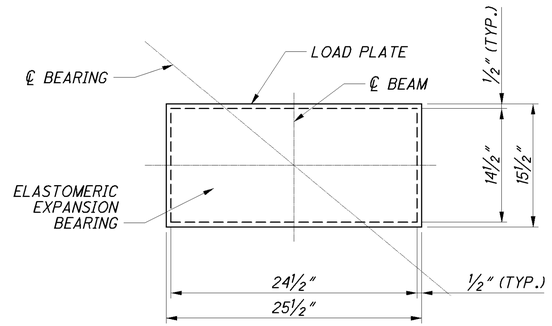

PLAN VIEW - PIER BEARING

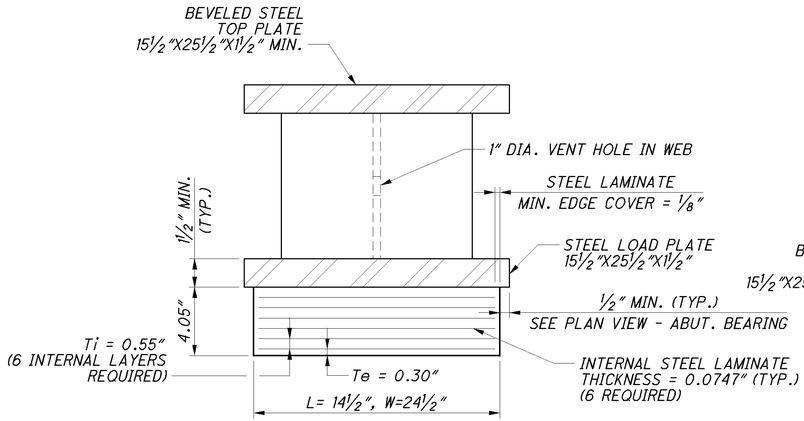

LAMINATED ELASTOMERIC EXPANSION BEARING, 50 DUROMETER

ABUTMENTS
DEAD LOAD REACTION = 204.0 K
LIVE LOAD REACTION = 109.0 K (NO IMPACT)
MAXIMUM DESIGN LOAD = 313.0 K

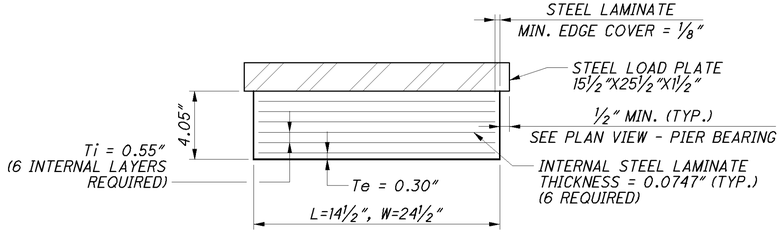

LAMINATED ELASTOMERIC EXPANSION BEARING, 50 DUROMETER

PIER
DEAD LOAD REACTION = 196.9 K
LIVE LOAD REACTION = 134.4 K (NO IMPACT)
MAXIMUM DESIGN LOAD = 331.3 K

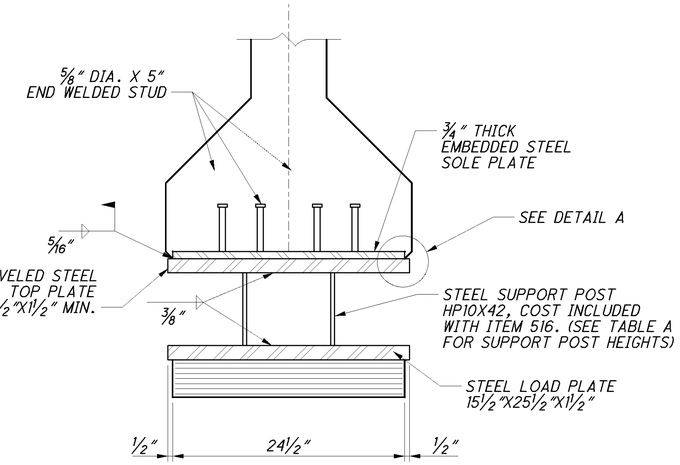

END VIEW

ABUTMENT BEARING WITH LOAD PLATE
(LOAD PLATES ARE TO BE BONDED TO THE ELASTOMER DURING THE MOLDING PROCESS)

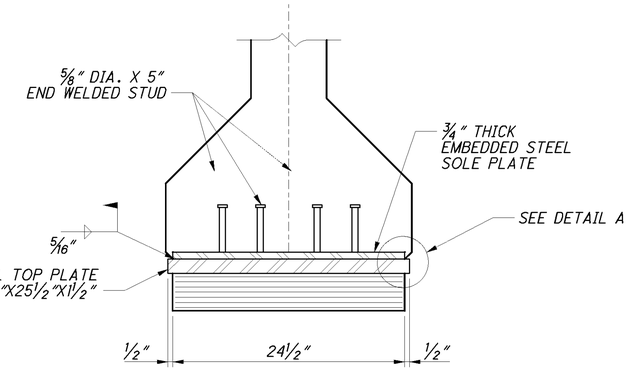

END VIEW

PIER BEARING WITH LOAD PLATE
(LOAD PLATES ARE TO BE BONDED TO THE ELASTOMER DURING THE MOLDING PROCESS)

NOTES:

1. STRUCTURAL STEEL: ALL STRUCTURAL STEEL SHOWN SHALL BE ASTM A709 GRADE 50, UNLESS NOTED OTHERWISE.
2. ELASTOMERIC BEARINGS: THE ELASTOMER SHALL HAVE A HARDNESS OF 50 DUROMETER. THE BEARINGS WERE DESIGNED IN ACCORDANCE WITH SECTION 14.7.6 (METHOD A) OF THE AASHTO LRFD BRIDGE DESIGN SPECIFICATIONS. THE LONG TERM COMPRESSION PROOF LOAD TEST (AASHTO STANDARD SPECIFICATIONS FOR HIGHWAY BRIDGES, DIVISION II, SECTION 18.7.2.6) IS NOT REQUIRED.
3. ALL BEARINGS SHALL BE MARKED PRIOR TO SHIPPING. THE MARKS SHALL INCLUDE THE BEARING LOCATION ON THE BRIDGE, AND A DIRECTION ARROW THAT POINTS UP-STATION. ALL MARKS SHALL BE PERMANENT AND BE VISIBLE AFTER BEARING IS INSTALLED.
4. PAINTING: STEEL LOAD PLATES AT THE PIER SHALL BE SHOP PAINTED WITH AN INORGANIC ZINC PRIMER AS SPECIFIED IN CMS 513.27. APPLY PAINT TO THE EXPOSED STEEL LOAD PLATES IN ACCORDANCE WITH CMS 514. PAYMENT IS INCLUDED IN THE UNIT PRICE BID FOR EACH BEARING.
5. THE STEEL LOAD PLATE SHALL BE BONDED BY VULCANIZATION TO THE ELASTOMER DURING THE MOLDING PROCESS.
6. BASIS OF PAYMENT: THE UNIT BID PRICE SHALL INCLUDE ALL MATERIALS, LABOR, TESTING, AND INCIDENTALS NECESSARY TO FURNISH AND INSTALL LAMINATED ELASTOMERIC BEARINGS. PAYMENT WILL BE MADE AT THE CONTRACT PRICE FOR ITEM 516, EACH, ELASTOMERIC BEARINGS WITH INTERNAL LAMINATES (NEOPRENE), AS PER PLAN: 14½"X24½"X4.05" WITH 15½"X25½"X1½" (MIN.) LOAD PLATES (ABUTMENTS AND PIERS)
7. FOR FRAMING PLAN, SEE SHEET 14/32.
8. TOTAL DESIGN LOAD FOR BEARING EQUALS THE SUM OF THE UNFACTORED DEAD LOADS AND UNFACTORED LIVE LOADS (WITHOUT IMPACT) TABULATED IN THE BEARING TABLE.

TABLE A

SUPPORT POST HEIGHTS		
BEAM	REAR	FORWARD
1	19.56"	8.06"
2	19.44"	11.56"
3	19.19"	14.94"
4	18.88"	18.19"
5	15.38"	18.25"
6	11.75"	18.25"
7	8.06"	18.25"

TABLE B

BEVELED LOAD PLATE THICKNESSES			
REAR ABUTMENT		FORWARD ABUTMENT	
D.S.	U.S.	D.S.	U.S.
1½"	1⅞"	1 13/16"	1½"

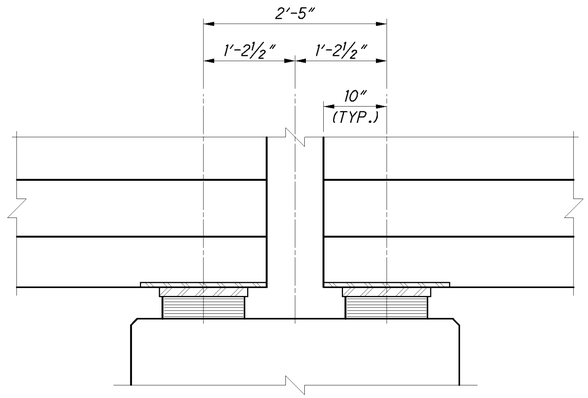

BEARING DETAIL

PIER

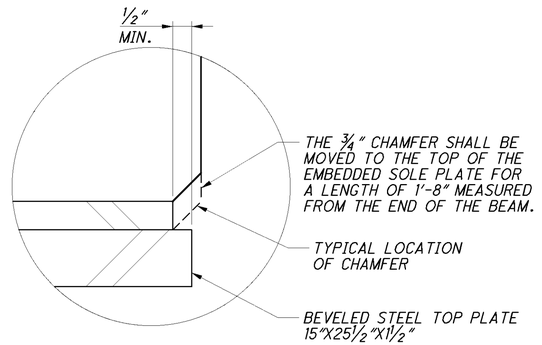

DETAIL A

DESIGN AGENCY
PARSONS BRINCKERHOFF
2545 FARMERS DRIVE
SUITE 350
COLUMBUS, OHIO 43235

DESIGNED	DRAWN	REVIEWED	DATE
PJL	LEL	EBS	01/07/13
CHECKED	REVISED	STRUCTURE FILE NUMBER	
SAP		0201693	

BEARING DETAILS
BRIDGE NO. ALL-75-0212
BREESE RD. OVER I-75

ALL-75-0.21
PID No. 89029

J:\Projects\ALL\89029\structures\ALL075_0212C\sheets\075_0212CBR001.dgn 09-MAY-2013 3:06PM jint

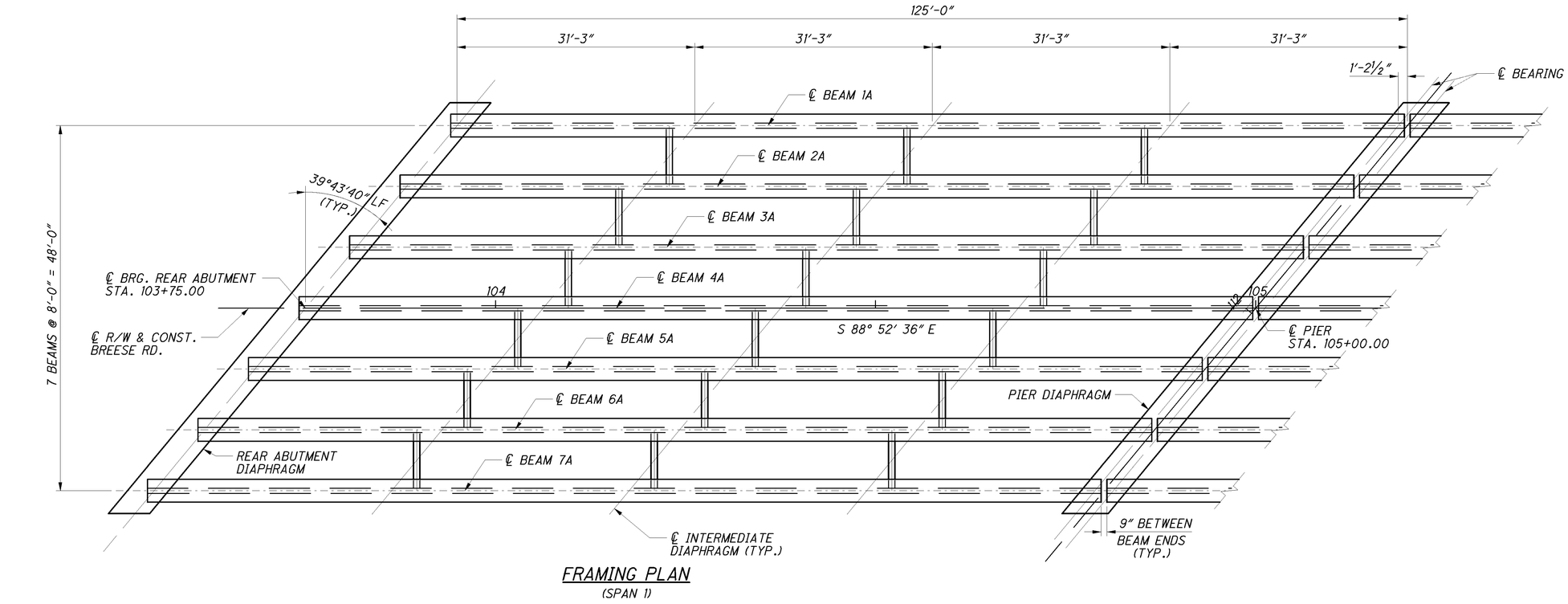

FRAMING PLAN
(SPAN 1)

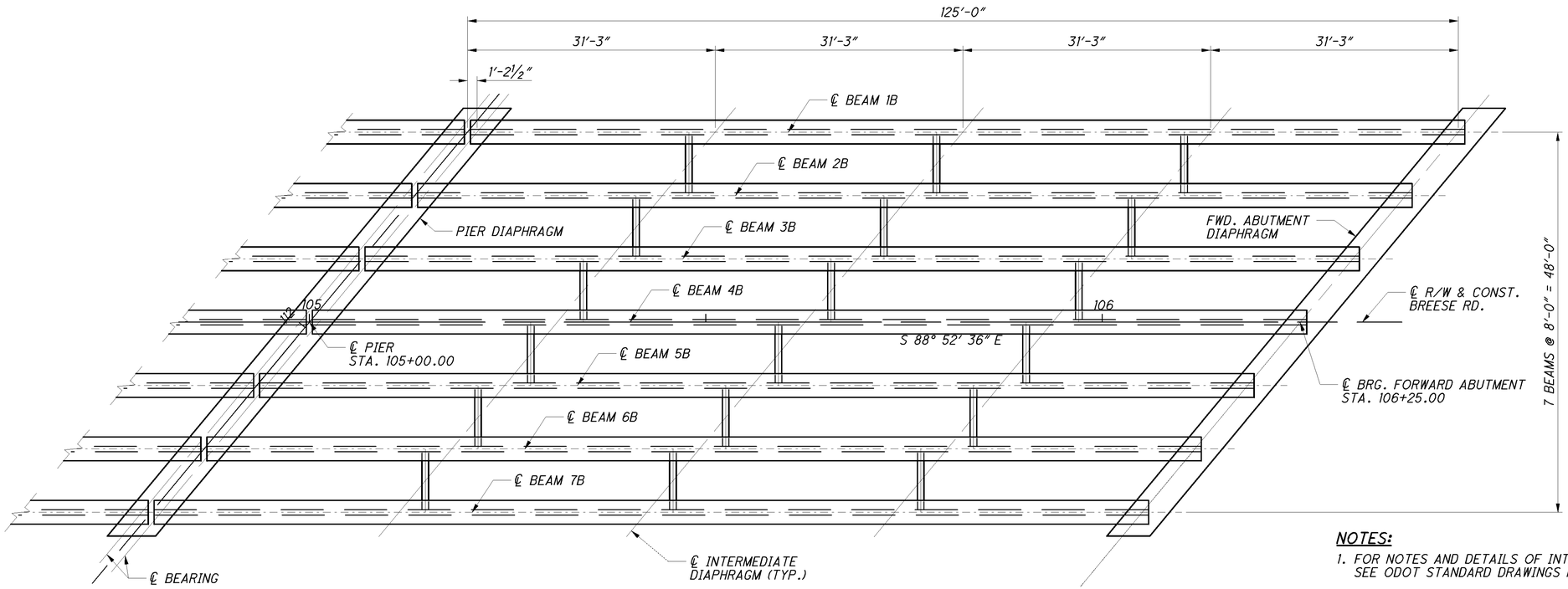

FRAMING PLAN
(SPAN 2)

NOTES:

1. FOR NOTES AND DETAILS OF INTERMEDIATE DIAPHRAGMS, SEE ODOT STANDARD DRAWINGS PSID-1-99.
2. FOR PIER DIAPHRAGM DETAILS, SEE SHEET 12/32.
3. FOR SEMI-INTEGRAL ABUTMENT DETAILS, SEE SHEET 9/32.
4. FOR SEMI-INTEGRAL ABUTMENT DIAPHRAGM DETAILS, SEE SHEET 20/32.

DESIGN AGENCY
PARSONS BRINCKERHOFF
2945 FARMERS DRIVE
SUITE 350
COLUMBUS, OHIO 43235

DESIGNED	DRAWN	REVIEWED	DATE
PJL	LEL	EBS	01/07/13
CHECKED	REVISED	STRUCTURE FILE NUMBER	
SAP		0201693	

FRAMING PLAN
BRIDGE NO. ALL-75-0212
BREESE RD. OVER I-75

ALL-75-0.21
PID No. 89029

J:\Projects\ALL\89029\structures\ALL075_0212\sheets\075_0212CSD002.dgn 09-MAY-2013 3:06PM lint

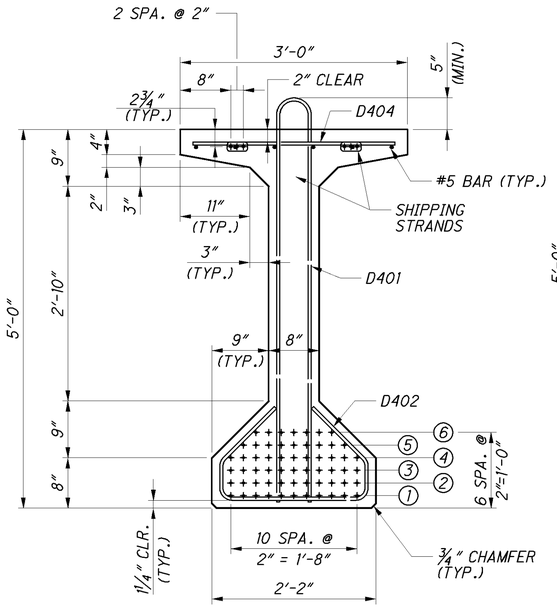

TYPICAL MID-SPAN SECTION

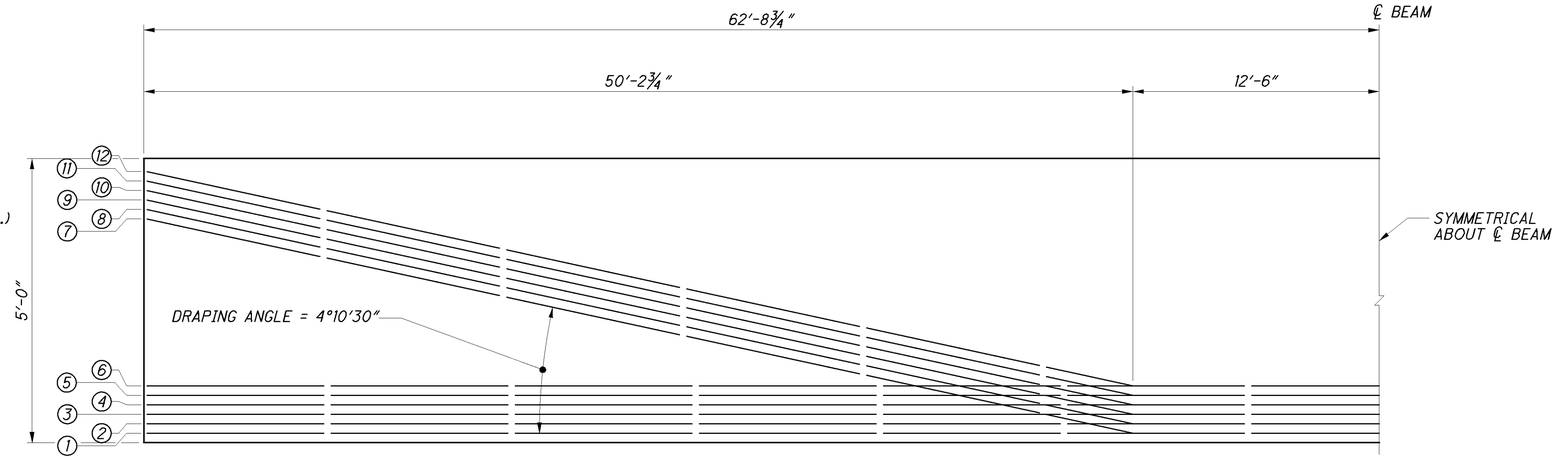

DRAPING DETAIL

NOT TO SCALE

NUMBER OF STRANDS PER ROW														CONCRETE STRENGTHS		D401 BARS REQ'D	D402 BARS REQ'D	D404 BARS REQ'D	D405 BARS REQ'D
BEAM MARK	①	②	③	④	⑤	⑥	⑦	⑧	⑨	⑩	⑪	⑫	TOTAL STRANDS	f'ci	f'c				
END	8	8	8	8	6	4	3	3	3	3	3	3	60	7	10	98	98	98	12
MID-SPAN	11	11	11	11	9	7	–	–	–	–	–	–							

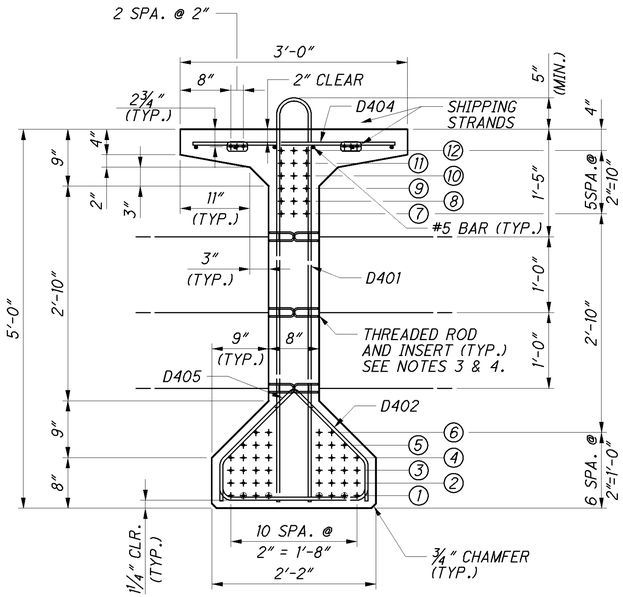

TYPICAL END SECTION

(SPAN 1)

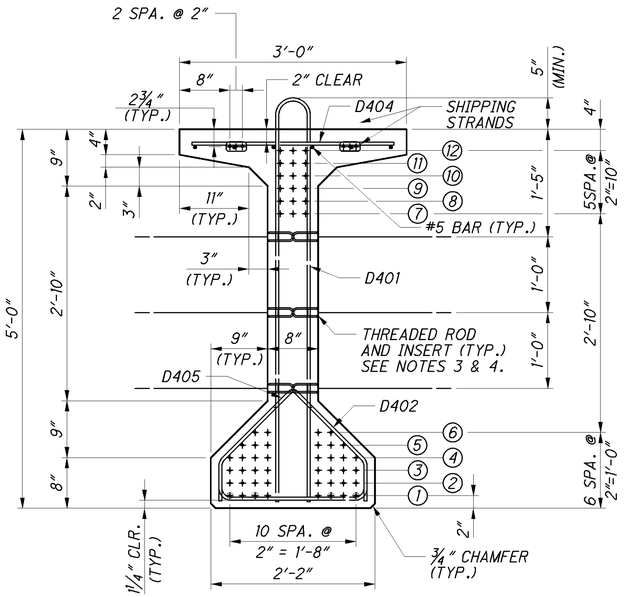

TYPICAL END SECTION

(SPAN 2)

LEGEND:

⊕ - EXTENDED STRANDS AT PIER DIAPHRAGM ONLY

NOTES:

1. ALL REINFORCEMENT IS TO BE EPOXY COATED.
2. SEE GENERAL NOTES FOR INITIAL STRAND STRESS AND TENSION LOAD.
3. PROVIDE THREADED RODS AND INSERTS ON EACH FACE OF WEB FOR INTERIOR BEAMS. PROVIDE THREADED RODS AND INSERTS ON THE INTERIOR WEB FACE FOR FASCIA BEAMS.
4. DIMENSIONS SHOWN FOR THE THREADED RODS AND INSERTS FOR THE INTERMEDIATE DIAPHRAGMS SHALL BE ADJUSTED AS NECESSARY TO AVOID THE PRESTRESSING STRANDS AT ALL LOCATIONS.
5. SHIPPING STRANDS:
   THE FABRICATOR MAY ADD SHIPPING STRANDS AT THE LOCATIONS SHOWN ON SCD PSID-1-99 SHEET 1 OF 8. THESE SHIPPING STRANDS SHALL BE DEBONDED FOR THE ENTIRE LENGTH OF THE BEAM EXCEPT FOR THE LAST 10'-0" AT EACH END. THE STRANDS SHALL BE CUT AFTER ALL HANDLING OPERATIONS ARE COMPLETE.
6. ALL BEAMS SHALL BE STORED FOR A MINIMUM OF 90 DAYS PRIOR TO DECK PLACEMENT.
7. FOR ADDITIONAL NOTES AND DETAILS SEE ODOT STD. DWG PSID-1-99.
8. VERTICAL REINFORCEMENT QUANTITIES INCLUDE PIER DIAPHRAGM STEEL.

DESIGN AGENCY
PARSONS BRINCKERHOFF
2545 FARMERS DRIVE
SUITE 350
COLUMBUS, OHIO 43235

DESIGNED	DRAWN	REVIEWED	DATE
PJL	LEL	EBS	01/07/13
CHECKED	REVISED	STRUCTURE FILE NUMBER	
SAP		0201693	

SUPERSTRUCTURE DETAILS
BRIDGE NO. ALL-75-0212
BREESE RD. OVER I-75

ALL-75-0.21
PID No. 89029

J:\Projects\ALL\89029\structures\ALL075_0212C\sheets\075_0212CSD001.dgn 09-MAY-2013 3:06PM jint

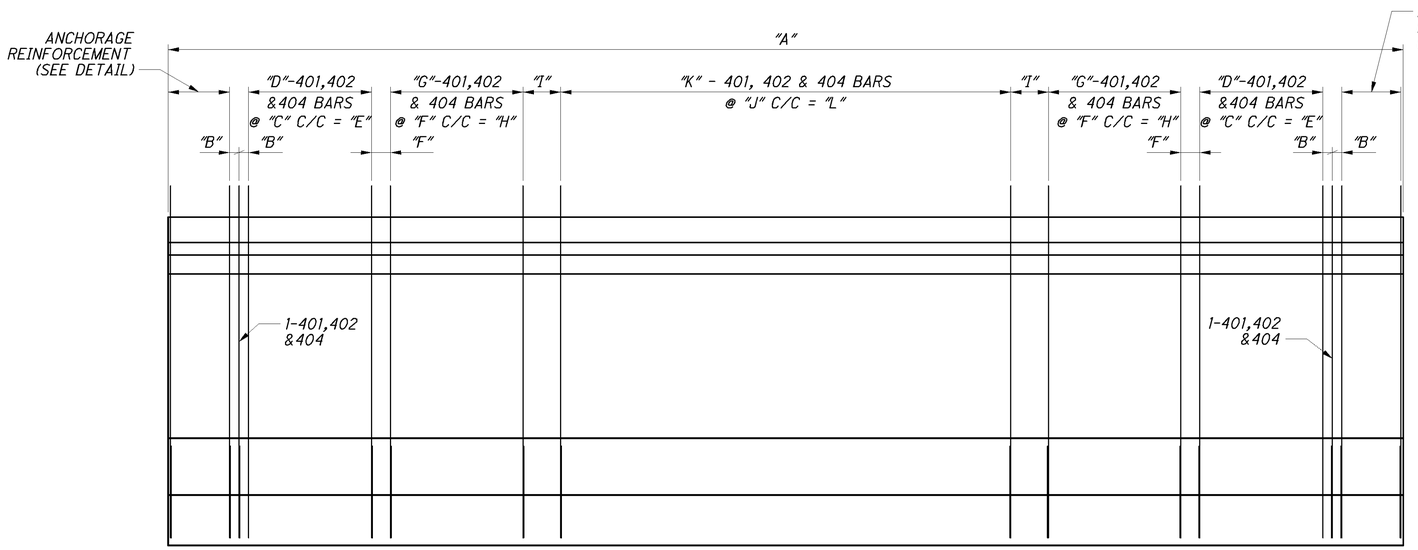

SHEAR REINFORCEMENT
NOT TO SCALE

EXTEND STRANDS AS SHOWN AND BEND WITHOUT HEAT (AT PIERS ONLY) SEE BEAM SECTIONS AT END ON SHEET 15/32 .

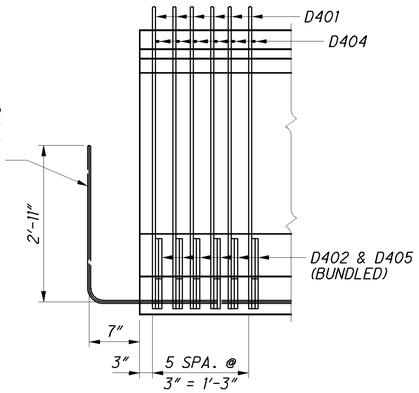

ANCHORAGE REINFORCEMENT

BEAM DIMENSIONS													
NO. REQ'D.	DIMENSIONS												APPROXIMATE WEIGHT (LBS)
	"A"	"B"	"C"	"D"	"E"	"F"	"G"	"H"	"I"	"J"	"K"	"L"	
14	125'-5½"	3"	6"	11	5'-0"	1'-0"	7	6'-0"	1'-8¾"	2'-0"	48	94'-0"	112,386

NOTES:

1. FOR NOTES SEE SHEET 15/32 .

J:\Projects\ALL\89029\structures\ALL075_0212C\sheets\075_0212CSD005.dgn 09-MAY-2013 3:06PM lint

DESIGN AGENCY
PARSONS BRINCKERHOFF
2945 FARMERS DRIVE
SUITE 350
COLUMBUS, OHIO 43235

DESIGNED	DRAWN	REVIEWED	DATE
PJL	LEL	EBS	01/07/13
CHECKED	REVISED	STRUCTURE FILE NUMBER	
SAP		0201960	

SUPERSTRUCTURE DETAILS
BRIDGE NO. ALL-75-0212
BREESE RD. OVER I-75

ALL-75-0.21
PID No. 89029

640
907

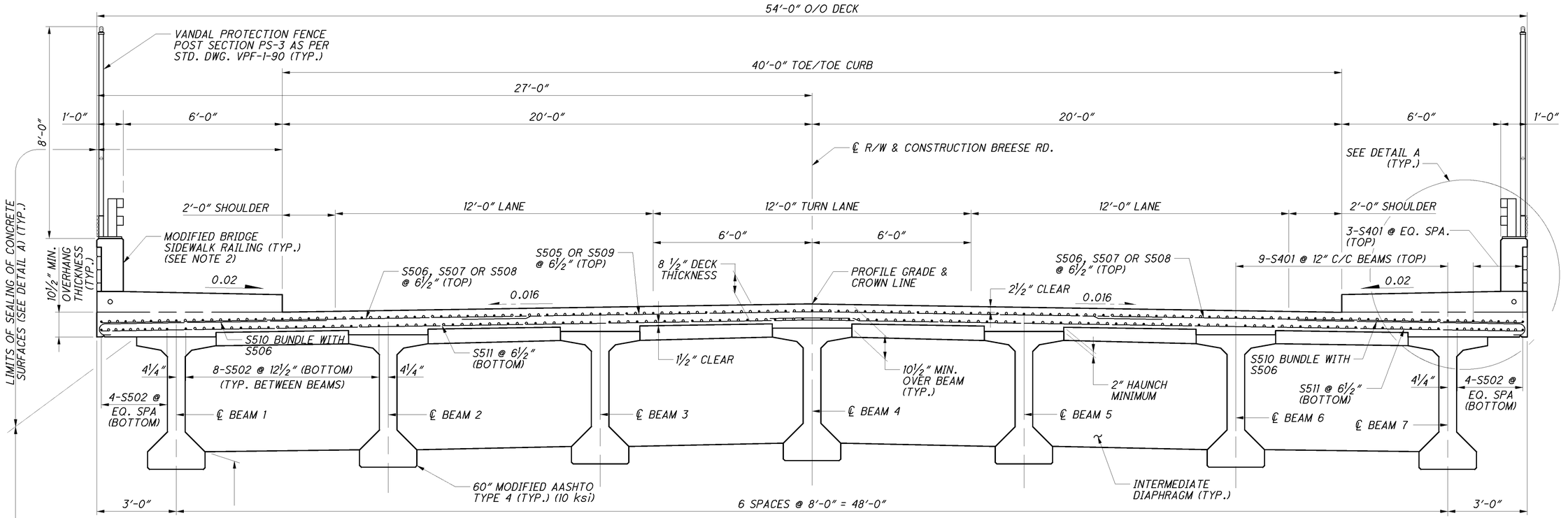

TYPICAL TRANSVERSE SECTION

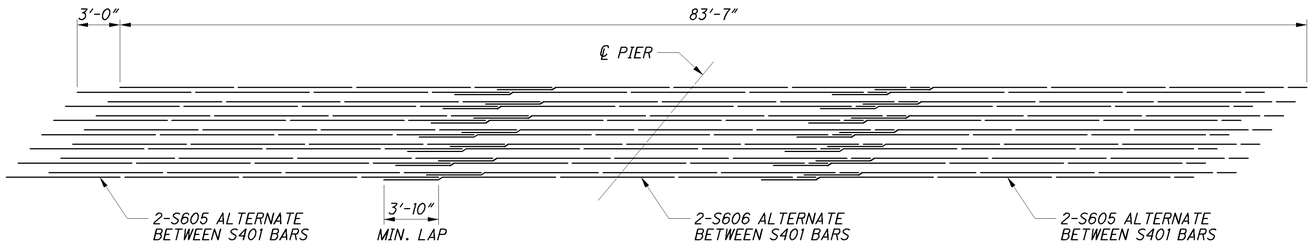

NEGATIVE MOMENT REINFORCEMENT

(TOP MAT)

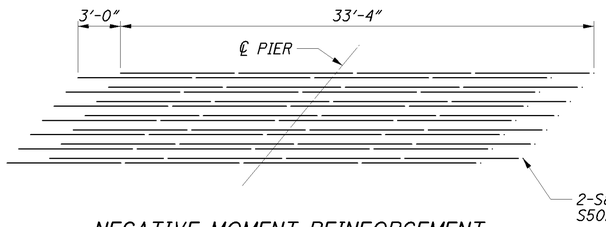

NEGATIVE MOMENT REINFORCEMENT

(BOTTOM MAT)

NOTES:

1. FOR DECK SLAB PLANS SEE SHEETS 18/32 & 19/32.
2. SEE ODOT STANDARD DRAWING BR-2-98 FOR ADDITIONAL NOTES AND DETAILS.
3. FOR AESTHETIC DETAILS, SEE SHEET 29/32
4. FOR PARAPET AND SIDEWALK DETAILS, SEE SHEET 23/32

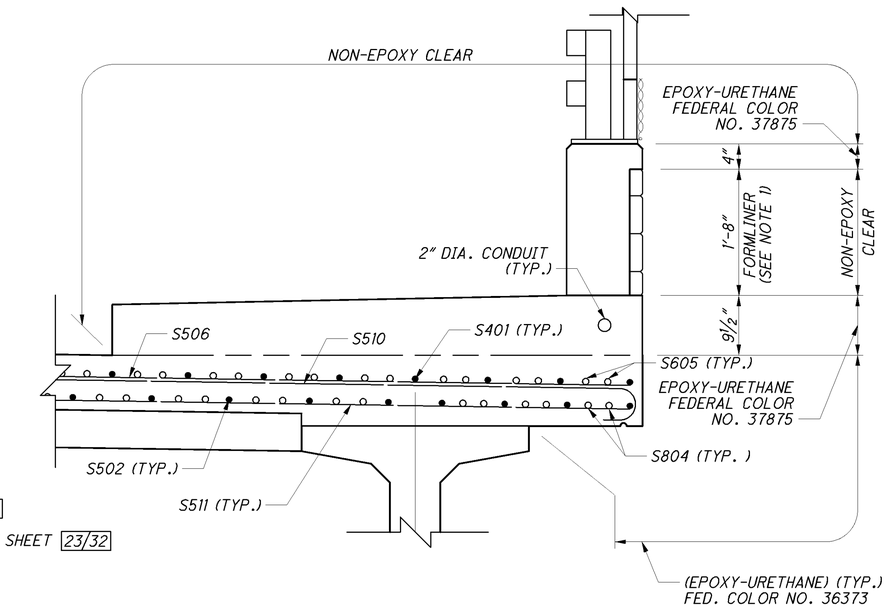

DETAIL A

DESIGN AGENCY
PARSONS BRINCKERHOFF
2545 FARMERS DRIVE
SUITE 350
COLUMBUS, OHIO 43235

DESIGNED	DRAWN	REVIEWED	DATE
PJL	BKJ	EBS	01/07/13
CHECKED	REVISED	STRUCTURE FILE NUMBER	
SAP	LEL	0201693	

TYPICAL TRANSVERSE SECTION
BRIDGE NO. ALL-75-0212
BREESE RD. OVER I-75

ALL-75-0.21
PID No. 89029

17 / 32

641
907

J:\Projects\ALL\89029\structures\ALL075_0212C\sheets\075_0212CTS001.dgn 09-MAY-2013 3:06PM lint

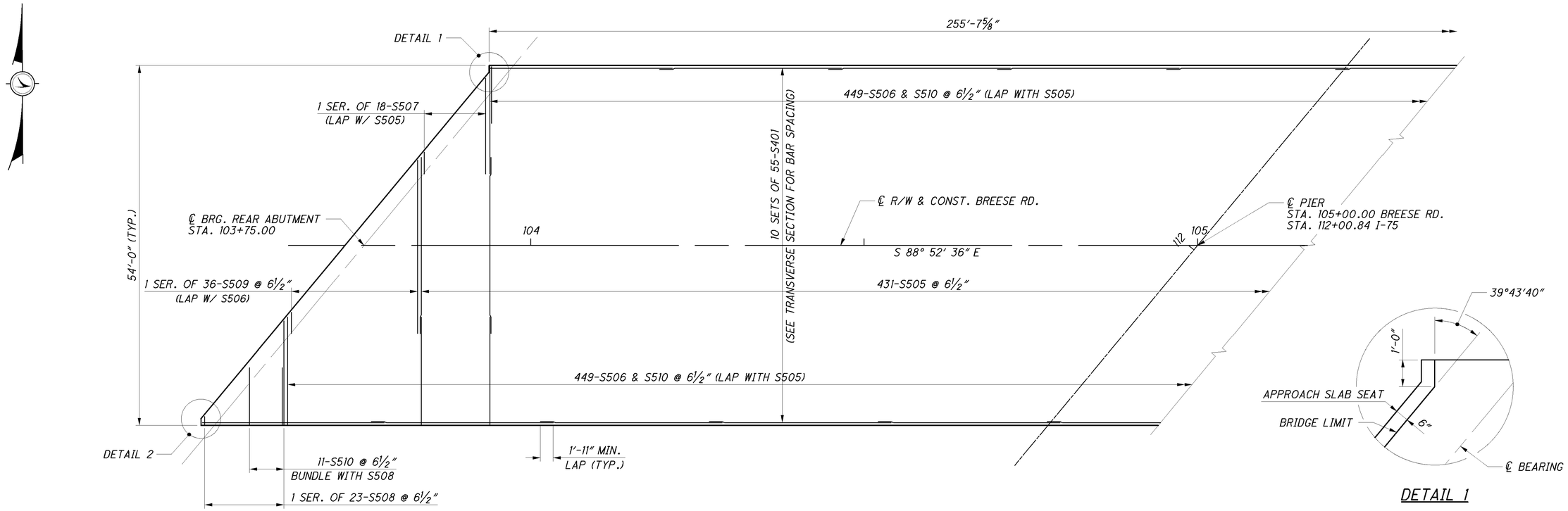

NOTES:

1. FOR NEGATIVE MOMENT REINFORCEMENT LAYOUT, SEE SHEET 17/32 .
2. FOR DECK PLACEMENT SEQUENCE, SEE SHEET 21/32 .

DECK SLAB PLAN (TOP MAT)

DETAIL 1

DETAIL 2

DESIGN AGENCY
PARSONS BRINCKERHOFF
2545 FARMERS DRIVE
SUITE 350
COLUMBUS, OHIO 43235

DESIGNED	DRAWN	REVIEWED	DATE
PJL	LEL	EBS	01/07/13
CHECKED	REVISED	STRUCTURE FILE NUMBER	
SAP		0201693	

DECK PLAN - TOP MAT REINFORCING
BRIDGE NO. ALL-75-0212
BREESE RD. OVER I-75

ALL-75-0.21
PID No. 89029

18 / 32

642
907

J:\Projects\ALL\89029\structures\ALL075_0212C\sheets\075_0212CDP001.dgn 09-MAY-2013 3:06PM jint

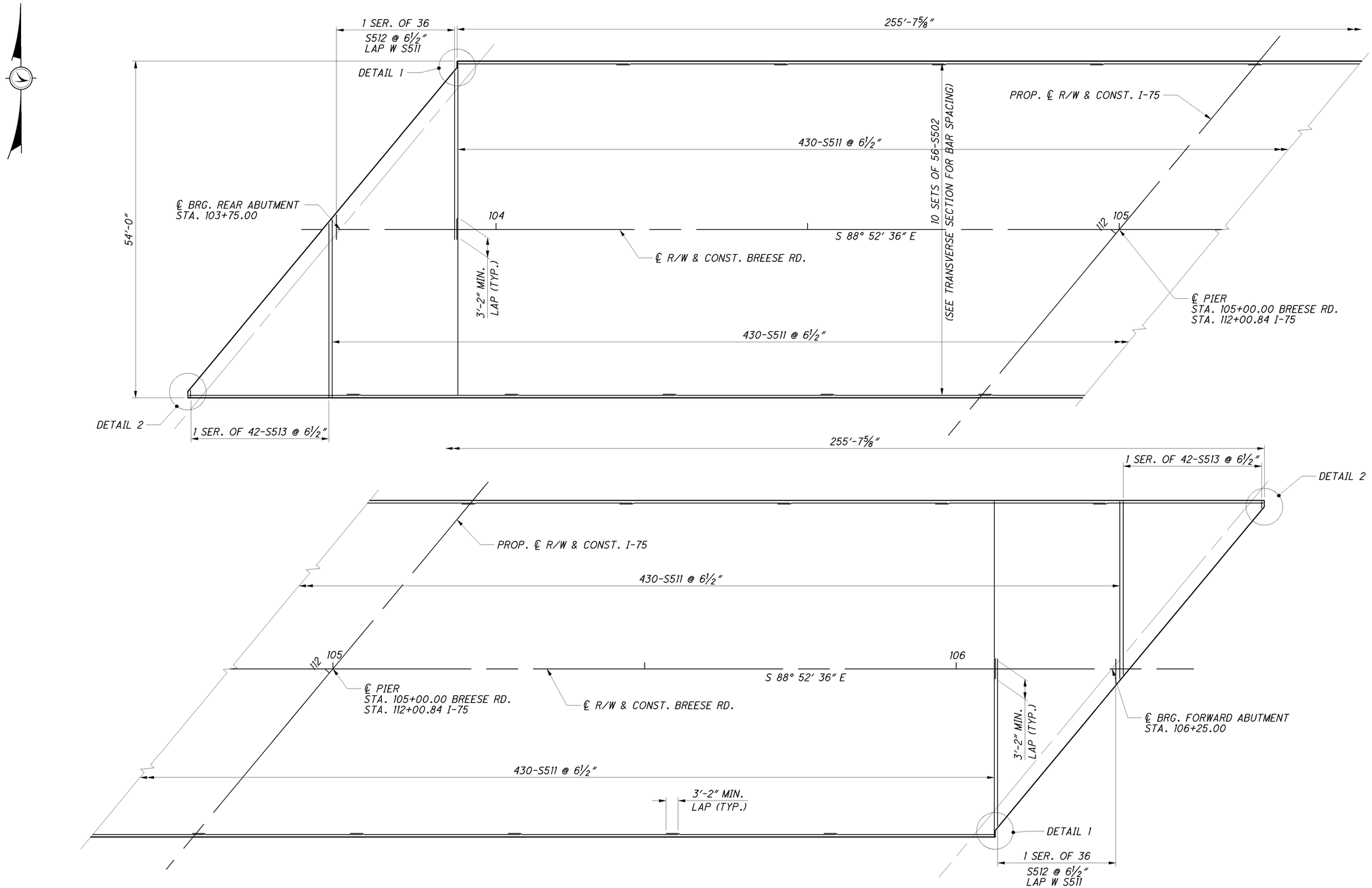

DECK SLAB PLAN (BOTTOM MAT)

NOTES:

1. FOR DETAIL 1 AND DETAIL 2 SEE SHEET 18/32 .
2. FOR DECK PLACEMENT SEQUENCE, SEE SHEET 21/32 .

DESIGN AGENCY
PARSONS BRINCKERHOFF
2545 FARMERS DRIVE
SUITE 350
COLUMBUS, OHIO 43235

DESIGNED	DRAWN	REVIEWED	DATE
PJL	BKJ	EBS	01/07/13
CHECKED	REVISED	STRUCTURE FILE NUMBER	
SAP	LEL	0201693	

DECK PLAN - BOTTOM MAT REINFORCING

BRIDGE NO. ALL-75-0212
BREESE RD. OVER I-75

ALL-75-0.21
PID No. 89029

19 / 32

643
907

J:\Projects\ALL\89029\structures\ALL075_0212C\sheets\075_0212CDP002.dgn 09-MAY-2013 3:07PM lint

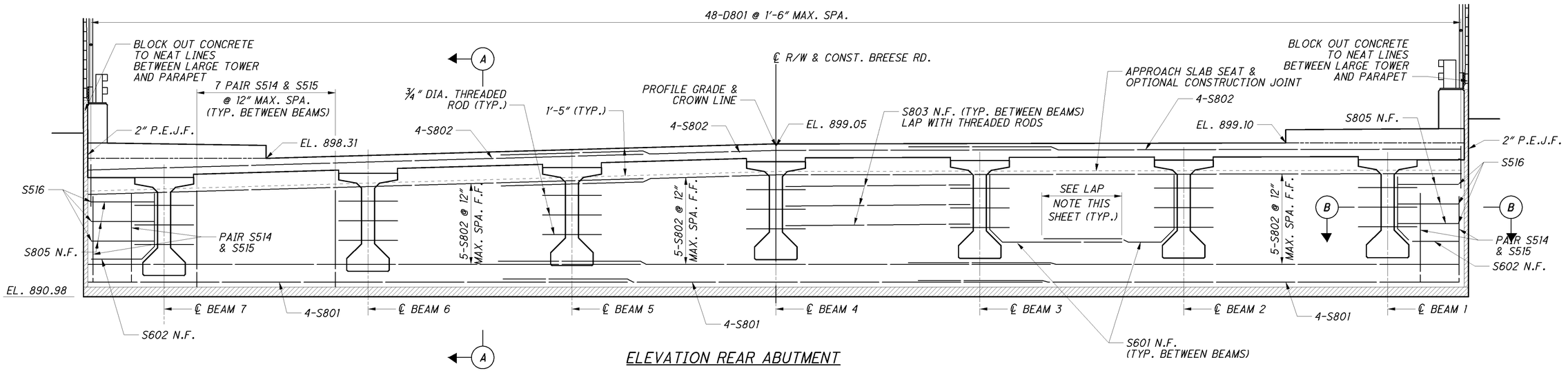

ELEVATION REAR ABUTMENT

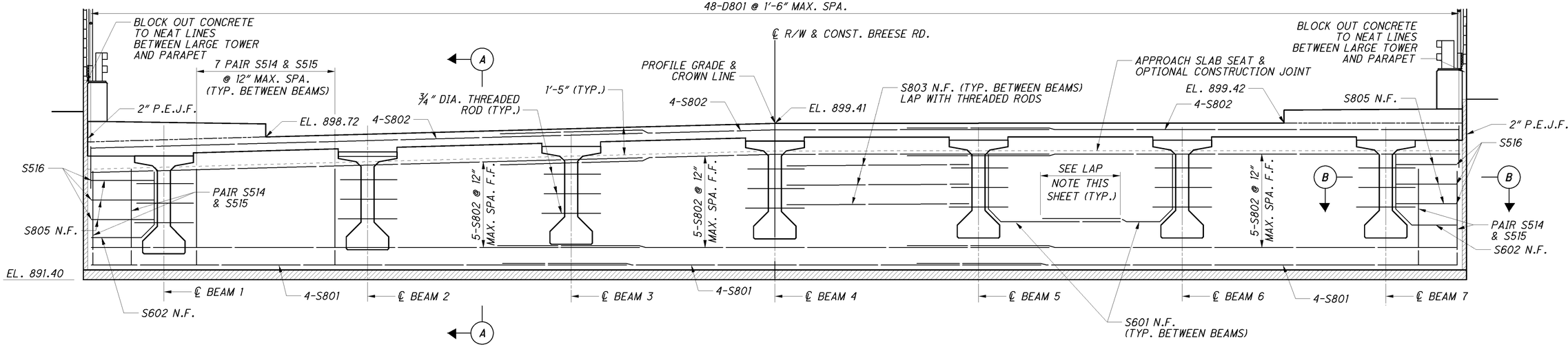

ELEVATION FORWARD ABUTMENT

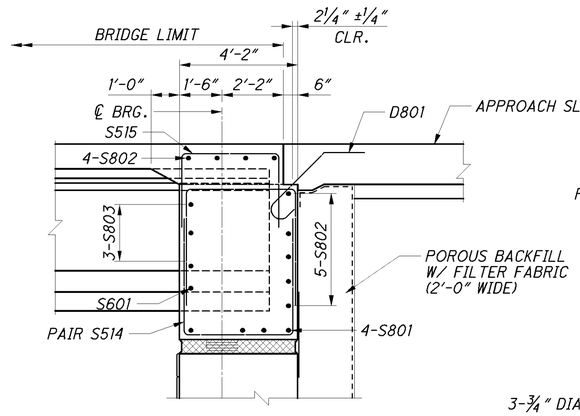

SECTION A-A

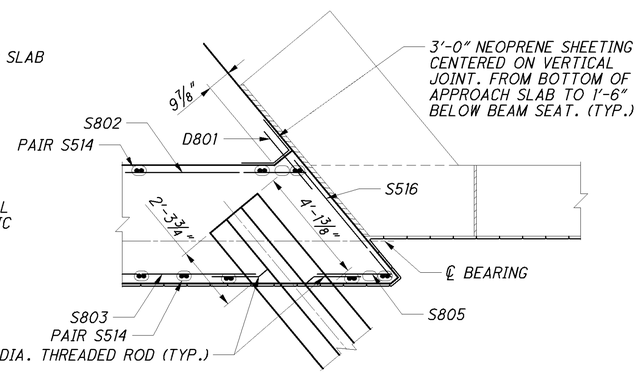

SECTION B-B

MINIMUM LAP:
S514 = 2'-5"
S601 = 4'-1"
S801 = 6'-4"
S802 = 7'-3"

NOTES:

1. ALL VERTICAL REINFORCEMENT PLACED PARALLEL TO BEAMS.
2. FOR FRAMING PLAN, SEE SHEET 14/32.
3. FOR ABUTMENT DETAILS, SEE SHEETS 6/32 THROUGH 10/32.
4. FOR SLAB PLAN, SEE SHEETS 18/32 & 19/32.
5. PLACE THE DIAPHRAGM CONCRETE ENCASING THE STRUCTURAL MEMBER ENDS AFTER THE DECK PLACEMENT IN THE ADJACENT SPAN IS COMPLETE. PROCEDURES THAT PLACE THE ABUTMENT DIAPHRAGM WITH THE DECK CONCRETE MAY BE APPROVED BY THE ENGINEER IF THE PLACEMENT SUBMITTAL CAN ASSURE THAT THE DECK CONCRETE IN THE ADJACENT SPAN WILL BE PLACED BEFORE CONCRETE IN THE DIAPHRAGM HAS REACHED ITS INITIAL SET.
6. FOR AESTHETIC DETAILS, SEE SHEET 29/32.

DESIGN AGENCY
PARSONS BRINCKERHOFF
2945 FARMERS DRIVE
SUITE 350
COLUMBUS, OHIO 43235

DESIGNED	DRAWN	REVIEWED	DATE
PJL	LEL	EBS	01/07/13
CHECKED	REVISED	STRUCTURE FILE NUMBER	
SAP		0201693	

ABUTMENT DIAPHRAGM DETAILS
BRIDGE NO. ALL-75-0212
BREESE RD. OVER I-75

ALL-75-0.21
PID No. 89029

J:\Projects\ALL\89029\structures\ALL075_0212C\sheets\075_0212CSD004.dgn 09-MAY-2013 3:07PM jint

SCREED TABLE												
SPAN 1												
	LOCATION	CL BRG. REAR ABUT.	1/10	2/10	3/10	4/10	5/10	6/10	7/10	8/10	9/10	CL BRG. PIER REAR
LEFT TOE OF CURB	STATION	103+96.61	104+08.99	104+21.37	104+33.74	104+46.12	104+58.50	104+70.88	104+83.26	104+95.64	105+08.02	105+20.40
	FINAL DECK SURFACE EL.	899.11	899.35	899.55	899.73	899.89	900.01	900.11	900.18	900.22	900.23	900.22
	DEFLECTION	0.00	0.05	0.10	0.14	0.16	0.17	0.16	0.13	0.09	0.05	0.00
	SCREED EL.	899.11	899.40	899.65	899.87	900.05	900.18	900.27	900.31	900.31	900.28	900.22
BEAM 1	STATION	103+94.94	104+07.32	104+19.70	104+32.08	104+44.46	104+56.84	104+69.22	104+81.60	104+93.98	105+06.36	105+18.74
	FINAL DECK SURFACE EL.	899.11	899.35	899.56	899.74	899.90	900.03	900.13	900.20	900.25	900.27	900.26
	DEFLECTION	0.00	0.05	0.10	0.14	0.16	0.17	0.16	0.13	0.09	0.05	0.00
	SCREED EL.	899.11	899.40	899.66	899.88	900.06	900.20	900.29	900.33	900.34	900.32	900.26
	TOP OF HAUNCH EL	898.40	898.69	898.95	899.17	899.35	899.49	899.58	899.62	899.63	899.61	899.55
LEFT TOE OF SIDEWALK	STATION	103+91.62	104+04.00	104+16.38	104+28.76	104+41.14	104+53.52	104+65.90	104+78.27	104+90.65	105+03.03	105+15.41
	FINAL DECK SURFACE EL.	899.10	899.35	899.57	899.76	899.92	900.06	900.17	900.25	900.30	900.33	900.32
	DEFLECTION	0.00	0.05	0.11	0.14	0.17	0.18	0.17	0.14	0.10	0.05	0.00
	SCREED EL.	899.10	899.40	899.68	899.90	900.09	900.24	900.34	900.39	900.40	900.38	900.32
BEAM 2	STATION	103+88.30	104+00.68	104+13.05	104+25.43	104+37.81	104+50.19	104+62.57	104+74.95	104+87.33	104+99.71	105+12.09
	FINAL DECK SURFACE EL.	899.10	899.35	899.58	899.78	899.95	900.09	900.21	900.29	900.35	900.39	900.39
	DEFLECTION	0.00	0.06	0.11	0.15	0.18	0.19	0.18	0.15	0.11	0.05	0.00
	SCREED EL.	899.10	899.41	899.69	899.93	900.13	900.28	900.39	900.44	900.46	900.44	900.39
	TOP OF HAUNCH EL	898.39	898.70	898.98	899.22	899.42	899.57	899.68	899.73	899.75	899.73	899.68
BEAM 3	STATION	103+81.65	103+94.03	104+06.41	104+18.79	104+31.16	104+43.54	104+55.92	104+68.30	104+80.68	104+93.06	105+05.44
	FINAL DECK SURFACE EL.	899.08	899.35	899.59	899.80	899.99	900.15	900.28	900.38	900.45	900.50	900.52
	DEFLECTION	0.00	0.06	0.11	0.15	0.18	0.19	0.18	0.15	0.11	0.05	0.00
	SCREED EL.	899.08	899.41	899.70	899.95	900.17	900.34	900.46	900.53	900.56	900.55	900.52
	TOP OF HAUNCH EL	898.37	898.70	898.99	899.24	899.46	899.63	899.75	899.82	899.85	899.84	899.81
BEAM 4 / PGL / CROWN LINE	STATION	103+75.00	103+87.38	103+99.76	104+12.14	104+24.52	104+36.90	104+49.28	104+61.65	104+74.03	104+86.41	104+98.79
	FINAL DECK SURFACE EL.	899.05	899.33	899.59	899.82	900.02	900.19	900.34	900.45	900.54	900.61	900.64
	DEFLECTION	0.00	0.06	0.11	0.15	0.18	0.19	0.18	0.15	0.11	0.05	0.00
	SCREED EL.	899.05	899.39	899.70	899.97	900.20	900.38	900.52	900.60	900.65	900.66	900.64
	TOP OF HAUNCH EL	898.34	898.68	898.99	899.26	899.49	899.67	899.81	899.89	899.94	899.95	899.93
BEAM 5	STATION	103+68.35	103+80.73	103+93.11	104+05.49	104+17.87	104+30.25	104+42.63	104+55.01	104+67.39	104+79.76	104+92.14
	FINAL DECK SURFACE EL.	898.76	899.06	899.33	899.57	899.79	899.97	900.13	900.27	900.37	900.45	900.50
	DEFLECTION	0.00	0.06	0.11	0.15	0.18	0.19	0.18	0.15	0.11	0.05	0.00
	SCREED EL.	898.76	899.12	899.44	899.72	899.97	900.16	900.31	900.42	900.48	900.50	900.50
	TOP OF HAUNCH EL	898.05	898.41	898.73	899.01	899.26	899.45	899.60	899.71	899.77	899.79	899.79
BEAM 6	STATION	103+61.70	103+74.08	103+86.46	103+98.84	104+11.22	104+23.60	104+35.98	104+48.36	104+60.74	104+73.12	104+85.50
	FINAL DECK SURFACE EL.	898.46	898.77	899.06	899.32	899.55	899.75	899.92	900.07	900.19	900.28	900.35
	DEFLECTION	0.00	0.06	0.11	0.15	0.18	0.19	0.18	0.15	0.11	0.05	0.00
	SCREED EL.	898.46	898.83	899.17	899.47	899.73	899.94	900.10	900.22	900.30	900.33	900.35
	TOP OF HAUNCH EL	897.75	898.12	898.46	898.76	899.02	899.23	899.39	899.51	899.59	899.62	899.64
RIGHT TOE OF SIDEWALK	STATION	103+58.38	103+70.76	103+83.14	103+95.52	104+07.90	104+20.28	104+32.65	104+45.03	104+57.41	104+69.79	104+82.17
	FINAL DECK SURFACE EL.	898.31	898.63	898.92	899.19	899.42	899.63	899.82	899.97	900.10	900.20	900.27
	DEFLECTION	0.00	0.05	0.11	0.14	0.17	0.18	0.17	0.14	0.10	0.05	0.00
	SCREED EL.	898.31	898.68	899.03	899.33	899.59	899.81	899.99	900.11	900.20	900.25	900.27
BEAM 7	STATION	103+55.06	103+67.43	103+79.81	103+92.19	104+04.57	104+16.95	104+29.33	104+41.71	104+54.09	104+66.47	104+78.85
	FINAL DECK SURFACE EL.	898.15	898.48	898.78	899.05	899.30	899.52	899.71	899.87	900.00	900.11	900.19
	DEFLECTION	0.00	0.05	0.10	0.14	0.16	0.17	0.16	0.13	0.09	0.05	0.00
	SCREED EL.	898.15	898.53	898.88	899.19	899.46	899.69	899.87	900.00	900.09	900.16	900.19
	TOP OF HAUNCH EL	897.44	897.82	898.17	898.48	898.75	898.98	899.16	899.29	899.38	899.45	899.48
RIGHT TOE OF CURB	STATION	103+53.39	103+65.77	103+78.15	103+90.53	104+02.91	104+15.29	104+27.67	104+40.05	104+52.43	104+64.81	104+77.18
	FINAL DECK SURFACE EL.	898.07	898.40	898.71	898.99	899.23	899.46	899.65	899.82	899.95	900.06	900.15
	DEFLECTION	0.00	0.05	0.10	0.14	0.16	0.17	0.16	0.13	0.09	0.05	0.00
	SCREED EL.	898.07	898.45	898.81	899.13	899.39	899.63	899.81	899.95	900.04	900.11	900.15

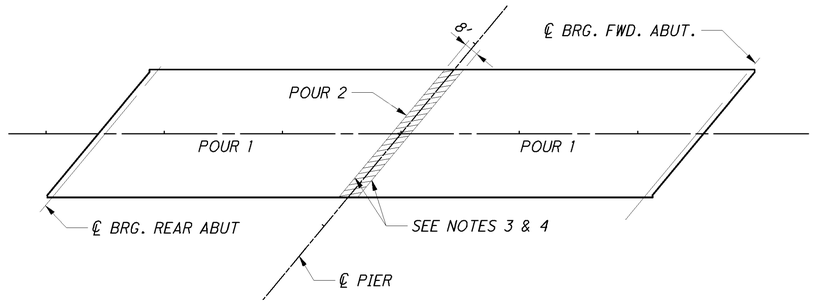

CONCRETE DECK PLACEMENT SEQUENCE

NOTES:

1. FOR NOTES SEE SHEET 22/32.
2. FOR SPAN 2 SCREED TABLE SEE SHEET 22/32.
3. SEAL CONSTRUCTION JOINTS WITH 2'-0" WIDE HMWM PER 705.15, INCLUDE WITH ITEM 898 FOR PAYMENT.
4. DO NOT PLACE DECK CONCRETE BETWEEN CONSTRUCTION JOINTS PRIOR TO THE CONCRETE PLACEMENT IN THE ADJACENT SPANS. SEE STD. DWG. PSID-1-99 FOR ADDITIONAL NOTES AND DETAILS.

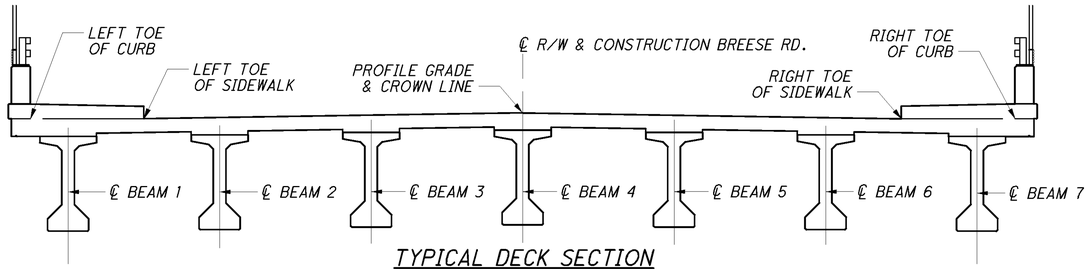

TYPICAL DECK SECTION

DESIGN AGENCY
PARSONS BRINCKERHOFF
2945 FARMERS DRIVE
SUITE 350
COLUMBUS, OHIO 43235

DESIGNED	DRAWN	REVIEWED	DATE
PJL	LEL	EBS	01/07/13
CHECKED	REVISED	STRUCTURE FILE NUMBER	
SAP		0201693	

SCREED TABLE
BRIDGE NO. ALL-75-0212
BREESE RD. OVER I-75

ALL-75-0.21
PID No. 89029

21 / 32

645
907

I:\Projects\ALL\89029\structures\ALL075_0212C\sheets\075_0212CSD003.dgn 09-MAY-2013 3:07PM lint

SCREED TABLE												
SPAN 2												
	LOCATION	CL BRG. PIER FWD.	1/10	2/10	3/10	4/10	5/10	6/10	7/10	8/10	9/10	CL BRG. FWD ABUT.
LEFT TOE OF CURB	STATION	105+22.82	105+35.19	105+47.57	105+59.95	105+72.33	105+84.71	105+97.09	106+09.47	106+21.85	106+34.23	106+46.61
	FINAL DECK SURFACE EL.	900.21	900.17	900.09	899.99	899.86	899.70	899.52	899.30	899.06	898.80	898.50
	DEFLECTION	0.00	0.05	0.09	0.13	0.16	0.17	0.16	0.14	0.10	0.05	0.00
	SCREED EL.	900.21	900.22	900.18	900.12	900.02	899.87	899.68	899.44	899.16	898.85	898.50
BEAM 1	STATION	105+21.15	105+33.53	105+45.91	105+58.29	105+70.67	105+83.05	105+95.43	106+07.81	106+20.19	106+32.57	106+44.94
	FINAL DECK SURFACE EL.	900.25	900.21	900.14	900.04	899.91	899.76	899.58	899.37	899.13	898.87	898.57
	DEFLECTION	0.00	0.05	0.09	0.13	0.16	0.17	0.16	0.14	0.10	0.05	0.00
	SCREED EL.	900.25	900.26	900.23	900.17	900.07	899.93	899.74	899.51	899.23	898.92	898.57
	TOP OF HAUNCH EL	899.54	899.55	899.52	899.46	899.36	899.22	899.03	898.80	898.52	898.21	897.86
LEFT TOE OF SIDEWALK	STATION	105+17.83	105+30.21	105+42.59	105+54.97	105+67.35	105+79.72	105+92.10	106+04.48	106+16.86	106+29.24	106+41.62
	FINAL DECK SURFACE EL.	900.32	900.29	900.22	900.13	900.01	899.87	899.69	899.49	899.26	899.00	898.72
	DEFLECTION	0.00	0.05	0.10	0.14	0.17	0.18	0.17	0.14	0.11	0.05	0.00
	SCREED EL.	900.32	900.34	900.32	900.27	900.18	900.05	899.86	899.63	899.37	899.05	898.72
BEAM 2	STATION	105+14.50	105+26.88	105+39.26	105+51.64	105+64.02	105+76.40	105+88.78	106+01.16	106+13.54	106+25.92	106+38.30
	FINAL DECK SURFACE EL.	900.39	900.36	900.31	900.22	900.11	899.97	899.81	899.61	899.39	899.14	898.86
	DEFLECTION	0.00	0.05	0.11	0.15	0.18	0.19	0.18	0.15	0.11	0.06	0.00
	SCREED EL.	900.39	900.41	900.42	900.37	900.29	900.16	899.99	899.76	899.50	899.20	898.86
	TOP OF HAUNCH EL	899.68	899.70	899.71	899.66	899.58	899.45	899.28	899.05	898.79	898.49	898.15
BEAM 3	STATION	105+07.86	105+20.24	105+32.61	105+44.99	105+57.37	105+69.75	105+82.13	105+94.51	106+06.89	106+19.27	106+31.65
	FINAL DECK SURFACE EL.	900.52	900.51	900.47	900.40	900.30	900.18	900.03	899.85	899.64	899.40	899.14
	DEFLECTION	0.00	0.05	0.11	0.15	0.18	0.19	0.18	0.15	0.11	0.06	0.00
	SCREED EL.	900.52	900.56	900.58	900.55	900.48	900.37	900.21	900.00	899.75	899.46	899.14
	TOP OF HAUNCH EL	899.81	899.85	899.87	899.84	899.77	899.66	899.50	899.29	899.04	898.75	898.43
BEAM 4 / PGL / CROWN LINE	STATION	105+01.21	105+13.59	105+25.97	105+38.35	105+50.72	105+63.10	105+75.48	105+87.86	106+00.24	106+12.62	106+25.00
	FINAL DECK SURFACE EL.	900.65	900.65	900.62	900.57	900.49	900.38	900.24	900.07	899.88	899.66	899.41
	DEFLECTION	0.00	0.05	0.11	0.15	0.18	0.19	0.18	0.15	0.11	0.06	0.00
	SCREED EL.	900.65	900.70	900.73	900.72	900.67	900.57	900.42	900.22	899.99	899.72	899.41
	TOP OF HAUNCH EL	899.94	899.99	900.02	900.01	899.96	899.86	899.71	899.51	899.28	899.01	898.70
BEAM 5	STATION	104+94.56	105+06.94	105+19.32	105+31.70	105+44.08	105+56.46	105+68.83	105+81.21	105+93.59	106+05.97	106+18.35
	FINAL DECK SURFACE EL.	900.51	900.52	900.51	900.47	900.40	900.31	900.19	900.04	899.86	899.66	899.42
	DEFLECTION	0.00	0.05	0.11	0.15	0.18	0.19	0.18	0.15	0.11	0.06	0.00
	SCREED EL.	900.51	900.57	900.62	900.62	900.58	900.50	900.37	900.19	899.97	899.72	899.42
	TOP OF HAUNCH EL	899.80	899.86	899.91	899.91	899.87	899.79	899.66	899.48	899.26	899.01	898.71
BEAM 6	STATION	104+87.91	105+00.29	105+12.67	105+25.05	105+37.43	105+49.81	105+62.19	105+74.57	105+86.95	105+99.32	106+11.70
	FINAL DECK SURFACE EL.	900.36	900.39	900.39	900.37	900.32	900.24	900.13	899.99	899.83	899.64	899.42
	DEFLECTION	0.00	0.05	0.11	0.15	0.18	0.19	0.18	0.15	0.11	0.06	0.00
	SCREED EL.	900.36	900.44	900.50	900.52	900.50	900.43	900.31	900.14	899.94	899.70	899.42
	TOP OF HAUNCH EL	899.65	899.73	899.79	899.81	899.79	899.72	899.60	899.43	899.23	898.99	898.71
RIGHT TOE OF SIDEWALK	STATION	104+84.59	104+96.97	105+09.35	105+21.73	105+34.10	105+46.48	105+58.86	105+71.24	105+83.62	105+96.00	106+08.38
	FINAL DECK SURFACE EL.	900.28	900.32	900.33	900.31	900.27	900.20	900.10	899.97	899.81	899.63	899.42
	DEFLECTION	0.00	0.05	0.10	0.14	0.17	0.18	0.17	0.14	0.11	0.05	0.00
	SCREED EL.	900.28	900.37	900.43	900.45	900.44	900.38	900.27	900.11	899.92	899.68	899.42
BEAM 7	STATION	104+81.26	104+93.64	105+06.02	105+18.40	105+30.78	105+43.16	105+55.54	105+67.92	105+80.30	105+92.68	106+05.06
	FINAL DECK SURFACE EL.	900.20	900.25	900.27	900.26	900.22	900.15	900.06	899.94	899.79	899.62	899.42
	DEFLECTION	0.00	0.05	0.09	0.13	0.16	0.17	0.16	0.14	0.10	0.05	0.00
	SCREED EL.	900.20	900.30	900.36	900.39	900.38	900.32	900.22	900.08	899.89	899.67	899.42
	TOP OF HAUNCH EL	899.49	899.59	899.65	899.68	899.67	899.61	899.51	899.37	899.18	898.96	898.71
RIGHT TOE OF CURB	STATION	104+79.60	104+91.98	105+04.36	105+16.74	105+29.12	105+41.50	105+53.88	105+66.26	105+78.63	105+91.01	106+03.39
	FINAL DECK SURFACE EL.	900.16	900.21	900.23	900.23	900.19	900.13	900.04	899.93	899.78	899.61	899.41
	DEFLECTION	0.00	0.05	0.09	0.13	0.16	0.17	0.16	0.14	0.10	0.05	0.00
	SCREED EL.	900.16	900.26	900.32	900.36	900.35	900.30	900.20	900.07	899.88	899.66	899.41

NOTES:

1. CAMBER
   CALCULATED CAMBER AT THE TIME OF RELEASE IS 2⅝ INCHES INTERIOR BEAM.
   CALCULATED CAMBER AT THE TIME OF ERECTION IS 4½ INCHES INTERIOR BEAM.
   CALCULATED LONG-TERM CAMBER IS 6½ INCHES INTERIOR BEAM.

2. SCREED ELEVATIONS
   SCREED ELEVATIONS SHOWN REPRESENT THE THEORETICAL DECK SURFACE LOCATION PRIOR TO DEFLECTIONS CAUSED BY DECK PLACEMENT AND OTHER ANTICIPATED DEAD LOADS.

3. DECK SLAB THICKNESS FOR CONCRETE QUANTITY
   THE TOPPING THICKNESSES SHOWN FROM THE TOP OF THE DECK SLAB TO THE TOP OF THE TOP FLANGE ALONG THE CENTERLINE OF THE I-BEAM ARE THEORETICAL DIMENSIONS. THE HAUNCH DEPTH IS THE TOPPING THICKNESS MINUS THE DESIGN SLAB THICKNESS. THE DEPARTMENT WILL PAY FOR SUPERSTRUCTURE CONCRETE BASED ON THE DESIGN SLAB THICKNESS AND THE AVERAGE OF THE THEORETICAL HAUNCH DEPTHS AT MID-SPAN AND AT EACH BEAM BEARING EVEN THOUGH DEVIATION FROM THE DIMENSIONS SHOWN MAY BE NECESSARY TO PLACE THE DECK SURFACE AT THE FINISHED GRADE. ONCE ALL BEAMS ARE SET IN THEIR FINAL POSITION, THE ACTUAL CAMBER FOR EACH MEMBER WILL BE THE TOP OF BEAM ELEVATION AT MID-SPAN MINUS THE AVERAGE TOP OF BEAM ELEVATION AT EACH BEARING. THE ACTUAL TOPPING THICKNESS AT MID-SPAN WILL BE THE THEORETICAL DIMENSION PLUS OR MINUS THE DIFFERENCE BETWEEN THE ACTUAL AND ANTICIPATED CAMBER.

4. TOP OF HAUNCH ELEVATIONS
   TOP OF HAUNCH ELEVATIONS SHOWN REPRESENT THE THEORETICAL LOCATION OF THE BOTTOM OF THE DECK ABOVE THE BEAM/GIRDER HAUNCH PRIOR TO DEFLECTIONS CAUSED BY DECK PLACEMENT AND OTHER ANTICIPATED DEAD LOADS.

5. FINAL DECK SURFACE ELEVATIONS
   FINAL DECK SURFACE ELEVATIONS SHOWN REPRESENT THE DECK SURFACE LOCATION AFTER ALL ANTICIPATED DEAD LOAD DEFLECTIONS HAVE OCCURRED.

6. DEFLECTIONS
   DEFLECTIONS ARE BASED ON THE DEAD LOADS FROM THE DECK, HAUNCH, BARRIERS, AND DIAPHRAGMS.

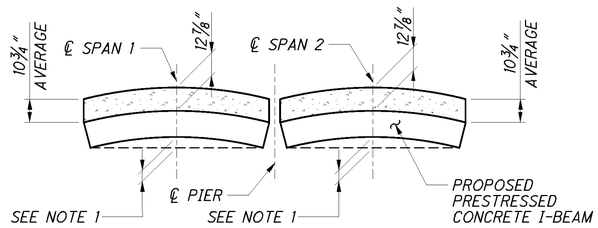

DECK SLAB THICKNESS DIAGRAM

DESIGN AGENCY
PARSONS BRINCKERHOFF
2945 FARMERS DRIVE
SUITE 350
COLUMBUS, OHIO 43235

DESIGNED	DRAWN	REVIEWED	DATE
PJL	LEL	EBS	01/07/13
CHECKED	REVISED	STRUCTURE FILE NUMBER	
SAP		0201693	

SCREED TABLE
BRIDGE NO. ALL-75-0212
BREESE RD. OVER I-75

ALL-75-0.21
PID No. 89029

J:\Projects\ALL\89029\structures\ALL075_0212C\sheets\075_0212CSD006.dgn 09-MAY-2013 3:07PM jint

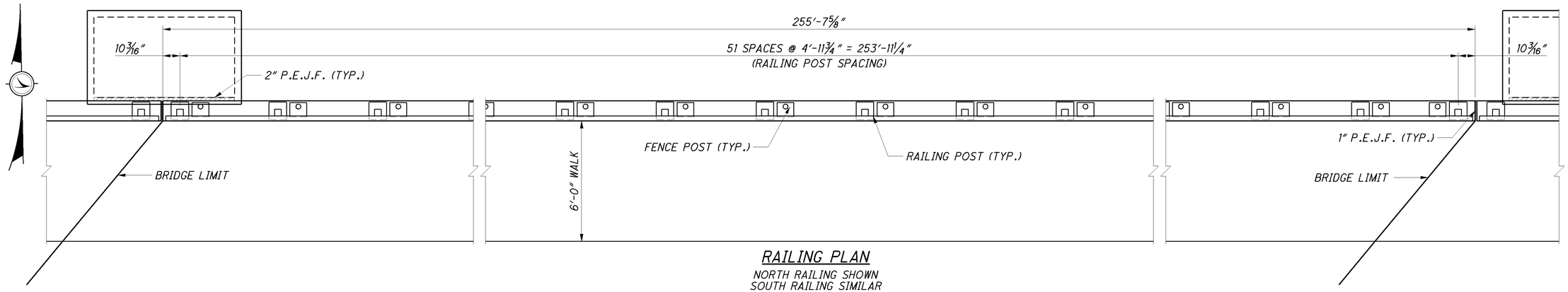

RAILING PLAN

NORTH RAILING SHOWN
SOUTH RAILING SIMILAR

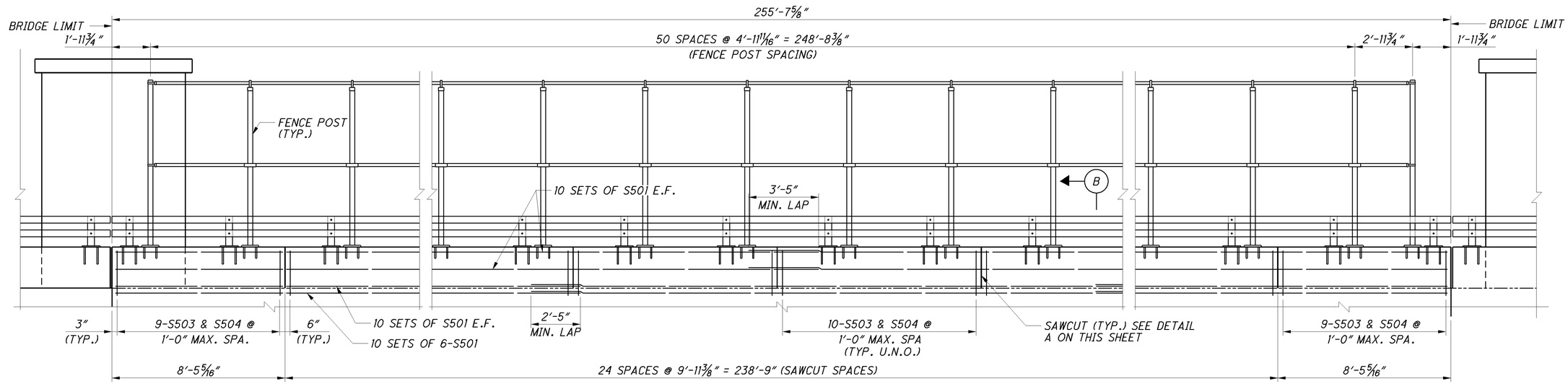

RAILING ELEVATION

NORTH RAILING SHOWN
SOUTH RAILING SIMILAR

B

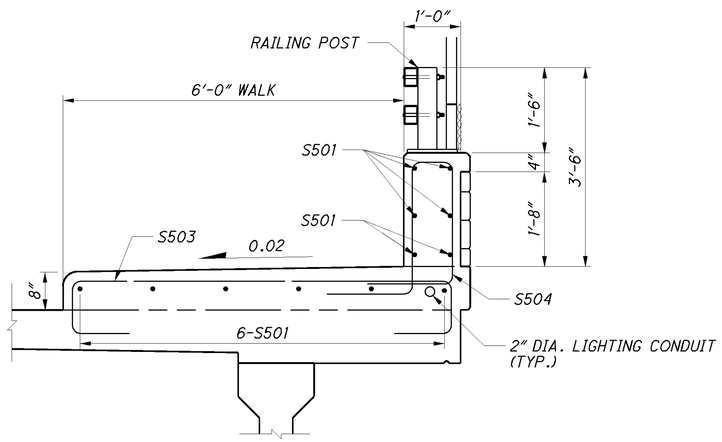

SECTION B-B

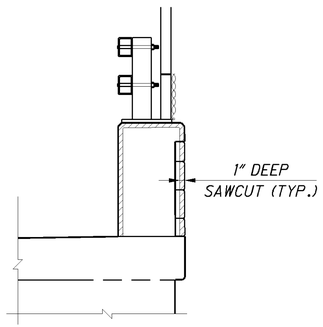

DETAIL A

NOTES:

1. VANDAL PROTECTION FENCE SHALL BE CONSTRUCTED USING POST SECTION PS-3 AND BASE PLATE BP-1.
2. FOR AESTHETIC DETAILS, SEE SHEET 29/32.
3. ALL SIDEWALK CONCRETE ON THE DECK INCLUDED WITH ITEM 898 QC/QA CONCRETE, SUPERSTRUCTURE (DECK), AS PER PLAN FOR PAYMENT. BARRIER CONCRETE TO BE INCLUDED WITH ITEM 517 AS PER PLAN FOR PAYMENT.

DESIGN AGENCY
PARSONS BRINCKERHOFF
2945 FARMERS DRIVE
SUITE 350
COLUMBUS, OHIO 43235

DESIGNED	DRAWN	REVIEWED	DATE
PJL	LEL	EBS	01/07/13
CHECKED	REVISED	STRUCTURE FILE NUMBER	
SAP		0201693	

BRIDGE SIDEWALK RAILING DETAILS
BRIDGE NO. ALL-75-0212
BREESE RD. OVER I-75

ALL-75-0.21
PID No. 89029

J:\Projects\ALL\89029\structures\ALL075_0212C\sheets\075_0212CRA001.dgn 29-OCT-2013 4:33PM lint

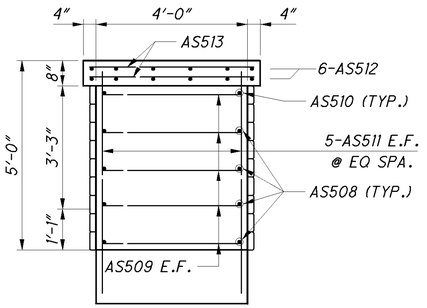

SECTION F-F

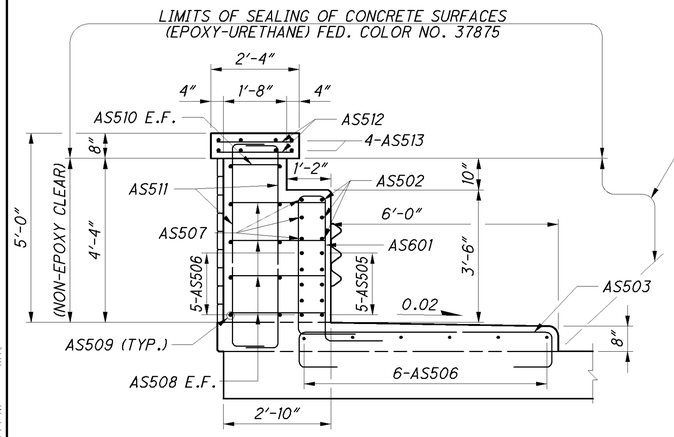

SECTION D-D

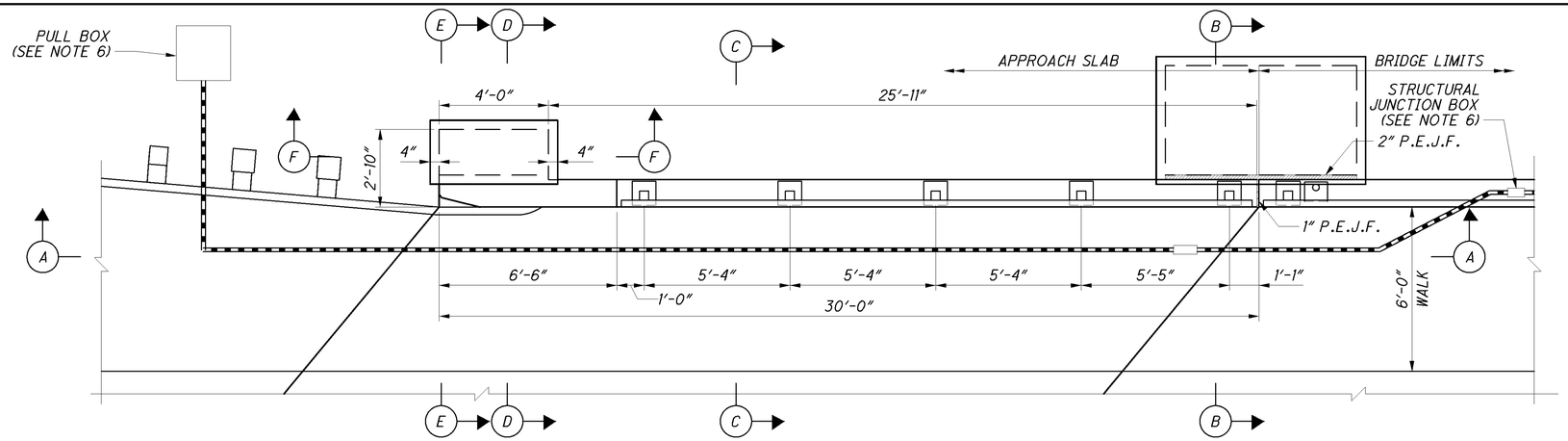

TRANSITION PARAPET

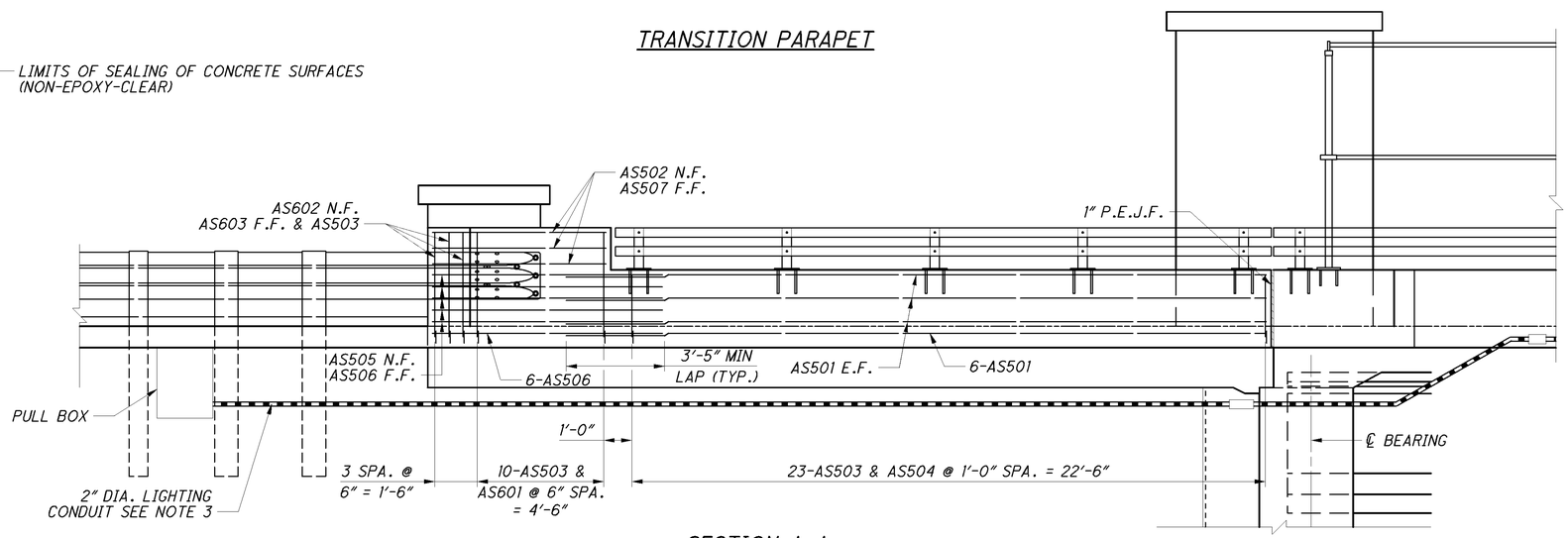

SECTION A-A

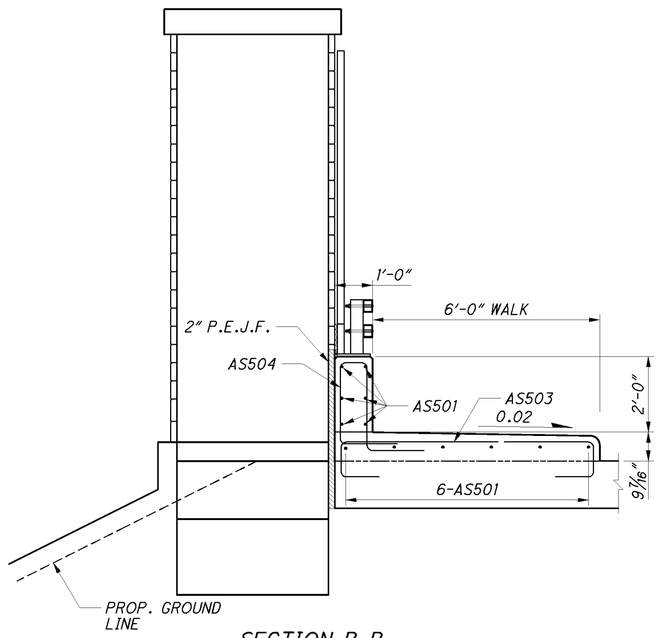

SECTION B-B

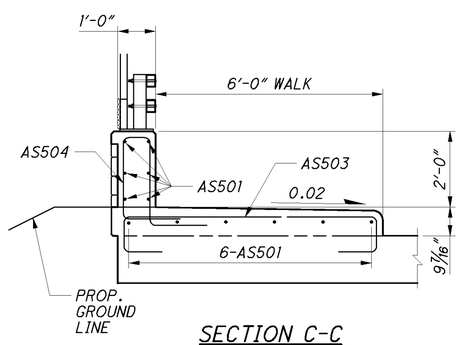

SECTION C-C

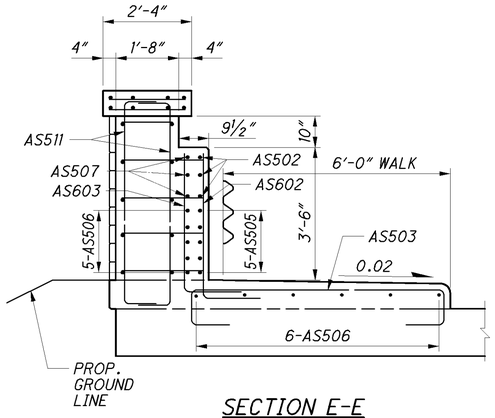

SECTION E-E

NOTES:

1. VANDAL PROTECTION FENCE SHALL BE CONSTRUCTED USING POST SECTION PS-3 AND BASE PLATE BP-1.
2. FOR AESTHETIC DETAILS, SEE SHEET 29/32.
3. FOR ADDITIONAL NOTES AND DETAILS, SEE STANDARD CONSTRUCTION DRAWING BR-2-98.
4. THE COST OF THE APPROACH SLAB RAILING SHALL BE INCLUDED WITH ITEM 898, QC/QA CONCRETE, CLASS QSC2, SUPERSTRUCTURE (APPROACH SLAB), (T=17"), AS PER PLAN.
5. ALL LABOR AND MATERIALS, EXCLUDING SEALING AND FORMLINER, NECESSARY TO CONSTRUCT TOWER SHOWN IN SECTION D-D SHALL BE INCLUDED WITH APPROACH SLAB FOR PAYMENT.
6. FOR ADDITIONAL NOTES AND DETAILS OF PULL BOXES, STRUCTURE JUNCTION BOXES AND CONDUIT, SEE STANDARD CONSTRUCTION DRAWINGS HL-30.11, HL-30.31 AND HL-30.32. SEE SHEET 4/32 FOR QUANTITIES OF THESE ITEMS.

DESIGN AGENCY
PARSONS BRINCKERHOFF
2945 FARMERS DRIVE
SUITE 350
COLUMBUS, OHIO 43235

DESIGNED	DRAWN	REVIEWED	DATE
PJL	BKJ	EBS	01/07/13
CHECKED	REVISED	STRUCTURE FILE NUMBER	
SAP		0201693	

PARAPET DETAILS
BRIDGE NO. ALL-75-0212
BREESE RD. OVER I-75

ALL-75-0.21
PID No. 89029

24/32

648
907

J:\Projects\ALL\89029\structures\ALL075_0212C\sheets\075_0212CRA002.dgn 09-MAY-2013 3:07PM jint

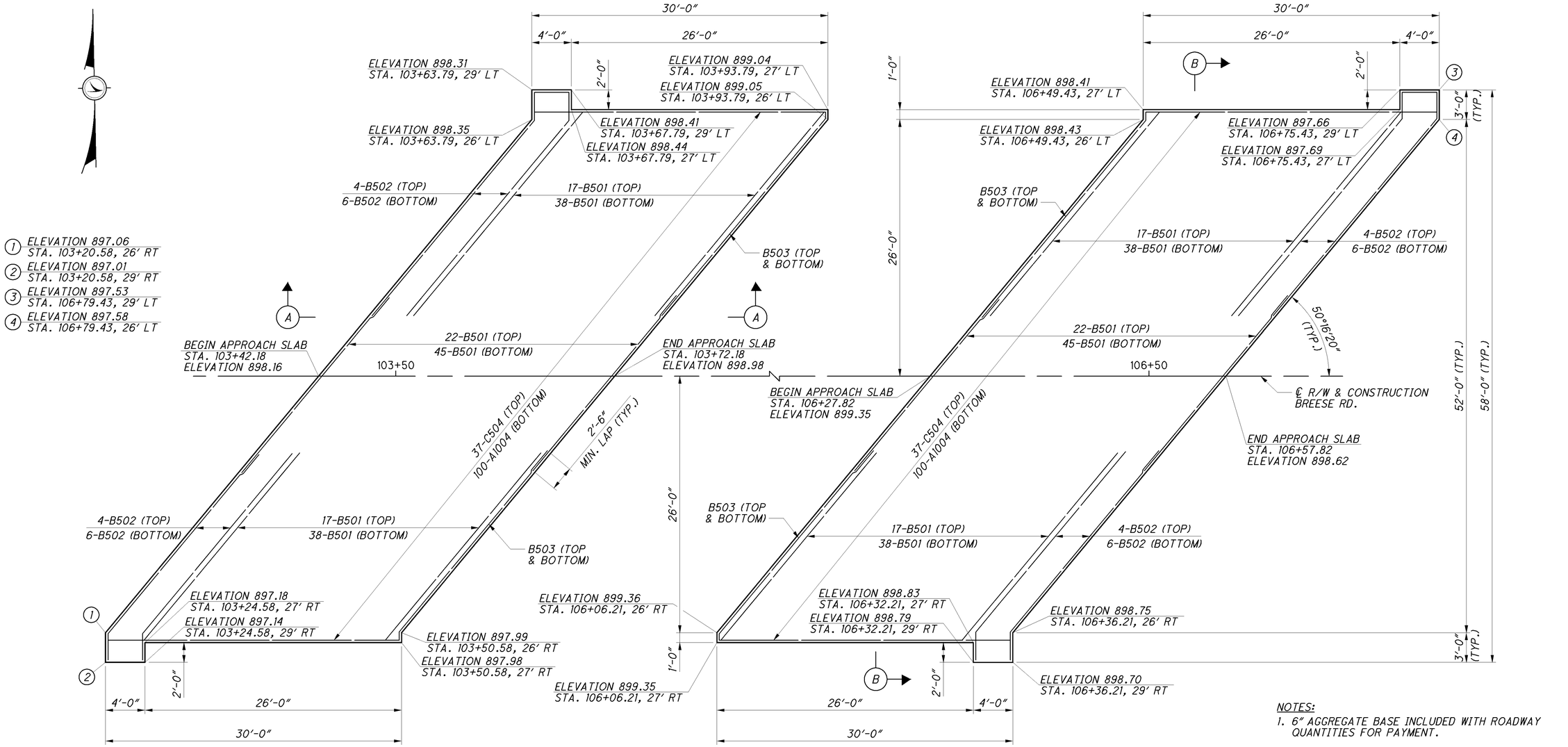

DESIGN AGENCY
PARSONS BRINCKERHOFF
2945 FARMERS DRIVE
SUITE 350
COLUMBUS, OHIO 43235

DESIGNED	DRAWN	REVIEWED	DATE
PJL	LEL	EBS	01/07/13
CHECKED	REVISED	STRUCTURE FILE NUMBER	
SAP		0201693	

MODIFIED APPROACH SLAB DEATILS

BRIDGE NO. ALL-75-0212
BREESE RD. OVER I-75

ALL-75-0.21
PID No. 89029

25 / 32

649
907

J:\Projects\ALL\89029\structures\ALL075_0212C\sheets\075_0212CMD001.dgn 09-MAY-2013 3:07PM lint

MARK	NUMBER TOTAL	LENGTH	WEIGHT	TYPE	DIMENSIONS A	B	C	D	E	R	INC
SUPERSTRUCTURE											
S401	550	27'- 04"	10,043	STR.							
S410	36	14'- 08"	353	6	4'-4"	4'-8"	8"				
S501	240	28'- 08"	7,176	STR.							
S502	560	28'- 05"	16,598	STR.							
S503	516	9'- 08"	5,203	5	6'-8"	11"	10"				
S504	516	7'- 08"	4,127	30	1'-6"	8"	2'-4"	2'-2"			
S505	431	26'- 06"	11,913	STR.							
S506	898	16'- 01"	15,064	STR.							
	2	3'- 03"									
S507	SER. OF	TO	331	STR.							8"
	18	14'- 04"									
	2	1'- 02"									
S508	SER. OF	TO	400	STR.							8"
	23	15'- 06"									
	2	3'- 02"									
S509	SER. OF	'-	1,096	STR.							8"
	36	26'- 00"									
S510	920	9'- 01"	8,717	16	8'-6"						
S511	860	28'- 05"	25,490	STR.							
	2	3'- 10"									
S512	SER. OF	TO	1,149	STR.							8"
	36	26'- 09"									
	2	1'- 00"									
S513	SER. OF	TO	1,260	STR.							8"
	42	27'- 09"									
S514	184	13'- 02"	2,527	2	4'-3"	4'- 11"	4'-3"				
S515	92	9'- 07"	920	2	2'-9"	4'-4"	2'-9"				
S516	12	4'- 11"	62	STR.							
S601	24	9'- 06"	343	13	2'-9"	9"	9"	5'-9"			
S602	4	5'- 10"	36	13	2'-9"	9"	9"	2'-1"			
S605	216	30'- 00"	9,733	STR.							
S606	108	31'- 03"	5,070	STR.							
S610	48	9'- 02"	661	13	5'-7"	8"	8"	2'-8"			
S611	36	9'- 01"	492	STR.							
S801	24	27'- 07"	1,768	STR.							
S802	54	28'- 02"	4,062	STR.							
S803	36	9'- 01"	874	STR.							
S804	110	33'- 04"	9,790	STR.							
S805	12	3'- 00"	97	STR.							
D801	96	5'- 06"	1,410	18	3'-2"	1'-0"	1'-0"				
SUPERSTRUCTURE TOTAL			146,765								

MARK	NUMBER TOTAL	LENGTH	WEIGHT	TYPE	DIMENSIONS A	B	C	D	E	R	INC
PIER											
P401	24	3'- 08"	59	35	2'-8"	8"					
P501	10	30'- 00"	313	STR.							
P502	20	22'- 09"	475	STR.							
P601	224	11'- 04"	3,814	2	4'-6"	2'-8"	4'-6"				
	2	12'- 04"				3'-8"					
P602	SER. OF	TO	229	2	4'-6"	TO	4'-6"				4"
	6	13'- 00"				4'-4"					
P611	12	18'- 02"	328	33	5'-8"	2'-10"					
P612	8	4'- 04"	53	1	2'-11"	1'-7"					
P701	44	13'- 04"	1,200	17	11'-8"						
P702	128	16'- 02"	4,230	33	4'-8'	2'-8"					
P901	20	4'- 02"	284	1	2'-11"	1'-7"					
P1001	26	30'- 11"	3,459	16	29'-6"						
P1002	14	46'- 03"	2,787	STR.							
P1003	32	29'- 00"	3,994	16	27'-7"						
P1004	66	14'- 06"	4,118	17	11'-8"						
P1005	10	24'- 06"	1,055	STR.							
P1006	26	32'- 06"	3,637	STR.							
P1007	13	27'- 07"	1,543	STR.							
P1008	18	28'- 09"	2,227	1	24'-6"	4'-7"					
P1009	13	28'- 11"	1,618	STR.							
P1010	16	25'- 02"	1,733	STR.							
P1101	104	17'- 05"	9,624	1	2'-0"	15'-9"					
P1102	104	21'- 07"	11,926	16	20'-0"						
PIER TOTAL			58,706								

MARK	NUMBER TOTAL	LENGTH	WEIGHT	TYPE	DIMENSIONS A	B	C	D	E	R	INC
APPROACH SLABS											
AS501	48	24'- 11"	1,248	STR.							
AS502	12	6'- 01"	77	19	4'-8"	1'-4"	4"				
AS503	144	9'- 08"	1,452	5	6'-8"	11"	10"				
AS504	92	7'- 08"	736	30	1'-6"	8"	2'-4"	2'-2"			
AS505	20	8'- 03"	173	19	6'-10"	1'-4"	4"				
AS506	44	8'- 03"	379	STR.							
AS507	12	6'- 02"	78	STR.							
AS508	32	2'- 06"	84	STR.							
AS509	40	3'- 08"	153	STR.							
AS510	8	1'- 04"	12	STR.							
AS511	40	6'- 09"	282	2	10"	5'-4"	10"				
AS512	48	2'- 00"	101	STR.							
AS513	32	4'- 04"	145	STR.							
AS601	40	11'- 03"	676	30	1'-10"	8"	3'-10"	3'-8"			
AS602	12	5'- 06"	100	1	1'-10"	3'-10"					
AS603	12	5'- 04"	97	1	1'-10"	3'-8"					
B501	354	24'- 09"	9,139	STR.							
B502	40	25'- 11"	1,082	19	23'-3"	2'-0"	1'-8"				
B503	8	24'- 01"	201	19	23'-3"	8"	7"				
C504	74	29'- 06"	2,277	STR.							
A1004	200	30'- 11"	26,607	16	29'-6"						
APPROACH SLAB TOTAL			45,099								
FOR INFORMATION ONLY. NOT INCLUDED WITH ITEM 509.											

NOTES:

1. THE BAR SIZE NUMBER IS SPECIFIED ON THE PLANS IN THE BAR MARK COLUMN. THE FIRST DIGIT WHERE THREE DIGITS ARE USED, AND THE FIRST TWO DIGITS WHERE FOUR ARE USED, INDICATES THE BAR SIZE NUMBER. FOR EXAMPLE, P601 IS A NO. 6 BAR. BAR DIMENSIONS SHOWN ARE OUT TO OUT UNLESS OTHERWISE INDICATED. R INDICATES INSIDE RADIUS, UNLESS OTHERWISE NOTED. "STD." WRITTEN IN PLACE OF A DIMENSION INDICATES A STANDARD BEND AT THE END OF THE BAR.

2. ALL REINFORCEMENT IS TO BE EPOXY COATED.

DESIGN AGENCY
PARSONS BRINCKERHOFF
2945 FARMERS DRIVE
SUITE 350
COLUMBUS, OHIO 43235

DESIGNED PJL | DRAWN LEL | REVIEWED EBS | DATE 01/07/13
CHECKED SAP | REVISED | STRUCTURE FILE NUMBER 0201693

REINFORCING STEEL LIST
BRIDGE NO. ALL-75-0212 & ALL-75-0212C
BREESE RD. OVER I-75

ALL-75-0.21
PID No. 89029

J:\Projects\ALL\89029\structures\ALL075_0212C\sheets\075_0212CRL001.dgn 09-MAY-2013 3:07PM jint

MARK	NUMBER			LENGTH	WEIGHT	TYPE	DIMENSIONS						
	REAR	FWD.	TOTAL				A	B	C	D	E	R	INC
ABUTMENTS													
A501	56	56	112	25'- 03"	2,950	STR.							
A502	12	12	24	18'- 11"	474	2	7'-9"	3'-8"	7'-9"				
A505	14	14	28	3'- 08"	108	STR.							
A507	24	24	48	19'- 01"	956	33	6'-0"	3'-0"					
A508	24	24	48	21'- 09"	1,089	33	6'-8"	3'-8"					
A509	36	36	72	9'- 08"	726	STR.							
A510	44	44	88	11'- 01"	1,018	1	10"	10'-4"					
A511	36	36	72	4'- 04"	326	STR.							
A512	24	24	48	7'- 04"	368	STR.							
A513	18	18	36	28'- 02"	1,058	STR.							
A601	97	97	194	27'- 08"	8,062	33	10'-8"	2'-7"					
A602	43	43	86	18'- 08"	2,412	33	6'-2"	2'-7"					
A603	140	140	280	13'- 00"	5,468	1	1'-0"	12-'3"					
A604	86	86	172	9'- 04"	2,412	2	2'-11"	3'-10"	2'-11"				
A605	37	35	72	10'- 02"	1,100	1	1'-0"	11'-4"					
A606	15	15	30	28'- 08"	1,292	2	13'-5"	2'-2"	13'-5"				
A607	2	2	4	29'- 04"	177	2	13'-5"	2'-10"	13'-5"				
A608	1	1	2	7'- 10"	24	2	2'-11"	2'-4"	2'-11"				
A609	1	1	2	8'- 11"	27	2	2'-11"	3'-5"	2'-11"				
A610	22	22	44	11'- 10"	783	STR.							
A611	60	60	120	26'- 03"	4,732	STR.							
A612	22	22	44	9'- 08"	639	STR.							
A613	11	11	22	8'- 05"	279	19	3'-1"	3'-2"	3'-10"				
A614	11	11	22	8'- 03"	273	11	3'-2"	3'-10"	4'-1"				
A615	2		2	34'- 04"	104	STR.							
A616		2	2	34'- 00"	103	STR.							
A617	24	25	49	9'- 10"	724	2	4'-0"	2'-2"	4'-0"				
		1	1	13'- 04"			5'-9"		5'-9"				
A618		SER. OF	SER. OF	TO	146	2	TO	2'-2"	TO				3'-0"
		5	5	25'- 04"			11'-9"		11'-9"				
		1	1	23'- 00"			10'-7"		10'-7"				
A619		SER. OF	SER. OF	TO	144	2	TO	2'-2"	TO				8"
		4	4	24'- 10"			11'-6"		11'-6"				
		2	2	2'- 04"									
A620		SER. OF	SER. OF	TO	529	STR.							2'-9"
		11	11	29'- 08"									
		1	1	19'- 10"			9'-0"		9'-0"				
A621		SER. OF	SER. OF	TO	126	2	TO	2'-2"	TO				8"
		4	4	21'- 10"			10'-0"		10'-0"				
A622	12	14	26	31'- 11"	1,247	STR.							
		1	1	16'- 10"			7'-6"		7'-6"				
A623		SER. OF	SER. OF	TO	108	2	TO	2'-2"	TO				8"
		4	4	18'- 10"			8'-6"		8'-6"				
		1	1	13'- 10"			6'-0"		6'-0"				
A625		SER. OF	SER. OF	TO	89	2	TO	2'-2"	TO				8"
		4	4	15'- 08"			6'-11"		6'-11"				
		1	1	10'- 10"			4'-6"		4'-6"				
A627		SER. OF	SER. OF	TO	71	2	TO	2'-2"	TO				8"
		4	4	12'- 08"			5'-5"		5'-5"				
		2	2	9'- 05"				8'-7"					
A628		SER. OF	SER. OF	TO	99	1	1'-0"	TO					1'-1"
		3	3	12'- 06"				11'-8"					
		2	2	12'- 02"				11'-4"					
A629		SER. OF	SER. OF	TO	152	1	1'-0"	TO					4"
		4	4	13'- 01"				12'-3"					
		2	2	10'- 08"				9'-10"					
A631		SER. OF	SER. OF	TO	134	1	1'-0"	TO					4"
		4	4	11'- 07"				10'-9"					
A633		2	2	10'- 01"	31	1	1'-0"	9'-3"					
A634		2	2	9'- 10"	30	1	1'-0"	9'-0"					

MARK	NUMBER			LENGTH	WEIGHT	TYPE	DIMENSIONS						
	REAR	FWD.	TOTAL				A	B	C	D	E		INC
ABUTMENTS													
		1	1	24'- 10"			11'-6"		11'-6"				
A635		SER. OF	SER. OF	TO	159	2	TO	2'-2"	TO				1'-0"
		4	4	27'- 10"			13'-0"		13'-0"				
		1	1	11'- 00"			4'-7"		4'-7"				
A636		SER. OF	SER. OF	TO	106	2	TO	2'-2"	TO				4'-5"
		4	4	24'- 02"			11'-2"		11'-2"				
		1	1	20'- 06"			9'-4"		9'-4"				
A637		SER. OF	SER. OF	TO	132	2	TO	2'-2"	TO				11"
		4	4	23'- 04"			10'-9"		10'-9"				
		2	2	1'- 07"									
A638		SER. OF	SER. OF	TO	492	STR.							1'-10"
		13	13	23'- 07"									
		1	1	16'- 02"			7'-2"		7'-2"				
A639		SER. OF	SER. OF	TO	106	2	TO	2'-2"	TO				11"
		4	4	19'- 00"			8'-7"		8'-7"				
A640	12	12	24	25'- 07"	923	STR.							
		1	1	11'- 10"			5'-0"		5'-0"				
A641		SER. OF	SER. OF	TO	80	2	TO	2'-2"	TO				11"
		4	4	14'- 08"			6'-5"		6'-5"				
		2	2	11'- 11"				11'-1"					
A643		SER. OF	SER. OF	TO	152	1	1'-0"	TO					5"
		4	4	13'- 03"				12'-5"					
A644		2	2	10'- 08"	33	1	1'-0"	9'-10"					
		2	2	9'- 09"				8'-11"					
A645		SER. OF	SER. OF	TO	126	1	1'-0"	TO					6"
		4	4	11'- 02"				10'-4"					
A646		2	2	8'- 05"	26	1	1'-0"	7'-7"					
A647		2	2	9'- 00"	28	1	1'-0"	8'-2"					
A648		2	2	8'- 08"	27	1	1'-0"	7'-10"					
A649		2	2	29'- 00"	88	STR.							
	1		1	9'- 06"			3'-10"		3'-10"				
A650	SER. OF		SER. OF	TO	155	2	TO	2'-2"	TO				3'-1"
	6		6	24'- 10"			11'-6"		11'-6"				
	1		1	22'- 02"			10-2"		10-2"				
A651	SER. OF		SER. OF	TO	140	2	TO	2'-2"	TO				8"
	4		4	24'- 02"			11'-2"		11'-2"				
	2		2	1'- 10"									
A652	SER. OF		SER. OF	TO	559	STR.							2'-6"
	12		12	29'- 02"									
	1		1	18'- 10"			8'-6"		8'-6"				
A653	SER. OF		SER. OF	TO	120	2	TO	2'-2"	TO				8"
	4		4	20'- 10"			9'-6"		9'-6"				
	2		2	9'- 05"				8'-7"					
A654	SER. OF		SER. OF	TO	120	1	1'-0"	TO					4"
	4		4	10'- 06"				9'-8"					
	1		1	15'- 06"			6'-10"		6'-10"				
A655	SER. OF		SER. OF	TO	100	2	TO	2'-2"	TO				8"
	4		4	17'- 06"			7'-10"		7'-10"				
	2		2	11'- 01"				10'-3"					
A656	SER. OF		SER. OF	TO	140	1	1'-0"	TO					4"
	4		4	12'- 01"				11'-3"					
	1		1	12'- 04"			5'-3"		5'-3"				
A657	SER. OF		SER. OF	TO	81	2	TO	2'-2"	TO				8"
	4		4	14'- 04"			6'-3"		6'-3"				
	1		1	9'- 06"			3'-10"		3'-10"				
A659	SER. OF		SER. OF	TO	62	2	TO	2'-2"	TO				6"
	4		4	11'- 00"			4'-7"		4'-7"				
A661	2		2	9'- 10"	30	1	1'-0"	9'-0"					
A662	2		2	8'- 02"	25	1	1'-0"	7'-4"					
A663	2		2	8'- 09"	27	1	1'-0"	7'-11"					
A664	2		2	8'- 07"	26	1	1'-0"	7'-9"					

NOTES:

1. THE BAR SIZE NUMBER IS SPECIFIED ON THE PLANS IN THE BAR MARK COLUMN. THE FIRST DIGIT WHERE THREE DIGITS ARE USED, AND THE FIRST TWO DIGITS WHERE FOUR ARE USED, INDICATES THE BAR SIZE NUMBER. FOR EXAMPLE, P601 IS A NO. 6 BAR. BAR DIMENSIONS SHOWN ARE OUT TO OUT UNLESS OTHERWISE INDICATED. R INDICATES INSIDE RADIUS, UNLESS OTHERWISE NOTED. "STD." WRITTEN IN PLACE OF A DIMENSION INDICATES A STANDARD BEND AT THE END OF THE BAR.

2. ALL REINFORCEMENT IS TO BE EPOXY COATED.

DESIGN AGENCY
PARSONS BRINCKERHOFF
2545 FARMERS DRIVE
SUITE 350
COLUMBUS, OHIO 43235

DESIGNED PJL | DRAWN LEL | REVIEWED EBS | DATE 01/07/13 | CHECKED SAP | REVISED | STRUCTURE FILE NUMBER 0201693

REINFORCING STEEL LIST
BRIDGE NO. ALL-75-0212
BREESE RD. OVER I-75

ALL-75-0.21
PID No. 89029

J:\Projects\ALL\89029\structures\ALL075_0212C\sheets\075_0212CRL002.dgn 09-MAY-2013 3:07PM lint

MARK	NUMBER			LENGTH	WEIGHT	TYPE	DIMENSIONS						
	REAR	FWD.	TOTAL				A	B	C	D	E	———	INC
					ABUTMENTS								
	1		1	24'- 06"			11'-4"		11'-4"				
A665	SER. OF		SER. OF	TO	156	2	TO	2'-2"	TO				11"
	4		4	27'- 02"			12'-8"		12'-8"				
	1		1	10'- 08"			4'-5"		4'-5"				
A666	SER. OF		SER. OF	TO	104	2	TO	2'-2"	TO				4'-5"
	4		4	23'- 10"			11'-0"		11'-0"				
	1		1	20'- 04"			9'-3"		9'-3"				
A667	SER. OF		SER. OF	TO	131	2	TO	2'-2"	TO				11"
	4		4	23'- 00"			10'-7"		10'-7"				
	2		2	2'- 06"									
A668	SER. OF		SER. OF	TO	478	STR.							11"
	12		12	24'- 00"									
	1		1	16'- 00"			7'-1"		7'-1"				
A669	SER. OF		SER. OF	TO	105	2	TO	2'-2"	TO				11"
	4		4	18'- 10"			8'-6"		8'-6"				
A670	2		2	28'- 08"	87	STR.							
	1		1	11'- 10"			5'-0"		5'-0"				
A671	SER. OF		SER. OF	TO	80	2	TO	2'-2"	TO				11"
	4		4	14'- 06"			6'-4"		6'-4"				
	2		2	12'- 01"				11'-3"					
A673	SER. OF		SER. OF	TO	153	1	1'-0"	TO					5"
	4		4	13'- 03"				12'-5"					
A674	2		2	10'- 09"	33	1	1'-0"	9'-11"					
	2		2	10'- 00"				9'-2"					
A675	SER. OF		SER. OF	TO	129	1	1'-0"	TO					5"
	4		4	11'- 04"				10'-6"					
A676	2		2	8'- 08"	27	1	1'-0"	7'-10"					
A677	2		2	9'- 02"	28	1	1'-0"	8'-4"					
A678	2		2	8'- 11"	27	1	1'-0"	8'-1"					
A679	8	8	16	18'- 05"	443	34	2'-2"	5'-7"	7'-4"				
A680	9	9	18	14'- 02"	384	34	2'-2"	3'-5"	5'-3"				
A685	8	8	16	14'- 06"	349	18	8'-7"	2'-7"	4'-7"				
A686	10	10	20	5'- 10"	176	STR.							
A687	8	8	16	23'- 07"	567	36	3'-8"	6'-9"	1'-10"	2'-3"	1'-5"		
	2	2	4	19'- 01"				6'-3"					
A688	SER. OF	SER. OF	SER. OF	TO	376	36	3'-8"	TO	1'-10"	2'-3"	1'-5"		1'-9"
	3	3	3	22'- 07"				4'-6"					
A689	2	2	4	13'- 08"	83	18	7'-9"	2'-7"	4'-7"				
A701	14	14	28	8'- 06"	487	1	1'-2"	7'-6"					
A702	4	4	8	7'- 09"	127	1	1'-2"	6'-9"					
A801	36	36	72	26'- 05"	5,079	STR.							
A802	171	171	342	13'- 04"	12,176	1	1'-4"	12'-2"					
A803	25	25	50	12'- 06"	1,669	1	1'-4"	11'-4"					
A804	12	12	24	28'- 04"	1,816	STR.							
A805	10	10	20	29'- 08"	1,585	STR.							
ABUTMENT TOTAL					71,508								

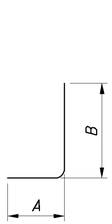

TYPE-1

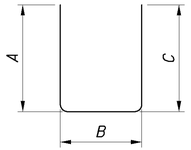

TYPE-2

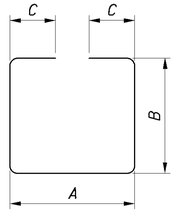

TYPE-5

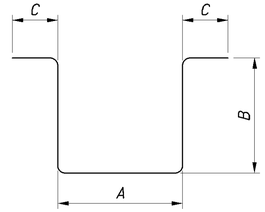

TYPE-6

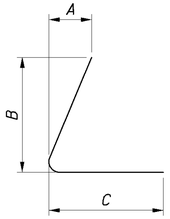

TYPE-11

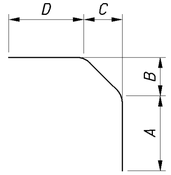

TYPE-13

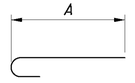

TYPE-16

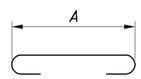

TYPE-17

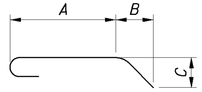

TYPE-18

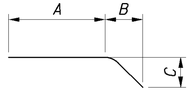

TYPE-19

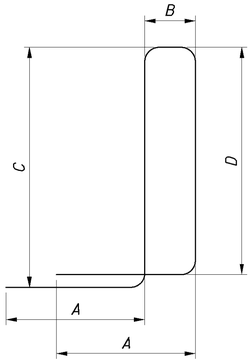

TYPE-30

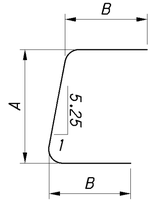

TYPE-28

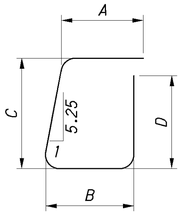

TYPE-29

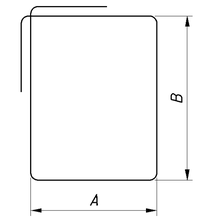

TYPE-33

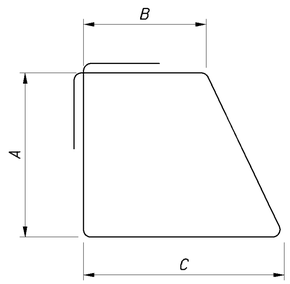

TYPE-34

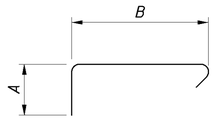

TYPE-35

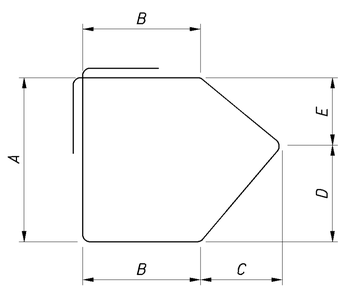

TYPE-36

NOTES:

1. THE BAR SIZE NUMBER IS SPECIFIED ON THE PLANS IN THE BAR MARK COLUMN. THE FIRST DIGIT WHERE THREE DIGITS ARE USED, AND THE FIRST TWO DIGITS WHERE FOUR ARE USED, INDICATES THE BAR SIZE NUMBER. FOR EXAMPLE, P601 IS A NO. 6 BAR. BAR DIMENSIONS SHOWN ARE OUT TO OUT UNLESS OTHERWISE INDICATED. R INDICATES INSIDE RADIUS, UNLESS OTHERWISE NOTED. "STD." WRITTEN IN PLACE OF A DIMENSION INDICATES A STANDARD BEND AT THE END OF THE BAR.

2. ALL REINFORCEMENT IS TO BE EPOXY COATED.

DESIGN AGENCY
PARSONS BRINCKERHOFF
2945 FARMERS DRIVE
SUITE 350
COLUMBUS, OHIO 43235

DESIGNED PJL | DRAWN LEL | REVIEWED EBS | DATE 01/07/13 | CHECKED SAP | REVISED | STRUCTURE FILE NUMBER 0201693

REINFORCING STEEL LIST
BRIDGE NO. ALL-75-0212
BREESE RD. OVER I-75

ALL-75-0.21
PID No. 89029

J:\Projects\ALL\89029\structures\ALL075_0212C\sheets\075_0212CRL003.dgn 09-MAY-2013 3:07PM jint

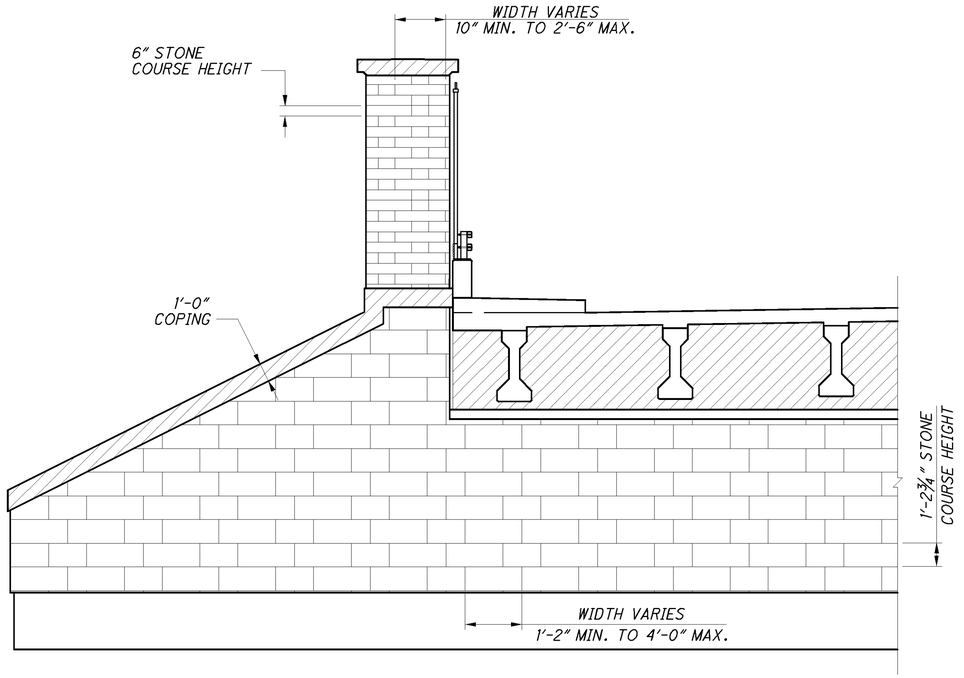

ABUTMENT AESTHETICS

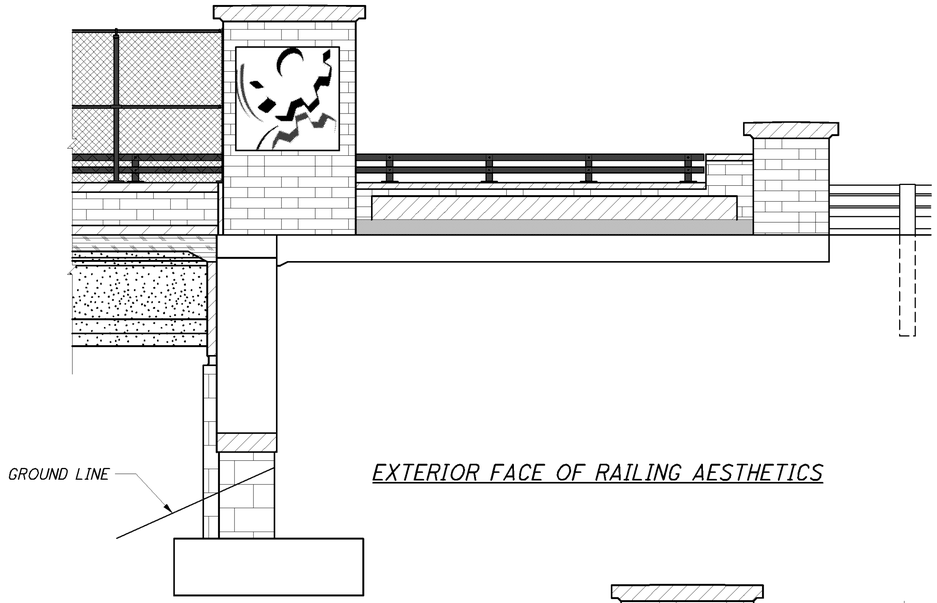

EXTERIOR FACE OF RAILING AESTHETICS

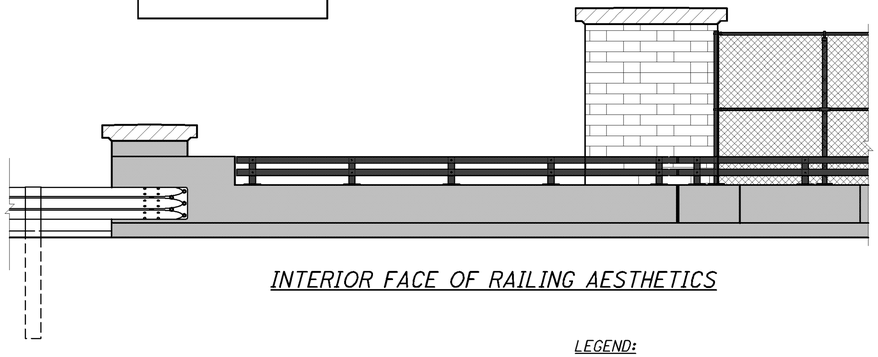

INTERIOR FACE OF RAILING AESTHETICS

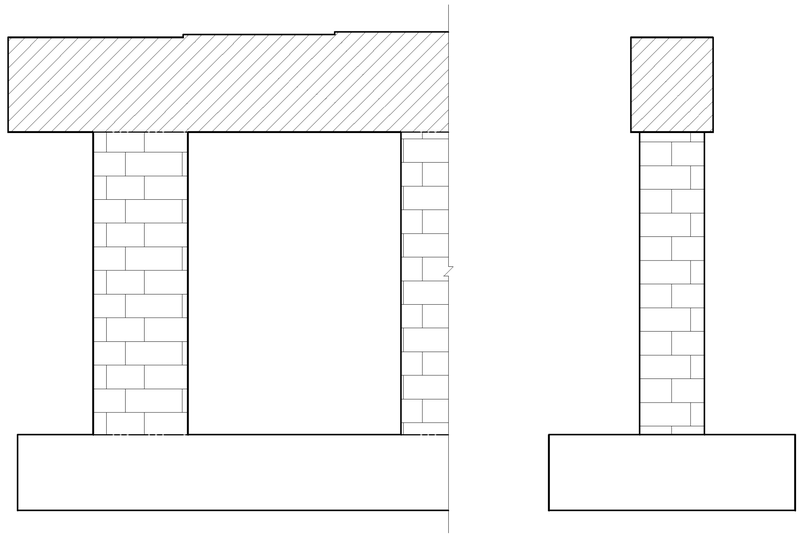

PIER AESTHETICS

PIER SECTION

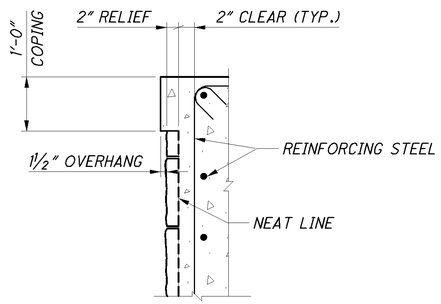

TYPICAL FORMLINER SECTION

SECTION AT WINGWALL SHOWN

LEGEND:

- FORMLINER PATTERN 1:
  - ROUGH CUT STONE FORMLINER W/ 2" RELIEF AND INTEGRALLY COLORED CONCRETE, FEDERAL COLOR NO. 36373, GRAY
- FORMLINER PATTERN 2:
  -ROUGH CUT STONE FORMLINER W/ 15#8" RELIEF AND INTEGRALLY COLORED CONCRETE, FEDERAL COLOR NO. 36373, GRAY
- -INTEGRALLY COLORED CONCRETE, FEDERAL COLOR NO. 36373, GRAY
- -VANDAL PROTECTION FENCE, AS PER PLAN, FEDERAL COLOR NO. 27038, BLACK
- -EPOXY-URETHANE SEALER, FEDERAL COLOR NO. 25095, BLUE
- -EPOXY-URETHANE SEALER, FEDERAL COLOR NO. 37875, WHITE
- -EPOXY-URETHANE SEALER, FEDERAL COLOR NO. 36373, GRAY
- -RAILING, AS PER PLAN, FEDERAL COLOR NUMBER 27038, BLACK

DESIGN AGENCY
PARSONS BRINCKERHOFF
2945 FARMERS DRIVE
SUITE 350
COLUMBUS, OHIO 43235

DESIGNED	DRAWN	REVIEWED	DATE
PJL	LEL	EBS	01/07/13
CHECKED	REVISED	STRUCTURE FILE NUMBER	
SAP		0201693	

AESTHETICS DETAILS
BRIDGE NO. ALL-75-0212
BREESE RD. OVER I-75

ALL-75-0.21
PID No. 89029

29 / 32

653
907

J:\Projects\ALL\89029\structures\ALL075_0212C\sheets\075_0212CMD002.dgn 09-MAY-2013 3:07PM jint

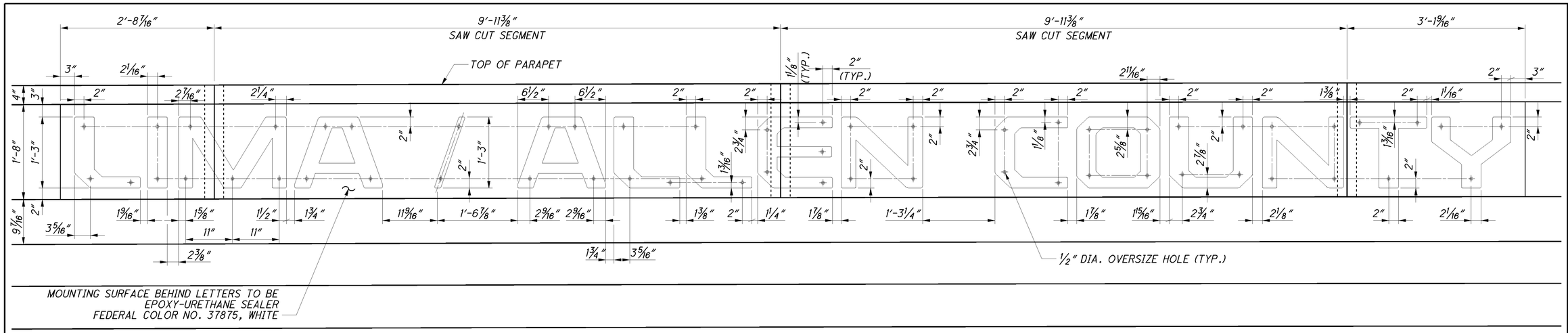

LETTERING HOLE LAYOUT

(HOLES IN PARAPET TO BE FIELD DRILLED PER ANCHOR MANUFACTURER'S SPECIFICATIONS)

ITEM SPECIAL (530E00200) - STRUCTURE, MISC. BRIDGE MOUNTED DISPLAYS:

THIS ITEM INCLUDES MOUNTING OF ALUMINUM LETTERS AND FOUR "GEAR LOGO" PLAQUES TO THE PROPOSED BRIDGE. THIS INCLUDES THE PHRASE "LIMA / ALLEN COUNTY" ON THE NORTH SIDE OF THE BRIDGE, "REAL AMERICAN STRENGTH" ON THE SOUTHEAST AND NORTHWEST CORNERS OF THE APPROACH SLAB RAILING AND ONE 5' X 5' "GEAR LOGO" PLAQUE ON EACH OF THE FOUR LARGE TOWERS/PILASTERS.

THE CITY OF LIMA SHALL PROVIDE THE GRAPHIC IMAGES FOR THE GEAR LOGO SHOWN AND ANY ADDITIONAL INFORMATION TO ACCURATELY REPRODUCE THE DISPLAYS SHOWN ON THESE SHEETS. THE GEAR LOGO PLAQUES SHALL BE COMPRISED OF PORCELAIN ENAMEL COATED GRAPHIC PANELS SUPPLIED BY ADVANCED SIGNS, 2222 ASHMORE AVENUE, CHATANOOGA, TN 37415, PHONE 866-780-0619 OR AN APPROVED EQUAL. THEY SHALL BE ATTACHED TO THE CONCRETE TOWERS BY STAINLESS STEEL HILTI KWIK HUS-EZ SCREW ANCHORS OR APPROVED EQUAL.

THE CONTRACTOR IN COORDINATION WITH THE DISPLAY PROVIDER SHALL PROVIDE SHOP DRAWINGS AND SAMPLES OF WORK FOR APPROVAL BY THE ENGINEER AND CITY OF LIMA. THE ENGINEER SHALL DETERMINE WHEN ADDITIONAL REVIEW WILL BE REQUIRED BY FHWA. THE CONTRACTOR AND SUPPLIER MUST COORINATE THESE DRAWINGS. ENSURE THAT THE SHOP DRAWINGS MEET PROJECT REQUIREMENTS, INCLUDING MATERIALS, FIELD MEASUREMENTS, CONSTRUCTION SPECIFICATIONS, CONTRACT DOCUMENTS, PERFORMANCE CRITERIA, AND SIMILAR DATA.

THE CITY OF LIMA WILL NOT MAKE ALLOWANCE FOR ADDITIONAL COST OR DELAYS TO THE CONTRACTOR FOR INCORRECT MANUFACTURING AS A RESULT OF FAILURE TO COORDINATE.

FOR THE SHOP DRAWINGS, THE CONTRACTOR SHALL VERIFY AND ADJUST ACCORDINGLY THE DIMENSIONS FOR THE LETTER AND PLAQUE CONNECTIONS WITH FIELD MEASUREMENTS OF THE MOUNTING SURFACES. THE REQUIRED SHOP DRAWINGS SHALL INCLUDE, BUT ARE NOT LIMITED TO, THE FEATURES OUTLINED ABOVE, AN ELEVATION VIEW INCLUDING DIMENSIONS FROM THE CENTER OF THE DISPLAY TO THE MOUNTING HOLES, AND DIMENSIONS AND FABRICATION DETAILS OF ANY CONNECTION TEMPLATES OR OTHER DEVICES OR HARDWARE. THE DISPLAYS SHALL NOT BE MANUFACTURED UNTIL RECEIVING APPROVAL OF THE SHOP DRAWINGS.

ALL COSTS ASSOCIATED WITH THE DISPLAYS, INCLUDING ADDITIONAL WORK DESCRIBED ABOVE, AS WELL AS THE COMPLETE INSTALLATION AND ASSEMBLY OF THE DISPLAYS (INCLUDING OVERHEAD AND PROFIT) SHALL BE INCLUDED IN THE LUMP SUM PRICE FOR ITEM SPECIAL (530E00200) - STRUCTURE, MISC.: BRIDGE MOUNTED DISPLAYS.

NOTES:

1. ALL HARDWARE, INCLUDING ANCHOR BOLTS AND WASHERS SHALL BE STAINLESS STEEL.
2. TO ENSURE CORROSION DOES NOT OCCUR BETWEEN THE STEEL PARTS AND ALUMINUM PARTS, PREVENT CONTACT BETWEEN ALUMINUM AND STEEL PARTS WITH A MINIMUM 1/16 INCH THICK CHLOROPRENE OR NEOPRENE GASKET OR APPROVED EQUAL.
3. HOLES IN BRIDGE PARAPET AND TOWERS ARE FIELD DRILLED AND SHALL BE PREPPED PER THE ANCHOR BOLT MANUFACTURERS GUIDELINES.
4. "LIMA / ALLEN COUNTY" SHALL BE FASTENED IN THE CENTER OF THE BRIDGE ON THE NORTH SIDE OF THE RESERVOIR RD BRIDGE FACING SOUTHBOUND I-75 TRAFFIC. "REAL AMERICAN STRENGTH" SHALL BE FASTENED ON THE NORTHWEST FACING SOUTHBOUND I-75 TRAFFIC AND SOUTHEAST FACING NORTHBOUND I-75 TRAFFIC ENDS OF THE APPROACH SLAB RAILINGS. THE GEAR PLAQUES WILL BE FASTENED TO THE OUTSIDE FACE OF ALL FOUR LARGE BRIDGE TOWERS, VISIBLE TO I-75 TRAFFIC.
5. TRUE TYPE FONT REXLIA FREE WILL BE USED FOR ALL BRIDGE AESTHETIC LETTERING. USE 15 INCH TALL LETTERS FOR "LIMA / ALLEN COUNTY" AND 9 INCH TALL LETTERS FOR "REAL AMERICAN STRENGTH". THE FONT IS AVAILABLE FROM THE CITY OF LIMA AND THE LOCAL COMMUNITY BRANDING COMMITTEE WEBSITE, WWW.REALAMERICANSTRENGTH.COM.

DESIGN AGENCY
PARSONS BRINCKERHOFF
2545 FARMERS DRIVE
SUITE 350
COLUMBUS, OHIO 43235

DESIGNED	DRAWN	REVIEWED	DATE
ACF	LEL	EBS	01/07/13
CHECKED	REVISED	STRUCTURE FILE NUMBER	
EJC		0201693	

AESTHETICS DETAILS
BRIDGE NO. ALL-75-0212
BREESE RD. OVER I-75

ALL-75-0.21
PID No. 89029

J:\Projects\ALL\89029\structures\ALL075_0212C\sheets\075_0212CMD003.dgn 29-OCT-2013 4:33PM jint

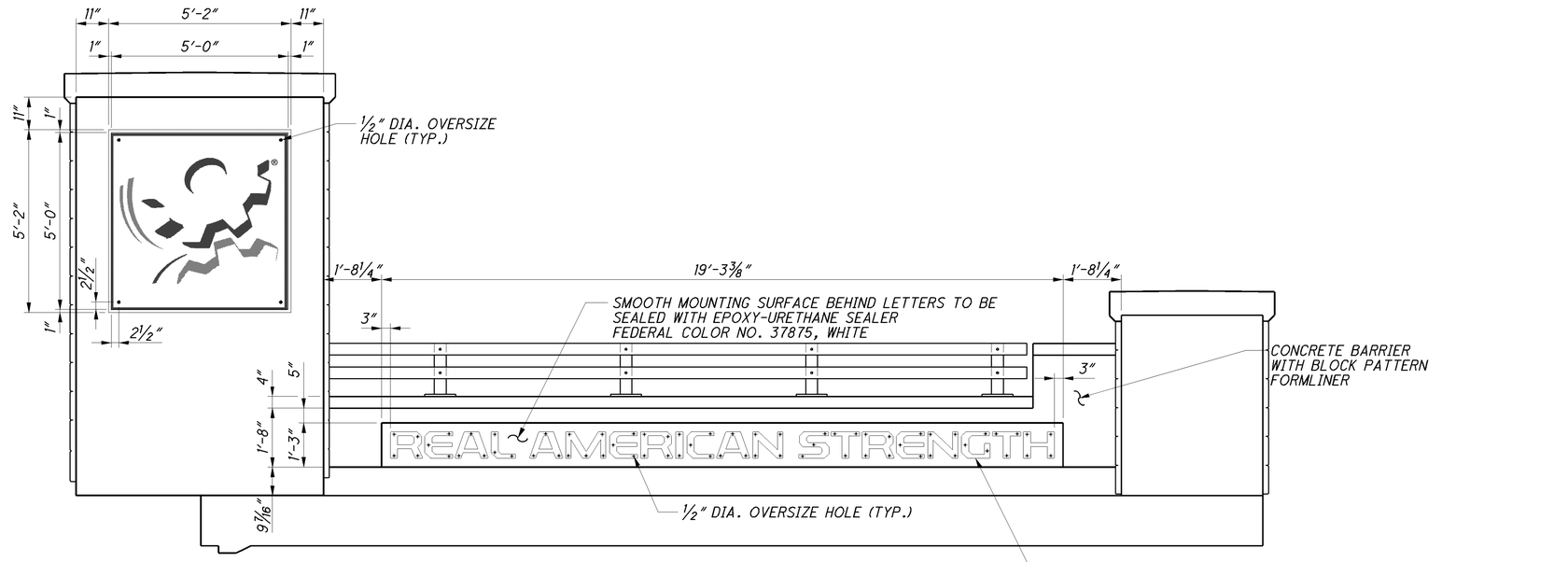

REAL AMERICAN STRENGTH SIGN

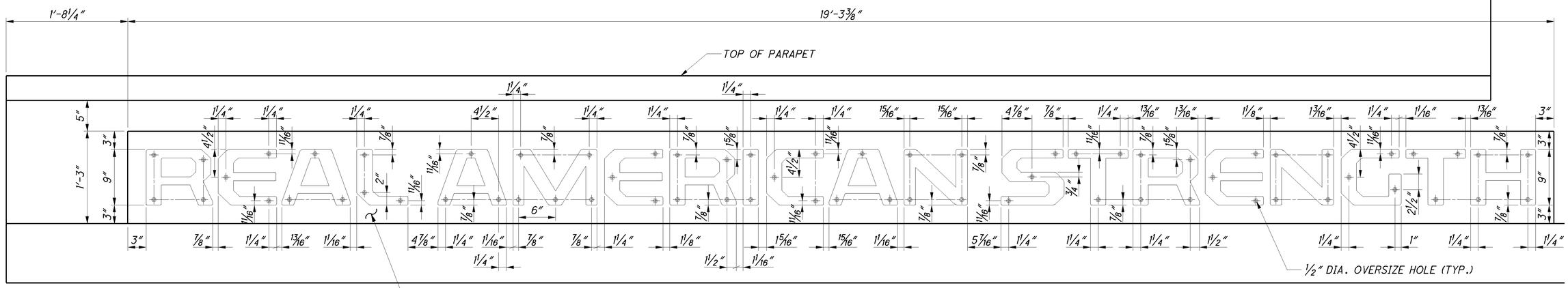

LETTERING HOLE LAYOUT

(HOLES IN PARAPET TO BE FIELD DRILLED PER ANCHOR MANUFACTURER'S SPECIFICATIONS)

NOTE:
FOR NOTES SEE SHEET 30/32.

DESIGN AGENCY
PARSONS BRINCKERHOFF
2545 FARMERS DRIVE
SUITE 350
COLUMBUS, OHIO 43235

DESIGNED	DRAWN	REVIEWED	DATE
ACF	LEL	EBS	01/07/13
CHECKED	REVISED	STRUCTURE FILE NUMBER	
EJC		0201693	

AESTHETICS DETAILS
BRIDGE NO. ALL-75-0212
BREESE RD. OVER I-75

ALL-75-0.21
PID No. 89029

31/32

655
907

J:\Projects\ALL\89029\structures\ALL075_0212C\sheets\075_0212CMD004.dgn 29-OCT-2013 4:33PM lint

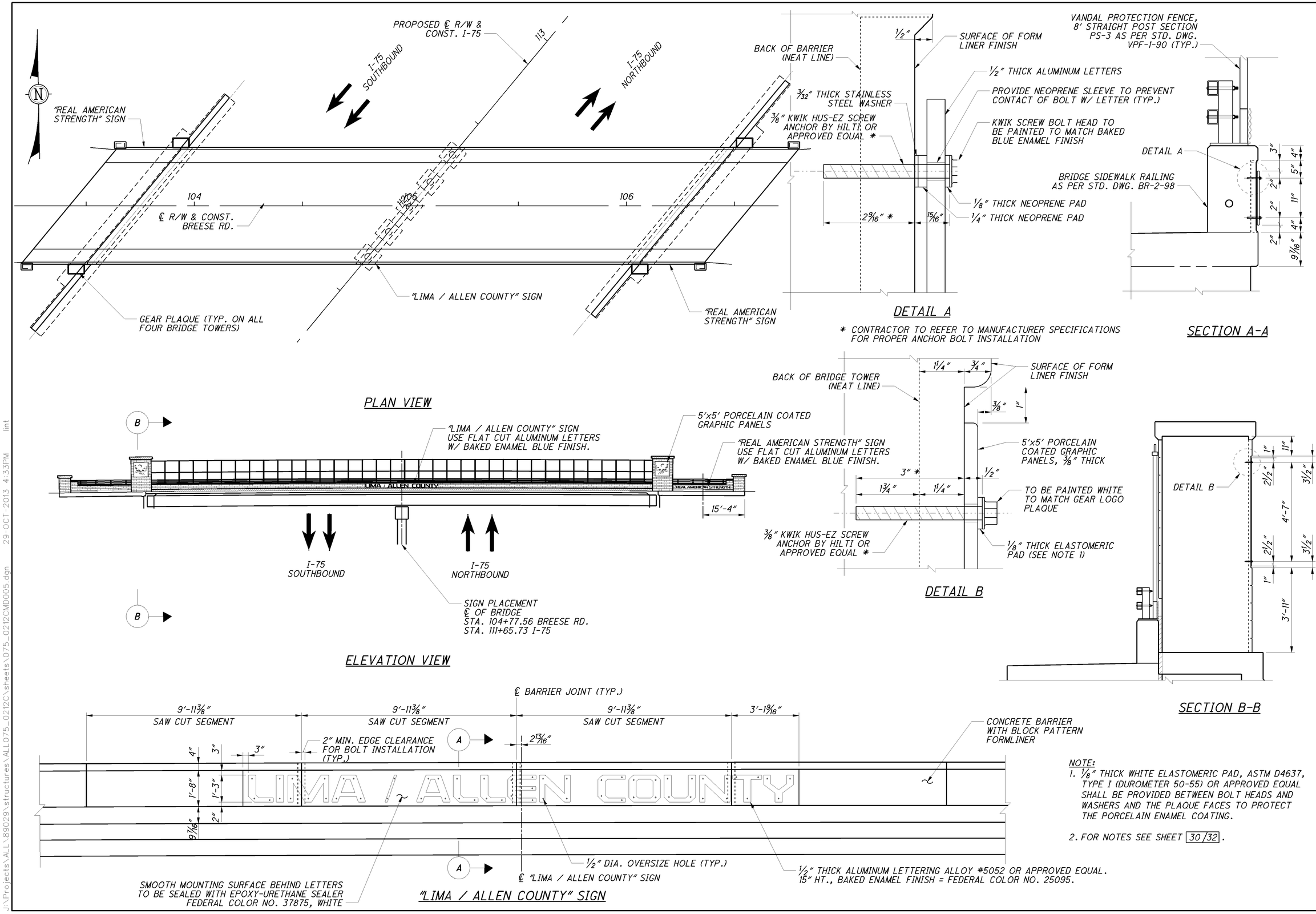

NOTE:

1. 1/8" THICK WHITE ELASTOMERIC PAD, ASTM D4637, TYPE I (DUROMETER 50-55) OR APPROVED EQUAL SHALL BE PROVIDED BETWEEN BOLT HEADS AND WASHERS AND THE PLAQUE FACES TO PROTECT THE PORCELAIN ENAMEL COATING.

2. FOR NOTES SEE SHEET 30/32.

DESIGN AGENCY
PARSONS BRINCKERHOFF
2545 FARMERS DRIVE
SUITE 350
COLUMBUS, OHIO 43235

DESIGNED	DRAWN	REVIEWED	DATE
ACF	LEL	EBS	01/07/13
CHECKED	REVISED	STRUCTURE FILE NUMBER	
EJC		0201963	

AESTHETICS DETAILS
BRIDGE NO. ALL-75-0212
BREESE RD. OVER I-75

ALL-75-0.21
PID No. 89029

32/32

656/907

J:\Projects\ALL\89029\structures\ALL075_0212C\sheets\075_0212CMD005.dgn 29-OCT-2013 4:33PM jint

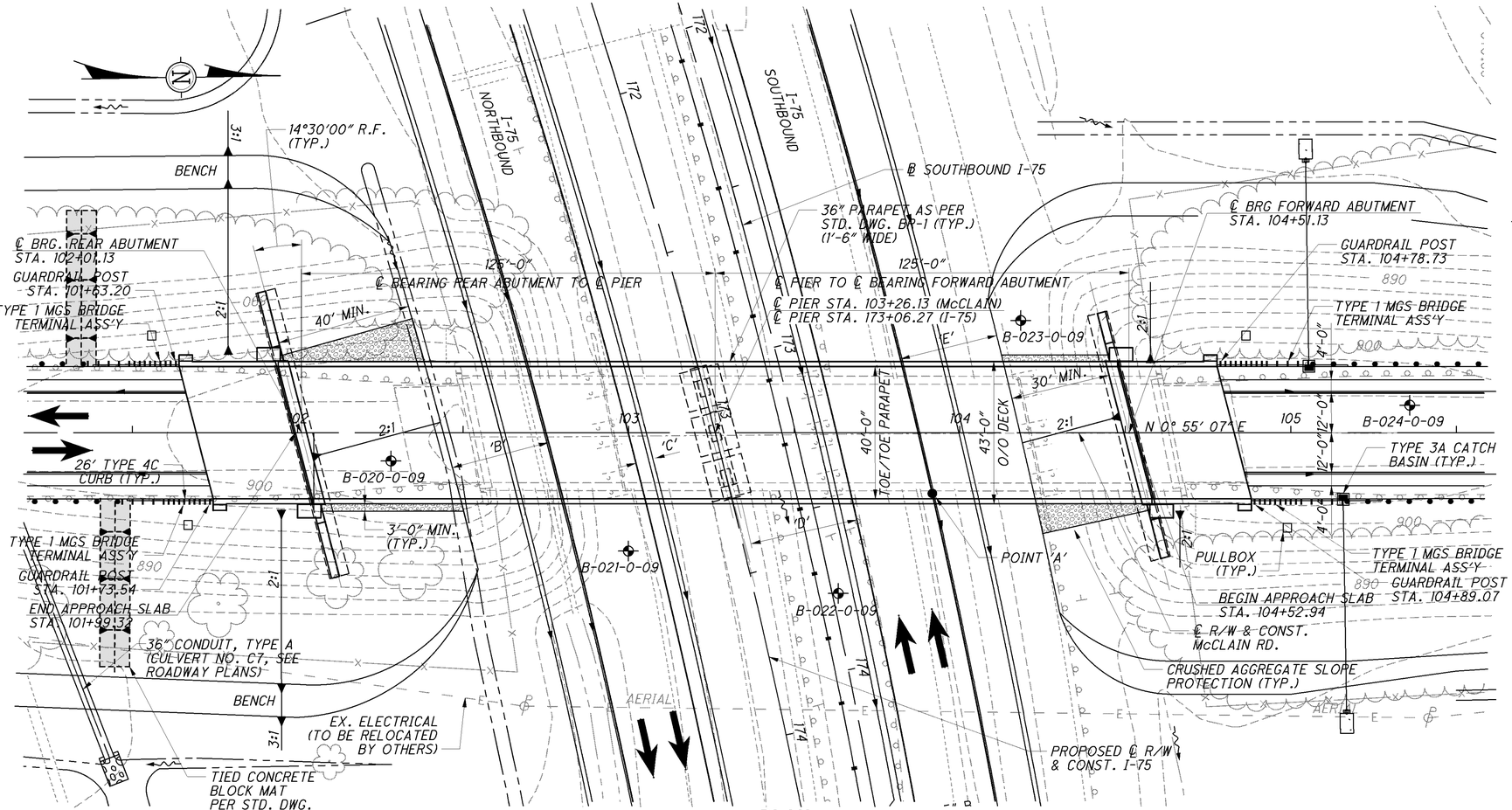

PLAN

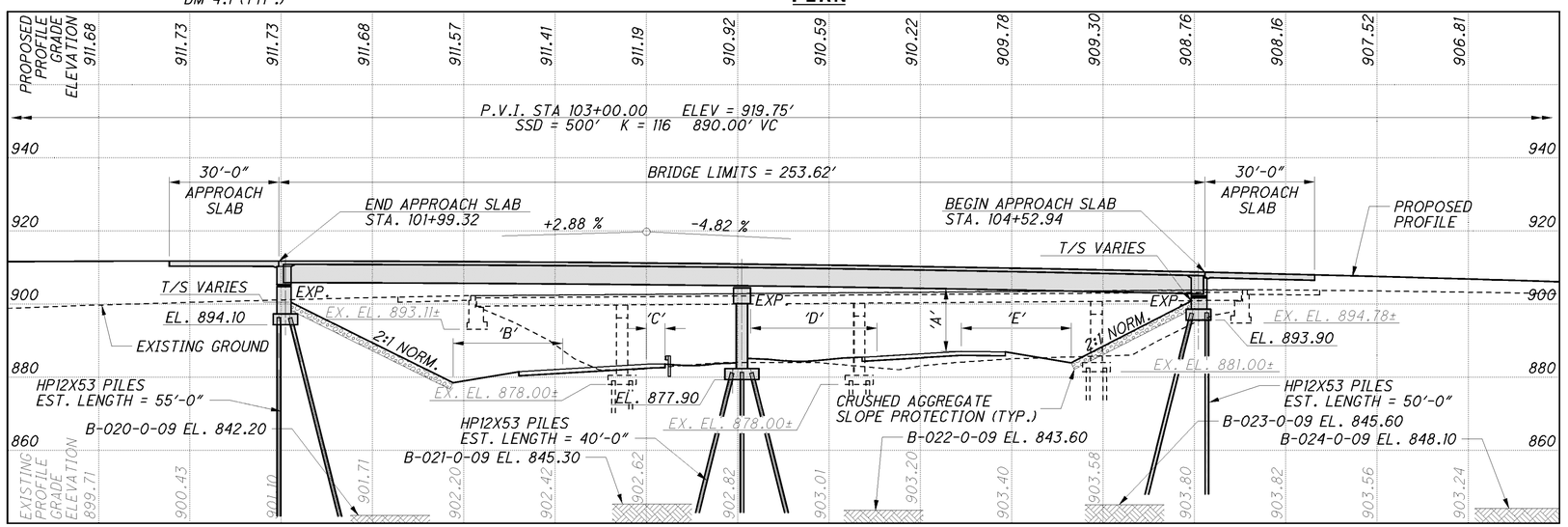

PROFILE

ALONG ℄ R/W & CONSTRUCTION

NOTES

EARTHWORK LIMITS SHOWN ARE APPROXIMATE. ACTUAL SLOPES SHALL CONFORM TO PLAN CROSS SECTIONS.

DESIGN TRAFFIC:
2015 ADT = 1,680 2015 ADTT = 67
2035 ADT = 2,340 2035 ADTT = 94
DIRECTIONAL DISTRIBUTION = 0.55

LEGEND

⌖ BORING LOCATION

● 17.00' REQUIRED MINIMUM VERTICAL CLEARANCE
POINT 'A' - 17.20' ACTUAL MINIMUM VERTICAL CLEARANCE
30.00' REQUIRED MINIMUM HORIZONTAL CLEARANCE
POINT 'B' - 30.00' ACTUAL MINIMUM HORIZONTAL CLEARANCE
POINT 'C' - 6.00' ACTUAL MINIMUM HORIZONTAL CLEARANCE
POINT 'D' - 32.74' ACTUAL MINIMUM HORIZONTAL CLEARANCE
POINT 'E' - 30.00' ACTUAL MINIMUM HORIZONTAL CLEARANCE

SOIL BORING LOCATIONS

BORING	STATION, OFFSET	APPROX. TOP OF ROCK
B-020-0-09	STA. 102+29.8, 7.3' RT.	842.20
B-021-0-09	STA. 103+01.5, 34.6' RT.	845.30
B-022-0-09	STA. 103+64.9, 47.5' RT.	843.60
B-023-0-09	STA. 104+20.1, 34.9' LT.	845.60
B-024-0-09	STA. 105+37.6, 9.2' LT.	848.10

EXISTING STRUCTURE

TYPE: CONTINUOUS 4-SPAN STEEL BEAMS WITH REINFORCED CONCRETE DECK AND SUBSTRUCTURE

SPANS: 39'± - 65'± - 65'± - 39'± C/C BRGS.
ROADWAY: 30'-0" ± TOE/TOE PARAPETS
LOADING: CF-130 (51)
SKEW: 11°44' RF ±
APPROACH SLABS: AS-1-54 (20' LONG)
ALIGNMENT: TANGENT
CROWN: NORMAL 3/16"/FT
STRUCTURE FILE NUMBER: 0201715
DATE BUILT: 1958
WEARING SURFACE: MICROSILICA MODIFIED CONCRETE

PROPOSED STRUCTURE

TYPE: 2-SPAN, DRAPED STRAND CONCRETE I-BEAMS WITH REINFORCED CONCRETE DECK, CAP AND COLUMN PIER, AND PARTIAL HEIGHT SEMI-INTEGRAL ABUTMENTS.
SPANS: 125'-0" AND 125'-0" ℄ BRG. ABUTMENTS TO ℄ PIER
ROADWAY: 40'-0" TOE/TOE PARAPET
LOADING: HL-93
FUTURE WEARING SURFACE (FWS) OF 0.060 kips/ft^2
SKEW: 14°30'00" RIGHT FORWARD
APPROACH SLABS: AS-1-81, 30'-0" LONG (MODIFIED)
WEARING SURFACE: 1" MONOLITHIC
ALIGNMENT: TANGENT
CROWN: 0.016 FT/FT
COORDINATES: LATITUDE 40°41'54"
LONGITUDE 84°6'24"

DESIGN AGENCY
PARSONS BRINCKERHOFF
2545 FARMERS DRIVE
SUITE 350
COLUMBUS, OHIO 43235

DESIGNED	DRAWN	REVIEWED	DATE
ECM	RCK	EBS	11-29-12
CHECKED	REVISED	STRUCTURE FILE NUMBER	
BMG		0201723	

ALLEN COUNTY
STA. 101+99.32
STA. 104+52.94

SITE PLAN
BRIDGE NO. ALL-75-0328
McCLAIN RD. OVER I-75

ALL-75-0.21
PID No. 89029

1 / 27

657
907

J:\Projects\ALL\89029\structures\ALL075_0328C\sheets\075_0328CSP001.dgn 12-JUN-2013 1:45PM jint

STANDARD DRAWINGS AND SUPPLEMENTAL SPECIFICATIONS

REFER TO THE FOLLOWING STANDARD BRIDGE DRAWING(S):

AS-1-81	REVISED	07-19-02
BR-1	REVISED	07-19-02
PSID-1-99	REVISED	07-18-08
SICD-1-96	REVISED	07-19-02
VPF-1-90	REVISED	04-15-11

AND TO THE FOLLOWING SUPPLEMENTAL SPECIFICATION(S):

800	DATED	07-19-13
832	DATED	05-5-09
898	DATED	10-21-11

DESIGN SPECIFICATIONS

DESIGN SPECIFICATIONS: THIS STRUCTURE CONFORMS TO THE "LRFD BRIDGE DESIGN SPECIFICATIONS" ADOPTED BY THE AMERICAN ASSOCIATION OF STATE HIGHWAY AND TRANSPORTATION OFFICIALS, 2010 AND THE ODOT BRIDGE DESIGN MANUAL, 2007 EXCEPT AS NOTED ELSEWHERE IN THE PLANS.

LOAD MODIFIER FOR OPERATIONAL IMPORTANCE

OPERATIONAL IMPORTANCE: A LOAD MODIFIER OF 1.00 HAS BEEN ASSUMED FOR THE DESIGN OF THIS STRUCTURE IN ACCORDANCE WITH THE AASHTO LRFD BRIDGE DESIGN SPECIFICATIONS, ARTICLE 1.3.5 AND THE ODOT BRIDGE DESIGN MANUAL, 2007.

DESIGN LOADING

DESIGN LOADING: HL-93

FUTURE WEARING SURFACE (FWS) OF 0.060 KIPS/SQ.FT.

DESIGN DATA

DESIGN DATA:
CONCRETE CLASS QSC2 - COMPRESSIVE STRENGTH 4.5 KSI (SUPERSTRUCTURE)
CONCRETE CLASS QSC1 - COMPRESSIVE STRENGTH 4.0 KSI (SUBSTRUCTURE)

REINFORCING STEEL - MINIMUM YIELD STRENGTH 60 KSI
STRUCTURAL STEEL - ASTM A709 GRADE 50 - YIELD STRENGTH 50 KSI

CONCRETE FOR PRESTRESSED BEAMS:
COMPRESSIVE STRENGTH (FINAL) - 10.0 KSI
COMPRESSIVE STRENGTH (RELEASE) - 7.0 KSI
PRESTRESSING STRAND:
AREA = 0.167 SQ.IN.
ULTIMATE STRENGTH = 270 KSI
INITIAL STRESS = 202.5 KSI (LOW RELAXATION STRANDS)

DECK PROTECTION METHOD

EPOXY COATED REINFORCING STEEL

2.5" CONCRETE COVER

SEALING OF CONCRETE SURFACES

MONOLITHIC WEARING SURFACE

MONOLITHIC WEARING SURFACE IS ASSUMED, FOR DESIGN PURPOSES, TO BE 1 INCH THICK.

ABUTMENT CONTRUCTION

EXCAVATION FOR THE REAR ABUTMENT CONSTRUCTION SHALL BE AS SHOWN ON THE PLANS. AFTER THE FOOTING AND THE BREASTWALL HAVE BEEN CONSTRUCTED, CONSTRUCT THE EMBANKMENT IMMEDIATELY BEHIND THE ABUTMENTS UP TO THE BEAM SEAT ELEVATION AND ON A 1:1 SLOPE UP TO THE SUBGRADE ELEVATION PRIOR TO SETTING THE BEAMS ON THE ABUTMENT.

PILE DRIVING CONSTRAINTS

FORWARD ABUTMENT: PRIOR TO DRIVING PILES AT THE ABUTMENT, CONSTRUCT THE BRIDGE APPROACH EMBANKMENT BEHIND THE ABUTMENT UP AT A 1:1 SLOPE FROM THE TOP OF THE HEEL OF THE FOOTING TO THE SUBGRADE ELEVATION AND FOR A MINIMUM DISTANCE OF 150 FEET BEHIND THE ABUTMENT. DO NOT BEGIN THE INSTALLATION OF THE ABUTMENT PILES UNTIL AFTER THE ABOVE REQUIRED EMBANKMENT HAS BEEN CONSTRUCTED.

PILE DESIGN LOADS (ULTIMATE BEARING VALUE)

PILES TO BEDROCK: DRIVE PILES TO REFUSAL ON BEDROCK. THE DEPARTMENT WILL CONSIDER REFUSAL TO BE OBTAINED BY PENETRATING WEAK BEDROCK FOR SEVERAL INCHES TO A MINIMUM RESISTANCE OF 20 BLOWS PER INCH OR BY CONTACTING STRONG BEDROCK AND THE PILE RECEIVING AT LEAST 20 BLOWS. SELECT THE HAMMER SIZE TO ACHIEVE THE REQUIRED DEPTH TO BEDROCK AND REFUSAL. INSTEAD OF DRIVING TO REFUSAL, THE CONTRACTOR MAY PERFORM DYNAMIC LOAD TESTING ACCORDING TO C&MS 523 TO ESTABLISH A DRIVING CRITERIA FOR EACH PILE TYPE AND CAPACITY. ESTABLISH THE DRIVING CRITERIA TO ACHIEVE AN ULTIMATE BEARING VALUE THAT IS 1.5 TIMES THE TOTAL FACTORED LOAD GIVEN BELOW FOR THE PILES. PAYMENT FOR DYNAMIC LOAD TESTING PERFORMED AT THE CONTRACTOR'S OPTION IS INCLUDED IN THE UNIT PRICE PAY ITEM FOR PILES DRIVEN.

THE TOTAL FACTORED LOAD IS 373 KIPS PER PILE FOR THE 52 ABUTMENT PILES. THE TOTAL FACTORED LOAD IS 355 KIPS PER PILE FOR THE 27 PIER PILES.

REAR ABUTMENT PILES:
HP12 X 53 PILES 60 FEET LONG, ORDER LENGTH

PIER PILES:
HP12 X 53 PILES 45 FEET LONG, ORDER LENGTH

FORWARD ABUTMENT PILES:
HP12 X 53 PILES 55 FEET LONG, ORDER LENGTH

EXISTING STRUCTURE PLANS:

CONSTRUCTION PLANS FOR THE EXISTING BRIDGE ARE ON FILE AT THE OHIO DEPARTMENT OF TRANSPORTATION,

DISTRICT ONE OFFICE,
1885 NORTH MCCULLOUGH ST.,
LIMA, OHIO 45801

AND ARE AVAILABLE FOR REFERENCE.

PILE SPLICES:

IN LIEU OF USING THE FULL PENETRATION BUTT WELDS SPECIFIED IN CMS 507.09 TO SPLICE STEEL H-PILES, THE CONTRACTOR MAY USE A MANUFACTURED H-PILE SPLICER. FURNISHE SPLICERS FROM THE FOLLOWING MANUFACTURER:

ASSOCIATED PILE AND FITTING CORPORATION
8 WOOD HOLLOW RD. PLAZA 1
PARSIPPANY, NEW JERSEY 07054

INSTALL AND WELD THE SPLICER TO THE PILE SECTIONS IN ACCORDANCE WITH THE MANUFACTURER'S WRITTEN ASSEMBLY PROCEDURE SUPPLIED TO THE ENGINEER BEFORE THE WELDING IS PERFORMED.

DECK PLACEMENT DESIGN ASSUMPTIONS:

DECK PLACEMENT DESIGN ASSUMPTIONS:
THE FOLLOWING ASSUMPTIONS OF CONSTRUCTION MEANS AND METHODS WERE MADE FOR THE ANALYSIS AND DESIGN OF THE SUPERSTRUCTURE. THE CONTRACTOR IS RESPONSIBLE FOR THE DESIGN OF THE FALSEWORK SUPPORT SYSTEM WITHIN THESE PARAMETERS AND WILL ASSUME RESPONSIBILITY FOR SUPERSTRUCTURE ANALYSIS FOR DEVIATION FROM THESE DESIGN ASSUMPTIONS.

AN EIGHT WHEEL FINISHING MACHINE WITH A MAXIMUM WHEEL LOAD OF 1.07 KIPS FOR A TOTAL MACHINE LOAD OF 8.55 KIPS.

A MINIMUM OUT-TO-OUT WHEEL SPACING AT EACH END OF THE MACHINE OF 103".

A MAXIMUM SPACING OF OVERHANG FALSEWORK BRACKETS OF 48 IN.

A MAXIMUM DISTANCE FROM THE CENTERLINE OF THE FASCIA GIRDER TO THE FACE OF THE SAFETY HANDRAIL OF 65".

ABBREVIATIONS:

ABUT. = ABUTMENT
APPROX. = APPROXIMATE
BRG. = BEARING
C/C = CENTER TO CENTER
C.J. = CONSTRUCTION JOINT
CLR. = CLEAR
CONST. = CONSTRUCTION
DIA. = DIAMETER
DWG. = DRAWING
E.F. = EACH FACE
EL. = ELEVATION
EST. = ESTIMATE
EX. = EXISTING
F.A. = FORWARD ABUTMENT
F.F. = FAR FACE
FWD. = FORWARD
HMWM = HIGH MOLECULAR WEIGHT METHACRYLATE
LT. = LEFT
MAX. = MAXIMUM
MIN. = MINIMUM
N.F. = NEAR FACE
N.P.C.P.P. = NON-PERFORATED CORRUGATED PLASTIC PIPE
O/O = OUT TO OUT
P.C.P.P. = PERFORATED CORRUGATED PLASTIC PIPE
P.E.J.F. = PREFORMED EXPANSION JOINT FILLER
P.F.J. = PRECOMPRESSED FOAM JOINT
PROP. = PROPOSED
R.A. = REAR ABUTMENT
RT. = RIGHT
SER. = SERIES
SPA. = SPACES
STA. = STATION
STD. = STANDARD
T/T = TOE TO TOE
T/S = TOP OF SLOPE
TYP. = TYPICAL

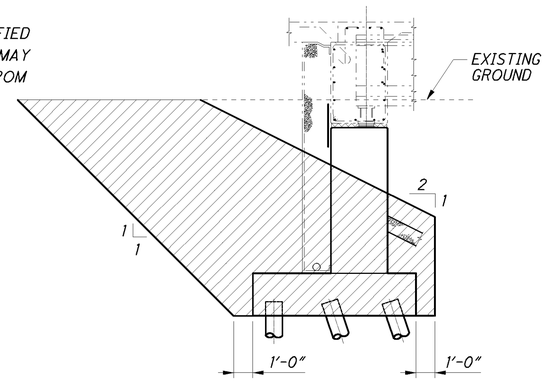

UNCLASSIFIED EXCAVATION AT REAR ABUTMENT

- LIMITS OF UNCLASSIFIED EXCAVATION, AS PER PLAN

DESIGN AGENCY
PARSONS BRINCKERHOFF
2945 FARMERS DRIVE
SUITE 350
COLUMBUS, OHIO 43235

DESIGNED	DRAWN	REVIEWED	DATE
APV	APV	EBS	11-29-12
CHECKED	REVISED	STRUCTURE FILE NUMBER	
BMG		0201723	

GENERAL NOTES
BRIDGE NO. ALL-75-0328
McCLAIN RD. OVER I-75

ALL-75-0.21
PID No. 89029

J:\Projects\ALL\89029\structures\ALL075_0328C\sheets\075_0328CGN001.dgn 09-MAY-2013 3:07PM lint

ITEM 511-CONCRETE, MISC.: FORMING OF ROUGH CUT STONE FINISH USING FORMLINERS

DESCRIPTION;
CONCRETE FORMLINERS SHALL BE USED ON THE FOLLOWING SURFACES ACCORDING TO THE DETAILS IN PLANS:

1.ABUTMENT AND WINGWALL FACES.
2.PARAPETS.
3.TOWER FACES.
4. PIER COLUMNS

THE FORMLINER USED SHALL MEET THE DETAILS SHOWN IN THE PLANS FOR STAGGERED (INTERLOCKING) PATTERNS, INCLUDING DEPTH OF RELIEF AND SIZE OF STONE PATTERN. HORIZONTAL JOINTS IN THE STONE PATTERN SHALL BE ALIGNED AND AT THE SAME ELEVATION. THE FINISHED TEXTURE OF THE ROUGH CUT STONE SHALL BE SIMILAR TO THAT OF RUBBED CONCRETE.

FORMLINERS FOR PATTERN 1 SHALL MATCH THE DIMENSIONAL SPECIFICATIONS OF THE FOLLOWING MANUFACTURER OR APPROVED EQUAL:

PATTERN #1104-R2 (RANDOM CUT STONE)
CUSTOM ROCK
2020 WEST 7TH STREET
ST. PAUL, MN 55116
651-699-1345
WWW.CUSTOM-ROCK.COM

FORMLINERS FOR PATTERN 2 SHALL MATCH THE DIMENSIONAL SPECIFICATIONS OF THE FOLLOWING MANUFACTURER OR APPROVED EQUAL:

PATTERN #1599 (RANDOM CUT STONE)
SPEC FORMLINERS, INC.
530 E. DYER RD.
SANTA ANA, CA 92707
888-429-9550
WWW.SPECFORMLINERS.COM

THE FORMLINER MANUFACTURER SHALL SUBMIT EVIDENCE OF AT LEAST TWO SIMILAR ARCHITECTURAL CONCRETE CONSTRUCTION PROJECTS WITHIN THE PAST FIVE YEARS FOR A REVIEW AND APPROVAL BY THE ENGINEER. COMPLETE SHOP DRAWINGS DETAILING THE STONE PATTERNS SHALL BE SUBMITTED IN ACCORDANCE WITH 501.04 FOR APPROVAL PRIOR TO PLACING ANY CONCRETE WHERE THE FORMLINERS WILL BE USED. SHOP DRAWINGS SHALL INCLUDE FORMLINER INSTALLATION AND CASTING INSTRUCTIONS, AND INDICATE FORMLINER BACKUP, REVEAL, AND CHAMFER STRIP LOCATIONS. THE CONTRACTOR SHALL COORDINATE WITH THE FORMLINER MANUFACTURER TO ASSURE UNDERSTANDING OF FORMLINER USE, TEST PANEL MOCK-UP REQUIREMENTS, AND FINAL CONSTRUCTION PROCEDURES.

MATERIALS:
THE FORMLINER SHALL BE FABRICATED WITH SHAPES THAT ALLOW REMOVAL OF THE FORMS WITHOUT DAMAGE OR VISUAL IMPAIRMENT OF THE CONCRETE, AND SHALL HAVE 1/8" MINIMUM RADII WITH NO SHARP EDGES. THE FORMLINER SHALL BE CAPABLE OF WITHSTANDING APPLIED CONCRETE POUR PRESSURE WITHOUT LEAKAGE, PHYSICAL DEFECT, OR VISUAL IMPAIRMENT.

CONSTRUCTION REQUIREMENTS:
FORMLINERS SHALL BE CLEANED BEFORE EACH USE. DAMAGED FORMLINERS WHOSE CONTINUED USE OR REPAIR WOULD NEGATIVELY IMPACT THE AESTHETICS OF THE FINISHED CONCRETE SHALL BE REPLACED. FORMLINER JOINTS SHALL BE SEALED TO PREVENT CEMENT PASTE FROM BLEEDING. FORMLINERS SHALL BE INSTALLED IN ACCORDANCE WITH THE APPROVED SHOP DRAWINGS. CHAMFERED CORNERS SHALL FORM SMOOTH, SOLID UNBROKEN CONTINUOUS SURFACES WHICH ARE UNIFORMLY STRAIGHT. AN APPROVED COMPATIBLE FORMLINER RELEASE AGENT SHALL BE APPLIED AT A RATE RECOMMENDED BY THE MANUFACTURER.

THE CONCRETE COPING SHALL BE CAST WITH NO FORMLINER USED.

AS PART OF THIS ITEM, A 7 FEET BY 3 FEET SECTION OF WALL THAT COMPRISES A MINIMUM OF ONE COMPLETE STONE BLOCK WILL BE CAST BY THE CONTRACTOR FOR EACH PATTERN USED FOR APPROVAL BY THE ENGINEER. IF THE SECTION DOES NOT MEET THE ENGINEER'S APPROVAL, THE PROPOSED FORMLINER MAY BE REJECTED. THE SECTION MUST BE APPROVED BEFORE PLACINGANY CONCRETE WHERE THE FORMLINERS WILL BE USED. REJECTION OF THE SECTION WILL REQUIRE CONSTRUCTION OF ANOTHER SECTION UNTIL APPROVAL IS GRANTED. THE WALL SECTION SHALL USE ACTUAL PROJECT SPECIFIC MATERIALS, METHODS, AND WORKMANSHIP, INCLUDING CONCRETE MIX (CEMENT TYPE, AGGREGATE GRADATION, SLUMP, WATER/CEMENT RATIO, PLASTICIZERS, AND ADDITIVES), FORMLINER AND FORMWORK SYSTEMS, INSERTS, FORM RELEASE AGENTS, PLACEMENT RATE, FORM PRESSURES, AND JOINT SEALING, VIBRATING, AND STRIPPING PRACTICES. ANY INTENDED PATCHING OR REPAIR PROCEDURES FOR THE CORRECTION OF MINOR DEFECTS THAT DO NOT RESULT IN REJECTION OF THE ENTIRE WALL SECTION SHALL BE DEMONSTRATED ON THE SECTION.

THE ACCEPTED WALL SECTION SHALL BE THE STANDARD BY WHICH THE FINAL CONSTRUCTION WILL BE EVALUATED FOR TECHNICAL AND AESTHETIC MERIT. THE WALL SECTION SHALL BE CONSTRUCTED AT THE CONSTRUCTION SITE, OR AT AN ALTERNATIVE LOCATION AGREED UPON BY THE ENGINEER. UPON COMPLETION OF THE FINAL CONSTRUCTION, THE CONTRACTOR SHALL BE RESPONSIBLE FOR REMOVAL AND DISPOSAL OF THE WALL SECTION MOCK-UP.

PORTIONS OF THE STRUCTURE DETAILED IN THE PLAN SET SHALL BE CAST WITH STONE FACING FORMLINER TEXTURE AND BE SEALED WITH ITEM 512 - SEALING OF CONCRETE SURFACES (NON-EPOXY (CLEAR)).

METHOD OF MEASUREMENT:
ROUGH CUT STONE FORMLINERS WILL NOT BE MEASURED INDIVIDUALLY FOR PAYMENT UNDER THIS ITEM.

BASIS OF PAYMENT:
ITEM 511-CONCRETE, MISC.: FORMING OF ROUGH CUT STONE FINISH USING FORMLINERS WILL BE PAID FOR AT THE CONTRACT SQ. FT. PRICE. THE WORK SHALL INCLUDE FABRICATION AND ERECTION OF FORMLINERS, PREPARATION OF FORMLINER SHOP DRAWINGS, AND CONSTRUCTION AND REMOVAL OF THE PRE-CONSTRUCTION WALL SECTION, AND SHALL INCLUDE ALL LABOR, MATERIALS, EQUIPMENT, AND INCIDENTALS REQUIRED TO COMPLETE THIS ITEM.

THE DEPARTMENT WILL PAY FOR SEALING OF CONCRETE SURFACES SEPARATELY UNDER ITEM 512-SEALING OF CONCRETE SURFACES (NON-EPOXY (CLEAR)). SEE THE GENERAL SEALING OF CONCRETE SURFACES PLAN NOTE FOR REQUIREMENTS FOR THE NON-EPOXY (CLEAR) SEALER.

ITEM 512-SEALING OF CONCRETE SURFACES (EPOXY-URETHANE), AS PER PLAN

EPOXY-URETHANE FOR THE BEAMS SHALL BE FEDERAL COLOR STANDARD NUMBER 25095. EPOXY-URETHANE FOR THE WINGWALL COPING, PIER CAP, ABUTMENT DIAPHRAGM, PARAPET ACCENTS, AND TOWER CAPS SHALL BE FEDERAL COLOR STANDARD NUMBER 37875. EPOXY-URETHANE FOR THE DECK EDGE BELOW PARAPET SHALL BE FEDERAL COLOR NUMBER 36373. ALL CONCRETE SHALL BE SEALED AS PER PLAN DETAILS.

ITEM 512 - SEALING OF CONCRETE SURFACES (NON-EPOXY CLEAR, AS PER PLAN)

THE NON-EPOXY (CLEAR) SEALER SHALL BE USED ON THE FOLLOWING SURFACES ACCORDING TO THE DETAILS IN PLANS:

1. ABUTMENT AND WINGWALL FACES.
2. PIERS.
3. DECK AND PARAPETS.
4. TOWER FACES.

PAYMENT FOR SEALING SURFACES OF ITEMS 1, 2, 3, AND 4 SHALL BE INCLUDED IN THIS ITEM 512.

ITEM 518 - 6" NON-PERFORATED CORRUGATED PLASTIC PIPE, INCLUDING SPECIALS, AS PER PLAN

ANIMAL GUARDS SHALL BE PROVIDED AT THE OUTLET OF THE DRAINAGE PIPES, STEEL BOLTS OR RODS FOR THE ANIMAL GUARDS SHALL BE GALVANIZED PER CMS 711.02. SEE STD DWG. DM 1.1 FOR ADDITIONAL DETAILS AND NOTES. THE ANIMAL GUARDS AND CRUSHED AGGREGATE SLOPE PROTECTION ARE INCIDENTAL TO ITEM 518 - 6" NON-PERFORATED CORRUGATED PLASTIC PIPE, INCLUDING SPECIALS, AS PER PLAN.

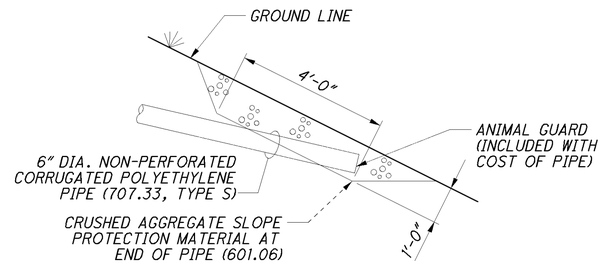

TERMINATION OF 6" NON-PERFORATED CORRUGATED PLASTIC PIPE (N.P.C.P.P.)

ITEM 607 - VANDAL PROTECTION FENCE, AS PER PLAN

ALL MATERIALS NECESSARY FOR THE INSTALLATION OF THE VANDAL PROTECTION FENCING, INCLUDING ALL POSTS AND RAILS SHALL BE FEDERAL COLOR NUMBER 27038, BLACK. THE PVC COATING FOR THE FABRIC SHALL BE BLACK IN COLOR CLOSELY APPROACHING FEDERAL COLOR NUMBER 27038. ALL LABOR AND MATERIALS FOR COATING SHALL BE INCLUDED WITH THIS ITEM FOR PAYMENT.

ITEM 898 - QC/QA CONCRETE, CLASS QSC2, SUPERSTRUCTURE (APPROACH SLAB), AS PER PLAN

THE ACCEPTED QUANTITIES SHALL INCLUDE:
CONCRETE, PARAPETS, REINFORCING STEEL, JOINT FILLERS, JOINT SEALERS, JOINT SEALS, WATERPROOFING, AND END TOWER INCLUDING CAP.

THE PARAPET PORTION OF THIS IEM 898 SHALL CONTAIN INTEGRALLY COLORED CONCRETE USING CHROMIX ADMIXTURES AS PROVIDED BY L.M. SCOFIELD COMPANY, DOUGLASVILLE, GEORGIA (800) 800-9900 OR AN APPROVED EQUAL MATCHING FEDERAL COLOR NO. 36373.

ITEM 898 - QC/QA CONCRETE, CLASS QSC2, SUPERSTRUCTURE (PARAPET), AS PER PLAN

ITEM 898 - QC/QA CONCRETE, CLASS QSC2, SUBSTRUCTURE (PIER ABOVE FOOTING), AS PER PLAN

ITEM 898 - QC/QA CONCRETE, CLASS QSC2, SUBSTRUCTURE (ABUTMENT INCLUDING FOOTING), AS PER PLAN

THIS ITEM 898 SHALL CONTAIN INTEGRALLY COLORED CONCRETE USING CHROMIX ADMIXTURES AS PROVIDED BY L.M. SCOFIELD COMPANY, DOUGLASVILLE, GEORGIA (800) 800-9900 OR AN APPROVED EQUAL MATCHING FEDERAL COLOR NO. 36373.

IT IS NOT NECESSARY FOR THE CONTRACTOR TO PROVIDE INTEGRAL COLORING IN THE LARGE AND SMALL TOWER CAPS, ABUTMENT FOOTING, OR PIER CAP.

DESIGN AGENCY
PARSONS BRINCKERHOFF
2945 FARMERS DRIVE
SUITE 350
COLUMBUS, OHIO 43235

DESIGNED	DRAWN	REVIEWED	DATE
APV	APV	EBS	11-29-12
CHECKED	REVISED	STRUCTURE FILE NUMBER	
BMG		0201723	

GENERAL NOTES
BRIDGE NO. ALL-75-0328
McCLAIN RD. OVER I-75

ALL-75-0.21
PID No. 89029

J:\Projects\ALL\89029\structures\ALL075_0328C\sheets\075_0328CGN002.dgn 09-MAY-2013 3:07PM jint

MADE BY: APV | DATE: 4/29/11
CHECKED BY: ECM | DATE: 5/5/11

01/IMS/BR/	03/ENH/OT/	ITEM	EXTENSION	TOTAL	UNIT	ESTIMATED QUANTITIES DESCRIPTION	ALL-75-0328 ABUT.	 PIER	 SUPER.	 GEN.	SEE SHEET NO.
LUMP		202	11002	LUMP		STRUCTURE REMOVED, OVER 20 FOOT SPAN				LUMP	
134		202	22900	134	SQ YD	APPROACH SLAB REMOVED				134	
LUMP		503	11100	LUMP		COFFERDAMS AND EXCAVATION BRACING				LUMP	
LUMP		503	21301	LUMP		UNCLASSIFIED EXCAVATION, AS PER PLAN				LUMP	2/27
LUMP		505	11100	LUMP		PILE DRIVING EQUIPMENT MOBILIZATION				LUMP	
3,825		507	00250	3,825	FT	STEEL PILES HP12X53, DRIVEN	2,745	1,080			
4,220		507	00200	4,220	FT	STEEL PILES HP12X53, FURNISHED	3,005	1,215			
79		507	93300	79	EACH	STEEL POINTS OR SHOES	52	27			
153,001	6,568	509	10000	159,569	POUND	EPOXY COATED REINFORCING STEEL	29,745	28,265	101,559		
	4,297	511	71200	4,297	SQ FT	CONCRETE, MISC.: FORMING OF ROUGH CUT STONE FINISH USING FORMLINERS	2,023	831	1,167	276	
658	91	512	10051	749	SQ YD	SEALING OF CONCRETE SURFACES (NON-EPOXY), AS PER PLAN	225	93	348	83	3/27
798	38	512	10101	836	SQ YD	SEALING OF CONCRETE SURFACES (EPOXY-URETHANE), AS PER PLAN	38	69	710	19	3/27
78		512	33000	78	SQ YD	TYPE 2 WATERPROOFING	78				
10		515	15030	10	EACH	DRAPED STRAND PRESTRESSED CONCRETE BRIDGE I-BEAM MEMBERS, LEVEL 3, TYPE 4 MOD. (60 IN.)			10		
24		515	20000	24	EACH	INTERMEDIATE DIAPHRAMS			24		
14		516	13600	14	SQ FT	1" PREFORMED EXPANSION JOINT FILLER	14				
185		516	13900	185	SQ FT	2" PREFORMED EXPANSION JOINT FILLER	185				
122		516	14020	122	FT	SEMI-INTEGRAL ABUTMENT EXPANSION JOINT SEAL	122				
10		516	44201	10	EACH	ELASTOMERIC BEARING WITH INTERNAL LAMINATES AND LOAD PLATE (NEOPRENE), AS PER PLAN 12" X 23" X 3.65" WITH 13" X 24" X 1 1/2" LOAD PLATES	10				12/27
10		516	44201	10	EACH	ELASTOMERIC BEARING WITH INTERNAL LAMINATES AND LOAD PLATE (NEOPRENE), AS PER PLAN 12" X 23" X 3.14" WITH 13" X 27" X 1 1/2" (MIN.) LOAD PLATES		10			12/27
171		518	21200	171	CU YD	POROUS BACKFILL WITH FILTER FABRIC		171			
167		518	40000	167	FT	6" PERFORATED CORRUGATED PLASTIC PIPE		167			
65		518	40011	65	FT	6" NON-PERFORATED CORRUGATED PLASTIC PIPE, INCLUDING SPECIALS, AS PER PLAN		65			3/27
LUMP		530	00200	LUMP		SPECIAL - STRUCTURE, MISC.: BRIDGE MOUNTED DISPLAY				LUMP	
525		601	20000	525	SQ YD	CRUSHED AGGREGATE SLOPE PROTECTION				525	
508		607	39901	508	FT	VANDAL PROTECTION FENCE, 6' STRAIGHT, COATED FABRIC, AS PER PLAN			508		3/27
680		625	25400	680	FT	CONDUIT, 2", 725.04				680	
4		625	29920	4	EACH	STRUCTURE JUNCTION BOX				4	
4		625	30700	4	EACH	PULL BOX, 725.08, 18"				4	
409		898	10210	409	CU YD	QC/QA CONCRETE, CLASS QSC2, SUPERSTRUCTURE (DECK)			409		
287		898	10709	287	SQ YD	QC/QA CONCRETE, CLASS QSC2, SUPERSTRUCTURE (APPROACH SLAB), (T=17"), AS PER PLAN				287	3/27
58	8	898	11001	66	CU YD	QC/QA CONCRETE, CLASS QSC2, SUPERSTRUCTURE (PARAPET), AS PER PLAN			66		3/27
67	5	898	20101	72	CU YD	QC/QA CONCRETE, CLASS QSC1, SUBSTRUCTURE (PIER ABOVE FOOTING), AS PER PLAN		72			3/27
259	47	898	20161	306	CU YD	QC/QA CONCRETE, CLASS QSC1, SUBSTRUCTURE (ABUTMENT INCLUDING FOOTING), AS PER PLAN	306				3/27
64		898	20300	64	CU YD	QC/QA CONCRETE, CLASS QSC1, SUBSTRUCTURE (FOOTING)		64			

DESIGN AGENCY
PARSONS BRINCKERHOFF
2545 FARMERS DRIVE
SUITE 350
COLUMBUS, OHIO 43235

DESIGNED APV | DRAWN APV | REVIEWED EBS | DATE 11-29-12
CHECKED ECM | REVISED | STRUCTURE FILE NUMBER 0201723

ESTIMATED QUANTITIES
BRIDGE NO. ALL-75-0328
McCLAIN RD. OVER I-75

ALL-75-0.21
PID No. 89029

J:\Projects\ALL\89029\structures\ALL075_0328\sheets\075_0328EQ001.dgn 20-JUN-2013 3:38PM jint

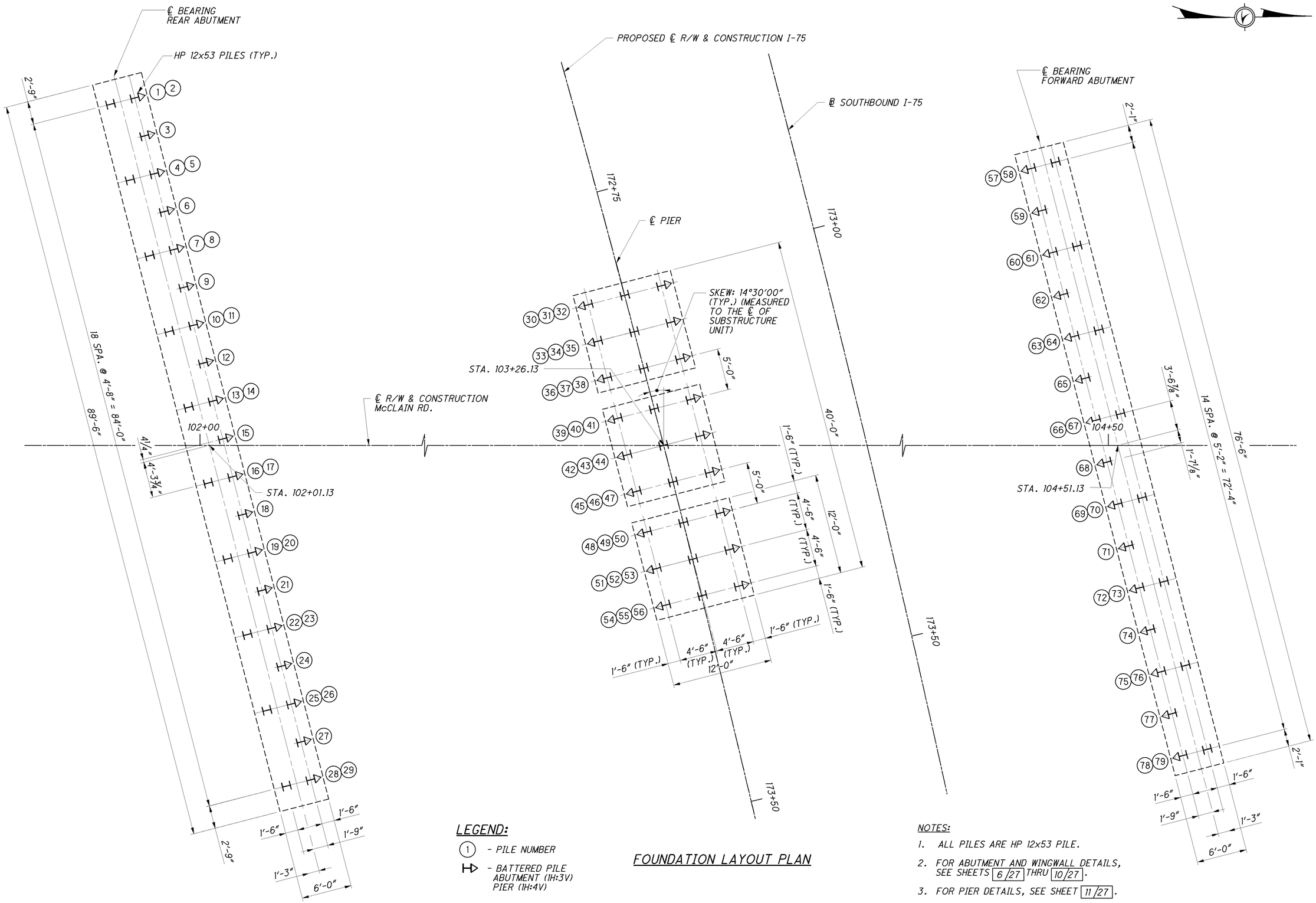

LEGEND:

(1) - PILE NUMBER

⊢▷ - BATTERED PILE
ABUTMENT (1H:3V)
PIER (1H:4V)

FOUNDATION LAYOUT PLAN

NOTES:

1. ALL PILES ARE HP 12x53 PILE.
2. FOR ABUTMENT AND WINGWALL DETAILS, SEE SHEETS 6/27 THRU 10/27.
3. FOR PIER DETAILS, SEE SHEET 11/27.

DESIGN AGENCY
PARSONS BRINCKERHOFF
2945 FARMERS DRIVE
SUITE 350
COLUMBUS, OHIO 43235

DESIGNED	DRAWN	REVIEWED	DATE
ECM	ECM	EBS	11-29-12
CHECKED	REVISED	STRUCTURE FILE NUMBER	
APV		0201723	

FOUNDATION LAYOUT PLAN
BRIDGE NO. ALL-75-0328
McCLAIN ROAD OVER I-75

ALL-75-0.21
PID No. 89029

J:\Projects\ALL\89029\structures\ALL075_0328C\sheets\075_0328CFP001.dgn 09-MAY-2013 3:07PM jint

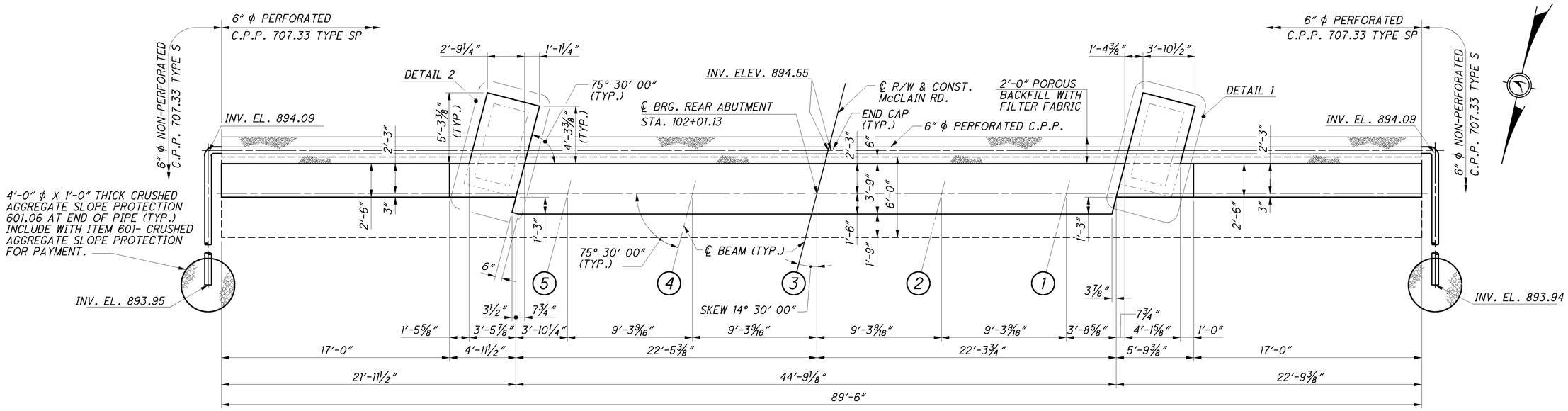

PLAN

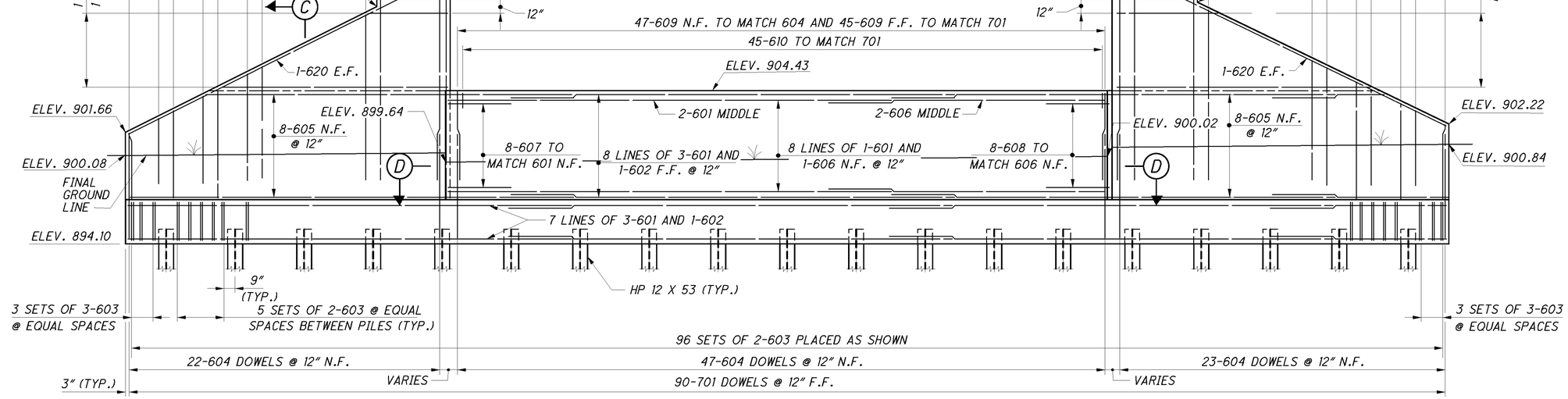

ELEVATION

(CORBEL REINFORCEMENT NOT SHOWN FOR CLARITY)

MINIMUM LAP LENGTHS
#6 HORIZONTAL = 4'-3"
#6 VERTICAL = 3'-1"

ALL BAR MARKS SHALL BE PREFIX RA FOR REAR ABUTMENT

NOTES:

1. FOR FOUNDATION LAOUT PLAN, SEE SHEET 5/27.
2. FOR SECTIONS A-A THRU D-D, SEE SHEET 7/27.
3. FOR DETAILS 1 AND 2, SEE SHEET 10/27.
4. FOR TOWER DETAILS, SEE SHEET 10/27.

DESIGN AGENCY
PARSONS BRINCKERHOFF
2945 FARMERS DRIVE
SUITE 350
COLUMBUS, OHIO 43235

DESIGNED	DRAWN	REVIEWED	DATE
ECM	RCK	EBS	11-29-12
CHECKED	REVISED	STRUCTURE FILE NUMBER	
BMG		0201723	

REAR ABUTMENT PLAN AND ELEVATION

BRIDGE NO. ALL-75-0328
McCLAIN RD. OVER I-75

ALL-75-0.21
PID No. 89029

J:\Projects\ALL\89029\structures\ALL075_0328C\sheets\075_0328CAR001.dgn 09-MAY-2013 3:07PM jint

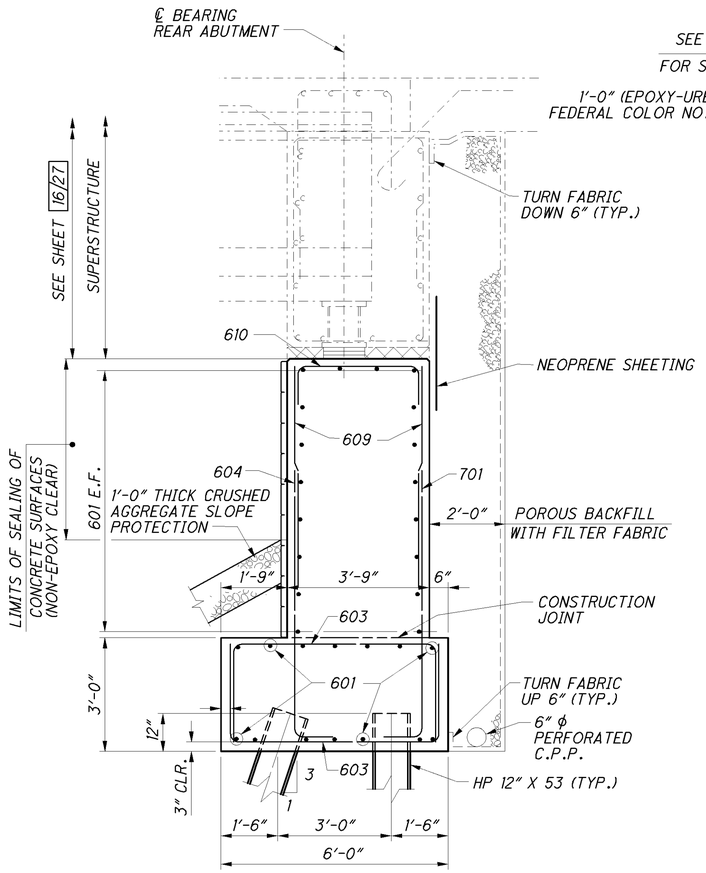

SECTION A-A

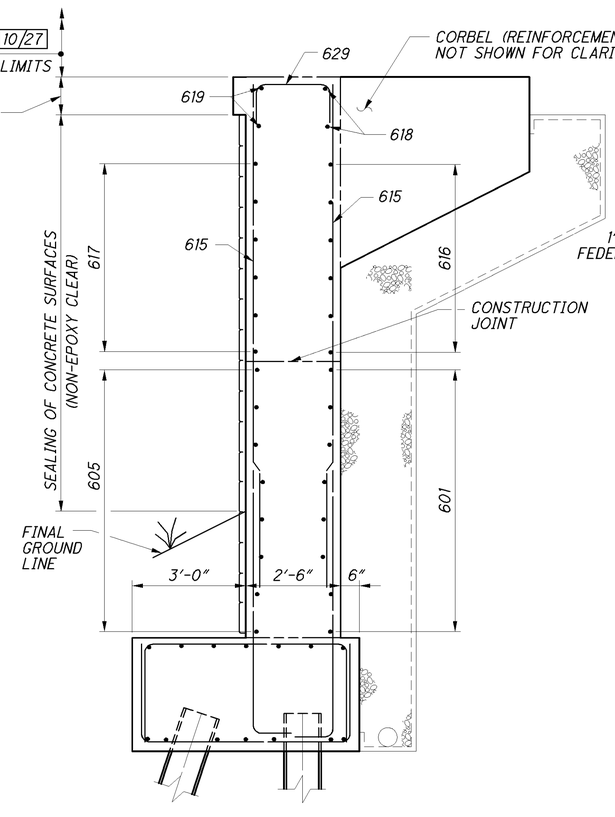

SECTION B-B

(SEE SECTION A-A FOR DETAILS NOT SHOWN)

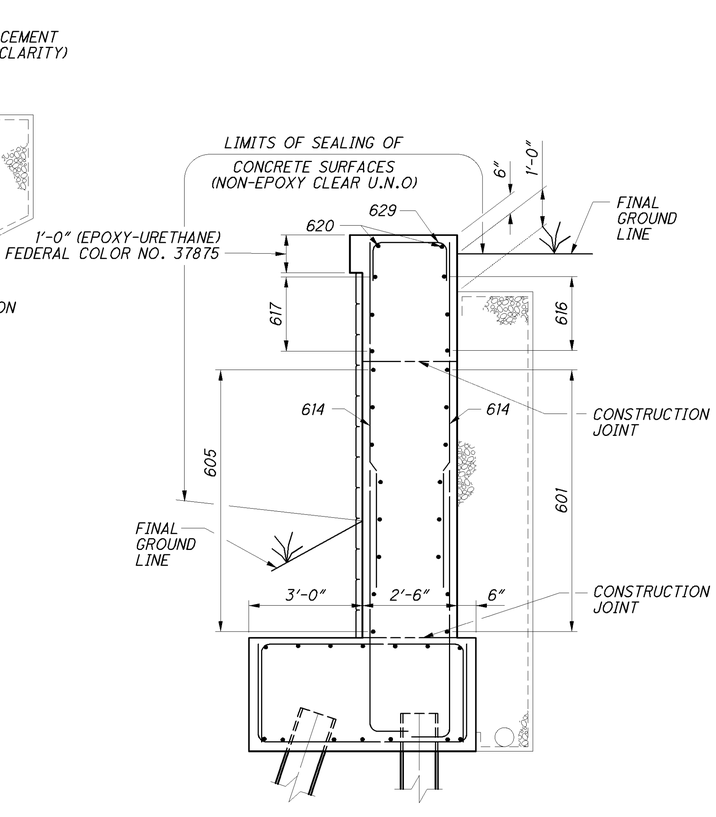

SECTION C-C

(SEE SECTION A-A FOR DETAILS NOT SHOWN)

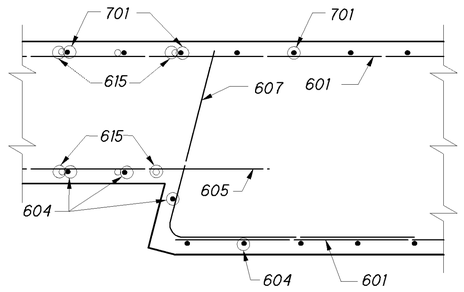

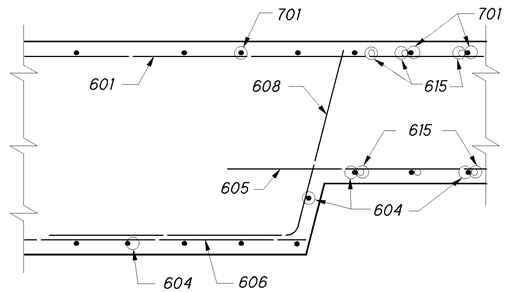

SECTION D-D

NOTES:

1. FOR LOCATION OF SECTIONS, SEE SHEET 6/27.
2. FOR ABUTMENT CORBEL DETAILS, SEE SHEET 10/27.
3. FOR SUPERSTRUCTURE DETAILS, SEE SHEETS 13/27 THRU 20/27.

ALL BAR MARKS SHALL BE PREFIXED RA FOR REAR ABUTMENT

DESIGN AGENCY
PARSONS BRINCKERHOFF
2545 FARMERS DRIVE
SUITE 350
COLUMBUS, OHIO 43235

DESIGNED	DRAWN	REVIEWED	DATE
ECM	RCK	EBS	11-29-12
CHECKED	REVISED	STRUCTURE FILE NUMBER	
BMG		0201723	

REAR ABUTMENT SECTIONS
BRIDGE NO. ALL-75-0328
McCLAIN RD. OVER I-75

ALL-75-0.21
PID No. 89029

7 / 27

663
907

J:\Projects\ALL\89029\structures\ALL075_0328C\sheets\075_0328CAR002.dgn 09-MAY-2013 3:07PM jint

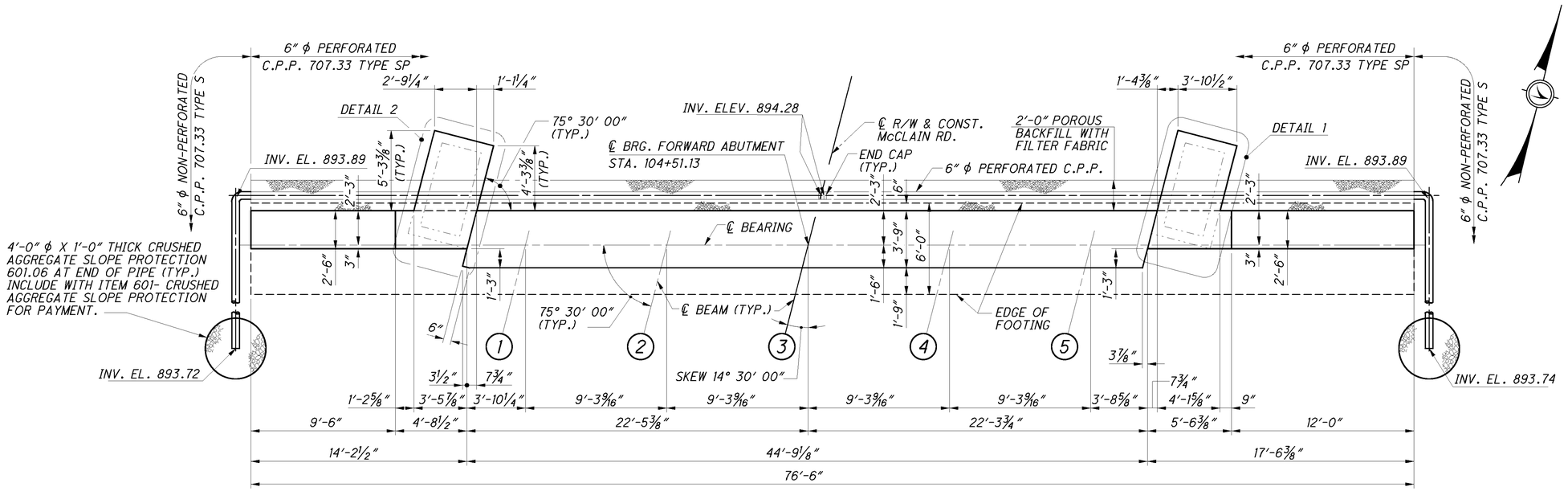

PLAN

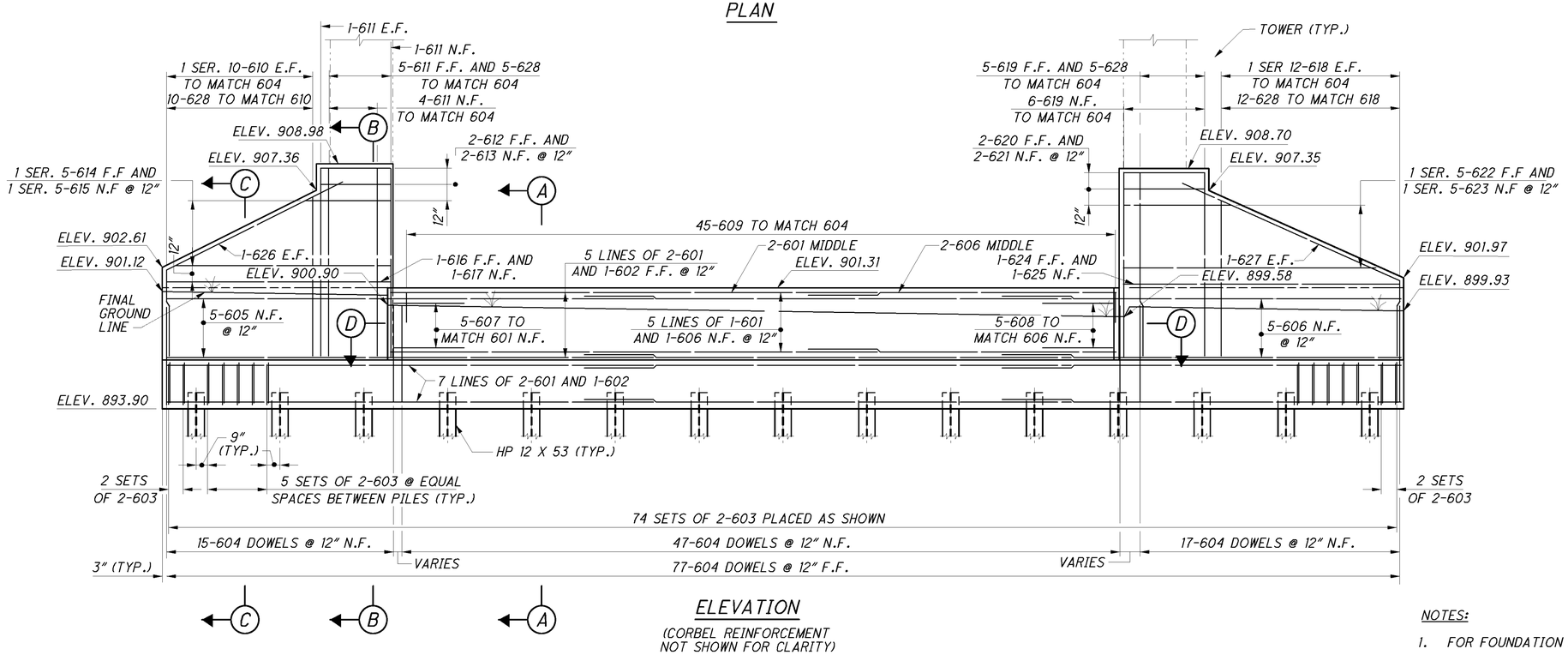

ELEVATION

(CORBEL REINFORCEMENT NOT SHOWN FOR CLARITY)

MINIMUM LAP LENGTHS
#6 HORIZONTAL = 4'-3"
#6 VERTICAL = 3'-1"

ALL BAR MARKS SHALL BE PREFIX FA FOR FORWARD ABUTMENT

NOTES:

1. FOR FOUNDATION LAOUT PLAN, SEE SHEET 5/27.
2. FOR SECTIONS A-A THRU D-D, SEE SHEET 9/27.
3. FOR DETAILS 1 AND 2, SEE SHEET 10/27.
4. FOR TOWER DETAILS, SEE SHEET 10/27.

DESIGN AGENCY
PARSONS BRINCKERHOFF
2545 FARMERS DRIVE
SUITE 350
COLUMBUS, OHIO 43235

DESIGNED	DRAWN	REVIEWED	DATE
ECM	RCK	EBS	11-29-12
CHECKED	REVISED	STRUCTURE FILE NUMBER	
BMG		0201723	

FORWARD ABUTMENT PLAN AND ELEVATION
BRIDGE NO. ALL-75-0328
McCLAIN RD. OVER I-75

ALL-75-0.21
PID No. 89029

8 / 27

664
907

J:\Projects\ALL\89029\structures\ALL075_0328\sheets\075_0328CAF001.dgn 09-MAY-2013 3:07PM jint

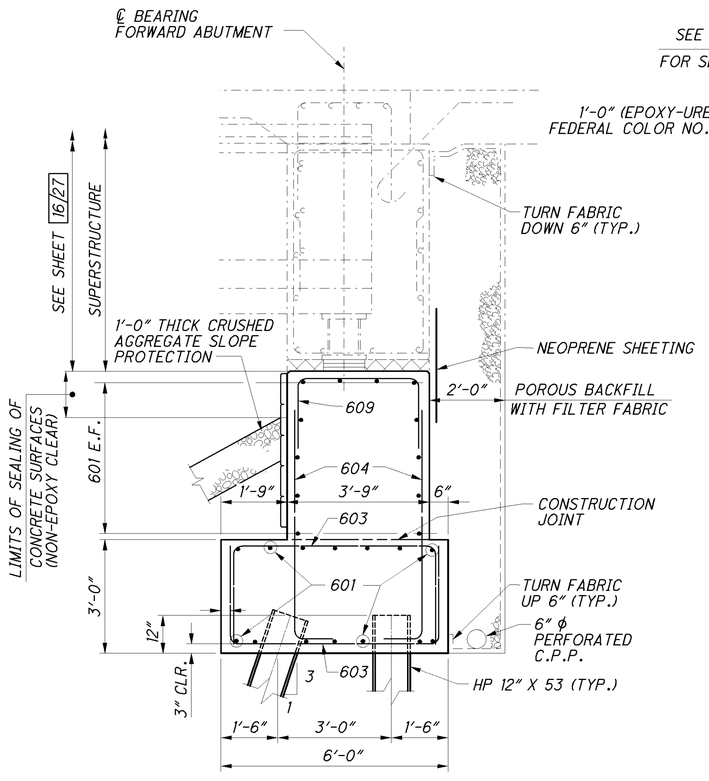

SECTION A-A

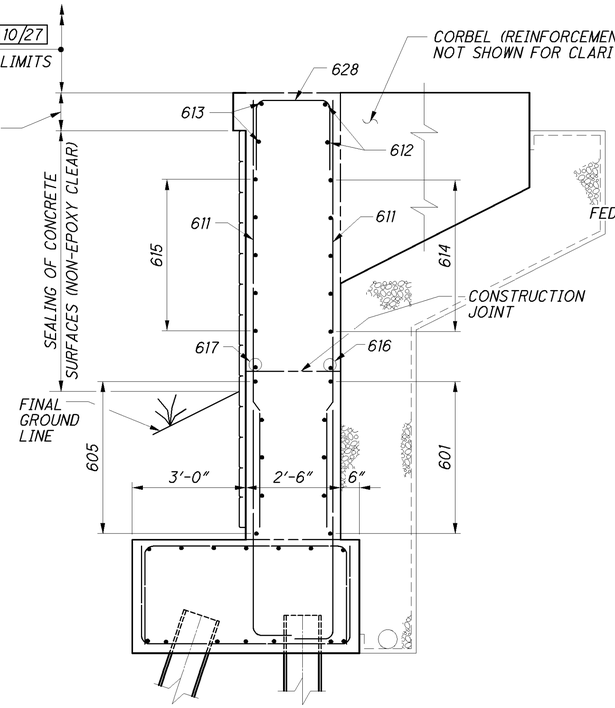

SECTION B-B
(SEE SECTION A-A FOR DETAILS NOT SHOWN)

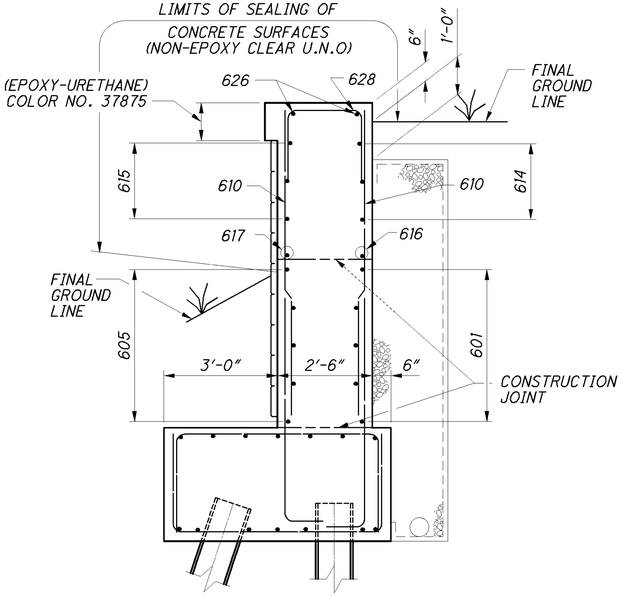

SECTION C-C
(SEE SECTION A-A FOR DETAILS NOT SHOWN)

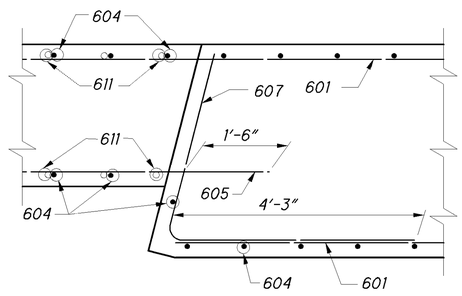

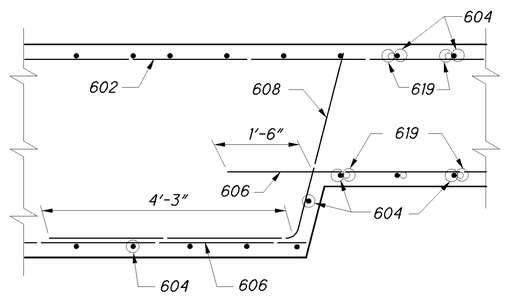

SECTION D-D

NOTES:

1. FOR LOCATION OF SECTIONS, SEE SHEET 8/27.
2. FOR ABUTMENT CORBEL DETAILS, SEE SHEET 10/27.
3. FOR SUPERSTRUCTURE DETAILS, SEE SHEETS 13/27 THRU 20/27.

ALL BAR MARKS SHALL BE PREFIXED FA FOR FORWARD ABUTMENT

DESIGN AGENCY
PARSONS BRINCKERHOFF
2945 FARMERS DRIVE
SUITE 350
COLUMBUS, OHIO 43235

DESIGNED	DRAWN	REVIEWED	DATE
ECM	RCK	EBS	11-29-12
CHECKED	REVISED	STRUCTURE FILE NUMBER	
BMG		0201723	

FORWARD ABUTMENT SECTIONS
BRIDGE NO. ALL-75-0328
McCLAIN RD. OVER I-75

ALL-75-0.21
PID No. 89029

9 / 27

665
907

J:\Projects\ALL\89029\structures\ALL075_0328C\sheets\075_0328CAF002.dgn 09-MAY-2013 3:07PM jint

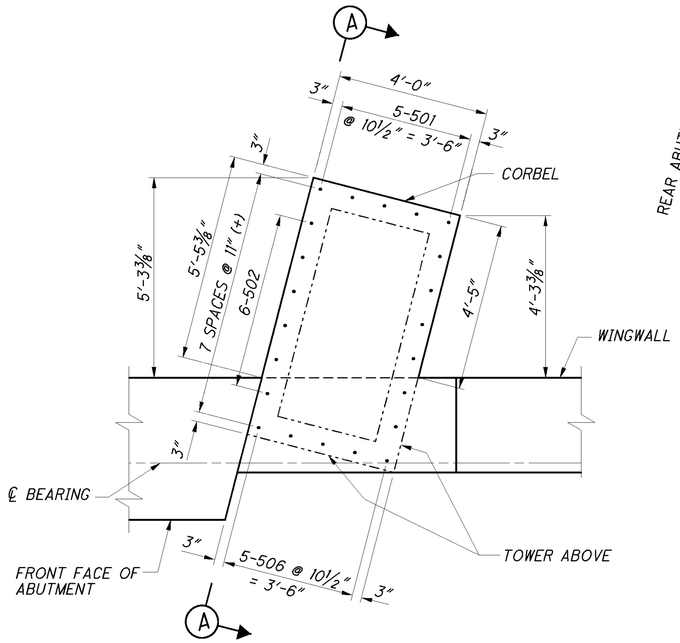

DETAIL 1

(DETAIL 1 SHOWN DETAIL 2 SIMILAR)

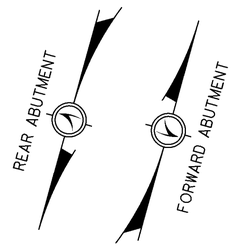

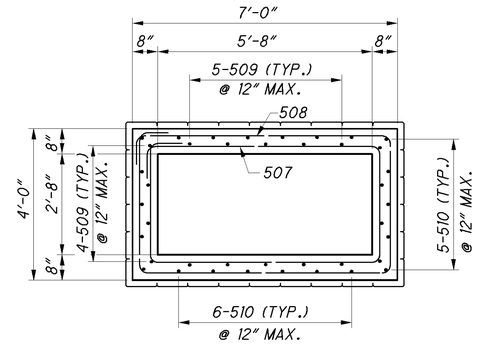

SECTION B-B

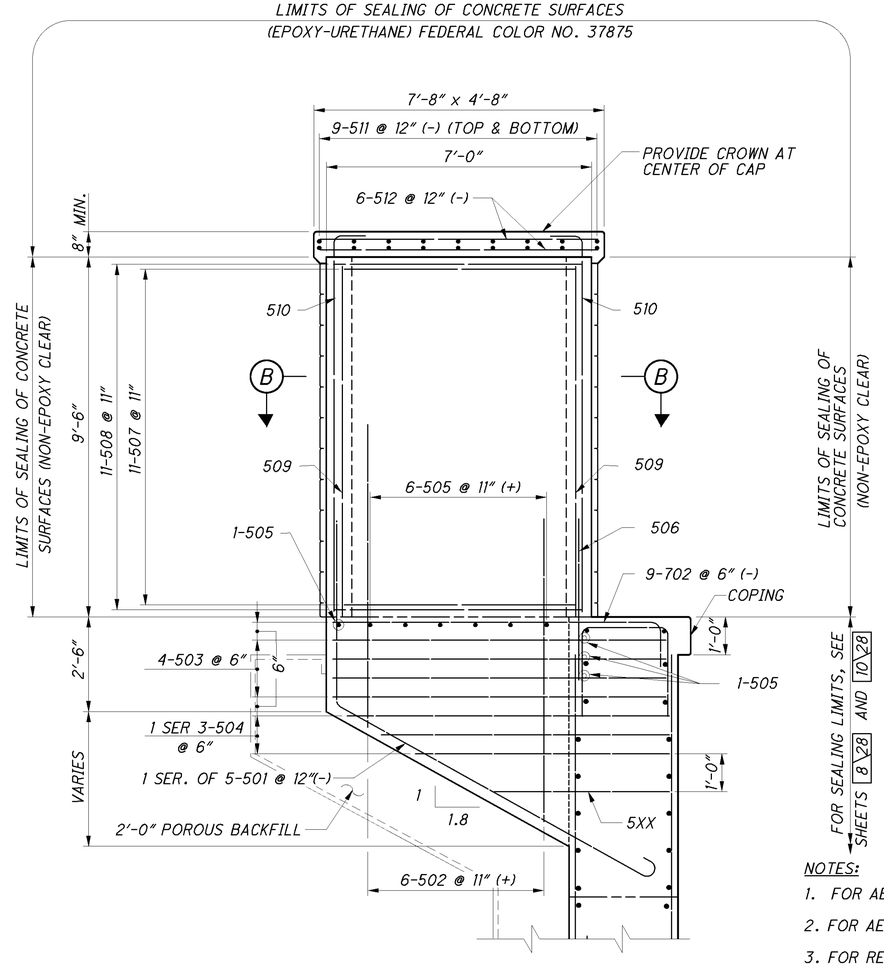

SECTION A-A

NOTES:

1. FOR ABUTMENT DETAILS, SEE SHEETS 6/27 THRU 9/27
2. FOR AESTHETIC DETAILS, SEE SHEET 26/27 AND 27/27.
3. FOR REINFORCING BAR LIST, SEE SHEET 23/27.

ALL BAR MARKS SHALL BE PREFIXED RA FOR REAR ABUTMENT AND FA FOR FORWARD ABUTMENT

DESIGN AGENCY
PARSONS BRINCKERHOFF
2545 FARMERS DRIVE
SUITE 350
COLUMBUS, OHIO 43235

DESIGNED	DRAWN	REVIEWED	DATE
ECM	RCK	EBS	11-29-12
CHECKED	REVISED	STRUCTURE FILE NUMBER	
BMG		0201723	

ABUTMENT CORBEL AND TOWER DETAILS

BRIDGE NO. ALL-75-0328
McCLAIN RD. OVER I-75

ALL-75-0.21
PID No. 89029

10 / 27

666
907

J:\Projects\ALL\89029\structures\ALL075_0328C\sheets\075_0328CAR003.dgn 09-MAY-2013 3:07PM jint

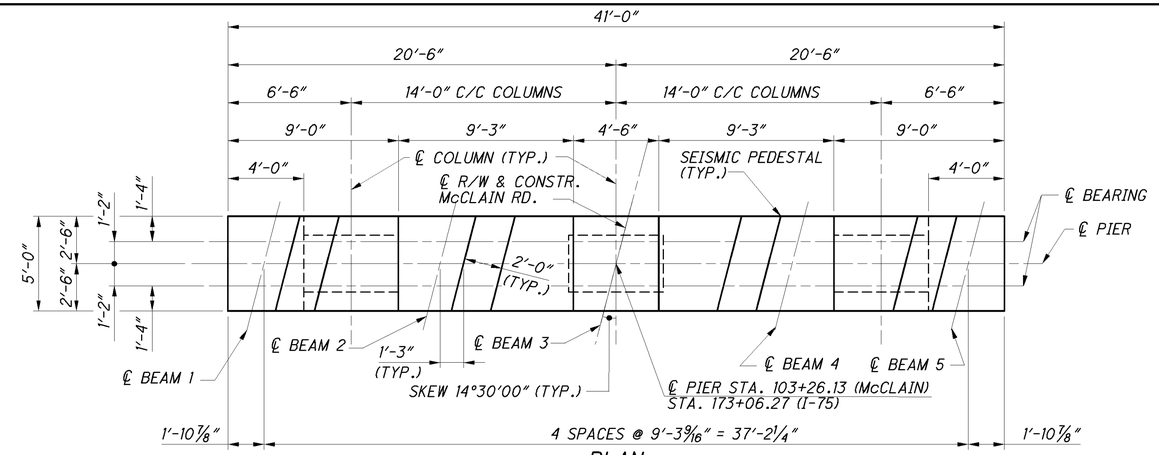

PLAN

(LOOKING UPSTATION)

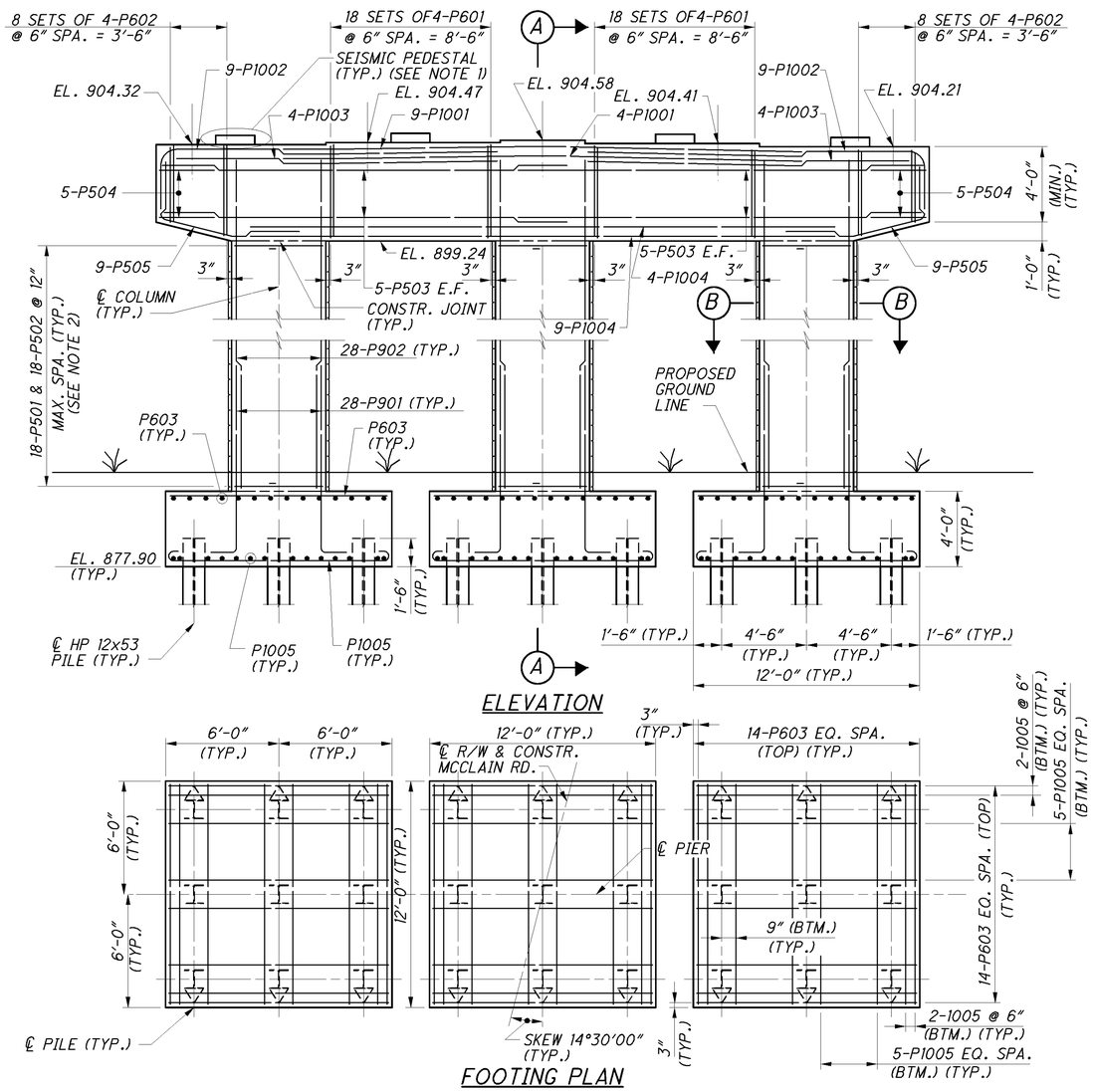

ELEVATION

FOOTING PLAN

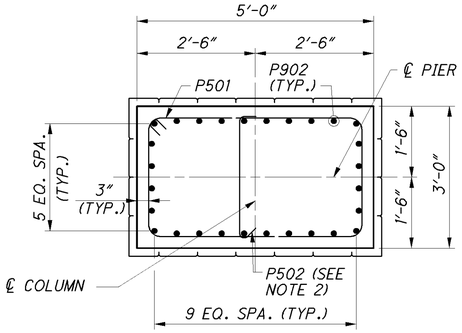

SECTION B-B

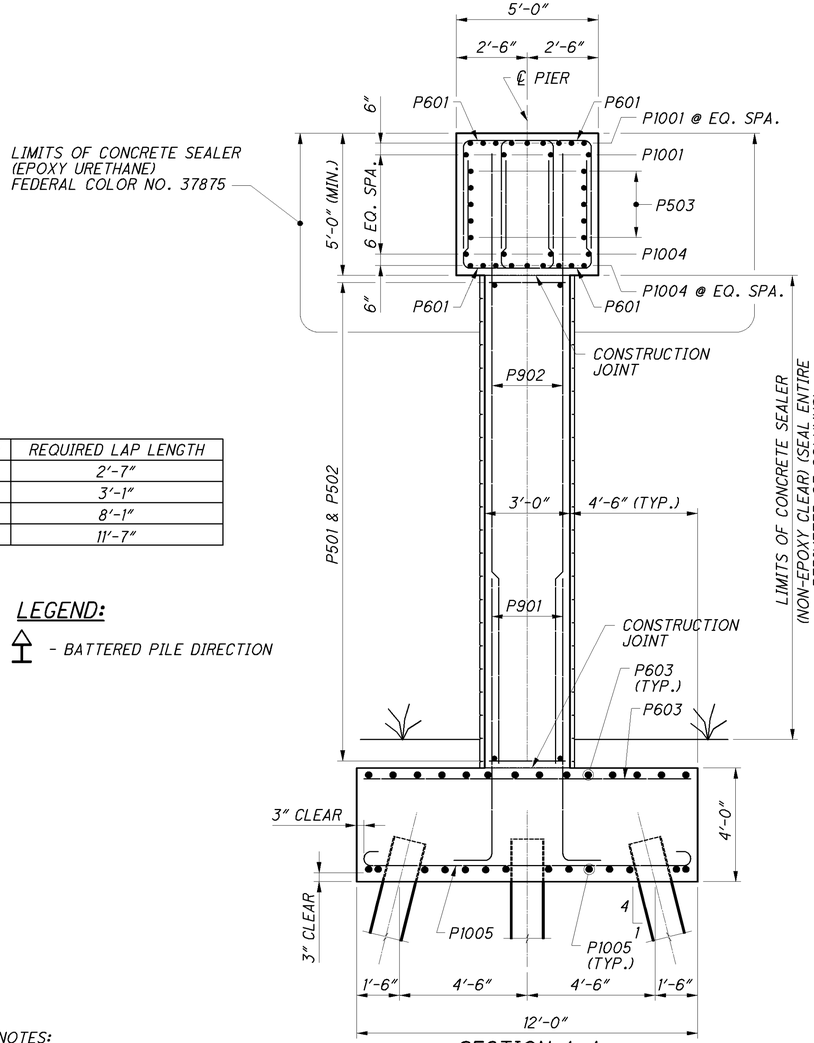

SECTION A-A

BAR	REQUIRED LAP LENGTH
#5	2'-7"
#6	3'-1"
#9	8'-1"
#10	11'-7"

LEGEND:

- BATTERED PILE DIRECTION

NOTES:

1. FOR SEISMIC PEDESTAL DETAILS, SEE SHEET 17/27 .
2. THE PLACEMENT OF P502 BARS SHALL ALTERNATE SUCH THAT THE 90° HOOKS SHALL BE STAGGERED.
3. FOR FOUNDATION LAYOUT PLAN, SEE SHEET 5/27 .
4. FOR REINFORCING STEEL LIST, SEE SHEET 24/27 .
5. FOR AESTHETICS DETAILS, SEE SHEET 26/27 .

DESIGN AGENCY
PARSONS BRINCKERHOFF
2945 FARMERS DRIVE
SUITE 350
COLUMBUS, OHIO 43235

DESIGNED	DRAWN	REVIEWED	DATE
ECM	ECM	EBS	11-29-12
CHECKED	REVISED	STRUCTURE FILE NUMBER	
APV		0201723	

PIER DETAILS

BRIDGE NO. ALL-75-0328
McCLAIN RD. OVER I-75

ALL-75-0.21
PID No. 89029

11 / 27

667
907

J:\Projects\ALL\89029\structures\ALL075_0328\sheets\075_0328CPI001.dgn 09-MAY-2013 3:07PM jint

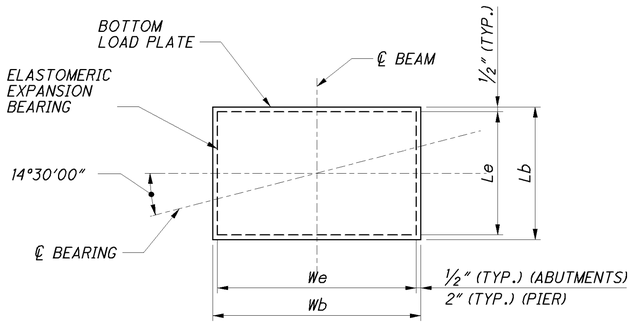

BEARING PLAN VIEW

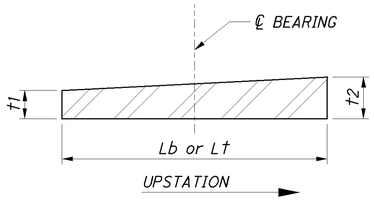

STEEL PLATE

(LOAD PLATE OR TOP PLATE)
(SEE TABLE FOR DIMENSIONS)

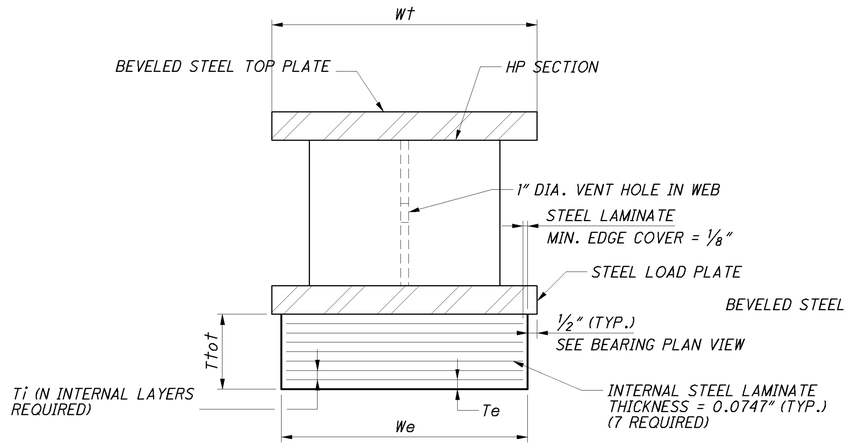

LAMINATED ELASTOMERIC EXPANSION BEARING, 50 DUROMETER

(AT ABUTMENTS)

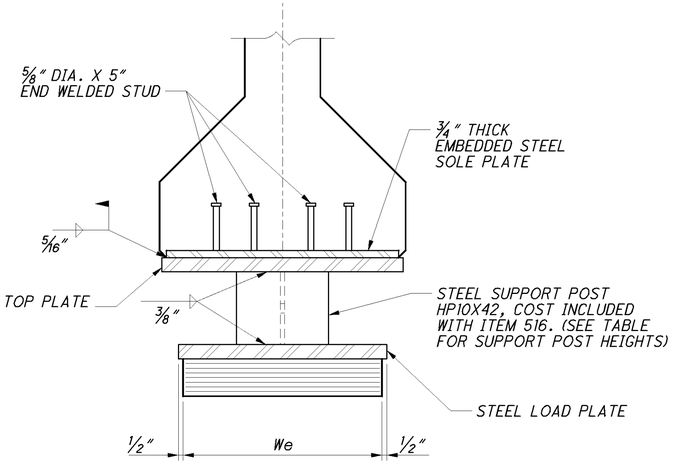

END VIEW

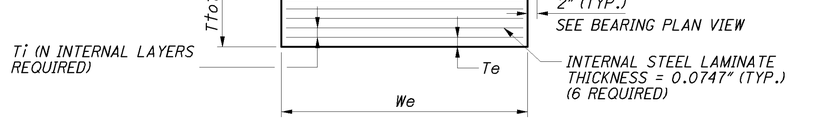

LAMINATED ELASTOMERIC EXPANSION BEARING, 50 DUROMETER

(AT PIER)

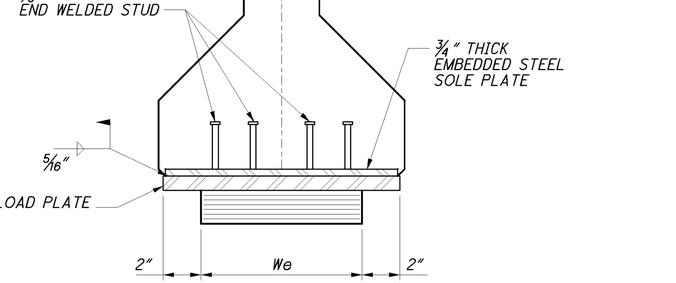

END VIEW

NOTES:

1. ELASTOMERIC BEARINGS: THE ELASTOMER SHALL HAVE A HARDNESS OF 50 DUROMETER. THE BEARINGS WERE DESIGNED IN ACCORDANCE WITH SECTION 14.7.6 (METHOD A) OF THE AASHTO LRFD BRIDGE DESIGN SPECIFICATIONS. THE LONG TERM COMPRESSION PROOF LOAD TEST (AASHTO STANDARD SPECIFICATION FOR HIGHWAY BRIDGES, DIVISION II, SECTION 18.7.2.6) IS NOT REQUIRED.
2. THE STEEL LOAD PLATES AT THE PIER SHALL BE SHOP PAINTED WITH AN INORGANIC ZINC PRIMER AS SPECIFICED IN CMS 513.27. APPLY PAINT TO THE EXPOSED STEEL LOAD PLATES IN ACCORDANCE WITH CMS 514. PAYMENT IS INCLUDED IN THE UNIT PRICE BID FOR EACH BEARING.
3. THE STEEL LOAD PLATE SHALL BE BONDED BY VULCANIZATION TO THE ELASTOMER DURING THE MOLDING PROCESS.
4. TOTAL DESIGN LOAD FOR BEARING EQUALS THE SUM OF THE DEAD LOADS AND LIVE LOADS (WITHOUT IMPACT) TABULATED IN THE BEARING TABLE.
5. BASIS OF PAYMENT: THE UNIT BID PRICE SHALL INCLUDE ALL MATERIALS, LABOR, TESTING, AND INCIDENTALS NECESSARY TO FURNISH AND INSTALL LAMINATED ELASTOMERIC BEARINGS. SAMPLE BEARINGS SHALL NOT BE MEASURED FOR PAYMENT. PAYMENT WILL BE MADE AT THE CONTRACT PRICE FOR ITEM 516 - ELASTOMERIC BEARINGS W/INTERNAL LAMINATES AND LOAD PLATE (NEOPRENE), AS PER PLAN.
6. ALL BEARINGS SHALL BE MARKED PRIOR TO SHIPPING. THE MARKS SHALL INCLUDE THE BEARING LOCATION ON THE BRIDGE, AND A DIRECTION ARROW THAT POINTS UP-STATION. ALL MARKS SHALL BE PERMANENT AND BE VISIBLE AFTER THE BEARING IS INSTALLED.
7. FOR FRAMING PLAN, SEE SHEET 13/27.

BEARING LOCATION		BEARING TYPE	DEAD LOAD (Kip)	LIVE LOAD (Kip)	TOTAL LOAD (Kip)	Le (in.)	We (in.)	Ti (in.)	NO. OF Ti's	Te (1 EA.) (in.)	NUMBER OF INTERNAL LAMINATES (0.0747")	Ttot (in.)	STEEL LOAD PLATE (in.)				STEEL TOP PLATE (in.)				HP SUPPORT POSTS (in.)
													Wb	Lb	t1	t2	Wt	Lt	t1	t2	
REAR ABUTMENT	BEAM 1	EXPANSION	188	94	282	12	23	0.41	7	0.26	7	3.65	24	13	1.5	1.5	25.5	12	1.5	1.5625	6.1250
	BEAM 2																				8.2500
	BEAM 3																				9.8750
	BEAM 4																				8.1875
	BEAM 5																				6.0000
PIER - SPAN 1		EXPANSION	189	111	300	12	23	0.41	6	0.26	6	3.17	27	13	1.7500	1.5	N/A	N/A	N/A	N/A	N/A
PIER - SPAN 2															1.5625	1.5					
FWD. ABUTMENT	BEAM 1	EXPANSION	188	94	282	12	23	0.41	7	0.26	7	3.65	24	13	1.5	1.5	25.5	12	1.8750	1.5	8.5625
	BEAM 2																				10.0625
	BEAM 3																				11.1250
	BEAM 4																				8.8125
	BEAM 5																				6.0000

DESIGN AGENCY
PARSONS BRINCKERHOFF
2945 FARMERS DRIVE
SUITE 350
COLUMBUS, OHIO 43235

DESIGNED ECM | DRAWN APV | CHECKED BMG | REVIEWED EBS | DATE 11-29-12 | STRUCTURE FILE NUMBER 0201723 | REVISED

BEARING DETAILS
BRIDGE NO. ALL-75-0328
McCLAIN ROAD OVER I-75

ALL-75-0.21
PID No. 89029

12 / 27

668
907

J:\Projects\ALL\89029\structures\ALL075_0328\sheets\075_0328CBR001.dgn 09-MAY-2013 3:07PM lint

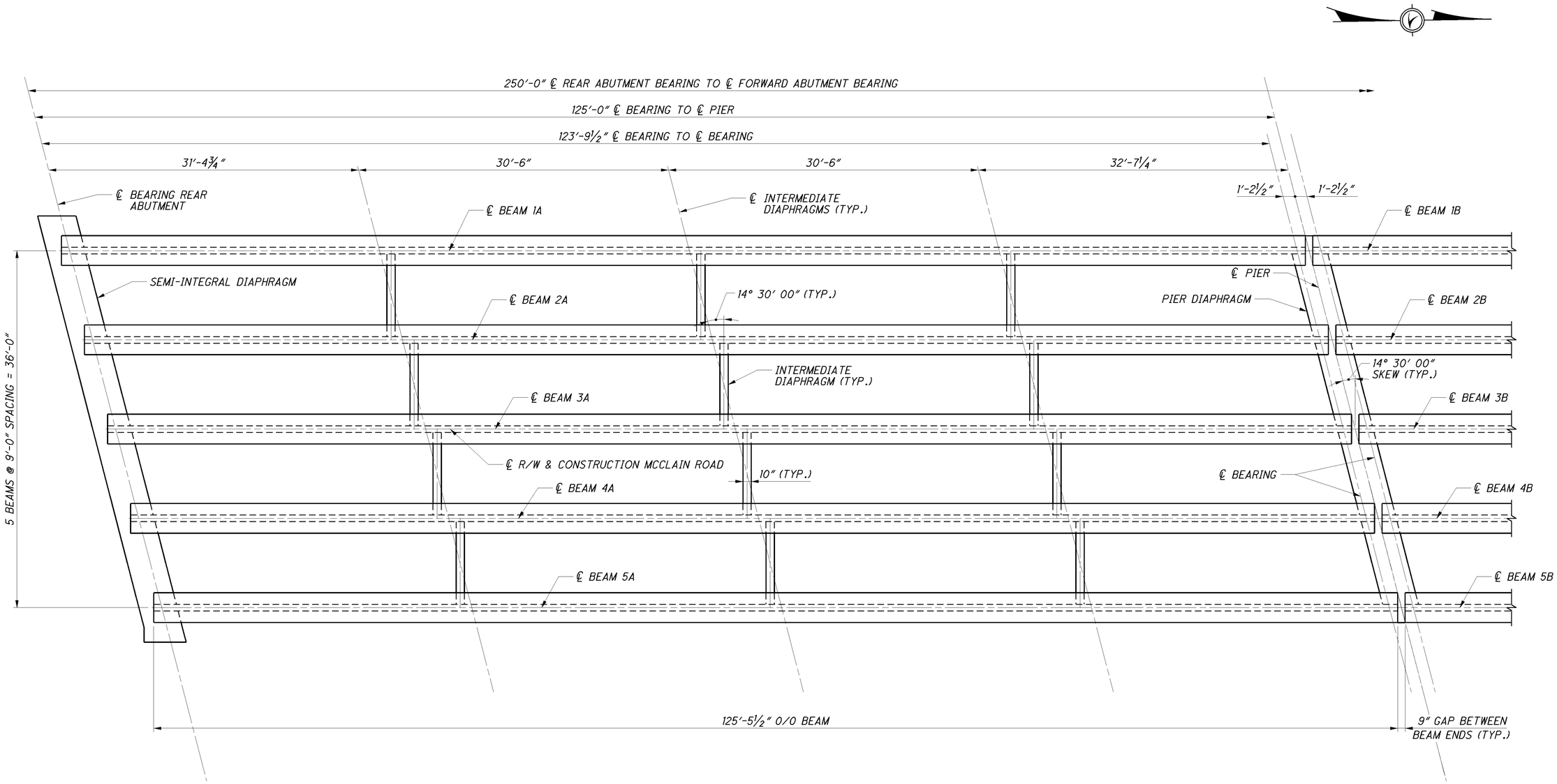

FRAMING PLAN

(SPAN 1 SHOWN
SPAN 2 SIMILAR
ABOUT ℄ PIER)

NOTES:

1. FOR DETAILS OF INTERMEDIATE DIAPHRAGMS, SEE ODOT STANDARD DRAWINGS PSID-1-99 SHEETS 1 TO 8 OF 8.
2. DO NOT PLACE THE DECK CONCRETE UNTIL ALL INTERMEDIATE DIAPHRAGMS HAVE BEEN PROPERLY INSTALLED. IF CONCRETE DIAPHRAGMS ARE USED, COMPLETE THE INSTALLATION OF THE INTERMEDIATE DIAPHRAGMS AT LEAST 48 HOURS BEFORE DECK PLACEMENT BEGINS.
3. FOR PIER DIAPHRAGM DETAILS, REFER TO SHEET 17/27
4. FOR SEMI-INTEGRAL DIAPHRAGM DETAILS, REFER TO SHEET 16/27

DESIGN AGENCY
PARSONS BRINCKERHOFF
2545 FARMERS DRIVE
SUITE 350
COLUMBUS, OHIO 43235

DESIGNED	DRAWN	REVIEWED	DATE
ECM	ECM	EBS	11-29-12
CHECKED	REVISED	STRUCTURE FILE NUMBER	
BMG		0201723	

FRAMING PLAN
BRIDGE NO. ALL-75-0328
McCLAIN ROAD OVER I-75

ALL-75-0.21
PID No. 89029

13 / 27

669
907

J:\Projects\ALL\89029\structures\ALL075_0328C\sheets\075_0328CSD001.dgn 08-NOV-2013 4:07PM lint

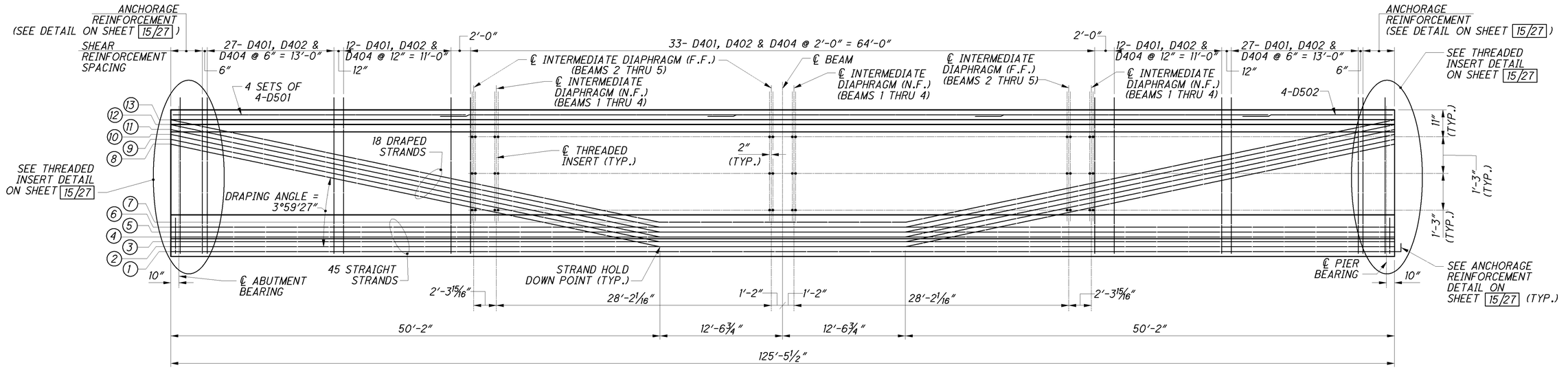

TYPICAL BEAM ELEVATION
(SPAN 1 SHOWN, SPAN 2 SIMILAR)

NOTES:
1. FOR NOTES, SEE SHEET 16/28.

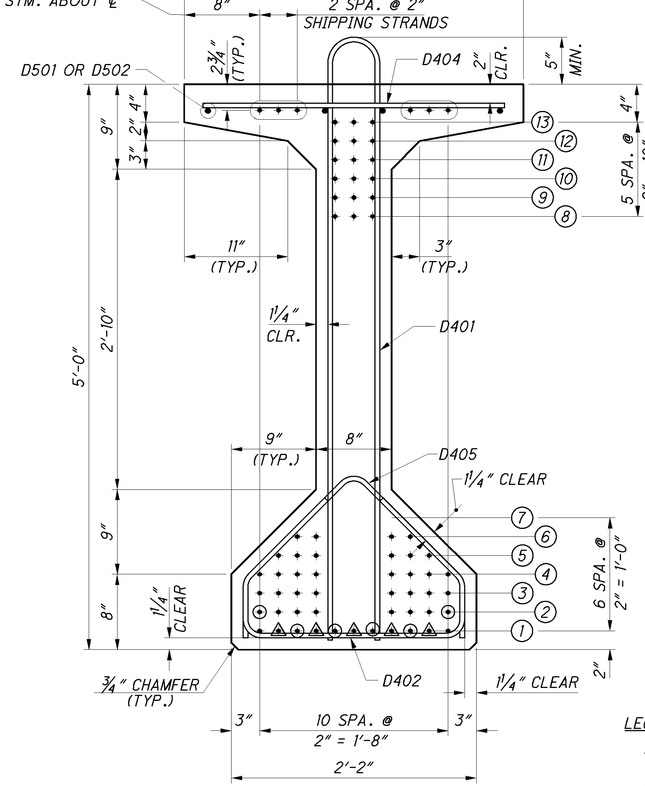

MODIFIED AASHTO TYPE 4 (60") SECTION AT BEAM END
(SPAN 1 - 1A THROUGH 5A)

LEGEND:
- ⚠ EXTEND STRANDS AT PIER DIAPHRAGM ONLY
- ⊙ DEBOND TENDONS
  - DEBOND LENGTH = 2'-0" AT LEVEL (1)
  - DEBOND LENGTH = 4'-0" AT LEVEL (2)

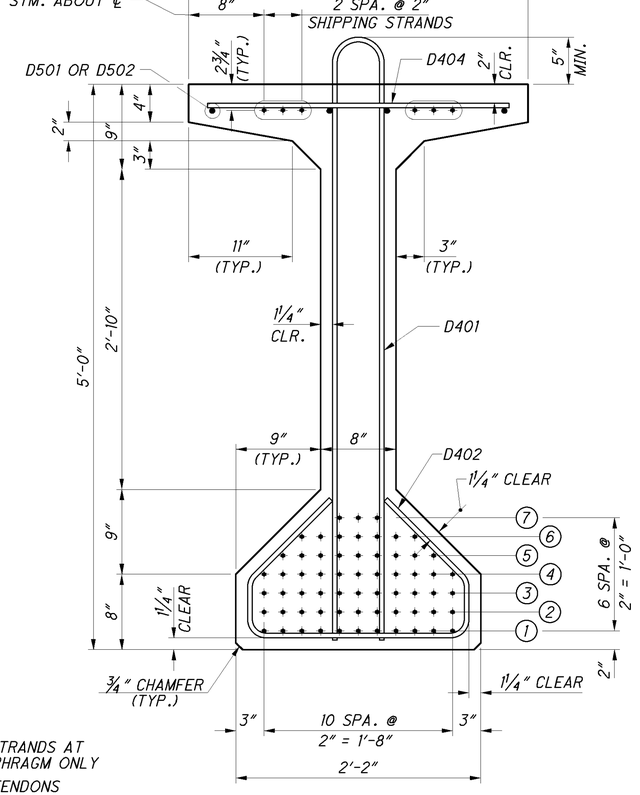

MODIFIED AASHTO TYPE 4 (60") SECTION AT BEAM MIDSPAN

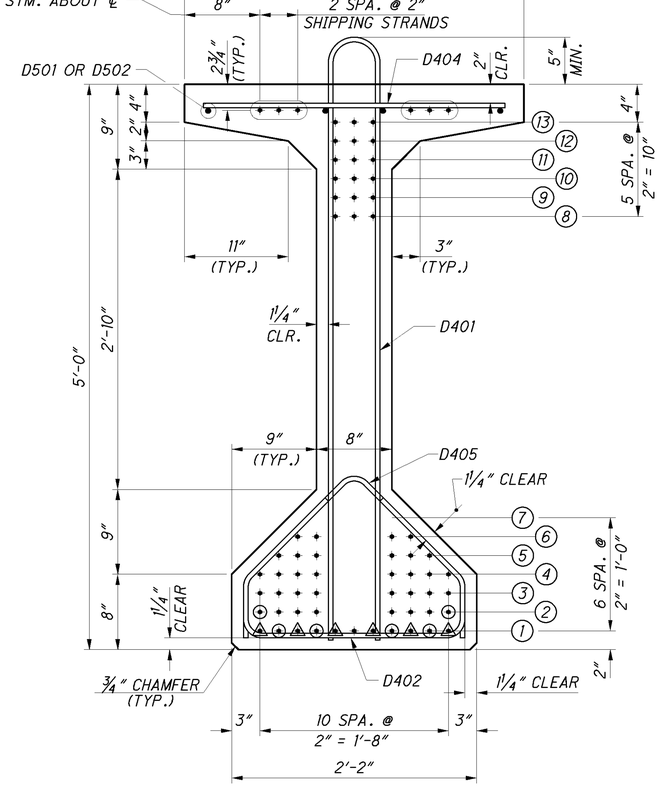

MODIFIED AASHTO TYPE 4 (60") SECTION AT BEAM END
(SPAN 2 - 1B THROUGH 5B)

DESIGN AGENCY
PARSONS BRINCKERHOFF
2945 FARMERS DRIVE
SUITE 350
COLUMBUS, OHIO 43235

DESIGNED	DRAWN	REVIEWED	DATE
ECM	RCK	EBS	11-29-12
CHECKED	REVISED	STRUCTURE FILE NUMBER	
BMG		0201723	

BEAM DETAILS
BRIDGE NO. ALL-75-0328
McCLAIN RD. OVER I-75

ALL-75-0.21
PID No. 89029

J:\Projects\ALL\89029\structures\ALL075_0328\sheets\075_0328SD002.dgn 09-MAY-2013 3:07PM jint

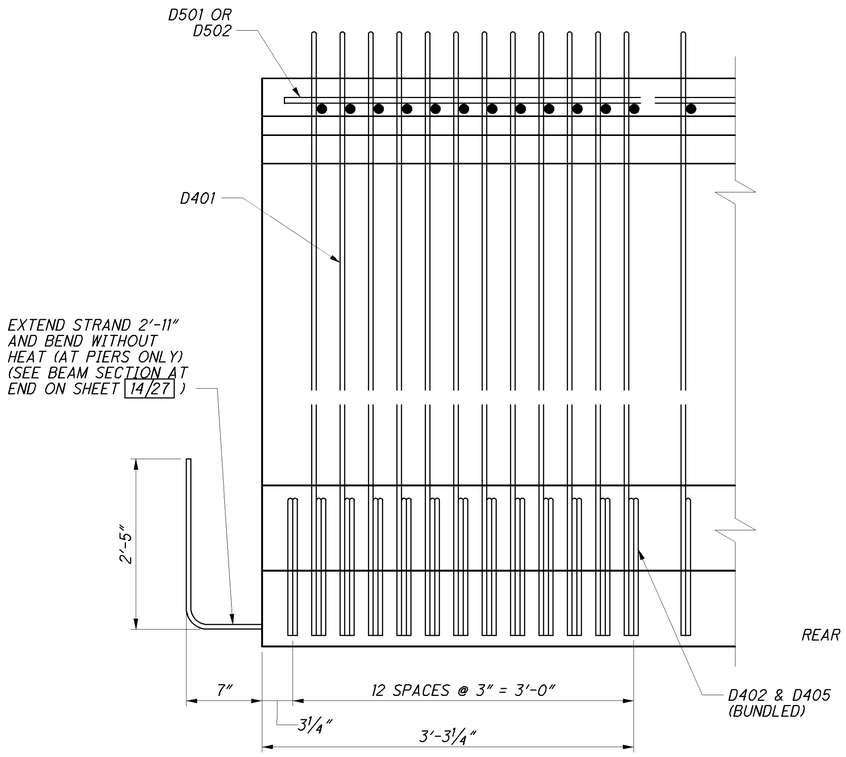

ANCHORAGE REINFORCEMENT DETAIL

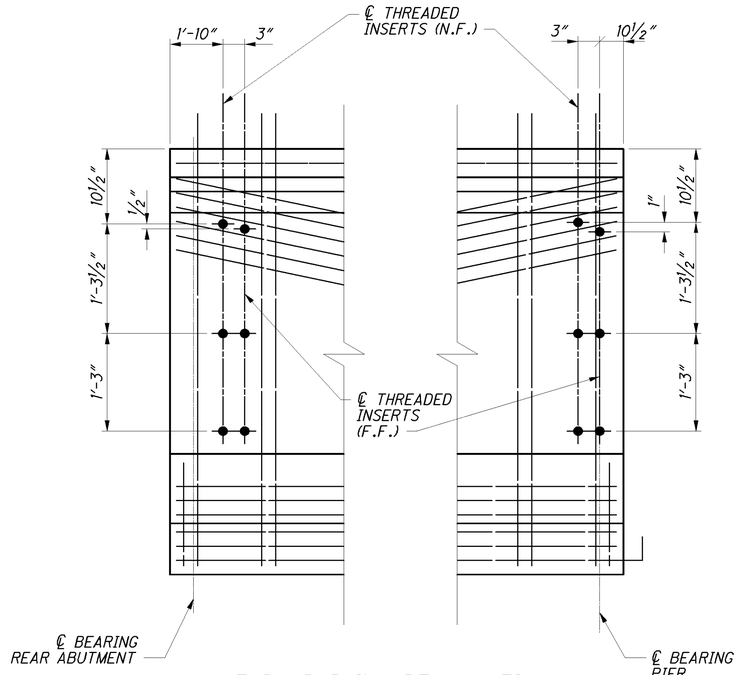

THREADED INSERT LOCATIONS

(SPAN 1 SHOWN, SPAN 2 OPPOSITE HAND)

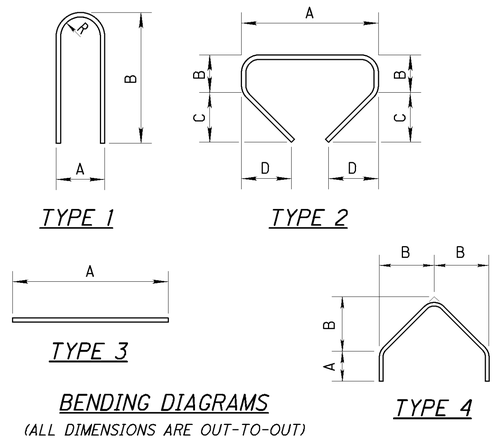

BENDING DIAGRAMS

(ALL DIMENSIONS ARE OUT-TO-OUT)

MARK	NUMBER REQUIRED	TYPE	DIMENSIONS				
			A	B	C	D	R
MODIFIED AASHTO TYPE 4 (60")							
D401	1,350	1	5½"	5'-4"			2¼"
D402	1,370	2	1'-11½"	6¼"	8½"	8½"	
D404	1,350	3	2'-8"				
D405	260	4	6¼"	11¾"			
D501	160	3	30'-0"				
D502	40	3	15'-4"				

BAR SIZE IS INDICATED IN THE BAR MARK. THE FIRST LETTER IDENTIFIES THE BAR LOCATION, THE NEXT DIGIT INDICATES THE INCH-POUND BAR SIZE AND THE REMAINING DIGITS ITS SEQUENCE NUMBER. ALL STEEL SHALL BE EPOXY COATED. QUANTITIES SHOWN ARE THE TOTAL REQUIRED FOR ALL 10 BEAMS.

BEAM MARK	*NUMBER OF STRANDS PER ROW													TOTAL STRANDS	CONCRETE STRENGTHS		D401 BARS REQ'D	D402 BARS REQ'D	D404 BARS REQ'D	D405 BARS REQ'D
	①	②	③	④	⑤	⑥	⑦	⑧	⑨	⑩	⑪	⑫	⑬		f'ci	f'c				
END	11	8	8	8	6	4	-	3	3	3	3	3	3	63	7	10	135	137	135	26
MID-SPAN	11	11	11	11	9	7	3	-	-	-	-	-	-							

*ABOVE TABLE IS FOR EACH BEAM

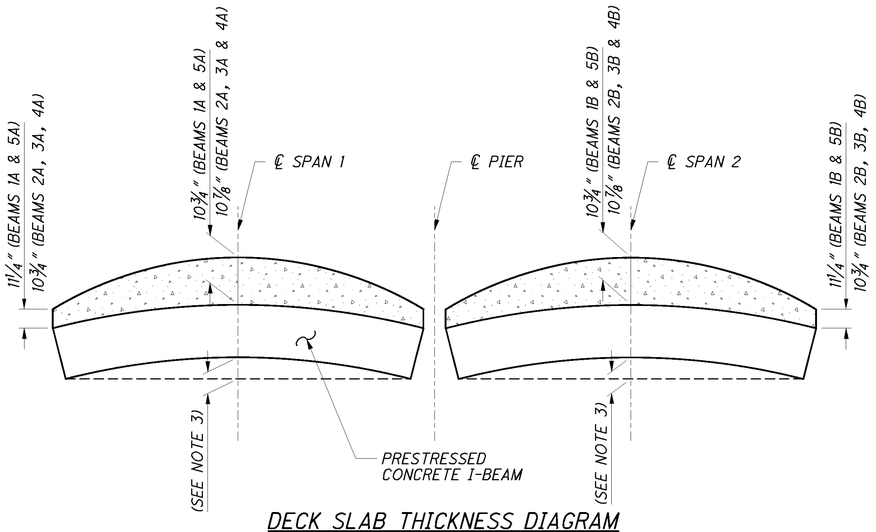

DECK SLAB THICKNESS DIAGRAM

NOTES:

1. FOR DIAPHRAGM DETAILS, SEE SHEETS 16/27 AND 17/27 .
2. FOR DETAILS NOT SHOWN, SEE ODOT STANDARD DRAWING PSID-1-99.
3. THE BEAMS CALCULATED CAMBER AT THE TIME OF RELEASE IS 2.815". THE BEAMS CALCULATED CAMBER AT THE TIME OF ERECTION IS 4.939". THE BEAMS CALCULATED LONG-TERM CAMBER IS 7.025".
4. THE TOPPING THICKNESSES SHOWN FROM THE TOP OF THE DECK SLAB TO THE TOP OF THE TOP FLANGE ALONG THE CENTERLINE OF THE I-BEAM ARE THEORETICAL DIMENSIONS. THE HAUNCH DEPTH IS THE TOPPING THICKNESS MINUS THE DESIGN SLAB THICKNESS. THE DEPARTMENT WILL PAY FOR SUPERSTRUCTURE CONCRETE BASED ON THE DESIGN SLAB THICKNESS AND THE AVERAGE OF THE THEORETICAL HAUNCH DEPTHS AT MID-SPAN AND AT EACH BEAM BEARING EVEN THOUGH DEVIATION FROM THE DIMENSIONS SHOWN MAY BE NECESSARY TO PLACE THE DECK SURFACE AT THE FINISHED GRADE. ONCE ALL BEAMS ARE SET IN THEIR FINAL POSITION, THE ACTUAL CAMBER FOR EACH MEMBER WILL BE AT THE TOP OF BEAM ELEVATION AT MID-SPAN MINUS THE AVERAGE TOP OF BEAM ELEVATION AT EACH BEARING. THE ACTUAL TOPPING THICKNESS AT MID-SPAN WILL BE THE THEORETICAL DIMENSION PLUS OR MINUS THE DIFFERENCE BETWEEN THE ACTUAL AND ANTICIPATED CAMBER.
5. FOR THREADED RODS AND INSERT LOCATIONS, SEE SHEETS 14/27, 16/27 AND 17/27 .
6. ALL BEAMS SHALL BE STORED FOR A MINIMUM OF 90 DAYS PRIOR TO DECK PLACEMENT.
7. FOR EMBEDDED STEEL SOLE PLATE DETAIL, SEE ODOT STANDARD DRAWING PSID-1-99, SHEET 4 OF 6.

DESIGN AGENCY
PARSONS BRINCKERHOFF
2945 FARMERS DRIVE
SUITE 350
COLUMBUS, OHIO 43235

DESIGNED ECM | DRAWN RCK | REVIEWED EBS | DATE 11-29-12
CHECKED BMG | REVISED | STRUCTURE FILE NUMBER 0201723

BEAM DETAILS
BRIDGE NO. ALL-75-0328
McCLAIN RD. OVER I-75

ALL-75-0.21
PID No. 89029

15 / 27

671
907

J:\Projects\ALL\89029\structures\ALL075_0328C\sheets\075_0328CSD003.dgn 09-MAY-2013 3:07PM jint

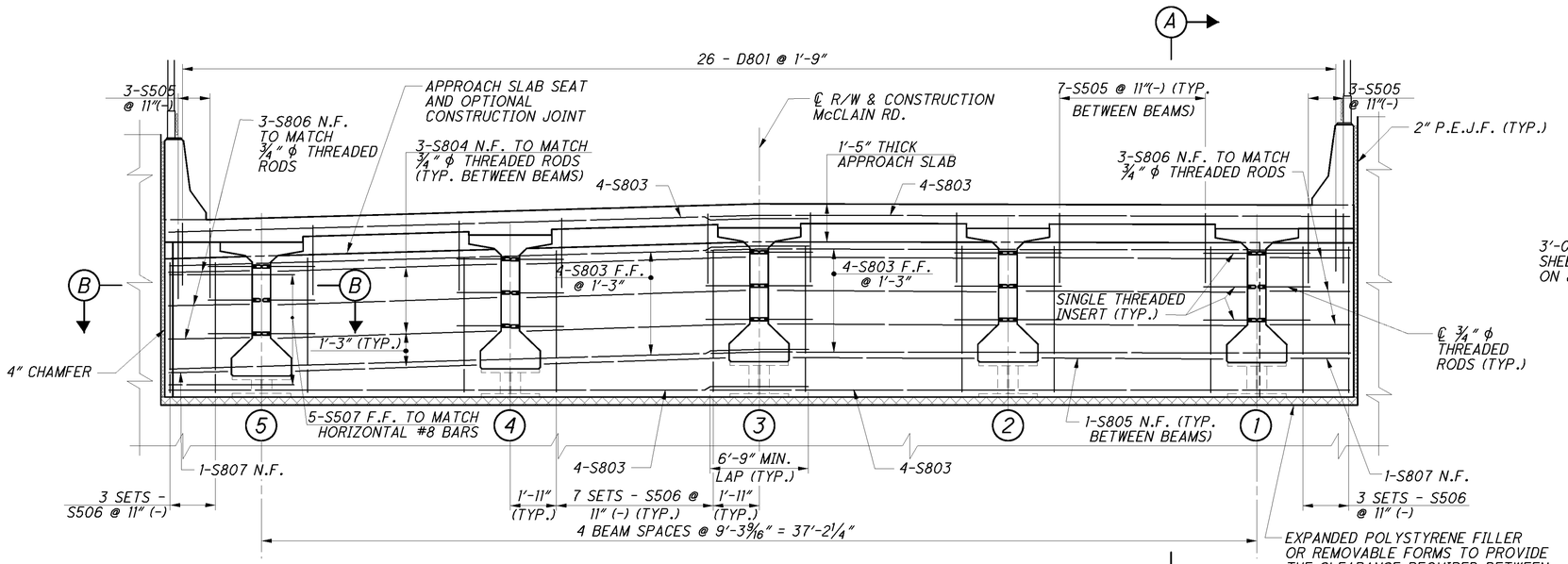

ELEVATION REAR ABUTMENT

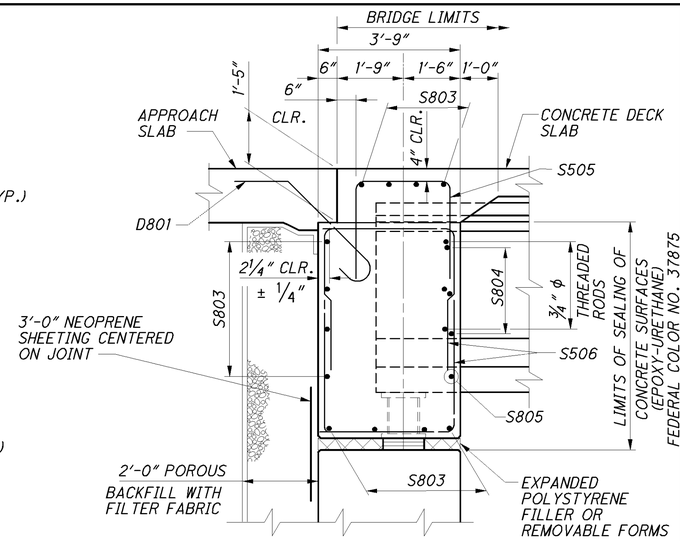

SECTION A-A

NOTES:

1. ALL VERTICAL REINFORCEMENT PLACED PARALLEL TO BEAMS.
2. FOR FRAMING PLAN, SEE SHEET 13/27 .
3. FOR REINFORCEMENT BAR LIST, SEE SHEET 24/27 .
4. FOR ABUTMENT DETAILS, SEE SHEETS 6/27 THROUGH 10/27 .
5. FOR SLAB PLAN, SEE SHEET 18/27 .
6. FOR APPROACH SLAB PLAN, SEE SHEET 21/27 AND 22/27 .
7. FOR TOP OF DECK ELEVATIONS, SEE SHEET 20/27 .
8. ABUTMENT DIAPHRAGM CONCRETE: PLACE THE DIAPHRAGM CONCRETE ENCASING THE STRUCTURAL MEMBER ENDS AFTER THE DECK PLACEMENT IN THE ADJACENT SPAN IS COMPLETE. PROCEDURES THAT PLACE THE ABUTMENT DIAPHRAGM WITH THE DECK CONCRETE MAY BE APPROVED BY THE ENGINEER IF THE PLACEMENT SUBMITTAL CAN ASSURE THAT THE DECK CONCRETE IN THE ADJACENT SPAN WILL BE PLACED BEFORE CONCRETE IN THE DIAPHRAGM HAS REACHED ITS INITIAL SET.
9. FOR ADDITIONAL DIAPHRAGM DETAILS, SEE ODOT STANDARD DRAWING SICD-1-96, SHEET 1 THRU 7 OF 7.

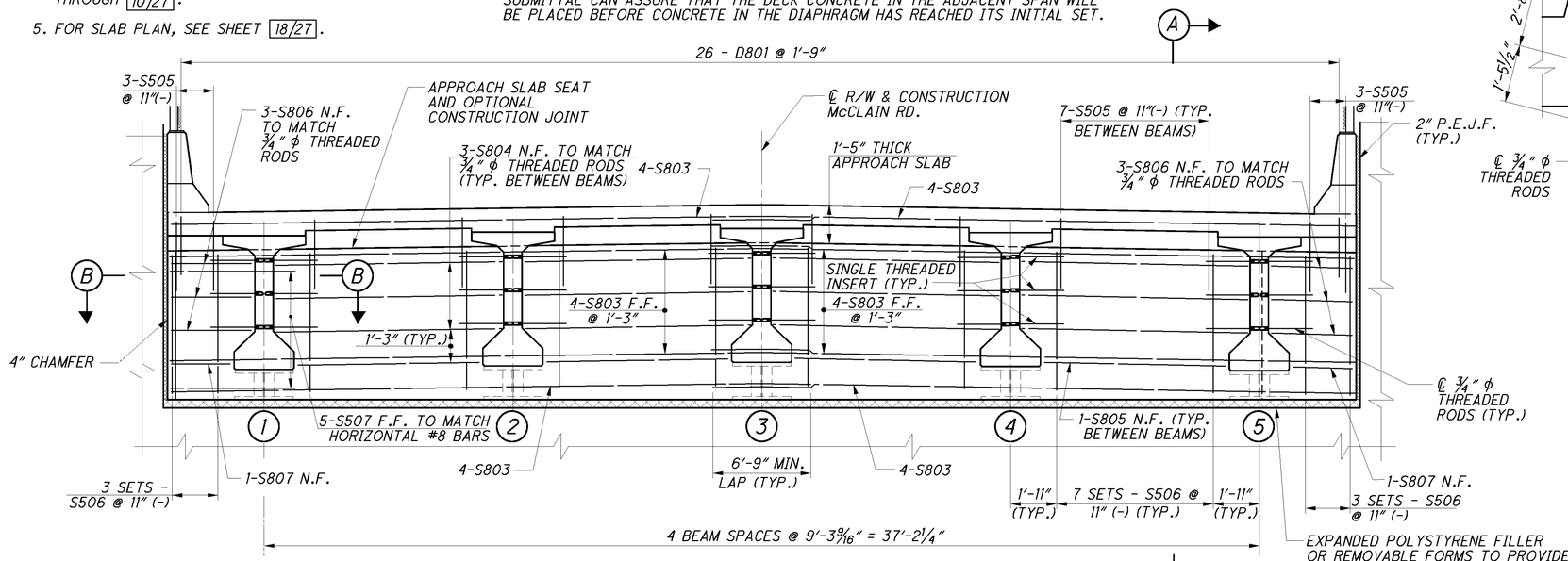

ELEVATION FORWARD ABUTMENT

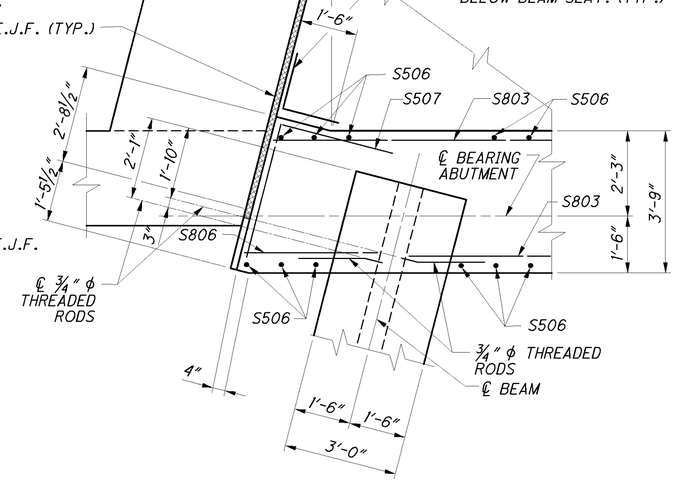

SECTION B-B

DESIGN AGENCY
PARSONS BRINCKERHOFF
2945 FARMERS DRIVE
SUITE 350
COLUMBUS, OHIO 43235

DESIGNED	DRAWN	REVIEWED	DATE
ECM	ECM	EBS	11-29-12
CHECKED	REVISED	STRUCTURE FILE NUMBER	
APV		0201723	

SEMI-INTEGRAL ABUTMENT DIAPHRAGM DETAILS

BRIDGE NO. ALL-75-0328
McCLAIN RD. OVER I-75

ALL-75-0.21
PID No. 89029

16 / 27

672
907

J:\Projects\ALL\89029\structures\ALL075_0328C\sheets\075_0328CSD005.dgn 09-MAY-2013 3:07PM lint

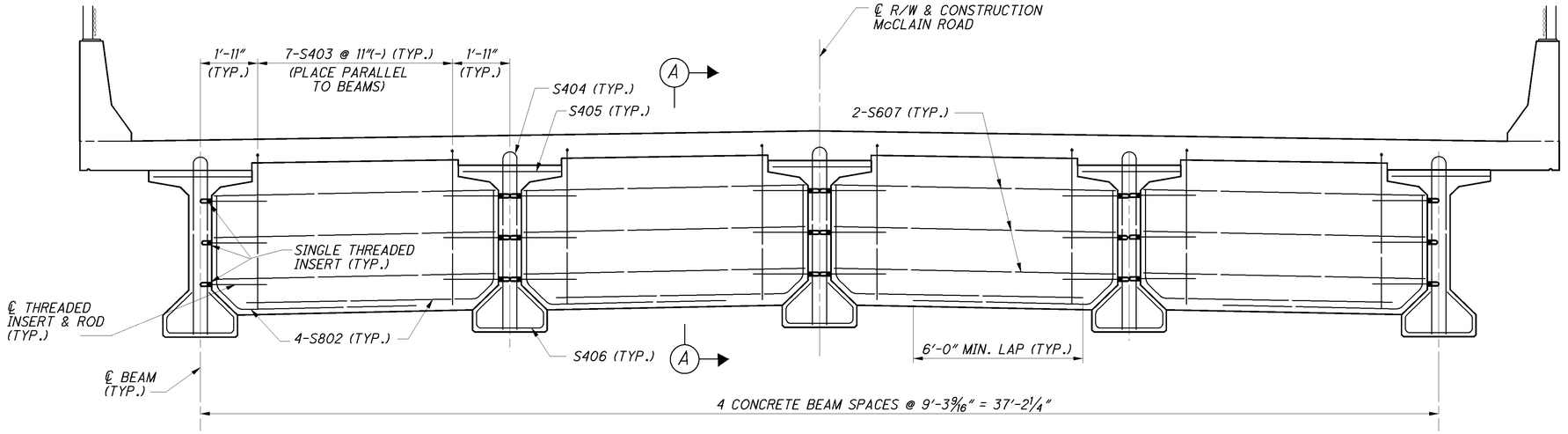

ELEVATION - PIER DIAPHRAGM

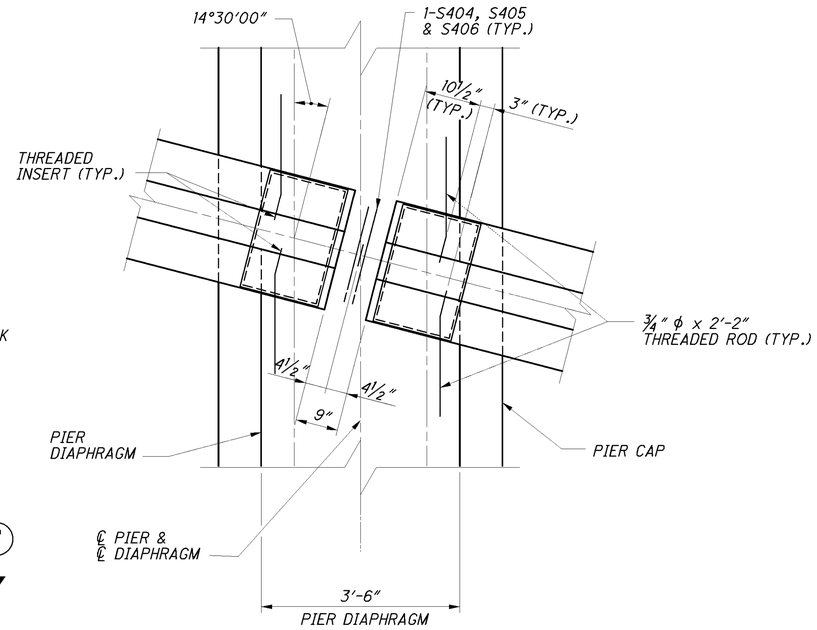

SECTION B-B

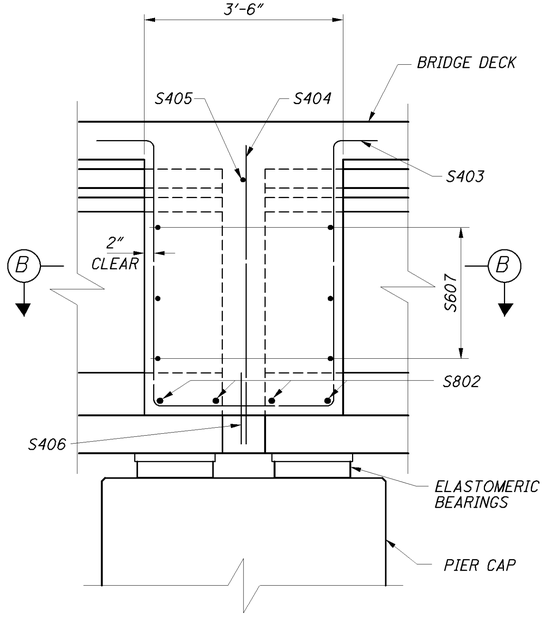

SECTION A-A

NOTES:

1. ALL VERTICAL REINFORCEMENT PLACED PARALLEL TO BEAMS.
2. FOR PIER DETAILS, SEE SHEET 11/27.
3. FOR FRAMING PLAN, SEE SHEET 13/27.
4. FOR SLAB PLAN, SEE SHEET 18/27.
5. FOR REINFORCEMENT BAR LIST, SEE SHEET 24/27.
6. FOR TOP OF DECK ELEVATIONS ALONG ℄ PIER BEARING, SEE SHEET 20/27.

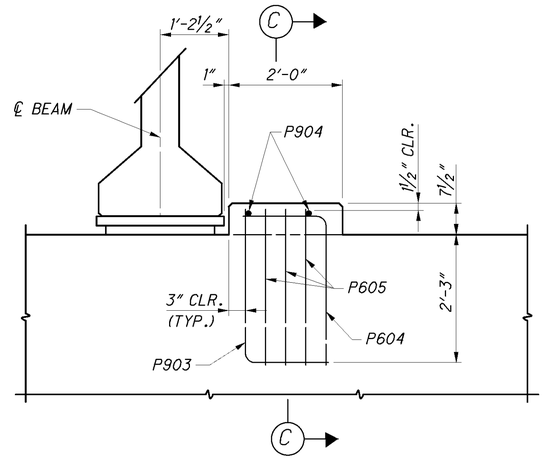

PROPOSED PIER CAP SEISMIC PEDESTAL

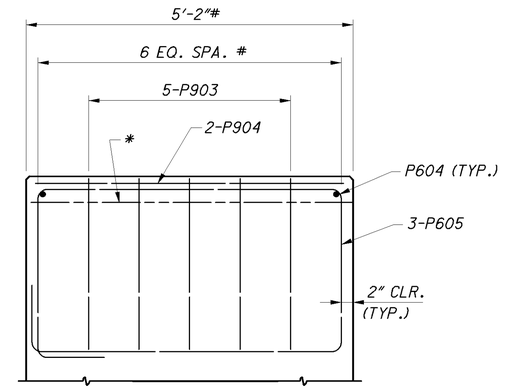

PROPOSED SEISMIC PEDESTAL SECTION C-C

(# MEASURED ALONG ℄ OF BEAM)
(* THE SURFACE OF THE BEAM SEAT WITHIN THE LIMITS OF THE SEISMIC PEDESTAL SHALL BE FINISHED WITH A SERRATED TROWEL. THE SERRATIONS SHALL BE ¼" DEEP MINIMUM.)

DESIGN AGENCY
PARSONS BRINCKERHOFF
2545 FARMERS DRIVE
SUITE 350
COLUMBUS, OHIO 43235

DESIGNED	DRAWN	REVIEWED	DATE
ECM	ECM	EBS	11-29-12
CHECKED	REVISED	STRUCTURE FILE NUMBER	
APV		0201723	

PIER DIAPHRAGM DETAILS
BRIDGE NO. ALL-75-0328
McCLAIN RD. OVER I-75

ALL-75-0.21
PID No. 89029

17 / 27

673
907

J:\Projects\ALL\89029\structures\ALL075_0328C\sheets\075_0328CSD006.dgn 09-MAY-2013 3:07PM jint

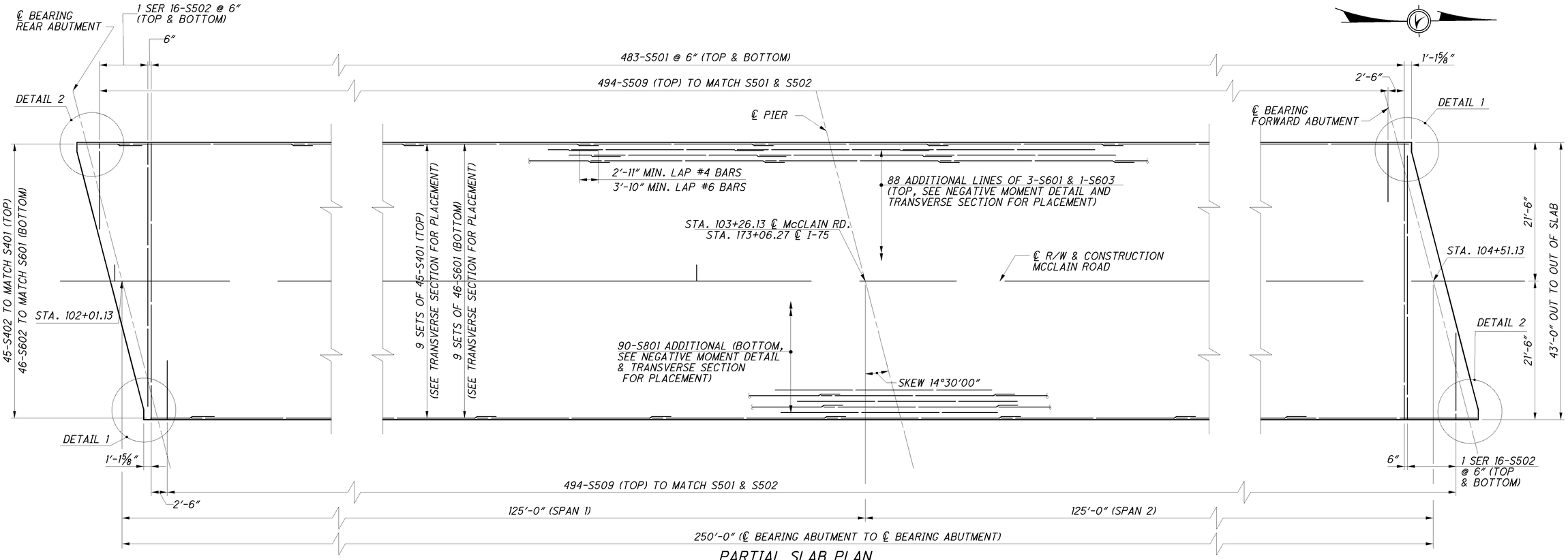

PARTIAL SLAB PLAN

(PARAPETS NOT SHOWN)

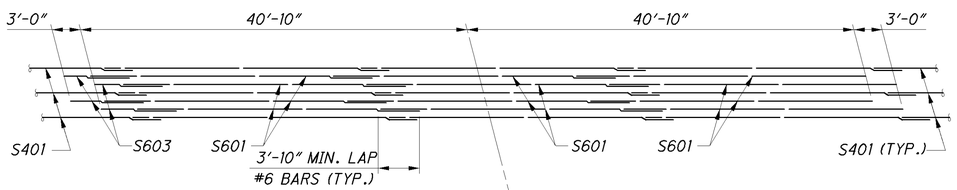

(TOP MAT REINFORCEMENT)

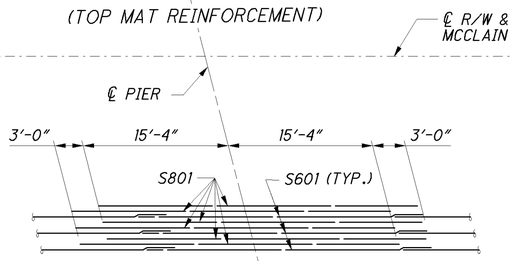

(BOTTOM MAT REINFORCEMENT)

NEGATIVE MOMENT DETAIL

(SEE TRANSVERSE SECTION FOR SPACING OF LONGITUDINAL REINFORCEMENT)

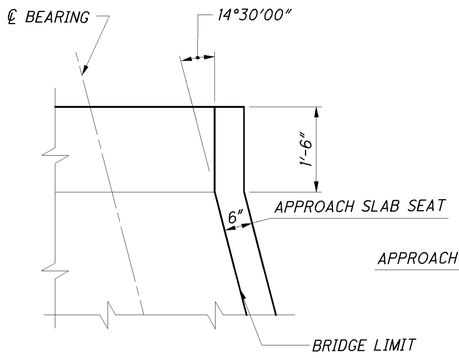

DETAIL 1

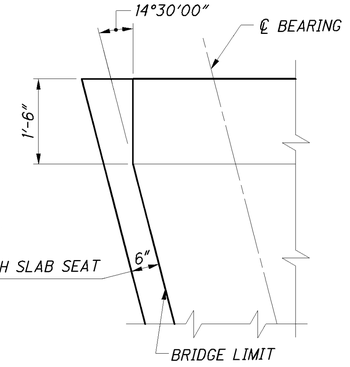

DETAIL 2

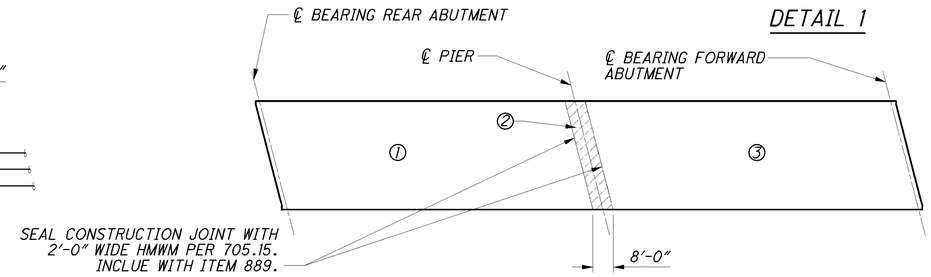

CONCRETE DECK PLACEMENT SEQUENCE

NOTES:

1. FOR TRANSVERSE SECTION, SEE SHEET 19/27
2. FOR SEMI-INTEGRAL DIAPHRAGM DETAILS, SEE SHEET 16/27
3. FOR PIER DIAPHRAGM DETAILS, SEE SHEET 17/27
4. CONCRETE DECK PLACEMENTS ① MAY BE MADE ON THE SAME OR SEPARATE DAYS. PLACEMENT ② SHALL NOT BE MADE UNTIL CONCRETE IN ADJACENT SPANS HAVE BEEN IN PLACE AT LEAST 48 HOURS. PLACEMENT ② SHALL INCLUDE THE PLACEMENT OF PIER DIAPHRAGMS. THE CONTRACTOR SHALL BEGIN EACH POUR SEQUENCE AT THE LOWEST ELEVATION AND PROCEEED UPGRADE.

DESIGN AGENCY
PARSONS BRINCKERHOFF
2545 FARMERS DRIVE
SUITE 350
COLUMBUS, OHIO 43235

DESIGNED	DRAWN	REVIEWED	DATE
ECM	ECM	EBS	11-29-12
CHECKED	REVISED	STRUCTURE FILE NUMBER	
BMG		0201723	

DECK REINFORCING PLAN

BRIDGE NO. ALL-75-0328
McCLAIN ROAD OVER I-75

ALL-75-0.21
PID No. 89029

18 / 27

674
907

J:\Projects\ALL\89029\structures\ALL075_0328C\sheets\075_0328CDP001.dgn 09-MAY-2013 3:07PM jint

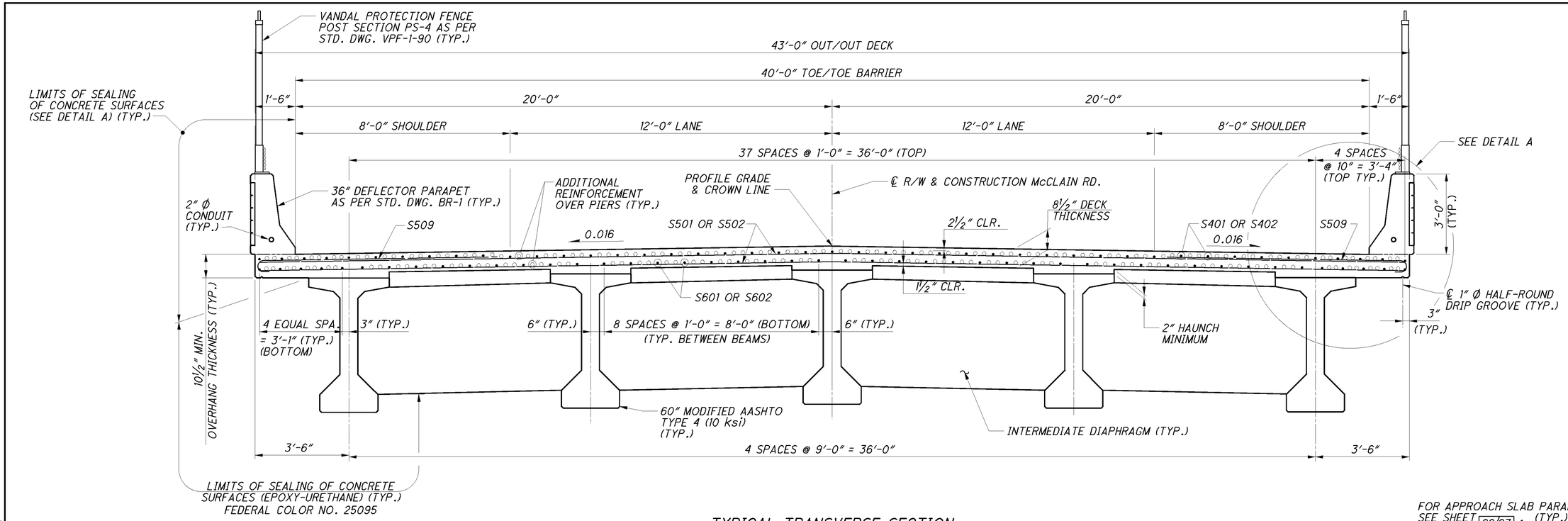

TYPICAL TRANSVERSE SECTION

FOR APPROACH SLAB PARAPETS, SEE SHEET 22/27 . (TYP.)

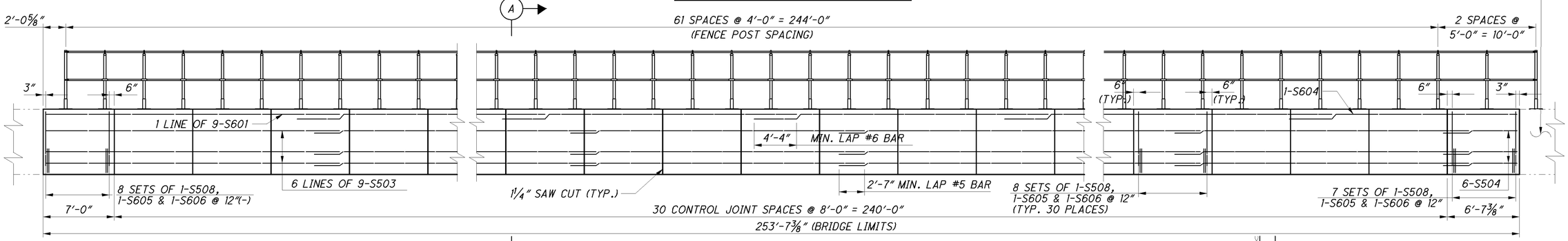

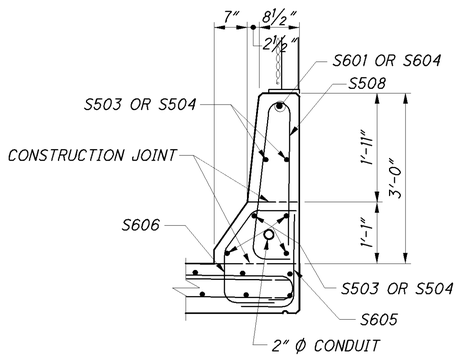

SECTION A-A

TYPICAL PARAPET ELEVATION

EAST ELEVATION, LOOKING WEST, SHOWN,
WEST ELEVATION, LOOKING EAST, OPPOSITE HAND

NOTES:

1. FOR GENERAL NOTES, SEE SHEETS 2/27 AND 3/27 .
2. FOR SLAB PLAN, SEE SHEET 18/27.
3. FOR ADDITIONAL BARRIER NOTES AND DETAILS, SEE ODOT STANDARD DRAWING BR-1.
4. FOR AESTHETIC DETAILS, SEE SHEET 26/27.
5. FOR 2" Ø CONDUIT PLACEMENT, SEE ODOT STANDARD DRAWING HL-30.32.

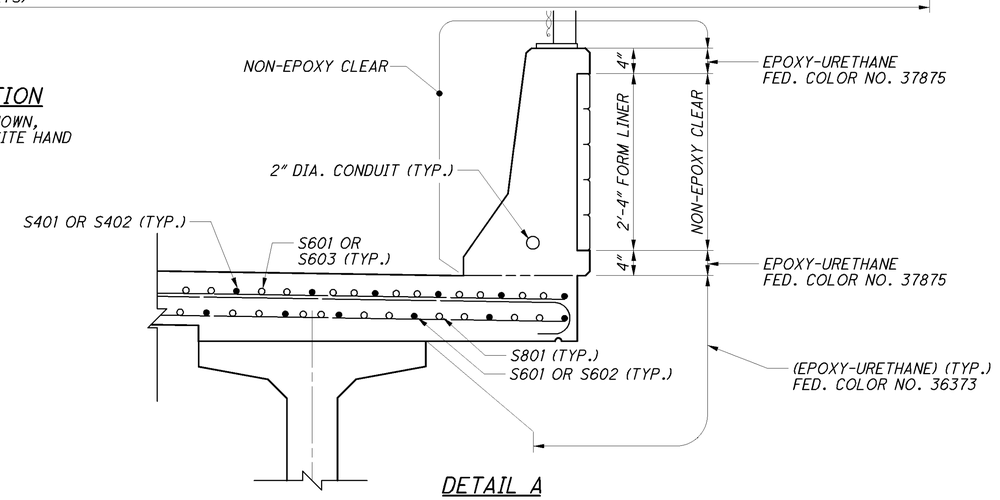

DETAIL A

DESIGN AGENCY
PARSONS BRINCKERHOFF
2945 FARMERS DRIVE
SUITE 350
COLUMBUS, OHIO 43235

DESIGNED	DRAWN	REVIEWED	DATE
ECM	RCK	EBS	11-29-12
CHECKED	REVISED	STRUCTURE FILE NUMBER	
APV		0201723	

SUPERSTRUCTURE DETAILS
BRIDGE NO. ALL-75-0328
McCLAIN RD. OVER I-75

ALL-75-0.21
PID No. 89029

19 / 27

675
907

J:\Projects\ALL\89029\structures\ALL075_0328C\sheets\075_0328CTS001.dgn 09-MAY-2013 3:07PM lint

SCREED TABLE

	LOCATION	CL BRG. REAR ABUT.	1/10	2/10	3/10	4/10	5/10	6/10	7/10	8/10	9/10	CL BRG. PIER REAR	CL BRG. PIER FWD.	1/10	2/10	3/10	4/10	5/10	6/10	7/10	8/10	9/10	CL BRG. FWD ABUT.
LEFT TOE OF BARRIER	STATION	101+95.96	102+08.34	102+20.72	102+33.10	102+45.48	102+57.85	102+70.23	102+82.61	102+94.99	103+07.37	103+19.75	103+22.16	103+34.54	103+46.92	103+59.30	103+71.68	103+84.06	103+96.44	104+08.82	104+21.20	104+33.58	104+45.96
	FINAL DECK SURFACE EL.	911.42	911.41	911.38	911.33	911.28	911.21	911.13	911.03	910.92	910.80	910.67	910.64	910.49	910.33	910.15	909.96	909.75	909.54	909.31	909.06	908.81	908.54
	DEFLECTION	0.00	0.05	0.11	0.15	0.17	0.18	0.17	0.14	0.10	0.05	0.00	0.00	0.05	0.10	0.14	0.17	0.18	0.17	0.15	0.11	0.05	0.00
	SCREED EL.	911.42	911.46	911.48	911.48	911.45	911.39	911.30	911.18	911.03	910.86	910.67	910.64	910.54	910.43	910.29	910.13	909.93	909.71	909.45	909.17	908.86	908.54
	TOP OF HAUNCH EL	-----	-----	-----	-----	-----	-----	-----	-----	-----	-----	-----	-----	-----	-----	-----	-----	-----	-----	-----	-----	-----	-----
BEAM 1	STATION	101+96.47	102+08.85	102+21.23	102+33.61	102+45.99	102+58.37	102+70.75	102+83.13	102+95.51	103+07.89	103+20.27	103+22.68	103+35.06	103+47.44	103+59.82	103+72.20	103+84.58	103+96.96	104+09.34	104+21.72	104+34.10	104+46.47
	FINAL DECK SURFACE EL.	911.45	911.44	911.41	911.36	911.31	911.24	911.16	911.06	910.95	910.83	910.69	910.67	910.51	910.35	910.17	909.98	909.78	909.56	909.33	909.08	908.83	908.56
	DEFLECTION	0.00	0.06	0.11	0.15	0.18	0.19	0.18	0.15	0.11	0.05	0.00	0.00	0.05	0.11	0.15	0.18	0.19	0.18	0.15	0.11	0.06	0.00
	SCREED EL.	911.45	911.49	911.52	911.51	911.48	911.42	911.33	911.21	911.06	910.88	910.69	910.67	910.57	910.46	910.32	910.16	909.96	909.74	909.48	909.19	908.88	908.56
	TOP OF HAUNCH EL	910.74	910.78	910.81	910.81	910.78	910.71	910.62	910.50	910.35	910.17	909.98	909.96	909.86	909.75	909.61	909.45	909.25	909.03	908.77	908.48	908.17	907.85
BEAM 2	STATION	101+98.80	102+11.18	102+23.56	102+35.94	102+48.32	102+60.70	102+73.08	102+85.46	102+97.84	103+10.22	103+22.60	103+25.01	103+37.39	103+49.77	103+62.15	103+74.53	103+86.91	103+99.28	104+11.66	104+24.04	104+36.42	104+48.80
	FINAL DECK SURFACE EL.	911.59	911.57	911.54	911.49	911.44	911.36	911.28	911.18	911.07	910.94	910.81	910.78	910.62	910.46	910.28	910.08	909.88	909.66	909.42	909.18	908.92	908.64
	DEFLECTION	0.00	0.06	0.12	0.17	0.19	0.20	0.19	0.16	0.12	0.06	0.00	0.00	0.06	0.12	0.16	0.19	0.20	0.19	0.17	0.12	0.06	0.00
	SCREED EL.	911.59	911.63	911.66	911.66	911.63	911.57	911.47	911.34	911.19	911.00	910.81	910.78	910.68	910.58	910.44	910.28	910.08	909.85	909.59	909.30	908.98	908.64
	TOP OF HAUNCH EL	910.88	910.92	910.95	910.95	910.92	910.86	910.76	910.64	910.48	910.30	910.10	910.07	909.98	909.87	909.73	909.57	909.37	909.14	908.88	908.59	908.27	907.94
P.G., CROWN LINE & CL BEAM 3	STATION	102+01.13	102+13.51	102+25.89	102+38.27	102+50.65	102+63.03	102+75.41	102+87.79	103+00.17	103+12.54	103+24.92	103+27.34	103+39.72	103+52.09	103+64.47	103+76.85	103+89.23	104+01.61	104+13.99	104+26.37	104+38.75	104+51.13
	FINAL DECK SURFACE EL.	911.73	911.71	911.67	911.62	911.56	911.49	911.40	911.30	911.19	911.06	910.92	910.89	910.73	910.57	910.38	910.19	909.98	909.75	909.52	909.27	909.01	908.73
	DEFLECTION	0.00	0.06	0.12	0.17	0.19	0.20	0.19	0.16	0.12	0.06	0.00	0.00	0.06	0.12	0.16	0.19	0.20	0.19	0.17	0.12	0.06	0.00
	SCREED EL.	911.73	911.77	911.79	911.79	911.76	911.69	911.60	911.47	911.31	911.12	910.92	910.89	910.79	910.68	910.55	910.38	910.18	909.95	909.68	909.39	909.07	908.73
	TOP OF HAUNCH EL	911.02	911.06	911.08	911.08	911.05	910.99	910.89	910.76	910.60	910.41	910.21	910.18	910.09	909.97	909.84	909.67	909.47	909.24	908.98	908.68	908.36	908.02
BEAM 4	STATION	102+03.46	102+15.84	102+28.22	102+40.60	102+52.98	102+65.35	102+77.73	102+90.11	103+02.49	103+14.87	103+27.25	103+29.66	103+42.04	103+54.42	103+66.80	103+79.18	103+91.56	104+03.94	104+16.32	104+28.70	104+41.08	104+53.46
	FINAL DECK SURFACE EL.	911.58	911.56	911.52	911.47	911.41	911.33	911.24	911.14	911.02	910.89	910.75	910.72	910.56	910.39	910.21	910.01	909.80	909.57	909.33	909.08	908.82	908.54
	DEFLECTION	0.00	0.06	0.12	0.17	0.19	0.20	0.19	0.16	0.12	0.06	0.00	0.00	0.06	0.12	0.16	0.19	0.20	0.19	0.17	0.12	0.06	0.00
	SCREED EL.	911.58	911.62	911.64	911.64	911.61	911.54	911.44	911.30	911.14	910.95	910.75	910.72	910.62	910.51	910.37	910.20	910.00	909.77	909.50	909.20	908.88	908.54
	TOP OF HAUNCH EL	910.88	910.91	910.94	910.93	910.90	910.83	910.73	910.60	910.43	910.25	910.04	910.01	909.91	909.80	909.66	909.49	909.29	909.06	908.79	908.49	908.17	907.83
BEAM 5	STATION	102+05.79	102+18.16	102+30.54	102+42.92	102+55.30	102+67.68	102+80.06	102+92.44	103+04.82	103+17.20	103+29.58	103+31.99	103+44.37	103+56.75	103+69.13	103+81.51	103+93.89	104+06.27	104+18.65	104+31.03	104+43.41	104+55.79
	FINAL DECK SURFACE EL.	911.44	911.41	911.37	911.32	911.26	911.18	911.08	910.98	910.86	910.73	910.58	910.55	910.39	910.22	910.03	909.83	909.61	909.39	909.15	908.89	908.62	908.34
	DEFLECTION	0.00	0.06	0.11	0.15	0.18	0.19	0.18	0.15	0.11	0.05	0.00	0.00	0.05	0.11	0.15	0.18	0.19	0.18	0.15	0.11	0.06	0.00
	SCREED EL.	911.44	911.47	911.48	911.47	911.43	911.36	911.26	911.13	910.97	910.78	910.58	910.55	910.45	910.32	910.18	910.00	909.80	909.56	909.30	909.00	908.68	908.34
	TOP OF HAUNCH EL	910.73	910.76	910.78	910.76	910.72	910.65	910.55	910.42	910.26	910.07	909.87	909.84	909.74	909.61	909.47	909.30	909.09	908.85	908.59	908.29	907.97	907.64
RIGHT TOE OF BARRIER	STATION	102+06.30	102+18.68	102+31.06	102+43.44	102+55.82	102+68.20	102+80.58	102+92.96	103+05.34	103+17.72	103+30.10	103+32.51	103+44.89	103+57.27	103+69.65	103+82.03	103+94.41	104+06.78	104+19.16	104+31.54	104+43.92	104+56.30
	FINAL DECK SURFACE EL.	911.41	911.38	911.34	911.29	911.22	911.14	911.05	910.94	910.82	910.69	910.54	910.51	910.35	910.18	909.99	909.79	909.57	909.35	909.10	908.85	908.58	908.30
	DEFLECTION	0.00	0.05	0.11	0.15	0.17	0.18	0.17	0.14	0.10	0.05	0.00	0.00	0.05	0.10	0.14	0.17	0.18	0.17	0.15	0.11	0.05	0.00
	SCREED EL.	911.41	911.44	911.45	911.44	911.39	911.32	911.22	911.09	910.93	910.74	910.54	910.51	910.41	910.28	910.13	909.96	909.75	909.52	909.25	908.96	908.64	908.30
	TOP OF HAUNCH EL	-----	-----	-----	-----	-----	-----	-----	-----	-----	-----	-----	-----	-----	-----	-----	-----	-----	-----	-----	-----	-----	-----

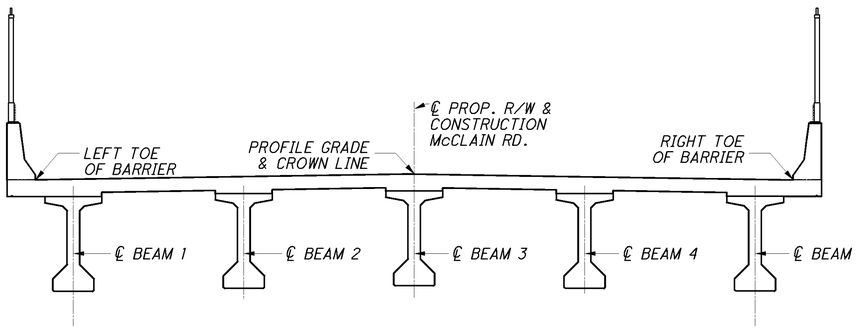

TYPICAL CROSS SECTION

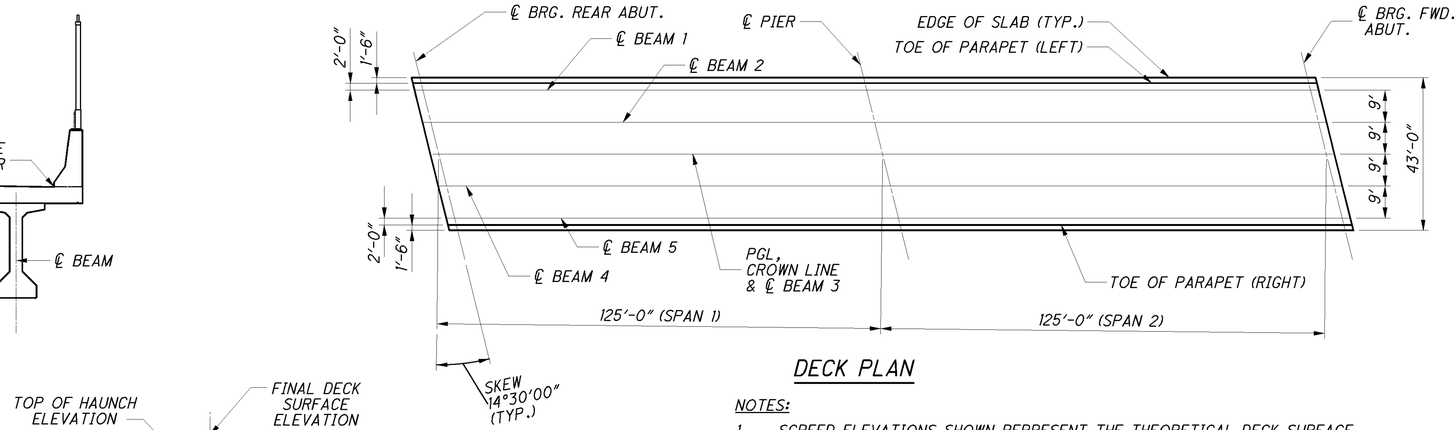

DECK PLAN

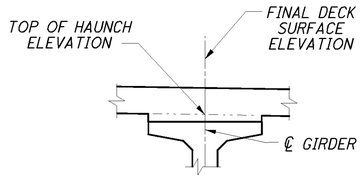

DECK HANCH DETAIL

NOTES:

1. SCREED ELEVATIONS SHOWN REPRESENT THE THEORETICAL DECK SURFACE LOCATION PRIOR TO DEFLECTIONS CAUSED BY DECK PLACEMENT AND OTHER ANTICIPATED DEAD LOADS.
2. TOP OF HAUNCH ELEVATIONS SHOWN REPRESENT THE THEORETICAL LOCATION OF THE BOTTOM OF THE DECK ABOVE THE BEAM/GIRDER HAUNCH PRIOR TO DEFLECTIONS CAUSED BY DECK PLACEMENT AND OTHER ANTICIPATED DEAD LOADS.
3. FINAL DECK SURFACE ELEVATIONS SHOWN REPRESENT THE DECK SURFACE LOCATION AFTER ALL ANTICIPATED DEAD LOAD DEFLECTIONS HAVE OCCURRED.
4. FOR TRANSVERSE SECTION, SEE SHEET 19/27 .
5. FOR DECK SLAB THICKNESS DIAGRAM, SEE SHEET 15/27.

DESIGN AGENCY
PARSONS BRINCKERHOFF
2945 FARMERS DRIVE
SUITE 350
COLUMBUS, OHIO 43235

DESIGNED ECM | DRAWN RCK | CHECKED BMG | REVIEWED EBS | DATE 11-29-12 | REVISED | STRUCTURE FILE NUMBER 0201723

SCREED ELEVATIONS
BRIDGE NO. ALL-75-0328
McCLAIN ROAD OVER I-75

ALL-75-0.21
PID No. 89029

20/27

676
907

I:\Projects\ALL\89029\structures\ALL075_0328C\sheets\075_0328CSD004.dgn 09-MAY-2013 3:07PM jlint

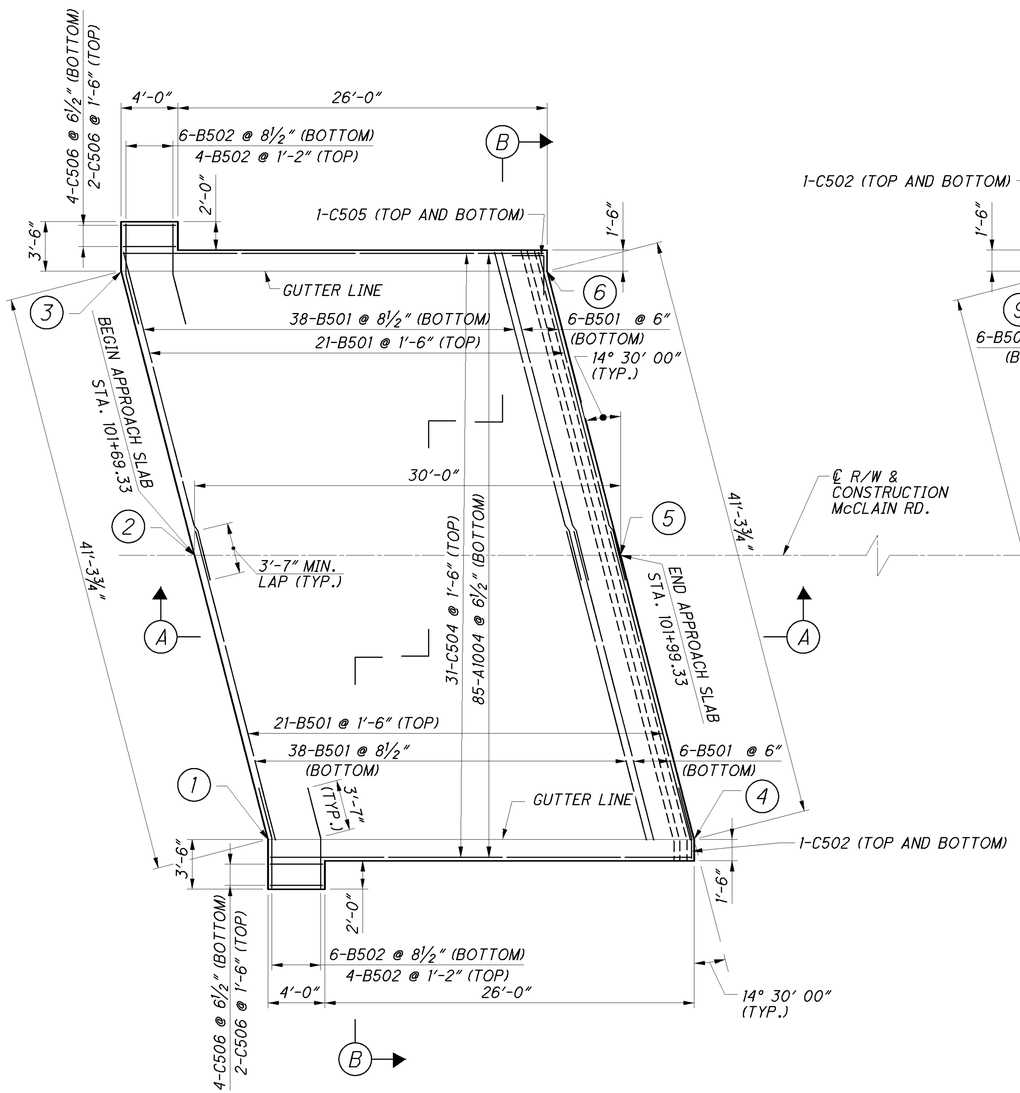

REAR APPROACH SLAB PLAN

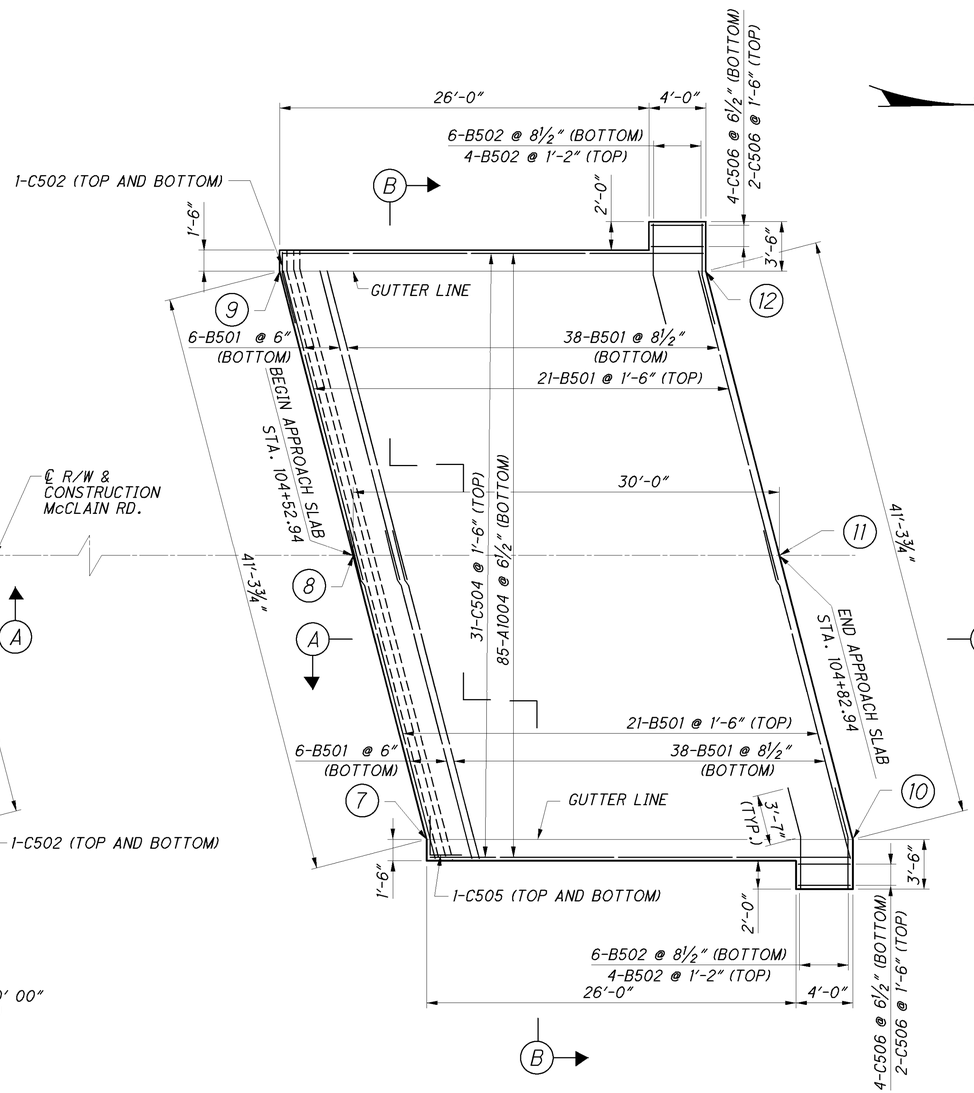

FORWARD APPROACH SLAB PLAN

NOTES:

1. FOR ADDITIONAL NOTES AND DETAILS, SEE ODOT STANDARD DRAWING AS-1-81.
2. FOR APPROACH SLAB PARAPET DETAILS, SEE SHEET 22/27.
3. FOR REINFORCING STEEL LIST, SEE SHEET 25/27.
4. 6" AGGREGATE BASE INCLUDED WITH ROADWAY QUANTITIES FOR PAYMENT.

APPROACH SLAB ELEVATION TABLE	
LOCATION	ELEVATION
1	911.41
2	911.72
3	911.39
4	911.40
5	911.73
6	911.41
7	908.24
8	908.68
9	908.48
10	907.50
11	907.96
12	907.77

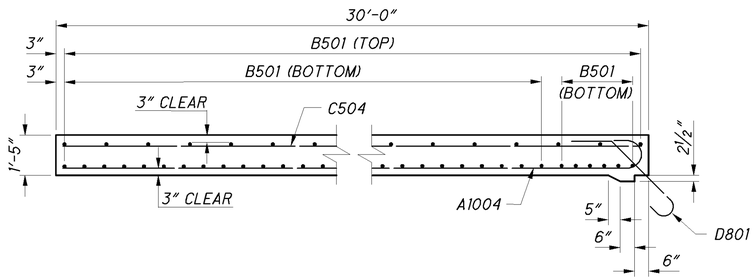

SECTION A-A

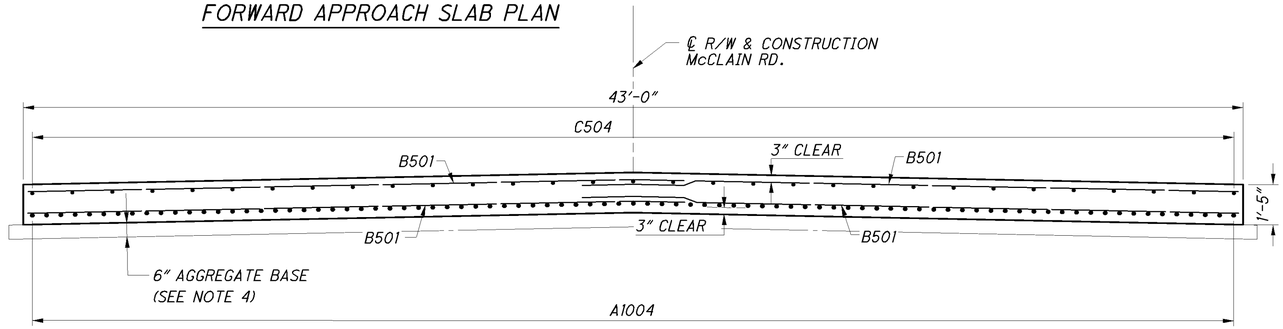

SECTION B-B

DESIGN AGENCY
PARSONS BRINCKERHOFF
2545 FARMERS DRIVE
SUITE 350
COLUMBUS, OHIO 43235

DESIGNED	DRAWN	REVIEWED	DATE
ECM	ECM	EBS	11-29-12
CHECKED	REVISED	STRUCTURE FILE NUMBER	
APV		0201723	

APPROACH SLAB DETAILS
BRIDGE NO. ALL-75-0328
McCLAIN RD. OVER I-75

ALL-75-0.21
PID No. 89029

21/27

677/907

J:\Projects\ALL\89029\structures\ALL075_0328C\sheets\075_0328CMD001.dgn 09-MAY-2013 3:07PM lint

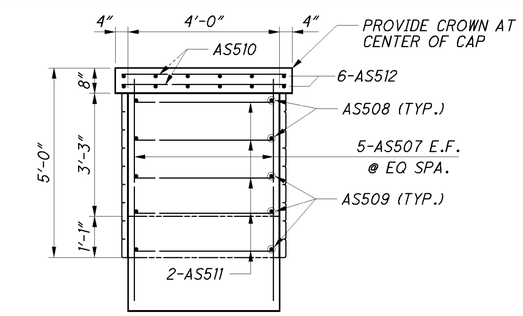

SECTION G-G

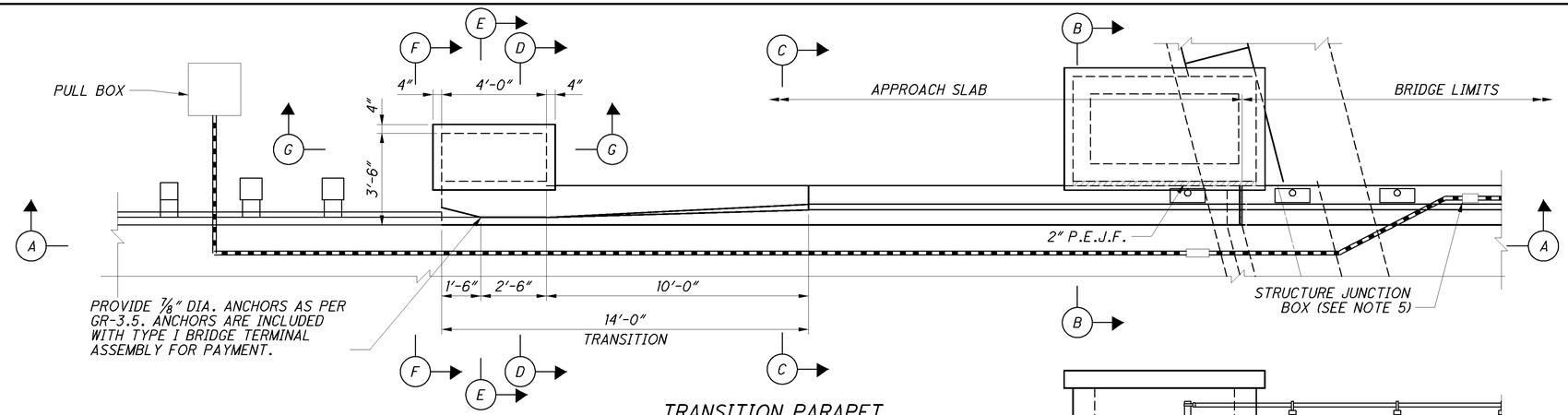

TRANSITION PARAPET

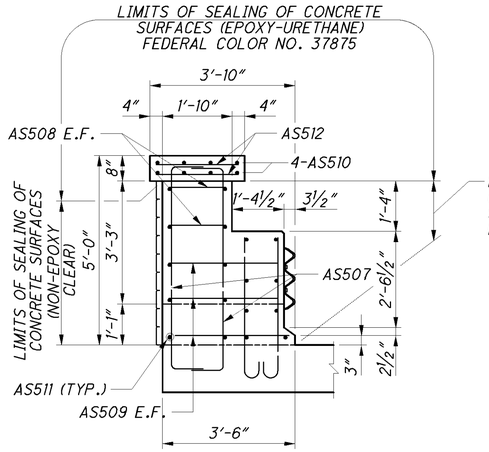

SECTION E-E
TOWER DETAIL

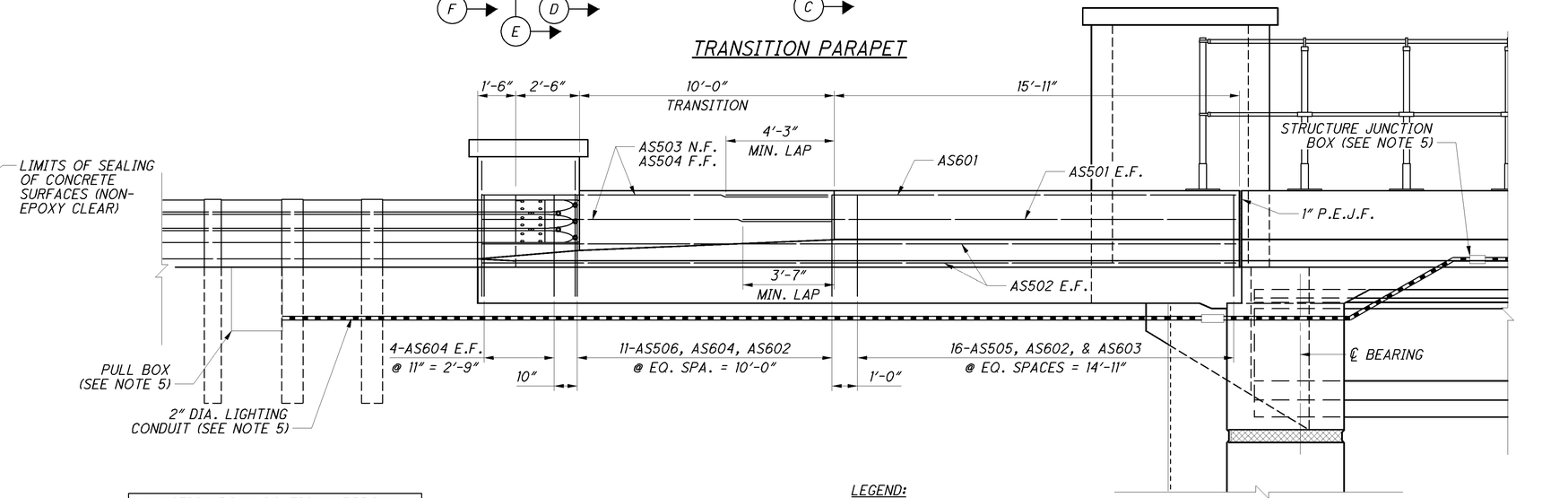

SECTION A-A

JUNCTION BOX LOCATION (APPROX.)	
STATION	SIDE
102+17	LT.
102+26	RT.
104+26	LT.
104+35	RT.

LEGEND:
N.F. = NEAR FACE
F.F. = FAR FACE
E.F. = EACH FACE
C.J. = CONSTRUCTION JOINT

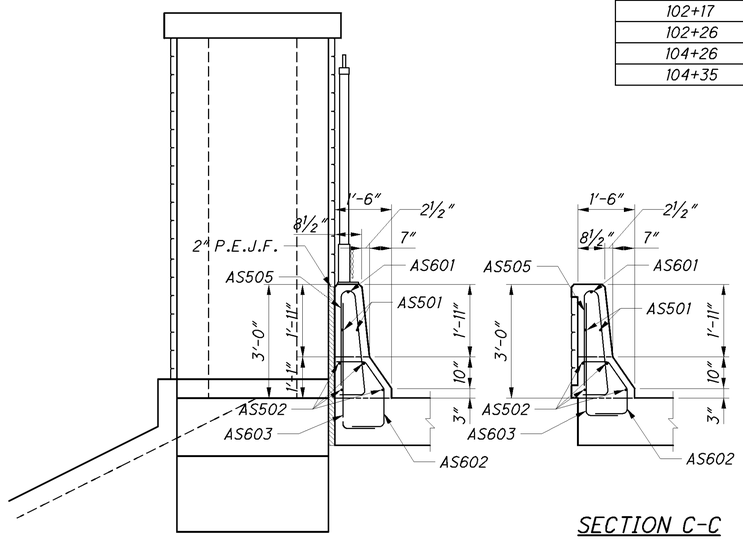

SECTION B-B

SECTION C-C

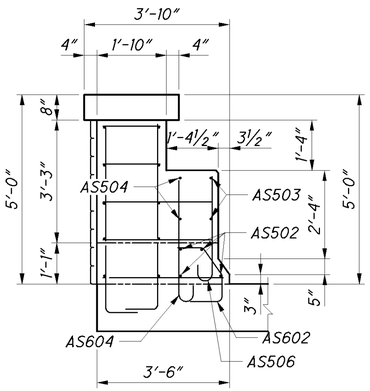

SECTION D-D

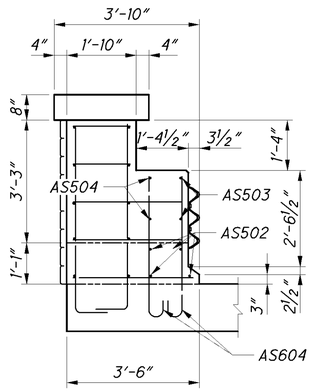

SECTION E-E
PARAPET DETAIL

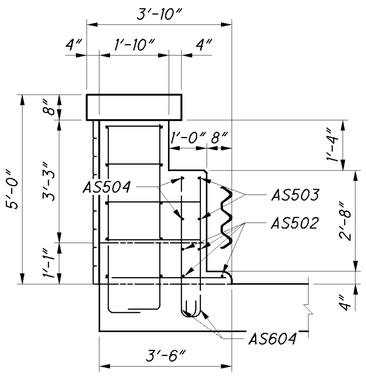

SECTION F-F

NOTES:

1. FOR AESTHETIC DETAILS, SEE SHEET 26/27 .
2. FOR ADDITIONAL NOTES AND DETAILS, SEE STANDARD CONSTRUCTION DRAWING BR-1.
3. THE COST OF THE APPROACH SLAB PARAPET, EXCLUDING SEALING AND FORMLINER, SHALL BE INCLUDED WITH ITEM 898, QC/QA CONCRETE, CLASS QSC 2, SUPERSTRUCTURE (APPROACH SLAB), (T=15"), AS PER PLAN.
4. ALL LABOR AND MATERIAL, EXCLUDING SEALING AND FORMLINER, NECESSARY TO CONSTRUCT TOWER SHOWN IN SECTION D-D, E-E, AND F-F SHALL BE INCLUDED WITH APPROACH SLAB FOR PAYMENT.
5. FOR ADDITIONAL NOTES AND DETAILS OF PULL BOXES, STRUCTURE JUNCTION BOXES, AND CONDUIT, SEE STANDARD CONSTRUCTION DRAWING HL-30.11, HL-30.31, HL-30.32. SEE SHEET 4/27 FOR QUANTITIES FOR THESE ITEMS.
6. FOR BRIDGE TERMINAL ASSEMBLIES SEE ROADWAY STANDARD DRAWINGS GR-3.1 AND GR-3.2. SEE ROADWAY PLANS FOR DETAILS AND PAYMENT.

DESIGN AGENCY
PARSONS BRINCKERHOFF
2545 FARMERS DRIVE
SUITE 350
COLUMBUS, OHIO 43235

DESIGNED	DRAWN	REVIEWED	DATE
ECM	ECM	EBS	11-29-12
CHECKED	REVISED	STRUCTURE FILE NUMBER	
BMG		0201723	

APPROACH SLAB PARAPET DETAILS
BRIDGE NO. ALL-75-0328
McCLAIN ROAD OVER I-75

ALL-75-0.21
PID No. 89029

22 / 27

678
907

J:\Projects\ALL\89029\structures\ALL075_0328\sheets\075_0328CMD002.dgn 09-MAY-2013 3:07PM jint

MARK	NUMBER TOTAL	LENGTH	WEIGHT	TYPE	DIMENSIONS A	B	C	D	E	R	INC
REAR ABUTMENT											
	2	12′-0″			7′-7″						
RA501	SER.	TO	132	19	TO	1′-10″	3′-4″				4″
	5	13′-2″			8′-9″						
RA502	12	19′-6″	245	2	7′-11″	3′-8″					
RA503	8	21′-9″	182	33	3′-8″	6′-8″					
	2	17′-1″				4′-4″					
RA504	SER.	TO	119	33	3′-8″	TO					1′-11″
	3	20′-11″				6′-3″					
RA505	20	3′-8″	77	STR.							
RA506	10	3′-10″	40	STR.							
RA507	22	19′-1″	438	33	3′-0″	6′-0″					
RA508	22	21′-9″	500	33	3′-8″	6′-8″					
RA509	36	10′-10″	407	STR.							
RA510	44	10′-7″	486	1	10″	9′-10″					
RA511	36	4′-4″	163	STR.							
RA512	24	7′-4″	184	STR.							
RA513	2	13′-1″	28	2	3′-8″	2′-7″					
RA601	76	30′-0″	3,425	STR.							
RA602	22	11′-11″	394	STR.							
RA603	192	10′-4″	2,980	2	2′-7″	5′-6″	2′-7″				
RA604	92	7′-10″	1,082	1	1′-0″	7′-0″					
RA605	16	24′-3″	583	STR.							
RA606	10	18′-8″	280	STR.							
RA607	8	7′-7″	91	11	0′-11 1/8″	3′-4″	4′-3″				
RA608	8	7′-7″	91	19	4′-3″	0′-11 1/8″	3′-4″				
RA609	92	5′-10″	806	STR.							
RA610	45	5′-1″	344	2	1′-0″	3′-5″	1′-0″				
RA611	3	10′-10″	49	2	4′-6″	2′-2″	4′-6″				
RA612	3	13′-10″	62	2	6′-0″	2′-2″	6′-0″				
RA613	3	21′-10″	98	2	7′-6″	7′-2″	7′-6″				
	1	7′-8″									
RA614	SER.	TO	113	STR.							0′-6″
	8	11′-2″									
RA615	24	13′-4″	481	STR.							
	1	6′-1″									
RA616	SER.	TO	100	STR.							2′-0″
	6	16′-1″									
	1	5′-6″									
RA617	SER.	TO	95	STR.							2′-0″
	6	15′-6″									
RA618	2	5′-2″	16	STR.							
RA619	2	4′-8″	14	STR.							
RA620	4	20′-6″	123	STR.							
RA621	3	12′-0″	54	2	5′-1″	2′-2″	5′-1″				
RA622	3	14′-10″	67	2	6′-6″	2′-2″	6′-6″				
RA623	3	17′-10″	80	2	8′-0″	2′-2″	8′-0″				
	1	8′-1″									
RA624	SER.	TO	118	STR.							0′-5 7/8″
	8	11′-6″									
	1	6′-4″									
RA625	SER.	TO	104	STR.							2′-0 3/4″
	6	16′-8″									
	1	6′-10″									
RA626	SER.	TO	108	STR.							2′-0 3/4″
	6	17′-2″									
RA627	2	4′-10″	15	STR.							
RA628	2	5′-4″	16	STR.							
RA629	28	3′-10″	161	2	1′-0″	2′-2″	1′-0″				

MARK	NUMBER TOTAL	LENGTH	WEIGHT	TYPE	DIMENSIONS A	B	C	D	E	R	INC
REAR ABUTMENT											
RA701	90	8′-0″	1,472	1	1′-2″	7′-0″					
RA702	18	7′-8″	283	1	1′-2″	6′-8″					
D801	26	5′-2″	359	18	2′-11″	1′-0″	1′-0″				
REAR ABUTMENT TOTAL			17,065								

MARK	NUMBER TOTAL	LENGTH	WEIGHT	TYPE	DIMENSIONS A	B	C	D	E	R	INC
PIER											
P501	54	14′-6″	817	3	4′-6″	2′-6″					
P502	54	3′-9″	211	34	2′-6″	0′-10″					
P503	20	21′-7″	450	STR.							
P504	10	5′-11″	62	2	0′-10″	4′-6″	0′-10″				
P505	18	9′-2″	172	13	2′-7″	4′-0″	1′-0″	2′-7″			
P601	144	10′-10″	2,343	2	4′-1″	3′-0″	4′-1″				
P602	64	10′-0″	961	2	3′-8″	3′-0″	3′-8″				
P603	84	11′-6″	1,451	STR.							
P604	8	3′-11″	47	1	1′-7″	2′-6″					
P605	12	15′-9″	284	33	4′-10″	2′-5 1/2″	1′-0″				
P901	84	13′-2″	3,760	1	1′-7″	11′-10″					
P902	84	21′-10″	6,236	STR.							
P903	20	3′-9″	255	1	1′-7″	2′-6″					
P904	8	4′-10″	131	STR.							
P1001	13	25′-7″	1,431	STR.							
P1002	18	22′-6″	1,743	1	3′-8″	19′-2″					
P1003	8	19′-2″	660	STR.							
P1004	13	37′-0″	2,070	STR.							
P1005	84	14′-4″	5,181	17	11′-6″						
PIER TOTAL			28,265								

NOTES:

1. FOR NOTES, SEE SHEET 25/27.

DESIGN AGENCY
PARSONS BRINCKERHOFF
2945 FARMERS DRIVE
SUITE 350
COLUMBUS, OHIO 43235

DESIGNED	DRAWN	REVIEWED	DATE
RCK	RCK	EBS	11-29-12
CHECKED	REVISED	STRUCTURE FILE NUMBER	
ECM		0201723	

REINFORCING STEEL LIST

BRIDGE NO. ALL-75-0328
McCLAIN RD. OVER I-75

ALL-75-0.21
PID No. 89029

679
907

J:\Projects\ALL\89029\structures\ALL075_0328C\sheets\075_0328CRL001.dgn 09-MAY-2013 3:07PM lint

MARK	NUMBER TOTAL	LENGTH	WEIGHT	TYPE	DIMENSIONS A	B	C	D	E	R	INC
FORWARD ABUTMENT											
	2	12'-0"			7'-7"						
FA501	SER.	TO	132	19	TO	1'-10"	3'-4"				4"
	5	13'-2"			8'-9"						
FA502	12	19'-6"	245	2	7'-11"	3'-8"					
FA503	8	21'-9"	182	33	3'-8"	6'-8"					
	2	17'-1"				4'-4"					
FA504	SER.	TO	119	33	3'-8"	TO					1'-11"
	3	20'-11"				6'-3"					
FA505	20	3'-8"	77	STR.							
FA506	10	3'-10"	40	STR.							
FA507	22	19'-1"	438	33	3'-0"	6'-0"					
FA508	22	21'-9"	500	33	3'-8"	6'-8"					
FA509	36	10'-10"	407	STR.							
FA510	44	10'-7"	486	1	10"	9'-10"					
FA511	36	4'-4"	163	STR.							
FA512	24	7'-4"	184	STR.							
FA513	2	13'-1"	28	2	3'-8"	2'-7"					
FA601	45	30'-0"	2,028	STR.							
FA602	19	24'-6"	699	STR.							
FA603	148	10'-4"	2,297	2	2'-7"	5'-6"	2'-7"				
FA604	156	7'-1"	1,660	1	1'-0"	6'-3"					
FA605	5	15'-9"	118	STR.							
FA606	12	19'-0"	342	STR.							
FA607	5	7'-7"	57	11	0'-11 1/8"	3'-4"	4'-3"				
FA608	5	7'-7"	57	19	4'-3"	11 1/8"	3'-4"				
FA609	45	6'-4"	428	2	1'-8"	3'-4"	1'-8"				
	1	5'-3"									
FA610	SER.	TO	113	STR.							0'-6"
	10	9'-9"									
FA611	12	11'-4"	204	STR.							
FA612	2	4'-11"	15	STR.							
FA613	2	4'-5"	13	STR.							
	1	6'-0"									
FA614	SER.	TO	75	STR.							2'-0"
	5	14'-0"									
	1	5'-6"									
FA615	SER.	TO	71	STR.							2'-0"
	5	13'-6"									
FA616	1	14'-5"	22	STR.							
FA617	1	13'-11"	21	STR.							
	1	4'-8"									
FA618	SER.	TO	128	STR.							0'-5 3/8"
	12	9'-7"									
FA619	11	11'-1"	183	STR.							
FA620	2	4'-7"	14	STR.							
FA621	2	5'-2"	16	STR.							
	1	6'-0"									
FA622	SER.	TO	79	STR.							2'-2 3/4"
	5	14'-11"									
	1	6'-6"									
FA623	SER.	TO	82	STR.							2'-2 3/4"
	5	15'-5"									

MARK	NUMBER TOTAL	LENGTH	WEIGHT	TYPE	DIMENSIONS A	B	C	D	E	R	INC
FORWARD ABUTMENT											
FA624	1	16'-8"	25	STR.							
FA625	1	17'-2"	26	STR.							
FA626	2	12'-1"	36	STR.							
FA627	2	14'-8"	44	STR.							
FA628	32	3'-10"	184	2	1'-0"	2'-2"	1'-0"				
FA702	18	7'-8"	283	1	1'-2"	6'-8"					
D801	26	5'-2"	359	18	2'-11"	1'-0"	1'-0"				
FORWARD ABUTMENT TOTAL			12,680								

MARK	NUMBER TOTAL	LENGTH	WEIGHT	TYPE	DIMENSIONS A	B	C	D	E	R	INC
SUPERSTRUCTURE											
S401	405	30'-0"	8,116	STR.							
S402	45	9'-10"	296	STR.							
S403	28	13'-7"	254	6	3'-3"	4'-8"	0'-8"				
S404	5	11'-4"	38	24	0'-5 1/2"	5'-4"				0'-2 1/4"	
S405	5	2'-8"	9	STR.							
S406	5	4'-10"	16	36	1'-11 1/2"	0'-6 1/4"	0'-8 1/2"	0'-8 1/2"			
S501	483	42'-8"	21,494	STR.							
	4	13'-3"									
S502	SER.	TO	1,802	STR.							1'-10"
	16	40'-9"									
S503	108	30'-0"	3,379	STR.							
S504	12	6'-10"	86	STR.							
S505	68	7'-7"	538	2	2'-7"	2'-8"	2'-7"				
S506	136	11'-3"	1,596	2	4'-0"	3'-6"	4'-0"				
S507	10	6'-5"	67	1	2'-9"	3'-10"					
S508	510	5'-11"	3,147	23	0'-8"	2'-9"	2'-6"	0'-9 5/8"		0'-1 1/2"	
S509	988	9'-6"	9,790	16	8'-11"						
S601	696	30'-0"	31,362	STR.							
S602	46	18'-2"	1,255	STR.							
S603	88	6'-2"	815	STR.							
S604	2	22'-7"	68	STR.							
S605	510	2'-3"	1,724	1	0'-11"	1'-6"					
S606	510	3'-1"	2,362	14	0'-10 1/2"	0'-10"	0'-8 1/2"	0'-6"	0'-9"		
S607	24	8'-3"	297	STR.							
S801	90	33'-8"	8,090	STR.							
S802	32	10'-4"	883	13	2'-9"	0'-9"	0'-10 3/8"	6'-6"			
S803	48	25'-7"	3,279	STR.							
S804	24	8'-4"	534	STR.							
S805	8	6'-10"	146	STR.							
S806	12	2'-11"	93	STR.							
S807	4	2'-2"	23	STR.							
SUPERSTRUCTURE TOTAL			101,559								

NOTES:
1. FOR NOTES, SEE SHEET 25/27.

DESIGN AGENCY
PARSONS BRINCKERHOFF
2545 FARMERS DRIVE
SUITE 350
COLUMBUS, OHIO 43235

DESIGNED	DRAWN	REVIEWED	DATE
RCK	RCK	EBS	11-29-12
CHECKED	REVISED	STRUCTURE FILE NUMBER	
ECM		0201723	

REINFORCING STEEL LIST
BRIDGE NO. ALL-75-0328
McCLAIN RD. OVER I-75

ALL-75-0.21
PID No. 89029

680
907

J:\Projects\ALL\89029\structures\ALL075_0328C\sheets\075_0328CRL002.dgn 09-MAY-2013 3:07PM jint

MARK	NUMBER TOTAL	LENGTH	WEIGHT	TYPE	DIMENSIONS A	B	C	D	E	R	INC
APPROACH SLAB											
A1004	170	30'-11"	22,616	16	29'-6"						
B501	260	23'-9"	6,440	STR.							
B502	40	6'-8"	278	11	0'-10"	3'-5"	3'-3"				
C502	4	4'-8"	20	11	0'-10"	3'-5"	1'-3"				
C504	62	29'-6"	1,908	STR.							
C505	4	4'-10"	20	1	2'-6"	2'-6"					
C506	24	3'-6"	88	STR.							
AS501	8	19'-6"	163	STR.							
AS502	16	29'-7"	494	STR.							
AS503	8	13'-10"	116	25	10'-0"	2'-5"	1'-4 1/2"	1 1/2"	5"		
AS504	8	13'-8"	115	STR.							
AS505	64	6'-0"	401	23	8"	2'-9"	2'-6"			1 1/2"	
AS506	44	3'-3"	150	16	2'-8"						
AS507	40	6'-9"	282	2	10"	5'-4"					
AS508	16	1'-6"	26	STR.							
AS509	24	2'-10"	71	STR.							
AS510	32	4'-4"	145	STR.							
AS511	40	3'-8"	153	STR.							
AS512	48	2'-2"	109	STR.							
AS601	4	20'-2"	122	STR							
AS602	108	3'-5"	555	14	10 1/2"	1'-3"	8 1/2"	6"	9"		
AS603	64	3'-10"	369	1	1'-0"	3'-0"					
AS604	76	3'-10"	438	16	3'-2"						
APPROACH SLAB TOTAL			35,079								
FOR INFORMATION ONLY, NOT INCLUDED WITH ITEM 509											

BAR BENDING DIAGRAMS

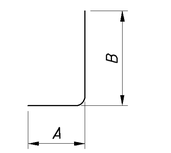

TYPE-1

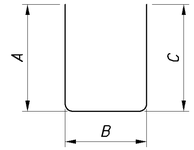

TYPE-2

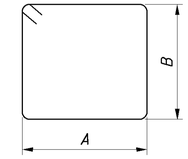

TYPE-3

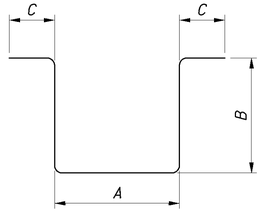

TYPE-6

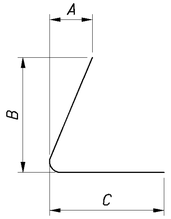

TYPE-11

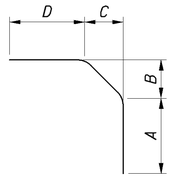

TYPE-13

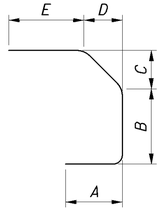

TYPE-14

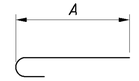

TYPE-16

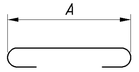

TYPE-17

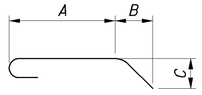

TYPE-18

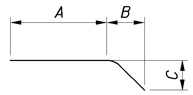

TYPE-19

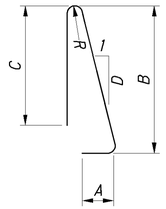

TYPE-23

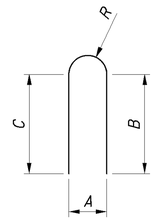

TYPE-24

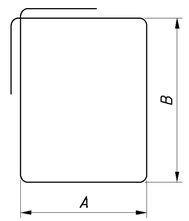

TYPE-33

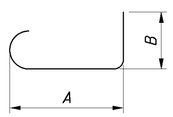

TYPE-34

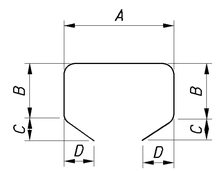

TYPE-36

NOTES:

1. THE BAR SIZE NUMBER IS SPECIFIED ON THE PLANS IN THE BAR MARK COLUMN. THE FIRST DIGIT WHERE THREE DIGITS ARE USED, AND THE FIRST TWO DIGITS WHERE FOUR ARE USED, INDICATES THE BAR SIZE NUMBER. FOR EXAMPLE, P601 IS A NO. 6 BAR. BAR DIMENSIONS SHOWN ARE OUT TO OUT UNLESS OTHERWISE INDICATED. R INDICATES INSIDE RADIUS, UNLESS OTHERWISE NOTED. "STD." WRITTEN IN PLACE OF A DIMENSION INDICATES A STANDARD BEND AT THE END OF THE BAR.

2. ALL REINFORCEMENT IS TO BE EPOXY COATED.

3. FOR LIST OF ABBREVIATIONS, SEE SHEET 2/27.

DESIGN AGENCY
PARSONS BRINCKERHOFF
2945 FARMERS DRIVE
SUITE 350
COLUMBUS, OHIO 43235

DESIGNED RCK | DRAWN RCK | REVIEWED EBS | DATE 11-29-12
CHECKED ECM | REVISED | STRUCTURE FILE NUMBER 0201723

REINFORCING STEEL LIST
BRIDGE NO. ALL-75-0328
McCLAIN RD. OVER I-75

ALL-75-0.21
PID No. 89029

J:\Projects\ALL\89029\structures\ALL075_0328\sheets\075_0328CRL003.dgn 09-MAY-2013 3:08PM jint

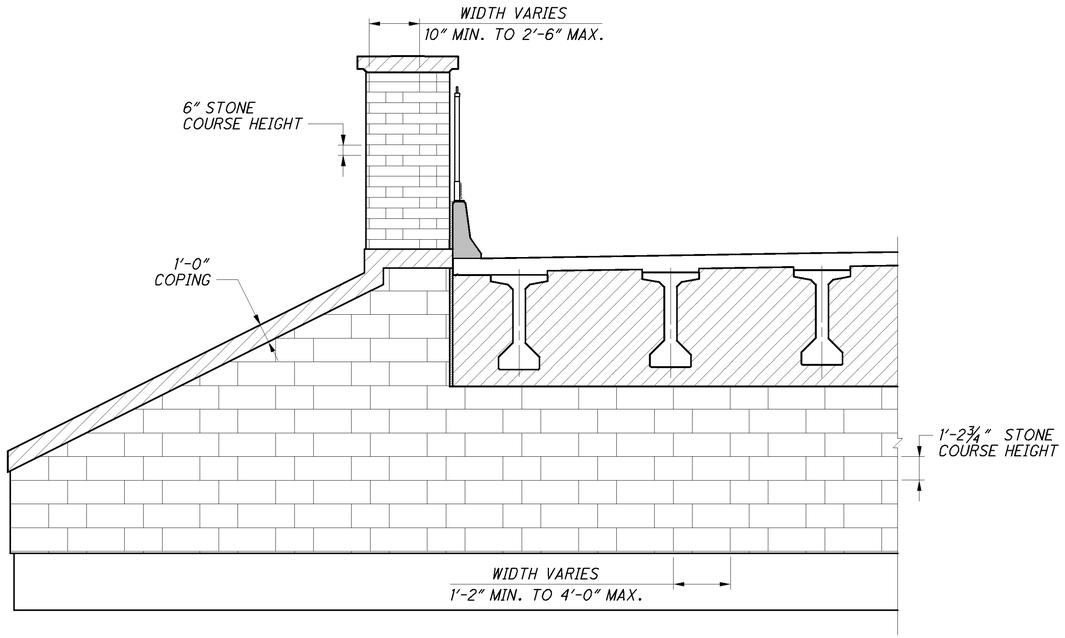

ABUTMENT AESTHETICS

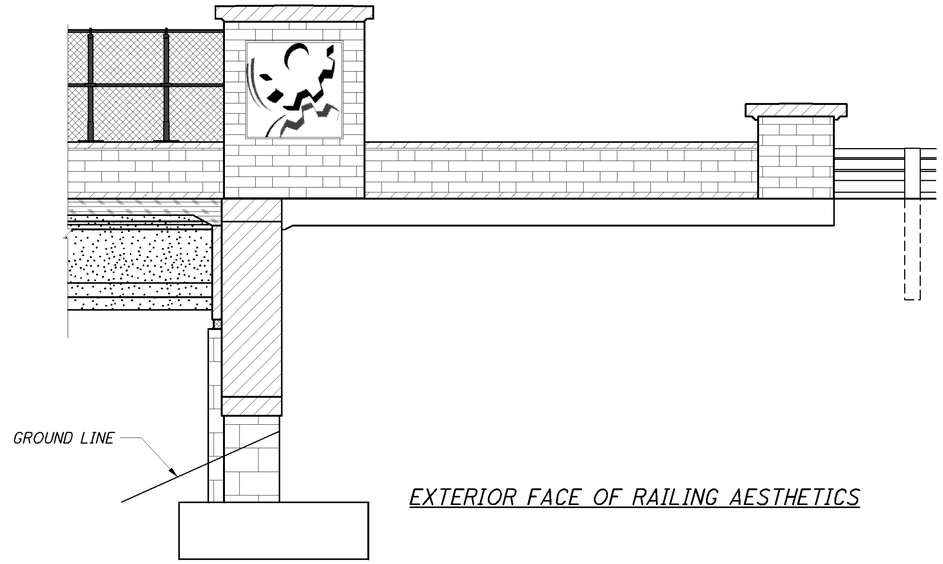

EXTERIOR FACE OF RAILING AESTHETICS

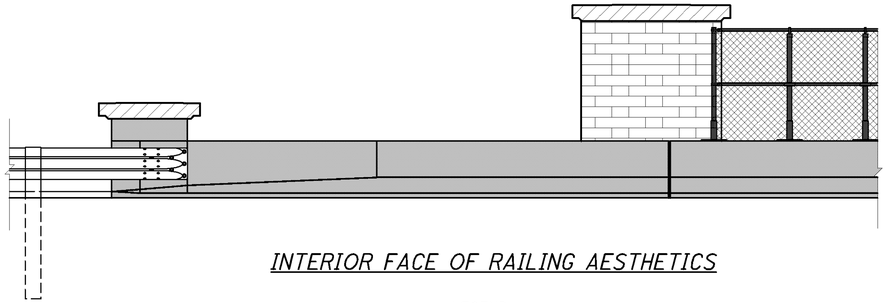

INTERIOR FACE OF RAILING AESTHETICS

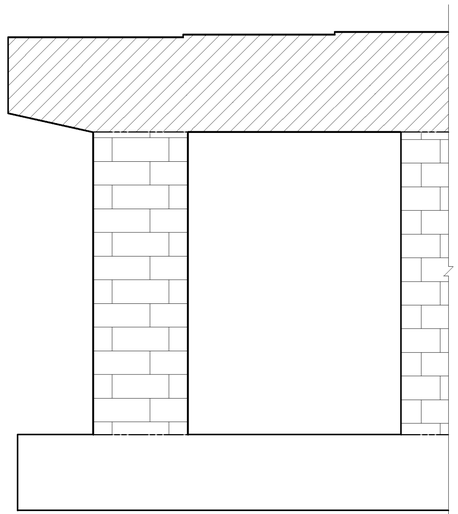

PIER AESTHETICS

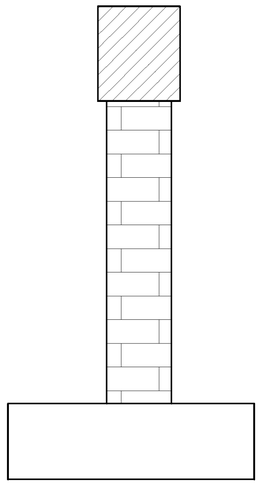

PIER SECTION

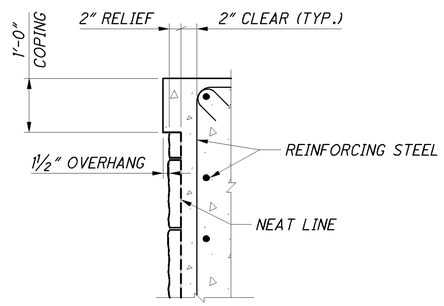

TYPICAL FORMLINER SECTION

SECTION AT WINGWALL SHOWN

LEGEND:

- FORMLINER PATTERN 1:
  - ROUGH CUT STONE FORMLINER W/ 2" RELIEF AND INTEGRALLY COLORED CONCRETE, FEDERAL COLOR NO. 36373, GRAY
- FORMLINER PATTERN 2:
  -ROUGH CUT STONE FORMLINER W/ 15#8" RELIEF AND INTEGRALLY COLORED CONCRETE, FEDERAL COLOR NO. 36373, GRAY
- -INTEGRALLY COLORED CONCRETE, FEDERAL COLOR NO. 36373, GRAY
- -VANDAL PROTECTION FENCE, AS PER PLAN, FEDERAL COLOR NO. 27038, BLACK
- -EPOXY-URETHANE SEALER, FEDERAL COLOR NO. 25095, BLUE
- -EPOXY-URETHANE SEALER, FEDERAL COLOR NO. 37875, WHITE
- -EPOXY-URETHANE SEALER, FEDERAL COLOR NO. 36373, GRAY

DESIGN AGENCY
PARSONS BRINCKERHOFF
2545 FARMERS DRIVE
SUITE 350
COLUMBUS, OHIO 43235

DESIGNED	DRAWN	REVIEWED	DATE
PJL	LEL	EBS	11-29-12
CHECKED	REVISED	STRUCTURE FILE NUMBER	
SAP		0201723	

AESTHETICS DETAILS
BRIDGE NO. ALL-75-0328
McCLAIN RD. OVER I-75

ALL-75-0.21
PID No. 89029

J:\Projects\ALL\89029\structures\ALL075_0328\sheets\075_0328GMD003.dgn 09-MAY-2013 3:08PM lint

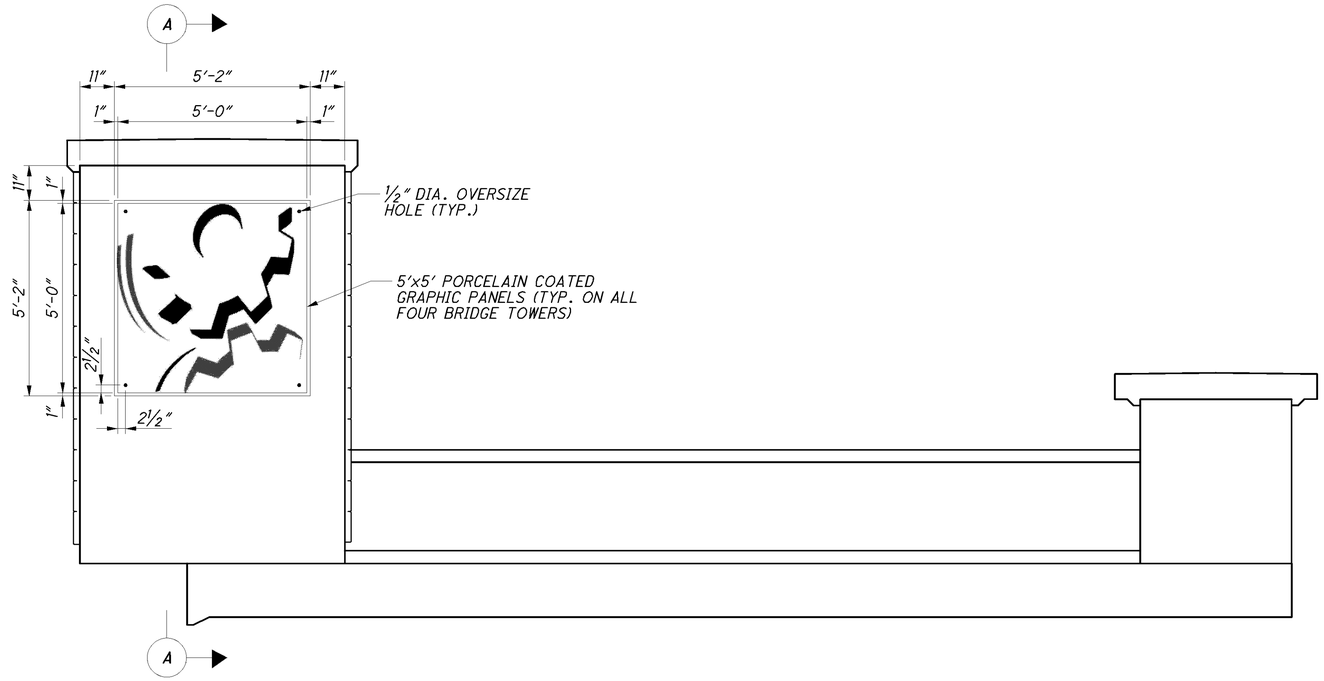

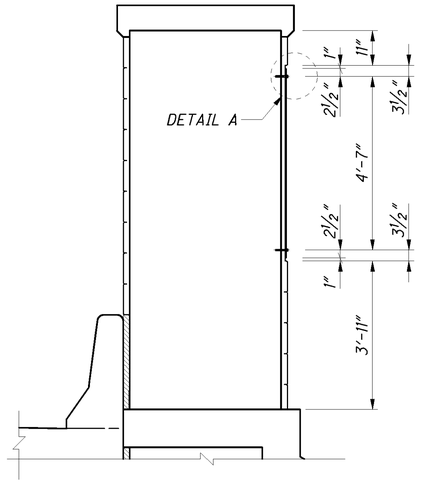

SECTION A-A

NOTES:

1. ALL HARDWARE, INCLUDING ANCHOR BOLTS AND WASHERS SHALL BE STAINLESS STEEL.
2. TO ENSURE CORROSION DOES NOT OCCUR BETWEEN THE STEEL PARTS AND ALUMINUM PARTS, PREVENT CONTACT BETWEEN ALUMINUM AND STEEL PARTS WITH A MINIMUM 1/16 INCH THICK CHLOROPRENE OR NEOPRENE GASKET OR APPROVED EQUAL.
3. HOLES IN TOWERS ARE FIELD DRILLED AND SHALL BE PREPPED PER THE ANCHOR BOLT MANUFACTURERS GUIDELINES.
4. ⅛″ THICK WHITE ELASTOMERIC PAD, ASTM D4637, TYPE I (DUROMETER 50-55) OR APPROVED EQUAL SHALL BE PROVIDED BETWEEN BOLT HEADS AND THE PLAQUE FACES TO PROTECT THE PORCELAIN ENAMEL COATING.

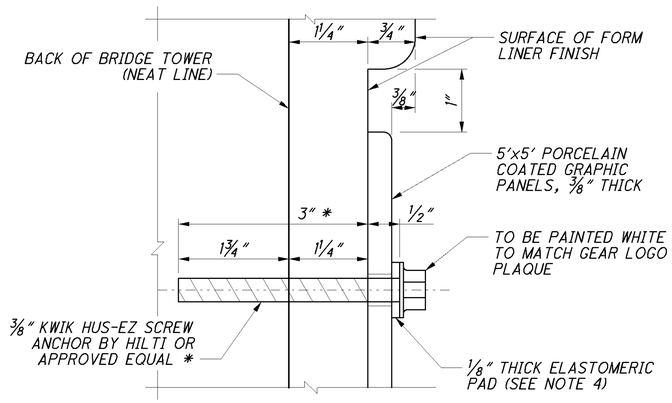

DETAIL A

* CONTRACTOR TO REFER TO MANUFACTURER SPECIFICATIONS FOR PROPER ANCHOR BOLT INSTALLATION

ITEM SPECIAL (530E00200) - STRUCTURE, MISC. BRIDGE MOUNTED DISPLAYS:

THIS ITEM INCLUDES MOUNTING OF FOUR "GEAR LOGO" PLAQUES TO THE PROPOSED BRIDGE. ONE 5′ X 5′ "GEAR LOGO" PLAQUE ON EACH OF THE FOUR LARGE TOWERS/PILASTERS.

THE CITY OF LIMA SHALL PROVIDE THE GRAPHIC IMAGES FOR THE GEAR LOGO SHOWN AND ANY ADDITIONAL INFORMATION TO ACCURATELY REPRODUCE THE DISPLAYS SHOWN ON THESE SHEETS. THE GEAR LOGO PLAQUES SHALL BE COMPRISED OF PORCELAIN ENAMEL COATED GRAPHIC PANELS SUPPLIED BY ADVANCED SIGNS, 2222 ASHMORE AVENUE, CHATANOOGA, TN 37415, PHONE 866-780-0619 OR AN APPROVED EQUAL. THEY SHALL BE ATTACHED TO THE CONCRETE TOWERS BY STAINLESS STEEL HILTI KWIK HUS-EZ SCREW ANCHORS OR APPROVED EQUAL.

THE CONTRACTOR IN COORDINATION WITH THE DISPLAY PROVIDER SHALL PROVIDE SHOP DRAWINGS AND SAMPLES OF WORK FOR APPROVAL BY THE ENGINEER AND CITY OF LIMA. THE ENGINEER SHALL DETERMINE WHEN ADDITIONAL REVIEW WILL BE REQUIRED BY FHWA. THE CONTRACTOR AND SUPPLIER MUST COORINATE THESE DRAWINGS. ENSURE THAT THE SHOP DRAWINGS MEET PROJECT REQUIREMENTS, INCLUDING MATERIALS, FIELD MEASUREMENTS, CONSTRUCTION SPECIFICATIONS, CONTRACT DOCUMENTS, PERFORMANCE CRITERIA, AND SIMILAR DATA.

THE CITY OF LIMA WILL NOT MAKE ALLOWANCE FOR ADDITIONAL COST OR DELAYS TO THE CONTRACTOR FOR INCORRECT MANUFACTURING AS A RESULT OF FAILURE TO COORDINATE.

FOR THE SHOP DRAWINGS, THE CONTRACTOR SHALL VERIFY AND ADJUST ACCORDINGLY THE DIMENSIONS FOR THE PLAQUE CONNECTIONS WITH FIELD MEASUREMENTS OF THE MOUNTING SURFACES. THE REQUIRED SHOP DRAWINGS SHALL INCLUDE, BUT ARE NOT LIMITED TO, THE FEATURES OUTLINED ABOVE, AN ELEVATION VIEW INCLUDING DIMENSIONS FROM THE CENTER OF THE DISPLAY TO THE MOUNTING HOLES, AND DIMENSIONS AND FABRICATION DETAILS OF ANY CONNECTION TEMPLATES OR OTHER DEVICES OR HARDWARE. THE DISPLAYS SHALL NOT BE MANUFACTURED UNTIL RECEIVING APPROVAL OF THE SHOP DRAWINGS.

ALL COSTS ASSOCIATED WITH THE DISPLAYS, INCLUDING ADDITIONAL WORK DESCRIBED ABOVE, AS WELL AS THE COMPLETE INSTALLATION AND ASSEMBLY OF THE DISPLAYS (INCLUDING OVERHEAD AND PROFIT) SHALL BE INCLUDED IN THE LUMP SUM PRICE FOR ITEM SPECIAL (530E00200) - STRUCTURE, MISC.: BRIDGE MOUNTED DISPLAYS.

DESIGN AGENCY
PARSONS BRINCKERHOFF
2545 FARMERS DRIVE
SUITE 350
COLUMBUS, OHIO 43235

DESIGNED	DRAWN	REVIEWED	DATE
ACF	TLP	EBS	11-29-12
CHECKED	REVISED	STRUCTURE FILE NUMBER	
EJC		0201723	

AESTHETICS DETAILS
BRIDGE NO. ALL-75-0328
McCLAIN RD. OVER I-75

ALL-75-0.21
PID No. 89029

J:\Projects\ALL\89029\structures\ALL075_0328C\sheets\075_0328CMD004.dgn 09-MAY-2013 3:08PM jint

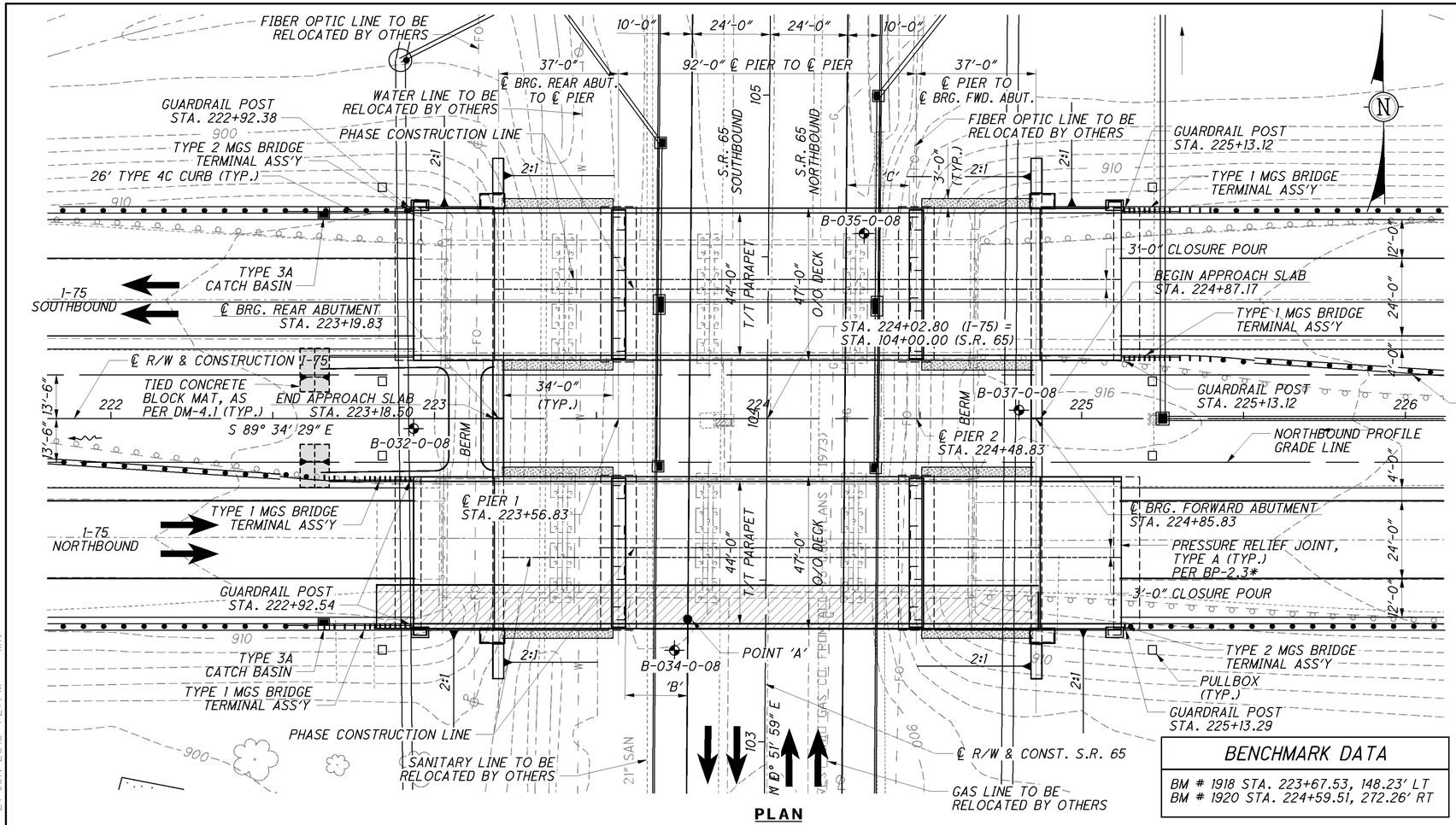

PLAN

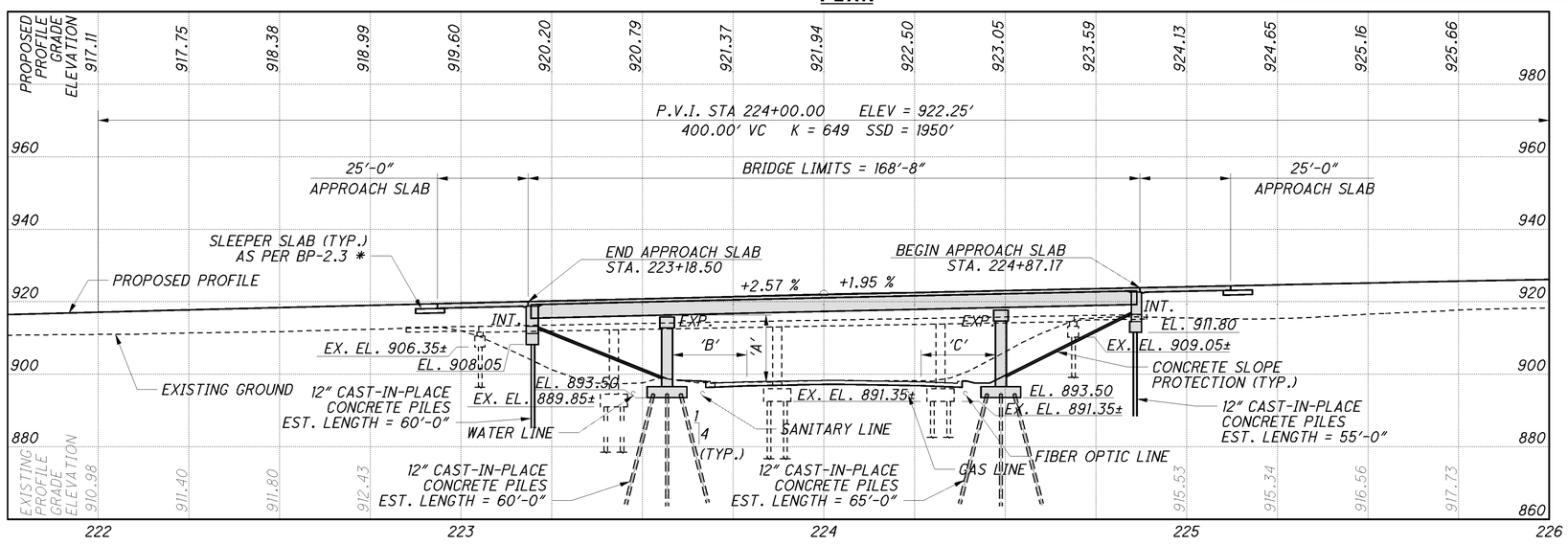

PROFILE

ALONG N.B. PROFILE GRADE LINE

NOTES

EARTHWORK LIMITS SHOWN ARE APPROXIMATE. ACTUAL SLOPES SHALL CONFORM TO PLAN CROSS SECTIONS.

DESIGN TRAFFIC:
2015 ADT = 45,300 2015 ADTT = 17,667
2035 ADT = 54,700 2035 ADTT = 21,333
DIRECTIONAL DISTRIBUTION = 0.51

LEGEND

⌖ BORING LOCATION

● 17.00' REQUIRED MINIMUM VERTICAL CLEARANCE
POINT 'A' - 17.14' ACTUAL MINIMUM VERTICAL CLEARANCE

19.00' REQUIRED MINIMUM HORIZONTAL CLEARANCE
POINT 'B' - 19.83' ACTUAL MINIMUM HORIZONTAL CLEARANCE
POINT 'C' - 19.74' ACTUAL MINIMUM HORIZONTAL CLEARANCE

▨ - TEMPORARY STRUCTURE

* USE PRESSURE RELIEF JOINT FOR RIGID PAVEMENT OPTION ONLY

SOIL BORING LOCATIONS

BORING	STATION, OFFSET	BOTTOM OF BORING
B-032-0-08	STA. 222+93.5, 3.1' RT.	**836.2
B-034-0-08	STA. 223+74.1, 71.7' RT.	**831.4
B-035-0-08	STA. 224+32.7, 57.2' LT.	**841.0
B-037-0-08	STA. 224+80.6, 2.6' LT.	**839.2

** ROCK NOT ENCOUNTERED

EXISTING STRUCTURE

TYPE: CONTINUOUS 4-SPAN REINFORCED CONCRETE SLAB WITH REINFORCED CONCRETE SUBSTRUCTURES

SPANS: 36'±-45'±-45'±-36'± C/C BRGS.
ROADWAY: 33'-6"± TOE/TOE PARAPETS
LOADING: CF-2000 (51)
SKEW: 0°27' LF ±
APPROACH SLABS: AS-1-54 (L=20')
ALIGNMENT: TANGENT
CROWN: NORMAL 3/16"/FT.
STRUCTURE FILE NUMBER: 0201804 (LT), 0201839 (RT)
DATE BUILT: 1957
WEARING SURFACE: MICROSILICA MODIFIED CONCRETE

BENCHMARK DATA

BM # 1918 STA. 223+67.53, 148.23' LT
BM # 1920 STA. 224+59.51, 272.26' RT

PROPOSED STRUCTURE

TYPE: THREE-SPAN COMPOSITE PRESTRESSED CONCRETE I-BEAM WITH REINFORCED CONCRETE DECK, CAP AND COLUMN PIER, AND INTEGRAL ABUTMENTS.

SPANS: 37'-0', 92'-0", 37'-0" ℄ ABUT. BRG. TO ℄ PIER
ROADWAY: 44'-0" TOE/TOE PARAPET
LOADING: HL-93
FUTURE WEARING SURFACE (FWS) OF 0.060 kips/ft^2
SKEW: NONE
APPROACH SLABS: 25'-0" LONG (AS-1-81) MODIFIED
WEARING SURFACE: 1" MONOLITHIC
ALIGNMENT: TANGENT
CROWN: 0.016 FT/FT
COORDINATES: LATITUDE 40°41'56"
LONGITUDE 84°5'24"

DESIGN AGENCY
PARSONS BRINCKERHOFF
2545 FARMERS DRIVE
SUITE 350
COLUMBUS, OHIO 43235

DESIGNED PJL | DRAWN LEL | REVIEWED EBS | DATE 01/18/13
CHECKED SAP | REVISED
STRUCTURE FILE NUMBER LEFT: 0201812 RIGHT: 0201820

ALLEN COUNTY
STA. 223+18.50
STA. 224+87.17

SITE PLAN
BRIDGE NO. ALL-75-0423 L&R
I-75 OVER S.R. 65

ALL-75-0.21
PID No. 89029

1 / 43

684
907

J:\Projects\ALL\89029\structures\ALL075_0423C\sheets\075_0423CSP001.dgn 21-JUN-2013 1:27PM jint

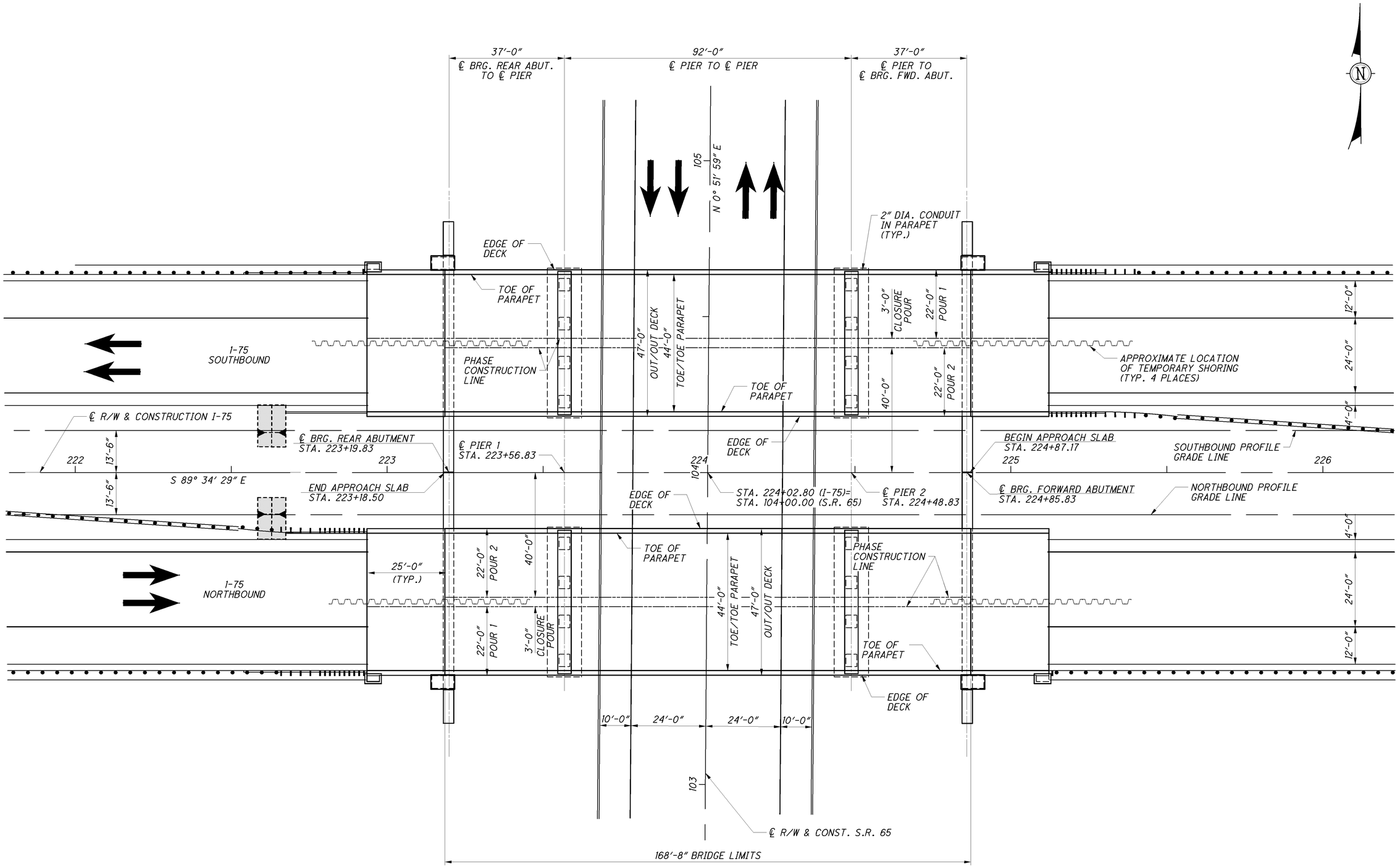

GENERAL PLAN

NOTES:

1. THE MAXIMUM DESIGN HEIGHT OF THE TEMPORARY SHORING IS 12'-0" FOR ALL LOCATIONS, THE EMBEDMENT DEPTH IS 18'-0", THE SECTION MODULES IS 15 IN³/FT, AND THE ALLOWABLE STRENGTH IS 32 KSI.

J:\Projects\ALL\89029\structures\ALL075_0423C\sheets\075_0423CGP001.dgn 12-JUN-2013 4:34PM jint

DESIGN AGENCY
PARSONS BRINCKERHOFF
2545 FARMERS DRIVE
SUITE 350
COLUMBUS, OHIO 43235

DESIGNED	DRAWN	REVIEWED	DATE
PJL	BKJ	EBS	01/18/13
CHECKED	REVISED	STRIPPING FILE NUMBER	
SAP		LEFT: 0201812 RIGHT: 0201820	

ALLEN COUNTY
STA. 223+18.50
STA. 224+87.17

GENERAL PLAN
BRIDGE NO. ALL-75-0423 L&R
I-75 OVER S.R. 65

ALL-75-0.21
PID No. 89029

2 / 43

685
907

STANDARD DRAWINGS AND SUPPLEMENTAL SPECIFICATIONS

REFER TO THE FOLLOWING STANDARD BRIDGE DRAWING(S):

AS-1-81 REVISED 01-18-13
BR-1 REVISED 07-19-02
PCB-91 REVISED 01-18-13
PSID-1-99 REVISED 07-18-08
ICD-1-82 REVISED 07-19-02

AND TO THE FOLLOWING SUPPLEMENTAL SPECIFICATION(S):

800 DATED 07-19-13
832 DATED 05-05-09
898 DATED 10-21-11

DESIGN SPECIFICATIONS

DESIGN SPECIFICATIONS: THIS STRUCTURE CONFORMS TO THE "LRFD BRIDGE DESIGN SPECIFICATIONS" ADOPTED BY THE AMERICAN ASSOCIATION OF STATE HIGHWAY AND TRANSPORTATION OFFICIALS, FIFTH EDITION, INCLUDING THE 2010 INTERIM SPECIFICATIONS AND THE ODOT BRIDGE DESIGN MANUAL, 2007.

DESIGN DATA

DESIGN DATA:
CONCRETE CLASS QSC2 - COMPRESSIVE STRENGTH 4.5 KSI (SUPERSTRUCTURE)
CONCRETE CLASS QSC1 - COMPRESSIVE STRENGTH 4.0 KSI (SUBSTRUCTURE)

REINFORCING STEEL - MINIMUM YIELD STRENGTH 60 KSI
STRUCTURAL STEEL - ASTM A709 GRADE 50 - YIELD STRENGTH 50 KSI

CONCRETE FOR PRESTRESSED BEAMS:
COMPRESSIVE STRENGTH (FINAL) - 7.0 KSI
COMPRESSIVE STRENGTH (RELEASE) - 5.0 KSI
PRESTRESSING STRAND:
AREA = 0.167 SQ.IN.
ULTIMATE STRENGTH = 270 KSI
INITIAL STRESS = 202.5 KSI (LOW RELAXATION STRANDS)

LOAD MODIFIER FOR OPERATIONAL IMPORTANCE

OPERATIONAL IMPORTANCE: A LOAD MODIFIER OF 1.00 HAS BEEN ASSUMED FOR THE DESIGN OF THIS STRUCTURE IN ACCORDANCE WITH THE AASHTO LRFD BRIDGE DESIGN SPECIFICATIONS, ARTICLE 1.3.5 AND THE ODOT BRIDGE DESIGN MANUAL, 2007.

DESIGN LOADING

DESIGN LOADING: HL-93

FUTURE WEARING SURFACE (FWS) OF 0.060 KIPS/SQ.FT.

DECK PROTECTION METHOD

EPOXY COATED REINFORCING STEEL

2.5" CONCRETE COVER

SEALING OF CONCRETE SURFACES

MONOLITHIC WEARING SURFACE

MONOLITHIC WEARING SURFACE IS ASSUMED, FOR DESIGN PURPOSES, TO BE 1 INCH THICK.

EXISTING STRUCTURE PLANS:

CONSTRUCTION PLANS FOR THE EXISTING BRIDGE ARE ON FILE AT THE OHIO DEPARTMENT OF TRANSPORTATION, DISTRICT ONE OFFICE, 1885 NORTH MCCULLOUGH ST., LIMA, OHIO 45801 AND ARE AVAILABLE FOR REFERENCE.

PILE DESIGN LOADS (ULTIMATE BEARING VALUE)

PILE DESIGN LOADS (ULTIMATE BEARING VALUE):
THE ULTIMATE BEARING VALUE IS 280 KIPS PER PILE FOR THE REAR AND FORWARD ABUTMENT PILES. THE ULTIMATE BEARING VALUE IS 281 KIPS PER PILE FOR THE PIER 1 AND PIER 2 PILES.

REAR ABUTMENT PILES:
12" CAST-IN-PLACE PILES 65 FEET LONG, ORDER LENGTH
1 DYNAMIC LOAD TESTING ITEMS

FORWARD ABUTMENT PILES:
12" CAST-IN-PLACE PILES 60 FEET LONG, ORDER LENGTH

PIER PILES:
12" CAST-IN-PLACE (PIER 1) PILES 65 FEET LONG, ORDER LENGTH
12" CAST-IN-PLACE (PIER 2) PILES 70 FEET LONG, ORDER LENGTH
1 DYNAMIC LOAD TESTING ITEMS

PILE DRIVING CONSTRAINTS:

PRIOR TO DRIVING PILES, CONSTRUCT THE SPILL THROUGH SLOPES AND THE BRIDGE APPROACH EMBANKMENT BEHIND THE ABUTMENTS UP TO THE LEVEL OF THE SUBGRADE ELEVATION FOR A MINIMUM DISTANCE OF 200 FEET BEHIND EACH ABUTMENT. DO NOT BEGIN THE EXCAVATION FOR THE ABUTMENT FOOTINGS AND THE INSTALLATION OF THE ABUTMENT PILES UNTIL AFTER THE ABOVE REQUIRED EMBANKMENT HAS BEEN CONSTRUCTED.

BATTERED PILES

BATTERED PILES: THE BLOW COUNT FOR BATTERED PILES SHALL BE THE BLOW COUNT DETERMINED FOR VERTICAL PILES OF THE SAME ULTIMATE BEARING VALUE DIVIDED BY AN EFFICIENCY FACTOR (D). COMPUTE THE EFFICIENCY FACTOR (D) AS FOLLOWS:

$$D = \frac{1-UG}{\sqrt{1+G^2}}$$

U = COEFFICIENT OF FRICTION, WHICH IS ESTIMATED AT 0.05 FOR DOUBLE-ACTING AIR OPERATED OR DIESEL HAMMERS; 0.1 FOR SINGLE-ACTING AIR OPERATED OR DIESEL HAMMERS; AND 0.2 FOR DROP HAMMERS.
G = RATE OF BATTER (1/4)

DECK PLACEMENT DESIGN ASSUMPTIONS:

DECK PLACEMENT DESIGN ASSUMPTIONS: THE FOLLOWING ASSUMPTIONS OF CONSTRUCTION MEANS AND METHODS WERE MADE FOR THE ANALYSIS AND DESIGN OF THE SUPERSTRUCTURE. THE CONTRACTOR IS RESPONSIBLE FOR THE DESIGN OF THE FALSEWORK SUPPORT SYSTEM WITHIN THESE PARAMETERS AND WILL ASSUME RESPONSIBILITY FOR SUPERSTRUCTURE ANALYSIS FOR DEVIATION FROM THESE DESIGN ASSUMPTIONS.

AN EIGHT WHEEL FINISHING MACHINE WITH A MAXIMUM WHEEL LOAD OF 1.07 KIPS FOR A TOTAL MACHINE LOAD OF 8.59 KIPS.

A MINIMUM OUT-TO-OUT WHEEL SPACING AT EACH END OF THE MACHINE OF 103".

A MAXIMUM SPACING OF OVERHANG FALSEWORK BRACKETS OF 48 IN.

A MAXIMUM DISTANCE FROM THE CENTERLINE OF THE FASCIA GIRDER TO THE FACE OF THE SAFETY HANDRAIL OF 65".

ITEM 202 STRUCTURE REMOVED, OVER 20 FOOT, AS PER PLAN:

STRUCTURE REMOVAL SHALL BE IN ACCORDANCE WITH 202 EXCEPT THAT THE CENTER AND FORWARD PIERS SHALL BE COMPLETELY REMOVED, INCLUDING PILING, TO THE EXISTING BOTTOM OF FOOTING ELEVATIONS (891.35+/-).

ITEM 503, COFFERDAMS AND EXCAVATION BRACING, AS PER PLAN:

ITEM 503, COFFERDAMS AND EXCAVATION BRACING, AS PER PLAN: THE DESIGN SHOWN ON THE PLANS FOR TEMPORARY SUPPORT OF EXCAVATION IS ONE REPRESENTATIVE DESIGN THAT MAY BE USED TO CONSTRUCT THE PROJECT. THE CONTRACTOR MAY CONSTRUCT THE DESIGN SHOWN ON THE PLANS OR PREPARE AN ALTERNATE DESIGN TO SUPPORT THE SIDES OF EXCAVATIONS. IF CONSTRUCTING AN ALTERNATE DESIGN FOR TEMPORARY SUPPORT OF EXCAVATION, PREPARE AND PROVIDE PLANS IN ACCORDANCE WITH C&MS 501.05. THE DEPARTMENT WILL PAY FOR THE TEMPORARY SUPPORT OF EXCAVATION AT THE CONTRACT LUMP SUM PRICE FOR COFFERDAMS, CRIBS, AND SHEETING. NO ADDITIONAL PAYMENT WILL BE MADE FOR PROVIDING AN ALTERNATE DESIGN.

ITEM 511-CONCRETE, MISC.: FORMING OF ROUGH CUT STONE FINISH USING FORMLINERS

DESCRIPTION;
CONCRETE FORMLINERS SHALL BE USED ON THE FOLLOWING SURFACES ACCORDING TO THE DETAILS IN THE PLANS:
1. ABUTMENT AND WINGWALL FACES.
2. PIER COLUMNS.
3. PARAPETS.
4. TOWER FACES.

THE FORMLINER USED SHALL MEET THE DETAILS SHOWN IN THE PLANS FOR STAGGERED (INTERLOCKING) PATTERNS, INCLUDING DEPTH OF RELIEF AND SIZE OF STONE PATTERN. HORIZONTAL JOINTS IN THE STONE PATTERN SHALL BE ALIGNED AND AT THE SAME ELEVATION. THE FINISHED TEXTURE OF THE ROUGH CUT STONE SHALL BE SIMILAR TO THAT OF RUBBED CONCRETE.

FORMLINERS FOR PATTERN 1 SHALL MATCH THE DIMENSIONAL SPECIFICATIONS OF THE FOLLOWING MANUFACTURER OR APPROVED EQUAL:

PATTERN #1104-R2 (RANDOM CUT STONE)
CUSTOM ROCK
2020 WEST 7TH STREET
ST. PAUL, MN 55116
651-699-1345
WWW.CUSTOM-ROCK.COM

FORMLINERS FOR PATTERN 2 SHALL MATCH THE DIMENSIONAL SPECIFICATIONS OF THE FOLLOWING MANUFACTURER OR APPROVED EQUAL:

PATTERN #1599 (RANDOM CUT STONE)
SPEC FORMLINERS, INC.
530 E. DYER RD.
SANTA ANA, CA 92707
888-429-9550
WWW.SPECFORMLINERS.COM

THE FORMLINER MANUFACTURER SHALL SUBMIT EVIDENCE OF AT LEAST TWO SIMILAR ARCHITECTURAL CONCRETE CONSTRUCTION PROJECTS WITHIN THE PAST FIVE YEARS FOR A REVIEW AND APPROVAL BY THE ENGINEER. COMPLETE SHOP DRAWINGS DETAILING THE STONE PATTERNS SHALL BE SUBMITTED IN ACCORDANCE WITH 501.04 FOR APPROVAL PRIOR TO PLACING ANY CONCRETE WHERE THE FORMLINERS WILL BE USED. SHOP DRAWINGS SHALL INCLUDE FORMLINER INSTALLATION AND CASTING INSTRUCTIONS, AND INDICATE FORMLINER BACKUP, REVEAL, AND CHAMFER STRIP LOCATIONS. THE CONTRACTOR SHALL COORDINATE WITH THE FORMLINER MANUFACTURER TO ASSURE UNDERSTANDING OF FORMLINER USE, TEST PANEL MOCK-UP REQUIREMENTS, AND FINAL CONSTRUCTION PROCEDURES.

MATERIALS:
THE FORMLINER SHALL BE FABRICATED WITH SHAPES THAT ALLOW REMOVAL OF THE FORMS WITHOUT DAMAGE OR VISUAL IMPAIRMENT OF THE CONCRETE, AND SHALL HAVE 1/8" MINIMUM RADII WITH NO SHARP EDGES. THE FORMLINER SHALL BE CAPABLE OF WITHSTANDING APPLIED CONCRETE POUR PRESSURE WITHOUT LEAKAGE, PHYSICAL DEFECT, OR VISUAL IMPAIRMENT.

CONSTRUCTION REQUIREMENTS:
FORMLINERS SHALL BE CLEANED BEFORE EACH USE. DAMAGED FORMLINERS WHOSE CONTINUED USE OR REPAIR WOULD NEGATIVELY IMPACT THE AESTHETICS OF THE FINISHED CONCRETE SHALL BE REPLACED. FORMLINER JOINTS SHALL BE SEALED TO PREVENT CEMENT PASTE FROM BLEEDING. FORMLINERS SHALL BE INSTALLED IN ACCORDANCE WITH THE APPROVED SHOP DRAWINGS. CHAMFERED CORNERS SHALL FORM SMOOTH, SOLID UNBROKEN CONTINUOUS SURFACES WHICH ARE UNIFORMLY STRAIGHT. AN APPROVED COMPATIBLE FORMLINER RELEASE AGENT SHALL BE APPLIED AT A RATE RECOMMENDED BY THE MANUFACTURER.

THE CONCRETE COPING SHALL BE CAST WITH NO FORMLINER USED.

AS PART OF THIS ITEM, A 7 FEET BY 3 FEET SECTION OF WALL THAT COMPRISES A MINIMUM OF ONE COMPLETE STONE BLOCK WILL BE CAST BY THE CONTRACTOR FOR EACH PATTERN USED FORAPPROVAL BY THE ENGINEER. IF THE SECTION DOES NOT MEET THE ENGINEER'S APPROVAL, THE PROPOSED FORMLINER MAY BE REJECTED. THE SECTION MUST BE APPROVED BEFORE PLACING ANY CONCRETE WHERE THE FORMLINERS WILL BE USED. REJECTION OF THE SECTION WILL REQUIRE CONSTRUCTION OF ANOTHER SECTION UNTIL APPROVAL IS GRANTED. THE WALL SECTION SHALL USE ACTUAL PROJECT SPECIFIC MATERIALS, METHODS, AND WORKMANSHIP, INCLUDING CONCRETE MIX (CEMENT TYPE, AGGREGATE GRADATION, SLUMP, WATER/CEMENT RATIO, PLASTICIZERS, AND ADDITIVES), FORMLINER AND FORMWORK SYSTEMS, INSERTS, FORM RELEASE AGENTS, PLACEMENT RATE, FORM PRESSURES, AND JOINT SEALING, VIBRATING, AND STRIPPING PRACTICES. ANY INTENDED PATCHING OR REPAIR PROCEDURES FOR THE CORRECTION OF MINOR DEFECTS THAT DO NOT RESULT IN REJECTION OF THE ENTIRE WALL SECTION SHALL BE DEMONSTRATED ON THE SECTION.

THE ACCEPTED WALL SECTION SHALL BE THE STANDARD BY WHICH THE FINAL CONSTRUCTION WILL BE EVALUATED FOR TECHNICAL AND AESTHETIC MERIT. THE WALL SECTION SHALL BE CONSTRUCTED AT THE CONSTRUCTION SITE, OR AT AN ALTERNATIVE LOCATION AGREED UPON BY THE ENGINEER. UPON COMPLETION OF THE FINAL CONSTRUCTION, THE CONTRACTOR SHALL BE RESPONSIBLE FOR REMOVAL AND DISPOSAL OF THE WALL SECTION MOCK-UP.

PORTIONS OF THE ABUTMENTS AND PIERS DETAILED IN THE PLAN SET SHALL BE CAST WITH STONE FACING FORMLINER TEXTURE AND BE SEALED WITH ITEM 512 - SEALING OF CONCRETE SURFACES (NON-EPOXY (CLEAR)).

METHOD OF MEASUREMENT:
ROUGH CUT STONE FORMLINERS WILL NOT BE MEASURED INDIVIDUALLY FOR PAYMENT UNDER THIS ITEM.

BASIS OF PAYMENT:
ITEM 511-CONCRETE, MISC.: FORMING OF ROUGH CUT STONE FINISH USING FORMLINERS WILL BE PAID FOR AT THE CONTRACT SQ. FT. PRICE. THE WORK SHALL INCLUDE FABRICATION AND ERECTION OF FORMLINERS, PREPARATION OF FORMLINER SHOP DRAWINGS, AND CONSTRUCTION AND REMOVAL OF THE PRE-CONSTRUCTION WALL SECTION, AND SHALL INCLUDE ALL LABOR, MATERIALS, EQUIPMENT, AND INCIDENTALS REQUIRED TO COMPLETE THIS ITEM.

THE DEPARTMENT WILL PAY FOR SEALING OF CONCRETE SURFACES SEPARATELY UNDER ITEM 512-SEALING OF CONCRETE SURFACES (NON-EPOXY (CLEAR)). SEE THE GENERAL SEALING OF CONCRETE SURFACES PLAN NOTE FOR REQUIREMENTS FOR THE NON-EPOXY (CLEAR) SEALER.

ITEM 512-SEALING OF CONCRETE SURFACES (EPOXY-URETHANE), AS PER PLAN

EPOXY-URETHANE FOR THE WINGWALL COPING, PIER CAP, TOWER CAPS, ABUTMENT DIAPHRAGMS AND PARAPETS ACCENTS SHALL BE FEDERAL COLOR STANDARD NUMBER 37875. EPOXY-URETHANE FOR THE BEAMS SHALL BE FEDERAL COLOR STANDARD NUMBER 25095. EPOXY-URETHANE FOR DECK EDGE BELOW PARAPET SHALL BE FEDERAL COLOR STANDARD NUMBER 36373. ALL CONCRETE SHALL BE SEALED AS PER PLAN DETAILS.

DESIGN AGENCY
PARSONS BRINCKERHOFF
2945 FARMERS DRIVE
SUITE 350
COLUMBUS, OHIO 43235

DESIGNED	DRAWN	REVIEWED	DATE
PJL	BKJ	EBS	01/18/13
CHECKED	REVISED	STRUCTURE FILE NUMBER	
SAP		LEFT: 0201812 RIGHT: 0201820	

GENERAL NOTES
BRIDGE NO. ALL-75-0423 L&R
I-75 OVER S.R. 65

ALL-75-0.21
PID No. 89029

J:\Projects\ALL\89029\structures\ALL075_0423C\sheets\075_0423CGN001.dgn 23-MAY-2013 10:20AM jint

ITEM 512 - SEALING OF CONCRETE SURFACES (NON-EPOXY), AS PER PLAN

THE NON-EPOXY (CLEAR) SEALER SHALL BE USED ON THE FOLLOWING SURFACES ACCORDING TO THE DETAILS IN PLANS:

1. ABUTMENT AND WINGWALL FACES.
2. PIER COLUMNS.
3. PARAPETS.
4. TOWER FACES.

PAYMENT FOR SEALING SURFACES OF ITEMS 1, 2, 3, AND 4 SHALL BE INCLUDED IN THIS ITEM 512.

ITEM 518 - 6" NON-PERFORATED CORRUGATED PLASTIC PIPE, INCLUDING SPECIALS, AS PER PLAN

ANIMAL GUARDS SHALL BE PROVIDED AT THE OUTLET OF THE DRAINAGE PIPES, STEEL BOLTS OR RODS FOR THE ANIMAL GUARDS SHALL BE GALVANIZED PER CMS 711.02. SEE STD DWG. DM 1.1 FOR ADDITIONAL DETAILS AND NOTES. THE ANIMAL GUARDS AND CRUSHED AGGREGATE SLOPE PROTECTION ARE INCIDENTAL TO ITEM 518 - 6" NON-PERFORATED CORRUGATED PLASTIC PIPE, INCLUDING SPECIALS, AS PER PLAN.

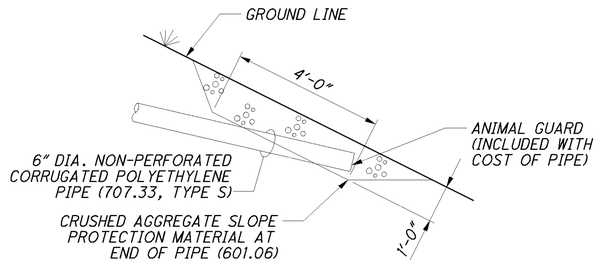

TERMINATION OF 6" NON-PERFORATED CORRUGATED PLASTIC PIPE (NPCPP)

ITEM 898 - QC/QA CONCRETE, CLASS QSC2, SUPERSTRUCTURE (APPROACH SLAB), AS PER PLAN

THE ACCEPTED QUANTITIES SHALL INCLUDE: CONCRETE, CONCRETE BARRIER, END TOWER INCLUDING CAP, REINFORCING STEEL, JOINT FILLERS, JOINT SEALERS, JOINT SEALS, AND WATERPROOFING.

THIS ITEM 898 SHALL CONTAIN INTEGRALLY COLORED CONCRETE USING CHROMIX ADMIXTURES AS PROVIDED BY L. M. SCOFIELD COMPANY, DOUGLASVILLE, GEORGIA (800) 800-9000 OR AN APPROVED EQUAL. USE FEDERAL COLOR NUMBER 36373 FOR ONLY THE APPROACH SLAB PARAPETS AND END TOWERS, INCLUDING CAPS.

ITEM 898 - QC/QA CONCRETE, CLASS QSC2, SUBSTRUCTURE (ABUTMENT INCLUDING FOOTING), AS PER PLAN

ITEM 898 - QC/QA CONCRETE, CLASS QSC2, SUBSTRUCTURE (PIER ABOVE FOOTING), AS PER PLAN

ITEM 898 - QC/QA CONCRETE, CLASS QSC2, SUBSTRUCTURE (PARAPET), AS PER PLAN

THIS ITEM 898 SHALL CONTAIN INTEGRALLY COLORED CONCRETE USING CHROMIX ADMIXTURES AS PROVIDED BY L. M. SCOFIELD COMPANY, DOUGLASVILLE, GEORGIA (800) 800-9000 OR AN APPROVED EQUAL. USE FEDERAL COLOR NUMBER 36373.

IT IS NOT NECESSARY FOR THE CONTRACTOR TO PROVIDE INTEGRAL COLORING IN THE PIER CAPS, THE LARGE AND SMALL TOWER CAPS, AND THE ABUTMENT FOOTING.

ABBREVIATIONS:

ABUT. = ABUTMENT
APPROX. = APPROXIMATE
ASS'Y = ASSEMBLY
BRG. = BEARING
C/C = CENTER TO CENTER
C.J. = CONSTRUCTION JOINT
CLR. = CLEAR
CONST. = CONSTRUCTION
DIA. = DIAMETER
DWG. = DRAWING
E.F. = EACH FACE
EL. = ELEVATION
EST. = ESTIMATE
EX. = EXISTING
F.A. = FORWARD ABUTMENT
F.F. = FAR FACE
FWD. = FORWARD
LT. = LEFT
MAX. = MAXIMUM
MIN. = MINIMUM
N.F. = NEAR FACE
N.P.C.P.P. = NON-PERFORATED CORRUGATED PLASTIC PIPE
O/O = OUT TO OUT
P.C.P.P. = PERFORATED CORRUGATED PLASTIC PIPE
P.E.J.F. = PREFORMED EXPANSION JOINT FILLER
P.F.J. = PRECOMPRESSED FOAM JOINT
PROP. = PROPOSED
R.A. = REAR ABUTMENT
RT. = RIGHT
SER. = SERIES
SPA. = SPACES
STA. = STATION
STD. = STANDARD
T/T = TOE TO TOE
T/S = TOP OF SLOPE
TYP. = TYPICAL
D.S. = DOWN STATION
U.S. = UP STATION

J:\Projects\ALL\89029\structures\ALL075_0423C\sheets\075_0423CGN002.dgn 23-MAY-2013 10:20AM jint

DESIGN AGENCY
PARSONS BRINCKERHOFF
2945 FARMERS DRIVE
SUITE 350
COLUMBUS, OHIO 43235

DESIGNED	DRAWN	REVIEWED	DATE
PJL	BKJ	EBS	01/18/13
CHECKED	REVISED	STRUCTURE FILE NUMBER	
SAP		LEFT: 0201812 RIGHT: 0201820	

GENERAL NOTES
BRIDGE NO. ALL-75-0423 L&R
I-75 OVER S.R. 65

ALL-75-0.21
PID No. 89029

01/IMS/BR/	03/ENH/OT/	ITEM	EXTENSION	TOTAL	UNIT	ESTIMATED QUANTITIES DESCRIPTION	ALL-75-0423L ABUT.	PIER	SUPER.	GEN.	SEE SHEET NO.
LUMP		202	11003	LUMP		STRUCTURE REMOVED, OVER 20 FOOT SPAN, AS PER PLAN				LUMP	3/43
107		202	22900	107	SQ YD	APPROACH SLAB REMOVED				107	
LUMP		503	11101	LUMP		COFFERDAMS AND EXCAVATION BRACING, AS PER PLAN	LUMP				2/43
LUMP		503	21301	LUMP		UNCLASSIFIED EXCAVATION, AS PER PLAN	LUMP				4/43
LUMP		505	11100	LUMP		PILE DRIVING EQUIPMENT MOBILIZATION				LUMP	
4,765		507	00500	4765	FT	12" CAST-IN-PLACE REINFORCED CONCRETE PILES, DRIVEN	1265	3500			
5,155		507	00550	5155	FT	12" CAST-IN-PLACE REINFORCED CONCRETE PILES, FURNISHED	1375	3780			
167,008	3,020	509	10000	170028	POUND	EPOXY COATED REINFORCING STEEL	16,046	71,022	82,960		
	3,738	511	71200	3738	SQ FT	CONCRETE, MISC.: FORMING OF ROUGH CUT STONE FINISH USING FORMLINERS	1108	2002	464	164	
894	55	512	10051	949	SQ YD	SEALING OF CONCRETE SURFACES (NON-EPOXY), AS PER PLAN	149	223	487	90	4/43
415	17	512	10101	432	SQ YD	SEALING OF CONCRETE SURFACES (EPOXY-URETHANE), AS PER PLAN	19	125	280	8	3/43
75		512	10300	75	SQ YD	SEALING CONCRETE BRIDGE DECKS WITH HMWM RESIN			75		
9		512	33000	9	SQ YD	TYPE 2 WATERPROOFING	9				
18		515	15020	18	EACH	DRAPED STRAND PRESTRESSED CONCRETE BRIDGE I-BEAM			18		
15		515	20000	15	EACH	INTERMEDIATE DIAPHRAMS			15		
209		516	13600	209	SQ FT	1" PREFORMED EXPANSION JOINT FILLER	194		15		
151	51	516	13900	202	SQ FT	2" PREFORMED EXPANSION JOINT FILLER	202				
148		516	14014	148	FT	INTEGRAL ABUTMENT EXPANSION JOINT SEAL				148	
12		516	44101	12	EACH	ELASTOMERIC BEARING WITH INTERNAL LAMINATES AND LOAD PLATE (NEOPRENE), AS PER PLAN: 12"X22"X2.92" WITH 13"X25.5"X1.5" LOAD PLATES		12			21/43
12		516	44101	12	EACH	ELASTOMERIC BEARING WITH INTERNAL LAMINATES AND LOAD PLATE (NEOPRENE), AS PER PLAN: 9"X18"X2.32" WITH 10"X25.5"X1.5" LOAD PLATES		12			21/43
12		516	44101	12	EACH	ELASTOMERIC BEARING WITH INTERNAL LAMINATES AND LOAD PLATE (NEOPRENE), AS PER PLAN: 6"X13"X1.42" WITH 11.5"X14"X1.5" LOAD PLATES	12				22/43
126		518	21200	126	CU YD	POROUS BACKFILL WITH FILTER FABRIC	126				
161		518	40000	161	FT	6" PERFORATED CORRUGATED PLASTIC PIPE	161				
20		518	40011	20	FT	6" NON-PERFORATED CORRUGATED PLASTIC PIPE, INCLUDING SPECIALS, AS PER PLAN	20				4/43
2		523	20000	2	EACH	DYNAMIC LOAD TESTING	1	1			
399		601	21000	399	SQ YD	CONCRETE SLOPE PROTECTION				399	
476		625	25400	476	FT	CONDUIT, 2", 725.04			336	140	
4		625	29920	4	EACH	STRUCTURE JUNCTION BOX				4	
4		625	30700	4	EACH	PULL BOX, 725.08, 18"				4	
288		898	10200	288	CU YD	QC/QA CONCRETE, CLASS QSC2, SUPERSTRUCTURE (DECK)	288				
262		898	10705	262	SQ YD	QC/QA CONCRETE, CLASS QSC2, SUPERSTRUCTURE (APPROACH SLAB), (T=15"), AS PER PLAN				262	4/43
43	3	898	11001	46	CU YD	QC/QA CONCRETE, CLASS QSC2, SUPERSTRUCTURE (PARAPET), AS PER PLAN			46		4/43
127	12	898	20101	139	CU YD	QC/QA CONCRETE, CLASS QSC1, SUBSTRUCTURE (PIER ABOVE FOOTING), AS PER PLAN		139			4/43
164	7	898	20161	171	CU YD	QC/QA CONCRETE, CLASS QSC1, SUBSTRUCTURE (ABUTMENT INCLUDING FOOTING), AS PER PLAN	171				4/43
118		898	20300	118	CU YD	QC/QA CONCRETE, CLASS QSC1, SUBSTRUCTURE (FOOTING)		118			

CALC BY: SAP DATE: 1/9/2013
CHCK BY: EBS DATE: 1/18/2013

DESIGN AGENCY
PARSONS BRINCKERHOFF
2945 FARMERS DRIVE
SUITE 350
COLUMBUS, OHIO 43235

DESIGNED	DRAWN	REVIEWED	DATE
SAP	LEL	EBS	01/18/13
CHECKED	REVISED	STRUCTURE FILE NUMBER	
PJL		LEFT: 0201812 RIGHT: 0201820	

ESTIMATED QUANTITIES
BRIDGE NO. ALL-75-0423 L&R
I-75 OVER S.R. 65

ALL-75-0.21
PID No. 89029

688
907

J:\Projects\ALL\89029\structures\ALL075_0423C\sheets\075_0423CEQ001.dgn 08-NOV-2013 4:17PM jint

01/IMS/BR/	03/ENH/OT/	ITEM	EXTENSION	TOTAL	UNIT	ESTIMATED QUANTITIES DESCRIPTION	ALL-75-0423R ABUT.	 PIER	 SUPER.	 GEN.	SEE SHEET NO.
LUMP		202	11003	LUMP		STRUCTURE REMOVED, OVER 20 FOOT SPAN, AS PER PLAN				LUMP	3/43
173		202	22900	173	SQ YD	APPROACH SLAB REMOVED				173	
LUMP		502	11100	LUMP		STRUCTURE FOR MAINTAINING TRAFFIC				LUMP	
LUMP		503	11101	LUMP		COFFERDAMS AND EXCAVATION BRACING, AS PER PLAN	LUMP				2/43
LUMP		503	21301	LUMP		UNCLASSIFIED EXCAVATION, AS PER PLAN	LUMP				4/43
LUMP		505	11100	LUMP		PILE DRIVING EQUIPMENT MOBILIZATION				LUMP	
4,765		507	00500	4765	FT	12" CAST-IN-PLACE REINFORCED CONCRETE PILES, DRIVEN	1265	3500			
5,155		507	00550	5155	FT	12" CAST-IN-PLACE REINFORCED CONCRETE PILES, FURNISHED	1375	3780			
167,008	3,020	509	10000	170028	POUND	EPOXY COATED REINFORCING STEEL	16,046	71,022	82,960		
	3,738	511	71200	3738	SQ FT	CONCRETE, MISC.: FORMING OF ROUGH CUT STONE FINISH USING FORMLINERS	1108	2002	464	164	
949		512	10051	949	SQ YD	SEALING OF CONCRETE SURFACES (NON-EPOXY), AS PER PLAN	149	223	487	90	4/43
415	17	512	10101	432	SQ YD	SEALING OF CONCRETE SURFACES (EPOXY-URETHANE), AS PER PLAN	19	125	280	8	3/43
75		512	10300	75	SQ YD	SEALING CONCRETE BRIDGE DECKS WITH HMWM RESIN			75		
9		512	33000	9	SQ YD	TYPE 2 WATERPROOFING	9				
18		515	15020	18	EACH	DRAPED STRAND PRESTRESSED CONCRETE BRIDGE I-BEAM			18		
15		515	20000	15	EACH	INTERMEDIATE DIAPHRAMS			15		
209		516	13600	209	SQ FT	1" PREFORMED EXPANSION JOINT FILLER	194		15		
66	51	516	13900	117	SQ FT	2" PREFORMED EXPANSION JOINT FILLER	117				
122		516	14014	122	FT	INTEGRAL ABUTMENT EXPANSION JOINT SEAL				122	
12		516	44101	12	EACH	ELASTOMERIC BEARING WITH INTERNAL LAMINATES AND LOAD PLATE (NEOPRENE), AS PER PLAN: 12"X22"X2.92" WITH 13"X25.5"X1.5" LOAD PLATES		12			21/43
12		516	44101	12	EACH	ELASTOMERIC BEARING WITH INTERNAL LAMINATES AND LOAD PLATE (NEOPRENE), AS PER PLAN: 9"X18"X2.32" WITH 10"X25.5"X1.5" LOAD PLATES		12			21/43
12		516	44101	12	EACH	ELASTOMERIC BEARING WITH INTERNAL LAMINATES AND LOAD PLATE (NEOPRENE), AS PER PLAN: 6"X13"X1.42" WITH 11.52"X14"X1.5" LOAD PLATES	12				22/43
126		518	21200	126	CU YD	POROUS BACKFILL WITH FILTER FABRIC	126				
161		518	40000	161	FT	6" PERFORATED CORRUGATED PLASTIC PIPE	161				
20		518	40011	20	FT	6" NON-PERFORATED CORRUGATED PLASTIC PIPE, INCLUDING SPECIALS, AS PER PLAN	20				4/43
2		523	20000	2	EACH	DYNAMIC LOAD TESTING	1	1			
399		601	21000	399	SQ YD	CONCRETE SLOPE PROTECTION				399	
476		625	25400	476	FT	CONDUIT, 2", 725.04			336	140	
4		625	29920	4	EACH	STRUCTURE JUNCTION BOX				4	
4		625	30700	4	EACH	PULL BOX, 725.08, 18"				4	
288		898	10200	288	CU YD	QC/QA CONCRETE, CLASS QSC2, SUPERSTRUCTURE (DECK)	288				
262		898	10705	262	SQ YD	QC/QA CONCRETE, CLASS QSC2, SUPERSTRUCTURE (APPROACH SLAB), (T=15"), AS PER PLAN				262	4/43
43	3	898	11001	46	CU YD	QC/QA CONCRETE, CLASS QSC2, SUPERSTRUCTURE (PARAPET), AS PER PLAN			46		4/43
127	12	898	20101	139	CU YD	QC/QA CONCRETE, CLASS QSC1, SUBSTRUCTURE (PIER ABOVE FOOTING), AS PER PLAN		139			4/43
164	7	898	20161	171	CU YD	QC/QA CONCRETE, CLASS QSC1, SUBSTRUCTURE (ABUTMENT INCLUDING FOOTING), AS PER PLAN	171				4/43
118		898	20300	118	CU YD	QC/QA CONCRETE, CLASS QSC1, SUBSTRUCTURE (FOOTING)		118			

CALC BY: SAP DATE: 1/9/2013
CHCK BY: EBS DATE: 1/18/2013

DESIGN AGENCY
PARSONS BRINCKERHOFF
2945 FARMERS DRIVE
SUITE 350
COLUMBUS, OHIO 43235

DESIGNED SAP | CHECKED PJL
DRAWN LEL | REVISED
REVIEWED EBS | DATE 01/18/13
STRUCTURE FILE NUMBER LEFT: 0201812 RIGHT: 0201820

ESTIMATED QUANTITIES
BRIDGE NO. ALL-75-0423 L&R
I-75 OVER S.R. 65

ALL-75-0.21
PID No. 89029

J:\Projects\ALL\89029\structures\ALL075_0423C\sheets\075_0423CEQ002.dgn 08-NOV-2013 4:17PM jint

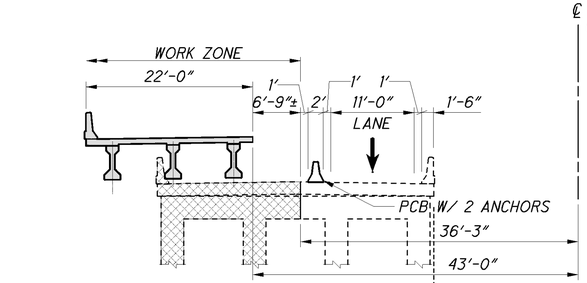

SOUTHBOUND

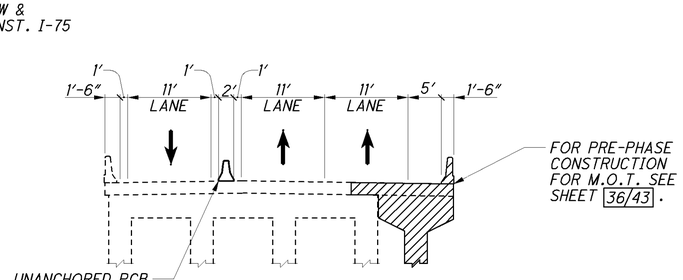

NORTHBOUND

PHASE IA

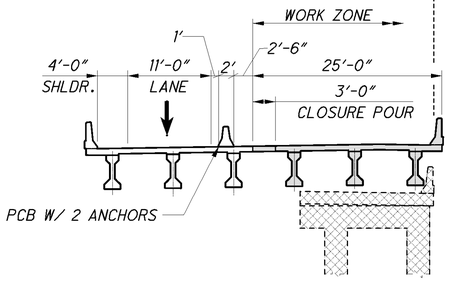

SOUTHBOUND

PHASE IB

SECTION A-A

BRIDGE NO. ALL-75-0423 L&R

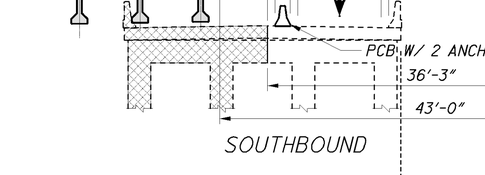

SOUTHBOUND

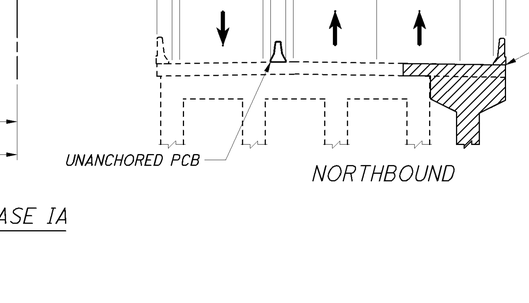

NORTHBOUND

PHASE IIA

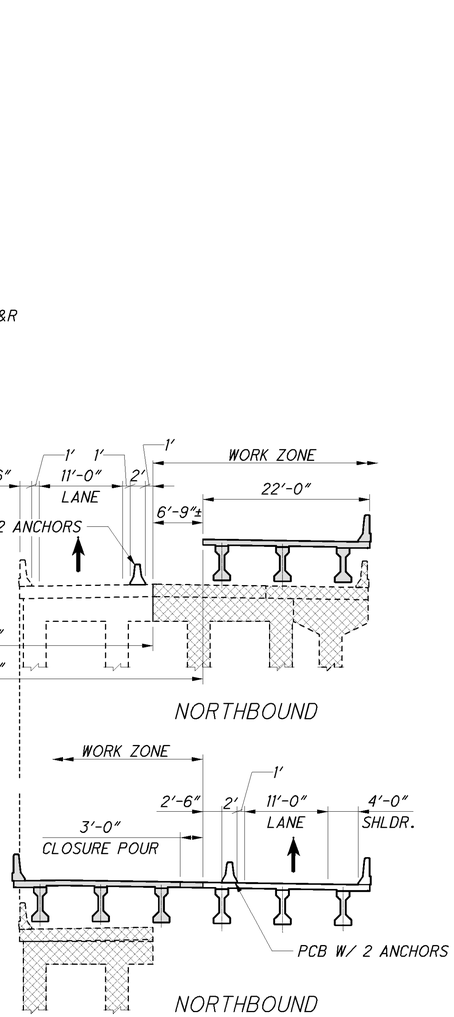

NORTHBOUND

PHASE IIB

SECTION B-B

BRIDGE NO. ALL-75-0423 L/R

LEGEND:

- REMOVAL
- TEMPORARY STRUCTURE
- PROPOSED
- PORTABLE CONCRETE BARRIER (PCB) (TO BE ANCHORED ON BRIDGES AS SHOWN)

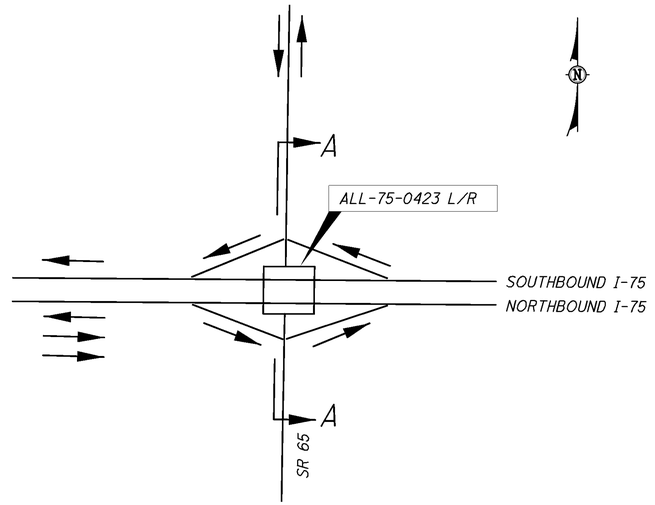

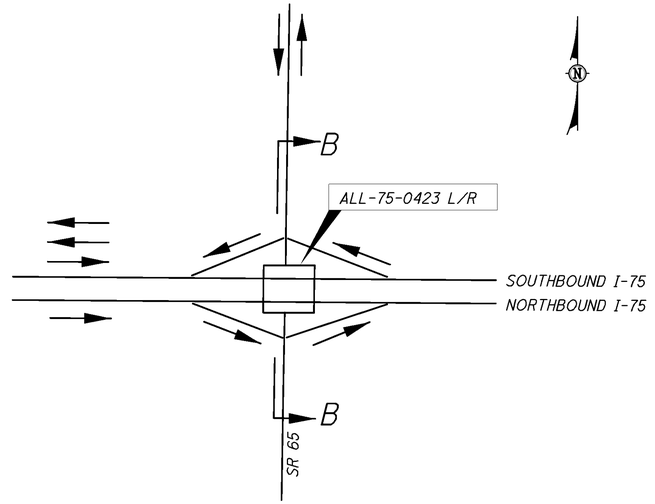

PHASE IA
1. INSTALL PORTABLE CONCRETE BARRIER ON BOTH EXISTING STRUCTURES AND SHIFT TRAFFIC AS SHOWN.
2. REMOVE THE OUTSIDE PORTION OF THE EXISTING SOUTHBOUND STRUCTURE.
3. CONSTRUCT THE OUTSIDE PORTION OF THE SOUTHBOUND BRIDGE.

PHASE IB
1. INSTALL PORTABLE CONCRETE BARRIER ON THE NEWLY BUILT SOUTHBOUND STRUCTURE AND SHIFT TRAFFIC.
2. REMOVE THE REMAINDER OF THE EXISTING SOUTHBOUND BRIDGE.
3. CONSTRUCT THE REMAINDER OF THE SOUTHBOUND BRIDGE TO THE LIMITS SHOWN, NOT INCLUDING THE CLOSURE POUR.
4. COMPLETE THE SOUTHBOUND CLOSURE POUR.

PHASE IIA
1. ADJUST THE PORTABLE CONCRETE BARRIER ON THE NEWLY BUILT SOUTHBOUND BRIDGE AND SHIFT TRAFFIC AS SHOWN.
2. REMOVE THE OUTSIDE PORTION OF THE EXISTING NORTHBOUND STRUCTURE, INCLUDING THE TEMPORARY STRUCTURE.
3. CONSTRUCT THE OUTSIDE PORTION OF THE NORTHBOUND BRIDGE.

PHASE IIB
1. INSTALL PORTABLE CONCRETE BARRIER ON THE NEWLY BUILT NORTHBOUND STRUCTURE AND SHIFT TRAFFIC.
2. REMOVE THE REMAINDER OF THE EXISTING NORTHBOUND BRIDGE.
3. CONSTRUCT THE REMAINDER OF THE NORTHBOUND BRIDGE TO THE LIMITS SHOWN, NOT INCLUDING THE CLOSURE POUR.
4. COMPLETE THE NORTHBOUND CLOSURE POUR.

DESIGN AGENCY
PARSONS BRINCKERHOFF
2545 FARMERS DRIVE
SUITE 350
COLUMBUS, OHIO 43235

DESIGNED	DRAWN	REVIEWED	DATE
PJL	LEL	EBS	01/18/13
CHECKED	REVISED	STRUCTURE FILE NUMBER	
SAP		LEFT: 0201812 RIGHT: 0201820	

MAINTENANCE OF TRAFFIC
BRIDGE NO. ALL-75-0423 L&R
I-75 OVER S.R. 65

ALL-75-0.21
PID No. 89029

J:\Projects\ALL\89029\structures\ALL075_0423C\sheets\075_0423CPC001.dgn 09-MAY-2013 3:08PM jint

REMOVAL PLAN

J:\Projects\ALL\89029\structures\ALL075_0423C\sheets\075_0423CRP001.dgn 09-MAY-2013 3:08PM jint

DESIGN AGENCY
PARSONS BRINCKERHOFF
2945 FARMERS DRIVE
SUITE 350
COLUMBUS, OHIO 43235

DESIGNED	DRAWN	REVIEWED	DATE
PJL	BKJ	EBS	01/18/13
CHECKED	REVISED	SYMBOLOGY FILE NUMBER	
SAP		LEFT: 0201812 RIGHT: 0201820	

REMOVAL PLAN
BRIDGE NO. ALL-75-0423 L&R
I-75 OVER S.R. 65

ALL-75-0.21
PID No. 89029

8 / 43

691
907

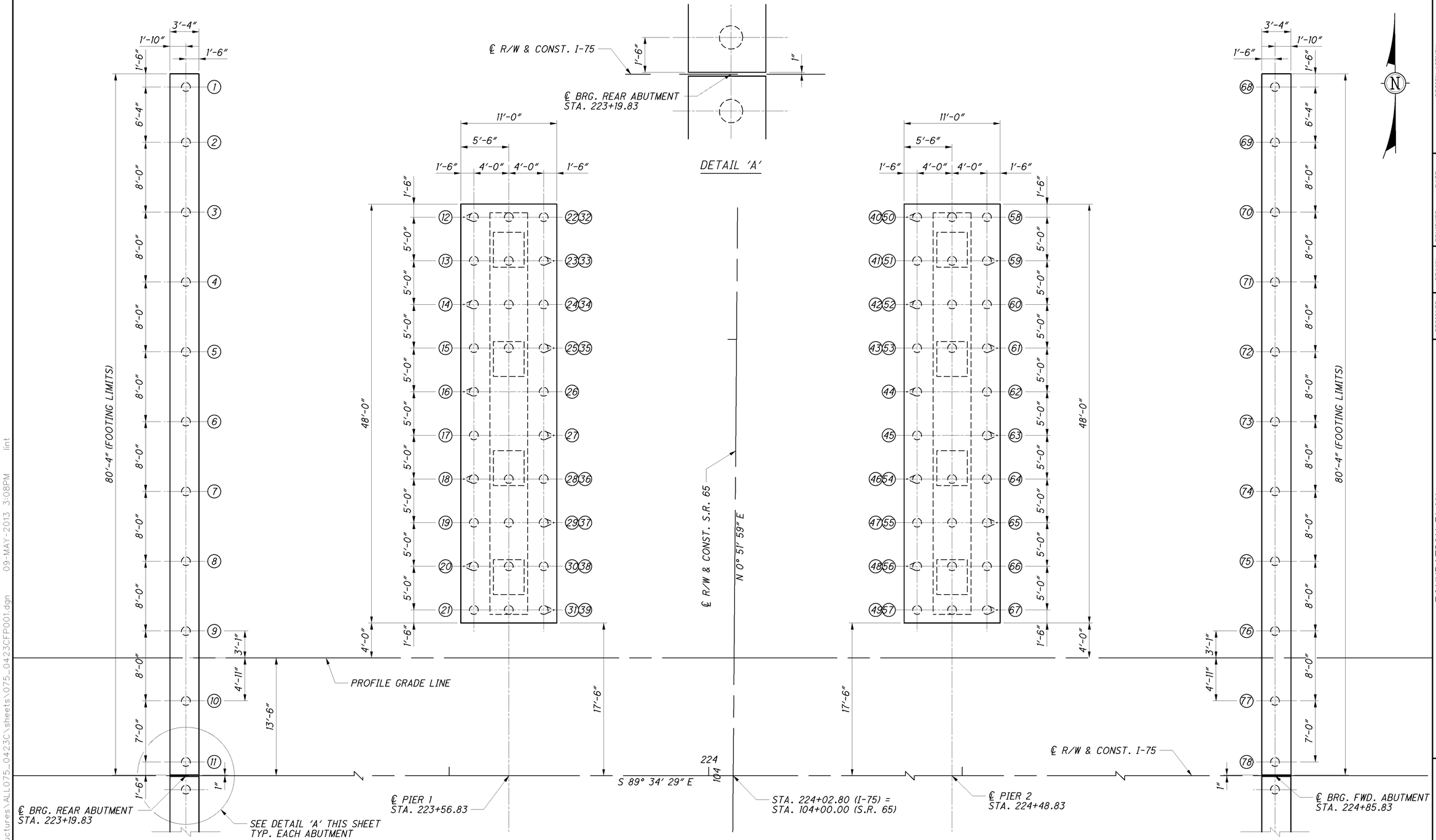

FOUNDATION LAYOUT PLAN

LEGEND:

(1) - PILE NUMBER

◌ - 12" DIA. CAST-IN-PLACE CONCRETE PILE

◌ - BATTER PILE (1H:4V)

J:\Projects\ALL\89029\structures\ALL075_0423C\sheets\075_0423CFP001.dgn 09-MAY-2013 3:08PM lint

DESIGN AGENCY
PARSONS BRINCKERHOFF
2545 FARMERS DRIVE
SUITE 350
COLUMBUS, OHIO 43235

DESIGNED	DRAWN	REVIEWED	DATE
PJL	BKJ	EBS	01/18/13
CHECKED	REVISED	STRUCTURE FILE NUMBER	
SAP		LEFT: 0201812 RIGHT: 0201820	

FOUNDATION PLAN
BRIDGE NO. ALL-75-0423 L&R
I-75 OVER S.R. 65

ALL-75-0.21
PID No. 89029

9 / 43

692
907

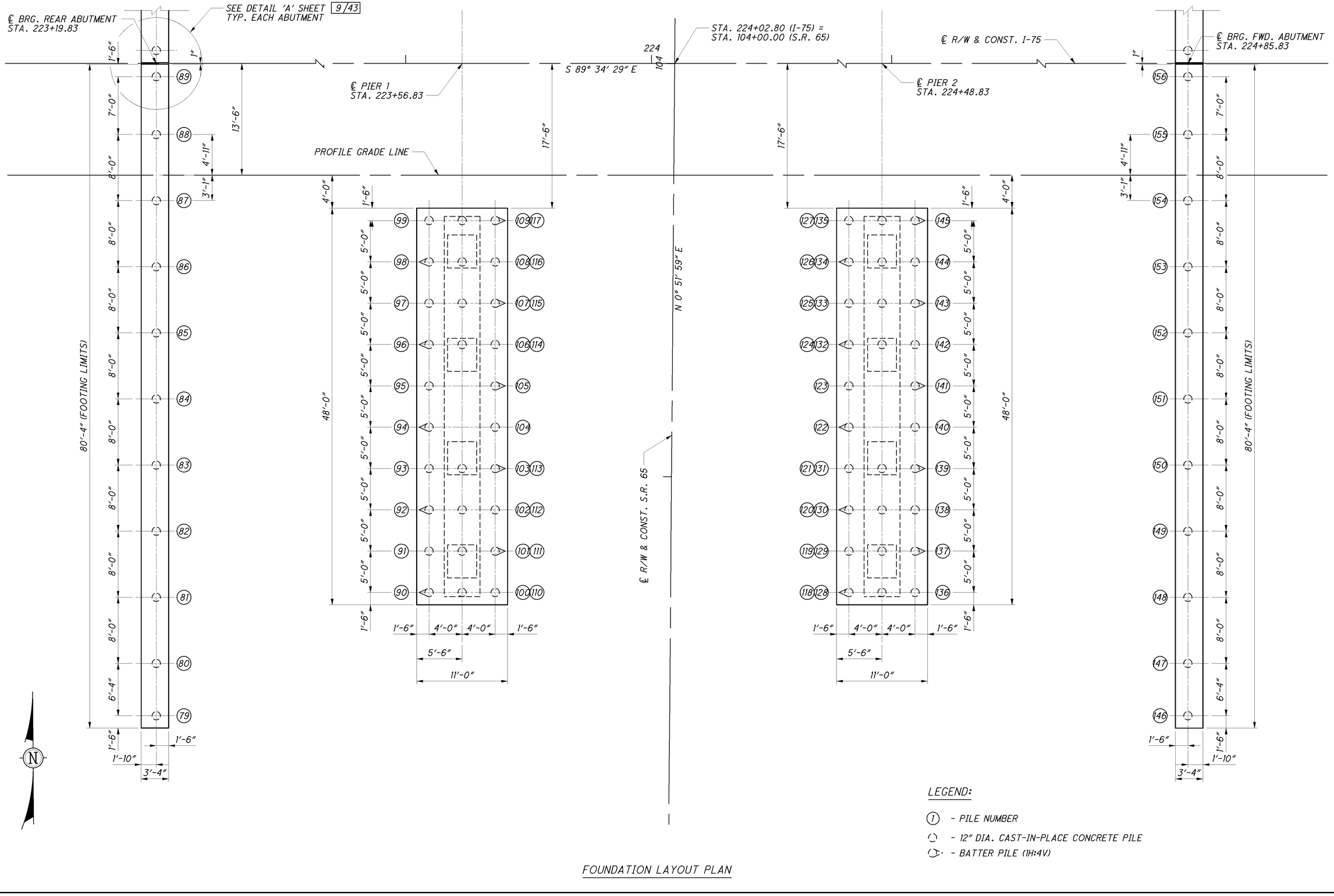

FOUNDATION LAYOUT PLAN

LEGEND:

(1) - PILE NUMBER

- 12" DIA. CAST-IN-PLACE CONCRETE PILE

- BATTER PILE (1H:4V)

J:\Projects\ALL\89029\structures\ALL075_0423C\sheets\075_0423CFP002.dgn 09-MAY-2013 3:08PM jint

DESIGN AGENCY
PARSONS BRINCKERHOFF
2945 FARMERS DRIVE
SUITE 350
COLUMBUS, OHIO 43235

DESIGNED	DRAWN	REVIEWED	DATE
PJL	BKJ	EBS	01/18/13
CHECKED	REVISED	SYMBOLOGY FILE NUMBER	LEFT: 0201812 RIGHT: 0201820
SAP			

FOUNDATION PLAN
BRIDGE NO. ALL-75-0423 L&R
I-75 OVER S.R. 65

ALL-75-0.21
PID No. 89029

10 / 43

693
907

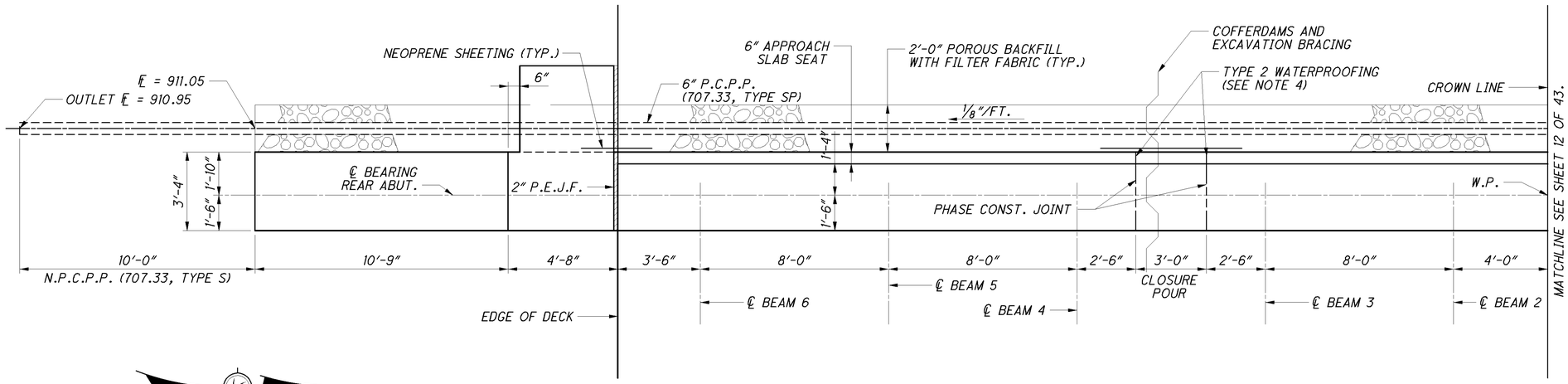

PLAN

NOTES:

1. FOR SECTIONS A-A & B-B, SEE SHEET 17/43.
2. FOR FOUNDATION LAYOUT PLAN, SEE SHEET 9/43 & 10/43.
3. FOR AESTHETIC DETAILS, SEE SHEET 35/43.
4. TYPE 2 WATERPROOFING SHALL BE 3'-0" WIDE, CENTERED ON JOINTS, AND PLACED FROM THE TOP OF FOOTING TO THE APPROACH SLAB SEAT.
5. SELECT MECHANICAL CONNECTOR WHICH PROVIDES A FLUSH SURFACE WITH THE CONSTRUCTION JOINT.

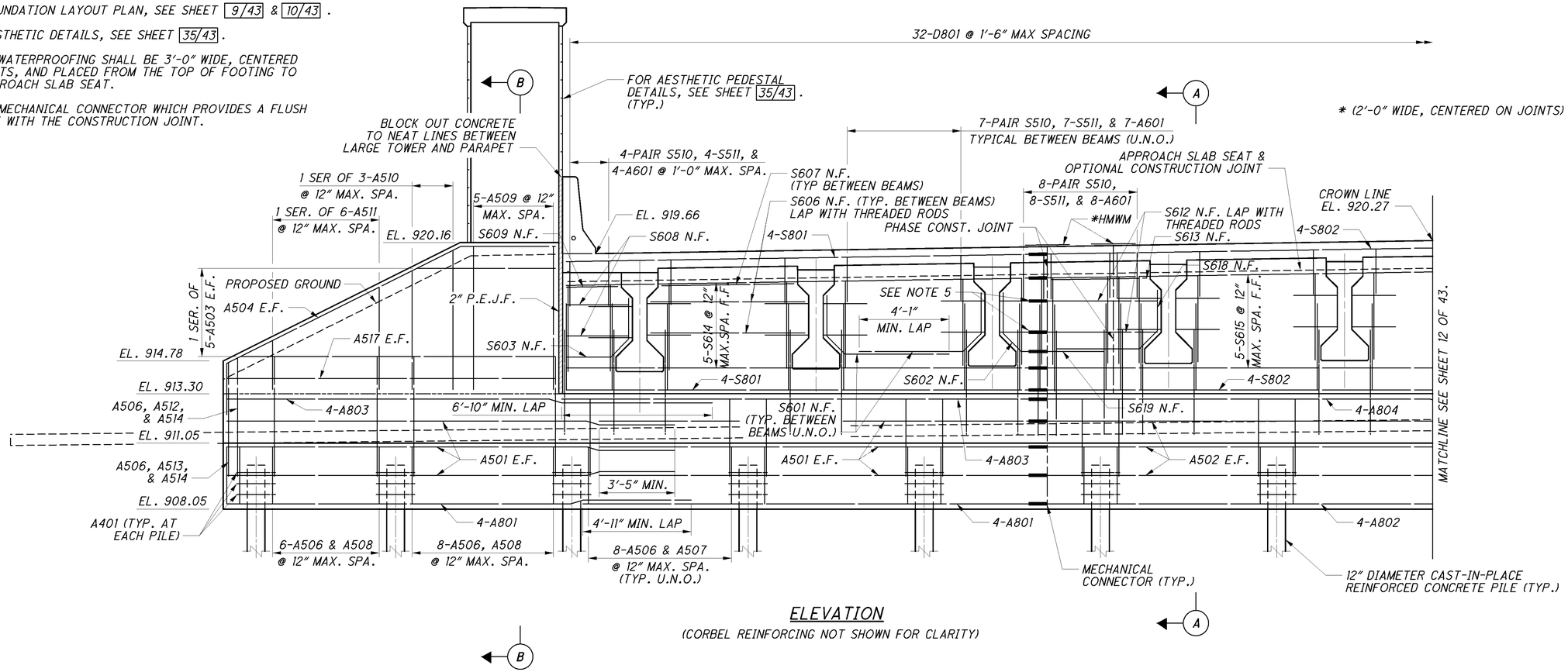

ELEVATION

(CORBEL REINFORCING NOT SHOWN FOR CLARITY)

DESIGN AGENCY
PARSONS BRINCKERHOFF
2945 FARMERS DRIVE
SUITE 350
COLUMBUS, OHIO 43235

DESIGNED PJL
DRAWN LEL
CHECKED SAP
REVIEWED EBS
DATE 01/18/13
SYMBOLOGY FILE NUMBER LEFT: 0201812 RIGHT: 0201820
REVISED

REAR ABUTMENT DETAILS
BRIDGE NO. ALL-75-0423 L&R
I-75 OVER S.R. 65

ALL-75-0.21
PID No. 89029

11 / 43
694 / 907

J:\Projects\ALL\89029\structures\ALL075_0423C\sheets\075_0423CAR001.dgn 09-MAY-2013 3:08PM lint

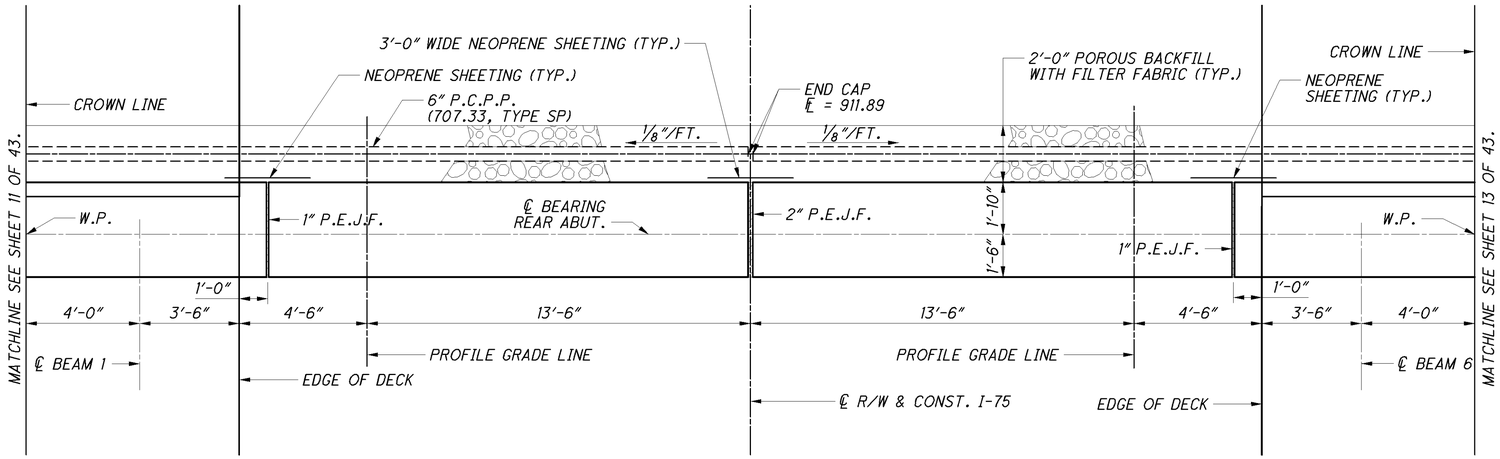

PLAN

NOTES:

1. FOR SECTIONS A-A & C-C, SEE SHEET 17/43.
2. FOR FOUNDATION LAYOUT PLAN, SEE SHEET 9/43 & 10/43.
3. FOR AESTHETIC DETAILS, SEE SHEET 35/43.

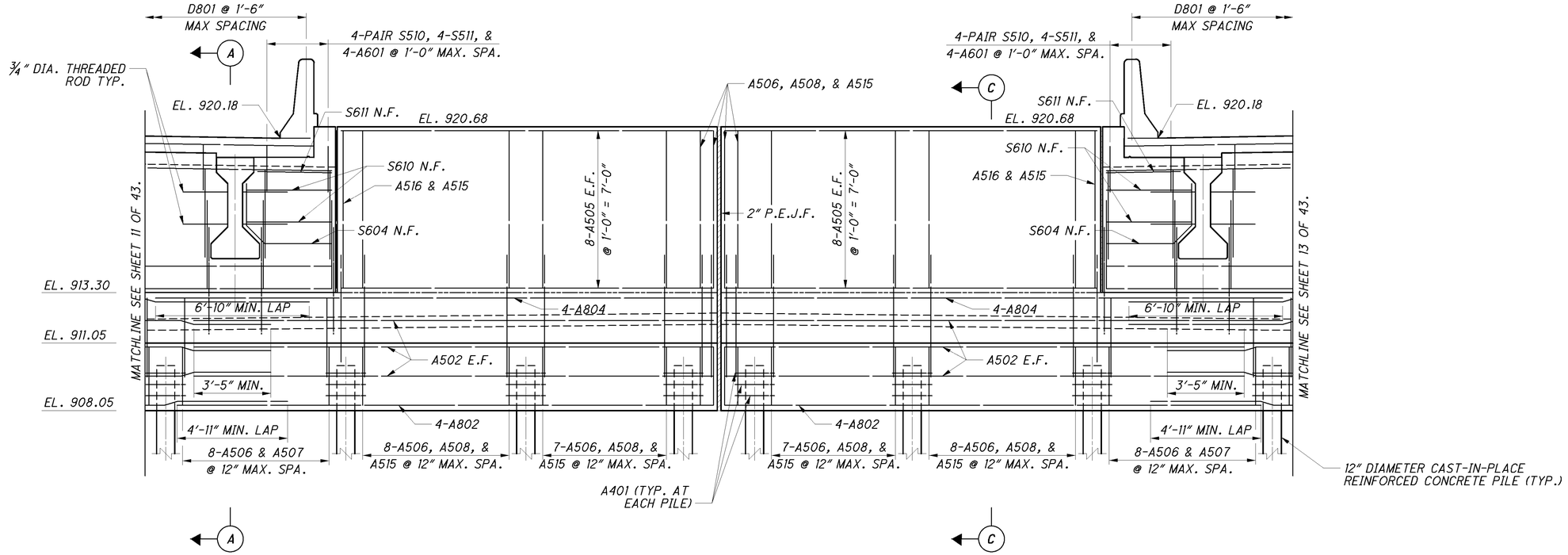

ELEVATION

(CORBEL REINFORCING NOT SHOWN FOR CLARITY)

DESIGN AGENCY
PARSONS BRINCKERHOFF
2945 FARMERS DRIVE
SUITE 350
COLUMBUS, OHIO 43235

DESIGNED PJL
DRAWN LEL
CHECKED SAP
REVIEWED EBS
DATE 01/18/13
REVISED
STRUCTURE FILE NUMBER
LEFT: 0201812
RIGHT: 0201820

REAR ABUTMENT DETAILS
BRIDGE NO. ALL-75-0423 L&R
I-75 OVER S.R. 65

ALL-75-0.21
PID No. 89029

J:\Projects\ALL\89029\structures\ALL075_0423C\sheets\075_0423CAR002.dgn 09-MAY-2013 3:08PM jint

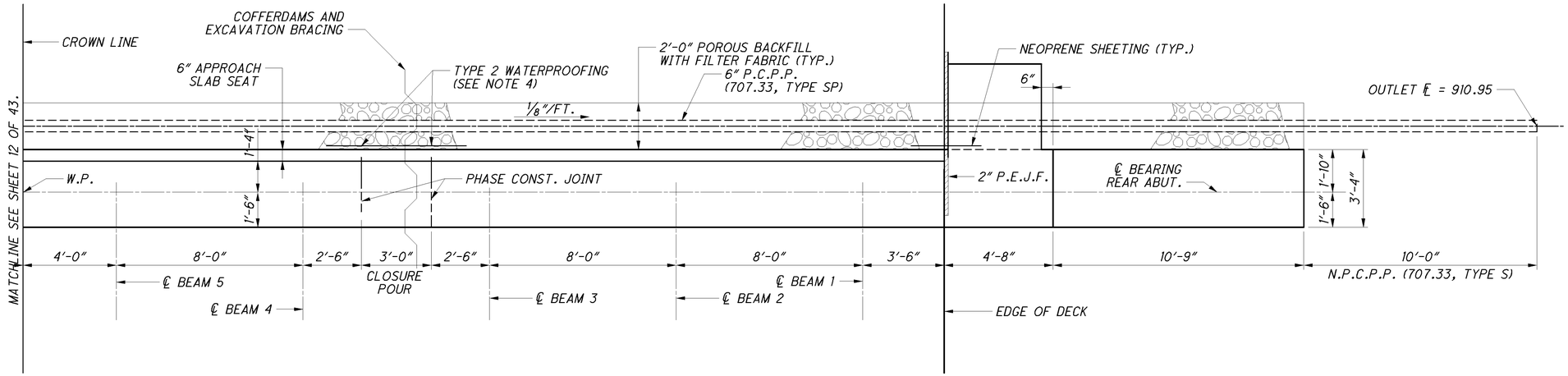

PLAN

NOTES:

1. FOR SECTIONS A-A & B-B, SEE SHEET 17/43 .
2. FOR FOUNDATION LAYOUT PLAN, SEE SHEET 9/43 & 10/43 .
3. FOR AESTHETIC DETAILS, SEE SHEET 35/43 .
4. TYPE 2 WATERPROOFING SHALL BE 3'-0" WIDE, CENTERED ON JOINTS, AND PLACED FROM THE TOP OF FOOTING TO THE APPROACH SLAB SEAT.
5. SELECT MECHANICAL CONNECTOR WHICH PROVIDES A FLUSH SURFACE WITH THE CONSTRUCTION JOINT.

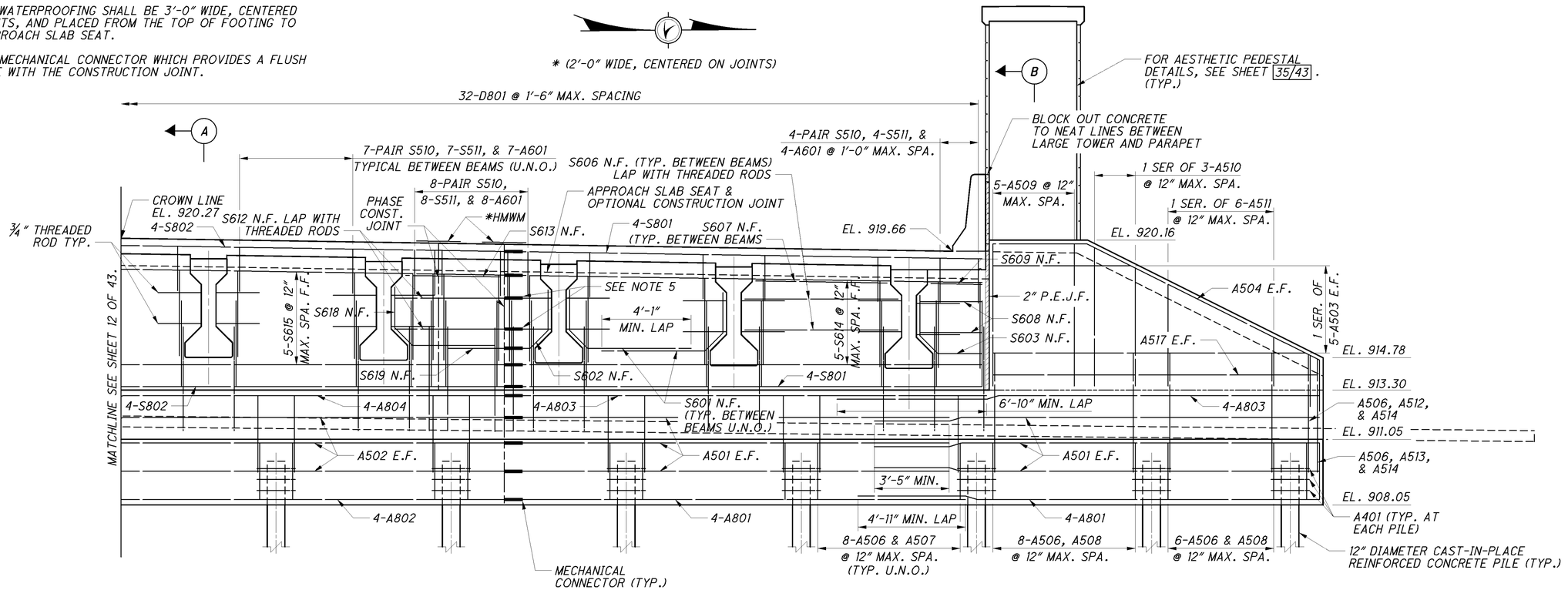

ELEVATION

(CORBEL REINFORCING NOT SHOWN FOR CLARITY)

DESIGN AGENCY
PARSONS BRINCKERHOFF
2945 FARMERS DRIVE
SUITE 350
COLUMBUS, OHIO 43235

DESIGNED	DRAWN	REVIEWED	DATE
PJL	LEL	EBS	01/18/13
CHECKED	REVISED	STRUCTURE FILE NUMBER	
SAP		LEFT: 0201812 RIGHT: 0201820	

REAR ABUTMENT DETAILS

BRIDGE NO. ALL-75-0423 L&R
I-75 OVER S.R. 65

ALL-75-0.21
PID No. 89029

J:\Projects\ALL\89029\structures\ALL075_0423C\sheets\075_0423CAR003.dgn 09-MAY-2013 3:08PM lint

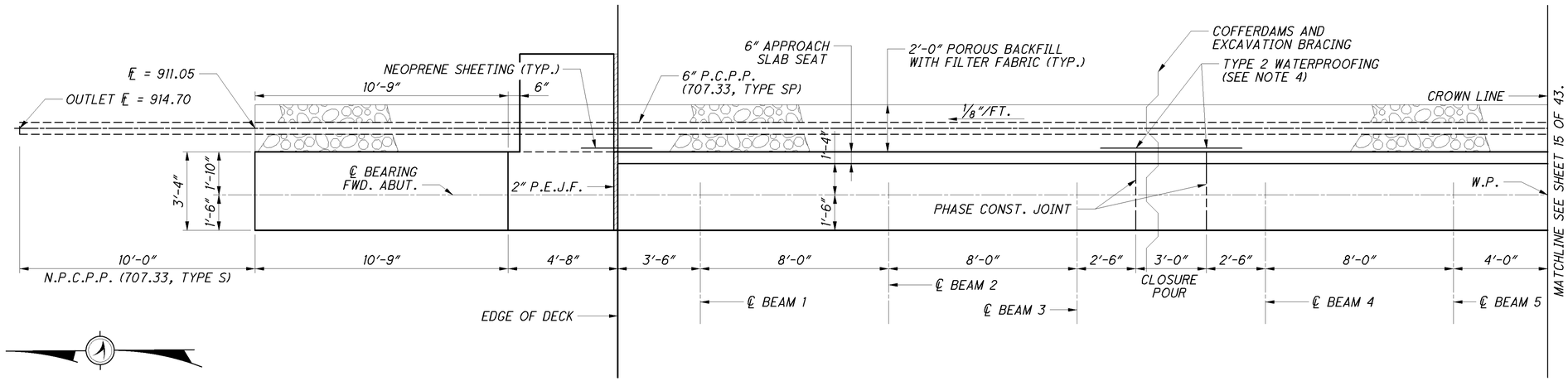

PLAN

NOTES:

1. FOR SECTIONS A-A & B-B, SEE SHEET 17/43.
2. FOR FOUNDATION LAYOUT PLAN, SEE SHEET 9/43 & 10/43.
3. FOR AESTHETIC DETAILS, SEE SHEET 35/43.
4. TYPE 2 WATERPROOFING SHALL BE 3′-0″ WIDE, CENTERED ON JOINTS, AND PLACED FROM THE TOP OF FOOTING TO THE APPROACH SLAB SEAT.
5. SELECT MECHANICAL CONNECTOR WHICH PROVIDES A FLUSH SURFACE WITH THE CONSTRUCTION JOINT.

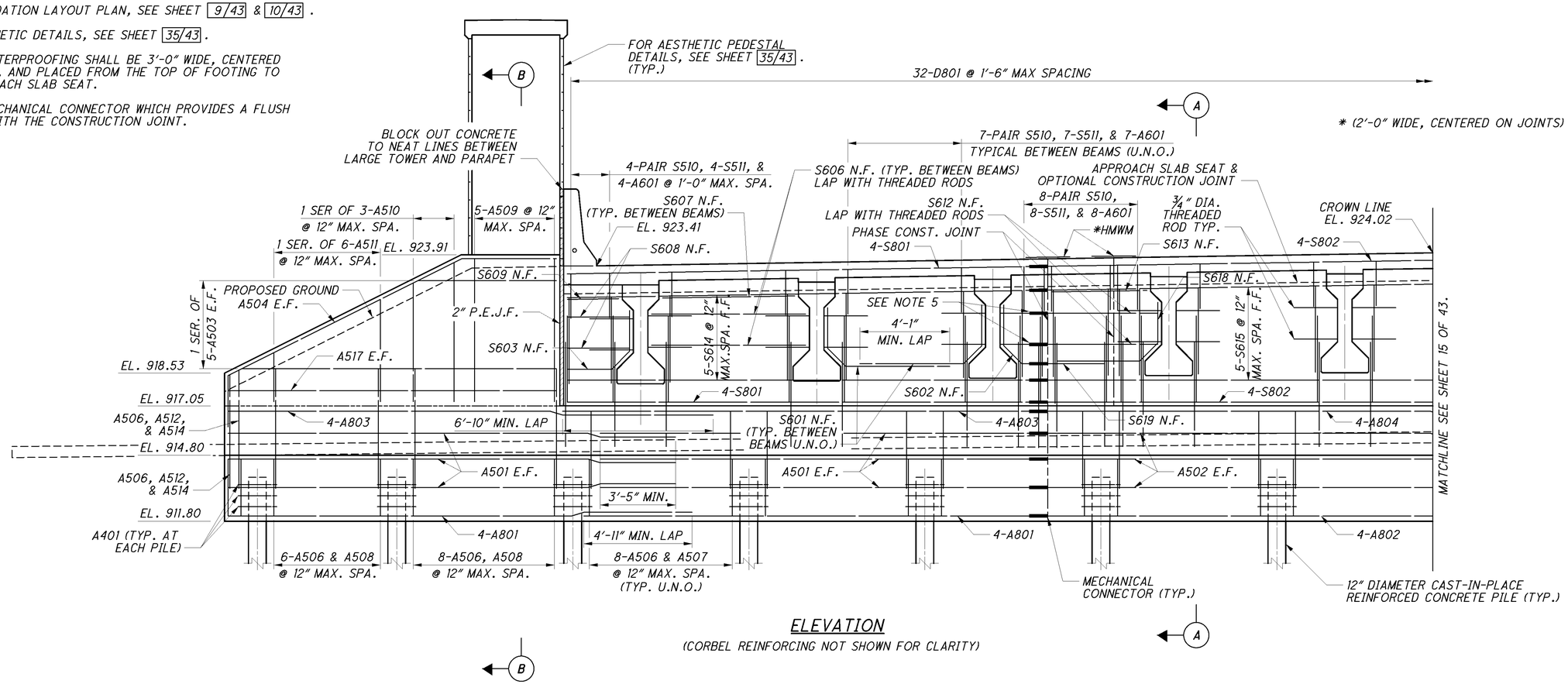

ELEVATION

(CORBEL REINFORCING NOT SHOWN FOR CLARITY)

DESIGN AGENCY
PARSONS BRINCKERHOFF
2945 FARMERS DRIVE
SUITE 350
COLUMBUS, OHIO 43235

DESIGNED	DRAWN	REVIEWED	DATE
PJL	LEL	EBS	01/18/13
CHECKED	REVISED	SYMBOLOGY FILE NUMBER	
SAP		LEFT: 0201812 RIGHT: 0201820	

FORWARD ABUTMENT DETAILS
BRIDGE NO. ALL-75-0423 L&R
I-75 OVER S.R. 65

ALL-75-5.53
PID No. 89029

14 / 43

697
907

J:\Projects\ALL\89029\structures\ALL075_0423C\sheets\075_0423CAF001.dgn 09-MAY-2013 3:08PM lint

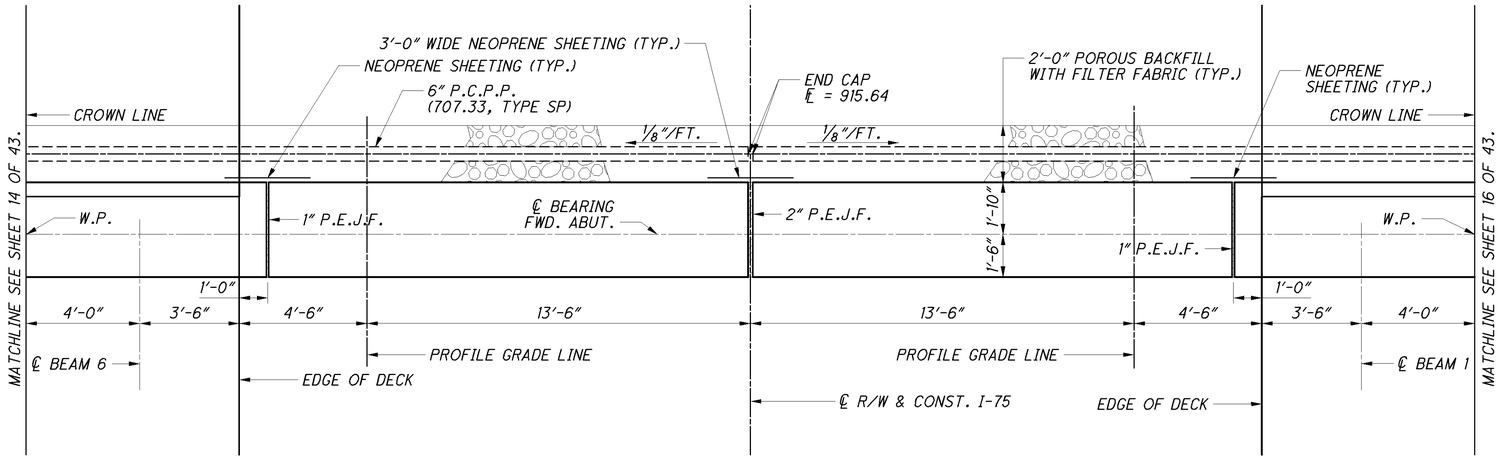

PLAN

NOTES:

1. FOR SECTIONS A-A & C-C, SEE SHEET 17/43.
2. FOR FOUNDATION LAYOUT PLAN, SEE SHEET 9/43 & 10/43.
3. FOR AESTHETIC DETAILS, SEE SHEET 35/43.

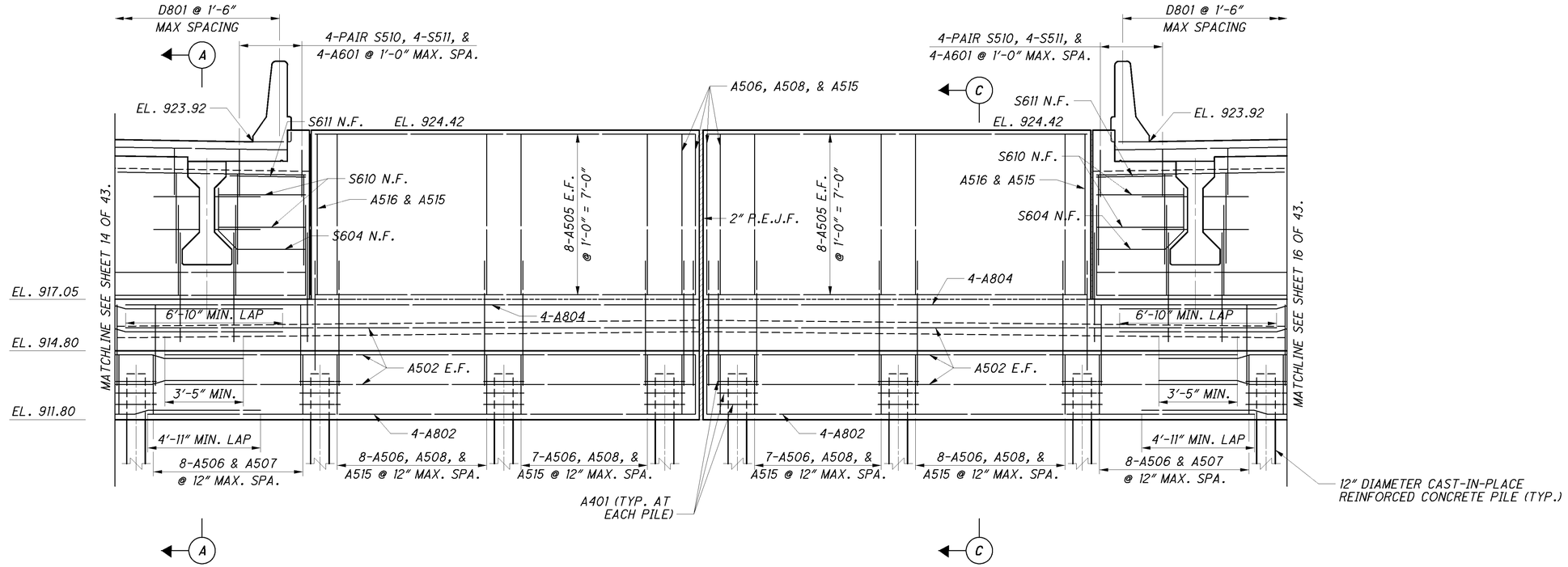

ELEVATION

(CORBEL REINFORCING NOT SHOWN FOR CLARITY)

J:\Projects\ALL\89029\structures\ALL075_0423C\sheets\075_0423CAF002.dgn 09-MAY-2013 3:08PM lint

DESIGN AGENCY
PARSONS BRINCKERHOFF
2545 FARMERS DRIVE
SUITE 350
COLUMBUS, OHIO 43235

DESIGNED	DRAWN	REVIEWED	DATE
PJL	LEL	EBS	01/18/13
CHECKED	REVISED	SYMBOLOGY FILE NUMBER	
SAP		LEFT: 0201812 RIGHT: 0201820	

FORWARD ABUTMENT DETAILS

BRIDGE NO. ALL-75-0423 L&R
I-75 OVER S.R. 65

ALL-75-0.21
PID No. 89029

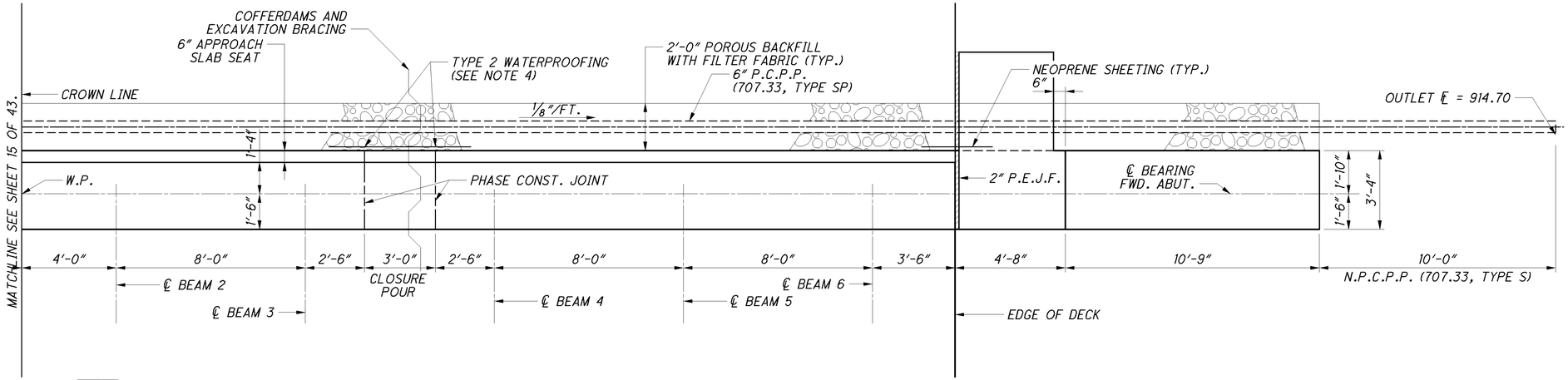

PLAN

NOTES:

1. FOR SECTIONS A-A & B-B, SEE SHEET 17/43 .
2. FOR FOUNDATION LAYOUT PLAN, SEE SHEET 9/43 & 10/43 .
3. FOR AESTHETIC DETAILS, SEE SHEET 35/43 .
4. TYPE 2 WATERPROOFING SHALL BE 3'-0" WIDE, CENTERED ON JOINTS, AND PLACED FROM THE TOP OF FOOTING TO THE APPROACH SLAB SEAT.
5. SELECT MECHANICAL CONNECTOR WHICH PROVIDES A FLUSH SURFACE WITH THE CONSTRUCTION JOINT.

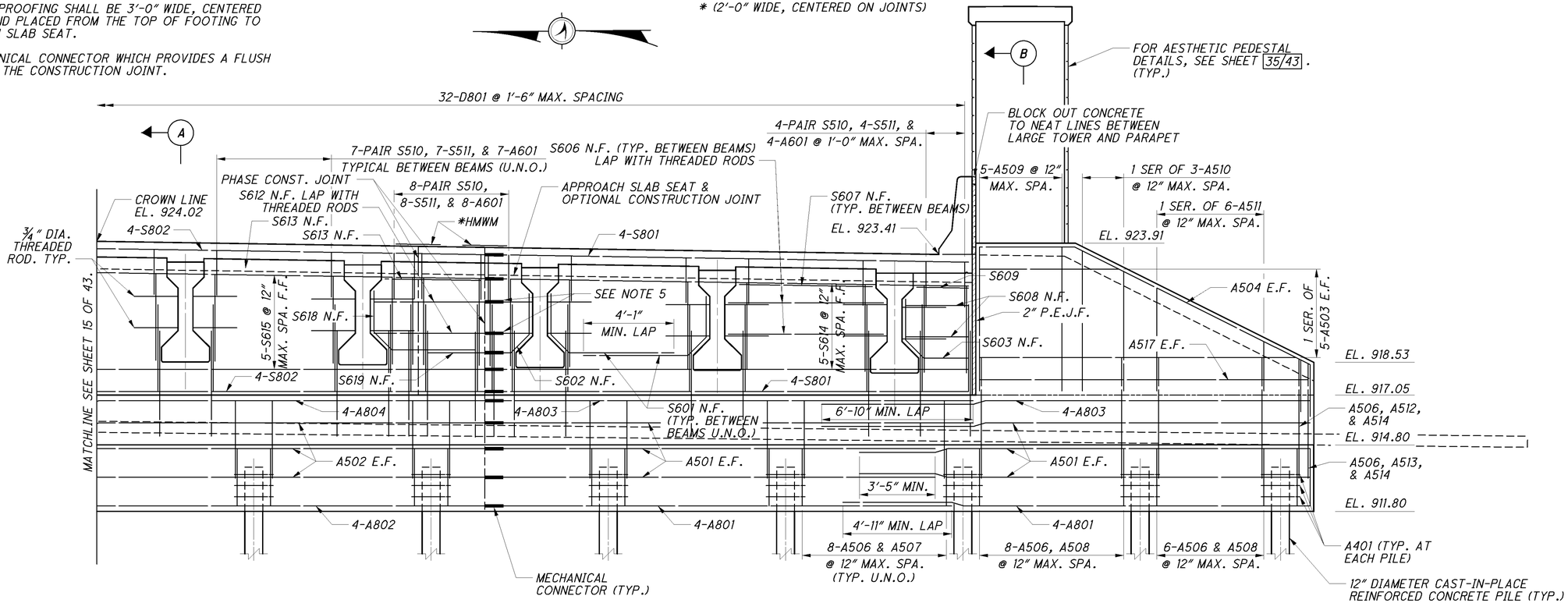

ELEVATION

(CORBEL REINFORCING NOT SHOWN FOR CLARITY)

DESIGN AGENCY
PARSONS BRINCKERHOFF
2945 FARMERS DRIVE
SUITE 350
COLUMBUS, OHIO 43235

DESIGNED	DRAWN	REVIEWED	DATE
PJL	LEL	EBS	01/18/13
CHECKED	REVISED	SYMBOLIPHIC FILE NUMBER	
SAP		LEFT: 0201812 RIGHT: 0201820	

FORWARD ABUTMENT DETAILS
BRIDGE NO. ALL-75-0423 L&R
I-75 OVER S.R. 65

ALL-75-0.21
PID No. 89029

16 / 43

699
907

J:\Projects\ALL\89029\structures\ALL075_0423C\sheets\075_0423CAF003.dgn 09-MAY-2013 3:08PM jint

NOTES:

1. ABUTMENT DIAPHRAGM CONCRETE, PHASED CONSTRUCTION: PLACE THE CONCRETE ENCASING THE PRESTRESSED I-BEAM STRUCTURAL MEMBERS WITH THE DECK CONCRETE OR AT LEAST 48 HOURS BEFORE PLACEMENT OF THE DECK CONCRETE.
2. NEOPRENE SHEETING, 3 FEET WIDE, SHALL EXTEND FROM APPROACH SLAB DOWN TO THE BOTTOM OF HORIZONTAL NEOPRENE SHEETING AT THE JOINT BETWEEN DIAPHRAGM AND WINGWALL.
3. FOR ADDITIONAL INTERGRAL ABUTMENT DETAILS AND NOTES SEE O.D.O.T. STD. DWG. ICD-1-82.
4. FOR AESTHETIC DETAILS, SEE SHEET 35/43 .

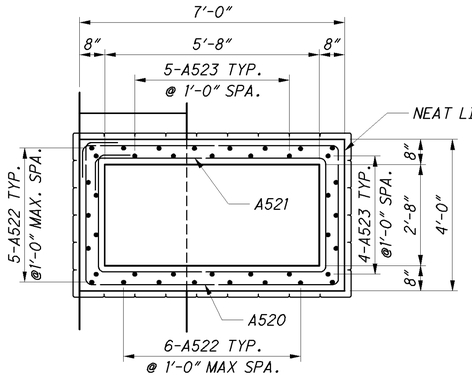

SECTION D-D

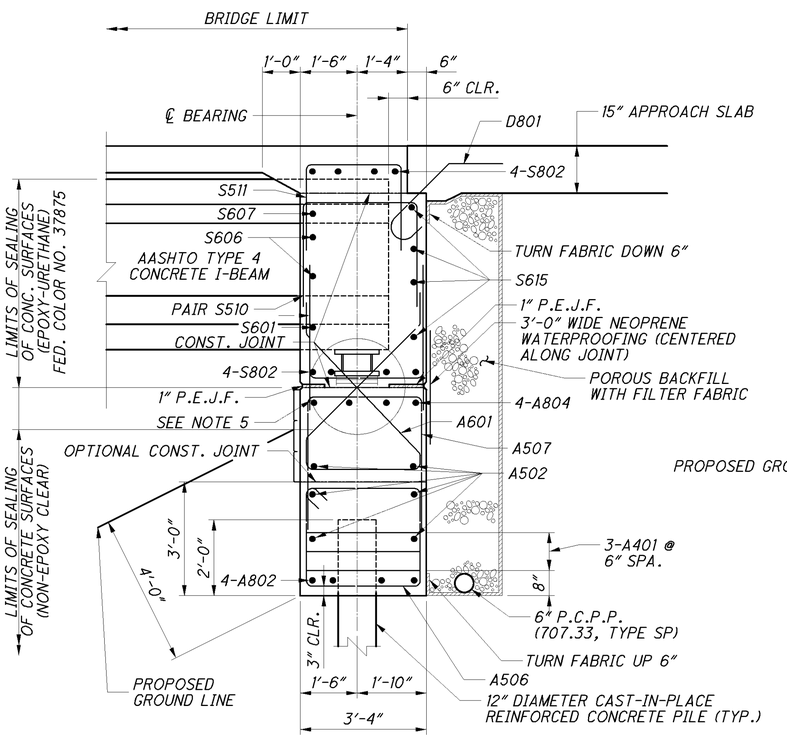

SECTION A-A

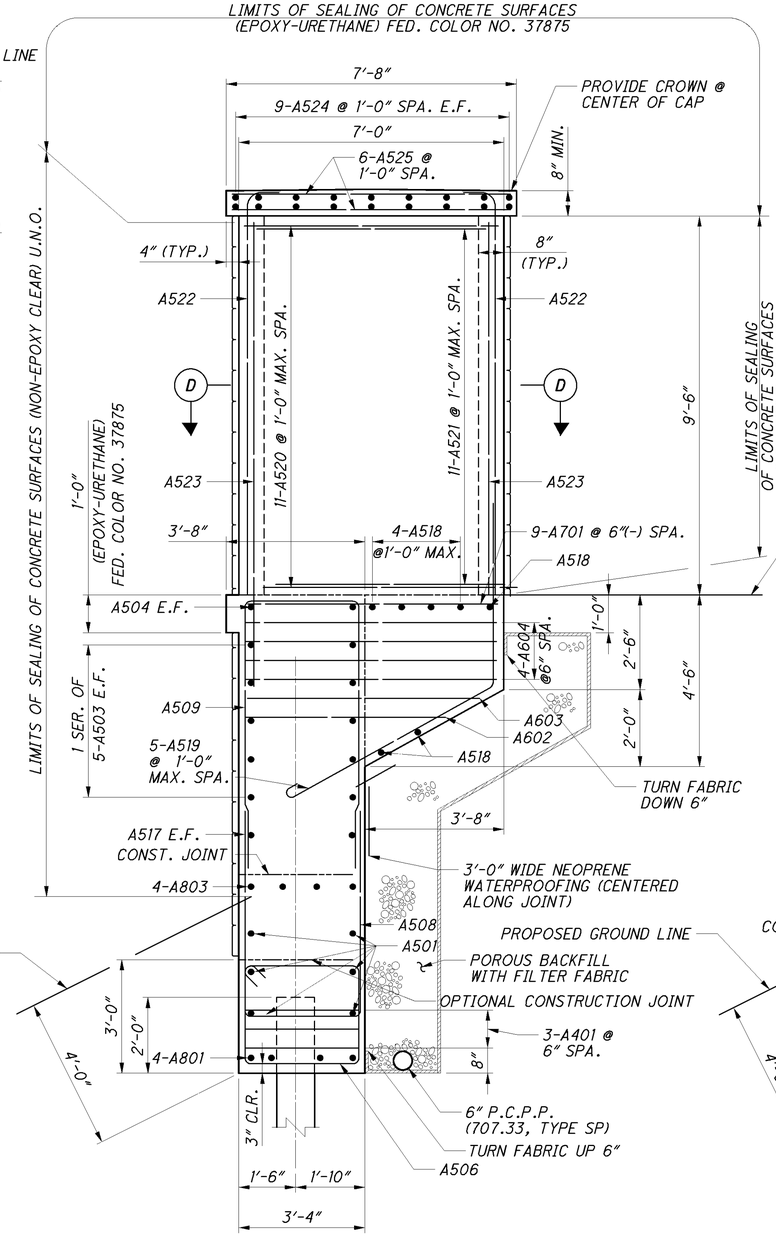

SECTION B-B

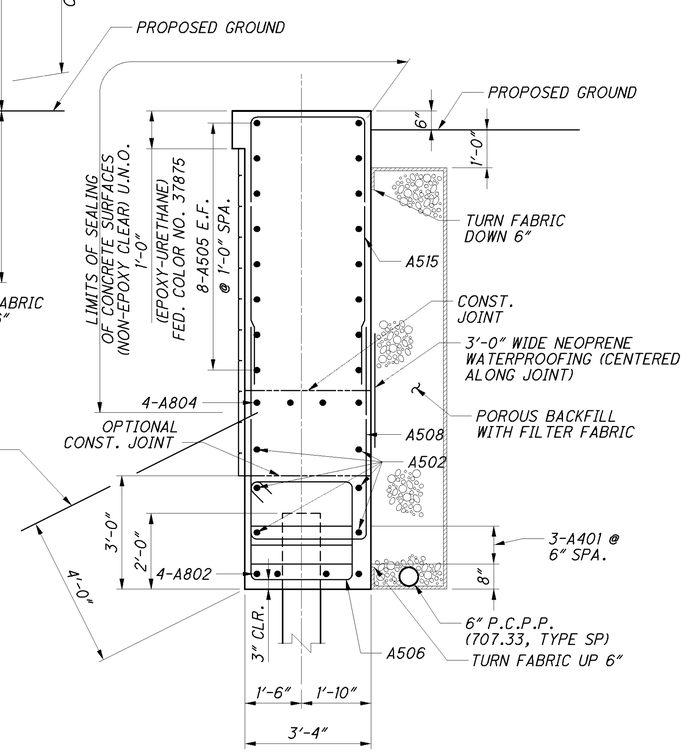

SECTION C-C

DESIGN AGENCY
PARSONS BRINCKERHOFF
2945 FARMERS DRIVE
SUITE 350
COLUMBUS, OHIO 43235

DESIGNED PJL
DRAWN LEL
CHECKED SAP
REVIEWED EBS
DATE 01/18/13
REVISED
STRUCTURE FILE NUMBER
LEFT: 0201812
RIGHT: 0201820

ABUTMENT DETAILS

BRIDGE NO. ALL-75-0423 L&R
I-75 OVER S.R. 65

ALL-75-0.21
PID No. 89029

J:\Projects\ALL\89029\structures\ALL075_0423C\sheets\075_0423CAF004.dgn 09-MAY-2013 3:08PM jint

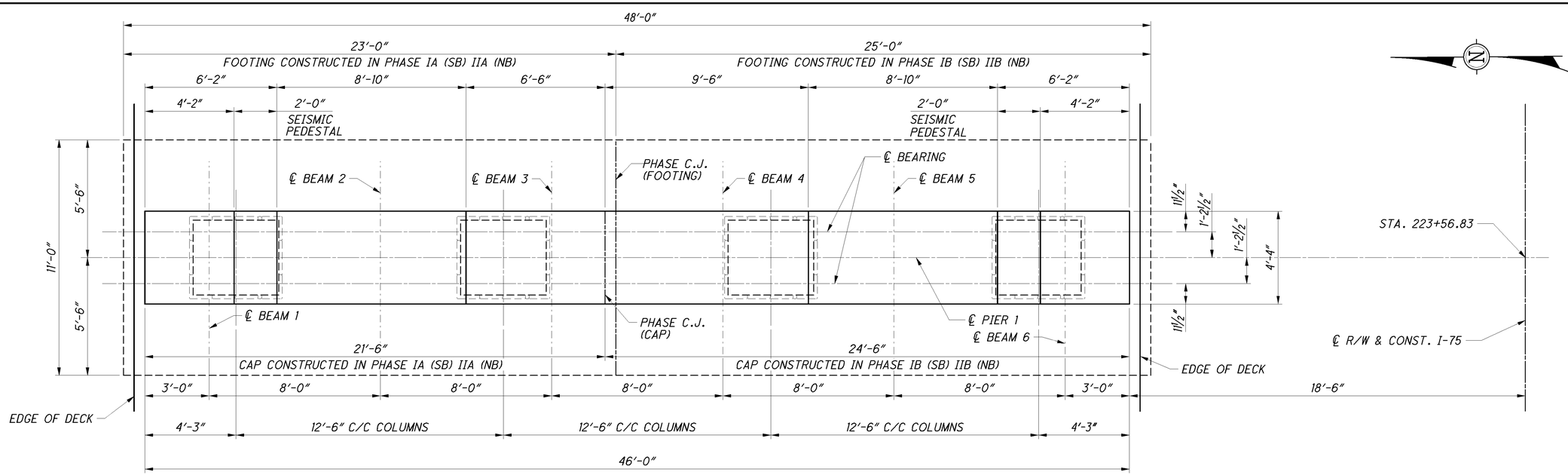

TYPICAL PIER PLAN

PILES NOT SHOWN FOR CLARITY

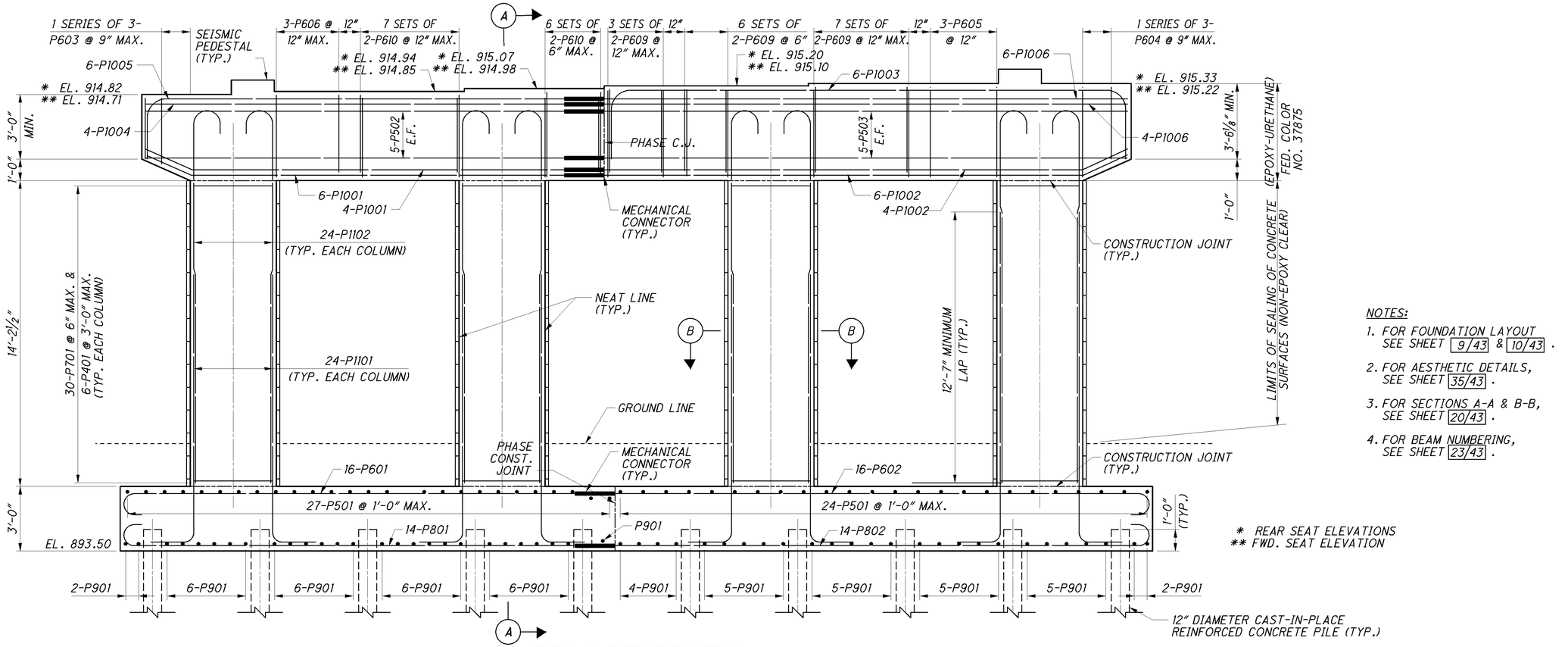

TYPICAL PIER ELEVATION

SOUTHBOUND SHOWN, NORTHBOUND OPPOSITE HAND

* REAR SEAT ELEVATIONS
** FWD. SEAT ELEVATION

NOTES:

1. FOR FOUNDATION LAYOUT SEE SHEET 9/43 & 10/43 .
2. FOR AESTHETIC DETAILS, SEE SHEET 35/43 .
3. FOR SECTIONS A-A & B-B, SEE SHEET 20/43 .
4. FOR BEAM NUMBERING, SEE SHEET 23/43 .

DESIGN AGENCY
PARSONS BRINCKERHOFF
2945 FARMERS DRIVE
SUITE 350
COLUMBUS, OHIO 43235

DESIGNED PJL
DRAWN BKJ
CHECKED SAP
REVIEWED EBS
DATE 01/18/13
STRUCTURE FILE NUMBER LEFT: 0201812 RIGHT: 0201820
REVISED

PIER 1 DETAILS
BRIDGE NO. ALL-75-0423 L&R
I-75 OVER S.R. 65

ALL-75-0.21
PID No. 89029

J:\Projects\ALL\89029\structures\ALL075_0423\sheets\075_0423CP1001.dgn 09-MAY-2013 3:08PM lint

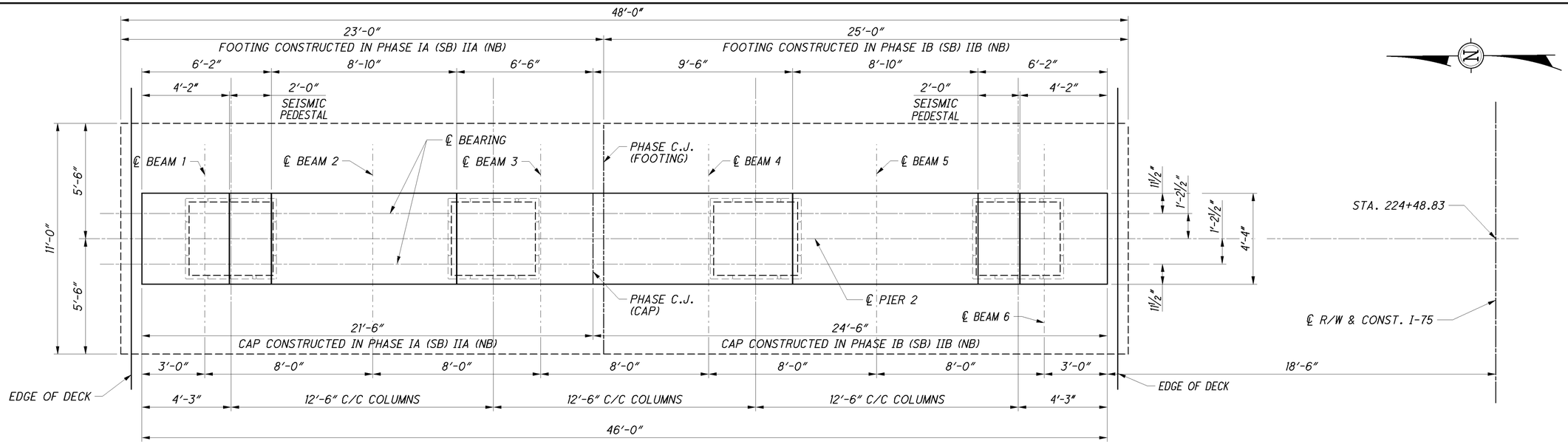

TYPICAL PIER PLAN

PILES NOT SHOWN FOR CLARITY

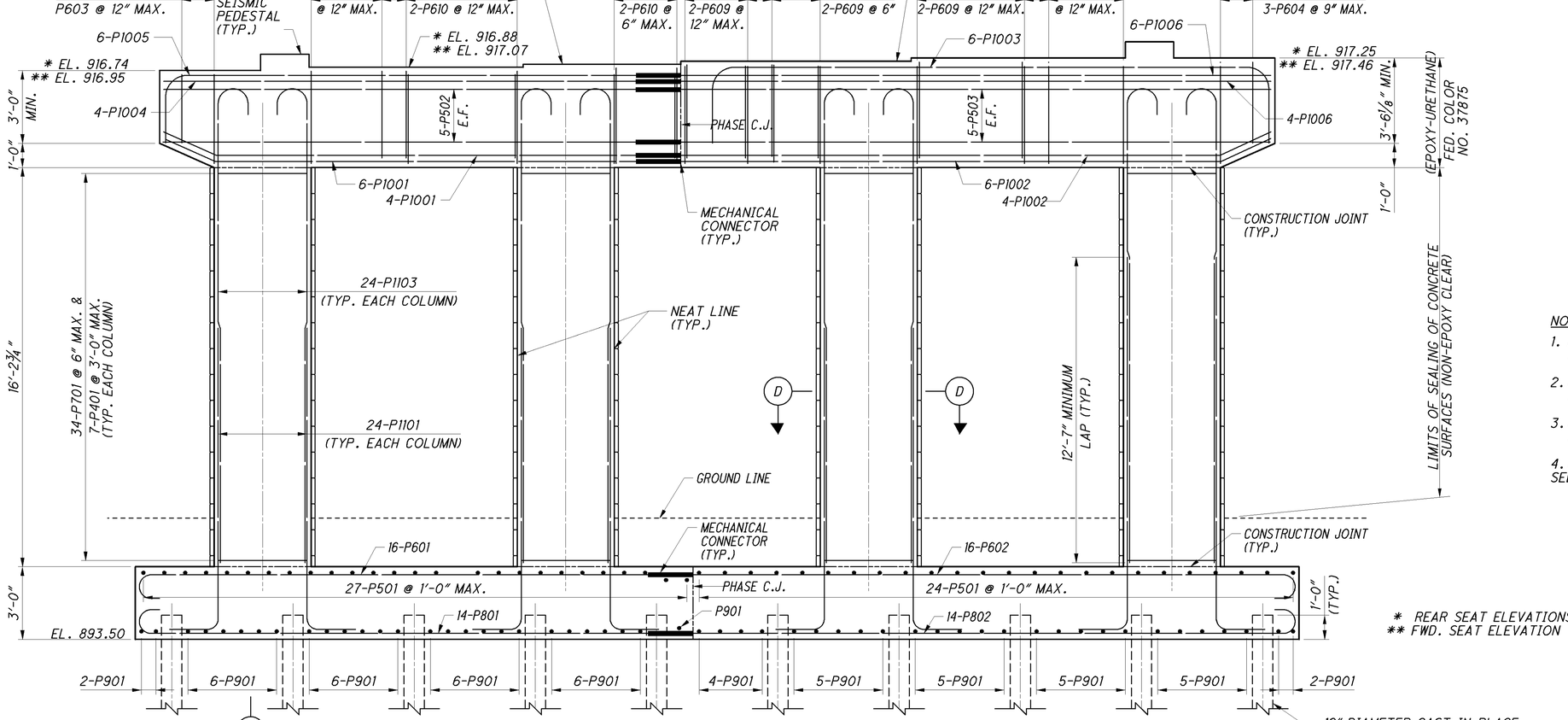

* REAR SEAT ELEVATIONS
** FWD. SEAT ELEVATION

TYPICAL PIER ELEVATION

SOUTHBOUND SHOWN, NORTHBOUND OPPOSITE HAND

NOTES:

1. FOR FOUNDATION LAYOUT SEE SHEET 9/43 & 10/43 .
2. FOR AESTHETIC DETAILS, SEE SHEET 35/43 .
3. FOR SECTIONS A-A & B-B, SEE SHEET 20/43 .
4. FOR BEAM NUMBERING, SEE SHEET 23/43 .

DESIGN AGENCY
PARSONS BRINCKERHOFF
2945 FARMERS DRIVE
SUITE 350
COLUMBUS, OHIO 43235

DESIGNED	DRAWN	REVIEWED	DATE
PJL	BKJ	EBS	01/18/13
CHECKED	REVISED	STRUCTURE FILE NUMBER	
SAP		LEFT: 0201812 RIGHT: 0201820	

PIER 2 DETAILS
BRIDGE NO. ALL-75-0423 L&R
I-75 OVER S.R. 65

ALL-75-0.21
PID No. 89029

19 / 43

702
907

J:\Projects\ALL\89029\structures\ALL075_0423C\sheets\075_0423CPI002.dgn 09-MAY-2013 3:08PM jint

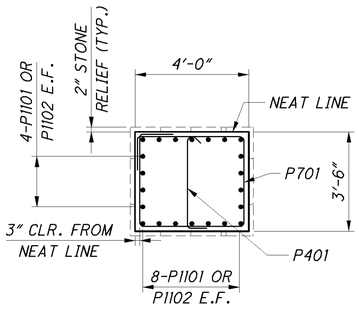

SECTION B-B

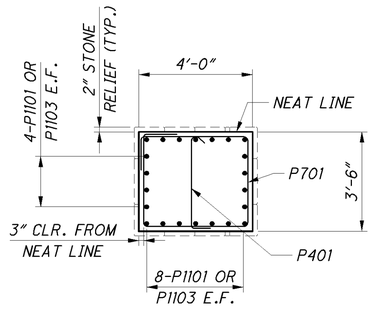

SECTION D-D

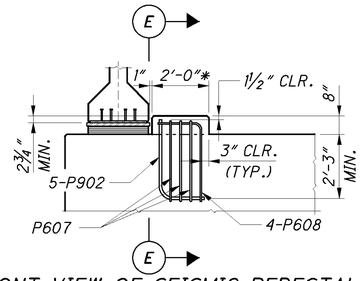

FRONT VIEW OF SEISMIC PEDESTAL

* MEASURED PARALLEL TO THE CENTERLINE OF BEARINGS.

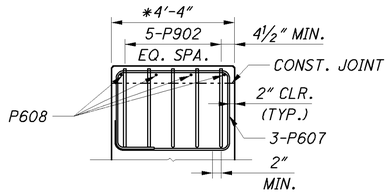

SECTION E-E

* THE SURFACE OF THE BEAM SEAT IN THIS AREA SHALL BE FINISHED WITH A SERRATED TROWEL. THE SERRATIONS SHALL BE ¼" DEEP MINIMUM.

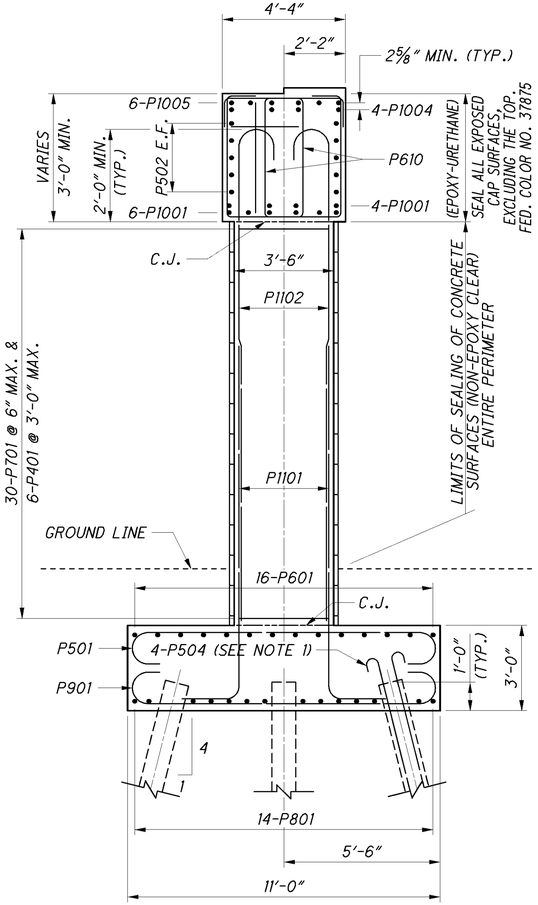

SECTION A-A

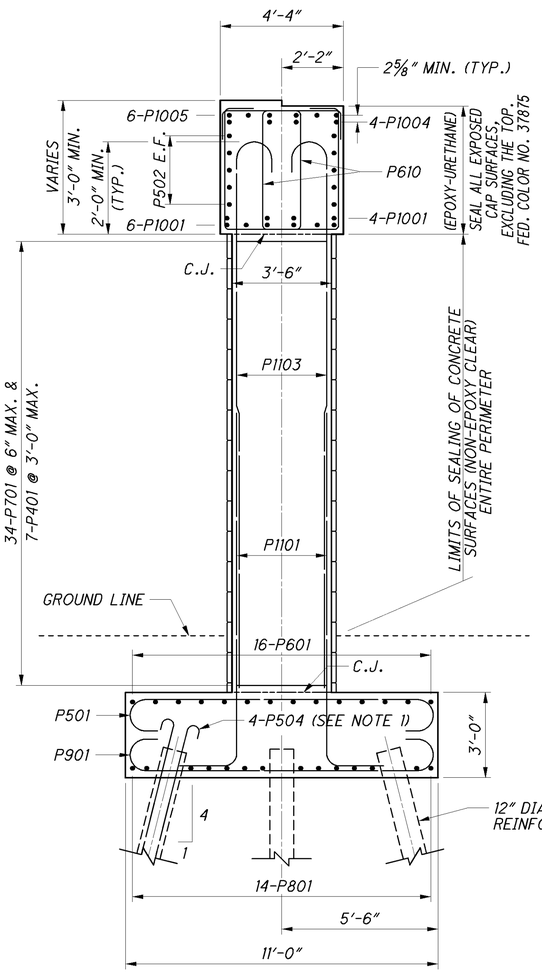

SECTION C-C

NOTES:

1. 4-P504 BARS SHALL BE PLACED IN PILES 12-21 AND 58-67 FOR STRUCTURE 0423L AND IN PILES 90-99 AND 136-145 FOR STRUCTURE 0423R. BARS SHALL BE SPACED EVENLY. EMBED P504 BARS 1'-0" INTO FOOTING SEE FOUNDATION LAYOUT PLANS 9/43 & 10/43 FOR PILE NUMBERING.

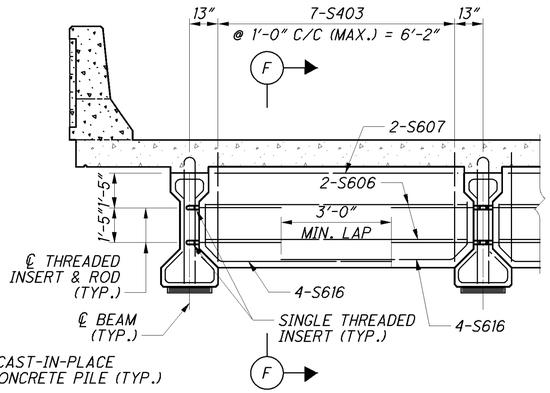

PIER DIAPHRAGM

AASHTO TYPE 4

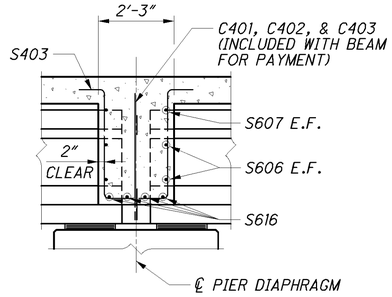

SECTION F-F

DESIGN AGENCY
PARSONS BRINCKERHOFF
2945 FARMERS DRIVE
SUITE 350
COLUMBUS, OHIO 43235

DESIGNED	DRAWN	REVIEWED	DATE
PJL	BKJ	EBS	01/18/13
CHECKED	REVISED	STRUCTURE FILE NUMBER	
SAP		LEFT: 0201812 RIGHT: 0201820	

PIER DETAILS

BRIDGE NO. ALL-75-0423 L&R
I-75 OVER S.R. 65

ALL-75-0.21
PID No. 89029

703/907

J:\Projects\ALL\89029\structures\ALL075_0423C\sheets\075_0423CPI003.dgn 09-MAY-2013 3:08PM lint

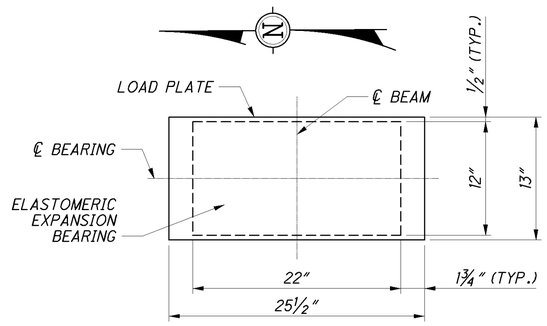

PLAN VIEW - PIER BEARING

PIER 1 FORWARD BEARING & PIER 2 REAR BEARING

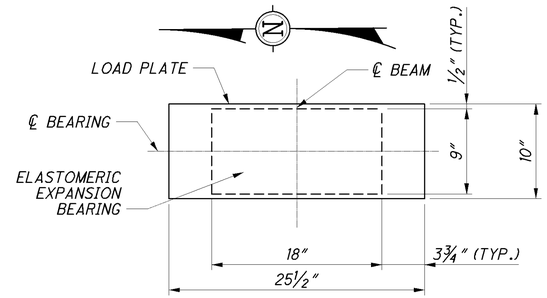

PLAN VIEW - PIER BEARING

PIER 1 REAR BEARING & PIER 2 FORWARD BEARING

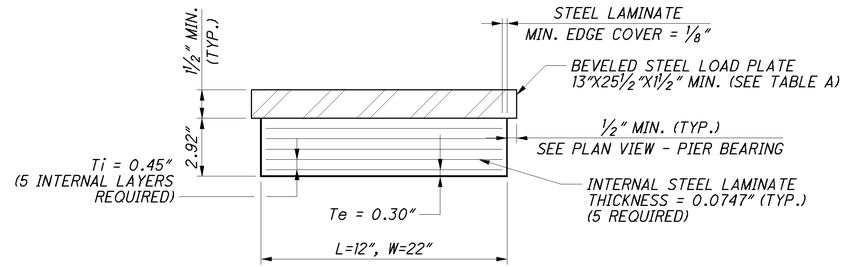

LAMINATED ELASTOMERIC EXPANSION BEARING, 50 DUROMETER

PIER 1 FORWARD BEARING & PIER 2 REAR BEARING
DEAD LOAD REACTION = 109.2 K
LIVE LOAD REACTION = 94.0 K (NO IMPACT)
MAXIMUM DESIGN LOAD = 203.2 K

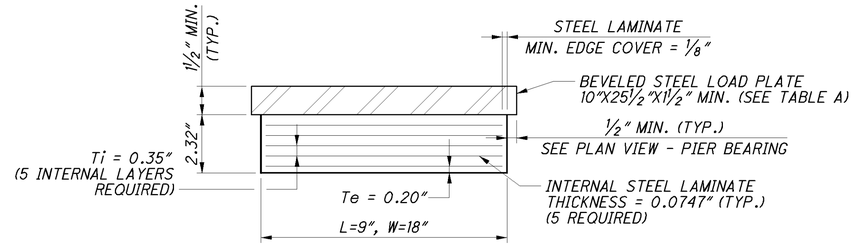

LAMINATED ELASTOMERIC EXPANSION BEARING, 50 DUROMETER

PIER 1 REAR BEARING & PIER 2 FORWARD BEARING
DEAD LOAD REACTION = 51.3 K
LIVE LOAD REACTION = 78.1 K (NO IMPACT)
MAXIMUM DESIGN LOAD = 129.4 K

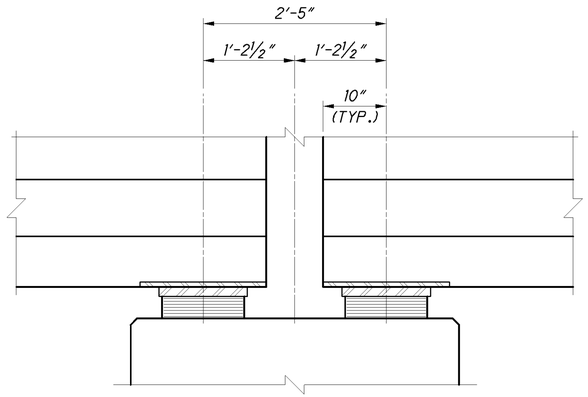

BEARING DETAIL

PIER

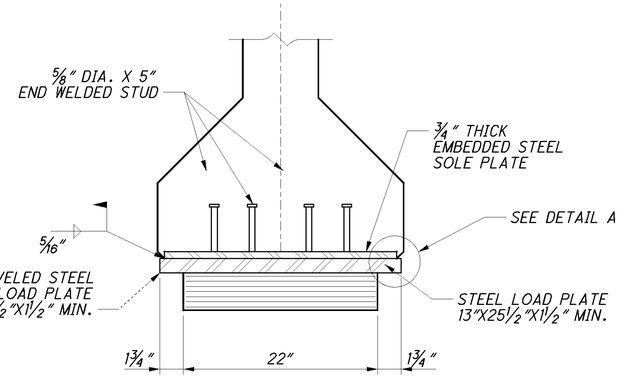

END VIEW

PIER 1 FORWARD BEARING & PIER 2 REAR BEARING WITH LOAD PLATE

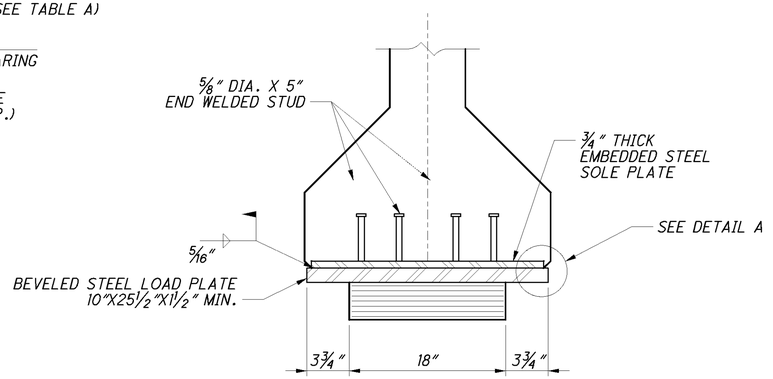

END VIEW

PIER 1 REAR BEARING & PIER 2 FORWARD BEARING WITH LOAD PLATE

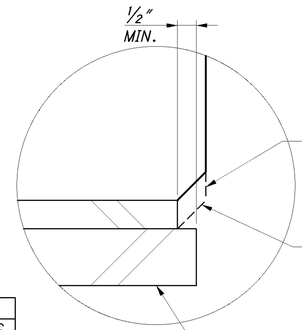

DETAIL A

NOTES:

1. STRUCTURAL STEEL: ALL STRUCTURAL STEEL SHOWN SHALL BE ASTM A709 GRADE 50, UNLESS NOTED OTHERWISE.
2. ELASTOMERIC BEARINGS: THE ELASTOMER SHALL HAVE A HARDNESS OF 50 DUROMETER. THE BEARINGS WERE DESIGNED IN ACCORDANCE WITH SECTION 14.7.6 (METHOD A) OF THE AASHTO LRFD BRIDGE DESIGN SPECIFICATIONS. THE LONG TERM COMPRESSION PROOF LOAD TEST (AASHTO STANDARD SPECIFICATIONS FOR HIGHWAY BRIDGES, DIVISION II, SECTION 18.7.2.6) IS NOT REQUIRED.
3. ALL BEARINGS SHALL BE MARKED PRIOR TO SHIPPING. THE MARKS SHALL INCLUDE THE BEARING LOCATION ON THE BRIDGE, AND A DIRECTION ARROW THAT POINTS UP-STATION. ALL MARKS SHALL BE PERMANENT AND BE VISIBLE AFTER BEARING IS INSTALLED.
4. PAINTING: STEEL LOAD PLATES AT THE PIER SHALL BE SHOP PAINTED WITH AN INORGANIC ZINC PRIMER AS SPECIFIED IN CMS 513.27. APPLY PAINT TO THE EXPOSED STEEL LOAD PLATES IN ACCORDANCE WITH CMS 514. PAYMENT IS INCLUDED IN THE UNIT PRICE BID FOR EACH BEARING.
5. THE STEEL LOAD PLATES SHALL BE BONDED BY VULCANIZATION TO THE ELASTOMER DURING THE MOLDING PROCESS.
6. BASIS OF PAYMENT: THE UNIT BID PRICE SHALL INCLUDE ALL MATERIALS, LABOR, TESTING, AND INCIDENTALS NECESSARY TO FURNISH AND INSTALL LAMINATED ELASTOMERIC BEARINGS. PAYMENT WILL BE MADE AT THE CONTRACT PRICE FOR ITEM 516, EACH, ELASTOMERIC BEARINGS WITH INTERNAL LAMINATES (NEOPRENE), AS PER PLAN: 12"X22"X2.92" WITH 13"X25 1/2"X1 1/2" (MIN.) LOAD PLATES (SPAN 1 AND 3 PIER BEARING), 9"X18"X2.32" WITH 10"X25 1/2"X1 1/2" (MIN.) LOAD PLATES (SPAN 2 PIER BEARING), AND 6"X13"X1.42" WITH 11 1/2"X14"X1 1/2" (MIN.) LOAD PLATES (ABUTMENT BEARING)
7. TOTAL DESIGN LOAD FOR BEARING EQUALS THE SUM OF THE UNFACTORED DEAD LOADS AND UNFACTORED LIVE LOADS (WITHOUT IMPACT) TABULATED IN THE BEARING TABLE.

TABLE A

BEVELED LOAD PLATE THICKNESSES											
REAR ABUTMENT BRG.		PIER 1 REAR BRG.		PIER 1 FWD. BRG.		PIER 2 REAR BRG.		PIER 2 FWD. BRG.		FWD. ABUTMENT BRG.	
D.S.	U.S.	D.S.	U.S.	D.S.	U.S.	D.S.	U.S.	D.S.	U.S.	D.S.	U.S.
1 3/4"	1 1/2"	1 3/4"	1 1/2"	1 7/8"	1 1/2"	1 11/16"	1 1/2"	1 3/4"	1 1/2"	1 3/4"	1 1/2"

DESIGN AGENCY
PARSONS BRINCKERHOFF
2945 FARMERS DRIVE
SUITE 350
COLUMBUS, OHIO 43235

DESIGNED SAP | DRAWN LEL | REVIEWED EBS | DATE 01/18/13
CHECKED PJL | REVISED | STRUCTURE FILE NUMBER LEFT: 0201812 RIGHT: 0201820

BEARING DETAILS
BRIDGE NO. ALL-75-0423
I-75 OVER S.R. 65

ALL-75-0.21
PID No. 89029

21 / 43

704
907

J:\Projects\ALL\89029\structures\ALL075_0423C\sheets\075_0423CBR001.dgn 09-MAY-2013 3:08PM jint

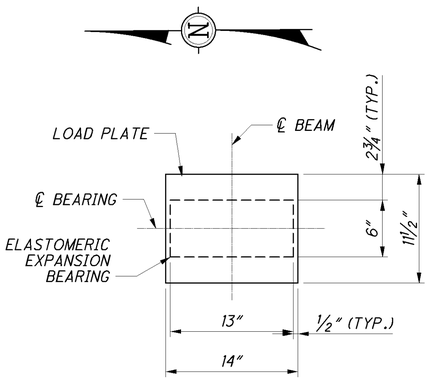

PLAN VIEW - ABUTMENT BEARING

REAR AND FORWARD ABUTMENT BEARINGS

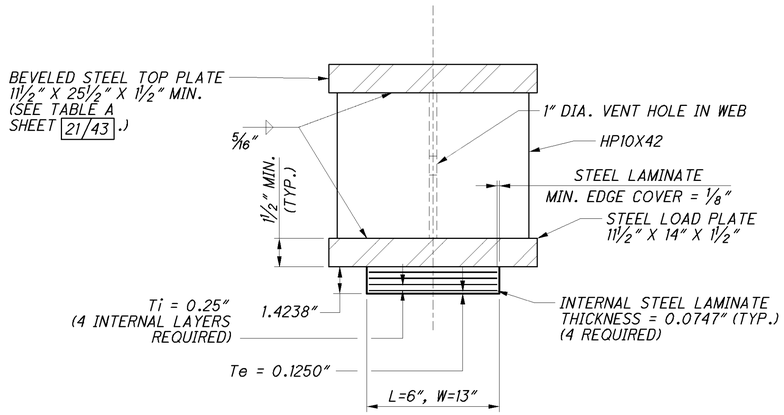

LAMINATED ELASTOMERIC EXPANSION BEARING, 50 DUROMETER

ABUTMENT BEARINGS
DEAD LOAD REACTION = 45.20 K
LIVE LOAD REACTION = 0 K (NO IMPACT)
MAXIMUM DESIGN LOAD = 45.20 K

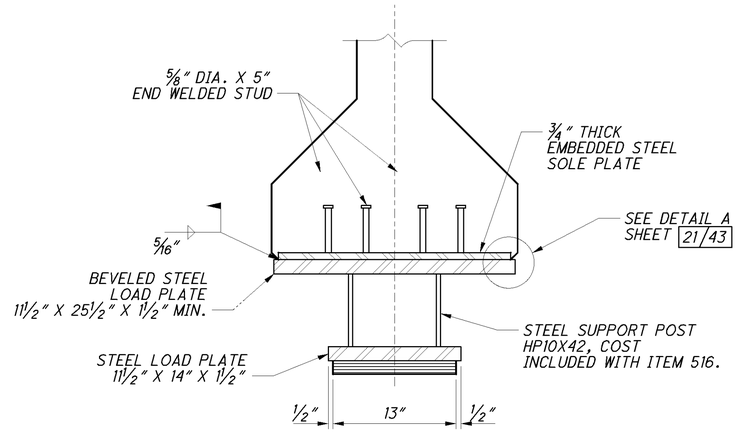

END VIEW

ABUTMENT BEARINGS

SUPPORT POST HEIGHTS					
ALL-75-0423L			ALL-75-0423R		
BEAM	REAR	FORWARD	BEAM	REAR	FORWARD
1	7.45"	7.45"	1	13.60"	13.60"
2	8.99"	8.99"	2	13.60"	13.60"
3	10.52"	10.52"	3	12.06"	12.06"
4	12.06"	12.06"	4	10.52"	10.52"
5	13.60"	13.60"	5	8.99"	8.99"
6	13.60"	13.60"	6	7.45"	7.45"

NOTES:

1. FOR ADDITIONAL BEARING NOTES AND DETAILS SEE SHEET 21/43

DESIGN AGENCY
PARSONS BRINCKERHOFF
2545 FARMERS DRIVE
SUITE 350
COLUMBUS, OHIO 43235

DESIGNED	DRAWN	REVIEWED	DATE
SAP	LEL	EBS	01/18/13
CHECKED	REVISED	STRUCTURE FILE NUMBER	
PJL		LEFT: 0201812 RIGHT: 0201820	

BEARING DETAILS
BRIDGE NO. ALL-75-0423 L&R
1-75 OVER S.R. 65

ALL-75-5.53
PID No. 76691

J:\Projects\ALL\89029\structures\ALL075_0423C\sheets\075_0423CBR002.dgn 09-MAY-2013 3:08PM jint

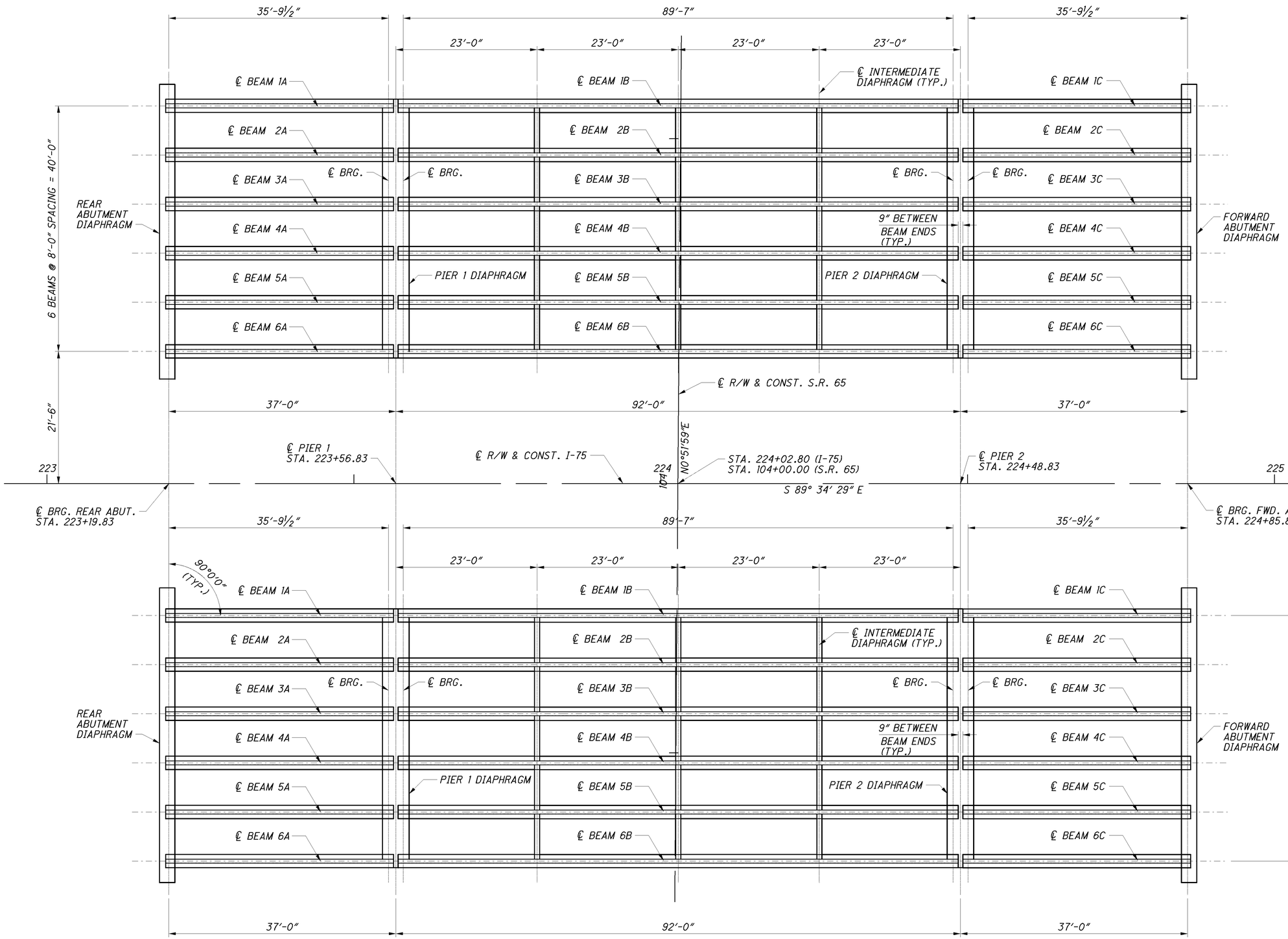

J:\Projects\ALL_89029\structures\ALL075_0423C\sheets\075_0423CSD001.dgn 09-MAY-2013 3:08PM lint

DESIGN AGENCY
PARSONS BRINCKERHOFF
2545 FARMERS DRIVE
SUITE 350
COLUMBUS, OHIO 43235

DESIGNED	DRAWN	REVIEWED	DATE
PJL	BKJ	EBS	01/18/13
CHECKED	REVISED	STRUCTURE FILE NUMBER	
SAP		LEFT: 0201812 RIGHT: 0201820	

FRAMING PLAN
BRIDGE NO. ALL-75-0423 L&R
I-75 OVER S.R. 65

ALL-75-0.21
PID No. 89029

23 / 43

706
907

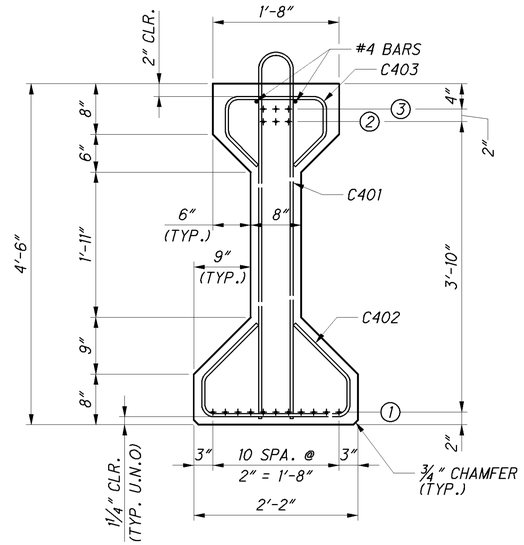

TYPICAL MID-SPAN SECTION

(SPANS 1 AND 3)

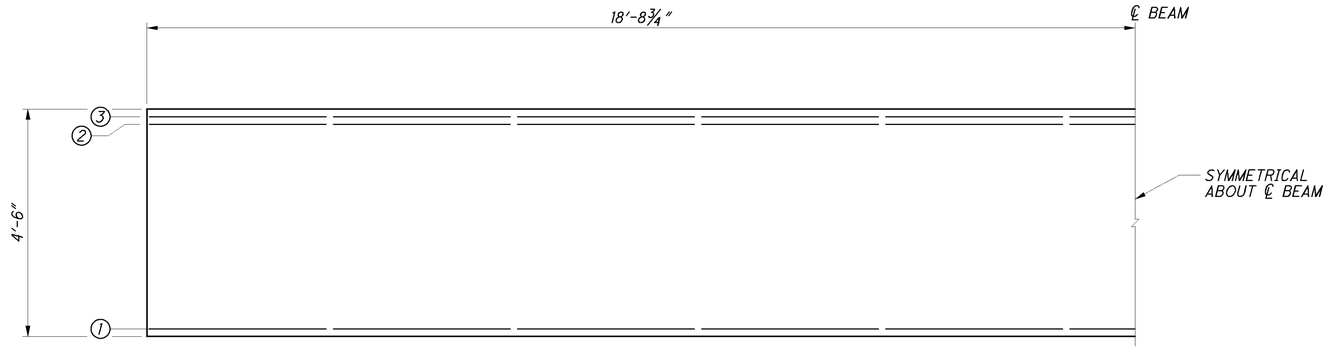

DRAPING DETAIL

NOT TO SCALE
(SPANS 1 AND 3)

BEAM MARK	NUMBER OF STRANDS PER ROW ①	②	③	TOTAL STRANDS	CONCRETE STRENGTHS f'ci	f'c	C401 BARS REQ'D	C402 BARS REQ'D	C403 BARS REQ'D	C405 BARS REQ'D
END	11	3	3	17	5	7	32	38	32	12
MID-SPAN	11	3	3							

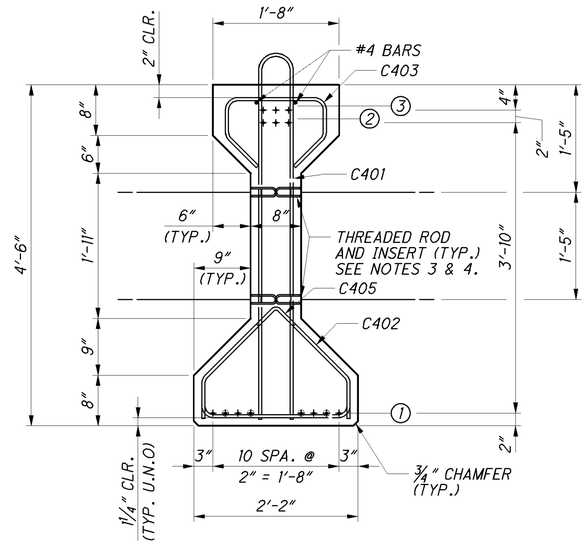

TYPICAL END SECTION

(SPANS 1 AND 3)

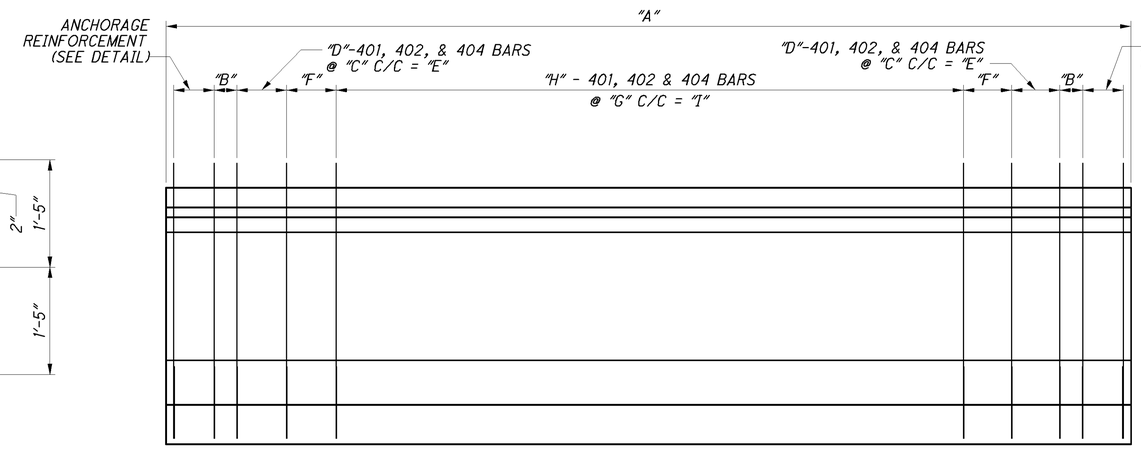

SHEAR REINFORCEMENT

NOT TO SCALE
(SPANS 1 AND 3)

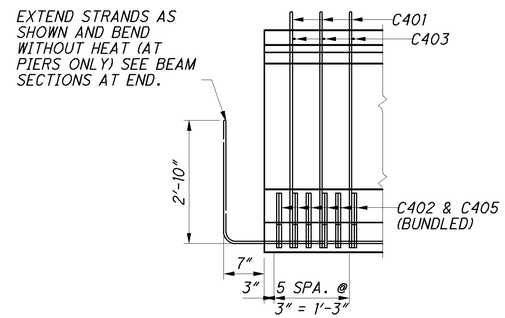

ANCHORAGE REINFORCEMENT

BEAM DIMENSIONS										
NO. REQ'D.	DIMENSIONS "A"	"B"	"C"	"D"	"E"	"F"	"G"	"H"	"I"	APPROXIMATE WEIGHT (LBS)
24	37'-5 1/2"	6"	6"	6	2'-6"	1'-2 3/4"	2'-0"	14	26'-0"	30,789

LEGEND:

⊕ - EXTENDED STRANDS AT PIER DIAPHRAGM ONLY

NOTES:

1. ALL REINFORCEMENT IS TO BE EPOXY COATED.
2. SEE GENERAL NOTES FOR INITIAL STRAND STRESS AND TENSION LOAD.
3. PROVIDE THREADED RODS AND INSERTS ON EACH FACE OF WEB FOR INTERIOR BEAMS. PROVIDE THREADED RODS AND INSERTS ON THE INTERIOR WEB FACE FOR FASCIA BEAMS.
4. DIMENSIONS SHOWN FOR THE THREADED RODS AND INSERTS FOR THE INTERMEDIATE DIAPHRAGMS SHALL BE ADJUSTED AS NECESSARY TO AVOID THE PRESTRESSING STRANDS AT ALL LOCATIONS.
5. SHIPPING STRANDS: THE FABRICATOR MAY ADD SHIPPING STRANDS AT THE LOCATIONS SHOWN ON SCD PSID-1-99 SHEET 1 OF 8. THESE SHIPPING STRANDS SHALL BE DEBONDED FOR THE ENTIRE LENGTH OF THE BEAM EXCEPT FOR THE LAST 10'-0" AT EACH END. THE STRANDS SHALL BE CUT AFTER ALL HANDLING OPERATIONS ARE COMPLETE.
6. ALL BEAMS SHALL BE STORED FOR A MINIMUM OF 90 DAYS PRIOR TO DECK PLACEMENT.
7. FOR ADDITIONAL NOTES AND DETAILS SEE ODOT STD. DWG PSID-1-99.
8. VERTICAL REINFORCEMENT QUANTITIES INCLUDE PIER DIAPHRAGM STEEL.

DESIGN AGENCY
PARSONS BRINCKERHOFF
2945 FARMERS DRIVE
SUITE 350
COLUMBUS, OHIO 43235

DESIGNED	DRAWN	REVIEWED	DATE
PJL	BKJ	EBS	03/09/12
CHECKED	REVISED	STRUCTURE FILE NUMBER	
SAP		LEFT: 0201812 RIGHT: 0201820	

SUPERSTRUCTURE DETAILS
BRIDGE NO. ALL-75-0423 L&R
I-75 OVER S.R. 65

ALL-75-0.21
PID No. 89029

707
907

J:\Projects\ALL\89029\structures\ALL075_0423C\sheets\075_0423CSD002.dgn 09-MAY-2013 3:08PM jint

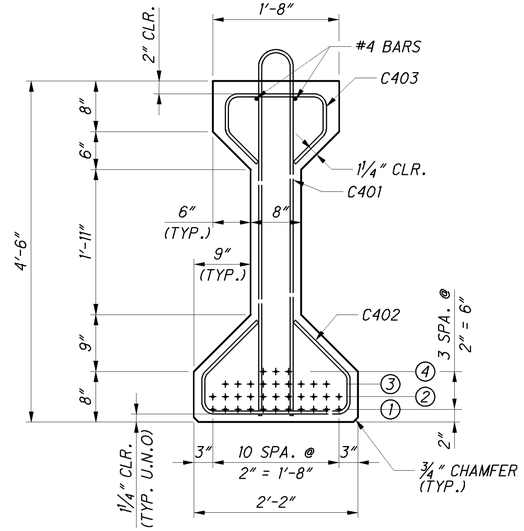

TYPICAL MID-SPAN SECTION
(SPAN 2)

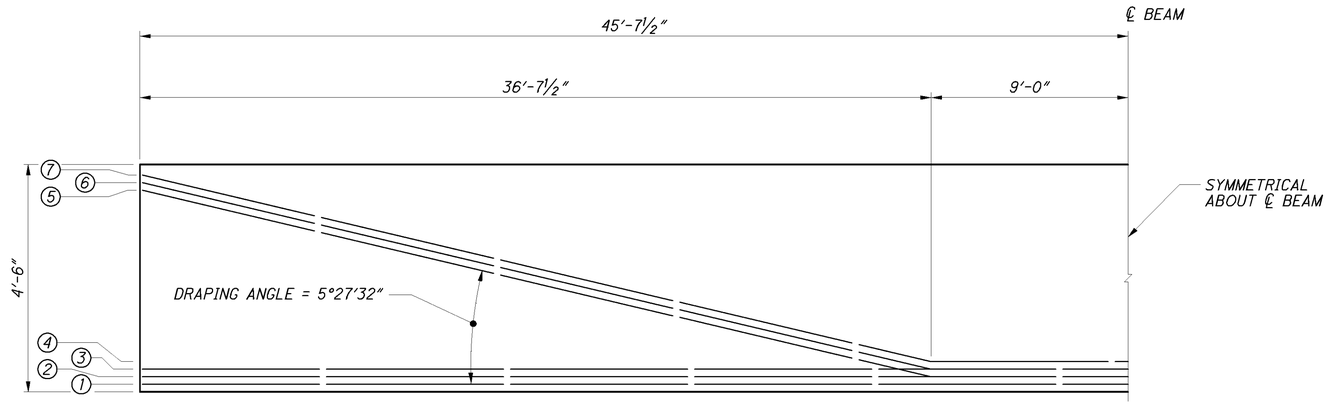

DRAPING DETAIL
NOT TO SCALE
(SPAN 2)

NUMBER OF STRANDS PER ROW									CONCRETE STRENGTHS		C401 BARS REQ'D	C402 BARS REQ'D	C403 BARS REQ'D	C405 BARS REQ'D
BEAM MARK	①	②	③	④	⑤	⑥	⑦	TOTAL STRANDS	f'ci	f'c				
END	11	8	6	-	3	3	3	34	5	7	73	79	73	12
MID-SPAN	11	11	9	3	-	-	-							

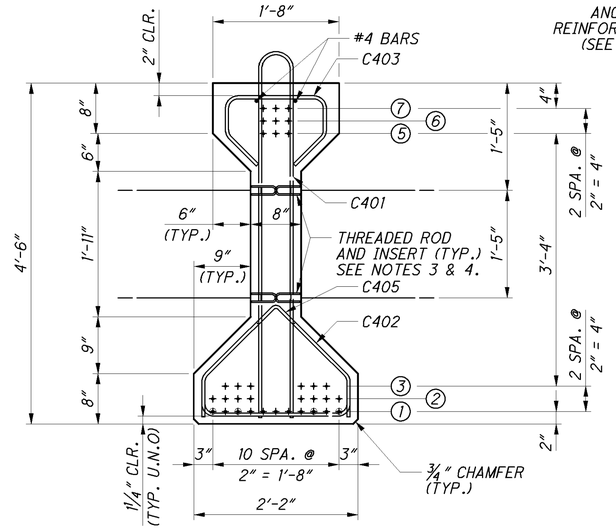

TYPICAL END SECTION
(SPAN 2)

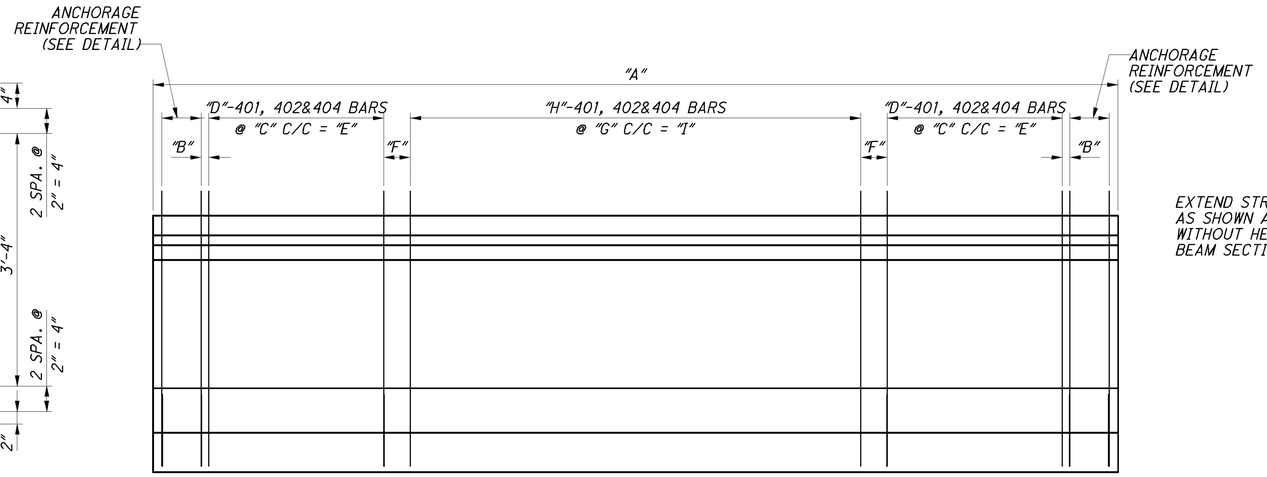

SHEAR REINFORCEMENT
NOT TO SCALE
(SPAN 2)

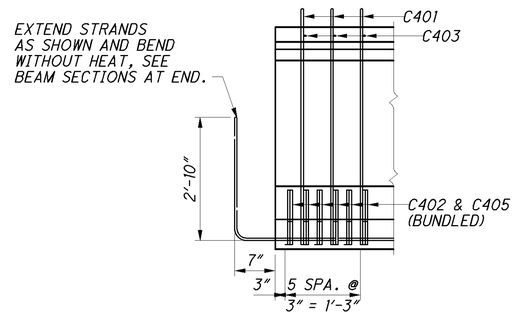

ANCHORAGE REINFORCEMENT

BEAM DIMENSIONS										
NO. REQ'D.	DIMENSIONS									APPROXIMATE WEIGHT (LBS)
	"A"	"B"	"C"	"D"	"E"	"F"	"G"	"H"	"I"	
12	91'-3"	6"	6"	15	7'-0"	7½"	2'-0"	37	72'-0"	74,998

LEGEND:

⊕ - EXTENDED STRANDS AT PIER DIAPHRAGM ONLY

NOTES:

1. FOR NOTES SEE SHEET 24/43 .

DESIGN AGENCY
PARSONS BRINCKERHOFF
2945 FARMERS DRIVE
SUITE 350
COLUMBUS, OHIO 43235

DESIGNED	DRAWN	REVIEWED	DATE
PJL	BKJ	EBS	03/09/12
CHECKED	REVISED	STRUCTURE FILE NUMBER	
SAP		LEFT: 0201812 RIGHT: 0201820	

SUPERSTRUCTURE DETAILS
BRIDGE NO. ALL-75-0423 L&R
I-75 OVER S.R. 65

ALL-75-0.21
PID No. 89029

25 / 43

708
907

J:\Projects\ALL\89029\structures\ALL075_0423C\sheets\075_0423CSD003.dgn 09-MAY-2013 3:08PM lint

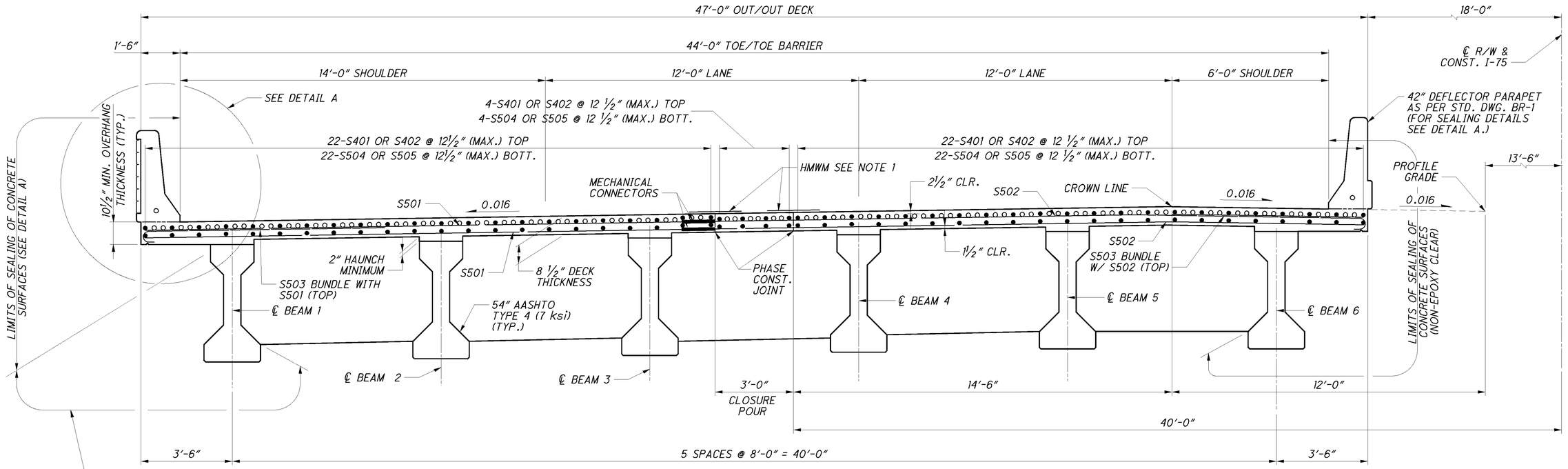

TYPICAL TRANSVERSE SECTION

SOUTHBOUND SHOWN
NORTHBOUND SYMMETRICAL ABOUT ℄ I-75

NOTES:
1. HMWM SEALER SHALL BE 2'-0" WIDE, CENTERED ON EACH CONSTRUCTION JOINT.

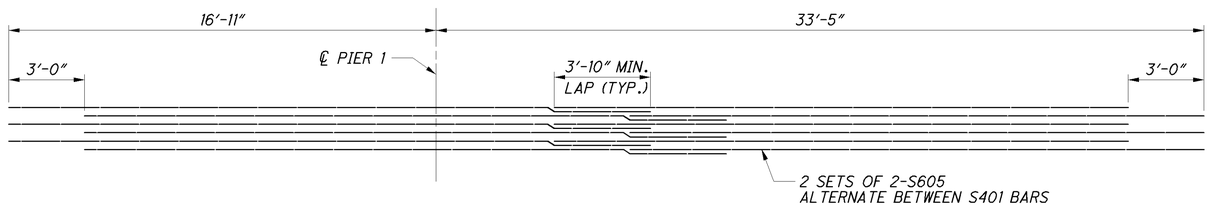

NEGATIVE MOMENT REINFORCEMENT

(TOP MAT)
(PIER 2 OPPOSITE HAND)

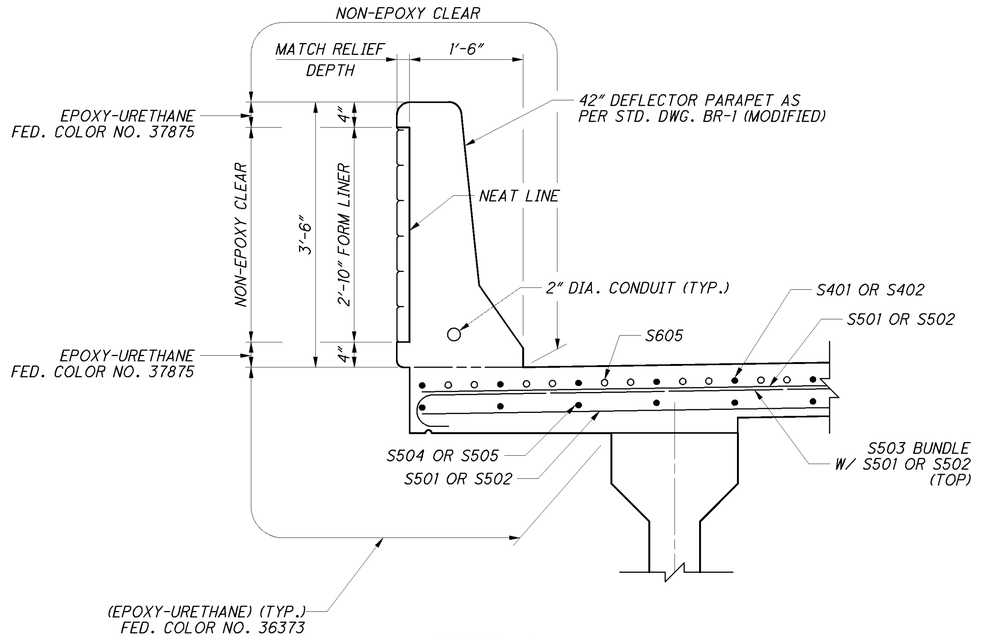

DETAIL A

(FOR NOTES AND DETAILS NOT SHOWN, SEE STANDARD DRAWING BR-1)

DESIGN AGENCY
PARSONS BRINCKERHOFF
2545 FARMERS DRIVE
SUITE 350
COLUMBUS, OHIO 43235

DESIGNED	DRAWN	REVIEWED	DATE
PJL	LEL	EBS	03/09/12
CHECKED	REVISED	STRUCTURE FILE NUMBER	
SAP	BKJ	LEFT: 0201812 RIGHT: 0201820	

SUPERSTRUCTURE DETAILS
BRIDGE NO. ALL-75-0423 L&R
I-75 OVER S.R. 65

ALL-75-0.21
PID No. 89029

709
907

J:\Projects\ALL\89029\structures\ALL075_0423C\sheets\075_0423CTS001.dgn 09-MAY-2013 3:08PM jint

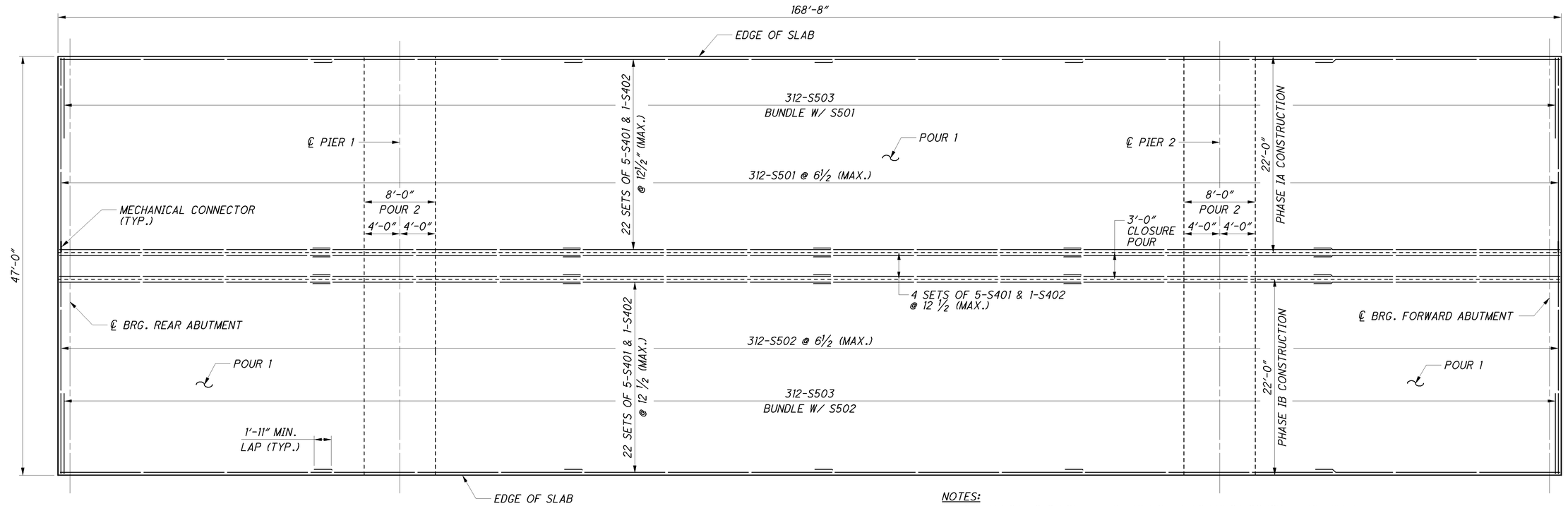

DECK SLAB PLAN (TOP)

SB SHOWN, NB SIMILAR

NOTES:

1. FOR TYPICAL SECTION, SEE SHEET 26/43 .
2. DO NOT PLACE DECK CONCRETE BETWEEN CONSTRUCTION JOINTS PRIOR TO THE CONCRETE PLACEMENT IN THE ADJACENT SPANS. SEE STD. DWG. PSID-1-99 FOR ADDITIONAL NOTES AND DETAILS.

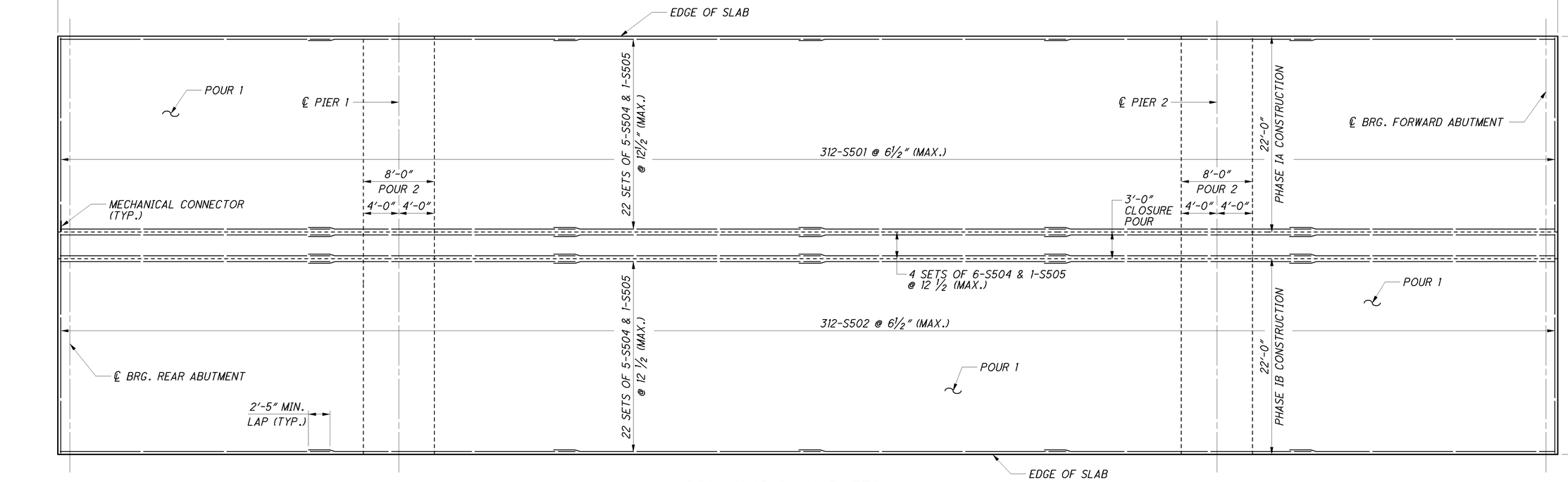

DECK SLAB PLAN (BOTTOM)

SB SHOWN, NB SIMILAR

DESIGN AGENCY
PARSONS BRINCKERHOFF
2545 FARMERS DRIVE
SUITE 350
COLUMBUS, OHIO 43235

DESIGNED	DRAWN	REVIEWED	DATE
BKJ	BKJ	EBS	01/18/13
CHECKED	REVISED	SHEET NUMBER	
SAP		LEFT: 0201812 RIGHT: 0201820	

DECK PLAN

BRIDGE NO. ALL-75-0423 L&R
I-75 OVER S.R. 65

ALL-75-0.21

PID No. 89029

27 / 43

710
907

J:\Projects\ALL\89029\structures\ALL075_0423C\sheets\075_0423CDP001.dgn 09-MAY-2013 3:08PM lint

LEFT SCREED TABLE																
	LOCATION	CL BRG. REAR ABUT.	2/10	5/10	7/10	CL BRG. PIER REAR	CL BRG. PIER FWD.	2/10	5/10	7/10	CL BRG. PIER REAR	CL BRG. PIER FWD.	2/10	5/10	7/10	CL BRG. FWD ABUT.
LEFT TOE OF BARRIER	STATION	223+19.83	223+28.78	223+37.73	223+46.68	223+55.62	223+58.04	223+80.44	224+02.83	224+25.23	224+47.62	224+50.04	224+58.99	224+67.94	224+76.89	224+85.83
	FINAL DECK SURFACE EL.	919.66	919.88	920.09	920.30	920.51	920.56	921.08	921.59	922.09	922.59	922.64	922.83	923.03	923.22	923.41
	DEFLECTION	0.00	0.00	0.00	0.00	0.00	0.00	0.06	0.09	0.06	0.00	0.00	0.00	0.00	0.00	0.00
	SCREED EL.	919.66	919.88	920.09	920.30	920.51	920.56	921.14	921.68	922.15	922.59	922.64	922.83	923.03	923.22	923.41
BEAM 1	STATION	223+19.83	223+28.78	223+37.73	223+46.68	223+55.62	223+58.04	223+80.44	224+02.83	224+25.23	224+47.62	224+50.04	224+58.99	224+67.94	224+76.89	224+85.83
	FINAL DECK SURFACE EL.	919.70	919.91	920.12	920.33	920.54	920.60	921.11	921.62	922.12	922.62	922.67	922.86	923.06	923.25	923.44
	DEFLECTION	0.00	0.00	0.00	0.00	0.00	0.00	0.06	0.09	0.06	0.00	0.00	0.00	0.00	0.00	0.00
	SCREED EL.	919.70	919.91	920.12	920.33	920.54	920.60	921.17	921.71	922.18	922.62	922.67	922.86	923.06	923.25	923.44
	TOP OF HAUNCH EL	918.99	919.20	919.41	919.62	919.83	919.89	920.46	921.00	921.47	921.91	921.96	922.16	922.35	922.54	922.73
BEAM 2	STATION	223+19.83	223+28.78	223+37.73	223+46.68	223+55.62	223+58.04	223+80.44	224+02.83	224+25.23	224+47.62	224+50.04	224+58.99	224+67.94	224+76.89	224+85.83
	FINAL DECK SURFACE EL.	919.82	920.04	920.25	920.46	920.67	920.72	921.24	921.75	922.25	922.75	922.80	922.99	923.19	923.38	923.57
	DEFLECTION	0.00	0.00	0.00	0.00	0.00	0.00	0.07	0.10	0.07	0.00	0.00	0.00	0.00	0.00	0.00
	SCREED EL.	919.82	920.04	920.25	920.46	920.67	920.72	921.31	921.85	922.32	922.75	922.80	922.99	923.19	923.38	923.57
	TOP OF HAUNCH EL	919.12	919.33	919.54	919.75	919.96	920.02	920.60	921.14	921.61	922.04	922.09	922.28	922.48	922.67	922.86
BEAM 3	STATION	223+19.83	223+28.78	223+37.73	223+46.68	223+55.62	223+58.04	223+80.44	224+02.83	224+25.23	224+47.62	224+50.04	224+58.99	224+67.94	224+76.89	224+85.83
	FINAL DECK SURFACE EL.	919.95	920.16	920.38	920.59	920.80	920.85	921.37	921.88	922.38	922.87	922.93	923.12	923.31	923.51	923.70
	DEFLECTION	0.00	0.00	0.00	0.00	0.00	0.00	0.07	0.10	0.07	0.00	0.00	0.00	0.00	0.00	0.00
	SCREED EL.	919.95	920.16	920.38	920.59	920.80	920.85	921.44	921.98	922.45	922.87	922.93	923.12	923.31	923.51	923.70
	TOP OF HAUNCH EL	919.24	919.46	919.67	919.88	920.09	920.14	920.73	921.27	921.74	922.16	922.22	922.41	922.61	922.80	922.99
PHASE CONSTRUCTION LINE	STATION	223+19.83	223+28.78	223+37.73	223+46.68	223+55.62	223+58.04	223+80.44	224+02.83	224+25.23	224+47.62	224+50.04	224+58.99	224+67.94	224+76.89	224+85.83
	FINAL DECK SURFACE EL.	919.99	920.20	920.42	920.63	920.84	920.89	921.41	921.92	922.42	922.91	922.97	923.16	923.35	923.55	923.74
	DEFLECTION	0.00	0.00	0.00	0.00	0.00	0.00	0.07	0.10	0.07	0.00	0.00	0.00	0.00	0.00	0.00
	SCREED EL.	919.99	920.20	920.42	920.63	920.84	920.89	921.48	922.02	922.49	922.91	922.97	923.16	923.35	923.55	923.74
PHASE CONSTRUCTION LINE	STATION	223+19.83	223+28.78	223+37.73	223+46.68	223+55.62	223+58.04	223+80.44	224+02.83	224+25.23	224+47.62	224+50.04	224+58.99	224+67.94	224+76.89	224+85.83
	FINAL DECK SURFACE EL.	920.04	920.25	920.46	920.67	920.88	920.94	921.46	921.97	922.47	922.96	923.01	923.21	923.40	923.59	923.79
	DEFLECTION	0.00	0.00	0.00	0.00	0.00	0.00	0.07	0.10	0.07	0.00	0.00	0.00	0.00	0.00	0.00
	SCREED EL.	920.04	920.25	920.46	920.67	920.88	920.94	921.53	922.07	922.54	922.96	923.01	923.21	923.40	923.59	923.79
BEAM 4	STATION	223+19.83	223+28.78	223+37.73	223+46.68	223+55.62	223+58.04	223+80.44	224+02.83	224+25.23	224+47.62	224+50.04	224+58.99	224+67.94	224+76.89	224+85.83
	FINAL DECK SURFACE EL.	920.08	920.29	920.50	920.71	920.92	920.98	921.50	922.01	922.51	923.00	923.05	923.25	923.44	923.63	923.83
	DEFLECTION	0.00	0.00	0.00	0.00	0.00	0.00	0.07	0.10	0.07	0.00	0.00	0.00	0.00	0.00	0.00
	SCREED EL.	920.08	920.29	920.50	920.71	920.92	920.98	921.57	922.11	922.58	923.00	923.05	923.25	923.44	923.63	923.83
	TOP OF HAUNCH EL	919.37	919.58	919.80	920.01	920.21	920.27	920.86	921.40	921.87	922.29	922.35	922.54	922.73	922.93	923.12
BEAM 5	STATION	223+19.83	223+28.78	223+37.73	223+46.68	223+55.62	223+58.04	223+80.44	224+02.83	224+25.23	224+47.62	224+50.04	224+58.99	224+67.94	224+76.89	224+85.83
	FINAL DECK SURFACE EL.	920.21	920.42	920.63	920.84	921.05	921.11	921.62	922.13	922.64	923.13	923.18	923.38	923.57	923.76	923.95
	DEFLECTION	0.00	0.00	0.00	0.00	0.00	0.00	0.07	0.10	0.07	0.00	0.00	0.00	0.00	0.00	0.00
	SCREED EL.	920.21	920.42	920.63	920.84	921.05	921.11	921.69	922.23	922.71	923.13	923.18	923.38	923.57	923.76	923.95
	TOP OF HAUNCH EL	919.50	919.71	919.92	920.13	920.34	920.40	920.99	921.53	922.00	922.42	922.47	922.67	922.86	923.05	923.25
CROWN	STATION	223+19.83	223+28.78	223+37.73	223+46.68	223+55.62	223+58.04	223+80.44	224+02.83	224+25.23	224+47.62	224+50.04	224+58.99	224+67.94	224+76.89	224+85.83
	FINAL DECK SURFACE EL.	920.27	920.48	920.70	920.91	921.12	921.17	921.69	922.20	922.70	923.19	923.25	923.44	923.63	923.83	924.02
	DEFLECTION	0.00	0.00	0.00	0.00	0.00	0.00	0.06	0.09	0.06	0.00	0.00	0.00	0.00	0.00	0.00
	SCREED EL.	920.27	920.48	920.70	920.91	921.12	921.17	921.75	922.29	922.76	923.19	923.25	923.44	923.63	923.83	924.02
BEAM 6	STATION	223+19.83	223+28.78	223+37.73	223+46.68	223+55.62	223+58.04	223+80.44	224+02.83	224+25.23	224+47.62	224+50.04	224+58.99	224+67.94	224+76.89	224+85.83
	FINAL DECK SURFACE EL.	920.21	920.42	920.63	920.84	921.05	921.11	921.62	922.13	922.64	923.13	923.18	923.38	923.57	923.76	923.95
	DEFLECTION	0.00	0.00	0.00	0.00	0.00	0.00	0.06	0.09	0.06	0.00	0.00	0.00	0.00	0.00	0.00
	SCREED EL.	920.21	920.42	920.63	920.84	921.05	921.11	921.68	922.22	922.69	923.13	923.18	923.38	923.57	923.76	923.95
	TOP OF HAUNCH EL	919.50	919.71	919.93	920.13	920.34	920.40	920.98	921.51	921.99	922.42	922.47	922.67	922.86	923.06	923.25
RIGHT TOE OF BARRIER	STATION	223+19.83	223+28.78	223+37.73	223+46.68	223+55.62	223+58.04	223+80.44	224+02.83	224+25.23	224+47.62	224+50.04	224+58.99	224+67.94	224+76.89	224+85.83
	FINAL DECK SURFACE EL.	920.18	920.39	920.60	920.81	921.02	921.08	921.59	922.10	922.60	923.10	923.15	923.34	923.54	923.73	923.92
	DEFLECTION	0.00	0.00	0.00	0.00	0.00	0.00	0.06	0.09	0.06	0.00	0.00	0.00	0.00	0.00	0.00
	SCREED EL.	920.18	920.39	920.60	920.81	921.02	921.08	921.65	922.19	922.66	923.10	923.15	923.34	923.54	923.73	923.92

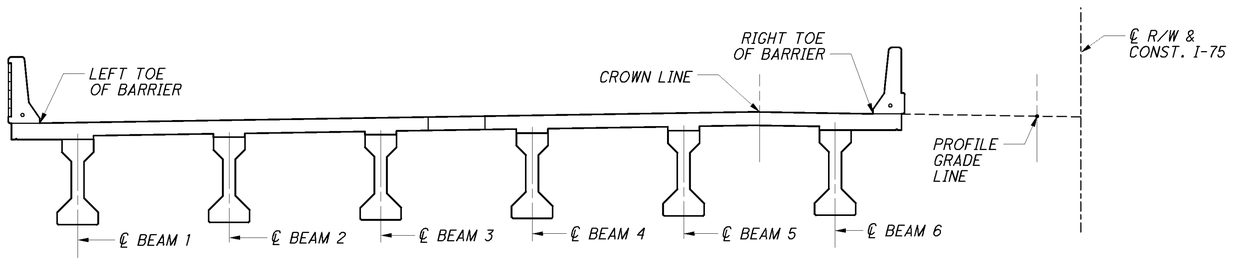

TYPICAL LEFT BRIDGE SECTION

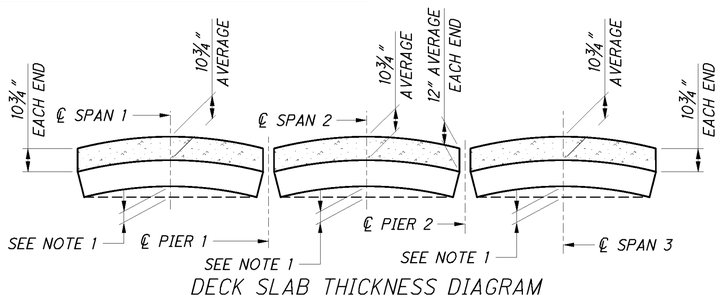

DECK SLAB THICKNESS DIAGRAM

MEASURED ALONG ℄ BEAM

NOTES:

1. CALCULATED CAMBER FOR SPAN 2 BEAMS AT THE TIME OF RELEASE IS 1⅜ INCHES.
   CALCULATED CAMBER FOR SPAN 2 BEAMS AT THE TIME OF ERECTION IS 2½ INCHES.
   CALCULATED LONG-TERM CAMBER FOR SPAN 2 BEAMS IS 3⅝ INCHES.
   CALCULATED CAMBER FOR SPAN 1 AND 3 BEAMS AT THE TIME OF RELEASE IS 0 INCHES.
   CALCULATED CAMBER FOR SPAN 1 AND 3 BEAMS AT THE TIME OF ERECTION IS ⅛ INCHES.
   CALCULATED LONG-TERM CAMBER FOR SPAN 1 AND 3 BEAMS IS ⅛ INCHES.
2. DECK SLAB THICKNESS FOR CONCRETE QUANTITY: THE TOPPING THICKNESSES SHOWN FROM THE TOP OF THE DECK SLAB TO THE TOP OF THE TOP FLANGE ALONG THE CENTER-LINE OF THE I-BEAM ARE THEORETICAL DIMENSIONS. THE HAUNCH DEPTH IS THE TOPPING THICKNESS MINUS THE DESIGN SLAB THICKNESS. THE DEPARTMENT WILL PAY FOR SUPER-STRUCTURE CONCRETE BASED ON THE DESIGN SLAB THICKNESS AND THE AVERAGE OF THE THEORETICAL HAUNCH DEPTHS AT MID-SPAN AND AT EACH BEAM BEARING EVEN THOUGH DEVIATION FROM THE DIMENSIONS SHOWN MAY BE NECESSARY TO PLACE THE DECK SURFACE AT THE FINISHED GRADE. ONCE ALL BEAMS ARE SET IN THEIR FINAL POSITION, THE ACTUAL CAMBER FOR EACH MEMBER WILL BE THE TOP OF BEAM ELEVATION AT MID-SPAN MINUS THE AVERAGE TOP OF BEAM ELEVATION AT EACH BEARING. THE ACTUAL TOPPING THICKNESS AT MID-SPAN WILL BE THE THEORETICAL DIMENSION PLUS OR MINUS THE DIFFERENCE BETWEEN THE ACTUAL AND ANTICIPATED CAMBER.
3. SCREED ELEVATIONS SHOWN REPRESENT THE THEORETICAL DECK SURFACE LOCATION PRIOR TO DEFLECTIONS CAUSED BY DECK PLACEMENT AND OTHER ANTICIPATED DEAD LOADS.
4. TOP OF HAUNCH ELEVATIONS SHOWN REPRESENT THE THEORETICAL LOCATION OF THE BOTTOM OF THE DECK ABOVE THE BEAM/GIRDER HAUNCH PRIOR TO DEFLECTIONS CAUSED BY DECK PLACEMENT AND OTHER ANTICIPATED DEAD LOADS.
5. FINAL DECK SURFACE ELEVATIONS SHOWN REPRESENT THE DECK SURFACE LOCATION AFTER ALL ANTICIPATED DEAD LOAD DEFLECTIONS HAVE OCCURRED.

DESIGN AGENCY
PARSONS BRINCKERHOFF
2945 FARMERS DRIVE
SUITE 350
COLUMBUS, OHIO 43235

DESIGNED	DRAWN	REVIEWED	DATE
SAP	BKJ	EBS	01/18/13
CHECKED	REVISED	STRUCTURE FILE NUMBER	
PJL		LEFT: 0201812 RIGHT: 0201820	

LEFT BRIDGE - SCREED TABLE

BRIDGE NO. ALL-75-0423
I-75 OVER S.R. 65

ALL-75-0.21
PID No. 89029

J:\Projects\ALL\89029\structures\ALL075_0423C\sheets\075_0423CSD004.dgn 09-MAY-2013 3:08PM jint

RIGHT SCREED TABLE																
	LOCATION	CL BRG. REAR ABUT.	1/4	5/10	3/4	CL BRG. PIER REAR	CL BRG. PIER FWD.	1/4	5/10	3/4	CL BRG. PIER REAR	CL BRG. PIER FWD.	1/4	5/10	3/4	CL BRG. FWD ABUT.
LEFT TOE OF BARRIER	STATION	223+19.83	223+28.78	223+37.73	223+46.68	223+55.62	223+58.04	223+80.44	224+02.83	224+25.23	224+47.62	224+50.04	224+58.99	224+67.94	224+76.89	224+85.83
	FINAL DECK SURFACE EL.	920.18	920.39	920.60	920.81	921.02	921.08	921.59	922.10	922.60	923.10	923.15	923.34	923.54	923.73	923.92
	DEFLECTION	0.00	0.00	0.00	0.00	0.00	0.00	0.06	0.09	0.06	0.00	0.00	0.00	0.00	0.00	0.00
	SCREED EL.	920.18	920.39	920.60	920.81	921.02	921.08	921.65	922.19	922.66	923.10	923.15	923.34	923.54	923.73	923.92
BEAM 1	STATION	223+19.83	223+28.78	223+37.73	223+46.68	223+55.62	223+58.04	223+80.44	224+02.83	224+25.23	224+47.62	224+50.04	224+58.99	224+67.94	224+76.89	224+85.83
	FINAL DECK SURFACE EL.	920.21	920.42	920.63	920.84	921.05	921.11	921.62	922.13	922.64	923.13	923.18	923.38	923.57	923.76	923.95
	DEFLECTION	0.00	0.00	0.00	0.00	0.00	0.00	0.06	0.09	0.06	0.00	0.00	0.00	0.00	0.00	0.00
	SCREED EL.	920.21	920.42	920.63	920.84	921.05	921.11	921.68	922.22	922.70	923.13	923.18	923.38	923.57	923.76	923.95
	TOP OF HAUNCH EL	919.50	919.71	919.92	920.13	920.34	920.40	920.98	921.52	921.99	922.42	922.47	922.67	922.86	923.05	923.25
CROWN	STATION	223+19.83	223+28.78	223+37.73	223+46.68	223+55.62	223+58.04	223+80.44	224+02.83	224+25.23	224+47.62	224+50.04	224+58.99	224+67.94	224+76.89	224+85.83
	FINAL DECK SURFACE EL.	920.27	920.48	920.70	920.91	921.12	921.17	921.69	922.20	922.70	923.19	923.25	923.44	923.63	923.83	924.02
	DEFLECTION	0.00	0.00	0.00	0.00	0.00	0.00	0.07	0.10	0.07	0.00	0.00	0.00	0.00	0.00	0.00
	SCREED EL.	920.27	920.48	920.70	920.91	921.12	921.17	921.76	922.30	922.77	923.19	923.25	923.44	923.63	923.83	924.02
BEAM 2	STATION	223+19.83	223+28.78	223+37.73	223+46.68	223+55.62	223+58.04	223+80.44	224+02.83	224+25.23	224+47.62	224+50.04	224+58.99	224+67.94	224+76.89	224+85.83
	FINAL DECK SURFACE EL.	920.21	920.42	920.63	920.84	921.05	921.11	921.62	922.13	922.64	923.13	923.18	923.38	923.57	923.76	923.95
	DEFLECTION	0.00	0.00	0.00	0.00	0.00	0.00	0.07	0.10	0.07	0.00	0.00	0.00	0.00	0.00	0.00
	SCREED EL.	920.21	920.42	920.63	920.84	921.05	921.11	921.69	922.23	922.71	923.13	923.18	923.38	923.57	923.76	923.95
	TOP OF HAUNCH EL	919.50	919.71	919.92	920.13	920.34	920.40	920.99	921.53	922.00	922.42	922.47	922.67	922.86	923.05	923.25
BEAM 3	STATION	223+19.83	223+28.78	223+37.73	223+46.68	223+55.62	223+58.04	223+80.44	224+02.83	224+25.23	224+47.62	224+50.04	224+58.99	224+67.94	224+76.89	224+85.83
	FINAL DECK SURFACE EL.	920.08	920.29	920.50	920.71	920.92	920.98	921.50	922.01	922.51	923.00	923.05	923.25	923.44	923.63	923.83
	DEFLECTION	0.00	0.00	0.00	0.00	0.00	0.00	0.07	0.10	0.07	0.00	0.00	0.00	0.00	0.00	0.00
	SCREED EL.	920.08	920.29	920.50	920.71	920.92	920.98	921.57	922.11	922.58	923.00	923.05	923.25	923.44	923.63	923.83
	TOP OF HAUNCH EL	919.37	919.58	919.80	920.01	920.21	920.27	920.86	921.40	921.87	922.29	922.35	922.54	922.73	922.93	923.12
PHASE CONSTRUCTION LINE	STATION	223+19.83	223+28.78	223+37.73	223+46.68	223+55.62	223+58.04	223+80.44	224+02.83	224+25.23	224+47.62	224+50.04	224+58.99	224+67.94	224+76.89	224+85.83
	FINAL DECK SURFACE EL.	920.04	920.25	920.46	920.67	920.88	920.94	921.46	921.97	922.47	922.96	923.01	923.21	923.40	923.59	923.79
	DEFLECTION	0.00	0.00	0.00	0.00	0.00	0.00	0.07	0.10	0.07	0.00	0.00	0.00	0.00	0.00	0.00
	SCREED EL.	920.04	920.25	920.46	920.67	920.88	920.94	921.53	922.07	922.54	922.96	923.01	923.21	923.40	923.59	923.79
PHASE CONSTRUCTION LINE	STATION	223+19.83	223+28.78	223+37.73	223+46.68	223+55.62	223+58.04	223+80.44	224+02.83	224+25.23	224+47.62	224+50.04	224+58.99	224+67.94	224+76.89	224+85.83
	FINAL DECK SURFACE EL.	919.99	920.20	920.42	920.63	920.84	920.89	921.41	921.92	922.42	922.91	922.97	923.16	923.35	923.55	923.74
	DEFLECTION	0.00	0.00	0.00	0.00	0.00	0.00	0.07	0.10	0.07	0.00	0.00	0.00	0.00	0.00	0.00
	SCREED EL.	919.99	920.20	920.42	920.63	920.84	920.89	921.48	922.02	922.49	922.91	922.97	923.16	923.35	923.55	923.74
BEAM 4	STATION	223+19.83	223+28.78	223+37.73	223+46.68	223+55.62	223+58.04	223+80.44	224+02.83	224+25.23	224+47.62	224+50.04	224+58.99	224+67.94	224+76.89	224+85.83
	FINAL DECK SURFACE EL.	919.95	920.16	920.38	920.59	920.80	920.85	921.37	921.88	922.38	922.87	922.93	923.12	923.31	923.51	923.70
	DEFLECTION	0.00	0.00	0.00	0.00	0.00	0.00	0.07	0.10	0.07	0.00	0.00	0.00	0.00	0.00	0.00
	SCREED EL.	919.95	920.16	920.38	920.59	920.80	920.85	921.44	921.98	922.45	922.87	922.93	923.12	923.31	923.51	923.70
	TOP OF HAUNCH EL	919.24	919.46	919.67	919.88	920.09	920.14	920.73	921.27	921.74	922.16	922.22	922.41	922.61	922.80	922.99
BEAM 5	STATION	223+19.83	223+28.78	223+37.73	223+46.68	223+55.62	223+58.04	223+80.44	224+02.83	224+25.23	224+47.62	224+50.04	224+58.99	224+67.94	224+76.89	224+85.83
	FINAL DECK SURFACE EL.	919.82	920.04	920.25	920.46	920.67	920.72	921.24	921.75	922.25	922.75	922.80	922.99	923.19	923.38	923.57
	DEFLECTION	0.00	0.00	0.00	0.00	0.00	0.00	0.07	0.10	0.07	0.00	0.00	0.00	0.00	0.00	0.00
	SCREED EL.	919.82	920.04	920.25	920.46	920.67	920.72	921.31	921.85	922.32	922.75	922.80	922.99	923.19	923.38	923.57
	TOP OF HAUNCH EL	919.12	919.33	919.54	919.75	919.96	920.02	920.60	921.14	921.61	922.04	922.09	922.28	922.48	922.67	922.86
BEAM 6	STATION	223+19.83	223+28.78	223+37.73	223+46.68	223+55.62	223+58.04	223+80.44	224+02.83	224+25.23	224+47.62	224+50.04	224+58.99	224+67.94	224+76.89	224+85.83
	FINAL DECK SURFACE EL.	919.70	919.91	920.12	920.33	920.54	920.60	921.11	921.62	922.12	922.62	922.67	922.86	923.06	923.25	923.44
	DEFLECTION	0.00	0.00	0.00	0.00	0.00	0.00	0.06	0.09	0.06	0.00	0.00	0.00	0.00	0.00	0.00
	SCREED EL.	919.70	919.91	920.12	920.33	920.54	920.60	921.17	921.71	922.18	922.62	922.67	922.86	923.06	923.25	923.44
	TOP OF HAUNCH EL	918.99	919.20	919.41	919.62	919.83	919.89	920.46	921.00	921.47	921.91	921.96	922.16	922.35	922.54	922.73
RIGHT TOE OF BARRIER	STATION	223+19.83	223+28.78	223+37.73	223+46.68	223+55.62	223+58.04	223+80.44	224+02.83	224+25.23	224+47.62	224+50.04	224+58.99	224+67.94	224+76.89	224+85.83
	FINAL DECK SURFACE EL.	919.66	919.88	920.09	920.30	920.51	920.56	921.08	921.59	922.09	922.59	922.64	922.83	923.03	923.22	923.41
	DEFLECTION	0.00	0.00	0.00	0.00	0.00	0.00	0.06	0.09	0.06	0.00	0.00	0.00	0.00	0.00	0.00
	SCREED EL.	919.66	919.88	920.09	920.30	920.51	920.56	921.14	921.68	922.15	922.59	922.64	922.83	923.03	923.22	923.41

NOTE:

1. FOR NOTES SEE SHEET 28/43 .

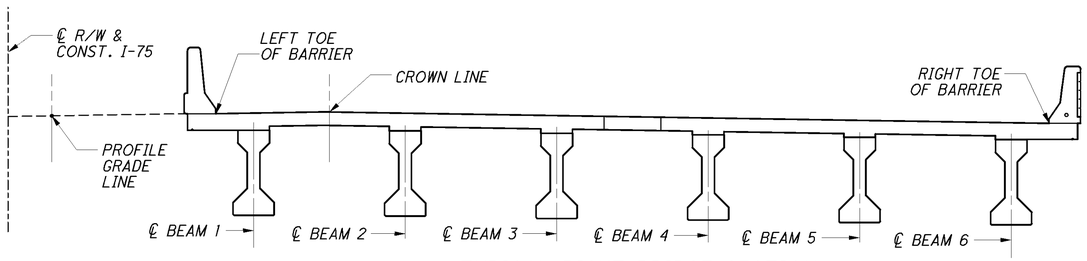

TYPICAL RIGHT BRIDGE SECTION

DESIGN AGENCY
PARSONS BRINCKERHOFF
2945 FARMERS DRIVE
SUITE 350
COLUMBUS, OHIO 43235

DESIGNED	DRAWN	REVIEWED	DATE
SAP	BKJ	EBS	01/18/13
CHECKED	REVISED	SYMBOLOGY FILE NUMBER	
PJL	LEL	LEFT: 0201812 RIGHT: 0201820	

RIGHT BRIDGE - SCREED TABLE

BRIDGE NO. ALL-75-0423
I-75 OVER S.R. 65

ALL-75-0.21
PID No. 89029

29/43

712
907

J:\Projects\ALL\89029\structures\ALL075_0423C\sheets\075_0423CSD005.dgn 09-MAY-2013 3:08PM lint

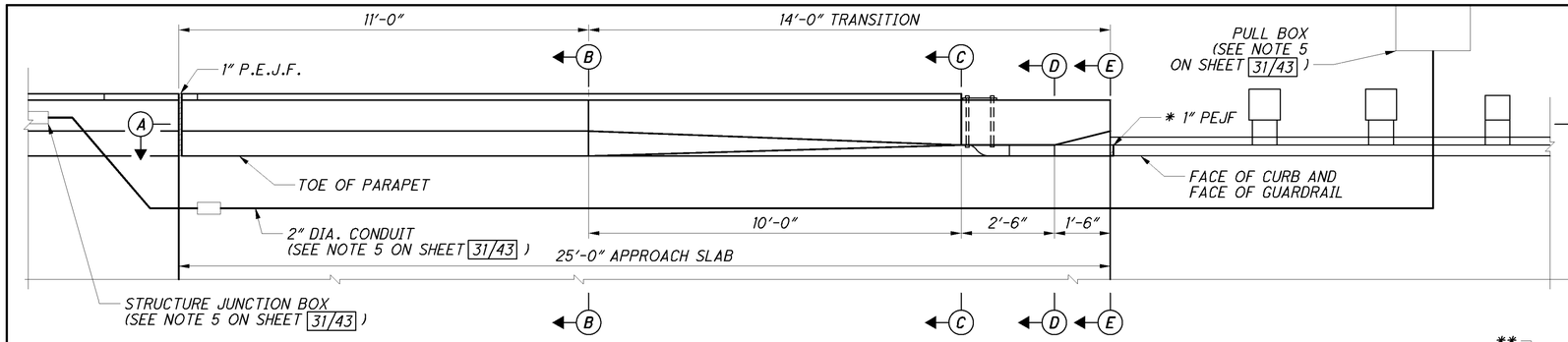

PART PLAN ON APPROACH SLABS (MEDIAN PARAPET)

FOR OUTSIDE PARAPET ON APPROACH SLABS SEE SHEET 31/43 .

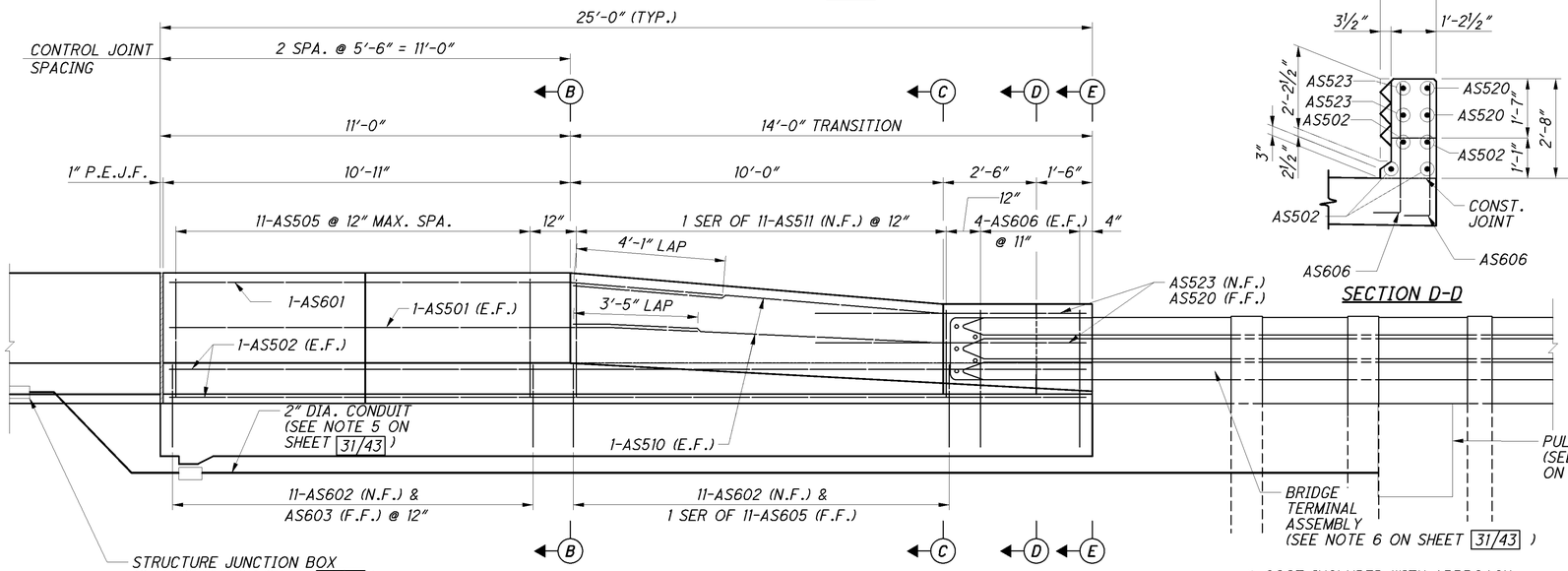

SECTION A-A

JUNCTION BOX LOCATION (APPROX.)	
NORTHBOUND & SOUTHBOUND	
STATION	SIDE
223+30	LT. & RT.
224+76	LT. & RT.

NOTES

1. FOR NOTES, SEE SHEET 31/43 .

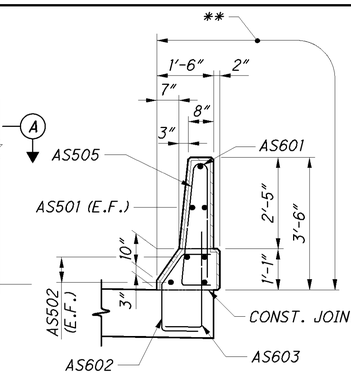

SECTION B-B

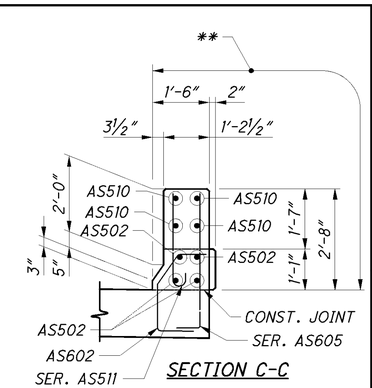

SECTION C-C

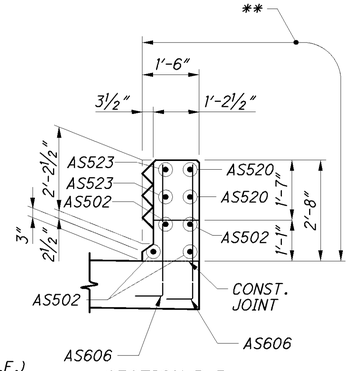

SECTION D-D

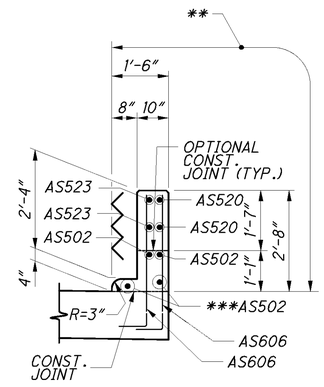

SECTION E-E

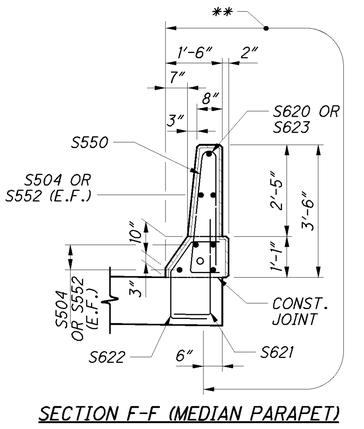

SECTION F-F (MEDIAN PARAPET)

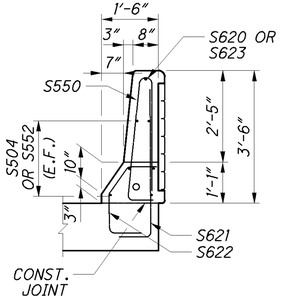

SECTION F-F (OUTSIDE PARAPET)

FOR SEALING SEE DETAIL A ON SHEET 26/43 .

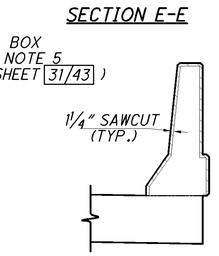

DETAIL A

(SECTION THROUGH SAWCUT)
SAWCUT PERIMETER = 8'-1"

* COST INCLUDED WITH APPROACH SLAB FOR PAYMENT.

** LIMITS OF CONCRETE SEALING (NON-EPOXY CLEAR)

*** FIELD BEND IF NECESSARY

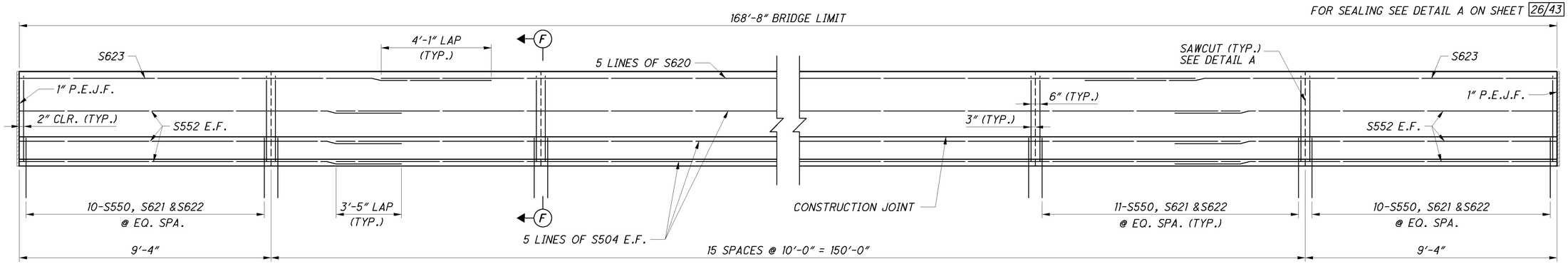

PARAPET ELEVATION

DESIGN AGENCY
PARSONS BRINCKERHOFF
2945 FARMERS DRIVE
SUITE 350
COLUMBUS, OHIO 43235

DESIGNED	DRAWN	REVIEWED	DATE
PJL	BKJ	EBS	01/18/13
CHECKED	REVISED	STRUCTURE NUMBER	
SAP		LEFT: 0201812 RIGHT: 0201820	

PARAPET DETAILS 1 OF 1
BRIDGE NO. ALL-75-0423 L&R
1-75 OVER S.R. 65

ALL-75-0.21
PID No. 89029

30 / 43

713
907

J:\Projects\ALL\89029\structures\ALL075_0423C\sheets\075_0423CRA001.dgn 09-MAY-2013 3:08PM jint

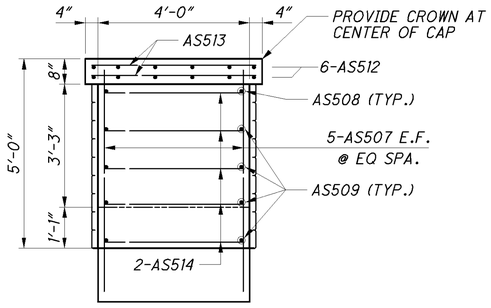

SECTION G-G

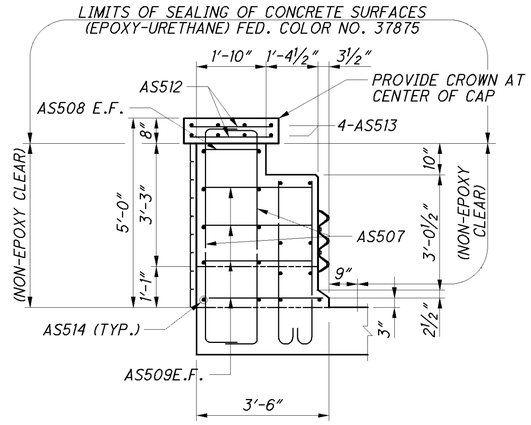

SECTION E-E
TOWER DETAIL

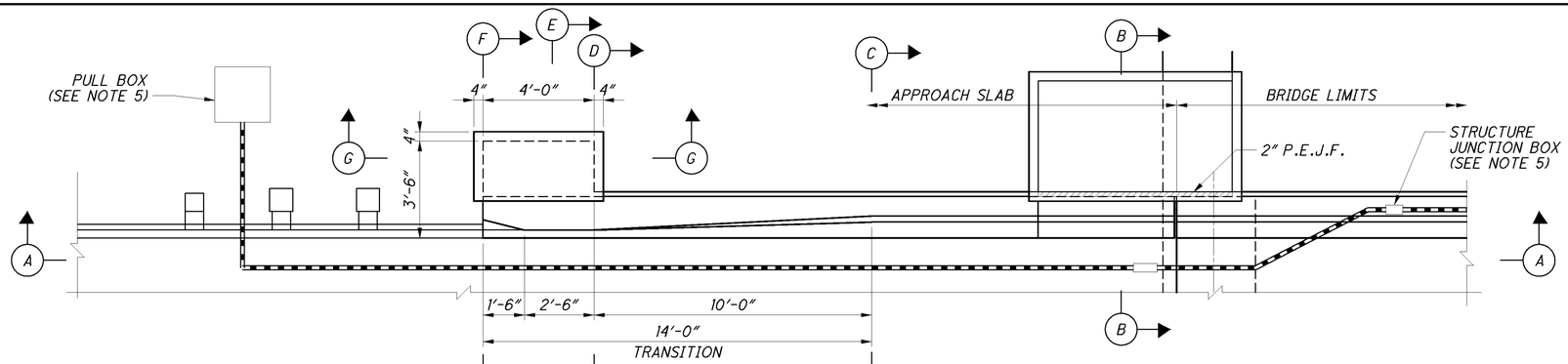

OUTSIDE TRANSITION PARAPET

FOR MEDIAN PARAPET DETAILS SEE SHEET 30/43 .

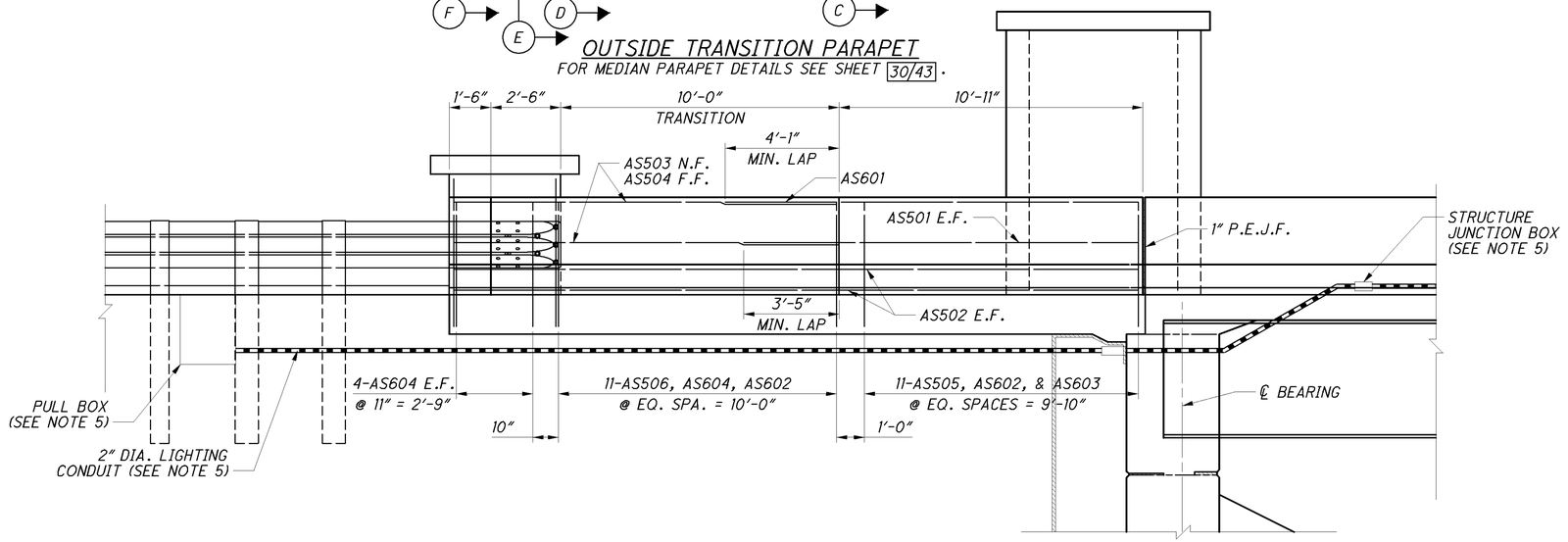

SECTION A-A

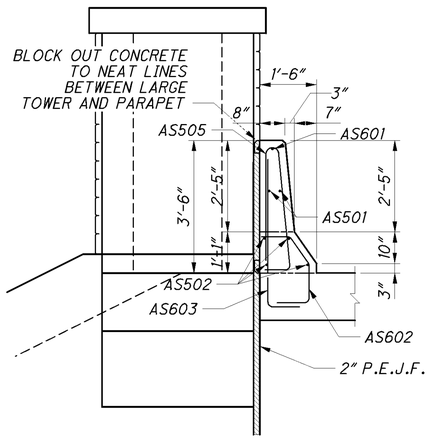

SECTION B-B

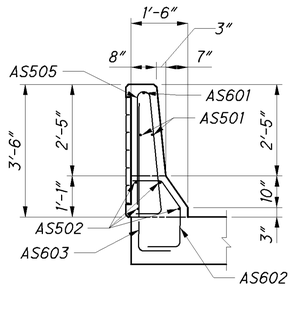

SECTION C-C

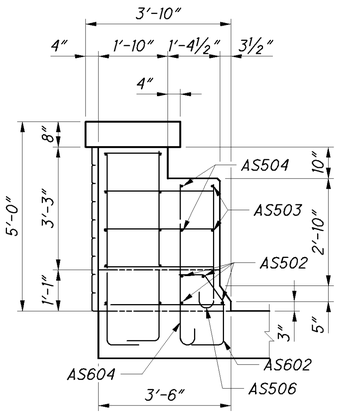

SECTION D-D

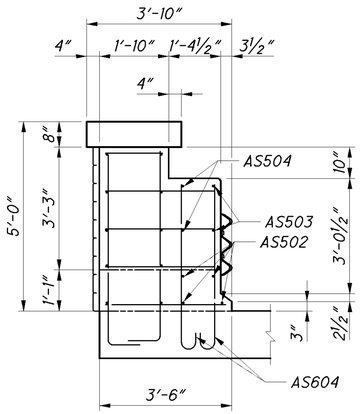

SECTION E-E
PARAPET DETAIL

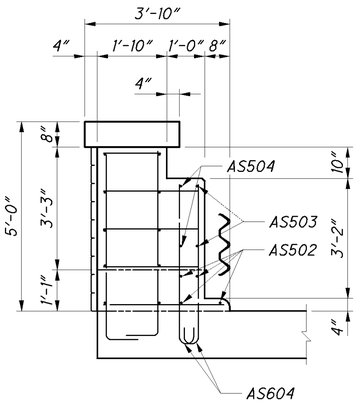

SECTION F-F

NOTES:

1. FOR AESTHETIC DETAILS, SEE SHEET 35/43 .
2. FOR ADDITIONAL NOTES AND DETAILS, SEE STANDARD CONSTRUCTION DRAWING BR-1.
3. THE COST OF THE APPROACH SLAB PARAPET, EXCLUDING SEALING AND FORMLINER, SHALL BE INCLUDED WITH ITEM 898, QC/QA CONCRETE, CLASS QSC 2, SUPERSTRUCTURE (APPROACH SLAB), (T=15"), AS PER PLAN.
4. ALL LABOR AND MATERIAL, EXCLUDING SEALING AND FORMLINER, NECESSARY TO CONSTRUCT TOWER SHOWN IN SECTION D-D, E-E, AND F-F SHALL BE INCLUDED WITH APPROACH SLAB FOR PAYMENT.
5. FOR ADDITIONAL NOTES AND DETAILS OF PULL BOXES, STRUCTURE JUNCTION BOXES, AND CONDUIT, SEE STANDARD CONSTRUCTION DRAWING HL-30.11, HL-30.31, HL-30.32. SEE SHEETS 5/43 AND 6/43 FOR QUANTITIES FOR THESE ITEMS.
6. FOR BRIDGE TERMINAL ASSEMBLIES SEE ROADWAY STANDARD DRAWINGS GR-3.1 AND GR-3.2. SEE ROADWAY PLANS FOR DETAILS AND PAYMENT.

DESIGN AGENCY
PARSONS BRINCKERHOFF
2945 FARMERS DRIVE
SUITE 350
COLUMBUS, OHIO 43235

DESIGNED	DRAWN	REVIEWED	DATE
PJL	BKJ	EBS	01/18/13
CHECKED	REVISED	SYMBOLS PER ROADWAY STANDARD DRAWING	
SAP		LEFT: 0201812 RIGHT: 0201820	

PARAPET DETAILS 2 OF 2
BRIDGE NO. ALL-75-0423 L&R
I-75 OVER S.R. 65

ALL-75-0.21
PID No. 89029

31 / 43

714
907

J:\Projects\ALL\89029\structures\ALL075_0423C\sheets\075_0423CRA002.dgn 09-MAY-2013 3:08PM jint

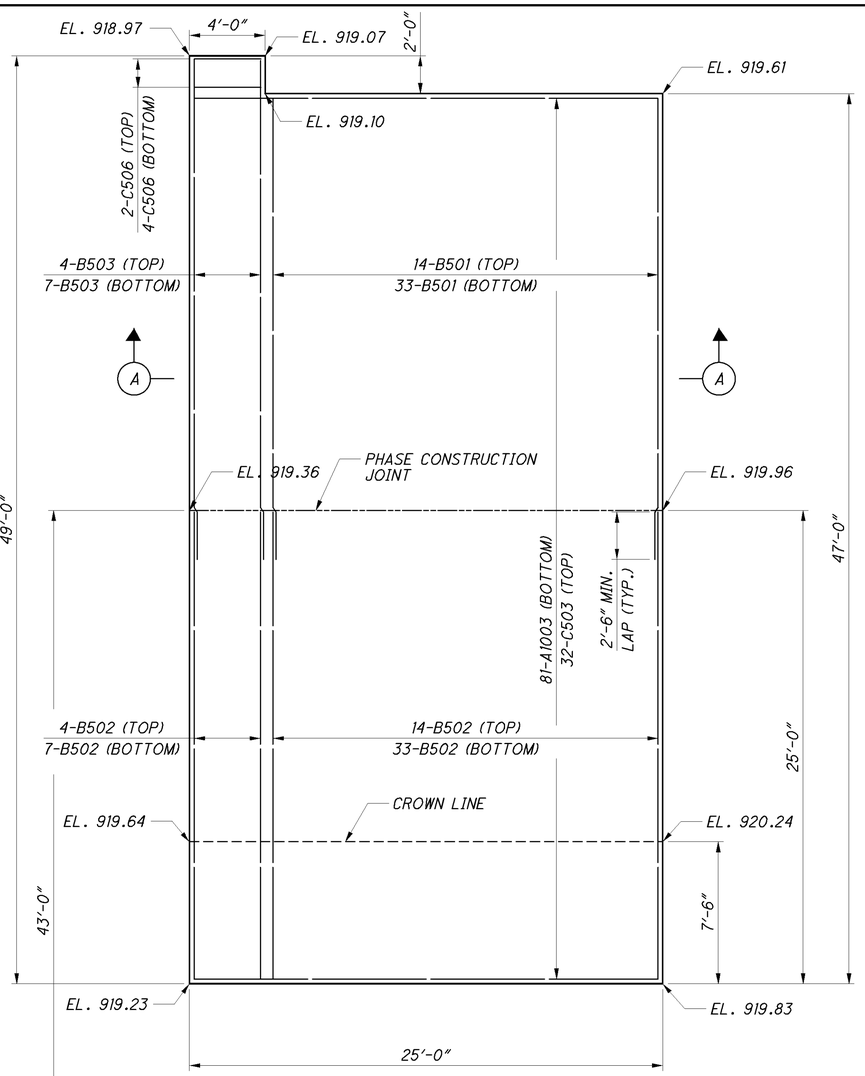

REAR APPROACH SLAB PLAN

(SEE SECTIONS A-A & B-B FOR SPACING)
(SOUTHBOUND SHOWN, NORTHBOUND SIMILAR)

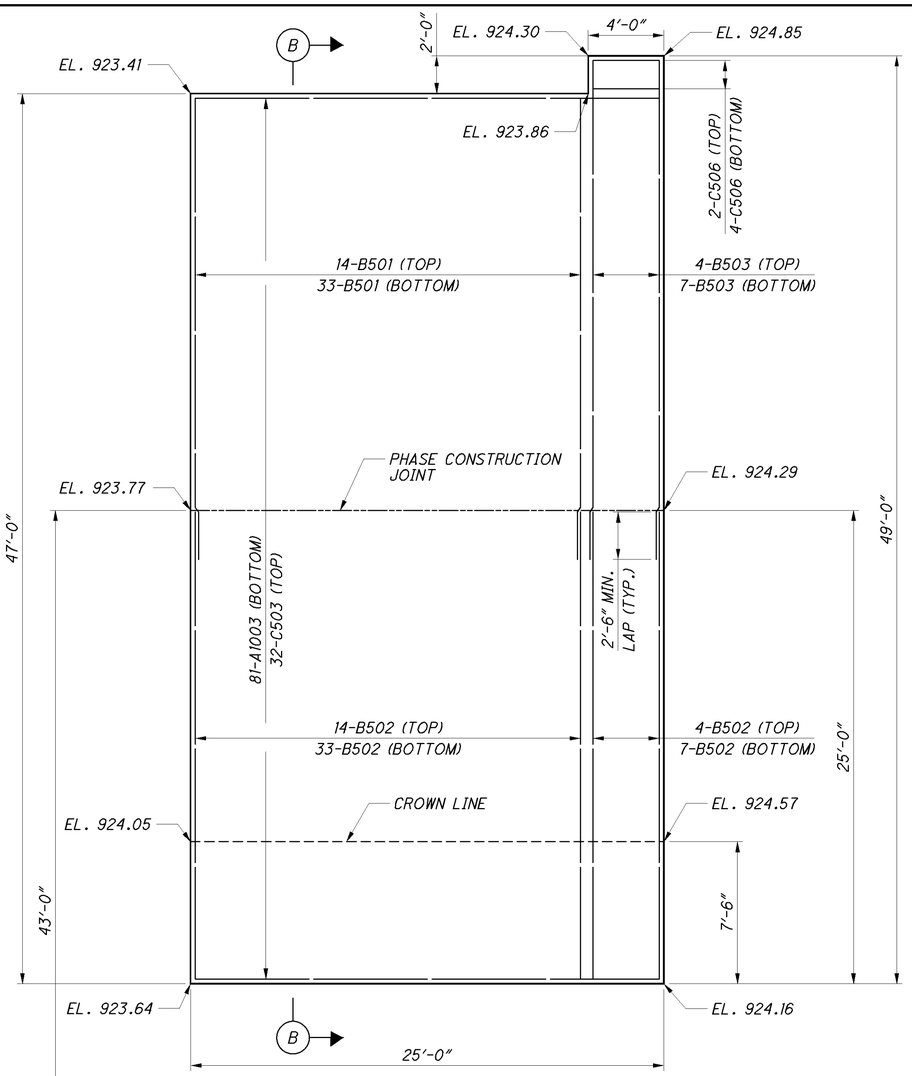

FORWARD APPROACH SLAB PLAN

(SEE SECTIONS A-A & B-B FOR SPACING)
(SOUTHBOUND SHOWN, NORTHBOUND SIMILAR)

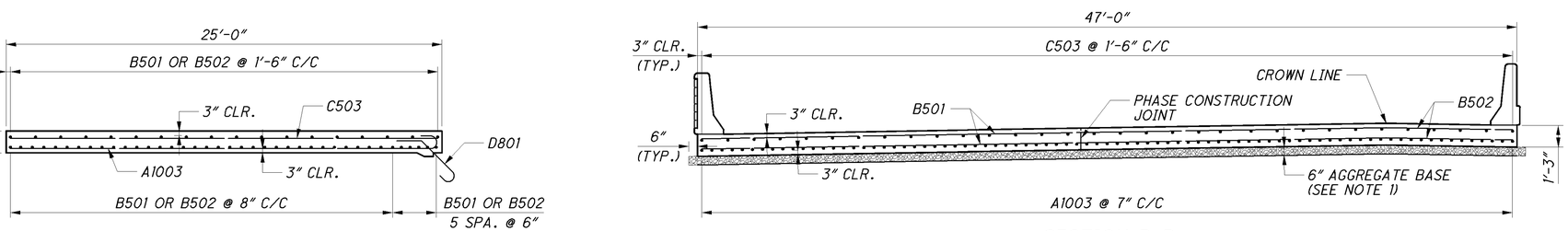

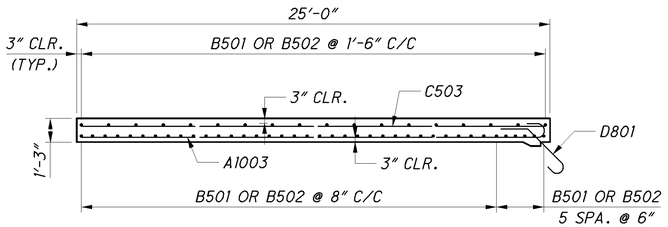

SECTION A-A

SECTION B-B

NOTES:

1. 6" AGGREGATE BASE INCLUDED WITH ROADWAY QUANTITIES FOR PAYMENT.
2. SUBGRADE COMPACTION INCLUDED WITH ROADWAY QUANTITIES FOR PAYMENT.
3. ADJUST LOCATION OF LONGITUDINAL REINFORCEMENT TO CLEAR THE CONSTRUCTION JOINT BY 2".

DESIGN AGENCY
PARSONS BRINCKERHOFF
2545 FARMERS DRIVE
SUITE 350
COLUMBUS, OHIO 43235

DESIGNED	DRAWN	REVIEWED	DATE
PJL	LEL	EBS	01/18/13
CHECKED	REVISED	SYMBOLOGY FILE NUMBER	
SAP		LEFT: 0201812 RIGHT: 0201820	

APPROACH SLAB DEATILS
BRIDGE NO. ALL-75-0423 L&R
I-75 OVER S.R.65

ALL-75-0.21
PID No. 89029

32 / 43

715
907

J:\Projects\ALL\89029\structures\ALL075_0423C\sheets\075_0423CMD001.dgn 09-MAY-2013 3:09PM lint

MARK	NUMBER TOTAL	LENGTH	WEIGHT	TYPE	DIMENSIONS A	B	C	D	E	R	INC
APPROACH SLABS											
AS501	16	14'- 02"	237	STR.							
AS502	32	24'- 07"	821	STR.							
AS503	8	13'- 10"	116	25	10'-0"	2'-5"	1'-4"	1 1/2"	5"		
AS504	8	13'- 10"	116	STR.							
AS505	88	7'- 01"	651	23	8"	3'-3"	3'-0"			1 1/2"	
AS506	44	3'- 10"	176	16	3'-3"						
AS507	40	6'- 09"	282	2	10"	5'-4"	10"				
AS508	8	1'- 06"	13	STR.							
AS509	32	2'- 10"	95	STR.							
AS510	16	10'- 00"	167	STR.							
	4	3'- 00"			2'-5"						
AS511	SER. OF	TO	157	16	TO						1"
	11	3'- 10"			3'-3"						
AS512	48	2'- 02"	109	STR.							
AS513	32	4'- 04"	145	STR.							
AS514	40	3'- 08"	153	STR.							
AS520	8	5'- 08"	48	STR.							
AS523	8	5'- 08"	48	25	1'-10"	2'-5"	1'-4"	1 1/2"	5"		
AS601	8	15'- 00"	181	STR.							
AS602	176	3'- 02"	838	14	10 1/2"	1'-0"	8 1/2"	6"	9"		
AS603	88	3'- 07"	474	1	12"	2'-9"					
AS604	76	4'- 10"	552	16	4'-2"						
	4	4'- 02"				3'-4"					
AS605	SER. OF	TO	303	1	12"	TO					1"
	11	5'- 00"				4'-2"					
AS606	32	4'- 02"	201	1	12"	3'-4"					
B501	188	24'- 05"	4,788	STR.							
B502	232	24'- 07"	5,949	STR.							
B503	44	26'- 05"	1,213	STR.							
C503	128	24'- 06"	3,271	STR.							
C506	24	3'- 06"	88	STR.							
A1003	324	25'- 11"	36,133	16	24'-6"						
APPROACH SLAB TOTAL			57,325								
FOR INFORMATION ONLY. NOT INCLUDED WITH ITEM 509.											

MARK	NUMBER TOTAL	LENGTH	WEIGHT	TYPE	DIMENSIONS A	B	C	D	E	R	INC
SUPERSTRUCTURE											
S401	480	30'- 00"	9,620	STR.							
S402	96	27'- 11"	1,791	STR.							
S403	140	11'- 03"	1,053	6	1'-11"	4'-2"	8"				
S501	1248	21'- 10"	28,420	STR.							
S502	1248	24'- 10"	32,325	STR.							
S503	1248	9'- 07"	12,475	16	9'-0"						
S504	600	30'- 00"	18,774	STR.							
S505	96	30'- 05"	3,046	STR.							
S510	352	10'- 07"	3,886	2	3'-11"	3'-0"	3'-11"				
S511	176	7'- 01"	1,301	2	2'-5"	2'-6"	2'-5"				
S550	740	7'- 01"	5,468	23	8"	3'-3"	3'-0"			1 1/2"	
S552	48	19'- 05"	973	STR.							
S601	32	7'- 09"	373	13	1'-11"	9"	9"	4'-10"			
S602	4	4'- 02"	26	13	1'-11"	9"	9"	1'-3"			
S603	4	5'- 00"	31	13	1'-11"	9"	9"	2'-1"			
S604	4	6'- 00"	37	13	1'-11"	9"	9"	3'-1"			
S605	720	25'- 07"	27,667	STR.							
S606	112	7'- 00"	1,178	STR.							
S607	56	6'- 00"	505	STR.							
S608	8	2'- 10"	35	STR.							
S609	4	2'- 04"	15	STR.							
S610	8	3'- 10"	47	STR.							
S611	4	3'- 04"	21	STR.							
S612	8	5'- 00"	61	STR.							
S613	4	4'- 06"	28	STR.							
S614	20	21'- 10"	656	STR.							
S615	20	25'- 10"	777	STR.							
S616	160	7'- 03"	1,743	13	1'-10"	9"	9"	4'-5"			
S617	4	4'- 03"	26	STR.							
S618	4	7'- 00"	43	13	1'-11"	9"	9"	4'-1"			
S619	4	4'- 03"	26	STR.							
S620	20	30'- 00"	902	STR.							
S621	740	3'- 02"	3,520	1	12"	2'-4"					
S622	740	2'- 09"	3,057	14	10 1/2"	7"	8 1/2"	6"	9"		
S623	8	21'- 05"	258	STR.							
S801	32	21'- 10"	1,866								
S802	32	25'- 10"	2,208								
D801	128	4'- 11"	1,681	18	2'-7"	1'-0"	1'-0"				
SUPERSTRUCTURE TOTAL			165,919								

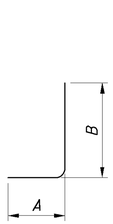

TYPE-1

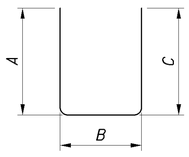

TYPE-2

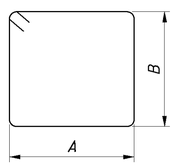

TYPE-3

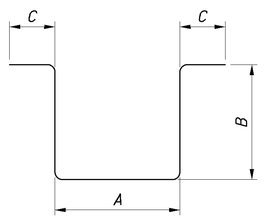

TYPE-6

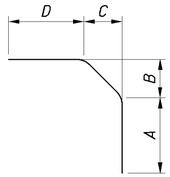

TYPE-13

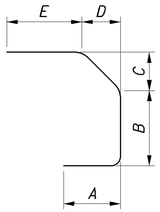

TYPE-14

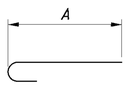

TYPE-16

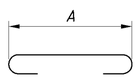

TYPE-17

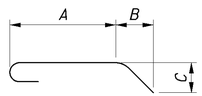

TYPE-18

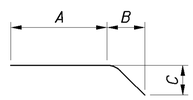

TYPE-19

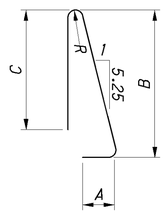

TYPE-23

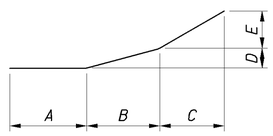

TYPE-25

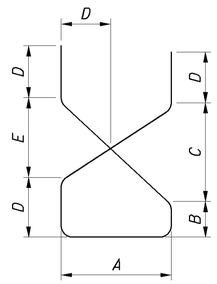

TYPE-26

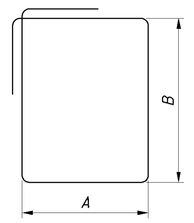

TYPE-33

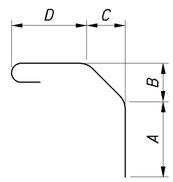

TYPE-34

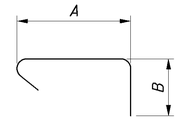

TYPE-35

NOTES:

1. THE BAR SIZE NUMBER IS SPECIFIED ON THE PLANS IN THE BAR MARK COLUMN. THE FIRST DIGIT WHERE THREE DIGITS ARE USED, AND THE FIRST TWO DIGITS WHERE FOUR ARE USED, INDICATES THE BAR SIZE NUMBER. FOR EXAMPLE, P601 IS A NO. 6 BAR. BAR DIMENSIONS SHOWN ARE OUT TO OUT UNLESS OTHERWISE INDICATED. R INDICATES INSIDE RADIUS, UNLESS OTHERWISE NOTED. "STD." WRITTEN IN PLACE OF A DIMENSION INDICATES A STANDARD BEND AT THE END OF THE BAR.
2. ALL REINFORCEMENT IS TO BE EPOXY COATED.

DESIGN AGENCY
PARSONS BRINCKERHOFF
2945 FARMERS DRIVE
SUITE 350
COLUMBUS, OHIO 43235

DESIGNED PJL | DRAWN BKJ | CHECKED SAP | REVIEWED EBS | DATE 01/18/13

SYMBOL SHEET NUMBER
LEFT: 0201812
RIGHT: 0201820

REVISED

REINFORCING STEEL LIST
BRIDGE NO. ALL-75-0423 L&R
I-75 OVER S.R. 65

ALL-75-5.53
PID No. 89029

J:\Projects\ALL\89029\structures\ALL075_0423C\sheets\075_0423CRL001.dgn 09-MAY-2013 3:09PM jint

MARK	NUMBER			LENGTH	WEIGHT	TYPE	DIMENSIONS						
	REAR	FWD.	TOTAL				A	B	C	D	E	R	INC
ABUTMENTS													
A401	66	66	132	9'- 10"	868	3	2'-11"	1'-9"					
A501	24	24	48	20'- 04"	1,018	STR.							
A502	24	24	48	23'- 01"	1,156	STR.							
	4	4	8	6'- 03"									
A503	SER. OF	SER. OF	SER. OF	OF	428	STR.							2'-0"
	5	5	5	14'- 03"									
A504	4	4	8	16'- 01"	135	19	4'-4"	10'-6"	5'-3"				
A505	32	32	64	16'- 06"	1,102	STR.							
A506	162	162	324	11'- 09"	3,971	3	3'-0"	2'-7"					
A507	96	96	192	9'- 11"	1,986	2	3'-7"	3'-0"	3'-7"				
A508	62	62	124	15'- 01"	1,951	2	6'-2"	3'-0"	6'-2"				
A509	10	10	20	16'- 01"	336	2	6'-8"	3'-0"	6'-8"				
	2	2	4	13'- 11"			5'-7"		5'-7"				
A510	SER. OF	SER. OF	SER. OF	OF	186	2	TO	3'-0"	TO				11"
	3	3	3	15'- 09"			6'-6"		6'-6"				
	2	2	4	7'- 07"			2'-5"		2'-5"				
A511	SER. OF	SER. OF	SER. OF	OF	251	2	TO	3'-0"	TO				12"
	6	6	6	12'- 05"			4'-10"		4'-10"				
A512	2	2	4	13'- 05"	56	2	5'-4"	3'-0"	5'-4"				
A513	2	2	4	13'- 01"	55	2	5'-2"	3'-0"	5'-2"				
A514	34	34	68	7'- 07"	538	2	2'-5"	3'-0"	2'-5"				
A515	6	6	12	17'- 01"	214	2	7'-2"	3'-0"	7'-2"				
A516	2	2	4	14'- 09"	62	2	6'-0"	3'-0"	6'-0"				
A517	4	4	8	14'- 11"	125	STR.							
A518	14	14	28	3'- 08"	108	STR.							
A519	10	10	20	11'- 07"	242	18	6'-10"	2'-4"	4'-3"				
A520	22	22	44	21'- 09"	999	33	6'-8"	3'-8"					
A521	22	22	44	19'- 01"	876	33	6'-0"	3'-0"					
A522	44	44	88	10'- 08"	980	1	10"	10'-0"					
A523	36	36	72	11'- 09"	883	STR.							
A524	36	36	72	4'- 04"	326	STR.							
A525	24	24	48	7'- 04"	368	STR.							
A601	88	88	176	13'- 11"	3,679	26	3'-0"	5"	3'-5"	10"	2'-7"		
A602	2	2	4	19'- 02"	116	33	5'-4"	3'-8"					
A603	2	2	4	21'- 00"	127	33	6'-3"	3'-8"					
A604	8	8	16	21'- 10"	525	33	6'-8"	3'-8"					
A701	18	18	36	6'- 08"	491	STR.							
A801	16	16	32	21'- 01"	1,802	STR.							
A802	16	16	32	24'- 04"	2,080	STR.							
A803	16	16	32	22'- 01"	1,887	STR.							
A804	16	16	32	25'- 04"	2,165	STR.							
ABUTMENT TOTAL					32,092								

MARK	NUMBER	LENGTH	WEIGHT	TYPE	DIMENSIONS						
	TOTAL				A	B	C	D	E	R	INC
PIER											
P401	104	4'- 00"	278	35	3'-0"	8"					
P501	204	11'- 10"	2,518	17	10'-8"						
P502	40	21'- 04"	891	STR							
P503	40	24'- 04"	1,016	STR							
P504	160	7'- 05"	1,238	16	6'-10"						
P601	64	23'- 06"	2,260	16	22'-10"						
P602	64	25'- 06"	2,452	16	24'-10"						
	4	15'- 02"				3'-0"					
P603	SER. OF	TO	286	33	4'-0"	TO					8"
	3	16'- 06"				3'-8"					
	4	16'- 02"				3'-6"					
P604	SER. OF	TO	304	33	4'-0"	TO					8"
	3	17'- 06"				4'-2"					
P605	12	17'- 04"	313	33	4'-0"	4'-1"					
P606	12	16'- 06"	298	33	4'-0"	3'-8"					
P607	24	14'- 10"	535	33	4'-0"	2'-10"					
P608	32	4'- 03"	205	1	1'-7"	2'-10"					
P609	128	14'- 08"	2,820	33	2'-8"	4'-1"					
P610	104	13'- 10"	2,161	33	2'-8"	3'-8"					
P701	512	14'- 06"	15,175	33	3'-6"	3'-0"					
P801	56	23'- 09"	3,552	16	22'-10"						
P802	56	25'- 09"	3,851	16	24'-10"						
P901	212	13'- 02"	9,491	17	10'-8"						
P902	40	4'- 01"	556	1	1'-7"	2'-9"					
P1001	40	21'- 06"	3,701	19	19'-2"	2'-2"	1'-0"				
P1002	40	24'- 06"	4,217	19	22'-2"	2'-2"	1'-0"				
P1003	24	29'- 08"	3,064	2	3'-1"	24'-2"	3'-1"				
P1004	16	21'- 04"	1,469	STR							
P1005	24	23'- 07"	2,436	1	2'-7"	21'-4"					
P1006	40	24'- 04"	4,189	STR							
P1101	384	16'- 10"	34,344	1	2'-0"	15'-2"					
P1102	192	17'- 10"	18,192	16	16'-3"						
P1103	192	19'- 10"	20,232	16	18'-3"						
PIER TOTAL			142,044								

NOTES:

1. THE BAR SIZE NUMBER IS SPECIFIED ON THE PLANS IN THE BAR MARK COLUMN. THE FIRST DIGIT WHERE THREE DIGITS ARE USED, AND THE FIRST TWO DIGITS WHERE FOUR ARE USED, INDICATES THE BAR SIZE NUMBER. FOR EXAMPLE, P601 IS A NO. 6 BAR. BAR DIMENSIONS SHOWN ARE OUT TO OUT UNLESS OTHERWISE INDICATED. R INDICATES INSIDE RADIUS, UNLESS OTHERWISE NOTED. "STD." WRITTEN IN PLACE OF A DIMENSION INDICATES A STANDARD BEND AT THE END OF THE BAR.

2. ALL REINFORCEMENT IS TO BE EPOXY COATED.

DESIGN AGENCY
PARSONS BRINCKERHOFF
2945 FARMERS DRIVE
SUITE 350
COLUMBUS, OHIO 43235

DESIGNED PJL | DRAWN BKJ | CHECKED SAP | REVIEWED EBS | DATE 01/18/13

STRUCTURE FILE NUMBER
LEFT: 0201812
RIGHT: 0201820

REVISED

REINFORCING STEEL LIST

BRIDGE NO. ALL-75-0423 L&R
I-75 OVER S.R. 65

ALL-75-5.53
PID No. 89029

717
907

J:\Projects\ALL\89029\structures\ALL075_0423C\sheets\075_0423CRL002.dgn 09-MAY-2013 3:09PM lint

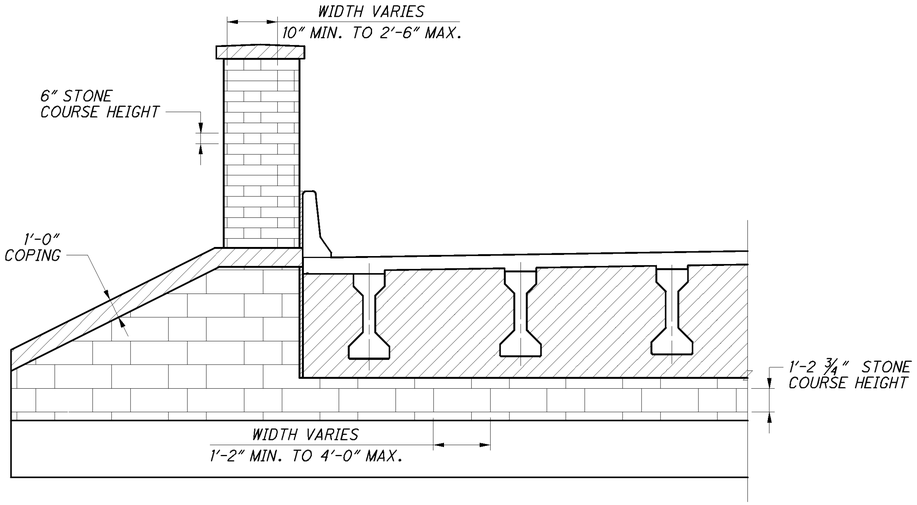

ABUTMENT AESTHETICS

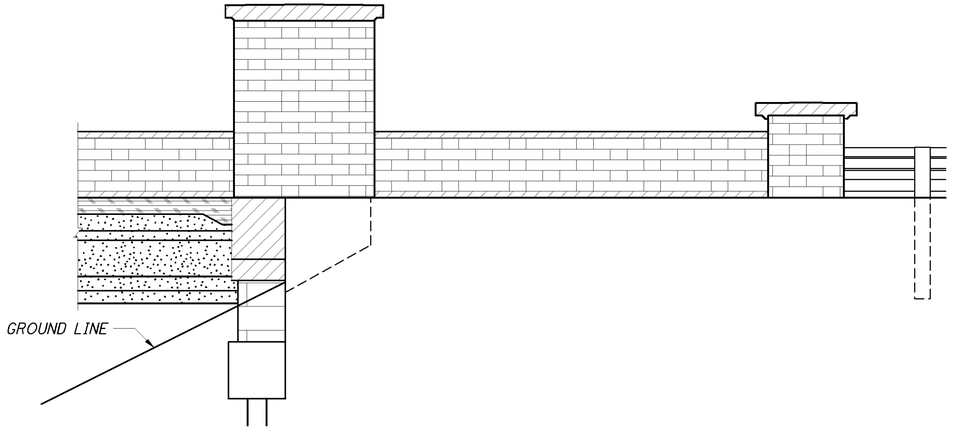

EXTERIOR FACE OF OUTSIDE PARAPET AESTHETICS

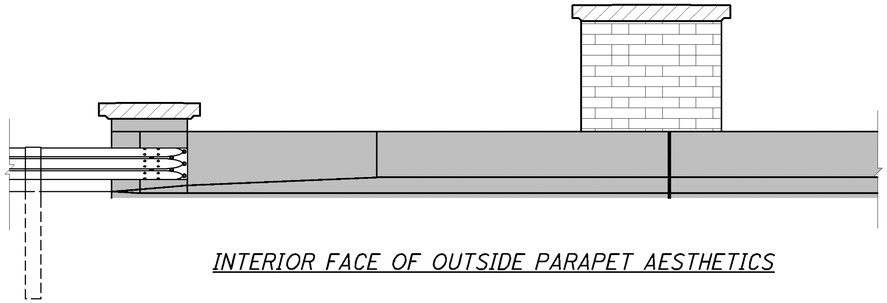

INTERIOR FACE OF OUTSIDE PARAPET AESTHETICS

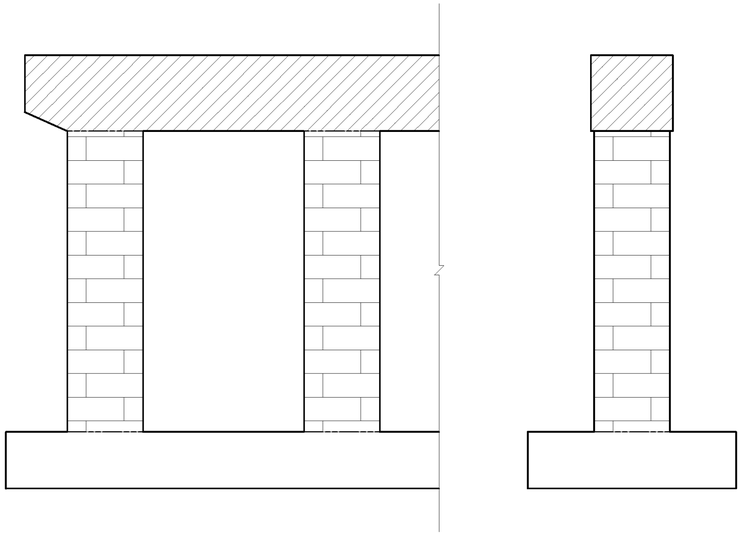

PIER AESTHETICS

PIER SECTION

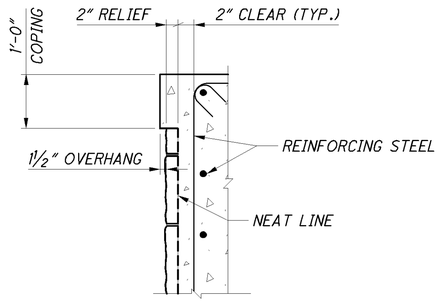

TYPICAL FORMLINER SECTION

SECTION AT WINGWALL SHOWN

LEGEND:

- FORMLINER PATTERN 1:
  -ROUGH CUT STONE FORMLINER W/ 2" RELIEF AND INTEGRALLY COLORED CONCRETE, FEDERAL COLOR NO. 36373, GRAY
- FORMLINER PATTERN 2:
  -ROUGH CUT STONE FORMLINER W/ 1⅝" RELIEF AND INTEGRALLY COLORED CONCRETE, FEDERAL COLOR NO. 36373, GRAY
- -INTEGRALLY COLORED CONCRETE FEDERAL COLOR NO. 36373, GRAY
- -EPOXY-URETHANE SEALER FEDERAL COLOR NO. 25095, BLUE
- -EPOXY-URETHANE SEALER FEDERAL COLOR NO. 37875, WHITE
- -EPOXY-URETHANE SEALER FEDERAL COLOR NO. 36373, GRAY

DESIGN AGENCY
PARSONS BRINCKERHOFF
2945 FARMERS DRIVE
SUITE 350
COLUMBUS, OHIO 43235

DESIGNED	DRAWN	REVIEWED	DATE
PJL	BKJ	EBS	01/18/13
CHECKED	REVISED	SYMBOLOGY FILE NUMBER	
SAP		LEFT: 0201812 RIGHT: 0201820	

AESTHETICS DETAILS
BRIDGE NO. ALL-75-0423 L&R
I-75 OVER S.R. 65

ALL-75-0.21
PID No. 89029

35 / 43

718
907

J:\Projects\ALL\89029\structures\ALL075_0423C\sheets\075_0423CMD002.dgn 09-MAY-2013 3:09PM jint

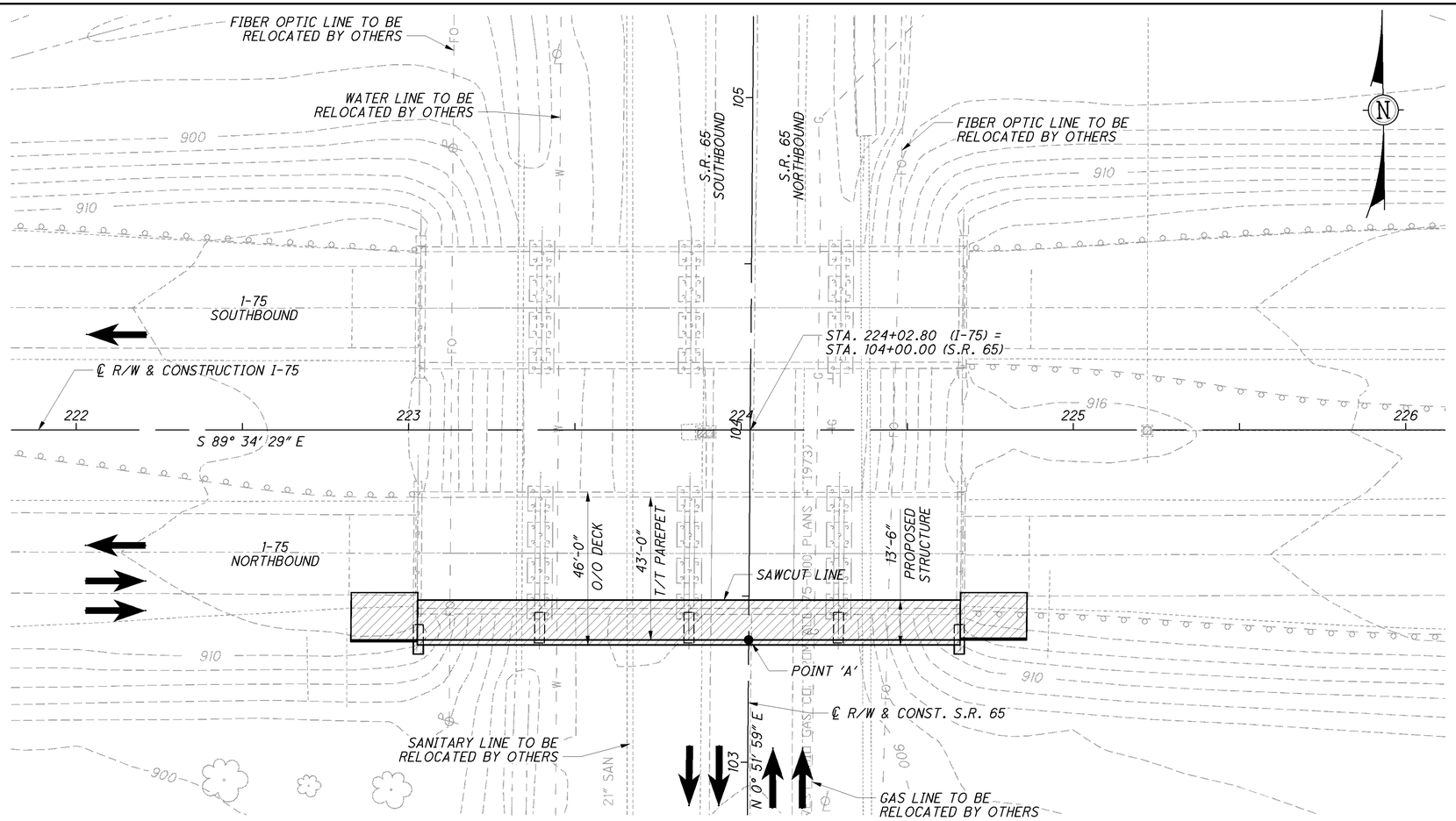

PLAN

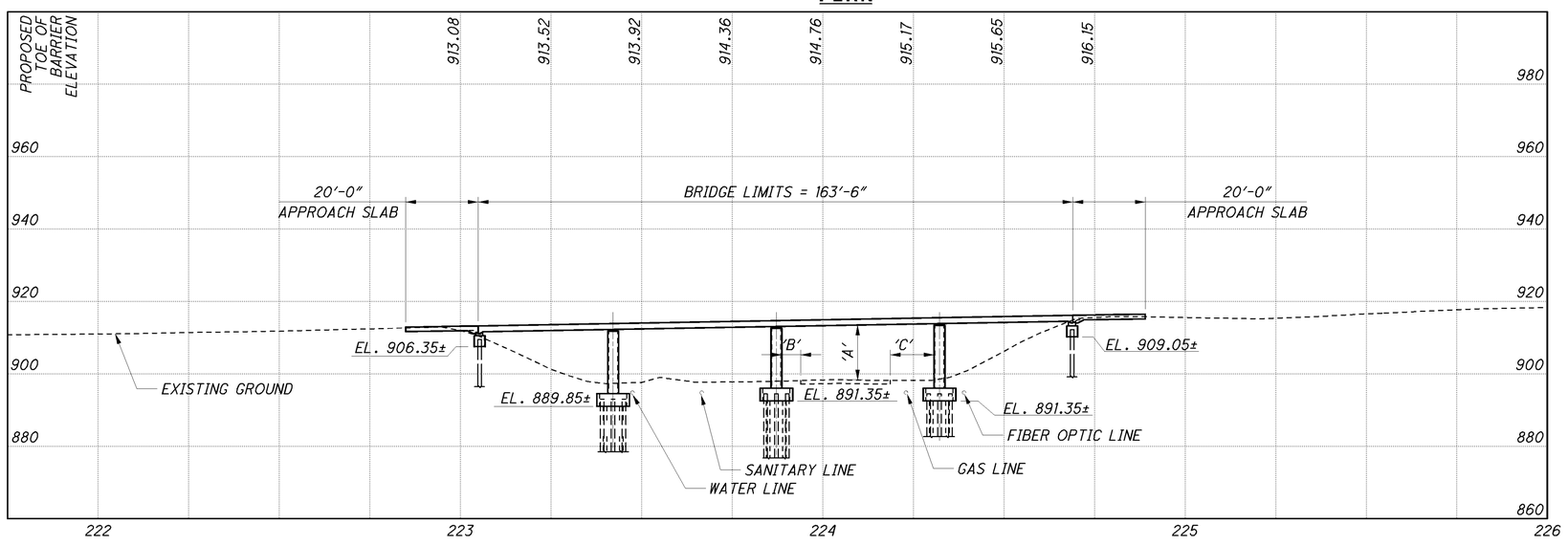

PROFILE

ALONG N.B. PROFILE GRADE LINE

NOTES

EARTHWORK LIMITS SHOWN ARE APPROXIMATE. ACTUAL SLOPES SHALL CONFORM TO PLAN CROSS SECTIONS.

DESIGN TRAFFIC:
2015 ADT = 45,300 2015 ADTT = 17,667
2035 ADT = 54,700 2035 ADTT = 21,333
DIRECTIONAL DISTRIBUTION = 0.51

LEGEND

● 17.00' REQUIRED MINIMUM VERTICAL CLEARANCE
POINT 'A' - 16.3'± ACTUAL MINIMUM VERTICAL CLEARANCE

19.00' REQUIRED MINIMUM HORIZONTAL CLEARANCE
POINT 'B' - 5.1'± ACTUAL MINIMUM HORIZONTAL CLEARANCE
POINT 'C' - 12.1'± ACTUAL MINIMUM HORIZONTAL CLEARANCE

▨ - TEMPORARY STRUCTURE

EXISTING STRUCTURE

TYPE: CONTINUOUS 4-SPAN REINFORCED CONCRETE SLAB WITH REINFORCED CONCRETE SUBSTRUCTURES

SPANS: 36'±-45'±-45'±-36'± C/C BRGS.
ROADWAY: 33'-6"± TOE/TOE PARAPETS
LOADING: CF-2000 (51)
SKEW: 0°27' LF ±
APPROACH SLABS: AS-1-54 (L=20')
ALIGNMENT: TANGENT
CROWN: NORMAL 3/16"/FT.
STRUCTURE FILE NUMBER: 0201804 (LT), 0201839 (RT)
DATE BUILT: 1957
WEARING SURFACE: MICROSILICA MODIFIED CONCRETE

PROPOSED STRUCTURE

TYPE: WIDENING OF CONCRETE SLAB STRUCTURE WITH CAP AND COLUMN TYPE PIERS AND STANDARD SLAB ABUTMENT ON PILES.

SPANS: 36'-0', 45'-0", 45'-0", 36'-0" ℄ BEARINGS
ROADWAY: 43'-0" TOE/TOE PARAPET
SKEW: NONE
APPROACH SLABS: 20'-0" LONG (AS-1-81)
WEARING SURFACE: 1" MONOLITHIC
ALIGNMENT: TANGENT
CROWN: 3/16" FT/FT
COORDINATES: LATITUDE 40°41'56"
LONGITUDE 84°5'24"

DESIGN AGENCY
PARSONS BRINCKERHOFF
2945 FARMERS DRIVE
SUITE 350
COLUMBUS, OHIO 43235

DESIGNED	DRAWN	REVIEWED	DATE
PJL	LEL	EBS	03/09/12
CHECKED	REVISED	STRUCTURE FILE NUMBER	
SAP		LEFT: 0201812 RIGHT: 0201820	

ALLEN COUNTY
STA. 223+18.83
STA. 224+86.83

TEMPORARY BRIDGE SITE PLAN
BRIDGE NO. ALL-75-0423 L&R
I-75 OVER S.R. 65

ALL-75-0.21
PID No. 89029

35A / 43

718A
907

J:\Projects\ALL\89029\structures\ALL075_0423C\sheets\075_0423CSP002.dgn 09-MAY-2013 3:09PM jlint

TEMPORARY BRIDGE GENERAL NOTES

STANDARD DRAWINGS AND SUPPLEMENTAL SPECIFICATIONS

REFER TO THE FOLLOWING ODOT STANDARD BRIDGE DRAWINGS:

AS-1-81	(REVISED)	01-18-13
BR-1	(REVISED)	07-19-02
CS-1-08	(DATED)	07-18-08
PCB-91	(REVISED)	01-18-13

DESIGN SPECIFICATION

THIS STRUCTURE CONFORMS TO "STANDARD SPECIFICATIONS FOR HIGHWAY BRIDGES" ADOPTED BY THE AMERICAN ASSOCIATION OF STATE HIGHWAY AND TRANSPORTATION OFFICIALS, 17TH EDITION, INCLUDING THE MARCH 2005 INTERIM SPECIFICATIONS AND THE ODOT BRIDGE DESIGN MANUAL.

DESIGN LOADING

HS25-44, CASE 1 AND THE ALTERNATIVE MILITARY LOADING

DESIGN DATA

CONCRETE CLASS S	-	COMPRESSIVE STRENGTH 4500 PSI (SUPERSTRUCTURE)
CONCRETE CLASS C	-	COMPRESSIVE STRENGTH 4000 PSI (SUBSTRUCTURE)
REINFORCING STEEL	-	ASTM A615 OR A996 GRADE 60 MINIMUM YIELD STRENGTH 60,000 PSI

DECK PROTECTION METHOD

- EPOXY COATED REINFORCING STEEL
- 2½" CONCRETE COVER

MONOLITHIC WEARING SURFACE

MONOLITHIC WEARING SURFACE IS ASSUMED, FOR DESIGN PURPOSES, TO BE 1 INCH THICK.

EXISTING STRUCTURE VERIFICATION

DETAILS AND DIMENSIONS SHOWN ON THESE PLANS PERTAINING TO THE EXISTING STRUCTURE HAVE BEEN OBTAINED FROM PLANS OF THE EXISTING STRUCTURE AND FROM FIELD OBSERVATIONS AND MEASUREMENTS. CONSEQUENTLY, THEY ARE INDICATIVE OF THE EXISTING STRUCTURE AND THE PROPOSED WORK BUT THEY SHALL BE CONSIDERED TENTATIVE AND APPROXIMATE. THE CONTRACTOR IS REFERRED TO CMS SECTIONS 102.05 AND 105.02.

BASE CONTRACT BID PRICES UPON A RECOGNITION OF THE UNCERTAINTIES DESCRIBED ABOVE AND UPON A PREBID EXAMINATION OF THE EXISTING STRUCTURE. HOWEVER, THE DEPARTMENT WILL PAY FOR ALL PROJECT WORK BASED UPON ACTUAL DETAILS AND DIMENSIONS THAT HAVE BEEN VERIFIED IN THE FIELD.

EXISTING STRUCTURE PLANS

CONSTRUCTION PLANS FOR THE EXISTING BRIDGE ARE ON FILE AT THE OHIO DEPARTMENT OF TRANSPORTATION, DISTRICT ONE OFFICE, 1885 NORTH MCCULLOUGH ST., LIMA, OHIO 45801 AND ARE AVAILABLE FOR REFERENCE.

PILE DESIGN LOADS (ULTIMATE BEARING VALUE)

THE ULTIMATE BEARING VALUE IS 70 TONS PER PILE FOR THE 4 REAR AND FORWARD ABUTMENT PILES. THE ULTIMATE BEARING VALUE IS 100 TONS PER PILE FOR THE 18 PIER 1, 2, AND 3 PILES.

ABUTMENT PILES:

12" CAST-IN-PLACE PILES 40 FEET LONG, ORDER LENGTH
1 DYNAMIC LOAD TESTING ITEM

PIER PILES:

12" CAST-IN-PLACE PILES 35 FEET LONG, ORDER LENGTH
1 DYNAMIC LOAD TESTING ITEM

PROPOSED WORK

THE WORK TO BE DONE UNDER THIS CONTRACT IS AS SHOWN ON THE CONSTRUCTION PLANS. THE SUGGESTED CONSTRUCTION SEQUENCE IS AS FOLLOWS:

PRE-PHASE CONSTRUCTION FOR MOT

1. INSTALL PORTABLE CONCRETE BARRIER ON THE EXISTING NORTHBOUND STRUCTURE AND SHIFT TRAFFIC.

2. REMOVE THE OUSIDE PORTION OF THE EXISTING NORTHBOUND STRUCTURE AS SHOWN.

3. CONSTRUCT THE TEMPORARY BRIDGE.

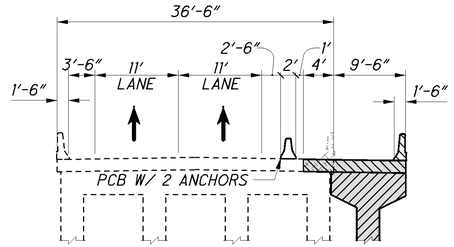

NORTHBOUND

LEGEND:

- REMOVAL
- TEMPORARY STRUCTURE
- PROPOSED
- PORTABLE CONCRETE BARRIER (PCB) (TO BE ANCHORED ON BRIDGES AS SHOWN)

ITEM 202, PORTIONS OF STRUCTURE REMOVED, AS PER PLAN
DESCRIPTION

DESCRIPTION: THIS WORK CONSISTS OF THE REMOVAL OF CONCRETE DECK INCLUDING PARAPET AND RAILING. THE PROVISIONS OF ITEM 202 APPLY EXCEPT AS SPECIFIED BY THE FOLLOWING NOTES. PERFORM WORK CAREFULLY DURING DECK REMOVALS TO PROTECT PORTIONS OF SUCH SYSTEMS THAT ARE TO BE SALVAGED AND INCORPORATED INTO THE PROPOSED STRUCTURE. THE USE OF EXPLOSIVES, HEADACHE BALLS AND/OR HOE RAM TYPE OF EQUIPMENT IS PROHIBITED. SUBMIT CONSTRUCTION PLANS ACCORDING TO CMS 501.05.

REMOVAL METHODS: THE CONTRACTOR MAY REMOVE CONCRETE BY CUTTING AND BY MEANS OF HAND OPERATED PNEUMATIC HAMMERS EMPLOYING POINTED OR BLUNTED CHISEL TYPE TOOLS.

DUE TO THE POSSIBLE PRESENCE OF ATTACHMENTS (E.G., FINISHING MACHINE, SCUPPER AND FORM SUPPORTS, ETC.) TO EXISTING STRUCTURAL MEMBERS, PERFORM WORK CAREFULLY DURING DECK REMOVAL TO AVOID DAMAGING STRUCTURAL MEMBERS THAT ARE TO REMAIN. REPLACE OR REPAIR STRUCTURAL MEMBERS DAMAGED BY THE REMOVAL OPERATIONS AT NO COST TO THE PROJECT. AT LEAST 7 DAYS BEFORE PERFORMING REPAIR WORK, SUBMIT A PROPOSED REPAIR PLAN, DEVELOPED BY AN OHIO REGISTERED PROFESSIONAL ENGINEER TO THE DIRECTOR. OBTAIN THE DIRECTOR'S APPROVAL BEFORE PERFORMING REPAIR.

MEASUREMENT & PAYMENT: THE DEPARTMENT WILL MEASURE THE QUANTITY OF REMOVALS ON A LUMP SUM BASIS. THE DEPARTMENT WILL PAY FOR THE ACCEPTED QUANTITIES OF REMOVALS AT THE CONTRACT PRICE FOR ITEM 202, PORTIONS OF STRUCTURE REMOVED, AS PER PLAN.

ITEM 509, REINFORCING STEEL, REPLACEMENT OF EXISTING REINFORCING STEEL, AS PER PLAN

REPLACE ALL EXISTING REINFORCING BARS DEEMED BY THE ENGINEER TO BE UNUSABLE BECAUSE OF CORROSION. THE DEPARTMENT WILL MEASURE THE REPLACEMENT REINFORCING STEEL BY THE NUMBER OF POUNDS ACCEPTED IN PLACE.

THIS WORK SHALL INCLUDE THE COST OF ALL MATERIALS AND LABOR NECESSARY TO SUPPLY AND PLACE THE REINFORCING STEEL INCLUDING DOWEL HOLES AND GROUT.

REPLACE ALL EXISTING REINFORCING STEEL BARS WHICH ARE TO BE INCORPORATED INTO THE NEW WORK AND ARE DEEMED BY THE ENGINEER TO BE MADE UNUSABLE BY CONCRETE REMOVAL OPERATIONS WITH NEW REINFORCING STEEL OF THE SAME SIZE AT NO COST TO THE DEPARTMENT.

CONCRETE PARAPETS

AS SOON AS A CONCRETE SAW CAN BE OPERATED WITHOUT DAMAGING THE FRESHLY PLACED CONCRETE, SAWCUT 1¼" DEEP CONTROL JOINTS INTO THE PERIMETER OF THE CONCRETE PARAPET STARTING AND ENDING AT THE ELEVATION OF THE CONCRETE DECK. PLACE THE SAWCUTS AT A MINIMUM OF 6 FEET AND A MAXIMUM OF 10 FEET CENTERS. USE AN EDGE GUIDE, FENCE, OR JIG TO ENSURE THAT THE CUT JOINT IS STRAIGHT, TRUE, AND ALIGNED ON ALL FACES OF THE PARAPET. THE JOINT WIDTH SHALL BE THE WIDTH OF THE SAW BLADE, A NOMINAL WIDTH OF ¼ INCH. SEAL THE PERIMETER OF THE DEFLECTION CONTROL JOINT TO A MINIMUM DEPTH OF 1 INCH WITH A POLYURETHANE OR POLYMERIC MATERIAL CONFORMING TO ASTM C920, TYPE S. LEAVE THE BOTTOM ½ INCH OF THE INSIDE AND OUTSIDE FACE UNSEALED TO ALLOW WATER TO ESCAPE.

CALC BY: SAP 1/22/2013
CHCK BY: EBS 1/24/2013

FOR INFORMATION PURPOSES: INCLUDED WITH ITEM 502 STRUCTURE FOR MAINTAINING TRAFFIC (ALL-75-0423 R)

ITEM	EXTENSION	TOTAL	UNIT	ESTIMATED QUANTITIES DESCRIPTION	ALL-75-0423R ABUT.	PIER	SUPER.	GEN.	SEE SHEET NO.
202	11201	LUMP		PORTIONS OF STRUCTURE REMOVED, AS PER PLAN				LUMP	36/43
503	11100	LUMP		COFFERDAMS AND EXCAVATION BRACING				LUMP	
503	21300	LUMP		UNCLASSIFIED EXCAVATION				LUMP	
505	11100	LUMP		PILE DRIVING EQUIPMENT MOBILIZATION				LUMP	
507	00500	680	FT	12" CAST-IN-PLACE REINFORCED CONCRETE PILES, DRIVEN	140	540			
507	00550	790	FT	12" CAST-IN-PLACE REINFORCED CONCRETE PILES, FURNISHED	160	630			
509	25000	44800	POUND	REINFORCING STEEL	1,320	7,586	35,894		
509	20001	500	POUND	REINFORCING STEEL, REPLACEMENT OF EXISTING REINFORCING STEEL, AS PER PLAN			500		
510	09950	92	EACH	DOWEL HOLES WITH CEMENT GROUT				92	
516	13200	38	SQ FT	1/2" PREFORMED EXPANSION JOINT FILLER	11	27			
516	13600	26	SQ FT	1" PREFORMED EXPANSION JOINT FILLER	26				
518	21200	7	CU YD	POROUS BACKFILL WITH FILTER FABRIC	7				
518	40000	19	FT	6" PERFORATED CORRUGATED PLASTIC PIPE	19				
518	40011	32	FT	6" NON-PERFORATED CORRUGATED PLASTIC PIPE, INCLUDING SPECIALS, AS PER PLAN	32				4/43
523	20000	2	EACH	DYNAMIC LOAD TESTING	1	1			
898	10200	133	CU YD	QC/QA CONCRETE, CLASS QSC2, SUPERSTRUCTURE (DECK)			133		
898	10689	66	SQ YD	QC/QA CONCRETE, CLASS QSC2, SUPERSTRUCTURE (APPROACH SLAB), (T=12"), AS PER PLAN				66	42/43
898	11000	21	CU YD	QC/QA CONCRETE, CLASS QSC2, SUPERSTRUCTURE (PARAPET)			21		
898	20100	26	CU YD	QC/QA CONCRETE, CLASS QSC1, SUBSTRUCTURE (PIER ABOVE FOOTING)		26			
898	20160	11	CU YD	QC/QA CONCRETE, CLASS QSC1, SUBSTRUCTURE (ABUTMENT INCLUDING FOOTING)	11				
898	20300	21	CU YD	QC/QA CONCRETE, CLASS QSC1, SUBSTRUCTURE (FOOTING)		21			

DESIGN AGENCY
PARSONS BRINCKERHOFF
2945 FARMERS DRIVE
SUITE 350
COLUMBUS, OHIO 43235

DESIGNED	DRAWN	REVIEWED	DATE
ECM	ECM	EBS	01/18/13
CHECKED	REVISED	STRUCTURE FILE NUMBER	
APV		0201820	

TEMPORARY BRIDGE GENERAL NOTES
BRIDGE NO. ALL-75-0423 R
I-75 OVER S.R. 65

ALL-75-0.21
PID No. 89029

36/43

719
907

J:\Projects\ALL\89029\structures\ALL075_0423C\sheets\temp bridge\075_0423CGN001.dgn 23-MAY-2013 10:20AM lint

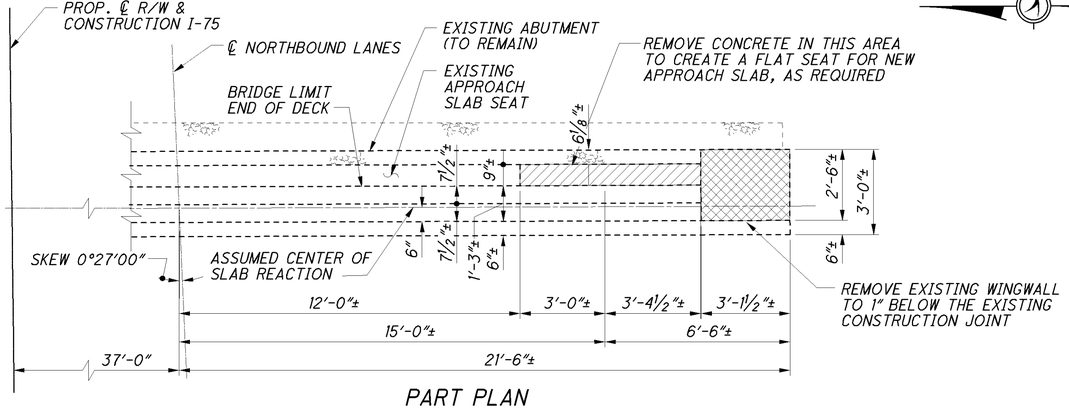

PART PLAN

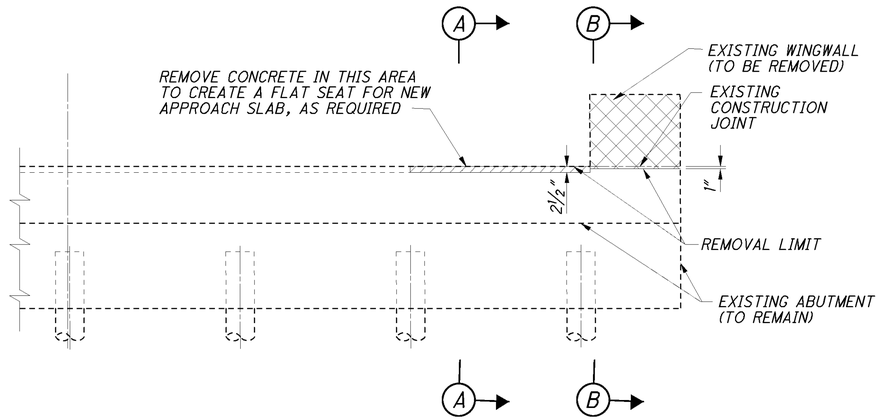

PART ELEVATION

(EXISTING BRIDGE DECK AND APPROACH SLAB NOT SHOWN FOR CLARITY)

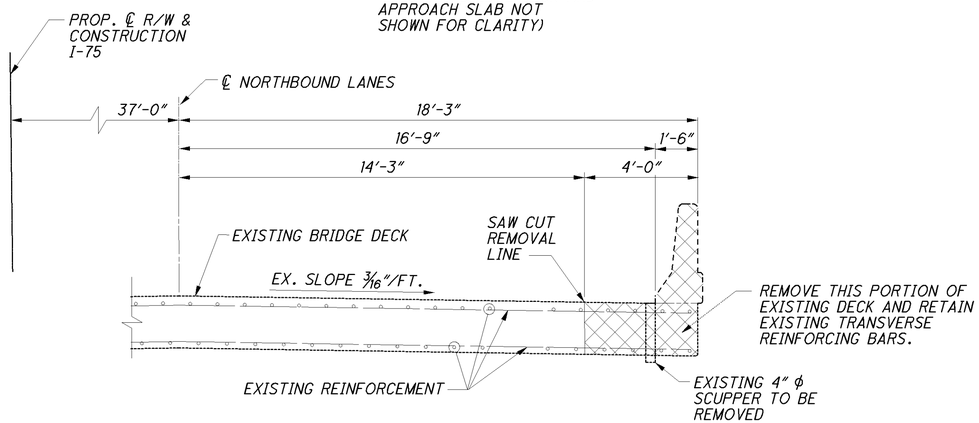

PART TRANSVERSE SECTION

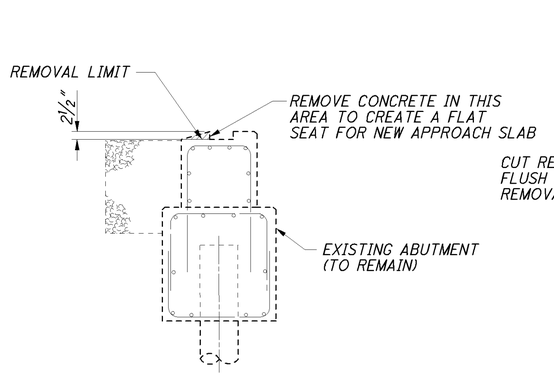

SECTION A-A

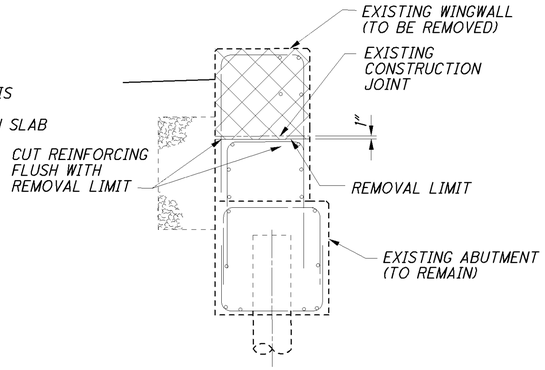

SECTION B-B

NOTES:

1. FORWARD ABUTMENT SHOWN. REAR ABUTMENT SIMILAR EXCEPT OPPOSITE HAND.
2. AREAS INDICATED FOR REMOVAL SHALL BE REMOVED ACCORDING TO ITEM 202 PORTIONS OF STRUCTURE REMOVED.

DESIGN AGENCY
PARSONS BRINCKERHOFF
2945 FARMERS DRIVE
SUITE 350
COLUMBUS, OHIO 43235

DESIGNED	DRAWN	REVIEWED	DATE
ECM	RCK	EBS	01/18/13
CHECKED	REVISED	STRUCTURE FILE NUMBER	
APV		0201820	

STRUCTURAL REMOVAL DETAILS

BRIDGE NO. ALL-75-0423 R
I-75 OVER S.R. 65

ALL-75-0.21
PID No. 89029

37 / 43

720
907

09-MAY-2013 3:09PM jint
J:\Projects\ALL\89029\structures\ALL075_0423C\sheets\temp bridge\075_0423CAF002.dgn

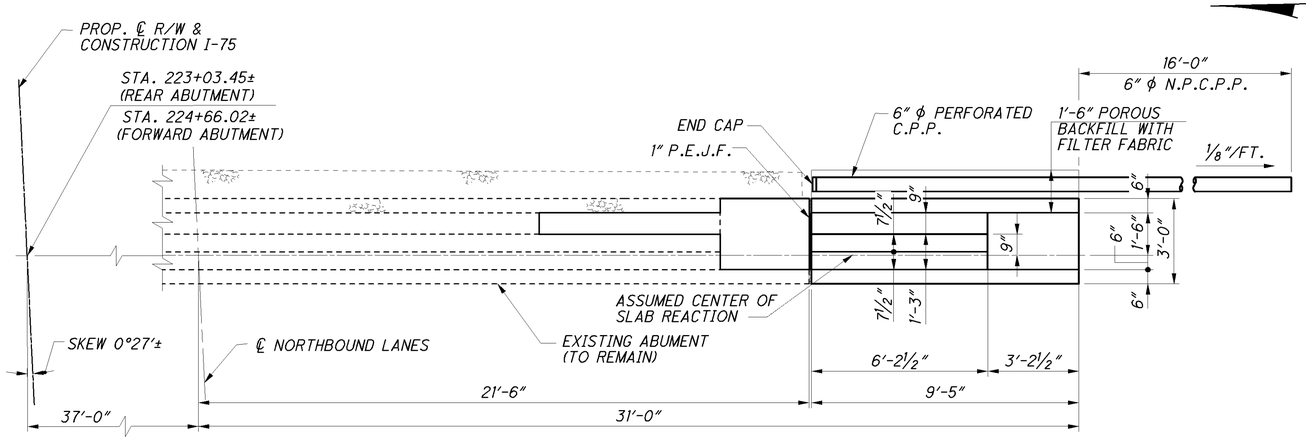

PART PLAN

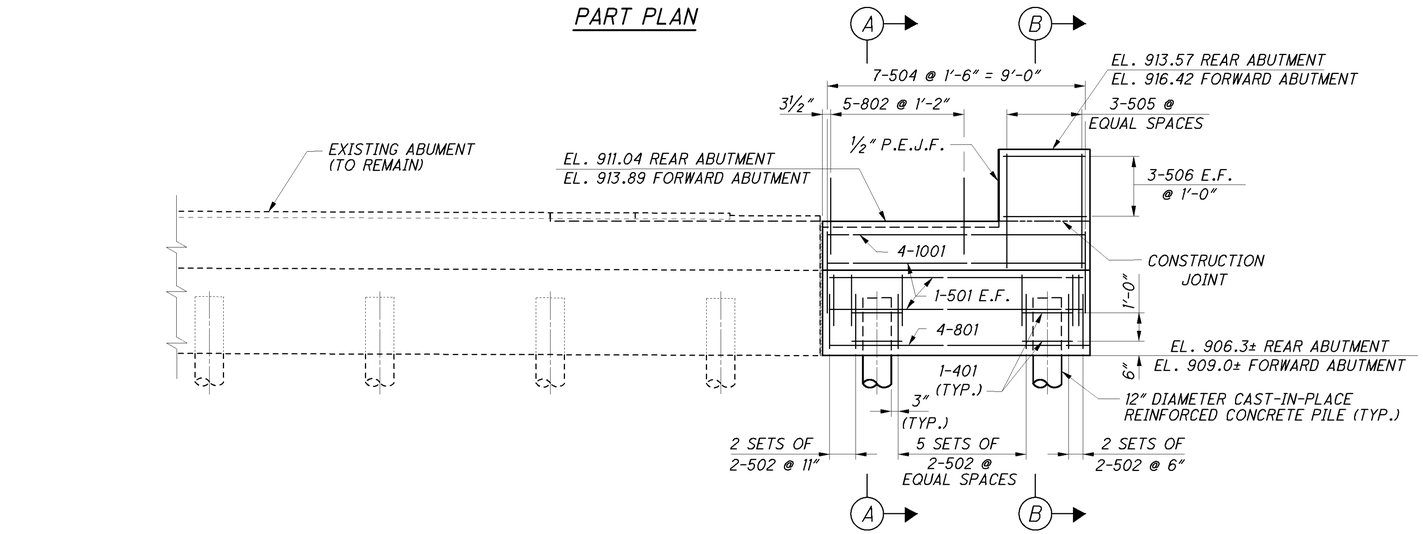

PART ELEVATION

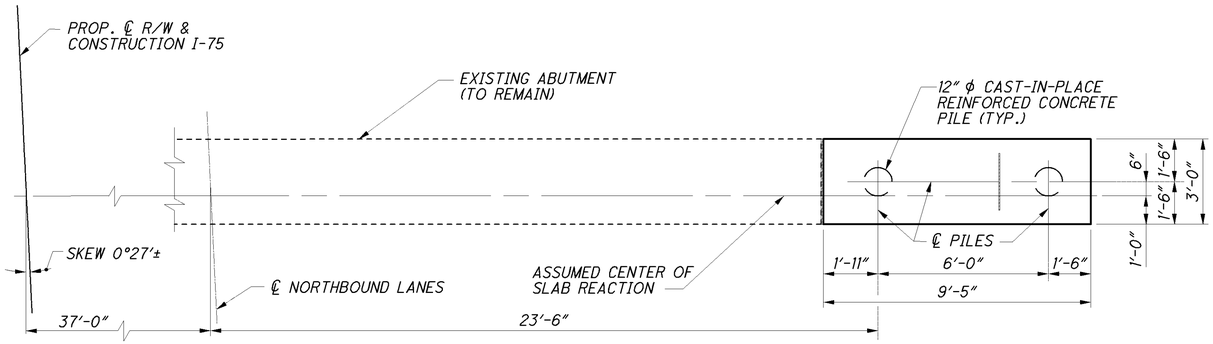

PART FOOTING PLAN

ALL BAR MARKS SHALL BE PREFIXED : RA FOR REAR ABUTMENT AND FA FOR FORWARD ABUTMENT

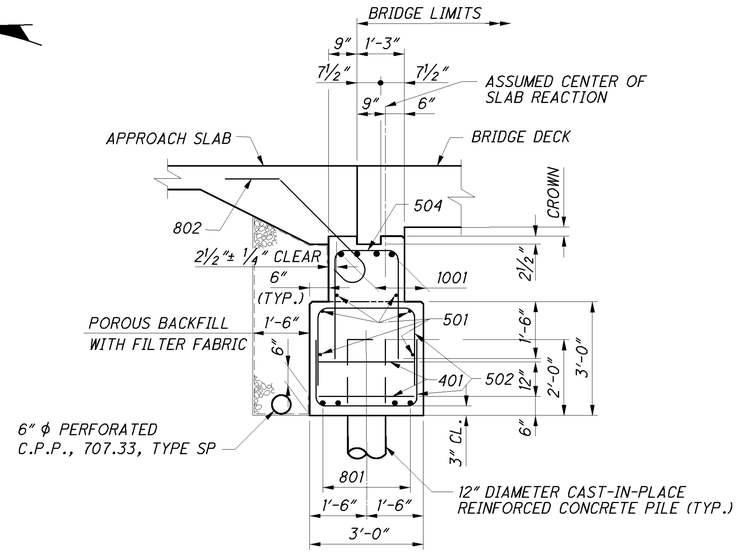

SECTION A-A

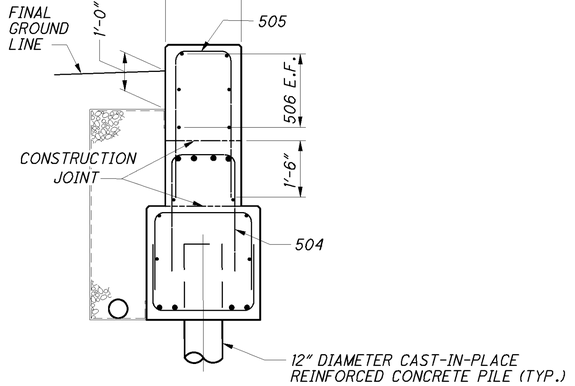

SECTION B-B

NOTES:

1. FORWARD ABUTMENT SHOWN, REAR ABUTMENT SIMILAR EXCEPT OPPOSITE HAND AND AS NOTED.
2. POROUS BACKFILL WITH FILTER FABRIC SHALL EXTEND FROM THE TOP OF THE FOOTING UP TO THE PLANE OF THE SUBGRADE, TO ONE FOOT BELOW THE EMBANKMENT SURFACE, AND LATERALLY TO THE ENDS OF THE WINGWALLS.
3. FOR REINFORCING STEEL LIST, SEE SHEET 43/43.

DESIGN AGENCY
PARSONS BRINCKERHOFF
2945 FARMERS DRIVE
SUITE 350
COLUMBUS, OHIO 43235

DESIGNED	DRAWN	REVIEWED	DATE
ECM	RCK	EBS	01/18/13
CHECKED	REVISED	STRUCTURE FILE NUMBER	
APV		0201820	

ABUTMENT PLAN, ELEVATION AND SECTIONS

BRIDGE NO. ALL-75-0423 R
I-75 OVER S.R. 65

ALL-75-0.21
PID No. 89029

38/43

721
907

J:\Projects\ALL\89029\structures\ALL075_0423C\sheets\temp bridge\075_0423CAFC01.dgn 09-MAY-2013 3:09PM jint

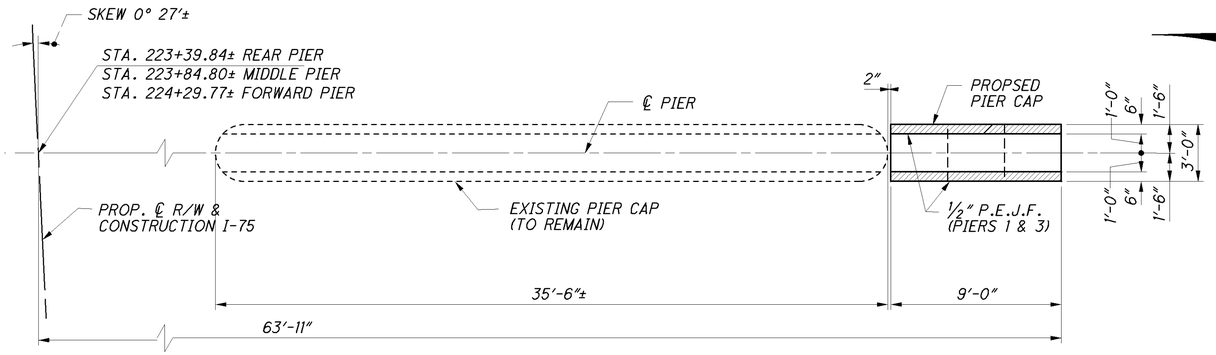

PLAN

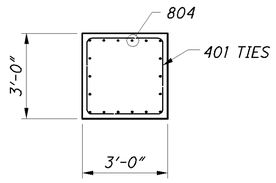

SECTION A-A

	ELEV. "A"	ELEV. "B"
REAR PIER	911.68	889.8±
MIDDLE PIER	912.47	891.3±
FORWARD PIER	913.26	891.3±

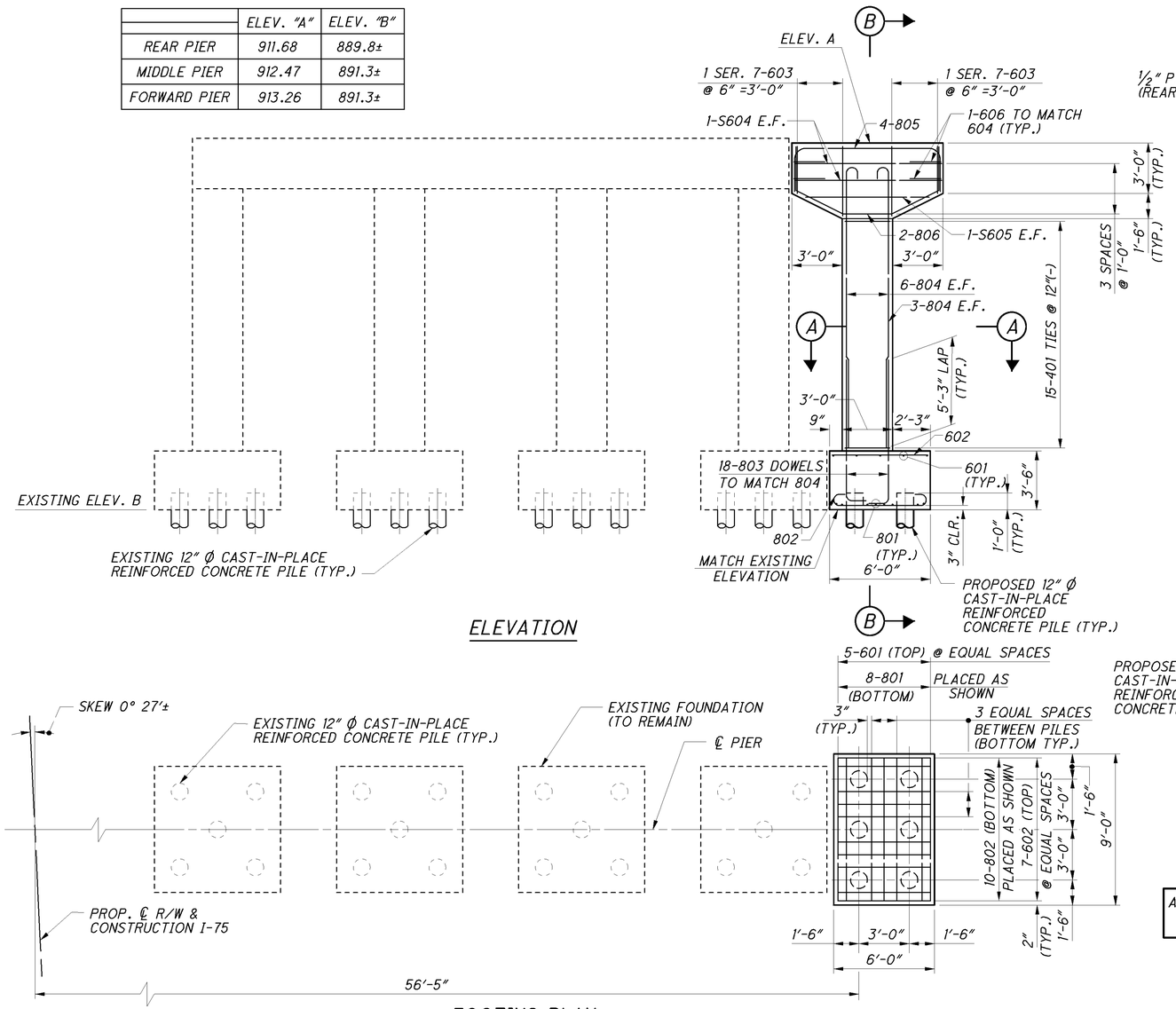

ELEVATION

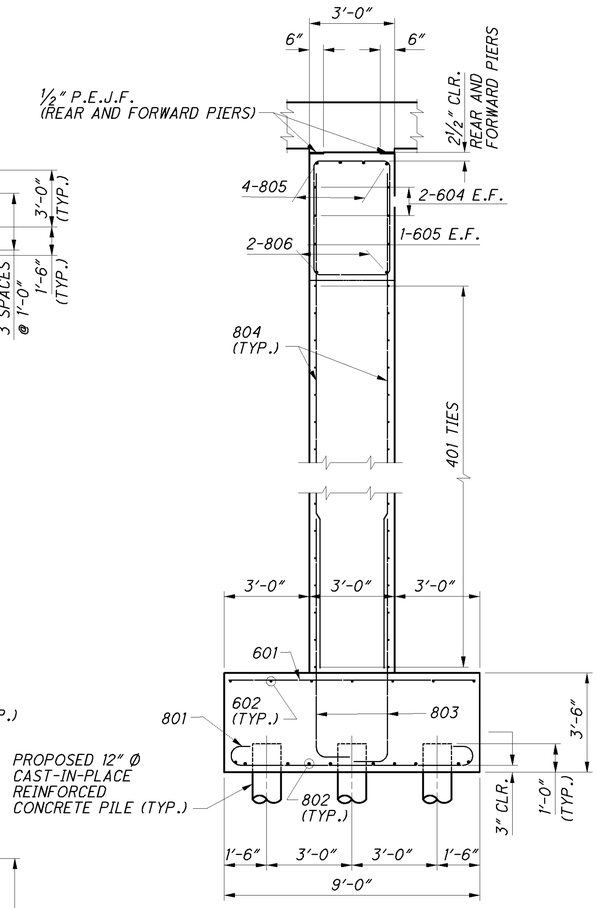

SECTION B-B

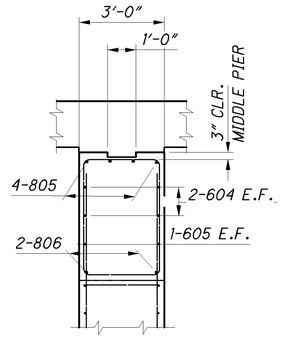

SECTION B-B
(AT MIDDLE PIER)

FOOTING PLAN

ALL BAR MARKS SHALL BE PREFIXED : TP FOR TEMPORARY PIER

NOTE:

1. FOR REINFORCING STEEL LIST, SEE SHEET 43/43.

DESIGN AGENCY
PARSONS BRINCKERHOFF
2545 FARMERS DRIVE
SUITE 350
COLUMBUS, OHIO 43235

DESIGNED	DRAWN	REVIEWED	DATE
ECM	RCK	EBS	01/18/13
CHECKED	REVISED	STRUCTURE FILE NUMBER	
APV		0201820	

PIER DETAILS
BRIDGE NO. ALL-75-0423 R
I-75 OVER S.R. 65

ALL-75-0.21
PID No. 89029

J:\Projects\ALL\89029\structures\ALL075_0423C\sheets\temp bridge\075_0423CPI001.dgn 09-MAY-2013 3:09PM lint

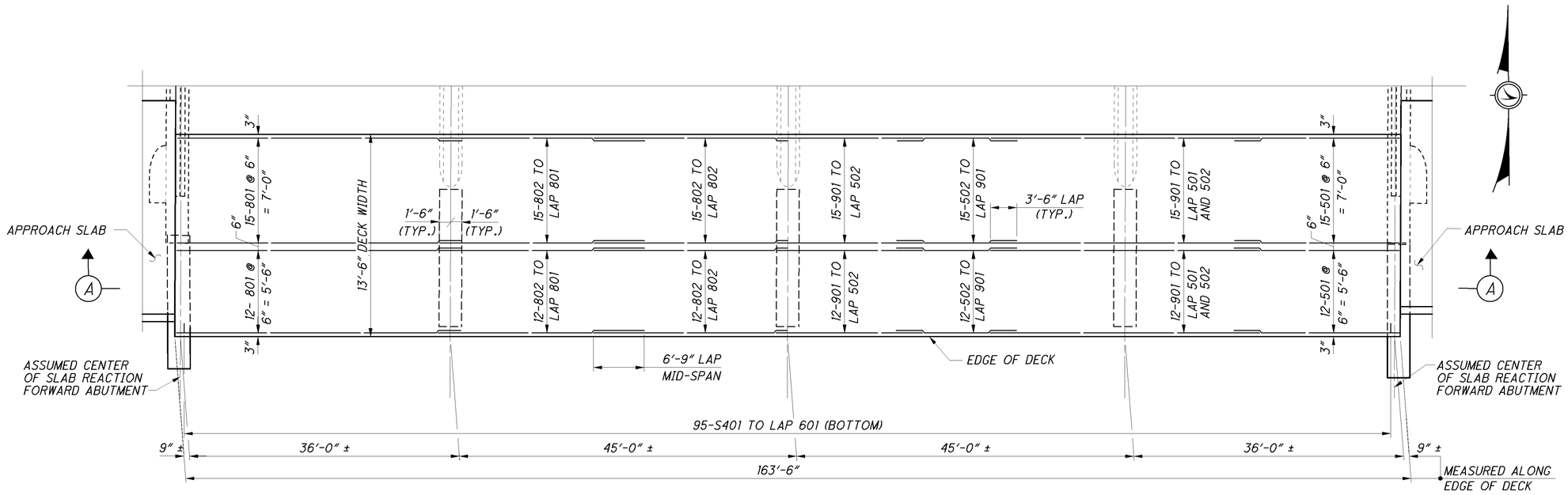

BOTTOM REINFORCEMENT

TOP REINFORCEMENT

SLAB PLAN

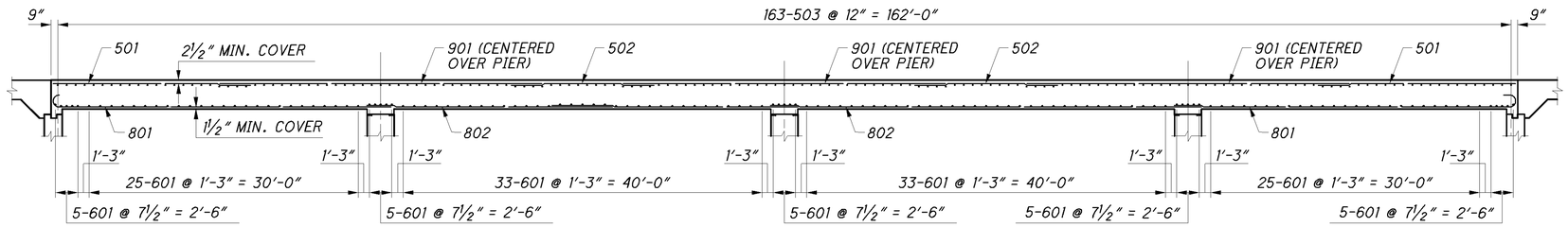

SECTION A-A

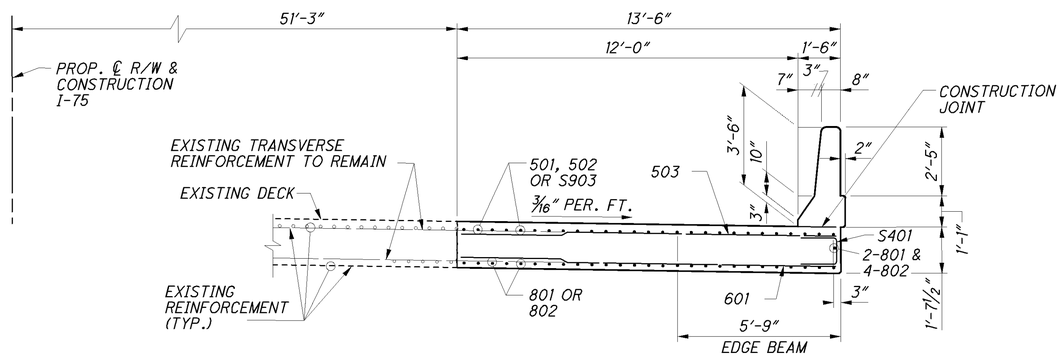

SECTION B-B

ALL BAR MARKS SHALL BE PREFIXED : TS FOR TEMPORARY SUPERSTRUCTURE

NOTES:

1. FOR EXISTING SLAB REMOVAL, SEE SHEET 37/43.
2. S401 BARS SHALL NOT BE LAPPED WITH ADDITIONAL BARS AT THE PIERS AND ABUTMENTS.
3. FOR REINFORCING STEEL LIST, SEE SHEET 43/43.

DESIGN AGENCY
PARSONS BRINCKERHOFF
2545 FARMERS DRIVE
SUITE 350
COLUMBUS, OHIO 43235

DESIGNED	DRAWN	REVIEWED	DATE
ECM	RCK	EBS	01/18/13
CHECKED	REVISED	STRUCTURE FILE NUMBER	
APV		0201820	

SLAB PLAN
BRIDGE NO. ALL-75-0423 R
I-75 OVER S.R. 65

ALL-75-0.21
PID No. 89029

J:\Projects\ALL\89029\structures\ALL075_0423C\sheets\temp bridge\075_0423CDP001.dgn 09-MAY-2013 3:09PM jint

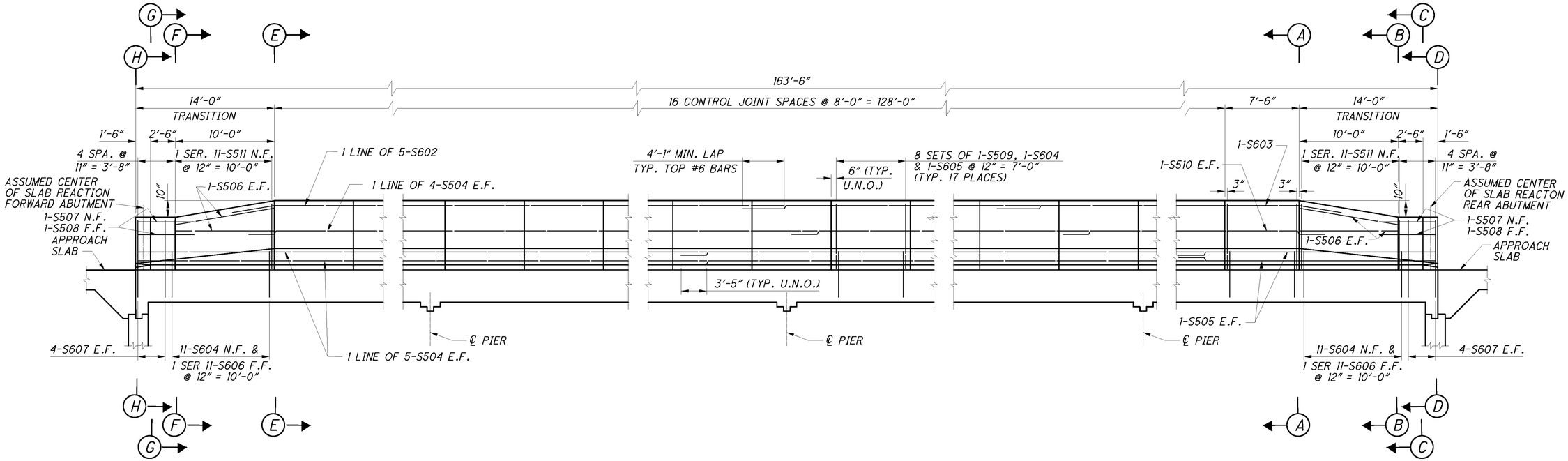

RAILING ELEVATION

(LOOKING SOUTH)

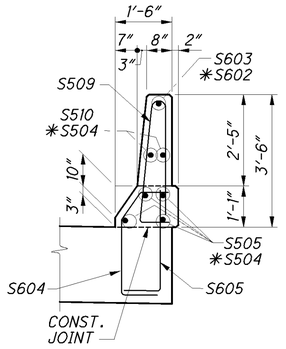

SECTION A-A

(SHOWN)

*SECTION E-E

(OPPOSITE HAND)

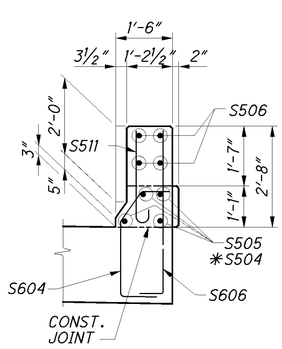

SECTION B-B

(SHOWN)

*SECTION F-F

(OPPOSITE HAND)

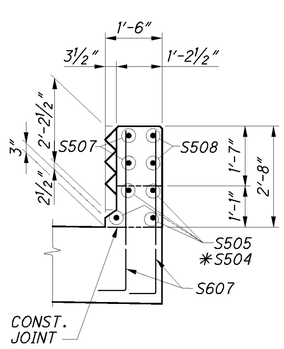

SECTION C-C

(SHOWN)

*SECTION G-G

(OPPOSITE HAND)

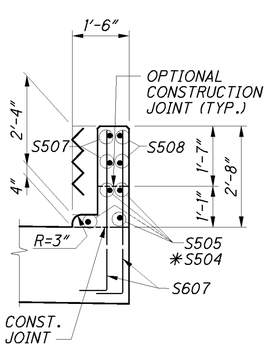

SECTION D-D

(SHOWN)

*SECTION H-H

(OPPOSITE HAND)

ALL BAR MARKS SHALL BE PREFIXED : TS FOR TEMPORARY SUPERSTRUCTURE

DESIGN AGENCY
PARSONS BRINCKERHOFF
2545 FARMERS DRIVE
SUITE 350
COLUMBUS, OHIO 43235

DESIGNED	DRAWN	REVIEWED	DATE
ECM	RCK	EBS	01/18/13
CHECKED	REVISED	STRUCTURE FILE NUMBER	
APV		0201820	

RAILING ELEVATION AND SECTIONS
BRIDGE NO. ALL-75-0423 R
I-75 OVER S.R. 65

ALL-75-0.21
PID No. 89029

41 / 43

724
907

J:\Projects\ALL\89029\structures\ALL075_0423C\sheets\temp bridge\075_0423CSD001.dgn 09-MAY-2013 3:06PM jint

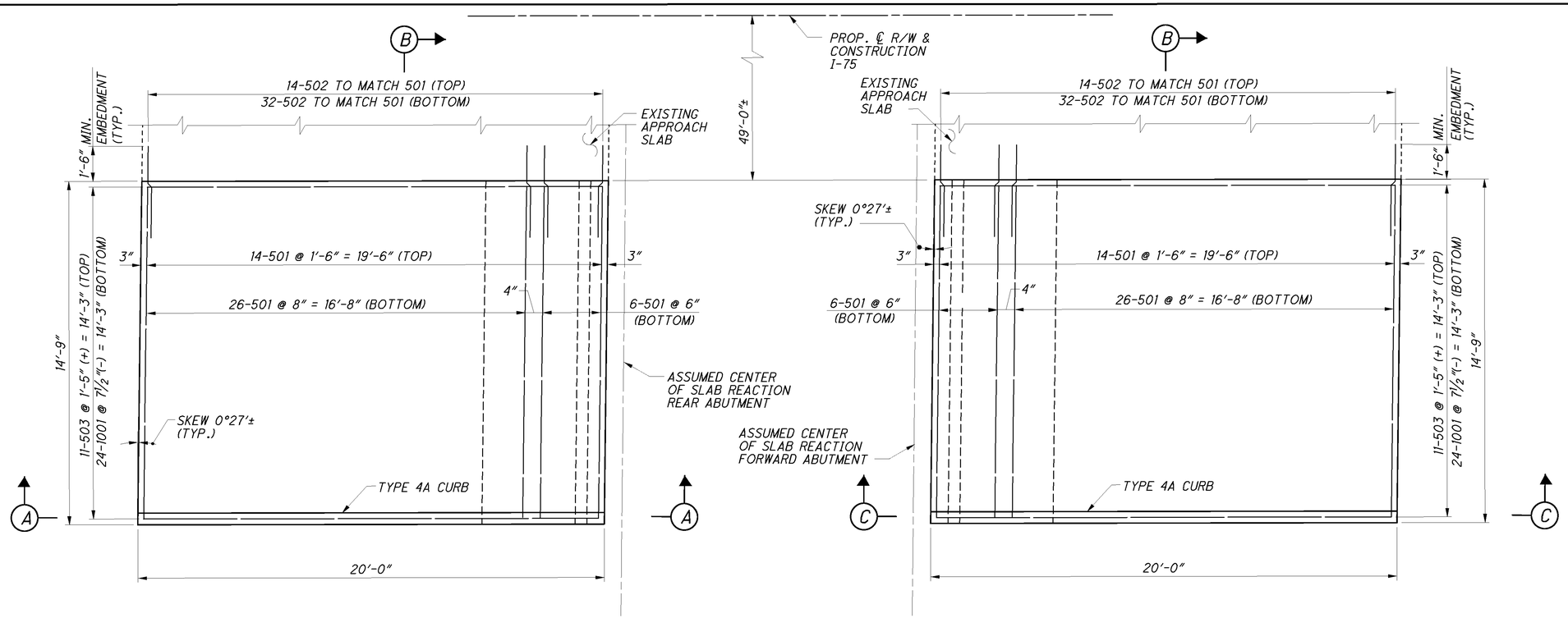

REAR APPROACH SLAB

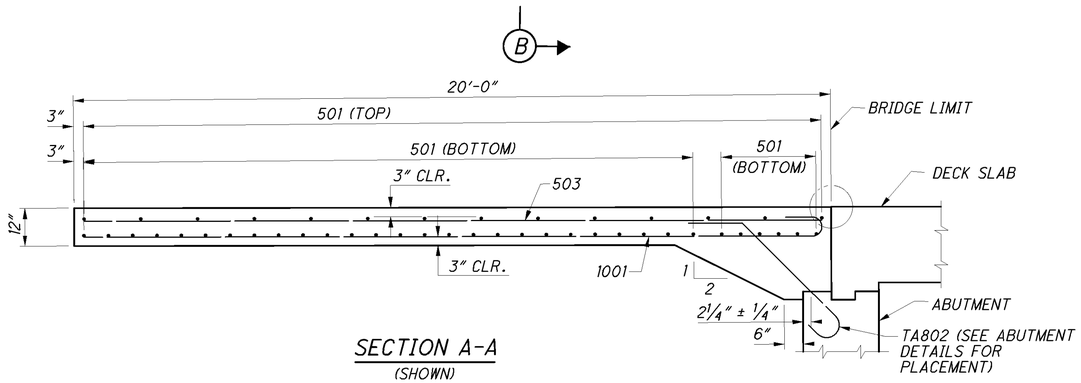

SECTION A-A
(SHOWN)

SECTION C-C
(OPPOSITE HAND)

FORWARD APPROACH SLAB

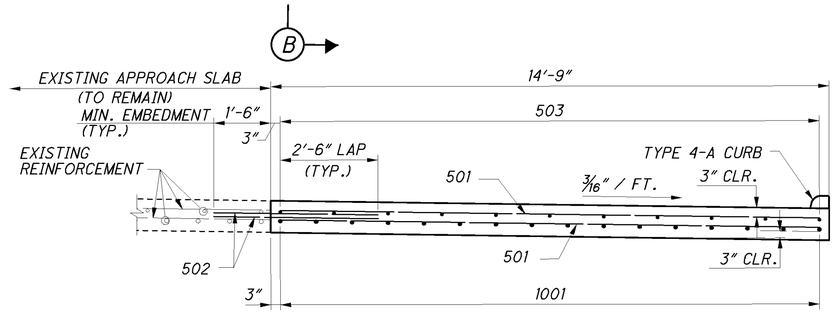

SECTION B-B

MARK	NUMBER TOTAL	LENGTH	WEIGHT	TYPE	DIMENSIONS A	B	C	D	E	R	INC
TEMPORARY APPROACH SLAB											
TAS501	92	14'- 03"	1,368	STR.							
TAS502	92	4'- 03"	408	STR.							
TAS503	22	19'- 06"	448	STR.							
TAS1001	48	20'- 11"	4,321	16	19'-6"						
APPROACH SLAB TOTAL			6,545								
FOR INFORMATION ONLY. NOT INCLUDED WITH ITEM 509.											

ALL BAR MARKS SHALL BE PREFIXED : TAS FOR TEMPORARY APPROACH SLAB

* FOR INFORMATION ONLY, NOT INCLUDED WITH ITEM 509. COST FOR APPROACH SLAB REINFORCING SHALL BE INCLUDED WITH ITEM 898, QC/QA CONCRETE, CLASS QSC2, SUPERSTRUCTURE (APPROACH SLAB), AS PER PLAN.

DESIGN AGENCY
PARSONS BRINCKERHOFF
2545 FARMERS DRIVE
SUITE 350
COLUMBUS, OHIO 43235

DESIGNED	DRAWN	REVIEWED	DATE
ECM	RCK	EBS	01/18/13
CHECKED	REVISED	STRUCTURE FILE NUMBER	
APV		0201820	

APPROACH SLAB DETAILS
BRIDGE NO. ALL-75-0423 R
I-75 OVER S.R. 65

ALL-75-0.21
PID No. 89029

J:\Projects\ALL\89029\structures\ALL075_0423C\sheets\temp bridge\075_0423CMD002.dgn 09-MAY-2013 3:09PM jint

MARK	NUMBER TOTAL	LENGTH	WEIGHT	TYPE	DIMENSIONS A	B	C	D	E	R	INC
TEMPORARY PIER											
TP401	45	10'- 06"	316	3	2'-6"	2'-6"					
TP601	15	8'- 08"	196	STR.							
TP602	21	5'- 08"	179	STR.							
	6	12'- 00"				2'-9"					
TP603	SER. OF	TO	842	33	2'-8"	TO					
	7	14'- 08"				4'-1"					
TP604	12	8'- 08"	157	STR.							
TP605	6	6'- 08"	61	STR.							
TP606	12	7'- 02"	130	2	2'-6"	2'-6"	2'-6"				
TP801	24	10'- 06"	673	17	8'-8"						
TP802	30	7'- 06"	601	17	5'-8"						
TP803	54	9'- 08"	1,394	1	1'-4"	8'-6"					
TP804	54	16'- 05"	2,367	16	15'-6"						
TP805	12	13'- 07"	436	2	2'-6"	8'-8"	2'-6"				
TP806	6	14'- 07"	234	36	3'-0"	2'-10"	1'-4"	2'-9"			
TEMPORARY PIER TOTAL			7,586								

MARK	NUMBER TOTAL	LENGTH	WEIGHT	TYPE	DIMENSIONS A	B	C	D	E	R	INC
TEMPORARY ABUTMENT											
TA401	8	9'- 01"	49	3	2'-7"	1'-9"					
TA501	12	9'- 01"	114	STR.							
TA502	36	7'- 05"	279	2	2'-6"	2'-8"	2'-6"				
TA504	14	7'- 07"	111	2	3'-1"	1'-8"	3'-1"				
TA505	6	9'- 03"	58	2	3'-11"	1'-8"	3'-11"				
TA506	12	2'- 10"	36	STR.							
TA801	8	9'- 01"	195	STR.							
TA802	10	6'- 02"	165	18	3'-10"	1'-0"	1'-0"				
TA1001	8	9'- 01"	313	STR.							
TEMPORARY ABUTMENT TOTAL			1,320								

MARK	NUMBER TOTAL	LENGTH	WEIGHT	TYPE	DIMENSIONS A	B	C	D	E	R	INC
TEMPORARY SUPERSTRUCTURE											
TS401	131	3'- 05"	299	2	1'-3"	1'-7"	1'-3"				
TS501	54	22'- 00"	1,240	STR.							
TS502	54	16'- 01"	906	STR.							
TS503	163	13'- 04"	2,267	STR.							
TS504	28	30'- 00"	877	STR.							
TS505	4	30'- 03"	127	STR.							
TS506	8	10'- 00"	84	STR.							
TS507	4	5'- 08"	24	25	1'-10"	2'-5"	1'-4"	1 1/2"	5"		
TS508	4	5'- 08"	24	STR.							
TS509	136	7'- 01"	1,005	23	8"	3'-3"	3'-0"			1 1/2"	
TS510	2	36'- 01"	76	STR.							
	2	3'- 00"			2'-5"						
TS511	SER. OF	TO	79	16	TO						1"
	11	3'- 10"			3'-3"						
TS601	141	13'- 04"	2,824	STR.							
TS602	5	30'- 00"	226	STR.							
TS603	1	14'- 01"	22	STR.							
TS604	158	3'- 06"	831	14	10 1/2"	1'-4"	8 1/2"	6"	9"		
TS605	136	3'- 11"	801	1	12"	3'-1"					
	2	4'- 06"				3'-8"					
TS606	SER. OF	TO	163	1	12"	TO					
	11	5'- 04"				4'-6"					
TS607	16	4'- 06"	109	1	12"	3'-8"					
TS801	56	38'- 11"	5,819	16	38'-0"						
TS802	112	27'- 05"	8,199	STR.							
TS901	81	35'- 11"	9,892	STR.							
TEMPORARY SUPERSTRUCTURE TOTAL			35,894								

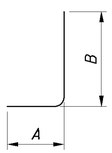

TYPE-1

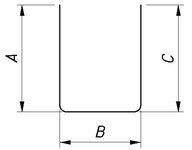

TYPE-2

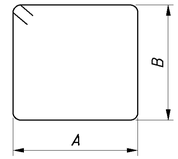

TYPE-3

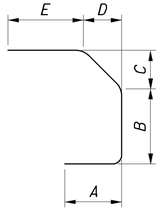

TYPE-14

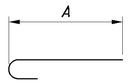

TYPE-16

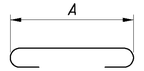

TYPE-17

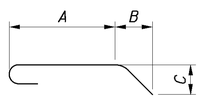

TYPE-18

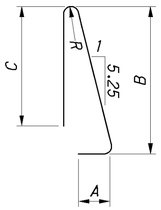

TYPE-23

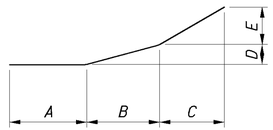

TYPE-25

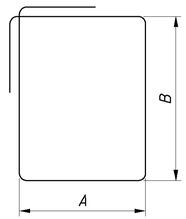

TYPE-33

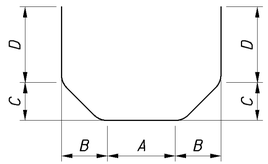

TYPE-36

NOTES:

1. THE BAR SIZE NUMBER IS SPECIFIED ON THE PLANS IN THE BAR MARK COLUMN. THE FIRST DIGIT WHERE THREE DIGITS ARE USED, AND THE FIRST TWO DIGITS WHERE FOUR ARE USED, INDICATES THE BAR SIZE NUMBER. FOR EXAMPLE, P601 IS A NO. 6 BAR. BAR DIMENSIONS SHOWN ARE OUT TO OUT UNLESS OTHERWISE INDICATED. R INDICATES INSIDE RADIUS, UNLESS OTHERWISE NOTED. "STD." WRITTEN IN PLACE OF A DIMENSION INDICATES A STANDARD BEND AT THE END OF THE BAR.

2. ALL REINFORCEMENT IS TO BE EPOXY COATED.

DESIGN AGENCY
PARSONS BRINCKERHOFF
2945 FARMERS DRIVE
SUITE 350
COLUMBUS, OHIO 43235

DESIGNED	DRAWN	REVIEWED	DATE
ECM	ECM	EBS	01/18/13
CHECKED	REVISED	STRUCTURE FILE NUMBER	
APV		0201820	

TEMPORARY BRIDGE REINFORCING STEEL LIST

BRIDGE NO. ALL-75-0423 R
I-75 OVER S.R. 65

ALL-75-5.53
PID No. 89029

43 / 43

726
907

J:\Projects\ALL\89029\structures\ALL075_0423C\sheets\temp bridge\075_0423CRL001.dgn 09-MAY-2013 3:09PM jint

BENCHMARK DATA

BM # 11795 STA. 237+00.43, 165.40' RT
BM # 17032 STA. 237+58.88, 167.15' RT

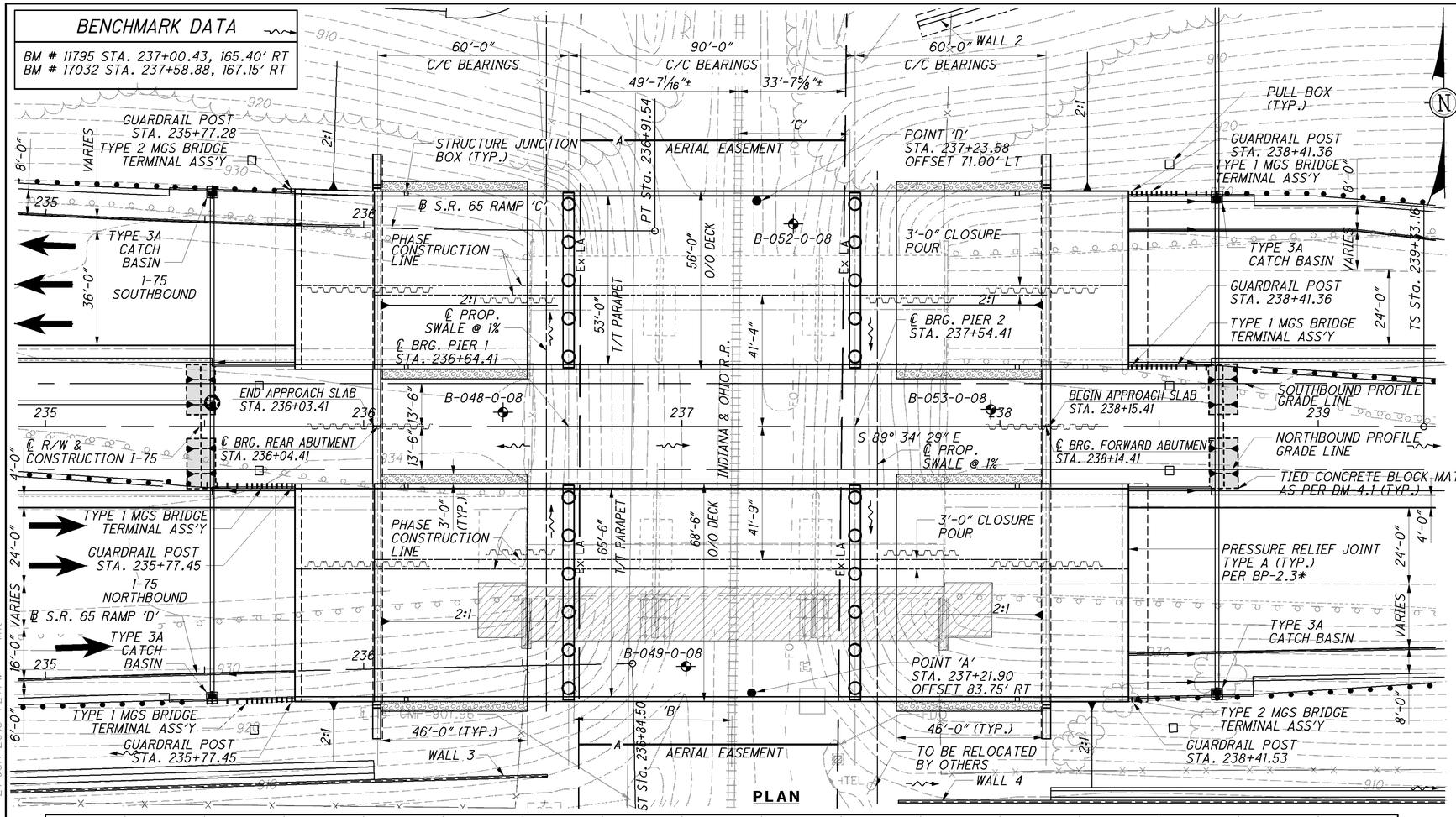

PLAN

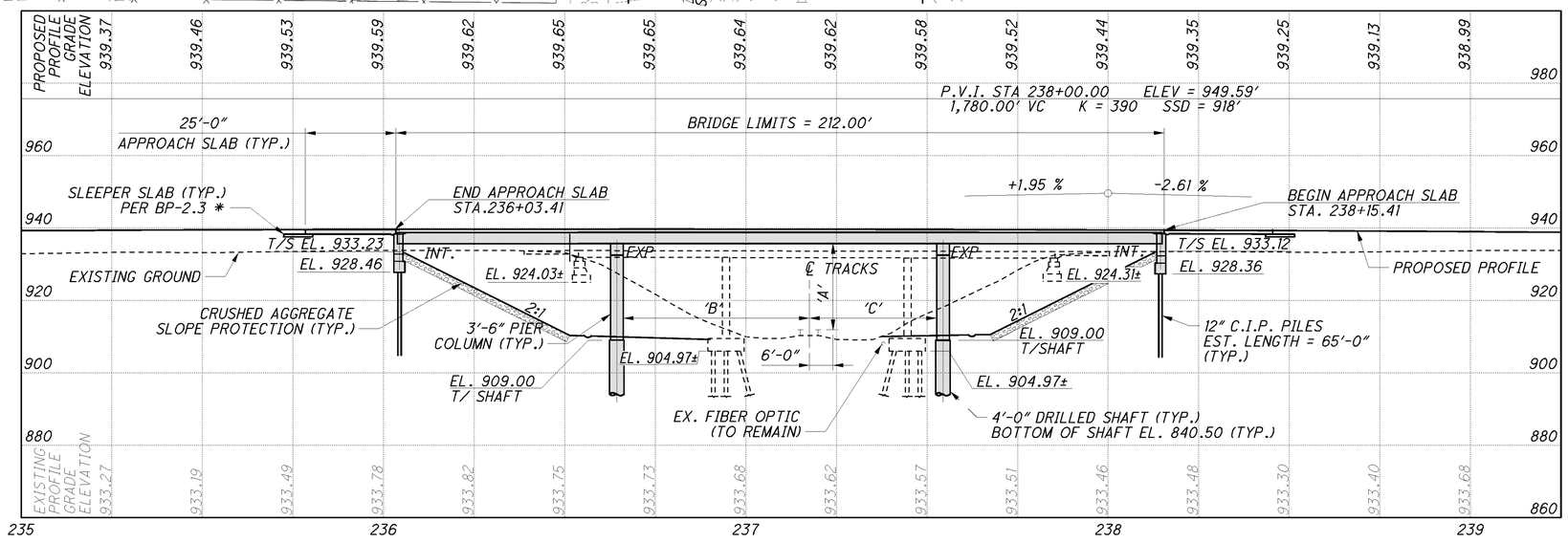

PROFILE
ALONG N.B. PROFILE GRADE LINE

NOTES

EARTHWORK LIMITS SHOWN ARE APPROXIMATE. ACTUAL SLOPES SHALL CONFORM TO PLAN CROSS SECTIONS.

DESIGN TRAFFIC:
2015 ADT = 45,300 2015 ADTT = 17,667
2035 ADT = 54,700 2035 ADTT = 21,333
DIRECTIONAL DISTRIBUTION = 0.51
AVERAGE DAILY TRAIN TRAFFIC = 6

LEGEND

⊕ BORING LOCATION

● 23.50' REQUIRED MINIMUM VERTICAL CLEARANCE
POINT 'A' - 23.50' ACTUAL MINIMUM VERTICAL CLEARANCE
POINT 'D' - 24.38' ACTUAL MINIMUM VERTICAL CLEARANCE

25.00' REQUIRED MINIMUM HORIZONTAL CLEARANCE
POINT 'B' - 49.72' ACTUAL MINIMUM HORIZONTAL CLEARANCE
POINT 'C' - 34.88' ACTUAL MINIMUM HORIZONTAL CLEARANCE

▨ - TEMPORARY STRUCTURE

* PROVIDE PRESSURE RELIEF JOINT FOR RIGID PAVEMENT OPTION ONLY

SOIL BORING LOCATIONS

BORING	STATION, OFFSET	BOTTOM OF BORING
B-048-0-08	STA. 236+43.8, 4.5' LT.	**857.2
B-049-0-08	STA. 237+01.3, 75.4' RT.	**834.1
B-052-0-08	STA. 237+35.0, 63.7' LT.	**829.2
B-053-0-08	STA. 237+97.1, 5.4' LT.	**857.2

** ROCK NOT ENCOUNTERED

EXISTING STRUCTURE

TYPE: CONTINUOUS 3-SPAN REINFORCED CONCRETE SLAB WITH REINFORCED CONCRETE SUBSTRUCTURE
SPANS: 40'±-50'±-40'± C/C BRGS.
ROADWAY: 31'-0"± TOE/TOE PARAPETS
LOADING: CF-2000(51)
SKEW: 0°39'4.5"± LF
APPROACH SLABS: AS-1-54 (L=15')
ALIGNMENT: TANGENT
CROWN: NORMAL 3/16"/FT.
STRUCTURAL FILE NUMBER: 0201863 (LT), 0201898 (RT)
DATE BUILT: 1957
WEARING SURFACE: MICROSILICA MODIFIED CONCRETE

PROPOSED STRUCTURE

TYPE: 3-SPAN STEEL ROLLED BEAM (A709 GRADE 50W) WITH REINFORCED CONCRETE DECK, INTEGRAL ABUTMENTS AND CAP AND COLUMN PIERS.
SPANS: 60'-0", 90'-0", 60'-0" C/C BEARINGS
ROADWAY: 53'-0" (S.B.) & 65'-6" (N.B.) TOE/TOE PARAPET
LOADING: HL-93
FUTURE WEARING SURFACE (FWS) OF 0.060 kips/ft^2
SKEW: NONE
APPROACH SLABS: AS-1-81, 25'-0" LONG (MODIFIED)
WEARING SURFACE: 1" MONOLITHIC
ALIGNMENT: TANGENT
CROWN: VARIES (0.016 FT/FT MIN. AND 0.037 FT/FT MAX.)
COORDINATES: LATITUDE 40°41'56"
LONGITUDE 84°5'6"

DESIGN AGENCY
PARSONS BRINCKERHOFF
2545 FARMERS DRIVE
SUITE 350
COLUMBUS, OHIO 43235

DESIGNED PJL | DRAWN LEL | REVIEWED EBS | DATE 02/01/13
CHECKED SAP | REVISED
STRUCTURE FILE NUMBER LEFT: 0201871 RIGHT: 0201901

ALLEN COUNTY
STA. 236+03.41
STA. 238+15.41

SITE PLAN
BRIDGE NO. ALL-75-0448 L&R
I-75 OVER INDIANA & OHIO RAILWAY

ALL-75-0.21
PID No. 89029

J:\Projects\ALL_89029\structures\ALL075_0448C\sheets\075_0448CSP001.dgn 21-JUN-2013 1:27PM jint

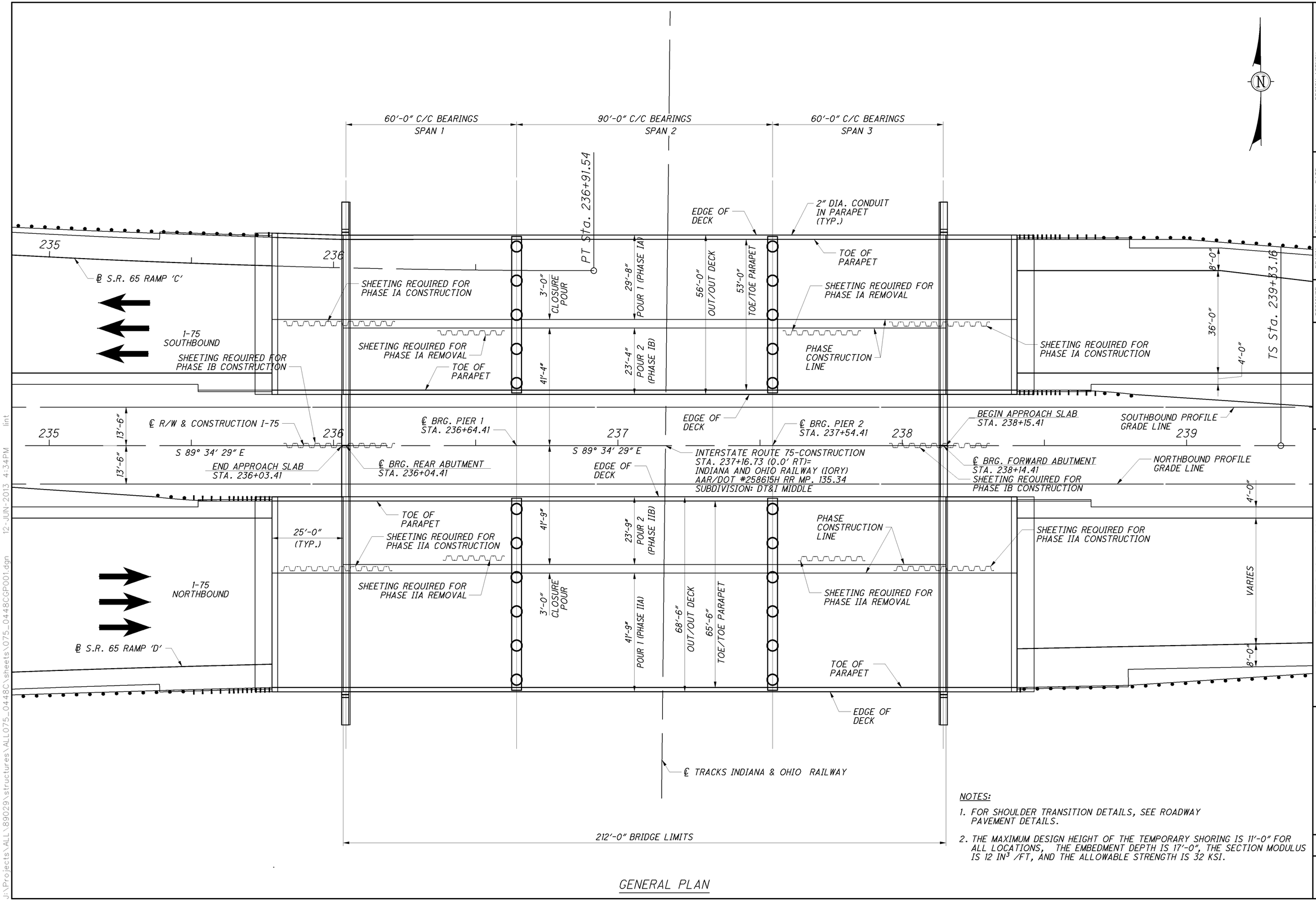

N

NOTES:

1. FOR SHOULDER TRANSITION DETAILS, SEE ROADWAY PAVEMENT DETAILS.
2. THE MAXIMUM DESIGN HEIGHT OF THE TEMPORARY SHORING IS 11'-0" FOR ALL LOCATIONS, THE EMBEDMENT DEPTH IS 17'-0", THE SECTION MODULUS IS 12 IN^3 /FT, AND THE ALLOWABLE STRENGTH IS 32 KSI.

GENERAL PLAN

DESIGN AGENCY
PARSONS BRINCKERHOFF
2545 FARMERS DRIVE
SUITE 350
COLUMBUS, OHIO 43235

DESIGNED	DRAWN	REVIEWED	DATE
PJL	BKJ	EBS	02/01/13
CHECKED	REVISED	STRUCTURE NUMBER	
SAP		LEFT: 0201871 RIGHT: 0201901	

ALLEN COUNTY
STA. 236+03.41
STA. 238+15.41

GENERAL PLAN
BRIDGE NO. ALL-75-0448 L&R
I-75 OVER INDIANA & OHIO RAILWAY

ALL-75-0.21
PID No. 89029

2 / 50

728
907

J:\Projects\ALL\89029\structures\ALL075_0448C\sheets\075_0448CGP001.dgn 12-JUN-2013 4:34PM jint

STANDARD DRAWINGS AND SUPPLEMENTAL SPECIFICATIONS

REFER TO THE FOLLOWING STANDARD BRIDGE DRAWING(S):

AS-1-81	REVISED	01-18-13
BR-1	REVISED	07-19-02
GSD-1-96	REVISED	07-19-02
ICD-1-82	REVISED	07-19-02
PCB-91	REVISED	01-18-13

AND TO THE FOLLOWING SUPPLEMENTAL SPECIFICATION(S):

800 DATED 07-19-13
832 DATED 05-05-09
898 DATED 10-21-11

DESIGN SPECIFICATIONS

DESIGN SPECIFICATIONS: THIS STRUCTURE CONFORMS TO THE "LRFD BRIDGE DESIGN SPECIFICATIONS" ADOPTED BY THE AMERICAN ASSOCIATION OF STATE HIGHWAY AND TRANSPORTATION OFFICIALS, FIFTH EDITION, INCLUDING THE 2010 INTERIM SPECIFICATIONS, AND THE ODOT BRIDGE DESIGN MANUAL, 2007.

DESIGN DATA

CONCRETE CLASS QSC2 - COMPRESSIVE STRENGTH 4.5 KSI (SUPERSTRUCTURE)

CONCRETE CLASS QSC1 - COMPRESSIVE STRENGTH 4.0 KSI (SUBSTRUCTURE)

CONCRETE CLASS S MODIFIED - COMPRESSIVE STRENGTH 4.0 KSI (DRILLED SHAFT)

REINFORCING STEEL - MINIMUM YIELD STRENGTH 60 KSI

STRUCTURAL STEEL - ASTM A709 GRADE 50W YIELD STRENGTH 50 KSI

LOAD MODIFIER FOR OPERATIONAL IMPORTANCE

OPERATIONAL IMPORTANCE: A LOAD MODIFIER OF 1.00 HAS BEEN ASSUMED FOR THE DESIGN OF THIS STRUCTURE IN ACCORDANCE WITH THE AASHTO LRFD BRIDGE DESIGN SPECIFICATIONS, ARTICLE 1.3.5 AND THE ODOT BRIDGE DESIGN MANUAL, 2007.

DESIGN LOADING

DESIGN LOADING: HL-93

FUTURE WEARING SURFACE (FWS) OF 0.060 KIPS/SQ.FT.

DECK PROTECTION METHOD

EPOXY COATED REINFORCING STEEL

2.5" CONCRETE COVER

SEALING OF CONCRETE SURFACES

MONOLITHIC WEARING SURFACE

MONOLITHIC WEARING SURFACE IS ASSUMED, FOR DESIGN PURPOSES, TO BE 1 INCH THICK.

EXISTING STRUCTURE PLANS:

CONSTRUCTION PLANS FOR THE EXISTING BRIDGE ARE ON FILE AT THE OHIO DEPARTMENT OF TRANSPORTATION, DISTRICT ONE OFFICE, 1885 NORTH MCCULLOUGH ST., LIMA, OHIO 45801 AND ARE AVAILABLE FOR REFERENCE.

PILE DESIGN LOADS (ULTIMATE BEARING VALUE)

THE ULTIMATE BEARING VALUE IS 179 KIPS PER PILE FOR THE 28 LEFT BRIDGE ABUTMENT PILES. THE ULTIMATE BEARING VALUE IS 176 KIPS PER PILE FOR THE 32 RIGHT BRIDGE ABUTMENT PILES.

ABUTMENT PILES:
12" CAST-IN-PLACE PILES 70 FEET LONG, ORDER LENGTH
2 DYNAMIC LOAD TESTING ITEMS

DRILLED SHAFTS

DRILLED SHAFTS: THE MAXIMUM FACTORED LOAD TO BE SUPPORTED BY EACH DRILLED SHAFT IS 629 KIPS AT THE PIERS. THIS LOAD IS RESISTED BY SIDE RESISTANCE AND ALSO BY TIP RESISTANCE. THE FACTORED RESISTANCE DEVELOPED BY SIDE RESISTANCE IS 484 KIPS. THE FACTORED RESISTANCE PROVIDED BY THE DRILLED SHAFT TIP IS 145 KIPS.

CONSTRUCTION CLEARANCE

MAINTAIN A CONSTRUCTION CLEARANCE OF 13 FEET HORIZONTALLY FROM THE CENTER OF TRACKS AND 20 FEET VERTICALLY FROM A POINT LEVEL WITH THE TOP OF THE HIGHER RAIL, AND 6 FEET FROM THE CENTER OF TRACKS, AT ALL TIMES.

DECK PLACEMENT DESIGN ASSUMPTIONS

THE FOLLOWING ASSUMPTIONS OF CONSTRUCTION MEANS AND METHODS WERE MADE FOR THE ANALYSIS AND DESIGN OF THE SUPERSTRUCTURE. THE CONTRACTOR IS RESPONSIBLE FOR THE DESIGN OF THE FALSEWORK SUPPORT SYSTEM WITHIN THESE PARAMETERS AND WILL ASSUME RESPONSIBILITY FOR SUPERSTRUCTURE ANALYSIS FOR DEVIATION FROM THESE DESIGN ASSUMPTIONS.

AN EIGHT WHEEL FINISHING MACHINE WITH THE LOADS:

	MAXIMUM WHEEL LOAD	TOTAL MACHINE LOAD
SOUTHBOUND PHASE IA	0.95 K	7.60 K
SOUTHBOUND PHASE IB	0.95 K	7.60 K
NORTHBOUND PHASE IIA	1.02 K	8.16 K
NORTHBOUND PHASE IIB	0.95 K	7.60 K

A MINIMUM OUT-TO-OUT WHEEL SPACING AT EACH END OF THE MACHINE OF 103".

A MAXIMUM SPACING OF OVERHANG FALSEWORK BRACKETS OF 48 IN.

A MAXIMUM DISTANCE FROM THE CENTERLINE OF THE FASCIA GIRDER TO THE FACE OF THE SAFETY HANDRAIL OF 65".

ITEM 503, COFFERDAMS, AND EXCAVATION BRACING, AS PER PLAN:

THE DESIGN SHOWN ON THE PLANS FOR TEMPORARY SUPPORT OF EXCAVATION IS ONE REPRESENTATIVE DESIGN THAT MAY BE USED TO CONSTRUCT THE PROJECT. THE CONTRACTOR MAY CONSTRUCT THE DESIGN SHOWN ON THE PLANS OR PREPARE AN ALTERNATE DESIGN TO SUPPORT THE SIDES OF EXCAVATIONS. IF CONSTRUCTING AN ALTERNATE DESIGN FOR TEMPORARY SUPPORT OF EXCAVATION, PREPARE AND PROVIDE PLANS IN ACCORDANCE WITH C&MS 501.05. THE DEPARTMENT WILL PAY FOR THE TEMPORARY SUPPORT OF EXCAVATION AT THE CONTRACT LUMP SUM PRICE FOR COFFERDAMS, CRIBS, AND SHEETING. NO ADDITIONAL PAYMENT WILL BE MADE FOR PROVIDING AN ALTERNATE DESIGN.

ITEM 511-CONCRETE, MISC.: FORMING OF ROUGH CUT STONE FINISH USING FORMLINERS

DESCRIPTION;
CONCRETE FORMLINERS SHALL BE USED ON THE FOLLOWING SURFACES ACCORDING TO THE DETAILS IN THE PLANS:

1. ABUTMENT AND WINGWALL FACES.
2. DECK AND APPROACH SLAB PARAPETS.

THE FORMLINER USED SHALL MEET THE DETAILS SHOWN IN THE PLANS FOR STAGGERED (INTERLOCKING) PATTERNS, INCLUDING DEPTH OF RELIEF AND SIZE OF STONE PATTERN. HORIZONTAL JOINTS IN THESTONE PATTERN SHALL BE ALIGNED AND AT THE SAME ELEVATION. THE FINISHED TEXTURE OF THE ROUGH CUT STONE SHALL BE SIMILAR TO THAT OF RUBBED CONCRETE.

FORMLINERS FOR PATTERN 1 SHALL MATCH THE DIMENSIONAL SPECIFICATIONS OF THE FOLLOWING MANUFACTURER OR APPROVED EQUAL:

PATTERN #1104-R2 (RANDOM CUT STONE)
CUSTOM ROCK
2020 WEST 7TH STREET
ST. PAUL, MN 55116
651-699-1345
WWW.CUSTOM-ROCK.COM

FORMLINERS FOR PATTERN 2 SHALL MATCH THE DIMENSIONAL SPECIFICATIONS OF THE FOLLOWING MANUFACTURER OR APPROVED EQUAL:

PATTERN #1599 (RANDOM CUT STONE)
SPEC FORMLINERS, INC.
530 E. DYER RD.
SANTA ANA, CA 92707
888-429-9550
WWW.SPECFORMLINERS.COM

THE FORMLINER MANUFACTURER SHALL SUBMIT EVIDENCE OF AT LEAST TWO SIMILAR ARCHITECTURAL CONCRETE CONSTRUCTION PROJECTSWITHIN THE PAST FIVE YEARS FOR A REVIEW AND APPROVAL BY THEENGINEER. COMPLETE SHOP DRAWINGS DETAILING THE STONE PATTERNS SHALL BE SUBMITTED IN ACCORDANCE WITH 501.04 FOR APPROVAL PRIOR TO PLACING ANY CONCRETE WHERE THE FORMLINERS WILL BE USED. SHOP DRAWINGS SHALL INCLUDE FORMLINER INSTALLATION AND CASTING INSTRUCTIONS, AND INDICATE FORMLINER BACKUP, REVEAL, AND CHAMFER STRIP LOCATIONS. THE CONTRACTOR SHALL COORDINATE WITH THE FORMLINER MANUFACTURER TO ASSURE UNDERSTANDING OF FORMLINER USE, TEST PANEL MOCK-UP REQUIREMENTS, AND FINAL CONSTRUCTION PROCEDURES.

MATERIALS:
THE FORMLINER SHALL BE FABRICATED WITH SHAPES THAT ALLOW REMOVAL OF THE FORMS WITHOUT DAMAGE OR VISUAL IMPAIRMENT OF THE CONCRETE, AND SHALL HAVE ½" MINIMUM RADII WITH NO SHARP EDGES. THE FORMLINER SHALL BE CAPABLE OF WITHSTANDING APPLIED CONCRETE POUR PRESSURE WITHOUT LEAKAGE, PHYSICAL DEFECT, OR VISUAL IMPAIRMENT.

CONSTRUCTION REQUIREMENTS:
FORMLINERS SHALL BE CLEANED BEFORE EACH USE. DAMAGED FORMLINERS WHOSE CONTINUED USE OR REPAIR WOULD NEGATIVELY IMPACT THE AESTHETICS OF THE FINISHED CONCRETE SHALL BE REPLACED. FORMLINER JOINTS SHALL BE SEALED TO PREVENT CEMENT PASTE FROM BLEEDING. FORMLINERS SHALL BE INSTALLED IN ACCORDANCE WITH THE APPROVED SHOP DRAWINGS. CHAMFERED CORNERS SHALL FORM SMOOTH, SOLID UNBROKEN CONTINUOUS SURFACES WHICH ARE UNIFORMLY STRAIGHT. AN APPROVED COMPATIBLE FORMLINER RELEASE AGENT SHALL BE APPLIED AT A RATE RECOMMENDED BY THE MANUFACTURER.

THE CONCRETE COPING SHALL BE CAST WITH NO FORMLINER USED.

AS PART OF THIS ITEM, A 7 FEET BY 3 FEET SECTION OF WALL THAT COMPRISES A MINIMUM OF ONE COMPLETE STONE BLOCK WILL BE CAST BY THE CONTRACTOR FOR EACH PATTERN USED FOR APPROVAL BY THE ENGINEER. IF THE SECTION DOES NOT MEET THE ENGINEER'S APPROVAL, THE PROPOSED FORMLINER MAY BE REJECTED. THE SECTION MUST BE APPROVED BEFORE PLACING ANY CONCRETE WHERE THE FORMLINERS WILL BE USED. REJECTION OF THE SECTION WILL REQUIRE CONSTRUCTION OF ANOTHER SECTION UNTIL APPROVAL IS GRANTED. THE WALL SECTION SHALL USE ACTUAL PROJECT SPECIFIC MATERIALS, METHODS, AND WORKMANSHIP, INCLUDING CONCRETE MIX (CEMENT TYPE, AGGREGATE GRADATION, SLUMP, WATER/ CEMENT RATIO, PLASTICIZERS, AND ADDITIVES), FORMLINER AND FORMWORK SYSTEMS, INSERTS, FORM RELEASE AGENTS, PLACEMENT RATE, FORM PRESSURES, AND JOINT SEALING, VIBRATING, AND STRIPPING PRACTICES. ANY INTENDED PATCHING OR REPAIR PROCEDURES FOR THE CORRECTION OF MINOR DEFECTS THAT DO NOT RESULT IN REJECTION OF THE ENTIRE WALL SECTION SHALL BE DEMONSTRATED ON THE SECTION.

THE ACCEPTED WALL SECTION SHALL BE THE STANDARD BY WHICH THE FINAL CONSTRUCTION WILL BE EVALUATED FOR TECHNICAL AND AESTHETIC MERIT. THE WALL SECTION SHALL BE CONSTRUCTED AT THE CONSTRUCTION SITE, OR AT AN ALTERNATIVE LOCATION AGREED UPON BY THE ENGINEER. UPON COMPLETION OF THE FINAL CONSTRUCTION, THE CONTRACTOR SHALL BE RESPONSIBLE FOR REMOVAL AND DISPOSAL OF THE WALL SECTION MOCK-UP.

PORTIONS OF THE STRUCTURE DETAILED IN THE PLAN SET SHALL BE CAST WITH STONE FACING FORMLINER TEXTURE AND BE SEALED WITH ITEM 512 - SEALING OF CONCRETE SURFACES (NON-EPOXY (CLEAR)).

METHOD OF MEASUREMENT:
ROUGH CUT STONE FORMLINERS WILL NOT BE MEASURED INDIVIDUALLY FOR PAYMENT UNDER THIS ITEM.

BASIS OF PAYMENT:
ITEM 511-CONCRETE, MISC.: FORMING OF ROUGH CUT STONE FINISH USING FORMLINERS WILL BE PAID FOR AT THE CONTRACT SQ. FT. PRICE. THE WORK SHALL INCLUDE FABRICATION AND ERECTION OF FORMLINERS, PREPARATION OF FORMLINER SHOP DRAWINGS, AND CONSTRUCTION AND REMOVAL OF THE PRE-CONSTRUCTION WALL SECTION, AND SHALL INCLUDE ALL LABOR, MATERIALS, EQUIPMENT, AND INCIDENTALS REQUIRED TO COMPLETE THIS ITEM.

THE DEPARTMENT WILL PAY FOR SEALING OF CONCRETE SURFACES SEPARATELY UNDER ITEM 512-SEALING OF CONCRETE SURFACES (NON-EPOXY (CLEAR)). SEE THE GENERAL SEALING OF CONCRETE SURFACES PLAN NOTE FOR REQUIREMENTS FOR THE NON-EPOXY (CLEAR) SEALER.

DESIGN AGENCY
PARSONS BRINCKERHOFF
2945 FARMERS DRIVE
SUITE 350
COLUMBUS, OHIO 43235

DESIGNED	DRAWN	REVIEWED	DATE
PJL	TLP	EBS	02/01/13
CHECKED	REVISED	STRUCTURE FILE NUMBER	
SAP		LEFT: 0201871 RIGHT: 0201901	

GENERAL NOTES
BRIDGE NO. ALL-75-0448 L&R
I-75 OVER INDIANA & OHIO RAILWAY

ALL-75-0.21
PID No. 89029

729
907

J:\Projects\ALL 89029\structures\ALL075_0448C\sheets\075_0448CGN001.dgn 09-MAY-2013 3:09PM jint

ITEM 512-SEALING OF CONCRETE SURFACES, EPOXY-URETHANE, AS PER PLAN

EPOXY-URETHANE FOR THE WINGWALL COPING, ABUTMENT DIAPHRAGMS, AND PARAPET ACCENTS SHALL BE FEDERAL COLOR STANDARD NUMBER 37875. EPOXY-URETHANE FOR THE BEAMS SHALL BE FEDERAL COLOR STANDARD NUMBER 25095. EPOXY-URETHANE FOR DECK EDGE AND PIER COLUMNS SHALL BE FEDERAL COLOR STANDARD NUMBER 36373. ALL CONCRETE SHALL BE SEALED AS PER PLAN DETAILS.

ITEM 512 - SEALING OF CONCRETE SURFACES ((NON-EPOXY) (CLEAR)), AS PER PLAN

THE NON-EPOXY (CLEAR) SEALER SHALL BE USED ON THE FOLLOWING SURFACES ACCORDING TO THE DETAILS IN PLANS:

1. ABUTMENT AND WINGWALL FACES.
2. DECK AND APPROACH SLAB PARAPETS.

PAYMENT FOR SEALING SURFACES OF ITEMS 1 AND 2 SHALL BE INCLUDED IN THIS ITEM 512.

ITEM 518 - 6" NON-PERFORATED CORRUGATED PLASTIC PIPE, INCLUDING SPECIALS, AS PER PLAN

ANIMAL GUARDS SHALL BE PROVIDED AT THE OUTLET OF THE DRAINAGE PIPES, STEEL BOLTS OR RODS FOR THE ANIMAL GUARDS SHALL BE GALVANIZED PER CMS 711.02. SEE STD DWG. DM 1.1 FOR ADDITIONAL DETAILS AND NOTES. THE ANIMAL GUARDS AND CRUSHED AGGREGATE SLOPE PROTECTION ARE INCIDENTAL TO ITEM 518 - 6" NON-PERFORATED CORRUGATED PLASTIC PIPE, INCLUDING SPECIALS, AS PER PLAN.

ITEM 898 - QC/QA CONCRETE, CLASS QSC2, SUPERSTRUCTURE (APPROACH SLAB), AS PER PLAN

THE ACCEPTED QUANTITIES SHALL INCLUDE:
CONCRETE, CONCRETE BARRIER, REINFORCING STEEL, JOINT FILLERS, JOINT SEALERS, JOINT SEALS AND WATERPROOFING.

THIS ITEM 898 SHALL CONTAIN INTEGRALLY COLORED CONCRETE USING CHROMIX ADMIXTURES AS PROVIDED BY L. M. SCOFIELD COMPANY, DOUGLASVILLE, GEORGIA (800) 800-9000 OR AN APPROVED EQUAL. USE FEDERAL COLOR NUMBER 36373 FOR ONLY THE APPROACH PARAPETS.

ITEM 898 - QC/QA CONCRETE, CLASS QSC2, SUBSTRUCTURE (ABUTMENT INCLUDING FOOTING), AS PER PLAN

ITEM 898 - QC/QA CONCRETE, CLASS QSC2, SUPERSTRUCTURE (PARAPET), AS PER PLAN

THIS ITEM 898 SHALL CONTAIN INTEGRALLY COLORED CONCRETE USING CHROMIX ADMIXTURES AS PROVIDED BY L. M. SCOFIELD COMPANY, DOUGLASVILLE, GEORGIA (800) 800-9000 OR AN APPROVED EQUAL. USE FEDERAL COLOR NUMBER 36373.

IT IS NOT NECESSARY FOR THE CONTRACTOR TO PROVIDE INTEGRAL COLORING IN THE ABUTMENT FOOTING.

RAILROAD

ALL MOVEMENTS OF EQUIPMENT WITHIN RAILROAD PROPERTY MUST BE COORDINATED WITH THE RAILROAD FLAGGER.

DURING TRAIN MOVEMENTS THROUGH THE PROJECT LOCATION, VEHICLES, EQUIPMENT, AND PERSONNEL WILL NOT BE ALLOWED TO OPERATE WITHIN 25 FEET OF THE TRACK.

ANY DAMAGE CAUSED BY THE ROADWAY WORK TO THE TRACK OR RAILROAD PROPERTY WILL REQUIRE REPAIR BY THE ROADWAY AUTHORITY OR THEIR DESIGNATED CONTRACTOR IMMEDIATELY UPON NOTIFICATION FROM THE RAILROAD OR THEIR DESIGNATED PERSONNEL OR CONTRACTOR.

RAILROAD CONT'D

RAILROAD COORDINATOR & FLAGGER

THE ROADWAY AUTHORITY, OR DESIGNATED CONTRACTOR, SHALL COORDINATE WITH THE RAILROAD WHENEVER CONTRACTOR'S WORK ACTIVITIES ARE LOCATED OVER, UNDER, OR WITHIN THE RAILROAD RIGHT-OF-WAY. A MINIMUM OF 72 HOURS NOTICE IN ADVANCE OF ANY WORK PERFORMED WITHIN OR ADJACENT TO THE RAILROAD RIGHT-OF-WAY. TO SCHEDULE A RAILROAD FLAGGER OR COORDINATE ALL RAILROAD ACTIVITIES, CONTACT THE FOLLOWING RAILROAD PERSONNEL:

RAILROAD FLAGGER AND PROTECTIVE SERVICES AND DEVICES WILL BE REQUIRED AND FURNISHED WHEN CONTRACTOR'S WORK ACTIVITIES ARE LOCATED OVER, UNDER, OR WITHIN THE RAILROAD RIGHT-OF-WAY. THE CONTRACTOR SHALL PROVIDE THE RAILROAD A MINIMUM OF 72 HOURS NOTICE IN ADVANCE OF ANY WORK PERFORMED WITHIN OR ADJACENT TO THE RAILROAD RIGHT-OF-WAY.

BILL KELLY GENERAL MANAGER
INDIANA AND OHIO RAILWAY (IORY)
2856 CYPRESS WAY
CINCINNATI, OH 45212
OFFICE: 513-458-4369
E-MAIL BILL.KELLY@GWRR.COM
OR
DON KUCHEY ROADMASTER
INDIANA AND OHIO RAILWAY (IORY)
2856 CYPRESS WAY
CINCINNATI, OH 45212
OFFICE: 513-458-4369
MOBILE: 513-505-3156
E-MAIL: DON.KUCHEY@GWRR.COM

CONTRACTOR MUST SUBMIT DETAILED DEMOLITION PLANS, STAMPED AND SIGNED BY A OHIO LICENSED PROFESSIONAL ENGINEER, TO THE IORY AT LEAST 45 DAYS PRIOR TO COMMENCING ANY WORK. THE PLANS MUST BE REVIEWED AND APPROVED BY THE I&O RR PRIOR TO COMMENCING WORK. THIS WORK SHALL BE CONSIDERED INCIDENTAL TO THE EXISTING BRIDGE REMOVAL, ITEM 202.

CONTRACTOR SHALL SUBMIT TO I&O RR ANY TEMPORARY SCAFFOLDING OR TEMPORARY STRUCTURES DETAIL TO BE CONSTRUCTED WITHIN THE RAILROAD R/W FOR APPROVAL PRIOR TO BEGINNING WORK.

BALLAST PROTECTION

THE CONTRACTOR SHALL PROVIDE DETAILS TO I&O RR REGARDING THE USE OR DESIGN OF A "COVER-MAT" OR SIMILAR PROTECTION OF THE TRACK BALLAST AND STRUCTURE. THE TRACK BALLAST AND STRUCTURE MUST BE PROTECTED TO PREVENT INFILTRATION OF THE ACCUMULATED DUST AND FOREIGN MATTER OR ANY OTHER MATERIAL INTO THE TRACK BALLAST AND STRUCTURE WHICH WOULD CREATE INSTABILITY AND DETERIORATION OF THE TRACK BALLAST AND STRUCTURE. PLEASE PROVIDE THE METHOD IN WHICH THE TRACK BALLAST AND STRUCTURE WILL BE PROTECTED FROM THIS OUTFALL AND ANY OTHER MATERIAL THAT MAY OR HAVE THE POTENTIAL TO FALL FROM THE REMOVAL WORK AND INFILTRATE OR DAMAGE THE TRACK BALLAST AND STRUCTURE.

PAYMENT FOR ALL LABOR, EQUIPTMENT, AND MATERIALS NECESSARY FOR THIS WORK SHALL BE CONSIDERED INCIDENTAL TO THE DEMOLITION OF THE EXISTING BRIDGE AND CONSTRUCTION OF THE PROPOSED.

CRANE, BOOM, AND EQUIPMENT OPERATION GUIDELINES

- THE I&O RR REQUIREMENTS ARE FOR ALL EQUIPMENT TO MAINTAIN A STATIONARY DISTANCE OF 25' MINIMUM FROM THE CENTERLINE OF TRACK. PLEASE MAINTAIN THESE CLEARANCES AT ALL TIMES.

- ALL MOVEMENTS OF EQUIPMENT WITHIN RAILROAD RIGHT OF WAY MUST BE COORDINATED WITH THE RAILROAD FLAGGER.

- DURING TRAIN MOVEMENTS THROUGH THE PROJECT LOCATION, VEHICLES, EQUIPMENT, AND PERSONNEL WILL NOT BE ALLOWED TO OPERATE WITHIN 25 FEET OF THE TRACK.

- ANY DAMAGE CAUSED BY THE ROADWAY WORK TO THE TRACK OR RAILROAD PROPERTY WILL REQUIRE REPAIR IMMEDIATELY UPON NOTIFICATION FROM THE RAILROAD OR THEIR DESIGNATED PERSONNEL OR CONTRACTOR. IF THE DAMAGE AFFECTS THE TRACK, TRACK STRUCTURE, RAILROAD FACILITIES, OR TRAIN OPERATIONS AS DETERMINED BY THE RAILROAD, THE REPAIRS WILL BE PERFORMED BY THE RAILROAD AT THE ROADWAY AUTHORITIES EXPENSE INCLUDING ALL ASSOCIATED COSTS OF DELAYS OF THE RAILROAD.

- NO CRANE OR BOOM EQUIPMENT WILL BE ALLOWED TO SET UP TO WORK OR PARK WITHIN BOOM DISTANCE PLUS 15 FEET OF CENTERLINE OF TRACK WITHOUT SPECIFIC PERMISSION FROM RAILROAD OFFICIAL AND FLAGMAN.

- NO CRANE OR BOOM EQUIPMENT WILL BE ALLOWED TO FOUL TRACK OR LIFT A LOAD OVER THE TRACK WITHOUT FLAG PROTECTION AND TRACK TIME.

- ALL EMPLOYEES WILL STAY WITH THEIR MACHINES WHEN CRANE OR BOOM EQUIPMENT IS WITHIN 25' OF, OR ALIGNED IN THE DIRECTION OF THE TRACK.

- ALL CRANES AND BOOM EQUIPMENT UNDER LOAD WILL STOP WORK WHILE TRAIN IS PASSING AND BE 25' CLEAR OF TRACK CENTERLINE.

- SWINGING LOADS MUST BE SECURED TO PREVENT MOVEMENT WHILE TRAIN IS PASSING.

- NO LOAD WILL BE SUSPENDED ABOVE A MOVING TRAIN OR WITHIN 25' OF THE TRACK CENTERLINE.

- NO EQUIPMENT WILL BE ALLOWED WITHIN 25 FEET OF CENTERLINE OF TRACK WITHOUT SPECIFIC AUTHORIZATION OF FLAGMAN.

- TRUCKS, TRACTORS OR ANY EQUIPMENT WILL NOT TOUCH BALLAST LINE WITHOUT SPECIFIC PERMISSION FROM RAILROAD OFFICIAL AND FLAGMAN.

- NO EQUIPMENT OR LOAD MOVEMENT WITHIN 25 FEET OR ABOVE A STANDING TRAIN OR RAILROAD EQUIPMENT WITHOUT SPECIFIC AUTHORIZATION OF THE FLAGMAN.

- ALL OPERATING EQUIPMENT WITHIN 25 FEET OF TRACK MUST HALT OPERATIONS WHEN A TRAIN IS PASSING. ALL OTHER OPERATING EQUIPMENT MAY BE HALTED BY THE FLAGMAN IF THE FLAGMAN VIEWS THE OPERATION TO BE DANGEROUS TO THE PASSING TRAIN.

- ALL EQUIPMENT, LOADS AND CABLES ARE PROHIBITED FROM TOUCHING RAILS.

- WHILE CLEARING AND GRUBBING, NO VEGETATION WILL BE REMOVED FROM RAILROAD EMBANKMENT WITH HEAVY EQUIPMENT WITHOUT SPECIFIC PERMISSION FROM THE RAILROAD ENGINEER AND FLAGMAN.

- NO EQUIPMENT OR MATERIALS WILL BE PARKED OR STORED ON RAILROAD'S PROPERTY UNLESS SPECIFIC AUTHORIZATION IS GRANTED FROM THE RAILROAD ENGINEER.

- ALL UNATTENDED EQUIPMENT THAT IS LEFT PARKED ON RAILROAD PROPERTY MUST BE 25'; CLEAR OF THE CENTER OF TRACK TO ANY PART OF THE EQUIPMENT, AND SHALL BE EFFECTIVELY IMMOBILIZED SO THAT IT CANNOT BE MOVED BY UNAUTHORIZED PERSONS.

- ALL CRANES AND BOOM EQUIPMENT WILL BE TURNED AWAY FROM TRACK AND BE A MINIMUM OF 25' CLEAR FROM THE CENTERLINE OF TRACK AFTER EACH WORK DAY OR WHENEVER UNATTENDED BY AN OPERATOR.

ADDITIONALLY, THE RAILROAD SPECIAL PROVISIONS INCLUDED WITH THE ROADWAY CONSTRUCTION AGREEMENT MUST ALSO BE ADHERED TO.

PILE DRIVING OPERATIONS

DUE TO CLOSE PROXIMITY OF PILE DRIVING OPERATIONS, TRACK MUST BE MONITORED FOR MOVEMENT BY A LICENSED LAND SURVEYOR. SOILS ADJACENT TO PILE DRIVING OPERATIONS SHALL BE MONITORED BY A LICENSED LAND SURVEYOR. VIBRATION DURING ALL DRIVING SHALL BE MONITORED TO ENSURE STABILITY OF TRACK AND TRACK BED IS NOT COMPROMISED. RECORDED PEAK GROUND PARTICLE VELOCITIES SHALL GENERALLY NOT EXCEED 0.50 IN/SEC AT THE RAILROAD TRACK (THIS LIMIT WILL BE EVALUATED ON A PROJECT BY PROJECT BASIS). THE DEPARTMENT WILL MONITOR DEVICES WHEN CONSTRUCTION ACTIVITIES CAUSE VIBRATIONS THAT ARE DEEMED TO REQUIRE MONITORING PER THE ENGINEER OF RECORD.

IMMEDIATELY CEASE ANY CONSTRUCTION ACTIVITIES THAT PRODUCE PEAK PARTICLE VELOCITIES IN EXCESS OF THE GENERALLY ACCEPTED LIMIT AT THE TRACK. PROPOSED AS NECESSARY, FOR APPROVAL BY THE ENGINEER OF RECORD, ALTERNATE CONSTRUCTION METHODS TO ASSURE THAT PEAK PARTICLE VELOCITIES REMAIN BELOW THE GENERALLY ACCEPTED LIMIT AT THE TRACK. THE CONTRACTOR IS RESPONSIBLE FOR ANY PROPERTY DAMAGE AS A RESULT OF VIBRATIONS IN EXCESS OF ALLOWABLE VIBRATIONS. MOVEMENT OR DAMAGE TO TRACK, BALLAST, AND/OR SUBGRADE SHALL BE REPAIRED BY THE CONTRACTOR.

THE ROADWAY AUTHORITY AND RAILROAD SHALL BE NOTIFIED AT LEAST TWO WEEKS PRIOR TO BEGINNING CONSTRUCTION SO THAT VIBRATIONS CAN BE MONITORED.

PAYMENT FOR ALL LABOR, EQUIPMENT, AND MATERIALS NECESSARY FOR THIS WORK SHALL BE CONSIDERED INCIDENTAL TO THE CONSTRUCTION OF THE PROPOSED BRIDGE AND TEMPORARY STRUCTURE FOR MAINTAINING TRAFFIC.

DESIGN AGENCY
PARSONS BRINCKERHOFF
2945 FARMERS DRIVE
SUITE 350
COLUMBUS, OHIO 43235

DESIGNED	DRAWN	REVIEWED	DATE
PJL	TLP	EBS	02/01/13
CHECKED	REVISED	STRUCTURE FILE NUMBER	
SAP		LEFT: 0201871 RIGHT: 0201901	

GENERAL NOTES
BRIDGE NO. ALL-75-0448 L&R
I-75 OVER INDIANA & OHIO RAILWAY

ALL-75-0.21
PID No. 89029

730
907

J:\Projects\ALL\89029\structures\ALL075_0448C\sheets\075_0448CGN002.dgn 09-MAY-2013 3:09PM lint

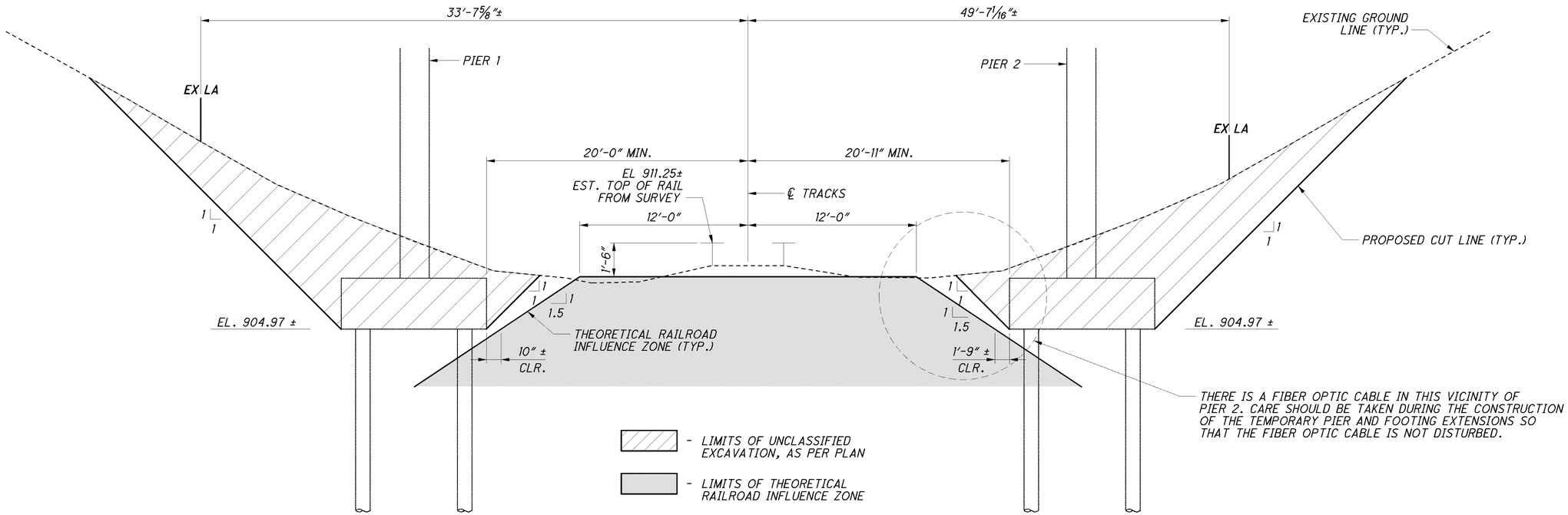

UNCLASSIFIED EXCAVATION FOR TEMPORARY PIER

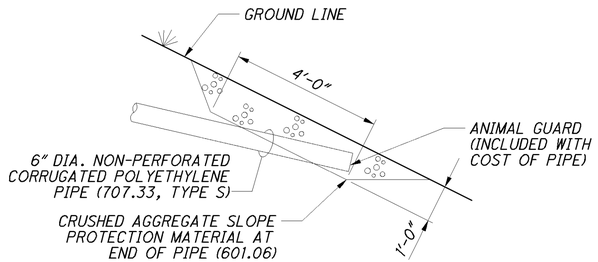

TERMINATION OF 6" NON-PERFORATED CORRUGATED PLASTIC PIPE (NPCPP)

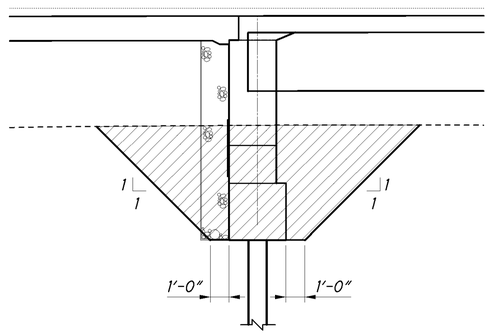

UNCLASSIFIED EXCAVATION AT ABUTMENT

- LIMITS OF UNCLASSIFIED
EXCAVATION, AS PER PLAN

ABBREVIATIONS:

ABUT. = ABUTMENT
APPROX. = APPROXIMATE
ASS'Y = ASSEMBLY
BRG. = BEARING
C/C = CENTER TO CENTER
C.J. = CONSTRUCTION JOINT
CLR. = CLEAR
CONST. = CONSTRUCTION
DIA. = DIAMETER
DWG. = DRAWING
E.F. = EACH FACE
EL. = ELEVATION
EST. = ESTIMATE
EX. = EXISTING
F.A. = FORWARD ABUTMENT
F.F. = FAR FACE
FWD. = FORWARD
HMWM = HIGH MOLECULAR WEIGHT METHACRYLATE
LT. = LEFT
MAX. = MAXIMUM
MIN. = MINIMUM
N.F. = NEAR FACE
N.P.C.P.P. = NON-PERFORATED CORRUGATED PLASTIC PIPE
O/O = OUT TO OUT
P.C.P.P. = PERFORATED CORRUGATED PLASTIC PIPE
P.E.J.F. = PREFORMED EXPANSION JOINT FILLER
PROP. = PROPOSED
R.A. = REAR ABUTMENT
RT. = RIGHT
SER. = SERIES
SPA. = SPACES
STA. = STATION
STD. = STANDARD
T/T = TOE TO TOE
T/S = TOP OF SLOPE
TYP. = TYPICAL
D.S. = DOWN STATION
U.S. = UP STATION

DESIGN AGENCY
PARSONS BRINCKERHOFF
2545 FARMERS DRIVE
SUITE 350
COLUMBUS, OHIO 43235

DESIGNED PJL | DRAWN TLP | REVIEWED EBS | DATE 02/01/13
CHECKED SAP | REVISED | STRUCTURE NUMBER LEFT: 0201871 RIGHT: 0201901

GENERAL NOTES
BRIDGE NO. ALL-75-0448 L&R
I-75 OVER INDIANA & OHIO RAILWAY

ALL-75-0.21
PID No. 89029

J:\Projects\ALL\89029\structures\ALL075_0448C\sheets\075_0448CGN003.dgn 09-MAY-2013 3:09PM jint

CALC BY: EBS DATE: 1/25/2013
CHCK BY: SAP DATE: 2/1/2013

01/IMS/BR/	03/ENH/OT/	ITEM	EXTENSION	TOTAL	UNIT	ESTIMATED QUANTITIES DESCRIPTION	ALL-75-0448L ABUT.	PIER	SUPER.	GEN.	SEE SHEET NO.
LUMP		202	11002	LUMP		STRUCTURE REMOVED, OVER 20 FOOT SPAN				LUMP	
40		202	22900	40	SQ YD	APPROACH SLAB REMOVED				40	
LUMP		503	11101	LUMP		COFFERDAMS AND EXCAVATION BRACING, AS PER PLAN	LUMP				2/50
LUMP		503	21301	LUMP		UNCLASSIFIED EXCAVATION, AS PER PLAN				LUMP	5/50
LUMP		505	11100	LUMP		PILE DRIVING EQUIPMENT MOBILIZATION	LUMP				
1,820		507	00500	1,820	FT	12" CAST-IN-PLACE REINFORCED CONCRETE PILES, DRIVEN	1,820				
1,960		507	00550	1,960	FT	12" CAST-IN-PLACE REINFORCED CONCRETE PILES, FURNISHED	1,960				
177,839		509	10000	177,839	POUND	EPOXY COATED REINFORCING STEEL	12,155	53,699	111,985		
	1,321	511	71200	1,321	SQ FT	CONCRETE, MISC.: FORMING OF ROUGH CUT STONE FINISH USING FORMLINERS	621		601	99	3/50
567		512	10051	567	SQ YD	SEALING OF CONCRETE SURFACES (NON-EPOXY), AS PER PLAN	91		395	81	4/50
514		512	10101	514	SQ YD	SEALING OF CONCRETE SURFACES (EPOXY-URETHANE), AS PER PLAN	7	400	103	4	4/50
95		512	10300	95	SQ YD	SEALING CONCRETE BRIDGE DECKS WITH HMWM RESIN			95		
9		512	33000	9	SQ YD	TYPE 2 WATERPROOFING	9				
295,680		513	10240	295,680	POUND	STRUCTURAL STEEL MEMBERS, LEVEL 2			295,680		
5,817		513	20000	5,817	EACH	WELDED STUD SHEAR CONNECTORS			5,817		
116		516	13200	116	SQ FT	1/2" PREFORMED EXPANSION JOINT FILLER	116				
153		516	13600	153	SQ FT	1" PREFORMED EXPANSION JOINT FILLER	138		15		
27		516	13900	27	SQ FT	2" PREFORMED EXPANSION JOINT FILLER	27				
152		516	14014	152	FT	INTEGRAL ABUTMENT EXPANSION JOINT SEAL			152		
14		516	44101	14	EACH	ELASTOMERIC BEARING WITH INTERNAL LAMINATES AND LOAD PLATE (NEOPRENE), AS PER PLAN: 16"X18"X3 3/4" WITH 17"X19"X1 1/2" LOAD PLATES		14			
124		518	21200	124	CU YD	POROUS BACKFILL WITH FILTER FABRIC	124				
171		518	40000	171	FT	6" PERFORATED CORRUGATED PLASTIC PIPE				171	4/50
20		518	40011	20	FT	6" NON-PERFORATED CORRUGATED PLASTIC PIPE, INCLUDING SPECIALS, AS PER PLAN				20	
1		523	20000	1	EACH	DYNAMIC LOAD TESTING	1				
685		524	94900	685	FT	DRILLED SHAFTS, 48" DIAMETER		685			
634		601	20000	634	SQ YD	CRUSHED AGGREGATE SLOPE PROTECTION				634	
524		625	25400	524	FT	CONDUIT, 2", 725.04			524		
4		625	29920	4	EACH	STRUCTURE JUNCTION BOX				4	
4		625	30700	4	EACH	PULL BOX, 725.08, 18"				4	
399		898	10200	399	CU YD	QC/QA CONCRETE, CLASS QSC2, SUPERSTRUCTURE (DECK)			399		
313		898	10705	313	SQ YD	QC/QA CONCRETE, CLASS QSC2, SUPERSTRUCTURE (APPROACH SLAB), (T=15", AS PER PLAN				313	4/50
53	5	898	11001	58	CU YD	QC/QA CONCRETE, CLASS QSC2, SUPERSTRUCTURE (PARAPET), AS PER PLAN			58		4/50
129		898	20100	129	CU YD	QC/QA CONCRETE, CLASS QSC1, SUBSTRUCTURE (PIER ABOVE FOOTING)		129			
122	4	898	20161	126	CU YD	QC/QA CONCRETE, CLASS QSC1, SUBSTRUCTURE (ABUTMENT INCLUDING FOOTING), AS PER PLAN	126				4/50

DESIGN AGENCY
PARSONS BRINCKERHOFF
2545 FARMERS DRIVE
SUITE 350
COLUMBUS, OHIO 43235

DESIGNED SAP | DRAWN TLP | REVIEWED EBS | DATE 02/01/13
CHECKED PJL | REVISED | STRUCTURE FILE NUMBER LEFT: 0201871 RIGHT: 0201901

LEFT BRIDGE - ESTIMATED QUANTITIES
BRIDGE NO. ALL-75-0448 L
I-75 OVER INDIANA & OHIO RAILWAY

ALL-75-0.21
PID No. 89029

J:\Projects\ALL\89029\structures\ALL075_0448C\sheets\075_0448CEQ001.dgn 08-NOV-2013 5:18PM lint

CALC BY: EBS DATE: 1/25/2013
CHCK BY: SAP DATE: 2/1/2013

01/IMS/BR/	03/ENH/OT/	ITEM	EXTENSION	TOTAL	UNIT	ESTIMATED QUANTITIES DESCRIPTION	ALL-75-0448R ABUT.	PIER	SUPER.	GEN.	SEE SHEET NO.
LUMP		202	11002	LUMP		STRUCTURE REMOVED, OVER 20 FOOT SPAN				LUMP	
69		202	22900	69	SQ YD	APPROACH SLAB REMOVED				69	
LUMP		502	11100	LUMP		STRUCTURE FOR MAINTAINING TRAFFIC				LUMP	
LUMP		503	11101	LUMP		COFFERDAMS AND EXCAVATION BRACING, AS PER PLAN	LUMP				2/50
LUMP		503	21301	LUMP		UNCLASSIFIED EXCAVATION, AS PER PLAN				LUMP	5/50
LUMP		505	11100	LUMP		PILE DRIVING EQUIPMENT MOBILIZATION	LUMP				
2,080		507	00500	2,080	FT	12" CAST-IN-PLACE REINFORCED CONCRETE PILES, DRIVEN	2,080				
2,240		507	00550	2,240	FT	12" CAST-IN-PLACE REINFORCED CONCRETE PILES, FURNISHED	2,240				
211,992		509	10000	211,992	POUND	EPOXY COATED REINFORCING STEEL	13,823	67,360	130,809		
	1,377	511	71200	1,377	SQ FT	CONCRETE, MISC.: FORMING OF ROUGH CUT STONE FINISH USING FORMLINERS	677		601	99	3/50
573		512	10051	573	SQ YD	SEALING OF CONCRETE SURFACES (NON-EPOXY), AS PER PLAN	97		395	81	4/50
609		512	10101	609	SQ YD	SEALING OF CONCRETE SURFACES (EPOXY-URETHANE), AS PER PLAN	7	482	116	4	4/50
95		512	10300	95	SQ YD	SEALING CONCRETE BRIDGE DECKS WITH HMWM RESIN			95		
9		512	33000	9	SQ YD	TYPE 2 WATERPROOFING	9				
340,360		513	10240	340,360	POUND	STRUCTURAL STEEL MEMBERS, LEVEL 2			340,360		
6,648		513	20000	6,648	EACH	WELDED STUD SHEAR CONNECTORS			6,648		
141		516	13200	141	SQ FT	1/2" PREFORMED EXPANSION JOINT FILLER	141				
169		516	13600	169	SQ FT	1" PREFORMED EXPANSION JOINT FILLER	154		15		
31		516	13900	31	SQ FT	2" PREFORMED EXPANSION JOINT FILLER	31				
177		516	14014	177	FT	INTEGRAL ABUTMENT EXPANSION JOINT SEAL			177		
16		516	44101	16	EACH	ELASTOMERIC BEARING WITH INTERNAL LAMINATES AND LOAD PLATE (NEOPRENE), AS PER PLAN: 16"X18"X3 3/4" WITH 17"X19"X1 1/2" LOAD PLATES		16			
142		518	21200	142	CU YD	POROUS BACKFILL WITH FILTER FABRIC	142				
197		518	40000	197	FT	6" PERFORATED CORRUGATED PLASTIC PIPE				197	
20		518	40011	20	FT	6" NON-PERFORATED CORRUGATED PLASTIC PIPE, INCLUDING SPECIALS, AS PER PLAN				20	4/50
1		523	20000	1	EACH	DYNAMIC LOAD TESTING	1				
834		524	94900	834	FT	DRILLED SHAFTS, 48" DIAMETER		834			
762		601	20000	762	SQ YD	CRUSHED AGGREGATE SLOPE PROTECTION				762	
524		625	25400	524	FT	CONDUIT, 2", 725.04			524		
4		625	29920	4	EACH	STRUCTURE JUNCTION BOX				4	
4		625	30700	4	EACH	PULL BOX, 725.08, 18"				4	
492		898	10200	492	CU YD	QC/QA CONCRETE, CLASS QSC2, SUPERSTRUCTURE (DECK)			492		
381		898	10705	381	SQ YD	QC/QA CONCRETE, CLASS QSC2, SUPERSTRUCTURE (APPROACH SLAB), (T=15"), AS PER PLAN				381	4/50
53	5	898	11001	58	CU YD	QC/QA CONCRETE, CLASS QSC2, SUPERSTRUCTURE (PARAPET), AS PER PLAN			58		4/50
157		898	20100	157	CU YD	QC/QA CONCRETE, CLASS QSC1, SUBSTRUCTURE (PIER ABOVE FOOTING)		157			
138	5	898	20161	143	CU YD	QC/QA CONCRETE, CLASS QSC1, SUBSTRUCTURE (ABUTMENT INCLUDING FOOTING), AS PER PLAN	143				4/50

DESIGN AGENCY
PARSONS BRINCKERHOFF
2545 FARMERS DRIVE
SUITE 350
COLUMBUS, OHIO 43235

REVIEWED EBS DATE 02/01/13
DRAWN TLP REVISED
DESIGNED SAP CHECKED PJL
STRUCTURE FILE NUMBER
LEFT: 0201871
RIGHT: 0201901

RIGHT BRIDGE - ESTIMATED QUANTITIES
BRIDGE NO. ALL-75-0448 R
I-75 OVER INDIANA & OHIO RAILWAY

ALL-75-0.21
PID No. 89029

J:\Projects\ALL\89029\structures\ALL075_0448C\sheets\075_0448CEQ002.dgn 08-NOV-2013 5:18PM jint

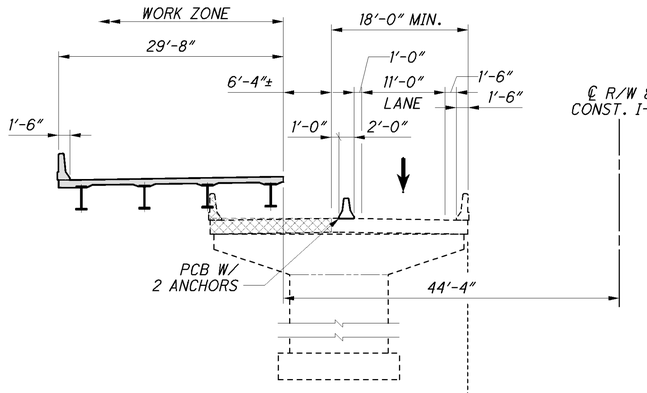

SOUTHBOUND

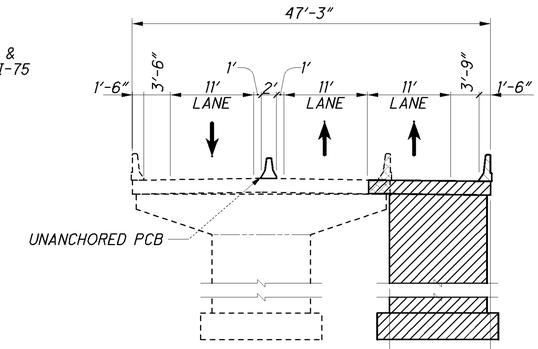

NORTHBOUND

PHASE IA

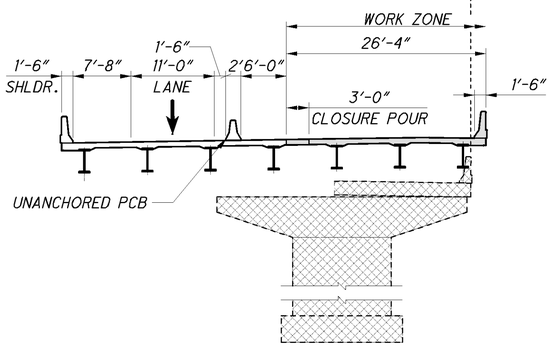

PHASE IB

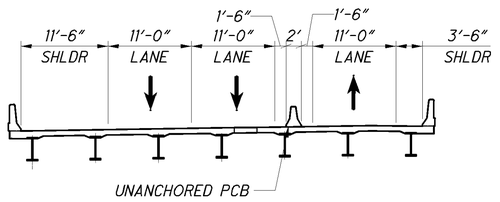

PHASE IIA

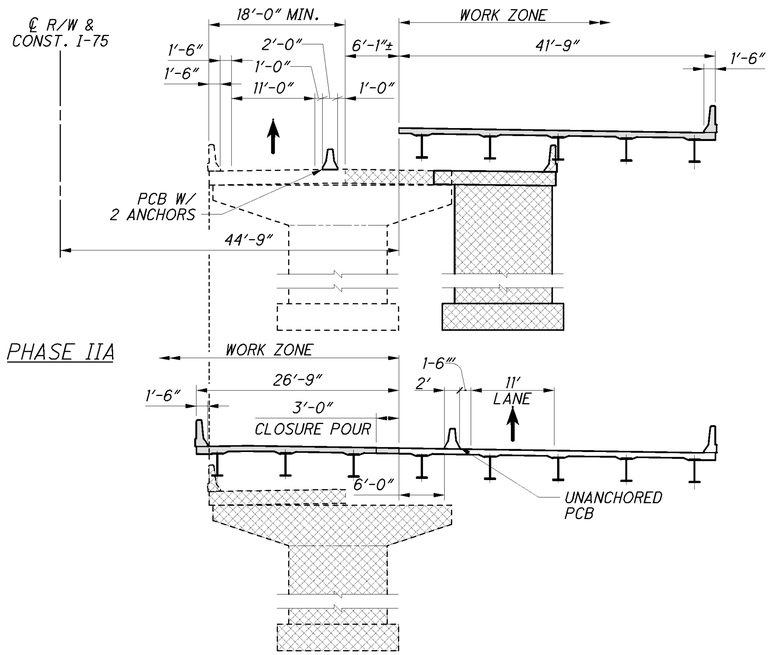

PHASE IIB

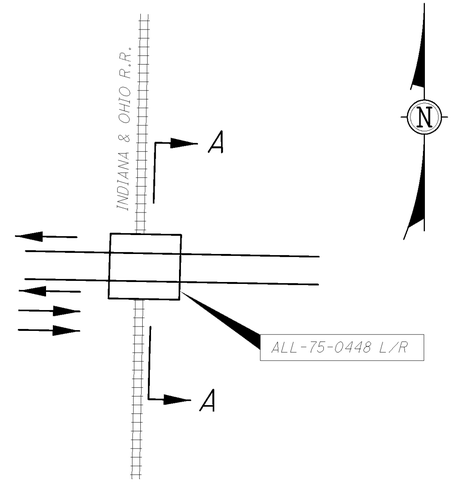

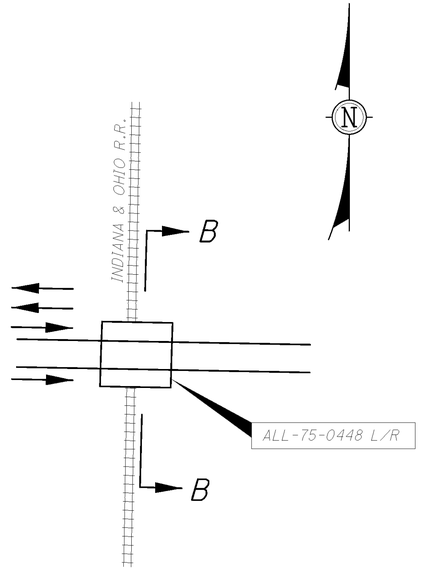

LEGEND:

- REMOVAL
- TEMPORARY STRUCTURE
- PROPOSED
- PORTABLE CONCRETE BARRIER (PCB) (TO BE ANCHORED ON BRIDGES AS SHOWN)

NOTES:

1. SEE SHEET 9/50 FOR NOTES.
2. SEE SECTION A-A FOR PHASES IA AND IB CONFIGURATION. SEE SECTION B-B FOR PHASES IIA AND IIB CONFIGURATION.
3. FOR PRE-PHASE IA MOT DURING CONSTRUCTION OF TEMPORARY BRIDGE, SEE SHEET 43/50.

DESIGN AGENCY
PARSONS BRINCKERHOFF
2945 FARMERS DRIVE
SUITE 350
COLUMBUS, OHIO 43235

DESIGNED	DRAWN	REVIEWED	DATE
PJL	LEL	EBS	02/01/13
CHECKED	REVISED	STRUCTURE NUMBER	
SAP		LEFT: 0201871 RIGHT: 0201901	

PHASE CONSTRUCTION DETAILS - PIERS

BRIDGE NO. ALL-75-0448 L&R
I-75 OVER INDIANA & OHIO RAILWAY

ALL-75-0.21
PID No. 89029

J:\Projects\ALL\89029\structures\ALL075_0448C\sheets\075_0448CPC001.dgn 09-MAY-2013 3:09PM lint

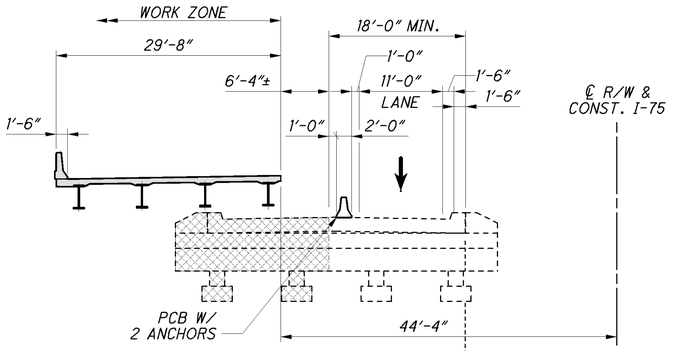

SOUTHBOUND

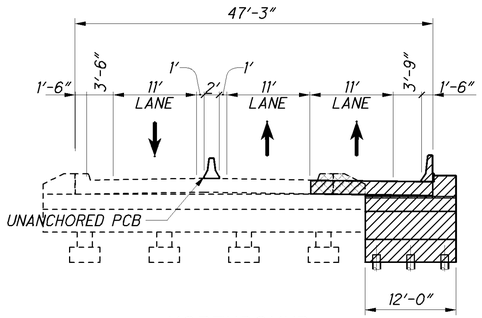

NORTHBOUND

PHASE IA

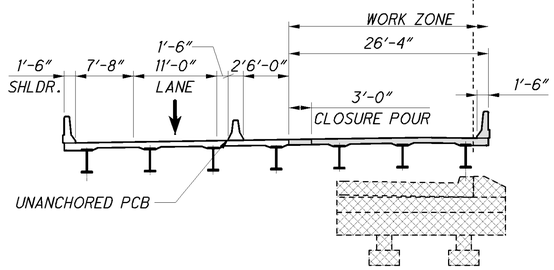

PHASE IB

LEGEND:

- REMOVAL
- TEMPORARY STRUCTURE
- PROPOSED
- PORTABLE CONCRETE BARRIER (PCB) (TO BE ANCHORED ON BRIDGES AS SHOWN)

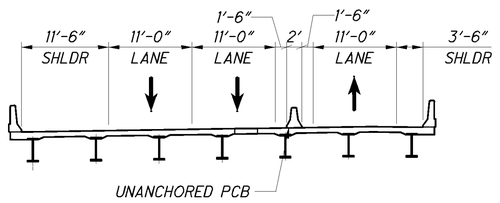

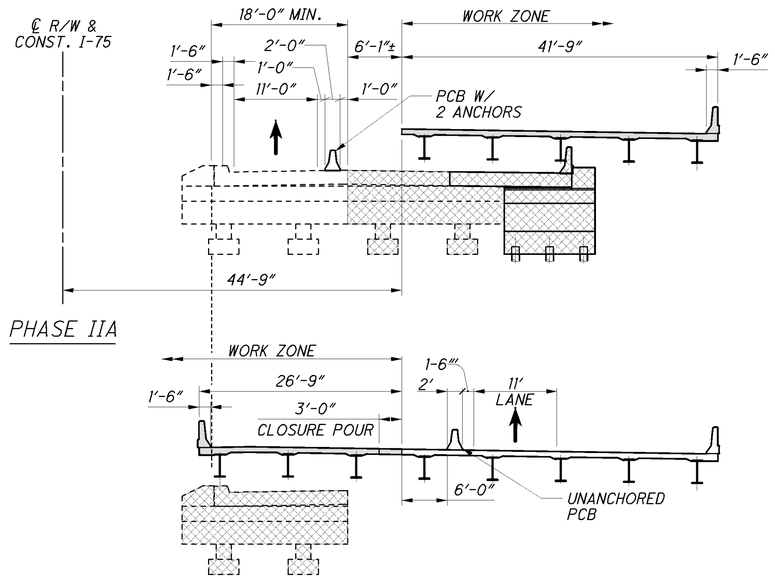

PHASE IIA

PHASE IIB

PHASE IA:
1. CONSTRUCT THE TEMPORARY STRUCTURE AS SHOWN IN THE PLANS PRIOR TO EXISTING DECK REMOVAL. SEE SHEET 43 /50.
2. INSTALL PORTABLE CONCRETE BARRIER ON BOTH EXISTING STRUCTURES AND SHIFT TRAFFIC AS SHOWN.
3. INSTALL SHEETING TO SUPPORT THE PORTION OF EXISTING ABUTMENT TO REMAIN. REMOVE THE OUTSIDE PORTION OF THE EXISTING SOUTHBOUND STRUCTURE. THE PIER SHOULD REMAIN. PORTIONS OF THE EXISTING ABUTMENTS SHOULD BE REMOVED.
4. INSTALL SHEETING TO SUPPORT THE PROPOSED ABUTMENT FILL. CONSTRUCT THE OUTSIDE PORTION OF THE SOUTHBOUND BRIDGE, INCLUDING THE PROPOSED DRILLED SHAFTS AND COLUMNS, WHILE LEAVING THE EXISTING SPILL-THROUGH SLOPES IN PLACE.

PHASE IB:
1. INSTALL PORTABLE CONCRETE BARRIER ON THE NEWLY BUILT SOUTHBOUND STRUCTURE AND SHIFT TRAFFIC.
2. REMOVE THE REMAINDER OF THE EXISTING SOUTHBOUND BRIDGE, INCLUDING THE PIERS, ABUTMENTS, AND SPILL THROUGH SLOPES. EXCAVATE THE EXISTING SPILL-THROUGH SLOPES, INCLUDING THE SLOPES AROUND THE PIERS THAT WERE CONSTRUCTED IN PHASE IA. DO NOT EXCAVATE THE SPILL-THROUGH SLOPE IN THE MEDIAN.
3. INSTALL SHEETING TO SUPPORT THE PROPOSED ABUTMENT FILL IN THE MEDIAN. CONSTRUCT THE REMAINDER OF THE SOUTHBOUND BRIDGE TO THE LIMITS SHOWN, NOT INCLUDING THE CLOSURE POUR.
4. COMPLETE THE SOUTHBOUND CLOSURE POUR.

PHASE IIA:
1. ADJUST THE PORTABLE CONCRETE BARRIER ON THE NEWLY BUILT SOUTHBOUND BRIDGE AND SHIFT TRAFFIC AS SHOWN.
2. INSTALL SHEETING TO SUPPORT THE PORTION OF EXISTING ABUTMENT TO REMAIN. REMOVE THE OUTSIDE PORTION OF THE EXISTING NORTHBOUND STRUCTURE, INCLUDING THE TEMPORARY STRUCTURE. THE EXISTING PIER SHOULD REMAIN AND THE TEMPORARY OUTSIDE PIER SHOULD BE REMOVED. PORTIONS OF THE EXISTING ABUTMENTS SHOULD BE REMOVED.
3. INSTALL SHEETING TO SUPPORT THE PROPOSED ABUTMENT FILL. CONSTRUCT THE OUTSIDE PORTION OF THE NORTHBOUND BRIDGE, INCLUDING THE PROPOSED DRILLED SHAFTS AND COLUMNS, WHILE LEAVING THE EXISTING SPILL-THROUGH SLOPES IN PLACE.

PHASE IIB:
1. INSTALL PORTABLE CONCRETE BARRIER ON THE NEWLY BUILT NORTHBOUND STRUCTURE AND SHIFT TRAFFIC.
2. REMOVE THE REMAINDER OF THE EXISTING NORTHBOUND BRIDGE, INCLUDING THE PIERS, ABUTMENTS, AND SPILL THROUGH SLOPES. EXCAVATE THE EXISTING SPILL-THROUGH SLOPES, INCLUDING THE SLOPES AROUND THE PIERS THAT WERE CONSTRUCTED IN PHASE IIA AND THE SPILL-THROUGH SLOPES IN THE MEDIAN.
3. CONSTRUCT THE REMAINDER OF THE NORTHBOUND BRIDGE TO THE LIMITS SHOWN, NOT INCLUDING THE CLOSURE POUR.
4. COMPLETE THE NORTHBOUND CLOSURE POUR.

NOTE:

1. SEE SECTION A-A ON SHEET 8 /50 FOR PHASES IA AND IB CONFIGURATION. SEE SECTION B-B ON SHEET 8 /50 FOR PHASES IIA AND IIB CONFIGURATION.

2. FOR PRE-PHASE IA MOT DURING CONSTRUCTION OF TEMPORARY BRIDGE, SEE SHEET 43/50 .

DESIGN AGENCY
PARSONS BRINCKERHOFF
2945 FARMERS DRIVE
SUITE 350
COLUMBUS, OHIO 43235

DESIGNED	DRAWN	REVIEWED	DATE
PJL	LEL	EBS	02/01/13
CHECKED	REVISED	STRUCTURE NUMBER	
SAP		LEFT: 0201871 RIGHT: 0201901	

PHASE CONSTRUCTION DETAILS - ABUTMENTS

BRIDGE NO. ALL-75-0448 L&R
I-75 OVER INDIANA & OHIO RAILWAY

ALL-75-0.21
PID No. 89029

J:\Projects\ALL\89029\structures\ALL075_0448C\sheets\075_0448CPC002.dgn 09-MAY-2013 3:09PM lint

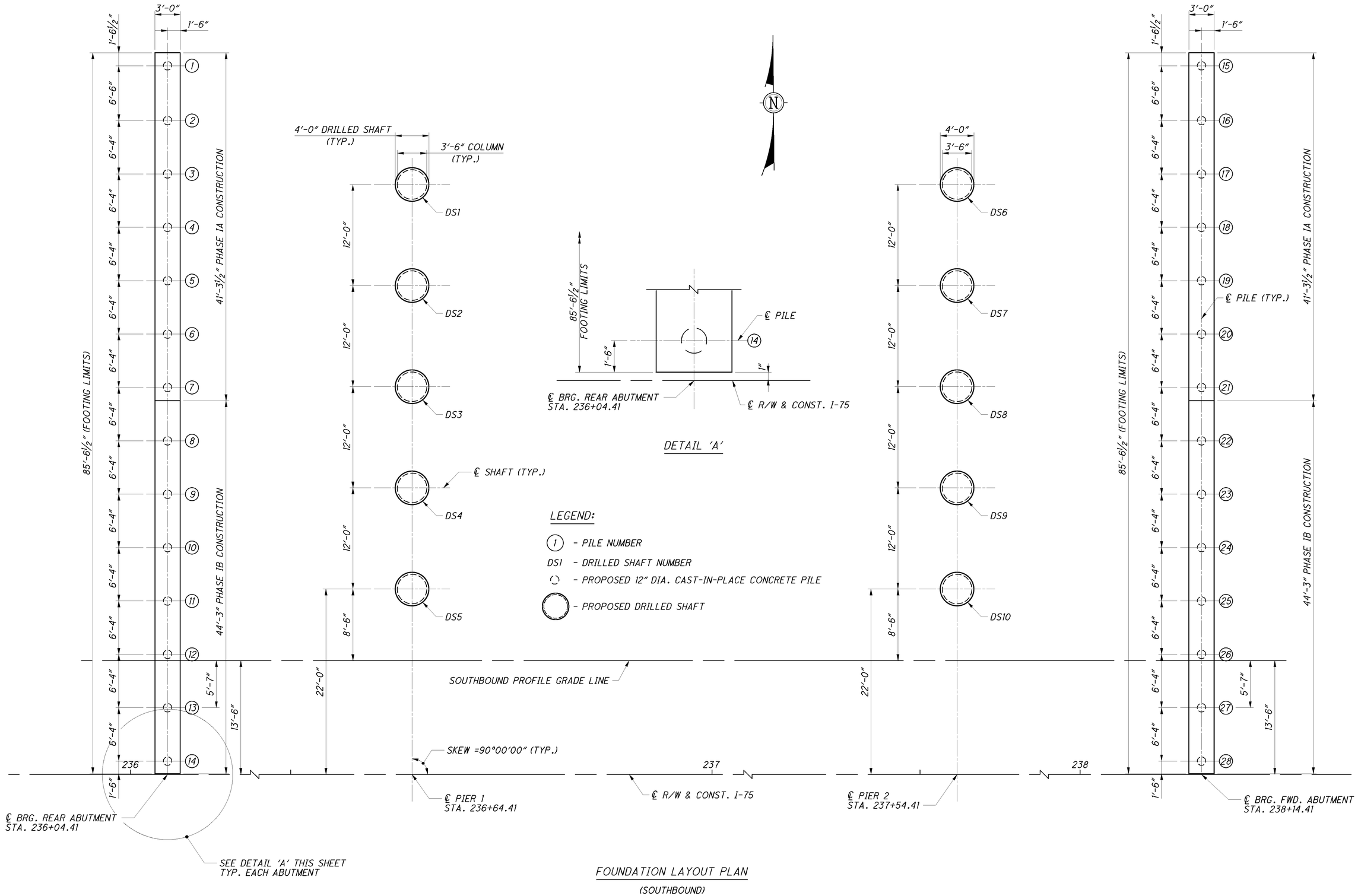

FOUNDATION LAYOUT PLAN

(SOUTHBOUND)

DESIGN AGENCY
PARSONS BRINCKERHOFF
2545 FARMERS DRIVE
SUITE 350
COLUMBUS, OHIO 43235

DESIGNED	DRAWN	REVIEWED	DATE
PJL	TLP	EBS	02/01/13
CHECKED	REVISED	STRUCTURE FILE NUMBER	
SAP		LEFT: 0201871 RIGHT: 0201901	

FOUNDATION LAYOUT PLAN (LEFT)
BRIDGE NO. ALL-75-0448 L&R
I-75 OVER INDIANA & OHIO RAILWAY

ALL-75-0.21
PID No. 89029

J:\Projects\ALL\89029\structures\ALL075_0448C\sheets\075_0448CFP001.dgn 09-MAY-2013 3:09PM lint

℄ BRG. REAR ABUTMENT
STA. 236+04.41

SEE DETAIL 'B' THIS SHEET
TYP. EACH ABUTMENT

SKEW =90°00'00" (TYP.)

℄ PIER 1
STA. 236+64.41

℄ R/W & CONST. I-75

℄ PIER 2
STA. 237+54.41

℄ BRG. FWD. ABUTMENT
STA. 238+14.41

℄ PILE (TYP.)

236 237 238

NORTHBOUND PROFILE GRADE LINE

22'-3"

1'-6" 6'-4" 6'-4" 6'-4

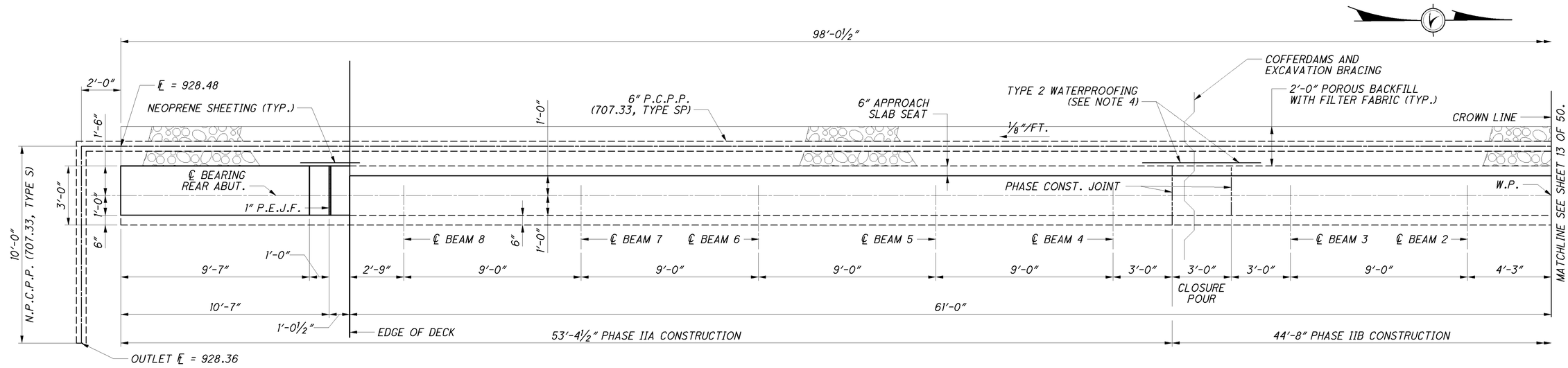

PLAN

NOTES:

1. FOR SECTIONS A-A & B-B, SEE SHEET 18/50 .
2. FOR FOUNDATION LAYOUT PLAN, SEE SHEET 10/50 & 11/50 .
3. FOR AESTHETIC DETAILS, SEE SHEET 41/50 .
4. TYPE 2 WATERPROOFING SHALL BE 3'-0" WIDE, CENTERED ON JOINTS, AND PLACED FROM THE TOP OF FOOTING TO THE APPROACH SLAB SEAT.

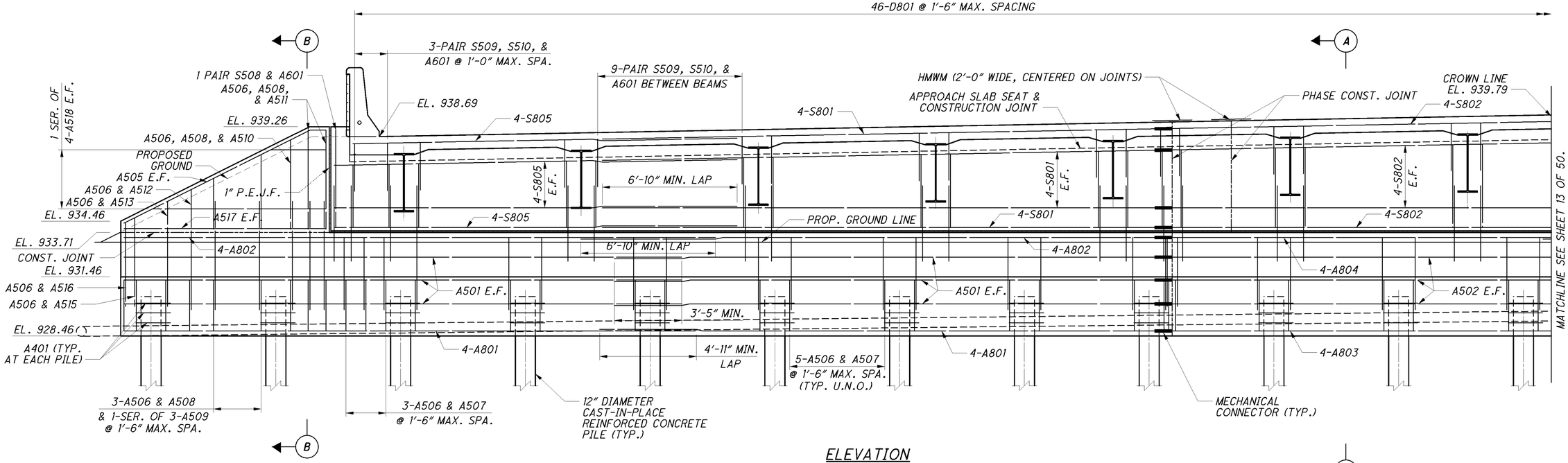

ELEVATION

DESIGN AGENCY
PARSONS BRINCKERHOFF
2945 FARMERS DRIVE
SUITE 350
COLUMBUS, OHIO 43235

DESIGNED	DRAWN	REVIEWED	DATE
PJL	LEL	EBS	02/01/13
CHECKED	REVISED	STRUCTURE FILE NUMBER	
SAP		LEFT: 0201871 RIGHT: 0201901	

REAR ABUTMENT DETAILS
BRIDGE NO. ALL-75-0448 L&R
I-75 OVER INDIANA & OHIO RAILWAY

ALL-75-0.21
PID No. 76691

12 / 50

738
907

J:\Projects\ALL\69029\structures\ALL075_0448C\sheets\075_0448CAR001.dgn 09-MAY-2013 3:09PM lint

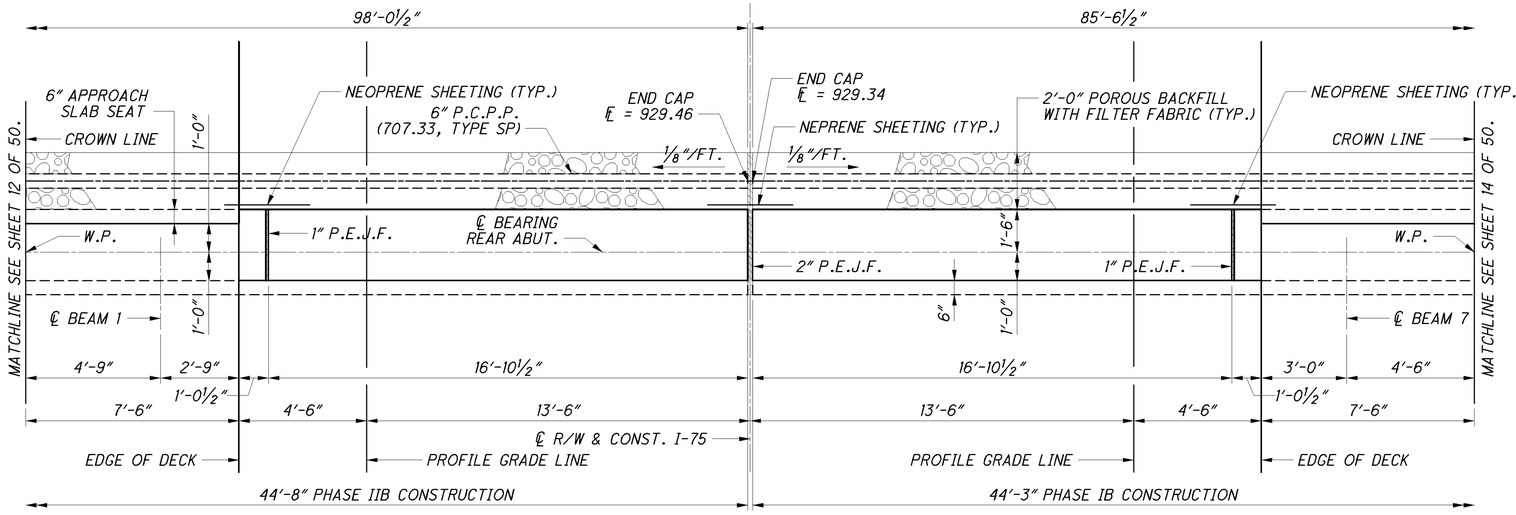

PLAN

NOTES:

1. FOR SECTIONS A-A & C-C, SEE SHEET 18/50 .
2. FOR FOUNDATION LAYOUT PLAN, SEE SHEET 10/50 & 11/50 .
3. FOR AESTHETIC DETAILS, SEE SHEET 41/50 .

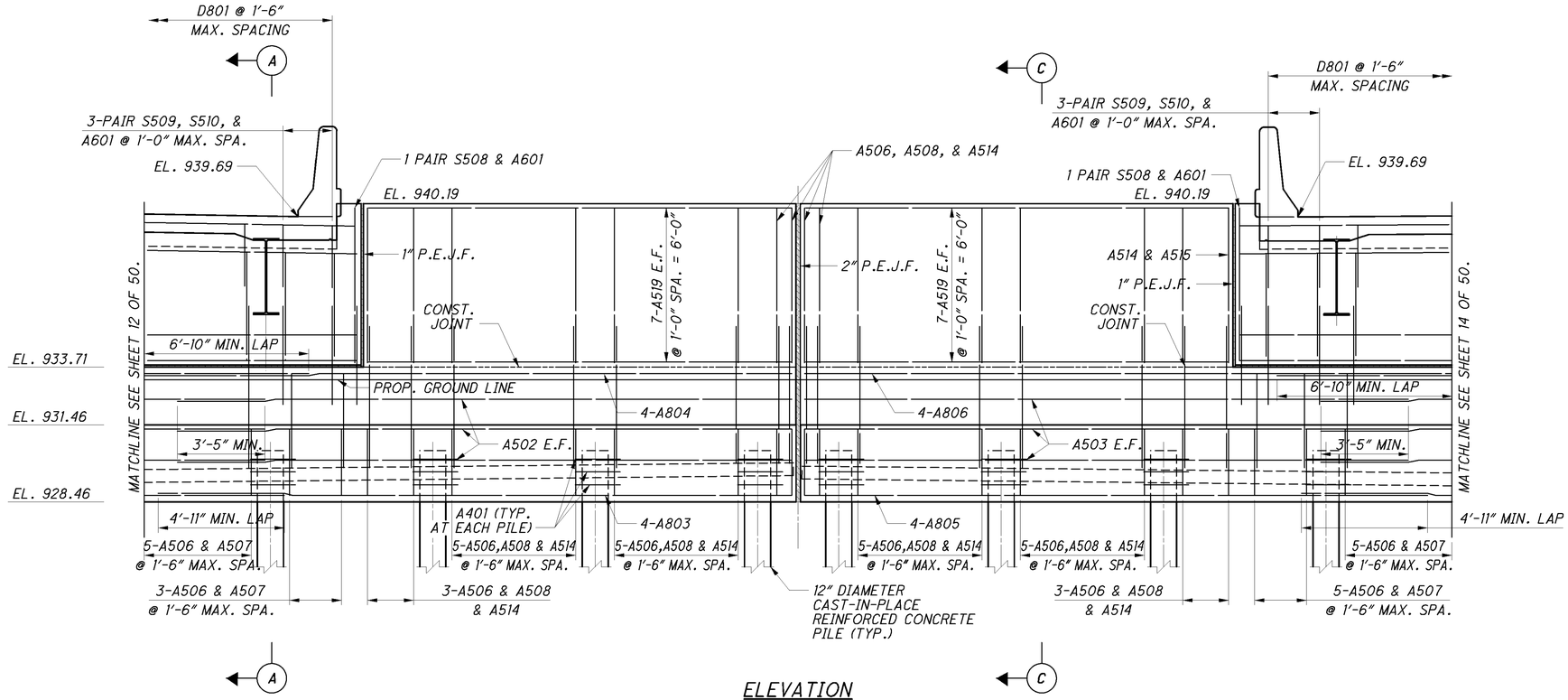

ELEVATION

DESIGN AGENCY
PARSONS BRINCKERHOFF
2945 FARMERS DRIVE
SUITE 350
COLUMBUS, OHIO 43235

DESIGNED PJL | DRAWN LEL | REVIEWED EBS | DATE 02/01/13
CHECKED SAP | REVISED | STRUCTURE NUMBER LEFT: 0201871 RIGHT: 0201901

REAR ABUTMENT DETAILS

BRIDGE NO. ALL-75-0448 L&R
I-75 OVER INDIANA & OHIO RAILWAY

ALL-75-0.21
PID No. 76691

J:\Projects\ALL\89029\structures\ALL075_0448C\sheets\075_0448CAR002.dgn 09-MAY-2013 3:09PM jint

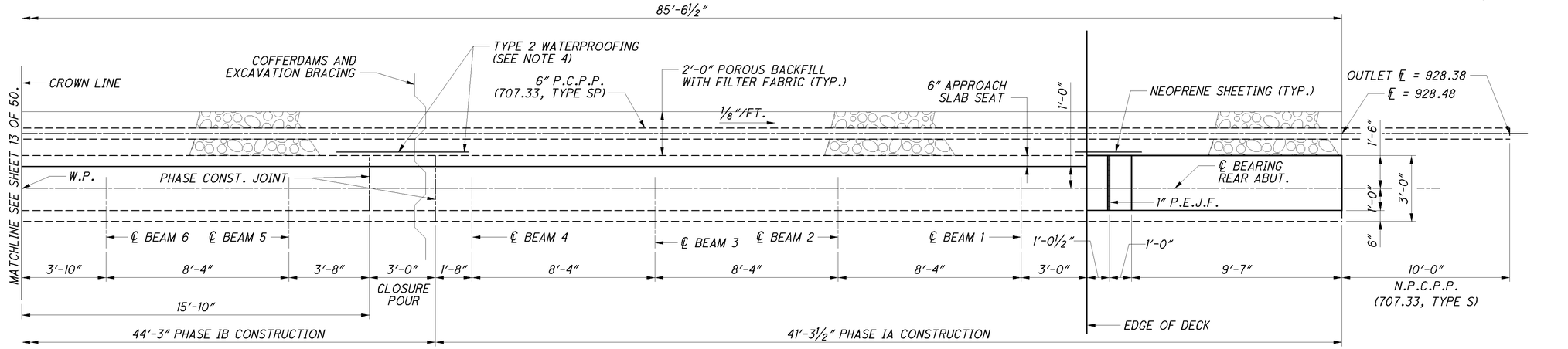

PLAN

NOTES:

1. FOR SECTIONS A-A & B-B, SEE SHEET 18/50.
2. FOR FOUNDATION LAYOUT PLAN, SEE SHEET 10/50 & 11/50.
3. FOR AESTHETIC DETAILS, SEE SHEET 41/50.
4. TYPE 2 WATERPROOFING SHALL BE 3'-0" WIDE, CENTERED ON JOINTS, AND PLACED FROM THE TOP OF FOOTING TO THE APPROACH SLAB SEAT.

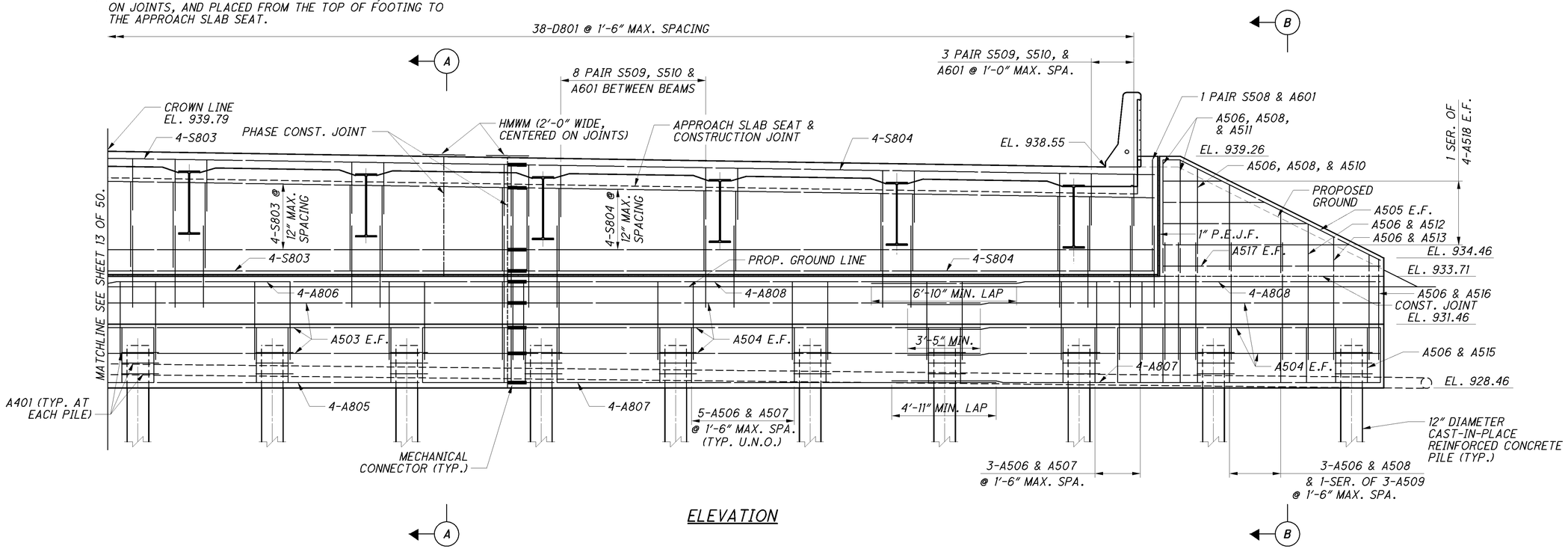

ELEVATION

DESIGN AGENCY
PARSONS BRINCKERHOFF
2945 FARMERS DRIVE
SUITE 350
COLUMBUS, OHIO 43235

DESIGNED	DRAWN	REVIEWED	DATE
PJL	LEL	EBS	02/01/13
CHECKED	REVISED	STRUCTURE NUMBER	
SAP		LEFT: 0201871 RIGHT: 0201901	

REAR ABUTMENT DETAILS
BRIDGE NO. ALL-75-0448 L&R
I-75 OVER INDIANA & OHIO RAILWAY

ALL-75-0.21
PID No. 76691

J:\Projects\ALL\89029\structures\ALL075_0448C\sheets\075_0448CAR003.dgn 09-MAY-2013 3:09PM jint

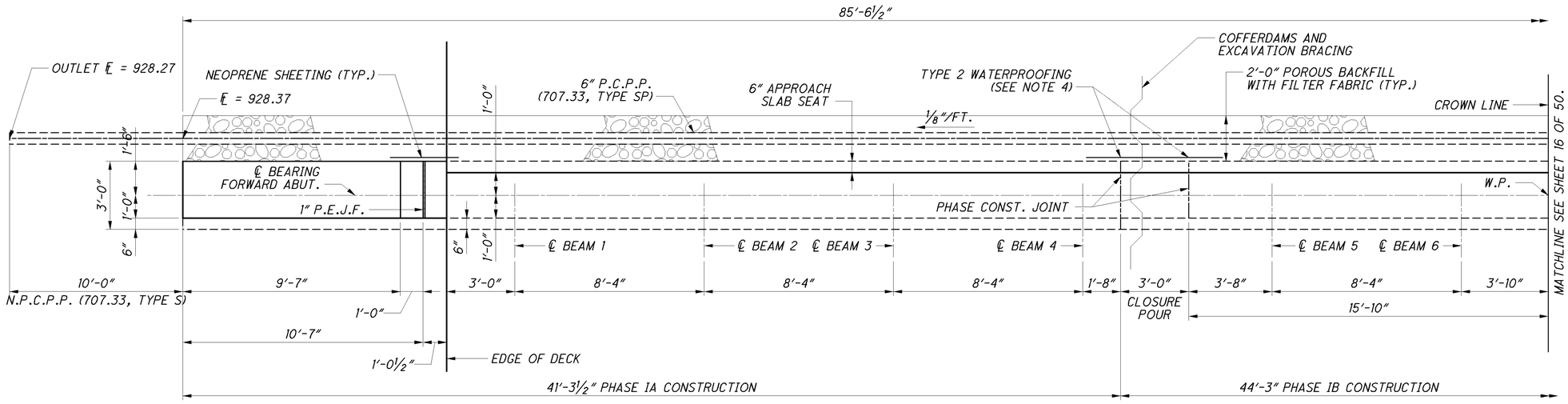

PLAN

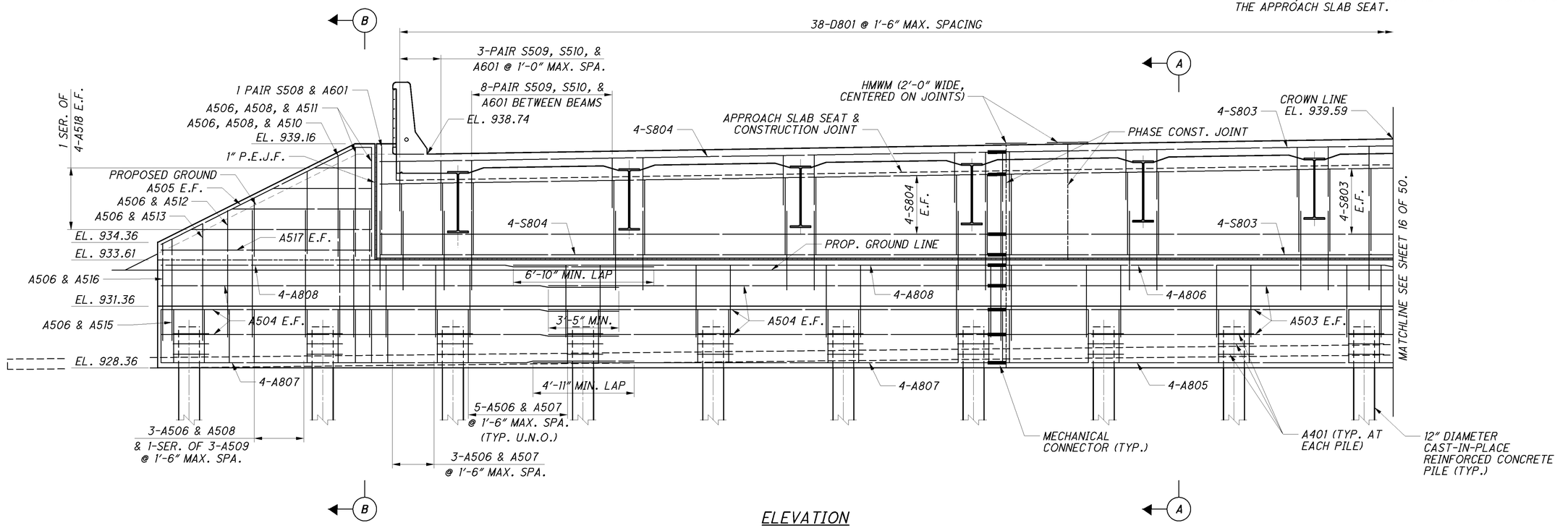

ELEVATION

NOTES:

1. FOR SECTIONS A-A & B-B, SEE SHEET 18/50.
2. FOR FOUNDATION LAYOUT PLAN, SEE SHEET 10/50 & 11/50.
3. FOR AESTHETIC DETAILS, SEE SHEET 41/50.
4. TYPE 2 WATERPROOFING SHALL BE 3'-0" WIDE, CENTERED ON JOINTS, AND PLACED FROM THE TOP OF FOOTING TO THE APPROACH SLAB SEAT.

DESIGN AGENCY
PARSONS BRINCKERHOFF
2945 FARMERS DRIVE
SUITE 350
COLUMBUS, OHIO 43235

DESIGNED	DRAWN	REVIEWED	DATE
PJL	LEL	EBS	02/01/13
CHECKED	REVISED	STRUCTURE FILE NUMBER	
SAP		LEFT: 0201871 RIGHT: 0201901	

FORWARD ABUTMENT DETAIL
BRIDGE NO. ALL-75-0448 L&R
I-75 OVER INDIANA & OHIO RAILWAY

ALL-75-0.21
PID No. 76691

15 / 50

741
907

J:\Projects\ALL\69029\structures\ALL075_0448C\sheets\075_0448CAF001.dgn 09-MAY-2013 3:09PM lint

NOTES:

1. FOR SECTIONS A-A & C-C, SEE SHEET 18/50.
2. FOR FOUNDATION LAYOUT PLAN, SEE SHEET 10/50 & 11/50 .
3. FOR AESTHETIC DETAILS, SEE SHEET 41/50.

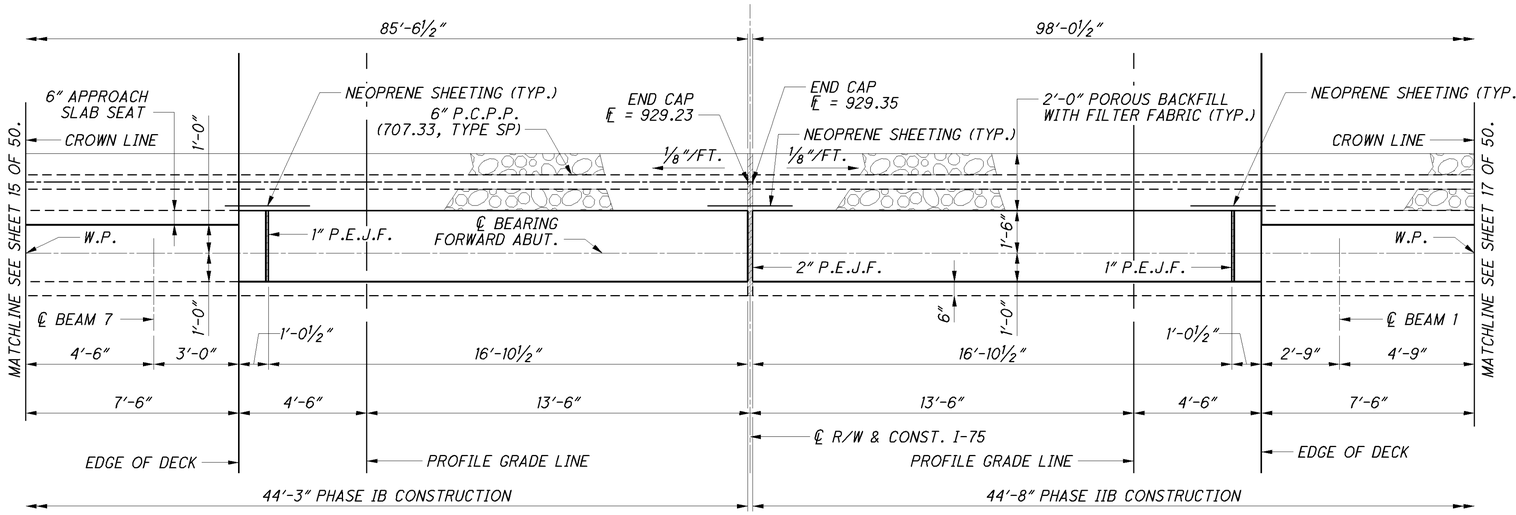

PLAN

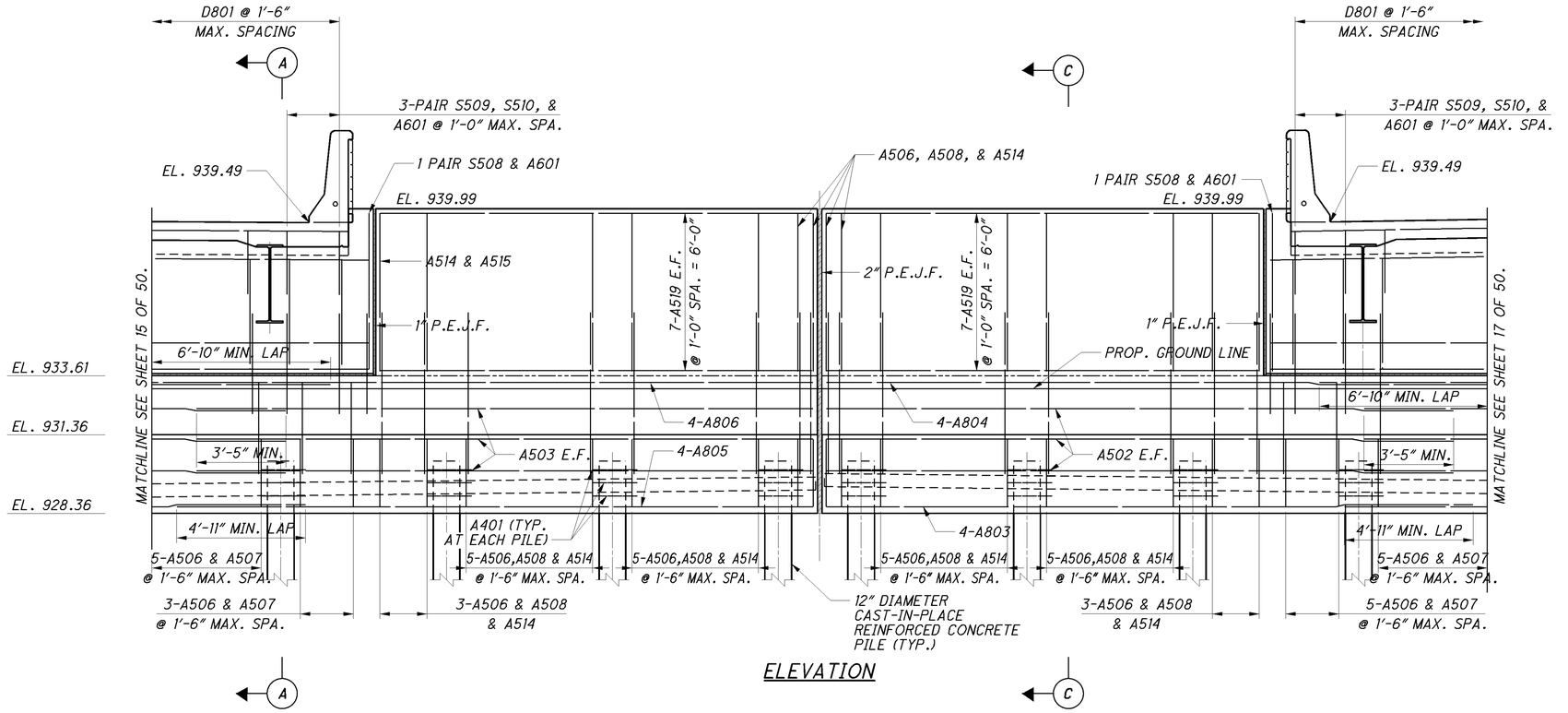

ELEVATION

DESIGN AGENCY
PARSONS BRINCKERHOFF
2945 FARMERS DRIVE
SUITE 350
COLUMBUS, OHIO 43235

DESIGNED PJL | DRAWN LEL | REVIEWED EBS | DATE 02/01/13
CHECKED SAP | REVISED | STRUCTURE NUMBER LEFT: 0201871 RIGHT: 0201901

FORWARD ABUTMENT DETAILS

BRIDGE NO. ALL-75-0448 L&R
I-75 OVER INDIANA & OHIO RAILWAY

ALL-75-0.21
PID No. 76691

J:\Projects\ALL\89029\structures\ALL075_0448C\sheets\075_0448CAF002.dgn 08-NOV-2013 5:04PM lint

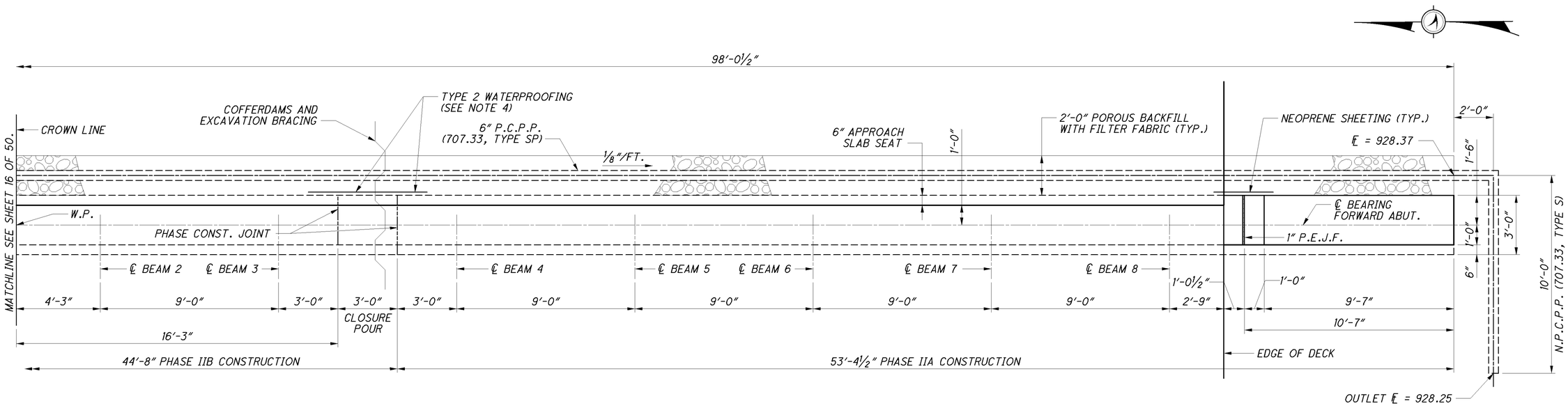

PLAN

NOTES:

1. FOR SECTIONS A-A & B-B, SEE SHEET 18/50 .
2. FOR FOUNDATION LAYOUT PLAN, SEE SHEET 10/50 & 11/50 .
3. FOR AESTHETIC DETAILS, SEE SHEET 41/50 .
4. TYPE 2 WATERPROOFING SHALL BE 3'-0" WIDE, CENTERED ON JOINTS, AND PLACED FROM THE TOP OF FOOTING TO THE APPROACH SLAB SEAT.

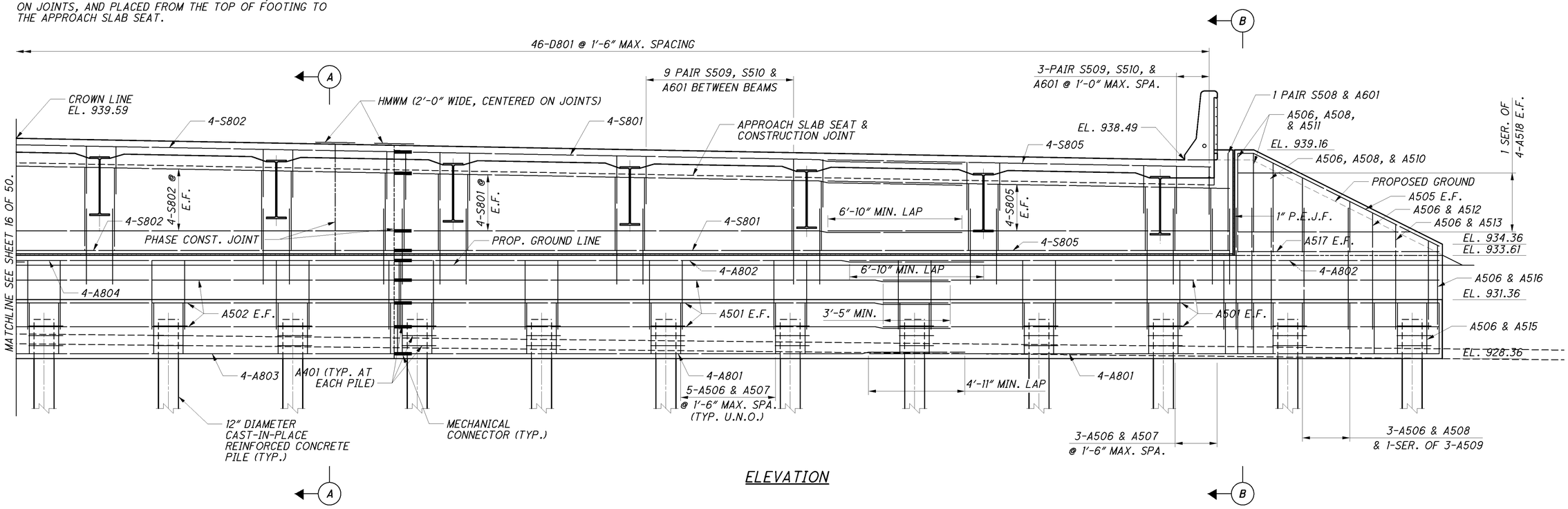

ELEVATION

DESIGN AGENCY
PARSONS BRINCKERHOFF
2945 FARMERS DRIVE
SUITE 350
COLUMBUS, OHIO 43235

DESIGNED	DRAWN	REVIEWED	DATE
PJL	LEL	EBS	02/01/13
CHECKED	REVISED	STRUCTURE NUMBER	
SAP		LEFT: 0201871 RIGHT: 0201901	

FORWARD ABUTMENT DETAILS
BRIDGE NO. ALL-75-0448 L&R
I-75 OVER INDIANA & OHIO RAILWAY

ALL-75-0.21
PID No. 76691

J:\Projects\ALL\89029\structures\ALL075_0448C\sheets\075_0448CAF003.dgn 09-MAY-2013 3:09PM jint

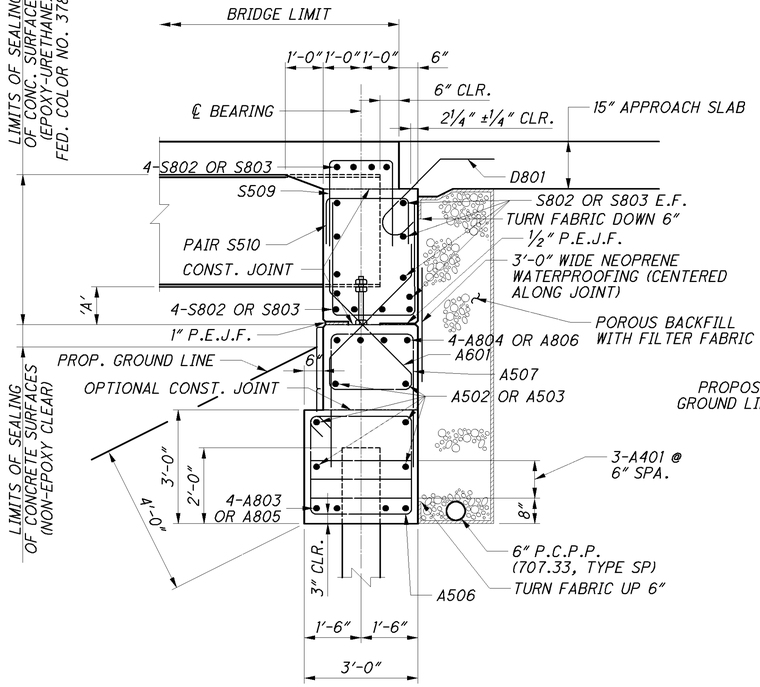

SECTION A-A

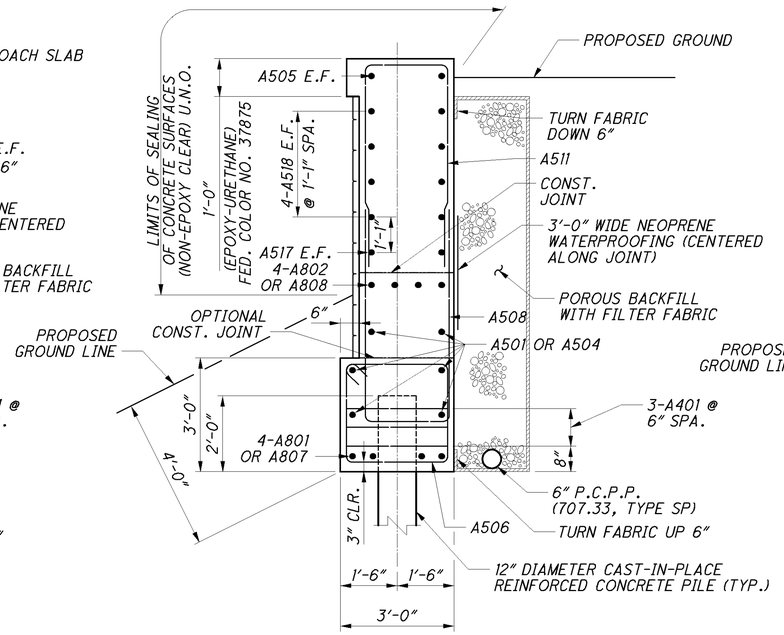

SECTION B-B

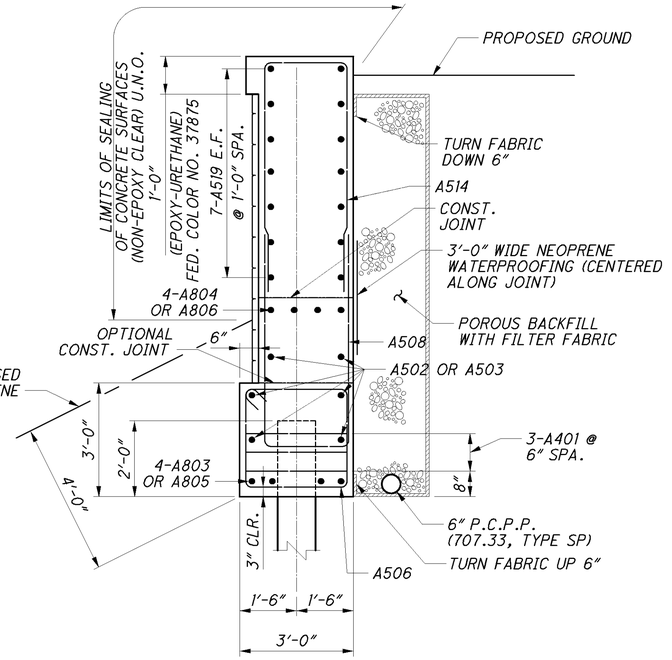

SECTION C-C

BEAM	REAR ABUTMENT DIMENSION 'A'		FORWARD ABUTMENT DIMENSION 'A'	
	0448L	0448R	0448L	0448R
1	1'-0"	2'-1 1/16"	1'-3 5/16"	1'-11 5/16"
2	1'-3 11/16"	2'-1 3/16"	1'-4 1/8"	2'-0"
3	1'-7 3/8"	1'-11 1/16"	1'-6 1/8"	1'-10 5/16"
4	1'-10 3/16"	1'-9 3/4"	1'-7 15/16"	1'-8 9/16"
5	1'-11 13/16"	1'-7 5/8"	1'-9 9/16"	1'-6 1/2"
6	2'-1 7/16"	1'-5 1/2"	1'-11 1/8"	1'-4 5/16"
7	2'-1 5/16"	1'-3 5/16"	1'-11"	1'-2 3/16"
8	-	1'-1 3/16"	-	1'-0"

J:\Projects\ALL\89029\structures\ALL075_0448C\sheets\075_0448CAF004.dgn 09-MAY-2013 3:09PM jint

DESIGN AGENCY
PARSONS BRINCKERHOFF
2945 FARMERS DRIVE
SUITE 350
COLUMBUS, OHIO 43235

DESIGNED	DRAWN	REVIEWED	DATE
PJL	LEL	EBS	02/01/13
CHECKED	REVISED	STRUCTURE NUMBER	
SAP		LEFT: 0201871 RIGHT: 0201901	

ABUTMENT & WINGWALL DETAILS
BRIDGE NO. ALL-75-0448 L&R
I-75 OVER INDIANA & OHIO RAILWAY

ALL-75-0.21
PID No. 89029

56′-0″
OUT/OUT DECK
55′-0″ PIER CAP

6″ 6″

30′-6″
PIER CONSTRUCTED IN PHASE IA

24′-6″
PIER CONSTRUCTED IN PHASE IB

3′-6″ 12′-0″ C/C COLUMNS 12′-0″ C/C COLUMNS 12′-0″ C/C COLUMNS 12′-0″ C/C COLUMNS 3′-6″

EDGE OF DECK 3′-4½″ 9′-7½″ 8′-4″ 8′-4″ 8′-4″ 9′-7½″ 3′-4½″ EDGE OF DECK

2′-0″ SEISMIC PEDESTAL SEISMIC PEDESTAL 2′-0″

3′-6″ 1′-9″ 1′-9″

℄ PIER

℄ R/W & CONST. I-75

PGL

℄ BRG.
PIER 1 STA. 236+64.41
PIER 2 STA. 237+54.41

PHASE CONST. JOINT

℄ BEAM 1 ℄ BEAM 2 ℄ BEAM 3 ℄ BEAM 4 ℄ BEAM 5 ℄ BEAM 6 CROWN LINE ℄ BEAM 7

2′-6″ 8′-4″ 8′-4″ 8′-4″ 8′-4″ 8′-4″ 8′-4″ 8′-4″ 2′-6″

17′-6″ 7′-0″

12′-0″ 13′-6″

B

PLAN

8-P602 @ 6″ (MAX.) 3′-6″ 1′-6″ 1′-6″ 3′-6″ *8 PAIR P603 **8 PAIR P604 @ 6″ (MAX.)

*3-P615 **3-P606 @ 12″ (MAX.) 2′-0″

*3-P613 **3-P607 @ 12″ (MAX.) 2′-0″ 3′-6″ *8 PAIR P610 **8 PAIR P611 @ 6″ (MAX.)

A

10½″ 1′-6″ 1′-6″ 12″ 5-P602 @ 12″ (MAX.) 1′-6″ 1′-6″ 10″ 12″ (MAX.) 1′-6″ 1′-6″ 3′-6″ *8-P612 *8-P613 @ 6″ (MAX.) *6-P612 **6-P613 @ 12″ (MAX.) 1′-6″ 1′-6″ 10½″

* EL. 934.76 ** EL. 934.74 * EL. 934.97 ** EL. 934.91 * EL. 935.15 ** EL. 935.06 6-P502 * EL. 935.28 ** EL. 935.20 6-P503 * EL. 935.40 ** EL. 935.32

* EL. 934.55 ** EL. 934.58

6-P1102 6-P1101 6-P501 12″ *PAIR P608 **PAIR P603 6-P1103 6-P1103 *P612 **P613 2′-0″ MIN. (TYP.)

P601 P601 P1101 E.F. 6″ 6″ 6-P1101 *3-P607 **3-P605 @ 12″ (MAX.) 2′-0″ PHASE CONST. JOINT 6″ P1103 E.F. 6″ 6-P1103

* EL. 931.55 ** EL. 931.58

B A

3″ CLR. (TYP.) MECHANICAL CONNECTOR (TYP.) C C

3′-6″ DIA. COLUMN (TYP.)

PROP. GROUND * EL.910.00 ** EL.910.00

SP401 (TYP. EACH COLUMN) 20-P1105 (TYP. EACH COLUMN)

TOP OF SHAFT * EL. 909.00 ** EL. 909.00 (TYP.) 4′-0″ DIA. DRILLED SHAFT (TYP.) CONST. JOINT (TYP.) G G

5′-7″ MIN. (TYP.)

2 ROWS OF 18-DS1101 (TYP. EACH DRILLED SHAFT)

SP402 (TYP. EACH DRILLED SHAFT)

12′-7″ MIN LAP (TYP.)

17-DS1101 (TYP. EACH DRILLED SHAFT) D D 18-DS1102 (TYP. EACH DRILLED SHAFT)

BOTTOM OF SHAFT * EL. 840.50 ** EL. 840.50 (TYP.)

ELEVATION

SOUTHBOUND PIER 1 SHOWN
(SOUTHBOUND PIER 2 SIMILAR)

* PIER 1
** PIER 2

NOTES:

1. FOR SEISMIC PEDESTAL DETAILS SEE SHEET 22/50.
2. FOR FOUNDATION LAYOUT PLAN, SEE SHEET 10/50 .
3. FOR AESTHETIC DETAILS, SEE SHEET 41/50.
4. FOR PIER SECTIONS, SEE SHEET 21/50.
5. THE CONTRACTOR MAY USE MECHANICAL CONNECTORS RATHER THAN THE LAPS SHOWN ON THE PLANS AT NO ADDITIONAL COST. ANY ADJUSTMENTS TO THE PLANS WILL BE THE RESPONSIBILITY OF THE CONTRACTOR.

DESIGN AGENCY
PARSONS BRINCKERHOFF
2545 FARMERS DRIVE
SUITE 350
COLUMBUS, OHIO 43235

DESIGNED	DRAWN	REVIEWED	DATE
PJL	LEL	EBS	02/01/13
CHECKED	REVISED	STRUCTURE FILE NUMBER	
SAP		LEFT: 0201871	
		RIGHT: 0201901	

LEFT BRIDGE - PIER DETAILS
BRIDGE NO. ALL-75-0448 L&R
I-75 OVER INDIANA & OHIO RAILWAY

ALL-75-0.21
PID No. 89029

19 / 50

745 / 907

J:\Projects\ALL\89029\structures\ALL075_0448C\sheets\075_0448CPI001.dgn 09-MAY-2013 3:09PM jint

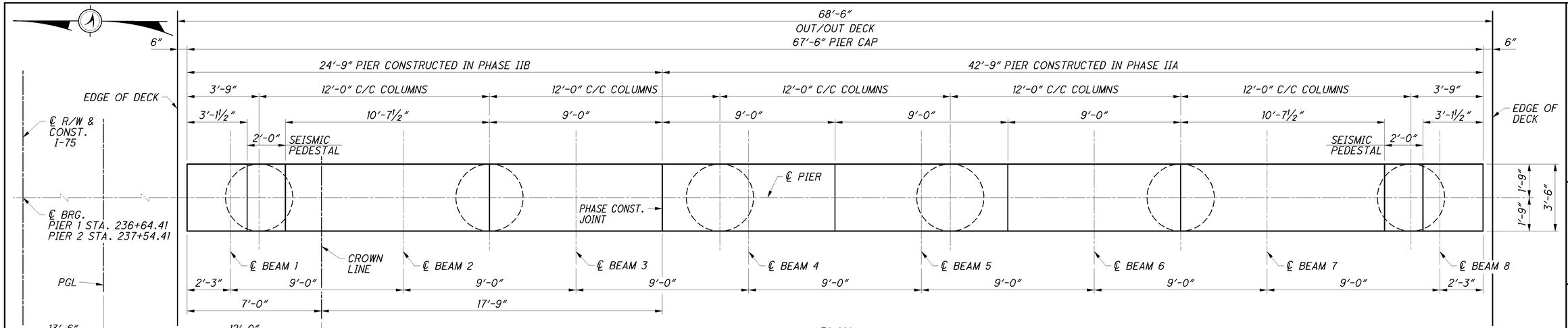

PLAN

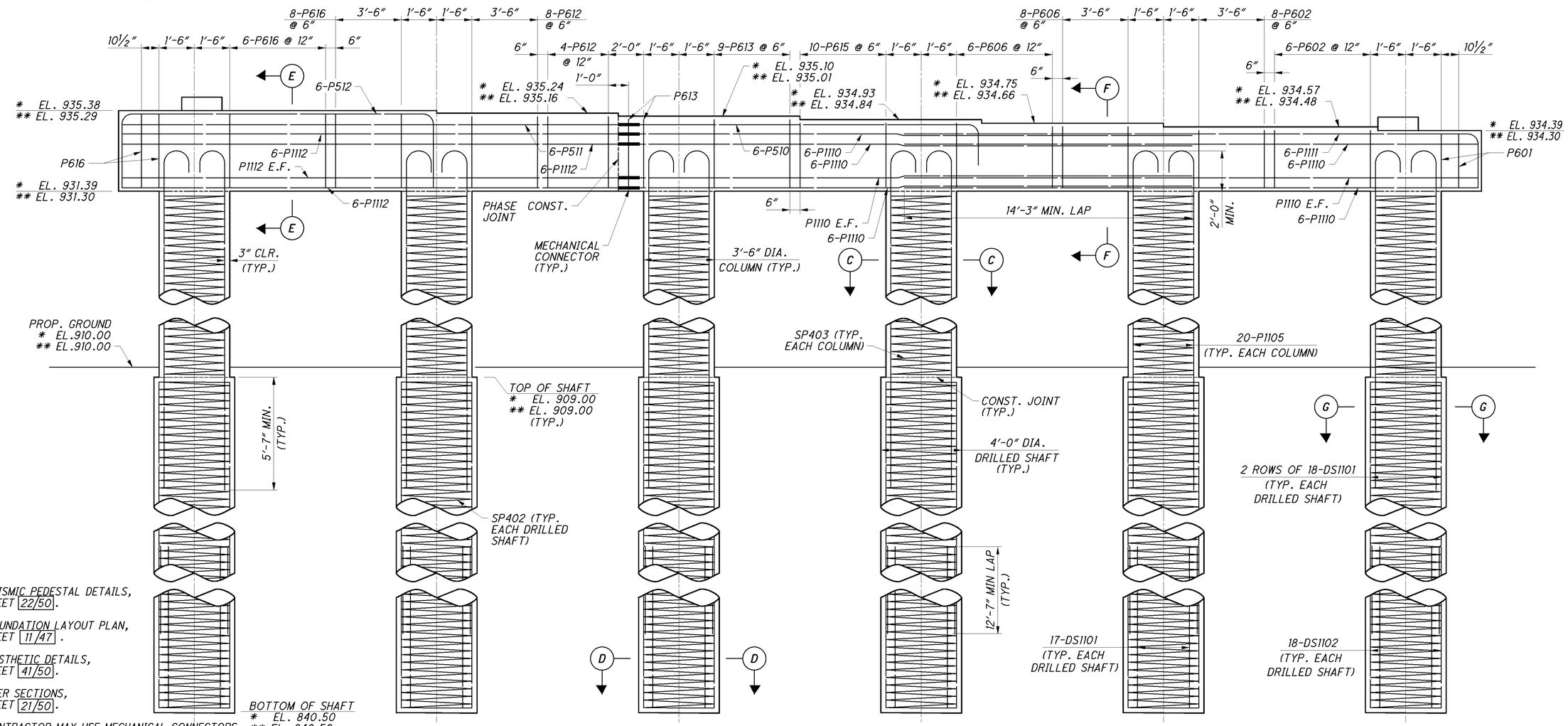

ELEVATION

NORTHBOUND PIER 1 SHOWN
(NORTHBOUND PIER 2 SIMILAR)

* PIER 1
** PIER 2

NOTES:

1. FOR SEISMIC PEDESTAL DETAILS, SEE SHEET 22/50.
2. FOR FOUNDATION LAYOUT PLAN, SEE SHEET 11/47.
3. FOR AESTHETIC DETAILS, SEE SHEET 41/50.
4. FOR PIER SECTIONS, SEE SHEET 21/50.
5. THE CONTRACTOR MAY USE MECHANICAL CONNECTORS RATHER THAN THE LAPS SHOWN ON THE PLANS AT NO ADDITIONAL COST. ANY ADJUSTMENTS TO THE PLANS WILL BE THE RESPONSIBILITY OF THE CONTRACTOR.

DESIGN AGENCY
PARSONS BRINCKERHOFF
2545 FARMERS DRIVE
SUITE 350
COLUMBUS, OHIO 43235

DESIGNED	DRAWN	REVIEWED	DATE
PJL	LEL	EBS	02/01/13
CHECKED	REVISED	STRUCTURE FILE NUMBER	
SAP		LEFT: 0201871 RIGHT: 0201901	

RIGHT BRIDGE - PIER DETAILS

BRIDGE NO. ALL-75-0448 L&R
1-75 OVER INDIANA & OHIO RAILWAY

ALL-75-0.21
PID No. 89029

20/50
746/907

J:\Projects\ALL\89029\structures\ALL075_0448C\sheets\075_0448CPI003.dgn 09-MAY-2013 3:09PM jint

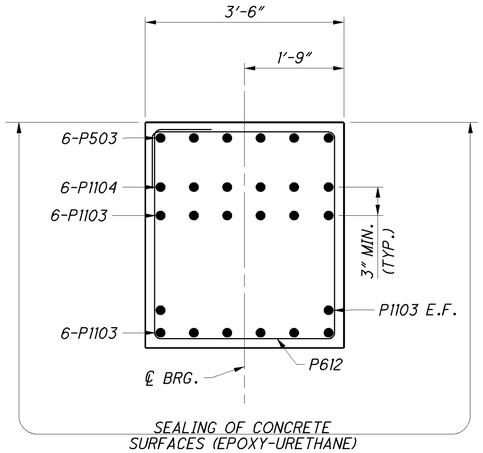

SEALING OF CONCRETE SURFACES (EPOXY-URETHANE) SEAL ENTIRE PERIMETER, EXCLUDING THE TOP FED. COLOR NO. 37875

SECTION A-A

SOUTHBOUND PIER CAP

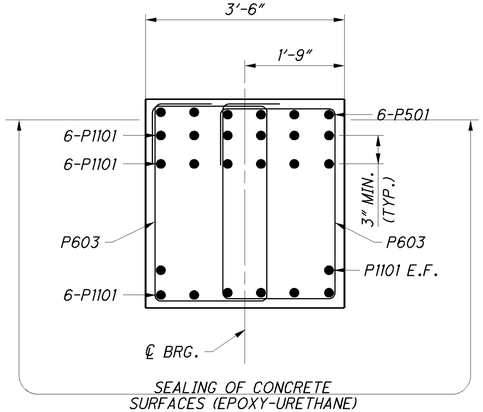

SEALING OF CONCRETE SURFACES (EPOXY-URETHANE) SEAL ENTIRE PERIMETER, EXCLUDING THE TOP FED. COLOR NO. 37875

SECTION B-B

SOUTHBOUND PIER CAP

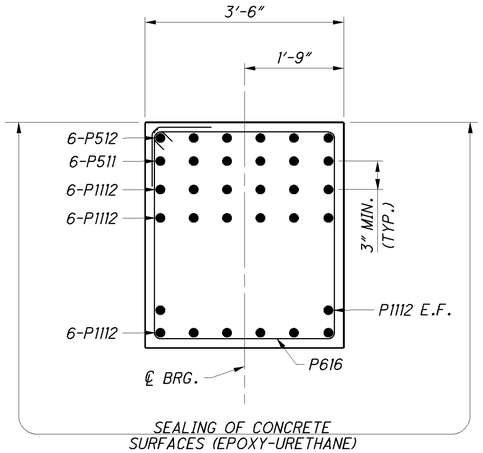

SEALING OF CONCRETE SURFACES (EPOXY-URETHANE) SEAL ENTIRE PERIMETER, EXCLUDING THE TOP FED. COLOR NO. 37875

SECTION E-E

NORTHBOUND PIER CAP

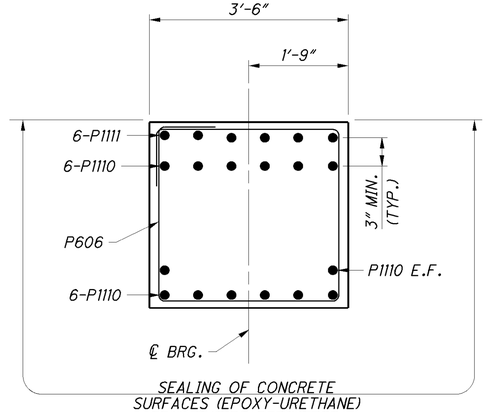

SEALING OF CONCRETE SURFACES (EPOXY-URETHANE) SEAL ENTIRE PERIMETER, EXCLUDING THE TOP FED. COLOR NO. 37875

SECTION F-F

NORTHBOUND PIER CAP

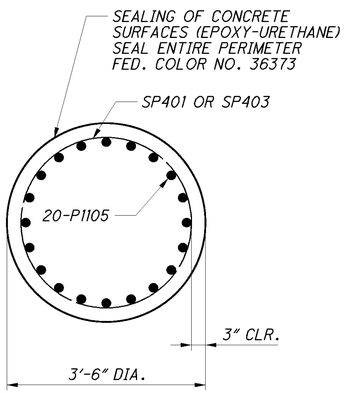

SECTION C-C

NORTHBOUND AND SOUTHBOUND COLUMNS

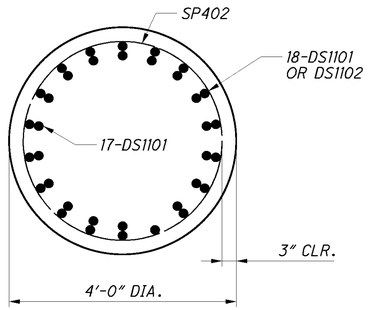

SECTION D-D

NORTHBOUND AND SOUTHBOUND DRILLED SHAFTS INTERIOR AND EXTERIOR BARS TO BE BUNDLED RADIALLY

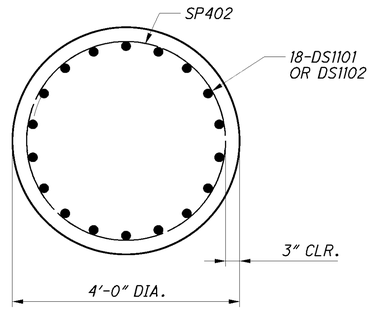

SECTION G-G

NORTHBOUND AND SOUTHBOUND DRILLED SHAFTS

NOTES:

1. FOR FOUNDATION LAYOUT PLAN, SEE SHEET 10/50 & 11/50.
2. FOR AESTHETIC DETAILS, SEE SHEET 41/50.

PIER SECTIONS

BRIDGE NO. ALL-75-0448 L&R
I-75 OVER INDIANA & OHIO RAILWAY

DESIGN AGENCY
PARSONS BRINCKERHOFF
2945 FARMERS DRIVE
SUITE 350
COLUMBUS, OHIO 43235

DESIGNED	DRAWN	REVIEWED	DATE
PJL	BKJ	EBS	02/01/13
CHECKED	REVISED	SYMBOLIZING PID NUMBER	
SAP		LEFT: 0201871 RIGHT: 0201901	

ALL-75-0.21
PID No. 89029

21 / 50

747
907

J:\Projects\ALL\89029\structures\ALL075_0448C\sheets\075_0448CPI002.dgn 07-NOV-2013 10:36AM jint

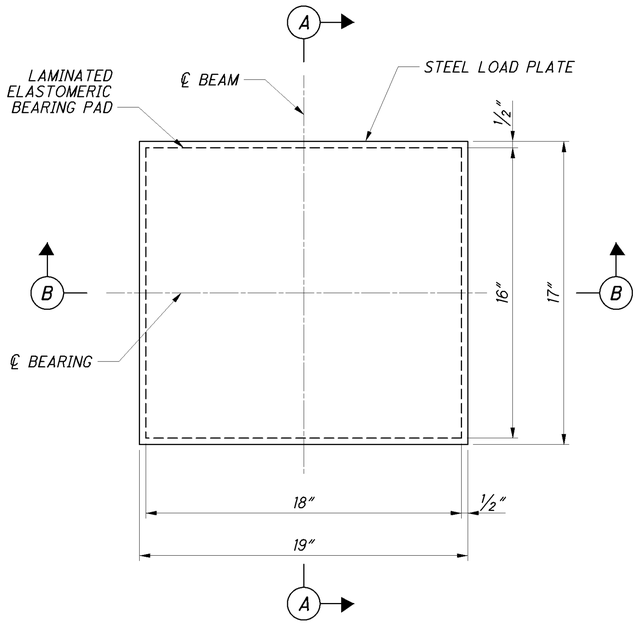

PIER BEARING PLAN VIEW

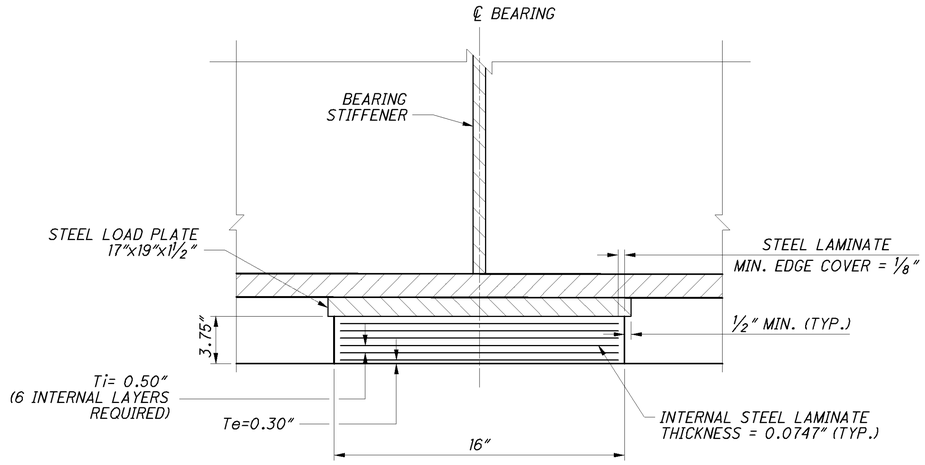

SECTION A-A

LAMINATED ELASTOMERIC EXPANSION PIER BEARING, 50 DUROMETER

NOTES:

STRUCTURAL STEEL:

ALL STRUCTURAL STEEL SHOWN SHALL BE ASTM A709 GRADE 50, UNLESS NOTED OTHERWISE.

ELASTOMERIC BEARINGS:

ELASTOMERIC BEARINGS: THE ELASTOMER SHALL HAVE A HARDNESS OF 50 DUROMETER. THE BEARINGS WERE DESIGNED IN ACCORDANCE WITH SECTION 14.7.6 (METHOD A) OF THE AASHTO LRFD BRIDGE DESIGN SPECIFICATIONS. THE LONGTERM COMPRESSION PROOF LOAD TEST (AASHTO STANDARD SPECIFICATIONS FOR HIGHWAY BRIDGES, DIVISION II, SECTION 18.7.2.6) IS NOT REQUIRED.

ALL BEARINGS SHALL BE MARKED PRIOR TO SHIPPING. THE MARKS SHALL INCLUDE THE BEARING LOCATION ON THE BRIDGE, AND A DIRECTION ARROW THAT POINTS UP-STATION. ALL MARKS SHALL BE PERMANENT AND BE VISIBLE AFTER THE BEARING IS INSTALLED.

BASIS OF PAYMENT:

THE UNIT BID PRICE SHALL INCLUDE ALL MATERIALS, LABOR, TESTING, AND INCIDENTALS NECESSARY TO FURNISH AND INSTALL LAMINATED ELASTOMERIC BEARINGS. PAYMENT WILL BE MADE AT THE CONTRACT PRICE FOR ITEM 516, EACH, ELASTOMERIC BEARINGS WITH INTERNAL LAMINATES (NEOPRENE), AS PER PLAN: 16"X18"X3¾" WITH 17"X19"X1½" (MIN.) LOAD PLATES (PIERS)

PAINTING:

STEEL LOAD PLATES AT THE PIER SHALL BE SHOP PAINTED WITH AN INORGANIC ZINC PRIMER AS SPECIFICED IN CMS 513.27. APPLY PAINT TO THE EXPOSED STEEL LOAD PLATES IN ACCORDANCE WITH CMS 514. PAYMENT IS INCLUDED IN THE UNIT PRICE BID FOR EACH BEARING.

	RIGHT BRIDGE	LEFT BRIDGE
DEAD LOAD REACTION	158.9 K	148.6 K
LIVE LOAD REACTION	118.1 K	111.9 K
MAXIMUM DESIGN LOAD	277.0 K	260.5 K

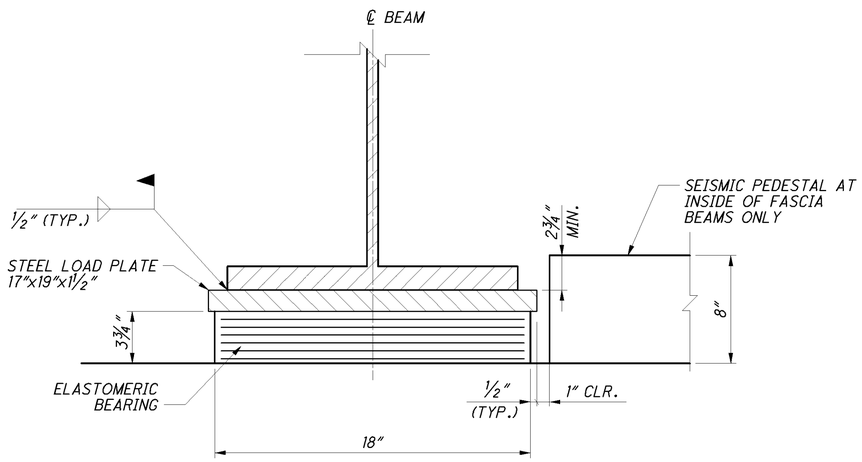

SECTION B-B

PIER BEARING WITH LOAD PLATE
(LOAD PLATES ARE TO BE BONDED TO THE ELASTOMER DURING THE MOLDING PROCESS)

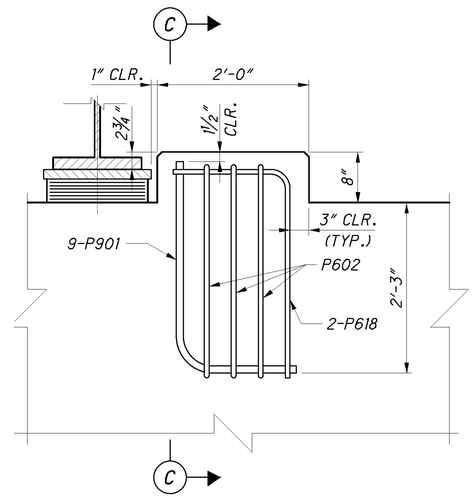

FRONT VIEW OF SEISMIC PEDESTAL

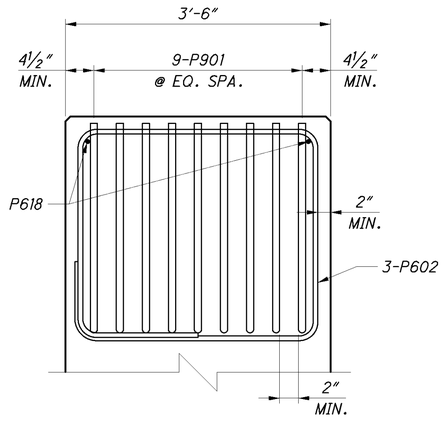

SECTION C-C

DESIGN AGENCY
PARSONS BRINCKERHOFF
2945 FARMERS DRIVE
SUITE 350
COLUMBUS, OHIO 43235

DESIGNED	DRAWN	REVIEWED	DATE
PJL	TLP	EBS	02/01/13
CHECKED	REVISED	STRUCTURE FILE NUMBER	
SAP		LEFT: 0201871 RIGHT: 0201901	

BEARING DETAILS

BRIDGE NO. ALL-75-0448 L&R
I-75 OVER INDIANA & OHIO RAILWAY

ALL-75-0.21
PID No. 89029

22 / 50

748
907

J:\Projects\ALL\89029\structures\ALL075_0448C\sheets\075_0448CBR001.dgn 09-MAY-2013 3:10PM lint

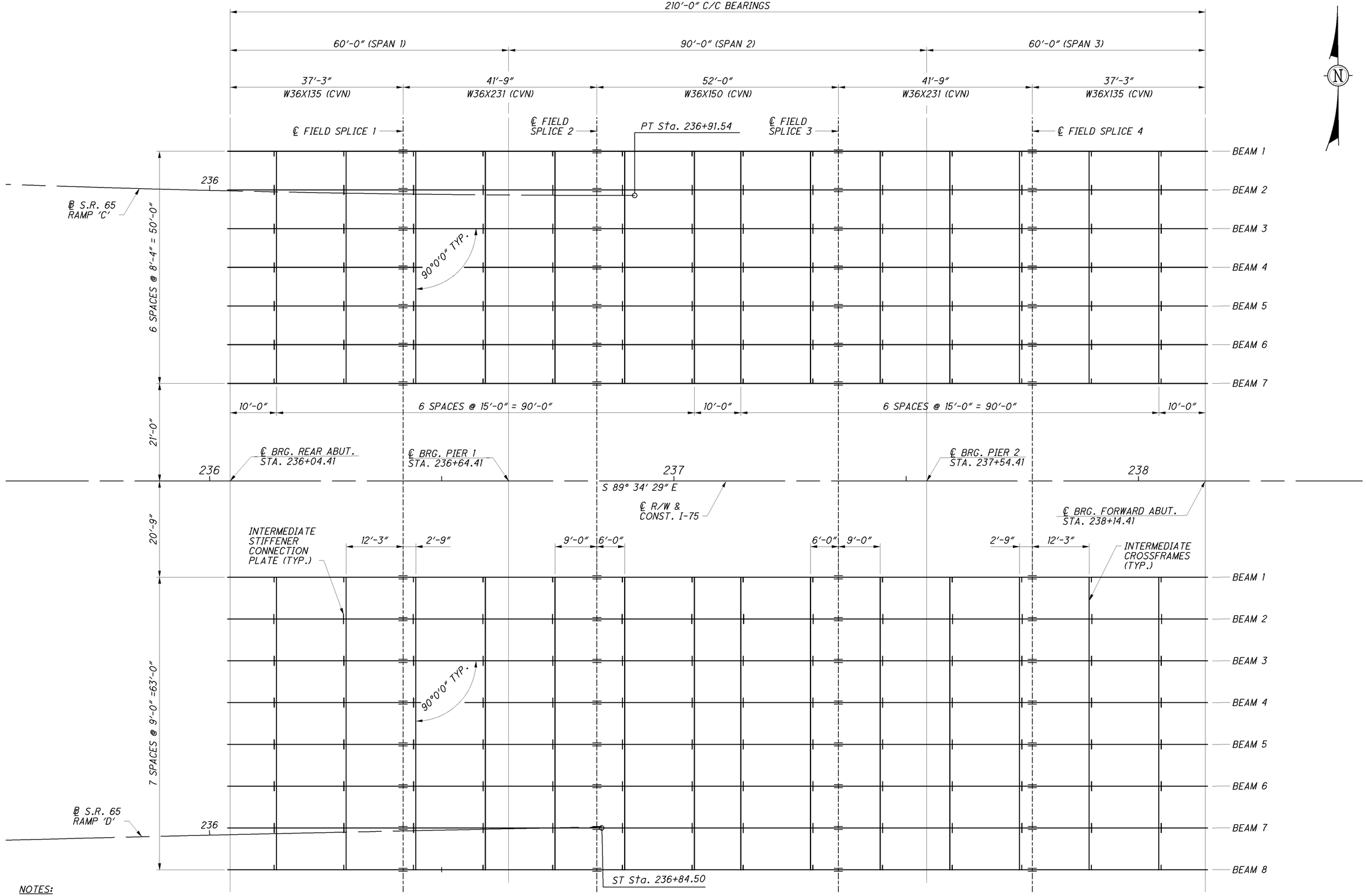

NOTES:

1. PROVIDE INTERMEDIATE CROSSFRAMES PER GSD-1-96.
2. LAYOUT OF CROSSFRAMES IS SIMILAR FOR NORTHBOUND AND SOUTHBOUND STRUCTURES.

FRAMING PLAN

DESIGN AGENCY
PARSONS BRINCKERHOFF
2545 FARMERS DRIVE
SUITE 350
COLUMBUS, OHIO 43235

DESIGNED	DRAWN	REVIEWED	DATE
PJL	BKJ	EBS	02/01/13
CHECKED	REVISED	STRUCTURE FILE NUMBER	
SAP		LEFT: 0201871 RIGHT: 0201901	

FRAMING PLAN

BRIDGE NO. ALL-75-0448 L&R
I-75 OVER INDIANA & OHIO RAILWAY

ALL-75-0.21
PID No. 89029

J:\Projects\ALL\89029\structures\ALL075_0448C\sheets\075_0448CSD001.dgn 09-MAY-2013 3:10PM lint

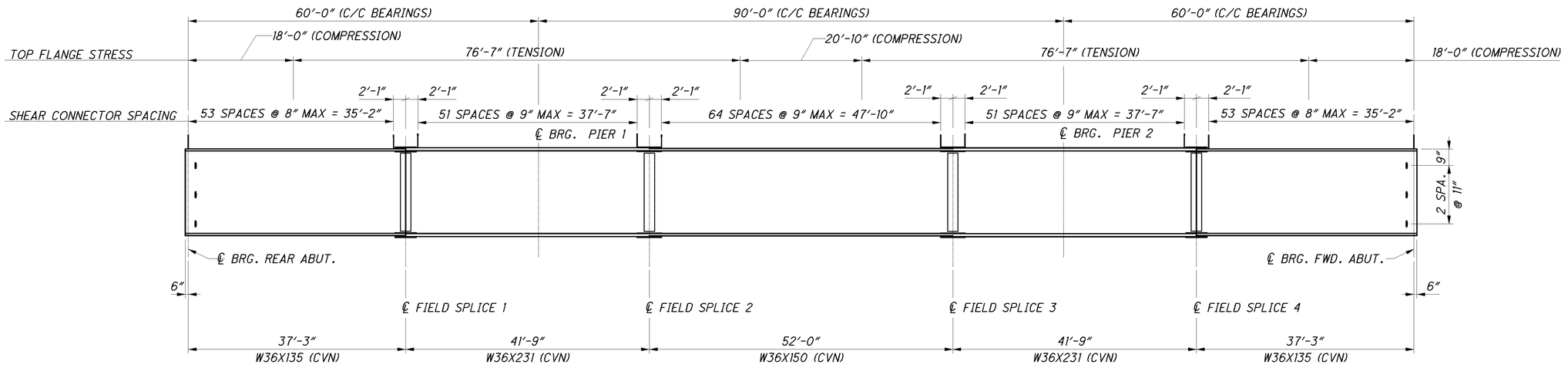

BEAM ELEVATION

BEAMS 1-8 NB & BEAMS 1-7 SB

NOTES:

1. CVN: WHERE A SHAPE OR PLATE IS DESIGNATED (CVN), FURNISH MATERIAL THAT MEETS THE MINIMUM NOTCH TOUGHNESS REQUIREMENTS AS SPECIFIED IN 711.01.

2. THE HOLE DIAMETER IN THE CROSS FRAMES AND GIRDER STIFFENERS SHALL BE 3/16" LARGER THAN THE DIAMETER OF THE ERECTION BOLTS. ERECTION BOLTS SHALL BE HIGH STRENGTH BOLTS AND SHALL REMAIN IN PLACE. SUPPLY TWO HARDENED WASHERS WITH EACH HIGH STRENGTH BOLT. FULLY TORQUE THE BOLTS OR USE A LOCK WASHER IN ADDITION TO THE TWO HARDENED WASHERS. FURNISH ERECTION BOLTS AS PART OF ITEM 513.

3. WELD ATTACHMENT OF SUPPORTS FOR CONCRETE DECK FINISHING MACHINE TO AREAS OF THE FASCIA STRINGER FLANGES DESIGNATED "COMPRESSION". DO NOT WELD ATTACHMENTS TO AREAS DESIGNATED "TENSION". FILLET WELDS TO COMPRESSION FLANGES SHALL BE AT LEAST 1" FROM EDGE OF FLANGE, BE NO MORE THAN 2" LONG, AND BE AT LEAST 1/4" FOR THICKNESSES UP TO 3/4" OR 5/16" FOR GREATER THAN 3/4" THICK.

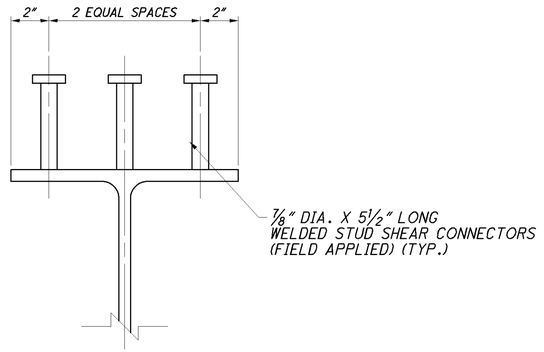

BEAM SHEAR CONNECTOR DETAIL

J:\Projects\ALL\89029\structures\ALL075_0448C\sheets\075_0448CSD002.dgn 09-MAY-2013 3:10PM lint

DESIGN AGENCY
PARSONS BRINCKERHOFF
2545 FARMERS DRIVE
SUITE 350
COLUMBUS, OHIO 43235

DESIGNED	DRAWN	REVIEWED	DATE
PJL	BKJ	EBS	02/01/13
CHECKED	REVISED	STRUCTURE FILE NUMBER	
SAP		LEFT: 0201871 RIGHT: 0201901	

BEAM ELEVATION
BRIDGE NO. ALL-75-0448 L&R
I-75 OVER INDIANA & OHIO RAILWAY

ALL-75-0.21
PID No. 89029

750/907

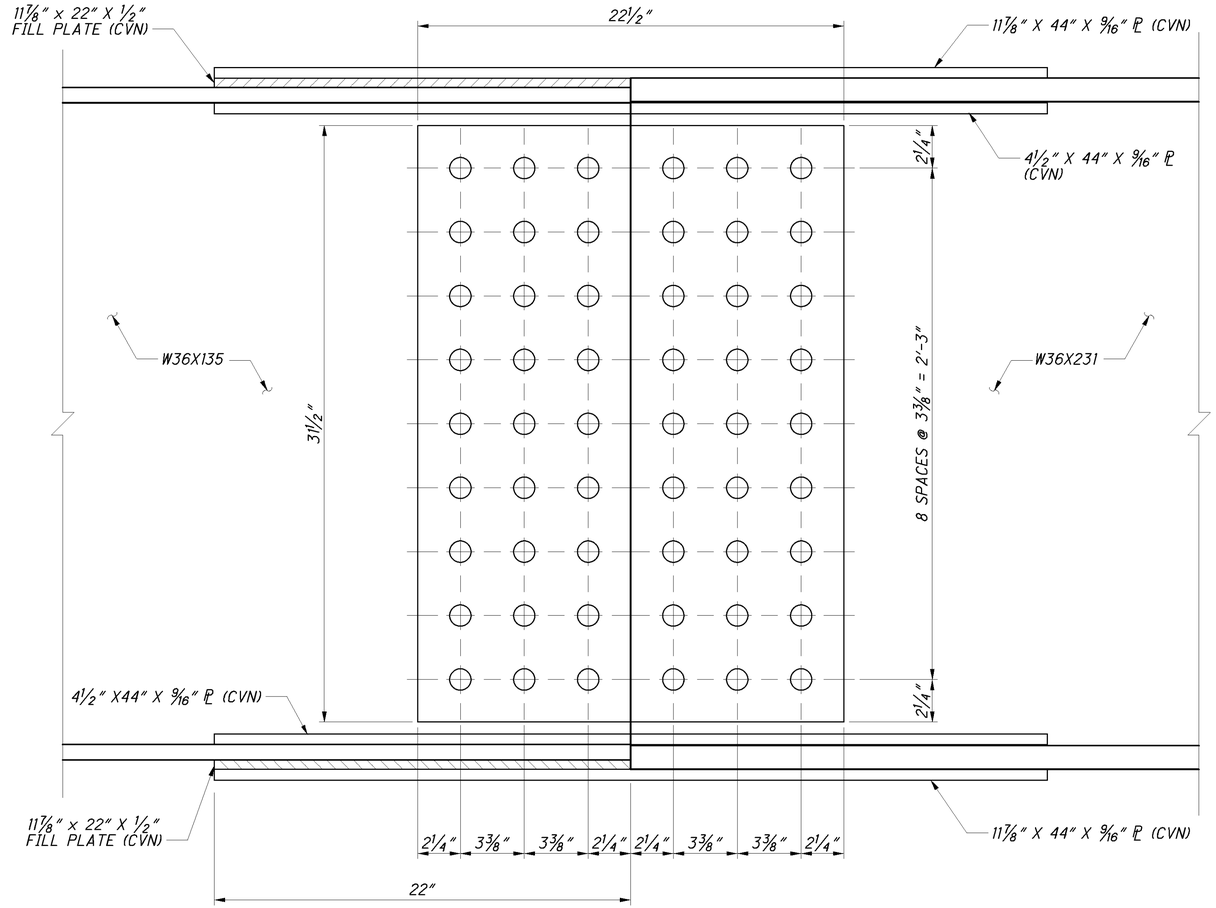

BEAM FIELD SPLICE ELEVATION

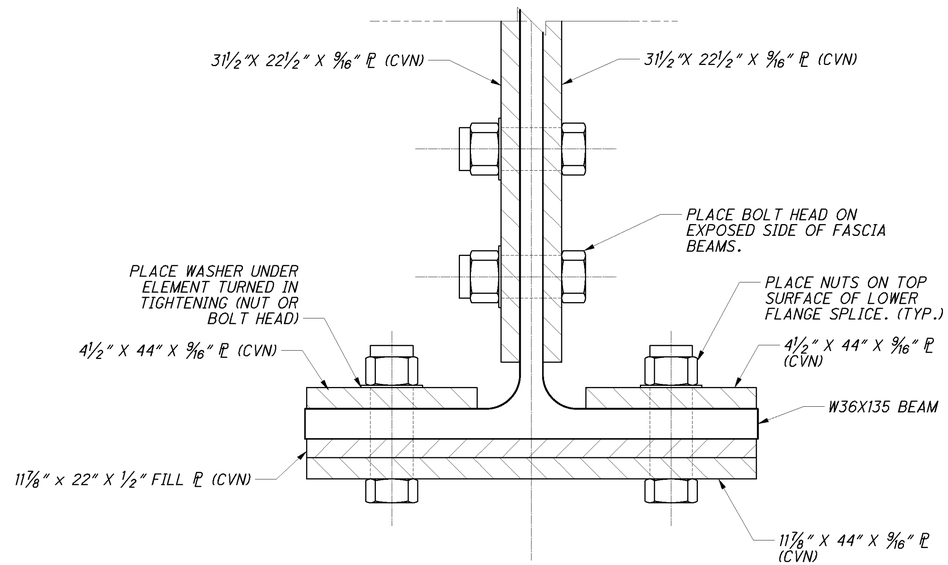

PARTIAL SECTION A-A

FIELD SLICE 1 SHOWN
FIELD SPLICE 4 OPPOSITE HAND

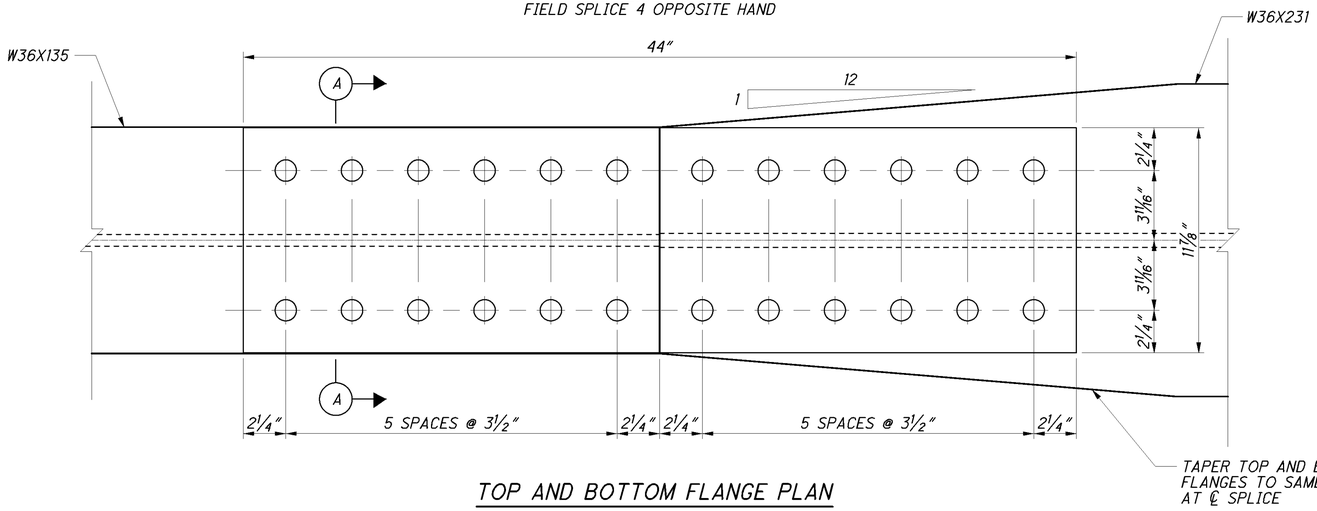

TOP AND BOTTOM FLANGE PLAN

NOTES:

1. HIGH STRENGTH BOLTS SHALL BE 1 1/8" DIAMETER TYPE III A325 UNLESS OTHERWISE NOTED.
2. CVN: WHERE A SHAPE OR PLATE IS DESIGNATED (CVN), FURNISH MATERIAL THAT MEETS THE MINIMUM NOTCH TOUGHNESS REQUIREMENTS AS SPECIFIED IN 711.01.

DESIGN AGENCY
PARSONS BRINCKERHOFF
2545 FARMERS DRIVE
SUITE 350
COLUMBUS, OHIO 43235

DESIGNED	DRAWN	REVIEWED	DATE
PJL	BKJ	EBS	02/01/13
CHECKED	REVISED	STRUCTURE FILE NUMBER	
SAP		LEFT: 0201871 RIGHT: 0201901	

FIELD SPLICE DETAIL - SPLICE 1 & 4

BRIDGE NO. ALL-75-0448 L&R
I-75 OVER INDIANA & OHIO RAILWAY

ALL-75-0.21
PID No. 89029

25/50

751
907

J:\Projects\ALL\89029\structures\ALL075_0448C\sheets\075_0448CSD003.dgn 09-MAY-2013 3:10PM jint

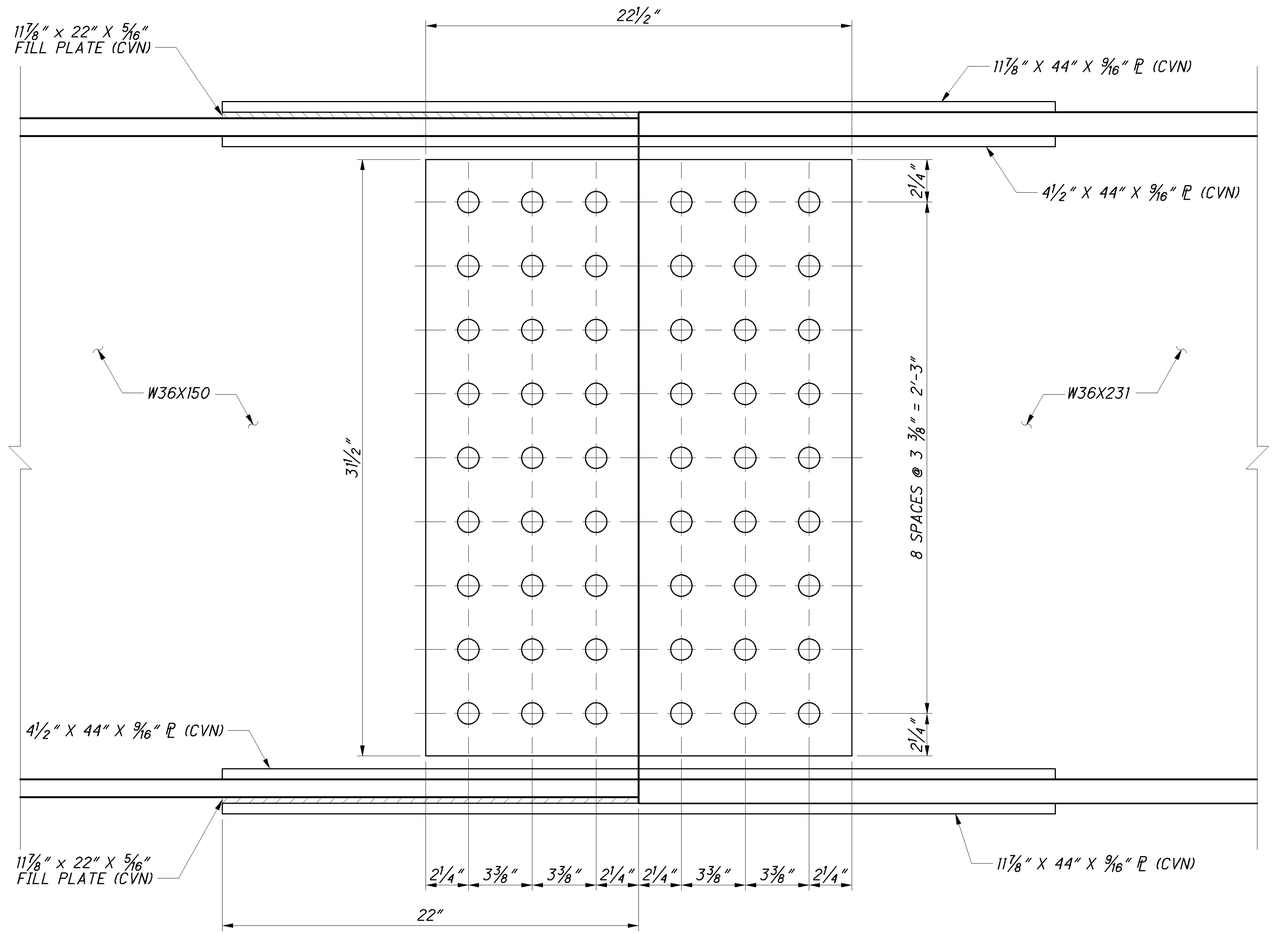

BEAM FIELD SPLICE ELEVATION

FIELD SPLICE 3 SHOWN
FIELD SPLICE 2 OPPOSITE HAND

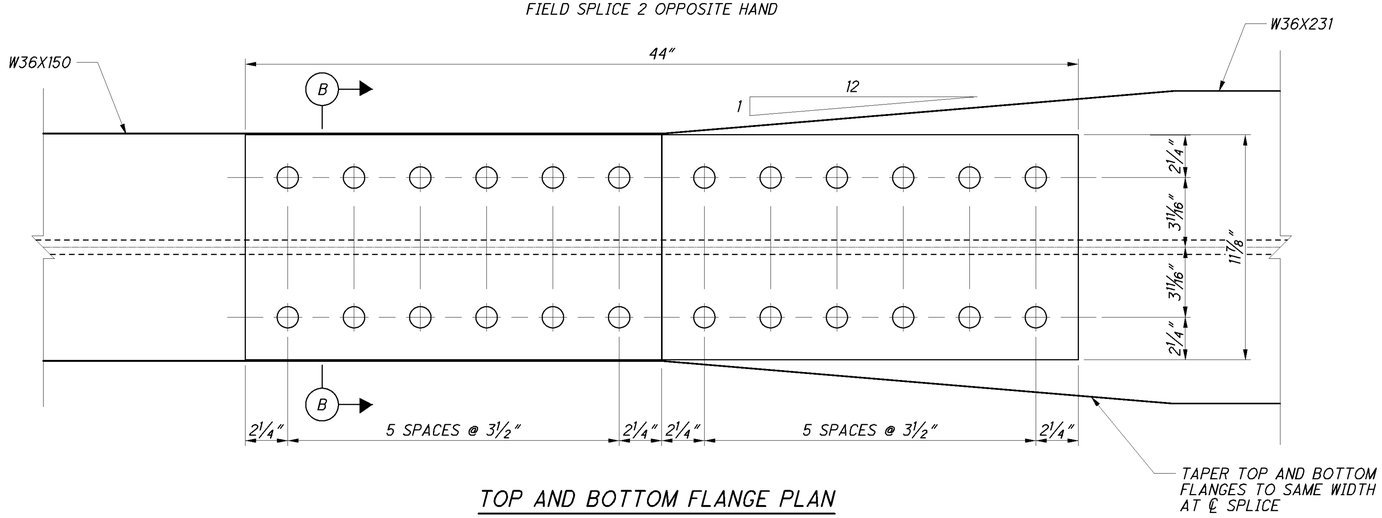

TOP AND BOTTOM FLANGE PLAN

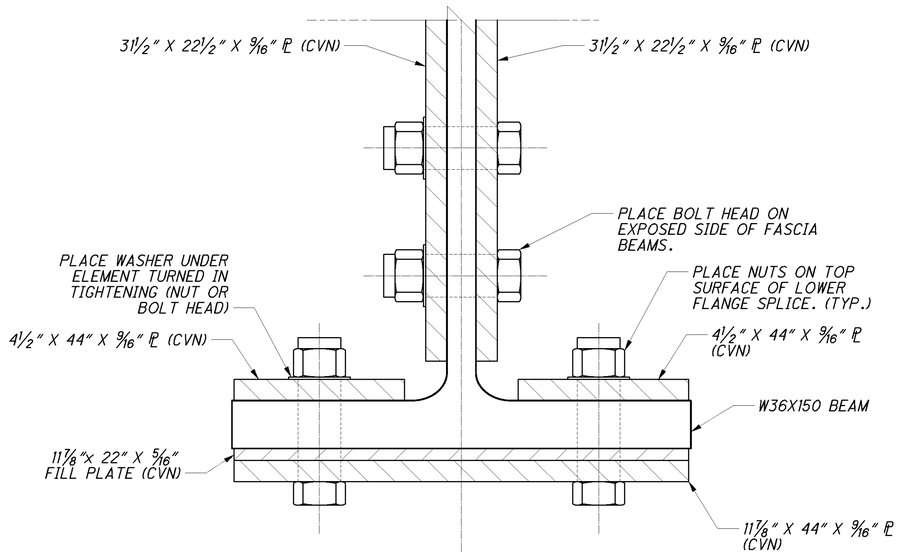

PARTIAL SECTION B-B

NOTES:

1. HIGH STRENGTH BOLTS SHALL BE 1 1/8" DIAMETER TYPE III A325 UNLESS OTHERWISE NOTED.
2. CVN: WHERE A SHAPE OR PLATE IS DESIGNATED (CVN), FURNISH MATERIAL THAT MEETS THE MINIMUM NOTCH TOUGHNESS REQUIREMENTS AS SPECIFIED IN 711.01.

DESIGN AGENCY
PARSONS BRINCKERHOFF
2945 FARMERS DRIVE
SUITE 350
COLUMBUS, OHIO 43235

DESIGNED	DRAWN	REVIEWED	DATE
PJL	BKJ	EBS	02/01/13
CHECKED	REVISED	STRUCTURE FILE NUMBER	
SAP		LEFT: 0201871 RIGHT: 0201901	

FIELD SPLICE DETAILS - SPLICE 2 & 3

BRIDGE NO. ALL-75-0448 L&R
I-75 OVER INDIANA & OHIO RAILWAY

ALL-75-0.21
PID No. 89029

26/50

752
907

J:\Projects\ALL\89029\structures\ALL075_0448\sheets\075_0448SD008.dgn 09-MAY-2013 3:10PM jint

SOUTHBOUND CAMBER TABLE

GIRDER	SPAN LOCATION	℄ BRG. REAR ABUT.	0.25	0.50	SPLICE 1	0.75	℄ BRG. PIER 1	SPLICE 2	0.25	0.50	0.75	SPLICE 3	℄ BRG. PIER 2	0.25	SPLICE 4	0.50	0.75	℄ BRG. FORWARD ABUT.
1	DEFLECTION DUE TO WEIGHT OF STEEL	0	0	0	0	0	0	2/16	2/16	4/16	2/16	2/16	0	0	0	0	0	0
	DEFLECTION DUE TO REMAINING DEAD LOAD	0	3/16	3/16	1/16	0	0	8/16	9/16	15/16	9/16	8/16	0	0	1/16	3/16	3/16	0
	GEOMETRIC CORRECTION	0	- 8/16	- 4/16	- 3/16	- 2/16	0	1 2/16	1 4/16	1	9/16	8/16	0	2/16	2/16	2/16	2/16	0
	REQUIRED SHOP CAMBER	0	- 5/16	- 1/16	- 2/16	- 2/16	0	1 12/16	1 15/16	2 3/16	1 4/16	1 2/16	0	2/16	3/16	5/16	5/16	0
2	DEFLECTION DUE TO WEIGHT OF STEEL	0	0	0	0	0	0	2/16	2/16	4/16	2/16	2/16	0	0	0	0	0	0
	DEFLECTION DUE TO REMAINING DEAD LOAD	0	3/16	3/16	2/16	0	0	9/16	11/16	1 2/16	11/16	9/16	0	0	2/16	3/16	3/16	0
	GEOMETRIC CORRECTION	0	- 4/16	- 2/16	- 1/16	-0	0	12/16	14/16	12/16	7/16	6/16	0	2/16	2/16	2/16	2/16	0
	REQUIRED SHOP CAMBER	0	- 1/16	1/16	1/16	-0	0	1 7/16	1 11/16	2 2/16	1 4/16	1 1/16	0	2/16	4/16	5/16	5/16	0
3	DEFLECTION DUE TO WEIGHT OF STEEL	0	0	0	0	0	0	2/16	2/16	4/16	2/16	2/16	0	0	0	0	0	0
	DEFLECTION DUE TO REMAINING DEAD LOAD	0	3/16	3/16	2/16	0	0	9/16	11/16	1 2/16	11/16	9/16	0	0	2/16	3/16	3/16	0
	GEOMETRIC CORRECTION	0	- 1/16	1/16	1/16	1/16	0	7/16	7/16	7/16	5/16	4/16	0	2/16	2/16	2/16	2/16	0
	REQUIRED SHOP CAMBER	0	2/16	4/16	3/16	1/16	0	1 2/16	1 4/16	1 13/16	1 2/16	15/16	0	2/16	4/16	5/16	5/16	0
4	DEFLECTION DUE TO WEIGHT OF STEEL	0	0	0	0	0	0	2/16	2/16	4/16	2/16	2/16	0	0	0	0	0	0
	DEFLECTION DUE TO REMAINING DEAD LOAD	0	3/16	3/16	2/16	0	0	9/16	11/16	1 2/16	11/16	9/16	0	0	2/16	3/16	3/16	0
	GEOMETRIC CORRECTION	0	2/16	2/16	2/16	2/16	0	3/16	4/16	5/16	4/16	3/16	0	2/16	2/16	2/16	2/16	0
	REQUIRED SHOP CAMBER	0	5/16	5/16	4/16	2/16	0	14/16	1 1/16	1 11/16	1 1/16	14/16	0	2/16	4/16	5/16	5/16	0
5	DEFLECTION DUE TO WEIGHT OF STEEL	0	0	0	0	0	0	2/16	2/16	4/16	2/16	2/16	0	0	0	0	0	0
	DEFLECTION DUE TO REMAINING DEAD LOAD	0	3/16	3/16	2/16	0	0	9/16	11/16	1 2/16	11/16	9/16	0	0	2/16	3/16	3/16	0
	GEOMETRIC CORRECTION	0	2/16	2/16	2/16	2/16	0	3/16	4/16	5/16	4/16	3/16	0	2/16	2/16	2/16	2/16	0
	REQUIRED SHOP CAMBER	0	5/16	5/16	4/16	2/16	0	14/16	1 1/16	1 11/16	1 1/16	14/16	0	2/16	4/16	5/16	5/16	0
6	DEFLECTION DUE TO WEIGHT OF STEEL	0	0	0	0	0	0	2/16	2/16	4/16	2/16	2/16	0	0	0	0	0	0
	DEFLECTION DUE TO REMAINING DEAD LOAD	0	3/16	3/16	2/16	0	0	9/16	11/16	1 2/16	11/16	9/16	0	0	2/16	3/16	3/16	0
	GEOMETRIC CORRECTION	0	2/16	2/16	2/16	2/16	0	3/16	4/16	5/16	4/16	3/16	0	2/16	2/16	2/16	2/16	0
	REQUIRED SHOP CAMBER	0	5/16	5/16	4/16	2/16	0	14/16	1 1/16	1 11/16	1 1/16	14/16	0	2/16	4/16	5/16	5/16	0
7	DEFLECTION DUE TO WEIGHT OF STEEL	0	0	0	0	0	0	2/16	2/16	4/16	2/16	2/16	0	0	0	0	0	0
	DEFLECTION DUE TO REMAINING DEAD LOAD	0	3/16	3/16	1/16	0	0	8/16	9/16	15/16	9/16	8/16	0	0	1/16	3/16	3/16	0
	GEOMETRIC CORRECTION	0	2/16	2/16	2/16	2/16	0	3/16	4/16	5/16	4/16	3/16	0	2/16	2/16	2/16	2/16	0
	REQUIRED SHOP CAMBER	0	5/16	5/16	3/16	2/16	0	13/16	15/16	1 8/16	15/16	13/16	0	2/16	3/16	5/16	5/16	0

NORTHBOUND CAMBER TABLE

GIRDER	SPAN LOCATION	℄ BRG. REAR ABUT.	0.25	0.50	SPLICE 1	0.75	℄ BRG. PIER 1	SPLICE 2	0.25	0.50	0.75	SPLICE 3	℄ BRG. PIER 2	0.25	SPLICE 4	0.50	0.75	℄ BRG. FORWARD ABUT.
1	DEFLECTION DUE TO WEIGHT OF STEEL	0	0	0	0	0	0	2/16	2/16	4/16	2/16	2/16	0	0	0	0	0	0
	DEFLECTION DUE TO REMAINING DEAD LOAD	0	3/16	3/16	1/16	0	0	8/16	10/16	1	10/16	8/16	0	0	1/16	3/16	3/16	0
	GEOMETRIC CORRECTION	0	2/16	2/16	2/16	2/16	0	3/16	4/16	5/16	4/16	3/16	0	2/16	2/16	2/16	2/16	0
	REQUIRED SHOP CAMBER	0	5/16	5/16	3/16	2/16	0	13/16	1	1 9/16	1	13/16	0	2/16	3/16	5/16	5/16	0
2	DEFLECTION DUE TO WEIGHT OF STEEL	0	0	0	0	0	0	2/16	2/16	4/16	2/16	2/16	0	0	0	0	0	0
	DEFLECTION DUE TO REMAINING DEAD LOAD	0	4/16	3/16	2/16	0	0	10/16	12/16	1 4/16	12/16	10/16	0	0	2/16	3/16	4/16	0
	GEOMETRIC CORRECTION	0	2/16	2/16	2/16	2/16	0	3/16	4/16	5/16	4/16	3/16	0	2/16	2/16	2/16	2/16	0
	REQUIRED SHOP CAMBER	0	6/16	5/16	4/16	2/16	0	15/16	1 2/16	1 13/16	1 2/16	15/16	0	2/16	4/16	5/16	6/16	0
3	DEFLECTION DUE TO WEIGHT OF STEEL	0	0	0	0	0	0	2/16	2/16	4/16	2/16	2/16	0	0	0	0	0	0
	DEFLECTION DUE TO REMAINING DEAD LOAD	0	4/16	3/16	2/16	0	0	10/16	12/16	1 4/16	12/16	10/16	0	0	2/16	3/16	4/16	0
	GEOMETRIC CORRECTION	0	2/16	2/16	2/16	2/16	0	3/16	4/16	5/16	4/16	3/16	0	2/16	2/16	2/16	2/16	0
	REQUIRED SHOP CAMBER	0	6/16	5/16	4/16	2/16	0	15/16	1 2/16	1 13/16	1 2/16	15/16	0	2/16	4/16	5/16	6/16	0
4	DEFLECTION DUE TO WEIGHT OF STEEL	0	0	0	0	0	0	2/16	2/16	4/16	2/16	2/16	0	0	0	0	0	0
	DEFLECTION DUE TO REMAINING DEAD LOAD	0	4/16	3/16	2/16	0	0	10/16	12/16	1 4/16	12/16	10/16	0	0	2/16	3/16	4/16	0
	GEOMETRIC CORRECTION	0	2/16	2/16	2/16	2/16	0	3/16	4/16	5/16	4/16	3/16	0	2/16	2/16	2/16	2/16	0
	REQUIRED SHOP CAMBER	0	6/16	5/16	4/16	2/16	0	15/16	1 2/16	1 13/16	1 2/16	15/16	0	2/16	4/16	5/16	6/16	0
5	DEFLECTION DUE TO WEIGHT OF STEEL	0	0	0	0	0	0	2/16	2/16	4/16	2/16	2/16	0	0	0	0	0	0
	DEFLECTION DUE TO REMAINING DEAD LOAD	0	4/16	3/16	2/16	0	0	10/16	12/16	1 4/16	12/16	10/16	0	0	2/16	3/16	4/16	0
	GEOMETRIC CORRECTION	0	2/16	2/16	2/16	2/16	0	3/16	4/16	5/16	4/16	3/16	0	2/16	2/16	2/16	2/16	0
	REQUIRED SHOP CAMBER	0	6/16	5/16	4/16	2/16	0	15/16	1 2/16	1 13/16	1 2/16	15/16	0	2/16	4/16	5/16	6/16	0
6	DEFLECTION DUE TO WEIGHT OF STEEL	0	0	0	0	0	0	2/16	2/16	4/16	2/16	2/16	0	0	0	0	0	0
	DEFLECTION DUE TO REMAINING DEAD LOAD	0	4/16	3/16	2/16	0	0	10/16	12/16	1 4/16	12/16	10/16	0	0	2/16	3/16	4/16	0
	GEOMETRIC CORRECTION	0	2/16	2/16	2/16	2/16	0	3/16	4/16	5/16	4/16	3/16	0	2/16	2/16	2/16	2/16	0
	REQUIRED SHOP CAMBER	0	6/16	5/16	4/16	2/16	0	15/16	1 2/16	1 13/16	1 2/16	15/16	0	2/16	4/16	5/16	6/16	0
7	DEFLECTION DUE TO WEIGHT OF STEEL	0	0	0	0	0	0	2/16	2/16	4/16	2/16	2/16	0	0	0	0	0	0
	DEFLECTION DUE TO REMAINING DEAD LOAD	0	4/16	3/16	2/16	0	0	10/16	12/16	1 4/16	12/16	10/16	0	0	2/16	3/16	4/16	0
	GEOMETRIC CORRECTION	0	2/16	2/16	2/16	2/16	0	3/16	4/16	5/16	4/16	3/16	0	2/16	2/16	2/16	2/16	0
	REQUIRED SHOP CAMBER	0	6/16	5/16	4/16	2/16	0	15/16	1 2/16	1 13/16	1 2/16	15/16	0	2/16	4/16	5/16	6/16	0
8	DEFLECTION DUE TO WEIGHT OF STEEL	0	0	0	0	0	0	2/16	2/16	4/16	2/16	2/16	0	0	0	0	0	0
	DEFLECTION DUE TO REMAINING DEAD LOAD	0	3/16	3/16	1/16	0	0	8/16	10/16	1	10/16	8/16	0	0	1/16	3/16	3/16	0
	GEOMETRIC CORRECTION	0	2/16	2/16	2/16	2/16	0	3/16	4/16	5/16	4/16	3/16	0	2/16	2/16	2/16	2/16	0
	REQUIRED SHOP CAMBER	0	5/16	5/16	3/16	2/16	0	13/16	1	1 9/16	1	13/16	0	2/16	3/16	5/16	5/16	0

NOTES:

1. SEE SHEET 28/50 FOR CAMBER DIAGRAM.

J:\Projects\ALL\89029\structures\ALL075_0448C\sheets\075_0448CSD006.dgn 09-MAY-2013 3:10PM jint

DESIGN AGENCY
PARSONS BRINCKERHOFF
2945 FARMERS DRIVE
SUITE 350
COLUMBUS, OHIO 43235

DESIGNED	DRAWN	REVIEWED	DATE
PJL	TLP	EBS	02/01/13
CHECKED	REVISED	STRUCTURE NUMBER	
SAP		LEFT: 0201871 RIGHT: 0201901	

CAMBER TABLE

BRIDGE NO. ALL-75-0448 L&R
I-75 OVER INDIANA & OHIO RAILWAY

ALL-75-0.21
PID No. 89029

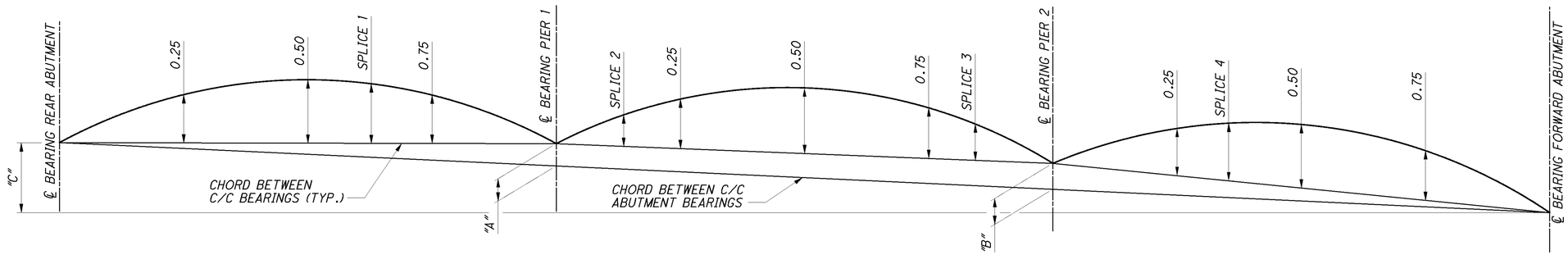

CAMBER DIAGRAM

SOUTHBOUND BLOCKING DIMENSIONS			
GIRDER	DIM "A"	DIM "B"	DIM "C"
BEAM 1	3 3/16"	2 5/8"	-2"
BEAM 2	2 1/2"	2 1/8"	-5/16"
BEAM 3	1 13/16"	1 11/16"	1 3/8"
BEAM 4	1 3/8"	1 3/8"	2 3/8"
BEAM 5	1 3/8"	1 3/8"	2 3/8"
BEAM 6	1 3/8"	1 3/8"	2 3/8"
BEAM 7	1 3/8"	1 3/8"	2 3/8"

NORTHBOUND BLOCKING DIMENSIONS			
GIRDER	DIM "A"	DIM "B"	DIM "C"
BEAM 1	1 3/8"	1 3/8"	2 3/8"
BEAM 2	1 3/8"	1 3/8"	2 3/8"
BEAM 3	1 3/8"	1 3/8"	2 3/8"
BEAM 4	1 3/8"	1 3/8"	2 3/8"
BEAM 5	1 3/8"	1 3/8"	2 3/8"
BEAM 6	1 3/8"	1 3/8"	2 3/8"
BEAM 7	1 3/8"	1 3/8"	2 3/8"
BEAM 8	1 3/8"	1 3/8"	2 3/8"

NOTES:
1. FOR TYPICAL SECTIONS, SEE SHEET 29/50.
2. FOR CAMBER TABLES, SEE SHEET 27/50.

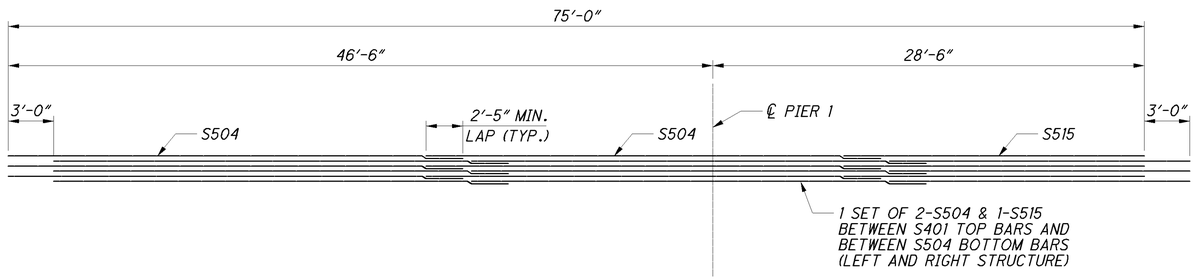

NEGATIVE MOMENT REINFORCEMENT

(TOP MAT)
(PIER 2 OPPOSITE HAND ABOUT ℄ OF PIER)

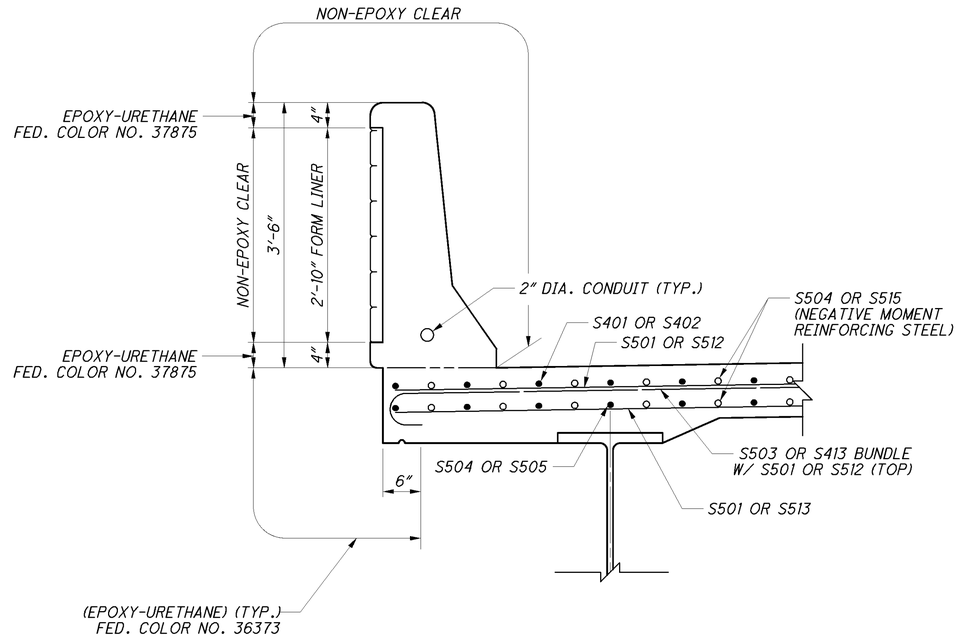

DETAIL A

(FOR NOTES AND DETAILS NOT SHOWN, SEE STANDARD DRAWING BR-1)

DESIGN AGENCY
PARSONS BRINCKERHOFF
2545 FARMERS DRIVE
SUITE 350
COLUMBUS, OHIO 43235

DESIGNED PJL | DRAWN TLP | REVIEWED EBS | DATE 02/01/13
CHECKED SAP | REVISED | STRUCTURE FILE NUMBER LEFT: 0201871 RIGHT: 0201901

CAMBER TABLE
BRIDGE NO. ALL-75-0448 L&R
I-75 OVER INDIANA & OHIO RAILWAY

ALL-75-0.21
PID No. 89029

J:\Projects\ALL\89029\structures\ALL075_0448C\sheets\075_0448CSD007.dgn 09-MAY-2013 3:10PM jint

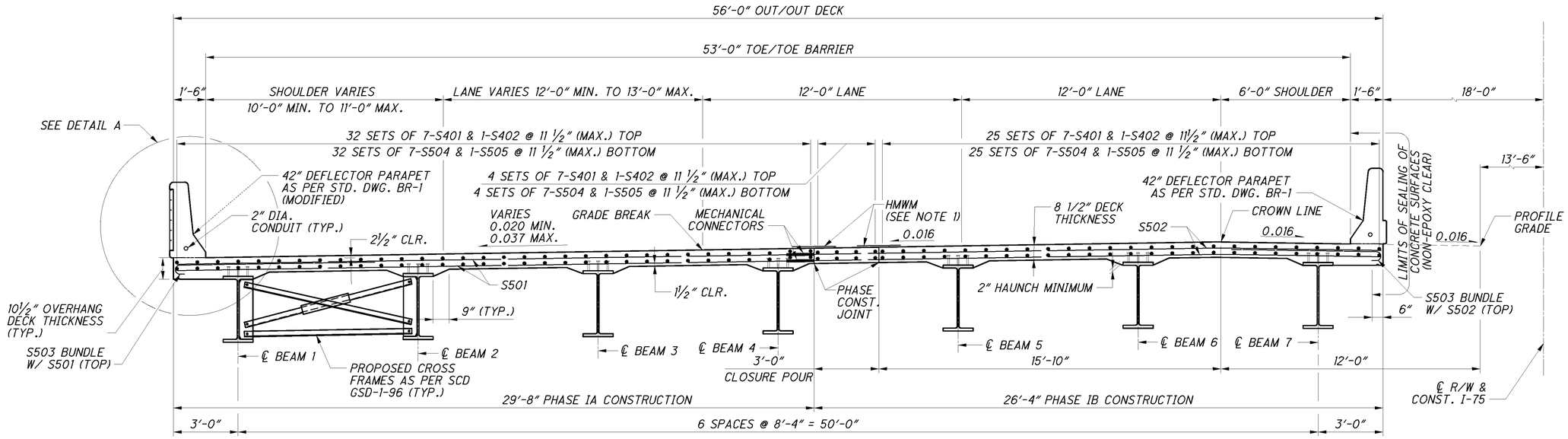

TYPICAL TRANSVERSE SECTION

LEFT (SOUTHBOUND)

NOTES:

1. HMWM SEALER SHALL BE 2'-0" WIDE, CENTERED ON EACH CONSTRUCTION JOINT.
2. FOR NEGATIVE MOMENT REINFORCEMENT, SEE SHEET 28/50.
3. FOR DETAIL A, SEE SHEET 28/50.
4. ABUTMENT DIAPHRAGM CONCRETE, PHASED CONSTRUCTION: PLACE THE DIAPHRAGM CONCRETE ENCASING THE STRUCTURAL MEMBER ENDS OF AN INDIVIDUAL PHASE WITH THE DECK CONCRETE OR AT LEAST 48 HOURS BEFORE PLACEMENT OF THE DECK CONCRETE. IF PLACED SEPARATELY, LOCATE THE HORIZONTAL CONSTRUCTION JOINT BETWEEN THE DIAPHRAGM AND DECK CONCRETE AT THE APPROACH SLAB SEAT. PLACE CLOSURE POUR CONCRETE IN THE DIAPHRAGM AND DECK CONCURRENTLY.
5. INTERMEDIATE CROSS FRAMES SHALL NOT BE PERMANENTLY ATTACHED IN THE CLOSURE POUR LOCATION UNTIL THE CONCRETE POURS ON BOTH SIDES OF THE CLOSURE POUR LOCATION HAVE BEEN COMPLETED.

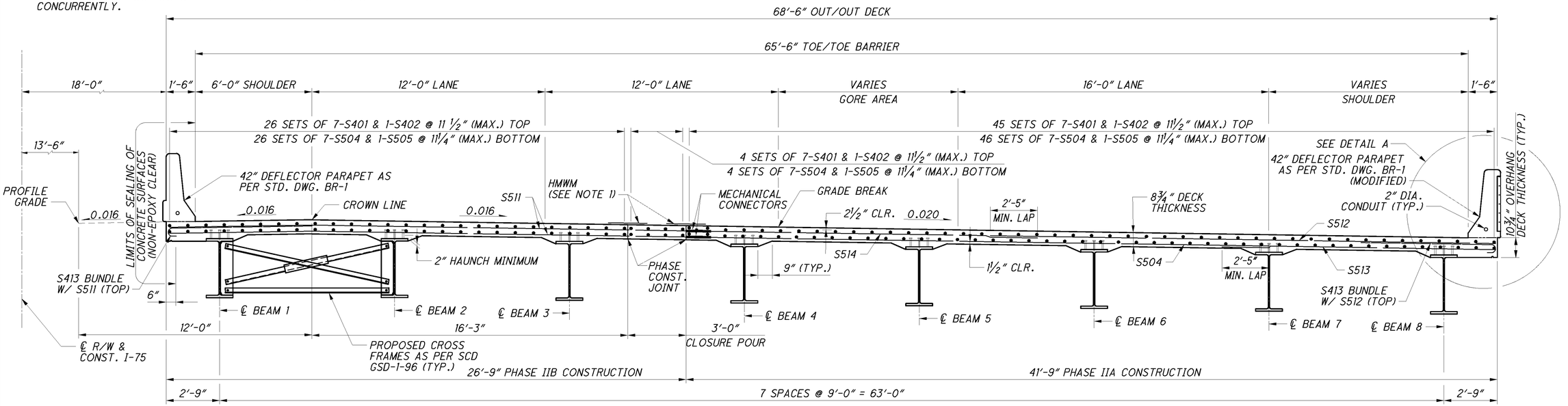

TYPICAL TRANSVERSE SECTION

RIGHT (NORTHBOUND)

DESIGN AGENCY
PARSONS BRINCKERHOFF
2945 FARMERS DRIVE
SUITE 350
COLUMBUS, OHIO 43235

DESIGNED	DRAWN	REVIEWED	DATE
PJL	LEL	EBS	02/01/13
CHECKED	REVISED	STRUCTURE NUMBER	
SAP		LEFT: 0201871 RIGHT: 0201901	

TYPICAL DECK SECTION

BRIDGE NO. ALL-75-0448 L&R
I-75 OVER INDIANA & OHIO RAILWAY

ALL-75-0.21
PID No. 89029

J:\Projects\ALL\89029\structures\ALL075_0448C\sheets\075_0448CTS001.dgn 09-MAY-2013 3:10PM lint

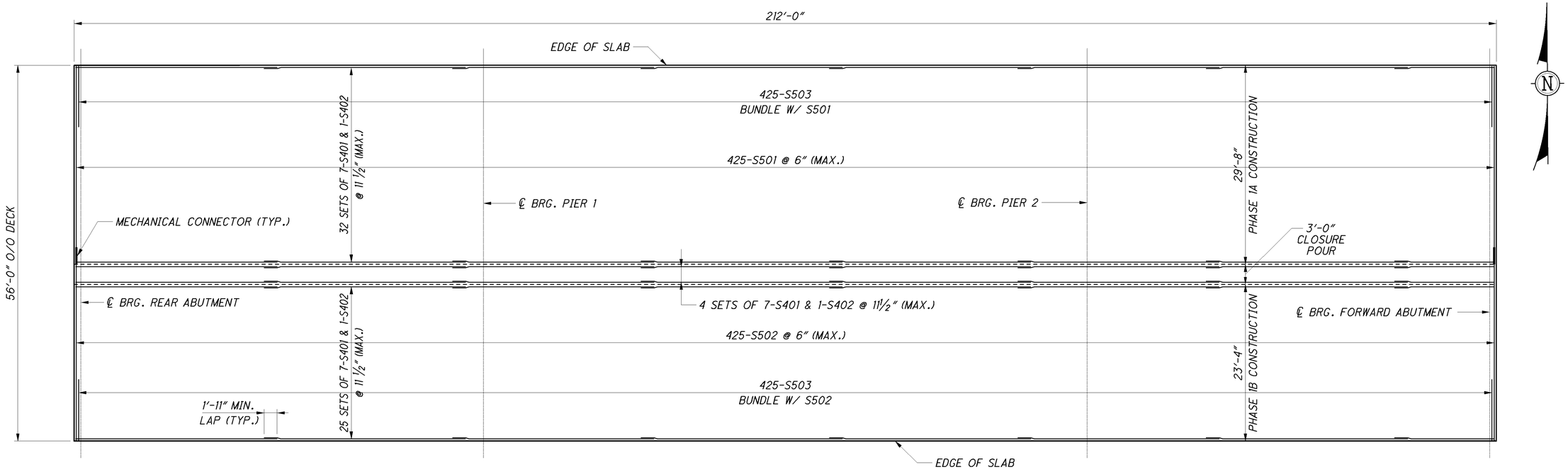

DECK SLAB PLAN (TOP)

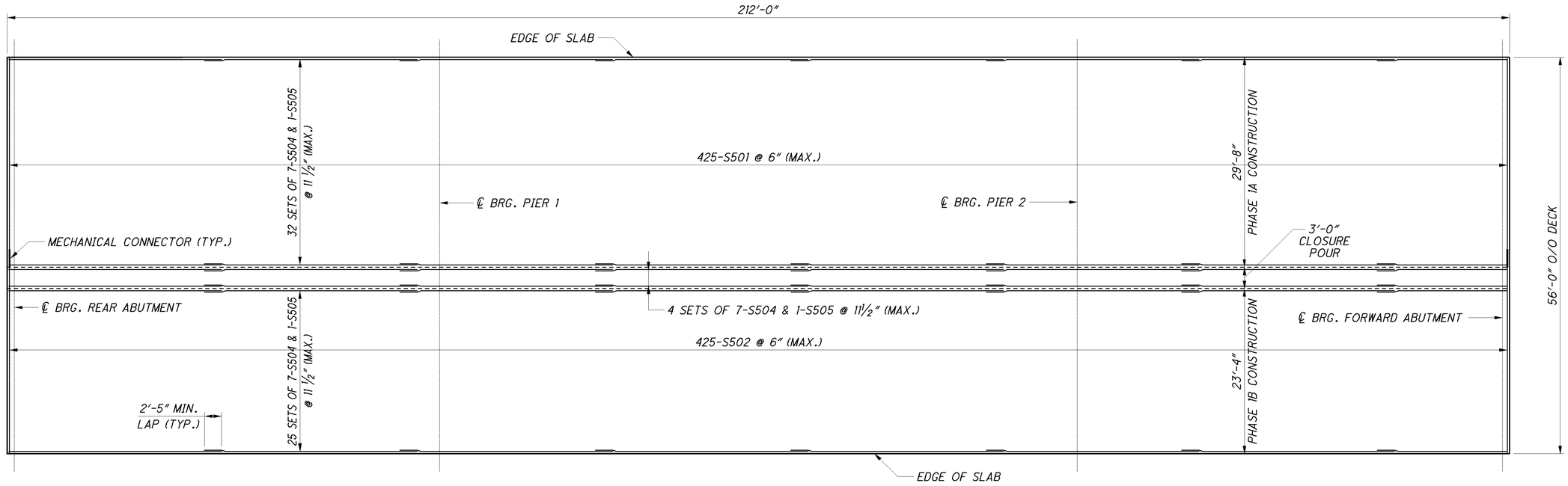

DECK SLAB PLAN (BOTTOM)

NOTES:
1. FOR TYPICAL SECTION AND ADDITIONAL NOTES, SEE SHEET 29/50 .

DESIGN AGENCY
PARSONS BRINCKERHOFF
2945 FARMERS DRIVE
SUITE 350
COLUMBUS, OHIO 43235

DESIGNED	DRAWN	REVIEWED	DATE
PJL	BKJ	EBS	02/01/13
CHECKED	REVISED	STRUCTURE FILE NUMBER	
SAP		LEFT: 0201871 RIGHT: 0201901	

DECK SLAB PLAN - LEFT BRIDGE
BRIDGE NO. ALL-75-0448 L&R
I-75 OVER INDIANA & OHIO RAILWAY

ALL-75-0.21
PID No. 89029

30 / 50

756
907

J:\Projects\ALL\89029\structures\ALL075_0448C\sheets\075_0448CDP001.dgn 09-MAY-2013 3:10PM lint

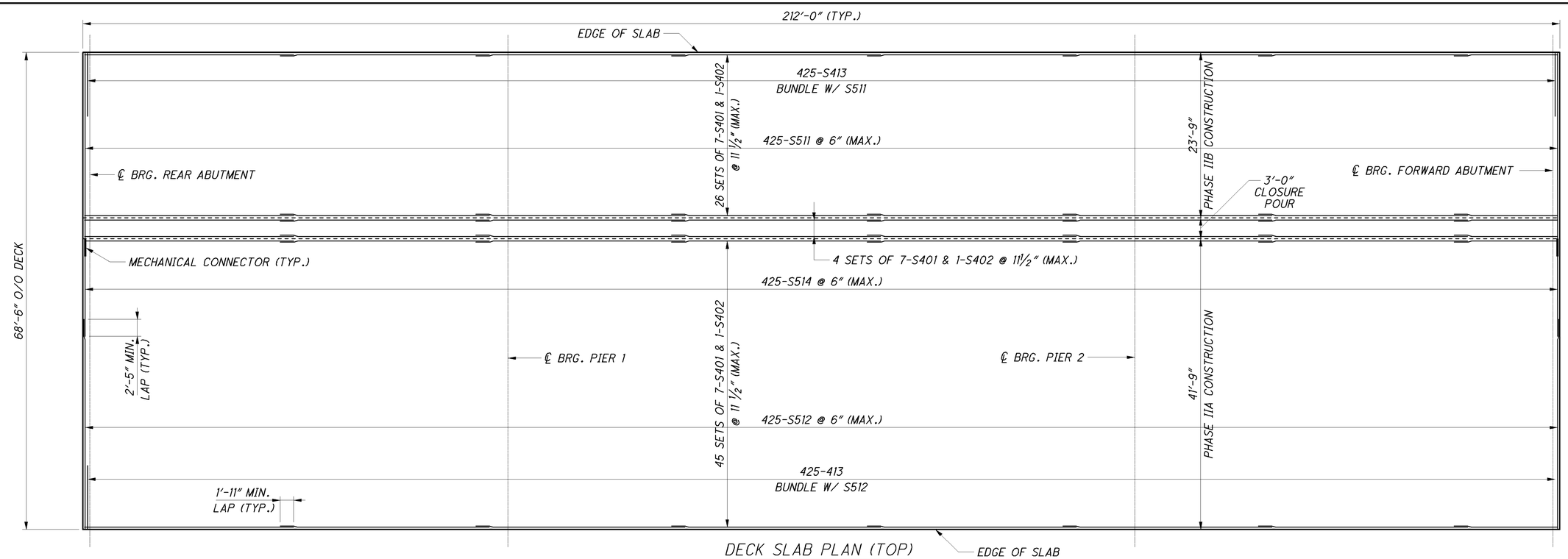

DECK SLAB PLAN (TOP)

NOTES:

1. FOR TYPICAL SECTION AND ADDITIONAL NOTES, SEE SHEET 29/50.

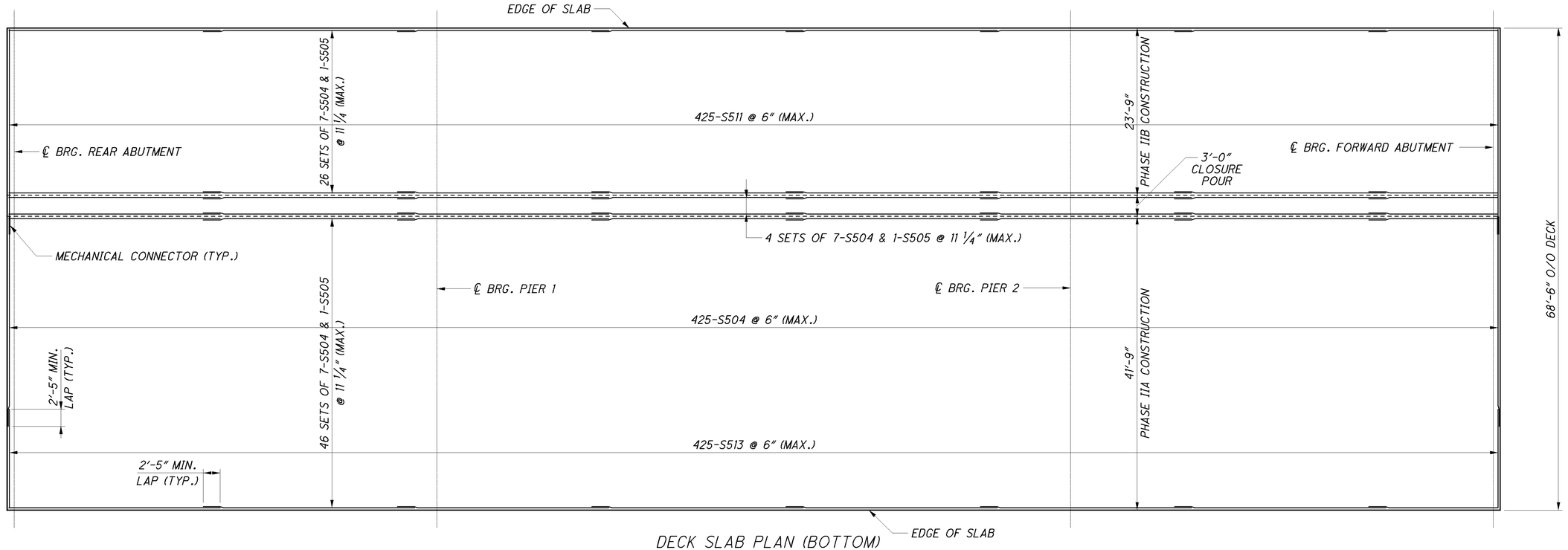

DECK SLAB PLAN (BOTTOM)

DESIGN AGENCY
PARSONS BRINCKERHOFF
2545 FARMERS DRIVE
SUITE 350
COLUMBUS, OHIO 43235

DESIGNED	DRAWN	REVIEWED	DATE
PJL	BKJ	EBS	02/01/13
CHECKED	REVISED	STRUCTURE FILE NUMBER	
SAP		LEFT: 0201871 RIGHT: 0201901	

DECK SLAB PLAN - RIGHT BRIDGE
BRIDGE NO. ALL-75-0448 L&R
I-75 OVER INDIANA & OHIO RAILWAY

ALL-75-0.21
PID No. 89029

31/50

757/907

J:\Projects\ALL\89029\structures\ALL075_0448\sheets\075_0448CDP002.dgn 09-MAY-2013 3:10PM jint

I-75 LEFT BRIDGE SCREED TABLE

	LOCATION	CL BRG. REAR ABUT.	1/4	1/2	SPLICE 1	3/4	CL BRG. PIER 1	SPLICE 2	1/4	1/2	3/4	SPLICE 3	CL BRG. PIER 2	1/4	SPLICE 4	1/2	3/4	CL BRG. FORWARD ABUT.
LEFT TOE OF BARRIER	STATION	236+04.41	236+19.41	236+34.41	236+41.66	236+49.41	236+64.41	236+83.41	236+86.91	237+09.41	237+31.91	237+35.41	237+54.41	237+69.41	237+77.16	237+84.41	237+99.41	238+14.41
	FINAL DECK SURFACE EL.	938.55	938.59	938.69	938.74	938.79	938.88	938.99	939.00	938.98	938.96	938.95	938.91	938.88	938.86	938.84	938.79	938.74
	DEFLECTION	0.00	0.02	0.02	0.01	0.00	0.00	0.04	0.05	0.08	0.05	0.04	0.00	0.00	0.01	0.02	0.02	0.00
	SCREED EL.	938.55	938.61	938.71	938.75	938.79	938.88	939.03	939.05	939.06	939.01	938.99	938.91	938.88	938.87	938.86	938.81	938.74
BEAM 1	STATION	236+04.41	236+19.41	236+34.41	236+41.66	236+49.41	236+64.41	236+83.41	236+86.91	237+09.41	237+31.91	237+35.41	237+54.41	237+69.41	237+77.16	237+84.41	237+99.41	238+14.41
	FINAL DECK SURFACE EL.	938.61	938.64	938.74	938.78	938.83	938.92	939.02	939.03	939.01	938.99	938.98	938.94	938.91	938.89	938.87	938.82	938.77
	DEFLECTION	0.00	0.02	0.02	0.01	0.00	0.00	0.04	0.05	0.08	0.05	0.04	0.00	0.00	0.01	0.02	0.02	0.00
	SCREED EL.	938.61	938.66	938.76	938.79	938.83	938.92	939.06	939.08	939.09	939.04	939.02	938.94	938.91	938.90	938.89	938.84	938.77
	TOP OF HAUNCH EL.	937.90	937.95	938.05	938.09	938.12	938.21	938.35	938.37	938.38	938.33	938.31	938.24	938.20	938.19	938.18	938.14	938.06
BEAM 2	STATION	236+04.41	236+19.41	236+34.41	236+41.66	236+49.41	236+64.41	236+83.41	236+86.91	237+09.41	237+31.91	237+35.41	237+54.41	237+69.41	237+77.16	237+84.41	237+99.41	238+14.41
	FINAL DECK SURFACE EL.	938.91	938.95	939.01	939.04	939.07	939.13	939.19	939.19	939.18	939.15	939.15	939.11	939.08	939.06	939.04	938.99	938.94
	DEFLECTION	0.00	0.02	0.02	0.01	0.00	0.00	0.05	0.06	0.09	0.06	0.05	0.00	0.00	0.01	0.02	0.02	0.00
	SCREED EL.	938.91	938.97	939.03	939.05	939.07	939.13	939.24	939.25	939.27	939.21	939.20	939.11	939.08	939.07	939.06	939.01	938.94
	TOP OF HAUNCH EL.	938.21	938.26	938.32	938.34	938.36	938.42	938.53	938.55	938.56	938.50	938.49	938.40	938.37	938.36	938.35	938.30	938.23
BEAM 3	STATION	236+04.41	236+19.41	236+34.41	236+41.66	236+49.41	236+64.41	236+83.41	236+86.91	237+09.41	237+31.91	237+35.41	237+54.41	237+69.41	237+77.16	237+84.41	237+99.41	238+14.41
	FINAL DECK SURFACE EL.	939.22	939.25	939.28	939.30	939.31	939.34	939.36	939.36	939.35	939.32	939.31	939.28	939.24	939.22	939.20	939.16	939.11
	DEFLECTION	0.00	0.02	0.02	0.01	0.00	0.00	0.05	0.06	0.09	0.06	0.05	0.00	0.00	0.01	0.02	0.02	0.00
	SCREED EL.	939.22	939.27	939.30	939.31	939.31	939.34	939.41	939.42	939.44	939.38	939.36	939.28	939.24	939.23	939.22	939.18	939.11
	TOP OF HAUNCH EL.	938.51	938.56	938.60	938.60	938.61	938.63	938.70	938.71	938.73	938.67	938.65	938.57	938.54	938.53	938.52	938.47	938.40
GRADE BREAK	STATION	236+04.41	236+19.41	236+34.41	236+41.66	236+49.41	236+64.41	236+83.41	236+86.91	237+09.41	237+31.91	237+35.41	237+54.41	237+69.41	237+77.16	237+84.41	237+99.41	238+14.41
	FINAL DECK SURFACE EL.	939.40	939.42	939.44	939.45	939.45	939.46	939.46	939.46	939.44	939.42	939.41	939.37	939.34	939.32	939.30	939.25	939.20
	DEFLECTION	0.00	0.02	0.02	0.01	0.00	0.00	0.05	0.06	0.09	0.06	0.05	0.00	0.00	0.01	0.02	0.02	0.00
	SCREED EL.	939.40	939.44	939.46	939.46	939.45	939.46	939.51	939.52	939.53	939.48	939.46	939.37	939.34	939.33	939.32	939.27	939.20
BEAM 4	STATION	236+04.41	236+19.41	236+34.41	236+41.66	236+49.41	236+64.41	236+83.41	236+86.91	237+09.41	237+31.91	237+35.41	237+54.41	237+69.41	237+77.16	237+84.41	237+99.41	238+14.41
	FINAL DECK SURFACE EL.	939.46	939.48	939.50	939.50	939.51	939.52	939.52	939.51	939.50	939.47	939.47	939.43	939.40	939.38	939.36	939.31	939.26
	DEFLECTION	0.00	0.02	0.02	0.01	0.00	0.00	0.05	0.06	0.09	0.06	0.05	0.00	0.00	0.01	0.02	0.02	0.00
	SCREED EL.	939.46	939.50	939.52	939.51	939.51	939.52	939.57	939.57	939.59	939.53	939.52	939.43	939.40	939.39	939.38	939.33	939.26
	TOP OF HAUNCH EL.	938.75	938.79	938.81	938.81	938.80	938.81	938.86	938.87	938.88	938.82	938.81	938.72	938.69	938.68	938.67	938.62	938.55
LEFT PHASE CONSTRUCTION	STATION	236+04.41	236+19.41	236+34.41	236+41.66	236+49.41	236+64.41	236+83.41	236+86.91	237+09.41	237+31.91	237+35.41	237+54.41	237+69.41	237+77.16	237+84.41	237+99.41	238+14.41
	FINAL DECK SURFACE EL.	939.48	939.51	939.52	939.53	939.54	939.54	939.54	939.54	939.53	939.50	939.49	939.46	939.42	939.40	939.38	939.34	939.29
	DEFLECTION	0.00	0.02	0.02	0.01	0.00	0.00	0.05	0.06	0.09	0.06	0.05	0.00	0.00	0.01	0.02	0.02	0.00
	SCREED EL.	939.48	939.53	939.54	939.54	939.54	939.54	939.59	939.60	939.62	939.56	939.54	939.46	939.42	939.41	939.40	939.36	939.29
RIGHT PHASE CONSTRUCTION	STATION	236+04.41	236+19.41	236+34.41	236+41.66	236+49.41	236+64.41	236+83.41	236+86.91	237+09.41	237+31.91	237+35.41	237+54.41	237+69.41	237+77.16	237+84.41	237+99.41	238+14.41
	FINAL DECK SURFACE EL.	939.53	939.56	939.57	939.58	939.58	939.59	939.59	939.59	939.57	939.55	939.54	939.51	939.47	939.45	939.43	939.38	939.33
	DEFLECTION	0.00	0.02	0.02	0.01	0.00	0.00	0.05	0.06	0.09	0.06	0.05	0.00	0.00	0.01	0.02	0.02	0.00
	SCREED EL.	939.53	939.58	939.59	939.59	939.58	939.59	939.64	939.65	939.66	939.61	939.59	939.51	939.47	939.46	939.45	939.40	939.33
BEAM 5	STATION	236+04.41	236+19.41	236+34.41	236+41.66	236+49.41	236+64.41	236+83.41	236+86.91	237+09.41	237+31.91	237+35.41	237+54.41	237+69.41	237+77.16	237+84.41	237+99.41	238+14.41
	FINAL DECK SURFACE EL.	939.59	939.61	939.63	939.64	939.64	939.65	939.65	939.65	939.63	939.60	939.60	939.56	939.53	939.51	939.49	939.44	939.39
	DEFLECTION	0.00	0.02	0.02	0.01	0.00	0.00	0.05	0.06	0.09	0.06	0.05	0.00	0.00	0.01	0.02	0.02	0.00
	SCREED EL.	939.59	939.63	939.65	939.65	939.64	939.65	939.70	939.71	939.72	939.66	939.65	939.56	939.53	939.52	939.51	939.46	939.39
	TOP OF HAUNCH EL.	938.88	938.93	938.94	938.94	938.93	938.94	938.99	939.00	939.01	938.96	938.94	938.86	938.82	938.81	938.80	938.76	938.68
BEAM 6	STATION	236+04.41	236+19.41	236+34.41	236+41.66	236+49.41	236+64.41	236+83.41	236+86.91	237+09.41	237+31.91	237+35.41	237+54.41	237+69.41	237+77.16	237+84.41	237+99.41	238+14.41
	FINAL DECK SURFACE EL.	939.72	939.75	939.76	939.77	939.78	939.78	939.78	939.78	939.77	939.74	939.73	939.70	939.66	939.64	939.62	939.58	939.53
	DEFLECTION	0.00	0.02	0.02	0.01	0.00	0.00	0.05	0.06	0.09	0.06	0.05	0.00	0.00	0.01	0.02	0.02	0.00
	SCREED EL.	939.72	939.77	939.78	939.78	939.78	939.78	939.83	939.84	939.86	939.80	939.78	939.70	939.66	939.65	939.64	939.60	939.53
	TOP OF HAUNCH EL.	939.02	939.06	939.08	939.07	939.07	939.07	939.12	939.13	939.15	939.09	939.07	938.99	938.95	938.94	938.93	938.89	938.82
CROWN	STATION	236+04.41	236+19.41	236+34.41	236+41.66	236+49.41	236+64.41	236+83.41	236+86.91	237+09.41	237+31.91	237+35.41	237+54.41	237+69.41	237+77.16	237+84.41	237+99.41	238+14.41
	FINAL DECK SURFACE EL.	939.79	939.81	939.83	939.83	939.84	939.84	939.84	939.84	939.83	939.80	939.79	939.76	939.72	939.70	939.68	939.64	939.59
	DEFLECTION	0.00	0.02	0.02	0.01	0.00	0.00	0.05	0.06	0.09	0.06	0.05	0.00	0.00	0.01	0.02	0.02	0.00
	SCREED EL.	939.79	939.83	939.85	939.84	939.84	939.84	939.89	939.90	939.91	939.85	939.84	939.76	939.72	939.71	939.70	939.66	939.59
BEAM 7	STATION	236+04.41	236+19.41	236+34.41	236+41.66	236+49.41	236+64.41	236+83.41	236+86.91	237+09.41	237+31.91	237+35.41	237+54.41	237+69.41	237+77.16	237+84.41	237+99.41	238+14.41
	FINAL DECK SURFACE EL.	939.71	939.74	939.75	939.76	939.77	939.77	939.77	939.77	939.76	939.73	939.72	939.69	939.65	939.63	939.61	939.57	939.51
	DEFLECTION	0.00	0.02	0.02	0.01	0.00	0.00	0.04	0.05	0.08	0.05	0.04	0.00	0.00	0.01	0.02	0.02	0.00
	SCREED EL.	939.71	939.76	939.77	939.77	939.77	939.77	939.81	939.82	939.84	939.78	939.76	939.69	939.65	939.64	939.63	939.59	939.51
	TOP OF HAUNCH EL.	939.01	939.05	939.07	939.06	939.06	939.06	939.10	939.11	939.13	939.07	939.05	938.98	938.94	938.93	938.92	938.88	938.81
RIGHT TOE OF BARRIER	STATION	236+04.41	236+19.41	236+34.41	236+41.66	236+49.41	236+64.41	236+83.41	236+86.91	237+09.41	237+31.91	237+35.41	237+54.41	237+69.41	237+77.16	237+84.41	237+99.41	238+14.41
	FINAL DECK SURFACE EL.	939.69	939.71	939.73	939.74	939.74	939.75	939.75	939.75	939.73	939.70	939.70	939.66	939.63	939.61	939.59	939.54	939.49
	DEFLECTION	0.00	0.02	0.02	0.01	0.00	0.00	0.04	0.05	0.08	0.05	0.04	0.00	0.00	0.01	0.02	0.02	0.00
	SCREED EL.	939.69	939.73	939.75	939.75	939.74	939.75	939.79	939.80	939.81	939.75	939.74	939.66	939.63	939.62	939.61	939.56	939.49

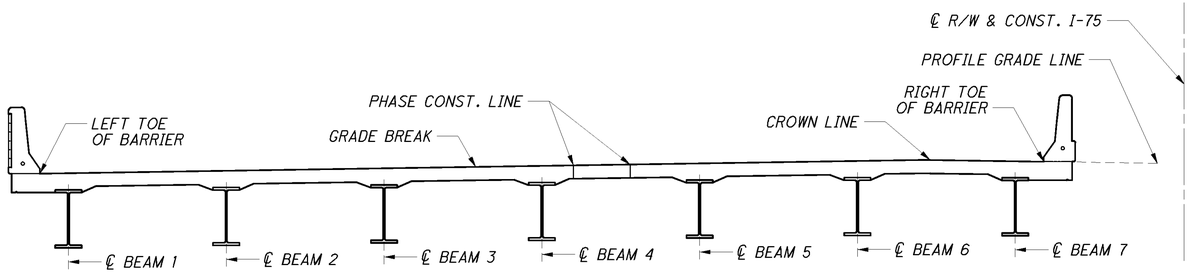

SCREED ELEVATIONS

SCREED ELEVATIONS SHOWN REPRESENT THE THEORETICAL DECK SURFACE LOCATION PRIOR TO DEFLECTIONS CAUSED BY DECK PLACEMENT AND OTHER ANTICIPATED DEAD LOADS.

TOP OF HAUNCH ELEVATIONS

TOP OF HAUNCH ELEVATIONS SHOWN REPRESENT THE THEORETICAL LOCATION OF THE BOTTOM OF THE DECK ABOVE THE BEAM/GIRDER HAUNCH PRIOR TO DEFLECTIONS CAUSED BY DECK PLACEMENT AND OTHER ANTICIPATED DEAD LOADS.

FINAL DECK SURFACE ELEVATIONS

FINAL DECK SURFACE ELEVATIONS SHOWN REPRESENT THE DECK SURFACE LOCATION AFTER ALL ANTICIPATED DEAD LOAD DEFLECTIONS HAVE OCCURRED.

DECK SLAB CONCRETE QUANTITY

THE ESTIMATED QUANTITY OF DECK SLAB CONCRETE IS BASED ON THE CONSTANT DECK SLAB THICKNESS, AS SHOWN, PLUS THE QUANTITY OF CONCRETE THAT FORMS EACH BEAM/GIRDER HAUNCH. THE ESTIMATE ASSUMES A CONSTANT HAUNCH THICKNESS OF 3.56 INCHES AND A CONSTANT HAUNCH WIDTH OUTSIDE THE EDGE OF EACH BEAM/ GIRDER FLANGE OF 9 INCHES. DEVIATE FROM THIS HAUNCH THICKNESS AS NECESSARY TO PLACE THE DECK SURFACE AT THE FINISHED GRADE. THE ALLOWABLE TOLERANCE FOR THE HAUNCH WIDTH OUTSIDE THE EDGE OF EACH BEAM/GIRDER FLANGE IS +/- 3 INCHES.

THE HAUNCH THICKNESS WAS MEASURED AT THE CENTERLINE OF THE BEAM/GIRDER, FROM THE SURFACE OF THE DECK TO THE BOTTOM OF THE TOP FLANGE MINUS THE DECK SLAB THICKNESS. THE AREA OF ALL EMBEDDED STEEL PLATES HAS BEEN DEDUCTED FROM THE HAUNCH QUANTITY IN ACCORDANCE WITH 511.24.

DESIGN AGENCY
PARSONS BRINCKERHOFF
2945 FARMERS DRIVE
SUITE 350
COLUMBUS, OHIO 43235

DESIGNED	DRAWN	REVIEWED	DATE
PJL	TLP	EBS	02/01/13
CHECKED	REVISED	STRUCTURE FILE NUMBER	
SAP		LEFT: 0201871 RIGHT: 0201901	

LEFT BRIDGE - SCREED TABLE
BRIDGE NO. ALL-75-0448 L&R
I-75 OVER INDIANA & OHIO RAILWAY

ALL-75-0.21
PID No. 89029

J:\Projects\ALL\89029\structures\ALL075_0448C\sheets\075_0448CSD004.dgn 09-MAY-2013 3:10PM lint

I-75 RIGHT BRIDGE SCREED TABLE

	LOCATION	CL BRG. REAR ABUT.	1/4	1/2	SPLICE 1	3/4	CL BRG. PIER 1	SPLICE 2	1/4	1/2	3/4	SPLICE 3	CL BRG. PIER 2	1/4	SPLICE 4	1/2	3/4	CL BRG. FORWARD ABUT.
LEFT TOE OF BARRIER	STATION	236+04.41	236+19.41	236+34.41	236+41.66	236+49.41	236+64.41	236+83.41	236+86.91	237+09.41	237+31.91	237+35.41	237+54.41	237+69.41	237+77.16	237+84.41	237+99.41	238+14.41
	FINAL DECK SURFACE EL.	939.69	939.71	939.73	939.74	939.74	939.75	939.75	939.75	939.73	939.70	939.70	939.66	939.63	939.61	939.59	939.54	939.49
	DEFLECTION	0.00	0.02	0.02	0.01	0.00	0.00	0.04	0.05	0.08	0.05	0.04	0.00	0.00	0.01	0.02	0.02	0.00
	SCREED EL.	939.69	939.73	939.75	939.75	939.74	939.75	939.79	939.80	939.81	939.75	939.74	939.66	939.63	939.62	939.61	939.56	939.49
BEAM 1	STATION	236+04.41	236+19.41	236+34.41	236+41.66	236+49.41	236+64.41	236+83.41	236+86.91	237+09.41	237+31.91	237+35.41	237+54.41	237+69.41	237+77.16	237+84.41	237+99.41	238+14.41
	FINAL DECK SURFACE EL.	939.71	939.73	939.75	939.76	939.76	939.77	939.77	939.77	939.75	939.72	939.72	939.68	939.65	939.63	939.61	939.56	939.51
	DEFLECTION	0.00	0.02	0.02	0.01	0.00	0.00	0.04	0.05	0.08	0.05	0.04	0.00	0.00	0.01	0.02	0.02	0.00
	SCREED EL.	939.71	939.75	939.77	939.77	939.76	939.77	939.81	939.82	939.83	939.77	939.76	939.68	939.65	939.64	939.63	939.58	939.51
	TOP OF HAUNCH EL.	938.98	939.02	939.04	939.04	939.03	939.04	939.08	939.09	939.10	939.04	939.03	938.95	938.92	938.91	938.90	938.85	938.78
CROWN	STATION	236+04.41	236+19.41	236+34.41	236+41.66	236+49.41	236+64.41	236+83.41	236+86.91	237+09.41	237+31.91	237+35.41	237+54.41	237+69.41	237+77.16	237+84.41	237+99.41	238+14.41
	FINAL DECK SURFACE EL.	939.79	939.81	939.83	939.83	939.84	939.84	939.84	939.84	939.83	939.80	939.79	939.76	939.72	939.70	939.68	939.64	939.59
	DEFLECTION	0.00	0.02	0.02	0.01	0.00	0.00	0.05	0.06	0.09	0.06	0.05	0.00	0.00	0.01	0.02	0.02	0.00
	SCREED EL.	939.79	939.83	939.85	939.84	939.84	939.84	939.89	939.90	939.92	939.85	939.84	939.76	939.72	939.71	939.70	939.66	939.59
BEAM 2	STATION	236+04.41	236+19.41	236+34.41	236+41.66	236+49.41	236+64.41	236+83.41	236+86.91	237+09.41	237+31.91	237+35.41	237+54.41	237+69.41	237+77.16	237+84.41	237+99.41	238+14.41
	FINAL DECK SURFACE EL.	939.72	939.74	939.76	939.76	939.77	939.78	939.78	939.77	939.76	939.73	939.73	939.69	939.66	939.64	939.62	939.57	939.52
	DEFLECTION	0.00	0.02	0.02	0.01	0.00	0.00	0.05	0.06	0.10	0.06	0.05	0.00	0.00	0.01	0.02	0.02	0.00
	SCREED EL.	939.72	939.76	939.78	939.77	939.77	939.78	939.83	939.83	939.86	939.79	939.78	939.69	939.66	939.65	939.64	939.59	939.52
	TOP OF HAUNCH EL.	938.99	939.03	939.05	939.05	939.04	939.05	939.10	939.10	939.13	939.06	939.05	938.96	938.93	938.92	938.91	938.86	938.79
BEAM 3	STATION	236+04.41	236+19.41	236+34.41	236+41.66	236+49.41	236+64.41	236+83.41	236+86.91	237+09.41	237+31.91	237+35.41	237+54.41	237+69.41	237+77.16	237+84.41	237+99.41	238+14.41
	FINAL DECK SURFACE EL.	939.57	939.60	939.61	939.62	939.63	939.63	939.63	939.63	939.62	939.59	939.58	939.55	939.51	939.49	939.47	939.43	939.37
	DEFLECTION	0.00	0.02	0.02	0.01	0.00	0.00	0.05	0.06	0.10	0.06	0.05	0.00	0.00	0.01	0.02	0.02	0.00
	SCREED EL.	939.57	939.62	939.63	939.63	939.63	939.63	939.68	939.69	939.72	939.65	939.63	939.55	939.51	939.50	939.49	939.45	939.37
	TOP OF HAUNCH EL.	938.84	938.89	938.91	938.90	938.90	938.90	938.95	938.96	938.99	938.92	938.90	938.82	938.78	938.77	938.76	938.72	938.65
LEFT PHASE CONSTRUCTION	STATION	236+04.41	236+19.41	236+34.41	236+41.66	236+49.41	236+64.41	236+83.41	236+86.91	237+09.41	237+31.91	237+35.41	237+54.41	237+69.41	237+77.16	237+84.41	237+99.41	238+14.41
	FINAL DECK SURFACE EL.	939.53	939.55	939.57	939.57	939.58	939.58	939.58	939.58	939.57	939.54	939.53	939.50	939.46	939.44	939.42	939.38	939.33
	DEFLECTION	0.00	0.02	0.02	0.01	0.00	0.00	0.05	0.06	0.10	0.06	0.05	0.00	0.00	0.01	0.02	0.02	0.00
	SCREED EL.	939.53	939.57	939.59	939.58	939.58	939.58	939.63	939.64	939.67	939.60	939.58	939.50	939.46	939.45	939.44	939.40	939.33
RIGHT PHASE CONSTRUCTION	STATION	236+04.41	236+19.41	236+34.41	236+41.66	236+49.41	236+64.41	236+83.41	236+86.91	237+09.41	237+31.91	237+35.41	237+54.41	237+69.41	237+77.16	237+84.41	237+99.41	238+14.41
	FINAL DECK SURFACE EL.	939.48	939.50	939.52	939.52	939.53	939.54	939.54	939.53	939.52	939.49	939.49	939.45	939.42	939.40	939.38	939.33	939.28
	DEFLECTION	0.00	0.02	0.02	0.01	0.00	0.00	0.05	0.06	0.10	0.06	0.05	0.00	0.00	0.01	0.02	0.02	0.00
	SCREED EL.	939.48	939.52	939.54	939.53	939.53	939.54	939.59	939.59	939.62	939.55	939.54	939.45	939.42	939.41	939.40	939.35	939.28
BEAM 4	STATION	236+04.41	236+19.41	236+34.41	236+41.66	236+49.41	236+64.41	236+83.41	236+86.91	237+09.41	237+31.91	237+35.41	237+54.41	237+69.41	237+77.16	237+84.41	237+99.41	238+14.41
	FINAL DECK SURFACE EL.	939.43	939.45	939.47	939.48	939.48	939.49	939.49	939.49	939.47	939.44	939.44	939.40	939.37	939.35	939.33	939.28	939.23
	DEFLECTION	0.00	0.02	0.02	0.01	0.00	0.00	0.05	0.06	0.10	0.06	0.05	0.00	0.00	0.01	0.02	0.02	0.00
	SCREED EL.	939.43	939.47	939.49	939.49	939.48	939.49	939.54	939.55	939.57	939.50	939.49	939.40	939.37	939.36	939.35	939.30	939.23
	TOP OF HAUNCH EL.	938.70	938.74	938.76	938.76	938.75	938.76	938.81	938.82	938.84	938.77	938.76	938.67	938.64	938.63	938.62	938.57	938.50
GRADE BREAK	STATION	236+04.41	236+19.41	236+34.41	236+41.66	236+49.41	236+64.41	236+83.41	236+86.91	237+09.41	237+31.91	237+35.41	237+54.41	237+69.41	237+77.16	237+84.41	237+99.41	238+14.41
	FINAL DECK SURFACE EL.	939.40	939.42	939.44	939.45	939.45	939.46	939.46	939.46	939.44	939.42	939.41	939.37	939.34	939.32	939.30	939.25	939.20
	DEFLECTION	0.00	0.02	0.02	0.01	0.00	0.00	0.05	0.06	0.10	0.06	0.05	0.00	0.00	0.01	0.02	0.02	0.00
	SCREED EL.	939.40	939.44	939.46	939.46	939.45	939.46	939.51	939.52	939.54	939.48	939.46	939.37	939.34	939.33	939.32	939.27	939.20
BEAM 5	STATION	236+04.41	236+19.41	236+34.41	236+41.66	236+49.41	236+64.41	236+83.41	236+86.91	237+09.41	237+31.91	237+35.41	237+54.41	237+69.41	237+77.16	237+84.41	237+99.41	238+14.41
	FINAL DECK SURFACE EL.	939.26	939.28	939.30	939.30	939.31	939.31	939.31	939.31	939.30	939.27	939.26	939.23	939.20	939.18	939.16	939.11	939.06
	DEFLECTION	0.00	0.02	0.02	0.01	0.00	0.00	0.05	0.06	0.10	0.06	0.05	0.00	0.00	0.01	0.02	0.02	0.00
	SCREED EL.	939.26	939.30	939.32	939.31	939.31	939.31	939.36	939.37	939.40	939.33	939.31	939.23	939.20	939.19	939.18	939.13	939.06
	TOP OF HAUNCH EL.	938.53	938.57	938.59	938.58	938.58	938.59	938.64	938.64	938.67	938.60	938.59	938.50	938.47	938.46	938.45	938.40	938.33
BEAM 6	STATION	236+04.41	236+19.41	236+34.41	236+41.66	236+49.41	236+64.41	236+83.41	236+86.91	237+09.41	237+31.91	237+35.41	237+54.41	237+69.41	237+77.16	237+84.41	237+99.41	238+14.41
	FINAL DECK SURFACE EL.	939.08	939.10	939.12	939.12	939.13	939.13	939.13	939.13	939.12	939.09	939.08	939.05	939.02	939.00	938.98	938.93	938.88
	DEFLECTION	0.00	0.02	0.02	0.01	0.00	0.00	0.05	0.06	0.10	0.06	0.05	0.00	0.00	0.01	0.02	0.02	0.00
	SCREED EL.	939.08	939.12	939.14	939.13	939.13	939.13	939.18	939.19	939.22	939.15	939.13	939.05	939.02	939.01	939.00	938.95	938.88
	TOP OF HAUNCH EL.	938.35	938.39	938.41	938.40	938.40	938.41	938.46	938.46	938.49	938.42	938.41	938.32	938.29	938.28	938.27	938.22	938.15
BEAM 7	STATION	236+04.41	236+19.41	236+34.41	236+41.66	236+49.41	236+64.41	236+83.41	236+86.91	237+09.41	237+31.91	237+35.41	237+54.41	237+69.41	237+77.16	237+84.41	237+99.41	238+14.41
	FINAL DECK SURFACE EL.	938.90	938.92	938.94	938.94	938.95	938.95	938.95	938.95	938.94	938.91	938.90	938.87	938.84	938.82	938.80	938.75	938.70
	DEFLECTION	0.00	0.02	0.02	0.01	0.00	0.00	0.05	0.06	0.10	0.06	0.05	0.00	0.00	0.01	0.02	0.02	0.00
	SCREED EL.	938.90	938.94	938.96	938.95	938.95	938.95	939.00	939.01	939.04	938.97	938.95	938.87	938.84	938.83	938.82	938.77	938.70
	TOP OF HAUNCH EL.	938.17	938.21	938.23	938.22	938.22	938.23	938.28	938.28	938.31	938.24	938.23	938.14	938.11	938.10	938.09	938.04	937.97
BEAM 8	STATION	236+04.41	236+19.41	236+34.41	236+41.66	236+49.41	236+64.41	236+83.41	236+86.91	237+09.41	237+31.91	237+35.41	237+54.41	237+69.41	237+77.16	237+84.41	237+99.41	238+14.41
	FINAL DECK SURFACE EL.	938.72	938.74	938.76	938.76	938.77	938.77	938.77	938.77	938.76	938.73	938.72	938.69	938.66	938.64	938.62	938.57	938.52
	DEFLECTION	0.00	0.02	0.02	0.01	0.00	0.00	0.04	0.05	0.08	0.05	0.04	0.00	0.00	0.01	0.02	0.02	0.00
	SCREED EL.	938.72	938.76	938.78	938.77	938.77	938.77	938.81	938.82	938.84	938.78	938.76	938.69	938.66	938.65	938.64	938.59	938.52
	TOP OF HAUNCH EL.	937.99	938.03	938.05	938.04	938.04	938.05	938.09	938.09	938.11	938.05	938.04	937.96	937.93	937.92	937.91	937.86	937.79
RIGHT TOE OF BARRIER	STATION	236+04.41	236+19.41	236+34.41	236+41.66	236+49.41	236+64.41	236+83.41	236+86.91	237+09.41	237+31.91	237+35.41	237+54.41	237+69.41	237+77.16	237+84.41	237+99.41	238+14.41
	FINAL DECK SURFACE EL.	938.69	938.71	938.73	938.74	938.74	938.75	938.75	938.75	938.73	938.71	938.70	938.66	938.63	938.61	938.59	938.54	938.49
	DEFLECTION	0.00	0.02	0.02	0.01	0.00	0.00	0.04	0.05	0.08	0.05	0.04	0.00	0.00	0.01	0.02	0.02	0.00
	SCREED EL.	938.69	938.73	938.75	938.75	938.74	938.75	938.79	938.80	938.81	938.76	938.74	938.66	938.63	938.62	938.61	938.56	938.49

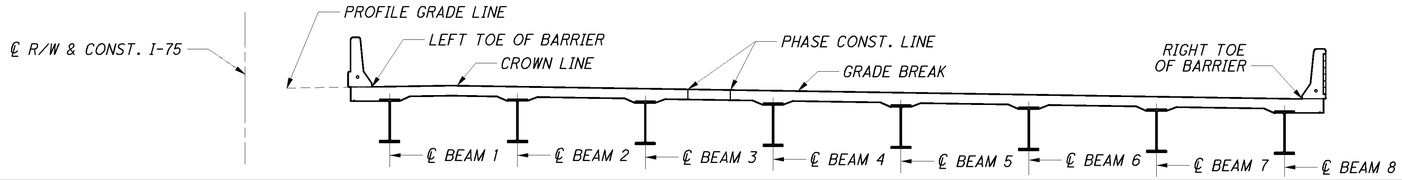

J:\Projects\ALL\89029\structures\ALL075_0448C\sheets\075_0448CSD05.dgn 09-MAY-2013 3:10PM jint

DESIGN AGENCY
PARSONS BRINCKERHOFF
2945 FARMERS DRIVE
SUITE 350
COLUMBUS, OHIO 43235

DESIGNED	DRAWN	REVIEWED	DATE
PJL	TLP	EBS	02/01/13
CHECKED	REVISED	STRUCTURE FILE NUMBER	LEFT: 0201871 RIGHT: 0201901
SAP			

RIGHT BRIDGE - SCREED TABLE
BRIDGE NO. ALL-75-0448 L&R
I-75 OVER INDIANA & OHIO RAILWAY

ALL-75-0.21
PID No. 89029

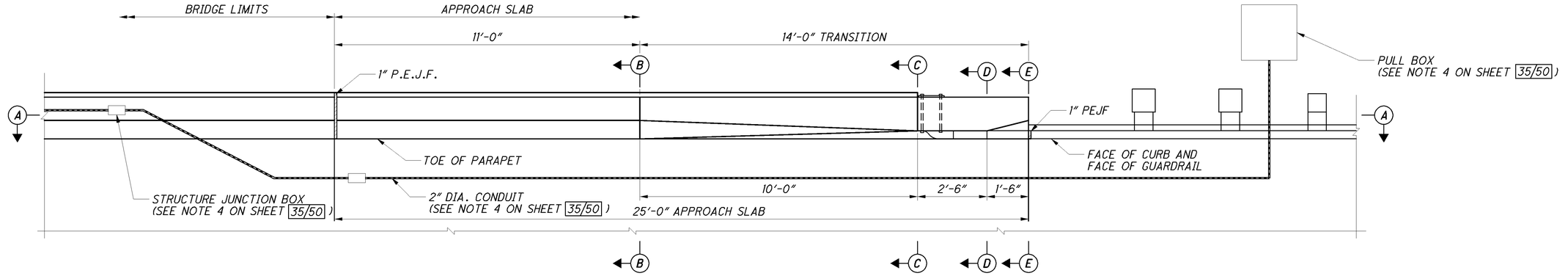

PART PLAN AT APPROACH SLABS

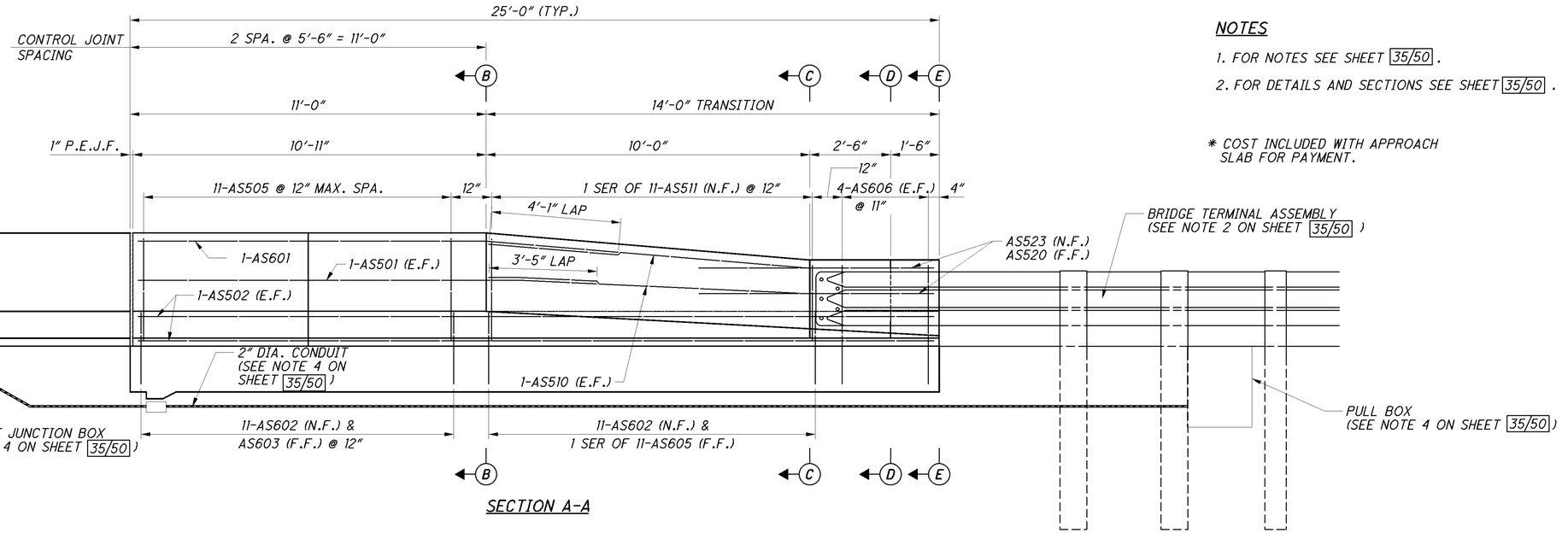

SECTION A-A

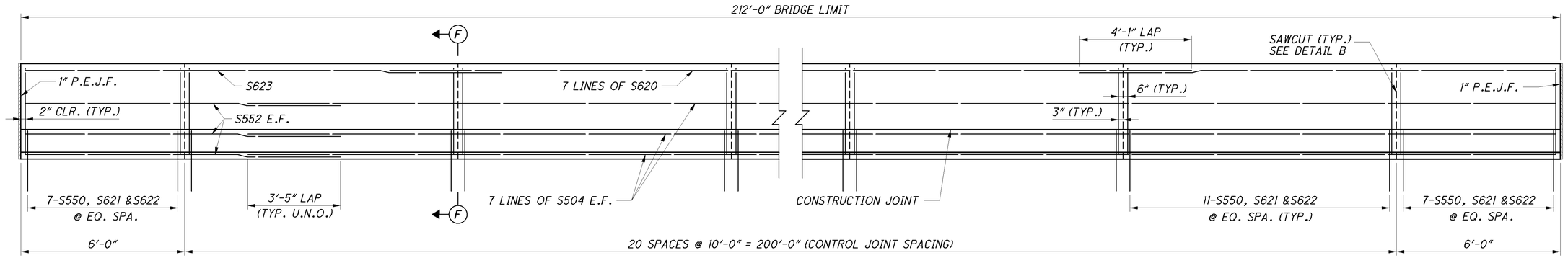

PARAPET ELEVATION

NOTES

1. FOR NOTES SEE SHEET 35/50.
2. FOR DETAILS AND SECTIONS SEE SHEET 35/50.

* COST INCLUDED WITH APPROACH SLAB FOR PAYMENT.

DESIGN AGENCY
PARSONS BRINCKERHOFF
2945 FARMERS DRIVE
SUITE 350
COLUMBUS, OHIO 43235

DESIGNED	DRAWN	REVIEWED	DATE
PJL	BKJ	EBS	02/01/13
CHECKED	REVISED	STRUCTURE FILE NUMBER	
SAP	LEL	LEFT: 0201871 RIGHT: 0201901	

PARAPET DETAILS

BRIDGE NO. ALL-75-0448 L&R
I-75 OVER INDIANA & OHIO RAILWAY

ALL-75-0.21
PID No. 89029

760/907

J:\Projects\ALL\89029\structures\ALL075_0448C\sheets\075_0448CRA001.dgn 09-MAY-2013 3:10PM lint

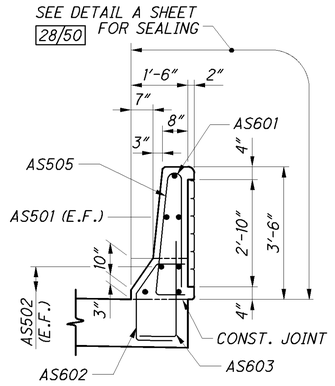

SECTION B-B (OUTSIDE PARAPET)

(SEALING LIMITS TYPICAL FOR OUTSIDE PARAPET TRANSITION SECTIONS B-B THROUGH E-E)

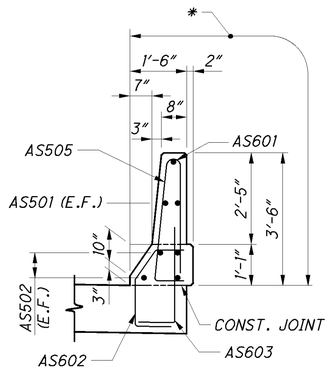

SECTION B-B (MEDIAN PARAPET)

(SEALING LIMITS TYPICAL FOR MEDIAN PARAPET TRANSITION SECTIONS B-B THROUGH E-E)

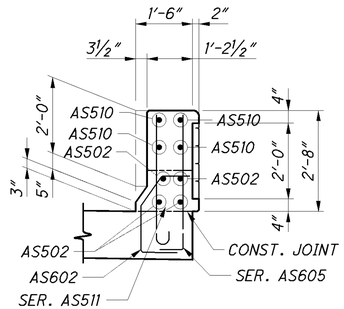

SECTION C-C (OUTSIDE PARAPET)

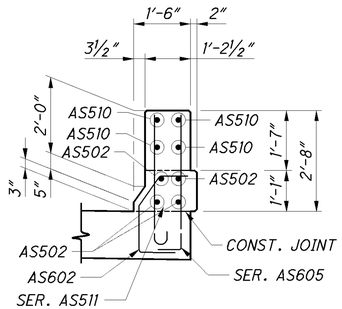

SECTION C-C (MEDIAN PARAPET)

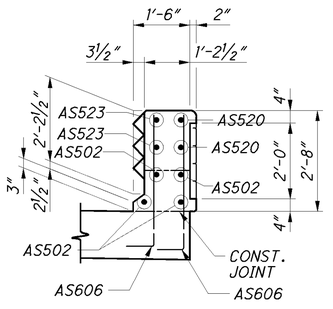

SECTION D-D (OUTSIDE PARAPET)

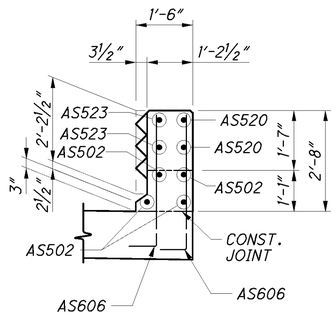

SECTION D-D (MEDIAN PARAPET)

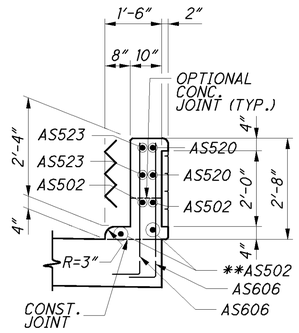

SECTION E-E (OUTSIDE PARAPET)

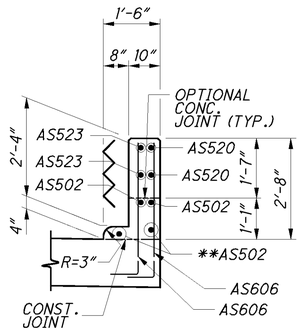

SECTION E-E (MEDIAN PARAPET)

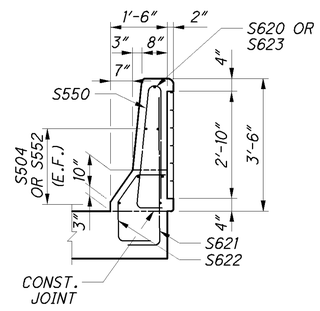

SECTION F-F (OUTSIDE PARAPET)

(FOR SEALING LIMITS, SEE DETAIL A ON SHEET 28/50)

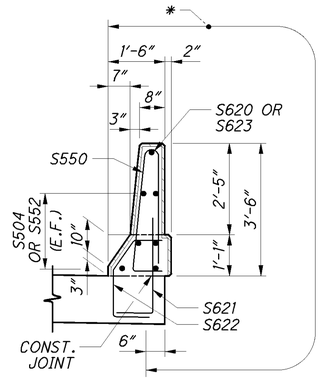

SECTION F-F (MEDIAN PARAPET)

NOTES

1. FOR ADDITIONAL NOTES AND DETAILS, SEE STANDARD CONSTRUCTION DRAWINGS BR-1 & AS-1-81.
2. FOR BRIDGE TERMINAL ASSEMBLIES SEE ROADWAY STANDARD DRAWINGS GR-3.1 AND GR-3.2. SEE ROADWAY PLANS FOR DETAILS AND PAYMENT.
3. THE COST OF THE APPROACH SLAB PARAPET, EXCLUDING SEALING AND FORMLINER, SHALL BE INCLUDED WITH ITEM 898, QA/QC CONCRETE, CLASS QSC2, SUPERSTRUCTURE (APPROACH SLAB), (T=15"), AS PER PLAN.
4. FOR ADDITIONAL NOTES AND DETAILS OF PULL BOXES, STRUCTURE JUNCTION BOXES, AND CONDUIT, SEE STANDARD CONSTRUCTION DRAWING HL-30.11, HL-30.31, HL-30.32. SEE SHEETS 6/50 AND 7/50 FOR QUANTITIES FOR THESE ITEMS.
5. FOR AESTHETIC DETAILS, SEE SHEET 41/50.
6. FOR LOCATIONS OF SECTIONS AND DETAIL B SEE SHEET 34/50.

JUNCTION BOX LOCATION (APPROX.)			
NORTHBOUND		SOUTHBOUND	
STATION	SIDE	STATION	SIDE
236+14	LT. & RT.	236+14	LT. & RT.
238+05	LT. & RT.	238+05	LT. & RT.

* LIMITS OF CONCRETE SEALING (NON-EPOXY CLEAR)

** FIELD BEND IF NECESSARY

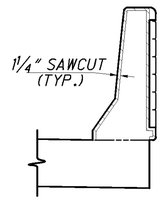

DETAIL B (OUTSIDE PARAPET)

(SECTION THROUGH SAWCUT)
SAWCUT PERIMETER = 8'-1"

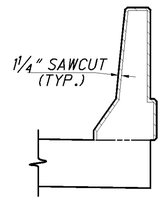

DETAIL B (MEDIAN PARAPET)

(SECTION THROUGH SAWCUT)
SAWCUT PERIMETER = 8'-1"

DESIGN AGENCY
PARSONS BRINCKERHOFF
2945 FARMERS DRIVE
SUITE 350
COLUMBUS, OHIO 43235

DESIGNED	DRAWN	REVIEWED	DATE
PJL	BKJ	EBS	02/01/13
CHECKED	REVISED	STRUCTURE NUMBER	
SAP	LEL	LEFT: 0201871 RIGHT: 0201901	

PARAPET DETAILS
BRIDGE NO. ALL-75-0448 L&R
I-75 OVER INDIANA & OHIO RAILWAY

ALL-75-0.21
PID No. 89029

35/50

761/907

J:\Projects\ALL\89029\structures\ALL075_0448C\sheets\075_0448CRA002.dgn 09-MAY-2013 3:10PM lint

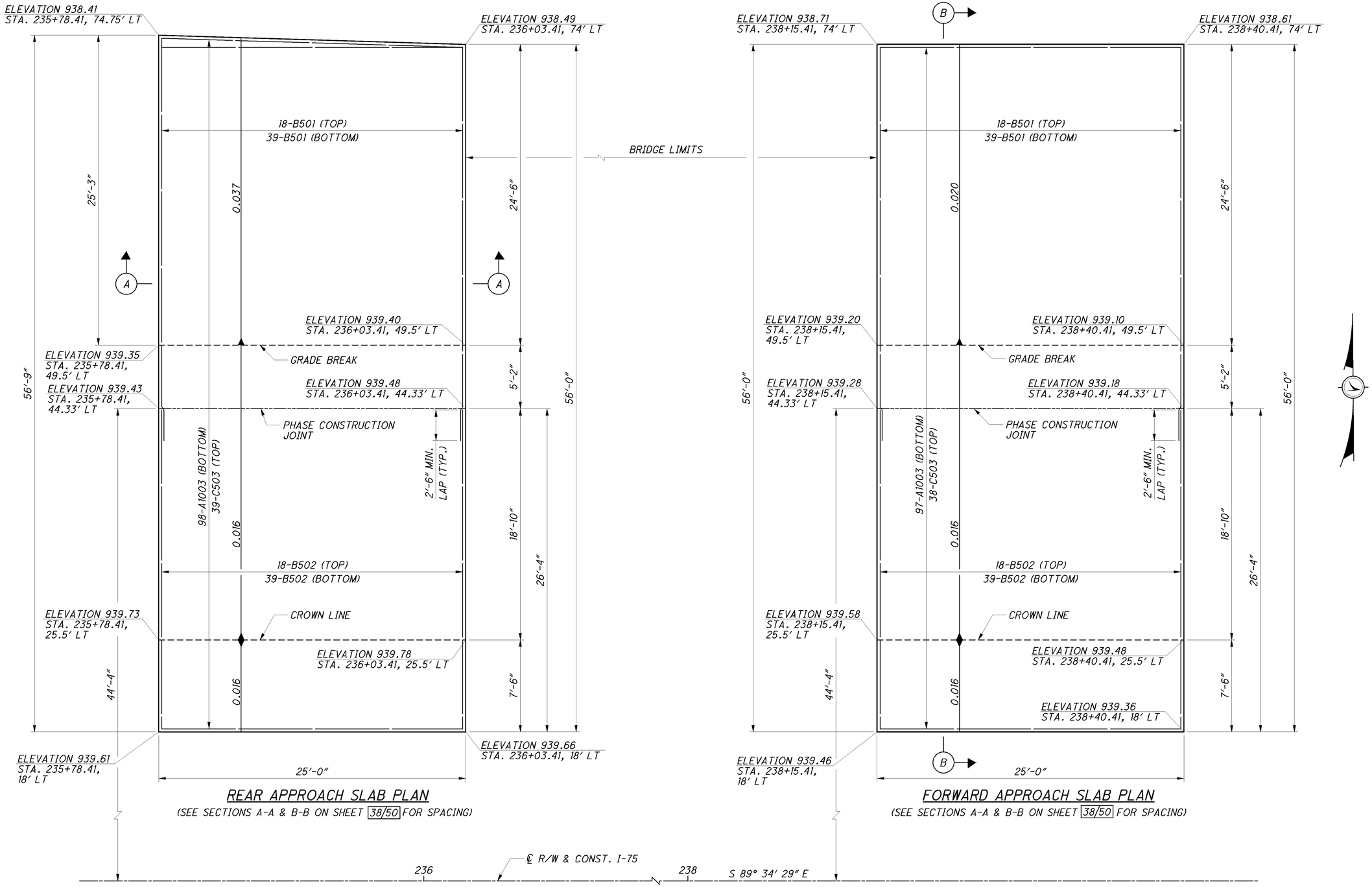

REAR APPROACH SLAB PLAN

(SEE SECTIONS A-A & B-B ON SHEET 38/50 FOR SPACING)

FORWARD APPROACH SLAB PLAN

(SEE SECTIONS A-A & B-B ON SHEET 38/50 FOR SPACING)

NOTES:

1. 6" AGGREGATE BASE INCLUDED WITH ROADWAY QUANTITIES FOR PAYMENT.
2. SUBGRADE COMPACTION INCLUDED WITH ROADWAY QUANTITIES FOR PAYMENT.
3. ADJUST LOCATION OF LONGITUDINAL REINFORCEMENT TO CLEAR THE CONSTRUCTION JOINT BY 2".

DESIGN AGENCY
PARSONS BRINCKERHOFF
2545 FARMERS DRIVE
SUITE 350
COLUMBUS, OHIO 43235

DESIGNED	DRAWN	REVIEWED	DATE
PJL	TLP	EBS	02/01/13
CHECKED	REVISED	STRUCTURE FILE NUMBER	
SAP		LEFT: 0201871 RIGHT: 0201901	

APPROACH SLAB DEATILS
BRIDGE NO. ALL-75-0448 L&R
I-75 OVER INDIANA & OHIO RAILWAY

ALL-75-0.21
PID No. 89029

36/50

762/907

J:\Projects\ALL\89029\structures\ALL075_0448\sheets\075_0448CMD001.dgn 09-MAY-2013 3:10PM lint

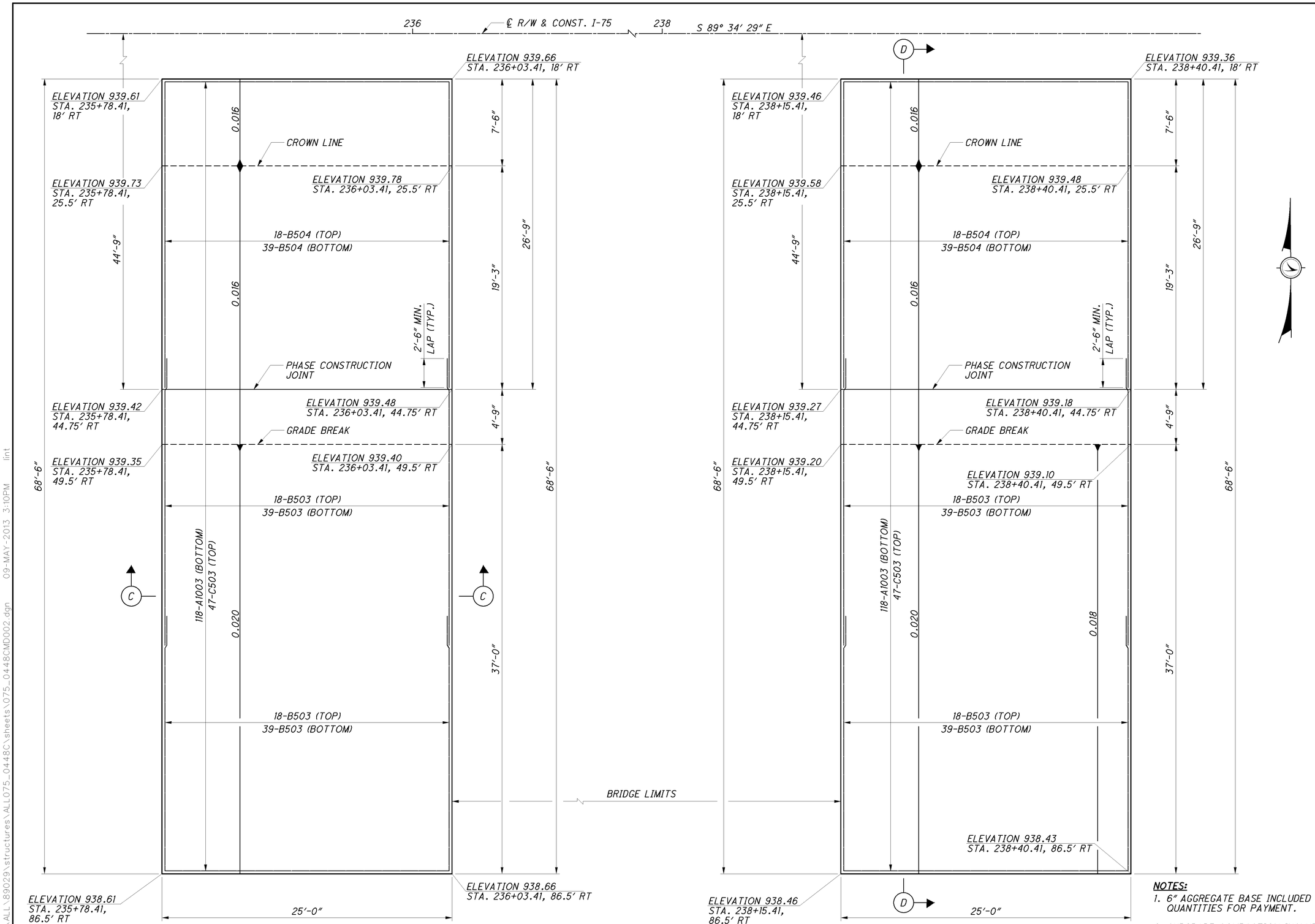

NOTES:

1. 6″ AGGREGATE BASE INCLUDED WITH ROADWAY QUANTITIES FOR PAYMENT.
2. SUBGRADE COMPACTION INCLUDED WITH ROADWAY QUANTITIES FOR PAYMENT.
3. ADJUST LOCATION OF LONGITUDINAL REINFORCEMENT TO CLEAR THE CONSTRUCTION JOINT BY 2″.

DESIGN AGENCY
PARSONS BRINCKERHOFF
2545 FARMERS DRIVE
SUITE 350
COLUMBUS, OHIO 43235

DESIGNED	DRAWN	REVIEWED	DATE
PJL	TLP	EBS	02/01/13
CHECKED	REVISED	STRUCTURE NUMBER	
SAP		LEFT: 0201871 RIGHT: 0201901	

APPROACH SLAB DEATILS
BRIDGE NO. ALL-75-0448 L&R
I-75 OVER INDIANA & OHIO RAILWAY

ALL-75-0.21
PID No. 89029

J:\Projects\ALL\89029\structures\ALL075_0448C\sheets\075_0448CMD002.dgn 09-MAY-2013 3:10PM jint

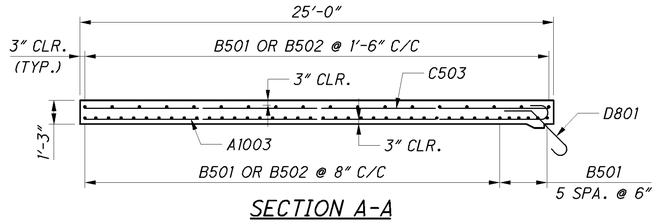

SECTION A-A

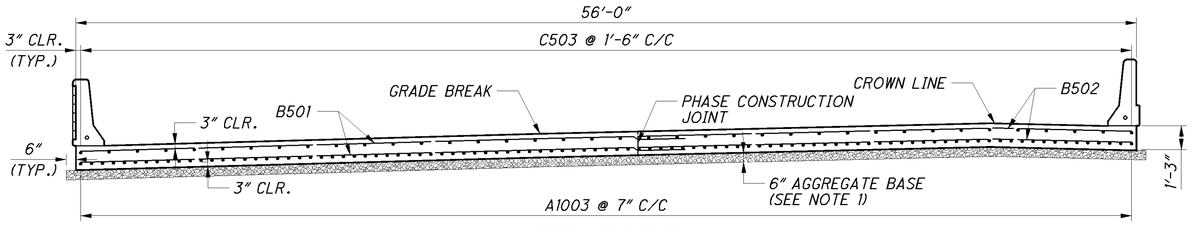

SECTION B-B

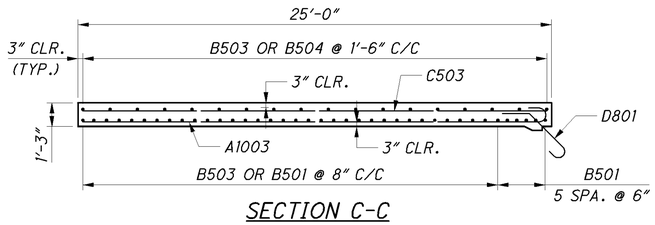

SECTION C-C

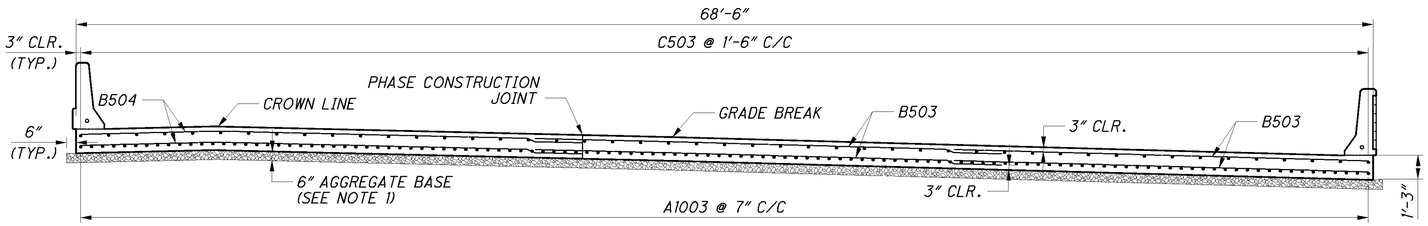

SECTION D-D

NOTES:

1. *6" AGGREGATE BASE INCLUDED WITH ROADWAY QUANTITIES FOR PAYMENT.*
2. *SUBGRADE COMPACTION INCLUDED WITH ROADWAY QUANTITIES FOR PAYMENT.*
3. *ADJUST LOCATION OF LONGITUDINAL REINFORCEMENT TO CLEAR THE CONSTRUCTION JOINT BY 2".*
4. *FOR LOCATION OF SECTIONS A-A THRU D-D SEE SHEETS 36/50 AND 37/50 .*

DESIGN AGENCY
PARSONS BRINCKERHOFF
2945 FARMERS DRIVE
SUITE 350
COLUMBUS, OHIO 43235

DESIGNED	DRAWN	REVIEWED	DATE
PJL	TLP	EBS	02/01/13
CHECKED	REVISED	STRUCTURE FILE NUMBER	
SAP		LEFT: 0201871 RIGHT: 0201901	

APPROACH SLAB DEATILS
BRIDGE NO. ALL-75-0448 L&R
I-75 OVER INDIANA & OHIO RAILWAY

ALL-75-0.21
PID No. 89029

38/50

764/907

J:\Projects\ALL\89029\structures\ALL075_0448C\sheets\075_0448CMD003.dgn 09-MAY-2013 3:10PM jint

MARK	NUMBER REAR LEFT	NUMBER REAR RIGHT	NUMBER FWD. LEFT	NUMBER FWD. RIGHT	NUMBER TOTAL	LENGTH	WEIGHT	TYPE	DIMENSIONS A	B	C	D	E	R	INC
ABUTMENTS															
A401	42	48	42	48	180	9'- 02"	1,103	3	2'-7"	1'-9"					
A501		12		12	24	28'- 04"	710	STR.							
A502		12		12	24	24'- 00"	601	STR.							
A503	12		12		24	23'- 09"	595	STR.							
A504	12		12		24	22'- 04"	560	STR.							
A505	2	2	2	2	8	11'- 07"	98	19	10"	9'-7"	4'-10"				
A506	71	81	71	81	304	11'- 01"	3,515	3	2'-8"	2'-7"					
A507	46	56	46	56	204	9'- 01"	1,934	2	3'-7"	2'-2"	3'-7"				
A508	21	21	21	21	84	14'- 07"	1,278	2	6'-4"	2'-2"	6'-4"				
	1	1	1	1	4	7'- 07"			2'-10		2'-10				
A509	SER. OF	SER. OF	SER. OF	SER. OF	SER. OF	TO	110	2	TO	2'-2"	TO				1'-2"
	3	3	3	3	3	9'- 11"			4'-0"		4'-0"				
A510	1	1	1	1	4	11'- 05"	48	2	4'-9"	2'-2"	4'-9"				
A511	2	2	2	2	8	12'- 05"	104	2	5'-3"	2'-2"	5'-3"				
A512	1	1	1	1	4	17'- 01"	72	3	6'-1"	2'-2"					
A513	1	1	1	1	4	15'- 11"	68	3	5'-6"	2'-2"					
A514	15	15	15	15	60	14'- 01"	882	2	6'-1"	2'-2"	6'-1"				
A515	1	1	1	1	4	14'- 03"	60	3	4'-8"	2'-2"					
A516	1	1	1	1	4	13'- 09"	58	3	4'-5"	2'-2"					
A517	2	2	2	2	8	10'- 02"	86	STR.							
	2	2	2	2	8	2'- 07"									
A518	SER. OF	SER. OF	SER. OF	SER. OF	SER. OF	TO	196	STR.							2'-2"
	4	4	4	4	4	9'- 01"									
A519	14	14	14	14	56	16'- 06"	964	STR.							
A601	56	71	56	71	254	10'- 09"	4,102	26	2'-2"	5"	2'-7"	10"	1'-9"		
A801		8		8	16	29'- 01"	1,243	STR.							
A802		8		8	16	30'- 01"	1,286	STR.							
A803		8		8	16	24'- 09"	1,058	STR.							
A804		8		8	16	25'- 08"	1,097	STR.							
A805	8		8		16	24'- 06"	1,047	STR.							
A806	8		8		16	25'- 06"	1,090	STR.							
A807	8		8		16	23'- 01"	987	STR.							
A808	8		8		16	24'- 00"	1,026	STR.							
ABUTMENT TOTAL							25,978								

MARK	NUMBER LEFT	NUMBER RIGHT	NUMBER TOTAL	LENGTH	WEIGHT	TYPE	DIMENSIONS A	B	C	D	INC
DRILLED SHAFT											
SP402	10	12	22	68'- 01"	29,436	27	4 1/2"	3'-6"	68'-1"		
DS1101	530	636	1166	40'- 00"	247,799	STR.					
DS1102	180	216	396	13'- 03"	27,878	STR.					
DRILLED SHAFT TOTAL					305,113						
FOR INFORMATION ONLY. NOT INCLUDED WITH ITEM 509.											

MARK	NUMBER LEFT	NUMBER RIGHT	NUMBER TOTAL	LENGTH	WEIGHT	TYPE	DIMENSIONS A	B	C	D	INC
PIER											
SP401	10		10	22'- 07"	3,920	27	4 1/2"	3'-6"	68'-1"		
SP403		12	12	22'- 04"	4,656	27	4 1/2"	3'-6"	68'-1"		
P501	12		12	17'- 01"	214	1	10"	15'-4"			
P502	12		12	2'- 04"	30	STR.					
P503	12		12	26'- 11"	337	2	10"	23'-0"	3'-4"		
P510		12	12	16'- 07"	208	1	10"	17'-0"			
P511		12	12	24'- 07"	308	STR.					
P512		12	12	19'- 07"	246	2	10"	15'-5"	3'-7"		
P601	6	4	10	12'- 10"	194	33	3'-2"	2'-8"			
P602	38	40	78	13'- 02"	1,544	33	3'-2"	2'-10"			
P603	22		22	11'- 04"	375	33	2'-0"	3'-1"			
P604	16		16	11'- 02"	269	33	2'-0"	3'-0"			
P605	6		6	13'- 08"	124	33	3'-2"	3'-1"			
P606	3	28	31	13'- 06"	629	33	3'-2"	3'-0"			
P607	6		6	14'- 00"	127	33	3'-2"	3'-3"			
P608	6		6	11'- 06"	104	33	2'-0"	3'-2"			
P610	16		16	11'- 10"	285	33	2'-0"	3'-4"			
P611	16		16	11'- 08"	281	33	2'-0"	3'-3"			
P612	16	24	40	14'- 06"	872	33	3'-2"	3'-6"			
P613	19	22	41	14'- 02"	874	33	3'-2"	3'-4"			
P615		20	20	13'- 10"	416	33	3'-2"	3'-2"			
P616		32	32	14'- 10"	713	33	3'-2"	3'-8"			
P618	8	8	16	4'- 03"	104	1	1'-7"	2'-10"			
P901	28	28	56	4'- 02"	794	1	1'-7"	2'-10"			
P1101	28		28	30'- 04"	4,513	STR.					
P1102	12		12	32'- 07"	2,078	1	2'-7"	30'-4"			
P1103	40		40	24'- 04"	5,172	STR.					
P1105	200	240	440	31'- 09"	74,224	16	30'-2"				
P1110		68	68	28'- 05"	10,267	STR.					
P1111		12	12	30'- 08"	1,956	1	2'-7"	28'-5"			
P1112		40	40	24'- 07"	5,225	STR.					
PIER TOTAL					121,059						

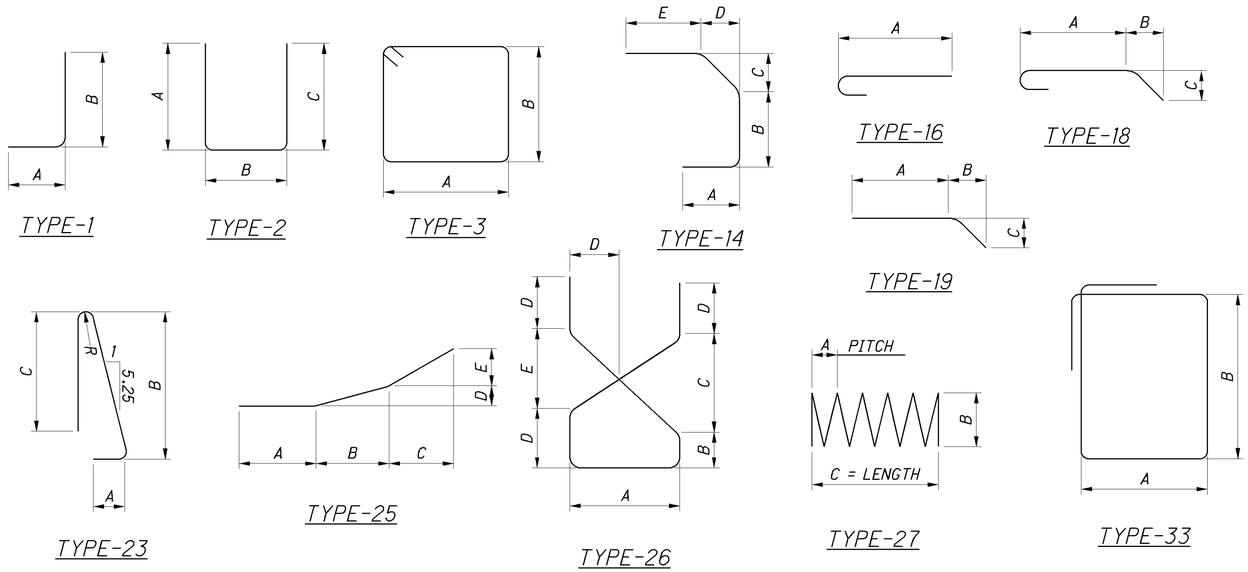

NOTES:

1. THE BAR SIZE NUMBER IS SPECIFIED ON THE PLANS IN THE BAR MARK COLUMN. THE FIRST DIGIT WHERE THREE DIGITS ARE USED, AND THE FIRST TWO DIGITS WHERE FOUR ARE USED, INDICATES THE BAR SIZE NUMBER. FOR EXAMPLE, P601 IS A NO. 6 BAR. BAR DIMENSIONS SHOWN ARE OUT TO OUT UNLESS OTHERWISE INDICATED. R INDICATES INSIDE RADIUS, UNLESS OTHERWISE NOTED. "STD." WRITTEN IN PLACE OF A DIMENSION INDICATES A STANDARD BEND AT THE END OF THE BAR.

2. ALL REINFORCEMENT IS TO BE EPOXY COATED.

DESIGN AGENCY
PARSONS BRINCKERHOFF
2945 FARMERS DRIVE
SUITE 350
COLUMBUS, OHIO 43235

DESIGNED PJL | DRAWN TLP | REVIEWED EBS | DATE 02/01/13
CHECKED SAP | REVISED | STRUCTURE FILE NUMBER LEFT: 0201871 RIGHT: 0201901

REINFORCING STEEL LIST
BRIDGE NO. ALL-75-0448 L&R
I-75 OVER INDIANA & OHIO RAILWAY

ALL-75-0.21
PID No. 89029

J:\Projects\ALL\89029\structures\ALL075_0448C\sheets\075_0448CRL001.dgn 08-NOV-2013 4:59PM lint

MARK	NUMBER			LENGTH	WEIGHT	TYPE	DIMENSIONS						
	LEFT	RIGHT	TOTAL				A	B	C	D	E	R	INC
SUPERSTRUCTURE													
S401	427	525	952	30'- 00"	19,079	STR.							
S402	61	75	136	15'- 01"	1,371	STR.							
S413		850	850	8'- 05"	4,779	16	7'-11"						
S501	850		850	29'- 06"	26,154	STR.							
S502	850		850	26'- 02"	23,199	STR.							
S503	850		850	9'- 05"	8,349	16	8'-10"						
S504	743	1331	2074	30'- 00"	64,896	STR.							
S505	61	76	137	32'- 07"	4,657	STR.							
S508	8	8	16	10'- 05"	174	2	4'-3"	2'-2"	4'-3"				
S509	108	138	246	5'- 07"	1,433	2	2'-1"	1'-8"	2'-1"				
S510	216	276	492	9'- 03"	4,747	2	3'-8"	2'-2"	3'-8"				
S511		850	850	26'- 07"	23,568	STR.							
S512		425	425	26'- 04"	11,673	STR.							
S513		425	425	14'- 00"	6,206	STR.							
S514		425	425	17'- 08"	7,832	STR.							
S515	116	145	261	19'- 10"	5,400	STR.							
S550	468	468	936	7'- 01"	6,916	23	8"	3'-3"	3'-0"			1 1/2"	
S552	12	12	24	25'- 07"	642	STR.							
S620	14	14	28	30'- 00"	1,262	STR.							
S621	468	468	936	3'- 02"	4,452	1	12"	2'-4"					
S622	468	468	936	2'- 09"	3,868	14	10 1/2"	7"	8 1/2"	6"	9"		
S623	2	2	4	30'- 03"	182	STR.							
S801		32	32	28'- 10"	2,464	STR.							
S802		32	32	27'- 07"	2,357	STR.							
S803	32		32	27'- 02"	2,322	STR.							
S804	32		32	30'- 06"	2,606	STR.							
D801	76	92	168	4'- 11"	2,206	18	2'-7"	1'-0"	1'-0"				
SUPERSTRUCTURE TOTAL					240,588								

MARK	NUMBER			LENGTH	WEIGHT	TYPE	DIMENSIONS						
	LEFT	RIGHT	TOTAL				A	B	C	D	E	R	INC
APPROACH SLABS													
AS501	8	8	16	14'- 02"	237	STR.							
AS502	16	16	32	24'- 07"	821	STR.							
AS505	44	44	88	7'- 01"	651	23	8"	3'-3"	3'-0"			1 1/2"	
AS510	16	16	32	10'- 00"	334	STR.							
	4	4	8	3'- 00"			2'-5"						
AS511	SER. OF	SER. OF	SER. OF	TO	314	16	TO						
	11	11	11	3'- 10"			3'-3"						
AS520	8	8	16	5'- 08"	95	STR.							
AS523	8	8	16	5'- 08"	95	25	1'-10"	2'-5"	1'-4"	1 1/2"	5"		1"
B501	114		114	32'- 10"	3,904	STR.							
B502	114		114	25'- 11"	3,082	STR.							
B503		228	228	23'- 04"	5,549	STR.							
B504		114	114	26'- 04"	3,132	STR.							
C503	77	94	171	24'- 06"	4,370	STR.							
AS601	4	4	8	15'- 00"	181	STR.							
AS602	88	88	176	3'- 02"	838	14	10 1/2"	1'-0"	8 1/2"	6"	9"		
AS603	44	44	88	3'- 07"	474	1	12"	2'-9"					
	4	4	8	4'- 02"				3'-4"					
AS605	SER. OF	SER. OF	SER. OF	TO	606	1	12"	TO					1"
	11	11	11	5'- 00"				4'-2"					
AS606	32	32	64	4'- 02"	401	1	12"	3'-4"					
A1003	195	236	431	25'- 11"	48,065	16	24-6"						
APPROACH SLAB TOTAL					73,149								
FOR INFORMATION ONLY. NOT INCLUDED WITH ITEM 509.													

NOTES:

1. THE BAR SIZE NUMBER IS SPECIFIED ON THE PLANS IN THE BAR MARK COLUMN. THE FIRST DIGIT WHERE THREE DIGITS ARE USED, AND THE FIRST TWO DIGITS WHERE FOUR ARE USED, INDICATES THE BAR SIZE NUMBER. FOR EXAMPLE, P601 IS A NO. 6 BAR. BAR DIMENSIONS SHOWN ARE OUT TO OUT UNLESS OTHERWISE INDICATED. R INDICATES INSIDE RADIUS, UNLESS OTHERWISE NOTED. "STD." WRITTEN IN PLACE OF A DIMENSION INDICATES A STANDARD BEND AT THE END OF THE BAR.

2. ALL REINFORCEMENT IS TO BE EPOXY COATED.

DESIGN AGENCY
PARSONS BRINCKERHOFF
2945 FARMERS DRIVE
SUITE 350
COLUMBUS, OHIO 43235

DESIGNED	DRAWN	REVIEWED	DATE
PJL	TLP	EBS	02/01/13
CHECKED	REVISED	STRUCTURE NUMBER	
SAP		LEFT: 0201871 RIGHT: 0201901	

REINFORCING STEEL LIST
BRIDGE NO. ALL-75-0448 L&R
I-75 OVER INDIANA & OHIO RAILWAY

ALL-75-0.21
PID No. 89029

J:\Projects\ALL\89029\structures\ALL075_0448C\sheets\075_0448CRL002.dgn 09-MAY-2013 3:10PM jint

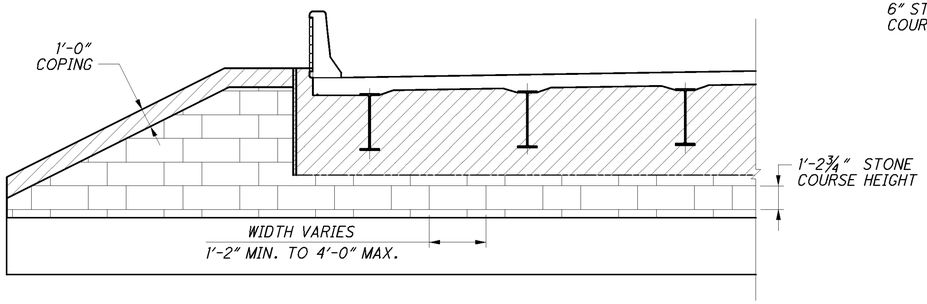

ABUTMENT AESTHETICS

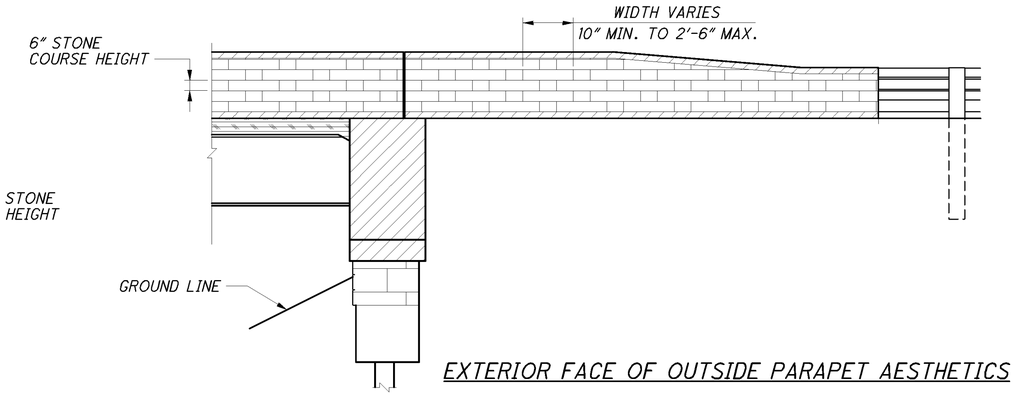

EXTERIOR FACE OF OUTSIDE PARAPET AESTHETICS

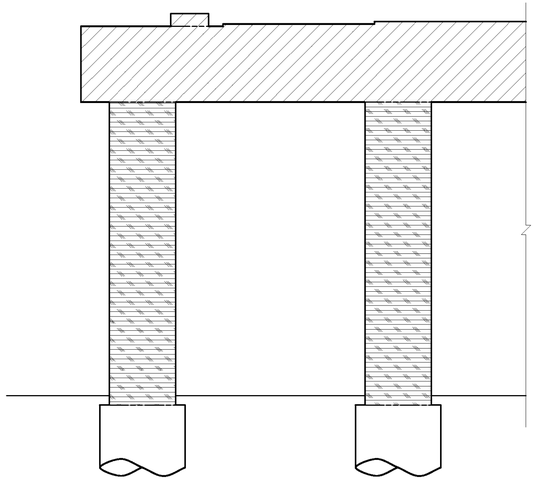

PIER AESTHETICS

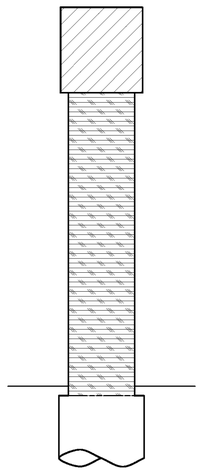

PIER SECTION

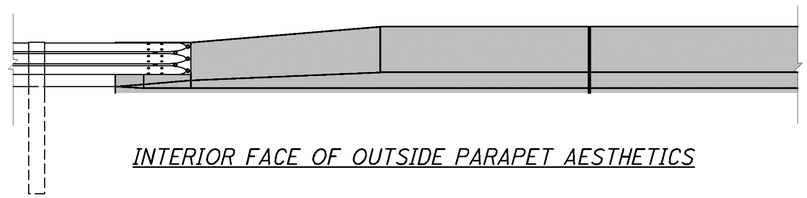

INTERIOR FACE OF OUTSIDE PARAPET AESTHETICS

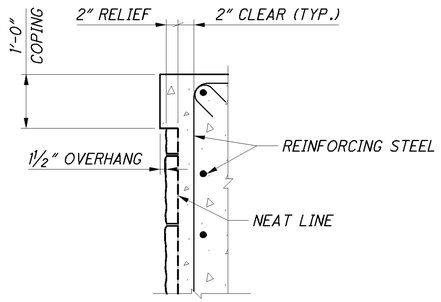

TYPICAL FORMLINER SECTION

SECTION AT WINGWALL SHOWN

LEGEND:

- FORMLINER PATTERN 1:
  -ROUGH CUT STONE FORMLINER W/ 2" RELIEF AND INTEGRALLY COLORED CONCRETE, FEDERAL COLOR NO. 36373, GRAY
- FORMLINER PATTERN 2:
  -ROUGH CUT STONE FORMLINER W/ 1⅝" INTEGRALLY COLORED CONCRETE, FEDERAL COLOR NO. 36373, GRAY
- -INTEGRALLY COLORED CONCRETE FEDERAL COLOR NO. 36373, GRAY
- -EPOXY-URETHANE SEALER FEDERAL COLOR NO. 37875, WHITE
- -EPOXY-URETHANE SEALER FEDERAL COLOR NO. 36373, GRAY

DESIGN AGENCY
PARSONS BRINCKERHOFF
2945 FARMERS DRIVE
SUITE 350
COLUMBUS, OHIO 43235

DESIGNED	DRAWN	REVIEWED	DATE
PJL	TLP	EBS	02/01/13
CHECKED	REVISED	STRUCTURE FILE NUMBER	
SAP		LEFT: 0201871 RIGHT: 0201901	

AESTHETICS DETAILS

BRIDGE NO. ALL-75-0448 L&R
I-75 OVER INDIANA & OHIO RAILWAY

ALL-75-0.21
PID No. 89029

J:\Projects\ALL\89029\structures\ALL075_0448C\sheets\075_0448CMD004.dgn 09-MAY-2013 3:10PM jint

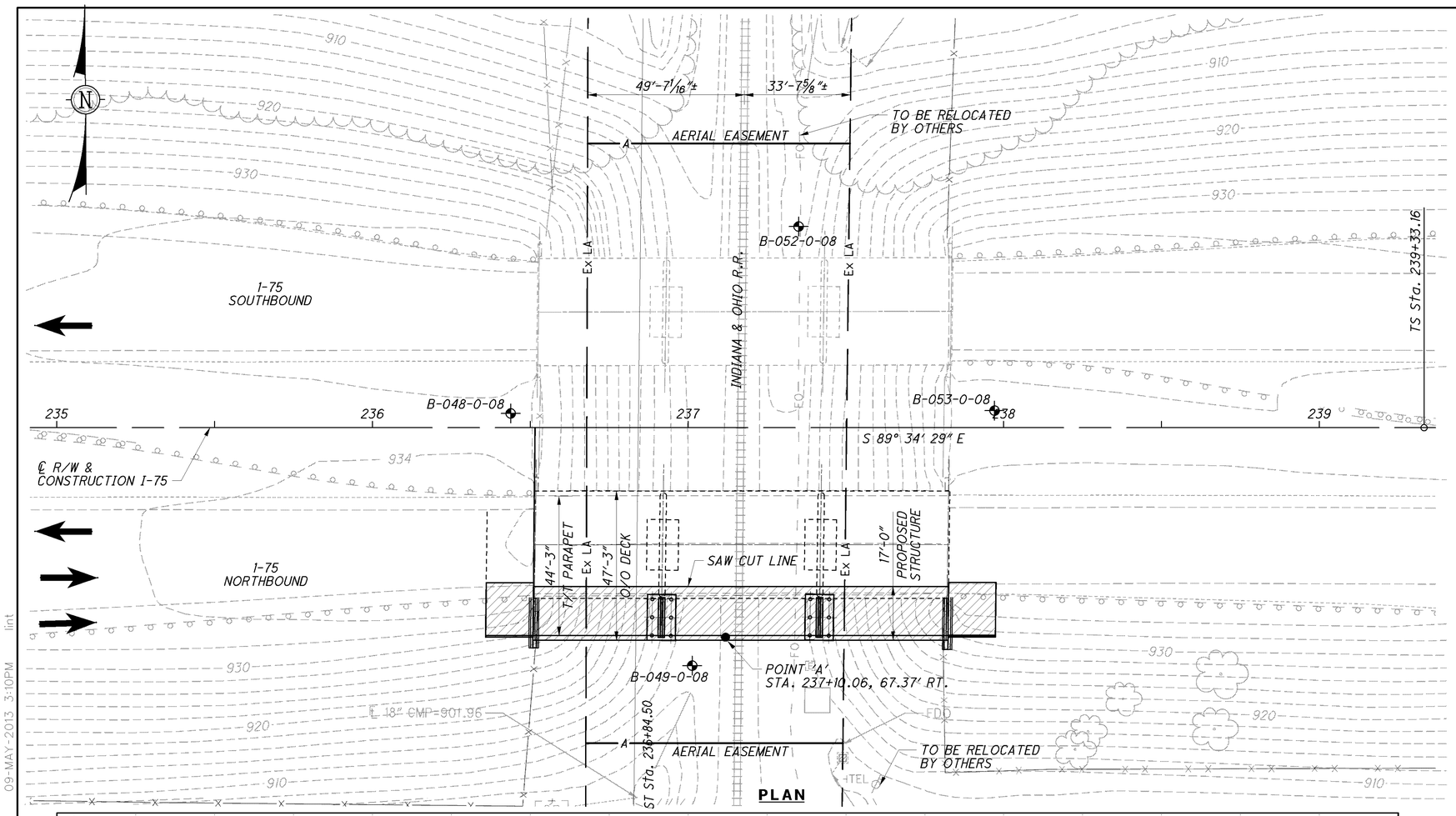

PLAN

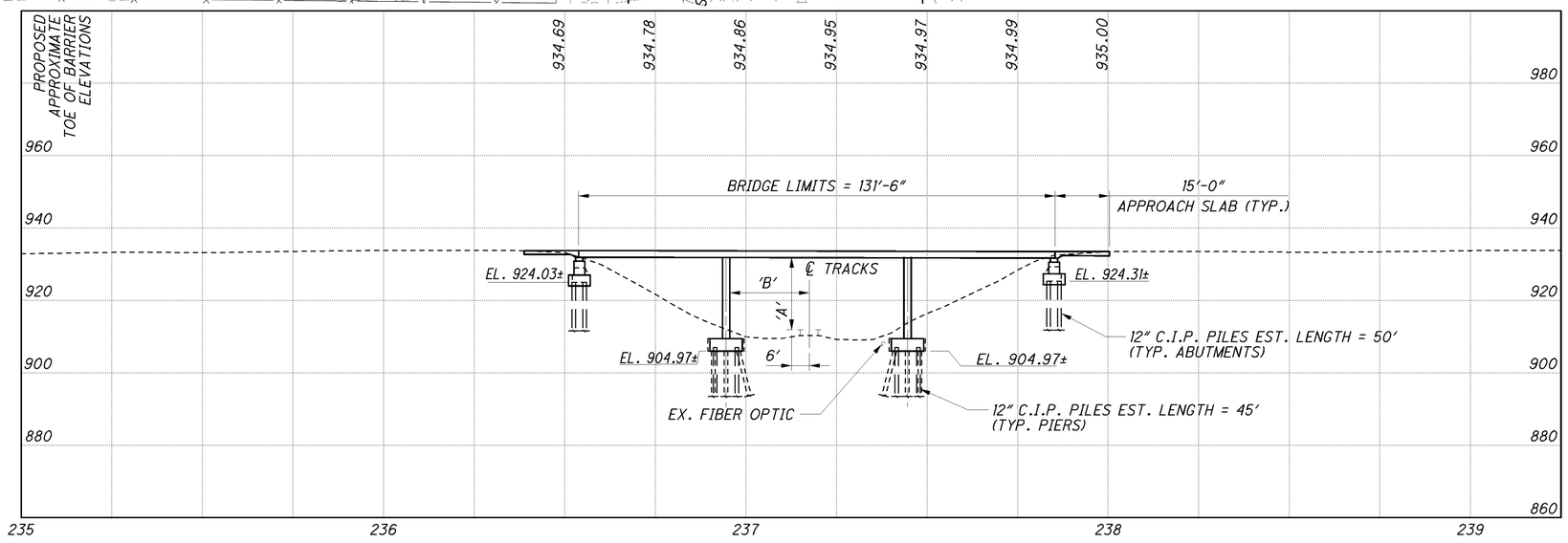

PROFILE
ALONG PROPOSED TOE OF BARRIER

NOTES

EARTHWORK LIMITS SHOWN ARE APPROXIMATE. ACTUAL SLOPES SHALL CONFORM TO PLAN CROSS SECTIONS.

LEGEND

BORING LOCATION

● 20.0' REQUIRED MINIMUM VERTICAL CONST. CLEARANCE
POINT 'A' - 21.8'± ACTUAL MINIMUM VERTICAL CONST. CLEARANCE

13.0' REQUIRED MINIMUM HORIZONTAL CONST. CLEARANCE
POINT 'B' - 23.5'± ACTUAL MINIMUM HORIZONTAL CONST. CLEARANCE

- TEMPORARY STRUCTURE

EXISTING STRUCTURE

TYPE: CONTINUOUS 3-SPAN REINFORCED CONCRETE SLAB WITH REINFORCED CONCRETE CAPPED PILE SUBSTRUCTURE

SPANS: 40'±-50'±-40'± C/C BRGS.
ROADWAY: 31'-0"± TOE/TOE PARAPETS
LOADING: CF-2000(51)
SKEW: 0°39'4.5"± LT
APPROACH SLABS: AS-1-54 (L=15')
ALIGNMENT: TANGENT
CROWN: NORMAL 3/16"/FT.
STRUCTURAL FILE NUMBER: 0201863 (LT), 0201898 (RT)
DATE BUILT: 1957
WEARING SURFACE: MICROSILICA MODIFIED CONCRETE

PROPOSED WORK

TYPE: WIDENING OF CONCRETE SLAB STRUCTURE WITH WALL TYPE PIERS AND STANDARD CONCRETE SLAB ABUTMENTS ON PILES
SPANS: 40'-0"±, 50'-0"±, 40'-0"±, C/C BEARINGS
ROADWAY: 44'-3" (N.B.) TOE/TOE PARAPET
SKEW: NONE
APPROACH SLABS: 15'-0" LONG (AS-1-81)
WEARING SURFACE: 1" MONOLITHIC
ALIGNMENT: TANGENT
CROWN: 3/16" /FT.
COORDINATES: LATITUDE 40°41'56"
LONGITUDE 84°5'6"

DESIGN AGENCY
PARSONS BRINCKERHOFF
2545 FARMERS DRIVE
SUITE 350
COLUMBUS, OHIO 43235

DESIGNED	DRAWN	REVIEWED	DATE
PJL	LEL	EBS	02/01/13
CHECKED	REVISED	STRUCTURE FILE NUMBER	
SAP			

TEMPORARY BRIDGE SITE PLAN
BRIDGE NO. ALL-75-0448 R
I-75 OVER INDIANA & OHIO RAILWAY

ALL-75-0.21
PID No. 89029

42/50

768/907

J:\Projects\ALL\89029\structures\ALL075_0448C\sheets\075_0448CSP002.dgn 09-MAY-2013 3:10PM jint

TEMPORARY BRIDGE GENERAL NOTES

STANDARD DRAWINGS AND SUPPLEMENTAL SPECIFICATIONS

REFER TO THE FOLLOWING ODOT STANDARD BRIDGE DRAWINGS:

AS-1-81	REVISED	01-18-13
BR-1	REVISED	07-19-02
CS-1-08	DATED	07-18-08
PCB-91	REVISED	01-18-13

DESIGN SPECIFICATION

THIS STRUCTURE CONFORMS TO "STANDARD SPECIFICATIONS FOR HIGHWAY BRIDGES" ADOPTED BY THE AMERICAN ASSOCIATION OF STATE HIGHWAY AND TRANSPORTATION OFFICIALS, 17TH EDITION, INCLUDING THE MARCH 2005 INTERIM SPECIFICATIONS AND THE ODOT BRIDGE DESIGN MANUAL.

DESIGN LOADING

HS25-44, CASE 1 AND THE ALTERNATIVE MILITARY LOADING

DESIGN DATA

CONCRETE CLASS S	-	COMPRESSIVE STRENGTH 4500 PSI (SUPERSTRUCTURE)
CONCRETE CLASS C	-	COMPRESSIVE STRENGTH 4000 PSI (SUBSTRUCTURE)
REINFORCING STEEL	-	ASTM A615 OR A996 GRADE 60 MINIMUM YIELD STRENGTH 60,000 PSI

DECK PROTECTION METHOD

- $2\frac{1}{2}$" CONCRETE COVER

MONOLITHIC WEARING SURFACE

MONOLITHIC WEARING SURFACE IS ASSUMED, FOR DESIGN PURPOSES, TO BE 1 INCH THICK.

EXISTING STRUCTURE VERIFICATION

DETAILS AND DIMENSIONS SHOWN ON THESE PLANS PERTAINING TO THE EXISTING STRUCTURE HAVE BEEN OBTAINED FROM PLANS OF THE EXISTING STRUCTURE AND FROM FIELD OBSERVATIONS AND MEASUREMENTS. CONSEQUENTLY, THEY ARE INDICATIVE OF THE EXISTING STRUCTURE AND THE PROPOSED WORK BUT THEY SHALL BE CONSIDERED TENTATIVE AND APPROXIMATE. THE CONTRACTOR IS REFERRED TO CMS SECTIONS 102.05 AND 105.02.

BASE CONTRACT BID PRICES UPON A RECOGNITION OF THE UNCERTAINTIES DESCRIBED ABOVE AND UPON A PREBID EXAMINATION OF THE EXISTING STRUCTURE. HOWEVER, THE DEPARTMENT WILL PAY FOR ALL PROJECT WORK BASED UPON ACTUAL DETAILS AND DIMENSIONS THAT HAVE BEEN VERIFIED IN THE FIELD.

EXISTING STRUCTURE PLANS

CONSTRUCTION PLANS FOR THE EXISTING BRIDGE ARE ON FILE AT THE OHIO DEPARTMENT OF TRANSPORTATION, DISTRICT ONE OFFICE, 1885 NORTH MCCULLOUGH ST., LIMA, OHIO 45801 AND ARE AVAILABLE FOR REFERENCE.

PILE DESIGN LOADS (ULTIMATE BEARING VALUE)

THE ULTIMATE BEARING VALUE IS 83 TONS PER PILE FOR THE 12 ABUTMENT PILES. THE ULTIMATE BEARING VALUE IS 79 TONS PER PILE FOR THE 12 PIER PILES.

ABUTMENT PILES:

12" CAST-IN-PLACE PILES 55 FEET LONG, ORDER LENGTH
1 DYNAMIC LOAD TESTING ITEM

PIER PILES:

12" CAST-IN-PLACE PILES 50 FEET LONG, ORDER LENGTH
1 DYNAMIC LOAD TESTING ITEM

PROPOSED WORK

THE WORK TO BE DONE UNDER THIS CONTRACT IS AS SHOWN ON THE CONSTRUCTION PLANS. THE SUGGESTED CONSTRUCTION SEQUENCE IS AS FOLLOWS:

PRE-PHASE CONSTRUCTION FOR MOT

1. INSTALL PORTABLE CONCRETE BARRIER ON THE EXISTING NORTHBOUND STRUCTURE AND SHIFT TRAFFIC.
2. REMOVE THE OUTSIDE PORTION OF THE EXISTING NORTHBOUND STRUCTURE AS SHOWN.
3. BEGIN PHASE IA CONSTRUCTION OF THE TEMPORARY BRIDGE.

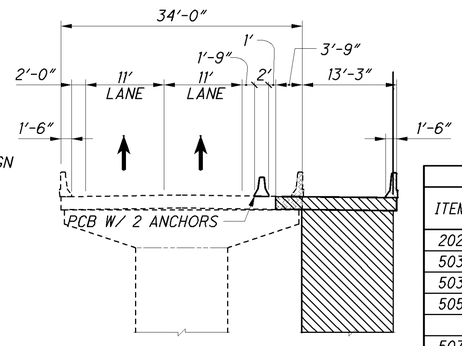

NORTHBOUND

LEGEND:

- REMOVAL
- TEMPORARY STRUCTURE
- PORTABLE CONCRETE BARRIER (PCB) (TO BE ANCHORED ON BRIDGES AS SHOWN)

ITEM 202, PORTIONS OF STRUCTURE REMOVED, AS PER PLAN
DESCRIPTION

DESCRIPTION: THIS WORK CONSISTS OF THE PARTIAL REMOVAL OF CONCRETE DECK INCLUDING PARAPET AND PARTIAL REMOVAL OF APPROACH SLABS.
THE PROVISIONS OF ITEM 202 APPLY EXCEPT AS SPECIFIED BY THE FOLLOWING NOTES. PERFORM WORK CAREFULLY DURING DECK REMOVALS TO PROTECT PORTIONS OF SUCH SYSTEMS THAT ARE TO BE SALVAGED AND INCORPORATED INTO THE PROPOSED STRUCTURE. THE USE OF EXPLOSIVES, HEADACHE BALLS AND/OR HOE RAM TYPE OF EQUIPMENT IS PROHIBITED. SUBMIT CONSTRUCTION PLANS ACCORDING TO CMS 501.05 AND THE STRUCTURE GENERAL NOTES.

REMOVAL METHODS: THE CONTRACTOR MAY REMOVE CONCRETE BY CUTTING AND BY MEANS OF HAND OPERATED PNEUMATIC HAMMERS EMPLOYING POINTED OR BLUNTED CHISEL TYPE TOOLS.

DUE TO THE POSSIBLE PRESENCE OF ATTACHMENTS (E.G., FINISHING MACHINE, SCUPPER AND FORM SUPPORTS, ETC.) TO EXISTING STRUCTURAL SLAB, PERFORM WORK CAREFULLY DURING DECK REMOVAL TO AVOID DAMAGING PORTIONS OF THE SLAB THAT ARE TO REMAIN. REPLACE OR REPAIR PORTIONS OF THE SLAB DAMAGED BY THE REMOVAL OPERATIONS AT NO COST TO THE PROJECT. AT LEAST 7 DAYS BEFORE PERFORMING REPAIR WORK, SUBMIT A PROPOSED REPAIR PLAN, DEVELOPED BY AN OHIO REGISTERED PROFESSIONAL ENGINEER TO THE DIRECTOR. OBTAIN THE DIRECTOR'S APPROVAL BEFORE PERFORMING REPAIR.

MEASUREMENT & PAYMENT: THE DEPARTMENT WILL MEASURE THE QUANTITY OF REMOVALS ON A LUMP SUM BASIS. THE DEPARTMENT WILL PAY FOR THE ACCEPTED QUANTITIES OF REMOVALS AT THE CONTRACT PRICE FOR ITEM 202, PORTIONS OF STRUCTURE REMOVED, AS PER PLAN.

ITEM 509, REINFORCING STEEL, REPLACEMENT OF EXISTING REINFORCING STEEL, AS PER PLAN

REPLACE ALL EXISTING REINFORCING BARS DEEMED BY THE ENGINEER TO BE UNUSABLE BECAUSE OF CORROSION. THE DEPARTMENT WILL MEASURE THE REPLACEMENT REINFORCING STEEL BY THE NUMBER OF POUNDS ACCEPTED IN PLACE.

THIS WORK SHALL INCLUDE THE COST OF ALL MATERIALS AND LABOR NECESSARY TO SUPPLY AND PLACE THE REINFORCING STEEL INCLUDING DOWEL HOLES AND GROUT.

REPLACE ALL EXISTING REINFORCING STEEL BARS WHICH ARE TO BE INCORPORATED INTO THE NEW WORK AND ARE DEEMED BY THE ENGINEER TO BE MADE UNUSABLE BY CONCRETE REMOVAL OPERATIONS WITH NEW REINFORCING STEEL OF THE SAME SIZE AT NO COST TO THE DEPARTMENT.

CONCRETE PARAPETS

AS SOON AS A CONCRETE SAW CAN BE OPERATED WITHOUT DAMAGING THE FRESHLY PLACED CONCRETE, SAWCUT 1¼" DEEP CONTROL JOINTS INTO THE PERIMETER OF THE CONCRETE PARAPET STARTING AND ENDING AT THE ELEVATION OF THE CONCRETE DECK. PLACE THE SAWCUTS AT A MINIMUM OF 6 FEET AND A MAXIMUM OF 10 FEET CENTERS. USE AN EDGE GUIDE, FENCE, OR JIG TO ENSURE THAT THE CUT JOINT IS STRAIGHT, TRUE, AND ALIGNED ON ALL FACES OF THE PARAPET. THE JOINT WIDTH SHALL BE THE WIDTH OF THE SAW BLADE, A NOMINAL WIDTH OF ¼ INCH. SEAL THE PERIMETER OF THE DEFLECTION CONTROL JOINT TO A MINIMUM DEPTH OF 1 INCH WITH A POLYURETHANE OR POLYMERIC MATERIAL CONFORMING TO ASTM C920, TYPE S. LEAVE THE BOTTOM ½ INCH OF THE INSIDE AND OUTSIDE FACE UNSEALED TO ALLOW WATER TO ESCAPE.

RAILROAD

SEE SHEET 4/50 FOR RAILROAD NOTES.

CALC BY: EBS DATE: 1/25/2013
CHCK BY: SAP DATE: 2/1/2013

FOR INFORMATION PURPOSES: INCLUDED IN ITEM 502 STRUCTURES FOR MAINTAINING TRAFFIC (ALL-75-0448 R)

ITEM	EXTENSION	TOTAL	UNIT	ESTIMATED QUANTITIES DESCRIPTION	ALL-75-0448R ABUT.	PIER	SUPER.	GEN.	SEE SHEET NO.
202	11201	LUMP		PORTIONS OF STRUCTURE REMOVED, AS PER PLAN				LUMP	43/50
503	11100	LUMP		COFFERDAMS AND EXCAVATION BRACING				LUMP	
503	21301	LUMP		UNCLASSIFIED EXCAVATION, AS PER PLAN				LUMP	5/50
505	11100	LUMP		PILE DRIVING EQUIPMENT MOBILIZATION				LUMP	
507	00500	1,140	FT	12" CAST-IN-PLACE REINFORCED CONCRETE PILES, DRIVEN	600	540			
507	00550	1,260	FT	12" CAST-IN-PLACE REINFORCED CONCRETE PILES, FURNISHED	660	600			
509	10000	47,823	POUND	EPOXY COATED REINFORCING STEEL	2,793	8,414	36,616		
509	20001	500	POUND	REINFORCING STEEL, REPLACEMENT OF EXISTING REINFORCING STEEL, AS PER PLAN				500	43/50
510	09950	66	EACH	DOWEL HOLES WITH CEMENT GROUT			66		
516	13200	7	SQ FT	1/2" PREFORMED EXPANSION JOINT FILLER	7				
516	13600	34	SQ FT	1" PREFORMED EXPANSION JOINT FILLER	34				
518	21200	8	CU YD	POROUS BACKFILL WITH FILTER FABRIC	8				
518	40000	24	FT	6" PERFORATED CORRUGATED PLASTIC PIPE				24	
518	40011	20	FT	6" NON-PERFORATED CORRUGATED PLASTIC PIPE, INCLUDING SPECIALS, AS PER PLAN				20	5/50
523	20000	2	EACH	DYNAMIC LOAD TESTING	1	1			
898	10200	152	CU YD	QC/QA CONCRETE, CLASS QSC2, SUPERSTRUCTURE (DECK)			152		
898	10689	58	SQ YD	QC/QA CONCRETE, CLASS QSC2, SUPERSTRUCTURE (APPROACH SLAB), (T=12"), AS PER PLAN				58	4/50
898	11000	17	CU YD	QC/QA CONCRETE, CLASS QSC2, SUPERSTRUCTURE (PARAPET)			17		
898	20100	46	CU YD	QC/QA CONCRETE, CLASS QSC1, SUBSTRUCTURE (PIER ABOVE FOOTING)		46			
898	20160	31	CU YD	QC/QA CONCRETE, CLASS QSC1, SUBSTRUCTURE (ABUTMENT INCLUDING FOOTING)	31				
898	20300	34	CU YD	QC/QA CONCRETE, CLASS QSC1, SUBSTRUCTURE (FOOTING)		34			

DESIGN AGENCY
PARSONS BRINCKERHOFF
2945 FARMERS DRIVE
SUITE 350
COLUMBUS, OHIO 43235

DESIGNED	DRAWN	REVIEWED	DATE
ECM	ECM	EBS	02/01/13
CHECKED	REVISED		STRUCTURE FILE NUMBER
APV			

TEMPORARY BRIDGE GENERAL NOTES
BRIDGE NO. ALL-75-0448 R
I-75 OVER INDIANA & OHIO RAILWAY

ALL-75-0.21
PID No. 89029

769/907

J:\Projects\ALL\89029\structures\ALL075_0448C\sheets\From ECM 2-3-12\075_0448CGN001.dgn 23-MAY-2013 10:20AM lint

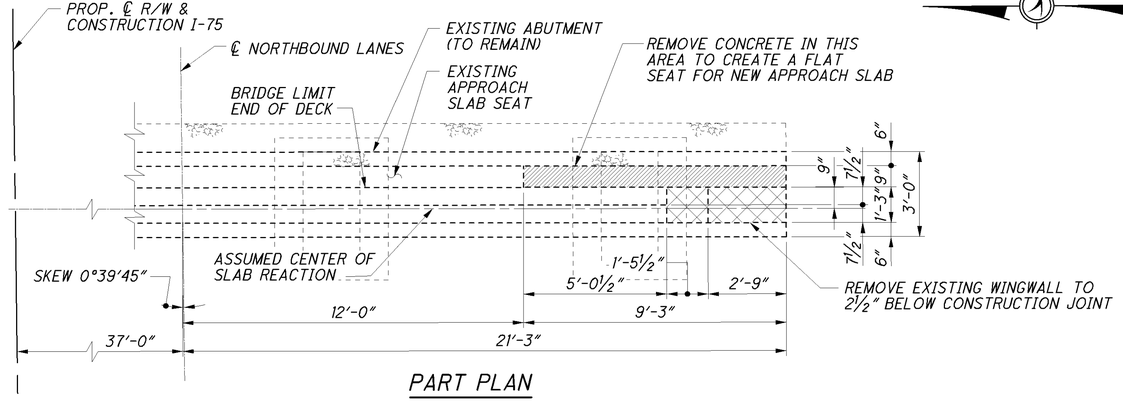

PART PLAN

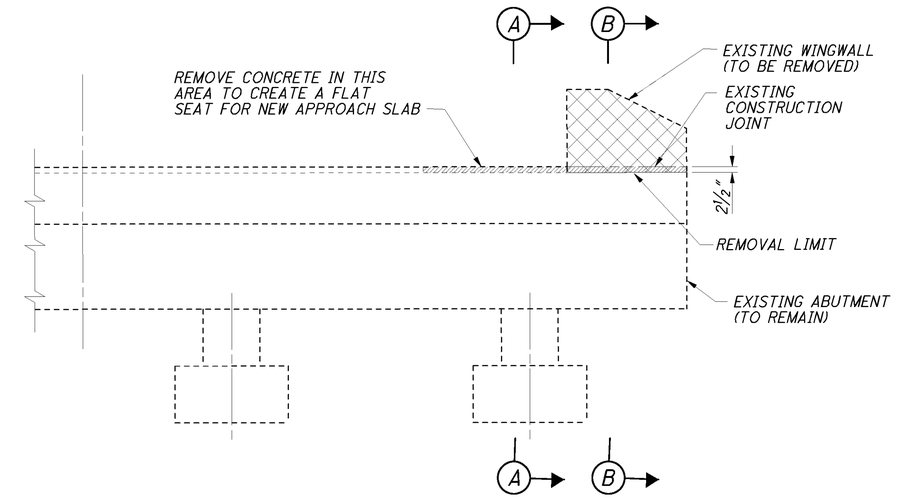

PART ELEVATION

(EXISTING BRIDGE DECK AND APPROACH SLAB NOT SHOWN FOR CLARITY)

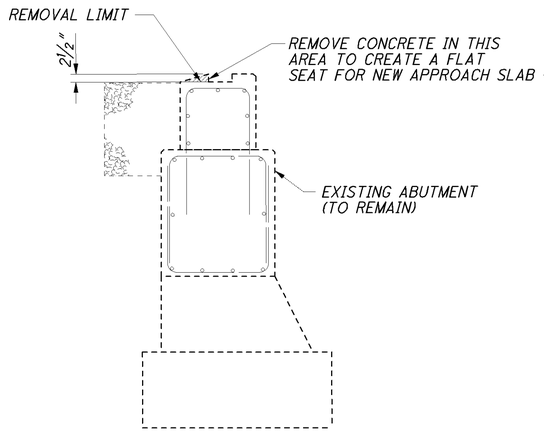

SECTION A-A

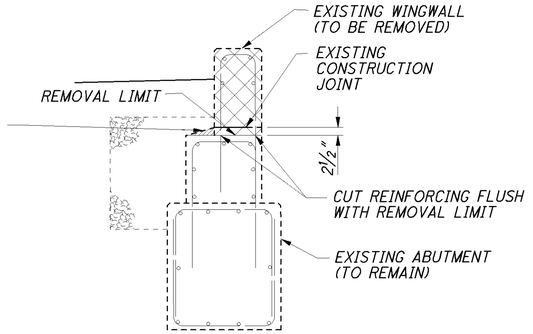

SECTION B-B

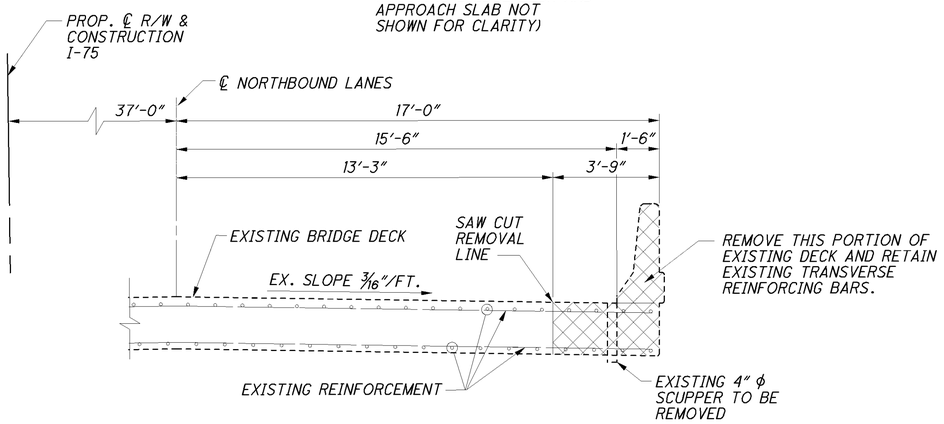

PART TRANSVERSE SECTION

NOTES:

1. FORWARD ABUTMENT SHOWN. REAR ABUTMENT SIMILAR EXCEPT OPPOSITE HAND.
2. AREAS INDICATED FOR REMOVAL SHALL BE REMOVED ACCORDING TO ITEM 202 PORTIONS OF STRUCTURE REMOVED.

DESIGN AGENCY
PARSONS BRINCKERHOFF
2545 FARMERS DRIVE
SUITE 350
COLUMBUS, OHIO 43235

DESIGNED	DRAWN	REVIEWED	DATE
ECM	RCK	EBS	02/01/13
CHECKED	REVISED		STRUCTURE FILE NUMBER
APV			

ABUTMENT REMOVAL DETAILS
BRIDGE NO. ALL-75-0448 R
I-75 OVER INDIANA & OHIO RAILWAY

ALL-75-0.21
PID No. 89029

770/907

09-MAY-2013 3:10PM jint
J:\Projects\ALL\89029\structures\ALL075_0448C\sheets\From ECM 2-3-12\075_0448CAF002.dgn

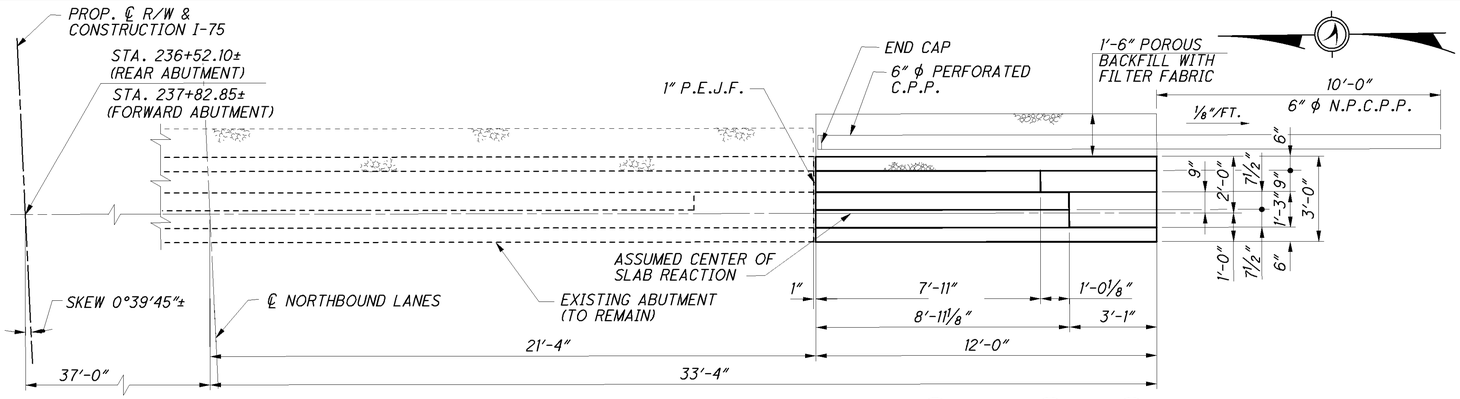

PART PLAN

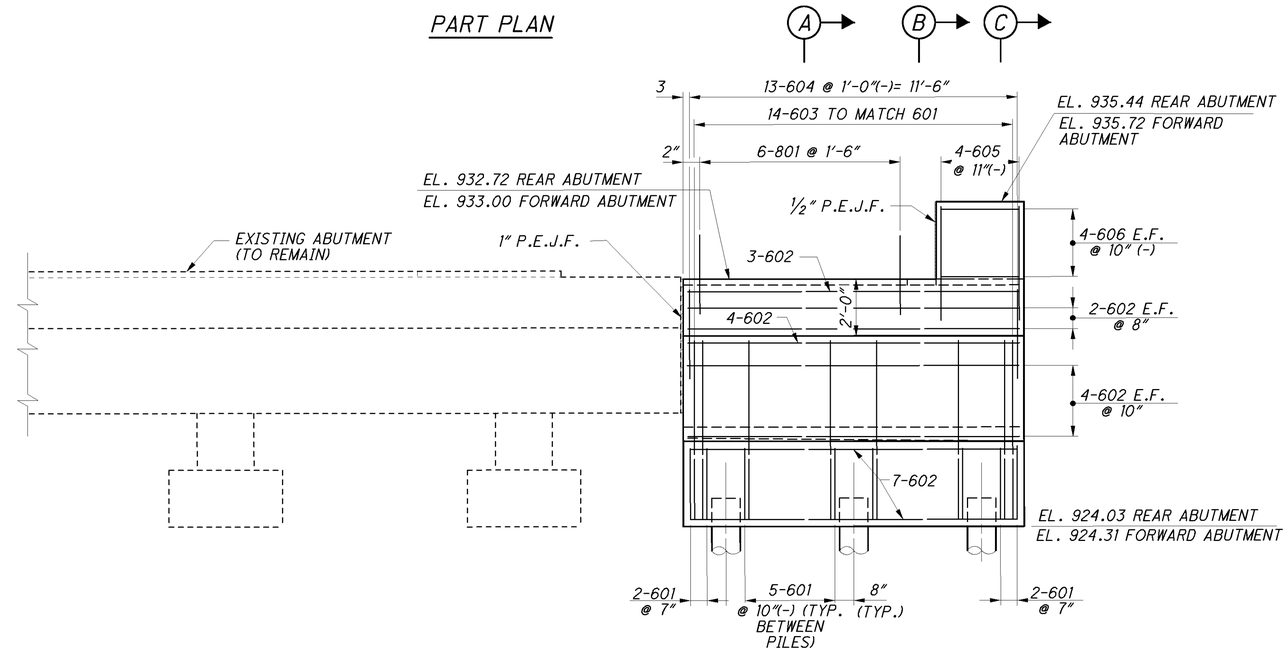

PART ELEVATION

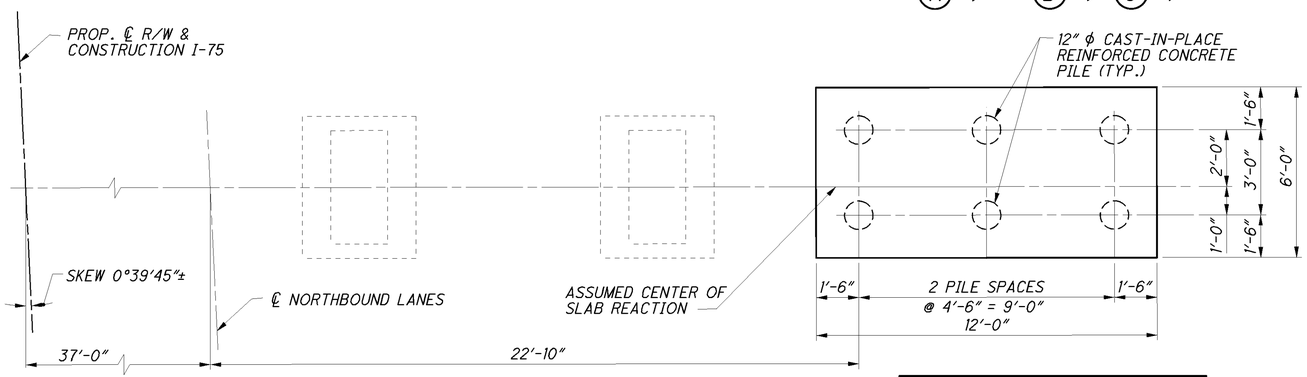

PART FOOTING PLAN

ALL BAR MARKS SHALL BE PREFIXED : TA FOR TEMPORARY ABUTMENT

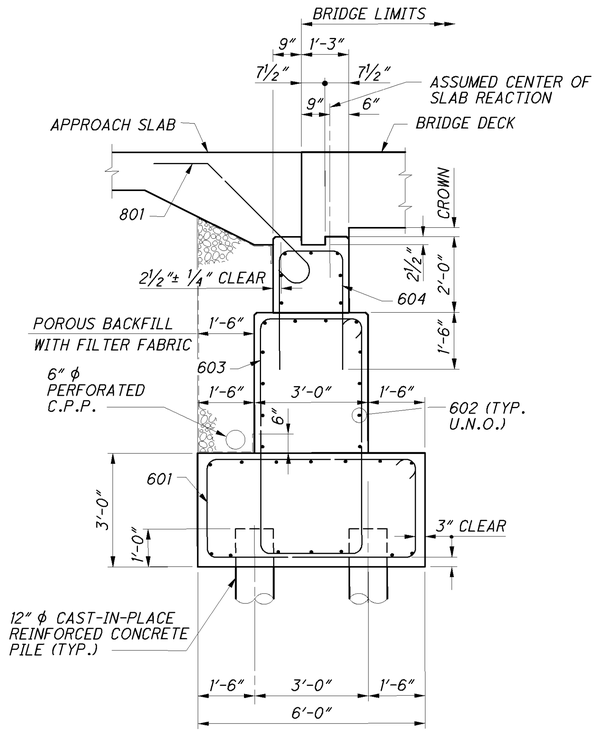

SECTION A-A

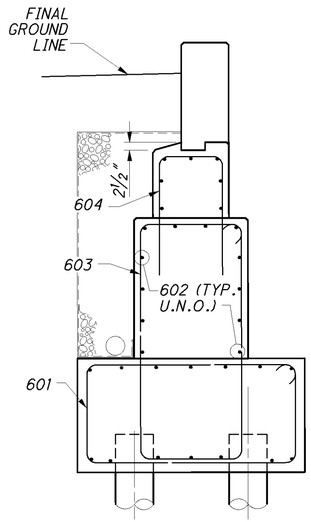

SECTION B-B

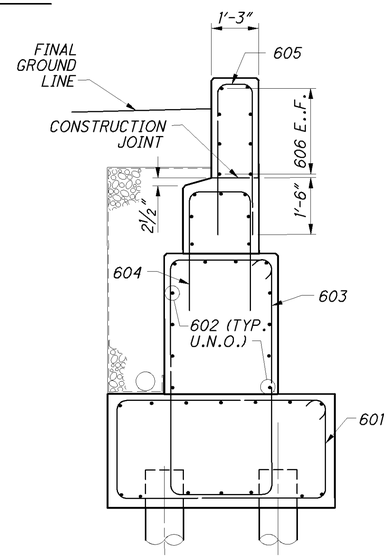

SECTION C-C

NOTES:

1. FORWARD ABUTMENT SHOWN, REAR ABUTMENT SIMILAR EXCEPT OPPOSITE HAND AND AS NOTED.
2. POROUS BACKFILL WITH FILTER FABRIC SHALL EXTEND FROM THE TOP OF THE FOOTING UP TO THE PLANE OF THE SUBGRADE, TO ONE FOOT BELOW THE EMBANKMENT SURFACE, AND LATERALLY TO THE ENDS OF THE WINGWALLS.
3. FOR REINFORCING STEEL LIST, SEE SHEET 50/50.

DESIGN AGENCY
PARSONS BRINCKERHOFF
2545 FARMERS DRIVE
SUITE 350
COLUMBUS, OHIO 43235

DESIGNED	DRAWN	REVIEWED	DATE
ECM	RCK	EBS	02/01/13
CHECKED	REVISED	STRUCTURE FILE NUMBER	
APV			

TEMPORARY ABUTMENT PLAN, ELEVATION AND SECTIONS

BRIDGE NO. ALL-75-0448 R
I-75 OVER INDIANA & OHIO RAILWAY

ALL-75-0.21
PID No. 89029

45/50

771/907

J:\Projects\ALL\89029\structures\ALL075_0448C\sheets\From ECM 2-3-12\075_0448CAF001.dgn 09-MAY-2013 3:10PM lint

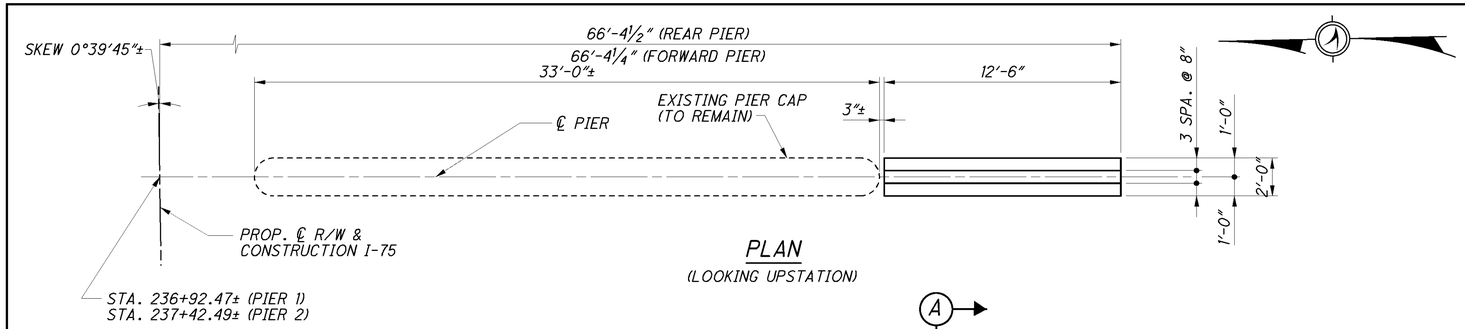

PLAN

(LOOKING UPSTATION)

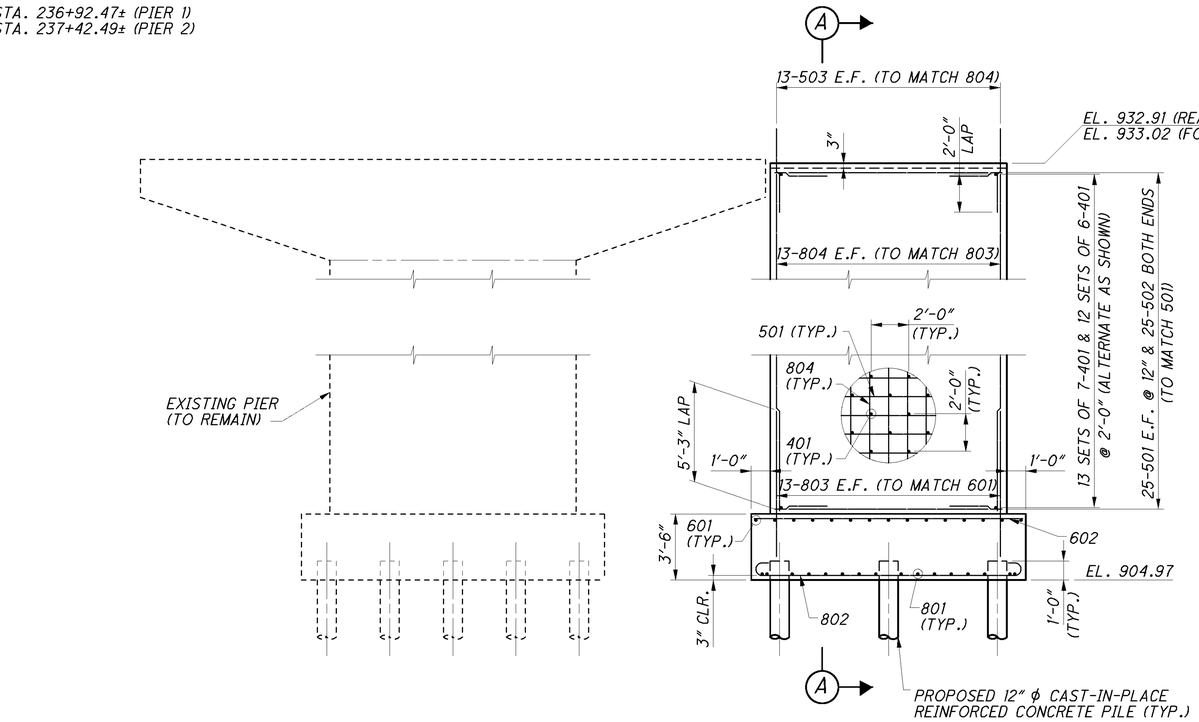

ELEVATION

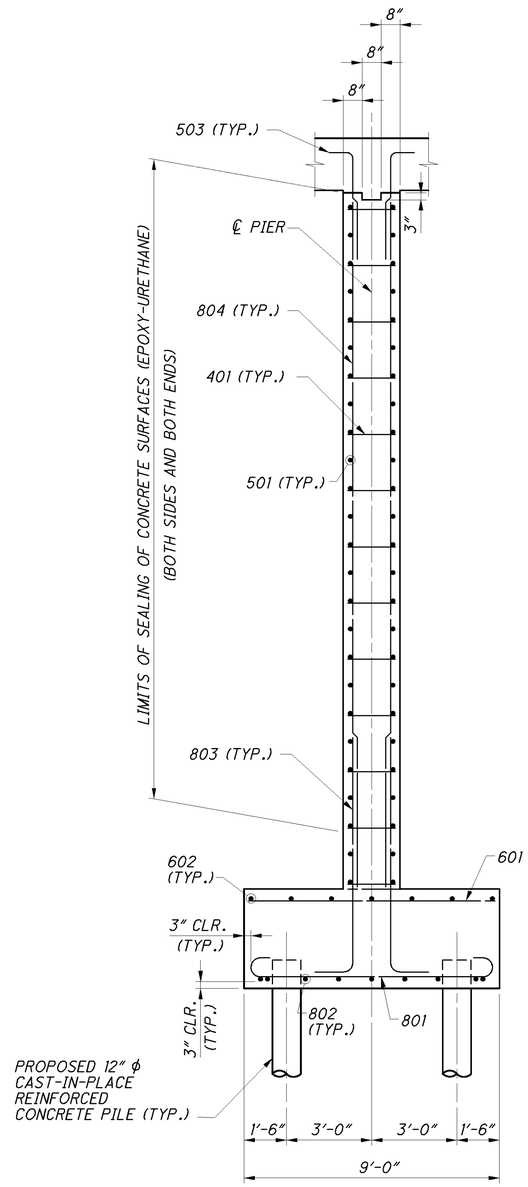

SECTION A-A

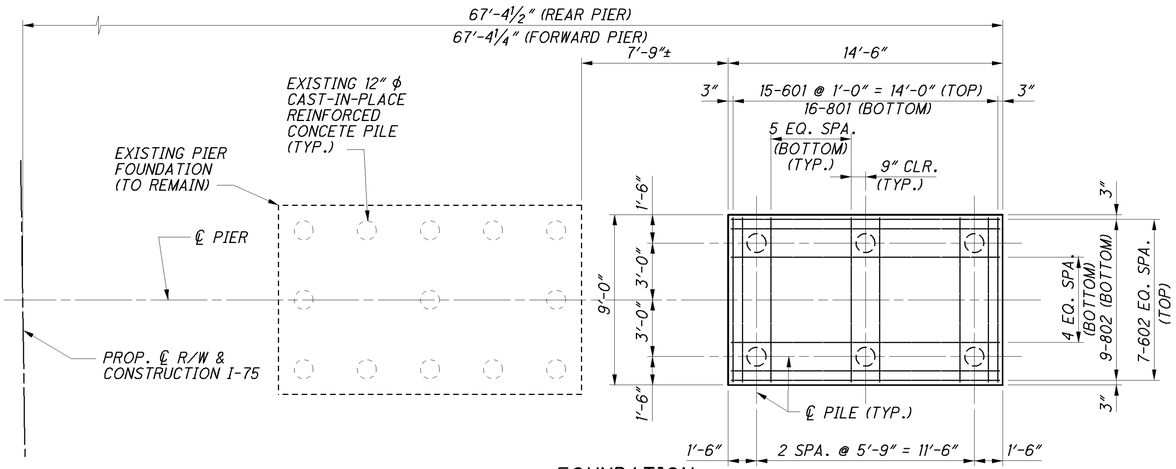

FOUNDATION

ALL BAR MARKS
SHALL BE PREFIXED:
TP FOR TEMPORARY PIER

NOTES:

1. THE PLACEMENT OF P401 BARS SHALL ALTERNATE SUCH THAT THE 90° HOOKS SHALL BE STAGGERED.
2. FOR REINFORCING STEEL LIST, SEE SHEET 50/50.

DESIGN AGENCY
PARSONS BRINCKERHOFF
2545 FARMERS DRIVE
SUITE 350
COLUMBUS, OHIO 43235

DESIGNED	DRAWN	REVIEWED	DATE
ECM	ECM	EBS	02/01/13
CHECKED	REVISED	STRUCTURE FILE NUMBER	
APV			

TEMPORARY PIER DETAILS

BRIDGE NO. ALL-75-0448 R
I-75 OVER INDIANA & OHIO RAILWAY

ALL-75-0.21
PID No. 89029

46/50

772
907

09-MAY-2013 3:10PM jint
J:\Projects\ALL\89029\structures\ALL075_0448C\sheets\From ECM 2-3-12\075_0448CPI001.dgn

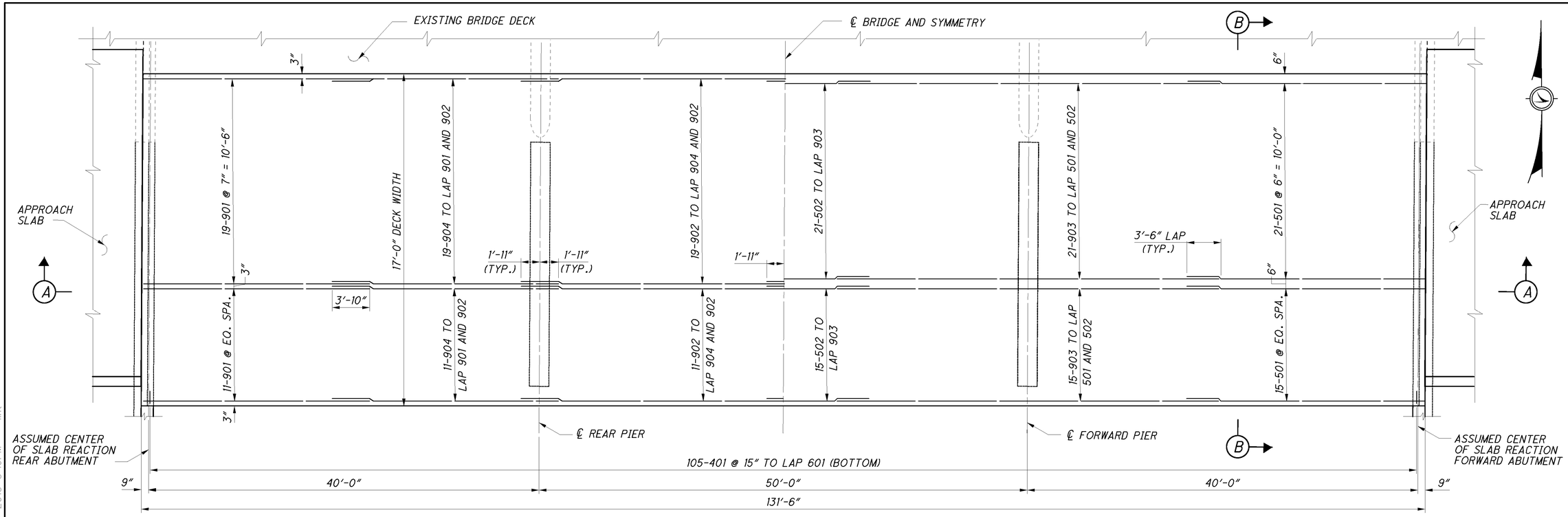

SLAB PLAN

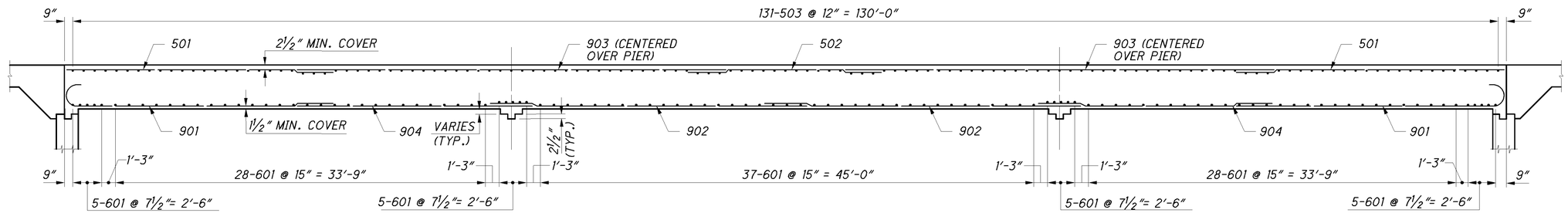

SECTION A-A

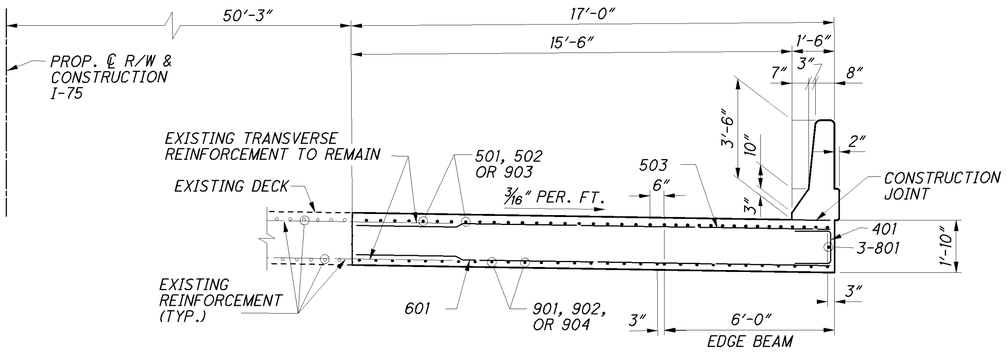

SECTION B-B

ALL BAR MARKS SHALL BE PREFIXED: TS FOR TEMPORARY SUPERSTRUCTURE

NOTES:

1. FOR EXISTING SLAB REMOVAL, SEE SHEET 44/50.
2. 401 BARS SHALL NOT BE LAPPED WITH ADDITIONAL BARS AT THE PIERS AND ABUTMENTS.
3. FOR REINFORCING STEEL LIST, SEE SHEET 50/50.

DESIGN AGENCY
PARSONS BRINCKERHOFF
2545 FARMERS DRIVE
SUITE 350
COLUMBUS, OHIO 43235

DESIGNED	DRAWN	REVIEWED	DATE
ECM	RCK	EBS	02/01/13
CHECKED	REVISED	STRUCTURE FILE NUMBER	
APV			

TEMPORARY SLAB PLAN AND SECTION
BRIDGE NO. ALL-75-0448 R
I-75 OVER INDIANA & OHIO RAILWAY

ALL-75-0.21
PID No. 89029

J:\Projects\ALL\89029\structures\ALL075_0448C\sheets\From ECM 2-3-12\075_0448CDP001.dgn 09-MAY-2013 3:10PM jint

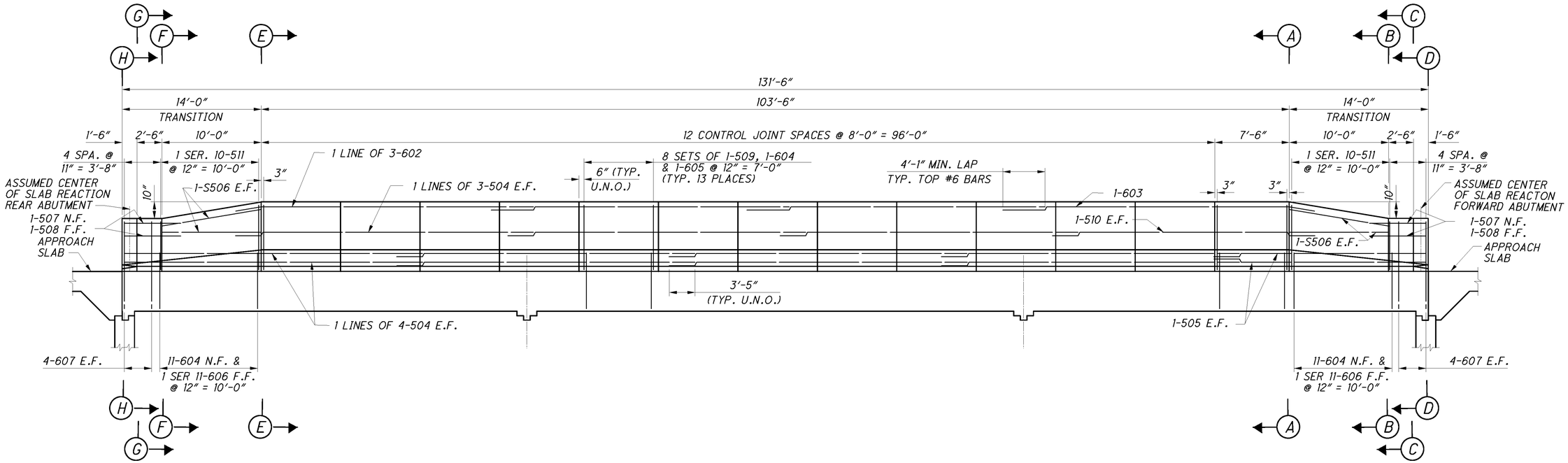

RAILING ELEVATION

(LOOKING SOUTH)

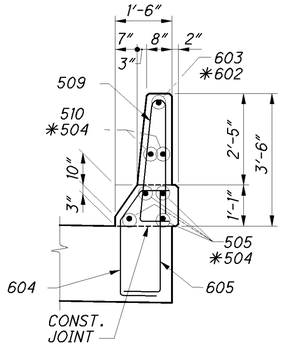

SECTION A-A

(SHOWN)

*SECTION E-E

(OPPOSITE HAND)

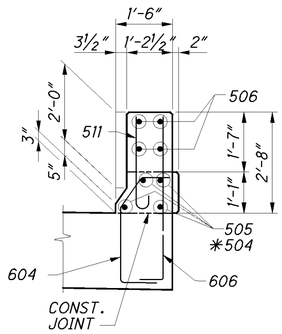

SECTION B-B

(SHOWN)

*SECTION F-F

(OPPOSITE HAND)

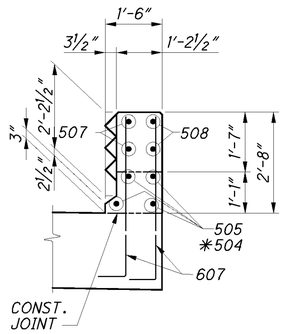

SECTION C-C

(SHOWN)

*SECTION G-G

(OPPOSITE HAND)

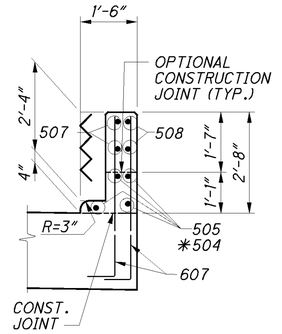

SECTION D-D

(SHOWN)

*SECTION H-H

(OPPOSITE HAND)

ALL BAR MARKS SHALL BE PREFIXED: TS FOR TEMPORARY SUPERSTRUCTURE

DESIGN AGENCY
PARSONS BRINCKERHOFF
2545 FARMERS DRIVE
SUITE 350
COLUMBUS, OHIO 43235

DESIGNED	DRAWN	REVIEWED	DATE
ECM	RCK	EBS	02/01/13
CHECKED	REVISED	STRUCTURE FILE NUMBER	
APV			

TEMPORARY RAILING ELEVATION AND SECTIONS

BRIDGE NO. ALL-75-0448 R
I-75 OVER INDIANA & OHIO RAILWAY

ALL-75-0.21
PID No. 89029

774/907

J:\Projects\ALL\89029\structures\ALL075_0448C\sheets\From ECM 2-3-12\075_0448CSD001.dgn 09-MAY-2013 3:10PM lint

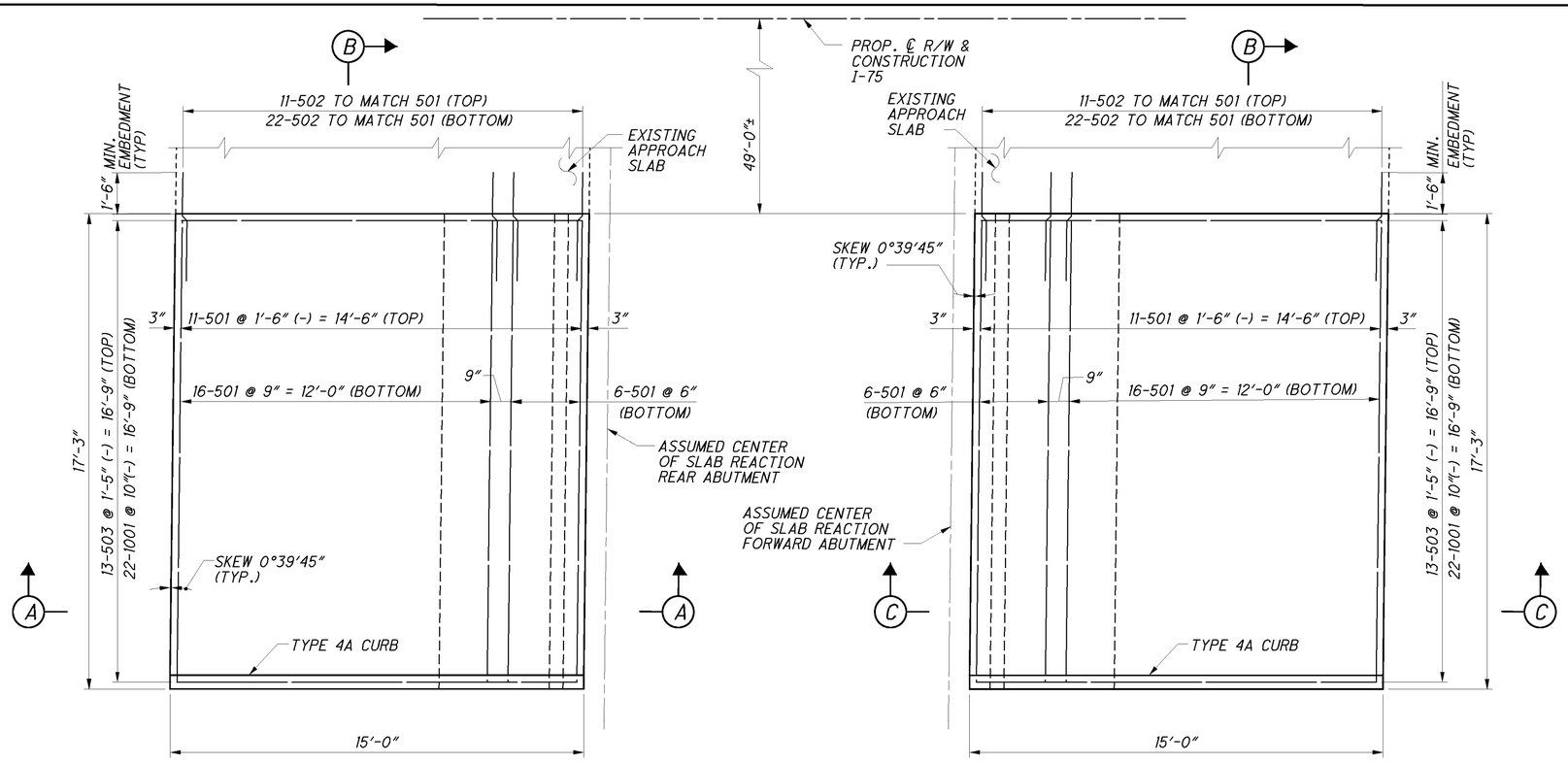

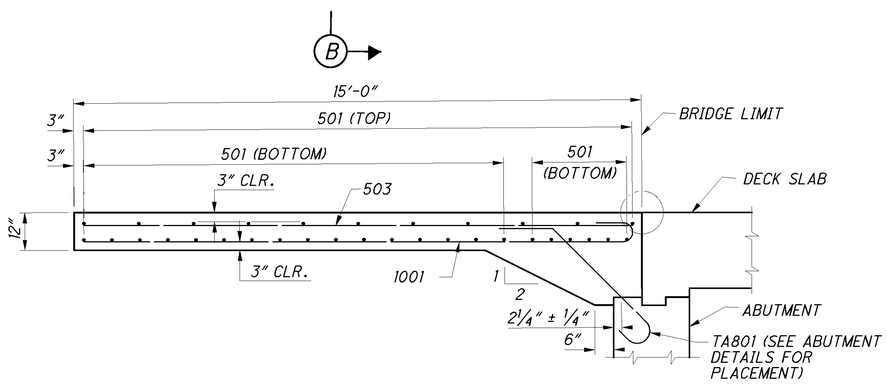

SECTION A-A
(SHOWN)

SECTION C-C
(OPPOSITE HAND)

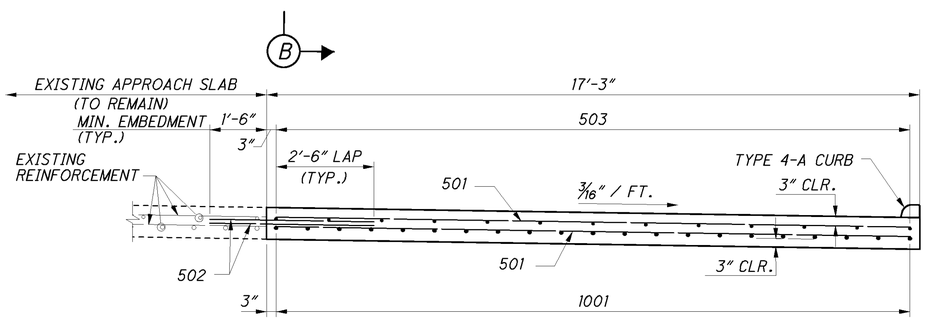

SECTION B-B

MARK	NUMBER TOTAL	LENGTH	WEIGHT	TYPE	DIMENSIONS A	B	C	D	E	R	INC
* TEMPORARY ABUTMENT											
TA601	28	17'- 08"	743	33	2'-7"	5'-8"					
TA602	33	11'- 08"	579	STR.							
TA603	28	19'- 00"	800	33	6'-3"	2'-8"					
TA604	26	7'- 08"	300	2	3'-2"	1'-8"	3'-2"				
TA605	8	8'- 09"	106	2	4'-1"	11"	4'-1"				
TA606	16	2'- 09"	67	STR.							
TA801	12	6'- 02"	198	18	3'-10"	1'-0"	1'-0"				
TEMPORARY ABUTMENT TOTAL			2,793								

ALL BAR MARKS SHALL BE PREFIXED: TAS FOR TEMPORARY APPROACH SLAB

* FOR INFORMATION ONLY, NOT INCLUDED WITH ITEM 509. COST FOR APPROACH SLAB REINFORCING SHALL BE INCLUDED WITH ITEM 898, QC/QA CONCRETE, CLASS QSC2, SUPERSTRUCTURE (APPROACH SLAB), AS PER PLAN.

DESIGN AGENCY
PARSONS BRINCKERHOFF
2545 FARMERS DRIVE
SUITE 350
COLUMBUS, OHIO 43235

DESIGNED	DRAWN	REVIEWED	DATE
ECM	RCK	EBS	02/01/13
CHECKED	REVISED	STRUCTURE FILE NUMBER	
APV		0201901	

TEMPORARY APPROACH SLABS
BRIDGE NO. ALL-75-0448 R
I-75 OVER INDIANA & OHIO RAILWAY

ALL-75-0.21
PID No. 89029

09-MAY-2013 3:10PM lint
J:\Projects\ALL\89029\structures\ALL075_0448C\sheets\From ECM 2-3-12\075_0448CMD002.dgn

MARK	NUMBER TOTAL	LENGTH	WEIGHT	TYPE	DIMENSIONS A	B	C	D	E	R	INC
TEMPORARY PIER											
TP401	182	2'- 08"	325	35	1'-8"	8"					
TP501	100	12'- 02"	1,269	STR.							
TP503	52	4'- 05"	240	1	10"	3'-8"					
TP601	30	8'- 08"	391	STR.							
TP602	14	14'- 02"	298	STR.							
TP801	32	10'- 06"	898	17	8'-8"						
TP802	18	16'- 00"	769	17	14'-2"						
TP803	52	6'- 04"	880	1	1'-4"	5'-2"					
TP804	52	24'- 01"	3,344	STR.							
TEMPORARY PIER TOTAL			8,414								

MARK	NUMBER TOTAL	LENGTH	WEIGHT	TYPE	DIMENSIONS A	B	C	D	E	R	INC
TEMPORARY ABUTMENT											
TA601	28	17'- 08"	743	33	2'-7"	5'-8"					
TA602	33	11'- 08"	579	STR.							
TA603	28	19'- 00"	800	33	6'-3"	2'-8"					
TA604	26	7'- 08"	300	2	3'-2"	1'-8"	3'-2"				
TA605	8	8'- 09"	106	2	4'-1"	11"	4'-1"				
TA606	16	2'- 09"	67	STR.							
TA801	12	6'- 02"	198	18	3'-10"	1'-0"	1'-0"				
TEMPORARY ABUTMENT TOTAL			2,793								

MARK	NUMBER TOTAL	LENGTH	WEIGHT	TYPE	DIMENSIONS A	B	C	D	E	R	INC
TEMPORARY SUPERSTRUCTURE											
TS401	105	3'- 05"	240	2	1'-3"	1'-2"	1'-3"				
TS501	72	24'- 05"	1,834	STR.							
TS502	36	17'- 11"	673	STR.							
TS503	131	16'- 08"	2,278	STR.							
TS504	22	30'- 00"	689	STR.							
TS505	4	24'- 10"	104	STR.							
TS506	8	10'- 00"	84	STR.							
TS507	4	5'- 08"	24	25	1'-10"	2'-5"	1'-4"	1 1/2"	5"		
TS508	4	5'- 08"	24	STR.							
TS509	104	7'- 01"	769	23	8"	3'-3"	3'-0"	1 1/2"			
TS510	2	30'- 07"	64	STR.							
	2	3'- 00"			2'-5"						
TS511	SER. OF	TO	79	16	TO						
	11	3'- 10"			3'-3"						
TS601	113	16'- 08"	2,829	STR.							
TS602	3	30'- 00"	136	STR.							
TS603	1	33'- 11"	51	STR.							
TS604	126	3'- 07"	679	14	10 1/2"	1'-5"	8 1/2"	6"	9"		
TS605	104	4'- 00"	625	1	12"	3'-2"					
	2	4'- 07"				3'-9"					
TS606	SER. OF	TO	166	1	12"	TO					
	11	5'- 05"				4'-7"					
TS607	16	4'- 07"	111	1	12"	3'-9"					
TS901	60	24'- 05"	4,981	16	23'-2"						
TS902	60	28'- 10"	5,882	STR.							
TS903	72	39'- 01"	9,568	STR.							
TS904	60	23'- 02"	4,726	STR.							
TEMPORARY SUPERSTRUCTURE TOTAL			36,616								

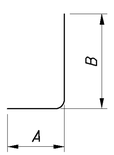

TYPE-1

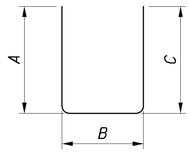

TYPE-2

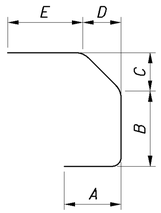

TYPE-14

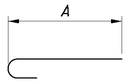

TYPE-16

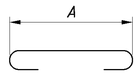

TYPE-17

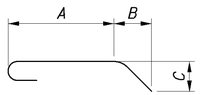

TYPE-18

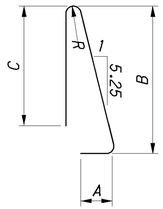

TYPE-23

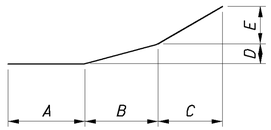

TYPE-25

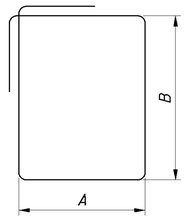

TYPE-33

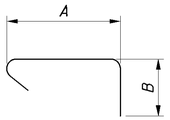

TYPE-35

NOTES:

1. THE BAR SIZE NUMBER IS SPECIFIED ON THE PLANS IN THE BAR MARK COLUMN. THE FIRST DIGIT WHERE THREE DIGITS ARE USED, AND THE FIRST TWO DIGITS WHERE FOUR ARE USED, INDICATES THE BAR SIZE NUMBER. FOR EXAMPLE, P601 IS A NO. 6 BAR. BAR DIMENSIONS SHOWN ARE OUT TO OUT UNLESS OTHERWISE INDICATED. R INDICATES INSIDE RADIUS, UNLESS OTHERWISE NOTED. "STD." WRITTEN IN PLACE OF A DIMENSION INDICATES A STANDARD BEND AT THE END OF THE BAR.

2. ALL REINFORCEMENT IS TO BE EPOXY COATED.

DESIGN AGENCY
PARSONS BRINCKERHOFF
2945 FARMERS DRIVE
SUITE 350
COLUMBUS, OHIO 43235

DESIGNED	DRAWN	REVIEWED	DATE
ECM	ECM	EBS	02/01/13
CHECKED	REVISED	STRUCTURE FILE NUMBER	
APV		0201901	

TEMPORARY BRIDGE REINFORCING STEEL LIST

BRIDGE NO. ALL-75-0448 R
I-75 OVER INDIANA & OHIO RAILWAY

ALL-75-5.53
PID No. 89029

50 / 50

776
907

J:\Projects\ALL\89029\structures\ALL075_0448C\sheets\From ECM 2-3-12\075_0448CRL001.dgn 09-MAY-2013 3:10PM lint

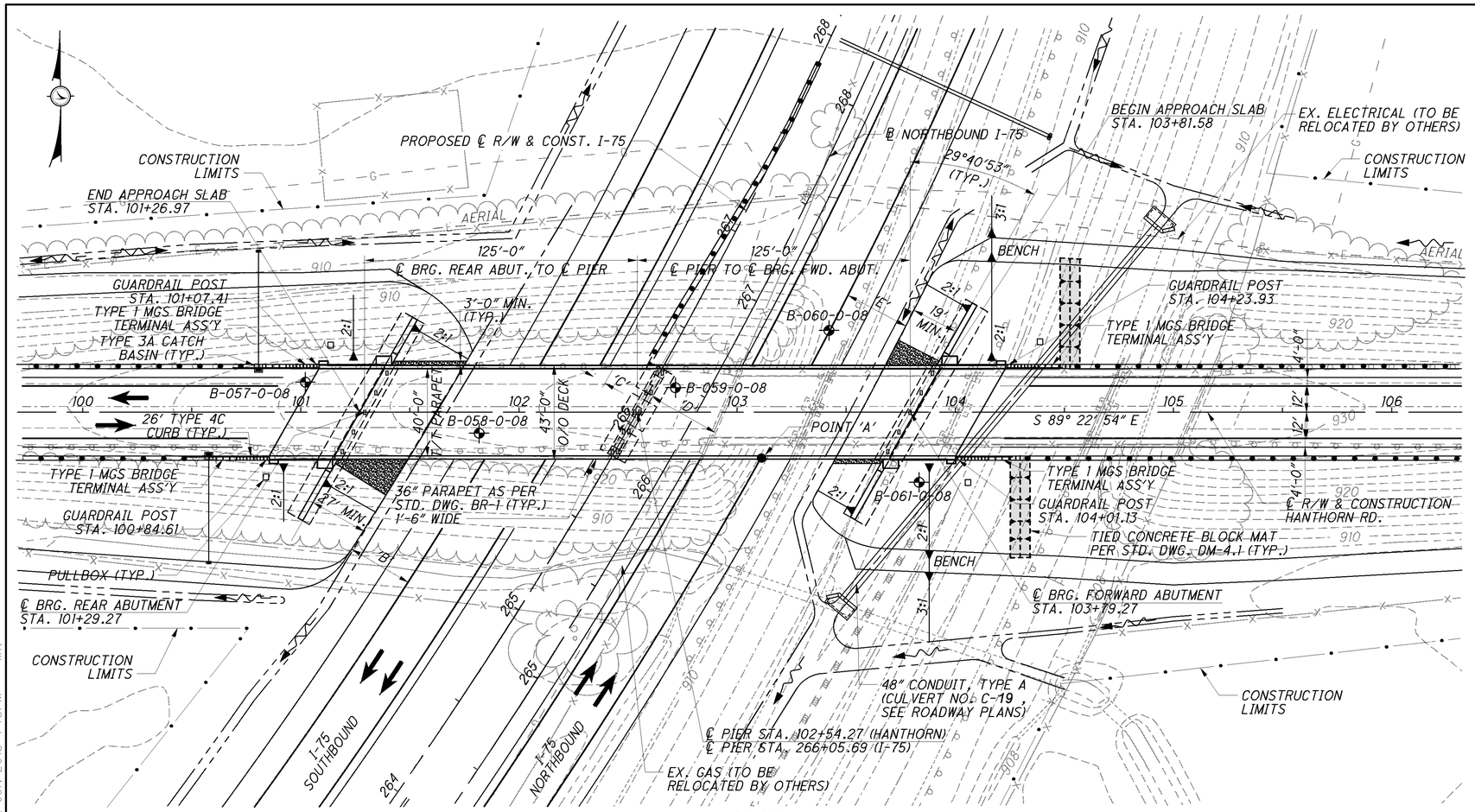

PLAN

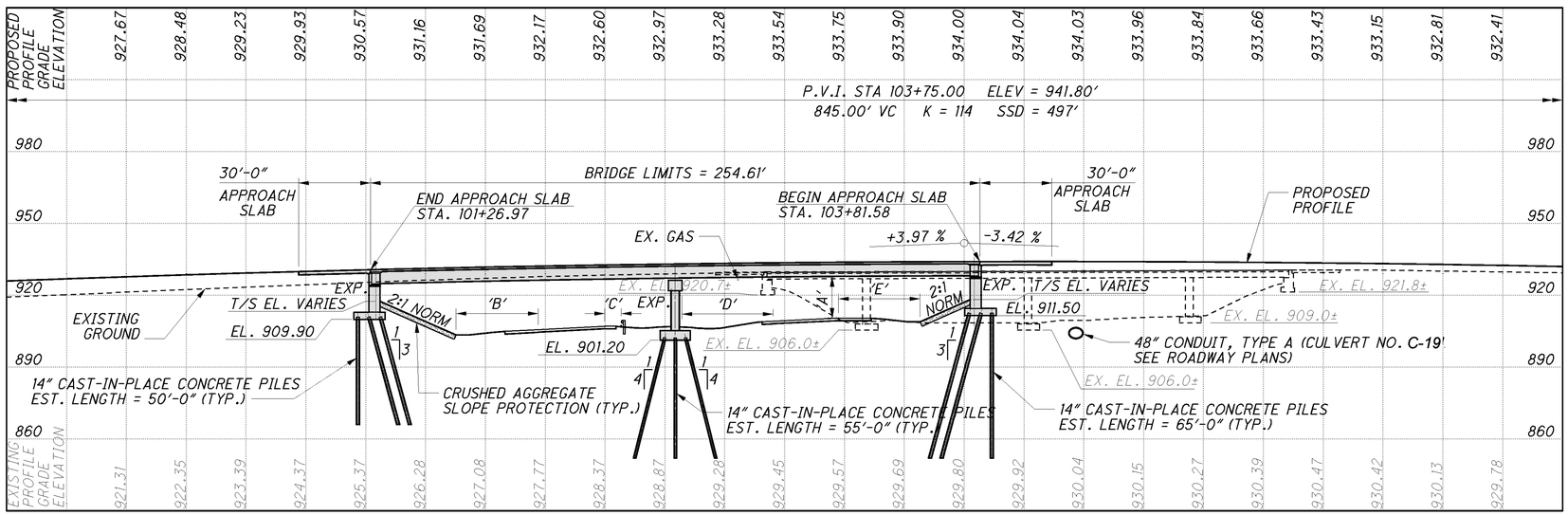

PROFILE
ALONG ℄ R/W & CONSTRUCTION

NOTES

EARTHWORK LIMITS SHOWN ARE APPROXIMATE. ACTUAL SLOPES SHALL CONFORM TO PLAN CROSS SECTIONS.

DESIGN TRAFFIC:
2015 ADT = 2,660 2015 ADTT = 106
2035 ADT = 2,830 2035 ADTT = 113
DIRECTIONAL DISTRIBUTION = 0.55

LEGEND

⌖ BORING LOCATION

● 17.00' REQUIRED MINIMUM VERTICAL CLEARANCE
POINT 'A' - 17.38' ACTUAL MINIMUM VERTICAL CLEARANCE
30.00' REQUIRED MINIMUM HORIZONTAL CLEARANCE
POINT 'B' - 30.00' ACTUAL MINIMUM HORIZONTAL CLEARANCE
POINT 'C' - 6.00' ACTUAL MINIMUM HORIZONTAL CLEARANCE
POINT 'D' - 32.95' ACTUAL MINIMUM HORIZONTAL CLEARANCE
POINT 'E' - 30.00' ACTUAL MINIMUM HORIZONTAL CLEARANCE

SOIL BORING LOCATIONS

BORING	STATION, OFFSET	APPROX. TOP OF ROCK
B-057-0-08	STA. 101+02.0, 13.8' LT.	** TERMINATED AT 862.5
B-058-0-08	STA. 101+81.8, 9.6' RT.	** TERMINATED AT 860.3
B-059-0-08	STA. 102+71.7, 11.3' LT.	** TERMINATED AT 862.5
B-060-0-08	STA. 103+42.1, 37.5' LT.	** TERMINATED AT 847.2
B-061-0-08	STA. 103+83.4, 32.1' RT.	** TERMINATED AT 864.2

** INDICATES BOTTOM OF BORING ELEVATION (ROCK NOT FOUND)

EXISTING STRUCTURE

TYPE: CONTINUOUS 4-SPAN STEEL BEAM WITH REINFORCED CONCRETE DECK AND SUBSTRUCTURE.

SPANS: 40.5'± - 67.5'± - 67.5'± - 40.5'± C/C BRGS.
ROADWAY: 28'-0" ± F/F OF 2' SAFETY CURB
LOADING: CF-130 (51)
SKEW: 23°20' LF ±
APPROACH SLABS: AS-1-54 (20' LONG)
ALIGNMENT: TANGENT
CROWN: NORMAL 3/16"/FT.
STRUCTURE FILE NUMBER: 0201928
DATE BUILT: 1958
WEARING SURFACE: LATEX MODIFIED CONCRETE

PROPOSED STRUCTURE

TYPE: 2-SPAN, DRAPED STRAND CONCRETE I-BEAMS WITH REINFORCED CONCRETE DECK, CAP AND COLUMN PIER, AND PARTIAL HEIGHT SEMI-INTEGRAL ABUTMENTS.

SPANS: 125'-0" AND 125'-0" ℄ BRG. ABUTMENTS TO ℄ PIER
ROADWAY: 40'-0" TOE/TOE PARAPET
LOADING: HL-93
FUTURE WEARING SURFACE (FWS) OF 0.060 kips/ft^2
SKEW: 29°40'53" LEFT FORWARD
APPROACH SLABS: AS-1-81, 30' LONG (MODIFIED)
WEARING SURFACE: 1" MONOLITHIC
ALIGNMENT: TANGENT
CROWN: 0.016 FT/FT
COORDINATES: LATITUDE 40°42'12"
LONGITUDE 84°4'30"

DESIGN AGENCY
PARSONS BRINCKERHOFF
2945 FARMERS DRIVE
SUITE 350
COLUMBUS, OHIO 43235

DESIGNED PJL | DRAWN BKJ/TLP | REVIEWED EBS | DATE 11-29-12
CHECKED SAP | REVISED | STRUCTURE FILE NUMBER 0201936

ALLEN COUNTY
STA. 101+26.97
STA. 103+81.58

SITE PLAN
BRIDGE NO. ALL-75-0508
C.R. 196 (HANTHORN RD.) OVER I-75

ALL-75-0.21
PID No. 89029

J:\Projects\ALL\89029\structures\ALL075_0508C\sheets\075_0508CSP001.dgn 12-JUN-2013 1:45PM jint

STANDARD DRAWINGS AND SUPPLEMENTAL SPECIFICATIONS

REFER TO THE FOLLOWING STANDARD BRIDGE DRAWING(S):

AS-1-81	REVISED	07-19-02
BR-1	REVISED	07-19-02
PSID-1-99	REVISED	07-18-08
SICD-1-96	REVISED	07-19-02
VPF-1-90	REVISED	04-15-11

AND TO THE FOLLOWING SUPPLEMENTAL SPECIFICATION(S):

800	DATED	07-19-13
832	DATED	05-05-09
898	DATED	10-21-11

DESIGN SPECIFICATIONS

DESIGN SPECIFICATIONS: THIS STRUCTURE CONFORMS TO THE "LRFD BRIDGE DESIGN SPECIFICATIONS" ADOPTED BY THE AMERICAN ASSOCIATION OF STATE HIGHWAY AND TRANSPORTATION OFFICIALS, 2010 AND THE ODOT BRIDGE DESIGN MANUAL, 2007 EXCEPT AS NOTED ELSEWHERE IN THE PLANS.

LOAD MODIFIER FOR OPERATIONAL IMPORTANCE

OPERATIONAL IMPORTANCE: A LOAD MODIFIER OF 1.00 HAS BEEN ASSUMED FOR THE DESIGN OF THIS STRUCTURE IN ACCORDANCE WITH THE AASHTO LRFD BRIDGE DESIGN SPECIFICATIONS, ARTICLE 1.3.5 AND THE ODOT BRIDGE DESIGN MANUAL, 2007.

DESIGN LOADING

DESIGN LOADING: HL-93

FUTURE WEARING SURFACE (FWS) OF 0.060 KIPS/SQ.FT.

DESIGN DATA

DESIGN DATA:
CONCRETE CLASS QSC2 - COMPRESSIVE STRENGTH 4.5 KSI (SUPERSTRUCTURE)
CONCRETE CLASS QSC1 - COMPRESSIVE STRENGTH 4.0 KSI (SUBSTRUCTURE)

REINFORCING STEEL - MINIMUM YIELD STRENGTH 60 KSI
STRUCTURAL STEEL - ASTM A709 GRADE 50 - YIELD STRENGTH 50 KSI

CONCRETE FOR PRESTRESSED BEAMS:
COMPRESSIVE STRENGTH (FINAL) - 10.0 KSI
COMPRESSIVE STRENGTH (RELEASE) - 7.0 KSI
PRESTRESSING STRAND:
AREA = 0.167 SQ.IN.
ULTIMATE STRENGTH = 270 KSI
INITIAL STRESS = 202.5 KSI (LOW RELAXATION STRANDS)

DECK PROTECTION METHOD

EPOXY COATED REINFORCING STEEL

2.5" CONCRETE COVER

SEALING OF CONCRETE SURFACES

MONOLITHIC WEARING SURFACE

MONOLITHIC WEARING SURFACE IS ASSUMED, FOR DESIGN PURPOSES, TO BE 1 INCH THICK.

ABUTMENT CONTRUCTION

EXCAVATION FOR THE REAR ABUTMENT CONSTRUCTION SHALL BE AS SHOWN ON THE PLANS. AFTER THE FOOTING AND THE BREASTWALL HAVE BEEN CONSTRUCTED, CONSTRUCT THE EMBANKMENT IMMEDIATELY BEHIND THE ABUTMENTS UP TO THE BEAM SEAT ELEVATION AND ON A 1:1 SLOPE UP TO THE SUBGRADE ELEVATION PRIOR TO SETTING THE BEAMS ON THE ABUTMENT.

PILE DRIVING CONSTRAINTS

FORWARD ABUTMENT: PRIOR TO DRIVING PILES AT THE FORWARD ABUTMENT, CONSTRUCT THE BRIDGE APPROACH EMBANKMENT BEHIND THE ABUTMENT UP AT A 1:1 SLOPE FROM THE TOP OF THE HEEL OF THE FOOTING TO THE SUBGRADE ELEVATION AND FOR A MINIMUM DISTANCE OF 150 FEET BEHIND THE ABUTMENT. DO NOT BEGIN THE INSTALLATION OF THE ABUTMENT PILES UNTIL AFTER THE ABOVE REQUIRED EMBANKMENT HAS BEEN CONSTRUCTED.

PILE DESIGN LOADS (ULTIMATE BEARING VALUE)

PILE DESIGN LOADS (ULTIMATE BEARING VALUE):
THE ULTIMATE BEARING VALUE IS 380 KIPS PER PILE FOR THE 121 ABUTMENT PILES. THE ULTIMATE BEARING VALUE IS 336 KIPS PER PILE FOR THE 27 PIER PILES.

REAR ABUTMENT PILES:
14" CAST-IN-PLACE PILES 55 FEET LONG, ORDER LENGTH
1 DYNAMIC LOAD TESTING ITEMS

PIER PILES:
14" CAST-IN-PLACE PILES 60 FEET LONG, ORDER LENGTH
1 DYNAMIC LOAD TESTING ITEMS

FORWARD ABUTMENT PILES:
14" CAST-IN-PLACE PILES 70 FEET LONG, ORDER LENGTH
1 DYNAMIC LOAD TESTING ITEMS

EXISTING STRUCTURE PLANS:

CONSTRUCTION PLANS FOR THE EXISTING BRIDGE ARE ON FILE AT THE OHIO DEPARTMENT OF TRANSPORTATION, DISTRICT ONE OFFICE, 1885 NORTH MCCULLOUGH ST., LIMA, OHIO 45801 AND ARE AVAILABLE FOR REFERENCE.

DECK PLACEMENT DESIGN ASSUMPTIONS:

DECK PLACEMENT DESIGN ASSUMPTIONS:
THE FOLLOWING ASSUMPTIONS OF CONSTRUCTION MEANS AND METHODS WERE MADE FOR THE ANALYSIS AND DESIGN OF THE SUPERSTRUCTURE. THE CONTRACTOR IS RESPONSIBLE FOR THE DESIGN OF THE FALSEWORK SUPPORT SYSTEM WITHIN THESE PARAMETERS AND WILL ASSUME RESPONSIBILITY FOR SUPERSTRUCTURE ANALYSIS FOR DEVIATION FROM THESE DESIGN ASSUMPTIONS.

AN EIGHT WHEEL FINISHING MACHINE WITH A MAXIMUM WHEEL LOAD OF 1.14 KIPS FOR A TOTAL MACHINE LOAD OF 9.13 KIPS.

A MINIMUM OUT-TO-OUT WHEEL SPACING AT EACH END OF THE MACHINE OF 103".

A MAXIMUM SPACING OF OVERHANG FALSEWORK BRACKETS OF 48 IN.

A MAXIMUM DISTANCE FROM THE CENTERLINE OF THE FASCIA GIRDER TO THE FACE OF THE SAFETY HANDRAIL OF 65".

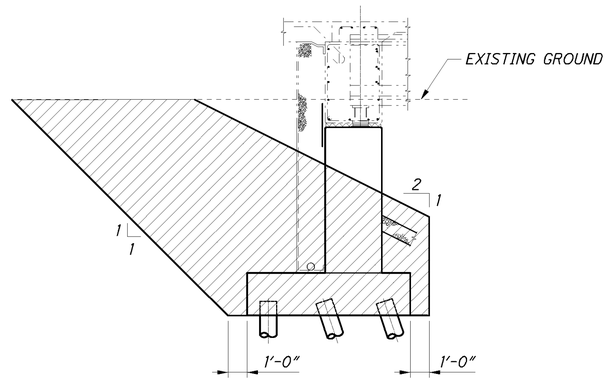

UNCLASSIFIED EXCAVATION AT REAR ABUTMENT

- LIMITS OF UNCLASSIFIED EXCAVATION, AS PER PLAN

ABBREVIATIONS:

ABUT. = ABUTMENT
APPROX. = APPROXIMATE
BRG. = BEARING
C/C = CENTER TO CENTER
C.J. = CONSTRUCTION JOINT
CLR. = CLEAR
CONST. = CONSTRUCTION
DIA. = DIAMETER
DWG. = DRAWING
E.F. = EACH FACE
EL. = ELEVATION
EST. = ESTIMATE
EX. = EXISTING
F.A. = FORWARD ABUTMENT
F.F. = FAR FACE
FWD. = FORWARD
HMWM = HIGH MOLECULAR WEIGHT METHACRYLATE
LT. = LEFT
MAX. = MAXIMUM
MIN. = MINIMUM
N.F. = NEAR FACE
N.P.C.P.P. = NON-PERFORATED CORRUGATED PLASTIC PIPE
O/O = OUT TO OUT
P.C.P.P. = PERFORATED CORRUGATED PLASTIC PIPE
P.E.J.F. = PREFORMED EXPANSION JOINT FILLER
P.F.J. = PRECOMPRESSED FOAM JOINT
PROP. = PROPOSED
R.A. = REAR ABUTMENT
RT. = RIGHT
SER. = SERIES
SPA. = SPACES
STA. = STATION
STD. = STANDARD
T/T = TOE TO TOE
T/S = TOP OF SLOPE
TYP. = TYPICAL

DESIGN AGENCY
PARSONS BRINCKERHOFF
2945 FARMERS DRIVE
SUITE 350
COLUMBUS, OHIO 43235

DESIGNED	DRAWN	REVIEWED	DATE
APV	APV	EBS	11-29-12
CHECKED	REVISED	STRUCTURE FILE NUMBER	
BMG		0201936	

GENERAL NOTES
BRIDGE NO. ALL-75-0508
C.R. 196 (HANTHORN RD.) OVER I-75

ALL-75-0.21
PID No. 89029

2 / 28

778
907

J:\Projects\ALL\89029\structures\ALL075_0508C\sheets\075_0508CGN001.dgn 09-MAY-2013 3:10PM jint

ITEM 511-CONCRETE, MISC.: FORMING OF ROUGH CUT STONE FINISH USING FORMLINERS

DESCRIPTION;
CONCRETE FORMLINERS SHALL BE USED ON THE FOLLOWING SURFACES ACCORDING TO THE DETAILS IN PLANS:

1.ABUTMENT AND WINGWALL FACES.
2.PARAPETS.
3.TOWER FACES.
4. PIER COLUMNS

THE FORMLINER USED SHALL MEET THE DETAILS SHOWN IN THE PLANS FOR STAGGERED (INTERLOCKING) PATTERNS, INCLUDING DEPTH OF RELIEF AND SIZE OF STONE PATTERN. HORIZONTAL JOINTS IN THE STONE PATTERN SHALL BE ALIGNED AND AT THE SAME ELEVATION. THE FINISHED TEXTURE OF THE ROUGH CUT STONE SHALL BE SIMILAR TO THAT OF RUBBED CONCRETE.

FORMLINERS FOR PATTERN 1 SHALL MATCH THE DIMENSIONAL SPECIFICATIONS OF THE FOLLOWING MANUFACTURER OR APPROVED EQUAL:

PATTERN #1104-R2 (RANDOM CUT STONE)
CUSTOM ROCK
2020 WEST 7TH STREET
ST. PAUL, MN 55116
651-699-1345
WWW.CUSTOM-ROCK.COM

FORMLINERS FOR PATTERN 2 SHALL MATCH THE DIMENSIONAL SPECIFICATIONS OF THE FOLLOWING MANUFACTURER OR APPROVED EQUAL:

PATTERN #1599 (RANDOM CUT STONE)
SPEC FORMLINERS, INC.
530 E. DYER RD.
SANTA ANA, CA 92707
888-429-9550
WWW.SPECFORMLINERS.COM

THE FORMLINER MANUFACTURER SHALL SUBMIT EVIDENCE OF AT LEAST TWO SIMILAR ARCHITECTURAL CONCRETE CONSTRUCTION PROJECTS WITHIN THE PAST FIVE YEARS FOR A REVIEW AND APPROVAL BY THE ENGINEER. COMPLETE SHOP DRAWINGS DETAILING THE STONE PATTERNS SHALL BE SUBMITTED IN ACCORDANCE WITH 501.04 FOR APPROVAL PRIOR TO PLACING ANY CONCRETE WHERE THE FORMLINERS WILL BE USED. SHOP DRAWINGS SHALL INCLUDE FORMLINER INSTALLATION AND CASTING INSTRUCTIONS, AND INDICATE FORMLINER BACKUP, REVEAL, AND CHAMFER STRIP LOCATIONS. THE CONTRACTOR SHALL COORDINATE WITH THE FORMLINER MANUFACTURER TO ASSURE UNDERSTANDING OF FORMLINER USE, TEST PANEL MOCK-UP REQUIREMENTS, AND FINAL CONSTRUCTION PROCEDURES.

MATERIALS:
THE FORMLINER SHALL BE FABRICATED WITH SHAPES THAT ALLOW REMOVAL OF THE FORMS WITHOUT DAMAGE OR VISUAL IMPAIRMENT OF THE CONCRETE, AND SHALL HAVE 1/8" MINIMUM RADII WITH NO SHARP EDGES. THE FORMLINER SHALL BE CAPABLE OF WITHSTANDING APPLIED CONCRETE POUR PRESSURE WITHOUT LEAKAGE, PHYSICAL DEFECT, OR VISUAL IMPAIRMENT.

CONSTRUCTION REQUIREMENTS:
FORMLINERS SHALL BE CLEANED BEFORE EACH USE. DAMAGED FORMLINERS WHOSE CONTINUED USE OR REPAIR WOULD NEGATIVELY IMPACT THE AESTHETICS OF THE FINISHED CONCRETE SHALL BE REPLACED. FORMLINER JOINTS SHALL BE SEALED TO PREVENT CEMENT PASTE FROM BLEEDING. FORMLINERS SHALL BE INSTALLED IN ACCORDANCE WITH THE APPROVED SHOP DRAWINGS. CHAMFERED CORNERS SHALL FORM SMOOTH, SOLID UNBROKEN CONTINUOUS SURFACES WHICH ARE UNIFORMLY STRAIGHT. AN APPROVED COMPATIBLE FORMLINER RELEASE AGENT SHALL BE APPLIED AT A RATE RECOMMENDED BY THE MANUFACTURER.

THE CONCRETE COPING SHALL BE CAST WITH NO FORMLINER USED.

AS PART OF THIS ITEM, A 7 FEET BY 3 FEET SECTION OF WALL THAT COMPRISES A MINIMUM OF ONE COMPLETE STONE BLOCK WILL BE CAST BY THE CONTRACTOR FOR EACH PATTERN USED FOR APPROVAL BY THE ENGINEER. IF THE SECTION DOES NOT MEET THE ENGINEER'S APPROVAL, THE PROPOSED FORMLINER MAY BE REJECTED. THE SECTION MUST BE APPROVED BEFORE PLACINGANY CONCRETE WHERE THE FORMLINERS WILL BE USED. REJECTION OF THE SECTION WILL REQUIRE CONSTRUCTION OF ANOTHER SECTION UNTIL APPROVAL IS GRANTED. THE WALL SECTION SHALL USE ACTUAL PROJECT SPECIFIC MATERIALS, METHODS, AND WORKMANSHIP, INCLUDING CONCRETE MIX (CEMENT TYPE, AGGREGATE GRADATION, SLUMP, WATER/CEMENT RATIO, PLASTICIZERS, AND ADDITIVES), FORMLINER AND FORMWORK SYSTEMS, INSERTS, FORM RELEASE AGENTS, PLACEMENT RATE, FORM PRESSURES, AND JOINT SEALING, VIBRATING, AND STRIPPING PRACTICES. ANY INTENDED PATCHING OR REPAIR PROCEDURES FOR THE CORRECTION OF MINOR DEFECTS THAT DO NOT RESULT IN REJECTION OF THE ENTIRE WALL SECTION SHALL BE DEMONSTRATED ON THE SECTION.

THE ACCEPTED WALL SECTION SHALL BE THE STANDARD BY WHICH THE FINAL CONSTRUCTION WILL BE EVALUATED FOR TECHNICAL AND AESTHETIC MERIT. THE WALL SECTION SHALL BE CONSTRUCTED AT THE CONSTRUCTION SITE, OR AT AN ALTERNATIVE LOCATION AGREED UPON BY THE ENGINEER. UPON COMPLETION OF THE FINAL CONSTRUCTION, THE CONTRACTOR SHALL BE RESPONSIBLE FOR REMOVAL AND DISPOSAL OF THE WALL SECTION MOCK-UP.

PORTIONS OF THE STRUCTURE DETAILED IN THE PLAN SET SHALL BE CAST WITH STONE FACING FORMLINER TEXTURE AND BE SEALED WITH ITEM 512 - SEALING OF CONCRETE SURFACES (NON-EPOXY (CLEAR)).

METHOD OF MEASUREMENT:
ROUGH CUT STONE FORMLINERS WILL NOT BE MEASURED INDIVIDUALLY FOR PAYMENT UNDER THIS ITEM.

BASIS OF PAYMENT:
ITEM 511-CONCRETE, MISC.: FORMING OF ROUGH CUT STONE FINISH USING FORMLINERS WILL BE PAID FOR AT THE CONTRACT SQ. FT. PRICE. THE WORK SHALL INCLUDE FABRICATION AND ERECTION OF FORMLINERS, PREPARATION OF FORMLINER SHOP DRAWINGS, AND CONSTRUCTION AND REMOVAL OF THE PRE-CONSTRUCTION WALL SECTION, AND SHALL INCLUDE ALL LABOR, MATERIALS, EQUIPMENT, AND INCIDENTALS REQUIRED TO COMPLETE THIS ITEM.

THE DEPARTMENT WILL PAY FOR SEALING OF CONCRETE SURFACES SEPARATELY UNDER ITEM 512-SEALING OF CONCRETE SURFACES (NON-EPOXY (CLEAR)). SEE THE GENERAL SEALING OF CONCRETE SURFACES PLAN NOTE FOR REQUIREMENTS FOR THE NON-EPOXY (CLEAR) SEALER.

ITEM 512-SEALING OF CONCRETE SURFACES (EPOXY-URETHANE), AS PER PLAN

EPOXY-URETHANE FOR THE BEAMS SHALL BE FEDERAL COLOR STANDARD NUMBER 25095. EPOXY-URETHANE FOR THE WINGWALL COPING, PIER CAP, ABUTMENT DIAPHRAGM, PARAPET ACCENTS, AND TOWER CAPS SHALL BE FEDERAL COLOR STANDARD NUMBER 37875. EPOXY-URETHANE FOR THE DECK EDGE BELOW PARAPET SHALL BE FEDERAL COLOR NUMBER 36373. ALL CONCRETE SHALL BE SEALED AS PER PLAN DETAILS.

ITEM 512 - SEALING OF CONCRETE SURFACES (NON-EPOXY CLEAR), AS PER PLAN

THE NON-EPOXY (CLEAR) SEALER SHALL BE USED ON THE FOLLOWING SURFACES ACCORDING TO THE DETAILS IN PLANS:

1. ABUTMENT AND WINGWALL FACES.
2. PIERS.
3. DECK AND PARAPETS.
4. TOWER FACES.

PAYMENT FOR SEALING SURFACES OF ITEMS 1, 2, 3, AND 4 SHALL BE INCLUDED IN THIS ITEM 512.

ITEM 518 - 6" NON-PERFORATED CORRUGATED PLASTIC PIPE, INCLUDING SPECIALS, AS PER PLAN

ANIMAL GUARDS SHALL BE PROVIDED AT THE OUTLET OF THE DRAINAGE PIPES, STEEL BOLTS OR RODS FOR THE ANIMAL GUARDS SHALL BE GALVANIZED PER CMS 711.02. SEE STD DWG. DM 1.1 FOR ADDITIONAL DETAILS AND NOTES. THE ANIMAL GUARDS AND CRUSHED AGGREGATE SLOPE PROTECTION ARE INCIDENTAL TO ITEM 518 - 6" NON-PERFORATED CORRUGATED PLASTIC PIPE, INCLUDING SPECIALS, AS PER PLAN.

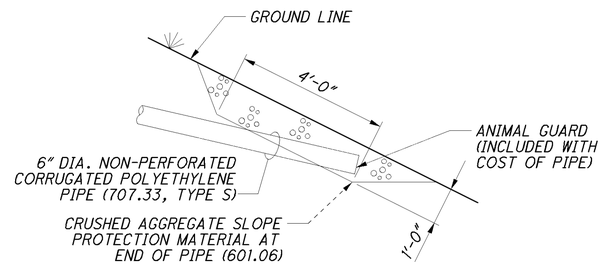

TERMINATION OF 6" NON-PERFORATED CORRUGATED PLASTIC PIPE (N.P.C.P.P.)

ITEM 607 - VANDAL PROTECTION FENCE, AS PER PLAN

ALL MATERIALS NECESSARY FOR THE INSTALLATION OF THE VANDAL PROTECTION FENCING, INCLUDING ALL POSTS AND RAILS SHALL BE FEDERAL COLOR NUMBER 27038, BLACK. THE PVC COATING FOR THE FABRIC SHALL BE BLACK IN COLOR CLOSELY APPROACHING FEDERAL COLOR NUMBER 27038. ALL LABOR AND MATERIALS FOR COATING SHALL BE INCLUDED WITH THIS ITEM FOR PAYMENT.

ITEM 898 - QC/QA CONCRETE, CLASS QSC2, SUPERSTRUCTURE (APPROACH SLAB), AS PER PLAN

THE ACCEPTED QUANTITIES SHALL INCLUDE:
CONCRETE, PARAPETS, REINFORCING STEEL, JOINT FILLERS, JOINT SEALERS, JOINT SEALS, WATERPROOFING, AND END TOWER INCLUDING CAP.

THE PARAPET PORTION OF THIS IEM 898 SHALL CONTAIN INTEGRALLY COLORED CONCRETE USING CHROMIX ADMIXTURES AS PROVIDED BY L.M. SCOFIELD COMPANY, DOUGLASVILLE, GEORGIA (800) 800-9900 OR AN APPROVED EQUAL MATCHING FEDERAL COLOR NO. 36373.

ITEM 898 - QC/QA CONCRETE, CLASS QSC2, SUPERSTRUCTURE (PARAPET), AS PER PLAN

ITEM 898 - QC/QA CONCRETE, CLASS QSC2, SUBSTRUCTURE (PIER ABOVE FOOTING), AS PER PLAN

ITEM 898 - QC/QA CONCRETE, CLASS QSC2, SUBSTRUCTURE (ABUTMENT INCLUDING FOOTING), AS PER PLAN

THIS ITEM 898 SHALL CONTAIN INTEGRALLY COLORED CONCRETE USING CHROMIX ADMIXTURES AS PROVIDED BY L.M. SCOFIELD COMPANY, DOUGLASVILLE, GEORGIA (800) 800-9900 OR AN APPROVED EQUAL MATCHING FEDERAL COLOR NO. 36373.

IT IS NOT NECESSARY FOR THE CONTRACTOR TO PROVIDE INTEGRAL COLORING IN THE LARGE AND SMALL TOWER CAPS, ABUTMENT FOOTING, OR PIER CAP.

DESIGN AGENCY
PARSONS BRINCKERHOFF
2945 FARMERS DRIVE
SUITE 350
COLUMBUS, OHIO 43235

DESIGNED	DRAWN	REVIEWED	DATE
APV	APV	EBS	11-29-12
CHECKED	REVISED	STRUCTURE FILE NUMBER	
BMG		0201936	

GENERAL NOTES
BRIDGE NO. ALL-75-0508
C.R. 196 (HANTHORN RD.) OVER I-75

ALL-75-0.21
PID No. 89029

779
907

J:\Projects\ALL\89029\structures\ALL075_0508\sheets\075_0508CGN002.dgn 09-MAY-2013 3:10PM jint

MADE BY: APV | DATE: 11/23/11
CHECKED BY: ECM | DATE: 11/23/11

01/IMS/BR/	03/ENH/OT/	ITEM	EXTENSION	TOTAL	UNIT	ESTIMATED QUANTITIES DESCRIPTION	ALL-75-0508 ABUT.	 PIER	 SUPER.	 GEN.	SEE SHEET NO.
LUMP		202	11002	LUMP		STRUCTURE REMOVED, OVER 20 FOOT SPAN				LUMP	
90		202	22900	90	SQ YD	APPROACH SLAB REMOVED				90	
LUMP		503	11100	LUMP		COFFERDAMS AND EXCAVATION BRACING				LUMP	
LUMP		503	21301	LUMP		UNCLASSIFIED EXCAVATION, AS PER PLAN				LUMP	2/28
LUMP		505	11100	LUMP		PILE DRIVING EQUIPMENT MOBILIZATION				LUMP	
8,480		507	00600	8,480	FT	14" CAST-IN-PLACE REINFORCED CONCRETE PILES, DRIVEN	6,995	1,485			
9,220		507	00650	9,220	FT	14" CAST-IN-PLACE REINFORCED CONCRETE PILES, FURNISHED	7,600	1,620			
188,879	6,550	509	10000	195,429	POUND	EPOXY COATED REINFORCING STEEL	62,619	28,278	104,532		
	5,631	511	71200	5,631	SQ FT	CONCRETE, MISC.: FORMING OF ROUGH CUT STONE FINISH USING FORMLINERS	3,416	772	1,167	276	
805	91	512	10051	896	SQ YD	SEALING OF CONCRETE SURFACES (NON-EPOXY), AS PER PLAN	379	86	348	83	3/28
840	38	512	10101	878	SQ YD	SEALING OF CONCRETE SURFACES (EPOXY-URETHANE), AS PER PLAN	44	103	712	19	3/28
98		512	33000	98	SQ YD	TYPE 2 WATERPROOFING	98				
10		515	15030	10	EACH	DRAPED STRAND PRESTRESSED CONCRETE BRIDGE I-BEAM MEMBERS, LEVEL 3, TYPE 4 MOD. (60 IN.)			10		
14		516	13600	14	SQ FT	1" PREFORMED EXPANSION JOINT FILLER	14				
200		516	13900	200	SQ FT	2" PREFORMED EXPANSION JOINT FILLER	200				
127		516	14020	127	FT	SEMI-INTEGRAL ABUTMENT EXPANSION JOINT SEAL	127				
10		516	44201	10	EACH	ELASTOMERIC BEARING WITH INTERNAL LAMINATES AND LOAD PLATE (NEOPRENE), AS PER PLAN 12" X 23" X 3.65" WITH 13" X 24" X 1 1/2" LOAD PLATES	10				12/28
10		516	44201	10	EACH	ELASTOMERIC BEARING WITH INTERNAL LAMINATES AND LOAD PLATE (NEOPRENE), AS PER PLAN 12" X 23" X 3.14" WITH 13" X 27" X 1 1/2" (MIN.) LOAD PLATES		10			12/28
189		518	21200	189	CU YD	POROUS BACKFILL WITH FILTER FABRIC		189			
219		518	40000	219	FT	6" PERFORATED CORRUGATED PLASTIC PIPE		219			
42		518	40011	42	FT	6" NON-PERFORATED CORRUGATED PLASTIC PIPE, INCLUDING SPECIALS, AS PER PLAN		42			3/28
3		523	20000	3	EACH	DYNAMIC LOAD TESTING				3	
LUMP		530	00200	LUMP		SPECIAL - STRUCTURE, MISC.: BRIDGE MOUNTED DISPLAY				LUMP	
357		601	20000	357	SQ YD	CRUSHED AGGREGATE SLOPE PROTECTION				357	
508		607	39901	508	FT	VANDAL PROTECTION FENCE, 6' STRAIGHT, COATED FABRIC, AS PER PLAN			508		3/28
680		625	25400	680	FT	CONDUIT, 2", 725.04				680	
4		625	29920	4	EACH	STRUCTURE JUNCTION BOX				4	
4		625	30700	4	EACH	PULL BOX, 725.08, 18"				4	
446		898	10210	446	CU YD	QC/QA CONCRETE, CLASS QSC2, SUPERSTRUCTURE (DECK)			446		
287		898	10709	287	SQ YD	QC/QA CONCRETE, CLASS QSC2, SUPERSTRUCTURE (APPROACH SLAB), (T=17"), AS PER PLAN				287	3/28
58	8	898	11001	66	CU YD	QC/QA CONCRETE, CLASS QSC2, SUPERSTRUCTURE (PARAPET), AS PER PLAN			66		3/28
69	5	898	20101	74	CU YD	QC/QA CONCRETE, CLASS QSC1, SUBSTRUCTURE (PIER ABOVE FOOTING), AS PER PLAN		74			3/28
576	47	898	20161	623	CU YD	QC/QA CONCRETE, CLASS QSC1, SUBSTRUCTURE (ABUTMENT INCLUDING FOOTING), AS PER PLAN	623				3/28
76		898	20300	76	CU YD	QC/QA CONCRETE, CLASS QSC1, SUBSTRUCTURE (FOOTING)		76			

DESIGN AGENCY
PARSONS BRINCKERHOFF
2945 FARMERS DRIVE
SUITE 350
COLUMBUS, OHIO 43235

DESIGNED APV | DRAWN APV | REVIEWED EBS | DATE 11-29-12
CHECKED ECM | REVISED | STRUCTURE FILE NUMBER 0201936

ESTIMATED QUANTITIES
BRIDGE NO. ALL-75-0508
C.R. 196 (HANTHORN RD.) OVER I-75

ALL-75-0.21
PID No. 89029

780
907

J:\Projects\ALL\89029\structures\ALL075_0508C\sheets\075_0508CEQ001.dgn 08-NOV-2013 3:38PM jint

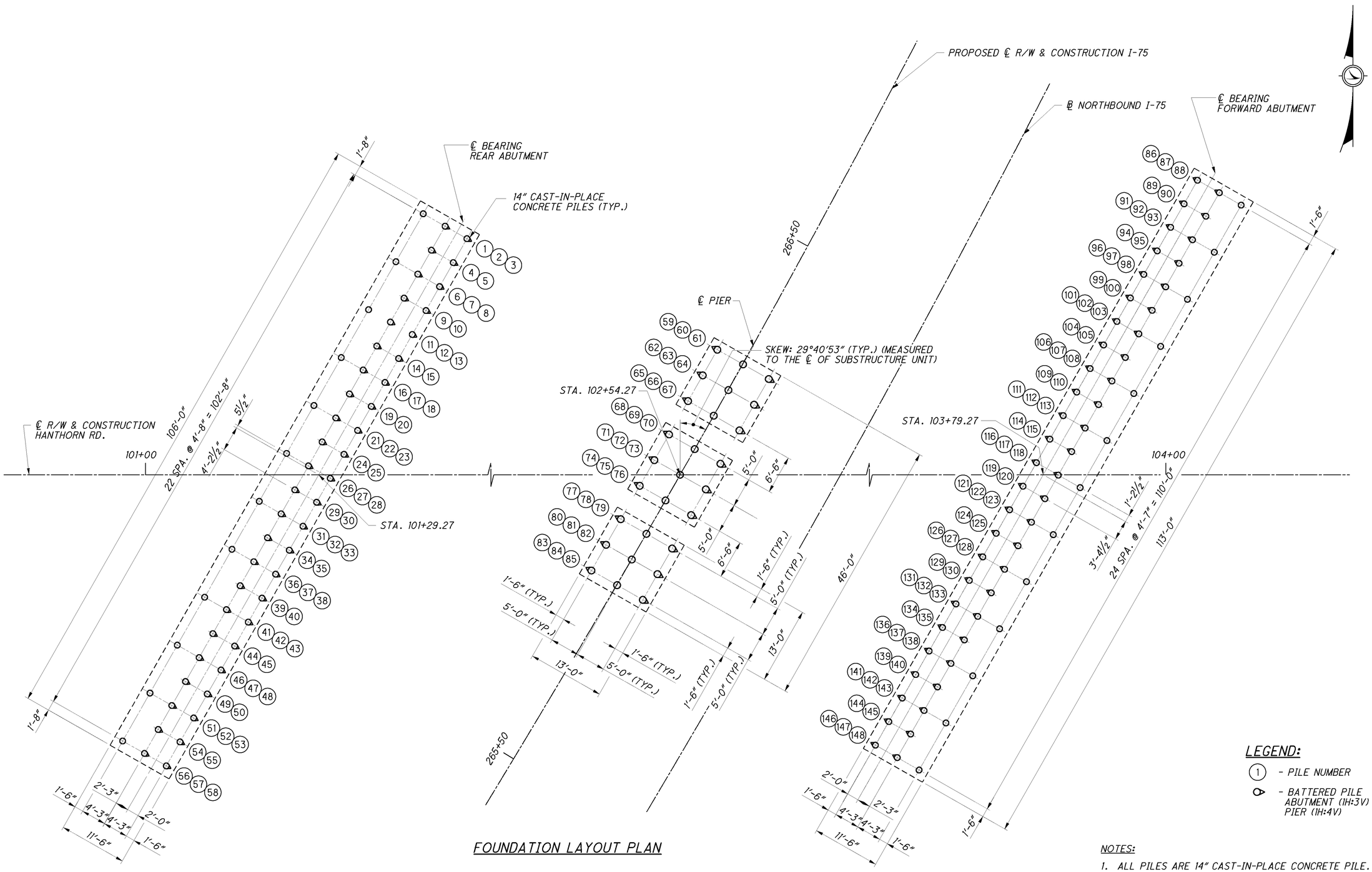

FOUNDATION LAYOUT PLAN

LEGEND:

(1) - PILE NUMBER

- BATTERED PILE ABUTMENT (1H:3V) PIER (1H:4V)

NOTES:

1. ALL PILES ARE 14" CAST-IN-PLACE CONCRETE PILE.
2. FOR ABUTMENT AND WINGWALL DETAILS, SEE SHEETS 6/28 THRU 10/28.
3. FOR PIER DETAILS, SEE SHEET 11/28.

DESIGN AGENCY
PARSONS BRINCKERHOFF
2545 FARMERS DRIVE
SUITE 350
COLUMBUS, OHIO 43235

DESIGNED	DRAWN	REVIEWED	DATE
ECM	ECM	EBS	11-29-12
CHECKED	REVISED	STRUCTURE FILE NUMBER	
BMG		0201936	

FOUNDATION LAYOUT PLAN
BRIDGE NO. ALL-75-0508
C.R. 196 (HANTHORN RD.) OVER I-75

ALL-75-0.21
PID No. 89029

5 / 28

781
907

J:\Projects\ALL\89029\structures\ALL075_0508C\sheets\075_0508CFP001.dgn 08-NOV-2013 3:38PM jint

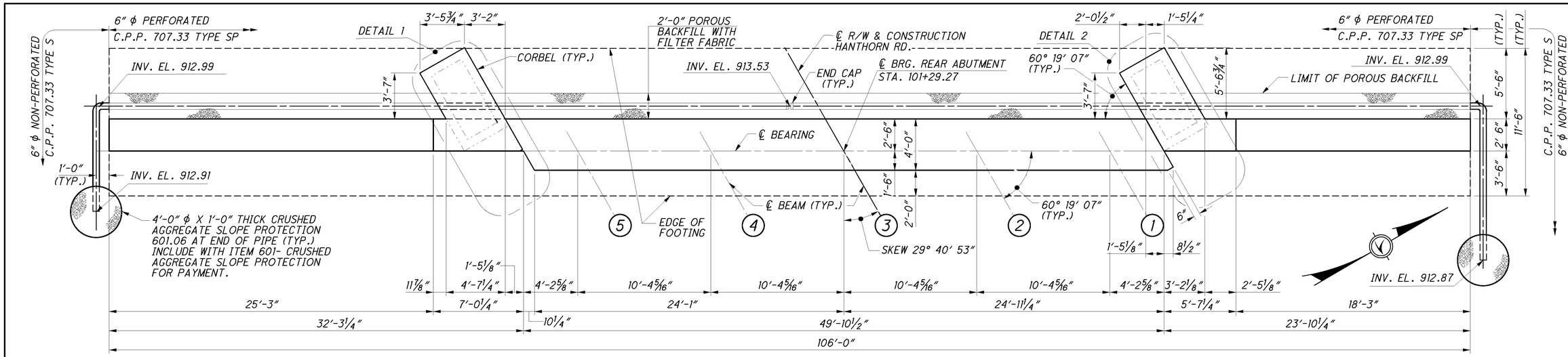

PLAN

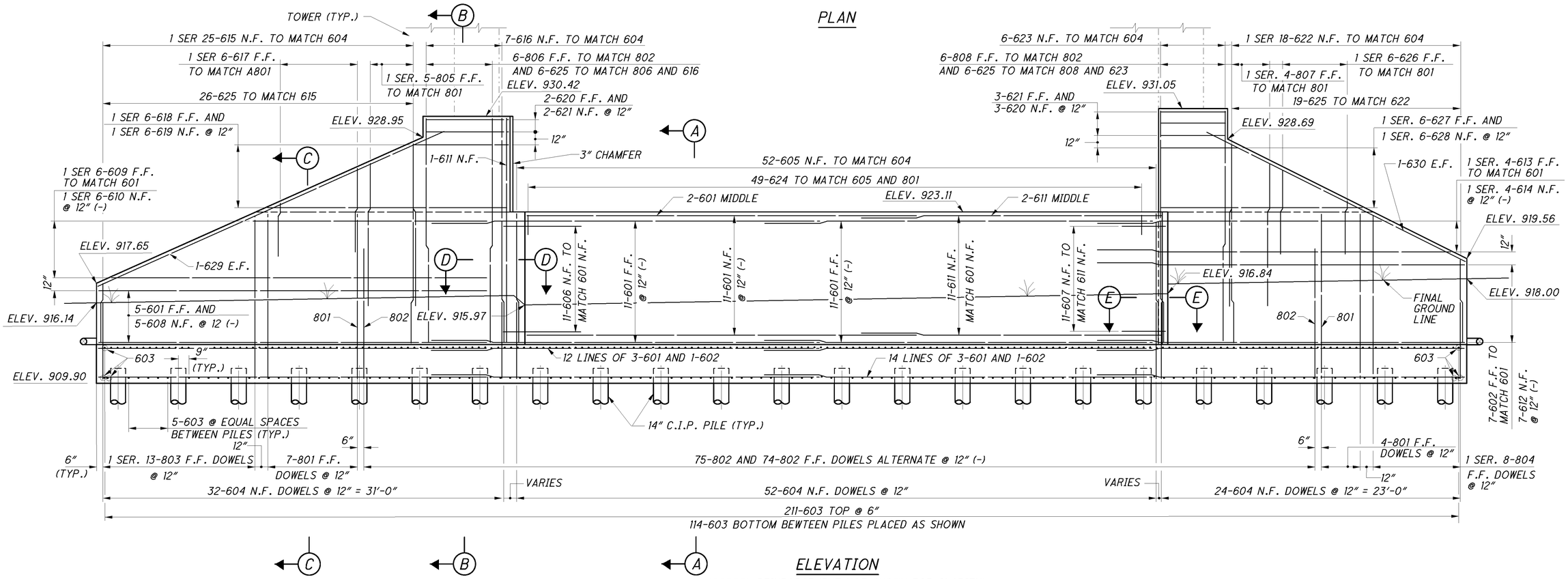

ELEVATION

(CORBEL REINFORCEMENT NOT SHOWN FOR CLARITY)

MINIMUM LAP LENGTHS	
#6 HORIZONTAL	= 4'-3"
#6 VERTICAL	= 3'-1"
#8	= 6'-5"

ALL BAR MARKS SHALL BE PREFIXED RA FOR REAR ABUTMENT

NOTES:

1. FOR FOUNDATION LAYOUT PLAN, SEE SHEET 5/28 .
2. FOR SECTIONS A-A THRU E-E, SEE SHEET 7/28.
3. FOR DETAILS 1 AND 2, SEE SHEET 10/28.
4. FOR TOWER DETAILS, SEE SHEET 10/28.

DESIGN AGENCY
PARSONS BRINCKERHOFF
2545 FARMERS DRIVE
SUITE 350
COLUMBUS, OHIO 43235

DESIGNED	DRAWN	REVIEWED	DATE
ECM	RCK	EBS	11-29-12
CHECKED	REVISED	STRUCTURE FILE NUMBER	
BMG		0201936	

REAR ABUTMENT PLAN AND ELEVATION

BRIDGE NO. ALL-75-0508
C.R. 196 (HANTHORN RD.) OVER I-75

ALL-75-0.21
PID No. 89029

6 / 28

782
907

J:\Projects\ALL\89029\structures\ALL075_0508C\sheets\075_0508CAR001.dgn 09-MAY-2013 3:10PM lint

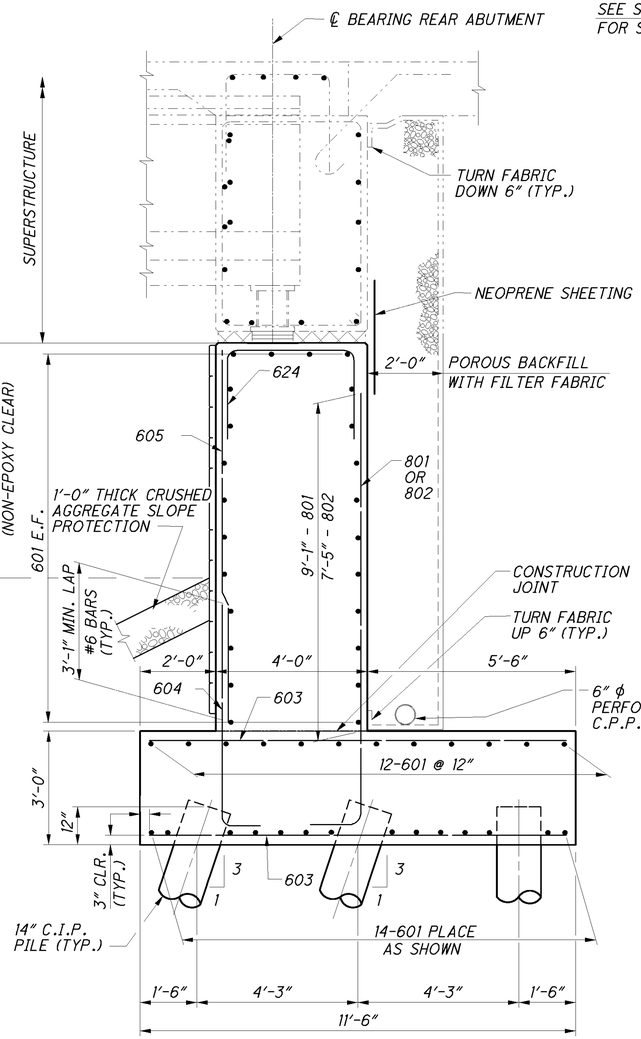

SECTION A-A

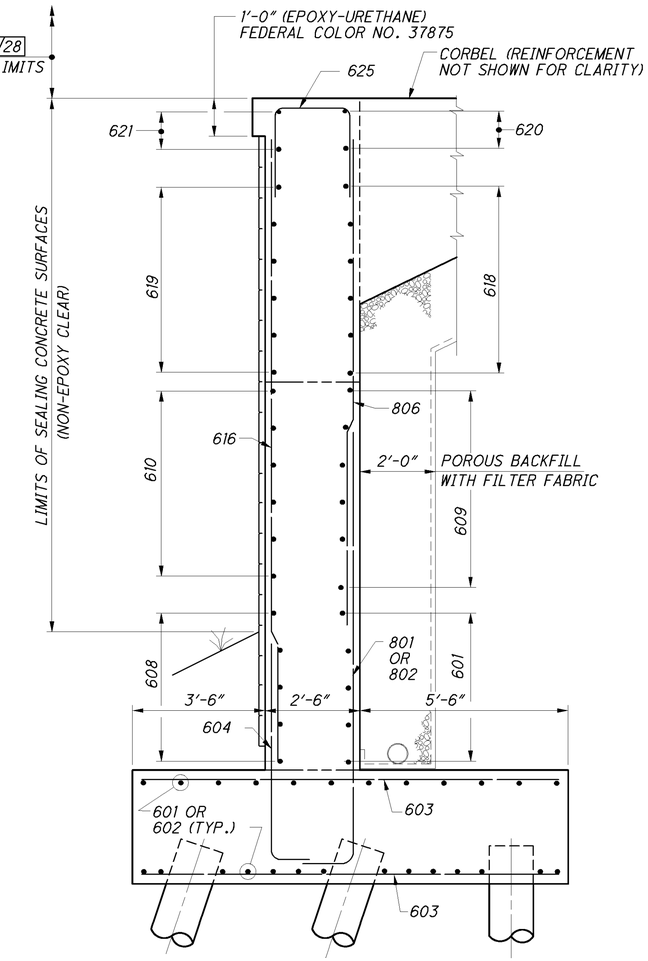

SECTION B-B

(SEE SECTION A-A FOR DETAILS NOT SHOWN)

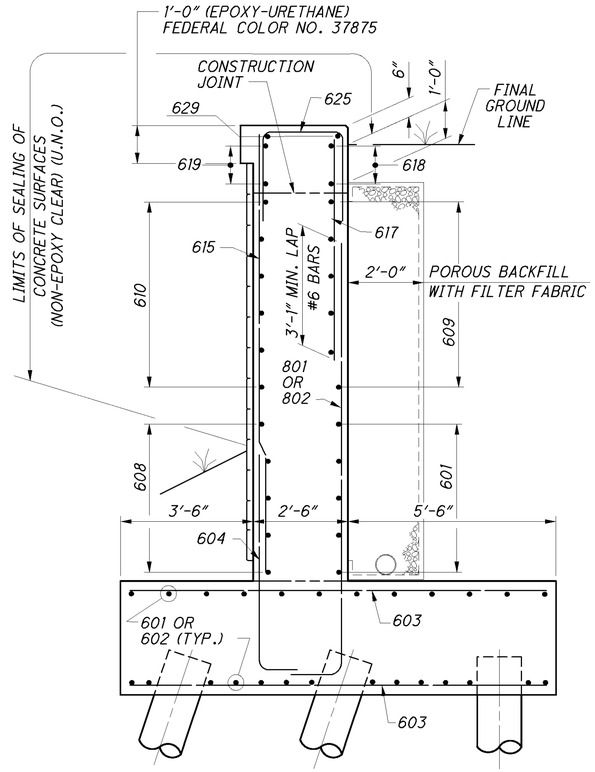

SECTION C-C

(SEE SECTION A-A FOR DETAILS NOT SHOWN)

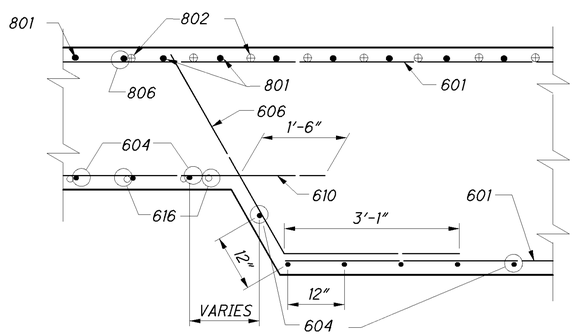

SECTION D-D

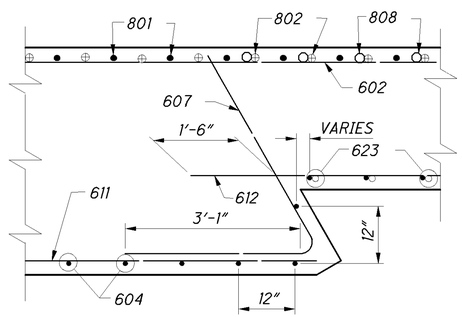

SECTION E-E

NOTES:

1. FOR LOCATION OF SECTIONS, SEE SHEET 6/28 .
2. FOR ABUTMENT CORBEL DETAILS, SEE SHEET 10/28 .
3. FOR SUPERSTRUCTURE DETAILS, SEE SHEETS 13/28 THRU 20/28 .

ALL BAR MARKS SHALL BE PREFIXED RA FOR REAR ABUTMENT

DESIGN AGENCY
PARSONS BRINCKERHOFF
2545 FARMERS DRIVE
SUITE 350
COLUMBUS, OHIO 43235

DESIGNED	DRAWN	REVIEWED	DATE
ECM	RCK	EBS	11-29-12
CHECKED	REVISED	STRUCTURE FILE NUMBER	
BMG		0201936	

REAR ABUTMENT SECTIONS
BRIDGE NO. ALL-75-0508
C.R. 196 (HANTHORN RD.) OVER I-75

ALL-75-0.21
PID No. 89029

7 / 28

783
907

J:\Projects\ALL\89029\structures\ALL075_0508C\sheets\075_0508CAR002.dgn 09-MAY-2013 3:10PM jint

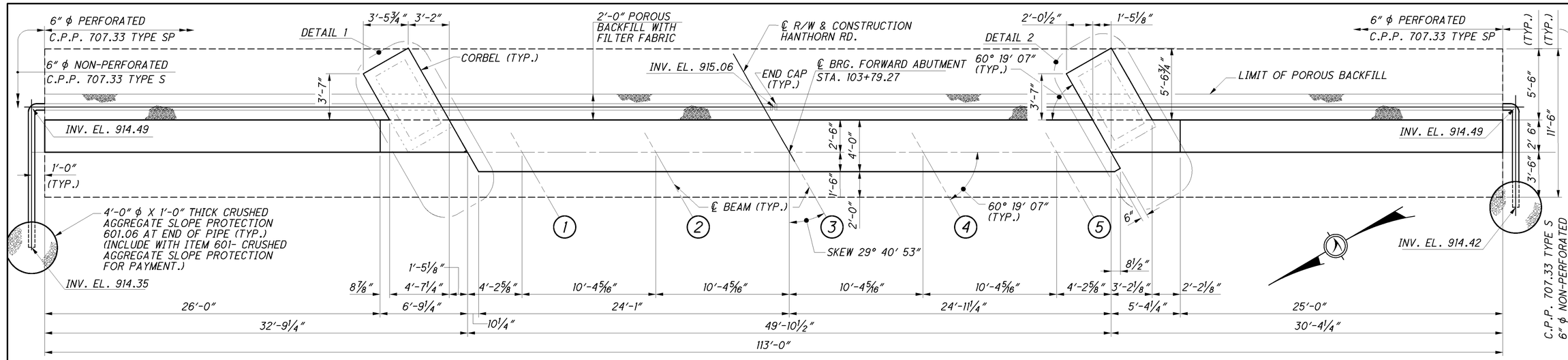

PLAN

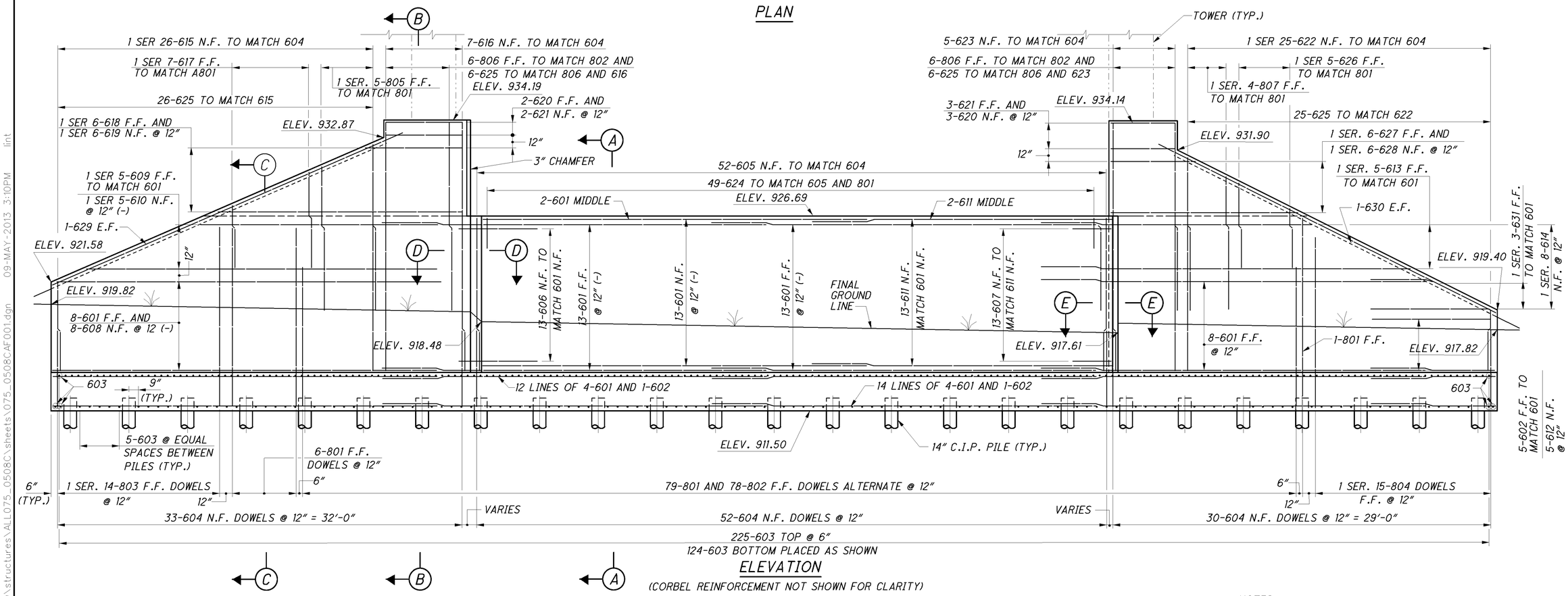

ELEVATION

(CORBEL REINFORCEMENT NOT SHOWN FOR CLARITY)

MINIMUM LAP LENGTHS	
#6 HORIZONTAL	= 4'-3"
#6 VERTICAL	= 3'-1"
#8	= 6'-5"

ALL BAR MARKS SHALL BE PREFIXED FA FOR FORWARD ABUTMENT

NOTES:

1. FOR FOUNDATION LAYOUT PLAN, SEE SHEET 5/28 .
2. FOR SECTIONS A-A THRU E-E, SEE SHEET 7/28.
3. FOR DETAILS 1 AND 2, SEE SHEET 10/28.
4. FOR TOWER DETAILS, SEE SHEET 10/28.

DESIGN AGENCY
PARSONS BRINCKERHOFF
2545 FARMERS DRIVE
SUITE 350
COLUMBUS, OHIO 43235

DESIGNED	DRAWN	REVIEWED	DATE
ECM	RCK	EBS	11-29-12
CHECKED	REVISED	STRUCTURE FILE NUMBER	
BMG		0201936	

FORWARD ABUTMENT PLAN AND ELEVATION
BRIDGE NO. ALL-75-0508
C.R. 196 (HANTHORN RD.) OVER I-75

ALL-75-0.21
PID No. 89029

8 / 28

784
907

J:\Projects\ALL\89029\structures\ALL075_0508C\sheets\075_0508CAF001.dgn 09-MAY-2013 3:10PM lint

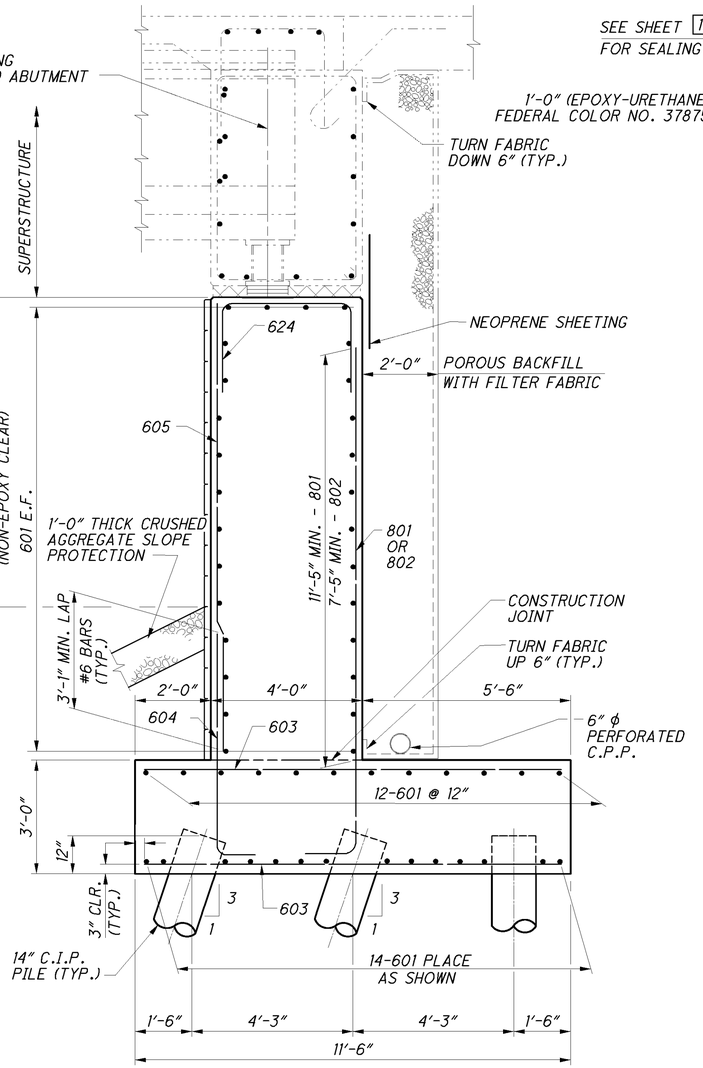

SECTION A-A

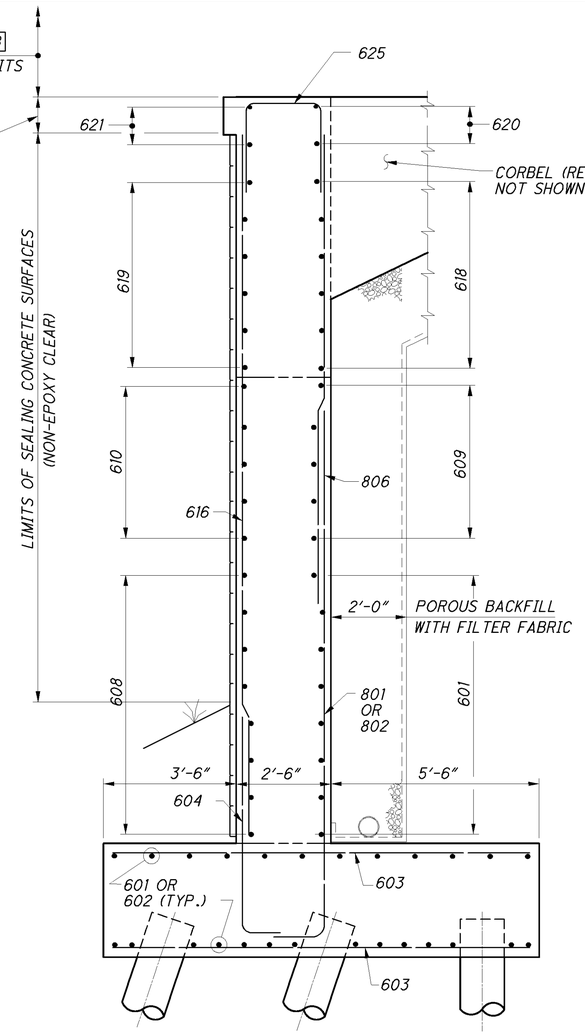

SECTION B-B

(SEE SECTION A-A FOR DETAILS NOT SHOWN)

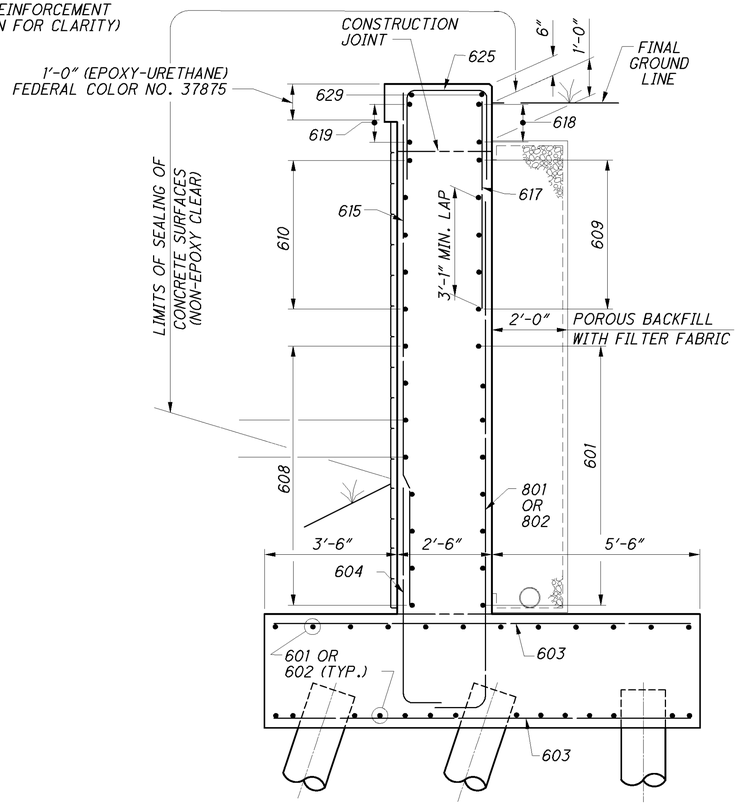

SECTION C-C

(SEE SECTION A-A FOR DETAILS NOT SHOWN)

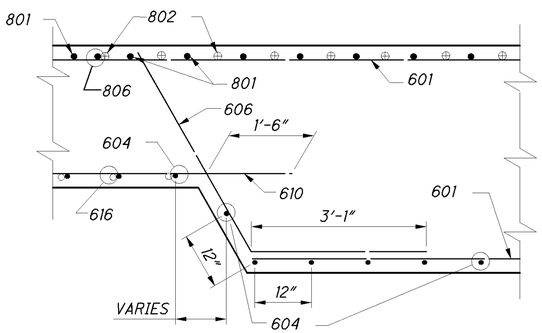

SECTION D-D

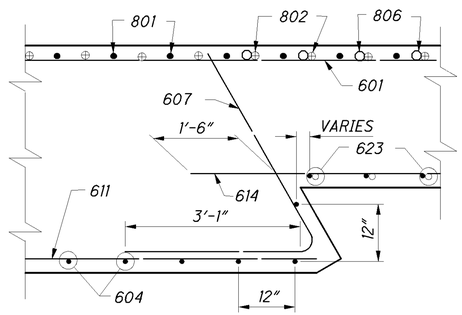

SECTION E-E

NOTES:

1. FOR LOCATION OF SECTIONS, SEE SHEET 8/28.
2. FOR ABUTMENT CORBEL DETAILS, SEE SHEET 10/28.
3. FOR SUPERSTRUCTURE DETAILS, SEE SHEETS 13/28 THRU 20/28.

ALL BAR MARKS SHALL BE PREFIXED FA FOR FORWARD ABUTMENT

FORWARD ABUTMENT SECTIONS

BRIDGE NO. ALL-75-0508
C.R. 196 (HANTHORN RD.) OVER I-75

ALL-75-0.21
PID No. 89029

9 / 28

785
907

DESIGN AGENCY
PARSONS BRINCKERHOFF
2945 FARMERS DRIVE
SUITE 350
COLUMBUS, OHIO 43235

DESIGNED	DRAWN	REVIEWED	DATE
ECM	RCK	EBS	11-29-12
CHECKED	REVISED	STRUCTURE FILE NUMBER	
BMG		0201936	

J:\Projects\ALL\89029\structures\ALL075_0508C\sheets\075_0508CAF002.dgn 09-MAY-2013 3:11PM lint

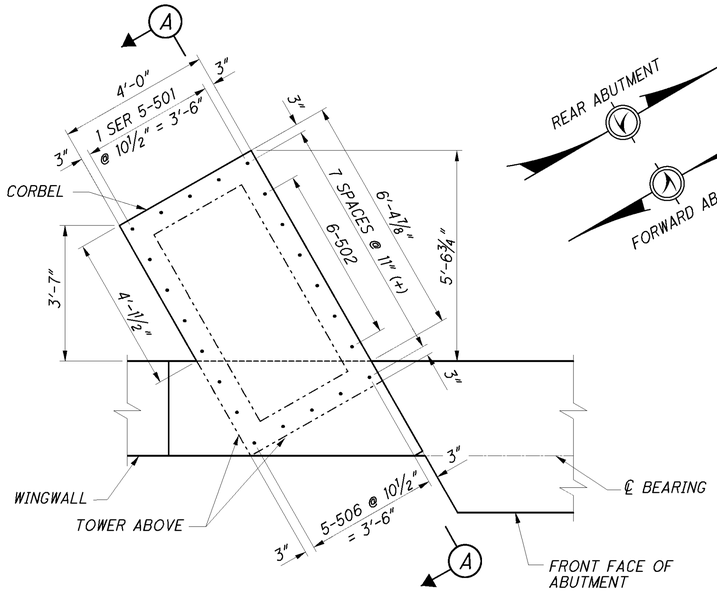

DETAIL 1

(DETAIL 1 SHOWN DETAIL 2 SIMILAR)

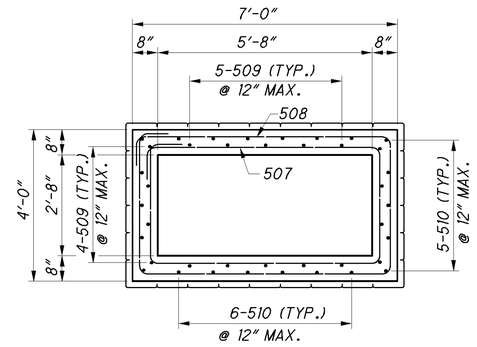

SECTION B-B

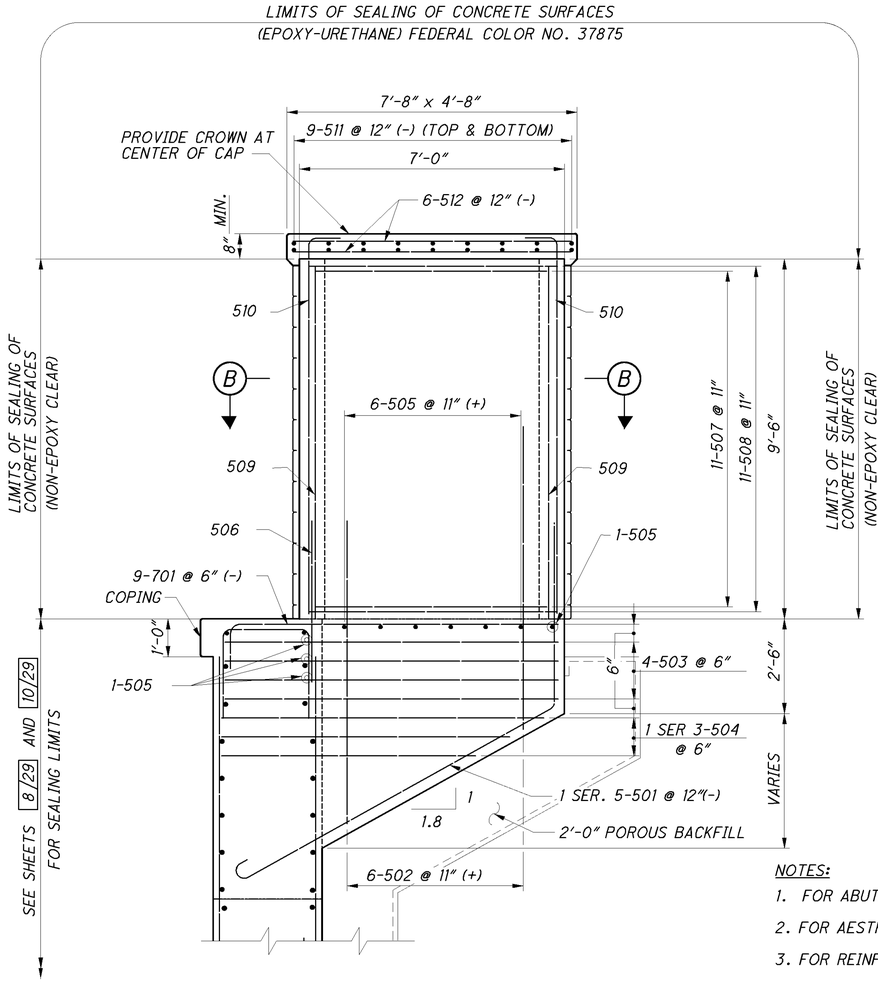

SECTION A-A

NOTES:

1. FOR ABUTMENT DETAILS, SEE SHEETS 6/28 THRU 9/28.
2. FOR AESTHETIC DETAILS, SEE SHEET 27/28 AND 28/28.
3. FOR REINFORCING BAR LIST, SEE SHEET 23/28 AND 24/28.

ALL BAR MARKS SHALL BE PREFIXED RA FOR REAR ABUTMENT AND FA FOR FORWARD ABUTMENT

DESIGN AGENCY
PARSONS BRINCKERHOFF
2945 FARMERS DRIVE
SUITE 350
COLUMBUS, OHIO 43235

DESIGNED	DRAWN	REVIEWED	DATE
ECM	RCK	EBS	11-29-12
CHECKED	REVISED	STRUCTURE FILE NUMBER	
BMG		0201936	

ABUTMENT CORBEL AND TOWER DETAILS

BRIDGE NO. ALL-75-0508
C.R. 196 (HANTHORN RD.) OVER I-75

ALL-75-0.21
PID No. 89029

J:\Projects\ALL\89029\structures\ALL075_0508C\sheets\075_0508CAR003.dgn 09-MAY-2013 3:11PM lint

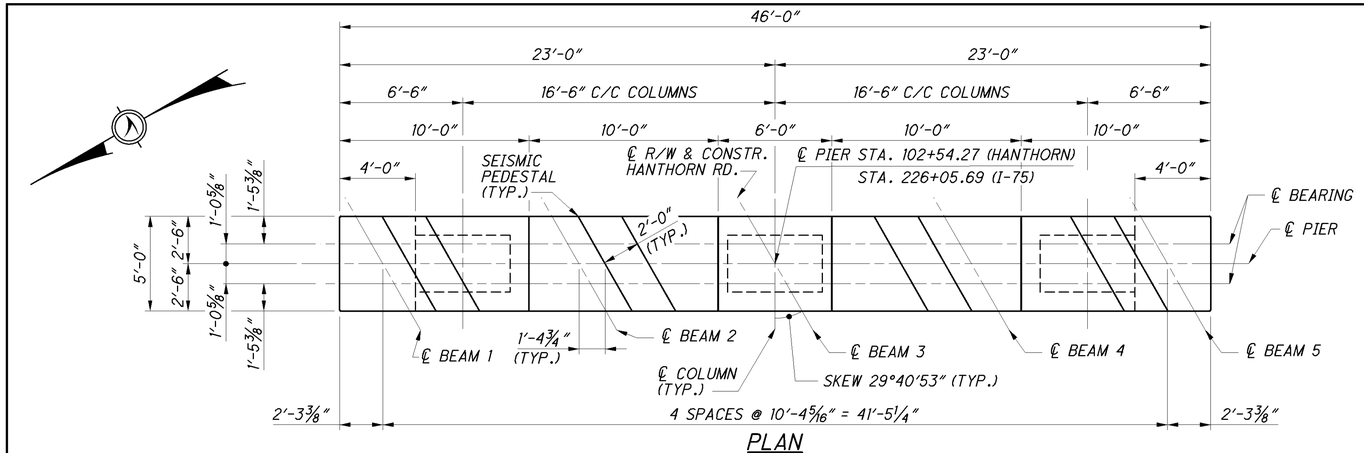

PLAN
(LOOKING UPSTATION)

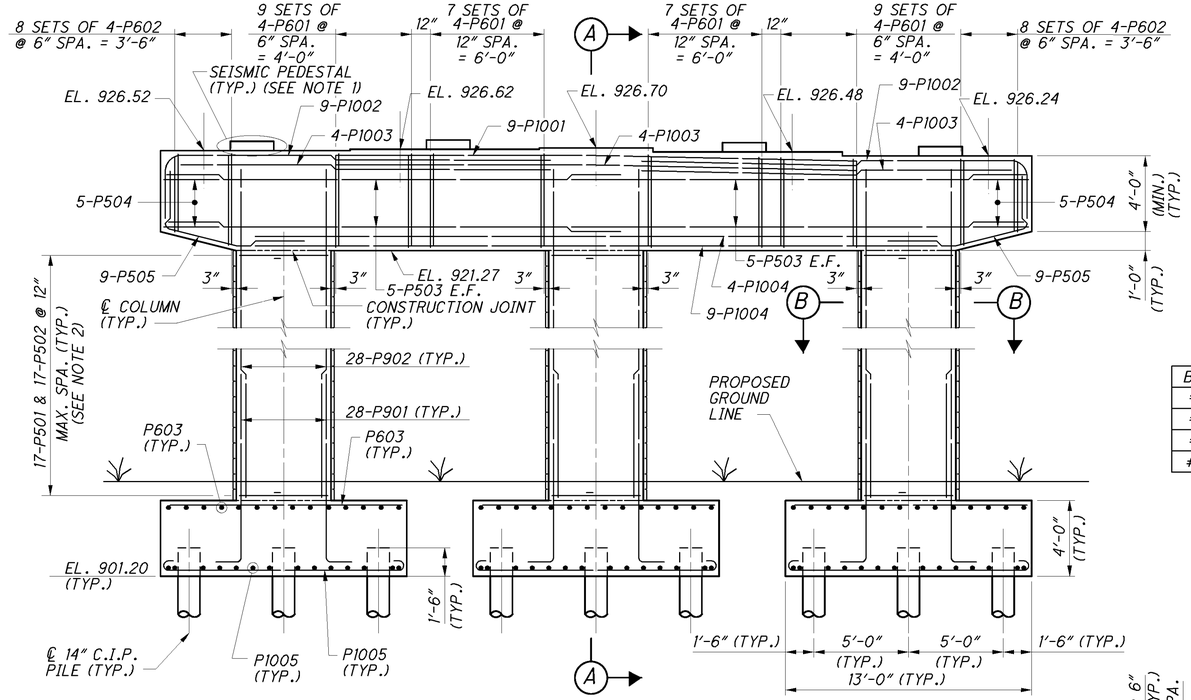

ELEVATION

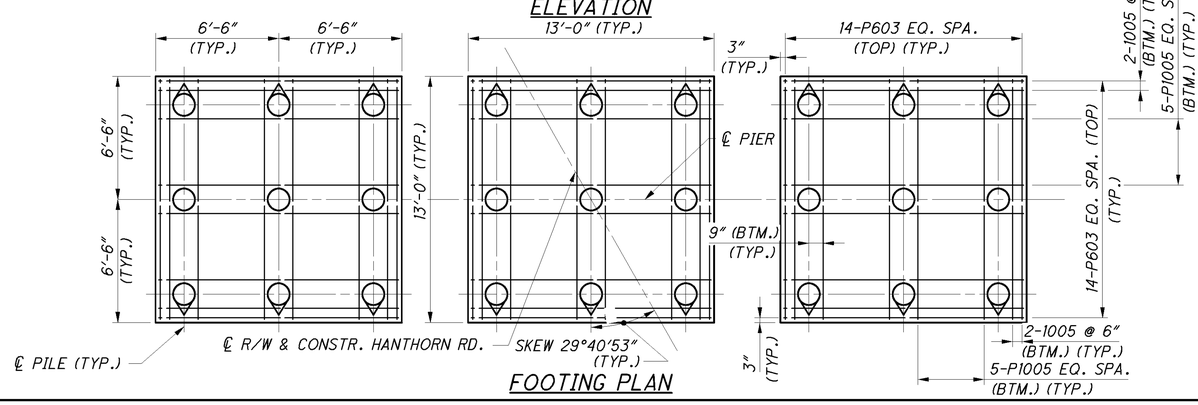

FOOTING PLAN

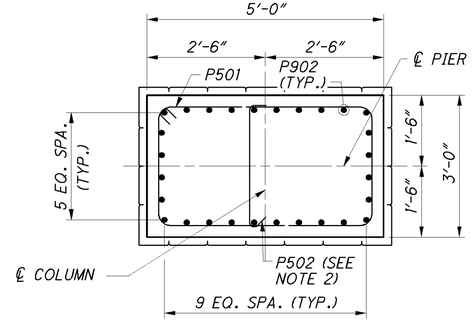

SECTION B-B

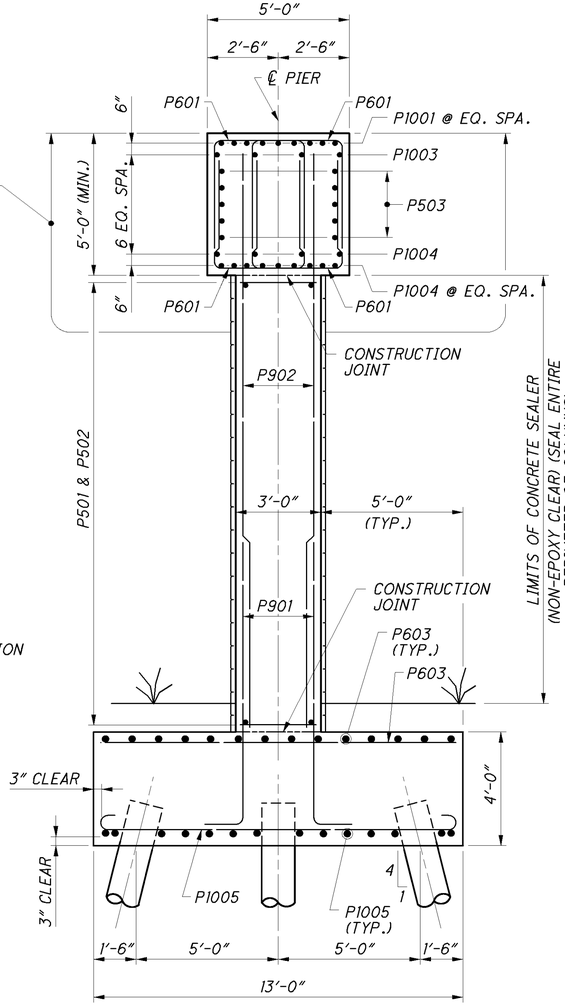

LIMITS OF CONCRETE SEALER (EPOXY URETHANE) FEDERAL COLOR NO. 37875

LIMITS OF CONCRETE SEALER (NON-EPOXY CLEAR) (SEAL ENTIRE PERIMETER OF COLUMNS)

SECTION A-A

BAR	REQUIRED LAP LENGTH
#5	2′-7″
#6	3′-1″
#9	8′-1″
#10	11′-7″

LEGEND:

- BATTERED PILE DIRECTION

NOTES:

1. FOR SEISMIC PEDESTAL DETAILS, SEE SHEET 17/28.
2. THE PLACEMENT OF P502 BARS SHALL ALTERNATE SUCH THAT THE 90° HOOKS SHALL BE STAGGERED.
3. FOR FOUNDATION LAYOUT PLAN, SEE SHEET 5/28.
4. FOR REINFORCING STEEL LIST, SEE SHEET 25/28.
5. FOR AESTHETICS DETAILS, SEE SHEET 27/28.

DESIGN AGENCY
PARSONS BRINCKERHOFF
2945 FARMERS DRIVE
SUITE 350
COLUMBUS, OHIO 43235

DESIGNED	DRAWN	REVIEWED	DATE
ECM	ECM	EBS	11-29-12
CHECKED	REVISED	STRUCTURE FILE NUMBER	
BMG		0201936	

PIER DETAILS
BRIDGE NO. ALL-75-0508
C.R. 196 (HANTHORN RD.) OVER I-75

ALL-75-0.21
PID No. 89029

11 / 28

787
907

J:\Projects\ALL\89029\structures\ALL075_0508C\sheets\075_0508CPI001.dgn 09-MAY-2013 3:11PM jint

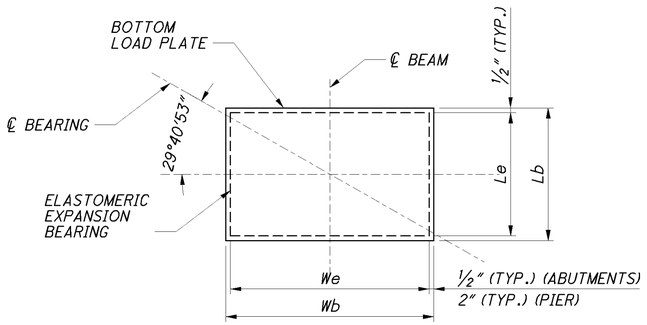

BEARING PLAN VIEW

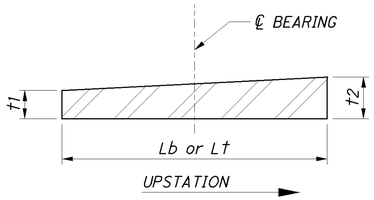

STEEL PLATE

(LOAD PLATE OR TOP PLATE)
(SEE TABLE FOR DIMENSIONS)

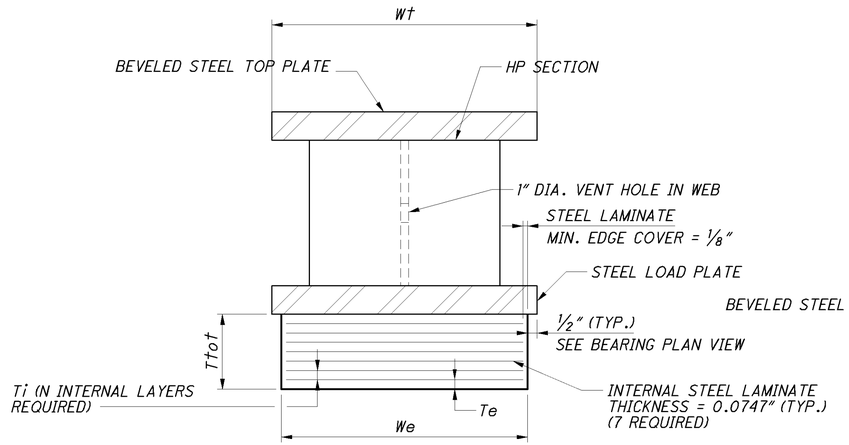

LAMINATED ELASTOMERIC EXPANSION BEARING, 50 DUROMETER

(AT ABUTMENTS)

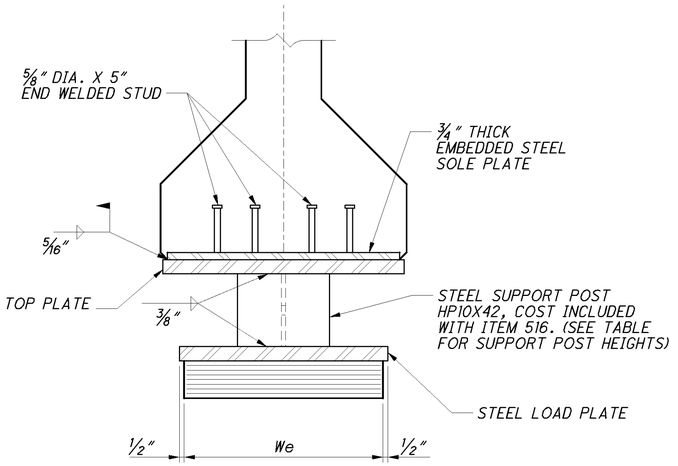

END VIEW

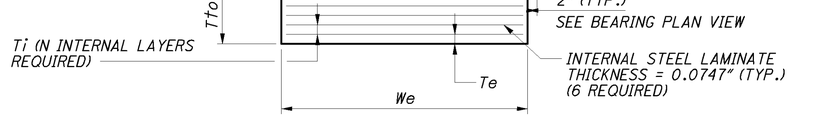

LAMINATED ELASTOMERIC EXPANSION BEARING, 50 DUROMETER

(AT PIER)

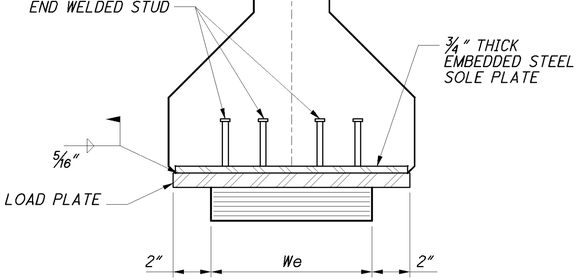

END VIEW

NOTES:

1. ELASTOMERIC BEARINGS: THE ELASTOMER SHALL HAVE A HARDNESS OF 50 DUROMETER. THE BEARINGS WERE DESIGNED IN ACCORDANCE WITH SECTION 14.7.6 (METHOD A) OF THE AASHTO LRFD BRIDGE DESIGN SPECIFICATIONS. THE LONG TERM COMPRESSION PROOF LOAD TEST (AASHTO STANDARD SPECIFICATION FOR HIGHWAY BRIDGES, DIVISION II, SECTION 18.7.2.6) IS NOT REQUIRED.
2. THE STEEL LOAD PLATES AT THE PIER SHALL BE SHOP PAINTED WITH AN INORGANIC ZINC PRIMER AS SPECIFICED IN CMS 513.27. APPLY PAINT TO THE EXPOSED STEEL LOAD PLATES IN ACCORDANCE WITH CMS 514. PAYMENT IS INCLUDED IN THE UNIT PRICE BID FOR EACH BEARING.
3. THE STEEL LOAD PLATE SHALL BE BONDED BY VULCANIZATION TO THE ELASTOMER DURING THE MOLDING PROCESS.
4. TOTAL DESIGN LOAD FOR BEARING EQUALS THE SUM OF THE DEAD LOADS AND LIVE LOADS (WITHOUT IMPACT) TABULATED IN THE BEARING TABLE.
5. BASIS OF PAYMENT: THE UNIT BID PRICE SHALL INCLUDE ALL MATERIALS, LABOR, TESTING, AND INCIDENTALS NECESSARY TO FURNISH AND INSTALL LAMINATED ELASTOMERIC BEARINGS. SAMPLE BEARINGS SHALL NOT BE MEASURED FOR PAYMENT. PAYMENT WILL BE MADE AT THE CONTRACT PRICE FOR ITEM 516 - ELASTOMERIC BEARINGS W/INTERNAL LAMINATES AND LOAD PLATE (NEOPRENE), AS PER PLAN.
6. ALL BEARINGS SHALL BE MARKED PRIOR TO SHIPPING. THE MARKS SHALL INCLUDE THE BEARING LOCATION ON THE BRIDGE, AND A DIRECTION ARROW THAT POINTS UP-STATION. ALL MARKS SHALL BE PERMANENT AND BE VISIBLE AFTER THE BEARING IS INSTALLED.
7. FOR FRAMING PLAN, SEE SHEET 13/28.

BEARING LOCATION		BEARING TYPE	DEAD LOAD (Kip)	LIVE LOAD (Kip)	TOTAL LOAD (Kip)	Le (in.)	We (in.)	Ti (in.)	NO. OF Ti's	Te (1 EA.) (in.)	NUMBER OF INTERNAL LAMINATES (0.0747")	Ttot (in.)	STEEL LOAD PLATE (in.)				STEEL TOP PLATE (in.)				HP SUPPORT POSTS (in.)
													Wb	Lb	t1	t2	Wt	Lt	t1	t2	
REAR ABUTMENT	BEAM 1	EXPANSION	189	97	286	12	23	0.41	7	0.26	7	3.65	24	13	1.5	1.5	25.5	12	1.5	1.8750	12.0000
	BEAM 2																				12.6250
	BEAM 3																				12.8125
	BEAM 4																				9.6250
	BEAM 5																				6.0000
PIER - SPAN 1		EXPANSION	190	115	305	12	23	0.41	6	0.26	6	3.17	27	13	1.5	1.5625	N/A	N/A	N/A	N/A	N/A
PIER - SPAN 2																1.6250					
FWD ABUTMENT	BEAM 1	EXPANSION	189	97	286	12	23	0.41	7	0.26	7	3.65	24	13	1.5	1.5	25.5	12	1.5	1.5625	6.5625
	BEAM 2																				8.5625
	BEAM 3																				10.1250
	BEAM 4																				8.2500
	BEAM 5																				6.0000

DESIGN AGENCY
PARSONS BRINCKERHOFF
2945 FARMERS DRIVE
SUITE 350
COLUMBUS, OHIO 43235

DESIGNED	DRAWN	REVIEWED	DATE
ECM	APV	EBS	11-29-12
CHECKED	REVISED	STRUCTURE FILE NUMBER	
BMG		0201936	

BEARING DETAILS
BRIDGE NO. ALL-75-0508
C.R. 196 (HANTHORN RD.) OVER I-75

ALL-75-0.21
PID No. 89029

12 / 28

788
907

J:\Projects\ALL\89029\structures\ALL075_0508C\sheets\075_0508CBR001.dgn 09-MAY-2013 3:11PM jint

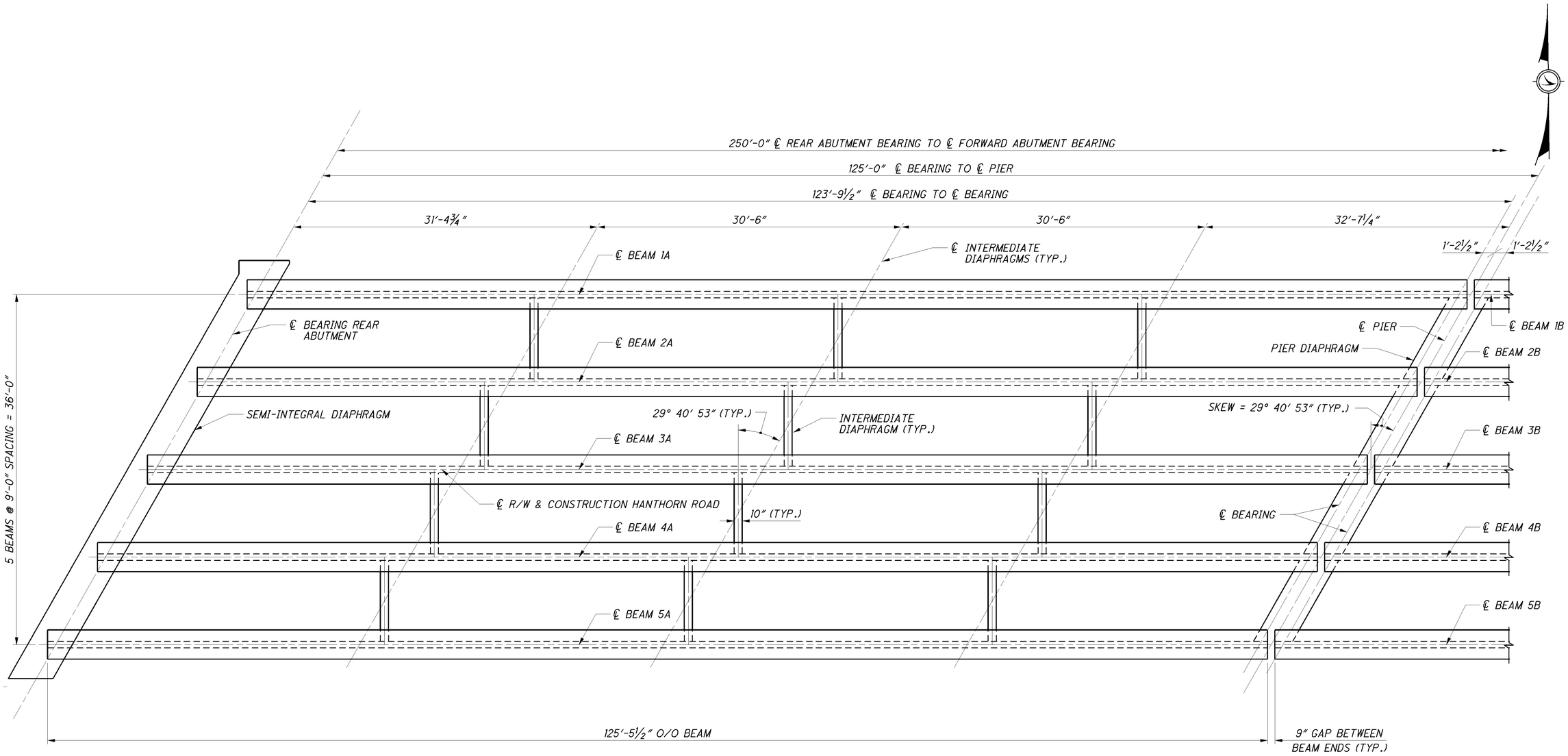

FRAMING PLAN

(SPAN 1 SHOWN
SPAN 2 SIMILAR)

NOTES:

1. FOR DETAILS OF INTERMEDIATE DIAPHRAGMS, SEE ODOT STANDARD DRAWINGS PSID-1-99 SHEETS 1 TO 8 OF 8.
2. DO NOT PLACE THE DECK CONCRETE UNTIL ALL INTERMEDIATE DIAPHRAGMS HAVE BEEN PROPERLY INSTALLED. IF CONCRETE DIAPHRAGMS ARE USED, COMPLETE THE INSTALLATION OF THE INTERMEDIATE DIAPHRAGMS AT LEAST 48 HOURS BEFORE DECK PLACEMENT BEGINS.
3. FOR PIER DIAPHRAGM DETAILS, SEE SHEET 17/28.
4. FOR SEMI-INTEGRAL ABUTMENT DIAPHRAGM DETAILS, SEE SHEET 16/28.

DESIGN AGENCY
PARSONS BRINCKERHOFF
2545 FARMERS DRIVE
SUITE 350
COLUMBUS, OHIO 43235

DESIGNED	DRAWN	REVIEWED	DATE
ECM	RCK	EBS	11-29-12
CHECKED	REVISED	STRUCTURE FILE NUMBER	
BMG		0201936	

FRAMING PLAN
BRIDGE NO. ALL-75-0508
C.R. 196 (HANTHORN RD.) OVER I-75

ALL-75-0.21
PID No. 89029

13 / 28

789
907

J:\Projects\ALL\89029\structures\ALL075_0508C\sheets\075_0508CSD001.dgn 08-NOV-2013 4:07PM lint

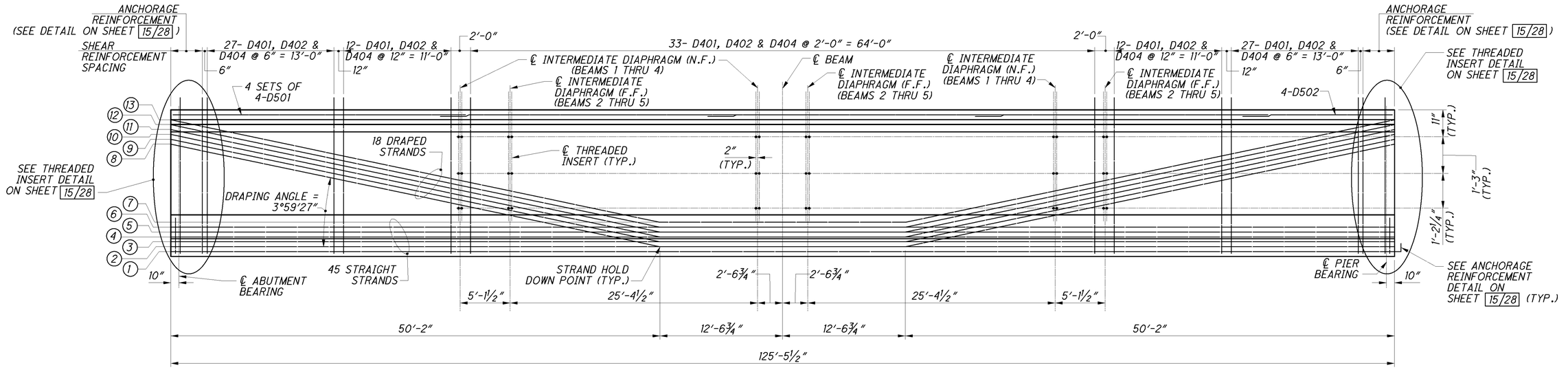

TYPICAL BEAM ELEVATION
(SPAN 1 SHOWN, SPAN 2 SIMILAR)

NOTES:
1. FOR NOTES, SEE SHEET 16/29.

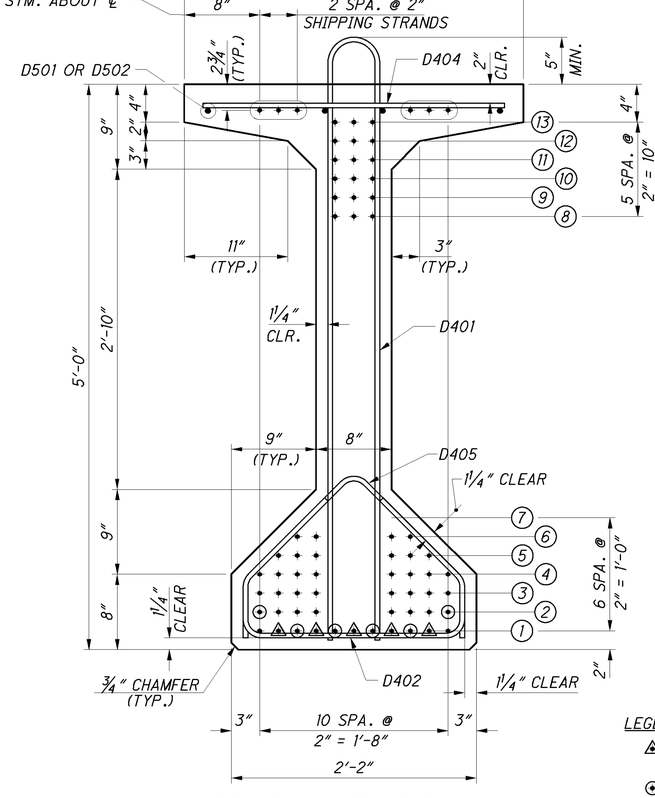

MODIFIED AASHTO TYPE 4 (60") SECTION AT BEAM END
(SPAN 1 - 1A THROUGH 5A)

LEGEND:
- ⚠ EXTEND STRANDS AT PIER DIAPHRAGM ONLY
- ⊙ DEBOND TENDONS
  - DEBOND LENGTH = 2'-0" AT LEVEL (1)
  - DEBOND LENGTH = 4'-0" AT LEVEL (2)

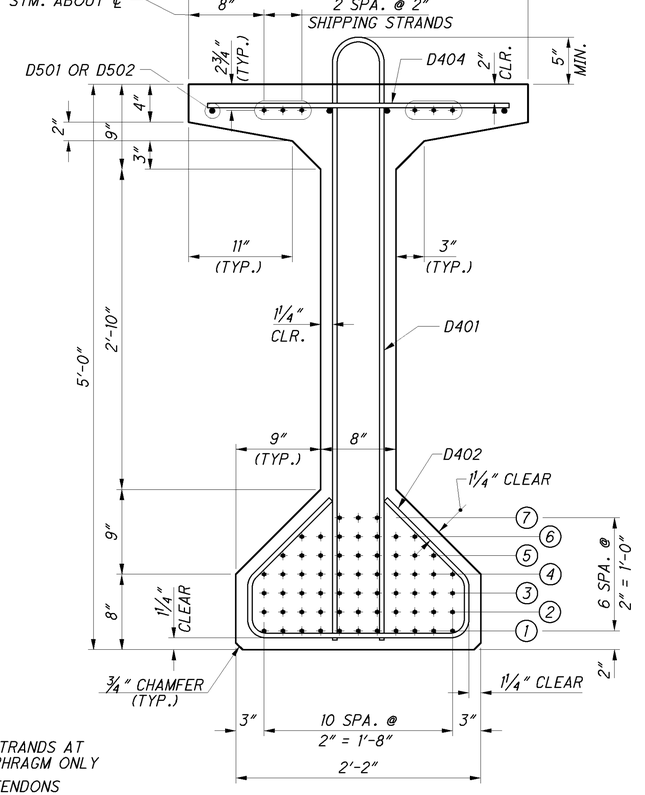

MODIFIED AASHTO TYPE 4 (60") SECTION AT BEAM MIDSPAN

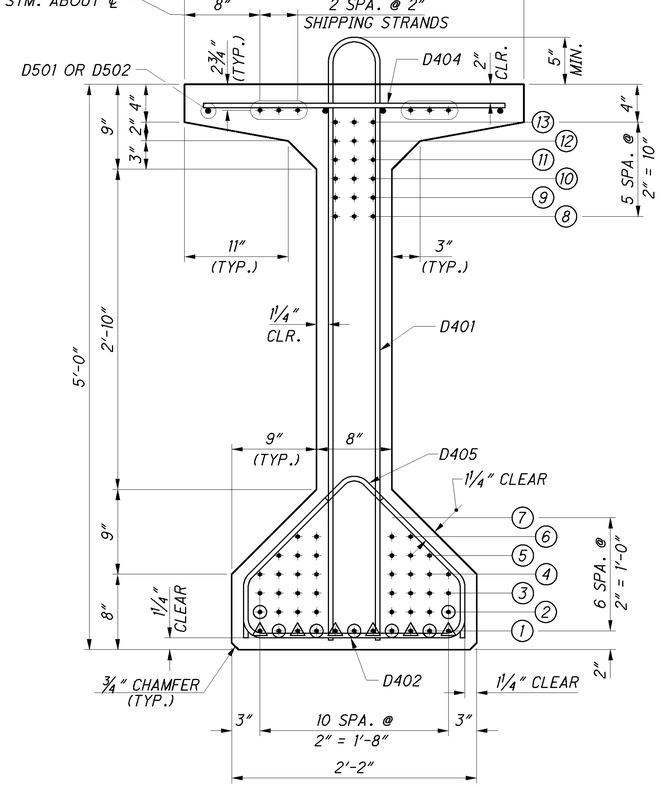

MODIFIED AASHTO TYPE 4 (60") SECTION AT BEAM END
(SPAN 2 - 1B THROUGH 5B)

DESIGN AGENCY
PARSONS BRINCKERHOFF
2545 FARMERS DRIVE
SUITE 350
COLUMBUS, OHIO 43235

DESIGNED ECM | CHECKED BMG
DRAWN RCK | REVISED
REVIEWED EBS | DATE 11-29-12
STRUCTURE FILE NUMBER 0201936

BEAM DETAILS
BRIDGE NO. ALL-75-0508
C.R. 196 (HANTHORN RD.) OVER I-75

ALL-75-0.21
PID No. 89029

14 / 28

790
907

J:\Projects\ALL\89029\structures\ALL075_0508\sheets\075_0508SD002.dgn 09-MAY-2013 3:11PM jint

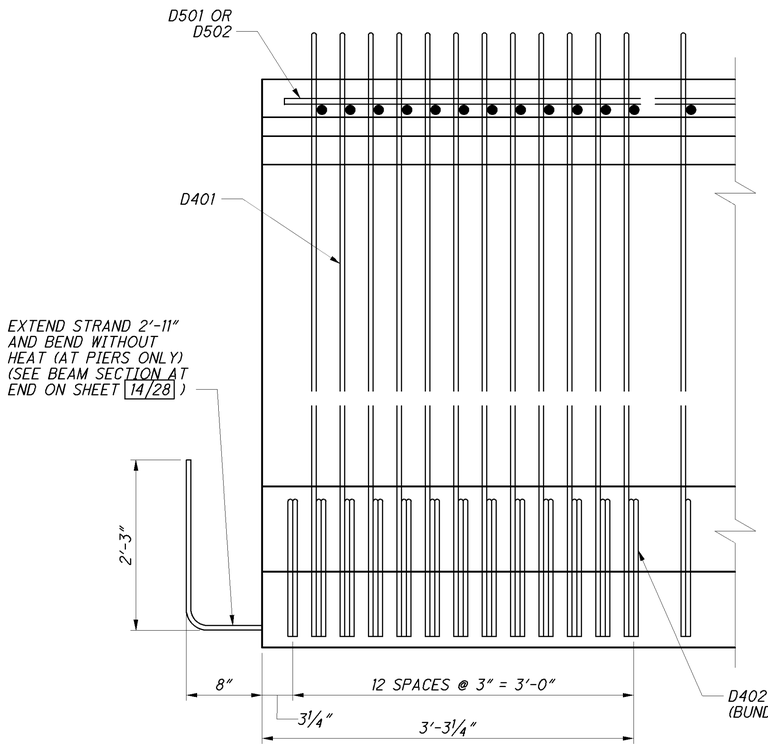

ANCHORAGE REINFORCEMENT DETAIL

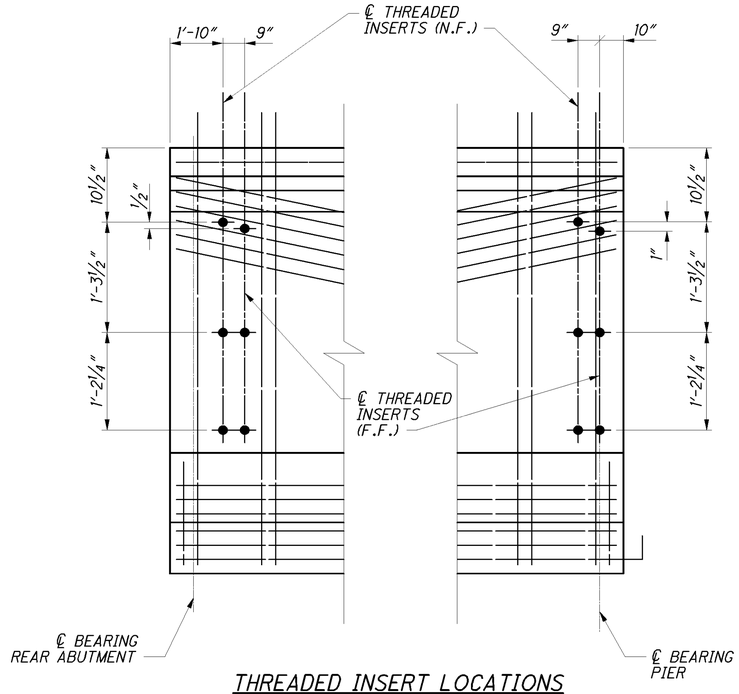

THREADED INSERT LOCATIONS

(SPAN 1 SHOWN, SPAN 2 OPPOSITE HAND)

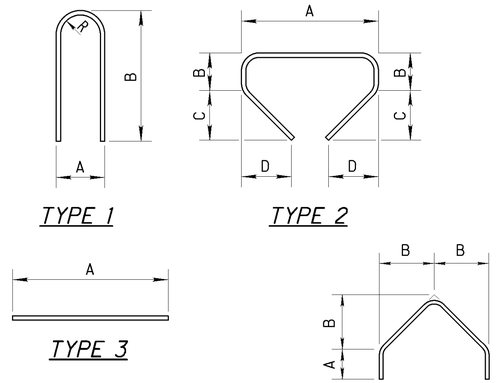

BENDING DIAGRAMS

(ALL DIMENSIONS ARE OUT-TO-OUT)

MARK	NUMBER REQUIRED	TYPE	DIMENSIONS				
			A	B	C	D	R
MODIFIED AASHTO TYPE 4 (60")							
D401	1,350	1	5½"	5'-4"			2¼"
D402	1,370	2	1'-11½"	6¼"	8½"	8½"	
D404	1,350	3	2'-8"				
D405	260	4	6¼"	11¾"			
D501	160	3	30'-0"				
D502	40	3	15'-4"				

BAR SIZE IS INDICATED IN THE BAR MARK. THE FIRST LETTER IDENTIFIES THE BAR LOCATION, THE NEXT DIGIT INDICATES THE INCH-POUND BAR SIZE AND THE REMAINING DIGITS ITS SEQUENCE NUMBER. ALL STEEL SHALL BE EPOXY COATED. QUANTITIES SHOWN ARE THE TOTAL REQUIRED FOR ALL 10 BEAMS.

*NUMBER OF STRANDS PER ROW															CONCRETE STRENGTHS		D401 BARS REQ'D	D402 BARS REQ'D	D404 BARS REQ'D	D405 BARS REQ'D
BEAM MARK	①	②	③	④	⑤	⑥	⑦	⑧	⑨	⑩	⑪	⑫	⑬	TOTAL STRANDS	f'ci	f'c				
END	11	8	8	8	6	4	-	3	3	3	3	3	3	63	7	10	135	137	135	26
MID-SPAN	11	11	11	11	9	7	3	-	-	-	-	-	-							

*ABOVE TABLE IS FOR EACH BEAM

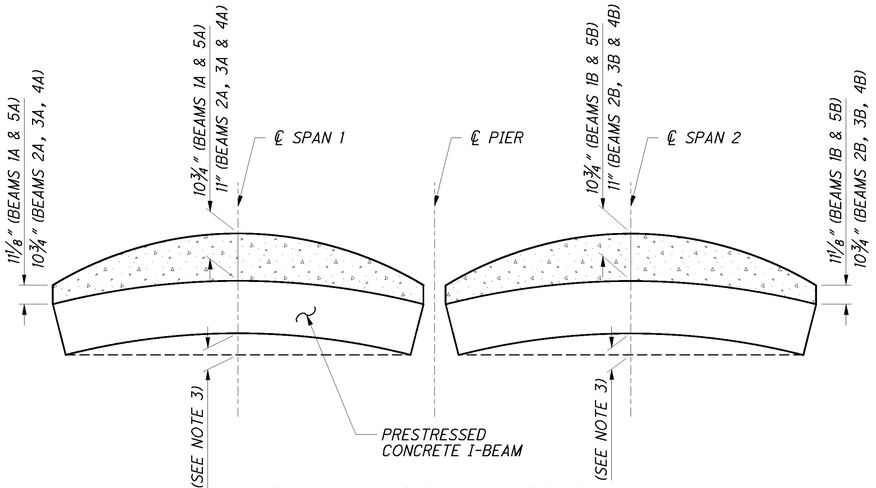

DECK SLAB THICKNESS DIAGRAM

NOTES:

1. FOR DIAPHRAGM DETAILS, SEE SHEETS 16/28 AND 17/28 .
2. FOR DETAILS NOT SHOWN, SEE ODOT STANDARD DRAWING PSID-1-99.
3. THE BEAMS CALCULATED CAMBER AT THE TIME OF RELEASE IS 2.815". THE BEAMS CALCULATED CAMBER AT THE TIME OF ERECTION IS 4.939". THE BEAMS CALCULATED LONG-TERM CAMBER IS 7.025".
4. THE TOPPING THICKNESSES SHOWN FROM THE TOP OF THE DECK SLAB TO THE TOP OF THE TOP FLANGE ALONG THE CENTERLINE OF THE I-BEAM ARE THEORETICAL DIMENSIONS. THE HAUNCH DEPTH IS THE TOPPING THICKNESS MINUS THE DESIGN SLAB THICKNESS. THE DEPARTMENT WILL PAY FOR SUPERSTRUCTURE CONCRETE BASED ON THE DESIGN SLAB THICKNESS AND THE AVERAGE OF THE THEORETICAL HAUNCH DEPTHS AT MID-SPAN AND AT EACH BEAM BEARING EVEN THOUGH DEVIATION FROM THE DIMENSIONS SHOWN MAY BE NECESSARY TO PLACE THE DECK SURFACE AT THE FINISHED GRADE. ONCE ALL BEAMS ARE SET IN THEIR FINAL POSITION, THE ACTUAL CAMBER FOR EACH MEMBER WILL BE AT THE TOP OF BEAM ELEVATION AT MID-SPAN MINUS THE AVERAGE TOP OF BEAM ELEVATION AT EACH BEARING. THE ACTUAL TOPPING THICKNESS AT MID-SPAN WILL BE THE THEORETICAL DIMENSION PLUS OR MINUS THE DIFFERENCE BETWEEN THE ACTUAL AND ANTICIPATED CAMBER.
5. FOR THREADED RODS AND INSERT LOCATIONS, SEE SHEETS 14/28, 16/28 AND 17/28 .
6. ALL BEAMS SHALL BE STORED FOR A MINIMUM OF 90 DAYS PRIOR TO DECK PLACEMENT.
7. FOR EMBEDDED STEEL SOLE PLATE DETAIL, SEE ODOT STANDARD DRAWING PSID-1-99, SHEET 4 OF 6.

DESIGN AGENCY
PARSONS BRINCKERHOFF
2945 FARMERS DRIVE
SUITE 350
COLUMBUS, OHIO 43235

DESIGNED ECM | DRAWN RCK | REVIEWED EBS | DATE 11-29-12
CHECKED BMG | REVISED | STRUCTURE FILE NUMBER 0201936

BEAM DETAILS
BRIDGE NO. ALL-75-0508
C.R. 196 (HANTHORN RD.) OVER I-75

ALL-75-0.21
PID No. 89029

J:\Projects\ALL\89029\structures\ALL075_0508C\sheets\075_0508CSD003.dgn 09-MAY-2013 3:11PM jint

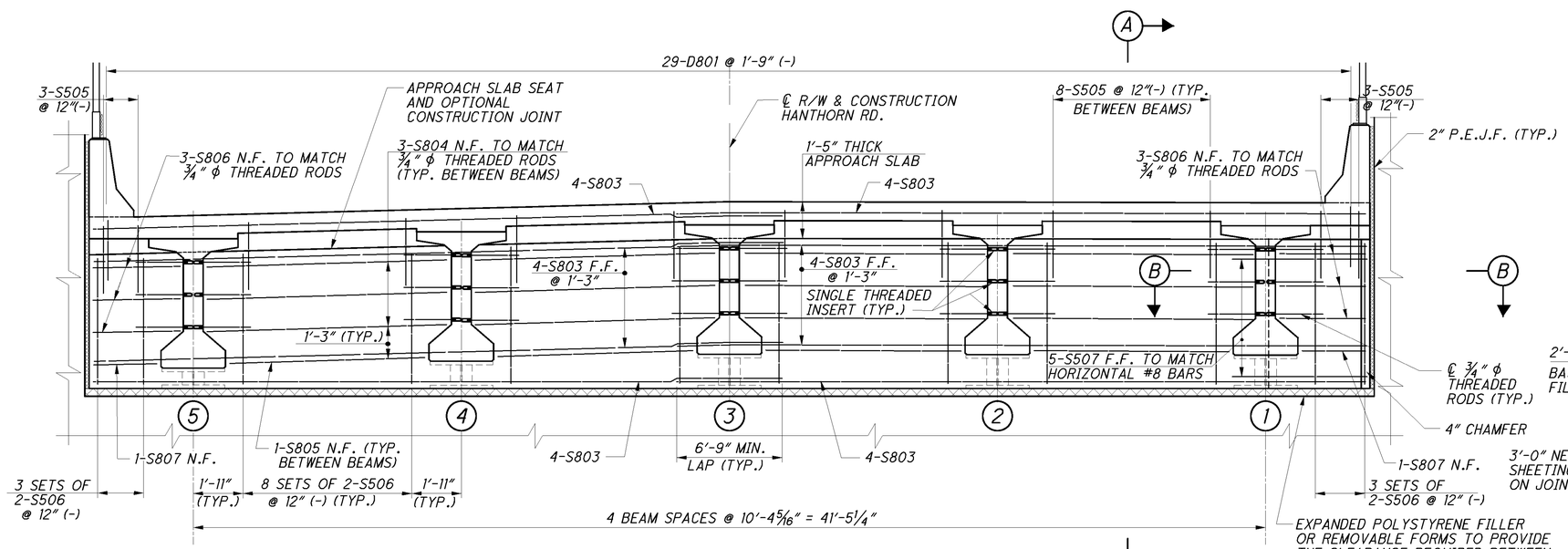

ELEVATION
REAR ABUTMENT

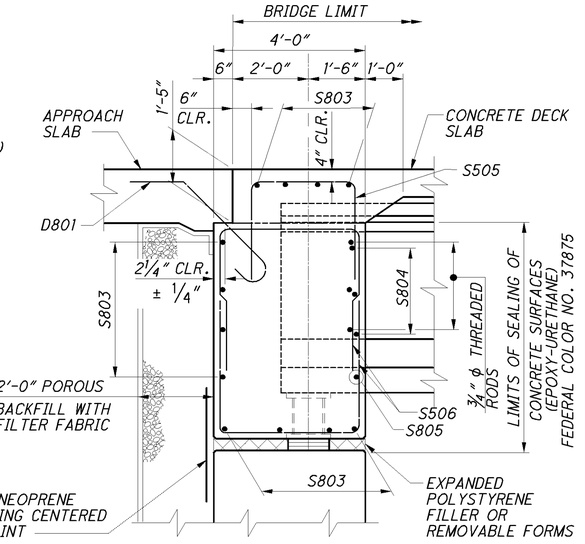

SECTION A-A

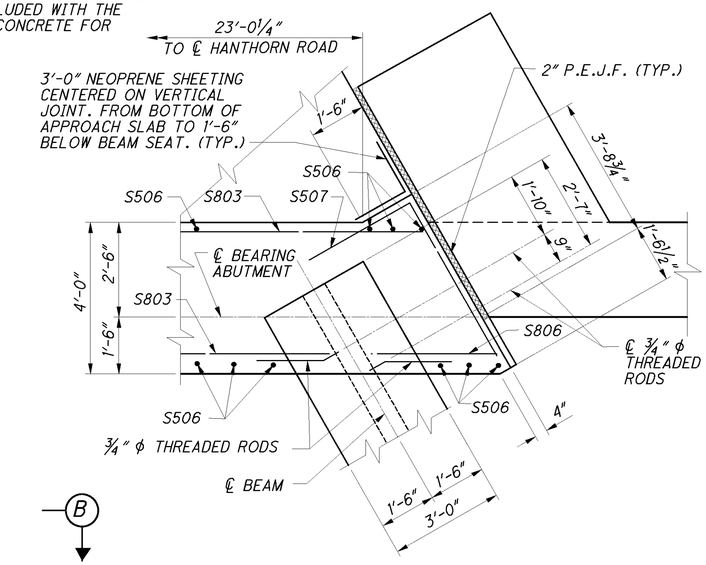

SECTION B-B

NOTES:

1. ALL VERTICAL REINFORCEMENT PLACED PARALLEL TO BEAMS.
2. FOR FRAMING PLAN, SEE SHEET 13/28.
3. FOR REINFORCEMENT BAR LIST, SEE SHEET 25/28.
4. FOR ABUTMENT DETAILS, SEE SHEETS 6/28 THROUGH 10/28.
5. FOR SLAB PLAN, SEE SHEET 18/28.
6. FOR APPROACH SLAB DETAILS, SEE SHEETS 21/28 AND 22/28.
7. FOR TOP OF DECK ELEVATIONS AT ℄ OF BEARING, SEE SHEET 20/28.
8. ABUTMENT DIAPHRAGM CONCRETE: PLACE THE DIAPHRAGM CONCRETE ENCASING THE STRUCTURAL MEMBER ENDS AFTER THE DECK PLACEMENT IN THE ADJACENT SPAN IS COMPLETE. PROCEDURES THAT PLACE THE ABUTMENT DIAPHRAGM WITH THE DECK CONCRETE MAY BE APPROVED BY THE ENGINEER IF THE PLACEMENT SUBMITTAL CAN ASSURE THAT THE DECK CONCRETE IN THE ADJACENT SPAN WILL BE PLACED BEFORE CONCRETE IN THE DIAPHRAGM HAS REACHED ITS INITIAL SET.
9. FOR ADDITIONAL DIAPHRAGM DETAILS, SEE ODOT STANDARD DRAWING SICD-1-96, SHEET 1 THRU 7 OF 7.

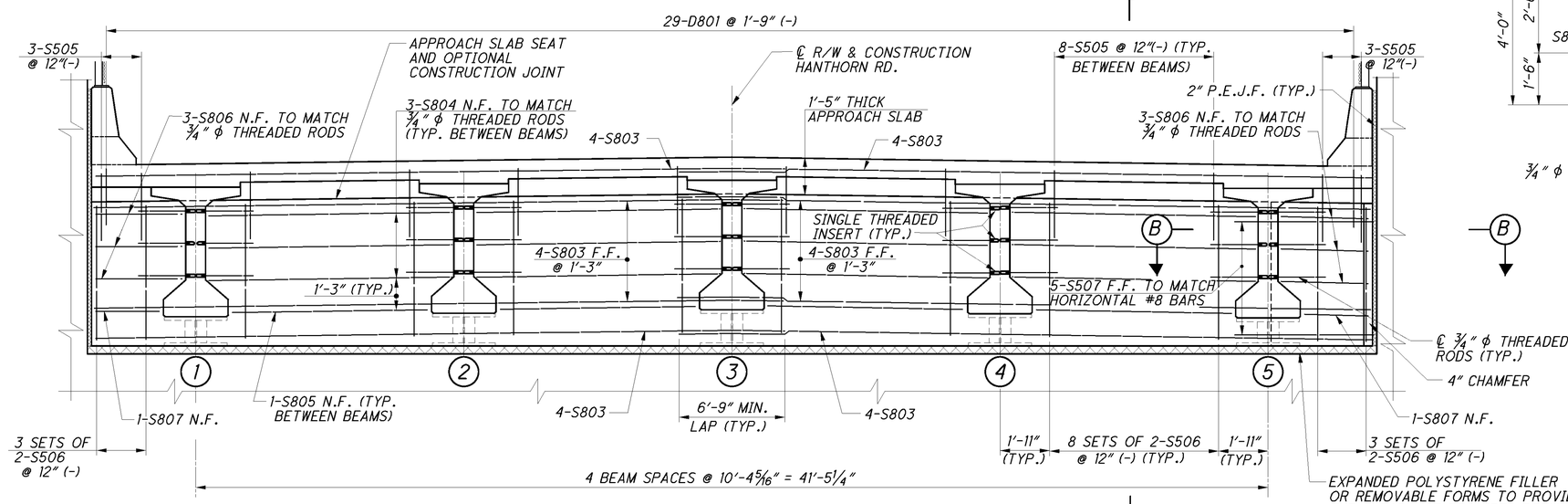

ELEVATION
FORWARD ABUTMENT

DESIGN AGENCY
PARSONS BRINCKERHOFF
2945 FARMERS DRIVE
SUITE 350
COLUMBUS, OHIO 43235

DESIGNED	DRAWN	REVIEWED	DATE
ECM	RCK	EBS	11-29-12
CHECKED	REVISED	STRUCTURE FILE NUMBER	
BMG		0201936	

SEMI-INTEGRAL ABUTMENT DIAPHRAGM DETAILS

BRIDGE NO. ALL-75-0508
C.R. 196 (HANTHORN RD.) OVER I-75

ALL-75-0.21
PID No. 89029

16/28

792
907

J:\Projects\ALL\89029\structures\ALL075_0508C\sheets\075_0508CSD005.dgn 09-MAY-2013 3:11PM jint

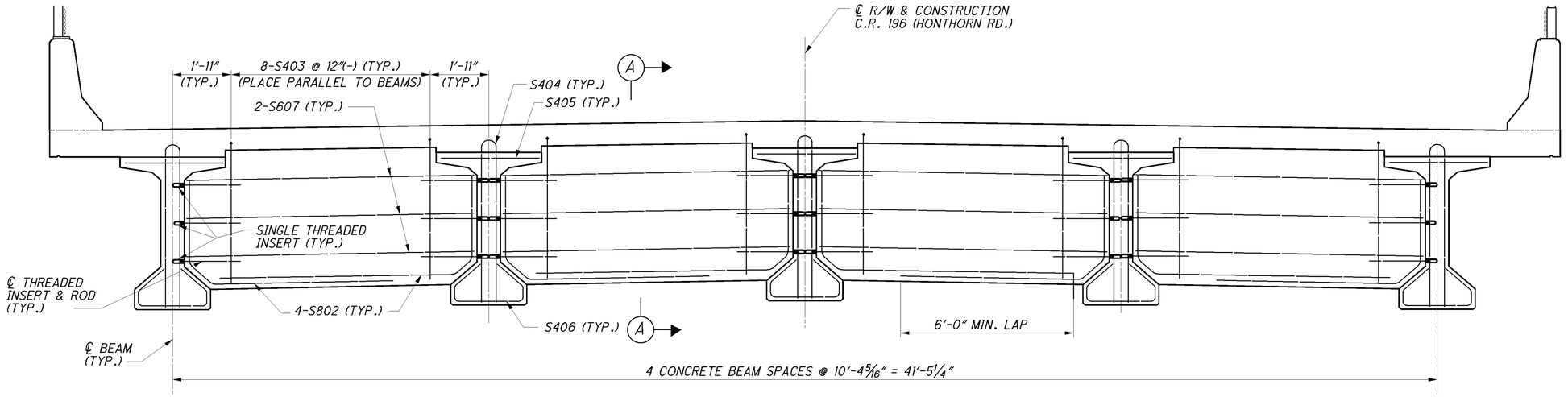

ELEVATION - PIER DIAPHRAGM

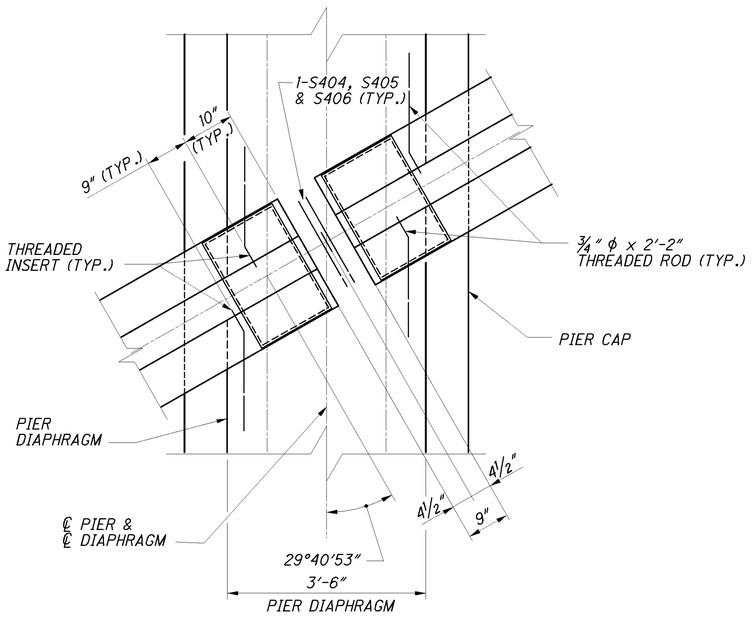

SECTION B-B

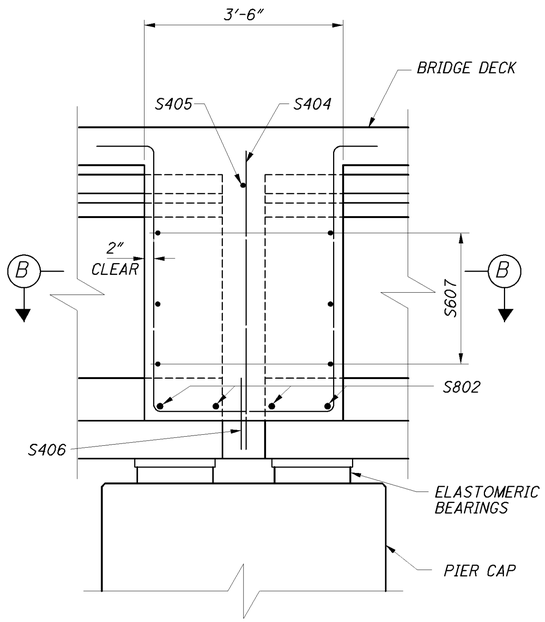

SECTION A-A

NOTES:

1. ALL VERTICAL REINFORCEMENT PLACED PARALLEL TO BEAMS.
2. FOR PIER DETAILS, SEE SHEET 11/28.
3. FOR FRAMING PLAN, SEE SHEET 13/28.
4. FOR SLAB PLAN, SEE SHEET 18/28.
5. FOR REINFORCEMENT BAR LIST, SEE SHEET 25/28.
6. FOR TOP OF DECK ELEVATIONS ALONG ℄ PIER BEARINGS, SEE SHEET 20/28.
7. FOR BEARING DETAILS, SEE SHEET 12/28.

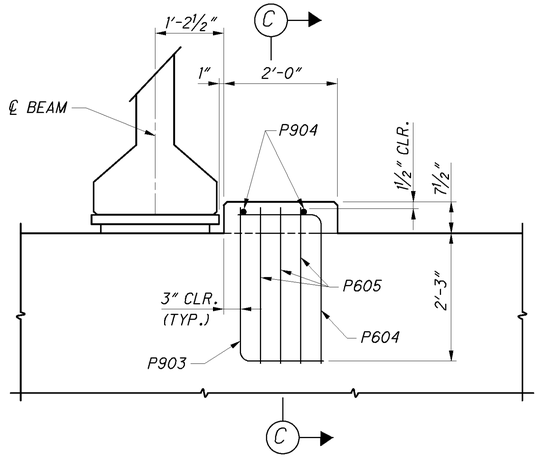

PROPOSED PIER CAP SEISMIC PEDESTAL

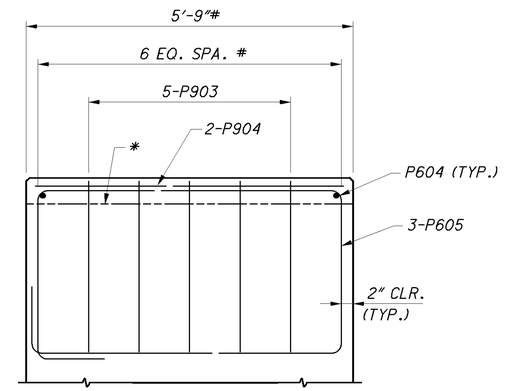

PROPOSED SEISMIC PEDESTAL SECTION C-C

(# MEASURED ALONG ℄ OF BEAM)
(* THE SURFACE OF THE BEAM SEAT WITHIN THE LIMITS OF THE SEISMIC PEDESTAL SHALL BE FINISHED WITH A SERRATED TROWEL. THE SERRATIONS SHALL BE 1/4" DEEP MINIMUM.)

DESIGN AGENCY
PARSONS BRINCKERHOFF
2545 FARMERS DRIVE
SUITE 350
COLUMBUS, OHIO 43235

DESIGNED	DRAWN	REVIEWED	DATE
ECM	RCK	EBS	11-29-12
CHECKED	REVISED	STRUCTURE FILE NUMBER	
BMG		0201936	

PIER DIAPHRAGM DETAILS
BRIDGE NO. ALL-75-0508
C.R. 196 (HANTHORN RD.) OVER I-75

ALL-75-0.21
PID No. 89029

17 / 28

793
907

J:\Projects\ALL\89029\structures\ALL075_0508C\sheets\075_0508CSD006.dgn 09-MAY-2013 3:11PM lint

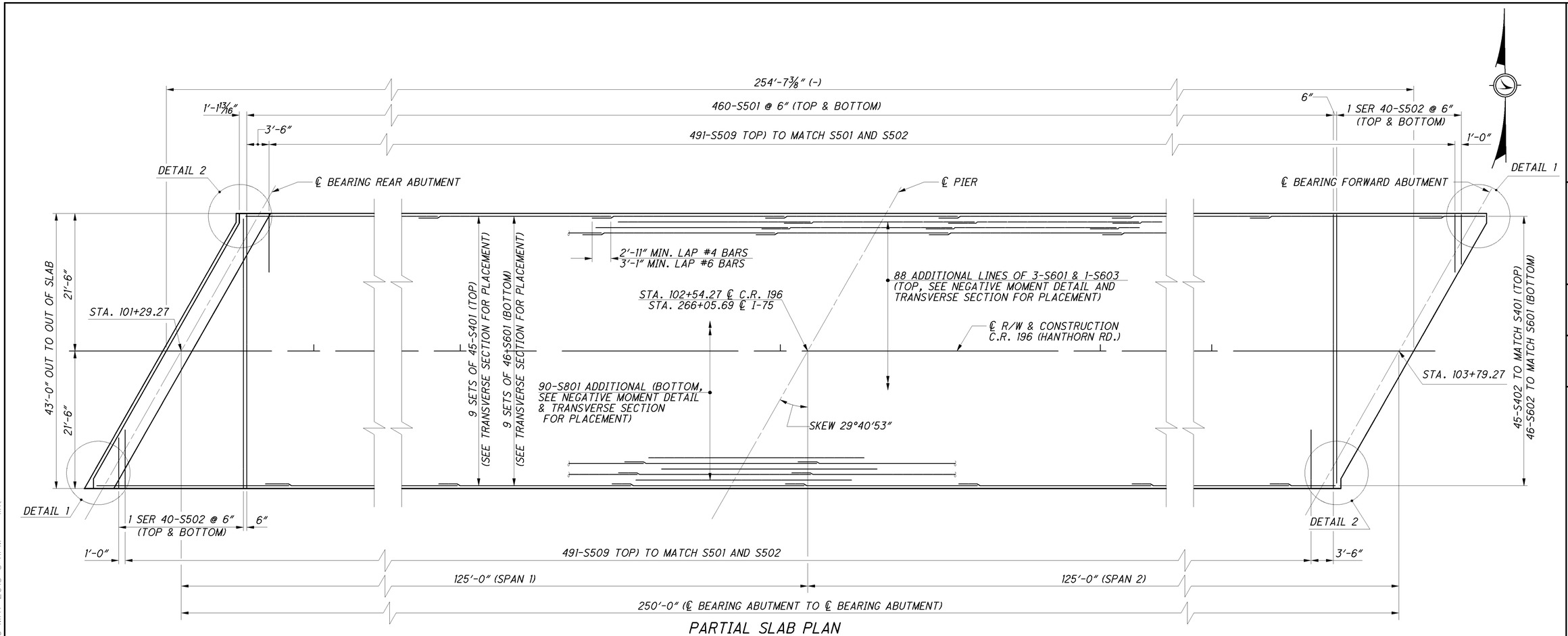

PARTIAL SLAB PLAN

(PARAPETS NOT SHOWN)

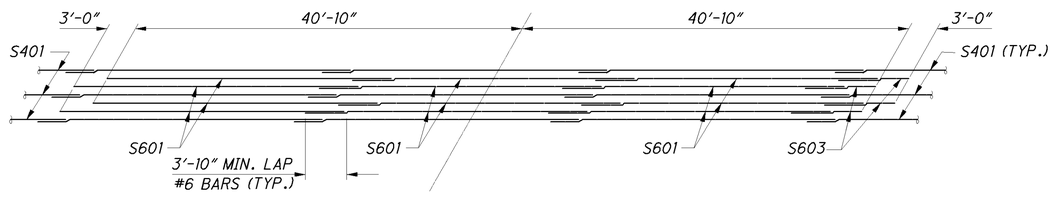

(TOP MAT REINFORCEMENT)

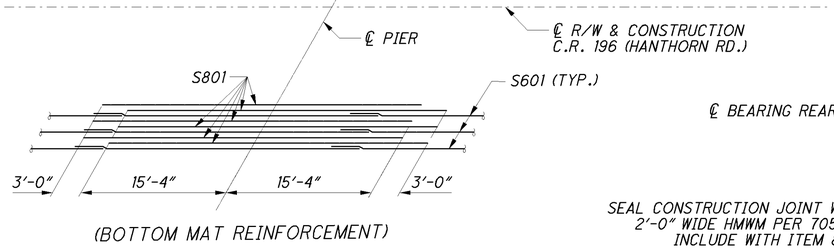

(BOTTOM MAT REINFORCEMENT)

NEGATIVE MOMENT DETAIL

(SEE TRANSVERSE SECTION FOR SPACING OF LONGITUDINAL REINFORCEMENT)

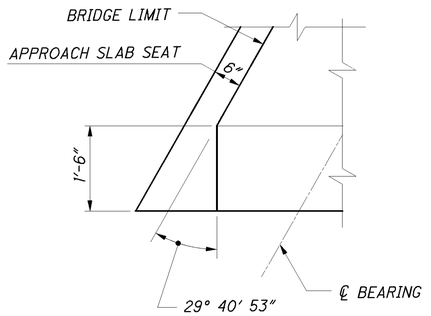

DETAIL 1

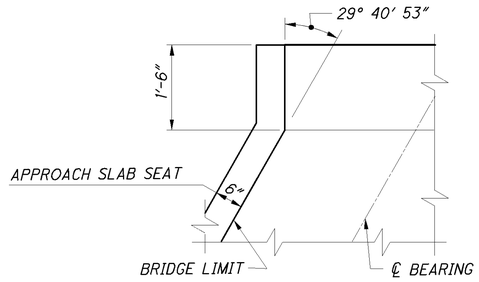

DETAIL 2

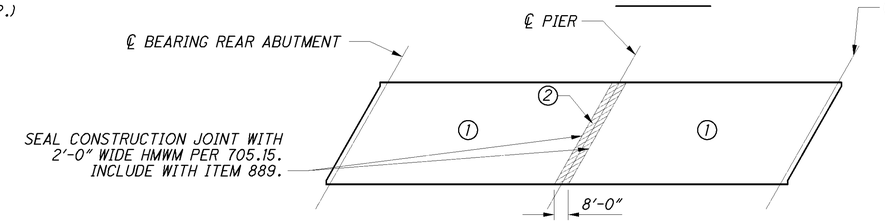

CONCRETE DECK PLACEMENT SEQUENCE

NOTES:

1. FOR TRANSVERSE SECTION, SEE SHEET 19/28.
2. FOR SEMI-INTEGRAL DIAPHRAGM DETAILS, SEE SHEET 16/28.
3. FOR PIER DIAPHRAGM DETAILS, SEE SHEET 17/28.
4. CONCRETE DECK PLACEMENTS ① MAY BE MADE ON THE SAME OR SEPARATE DAYS. PLACEMENT ② SHALL NOT BE MADE UNTIL CONCRETE IN ADJACENT SPANS HAVE BEEN IN PLACE AT LEAST 48 HOURS. PLACEMENT ② SHALL INCLUDE THE PLACEMENT OF PIER DIAPHRAGMS. THE CONTRACTOR SHALL BEGIN EACH POUR SEQUENCE AT THE LOWEST ELEVATION AND PROCEED UPGRADE.

DESIGN AGENCY
PARSONS BRINCKERHOFF
2945 FARMERS DRIVE
SUITE 350
COLUMBUS, OHIO 43235

DESIGNED	DRAWN	REVIEWED	DATE
APV	RCK	EBS	11-29-12
CHECKED	REVISED	STRUCTURE FILE NUMBER	
ECM		0201936	

DECK REINFORCING PLAN
BRIDGE NO. ALL-75-0508
C.R. 196 (HANTHORN RD.) OVER I-75

ALL-75-0.21
PID No. 89029

18 / 28

794
907

09-MAY-2013 3:11PM jint
I:\Projects\ALL\89029\structures\ALL075_0508C\sheets\075_0508CDP001.dgn

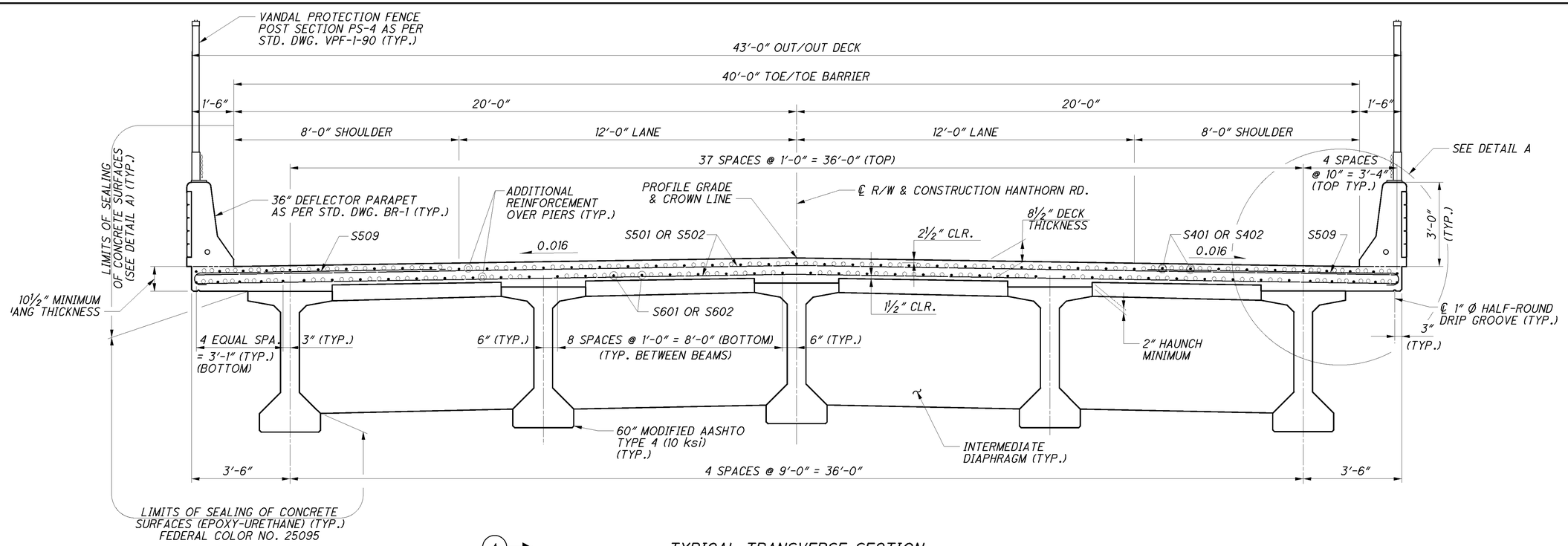

TYPICAL TRANSVERSE SECTION

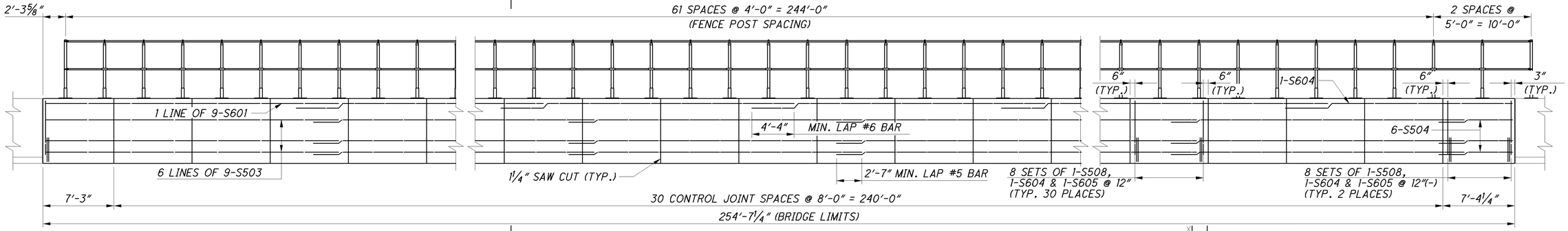

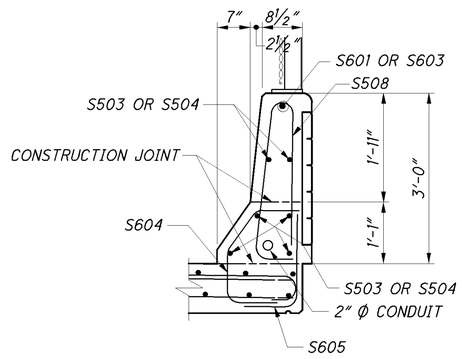

SECTION A-A

TYPICAL PARAPET ELEVATION

SOUTH ELEVATION, LOOKING NORTH, SHOWN,
NORTH ELEVATION, LOOKING SOUTH, OPPOSITE HAND

NOTES:

1. FOR GENERAL NOTES, SEE SHEETS 2/28 AND 3/28 .
2. FOR SLAB PLAN, SEE SHEET 18/28.
3. FOR ADDITIONAL BARRIER NOTES AND DETAILS, SEE ODOT STANDARD DRAWING BR-1.
4. FOR AESTHETIC DETAILS, SEE SHEET 27/28 .
5. FOR 2" Ø CONDUIT PLACEMENT, SEE ODOT STANDARD DRAWING HL-30.32.

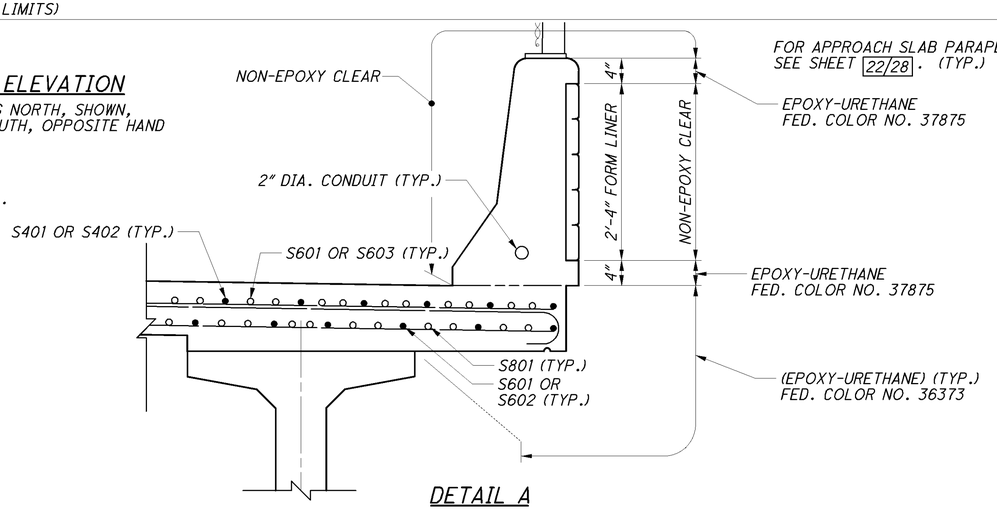

DETAIL A

DESIGN AGENCY
PARSONS BRINCKERHOFF
2945 FARMERS DRIVE
SUITE 350
COLUMBUS, OHIO 43235

DESIGNED	DRAWN	REVIEWED	DATE
APV	RCK	EBS	11-29-12
CHECKED	REVISED		STRUCTURE FILE NUMBER
ECM			0201936

SUPERSTRUCTURE DETAILS
BRIDGE NO. ALL-75-0508
C.R. 196 (HANTHORN RD.) OVER I-75

ALL-75-0.21
PID No. 89029

19 / 28

795
907

J:\Projects\ALL\89029\structures\ALL075_0508C\sheets\075_0508CTS001.dgn 09-MAY-2013 3:11PM jint

SCREED TABLE

	LOCATION	CL BRG. REAR ABUT.	1/10	2/10	3/10	4/10	5/10	6/10	7/10	8/10	9/10	CL BRG. PIER REAR	CL BRG. PIER FWD.	1/10	2/10	3/10	4/10	5/10	6/10	7/10	8/10	9/10	CL BRG. FWD ABUT.
LEFT TOE OF BARRIER	STATION	101+40.67	101+53.05	101+65.43	101+77.81	101+90.19	102+02.57	102+14.95	102+27.33	102+39.70	102+52.08	102+64.46	102+66.88	102+79.25	102+91.63	103+04.01	103+16.39	103+28.77	103+41.15	103+53.53	103+65.91	103+78.29	103+90.67
	FINAL DECK SURFACE EL.	930.63	930.91	931.18	931.44	931.68	931.90	932.12	932.32	932.51	932.68	932.84	932.87	933.02	933.15	933.27	933.37	933.46	933.54	933.60	933.66	933.69	933.72
	DEFLECTION	0.00	0.05	0.11	0.15	0.17	0.18	0.17	0.14	0.10	0.05	0.00	0.00	0.05	0.10	0.14	0.17	0.18	0.17	0.15	0.11	0.05	0.00
	SCREED EL.	930.63	930.97	931.29	931.58	931.85	932.09	932.29	932.46	932.61	932.73	932.84	932.87	933.07	933.25	933.41	933.54	933.64	933.71	933.75	933.76	933.75	933.72
	TOP OF HAUNCH EL	-----	-----	-----	-----	-----	-----	-----	-----	-----	-----	-----	-----	-----	-----	-----	-----	-----	-----	-----	-----	-----	-----
BEAM 1	STATION	101+39.53	101+51.91	101+64.29	101+76.67	101+89.05	102+01.43	102+13.81	102+26.19	102+38.56	102+50.94	102+63.32	102+65.74	102+78.11	102+90.49	103+02.87	103+15.25	103+27.63	103+40.01	103+52.39	103+64.77	103+77.15	103+89.53
	FINAL DECK SURFACE EL.	930.64	930.92	931.19	931.44	931.69	931.92	932.13	932.33	932.52	932.70	932.86	932.89	933.04	933.17	933.29	933.39	933.49	933.56	933.63	933.68	933.72	933.75
	DEFLECTION	0.00	0.06	0.11	0.15	0.18	0.19	0.18	0.15	0.11	0.05	0.00	0.00	0.05	0.11	0.15	0.18	0.19	0.18	0.15	0.11	0.06	0.00
	SCREED EL.	930.64	930.98	931.30	931.60	931.86	932.10	932.31	932.48	932.63	932.75	932.86	932.89	933.09	933.27	933.44	933.57	933.67	933.74	933.78	933.79	933.78	933.75
	TOP OF HAUNCH EL	929.93	930.27	930.59	930.89	931.16	931.39	931.60	931.77	931.92	932.04	932.15	932.18	932.38	932.57	932.73	932.86	932.96	933.03	933.07	933.08	933.07	933.04
BEAM 2	STATION	101+34.40	101+46.78	101+59.16	101+71.54	101+83.92	101+96.30	102+08.68	102+21.06	102+33.43	102+45.81	102+58.19	102+60.61	102+72.98	102+85.36	102+97.74	103+10.12	103+22.50	103+34.88	103+47.26	103+59.64	103+72.02	103+84.40
	FINAL DECK SURFACE EL.	930.66	930.94	931.22	931.48	931.73	931.96	932.18	932.39	932.59	932.77	932.93	932.97	933.12	933.26	933.38	933.49	933.59	933.67	933.75	933.80	933.85	933.88
	DEFLECTION	0.00	0.06	0.12	0.17	0.20	0.20	0.19	0.16	0.12	0.06	0.00	0.00	0.06	0.12	0.16	0.19	0.20	0.20	0.17	0.12	0.06	0.00
	SCREED EL.	930.66	931.01	931.34	931.65	931.92	932.17	932.38	932.56	932.70	932.83	932.93	932.97	933.18	933.37	933.54	933.69	933.79	933.87	933.91	933.92	933.91	933.88
	TOP OF HAUNCH EL	929.95	930.30	930.63	930.94	931.22	931.46	931.67	931.85	932.00	932.12	932.23	932.26	932.47	932.67	932.84	932.98	933.09	933.16	933.20	933.22	933.20	933.17
P.G., CROWN LINE & CL BEAM 3	STATION	101+29.27	101+41.65	101+54.03	101+66.41	101+78.79	101+91.17	102+03.55	102+15.93	102+28.31	102+40.68	102+53.06	102+55.48	102+67.86	102+80.23	102+92.61	103+04.99	103+17.37	103+29.75	103+42.13	103+54.51	103+66.89	103+79.27
	FINAL DECK SURFACE EL.	930.67	930.97	931.25	931.51	931.77	932.01	932.23	932.45	932.65	932.83	933.01	933.04	933.20	933.34	933.47	933.59	933.69	933.78	933.86	933.92	933.97	934.01
	DEFLECTION	0.00	0.06	0.12	0.17	0.20	0.20	0.19	0.16	0.12	0.06	0.00	0.00	0.06	0.12	0.16	0.19	0.20	0.20	0.17	0.12	0.06	0.00
	SCREED EL.	930.67	931.03	931.37	931.68	931.96	932.21	932.43	932.61	932.77	932.89	933.01	933.04	933.26	933.46	933.63	933.78	933.90	933.98	934.02	934.04	934.03	934.01
	TOP OF HAUNCH EL	929.97	930.32	930.66	930.97	931.25	931.50	931.72	931.90	932.06	932.19	932.30	932.33	932.55	932.75	932.93	933.07	933.19	933.27	933.32	933.33	933.32	933.30
BEAM 4	STATION	101+24.14	101+36.52	101+48.90	101+61.28	101+73.66	101+86.04	101+98.42	102+10.80	102+23.18	102+35.56	102+47.93	102+50.35	102+62.73	102+75.11	102+87.48	102+99.86	103+12.24	103+24.62	103+37.00	103+49.38	103+61.76	103+74.14
	FINAL DECK SURFACE EL.	930.41	930.71	930.99	931.26	931.52	931.77	932.00	932.22	932.43	932.62	932.80	932.83	932.99	933.14	933.28	933.40	933.51	933.61	933.69	933.76	933.81	933.85
	DEFLECTION	0.00	0.06	0.12	0.17	0.20	0.20	0.19	0.16	0.12	0.06	0.00	0.00	0.06	0.12	0.16	0.19	0.20	0.20	0.17	0.12	0.06	0.00
	SCREED EL.	930.41	930.77	931.11	931.43	931.72	931.97	932.20	932.38	932.54	932.68	932.80	932.83	933.05	933.26	933.44	933.59	933.71	933.80	933.85	933.88	933.87	933.85
	TOP OF HAUNCH EL	929.70	930.06	930.40	930.72	931.01	931.27	931.49	931.68	931.84	931.97	932.09	932.12	932.34	932.55	932.73	932.89	933.01	933.09	933.15	933.17	933.17	933.15
BEAM 5	STATION	101+19.01	101+31.39	101+43.77	101+56.15	101+68.53	101+80.91	101+93.29	102+05.67	102+18.05	102+30.43	102+42.80	102+45.22	102+57.60	102+69.98	102+82.35	102+94.73	103+07.11	103+19.49	103+31.87	103+44.25	103+56.63	103+69.01
	FINAL DECK SURFACE EL.	930.14	930.44	930.74	931.01	931.28	931.53	931.77	931.99	932.20	932.40	932.58	932.62	932.79	932.94	933.08	933.21	933.33	933.43	933.51	933.59	933.65	933.70
	DEFLECTION	0.00	0.06	0.11	0.15	0.18	0.19	0.18	0.15	0.11	0.05	0.00	0.00	0.05	0.11	0.15	0.18	0.19	0.18	0.15	0.11	0.06	0.00
	SCREED EL.	930.14	930.50	930.84	931.16	931.45	931.71	931.94	932.14	932.31	932.45	932.58	932.62	932.84	933.05	933.23	933.39	933.51	933.60	933.67	933.70	933.71	933.70
	TOP OF HAUNCH EL	929.43	929.79	930.14	930.46	930.75	931.01	931.23	931.43	931.60	931.75	931.88	931.91	932.13	932.34	932.52	932.68	932.80	932.89	932.96	932.99	933.00	932.99
RIGHT TOE OF BARRIER	STATION	101+17.87	101+30.25	101+42.63	101+55.01	101+67.39	101+79.77	101+92.15	102+04.53	102+16.91	102+29.29	102+41.66	102+44.08	102+56.46	102+68.84	102+81.21	102+93.59	103+05.97	103+18.35	103+30.73	103+43.11	103+55.49	103+67.87
	FINAL DECK SURFACE EL.	930.08	930.38	930.68	930.96	931.22	931.48	931.71	931.94	932.15	932.35	932.54	932.57	932.74	932.90	933.04	933.17	933.28	933.39	933.48	933.55	933.61	933.66
	DEFLECTION	0.00	0.05	0.11	0.15	0.17	0.18	0.17	0.14	0.10	0.05	0.00	0.00	0.05	0.10	0.14	0.17	0.18	0.17	0.15	0.11	0.05	0.00
	SCREED EL.	930.08	930.44	930.78	931.10	931.40	931.66	931.89	932.08	932.26	932.40	932.54	932.57	932.79	933.00	933.18	933.34	933.46	933.56	933.62	933.66	933.67	933.66
	TOP OF HAUNCH EL	-----	-----	-----	-----	-----	-----	-----	-----	-----	-----	-----	-----	-----	-----	-----	-----	-----	-----	-----	-----	-----	-----

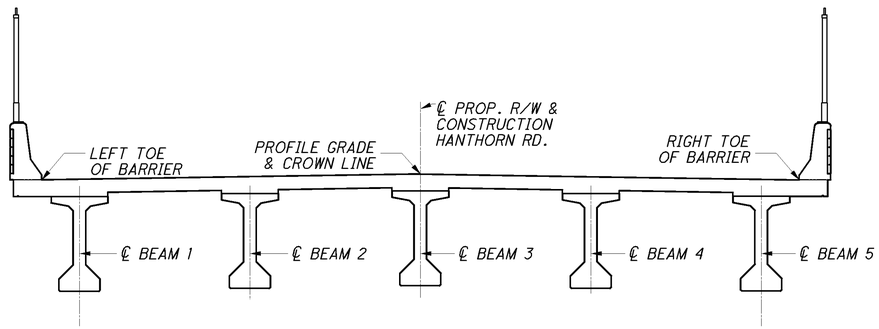

TYPICAL CROSS SECTION

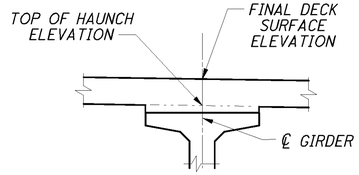

DECK HANCH DETAIL

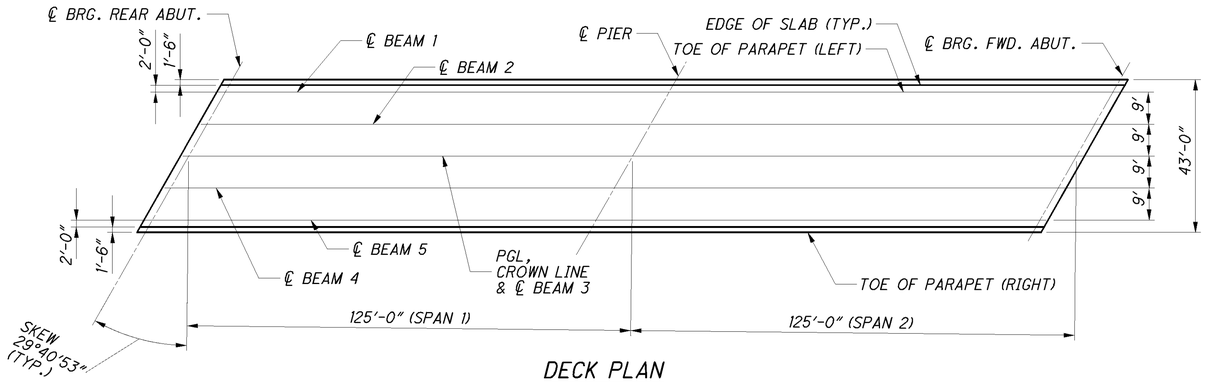

DECK PLAN

NOTES:

1. SCREED ELEVATIONS SHOWN REPRESENT THE THEORETICAL DECK SURFACE LOCATION PRIOR TO DEFLECTIONS CAUSED BY DECK PLACEMENT AND OTHER ANTICIPATED DEAD LOADS.
2. TOP OF HAUNCH ELEVATIONS SHOWN REPRESENT THE THEORETICAL LOCATION OF THE BOTTOM OF THE DECK ABOVE THE BEAM/GIRDER HAUNCH PRIOR TO DEFLECTIONS CAUSED BY DECK PLACEMENT AND OTHER ANTICIPATED DEAD LOADS.
3. FINAL DECK SURFACE ELEVATIONS SHOWN REPRESENT THE DECK SURFACE LOCATION AFTER ALL ANTICIPATED DEAD LOAD DEFLECTIONS HAVE OCCURRED.
4. FOR TRANSVERSE SECTION, SEE SHEET 19/28 .
5. FOR DECK SLAB THICKNESS DIAGRAM, SEE SHEET 15/28 .

DESIGN AGENCY
PARSONS BRINCKERHOFF
2945 FARMERS DRIVE
SUITE 350
COLUMBUS, OHIO 43235

DESIGNED ECM | CHECKED BMG
DRAWN RCK | REVISED
REVIEWED EBS | DATE 11-29-12
STRUCTURE FILE NUMBER 0201936

SCREED ELEVATIONS
BRIDGE NO. ALL-75-0508
C.R. 196 (HANTHORN RD.) OVER I-75

ALL-75-0.21
PID No. 89029

20/28

796
907

J:\Projects\ALL\89029\structures\ALL075_0508\sheets\075_0508SD004.dgn 09-MAY-2013 3:11PM jint

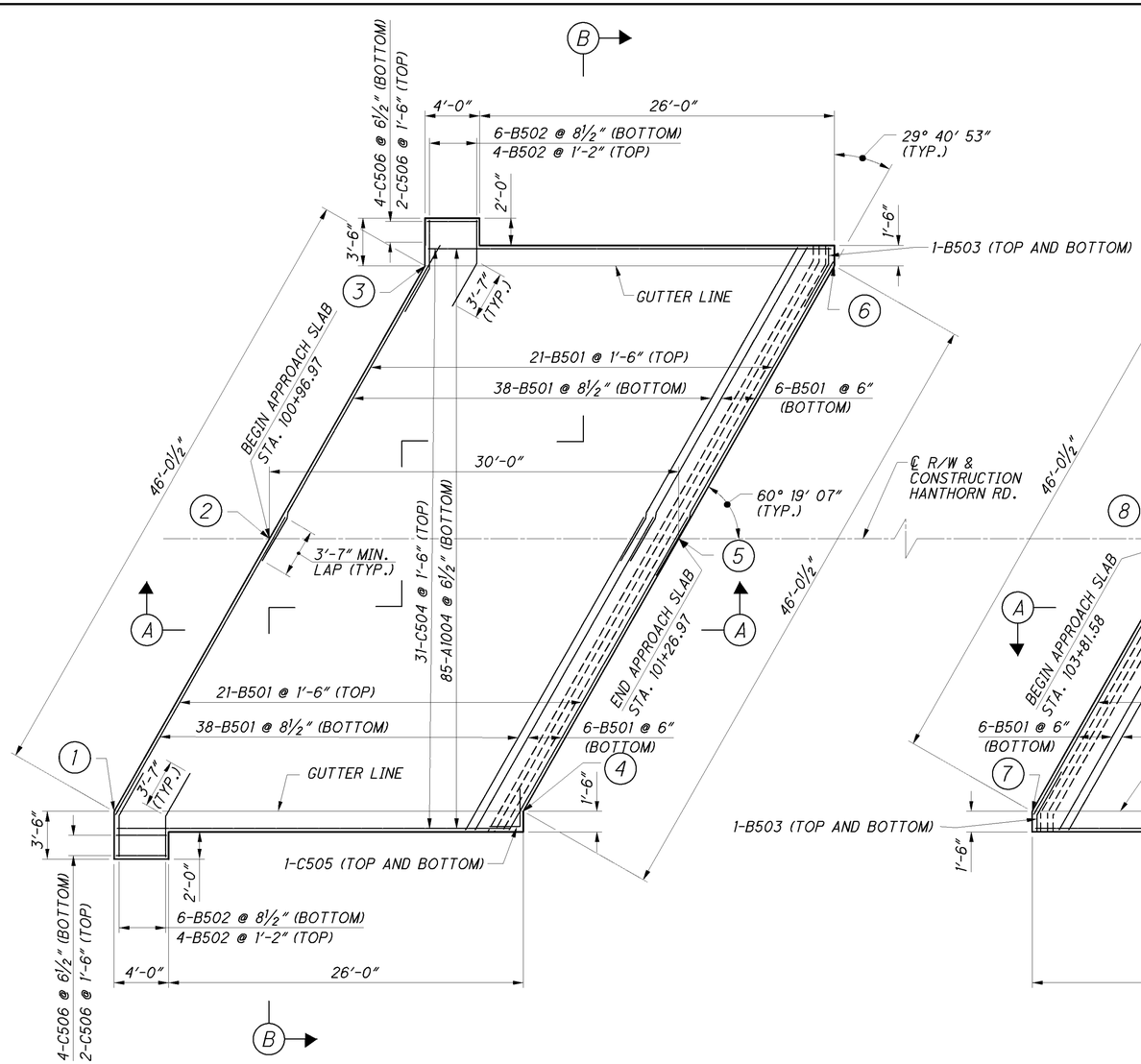

REAR APPROACH SLAB PLAN

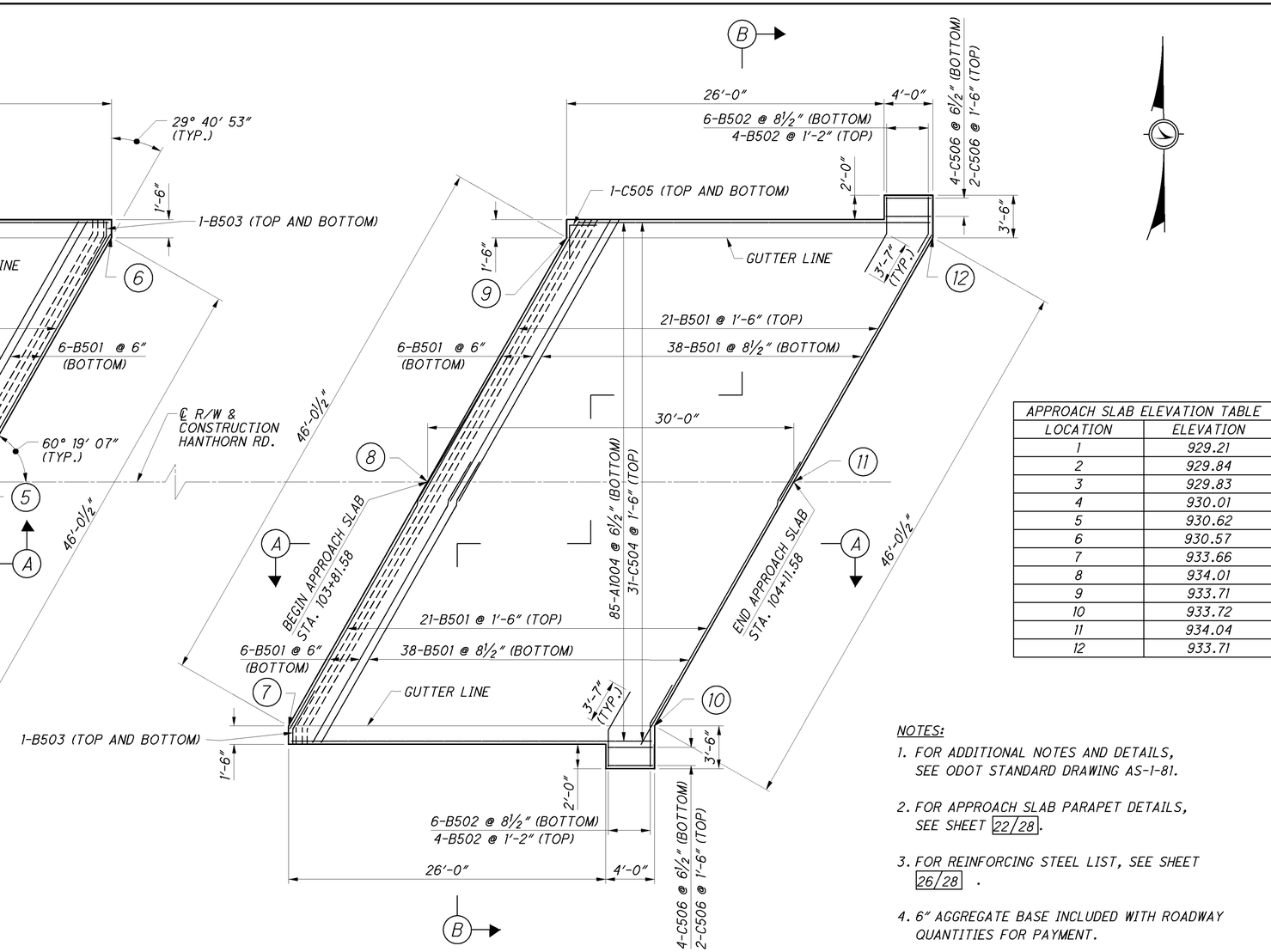

FORWARD APPROACH SLAB PLAN

APPROACH SLAB ELEVATION TABLE	
LOCATION	ELEVATION
1	929.21
2	929.84
3	929.83
4	930.01
5	930.62
6	930.57
7	933.66
8	934.01
9	933.71
10	933.72
11	934.04
12	933.71

NOTES:

1. FOR ADDITIONAL NOTES AND DETAILS, SEE ODOT STANDARD DRAWING AS-1-81.
2. FOR APPROACH SLAB PARAPET DETAILS, SEE SHEET 22/28.
3. FOR REINFORCING STEEL LIST, SEE SHEET 26/28 .
4. 6" AGGREGATE BASE INCLUDED WITH ROADWAY QUANTITIES FOR PAYMENT.

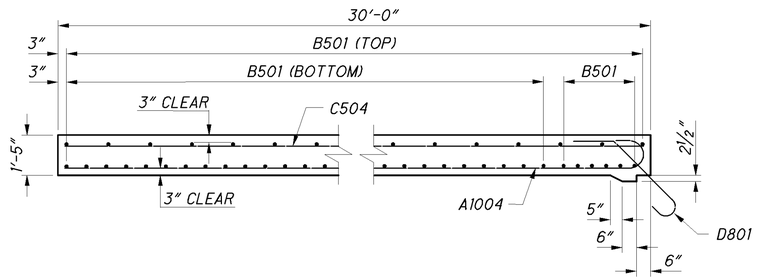

SECTION A-A

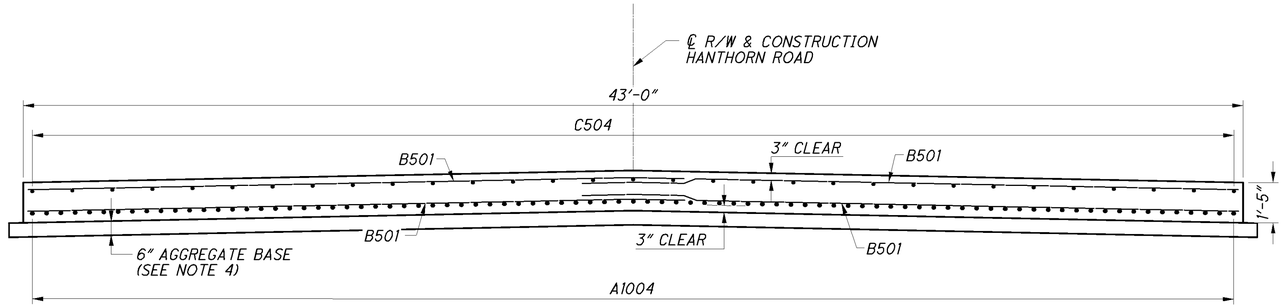

SECTION B-B

DESIGN AGENCY
PARSONS BRINCKERHOFF
2545 FARMERS DRIVE
SUITE 350
COLUMBUS, OHIO 43235

DESIGNED ECM | DRAWN RCK | CHECKED BMG | REVIEWED EBS | DATE 11-29-12 | REVISED | STRUCTURE FILE NUMBER 0201936

APPROACH SLAB DETAILS
BRIDGE NO. ALL-75-0508
C.R. 196 (HANTHORN RD.) OVER I-75

ALL-75-0.21
PID No. 89029

21 / 28

797
907

J:\Projects\ALL\89029\structures\ALL075_0508C\sheets\075_0508CMD001.dgn 09-MAY-2013 3:11PM jint

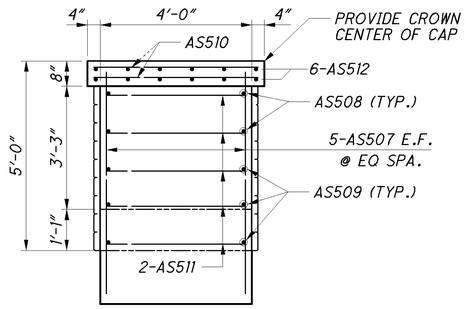

SECTION G-G

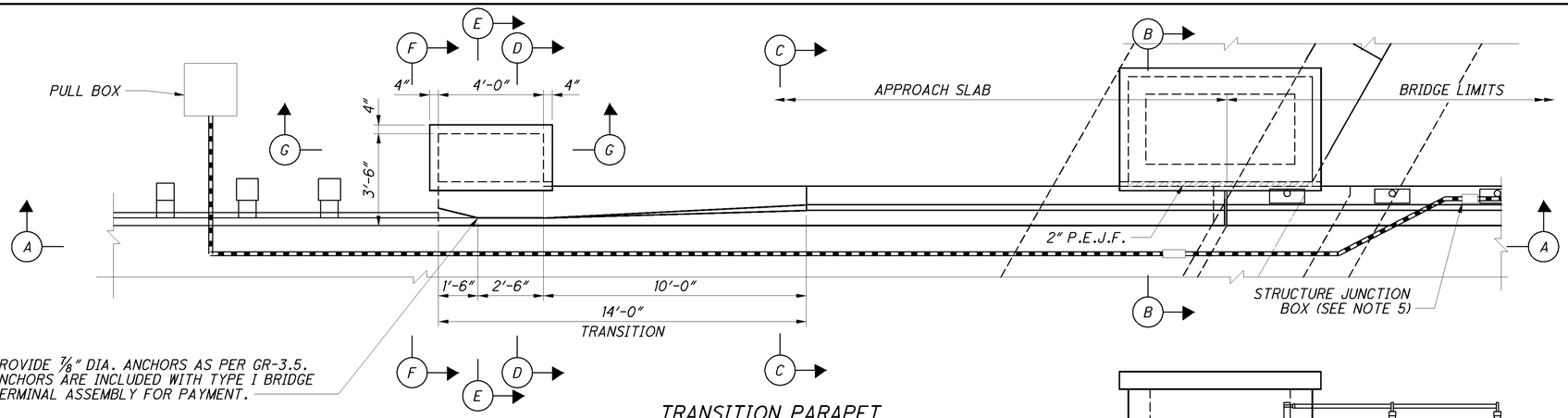

TRANSITION PARAPET

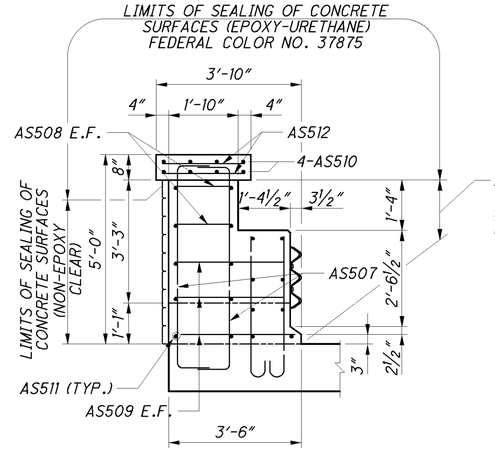

SECTION E-E
TOWER DETAIL

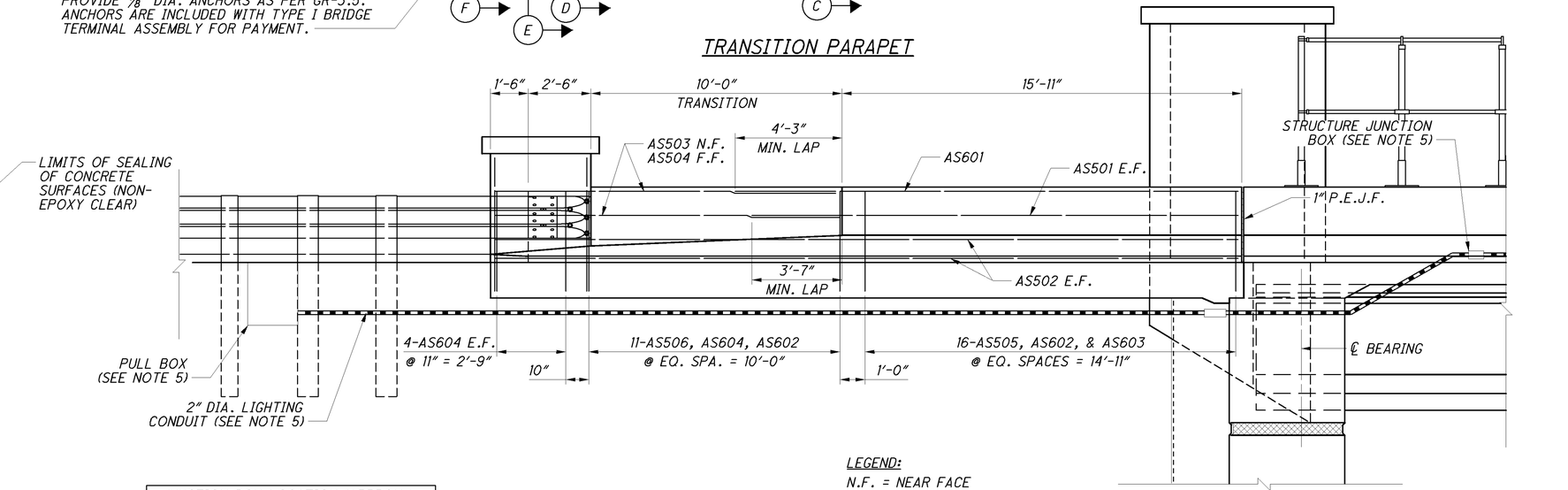

SECTION A-A

LEGEND:
N.F. = NEAR FACE
F.F. = FAR FACE
E.F. = EACH FACE
C.J. = CONSTRUCTION JOINT

JUNCTION BOX LOCATION (APPROX.)	
STATION	SIDE
101+39	RT.
101+59	LT.
103+49	RT.
103+69	LT.

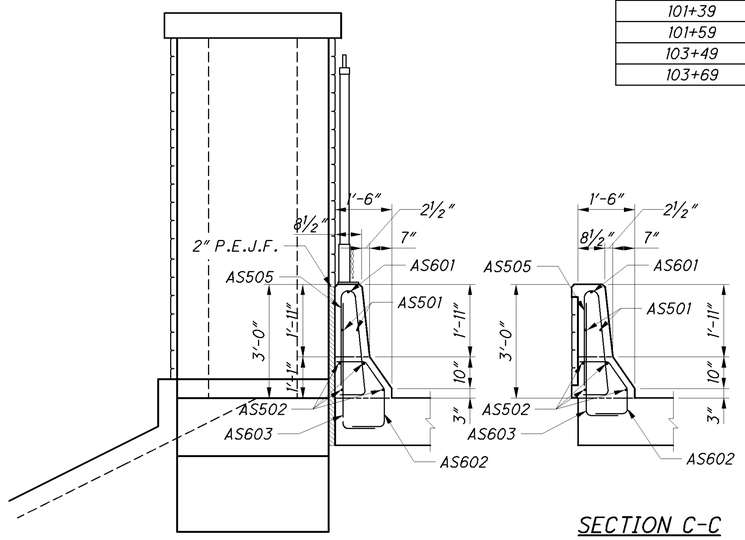

SECTION B-B

SECTION C-C

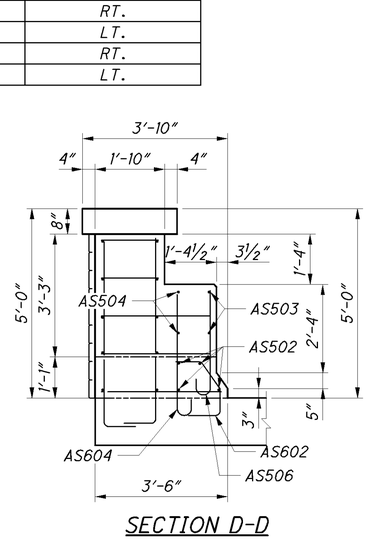

SECTION D-D

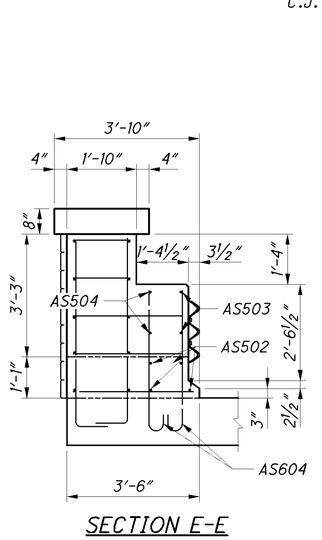

SECTION E-E
PARAPET DETAIL

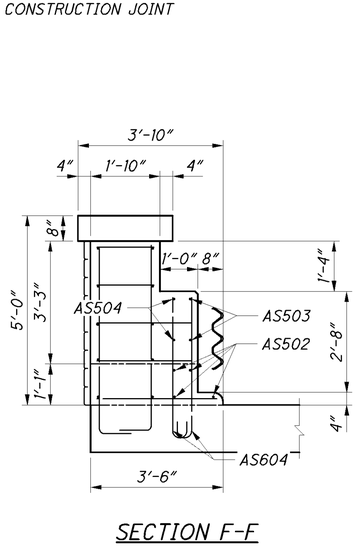

SECTION F-F

NOTES:

1. FOR AESTHETIC DETAILS, SEE SHEET 28/28.
2. FOR ADDITIONAL NOTES AND DETAILS, SEE STANDARD CONSTRUCTION DRAWING BR-1.
3. THE COST OF THE APPROACH SLAB PARAPET, EXCLUDING SEALING AND FORMLINER, SHALL BE INCLUDED WITH ITEM 898, QC/QA CONCRETE, CLASS QSC 2, SUPERSTRUCTURE (APPROACH SLAB), (T=15"), AS PER PLAN.
4. ALL LABOR AND MATERIAL, EXCLUDING SEALING AND FORMLINER, NECESSARY TO CONSTRUCT TOWER SHOWN IN SECTION D-D, E-E, AND F-F SHALL BE INCLUDED WITH APPROACH SLAB FOR PAYMENT.
5. FOR ADDITIONAL NOTES AND DETAILS OF PULL BOXES, STRUCTURE JUNCTION BOXES, AND CONDUIT, SEE STANDARD CONSTRUCTION DRAWING HL-30.11, HL-30.31, HL-30.32. SEE SHEET 4/28 FOR QUANTITIES FOR THESE ITEMS.
6. FOR BRIDGE TERMINAL ASSEMBLIES SEE ROADWAY STANDARD DRAWINGS GR-3.1 AND GR-3.2. SEE ROADWAY PLANS FOR DETAILS AND PAYMENT.

DESIGN AGENCY
PARSONS BRINCKERHOFF
2545 FARMERS DRIVE
SUITE 350
COLUMBUS, OHIO 43235

DESIGNED	DRAWN	REVIEWED	DATE
ECM	RCK	EBS	11-29-12
CHECKED	REVISED	STRUCTURE FILE NUMBER	
BMG		0201936	

APPROACH SLAB PARAPET DETAILS

BRIDGE NO. ALL-75-0508
C.R. 196 (HANTHORN RD.) OVER I-75

ALL-75-0.21
PID No. 89029

22/28

798
907

J:\Projects\ALL\89029\structures\ALL075_0508\sheets\075_0508SMD002.dgn 09-MAY-2013 3:11PM lint

MARK	NUMBER TOTAL	LENGTH	WEIGHT	TYPE	DIMENSIONS A	B	C	D	E	R	INC
REAR ABUTMENT											
	2	12′-0″			7′-7″						
RA501	SER.	TO	140	19	TO	1′-10″	3′-4″				6″
	5	14′-8″			10′-3″						
RA502	12	18′-1″	256	2	8′-6″	3′-8″					
RA503	8	21′-9″	182	33	3′-8″	6′-8″					
	2	17′-1″				4′-4″					
RA504	SER.	TO	119	33	3′-8″	TO					1′-11″
	3	20′-11″				6′-3″					
RA505	20	3′-8″	77	STR.							
RA506	10	3′-10″	40	STR.							
RA507	22	19′-1″	438	33	3′-0″	6′-0″					
RA508	22	21′-9″	500	33	3′-8″	6′-8″					
RA509	36	10′-10″	407	STR.							
RA510	44	10′-7″	486	1	10″	9′-10″					
RA511	36	4′-4″	163	STR.							
RA512	24	7′-4″	184	STR.							
RA601	130	30′-0″	5,858	STR.							
RA602	33	28′-3″	1,400	STR.							
RA603	326	11′-0″	5,386	STR.							
RA604	108	6′-9″	1,095	1	1′-0″	5′-11″					
RA605	52	9′-11″	775	STR.							
RA606	11	7′-2″	118	19	4′-2″	1′-6″	2′-8″				
RA607	11	7′-1″	117	11	2′-1″	3′-7″	3′-1″				
RA608	5	33′-9″	253	STR.							
	1	18′-3″									
RA609	SER.	TO	214	STR.							2′-2 1/4″
	6	29′-2″									
	1	22′-0″									
RA610	SER.	TO	247	STR.							2′-2 1/4″
	6	32′-11″									
RA611	13	24′-1″	470	STR.							
RA612	7	25′-4″	266	STR.							
	1	21′-7″									
RA613	SER.	TO	147	STR.							1′-11 5/8″
	4	27′-6″									
	1	18′-6″									
RA614	SER.	TO	129	STR.							1′-11 5/8″
	4	24′-5″									
	1	4′-8″									
RA615	SER.	TO	376	STR.							0′-5 3/8″
	25	15′-4″									
RA616	7	17′-2″	180	STR.							
	1	3′-8″									
RA617	SER.	TO	43	STR.							0′-5 3/8″
	6	5′-11″									
	1	6′-9″									
RA618	SER.	TO	111	STR.							2′-2 3/4″
	6	17′-11″									
	1	7′-11″									
RA619	SER.	TO	122	STR.							2′-2 3/4″
	6	19′-1″									
RA620	5	5′-0″	38	STR.							
RA621	5	6′-4″	48	STR.							

MARK	NUMBER TOTAL	LENGTH	WEIGHT	TYPE	DIMENSIONS A	B	C	D	E	R	INC
REAR ABUTMENT											
	1	6′-7″									
RA622	SER.	TO	300	STR.							0′-6 3/8″
	18	15′-7″									
RA623	5	17′-10″	134	STR.							
RA624	49	8′-0″	589	2	2′-4″	3′-8″	2′-4″				
RA625	57	6′-6″	556	2	2′-4″	2′-2″	2′-4″				
	1	4′-9″									
RA626	SER.	TO	56	STR.							0′-7 1/4″
	6	7′-9″									
	1	6′-0″									
RA627	SER.	TO	99	STR.							2′-0″
	6	16′-0″									
	1	7′-1″									
RA628	SER.	TO	109	STR.							2′-0″
	6	17′-1″									
RA629	2	28′-1″	84	STR.							
RA630	2	22′-2″	67	STR.							
RA701	18	7′-8″	283	1	1′-2″	6′-8″					
RA801	85	13′-3″	3,007	1	1′-4″	12′-1″					
RA802	75	11′-3″	2,253	1	1′-4″	10′-1″					
	1	7′-8″				6′-7″					
RA803	SER.	TO	362	1	1′-4″	TO					0′-5 1/2″
	13	13′-2″				12′-0″					
	1	9′-8″				8′-6″					
RA804	SER.	TO	244	1	1′-4″	TO					0′-6″
	8	13′-2″				12′-0″					
	1	10′-9″									
RA805	SER.	TO	155	STR.							0′-5 1/4″
	5	12′-6″									
RA806	6	16′-4″	262	STR.							
	1	10′-1″									
RA807	SER.	TO	118	STR.							0′-8″
	4	12′-1″									
RA808	6	17′-2″	275	STR.							
D801	29	5′-6″	426	18	3′-3″	1′-0″	1′-0″				
REAR ABUTMENT TOTAL			29,764								

NOTES:

1. FOR NOTES, SEE SHEET 26/28.

DESIGN AGENCY
PARSONS BRINCKERHOFF
2545 FARMERS DRIVE
SUITE 350
COLUMBUS, OHIO 43235

DESIGNED	DRAWN	REVIEWED	DATE
RCK	RCK	EBS	11-29-12
CHECKED	REVISED	STRUCTURE FILE NUMBER	
ECM		0201936	

REINFORCING STEEL LIST
BRIDGE NO. ALL-75-0508
C.R. 196 (HANTHORN RD.) OVER I-75

ALL-75-0.21
PID No. 89029

J:\Projects\ALL\89029\structures\ALL075_0508C\sheets\075_0508CRL001.dgn 09-MAY-2013 3:11PM jlint

MARK	NUMBER TOTAL	LENGTH	WEIGHT	TYPE	DIMENSIONS A	B	C	D	E	R	INC
FORWARD ABUTMENT											
	2	12'-0"			7'-7"						
FA501	SER.	TO	140	19	TO	1'-10"	3'-4"				8"
	5	14'-8"			10'-3"						
FA502	12	18'-1"	256	2	8'-6"	3'-8"					
FA503	8	21'-9"	182	33	3'-8"	6'-8"					
	2	17'-1"				4'-4"					
FA504	SER.	TO	119	33	3'-8"	TO					1'-11"
	3	20'-11"				6'-3"					
FA505	20	3'-8"	77	STR.							
FA506	10	3'-10"	40	STR.							
FA507	22	19'-1"	438	33	3'-0"	6'-0"					
FA508	22	21'-9"	500	33	3'-8"	6'-8"					
FA509	36	10'-10"	407	STR.							
FA510	44	10'-7"	486	1	10"	9'-10"					
FA511	36	4'-4"	163	STR.							
FA512	24	7'-4"	184	STR.							
FA601	161	30'-0"	7,255	STR.							
FA602	34	13'-9"	702	STR.							
FA603	349	11'-2"	5,854	STR.							
FA604	115	6'-9"	1,166	1	1'-0"	5'-11"					
FA605	52	11'-11"	931	STR.							
FA606	13	7'-2"	140	19	4'-2"	1'-6"	2'-8"				
FA607	13	7'-1"	138	11	2'-1"	3'-7"	3'-1"				
FA608	8	34'-3"	412	STR.							
	1	18'-6"									
FA609	SER.	TO	173	STR.							2'-3 1/2"
	5	27'-8"									
	1	22'-11"									
FA610	SER.	TO	206	STR.							2'-3 1/4"
	5	32'-0"									
FA611	15	23'-9"	535	STR.							
FA612	5	31'-10"	239	STR.							
	1	12'-6"									
FA613	SER.	TO	125	STR.							2'-0 3/4"
	5	20'-9"									
	1	17'-6"									
FA614	SER.	TO	293	STR.							1'-11 3/4"
	8	31'-4"									
	1	6'-11"									
FA615	SER.	TO	482	STR.							0'-5 1/4"
	26	17'-9"									
FA616	7	19'-5"	204	STR.							
	1	4'-6"									
FA617	SER.	TO	61	STR.							0'-5 3/8"
	7	7'-2"									
	1	7'-4"									
FA618	SER.	TO	118	STR.							2'-3 3/8"
	6	18'-9"									
	1	8'-6"									
FA619	SER.	TO	128	STR.							2'-3 3/8"
	6	19'-11"									
FA620	5	5'-0"	38	STR.							
FA621	5	6'-4"	48	STR.							

MARK	NUMBER TOTAL	LENGTH	WEIGHT	TYPE	DIMENSIONS A	B	C	D	E	R	INC
FORWARD ABUTMENT											
	1	4'-10"									
FA622	SER.	TO	407	STR.							0'-6"
	25	16'-10"									
FA623	5	19'-5"	146	STR.							
FA624	49	8'-0"	589	2	2'-4"	3'-8"	2'-4"				
FA625	63	6'-6"	615	2	2'-4"	2'-2"	2'-4"				
	1	4'-7"									
FA626	SER.	TO	42	STR.							0'-6"
	5	6'-7"									
	1	7'-11"									
FA627	SER.	TO	116	STR.							1'-11 3/4"
	6	17'-10"									
	1	6'-6"									
FA628	SER.	TO	103	STR.							1'-11 3/4"
	6	16'-5"									
FA629	2	29'-10"	90	STR.							
FA630	2	29'-5"	88	STR.							
	1	9'-6"									
FA631	SER.	TO	52	STR.							1'-11 1/2"
	3	13'-5"									
FA701	18	7'-8"	283	1	1'-2"	6'-8"					
FA801	86	15'-2"	3,483	1	1'-4"	14'-0"					
FA802	79	11'-3"	2,373	1	1'-4"	10'-1"					
	1	10'-0"				8'-11"					
FA803	SER.	TO	480	1	1'-4"	TO					0'-5 1/4"
	14	15'-8"				14'-6"					
	1	7'-10"				6'-8"					
FA804	SER.	TO	452	1	1'-4"	TO					0'-5 7/8"
	15	14'-9"				13'-8"					
	1	11'-2"									
FA805	SER.	TO	160	STR.							0'-5"
	5	12'-10"									
FA806	12	18'-6"	593	STR.							
	1	10'-3"									
FA807	SER.	TO	117	STR.							0'-6"
	4	11'-9"									
D801	29	5'-6"	426	18	3'-3"	1'-0"	1'-0"				
FORWARD ABUTMENT TOTAL			32,855								

NOTES:

1. FOR NOTES, SEE SHEET 26/28.

DESIGN AGENCY
PARSONS BRINCKERHOFF
2945 FARMERS DRIVE
SUITE 350
COLUMBUS, OHIO 43235

DESIGNED RCK | CHECKED ECM
DRAWN RCK | REVISED
REVIEWED EBS | DATE 11-29-12 | STRUCTURE FILE NUMBER 0201936

REINFORCING STEEL LIST
BRIDGE NO. ALL-75-0508
C.R. 196 (HANTHORN RD.) OVER I-75

ALL-75-0.21
PID No. 89029

J:\Projects\ALL\89029\structures\ALL075_0508C\sheets\075_0508CRL002.dgn 09-MAY-2013 3:11PM lint

MARK	NUMBER TOTAL	LENGTH	WEIGHT	TYPE	DIMENSIONS A	B	C	D	E	R	INC
SUPERSTRUCTURE											
S401	405	30'-0"	8,116	STR.							
S402	45	10'-10"	326	STR.							
S403	32	14'-10"	317	6	3'-8"	5'-1"	0'-8"				
S404	5	11'-4"	38	24	0'-5 1/2"	5'-4"				0'-2 1/4"	
S405	5	2'-8"	9	STR.							
S406	5	4'-10"	16	36	1'-11 1/2"	0'-6 1/4"	0'-8 1/2"	0'-8 1/2"			
S501	460	42'-8"	20,471	STR.							
	4	7'-9"									
S502	SER.	TO	4,144	STR.							0'-10 1/2"
	40	41'-11"									
S503	108	30'-0"	3,379	STR.							
S504	12	7'-10"	98	STR.							
S505	76	8'-2"	647	2	2'-7"	3'-3"	2'-7"				
S506	152	18'-7"	2,946	3	4'-2"	4'-10"					
S507	10	7'-7"	79	1	2'-9"	4'-11"					
S508	512	5'-11"	3,160	23	0'-8"	2'-9"	2'-6"	0'-9 5/8"		0'-1 1/2"	
S509	982	9'-6"	9,730	16	8'-11"						
S601	696	30'-0"	31,362	STR.							
S602	46	19'-3"	1,330	STR.							
S603	88	6'-2"	815	STR.							
S604	2	23'-7"	71	STR.							
S605	512	2'-3"	1,730	1	0'-11"	1'-6"					
S606	512	3'-1"	2,371	14	0'-10 1/2"	0'-10"	0'-8 1/2"	0'-6"	0'-9"		
S607	24	9'-4"	336	STR.							
S801	90	33'-8"	8,090	STR.							
S802	16	10'-11"	466	13	2'-9"	0'-9"	0'-10 3/8"	7'-1"			
S803	48	28'-2"	3,610	STR.							
S804	24	9'-3"	593	STR.							
S805	8	7'-1"	151	STR.							
S806	12	3'-3"	104	STR.							
S807	4	2'-6"	27	STR.							
D801	58	5'-6"	852	18	3'-3"	1'-0"	1'-0"				
SUPERSTRUCTURE TOTAL			104,532								

MARK	NUMBER TOTAL	LENGTH	WEIGHT	TYPE	DIMENSIONS A	B	C	D	E	R	INC
PIER											
P501	51	14'-6"	771	3	4'-6"	2'-6"					
P502	51	3'-9"	199	34	2'-6"	0'-10"					
P503	20	24'-1"	502	STR.							
P504	10	5'-11"	62	2	0'-10"	4'-6"	0'-10"				
P505	18	9'-2"	172	13	2'-7"	4'-0"	1'-0"	2'-7"			
P601	128	10'-10"	2,083	2	4'-1"	3'-0"	4'-1"				
P602	64	10'-0"	961	2	3'-8"	3'-0"	3'-8"				
P603	84	10'-6"	1,325	STR.							
P604	8	4'-1"	49	1	1'-7"	2'-8"					
P605	12	17'-5"	314	33	5'-5"	2'-8 1/2"	1'-0"				
P901	84	13'-2"	3,760	1	1'-7"	11'-10"					
P902	84	20'-7"	5,879	STR.							
P903	20	4'-0"	272	1	1'-7"	2'-8"					
P904	8	5'-5"	147	STR.							
P1001	9	30'-0"	1,162	STR.							
P1002	18	22'-10"	1,769	1	3'-8"	19'-6"					
P1003	12	22'-11"	1,183	STR.							
P1004	13	38'-0"	2,126	STR.							
P1005	84	15'-4"	5,542	17	12'-6"						
PIER TOTAL			28,278								

NOTES:

1. FOR NOTES, SEE SHEET 26/28.

DESIGN AGENCY
PARSONS BRINCKERHOFF
2945 FARMERS DRIVE
SUITE 350
COLUMBUS, OHIO 43235

DESIGNED RCK | DRAWN RCK | REVIEWED EBS | DATE 11-29-12
CHECKED ECM | REVISED | STRUCTURE FILE NUMBER 0201936

REINFORCING STEEL LIST

BRIDGE NO. ALL-75-0508
C.R. 196 (HANTHORN RD.) OVER I-75

ALL-75-0.21
PID No. 89029

25/28

801/907

J:\Projects\ALL\89029\structures\ALL075_0508C\sheets\075_0508CRL003.dgn 09-MAY-2013 3:11PM lint

MARK	NUMBER TOTAL	LENGTH	WEIGHT	TYPE	DIMENSIONS A	B	C	D	E	R	INC
APPROACH SLABS											
A1004	170	30'-11"	22,616	16	29'-6"						
B501	260	25'-9"	6,983	STR.							
B502	40	7'-0"	292	19	3'-4"	3'-2"	1'-9"				
B503	4	4'-9"	20	19	1'-2"	3'-2"	1'-9"				
C504	62	29'-6"	1,908	STR.							
C505	4	5'-4"	23	1	2'-9"	2'-9"					
C506	24	3'-6"	88	STR.							
AS501	8	19'-6"	163	STR.							
AS502	16	29'-7"	494	STR.							
AS503	8	13'-10"	116	25	10'-0"	2'-5"	1'-4 1/2"	1 1/2"	5"		
AS504	8	13'-8"	115	STR.							
AS505	64	6'-0"	401	23	8"	2'-9"	2'-6"			1 1/2"	
AS506	44	3'-3"	150	16	2'-8"						
AS507	40	6'-9"	282	2	10"	5'-4"					
AS508	16	1'-6"	26	STR.							
AS509	24	2'-10"	71	STR.							
AS510	32	4'-4"	145	STR.							
AS511	40	3'-8"	153	STR.							
AS512	48	2'-2"	109	STR.							
AS601	4	20'-2"	122	STR							
AS602	108	3'-5"	555	14	10 1/2"	1'-3"	8 1/2"	6"	9"		
AS603	64	3'-10"	369	1	1'-0"	3'-0"					
AS604	76	3'-10"	438	16	3'-2"						
APPROACH SLAB TOTAL			35,637								
FOR INFORMATION ONLY, NOT INCLUDED WITH ITEM 509											

NOTES:

1. THE BAR SIZE NUMBER IS SPECIFIED ON THE PLANS IN THE BAR MARK COLUMN. THE FIRST DIGIT WHERE THREE DIGITS ARE USED, AND THE FIRST TWO DIGITS WHERE FOUR ARE USED, INDICATES THE BAR SIZE NUMBER. FOR EXAMPLE, P601 IS A NO. 6 BAR. BAR DIMENSIONS SHOWN ARE OUT TO OUT UNLESS OTHERWISE INDICATED. R INDICATES INSIDE RADIUS, UNLESS OTHERWISE NOTED. "STD." WRITTEN IN PLACE OF A DIMENSION INDICATES A STANDARD BEND AT THE END OF THE BAR.

2. ALL REINFORCEMENT IS TO BE EPOXY COATED.

3. FOR LIST OF ABBREVIATIONS, SEE SHEET 2/28.

BAR BENDING DIAGRAMS

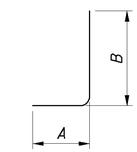

TYPE-1

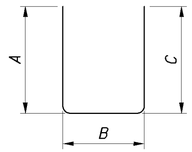

TYPE-2

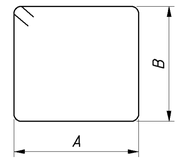

TYPE-3

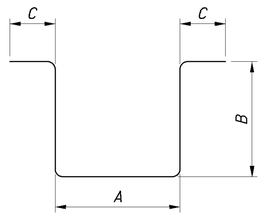

TYPE-6

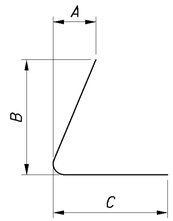

TYPE-11

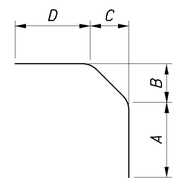

TYPE-13

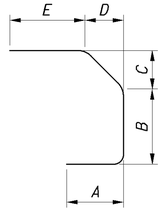

TYPE-14

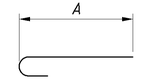

TYPE-16

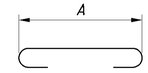

TYPE-17

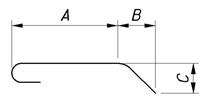

TYPE-18

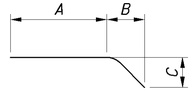

TYPE-19

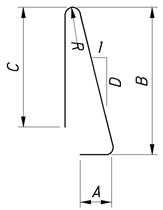

TYPE-23

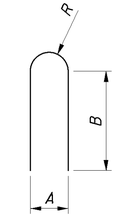

TYPE-24

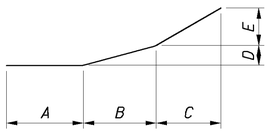

TYPE-25

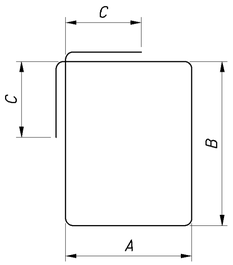

TYPE-33

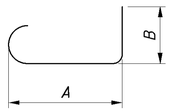

TYPE-34

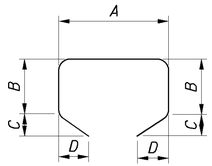

TYPE-36

DESIGN AGENCY
PARSONS BRINCKERHOFF
2945 FARMERS DRIVE
SUITE 350
COLUMBUS, OHIO 43235

DESIGNED	DRAWN	REVIEWED	DATE
RCK	RCK	EBS	11-29-12
CHECKED	REVISED	STRUCTURE FILE NUMBER	
ECM		0201936	

REINFORCING STEEL LIST
BRIDGE NO. ALL-75-0508
C.R. 196 (HANTHORN RD.) OVER I-75

ALL-75-0.21
PID No. 89029

26 / 28

802
907

J:\Projects\ALL\89029\structures\ALL075_0508C\sheets\075_0508CRL004.dgn 09-MAY-2013 3:11PM lint

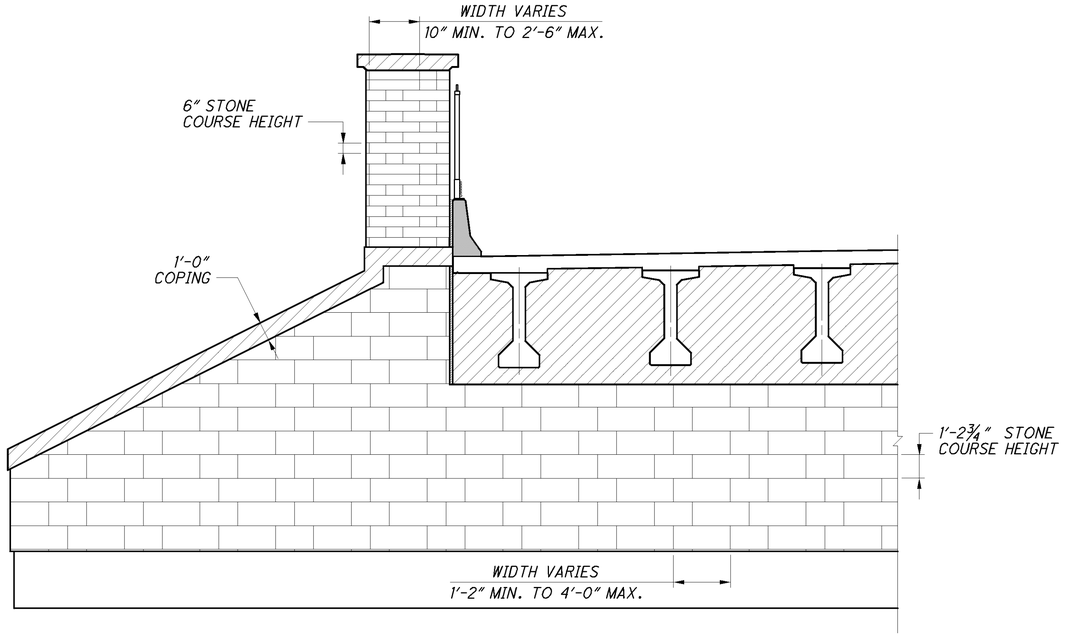

ABUTMENT AESTHETICS

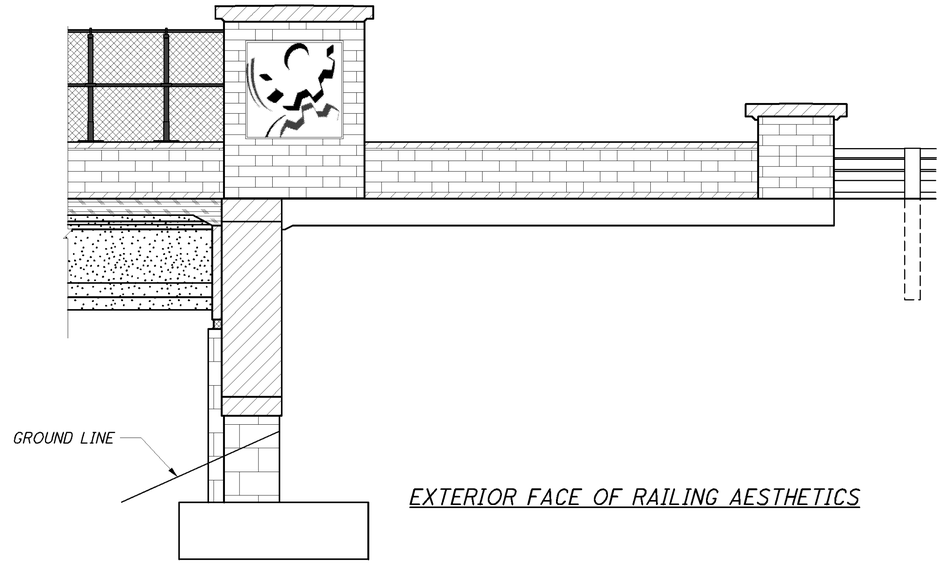

EXTERIOR FACE OF RAILING AESTHETICS

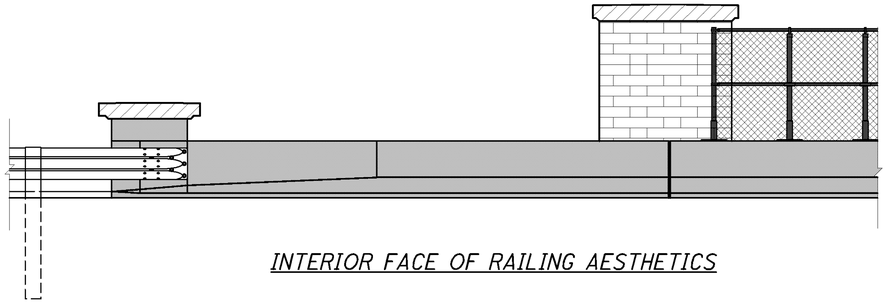

INTERIOR FACE OF RAILING AESTHETICS

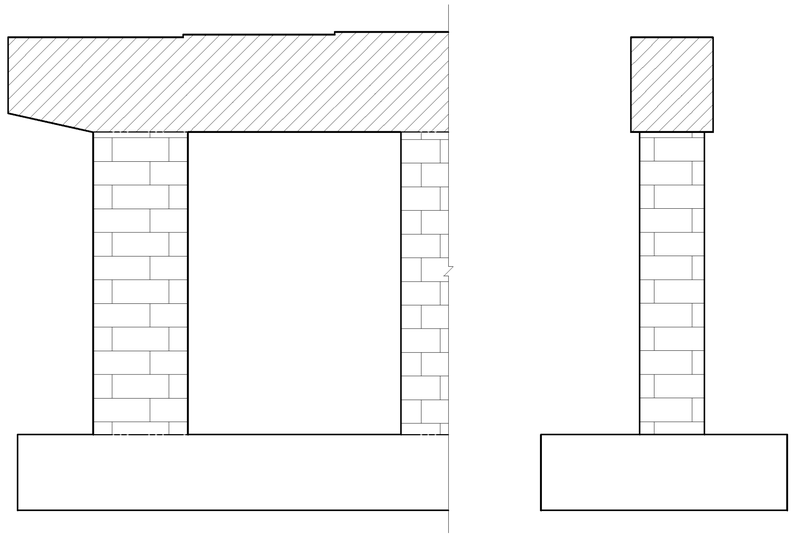

PIER AESTHETICS

PIER SECTION

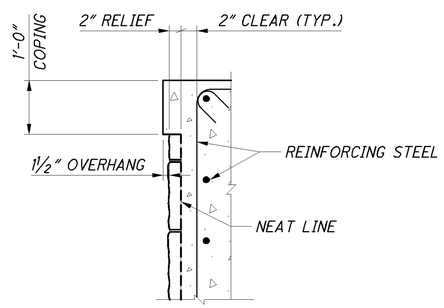

TYPICAL FORMLINER SECTION
SECTION AT WINGWALL SHOWN

LEGEND:

- FORMLINER PATTERN 1:
  - ROUGH CUT STONE FORMLINER W/ 2" RELIEF AND INTEGRALLY COLORED CONCRETE, FEDERAL COLOR NO. 36373, GRAY
- FORMLINER PATTERN 2:
  -ROUGH CUT STONE FORMLINER W/ 15#8" RELIEF AND INTEGRALLY COLORED CONCRETE, FEDERAL COLOR NO. 36373, GRAY
- -INTEGRALLY COLORED CONCRETE, FEDERAL COLOR NO. 36373, GRAY
- -VANDAL PROTECTION FENCE, AS PER PLAN, FEDERAL COLOR NO. 27038, BLACK
- -EPOXY-URETHANE SEALER, FEDERAL COLOR NO. 25095, BLUE
- -EPOXY-URETHANE SEALER, FEDERAL COLOR NO. 37875, WHITE
- -EPOXY-URETHANE SEALER, FEDERAL COLOR NO. 36373, GRAY

DESIGN AGENCY
PARSONS BRINCKERHOFF
2545 FARMERS DRIVE
SUITE 350
COLUMBUS, OHIO 43235

DESIGNED	DRAWN	REVIEWED	DATE
PJL	LEL	EBS	11-29-12
CHECKED	REVISED	STRUCTURE FILE NUMBER	
SAP		0201936	

AESTHETICS DETAILS
BRIDGE NO. ALL-75-0508
C.R. 196 (HANTHORN RD.) OVER I-75

ALL-75-0.21
PID No. 89029

803
907

J:\Projects\ALL\89029\structures\ALL075_0508\sheets\075_0508GMD003.dgn 09-MAY-2013 3:11PM jint

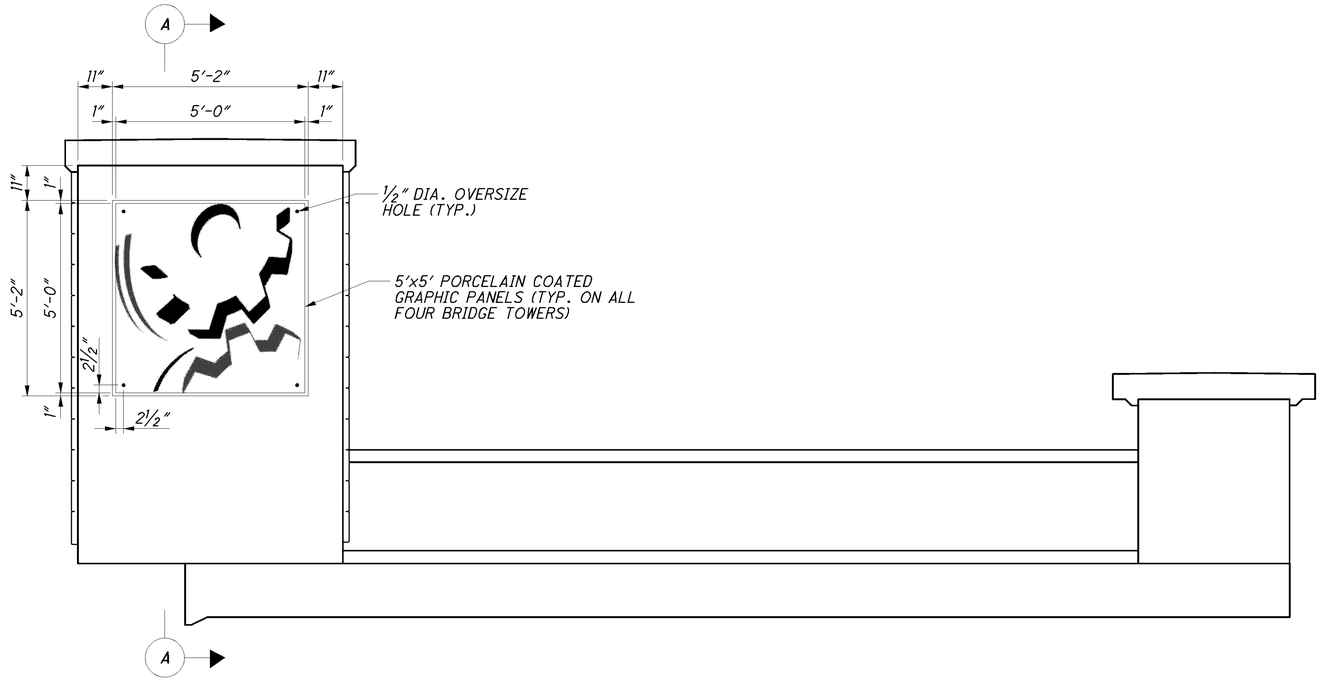

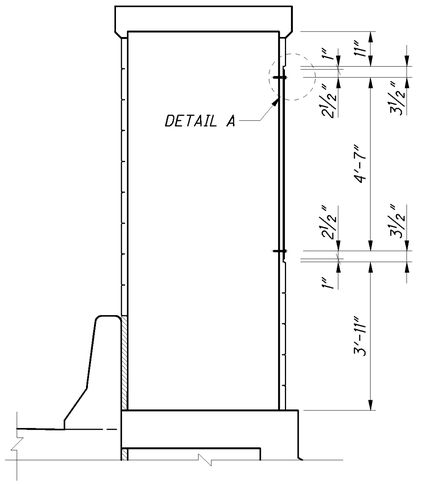

SECTION A-A

NOTES:

1. ALL HARDWARE, INCLUDING ANCHOR BOLTS AND WASHERS SHALL BE STAINLESS STEEL.
2. TO ENSURE CORROSION DOES NOT OCCUR BETWEEN THE STEEL PARTS AND ALUMINUM PARTS, PREVENT CONTACT BETWEEN ALUMINUM AND STEEL PARTS WITH A MINIMUM 1/16 INCH THICK CHLOROPRENE OR NEOPRENE GASKET OR APPROVED EQUAL.
3. HOLES IN TOWERS ARE FIELD DRILLED AND SHALL BE PREPPED PER THE ANCHOR BOLT MANUFACTURERS GUIDELINES.
4. ⅛″ THICK WHITE ELASTOMERIC PAD, ASTM D4637, TYPE I (DUROMETER 50-55) OR APPROVED EQUAL SHALL BE PROVIDED BETWEEN BOLT HEADS AND THE PLAQUE FACES TO PROTECT THE PORCELAIN ENAMEL COATING.

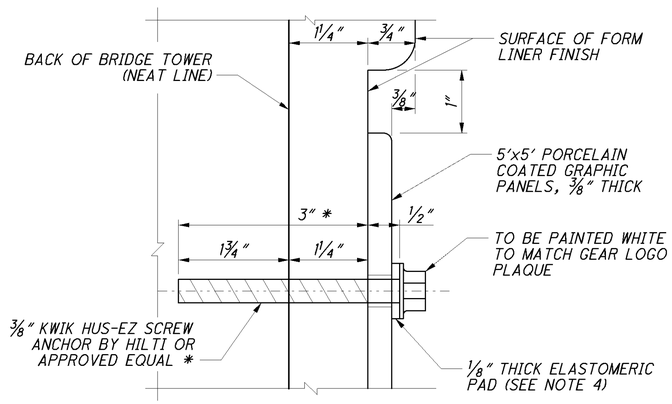

DETAIL A

* CONTRACTOR TO REFER TO MANUFACTURER SPECIFICATIONS FOR PROPER ANCHOR BOLT INSTALLATION

ITEM SPECIAL (530E00200) - STRUCTURE, MISC. BRIDGE MOUNTED DISPLAYS:

THIS ITEM INCLUDES MOUNTING OF FOUR "GEAR LOGO" PLAQUES TO THE PROPOSED BRIDGE. ONE 5′ X 5′ "GEAR LOGO" PLAQUE ON EACH OF THE FOUR LARGE TOWERS/PILASTERS.

THE CITY OF LIMA SHALL PROVIDE THE GRAPHIC IMAGES FOR THE GEAR LOGO SHOWN AND ANY ADDITIONAL INFORMATION TO ACCURATELY REPRODUCE THE DISPLAYS SHOWN ON THESE SHEETS. THE GEAR LOGO PLAQUES SHALL BE COMPRISED OF PORCELAIN ENAMEL COATED GRAPHIC PANELS SUPPLIED BY ADVANCED SIGNS, 2222 ASHMORE AVENUE, CHATANOOGA, TN 37415, PHONE 866-780-0619 OR AN APPROVED EQUAL. THEY SHALL BE ATTACHED TO THE CONCRETE TOWERS BY STAINLESS STEEL HILTI KWIK HUS-EZ SCREW ANCHORS OR APPROVED EQUAL.

THE CONTRACTOR IN COORDINATION WITH THE DISPLAY PROVIDER SHALL PROVIDE SHOP DRAWINGS AND SAMPLES OF WORK FOR APPROVAL BY THE ENGINEER AND CITY OF LIMA. THE ENGINEER SHALL DETERMINE WHEN ADDITIONAL REVIEW WILL BE REQUIRED BY FHWA. THE CONTRACTOR AND SUPPLIER MUST COORINATE THESE DRAWINGS. ENSURE THAT THE SHOP DRAWINGS MEET PROJECT REQUIREMENTS, INCLUDING MATERIALS, FIELD MEASUREMENTS, CONSTRUCTION SPECIFICATIONS, CONTRACT DOCUMENTS, PERFORMANCE CRITERIA, AND SIMILAR DATA.

THE CITY OF LIMA WILL NOT MAKE ALLOWANCE FOR ADDITIONAL COST OR DELAYS TO THE CONTRACTOR FOR INCORRECT MANUFACTURING AS A RESULT OF FAILURE TO COORDINATE.

FOR THE SHOP DRAWINGS, THE CONTRACTOR SHALL VERIFY AND ADJUST ACCORDINGLY THE DIMENSIONS FOR THE PLAQUE CONNECTIONS WITH FIELD MEASUREMENTS OF THE MOUNTING SURFACES. THE REQUIRED SHOP DRAWINGS SHALL INCLUDE, BUT ARE NOT LIMITED TO, THE FEATURES OUTLINED ABOVE, AN ELEVATION VIEW INCLUDING DIMENSIONS FROM THE CENTER OF THE DISPLAY TO THE MOUNTING HOLES, AND DIMENSIONS AND FABRICATION DETAILS OF ANY CONNECTION TEMPLATES OR OTHER DEVICES OR HARDWARE. THE DISPLAYS SHALL NOT BE MANUFACTURED UNTIL RECEIVING APPROVAL OF THE SHOP DRAWINGS.

ALL COSTS ASSOCIATED WITH THE DISPLAYS, INCLUDING ADDITIONAL WORK DESCRIBED ABOVE, AS WELL AS THE COMPLETE INSTALLATION AND ASSEMBLY OF THE DISPLAYS (INCLUDING OVERHEAD AND PROFIT) SHALL BE INCLUDED IN THE LUMP SUM PRICE FOR ITEM SPECIAL (530E00200) - STRUCTURE, MISC.: BRIDGE MOUNTED DISPLAYS.

DESIGN AGENCY
PARSONS BRINCKERHOFF
2545 FARMERS DRIVE
SUITE 350
COLUMBUS, OHIO 43235

DESIGNED	DRAWN	REVIEWED	DATE
ACF	TLP	EBS	11-29-12
CHECKED	REVISED	STRUCTURE FILE NUMBER	
EJC		0201936	

AESTHETICS DETAILS
BRIDGE NO. ALL-75-0508
C.R. 196 (HANTHORN RD.) OVER I-75

ALL-75-0.21
PID No. 89029

804
907

J:\Projects\ALL\89029\structures\ALL075_0508C\sheets\075_0508CMD004.dgn 09-MAY-2013 3:11PM lint

RIGHT OF WAY LEGEND SHEET

ALL-75-0.21

ALLEN COUNTY
VILLAGE OF FORT SHAWNEE
SEC. 13 NE 1/4, SE 1/4, SW 1/4, T.4S., R.6E.
SEC. 23 NE 1/4, SE 1/4, T.4S, R.6E.
SEC. 24 NW 1/4, SW 1/4, T.4S., R.6E.
SEC. 26 SE 1/4, NE 1/4, T.4S., R.6E.

PERRY TOWNSHIP
SEC. 8 SE 1/4, SEC. 17 NW 1/4, NE 1/4, T.4S., R.7E.
SEC. 18 NW 1/4, NE 1/4, T.4S., R.7E.
CITY OF LIMA

UTILITY OWNERS

SEE SHEET 2 OF 101 FOR UTILITY OWNERS AND LOCATION INFORMATION.

NOTE:

THE EXISTING R/W WIDTH LOCATIONS WERE DETERMINED USING THE FOLLOWING ODOT R/W PLANS ON FILE FROM THE OHIO DEPARTMENT OF TRANSPORTATION, DISTRICT 1 OFFICE LIMA, OHIO:
ALL-25-0.00 (DATED 1955)
ALL-25-(2.12)(3.28)(5.08)(6.11) PART IV (DATED 1958)
ALL-25-(2.12)(3.28)(5.08)(6.11) PART IV (DATED 1958)
ALL-25-0.00 (DATED 1955)
ALL-25-0.00 (DATED 1955)
ALL-75-0.00

THIS IMPROVEMENT IS ESPECIALLY DESIGNED FOR THROUGH TRAFFIC AND HAS BEEN DECLARED A LIMITED ACCESS HIGHWAY OR FREEWAY BY ACTION OF THE DIRECTOR IN ACCORDANCE WITH THE PROVISIONS OF SECTION 5511.02 OF THE REVISED CODE OF OHIO.

All Right of Way Monuments set and/or reset by the contractor's surveyor will include a cap as per Standard Construction Drawing RM-1.1 and bear the surveyor's Ohio registration number and/or name or company name. This work will be done in accordance with OAC 4733-37 as cited below.

I, Jeffrey L. Waggamon, P. S. have conducted a survey of the existing conditions for the Ohio Department of Transportation, District 1. The results of that survey are contained herein.

The survey shown on this plan is the result of field work performed by the Ohio Department of Transportation, District 1 between August 2006 and the date of this certification;

As a part of this project I have reestablished the locations of the existing property lines and the existing centerline of Right of Way of Breese Rd., McClain Rd., S.R. 65 and Hanthorn Rd. for property takes contained herein.

As a part of this work I have set the monuments at the proposed Property Corners, Section Corners and other points as shown herein.
As a part of this project I have calculated the proposed property lines, Gross Take, present roadway occupied (PRO), Net Take and Net Residue.

All of my work contained herein was conducted in accordance with Ohio Administrative Code 4733-37 commonly known as "A Minimum Standards for Boundary Surveys in the State of Ohio" unless noted.

The words I and my as used herein are to mean that either myself or someone working for me under my direct control or supervision.

Jeffrey L. Waggamon, P.S., Professional Land Surveyor #7125 — Date

CONVENTIONAL SYMBOLS

County Line
Township Line
Section Line
Corporation Line or
Fence Line (Ex.) (Pr)
Center Line
Limited Access R/W (Ex.) Ex LA-R/W
Limited Access R/W (Pr.) LA-R/W
Limited Access Easement (Ex.) Ex LA
Right of Way (Ex) Ex R/W
Right of Way (Pr) R/W
Standard Highway Easement (Ex.) Ex SH
Standard Highway Easement (Pr.) SH
Temporary Right of Way TMP
Channel Easement (Pr.) CH
Aerial Easement (Pr.) A
Sewer Easement (Ex.) Ex SW
Sewer Easement (Pr.) SW
Utility Easement (Ex.) Ex U
General Easement (Ex.)
Railroad or
Guardrail (Ex.) (Pr.)
Construction Limits
Edge of Pavement (Ex.)
Edge of Pavement (Pr.)
Edge of Shoulder (Ex.)
Edge of Shoulder (Pr.)
Ditch / Creek (Ex.)
Ditch / Creek (Pr.)
Tree Line (Ex)
Ownership Hook Symbol , Example
Property Line Symbol , Example
Break Line Symbol , Example
Tree (Pr) , Tree (Ex) , Shrub (Ex)
Tree (Remove) , Shrub (Remove)
Evergreen (Ex) , Stump
Evergreen (Remove) , Stump (Remove)
Wetland (Pr) , Grass (Pr) , Aerial Target
Post (Ex) , Mailbox (Ex) MB , Mailbox (Pr) MB
Light (Ex) , Telephone Marker (Ex) TEL
Fire Hydrant (Ex) , Water Meter (Ex) WM
Water Valve (Ex) , Utility Valve Unknown (Ex.)
Telephone Pole (Ex) , Power Pole (Ex)
Private Light Pole (Ex) , Public Light Pole (Ex)
Manhole (Pr) , Tower Light (Ex.)
Catch Basin (Pr) , Power Pole with Light (Ex.)

PROJECT DESCRIPTION

PROJECT CONSISTS OF 5.32 MILES OF 4-LANE INTERSTATE HIGHWAY RECONSTRUCTION WITH PROVISIONS FOR A FUTURE ADDITIONAL MEDIAN LANE. INCLUDES TWO INTERCHANGES; BREESE RD. AND SR 65. ALSO INCLUDED ARE VARIOUS SIDE ROAD IMPROVEMENTS. THE PROJECT UPGRADES PAVEMENT, ALIGNMENT, AND VARIOUS OTHER DEFICIENCIES.

PROJECT CONTROL

STATE PLANE GRID NAD 83,NORTH ZONE, CORS ADJUSTMENT by ties to the CORS network using stations, Lima, Kenton, Sidney and Van Wert and fit to match project control points established by Canter surveying for the ALL-75-0.21 project. The Project Adjustment Factor used for this project is 1.00008098.

LIMITED ACCESS

THIS IMPROVEMENT IS ESPECIALLY DESIGNED FOR THROUGH TRAFFIC AND HAS BEEN DECLARED A LIMITED ACCESS HIGHWAY OR FREEWAY BY ACTION OF THE DIRECTOR IN ACCORDANCE WITH THE PROVISIONS OF SECTION 5511.02 OF THE OHIO REVISED CODE.

PLANS PREPARED BY:

FIRM NAME : OHIO DEPT. OF TRANSPORTATION

PLANS PREPARED BY: BRIAN DENNIS

FIELD REVIEW BY: LARRY FLIPPIN, DEAN SIEBENECK, BRIAN DENNIS
DATE COMPLETED: 6-29-11

OWNERSHIP VERIFIED BY: LARRY A. FLIPPIN
DATE COMPLETED: 9-27-11

DATE COMPLETED: 10-06-11

INDEX OF SHEETS:

LEGEND SHEET	1, 2
PROPERTY MAPS	3-11
SUMMARY OF ADDITIONAL R/W	12-16
R/W SCHEMATIC SHEETS	17-18
R/W TOPOGRAPHIC SHEETS	19-101 (ODD SHEET NUMBERS)
R/W BOUNDARY SHEETS	20-102 (EVEN SHEET NUMBERS)
RAILROAD PLAT	103

LEGEND:
WL = FEE SIMPLE WITH LIMITATION OF ACCESS
WD = WARRANTY DEED
PRW = PROPERTY RIGHT FEE SIMPLE
SH = STANDARD HIGHWAY EASEMENT
SL = SLOPE EASEMENT
T = TEMPORARY EASEMENT
S = SEWER EASEMENT
CH = CHANNEL EASEMENT
A = AERIAL EASEMENT
V = IN NAME OF ANOTHER STATE AGENCY, LPA, ETC.
R = SPECIAL RESERVATION (SUBSURFACE RIGHTS)

STRUCTURE KEY

RESIDENTIAL
COMMERCIAL
OUT-BUILDING

MONUMENT LEGEND

EXISTING R/W MONUMENT BOX
PROPOSED R/W MONUMENT BOX
EXISTING CONCRETE MONUMENT
PROPOSED CONCRETE MONUMENT
RAILROAD SPIKE FOUND
RAILROAD SPIKE SET
I.P.F. IRON PIN FOUND
I.P.F. IRON PIN FOUND W/ ID CAP
I.P.S. IRON PIN SET W/ ID CAP
I.P.F. IRON PIPE FOUND
I.P.S. IRON PIPE SET
P.K.F. P.K. NAIL FOUND
P.K.S. P.K. NAIL SET

I, Kerry D. Osborn, P. S. have established the existing and proposed centerlines of right of way of Hume Rd., Yoder Rd. and I-75 for The Ohio Department of Transportation, District 1, based on the surveys provided from Jeffrey L. Waggamon, P.S. and Robert C. Canter, P.S. between August 2006 and the date of this certification. The results of those surveys are contained herein.

All of my work contained herein was conducted in accordance with Ohio Administrative Code 4733-37 commonly known as "A Minimum Standards for Boundary Surveys in the State of Ohio" unless noted.

The words I and my as used herein are to mean either myself or someone working under my direct supervision.

Kerry D. Osborn, P.S., Professional Land Surveyor 7326 — Date:

I, Robert C. Canter, P. S. have conducted a survey of the existing conditions for The Ohio Department of Transportation, District 1 between August 2006 and the date of this certification. The results of that survey are contained herein.

As a part of this project I provided survey to be used to reestablished the locations of the existing centerlines of Right of Way for I-75 for this projeCt shown herein.

All of my work contained herein was conducted in accordance with Ohio Administrative Code 4733-37 commonly known as "A Minimum Standards for Boundary Surveys in the State of Ohio" unless noted.

The words I and my as used herein are to mean either myself or someone working under my direct supervision.

Robert C. Canter, P.S., Professional Land Surveyor 7226 — Date:

SURVEYORS SEAL
STATE OF OHIO — JEFFREY L. WAGGAMON S-7125 — REGISTERED PROFESSIONAL SURVEYOR

SURVEYORS SEAL
STATE OF OHIO — ROBERT C. CANTER S-7226 — REGISTERED PROFESSIONAL SURVEYOR

SURVEYORS SEAL
STATE OF OHIO — KERRY D. OSBORN S-7326 — REGISTERED PROFESSIONAL SURVEYOR

FEDERAL PROJECT NO. E100878
PID NO. 89029
R/W DESIGNER BJD
R/W REVIEWER LAF
RIGHT OF WAY LEGEND SHEET
ALL-75-0.21
1 / 103
805 907

I:\Pid\89029\row\sheets\89029GT001.dgn 07-MAY-2012 11:02AM dsiebene

UTILITIES

THE LOCATION OF THE UNDERGROUND UTILITIES SHOWN ON THE PLANS ARE AS OBTAINED FROM THE OWNERS AS REQUIRED BY SECTION 153.64 O.R.C.

LISTED BELOW ARE ALL UTILITIES LOCATED WITHIN THE PROJECT CONSTRUCTION LIMITS TOGETHER WITH THEIR RESPECTIVE OWNERS:

AEP CONTACT:
209 N Wood,
Fostoria, Ohio 44830
Attn.: Jeff Meyers
AEP (419) 436-2008
Email: jdmeyers@aep.com

Don Wilson
369 E. O'Connor Ave.
Lima, Ohio 45801
419-998-5103
dewilson@aep.com

Ms. Tram Trinh
AEP Transmission
700 Morrison Road
Gahanna, OH 43240

ALLEN COUNTY SANITARY ENGINEER'S OFFICE
Brad Niemeyer,
Assistant Sanitary Engineer
(419) 228-3700
3230 N. Cole St.
Lima, Oh 45801

BP OIL PIPELINE
Mike Lerma
(419) 655-2966
Email: Michael.lerma@bp.com
12716 Tank Farm Road
Cygnet, OH 43413

Adam Neu (419) 222-7221
Email: Neual@bp.com
1771 Buckeye Rd
Lima, OH 45804

TELEPHONE SERVICE COMPANY
2 Willipie St.
PO Box 408
Wapakoneta, OH 45895
ATTN: Randy Heinl
(419) 739-2241
Email: randy@telserco.com

BUCKEYE PARTNERS
BUCKEYE PIPE LINE CO. LP
940 Buckeye Rd
Lima, Ohio 45802
ATTN: Marty White
(419) 236-7766
Email: mwhite@buckeye.com

CITY OF LIMA SANITARY DEPARTMENT
50 Town Square
Lima, Oh 45801
ATTN: Dave Schnipke,
Env. Compliance Manager
(419-221-5294)
Email: Dave.Schnipke@cityhall.lima.oh.us

CITY OF LIMA WATER DEPARTMENT
1405 Reservoir Road
Lima, Oh 45804
ATTN: Kent Shoemaker (419-221-5283)

COLUMBIA GAS TRANSMISSION
1804 Broad Ave.
Findlay, OH 45840
ATTN: Kevin Coppes
(419) 427-3200

DOMINION EAST OHIO GAS COMPANY
150 S. Jackson St.
Lima, Ohio 45801
ATTN: John Downing (419) 226-4864
email: John483@dom.com
(800) 877-4715

EMBARQ
122 S Elizabeth Street
Lima, Ohio 45801
ATTN: Bill Perrin
(419) 226-6220
Email: William.r.perrin@embarq.com

TEPPCO
2700 Hart Road
Lebanon, Ohio 45036
ATTN: Bob Sanders (513) 932-5886
cell (513) 304-0758; fax (513) 932-7077
rgsaunders@epco.com

TIME WARNER CABLE
3100 Elida Rd
Lima, Ohio 45805
ATTN: Gary Hohenbrink

MARATHON PIPE LINE LLC
539 S. Main St., Room 7642
Findlay, OH 45840
Attn: Dave Wisner
(419) 421-2211
Email: dswisner@marathonoil.com

MID VALLEY PIPELINE
PO 219
Cygnet, OH 43413
Or
5152 Rockridge Road
Cygnet, OH 43413
Attn: Chester Wilson
(419) 236-6887
Email: cwilson@sunocologistics.com
(888) 786-3260

QWEST COMMUNICATIONS
2626 N. Wapak Rd.
Elida, OH 45807
Attn: Mike Adams (cell 419-392-4133; office 419-229-7355)
Email: mike.adams@qwest.com
George McElvain-Denver (303)-837-3926
for plans and legal issues.

RIGHT OF WAY
UTILITY OWNER LIST

ALL-75-0.21

FEDERAL PROJECT NO. E100878
PID NO. 89029
R/W DESIGNER BJD
R/W REVIEWER LAF

806
907

I:\Pd\89029\row\sheets\89029GT002.dgn 07-MAY-2012 11:02AM dsiebene

ALL-75-0.21
ALLEN COUNTY
VILLAGE OF FORT SHAWNEE
S.E. 1/4, SECTION 26
T-4-S R-6-E

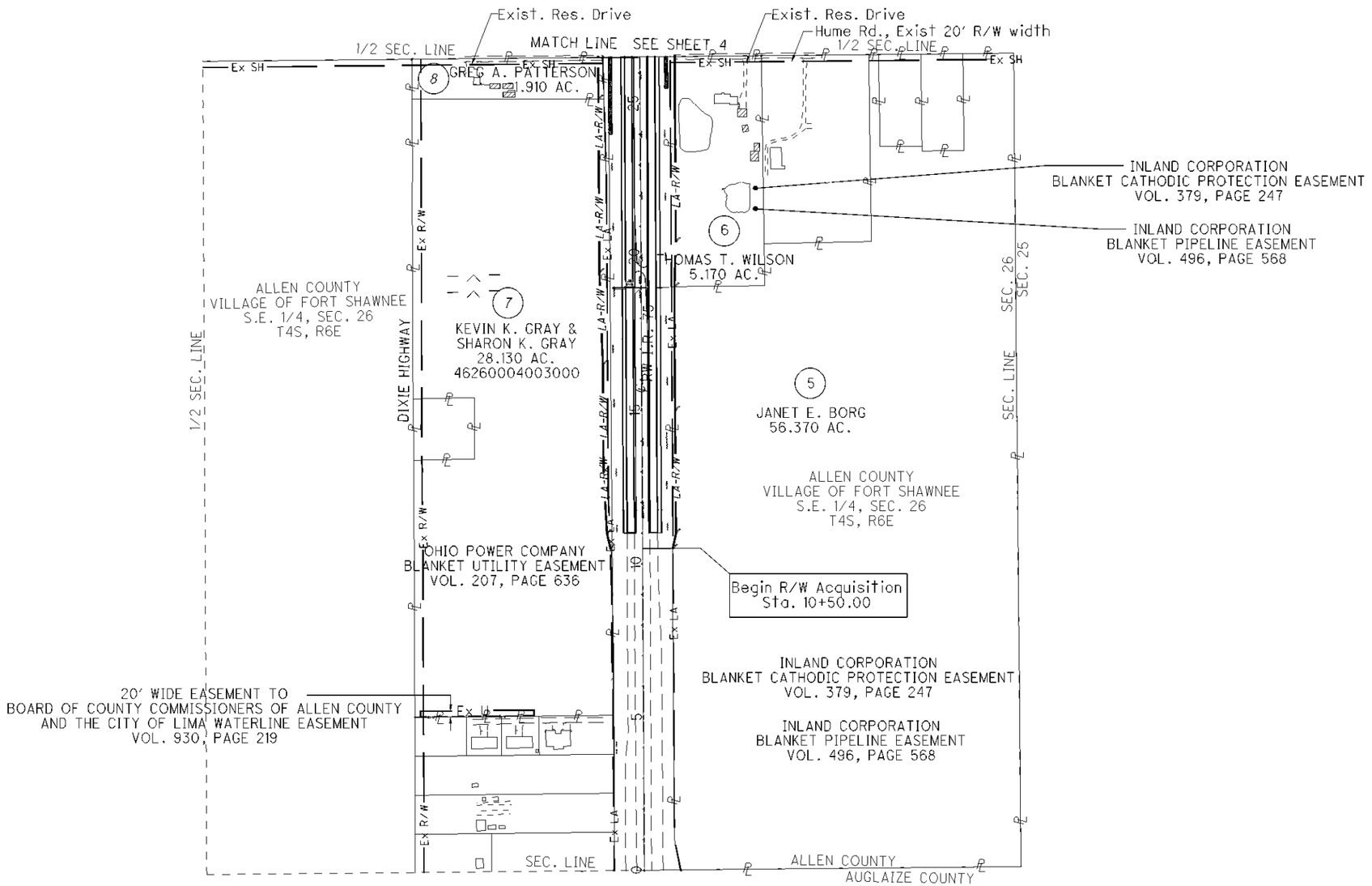

STRUCTURE KEY

- RESIDENTIAL
- COMMERCIAL
- OUT-BUILDING

REV. BY	DATE	DESCRIPTION

DATE COMPLETED: 10/06/11

HORIZONTAL SCALE IN FEET
0 100 200 400

PID NO. 89029

R/W DESIGNER BJD
R/W REVIEWER LAF

PROPERTY MAP

ALL-75-0.21

3 /103

807
907

I:\Pd\89029\row\sheets\89029RM001.dgn 07-MAY-2012 11:04 AM dsiebene

ALL-75-0.21
ALLEN COUNTY
VILLAGE OF FORT SHAWNEE
SECTION 26
T-4-S R-6-E

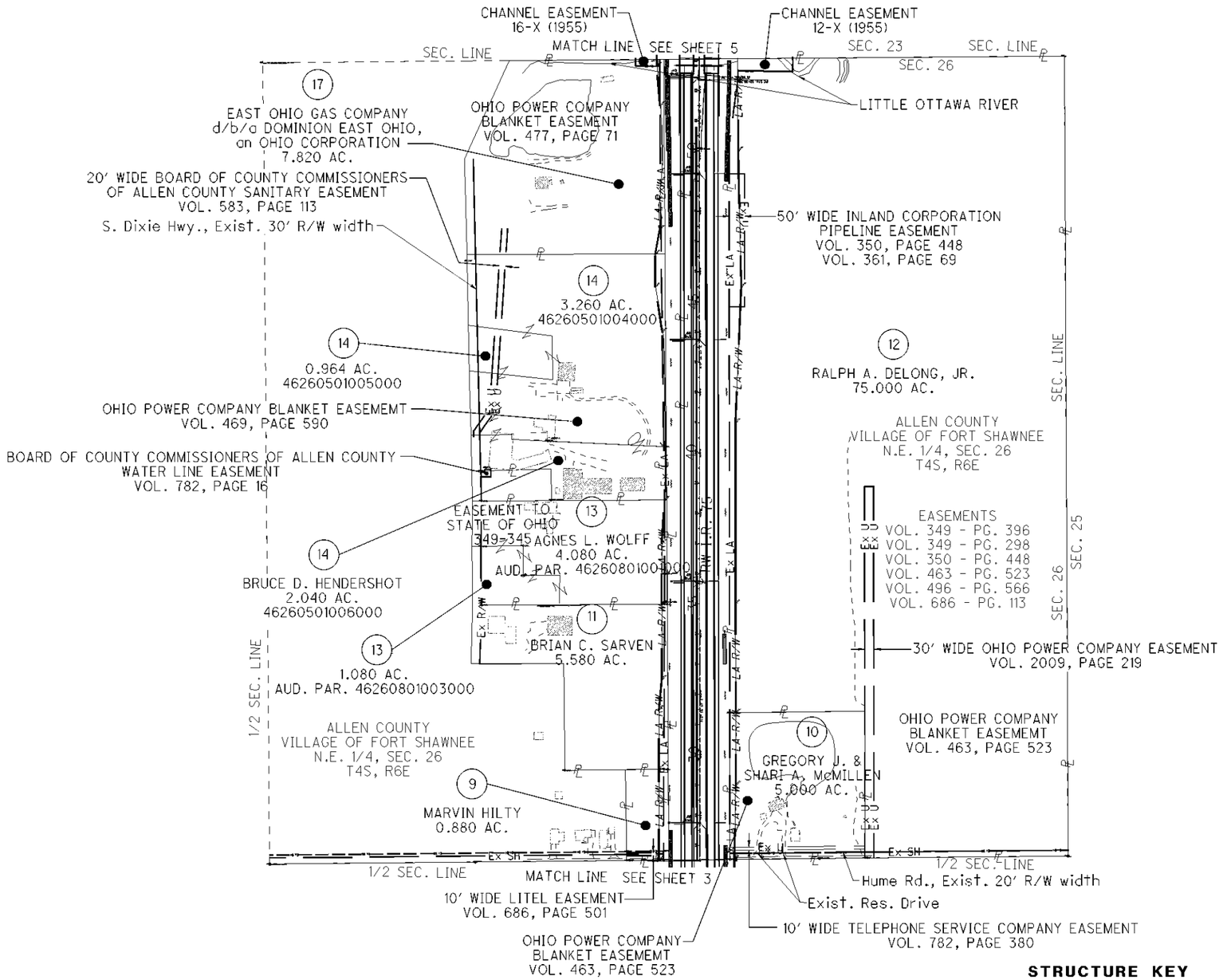

STRUCTURE KEY

- RESIDENTIAL
- COMMERCIAL
- OUT-BUILDING

REV. BY	DATE	DESCRIPTION
DJS	10/25/11	Revised Owner name for Parcel 11
DATE COMPLETED:		10/06/11

HORIZONTAL SCALE IN FEET
0 100 200 400

PID NO. 89029

R/W DESIGNER BJD
R/W REVIEWER LAF

PROPERTY MAP

ALL-75-0.21

4 / 103

808
907

I:\Pid\89029\row\sheets\89029RM002.dgn 07-MAY-2012 11:04AM dsiebene

ALL-75-0.21
ALLEN COUNTY
VILLAGE OF FORT SHAWNEE
SECTIONS 23 & 24
T-4-S R-6-E

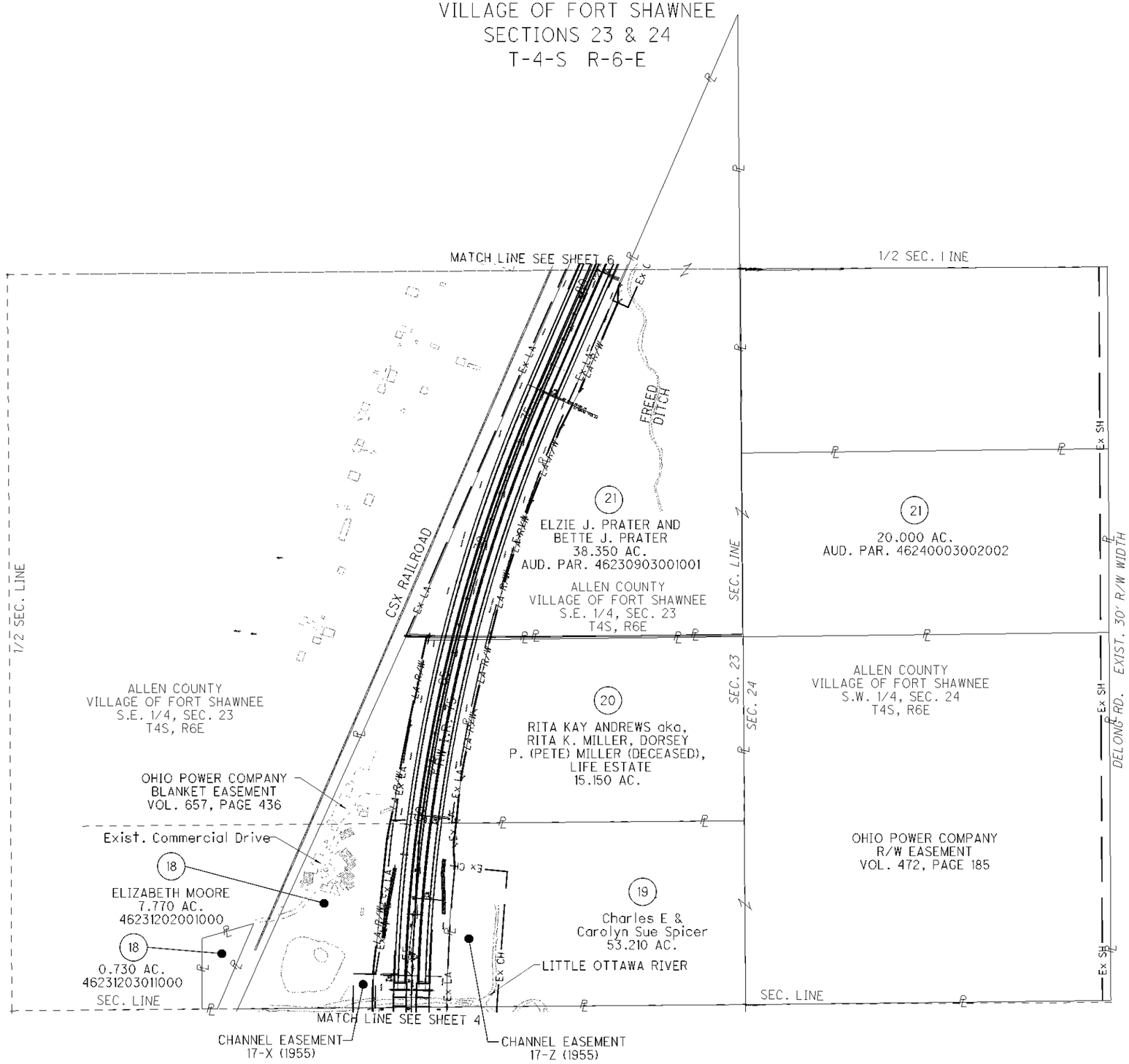

STRUCTURE KEY

- RESIDENTIAL
- COMMERCIAL
- OUT-BUILDING

HORIZONTAL SCALE IN FEET
0 100 200 400

PID NO. 89029

R/W DESIGNER BJD
R/W REVIEWER LAF

PROPERTY MAP

ALL-75-0.21

REV. BY	DATE	DESCRIPTION
DJS	4/18/12	REVISED OWNER NAME FOR PARCEL 20
DJS	3/22/12	CHANGED OWNER NAME FOR PARCEL 19
DATE COMPLETED:		10/06/11

I:\Pd\89029\row\sheets\89029RM003.dgn 07-MAY-2012 11:04AM dsiebene

ALL-75-0.21
ALLEN COUNTY
VILLAGE OF FORT SHAWNEE
SECTIONS 23 & 24
T-4-S R-6-E

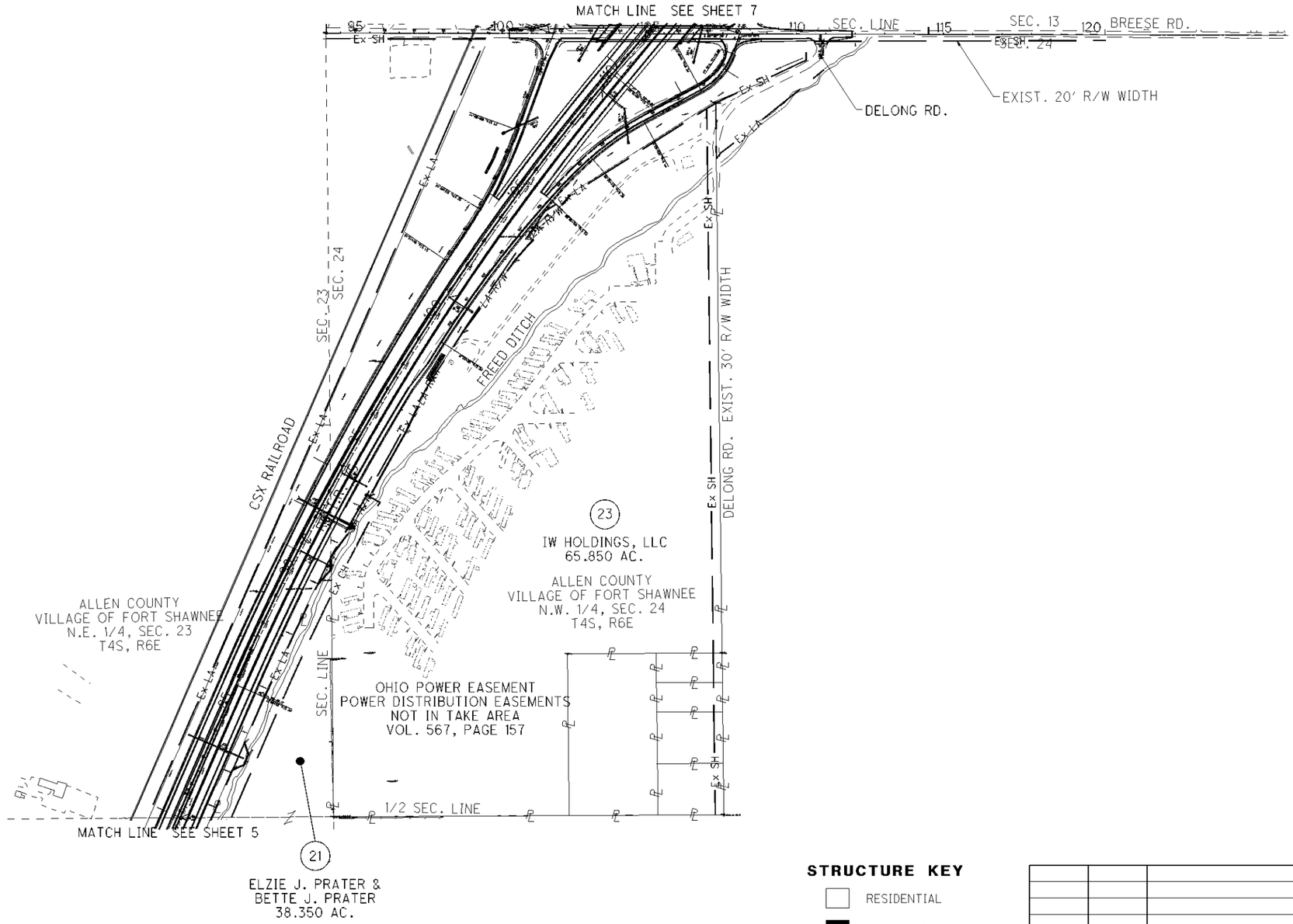

STRUCTURE KEY

- RESIDENTIAL
- COMMERCIAL
- OUT-BUILDING

REV. BY	DATE	DESCRIPTION

DATE COMPLETED: 10/06/11

HORIZONTAL SCALE IN FEET
0 100 200 400

P.I.D. NO. 89029

R/W DESIGNER BJD
R/W REVIEWER LAF

PROPERTY MAP

ALL-75-0.21

6 / 103

810 / 907

I:\Pd\89029\row\sheets\89029RM004.dgn 07-MAY-2012 11:05AM dsiebene

ALL-75-0.21
ALLEN COUNTY
VILLAGE OF FORT SHAWNEE
SECTION 13
T-4-S R-6-E

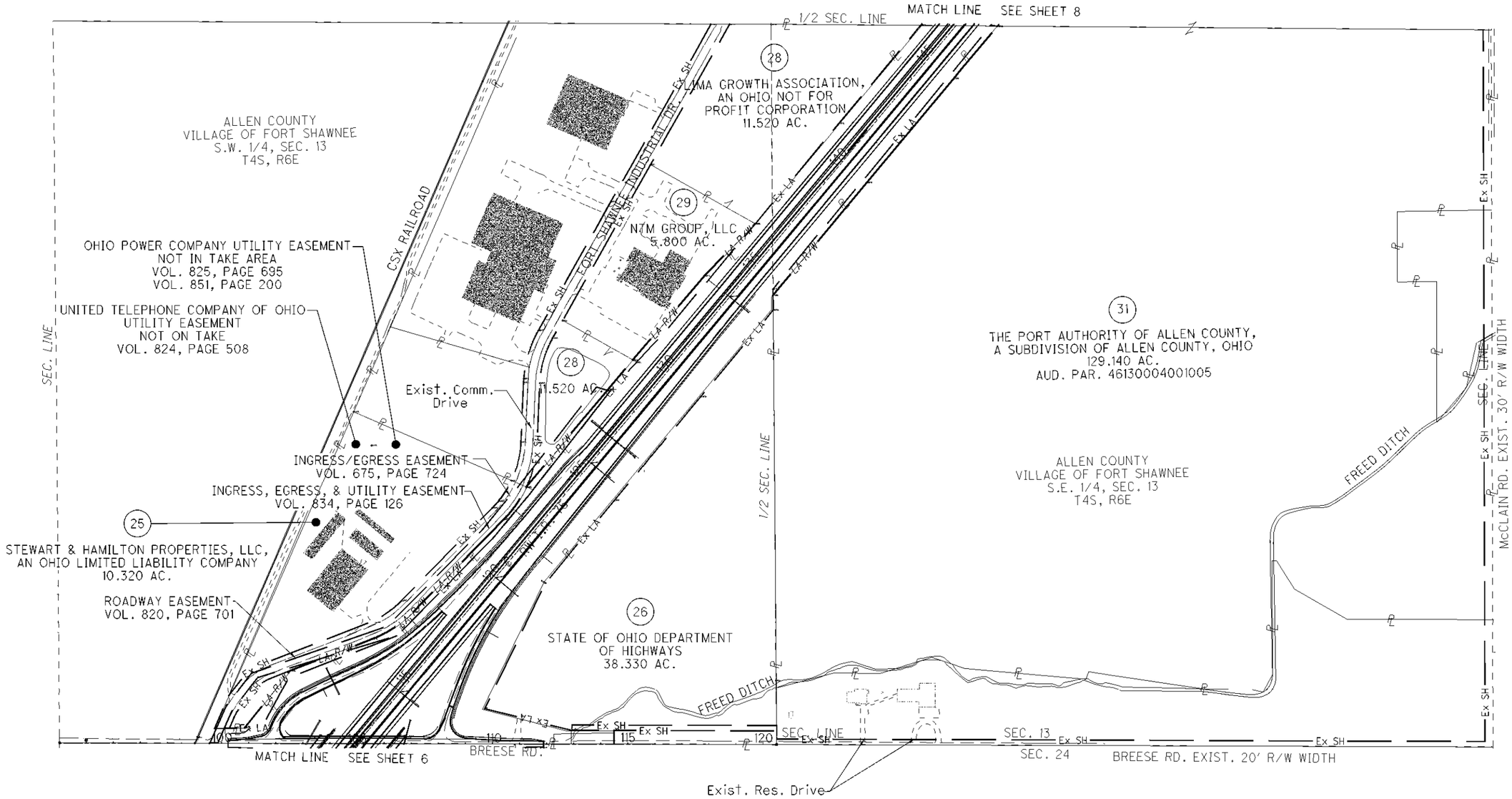

STRUCTURE KEY

- RESIDENTIAL
- COMMERCIAL
- OUT-BUILDING

REV. BY	DATE	DESCRIPTION
DJS	4/23/12	REVISED OWNER NAME FOR PARCEL 26
DJS	12/23/11	FIXED LANDHOOK & ADDED ℄ ON PARCEL 28
DATE COMPLETED:		10/06/11

HORIZONTAL SCALE IN FEET
0 100 200 400

PID NO. 89029
R/W DESIGNER BJD
R/W REVIEWER LAF

PROPERTY MAP
ALL-75-0.21

7/103
811/907

I:\Pid\89029\row\sheets\89029RM005.dgn 07-MAY-2012 11:05AM dsiebene

ALL-75-0.21
ALLEN COUNTY
VILLAGE OF FORT SHAWNEE
SECTION 13
T-4-S R-6-E

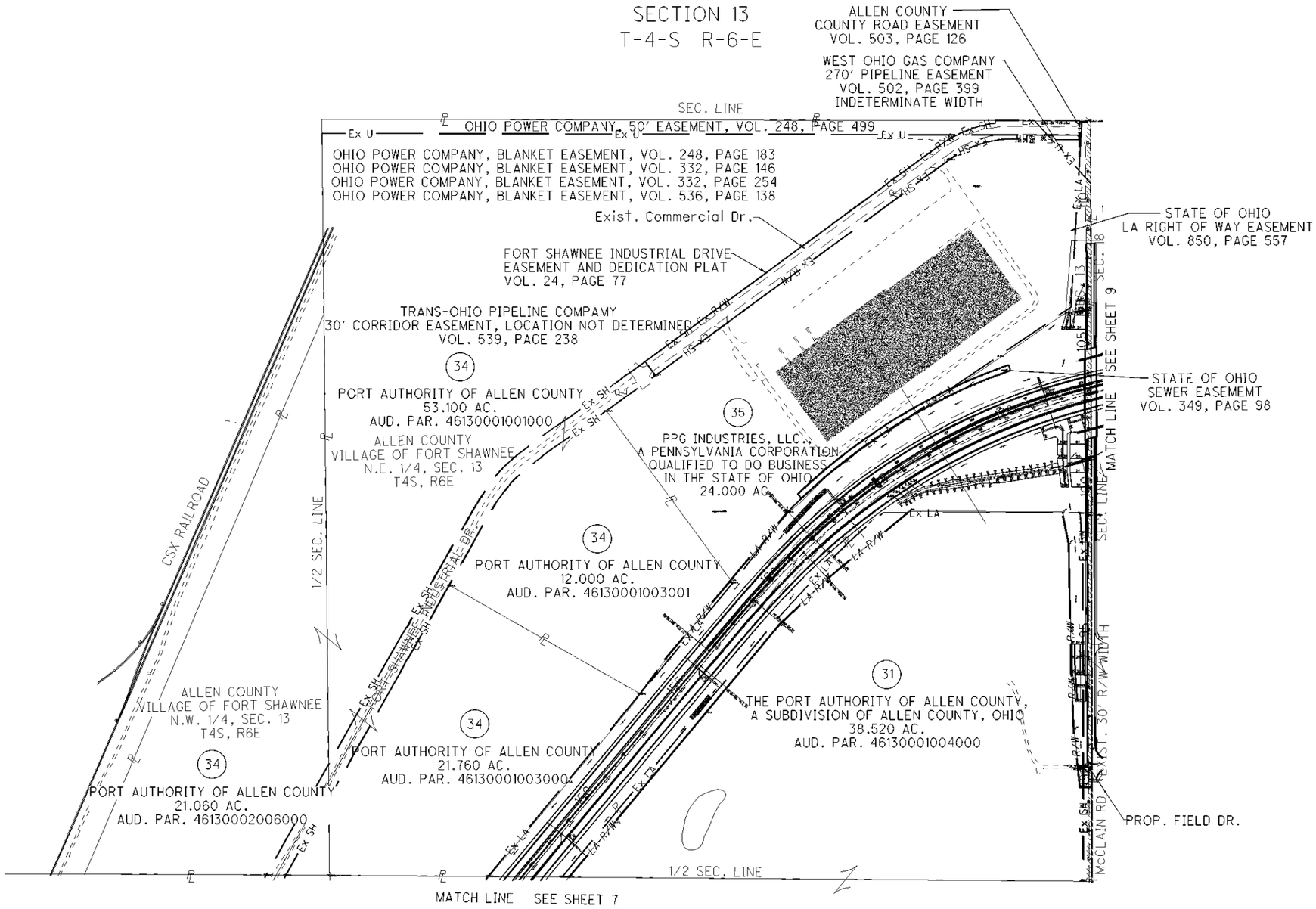

STRUCTURE KEY

- RESIDENTIAL
- COMMERCIAL
- OUT-BUILDING

REV. BY	DATE	DESCRIPTION
DATE COMPLETED:	10/06/11	

HORIZONTAL SCALE IN FEET
0 100 200 400

PID NO. 89029

R/W DESIGNER BJD
R/W REVIEWER LAF

PROPERTY MAP

ALL-75-0.21

8 / 103

812 / 907

I:\Pd\89029\row\sheets\89029RM006.dgn 07-MAY-2012 11:05AM dsiebene

ALL-75-0.21
ALLEN COUNTY
PERRY TOWNSHIP
CITY OF LIMA
SECTION 18, T-4-S R-7-E

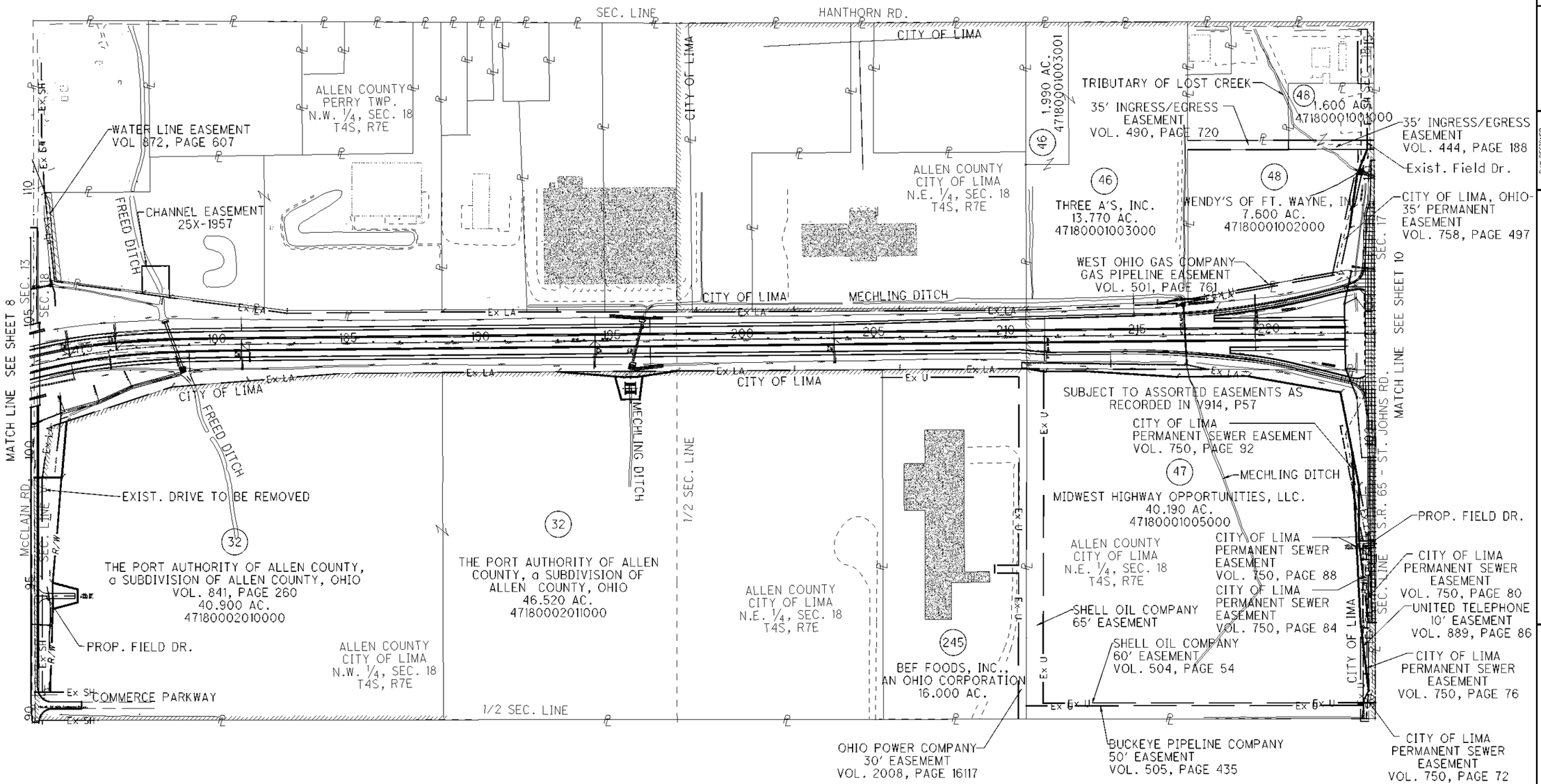

STRUCTURE KEY

- RESIDENTIAL
- COMMERCIAL
- OUT-BUILDING

REV. BY	DATE	DESCRIPTION
DJS	8/21/12	ADDED OHIO IN OWNERS NAME FOR PARCEL 245
DJS	8/20/12	REVISED OWNER NAME FOR PARCEL 245
DJS	6/5/12	REVISED OWNER NAME FOR PARCEL 32
DJS	4/18/12	REVISED OWNER NAME FOR PARCEL 32
DJS	11/17/11	ADDED TEMP PARCEL AT MECHLING DITCH

DATE COMPLETED: 10/06/11

HORIZONTAL SCALE IN FEET

PID NO. 89029

R/W DESIGNER BJD
R/W REVIEWER LAF

PROPERTY MAP

ALL-75-0.21

9 / 103

813 / 907

I:\Pid\89029\row\sheets\89029RM007.dgn 22-AUG-2012 7:56AM dsiebene

NOTE:
INTERSTATE 75 - CONSTRUCTION STA. 237+16.78 (0.0'RT)=
INDIANA AND OHIO RAILWAY (IORY)
AAR/DOT# 258615H
RR MP. 135.34
SUBDIVISION: DT&I MIDDLE

ALL-75-0.21
ALLEN COUNTY
PERRY TOWNSHIP
CITY OF LIMA
SECTION 17, T-4-S R-7-E

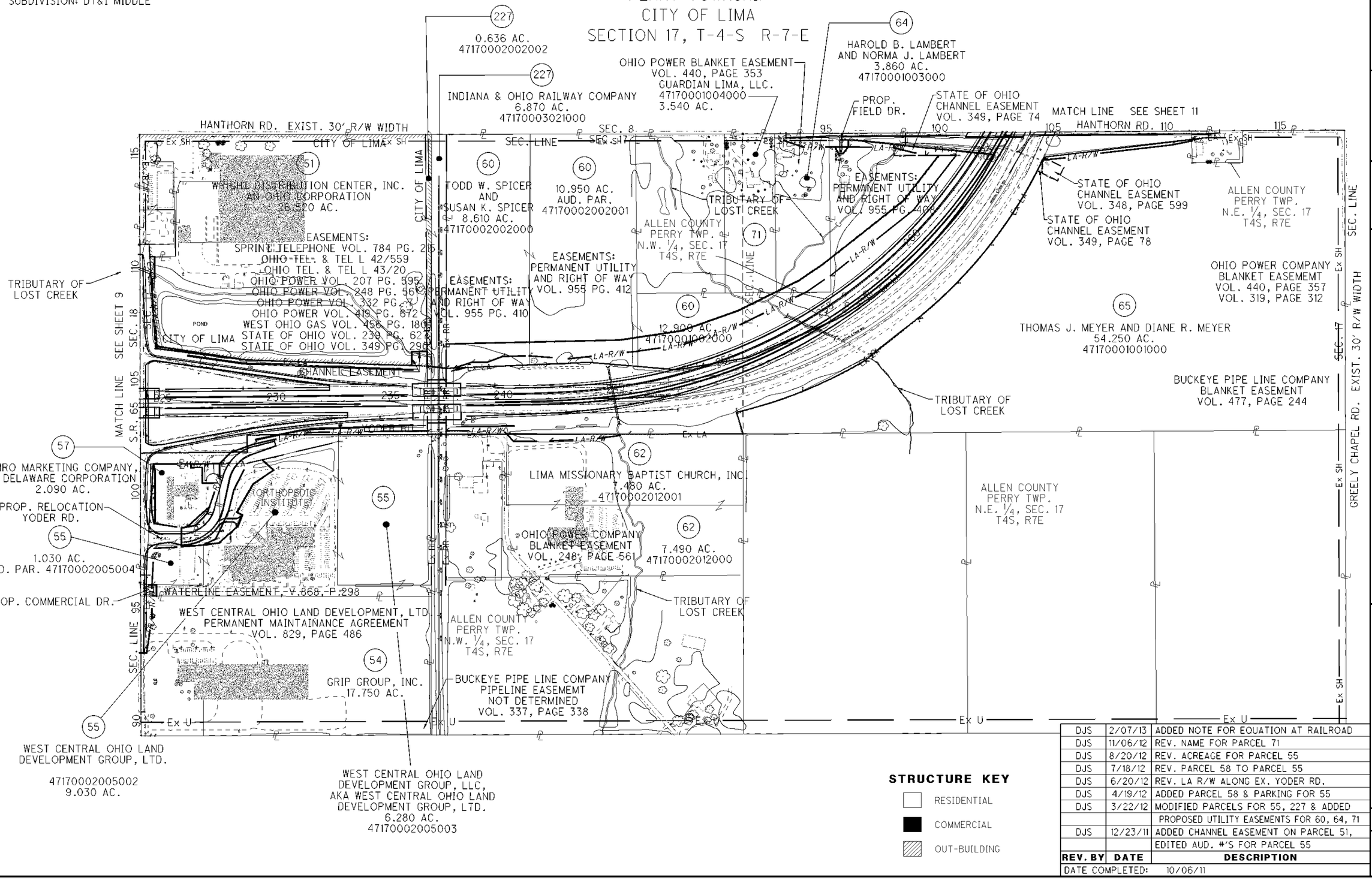

STRUCTURE KEY

- RESIDENTIAL
- COMMERCIAL
- OUT-BUILDING

REV. BY	DATE	DESCRIPTION
DJS	2/07/13	ADDED NOTE FOR EQUATION AT RAILROAD
DJS	11/06/12	REV. NAME FOR PARCEL 71
DJS	8/20/12	REV. ACREAGE FOR PARCEL 55
DJS	7/18/12	REV. PARCEL 58 TO PARCEL 55
DJS	6/20/12	REV. LA R/W ALONG EX. YODER RD.
DJS	4/19/12	ADDED PARCEL 58 & PARKING FOR 55
DJS	3/22/12	MODIFIED PARCELS FOR 55, 227 & ADDED
		PROPOSED UTILITY EASEMENTS FOR 60, 64, 71
DJS	12/23/11	ADDED CHANNEL EASEMENT ON PARCEL 51,
		EDITED AUD. #'S FOR PARCEL 55

DATE COMPLETED: 10/06/11

HORIZONTAL SCALE IN FEET
0 100 200 400

PID NO. 89029

R/W DESIGNER BJD
R/W REVIEWER LAF

PROPERTY MAP

ALL-75-0.21

10 / 103

814 / 907

I:\Pd\89029\row\sheets\89029RM008.dgn 07-FEB-2013 2:12PM dsiebene

ALL-75-0.21
ALLEN COUNTY
PERRY TOWNSHIP
CITY OF LIMA
SECTION 8, T-4-S R-7-E

SHEET 9 OF 9

End R/W Acquisition
STA. 293+22.08

TRANS-OHIO PIPELINE COMPANY
EASEMENT
VOL. 542, PAGE 176
ASSIGNMENT TO COLUMBIA LNG CORPORATION
VOL. 572, PAGE 347
ASSIGNMENT TO BUCKEYE PIPE LINE COMPANY
VOL. 641, PAGE 511
ASSIGNMENT TO MARATHON ENERGY HOLDINGS, INC.
VOL. 693, PAGE 283
GREATER OHIO ETHANOL, LLC
PARTIAL RELEASE
VOL. 948, PAGE 658

TRANS-OHIO PIPELINE COMPANY EASEMENT
VOL. 542, PAGE 176
ASSIGNMENT TO COLUMBIA LNG CORPORATION
VOL. 572, PAGE 347
ASSIGNMENT TO BUCKEYE PIPE LINE COMPANY
VOL. 641, PAGE 511
ASSIGNMENT TO MARATHON ENERGY HOLDINGS, INC.
VOL. 693, PAGE 283

THE OHIO FUEL GAS COMPANY
PARTIAL RELEASE OF LV. 47, PAGE 490
RESERVED EASEMENT AREA
VOL. 507, PAGE 607

1/2 SEC. LINE

30' TEMPORARY CONSTRUCTION EASEMENT

PIPELINE EASEMENT
GREATER OHIO ETHANOL, LLC.
VOL. 947, PAGE 773

CITY OF LIMA

67
15.180 AC.
AUD. PAR. 47080003001003

INGRESS EGRESS EASEMENT

PERMANENT SANITARY SEWER,
DRAINAGE CHANNEL, AND
WATER LINE EASEMENT
VOL. 955 PAGE 426

COLUMBIA GAS TRANSMISSION CORPORATION
10' EASEMENT WITHIN 40' STRIP
VOL. 598, PAGE 820

70
SHILOH MISSIONARY BAPTIST CHURCH
33.610 AC.
AUD. PAR. 47080004001002

COLUMBIA GAS OF OHIO
BLANKET AGREEMENT FOR LIMITED GAS SERVICE
VOL. 636, PAGE 239

THE OHIO FUEL GAS COMPANY
BLANKET PIPELINE EASEMENT
LEASE VOL. 47, PAGE 490
ALLEN COUNTY
PERRY TWP.
S.E. 1/4, SEC. 8
T4S, R7E

67
14.660 AC.
AUD. PAR. 47080003001004

ALLEN COUNTY
CITY OF LIMA
S.W. 1/4, SEC. 8
T4S, R7E

ALLEN COUNTY
CITY OF LIMA
S.E. 1/4, SEC. 8
T4S, R7E

CITY OF LIMA

LOST CREEK

WEST OHIO GAS COMPANY
60' EASEMENT
VOL. 502, PAGE 673

70
1.000 AC.
AUD. PAR. 47080004001001

UNITED TELEPHONE COMPANY OF OHIO
10' EASEMENT
VOL. 701, PAGE 343
VOL. 701, PAGE 341

69
0.280 AC.
AUD. PAR. 47080004007000

71
GUARDIAN LIMA, LLC
62.730 AC.

DUTTON DITCH

JILL L. SILVERTHORN
7.440 AC.
AUD. PAR. 47080004005001

69
3.940 AC.
AUD. PAR. 47080004005000

RAYMOND L. DORLEY
40' ACCESS EASEMENT
VOL. 483, PAGE 738

EASEMENTS
INGRESS AND EGRESS, VOL. 2006, PAGE 10149
DOMINION EAST OHIO GAS, VOL. 2007 PAGE 04668
CITY OF LIMA, OHIO, VOL. 955 PAGE 426
INLAND CORPORATION, 947, PAGE 773

67
GOE LIMA, AN OHIO LIMITED
LIBILITY COMPANY
11.310 AC.
AUD. PAR. 47080004002000

68
EASTERN REGION OPEN BIBLICAL CHURCHES
14.630 AC.

WEST OHIO GAS COMPANY
60' EASEMENT
VOL. 502, PAGE 673

HOUX PARKWAY

GREELY CHAPEL RD. EXIST. 30' R/W WIDTH

SEC. LINE

1/2 SEC. LINE

CITY OF LIMA

LA-R/W

Ex U

Ex SH

SEC. SH

SEC. LINE

MATCH LINE

SEE SHEET 10

HANTHORN RD.

SEC. 17

DOMINION EAST OHIO GAS
PIPELINE EASEMENT NO. 1
VOL. 2007, PAGE 4668

DOMINION EAST OHIO GAS, GRANT MEASURING
REGULATOR STATION AND INGRESS AND EGRESS

DOMINION EAST OHIO GAS
PIPELINE EASEMENT NO. 2

THE FOLLOWING EASEMENTS APPLY TO PARCEL 68:

OHIO POWER COMPANY BLANKET EASEMENT,
VOL. 275, PAGE 156

ALLEN COUNTY COMMISSIONERS
DRAINAGE EASEMENT ALONG GREELY CHAPEL
AND HANTHORN ROADS
VOL. 239, PAGE 614

OHIO POWER COMPANY FORFEITURE OF BLANKET
EASEMENT EXCEPT FOR EXISTING FACILITIES AND
ELECTRIC FACILITIES ALONG HANTHORN ROAD
VOL. 634, PAGE 40

OHIO FUEL GAS COMPANY BLANKET EASEMENT
VOL. 499, PAGE 318

THE FOLLOWING EASEMENTS APPLY TO
AUD. PAR. 47080004005001 :

OHIO POWER COMPANY
FORFEITURE OF BLANKET EASEMENT
EXCEPT FOR EXISTING FACILITIES AND
ELECTRIC FACILITIES ALONG HANTHORN ROAD
VOL. 634, PAGE 40

ALLEN COUNTY COMMISSIONERS
DRAINAGE EASEMENT ALONG GREELY CHAPEL
AND HANTHORN ROADS
VOL. 239, PAGE 614

OHIO FUEL GAS COMPANY BLANKET EASEMENT
VOL. 499, PAGE 318

OHIO POWER COMPANY BLANKET EASEMENT
VOL. 275, PAGE 156

STRUCTURE KEY

- RESIDENTIAL
- COMMERCIAL
- OUT-BUILDING

REV. BY	DATE	DESCRIPTION
DJS	11/06/12	REVISED NAME FOR PARCEL 71
DJS	3/22/12	ADDED UTILITY PARCELS ON PARCELS 67, 68, 71
DATE COMPLETED:		10/06/11

HORIZONTAL SCALE IN FEET
0 100 200 400

PID NO. 89029

R/W DESIGNER BJD
R/W REVIEWER LAF

PROPERTY MAP

ALL-75-0.21

11 / 103

815 907

I:\Pd\89029\row\sheets\89029RM009.dgn 06-NOV-2012 9:26AM dsiebene

TOTAL NUMBER OF :

42 OWNERSHIPS 0 TOTAL TAKES

63 PARCELS 6 OWNERSHIPS W/ STRUCTURES INVOLVED

ALL AREAS IN ACRES

RECORD AREA - TOTAL PRO - NET TAKE = NET RESIDUE

GRANTEE:

ALL RIGHT OF WAY ACQUIRED IN THE NAME OF STATE OF OHIO UNLESS OTHERWISE SHOWN.

PARCEL NO.	OWNER	SHEET NO.	OWNERS RECORD BOOK	OWNERS RECORD PAGE	AUDITOR'S PARCEL	RECORD AREA	TOTAL P.R.O.	GROSS TAKE	P.R.O. IN TAKE	NET TAKE	STRUCTURE	NET RESIDUE LEFT	NET RESIDUE RIGHT	TYPE FUND	REMARKS	AS ACQUIRED BOOK	AS ACQUIRED PAGE
														FEDERAL/STATE			
														90/10			
1 - 4	NOT USED																
5-WL	Janet E. Borg	3,19-22	2006	3774	46260004001000	56.370	0.091	0.190	0.000	0.190			56.089				
6-WL	Thomas T. Wilson	3,21-24	808	310	46260004002000	5.170	0.137	0.250	0.007	0.243	YES		4.790		10' WIRE FENCE		
7-WL	Kevin K. Gray & Sharon K. Gray	3,19-24	2011	1497	46260004003000	28.130	1.250	0.619	0.000	0.619		26.261					
8-WL	Greg A. Patterson	3,23,24	899	522	46260004003001	1.910	0.356	0.052	0.007	0.045		1.509					
9-WL	Marvin Hilty	4,23,24	2011	2374	46260801016000	0.880	0.197	0.222	0.124	0.098		0.585					
10-WL	Gregory J. McMillen & Shari A. McMillen	4,23,24	718	648	46260001003000	5.000	0.205	0.209	0.007	0.202			4.593				
11-WL	Brian C. Sarven	4,23,24	2010	15081	46260801005000	5.580	0.134	0.159	0.000	0.159		5.287					
12-WL	Ralph A. Delong, Jr.	4,23-28	830	262	46260001001000	75.000	13.169	14.061	12.860	1.201		60.630			12.860 Acres of easement converted to WL		
13-WL	Agnes L. Wolff	4,23-26	2007	558	46260801001000	4.080	0.103	0.063	0.000	0.063	YES				2 - 10" METAL SIGN POSTS		
					46260801003000	1.080	0.134	0.000	0.000	0.000							
	TOTAL 13-WL					5.160	0.237	0.063	0.000	0.063		4.860					
14-WL	Bruce D. Hendershot	4,25,26			46260501004000	8.180	0.309	0.264	0.178	0.086							
					46260501005000	0.964	0.103	0.000	0.000	0.000							
			881	212	46260501006000	2.040	0.082	0.000	0.000	0.000							
	TOTAL 14-WL		880	89		11.184	0.494	0.264	0.178	0.086		10.604					
15-16	NOT USED																
17-WL	EAST OHIO GAS COMPANY d/b/a DOMINION EAST OHIO, an OHIO CORPORATION	4,25-28	2011	9528	46260501003000	7.820	0.193	0.253	0.193	0.060		7.566			0.005 Acres of Exist. CH converted to WL		
														FEDERAL/STATE 90/10			

NOTE: ALL TEMPORARY PARCELS TO BE OF 24 MONTH DURATION.

NOTE: UNDER NO CIRCUMSTANCES ARE TEMPORARY EASEMENTS TO BE USED FOR STORAGE OF MATERIAL OR EQUIPMENT BY THE CONTRACTOR UNLESS NOTED OTHERWISE.

NOTE: RECORD AREAS SHOWN ARE COUNTY AUDITOR RECORD AREAS

* DENOTES RIGHT OF WAY ENCROACHMENT

LEGEND:

WL = FEE SIMPLE WITH LIMITATION OF ACCESS
WD = WARRANTY DEED
BS = BILL OF SALE
PRW = PROPERTY RIGHT FEE SIMPLE
SH = STANDARD HIGHWAY EASEMENT
LA = LIMITED ACCESS EASEMENT
T = TEMPORARY EASEMENT
SL = SLOPE EASEMENT
S = SEWER EASEMENT
CH = CHANNEL EASEMENT
FL = FLOW EASEMENT
U = UTILITY EASEMENT
A = AERIAL EASEMENT
PRE = PROPERTY RIGHT
SC = SCENIC EASEMENT
V = IN NAME OF ANOTHER STATE AGENCY, LPA, ETC.
R = SPECIAL RESERVATION
WA = WORK AGREEMENT
SA = SPECIAL AGREEMENT AND WAIVER OF DAMAGES

REV. BY	DATE	DESCRIPTION
DJS	5/9/13	Added length of fence to Remarks for Parcel 6-WL
DJS	4/10/12	Changed P.R.O. in Take, Net Take & Net Residue for Parcels 6-WL, 8-WL, 9-WL & 10-WL
DJS	10/25/11	Revised Owner name for Parcel 11

FIELD REVIEW BY: LAF, DJS, BJD DATE: 6/11

OWNERSHIP VERIFIED BY: LAF DATE: 9/27/11

DATE COMPLETED: 10/06/11

FEDERAL PROJECT NO. E100878

PID NO. 89029

STATE JOB NO. 416867

R/W DESIGNER BJD R/W REVIEWER LAF

SUMMARY OF ADDITIONAL RIGHT OF WAY

PARCELS 5-17

ALL-75-0.21

12 / 103

816 / 907

I:\Pid\89029\row\sheets\89029RS001.dgn 09-MAY-2013 8:34AM dsiebene

GRANTEE:
ALL RIGHT OF WAY ACQUIRED IN THE NAME OF STATE OF OHIO UNLESS OTHERWISE SHOWN.

ALL AREAS IN ACRES

RECORD AREA - TOTAL PRO - NET TAKE = NET RESIDUE

PARCEL NO.	OWNER	SHEET NO.	OWNERS RECORD BOOK	OWNERS RECORD PAGE	AUDITOR'S PARCEL	RECORD AREA	TOTAL P.R.O.	GROSS TAKE	P.R.O. IN TAKE	NET TAKE	STRUCTURE	NET RESIDUE LEFT	NET RESIDUE RIGHT	TYPE FUND	REMARKS	AS ACQUIRED BOOK	AS ACQUIRED PAGE
														FEDERAL/STATE			
18-WL	Elizabeth Moore	5,27-30	725	780	46231202001000	7.770	0.000	0.335	0.000	0.335	YES			90/10	SEMI TRAILER (STORAGE), (3) WOOD RAIL FENCES @ 15' EACH		
			725	778	46231203011000	0.730	0.176	0.000	0.000	0.000					0.046 AC. OF EXIST. CHANNEL EASEMENT WILL BE		
	TOTAL 18-WL					8.500	0.176	0.335	0.000	0.335		7.989			CONVERTED TO "WL" WITHIN THE TAKE		
19-WL1	Charles E & Carolyn Sue Spicer	5,27,28	2011	12493	46240003003000	53.2100	0.9240	0.0160	0.0000	0.0160					THIS PARCEL AREA CARRIED TO 10,000 ths OF AN ACRE		
19-WL2		5,29,30						0.0070	0.0068	0.0002					TO SHOW ACTUAL NEW TAKE AREA IS 10 SQ. FEET		
	GRAND TOTAL					53.2100	0.9240	0.0230	0.0068	0.0162			52.2698		0.0068 ACRES OF P.R.O. CONVERTED TO "WL"		
20-WL	Rita K. Andrews aka, Rita K. Miller,	5,27-30	814	303	46231201001000	15.150	0.000	0.182	0.000	0.182			14.968		THIS PARCEL LANDLOCKED PRIOR TO TAKE		
	Dorsey P. (Pete) Miller,		610	819													
	(deceased), Life Estate																
21-WL	Elzie J. Prater & Bette J. Prater	5,6,30-34	2008	14811	46230903001001	38.350	13.145	13.577	13.145	0.432					13.145 ACRES OF P.R.O. CONVERTED TO "WL"		
					46240003002002	20.000	0.458	0.000	0.000	0.000					0.076 AC. OF EXIST. CHANNEL EASEMENT WILL BE		
	TOTAL 21-WL					58.350	13.603	13.577	13.145	0.432			44.315		CONVERTED TO "WL" WITHIN THE TAKE		
22	NOT USED																
23-WL1	IW Holdings LLC	6,33,34	2006	13798	46240002003000	65.85	1.288	0.133	0.000	0.133					0.039 AC. OF EXIST. CHANNEL EASEMENT WILL BE		
23-WL2		6,35,36						0.161	0.000	0.161					CONVERTED TO "WL" WITHIN THE TAKE OF 23-WL1		
	GRAND TOTAL					65.85	1.288	0.294	0.000	0.294			64.268				
24	NOT USED																
25-WL	Stewart & Hamilton Properties, LLC.	7,35-38	2006	9670	46130003001000	10.320	0.000	0.705	0.000	0.705		9.615					
26-WL	State of Ohio Department of Highways	7,71,72	351	154	46130003002000	38.330	0.861	0.181	0.000	0.181			37.288		NO TAKE		
27	NOT USED																
28-WL	Lima Growth Association, an Ohio	7,37-40	821	615	46130003001001	11.520	0.000	0.232	0.000	0.232	S YES	11.288			BUSINESS SIGN, (2) 2 LIGHT ASSEMBLIES, ELECTRICAL		
	not for profit corporation		834	125											SUPPLY BOX		
29-WL	NTM Group, LLC.	7,39,40	0877	799	46130003001009	5.80	0.000	0.257	0.000	0.257	S	5.543			BUSINESS SIGN		
30	NOT USED																
31-WL	The Port Authority of Allen County,	7,39-46	841	255	46130004001005	128.880	1.178	0.513	0.000	0.513	YES,(2),S				* FENCE - IRON POST, BILLBOARD		
	a subdivision of Allen County, Ohio				46130001004000	38.790	0.672	1.032	0.000	1.032					TO BE ACQUIRED IN THE NAME OF BOARD OF COUNTY		
31-WDV		8,45,46,73-78	843	197	46130001004000			1.523	0.672	0.851					COMMISSIONERS, ALLEN COUNTY, OHIO		
	GRAND TOTAL					167.670	1.851	3.068	0.672	2.396			163.423				
32-WL1	The Port Authority of Allen	9,45,46	841	260	47180002010000	40.900	0.636	0.317	0.000	0.317							
32-WL2	County, a subdivision of Allen	9,49,50	841	263	47180002011000	45.380	0.000	0.126	0.000	0.126							
32-WDV	County, Ohio	9,45,46,73-76			47180002010000			1.436	0.562	0.874					TO BE ACQUIRED IN THE NAME OF BOARD OF COUNTY		
	GRAND TOTAL					86.280	0.636	1.879	0.562	1.317			84.327		COMMISSIONERS, ALLEN COUNTY, OHIO		
32-T1		9,75,76			47180002010000			0.164	0.000	0.164					FOR CONSTRUCTION OF FIELD DRIVE		
32-T2		9,49,50			47180002011000			0.171	0.000	0.171					MOVE FIELD DRIVE PIPE AWAY FROM NEW LA-R/W		
														FEDERAL/STATE 90/10			

NOTE: ALL TEMPORARY PARCELS TO BE OF 24 MONTH DURATION.

NOTE: UNDER NO CIRCUMSTANCES ARE TEMPORARY EASEMENTS TO BE USED FOR STORAGE OF MATERIAL OR EQUIPMENT BY THE CONTRACTOR UNLESS NOTED OTHERWISE.

NOTE: RECORD AREAS SHOWN ARE COUNTY AUDITOR RECORD AREAS

* DENOTES RIGHT OF WAY ENCROACHMENT

LEGEND:
WL = FEE SIMPLE WITH LIMITATION OF ACCESS
WD = WARRANTY DEED
BS = BILL OF SALE
PRW = PROPERTY RIGHT FEE SIMPLE
SH = STANDARD HIGHWAY EASEMENT
LA = LIMITED ACCESS EASEMENT
T = TEMPORARY EASEMENT
SL = SLOPE EASEMENT
S = SEWER EASEMENT
CH = CHANNEL EASEMENT
FL = FLOW EASEMENT
U = UTILITY EASEMENT
A = AERIAL EASEMENT
PRE = PROPERTY RIGHT
SC = SCENIC EASEMENT
V = IN NAME OF ANOTHER STATE AGENCY, LPA, ETC.
R = SPECIAL RESERVATION
WA = WORK AGREEMENT
SA = SPECIAL AGREEMENT AND WAIVER OF DAMAGES

			DJS	3/22/12	MOD. OWNERS NAME FOR PARCEL 19 & MOD. TAKE AREA
					FOR 23-WL2 & TOTALS & REMOVED STRUCTURES
			KCC	1/24/12	REMARKS FOR 23-WL2
			DJS	12/23/11	REMARKS FOR 19, 21, 31 & 32; AREAS FOR 31 & 32
			DJS	11/17/11	ADDED PARCEL 32-T2 / REV. 32-T TO 32-T1
			KCC	11/14/11	ACREAGE CHANGED 31-WDV
DJS	5/9/13	ADDED LENGTH OF FENCES TO PARCEL 18-WL	**REV. BY**	**DATE**	**DESCRIPTION**
DJS	6/5/12	REV. OWNER NAME FOR PARCEL 32 & ADDED REMARK TO PARCEL 26	FIELD REVIEW BY: LAF, DJS, BJD		DATE: 6/11
DJS	4/23/12	REV. OWNER NAME & RECORD FOR PARCEL 26	OWNERSHIP VERIFIED BY: LAF		DATE: 9/27/11
DJS	4/18/12	REV. OWNERS NAMES FOR PARCELS 20 & 32	DATE COMPLETED: 10/06/11		

FEDERAL PROJECT NO. E100878
PID NO. 89029
STATE JOB NO. 416867
R/W DESIGNER BJD
R/W REVIEWER LAF

SUMMARY OF ADDITIONAL RIGHT OF WAY
PARCELS 18-32

ALL-75-0.21

817/907

dsiebene 23-APR-2013 8:56AM
I:\Pd\89029\row\sheets\89029RS002.dgn

GRANTEE:
ALL RIGHT OF WAY ACQUIRED IN THE NAME OF STATE OF OHIO UNLESS OTHERWISE SHOWN.

ALL AREAS IN ACRES

RECORD AREA - TOTAL PRO - NET TAKE = NET RESIDUE

PARCEL NO.	OWNER	SHEET NO.	OWNERS RECORD BOOK	OWNERS RECORD PAGE	AUDITOR'S PARCEL	RECORD AREA	TOTAL P.R.O.	GROSS TAKE	P.R.O. IN TAKE	NET TAKE	STRUCTURE	NET RESIDUE LEFT	NET RESIDUE RIGHT	TYPE FUND	REMARKS	AS ACQUIRED BOOK	AS ACQUIRED PAGE
														FEDERAL/STATE			
33	NOT USED													90/10			
34-WL	Port Authority of Allen County	8,43,44	864	162	46130001003001	12.000	0.000	0.105	0.000	0.105							
					46130001001000	53.100	0.000										
					46130001003000	21.750	0.000										
					46130002006000	21.060	0.000										
	TOTAL 34-WL					107.910	0.000	0.105	0.000	0.105		107.805					
35-WL	PPG Industries LLC., a Pennsylvania	8,43,44	864	163	46130001003002	24.000	0.000	0.041	0.000	0.041		23.959					
	Corporation qualified to do business																
	in the State of Ohio																
36-45	NOT USED																
46-CH	Three A's Inc.	9,53,54	822	859	47180001003000	13.770	0.324	0.026	0.000	0.026					FOR DRAINAGE CONSTRUCTION AND MAINTENANCE		
					47180001003001	1.990	0.111										
47-WL	Midwest Highway Opportunities, LLC	9,51-54,83-86			47180001005000	40.190	2.026	2.119	1.702	0.417					1.702 ACRES OF P.R.O. CONVERTED TO "WL"		
47-WD		9,83,84						0.302	0.177	0.125					0.177 ACRES OF P.R.O. CONVERTED TO "WD"		
	GRAND TOTAL					40.190	2.026	2.421	1.879	0.542			37.622				
47-T		9,83-86						0.331	0.000	0.331					FOR MAINTENANCE OF TRAFFIC		
48-WL	Wendys of Ft. Wayne, Inc.	9,53,54,89,90	846	220	47180001002000	7.600	0.000	0.061	0.000	0.061							
					47180001001000	1.600	0.123										
	TOTAL 48-WL					9.200	0.123	0.061	0.000	0.061		9.016					
48-CH		9,53,54						0.008	0.000	0.008					FOR DRAINAGE CONSTRUCTION AND MAINTENANCE		
49-50	NOT USED																
51-WL	Wright Distribution Center, Inc.	10,53,54,87-90	894	196	47170002003000	26.520	0.919	0.089	0.000	0.089		25.512			COST OF CURE FOR 100' OF 6' HIGH CHAIN LINK FENCE		
	an Ohio Corporation																
51-CH		10,55-56						0.099	0.000	0.099					#,TO CONSTRUCT DRAINAGE DITCH FOR RETAINING WALL		
51-T		10,53-56						0.047	0.000	0.047					$, FOR CONSTRUCTION OF RETAINING WALL		
52-53	NOT USED																
54-WD	Grip Group, Inc.	10,83,84	810	715	47170002006000	17.750	0.172	0.244	0.144	0.100			17.478		0.144 ACRES OF P.R.O. CONVERTED TO "WD"		
55-WL	West Central Ohio Land Development	10,83-86	914	79	47170002005004	1.030	0.025	0.167	0.025	0.142					0.025 ACRES OF P.R.O. CONVERTED TO "WL"		
	Group, LTD. An Ohio Limited Liability		856	287	47170002005002	9.030		0.202	0.000	0.202	S,(3),Y				BUS. ENTRANCE, STOP & NO OUTLET SIGN - PRKG. LOT LIGHT		
55-WD	Company, AKA, West Central Ohio Land	10,83,84	856	281	47170002005002		0.028	0.057	0.028	0.029	S,(3),Y				2 METAL T POST W/ PVC COVERS, STOP SIGN - PRKG. LOT LIGHT		
55-WDV1	Development Group, LLC, An Ohio	10,85,91,92	929	484	47170002005002			0.197	0.000	0.197	YES				TO BE ACQUIRED IN THE NAME OF BOARD OF COUNTY		
	Limited Liability Company				47170002005004			0.008	0.000	0.008					COMMISSIONERS, ALLEN COUNTY, OHIO		
55-WDV2		10,55,56,91-94			47170002005002			0.399	0.000	0.399					0.028 ACRES OF P.R.O. CONVERTED TO "WD"		
		10,55,56	2012	7988	47170002005003	6.280	0.025										
	GRAND TOTAL					16.340	0.078	1.030	0.053	0.977			15.285				
55-T1		10,83,84			47170002005002			0.023	0.000	0.023					FOR CONSTRUCTION OF COMMERCIAL DRIVE		
55-T2		10,55,56,92-94			47170002005002			0.576	0.000	0.576				FEDERAL/STATE 90/10	FOR CONSTRUCTION OF COMMERCIAL DRIVE & TO PROVIDE DRIVE ACCESS DURING CONSTRUCTION		

NOTE: ALL TEMPORARY PARCELS TO BE OF 24 MONTH DURATION.

NOTE: UNDER NO CIRCUMSTANCES ARE TEMPORARY EASEMENTS TO BE USED FOR STORAGE OF MATERIAL OR EQUIPMENT BY THE CONTRACTOR UNLESS NOTED OTHERWISE.

NOTE: RECORD AREAS SHOWN ARE COUNTY AUDITOR RECORD AREAS

* DENOTES RIGHT OF WAY ENCROACHMENT

LEGEND:
WL = FEE SIMPLE WITH LIMITATION OF ACCESS
WD = WARRANTY DEED
BS = BILL OF SALE
PRW = PROPERTY RIGHT FEE SIMPLE
SH = STANDARD HIGHWAY EASEMENT
LA = LIMITED ACCESS EASEMENT
T = TEMPORARY EASEMENT
SL = SLOPE EASEMENT
S = SEWER EASEMENT
CH = CHANNEL EASEMENT
FL = FLOW EASEMENT
U = UTILITY EASEMENT
A = AERIAL EASEMENT
PRE = PROPERTY RIGHT
SC = SCENIC EASEMENT
V = IN NAME OF ANOTHER STATE AGENCY, LPA, ETC.
R = SPECIAL RESERVATION
WA = WORK AGREEMENT
SA = SPECIAL AGREEMENT AND WAIVER OF DAMAGES

$- COST OF CURE FOR 310' OF 6' HIGH CHAINLINK FENCE
#- COST OF CURE FOR 135' OF 6' HIGH CHAIN LINK FENCE

REV. BY	DATE	DESCRIPTION
DJS	5/9/13	CHANGED $ AND # ABOVE TO REFLECT CORRECT LENGTHS
DJS	8/20/12	REV. ACREAGE FOR PARCEL 55 AND TOTALS
DJS	7/18/12	ADDED 6.280 ACRES AUD. PARCEL TO PARCEL 55
DJS	5/14/12	MOD. AREAS FOR PARCEL 51-WL
DJS	4/3/12	ADDED COST TO CURE LENGTHS FOR PARCEL 51
DJS	3/22/12	REVISED AREAS FOR PARCELS 55-WL & 55-WDV1 & 55-T2, & REMOVED PARCEL 55-T3
DJS	12/23/11	MOD. PARCEL 55 AUD. #'s & TAKES, ADDED 51-CH & 55-T3
		CHANGED REMARKS FOR 47, 54, & 55
DJS	10/25/11	ADDED PARCEL 47-T

REV. BY	DATE	DESCRIPTION
FIELD REVIEW BY: LAF, DJS, BJD		DATE: 6/11
OWNERSHIP VERIFIED BY: LAF		DATE: 9/27/11
DATE COMPLETED: 10/06/11		

FEDERAL PROJECT NO. E100878
PID NO. 89029
STATE JOB NO. 416867
R/W DESIGNER BJD
R/W REVIEWER LAF

SUMMARY OF ADDITIONAL RIGHT OF WAY
PARCELS 34-55

ALL-75-0.21

dsiebene 23-APR-2013 9:02AM
I:\Pd\89029\row\sheets\89029RS003.dgn

GRANTEE:
ALL RIGHT OF WAY ACQUIRED IN THE NAME OF STATE OF OHIO UNLESS OTHERWISE SHOWN.

ALL AREAS IN ACRES

RECORD AREA - TOTAL PRO - NET TAKE = NET RESIDUE

PARCEL NO.	OWNER	SHEET NO.	OWNERS RECORD BOOK	OWNERS RECORD PAGE	AUDITOR'S PARCEL	RECORD AREA	TOTAL P.R.O.	GROSS TAKE	P.R.O. IN TAKE	NET TAKE	STRUCTURE	NET RESIDUE LEFT	NET RESIDUE RIGHT	TYPE FUND	REMARKS	AS ACQUIRED BOOK	AS ACQUIRED PAGE
														FEDERAL/STATE			
														90/10			
56	NOT USED																
57-WL	EMRO Marketing Company,	10,53,54,85,86	827	309	47170002005001	2.090	0.000	0.142	0.000	0.142	S(5),Y(5)				TRUCK ENTRANCE & EXIT SIGN,LIGHTED AD SIGN, 2 MOITORING WELLS		
57-WDV	a Delaware Corporation	10,85,91-94						0.290	0.000	0.290					LIGHTED BUS. SIGN & CONTROL BOX,ABANDONED SIGN BASE,		
	GRAND TOTAL					2.090	0.000	0.432	0.000	0.432			1.658		PRKG. LOT LIGHT * MONITORING WELL		
															57-WDV TO BE ACQUIRED IN THE NAME OF BOARD OF		
															COUNTY COMMISSIONERS, ALLEN COUNTY, OHIO		
57-T1		10,55,56,85,93,94						0.166	0.000	0.166					FOR CONSTRUCTION OF COMMERCIAL DRIVE		
57-T2		10,55,56,85,91,92						0.042	0.000	0.042					FOR CONSTRUCTION OF COMMERCIAL DRIVE		
57-T3		10,54,85,86,91,92						0.070	0.000	0.070					FOR DRIVES AND OTHER MISC. REMOVAL ITEMS		
58	NOT USED																
59	NOT USED																
60-WL	Todd W. Spicer & Susan K. Spicer	10,57-62,95-98	0876	545	47170002002000	8.610	0.253	0.210	0.000	0.210							
			801	278	47170002002001	10.950	0.320	0.394	0.000	0.394							
			2009	853	47170001002000	12.900	0.075	6.493	0.000	6.493					0.079 AC. OF EX. CHANNEL EASEMENT CONVERTED TO "WL"		
60-WDV		10,95,96			47170001002000			0.059	0.000	0.059					175' SPLIT RAIL FENCE, 2-8' METAL GATES		
	GRAND TOTAL					32.460	0.648	7.156	0.000	7.156		24.656			60-WDV TO BE ACQUIRED IN THE NAME OF BOARD OF		
															COUNTY COMMISSIONERS, ALLEN COUNTY, OHIO		
60-T		10,95,96						0.028	0.000	0.028					FOR CONSTRUCTION OF FIELD DRIVE		
60-UV1		10,57,58			47170002002000			0.659	0.000	0.659					# - SEE NOTE BELOW		
		10,57,58			47170002002001			0.728	0.000	0.728					# - SEE NOTE BELOW		
		10,57-60			47170001002000			0.983	0.000	0.983					# - SEE NOTE BELOW		
	TOTAL 60-U1							2.370	0.000	2.370							
60-UV2		10,59-62,97,98			47170001002000			0.989	0.000	0.989					# - SEE NOTE BELOW		
61	NOT USED																
62-WL	Lima Missionary Baptist Church, Inc.	10,57,58	822	751	47170002012001	7.480	0.309	0.266	0.000	0.266					* SIGN ENCROACHMENT IN EXISTING YODER RD., SHOWN ON SHTS. 55 & 93		
					47170002012000	7.490	0.331	0.000	0.000	0.000							
	TOTAL 62-WL					14.970	0.640	0.266	0.000	0.266			14.064				
63	NOT USED																
64-WL	Harold B. Lambert &	10,59,60	0950	330	47170001003000	3.860	0.165	0.094	0.000	0.094					0.138 AC. OF P.R.O. CONVERTED TO "WDV"		
64-WDV	Norma J. Lambert	10,95,96						0.246	0.138	0.108					TO BE ACQUIRED IN THE NAME OF BOARD OF COUNTY		
	GRAND TOTAL					3.860	0.165	0.340	0.138	0.202		3.493			COMMISSIONERS, ALLEN COUNTY, OHIO		
64-UV		10,59,60			47170001003000			0.291	0.000	0.291					# - SEE NOTE BELOW		
65-WL	Thomas J. Meyer & Diane R. Meyer	10,61,62,99-102	0952	301	47170001001000	54.250	1.199	1.237	1.049	0.188			52.863		1.049 AC. OF EX. P.R.O. CONVERTED TO "WL"		
															0.004 AC. OF EX. CHANNEL EASEMENT CONVERTED TO "WL"		
66	NOT USED																
														FEDERAL/STATE			
														90/10			

NOTE: ALL TEMPORARY PARCELS TO BE OF 24 MONTH DURATION.

NOTE: UNDER NO CIRCUMSTANCES ARE TEMPORARY EASEMENTS TO BE USED FOR STORAGE OF MATERIAL OR EQUIPMENT BY THE CONTRACTOR UNLESS NOTED OTHERWISE.

NOTE: RECORD AREAS SHOWN ARE COUNTY AUDITOR RECORD AREAS

* DENOTES RIGHT OF WAY ENCROACHMENT

LEGEND:
WL = FEE SIMPLE WITH LIMITATION OF ACCESS
WD = WARRANTY DEED
BS = BILL OF SALE
PRW = PROPERTY RIGHT FEE SIMPLE
SH = STANDARD HIGHWAY EASEMENT
LA = LIMITED ACCESS EASEMENT
T = TEMPORARY EASEMENT
SL = SLOPE EASEMENT
S = SEWER EASEMENT
CH = CHANNEL EASEMENT
FL = FLOW EASEMENT
U = UTILITY EASEMENT
A = AERIAL EASEMENT
PRE = PROPERTY RIGHT
SC = SCENIC EASEMENT
V = IN NAME OF ANOTHER STATE AGENCY, LPA, ETC.
R = SPECIAL RESERVATION
WA = WORK AGREEMENT
SA = SPECIAL AGREEMENT AND WAIVER OF DAMAGES

\# - TO BE ACQUIRED IN THE NAME OF EAST OHIO GAS COMPANY

REV. BY	DATE	DESCRIPTION
DJS	5/9/13	ADDED LENGTH OF FENCE AND METAL GATES TO PARCEL 60-WDV
DJS	10/24/12	CHANGED WATER WELLS TO MONITORING WELLS FOR PARCEL 57-WL
DJS	9/19/12	CHANGED 60-U1, 60-U2 & 64-U TO UV PARCELS
DJS	7/18/12	CHANGED PARCEL 58 TO NOT USED
DJS	5/24/12	MOVED NET RESIDUE TO LEFT SIDE FOR PARCEL 60
DJS	4/19/12	ADDED PARCEL 58 INFORMATION

REV. BY	DATE	DESCRIPTION
DJS	4/10/12	REVISED REMARKS FOR 60-U1, 60-U2, & 64-U
DJS	3/22/12	ADDED PARCELS 60-U1,60-U2, 64-U & MOVED PARCELS 67-WL, 67-WDV, 68WL, 69-WL TO SHEET 16/103
DJS	12/23/11	REV. AUDITOR'S PARCEL # FOR PARCEL 64, MOD. AUD. #'s FOR 67-WDV & 64, PARCEL 60 TAKES
DJS	12/07/11	ADDED REMARKS FOR PARCELS 62, 64 & 65

FIELD REVIEW BY: LAF, DJS, BJD DATE: 6/11
OWNERSHIP VERIFIED BY: LAF DATE: 9/27/11
DATE COMPLETED: 10/06/11

FEDERAL PROJECT NO. E100878
PID NO. 89029
STATE JOB NO. 416867
R/W DESIGNER BJD
R/W REVIEWER LAF

SUMMARY OF ADDITIONAL RIGHT OF WAY
PARCELS 57-69
ALL-75-0.21

15/103
819/907

I:\Pd\89029\row\sheets\89029RS004.dgn 23-APR-2013 9:08AM dsiebene

GRANTEE:
ALL RIGHT OF WAY ACQUIRED IN THE NAME OF STATE OF OHIO UNLESS OTHERWISE SHOWN.

ALL AREAS IN ACRES

RECORD AREA - TOTAL PRO - NET TAKE = NET RESIDUE

PARCEL NO.	OWNER	SHEET NO.	OWNERS RECORD BOOK	OWNERS RECORD PAGE	AUDITOR'S PARCEL	RECORD AREA	TOTAL P.R.O.	GROSS TAKE	P.R.O. IN TAKE	NET TAKE	STRUCTURE	NET RESIDUE LEFT	NET RESIDUE RIGHT	TYPE FUND	REMARKS	AS ACQUIRED BOOK	AS ACQUIRED PAGE
														FEDERAL/STATE			
67-WL	Greater Ohio Ethanol, an Ohio	11,61,62,95-98	2006	11258	47080004002000	11.310	0.000	0.293	0.000	0.293				90/10	CHAIN LINK FENCE		
67-WDV	Limited Liability Company	11,95,96						0.135	0.000	0.135					TO BE ACQUIRED IN THE NAME OF BOARD OF COUNTY		
					47080003001003	15.180	0.000								COMMISSIONERS, ALLEN COUNTY, OHIO		
					47080003001004	14.660	0.000										
	GRAND TOTAL					41.150	0.000	0.428	0.000	0.428		40.722					
67-T		11,61,62,97,98			47080004002000			0.407	0.000	0.407					# - SEE NOTE BELOW		
67-UV		11,61,62,95-98			47080004002000			0.515	0.000	0.515					# - SEE NOTE BELOW		
68-WL	Eastern Region Open Bible Churches	11,61,62,99-102	0896	330	47080004002002	14.630	0.202	0.352	0.000	0.352			14.076				
68-T		11,61,62,99-102						0.258	0.000	0.258					# - SEE NOTE BELOW		
68-UV		11,61,62,99-102						0.290	0.000	0.290					# - SEE NOTE BELOW		
69-WL	Jill L. Silverthorn	11,63,64	0937	808	47080004005001	7.440	0.000	0.211	0.000	0.211							
					47080004005000	3.940	0.243										
					47080004007000	0.280	0.052										
	TOTAL 69-WL					11.660	0.295	0.211	0.000	0.211			11.154		ELECTRIC FENCE		
70-WL1	Shiloh Missionary Baptist Church	11,63,64	714	645	47080004001002	33.610	0.779	0.041	0.000	0.041							
70-WL2								0.034	0.000	0.034							
		11	714	645	47080004001001	1.00	0.162										
	GRAND TOTAL					34.610	0.941	0.075	0.000	0.075			33.594				
71-WL	Guardian Lima, LLC	11,61-66	2009	4452	47080004001000	62.730	0.000	2.578	0.000	2.578		60.152					
71-UV1		10,59,60	2007	01086	47170001004000	3.540	0.000	0.0003	0.000	0.0003					# - SEE NOTE BELOW		
71-UV2		11,61,62,97,98			47080004001000		0.000	0.073	0.000	0.073					# - SEE NOTE BELOW		
72-226	NOT USED																
227A	Indiana & Ohio Railway Company	10,55,56,103	851	111	47170002002002	2.060	0.000	0.071	0.000	0.071					FOR I-75 STRUCTURE OVER R.R. = 3,087 SQ. FT.		
					47170003021000	6.870	0.000	0.288	0.000	0.288					FOR I-75 STRUCTURE OVER R.R. = 12,542 SQ. FT.		
227T	Indiana & Ohio Railway Company	10,55,56,103			47170002002002	2.060	0.000	0.112	0.000	0.112					TO REMOVE & RECONSTRUCT T-75 BRIDGE = 4,890 SQ. FT.		
					47170003021000	6.870	0.000	0.448	0.000	0.448					TO REMOVE & RECONSTRUCT T-75 BRIDGE = 19,489 SQ. FT.		
228-244	NOT USED																
245-WL	BEF FOODS, INC. an Ohio Corporation	9,51,52	2012	10581	47180001006000	16.000	0.000	0.010	0.000	0.010			15.990				
														FEDERAL/STATE 90/10			

NOTE: ALL TEMPORARY PARCELS TO BE OF 24 MONTH DURATION.

NOTE: UNDER NO CIRCUMSTANCES ARE TEMPORARY EASEMENTS TO BE USED FOR STORAGE OF MATERIAL OR EQUIPMENT BY THE CONTRACTOR UNLESS NOTED OTHERWISE.

NOTE: RECORD AREAS SHOWN ARE COUNTY AUDITOR RECORD AREAS

* DENOTES RIGHT OF WAY ENCROACHMENT

- TO BE ACQUIRED IN THE NAME OF EAST OHIO GAS COMPANY

LEGEND:
WL = FEE SIMPLE WITH LIMITATION OF ACCESS
WD = WARRANTY DEED
BS = BILL OF SALE
PRW = PROPERTY RIGHT FEE SIMPLE
SH = STANDARD HIGHWAY EASEMENT
LA = LIMITED ACCESS EASEMENT
T = TEMPORARY EASEMENT
SL = SLOPE EASEMENT
S = SEWER EASEMENT
CH = CHANNEL EASEMENT
FL = FLOW EASEMENT
U = UTILITY EASEMENT
A = AERIAL EASEMENT
PRE = PROPERTY RIGHT
SC = SCENIC EASEMENT
V = IN NAME OF ANOTHER STATE AGENCY, LPA, ETC.
R = SPECIAL RESERVATION
WA = WORK AGREEMENT
SA = SPECIAL AGREEMENT AND WAIVER OF DAMAGES

REV. BY	DATE	DESCRIPTION
DJS	11/06/12	REVISED NAME FOR PARCEL 71
DJS	9/19/12	CHANGED 67-U, 68-U, 71-U1 & 71-U2 TO UV PARCELS

REV. BY	DATE	DESCRIPTION
DJS	8/20/12	REVISED OWNERS NAME FOR PARCEL 245
DJS	5/14/12	MOD. PARCEL 227 NAME FROM RAILROAD TO RAILWAY
DJS	4/10/12	REVISED REMARKS FOR 67-T, 67-U, 68-T, 68-U, 71-U1, 71-U2
DJS	3/22/12	MOVED PARCEL 67-WL, 67-WDV, 68-WL, 69-WL FROM PAGE 15/103
		ADDED 67-T, 67-U, 68-T, 68-U, 71-U1 & 71-U2 & 227-A & 227-T AREAS
DJS	12/23/11	REVISED PARCEL 70, NO TAKE FROM 47080004001001

FIELD REVIEW BY: LAF, DJS, BJD DATE: 6/11
OWNERSHIP VERIFIED BY: LAF DATE: 9/27/11
DATE COMPLETED: 10/06/11

FEDERAL PROJECT NO. E100878
PID NO. 89029
STATE JOB NO. 416867
R/W DESIGNER BJD
R/W REVIEWER LAF

SUMMARY OF ADDITIONAL RIGHT OF WAY
PARCELS 70 - 245

ALL-75-0.21

16/103

820/907

dsiebene 07-NOV-2012 9:20AM
I:\Pd\89029\row\sheets\89029RS005.dgn

ALLEN COUNTY
VILLAGE OF FORT SHAWNEE
SECTION 26, T-4-S R-6-E

ALLEN COUNTY
VILLAGE OF FORT SHAWNEE
SECTION 23, T-4-S R-6-E

ALLEN COUNTY
VILLAGE OF FORT SHAWNEE
SECTION 24, T-4-S R-6-E

ALLEN COUNTY
VILLAGE OF FORT SHAWNEE
SECTION 13, T-4-S R-6-E

ALLEN COUNTY
PERRY TWP.
SECTION 18, T-4-S R-7-E

ALLEN COUNTY
VILLAGE OF FORT SHAWNEE
SECTION 13, T-4-S R-6-E

AUGLAIZE COUNTY
ALLEN COUNTY
VILLAGE OF FORT SHAWNEE
SEC. 26
SEC. 23
SEC. 24
SEC. 13
SEC. 18
CITY OF LIMA
CSX RAILROAD
LITTLE OTTAWA RIVER
℄ R/W & CONST. I-75
℄ R/W & CONST. BREESE RD.
℄ R/W & CONST. McCLAIN RD.
℄ RAMP "A"
℄ RAMP "B"
℄ RAMP "C"
℄ RAMP "D"
SHTS. 19/20
SHTS. 21/22
SHTS. 23/24
SHTS. 25/26
SHTS. 27/28
SHTS. 29/30
SHTS. 31/32
SHTS. 33/34
SHTS. 35/36
SHTS. 37/38
SHTS. 39/40
SHTS. 41/42
SHTS. 43/44
SHTS. 45/46
SHTS. 47/48
SHTS. 49/50
SHTS. 67/68
SHTS. 69/70
SHTS. 71/72
SHTS. 73/74
SHTS. 75/76
SHTS. 77/78
SHTS. 79/80

HORIZONTAL SCALE IN FEET
0 500 1000

PID NO. 89029

R/W DESIGNER BJD
R/W REVIEWER LAF

RIGHT OF WAY SCHEMATIC PLAN

ALL-75-0.21

17/103

821/907

REV. BY	DATE	DESCRIPTION

DATE COMPLETED: 10/06/11

I:\Pdy\89029\row\sheets\89029RSCM001.dgn 07-MAY-2012 11:07AM dsiebene

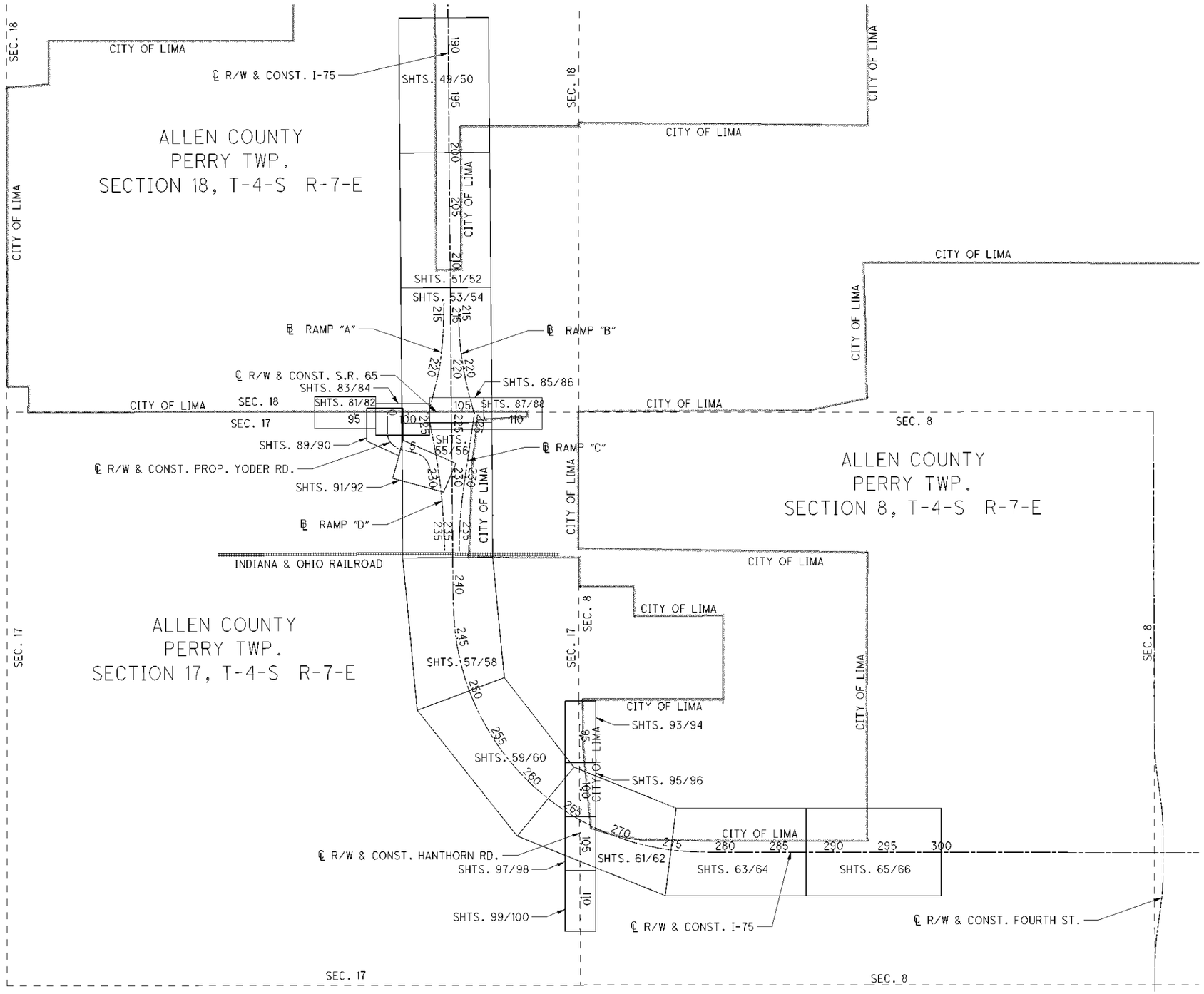

NOTE:
INTERSTATE 75 - STA. 237+16.78 (0.0'RT)=
INDIANA AND OHIO RAILWAY (IORY)
AAR/DOT# 258615H
RR MP. 135.34
SUBDIVISION: DT&I MIDDLE

REV. BY	DATE	DESCRIPTION
DJS	2/07/13	ADDED NOTE FOR EQUATION AT RAILROAD
DATE COMPLETED:		10/06/11

HORIZONTAL SCALE IN FEET
0 500 1000

PID NO. 89029

R/W DESIGNER BJD
R/W REVIEWER LAF

RIGHT OF WAY SCHEMATIC PLAN

ALL-75-0.21

18/103

822/907

I:\Pdi\89029\row\sheets\89029RSCM002.dgn 07-FEB-2013 9:20AM dsiebene

ALLEN COUNTY
VILLAGE OF FORT SHAWNEE
SEC. 26, S.E. 1/4, T-4-S, R-6-E

20' WIDE EASEMENT TO
BOARD OF COUNTY COMMISSIONERS OF ALLEN COUNTY
AND THE CITY OF LIMA WATERLINE EASEMENT
VOL. 930, PAGE 219

OHIO POWER COMPANY
BLANKET UTILITY EASEMENT
VOL. 207, PAGE 636

(1) GOSSARD PUBLIC STORAGE INC.
46260004009001

(2) CARL G. & DORLIA HICKS
46260004008000

(3) ALLEN T. NIEHAUS
46260004007000

(4) THOMAS L. & PAMELA K. HOUSTON
46260004006000

KOCH DR.

(7) KEVIN K. GRAY AND SHARON K. GRAY
28.130 AC.
46260004003000

AGRICULTURAL

ALLEN COUNTY
VILLAGE OF FORT SHAWNEE
S.E. 1/4, SEC.26
T4S, R6E

BEGIN PROJECT ALL-75-0.21
PID 89029
STA. 11+00.00

BEGIN R/W ACQUISITION
PID 89029
STA. 10+50.00

7-WL

POT STA. 0+00.00
VILLAGE OF FORT SHAWNEE

Ex LA — Ex LA — Ex LA — Ex LA — Ex LA — Ex LA — Ex LA — Ex LA — LA R/W — LA R/W — Ex LA

1 2 3 4 5 6 7 8 9 10 11 12

N 0° 40' 53" E

℄ R/W & CONST. I-75

MATCH LINE STA. 12+50 I-75

Ex LA — Ex LA — Ex LA — Ex LA — Ex LA — Ex LA — Ex LA — Ex LA — Ex LA — LA R/W — LA R/W

CONST. LIMITS (TYP.)

AUGLAIZE COUNTY
ALLEN COUNTY
SEC. LINE

(5) JANET E. BORG
46260004001000

WOODS

ALLEN COUNTY
VILLAGE OF FORT SHAWNEE
S.E. 1/4, SEC.26
T4S, R6E

5-WL

AGRICULTURAL

INLAND CORPORATION
BLANKET CATHODIC PROTECTION EASEMENT
VOL. 379, PAGE 247

INLAND CORPORATION
BLANKET PIPELINE EASEMENT
VOL. 496, PAGE 568

NOTE: ALL TREES ALONG THE EXISTING LA/RW FENCE WILL BE REMOVED UNLESS LABELED AS "SAVE"

REV. BY	DATE	DESCRIPTION

DATE COMPLETED: 10/06/11

HORIZONTAL SCALE IN FEET
0 25 50 100

R/W DESIGNER BJD
R/W REVIEWER LAF

PID NO. 89029

RIGHT OF WAY TOPO SHEET
BEGIN WORK TO STA. 12+50

ALL-75-0.21

19 / 103

823
907

I:\Pid 89029\row\sheets\89029RL001.dgn 07-MAY-2012 11:22AM dsiebene

ALLEN COUNTY
VILLAGE OF FORT SHAWNEE
SEC. 26, S.E. 1/4, T-4-S, R-6-E

20' WIDE EASEMENT TO
BOARD OF COUNTY COMMISSIONERS OF ALLEN COUNTY
AND THE CITY OF LIMA WATERLINE EASEMENT
VOL. 930, PAGE 219

OHIO POWER COMPANY
BLANKET UTILITY EASEMENT
VOL. 207, PAGE 636

ALLEN COUNTY
VILLAGE OF FORT SHAWNEE
S.E. 1/4, SEC.26
T4S, R6E

(1) GOSSARD PUBLIC STORAGE INC. 46260004009001

(2) CARL G. & DORLIA HICKS 46260004008000

(3) ALLEN T. NIEHAUS 46260004007000

(4) THOMAS L. & PAMELA K. HOUSTON 46260004006000

(7) KEVIN K. GRAY AND SHARON K. GRAY
28.130 AC.
46260004003000

POT Sta. 0+00.00
VILLAGE OF FORT SHAWNEE

Ex LA

+00.00
0.00'℄

1 2 3 4 5 6 7 8 9 10 11 12

N 0° 40' 53" E

℄ R/W & CONST. I-75

BEGIN LA-R/W ACQUISITION STA. 10+50.00

+00.00
115.00'LT

N 11° 7' 12" W, 51.08'

7-WL

+50.00
104.55'LT

LA-R/W

N 2° 10' 51" W, 200.25'

S 1° 03' 23" E, 179.60'

+29.52
110.00'LT

S 0° 40' 53" W, 1015.62'

MATCH LINE STA. 12+50 I-75

N 10°41'27" W
101.43'

+00.00
100.00'RT

+00.56
120.00'RT

N 0° 40' 54" E, 950.00'

N 0° 40' 54" E, 852.01'

+50.00, 100.01'RT
T.P.O.B. 5-WL

S 11° 59' 7" W, 50.99'

+00.00
110.00'RT

S 0° 40' 53" W, 400.00'

5-WL

(5) JANET E. BORG
46260004001000

ALLEN COUNTY
VILLAGE OF FORT SHAWNEE
S.E. 1/4, SEC.26
T4S, R6E

INLAND CORPORATION
BLANKET CATHODIC PROTECTION EASEMENT
VOL. 379, PAGE 247

INLAND CORPORATION
BLANKET PIPELINE EASEMENT
VOL. 496, PAGE 568

N 89° 35' 16" W, 1109.70'
SEC. LINE
AUGLAIZE COUNTY
ALLEN COUNTY

CORNER STONE FND.
S.E. COR. SEC. 26

HORIZONTAL SCALE IN FEET
0 25 50 100

R/W DESIGNER BJD
R/W REVIEWER LAF

PID NO. 89029

RIGHT OF WAY PLAN BOUNDARY SHHET
BEGIN WORK TO STA. 12+50

ALL-75-0.21

20/103

824/907

REV. BY	DATE	DESCRIPTION

DATE COMPLETED: 10/06/11

I:\Pd\89029\row\sheets\89029RD001.dgn 07-MAY-2012 11:22AM dsiebene

ALLEN COUNTY
VILLAGE OF FORT SHAWNEE
SEC. 26, S.E. 1/4, T-4-S, R-6-E

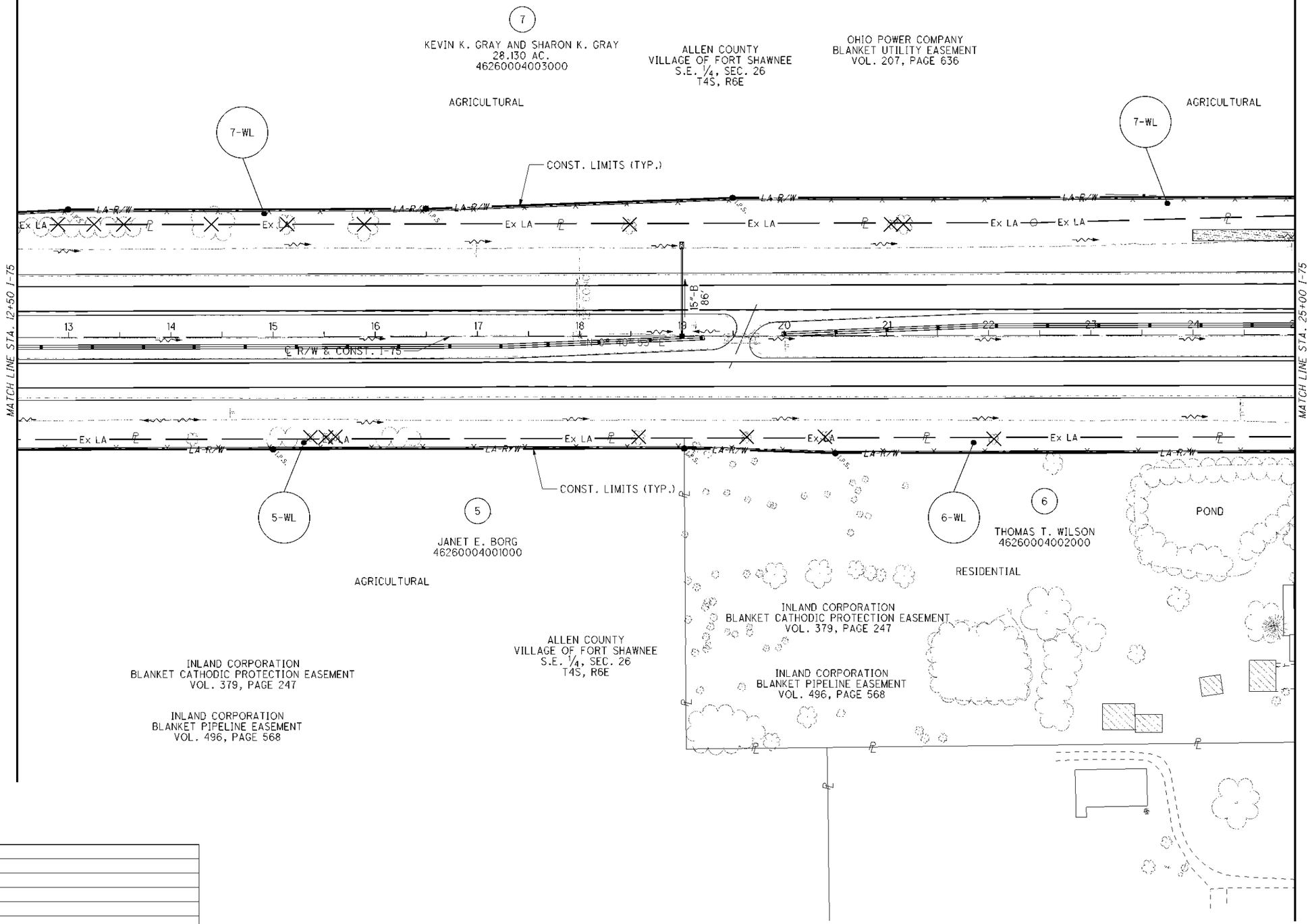

NOTE: ALL TREES ALONG THE EXISTING LA/RW FENCE WILL BE REMOVED UNLESS LABELED AS "SAVE"

REV. BY	DATE	DESCRIPTION
DATE COMPLETED:	10/06/11	

HORIZONTAL SCALE IN FEET
0 25 50 100

R/W DESIGNER BJD
R/W REVIEWER LAF

PID NO. 89029

RIGHT OF WAY TOPO SHEET
STA. 12+50 TO STA. 25+00

ALL-75-0.21

I:\Pd\89029\row\sheets\89029RL002.dgn 07-MAY-2012 11:22AM dsiebene

ALLEN COUNTY
VILLAGE OF FORT SHAWNEE
SEC. 26, S.E. ¼, T-4-S, R-6-E

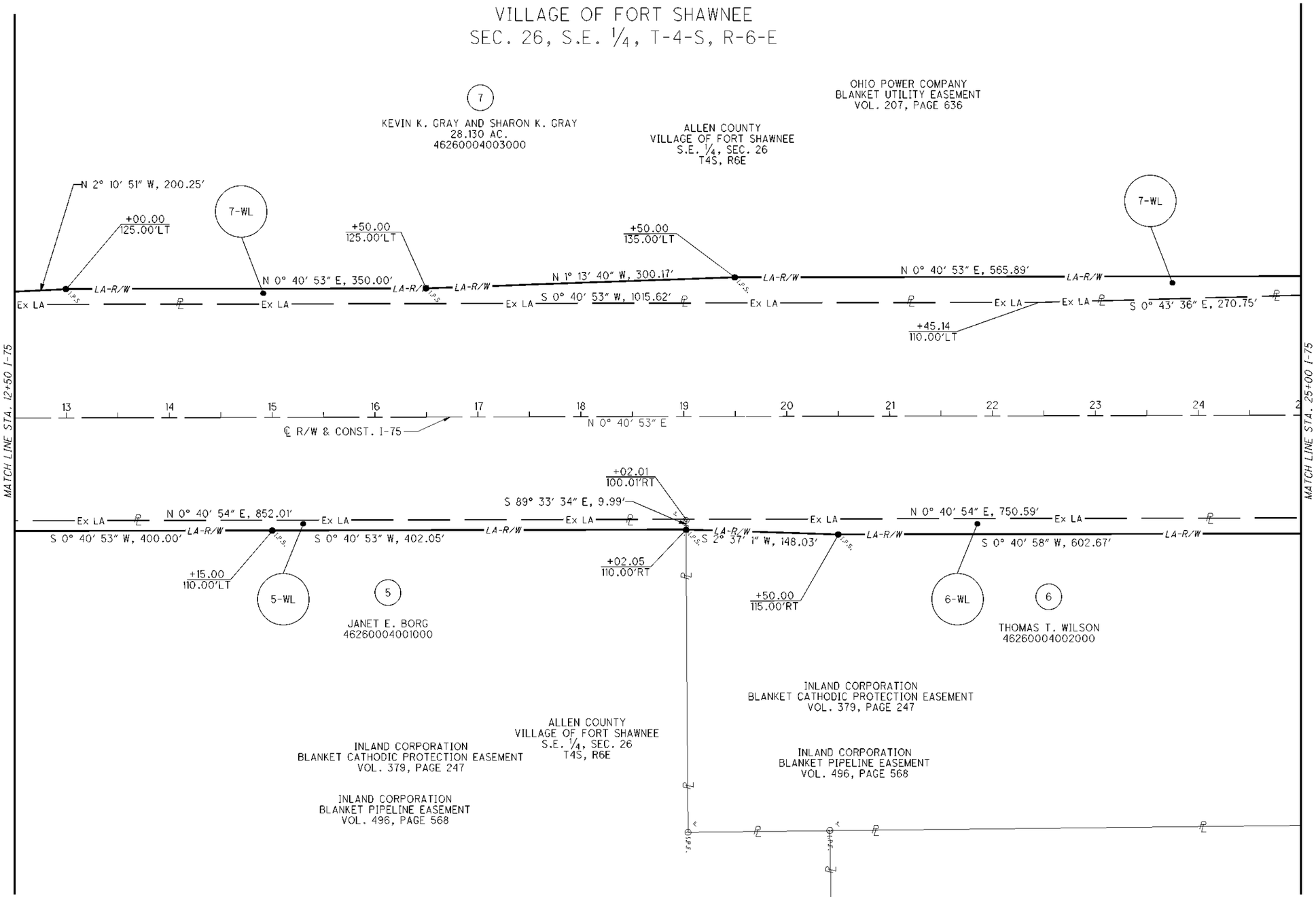

HORIZONTAL SCALE IN FEET
0 25 50 100

R/W DESIGNER: BJD
R/W REVIEWER: LAF

PID NO. 89029

RIGHT OF WAY PLAN BOUNDARY SHEET
STA. 12+50 TO STA. 25+00

ALL-75-0.21

22 / 103

826
907

REV. BY	DATE	DESCRIPTION

DATE COMPLETED: 10/06/11

I:\Pd\89029\row\sheets\89029RD002.dgn 07-MAY-2012 11:22AM dsiebene

ALLEN COUNTY
VILLAGE OF FORT SHAWNEE
SEC. 26, S.E. 1/4, T-4-S, R-6-E

RESIDENTIAL

8-WL

8
GREG A. PATTERSON
46260004003001

7-WL

1/2 SEC. LINE

W. HUME RD.

RESIDENTIAL

10' WIDE LITEL EASEMENT
VOL. 686, PAGE 501

9
MARVIN HILTY
46260801016000

"DOMINION" GAS IN R-EASING

102" DEEP APPROXIMATE LOCATION (FROM OWEST PLANS)

APPROXIMATE LOCATION OF 4" DUCT W/144 FOC 3'-6" DEEP (FROM TSC)

9-WL

11-WL

ALLEN COUNTY
VILLAGE OF FORT SHAWNEE
N.E. 1/4, SEC. 26
T4S, R6E

11
BRIAN C. SARVEN
46260801005000

RESIDENTIAL

CONST. LIMITS (TYP.)

11-WL

13-WL

13
AGNES L. WOLFF
46260801001000

RESIDENTIAL

12-WL

15"-B 99'

15"-B 90'

POT SHOT

TSC 2" DUCT BANK

L/A-R/W

Ex LA

MATCH LINE STA. 25+00 I-75

MATCH LINE STA. 37+50 I-75

N 0° 40' 53" E

N 0° 56' 07" E

℄ R/W & CONST. I-75

6-WL

12-WL

MIN. DIST. 83'

36" DEEP APPROXIMATE LOCATION (FROM OWEST PLANS)

60" DEEP APPROXIMATE LOCATION (FROM OWEST PLANS)

TSC HAS 1-1" INNER LINE IN WITH ONEST FIBER DUCT UNDER I-75 AROUND MP 0.

150' OF 12" CASING

EXTENDING TO R/W (FROM ONEST)

10-WL

CONST. LIMITS (TYP.)

12
RALPH A. DELONG JR.
46260001001000

AGRICULTURAL

6
THOMAS T. WILSON
46260004002000

RESIDENTIAL

10
GREGORY J. MCMILLEN &
SHARI A. MCMILLEN
46260001003000

RESIDENTIAL

POND

ALLEN COUNTY
VILLAGE OF FORT SHAWNEE
N.E. 1/4, SEC. 26
T4S, R6E

OHIO POWER COMPANY
BLANKET EASEMEMT
VOL. 463, PAGE 523

30' WIDE OHIO POWER COMPANY EASEMENT
VOL. 2009, PAGE 219

10' WIDE TELEPHONE SERVICE COMPANY EASEMENT
VOL. 782, PAGE 380

OHIO POWER COMPANY
BLANKET EASEMEMT
VOL. 463, PAGE 523

NOTE: ALL TREES ALONG THE EXISTING LA/RW FENCE WILL BE REMOVED UNLESS LABELED AS "SAVE"

REV. BY	DATE	DESCRIPTION
DJS	10/25/11	Revised Owner name for Parcel 11
DATE COMPLETED:	10/06/11	

HORIZONTAL SCALE IN FEET
0 25 50 100

R/W DESIGNER BJD
R/W REVIEWER LAF

PID NO. 89029

RIGHT OF WAY TOPO SHEET
STA. 25+00 TO STA. 37+50

ALL-75-0.21

23/103

827/907

I:\Pd\89029\row\sheets\89029RL003.dgn 07-MAY-2012 11:23AM dsiebene

I:\Pd\89029\row\sheets\89029RD003.dgn 09-MAY-2012 3:26PM dsiebene

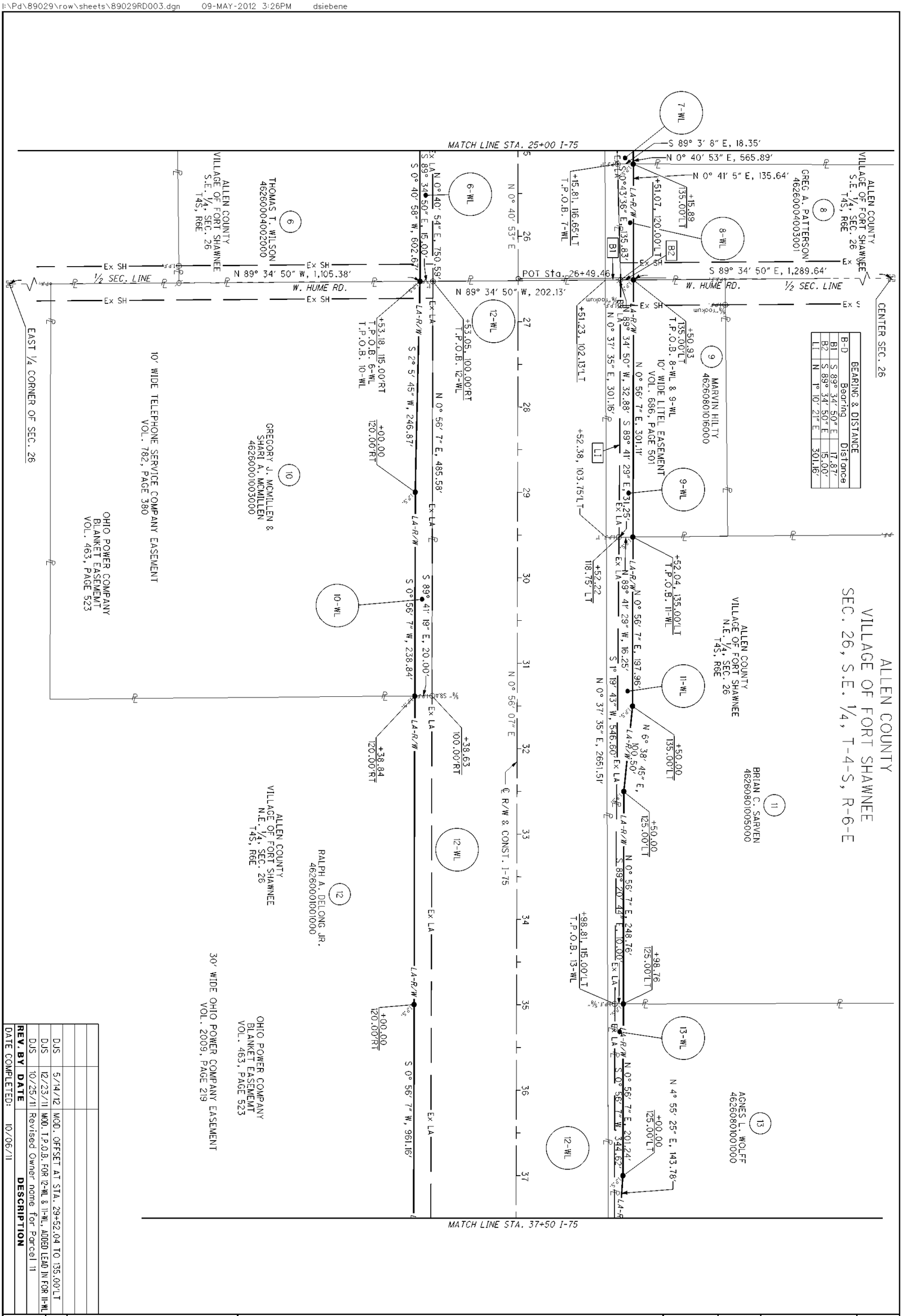

REV. BY	DATE	DESCRIPTION
DJS	5/14/12	MOD. OFFSET AT STA. 29+52.04 TO 135.00'LT
DJS	12/23/11	MOD. T.P.O.B. FOR 12-WL & 11-WL, ADDED LEAD IN FOR 11-WL
DJS	10/25/11	Revised Owner name for Parcel 11

DATE COMPLETED: 10/06/11

828 / 907	24/103	ALL-75-0.21	RIGHT OF WAY PLAN BOUNDARY SHHET STA. 25+00 TO STA. 37+50	PID NO. 89029	R/W DESIGNER BJD / R/W REVIEWER LAF	HORIZONTAL SCALE IN FEET

ALLEN COUNTY
VILLAGE OF FORT SHAWNEE
SEC. 26, S.E. 1/4, T-4-S, R-6-E

20' WIDE BOARD OF COUNTY COMMISSIONERS OF ALLEN COUNTY SANITARY EASEMENT VOL. 583, PAGE 113

14
0.964 AC.
46260501005000

ALLEN COUNTY
VILLAGE OF FORT SHAWNEE
N.E. 1/4, SEC. 26
T4S, R6E

14
BRUCE D HENDERSHOT
8.180 AC.
46260501004000

17
EAST OHIO GAS COMPANY
d/b/a DOMINION EAST OHIO,
an OHIO CORPORATION
46260501003000

14
BRUCE D. HENDERSHOT
2.040 AC.
46260501006000

RESIDENTIAL

RESIDENTIAL

RESIDENTIAL

RESIDENTIAL

13
AGNES L. WOLFF
46260801001000

13-WL

14-WL

14-WL

17-WL

12-WL

12-WL

12-WL

CONST. LIMITS (TYP.)

Ex LA

LA-R/W

5"-B 90'

5"-B 94'

N 0° 56' 07" E

℄ R/W & CONST. I-75

MATCH LINE STA. 37+50 I-75

MATCH LINE STA. 50+00 I-75

CONST. LIMITS (TYP.)

12
RALPH A. DELONG JR.
46260001001000

AGRICULTURAL

8P PIPELINE
8" HP OIL IN
12" ENCASING
(IDLE)

8P PIPELINE
6" HP OIL IN
10" ENCASING
(OUT OF SERVICE)

ALLEN COUNTY
VILLAGE OF FORT SHAWNEE
N.E. 1/4, SEC. 26
T4S, R6E

OHIO POWER COMPANY
BLANKET EASEMEMT
VOL. 463, PAGE 523

30' WIDE OHIO POWER COMPANY EASEMENT
VOL. 2009, PAGE 219

50' WIDE INLAND CORPORATION
PIPELINE EASEMENT
VOL. 350, PAGE 448
VOL. 361, PAGE 69

NOTE: ALL TREES ALONG THE EXISTING LA/RW FENCE WILL BE REMOVED UNLESS LABELED AS "SAVE"

REV. BY	DATE	DESCRIPTION
DATE COMPLETED:	10/06/11	

HORIZONTAL SCALE IN FEET
0 25 50 100

R/W DESIGNER BJD
R/W REVIEWER LAF

PID NO. 89029

RIGHT OF WAY TOPO SHEET
STA. 37+50 TO STA. 50+00

ALL-75-0.21

25/103

829/907

I:\Pid\89029\row\sheets\89029RL004.dgn 07-MAY-2012 11:24AM dsiebene

ALLEN COUNTY
VILLAGE OF FORT SHAWNEE
SEC. 26, S.E. 1/4, T-4-S, R-6-E

14
0.964 AC.
46260501005000

20' WIDE BOARD OF COUNTY COMMISSIONERS
OF ALLEN COUNTY SANITARY EASEMENT
VOL. 583, PAGE 113

13
AGNES L. WOLFF
46260801001000

14
BRUCE D. HENDERSHOT
2.040 AC.
46260501006000

ALLEN COUNTY
VILLAGE OF FORT SHAWNEE
N.E. 1/4, SEC. 26
T4S, R6E

14
BRUCE D HENDERSHOT
8.180 AC.
46260501004000

17
EAST OHIO GAS COMPANY
d/b/a DOMINION EAST OHIO,
an OHIO CORPORATION
46260501003000

13-WL
N 4° 55' 25" E, 143.78'
S 0° 56' 7" W, 344.62'

+43.43
115.00'LT
T.P.O.B. 14-WL

+19.82
117.27'LT

14-WL

+00.00
122.17'LT

+50.00
145.00'LT

+58.36
145.00'LT

17-WL

+40.00
130.00'LT

N 3° 49' 42" W, 60.21'
N 0° 32' 13" E, 250.01'

+00.00
127.18'LT

+00.00
135.00'LT

N 5° 24' 26" E
100.31'

Ex LA
N 0° 11' 50" E, 176.40'
Ex LA
N 0° 11' 50" E, 380.21'
S 0° 37' 35" W, 814.98'
N 0° 37' 35" E, 2651.51'
Ex LA
N 7° 43' 6" W, 151.73'
LA-R/W
N 0° 56' 7" E, 108.36'
LA-R/W
S 89° 10' 5" E, 32.05'
Ex LA
N 11° 20' 48" E
83.00'
LA-R/W
Ex LA
S 0° 37' 35" W, 644.29'
Ex LA

N 89° 15' 53" W, 6.45'

+43.45
108.56'LT

12-WL

N 89° 10' 5" W, 32.05'

+58.42
112.95'LT

MATCH LINE STA. 37+50 I-75

38 39 40 41 42 43 44 45 46 47 48 49 5

N 0° 56' 07" E

℄ R/W & CONST. I-75

MATCH LINE STA. 50+00 I-75

12-WL

12-WL

Ex LA Ex LA Ex LA Ex LA Ex LA

LA-R/W S 0° 56' 7" W, 961.16' LA-R/W

LA-R/W S 3° 28' 48" W, 450.44' LA-R/W

LA-R/W S 0° 20' 16" E, 450.11' LA-R/W

+00.00
120.00'RT

+50.00
140.00'RT

+00.00
130.00'RT

12
RALPH A. DELONG JR.
46260001001000

ALLEN COUNTY
VILLAGE OF FORT SHAWNEE
N.E. 1/4, SEC. 26
T4S, R6E

OHIO POWER COMPANY
BLANKET EASEMEMT
VOL. 463, PAGE 523

30' WIDE OHIO POWER COMPANY EASEMENT
VOL. 2009, PAGE 219

50' WIDE INLAND CORPORATION
PIPELINE EASEMENT
VOL. 350, PAGE 448
VOL. 361, PAGE 69

REV. BY	DATE	DESCRIPTION
DJS	12/23/11	MOVED T.P.O.B. & MODIFIED TWO DIST. ALONG 14-WL
DATE COMPLETED:	10/06/11	

HORIZONTAL SCALE IN FEET
0 25 50 100

R/W DESIGNER BJD
R/W REVIEWER LAF

PID NO. 89029

RIGHT OF WAY PLAN BOUNDARY SHEET
STA. 37+50 TO STA. 50+00

ALL-75-0.21

26/103

830/907

I:\Pid\89029\row\sheets\89029RD004.dgn 07-MAY-2012 11:24AM dsiebene

ALLEN COUNTY
VILLAGE OF FORT SHAWNEE
SEC. 26, N.E. 1/4, T-4-S, R-6-E
SEC. 23, S.E. 1/4, T-4-S, R-6-E

CURVE 175-1
P.I.= Sta. 64+32.51
D = 23° 36' 15" (RT)
Dc = 1° 00' 00"
R = 5,729.58'
T = 1,197.19'
L = 2,360.42'
E = 123.74'
C = 2,343.76'
C.B. = N 12° 44' 15" E
e_d = 0.033

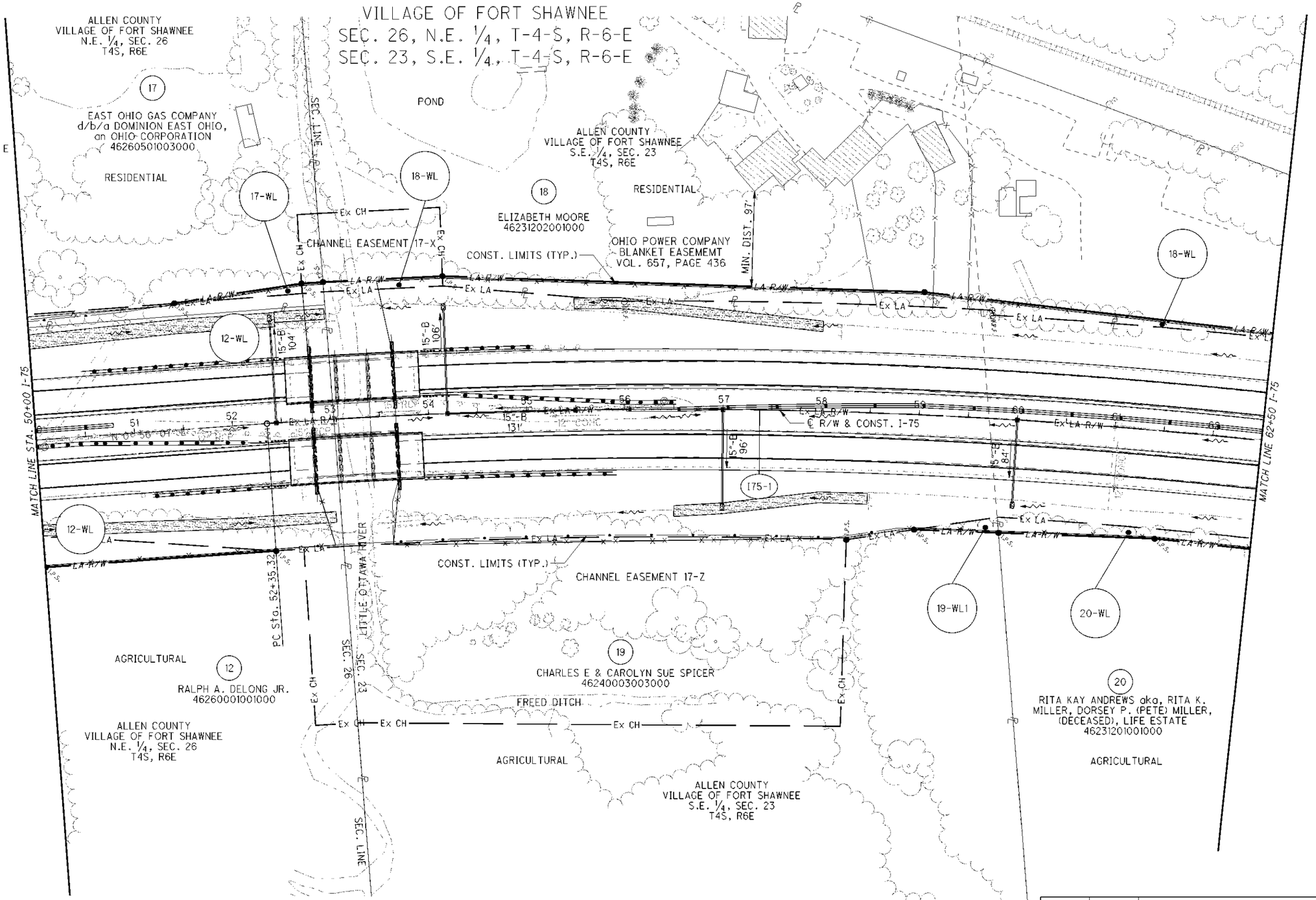

NOTE: ALL TREES ALONG THE EXISTING LA/RW FENCE WILL BE REMOVED UNLESS LABELED AS "SAVE"

REV. BY	DATE	DESCRIPTION
DJS	4/18/12	REVISED OWNERS NAME FOR PARCEL 20
DJS	3/22/12	MODIFIED OWNER NAME FOR PARCEL 19
DATE COMPLETED:		10/06/11

HORIZONTAL SCALE IN FEET
0 25 50 100

R/W DESIGNER BJD
R/W REVIEWER LAF

PID NO. 89029

RIGHT OF WAY TOPO SHEET
STA. 50+00 TO STA. 62+50

ALL-75-0.21

27/103

831/907

I:\Pid\89029\row\sheets\89029RL005.dgn 07-MAY-2012 11:24 AM dsiebene

ALLEN COUNTY
VILLAGE OF FORT SHAWNEE
SEC. 26, N.E. 1/4, T-4-S, R-6-E
SEC. 23, S.E. 1/4, T-4-S, R-6-E

CURVE I75-1
P.I.= Sta. 64+32.51
D = 23° 36′ 15″ (RT)
Dc = 1° 00′ 00″
R = 5,729.58′
T = 1,197.19′
L = 2,360.42′
E = 123.74′
C = 2,343.76′
C.B. = N 12° 44′ 15″ E
e_d= 0.033

BEARING & DISTANCE		
B-D	Bearing	Distance
B3	S 2° 11′ 11″ W	121.31′

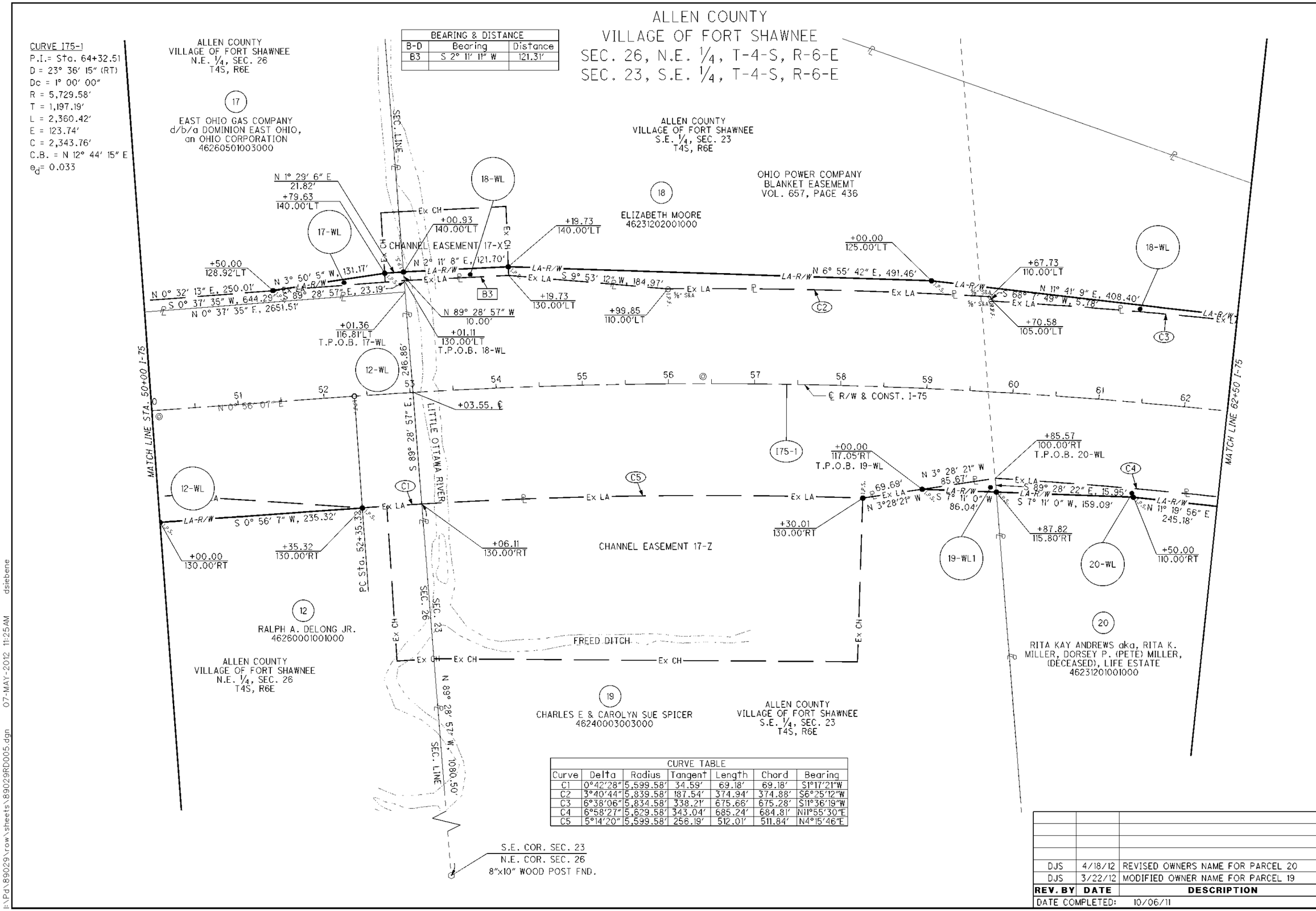

CURVE TABLE						
Curve	Delta	Radius	Tangent	Length	Chord	Bearing
C1	0°42′28″	5,599.58′	34.59′	69.18′	69.18′	S1°17′21″W
C2	3°40′44″	5,839.58′	187.54′	374.94′	374.88′	S6°25′12″W
C3	6°38′06″	5,834.58′	338.21′	675.66′	675.28′	S11°36′19″W
C4	6°58′27″	5,629.58′	343.04′	685.24′	684.81′	N11°55′30″E
C5	5°14′20″	5,599.58′	256.19′	512.01′	511.84′	N4°15′46″E

REV. BY	DATE	DESCRIPTION
DJS	4/18/12	REVISED OWNERS NAME FOR PARCEL 20
DJS	3/22/12	MODIFIED OWNER NAME FOR PARCEL 19

DATE COMPLETED: 10/06/11

HORIZONTAL SCALE IN FEET 0 25 50 100

R/W DESIGNER BJD
R/W REVIEWER LAF

PID NO. 89029

RIGHT OF WAY PLAN BOUNDARY SHEET
STA. 50+00 TO STA. 62+50

ALL-75-0.21

I:\Pd\89029\row\sheets\89029RD005.dgn 07-MAY-2012 11:25AM dsiebene

ALLEN COUNTY
VILLAGE OF FORT SHAWNEE
SEC. 23, S.E. 1/4, T-4-S, R-6-E

CURVE I75-1
P.I.= Sta. 64+32.51
D = 23° 36' 15" (RT)
Dc = 1° 00' 00"
R = 5,729.58'
T = 1,197.19'
L = 2,360.42'
E = 123.74'
C = 2,343.76'
C.B. = N 12° 44' 15" E
e_d = 0.033

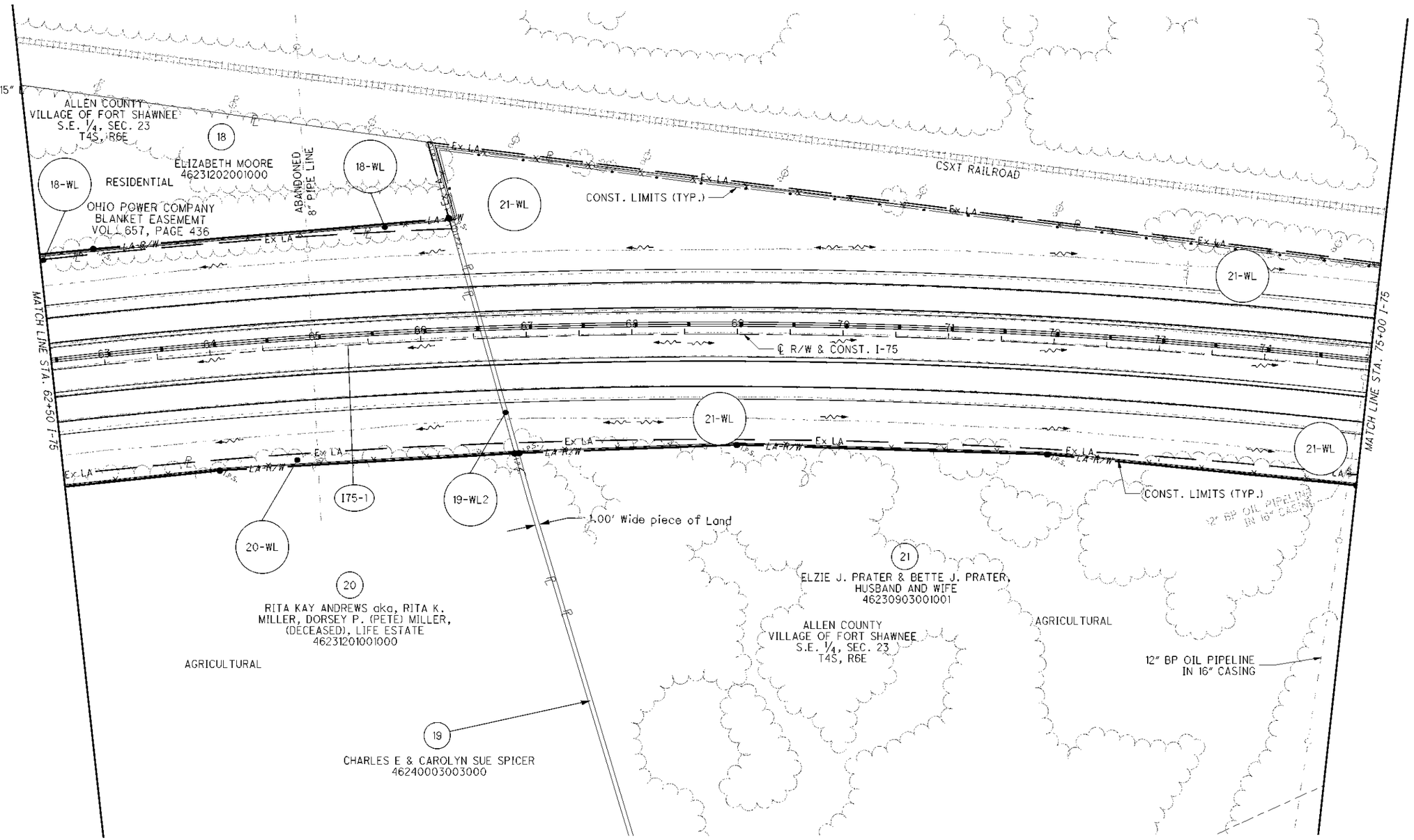

NOTE: ALL TREES ALONG THE EXISTING LA/RW FENCE WILL BE REMOVED UNLESS LABELED AS "SAVE"

REV. BY	DATE	DESCRIPTION
DJS	4/18/12	REVISED OWNERS NAME FOR PARCEL 20
DJS	3/22/12	MODIFIED OWNER NAME FOR PARCEL 19
DATE COMPLETED:		10/06/11

HORIZONTAL SCALE IN FEET
0 25 50 100

R/W DESIGNER BJD
R/W REVIEWER LAF

PID NO. 89029

RIGHT OF WAY TOPO SHEET
STA. 62+50 TO STA. 75+00

ALL-75-0.21

29/103

833/907

I:\Pid\89029\row\sheets\89029RL006.dgn 07-MAY-2012 11:25AM dsiebene

ALLEN COUNTY
VILLAGE OF FORT SHAWNEE
SEC. 24, S.W. 1/4, T-4-S, R-6-E

BEARING & DISTANCE		
B-D	Bearing	Distance
B4	S 88° 15' 24" E	10.27'
B5	S 88° 15' 24" E	10.29'

CURVE 175-1
P.I.= Sta. 64+32.51
D = 23° 36' 15" (RT)
Dc = 1° 00' 00"
R = 5,729.58'
T = 1,197.19'
L = 2,360.42'
E = 123.74'
C = 2,343.76'
C.B. = N 12° 44' 15" E
e_d = 0.033

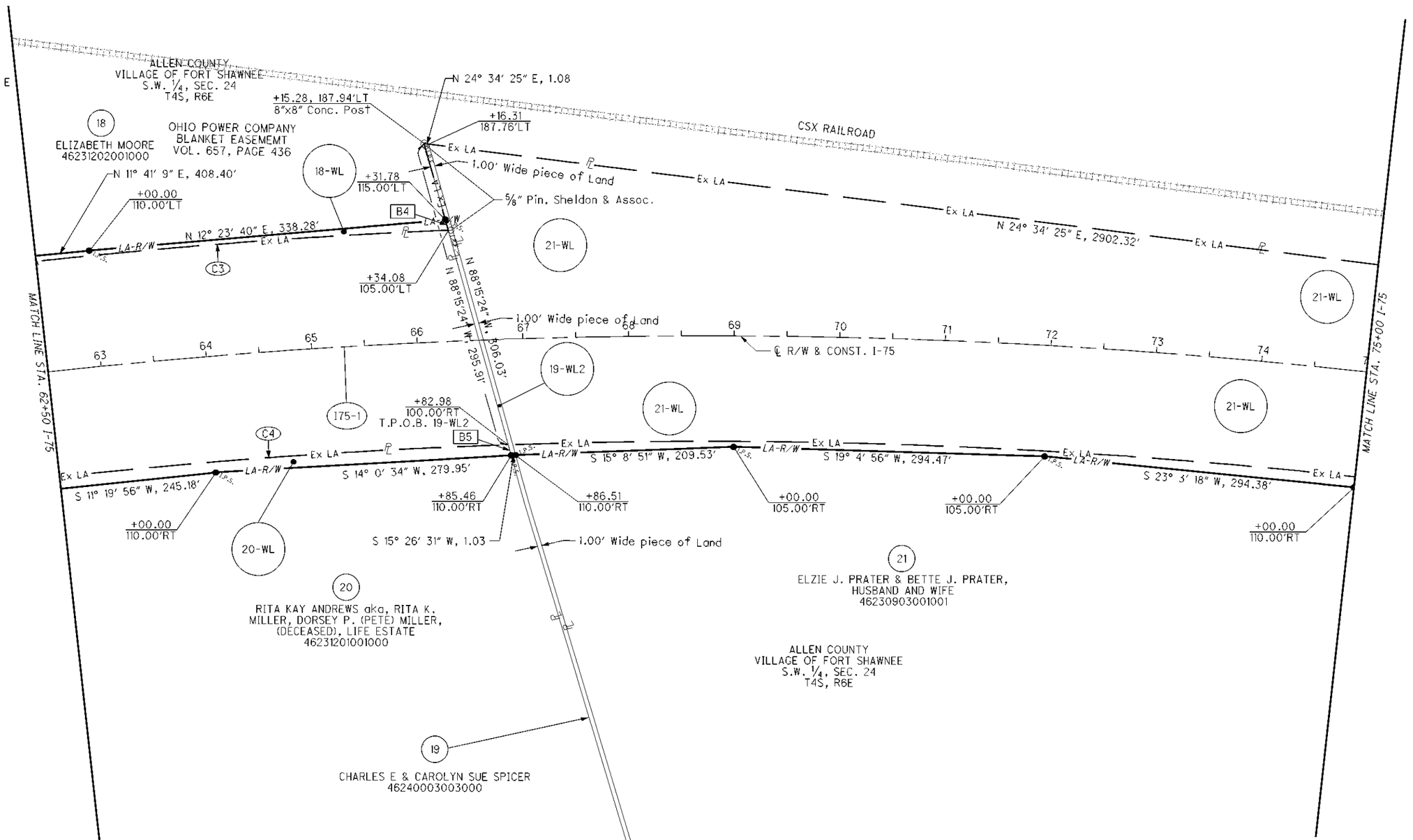

CURVE TABLE						
Curve	Delta	Radius	Tangent	Length	Chord	Bearing
C3	6°38'06"	5,834.58'	338.21'	675.66'	675.66'	S11°36'19"W
C4	6°58'27"	5,629.58'	343.04'	685.24'	684.81'	N11°55'30"E

REV. BY	DATE	DESCRIPTION
DJS	4/18/12	REVISED OWNERS NAME FOR PARCEL 20
DJS	3/22/12	MODIFIED OWNER NAME FOR PARCEL 19
DJS	12/23/11	MOD. T.P.O.B. AND EDITED A DIST. ALONG 19-WL2
DATE COMPLETED:		10/06/11

HORIZONTAL SCALE IN FEET
0 25 50 100
R/W DESIGNER BJD
R/W REVIEWER LAF
PID NO. 89029

RIGHT OF WAY PLAN BOUNDARY SHEET
STA. 62+50 TO STA. 75+00

ALL-75-0.21

30/103

834/907

I:\Pdf\89029\row\sheets\89029RD006.dgn 07-MAY-2012 11:25AM dsiebene

CURVE I75-1
P.I.= Sta. 64+32.51
D = 23° 36' 15" (RT)
Dc = 1° 00' 00"
R = 5,729.58'
T = 1,197.19'
L = 2,360.42'
E = 123.74'
C = 2,343.76'
C.B. = N 12° 44' 15" E
e_d = 0.033

CURVE I75-2
P.I.= Sta. 98+00.86
D = 16° 18' 41" (RT)
Dc = 0° 40' 00"
R = 8,594.37'
T = 1,231.69'
L = 2,446.73'
E = 87.81'
C = 2,438.47'
C.B. = N 32° 41' 43" E
e_d =0.026

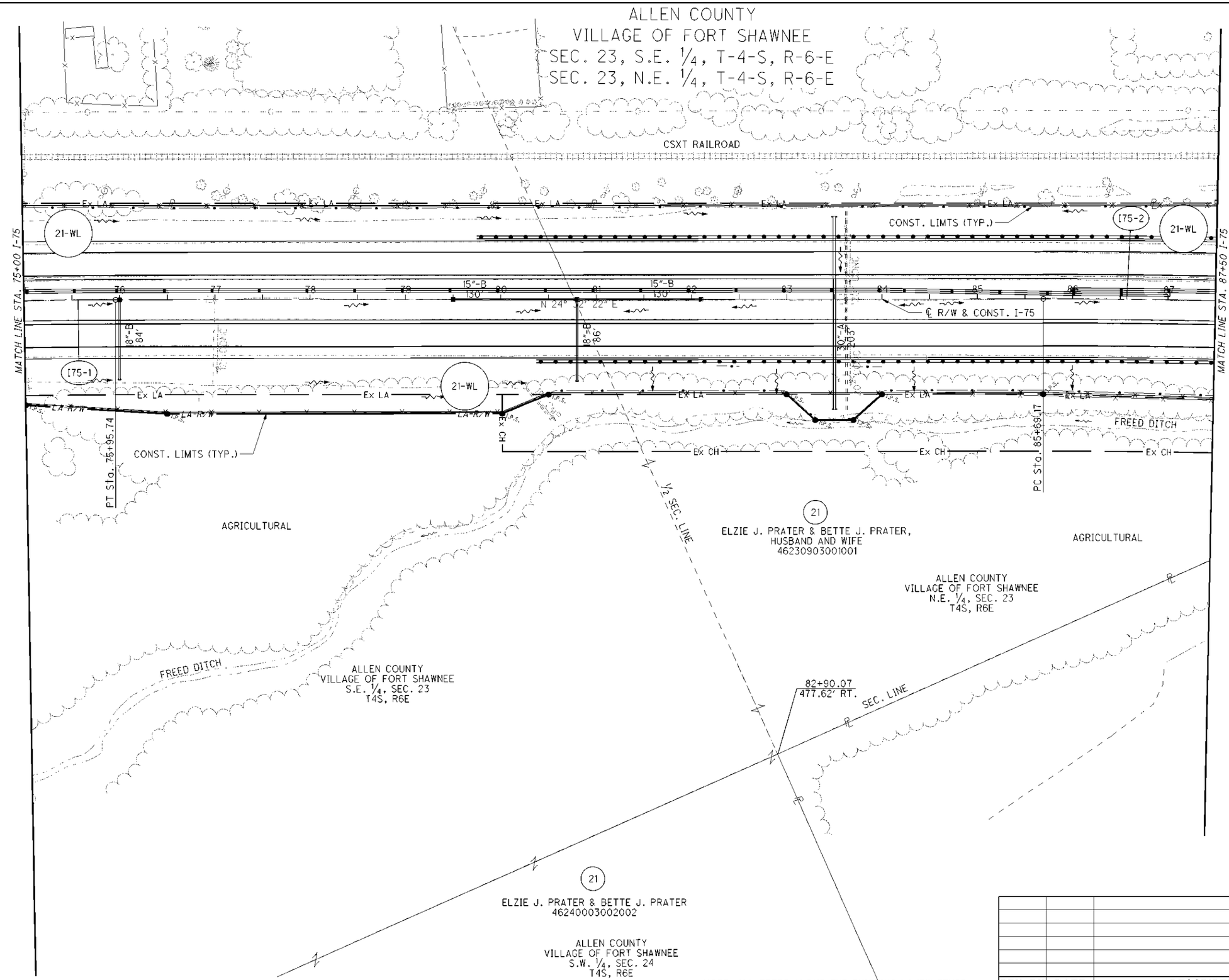

NOTE: ALL TREES ALONG THE EXISTING LA/RW FENCE WILL BE REMOVED UNLESS LABELED AS "SAVE"

REV. BY	DATE	DESCRIPTION
DATE COMPLETED:	10/06/11	

HORIZONTAL SCALE IN FEET
0 25 50 100

R/W DESIGNER BJD
R/W REVIEWER LAF

PID NO. 89029

RIGHT OF WAY TOPO SHEET
STA. 75+00 TO STA. 87+50

ALL-75-0.21

835/907

I:\Pid\89029\row\sheets\89029RL007.dgn 07-MAY-2012 11:26AM dsiebene

CURVE I75-1
P.I.= Sta. 64+32.51
D = 23° 36′ 15″ (RT)
Dc = 1° 00′ 00″
R = 5,729.58′
T = 1,197.19′
L = 2,360.42′
E = 123.74′
C = 2,343.76′
C.B. = N 12° 44′ 15″ E
e_d = 0.033

CURVE I75-2
P.I.= Sta. 98+00.86
D = 16° 18′ 41″ (RT)
Dc = 0° 40′ 00″
R = 8,594.37′
T = 1,231.69′
L = 2,446.73′
E = 87.81′
C = 2,438.47′
C.B. = N 32° 41′ 43″ E
e_d = 0.026

ALLEN COUNTY
VILLAGE OF FORT SHAWNEE
SEC. 23, S.E. ¼, T-4-S, R-6-E
SEC. 23, N.E. ¼, T-4-S, R-6-E

CSX RAILROAD

Ex LA ℄ Ex LA Ex LA ℄ Ex LA Ex LA ℄

N 24° 34′ 25″ E, 2902.32′

21-WL

I75-2

MATCH LINE STA. 75+00 I-75

75 76 77 78 79 80 81 82 83 84 85 86 87

N 24° 32′ 22″ E

℄ R/W & CONST. I-75

MATCH LINE STA. 87+50 I-75

I75-1

21-WL

+50.00
100.00′RT

S 2° 7′ 47″ W, 52.46′

+22.07, 100.00′RT
T.P.O.B. 21-WL

S 24°32′22″ W
T.P.S. 72.07′

+00.00
100.00′RT

+00.00
100.00′RT

+69.17
100.00′RT

Ex LA

LA-R/W
148.44′
S 28° 5′ 56″ W

T.P.S.

LA-R/W

S 24° 32′ 22″ W, 351.50′

LA-R/W

T.P.S.

Ex LA

S 24° 32′ 22″ W, 177.93′

T.P.S.

Ex LA

S 24° 32′ 22″ W, 169.17′

Ex LA

S 26° 19′ 30″ W, 425.72′

+00.00
110.00′RT

PT Sta. 75+95.74

+50.00
120.00′RT

+01.50
120.00′RT

Ex CH

S 66° 31′ 36″ W, 40.36′

Ex CH

+30.00
127.00′RT

Ex CH

+70.00
127.00′RT

S 17° 26′ 52″ E, 40.36′

S 24° 32′ 22″ W, 40.00′

PC Sta. 85+69.17

Ex CH

½ SEC. LINE

N 89° 26′ 37″ W, 413.30′

21

ELZIE J. PRATER & BETTE J. PRATER,
HUSBAND AND WIFE
46230903001001

ALLEN COUNTY
VILLAGE OF FORT SHAWNEE
N.E. ¼, SEC. 23
T4S, R6E

FREED DITCH

ALLEN COUNTY
VILLAGE OF FORT SHAWNEE
S.E. ¼, SEC. 23
T4S, R6E

82+90.07
477.62′ RT.

SEC. LINE

EAST ¼ COR., SEC. 23
12″x12″ CONC. POST FND.

21

ELZIE J. PRATER & BETTE J. PRATER
46240003002002

ALLEN COUNTY
VILLAGE OF FORT SHAWNEE
S.W. ¼, SEC. 24
T4S, R6E

REV. BY	DATE	DESCRIPTION

DATE COMPLETED: 10/06/11

HORIZONTAL SCALE IN FEET
0 25 50 100

R/W DESIGNER BJD
R/W REVIEWER LAF

PID NO. 89029

RIGHT OF WAY PLAN BOUNDARY SHEET
STA. 75+00 TO STA. 87+50

ALL-75-0.21

32/103

836/907

I:\Pd\89029\row\sheets\89029RD007.dgn 07-MAY-2012 11:26AM dsiebene

CURVE I75-2
P.I.= Sta. 98+00.86
D = 16° 18' 41" (RT)
Dc = 0° 40' 00"
R = 8,594.37'
T = 1,231.69'
L = 2,446.73'
E = 87.81'
C = 2,438.47'
C.B. = N 32° 41' 43" E
e_d=0.026

ALLEN COUNTY
VILLAGE OF FORT SHAWNEE
SEC. 23, N.E. 1/4, T-4-S R-6-E
SEC. 24, N.W. 1/4, T-4-S R-6-E

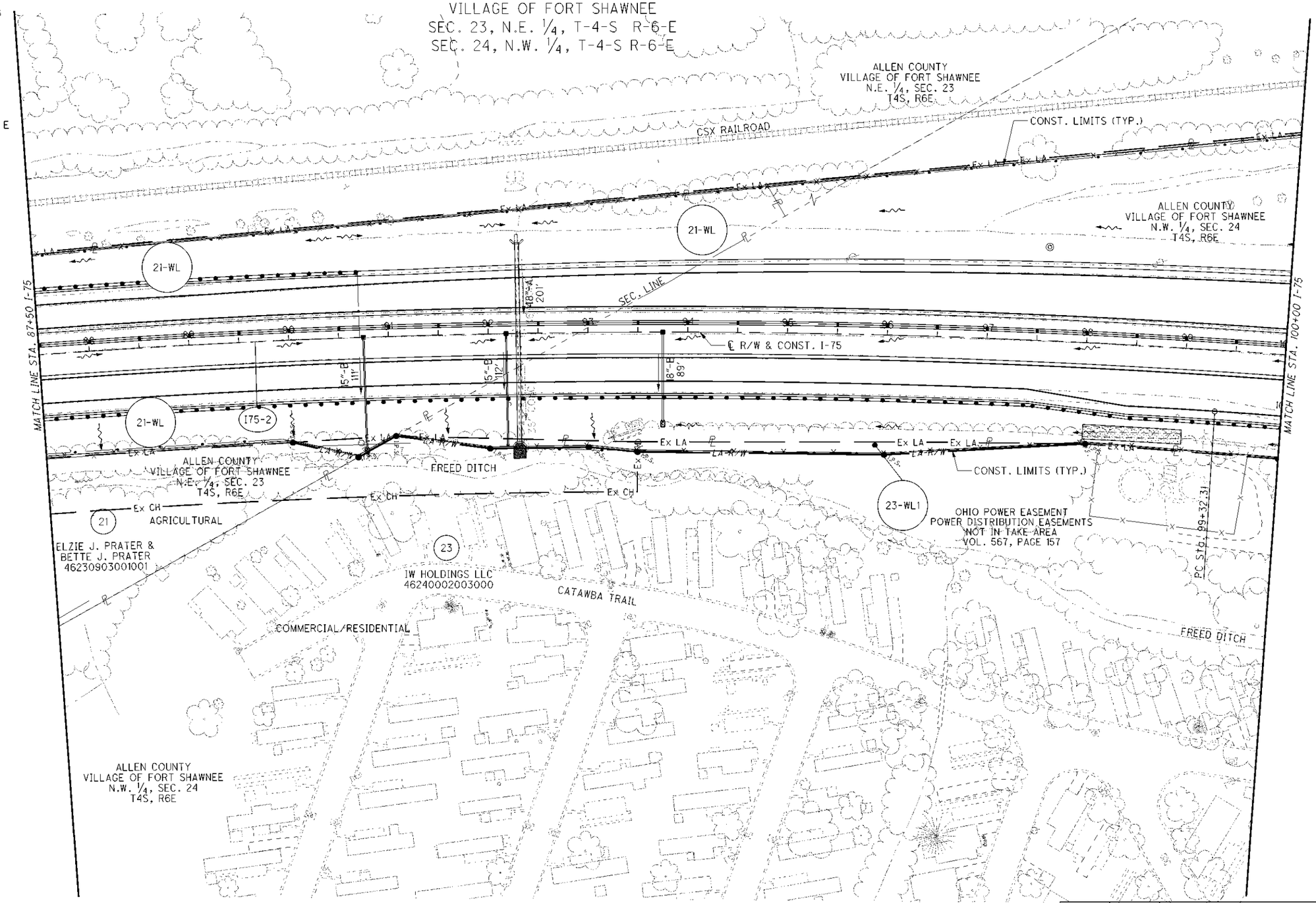

NOTE: ALL TREES ALONG THE EXISTING LA/RW FENCE WILL BE REMOVED UNLESS LABELED AS "SAVE"

REV. BY	DATE	DESCRIPTION
DATE COMPLETED:	10/06/11	

HORIZONTAL SCALE IN FEET
0 25 50 100

R/W DESIGNER: BJD
R/W REVIEWER: LAF

PID NO. 89029

RIGHT OF WAY TOPO SHEET
STA. 87+50 TO STA. 100+00

ALL-75-0.21

33/103

837/907

I:\Pd\89029\row\sheets\89029RL008.dgn 07-MAY-2012 11:27AM dsiebene

CURVE I75-2
P.I.= Sta. 98+00.86
D = 16° 18' 41" (RT)
Dc = 0° 40' 00"
R = 8,594.37'
T = 1,231.69'
L = 2,446.73'
E = 87.81'
C = 2,438.47'
C.B. = N 32° 41' 43" E
e_d=0.026

ALLEN COUNTY
VILLAGE OF FORT SHAWNEE
SEC. 23, N.E. 1/4, T-4-S R-6-E
SEC. 24, N.W. 1/4, T-4-S R-6-E

ALLEN COUNTY
VILLAGE OF FORT SHAWNEE
N.E. 1/4, SEC. 23
T4S, R6E

N.E. COR., SEC. 23
N.W. COR., SEC. 24
MON. BOX FND.

SEC. LINE

SEC. 23

SEC. 24

CSX RAILROAD

SEC. LINE

S 0° 27' 48" W, 1780.67'

Ex LA

+77.47
148.57'LT

N 89° 39' 48" E, 37.07'

+96.27
116.79'LT

N 24° 34' 25" E, 2902.32'

21-WL

S 0° 27' 48" W, 491.02'

ALLEN COUNTY
VILLAGE OF FORT SHAWNEE
N.W. 1/4, SEC. 24
T4S, R6E

MATCH LINE STA. 87+50 I-75

MATCH LINE STA. 100+00 I-75

88 89 90 91 92 93 94 95 96 97 98 99 100

℄ R/W & CONST. I-75

ALLEN COUNTY
VILLAGE OF FORT SHAWNEE
N.E. 1/4, SEC. 23
T4S, R6E

21-WL

I75-2

23-WL1

+04.84, 100.00'RT
P.O.B. 23-WL1

S 26° 19' 30" W, 425.72'

+00.00
102.60'RT

LA-R/W

S 42° 35' 57" W, 67.38'

+65.95
120.00'RT

N 31° 17' 46" E, 241.78'

S 37° 29' 19" W
95.16'

S 29° 4' 42" W
98.66'

+49.41
110.00'RT

+49.41
120.00'RT

+00.00
115.00'RT

+00.00
115.00'RT

Ex CH

S 35° 26' 3" W, 48.99'

N 29° 58' 39" E, 290.36'

S 30° 34' 35" W, 247.08'

+43.46
106.23'RT

+00.00
120.00'RT

N 30° 31' 23" E, 158.28'

S 26° 49' 54" W, 201.83'

+03.61
101.50'RT

N 34° 23' 36" E, 194.06'

OHIO POWER EASEMENT
POWER DISTRIBUTION EASEMENTS
NOT IN TAKE AREA
VOL. 567, PAGE 157

FREED DITCH

PC Sta. 99+32.31

21

ELZIE J. PRATER &
BETTE J. PRATER,
HUSBAND AND WIFE
46230903001001

SEC. LINE

23

IW HOLDINGS LLC
46240002003000

ALLEN COUNTY
VILLAGE OF FORT SHAWNEE
N.W. 1/4, SEC. 24
T4S, R6E

HORIZONTAL SCALE IN FEET
0 25 50 100

R/W DESIGNER: BJD
R/W REVIEWER: LAF

PID NO. 89029

RIGHT OF WAY PLAN BOUNDARY SHEET
STA. 87+50 TO STA. 100+00

ALL-75-0.21

34/103

838/907

REV. BY	DATE	DESCRIPTION

DATE COMPLETED: 10/06/11

I:\Pdt\89029\row\sheets\89029RD008.dgn 07-MAY-2012 11:27 AM dsiebene

CURVE 175-2
P.I.= Sta. 98+00.86
D = 16° 18' 41" (RT)
Dc = 0° 40' 00"
R = 8,594.37'
T = 1,231.69'
L = 2,446.73'
E = 87.81'
C = 2,438.47'
C.B. = N 32° 41' 43" E
e_d=0.026

ALLEN COUNTY
VILLAGE OF FORT SHAWNEE
SEC. 24, N.W. 1/4, T-4-S R-6-E
SEC. 13, S.W. 1/4, T-4-S R-6-E

ALLEN COUNTY
VILLAGE OF FORT SHAWNEE
S.W. 1/4, SEC. 13
T4S, R6E

25
STEWERT & HAMILTON PROPERTIES, LLC
AN OHIO LIMITED LIABILITY COMPANY
46130003001000
10.320 AC.

25-WL

CONST. LIMITS (TYP.)

STA. 101+69.93, BREESE RD.=
STA. 109+49.21, RAMP "C"

STA. 101+74.19, BREESE RD.=
STA. 110+30.54, RAMP "A"

ST Sta. 101+72.43

SC Sta. 103+82.43

ALLEN COUNTY
VILLAGE OF FORT SHAWNEE
N.W. 1/4, SEC. 24
T4S, R6E

℄ R/W & CONST. BREESE RD.

℄ RAMP 'A'

℄ RAMP 'C'

PC Sta. 110+09.38

PT Sta. 111+86.34

N 21° 07' 21" E

121°07'21"E

SEC. LINE

42"-A 125'

42"-A 198'

+43

℄ R/W & CONST. I-75

MATCH LINE STA. 100+00 I-75

MATCH LINE STA. 112+50 I-75

15"-B 90'

8'-B 85'

175-2

I-75 STA.112+00.84=
BREESE RD. STA. 105+00

PT Sta. 110+15.90

PC Sta. 111+81.57

36"-A 114'

36"-A 186'

WELL (SAVE)

23-WL2

23
IW HOLDINGS LLC
46240002003000

CS Sta. 105+42.86

CONST. LIMITS (TYP.)

SC Sta. 107+42.86

℄ RAMP 'B'

PT S1

COMMERCIAL/RESIDENTIAL

OHIO POWER EASEMENT
POWER DISTRIBUTION EASEMENTS
NOT IN TAKE AREA
VOL. 567, PAGE 157

ALLEN COUNTY
VILLAGE OF FORT SHAWNEE
N.W. 1/4, SEC. 24
T4S, R6E

FREED DITCH

See sheets 67-72 for Breese Rd. deatails.

NOTE: ALL TREES ALONG THE EXISTING LA/RW FENCE WILL BE REMOVED UNLESS LABELED AS "SAVE"

REV. BY	DATE	DESCRIPTION
DJS	3/22/12	REVISED PARCEL 23-WL2 TO SAVE WELL, REMOVED BILLBOARD
KCC	01/23/12	Added well and billboard in 23-WL2
DATE COMPLETED:		10/06/11

HORIZONTAL SCALE IN FEET
0 25 50 100

R/W DESIGNER BJD
R/W REVIEWER LAF

PID NO. 89029

RIGHT OF WAY TOPO SHEET
STA. 100+00 TO STA. 112+50

ALL-75-0.21

35/103

839/907

I:\Pd\89029\row\sheets\89029RL009.dgn 07-MAY-2012 11:28AM dsiebene

ALLEN COUNTY
VILLAGE OF FORT SHAWNEE
SEC. 24, N.W. 1/4, T-4-S R-6-E
SEC. 13, S.W. 1/4, T-4-S R-6-E

BEARING & DISTANCE		
B-D	Bearing	Distance
B6	S 69° 45′ 52″ W	430.58′

CURVE I75-2
P.I.= Sta. 98+00.86
D = 16° 18′ 41″ (RT)
Dc = 0° 40′ 00″
R = 8,594.37′
T = 1,231.69′
L = 2,446.73′
E = 87.81′
C = 2,438.47′
C.B. = N 32° 41′ 43″ E
e$_d$=0.026

S.W. COR., SEC. 13
MON. BOX FND.

S 68° 52′ 36″ E, 684.03′

98

100 SEC. 13 SEC. 24

CSX RAILROAD

Ex LA

℄

ST Sta. 101+72.43

SC Sta. 103+82.43

PT Sta. 106+80.44

+80.44

ALLEN COUNTY
VILLAGE OF FORT SHAWNEE
N.W. 1/4, SEC. 24
T4S, R6E

100+85.77
℄ R/W Breese Rd.
S 89° 32′ 15″ W, 62.24′

110+20.91
308.18′LT
STA. 101+69.93, BREESE RD.=
STA. 109+49.21, RAMP "C"

STA. 101+74.19, BREESE RD.=
STA. 110+30.54, RAMP "A"

℄ RAMP 'A'

℄ RAMP 'C'

PC Sta. 110+09.38

PT Sta. 111+86.34

SEC. LINE

℄ R/W & CONST. BREESE RD.

109+81.25, 355.00′LT =
100+85.77, 56.86′LT
T.P.O.B. 25-WL

STEWERT & HAMILTON PROPERTIES, LLC
AN OHIO LIMITED LIABILITY COMPANY
46130003001000
10.320 AC.

ALLEN COUNTY
VILLAGE OF FORT SHAWNEE
S.W. 1/4, SEC. 13
T4S, R6E

N 1° 07′ 15″ E, 56.86′

112+49.73
361.24′LT

LA-R/W

N 39° 30′ 42″ E, 269.98′

25-WL

S 29° 51′ 45″ W, 209.85′

B6

112+26.91
348.18′LT

N 21° 07′ 21″ E

N 21° 07′ 21″ E

N 40° 51′ 04″ E

℄ R/W & CONST. I-75

175-2

MATCH LINE STA. 100+00 I-75

MATCH LINE STA. 112+50 I-75

+00.00
104.78′RT
T.P.O.B. 23-WL2

23-WL2

N 34° 23′ 36″ E, 201.52′

S 37° 3′ 14″ W, 296.33′

+03.99
103.50′RT

N 35° 45′ 49″ E, 296.73′

+00.00
115.00′RT

S 41° 37′ 36″ W
99.02′

+00.00
124.00′RT

+29.00
113.00′RT

S 15° 48′ 16″ W, 30.64′
S 50° 49′ 34″ W, 72.03′

+00.00
130.00′RT

23

IW HOLDINGS LLC
46240002003000

+04.27
100.00′RT

N 58° 39′ 14″ E
101.06′

+00.00
136.04′RT

S 41° 15′ 28″ W
98.64′

CS Sta. 105+42.86

SC Sta. 107+42.86

N 58° 39′ 14″ E, 585.64′

PT S1 PT Sta. 104+60.57

PT Sta. 110+15.90

I-75 STA.112+00.84=
BREESE RD. STA. 105+00

℄ RAMP 'B'

PC Sta. 111+81.57

N 62° 33′ 12″ E

111+64.34
325.00′RT

N 68° 43′ 46″ E, 513.78′

OHIO POWER EASEMENT
POWER DISTRIBUTION EASEMENTS
NOT IN TAKE AREA
VOL. 567, PAGE 157

FREED DITCH

ALLEN COUNTY
VILLAGE OF FORT SHAWNEE
N.W. 1/4, SEC. 24
T4S, R6E

See sheets 67-72 for Breese Rd. details.

REV. BY	DATE	DESCRIPTION
DJS	3/22/12	REVISED PARCEL 23-WL2
DATE COMPLETED:		10/06/11

HORIZONTAL SCALE IN FEET
0 25 50 100

R/W DESIGNER BJD
R/W REVIEWER LAF

PID NO. 89029

RIGHT OF WAY PLAN BOUNDARY SHEET
STA. 100+00 TO STA. 112+50

ALL-75-0.21

36/103

840/907

I:\Pd\89029\row\sheets\89029RD009.dgn 07-MAY-2012 11:28AM dsiebene

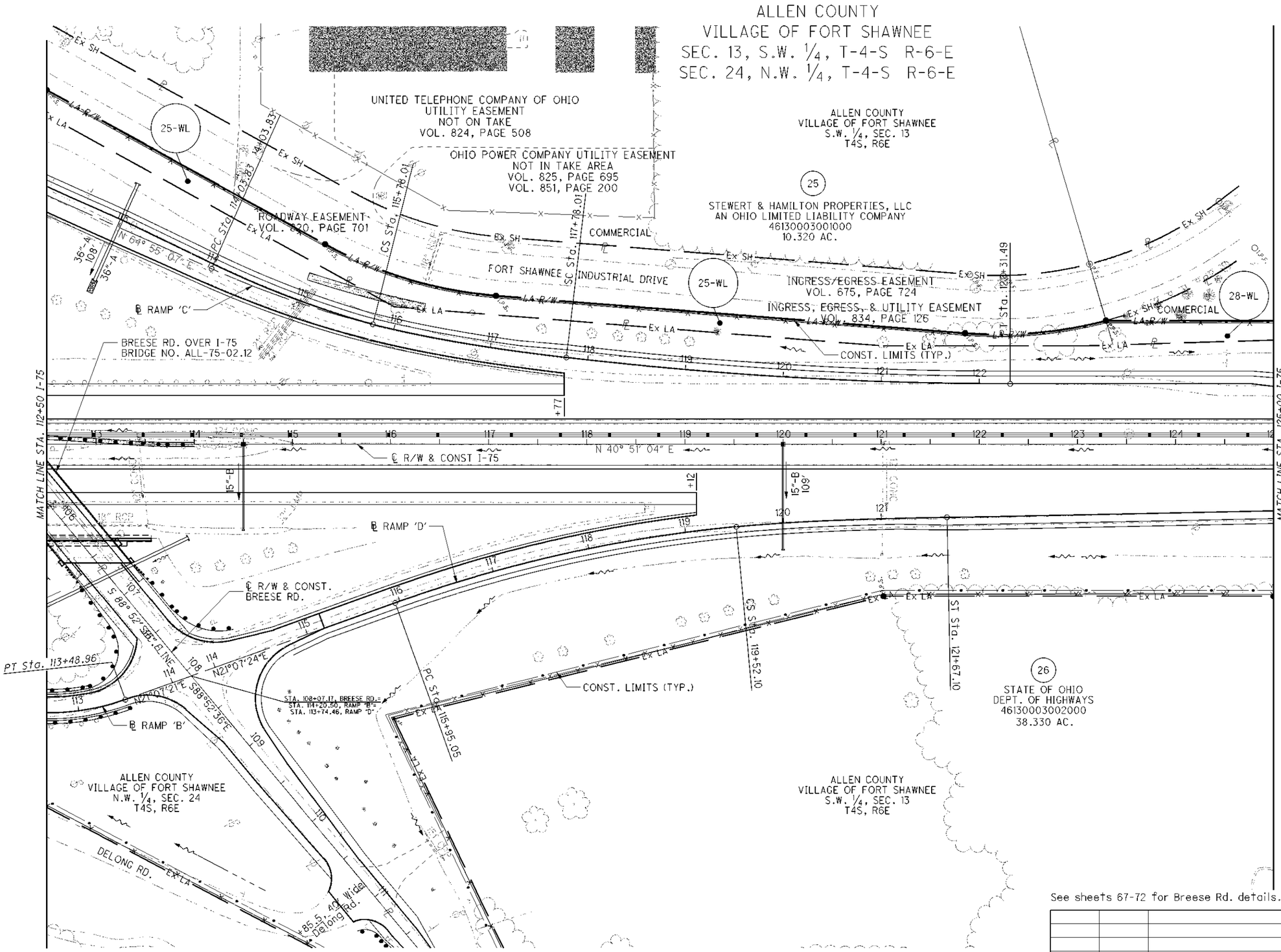

See sheets 67-72 for Breese Rd. details.

NOTE: ALL TREES ALONG THE EXISTING LA/RW FENCE WILL BE REMOVED UNLESS LABELED AS "SAVE"

REV. BY	DATE	DESCRIPTION
DJS	12/23/11	REMOVED EXTRA ℄ SYMBOLS NEAR RAMP "C"

DATE COMPLETED: 10/06/11

HORIZONTAL SCALE IN FEET 0 25 50 100

R/W DESIGNER BJD
R/W REVIEWER LAF

PID NO. 89029

RIGHT OF WAY TOPO SHEET
STA. 112+50 TO STA. 125+00

ALL-75-0.21

I:\Pd\89029\row\sheets\89029RL010.dgn 07-MAY-2012 11:29AM dsiebene

CURVE TABLE						
Curve	Delta	Radius	Tangent	Length	Chord	Bearing
C5	24°26'22"	430.00'	93.12'	183.42'	182.03'	N57°38'29"E
C6	19°18'43"	430.00'	73.16'	144.94'	144.25'	N35°45'56"E

STATION & OFFSET		
S-O	Station	Offset
S2	123+29.30	125.92'LT

ALLEN COUNTY
VILLAGE OF FORT SHAWNEE
SEC. 13, S.W. 1/4, T-4-S R-6-E
SEC. 24, N.W. 1/4, T-4-S R-6-E

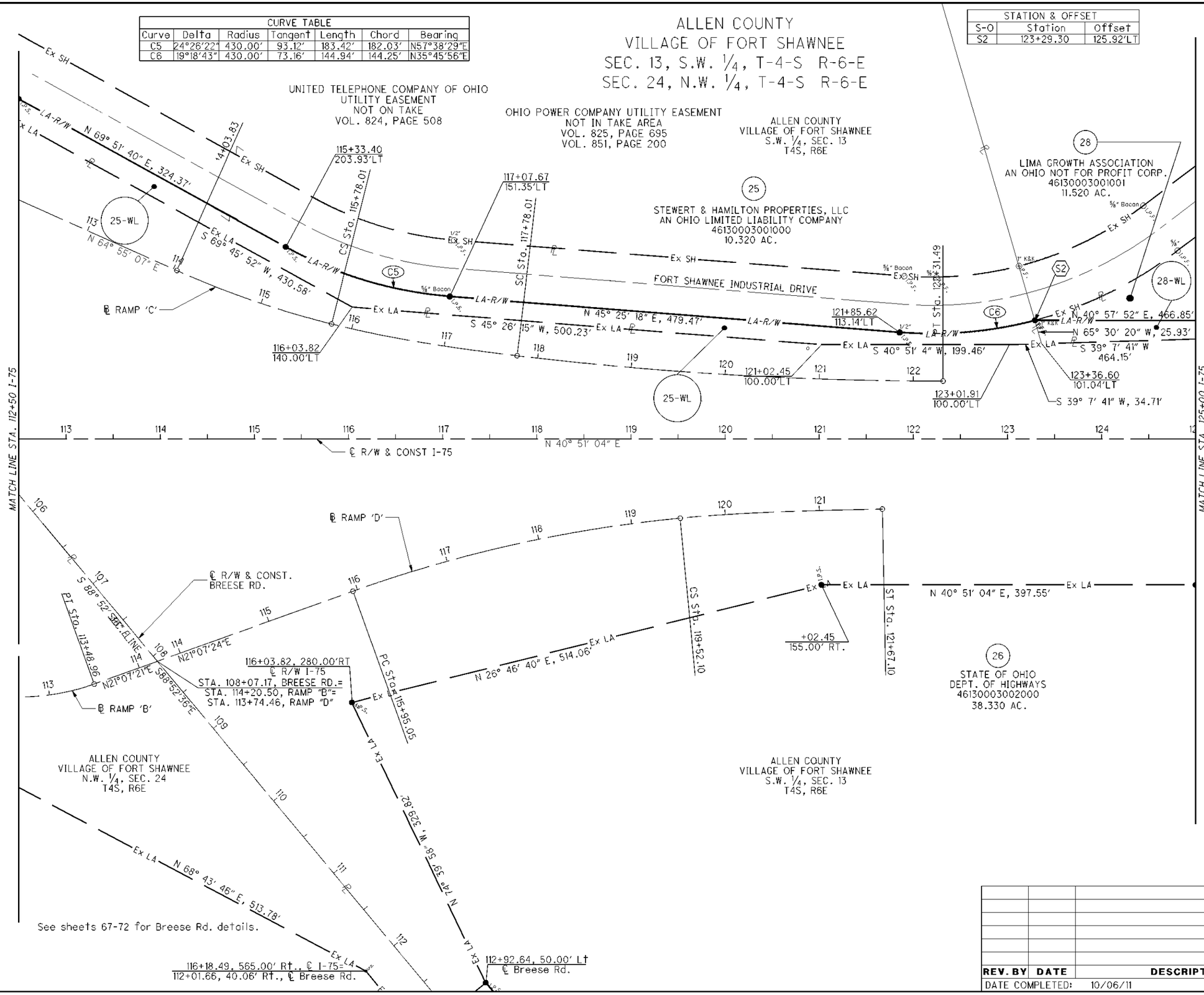

See sheets 67-72 for Breese Rd. details.

REV. BY	DATE	DESCRIPTION

DATE COMPLETED: 10/06/11

HORIZONTAL SCALE IN FEET 0 25 50 100

R/W DESIGNER BJD
R/W REVIEWER LAF

PID NO. 89029

RIGHT OF WAY PLAN BOUNDARY SHEET
STA. 112+50 TO STA. 125+00

ALL-75-0.21

I:\Pd\89029\row\sheets\89029RD010.dgn 07-MAY-2012 11:29AM dsiebene

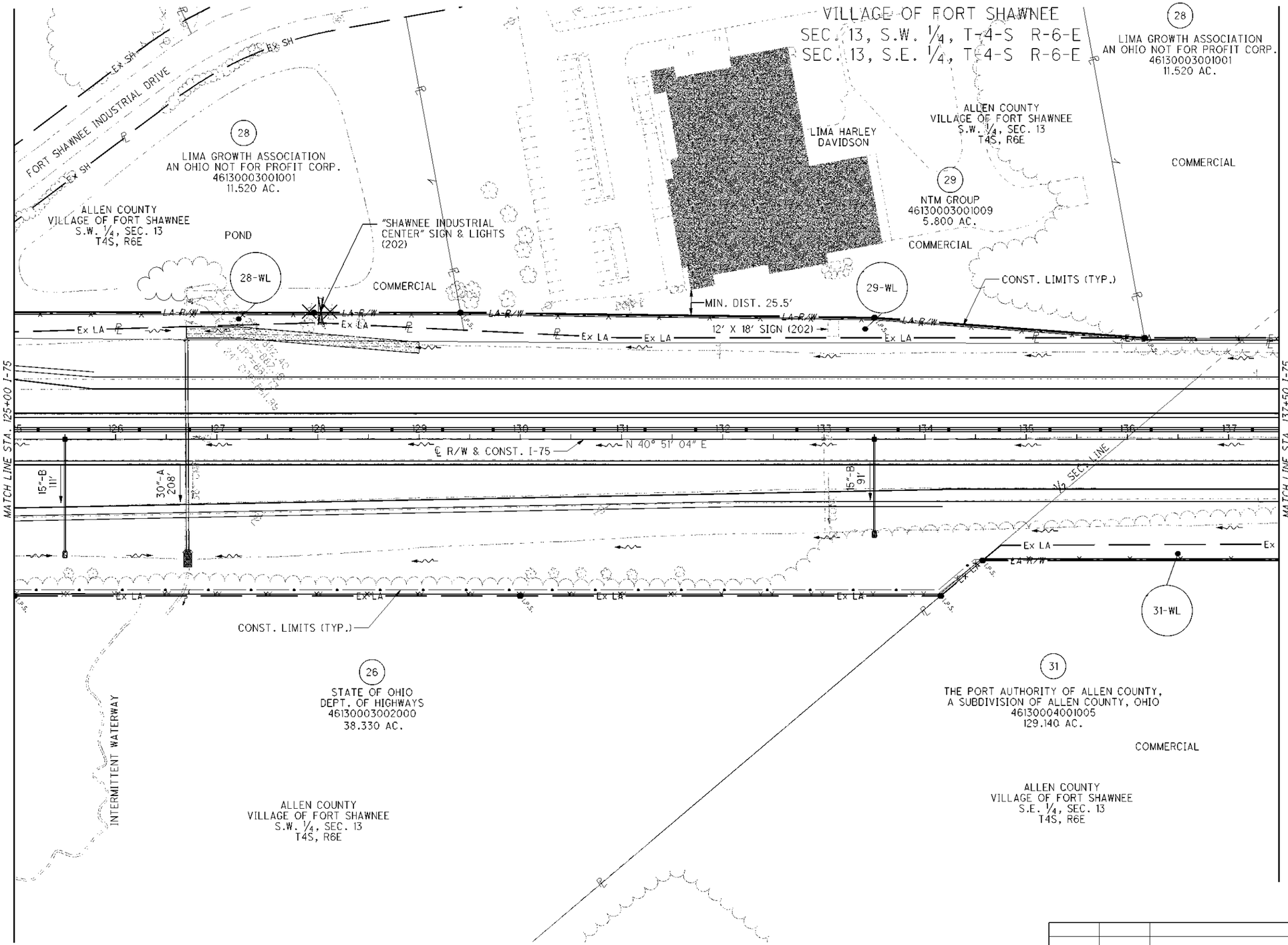

NOTE: ALL TREES ALONG THE EXISTING LA/RW FENCE WILL BE REMOVED UNLESS LABELED AS "SAVE"

REV. BY	DATE	DESCRIPTION
DATE COMPLETED:	10/06/11	

HORIZONTAL SCALE IN FEET
0 25 50 100

R/W DESIGNER BJD
R/W REVIEWER LAF

PID NO. 89029

RIGHT OF WAY TOPO SHEET
STA. 125+00 TO STA. 137+50

ALL-75-0.21

39/103

843/907

I:\Pd\89029\row\sheets\89029RL011.dgn 07-MAY-2012 11:29AM dsieberre

ALLEN COUNTY
VILLAGE OF FORT SHAWNEE
SEC. 13, S.W. 1/4, T-4-S R-6-E
SEC. 13, S.E. 1/4, T-4-S R-6-E

28
LIMA GROWTH ASSOCIATION
AN OHIO NOT FOR PROFIT CORP.
46130003001001
11.520 AC.

ALLEN COUNTY
VILLAGE OF FORT SHAWNEE
S.W. 1/4, SEC. 13
T4S, R6E

29
NTM GROUP, LLC.
46130003001009
5.800 AC.
"LIMA HARLEY DAVIDSON"

ALLEN COUNTY
VILLAGE OF FORT SHAWNEE
S.W. 1/4, SEC. 13
T4S, R6E

28
LIMA GROWTH ASSOCIATION
AN OHIO NOT FOR PROFIT CORP.
46130003001001
11.520 AC.

FORT SHAWNEE INDUSTRIAL DR.

5/8" Sheldon
5/8" Bacon
5/8" Bacon
5/8" Bacon
1" K&
Ex SH
Ex SH
Ex SH
Ex SH

28-WL
+96.16
125.00'LT
N 40° 57' 52" E, 466.85'
LA R/W
S 39° 7' 41" W, 464.15'
Ex LA
+00.54
115.00'LT

28-WL
+40.98
125.00'LT
T.P.O.B. 28-WL
N 40° 51' 04" E, 144.82'
LA R/W
S 43° 43' 17" W, 143.79'
Ex LA
+44.15
107.80'LT

N 41° 33' 5" E, 409.05'
LA R/W
S 59° 35' 4" E, 17.49'
Ex LA
S 43° 43' 17" W
155.77'
+99.72
100.00'LT

29-WL
+50.00
120.00'LT
S 40° 51' 4" W, 517.40'
Ex LA

+17.12, 100.00'LT
T.P.O.B. 29-WL
N 45° 7' 59" E, 267.87'
LA R/W
S 40°51'4" W
99.36'
137+16.48
100.00' LT.

MATCH LINE STA. 125+00 I-75
MATCH LINE STA. 137+50 I-75

126 127 128 129 130 131 132 133 134 135 136 137

℄ R/W & CONST. I-75
N 40° 51' 04" E

1/2 SEC. LINE
CENTER SEC. 13
IRON PIN FND.
I.P.F.
5/8" Yarno
S0°34'00"W,659.84'
1/2 SEC. LINE

S 0° 34' 00" W, 976.89'
1/2 SEC. LINE

+74.62, 105.00'RT
T.P.O.B. 31-WL
N 0° 34' 0" E, 23.20'
Ex LA
N 40° 37' 25" E, 1260.07'
LA R/W
S 40° 51' 4" W, 1294.19'
+56.92
120.00'RT
31-WL

N 0° 34' 0" E, 54.13'
Ex LA
+15.63
155.00'RT

+00.00
155.00'RT
Ex LA
N 40° 51' 04" E, 500.00'
Ex LA
+00.00
155.00'RT
Ex LA
N 40° 51' 04" E, 415.63'
Ex LA

26
STATE OF OHIO
DEPT. OF HIGHWAYS
46130003002000
38.330 AC.

ALLEN COUNTY
VILLAGE OF FORT SHAWNEE
S.W. 1/4, SEC. 13
T4S, R6E

INTERMITTENT WATERWAY

31
THE PORT AUTHORITY OF ALLEN COUNTY,
A SUBDIVISION OF ALLEN COUNTY, OHIO
46130004001005
129.140 AC.

ALLEN COUNTY
VILLAGE OF FORT SHAWNEE
S.E. 1/4, SEC. 13
T4S, R6E

REV. BY	DATE	DESCRIPTION
DATE COMPLETED:	10/06/11	

HORIZONTAL SCALE IN FEET
0 25 50 100

R/W DESIGNER: BJD
R/W REVIEWER: LAF
PID NO. 89029

RIGHT OF WAY PLAN BOUNDARY SHEET
STA. 125+00 TO STA. 137+50

ALL-75-0.21

40/103

844/907

I:\Pd\89029\row\sheets\89029RD011.dgn 07-MAY-2012 11:30AM dsiebene

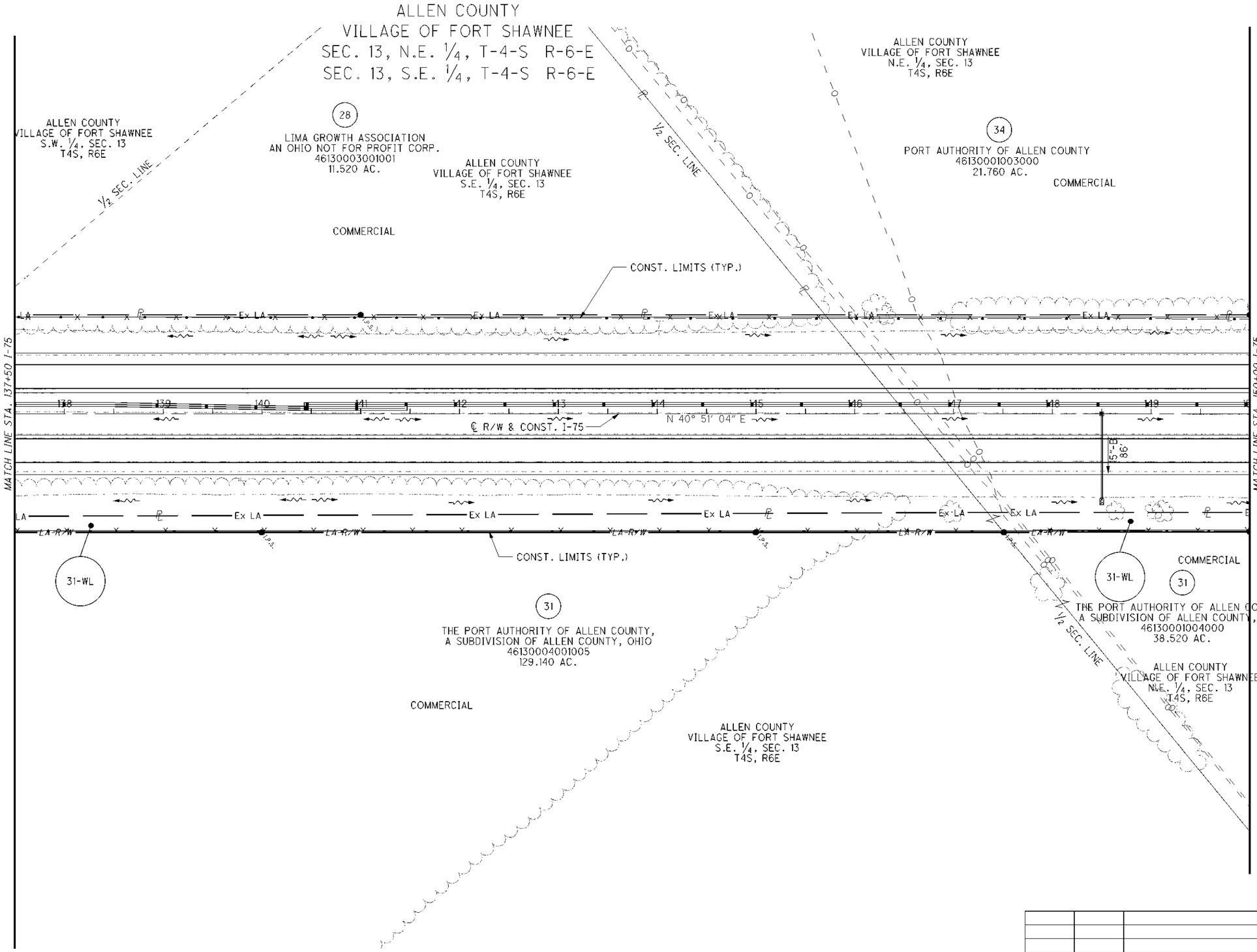

NOTE: ALL TREES ALONG THE EXISTING LA/RW FENCE WILL BE REMOVED UNLESS LABELED AS "SAVE"

REV. BY	DATE	DESCRIPTION

DATE COMPLETED: 10/06/11

HORIZONTAL SCALE IN FEET 0 25 50 100

R/W DESIGNER BJD
R/W REVIEWER LAF

PID NO. 89029

RIGHT OF WAY TOPO SHEET
STA. 137+50 TO STA. 150+00

ALL-75-0.21

I:\Pd\89029\row\sheets\89029RL012.dgn 01-APR-2013 12:56PM dsiebene

ALLEN COUNTY
VILLAGE OF FORT SHAWNEE
SEC. 13, N.E. ¼, T-4-S R-6-E
SEC. 13, S.E. ¼, T-4-S R-6-E

CENTER SEC. 13
IRON PIN FND.
L.P.F. ⅝" Yarno

½ SEC. LINE

ALLEN COUNTY
VILLAGE OF FORT SHAWNEE
S.W. ¼, SEC. 13
T4S, R6E

(28)
LIMA GROWTH ASSOCIATION
AN OHIO NOT FOR PROFIT CORP.
46130003001001
11.520 AC.

ALLEN COUNTY
VILLAGE OF FORT SHAWNEE
S.E. ¼, SEC. 13
T4S, R6E

S 88° 33' 18" E, 552.17'

(34)
PORT AUTHORITY OF ALLEN COUNTY
46130001003000
21.760 AC.

ALLEN COUNTY
VILLAGE OF FORT SHAWNEE
N.E. ¼, SEC. 13
T4S, R6E

MATCH LINE STA. 137+50 I-75

+00.00, 100.00' LT.

LA — Ex LA — N 40° 51' 4" E, 383.52' — Ex LA — N 40° 51' 4" E, 470.36' — Ex LA — Ex LA — N 40° 51' 4" E, 429.64' — Ex LA

+70.36, 100.00' LT.

+00.00, 100.00' LT.

138 139 140 141 142 143 144 145 146 147 148 149 15

℄ R/W & CONST. I-75 — N 40° 51' 04" E

MATCH LINE STA. 150+00 I-75

+34.68
100.00'RT

LA — Ex LA — N 40° 37' 25" E, 1260.07' — Ex LA — Ex LA — Ex LA — Ex LA — N 40° 51' 4" E, 1171.56'

LA-R/W — S 40° 51' 4" W, 543.08' — LA-R/W — S 40° 51' 4" W, 500.00' — LA-R/W — S 40° 51' 4" W, 251.11' — LA-R/W — LA-R/W — S 40° 45' 42" W, 248.89'

+00.00, 120.00' RT.

+00.00, 120.00' RT.

+51.11
120.00'RT

31-WL

31-WL

(31)
THE PORT AUTHORITY OF ALLEN COUNTY,
A SUBDIVISION OF ALLEN COUNTY, OHIO
46130004001005
129.140 AC.

(31)
THE PORT AUTHORITY OF ALLEN COUNTY,
A SUBDIVISION OF ALLEN COUNTY, OHIO
46130001004000
38.520 AC.

½ SEC. LINE

ALLEN COUNTY
VILLAGE OF FORT SHAWNEE
N.E. ¼, SEC. 13
T4S, R6E

ALLEN COUNTY
VILLAGE OF FORT SHAWNEE
S.E. ¼, SEC. 13
T4S, R6E

REV. BY	DATE	DESCRIPTION
DATE COMPLETED:	10/06/11	

HORIZONTAL SCALE IN FEET
0 25 50 100

R/W DESIGNER BJD
R/W REVIEWER LAF

PID NO. 89029

RIGHT OF WAY PLAN BOUNDARY SHEET
STA. 137+50 TO STA. 150+00

ALL-75-0.21

42/103

846/907

I:\Pd\89029\row\sheets\89029RD012.dgn 07-MAY-2012 11:31AM dsiebene

ALLEN COUNTY
VILLAGE OF FORT SHAWNEE
SEC. 13, N.E. 1/4, T-4-S R-6-E

ALLEN COUNTY
VILLAGE OF FORT SHAWNEE
N.E. 1/4, SEC. 13
T4S, R6E

(34)
PORT AUTHORITY OF ALLEN COUNTY
46130001003001
12.000 AC.

(35)
PPG INDUSTRIES, LLC., A PENNSYLVANIA CORPORATION
QUALIFIED TO DO BUSINESS IN THE STATE OF OHIO
46130001003002
24.000 AC.

(34)
PORT AUTHORITY OF ALLEN COUNTY
46130001003000
21.760 AC.

COMMERCIAL

COMMERCIAL

COMMERCIAL

34-WL

35-WL

CONST. LIMITS (TYP.)

MATCH LINE STA. 150+00 I-75

MATCH LINE STA. 162+50 I-75

℄ R/W & CONST. I-75

N 40° 51' 04" E

15'-86'

8'x12' Billboard (Removed by Others)

Iron Post (202)

CONST. LIMITS (TYP.)

31-WL

31-WL

31-WL

I75-3

TS Sta. 156+10.95

SC Sta. 161+45.95

CURVE I75-3

P.I.= Sta. 169+39.08	p = 5.20'
D = 49° 34' 27" (RT)	Dc = 36° 11' 57" (RT)
Dc = 2° 30' 00"	Lc = 1,447.97'
R = 2,291.83'	Ts = 1,328.13'
Ls = 535.00'	Es = 238.30'
θs = 6° 41' 15"	C = 1,424.01'
LT = 356.92'	C1=C2 = 534.68'
ST = 178.57'	C.B.1 = N 43° 04' 48" E
x = 534.27'	C.B. = N 65° 38' 17" E
y = 20.79'	C.B.2 = S 88° 11' 47" W
k = 267.38'	e_d = 0.059

(31)
THE PORT AUTHORITY OF ALLEN COUNTY,
A SUBDIVISION OF ALLEN COUNTY, OHIO
46130001004000
38.520 AC.

POND

W - 1/2 SEC. LINE

ALLEN COUNTY
VILLAGE OF FORT SHAWNEE
N.E. 1/4, SEC. 13
T4S, R6E

NOTE: ALL TREES ALONG THE EXISTING LA/RW FENCE WILL BE REMOVED UNLESS LABELED AS "SAVE"

REV. BY	DATE	DESCRIPTION
DJS	5/9/13	ADDED IRON POST REMOVAL & BILLBOARD
		REMOVED BY OTHERS FOR PARCEL 31-WL

DATE COMPLETED: 10/06/11

HORIZONTAL SCALE IN FEET
0 25 50 100

R/W DESIGNER BJD
R/W REVIEWER LAF

PID NO. 89029

RIGHT OF WAY TOPO SHEET
STA. 150+00 TO STA. 162+50

ALL-75-0.21

43/103

847/907

I:\Pd\89029\row\sheets\89029RL013.dgn 23-APR-2013 2:29PM dsiebene

ALLEN COUNTY
VILLAGE OF FORT SHAWNEE
SEC. 13, N.E. 1/4, T-4-S R-6-E

ALLEN COUNTY
VILLAGE OF FORT SHAWNEE
N.E. 1/4, SEC. 13
T4S, R6E

BEARING & DISTANCE		
B-D	Bearing	Distance
B8	S 35° 19' 16" E	11.82'

(34)
PORT AUTHORITY OF ALLEN COUNTY
46130001003000
21.760 AC.

(34)
PORT AUTHORITY OF ALLEN COUNTY
46130001003001
12.000 AC.

(35)
PPG INDUSTRIES, LLC., A PENNSYLVANIA CORPORATION
QUALIFIED TO DO BUSINESS IN THE STATE OF OHIO
46130001003002
24.000 AC.

+00.00
100.00'LT

+01.30
100.00'LT
T.P.O.B. 34-WL

+50.00
110.00'LT

+04.95
115.00'LT

+02.59
103.43'LT
T.P.O.B. 35-WL

+99.61
140.62'LT

B8

C50

34-WL

35-WL

Ex LA — S 40° 51' 4" W, 401.30' — Ex LA

N 37° 0' 14" E, 149.04'

N 40° 36' 57" E, 358.97'

S 40° 51' 4" W, 504.85'

N 40° 49' 58" E, 309.11'

S 38° 43' 35" W, 312.15'

5/8" LBJ

MATCH LINE STA. 150+00 I-75

MATCH LINE STA. 162+50 I-75

0 151 152 153 154 155 156 157 158 159 160 161 162

℄ R/W & CONST. I-75

N 40° 51' 04" E

N 40° 51' 4" E, 1171.56'

Ex LA — Ex LA — Ex LA

LA-R/W

S 40° 45' 42" W, 500.00'

+00.00, 118.83' RT.

+00.00, 119.61' RT.

TS Sta. 156+10.95

S 40° 45' 42" W, 396.05'

175-3

+09.79
96.44'RT

+00.00
115.00'RT

N 43° 18' 40" E, 291.85'

S 47° 21' 2" W, 236.13'

+11.28
84.09'RT

C7

S 51° 32' 40" W
362.58'

+45.95
125.00'RT

ST. Sta. 161+45.95

31-WL

CURVE 175-3

P.I.= Sta. 169+39.08	p = 5.20'
D = 49° 34' 27" (RT)	Dc = 36° 11' 57" (RT)
Dc = 2° 30' 00"	Lc = 1,447.97'
R = 2,291.83'	Ts = 1,328.13'
Ls = 535.00'	Es = 238.30'
θs = 6° 41' 15"	C = 1,424.01'
LT = 356.92'	CI=C2 = 534.68'
ST = 178.57'	C.B.1 = N 43° 04' 48" E
x = 534.27'	C.B. = N 65° 38' 17" E
y = 20.79'	C.B.2 = S 88° 11' 47" W
k = 267.38'	e_d = 0.059

CURVE TABLE						
Curve	Delta	Radius	Tangent	Length	Chord	Bearing
C7	7°31'58"	1,804.86'	118.81'	237.28'	237.11'	N49°07'03"E
C50	7°31'57"	2,029.86'	133.62'	266.86'	266.66'	N49°11'28"E

(31)
THE PORT AUTHORITY OF ALLEN COUNTY,
A SUBDIVISION OF ALLEN COUNTY, OHIO
46130001004000
38.520 AC.

ALLEN COUNTY
VILLAGE OF FORT SHAWNEE
N.E. 1/4, SEC. 13
T4S, R6E

N 1/2 SEC. LINE

REV. BY	DATE	DESCRIPTION
DATE COMPLETED:		10/06/11

HORIZONTAL SCALE IN FEET
0 25 50 100

R/W DESIGNER: BJD
R/W REVIEWER: LAF

PID NO. 89029

RIGHT OF WAY PLAN BOUNDARY SHEET
STA. 150+00 TO STA. 162+50

ALL-75-0.21

I:\Pid\89029\row\sheets\89029RD013.dgn 07-MAY-2012 11:33AM dsiebene

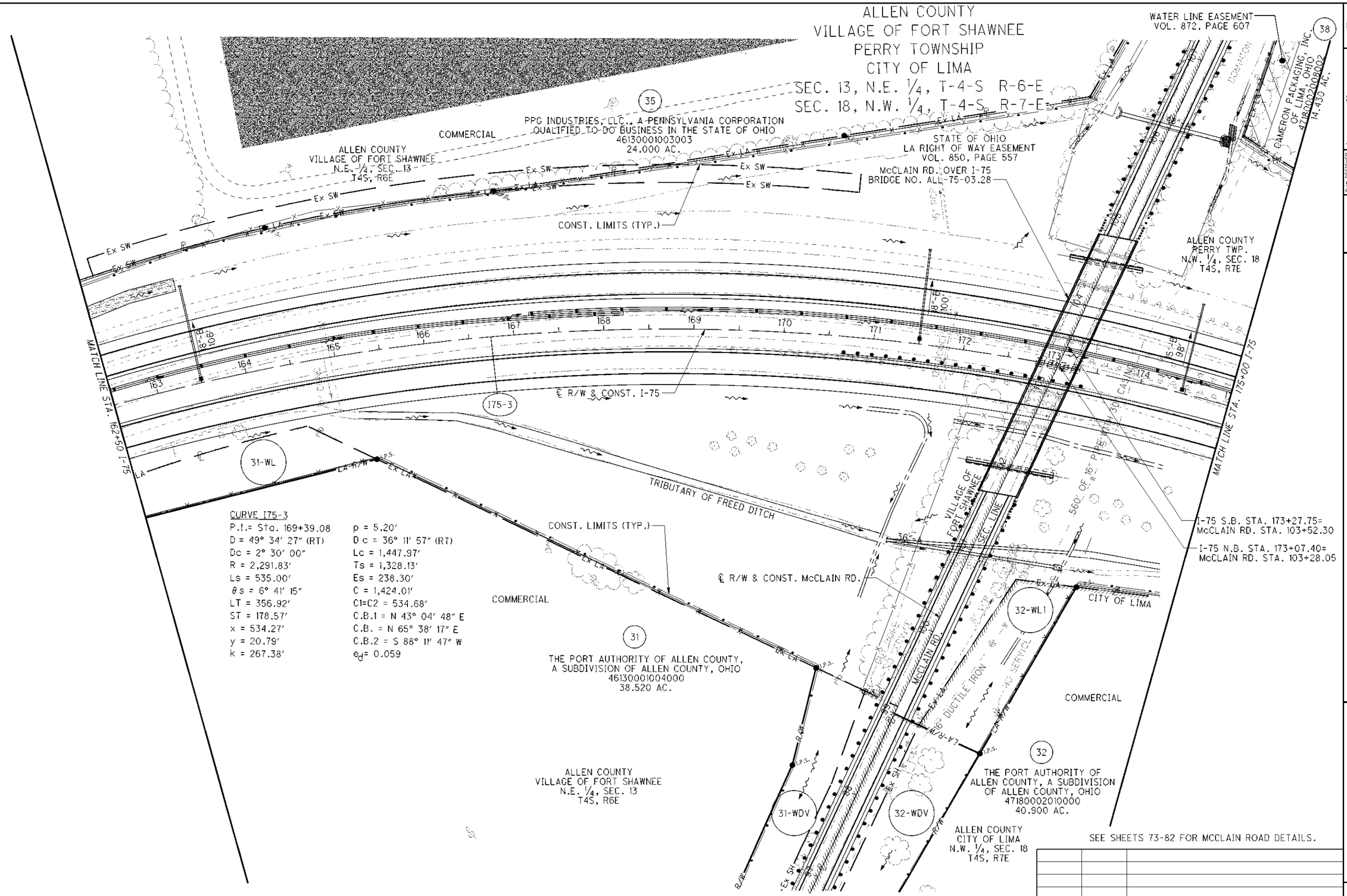
ALLEN COUNTY
VILLAGE OF FORT SHAWNEE
PERRY TOWNSHIP
CITY OF LIMA
SEC. 13, N.E. 1/4, T-4-S R-6-E
SEC. 18, N.W. 1/4, T-4-S R-7-E
WATER LINE EASEMENT
VOL. 872, PAGE 607
CAMERON PACKAGING, INC. OF LIMA, OHIO
41800020008002
14.430 AC.
PPG INDUSTRIES, LLC., A PENNSYLVANIA CORPORATION
QUALIFIED TO DO BUSINESS IN THE STATE OF OHIO
46130001003003
24.000 AC.
COMMERCIAL
ALLEN COUNTY
VILLAGE OF FORT SHAWNEE
N.E. 1/4, SEC. 13
T4S, R6E
STATE OF OHIO
LA RIGHT OF WAY EASEMENT
VOL. 850, PAGE 557
McCLAIN RD. OVER I-75
BRIDGE NO. ALL-75-03.28
CONST. LIMITS (TYP.)
ALLEN COUNTY
PERRY TWP.
N.W. 1/4, SEC. 18
T4S, R7E
MATCH LINE STA. 162+50 I-75
MATCH LINE STA. 175+00 I-75
℄ R/W & CONST. I-75
TRIBUTARY OF FREED DITCH
CONST. LIMITS (TYP.)
℄ R/W & CONST. McCLAIN RD.
I-75 S.B. STA. 173+27.75= McCLAIN RD. STA. 103+52.30
I-75 N.B. STA. 173+07.40= McCLAIN RD. STA. 103+28.05
CURVE I75-3
P.I.= Sta. 169+39.08
D = 49° 34' 27" (RT)
Dc = 2° 30' 00"
R = 2,291.83'
Ls = 535.00'
θs = 6° 41' 15"
LT = 356.92'
ST = 178.57'
x = 534.27'
y = 20.79'
k = 267.38'
p = 5.20'
D c = 36° 11' 57" (RT)
Lc = 1,447.97'
Ts = 1,328.13'
Es = 238.30'
C = 1,424.01'
C1=C2 = 534.68'
C.B.1 = N 43° 04' 48" E
C.B. = N 65° 38' 17" E
C.B.2 = S 88° 11' 47" W
ed= 0.059
COMMERCIAL
THE PORT AUTHORITY OF ALLEN COUNTY, A SUBDIVISION OF ALLEN COUNTY, OHIO
46130001004000
38.520 AC.
ALLEN COUNTY
VILLAGE OF FORT SHAWNEE
N.E. 1/4, SEC. 13
T4S, R6E
COMMERCIAL
THE PORT AUTHORITY OF ALLEN COUNTY, A SUBDIVISION OF ALLEN COUNTY, OHIO
47180002010000
40.900 AC.
ALLEN COUNTY
CITY OF LIMA
N.W. 1/4, SEC. 18
T4S, R7E
CITY OF LIMA
VILLAGE OF FORT SHAWNEE SEC. LINE
560' OF 16" PIPE
6" DUCTILE IRON
McCLAIN RD.
SEE SHEETS 73-82 FOR McCLAIN ROAD DETAILS.
NOTE: ALL TREES ALONG THE EXISTING LA/RW FENCE WILL BE REMOVED UNLESS LABELED AS "SAVE"
HORIZONTAL SCALE IN FEET
R/W DESIGNER BJD
R/W REVIEWER LAF
PID NO. 89029
RIGHT OF WAY TOPO SHEET
STA 162+50 TO STA. 175+00
ALL-75-0.21
45/103
849/907
DJS 4/18/12 REVISED OWNERS NAME FOR PARCEL 32
REV. BY DATE DESCRIPTION
DATE COMPLETED: 10/06/11
I:\Pid\89029\row\sheets\89029RL014.dgn 07-MAY-2012 11:34AM dsiebene

ALLEN COUNTY
VILLAGE OF FORT SHAWNEE
PERRY TOWNSHIP
CITY OF LIMA
SEC. 13, N.E. ¼, T-4-S R-6-E
SEC. 18, N.W. ¼, T-4-S R-7-E

(35) PPG INDUSTRIES, LLC., A PENNSYLVANIA CORPORATION QUALIFIED TO DO BUSINESS IN THE STATE OF OHIO
46130001003003
24.000 AC.

ALLEN COUNTY
VILLAGE OF FORT SHAWNEE
N.E. ¼, SEC. 13
T4S, R6E

STATE OF OHIO
LA RIGHT OF WAY EASEMENT
VOL. 850, PAGE 557

N.E. COR., SEC. 13
MON. BOX FND.

(38) WATER LINE EASEMENT
VOL. 872, PAGE 607
CAMERON PACKAGING, OHIO, INC.
47180002008002
14.430 AC.

ALLEN COUNTY
PERRY TWP.
N.W. ¼, SEC. 18
T4S, R7E

MATCH LINE STA. 162+50 I-75

MATCH LINE STA. 175+00 I-75

℄ R/W & CONST. I-75

℄ R/W & CONST. McCLAIN RD.

I-75 S.B. STA. 173+27.75= McCLAIN RD. STA. 103+52.30

I-75 N.B. STA. 173+07.40= McCLAIN RD. STA. 103+28.05

CURVE TABLE						
Curve	Delta	Radius	Tangent	Length	Chord	Bearing
C7	7°31'58"	1,804.86'	118.81'	237.28'	237.11'	N49°07'03"E
C50	7°31'57"	2,029.86'	133.62'	266.86'	266.66'	N49°11'28"E
C51	7°16'25"	2,029.86'	129.02'	257.68'	257.51'	N56°35'38"E

CURVE I75-3

P.I.= Sta. 169+39.08	p = 5.20'
D = 49° 34' 27" (RT)	D c = 36° 11' 57" (RT)
Dc = 2° 30' 00"	Lc = 1,447.97'
R = 2,291.83'	Ts = 1,328.13'
Ls = 535.00'	Es = 238.30'
θs = 6° 41' 15"	C = 1,424.01'
LT = 356.92'	C1=C2 = 534.68'
ST = 178.57'	C.B.1 = N 43° 04' 48" E
x = 534.27'	C.B. = N 65° 38' 17" E
y = 20.79'	C.B.2 = S 88° 11' 47" W
k = 267.38'	e_d = 0.059

(31) THE PORT AUTHORITY OF ALLEN COUNTY, A SUBDIVISION OF ALLEN COUNTY, OHIO
46130001004000
38.520 AC.

(32) THE PORT AUTHORITY OF ALLEN COUNTY, A SUBDIVISION OF ALLEN COUNTY, OHIO
47180002010000
40.900 AC.

ALLEN COUNTY
CITY OF LIMA
N.W. ¼, SEC. 18
T4S, R7E

See sheets 74,76,78 - for Parcels 31-WDV and 32-WDV details.

REV. BY	DATE	DESCRIPTION
DJS	4/18/12	REVISED OWNERS NAME FOR PARCEL 32
DATE COMPLETED:	10/06/11	

HORIZONTAL SCALE IN FEET 0 25 50 100

R/W DESIGNER BJD R/W REVIEWER LAF

PID NO. 89029

RIGHT OF WAY PLAN BOUNDARY SHEET
STA 162+50 TO STA. 175+00

ALL-75-0.21

I:\Pdt\89029\row\sheets\89029RD014.dgn 07-MAY-2012 11:34 AM dsiebene

ALLEN COUNTY
PERRY TOWNSHIP
CITY OF LIMA
SEC. 18, N.W. 1/4, T-4-S R-7-E

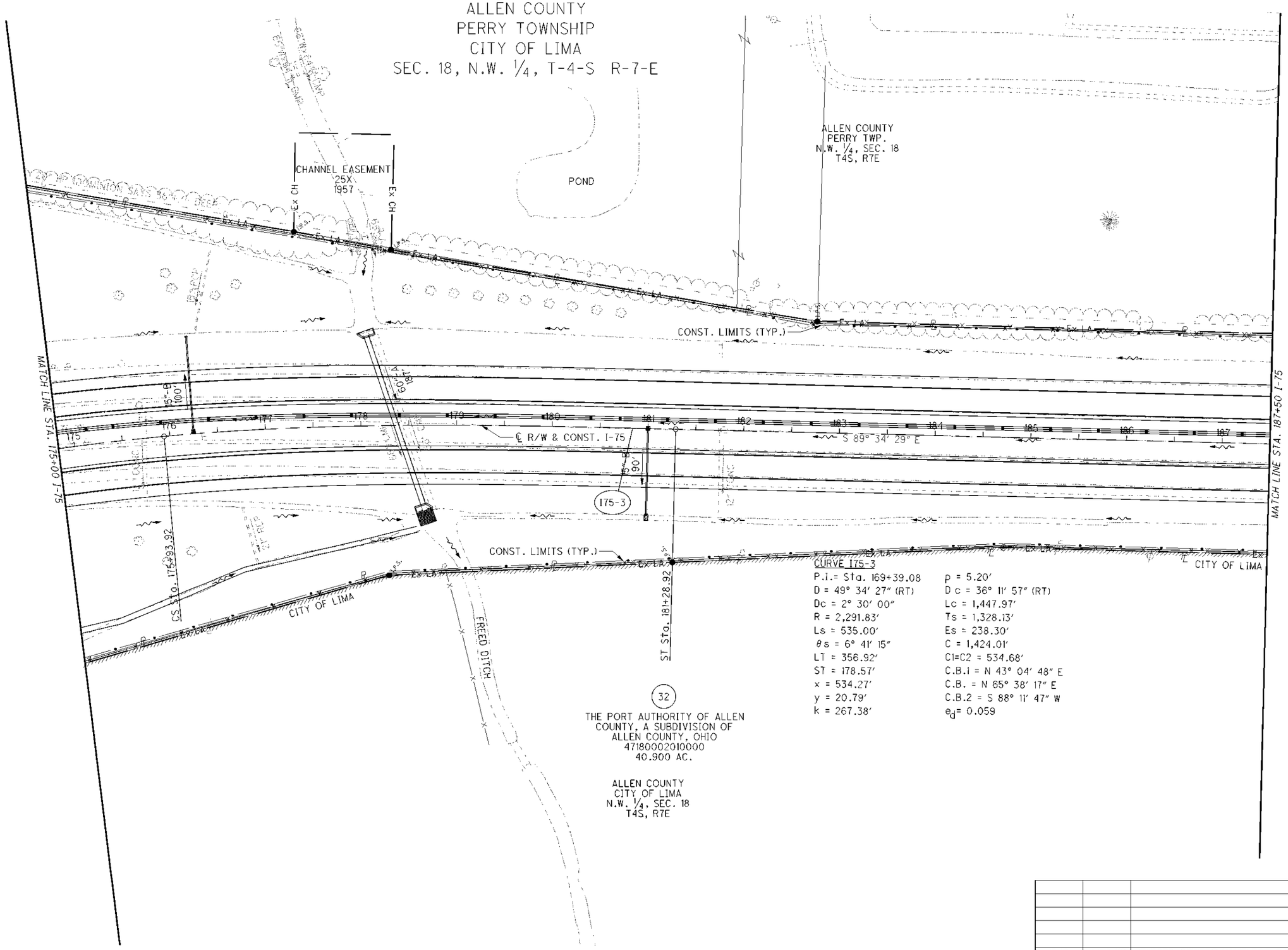

CURVE I75-3

P.I.= Sta. 169+39.08	p = 5.20'
D = 49° 34' 27" (RT)	Dc = 36° 11' 57" (RT)
Dc = 2° 30' 00"	Lc = 1,447.97'
R = 2,291.83'	Ts = 1,328.13'
Ls = 535.00'	Es = 238.30'
θs = 6° 41' 15"	C = 1,424.01'
LT = 356.92'	C1=C2 = 534.68'
ST = 178.57'	C.B.1 = N 43° 04' 48" E
x = 534.27'	C.B. = N 65° 38' 17" E
y = 20.79'	C.B.2 = S 88° 11' 47" W
k = 267.38'	e_d = 0.059

NOTE: ALL TREES ALONG THE EXISTING LA/RW FENCE WILL BE REMOVED UNLESS LABELED AS "SAVE"

REV. BY	DATE	DESCRIPTION
DJS	4/18/12	REVISED OWNERS NAME FOR PARCEL 32
DATE COMPLETED:		10/06/11

HORIZONTAL SCALE IN FEET
0 25 50 100

R/W DESIGNER BJD
R/W REVIEWER LAF

PID NO. 89029

RIGHT OF WAY TOPO SHEET
STA. 175+00 TO STA. 187+50

ALL-75-0.21

47/103

851/907

I:\Pd\89029\row\sheets\89029RL015.dgn 07-MAY-2012 11:35AM dsiebene

ALLEN COUNTY
PERRY TOWNSHIP
CITY OF LIMA
SEC. 18, N.W. 1/4, T-4-S R-7-E

FREED DITCH

Ex CH

CHANNEL EASEMENT
25X
1957

+37.80
204.67'LT

S 81° 8' 46" E, 335.88'

Ex LA

Ex CH

Ex CH

S 80° 34' 41" E, 103.21'

+33.62
183.62'LT

S 81° 25' 38" E, 451.58'

ALLEN COUNTY
PERRY TWP.
N.W. 1/4, SEC. 18
T4S, R7E

+74.15
116.00'LT

S 89° 28' 38" E, 587.63

MATCH LINE STA. 175+00 I-75

175 176 177 178 179 180 181 182 183 184 185 186 187

℄ R/W & CONST. I-75

S 89° 34' 29" E

MATCH LINE STA. 187+50 I-75

175-3

CS Sta. 175+93.92

ST Sta. 181+28.92

+27.80
156.40'RT

N 72° 53' 24" E, 420.24'
CITY OF LIMA

N 86° 24' 28" E, 296.02'

+28.92
139.26'RT

N 86° 23' 55" E, 346.28'

S 89° 26' 16" E, 387.18'

+74.34
114.94'RT

CITY OF LIMA

FREED DITCH

32

THE PORT AUTHORITY OF ALLEN
COUNTY, A SUBDIVISION OF
ALLEN COUNTY, OHIO
47180002010000
40.900 AC.

ALLEN COUNTY
CITY OF LIMA
N.W. 1/4, SEC. 18
T4S, R7E

CURVE 175-3

P.I.= Sta. 169+39.08	p = 5.20'
D = 49° 34' 27" (RT)	D c = 36° 11' 57" (RT)
Dc = 2° 30' 00"	Lc = 1,447.97'
R = 2,291.83'	Ts = 1,328.13'
Ls = 535.00'	Es = 238.30'
θs = 6° 41' 15"	C = 1,424.01'
LT = 356.92'	C1=C2 = 534.68'
ST = 178.57'	C.B.1 = N 43° 04' 48" E
x = 534.27'	C.B. = N 65° 38' 17" E
y = 20.79'	C.B.2 = S 88° 11' 47" W
k = 267.38'	e_d = 0.059

REV. BY	DATE	DESCRIPTION
DJS	4/18/12	REVISED OWNERS NAME FOR PARCEL 32
DATE COMPLETED:		10/06/11

HORIZONTAL SCALE IN FEET
0 25 50 100

R/W DESIGNER BJD
R/W REVIEWER LAF

PID NO. 89029

RIGHT OF WAY PLAN BOUNDARY SHEET
STA. 175+00 TO STA. 187+50

ALL-75-0.21

48/103

852/907

I:\Pdt\89029\row\sheets\89029RD015.dgn 07-MAY-2012 11:35AM dsiebene

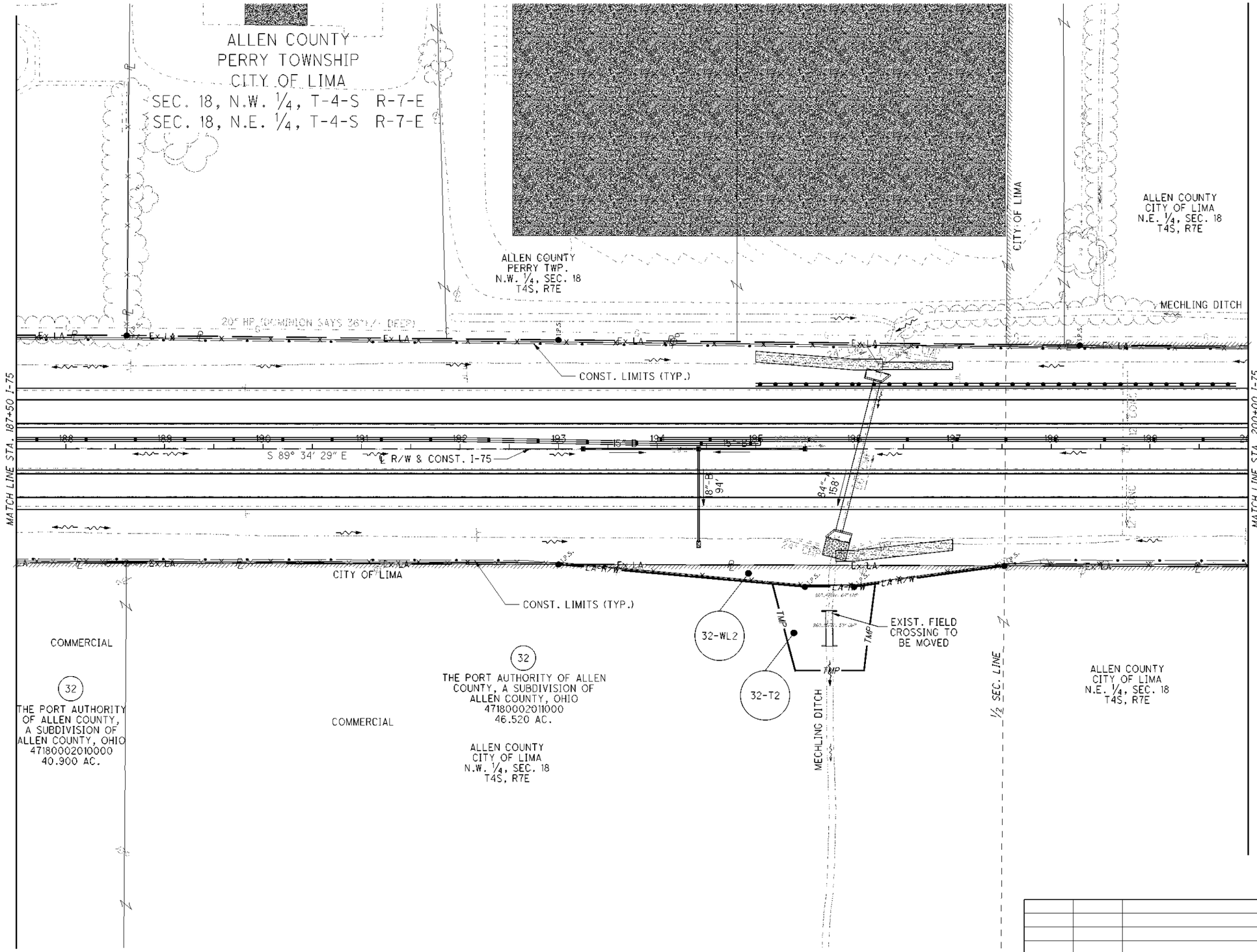

NOTE: ALL TREES ALONG THE EXISTING LA/RW FENCE WILL BE REMOVED UNLESS LABELED AS "SAVE"

REV. BY	DATE	DESCRIPTION
DJS	4/18/12	REVISED OWNERS NAME FOR PARCEL 32
DJS	11/17/11	ADDES PARCEL 32-T2 TO MOVE FIELD CROSSING

DATE COMPLETED: 10/06/11

HORIZONTAL SCALE IN FEET
0 25 50 100

R/W DESIGNER BJD
R/W REVIEWER LAF

PID NO. 89029

RIGHT OF WAY TOPO SHEET STA. 187+50 TO STA. 200+00

ALL-75-0.21

49/103

853/907

I:\Pd\89029\row\sheets\89029RL016.dgn 07-MAY-2012 11:35AM dsiebene

ALLEN COUNTY
PERRY TOWNSHIP
CITY OF LIMA
SEC. 18, N.W. 1/4, T-4-S R-7-E
SEC. 18, N.E. 1/4, T-4 S R-7-E

ALLEN COUNTY
PERRY TWP.
N.W. 1/4, SEC. 18
T4S, R7E

ALLEN COUNTY
CITY OF LIMA
N.E. 1/4, SEC. 18
T4S, R7E

CITY OF LIMA

MECHLING DITCH

MECHLING DITCH

S 89° 28' 38" E
Ex LA
587.63'

S 88° 58' 56" E, 438.24'
Ex LA

S 88° 58' 56" E, 528.99'
Ex LA

S 89° 20' 44" E, 371.04'
Ex LA

+61.78
115.00'LT

+00.00
110.47'LT

+28.96
105.00'LT

MATCH LINE STA. 187+50 I-75

188 189 190 191 192 193 194 195 196 197 198 199 200

℄ R/W & CONST. I-75

S 89° 34' 29" E

MATCH LINE STA. 200+00 I-75

S 89° 26' 16" E
Ex LA
387.18'

S 89° 23' 20" E, 438.48'
Ex LA

CITY OF LIMA

+61.52
115.87'RT

+00.00
117.29'RT

S 89° 23' 21" E, 452.46'
Ex LA

+16.97
137.00'RT

+21.53
137.00'RT

+52.46
118.76'RT
T.P.O.B. 32-WL2

S 89° 23' 20" E, 447.54'
Ex LA

N 84° 23' 4" W, 251.03'

LA R/W

S 82° 29' 34" W
153.93'

B20
+50.00
140.00'RT

B21

B22
+00.00
140.00'RT

32-WL2

TMP

TMP

S 7° 53' 24" W
88.75'

N 14° 14' 20" W
90.96'

+40.00
225.00'RT

32-T2

TMP

+10.00
225.00'RT

N 89° 34' 29" W
70.00'

32
THE PORT AUTHORITY OF ALLEN COUNTY, A SUBDIVISION OF ALLEN COUNTY, OHIO
47180002010000
40.900 AC.

32
THE PORT AUTHORITY OF ALLEN COUNTY, A SUBDIVISION OF ALLEN COUNTY, OHIO
47180002011000
46.520 AC.

ALLEN COUNTY
CITY OF LIMA
N.W. 1/4, SEC. 18
T4S, R7E

ALLEN COUNTY
CITY OF LIMA
N.E. 1/4, SEC. 18
T4S, R7E

1/2 SEC. LINE

N 0° 54' 48" E, 1,323.77'

MECHLING DITCH

CENTER SEC. 18
IRON PIN SET

BEARING & DISTANCE		
B-D	Bearing	Distance
B20	S 84° 23' 04" E	33.16'
B21	S 89° 34' 29" E	50.00'
B22	N 82° 29' 34" E	21.74'

REV. BY	DATE	DESCRIPTION
DJS	4/18/12	REVISED OWNERS NAME FOR PARCEL 32
DJS	11/17/11	ADDED PARCEL 32-T2
DATE COMPLETED:		10/06/11

HORIZONTAL SCALE IN FEET
0 25 50 100

R/W DESIGNER BJD
R/W REVIEWER LAF

PID NO. 89029

RIGHT OF WAY PLAN BOUNDARY SHEET
STA. 187+50 TO STA. 200+00

ALL-75-0.21

50/103

854/907

I:\Pid\89029\row\sheets\89029RD016.dgn 07-MAY-2012 11:36AM dsiebene

ALLEN COUNTY
CITY OF LIMA
SEC. 18, N.E. 1/4, T-4-S R-7-E

ALLEN COUNTY
CITY OF LIMA
N.E. 1/4, SEC. 18
T4S, R7E

46
THREE A'S, INC.
47180001003000
13.770 AC.
COMMERCIAL

MECHLING DITCH

CITY OF LIMA

CONST. LIMITS (TYP.)

MATCH LINE STA. 200+00 I-75

200 201 202 203 204 205 206 207 208 209 210 211 212

S 89° 34' 29" E

℄ R/W & CONST. I-75

MATCH LINE STA. 212+50 I-75

15'-B 87'

15' Type B x100'

CONST. LIMITS (TYP.)

Ex LA

CITY OF LIMA

Ex U

245-WL

47-WL

32
THE PORT AUTHORITY OF ALLEN COUNTY, A SUBDIVISION OF ALLEN COUNTY, OHIO
47180002011000
46.520 AC.
COMMERCIAL

245
BEF FOODS, INC,
AN OHIO CORPORATION
47180001006000
16.000 AC.
COMMERCIAL

47
MIDWEST HIGHWAY OPPORTUNITIES, LLC.
47180001005000
40.190 AC.
COMMERCIAL

ALLEN COUNTY
CITY OF LIMA
N.E. 1/4, SEC. 18
T4S, R7E

OHIO POWER COMPANY
30' EASEMEMT
VOL. 2008, PAGE 16117

SHELL OIL COMPANY
65' EASEMENT

NOTE: ALL TREES ALONG THE EXISTING LA/RW FENCE WILL BE REMOVED UNLESS LABELED AS "SAVE"

REV. BY	DATE	DESCRIPTION
DJS	8/20/12	REVISED OWNERS NAME FOR PARCEL 245
DJS	4/18/12	REVISED OWNERS NAME FOR PARCEL 32
DATE COMPLETED:		10/06/11

HORIZONTAL SCALE IN FEET
0 25 50 100

R/W DESIGNER BJD
R/W REVIEWER LAF

PID NO. 89029

RIGHT OF WAY TOPO SHEET
STA. 200+00 TO STA. 212+50

ALL-75-0.21

51/103

855/907

I:\Pid\89029\row\sheets\89029RL017.dgn 20-AUG-2012 9:32AM dsiebene

ALLEN COUNTY
CITY OF LIMA
SEC. 18, N.E. 1/4, T-4-S R-7-E

ALLEN COUNTY
CITY OF LIMA
N.E. 1/4, SEC. 18
T4S, R7E

(45)
J & T REAL ESTATE LLC
47180001004001

(46)
THREE A'S, INC.
47180001003000
13.770 AC.

MECHLING DITCH

S 89° 20' 44" E, 371.04'
+00.00
103.52'LT
S 89° 20' 44" E, 400.00'
+00.00
101.92'LT
S 89° 20' 44" E, 479.57'
CITY OF LIMA
N 88° 29' 33" E, 500.72'
+79.56
100.00'LT

MATCH LINE STA. 200+00 I-75

200 201 202 203 204 205 206 207 208 209 210 211 212

S 89° 34' 29" E
℄ R/W & CONST. I-75

MATCH LINE STA. 212+50 I-75

S 88° 29' 0" E, 19.39'
+61.96
100.00'RT
245-WL
+81.35
100.37'RT
S 0° 31' 17" E, 22.69'
N 0° 43' 27" E, 23.00'
S 88° 46' 41" E, 1320.52'
+61.84, 123.00'RT
T.P.O.B. 245-WL
B9
B10
+81.31
123.06'RT
N 89° 34' 29" W
150.00'
47-WL1
+50.00
135.00'RT

S 89° 23' 20" E, 447.54'
+00.00
120.21'RT
S 89° 23' 20" E, 400.00'
+00.00
121.50'RT
CITY OF LIMA
S 89° 23' 20" E, 461.85'

(32)
THE PORT AUTHORITY OF ALLEN
COUNTY, A SUBDIVISION OF
ALLEN COUNTY, OHIO
47180002011000
46.520 AC.

(245)
BEF FOODS, INC.,
AN OHIO CORPORATION
47180001006000
16.000 AC.

(47)
MIDWEST HIGHWAY
OPPORTUNITIES, LLC.
47180001005000
40.190 AC.

ALLEN COUNTY
CITY OF LIMA
N.E. 1/4, SEC. 18
T4S, R7E

OHIO POWER COMPANY
30' EASEMEMT
VOL. 2008, PAGE 16117

SHELL OIL COMPANY
65' EASEMENT

BEARING & DISTANCE		
B-D	Bearing	Distance
B9	N 89° 24' 35" W	19.47'
B10	N 79° 42' 37" W	69.72'

REV. BY	DATE	DESCRIPTION
DJS	8/20/12	REVISED OWNERS NAME FOR PARCEL 245
DJS	4/18/12	REVISED OWNERS NAME FOR PARCEL 32
DJS	12/23/11	REVISED BEARING ALONG LEAD-IN FOR 245-WL
DATE COMPLETED:		10/06/11

HORIZONTAL SCALE IN FEET
0 25 50 100

R/W DESIGNER BJD
R/W REVIEWER LAF

PID NO. 89029

RIGHT OF WAY PLAN BOUNDARY SHEET
STA. 200+00 TO STA. 212+50

ALL-75-0.21

52/103

856/907

I:\Pd\89029\row\sheets\89029RD017.dgn 20-AUG-2012 10:09AM dsiebene

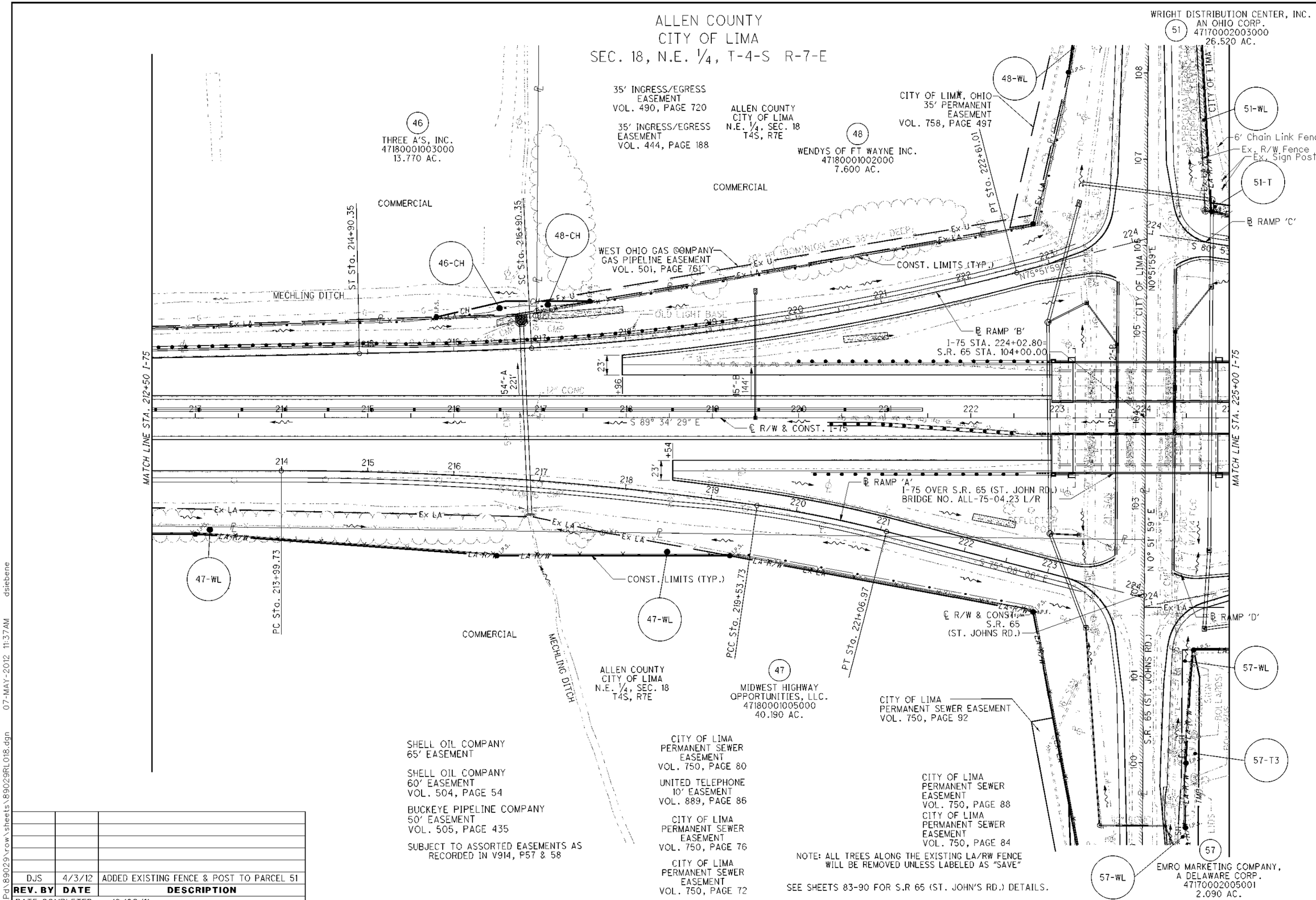

REV. BY	DATE	DESCRIPTION
DJS	4/3/12	ADDED EXISTING FENCE & POST TO PARCEL 51

DATE COMPLETED: 10/06/11

I:\Pd\89029\row\sheets\89029RL018.dgn 07-MAY-2012 11:37AM dsiebene

HORIZONTAL SCALE IN FEET 0 25 50 100

R/W DESIGNER BJD
R/W REVIEWER LAF

PID NO. 89029

RIGHT OF WAY TOPO SHEET
STA. 212+50 TO STA. 225+00

ALL-75-0.21

ALLEN COUNTY
CITY OF LIMA
SEC. 18, N.E. ¼, T-4-S R-7-E

SEC. LINE
N 89° 07' 43" W, 707.17'
N.E. COR., SEC. 18
MONUMENT BOX FND.

(46) THREE A'S, INC. 47180001003000 13.770 AC.

35' INGRESS/EGRESS EASEMENT VOL. 490, PAGE 720

35' INGRESS/EGRESS EASEMENT VOL. 444, PAGE 188

ALLEN COUNTY CITY OF LIMA N.E. ¼, SEC. 18 T4S, R7E

(48) WENDYS OF FT WAYNE INC. 47180001002000 7.600 AC.

CITY OF LIMA, OHIO 35' PERMANENT EASEMENT VOL. 758, PAGE 497

(51) WRIGHT DISTRIBUTION CENTER, INC. AN OHIO CORP. 47170002003000 26.520 AC.

CITY OF LIMA

46-CH
48-CH
48-WL
51-WL
51-T
47-WL
57-WL
57-T3

PC Sta. 213+99.73
PT Sta. 214+90.35
PC Sta. 216+90.35
PCC Sta. 219+53.73
PT Sta. 221+06.97
PT Sta. 222+61.01

+96.33, 135.00'LT
T.P.O.B. 46-CH & 48CH

S 89° 34' 29" E, 36.33'
+60.00
135.00'LT
N 77° 40' 8" E, 82.02'
+80.00
116.89'LT
S 89° 34' 29" E, 61.58'
+57.91
135.00'LT
S 88° 29' 33" W, 92.25'
+72.20
120.00'LT
S 80° 29' 57" W, 24.42'
+96.25
124.21'LT
S 80° 29' 57" W, 62.60'
N 0° 53' 0" E, 10.79'
N 88° 29' 33" E, 500.72'
S 0° 53' 00" W, 1,053.35'
N 80° 29' 57" E, 522.10'
S 0°51'59" W, 1,324.27'
S 89° 34' 29" E
N 89° 34' 29" W, 150.00'
N 85° 29' 21" W, 350.89'
+00.00
135.00'RT
N 89° 34' 29" W, 270.41'
+50.00
160.00'RT
+20.41
160.00'RT
S 88° 46' 41" E, 1320.52'
N 79° 6' 22" W, 357.74'
N 10° 8' 25" W, 360.69'
N 13° 37' 48" E, 180.47'
S 0° 51' 59" W, 648.58'
N 0° 51' 59" E

223+13.42
400.70'LT
222+72.20
225.00'LT
224+01.71, 141.42'RT ℄ I-75=
102+58.58, ℄ S.R. 65
222+72.20, 225.00'RT ℄ I-75=
101+74.00, 128.86'LT ℄ S.R. 65
224+58.73
269.36'RT

℄ RAMP 'A'
℄ RAMP 'B'
I-75 STA. 224+02.80=
S.R. 65 STA. 104+00.00
℄ RAMP 'C'
106+13.89, S.R. 65=
223+93.98, RAMP "C"
106+07.78, S.R. 65=
224+17.25, RAMP "B"
℄ RAMP 'D'
℄ R/W & CONST. I-75
℄ R/W & CONST.
S.R. 65 (ST. JOHNS RD.)

MECHLING DITCH

CITY OF LIMA PERMANENT SEWER EASEMENT VOL. 750, PAGE 88

CITY OF LIMA PERMANENT SEWER EASEMENT VOL. 750, PAGE 84

SHELL OIL COMPANY 65' EASEMENT

SHELL OIL COMPANY 60' EASEMENT VOL. 504, PAGE 54

BUCKEYE PIPELINE COMPANY 50' EASEMENT VOL. 505, PAGE 435

SUBJECT TO ASSORTED EASEMENTS AS RECORDED IN V914, P57 & 58

ALLEN COUNTY CITY OF LIMA N.E. ¼, SEC. 18 T4S, R7E

(47) MIDWEST HIGHWAY OPPORTUNITIES, LLC. 47180001005000 40.190 AC.

CITY OF LIMA PERMANENT SEWER EASEMENT VOL. 750, PAGE 80

UNITED TELEPHONE 10' EASEMENT VOL. 889, PAGE 86

CITY OF LIMA PERMANENT SEWER EASEMENT VOL. 750, PAGE 76

CITY OF LIMA PERMANENT SEWER EASEMENT VOL. 750, PAGE 72

CITY OF LIMA PERMANENT SEWER EASEMENT VOL. 750, PAGE 92

(57) EMRO MARKETING COMPANY, A DELAWARE CORP. 47170002005001 2.090 AC.

NOTE: See sheets 84,86,88,90 for details of Parcels 47-WL,48-WL, 51-WL and 57-WL.

MATCH LINE STA. 212+50 I-75
MATCH LINE STA. 225+00 I-75

BEARING & DISTANCE		
B-D	Bearing	Distance
B11	S 80° 16' 10" E	398.39'
B12	N 81° 44' 44" W	396.25'
B13	N 2° 49' 12" W	10.46'

STATION & OFFSET		
S-O	Station	Offset
S2	224+79.05	249.42'LT
S3	224+79.64	238.98'LT

REV. BY	DATE	DESCRIPTION
DJS	12/23/11	REMOVED T.P.O.B. FOR PARCEL 47-WL
DATE COMPLETED:		10/06/11

HORIZONTAL SCALE IN FEET
0 25 50 100

R/W DESIGNER BJD
R/W REVIEWER LAF

PID NO. 89029

RIGHT OF WAY PLAN BOUNDARY SHEET
STA. 212+50 TO STA. 225+00

ALL-75-0.21

54 / 103

858 / 907

I:\Pd\89029\row\sheets\89029RD018.dgn 07-MAY-2012 11:37AM dsiebene

ALLEN COUNTY
PERRY TOWNSHIP
CITY OF LIMA
SEC. 17, N.W. 1/4, T-4-S R-7-E

NOTE:
INTERSTATE 75 - STA. 237+16.78 (0.0'RT.)=
INDIANA AND OHIO RAILWAY (IORY)
AAR/DOT# 258615H
RR MP. 135.34
SUBDIVISION: DT&I MIDDLE

EASEMENTS:
SPRINT TELEPHONE VOL. 784 PG. 215
OHIO TEL. & TEL L 42/559
OHIO TEL. & TEL L 43/20
OHIO POWER VOL. 207 PG. 595
OHIO POWER VOL. 248 PG. 561
OHIO POWER VOL. 332 PG. 7
OHIO POWER VOL. 419 PG. 672
WEST OHIO GAS VOL. 456 PG. 180
STATE OF OHIO VOL. 239 PG. 627
STATE OF OHIO VOL. 349 PG. 290

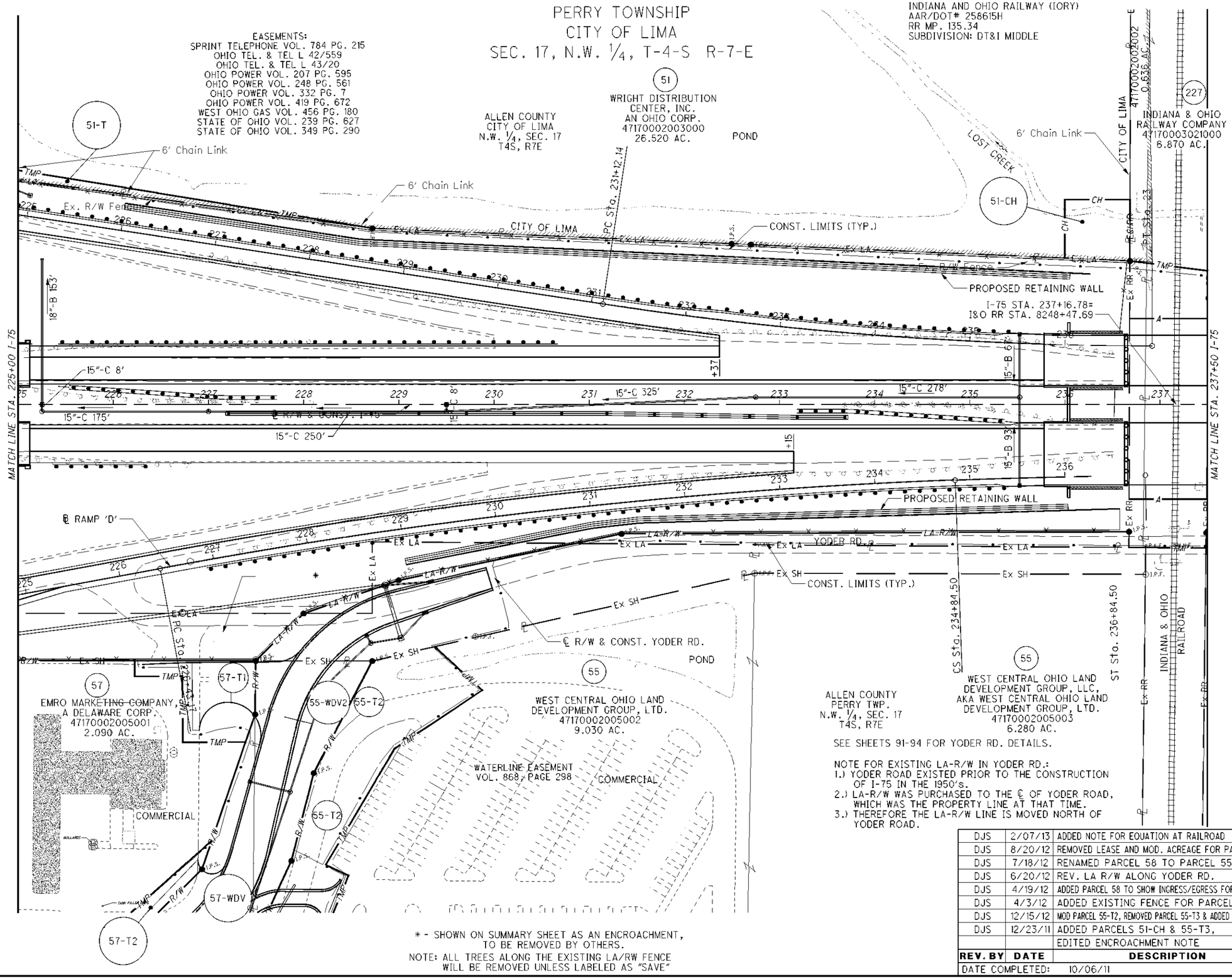

SEE SHEETS 91-94 FOR YODER RD. DETAILS.

NOTE FOR EXISTING LA-R/W IN YODER RD.:
1.) YODER ROAD EXISTED PRIOR TO THE CONSTRUCTION OF I-75 IN THE 1950's.
2.) LA-R/W WAS PURCHASED TO THE ℄ OF YODER ROAD, WHICH WAS THE PROPERTY LINE AT THAT TIME.
3.) THEREFORE THE LA-R/W LINE IS MOVED NORTH OF YODER ROAD.

* - SHOWN ON SUMMARY SHEET AS AN ENCROACHMENT, TO BE REMOVED BY OTHERS.
NOTE: ALL TREES ALONG THE EXISTING LA/RW FENCE WILL BE REMOVED UNLESS LABELED AS "SAVE"

REV. BY	DATE	DESCRIPTION
DJS	2/07/13	ADDED NOTE FOR EQUATION AT RAILROAD
DJS	8/20/12	REMOVED LEASE AND MOD. ACREAGE FOR PARCEL 55
DJS	7/18/12	RENAMED PARCEL 58 TO PARCEL 55
DJS	6/20/12	REV. LA R/W ALONG YODER RD.
DJS	4/19/12	ADDED PARCEL 58 TO SHOW INGRESS/EGRESS FOR PARCEL 55
DJS	4/3/12	ADDED EXISTING FENCE FOR PARCEL 51
DJS	12/15/12	MOD PARCEL 55-T2, REMOVED PARCEL 55-T3 & ADDED R.R. PARCELS
DJS	12/23/11	ADDED PARCELS 51-CH & 55-T3,
		EDITED ENCROACHMENT NOTE

DATE COMPLETED: 10/06/11

HORIZONTAL SCALE IN FEET 0 25 50 100

R/W DESIGNER BJD
R/W REVIEWER LAF

PID NO. 89029

RIGHT OF WAY TOPO SHEET
STA. 225+00 TO STA. 237+50

ALL-75-0.21

I:\Pd\89029\row\sheets\89029RL019.dgn 11-FEB-2013 8:55AM dsiebene

ALLEN COUNTY
PERRY TOWNSHIP
CITY OF LIMA
SEC. 17, N.W. 1/4, T-4-S R-7-E

EASEMENTS:
SPRINT TELEPHONE VOL. 784 PG. 215
OHIO TEL. & TEL L 42/559
OHIO TEL. & TEL L 43/20
OHIO POWER VOL. 207 PG. 595
OHIO POWER VOL. 248 PG. 561
OHIO POWER VOL. 332 PG. 7
OHIO POWER VOL. 419 PG. 672
WEST OHIO GAS VOL. 456 PG. 180
STATE OF OHIO VOL. 239 PG. 627
STATE OF OHIO VOL. 349 PG. 290

51-T

POND

TMP

℄ LA

S 80° 16' 10" E, 398.39'

N 81° 44' 44" W, 396.25'

Ex LA

225 01" E 226 227 228 229 230 231 232 233 234 235 236

℄ RAMP 'C'

+72.20
185.00'LT

ALLEN COUNTY
CITY OF LIMA
N.W. 1/4, SEC. 17
T4S, R7E

51
WRIGHT DISTRIBUTION CENTER, INC.
AN OHIO CORP.
47170002003000
26.520 AC.

POND

PC Sta. 231+12.14

CITY OF LIMA

S 87° 6' 44" E, 378.15'

Ex LA

232+50.00
168.75'LT

350.32'

S 87° 6' 44" E, 418.78'

Ex LA

51-CH

N 0° 25' 31" E, 61.30'

CH

LOST CREEK

236+00.00, 215.00'LT
S 89° 34' 29" E, 68.58'
S 87° 06' 44" W, 68.45'
S 0° 35' 49" W, 64.24'
236+68.58, 215.00'LT

227

47170002002002
0.635 AC.

INDIANA & OHIO RAILWAY COMPANY
47170003021000
6.870 AC.

236+00.00, 153.70'LT

236+68.39
150.76'LT

Ex RR

I-75 STA. 237+16.78=
I&O RR STA. 8248+47.69

℄ A

℄ R/W & CONST. I-75

S 89° 34' 29" E

NOTE: See sheet 103 for Railroad Plat with Parcel details.

MATCH LINE STA. 225+00 I-75

MATCH LINE STA. 237+50 I-75

℄ RAMP 'D'

N 79° 51' 58" E

+00.00
220.00'RT

+49.71
269.81'RT

PC Sta. 226+43.11

Ex LA

LA-R/W

I.P.S.

1/2" Bent

Ex SH

TMP

R/W

57-T1

55-WDV2

55-T2

PC Sta. 5+42.77

Sta. 7+18.16

231+34.15
136.27'RT

+00.00
185.00'RT

N 74° 09' 46" E

POT Sta. 6+38.29

℄ R/W & CONST. YODER RD.

POND

55

WEST CENTRAL OHIO LAND DEVELOPMENT GROUP, LTD.
47170002005002
9.030 AC.

57

EMRO MARKETING COMPANY,
A DELAWARE CORP.
47170002005001
2.090 AC.

NOTE: See sheets 92,94 for Parcel details along Yoder Rd.

WATERLINE EASEMENT
VOL. 868, PAGE 298

NOTE:
INTERSTATE 75 - STA. 237+16.78 (0.0'RT.)=
INDIANA AND OHIO RAILWAY (IORY)
AAR/DOT# 258615H
RR MP. 135.34
SUBDIVISION: DT&I MIDDLE

NOTE FOR EXISTING LA-R/W IN YODER RD.:
1.) YODER ROAD EXISTED PRIOR TO THE CONSTRUCTION OF I-75 IN THE 1950's.
2.) LA-R/W WAS PURCHASED TO THE ℄ OF YODER ROAD, WHICH WAS THE PROPERTY LINE AT THAT TIME.
3.) THEREFORE THE LA-R/W LINE IS MOVED NORTH OF YODER ROAD.

ALLEN COUNTY
PERRY TWP.
N.W. 1/4, SEC. 17
T4S, R7E

55

WEST CENTRAL OHIO LAND DEVELOPMENT GROUP, LLC.
AKA WEST CENTRAL OHIO LAND DEVELOPMENT GROUP, LTD.
47170002005003
6.280 AC.

CS Sta. 234+84.50

ST Sta. 236+84.50

INDIANA & OHIO RAILROAD

237+48.64
135.00'RT

REV. BY	DATE	DESCRIPTION
DJS	2/07/13	ADDED NOTE FOR EQUATION AT RAILROAD
DJS	8/20/12	REMOVED LEASE AND MOD. ACREAGE FOR PARCEL 55
DJS	7/18/12	RENAMED PARCEL 58 TO PARCEL 55
DJS	6/20/12	REV. LA R/W ALONG YODER RD.
DJS	3/22/12	REMOVED PARCEL 55-T3 & ADDED 55-T2
DJS	12/23/11	ADDED PARCEL 51-CH & 55-T3
DATE COMPLETED:		10/06/11

HORIZONTAL SCALE IN FEET
0 25 50 100

R/W DESIGNER BJD
R/W REVIEWER LAF

PID NO. 89029

RIGHT OF WAY PLAN BOUNDARY SHEET
STA. 225+00 TO STA. 237+50

ALL-75-0.21

56/103

860/907

I:\Pid\89029\row\sheets\89029RD019.dgn 11-FEB-2013 9:01AM dsiebene

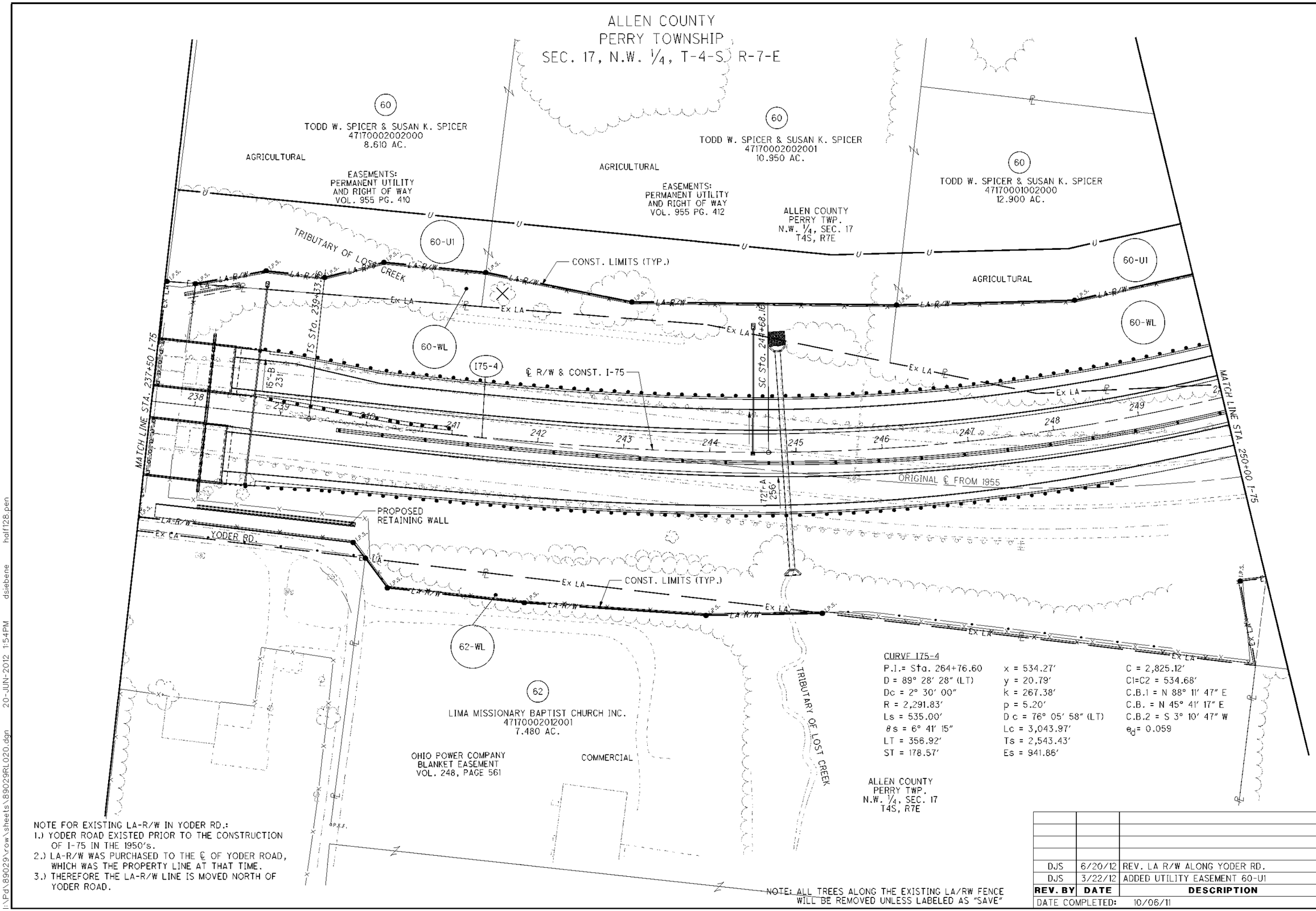

CURVE I75-4

P.I.= Sta. 264+76.60	x = 534.27'	C = 2,825.12'
D = 89° 28' 28" (LT)	y = 20.79'	C1=C2 = 534.68'
Dc = 2° 30' 00"	k = 267.38'	C.B.1 = N 88° 11' 47" E
R = 2,291.83'	p = 5.20'	C.B. = N 45° 41' 17" E
Ls = 535.00'	D c = 76° 05' 58" (LT)	C.B.2 = S 3° 10' 47" W
θs = 6° 41' 15"	Lc = 3,043.97'	e_d= 0.059
LT = 356.92'	Ts = 2,543.43'	
ST = 178.57'	Es = 941.86'	

NOTE FOR EXISTING LA-R/W IN YODER RD.:
1.) YODER ROAD EXISTED PRIOR TO THE CONSTRUCTION OF I-75 IN THE 1950's.
2.) LA-R/W WAS PURCHASED TO THE ℄ OF YODER ROAD, WHICH WAS THE PROPERTY LINE AT THAT TIME.
3.) THEREFORE THE LA-R/W LINE IS MOVED NORTH OF YODER ROAD.

NOTE: ALL TREES ALONG THE EXISTING LA/RW FENCE WILL BE REMOVED UNLESS LABELED AS "SAVE"

REV. BY	DATE	DESCRIPTION
DJS	6/20/12	REV. LA R/W ALONG YODER RD.
DJS	3/22/12	ADDED UTILITY EASEMENT 60-U1

DATE COMPLETED: 10/06/11

HORIZONTAL SCALE IN FEET 0 25 50 100

R/W DESIGNER BJD
R/W REVIEWER LAF

PID NO. 89029

RIGHT OF WAY TOPO SHEET
STA. 237+50 TO STA. 250+00

ALL-75-0.21

I:\Pd\89029\row\sheets\89029RL020.dgn 20-JUN-2012 1:54PM dsiebene half128.pen

ALLEN COUNTY
PERRY TOWNSHIP
SEC. 17, N.W. 1/4, T-4-S R-7-E

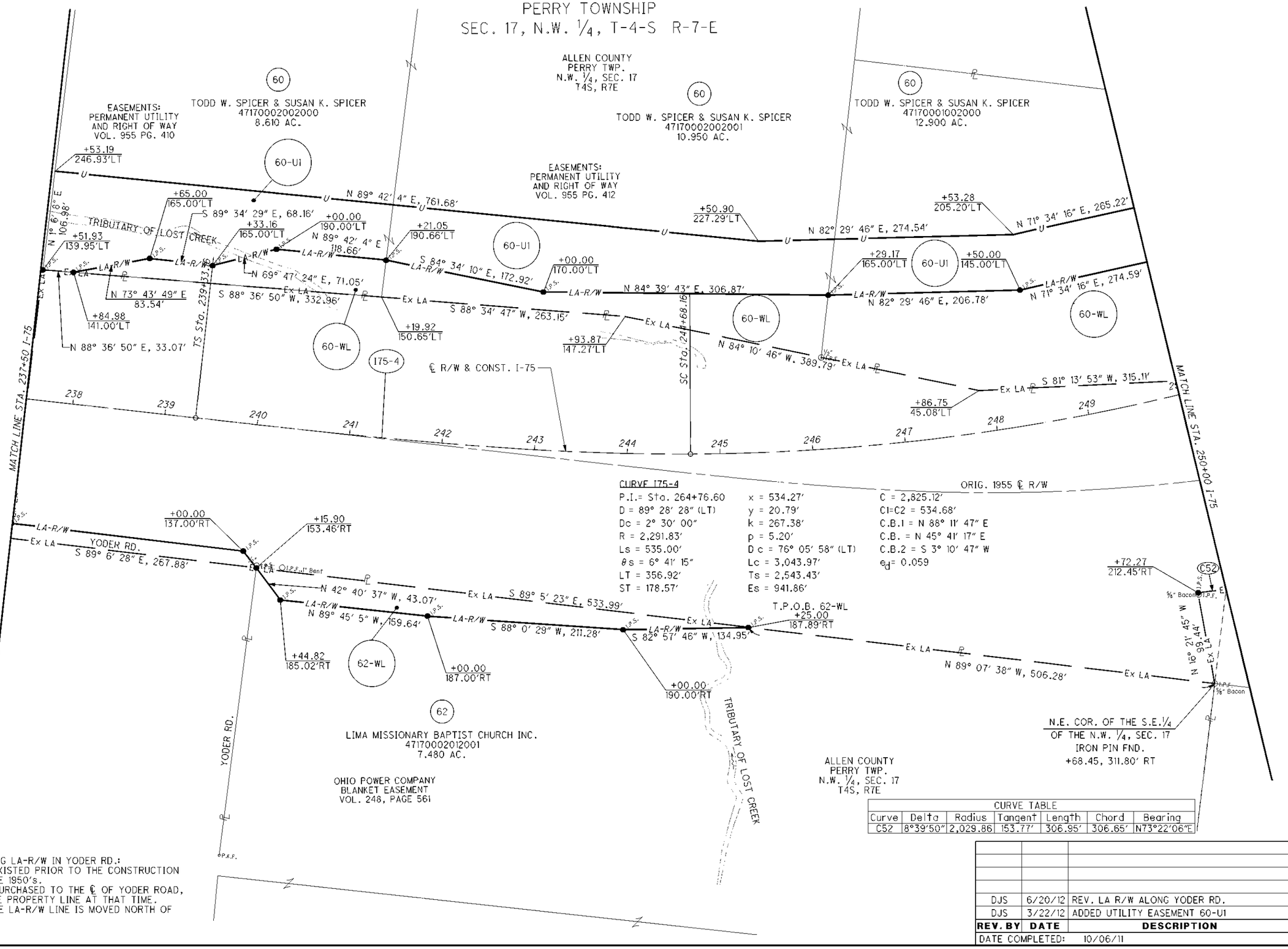

CURVE TABLE						
Curve	Delta	Radius	Tangent	Length	Chord	Bearing
C52	8°39'50"	2,029.86	153.77'	306.95'	306.65'	N73°22'06"E

NOTE FOR EXISTING LA-R/W IN YODER RD.:
1.) YODER ROAD EXISTED PRIOR TO THE CONSTRUCTION OF I-75 IN THE 1950's.
2.) LA-R/W WAS PURCHASED TO THE ℄ OF YODER ROAD, WHICH WAS THE PROPERTY LINE AT THAT TIME.
3.) THEREFORE THE LA-R/W LINE IS MOVED NORTH OF YODER ROAD.

REV. BY	DATE	DESCRIPTION
DJS	6/20/12	REV. LA R/W ALONG YODER RD.
DJS	3/22/12	ADDED UTILITY EASEMENT 60-U1

DATE COMPLETED: 10/06/11

HORIZONTAL SCALE IN FEET
0 25 50 100

R/W DESIGNER BJD
R/W REVIEWER LAF

PID NO. 89029

RIGHT OF WAY PLAN BOUNDARY SHEET
STA. 237+50 TO STA. 250+00

ALL-75-0.21

I:\Pid\89029\row\sheets\89029RD020.dgn 20-JUN-2012 1:58PM dsiebene half128.pen

ALLEN COUNTY
PERRY TOWNSHIP
SEC. 17, N.E. 1/4, T-4-S R-7-E
SEC. 17, N.W. 1/4, T-4-S R-7-E

ALLEN COUNTY
PERRY TWP.
N.W. 1/4, SEC. 17
T4S, R7E

71
GUARDIAN LIMA, LLC
47170001004000

64
HAROLD B. LAMBERT, HUSBAND &
NORMA J. LAMBERT, WIFE
47170001003000

60
TODD W. & SUSAN K. SPICER
47170001002000
12.900 AC.

TRIBUTARY OF LOST CREEK

EASEMENTS:
PERMANENT UTILITY
AND RIGHT OF WAY
VOL. 955 PG. 408

60-UV1

71-UV1

RESIDENTIAL

AGRICULTURAL

ALLEN COUNTY
PERRY TWP.
N.E. 1/4, SEC. 17
T4S, R7E

60
TODD W. & SUSAN K. SPICER
47170001002000
12.900 AC.

60-WL

1/2 SEC. LINE

L.A. R/W

64-UV

60-UV2

CONST. LIMITS (TYP.)

64-WL

I75-4

℄ R/W & CONST. I-75

MATCH LINE STA. 250+00 I-75

MATCH LINE STA. 262+50 I-75

Ex LA

ORIGINAL ℄ FROM 1955

CONST. LIMITS (TYP.)

ALLEN COUNTY
PERRY TWP.
N.E. 1/4, SEC. 17
T4S, R7E

AGRICULTURAL

TRIBUTARY OF LOST CREEK

65
THOMAS J. & DIANE R. MEYER
47170001001000
54.250 AC.

OHIO POWER COMPANY
BLANKET EASEMEMT
VOL. 440, PAGE 357
VOL. 319, PAGE 312

BUCKEYE PIPE LINE COMPANY
BLANKET EASEMENT
VOL. 477, PAGE 244

ALLEN COUNTY
PERRY TWP.
N.E. 1/4, SEC. 17
T4S, R7E

NOTE: ALL TREES ALONG THE EXISTING LA/RW FENCE
WILL BE REMOVED UNLESS LABELED AS "SAVE"

CURVE I75-4
P.I.= Sta. 264+76.60
D = 89° 28' 28" (LT)
Dc = 2° 30' 00"
R = 2,291.83'
Ls = 535.00'
θs = 6° 41' 15"
LT = 356.92'
ST = 178.57'
x = 534.27'
y = 20.79'
k = 267.38'
p = 5.20'
Dc = 76° 05' 58" (LT)
Lc = 3,043.97'
Ts = 2,543.43'
Es = 941.86'
C = 2,825.12'
C1=C2 = 534.68'
C.B.1 = N 88° 11' 47" E
C.B. = N 45° 41' 17" E
C.B.2 = S 3° 10' 47" W
e_d = 0.059

HORIZONTAL SCALE IN FEET
0 25 50 100

R/W DESIGNER BJD
R/W REVIEWER LAF

PID NO. 89029

RIGHT OF WAY TOPO SHEET
STA. 250+00 TO STA. 262+50

ALL-75-0.21

59/103

863/907

REV. BY	DATE	DESCRIPTION
DJS	11/06/12	REVISED NAME FOR PARCEL 71
DJS	9/19/12	CHANGED 60-U1, 60-U2, 64-U & 71-U1 TO UV PARCELS
DJS	3/22/12	ADDED UTILITY EASEMENTS 60-U1, 60-U2, 64-U, 71-U1
DATE COMPLETED:		10/06/11

I:\Pd\89029\row\sheets\89029RL021.dgn 06-NOV-2012 10:50AM dsiebene

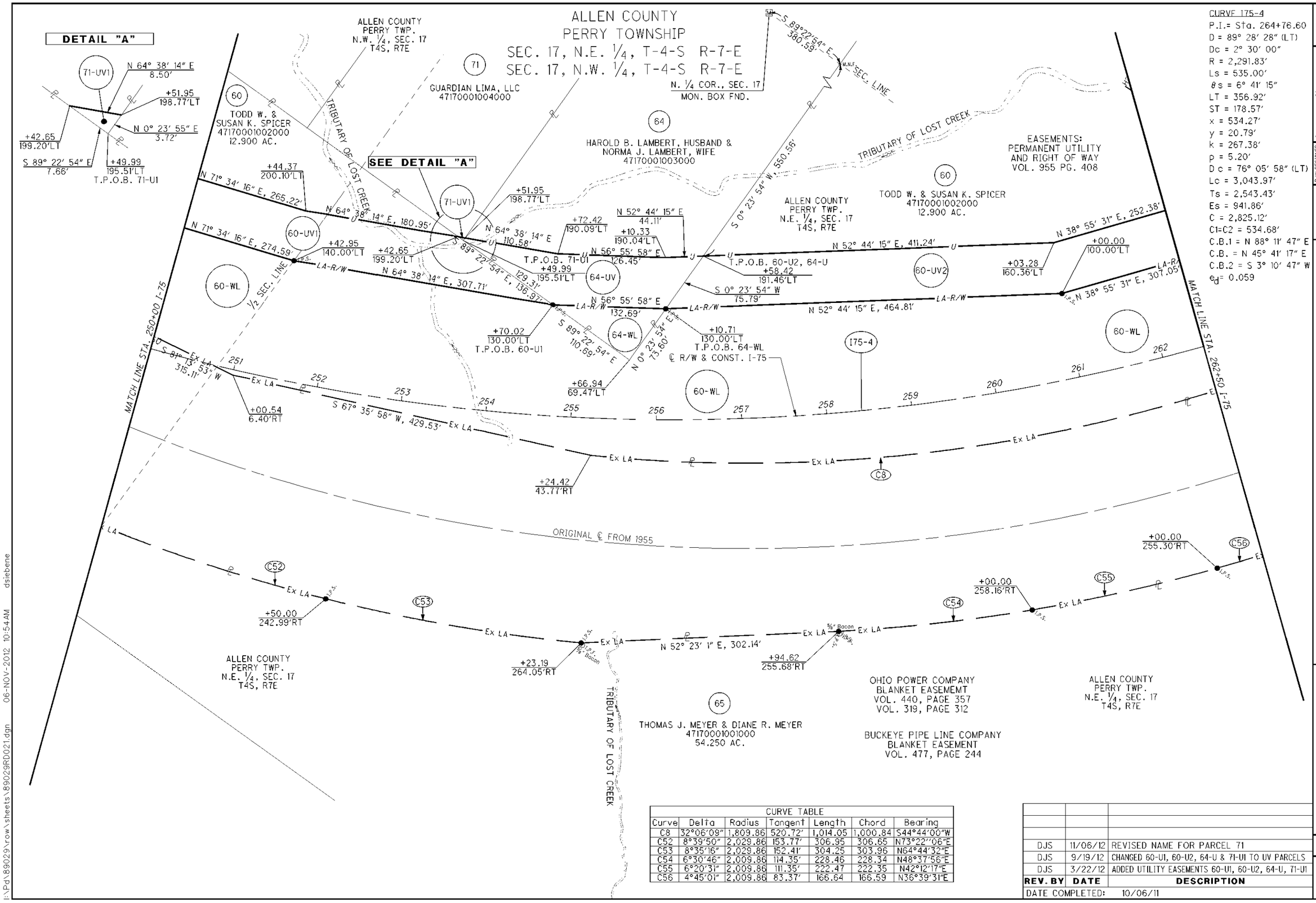

CURVE I75-4
P.I.= Sta. 264+76.60
D = 89° 28' 28" (LT)
Dc = 2° 30' 00"
R = 2,291.83'
Ls = 535.00'
θs = 6° 41' 15"
LT = 356.92'
ST = 178.57'
x = 534.27'
y = 20.79'
k = 267.38'
p = 5.20'
Dc = 76° 05' 58" (LT)
Lc = 3,043.97'
Ts = 2,543.43'
Es = 941.86'
C = 2,825.12'
C1=C2 = 534.68'
C.B.1 = N 88° 11' 47" E
C.B. = N 45° 41' 17" E
C.B.2 = S 3° 10' 47" W
e_d = 0.059

CURVE TABLE						
Curve	Delta	Radius	Tangent	Length	Chord	Bearing
C8	32°06'09"	1,809.86	520.72'	1,014.05	1,000.84	S44°44'00"W
C52	8°39'50"	2,029.86	153.77'	306.95	306.65	N73°22'06"E
C53	8°35'16"	2,029.86	152.41'	304.25	303.96	N64°44'32"E
C54	6°30'46"	2,009.86	114.35'	228.46	228.34	N48°37'56"E
C55	6°20'31"	2,009.86	111.35'	222.47	222.35	N42°12'17"E
C56	4°45'01"	2,009.86	83.37'	166.64	166.59	N36°39'31"E

REV. BY	DATE	DESCRIPTION
DJS	11/06/12	REVISED NAME FOR PARCEL 71
DJS	9/19/12	CHANGED 60-U1, 60-U2, 64-U & 71-U1 TO UV PARCELS
DJS	3/22/12	ADDED UTILITY EASEMENTS 60-U1, 60-U2, 64-U, 71-U1

DATE COMPLETED: 10/06/11

HORIZONTAL SCALE IN FEET
0 25 50 100

R/W DESIGNER BJD
R/W REVIEWER LAF

PID NO. 89029

RIGHT OF WAY PLAN BOUNDARY SHEET
STA. 250+00 TO STA. 262+50

ALL-75-0.21

60/103

864/907

I:\Pd\89029\row\sheets\89029RD021.dgn 06-NOV-2012 10:54AM dsiebene

ALLEN COUNTY
PERRY TOWNSHIP
CITY OF LIMA
SEC. 17, N.E. ¼, T-4-S R-7-E
SEC. 8, S.E. ¼, T-4-S R-7-E

DOMINION EAST OHIO GAS
PIPELINE EASEMENT NO. 1
VOL. 2007, PAGE 4668

EASEMENTS
INGRESS AND EGRESS, VOL. 2006, PAGE 10149
DOMINION EAST OHIO GAS, VOL. 2007 PAGE 04668
CITY OF LIMA, OHIO, VOL. 955 PAGE 426
INLAND CORPORATION, 947, PAGE 773

TRANS-OHIO PIPELINE COMPANY
EASEMENT
VOL. 542, PAGE 176
ASSIGNMENT TO COLUMBIA LNG CORPORATION
VOL. 572, PAGE 347
ASSIGNMENT TO BUCKEYE PIPE LINE COMPANY
VOL. 641, PAGE 511
ASSIGNMENT TO MARATHON ENERGY HOLDINGS, INC.
VOL. 693, PAGE 283
GREATER OHIO ETHANOL, LLC
PARTIAL RELEASE
VOL. 948, PAGE 658

TODD W. SPICER &
SUSAN K. SPICER
47170001002000
12.900 AC.

GREATER OHIO ETHANOL
47080004002000
11.310 AC.

ALLEN COUNTY
CITY OF LIMA
S.E. ¼, SEC. 8
T4S, R7E

GAURDIAN LIMA, LLC
47080004001000
62.730 AC.

DOMINION EAST OHIO
GAS, GRANT MEASURING
REGULATOR STATION AND
INGRESS AND EGRESS

INGRESS EGRESS EASEMENT
PERMANENT SANITARY SEWER,
DRAINAGE CHANNEL, AND
WATER LINE EASEMENT
VOL. 955 PAGE 426

I-75 S.B. STA. 266+05.69=
HANTHORN RD. STA. 102+81.41

I-75 N.B. STA. 266+42.21=
HANTHORN RD. STA. 102+81.41

CONST. LIMITS (TYP.)

CURVE I75-4
P.I.= Sta. 264+76.60
D = 89° 28' 28" (LT)
Dc = 2° 30' 00"
R = 2,291.83'
Ls = 535.00'
θs = 6° 41' 15"
LT = 356.92'
ST = 178.57'
x = 534.27'
y = 20.79'
k = 267.38'
p = 5.20'
Δc = 76° 08' 58" (LT)
Lc = 3,043.97'
Ts = 2,543.43'
Es = 947.86'
C = 2,825.12'
C1=C2 = 534.68'
C.B.1 = N 88° 11' 47" E
C.B.2 = N 45° 41' 17" E
C.B.2 = S 3° 10' 47" W
e = 0.059

DOMINION EAST OHIO GAS
PIPELINE EASEMENT NO. 2

℄ R/W & CONST. I-75

MATCH LINE STA. 262+50 I-75

MATCH LINE STA. 275+00 I-75

(20" HP GAS LINE WEST OHIO GAS CO.
FROM ALL-75-0.00 PLANS - 1973)

STATE OF OHIO
CHANNEL EASEMENT
VOL. 348, PAGE 599

STATE OF OHIO
CHANNEL EASEMENT
VOL. 349, PAGE 78

AGRICULTURAL

THOMAS J. MEYER & DIANE R. MEYER,
HUSBAND & WIFE
47170001001000
54.250 AC.

OHIO POWER COMPANY
BLANKET EASEMEMT
VOL. 440, PAGE 357
VOL. 319, PAGE 312

ALLEN COUNTY
PERRY TWP.
N.E. ¼, SEC. 17
T4S, R7E

BUCKEYE PIPE LINE COMPANY
BLANKET EASEMENT
VOL. 477, PAGE 244

DOMINION EAST OHIO GAS LINE

COLUMBIA GAS LINE

CONST. LIMITS (TYP.)

JILL L. SILVERTHORN
47080004005001
7.440 AC.

WEST OHIO GAS COMPANY
60' EASEMENT
VOL. 502, PAGE 673

EASTERN REGION OPEN
BIBLE CHURCHES
47080004002002
14.630 AC.

ALLEN COUNTY
PERRY TWP.
S.E. ¼, SEC. 8
T4S, R7E

COMMERCIAL

THE FOLLOWING EASEMENTS APPLY TO PARCEL OWNER 68:

OHIO POWER COMPANY BLANKET EASEMENT,
VOL. 275, PAGE 156

ALLEN COUNTY COMMISSIONERS
DRAINAGE EASEMENT ALONG GREELY CHAPEL
AND HANTHORN ROADS
VOL. 239, PAGE 614

OHIO POWER COMPANY FORFEITURE OF BLANKET
EASEMENT EXCEPT FOR EXISTING FACILITIES AND
ELECTRIC FACILITIES ALONG HANTHORN ROAD
VOL. 634, PAGE 40

OHIO FUEL GAS COMPANY BLANKET EASEMENT
VOL. 499, PAGE 318

NOTE: ALL TREES ALONG THE EXISTING LA/RW FENCE
WILL BE REMOVED UNLESS LABELED AS "SAVE"

SEE SHEETS 95-102 FOR HANTHORN RD. DETAILS.

REV. BY	DATE	DESCRIPTION
DJS	11/06/12	REVISED NAME FOR PARCEL 71
DJS	9/19/12	CHANGED 60-U2, 67-U, 68-U & 71-U2 TO UV PARCELS
DJS	3/22/12	ADDED UTILITY EASEMENTS FOR PARCELS 60-U2, 67-U, 67-T, 68-U, 68-T, 71-U2
DATE COMPLETED:		10/06/11

HORIZONTAL SCALE IN FEET
0 25 50 100

R/W DESIGNER: BJD
R/W REVIEWER: LAF

PID NO. 89029

RIGHT OF WAY TOPO SHEET
STA. 262+50 TO STA. 275+00

ALL-75-0.21

61/103

865/907

I:\Pid\89029\row\sheets\89029RL022.dgn 07-NOV-2012 8:24AM dsiebene

NOTE: See sheet 96 for rest of Lead-in for Parcel 67-T.

ALLEN COUNTY
PERRY TOWNSHIP
CITY OF LIMA
SEC. 17, N.E. 1/4, T-4-S R-7-E
SEC. 8, S.E. 1/4, T-4-S R-7-E

TODD W. SPICER & SUSAN K. SPICER
47170001002000
12.900 AC.
60

GREATER OHIO ETHANOL
47080004002000
11.310 AC.
67

EASEMENTS
INGRESS AND EGRESS, VOL. 2006, PAGE 10149
DOMINION EAST OHIO GAS, VOL. 2007 PAGE 04668
CITY OF LIMA, OHIO, VOL. 955 PAGE 426
INLAND CORPORATION, 947, PAGE 773

TRANS-OHIO PIPELINE COMPANY
EASEMENT
VOL. 542, PAGE 176
ASSIGNMENT TO COLUMBIA LNG CORPORATION
VOL. 572, PAGE 347
ASSIGNMENT TO BUCKEYE PIPE LINE COMPANY
VOL. 641, PAGE 511
ASSIGNMENT TO MARATHON ENERGY HOLDINGS, INC.
VOL. 693, PAGE 283
GREATER OHIO ETHANOL, LLC
PARTIAL RELEASE
VOL. 948, PAGE 658

CURVE 175-4
P.I.= Sta. 264+76.60
D = 89° 28' 28" (LT)
Dc = 2° 30' 00"
R = 2,291.83'
Ls = 535.00'
θs = 6° 41' 15"
LT = 356.92'
ST = 178.57'
x = 534.27'
y = 20.79'
k = 267.38'
p = 5.20'
Dc = 76° 05' 58" (LT)
Lc = 3,043.97'
Ts = 2,543.43'
Es = 941.86'
C = 2,825.12'
C1=C2 = 534.68'
C.B.1 = N 88° 11' 47" E
C.B. = N 45° 41' 17" E
C.B.2 = S 3° 10' 47" W
e_d = 0.059

DOMINION EAST OHIO GAS PIPELINE EASEMENT NO. 1
VOL. 2007, PAGE 4668

INTERMITTENT WATERWAY

SEC. LINE

MATCH LINE STA. 262+50 I-75

MATCH LINE STA. 275+00 I-75

CITY OF LIMA

ALLEN COUNTY
CITY OF LIMA
S.E. 1/4, SEC. 8
T4S, R7E

INGRESS EGRESS EASEMENT
PERMANENT SANITARY SEWER, DRAINAGE CHANNEL, AND WATER LINE EASEMENT
VOL. 955 PAGE 426

GUARDIAN LIMA, LLC
47080004001000
62.730 AC.
71

℄ R/W & CONST. I-75

DOMINION EAST OHIO GAS PIPELINE EASEMENT NO. 2

℄ R/W I-75 STA. 266+05.69=
HANTHORN RD. STA. 102+81.41

ORIGINAL ℄ FROM 1955

JILL L. SILVERTHORN
47080004005001
7.440 AC.
69

OHIO POWER COMPANY
BLANKET EASEMEMT
VOL. 440, PAGE 357
VOL. 319, PAGE 312

STATE OF OHIO
CHANNEL EASEMENT
VOL. 348, PAGE 599

STATE OF OHIO
CHANNEL EASEMENT
VOL. 349, PAGE 78

THOMAS J. MEYER & DIANE R. MEYER,
HUSBAND & WIFE
47170001001000
54.250 AC.
65

BUCKEYE PIPE LINE COMPANY
BLANKET EASEMENT
VOL. 477, PAGE 244

ALLEN COUNTY
PERRY TWP.
N.E. 1/4, SEC. 17
T4S, R7E

WEST OHIO GAS COMPANY
60' EASEMENT
VOL. 502, PAGE 673

EASTERN REGION OPEN
BIBLE CHURCHES
47080004002002
14.630 AC.
68

ALLEN COUNTY
PERRY TWP.
S.E. 1/4, SEC. 8
T4S, R7E

BEARING & DISTANCE		
B-D	Bearing	Distance
B11	N 86° 39' 09" E	7.22'
B12	N 0° 53' 42" E	16.75'

CURVE TABLE						
Curve	Delta	Radius	Tangent	Length	Chord	Bearing
C8	32°06'09"	1,809.86	520.72'	1,014.05	1,000.84	S44°44'00"W
C9	14°54'20"	1,809.86	236.75'	470.83	469.51	S14°24'13"W
C10	3°53'58"	2,009.86	68.42'	136.79	136.76	N24°33'15"E
C11	1°05'47"	2,009.86	19.23'	38.46	358.46	N18°48'30"E
C56	4°45'01"	2,009.86	83.37'	166.64	166.59	N36°39'31"E
C57	7°46'46"	2,009.86	136.66'	272.89	272.68	N30°23'37"E
C58	5°24'01"	2,009.86	94.79'	189.43	189.36	N16°33'36"E
C59	6°54'33"	2,009.86	121.33'	242.36	242.21	N10°24'20"E

THE FOLLOWING EASEMENTS APPLY TO PARCEL OWNER 68:

OHIO POWER COMPANY BLANKET EASEMENT, VOL. 275, PAGE 156

ALLEN COUNTY COMMISSIONERS DRAINAGE EASEMENT ALONG GREELY CHAPEL AND HANTHORN ROADS VOL. 239, PAGE 614

OHIO POWER COMPANY FORFEITURE OF BLANKET EASEMENT EXCEPT FOR EXISTING FACILITIES AND ELECTRIC FACILITIES ALONG HANTHORN ROAD VOL. 634, PAGE 40

OHIO FUEL GAS COMPANY BLANKET EASEMENT VOL. 499, PAGE 318

NOTE: See sheets 95-102 for information of Parcels 60-WL, 65-WL, 67-WL, 67-U, 68-U, 68-T and 68-WL along Hanthorn Rd.

REV. BY	DATE	DESCRIPTION
DJS	11/06/12	REVISED NAME FOR PARCEL 71
DJS	9/19/12	CHANGED 60-U2, 67-U, 68-U & 71-U2 TO UV PARCELS
DJS	3/22/12	ADDED UTILITY EASEMENTS FOR PARCELS 60-U2, 67-U, 67-T, 68-U, 68-T, 71-U2

DATE COMPLETED: 10/06/11

HORIZONTAL SCALE IN FEET
0 25 50 100

R/W DESIGNER BJD
R/W REVIEWER LAF

PID NO. 89029

RIGHT OF WAY PLAN BOUNDARY SHEET
STA. 262+50 TO STA. 275+00

ALL-75-0.21

62/103

866/907

I:\Pdl\89029\row\sheets\89029RD022.dgn 06-NOV-2012 11:21AM dsiebene

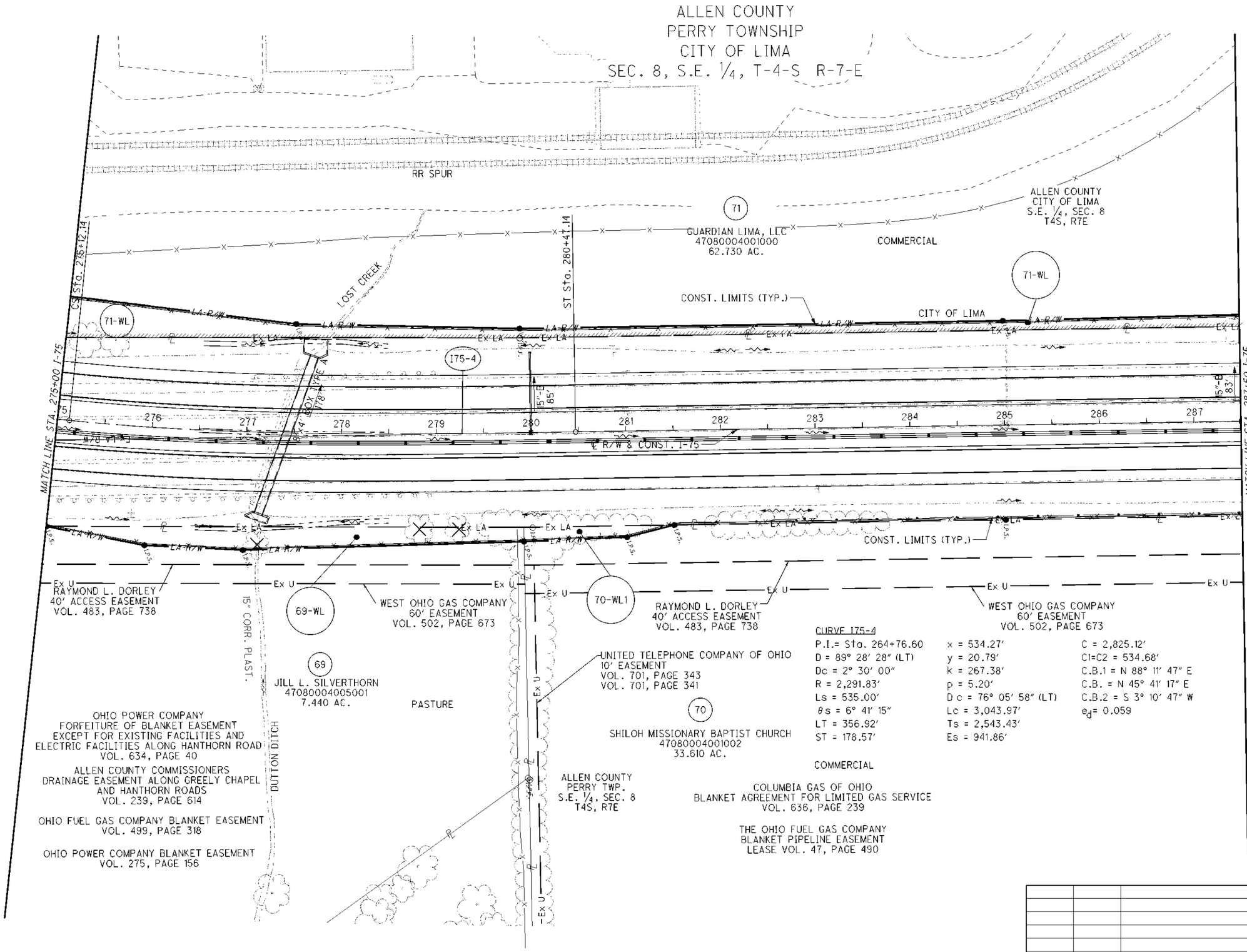

CURVE 175-4

P.I.= Sta. 264+76.60	x = 534.27'	C = 2,825.12'
D = 89° 28' 28" (LT)	y = 20.79'	C1=C2 = 534.68'
Dc = 2° 30' 00"	k = 267.38'	C.B.1 = N 88° 11' 47" E
R = 2,291.83'	p = 5.20'	C.B. = N 45° 41' 17" E
Ls = 535.00'	D c = 76° 05' 58" (LT)	C.B.2 = S 3° 10' 47" W
θs = 6° 41' 15"	Lc = 3,043.97'	e_d= 0.059
LT = 356.92'	Ts = 2,543.43'	
ST = 178.57'	Es = 941.86'	

NOTE: ALL TREES ALONG THE EXISTING LA/RW FENCE WILL BE REMOVED UNLESS LABELED AS "SAVE"

REV. BY	DATE	DESCRIPTION
DJS	11/06/12	REVISED NAME FOR PARCEL 71

DATE COMPLETED: 10/06/11

HORIZONTAL SCALE IN FEET 0 25 50 100

R/W DESIGNER BJD
R/W REVIEWER LAF

PID NO. 89029

RIGHT OF WAY TOPO SHEET
STA. 275+00 TO STA. 287+50

ALL-75-0.21

I:\Pd\89029\row\sheets\89029RL023.dgn 06-NOV-2012 12:52PM dsiebene

ALLEN COUNTY
PERRY TOWNSHIP
CITY OF LIMA
SEC. 8, S.E. 1/4, T-4-S R-7-E

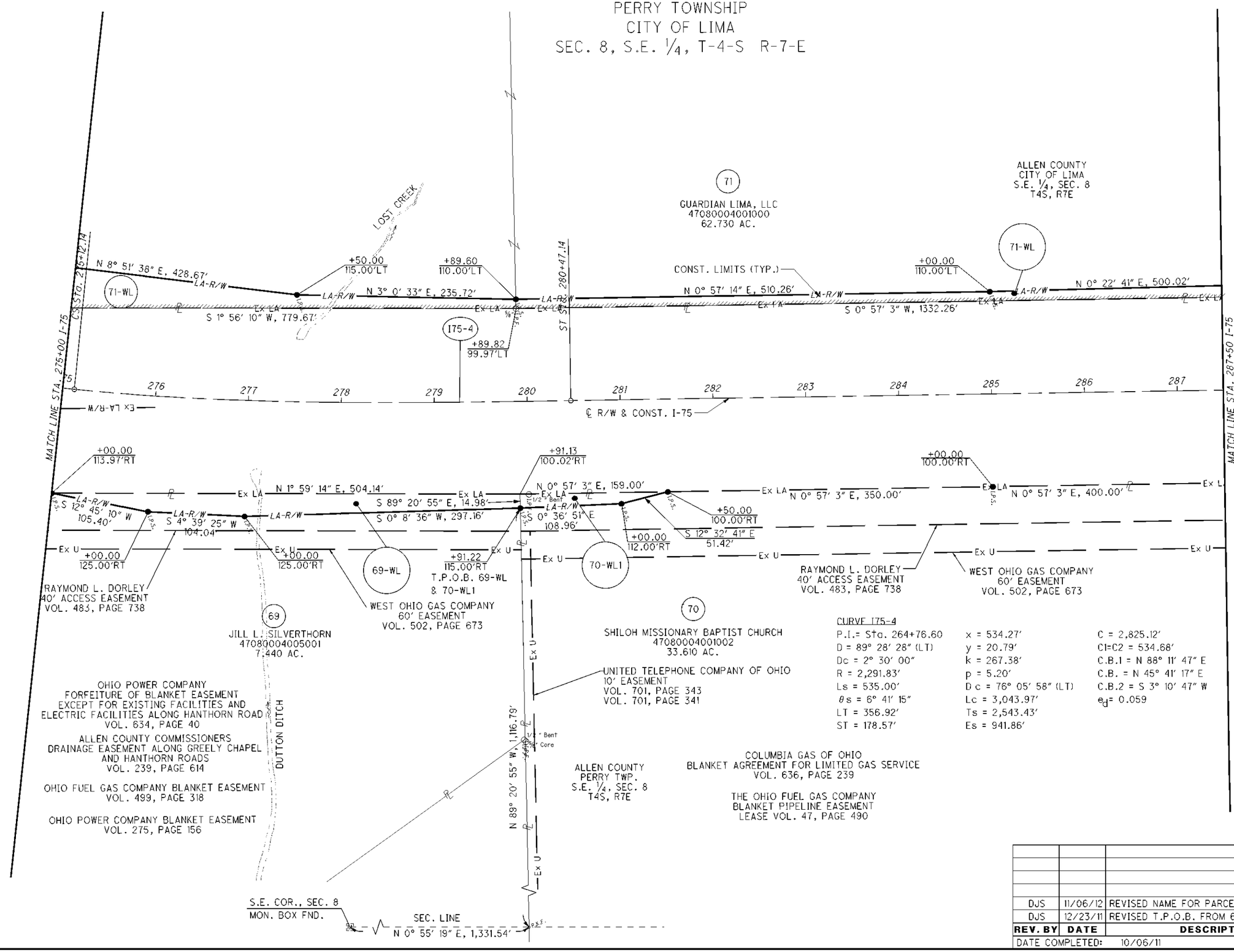

CURVE I75-4

P.I.= Sta. 264+76.60	x = 534.27'	C = 2,825.12'
D = 89° 28' 28" (LT)	y = 20.79'	C1=C2 = 534.68'
Dc = 2° 30' 00"	k = 267.38'	C.B.1 = N 88° 11' 47" E
R = 2,291.83'	p = 5.20'	C.B. = N 45° 41' 17" E
Ls = 535.00'	D c = 76° 05' 58" (LT)	C.B.2 = S 3° 10' 47" W
θs = 6° 41' 15"	Lc = 3,043.97'	e_d= 0.059
LT = 356.92'	Ts = 2,543.43'	
ST = 178.57'	Es = 941.86'	

REV. BY	DATE	DESCRIPTION
DJS	11/06/12	REVISED NAME FOR PARCEL 71
DJS	12/23/11	REVISED T.P.O.B. FROM 67 TO 69
DATE COMPLETED:		10/06/11

HORIZONTAL SCALE IN FEET
0 25 50 100

R/W DESIGNER: BJD
R/W REVIEWER: LAF

PID NO. 89029

RIGHT OF WAY PLAN BOUNDARY SHEET
STA. 275+00 TO STA. 287+50

ALL-75-0.21

64/103

868/907

I:\Pid\89029\row\sheets\89029RD023.dgn 06-NOV-2012 1:18PM dsiebene

ALLEN COUNTY
PERRY TOWNSHIP & CITY OF LIMA
SEC. 8, S.E. 1/4, T-4-S R-7-E

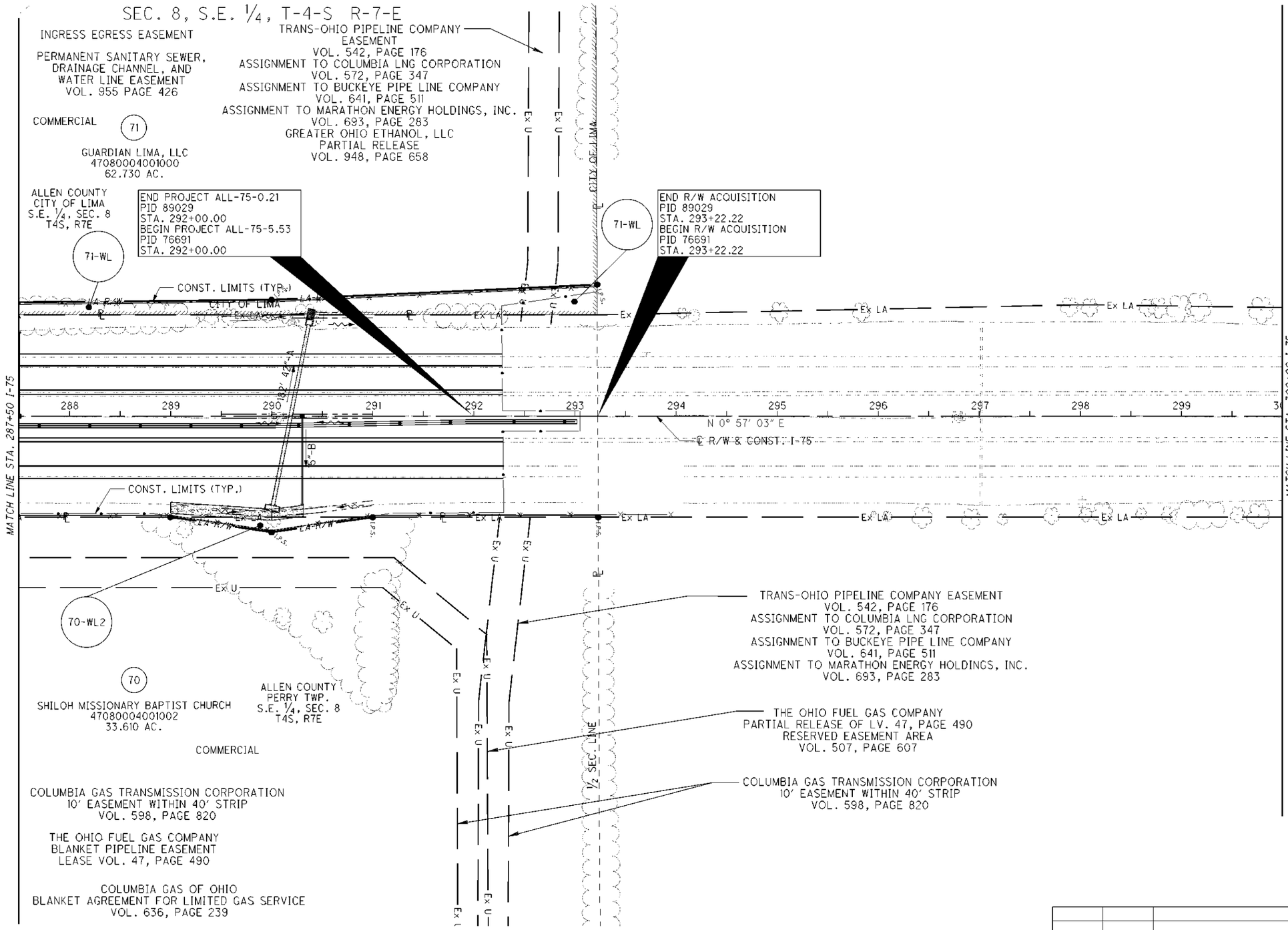

NOTE: ALL TREES ALONG THE EXISTING LA/RW FENCE WILL BE REMOVED UNLESS LABELED AS "SAVE"

REV. BY	DATE	DESCRIPTION
DJS	11/06/12	REVISED NAME FOR PARCEL 71

DATE COMPLETED: 10/06/11

HORIZONTAL SCALE IN FEET 0 25 50 100

R/W DESIGNER BJD
R/W REVIEWER LAF

PID NO. 89029

RIGHT OF WAY TOPO SHEET
STA. 287+50 TO STA. 300+00

ALL-75-0.21

I:\Pd\89029\row\sheets\89029RL024.dgn 06-NOV-2012 1:32PM dsiebene

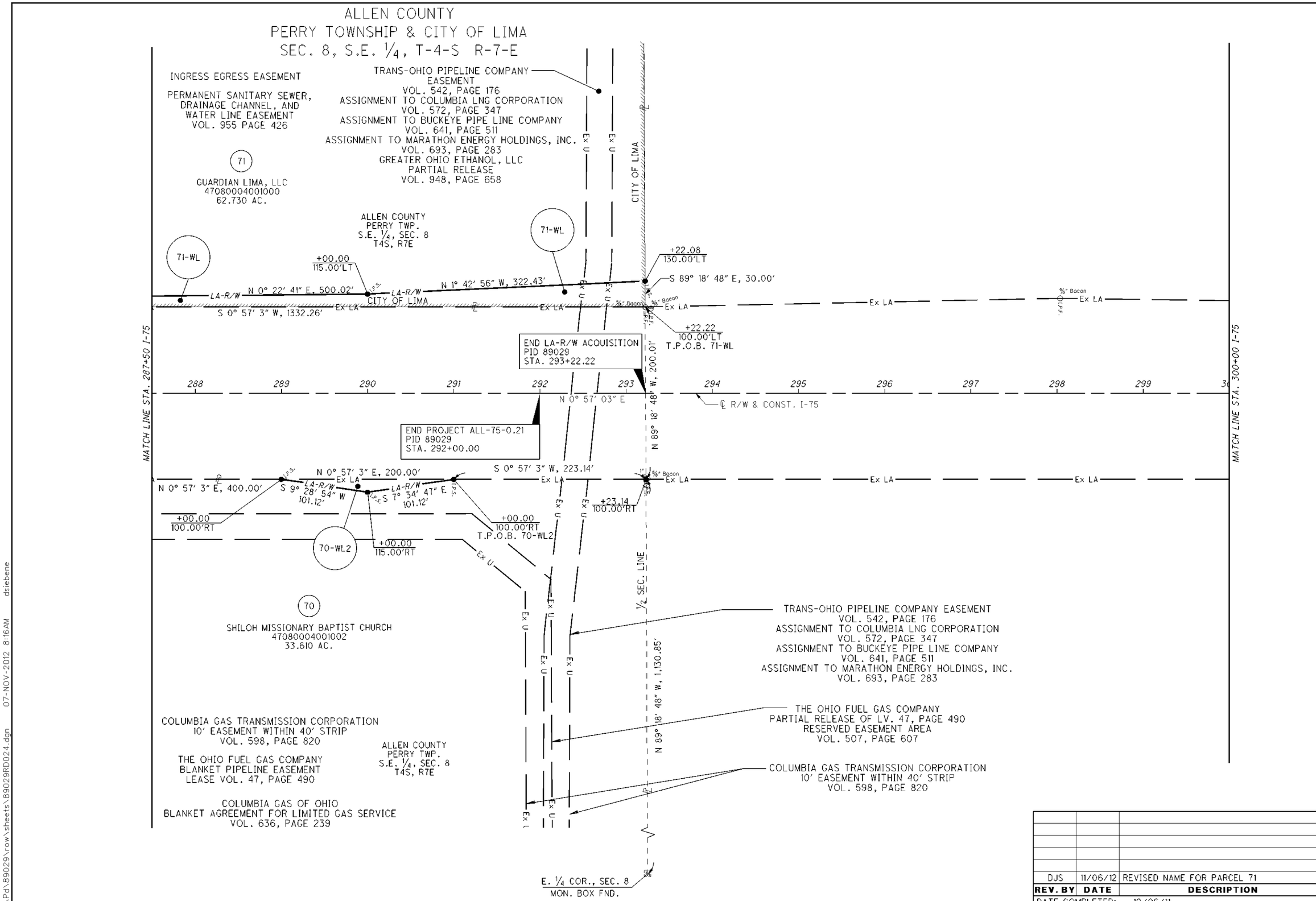
ALLEN COUNTY
PERRY TOWNSHIP & CITY OF LIMA
SEC. 8, S.E. 1/4, T-4-S R-7-E
INGRESS EGRESS EASEMENT
PERMANENT SANITARY SEWER, DRAINAGE CHANNEL, AND WATER LINE EASEMENT VOL. 955 PAGE 426
TRANS-OHIO PIPELINE COMPANY EASEMENT VOL. 542, PAGE 176 ASSIGNMENT TO COLUMBIA LNG CORPORATION VOL. 572, PAGE 347 ASSIGNMENT TO BUCKEYE PIPE LINE COMPANY VOL. 641, PAGE 511 ASSIGNMENT TO MARATHON ENERGY HOLDINGS, INC. VOL. 693, PAGE 283 GREATER OHIO ETHANOL, LLC PARTIAL RELEASE VOL. 948, PAGE 658
71
GUARDIAN LIMA, LLC 47080004001000 62.730 AC.
ALLEN COUNTY PERRY TWP. S.E. 1/4, SEC. 8 T4S, R7E
71-WL
+00.00 115.00'LT
N 0° 22' 41" E, 500.02'
N 1° 42' 56" W, 322.43'
S 0° 57' 3" W, 1332.26'
+22.08 130.00'LT
S 89° 18' 48" E, 30.00'
+22.22 100.00'LT T.P.O.B. 71-WL
CITY OF LIMA
END LA-R/W ACQUISITION PID 89029 STA. 293+22.22
N 0° 57' 03" E
N 89° 18' 48" W, 200.01'
℄ R/W & CONST. I-75
END PROJECT ALL-75-0.21 PID 89029 STA. 292+00.00
MATCH LINE STA. 287+50 I-75
MATCH LINE STA. 300+00 I-75
N 0° 57' 3" E, 200.00'
S 0° 57' 3" W, 223.14'
N 0° 57' 3" E, 400.00'
S 9° 28' 54" W 101.12'
S 7° 34' 47" E 101.12'
+00.00 100.00'RT
+00.00 115.00'RT
+00.00 100.00'RT T.P.O.B. 70-WL2
+23.14 100.00'RT
70-WL2
70
SHILOH MISSIONARY BAPTIST CHURCH 47080004001002 33.610 AC.
1/2 SEC. LINE
N 89° 18' 48" W, 1,130.85'
TRANS-OHIO PIPELINE COMPANY EASEMENT VOL. 542, PAGE 176 ASSIGNMENT TO COLUMBIA LNG CORPORATION VOL. 572, PAGE 347 ASSIGNMENT TO BUCKEYE PIPE LINE COMPANY VOL. 641, PAGE 511 ASSIGNMENT TO MARATHON ENERGY HOLDINGS, INC. VOL. 693, PAGE 283
THE OHIO FUEL GAS COMPANY PARTIAL RELEASE OF LV. 47, PAGE 490 RESERVED EASEMENT AREA VOL. 507, PAGE 607
COLUMBIA GAS TRANSMISSION CORPORATION 10' EASEMENT WITHIN 40' STRIP VOL. 598, PAGE 820
COLUMBIA GAS TRANSMISSION CORPORATION 10' EASEMENT WITHIN 40' STRIP VOL. 598, PAGE 820
THE OHIO FUEL GAS COMPANY BLANKET PIPELINE EASEMENT LEASE VOL. 47, PAGE 490
ALLEN COUNTY PERRY TWP. S.E. 1/4, SEC. 8 T4S, R7E
COLUMBIA GAS OF OHIO BLANKET AGREEMENT FOR LIMITED GAS SERVICE VOL. 636, PAGE 239
E. 1/4 COR., SEC. 8 MON. BOX FND.
288 289 290 291 292 293 294 295 296 297 298 299 300
HORIZONTAL SCALE IN FEET
0 25 50 100
R/W DESIGNER BJD
R/W REVIEWER LAF
PID NO. 89029
RIGHT OF WAY PLAN BOUNDARY SHEET
STA. 287+50 TO STA. 300+00
ALL-75-0.21
DJS 11/06/12 REVISED NAME FOR PARCEL 71
REV. BY DATE DESCRIPTION
DATE COMPLETED: 10/06/11
66/103
870/907
I:\Pd\89029\row\sheets\89029RD024.dgn 07-NOV-2012 8:16AM dsiebene

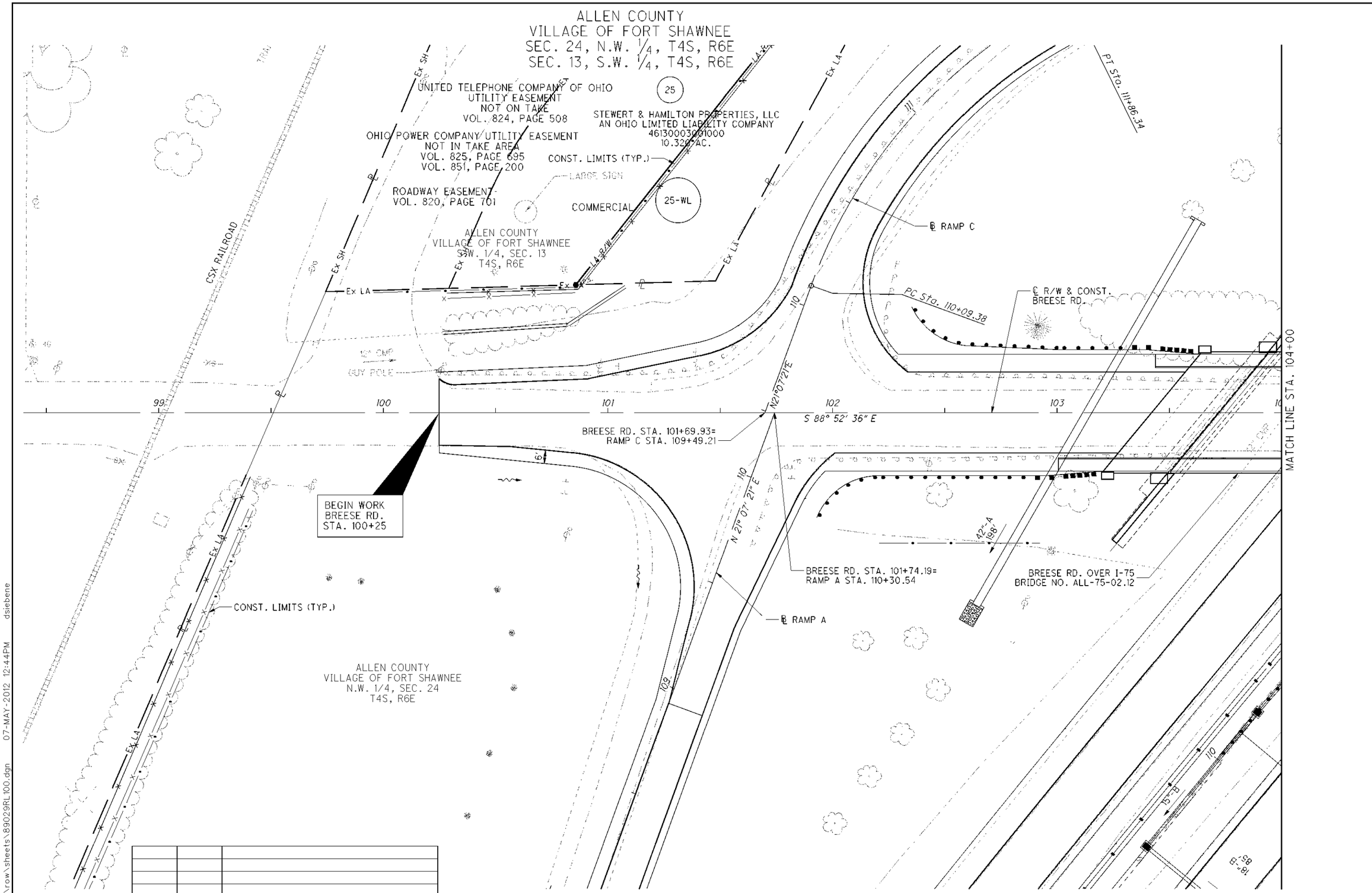

REV. BY	DATE	DESCRIPTION

DATE COMPLETED: 10/06/11

NOTE: ALL TREES ALONG THE EXISTING LA/RW FENCE WILL BE REMOVED UNLESS LABELED AS "SAVE"

HORIZONTAL SCALE IN FEET 0 10 20 40

R/W DESIGNER BJD
R/W REVIEWER LAF

PID NO. 89029

RIGHT OF WAY TOPO SHEET - BREESE RD.
BEGIN WORK TO STA. 104+00.00

ALL-75-0.21

I:\Pd\89029\row\sheets\89029RL100.dgn 07-MAY-2012 12:44PM dsiebene

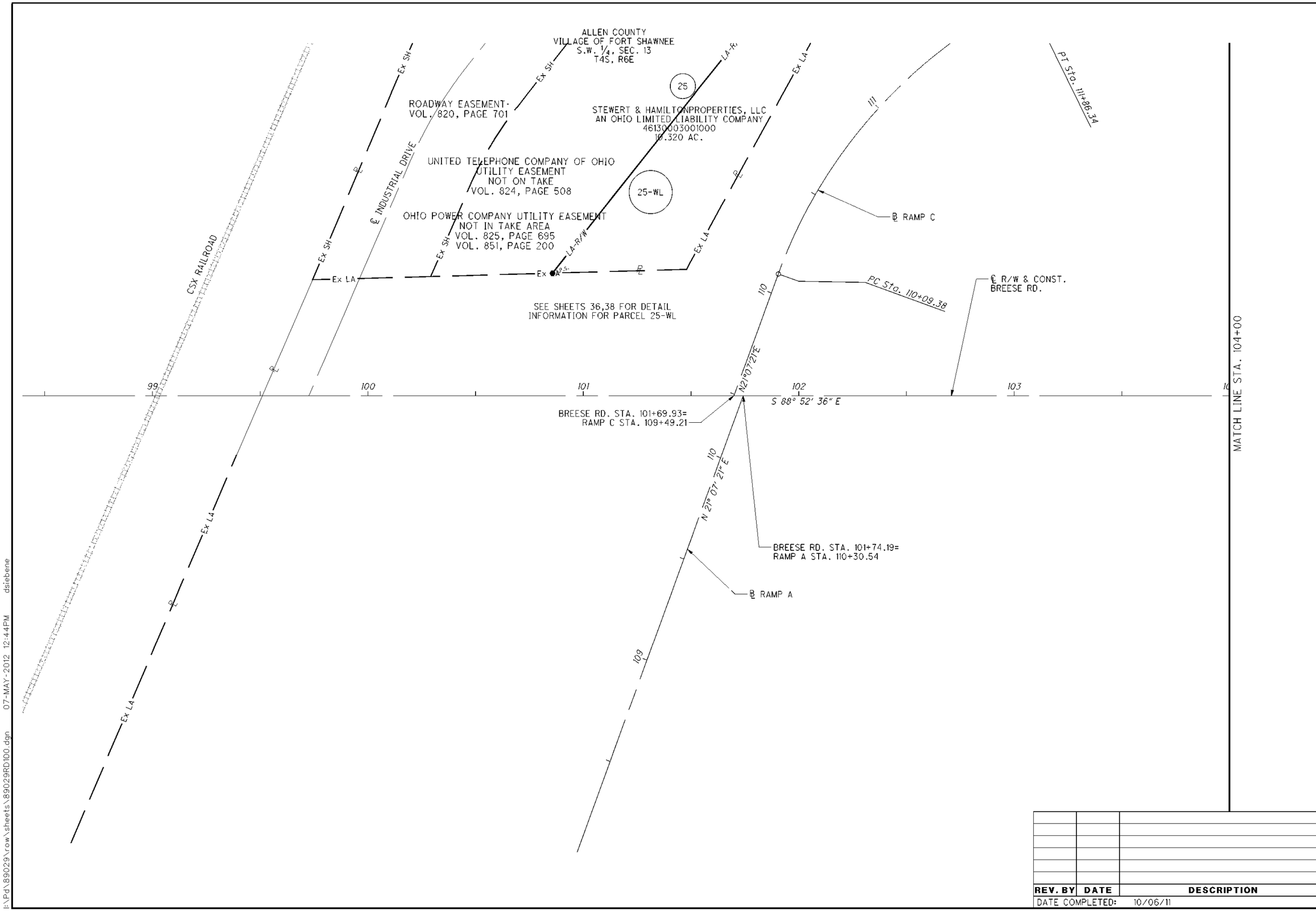

REV. BY	DATE	DESCRIPTION

DATE COMPLETED: 10/06/11

HORIZONTAL SCALE IN FEET 0 10 20 40

R/W DESIGNER BJD
R/W REVIEWER LAF

PID NO. 89029

R/W BOUNDARY SHEET - BREESE RD.
BEGIN WORK TO STA. 104+00.00

ALL-75-0.21

I:\Pd\89029\row\sheets\89029RD100.dgn 07-MAY-2012 12:44PM dsiebene

ALLEN COUNTY
VILLAGE OF FORT SHAWNEE
SEC. 24, N.W. 1/4, T-4-S R-6-E
SEC. 13, S.W. 1/4, T-4-S R-6-E

ALLEN COUNTY
VILLAGE OF FORT SHAWNEE
S.W. 1/4, SEC. 13
T4S, R6E

℄ R/W & CONST. I-75

I-75 STA. 112+00.84=
BREESE RD. STA. 105+00.00

MATCH LINE STA. 104+00

℄ R/W & CONST.
BREESE RD.

S 88° 52' 36" E

℄ RAMP D

N 21° 07' 24" E

BREESE RD. STA. 108+07.17=
RAMP D STA. 113+74.46

BREESE RD. STA. 108+07.17=
RAMP B STA. 114+20.50

N 21° 07' 21" E

MATCH LINE STA. 109+00

PT Sta. 113+48.96

BREESE RD. OVER I-75
BRIDGE NO. ALL-75-02.12

℄ RAMP B

ALLEN COUNTY
VILLAGE OF FORT SHAWNEE
N.W. 1/4, SEC. 24
T4S, R6E

PC Sta. 111+81.57

PT Sta. 110+15.90

CONST. LIMITS (TYP.)

EX LA

NOTE: ALL TREES ALONG THE EXISTING LA/RW FENCE WILL BE REMOVED UNLESS LABELED AS "SAVE"

REV. BY	DATE	DESCRIPTION
DATE COMPLETED:	10/06/11	

HORIZONTAL SCALE IN FEET
0 10 20 40

R/W DESIGNER: BJD
R/W REVIEWER: LAF

PID NO. 89029

RIGHT OF WAY TOPO SHEET - BREESE RD.
STA. 104+00.00 TO STA. 109+00.00

ALL-75-0.21

69/103

873/907

I:\Pd\89029\row\sheets\89029RL101.dgn 07-MAY-2012 12:44PM dsiebene

ALLEN COUNTY
VILLAGE OF FORT SHAWNEE
SEC. 24, N.W. 1/4, T-4-S R-6-E
SEC. 13, S.W. 1/4, T-4-S R-6-E

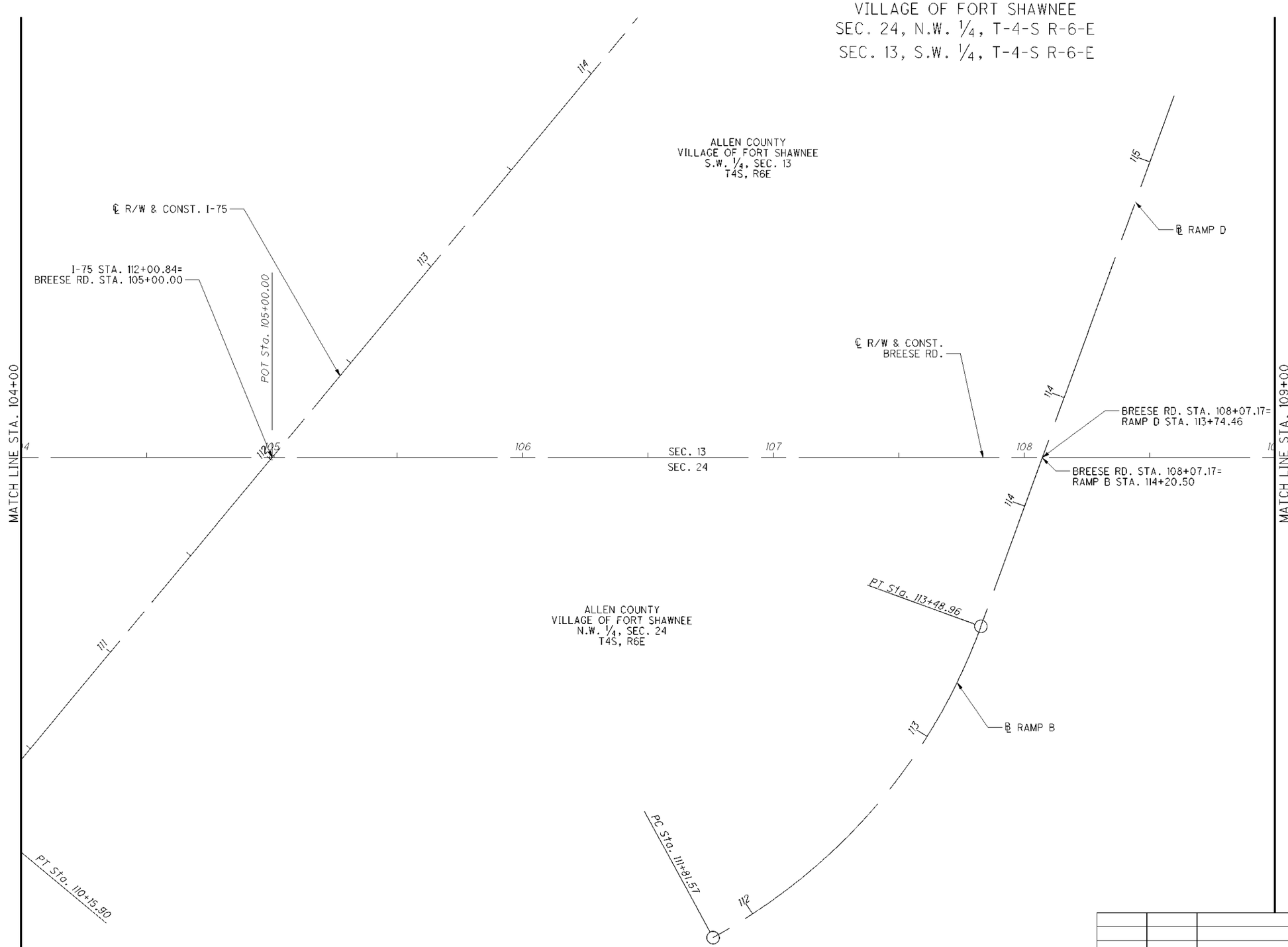

HORIZONTAL SCALE IN FEET
0 10 20 40

R/W DESIGNER: BJD
R/W REVIEWER: LAF

PID NO. 89029

R/W BOUNDARY SHEET - BREESE RD.
STA. 104+00.00 TO STA. 109+00.00

ALL-75-0.21

70/103

874/907

REV. BY	DATE	DESCRIPTION

DATE COMPLETED: 10/06/11

I:\Pd\89029\row\sheets\89029RD101.dgn 07-MAY-2012 12:44PM dsiebene

ALLEN COUNTY
VILLAGE OF FORT SHAWNEE
SEC. 13, S.W. 1/4, T-4-S R-6-E
SEC. 24, N.W. 1/4, T-4-S R-6-E

ALLEN COUNTY
VILLAGE OF FORT SHAWNEE
S.W. 1/4, SEC. 13
T4S, R6E

26

STATE OF OHIO DEPARTMENT OF HIGHWAYS
46130003002000
38.330 AC.

END WORK
BREESE RD.
STA. 114+47.19

MATCH LINE STA. 109+00

℄ R/W & CONST. BREESE RD.

CONST. LIMITS (TYP.)

LA-R/W

26-WL

SEC. 13
SEC. 24

S 88° 52' 36" E

Ex LA

Ex SH

+85.5, 40' Wide
Delong Rd

BEGIN R/W ACQUISITION
BREESE RD.
STA. 112+92.64

END R/W ACQUISITION
BREESE RD.
STA. 114+50.00

FREED DITCH

ALLEN COUNTY
VILLAGE OF FORT SHAWNEE
N.W. 1/4, SEC. 24
T4S, R6E

NOTE: ALL TREES ALONG THE EXISTING LA/RW FENCE WILL BE REMOVED UNLESS LABELED AS "SAVE"

REV. BY	DATE	DESCRIPTION
DJS	4/23/12	REV. OWNERS NAME FOR PARCEL 26

DATE COMPLETED: 10/06/11

HORIZONTAL SCALE IN FEET
0 10 20 40

R/W DESIGNER: BJD
R/W REVIEWER: LAF

PID NO. 89029

RIGHT OF WAY TOPO SHEET - BREESE RD.
STA. 109+00.00 TO END WORK

ALL-75-0.21

71/103

875/907

I:\Pd\89029\row\sheets\89029RL102.dgn 07-MAY-2012 12:45PM dsiebene

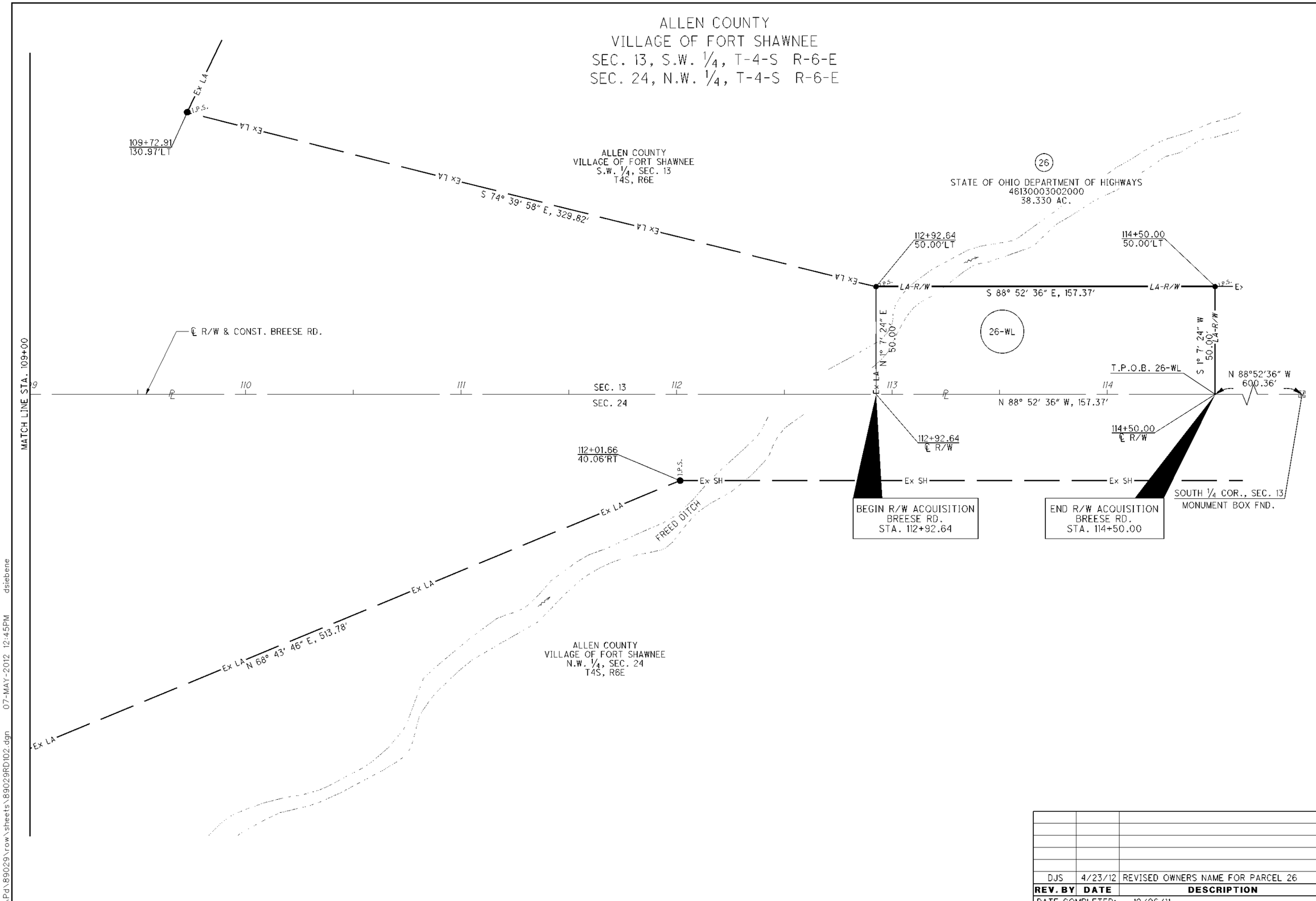

REV. BY	DATE	DESCRIPTION
DJS	4/23/12	REVISED OWNERS NAME FOR PARCEL 26

DATE COMPLETED: 10/06/11

R/W BOUNDARY SHEET - BREESE RD.
STA. 109+00.00 TO END WORK

PID NO. 89029

R/W DESIGNER BJD
R/W REVIEWER LAF

ALL-75-0.21

I:\Pd\89029\row\sheets\89029RD102.dgn 07-MAY-2012 12:45PM dsiebene

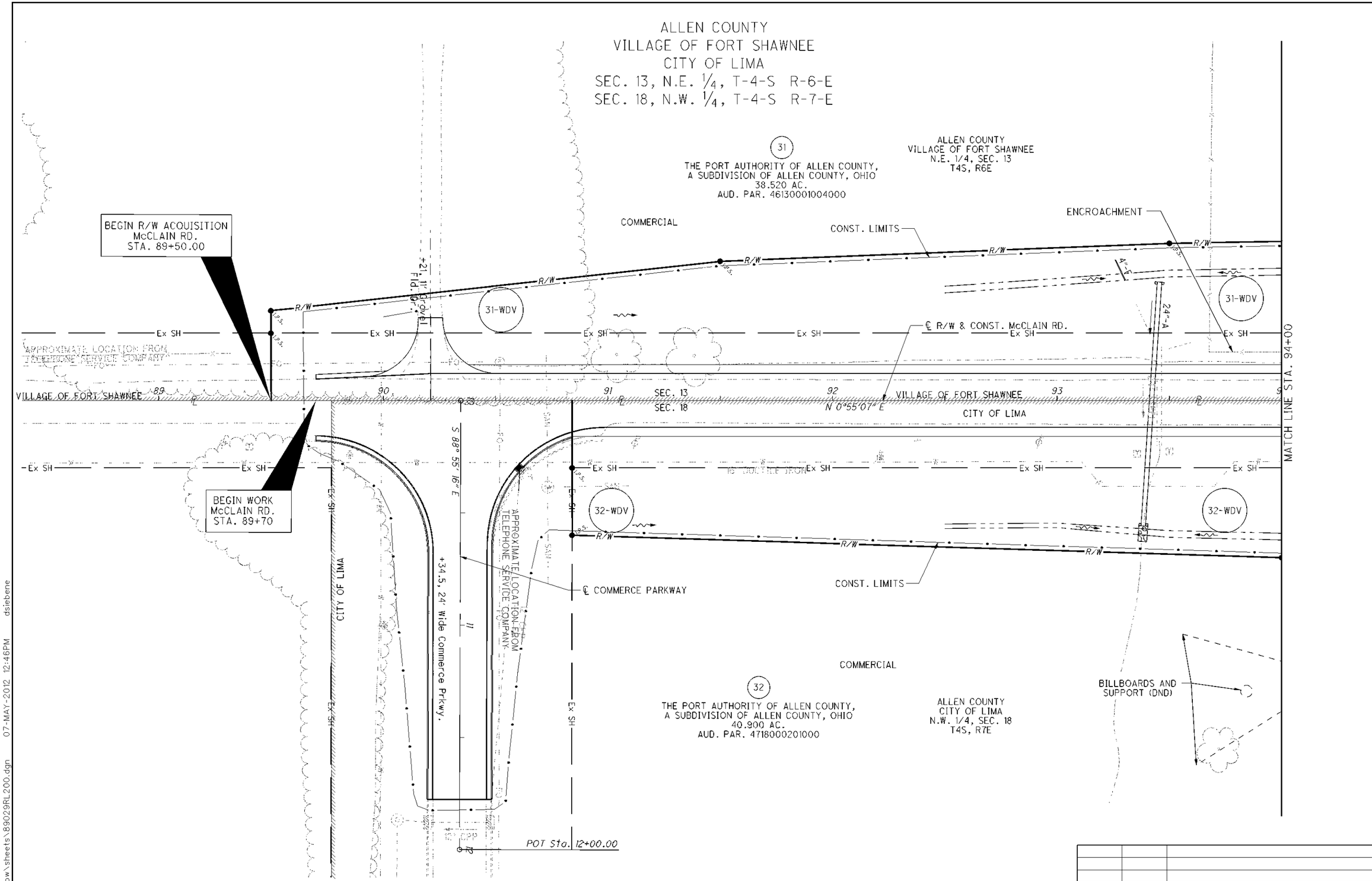

NOTE: ALL TREES ALONG THE EXISTING LA/RW FENCE WILL BE REMOVED UNLESS LABELED AS "SAVE"

REV. BY	DATE	DESCRIPTION
DJS	4/18/12	REVISED OWNERS NAME FOR PARCEL 32

DATE COMPLETED: 10/06/11

HORIZONTAL SCALE IN FEET 0 10 20 40

R/W DESIGNER BJD
R/W REVIEWER LAF

PID NO. 89029

RIGHT OF WAY TOPO SHEET - McCLAIN RD.
BEGIN WORK TO STA. 94+00.00

ALL-75-0.21

I:\Pd\89029\row\sheets\89029RL200.dgn 07-MAY-2012 12:46PM dsiebene

ALLEN COUNTY
VILLAGE OF FORT SHAWNEE
CITY OF LIMA
SEC. 13, N.E. 1/4, T-4-S R-6-E
SEC. 18, N.W. 1/4, T-4-S R-7-E

(31)

THE PORT AUTHORITY OF ALLEN COUNTY,
A SUBDIVISION OF ALLEN COUNTY, OHIO
38.520 AC.
AUD. PAR. 46130001004000

ALLEN COUNTY
VILLAGE OF FORT SHAWNEE
N.E. 1/4, SEC. 13
T4S, R6E

+50.00
62.00'LT

+50.00
70.00'LT

N 1° 22' 19" W, 200.16'

N 0° 6' 0" W
450.07'

N 5° 21' 32" W, 201.21'

+50.00
40.00'LT

+50.00
30.00'LT

N 89° 4' 53" W
40.00'

31-WDV

℄ R/W & CONST. McCLAIN RD.

Ex SH

+34.14
0.44' LT

VILLAGE OF FORT SHAWNEE

89 90 91 92 93 94

SEC. LINE

N 0°55'07" E

CITY OF LIMA

S 0° 55' 7" W, 958.38'
N 0° 55' 7" E, 815.85'

MATCH LINE STA. 94+00

+50.00
℄ R/W

+76.97
3.11' RT

+84.14
℄ R/W

BEGIN R/W ACQUISITION
McCLAIN RD.
STA. 89+50.00

CITY OF LIMA

N 88° 59' 38" W, 60.00'

32-WDV

R/W

S 2° 43' 53" W, 316.11'

+84.05
60.00'RT

℄ COMMERCE PARKWAY

+00.00
70.00'RT

(32)

THE PORT AUTHORITY OF ALLEN COUNTY,
A SUBDIVISION OF ALLEN COUNTY, OHIO
40.900 AC.
AUD. PAR. 4718000201000

ALLEN COUNTY
CITY OF LIMA
N.W. 1/4, SEC. 18
T4S, R7E

REV. BY	DATE	DESCRIPTION
DJS	4/18/12	REVISED OWNERS NAME FOR PARCEL 32

DATE COMPLETED: 10/06/11

HORIZONTAL SCALE IN FEET
0 10 20 40

R/W DESIGNER BJD
R/W REVIEWER LAF

PID NO. 89029

R/W BOUNDARY SHEET - McCLAIN RD.
BEGIN WORK TO STA. 94+00.00

ALL-75-0.21

74/103

878/907

I:\Pd\89029\row\sheets\89029RD200.dgn 07-MAY-2012 12:46PM dsiebene

ALLEN COUNTY
VILLAGE OF FORT SHAWNEE
CITY OF LIMA
SEC. 13, N.E. 1/4, T-4-S R-6-E
SEC. 18, N.W. 1/4, T-4-S R-7-E

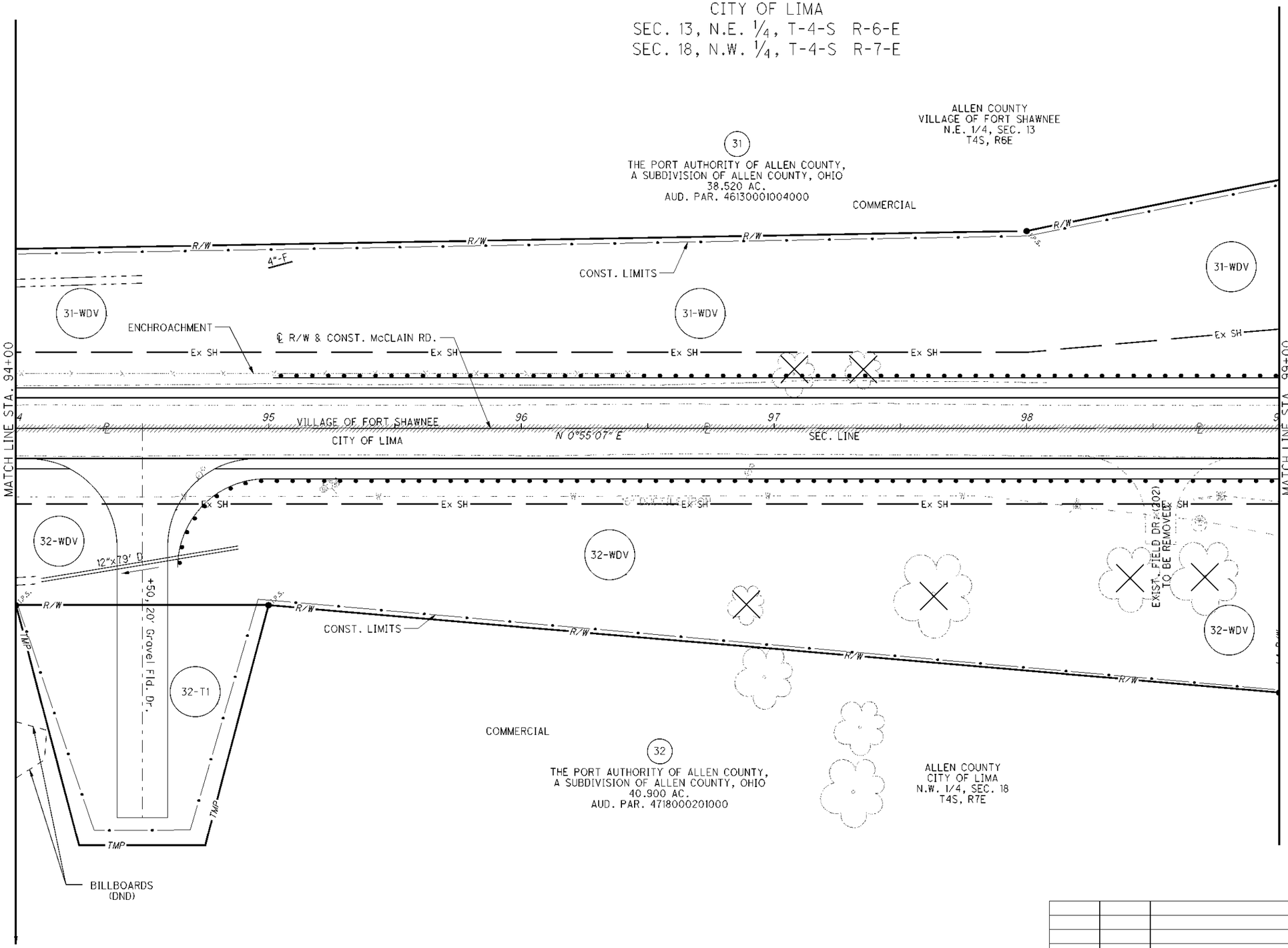

NOTE: ALL TREES ALONG THE EXISTING LA/RW FENCE WILL BE REMOVED UNLESS LABELED AS "SAVE"

REV. BY	DATE	DESCRIPTION
DJS	4/18/12	REVISED OWNERS NAME FOR PARCEL 32
DJS	11/17/11	REVISED 32-T TO 32-T1
DATE COMPLETED:		10/11/06

HORIZONTAL SCALE IN FEET
0 10 20 40

R/W DESIGNER BJD
R/W REVIEWER LAF

PID NO. 89029

RIGHT OF WAY TOPO SHEET - McCLAIN RD.
STA. 94+00.00 TO STA. 99+00.00

ALL-75-0.21

75/103

879/907

I:\Pd\89029\row\sheets\89029RL201.dgn 07-MAY-2012 12:46PM dsiebene

ALLEN COUNTY
VILLAGE OF FORT SHAWNEE
CITY OF LIMA
SEC. 13, N.E. 1/4, T-4-S R-6-E
SEC. 18, N.W. 1/4, T-4-S R-7-E

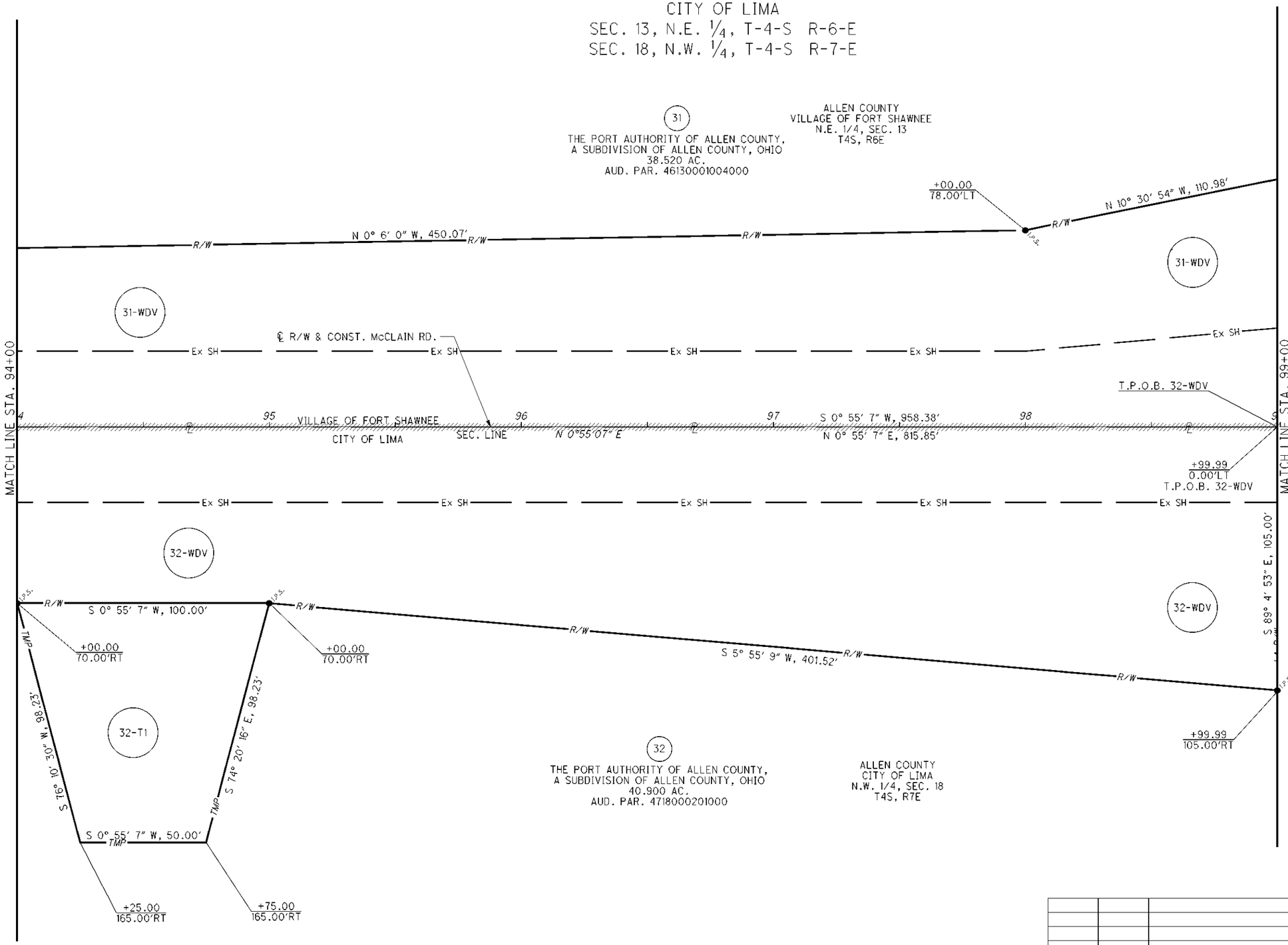

HORIZONTAL SCALE IN FEET
0 10 20 40

R/W DESIGNER BJD
R/W REVIEWER LAF

PID NO. 89029

R/W BOUNDARY SHEET - McCLAIN RD.
STA. 94+00.00 TO STA. 99+00.00

ALL-75-0.21

76/103

880/907

REV. BY	DATE	DESCRIPTION
DJS	4/18/12	REVISED OWNERS NAME FOR PARCEL 32
DJS	11/17/11	REVISED 32-T TO 32-T1
DATE COMPLETED:		10/06/11

I:\Pd\89029\row\sheets\89029RD201.dgn 07-MAY-2012 12:47PM dsiebene

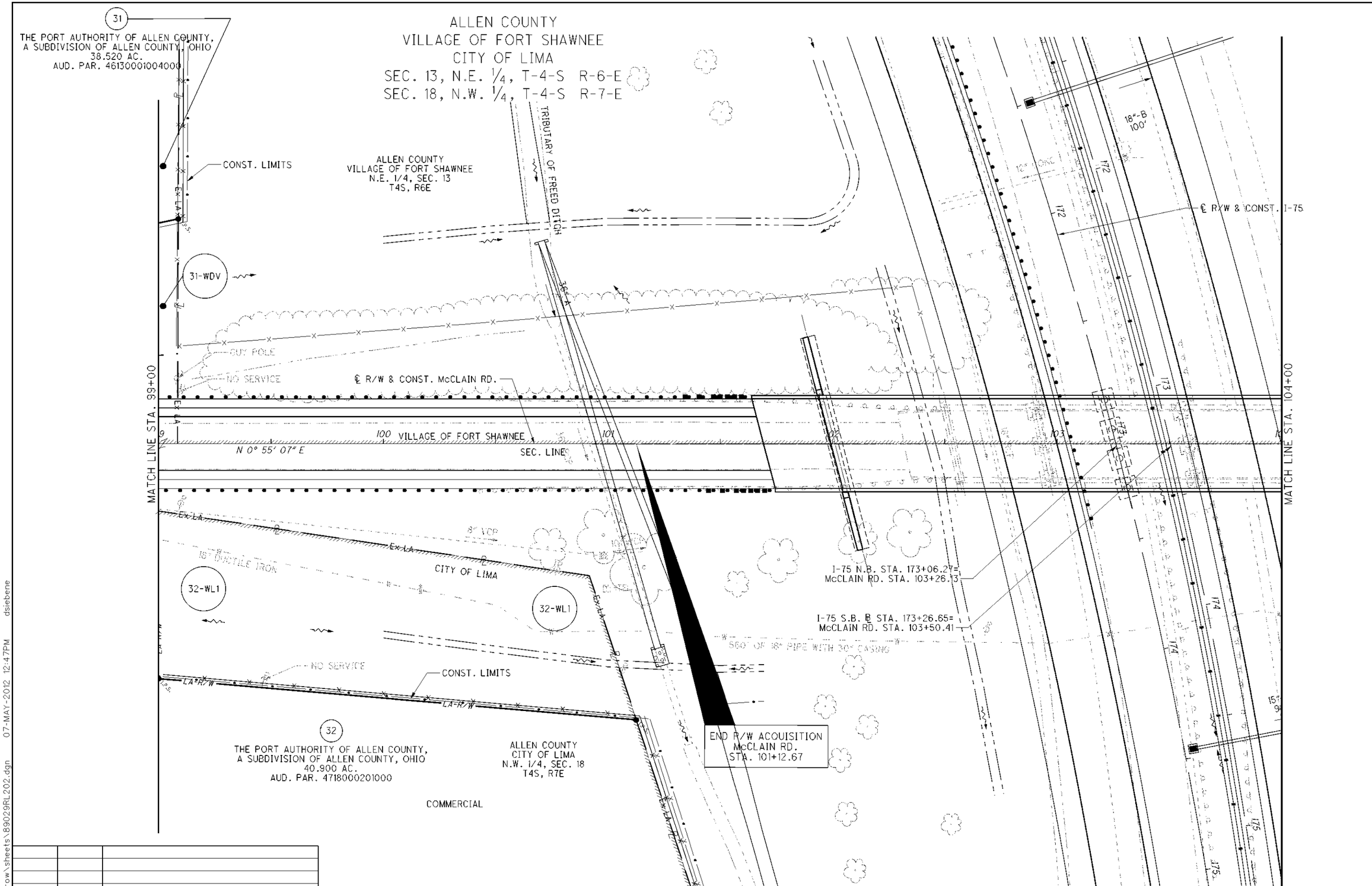

REV. BY	DATE	DESCRIPTION
DJS	4/18/12	REVISED OWNERS NAME FOR PARCEL 32

DATE COMPLETED: 10/06/11

NOTE: ALL TREES ALONG THE EXISTING LA/RW FENCE WILL BE REMOVED UNLESS LABELED AS "SAVE"

HORIZONTAL SCALE IN FEET 0 10 20 40

R/W DESIGNER BJD
R/W REVIEWER LAF

PID NO. 89029

RIGHT OF WAY TOPO SHEET - McCLAIN RD.
STA. 99+00.00 TO STA. 104+00.00

ALL-75-0.21

I:\Pd\89029\row\sheets\89029RL202.dgn 07-MAY-2012 12:47PM dsiebene

ALLEN COUNTY
VILLAGE OF FORT SHAWNEE
PERRY TOWNSHIP
CITY OF LIMA
SEC. 13, N.E. 1/4, T-4-S R-6-E
SEC. 18, N.W. 1/4, T-4-S R-7-E

31
THE PORT AUTHORITY OF
ALLEN COUNTY, A SUBDIVISION
OF ALLEN COUNTY, OHIO
38.520 AC.
AUD. PAR. 46130001004000

ALLEN COUNTY
VILLAGE OF FORT SHAWNEE
N.E. 1/4, SEC. 13
T4S, R6E

N 10° 30' 54" W, 110.98'

170+66.90, 368.99'RT I-75 =
99+08.78, 100.00'LT ℄ McClain Rd.

31-WDV

S 88° 51' 14" E, 100.00'

+99.99, ℄
T.P.O.B. 32-WDV

S 0° 55' 7" W, 958.38'

℄ R/W & CONST. McCLAIN RD.

171+80.47, 401.83'RT I-75 =
99+08.38, ℄ McClain Rd.
T.P.O.B. 31-WDV

MATCH LINE STA. 99+00

100 VILLAGE OF FORT SHAWNEE 101 SEC. LINE 102 S 0° 55' 07" W, 1,369.12' 103

S 0° 55' 07" W, 1,377.51'

172

℄ R/W & CONST. I-75

173

N.E. COR., SEC. 13
MON. BOX FND.

SEC. LINE

S 89° 04' 53" E, 30.00'

T.P.O.B. 32-WL1

Ex LA R

END R/W ACQUISITION
McCLAIN RD.
STA. 101+12.67

CITY OF LIMA

32-WL1

See sheet 46 for Parcel 32-WL1 details.

LA-R/W

LA-R/W

32
THE PORT AUTHORITY OF
ALLEN COUNTY, A SUBDIVISION
OF ALLEN COUNTY, OHIO
40.900 AC.
AUD. PAR. 4718000201000

ALLEN COUNTY
CITY OF LIMA
N.W. 1/4, SEC. 18
T4S, R7E

I-75 N.B. STA. 173+06.27=
McCLAIN RD. STA. 103+26.13

ALLEN COUNTY
PERRY TWP.
N.W. 1/4, SEC. 18
T4S, R7E

MATCH LINE STA. 104+00

174

175

REV. BY	DATE	DESCRIPTION
DJS	4/18/12	REVISED OWNERS NAME FOR PARCEL 32
DATE COMPLETED:		10/06/11

I:\Pd\89029\row\sheets\89029RD202.dgn 07-MAY-2012 12:47PM dsieberne

HORIZONTAL SCALE IN FEET
0 10 20 40

R/W DESIGNER BJD
R/W REVIEWER LAF

PID NO. 89029

R/W BOUNDARY SHEET - McCLAIN RD.
STA. 99+00.00 TO STA. 104+00.00

ALL-75-0.21

78/103

882/907

ALLEN COUNTY
VILLAGE OF FORT SHAWNEE
PERRY TOWNSHIP
SEC. 13, N.E. 1/4, T-4-S R-6-E
SEC. 18, N.W. 1/4, T-4-S R-7-E

WEST OHIO GAS COMPANY
270' PIPELINE EASEMENT
VOL. 502, PAGE 399
INDETERMINATE WIDTH

35

PPG INDUSTRIES, LLC., A PENNSYLVANIA CORPORATION
QUALIFIED TO DO BUSINESS IN THE STATE OF OHIO
46130001003003
24.000 AC.

ALLEN COUNTY
VILLAGE OF FORT SHAWNEE
N.E. 1/4, SEC. 13
T4S, R6E

COMMERCIAL

ALLEN COUNTY
COUNTY ROAD EASEMENT
VOL. 503, PAGE 126

STATE OF OHIO
LA RIGHT OF WAY EASEMENT
VOL. 850, PAGE 557

Ex LA

CONST. LIMITS

END WORK
McCLAIN RD.
STA. 108+50

℄ R/W & CONST. McCLAIN RD.

MATCH LINE STA. 104+00

MATCH LINE STA. 109+00

105 106 VILLAGE OF FORT SHAWNEE 107 SEC. 13 108 SEC. 18

N 0°55'07" E

48"-A

DOMINION GAS CO.

16" DUCTILE IRON

360' OF 16" PIPE WITH 30" CASING

S.B. I-75

TRIBUTARY OF LOST CREEK

ALLEN COUNTY
PERRY TWP.
N.W. 1/4, SEC. 18
T4S, R7E

NOTE: ALL TREES ALONG THE EXISTING LA/RW FENCE WILL BE REMOVED UNLESS LABELED AS "SAVE"

REV. BY	DATE	DESCRIPTION
DATE COMPLETED:	10/06/11	

HORIZONTAL SCALE IN FEET
0 10 20 40

R/W DESIGNER BJD
R/W REVIEWER LAF

PID NO. 89029

RIGHT OF WAY TOPO SHEET - McCLAIN RD.
STA. 104+00.00 TO STA. 109+00.00

ALL-75-0.21

79/103

883/907

I:\Pid\89029\row\sheets\89029RL203.dgn 07-MAY-2012 12:49PM dsiebene

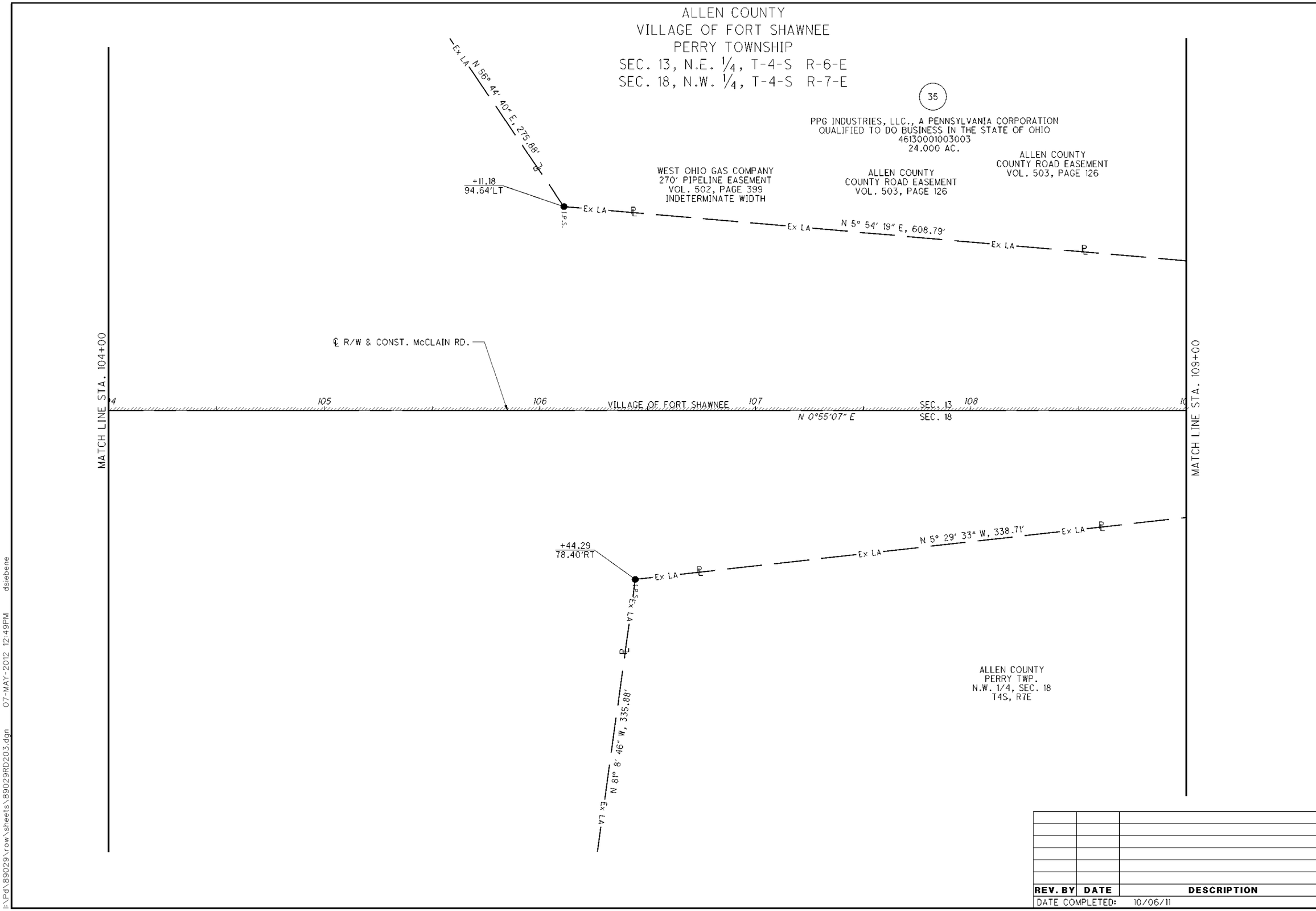

REV. BY	DATE	DESCRIPTION

DATE COMPLETED: 10/06/11

HORIZONTAL SCALE IN FEET 0 10 20 40

R/W DESIGNER BJD
R/W REVIEWER LAF

PID NO. 89029

R/W BOUNDARY SHEET - McCLAIN RD.
STA. 104+00.00 TO STA. 109+00.00

ALL-75-0.21

I:\Pd\89029\row\sheets\89029RD203.dgn 07-MAY-2012 12:49PM dsiebene

ALLEN COUNTY
VILLAGE OF FORT SHAWNEE
PERRY TOWNSHIP
SEC. 13, N.E. 1/4, T-4-S R-6-E
SEC. 18, N.W. 1/4, T-4-S R-7-E

APPROXIMATE LOCATION IS 9' DEEP (DOMINION)

ALLEN COUNTY
VILLAGE OF FORT SHAWNEE
N.E. 1/4, SEC. 13
T4S, R6E

PETROLEUM

Ex LA

Ex SH

I.P.S.

FORT SHAWNEE INDUSTRIAL DR.

POT Sta. 112+77.51

HS

MATCH LINE STA. 109+00

VILLAGE OF FORT SHAWNEE

109 110 111 112

N 0°55'07" E

MCCLAIN RD.

SEC. 13

SEC. 18

DOMINION

TEST STA.

FIBER OPTIC MARKER W/MH

ALLEN COUNTY
PERRY TWP.
N.W. 1/4, SEC. 18
T4S, R7E

ELECTRICAL SUB-STATION

ELECTRICAL SUB-STATION

NOTE: ALL TREES ALONG THE EXISTING LA/RW FENCE WILL BE REMOVED UNLESS LABELED AS "SAVE"

REV. BY	DATE	DESCRIPTION
DATE COMPLETED:	10/06/11	

HORIZONTAL SCALE IN FEET
0 10 20 40

R/W DESIGNER BJD
R/W REVIEWER LAF

PID NO. 89029

RIGHT OF WAY TOPO SHEET - McCLAIN RD.
STA. 109+00.00 TO STA. 112+77

ALL-75-0.21

81/103

885/907

I:\Pd\89029\row\sheets\89029RL204.dgn 07-MAY-2012 12:50PM dsiebene

ALLEN COUNTY
VILLAGE OF FORT SHAWNEE
PERRY TOWNSHIP
SEC. 13, N.E. 1/4, T-4-S R-6-E
SEC. 18, N.W. 1/4, T-4-S R-7-E

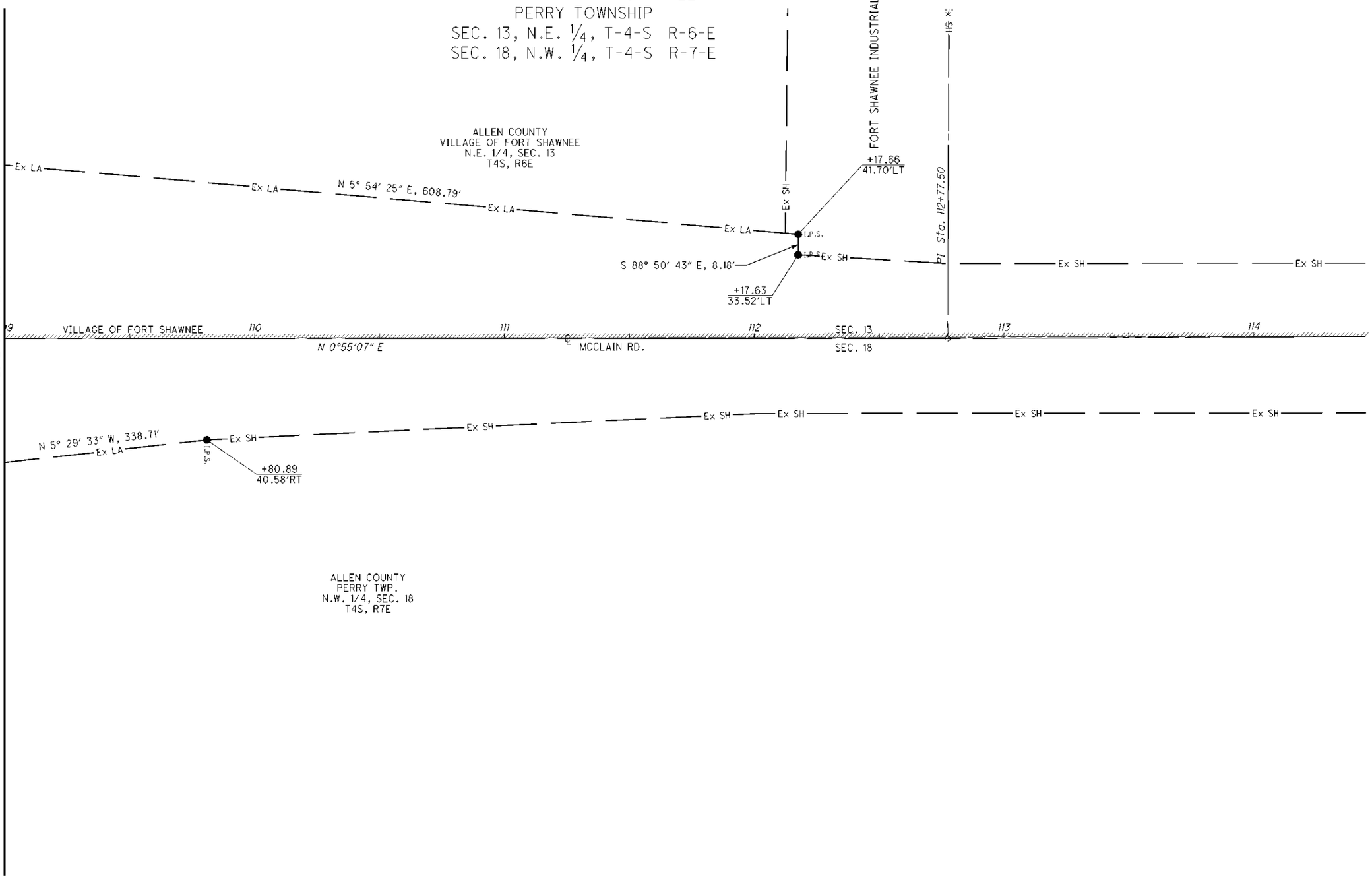

ALLEN COUNTY
PERRY TWP.
N.W. 1/4, SEC. 18
T4S, R7E

REV. BY	DATE	DESCRIPTION

DATE COMPLETED: 10/06/11

HORIZONTAL SCALE IN FEET
0 10 20 40

R/W DESIGNER: BJD
R/W REVIEWER: LAF

PID NO. 89029

R/W BOUNDARY SHEET - McCLAIN RD.
STA. 109+00.00 TO STA. 112+77

ALL-75-0.21

82/103

886/907

I:\Pd\89029\row\sheets\89029RD204.dgn 07-MAY-2012 12:50PM dsiebene

ALLEN COUNTY
PERRY TOWNSHIP
CITY OF LIMA
SEC. 18, N.E. 1/4, T-4-S R-7-E
SEC. 17, N.W. 1/4, T-4-S R-7-E

REV. BY	DATE	DESCRIPTION
DJS	10/2/12	REPRINTED TO SHOW PARKING ON PARCEL 55
DJS	8/20/12	REVISED ACREAGE FOR PARCEL 55
DJS	4/19/12	ADDED PARKING & DRIVE FOR PARCEL 55
DJS	12/23/11	EDITED AUD. #'S, MODIFIED POST @ DRIVE, & DELETED WOOD SIGN ALL FOR PARCEL 55
DJS	10/25/11	REV. SHEET FOR PARCEL 47-T

DATE COMPLETED: 10/06/11

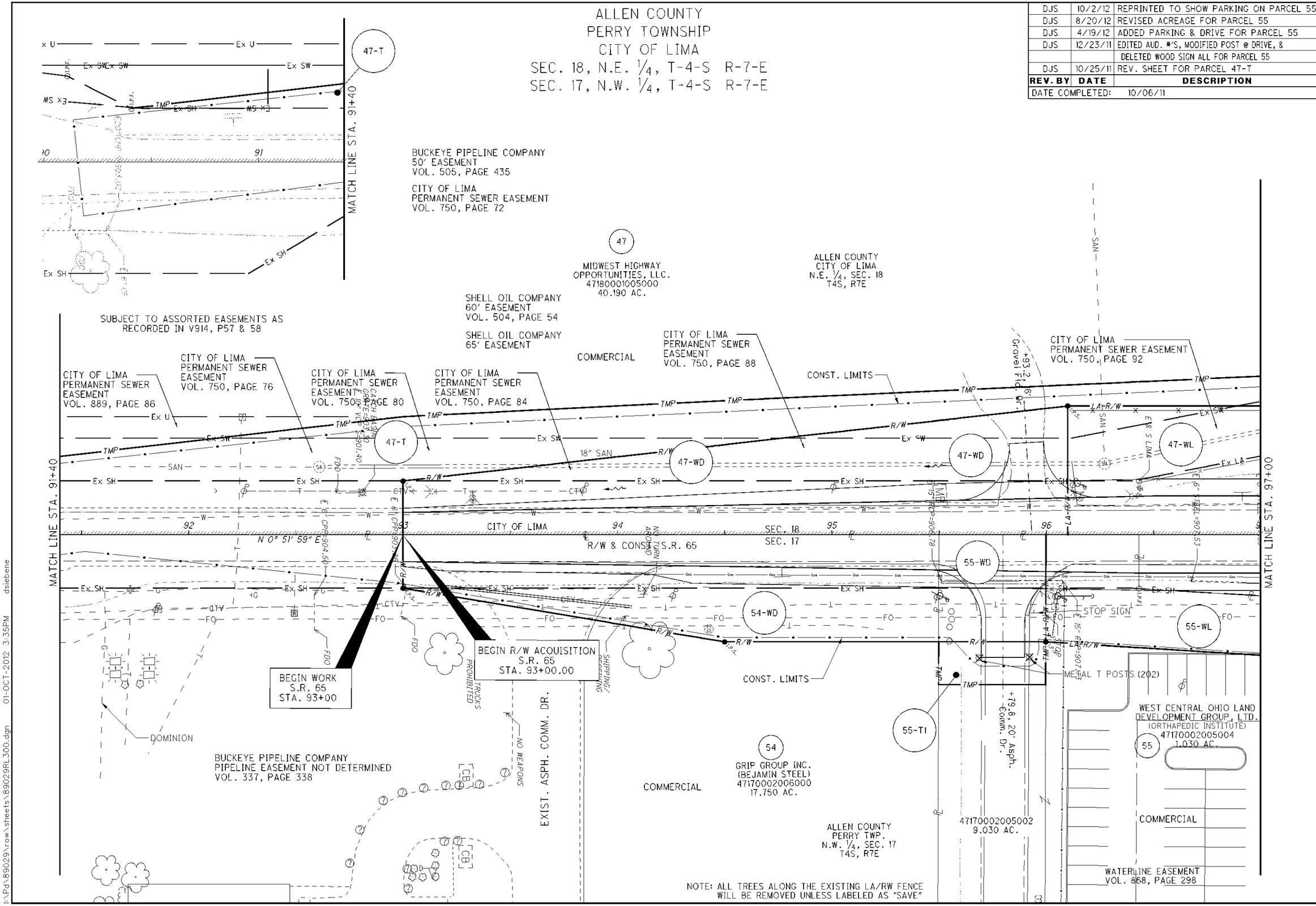

NOTE: ALL TREES ALONG THE EXISTING LA/RW FENCE WILL BE REMOVED UNLESS LABELED AS "SAVE"

HORIZONTAL SCALE IN FEET 0 10 20 40

R/W DESIGNER BJD
R/W REVIEWER LAF

PID NO. 89029

RIGHT OF WAY TOPO SHEET - S.R. 65
BEGIN WORK TO STA. 97+00.00

ALL-75-0.21

I:\Pd\89029\row\sheets\89029RL300.dgn 01-OCT-2012 3:35PM dsiebene

ALLEN COUNTY
PERRY TOWNSHIP
CITY OF LIMA
SEC. 18, N.E. 1/4, T-4-S R-7-E
SEC. 17, N.W. 1/4, T-4-S R-7-E

REV. BY	DATE	DESCRIPTION
DJS	8/20/12	REVISED ACREAGE FOR PARCEL 55
DJS	12/23/11	REVISED PARCEL 47-T & AUD. #'S FOR PARCEL 55
DJS	10/25/11	REV. SHEET FOR PARCEL 47-T

DATE COMPLETED: 10/06/11

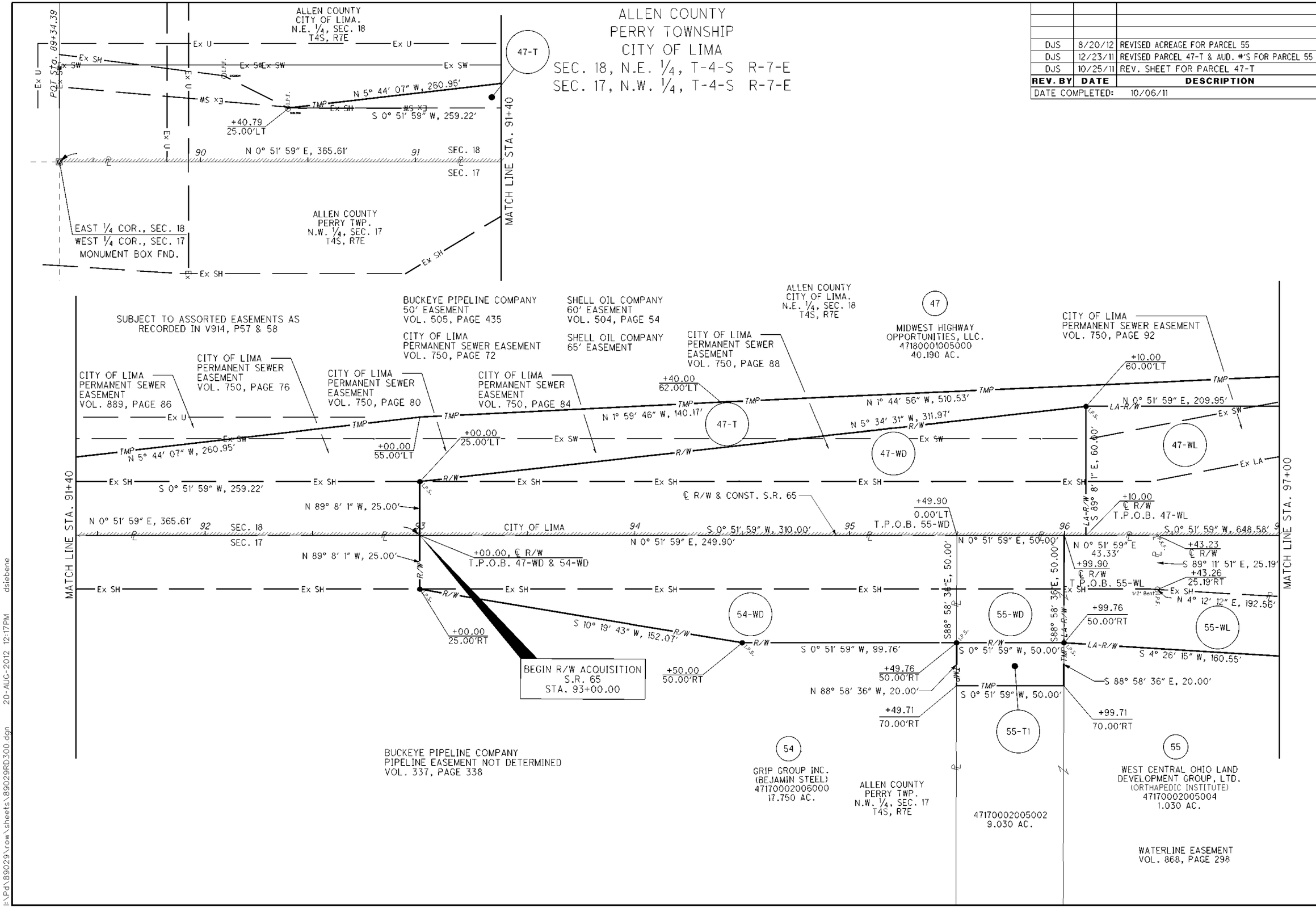

HORIZONTAL SCALE IN FEET

R/W DESIGNER BJD
R/W REVIEWER LAF

PID NO. 89029

R/W BOUNDARY SHEET - S.R. 65
BEGIN WORK TO STA. 97+00.00

ALL-75-0.21

I:\Pd\89029\row\sheets\89029RD300.dgn 20-AUG-2012 12:17PM dsiebene

REV. BY	DATE	DESCRIPTION
DJS	10/2/12	REPRINTED TO SHOW PARKING ON PARCEL 55
DJS	8/20/12	REVISED ACREAGE FOR PARCEL 55
DJS	4/19/12	ADDED PARKING ON PARCEL 55
DJS	3/22/12	MOD. PARCELS 55-WL & 55WDV1 ALONG YODER ROAD
DJS	12/23/11	EDITED AUD. #'S FOR PARCEL55, MOVED IPS FOR
		PARCEL 57-WL, & ADDED VARIOUS (DND) FOR 57-T3
DJS	10/25/11	ADDED PARCEL 47-T & DRIVE REMOVAL
DATE COMPLETED:		10/06/11

ALLEN COUNTY
PERRY TOWNSHIP
CITY OF LIMA
SEC. 18, N.E. 1/4, T-4-S R-7-E
SEC. 17, N.W. 1/4, T-4-S R-7-E

DRIVE REMOVAL

CITY OF LIMA
PERMANENT SEWER EASEMENT
VOL. 750, PAGE 92

MIDWEST HIGHWAY OPPORTUNITIES, LLC.
47180001005000
40.190 AC.

ALLEN COUNTY
CITY OF LIMA
N.E. 1/4, SEC. 18
T4S, R7E

COMMERCIAL

S.R. 65 STA. 98+05.29=
YODER RD. STA. 0+00.00

S.R. 65 STA. 101+91.13=
RAMP A STA. 224+15.97
S.R. 65 STA. 101+81.09=
RAMP D STA. 223+90.86

℄ R/W & CONST. S.R. 65

CITY OF LIMA

SEC. LINE

MATCH LINE STA. 97+00

MATCH LINE STA. 102+00

ABANDONED SIGN FOUNDATION

LIGHTED SIGN

EXIST. COMM. DR.

TRUCK EXIT SIGN

TRUCK ENTER SIGN

BRICK SIGN

MAIN ENTRANCE

NO LEFT TURN AROUND

CONST. LIMITS

AND CONTROL BOX

SPEEDWAY

℄ RAMP 'A'

℄ RAMP 'D'

℄ R/W & CONST. YODER RD.

EMRO MARKETING COMPANY,
A DELAWARE CORPORATION
2.090 AC.

WEST CENTRAL OHIO LAND
DEVELOPMENT GROUP, LTD
(ORTHAPEDIC INSTITUTE)
47170002005004
1.030 AC.

47170002005002
9.030 AC.

WATERLINE EASEMENT
VOL. 868, PAGE 298

VERTICAL PVC PIPES (DND)

BOLLARDS

TANK FILLER CAPS

ALLEN COUNTY
PERRY TWP.
N.W. 1/4, SEC. 17
T4S, R7E

PC Sta. 1+80.85

PC Sta. 226+43.17

N 0° 51' 59" E

S 89° 08' 01" E

S 75° 08' 06" E

N 79° 51' 58" E

NOTE: ALL TREES ALONG THE EXISTING LA/RW FENCE WILL BE REMOVED UNLESS LABELED AS "SAVE"

HORIZONTAL SCALE IN FEET

R/W DESIGNER BJD
R/W REVIEWER LAF

PID NO. 89029

RIGHT OF WAY TOPO SHEET - S.R. 65
STA. 97+00.00 TO STA. 102+00.00

ALL-75-0.21

85/103

889/907

I:\Pd\89029\row\sheets\89029RL301.dgn 01-OCT-2012 3:38PM dsiebene

ALLEN COUNTY
PERRY TOWNSHIP
CITY OF LIMA
SEC. 18, N.E. 1/4, T-4-S R-7-E
SEC. 17, N.W. 1/4, T-4-S R-7-E

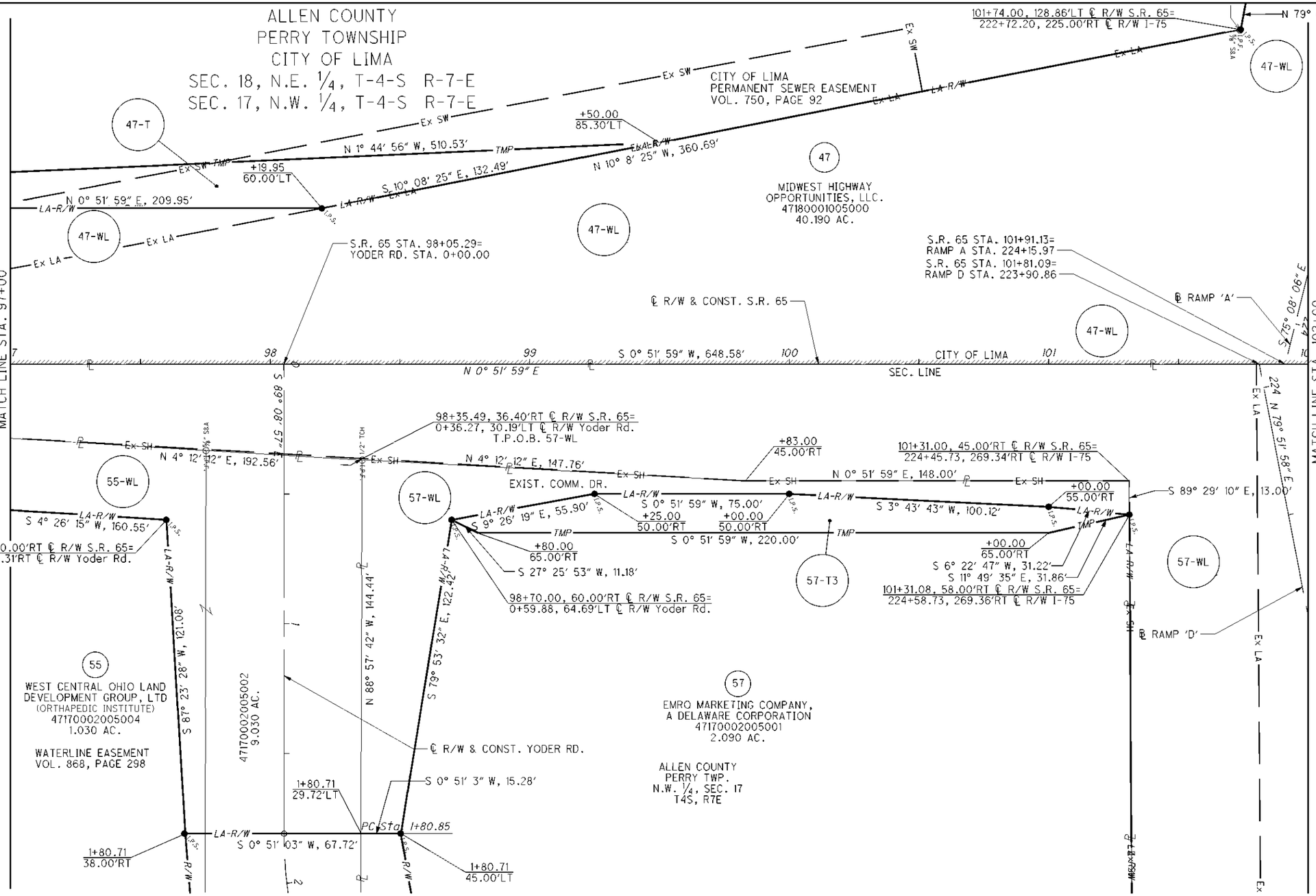

NOTE: See sheets 92,94 for Parcel details along Yoder Rd.

NOTE: ALL TREES ALONG THE EXISTING LA/RW FENCE WILL BE REMOVED UNLESS LABELED AS "SAVE"

REV. BY	DATE	DESCRIPTION
DJS	8/20/12	REVISED ACREAGE FOR PARCEL 55
DJS	3/22/12	REVISED PARCEL 55-WL
DJS	12/23/11	EDITED AUD. #'S FOR PARCEL 55, MOD. BEARING ALONG 47-WL
DJS	10/25/11	ADDED PARCEL 47-T
DATE COMPLETED:		10/06/11

HORIZONTAL SCALE IN FEET
0 10 20 40
R/W DESIGNER BJD
R/W REVIEWER LAF
PID NO. 89029

R/WAY BOUNDARY SHEET - S.R. 65 STA. 97+00.00 TO STA. 102+00.00

ALL-75-0.21

86/103

890/907

I:\Pd\89029\row\sheets\89029RD301.dgn 20-AUG-2012 12:38PM dsiebene

ALLEN COUNTY
PERRY TOWNSHIP
CITY OF LIMA
SEC. 18, N.E. 1/4, T-4-S R-7-E
SEC. 17, N.W. 1/4, T-4-S R-7-F

ALLEN COUNTY
CITY OF LIMA
N.E. 1/4, SEC. 18
T4S, R7E

WEST OHIO GAS COMPANY
GAS PIPELINE EASEMEMT
VOL. 501, PAGE 761

PT Sta. 222+61.01

CITY OF LIMA, OHIO
35' PERMANENT EASEMEMT
VOL. 758, PAGE 497

CONST. LIMITS

℄ RAMP 'A'

℄ RAMP 'B'

℄ RAMP 'C'

℄ RAMP 'D'

℄ R/W & CONST. S.R. 65

S 89° 34' 29" E

S 75° 08' 06" E

N 75° 51' 59" E

N 0° 51' 59" E

S 80° 53' 01" E

S.R. 65 STA. 106+07.78=
RAMP B STA. 224+17.25

S.R. 65 STA. 106+13.89=
RAMP C STA. 223+93.98

I-75 STA. 224+02.80=
S.R. 65 STA. 104+00.00

I-75 OVER S.R. 65 (ST. JOHNS RD.)
BRIDGE NO. ALL-75-04.23 L/R

℄ R/W & CONST. I-75

MATCH LINE STA. 102+00

MATCH LINE STA. 107+00

CITY OF LIMA

SEC. LINE

ALLEN COUNTY
PERRY TWP.
N.W. 1/4, SEC. 17
T4S, R7E

51-WL

6' Chainlink Fence

Ex. Sign Post

51-T

51

COMMERCIAL

WRIGHT DISTRIBUTION
CENTER, INC.
AN OHIO CORPORATION
26.520 AC.

ALLEN COUNTY
CITY OF LIMA
N.W. 1/4, SEC. 17
T4S, R7E

EASEMENTS:
SPRINT TELEPHONE VOL. 784 PG. 215
OHIO TEL. & TEL L 42/559
OHIO TEL. & TEL L 43/20
OHIO POWER VOL. 207 PG. 595
OHIO POWER VOL. 248 PG. 561
OHIO POWER VOL. 332 PG. 7
OHIO POWER VOL. 419 PG. 672
WEST OHIO GAS VOL. 456 PG. 180
STATE OF OHIO VOL. 239 PG. 627
STATE OF OHIO VOL. 349 PG. 290

NOTE: ALL TREES ALONG THE EXISTING LA/RW FENCE
WILL BE REMOVED UNLESS LABELED AS "SAVE"

REV. BY	DATE	DESCRIPTION
DJS	4/3/12	ADDED FENCE & POST ON PARCEL 51
DATE COMPLETED:		10/06/11

I:\Pd\89029\row\sheets\89029RL302.dgn 07-MAY-2012 12:55PM dsiebene

HORIZONTAL SCALE IN FEET
0 10 20 40

R/W DESIGNER BJD
R/W REVIEWER LAF

PID NO. 89029

RIGHT OF WAY TOPO SHEET - S.R. 65
STA. 102+00.00 TO STA. 107+00.00

ALL-75-0.21

87/103

891/907

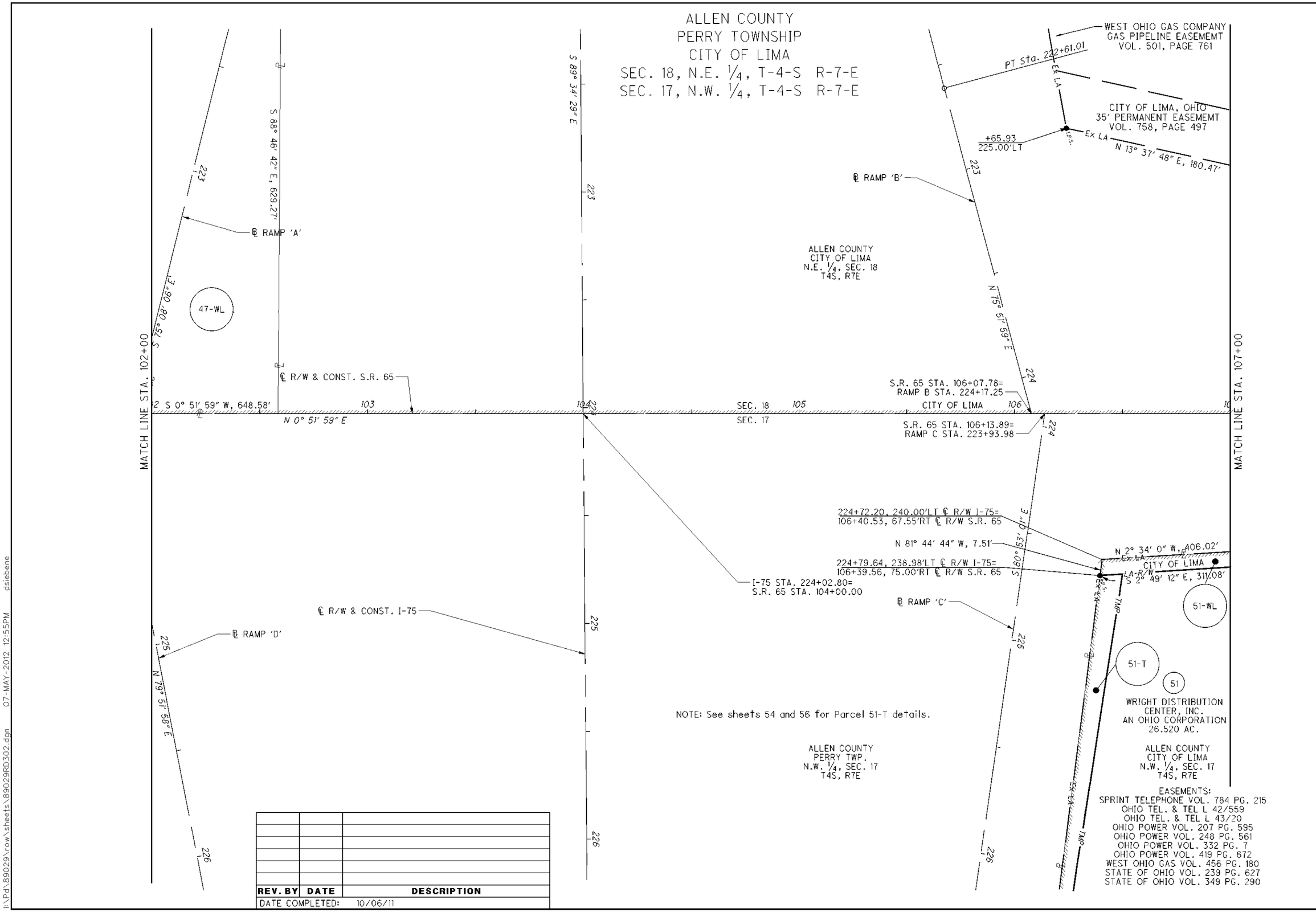

HORIZONTAL SCALE IN FEET 0 10 20 40

R/W DESIGNER BJD
R/W REVIEWER LAF

PID NO. 89029

R/W BOUNDARY SHEET - S.R. 65
STA. 102+00.00 TO STA. 107+00.00

ALL-75-0.21

I:\Pd\89029\row\sheets\89029RD302.dgn 07-MAY-2012 12:55PM dsiebene

ALLEN COUNTY
PERRY TOWNSHIP
CITY OF LIMA
SEC. 18, N.E. 1/4, T-4-S R-7-E
SEC. 17, N.W. 1/4, T-4-S R-7-E

48
WENDY'S OF FT. WAYNE, INC.
7.600 AC.
AUD. PAR. 47180001002000

ALLEN COUNTY
CITY OF LIMA
N.E. 1/4, SEC. 18
T4S, R7E

CITY OF LIMA, OHIO
35' PERMANENT EASEMEMT
VOL. 758, PAGE 497

35' INGRESS/EGRESS EASEMEMT
VOL. 444, PAGE 188

END R/W ACQUISITION
S.R. 65
STA. 110+97.79

COMMERCIAL

Ex LA-R/W
LA-R/W
CONST. LIMITS
48-WL
24" CMP
Ex SH
℄ R/W & CONST. S.R. 65
MATCH LINE STA. 107+00
107
108
109
110
111
112
N 0° 51' 59" E
SEC. LINE
CITY OF LIMA
5' CPP
Ex LA
CITY OF LIMA
END WORK
S.R. 65
STA. 111+00
100'- 6' High Chain Link (202)
51-WL
CONST. LIMITS
51
WRIGHT DISTRIBUTION
CENTER, INC.
AN OHIO CORPORATION
26.520 AC.
COMMERCIAL
TRIBUTARY OF LOST CREEK
ALLEN COUNTY
CITY OF LIMA
N.W. 1/4, SEC. 17
T4S, R7E

EASEMENTS:
SPRINT TELEPHONE VOL. 784 PG. 215
OHIO TEL. & TEL L 42/559
OHIO TEL. & TEL L 43/20
OHIO POWER VOL. 207 PG. 595
OHIO POWER VOL. 248 PG. 561
OHIO POWER VOL. 332 PG. 7
OHIO POWER VOL. 419 PG. 672
WEST OHIO GAS VOL. 456 PG. 180
STATE OF OHIO VOL. 239 PG. 627
STATE OF OHIO VOL. 349 PG. 290

NOTE: ALL TREES ALONG THE EXISTING LA/RW FENCE WILL BE REMOVED UNLESS LABELED AS "SAVE"

REV. BY	DATE	DESCRIPTION
DJS	5/9/13	ADDED LENGTH AND REMOVAL FOR FENCE ON PARCEL 51-WL
DJS	5/14/12	REV. PARCEL 51-WL TAKE FOR CLEARZONE GRADING
DATE COMPLETED:		10/06/11

HORIZONTAL SCALE IN FEET
0 10 20 40

R/W DESIGNER BJD
R/W REVIEWER LAF

PID NO. 89029

RIGHT OF WAY TOPO SHEET - S.R. 65
STA. 107+00.00 TO END WORK

ALL-75-0.21

89/103
893/907

I:\Pid\89029\row\sheets\89029RL303.dgn 09-MAY-2013 8:44AM dsiebene

ALLEN COUNTY
PERRY TOWNSHIP
CITY OF LIMA
SEC. 18, N.E. 1/4, T-4-S R-7-E
SEC. 17, N.W. 1/4, T-4-S R-7-E

ALLEN COUNTY
CITY OF LIMA
N.E. 1/4, SEC. 18
T4S, R7E

48

WENDY'S OF FT. WAYNE, INC.
7.600 AC.
AUD. PAR. 47180001002000

48-WL

CITY OF LIMA, OHIO
35' PERMANENT EASEMEMT
VOL. 758, PAGE 497

35' INGRESS/EGRESS EASEMEMT
VOL. 444, PAGE 188

END R/W ACQUISITION
S.R. 65
STA. 110+97.79

MATCH LINE STA. 107+00

+00.00
92.46'LT

Ex LA
N 13° 37' 48" E, 180.47'

Ex LA
LA-R/W N 8° 41' 0" E, 201.88'

Ex LA
S 13° 37' 48" W, 305.34'

+00.00
65.00'LT

N 23° 6' 46" E, 105.66'

LA-R/W

+97.79, 25.00'LT
T.P.O.B. 48-WL

N 89° 07' 43" W, 25.00'

+97.79, ℄

℄ R/W & CONST. S.R. 65

107 108 109 SEC. 18 110 CITY OF LIMA 111 112

N 0° 51' 59" E

SEC. 17

S 0° 51' 59" W, 485.06'

S 0° 51' 59" W, 483.05'

N.E. COR., SEC. 18
N.W. COR., SEC. 17
MONUMENT BOX FND.

Ex SH

+99.80, ℄

S 89°06'07" E
40.00'

+99.78
25.00'RT

+99.78
40' RT.

ALLEN COUNTY
PERRY TWP.
N.W. 1/4, SEC. 17
T4S, R7E

+45.82
43.24'RT
T.P.O.B. 51-WL

S 2°34'00" E
54.05'

CITY OF LIMA

N 2° 34' 0" W, 406.02'

S 2° 49' 12" E, 311.08'

+50.00
55.00'RT

N 89° 06' 34" W, 10.00'

+50.00
65.00'RT

S 0° 51' 59" W, 95.83'

S 89° 08' 48" E, 21.76'

+45.83
65.00'RT

51-WL

51

WRIGHT DISTRIBUTION
CENTER, INC.
AN OHIO CORPORATION
26.520 AC.

TRIBUTARY OF LOST CREEK

ALLEN COUNTY
CITY OF LIMA
N.W. 1/4, SEC. 17
T4S, R7E

EASEMENTS:
SPRINT TELEPHONE VOL. 784 PG. 215
OHIO TEL. & TEL L 42/559
OHIO TEL. & TEL L 43/20
OHIO POWER VOL. 207 PG. 595
OHIO POWER VOL. 248 PG. 561
OHIO POWER VOL. 332 PG. 7
OHIO POWER VOL. 419 PG. 672
WEST OHIO GAS VOL. 456 PG. 180
STATE OF OHIO VOL. 239 PG. 627
STATE OF OHIO VOL. 349 PG. 290

HORIZONTAL SCALE IN FEET
0 10 20 40

R/W DESIGNER BJD
R/W REVIEWER LAF

PID NO. 89029

R/W BOUNDARY SHEET - S.R. 65
STA. 107+00.00 TO END WORK

ALL-75-0.21

90/103

894/907

REV. BY	DATE	DESCRIPTION
DJS	5/14/12	MOD. 51-WL TAKE NEAR CREEK
DJS	12/23/11	ADDED T. TO THE P.O.B.
DATE COMPLETED:		10/06/11

I:\Pd\89029\row\sheets\89029RD303.dgn 10-MAY-2012 11:06AM dsiebene

ALLEN COUNTY
PERRY TOWNSHIP
CITY OF LIMA
SEC. 17, N.W. 1/4, T-4-S R-7-E

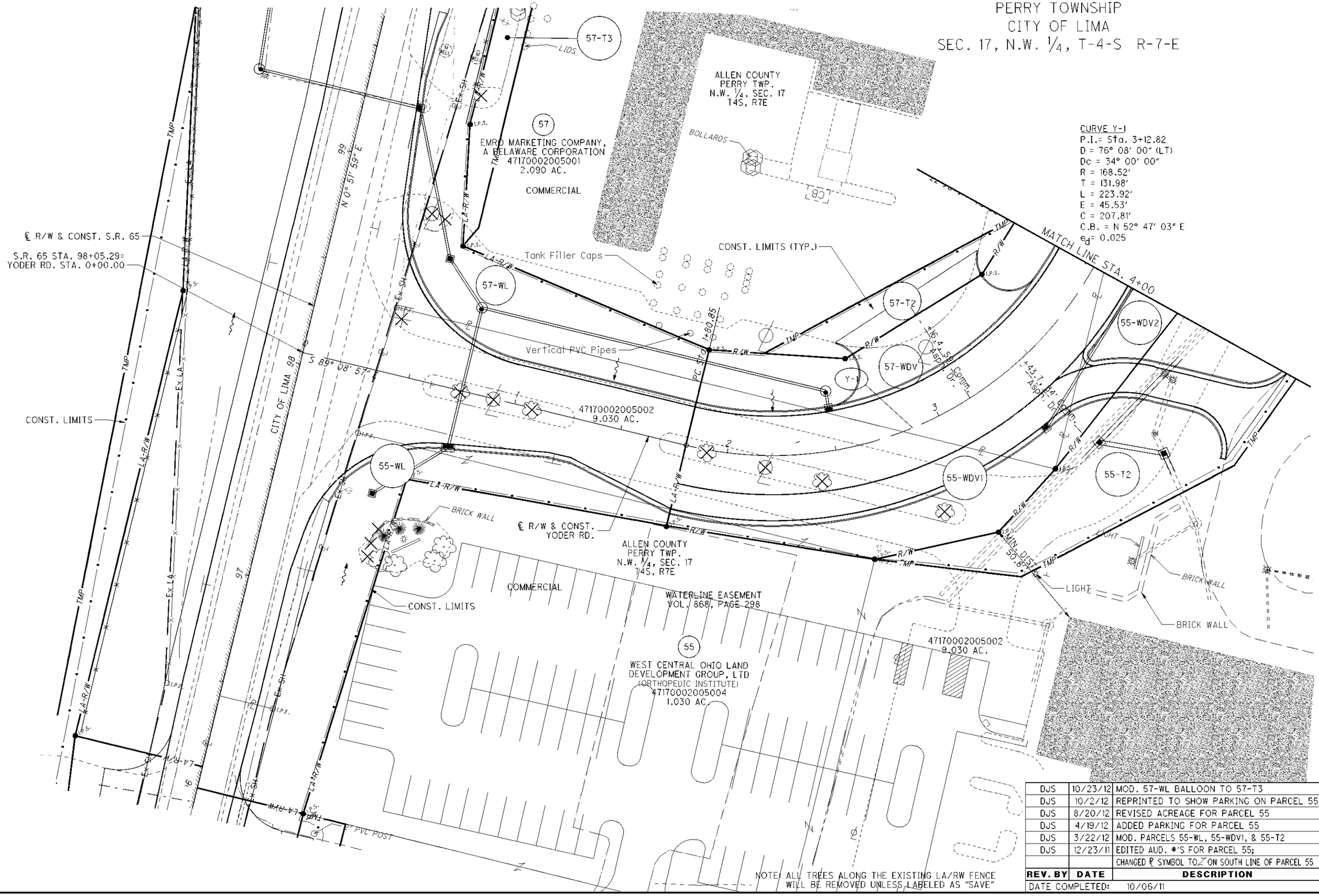

NOTE: ALL TREES ALONG THE EXISTING LA/RW FENCE WILL BE REMOVED UNLESS LABELED AS "SAVE"

REV. BY	DATE	DESCRIPTION
DJS	10/23/12	MOD. 57-WL BALLOON TO 57-T3
DJS	10/2/12	REPRINTED TO SHOW PARKING ON PARCEL 55
DJS	8/20/12	REVISED ACREAGE FOR PARCEL 55
DJS	4/19/12	ADDED PARKING FOR PARCEL 55
DJS	3/22/12	MOD. PARCELS 55-WL, 55-WDV1, & 55-T2
DJS	12/23/11	EDITED AUD. #'S FOR PARCEL 55;
		CHANGED ℄ SYMBOL TO ⁄ ON SOUTH LINE OF PARCEL 55

DATE COMPLETED: 10/06/11

HORIZONTAL SCALE IN FEET
0 10 20 40

R/W DESIGNER: BJD
R/W REVIEWER: LAF
PID NO. 89029

RIGHT OF WAY TOPO SHEET - YODER RD.
BEGIN WORK TO STA. 4+00.00

ALL-75-0.21

91/103

895/907

I:\Pd\89029\row\sheets\89029RL309.dgn 24-OCT-2012 7:27AM dsiebene

ALLEN COUNTY
PERRY TOWNSHIP
CITY OF LIMA
SEC. 17, N.W. 1/4, T-4-S R-7-E
SEC. 18, N.E. 1/4, T-4-S R-7-E

ALLEN COUNTY
CITY OF LIMA
N.E. 1/4, SEC. 18
T4S, R7E

ALLEN COUNTY
PERRY TWP.
N.W. 1/4, SEC. 17
T4S, R7E

57
EMRO MARKETING COMPANY,
A DELAWARE CORPORATION
47170002005001
2.090 AC.

47170002005002
9.030 AC.

47170002005002
6.710 AC.

55
WEST CENTRAL OHIO LAND
DEVELOPMENT GROUP, LTD
(ORTHOPEDIC INSTITUTE)
47170002005004
1.030 AC.

WATERLINE EASEMENT
VOL. 868, PAGE 298

ALLEN COUNTY
PERRY TWP.
N.W. 1/4, SEC. 17
T4S, R7E

BEARING & DISTANCE		
B-D	Bearing	Distance
B14	N 0° 51' 03" E	15.28'
B15	N 19° 21' 39" E	172.05'
B16	S 19° 21' 39" W	31.64'
B17	S 80° 59' 35" W	37.12'

CURVE Y-1
P.I.= Sta. 3+12.82
D = 76° 08' 00" (LT)
Dc = 34° 00' 00"
R = 168.52'
T = 131.98'
L = 223.92'
E = 45.53'
C = 207.81'
C.B. = N 52° 47' 03" E
e_d = 0.025

℄ R/W & CONST. S.R. 65
S.R. 65 STA. 98+05.29=
YODER RD. STA. 0+00.00

MATCH LINE STA. 4+00

NOTE: See sheet 84 and 86 for details
on Parcels 55-WL and 57-WL.

DJS	8/20/12	REVISED ACREAGE FOR PARCEL 55
DJS	3/22/12	MOD. PARCELS 55-WL,55-WDV1 & 55-T2
DJS	12/23/11	ADDED T.P.O.B. ON 57-WDV, 55-WDV1 & 55WDV2; MOD. BIG;
		EDITED AUD. #'S FOR PARCEL 55
REV. BY	DATE	DESCRIPTION
DATE COMPLETED:		10/06/11

HORIZONTAL SCALE IN FEET
0 10 20 40

R/W DESIGNER BJD
R/W REVIEWER LAF
PID NO. 89029

R/W BOUNDARY SHEET - YODER RD.
BEGIN WORK TO STA. 4+00.00

ALL-75-0.21

92/103
896/907

I:\Pdl\89029\row\sheets\89029RD309.dgn 20-AUG-2012 1:17PM dsiebene

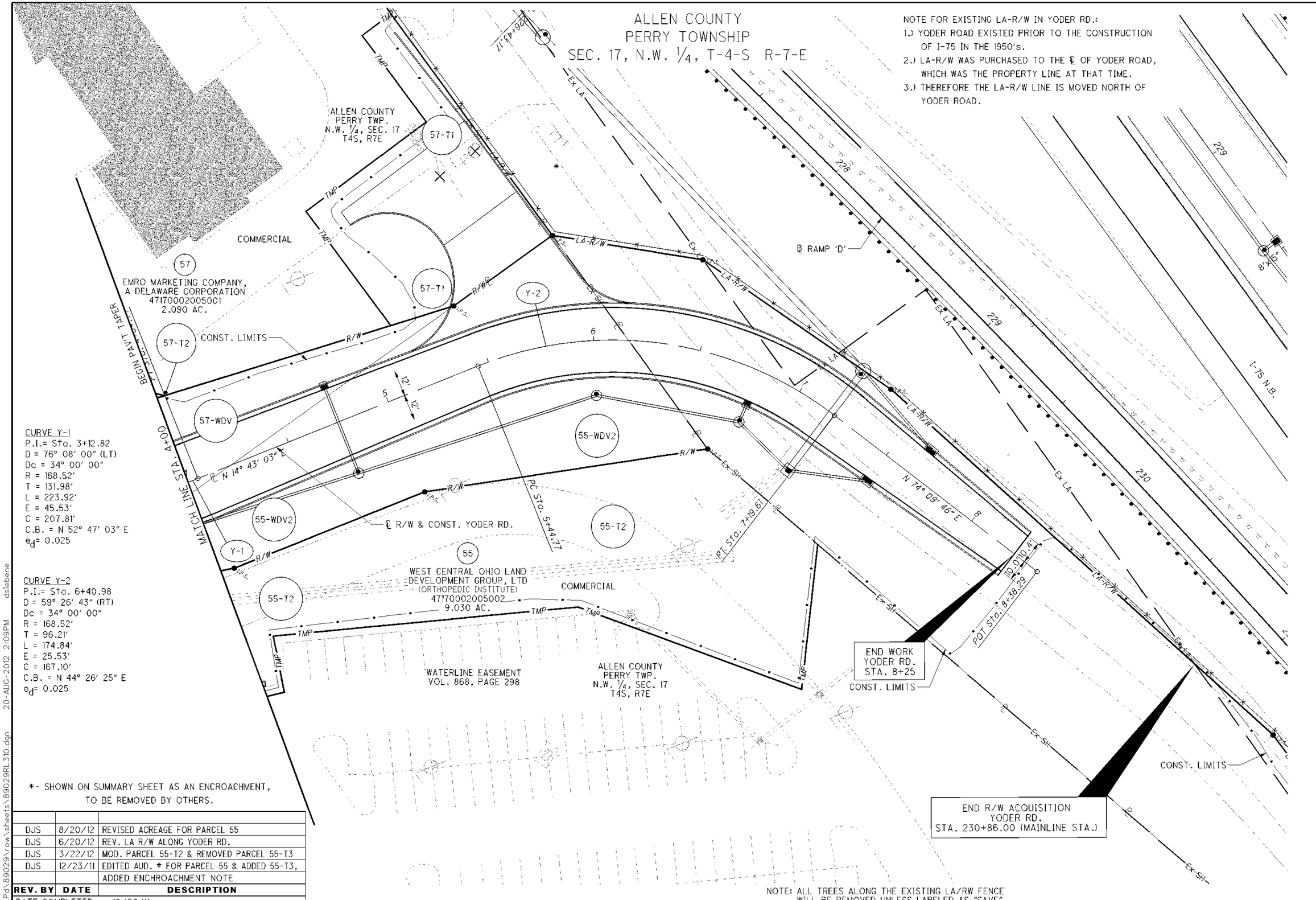

REV. BY	DATE	DESCRIPTION
DJS	8/20/12	REVISED ACREAGE FOR PARCEL 55
DJS	6/20/12	REV. LA R/W ALONG YODER RD.
DJS	3/22/12	MOD. PARCEL 55-T2 & REMOVED PARCEL 55-T3
DJS	12/23/11	EDITED AUD. # FOR PARCEL 55 & ADDED 55-T3, ADDED ENCHROACHMENT NOTE

DATE COMPLETED: 10/06/11

I:\Pd\89029\row\sheets\89029RL310.dgn 20-AUG-2012 2:09PM dsiebene

HORIZONTAL SCALE IN FEET 0 10 20 40

R/W DESIGNER BJD
R/W REVIEWER LAF

PID NO. 89029

RIGHT OF WAY TOPO SHEET - YODER RD. STA. 4+00.00 TO END WORK

ALL-75-0.21

ALLEN COUNTY
PERRY TOWNSHIP
SEC. 17, N.W. 1/4, T-4-S R-7-E

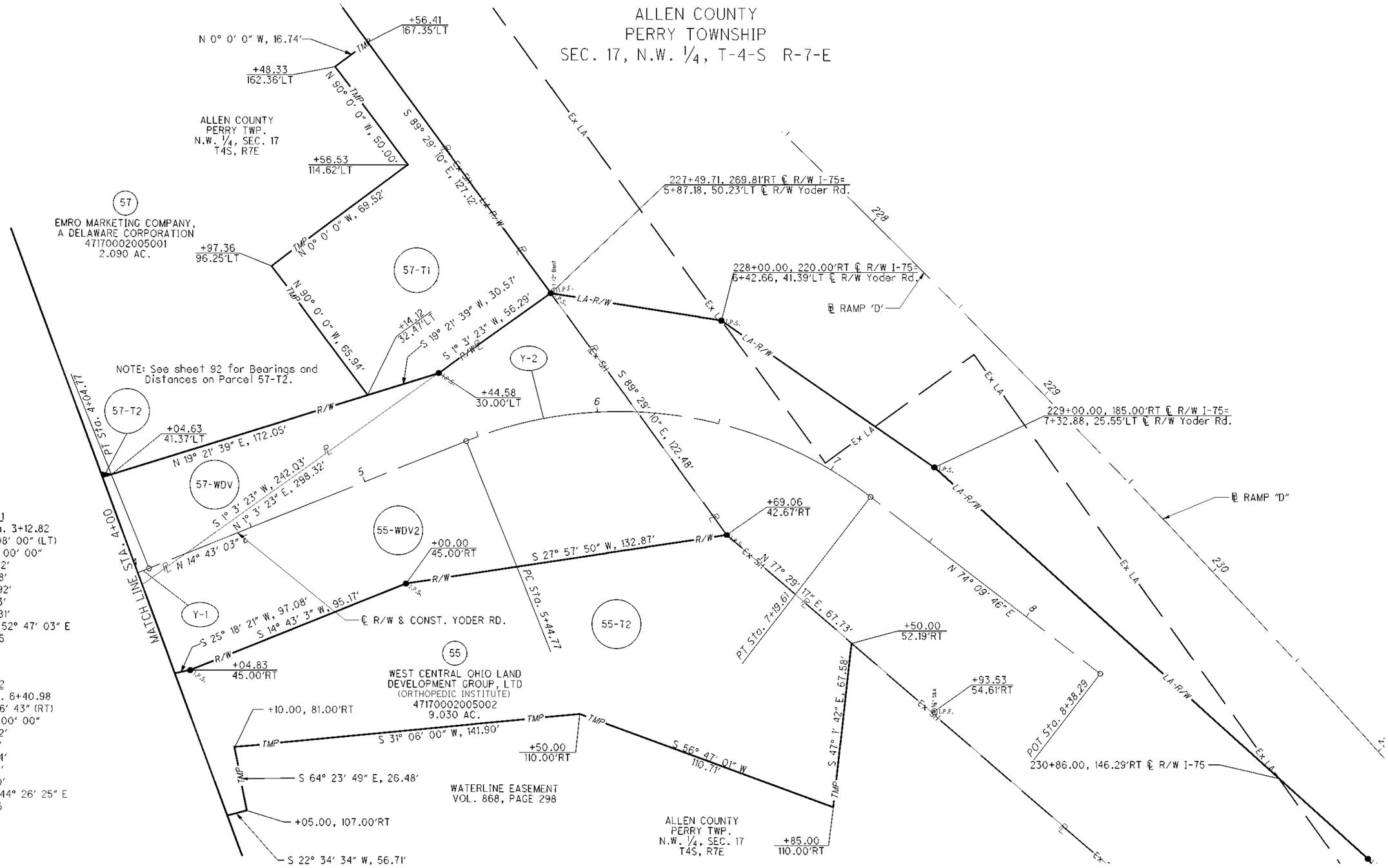

NOTE FOR EXISTING LA-R/W IN YODER RD.:
1.) YODER ROAD EXISTED PRIOR TO THE CONSTRUCTION OF I-75 IN THE 1950's.
2.) LA-R/W WAS PURCHASED TO THE ℄ OF YODER ROAD, WHICH WAS THE PROPERTY LINE AT THAT TIME.
3.) THEREFORE THE LA-R/W LINE IS MOVED NORTH OF YODER ROAD.

REV. BY	DATE	DESCRIPTION
DJS	8/20/12	REVISED ACREAGE FOR PARCEL 55
DJS	6/20/12	REV. LA R/W ALONG YODER RD.
DJS	3/22/12	MOD. PARCEL 55-T2 & REMOVED PARCEL 55-T3
DJS	12/23/11	ADDED PARCEL 55-T3 & EDITED AUD. # FOR PARCEL 55

DATE COMPLETED: 10/06/11

HORIZONTAL SCALE IN FEET
0 10 20 40

R/W DESIGNER: BJD
R/W REVIEWER: LAF

PID NO. 89029

R/W BOUNDARY SHEET - YODER RD.
STA. 4+00.00 TO END WORK

ALL-75-0.21

94/103

898/907

I:\Pid\89029\row\sheets\89029RD310.dgn 20-AUG-2012 2:17PM dsiebene

ALLEN COUNTY
PERRY TOWNSHIP
CITY OF LIMA
SEC. 17, N.E. 1/4, T-4-S R-7-E
SEC. 8, S.E. 1/4, T-4-S R-7-E

HOUX PARKWAY

EASEMENTS
INGRESS AND EGRESS, VOL. 2006, PAGE 10149
DOMINION EAST OHIO GAS, VOL. 2007 PAGE 04668
CITY OF LIMA, OHIO, VOL. 955 PAGE 426
INLAND CORPORATION, 947, PAGE 773

(67)
GREATER OHIO ETHANOL
47080004002000
11.310 AC.

ALLEN COUNTY
CITY OF LIMA
S.E. 1/4, SEC. 8
T4S, R7E

COMMERCIAL

BEGIN WORK
HANTHORN RD.
STA. 93+25

DOMINION EAST OHIO GAS
PIPELINE EASEMENT NO. 1
VOL. 2007, PAGE 4668

CONST. LIMITS

67-UV
67-WDV
67-WL

CITY OF LIMA

FENCE (202)

DOMINION EAST OHIO GAS
PIPELINE EASEMENT NO. 2

℄ R/W & CONST. HANTHORN RD.

1955 ℄ HANTHORN RD.

S 89° 22' 54" E

SEC. LINE

MATCH LINE STA. 97+50

BEGIN R/W ACQUISITION
HANTHORN RD.
STA. 93+15.00

64-WDV
60-WDV
60-WL
60-T

2-8' METAL GATES (202)

MIN. DIST. 27'

RESIDENCE

RESIDENTIAL

(64)
HAROLD B. & NORMA J. LAMBERT
47170001003000
3.860 AC.

OHIO POWER BLANKET EASEMENT
VOL. 440, PAGE 353

ALLEN COUNTY
PERRY TWP.
N.E. 1/4, SEC. 17
T4S, R7E

(60)
TODD W. & SUSAN K. SPICER
47170001002000
12.900 AC.

AGRICULTURAL

EASEMENTS:
PERMANENT UTILITY
AND RIGHT OF WAY
VOL. 955 PG. 408

BARN

NOTE: ALL TREES ALONG THE EXISTING LA/RW FENCE WILL BE REMOVED UNLESS LABELED AS "SAVE"

REV. BY	DATE	DESCRIPTION
DJS	5/9/13	ADDED FENCE & GATES REMOVAL FOR PARCEL 60
DJS	9/19/12	CHANGED PARCEL 67-U TO 67-UV
DJS	3/22/12	ADDED UTILITY EASEMENT PARCEL 67-U
DATE COMPLETED:		10/06/11

HORIZONTAL SCALE IN FEET
0 10 20 40

R/W DESIGNER BJD
R/W REVIEWER LAF

PID NO. 89029

RIGHT OF WAY TOPO SHEET - HANTHORN RD.
BEGIN WORK TO STA. 97+50.00

ALL-75-0.21

95/103

899/907

I:\Pid\89029\row\sheets\89029RL400.dgn 23-APR-2013 2:10PM dsiebene

ALLEN COUNTY
PERRY TOWNSHIP
CITY OF LIMA
SEC. 17, N.E. 1/4, T-4-S R-7-E
SEC. 8, S.E. 1/4, T-4-S R-7-E

BEARING & DISTANCE		
B-D	Bearing	Distance
B18	S 0° 37' 59" W	2.64'
B19	N 89° 22' 55" W	1.04'

ALLEN COUNTY
CITY OF LIMA
S.E. 1/4, SEC. 8
T4S, R7E

HOUX PARKWAY

EASEMENTS
INGRESS AND EGRESS, VOL. 2006, PAGE 10149
DOMINION EAST OHIO GAS, VOL. 2007 PAGE 04668
CITY OF LIMA, OHIO, VOL. 955 PAGE 426
INLAND CORPORATION, 947, PAGE 773

67
GREATER OHIO ETHANOL
47080004002000
11.310 AC.

DOMINION EAST OHIO GAS
PIPELINE EASEMENT NO. 1
VOL. 2007, PAGE 4668

+50.00
45.00'LT

+15.00
30.00'LT
T.P.O.B. 67-WDV

N 67° 25' 9" E
38.08'

215.55'
N 87° 11' 5" E, 250.45'

CITY OF LIMA
N 89° 22' 55" W, 285.00'

+65.16
102.86'LT

N 86° 40' 24" E, 455.50'

67-U

S 0° 37' 6" W
15.10'

+00.00
75.10'LT

S 85° 20' 6" W, 475.23'

+00.00
60.00'LT

N 86° 39' 9" E, 578.39'

+65.16
57.91'LT
T.P.O.B. 67-U

N 0° 37' 9" E
44.95'

S 87° 11' 5" W
34.90'

67-WL

+01.04
32.64'LT

S 85° 35' 43" W, 578.10'

67-WDV

+00.00
30.00'LT
T.P.O.B. 67-WL

B18

B19

+01.04
30.00'LT

DOMINION EAST OHIO GAS
PIPELINE EASEMENT NO. 2

N 0°37'6" E
30.00'

+15.00, ℄ R/W
T.P.O.B. 64-WDV

℄ R/W & CONST. HANTHORN RD.

S 89° 22' 54" E, 466.18'

S 89° 22' 54" E, 199.41'

+14.41
℄ R/W

S 89° 22' 54" E

1955 ℄ HANTHORN RD.

SEC. LINE

MATCH LINE STA. 97+50

S 89°22'54" E, 181.18'

NORTH 1/4 COR., SEC. 17
SOUTH 1/4 COR., SEC. 8
MONUMENT BOX FND.

BEGIN R/W ACQUISITION
HANTHORN RD.
STA. 93+15.00

+15.00
30.00'RT

N 69° 56' 31" W, 90.14'

+00.00
60.00'RT

N 89° 22' 54" W, 114.64'

64-WDV

S 0° 23' 54" W, 60.00'

S 0°23'54" W, 30.00'

+14.52, 30.00'RT
T.P.O.B. 60-WDV

S 89° 22' 55" E, 85.48'

Ex SH 5/8" Backrath

60-WDV

+14.64
60.00'RT

+40.00
60.00'RT

N 89° 22' 54" W, 85.36'

S 89° 22' 54" E
60.00'

N 25° 56' 19" W
33.54'

S 40° 25' 26" W
39.05'

+23.89
30.00'RT

S 89° 22' 55" E
23.89'

+00.00, 30.00'RT
T.P.O.B. 60-WL

S 82° 54' 10" E, 177.24'

60-WL

+00.00
60.00'RT

N 87° 56' 59" W, 200.06'

+75.00
90.00'RT

N 89° 22' 54" W
20.00'

+55.00
90.00'RT

60-T

RESIDENCE

64
HAROLD B. & NORMA J. LAMBERT
47170001003000
3.860 AC.

OHIO POWER BLANKET EASEMENT
VOL. 440, PAGE 353

ALLEN COUNTY
PERRY TWP.
N.E. 1/4, SEC. 17
T4S, R7E

60
TODD W. & SUSAN K. SPICER
47170001002000
12.900 AC.

EASEMENTS:
PERMANENT UTILITY
AND RIGHT OF WAY
VOL. 955 PG. 408

REV. BY	DATE	DESCRIPTION
DJS	3/22/12	ADDED UTILITY EASEMENT 67-U
DATE COMPLETED:		10/06/11

HORIZONTAL SCALE IN FEET
0 10 20 40

R/W DESIGNER: BJD
R/W REVIEWER: LAF
PID NO. 89029

R/W BOUNDARY SHEET - HANTHORN RD.
BEGIN WORK TO STA. 97+50.00

ALL-75-0.21

96/103

900/907

I:\Pd\89029\row\sheets\89029RD400.dgn 07-MAY-2012 1:00PM dsiebene

NOTE: See sheets 59-62 for information of Parcels 60-U2 & 67-T

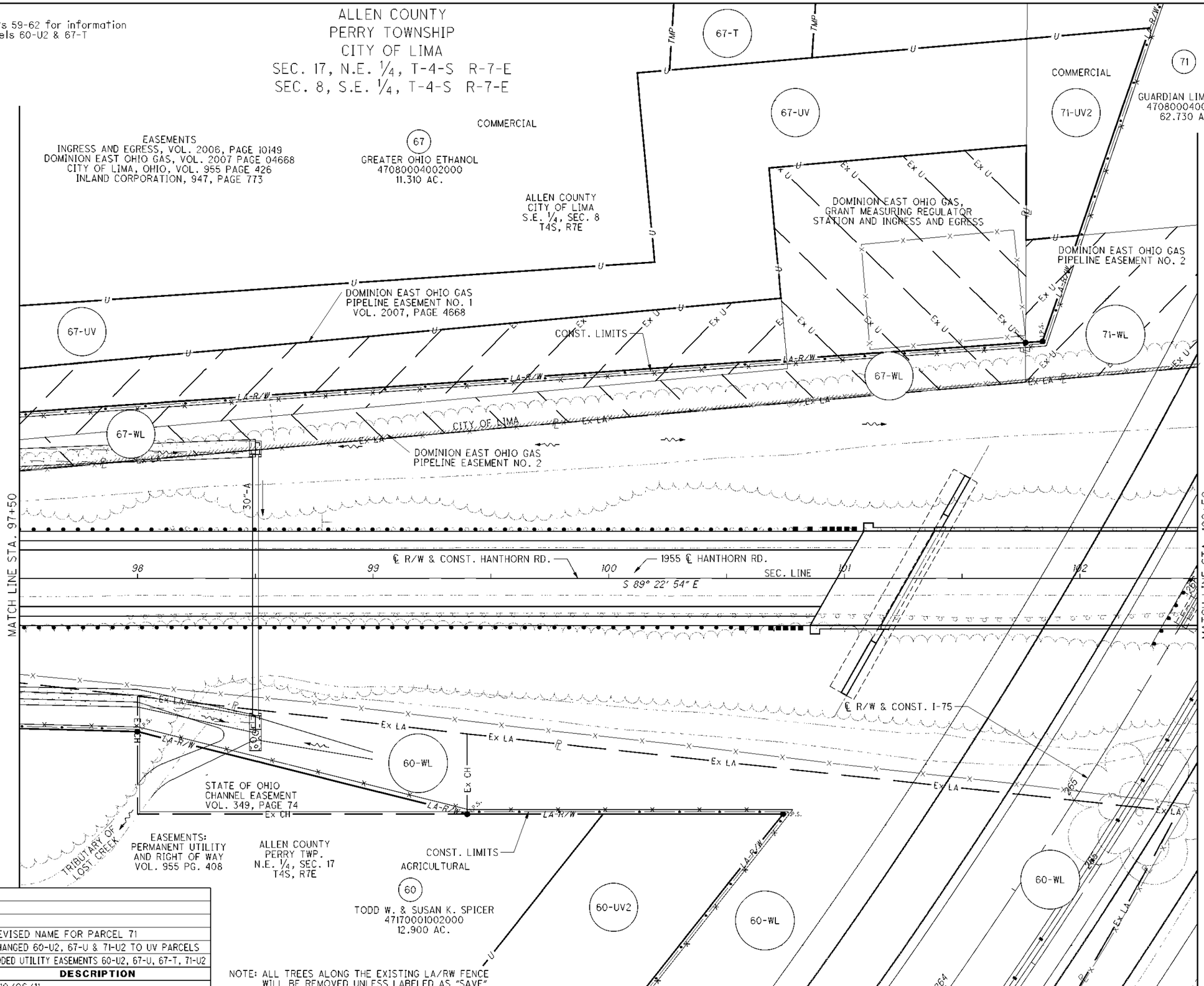

REV. BY	DATE	DESCRIPTION
DJS	11/06/12	REVISED NAME FOR PARCEL 71
DJS	9/19/12	CHANGED 60-U2, 67-U & 71-U2 TO UV PARCELS
DJS	3/22/12	ADDED UTILITY EASEMENTS 60-U2, 67-U, 67-T, 71-U2
DATE COMPLETED:		10/06/11

NOTE: ALL TREES ALONG THE EXISTING LA/RW FENCE WILL BE REMOVED UNLESS LABELED AS "SAVE"

HORIZONTAL SCALE IN FEET 0 10 20 40

R/W DESIGNER BJD
R/W REVIEWER LAF

PID NO. 89029

RIGHT OF WAY TOPO SHEET - HANTHORN RD.
STA. 97+50.00 TO STA. 102+50.00

ALL-75-0.21

I:\Pd\89029\row\sheets\89029RL401.dgn 06-NOV-2012 1:41PM dsiebene

ALLEN COUNTY
PERRY TOWNSHIP
CITY OF LIMA
SEC. 17, N.E. 1/4, T-4-S R-7-E
SEC. 8, S.E. 1/4, T-4-S R-7-E

NOTE: See sheets 61 & 62 for details on Parcel 67-T.

NOTE: See sheets 62,64 for detail on Parcel 71-WL.

EASEMENTS
INGRESS AND EGRESS, VOL. 2006, PAGE 10149
DOMINION EAST OHIO GAS, VOL. 2007 PAGE 04668
CITY OF LIMA, OHIO, VOL. 955 PAGE 426
INLAND CORPORATION, 947, PAGE 773

67
GREATER OHIO ETHANOL
47080004002000
11.310 AC.

ALLEN COUNTY
CITY OF LIMA
S.E. 1/4, SEC. 8
T4S, R7E

71
GUARDIAN LIMA, LLC
47080004001000
62.730 AC.

67-T
67-UV
71-UV2
71-WL
67-WL
60-WL
60-UV2

100+12.18
214.37'LT

N 85° 35' 43" E, 166.08'

101+77.62
228.91'LT
T.P.O.B. 71-U2

N 85° 35' 43" E
52.33'

102+29.75
233.49'LT

S 0° 53' 42" W
45.19'

N 0° 53' 42" E, 85.42'

S 85° 35' 43" W, 22.48'

S 19° 31' 18" W, 93.05'

101+77.41
183.72'LT

100+68.12
174.11'LT

S 85° 35' 43" W, 109.71'

DOMINION EAST OHIO GAS,
GRANT MEASURING REGULATOR
STATION AND INGRESS AND EGRESS

101+99.60
145.46'LT

101+77.21
143.49'LT

DOMINION EAST OHIO GAS
PIPELINE EASEMENT NO. 2

N 4° 39' 3" W, 80.52'

100+19.58
134.19'LT

N 86° 40' 24" E, 455.50'

DOMINION EAST OHIO GAS
PIPELINE EASEMENT NO. 1
VOL. 2007, PAGE 4668

100+73.21
118.85'LT

S 4° 39' 3" E, 55.50'

101+77.00
100.00'LT

S 85° 20' 6" W, 475.23'

N 86° 39' 9" E, 578.39'

S 0° 53' 42" W, 16.75'

101+76.92
83.25'LT

S 85° 35' 43" W, 578.10'

DOMINION EAST OHIO GAS
PIPELINE EASEMENT NO. 2

CITY OF LIMA

MATCH LINE STA. 97+50

MATCH LINE STA. 102+50

98 99 100 101 102

℄ R/W & CONST. HANTHORN RD.

1955 ℄ HANTHORN RD.

SEC. LINE

S 89° 22' 54" E

+00.00
50.00'RT

S 82° 54' 10" E, 177.24'

Ex LA

S 82° 51' 43" E, 140.91'

+40.00
66.00'RT

℄ R/W & CONST. I-75

N 87° 56' 59" W
200.06'

+00.00
65.00'RT

LA-R/W

N 75° 20' 44" W, 144.31'

Ex CH

STATE OF OHIO
CHANNEL EASEMENT
VOL. 349, PAGE 74

S 83° 8' 21" E, 303.48'

N 89° 22' 54" W, 134.01'

+40.00
100.00'RT

264+21.32, 100.00'LT ℄ R/W I-75=
100+74.01, 100.00'RT ℄ R/W Hanthorn Rd.

EASEMENTS:
PERMANENT UTILITY
AND RIGHT OF WAY
VOL. 955 PG. 408

60
TODD W. & SUSAN K. SPICER
47170001002000
12.900 AC.

TRIBUTARY OF
LOST CREEK

N 38° 55' 31" E, 307.05'

ALLEN COUNTY
PERRY TWP.
N.E. 1/4, SEC. 17
T4S, R7E

NOTE: See sheets 59-62 for details on Parcel 60-U2.

CURVE TABLE						
Curve	Delta	Radius	Tangent	Length	Chord	Bearing
C8	32°06'09"	1,809.86	520.72'	1,014.05	1,000.84	S44°44'00"W

REV. BY	DATE	DESCRIPTION
DJS	11/06/12	REVISED NAME FOR PARCEL 71
DJS	9/19/12	CHANGED 60-U2, 67-U & 71-U2 TO UV PARCELS
DJS	3/22/12	ADDED UTILITY EASEMENTS 60-U2, 67-U, 67-T, 71-U2
DATE COMPLETED:		10/06/11

I:\Pdv\89029\row\sheets\89029RD401.dgn 06-NOV-2012 1:45PM dsiebene

HORIZONTAL SCALE IN FEET
0 10 20 40

R/W DESIGNER BJD
R/W REVIEWER LAF

PID NO. 89029

R/W BOUNDARY SHEET - HANTHORN RD.
STA. 97+50.00 TO STA. 102+50.00

ALL-75-0.21

98/103

902
907

ALLEN COUNTY
CITY OF LIMA
S.E. 1/4, SEC. 8
T4S, R7E

ALLEN COUNTY
PERRY TOWNSHIP
CITY OF LIMA
SEC. 17, N.E. 1/4, T-4-S R-7-E
SEC. 8, S.E. 1/4, T-4-S R-7-E

GUARDIAN LIMA, LLC
47080004001000
62.730 AC.
COMMERCIAL

71-WL

DOMINION EAST OHIO GAS
PIPELINE EASEMENT NO. 2

℄ R/W &
CONST. I-75

CITY OF LIMA

WEST OHIO GAS COMPANY
60' EASEMENT
VOL. 502, PAGE 673

68-T

68-UV

CONST. LIMITS

68-WL

68
COMMERCIAL
EASTERN REGION OPEN
BIBLE CHURCHES
47080004002002
14.630 AC.

ALLEN COUNTY
PERRY TWP.
S.E. 1/4, SEC. 8
T4S, R7E

MATCH LINE STA. 102+50

MATCH LINE STA. 107+50

℄ R/W & CONST. HANTHORN RD.

1955 ℄ HANTHORN RD.
SEC. LINE

S 89° 22' 54" E

THE FOLLOWING EASEMENTS APPLY TO PARCEL OWNER 68:
OHIO POWER COMPANY BLANKET EASEMENT, VOL. 275, PAGE 156
ALLEN COUNTY COMMISSIONERS DRAINAGE EASEMENT
ALONG GREELY CHAPEL AND HANTHORN ROADS
VOL. 239, PAGE 614
OHIO POWER COMPANY FORFEITURE OF BLANKET
EASEMENT EXCEPT FOR EXISTING FACILITIES AND
ELECTRIC FACILITIES ALONG HANTHORN ROAD
VOL. 634, PAGE 40
OHIO FUEL GAS COMPANY BLANKET EASEMENT
VOL. 499, PAGE 318

65-WL

I-75 N.B.
STA. 266+42.21
HANTHORN RD.
STA. 102+81.41

I-75 S.B.
STA. 266+05.69
HANTHORN RD.
STA. 102+54.21

℄ R/W & CONSTRUCTION I-75

STATE OF OHIO
CHANNEL EASEMENT
VOL. 348, PAGE 599

STATE OF OHIO
CHANNEL EASEMENT
VOL. 349, PAGE 78

TRIBUTARY TO LOST CREEK

CONST. LIMITS

OHIO POWER COMPANY
BLANKET EASEMEMT
VOL. 440, PAGE 357
VOL. 319, PAGE 312

AGRICULTURAL

65
THOMAS J. & DIANE R. MEYER
47170001001000
54.250 AC.

BUCKEYE PIPE LINE COMPANY
BLANKET EASEMEMT
VOL. 477, PAGE 244

ALLEN COUNTY
PERRY TWP.
N.E. 1/4, SEC. 17
T4S, R7E

NOTE: ALL TREES ALONG THE EXISTING LA/RW FENCE
WILL BE REMOVED UNLESS LABELED AS "SAVE"

REV. BY	DATE	DESCRIPTION
DJS	11/06/12	REVISED NAME FOR PARCEL 71
DJS	9/19/12	CHANGED PARCEL 68-U TO 68-UV
DJS	3/22/12	ADDED UTILITY EASEMENTS 68-U & 68-T
DATE COMPLETED:		10/06/11

HORIZONTAL SCALE IN FEET
0 10 20 40

R/W DESIGNER BJD
R/W REVIEWER LAF

PID NO. 89029

RIGHT OF WAY TOPO SHEET - HANTHORN RD.
STA. 102+50.00 TO STA. 107+50.00

ALL-75-0.21

99/103

903
907

I:\Pid\89029\row\sheets\89029RL402.dgn 07-NOV-2012 7:25AM dsiebene

ALLEN COUNTY
PERRY TOWNSHIP
CITY OF LIMA
SEC. 17, N.E. ¼, T-4-S R-7-E
SEC. 8, S.E. ¼, T-4-S R-7-E

ALLEN COUNTY
CITY OF LIMA
S.E. ¼, SEC. 8
T4S, R7E

NOTE: See sheets 62,64 for detail on Parcel 71-WL.

71

GUARDIAN LIMA, LLC
47080004001000
62.730 AC.

71-WL

DOMINION EAST OHIO GAS
PIPELINE EASEMENT NO. 2

℄ R/W &
CONST. I-75

CITY OF LIMA
Ex LA

5/8" I.P.F.

268

267

Ex LA

105+49.02, 110.00'LT ℄ R/W Hanthorn Rd.=
268+27.00, 213.28'RT ℄ R/W I-75

106+35.65
186.70'LT

106+28.55
162.29'LT

C61

C60

TMP

S 83° 37' 46" E, 423.60'

68-T

U

S 83° 37' 46" E, 427.26'

68-UV

N 85° 48' 44" W, 591.10'

106+18.25
128.69'LT

WEST OHIO GAS COMPANY
60' EASEMENT
VOL. 502, PAGE 673

C11

LA-R/W

S 83° 37' 46" E, 498.87'

68

EASTERN REGION OPEN
BIBLE CHURCHES
47080004002002
14.630 AC.

68-WL

ALLEN COUNTY
PERRY TWP.
S.E. ¼, SEC. 8
T4S, R7E

5/8" Bacon
I.P.F.

N 85° 48' 44" W, 665.95'

105+36.38, 73.68'LT ℄ R/W Hanthorn Rd.=
267+91.99, 216.90'RT ℄ R/W I-75

THE FOLLOWING EASEMENTS APPLY
TO PARCEL OWNER 68:

OHIO POWER COMPANY BLANKET EASEMENT,
VOL. 275, PAGE 156

ALLEN COUNTY COMMISSIONERS
DRAINAGE EASEMENT ALONG GREELY CHAPEL
AND HANTHORN ROADS
VOL. 239, PAGE 614

OHIO POWER COMPANY FORFEITURE OF BLANKET
EASEMENT EXCEPT FOR EXISTING FACILITIES AND
ELECTRIC FACILITIES ALONG HANTHORN ROAD
VOL. 634, PAGE 40

OHIO FUEL GAS COMPANY BLANKET EASEMENT
VOL. 499, PAGE 318

ORIGINAL ℄ FROM 1955

1955 ℄ HANTHORN RD.

MATCH LINE STA. 102+50
POT Sta. 102+54.21

103 104 105 106 107

S 89° 22' 54" E

SEC. LINE

N 89° 22' 54" W, 603.98'

105+08.30
0.00'RT

℄ R/W & CONST. HANTHORN RD.

65-WL

MATCH LINE STA. 107+50

I-75 S.B.
STA. 266+05.69=
HANTHORN RD.
STA. 102+54.27

C10

℄

65-WL

Ex LA

LA-R/W

N 84° 8' 14" E, 575.86'

5/8" I.P.F.

Ex CH

104+52.82, 125.00'RT ℄ R/W Hanthorn Rd.=
265+96.36, 234.41'RT ℄ R/W I-75

STATE OF OHIO
CHANNEL EASEMENT
VOL. 349, PAGE 78

TRIBUTARY TO LOST CREEK

65

THOMAS J. & DIANE R. MEYER
47170001001000
54.250 AC.

OHIO POWER COMPANY
BLANKET EASEMENT
VOL. 440, PAGE 357
VOL. 319, PAGE 312

BUCKEYE PIPE LINE COMPANY
BLANKET EASEMENT
VOL. 477, PAGE 244

ALLEN COUNTY
PERRY TWP.
N.E. ¼, SEC. 17
T4S, R7E

STATE OF OHIO
CHANNEL EASEMENT
VOL. 348, PAGE 599

CURVE TABLE

Curve	Delta	Radius	Tangent	Length	Chord	Bearing
C10	3°53'58"	2,009.86	68.42'	136.79'	136.76	S24°33'15"W
C11	1°05'47"	2,009.86	19.23'	38.46'	338.46	N19°48'30"E
C60	0°58'22"	2,069.86	17.57'	35.15'	35.15	N17°40'15"E
C61	0°42'13"	2,069.86	12.71'	25.42'	25.42'	N16°49'57"E

REV. BY	DATE	DESCRIPTION
DJS	11/06/12	REVISED NAME FOR PARCEL 71
DJS	9/19/12	CHANGED PARCEL 68-U TO 68-UV
DJS	3/22/12	ADDED UTILITY EASEMENTS 68-U & 68-T
DJS	12/23/11	EDITED CHORD IN C11 CURVE TABLE

DATE COMPLETED: 10/06/11

HORIZONTAL SCALE IN FEET
0 10 20 40

R/W DESIGNER BJD
R/W REVIEWER LAF

PID NO. 89029

R/W BOUNDARY SHEET - HANTHORN RD.
STA. 102+50.00 TO STA. 107+50.00

ALL-75-0.21

100/103
904/907

I:\Pid\89029\row\sheets\89029RD402.dgn 07-NOV-2012 7:28AM dsiebene

ALLEN COUNTY
PERRY TOWNSHIP
SEC. 17, N.E. 1/4, T-4-S R-7-E
SEC. 8, S.E. 1/4, T-4-S R-7-E

68

EASTERN REGION OPEN
BIBLE CHURCHES
47080004002002
14.630 AC.

68-T

68-U

WEST OHIO GAS COMPANY
60' EASEMENT
VOL. 502, PAGE 673

COMMERCIAL

ALLEN COUNTY
PERRY TWP.
S.E. 1/4, SEC. 8
T4S, R7E

TMP

U

Ex U

CONST. LIMITS

68-WL

LA-R/W

Ex LA

℄ R/W & CONST. HANTHORN RD.

END R/W ACQUISITION
HANTHORN RD.
STA. 112+01.04

BILLBOARD

Ex SH

MATCH LINE STA. 107+50

108 109 SEC. LINE 110 1955 ℄ HANTHORN ED. 111 112 113

65-WL

SHED

END WORK
HANTHORN RD.
STA. 112+35

BARN

BASKETBALL HOOP

FOUNDATION ONLY

65

THOMAS J. & DIANE R. MEYER
47170001001000
54.250 AC.

AGRICULTURAL

OHIO POWER COMPANY
BLANKET EASEMEMT
VOL. 440, PAGE 357
VOL. 319, PAGE 312

BUCKEYE PIPE LINE COMPANY
BLANKET EASEMEMT
VOL. 477, PAGE 244

ALLEN COUNTY
PERRY TWP.
N.E. 1/4, SEC. 17
T4S, R7E

REV. BY	DATE	DESCRIPTION
DJS	3/22/12	ADDED UTILITY EASEMENTS 68-U & 68-T
DATE COMPLETED:		10/06/11

NOTE: ALL TREES ALONG THE EXISTING LA/RW FENCE WILL BE REMOVED UNLESS LABELED AS "SAVE"

HORIZONTAL SCALE IN FEET
0 10 20 40

R/W DESIGNER BJD
R/W REVIEWER LAF

PID NO. 89029

RIGHT OF WAY TOPO SHEET - HANTHORN RD.
STA. 107+50.00 TO END WORK

ALL-75-0.21

101/103

905/907

I:\Pid\89029\row\sheets\89029RL403.dgn 07-MAY-2012 1:03PM dsiebene

ALLEN COUNTY
PERRY TOWNSHIP
SEC. 17, N.E. 1/4, T-4-S R-7-E
SEC. 8, S.E. 1/4, T-4-S R-7-E

ALLEN COUNTY
PERRY TWP.
S.E. 1/4, SEC. 8
T4S, R7E

MATCH LINE STA. 107+50

TMP
S 83° 37' 46" E, 423.60'
68-T
S 83° 37' 46" E, 427.26'
68-U
U
WEST OHIO GAS COMPANY
60' EASEMENT
VOL. 502, PAGE 673
N 85° 48' 44" W, 591.10'
110+57.12
144.25'LT
110+53.67
119.47'LT
N 79° 15' 47" W, 25.00'
S 79° 15' 47" E
25.00'
110+81.73
139.86'LT
S 8° 33' 13" W
25.02'
110+78.28
115.08'LT
T.P.O.B. 68-T
S 79° 15' 47" E, 156.98'
N 79° 15' 47" W, 131.98'
68
EASTERN REGION OPEN
BIBLE CHURCHES
47080004002002
14.630 AC.
112+08.20
91.89'LT
T.P.O.B. 68-U
N 85° 48' 44" W
52.96'
+61.06
88.59'LT
N 0° 37' 59" E
58.59'
END ACQUISITION
℄ HANTHORN RD.
STA. 112+01.04
68-WL
LA-R/W
S 83° 37' 46" E, 498.87'
+45.38
60.00'LT
Ex LA
N 85° 48' 44" W, 665.95'
S 79° 15' 47" E, 158.12'
+01.04
32.22'LT
T.P.O.B. 68-WL
+61.04
30.00'LT
117+86.23
30.00'LT
N 89° 22' 54" W, 525.19'
Ex SH
I.P.F. 5/8" Bacon
N 0°37'06" E
32.22'
℄ R/W & CONST. HANTHORN RD.
1955 ℄ Hanthorn Rd.
108
109
SEC. 8
SEC. 17
110
111
112
113
N 89° 22' 54" W, 603.98'
S 89° 22' 54" E
N 89° 22' 54" W, 585.03'
N 89° 22' 54" W, 673.79'
+01.04
℄ R/W
117+86.07, ℄ R/W
S.E. COR., SEC. 8
N.E. COR., SEC. 17
MONUMENT BOX FND.
30.00'
N 0°55'0" E
65-WL
+12.28, 0.00'RT
T.P.O.B. 65-WL
N 0° 54' 7" E
37.75'
+12.10
37.74'RT
I.P.F. 5/8" #4738 & 5646
Ex SH
+81.22
30.00'RT
Ex LA
N 0° 54' 7" E, 6.34'
N 80° 15' 43" E, 88.51'
+12.07
44.09'RT
65-WL
N 84° 8' 14" E, 575.86'
+25.00
60.00'RT
65
THOMAS J. & DIANE R. MEYER
47170001001000
54.250 AC.
OHIO POWER COMPANY
BLANKET EASEMEMT
VOL. 440, PAGE 357
VOL. 319, PAGE 312
BUCKEYE PIPE LINE COMPANY
BLANKET EASEMEMT
VOL. 477, PAGE 244
ALLEN COUNTY
PERRY TWP.
N.E. 1/4, SEC. 17
T4S, R7E

REV. BY	DATE	DESCRIPTION
DJS	3/22/12	ADDED UTILITY EASEMENTS 68-U & 68-T
DJS	12/23/11	EDITED DISTANCE ON PARCEL 65-WL
DATE COMPLETED:		10/06/11

HORIZONTAL SCALE IN FEET
0 10 20 40
R/W DESIGNER BJD
R/W REVIEWER LAF
PID NO. 89029
R/W BOUNDARY SHEET - HANTHORN RD.
STA. 107+50.00 TO END WORK
ALL-75-0.21
102/103
906
907

I:\Pid\89029\row\sheets\89029RD403.dgn 07-MAY-2012 1:03PM dsiebene

INDIANA & OHIO RAILROAD

ALLEN COUNTY
PERRY TOWNSHIP
CITY OF LIMA
SEC. 17, N.W. 1/4, T-4-S R-7-E

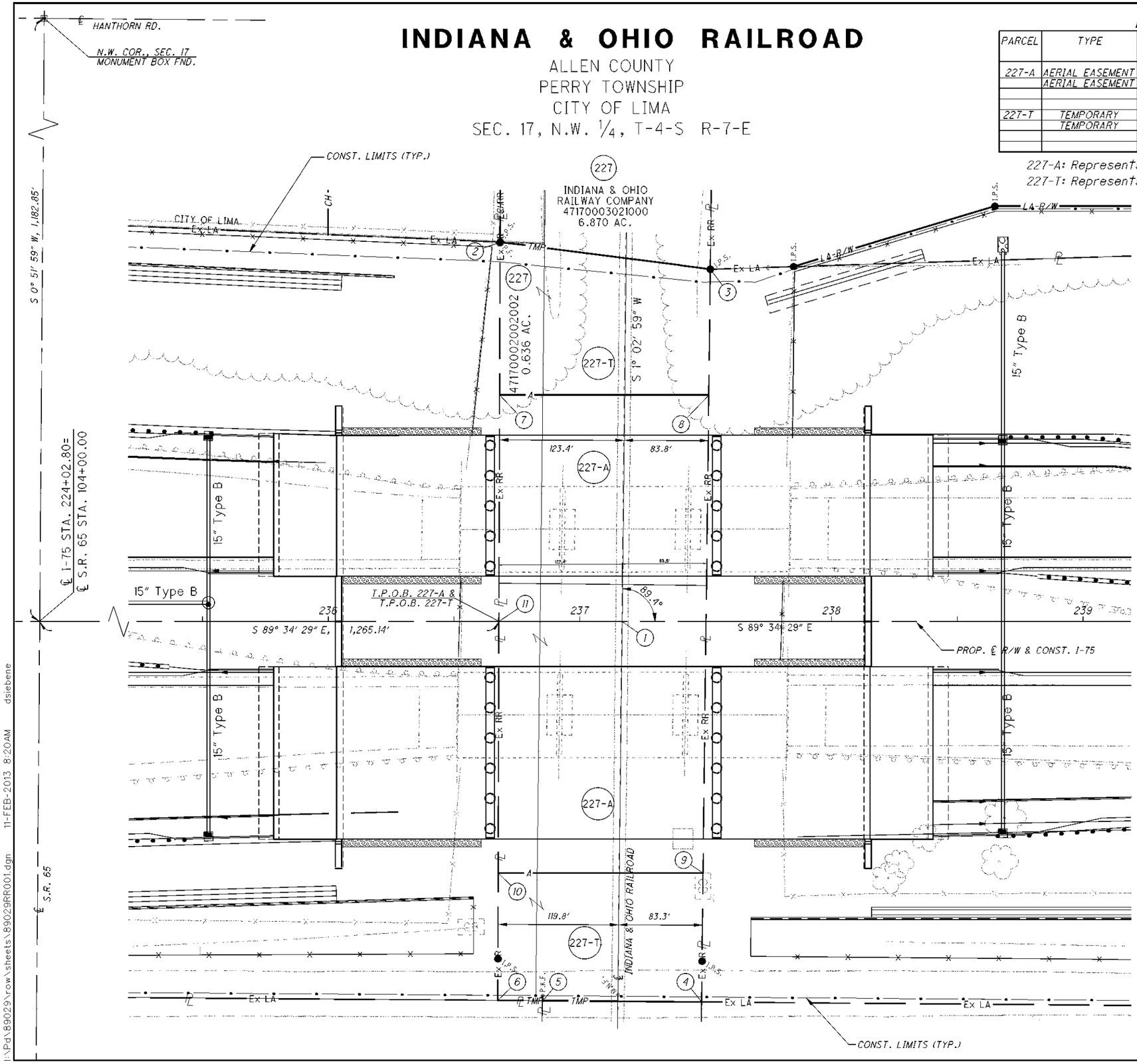

ALL AREAS IN SQUARE FEET

PARCEL	TYPE	AUDITOR'S PARCEL	TOTAL AREAS	AREA OF OVERLAP	
				TEMPORARY	AERIAL
227-A	AERIAL EASEMENT	47170002002002	3,087 S.F.	3,087 S.F.	
	AERIAL EASEMENT	47170003021000	12,542 S.F.	12,543 S.F.	
		TOTAL 227-A	15,629 S.F.		
227-T	TEMPORARY	47170002002002	4,890 S.F.		3,087 S.F.
	TEMPORARY	47170003021000	19,489 S.F.		12,543 S.F.
		TOTAL 227-T	24,379 S.F.		

227-A: Represents an Aerial Easement —A—
227-T: Represents an Temporary Easement —TMP—

STATION OFFSET TABLE

BALLOON	PROP. I-75		INDIANA & OHIO RAILWAY CO.	
	STATION	OFFSET	STATION	OFFSET
1	237+16.78	℄	8229+51.19	℄
2	236+68.39	150.76'LT	8228+00.97	50.03'RT
3	237+51.93	139.96'LT	8228+10.86	33.62'LT
4	237+48.46	151.20'RT	8231+02.04	33.33'LT
5	236+85.22	150.68'RT	8231+02.20	29.91'RT
6	236+67.49	150.55'RT	8231+02.27	47.65'RT
7	236+68.21	90.00'LT	8228+61.72	49.55'RT
8	237+51.31	90.00'LT	8228+60.82	33.55'LT
9	237+49.06	100.00'RT	8230+50.83	33.37'LT
10	236+67.64	100.00'RT	8230+51.72	48.05'RT
11	236+67.94	℄	8229+51.72	48.84'RT

PROPOSED EASEMENT TAKES

PARCEL	COURSE	BEARING	DISTANCE
227-T	11-2	N 0° 35' 49" E	150.76'
	2-3	S 82° 12' 18" E	84.23'
	3-4	S 1° 06' 25" W	291.18'
	4-5	N 89° 06' 13" W	63.24'
	5-6	N 89° 09' 28" W	17.74'
	6-11	N 0° 35' 49" E	150.55'
227-A	11-7	N 0° 35' 49" E	90.00'
	7-8	S 89° 34' 29" E	83.10'
	8-9	S 1° 06' 14" W	190.01'
	9-10	N 89° 34' 29" W	81.42'
	10-11	N 0° 35' 49" E	100.00'

NOTE: INTERSTATE 75 - CONSTRUCTION STA. 237+16.78 (0.0'RT)=
INDIANA AND OHIO RAILWAY (IORY)
AAR/DOT# 258615H
RR MP. 135.34
SUBDIVISION DT&I MIDDLE

VALUATION MAP NO.
VI-Ohio/54
DETROIT, TOLEDO & IRONTON R.R.
Station 8131+20 To Station 8236+80

NOTE: UNDER NO CIRCUMSTANCES ARE TEMPORARY EASEMENTS TO BE USED FOR STORAGE OF MATERIAL OR EQUIPMENT BY THE CONTRACTOR UNLESS NOTED OTHERWISE.

REV. BY	DATE	DESCRIPTION
DJS	2/07/13	ADDED NOTE FOR AERIAL AND TEMPORARY EASEMENTS
		& ADDED NOTE FOR EQUATION AT RAILROAD
DJS	3/22/12	ADDED INFORMATION FOR PARCELS 227-A & 227-T
DATE COMPLETED		

HORIZONTAL SCALE IN FEET
0 25 50 100

R/W DESIGNER BJD
R/W REVIEWER LAF

PID NO. 89029

RAILROAD PLAT
INDIANA & OHIO RAILROAD

ALL-75-0.21

103/103

907/907

I:\Pd\89029\row\sheets\89029RR001.dgn 11-FEB-2013 8:20AM dsiebene

PROJECT DESCRIPTION

THIS PROJECT CONSISTS OF THE GEOTECHNICAL EXPLORATION OF A 9 MILE SEGMENT OF INTERSTATE 75 BETWEEN THE AUGLAIZE/ALLEN COUNTY LINE AND SR 81 IN ALLEN COUNTY. THE EASTERN AND WESTERN LIMITS OF THE STUDY AREA GENERALLY FOLLOW THE EXISTING ALIGNMENT OF I-75. ADDITIONAL AREAS EXTEND FURTHER EAST AND WEST OF I-75 TO ALLOW FOR A BROADER SCOPE OF INTERCHANGE IMPROVEMENTS AND OTHER ROADWAY MODIFICATIONS.

HISTORIC RECORDS

HISTORIC BORING RECORDS FOR THE PROJECT AREA WERE REQUESTED FROM THE ODOT OFFICE OF GEOTECHNICAL ENGINEERING AND THE DISTRICT. HISTORIC SOUNDING RECORDS EXIST AND ARE DISCUSSED IN THE ROADWAY EXPLORATION REPORT. DUE TO CHANGES IN STATIONING, LOCATIONS FOR THE SOUNDINGS ARE NOT CERTAIN AND ARE NOT SHOWN ON THE ROADWAY EXPLORATION DRAWINGS.

GEOLOGY

THE ROADWAY SITE IS LOCATED IN THE CENTRAL OHIO CLAYEY TILL PLAIN. THIS REGION IS COMPRISED OF GROUND MORAINE AND END MORAINE TILL DEPOSITS OVERLYING DOLOMITE AND DOLOMITE WITH INTERBEDDED SHALE. THE NATURAL OVERBURDEN THICKNESS RANGES BETWEEN JUST A FEW FEET IN THE VICINITY OF THE OTTAWA RIVER TO APPROXIMATELY 130 FEET NEAR THE INTERSECTION OF I-75 AND HANTHORN ROAD. CAVES AND OTHER KARST FEATURES MAY BE PRESENT ACCORDING TO THE PHYSIOGRAPHIC REGIONS OF OHIO MAP (ODNR, 1998), BUT NO KNOWN FEATURES WERE IDENTIFIED ON THE OHIO KARST AREAS MAP (ODNR, 2007).

RECONNAISSANCE

A FIELD RECONNAISSANCE WAS COMPLETED ON MARCH 13, 2007, FOCUSING MAINLY ON PAVEMENT CONDITIONS, SITE TOPOGRAPHY AND DRAINAGE. THE MAINLINE SHOULDER PAVEMENTS SHOW EXTENSIVE "ALLIGATOR" CRACKING AND THE MAINLINE PAVEMENTS SHOW REFLECTIVE CRACKING AT THE EXPANSION JOINT LOCATIONS. THE SURROUNDING AREA IS DESCRIBED AS GENTLY UNDULATING WITH MOST OF THE SURROUNDING AREA CONSISTING OF OPEN FIELD OR LIGHTLY DEVELOPED COMMERCIAL AND RESIDENTIAL DISTRICTS. DRAINAGE ALONG THE ALIGNMENT IS DESCRIBED AS SLUGGISH WITH AREAS OF STANDING WATER, AND FLOWING WATER IN DRAINAGE DITCHES AND NATURAL STREAMS GENERALLY CREATING STEEP TO VERTICAL CUT BANKS IN THE SOIL PROFILE.

SUBSURFACE EXPLORATION

DURING THE FIRST PHASE OF DRILLING, 122 SOIL PROFILE BORINGS WERE DRILLED IN LANES OF TRAFFIC, ON MEDIANS OR ON SHOULDERS AT SELECTED AREAS THROUGHOUT THE PROJECT AREA SPACED APPROXIMATELY 400 FEET APART. DURING THE SECOND PHASE OF DRILLING, 84 BORINGS WERE ADVANCED ALONG ENTRANCE AND EXIT RAMPS OF THE INTERCHANGES, AREAS OF PROPOSED HIGHWAY REALIGNMENT, AND SELECTED SECONDARY ROADS IN AREAS OF PROPOSED UPGRADES. A THIRD PHASE OF DRILLING, CONSISTING OF 36 BORINGS, WAS PERFORMED ALONG ADDITIONAL SECONDARY ROADS IN AREAS OF PROPOSED UPGRADES. THE BORINGS WERE ADVANCED USING 3.25-INCH I.D. HOLLOW-STEM AUGERS. STANDARD PENETRATION TEST (SPT) SAMPLES WERE OBTAINED AT CONTINUOUS INTERVALS WITH A MINIMUM OF FOUR TESTS PER BOREHOLE FOR ALL SUBGRADE BORINGS AND AT 2.5 FOOT INTERVALS FOR ALL PROPOSED EMBANKMENTS OR CUT AND FILL AREAS. SPT SAMPLES WERE OBTAINED USING A TRUCK-MOUNTED DRILL RIG WITH A CALIBRATED AUTOMATIC HAMMER WITH AN ENERGY RATIO (ER) OF 80% (JUNE, 2007) DURING PHASES ONE AND TWO. MULTIPLE DRILL RIGS WERE USED DURING PHASE THREE AND INCLUDED A TRUCK-MOUNTED RIG WITH AN ER OF 74.4% (FEB., 2010), A TRACK-MOUNTED RIG WITH AN ER OF 81.9% (FEB., 2010), AND AN ATV-MOUNTED RIG WITH ER OF 88.4% (OCT., 2009) TWO OF THE BORINGS PERFORMED IN THE FIRST MOBILIZATION EXTENDED TO BEDROCK IN THE VICINITY OF THE QUARRY TUNNEL. UPON ENCOUNTERING BEDROCK, NQ-SIZED ROCK CORING EQUIPMENT WAS USED TO OBTAIN 45 TO 46 FEET OF ROCK CORE SAMPLE. AT THE CONCLUSION OF DRILLING OPERATIONS, BOREHOLES WERE BACKFILLED WITH AUGER SOIL CUTTINGS AND PAVEMENT WAS PATCHED WITH ASPHALT COLD PATCH.

EXPLORATION FINDINGS

SOILS ENCOUNTERED ALONG THE PROJECT ALIGNMENT CONSISTED PRIMARILY OF FINE GRAINED GLACIAL SOILS CLASSIFYING AS SILT AND CLAY (A-6A), SILTY CLAY (A-6B) AND CLAY (A-7-6), AND TO A LESSER EXTENT SANDY SILT (A-4A) AND SILT (A-4B). FEW COARSE GRAINED SOILS WERE ENCOUNTERED IN VARIOUS AREAS CONSISTING OF COARSE AND FINE SAND (A-3A), GRAVEL WITH SAND AND SILT (A-2-4), GRAVEL WITH SAND SILT AND CLAY (A-2-6), GRAVEL (A-1-A) AND GRAVEL WITH SAND (A-1-B). IN THE TWO BORINGS LOCATED NEAR THE QUARRY TUNNEL, THE BEDROCK ENCOUNTERED CONSISTED OF MODERATELY TO UNWEATHERED DOLOMITE, SHALE AND LIMESTONE IN VARIOUS LAYERING AND INTERBEDDED PERCENTAGES.

SPECIFICATIONS

THIS ROADWAY EXPLORATION WAS PERFORMED IN ACCORDANCE WITH THE STATE OF OHIO, DEPARTMENT OF TRANSPORTATION, OFFICE OF GEOTECHNICAL ENGINEERING, SPECIFICATIONS FOR GEOTECHNICAL EXPLORATION (SGE) AND THE GEOTECHNICAL BULLETIN 1 (GB1). THE EXPLORATIONS WERE PERFORMED OVER A SPAN OF SEVERAL YEARS, SO THE MOST RECENT EDITIONS OF THE SPECIFICATIONS WERE FOLLOWED AT THE TIME OF DRILLING.

AVAILABLE INFORMATION

ALL AVAILABLE SOIL AND BEDROCK INFORMATION THAT CAN BE CONVENIENTLY SHOWN ON THE PROFILE SHEETS HAS BEEN SO REPORTED. ADDITIONAL SUBSURFACE EXPLORATIONS MAY HAVE BEEN MADE TO STUDY SOME SPECIAL ASPECT OF THE PROJECT. COPIES OF THIS DATA, IF ANY, MAY BE INSPECTED IN THE DISTRICT DEPUTY DIRECTOR'S OFFICE, THE OFFICE OF GEOTECHNICAL ENGINEERING AT 1600 WEST BROAD STREET COLUMBUS, OHIO OR THE OFFICE OF STRUCTURAL ENGINEERING AT 1980 WEST BROAD STREET COLUMBUS, OHIO.

LEGEND

DESCRIPTION	ODOT CLASS	CLASSIFIED MECH./VISUAL	
GRAVEL AND/OR STONE FRAGMENTS	A-1-a	13	7
GRAVEL AND/OR STONE FRAGMENTS WITH SAND	A-1-b	7	5
GRAVEL WITH SAND AND SILT	A-2-4	10	3
GRAVEL WITH SAND, SILT AND CLAY	A-2-6	9	10
COARSE AND FINE SAND	A-3a	1	0
SANDY SILT	A-4a	34	27
SILT	A-4b	6	7
SILT AND CLAY	A-6a	260	343
SILTY CLAY	A-6b	191	215
CLAY	A-7-6	83	80
	TOTAL	614	697
SHALE	VISUAL		
LIMESTONE	VISUAL		
DOLOMITE	VISUAL		
PAVEMENT OR BASE = X = APPROXIMATE THICKNESS	VISUAL		
SOD AND TOPSOIL = X = APPROXIMATE THICKNESS	VISUAL		

EXPLORATION LOCATION - PLAN VIEW.

DRIVE SAMPLE AND/OR ROCK CORE BORING PLOTTED TO VERTICAL SCALE ONLY. HORIZONTAL BAR INDICATES A CHANGE IN STRATIGRAPHY.

WC INDICATES WATER CONTENT IN PERCENT.

N_{60} INDICATES STANDARD PENETRATION RESISTANCE NORMALIZED TO 60% DRILL ROD ENERGY RATIO.

* INDICATES A SAMPLE TAKEN WITHIN 3 FEET OF PROPOSED GRADE.

● PLASTIC SOIL WITH MOISTURE CONTENT EQUAL TO OR GREATER THAN THE LIQUID LIMIT MINUS THREE.

SS INDICATES A SPLIT SPOON SAMPLE.

NP INDICATES A NON-PLASTIC SAMPLE.

TR INDICATES TOP OF ROCK.

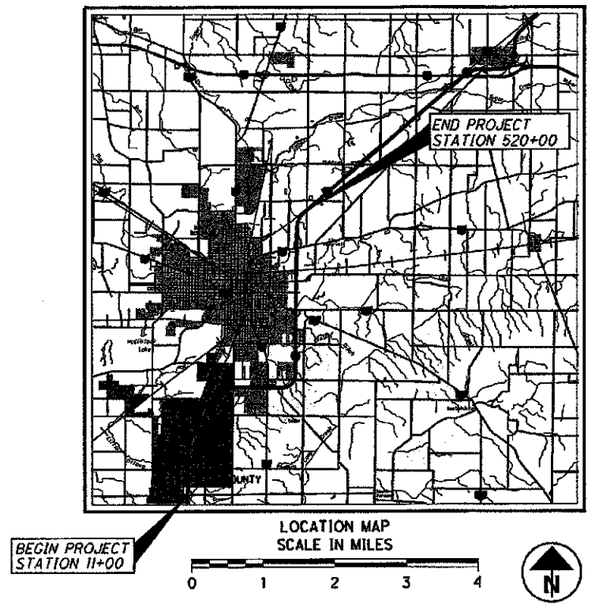

PARTICLE SIZE DEFINITIONS

12"	3"	2.0 mm	0.42 mm	0.074 mm	0.005 mm
BOULDERS	COBBLES	GRAVEL	COARSE SAND	FINE SAND	SILT	CLAY
		No. 10 SIEVE	No. 40 SIEVE	No. 200 SIEVE	

RECON. - MMF 3/07
DRILLING - MM, MW, AC - 6/07-7/07
DRAWN - MJ 10/07, 9/09-10/09, MJ 5/10
REVIEWED - RJK 10/09, RJK 5/10

DESIGN AGENCY
STANTEC CONSULTING SERVICES INC.
CINCINNATI, OHIO

PID NO. 76691

SOIL PROFILE

ALL-75-0.21

1/90

1/97

V:\1755\active\175530002\geotechnical\drawing\ODOTSubmittal\projects\ALL\76691\roadway\sheets\76691IC001.dgn

INDEX OF SHEETS						
LOCATION FROM STA.	TO STA.	PLAN VIEW SHEET	PROFILE SHEET	CUT MAX.		FILL EMB. MAX
I-75 MAINLINE						
0+00	14+00	18	18	0	FT	3 FT
14+00	29+00	19	19	0	FT	3 FT
29+00	44+00	20	20	0	FT	3 FT
44+00	59+00	21	21	0	FT	4 FT
59+00	74+00	22	22	0	FT	3 FT
74+00	89+00	23	23	0	FT	5 FT
89+00	104+00	24	24	0	FT	6 FT
104+00	119+00	25	25	2	FT	6 FT
119+00	134+00	26	26	0	FT	4 FT
134+00	149+00	27	27	0	FT	4 FT
149+00	164+00	28	28	2	FT	4 FT
164+00	179+00	29	29	<1	FT	3 FT
179+00	194+00	30	30	0	FT	4 FT
194+00	209+00	31	31	0	FT	3 FT
209+00	224+00	32	32	0	FT	7 FT
224+00	239+00	33	33	0	FT	11 FT
239+00	254+00	34	34	0	FT	10 FT
254+00	269+00	35	35	<2	FT	6 FT
269+00	284+00	36	36	8	FT	3 FT
284+00	299+00	37	37	0	FT	3 FT
299+00	314+00	38	38	0	FT	4 FT
314+00	329+00	39	39	<1	FT	3 FT
329+00	344+00	40	40	0	FT	3 FT
344+00	359+00	41	41	<1	FT	2 FT
359+00	374+00	42	42	0	FT	10 FT
374+00	389+00	43	43	<1	FT	9 FT
389+00	404+00	44	44	<1	FT	0 FT
404+00	419+00	45	45	<1	FT	2 FT
419+00	434+00	46	46	0	FT	5 FT
434+00	449+00	47	47	<1	FT	3 FT
449+00	464+00	48	48	<1	FT	5 FT
464+00	479+00	49	49	0	FT	7 FT

INDEX OF SHEETS						
LOCATION FROM STA.	TO STA.	PLAN VIEW SHEET	PROFILE SHEET	CUT MAX.		FILL EMB. MAX
BREESE RD.		50	50	0	FT	2 FT
BREESE RD. RAMP A		51	51	0	FT	<1 FT
BREESE RD. RAMP B		52	52	0	FT	2 FT
BREESE RD. RAMP C		53	53	<1	FT	2 FT
BREESE RD. RAMP D		54	54	0	FT	<1 FT
McCLAIN RD.		55	55	10	FT	9 FT
McCLAIN RD. CONT.		56	56	0	FT	2 FT
S.R. 65		57	57	0	FT	<1 FT
S.R. 65 CONT.		58	58	0	FT	0 FT
S.R. 65 RAMP A		59	59	0	FT	2 FT
S.R. 65 RAMP B		60	60	<1	FT	<1 FT
S.R. 65 RAMP C		61	61	<1	FT	7 FT
S.R. 65 RAMP D		62	62	0	FT	8 FT
YODER RD.		63	63	3	FT	2 FT
HANTHORN RD.		64	64	0	FT	4 FT
FOURTH ST.		65	65	<1	FT	3 FT
FOURTH ST. CONT.		66	66	0	FT	3 FT
FOURTH ST. RAMP A		67	67	2	FT	3 FT
FOURTH ST. RAMP B		68	68	2	FT	<1 FT
FOURTH ST. RAMP C		69	69	3	FT	2 FT
FOURTH ST. RAMP D		70	70	2	FT	5 FT
PATROL DRIVE		71	71	0	FT	2 FT
S.R. 117/309		72	72	<1	FT	0 FT
S.R. 117/309 CONT.		73	73	<1	FT	0 FT
S.R. 117/309 RAMP A		74	74	<1	FT	3 FT
S.R. 117/309 RAMP F		75	75	<1	FT	3 FT
S.R. 117/309 RAMP C		76	76	<1	FT	8 FT
S.R. 117/309 RAMP E		77	77	<1	FT	10 FT
S.R. 117/309 ASSOC.		78	78	TBD	FT	TBD FT
S.R. 117/309 ASSOC.		79	79	TBD	FT	TBD FT
S.R. 117/309 ASSOC.		80	80	TBD	FT	TBD FT
S.R. 117/309 ASSOC.		81	81	TBD	FT	TBD FT
BRYN MAWR AVE.		82	82	0	FT	3 FT

INDEX OF SHEETS						
LOCATION FROM STA.	TO STA.	PLAN VIEW SHEET	PROFILE SHEET	CUT MAX.		FILL EMB. MAX
RESERVOIR RD.		83	83	0	FT	4 FT
S.R. 81		84	84	<1	FT	0 FT
S.R. 81 CONT.		85	85	2	FT	2 FT
S.R. 81 RAMP C		86	86	0	FT	6 FT
S.R. 81 RAMP D		87	87	3	FT	7 FT
S.R. 81 RAMP B		88	88	0	FT	6 FT
S.R. 81 RAMP F		89	89	4	FT	4 FT
NEUBRECHT RD.		90	90	<1	FT	0 FT

DESIGN AGENCY
STANTEC CONSULTING SERVICES INC.
CINCINNATI, OHIO

PID NO. 76691

INDEX OF SHEETS

ALL-75-0.21

2/90

(2/97)

V:\1755\active\175530002\geotechnical\drawing\ODOTSubmittal\projects\ALL\76691\roadway\sheets\76691IC002.dgn

SUMMARY OF SOIL TEST DATA
INTERSTATE 75 MAINLINE

EXPLORATION NO., STATION & OFFSET	FROM TO	SAMPLE ID	% REC	% AGG	% CS	% FS	% SILT	% CLAY	LL	PL	PI	% WC	ODOT CLASS
B-001-0-07	0.0 - 1.5	SS-1	100	15	8	11	18	48	42	18	24	14	A-7-6 (12)
STA. 0+00, 1.0' RT.	1.5 - 3.0	SS-2	100	3	6	11	34	46	32	16	16	13	A-6b (10)
NORTHING=365242	3.0 - 4.5	SS-3	93	4	6	11	34	45	32	16	16	15	A-6b (10)
EASTING=1516031	4.5 - 6.0	SS-4	100				SAME AS SS-3					15	A-6b (VISUAL)
	6.0 - 7.5	SS-5	93				SAME AS SS-3					16	A-6b (VISUAL)
	7.5 - 9.0	SS-6	80				SAME AS SS-3					16	A-6b (VISUAL)
B-002-0-07	0.0 - 1.5	SS-1	87	4	5	11	29	50	41	17	24	15	A-7-6 (14)
STA. 4+01, CENTERLINE	1.5 - 3.0	SS-2	100	2	4	11	42	42	30	18	12	13	A-6a (9)
NORTHING= 365642	3.0 - 4.5	SS-3	67				SAME AS SS-2					15	A-6a (VISUAL)
EASTING= 1516034	4.5 - 6.0	SS-4	100				SAME AS SS-2					15	A-6a (VISUAL)
	6.0 - 7.5	SS-5	73				SAME AS SS-2					16	A-6a (VISUAL)
	7.5 - 9.0	SS-6	100				SAME AS SS-2					16	A-6a (VISUAL)
B-003-0-07	1.8 - 3.3	SS-1	87	14	9	11	27	40	35	18	17	17	A-6b (9)
STA. 8+01, 30' RT.	3.3 - 4.8	SS-2	73	3	6	12	32	48	39	19	20	20	A-6b (12)
NORTHING= 366041	4.8 - 6.3	SS-3	100	5	5	12	33	45	29	17	12	18	A-6a (9)
EASTING= 1516069	6.3 - 7.8	SS-4	87				SAME AS SS-3					15	A-6a (VISUAL)
	7.8 - 9.3	SS-5	100				SAME AS SS-3					16	A-6a (VISUAL)
	9.3 - 10.8	SS-6	100				SAME AS SS-3					17	A-6a (VISUAL)
B-004-0-07	1.5 - 3.0	SS-1	73	1	4	11	28	55	44	17	27	22	A-7-6 (16)*
STA. 12+01, 30' LT.	3.0 - 4.5	SS-2	100	4	6	12	32	47	34	18	16	15	A-6b (10)*
NORTHING= 3664422	4.5 - 6.0	SS-3	67				SAME AS SS-5					15	A-6a (VISUAL)
EASTING= 1516013	6.0 - 7.5	SS-4	100				SAME AS SS-5					15	A-6a (VISUAL)
	7.5 - 9.0	SS-5	100	6	6	11	34	44	31	18	13	16	A-6a (9)
	9.0 - 10.5	SS-6	100				SAME AS SS-5					16	A-6a (VISUAL)
B-005-0-07	0.0 - 1.5	SS-1	80	40	16	10	18	16	33	21	12	11	A-2-6 (0)
STA. 15+99, 76' RT.	1.5 - 3.0	SS-2	93	5	7	12	32	45	28	17	11	16	A-6a (8)
NORTHING= 366840	3.0 - 4.5	SS-3	100	5	7	13	32	43	30	17	13	16	A-6a (9)
EASTING= 1516124	4.5 - 6.0	SS-4	100				SAME AS SS-4					17	A-6a (VISUAL)
	6.0 - 7.5	SS-5	100				SAME AS SS-4					16	A-6a (VISUAL)
	7.5 - 9.0	SS-6	80				SAME AS SS-4					16	A-6a (VISUAL)
	9.0 - 10.5	SS-7	100				SAME AS SS-4					18	A-6a (VISUAL)
B-006-0-07	0.0 - 1.5	SS-1	73	20	10	9	26	35	38	18	20	12	A-6b (9)*
STA. 20+77, 63' LT.	1.5 - 3.0	SS-2	67				SAME AS SS-3					19	A-4a (VISUAL)
NORTHING= 367319	3.0 - 4.5	SS-3	100	4	7	15	41	34	23	16	7	17	A-4a (8)
EASTING= 1515992	4.5 - 6.0	SS-4	100	7	6	11	36	40	28	18	10	17	A-4a (8)
	6.0 - 7.5	SS-5	80				SAME AS SS-4					17	A-4a (VISUAL)
	7.5 - 9.0	SS-6	100				SAME AS SS-4					16	A-4a (VISUAL)
B-007-0-07	0.0 - 1.5	SS-1	0				SAME AS BS-3					-	A-6b (VISUAL)
STA. 24+01, CENTERLINE	1.5 - 3.0	SS-2	0				SAME AS BS-3					-	A-6b (VISUAL)
NORTHING= 367642	3.0 BAG	BS-3	100	4	5	10	31	49	35	17	18	13	A-6b (11)
EASTING= 1516057	3.0 - 4.5	SS-4	100	4	7	12	35	43	30	18	12	16	A-6a (9)
	4.5 - 6.0	SS-5	100				SAME AS SS-4					13	A-6a (VISUAL)
	6.0 - 7.5	SS-6	100				SAME AS SS-7					16	A-6a (VISUAL)
	7.5 - 9.0	SS-7	100	4	6	11	35	45	31	17	14	15	A-6a (10)
B-008-0-07	1.5 - 3.0	SS-1	100				SAME AS SS-1					24	A-6b (VISUAL)*
STA. 28+01, 30' RT.	3.0 - 4.5	SS-2	100	3	4	10	31	52	40	19	21	20	A-6b (12)
NORTHING= 368041	4.5 - 6.0	SS-3	80	23	7	9	31	30	33	20	13	25	A-6a (7)
EASTING= 1516093	6.0 - 7.5	SS-4	100				SAME AS SS-3					26	A-6a (VISUAL)
	7.5 - 9.0	SS-5	80				SAME AS SS-3					18	A-6a (VISUAL)
	9.0 - 10.5	SS-6	100				SAME AS SS-3					19	A-6a (VISUAL)
B-009-0-07	1.4 - 2.9	SS-1	87	4	5	12	32	47	36	16	20	20	A-6b (12)*
STA. 32+01, 30 LT.	2.9 - 4.4	SS-2	100	2	5	12	36	45	36	16	20	20	A-6b (12)
NORTHING= 368422	4.4 - 5.9	SS-3	100				SAME AS SS-2					26	A-6b (VISUAL)
EASTING= 151040	5.9 - 7.4	SS-4	100	1	4	13	38	45	38	21	17	23	A-6b (11)
	7.4 - 8.9	SS-5	80				SAME AS SS-4					22	A-6b (VISUAL)
	8.9 - 10.4	SS-6	73				SAME AS SS-4					20	A-6b (VISUAL)

SUMMARY OF SOIL TEST DATA
INTERSTATE 75 MAINLINE - CONTINUED

EXPLORATION NO., STATION & OFFSET	FROM TO	SAMPLE ID	% REC	% AGG	% CS	% FS	% SILT	% CLAY	LL	PL	PI	% WC	ODOT CLASS
B-010-0-07	0.0 - 1.5	SS-1	40	11	8	11	32	38	34	21	13	8	A-6a (8)*
STA. 36+01, 30' RT.	1.5 - 3.0	SS-2	0				SAME AS SS-1					-	A-6a (VISUAL)*
NORTHING= 368841	3.0 - 4.5	SS-3	0				SAME AS SS-2					-	A-6a (VISUAL)
EASTING= 1516106	4.5 BAG	BS-4	100	24	7	10	23	35	33	18	15	14	A-6a (7)
	4.5 - 6.0	SS-5	100	7	6	10	31	45	30	18	12	17	A-6a (9)
	6.0 - 7.5	SS-6	73				SAME AS SS-6					16	A-6a (VISUAL)
	7.5 - 9.0	SS-7	100				SAME AS SS-6					16	A-6a (VISUAL)
	9.0 - 10.5	SS-8	100				SAME AS SS-6					16	A-6a (VISUAL)
B-011-0-07	0.0 - 1.5	SS-1	87	51	17	9	22	2	32	21	11	5	A-2-6 (0)*
STA. 40+69, 61' LT.	1.5 - 3.0	SS-2	83	3	6	12	29	50	37	17	20	17	A-6b (12)*
NORTHING= 369311	3.0 - 4.5	SS-3	100	1	3	10	34	52	36	18	18	23	A-6b (11)
EASTING= 1516023	4.5 - 6.0	SS-4	67				SAME AS SS-4					24	A-6b (VISUAL)
	6.0 - 7.5	SS-5	100				SAME AS SS-4					16	A-6b (VISUAL)
	7.5 - 9.0	SS-6	100				SAME AS SS-4					16	A-6b (VISUAL)
B-012-0-07	0.0 - 1.5	SS-1	93	22	12	12	24	30	32	16	16	9	A-6b (6)
STA. 44+01, CENTERLINE	1.5 - 3.0	SS-2	100	1	4	14	36	45	37	21	16	20	A-6b (10)
NORTHING= 369641	3.0 - 4.5	SS-3	93	1	4	9	39	47	41	20	21	21	A-7-6 (13)
EASTING= 1516090	4.5 - 6.0	SS-4	100				SAME AS SS-3					21	A-7-6 (VISUAL)
	6.0 - 7.5	SS-5	100				SAME AS SS-3					16	A-7-6 (VISUAL)
	7.5 - 9.0	SS-6	100				SAME AS SS-3					16	A-7-6 (VISUAL)
B-013-0-07	2.0 - 3.5	SS-1	100	7	6	11	32	45	30	18	12	15	A-6a (9)
STA. 48+01, 30' RT.	3.5 - 5.0	SS-2	100	5	2	8	29	55	35	19	16	15	A-6b (10)
NORTHING= 370041	5.0 - 6.5	SS-3	93				SAME AS SS-2					17	A-6b (VISUAL)
EASTING= 1516126	6.5 - 8.0	SS-4	100				SAME AS SS-2					16	A-6b (VISUAL)
	8.0 - 9.5	SS-5	100				SAME AS SS-2					16	A-6b (VISUAL)
	9.5 - 11.0	SS-6	87				SAME AS SS-2					16	A-6b (VISUAL)
B-014-0-07	0.6 - 2.1	SS-1	100				GRAY GRAVEL WITH SAND, SILT AND CLAY					5	A-2-6 (VISUAL)*
STA. 52+01, 30' LT.	2.1 - 3.6	SS-2	87	2	4	11	34	49	34	18	16	22	A-6b (10)
NORTHING= 370442	3.6 - 5.1	SS-3	100	4	7	11	31	47	35	17	18	20	A-6b (11)
EASTING= 1516073	5.1 - 6.6	SS-4	100				SAME AS SS-3					19	A-6b (VISUAL)
	6.6 - 8.1	SS-5	73				SAME AS SS-3					21	A-6b (VISUAL)
	8.1 - 9.6	SS-6	93				SAME AS SS-3					19	A-6b (VISUAL)
B-015-0-07	0.0 - 1.5	SS-1	80	14	8	10	31	38	32	17	15	9	A-6a (9)
STA. 55+83, 72' RT.	1.5 - 3.0	SS-2	100	3	7	12	33	46	29	16	13	13	A-6a (9)
NORTHING= 370818	3.0 - 4.5	SS-3	80	2	5	12	31	50	36	18	18	22	A-6b (11)
EASTING= 1516191	4.5 - 6.0	SS-4	73				SAME AS SS-3					19	A-6b (VISUAL)
	6.0 - 7.5	SS-5	93				SAME AS SS-3					26	A-6b (VISUAL)
	7.5 - 9.0	SS-6	100				SAME AS SS-3					19	A-6b (VISUAL)
	9.0 - 10.5	SS-7	100				SAME AS SS-3					17	A-6b (VISUAL)
B-016-0-07	0.0 - 1.5	SS-1	87	31	11	7	24	28	38	19	19	10	A-6b (6)
STA. 60+52, 65' LT.	1.5 - 3.0	SS-2	77	8	7	12	31	42	34	19	15	17	A-6a (10)
NORTHING= 371299	3.0 - 4.5	SS-3	93				SAME AS SS-2					17	A-6a (VISUAL)
EASTING= 1516110	4.5 - 6.0	SS-4	100				SAME AS SS-2					15	A-6a (VISUAL)
	6.0 - 7.5	SS-5	47				SAME AS SS-6					15	A-6a (VISUAL)
	7.5 - 9.0	SS-6	100	5	5	10	34	46	30	17	13	16	A-6a (9)
B-017-0-07	0.0 - 1.5	SS-1	93	22	14	12	23	30	31	16	15	9	A-6a (6)
STA. 64+01, CENTERLINE	1.5 - 3.0	SS-2	93	3	5	11	34	47	32	17	15	14	A-6a (10)
NORTHING= 371631	3.0 - 4.5	SS-3	100	4	6	11	35	45	29	18	11	16	A-6a (8)
EASTING= 1516241	4.5 - 6.0	SS-4	100				SAME AS SS-3					10	A-6a (VISUAL)
	6.0 - 7.5	SS-5	93				SAME AS SS-3					16	A-6a (VISUAL)
	7.5 - 9.0	SS-6	100				SAME AS SS-3					16	A-6a (VISUAL)
B-018-0-07	1.8 - 3.3	SS-1	100	4	2	11	40	43	28	17	11	15	A-6a (8)*
STA. 68+01, 30' RT.	3.3 - 4.8	SS-2	93	5	6	11	32	47	29	18	11	16	A-6a (8)*
NORTHING= 372010	4.8 - 6.3	SS-3	100				SAME AS SS-2					16	A-6a (VISUAL)
EASTING= 1516370	6.3 - 7.8	SS-4	100				SAME AS SS-2					16	A-6a (VISUAL)
	7.8 - 9.3	SS-5	100				SAME AS SS-2					17	A-6a (VISUAL)
	9.3 - 10.8	SS-6	100				SAME AS SS-2					18	A-6a (VISUAL)

DRAWN MJ
CHECKED RJK

SOIL PROFILE AND SUMMARY OF SOIL TEST DATA

ALL-75-0.21

3 / 90

3 / 97

V:\1755\active\175530002\geotechnical\drawing\ODOTSubmittal\projects\ALL\76691\roadway\sheets\76691D001.dgn

SUMMARY OF SOIL TEST DATA
INTERSTATE 75 MAINLINE - CONTINUED

EXPLORATION NO., STATION & OFFSET	FROM TO	SAMPLE ID	% REC	% AGG	% CS	% FS	% SILT	% CLAY	LL	PL	PI	% WC	ODOT CLASS
B-019-0-07	1.4 - 2.9	SS-1	80	4	7	11	35	44	29	17	12	16	A-6a (9)*
STA. 71+01, 30' LT.	2.9 - 4.4	SS-2	100	5	6	11	34	45	30	17	13	16	A-6a (9)
NORTHING= 372313	4.4 - 5.9	SS-3	93				SAME AS SS-2					17	A-6a (VISUAL)
EASTING= 1516406	5.9 - 7.4	SS-4	100				SAME AS SS-2					17	A-6a (VISUAL)
	7.4 - 8.9	SS-5	93				SAME AS SS-2					16	A-6a (VISUAL)
	8.9 - 10.4	SS-6	87				SAME AS SS-2					17	A-6a (VISUAL)
B-020-0-07	0.0 - 1.5	SS-1	67				SAME AS SS-2					16	A-6b (VISUAL)*
STA. 76+02, 68' RT.	1.5 - 3.0	SS-2	73	30	12	9	20	29	32	16	16	16	A-6b (5)
NORTHING= 372739	3.0 - 4.5	SS-3	73	4	6	11	30	49	31	17	14	17	A-6a (10)
EASTING= 1516685	4.5 - 6.0	SS-4	100				SAME AS SS-3					16	A-6a (VISUAL)
	6.0 - 7.5	SS-5	100				SAME AS SS-3					17	A-6a (VISUAL)
	7.5 - 9.0	SS-6	100				SAME AS SS-3					17	A-6a (VISUAL)
	9.0 - 10.5	SS-7	67				SAME AS SS-3					16	A-6a (VISUAL)
B-021-0-07	0.0 - 1.5	SS-1	67	12	9	14	31	34	34	19	15	9	A-6a (8)*
STA. 80+33, 69' LT.	1.5 - 3.0	SS-2	33				SAME AS SS-1					26	A-6a (VISUAL)
NORTHING= 373189	3.0 - 4.5	SS-3	93	4	6	11	34	46	33	18	15	16	A-6a (10)
EASTING= 1516739	4.5 - 6.0	SS-4	100	6	6	11	31	46	34	19	15	18	A-6a (10)
	6.0 - 7.5	SS-5	100				SAME AS SS-4					15	A-6a (VISUAL)
	7.5 - 9.0	SS-6	100				SAME AS SS-4					16	A-6a (VISUAL)
B-022-0-07	0.0 - 1.5	SS-1	100	7	6	13	34	41	38	17	21	12	A-6b (12)
STA. 84+01, CENTERLINE	1.5 - 3.0	SS-2	100				SAME AS SS-1					18	A-6b (VISUAL)
NORTHING= 373494	3.0 - 4.5	SS-3	93	4	8	18	31	39	38	19	19	19	A-6b (11)
EASTING= 1516954	4.5 - 6.0	SS-4	100				SAME AS SS-3					21	A-6b (VISUAL)
	6.0 - 7.5	SS-5	73				SAME AS SS-6					22	A-6b (VISUAL)
	7.5 - 9.0	SS-6	100	6	5	19	33	37	37	19	18	23	A-6b (10)
B-023-0-07	1.8 - 3.3	SS-1	67	8	7	12	32	42	31	18	13	17	A-6a (9)*
STA. 88+01, 30' RT.	3.3 - 4.8	SS-2	73	6	5	12	30	47	35	17	18	19	A-6b (11)
NORTHING= 373844	4.8 - 6.3	SS-3	27				SAME AS SS-2					19	A-6b (VISUAL)
EASTING= 1517150	6.3 - 7.8	SS-4	100				SAME AS SS-2					17	A-6b (VISUAL)
	7.8 - 9.3	SS-5	100	4	18	12	29	37	38	19	19	18	A-6b (10)
	9.3 - 10.8	SS-6	100				SAME AS SS-5					26	A-6b (VISUAL)
B-024-0-07	1.5 - 3.0	SS-1	87	3	7	12	32	46	34	16	18	15	A-6b (11)*
STA. 92+01, 30' LT.	3.0 - 4.5	SS-2	100	2	4	12	34	49	37	18	19	21	A-6b (12)
NORTHING= 374266	4.5 - 6.0	SS-3	53				SAME AS SS-2					22	A-6b (VISUAL)
EASTING= 1517281	6.0 - 7.5	SS-4	73				SAME AS SS-2					21	A-6b (VISUAL)
	7.5 - 9.0	SS-5	100				SAME AS SS-6					22	A-6b (VISUAL)
	9.0 - 10.5	SS-6	80	4	9	13	30	44	38	18	20	25	A-6b (12)
B-025-0-07	0.0 - 1.5	SS-1	67	12	11	12	28	38	36	20	16	18	A-6b (8)
STA. 96+05, 70' RT.	1.5 - 3.0	SS-2	67	4	6	12	35	43	30	16	14	16	A-6a (10)
NORTHING= 374524	3.0 - 4.5	SS-3	100	40	3	8	22	28	36	21	15	22	A-6a (10)
EASTING= 1517569	4.5 - 6.0	SS-4	100				SAME AS SS-3					30	A-6a (VISUAL)
	6.0 - 7.5	SS-5	53				SAME AS SS-6					26	A-6b (VISUAL)
	7.5 - 9.0	SS-6	73	1	6	28	26	39	35	15	20	23	A-6b (10)
	9.0 - 10.5	SS-7	80				SAME AS SS-6					26	A-6b (VISUAL)
B-026-0-07	0.5 - 2.0	SS-1	40									6	A-2-6 (VISUAL)*
STA. 100+01, 29' LT.	2.0 - 3.5	SS-2	40				SAME AS BS-4					21	A-6a (VISUAL)
NORTHING= 374911	3.5 - 5.0	SS-3	7				SAME AS BS-4					20	A-6a (VISUAL)
EASTING= 1517700	5.0 BAG	BS-4	100	38	12	8	18	25	30	16	14	20	A-6a (3)
	5.0 - 6.5	SS-5	100	4	6	11	33	46	31	17	14	17	A-6a (10)
	6.5 - 8.0	SS-6	67				SAME AS SS-5					17	A-6a (VISUAL)
	8.0 - 9.5	SS-7	93				SAME AS SS-5					16	A-6a (VISUAL)
B-027-0-07	0.0 - 1.5	SS-1	73	6	4	11	28	52	52	21	31	22	A-7-6 (18)
STA. 104+01, 1' RT.	1.5 - 3.0	SS-2	87	1	2	10	29	59	54	23	31	28	A-7-6 (19)
NORTHING= 375220	3.0 - 4.5	SS-3	80	1	3	11	29	56	48	20	28	23	A-7-6 (17)
EASTING= 1517957	4.5 - 6.0	SS-4	87				SAME AS SS-3					22	A-7-6 (VISUAL)
	6.0 - 7.5	SS-5	93				SAME AS SS-3					20	A-7-6 (VISUAL)
	7.5 - 9.0	SS-6	100				SAME AS SS-3					21	A-7-6 (VISUAL)

SUMMARY OF SOIL TEST DATA
INTERSTATE 75 MAINLINE - CONTINUED

EXPLORATION NO., STATION & OFFSET	FROM TO	SAMPLE ID	% REC	% AGG	% CS	% FS	% SILT	% CLAY	LL	PL	PI	% WC	ODOT CLASS
B-028-0-07	1.8 - 3.3	SS-1	73				SAME AS SS-2					18	A-6b (VISUAL)
STA. 108+01, 31' RT.	3.3 - 4.8	SS-2	100	1	5	10	27	57	40	19	21	25	A-6b (12)
NORTHING= 376516	4.8 - 6.3	SS-3	100	30	20	11	17	23	30	18	12	17	A-6a (2)
EASTING= 1518226	6.3 - 7.8	SS-4	100				SAME AS SS-3					18	A-6a (VISUAL)
	7.8 - 9.3	SS-5	100				SAME AS SS-3					25	A-6a (VISUAL)
	9.3 - 10.8	SS-6	100				SAME AS SS-3					17	A-6a (VISUAL)
B-029-0-07	0.9 - 2.4	SS-1	100				GRAY GRAVEL WITH SAND, SILT AND CLAY					18	A-2-6 (VISUAL)*
STA. 112+01, 29' LT.	2.4 - 3.9	SS-2	100	4	8	10	36	42	32	18	14	15	A-6a (10)
NORTHING= 375859	3.9 - 5.4	SS-3	100	6	9	10	32	44	31	18	13	16	A-6a (9)
EASTING= 1518440	5.4 - 6.9	SS-4	100				SAME AS SS-3					16	A-6a (VISUAL)
	6.9 - 8.4	SS-5	47				SAME AS SS-3					17	A-6a (VISUAL)
	8.4 - 9.9	SS-6	100				SAME AS SS-3					16	A-6a (VISUAL)
B-030-0-07	0.0 - 1.5	SS-1	93	3	7	12	29	49	33	17	16	7	A-6b (10)
STA. 116+09, 62' RT.	1.5 - 3.0	SS-2	47				SAME AS SS-1					11	A-6b (VISUAL)
NORTHING= 376107	3.0 - 4.5	SS-3	67				SAME AS SS-4					23	A-6b (VISUAL)
EASTING= 1518776	4.5 - 6.0	SS-4	80	10	9	12	26	44	35	18	17	25	A-6b (10)
	6.0 - 7.5	SS-5	100	4	5	11	33	47	30	18	12	17	A-6a (9)
	7.5 - 9.0	SS-6	100				SAME AS SS-5					16	A-6a (VISUAL)
	9.0 - 10.5	SS-7	100				SAME AS SS-5					16	A-6a (VISUAL)
B-031-0-07	0.0 - 1.5	SS-1	73	35	7	8	21	30	39	15	24	15	A-6b (8)
STA. 121+46, 73' LT.	1.5 - 3.0	SS-2	87	10	7	12	31	40	34	17	17	18	A-6b (10)
NORTHING= 376603	3.0 - 4.5	SS-3	93	5	6	10	37	42	31	19	12	16	A-6a (9)
EASTING= 1519025	4.5 - 6.0	SS-4	100				SAME AS SS-3					16	A-6a (VISUAL)
	6.0 - 7.5	SS-5	73				SAME AS SS-3					16	A-6a (VISUAL)
	7.5 - 9.0	SS-6	100				SAME AS SS-3					16	A-6a (VISUAL)
B-032-0-07	0.0 - 1.5	SS-1	100	1	3	9	28	58	47	22	25	19	A-7-6 (15)
STA. 124+01, CENTERLINE	1.5 - 3.0	SS-2	93	4	5	11	32	49	35	19	16	16	A-6b (10)
NORTHING= 376747	3.0 - 4.5	SS-3	100				SAME AS SS-2					16	A-6b (VISUAL)
EASTING= 1519248	4.5 - 6.0	SS-4	100	0	4	10	33	54	40	19	21	17	A-6b (12)
	6.0 - 7.5	SS-5	100				SAME AS SS-4					16	A-6b (VISUAL)
	7.5 - 9.0	SS-6	100				SAME AS SS-4					16	A-6b (VISUAL)
B-033-0-07	1.0 - 2.5	SS-1	87				SAME AS SS-2					16	A-6a (VISUAL)*
STA. 128+01, 30' RT.	2.5 - 4.0	SS-2	47	9	7	11	31	42	31	17	14	17	A-6a (9)
NORTHING= 377030	4.0 - 5.5	SS-3	53				SAME AS SS-4					18	A-6b (VISUAL)
EASTING= 1518532	5.5 - 7.0	SS-4	53	3	5	12	28	53	38	19	19	22	A-6b (12)
	7.0 - 8.5	SS-5	80				SAME AS SS-4					22	A-6b (VISUAL)
	8.5 - 10.0	SS-6	7				SAME AS SS-4					23	A-6b (VISUAL)
B-034-0-07	1.5 - 3.0	SS-1	0				GRAY GRAVEL WITH SAND, SILT AND CLAY					-	A-2-6 (VISUAL)*
STA. 132+01, 30' LT.	3.0 - 4.5	SS-2	100	3	3	10	29	54	43	20	23	23	A-7-6 (14)*
NORTHING= 377372	4.5 - 6.0	SS-3	87				SAME AS SS-2					16	A-7-6 (VISUAL)
EASTING= 1519748	6.0 - 7.5	SS-4	100	4	6	11	34	45	33	17	16	17	A-6b (10)
	7.5 - 9.0	SS-5	93				SAME AS SS-4					17	A-6b (VISUAL)
	9.0 - 10.5	SS-6	93				SAME AS SS-4					18	A-6b (VISUAL)
B-035-0-07	0.0 - 1.5	SS-1	73				TOPSOIL					14	(VISUAL)*
STA. 135+92, 65' RT.	1.5 - 3.0	SS-2	80	1	4	11	41	44	35	19	16	22	A-6b (10)
NORTHING= 377606	3.0 - 4.5	SS-3	100	2	4	9	30	56	44	19	25	21	A-7-6 (15)
EASTING= 1520076	4.5 - 6.0	SS-4	100	9	7	9	28	47	41	19	22	19	A-7-6 (13)
	6.0 - 7.5	SS-5	73				SAME AS SS-4					23	A-7-6 (VISUAL)
	7.5 - 9.0	SS-6	100				SAME AS SS-4					19	A-7-6 (VISUAL)
B-036-0-07	0.0 - 1.5	SS-1	73				GRAY GRAVEL WITH SAND, SILT AND CLAY					8	A-2-6 (VISUAL)*
STA. 141+37, 65' LT.	1.5 - 3.0	SS-2	83	5	6	13	35	42	29	16	13	16	A-6a (9)*
NORTHING= 378103	3.0 - 4.5	SS-3	100	7	6	12	35	39	28	17	11	15	A-6a (8)
EASTING= 1520334	4.5 - 6.0	SS-4	100				SAME AS SS-3					15	A-6a (VISUAL)
	6.0 - 7.5	SS-5	47				SAME AS SS-3					15	A-6a (VISUAL)
	7.5 - 9.0	SS-6	100				SAME AS SS-3					15	A-6a (VISUAL)

DRAWN MJ
CHECKED RJK

SOIL PROFILE
SUMMARY OF SOIL TEST DATA

ALL-75-0.21

4 / 97

V:\1755\active\175530002\geotechnical\drawing\DOOTSubmittal\projects\ALL\76691\roadway\sheets\76691D002.dgn

SUMMARY OF SOIL TEST DATA
INTERSTATE 75 MAINLINE - CONTINUED

EXPLORATION NO., STATION & OFFSET	FROM	TO	SAMPLE ID	% REC	% AGG	% CS	% FS	% SILT	% CLAY	LL	PL	PI	% WC	ODOT CLASS
B-037-0-07	0.0	1.5	SS-1	100	7	6	11	34	41	29	17	12	14	A-6a (9)*
STA. 144+01, CENTERLINE	1.5	3.0	SS-2	100	3	6	12	35	44	28	17	11	15	A-6a (8)
NORTHING= 378260	3.0	4.5	SS-3	100	5	6	12	34	42	28	15	13	16	A-6a (9)
EASTING= 1520555	4.5	6.0	SS-4	100				SAME AS SS-3					15	A-6a (VISUAL)
	6.0	7.5	SS-5	100				SAME AS SS-3					18	A-6a (VISUAL)
	7.5	9.0	SS-6	40				SAME AS SS-3					15	A-6a (VISUAL)
B-038-0-07	1.5	3.0	SS-1	87	1	4	10	41	43	39	21	18	26	A-6b (11)*
STA. 148+01, 30' RT.	3.0	4.5	SS-2	80	0	2	8	35	54	45	19	26	24	A-7-6 (15)
NORTHING= 378543	4.5	6.0	SS-3	33				SAME AS SS-2					19	A-7-6 (VISUAL)
EASTING= 1520839	6.0	7.5	SS-4	53				SAME AS SS-2					20	A-7-6 (VISUAL)
	7.5	9.0	SS-5	100				SAME AS SS-2					23	A-7-6 (VISUAL)
	9.0	10.5	SS-6	53				SAME AS SS-2					16	A-7-6 (VISUAL)
B-039-0-07	1.5	3.0	SS-1	73	3	4	11	33	49	39	17	22	21	A-6b (13)*
STA. 152+01, 30' LT.	3.0	4.5	SS-2	80	1	3	11	32	54	49	22	27	28	A-7-6 (17)
NORTHING= 378885	4.5	6.0	SS-3	93				SAME AS SS-2					29	A-7-6 (VISUAL)
EASTING= 1521056	6.0	7.5	SS-4	100	1	2	10	34	54	50	20	30	24	A-7-6 (18)
	7.5	9.0	SS-5	93				SAME AS SS-4					22	A-7-6 (VISUAL)
	9.0	10.5	SS-6	100				SAME AS SS-4					25	A-7-6 (VISUAL)
B-040-0-07	0.0	1.5	SS-1	80	33	19	10	17	21	32	17	15	15	A-6a (2)*
STA. 155+84, 65' RT.	1.5	3.0	SS-2	73	4	3	10	27	56	50	23	27	29	A-7-6 (17)
NORTHING= 379113	3.0	4.5	SS-3	93	1	7	13	31	49	50	21	29	28	A-7-6 (18)
EASTING= 1521378	4.5	6.0	SS-4	100				SAME AS SS-3					27	A-7-6 (VISUAL)
	6.0	7.5	SS-5	73				SAME AS SS-3					24	A-7-6 (VISUAL)
	7.5	9.0	SS-6	100				SAME AS SS-3					26	A-7-6 (VISUAL)
B-041-0-07	0.0	1.5	SS-1	100	2	4	19	34	41	34	17	17	11	A-6b (11)*
STA. 161+22, 82' LT.	1.5	3.0	SS-2	100				SAME AS SS-1					14	A-6b (VISUAL)*
NORTHING= 379609	3.0	4.5	SS-3	87				SAME AS SS-1					21	A-6b (VISUAL)
EASTING= 1521638	4.5	6.0	SS-4	100				SAME AS SS-5					24	A-6a (VISUAL)
	6.0	7.5	SS-5	80	3	6	14	35	42	31	17	14	20	A-6a (10)
	7.5	9.0	SS-6	100	6	11	41	15	28	37	13	24	22	A-6b (6)
B-042-0-07	0.0	1.5	SS-1	100	2	4	11	34	49	49	18	31	20	A-7-6 (18)
STA. 163+97, 29' LT.	1.5	3.0	SS-2	67	2	4	12	28	54	45	19	26	24	A-7-6 (15)
NORTHING= 379748	3.0	4.5	SS-3	73	1	2	10	35	52	48	21	27	24	A-7-6 (16)
EASTING= 1521889	4.5	6.0	SS-4	87				SAME AS SS-3					18	A-7-6 (VISUAL)
	6.0	7.5	SS-5	53				SAME AS SS-3					22	A-7-6 (VISUAL)
	7.5	9.0	SS-6	100				SAME AS SS-3					24	A-7-6 (VISUAL)
B-018-0-08	2.5	4.0	SS-1	100	2	4	17	40	37	42	18	24	27	A-7-6 (14)
STA. 165+22, 27' RT.	5.0	6.5	SS-2	100	4	6	11	40	39	33	18	15	18	A-6a (10)
NORTHING= 379774	7.5	9.0	SS-3	100				SAME AS SS-3					18	A-6a (VISUAL)
EASTING= 1522024	10.0	11.5	SS-4	100	6	6	11	39	38	28	16	12	15	A-6a (9)
B-043-0-07	1.8	3.3	SS-1	93				SAME AS SS-2					19	A-7-6 (VISUAL)*
STA. 167+91, 9' LT.	3.3	4.8	SS-2	67	0	4	16	33	47	42	16	26	22	A-7-6 (15)
NORTHING= 379938	4.8	6.3	SS-3	80	5	7	14	31	44	38	19	19	25	A-6b (12)
EASTING= 1522239	6.3	7.8	SS-4	100	21	10	9	23	37	41	19	22	21	A-7-6 (10)
	7.8	9.3	SS-5	100				SAME AS SS-4					18	A-7-6 (VISUAL)
	9.3	10.8	SS-6	100				SAME AS SS-4					16	A-7-6 (VISUAL)
B-019-0-08	2.5	4.0	SS-1	60				SAME AS SS-2					27	A-7-6 (VISUAL)
STA. 169+15, 24' RT.	5.0	6.5	SS-2	87	1	2	11	37	49	49	21	28	28	A-7-6 (17)
NORTHING= 379959	7.5	9.0	SS-3	100				SAME AS SS-2					16	A-7-6 (VISUAL)
EASTING= 1522365	10.0	11.5	SS-4	100	4	5	10	43	38	27	15	12	14	A-6a (9)
B-044-0-07	1.0	2.5	SS-1	93	38	13	8	19	23	32	16	16	24	A-6b (3)*
STA. 171+85, 65' LT.	2.5	4.0	SS-2	87	1	2	11	37	49	38	19	19	25	A-6b (12)*
NORTHING= 380135	4.0	5.5	SS-3	100	3	3	10	33	51	44	18	26	23	A-7-6 (15)
EASTING= 1522591	5.5	7.0	SS-4	93				SAME AS SS-3					19	A-7-6 (VISUAL)
	7.0	8.5	SS-5	100				SAME AS SS-3					23	A-7-6 (VISUAL)
	8.5	10.0	SS-6	100				SAME AS SS-3					21	A-7-6 (VISUAL)

SUMMARY OF SOIL TEST DATA
INTERSTATE 75 MAINLINE - CONTINUED

EXPLORATION NO., STATION & OFFSET	FROM	TO	SAMPLE ID	% REC	% AGG	% CS	% FS	% SILT	% CLAY	LL	PL	PI	% WC	ODOT CLASS
B-045-0-07	0.0	1.5	SS-1	80									16	A-2-6 (VISUAL)*
STA. 175+94, 44' RT.	1.5	3.0	SS-2	67	0	6	11	34	49	42	18	24	23	A-7-6 (14)
NORTHING= 380109	3.0	4.5	SS-3	80	0	3	10	41	46	41	18	23	24	A-7-6 (13)
EASTING= 1523014	4.5	6.0	SS-4	100				SAME AS SS-3					23	A-7-6 (VISUAL)
	6.0	7.5	SS-5	93	4	9	40	33	15	22	18	4	28	A-4a (3)
	7.5	9.0	SS-6	100	3	16	34	28	20	24	14	10	24	A-4a (3)
B-025-0-08	2.5	4.0	SS-1	67	4	3	14	47	32	43	19	24	24	A-7-6 (14)
STA. 177+39, 58' RT.	5.0	6.5	SS-2	80				SAME AS SS-1					27	A-7-6 (VISUAL)
NORTHING= 380108	7.5	9.0	SS-3	87				SAME AS SS-4					24	A-4a (VISUAL)
EASTING= 1523157	10.0	11.5	SS-4	100	4	5	27	38	26	25	15	10	21	A-4a (6)
B-046-0-07	0.0	1.5	SS-1	73	7	7	12	35	39	43	20	23	19	A-7-6 (14)*
STA. 180+42, 72' LT.	1.5	3.0	SS-2	87	2	4	11	36	47	40	19	21	24	A-6b (12)
NORTHING= 380242	3.0	4.5	SS-3	93				SAME AS SS-2					25	A-6b (VISUAL)
EASTING= 1523458	4.5	6.0	SS-4	100	1	2	15	29	54	44	17	27	24	A-7-6 (16)
	6.0	7.5	SS-5	100				SAME AS SS-4					21	A-7-6 (VISUAL)
	7.5	9.0	SS-6	87				SAME AS SS-4					23	A-7-6 (VISUAL)
B-047-0-07	0.0	1.5	SS-1	100	1	4	12	34	49	37	19	18	22	A-6b (11)*
STA. 183+78, CENTERLINE	1.5	3.0	SS-2	100	4	5	12	37	43	32	16	16	16	A-6b (10)
NORTHING= 380169	3.0	4.5	SS-3	100				SAME AS SS-2					15	A-6b (VISUAL)
EASTING= 1523793	4.5	6.0	SS-4	100				SAME AS SS-2					17	A-6b (VISUAL)
	6.0	7.5	SS-5	73				SAME AS SS-2					16	A-6b (VISUAL)
	7.5	9.0	SS-6	100				SAME AS SS-2					17	A-6b (VISUAL)
B-048-0-07	1.5	3.0	SS-1	93				SAME AS SS-2					14	A-4a (VISUAL)*
STA. 187+78, 30' RT.	3.0	4.5	SS-2	100	5	5	11	39	40	27	17	10	17	A-4a (8)
NORTHING= 380136	4.5	6.0	SS-3	100	7	16	14	28	35	30	17	13	16	A-6a (7)
EASTING= 1524193	6.0	7.5	SS-4	100				SAME AS SS-3					14	A-6a (VISUAL)
	7.5	9.0	SS-5	100				SAME AS SS-3					16	A-6a (VISUAL)
	9.0	10.5	SS-6	67				SAME AS SS-3					16	A-6a (VISUAL)
B-049-0-07	1.5	3.0	SS-1	87	8	17	17	24	33	29	16	13	21	A-6a (6)*
STA. 191+78, 30' LT.	3.0	4.5	SS-2	87	1	3	12	38	46	39	19	20	23	A-6b (12)*
NORTHING= 380193	4.5	6.0	SS-3	87				SAME AS SS-2					26	A-6b (VISUAL)
EASTING= 1524593	6.0	7.5	SS-4	93				SAME AS SS-2					24	A-6b (VISUAL)
	7.5	9.0	SS-5	93				SAME AS SS-2					23	A-6b (VISUAL)
	9.0	10.5	SS-6	100				SAME AS SS-2					19	A-6b (VISUAL)
B-050-0-07	0.0	1.5	SS-1	73	38	17	11	17	17	35	20	15	14	A-2-6 (1)*
STA. 195+61, 58' RT.	1.5	3.0	SS-2	80	23	15	18	20	24	32	15	17	23	A-6b (4)*
NORTHING= 380102	3.0	4.5	SS-3	67				SAME AS SS-2					24	A-6b (VISUAL)
EASTING= 1524975	4.5	6.0	SS-4	73				SAME AS SS-2					40	A-6b (VISUAL)
	6.0	7.5	SS-5	100				SAME AS SS-2					26	A-6b (VISUAL)
	7.5	9.0	SS-6	100				SAME AS SS-2					21	A-6b (VISUAL)
B-051-0-07	0.0	1.5	SS-1	100	4	6	12	38	40	29	17	12	14	A-6a (9)*
STA. 200+30, 74' LT.	1.5	3.0	SS-2	87	9	7	14	35	36	27	16	11	16	A-6a (7)
NORTHING= 380230	3.0	4.5	SS-3	100				SAME AS SS-2					15	A-6a (VISUAL)
EASTING= 1525446	4.5	6.0	SS-4	100	3	5	11	35	45	30	18	12	15	A-6a (8)
	6.0	7.5	SS-5	100				SAME AS SS-4					16	A-6a (VISUAL)
	7.5	9.0	SS-6	100				SAME AS SS-4					16	A-6a (VISUAL)
B-052-0-07	0.0	1.5	SS-1	100	8	5	9	39	39	31	17	14	15	A-6a (10)
STA. 203+78, CENTERLINE	1.5	3.0	SS-2	100	4	5	11	34	46	29	18	11	15	A-6a (8)
NORTHING= 380154	3.0	4.5	SS-3	100	5	6	11	33	45	30	16	14	16	A-6a (10)
EASTING= 1525793	4.5	6.0	SS-4	100				SAME AS SS-3					15	A-6a (VISUAL)
	6.0	7.5	SS-5	93				SAME AS SS-3					16	A-6a (VISUAL)
	7.5	9.0	SS-6	100				SAME AS SS-3					16	A-6a (VISUAL)

DRAWN NJ
CHECKED RJK

SOIL PROFILE
SUMMARY OF SOIL TEST DATA

ALL-75-0.21

5/90
5/97

V:\1755\active\175530002\geotechnical\drawing\ODOTSubmittal\projects\ALL\76691\roadway\sheets\76691D003.dgn

SUMMARY OF SOIL TEST DATA
INTERSTATE 75 MAINLINE - CONTINUED

EXPLORATION NO., STATION & OFFSET	FROM TO	SAMPLE ID	% REC	% AGG	% CS	% FS	% SILT	% CLAY	LL	PL	PI	% WC	ODOT CLASS
B-053-0-07	1.5 - 3.0	SS-1	87	2	6	13	33	46	30	15	15	14	A-6a (10)
STA. 207+78, 30' RT.	3.0 - 4.5	SS-2	100	3	5	12	33	47	30	17	13	15	A-6a (9)
NORTHING= 380121	4.5 - 6.0	SS-3	87	2	7	12	35	45	30	18	12	15	A-6a (9)
EASTING= 1526193	6.0 - 7.5	SS-4	100				SAME AS SS-3					16	A-6a (VISUAL)
	7.5 - 9.0	SS-5	100				SAME AS SS-3					16	A-6a (VISUAL)
	9.0 - 10.5	SS-6	87				SAME AS SS-3					17	A-6a (VISUAL)
B-054-0-07	0.6 - 2.1	SS-1	100	25	8	10	26	31	34	18	16	14	A-6b (7)*
STA. 212+30, 81' LT.	2.1 - 3.6	SS-2	67	32	16	11	21	20	36	21	15	19	A-6a (3)
NORTHING= 380228	3.6 - 5.1	SS-3	67				SAME AS SS-2					23	A-6a (VISUAL)
EASTING= 1526646	5.1 - 6.6	SS-4	80				SAME AS SS-2					24	A-6a (VISUAL)
	6.6 - 8.1	SS-5	80				SAME AS SS-2					29	A-6a (VISUAL)
	8.1 - 9.6	SS-6	100	4	4	13	32	47	43	20	23	37	A-7-6 (14)
B-055-0-07	0.0 - 1.5	SS-1	80				SAME AS SS-2					12	A-6a (VISUAL)
STA. 215+52, 62' RT.	1.5 - 3.0	SS-2	80	12	11	16	31	32	33	19	14	12	A-6a (7)
NORTHING= 380075	3.0 - 4.5	SS-3	100				SAME AS SS-4					28	A-6b (VISUAL)
EASTING= 1526967	4.5 - 6.0	SS-4	80	2	4	10	26	58	38	19	19	20	A-6b (12)
	6.0 - 7.5	SS-5	100				SAME AS SS-4					15	A-6b (VISUAL)
	7.5 - 9.0	SS-6	100				SAME AS SS-4					16	A-6b (VISUAL)
B-056-0-07	0.9 - 2.4	SS-1	100									3	A-2-6 (VISUAL)
STA. 219+78, 30' LT.	2.4 - 3.9	SS-2	80	24	8	10	24	34	33	17	16	14	A-6b (7)
NORTHING= 380172	3.9 - 5.4	SS-3	100	4	6	18	27	45	32	16	16	16	A-6b (10)
EASTING= 1527393	5.4 - 6.9	SS-4	100				SAME AS SS-3					17	A-6b (VISUAL)
	6.9 - 8.4	SS-5	100				SAME AS SS-3					17	A-6b (VISUAL)
	8.4 - 9.9	SS-6	100				SAME AS SS-3					20	A-6b (VISUAL)
B-057-0-07	0.0 - 1.5	SS-1	80	19	6	16	25	34	35	17	18	18	A-6b (8)
STA. 222+70, 1' LT.	1.5 - 3.0	SS-2	87	2	4	20	33	41	36	16	20	18	A-6b (12)
NORTHING= 380140	3.0 - 4.5	SS-3	93				SAME AS SS-3					20	A-6b (VISUAL)
EASTING= 1527685	4.5 - 6.0	SS-4	100				SAME AS SS-3					18	A-6b (VISUAL)
	6.0 - 7.5	SS-5	83				SAME AS SS-3					23	A-6b (VISUAL)
	7.5 - 9.0	SS-6	87	2	4	15	32	47	38	17	21	19	A-6b (12)
B-058-0-07	1.0 - 2.5	SS-1	87	47	14	7	16	16	24	15	9	9	A-2-4 (0)
STA. 227+78,30' RT.	2.5 - 4.0	SS-2	100	10	9	11	30	40	27	15	12	15	A-6a (8)
NORTHING= 380106	4.0 - 5.5	SS-3	67				SAME AS SS-2					12	A-6a (VISUAL)
EASTING= 1528193	5.5 - 7.0	SS-4	80	37	23	5	16	18	27	15	12	13	A-2-6 (0)
	7.0 - 8.5	SS-5	67				SAME AS SS-6					18	A-6a (VISUAL)
	8.5 - 10.0	SS-6	87	20	5	10	28	37	30	15	15	18	A-6a (8)
B-059-0-07	1.4 - 2.9	SS-1	100				SAME AS SS-2					16	A-6a (VISUAL)
STA. 231+78, 30' LT.	2.9 - 4.4	SS-2	93	5	6	11	33	45	29	15	14	13	A-6a (10)
NORTHING= 380163	4.4 - 5.9	SS-3	47				SAME AS SS-2					11	A-6a (VISUAL)
EASTING= 1528593	5.9 - 7.4	SS-4	93				SAME AS SS-6					14	A-6a (VISUAL)
	7.4 - 8.9	SS-5	100	8	8	11	33	40	29	16	13	14	A-6a (9)
	8.9 - 10.4	SS-6	93				SAME AS SS-5					15	A-6a (VISUAL)
B-060-0-07	0.6 - 2.2	SS-1	87	81	10	2	4	3	NP	NP	NP	11	A-1-a (0)
STA. 235+78, 30' RT.	2.2 - 3.7	SS-2	73	5	9	11	30	45	27	16	11	13	A-6a (8)
NORTHING= 380100	3.7 - 5.2	SS-3	87				SAME AS SS-2					13	A-6a (VISUAL)
EASTING= 1528993	5.2 - 6.7	SS-4	100	10	10	11	25	45	29	16	13	12	A-6a (8)
	6.7 - 8.2	SS-5	67				SAME AS SS-4					14	A-6a (VISUAL)
	8.2 - 9.7	SS-6	80				SAME AS SS-4					15	A-6a (VISUAL)
B-061-0-07	0.0 - 1.5	SS-1	100	4	6	23	26	42	37	16	21	21	A-6b (11)
STA. 241+01, 2' LT.	1.5 - 3.0	SS-2	100	5	5	16	32	42	32	16	16	19	A-6b (10)
NORTHING= 380128	3.0 - 4.5	SS-3	93	4	5	12	31	49	35	17	18	18	A-6b (11)
EASTING= 1529518	4.5 - 6.0	SS-4	80				SAME AS SS-3					16	A-6b (VISUAL)
	6.0 - 7.5	SS-5	100				SAME AS SS-3					16	A-6b (VISUAL)
	7.5 - 9.0	SS-6	93				SAME AS SS-3					16	A-6b (VISUAL)

SUMMARY OF SOIL TEST DATA
INTERSTATE 75 MAINLINE - CONTINUED

EXPLORATION NO., STATION & OFFSET	FROM TO	SAMPLE ID	% REC	% AGG	% CS	% FS	% SILT	% CLAY	LL	PL	PI	% WC	ODOT CLASS
B-064-0-07	1.4 - 2.9	SS-1	100	10	7	11	31	41	30	16	14	16	A-6a (9)
STA. 248+17, 20' RT.	2.9 - 4.4	SS-2	67				SAME AS SS-1					18	A-6a (VISUAL)
NORTHING= 380189	4.4 - 5.9	SS-3	93				SAME AS SS-5					17	A-6b (VISUAL)
EASTING= 1530230	5.9 - 7.4	SS-4	47				SAME AS SS-5					17	A-6b (VISUAL)
	7.4 - 8.9	SS-5	100	4	5	14	31	46	35	18	17	18	A-6b (11)
	8.9 - 10.4	SS-6	93				SAME AS SS-5					23	A-6b (VISUAL)
B-062-0-07	0.0 - 1.5	SS-1	80				SAME AS SS-2					13	A-6a (VISUAL)
STA. 249+10, 145' RT.	1.5 - 3.0	SS-2	67	27	18	11	20	24	32	18	14	15	A-6a (3)
NORTHING= 380096	3.0 - 4.5	SS-3	33				SAME AS SS-2					28	A-6a (VISUAL)
EASTING= 1530357	4.5 - 6.0	SS-4	73	4	6	12	30	48	32	18	14	19	A-6a (10)
	6.0 - 7.5	SS-5	73				SAME AS SS-4					17	A-6a (VISUAL)
	7.5 - 9.0	SS-6	100				SAME AS SS-4					17	A-6a (VISUAL)
B-054-1-08	1.0 - 2.5	SS-1	87	1	5	12	40	42	35	16	19	18	A-6b (12)
STA. 252+15, 25' RT.	3.5 - 5.0	SS-2	73				SAME AS SS-1					16	A-6b (VISUAL)
NORTHING= 380321	6.0 - 7.5	SS-3	100	3	6	12	41	38	31	16	15	15	A-6a (10)
EASTING= 1530609	8.5 - 10.0	SS-4	47				SAME AS SS-3					14	A-6a (VISUAL)
B-063-0-07	1.5 - 3.0	SS-1	7				SAME AS SS-2					20	A-6a (VISUAL)
STA. 252+81, 169' RT.	3.0 - 4.5	SS-2	87	1	4	18	29	48	32	17	15	15	A-6a (10)
NORTHING= 380221	4.5 - 6.0	SS-3	100				SAME AS SS-2					16	A-6a (VISUAL)
EASTING= 1530734	6.0 - 7.5	SS-4	100	4	7	11	32	45	31	17	14	16	A-6a (10)
	7.5 - 9.0	SS-5	73				SAME AS SS-4					16	A-6a (VISUAL)
	9.0 - 10.5	SS-6	47				SAME AS SS-4					16	A-6a (VISUAL)
B-054-0-08	2.5 - 4.0	SS-1	87	3	7	12	39	39	33	16	17	15	A-6b (11)
STA. 255+45, 83' RT.	5.0 - 6.5	SS-2	100	5	5	14	36	41	42	19	23	23	A-7-6 (14)
NORTHING= 380435	7.5 - 9.0	SS-3	100	5	5	11	38	41	33	18	15	18	A-6a (10)
EASTING= 1530932	10.0 - 11.5	SS-4	100				SAME AS SS-3					17	A-6a (VISUAL)
B-054-2-08	1.0 - 2.5	SS-1	40				SAME AS SS-2					18	A-6a (VISUAL)
STA. 256+02, 1' RT.	3.5 - 5.0	SS-2	80	4	6	12	38	40	33	18	15	15	A-6a (10)
NORTHING= 380535	6.0 - 7.5	SS-3	100				SAME AS SS-2					17	A-6a (VISUAL)
EASTING= 1530936	8.5 - 10.0	SS-4	100	3	7	12	41	37	29	15	14	16	A-6a (10)
B-065-0-07	0.0 - 1.5	SS-1	73	44	22	10	12	12	28	19	9	5	A-2-4 (0)
STA. 256+86, 84' RT.	1.5 - 3.0	SS-2	80	5	8	12	33	43	29	16	13	16	A-6a (9)
NORTHING=380517	3.0 - 4.5	SS-3	100				SAME AS SS-2					16	A-6a (VISUAL)
EASTING= 1531052	4.5 - 6.0	SS-4	67				SAME AS SS-2					16	A-6a (VISUAL)
	6.0 - 7.5	SS-5	100				SAME AS SS-2					16	A-6a (VISUAL)
	7.5 - 9.0	SS-6	100				SAME AS SS-2					17	A-6a (VISUAL)
B-055-0-08	2.5 - 4.0	SS-1	100	4	6	11	41	38	31	17	14	16	A-6a (10)
STA. 259+37, 97' RT.	5.0 - 6.5	SS-2	100				SAME AS SS-1					17	A-6a (VISUAL)
NORTHING= 380675	7.5 - 9.0	SS-3	100	5	6	11	47	31	30	15	15	18	A-6a (10)
EASTING= 1531261	10.0 - 11.5	SS-4	100				SAME AS SS-3					20	A-6a (VISUAL)
B-056-1-08	1.0 - 2.5	SS-1	67	9	6	11	37	37	29	13	16	14	A-6b (10)
STA. 259+96, 3' RT.	3.5 - 5.0	SS-2	73				SAME AS SS-3					16	A-6a (VISUAL)
NORTHING= 380784	6.0 - 7.5	SS-3	100	9	6	11	41	33	27	14	13	16	A-6a (9)
EASTING= 1531240	8.5 - 10.0	SS-4	80				SAME AS SS-3					16	A-6a (VISUAL)
B-066-0-07	0.0 - 1.5	SS-1	100	24	9	13	23	30	33	18	15	13	A-6a (6)
STA. 260+08, 221' RT.	1.5 - 3.0	SS-2	67	29	6	9	22	34	37	18	19	19	A-6b (8)
NORTHING= 380638	3.0 - 4.5	SS-3	100				SAME AS SS-2					29	A-6b (VISUAL)
EASTING= 1531402	4.5 - 6.0	SS-4	80				SAME AS SS-6					29	A-7-6 (VISUAL)
	6.0 - 7.5	SS-5	73				SAME AS SS-6					29	A-7-6 (VISUAL)
	7.5 - 9.0	SS-6	100	0	1	7	28	64	61	20	41	27	A-7-6 (20)
B-067-0-07	1.5 - 3.0	SS-1	100	20	4	8	25	44	38	20	18	13	A-6b (10)
STA. 262+85, 197' RT.	3.0 - 4.5	SS-2	100	4	8	12	32	46	31	17	14	15	A-6a (10)
NORTHING= 380879	4.5 - 6.0	SS-3	67				SAME AS SS-2					16	A-6a (VISUAL)
EASTING= 1531585	6.0 - 7.5	SS-4	87				SAME AS SS-2					15	A-6a (VISUAL)
	7.5 - 9.0	SS-5	100				SAME AS SS-2					15	A-6a (VISUAL)
	9.0 - 10.5	SS-6	27				SAME AS SS-2					14	A-6a (VISUAL)

DRAWN MJ CHECKED RJK

SOIL PROFILE SUMMARY OF SOIL TEST DATA

ALL-75-0.21

6 / 90

6/97

V:\1755\active\175530002\geotechnical\drawing\ODOTSubmittal\projects\ALL\76691\roadway\sheets\76691ID004.dgn

SUMMARY OF SOIL TEST DATA
INTERSTATE 75 MAINLINE - CONTINUED

EXPLORATION NO., STATION & OFFSET	FROM TO	SAMPLE ID	% REC	% AGG	% CS	% FS	% SILT	% CLAY	LL	PL	PI	% WC	ODOT CLASS
B-056-0-08	2.5 - 4.0	SS-1	100	7	7	11	41	34	32	17	15	18	A-6a (10)
STA. 263+08, 89' RT.	5.0 - 6.5	SS-2	67				SAME AS SS-1					15	A-6a (VISUAL)
NORTHING= 380965	7.5 - 9.0	SS-3	87				SAME AS SS-1					17	A-6a (VISUAL)
EASTING= 1531515	10.0 - 11.5	SS-4	100	5	5	11	44	35	28	13	15	16	A-6a (10)
B-056-2-08	1.0 - 2.5	SS-1	67	3	6	12	41	38	32	18	14	15	A-6a (10)
STA. 263+93, 2' RT.	3.5 - 5.0	SS-2	73				SAME AS SS-1					15	A-6a (VISUAL)
NORTHING= 381087	6.0 - 7.5	SS-3	80				SAME AS SS-4					16	A-6a (VISUAL)
EASTING= 1531498	8.5 - 10.0	SS-4	100	4	6	12	41	37	25	13	12	16	A-6a (9)
B-068-0-07	0.0 - 1.5	SS-1	100	25	7	10	23	36	40	18	22	19	A-6b (10)
STA. 265+57, 149' RT.	1.5 - 3.0	SS-2	100	4	5	11	34	47	35	17	18	15	A-6b (11)
NORTHING= 381146	3.0 - 4.5	SS-3	100				SAME AS SS-4					16	A-6a (VISUAL)
EASTING= 1531713	4.5 - 6.0	SS-4	100	9	6	11	32	42	32	17	15	16	A-6a (10)
	6.0 - 7.5	SS-5	93				SAME AS SS-4					15	A-6a (VISUAL)
	7.5 - 9.0	SS-6	73				SAME AS SS-4					16	A-6a (VISUAL)
B-056-3-08	1.0 - 2.5	SS-1	47				SAME AS SS-2					14	A-6b (VISUAL)
STA. 267+98, 3' RT.	3.5 - 5.0	SS-2	53	2	5	11	40	42	37	17	20	14	A-6b (12)
NORTHING= 381435	6.0 - 7.5	SS-3	100				SAME AS SS-2					16	A-6b (VISUAL)
EASTING= 1531704	8.5 - 10.0	SS-4	100	3	6	11	39	41	31	16	15	16	A-6a (10)
B-069-0-07	1.0 - 2.5	SS-1	87				SAME AS SS-2					18	A-7-6 (VISUAL)
STA. 268+96, 75' RT.	2.5 - 4.0	SS-2	73	2	5	10	28	56	50	19	31	24	A-7-6 (18)
NORTHING= 381496	4.0 - 5.5	SS-3	53				SAME AS SS-4					28	A-6b (VISUAL)
EASTING= 1531810	5.5 - 7.0	SS-4	100	3	5	11	33	48	38	19	19	29	A-6b (12)
	7.0 - 8.5	SS-5	83				SAME AS SS-4					17	A-6b (VISUAL)
	8.5 - 10.0	SS-6	100	9	7	12	33	39	30	17	13	16	A-6a (9)
B-062-0-08	2.5 - 4.0	SS-1	100	7	7	12	38	36	29	14	15	16	A-6a (10)*
STA. 270+53, 22' RT.	5.0 - 6.5	SS-2	100				SAME AS SS-1					16	A-6a (VISUAL)
NORTHING= 381664	7.5 - 9.0	SS-3	100	5	6	11	38	40	30	16	14	16	A-6a (10)
EASTING= 1531818	10.0 - 11.5	SS-4	100				SAME AS SS-3					16	A-6a (VISUAL)
B-070-0-07	1.1 - 2.6	SS-1	80	19	9	10	26	37	31	18	13	16	A-6a (7)*
STA. 272+57, 87' RT.	2.6 - 4.1	SS-2	100	5	6	11	32	47	33	18	15	15	A-6a (10)*
NORTHING= 381846	4.1 - 5.6	SS-3	93				SAME AS SS-2					16	A-6a (VISUAL)
EASTING= 1531940	5.6 - 7.1	SS-4	100				SAME AS SS-2					16	A-6a (VISUAL)
	7.1 - 8.6	SS-5	53				SAME AS SS-2					16	A-6a (VISUAL)
	8.6 - 10.1	SS-6	7				SAME AS SS-2					16	A-6a (VISUAL)
B-071-0-07	0.0 - 1.5	SS-1	93				SAME AS SS-2					11	A-6b (VISUAL)*
STA. 275+39, 44' LT.	1.5 - 3.0	SS-2	87	16	8	12	27	37	37	19	18	18	A-6b (9)*
NORTHING= 382150	3.0 - 4.5	SS-3	93	3	6	10	33	47	33	18	15	16	A-6a (10)
EASTING= 1531864	4.5 - 6.0	SS-4	93				SAME AS SS-3					13	A-6a (VISUAL)
	6.0 - 7.5	SS-5	93				SAME AS SS-3					16	A-6a (VISUAL)
	7.5 - 9.0	SS-6	73				SAME AS SS-3					16	A-6a (VISUAL)
B-072-0-07	0.0 - 1.5	SS-1	100	27	11	12	20	30	35	18	17	15	A-6b (5)*
STA. 280+50, 20' RT.	1.5 - 3.0	SS-2	93	1	3	14	36	46	38	20	18	20	A-6b (11)*
NORTHING= 382653	3.0 - 4.5	SS-3	80				SAME AS SS-2					25	A-6b (VISUAL)
EASTING= 1531953	4.5 - 6.0	SS-4	0				SAME AS SS-2					-	A-6b (VISUAL)
	6.0 - 7.5	SS-5	80				SAME AS SS-2					22	A-6b (VISUAL)
	7.5 - 9.0	SS-6	100	6	5	10	33	45	37	17	20	20	A-6b (12)
B-073-0-07	2.3 - 3.8	SS-1	87	3	6	10	37	45	30	17	13	15	A-6a (9)*
STA. 284+45, 30' RT.	3.8 - 5.3	SS-2	100	3	6	11	32	48	30	17	13	16	A-6a (9)
NORTHING= 383048	5.3 - 6.8	SS-3	67				SAME AS SS-5					7	A-2-6 (VISUAL)
EASTING= 1531970	6.8 - 8.3	SS-4	7				SAME AS SS-5					12	A-2-6 (VISUAL)
	8.3 - 9.8	SS-5	100	12	59	12	10	8	37	19	18	15	A-2-6 (0)
	9.8 - 11.3	SS-6	93				SAME AS SS-5					16	A-2-6 (VISUAL)

SUMMARY OF SOIL TEST DATA
INTERSTATE 75 MAINLINE - CONTINUED

EXPLORATION NO., STATION & OFFSET	FROM TO	SAMPLE ID	% REC	% AGG	% CS	% FS	% SILT	% CLAY	LL	PL	PI	% WC	ODOT CLASS
B-074-0-07	1.5 - 3.0	SS-1	87	5	4	15	32	44	34	19	15	20	A-6a (10)*
STA. 288+45, 30' LT.	3.0 - 4.5	SS-2	100	6	5	12	34	43	37	19	18	21	A-6b (11)*
NORTHING= 383449	4.5 - 6.0	SS-3	93	7	9	12	28	44	41	19	22	24	A-7-6 (12)
EASTING= 1531917	6.0 - 7.5	SS-4	87				SAME AS SS-3					26	A-7-6 (VISUAL)
	7.5 - 9.0	SS-5	100				SAME AS SS-3					35	A-7-6 (VISUAL)
	9.0 - 10.5	SS-6	7				SAME AS SS-3					18	A-7-6 (VISUAL)
B-075-0-07	0.0 - 1.5	SS-1	2				SAME AS SS-2					13	A-6b (VISUAL)*
STA. 291+55, 68' RT.	1.5 - 3.0	SS-2	73	4	7	12	34	44	39	21	18	30	A-6b (11)
NORTHING= 383758	3.0 - 4.5	SS-3	80	1	8	13	34	44	40	18	22	23	A-6b (13)
EASTING= 1532020	4.5 - 6.0	SS-4	67				SAME AS SS-3					20	A-6b (VISUAL)
	6.0 - 7.5	SS-5	100				SAME AS SS-3					14	A-6b (VISUAL)
	7.5 - 9.0	SS-6	100				SAME AS SS-3					17	A-6b (VISUAL)
B-076-0-07	0.0 - 1.5	SS-1	0				SAME AS SS-3					-	A-6b (VISUAL)*
STA. 295+53, 62' LT.	1.5 - 3.0	SS-2	53				SAME AS SS-3					19	A-6b (VISUAL)*
NORTHING= 384158	3.0 - 4.5	SS-3	80	4	4	10	35	47	37	18	19	17	A-6b (12)
EASTING= 1531896	4.5 - 6.0	SS-4	93	6	5	10	31	47	33	19	14	17	A-6a (10)
	6.0 - 7.5	SS-5	73				SAME AS SS-4					16	A-6a (VISUAL)
	7.5 - 9.0	SS-6	100	4	5	10	32	48	31	18	13	16	A-6a (9)
B-077-0-07	0.0 - 1.5	SS-1	100	6	6	11	34	44	36	18	18	13	A-6b (11)
STA. 300+51, 5' RT.	1.5 - 3.0	SS-2	100	5	5	11	34	46	32	17	15	14	A-6a (10)
NORTHING= 384655	3.0 - 4.5	SS-3	100				SAME AS SS-2					16	A-6a (VISUAL)
EASTING= 1531972	4.5 - 6.0	SS-4	100				SAME AS SS-2					13	A-6a (VISUAL)
	6.0 - 7.5	SS-5	100	4	5	11	36	44	31	16	15	16	A-6a (10)
	7.5 - 9.0	SS-6	100				SAME AS SS-5					15	A-6a (VISUAL)
B-078-0-07	1.0 - 2.5	SS-1	87				SAME AS SS-2					18	A-6a (VISUAL)*
STA. 304+45, 30' RT.	2.5 - 4.0	SS-2	67	8	6	13	35	38	28	17	11	15	A-6a (8)
NORTHING= 385048	4.0 - 5.5	SS-3	87	3	6	11	37	43	29	17	12	16	A-6a (9)
EASTING= 1532003	5.5 - 7.0	SS-4	80				SAME AS SS-3					16	A-6a (VISUAL)
	7.0 - 8.5	SS-5	1				SAME AS SS-3					3	A-6a (VISUAL)
	8.5 - 10.0	SS-6	73				SAME AS SS-3					16	A-6a (VISUAL)
B-079-0-07	1.4 - 2.9	SS-1	93	4	10	17	33	36	28	16	12	17	A-6a (8)
STA. 308+45, 30' LT.	2.9 - 4.4	SS-2	87	3	6	15	34	43	39	19	20	24	A-6b (12)
NORTHING= 385449	4.4 - 5.9	SS-3	93				SAME AS SS-2					24	A-6b (VISUAL)
EASTING= 1531950	5.9 - 7.4	SS-4	100				SAME AS SS-6					20	A-6a (VISUAL)
	7.4 - 8.9	SS-5	87				SAME AS SS-6					22	A-6a (VISUAL)
	8.9 - 10.4	SS-6	100	5	6	12	39	40	29	18	11	16	A-6a (8)
B-080-0-07	2.1 - 3.6	SS-1	100	4	7	14	33	43	31	18	13	14	A-6a (9)*
STA. 312+45, 30' RT.	3.6 - 5.1	SS-2	100	2	6	13	35	44	29	17	12	15	A-6a (9)
NORTHING= 385848	5.1 - 6.6	SS-3	100				SAME AS SS-2					16	A-6a (VISUAL)
EASTING= 1532017	6.6 - 8.1	SS-4	100				SAME AS SS-2					18	A-6a (VISUAL)
	8.1 - 9.6	SS-5	87				SAME AS SS-2					18	A-6a (VISUAL)
	9.6 - 11.1	SS-6	100				SAME AS SS-2					14	A-6a (VISUAL)
B-081-0-07	0.0 - 1.5	SS-1	100	5	5	15	35	42	36	18	18	13	A-6b (11)*
STA. 316+45, 30' LT.	1.5 - 3.0	SS-2	93	1	3	15	33	49	39	21	18	21	A-6b (11)*
NORTHING= 386249	3.0 - 4.5	SS-3	100	1	2	10	26	60	48	18	30	23	A-7-6 (18)
EASTING= 1531964	4.5 - 6.0	SS-4	87				SAME AS SS-3					19	A-7-6 (VISUAL)
	6.0 - 7.5	SS-5	93				SAME AS SS-3					24	A-7-6 (VISUAL)
	7.5 - 9.0	SS-6	100				SAME AS SS-3					17	A-7-6 (VISUAL)
B-082-0-07	0.0 - 1.5	SS-1	87	49	18	9	12	12	23	16	7	15	A-2-4 (0)*
STA. 321+34, 59' RT.	1.5 - 3.0	SS-2	100	5	7	12	34	43	26	17	9	15	A-4a (8)*
NORTHING= 386737	3.0 - 4.5	SS-3	100				SAME AS SS-2					16	A-4a (VISUAL)
EASTING= 1532060	4.5 - 6.0	SS-4	80				SAME AS SS-2					16	A-4a (VISUAL)
	6.0 - 7.5	SS-5	100				SAME AS SS-2					16	A-4a (VISUAL)
	7.5 - 9.0	SS-6	67				SAME AS SS-2					14	A-4a (VISUAL)

DRAWN MJ CHECKED RJK

SOIL PROFILE

SUMMARY OF SOIL TEST DATA

ALL-75-0.21

7/90

7/97

V:\1755\active\175530002\geotechnical\drawing\ODOTSubmittal\projects\ALL\76691\roadway\sheets\76691HD005.dgn

SUMMARY OF SOIL TEST DATA
INTERSTATE 75 MAINLINE - CONTINUED

EXPLORATION NO., STATION & OFFSET	FROM TO	SAMPLE ID	% REC	% AGG	% CS	% FS	% SILT	% CLAY	LL	PL	PI	% WC	ODOT CLASS
B-083-0-07	0.8 - 2.3	SS-1	33	72	15	4	6	3	NP	NP	NP	20	A-1-a (0)*
STA. 323+95, 15' RT.	2.3 - 3.8	SS-2	73	3	5	13	31	48	36	19	17	20	A-6b (11)
NORTHING= 386998	3.8 - 5.3	SS-3	63				SAME AS SS-2					16	A-6b (VISUAL)
EASTING= 1532021	5.3 - 6.8	SS-4	93				SAME AS SS-2					16	A-6b (VISUAL)
	6.8 - 8.3	SS-5	80				SAME AS SS-2					17	A-6b (VISUAL)
	8.3 - 9.8	SS-6	100				SAME AS SS-2					17	A-6b (VISUAL)
B-084-0-07	1.5 - 3.0	SS-1	100	3	4	9	50	35	24	17	7	17	A-4b (8)*
STA. 327+95, 15' LT.	3.0 - 4.5	SS-2	100	4	6	12	39	39	26	17	9	16	A-4a (8)
NORTHING= 387399	4.5 - 6.0	SS-3	93	23	9	14	25	30	30	17	13	16	A-6a (5)
EASTING= 1531997	6.0 - 7.5	SS-4	100				SAME AS SS-3					18	A-6a (VISUAL)
	7.5 - 9.0	SS-5	93				SAME AS SS-3					16	A-6a (VISUAL)
	9.0 - 10.5	SS-6	87				SAME AS SS-3					16	A-6a (VISUAL)
B-085-0-07	1.5 - 3.0	SS-1	100	9	7	11	31	42	28	17	11	15	A-6a (8)*
STA. 331+95, 29' RT.	3.0 - 4.5	SS-2	100	4	7	13	35	43	29	17	12	15	A-6a (9)
NORTHING= 387798	4.5 - 6.0	SS-3	100				SAME AS SS-2					16	A-6a (VISUAL)
EASTING= 1532045	6.0 - 7.5	SS-4	87				SAME AS SS-2					16	A-6a (VISUAL)
	7.5 - 9.0	SS-5	67				SAME AS SS-2					18	A-6a (VISUAL)
	9.0 - 10.5	SS-6	80				SAME AS SS-2					17	A-6a (VISUAL)
B-086-0-07	0.0 - 1.5	SS-1	80	13	5	11	31	40	42	19	23	21	A-7-6 (13)*
STA. 335+70, 58' LT.	1.5 - 3.0	SS-2	93	4	6	12	32	45	32	18	14	16	A-6a (10)
NORTHING= 388173	3.0 - 4.5	SS-3	100				SAME AS SS-2					16	A-6a (VISUAL)
EASTING= 1531995	4.5 - 6.0	SS-4	100	5	6	13	35	40	29	17	12	17	A-6a (9)
	6.0 - 7.5	SS-5	100				SAME AS SS-4					16	A-6a (VISUAL)
	7.5 - 9.0	SS-6	100				SAME AS SS-4					16	A-6a (VISUAL)
B-087-0-07	1.3 - 2.8	SS-1	40	8	7	14	28	43	37	15	22	18	A-6b (12)
STA. 339+95, CENTERLINE	2.8 - 4.3	SS-2	73				SAME AS SS-1					27	A-6b (VISUAL)
NORTHING= 388598	4.3 - 5.8	SS-3	63				SAME AS SS-1					22	A-6b (VISUAL)
EASTING= 1532008	5.8 - 7.3	SS-4	27				SAME AS SS-1					19	A-6b (VISUAL)
	7.3 - 8.8	SS-5	80				SAME AS SS-1					16	A-6b (VISUAL)
	8.8 - 10.3	SS-6	100				SAME AS SS-1					15	A-6b (VISUAL)
B-088-0-07	0.0 - 1.5	SS-1	80	3	9	14	28	46	48	18	30	16	A-7-6 (17)*
STA. 344+14, 54' RT.	1.5 - 3.0	SS-2	63				SAME AS SS-1					17	A-7-6 (VISUAL)*
NORTHING= 389018	3.0 - 4.5	SS-3	73	7	19	49	12	13	22	17	5	24	A-3a (0)
EASTING= 1532058	4.5 - 6.0	SS-4	100				SAME AS SS-5					15	A-6a (VISUAL)
	6.0 - 7.5	SS-5	80	3	6	11	37	44	26	15	11	14	A-6a (8)
	7.5 - 9.0	SS-6	100				SAME AS SS-5					15	A-6a (VISUAL)
B-089-0-07	1.5 - 3.0	SS-1	60	28	17	18	18	19	26	16	10	16	A-4a (0)*
STA. 347+95, 15' LT.	3.0 - 4.5	SS-2	100	2	3	12	36	47	52	20	32	30	A-7-6 (18)
NORTHING= 389398	4.5 - 6.0	SS-3	80				SAME AS SS-2					26	A-7-6 (VISUAL)
EASTING= 1531985	6.0 - 7.5	SS-4	67				SAME AS SS-2					26	A-7-6 (VISUAL)
	7.5 - 9.0	SS-5	7				SAME AS SS-2					17	A-7-6 (VISUAL)
	9.0 - 10.5	SS-6	100	4	6	11	36	43	30	17	13	18	A-6a (9)
B-090-0-07	0.0 - 1.5	SS-1	67				SAME AS SS-2					13	A-6a (VISUAL)*
STA. 352+07, 69' RT.	1.5 - 3.0	SS-2	80	3	6	12	34	45	30	17	13	16	A-6a (9)*
NORTHING= 389811	3.0 - 4.5	SS-3	93				SAME AS SS-2					17	A-6a (VISUAL)
EASTING= 1532066	4.5 - 6.0	SS-4	80				SAME AS SS-2					17	A-6a (VISUAL)
	6.0 - 7.5	SS-5	100				SAME AS SS-2					17	A-6a (VISUAL)
	7.5 - 9.0	SS-6	93				SAME AS SS-2					17	A-6a (VISUAL)
B-091-0-07	0.0 - 1.5	SS-1	100	9	6	16	32	37	37	19	18	17	A-6b (10)*
STA. 355+58, 69' LT.	1.5 - 3.0	SS-2	87	2	4	14	38	41	36	21	15	20	A-6a (10)
NORTHING= 390162	3.0 - 4.5	SS-3	100	1	2	10	34	54	45	19	26	24	A-7-6 (15)
EASTING= 1531929	4.5 - 6.0	SS-4	100				SAME AS SS-3					26	A-7-6 (VISUAL)
	6.0 - 7.5	SS-5	100	3	4	11	31	50	43	19	24	21	A-7-6 (14)
	7.5 - 9.0	SS-6	100				SAME AS SS-5					21	A-7-6 (VISUAL)

SUMMARY OF SOIL TEST DATA
INTERSTATE 75 MAINLINE - CONTINUED

EXPLORATION NO., STATION & OFFSET	FROM TO	SAMPLE ID	% REC	% AGG	% CS	% FS	% SILT	% CLAY	LL	PL	PI	% WC	ODOT CLASS
B-092-0-07	1.4 - 2.9	SS-1	87	34	13	18	17	19	27	15	12	14	A-6a (1)
STA. 359+95, 1' LT.	2.9 - 4.4	SS-2	100	4	5	19	34	38	32	18	14	18	A-6a (9)
NORTHING= 390598	4.4 - 5.9	SS-3	40				SAME AS SS-4					20	A-6b (VISUAL)
EASTING= 1532003	5.9 - 7.4	SS-4	100	7	10	18	28	37	37	17	20	21	A-6b (10)
	7.4 - 8.9	SS-5	0				SAME AS SS-4					-	A-6b (VISUAL)
	8.9 - 10.4	SS-6	67				SAME AS SS-4					16	A-6b (VISUAL)
B-093-0-07	0.7 - 2.2	SS-1	20	69	19	5	5	2	NP	NP	NP	4	A-1-a (0)
STA. 363+95, 14' RT.	2.2 - 3.7	SS-2	80	6	5	4	66	18	22	14	8	14	A-4b (8)
NORTHING= 390998	3.7 - 5.2	SS-3	93				SAME AS SS-2					16	A-4b (VISUAL)
EASTING= 1532022	5.2 - 6.7	SS-4	53				SAME AS SS-2					14	A-4b (VISUAL)
	6.7 - 8.2	SS-5	93				SAME AS SS-2					16	A-4b (VISUAL)
	8.2 - 9.7	SS-6	87				SAME AS SS-2					14	A-4b (VISUAL)
B-094-0-07	1.0 - 2.5	SS-1	87				SAME AS SS-2					10	A-6a (VISUAL)
STA. 367+95, 16' LT.	2.5 - 4.0	SS-2	87	15	11	16	25	32	30	15	15	19	A-6a (6)
NORTHING= 391398	4.0 - 5.5	SS-3	93	8	9	21	27	36	33	17	16	19	A-6b (8)
EASTING= 1531997	5.5 - 7.0	SS-4	73				SAME AS SS-3					19	A-6b (VISUAL)
	7.0 - 8.5	SS-5	87				SAME AS SS-3					21	A-6b (VISUAL)
	8.5 - 10.0	SS-6	67	22	8	14	25	31	37	17	20	22	A-6b (8)
B-095-0-07	0.5 - 2.0	SS-1	100									4	A-1-b (VISUAL)
STA. 371+95, 29' RT.	2.0 - 3.5	SS-2	67	5	7	13	34	42	28	17	11	15	A-6a (8)
NORTHING= 391798	3.5 - 5.0	SS-3	100				SAME AS SS-2					18	A-6a (VISUAL)
EASTING= 1532047	5.0 - 6.5	SS-4	63				SAME AS SS-2					23	A-6a (VISUAL)
	6.5 - 8.0	SS-5	80				SAME AS SS-2					17	A-6a (VISUAL)
	8.0 - 9.5	SS-6	67				SAME AS SS-2					21	A-6a (VISUAL)
B-096-0-07	1.2 - 2.7	SS-1	100				SAME AS SS-3					14	A-6a (VISUAL)
STA. 375+95, 30' LT.	2.7 - 4.2	SS-2	47				SAME AS SS-3					15	A-6a (VISUAL)
NORTHING= 392198	4.2 - 5.7	SS-3	100	10	7	11	33	39	30	17	13	14	A-6a (9)
EASTING= 1531992	5.7 - 7.2	SS-4	80	5	6	13	33	43	29	16	13	16	A-6a (9)
	7.2 - 8.7	SS-5	100	8	6	14	33	39	29	16	13	16	A-6a (9)
	8.7 - 10.2	SS-6	93				SAME AS SS-5					15	A-6a (VISUAL)
B-097-0-07	1.5 - 3.0	SS-1	40	30	14	13	19	25	28	15	13	10	A-6a (3)
STA. 380+21, 29' RT.	3.0 - 4.5	SS-2	100	5	6	14	35	41	29	17	12	11	A-6a (9)
NORTHING= 392624	4.5 - 6.0	SS-3	100				SAME AS SS-2					15	A-6a (VISUAL)
EASTING= 1532057	6.0 - 7.5	SS-4	87				SAME AS SS-2					17	A-6a (VISUAL)
	7.5 - 9.0	SS-5	100				SAME AS SS-2					22	A-6a (VISUAL)
	9.0 - 10.5	SS-6	80				SAME AS SS-2					21	A-6a (VISUAL)
B-098-0-07	0.8 - 2.3	SS-1	20									3	A-1-b (VISUAL)*
STA. 383+95, 14' RT.	2.3 - 3.8	SS-2	47				SAME AS SS-4					16	A-6a (VISUAL)*
NORTHING= 392998	3.8 - 5.3	SS-3	47				SAME AS SS-4					21	A-6a (VISUAL)
EASTING= 1532046	5.3 - 6.8	SS-4	87	4	8	12	4	72	29	17	12	17	A-6a (9)
	6.8 - 8.3	SS-5	20				SAME AS SS-4					17	A-6a (VISUAL)
	8.3 - 9.8	SS-6	87	6	7	12	33	43	29	17	12	19	A-6a (9)
B-099-0-07	1.5 - 3.0	SS-1	73	14	29	14	22	22	26	16	10	15	A-4a (2)*
STA. 387+95, 16' LT.	3.0 - 4.5	SS-2	100				SAME AS SS-1					15	A-4a (VISUAL)
NORTHING= 393398	4.5 - 6.0	SS-3	80				SAME AS SS-1					16	A-4a (VISUAL)
EASTING= 1532021	6.0 - 7.5	SS-4	93				SAME AS SS-1					19	A-4a (VISUAL)
	7.5 - 9.0	SS-5	100				SAME AS SS-6					18	A-4a (VISUAL)
	9.0 - 10.5	SS-6	100	6	7	13	35	40	27	17	10	14	A-4a (8)
B-100-0-07	0.0 - 1.5	SS-1	93	21	14	12	25	28	33	18	15	16	A-6a (6)
STA. 392+70, 66' RT.	1.5 - 3.0	SS-2	100	5	9	13	33	41	32	17	15	16	A-6a (10)
NORTHING= 393872	3.0 - 4.5	SS-3	87				SAME AS SS-2					15	A-6a (VISUAL)
EASTING= 1532109	4.5 - 6.0	SS-4	87				SAME AS SS-2					17	A-6a (VISUAL)
	6.0 - 7.5	SS-5	40				SAME AS SS-2					16	A-6a (VISUAL)
	7.5 - 9.0	SS-6	0				SAME AS SS-2					-	A-6a (VISUAL)

DRAWN MJ
CHECKED RJK

SOIL PROFILE
SUMMARY OF SOIL TEST DATA

ALL-75-0.21

8 / 90

(8/97)

Y:\1755\active\175530002\geotechnical\drawing\ODOTSubmittal\projects\ALL\76691\roadway\sheets\76691D006.dgn

SUMMARY OF SOIL TEST DATA
INTERSTATE 75 MAINLINE - CONTINUED

EXPLORATION NO., STATION & OFFSET	FROM	TO	SAMPLE ID	% REC	% AGG	% CS	% FS	% SILT	% CLAY	LL	PL	PI	% WC	ODOT CLASS
B-101-0-07	0.0	1.5	SS-1	87	46	8	8	18	21	29	17	12	19	A-6a (1)*
STA. 395+27, 48' LT.	1.5	3.0	SS-2	100	7	7	15	31	41	25	15	10	15	A-4a (7)
NORTHING= 394131	3.0	4.5	SS-3	93				SAME AS SS-2					17	A-4a (VISUAL)
EASTING= 1531997	4.5	6.0	SS-4	100				SAME AS SS-2					16	A-4a (VISUAL)
	6.0	7.5	SS-5	47				SAME AS SS-2					16	A-4a (VISUAL)
	7.5	9.0	SS-6	100				SAME AS SS-2					17	A-4a (VISUAL)
B-102-0-07	1.7	3.2	SS-1	73				SAME AS SS-2					17	A-6b (VISUAL)*
STA. 399+82, CENTERLINE	3.2	4.7	SS-2	100	2	6	11	28	54	38	19	19	24	A-6b (12)
NORTHING= 394585	4.7	6.2	SS-3	100				SAME AS SS-2					15	A-6b (VISUAL)
EASTING= 1532052	6.2	7.7	SS-4	100				SAME AS SS-2					15	A-6b (VISUAL)
	7.7	9.2	SS-5	100				SAME AS SS-2					15	A-6b (VISUAL)
	9.2	10.7	SS-6	87				SAME AS SS-2					17	A-6b (VISUAL)
B-103-0-07	1.5	3.0	SS-1	93	2	5	12	33	49	35	18	17	15	A-6b (11)*
STA. 403+82, 14' RT.	3.0	4.5	SS-2	87				SAME AS SS-1					23	A-6b (VISUAL)
NORTHING= 394985	4.5	6.0	SS-3	93				SAME AS SS-1					22	A-6b (VISUAL)
EASTING= 1532074	6.0	7.5	SS-4	100				SAME AS SS-1					23	A-6b (VISUAL)
	7.5	9.0	SS-5	100				SAME AS SS-1					19	A-6b (VISUAL)
	9.0	10.5	SS-6	87				SAME AS SS-1					18	A-6b (VISUAL)
B-104-0-07	1.8	3.3	SS-1	100	4	5	13	34	44	28	18	10	14	A-6a (8)*
STA. 407+82, 15' LT.	3.3	4.8	SS-2	73	3	8	12	33	43	29	18	11	16	A-6a (8)
NORTHING= 395385	4.8	6.3	SS-3	93				SAME AS SS-2					15	A-6a (VISUAL)
EASTING= 1532052	6.3	7.8	SS-4	80				SAME AS SS-2					16	A-6a (VISUAL)
	7.8	9.3	SS-5	100				SAME AS SS-2					16	A-6a (VISUAL)
	9.3	10.8	SS-6	100				SAME AS SS-2					15	A-6a (VISUAL)
B-105-0-07	0.9	2.4	SS-1	73	69	18	5	5	3	NP	NP	NP	5	A-1-a (0)*
STA. 411+82, 30' RT.	2.4	3.9	SS-2	0				SAME AS SS-1					-	A-1-a (VISUAL)*
NORTHING= 395784	3.9	5.4	SS-3	47	11	6	11	31	41	33	17	16	21	A-6b (10)
EASTING= 1532104	5.4	6.9	SS-4	80				SAME AS SS-3					26	A-6b (VISUAL)
	6.9	8.4	SS-5	100				SAME AS SS-3					25	A-6b (VISUAL)
	8.4	9.9	SS-6	87				SAME AS SS-3					27	A-6b (VISUAL)
B-106-0-07	0.0	1.5	SS-1	100	16	7	12	26	39	32	18	14	11	A-6a (8)*
STA. 415+22, 49' LT.	1.5	3.0	SS-2	93	7	7	13	31	42	33	18	15	16	A-6a (10)*
NORTHING= 396126	3.0	4.5	SS-3	100				SAME AS SS-2					15	A-6a (VISUAL)
EASTING= 1532032	4.5	6.0	SS-4	100				SAME AS SS-2					16	A-6a (VISUAL)
	6.0	7.5	SS-5	87				SAME AS SS-2					15	A-6a (VISUAL)
	7.5	9.0	SS-6	100				SAME AS SS-2					15	A-6a (VISUAL)
B-107-0-07	1.5	3.0	SS-1	1				SAME AS SS-2					11	A-6a (VISUAL)
STA. 419+82, CENTERLINE	3.0	4.5	SS-2	47	19	8	13	26	33	29	16	13	13	A-6a (6)
NORTHING= 396585	4.5	6.0	SS-3	100				SAME AS SS-2					16	A-6a (VISUAL)
EASTING= 1532089	6.0	7.5	SS-4	100				SAME AS SS-2					15	A-6a (VISUAL)
	7.5	9.0	SS-5	100				SAME AS SS-2					16	A-6a (VISUAL)
	9.0	10.5	SS-6	67				SAME AS SS-2					19	A-6a (VISUAL)
B-108-0-07	0.8	2.3	SS-1	87	66	19	4	6	5	20	15	5	5	A-1-a (0)
STA. 423+82, 15' RT.	2.3	3.8	SS-2	93	3	6	12	35	44	31	17	14	15	A-6a (10)
NORTHING= 396984	3.8	5.3	SS-3	100				SAME AS SS-2					16	A-6a (VISUAL)
EASTING= 1532111	5.3	6.8	SS-4	100				SAME AS SS-2					15	A-6a (VISUAL)
	6.8	8.3	SS-5	73				SAME AS SS-2					15	A-6a (VISUAL)
	8.3	9.8	SS-6	100				SAME AS SS-2					15	A-6a (VISUAL)
B-109-0-07	0.9	2.4	SS-1	100	78	12	3	4	3	NP	NP	NP	14	A-1-a (0)
STA. 426+77, 15' LT.	2.4	3.9	SS-2	87	5	6	13	32	44	32	18	14	16	A-6a (10)
NORTHING= 397280	3.9	5.4	SS-3	100				SAME AS SS-2					16	A-6a (VISUAL)
EASTING= 1532086	5.4	6.9	SS-4	87				SAME AS SS-2					14	A-6a (VISUAL)
	6.9	8.4	SS-5	93				SAME AS SS-2					22	A-6a (VISUAL)
	8.4	9.9	SS-6	100				SAME AS SS-2					17	A-6a (VISUAL)

SUMMARY OF SOIL TEST DATA
INTERSTATE 75 MAINLINE - CONTINUED

EXPLORATION NO., STATION & OFFSET	FROM	TO	SAMPLE ID	% REC	% AGG	% CS	% FS	% SILT	% CLAY	LL	PL	PI	% WC	ODOT CLASS
B-109-1-07	0.9	2.4	SS-1	100	66	19	4	6	5	22	15	7	14	A-2-4 (0)
STA. 429+32, 24' RT.	2.4	3.9	SS-2	100	15	11	14	27	33	31	17	14	16	A-6a (6)
NORTHING= 397535	3.9	5.4	SS-3	73				SAME AS SS-2					16	A-6a (VISUAL)
EASTING= 1532081	5.4	6.9	SS-4	60				SAME AS SS-2					15	A-6a (VISUAL)
	6.9	8.4	SS-5	53				SAME AS SS-2					16	A-6a (VISUAL)
	10.0	11.5	SS-6	27				SAME AS SS-2					11	A-6a (VISUAL)
	12.5	14.0	SS-7	60				SAME AS SS-2					18	A-6a (VISUAL)
	15.0	16.5	SS-8	100				SAME AS SS-2					16	A-6a (VISUAL)
	17.5	19.0	SS-9	73				SAME AS SS-2					16	A-6a (VISUAL)
	20.0	21.5	SS-10	100				SAME AS SS-2					16	A-6a (VISUAL)
	22.5	24.0	SS-11	100				SAME AS SS-2					20	A-6a (VISUAL)
	25.0	26.5	SS-12	100				SAME AS SS-2					13	A-6a (VISUAL)
	27.5	29.0	SS-13	60				SAME AS SS-2					17	A-6a (VISUAL)
	30.0	31.5	SS-14	80				SAME AS SS-2					22	A-6a (VISUAL)
	32.5	34.0	SS-15	93				SAME AS SS-2					22	A-6a (VISUAL)
	35.0	36.5	SS-16	93				SAME AS SS-2					16	A-6a (VISUAL)
	37.5	37.1	SS-17	0				SAME AS SS-2					-	A-6a (VISUAL)
B-110-0-07	0.5	2.0	SS-1	93	80	15	3	0	2	NP	NP	NP	3	A-1-a (0)
STA. 430+77, 30' RT.	2.0	3.5	SS-2	100	5	6	11	34	44	38	17	21	13	A-6a (8)
NORTHING= 397679	3.5	5.0	SS-3	100				SAME AS SS-2					15	A-6a (VISUAL)
EASTING= 1532139	5.0	6.5	SS-4	100				SAME AS SS-2					16	A-6a (VISUAL)
	6.5	8.0	SS-5	87				SAME AS SS-2					19	A-6a (VISUAL)
	10.0	11.5	SS-6	100				SAME AS SS-2					17	A-6a (VISUAL)
	12.5	14.0	SS-7	100	5	15	11	29	40	31	16	15	16	A-6a (9)
	15.0	16.5	SS-8	100				SAME AS SS-7					16	A-6a (VISUAL)
	17.5	19.0	SS-9	100				SAME AS SS-7					16	A-6a (VISUAL)
	20.0	21.5	SS-10	100				SAME AS SS-7					25	A-6a (VISUAL)
	22.5	24.0	SS-11	100	13	9	29	27	23	30	17	13	15	A-6a (4)
	25.0	26.5	SS-12	80				SAME AS SS-11					15	A-6a (VISUAL)
	27.5	29.0	SS-13	100				SAME AS SS-11					12	A-6a (VISUAL)
	30.0	31.5	SS-14	93				SAME AS SS-11					21	A-6a (VISUAL)
	32.5	34.0	SS-15	2				SAME AS SS-11					16	A-6a (VISUAL)
	35.1	36.3	SS-16	2				SAME AS SS-11					-	A-6a (VISUAL)
B-111-0-07	0.9	2.4	SS-1	100									2	A-1-b (VISUAL)
STA. 434+77, 30' LT.	2.4	3.9	SS-2	100	4	7	13	32	45	32	18	14	15	A-6a (10)
NORTHING= 398080	3.9	5.4	SS-3	73				SAME AS SS-2					24	A-6a (VISUAL)
EASTING= 1532086	5.4	6.9	SS-4	80				SAME AS SS-2					14	A-6a (VISUAL)
	6.9	8.4	SS-5	100				SAME AS SS-2					13	A-6a (VISUAL)
	8.4	9.9	SS-6	100				SAME AS SS-2					13	A-6a (VISUAL)
B-112-0-07	1.3	2.8	SS-1	100	61	22	6	7	4	NP	NP	NP	4	A-1-a (0)*
STA. 437+17, CENTERLINE	2.8	4.3	SS-2	93				SAME AS SS-1					21	A-1-a (VISUAL)
NORTHING= 398319	4.3	5.8	SS-3	67	10	5	12	36	37	35	16	19	19	A-6b (11)
EASTING= 1532120	5.8	7.3	SS-4	33				SAME AS SS-3					8	A-6b (VISUAL)
	7.3	8.8	SS-5	80				SAME AS SS-3					16	A-6b (VISUAL)
	8.8	10.3	SS-6	73				SAME AS SS-3					16	A-6b (VISUAL)
B-113-0-07	0.0	1.5	SS-1	93									3	A-1-b (VISUAL)
STA. 441+29, 51' RT.	1.5	3.0	SS-2	87	10	12	17	23	38	37	21	16	24	A-6b (8)
NORTHING= 398731	3.0	4.5	SS-3	93	3	5	10	26	57	35	19	16	18	A-6b (10)
EASTING= 1532178	4.5	6.0	SS-4	93				SAME AS SS-3					18	A-6b (VISUAL)
	6.0	7.5	SS-5	100				SAME AS SS-3					17	A-6b (VISUAL)
	7.5	9.0	SS-6	67				SAME AS SS-3					16	A-6b (VISUAL)
B-114-0-07	2.0	3.5	SS-1	80	5	13	14	29	40	29	17	12	15	A-6a (8)*
STA. 445+17, 8' LT.	3.5	5.0	SS-2	100	4	6	12	29	49	34	19	15	16	A-6a (10)
NORTHING= 399119	5.0	6.5	SS-3	100				SAME AS SS-2					16	A-6a (VISUAL)
EASTING= 1532127	6.5	8.0	SS-4	100				SAME AS SS-2					16	A-6a (VISUAL)
	8.0	9.5	SS-5	93				SAME AS SS-2					17	A-6a (VISUAL)
	9.5	11.0	SS-6	67				SAME AS SS-2					19	A-6a (VISUAL)

DRAWN MJ
CHECKED RJK

SOIL PROFILE
SUMMARY OF SOIL TEST DATA

ALL-75-0.21

9/90

9/97

V:\1755\active\175530002\geotechnical\drawing\ODOTSubmittal\projects\ALL\76691\roadway\sheets\7669110007.dgn

SUMMARY OF SOIL TEST DATA
INTERSTATE 75 MAINLINE - CONTINUED

EXPLORATION NO., STATION & OFFSET	FROM TO	SAMPLE ID	% REC	% AGG	% CS	% FS	% SILT	% CLAY	LL	PL	PI	% WC	ODOT CLASS
B-115-0-07	0.0 - 1.5	SS-1	100	4	27	16	21	32	31	16	15	16	A-6a (5)
STA. 449+23, 62' RT.	1.5 - 3.0	SS-2	87	5	6	11	27	52	34	18	16	17	A-6b (10)
NORTHING= 399524	3.0 - 4.5	SS-3	100				SAME AS SS-2					17	A-6b (VISUAL)
EASTING= 1532203	4.5 - 6.0	SS-4	100				SAME AS SS-2					16	A-6b (VISUAL)
	6.0 - 7.5	SS-5	100				SAME AS SS-2					17	A-6b (VISUAL)
	7.5 - 9.0	SS-6	100				SAME AS SS-2					18	A-6b (VISUAL)
B-116-0-07	0.0 - 1.5	SS-1	100									22	A-1-a (VISUAL)*
STA. 453+33, 53' LT.	1.5 - 3.0	SS-2	87	7	8	13	27	46	36	19	17	24	A-6b (10)
NORTHING= 399936	3.0 - 4.5	SS-3	100				SAME AS SS-2					16	A-6b (VISUAL)
EASTING= 1532096	4.5 - 6.0	SS-4	93				SAME AS SS-2					16	A-6b (VISUAL)
	6.0 - 7.5	SS-5	100				SAME AS SS-6					17	A-6a (VISUAL)
	7.5 - 9.0	SS-6	100	2	5	19	32	42	28	16	12	20	A-6a (9)
B-117-0-07	0.9 - 2.4	SS-1	100	81	10	4	3	2	NP	NP	NP	4	A-1-a (0)
STA. 457+17, CENTERLINE	2.4 - 3.9	SS-2	93	9	9	12	30	41	27	15	12	13	A-6a (8)
NORTHING= 400319	3.9 - 5.4	SS-3	0				SAME AS SS-2					-	A-6a (VISUAL)
EASTING= 1532156	5.4 - 6.9	SS-4	100				SAME AS SS-2					14	A-6a (VISUAL)
	6.9 - 8.4	SS-5	87				SAME AS SS-2					14	A-6a (VISUAL)
	8.4 - 9.9	SS-6	100				SAME AS SS-2					14	A-6a (VISUAL)
B-118-0-07	0.5 - 2.0	SS-1	100	74	14	4	5	4	NP	NP	NP	13	A-1-a (0)
STA. 459+27, 28' RT.	2.0 - 3.5	SS-2	87	4	7	11	35	43	29	15	14	13	A-6a (10)
NORTHING= 400528	3.5 - 5.0	SS-3	93				SAME AS SS-2					13	A-6a (VISUAL)
EASTING= 1532188	5.0 - 6.5	SS-4	100				SAME AS SS-2					15	A-6a (VISUAL)
	6.5 - 8.0	SS-5	87				SAME AS SS-2					14	A-6a (VISUAL)
	8.0 - 9.5	SS-6	87				SAME AS SS-2					12	A-6a (VISUAL)
B-119-0-07	0.5 - 2.0	SS-1	100	73	15	5	5	3	20	16	4	4	A-1-a (0)
STA. 463+62, 8' LT.	2.0 - 3.5	SS-2	93	7	7	12	27	47	33	17	16	16	A-6b (10)
NORTHING= 400964	3.5 - 5.0	SS-3	100				SAME AS SS-2					18	A-6b (VISUAL)
EASTING= 1532159	5.0 - 6.5	SS-4	80				SAME AS SS-2					17	A-6b (VISUAL)
	6.5 - 8.0	SS-5	100				SAME AS SS-2					16	A-6b (VISUAL)
	8.0 - 9.5	SS-6	100				SAME AS SS-2					20	A-6b (VISUAL)
B-120-0-07	0.0 - 1.5	SS-1	93				SAME AS SS-2					11	A-6b (VISUAL)
STA. 467+82, 66' RT.	1.5 - 3.0	SS-2	87	4	5	13	29	49	35	18	17	17	A-6b (11)
NORTHING= 401383	3.0 - 4.5	SS-3	80				SAME AS SS-2					21	A-6b (VISUAL)
EASTING= 1532241	4.5 - 6.0	SS-4	100				SAME AS SS-2					17	A-6b (VISUAL)
	6.0 - 7.5	SS-5	87				SAME AS SS-2					24	A-6b (VISUAL)
	7.5 - 9.0	SS-6	100				SAME AS SS-2					24	A-6b (VISUAL)
B-121-0-07	0.0 - 1.5	SS-1	100	31	18	9	18	24	33	20	13	10	A-6a (2)*
STA. 471+05, 39' LT.	1.5 - 3.0	SS-2	80	4	7	12	37	41	30	18	12	19	A-6a (9)
NORTHING= 401708	3.0 - 4.5	SS-3	87				SAME AS SS-2					23	A-6a (VISUAL)
EASTING= 1532141	4.5 - 6.0	SS-4	100				SAME AS SS-2					24	A-6a (VISUAL)
	6.0 - 7.5	SS-5	100				SAME AS SS-2					18	A-6a (VISUAL)
	7.5 - 9.0	SS-6	100				SAME AS SS-2					20	A-6a (VISUAL)

SUMMARY OF SOIL TEST DATA
BREESE RD

EXPLORATION NO., STATION & OFFSET	FROM TO	SAMPLE ID	% REC	% AGG	% CS	% FS	% SILT	% CLAY	LL	PL	PI	% WC	ODOT CLASS
B-009-1-08	1.0 - 2.5	SS-1	67	4	6	10	35	45	35	17	18	22	A-6b (11)*
STA. 100+65, 7' LT.	2.5 - 4.0	SS-2	67				SAME AS SS-1					20	A-6b (VISUAL)
NORTHING= 375855	4.0 - 5.5	SS-3	0				SAME AS SS-1					-	A-6b (VISUAL)
EASTING= 1518027	5.5 - 7.0	SS-4	100	1	4	10	34	51	44	18	26	25	A-7-6 (15)
B-009-0-08	2.5 - 4.0	SS-1	27				SAME AS SS-3					19	A-7-6 (VISUAL)
STA. 103+27, 11' RT.	5.0 - 6.5	SS-2	33				SAME AS SS-3					21	A-7-6 (VISUAL)
NORTHING= 375832	7.5 - 9.0	SS-3	100	3	3	10	40	44	43	18	25	23	A-7-6 (15)
EASTING= 1518289	10.0 - 11.5	SS-4	47				SAME AS SS-3					22	A-7-6 (VISUAL)
STRUCTURAL BORING - GREATER DEPTHS NOT SHOWN													
B-013-0-08	2.5 - 4.0	SS-1	33				SAME AS SS-2					19	A-6b (VISUAL)
STA. 106+74, 6' LT.	5.0 - 6.5	SS-2	80	6	5	13	36	40	33	17	16	17	A-6b (11)
NORTHING= 375842	7.5 - 9.0	SS-3	93				SAME AS SS-2					18	A-6b (VISUAL)
EASTING= 1518637	10.0 - 11.5	SS-4	100				SAME AS SS-2					19	A-6b (VISUAL)
STRUCTURAL BORING - GREATER DEPTHS NOT SHOWN													
B-013-1-08	1.0 - 2.5	SS-1	56	3	4	13	39	41	31	12	15	18	A-6a (10)*
STA. 111+95, 8' LT.	2.5 - 4.0	SS-2	80									6	A-1-a (VISUAL)*
NORTHING= 375834	4.0 - 5.5	SS-3	73	11	5	24	28	32	39	17	22	19	A-6b (10)
EASTING= 1519158	5.5 - 7.0	SS-4	73				SAME AS SS-3					24	A-6b (VISUAL)

SUMMARY OF SOIL TEST DATA
BREESE ROAD RAMP A

EXPLORATION NO., STATION & OFFSET	FROM TO	SAMPLE ID	% REC	% AGG	% CS	% FS	% SILT	% CLAY	LL	PL	PI	% WC	ODOT CLASS
B-005-0-08	1.1 - 2.6	SS-1	27				SAME AS SS-2					15	A-6b (VISUAL)
STA. 104+86, 103' LT.	2.6 - 4.1	SS-2	73	4	5	11	37	43	33	17	16	17	A-6b (11)
NORTHING=375351	4.1 - 5.6	SS-3	100	5	6	11	32	46	33	18	15	17	A-6a (10)
EASTING=1517925	5.6 - 7.1	SS-4	93				SAME AS SS-3					16	A-6a (VISUAL)
B-007-0-08	1.1 - 2.6	SS-1	67	6	3	11	33	47	45	17	28	20	A-7-6 (16)*
STA. 108+56, 226' LT.	2.6 - 4.1	SS-2	80				SAME AS SS-1					21	A-7-6 (VISUAL)
NORTHING= 375722	4.1 - 5.6	SS-3	67				SAME AS SS-1					22	A-7-6 (VISUAL)
EASTING= 1518065	5.6 - 7.1	SS-4	73	4	3	10	39	45	43	19	24	25	A-7-6 (14)

SUMMARY OF SOIL TEST DATA
BREESE ROAD RAMP B

EXPLORATION NO., STATION & OFFSET	FROM TO	SAMPLE ID	% REC	% AGG	% CS	% FS	% SILT	% CLAY	LL	PL	PI	% WC	ODOT CLASS
B-006-0-08	1.1 - 2.6	SS-1	67	8	5	13	36	39	37	18	19	20	A-6b (12)*
STA. 107+59, 98' RT.	2.6 - 4.1	SS-2	80	1	4	15	38	42	40	21	19	24	A-6b (12)
NORTHING= 375441	4.1 - 5.6	SS-3	80				SAME AS SS-2					23	A-6b (VISUAL)
EASTING= 1518253	5.6 - 7.1	SS-4	67				SAME AS SS-2					23	A-6b (VISUAL)
B-008-0-08	1.1 - 2.6	SS-1	93	4	4	13	35	44	38	17	21	19	A-6b (13)*
STA. 111+26, 239' RT.	2.6 - 4.1	SS-2	63				SAME AS SS-1					22	A-6b (VISUAL)
NORTHING= 375981	4.1 - 5.6	SS-3	0				SAME AS SS-1					-	A-6b (VISUAL)
EASTING= 1518594	5.6 - 7.1	SS-4	93	2	6	12	39	41	36	18	18	21	A-6b (11)

DRAWN MJ | CHECKED RJK

SOIL PROFILE

SUMMARY OF SOIL TEST DATA

ALL-75-0.21

10/90

10/97

V:\1755\active\175530002\geotechnical\drawing\ODOTSubmittal\projects\ALL\76691\roadway\sheets\76691IDC008.dgn

SUMMARY OF SOIL TEST DATA
BREESE ROAD RAMP C

EXPLORATION NO., STATION & OFFSET	FROM TO	SAMPLE ID	% REC	% AGG	% CS	% FS	% SILT	% CLAY	LL	PL	PI	% WC	ODOT CLASS
B-014-0-08	1.1 - 2.6	SS-1	67	4	5	11	31	49	36	17	19	17	A-6b (12)*
STA. 112+09, 271' LT.	2.6 - 4.1	SS-2	73				SAME AS SS-1					19	A-6b (VISUAL)*
NORTHING= 376023	4.1 - 5.6	SS-3	73				SAME AS SS-1					24	A-6b (VISUAL)
EASTING= 1518262	5.6 - 7.1	SS-4	63	2	4	9	36	49	44	18	26	26	A-7-6 (15)
B-016-0-08	1.1 - 2.6	SS-1	93	4	4	11	35	46	38	18	20	16	A-6b (12)*
STA. 115+74, 109' LT.	2.6 - 4.1	SS-2	100	3	7	10	40	40	31	17	14	17	A-6a (10)
NORTHING= 376194	4.1 - 5.6	SS-3	100				SAME AS SS-2					22	A-6a (VISUAL)
EASTING= 1518624	5.6 - 7.1	SS-4	73				SAME AS SS-2					16	A-6a (VISUAL)

SUMMARY OF SOIL TEST DATA
BREESE ROAD RAMP D

EXPLORATION NO., STATION & OFFSET	FROM TO	SAMPLE ID	% REC	% AGG	% CS	% FS	% SILT	% CLAY	LL	PL	PI	% WC	ODOT CLASS
B-015-0-08	1.1 - 2.6	SS-1	100	3	4	13	37	43	37	17	20	17	A-6b (12)*
STA. 115+41, 177' RT.	2.6 - 4.1	SS-2	93	3	5	14	37	41	38	18	20	21	A-6b (12)
NORTHING= 375981	4.1 - 5.6	SS-3	27				SAME AS SS-2					15	A-6b (VISUAL)
EASTING= 1518819	5.6 - 7.1	SS-4	53				SAME AS SS-2					18	A-6b (VISUAL)
B-017-0-08	1.1 - 2.6	SS-1	100	5	5	11	38	41	31	18	13	16	A-6a (9)*
STA. 118+39, 95' RT.	2.6 - 4.1	SS-2	100	5	6	11	39	39	30	18	12	15	A-6a (9)
NORTHING= 376260	4.1 - 5.6	SS-3	87				SAME AS SS-2					16	A-6a (VISUAL)
EASTING= 1518952	5.6 - 7.1	SS-4	87				SAME AS SS-2					16	A-6a (VISUAL)

SUMMARY OF SOIL TEST DATA
McCLAIN ROAD

EXPLORATION NO., STATION & OFFSET	FROM TO	SAMPLE ID	% REC	% AGG	% CS	% FS	% SILT	% CLAY	LL	PL	PI	% WC	ODOT CLASS
B-019-1-08	1.0 - 2.5	SS-1	67	1	2	9	54	34	31	18	13	19	A-6a (9)*
STA. 89+47, 3' RT.	2.5 - 4.0	SS-2	87	4	5	11	37	43	33	18	15	17	A-6a (10)
NORTHING= 378723	4.0 - 5.5	SS-3	80				SAME AS SS-2					16	A-6a (VISUAL)
EASTING= 1522709	5.5 - 7.0	SS-4	100				SAME AS SS-2					15	A-6a (VISUAL)
							SAME AS SS-2					18	A-7-6 (VISUAL)
B-019-2-08	0.6 - 2.1	SS-1	80				42	47	44	20	24	25	A-7-6 (14)
STA. 93+65, 10' LT.	2.1 - 3.6	SS-2	60	1	3	7	SAME AS SS-2					15	A-7-6 (VISUAL)
NORTHING= 379141	3.6 - 5.1	SS-3	7				33	51	44	19	25	25	A-7-6 (15)
EASTING= 1522702	5.1 - 6.6	SS-4	67	3	4	9	SAME AS SS-4					17	A-7-6 (VISUAL)
	6.6 - 8.1	SS-5	100										
B-019-3-08	1.0 - 2.5	SS-1	53	3	3	8	39	47	39	17	22	22	A-6b (13)
STA. 97+64, 5' RT.	2.5 - 4.0	SS-2	73	6	5	9	34	46	39	17	22	22	A-6b (13)
NORTHING= 379540	4.0 - 5.5	SS-3	80				SAME AS SS-2					15	A-6b (VISUAL)
EASTING= 1522723	5.5 - 7.0	SS-4	100				SAME AS SS-2					16	A-6b (VISUAL)
B-020-0-08	2.5 - 4.0	SS-1	80	3	5	11	40	41	32	18	14	17	A-6a (10)
STA. 102+30, 7' RT.	5.0 - 6.5	SS-2	100				SAME AS SS-1					17	A-6a (VISUAL)
NORTHING= 380006	7.5 - 9.0	SS-3	87	0	2	10	50	38	43	16	27	27	A-7-6 (15)
EASTING= 1522733	10.0 - 11.5	SS-4	80	4	2	10	41	43	35	16	19	19	A-6b (12)
STRUCTURAL BORING - GREATER DEPTHS NOT SHOWN													
B-024-0-08	2.5 - 4.0	SS-1	0				SAME AS SS-2					-	A-6a (VISUAL)
STA. 105+38, 9' LT.	5.0 - 6.5	SS-2	80	4	4	12	39	41	31	16	15	18	A-6a (10)
NORTHING= 380314	7.5 - 9.0	SS-3	67				SAME AS SS-2					20	A-6a (VISUAL)
EASTING= 1522721	10.0 - 11.5	SS-4	93	3	5	11	39	42	41	18	23	23	A-7-6 (13)
STRUCTURAL BORING - GREATER DEPTHS NOT SHOWN													
B-024-1-08	1.0 - 2.5	SS-1	53	5	4	10	36	45	39	17	22	16	A-6b (13)*
STA. 108+44, 10' RT.	2.5 - 4.0	SS-2	67	3	5	11	38	43	33	17	16	18	A-6b (10)*
NORTHING= 380620	4.0 - 5.5	SS-3	67				SAME AS SS-2					19	A-6b (VISUAL)
EASTING= 1522745	5.5 - 7.0	SS-4	67				SAME AS SS-2					20	A-6b (VISUAL)

SUMMARY OF SOIL TEST DATA
STATE ROUTE 65

EXPLORATION NO., STATION & OFFSET	FROM TO	SAMPLE ID	% REC	% AGG	% CS	% FS	% SILT	% CLAY	LL	PL	PI	% WC	ODOT CLASS
B-040-0-08	1.5 - 3.0	SS-1	73	1	3	20	41	35	33	18	15	20	A-6a (10)*
STA. 93+02, 10' RT.	3.0 - 4.5	SS-2	53	9	7	21	24	39	42	16	26	23	A-7-6 (12)
NORTHING= 379040	4.5 - 6.0	SS-3	27				SAME AS SS-2					17	A-7-6 (VISUAL)
EASTING= 1527811	6.0 - 7.5	SS-4	53	8	5	12	35	40	38	18	20	18	A-6b (12)
B-039-0-08	1.5 - 3.0	SS-1	0				SAME AS SS-2					-	A-6a (VISUAL)*
STA. 97+10, 11' RT.	3.0 - 4.5	SS-2	67	16	6	11	31	36	33	18	15	15	A-6a (9)
NORTHING= 379449	4.5 - 6.0	SS-3	100	15	5	10	36	34	32	18	14	16	A-6a (9)
EASTING= 1527818	6.0 - 7.5	SS-4	80				SAME AS SS-3					15	A-6a (VISUAL)
B-038-0-08	0.9 - 2.4	SS-1	53	8	6	14	34	39	35	18	17	20	A-6b (11)*
STA. 101+27, 41' LT.	2.4 - 3.9	SS-2	33				COMBINED WITH SS-1					17	A-6b (11)
NORTHING= 379866	3.9 - 5.4	SS-3	80	28	4	9	26	33	34	17	17	18	A-6b (8)
EASTING= 1527772	5.4 - 6.9	SS-4	80				SAME AS SS-3					17	A-6b (VISUAL)
B-044-0-08 (RAMP D BORING)	1.5 - 3.0	SS-1	60	9	6	11	36	38	31	17	14	16	A-6a (10)
STA. 224+77, 168' RT.	3.0 - 4.5	SS-2	60				SAME AS SS-1					17	A-6a (VISUAL)
NORTHING= 379970	4.5 - 6.0	SS-3	100	13	6	11	34	36	30	17	13	16	A-6a (8)
EASTING= 1527890	6.0 - 7.5	SS-4	100				SAME AS SS-3					16	A-6a (VISUAL)
B-045-0-08 (RAMP C BORING)	1.5 - 3.0	SS-1	60	3	7	11	30	49	49	19	30	24	A-7-6 (18)
STA. 224+88, 203' LT.	3.0 - 4.5	SS-2	80	3	2	9	38	48	47	19	28	22	A-7-6 (17)
NORTHING= 380340	4.5 - 6.0	SS-3	0				SAME AS SS-2					-	A-7-6 (VISUAL)
EASTING= 1527904	6.0 - 7.5	SS-4	1				SAME AS SS-2					23	A-7-6 (VISUAL)
B-031-0-08	0.9 - 2.4	SS-1	27	16	5	19	26	34	40	17	23	22	A-6b (10)*
STA. 106+70, 43' LT.	2.4 - 3.9	SS-2	27				COMBINED WITH SS-1					20	A-6b (10)*
NORTHING= 380409	3.9 - 5.4	SS-3	20				SAME AS SS-1					18	A-6b (VISUAL)
EASTING= 1527778	5.4 - 6.9	SS-4	80	4	6	12	37	41	31	17	14	17	A-6a (10)
B-030-0-08	1.5 - 3.0	SS-1	60	4	6	29	34	27	30	16	14	15	A-6a (7)*
STA. 110+21, 8' LT.	3.0 - 4.5	SS-2	67				COMBINED WITH SS-1					30	A-6a (7)
NORTHING= 380759	4.5 - 6.0	SS-3	2				SAME AS SS-4					4	A-7-6 (VISUAL)
EASTING= 1527819	6.0 - 7.5	SS-4	53	3	6	14	29	48	50	18	32	23	A-7-6 (18)

SUMMARY OF SOIL TEST DATA
STATE ROUTE 65 RAMP A

EXPLORATION NO., STATION & OFFSET	FROM TO	SAMPLE ID	% REC	% AGG	% CS	% FS	% SILT	% CLAY	LL	PL	PI	% WC	ODOT CLASS
B-055-0-07 (I-75 MAINLINE)	0.0 - 1.5	SS-1	80				SAME AS SS-2					12	A-6a (VISUAL)
STA. 215+52, 62' RT.	1.5 - 3.0	SS-2	80	12	11	16	31	32	33	19	14	12	A-6a (7)
NORTHING= 380075	3.0 - 4.5	SS-3	100				SAME AS SS-4					28	A-6b (VISUAL)
EASTING= 1526967	4.5 - 6.0	SS-4	80	2	4	10	26	58	38	19	19	20	A-6b (12)
	6.0 - 7.5	SS-5	100				SAME AS SS-4					15	A-6b (VISUAL)
	7.5 - 9.0	SS-6	100				SAME AS SS-4					16	A-6b (VISUAL)
B-026-0-08	1.5 - 3.0	SS-1	40				SAME AS SS-2					22	A-6b (VISUAL)
STA. 218+77, 88' RT.	3.0 - 4.5	SS-2	67	4	5	17	38	36	34	15	19	19	A-6b (11)
NORTHING= 380055	4.5 - 6.0	SS-3	73	3	6	21	40	30	31	17	14	21	A-6a (8)
EASTING= 1527291	6.0 - 7.5	SS-4	73				SAME AS SS-3					25	A-6a (VISUAL)
B-028-0-08	1.5 - 3.0	SS-1	73	4	7	12	40	37	31	17	14	16	A-6a (10)
STA. 222+67, 177' RT.	3.0 - 4.5	SS-2	100	8	7	13	39	34	30	20	10	16	A-4a (7)
NORTHING= 379963	4.5 - 6.0	SS-3	100				SAME AS SS-2					17	A-4a (VISUAL)
EASTING= 1527681	6.0 - 7.5	SS-4	100				SAME AS SS-2					19	A-4a (VISUAL)

DRAWN MJ
DESIGNED RJK

SOIL PROFILE
SUMMARY OF SOIL TEST DATA

ALL-75-0.21

11/90

11/97

V:\1755\active\175530002\geotechnical\drawing\ODOTSubmittal\projects\ALL\76691\roadway\sheets\76691D0009.dgn

SUMMARY OF SOIL TEST DATA
STATE ROUTE 65 RAMP B

EXPLORATION NO., STATION & OFFSET	FROM TO	SAMPLE ID	% REC	% AGG	% CS	% FS	% SILT	% CLAY	LL	PL	PI	% WC	ODOT CLASS
B-027-0-08	1.5 - 3.0	SS-1	40				SAME AS SS-2					17	A-6b (VISUAL)*
STA. 218+73, 91' LT.	3.0 - 4.5	SS-2	67	15	10	13	31	31	32	16	16	17	A-6b (8)
NORTHING= 380233	4.5 - 6.0	SS-3	80	16	9	12	34	29	30	16	14	16	A-6a (7)
EASTING= 1527288	6.0 - 7.5	SS-4	80				SAME AS SS-3					18	A-6a (VISUAL)
B-029-0-08	1.5 - 3.0	SS-1	100	23	5	14	29	29	30	16	14	15	A-6a (6)*
STA. 222+60, 175' LT.	3.0 - 4.5	SS-2	100	9	6	11	44	30	30	17	13	17	A-6a (9)
NORTHING= 380315	4.5 - 6.0	SS-3	100				SAME AS SS-2					17	A-6a (VISUAL)
EASTING= 1527676	6.0 - 7.5	SS-4	100				SAME AS SS-2					16	A-6a (VISUAL)

SUMMARY OF SOIL TEST DATA
STATE ROUTE 65 RAMP C

EXPLORATION NO., STATION & OFFSET	FROM TO	SAMPLE ID	% REC	% AGG	% CS	% FS	% SILT	% CLAY	LL	PL	PI	% WC	ODOT CLASS
B-045-0-08	1.5 - 3.0	SS-1	60	3	7	11	30	49	49	19	30	24	A-7-6 (18)*
STA. 224+88, 203' LT.	3.0 - 4.5	SS-2	80	3	2	9	38	48	47	19	28	22	A-7-6 (17)*
NORTHING= 380340	4.5 - 6.0	SS-3	0				SAME AS SS-2					-	A-7-6 (VISUAL)
EASTING= 1527904	6.0 - 7.5	SS-4	1				SAME AS SS-2					23	A-7-6 (VISUAL)
B-047-0-08	1.1 - 2.6	SS-1	0				SAME AS SS-2					-	A-6a (VISUAL)
STA. 228+73, 115' LT.	2.6 - 4.1	SS-2	53	5	7	11	41	36	28	15	13	12	A-6a (9)
NORTHING= 380250	4.1 - 5.6	SS-3	33				SAME AS SS-2					13	A-6a (VISUAL)
EASTING= 1528288	5.6 - 7.1	SS-4	100	6	9	13	38	34	28	14	14	12	A-6a (9)
B-059-0-07 (I-75 MAINLINE)	1.4 - 2.9	SS-1	100				SAME AS SS-2					16	A-6a (VISUAL)
STA. 231+78, 30' LT.	2.9 - 4.4	SS-2	93	5	6	11	33	45	29	15	14	13	A-6a (10)
NORTHING= 380163	4.4 - 5.9	SS-3	47				SAME AS SS-2					11	A-6a (VISUAL)
EASTING= 1528593	5.9 - 7.4	SS-4	93				SAME AS SS-5					14	A-6a (VISUAL)
	7.4 - 8.9	SS-5	100	8	8	11	33	40	29	16	13	14	A-6a (9)
	8.9 - 10.4	SS-6	93				SAME AS SS-5					15	A-6a (VISUAL)

SUMMARY OF SOIL TEST DATA
STATE ROUTE 65 RAMP D

EXPLORATION NO., STATION & OFFSET	FROM TO	SAMPLE ID	% REC	% AGG	% CS	% FS	% SILT	% CLAY	LL	PL	PI	% WC	ODOT CLASS
B-044-0-08	1.5 - 3.0	SS-1	60	9	6	11	36	38	31	17	14	16	A-6a (10)*
STA. 224+77, 168' RT.	3.0 - 4.5	SS-2	60				SAME AS SS-1					17	A-6a (VISUAL)
NORTHING= 379970	4.5 - 6.0	SS-3	100	13	6	11	34	36	30	17	13	16	A-6a (8)
EASTING= 1527890	6.0 - 7.5	SS-4	100				SAME AS SS-3					16	A-6a (VISUAL)
B-046-0-08	1.5 - 3.0	SS-1	100	10	7	13	32	38	31	16	15	15	A-6a (9)*
STA. 228+76, 94' RT.	3.0 - 4.5	SS-2	100				SAME AS SS-1					19	A-6a (VISUAL)
NORTHING= 380041	4.5 - 6.0	SS-3	47				SAME AS SS-1					14	A-6a (VISUAL)
EASTING= 1528290	6.0 - 7.5	SS-4	67	9	7	11	38	35	29	16	13	14	A-6a (9)
B-060-0-07 (I-75 MAINLINE)	0.6 - 2.2	SS-1	87	81	10	2	4	3	NP	NP	NP	11	A-1-a (0)
STA. 235+78, 30' RT.	2.2 - 3.7	SS-2	73	5	9	11	30	45	27	16	11	13	A-6a (8)
NORTHING= 380100	3.7 - 5.2	SS-3	87				SAME AS SS-2					13	A-6a (VISUAL)
EASTING= 1528993	5.2 - 6.7	SS-4	100	10	10	11	25	45	29	16	13	12	A-6a (8)
	6.7 - 8.2	SS-5	67				SAME AS SS-4					14	A-6a (VISUAL)
	8.2 - 9.7	SS-6	80				SAME AS SS-4					15	A-6a (VISUAL)

SUMMARY OF SOIL TEST DATA
YODER ROAD RELOCATION AT SR 65

EXPLORATION NO., STATION & OFFSET	FROM TO	SAMPLE ID	% REC	% AGG	% CS	% FS	% SILT	% CLAY	LL	PL	PI	% WC	ODOT CLASS
B-039-0-08 (SR 65 BORING)	1.5 - 3.0	SS-1	0				SAME AS SS-2					-	A-6a (VISUAL)
STA. 97+10, 11' RT.	3.0 - 4.5	SS-2	67	16	6	11	31	36	33	18	15	15	A-6a (9)
NORTHING= 379449	4.5 - 6.0	SS-3	100	15	5	10	36	34	32	18	14	16	A-6a (9)
EASTING= 1527818	6.0 - 7.5	SS-4	80				SAME AS SS-3					15	A-6a (VISUAL)
B-041-0-08	2.5 - 4.0	SS-1	80	11	5	14	35	35	36	17	19	20	A-6b (11)*
STA. 2+80, 5' RT.	5.0 - 6.5	SS-2	0				SAME AS SS-1					-	A-6b (VISUAL)
NORTHING= 379564	7.5 - 9.0	SS-3	40	21	6	11	31	31				13	A-4a (VISUAL)
EASTING= 1528086	10.0 - 11.5	SS-4	100	3	5	11	49	32	27	17	10	15	A-4a (8)
	12.5 - 14.0	SS-5	100	4	6	12	43	35	25	15	10	14	A-4a (8)
B-042-0-08	2.5 - 4.0	SS-1	67	13	4	11	31	41	39	18	21	26	A-6b (12)*
STA. 4+11, 14' RT.	5.0 - 6.5	SS-2	80	9	5	11	36	39	30	17	13	17	A-6a (9)
NORTHING= 379669	7.5 - 9.0	SS-3	87				SAME AS SS-2					15	A-6a (VISUAL)
EASTING= 1528170	10.0 - 11.5	SS-4	100	15	5	10	36	34	26	15	11	14	A-6a (8)
B-043-0-08	2.5 - 4.0	SS-1	100	2	6	13	37	42	33	17	16	23	A-6b (10)*
STA. 7+61, 14' LT.	5.0 - 6.5	SS-2	100				SAME AS SS-4					16	A-4b (VISUAL)
NORTHING= 379946	7.5 - 9.0	SS-3	100				SAME AS SS-4					19	A-4b (VISUAL)
EASTING= 1528344	10.0 - 11.5	SS-4	100	1	5	9	51	34	28	18	10	21	A-4b (8)

SUMMARY OF SOIL TEST DATA
HANTHORN ROAD

EXPLORATION NO., STATION & OFFSET	FROM TO	SAMPLE ID	% REC	% AGG	% CS	% FS	% SILT	% CLAY	LL	PL	PI	% WC	ODOT CLASS
B-057-1-08	1.0 - 2.5	SS-1	67				SAME AS SS-2					14	A-6a (VISUAL)
STA. 97+31, 10' LT.	2.5 - 4.0	SS-2	80	25	9	16	27	23	30	18	12	16	A-6a (4)
NORTHING= 381281	4.0 - 5.5	SS-3	73	12	8	25	31	24	25	14	11	16	A-6a (4)
EASTING= 1531087	5.5 - 7.0	SS-4	100				SAME AS SS-3					22	A-6a (VISUAL)
B-057-0-08	2.5 - 4.0	SS-1	20				SAME AS SS-2					24	A-6b (VISUAL)
STA. 101+02, 14' LT.	5.0 - 6.5	SS-2	80	5	4	13	38	40	38	17	21	21	A-6b (13)
NORTHING= 381281	7.5 - 9.0	SS-3	67	2	2	15	35	46	42	17	25	23	A-7-6 (14)
EASTING= 1531459	10.0 - 11.5	SS-4	100				SAME AS SS-3					20	A-7-6 (VISUAL)
STRUCTURAL BORING - GREATER DEPTHS NOT SHOWN													
B-058-0-08	2.5 - 4.0	SS-1	100	2	3	13	38	44	40	17	23	23	A-6b (13)
STA. 101+82, 10' RT.	5.0 - 6.5	SS-2	100				SAME AS SS-1					20	A-6b (VISUAL)
NORTHING= 381257	7.5 - 9.0	SS-3	87				SAME AS SS-1					24	A-6b (VISUAL)
EASTING= 1531538	10.0 - 11.5	SS-4	100				SAME AS SS-1					22	A-6b (VISUAL)
STRUCTURAL BORING - GREATER DEPTHS NOT SHOWN													
B-059-0-08	2.5 - 4.0	SS-1	60				SAME AS SS-2					20	A-7-6 (VISUAL)
STA. 102+72, 11' LT.	5.0 - 6.5	SS-2	87	3	3	14	35	45	44	17	27	22	A-7-6 (16)
NORTHING= 381277	7.5 - 9.0	SS-3	93				SAME AS SS-2					20	A-7-6 (VISUAL)
EASTING= 1531629	10.0 - 11.5	SS-4	100				SAME AS SS-2					23	A-7-6 (VISUAL)
STRUCTURAL BORING - GREATER DEPTHS NOT SHOWN													
B-061-1-08	1.0 - 2.5	SS-1	67	4	4	12	34	46	42	17	25	19	A-7-6 (14)
STA. 106+26, 6' RT.	2.5 - 4.0	SS-2	67	3	6	13	33	45	38	16	22	19	A-6b (13)
NORTHING= 381255	4.0 - 5.5	SS-3	73				SAME AS SS-4					22	A-7-6 (VISUAL)
EASTING= 1531983	5.5 - 7.0	SS-4	80	4	4	11	33	48	42	17	25	23	A-7-6 (14)
B-061-2-08	1.0 - 2.5	SS-1	67	6	4	12	35	43	40	17	23	20	A-6b (13)
STA. 110+33, 11' LT.	2.5 - 4.0	SS-2	80	1	2	16	38	43	38	17	21	23	A-6b (12)
NORTHING= 381268	4.0 - 5.5	SS-3	80				SAME AS SS-2					19	A-6b (VISUAL)
EASTING= 1532390	5.5 - 7.0	SS-4	100				SAME AS SS-2					17	A-6a (VISUAL)
	7.0 - 8.5	SS-5	100	9	16	28	23	24	29	15	14	21	A-6a (4)
	8.5 - 10.0	SS-6	87	2	3	7	40	48	30	18	12	20	A-6a (9)

DRAWN MJ
CHECKED RJK

SOIL PROFILE
SUMMARY OF SOIL TEST DATA

ALL-75-0.21

12 / 90

(12 / 97)

V:\1755\active\755300002\geotechnical\drawing\ODOTSubmittal\projects\ALL\76691\roadway\sheets\76691ID010.dgn

SUMMARY OF SOIL TEST DATA
FOURTH STREET

EXPLORATION NO., STATION & OFFSET	FROM TO	SAMPLE ID	% REC	% AGG	% CS	% FS	% SILT	% CLAY	LL	PL	PI	% WC	ODOT CLASS
B-076-1-08	1.0 - 2.5	SS-1	60	7	4	14	38	37	33	16	17	22	A-6b (11)*
STA. 97+26, 8' LT.	2.5 - 4.0	SS-2	47				SAME AS SS-1					23	A-6a (VISUAL)*
NORTHING= 386608	4.0 - 5.5	SS-3	40				SAME AS SS-1					19	A-6a (VISUAL)
EASTING= 1530380	5.5 - 7.0	SS-4	93	3	6	11	37	43	30	17	13	15	A-6a (9)
B-076-0-08	1.5 - 3.0	SS-1	67	4	8	12	38	38	26	14	12	12	A-6a (9)*
STA. 101+90, 9' LT.	3.0 - 4.5	SS-2	87	12	7	10	37	34	28	14	14	13	A-6a (9)
NORTHING= 386611	4.5 - 6.0	SS-3	80				SAME AS SS-2					12	A-6a (VISUAL)
EASTING= 1531143	6.0 - 7.5	SS-4	93				SAME AS SS-2					16	A-6a (VISUAL)
B-075-0-08	1.1 - 2.6	SS-1	67	11	68	15	5	1	29	14	15	13	A-2-6 (0)
STA. 106+12, 17' RT.	2.6 - 4.1	SS-2	87	4	7	12	40	37	30	16	14	14	A-6a (10)
NORTHING= 386634	4.1 - 5.6	SS-3	53				SAME AS SS-2					13	A-6a (VISUAL)
EASTING= 1531564	5.6 - 7.1	SS-4	67				SAME AS SS-2					14	A-6a (VISUAL)
B-074-0-08	2.5 - 4.0	SS-1	100	5	6	11	40	38	30	16	14	15	A-6a (10)
STA. 109+26, 8' LT.	5.0 - 6.5	SS-2	80				SAME AS SS-1					18	A-6a (VISUAL)
NORTHING= 386669	7.5 - 9.0	SS-3	93				SAME AS SS-1					16	A-6a (VISUAL)
EASTING= 1531876	10.0 - 11.5	SS-4	100				SAME AS SS-5					19	A-6b (VISUAL)
	12.5 - 14.0	SS-5	93	5	5	12	39	39	33	17	16	17	A-6b (11)
STRUCTURAL BORING - GREATER DEPTHS NOT SHOWN													
B-070-0-08	2.5 - 4.0	SS-1	93	3	6	11	41	39	30	16	14	14	A-6a (10)
STA. 111+78, 8' LT.	5.0 - 6.5	SS-2	87	5	6	11	39	39	31	17	14	16	A-6a (10)
NORTHING= 386665	7.5 - 9.0	SS-3	100				SAME AS SS-2					15	A-6a (VISUAL)
EASTING= 1532128	10.0 - 11.5	SS-4	100				SAME AS SS-2					16	A-6a (VISUAL)
STRUCTURAL BORING - GREATER DEPTHS NOT SHOWN													
B-069-0-08	1.1 - 2.6	SS-1	80	7	6	10	38	39	29	14	15	13	A-6a (10)*
STA. 114+89, 18' LT.	2.6 - 4.1	SS-2	1				SAME AS SS-1					20	A-6a (VISUAL)
NORTHING= 386655	4.1 - 5.6	SS-3	73	3	5	12	42	38	29	16	13	14	A-6a (9)
EASTING= 1532440	5.6 - 7.1	SS-4	100				SAME AS SS-3					15	A-6a (VISUAL)
B-068-0-08	1.1 - 2.6	SS-1	60	3	5	14	43	35	30	16	14	17	A-6a (10)*
STA. 118+26, 25' LT.	2.6 - 4.1	SS-2	80	3	5	9	39	44	34	17	17	17	A-6b (11)
NORTHING= 386612	4.1 - 5.6	SS-3	67				SAME AS SS-2					16	A-6b (VISUAL)
EASTING= 1532774	5.6 - 7.1	SS-4	80				SAME AS SS-2					15	A-6b (VISUAL)

SUMMARY OF SOIL TEST DATA
FOURTH STREET RAMP A

EXPLORATION NO., STATION & OFFSET	FROM TO	SAMPLE ID	% REC	% AGG	% CS	% FS	% SILT	% CLAY	LL	PL	PI	% WC	ODOT CLASS
B-063-0-08	1.1 - 2.6	SS-1	67	11	4	11	37	37	33	17	16	18	A-6b (10)*
STA. 311+82, 94' RT.	2.6 - 4.1	SS-2	53				SAME AS SS-1					15	A-6b (VISUAL)
NORTHING= 385784	4.1 - 5.6	SS-3	33				SAME AS SS-4					16	A-6a (VISUAL)
EASTING= 1532079	5.6 - 7.1	SS-4	87	4	5	10	10	41	31	17	14	16	A-6a (10)
B-064-0-08	1.1 - 2.6	SS-1	33				SAME AS SS-2					14	A-6a (VISUAL)*
STA. 315+45, 320' RT.	2.6 - 4.1	SS-2	80	8	5	10	40	37	29	16	13	16	A-6a (9)
NORTHING= 386143	4.1 - 5.6	SS-3	100	4	6	13	40	37	28	16	12	15	A-6a (9)
EASTING= 1532311	5.6 - 7.1	SS-4	100				SAME AS SS-3					15	A-6a (VISUAL)
B-066-0-08 (RAMP B BORING)	1.1 - 2.6	SS-1	93	0	6	17	41	36	33	16	17	18	A-6b (11)
STA. 316+72, 440' RT.	2.6 - 4.1	SS-2	100	4	6	12	40	38	30	17	13	15	A-6a (9)
NORTHING= 386268	4.1 - 5.6	SS-3	80				SAME AS SS-2					16	A-6a (VISUAL)
EASTING= 152434	5.6 - 7.1	SS-4	100	3	6	13	40	38	29	16	13	16	A-6a (9)
B-067-0-08	1.1 - 2.6	SS-1	67	2	6	10	41	41	31	15	16	13	A-6b (10)*
STA. 318+69, 556' RT.	2.6 - 4.1	SS-2	67				SAME AS SS-1					12	A-6b (VISUAL)*
NORTHING= 386463	4.1 - 5.6	SS-3	67	4	5	10	42	39	32	16	16	21	A-6b (10)
EASTING= 1532553	5.6 - 7.1	SS-4	87	0	3	13	44	40	36	18	18	20	A-6b (11)

SUMMARY OF SOIL TEST DATA
FOURTH STREET RAMP B

EXPLORATION NO., STATION & OFFSET	FROM TO	SAMPLE ID	% REC	% AGG	% CS	% FS	% SILT	% CLAY	LL	PL	PI	% WC	ODOT CLASS
B-064-0-08 (RAMP A BORING)	1.1 - 2.6	SS-1	33				SAME AS SS-2					14	A-6a (VISUAL)
STA. 315+45, 320' RT.	2.6 - 4.1	SS-2	80	8	5	10	40	37	29	16	13	16	A-6a (9)
NORTHING= 386143	4.1 - 5.6	SS-3	100	4	6	13	40	37	28	16	12	15	A-6a (9)
EASTING= 1532311	5.6 - 7.1	SS-4	100				SAME AS SS-3					15	A-6a (VISUAL)
B-066-0-08	1.1 - 2.6	SS-1	93	0	6	17	41	36	33	16	17	18	A-6b (11)
STA. 316+72, 440' RT.	2.6 - 4.1	SS-2	100	4	6	12	40	38	30	17	13	15	A-6a (9)
NORTHING= 386268	4.1 - 5.6	SS-3	80				SAME AS SS-2					16	A-6a (VISUAL)
EASTING= 152434	5.6 - 7.1	SS-4	100	3	6	13	40	38	29	16	13	16	A-6a (9)
B-065-0-08	1.1 - 2.6	SS-1	80	16	9	16	31	28	38	19	19	25	A-6b (8)*
STA. 317+28, 82' RT.	2.6 - 4.1	SS-2	20				SAME AS SS-1					19	A-6b (VISUAL)
NORTHING= 386330	4.1 - 5.6	SS-3	53				SAME AS SS-1					30	A-6b (VISUAL)
EASTING= 1532077	5.6 - 7.1	SS-4	100	0	2	9	43	46	52	20	32	32	A-7-6 (18)
B-067-0-08 (RAMP A BORING)	1.1 - 2.6	SS-1	67	2	6	10	41	41	31	15	16	13	A-6b (10)
STA. 318+69, 556' RT.	2.6 - 4.1	SS-2	67				SAME AS SS-1					12	A-6b (VISUAL)
NORTHING= 386463	4.1 - 5.6	SS-3	67	4	5	10	42	39	32	16	16	21	A-6b (10)
EASTING= 1532553	5.6 - 7.1	SS-4	87	0	3	13	44	40	36	18	18	20	A-6b (11)

SUMMARY OF SOIL TEST DATA
FOURTH STREET RAMP C

EXPLORATION NO., STATION & OFFSET	FROM TO	SAMPLE ID	% REC	% AGG	% CS	% FS	% SILT	% CLAY	LL	PL	PI	% WC	ODOT CLASS
B-077-0-08	1.1 - 2.6	SS-1	100	4	6	13	40	37	30	15	15	15	A-6a (10)*
STA. 322+66, 500' LT.	2.6 - 4.1	SS-2	87				SAME AS SS-1					12	A-6a (VISUAL)*
NORTHING= 386878	4.1 - 5.6	SS-3	80	2	7	11	43	37	27	14	13	12	A-6a (9)
EASTING= 1531504	5.6 - 7.1	SS-4	80	2	6	11	41	40	27	14	13	14	A-6a (9)
B-078-0-08	1.1 - 2.6	SS-1	73				SAME AS SS-2					19	A-6b (VISUAL)*
STA. 323+21, 61' LT.	2.6 - 4.1	SS-2	100	2	6	13	38	41	34	17	17	25	A-6b (11)
NORTHING= 386926	4.1 - 5.6	SS-3	53				SAME AS SS-2					16	A-6b (VISUAL)
EASTING= 1531943	5.6 - 7.1	SS-4	100	4	8	14	39	35	33	16	17	17	A-6b (11)
B-079-0-08	1.1 - 2.6	SS-1	60	16	21	20	27	16	23	14	9	8	A-4a (2)*
STA. 324+87, 292' LT.	2.6 - 4.1	SS-2	0				SAME AS SS-3					5	A-6b (VISUAL)*
NORTHING= 387095	4.1 - 5.6	SS-3	100	10	13	11	38	28	35	15	20	17	A-6b (10)
EASTING= 1531715	5.6 - 7.1	SS-4	87				SAME AS SS-3					13	A-6b (VISUAL)

SUMMARY OF SOIL TEST DATA
FOURTH STREET RAMP D

EXPLORATION NO., STATION & OFFSET	FROM TO	SAMPLE ID	% REC	% AGG	% CS	% FS	% SILT	% CLAY	LL	PL	PI	% WC	ODOT CLASS
B-080-0-08	1.1 - 2.6	SS-1	47				SAME AS SS-2					20	A-6a (VISUAL)*
STA. 324+75, 408' LT.	2.6 - 4.1	SS-2	87	5	8	14	36	37	28	14	14	14	A-6a (9)*
NORTHING= 387086	4.1 - 5.6	SS-3	67				SAME AS SS-4					20	A-6b (VISUAL)
EASTING= 1531599	5.6 - 7.1	SS-4	93	0	3	16	48	33	38	16	22	15	A-6b (13)
B-081-0-08	1.1 - 2.6	SS-1	80									17	A-6b (VISUAL)*
STA. 327+54, 83' LT.	2.6 - 4.1	SS-2	100	2	6	10	44	38	32	16	16	15	A-6b (10)*
NORTHING= 387359	4.1 - 5.6	SS-3	100									15	A-6a (VISUAL)
EASTING= 1531928	5.6 - 7.1	SS-4	93	3	7	12	42	37	30	16	14	16	A-6a (10)

DRAWN MJ
CHECKED RJK

SOIL PROFILE

SUMMARY OF SOIL TEST DATA

ALL-75-0.21

13/90

13/97

V:\1755\active\175530002\geotechnical\drawing\ODOTSubmittal\projects\ALL\75691\roadway\sheets\75691D011.dgn

SUMMARY OF SOIL TEST DATA
PATROL DRIVE

EXPLORATION NO., STATION & OFFSET	FROM TO	SAMPLE ID	% REC	% AGG	% CS	% FS	% SILT	% CLAY	LL	PL	PI	% WC	ODOT CLASS
B-078-1-08	1.0 - 2.5	SS-1	60	1	3	13	42	41	42	20	22	25	A-7-6 (13)*
STA. 12+81, 1' RT.	2.5 - 4.0	SS-2	87	1	3	9	36	51	52	19	33	28	A-7-6 (18)*
NORTHING= 386901	4.0 - 5.5	SS-3	67				SAME AS SS-2					22	A-7-6 (VISUAL)
EASTING= 1532542	5.5 - 7.0	SS-4	100				SAME AS SS-2					26	A-7-6 (VISUAL)

SUMMARY OF SOIL TEST DATA
STATE ROUTE 309 / BELLEFONTAINE AVENUE

EXPLORATION NO., STATION & OFFSET	FROM TO	SAMPLE ID	% REC	% AGG	% CS	% FS	% SILT	% CLAY	LL	PL	PI	% WC	ODOT CLASS
B-106-5-08	1.5 - 3.0	SS-1	53	4	5	11	45	35	31	18	13	20	A-6a (9)
STA. 880+64, 312' LT.	3.0 - 4.5	SS-2	40				SAME AS SS-1					17	A-6a (VISUAL)
NORTHING= 391921	4.5 - 6.0	SS-3	87	6	7	11	40	36	29	16	13	19	A-6a (9)
EASTING= 1530481	6.0 - 7.5	SS-4	100				SAME AS SS-3					17	A-6a (VISUAL)
B-106-2-08	1.5 - 3.0	SS-1	67	3	10	31	33	23	24	13	11	17	A-6a (5)
STA. 882+77, 155' LT.	3.0 - 4.5	SS-2	47				SAME AS SS-3					20	A-6b (VISUAL)
NORTHING= 391763	4.5 - 6.0	SS-3	73	1	6	31	28	34	38	14	24	20	A-6b (11)
EASTING= 1530694	6.0 - 7.5	SS-4	80				SAME AS SS-3					22	A-6b (VISUAL)
B-106-1-08	0.0 - 1.5	SS-1	87	0	5	40	39	16	23	16	7	15	A-4a (4)
STA. 885+82, 70' LT.	2.5 - 4.0	SS-2	73				SAME AS SS-1					21	A-4a (VISUAL)
NORTHING= 391679	5.0 - 6.5	SS-3	93	26	22	12	15	25	40	20	20	27	A-6b (4)
EASTING= 1530997	7.5 - 9.0	SS-4	80				SAME AS SS-5					14	A-6a (VISUAL)
	10.0 - 11.5	SS-5	100	6	6	12	39	37	27	13	14	13	A-6a (10)
B-106-0-08	1.5 - 3.0	SS-1	67	9	3	15	66	7	NP	NP	NP	21	A-4b (8)*
STA. 889+87, 36' RT.	3.0 - 4.5	SS-2	87				COMBINED WITH SS-1					15	A-4b (8)
NORTHING= 391573	4.5 - 6.0	SS-3	53	33	17	16	28	6	NP	NP	NP	17	A-2-4 (0)
EASTING= 1531340	6.0 - 7.5	SS-4	47				COMBINED WITH SS-3					10	A-2-4 (0)
B-089-0-08	1.5 - 3.0	SS-1	87	30	20	23	16	11	26	15	11	13	A-2-6 (0)*
STA. 901+43, 17' LT.	3.0 - 4.5	SS-2	67	27	3	16	24	30	25	15	10	13	A-4a (4)
NORTHING= 391626	4.5 - 6.0	SS-3	53				COMBINED WITH SS-2					15	A-4a (4)
EASTING= 1532556	6.0 - 7.5	SS-4	87				SAME AS SS-2					11	A-4a (VISUAL)
B-091-0-08	1.5 - 3.0	SS-1	33	5	8	41	25	21	NP	NP	NP	15	A-4a (2)*
STA. 902+06, 104' LT.	3.0 - 4.5	SS-2	67				COMBINED WITH SS-1					18	A-4a (2)
NORTHING= 391714	4.5 - 6.0	SS-3	100	4	27	21	22	26	41	18	23	24	A-7-6 (7)
EASTING= 1532618	6.0 - 7.5	SS-4	100				SAME AS SS-3					28	A-7-6 (VISUAL)
B-088-0-08	1.5 - 3.0	SS-1	2				SAME AS SS-2					18	A-6a (VISUAL)
STA. 905+57, 11' LT.	3.0 - 4.5	SS-2	67	22	10	14	30	24	31	16	15	20	A-6a (6)
NORTHING= 391621	4.5 - 6.0	SS-3	0				SAME AS SS-2					-	A-6a (VISUAL)
EASTING= 1532971	6.0 - 7.5	SS-4	53	4	6	14	36	40	42	16	26	23	A-7-6 (15)
B-087-0-08	1.5 - 3.0	SS-1	67				SAME AS SS-2					24	A-6a (VISUAL)
STA. 908+05, 8' LT.	3.0 - 4.5	SS-2	87	4	7	12	39	38	29	17	12	16	A-6a (9)
NORTHING= 391619	4.5 - 6.0	SS-3	100	66	17	8	8	1	NP	NP	NP	15	A-1-a (0)
EASTING= 1533218	6.0 - 7.5	SS-4	100	2	15	18	39	26	26	17	9	17	A-4a (6)

SUMMARY OF SOIL TEST DATA
LENORE AVENUE

EXPLORATION NO., STATION & OFFSET	FROM TO	SAMPLE ID	% REC	% AGG	% CS	% FS	% SILT	% CLAY	LL	PL	PI	% WC	ODOT CLASS
B-104-1-08	1.0 - 2.5	SS-1	53	9	7	29	26	29	36	17	19	26	A-6b (8)
STA. 885+92, 391' LT.	2.5 - 4.0	SS-2	67	2	4	26	29	39	41	17	24	22	A-7-6 (12)
NORTHING= 392000	4.0 - 5.5	SS-3	73				SAME AS SS-4					24	A-6b (VISUAL)
EASTING= 1531008	5.5 - 7.0	SS-4	80	6	5	22	31	36	37	18	19	25	A-6b (10)
	7.0 - 8.5	SS-5	87	4	6	15	44	31	27	16	11	17	A-6a (8)

SUMMARY OF SOIL TEST DATA
INDUSTRY AVENUE COURT / LEONARD AVENUE EXTENSION

EXPLORATION NO., STATION & OFFSET	FROM TO	SAMPLE ID	% REC	% AGG	% CS	% FS	% SILT	% CLAY	LL	PL	PI	% WC	ODOT CLASS
B-081-1-08	0.0 - 1.5	SS-1	80	67	15	6	9	3	23	17	6	11	A-1-a (0)
STA. 880+93, 1280' RT.	2.5 - 4.0	SS-2	87				SAME AS SS-3					20	A-4a (VISUAL)
NORTHING= 390329	5.0 - 6.5	SS-3	80	17	17	21	33	12	20	16	4	17	A-4a (2)
EASTING= 1530504	7.5 - 9.0	SS-4	73				SAME AS SS-5					14	A-6a (VISUAL)
	10.0 - 11.5	SS-5	100	5	5	12	39	39	25	14	11	15	A-6a (8)
B-102-2-08	1.0 - 2.5	SS-1	67	14	21	16	20	29	45	20	25	21	A-7-6 (8)
STA. 885+30, 510' RT.	2.5 - 4.0	SS-2	67				SAME AS SS-1					24	A-7-6 (VISUAL)
NORTHING= 391098	4.0 - 5.5	SS-3	67	6	8	13	38	35	29	17	12	16	A-6a (8)
EASTING= 1530947	5.5 - 7.0	SS-4	93	7	6	13	39	35	25	14	11	14	A-6a (8)
B-081-2-08	0.0 - 1.5	SS-1	80	4	5	23	34	34	38	19	19	17	A-6b (10)
STA. 885+39, 1193' RT.	2.5 - 4.0	SS-2	73				SAME AS SS-1					18	A-6b (VISUAL)
NORTHING= 390415	5.0 - 6.5	SS-3	100	0	4	22	39	35	33	17	16	18	A-6b (10)
EASTING= 1530957	7.5 - 9.0	SS-4	67				SAME AS SS-3					22	A-6b (VISUAL)
	10.0 - 11.5	SS-5	67	41	29	15	10	5	NP	NP	NP	14	A-1-b (0)
B-102-1-08	0.0 - 1.5	SS-1	67	36	18	13	21	12	29	15	14	17	A-2-6 (1)
STA. 885+58, 807' RT.	2.5 - 4.0	SS-2	33				SAME AS SS-3					21	A-2-4 (VISUAL)
NORTHING= 390801	5.0 - 6.5	SS-3	80	34	18	16	22	10	25	16	9	9	A-2-4 (0)
EASTING= 1530975	7.5 - 9.0	SS-4	73				SAME AS SS-3					15	A-2-4 (VISUAL)
	10.0 - 11.5	SS-5	100	5	5	12	41	37	26	14	12	13	A-6a (9)
B-081-3-08	0.0 - 1.5	SS-1	87				SAME AS SS-2					21	A-6a (VISUAL)
STA. 889+39, 812' RT.	2.5 - 4.0	SS-2	100	0	7	33	35	25	30	18	12	20	A-6a (6)
NORTHING= 390796	5.0 - 6.5	SS-3	100				SAME AS SS-2					30	A-6a (VISUAL)
EASTING= 1531356	7.5 - 9.0	SS-4	87	9	22	37	18	14	24	17	7	24	A-2-4 (0)
	10.0 - 11.5	SS-5	80	6	5	11	38	40	27	15	12	14	A-6a (9)

SUMMARY OF SOIL TEST DATA
INDUSTRY AVENUE

EXPLORATION NO., STATION & OFFSET	FROM TO	SAMPLE ID	% REC	% AGG	% CS	% FS	% SILT	% CLAY	LL	PL	PI	% WC	ODOT CLASS
B-103-4-08	1.0 - 2.5	SS-1	67	70	16	5	7	2				3	A-1-a (VISUAL)
STA. 876+26, 107' RT.	2.5 - 4.0	SS-2	40				SAME AS SS-1					12	A-1-a (VISUAL)
NORTHING= 391504	4.0 - 5.5	SS-3	87	5	5	15	33	42	40	20	20	23	A-6b (12)
EASTING= 1530041	5.5 - 7.0	SS-4	87				SAME AS SS-3					26	A-6b (VISUAL)

SUMMARY OF SOIL TEST DATA
KIBBY STREET

EXPLORATION NO., STATION & OFFSET	FROM TO	SAMPLE ID	% REC	% AGG	% CS	% FS	% SILT	% CLAY	LL	PL	PI	% WC	ODOT CLASS
B-103-3-08	1.5 - 3.0	SS-1	0				SAME AS SS-3					-	A-6a (VISUAL)
STA. 880+93, 19' RT.	3.0 - 4.5	SS-2	7				SAME AS SS-3					4	A-6a (VISUAL)
NORTHING= 391590	4.5 - 6.0	SS-3	80	5	6	17	38	34	28	16	12	17	A-6a (8)
EASTING= 1530508	6.0 - 7.5	SS-4	100	6	7	12	43	32	27	16	11	18	A-6a (8)
B-103-2-08	1.0 - 2.5	SS-1	80	34	13	18	19	16	26	15	11	8	A-2-6 (0)
STA. 886+47, 74' RT.	2.5 - 4.0	SS-2	80	9	12	17	28	34	40	20	20	32	A-6b (9)
NORTHING= 391534	4.0 - 5.5	SS-3	73				SAME AS SS-2					25	A-6b (VISUAL)
EASTING= 1531063	5.5 - 7.0	SS-4	93	7	7	17	29	40	58	17	41	25	A-7-6 (18)
B-103-1-08	1.0 - 2.5	SS-1	100	1	6	49	29	15	20	15	5	19	A-4a (2)
STA. 887+12, 94' RT.	2.5 - 4.0	SS-2	87				SAME AS SS-1					17	A-4a (VISUAL)
NORTHING= 391514	5.0 - 6.5	SS-3	67	15	17	18	24	26	34	16	18	23	A-6b (6)
EASTING= 1531128	7.5 - 9.0	SS-4	80				SAME AS SS-5					14	A-6a (VISUAL)
	10.0 - 11.5	SS-5	100	5	6	12	38	39	27	15	12	16	A-6a (9)

DRAWN MJ
CHECKED RJK

SOIL PROFILE
SUMMARY OF SOIL TEST DATA

ALL-75-0.21

14/97

V:\1755\active\175530002\geotechnical\drawing\ODOTSubmittal\projects\ALL\76691\roadway\sheets\76691ID012.dgn

SUMMARY OF SOIL TEST DATA
COLLINS AVENUE

EXPLORATION NO., STATION & OFFSET	FROM TO	SAMPLE ID	% REC	% AGG	% CS	% FS	% SILT	% CLAY	LL	PL	PI	% WC	ODOT CLASS
B-106-4-08	1.0 - 2.5	SS-1	67	3	5	12	31	49	39	17	22	19	A-6b (13)
STA. 873+27, 175' LT.	2.5 - 4.0	SS-2	80				SAME AS SS-1					15	A-6b (VISUAL)
NORTHING= 391787	4.0 - 5.5	SS-3	100	6	5	12	36	41	31	17	14	14	A-6a (10)
EASTING= 1529744	5.5 - 7.0	SS-4	93				SAME AS SS-3					15	A-6a (VISUAL)
B-104-3-08	1.0 - 2.5	SS-1	67	1	3	19	39	38	36	16	20	18	A-6b (12)
STA. 875+75, 507' LT.	2.5 - 4.0	SS-2	60				SAME AS SS-1					20	A-6b (VISUAL)
NORTHING= 392117	4.0 - 5.5	SS-3	73	4	4	13	34	45	37	18	19	21	A-6b (12)
EASTING= 1529993	5.5 - 7.0	SS-4	93				SAME AS SS-3					16	A-6b (VISUAL)

SUMMARY OF SOIL TEST DATA
STATE ROUTE 309 RAMP A

EXPLORATION NO., STATION & OFFSET	FROM TO	SAMPLE ID	% REC	% AGG	% CS	% FS	% SILT	% CLAY	LL	PL	PI	% WC	ODOT CLASS
B-102-0-08	2.5 - 4.0	SS-1	53	2	6	26	39	27	26	16	10	16	A-4a (6)
STA. 362+96, 135' LT.	5.0 - 6.5	SS-2	53				COMBINED WITH SS-1					27	A-4a (6)
NORTHING= 390900	7.5 - 9.0	SS-3	67				SAME AS SS-1					14	A-4a (VISUAL)
EASTING= 1531872	10.0 - 11.5	SS-4	100	6	6	11	39	38	24	16	8	15	A-4a (8)
B-103-0-08	2.5 - 4.0	SS-1	80	19	17	47	12	5	23	14	9	12	A-2-4 (0)
STA. 366+89, 225' LT.	5.0 - 6.5	SS-2	67				SAME AS SS-1					20	A-2-4 (VISUAL)
NORTHING= 391295	7.5 - 9.0	SS-3	100	4	6	12	39	39	29	17	12	16	A-6a (9)
EASTING= 1531787	10.0 - 11.5	SS-4	100				SAME AS SS-3					15	A-6a (VISUAL)
B-105-0-08	1.5 - 3.0	SS-1	33	20	16	21	26	17	NP	NP	NP	21	A-4a (2)*
STA. 368+58, 302' LT.	3.0 - 4.5	SS-2	53				COMBINED WITH SS-1					11	A-4a (2)
NORTHING= 391565	4.5 - 6.0	SS-3	67	24	9	26	24	17	26	15	11	15	A-6a (1)
EASTING= 1531713	6.0 - 7.5	SS-4	1				COMBINED WITH SS-3					20	A-6a (1)

SUMMARY OF SOIL TEST DATA
STATE ROUTE 309 RAMP C

EXPLORATION NO., STATION & OFFSET	FROM TO	SAMPLE ID	% REC	% AGG	% CS	% FS	% SILT	% CLAY	LL	PL	PI	% WC	ODOT CLASS
B-104-0-08	1.5 - 3.0	SS-1	67	28	26	19	15	12	NP	NP	NP	16	A-2-4 (0)*
STA. 370+88, 267' LT.	3.0 - 4.5	SS-2	80	26	21	17	22	14	27	16	11	19	A-6a (0)
NORTHING= 391694	4.5 - 6.0	SS-3	53				SAME AS SS-2					15	A-6a (VISUAL)
EASTING= 1531749	6.0 - 7.5	SS-4	43				SAME AS SS-2					17	A-6a (VISUAL)
B-107-0-08	2.5 - 4.0	SS-1	60	6	7	11	38	38	30	14	16	15	A-6b (10)
STA. 373+82, 119' LT.	5.0 - 6.5	SS-2	73				COMBINED WITH SS-1					18	A-6b (10)
NORTHING= 391987	7.5 - 9.0	SS-3	100				SAME AS SS-1					21	A-6b (VISUAL)
EASTING= 1531901	10.0 - 11.5	SS-4	67				SAME AS SS-1					16	A-6b (VISUAL)
	12.5 - 14.0	SS-5	100	3	4	23	41	29	32	16	16	19	A-6b (9)
	14.0 - 26.5	SS-6	1				SAME AS SS-5					14	A-6b (VISUAL)
B-108-0-08	2.5 - 4.0	SS-1	40				SAME AS SS-2					14	A-6b (VISUAL)
STA. 377+24, 68' LT.	5.0 - 6.5	SS-2	73	5	7	11	38	39	31	15	16	17	A-6b (10)
NORTHING= 392328	7.5 - 9.0	SS-3	100				SAME AS SS-2					19	A-6b (VISUAL)
EASTING= 1531956	10.0 - 11.5	SS-4	100	12	9	15	34	30	36	16	20	15	A-6b (10)

SUMMARY OF SOIL TEST DATA
STATE ROUTE 309 RAMP E

EXPLORATION NO., STATION & OFFSET	FROM TO	SAMPLE ID	% REC	% AGG	% CS	% FS	% SILT	% CLAY	LL	PL	PI	% WC	ODOT CLASS
B-264-0-08	2.5 - 4.0	SS-1	53	30	34	17	16	3	NP	NP	NP	13	A-1-b (0)
STA. 373+72, 246' RT.	5.0 - 6.5	SS-2	60				COMBINED WITH SS-1					9	A-1-b (0)
NORTHING= 391972	7.5 - 9.0	SS-3	100	4	7	13	41	35	26	15	11	16	A-6a (8)
EASTING= 1532266	10.0 - 11.5	SS-4	100				SAME AS SS-3					16	A-6a (VISUAL)
B-265-0-08	2.5 - 4.0	SS-1	100	5	10	12	27	46	31	16	15	15	A-6b (10)
STA. 376+96, 146' RT.	5.0 - 6.5	SS-2	80				SAME AS SS-3					15	A-6a (VISUAL)
NORTHING= 392298	7.5 - 9.0	SS-3	87	3	6	20	42	29	32	17	15	15	A-6a (9)
EASTING= 1532170	10.0 - 11.5	SS-4	80	19	4	9	41	27	26	17	9	29	A-4a (7)

SUMMARY OF SOIL TEST DATA
STATE ROUTE 309 RAMP F

EXPLORATION NO., STATION & OFFSET	FROM TO	SAMPLE ID	% REC	% AGG	% CS	% FS	% SILT	% CLAY	LL	PL	PI	% WC	ODOT CLASS
B-082-0-08	2.5 - 4.0	SS-1	67	12	12	12	31	33	47	23	24	22	A-7-6 (12)
STA. 361+39, 157' RT.	5.0 - 6.5	SS-2	73				COMBINED WITH SS-1					23	A-7-6 (12)
NORTHING= 390740	7.5 - 9.0	SS-3	80				SAME AS SS-1					29	A-7-6 (VISUAL)
EASTING= 1532162	10.0 - 11.5	SS-4	100	41	37	11	8	3	NP	NP	NP	24	A-1-b (0)
B-084-0-08	2.5 - 4.0	SS-1	67	0	5	40	27	28	29	17	12	22	A-6a (5)
STA. 364+38, 217' RT.	5.0 - 6.5	SS-2	80				SAME AS SS-3					20	A-1-b (VISUAL)
NORTHING= 391039	7.5 - 9.0	SS-3	100	48	20	16	12	4	NP	NP	NP	16	A-1-b (0)
EASTING= 1532226	10.0 - 11.5	SS-4	100	7	6	12	41	34	26	15	11	17	A-6a (8)
B-083-0-08	2.5 - 4.0	SS-1	67	30	31	17	19	3	NP	NP	NP	13	A-1-b (0)*
STA. 367+59, 268' RT.	5.0 - 6.5	SS-2	73				COMBINED WITH SS-1					16	A-1-b (0)*
NORTHING= 391359	7.5 - 9.0	SS-3	100	3	17	40	21	19	24	14	10	17	A-4a (1)
EASTING= 1532280	10.0 - 11.5	SS-4	100				SAME AS SS-3					15	A-4a (VISUAL)
B-093-0-08	2.5 - 4.0	SS-1	67	37	14	12	23	14	26	15	11	18	A-6a (1)*
STA. 369+67, 253' RT.	5.0 - 6.5	SS-2	67				COMBINED WITH SS-1					16	A-6a (1)
NORTHING= 391560	7.5 - 9.0	SS-3	67				SAME AS SS-1					17	A-6a (VISUAL)
EASTING= 1532268	10.0 - 11.5	SS-4	100	10	5	11	40	34	26	15	11	17	A-6a (8)
	12.5 - 14.0	SS-5	100				SAME AS SS-4					16	A-6a (VISUAL)

SUMMARY OF SOIL TEST DATA
BRYN MAWR AVENUE

EXPLORATION NO., STATION & OFFSET	FROM TO	SAMPLE ID	% REC	% AGG	% CS	% FS	% SILT	% CLAY	LL	PL	PI	% WC	ODOT CLASS
B-111-4-08	1.0 - 2.5	SS-1	87	5	6	12	37	40	30	16	14	14	A-6a (10)*
STA. 410+70, 10' LT.	2.5 - 4.0	SS-2	93				SAME AS SS-1					17	A-6a (VISUAL)*
NORTHING= 395467	4.0 - 5.5	SS-3	67				SAME AS SS-1					18	A-6a (VISUAL)
EASTING= 1532212	5.5 - 7.0	SS-4	80				SAME AS SS-5					28	A-7-6 (VISUAL)
	7.0 - 8.5	SS-5	87	2	2	8	35	53	49	19	30	30	A-7-6 (18)
B-111-8-08	1.0 - 2.5	SS-1	67	9	6	12	35	38	30	16	14	10	A-6a (9)
STA. 413+75, 10' LT.	2.5 - 4.0	SS-2	67	4	6	12	39	39	31	16	15	15	A-6a (10)
NORTHING= 395772	4.0 - 5.5	SS-3	100				SAME AS SS-2					16	A-6a (VISUAL)
EASTING= 1532230	5.5 - 7.0	SS-4	87				SAME AS SS-2					14	A-6a (VISUAL)

DRAWN MJ
CHECKED RJK

SOIL PROFILE
SUMMARY OF SOIL TEST DATA

ALL-75-0.21

15/90

(15/97)

V:\1755\active\175530002\geotechnical\drawing\ODOTSubmittal\projects\ALL_75691\roadway\sheets\75691ID013.dgn

SUMMARY OF SOIL TEST DATA
RESERVOIR ROAD

EXPLORATION NO., STATION & OFFSET	FROM TO	SAMPLE ID	% REC	% AGG	% CS	% FS	% SILT	% CLAY	LL	PL	PI	% WC	ODOT CLASS
B-113-1-08	1.0 - 2.5	SS-1	67									6	A-1-a (VISUAL)
STA. 98+54, 7' LT.	2.5 - 4.0	SS-2	73	1	5	11	33	50	42	18	24	18	A-7-6 (14)
NORTHING= 395881	4.0 - 5.5	SS-3	87	5	5	12	36	42	32	16	16	14	A-6b (10)
EASTING= 1531530	5.5 - 7.0	SS-4	100				SAME AS SS-3					16	A-6b (VISUAL)
B-112-3-08	1.5 - 3.0	SS-1	73	5	6	13	36	40	29	16	13	17	A-6a (9)*
STA. 109+90, 8' LT.	3.0 - 4.5	SS-2	80	4	6	13	37	40	31	17	14	16	A-6a (10)
NORTHING= 395929	4.5 - 6.0	SS-3	100				SAME AS SS-2					16	A-6a (VISUAL)
EASTING= 1532664	6.0 - 7.5	SS-4	67				SAME AS SS-2					16	A-6a (VISUAL)

SUMMARY OF SOIL TEST DATA
STATE ROUTE 81

EXPLORATION NO., STATION & OFFSET	FROM TO	SAMPLE ID	% REC	% AGG	% CS	% FS	% SILT	% CLAY	LL	PL	PI	% WC	ODOT CLASS
B-135-0-08	1.5 - 3.0	SS-1	67	28	6	12	24	30	34	16	18	18	A-6b (7)*
STA. 433+36, 40' LT.	3.0 - 4.5	SS-2	20				COMBINED WITH SS-1					21	A-6b (7)
NORTHING= 400412	4.5 - 6.0	SS-3	0				SAME AS SS-1					-	A-6b (VISUAL)
EASTING= 1530482	6.0 - 7.5	SS-4	47						41	20	21	24	A-6b (VISUAL)
B-134-0-08	2.5 - 4.0	SS-1	40	29	7	11	24	29	36	17	19	13	A-6b (7)*
STA. 437+30, 44' LT.	5.0 - 6.5	SS-2	53	9	3	9	43	36	29	16	13	21	A-6a (9)
NORTHING= 400533	7.5 - 9.0	SS-3	67				COMBINED WITH SS-2					18	A-6a (9)
EASTING= 1530856	10.0 - 11.5	SS-4	67	13	5	10	37	35	28	16	12	17	A-6a (8)
B-133-0-08	2.5 - 4.0	SS-1	67	9	6	16	33	36	35	19	16	18	A-6b (9)*
STA. 441+36, 18' LT.	5.0 - 6.5	SS-2	67				COMBINED WITH SS-1					24	A-6b (9)
NORTHING= 400627	7.5 - 9.0	SS-3	67	10	4	21	27	38	38	17	21	18	A-6b (11)
EASTING= 1531252	10.0 - 11.5	SS-4	67				COMBINED WITH SS-3					21	A-6b (11)
B-132-0-08	2.5 - 4.0	SS-1	67	11	7	13	31	38	31	17	14	16	A-6a (9)*
STA. 445+36, 17' RT.	5.0 - 6.5	SS-2	67				COMBINED WITH SS-1					15	A-6a (9)
NORTHING= 400692	7.5 - 9.0	SS-3	80				SAME AS SS-1					14	A-6a (VISUAL)
EASTING= 1531648	10.0 - 11.5	SS-4	87	7	8	20	38	27	22	14	8	13	A-4a (7)
B-131-0-08	2.5 - 4.0	SS-1	100	3	6	10	32	49	34	19	15	15	A-6a (10)
STA. 454+98, 20' RT.	5.0 - 6.5	SS-2	100				SAME AS SS-1					17	A-6a (VISUAL)
NORTHING= 400833	7.5 - 9.0	SS-3	100				SAME AS SS-1					19	A-6a (VISUAL)
EASTING= 1532590	10.0 - 11.5	SS-4	100	4	7	16	40	33	26	15	11	14	A-6a (8)
B-130-0-08	1.5 - 2.6	SS-1	2				SAME AS SS-2					6	A-6b (VISUAL)*
STA. 485+95, 2' RT.	2.6 - 4.1	SS-2	67	7	9	10	32	42	38	20	18	7	A-6b (11)
NORTHING= 400826	4.1 - 5.6	SS-3	80				COMBINED WITH SS-2					22	A-6b (11)
EASTING= 1532988	5.6 - 7.1	SS-4	100	8	6	10	33	43	34	19	15	18	A-6a (10)

SUMMARY OF SOIL TEST DATA
NUEBRECHT ROAD

EXPLORATION NO., STATION & OFFSET	FROM TO	SAMPLE ID	% REC	% AGG	% CS	% FS	% SILT	% CLAY	LL	PL	PI	% WC	ODOT CLASS
B-137-1-08	1.0 - 2.5	SS-1	13				SAME AS SS-3					5	A-6b (VISUAL)*
STA. 14+59, 2' RT.	2.5 - 4.0	SS-2	13				SAME AS SS-3					22	A-6b (VISUAL)
NORTHING= 400859	4.0 - 5.5	SS-3	67	19	6	18	28	30	39	15	24	22	A-6b (10)
EASTING= 1530949	5.5 - 7.0	SS-4	87				SAME AS SS-5					22	A-4a (VISUAL)
	7.0 - 8.5	SS-5	73	2	4	45	37	12	NP	NP	NP	23	A-4a (3)

SUMMARY OF SOIL TEST DATA
STATE ROUTE 81 RAMP B

EXPLORATION NO., STATION & OFFSET	FROM TO	SAMPLE ID	% REC	% AGG	% CS	% FS	% SILT	% CLAY	LL	PL	PI	% WC	ODOT CLASS
B-136-0-08	2.5 - 4.0	SS-1	100	0	2	16	48	34	35	20	15	22	A-6a (10)
STA. 463+34, 254' RT.	5.0 - 6.5	SS-2	100	3	6	16	33	42	41	19	22	22	A-7-6 (13)
NORTHING= 400931	7.5 - 9.0	SS-3	100				SAME AS SS-2					17	A-7-6 (VISUAL)
EASTING= 1532421	10.0 - 11.5	SS-4	100	3	5	15	32	45	31	16	15	18	A-6a (10)
B-138-0-08	2.5 - 4.0	SS-1	100	1	7	12	30	50	42	20	22	21	A-7-6 (13)
STA. 466+18, 211' RT.	5.0 - 6.5	SS-2	100				SAME AS SS-4					16	A-6a (VISUAL)
NORTHING= 401216	7.5 - 9.0	SS-3	100				SAME AS SS-4					17	A-6a (VISUAL)
EASTING= 1532382	10.0 - 11.5	SS-4	100	6	8	14	37	35	28	17	11	17	A-6a (8)
B-140-0-08	2.5 - 4.0	SS-1	100	5	7	14	38	36	32	16	16	22	A-6b (10)
STA. 468+67, 171' RT.	5.0 - 6.5	SS-2	100				SAME AS SS-1					23	A-6b (VISUAL)
NORTHING= 401466	7.5 - 9.0	SS-3	100				SAME AS SS-3					18	A-6a (VISUAL)
EASTING= 1532346	10.0 - 11.5	SS-4	100	4	6	13	36	41	30	17	13	17	A-6a (9)
B-142-0-08	2.5 - 4.0	SS-1	100	2	3	9	32	54	50	20	30	25	A-7-6 (18)
STA. 470+70, 140' RT.	5.0 - 6.5	SS-2	87				SAME AS SS-1					18	A-7-6 (VISUAL)
NORTHING= 401670	7.5 - 9.0	SS-3	100				SAME AS SS-1					17	A-7-6 (VISUAL)
EASTING= 1532320	10.0 - 11.5	SS-4	100	2	5	10	35	48	36	18	18	16	A-6b (11)

SUMMARY OF SOIL TEST DATA
STATE ROUTE 81 RAMP C

EXPLORATION NO., STATION & OFFSET	FROM TO	SAMPLE ID	% REC	% AGG	% CS	% FS	% SILT	% CLAY	LL	PL	PI	% WC	ODOT CLASS
B-122-0-08	2.5 - 4.0	SS-1	67	10	6	11	32	41	36	18	18	20	A-6b (11)
STA. 455+65, 58' RT.	5.0 - 6.5	SS-2	80				COMBINED WITH SS-1					23	A-6b (11)
NORTHING= 400166	7.5 - 9.0	SS-3	87	7	7	13	32	41	35	18	17	19	A-6b (11)
EASTING= 1532211	10.0 - 11.5	SS-4	100				SAME AS SS-3					23	A-6b (VISUAL)
B-124-0-08	2.5 - 4.0	SS-1	53	14	7	13	31	35	38	20	18	20	A-6b (10)
STA. 457+50, 93' RT.	5.0 - 6.5	SS-2	27				COMBINED WITH SS-1					21	A-6b (10)
NORTHING= 400351	7.5 - 9.0	SS-3	67					33	17	16	20	A-6b (VISUAL)	
EASTING= 1532250	10.0 - 11.5	SS-4	67	2	4	12	36	46	43	19	24	24	A-7-6 (14)
B-126-0-08	2.5 - 4.0	SS-1	27				SAME AS SS-2					15	A-6a (VISUAL)
STA. 459+28, 192' RT.	5.0 - 6.5	SS-2	80	2	7	14	35	42	31	17	14	20	A-6a (10)
NORTHING= 400526	7.5 - 9.0	SS-3	87				SAME AS SS-4					18	A-6b (VISUAL)
EASTING= 1532351	10.0 - 11.5	SS-4	67	4	5	12	32	47	35	18	17	17	A-6b (11)
B-128-0-08	2.5 - 4.0	SS-1	0				SAME AS SS-2					-	A-6a (VISUAL)
STA. 461+28, 245' RT.	5.0 - 6.5	SS-2	67	12	14	14	32	28	32	18	14	17	A-6a (7)
NORTHING= 400726	7.5 - 9.0	SS-3	53				COMBINED WITH SS-2					25	A-6a (7)
EASTING= 1532408	10.0 - 11.5	SS-4	87	1	10	11	35	43	39	21	18	27	A-6b (11)

DRAWN MJ
CHECKED RJK

SOIL PROFILE
SUMMARY OF SOIL TEST DATA

ALL-75-0.21

16/90

16/97

V:\1755\active\175530002\geotechnical\drawing\ODOTSubmittal\projects\ALL\76691\roadway\sheets\76691D014.dgn

SUMMARY OF SOIL TEST DATA
STATE ROUTE 81 RAMP D

EXPLORATION NO., STATION & OFFSET	FROM	TO	SAMPLE ID	% REC	% AGG	% CS	% FS	% SILT	% CLAY	LL	PL	PI	% WC	ODOT CLASS
B-123-0-08	2.5	4.0	SS-1	67	4	7	12	36	41	30	16	14	16	A-6a (10)
STA. 454+95, 51' LT.	5.0	6.5	SS-2	40				SAME AS SS-1					17	A-6a (VISUAL)
NORTHING= 400098	7.5	9.0	SS-3	67	3	5	12	36	44	35	18	17	25	A-6b (11)
EASTING= 1532101	10.0	11.5	SS-4	67				COMBINED WITH SS-3					23	A-6b (11)
B-125-0-08	2.5	4.0	SS-1	60	8	8	13	32	39	30	16	14	15	A-6a (9)*
STA. 456+84, 99' LT.	5.0	6.5	SS-2	80				SAME AS SS-3					17	A-6b (VISUAL)
NORTHING= 400288	7.5	9.0	SS-3	87	4	5	13	29	49	39	17	22	24	A-6b (13)
EASTING= 1532057	10.0	11.5	SS-4	73				SAME AS SS-3					23	A-6b (VISUAL)
B-127-0-08	2.5	4.0	SS-1	67				SAME AS SS-2					16	A-6a (VISUAL)*
STA. 458+67, 187' LT.	5.0	6.5	SS-2	80	4	6	12	36	42	29	16	13	14	A-6a (9)
NORTHING= 400472	7.5	9.0	SS-3	53	2	2	10	33	53	46	19	27	24	A-7-6 (16)
EASTING= 1531972	10.0	11.5	SS-4	67	1	2	11	37	49	43	18	25	21	A-7-6 (15)
B-129-0-08	2.5	4.0	SS-1	100	2	6	13	37	42	33	20	13	19	A-6a (9)*
STA. 460+64, 222' LT.	5.0	6.5	SS-2	100	1	5	9	48	37	29	17	12	19	A-6a (9)*
NORTHING= 400370	7.5	9.0	SS-3	67				SAME AS SS-2					18	A-6a (VISUAL)
EASTING= 1531940	10.0	11.5	SS-4	2				SAME AS SS-2					23	A-6a (VISUAL)

SUMMARY OF SOIL TEST DATA
STATE ROUTE 81 RAMP F

EXPLORATION NO., STATION & OFFSET	FROM	TO	SAMPLE ID	% REC	% AGG	% CS	% FS	% SILT	% CLAY	LL	PL	PI	% WC	ODOT CLASS
B-137-0-08	2.5	4.0	SS-1	100	10	10	17	33	30	27	15	12	16	A-6a (6)*
STA. 461+93, 218' LT.	5.0	6.5	SS-2	87	1	1	8	74	16	NP	NP	NP	21	A-4b (8)
NORTHING= 400799	7.5	9.0	SS-3	60				SAME AS SS-2					24	A-4b (VISUAL)
EASTING= 1531946	10.0	11.5	SS-4	100	1	4	59	23	13	NP	NP	NP	23	A-4a (0)
B-139-0-08	2.5	4.0	SS-1	100	2	6	9	34	49	42	20	22	26	A-7-6 (13)*
STA. 464+86, 186' LT.	5.0	6.5	SS-2	100				SAME AS SS-1					15	A-7-6 (VISUAL)*
NORTHING= 401091	7.5	9.0	SS-3	100				SAME AS SS-1					18	A-7-6 (VISUAL)
EASTING= 1531983	10.0	11.5	SS-4	100	3	9	11	34	43	31	19	12	17	A-6a (9)
	12.5	14.0	SS-5	100				SAME AS SS-4					18	A-6a (VISUAL)
	15.0	16.5	SS-6	100	4	6	16	34	40	40	19	21	16	A-6b (12)
B-141-0-08	2.5	4.0	SS-1	100				SAME AS SS-2					25	A-6a (VISUAL)*
STA. 467+89, 161' LT.	5.0	6.5	SS-2	100	3	5	10	32	50	34	19	15	15	A-6a (10)*
NORTHING= 401393	7.5	9.0	SS-3	100				SAME AS SS-2					16	A-6a (VISUAL)
EASTING= 1532014	10.0	11.5	SS-4	100	3	5	11	36	45	32	19	13	16	A-6a (9)
B-143-0-08	2.5	4.0	SS-1	100	3	5	11	37	44	36	17	19	16	A-6b (12)
STA. 470+91, 135' LT.	5.0	6.5	SS-2	100				SAME AS SS-1					16	A-6b (VISUAL)
NORTHING= 401695	7.5	9.0	SS-3	100	2	5	11	38	44	30	18	12	18	A-6a (9)
EASTING= 1532045	10.0	11.5	SS-4	100				SAME AS SS-3					19	A-6a (VISUAL)

DRAWN MJ
CHECKED RJK

SOIL PROFILE
SUMMARY OF SOIL TEST DATA

ALL-75-0.21

17/90

17/97

V:\1755\active\175530002\geotechnical\drawing\ODOTSubmittal\projects\ALL_76691\roadway\sheets\76691ND015.dgn

V:\1755\active\175530002\geotechnical\drawing\ODOTSubmittal\projects\ALL\76691\roadway\sheets\76691IP001.dgn

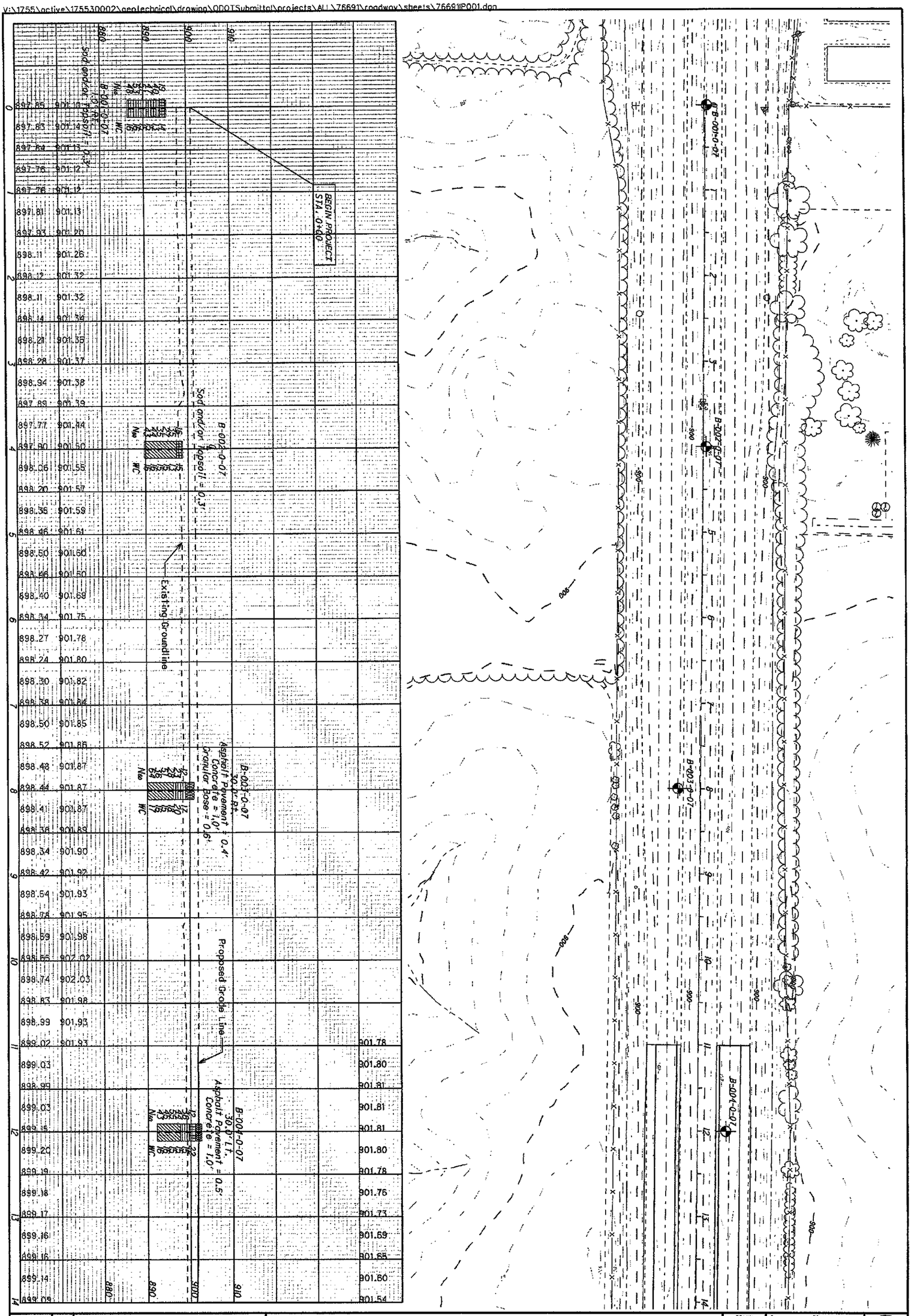

18/97	18/90	ALL-75-0.21	SOIL PROFILE I-75 STATION 0+00 - 14+00	DRAWN M.J. CHECKED J.M.M.	0 50 25 100 HORIZONTAL SCALE IN FEET

V:\1755\active\175530002\geotechnical\drawing\ODOTSubmittal\projects\ALL\76691\roadway\sheets\76691P002.dgn

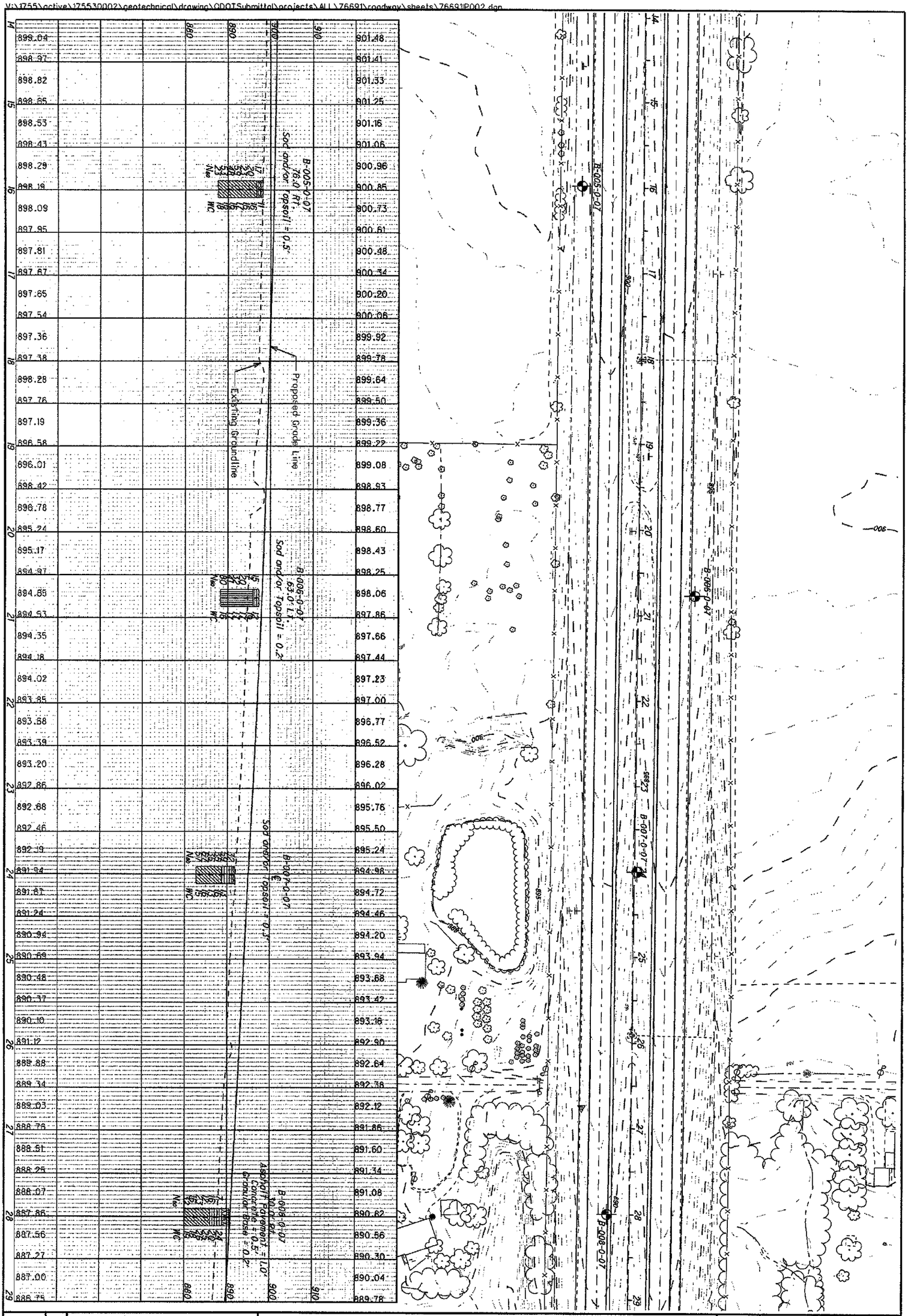

19/67	19/90	ALL-75-0.21	SOIL PROFILE I-75 STATION 14+00 - 29+00	DRAWN M.J. CHECKED J.M.M	0 50 100 25 HORIZONTAL SCALE IN FEET

V:\1755\active\175530002\geotechnical\drawing\ODOTSubmittal\projects\ALL\Z6691\roadway\sheets\Z6691P003.dgn

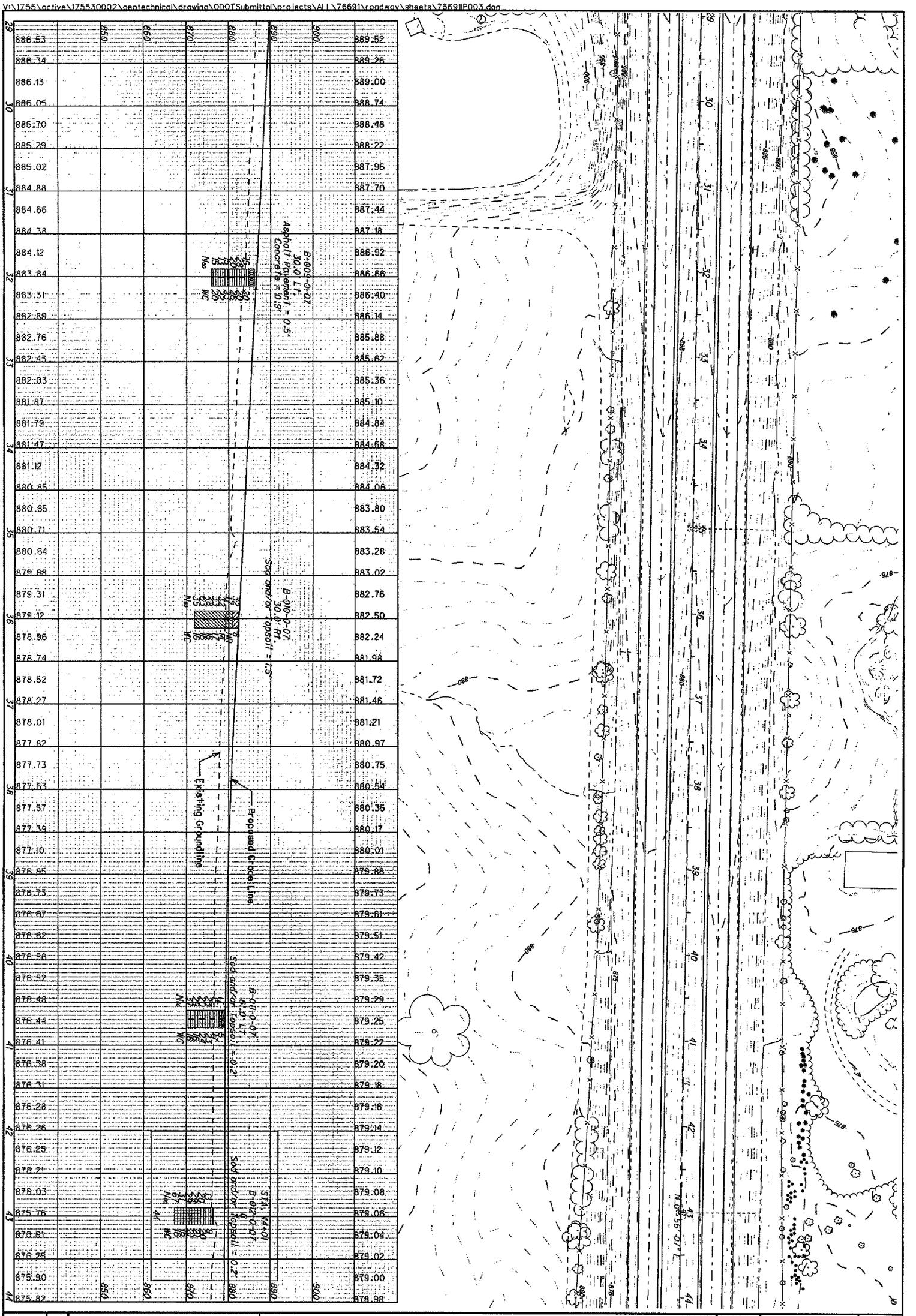

20/90	ALL-75-0.21	SOIL PROFILE I-75 STATION 29+00 - 44+00	DRAWN M.J. CHECKED J.M.M.	HORIZONTAL SCALE IN FEET

V:\1755\active\1755300002\geotechnical\drawing\ODOTSubmittal\projects\ALL\76691\roadway\sheets\76691IP004.dgn

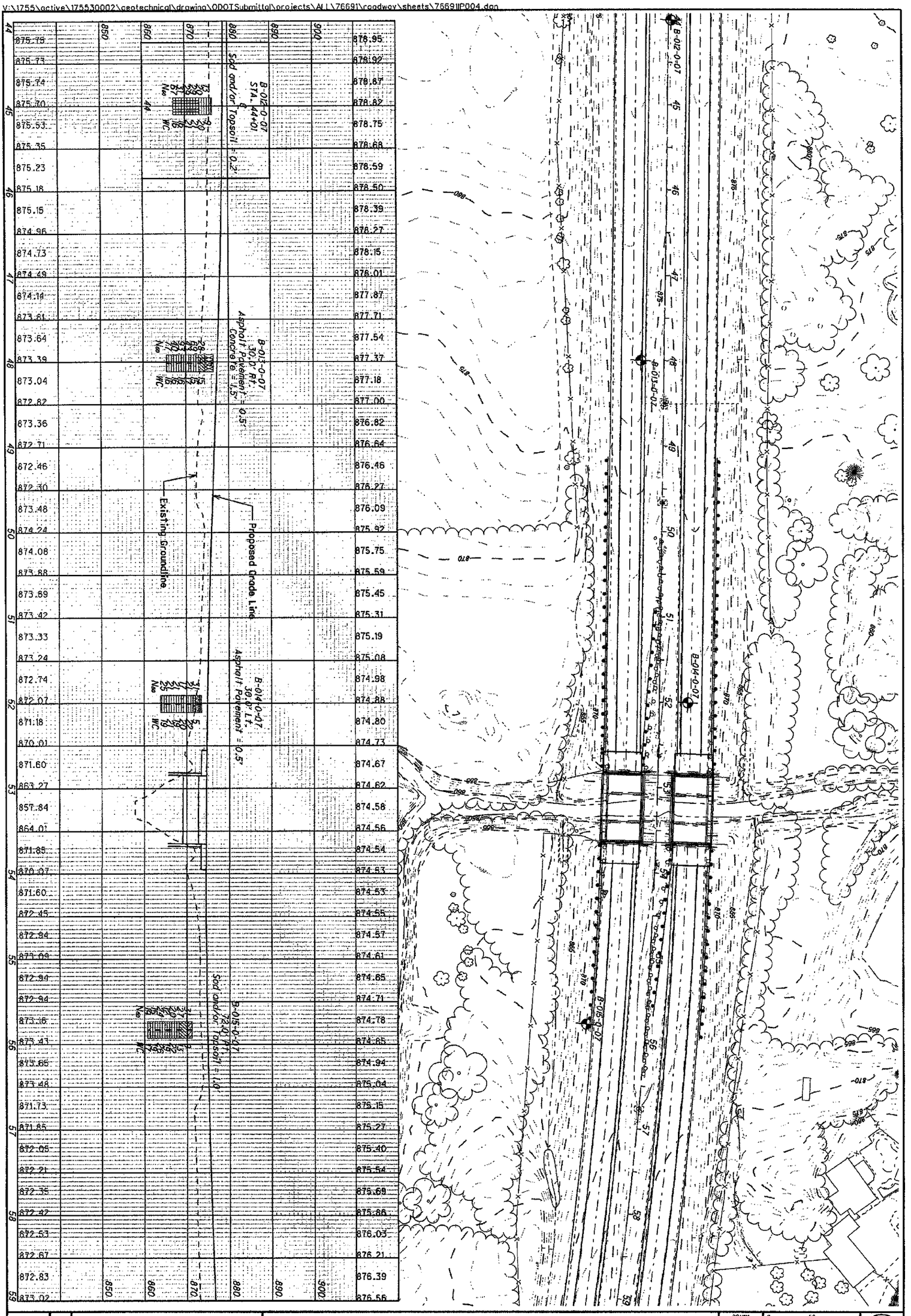

21/90	ALL-75-0.21	SOIL PROFILE I-75 STATION 44 +00 - 59+00	DRAWN M.J.	CHECKED J.M.M.	HORIZONTAL SCALE IN FEET

V:\1755\active\175530002\geotechnical\drawing\ODOTSubmittal\projects\ALL\76691\roadway\sheets\76691P005.dgn

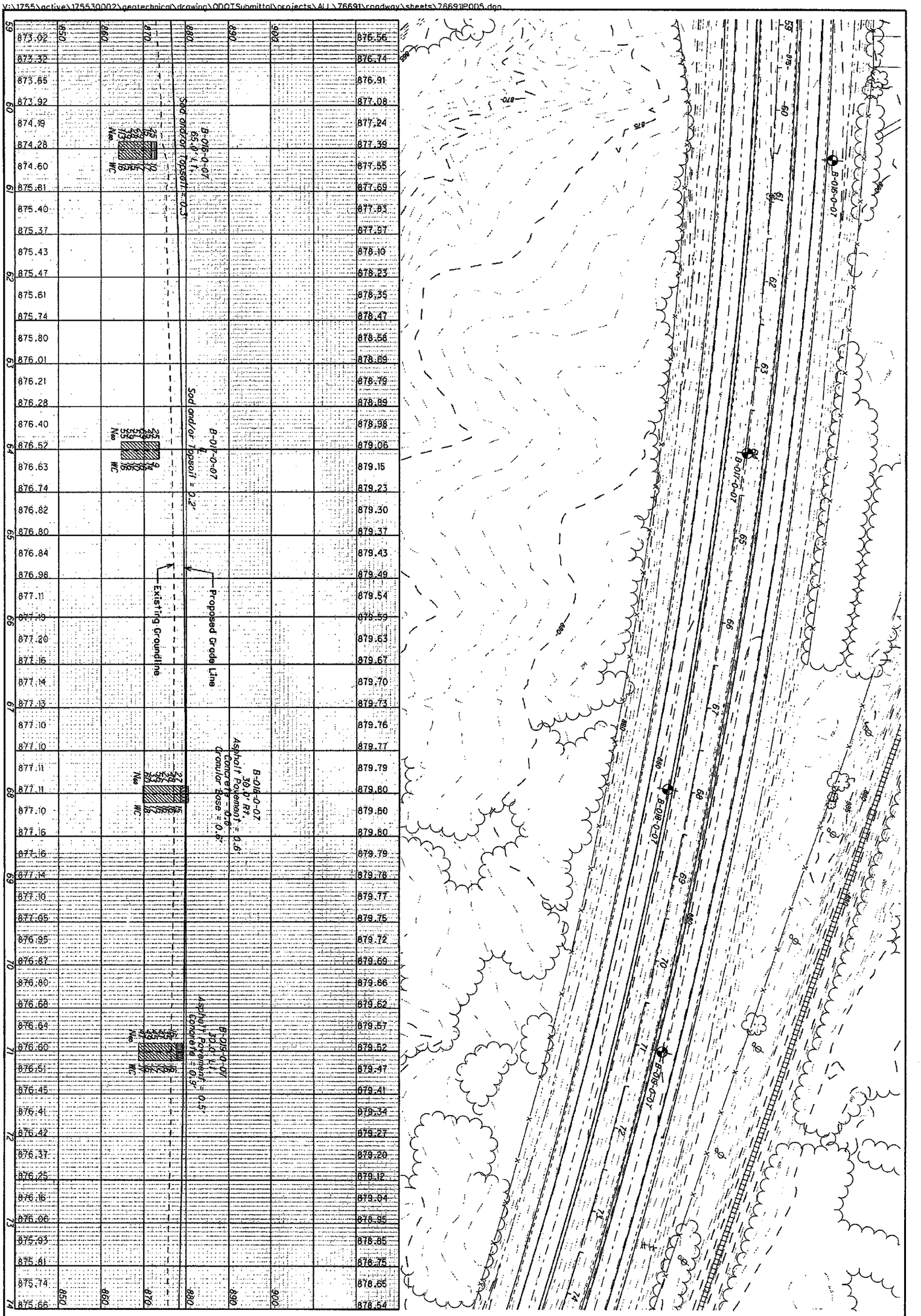

22/97	22/90	ALL-75-0.21	SOIL PROFILE I-75 STATION 59+00 - 74+00	DRAWN M.J. CHECKED J.M.M.

V:\1755\active\175530002\geotechnical\drawing\ODOTSubmittal\projects\ALL\76691\roadway\sheets\76691P006.dgn

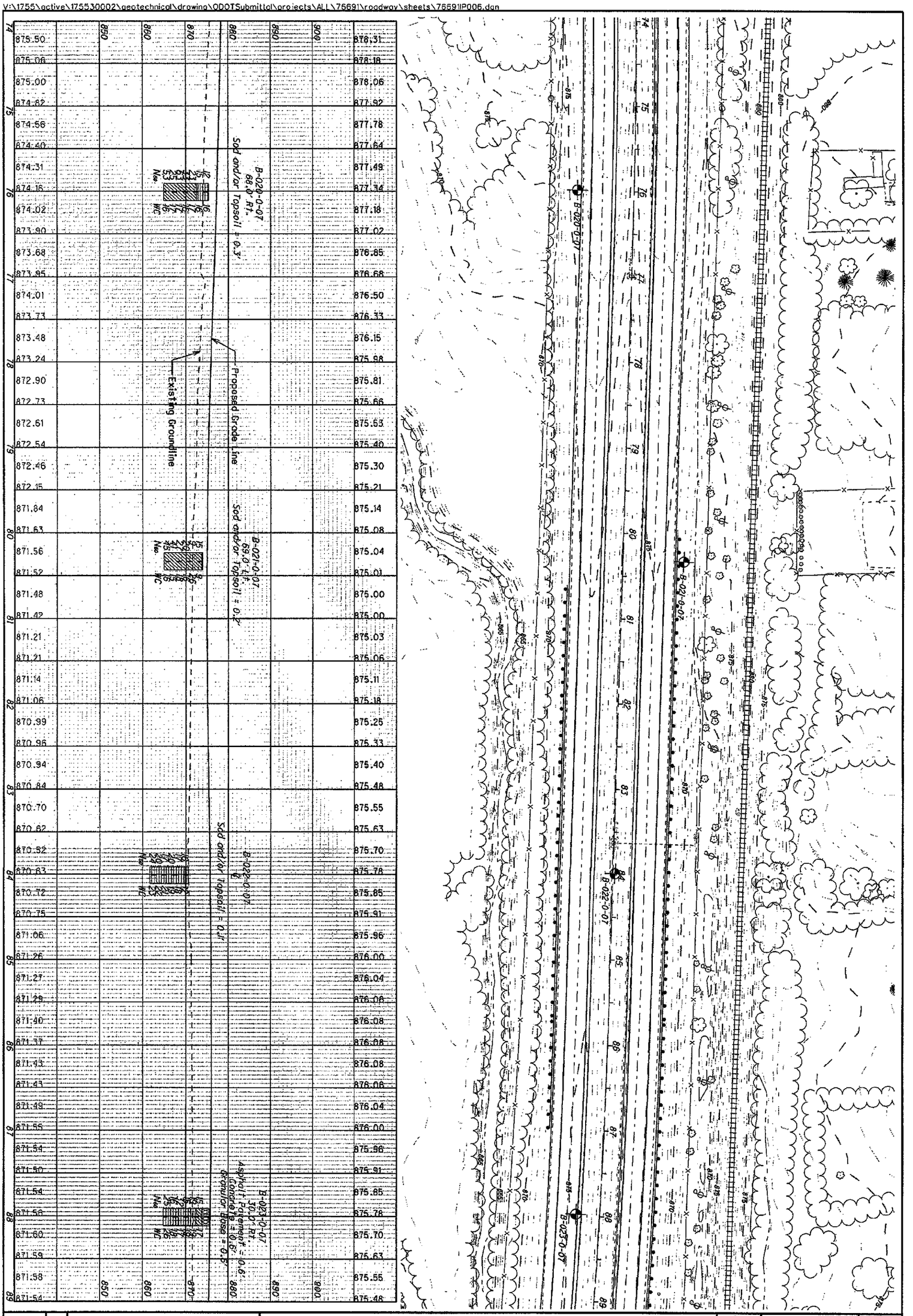

23/97	23/90	ALL-75-0.21	SOIL PROFILE I-75 STATION 74+00 - 89+00	DRAWN M.J. CHECKED J.M.M.	0 50 25 100 HORIZONTAL SCALE IN FEET	N

V:\1755\active\175530002\geotechnical\drawing\ODOTSubmittal\projects\ALL\76691\roadway\sheets\76691P007.dgn

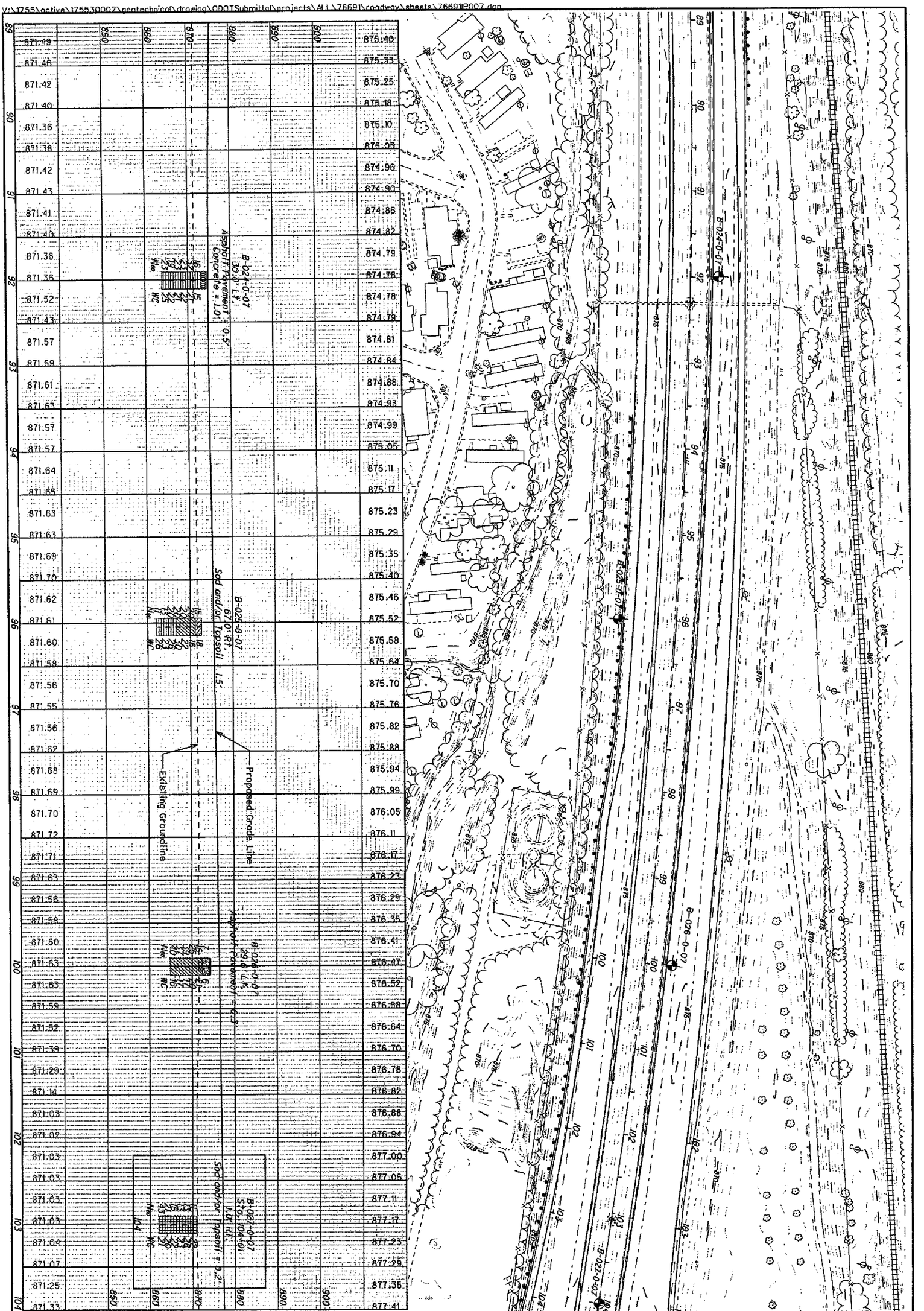

24 / 97	24 / 90	ALL-75-0.21	SOIL PROFILE I-75 STATION 89+00 - 104+00	DRAWN M.J. CHECKED J.M.M.	0 50 25 100 HORIZONTAL SCALE IN FEET

V:\1755\active\175530002\geotechnical\drawing\ODOTSubmittal\projects\ALL\76691\roadway\sheets\76691P008.dgn

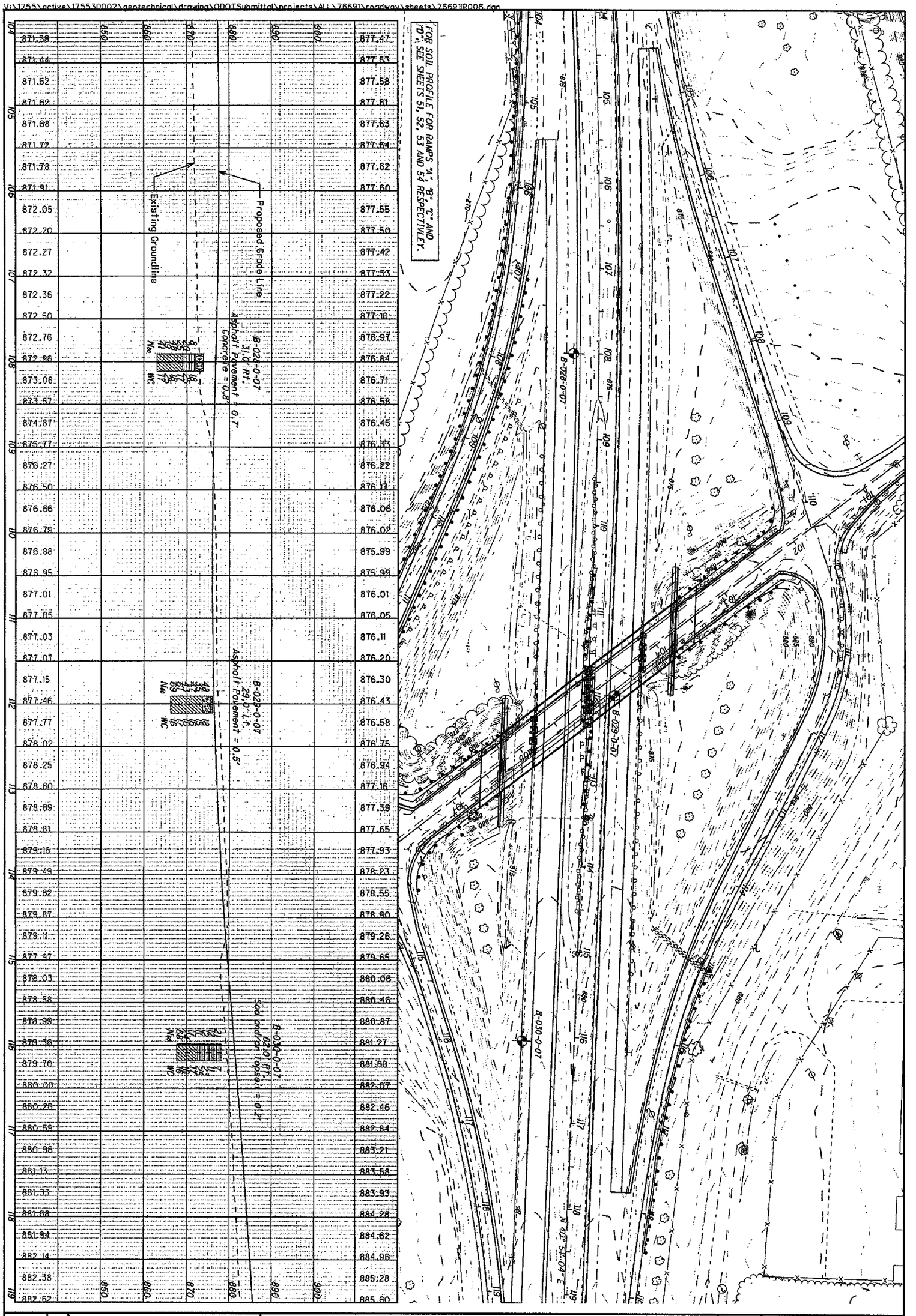

| | | |

V:\1755\active\175530002\geotechnical\drawing\ODOTSubmittal\projects\ALL\76691\roadway\sheets\76691IP009.dgn

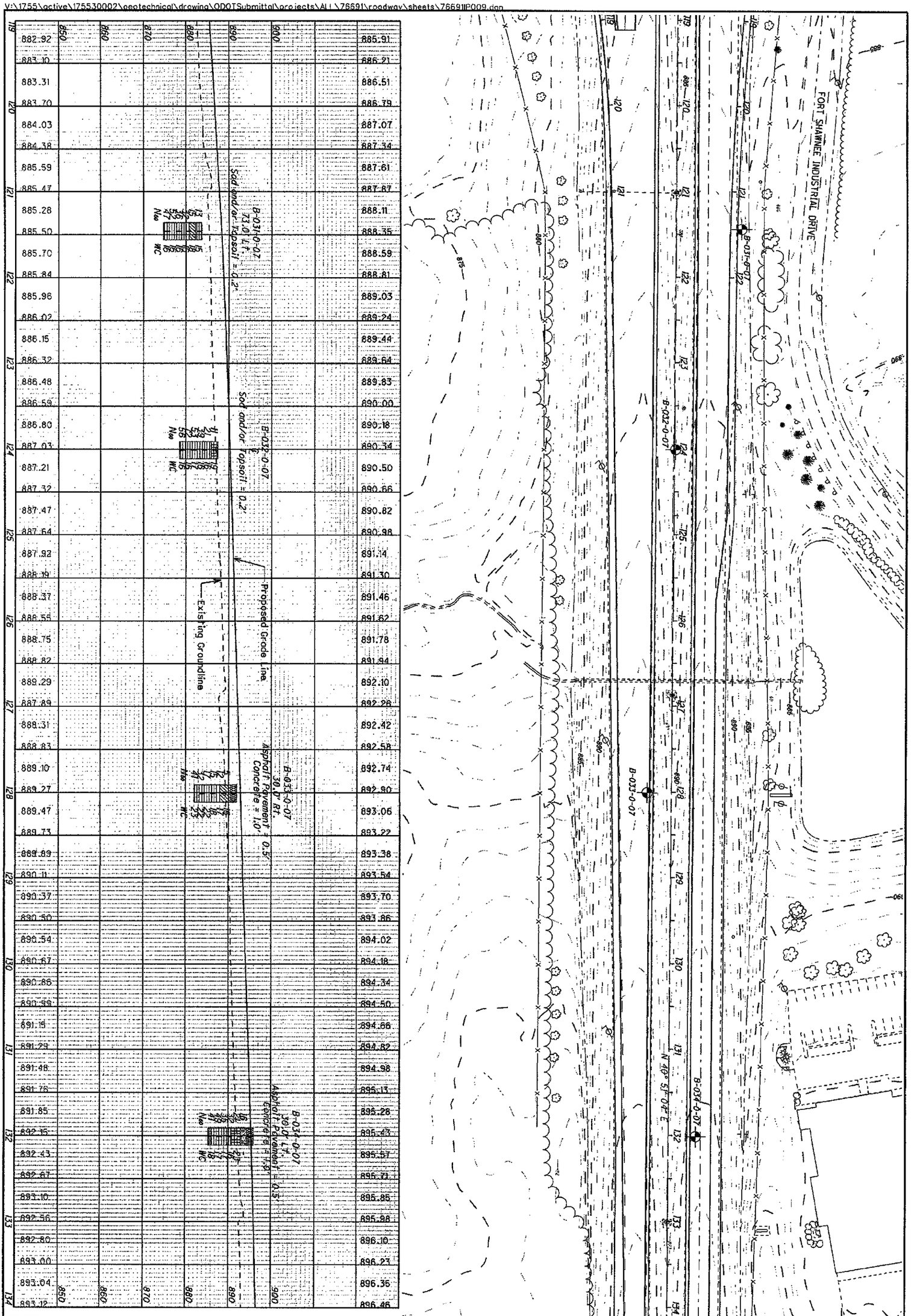

36 / 47	26 / 90	ALL-75-0.21	SOIL PROFILE I-75 STATION 119+00 - 134+00	DRAWN M.J. CHECKED J.M.M.	0 50 100 25 HORIZONTAL SCALE IN FEET	N

V:\1755\active\175530002\geotechnical\drawing\ODOTSubmittal\projects\ALL\76691\roadway\sheets\76691P010.dgn

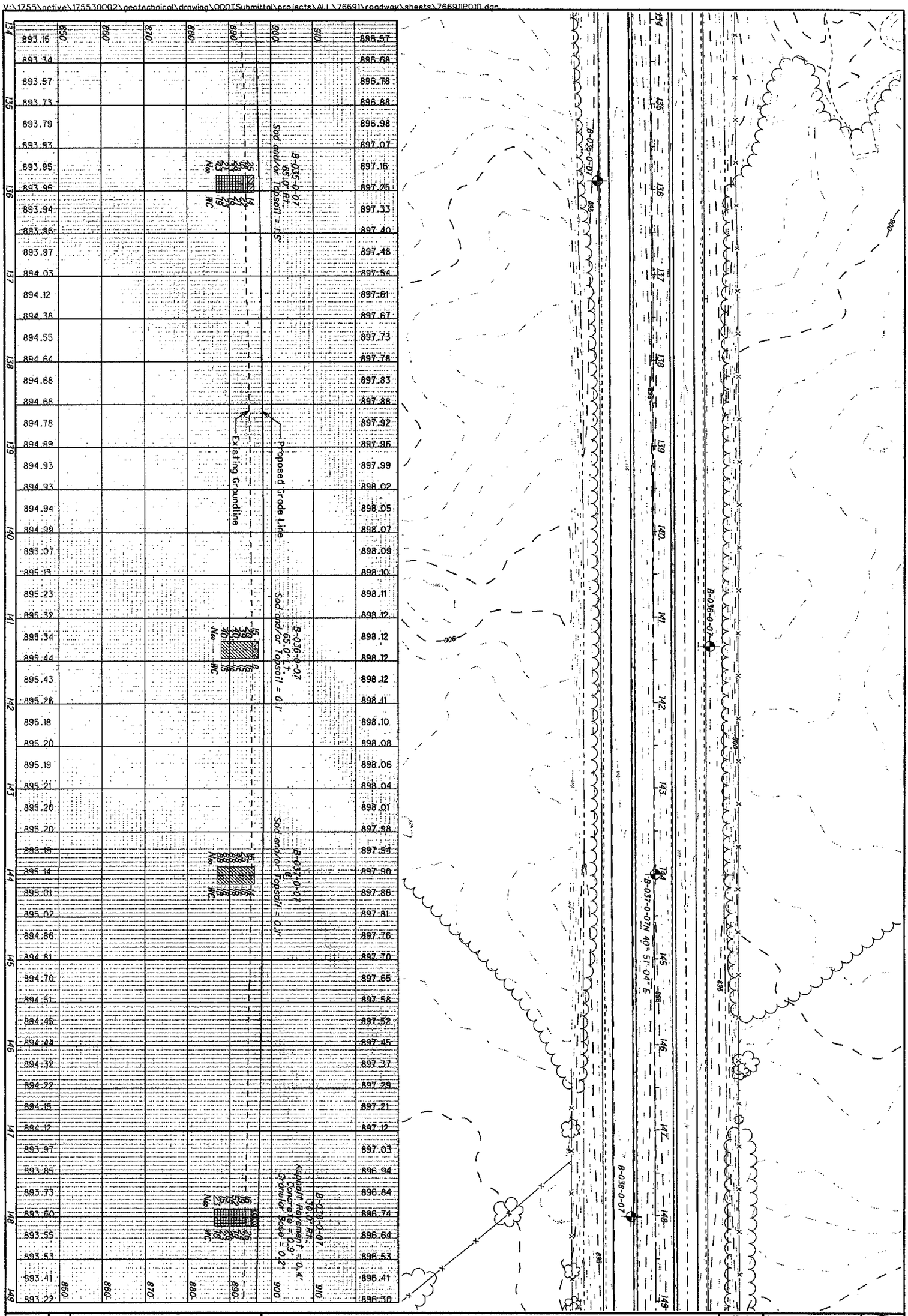

| | | |

V:\1755\active\175530002\geotechnical\drawing\ODOTSubmittal\projects\ALL\76691\roadway\sheets\76691IP011.dgn

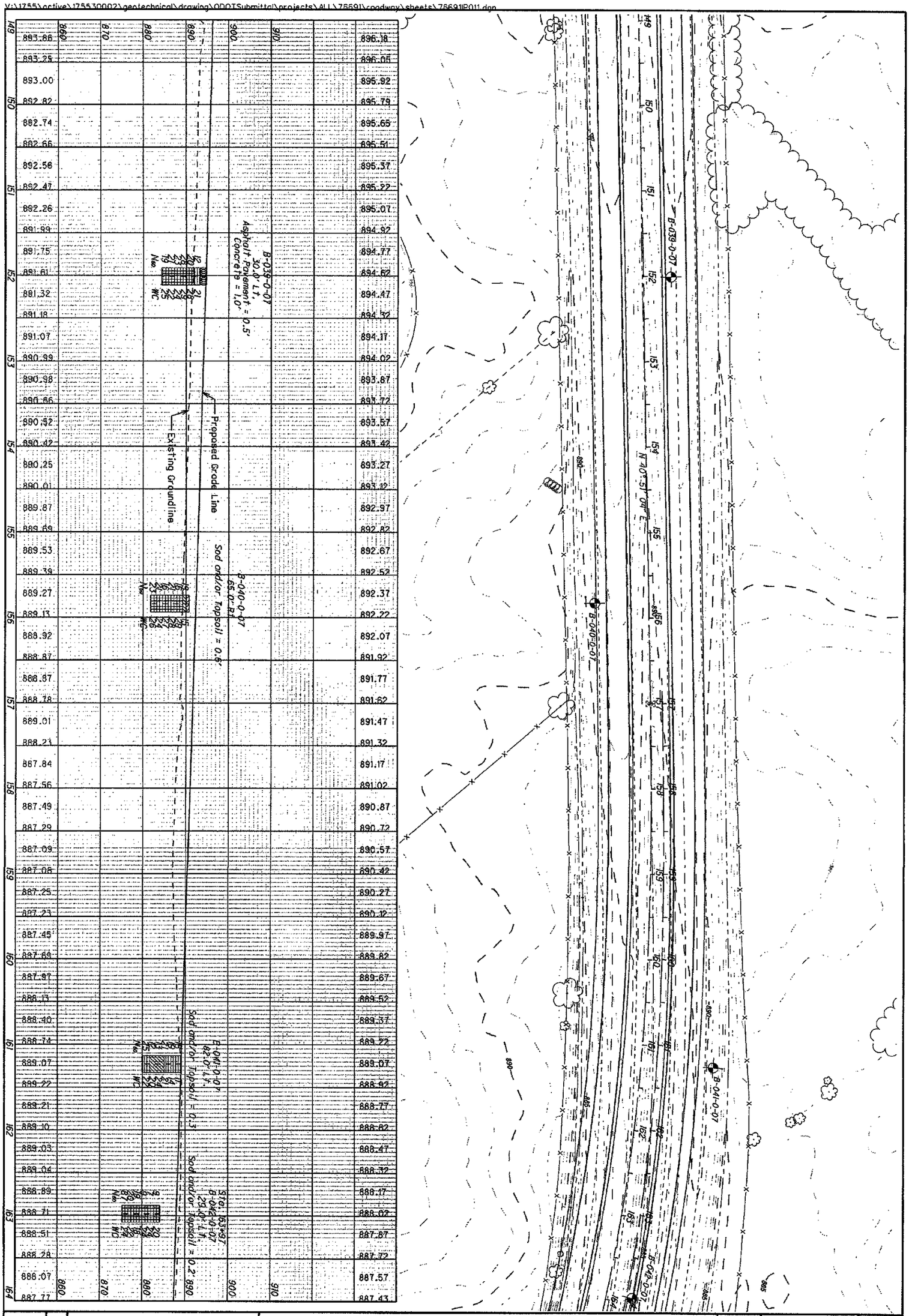

28/90	ALL-75-0.21	SOIL PROFILE I-75 STATION 149+00 - 164+00	DRAWN M.J. CHECKED J.M.M.	0 25 50 100 HORIZONTAL SCALE IN FEET	N

V:\1755\active\175530002\geotechnical\drawing\ODOTSubmittal\projects\ALL\76691\roadway\sheets\76691IP012.dgn

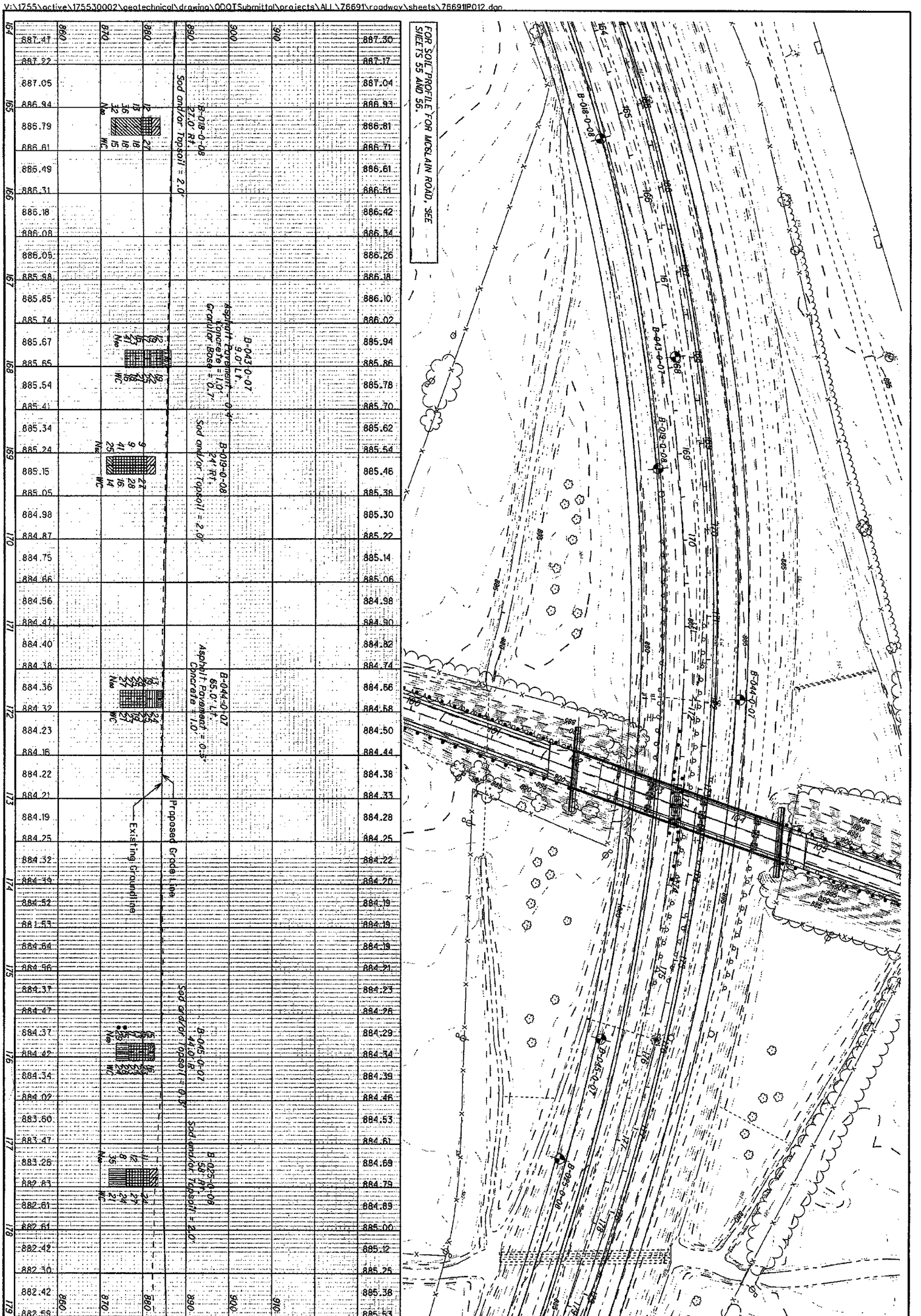

29/97	29/90	ALL-75-0.21	SOIL PROFILE I-75 STATION 164+00 - 179+00	DRAWN M.J. CHECKED J.M.M.	HORIZONTAL SCALE IN FEET

V:\1755\active\1755330002\geotechnical\drawing\000TSubmittal\projects\ALL\76691\roadway\sheets\76691IP013.dgn

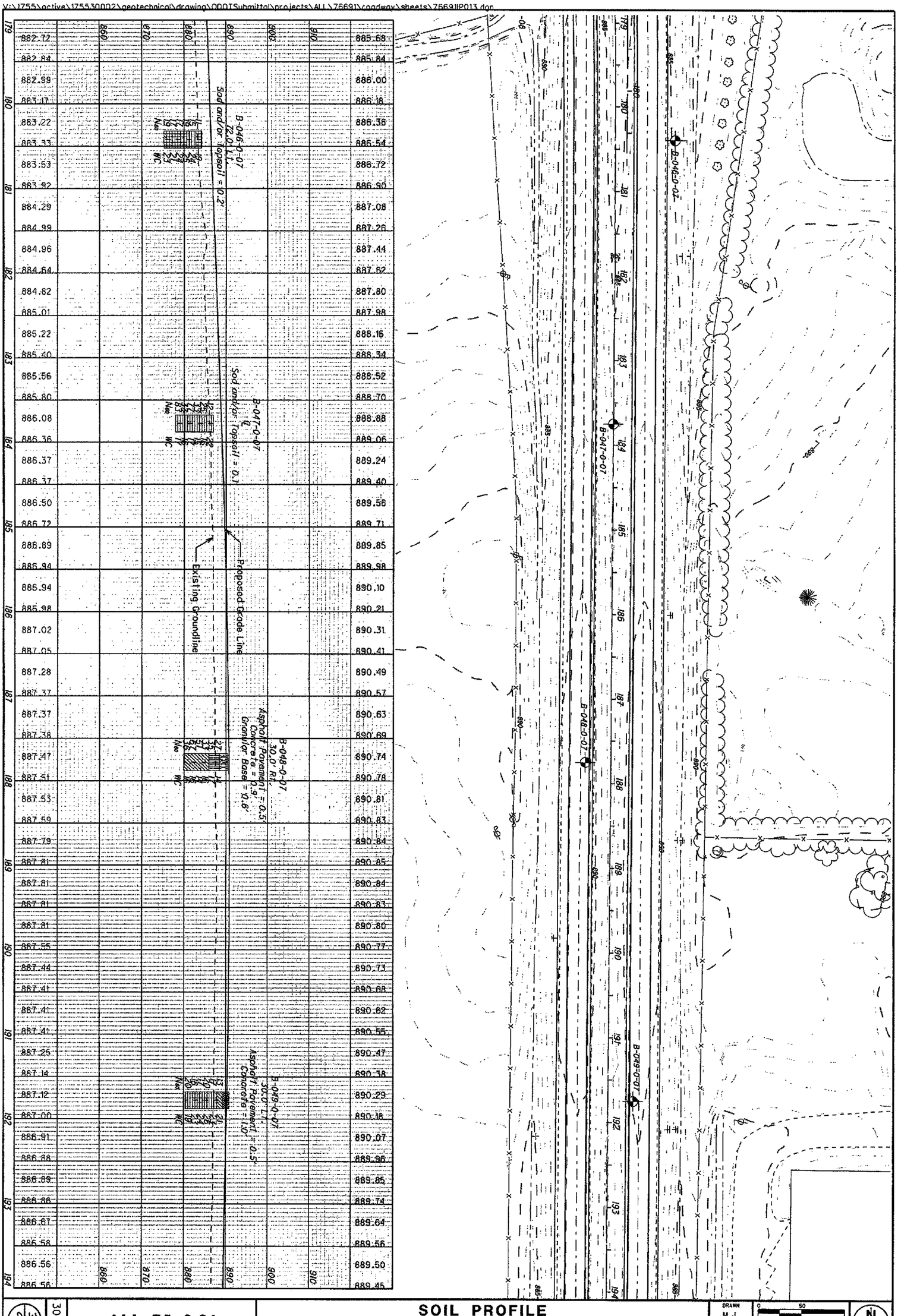

30/97	30/90	ALL-75-0.21	SOIL PROFILE I-75 STATION 179+00 - 194+00

DRAWN M.J.
CHECKED J.M.M.
0 25 50 100
HORIZONTAL SCALE IN FEET

V:\1755\active\175530002\geotechnical\drawing\ODOTSubmittal\projects\ALL\76691\roadway\sheets\76691P014.dgn

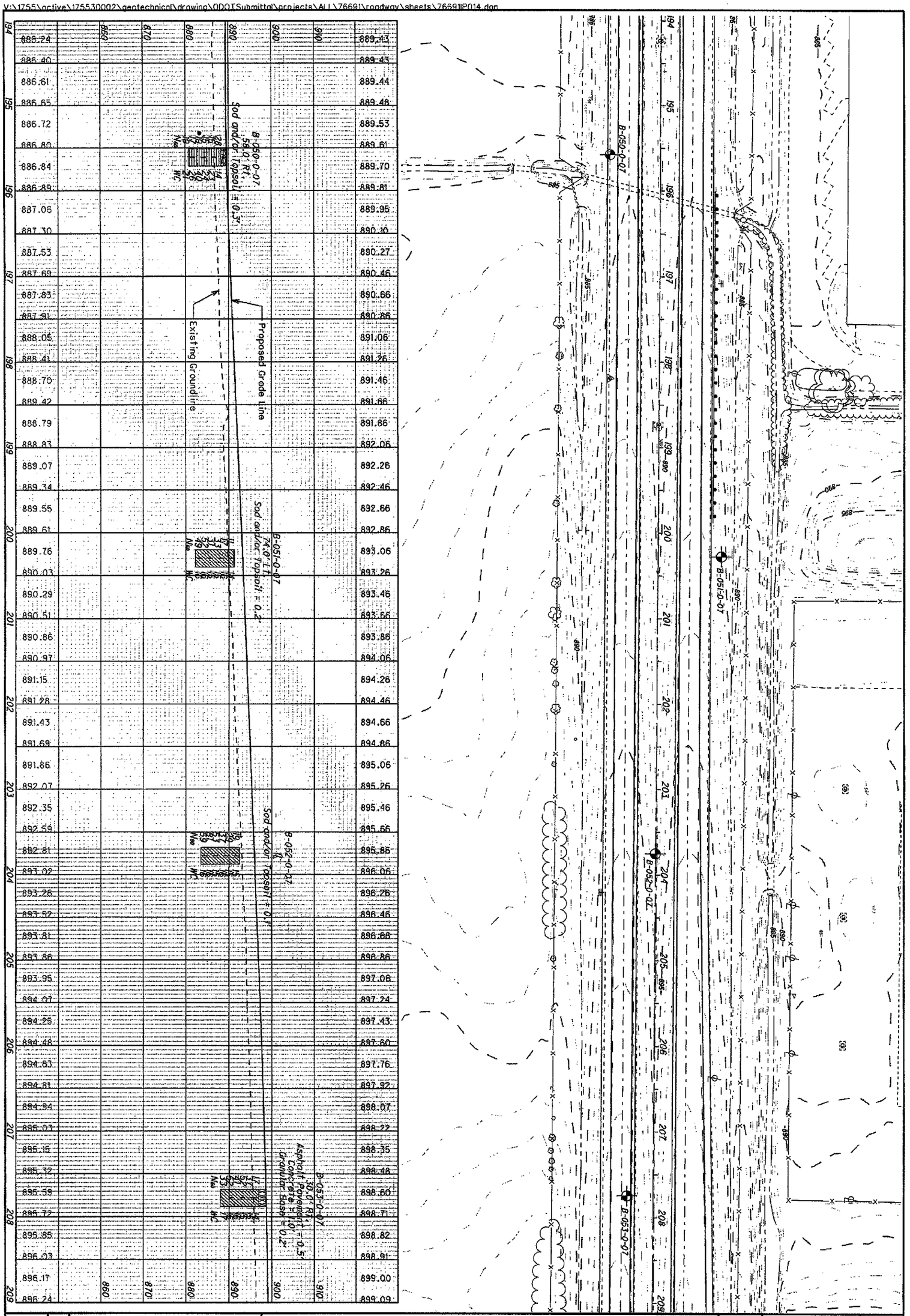

31/97	31/90
ALL-75-0.21	
SOIL PROFILE I-75 STATION 194+00 - 209+00	
DRAWN M.J.	CHECKED J.M.M.
HORIZONTAL SCALE IN FEET	0 50 25 100

V:\1755\active\1755300002\geotechnical\drawing\ODOTSubmittal\projects\ALL\76691\roadway\sheets\76691P015.dgn

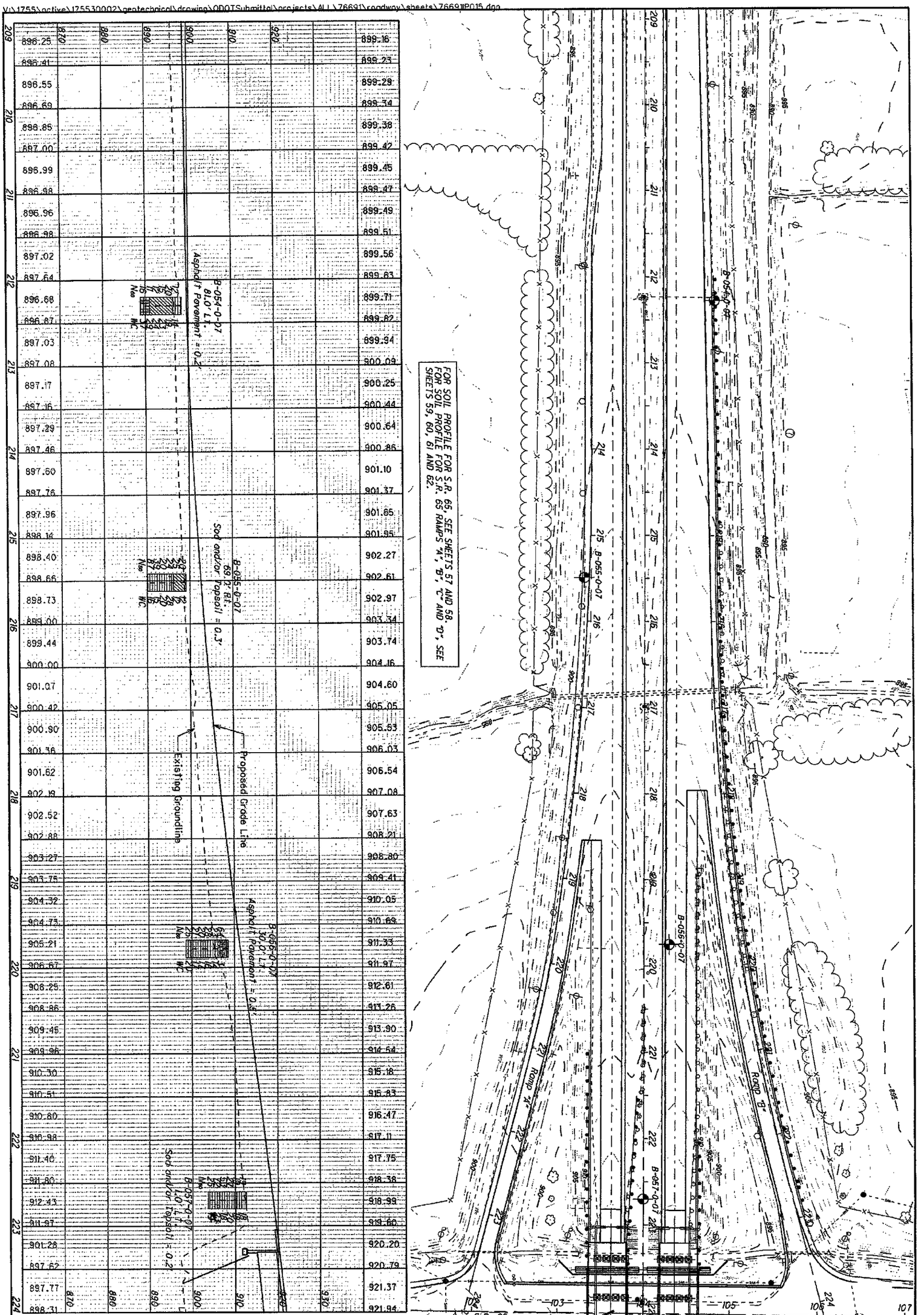

| | | |

V:\1755\active\175530002\geotechnical\drawing\ODOTSubmittal\projects\ALL\76691\roadway\sheets\76691IP016.dgn

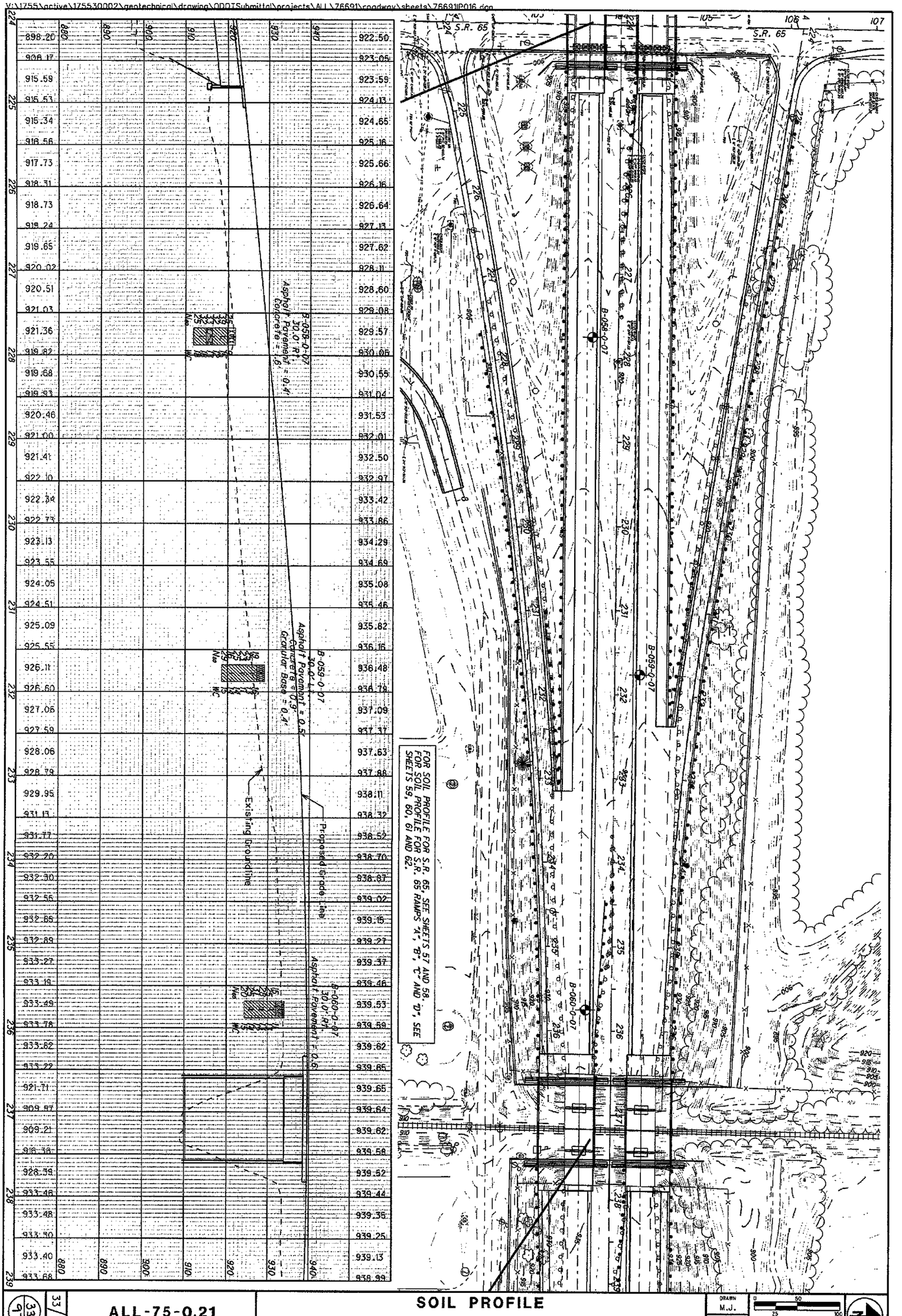

33/97	33/90	ALL-75-0.21	SOIL PROFILE I-75 STATION 224+00 - 239+00	DRAWN M.J. CHECKED J.M.M.	0 50 25 100 HORIZONTAL SCALE IN FEET

V:\1755\active\175530002\geotechnical\drawing\ODOTSubmittal\projects\ALL\76691\roadway\sheets\76691E017.dgn

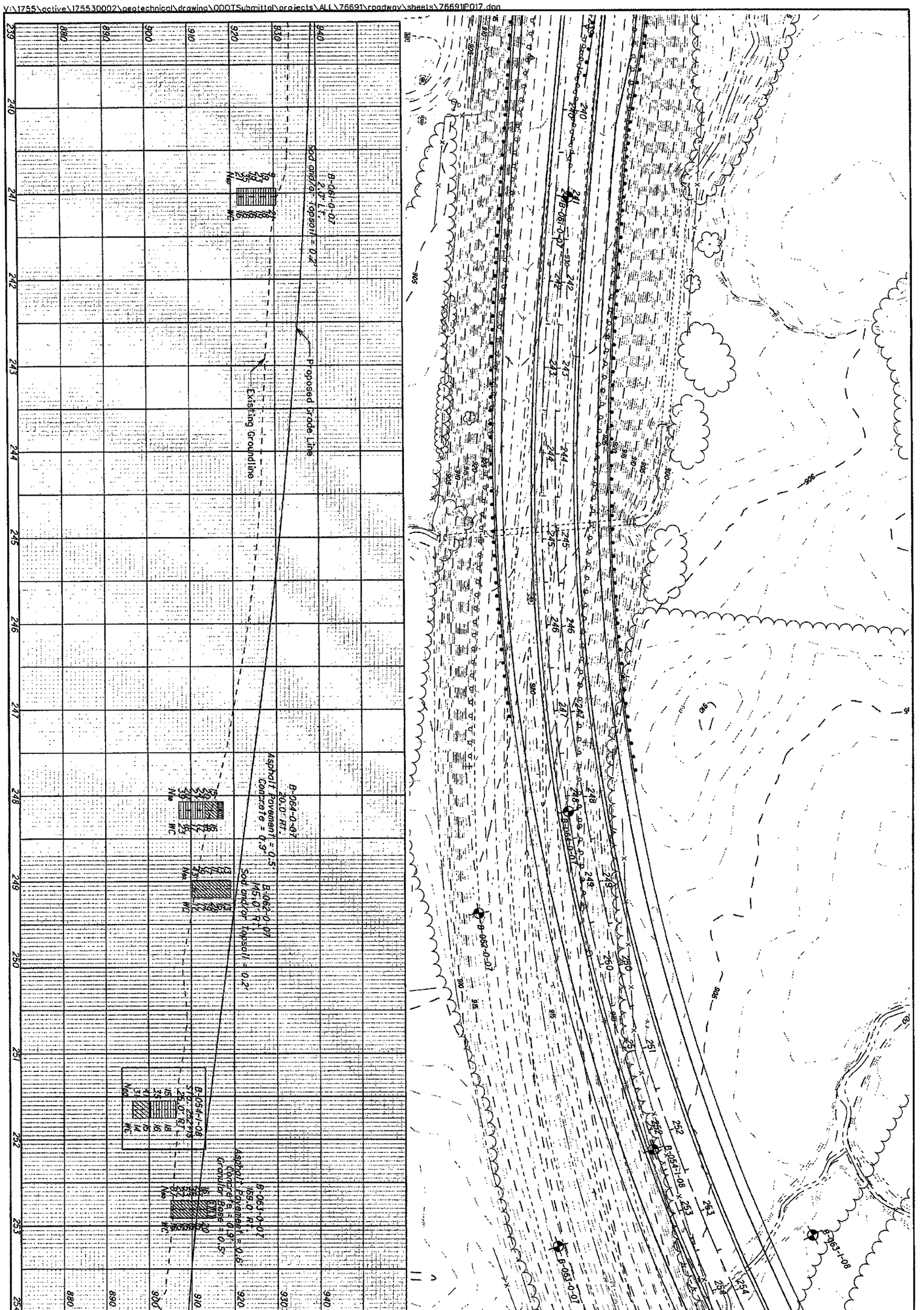

34/97	34/90	ALL-75-0.21	SOIL PROFILE I-75 STATION 239+00 - 254+00	DRAWN M.J. CHECKED J.M.M.	0 50 25 100 HORIZONTAL SCALE IN FEET

V:\1755\active\175530002\geotechnical\drawing\ODOTSubmittal\projects\ALL\76691\roadway\sheets\76691IP018.dgn

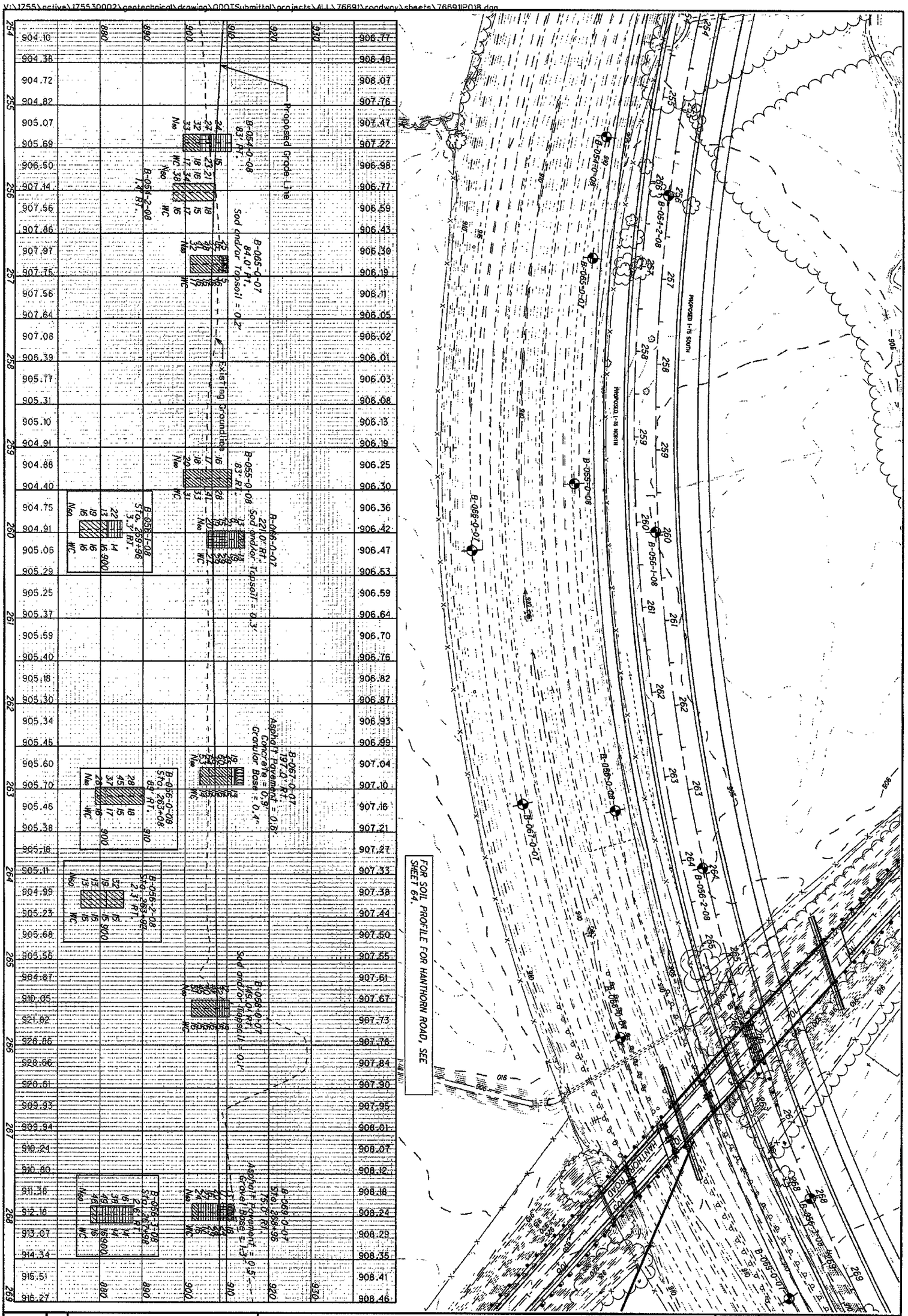

35/90	ALL-75-0.21	SOIL PROFILE I-75 STATION 254+00 - 269+00	DRAWN M.J. CHECKED J.M.M.	0 25 50 100 HORIZONTAL SCALE IN FEET	

V:\1755\active\175530002\geotechnical\drawing\ODOTSubmittal\projects\ALL\Z669\roadway\sheets\Z669IP019.dgn

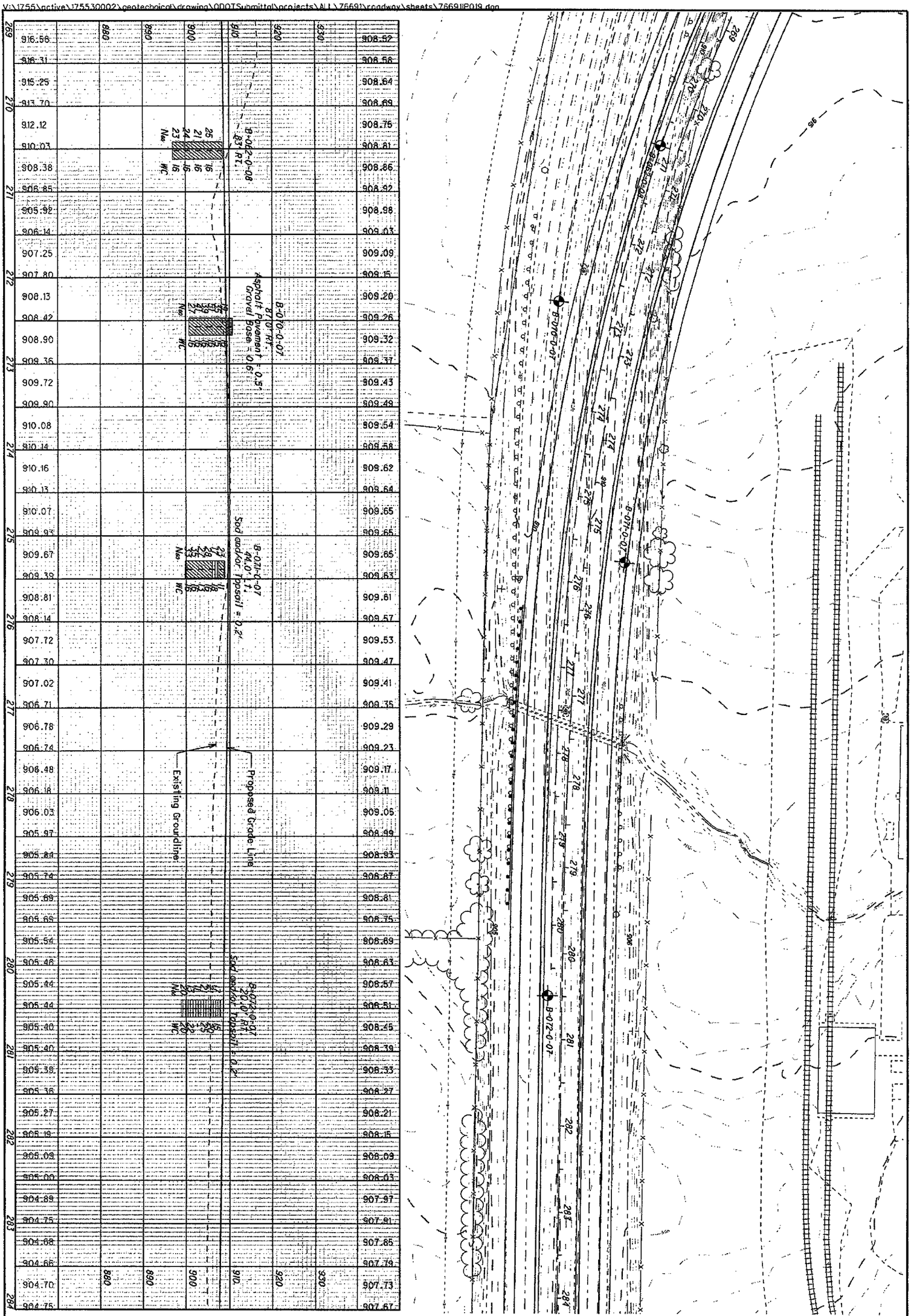

36/97	ALL-75-0.21	SOIL PROFILE I-75 STATION 269+00 - 284+00	DRAWN M.J. CHECKED J.M.M.

V:\1755\active\175530002\geotechnical\drawing\ODOTSubmittal\projects\ALL\76691\roadway\sheets\76691P020.dgn

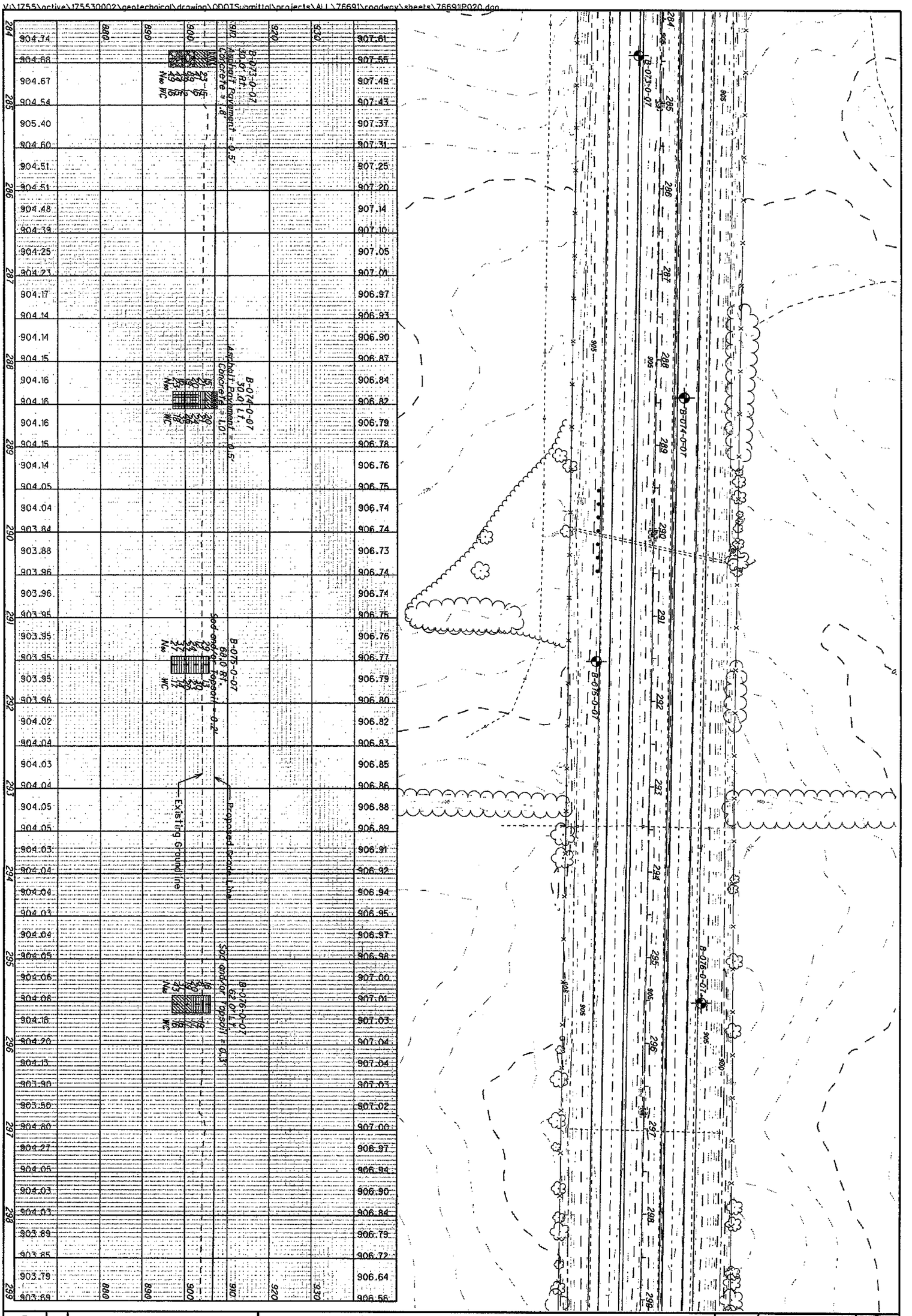

37/97	37/90	ALL-75-0.21	SOIL PROFILE I-75 STATION 284+00 - 299+00	DRAWN M.J. CHECKED J.M.M.	0 50 25 100 HORIZONTAL SCALE IN FEET	N

V:\1755\active\175530002\geotechnical\drawing\ODOTSubmittal\projects\ALL\76691\roadway\sheets\76691P033.dgn

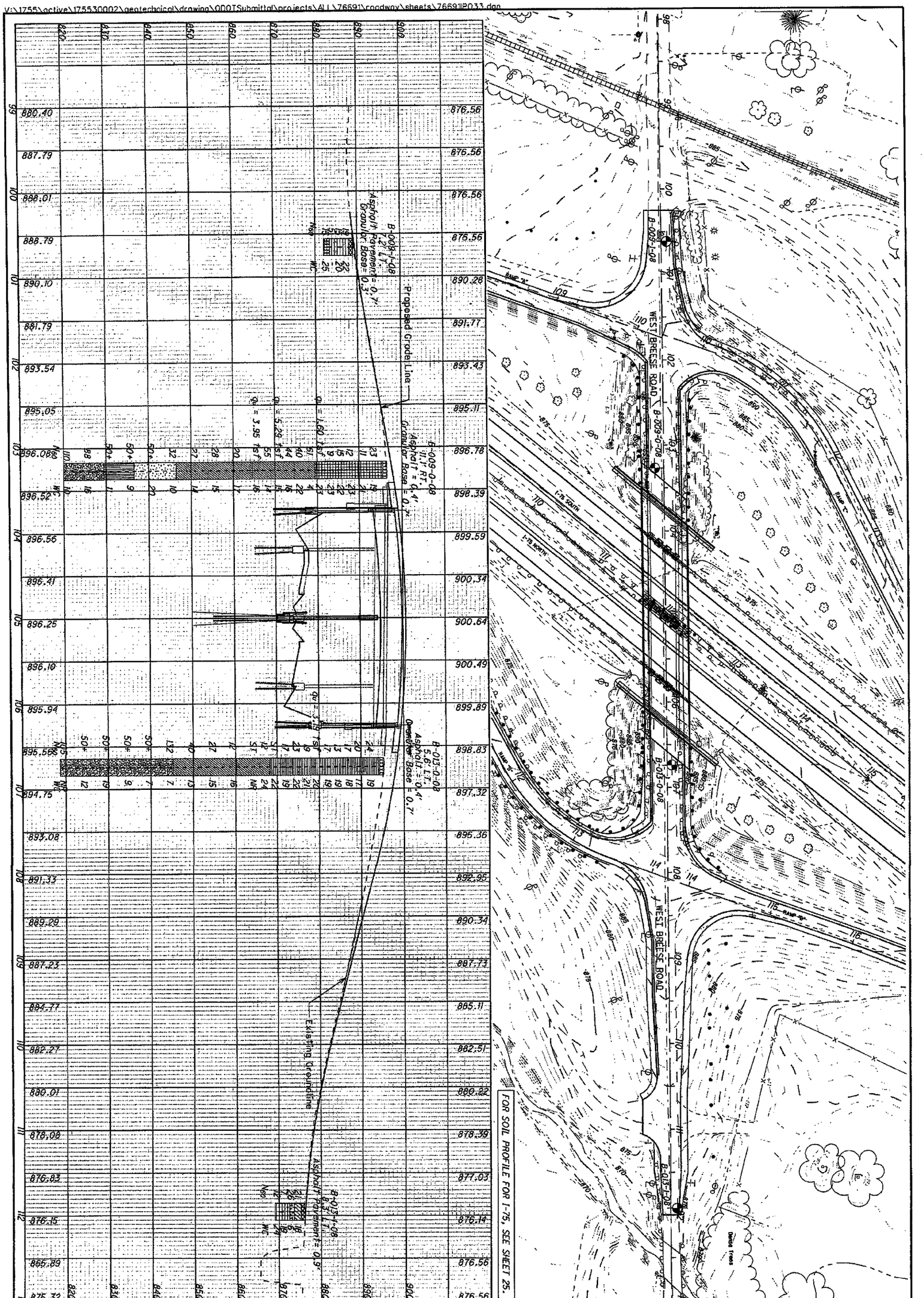

38 / 97	50 / 90	ALL-75-0.21	SOIL PROFILE BREESE ROAD STA. 99+00 - 113+00	DRAWN M.J. CHECKED R.J.K.	0 50 25 100 HORIZONTAL SCALE IN FEET

V:\1755\active\175530002\geotechnical\drawing\ODOTSubmittal\projects\ALL\76691\roadway\sheets\76691PD34.dgn

FOR SOIL PROFILE FOR I-75, SEE SHEETS 24 AND 25.

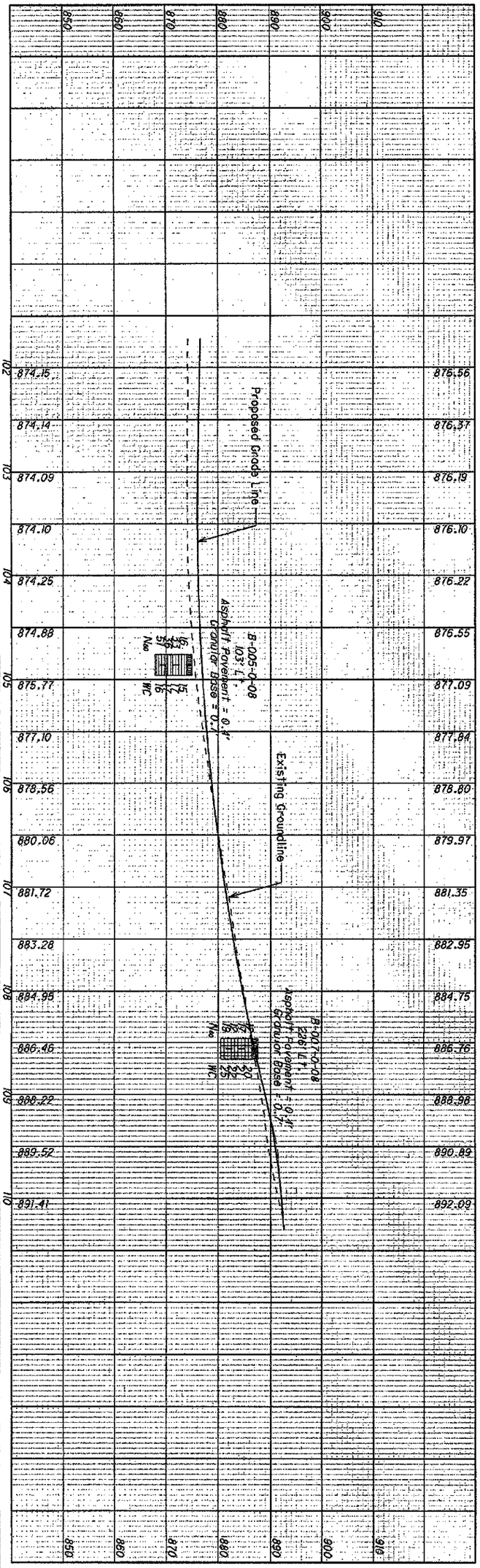

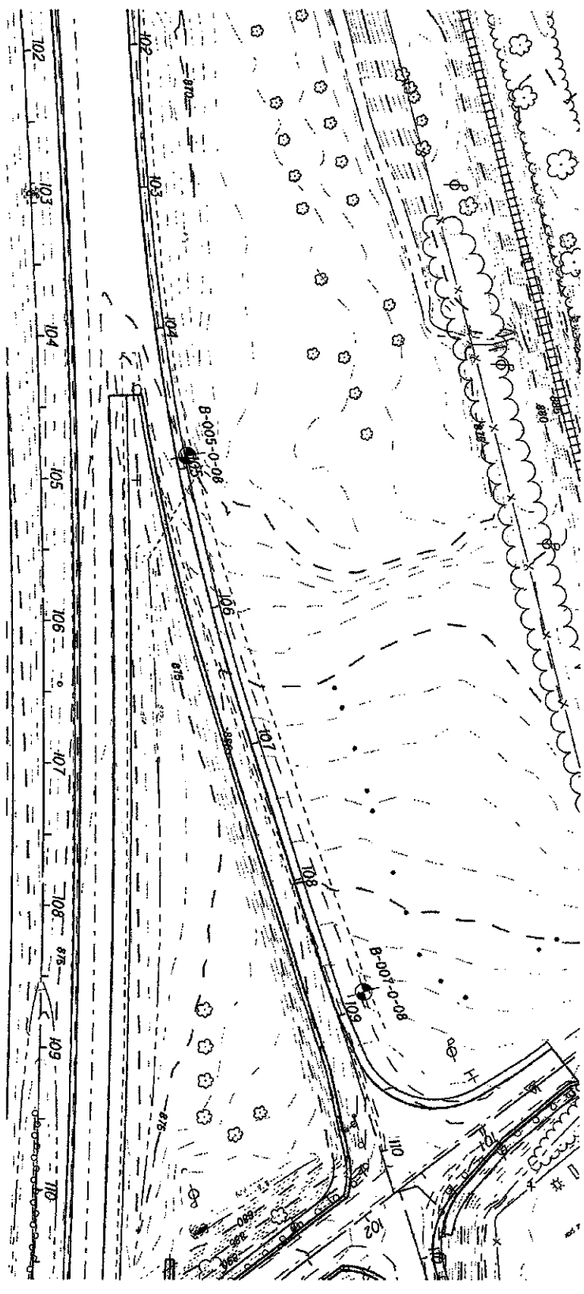

39/97	51/90	ALL-75-0.21	SOIL PROFILE BREESE ROAD - RAMP A	DRAWN M.J. CHECKED J.M.M.	0 50 25 100 HORIZONTAL SCALE IN FEET

V:\1755\active\1755300002\geotechnical\drawing\ODOTSubmittal\projects\ALL\76691\roadway\sheets\76691P035.dgn

FOR SOIL PROFILE FOR I-75, SEE SHEETS 24 AND 25.

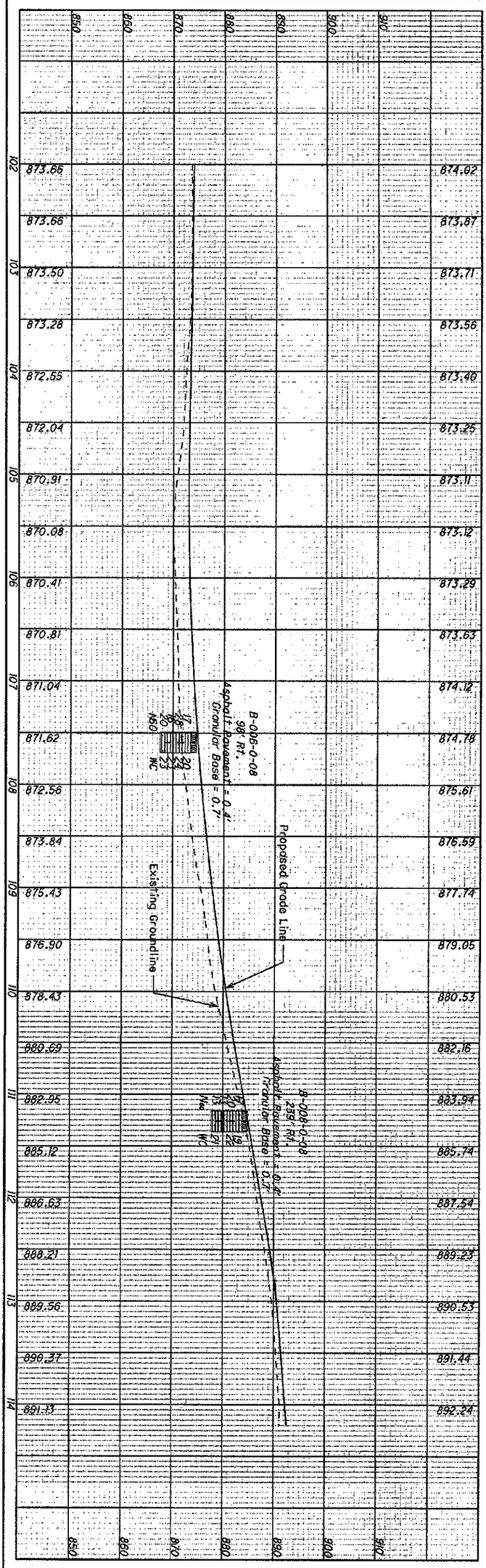

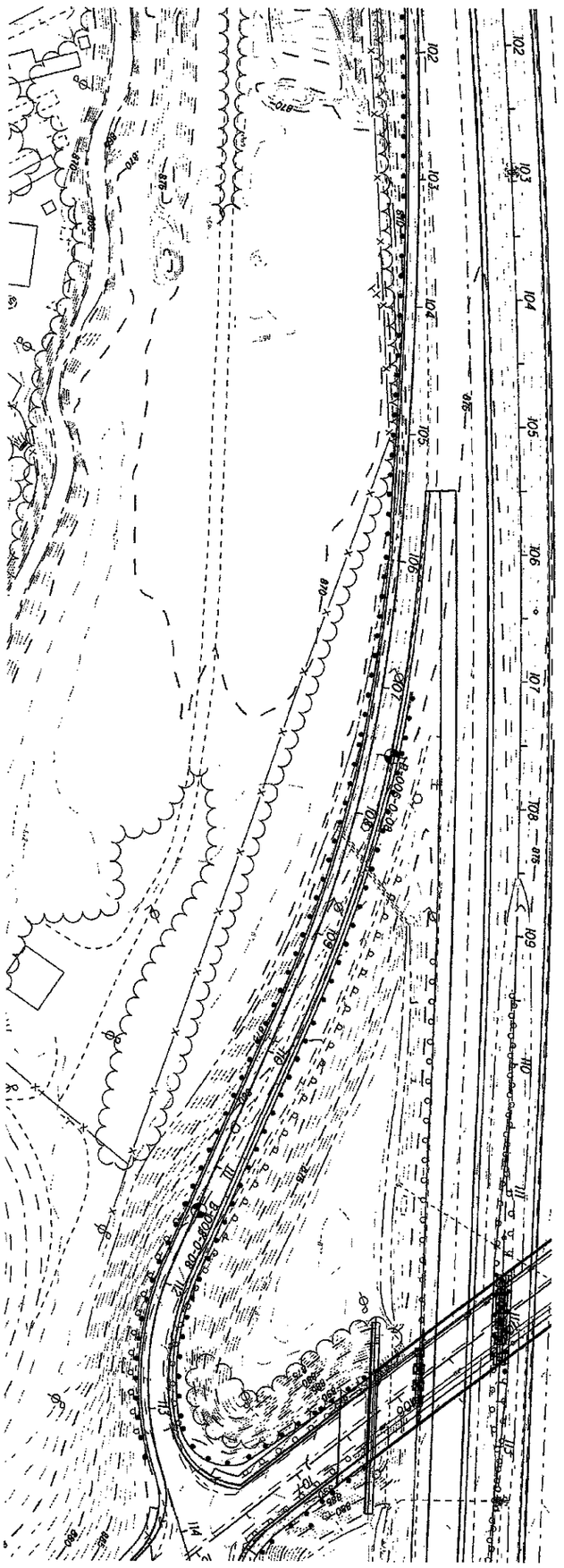

40 / 97	52 / 90	ALL-75-0.21	SOIL PROFILE BREESE ROAD - RAMP B	DRAWN M.J. CHECKED J.M.M.	0 50 25 100 HORIZONTAL SCALE IN FEET

V:\1755\active\175530002\geotechnical\drawing\ODOTSubmittal\projects\ALL\76691\roadway\sheets\76691P036.dgn

FOR SOIL PROFILE FOR I-75, SEE SHEETS 25 AND 26.

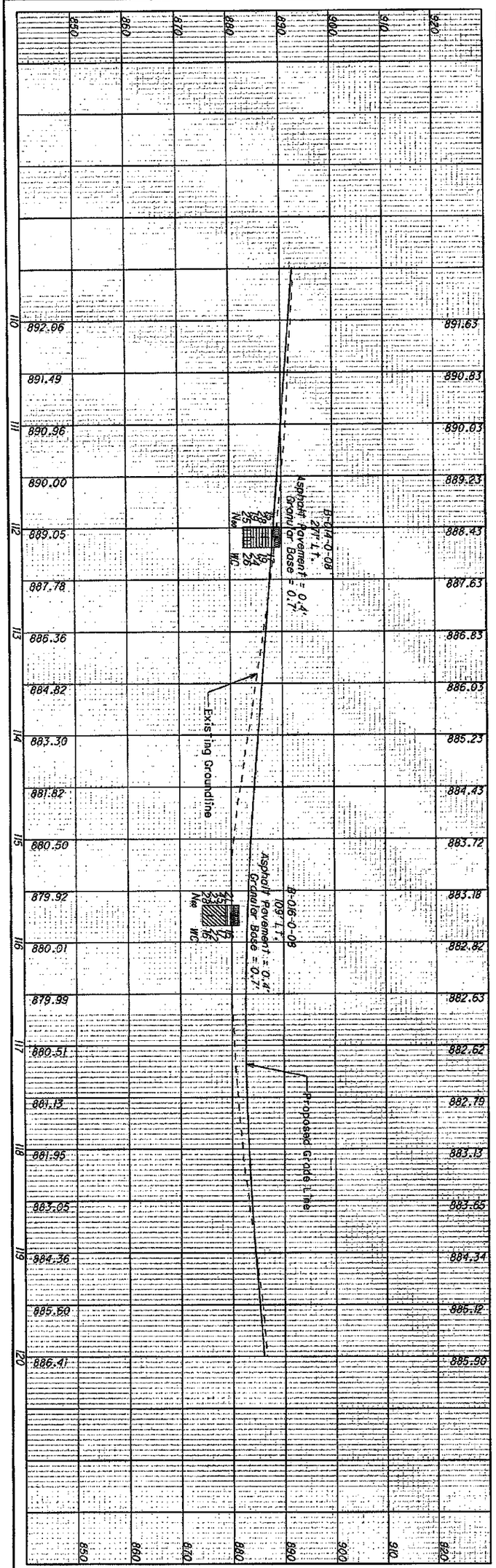

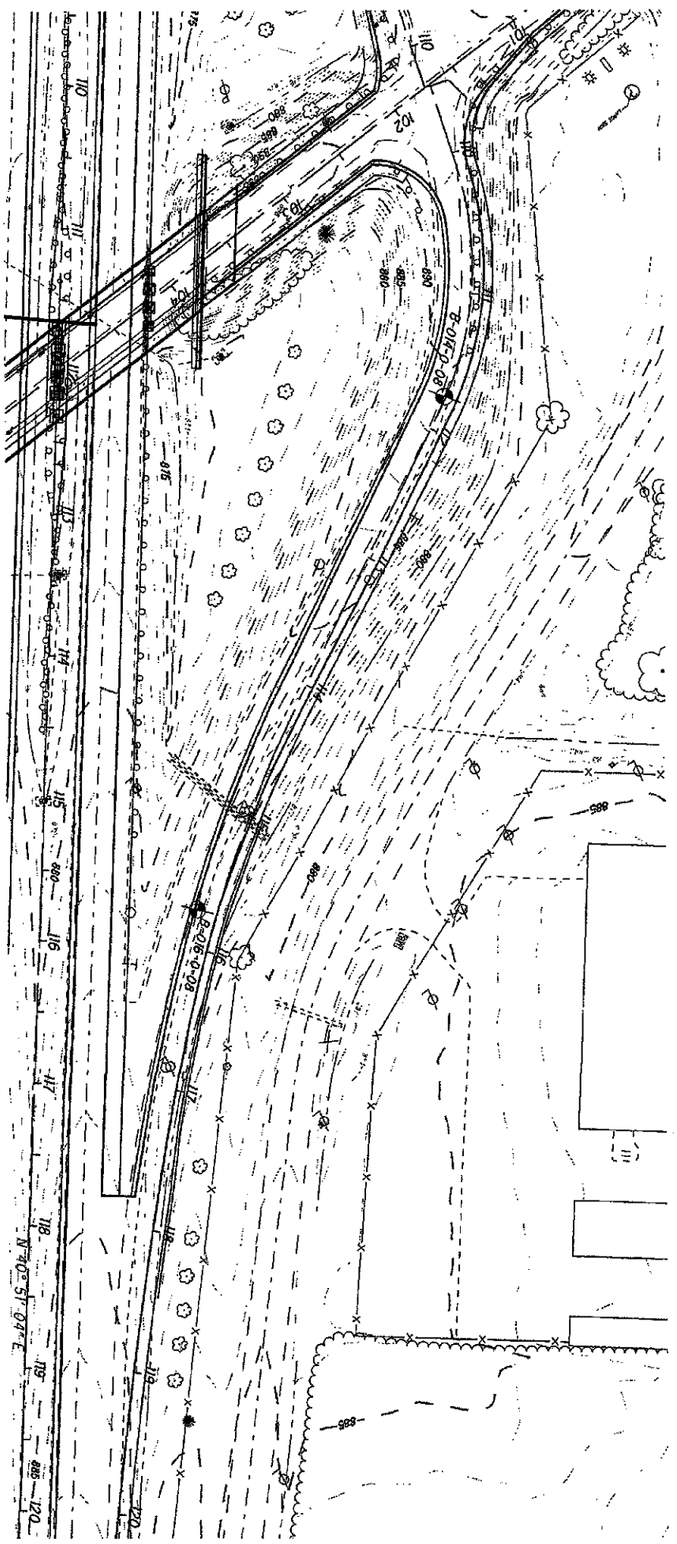

41/97	53/90	ALL-75-0.21	SOIL PROFILE BREESE ROAD - RAMP C	DRAWN M.J. CHECKED J.M.M.	0 25 50 100 HORIZONTAL SCALE IN FEET

V:\1755\active\175530002\geotechnical\drawing\ODOTSubmittal\projects\ALL\76691\roadway\sheets\76691PG37.dgn

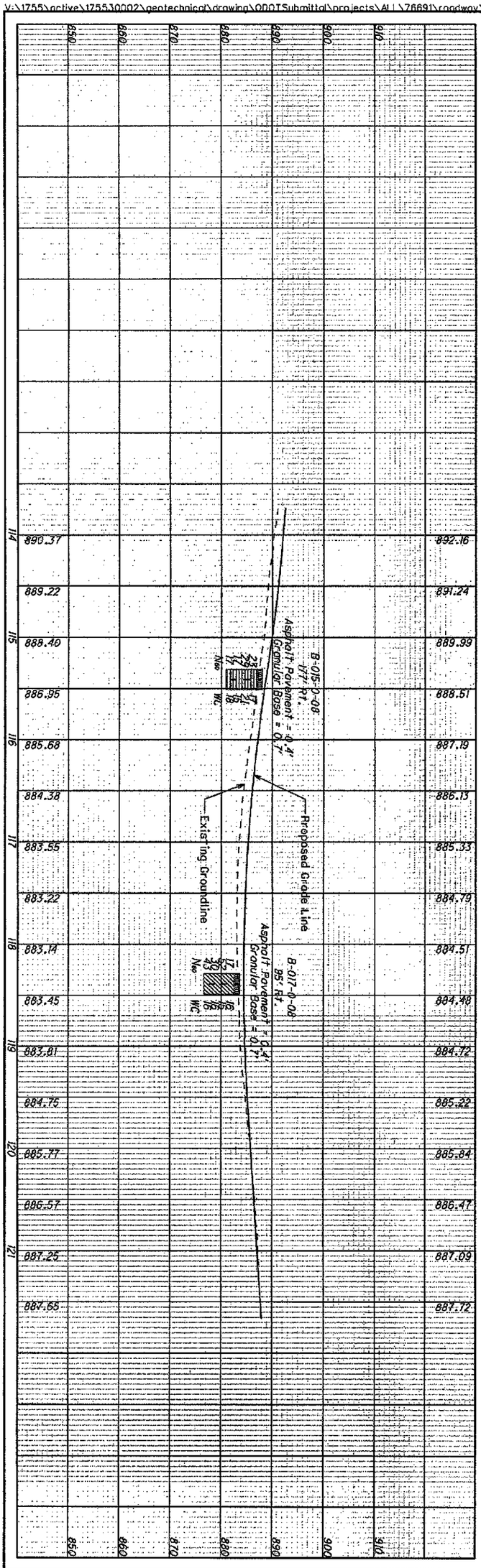
850
860
870
880
890
900
910
890.37
892.16
889.22
891.24
888.40
889.99
886.95
888.51
885.68
887.19
884.38
886.13
883.55
885.33
883.22
884.79
883.14
884.51
883.45
884.48
883.81
884.72
884.76
885.22
885.77
885.84
886.57
886.47
887.25
887.09
884.65
887.72
114
115
116
117
118
119
120
121
B-015-0-08
177' Rt.
Asphalt Pavement = 8.4"
Granular Base = 0.1'
B-017-0-08
85' Rt.
Asphalt Pavement = 10.4"
Granular Base = 0.1'
Proposed Grade Line
Existing Groundline
New
WC
18
18
18

V:\1755\active\1755.30002\geotechnical\drawing\ODOTSubmittal\projects\ALL\76691\roadway\sheets\76691P038.dgn

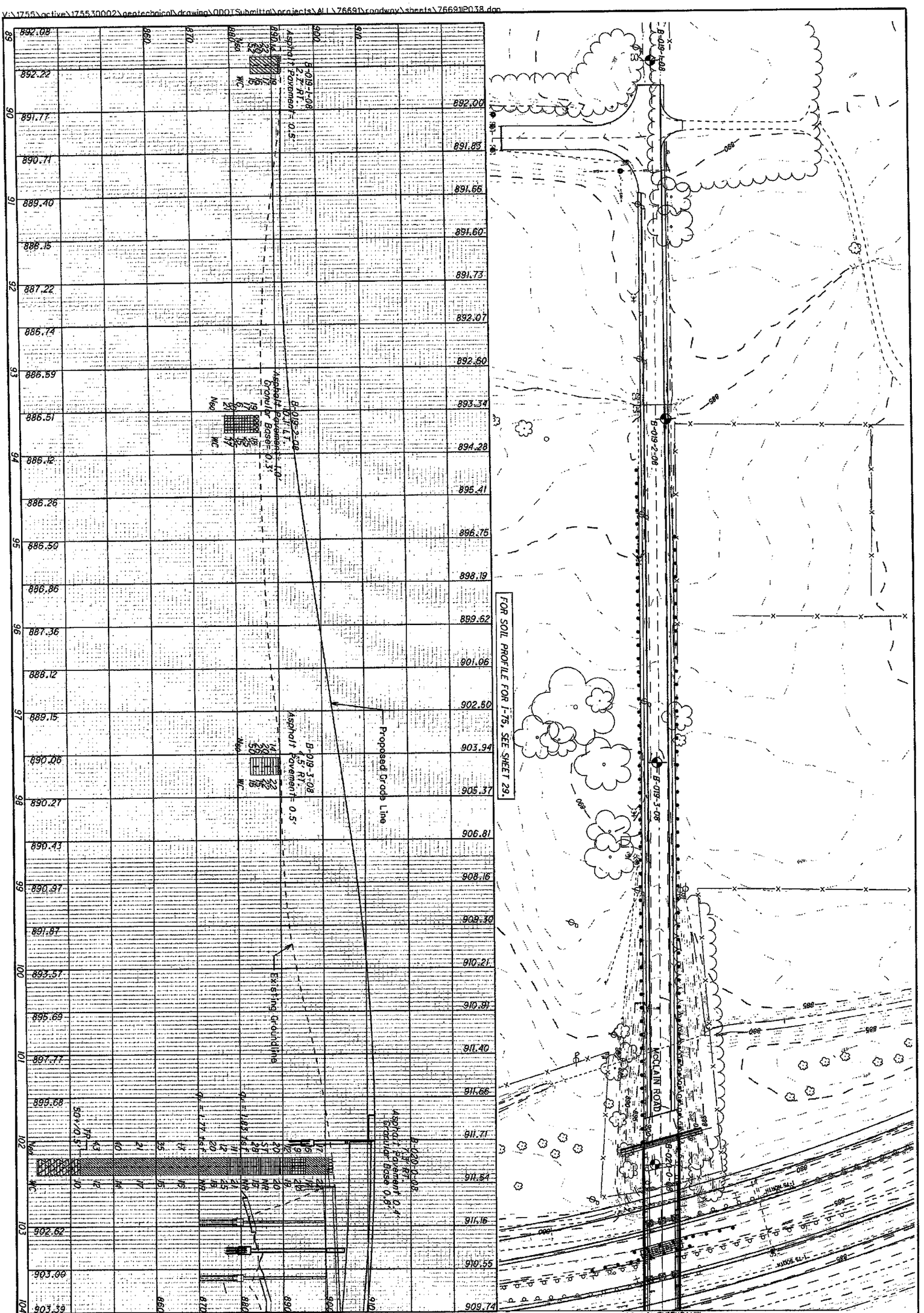

43/97	55/90	ALL-75-0.21	SOIL PROFILE McCLAIN ROAD STA. 89+00 - 104+00	DRAWN M.J. CHECKED R.J.K.	0 50 25 100 HORIZONTAL SCALE IN FEET

V:\1755\active\175530002\geotechnical\drawing\ODOT\submittal\projects\ALL\76691\roadway\sheets\76691P039.dgn

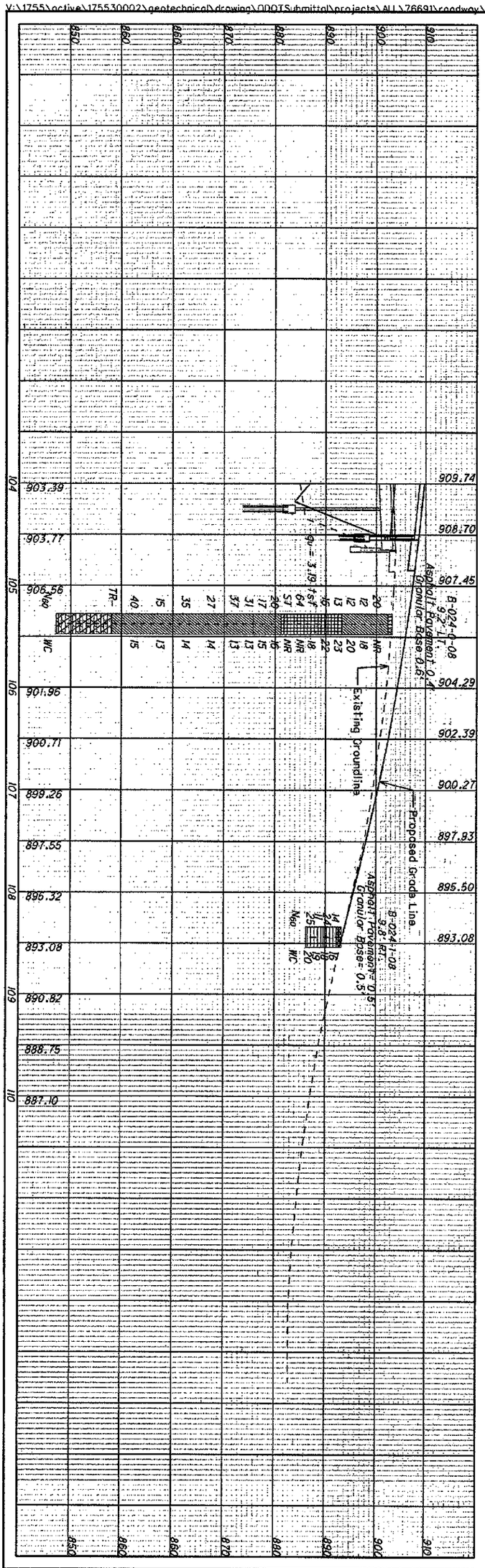

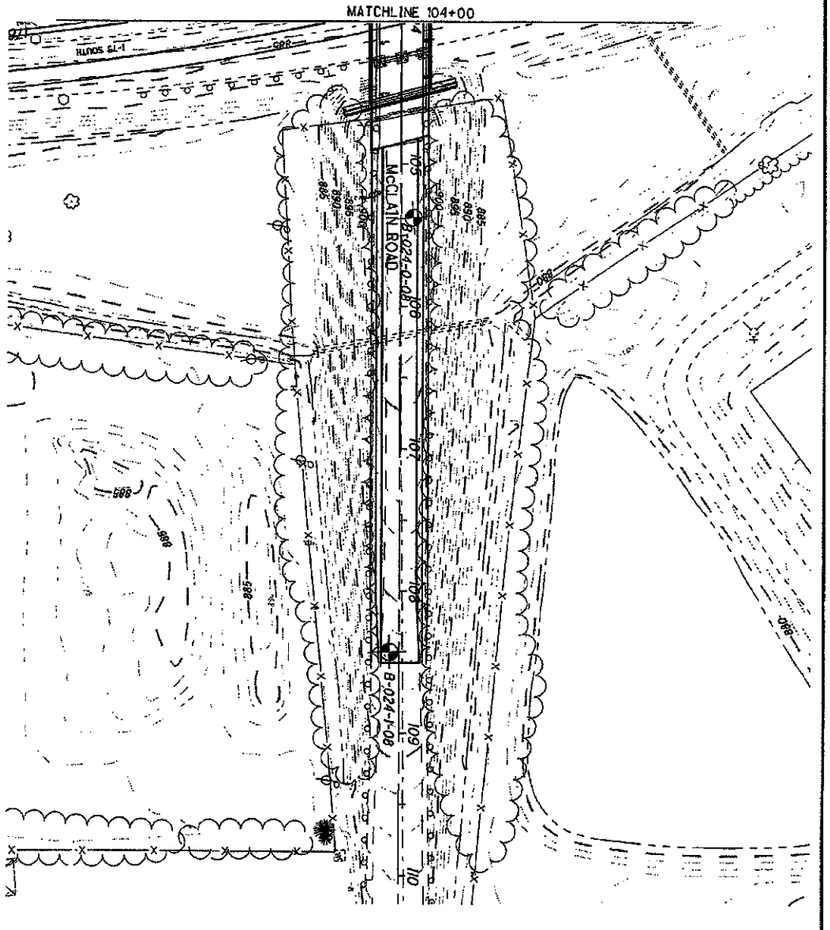

FOR SOIL PROFILE FOR I-75, SEE SHEET 29.

44	56/90	ALL-75-0.21	SOIL PROFILE McCLAIN ROAD STA. 104+00 - 110+00	DRAWN M.J. CHECKED R.J.K. 0 50 25 100 HORIZONTAL SCALE IN FEET

SOIL PROFILE FOR I-75, SEE SHEETS 32 AND 33.
FOR SOIL PROFILE FOR RAMPS "A" AND "D", SEE SHEETS 59 AND 62 RESPECTIVLY.

SOIL PROFILE
S.R. 65 - UNDER I-75

ALL-75-0.21

57/90

45/97

HORIZONTAL SCALE IN FEET
0 25 50 100

DRAWN M.J.
CHECKED J.M.M.

V:\1755\active\175530002\geotechnical\drawing\ODOT\submittal\projects\ALL\75691\roadway\sheets\75691P040.dgn

V:\1755\active\175530002\geotechnical\drawing\ODOTSubmittal\projects\ALL\76691\roadway\sheets\76691P041.dgn

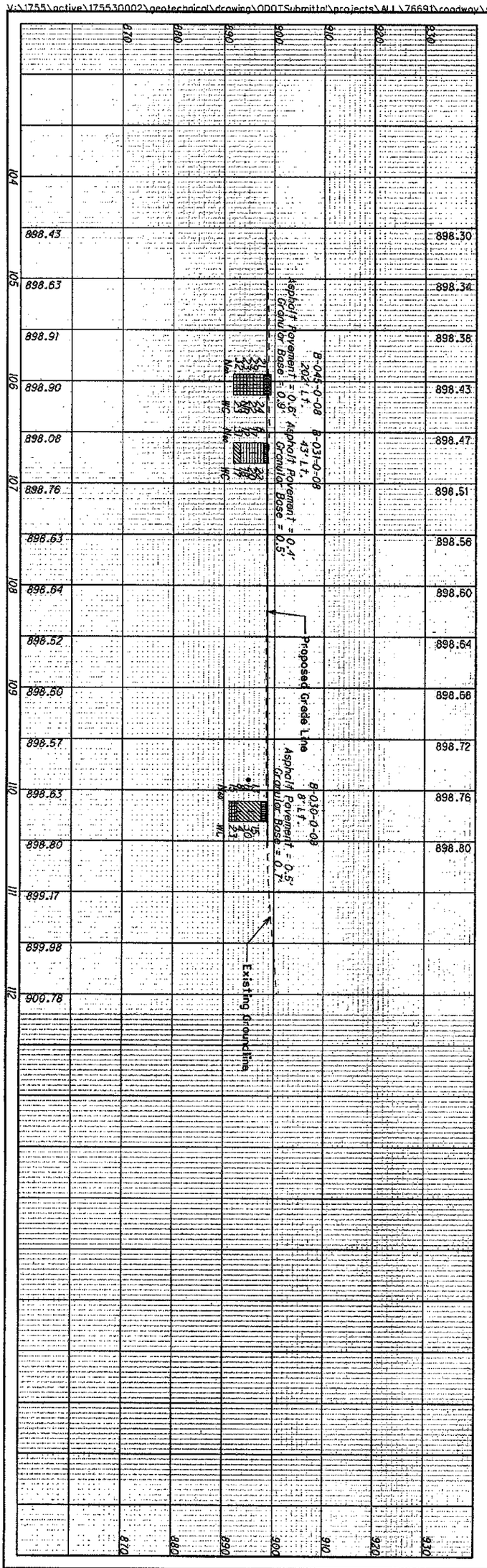

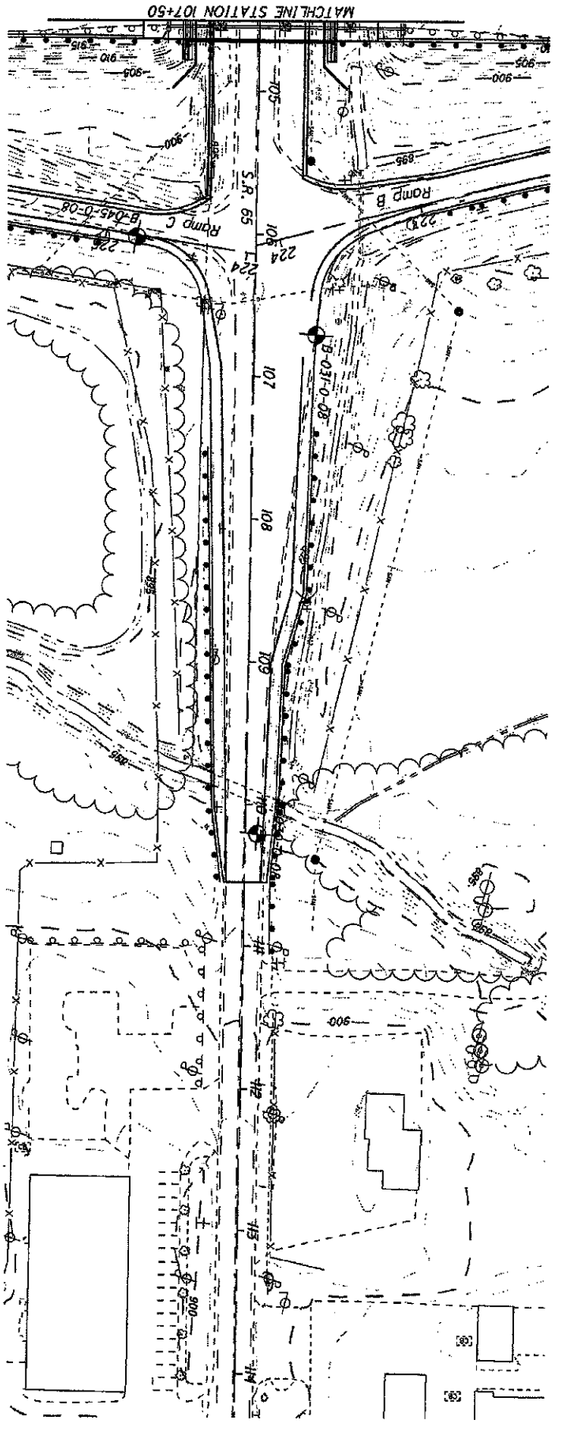

FOR SOIL PROFILE FOR I-75, SEE SHEETS 32 AND 33.
FOR SOIL PROFILE FOR RAMPS "B" AND "C", SEE SHEETS 60 AND 61.

46 97	58/90	ALL-75-0.21	SOIL PROFILE S.R. 65 - UNDER I-75 - CONTINUED	DRAWN M.J. CHECKED J.M.M.	0 50 25 100 HORIZONTAL SCALE IN FEET

V:\1755\active\175530002\geotechnical\drawing\ODOTSubmittal\projects\ALL\76691\roadway\sheets\76691P042.dgn

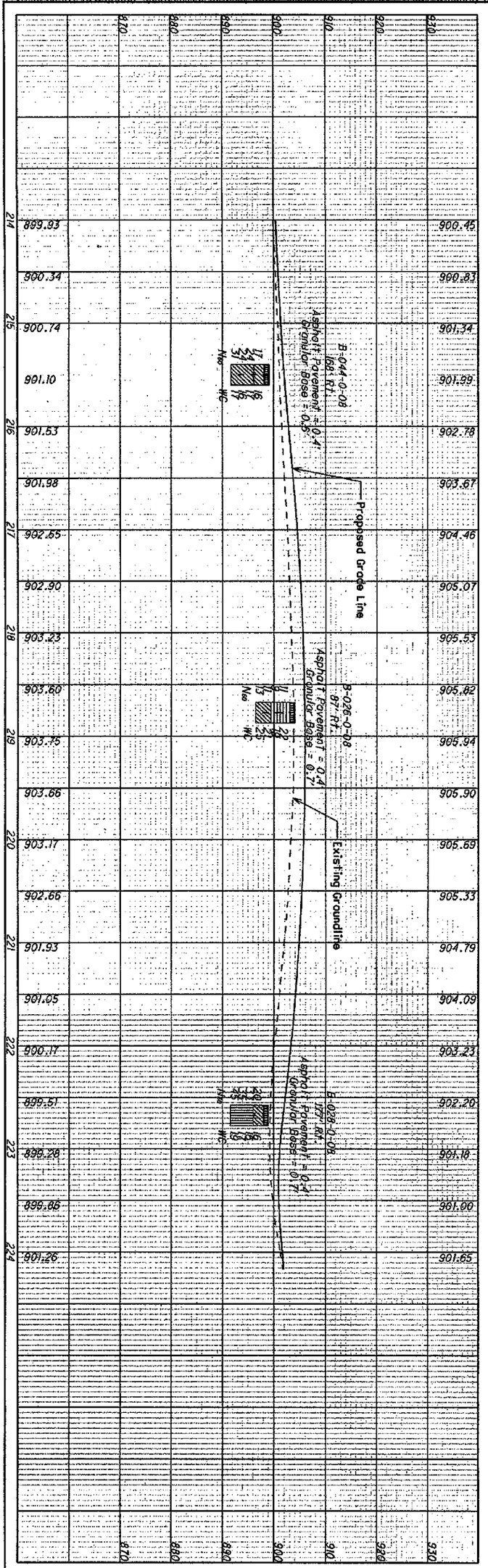

FOR SOIL PROFILE FOR I-75, SEE SHEET 32.

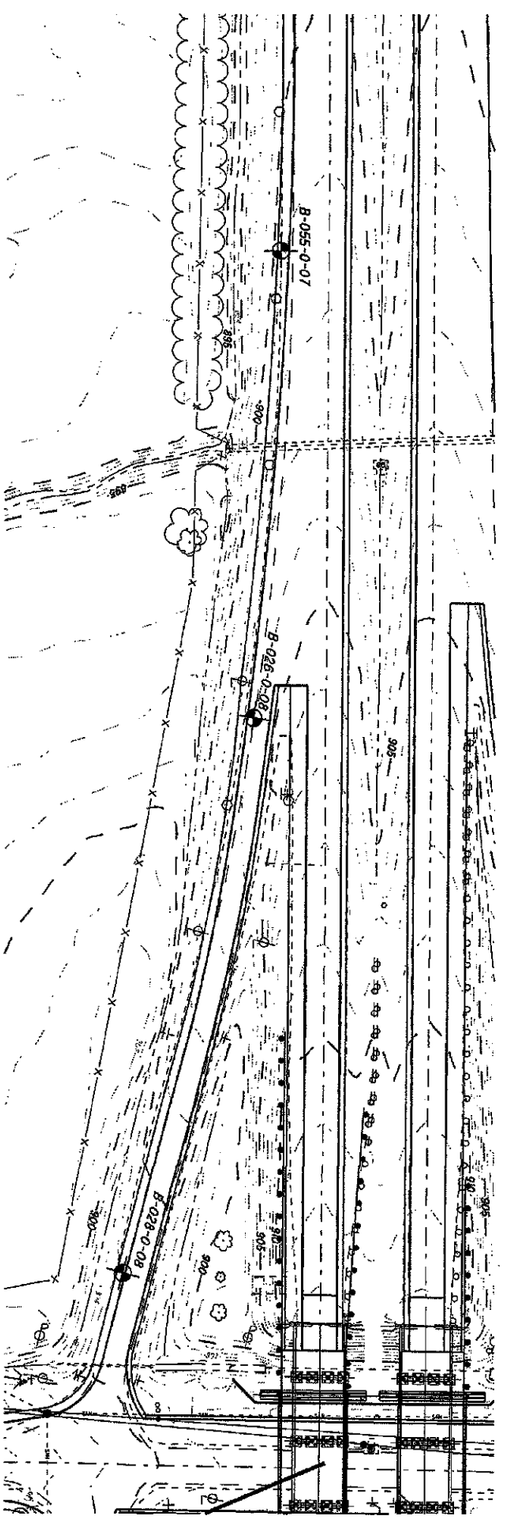

SOIL PROFILE
S.R. 65 - RAMP A

DRAWN M.J.
CHECKED J.M.M.

0 50
25 100
HORIZONTAL SCALE IN FEET

V:\1755\active\175530002\geotechnical\drawing\ODOTSubmittal\projects\ALL\76691\roadway\sheets\76691P043.dgn

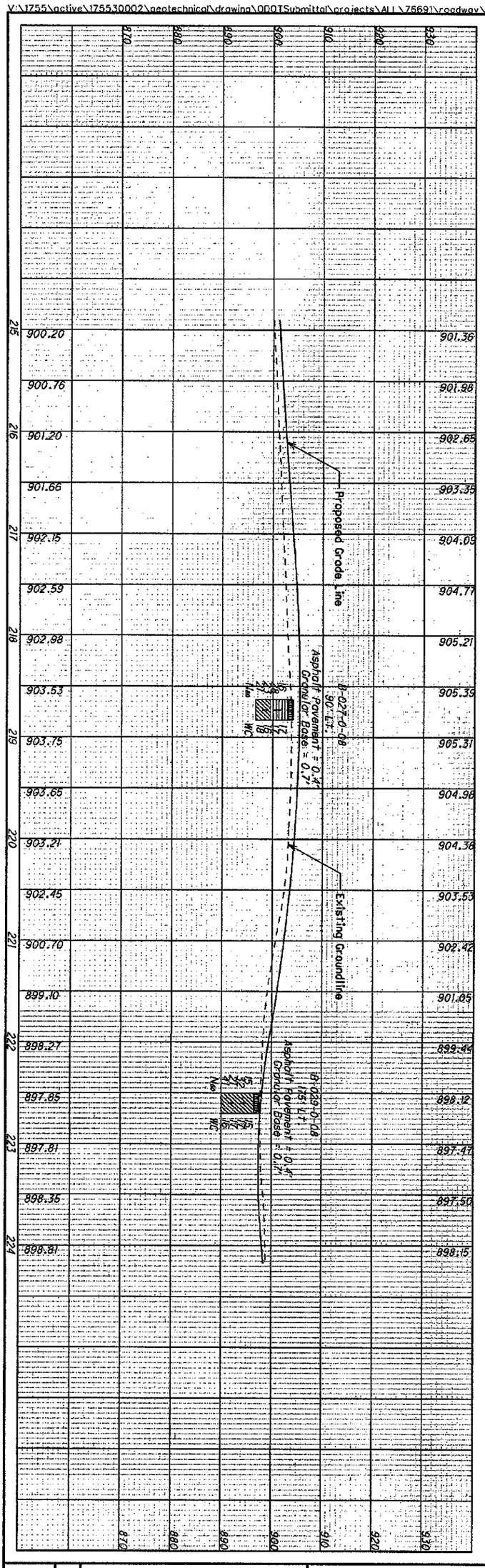
870
880
890
900
910
920
930
215
216
217
218
219
220
221
222
223
224
900.20
901.36
900.76
901.98
901.20
902.65
901.66
903.35
902.15
904.09
902.59
904.77
902.98
905.21
903.53
905.39
903.75
905.31
903.65
904.98
903.21
904.36
902.45
903.53
900.70
902.42
899.10
901.05
898.27
899.44
897.85
898.12
897.81
897.47
898.35
897.50
898.81
898.15
Proposed Grade Line
Existing Groundline
B-027-0-08
90' Lt.
Asphalt Pavement = 0.4'
Granular Base = 0.7'
B1-029-0-08
175' Lt.
Asphalt Pavement = 0.4'
Granular Base = 0.7'
Asphalt Pavement = 0.4'
Granular Base = 0.7'
Mix
Mix
Mix
Mix
#57
#8
#57
#8
#57
#8

V:\1755\active\175530002\geotechnical\drawing\ODOTSubmittal\projects\ALL\76691\roadway\sheets\76691IP044.dgn

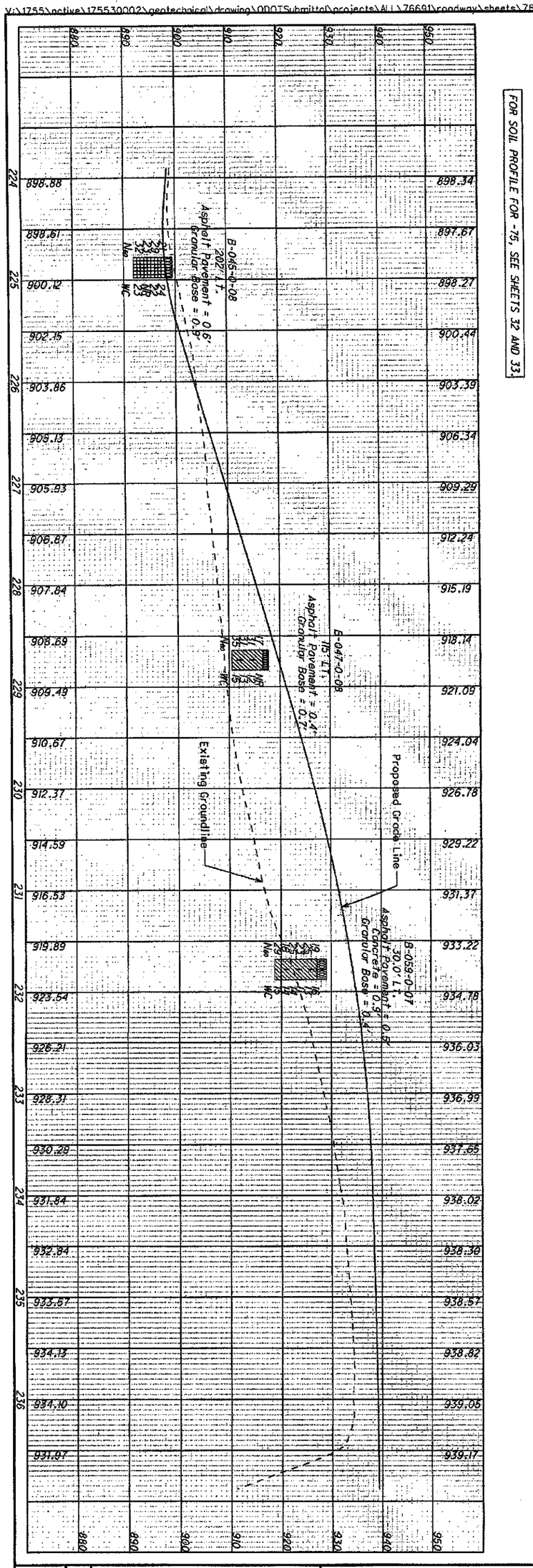

FOR SOIL PROFILE FOR -75, SEE SHEETS 32 AND 33

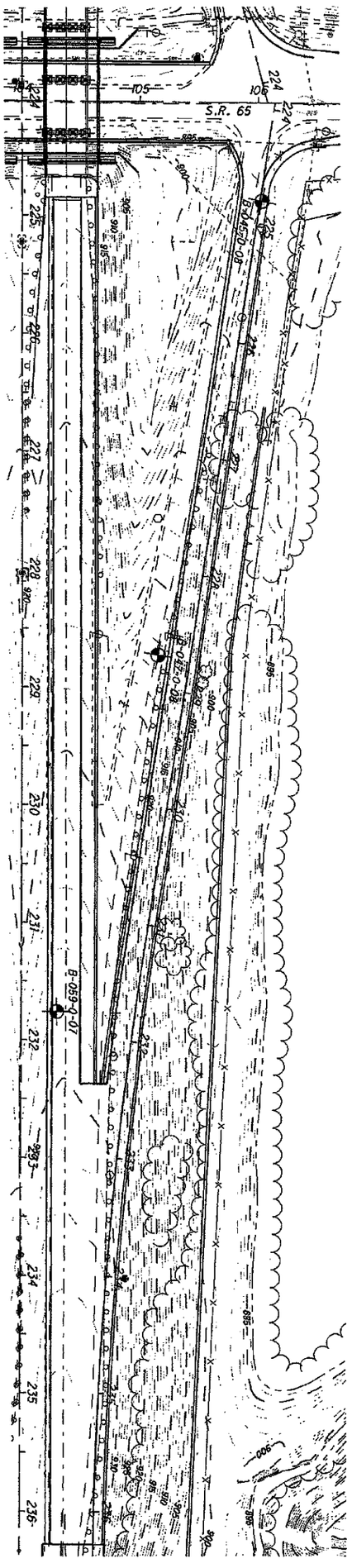

49/97	61/90	ALL-75-0.21	SOIL PROFILE S.R. 65 - RAMP C	DRAWN M.J. CHECKED J.M.M. 0 50 25 100 HORIZONTAL SCALE IN FEET

V:\1755\active\175530002\geotechnical\drawing\ODOTSubmittal\projects\ALL\76691\roadway\sheets\76691IP045.dgn

FOR SOIL PROFILE FOR I-75, SEE SHEET 32 AND 33.
FOR SOIL PROFILE FOR S.R. 65 SEE SHEETS 57 AND 58.
FOR SOIL PROFILE FOR YODER ROAD, SEE SHEET 63.

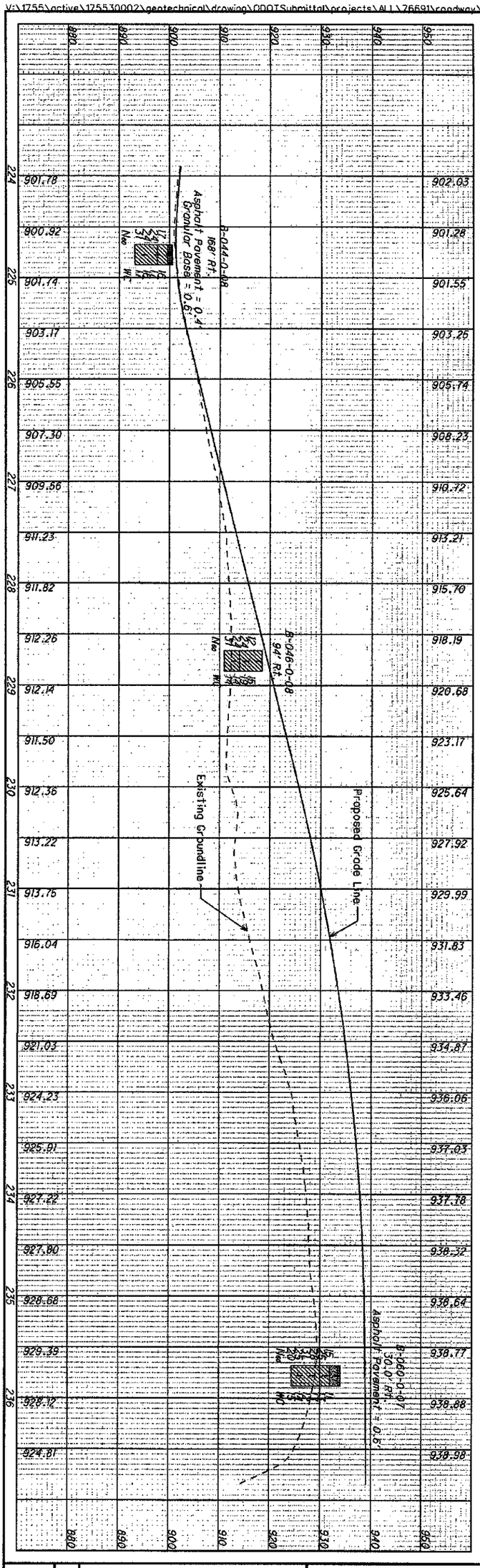

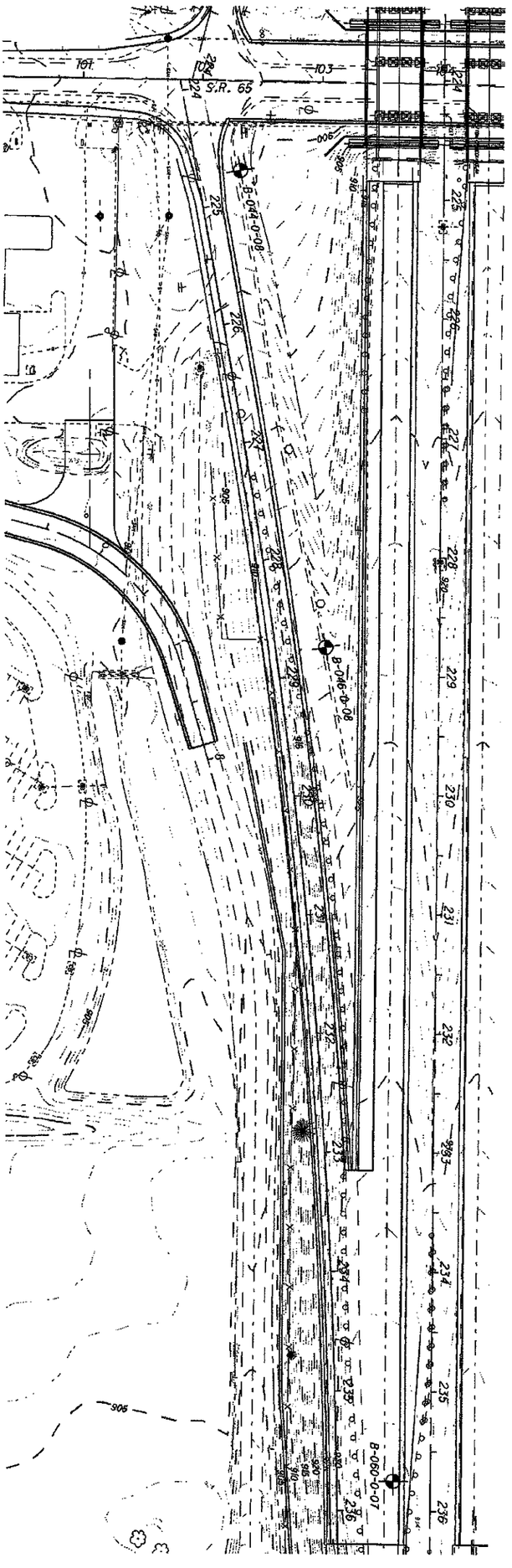

50/97	62/90	ALL-75-0.21	SOIL PROFILE S.R. 65 - RAMP D	DRAWN M.J. CHECKED J.M.M.	0 50 25 100 HORIZONTAL SCALE IN FEET

V:\1755\active\175530002\geotechnical\drawing\ODOTSubmittal\projects\ALL\76691\roadway\sheets\76691P046.dgn

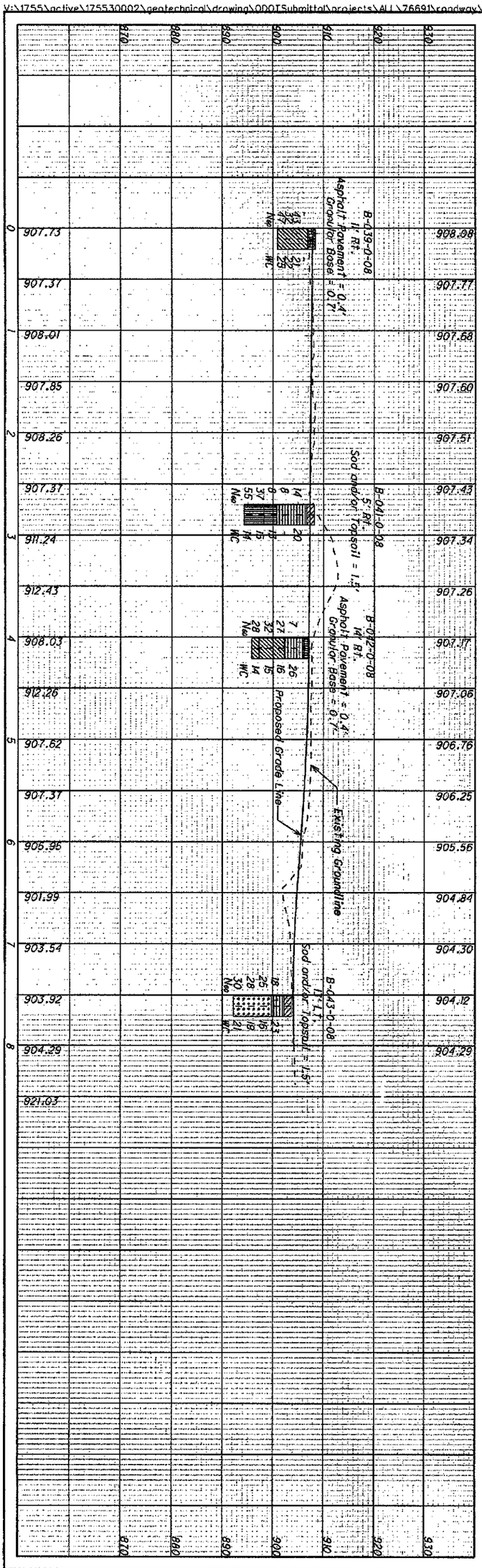

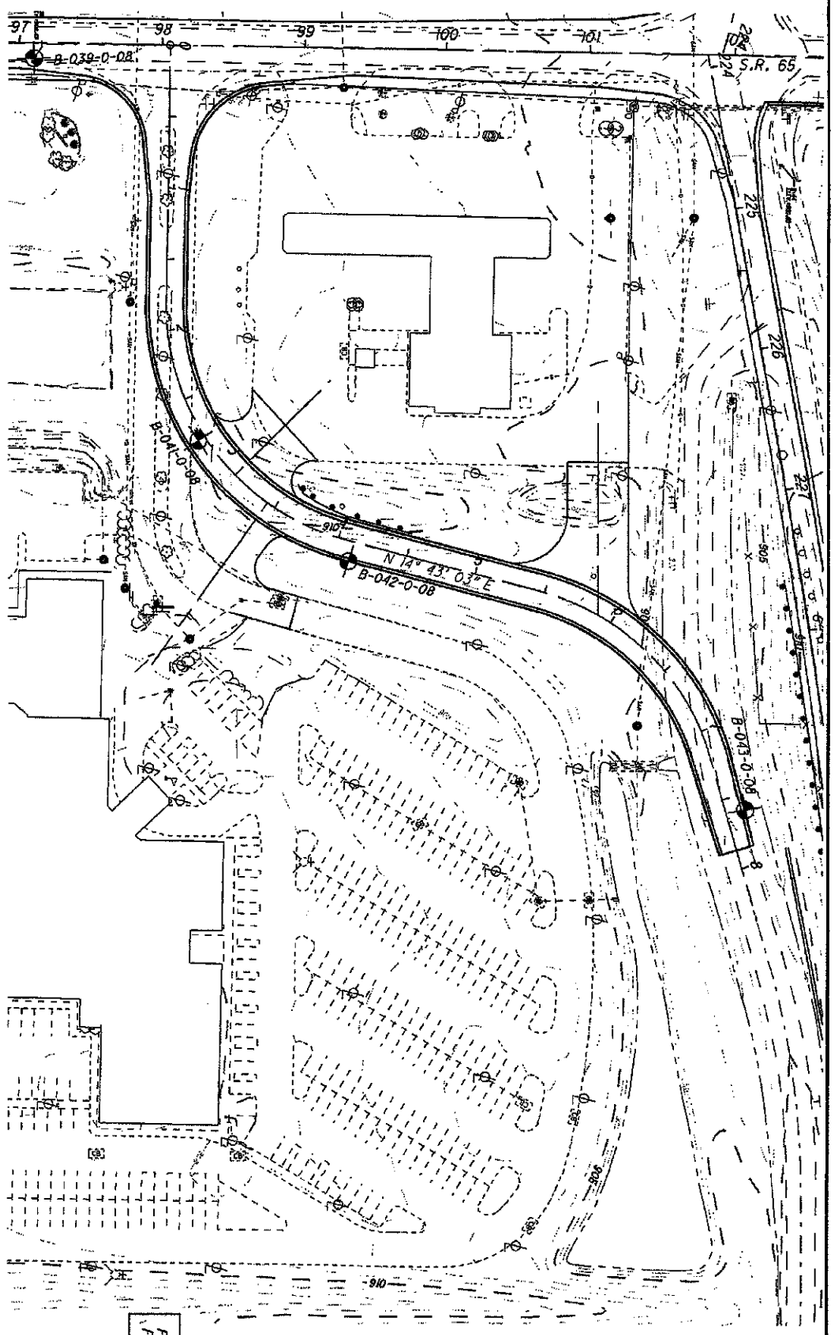

FOR SOIL PROFILE FOR S.R. 65, SEE SHEETS 57 AND 58.
FOR SOIL PROFILE FOR RAMP "D", SEE SHEET 62.

57 / 63	ALL-75-0.21	SOIL PROFILE YODER ROAD	DRAWN M.J.	0 50 25 100	N
			CHECKED J.M.M.	HORIZONTAL SCALE IN FEET	

V:\1755\active\175530002\geotechnical\drawing\ODOTSubmittal\projects\ALL\76691\roadway\sheets\76691P047.dgn

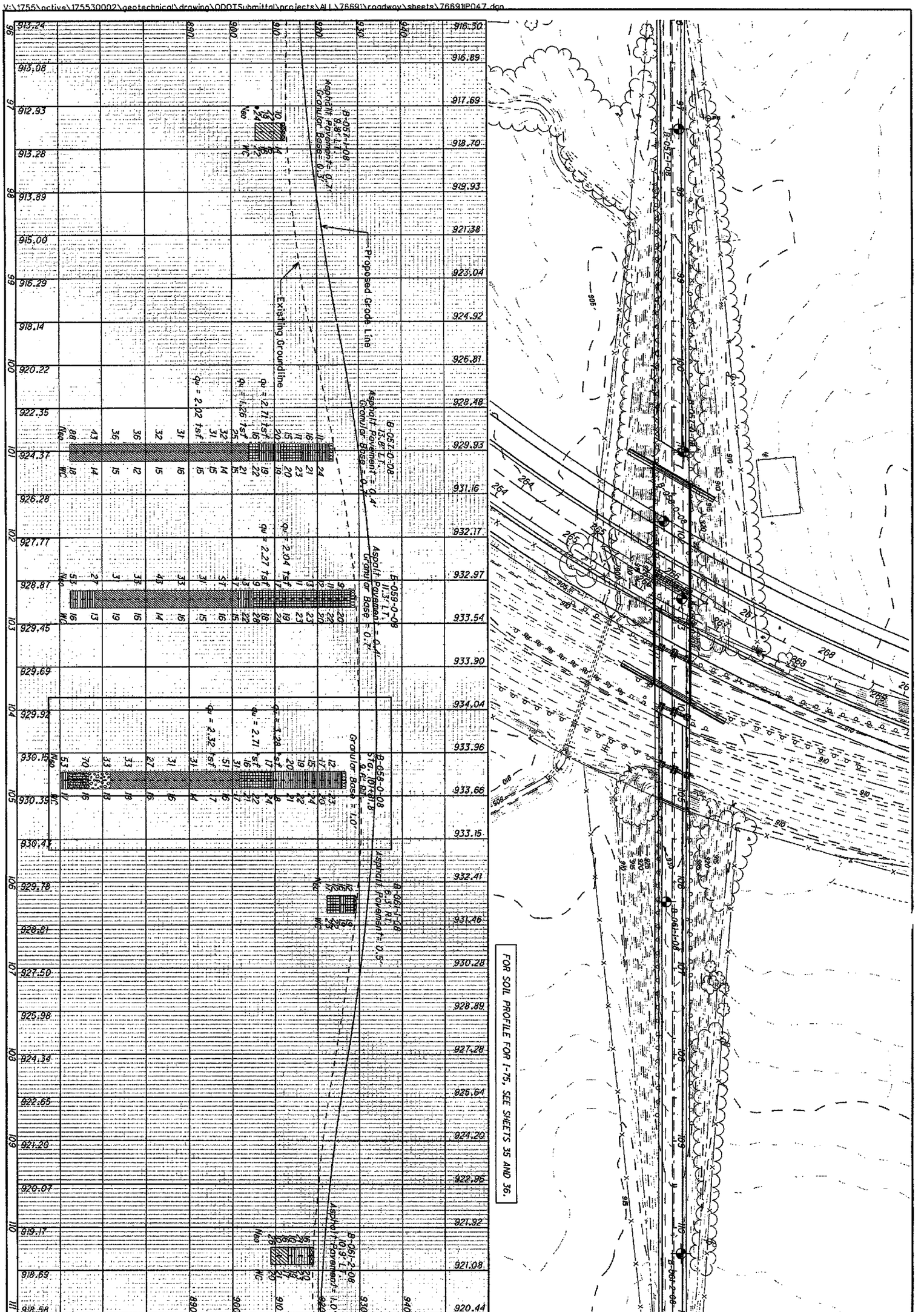

52 / 97	64 / 90	ALL-75-0.21	SOIL PROFILE HANTHORN ROAD STA. 96+00 - 111+00	DRAWN M.J. CHECKED R.J.K. 0 50 25 100 HORIZONTAL SCALE IN FEET

PROJECT DESCRIPTION

CONSTRUCT SEVEN RETAINING STRUCTURES ALONG I-75 AND CONNECTING SIDE ROADS.

HISTORIC RECORDS

HISTORIC BORING RECORDS FOR THE EXISITNG BRIDGE WERE REQUESTED FROM THE ODOT OFFICE OF GEOTECHNICAL ENGINEERING AND THE DISTRICT. NO SIGNIFICANT HISTORICAL DATA WAS FOUND FOR THE STRUCTURE LOCATIONS.

GEOLOGY

THE STRUCTURE SITE IS LOCATED IN THE CENTRAL OHIO CLAYEY TILL PLAIN. THIS REGION IS COMPRISED OF GROUND MORAINE AND END MORAINE TILL DEPOSITS OVERLYING DOLOMITE WITH INTERBEDDED SHALE. CAVES AND OTHER KARST FEATURES MAY BE PRESENT ACCORDING TO THE PHYSIOGRAPHIC REGION OF OHIO MAP (ODNR, 1998), BUT NO KNOWN FEATURES WERE IDENTIFIED IN THE OHIO KARST AREAS MAP (ODNR, 2007).

RECONNAISSANCE

A FIELD RECONNAISSANCE WAS COMPLETED ON MARCH 13, 2007, FOCUSING MAINLY ON PAVEMENT CONDITIONS AND SITE TOPOGRAPHY AND DRAINAGE. THE MAINLINE SHOULDER PAVEMENTS SHOW EXTENSIVE "ALLIGATOR" CRACKING AND THE MAINLINE PAVEMENTS SHOW REFLECTIVE CRACKING AT THE EXPANSION JOINT LOCATIONS.

THE SURROUNDING AREA IS DESCRIBED AS GENTLY UNDULATING MOSTLY CONSISTING OF OPEN FIELD OR LIGHTLY DEVELOPED COMMERCIAL AND RESIDENTIAL DISTRICTS. DRAINAGE ALONG THE ALIGNMENT IS DESCRIBED AS SLUGGISH WITH AREAS OF STANDING WATER, AND FLOWING WATER IN DRAINAGE DITCHES AND NATURAL STREAMS GENERALLY CREATING STEEP TO VERTICAL CUT BANKS IN THE SOIL PROFILE.

SUBSURFACE EXPLORATION

A TOTAL OF 34 BORINGS WERE ADVANCED FOR THE VARIOUS WALLS. THE BORINGS WERE ADVANCED USING 3.25-INCH I.D. HOLLOW-STEM AUGERS. STANDARD PENETRATION TEST (SPT) AND UNDISTURBED SHELBY TUBE (ST) SAMPLES WERE OBTAINED FOR THE UPPER 30 FEET OF EACH BORING AT 2.5-FOOT INTERVALS AND AT 5-FOOT INTERVALS BELOW THIS DEPTH INTO A MINIMUM OF 20 FEET OF HARD OR DENSE SOILS (N_{60} >30). WHEN BEDROCK WAS ENCOUNTERED, NQ SIZED ROCK CORING EQUIPMENT WAS USED TO OBTAIN A MINIMUM OF FIVE FEET OF ROCK CORE. SPT SAMPLES WERE OBTAINED USING THREE DIFFERENT DRILL RIGS WITH CALIBRATED AUTOMATIC HAMMERS WITH ENERGY RATIOS (ER) OF 81.9%(CALIBRATED ON 2/24/2010), 74.4%(CALIBRATED ON 2/24/2010), AND 83.1%(CALIBRATED ON 10/10/2010) AS SHOWN ON THE BORING LOGS. AT THE CONCLUSION OF DRILLING OPERATIONS, BOREHOLES WERE BACKFILLED WITH EITHER AUGER SOIL CUTTINGS OR BENTENITE CHIPS DEPENDING UPON CONDITIONS ENCOUNTERED.

EXPLORATION FINDINGS

MEDIUM STIFF TO HARD FINE GRAINED GLACIAL SOILS CLASSIFYING PREDOMINANTLY AS SILT AND CLAY (A-6A), WITH LESSER AMOUNTS OF SILTY CLAY (A-6B), CLAY (A-7-6), SANDY SILT (A-4A) AND SILT (A-4B) WERE ENCOUNTERED IN ALL BORINGS. FEW LAYERS OF LOOSE TO VERY DENSE COARSE GRAINED SOILS CLASSIFYING AS GRAVEL (A-1-A), GRAVEL WITH SAND (A-1-B), GRAVEL WITH SAND AND SILT (A-2-4), GRAVEL WITH SAND, SILT AND CLAY (A-2-6) AND COARSE AND FINE SAND (A-3A) WERE ENCOUNTERED AT VARIOUS DEPTHS ACROSS THE PROJECT LOCATIONS. COBBLES AND BOULDERS WERE ENCOUNTERED AT VARIOUS DEPTHS IN THE BORINGS ADVANCED FOR WALLS 1, 3 AND 4. BEDROCK WAS ENCOUNTERED AT ELEVATIONS RANGING FROM 842 TO 849 FEET IN THE BORINGS ADVANCED FOR WALLS 8, 9, 10 AND 11. BEDROCK WAS DESCRIBED AS DOLOMITE AND INTERBEDDED DOLOMITE AND SHALE, WITH RQD VALUES RANGING FROM 0% TO 26%.

PERCHED GROUND WATER WAS ENCOUNTERED IN FEW COARSE GRAINED DEPOSITS, BUT NO STATIC WATER LEVEL WAS OBSERVED IN THE BORINGS PRIOR BORING TERMINATION.

SPECIFICATIONS

THIS GEOTECHNICAL EXPLORATION WAS PERFORMED IN ACCORDANCE WITH THE STATE OF OHIO, DEPARTMENT OF TRANSPORTATION, OFFICE OF GEOTECHNICAL ENGINEERING, SPECIFICATIONS FOR GEOTECHNICAL EXPLORATIONS, DATED JANUARY 2009.

AVAILABLE INFORMATION

ALL AVAILABLE SOIL AND BEDROCK INFORMATION THAT CAN BE CONVENIENTLY SHOWN ON THE PROFILE SHEETS HAS BEEN SO REPORTED. ADDITIONAL SUBSURFACE EXPLORATIONS MAY HAVE BEEN MADE TO STUDY SOME SPECIAL ASPECT OF THE PROJECT. COPIES OF THIS DATA, IF ANY, MAY BE INSPECTED IN THE DISTRICT DEPUTY DIRECTOR'S OFFICE, THE OFFICE OF GEOTECHNICAL ENGINEERING AT 1600 WEST BROAD STREET OR THE OFFICE OF STRUCTURAL ENGINEERING AT 1980 WEST BROAD STREET.

LEGEND

DESCRIPTION	ODOT CLASS	CLASSIFIED MECH./VISUAL	
GRAVEL AND/OR STONE FRAGMENTS	A-1-a	5	2
GRAVEL AND/OR STONE FRAGMENTS WITH SAND	A-1-b	3	3
GRAVEL AND/OR STONE FRAGMENTS WITH SAND AND SILT	A-2-4	3	4
GRAVEL AND/OR STONE FRAGMENTS WITH SAND AND SILT & CLAY	A-2-6	1	2
COARSE AND FINE SAND	A-3a	2	1
SANDY SILT	A-4a	24	41
SILT	A-4b	3	1
SILT AND CLAY	A-6a	68	145
SILTY CLAY	A-6b	16	9
CLAY	A-7-6	10	6
	TOTAL	135	214

DOLOMITE	*VISUAL*
SHALE	*VISUAL*
PAVEMENT OR BASE = X = APPROXIMATE THICKNESS	*VISUAL*
SOD AND TOPSOIL = X = APPROXIMATE THICKNESS	*VISUAL*
EXPLORATION LOCATION - PLAN VIEW	
DRIVE SAMPLE AND/OR ROCK CORE BORING PLOTTED TO VERTICAL SCALE ONLY. HORIZONTAL BAR INDICATES A CHANGE IN STRATIGRAPHY.	
WC	INDICATES WATER CONTENT IN PERCENT.
N_{60}	INDICATES CORRECTED STANDARD PENETRATION RESISTANCE FOR 60% EFFICIENCY.
W—	INDICATES FREE WATER.
●	PLASTIC SOIL WITH MOISTURE CONTENT EQUAL TO OR GREATER THAN THE LIQUID LIMIT MINUS THREE.
⊖	NON-PLASTIC SOIL WITH MOISTURE CONTENT GREATER THAN OR EQUAL TO 25%, OR GREATER THAN 19% WITH A WET APPEARANCE.
NP	INDICATES A NON-PLASTIC SAMPLE.
ST	INDICATES A SHELBY TUBE SAMPLE.
SS	INDICATES A SPLIT SPOON SAMPLE, STANDARD PENETRATION TEST.
NQ	CORE SAMPLE.
TR	INDICATES TOP OF ROCK.

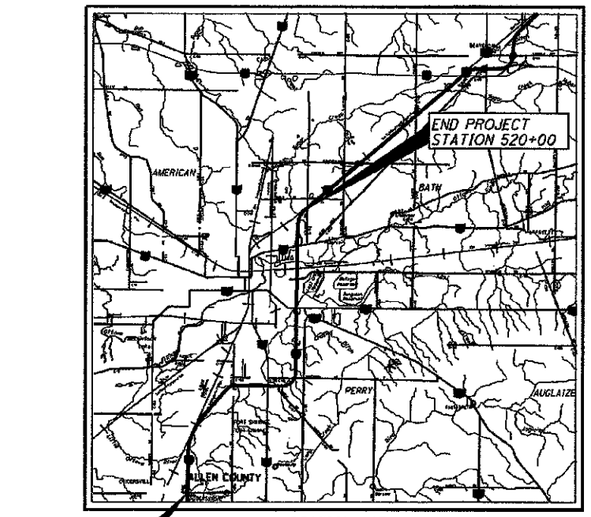

LOCATION MAP
SCALE IN MILES
0 1 2 3 4

PARTICLE SIZE DEFINITIONS

12"	3"	2.0 mm	0.42 mm	0.074 mm	0.005 mm
BOULDERS	COBBLES	GRAVEL	COARSE SAND	FINE SAND	SILT	CLAY
		No. 10 SIEVE	No. 40 SIEVE	No. 200 SIEVE	

RECON. - M.M.F. 03/07
DRILLING - MID OHIO 1/27/10-2/18/10, 5/26/10, M.M. - 2/24/10-2/25/10
M.W. - 4/2/09-4/7/09
DRAWN - M.J. 1/10-11/10
REVIEWED - J.M.M. 6 /10, R.J.K. 11/10

DESIGN AGENCY
STANTEC CONSULTING SERVICES INC.
CINCINNATI, OHIO

PID NO. 76691

STRUCTURE FOUNDATION EXPLORATION
RETAINING WALLS ALONG I-75

ALL-75-0.21

1/34

53/97

V:\1755\active\175530002\geotechnical\drawing\ODOTPlans\projects\ALL\76691\structures\Retaining Walls\SHEETS\76691ZC001.dgn

V:\1755\active\175530002\geotechnical\drawing\ODOTPlans\projects\ALL\76691\structures\Retaining Walls\SHEETS\76691ZP001.dgn

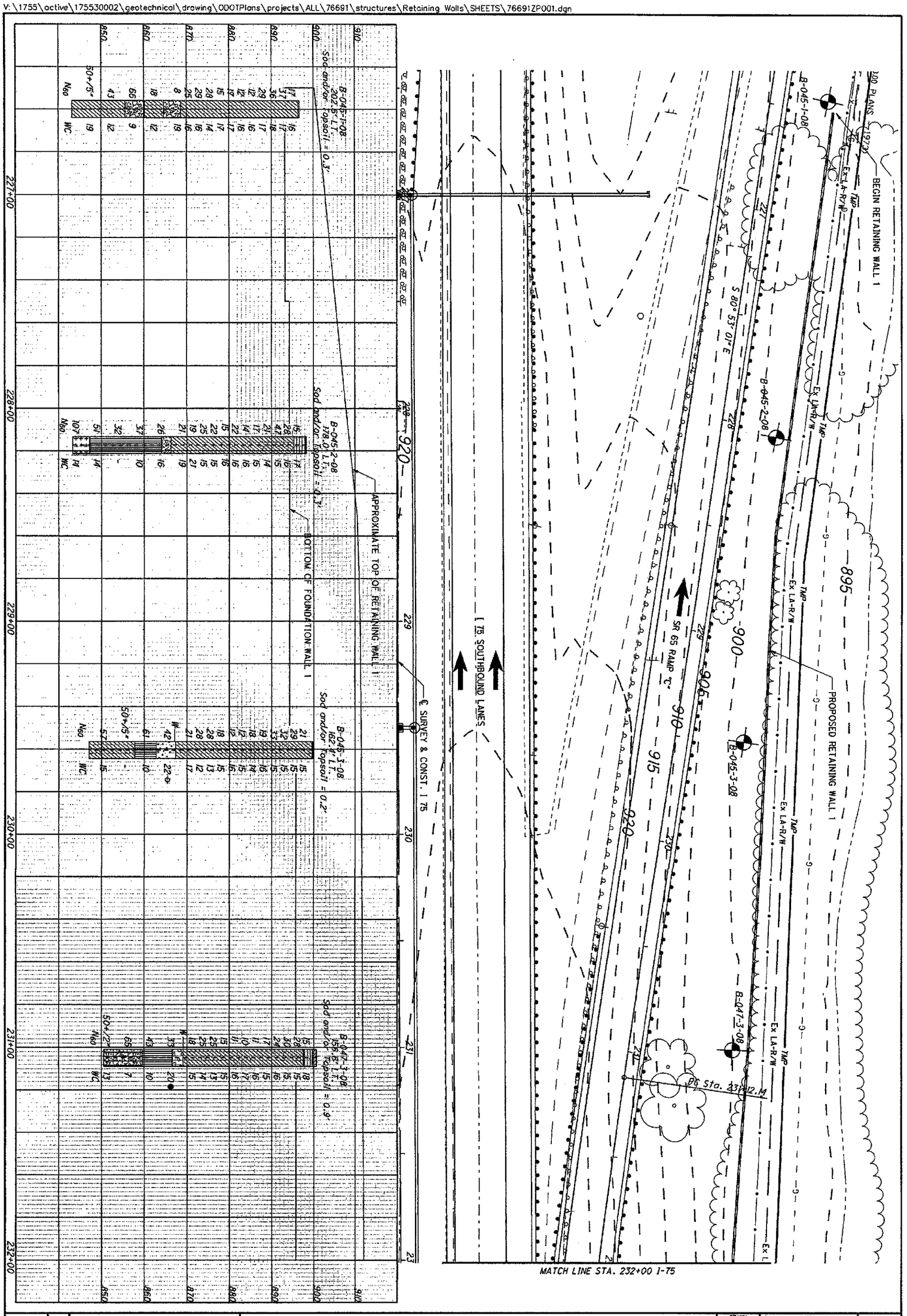

54 / 97	2 / 34	ALL-75-0.21	STRUCTURE FOUNDATION EXPLORATION RETAINING WALL 1 STA. 226+50 TO STA. 232+00	DRAWN MS-L CHECKED RJK	0 20 40 HORIZONTAL SCALE IN FEET

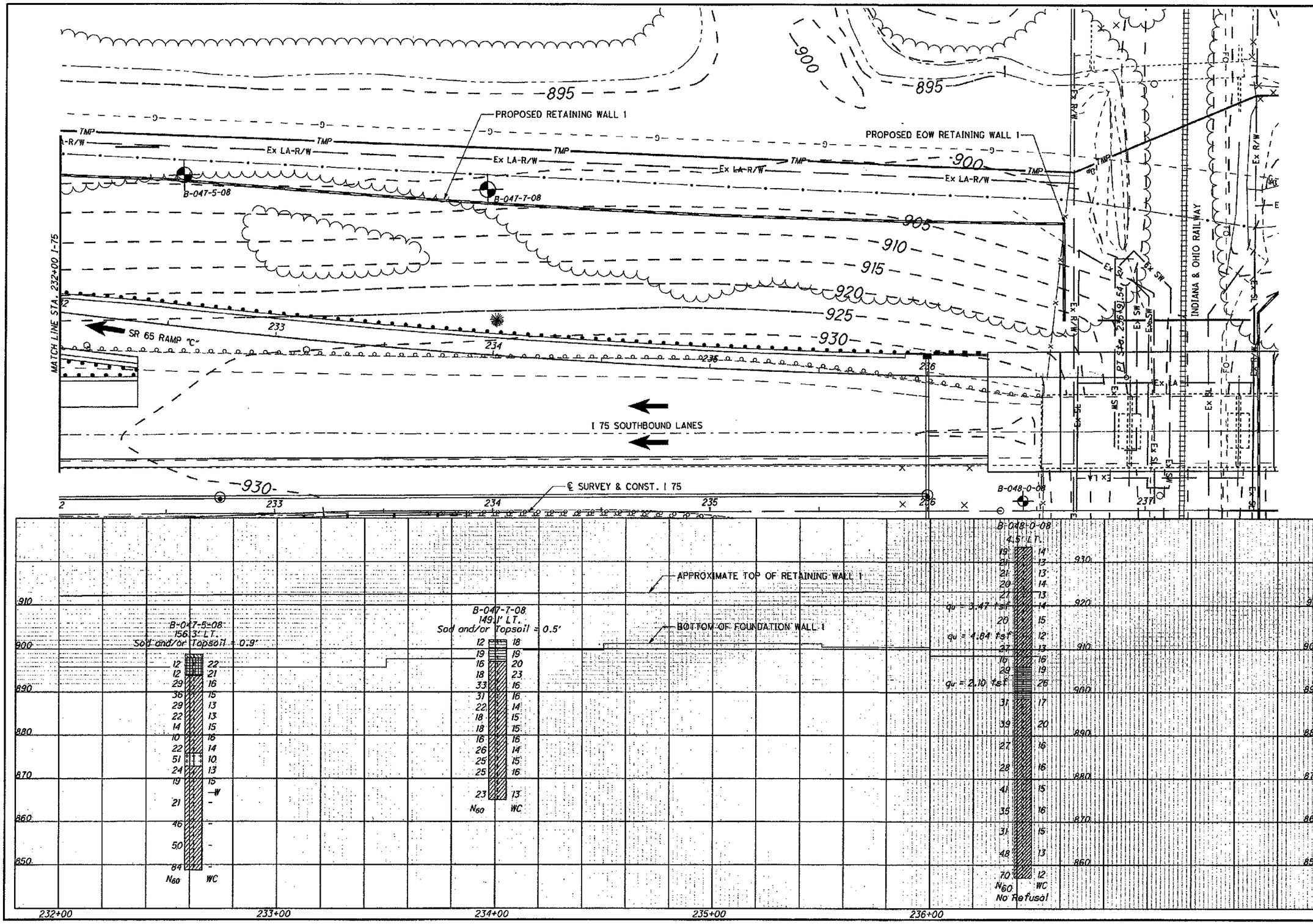

HORIZONTAL SCALE IN FEET

DRAWN MSJ
CHECKED RJK

STRUCTURE FOUNDATION EXPLORATION
REATAINING WALL 1 STA. 232+00 TO E.O.W.

ALL-75-0.21

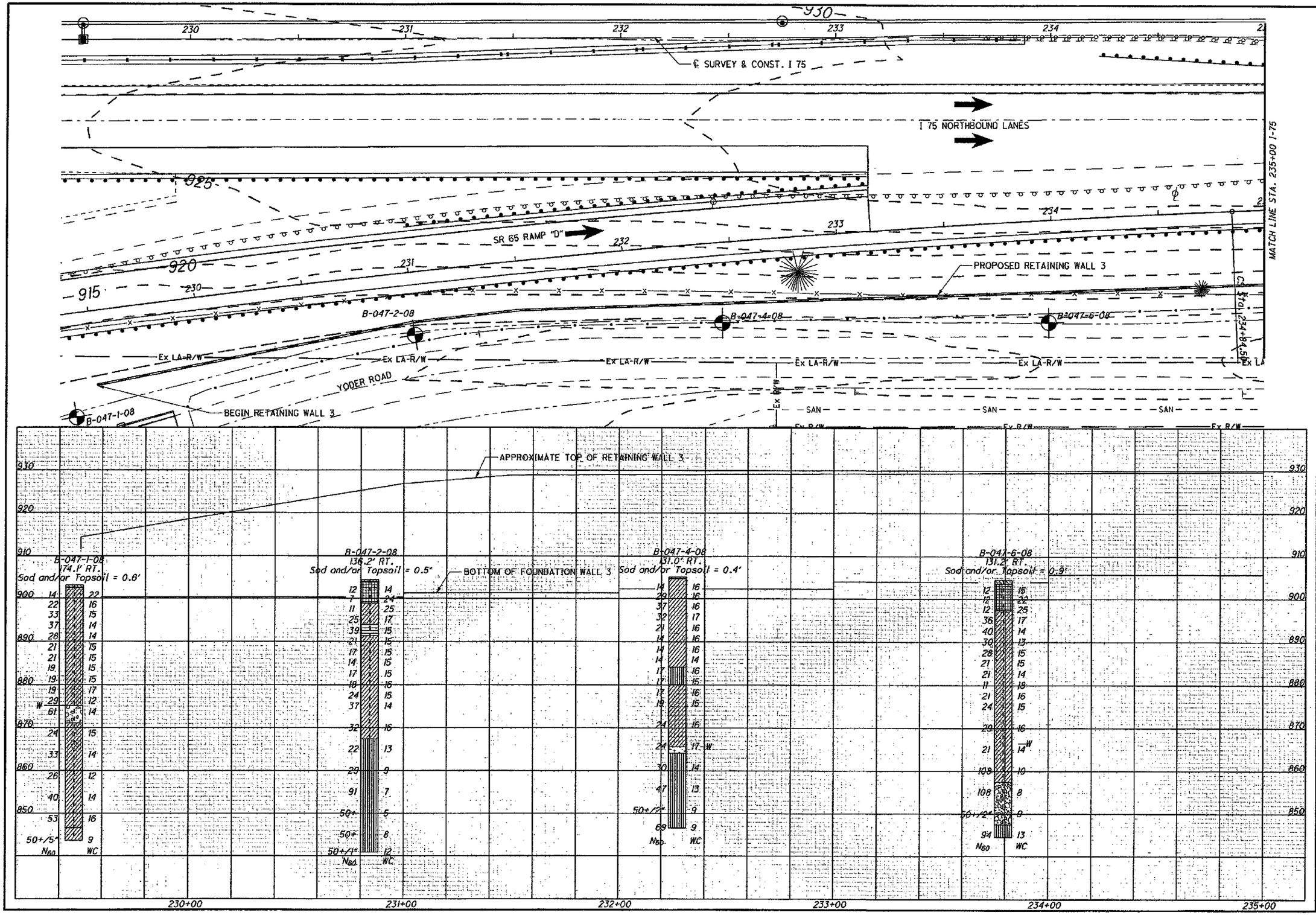

HORIZONTAL SCALE IN FEET

DRAWN MSJ
CHECKED RJK

STRUCTURE FOUNDATION EXPLORATION
RETAINING WALL 3 STA. 229+50 TO 235+00

ALL-75-0.21

HORIZONTAL SCALE IN FEET

DRAWN MSJ
CHECKED RJK

STRUCTURE FOUNDATION EXPLORATION
RETAINING WALL 3 STA. 235+00 TO E.O.W.

ALL-75-0.21

5 / 34

57 / 97

HORIZONTAL SCALE IN FEET
0 10 20 40

DRAWN MSJ
CHECKED RJK

STRUCTURE FOUNDATION EXPLORATION
RETAINING WALL 4 STA. 237+52 TO E.O.W.

ALL-75-0.21

6 / 34

58
97

PROJECT DESCRIPTION

REPLACE THE TWO EXISTING I-75 THREE SPAN REINFORCED CONCRETE BRIDGES OVER THE LITTLE OTTAWA RIVER.

HISTORIC RECORDS

HISTORIC BORING RECORDS FOR THE EXISTING BRIDGE WERE REQUESTED FROM THE ODOT OFFICE OF GEOTECHNICAL ENGINEERING AND THE DISTRICT. HISTORIC SOUNDING RECORDS EXIST AND ARE DISCUSSED IN THE FOUNDATION EXPLORATION REPORT. DUE TO CHANGES IN STATIONING, LOCATIONS FOR THE SOUNDINGS ARE NOT CERTAIN AND ARE NOT SHOWN ON THE FOUNDATION EXPLORATION DRAWINGS.

GEOLOGY

THE STRUCTURE SITE IS LOCATED IN THE CENTRAL OHIO CLAYEY TILL PLAIN. THIS REGION IS COMPRISED OF GROUND MORAINE AND END MORAINE TILL DEPOSITS OVERLYING DOLOMITE WITH INTERBEDDED SHALE. CAVES AND OTHER KARST FEATURES MAY BE PRESENT ACCORDING TO THE PHYSIOGRAPHIC REGION OF OHIO MAP (ODNR, 1998), BUT NO KNOWN FEATURES WERE IDENTIFIED IN THE OHIO KARST AREAS MAP (ODNR, 2007).

RECONNAISSANCE

A FIELD RECONNAISSANCE WAS COMPLETED ON MARCH 13, 2007, FOCUSING MAINLY ON PAVEMENT CONDITIONS AND SITE TOPOGRAPHY AND DRAINAGE. THE MAINLINE SHOULDER PAVEMENTS SHOW EXTENSIVE "ALLIGATOR" CRACKING AND THE MAINLINE PAVEMENTS SHOW REFLECTIVE CRACKING AT THE EXPANSION JOINT LOCATIONS. THE SURROUNDING AREA IS DESCRIBED AS GENTLY UNDULATING WITH MOST OF THE SURROUNDING AREA CONSISTING OF OPEN FIELD OR LIGHTLY DEVELOPED COMMERCIAL AND RESIDENTIAL DISTRICTS. DRAINAGE ALONG THE ALIGNMENT IS DESCRIBED AS SLUGGISH WITH AREAS OF STANDING WATER, AND FLOWING WATER IN DRAINAGE DITCHES AND NATURAL STREAMS GENERALLY CREATING STEEP TO VERTICAL CUT BANKS IN THE SOIL PROFILE.

SUBSURFACE EXPLORATION

FOUR BORINGS WERE ADVANCED AT THE I-75 BRIDGE OVER THE LITTLE OTTAWA RIVER. ONE BORING WAS ADVANCED AT EACH PIER AND ABUTMENT OF THE EXISTING STRUCTURE. THE ABUTMENT BORINGS (B-001 AND B-004) WERE LOCATED IN THE MEDIAN AREA OF I-75, WHILE THE PIER BORINGS (B-002 AND B-003) WERE ADVANCED ON THE RIVER BANKS ON EITHER SIDE OF THE INTERSTATE. THE BORINGS WERE ADVANCED USING 3.25-INCH I.D. HOLLOW-STEM AUGERS. STANDARD PENETRATION TEST (SPT) SAMPLES WERE OBTAINED AT 2.5-FOOT INTERVALS USING TWO SEPARATE RIGS WITH CALIBRATED AUTOMATIC HAMMERS WITH ENERGY RATIOS (ER) OF 80% AND 82.5% AS SHOWN ON THE BORING LOGS. UPON ENCOUNTERING BEDROCK, NQ-SIZED ROCK CORING EQUIPMENT WAS USED TO OBTAIN 10 FEET OF ROCK CORE SAMPLE. AT THE CONCLUSION OF DRILLING OPERATIONS, BOREHOLES WERE BACKFILLED WITH AUGER SOIL CUTTINGS.

EXPLORATION FINDINGS

MEDIUM TO VERY STIFF FINE-GRAINED SOILS THAT CLASSIFIED AS SILTY CLAY (A-6b) AND SILT AND CLAY (A-6a) WERE ENCOUNTERED AT THE SURFACE OF EACH BORING EXTENDING TO AN ELEVATION OF APPROXIMATELY 857 FEET.

A LAYER OF MEDIUM TO VERY DENSE COARSE-GRAINED SOILS RANGING IN THICKNESS FROM 6.5 TO 18.5 FEET WAS ENCOUNTERED BELOW THE SILTY CLAY LAYER. THE COARSE-GRAINED SOILS WERE CLASSIFIED AS GRAVELS WITH VARYING AMOUNTS OF SANDS, SILT, AND CLAY (A-1-a, A-1-b, A-2-4 AND A-2-6).

IN BORINGS B-002 AND B-003, A LAYER OF HARD SANDY SILT (A-4a) WAS ENCOUNTERED AT APPROXIMATELY ELEVATION 850, BELOW THE COARSE-GRAINED MATERIAL, AND EXTENDED TO BEDROCK.

BEDROCK WAS ENCOUNTERED IN ALL BORINGS AT ELEVATIONS RANGING FROM 843.8 FEET TO 846.5 FEET. THE BEDROCK WAS DESCRIBED AS DOLOMITE (90 %) WITH INTERBEDDED SHALE (10 %). THE DOLOMITE WAS DESCRIBED AS GRAY, SLIGHTLY WEATHERED AND STRONG WITH VERY THIN BEDDING. THE SHALE WAS DESCRIBED AS BLACK, SLIGHTLY WEATHERED, MODERATELY STRONG AND LAMINATED. A ZONE OF WEATHERED ROCK WAS ENCOUNTERED IN BORINGS B-002 AND B-004 RANGING IN THICKNESS FROM 0.4 FEET TO 2 FEET.

NO STATIC WATER LEVEL WAS OBSERVED IN THE BORINGS PRIOR TO ROCK CORING.

SPECIFICATIONS

THIS GEOTECHNICAL EXPLORATION WAS PERFORMED IN ACCORDANCE WITH THE STATE OF OHIO, DEPARTMENT OF TRANSPORTATION, OFFICE OF GEOTECHNICAL ENGINEERING, SPECIFICATIONS FOR GEOTECHNICAL EXPLORATIONS, DATED JANUARY 2009.

AVAILABLE INFORMATION

ALL AVAILABLE SOIL AND BEDROCK INFORMATION THAT CAN BE CONVENIENTLY SHOWN ON THE SOIL PROFILE SHEETS HAS BEEN SO REPORTED. ADDITIONAL SUBSURFACE EXPLORATIONS MAY HAVE BEEN MADE TO STUDY SOME SPECIAL ASPECT OF THE PROJECT. COPIES OF THIS DATA, IF ANY, MAY BE INSPECTED IN THE DISTRICT DEPUTY DIRECTOR'S OFFICE, THE OFFICE OF GEOTECHNICAL ENGINEERING AT 1600 WEST BROAD STREET OR THE OFFICE OF STRUCTURAL ENGINEERING AT 1980 WEST BROAD STREET.

LEGEND

DESCRIPTION	ODOT CLASS	CLASSIFIED MECH./VISUAL	
GRAVEL AND/OR STONE FRAGMENTS	A-1-a	1	1
GRAVEL AND/OR STONE FRAGMENTS WITH SAND	A-1-b	4	3
GRAVEL WITH SAND AND SILT	A-2-4	2	3
GRAVEL WITH SAND, SILT, AND CLAY	A-2-6	1	1
SANDY SILT	A-4a	2	3
SILT AND CLAY	A-6a	1	1
SILTY CLAY	A-6b	4	4
CLAY	A-7-6	1	1
	TOTAL	16	17
SHALE	*VISUAL*		
DOLOMITE	*VISUAL*		
WEATHERED DOLOMITE	*VISUAL*		
PAVEMENT OR BASE = X = APPROXIMATE THICKNESS	*VISUAL*		
SOD AND TOPSOIL = X = APPROXIMATE THICKNESS	*VISUAL*		

EXPLORATION LOCATION - PLAN VIEW

DRIVE SAMPLE AND/OR ROCK CORE BORING PLOTTED TO VERTICAL SCALE ONLY. HORIZONTAL BAR INDICATES A CHANGE IN STRATIGRAPHY.

N_{60} INDICATES CORRECTED STANDARD PENETRATION RESISTANCE FOR 60% EFFICIENCY.

WC INDICATES WATER CONTENT IN PERCENT.

NP INDICATES A NON-PLASTIC SAMPLE.

SS INDICATES A SPLIT SPOON SAMPLE, STANDARD PENETRATION TEST.

TR INDICATES TOP OF ROCK.

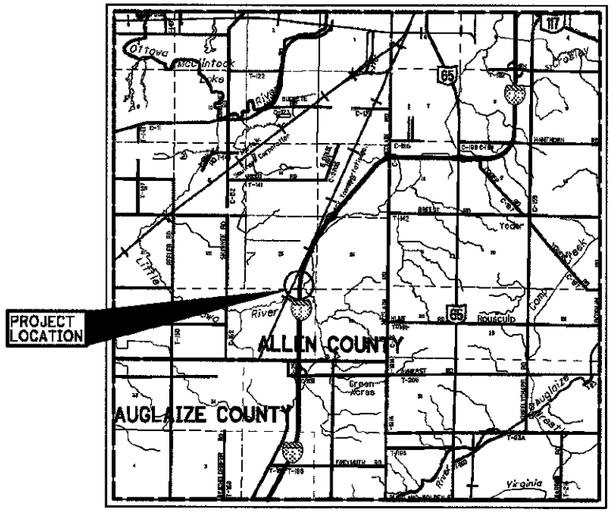

LOCATION MAP
SCALE IN MILES
0 1 2 3 4

N

PARTICLE SIZE DEFINITIONS

12"	3"	2.0 mm	0.42 mm	0.074 mm	0.005 mm
BOULDERS	COBBLES	GRAVEL	COARSE SAND	FINE SAND	SILT	CLAY
		No. 10 SIEVE	No. 40 SIEVE	No. 200 SIEVE		

D_{60} VALUES

BORING NO.	SAMPLE NO.	ELEVATION	D_{60} VALUE
B-002-0-08	SS-1 SS-3	861.4'-859.9' 856.4'-854.9'	0.023 mm 1.8 mm
B-003-0-08	SS-2 SS-3	859.3'-857.8' 856.8'-855.3'	0.110 mm 1.8 mm

RECON. - DR/JM 01/09
DRILLING - JM/MW/LW 2/09-3/09
DRAWN - MJ 5/09
REVIEWED - RK 6/09,4/10

DESIGN AGENCY
STANTEC CONSULTING SERVICES INC.
CINCINNATI, OHIO

PID NO. 76691

STRUCTURE FOUNDATION EXPLORATION
I-75 BRIDGE OVER LITTLE OTTAWA RIVER

ALL-75-01.00 L/R

1 / 6

59 / 97

V:\1755\active\75506027\DRAWINGS 09 (STRUCTURAL)\ALL-75-01.00 LR (LITTLE OTTAWA RIVER BRIDGE)\DGN\76691ZC001.dgn 10/19/2009 12:32:02 PM cwithers

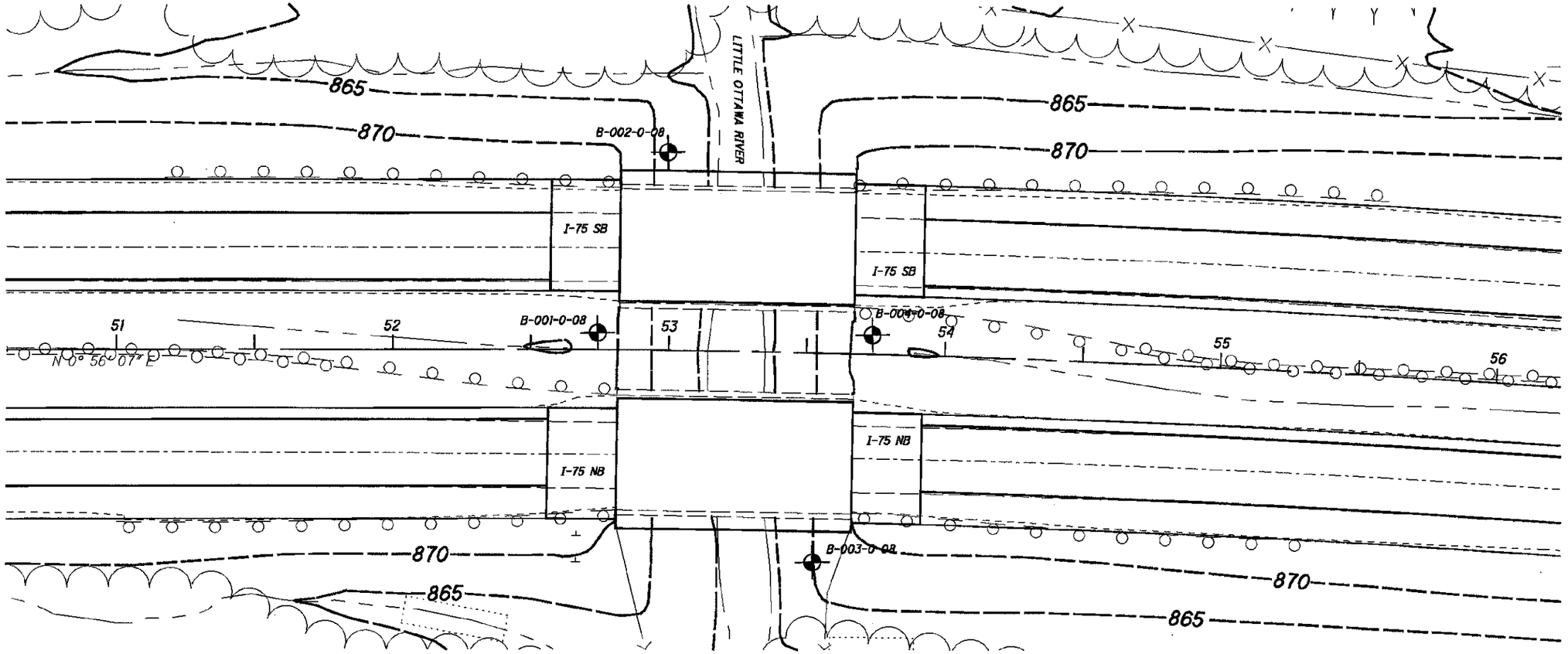

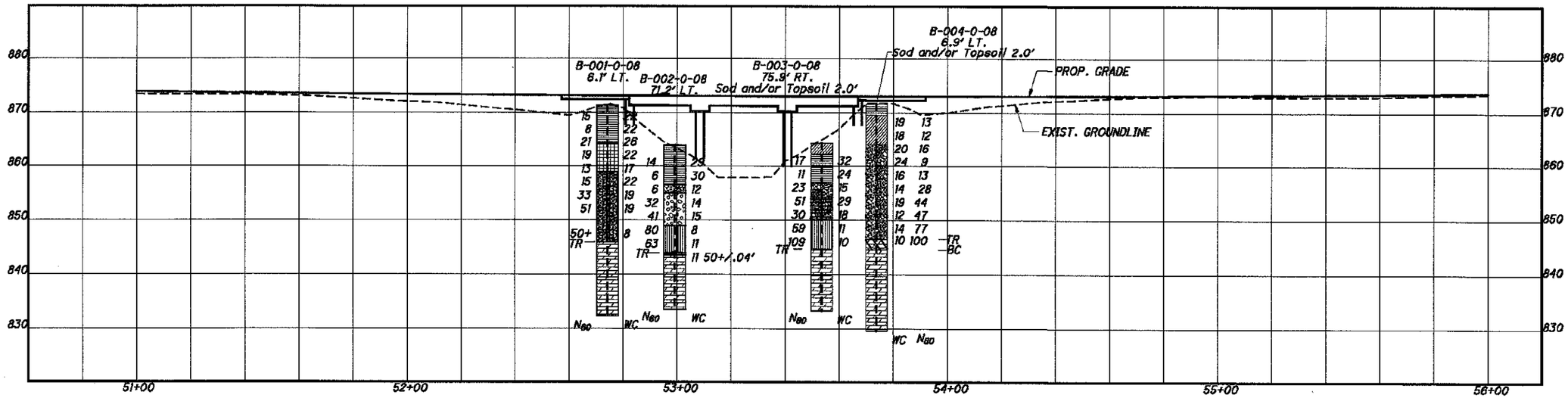

HORIZONTAL SCALE IN FEET
0 10 20 40

DRAWN C.W.
CHECKED R.J.K.

STRUCTURE FOUNDATION EXPLORATION
I-75 OVER LITTLE OTTAWA RIVER

ALL-75-01.00 L/R

2 / 6

60 / 97

V:\1755\active\175506027\DRAWINGS 09 (STRUCTURAL)\ALL-75-01.00 LR (LITTLE OTTAWA RIVER BRIDGE)\DGN\766912P001.dgn 10/19/2009 1:16:22 PM cwithers

V:\1755\active\175506027\DRAWINGS 09 (STRUCTURAL)\ALL-75-01.00 LR (LITTLE OTTAWA RIVER BRIDGE)\DGN\766917L001.dgn 10/19/2009 12:32:38 PM cwithers

OHIO DEPARTMENT OF TRANSPORTATION
OFFICE OF GEOTECHNICAL ENGINEERING

LOG OF BORING

BORING NO: B-001-0-08 BASELINE, STATION & OFFSET: STA 52+74.2 6.1' LT. SURFACE ELEV.: 871.3 PROJECT IDENTIFICATION: ALL-75-01.00 L/R
DATE STARTED: 02/09/09 DATE COMPLETED: 02/09/09 METHOD: 3¼" HSA/NQ WATER ELEV.: - BRIDGE WIDENING
NORTHING: 370514.98 EASTING: 1516097.83 SEALING/BACKFILLING TYPE: CUTTINGS HAMMER SYSTEM TYPE: CME AUTOMATIC
QUANTITY: N/A CALIBRATION DATE: 7/17/07 ER: 80%

ELEV.	DEPTH	STD. PEN./ RQD	N_{60}	REC. FT	LOSS FT	DESCRIPTION	SAMPLE TYPE & NO.	% REC.	% AGG	% C.S.	% F.S.	% SILT	% CLAY	LL	PL	PI	WC	ODOT CLASS
871.3	0																	
869.3	2					MEDIUM STIFF TO STIFF, MOTTLED BROWN AND GRAY SILTY CLAY, LITTLE SAND, TRACE GRAVEL, MOIST												
867.3	4	4/5/6	15				SS-1	100	3	5	15	34	43	39	18	21	22	A-6b(13)
865.3	6	3/3/3	8			7.0'	SS-2	-			SAME AS SS-1						22	A-6b (VISUAL)
863.3	8	4/7/9	21			VERY STIFF, MOTTLED GRAY AND BROWN CLAY AND SILT, TRACE SAND AND GRAVEL, DAMP TO MOIST	SS-3	100	1	2	5	38	54	63	25	38	26	A-7-6(20)
861.3	10																	
859.3	12	4/6/8	19			12.5'	SS-4	-			SAME AS SS-3						22	A-7-6(20) (VISUAL)
857.3	14	3/4/6	13			MEDIUM TO VERY DENSE, GRAVEL WITH SAND AND SILT, TRACE CLAY, WET	SS-5	-	30	21	23	20	6	NP	NP	NP	17	A-2-4(0)
855.3	16	4/5/6	15				SS-6	-			COMBINED WITH SAMPLE SS-5						22	A-2-4(0)
853.3	18	9/11/14	33				SS-7	-			SAME AS SS-5						19	A-2-4 (VISUAL)
851.3	20																	
849.3	22	7/14/24	51				SS-8	-			SAME AS SS-5						19	A-2-4 (VISUAL)
847.3	24																	
845.3	26	20/50+/0.4'	50+			TOP OF ROCK BEGIN CORE 25.4'	SS-9	-									8	A-2-4 (VISUAL)
843.3	28					DOLOMITE (90%) INTERBEDDED WITH SHALE (10%), UNIT RQD = 5%, LOSS = 1% DOLOMITE: GRAY, SLIGHTLY WEATHERED, STRONG, VERY THIN TO LAMINATED, SHALE: BLACK, SLIGHTLY WEATHERED, MODERATELY STRONG, VERY THIN TO LAMINATED. (VERTICAL JOINT FROM 845.9' TO 844.8'),												
841.3	30	5		8.5	0.1													
839.3	32																	
837.3	34																	
835.3	36	6		5.0	0.0													
833.3	38																	

BOTTOM OF BORING = 39.0'

V:\1755\active\175506027\DRAWINGS 09 (STRUCTURAL)\ALL-75-01.00 LR (LITTLE OTTAWA RIVER BRIDGE)\DGN\76691ZL002.dgn 10/19/2009 12:33:16 PM cwithers

OHIO DEPARTMENT OF TRANSPORTATION
OFFICE OF GEOTECHNICAL ENGINEERING

LOG OF BORING

BORING NO: B-002-0-08 BASELINE, STATION & OFFSET: STA 52+99.1 71.2' LT. SURFACE ELEV.: 863.9 PROJECT IDENTIFICATION: ALL-75-01.00 L/R
DATE STARTED: 03/31/09 DATE COMPLETED: 03/31/09 METHOD: 3¼" HSA/NQ WATER ELEV.: - BRIDGE WIDENING
NORTHING: 370542 EASTING: 1518033 SEALING/BACKFILLING TYPE: CUTTINGS HAMMER SYSTEM TYPE: CME AUTOMATIC
QUANTITY: N/A CALIBRATION DATE: 10/16/08 ER: 82.5%

ELEV.	DEPTH	STD. PEN./ RQD	N_{60}	REC. FT	LOSS FT	DESCRIPTION	SAMPLE TYPE & NO.	% REC.	PHYSICAL CHARACTERISTICS % AGG	% C.S.	% F.S.	% SILT	% CLAY	LL	PL	PI	WC	ODOT CLASS
863.9	0																	
861.9	2					MEDIUM STIFF TO STIFF, MOTTLED BROWN AND GRAY SILTY CLAY, SOME SAND, TRACE GRAVEL, MOIST													
859.9	4	5/5/5	14				SS-1	100	9	6	18	39	28	40	24	16	29	A-6b(9)
857.9	6	2/2/2	6				SS-2	58			SAME AS SS-1						30	A-6b (VISUAL)
855.9	8	9/11/12	32			7.5' DENSE, GRAY GRAVEL WITH SAND, TRACE SILT AND CLAY, WET 9.0'	SS-3	87	48	23	15	9	4	NP	NP	NP	12	A-1-b(0)
853.9	10	6/8/15	32			DENSE, GRAY GRAVEL, LITTLE SAND, TRACE SILT AND CLAY, WET	SS-4	100			SAME AS SS-5						14	A-1-a (VISUAL)
851.9	12																	
849.9	14	11/12/18	41			15.0'	SS-5	100	68	13	6	8	5	NP	NP	NP	15	A-1-a(0)
847.9	16	36/28/30	80			HARD, GRAY SANDY SILT AND GRAVEL, LITTLE CLAY, DAMP	SS-6	100	41	9	13	24	13	19	12	7	8	A-4a(0)
845.9	18	16/21/25	63				SS-7	100			SAME AS SS-6						11	A-4a (VISUAL)
843.9	20	50+/0.4'	50+			TOP OF ROCK 20.0'	SS-8	27			SAME AS SS-6						11	A-4a (VISUAL)
841.9	22					WEATHERED DOLOMITE AND SHALE (AUGERED) BEGIN CORE 20.4'												
839.9	24																	
837.9	26	9		9.7	0.3	DOLOMITE (90%) INTERBEDDED WITH SHALE (10%) UNIT RQD = 9%, LOSS = 3% DOLOMITE: GRAY, SLIGHTLY WEATHERED, STRONG, VERY THIN, SHALE: BLACK, MODERATELY WEATHERED, MODERATELY STRONG, LAMINATED													
835.9	28																	
833.9	30																	

BOTTOM OF BORING = 30.4'

V:\1755\active\175506027\DRAWINGS 09 (STRUCTURAL)\ALL-75-01.00 LR (LITTLE OTTAWA RIVER BRIDGE)\DGN\76691ZL003.dgn 10/19/2009 12:33:52 PM cwithers

OHIO DEPARTMENT OF TRANSPORTATION
OFFICE OF GEOTECHNICAL ENGINEERING

LOG OF BORING

BORING NO: B-003-0-08 BASELINE, STATION & OFFSET: 53+53.5 75.9' RT. SURFACE ELEV.: 864.3 PROJECT IDENTIFICATION: ALL-75-01.00 L/R
DATE STARTED: 03/31/09 DATE COMPLETED: 03/31/09 METHOD: 3¼" HSA/NQ WATER ELEV.: - BRIDGE WIDENING
NORTHING: 370591 EASTING: 1516182 SEALING/BACKFILLING TYPE: CUTTINGS HAMMER SYSTEM TYPE: CME AUTOMATIC
QUANTITY: N/A CALIBRATION DATE: 10/16/08 ER: 82.5%

ELEV.	DEPTH	STD. PEN./ RQD	N_{60}	REC. FT	LOSS FT	DESCRIPTION	SAMPLE TYPE & NO.	% REC.	PHYSICAL CHARACTERISTICS % AGG	% C.S.	% F.S.	% SILT	% CLAY	LL	PL	PI	WC	ODOT CLASS
864.3	0																	
862.3	2																	
860.3	4	5/5/7	17			STIFF TO VERY STIFF, MOTTLED BROWN AND GRAY SILTY CLAY, SOME SAND AND GRAVEL, MOIST	SS-1	27			SAME AS SS-2						32	A-6b (VISUAL)
858.3	6	4/4/4	11				SS-2	60	21	17	17	23	22	38	19	19	24	A-6b(5)
856.3	8	6/10/7	23			7.5' MEDIUM DENSE TO VERY DENSE, GRAVEL WITH SAND, LITTLE SILT, TRACE CLAY, MOIST	SS-3	87	48	22	12	12	6	NP	NP	NP	15	A-1-b(0)
854.3	10					10.0'												
852.3	12	7/21/16	51			DENSE TO VERY DENSE, GRAY GRAVEL WITH SAND, SILT AND CLAY, MOIST	SS-4	33			SAME AS SS-5						29	A-2-6 (VISUAL)
850.3	14	13/10/12	30			14.0'	SS-5	67	31	22	13	19	15	25	14	11	18	A-2-6(0)
848.3	16	21/21/22	59			HARD, GRAY SANDY SILT AND GRAVEL, LITTLE CLAY, DAMP	SS-6	100	39	10	15	25	11	17	13	4	11	A-4a(0)
846.3	18	27/40/39	109				SS-7	67			SAME AS SS-6						10	A-4a (VISUAL)
844.3	20					TOP OF ROCK BEGIN CORE 19.5'												
842.3	22	0		2.8	0.4	DOLOMITE (90%) INTERBEDDED WITH SHALE (10%) UNIT RQD = 7%, LOSS = 4%; DOLOMITE: GRAY, SLIGHTLY WEATHERED, STRONG, VERY THIN, SHALE: BLACK, MODERATELY WEATHERED, MODERATELY STRONG, LAMINATED												
840.3	24																	
838.3	26	9		8.5	0													
836.3	28																	
834.3	30																	

BOTTOM OF BORING = 31.0'

V:\1755\active\175506027\DRAWINGS 09 (STRUCTURAL)\ALL-75-01.00 LR (LITTLE OTTAWA RIVER BRIDGE)\DGN\76691ZL004.dgn 10/19/2009 12:34:41 PM cwithers

OHIO DEPARTMENT OF TRANSPORTATION
OFFICE OF GEOTECHNICAL ENGINEERING

LOG OF BORING

BORING NO: B-004-0-08 BASELINE, STATION & OFFSET: STA 53+73.7 6.9' LT. SURFACE ELEV.: 871.6 PROJECT IDENTIFICATION: ALL-75-01.00 L/R
DATE STARTED: 02/17/09 DATE COMPLETED: 02/17/09 METHOD: 3¼" HSA/NQ WATER ELEV.: - BRIDGE WIDENING
NORTHING: 370614 EASTING: 1516100 SEALING/BACKFILLING TYPE: CUTTINGS HAMMER SYSTEM TYPE: CME AUTOMATIC
QUANTITY: N/A CALIBRATION DATE: 7/17/07 ER: 80%

ELEV.	DEPTH	STD. PEN./ RQD	N_{60}	REC. FT	LOSS FT	DESCRIPTION	SAMPLE TYPE & NO.	% REC.	% AGG	% C.S.	% F.S.	% SILT	% CLAY	LL	PL	PI	WC	ODOT CLASS
871.6	0																	
869.6	2					TOPSOIL 2.0'												VISUAL
867.6	4	3/4/6	13			STIFF, BROWN SILTY CLAY, SOME SAND, TRACE GRAVEL, DAMP TO MOIST	SS-1	67	4	7	14	34	41	39	19	20	19	A-6b(12)
865.6	6	3/5/4	12			7.5'	SS-2	7			SAME AS SS-1						18	A-6b (VISUAL)
863.6	8	4/5/7	16			STIFF TO VERY STIFF, GRAY SILT AND CLAY, SOME SAND, TRACE GRAVEL, DAMP TO MOIST	SS-3	73	3	5	16	50	26	36	21	14	20	A-6a(10)
861.6	10	3/3/4	9			13.0'	SS-4	80			SAME AS SS-3						24	A-6a (VISUAL)
859.6	12	2/3/7	13			MEDIUM TO VERY DENSE, LIGHT BROWN GRAVEL WITH SAND, LITTLE SILT, TRACE CLAY, MOIST TO WET	SS-5	67			SAME AS SS-6						16	A-1-b (VISUAL)
857.6	14	12/10/11	28				SS-6	100	45	25	16	11	3	NP	NP	NP	14	A-1-b (0)
855.6	16	27/20/13	44				SS-7	60			SAME AS SS-6						19	A-1-b (VISUAL)
853.6	18	7/14/21	47				SS-8	67			SAME AS SS-6						12	A-1-b (VISUAL)
851.6	20	34/33/25	77				SS-8	40	57	15	11	11	6	NP	NP	NP	14	A-1-b (0)
849.6	22					TOP OF ROCK 25.0'												
847.6	24	37/39/36	100			WEATHERED DOLOMITE AND SHALE (AUGERED)	SS-9	100									10	ROCK (VISUAL)
845.6	26					BEGIN CORE 27.0'												
843.6	28	0		4.5	0.5	DOLOMITE (90%) INTERBEDDED WITH SHALE (10%), UNIT RQD = 10%, LOSS = 4% DOLOMITE: GRAY, SLIGHTLY WEATHERED, STRONG, VERY THIN TO LAMINATED, SHALE: BLACK, SLIGHTLY WEATHERED, MODERATELY STRONG, VERY THIN TO LAMINATED. (VERTICAL JOINT FROM 836.9'-836.3', 834.1'-833.8', 833.2'-831.4')												
841.6	30																	
839.6	32																	
837.6	34	15		9.9	0.1													
835.6	36																	
833.6	38																	
831.6	40																	
829.6	42																	

BOTTOM OF BORING = 42.0'

PROJECT DESCRIPTION

REPLACE THE EXISTING BREESE ROAD FOUR-SPAN REINFORCED CONCRETE BRIDGE OVER I-75.

HISTORIC RECORDS

HISTORIC BORING RECORDS FOR THE EXISITNG BRIDGE WERE REQUESTED FROM THE ODOT OFFICE OF GEOTECHNICAL ENGINEERING AND THE DISTRICT. HISTORIC RECORDS EXIST AND ARE DISCUSSED IN THE FOUNDATION EXPLORATION REPORT. DUE TO CHANGES IN STATIONING, LOCATIONS FOR THE DATA ARE NOT CERTAIN AND ARE THEREFORE NOT SHOWN ON THE FOUNDATION EXPLORATION DRAWINGS.

GEOLOGY

THE STRUCTURE SITE IS LOCATED IN THE CENTRAL OHIO CLAYEY TILL PLAIN. THIS REGION IS COMPRISED OF GROUND MORAINE AND END MORAINE TILL DEPOSITS OVERLYING DOLOMITE WITH INTERBEDDED SHALE. CAVES AND OTHER KARST FEATURES MAY BE PRESENT ACCORDING TO THE PHYSIOGRAPHIC REGION OF OHIO MAP (ODNR, 1998), BUT NO KNOWN FEATURES WERE IDENTIFIED ON THE OHIO KARST AREAS MAP (ODNR, 2007).

RECONNAISSANCE

A FIELD RECONNAISSANCE WAS COMPLETED ON MARCH 13, 2007, FOCUSING MAINLY ON PAVEMENT CONDITIONS AND SITE TOPOGRAPHY AND DRAINAGE. THE MAINLINE SHOULDER PAVEMENTS SHOW EXTENSIVE "ALLIGATOR" CRACKING AND THE MAINLINE PAVEMENTS SHOW REFLECTIVE CRACKING AT THE EXPANSION JOINT LOCATIONS.

THE SURROUNDING AREA IS DESCRIBED AS GENTLY UNDULATING WITH MOST OF THE SURROUNDING AREA CONSISTING OF OPEN FIELD OR LIGHTLY DEVELOPED COMMERCIAL AND RESIDENTIAL DISTRICTS. DRAINAGE ALONG THE ALIGNMENT IS DESCRIBED AS SLUGGISH WITH AREAS OF STANDING WATER, AND FLOWING WATER IN DRAINAGE DITCHES AND NATURAL STREAMS GENERALLY CREATING STEP TO VERTICAL CUT BANKS IN THE SOIL PROFILE.

SUBSURFACE EXPLORATION

FIVE BORINGS WERE ADVANCED AT THE BREESE ROAD BRIDGE OVER I-75. ONE BORING WAS ADVANCED AT EACH PIER AND ABUTMENT OF THE EXISTING STRUCTURE. THE ABUTMENT BORINGS (B-009 AND B-013) WERE LOCATED ON BREESE ROAD ON EITHER SIDE OF I-75, WHILE THE PIER BORINGS (B-010, B-011 AND B-012) WERE ADVANCED NEAR THE EXISTING PIERS ALONG I-75. THE BORINGS WERE ADVANCED USING 3.25-INCH I.D. HOLLOW-STEM AUGERS. STANDARD PENETRATION TEST (SPT) AND UNDISTURBED SHELBY TUBE (ST) SAMPLES WERE OBTAINED FOR THE UPPER 30 FEET AT 2.5-FOOT INTERVALS AND AT 5-FOOT INTERVALS BELOW THIS DEPTH FOR EACH SUBSTRUCTURE. SPT SAMPLES WERE OBTAINED USING A TRUCK MOUNTED DRILL RIG WITH A CALIBRATED AUTOMATIC HAMMER WITH AN ENERGY RATIO (ER) OF 80% (CALIBRATED ON 7-17-2007). AT THE CONCLUSION OF DRILLING OPERATIONS, BOREHOLES WERE BACKFILLED WITH AUGER SOIL CUTTINGS.

EXPLORATION FINDINGS

THE EXISTING FILL MATERIAL FOR THE EMBANKMENTS WAS FOUND TO HAVE A THICKNESS OF 16 FEET AND CONSISTED OF SILTY CLAY (A-6b) AND CLAY (A-7-6). STIFF TO HARD FINE GRAINED SOILS THAT CLASSIFIED AS SILTY CLAY (A-6b), SILT AND CLAY (A-6a), AND SANDY SILT (A-4a) WERE ENCOUNTERED AT THE SURFACE OF EACH BORING WITH THICKNESSES RANGING FROM 28 TO 36 FEET. COARSE GRAINED SOILS WERE ENCOUNTERED BELOW THE TOP HORIZON WITH THICKNESSES OF 10 TO 25 FEET. THE COARSE GRAINED SOILS CLASSIFIED AS MEDIUM TO VERY DENSE COARSE AND FINE SAND (A-3a), GRAVEL WITH SAND AND SILT (A-2-4), GRAVEL WITH SAND, SILT AND CLAY (A-2-6) AND GRAVEL WITH SAND (A-1-b). IN TWO BORINGS AN ADDITIONAL LAYER OF FINE GRAINED SOIL CLASSIFYING AS HARD SILT AND CLAY AND SILTY CLAY WAS ENCOUNTERED BELOW THE COARSE GRAINED MATERIAL EXTENDING TO THE BOTTOM OF THE BORINGS. COBBLES WERE ENCOUNTERED IN TWO BORINGS AT APPROXIMATE ELEVATION 842. NO BEDROCK WAS ENCOUNTERED IN THE BORINGS ADVANCED AT THE PROJECT LOCATION.

NO STATIC WATER LEVEL WAS OBSERVED IN THE BORINGS PRIOR TO BORING TERMINATION.

SPECIFICATIONS

THIS GEOTECHNICAL EXPLORATION WAS PERFORMED IN ACCORDANCE WITH THE STATE OF OHIO, DEPARTMENT OF TRANSPORTATION, OFFICE OF GEOTECHNICAL ENGINEERING, SPECIFICATIONS FOR GEOTECHNICAL EXPLORATIONS, DATED JANUARY 2009.

AVAILABLE INFORMATION

ALL AVAILABLE SOIL AND BEDROCK INFORMATION THAT CAN BE CONVENIENTLY SHOWN ON THE PROFILE SHEETS HAS BEEN SO REPORTED. ADDITIONAL SUBSURFACE EXPLORATIONS MAY HAVE BEEN MADE TO STUDY SOME SPECIAL ASPECT OF THE PROJECT. COPIES OF THIS DATA, IF ANY, MAY BE INSPECTED IN THE DISTRICT DEPUTY DIRECTOR'S OFFICE, THE OFFICE OF GEOTECHNICAL ENGINEERING AT 1600 WEST BROAD STREET COLUMBUS, OHIO OR THE OFFICE OF STRUCTURAL ENGINEERING AT 1980 WEST BROAD STREET COLUMBUS, OHIO.

LEGEND

DESCRIPTION	ODOT CLASS	CLASSIFIED MECH./VISUAL	
GRAVEL AND/OR STONE FRAGMENTS WITH SAND	A-1-b	3	8
COARSE AND FINE SAND	A-3a	1	1
GRAVEL AND/OR STONE FRAGMENTS WITH SAND AND SILT	A-2-4	3	2
GRAVEL AND/OR STONE FRAGMENTS WITH SAND, SILT AND CLAY	A-2-6	1	1
SANDY SILT	A-4a	3	2
SILT AND CLAY	A-6a	11	24
SILTY CLAY	A-6b	4	13
CLAY	A-7-6	4	8
	TOTAL	30	59

PAVEMENT OR BASE = X = APPROXIMATE THICKNESS *VISUAL*

SOD AND TOPSOIL = X = APPROXIMATE THICKNESS *VISUAL*

EXPLORATION LOCATION - PLAN VIEW

DRIVE SAMPLE AND/OR ROCK CORE BORING PLOTTED TO VERTICAL SCALE ONLY. HORIZONTAL BAR INDICATES A CHANGE IN STRATIGRAPHY.

WC INDICATES WATER CONTENT IN PERCENT.

N_{60} INDICATES CORRECTED STANDARD PENETRATION RESISTANCE FOR 60% EFFICIENCY.

NP INDICATES A NON-PLASTIC SAMPLE.

SS INDICATES A SPLIT SPOON SAMPLE, STANDARD PENETRATION TEST.

ST INDICATES A SHELBY TUBE SAMPLE.

BC BEGIN CORE.

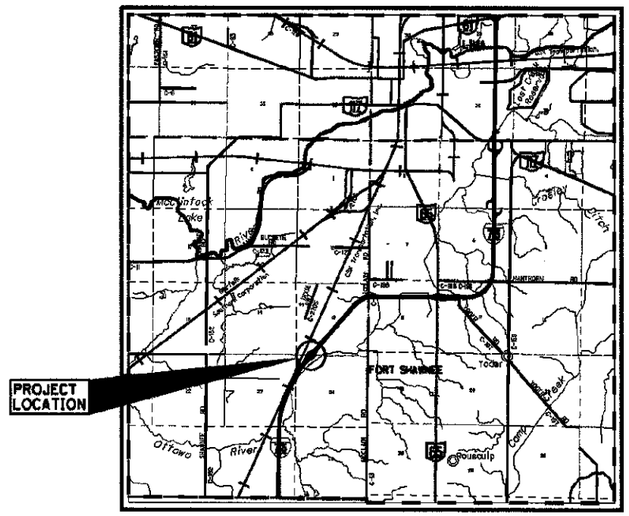
PROJECT LOCATION
Lake Loramie
Loramie Creek
Lost Creek
Lost Creek Reservoir
Miami-Erie Canal
Canal Feeder
Canal Feeder
Canal Feeder

V:\1755\active\175530002\geotechnical\drawing\ODOTSubmittal\projects\ALL\76691\geotechnical\sheets\ALL-75-02.12 (BREESE ROAD BRIDGE)\76691ZP001.dgn

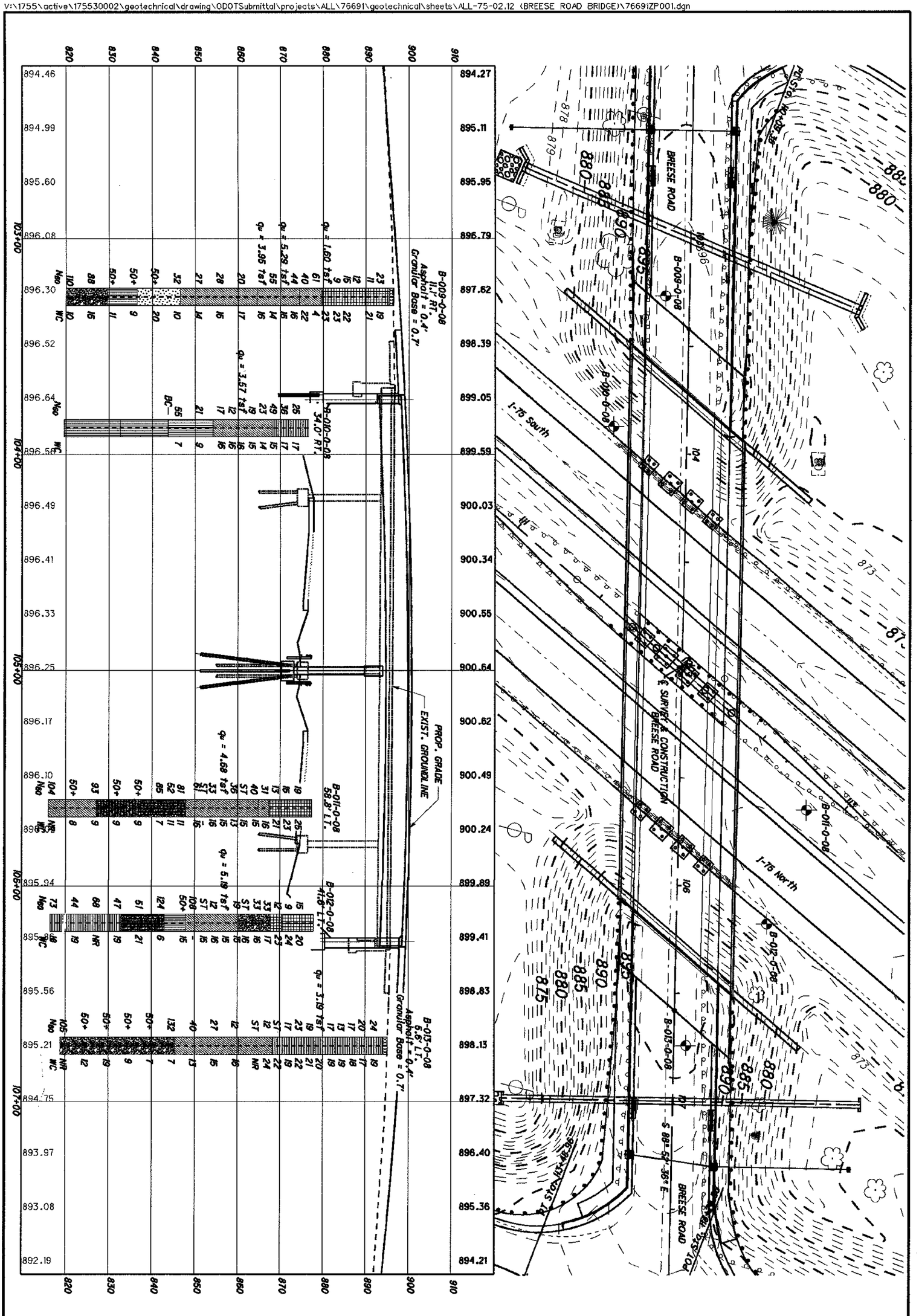

2/11	ALL-75-02.12	STRUCTURE FOUNDATION EXPLORATION BREESE ROAD OVER I-75	DRAWN C.W. CHECKED R.J.K.	HORIZONTAL SCALE IN FEET

V:\1755\active\1755006027\DRAWINGS 09 (STRUCTURAL)\ALL-75-02.12 (BREESE ROAD BRIDGE)\DGN\76691ZL001.dgn 9/29/2009 10:47:17 AM mjennings

OHIO DEPARTMENT OF TRANSPORTATION
OFFICE OF GEOTECHNICAL ENGINEERING

LOG OF BORING

BORING NO: B-009-0-08 BASELINE, STATION & OFFSET: STA 103+27, 11.1' RT. SURFACE ELEV.: 896.5 PROJECT IDENTIFICATION: ALL-75-02.12
DATE STARTED: 02/24/09 DATE COMPLETED: 02/24/09 METHOD: 3¼" HSA/NQ WATER ELEV.: - BRIDGE WIDENING
NORTHING: 375831.86 EASTING: 1518289.13 SEALING/BACKFILLING TYPE: CUTTINGS HAMMER SYSTEM TYPE: CME AUTOMATIC
QUANTITY: N/A CALIBRATION DATE: 7/17/07 ER: 80%

ELEV.	DEPTH	STD. PEN./ RQD	N_{60}	REC. FT	LOSS FT	DESCRIPTION	SAMPLE TYPE & NO.	% REC.	PHYSICAL CHARACTERISTICS % AGG	% C.S.	% F.S.	% SILT	% CLAY	LL	PL	PI	WC	ODOT CLASS
896.5	0					ASPHALT PAVEMENT (0.4') AND GRAVEL BASE (0.7') 1.1'												VISUAL
894.5	2																	
892.5	4	6/8/9	23			STIFF TO VERY STIFF, MOTTLED BROWN AND GRAY CLAY, LITTLE SAND, TRACE GRAVEL, MOIST (EMBANKMENT FILL).	SS-1	27			SAME AS SS-3						19	A-7-6 (VISUAL)
890.5	6	3/4/4	11				SS-2	33			SAME AS SS-3						21	A-7-6 (VISUAL)
888.5	8	4/4/5	12				SS-3	100	3	3	10	40	44	43	18	25	23	A-7-6(15)
886.5	10																	
884.5	12	3/5/6	15				SS-4	47			SAME AS SS-3						22	A-7-6 (VISUAL)
882.5	14	4/3/4	9				SS-5	80			SAME AS SS-3						23	A-7-6 (VISUAL)
880.5	16	q_u=1.60 tsf	-			17.0'	ST-6	87			SAME AS SS-3						23	A-7-6 (VISUAL)
878.5	18	9/29/17	61			VERY STIFF TO HARD, GRAY AND BROWN SILT AND CLAY, LITTLE SAND, TRACE GRAVEL, DAMP TO MOIST.	SS-7	80	-	-	-	-	-	29	16	13	4	A-6a (VISUAL)
876.5	20																	
874.5	22	10/12/18	40				SS-8	67			SAME AS SS-9						22	A-6a (VISUAL)
872.5	24	8/14/19	44				SS-9	100	9	7	10	41	33	32	18	14	16	A-6a(10)
870.5	26	q_u=5.29 tsf	-				ST-10	80			SAME AS SS-9						15	A-6a (VISUAL)
868.5	28	15/19/21	55				SS-11	100	8	6	12	40	34	29	17	12	14	A-6a(9)
866.5	30																	
864.5	32	q_u=3.95 tsf	-				ST-12	40			SAME AS SS-11						16	A-6a (VISUAL)
862.5	34																	
860.5	36	4/5/10	20				SS-13	27			SAME AS SS-14						17	A-6a (VISUAL)
858.5	38																	
856.5	40																	
854.5	42	5/9/12	28				SS-14	100	4	6	11	41	38	27	16	11	15	A-6a(9)
852.5	44																	
850.5	46	2/6/14	27				SS-15	100			SAME AS SS-14						14	A-6a (VISUAL)
848.5	48																	
846.5	50					50.0'												
844.5	52	10/10/14	32			DENSE TO VERY DENSE, COARSE AND FINE SAND, SOME GRAVEL, SOME SILT, TRACE CLAY, DAMP TO WET.	SS-16	100	35	18	16	22	9	15	12	3	10	A-3a(0)
842.5	54																	
840.5	56	50+/0.5'	50+				SS-17	33			SAME AS SS-16						20	A-3a (VISUAL)
838.5	58																	
836.5	60					60.0'												
834.5	62	33/50+/0.4'	50+			HARD, GRAY SANDY SILT, AND GRAVEL, LITTLE CLAY, DAMP.	SS-18	60			SAME AS SS-19						9	A-4a (VISUAL)
832.5	64																	
830.5	66	9/21/50+/0.4'	50+			66.2'	SS-19	100	42	9	12	26	11	21	13	8	11	A-4a(0)
828.5	68					VERY DENSE, GRAVEL WITH SAND, LITTLE SILT, TRACE CLAY, WET.													
826.5	70																	
824.5	72	26/34/32	88				SS-20	100	11	51	20	14	4	NP	NP	NP	16	A-1b(0)
822.5	74																	
820.5	76	22/42/41	110				SS-21	67			SAME AS SS-20						10	A-1b (VISUAL)

BOTTOM OF BORING = 76.5'

V:@I75S@active@I75S06027@DRAWINGS 09 (STRUCTURAL)@ALL-75-02.12 (BREESE ROAD BRIDGE)@DGN@766SIZL002.dgn 9/29/2009 10:49:55 AM mjennings

OHIO DEPARTMENT OF TRANSPORTATION
OFFICE OF GEOTECHNICAL ENGINEERING

LOG OF BORING

BORING NO: B-010-0-08 BASELINE, STATION & OFFSET: STA 103+87.9, 34.0' RT. SURFACE ELEV.: 876.6 PROJECT IDENTIFICATION: ALL-75-02.12
DATE STARTED: 02/10/09 DATE COMPLETED: 02/12/09 METHOD: 3¼" HSA/NQ WATER ELEV.: - BRIDGE WIDENING
NORTHING: 375807.75 EASTING: 1518349.60 SEALING/BACKFILLING TYPE: CUTTINGS HAMMER SYSTEM TYPE: CME AUTOMATIC
QUANTITY: N/A CALIBRATION DATE: 7/17/07 ER: 80%

ELEV.	DEPTH	STD. PEN./ RQD	N_{60}	REC. FT	LOSS FT	DESCRIPTION	SAMPLE TYPE & NO.	% REC.	PHYSICAL CHARACTERISTICS % AGG	% C.S.	% F.S.	% SILT	% CLAY	LL	PL	PI	WC	ODOT CLASS
876.6	0																	
874.6	2	5/7/12	25			VERY STIFF TO HARD, MOTTLED BROWN AND GRAY SILTY CLAY, LITTLE SAND, TRACE GRAVEL, MOIST.	SS-1	100	6	5	10	35	44	33	17	16	17	A-6b(11)
872.6	4																	
870.6	6	10/10/17	38				SS-2	100			SAME AS SS-1						17	A-6b (VISUAL)
868.6	8	9/17/20	49			8.6'	SS-3	100			SAME AS SS-1						15	A-6b (VISUAL)
866.6	10	5/7/10	23			STIFF TO VERY STIFF, GRAY SILT AND CLAY, LITTLE SAND, TRACE GRAVEL, DAMP TO MOIST.	SS-4	100	6	5	11	39	39	27	15	12	14	A-6a(9)
864.6	12																	
862.6	14	5/8/8	19				SS-5	100			SAME AS SS-4						15	A-6a (VISUAL)
860.6	16	q_u=3.57 tsf	-				ST-6	100									16	A-6a (VISUAL)
858.6	18	2/3/6	12				SS-7	100			SAME AS SS-4						16	A-6a (VISUAL)
856.6	20																	
854.6	22	5/7/6	17			22.5'	SS-8	20			SAME AS SS-4						16	A-6a (VISUAL)
852.6	24					VERY STIFF TO HARD, GRAY SANDY SILT, SOME GRAVEL, LITTLE CLAY, DAMP.													
850.6	26	3/10/6	21				SS-9	20			SAME AS SS-10						9	A-4a (VISUAL)
848.6	28																	
846.6	30																	
844.6	32	5/11/30	55			BEGIN CORE 33.0'	SS-10	100	33	12	13	25	17	18	13	5	7	A-4a(2)
842.6	34					VERY STIFF, GRAY SANDY SILT, SOME GRAVEL, LITTLE CLAY, COBBLES AND BOULDERS, DAMP (VISUAL).													
840.6	36																	
838.6	38																	
836.6	40																	
834.6	42					44.0'												
832.6	44					VERY STIFF, GRAY SANDY SILT, SOME GRAVEL, LITTLE CLAY, LITTLE COBBLES AND BOULDERS, DAMP, (AUGERED) (VISUAL).												
830.6	46																	
828.6	48																	
826.6	50																	
824.6	52																	
822.6	54																	
820.6	56																	

BOTTOM OF BORING = 57.0'

OHIO DEPARTMENT OF TRANSPORTATION
OFFICE OF GEOTECHNICAL ENGINEERING

LOG OF BORING

BORING NO: B-011-0-08 BASELINE, STATION & OFFSET: STA 105+63.9, 58.8' LT. SURFACE ELEV.: 877.4 PROJECT IDENTIFICATION: ALL-75-02.12
DATE STARTED: 02/23/09 DATE COMPLETED: 02/23/09 METHOD: 3¼" HSA/NQ WATER ELEV.: - BRIDGE WIDENING
NORTHING: 375897.06 EASTING: 1518527.46 SEALING/BACKFILLING TYPE: CUTTINGS HAMMER SYSTEM TYPE: CME AUTOMATIC
QUANTITY: N/A CALIBRATION DATE: 7/17/07 ER: 80%

ELEV.	DEPTH	STD. PEN./ RQD	N_{60}	REC. FT	LOSS FT	DESCRIPTION	SAMPLE TYPE & NO.	% REC.	% AGG	% C.S.	% F.S.	% SILT	% CLAY	LL	PL	PI	WC	ODOT CLASS
877.4	0																	
875.4	2					STIFF TO VERY STIFF, MOTTLED GRAY AND BROWN CLAY AND SILT, LITTLE SAND, TRACE GRAVEL, MOIST.													
873.4	4	5/6/8	19				SS-1	33			SAME AS SS-3						25	A-7-6 (VISUAL)
871.4	6	4/5/6	15				SS-2	60			SAME AS SS-3						23	A-7-6 (VISUAL)
869.4	8	3/5/5	13				SS-3	100	2	4	11	39	44	43	20	23	21	A-7-6(15)
867.4	10					10.0'												
865.4	12	6/11/12	31			HARD, DARK BROWN SILT AND CLAY, LITTLE SAND, TRACE GRAVEL, DAMP TO MOIST.	SS-4	100	6	5	11	38	40	30	17	13	16	A-6a(9)
863.4	14	8/13/17	40				SS-5	100	9	5	11	36	39	31	18	13	15	A-6a(9)
861.4	16	ST	-				ST-6	87			SAME AS SS-5						15	A-6a (VISUAL)
859.4	18					17.5'												
857.4	20	4/11/16	36			HARD, GRAY SILT AND CLAY, LITTLE SAND, LITTLE GRAVEL, DAMP TO MOIST	SS-7	100	10	8	11	42	29	27	16	11	13	A-6a(8)
855.4	22	q_u=4.68 tsf	-				ST-8	87			SAME AS SS-7						15	A-6a (VISUAL)
853.4	24	7/11/13	33				SS-9	100			SAME AS SS-7						16	A-6a (VISUAL)
851.4	26	ST	-				ST-10	33			SAME AS SS-7						-	A-6a (VISUAL)
849.4	28	13/30/16	61				SS-11	27			SAME AS SS-7						16	A-6a (VISUAL)
847.4	30					29.5'												
845.4	32	25/21/40	81			VERY DENSE, GRAY GRAVEL WITH SAND AND SILT, LITTLE CLAY, DAMP.	SS-12	100	43	15	13	18	11	19	12	7	11	A-2-4(0)
843.4	34	22/17/22	52				SS-13	60			SAME AS SS-12						11	A-2-4 (VISUAL)
841.5	36	17/24/40	85			35.9'	SS-14	87	43	10	12	22	13	18	12	6	7	A-2-4(0)
839.4	38					HARD, GRAY SILTY CLAY, TRACE SAND, TRACE GRAVEL, MOIST (VISUAL).												
837.4	40					40.0'												
835.4	42	48/42/50+/0.4'	50+			VERY DENSE, GRAY GRAVEL WITH SAND, SILT AND CLAY, DAMP.	SS-15	100	58	2	5	19	16	32	17	15	9	A-2-6(1)
833.4	44																	
831.4	46	10/50+/0.4'	50+				SS-16	47			SAME AS SS-15						9	A-2-6 (VISUAL)
829.4	48																	
827.4	50					50.3'												
825.4	52	50/24/46	93			HARD, DARK BROWN SILT AND CLAY, SOME SAND, LITTLE GRAVEL, SAND LENSES, DAMP.	SS-17	100	17	6	16	40	21	27	14	13	9	A-6a(7)
823.4	54																	
821.4	56	37/50+/0.3'	50+				SS-18	53			SAME AS SS-17						8	A-6a (VISUAL)
819.4	58																	
817.4	60																	
		39/38/40	104			61.5'	SS-19	-			SAME AS SS-17						-	A-6a (VISUAL)

BOTTOM OF BORING = 61.5'

OHIO DEPARTMENT OF TRANSPORTATION
OFFICE OF GEOTECHNICAL ENGINEERING

LOG OF BORING

BORING NO: B-012-0-08 BASELINE, STATION & OFFSET: STA 106+17.1, 41.6' LT. SURFACE ELEV.: 877.9 PROJECT IDENTIFICATION: ALL-75-02.12
DATE STARTED: 02/25/09 DATE COMPLETED: 02/25/09 METHOD: 3¼" HSA/NQ WATER ELEV.: - BRIDGE WIDENING
NORTHING: 375878.82 EASTING: 1518580.24 SEALING/BACKFILLING TYPE: CUTTINGS HAMMER SYSTEM TYPE: CME AUTOMATIC
QUANTITY: N/A CALIBRATION DATE: 7/17/07 ER: 80%

ELEV.	DEPTH	STD. PEN./ RQD	N_{60}	REC. FT	LOSS FT	DESCRIPTION	SAMPLE TYPE & NO.	% REC.	PHYSICAL CHARACTERISTICS % AGG	% C.S.	% F.S.	% SILT	% CLAY	LL	PL	PI	WC	ODOT CLASS
877.9	0																	
875.9	2					STIFF, MOTTLED GRAY AND BROWN CLAY AND SILT, LITTLE SAND, MOIST												
873.9	4	6/5/7	15				SS-1	33			SAME AS SS-2						20	A-7-6 (VISUAL)
871.9	6	3/3/4	9				SS-2	67	0	3	11	44	42	43	20	23	24	A-7-6(14)
869.9	8					7.5'												
		4/4/5	12			STIFF, MOTTLED BROWN AND GRAY CLAY, SOME SILT, LITTLE SAND, TRACE GRAVEL, MOIST.	SS-3	100	1	3	11	33	52	45	20	25	23	A-7-6(15)
867.9	10					10.0'												
		7/9/14	33			DENSE, BROWN GRAVEL WITH SAND, LITTLE SILT, TRACE CLAY, MOIST (VISUAL).	SS-4	100			SAME AS SS-5						17	A-1-b (VISUAL)
865.9	12																	
863.9	14	9/10/15	33				SS-5	100	3	60	22	13	2				16	A-1-b (VISUAL)
861.9	16	q_u =5.27 tsf	-				ST-6	100			SAME AS SS-5						16	A-1-b (VISUAL)
859.9	18					17.5'												
		3/5/9	19			STIFF TO HARD, GRAY SILT AND CLAY, LITTLE SAND, TRACE GRAVEL, DAMP TO MOIST.	SS-7	100	7	6	10	40	37	28	16	12	15	A-6a(9)
857.9	20																	
855.9	22	q_u=5.19 tsf	-				ST-8	100			SAME AS SS-7						15	A-6a (VISUAL)
853.9	24	3/3/6	12				SS-9	100			SAME AS SS-7						16	A-6a (VISUAL)
851.9	26	ST	-				ST-10	80			SAME AS SS-7						15	A-6a (VISUAL)
849.9	28	21/43/38	108				SS-11	67			SAME AS SS-7						-	A-6a (VISUAL)
847.9	30					30.0'												
		50/50+/0.4'	50+			HARD, DARK BROWN SANDY SILT, SOME GRAVEL, LITTLE CLAY, LITTLE COBBLES, MOIST.	SS-12	60	30	12	17	31	10	17	13	4	15	A-4a(2)
845.9	32																	
843.9	34					35.0'												
841.9	36	21/43/50	124			VERY DENSE, GRAY GRAVEL WITH SAND AND SILT, LITTLE CLAY, SOME COBBLES, DAMP TO WET.	SS-13	67	36	15	16	22	11	16	12	4	6	A-2-4(0)
839.9	38																	
837.9	40																	
		13/18/20	51				SS-14	20			SAME AS SS-13						21	A-2-4 (VISUAL)
835.9	42																	
833.9	44					45.0'												
831.9	46																	
		8/14/21	47			HARD, DARK BROWN SILTY CLAY, TRACE GRAVEL, MOIST.	SS-15	100	4	0	0	42	54	35	18	17	19	A-6b(11)
829.9	48																	
827.9	50																	
		18/25/26	68				SS-16	-			SAME AS SS-15						-	A-6b (VISUAL)
825.9	52																	
823.9	54																	
821.9	56	10/14/19	44				SS-17	87			SAME AS SS-15						19	A-6b (VISUAL)
819.9	58																	
817.9	60																	
		17/26/29	73			61.5'	SS-18	100			SAME AS SS-15						18	A-6b (VISUAL)

BOTTOM OF BORING = 61.5'

OHIO DEPARTMENT OF TRANSPORTATION
OFFICE OF GEOTECHNICAL ENGINEERING

LOG OF BORING

BORING NO: B-013-0-08 BASELINE, STATION & OFFSET: STA 106+74.1, 5.6' LT. SURFACE ELEV.: 895.3 PROJECT IDENTIFICATION: ALL-75-02.12
DATE STARTED: 02/24/09 DATE COMPLETED: 02/24/09 METHOD: 3¼" HSA/NQ WATER ELEV.: - BRIDGE WIDENING
NORTHING: 375841.71 EASTING: 1518636.54 SEALING/BACKFILLING TYPE: CUTTINGS HAMMER SYSTEM TYPE: CME AUTOMATIC
QUANTITY: N/A CALIBRATION DATE: 7/17/07 ER: 80%

ELEV.	DEPTH	STD. PEN./ RQD	N_{60}	REC. FT	LOSS FT	DESCRIPTION	SAMPLE TYPE & NO.	% REC.	PHYSICAL CHARACTERISTICS % AGG	% C.S.	% F.S.	% SILT	% CLAY	LL	PL	PI	WC	ODOT CLASS
895.3	0					ASPHALT PAVEMENT (0.4') AND GRAVEL BASE (0.7') 1.1'												VISUAL
893.3	2																	
891.3	4	9/9/9	24			STIFF TO VERY STIFF, MOTTLED BROWN AND GRAY SILTY CLAY, LITTLE SAND, TRACE GRAVEL, MOIST (EMBANKMENT FILL).	SS-1	33			SAME AS SS-2						19	A-6b (VISUAL)
889.3	6	5/6/9	20				SS-2	80	6	5	13	36	40	33	17	16	17	A-6b(11)
887.3	8	6/6/7	17				SS-3	93			SAME AS SS-3						18	A-6b (VISUAL)
885.3	10																	
883.3	12	4/5/5	13				SS-4	100			SAME AS SS-3						19	A-6b (VISUAL)
881.3	14	4/6/7	17				SS-5	87			SAME AS SS-3						19	A-6b (VISUAL)
879.3	16	q_u=3.19 tsf	-			17.0'	ST-6	80			SAME AS SS-3						20	A-6b (VISUAL)
877.3	18	3/6/8	19			VERY STIFF, GRAY SILTY CLAY, SOME SAND, TRACE GRAVEL, MOIST.	SS-7	93	3	5	16	35	41	38	19	19	21	A-6b(12)
875.3	20	4/8/9	23				SS-8	100			SAME AS SS-7						22	A-6b (VISUAL)
873.3	22																	
871.3	24	3/5/8	17				SS-9	93			SAME AS SS-7						19	A-6b (VISUAL)
869.3	26	ST	-			27.0'	ST-10	80			SAME AS SS-7						22	A-6b (VISUAL)
867.3	28	3/4/5	12			STIFF, MOTTLED BROWN AND GRAY SILT AND CLAY, TRACE SAND AND GRAVEL, MOIST.	SS-11	100	1	2	8	45	44	33	20	13	24	A-6a(9)
865.3	30																	
863.3	32	ST	-				ST-12	100			SAME AS SS-11						-	A-6a (VISUAL)
861.3	34					35.0'												
859.3	36	8/12/17	12			STIFF TO HARD, GRAY SILT AND CLAY, LITTLE SAND, TRACE GRAVEL, DAMP TO MOIST.	SS-13	100	9	5	11	35	40	27	15	12	16	A-6a (VISUAL)
857.3	38																	
855.3	40	4/10/10	27				SS-14	100			SAME AS SS-13						15	A-6a(9)
853.3	42																	
851.3	44																	
849.3	46	3/13/17	40				SS-15	100			SAME AS SS-14						13	A-6a (VISUAL)
847.3	48																	
845.3	50					50.0'												
843.3	52	21/50/49	132			VERY DENSE, GRAY GRAVEL WITH SAND, LITTLE SILT, TRACE CLAY, DAMP TO MOIST.	SS-16	67	55	14	12	14	5	13	13	0	7	A-1-b(0)
841.3	54																	
839.3	56	38/50+/0.4'	50+				SS-17	40			SAME AS SS-16						7	A-1-b (VISUAL)
837.3	58																	
835.3	60	50+/0.5'	50+				SS-18	80	53	11	11	20	5	13	13	0	9	A-1-b(0)
833.3	62																	
831.3	64																	
829.3	66	50+/0.2'	50+				SS-19	100			SAME AS SS-18						19	A-1-b (VISUAL)
827.3	68																	
825.3	70	50+/0.3'	50+				SS-20	100			SAME AS SS-18						12	A-1-b (VISUAL)
823.3	72																	
821.3	74																	
819.3	76	42/44/35	105				SS-21	0			SAME AS SS-18						-	A-1-b (VISUAL)

BOTTOM OF BORING = 76.5'

PROJECT DESCRIPTION

REPLACE THE EXISTING McCLAIN ROAD FOUR-SPAN REINFORCED CONCRETE BRIDGE OVER I-75.

HISTORIC RECORDS

HISTORIC BORING RECORDS FOR THE EXISITNG BRIDGE WERE REQUESTED FROM THE ODOT OFFICE OF GEOTECHNICAL ENGINEERING AND THE DISTRICT. HISTORIC RECORDS EXIST AND ARE DISCUSSED IN THE FOUNDATION EXPLORATION REPORT. DUE TO CHANGES IN STATIONING, LOCATIONS FOR THE DATA ARE NOT CERTAIN AND ARE THEREFORE NOT SHOWN ON THE FOUNDATION EXPLORATION DRAWINGS.

GEOLOGY

THE STRUCTURE SITE IS LOCATED IN THE CENTRAL OHIO CLAYEY TILL PLAIN. THIS REGION IS COMPRISED OF GROUND MORAINE AND END MORAINE TILL DEPOSITS OVERLYING DOLOMITE WITH INTERBEDDED SHALE. CAVES AND OTHER KARST FEATURES MAY BE PRESENT ACCORDING TO THE PHYSIOGRAPHIC REGION OF OHIO MAP (ODNR, 1998), BUT NO KNOWN FEATURES WERE IDENTIFIED ON THE OHIO KARST AREAS MAP (ODNR, 2007).

RECONNAISSANCE

A FIELD RECONNAISSANCE WAS COMPLETED ON MARCH 13, 2007, FOCUSING MAINLY ON PAVEMENT CONDITIONS AND SITE TOPOGRAPHY AND DRAINAGE. THE MAINLINE SHOULDER PAVEMENTS SHOW EXTENSIVE "ALLIGATOR" CRACKING AND THE MAINLINE PAVEMENTS SHOW REFLECTIVE CRACKING AT THE EXPANSION JOINT LOCATIONS.

THE SURROUNDING AREA IS DESCRIBED AS GENTLY UNDULATING WITH MOST OF THE SURROUNDING AREA CONSISTING OF OPEN FIELD OR LIGHTLY DEVELOPED COMMERCIAL AND RESIDENTIAL DISTRICTS. DRAINAGE ALONG THE ALIGNMENT IS DESCRIBED AS SLUGGISH WITH AREAS OF STANDING WATER, AND FLOWING WATER IN DRAINAGE DITCHES AND NATURAL STREAMS GENERALLY CREATING STEP TO VERTICAL CUT BANKS IN THE SOIL PROFILE.

SUBSURFACE EXPLORATION

FIVE BORINGS WERE ADVANCED AT THE MCCLAIN ROAD BRIDGE OVER I-75. ONE BORING WAS ADVANCED AT EACH PIER AND ABUTMENT OF THE EXISTING STRUCTURE. THE ABUTMENT BORINGS (B-020 AND B-024) WERE LOCATED ON MCCLAIN ROAD ON EITHER SIDE OF I-75, WHILE THE PIER BORINGS (B-021, B-022 AND B-023) WERE ADVANCED NEAR THE EXISTING PIERS ON I-75. THE BORINGS WERE ADVANCED USING 3.25-INCH INSIDE DIAMETER HOLLOW-STEM AUGERS. STANDARD PENETRATION TEST (SPT) AND UNDISTURBED SHELBY TUBE (ST) SAMPLES WERE OBTAINED FOR THE UPPER 30 FEET AT 2.5-FOOT INTERVALS AND AT 5-FOOT INTERVALS BELOW THIS DEPTH FOR EACH SUBSTRUCTURE. SPT SAMPLES WERE OBTAINED USING A TRUCK MOUNTED DRILL RIG WITH A CALIBRATED AUTOMATIC HAMMER WITH AN ENERGY RATIO (ER) OF 80% (CALIBRATED ON 7-17-2007). UPON ENCOUNTERING BEDROCK, NO-SIZED ROCK CORING EQUIPMENT WAS USED TO OBTAIN 10 FEET OF ROCK CORE SAMPLE. AT THE CONCLUSION OF DRILLING OPERATIONS, BOREHOLES WERE BACKFILLED WITH AUGER SOIL CUTTINGS.

EXPLORATION FINDINGS

STIFF TO VERY STIFF FINE-GRAINED GLACIAL TILL SOILS CLASSIFYING PREDOMINANTLY AS SILT AND CLAY (A-6a), BUT ALSO AS SILTY CLAY (A-6b) AND CLAY (A-7-6), ALL WITH VARYING AMOUNTS OF SANDS AND GRAVELS, WERE ENCOUNTERED IN ALL BORINGS. THE SOILS RANGED IN THICKNESS FROM 38.5 FEET IN BORING B-021 TO 59.5 FEET IN BORING B-020. UNCONFINED COMPRESSIVE STRENGTH TESTING WAS PERFORMED ON UNDISTURBED ST SAMPLES FROM ALL FIVE WITH RESULTS OF THE TESTS RANGING FROM 1.77 TO 4.42 TONS PER SQUARE FOOT. IN BORINGS B-021 AND B-022, LAYERS OF MEDIUM DENSE TO DENSE COARSE AND FINE SAND (A-3a) WERE ENCOUNTERED RANGING FROM 2.5 TO 5 FEET THICK.

BEDROCK WAS ENCOUNTERED IN ALL BORINGS AT ELEVATIONS RANGING FROM 842.2 FEET (B-020) TO 848.1 FEET (B-024). THE BEDROCK WAS DESCRIBED AS DOLOMITE (90%) WITH INTERBEDDED SHALE (10%). THE DOLOMITE WAS DESCRIBED AS GRAY, SLIGHTLY WEATHERED, AND STRONG WITH THIN TO LAMINATED BEDDING. THE SHALE WAS DESCRIBED AS BLACK, SLIGHTLY TO MODERATELY WEATHERED, AND MODERATELY STRONG WITH LAMINATED BEDDING. A TWO FOOT THICK ZONE OF SEVERELY WEATHERED ROCK WAS ENCOUNTERED IN BORING B-021.

NO STATIC WATER LEVEL WAS OBSERVED IN THE BORINGS PRIOR TO ROCK CORING.

SPECIFICATIONS

THIS GEOTECHNICAL EXPLORATION WAS PERFORMED IN ACCORDANCE WITH THE STATE OF OHIO, DEPARTMENT OF TRANSPORTATION, OFFICE OF GEOTECHNICAL ENGINEERING, SPECIFICATIONS FOR GEOTECHNICAL EXPLORATIONS, DATED JANUARY 2009.

AVAILABLE INFORMATION

ALL AVAILABLE SOIL AND BEDROCK INFORMATION THAT CAN BE CONVENIENTLY SHOWN ON THE SOIL PROFILE SHEETS HAS BEEN SO REPORTED. ADDITIONAL SUBSURFACE EXPLORATIONS MAY HAVE BEEN MADE TO STUDY SOME SPECIAL ASPECT OF THE PROJECT. COPIES OF THIS DATA, IF ANY, MAY BE INSPECTED IN THE DISTRICT DEPUTY DIRECTOR'S OFFICE, THE OFFICE OF GEOTECHNICAL ENGINEERING AT 1600 WEST BROAD STREET COLUMBUS, OHIO OR THE OFFICE OF STRUCTURAL ENGINEERING AT 1980 WEST BROAD STREET COLUMBUS, OHIO.

LEGEND

DESCRIPTION	ODOT CLASS	CLASSIFIED MECH./VISUAL	
COARSE AND FINE SAND	A-3a	2	0
SANDY SILT	A-4a	1	0
SILT AND CLAY	A-6a	16	38
SILTY CLAY	A-6b	5	2
CLAY	A-7-6	5	5
	TOTAL	29	45
SHALE	*VISUAL*		
WEATHERED SHALE	*VISUAL*		
DOLOMITE	*VISUAL*		
WEATHERED DOLOMITE	*VISUAL*		
PAVEMENT OR BASE = X = APPROXIMATE THICKNESS	*VISUAL*		
SOD AND TOPSOIL = X = APPROXIMATE THICKNESS	*VISUAL*		

EXPLORATION LOCATION - PLAN VIEW

DRIVE SAMPLE AND/OR ROCK CORE BORING PLOTTED TO VERTICAL SCALE ONLY. HORIZONTAL BAR INDICATES A CHANGE IN STRATIGRAPHY.

N_{60} INDICATES CORRECTED STANDARD PENETRATION RESISTANCE FOR 60% EFFICIENCY.

WC INDICATES WATER CONTENT IN PERCENT.

NP INDICATES A NON-PLASTIC SAMPLE.

SS INDICATES A SPLIT SPOON SAMPLE, STANDARD PENETRATION TEST.

ST INDICATES A SHELBY TUBE SAMPLE.

TR INDICATES TOP OF ROCK.

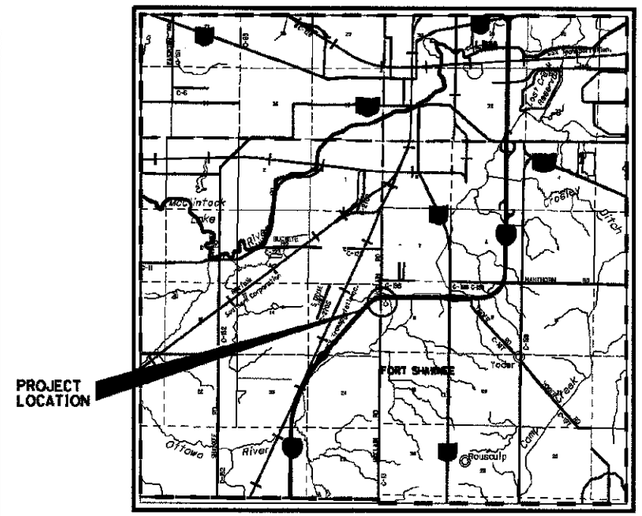

LOCATION MAP

SCALE IN MILES

0 1 2 3 4

N

PARTICLE SIZE DEFINITIONS

12"	3"	2.0 mm	0.42 mm	0.074 mm	0.005 mm
BOULDERS	COBBLES	GRAVEL	COARSE SAND	FINE SAND	SILT	CLAY
		No. 10 SIEVE	No. 40 SIEVE	No. 200 SIEVE		

RECON. - DR/JM 03/07, 01/09
DRILLING - JM/MW/LW 6/09-3/09
DRAWN - MJ/CW 5/09-7/09, 11/10
REVIEWED - JMM 9/09, RJK 11/10

DESIGN AGENCY
STANTEC CONSULTING SERVICES INC.
CINCINNATI, OHIO

PID NO. 76691

STRUCTURE FOUNDATION EXPLORATION
McCLAIN ROAD OVER I-75

ALL-75-03.28

1 / 11

72/97

V:\1755\active\175530002\geotechnical\drawing\ODOTSubmittal\projects\ALL\76691\geotechnical\sheets\ALL-75-03.28 (McCLAIN ROAD)\76691ZC001.dgn

V:\1755\active\175530002\geotechnical\drawing\ODOTSubmittal\projects\ALL\76691\geotechnical\sheets\ALL-75-03.28 (McCLAIN ROAD)\76691ZP001.dgn

HORIZONTAL SCALE IN FEET
0 10 20 40

DRAWN C.W.
CHECKED R.J.K.

STRUCTURE FOUNDATION EXPLORATION
McCLAIN ROAD OVER I-75

ALL-75-03.28

2 | 11

73/97

V:\1755\active\175506027\DRAWINGS 09 (STRUCTURAL)\ALL-75-03.28 (McCLAIN ROAD)\DGN\76691ZL001.dgn 9/30/2009 2:20:31 PM mjennings

OHIO DEPARTMENT OF TRANSPORTATION
OFFICE OF GEOTECHNICAL ENGINEERING

LOG OF BORING

BORING NO: B-020-0-09 BASELINE, STATION & OFFSET: STA 102+28.8, 7.3' RT. SURFACE ELEV.: 901.7 PROJECT IDENTIFICATION: ALL-75-03.28
DATE STARTED: 03/05/09 DATE COMPLETED: 03/05/09 METHOD: 3¼" HSA/NQ WATER ELEV.: - BRIDGE WIDENING
NORTHING: 380008.01 EASTING: 1522733.1 SEALING/BACKFILLING TYPE: CUTTINGS HAMMER SYSTEM TYPE: CME AUTOMATIC
QUANTITY: N/A CALIBRATION DATE: 7/17/07 ER: 80%

ELEV.	DEPTH	STD. PEN./ RQD	N_{60}	REC. FT	LOSS FT	DESCRIPTION	SAMPLE TYPE & NO.	% REC.	PHYSICAL CHARACTERISTICS % AGG	% C.S.	% F.S.	% SILT	% CLAY	LL	PL	PI	WC	ODOT CLASS
901.7	0					ASPHALT (0.4') GRAVEL BASE MATERIAL (0.6') 1.0'												VISUAL
899.7	2																	
897.7	4	5/6/7	17			VERY STIFF, MOTTLED LIGHT BROWN AND GRAY SILT AND CLAY, LITTLE SAND, TRACE GRAVEL, DAMP	SS-1	80	3	5	11	40	41	32	18	14	17	A-6a(10)
895.7	6	4/6/6	16			6.5'	SS-2	100			SAME AS SS-1						17	A-6a (VISUAL)
893.7	8	3/3/4	9			STIFF, GRAY CLAY AND SILT, LITTLE SAND, MOIST	SS-3	87	0	2	10	50	38	43	16	27	27	A-7-6(15)
891.7	10					10.0'												
889.7	12	3/4/5	12			STIFF, LIGHT GRAY GRADING TO LIGHT BROWN SILTY CLAY, LITTLE SAND, TRACE GRAVEL, MOIST 12.5'	SS-4	80	4	2	10	41	43	35	16	19	19	A-6b(12)
887.7	14	4/7/8	20			VERY STIFF, GRAY SILTY CLAY, LITTLE SAND, TRACE GRAVEL, MOIST	SS-5	93	1	4	10	38	47	37	18	19	20	A-6b(12)
885.7	16	ST	-			17.0'	ST-6	100			SAME AS SS-5						-	A-6b (VISUAL)
883.7	18	4/9/12	28			VERY STIFF, LIGHT BROWN GRADING TO LIGHT GRAY SILTY CLAY, LITTLE SAND, TRACE GRAVEL, MOIST	SS-7	100	1	6	13	40	40	39	19	20	19	A-6b(12)
881.7	20					20.0'												
879.7	22	q_u=1.83 tsf	-			STIFF, GRAY SILTY CLAY, SOME SAND, LITTLE GRAVEL, MOIST	ST-8	100			SAME AS SS-9						28	A-6b (VISUAL)
877.7	24	4/4/4	11			25.0'	SS-9	73	13	5	16	31	35	40	19	21	21	A-6b(11)
875.7	26	3/4/5	12			STIFF TO HARD, MOTTLED BROWN AND GRAY SILT AND CLAY, LITTLE SAND, TRACE GRAVEL, MOIST	SS-10	100			SAME AS SS-11						25	A-6a (VISUAL)
873.7	28	4/7/8	20				SS-11	100	3	5	12	41	39	28	17	11	18	A-6a(8)
871.7	30																	
869.7	32	q_u=1.77 tsf	-				ST-12	87			SAME AS SS-11						15	A-6a (VISUAL)
867.7	34																	
865.7	36	6/7/6	17				SS-13	100			SAME AS SS-11						18	A-6a (VISUAL)
863.7	38																	
861.7	40																	
859.7	42	6/12/14	35				SS-14	100	5	5	11	38	41	27	16	11	15	A-6a(8)
857.7	44																	
855.7	46	4/7/9	21				SS-15	73			SAME AS SS-14						17	A-6a (VISUAL)
853.7	48																	
851.7	50																	
849.7	52	8/12/18	40				SS-16	13			SAME AS SS-14						14	A-6a (VISUAL)
847.7	54																	
845.7	56	17/18/14	43				SS-17	80			SAME AS SS-14						12	A-6a (VISUAL)
843.7	58																	
841.7	60	50+/0.5'	50+	TOP OF ROCK		BEGIN CORE 59.5'	SS-18	100			SAME AS SS-14						10	A-6a (VISUAL)
839.7	62					DOLOMITE (90%) INTERBEDDED WITH SHALE (10%) RQD = 13%, LOSS = 5%; DOLOMITE: GRAY, SLIGHTLY WEATHERED, STRONG, VERY THIN BEDDED, SHALE: BLACK, MODERATELY WEATHERED, MODERATELY STRONG, LAMINATED.												
837.7	64	13		9.5	0.5													
835.7	66																	
833.7	68																	

BOTTOM OF BORING = 69.5'

V:\1755\active\175506027\DRAWINGS 09 (STRUCTURAL)\ALL-75-03.28 (McCLAIN ROAD)\DGN\76691ZL002.dgn 9/30/2009 2:22:35 PM mjennings

OHIO DEPARTMENT OF TRANSPORTATION
OFFICE OF GEOTECHNICAL ENGINEERING

LOG OF BORING

BORING NO: B-021-0-09 BASELINE, STATION & OFFSET: STA 103+01.5, 34.8' RT. SURFACE ELEV.: 881.3 PROJECT IDENTIFICATION: ALL-75-03.28
DATE STARTED: 02/25/09 DATE COMPLETED: 02/26/09 METHOD: 3¼" HSA/NQ WATER ELEV.: - BRIDGE WIDENING
NORTHING: 380077.3 EASTING: 1522761.4 SEALING/BACKFILLING TYPE: CUTTINGS HAMMER SYSTEM TYPE: CME AUTOMATIC
QUANTITY: N/A CALIBRATION DATE: 7/17/07 ER: 80%

ELEV.	DEPTH	STD. PEN./ RQD	N_{60}	REC. FT	LOSS FT	DESCRIPTION	SAMPLE TYPE & NO.	% REC.	PHYSICAL CHARACTERISTICS % AGG	% C.S.	% F.S.	% SILT	% CLAY	LL	PL	PI	WC	ODOT CLASS
881.3	0																	
879.3	2					MEDIUM STIFF, MOTTLED GRAY AND BROWN CLAY, SOME SILT AND SAND, TRACE GRAVEL, MOIST												
877.3	4	3/3/3	8			5.0'	SS-1	87	1	3	24	33	39	41	16	25	24	A-7-6(14)
875.3	6	2/8/10	24			DENSE, ORANGE-BROWN COARSE AND FINE SAND, LITTLE GRAVEL AND SILT, TRACE CLAY, WELL GRADED, WET	SS-2	73	15	28	39	14	6	NP	NP	NP	19	A-3a(0)
873.3	8					7.5'												
871.3	10	3/4/8	13			STIFF TO HARD, GRAY SILT AND CLAY, LITTLE SAND, TRACE GRAVEL, DAMP TO MOIST	SS-3	93			SAME AS SS-4						17	A-6a (VISUAL)
869.3	12	4/7/8	20				SS-4	100	9	5	10	38	38	27	16	11	16	A-6a(9)
867.3	14	4/5/7	16				SS-5	100			SAME AS SS-4						14	A-6a (VISUAL)
865.3	16	qu=3.45 tsf	-				ST-6	67			SAME AS SS-4						16	A-6a (VISUAL)
863.3	18	4/6/8	19				SS-7	100			SAME AS SS-4						16	A-6a (VISUAL)
861.3	20																	
859.3	22	ST	-				ST-8	100			SAME AS SS-9						-	A-6a (VISUAL)
857.3	24	8/10/11	28				SS-9	100	4	5	11	35	45	28	15	13	19	A-6a(9)
855.3	26	8/12/15	36				SS-10	100			SAME AS SS-9						12	A-6a (VISUAL)
853.3	28	7/8/8	21				SS-11	100			SAME AS SS-9						13	A-6a (VISUAL)
851.3	30					30.0'												
849.3	32	10/10/12	29			VERY STIFF TO HARD, DARK BROWN SILT AND CLAY, SOME SAND AND GRAVEL, MOIST	SS-12	67	29	10	11	26	24	26	15	11	15	A-6a(3)
847.3	34																	
845.3	36	8/9/50+	50+			TOP OF ROCK 38.0'	SS-13	13									18	A-6a (VISUAL)
843.3	38	50+/0.1'	50+			WEATHERED DOLOMITE AND SHALE (AUGERED) BEGIN CORE 38.5'	SS-14	7									18	(VISUAL)
841.3	40																	
839.3	42	0		7.4	0.5	DOLOMITE (85%) INTERBEDDED WITH SHALE (15%), RQD = 0%, LOSS = 4% DOLOMITE: GRAY, SLIGHTLY WEATHERED, STRONG, VERY THIN TO LAMINATED, SHALE: BLACK, SLIGHTLY WEATHERED, MODERATELY STRONG, VERY THIN TO LAMINATED.												
837.3	44																	
835.3	46																	
833.3	48	0		5.0	0.0													
831.3	50																	

BOTTOM OF BORING = 51.4'

15/97	4/11	ALL-75-03.28	STRUCTURE FOUNDATION EXPLORATION McCLAIN ROAD OVER I-75

DRAWN M.S.J.
CHECKED R.J.K.

V:\1755\active\175506027\DRAWINGS 09 (STRUCTURAL)\ALL-75-03.28 (McCLAIN ROAD)\DGN\76691ZL003.dgn 9/30/2009 2:24:53 PM mjennings

OHIO DEPARTMENT OF TRANSPORTATION
OFFICE OF GEOTECHNICAL ENGINEERING

LOG OF BORING

BORING NO: B-022-0-08 BASELINE, STATION & OFFSET: STA 103+84.9, 47.5' RT. SURFACE ELEV.: 883.6 PROJECT IDENTIFICATION: ALL-75-03.28
DATE STARTED: 02/25/09 DATE COMPLETED: 02/25/09 METHOD: 3¼" HSA/NQ WATER ELEV.: - BRIDGE WIDENING
NORTHING: 380140.57 EASTING: 1522775.33 SEALING/BACKFILLING TYPE: CUTTINGS HAMMER SYSTEM TYPE: CME AUTOMATIC
QUANTITY: N/A CALIBRATION DATE: 7/17/07 ER: 80%

ELEV.	DEPTH	STD. PEN./ RQD	N_{60}	REC. FT	LOSS FT	DESCRIPTION	SAMPLE TYPE & NO.	% REC.	PHYSICAL CHARACTERISTICS % AGG	% C.S.	% F.S.	% SILT	% CLAY	LL	PL	PI	WC	ODOT CLASS
883.6	0																	
881.6	2					STIFF TO VERY STIFF, MOTTLED BROWN AND GRAY CLAY, SOME SILT, LITTLE GRAVEL, TRACE SAND, MOIST													
879.6	4	6/7/8	20				SS-1	67			SAME AS SS-2						20	A-7-6 (VISUAL)
877.6	6	3/3/5	11				SS-2	100	12	2	8	30	48	46	21	25	24	A-7-6(15)
875.6	8	3/5/7	16				SS-3	100			SAME AS SS-2						15	A-7-6 (VISUAL)
873.6	10					10.0'												
871.6	12	6/8/11	25			VERY STIFF, MOTTLED GRAY AND BROWN SILT AND CLAY, LITTLE SAND, TRACE GRAVEL, DAMP TO MOIST	SS-4	100	7	5	10	37	41	29	16	13	14	A-6a(9)
869.6	14	6/7/9	21				SS-5	87			SAME AS SS-4						14	A-6a (VISUAL)
867.6	16	q_u=4.42 tsf	-				ST-6	100			SAME AS SS-4						15	A-6a (VISUAL)
865.6	18	4/6/9	20				SS-7	100	5	5	10	38	42	28	15	13	15	A-6a(9)
863.6	20																	
861.6	22	ST	-				ST-8	100			SAME AS SS-7						16	A-6a (VISUAL)
859.6	24	3/6/9	20				SS-9	100			SAME AS SS-7						15	A-6a (VISUAL)
857.6	26	ST	-				ST-10	100			SAME AS SS-7						-	A-6a (VISUAL)
855.6	28					27.5'												
853.6	30	3/5/9	19			STIFF, DARK BROWN SANDY SILT, SOME CLAY, LITTLE GRAVEL, MOIST 30.0'	SS-11	100	14	10	14	30	32	25	15	10	15	A-4a(6)
851.6	32	4/6/9	20			MEDIUM DENSE, COARSE AND FINE SAND, LITTLE CLAY AND SILT, TRACE GRAVEL, WELL GRADED, WET	SS-12	53	3	22	51	12	12	NP	NP	NP	20	A-3a(0)
849.6	34																	
847.6	36	4/8/13	28			35.0' VERY STIFF, GRAY SILTY CLAY, LITTLE SAND AND GRAVEL, MOIST	SS-13	100	11	4	6	26	53	36	18	18	18	A-6b(11)
845.6	38																	
843.6	40					TOP OF ROCK BEGIN CORE 40.0'												
841.6	42	0		2.6	0.4	DOLOMITE (85%) INTERBEDDED WITH SHALE (15%), RQD = 11%, LOSS = 3% DOLOMITE: GRAY, SLIGHTLY WEATHERED, STRONG, VERY THIN TO LAMINATED, SHALE: BLACK, SLIGHTLY WEATHERED, MODERATELY STRONG, VERY THIN TO LAMINATED.													
839.6	44																	
837.6	46																	
835.6	48	14		9.3	0.0													
833.6	50																	
831.6	52																	

BOTTOM OF BORING = 52.3'

V:\1755\active\175506027\DRAWINGS 09 (STRUCTURAL)\ALL-75-03.28 (McCLAIN ROAD)\DGN\76691ZL004.dgn 9/30/2009 2:27:02 PM mjennings

OHIO DEPARTMENT OF TRANSPORTATION
OFFICE OF GEOTECHNICAL ENGINEERING

LOG OF BORING

BORING NO: B-023-0-09 BASELINE, STATION & OFFSET: STA SURFACE ELEV.: 885.6 PROJECT IDENTIFICATION: ALL-75-03.26
DATE STARTED: 03/02/09 DATE COMPLETED: 03/03/09 METHOD: 3¼" HSA/NQ WATER ELEV.: - BRIDGE WIDENING
NORTHING: 380196.88 EASTING: 1522693.75 SEALING/BACKFILLING TYPE: CUTTINGS HAMMER SYSTEM TYPE: CME AUTOMATIC
QUANTITY: N/A CALIBRATION DATE: 7/17/07 ER: 80%

ELEV.	DEPTH	STD. PEN./ RQD	N_{60}	REC. FT	LOSS FT	DESCRIPTION	SAMPLE TYPE & NO.	% REC.	PHYSICAL CHARACTERISTICS % AGG	% C.S.	% F.S.	% SILT	% CLAY	LL	PL	PI	WC	ODOT CLASS
885.6	0																	
883.6	2																	
881.6	4	11/11/10	28			VERY STIFF TO HARD, MOTTLED BROWN AND GRAY SILT AND CLAY, LITTLE SAND, TRACE GRAVEL, MOIST	SS-1	-			SAME AS SS-2						-	A-6a (VISUAL)
879.6	6	4/6/7	17				SS-2	100	4	4	11	39	42	30	17	13	16	A-6a(9)
877.6	8	4/9/10	25				SS-3	100			SAME AS SS-2						17	A-6a (VISUAL)
875.6	10																	
873.6	12	6/14/15	39			11.5'	SS-4	100			SAME AS SS-2						14	A-6a (VISUAL)
871.6	14	5/7/9	21			VERY STIFF TO HARD, GRAY SILT AND CLAY, LITTLE SAND, TRACE GRAVEL, MOIST	SS-5	87	4	5	11	38	41	26	15	11	15	A-6a(8)
869.6	16	q_u=2.55 tsf	-				ST-6	100			SAME AS SS-5						16	A-6a (VISUAL)
867.6	18	4/6/7	17				SS-7	100	3	5	11	43	38	26	15	11	17	A-6a(8)
865.6	20																	
863.6	22	q_u=1.82 tsf	-				ST-8	100			SAME AS SS-7						16	A-6a (VISUAL)
861.6	24	5/8/10	24				SS-9	100			SAME AS SS-7						15	A-6a (VISUAL)
859.6	26	q_u=4.00 tsf	-				ST-10	93			SAME AS SS-7						16	A-6a (VISUAL)
857.6	28	3/5/6	15				SS-11	100	3	5	12	41	39	27	15	12	17	A-6a(9)
855.6	30	6/6/6	16				SS-12	100			SAME AS SS-11						14	A-6a (VISUAL)
853.6	32																	
851.3	34																	
849.6	36	15/20/39	78				SS-13	60			SAME AS SS-11						10	A-6a (VISUAL)
847.6	38																	
845.6	40	50+/0.2'	50+	TOP OF ROCK		BEGIN CORE 40.0'	SS-14	-			SAME AS SS-11						-	A-6a (VISUAL)
843.6	42					DOLOMITE (90%) INTERBEDDED WITH SHALE (10%) RQD = 10%, LOSS = 9%; DOLOMITE: GRAY, SLIGHTLY WEATHERED, STRONG, THIN TOVERY THIN BEDDED, SHALE: BLACK, MODERATELY WEATHERED, MODERATELY STRONG, LAMINATED.												
841.6	44	0		6.0	0.5													
839.6	46																	
		88		0.8	0.2													

BOTTOM OF BORING = 47.5'
NOTE: WATER PUMP FROZE DUE TO WEATHER, COULD ONLY CORE ROCK FOR 7.5'

9/11	ALL-75-03.28	STRUCTURE FOUNDATION EXPLORATION McCLAIN ROAD OVER I-75	DRAWN M.S.J. CHECKED R.J.K.

V:\1755\active\175506027\DRAWINGS 09 (STRUCTURAL)\ALL-75-03.28 (McCLAIN ROAD)\DGN\76691ZL005.dgn 9/30/2009 2:29:23 PM mjennings

OHIO DEPARTMENT OF TRANSPORTATION
OFFICE OF GEOTECHNICAL ENGINEERING

LOG OF BORING

BORING NO: B-024-0-09 BASELINE, STATION & OFFSET: STA 105+37.6, 9.2' LT. SURFACE ELEV.: 903.1 PROJECT IDENTIFICATION: ALL-75-03.28
DATE STARTED: 03/05/09 DATE COMPLETED: 03/05/09 METHOD: 3¼" HSA/NQ WATER ELEV.: - BRIDGE WIDENING
NORTHING: 380314.02 EASTING: 1522721.21 SEALING/BACKFILLING TYPE: CUTTINGS HAMMER SYSTEM TYPE: CME AUTOMATIC
N/A CALIBRATION DATE: 7/17/07 ER: 80%

ELEV.	DEPTH	STD. PEN./ RQD	N_{60}	REC. FT	LOSS FT	DESCRIPTION	SAMPLE TYPE & NO.	% REC.	PHYSICAL CHARACTERISTICS % AGG	% C.S.	% F.S.	% SILT	% CLAY	LL	PL	PI	WC	ODOT CLASS
903.1	0					ASPHALT (0.4') GRAVEL BASE MATERIAL (0.6') 1.0'												VISUAL
901.1	2																	
899.1	4	9/8/7	20			STIFF TO VERY STIFF, MOTTLED LIGHT BROWN AND GRAY SILT AND CLAY, LITTLE SAND, TRACE GRAVEL, MOIST	SS-1	-			SAME AS SS-2						-	A-6a (VISUAL)
897.1	6	3/4/5	12				SS-2	80	4	4	12	39	41	31	16	15	18	A-6a(10)
895.1	8	3/4/5	12				SS-3	67			SAME AS SS-2						20	A-6a (VISUAL)
893.1	10					10.0'												
891.1	12	3/5/5	13			VERY STIFF, GRAY CLAY AND SILT, LITTLE SAND, TRACE GRAVEL, MOIST	SS-4	93	3	5	11	39	42	41	18	23	23	A-7-6(13)
889.1	14	4/5/7	16				SS-5	100	2	2	8	47	41	45	17	28	22	A-7-6(16)
887.1	16	q_u=3.19 tsf	-				ST-6	100			SAME AS SS-5						18	A-7-6 (VISUAL)
885.1	18	4/9/12	28				SS-7	67			SAME AS SS-5						-	A-7-6 (VISUAL)
883.1	20																	
881.1	22	ST	-			22.0'	ST-8	80			SAME AS SS-5						-	A-7-6 (VISUAL)
879.1	24	6/7/8	20			VERY STIFF, DARK BROWN GRADING TO GRAY SILT AND CLAY, LITTLE SAND, TRACE GRAVEL, MOIST	SS-9	-	7	5	12	40	36	28	15	13	16	A-6a(9)
877.1	26	4/5/8	17				SS-10	100			SAME AS SS-9						15	A-6a (VISUAL)
875.1	28					27.5'												
873.1	30	8/9/14	31			VERY STIFF TO HARD, GRAY SILT AND CLAY, LITTLE SAND, TRACE TO LITTLE GRAVEL, DAMP	SS-11	100	4	3	8	41	44	27	16	11	13	A-6a(8)
871.1	32	9/14/14	37				SS-12	100			SAME AS SS-11						13	A-6a (VISUAL)
869.1	34																	
867.1	36	5/8/12	27				SS-13	100			SAME AS SS-11						14	A-6a (VISUAL)
865.1	38																	
863.1	40																	
861.1	42	6/11/15	35				SS-14	100			SAME AS SS-11						14	A-6a (VISUAL)
859.1	44																	
857.1	46	3/5/6	15				SS-15	100	13	9	16	32	30	25	12	13	13	A-6a(7)
855.1	48																	
853.1	50																	
851.1	52	10/11/19	40				SS-16	60			SAME AS SS-15						15	A-6a (VISUAL)
849.1	54																	
						TOP OF ROCK BEGIN CORE 55.0'												
847.1	56																	
845.1	58	0		6.0	0.0	DOLOMITE (90%) INTERBEDDED WITH SHALE (10%) RQD = 0%, LOSS = 0%; DOLOMITE: GRAY, UNWEATHERED, STRONG, VERY THIN BEDDED, SHALE: BLACK, SLIGHTLY WEATHERED, MODERATELY STRONG, LAMINATED.												
843.1	60																	
841.1	62																	
839.1	64	0		5.0	0.0													
837.1	66																	

BOTTOM OF BORING = 66.0'

\\Us1268-f01\workgroup\1755\active\175530002\geotechnical\drawing\ODOTSubmittal\projects\ALL75691\geotechnical\sheets\ALL-75-04.23 LR (S.R. 65, ST. JOHN RD.)\75691ZC001.dgn

PROJECT DESCRIPTION

REPLACE THE TWO EXISTING I-75 FOUR-SPAN REINFORCED CONCRETE BRIDGES OVER STATE ROUTE 65.

HISTORIC RECORDS

HISTORIC BORING RECORDS FOR THE EXISITNG BRIDGE WERE REQUESTED FROM THE ODOT OFFICE OF GEOTECHNICAL ENGINEERING AND THE DISTRICT. HISTORIC SOUNDING RECORDS EXIST AND ARE DISCUSSED IN THE FOUNDATION EXPLORATION REPORT. DUE TO CHANGES IN STATIONING, LOCATIONS FOR THE SOUNDINGS ARE NOT CERTAIN AND ARE NOT SHOWN ON THE FOUNDATION EXPLORATION DRAWINGS.

GEOLOGY

THE STRUCTURE SITE IS LOCATED IN THE CENTRAL OHIO CLAYEY TILL PLAIN. THIS REGION IS COMPRISED OF GROUND MORAINE AND END MORAINE TILL DEPOSITS OVERLYING DOLOMITE WITH INTERBEDDED SHALE. CAVES AND OTHER KARST FEATURES MAY BE PRESENT ACCORDING TO THE PHYSIOGRAPHIC REGION OF OHIO MAP (ODNR, 1998), BUT NO KNOW FEATURES WERE IDENTIFIED IN THE OHIO KARST AREAS MAP (ODNR, 2007).

RECONNAISSANCE

A FIELD RECONNAISSANCE WAS COMPLETED ON MARCH 13, 2007, FOCUSING MAINLY ON PAVEMENT CONDITIONS AND SITE TOPOGRAPHY AND DRAINAGE. THE MAINLINE SHOULDER PAVEMENTS SHOW EXTENSIVE "ALLIGATOR" CRACKING AND THE MAINLINE PAVEMENTS SHOW REFLECTIVE CRACKING AT THE EXPANSION JOINT LOCATIONS.

THE SURROUNDING AREA IS DESCRIBED AS GENTLY UNDULATING WITH MOST OF THE SURROUNDING AREA CONSISTING OF OPEN FIELD OR LIGHTLY DEVELOPED COMMERCIAL AND RESIDENTIAL DISTRICTS. DRAINAGE ALONG THE ALIGNMENT IS DESCRIBED AS SLUGGISH WITH AREAS OF STANDING WATER, AND FLOWING WATER IN DRAINAGE DITCHES AND NATURAL STREAMS GENERALLY CREATING STEEP TO VERTICAL CUT BANKS IN THE SOIL PROFILE.

SUBSURFACE EXPLORATION

FOUR BORINGS WERE ADVANCED AT THE I-75 BRIDGES OVER S.R. 65. ONE BORING WAS ADVANCED AT THE PROPOSED PIER AND ABUTMENT LOCATIONS FOR THE NEW STRUCTURE. THE ABUTMENT BORINGS (B-032 AND B-037) WERE LOCATED IN THE MEDIAN AREA OF I-75, WHILE THE PIER BORINGS (B-034 AND B-035) WERE ADVANCED ON EITHER SIDE OF S.R. 65 NEAR EXISTING PIER LOCATIONS. THE BORINGS WERE ADVANCED USING 3.25-INCH I.D. HOLLOW-STEM AUGERS. STANDARD PENETRATION TEST (SPT) AND UNDISTURBED SHELBY TUBE (ST) SAMPLES WERE OBTAINED FOR THE UPPER 30 FEET AT 2.5-FOOT INTERVALS AND AT 5-FOOT INTERVALS BELOW THIS DEPTH FOR EACH SUBSTRUCTURE. SPT SAMPLES WERE OBTAINED USING A TRUCK MOUNTED DRILL RIG WITH A CALIBRATED AUTOMATIC HAMMER WITH AN ENERGY RATIO (ER) OF 80%. AT THE CONCLUSION OF DRILLING OPERATIONS, BOREHOLES WERE BACKFILLED WITH AUGER SOIL CUTTINGS.

EXPLORATION FINDINGS

INTERBEDDED FINE AND COARSE GRAINED SOILS WERE ENCOUNTERED IN ALL BORINGS. MEDIUM STIFF TO HARD FINE GRAINED SOILS THAT CLASSIFIED AS SILTY CLAY (A-6b), SILT AND CLAY (A-6a), CLAY (A-7-6), SANDY SILT (A-4a) AND SILT (A-4b) WERE ENCOUNTERED AT THE SURFACE OF EACH BORING AND INTERBEDDED WITH THE COARSE GRAINED SOILS AT GREATER DEPTHS. THE COARSE GRAINED SOILS WERE CLASSIFIED AS MEDIUM TO VERY DENSE COARSE AND FINE SAND (A-3a), GRAVEL WITH SAND AND SILT (A-2-4) AND GRAVEL WITH SAND (A-1-b). NO BEDROCK WAS ENCOUNTERED IN THE BORINGS ADVANCED AT THE PROJECT LOCATION.

NO STATIC WATER LEVEL WAS OBSERVED IN THE BORINGS PRIOR BORING TERMINATION.

SPECIFICATIONS

THIS GEOTECHNICAL EXPLORATION WAS PERFORMED IN ACCORDANCE WITH THE STATE OF OHIO, DEPARTMENT OF TRANSPORTATION, OFFICE OF GEOTECHNICAL ENGINEERING, SPECIFICATIONS FOR GEOTECHNICAL EXPLORATIONS, DATED APRIL 2010.

AVAILABLE INFORMATION

ALL AVAILABLE SOIL AND BEDROCK INFORMATION THAT CAN BE CONVENIENTLY SHOWN ON THE PROFILE SHEETS HAS BEEN SO REPORTED. ADDITIONAL SUBSURFACE EXPLORATIONS MAY HAVE BEEN MADE TO STUDY SOME SPECIAL ASPECT OF THE PROJECT. COPIES OF THIS DATA, IF ANY, MAY BE INSPECTED IN THE DISTRICT DEPUTY DIRECTOR'S OFFICE, THE OFFICE OF GEOTECHNICAL ENGINEERING AT 1600 WEST BROAD STREET OR THE OFFICE OF STRUCTURAL ENGINEERING AT 1980 WEST BROAD STREET.

LEGEND

	DESCRIPTION	ODOT CLASS	CLASSIFIED MECH./VISUAL	
	GRAVEL AND/OR STONE FRAGMENTS WITH SAND	A-1-b	4	2
	GRAVEL AND/OR STONE FRAGMENTS WITH SAND AND SILT	A-2-4	1	0
	COARSE AND FINE SAND	A-3a	3	2
	SANDY SILT	A-4a	8	17
	SILT	A-4b	1	0
	SILT AND CLAY	A-6a	7	19
	SILTY CLAY	A-6b	3	5
	CLAY	A-7-6	2	4
		TOTAL	29	49
	PAVEMENT OR BASE = X = APPROXIMATE THICKNESS	*VISUAL*		
	SOD AND TOPSOIL = X = APPROXIMATE THICKNESS	*VISUAL*		

EXPLORATION LOCATION - PLAN VIEW

DRIVE SAMPLE AND/OR ROCK CORE BORING PLOTTED TO VERTICAL SCALE ONLY. HORIZONTAL BAR INDICATES A CHANGE IN STRATIGRAPHY.

WC	INDICATES WATER CONTENT IN PERCENT.
N_{60}	INDICATES CORRECTED STANDARD PENETRATION RESISTANCE NORMALIZED TO 60% DRILL ROD ENERGY RATIO.
SS	INDICATES A SPLIT SPOON SAMPLE.
ST	INDICATES A SHELBY TUBE SAMPLE.
NP	INDICATES A NON-PLASTIC SAMPLE.
Qu	UNCONFINED COMPRESSIVE STRENGTH IN TONS PER SQ. FT.

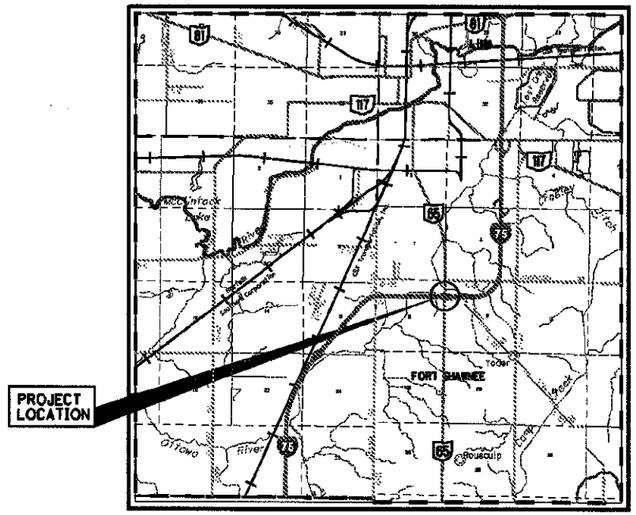

LOCATION MAP

SCALE IN MILES

0 1 2 3 4

PARTICLE SIZE DEFINITIONS

12"	3"	2.0 mm	0.42 mm	0.074 mm	0.005 mm
BOULDERS	COBBLES	GRAVEL	COARSE SAND	FINE SAND	SILT	CLAY
		No. 10 SIEVE	No. 40 SIEVE	No. 200 SIEVE		

RECON. - STN 3/07, DR/JM 01/09
DRILLING - MJW 2/09/09-3/31/09
DRAWN - MJ/CW 5/09-7/09, SLP 10/11
REVIEWED - JMM 10/09, RJK 10/11

DESIGN AGENCY
STANTEC CONSULTING SERVICES INC.
CINCINNATI, OHIO

PID NO. 89029

STRUCTURE FOUNDATION EXPLORATION
BRIDGE NO. ALL-75-0423 L&R
I-75 OVER S.R. 65

ALL-75-0.21
PID No. 89029

1 / 9

79
97

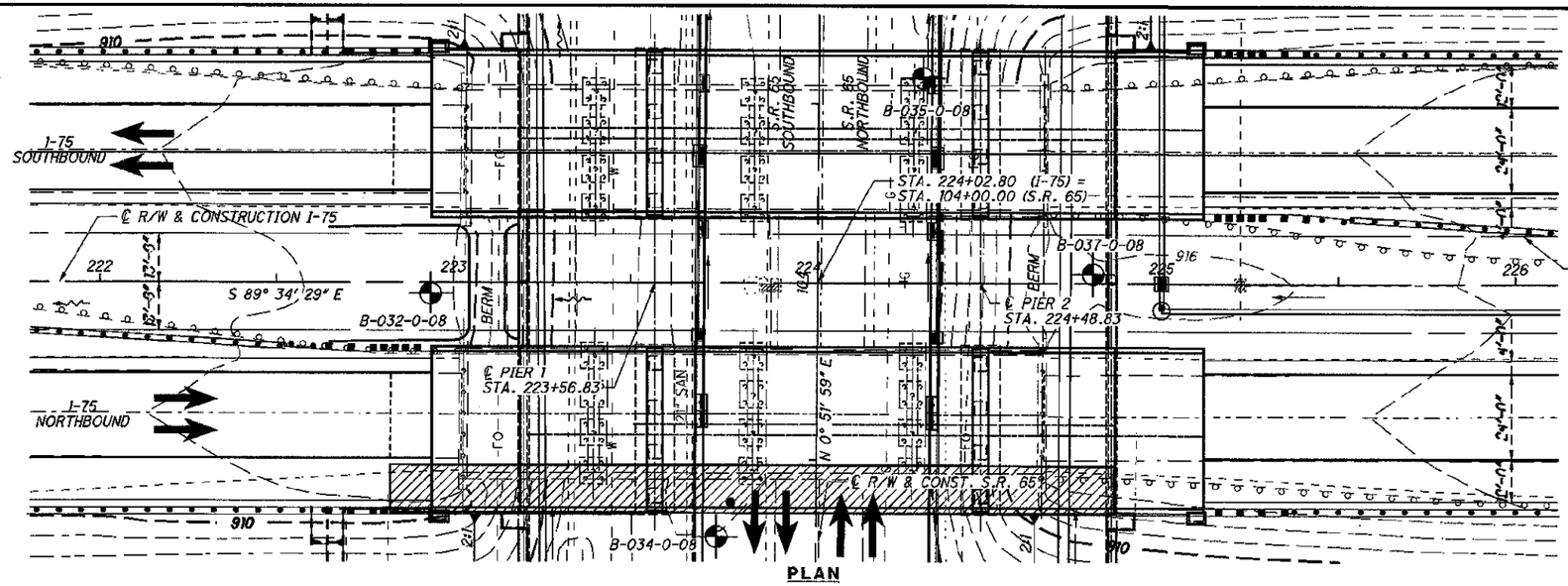

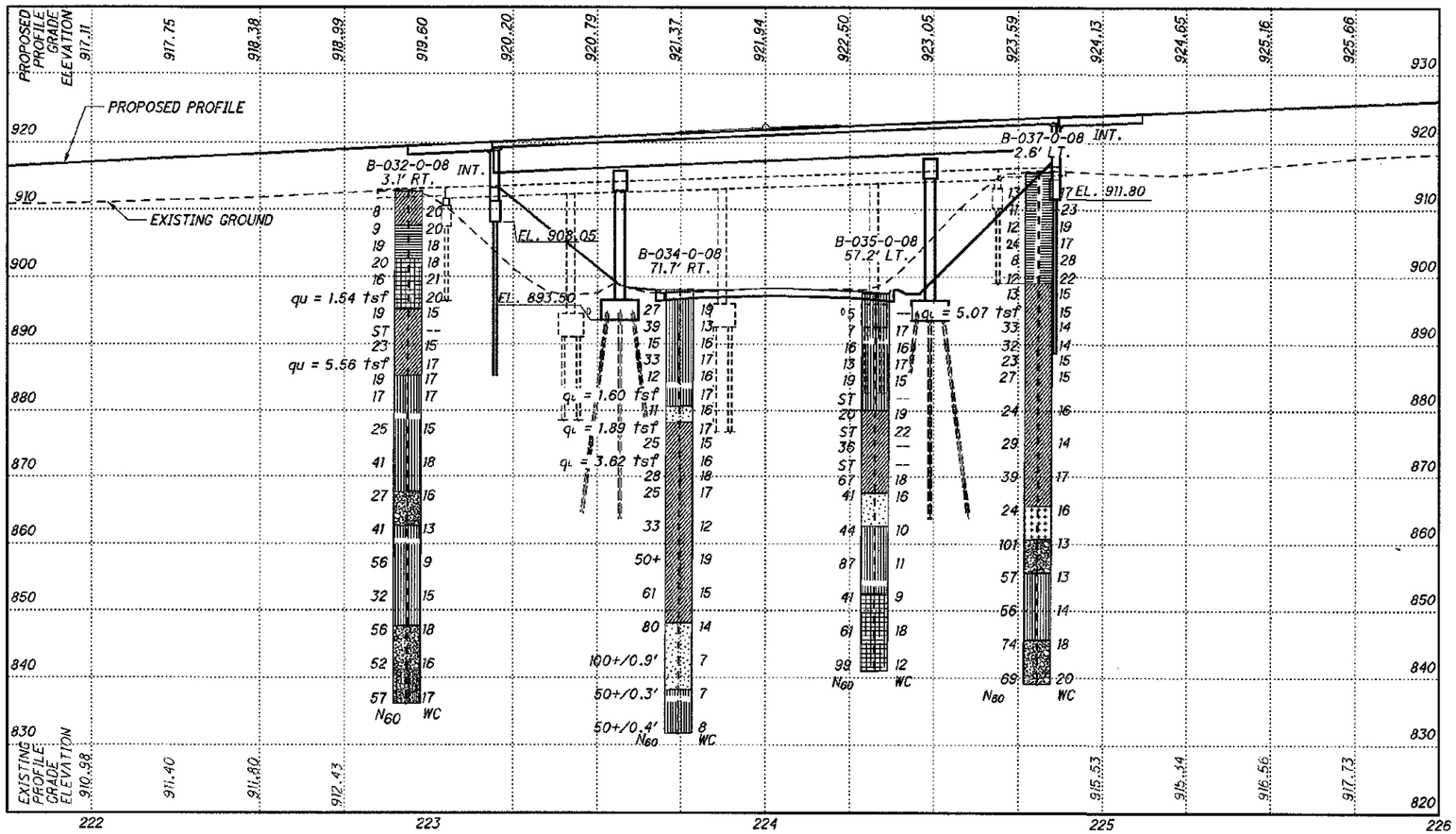

STRUCTURE FOUNDATION EXPLORATION
BRIDGE NO. ALL-75-0423 L&R
I-75 OVER S.R. 65

ALL-75-0.21
PID No. 89029

DRAWN S.L.P.
CHECKED R.J.K.

HORIZONTAL SCALE IN FEET
0 10 20 40

2 / 9

80/97

V:\1755\active\175530002\geotechnical\drawing\ODOTSubmittal\projects\All\76691\geotechnica\sheets\All-75-04.23 IR (S.R. 65, ST. JOHN RD.)\766917P002.dgn 1/20/2012 10:44:34 AM mjennings

\\Us1268-f01\workgroup\1755\active\175530002\geotechnical\drawing\ODOTSubmittal\projects\ALL\76691\geotechnical\sheets\ALL-75-04.23 LR (S.R. 65, ST. JOHN RD.)\76691ZL001.dgn

OHIO DEPARTMENT OF TRANSPORTATION
OFFICE OF GEOTECHNICAL ENGINEERING

LOG OF BORING

BORING NO: B-032-0-08 BASELINE, STATION & OFFSET: STA 222+93.5, 3.1' RT. SURFACE ELEV.: 912.7' PROJECT IDENTIFICATION: ALL-75-0423 L/R
DATE STARTED: 03/04/08 DATE COMPLETED: 03/04/09 METHOD: 3¼" HSA/NQ WATER ELEV.: - BRIDGE REPLACEMENT
NORTHING: 380136.12 EASTING: 1527705.78 SEALING/BACKFILLING TYPE: CUTTINGS HAMMER SYSTEM TYPE: CME AUTOMATIC
QUANTITY: N/A CALIBRATION DATE: 7/17/07 ER: 80%

ELEV.	DEPTH	STD. PEN./ ROD	N_{60}	REC. FT	LOSS FT	DESCRIPTION	SAMPLE TYPE & NO.	% REC.	PHYSICAL CHARACTERISTICS % AGG	% C.S.	% F.S.	% SILT	% CLAY	LL	PL	PI	WC	ODOT CLASS
912.7	0																	
910.7	2					MEDIUM STIFF, BROWN SILT AND CLAY AND SAND, TRACE GRAVEL, MOIST												
908.7	4	3/3/3	8			5.0'	SS-1	40	2	4	32	32	30	31	17	14	20	A-6a(7)
906.7	6	2/3/4	9			STIFF TO VERY STIFF, MOTTLED BROWN AND GRAY SILTY CLAY, SOME SAND, TRACE GRAVEL, MOIST	SS-2	80	4	4	25	33	34	34	15	19	20	A-6b(10)
904.7	8	3/6/8	19				SS-3	67			SAME AS SS-2						18	A-6b (Visual)
902.7	10					10.0'												
900.7	12	6/7/8	20			VERY STIFF, GRAY CLAY AND SILT, SOME SAND, TRACE GRAVEL, MOIST	SS-4	80			SAME AS SS-5						18	A-7-6 (Visual)
898.7	14	4/5/7	16				SS-5	100	2	6	15	37	40	41	20	21	21	A-7-6(13)
896.7	16	q_u=1.54 tsf	-				ST-6	100			SAME AS SS-5						20	A-7-6 (Visual)
894.7	18					17.5'												
892.7	20	3/6/8	19			VERY STIFF, MOTTLED BROWN AND GRAY SILT AND CLAY, SOME SAND, TRACE GRAVEL, DAMP	SS-7	100	4	12	11	37	36	29	18	11	15	A-6a(8)
890.7	22	ST	-				ST-8	100			SAME AS SS-7						-	A-6a (Visual)
888.7	24	5/7/10	23				SS-9	100			SAME AS SS-7						15	A-6a (Visual)
886.7	26	q_u=5.56 tsf	-				ST-10	100			SAME AS SS-7						17	A-6a (Visual)
884.7	28					27.5'												
882.7	30	4/6/8	19			VERY STIFF TO HARD, GRAY SANDY SILT AND CLAY, TRACE GRAVEL, MOIST	SS-11	100	6	5	11	41	37	25	16	9	17	A-4a(8)
880.7	32	3/5/8	17				SS-12	100			SAME AS SS-11						17	A-4a (Visual)
878.7	34																	
876.7	36	3/7/12	25				SS-13	100			SAME AS SS-11						15	A-4a (Visual)
874.7	38																	
872.7	40	18/13/18	41				SS-14	87			SAME AS SS-11						18	A-4a (Visual)
870.7	42																	
868.7	44					45.0'												
866.7	46	5/9/11	27			MEDIUM DENSE, BROWN GRAVEL WITH SAND, TRACE SILT AND CLAY, MOIST TO WET	SS-15	80	26	47	24	2	1	NP	NP	NP	16	A-1-b(0)
864.7	48																	
862.7	50					50.0'												
860.7	52	8/15/16	41			HARD, GRAY SANDY SILT, SOME GRAVEL, SOME CLAY, DAMP TO MOIST	SS-16	93	24	12	15	26	23	24	14	10	13	A-4a(3)
858.7	54																	
856.7	56	15/18/24	56				SS-17	80			SAME AS SS-16						9	A-4a (Visual)
854.7	58																	
852.7	60	9/9/15	32				SS-18	20			SAME AS SS-16						15	A-4a (Visual)
850.7	62																	
848.7	64					65.0'												
846.7	66	18/20/22	56			VERY DENSE, BROWN GRAVEL WITH SAND, TRACE SILT AND CLAY, POORLY GRADED, WET	SS-19	67	26	68	3	2	1	NP	NP	NP	18	A-1-b(0)
844.7	68																	
842.7	70	21/15/24	52				SS-20	87			SAME AS SS-19						16	A-1-b (Visual)
840.7	72					71.5' VERY DENSE, GRAY GRAVEL WITH SAND AND SILT, LITTLE CLAY, MOIST													
838.7	74																	
836.7	76	9/25/18	57				SS-21	67	42	14	17	16	11	16	11	5	17	A-2-4(0)

BOTTOM OF BORING = 76.5'

\\Us1268-f01\workgroup\1755\active\175530002\geotechnical\drawing\ODOTSubmittal\projects\ALL\76691\geotechnical\sheets\ALL-75-04.23 LR (S.R. 65, ST. JOHN RD.)\76691ZL002.dgn

OHIO DEPARTMENT OF TRANSPORTATION
OFFICE OF GEOTECHNICAL ENGINEERING

LOG OF BORING

BORING NO: B-034-0-08 BASELINE, STATION & OFFSET: STA 223+74.1, 71.7' RT. SURFACE ELEV.: 897.9' PROJECT IDENTIFICATION: ALL-75-0423 L/R
DATE STARTED: 03/03/09 DATE COMPLETED: 03/03/09 METHOD: 3¼" HSA/NQ WATER ELEV.: - BRIDGE REPLACEMENT
NORTHING: 380066.93 EASTING: 1527785.86 SEALING/BACKFILLING TYPE: CUTTINGS HAMMER SYSTEM TYPE: CME AUTOMATIC
QUANTITY: N/A CALIBRATION DATE: 7/17/07 ER: 80%

ELEV.	DEPTH	STD. PEN./ ROD	N_{60}	REC. FT	LOSS FT	DESCRIPTION	SAMPLE TYPE & NO.	% REC.	PHYSICAL CHARACTERISTICS % AGG	% C.S.	% F.S.	% SILT	% CLAY	LL	PL	PI	WC	ODOT CLASS
897.9	0																	
895.9	2																	
893.9	4	10/10/10	27			STIFF TO HARD, GRAY SANDY SILT AND CLAY, TRACE GRAVEL, MOIST	SS-1	13			SAME AS SS-3						19	A-4a (Visual)
891.9	6	9/15/14	39				SS-2	60			SAME AS SS-3						13	A-4a (Visual)
889.9	8	5/6/5	15				SS-3	100	4	6	12	38	40	25	15	10	16	A-4a(8)
887.9	10	10/11/14	33				SS-4	-			SAME AS SS-3						-	A-4a (Visual)
885.9	12	3/4/5	12				SS-5	100	5	2	9	41	43	24	14	10	16	A-4a(8)
883.9	14	q_u=1.60 tsf	-				ST-6	100			SAME AS SS-5						17	A-4a (Visual)
881.9	16					17.5'												
879.9	18	3/4/4	11			MEDIUM DENSE, COARSE AND FINE SAND, TRACE CLAY, SILT AND GRAVEL, WELL GRADED, WET	SS-7	100	6	33	46	9	6	NP	NP	NP	16	A-3a(0)
877.9	20					20.0'												
875.9	22	q_u=1.89 tsf	-			VERY STIFF, GRAY SILT AND CLAY, LITTLE SAND, TRACE GRAVEL, SAND SEAMS, MOIST	ST-8	80			SAME AS SS-9						17	A-6a (Visual)
873.9	24	6/8/11	25				SS-9	100	5	6	12	38	39	26	15	11	15	A-6a(8)
871.9	26	q_u=3.62 tsf	-				ST-10	100			SAME AS SS-9						16	A-6a (Visual)
869.9	28	5/10/11	28				SS-11	87			SAME AS SS-9						18	A-6a (Visual)
867.9	30	5/6/13	25				SS-12	100			SAME AS SS-9						17	A-6a (Visual)
865.9	32																	
863.9	34					35.0'												
861.9	36	6/9/16	33			HARD, GRAY SILT AND CLAY AND SAND, LITTLE GRAVEL, MOIST	SS-13	100	14	34	11	21	20	23	11	12	12	A-6a(2)
859.9	38																	
857.9	40	31/28/50+	50+				SS-14	53			SAME AS SS-13						19	A-6a (Visual)
855.9	42																	
853.9	44	14/21/25	61				SS-15	100			SAME AS SS-13						15	A-6a (Visual)
851.9	46																	
849.9	48																	
847.9	50					50.0'												
845.9	52	25/27/33	80			VERY DENSE, BROWN COARSE AND FINE SAND, TRACE SILT, CLAY AND GRAVEL, WELL GRADED, MOIST TO WET	SS-16	100	1	41	44	10	4	NP	NP	NP	14	A-3a(0)
843.9	54																	
841.9	56	22/50/50+ 0.4'	50+				SS-17	27			SAME AS SS-16						7	A-3a (Visual)
839.9	58																	
837.9	60					60.0'												
835.9	62	36/50+/0.3'	50+			HARD, DARK BROWN SANDY SILT, LITTLE CLAY, SOME GRAVEL, DAMP	SS-18	53	21	8	19	32	19	22	13	9	7	A-4a(3)
833.9	64																	
831.9	66	35/50+/0.4'	50+				SS-19	60			SAME AS SS-18						8	A-4a (Visual)

BOTTOM OF BORING = 66.5'

97	4/6	ALL-75-0.21 PID No. 89029	STRUCTURE FOUNDATION EXPLORATION BRIDGE NO. ALL-75-0423 L&R I-75 OVER S.R. 65	DRAWN M.S.J. CHECKED R.J.K.

\\Us1268-f01\workgroup\1755\active\175530002\geotechnical\drawing\ODOTSubmittal\projects\ALL\76691\geotechnical\sheets\ALL-75-04.23 LR (S.R. 65, ST. JOHN RD.)\76691ZL003.dgn

OHIO DEPARTMENT OF TRANSPORTATION
OFFICE OF GEOTECHNICAL ENGINEERING

LOG OF BORING

BORING NO: B-035-0-08 BASELINE, STATION & OFFSET: STA 224+32.7, 57.2' LT. SURFACE ELEV.: 897.5' PROJECT IDENTIFICATION: ALL-75-0423 L/R
DATE STARTED: 03/03/09 DATE COMPLETED: 03/03/09 METHOD: 3¼" HSA/NQ WATER ELEV.: - BRIDGE REPLACEMENT
NORTHING: 380195.43 EASTING: 1527645.48 SEALING/BACKFILLING TYPE: CUTTINGS HAMMER SYSTEM TYPE: CME AUTOMATIC
QUANTITY: N/A CALIBRATION DATE: 7/17/07 ER: 80%

ELEV.	DEPTH	STD. PEN./ ROD	N_{60}	REC. FT	LOSS FT	DESCRIPTION	SAMPLE TYPE & NO.	% REC.	PHYSICAL CHARACTERISTICS % AGG	% C.S.	% F.S.	% SILT	% CLAY	LL	PL	PI	WC	ODOT CLASS
897.5	0																	
895.5	2																	
893.5	4	2/2/2	5			MEDIUM TO VERY STIFF, GRAY SANDY SILT AND CLAY, TRACE GRAVEL, MOIST	SS-1	-			SAME AS SS-3						-	A-4a (Visual)
891.5	6	1/1/4	7				SS-2	33			SAME AS SS-3						17	A-4a (Visual)
889.5	8	3/5/7	16				SS-3	93	3	6	12	40	39	25	15	10	16	A-4a(8)
887.5	10																	
885.5	12	3/4/6	13				SS-4	100			SAME AS SS-3						17	A-4a (Visual)
883.5	14	4/7/7	19				SS-5	100			SAME AS SS-3						15	A-4a (Visual)
881.5	16	ST	-				ST-6	100			SAME AS SS-3						-	A-4a (Visual)
879.5	18	6/6/9	20			17.5' VERY STIFF TO HARD, GRAY SILT AND CLAY, SOME SAND, TRACE GRAVEL, MOIST	SS-7	80	5	16	9	35	35	26	13	13	19	A-6a(8)
877.5	20																	
875.5	22	ST	-				ST-8	73			SAME AS SS-7						22	A-6a (Visual)
873.5	24	12/15/12	36				SS-9	33			SAME AS SS-7						-	A-6a (Visual)
871.5	26	ST	-				ST-10	100			SAME AS SS-7						-	A-6a (Visual)
869.5	28	12/22/28	67				SS-11	100			SAME AS SS-7						18	A-6a (Visual)
867.5	30					30.0'												
865.5	32	8/15/16	41			DENSE, BROWN COARSE AND FINE SAND, SOME GRAVEL, TRACE SILT AND CLAY, WET	SS-12	73	24	23	42	8	3	NP	NP	NP	16	A-3a(0)
863.5	34					35.0'												
861.5	36	9/13/20	44			HARD, BROWN TO GRAY SANDY SILT AND GRAVEL, LITTLE CLAY, DAMP	SS-13	67			SAME AS SS-14						10	A-4a (Visual)
859.5	38																	
857.5	40	22/40/25	87				SS-14	100	36	10	12	26	16	21	14	7	11	A-4a(1)
855.5	42																	
853.5	44					45.0'												
851.5	46	14/17/14	41			HARD, GRAY CLAY, SOME SILT, TRACE SAND AND GRAVEL, DAMP TO MOIST	SS-15	73			SAME AS SS-16						9	A-7-6 (Visual)
849.5	48																	
847.5	50	22/21/25	61				SS-16	87	1	0	2	29	68	41	16	25	18	A-7-6(14)
845.5	52																	
843.5	54																	
841.5	56	24/36/38	99				SS-17	87			SAME AS SS-16						12	A-7-6 (Visual)

BOTTOM OF BORING = 56.5'

\\Us1268-f01\workgroup\1755\active\175530002\geotechnical\drawing\ODOTSubmittal\projects\ALL\76691\geotechnical\sheets\ALL-75-04.23 LR (S.R. 65, ST. JOHN RD.)\76691ZL004.dgn

OHIO DEPARTMENT OF TRANSPORTATION
OFFICE OF GEOTECHNICAL ENGINEERING

LOG OF BORING

BORING NO: B-037-0-08 BASELINE, STATION & OFFSET: STA 224+80.6, 2.6' LT. SURFACE ELEV.: 915.7' PROJECT IDENTIFICATION: ALL-75-0423 L/R
DATE STARTED: 03/02/09 DATE COMPLETED: 03/02/09 METHOD: 3¼" HSA/NQ WATER ELEV.: - BRIDGE REPLACEMENT
NORTHING: 380140.51 EASTING: 1527892.93 SEALING/BACKFILLING TYPE: CUTTINGS HAMMER SYSTEM TYPE: CME AUTOMATIC
QUANTITY: N/A CALIBRATION DATE: 7/17/07 ER: 80%

ELEV.	DEPTH	STD. PEN./ ROD	N_{60}	REC. FT	LOSS FT	DESCRIPTION	SAMPLE TYPE & NO.	% REC.	PHYSICAL CHARACTERISTICS % AGG	% C.S.	% F.S.	% SILT	% CLAY	LL	PL	PI	WC	ODOT CLASS
915.7	0																	
913.7	2					MEDIUM TO VERY STIFF, MOTTLED BROWN AND GRAY SILTY CLAY, SOME SAND, TRACE GRAVEL, DAMP													
911.7	4	4/4/6	13				SS-1	100	6	13	9	32	40	40	22	18	17	A-6b(11)
909.7	6	4/4/4	11				SS-2	100			SAME AS SS-1						23	A-6b (Visual)
907.7	8	3/4/5	12				SS-3	100			SAME AS SS-1						19	A-6b (Visual)
905.7	10																	
903.7	12	5/7/11	24				SS-4	100	7	5	16	35	37	35	17	18	17	A-6b(11)
901.7	14	2/2/4	8				SS-5	80			SAME AS SS-4						28	A-6b (Visual)
899.7	16	3/4/5	12			16.5'	SS-6	80			SAME AS SS-4						22	A-6b (Visual)
897.7	18	3/4/6	13			STIFF TO HARD, MOTTLED BROWN AND GRAY SILT AND CLAY, LITTLE SAND, TRACE GRAVEL, DAMP	SS-7	100	4	5	12	39	40	31	16	15	15	A-6a(10)
895.7	20																	
893.7	22	q_u=5.07 tsf	-				ST-8	100			SAME AS SS-7						15	A-6a (Visual)
891.7	24	5/12/13	33				SS-9	100			SAME AS SS-7						14	A-6a (Visual)
889.7	26	7/10/14	32				SS-10	100			SAME AS SS-7						14	A-6a (Visual)
887.7	28	6/7/10	23				SS-11	100			SAME AS SS-7						15	A-6a (Visual)
885.7	30																	
883.7	32	7/9/11	27				SS-12	100	4	5	11	41	39	28	15	13	15	A-6a(9)
881.7	34																	
879.7	36	5/7/11	24				SS-13	100			SAME AS SS-12						16	A-6a (Visual)
877.7	38																	
875.7	40																	
873.7	42	5/11/11	29				SS-14	100			SAME AS SS-12						14	A-6a (Visual)
871.7	44																	
869.7	46	9/12/17	39				SS-15	100			SAME AS SS-12						17	A-6a (Visual)
867.7	48																	
865.7	50					50.0'												
863.7	52	4/7/11	24			VERY STIFF, DARK BROWN SILT, SOME CLAY AND SAND, TRACE GRAVEL, SAND SEAMS, DAMP TO MOIST	SS-16	100	4	7	16	52	21	19	16	3	16	A-4b(8)
861.7	54																	
859.7	56	29/48/28	101			55.0' VERY DENSE, BROWN TO GRAY GRAVEL WITH SAND, TRACE SILT AND CLAY, WET	SS-17	100	41	46	5	6	2	NP	NP	NP	13	A-1-b(0)
857.7	58																	
855.7	60					60.0'												
853.7	62	29/21/22	57			HARD, GRAY SANDY SILT, SOME CLAY AND GRAVEL, DAMP	SS-18	100	28	11	12	28	21	23	14	9	13	A-4a(3)
851.7	64																	
849.7	66	17/21/21	56				SS-19	27			SAME AS SS-18						14	A-4a (Visual)
847.7	68																	
845.7	70					70.0'												
843.7	72	17/25/31	74			VERY DENSE, BROWN TO GRAY GRAVEL WITH SAND, TRACE SILT AND CLAY, POORLY GRADED, WET	SS-20	87	28	69	1	1	1	NP	NP	NP	18	A-1-b(0)
841.7	74																	
839.7	76	25/31/21	69				SS-21	67			SAME AS SS-20						20	A-1-b (Visual)

BOTTOM OF BORING = 76.5'

64 of 67	6 / 9	ALL-75-0.21 PID No. 89029	STRUCTURE FOUNDATION EXPLORATION BRIDGE NO. ALL-75-0423 L&R I-75 OVER S.R. 65	DRAWN M.S.J. CHECKED R.J.K.

PROJECT DESCRIPTION

REPLACE THE EXISTING I-75 REINFORCED CONCRETE BRIDGE OVER THE INDIANA AND OHIO RAILWAY.

HISTORIC RECORDS

HISTORIC BORING RECORDS FOR THE EXISTING BRIDGE WERE REQUESTED FROM THE ODOT OFFICE OF GEOTECHNICAL ENGINEERING AND THE DISTRICT. NO SIGNIFICANT HISTORICAL DATA WAS FOUND FOR THIS STRUCTURE LOCATION.

GEOLOGY

THE STRUCTURE SITE IS LOCATED IN THE CENTRAL OHIO CLAYEY TILL PLAIN. THIS REGION IS COMPRISED OF GROUND MORAINE AND END MORAINE TILL DEPOSITS OVERLYING DOLOMITE WITH INTERBEDDED SHALE. CAVES AND OTHER KARST FEATURES MAY BE PRESENT ACCORDING TO THE PHYSIOGRAPHIC REGION OF OHIO MAP (ODNR, 1998), BUT NO KNOWN FEATURES WERE IDENTIFIED IN THE OHIO KARST AREAS MAP (ODNR, 2007).

RECONNAISSANCE

A FIELD RECONNAISSANCE WAS COMPLETED ON MARCH 13, 2007, FOCUSING MAINLY ON PAVEMENT CONDITIONS AND SITE TOPOGRAPHY AND DRAINAGE. THE MAINLINE SHOULDER PAVEMENTS SHOW EXTENSIVE "ALLIGATOR" CRACKING AND THE MAINLINE PAVEMENTS SHOW REFLECTIVE CRACKING AT THE EXPANSION JOINT LOCATIONS. THE GENERAL BRIDGE STRUCTURE TYPE WAS ALSO DOCUMENTED.

THE SURROUNDING AREA IS DESCRIBED AS GENTLY UNDULATING WITH MOST OF THE SURROUNDING AREA CONSISTING OF OPEN FIELD OR LIGHTLY DEVELOPED COMMERCIAL AND RESIDENTIAL DISTRICTS. DRAINAGE ALONG THE ALIGNMENT IS DESCRIBED AS SLUGGISH WITH AREAS OF STANDING WATER, AND FLOWING WATER IN DRAINAGE DITCHES AND NATURAL STREAMS GENERALLY CREATING STEEP TO VERTICAL CUT BANKS IN THE SOIL PROFILE.

SUBSURFACE EXPLORATION

FOUR BORINGS WERE ADVANCED AT THE I-75 BRIDGE OVER THE INDIANA AND OHIO RAILWAY. ONE BORING WAS ADVANCED NEAR EACH PIER AND ABUTMENT OF THE EXISTING STRUCTURES. THE ABUTMENT BORINGS (B-048 AND B-053) WERE LOCATED IN THE MEDIAN AREA OF I-75, WHILE THE PIER BORINGS (B-049 AND B-052) WERE ADVANCED NEAR THE EXISTING PIERS ALONG THE RAILROAD. THE BORINGS WERE ADVANCED USING 3.25-INCH I.D. HOLLOW-STEM AUGERS. STANDARD PENETRATION TEST (SPT) AND UNDISTURBED SHELBY TUBE (ST) SAMPLES WERE OBTAINED FOR THE UPPER 30 FEET AT 2.5-FOOT INTERVALS AND AT 5-FOOT INTERVALS BELOW THIS DEPTH FOR EACH SUBSTRUCTURE. SPT SAMPLES WERE OBTAINED USING TWO SEPARATE DRILL RIGS WITH CALIBRATED AUTOMATIC HAMMERS HAVING ENERGY RATIOS (ER) OF 80% AND 78.5%. AT THE CONCLUSION OF DRILLING OPERATIONS, BOREHOLES WERE BACKFILLED WITH AUGER SOIL CUTTINGS.

EXPLORATION FINDINGS

FINE GRAINED GLACIAL SOILS CLASSIFYING AS STIFF TO HARD SILT AND CLAY (A-6a), SILTY CLAY (A-6b), CLAY (A-7-6) AND SANDY SILT (A-4a) WERE ENCOUNTERED IN ALL BORINGS. A LAYER OF COARSE GRAINED SOIL WAS ENCOUNTER AT A DEPTH OF 33.5 FT IN BORING B-049, CLASSIFYING AS MEDIUM DENSE TO DENSE GRAVEL WITH SAND AND SILT (A-2-4). NO BEDROCK WAS ENCOUNTERED IN THE BORINGS ADVANCED AT THE PROJECT LOCATION.

NO STATIC WATER LEVEL WAS OBSERVED IN THE BORINGS PRIOR TO BORING TERMINATION.

SPECIFICATIONS

THIS GEOTECHNICAL EXPLORATION WAS PERFORMED IN ACCORDANCE WITH THE STATE OF OHIO, DEPARTMENT OF TRANSPORTATION, OFFICE OF GEOTECHNICAL ENGINEERING, SPECIFICATIONS FOR GEOTECHNICAL EXPLORATIONS, DATED JANUARY, 2009.

AVAILABLE INFORMATION

ALL AVAILABLE SOIL AND BEDROCK INFORMATION THAT CAN BE CONVENIENTLY SHOWN ON THE PROFILE SHEETS HAS BEEN SO REPORTED. ADDITIONAL SUBSURFACE EXPLORATIONS MAY HAVE BEEN MADE TO STUDY SOME SPECIAL ASPECT OF THE PROJECT. COPIES OF THIS DATA, IF ANY, MAY BE INSPECTED IN THE DISTRICT DEPUTY DIRECTOR'S OFFICE, THE OFFICE OF GEOTECHNICAL ENGINEERING AT 1600 WEST BROAD STREET OR THE OFFICE OF STRUCTURAL ENGINEERING AT 1980 WEST BROAD STREET.

LEGEND

DESCRIPTION	ODOT CLASS	CLASSIFIED MECH./VISUAL	
GRAVEL AND/OR STONE FRAGMENTS WITH SAND AND SILT	A-2-4	1	1
SANDY SILT	A-4a	6	9
SILT AND CLAY	A-6a	18	39
SILTY CLAY	A-6b	1	1
CLAY	A-7-6	2	7
	TOTAL	28	57

EXPLORATION LOCATION - PLAN VIEW

DRIVE SAMPLE AND/OR ROCK CORE BORING PLOTTED TO VERTICAL SCALE ONLY. HORIZONTAL BAR INDICATES A CHANGE IN STRATIGRAPHY.

WC INDICATES WATER CONTENT IN PERCENT.

N_{60} INDICATES STANDARD PENETRATION RESISTANCE NORMALIZED TO 60% DRILL ROD ENERGY RATIO.

SS INDICATES A SPLIT-SPOON SAMPLE.

ST INDICATES A SHELBY TUBE SAMPLE.

NP INDICATES A NON-PLASTIC SAMPLE.

q_u INDICATES UNCONFINED COMPRESSIVE STRENGTH IN TONS PER SQUARE FOOT (TSF).

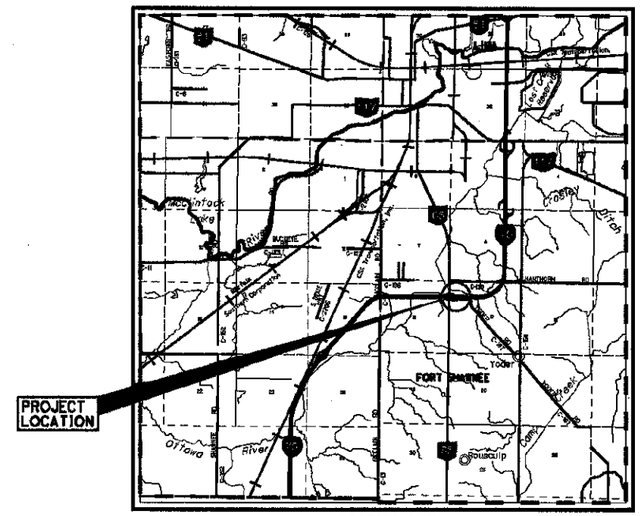

LOCATION MAP

SCALE IN MILES

0 1 2 3 4

PARTICLE SIZE DEFINITIONS

12"	3"	2.0 mm	0.42 mm	0.074 mm	0.005 mm
BOULDERS	COBBLES	GRAVEL	COARSE SAND	FINE SAND	SILT	CLAY
		No. 10 SIEVE	No. 40 SIEVE	No. 200 SIEVE		

RECON. - DR/JM 03/07, 01/09
DRILLING - MJW 3/12/09, CS 9/22/09
DRAWN - MJ/CW 5/09-10/09, SLP 02/12
REVIEWED - JMM 10/09, RJK 02/12

DESIGN AGENCY
STANTEC CONSULTING SERVICES INC.
CINCINNATI, OHIO

PID NO. 89029

STRUCTURE FOUNDATION EXPLORATION
BRIDGE NO. ALL-75-0448 OVER INDIANA & OHIO RAILWAY

ALL-75-0.21

1/10

85/97

C:\Users\aboyce\Desktop\New folder\76691ZC001.dgn

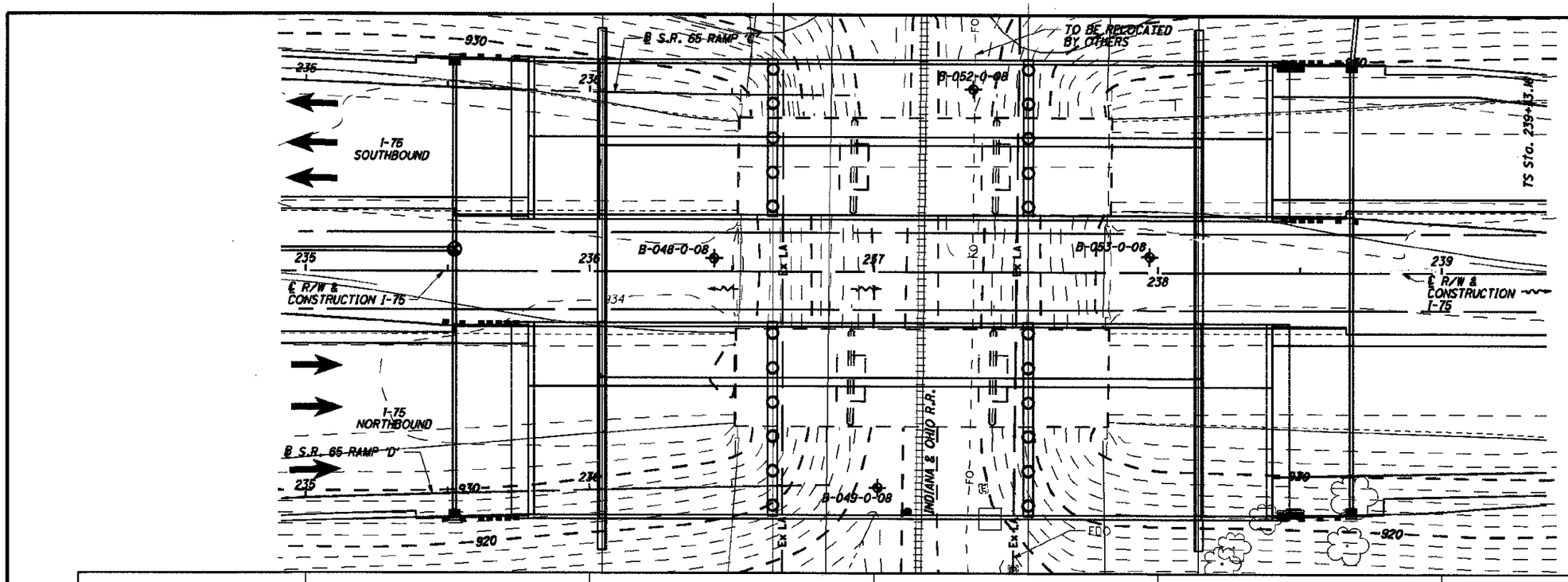

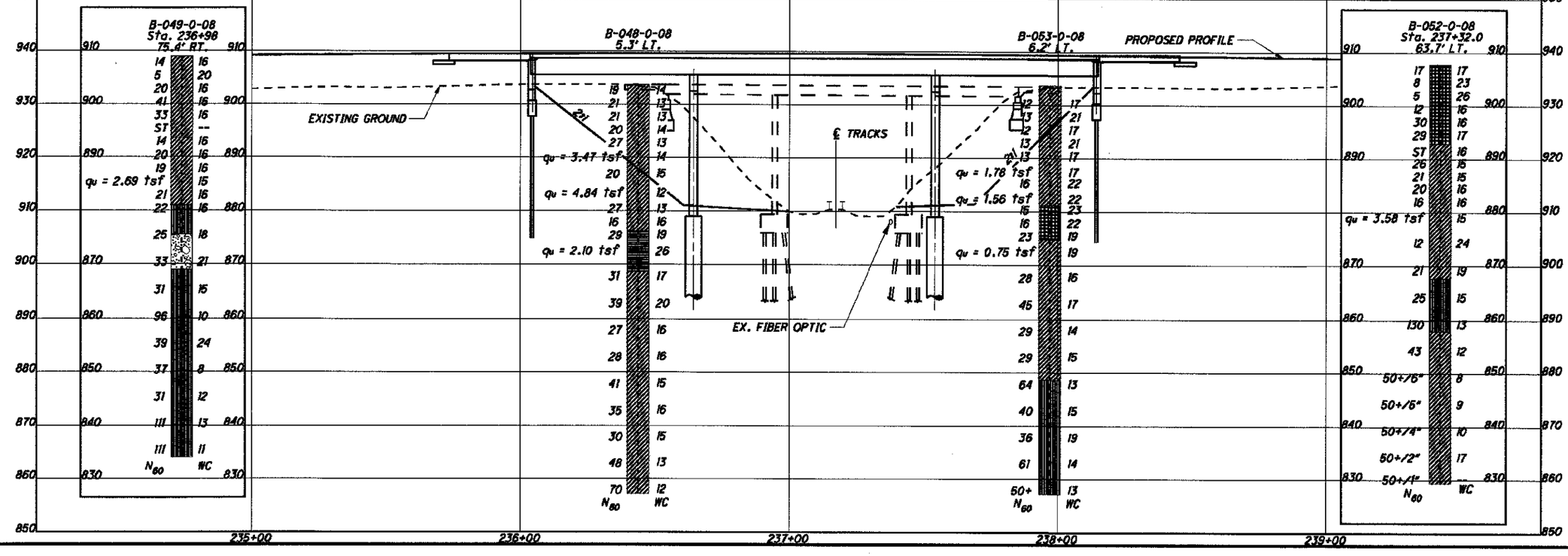

HORIZONTAL SCALE IN FEET
0 10 20 40

DRAWN M.J.
CHECKED J.M.M.

STRUCTURE FOUNDATION EXPLORATION

BRIDGE NO. ALL-75-0448 OVER INDIANA & OHIO RAILWAY

ALL-75-0.21

2 / 10

(86 / 97)

C:\Users\aboyce\Desktop\New folder\76691ZP001.dgn

\\us1268-f01\workgroup\1755\active\175530002\geotechnical\drawing\ODOTSubmittal\projects\ALL\76691\geotechnical\sheets\ALL-75-04.48 LR (INDIANA & OHIO RR)\76691ZL001.dgn

OHIO DEPARTMENT OF TRANSPORTATION
OFFICE OF GEOTECHNICAL ENGINEERING

LOG OF BORING

BORING NO: B-048-0-08 BASELINE, STATION & OFFSET: STA. 236+46.5.3' LT. SURFACE ELEV.: 933.7 PROJECT IDENTIFICATION: ALL-75-04.48 L/R
DATE STARTED: 03/12/09 DATE COMPLETED: 03/12/09 METHOD: 3¼" HSA/NQ WATER ELEV.: - BRIDGE WIDENING
NORTHING: 380133.7 EASTING: 1529058.6 SEALING/BACKFILLING TYPE: CUTTINGS HAMMER SYSTEM TYPE: CME AUTOMATIC
QUANTITY: N/A CALIBRATION DATE: 7/17/07 ER: 80%

ELEV.	DEPTH	STD. PEN./ ROD	N_{60}	REC. FT	LOSS FT	DESCRIPTION	SAMPLE TYPE & NO.	% REC.	PHYSICAL CHARACTERISTICS % AGG	% C.S.	% F.S.	% SILT	% CLAY	LL	PL	PI	WC	ODOT CLASS
933.7	0																	
931.7	2					STIFF, MOTTLED BROWN AND GRAY GRADING TO GRAY SILT AND CLAY, LITTLE SAND, TRACE GRAVEL, DAMP													
929.7	4	4/5/9	19			4.0'	SS-1	100	9	8	12	35	36	30	16	14	14	A-6a(9)
927.7	6	7/5/11	21			VERY STIFF, GRAY SILT AND CLAY, LITTLE SAND, TRACE GRAVEL, DAMP TO MOIST	SS-2	100			SAME AS SS-1						13	A-6a (Visual)
925.7	8	3/8/8	21				SS-3	100	7	7	12	36	38	27	15	12	13	A-6a(9)
923.7	10																	
921.7	12	4/7/8	20				SS-4	87			SAME AS SS-3						14	A-6a (Visual)
919.7	14	10/8/12	27				SS-5	20			SAME AS SS-3						13	A-6a (Visual)
917..7	16	q_u=3.47 tsf	-				ST-6	93	15	5	12	32	36	26	15	11	14	A-6a(7)
915.7	18	4/6/9	20				SS-7	100			SAME AS SS-6						15	A-6a(10)
913.7	20																	
911.7	22	q_u=4.84 tsf	-				ST-8	80			SAME AS SS-6						12	A-6a (Visual)
909.7	24	8/8/12	27				SS-9	100			SAME AS SS-6						13	A-6a (Visual)
907.7	26	3/4/8	16				SS-10	100	9	5	12	36	38	32	17	15	16	A-6a(10)
905.7	28	4/8/14	29			27.5' VERY STIFF, MOTTLED GRAY AND BROWN SILTY CLAY, LITTLE SAND AND GRAVEL, MOIST	SS-11	87	14	4	16	29	37	39	18	21	19	A-6b(11)
903.7	30																	
901.7	32	q_u=2.10 tsf	-				ST-12	80			SAME AS SS-11						26	A-6b (Visual)
899.7	34																	
897.7	36	5/8/15	31			35.0' VERY STIFF TO HARD, GRAY SILT AND CLAY, LITTLE SAND TRACE GRAVEL, DAMP TO MOIST	SS-13	100	3	6	11	38	42	30	17	13	17	A-6a(9)
895.7	38																	
893.7	40																	
891.7	42	8/12/17	39				SS-14	100			SAME AS SS-13						20	A-6a (Visual)
889..7	44																	
887.7	46	6/8/12	27				SS-15	100			SAME AS SS-13						16	A-6a (Visual)
885.7	48																	
883.7	50																	
881.7	52	5/9/12	28				SS-16	100	5	5	11	39	40	28	15	11	16	A-6a(9)
879.7	54																	
877.7	56	5/13/18	41				SS-17	100			SAME AS SS-16						15	A-6a (Visual)
875.7	58																	
873.7	60																	
871.7	62	8/12/14	35				SS-18	100			SAME AS SS-16						16	A-6a (Visual)
869.7	64																	
867.7	66	7/10/13	30				SS-19	100			SAME AS SS-16						15	A-6a (Visual)
865.7	68																	
863.7	70																	
861.7	72	10/15/21	48				SS-20	100			SAME AS SS-16						13	A-6a (Visual)
859.7	74																	
857.7	76	17/25/28	70				SS-21	100			SAME AS SS-16						12	A-6a (Visual)

BOTTOM OF BORING = 76.5'

\\us1268-f01\workgroup\1755\active\175530002\geotechnical\drawing\ODOTSubmittal\projects\ALL\76691\geotechnical\sheets\ALL-75-04.48 LR (INDIANA & OHIO RR)\76691ZL002.dgn

OHIO DEPARTMENT OF TRANSPORTATION
OFFICE OF GEOTECHNICAL ENGINEERING

LOG OF BORING

BORING NO: B-049-0-08 BASELINE, STATION & OFFSET: STA. 236+98. 75.4' RT. SURFACE ELEV.: 909.1 PROJECT IDENTIFICATION: ALL-75-04.48 L/R
DATE STARTED: 09/23/09 DATE COMPLETED: 09/23/09 METHOD: 3¼" HSA/NQ WATER ELEV.: - BRIDGE WIDENING
NORTHING: 380053.4 EASTING: 1529113.1 SEALING/BACKFILLING TYPE: CUTTINGS HAMMER SYSTEM TYPE: CME AUTOMATIC
QUANTITY: N/A CALIBRATION DATE: 6/04/09 ER: 78.5%

ELEV.	DEPTH	STD. PEN./ ROD	N_{60}	REC. FT	LOSS FT	DESCRIPTION	SAMPLE TYPE & NO.	% REC.	PHYSICAL CHARACTERISTICS % AGG	% C.S.	% F.S.	% SILT	% CLAY	LL	PL	PI	WC	ODOT CLASS
909.1	0																	
907.1	2	6/6/5	14			STIFF, MOTTLED BROWN AND GRAY GRADING TO GRAY SILT AND CLAY, LITTLE SAND, TRACE GRAVEL, DAMP TO MOIST	SS-1	53			SAME AS SS-4						16	A-6a (Visual)
905.1	4	2/2/2	5				SS-2	40			SAME AS SS-4						20	A-6a (Visual)
903.1	6	3/6/9	20				SS-3	80			SAME AS SS-4						16	A-6a (Visual)
901.1	8	8/16/15	41				SS-4	100	3	6	12	39	40	30	18	12	16	A-6a(9)
899.1	10	7/11/14	33				SS-5	100			SAME AS SS-4						16	A-6a (Visual)
897.1	12	ST	-				ST-6	0			SAME AS SS-4						-	A-6a (Visual)
895.1	14					15.5'												
893.1	16	6/5/6	14			VERY STIFF, GRAY SILT AND CLAY, LITTLE SAND, TRACE GRAVEL, MOIST	SS-7	100			SAME AS SS-8						16	A-6a (Visual)
891.1	18	5/6/9	20				SS-8	100	4	6	11	43	36	26	15	11	16	A-6a(9)
889.1	20	5/6/8	19				SS-9	47			SAME AS SS-8						16	A-6a (Visual)
887.1	22	q_u=2.69 tsf	-				ST-10	100			SAME AS SS-8						15	A-6a (Visual)
885.1	24	5/6/10	21				SS-11	100			SAME AS SS-8						16	A-6a (Visual)
883.1	26					28.0'												
881.1	28	5/7/10	22			VERY STIFF, MOTTLED GRAY AND BROWN SANDY SILT, SOME CLAY, TRACE GRAVEL, MOIST	SS-12	100	5	4	11	51	29	21	14	7	16	A-4a(9)
879.1	30																	
877.1	32					33.5'												
875.1	34	9/10/9	25			MEDIUM DENSE TO DENSE, GRAY GRAVEL WITH SAND AND SILT, TRACE CLAY, MOIST TO WET	SS-13	33			SAME AS SS-14						18	A-2-4 (Visual)
873.1	36																	
871.1	38																	
869.1	40	9/13/12	33			40.0'	SS-14	100	11	16	45	19	9	NP	NP	NP	21	A-2-4(0)
867.1	42					VERY STIFF TO HARD, GRAY SANDY SILT, LITTLE CLAY LITTLE TO SOME GRAVEL, DAMP TO WET													
865.1	44	7/11/13	31				SS-15	100			SAME AS SS-18						15	A-4a (Visual)
863.1	46																	
861.1	48																	
859.1	50	15/25/48	96				SS-16	100			SAME AS SS-18						10	A-4a (Visual)
857.1	52																	
855.1	54	14/12/18	39				SS-17	100			SAME AS SS-18						24	A-4a (Visual)
853.1	56																	
851.1	58																	
849.1	60	11/12/16	37				SS-18	87	12	14	19	37	18	15	11	4	8	A-4a(5)
847.1	62																	
845.1	64	7/10/14	31				SS-19	80			SAME AS SS-18						12	A-4a (Visual)
843.1	66																	
841.1	68																	
839.1	70	25/38/47	111				SS-20	67			SAME AS SS-21						13	A-4a (Visual)
837.1	72																	
835.1	74																	
		25/35/50	111				SS-21	100	23	11	17	29	20	22	12	10	11	A-4a(3)

BOTTOM OF BORING = 75.0'

\\us1268-f01\workgroup\1755\active\175530002\geotechnical\drawing\ODOTSubmittal\projects\ALL\76691\geotechnical\sheets\ALL-75-04.48 LR (INDIANA & OHIO RR)\76691ZL003.dgn

OHIO DEPARTMENT OF TRANSPORTATION
OFFICE OF GEOTECHNICAL ENGINEERING

LOG OF BORING

BORING NO: B-052-0-08 BASELINE, STATION & OFFSET: STA. 237+32.0, 63.7' LT. SURFACE ELEV.: 907.8 PROJECT IDENTIFICATION: ALL-75-04.48 L/R
DATE STARTED: 09/22/09 DATE COMPLETED: 09/22/09 METHOD: 3¼" HSA/NQ WATER ELEV.: - BRIDGE WIDENING
NORTHING: 380192.3 EASTING: 1529147.8 SEALING/BACKFILLING TYPE: CUTTINGS HAMMER SYSTEM TYPE: CME AUTOMATIC
QUANTITY: N/A CALIBRATION DATE: 6/04/09 ER: 78.5%

ELEV.	DEPTH	STD. PEN./ ROD	N_{60}	REC. FT	LOSS FT	DESCRIPTION	SAMPLE TYPE & NO.	% REC.	PHYSICAL CHARACTERISTICS % AGG	% C.S.	% F.S.	% SILT	% CLAY	LL	PL	PI	WC	ODOT CLASS
907.8	0																	
905.8	2	6/5/8	17			STIFF TO HARD, BROWN CLAY, SOME SILT AND SAND, TRACE GRAVEL, DAMP TO MOIST	SS-1	87			SAME AS SS-4						17	A-7-6 (Visual)
903.8	4	3/3/3	8				SS-2	13			SAME AS SS-4						23	A-7-6 (Visual)
901.8	6	3/1/3	5				SS-3	100			SAME AS SS-4						26	A-7-6 (Visual)
899.8	8	3/3/6	12				SS-4	100	1	2	18	32	46	41	17	24	16	A-7-6(14)
897.8	10	6/10/13	30				SS-5	100			SAME AS SS-4						16	A-7-6 (Visual)
895.8	12	6/10/12	29				SS-6	87			SAME AS SS-4						17	A-7-6 (Visual)
893.8	14					15.0'												
891.8	16	ST	-			STIFF TO VERY STIFF, MOTTLED GRAY AND BROWN SILT AND CLAY, LITTLE SAND, TRACE GRAVEL, MOIST	ST-7	100			SAME AS SS-8						16	A-6a (Visual)
889.8	18	7/8/12	26				SS-8	93	5	6	11	42	36	25	14	11	15	A-6a(9)
887.8	20	6/8/8	21				SS-9	100			SAME AS SS-8						15	A-6a (Visual)
885.8	22	4/6/9	20				SS-10	93			SAME AS SS-8						16	A-6a (Visual)
883.8	24	3/6/6	16				SS-11	80			SAME AS SS-8						16	A-6a (Visual)
881.8	26	q_u=3.58 tsf	-				ST-12	67			SAME AS SS-8						15	A-6a (Visual)
879.8	28																	
877.8	30																	
875.8	32																	
873.8	34	3/4/5	12				SS-13	100			SAME AS SS-14						24	A-6a (Visual)
871.8	36																	
869.8	38																	
867.8	40	5/7/9	21			40.0'	SS-14	20	4	5	10	37	44	30	17	13	19	A-6a(9)
865.8	42					STIFF TO HARD, MOTTLED BROWN AND GRAY SANDY SILT, SOME GRAVEL, LITTLE CLAY, DAMP													
863.8	44	6/8/11	25				SS-15	100			SAME AS SS-16						15	A-4a (Visual)
861.8	46																	
859.8	48																	
857.8	50	21/50/50	130			50.0'	SS-16	100	25	8	23	29	15	18	12	6	13	A-4a(2)
855.8	52					HARD, GRAY SILT AND CLAY, SOME SAND, LITTLE GRAVEL, DAMP TO MOIST													
853.8	54	10/13/20	43				SS-17	100			SAME AS SS-20						12	A-6a (Visual)
851.8	56																	
849..8	58																	
847.8	60	50+/6"	50+				SS-18	100			SAME AS SS-20						8	A-6a (Visual)
845.8	62																	
843.8	64	33/50+/5"	50+				SS-19	53			SAME AS SS-20						9	A-6a (Visual)
841.8	66																	
839.8	68																	
837.8	70	23/34/50+ 4"	50+				SS-20	100	17	9	20	34	20	22	10	12	10	A-6a(5)
835.8	72																	
833.8	74																	
831.8	76	50/50+/2"	50+				SS-21	13			SAME AS SS-20						17	A-6a (Visual)
829.8	78	50+/1"	50+				SS-21	13			SAME AS SS-20						-	A-6a (Visual)

BOTTOM OF BORING = 78.6'

07/08	5 / 10	ALL-75-0.21	STRUCTURE FOUNDATION EXPLORATION BRIDGE NO. ALL-75-0448 OVER INDIANA & OHIO RAILWAY	DRAWN M.S.J. CHECKED J.M.M.

\\us1268-f01\workgroup\1755\active\175530002\geotechnical\drawing\ODOTSubmittal\projects\ALL\76691\geotechnical\sheets\ALL-75-04.48 LR (INDIANA & OHIO RR)\76691ZL004.dgn

OHIO DEPARTMENT OF TRANSPORTATION
OFFICE OF GEOTECHNICAL ENGINEERING

LOG OF BORING

BORING NO: B-053-0-08 BASELINE, STATION & OFFSET: STA. 237+99. 6.2' LT. SURFACE ELEV.: 933.7 PROJECT IDENTIFICATION: ALL-75-04.48 L/R
DATE STARTED: 03/12/09 DATE COMPLETED: 03/12/09 METHOD: 3¼" HSA/NQ WATER ELEV.: - BRIDGE WIDENING
NORTHING: 380133.5 EASTING: 1529211.9 SEALING/BACKFILLING TYPE: CUTTINGS HAMMER SYSTEM TYPE: CME AUTOMATIC
QUANTITY: N/A CALIBRATION DATE: 7/17/07 ER: 80.0%

ELEV.	DEPTH	STD. PEN./ ROD	N_{60}	REC. FT	LOSS FT	DESCRIPTION	SAMPLE TYPE & NO.	% REC.	PHYSICAL CHARACTERISTICS % AGG	% C.S.	% F.S.	% SILT	% CLAY	LL	PL	PI	WC	ODOT CLASS
933.7	0																	
931.7	2																	
929.7	4	2/3/6	12			STIFF, BROWN SILT AND CLAY, LITTLE SAND, TRACE GRAVEL, MOIST	SS-1	87	4	6	12	37	42	31	17	14	17	A-6a(10)
927.7	6	3/5/5	13				SS-2	13			SAME AS SS-1						21	A-6a (Visual)
925.7	8	3/4/5	12				SS-3	100			SAME AS SS-1						17	A-6a(9)
923.7	10																	
921.7	12	3/4/6	13				SS-4	100			SAME AS SS-1						21	A-6a (Visual)
919.7	14	3/5/5	13				SS-5	100			SAME AS SS-1						17	A-6a (Visual)
917.7	16	q_u=1.78 tsf	-				ST-6	87	5	5	11	39	40	32	18	14	17	A-6a(10)
915.7	18	2/5/7	16				SS-7	100			SAME AS SS-6						22	A-6a(10)
913.7	20																	
911.7	22	q_u=1.56 tsf	-				ST-8	93			SAME AS SS-6						22	A-6a (Visual)
						22.5'												
909.7	24	3/5/6	15			STIFF TO VERY STIFF, MOTTLED GRAY AND BROWN CLAY, SOME SILT, LITTLE SAND, TRACE GRAVEL, MOIST	SS-9	100	1	3	13	33	50	44	18	26	23	A-7-6(15)
907.7	26	3/5/7	16				SS-10	93			SAME AS SS-9						22	A-7-6 (Visual)
905.7	28	4/6/11	23				SS-11	80			SAME AS SS-9						19	A-7-6 (Visual)
						29.0'												
903.7	30																	
901.7	32	q_u=0.75 tsf	-			VERY STIFF TO HARD, MOTTLED BROWN AND GRAY SILT AND CLAY, LITTLE SAND, TRACE GRAVEL, MOIST	ST-12	67			SAME AS SS-13						19	A-6a (Visual)
899.7	34																	
897.7	36	5/8/13	28				SS-13	100	9	5	11	37	38	32	17	15	16	A-6a(10)
895.7	38																	
893.7	40																	
891.7	42	13/18/16	45				SS-14	20			SAME AS SS-13						17	A-6a (Visual)
889.7	44																	
887.7	46	7/9/13	29				SS-15	100	6	5	11	38	40	26	15	11	14	A-6a(9)
885.7	48																	
883.7	50																	
881.7	52	10/9/13	29				SS-16	100			SAME AS SS-15						15	A-6a (Visual)
879.7	54																	
						55.0'												
877.7	56	17/21/27	64			HARD, GRAY SANDY SILT, SOME CLAY, TRACE TO LITTLE GRAVEL, MOIST	SS-17	100	5	5	23	45	22	17	12	5	13	A-4a(7)
875.7	58																	
873.7	60																	
871.7	62	13/14/16	40				SS-18	100			SAME AS SS-17						15	A-4a (Visual)
869.7	64																	
867.7	66	21/14/13	36				SS-19	53			SAME AS SS-17						19	A-4a (Visual)
865.7	68																	
863.7	70																	
861.7	72	12/18/28	61				SS-20	100	16	9	21	31	23	20	12	8	14	A-4a(4)
859.7	74																	
857.7	76	42/50+	50+				SS-21	13			SAME AS SS-20						13	A-4a (Visual)

···· BOTTOM OF BORING = 76.5'

PROJECT DESCRIPTION

REPLACE THE EXISTING HANTHORN ROAD FOUR-SPAN REINFORCED CONCRETE BRIDGE OVER I-75.

HISTORIC RECORDS

HISTORIC BORING RECORDS FOR THE EXISITNG BRIDGE WERE REQUESTED FROM THE ODOT OFFICE OF GEOTECHNICAL ENGINEERING AND THE DISTRICT. HISTORIC RECORDS EXIST AND ARE DISCUSSED IN THE FOUNDATION EXPLORATION REPORT. DUE TO CHANGES IN STATIONING, LOCATIONS FOR THE DATA ARE NOT CERTAIN AND ARE THEREFORE NOT SHOWN ON THE FOUNDATION EXPLORATION DRAWINGS.

GEOLOGY

THE STRUCTURE SITE IS LOCATED IN THE CENTRAL OHIO CLAYEY TILL PLAIN. THIS REGION IS COMPRISED OF GROUND MORAINE AND END MORAINE TILL DEPOSITS OVERLYING DOLOMITE WITH INTERBEDDED SHALE. CAVES AND OTHER KARST FEATURES MAY BE PRESENT ACCORDING TO THE PHYSIOGRAPHIC REGION OF OHIO MAP (ODNR, 1998), BUT NO KNOWN FEATURES WERE IDENTIFIED ON THE OHIO KARST AREAS MAP (ODNR, 2007).

RECONNAISSANCE

A FIELD RECONNAISSANCE WAS COMPLETED ON MARCH 13, 2007, FOCUSING MAINLY ON PAVEMENT CONDITIONS AND SITE TOPOGRAPHY AND DRAINAGE. THE MAINLINE SHOULDER PAVEMENTS SHOW EXTENSIVE "ALLIGATOR" CRACKING AND THE MAINLINE PAVEMENTS SHOW REFLECTIVE CRACKING AT THE EXPANSION JOINT LOCATIONS.

THE SURROUNDING AREA IS DESCRIBED AS GENTLY UNDULATING WITH MOST OF THE SURROUNDING AREA CONSISTING OF OPEN FIELD OR LIGHTLY DEVELOPED COMMERCIAL AND RESIDENTIAL DISTRICTS. DRAINAGE ALONG THE ALIGNMENT IS DESCRIBED AS SLUGGISH WITH AREAS OF STANDING WATER, AND FLOWING WATER IN DRAINAGE DITCHES AND NATURAL STREAMS GENERALLY CREATING STEP TO VERTICAL CUT BANKS IN THE SOIL PROFILE.

SUBSURFACE EXPLORATION

FIVE BORINGS WERE ADVANCED AT THE HANTHORN ROAD BRIDGE OVER I-75. ONE BORING WAS ADVANCED AT EACH PIER AND ABUTMENT LOCATION FOR THE PROPOSED STRUCTURE. THE ABUTMENT BORING (B-057) AND TWO PIER BORINGS (B-058 AND B-059) WERE LOCATED ON HANTHORN ROAD WEST OF I-75, WHILE THE REMAINING PIER BORING (B-060) AND ABUTMENT BORING (B-061) WERE ADVANCED ALONG I-75 ON THE WEST SHOULDER AND IN THE MEDIAN, RESPECTFULLY, TO ACCOUNT FOR THE REALLIGNMENT OF THE FREEWAY. THE BORINGS WERE ADVANCED USING 3.25-INCH I.D. HOLLOW-STEM AUGERS. STANDARD PENETRATION TEST (SPT) AND UNDISTURBED SHELBY TUBE (ST) SAMPLES WERE OBTAINED FOR THE UPPER 30 FEET AT 2.5-FOOT INTERVALS AND AT 5-FOOT INTERVALS BELOW THIS DEPTH FOR EACH SUBSTRUCTURE. SPT SAMPLES WERE OBTAINED USING TWO SEPARATE DRILL RIGS WITH CALIBRATED AUTOMATIC HAMMERS WITH ENERGY RATIOS (ER) OF 80% (CALIBRATED ON 7-17-2007) AND 82.5% (CALIBRATED ON 10/16/2008), AS SHOWN ON THE BORING LOGS. AT THE CONCLUSION OF DRILLING OPERATIONS, BOREHOLES WERE BACKFILLED WITH AUGER SOIL CUTTINGS.

EXPLORATION FINDINGS

STIFF TO HARD FINE-GRAINED SOILS WERE ENCOUNTERED IN ALL BORINGS AT THE GROUND SURFACE AND RANGING IN THICKNESS FROM 55 TO THE BOTTOM OF THE BORINGS. THE FINE GRAINED SOILS CLASSIFIED AS SILT AND CLAY (A-6a), SILTY CLAY (A-6b), CLAY (A-7-6), SANDY SILT (A-4a) AND SILT (A-4b). IN BORINGS B-058 AND B-060, COARSE-GRAINED SOIL WAS ENCOUNTERED AT A DEPTH OF 55 FEET THAT CLASSIFIED AS DENSE TO VERY DENSE GRAVEL (A-1-a), GRAVEL WITH SAND (A-1-b) AND GRAVEL WITH SAND AND SILT (A-2-4). THE COARSE-GRAINED LAYER EXTENDED 10 FEET IN BORING B-058 AND TO THE BOTTOM OF THE BORING IN B-060. NO BEDROCK WAS ENCOUNTERED IN ANY OF THE BORINGS ADVANCED AT THE PROJECT LOCATION.

NO STATIC WATER LEVEL WAS OBSERVED IN THE BORINGS PRIOR TO BORING TERMINATION.

SPECIFICATIONS

THIS GEOTECHNICAL EXPLORATION WAS PERFORMED IN ACCORDANCE WITH THE STATE OF OHIO, DEPARTMENT OF TRANSPORTATION, OFFICE OF GEOTECHNICAL ENGINEERING, SPECIFICATIONS FOR GEOTECHNICAL EXPLORATIONS, DATED JANUARY 2009.

AVAILABLE INFORMATION

ALL AVAILABLE SOIL AND BEDROCK INFORMATION THAT CAN BE CONVENIENTLY SHOWN ON THE PROFILE SHEETS HAS BEEN SO REPORTED. ADDITIONAL SUBSURFACE EXPLORATIONS MAY HAVE BEEN MADE TO STUDY SOME SPECIAL ASPECT OF THE PROJECT. COPIES OF THIS DATA, IF ANY, MAY BE INSPECTED IN THE DISTRICT DEPUTY DIRECTOR'S OFFICE, THE OFFICE OF GEOTECHNICAL ENGINEERING AT 1600 WEST BROAD STREET COLUMBUS, OHIO OR THE OFFICE OF STRUCTURAL ENGINEERING AT 1980 WEST BROAD STREET COLUMBUS, OHIO.

LEGEND

DESCRIPTION	ODOT CLASS	CLASSIFIED MECH./VISUAL	
GRAVEL AND/OR STONE FRAGMENTS	A-1-a	0	1
GRAVEL AND/OR STONE FRAGMENTS WITH SAND	A-1-b	1	1
GRAVEL AND/OR STONE FRAGMENTS WITH SAND AND SILT	A-2-4	0	1
SANDY SILT	A-4a	1	1
SILT	A-4b	1	2
SILT AND CLAY	A-6a	13	32
SILTY CLAY	A-6b	8	8
CLAY	A-7-6	7	12
	TOTAL	31	58

PAVEMENT OR BASE = X = APPROXIMATE THICKNESS *VISUAL*

SOD AND TOPSOIL = X = APPROXIMATE THICKNESS *VISUAL*

EXPLORATION LOCATION - PLAN VIEW

DRIVE SAMPLE AND/OR ROCK CORE BORING PLOTTED TO VERTICAL SCALE ONLY. HORIZONTAL BAR INDICATES A CHANGE IN STRATIGRAPHY.

N_{60} INDICATES CORRECTED STANDARD PENETRATION RESISTANCE FOR 60% EFFICIENCY.

WC INDICATES WATER CONTENT IN PERCENT.

NP INDICATES A NON-PLASTIC SAMPLE.

SS INDICATES A SPLIT SPOON SAMPLE, STANDARD PENETRATION TEST.

ST INDICATES A SHELBY TUBE SAMPLE.

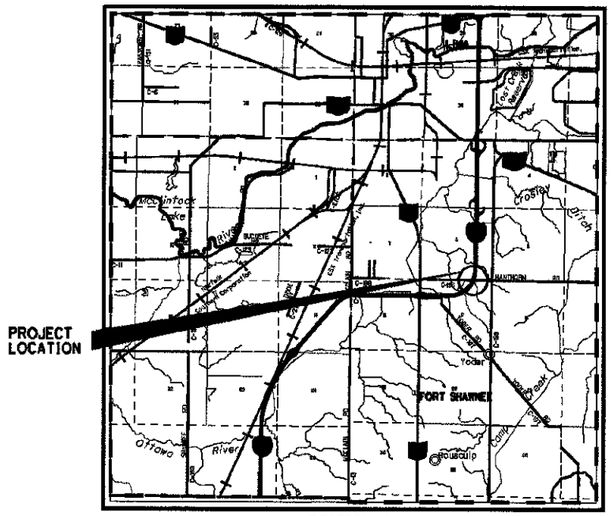

LOCATION MAP

SCALE IN MILES

0 1 2 3 4

PARTICLE SIZE DEFINITIONS

12"	3"	2.0 mm	0.42 mm	0.074 mm	0.005 mm
BOULDERS |	COBBLES |	GRAVEL |	COARSE SAND |	FINE SAND |	SILT | CLAY
		No. 10 SIEVE	No. 40 SIEVE	No. 200 SIEVE	

RECON. - DR/JM 03/07, 01/09
DRILLING - MJW 2/09/09-3/31/09
DRAWN - MJ/CW 5/09-7/09, 11/10
REVIEWED - JMM 9/09, RJK 11/10

DESIGN AGENCY
STANTEC CONSULTING SERVICES INC.
CINCINNATI, OHIO

PID NO. 76691

STRUCTURE FOUNDATION EXPLORATION
HANTHORN ROAD OVER I-75

ALL-75-05.08

1 / 12

91 / 97

V:\1755\active\175530002\geotechnical\drawing\ODOTSubmittal\projects\ALL\76691\geotechnical\sheets\ALL-75-05.08HANTHORN ROAD\76691ZC001.dgn

V:\1755\active\175530002\geotechnical\drawing\ODOTSubmittal\projects\ALL\76691\geotechnical\sheets\ALL-75-05.08HANTHORN ROAD\Y7669IZP001.dgn

HORIZONTAL SCALE IN FEET

DRAWN C.W.
CHECKED R.J.K.

STRUCTURE FOUNDATION EXPLORATION
HANTHORN ROAD OVER I-75

ALL-75-05.08

2 / 12

92 / 97

OHIO DEPARTMENT OF TRANSPORTATION
OFFICE OF GEOTECHNICAL ENGINEERING

LOG OF BORING

BORING NO: B-057-0-08 BASELINE, STATION & OFFSET: STA 101+02, 13.8' LT. SURFACE ELEV.: 924.0 PROJECT IDENTIFICATION: ALL-75-05.08
DATE STARTED: 03/11/09 DATE COMPLETED: 03/11/09 METHOD: 3¾" HSA/NQ WATER ELEV.: - BRIDGE WIDENING
NORTHING: 381281.27 EASTING: 1531458.93 SEALING/BACKFILLING TYPE: CUTTINGS HAMMER SYSTEM TYPE: CME AUTOMATIC
QUANTITY: N/A CALIBRATION DATE: 7/17/07 ER: 80%

ELEV.	DEPTH	STD. PEN./ RQD	N_{60}	REC. FT	LOSS FT	DESCRIPTION	SAMPLE TYPE & NO.	% REC.	PHYSICAL CHARACTERISTICS % AGG	% C.S.	% F.S.	% SILT	% CLAY	LL	PL	PI	WC	ODOT CLASS
924.0	0					ASPHALT (0.4') AND GRAVEL BASE MATERIAL (0.7') 1.1'												VISUAL
922.0	2																	
920.0	4	3/3/5	11			STIFF TO VERY STIFF, MOTTLED BROWN AND GRAY SILT AND CLAY, LITTLE SAND, TRACE GRAVEL, MOIST	SS-1	20			SAME AS SS-2						24	A-6b (Visual)
918.0	6	3/5/7	16				SS-2	80	5	4	13	38	40	38	17	21	21	A-6b(13)
916.0	8					7.5'												
		2/3/5	11			STIFF, LIGHT MOTTLED GRAY AND BROWN CLAY AND SILT, LITTLE SAND, TRACE GRAVEL, MOIST	SS-3	67	2	2	15	35	46	42	17	25	23	A-7-6(14)
914.0	10																	
		3/5/6	15				SS-4	100			SAME AS SS-3						20	A-7-6 (Visual)
912.0	12					12.5'												
910.0	14	4/5/10	20			VERY STIFF, GRAY SILTY CLAY, LITTLE SAND, TRACE GRAVEL, MOIST	SS-5	100	3	4	12	38	43	38	17	19	19	A-6b(12)
908.0	16	q_u=2.71 tsf	-				ST-6	80			SAME AS SS-5						19	A-6b (Visual)
906.0	18					17.5'												
		3/5/7	16			VERY STIFF, MOTTLED BROWN AND GRAY CLAY, SOME SILT AND SAND, TRACE GRAVEL, MOIST	SS-7	100	7	5	19	29	40	43	16	27	22	A-7-6(14)
904.0	20					20.0'												
		q_u=1.26 tsf	-			VERY STIFF TO HARD, GRAY SILT AND CLAY, LITTLE SAND, TRACE GRAVEL, DAMP TO MOIST	ST-8	87			SAME AS SS-9						21	A-6a (Visual)
902.0	22																	
900.0	24	5/6/13	25				SS-9	100	6	5	11	39	39	30	17	13	15	A-6a(9)
898.0	26	7/11/13	32				SS-10	100			SAME AS SS-9						14	A-6a (Visual)
896.0	28	9/11/12	31				SS-11	100			SAME AS SS-9						15	A-6a (Visual)
894.0	30																	
		q_u=2.02 tsf	-				ST-12	100	6	5	11	37	41	27	15	12	15	A-6a(9)
892.0	32																	
890.0	34																	
888.0	36	5/9/14	31				SS-13	100			SAME AS SS-12						16	A-6a (Visual)
886.0	38																	
884.0	40																	
		7/9/15	32				SS-14	100			SAME AS SS-12						15	A-6a (Visual)
882.0	42																	
880.0	44																	
878.0	46	10/12/15	36				SS-15	100	5	5	12	38	40	27	15	12	12	A-6a(9)
876.0	48																	
874.0	50																	
		8/11/16	36				SS-16	100			SAME AS SS-15						15	A-6a (Visual)
872.0	52																	
870.0	54																	
868.0	56	7/14/18	43				SS-17	100			SAME AS SS-15						14	A-6a (Visual)
866.0	58																	
864.0	60																	
		15/33/33	88				SS-18	67			SAME AS SS-15						18	A-6a (Visual)

BOTTOM OF BORING = 61.5'

OHIO DEPARTMENT OF TRANSPORTATION
OFFICE OF GEOTECHNICAL ENGINEERING

LOG OF BORING

BORING NO: B-058-0-08 BASELINE, STATION & OFFSET: STA 101+81.8, 9.6' RT. SURFACE ELEV.: 926.8 PROJECT IDENTIFICATION: ALL-75-05.08
DATE STARTED: 03/11/09 DATE COMPLETED: 03/11/09 METHOD: 3¼" HSA/NQ WATER ELEV.: - BRIDGE WIDENING
NORTHING: 381256.93 EASTING: 1531538.48 SEALING/BACKFILLING TYPE: CUTTINGS HAMMER SYSTEM TYPE: CME AUTOMATIC
QUANTITY: N/A CALIBRATION DATE: 7/17/07 ER: 80%

ELEV.	DEPTH	STD. PEN./ RQD	N_{60}	REC. FT	LOSS FT	DESCRIPTION	SAMPLE TYPE & NO.	% REC.	PHYSICAL CHARACTERISTICS % AGG	% C.S.	% F.S.	% SILT	% CLAY	LL	PL	PI	WC	ODOT CLASS
926.8	0					GRAVEL BASE MATERIAL 1.0'												VISUAL
924.8	2																	
922.8	4	2/4/5	12			STIFF TO VERY STIFF, MOTTLED BROWN AND GRAY SILTY CLAY, LITTLE SAND, TRACE GRAVEL, MOIST	SS-1	100	2	3	13	38	44	40	17	23	23	A-6b(13)
920.8	6	3/6/7	17				SS-2	100			SAME AS SS-1						20	A-6b (Visual)
918.8	8	3/5/6	15				SS-3	87			SAME AS SS-1						24	A-6b (Visual)
916.8	10	4/6/9	19				SS-4	100			SAME AS SS-1						22	A-6b (Visual)
914.8	12	5/6/8	20				SS-5	100			SAME AS SS-1						21	A-6b (Visual)
912.8	14	q_u=3.28 tsf	-				ST-6	80			SAME AS SS-1						18	A-6b (Visual)
910.8	16					17.5'												
908.8	18	3/5/8	17			VERY STIFF, MOTTLED GRAY AND BROWN CLAY AND SILT, LITTLE SAND, TRACE GRAVEL, MOIST	SS-7	87	5	3	12	35	45	45	18	27	24	A-7-6(18)
906.8	20	q_u=2.71 tsf	-				ST-8	87			SAME AS SS-7						22	A-7-6 (Visual)
904.8	22	3/5/7	16				SS-9	100			SAME AS SS-7						21	A-7-6 (Visual)
902.8	24					25.0'												
900.8	26	3/8/15	31			VERY STIFF TO HARD, MOTTLED BROWN AND GRAY SILT AND CLAY, LITTLE SAND, TRACE GRAVEL, MOIST	SS-10	100	6	5	11	38	40	28	17	11	17	A-6a(9)
898.8	28	9/16/22	51				SS-11	100			SAME AS SS-10						16	A-6a (Visual)
896.8	30	q_u=2.32 tsf	-				ST-12	87			SAME AS SS-10						17	A-6a (Visual)
894.8	32																	
892.8	34																	
890.8	36	4/10/13	31				SS-13	100	3	6	12	39	40	27	15	12	14	A-6a(9)
888.8	38																	
886.8	40	7/9/14	31				SS-14	100			SAME AS SS-13						16	A-6a (Visual)
884.8	42																	
882.8	44																	
880.8	46	6/9/11	27				SS-15	100			SAME AS SS-13						16	A-6a(9)
878.8	48																	
876.8	50	6/15/10	33				SS-16	100			SAME AS SS-13						18	A-6a (Visual)
874.8	52																	
872.8	54					55.0'												
870.8	56	8/15/10	33			DENSE, GRAY GRAVEL, LITTLE SAND, TRACE SILT AND CLAY, MOIST (VISUAL)	SS-17	67	74	15	5						13	A-1-a (Visual)
868.8	58																	
866.8	60					60.0'												
864.8	62	23/26/27	70			VERY DENSE, GRAY GRAVEL WITH SAND AND SILT, MOIST (VISUAL)	SS-18	67	17	57	13						16	A-2-4 (Visual)
862.8	64																	
860.8	66	13/14/26	53			65.0' HARD, GRAY SILTY CLAY, LITTLE SAND, TRACE GRAVEL, MOIST	SS-19	67	11	7	11	28	43	32	18	16	17	A-6b(10)

BOTTOM OF BORING = 66.5'

OHIO DEPARTMENT OF TRANSPORTATION
OFFICE OF GEOTECHNICAL ENGINEERING

LOG OF BORING

BORING NO: B-059-0-08 BASELINE, STATION & OFFSET: STA 102+71.7, 11.3' LT. SURFACE ELEV.: 929.0 PROJECT IDENTIFICATION: ALL-75-05.08
DATE STARTED: 03/09/09 DATE COMPLETED: 03/09/09 METHOD: 3¼" HSA/NQ WATER ELEV.: - BRIDGE WIDENING
NORTHING: 381276.86 EASTING: 1531628.59 SEALING/BACKFILLING TYPE: CUTTINGS HAMMER SYSTEM TYPE: CME AUTOMATIC
QUANTITY: N/A CALIBRATION DATE: 7/17/07 ER: 80%

ELEV.	DEPTH	STD. PEN./ RQD	N_{60}	REC. FT	LOSS FT	DESCRIPTION	SAMPLE TYPE & NO.	% REC.	PHYSICAL CHARACTERISTICS % AGG	% C.S.	% F.S.	% SILT	% CLAY	LL	PL	PI	WC	ODOT CLASS
929.0	0					ASPHALT (0.4') GRAVEL BASE (0.7') 1.1'												VISUAL
927.0	2																	
925.0	4	3/3/4	9			STIFF TO VERY STIFF , MOTTLED BROWN AND GRAY CLAY AND SILT, LITTLE SAND, TRACE GRAVEL, MOIST	SS-1	60			SAME AS SS-2					20	A-7-6 (Visual)
923.0	6	2/3/5	11				SS-2	87	3	3	14	35	45	44	17	27	22	A-7-6(16)
921.0	8	2/3/6	12				SS-3	93			SAME AS SS-2						20	A-7-6 (Visual)
919.0	10																	
917.0	12	3/4/6	13				SS-4	100			SAME AS SS-2						23	A-7-6 (Visual)
915.0	14	3/3/5	11				SS-5	93			SAME AS SS-2						23	A-7-6 (Visual)
913.0	16	q_u=2.04 tsf	-				ST-6	100			SAME AS SS-2						19	A-7-6 (Visual)
911.0	18	3/6/7	17				SS-7	80	2	3	11	36	48	47	18	29	24	A-7-6(17)
909.0	20																	
907.0	22	q_u=2.27 tsf	-				ST-8	47			SAME AS SS-7						18	A-7-6 (Visual)
905.0	24	2/2/5	9			24.0'	SS-9	87	2	4	13	30	51	49	19	30	28	A-7-6(18)
903.0	26	2/4/6	13			STIFF, MOTTLED BROWN AND GRAY SILTY CLAY, LITTLE SAND, TRACE GRAVEL, MOIST	SS-10	100	2	4	12	34	48	36	17	19	22	A-6b(12)
901.0	28	7/12/16	37			27.5' HARD, BROWN SILT AND CLAY, LITTLE SAND, TRACE GRAVEL, MOIST	SS-11	100	5	5	12	38	40	30	17	13	15	A-6a(9)
899.0	30																	
897.0	32	ST	-			32.0'	ST-12	73			SAME AS SS-11						16	A-6a (Visual)
895.0	34					VERY STIFF TO HARD, GRAY SILT AND CLAY, LITTLE SAND, TRACE GRAVEL, DAMP TO MOIST												
893.0	36	6/10/13	31				SS-13	100			SAME AS SS-14						15	A-6a (Visual)
891.0	38																	
889.0	40																	
887.0	42	9/11/14	33				SS-14	100	5	6	11	38	40	27	15	12	16	A-6a(9)
885.0	44																	
883.0	46	7/12/20	43				SS-15	100			SAME AS SS-14						14	A-6a (Visual)
881.0	48																	
879.0	50																	
877.0	52	8/11/14	33				SS-16	100			SAME AS SS-14						16	A-6a (Visual)
875.0	54																	
873.0	56	9/11/12	31				SS-17	47			SAME AS SS-14						19	A-6a (Visual)
871.0	58																	
869.0	60					60.5'												
867.0	62	7/10/10	27			VERY STIFF TO HARD, GRAY SILTY CLAY, LITTLE SAND, TRACE GRAVEL, DAMP TO MOIST	SS-18	100			SAME AS SS-19						13	A-8b (Visual)
865.0	64																	
863.0	66	12/16/24	53				SS-19	100	3	5	9	32	51	33	16	17	16	A-6b(11)

BOTTOM OF BORING = 66.5'

OHIO DEPARTMENT OF TRANSPORTATION
OFFICE OF GEOTECHNICAL ENGINEERING

LOG OF BORING

BORING NO: B-060-0-08 BASELINE, STATION & OFFSET: STA 103+42.1, 37.5' LT. SURFACE ELEV.: 908.7 PROJECT IDENTIFICATION: ALL-75-05.08
DATE STARTED: 03/31/09 DATE COMPLETED: 03/31/09 METHOD: 3¾" HSA/NQ WATER ELEV.: - BRIDGE WIDENING
NORTHING: 381302.36 EASTING: 1531699.34 SEALING/BACKFILLING TYPE: CUTTINGS HAMMER SYSTEM TYPE: CME AUTOMATIC
QUANTITY: N/A CALIBRATION DATE: 10/16/08 ER: 82.5%

ELEV.	DEPTH	STD. PEN./ RQD	N_{60}	REC. FT	LOSS FT	DESCRIPTION	SAMPLE TYPE & NO.	% REC.	PHYSICAL CHARACTERISTICS % AGG	% C.S.	% F.S.	% SILT	% CLAY	LL	PL	PI	WC	ODOT CLASS
908.7	0					SOD AND/OR TOPSOIL 1.0'												VISUAL
906.7	2																	
904.7	4	5/5/7	17			STIFF TO HARD, MOTTLED BROWN AND GRAY CLAY, SOME SILT, LITTLE SAND, TRACE GRAVEL, DAMP TO MOIST	SS-1	100	5	4	12	33	46	49	21	28	26	A-7-6(17)
902.7	6	5/5/5	14				SS-2	100			SAME AS SS-1						21	A-7-6 (Visual)
900.7	8	9/13/17	41				SS-3	100			SAME AS SS-1						16	A-7-6 (Visual)
898.7	10	11/14/17	42			11.5'	SS-4	100			SAME AS SS-1						17	A-7-6 (Visual)
896.7	12					VERY STIFF, GRAY SILT AND CLAY, LITTLE SAND, TRACE GRAVEL, MOIST												
894.7	14	4/10/11	29				SS-5	100	5	7	10	39	39	28	16	12	15	A-6a(9)
892.7	16	5/6/11	23				SS-6	87			SAME AS SS-5						16	A-6a (Visual)
890.7	18	4/5/8	18				SS-7	100			SAME AS SS-5						16	A-6a (Visual)
888.7	20																	
886.7	22	6/9/12	29				SS-8	100			SAME AS SS-5						15	A-6a (Visual)
884.7	24	5/6/8	19				SS-9	100			SAME AS SS-5						16	A-6a (Visual)
882.7	26	4/7/14	29				SS-10	100			SAME AS SS-5						16	A-6a (Visual)
880.7	28	4/7/12	28				SS-11	100			SAME AS SS-5						17	A-6a (Visual)
878.7	30					30.0'												
876.7	32	15/17/18	48			HARD, GRAY SILT, SOME SAND, LITTLE CLAY, TRACE GRAVEL, MOIST	SS-12	100	8	5	17	55	15	NP	NP	NP	16	A-4b(7)
874.7	34																	
872.7	36	3/16/18	47				SS-13	100			SAME AS SS-12						17	A-4b (Visual)
870.7	38																	
868.7	40	8/17/24	56				SS-14	100			SAME AS SS-12						13	A-4b (Visual)
866.7	42																	
864.7	44					45.0'												
862.7	46	22/39/44	114			HARD, GRAY SANDY SILT, SOME CLAY, LITTLE GRAVEL, MOIST	SS-15	87	20	4	13	37	26	23	13	10	19	A-4a(5)
860.7	48																	
858.7	50	21/45/33	107				SS-16	80			SAME AS SS-15						17	A-4a (Visual)
856.7	52																	
854.7	54					55.0'												
852.7	56	50/50+/0.1'	50+			VERY DENSE, GRAY GRAVEL WITH SAND, LITTLE SILT, TRACE CLAY, MOIST	SS-17	33			SAME AS SS-16						8	A-1-b (Visual)
850.7	58																	
848.7	60	20/22/17	54				SS-18	40	52	22	8	15	3	NP	NP	NP	11	A-1-b

BOTTOM OF BORING = 61.5'

OHIO DEPARTMENT OF TRANSPORTATION
OFFICE OF GEOTECHNICAL ENGINEERING

LOG OF BORING

BORING NO: B-061-0-08 BASELINE, STATION & OFFSET: STA 103+83.4, 32.1' RT. SURFACE ELEV.: 910.7 PROJECT IDENTIFICATION: ALL-75-05.08
DATE STARTED: 03/11/09 DATE COMPLETED: 03/11/09 METHOD: 3¼" HSA/NQ WATER ELEV.: - BRIDGE WIDENING
NORTHING: 381232.34 EASTING: 1531739.85 SEALING/BACKFILLING TYPE: CUTTINGS HAMMER SYSTEM TYPE: CME AUTOMATIC
QUANTITY: N/A CALIBRATION DATE: 7/17/07 ER: 80%

ELEV.	DEPTH	STD. PEN./ RQD	N_{60}	REC. FT	LOSS FT	DESCRIPTION	SAMPLE TYPE & NO.	% REC.	% AGG	% C.S.	% F.S.	% SILT	% CLAY	LL	PL	PI	WC	ODOT CLASS
910.7	0																	
908.7	2																	
906.7	4	4/5/6	15			STIFF, MOTTLED BROWN AND GRAY SILT, CLAY, LITTLE SAND, TRACE GRAVEL, MOIST	SS-1	80	1	4	14	37	44	39	18	21	22	A-6b(13)
904.7	6	3/3/4	9				SS-2	80	1	2	16	41	40	36	18	18	27	A-8b(11)
902.7	8	5/6/7	17			7.5' VERY STIFF TO HARD, MOTTLED BROWN AND GRAY GRADING TO GRAY SILT AND CLAY, LITTLE SAND, TRACE GRAVEL, DAMP TO MOIST	SS-3	100	4	6	11	39	40	30	17	13	17	A-6a(9)
900.7	10	7/11/18	39				SS-4	100			SAME AS SS-3						16	A-6a (Visual)
898.7	12	7/9/12	28				SS-5	100	4	6	11	39	40	26	15	11	14	A-6a(9)
896.7	14																	
894.7	16	q_u=2.28 tsf	-				ST-6	100			SAME AS SS-5						16	A-6a (Visual)
892.7	18	4/8/9	23				SS-7	100			SAME AS SS-5						16	A-6a (Visual)
890.7	20	4/6/10	21				SS-8	100			SAME AS SS-5						15	A-6a (Visual)
888.7	22	4/7/11	24				SS-9	100			SAME AS SS-5						15	A-6a (Visual)
886.7	24																	
884.7	26	q_u=2.10 tsf	-				ST-10	100	8	5	11	38	38	26	15	11	16	A-6a(9)
882.7	28	6/8/12	27				SS-11	100			SAME AS SS-10						16	A-6a (Visual)
880.7	30	8/9/12	28				SS-12	100			SAME AS SS-10						15	A-6a (Visual)
878.7	32																	
876.7	34																	
874.7	36	9/10/12	29				SS-13	100	5	7	11	36	41	26	15	11	15	A-6a(9)
872.7	38																	
870.7	40	7/13/13	35				SS-14	20			SAME AS SS-13						17	A-6a (Visual)
868.7	42																	
866.7	44																	
864.7	46	13/17/24	55				SS-15	27			SAME AS SS-13						18	A-6a (Visual)

BOTTOM OF BORING = 46.5'
BORING DISCONTINUED DUE TO DRILL BREAKING