STATE OF OHIO
DEPARTMENT OF TRANSPORTATION

ASD-89-12.15
ASD-302-0.00

VILLAGE OF POLK
ORANGE TOWNSHIP
PERRY TOWNSHIP
JACKSON TOWNSHIP

LOCATION MAP

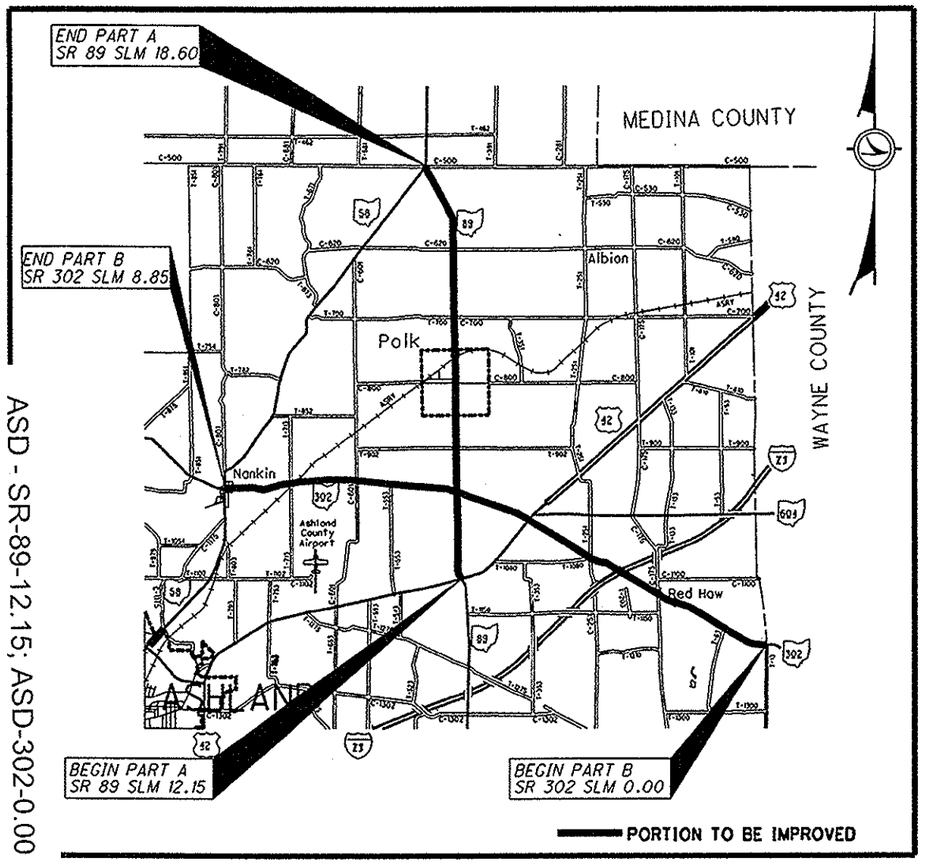

40° 54′ 13″ N LATITUDE 82° 12′ 51″ W LONGITUDE

ASD - SR-89-12.15; ASD-302-0.00
080101 PID - 25673
Dist 3 2/13/2008

INDEX OF SHEETS

1	-	TITLE SHEET
2	-	STRAIGHT LINE DIAGRAM
2	-	DESIGN DESIGNATION
3-4	-	GENERAL NOTES
5	-	DROPOFFS IN WORK ZONES
6	-	MAILBOX FACILITIES
7-8	-	GENERAL SUMMARY
9	-	PAVEMENT & SHOULDER DATA
10	-	TYPICAL SECTIONS
11	-	RUMBLE STRIP DETAIL
12	-	CURB RAMP DETAILS
13	-	GUARDRAIL SUB-SUMMARY
14	-	GUARDRAIL GENERAL NOTES
15-21	-	GUARDRAIL DETAILS
22	-	PAVEMENT MARKING INFORMATION
23-38	-	CULVERT ASD-89-16.70
39-40	-	STRUCTURE GENERAL NOTES
41	-	MAINTAINING TRAFFIC AND DETOUR MAP
42	-	STRUCTURE SUMMARY
43	-	BRIDGE TREATMENT
44	-	STRUCTURE ASD-302-0089
45-46	-	STRUCTURE ASD-302-0154
47-51	-	STRUCTURE ASD-302-0244
52-53	-	STRUCTURE ASD-302-0563
54-56	-	RIGHT OF WAY

PROJECT DESCRIPTION

THIS PROJECT WILL INCLUDE PAVEMENT REPAIR, RESURFACING WITH ASPHALT CONCRETE, ADJUSTMENT OF CASTINGS WHERE NECESSARY, GUARDRAIL, PAVEMENT MARKINGS AND MINOR BRIDGE REHABILITATION WORK.

PROJECT EARTH DISTURBED AREA = N/A (MAINTENANCE PROJECT)
ESTIMATED CONTRACTOR EARTH DISTURBED AREA = N/A (MAINTENANCE PROJECT)
NOTICE OF INTENT EARTH DISTURBED AREA = N/A (MAINTENANCE PROJECT)

CONVERSION OF METRIC STANDARD DRAWINGS

THE METRIC STANDARD DRAWINGS REFERENCED IN THIS PLAN SHALL BE CONVERTED TO ENGLISH UNITS USING THE SI (METRIC) TO ENGLISH CONVERSIONS FACTORS PROVIDED IN SECTION 109.02 OF THE 2005 CMS. CONVERSIONS SHALL BE APPROXIMATELY PRECISE AND SHALL REFLECT STANDARD INDUSTRY ENGLISH VALUES WHERE SUITABLE

2005 SPECIFICATIONS

THE STANDARD 2005 SPECIFICATIONS OF THE STATE OF OHIO DEPARTMENT OF TRANSPORTATION, INCLUDING CHANGES AND SUPPLEMENTAL SPECIFICATIONS LISTED IN THE PLANS AND THE PROPOSAL SHALL GOVERN THESE IMPROVEMENTS.

I HEREBY APPROVE THESE PLANS AND DECLARE THAT THE MAKING OF THESE IMPROVEMENTS WILL REQUIRE THE CLOSING OF THE HIGHWAY AND PROVISIONS FOR THE MAINTENANCE AND SAFETY OF TRAFFIC WILL BE AS INDICATED IN THE PLAN AND PROPOSAL.

WHERE ASD-89-16.70 APPEARS IN THE TITLE BLOCK OF THE PLAN, SHEETS SHALL BE CONSIDERED TO READ AS ASD-89-12.15.

John Hart — DISTRICT DEPUTY DIRECTOR OF TRANSPORTATION — 11/7/07 APPROVED DATE

James G. Beasley — DIRECTOR, DEPARTMENT OF TRANSPORTATION — 11-15-07 APPROVED DATE

ENGINEER'S SEAL

ROADWAY	BRIDGE
STATE OF OHIO — BRUCE A. DALTON E-53790 — REGISTERED PROFESSIONAL ENGINEER	STATE OF OHIO — DAVID C. MOLLENSHOTT E-50210 — REGISTERED PROFESSIONAL ENGINEER
SIGNED: Bruce A. Dalton	SIGNED: David C. Mollenshott
DATE: 11/06/07	DATE: 11/06/07

STANDARD DRAWINGS			
BP-3.1	07-28-00	MT-97.10	09-05-06
BP-4.1	07-28-00	MT-97.12	09-05-06
BP-7.1	01-19-07	MT-99.20M	01-30-95
		MT-101.60	09-20-06
		MT-105.10	10-18-02
DM-4.3	07-19-02	MT-105.11	10-18-02
DM-4.4	07-19-02		
		TC-41.20	01-19-01
GR-1.1	07-16-04	TC-65.10	01-21-05
GR-2.1	01-16-04	TC-65.11	01-21-05
GR-4.2	01-19-07	TC-71.10	01-19-07
		TC-73.10	01-19-01
		TC-52.10	01-19-07
RM-1.1	04-21-06	TC-52.20	01-19-07

SUPPLEMENTAL SPECIFICATIONS	
800	10-19-07
802	04-15-05
832	04-25-06

SPECIAL PROVISIONS

WATERWAY PERMIT #3 11-05-07

TWO WORKING DAYS BEFORE YOU DIG
Call 800-362-2764 TOLL FREE
OHIO UTILITIES PROTECTION SERVICE
NON-MEMBERS MUST BE CALLED DIRECTLY

PLAN PREPARED BY: DISTRICT THREE PRODUCTION DEPARTMENT

FEDERAL-AID PROJECT NO. E032(091)

PID NO. 25673

CONSTRUCTION PROJECT NO.

RAILROAD INVOLVEMENT ASHLAND RAILWAY, INC.

ASD-89-12.15

1/56

DESIGN FILE: I:\projects\25673\title1.dgn
WORKSTATION: cvanhorn DATE: 11/6/2007

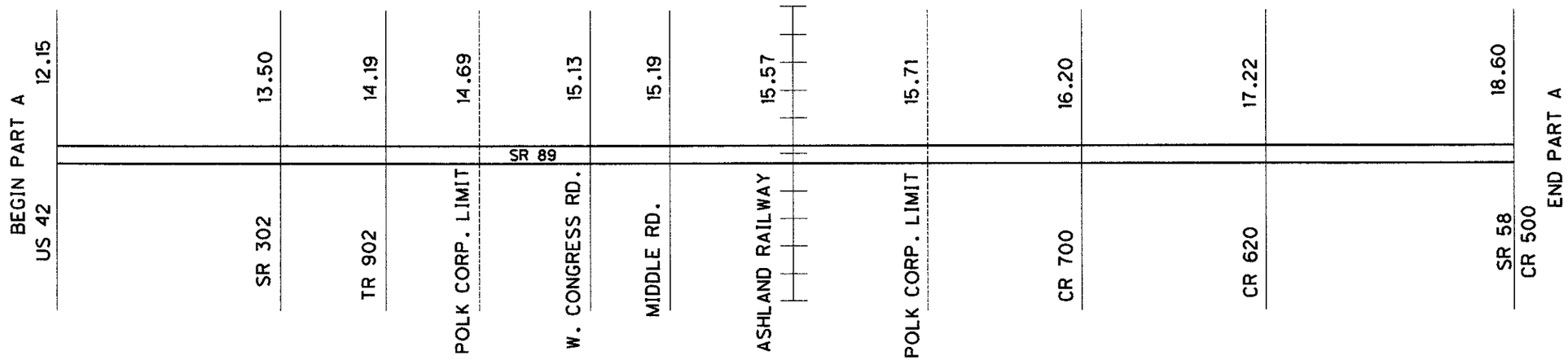

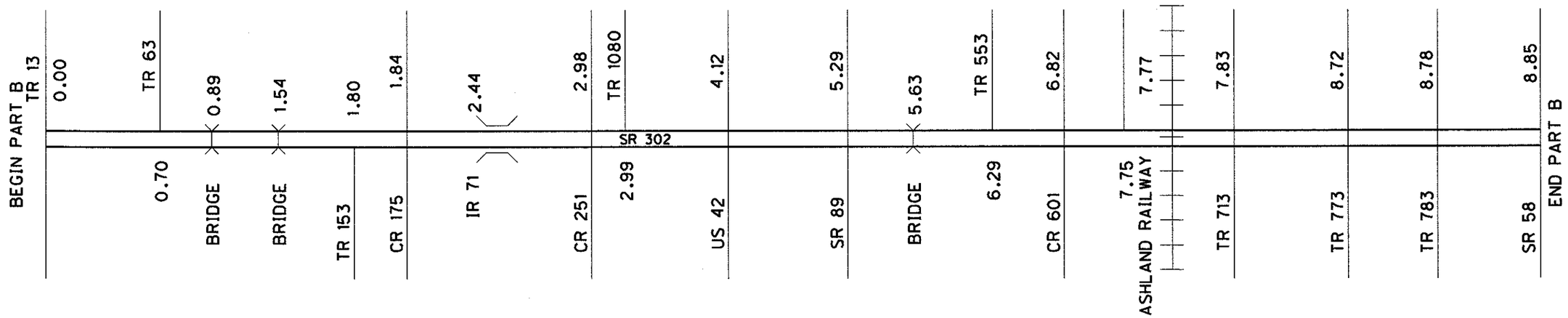

PART A - SR 89

DESIGN DESIGNATION (ENGLISH UNITS)

S.L.M.	12.15-15.71	15.71-18.60
CURRENT ADT (2005)	2790	2550
DESIGN YEAR ADT (2017)	3320	3240
DESIGN HOURLY VOLUME (2017)	330	320
DIRECTIONAL DISTRIBUTION	55%	52%
TRUCKS (24 HOUR B&C)	12%	15%
DESIGN SPEED	55 MPH	55 MPH
LEGAL SPEED	55 MPH	55 MPH

DESIGN FUNCTIONAL CLASSIFICATION: RURAL MAJOR COLLECTOR

NHS PROJECT	NO	NO

3R PROJECT

PART B - SR 302

DESIGN DESIGNATION (ENGLISH UNITS)

S.L.M.	0.00-4.12	4.12-8.85
CURRENT ADT (2005)	1430	1070
DESIGN YEAR ADT (2017)	1880	1350
DESIGN HOURLY VOLUME (2017)	210	160
DIRECTIONAL DISTRIBUTION	57%	55%
TRUCKS (24 HOUR B&C)	6%	7%
DESIGN SPEED	55 MPH	55 MPH
LEGAL SPEED	55 MPH	55 MPH

DESIGN FUNCTIONAL CLASSIFICATION: RURAL MAJOR COLLECTOR

NHS PROJECT	NO	NO

3R PROJECT

CALCULATED CVH
CHECKED BAD

STRAIGHT LINE DIAGRAM/ DESIGN DESIGNATION

ASD-89-12.15

DESIGN FILE: I:\projects\25673\straight line.dgn
WORKSTATION: cvanhorn DATE: 11/6/2007

PAVING AT RAILROAD CROSSINGS

PRIOR TO ANY WORK AT RAILROAD CROSSINGS THE CONTRACTOR SHALL CONTACT THE AFFECTED RAILROAD AUTHORITY SO AS TO MAKE THEM AWARE OF THE PROGRESS AND SCHEDULE OF WORK. THE CONTRACTOR SHALL COOPERATE WITH THE RAILROAD SO AS TO ELIMINATE ANY SAFETY CONCERNS. FLAGGING WILL BE REQUIRED BY THE RAILROAD. ODOT WILL BE RESPONSIBLE FOR PAYING THE RAILROAD FOR ALL FLAGGING COSTS. REFER TO THE RAILROAD SPECIAL CLAUSES IN THE PROPOSAL.

THE CROWN SHALL BE WORKED OUT OF THE RESURFACED PAVEMENT ON EACH SIDE OF THE RAILROAD CROSSING, BEGINNING 50 FEET FROM THE NEAREST RAIL, BY RAISING THE EDGES OF THE RESURFACED PAVEMENT TO MEET THE PLATFORM ELEVATION.

SUSPEND AND RESUME RESURFACING AT THE HEADER TIE, AS DIRECTED BY THE ENGINEER.

DETAIL - PAVING AT RAILROAD CROSSING

BUTT JOINT/BEGIN AND END RESURFACING AS DIRECTED BY THE ENGINEER

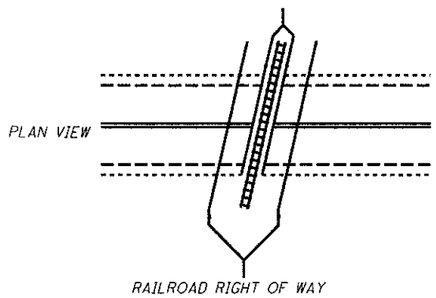

PROGRESSION OF WORK

GUARDRAIL SHALL BE REMOVED PRIOR TO ANY EMBANKMENT WORK AT THE GUARDRAIL RUN. GUARDRAIL WORK SHALL BE DONE AFTER WIDENING, RESURFACING, AND BERM WORK SO AS TO ESTABLISH PROPER GRADES FROM WHICH TO CONSTRUCT THE RAIL.

ROUTINE MAINTENANCE

BETWEEN THE TIME THAT BIDS ARE TAKEN AND THE START OF CONSTRUCTION, THE MAINTAINING AGENCY MAY ENTER UPON THE PROJECT AND PERFORM ROUTINE MAINTENANCE SUCH AS CRACK SEALING, PATCHING, AND BERM AND SHOULDER REPAIR. THE EFFECTS, IF ANY, OF THE PERFORMANCE OF ROUTINE MAINTENANCE SHALL BE CONSIDERED AS INHERENT IN WORK OF THE CHARACTER PROVIDED FOR IN THE PLAN AND THE RESULTING CONDITIONS SHALL NOT BE CONSIDERED AS DIFFERING MATERIALLY FROM THOSE EXISTING AT THE TIME BIDS WERE TAKEN.

BUTT JOINTS

BUTT JOINTS SHALL NOT BE CUT AND LEFT OPEN TO TRAFFIC. THEY SHALL BE FILLED IN WITH A TEMPORARY ASPHALT CONCRETE WEDGE OF SUFFICIENT LENGTH, AS DIRECTED BY THE ENGINEER.

CONSTRUCTION "BUMP" (W8-1-36) AND "ADVISORY SPEED" (W13-1-24) SIGNS SHALL BE ERECTED AND MAINTAINED DURING THE PERIOD THE BUTT JOINT IS LEFT OPEN. THESE SIGNS SHALL BE PAID FOR UNDER THE LUMP SUM ITEM FOR ITEM 614 MAINTAINING TRAFFIC.

PLACEMENT OF ASPHALT CONCRETE

TWO-WAY TRAFFIC SHALL BE MAINTAINED AT ALL TIMES EXCEPT THAT ONE-WAY TRAFFIC WILL BE PERMITTED FOR MINIMUM PERIODS OF TIME CONSISTENT WITH THE REQUIREMENTS OF THE SPECIFICATIONS FOR PROTECTION OF COMPLETED ASPHALT CONCRETE COURSES.

ITEM 209 - LINEAR GRADING

THE CONTRACTOR IS REQUIRED TO PERFORM LINEAR GRADING ON THE GRADED SHOULDER. IT IS ANTICIPATED THAT THERE ARE AREAS WHERE THE GRADED SHOULDER IS AT A HIGHER ELEVATION THAN THE ADJACENT PROPOSED PAVEMENT. A 10:1 SLOPE SHALL BE ESTABLISHED, OR AS DIRECTED BY THE ENGINEER, WHEN PERFORMING ITEM 209 LINEAR GRADING. THE INTENT IS TO PROVIDE AN UNOBSTRUCTED AND POSITIVE FLOW OF STORM WATER FROM THE PAVEMENT TO THE DITCH. THE LINEAR GRADING SHALL BE PERFORMED AFTER THE INTERMEDIATE COURSE HAS BEEN COMPLETED AND BEFORE THE SURFACE COURSE IS PLACED. ALL LABOR AND EQUIPMENT NECESSARY TO PERFORM THE ABOVE WORK SHALL BE INCLUDED IN THE UNIT PRICE BID PER MILE FOR ITEM 209 LINEAR GRADING.

UTILITIES

LISTED BELOW ARE ALL UTILITIES LOCATED WITHIN THE PROJECT CONSTRUCTION LIMITS TOGETHER WITH THEIR RESPECTIVE OWNERS.

American Electric Power
Steve Darby
2622 South SR 100
Tiffin, Ohio 44883
419-443-4609

Lorain-Medina Rural Electric
Brad Warnement
P.O. Box 158
Wellington, Ohio 44090
800-222-5673

Time Warner Cable
David Baker
1575 Lexington Avenue
Mansfield, Ohio 44901
419-756-6091, ext 5109

Columbia Gas Transmission
Jerry Roth
2385 Cotter Rd.
Mansfield, Ohio 44903
419-521-2846

Gatherco, Inc.
Tony Kovacevich
5772 Dressler Road NW
North Canton, Ohio 44720
330-498-9553

Firelands Electric Co-op
Denny Marugg
One Energy Place
New London, Ohio 44851
419-929-1571

Verizon
James Sauber
1534 SR 511 South
Ashland, Ohio 44805
419-282-6551

Embarq (formerly Sprint)
Don McCorkle
175 Ashland Road
P.O. Box 3555
Mansfield, Ohio 44907
419-755-7150

Ohio Edison Company
Diana Harvey
1717 Ashland Road
Mansfield, Ohio 44905
419-521-6190

Armstrong Utilities
Tad Sedwick
100 East 2nd Street
Ashland, Ohio 44805
419-289-0161 x. 224

BP Oil Pipeline Company
William Cook
1271 Tank Farm Road
Cygnet, Ohio 43413

Columbia Gas of Ohio
Tiffany Fritchley
920 West Goodale Blvd.
Columbus, Ohio 43212
614-460-2120

Marathon Ashland Pipeline
Dave Wisner
539 South Main St., RM 193M
Findlay, Ohio 45840
419-421-2211

Rural Lorain County Water Authority
Jim Truesdell
42401 SR 303, Box 567
LaGrange, Ohio 44050
440-355-6060

Nova Telephone Company
Walt Witmore
P.O. Box 27
Nova, Ohio 44859
419-652-3571

THE AFOREMENTIONED UTILITY COMPANIES AND AGENCIES HAVE VARIOUS FACILITIES IN THE AREA THAT WILL REMAIN IN PLACE DURING CONSTRUCTION.

INTERSECTIONS AND DRIVES

RURAL-INTERSECTIONS SHALL BE PAVED TO THE END OF THE RADII OR AS DIRECTED BY THE ENGINEER. (TO PROVIDE A SMOOTH TRANSITION BETWEEN THE TWO HIGHWAYS, AND TO ELIMINATE WATER POCKETS).

URBAN-INTERSECTIONS SHALL BE PAVED TO THE BACK OF CROSSWALKS OR AS DIRECTED BY THE ENGINEER. (TO PROVIDE A SMOOTH TRANSITION BETWEEN THE TWO HIGHWAYS, AND TO ELIMINATE WATER POCKETS).

EXISTING PAVED DRIVES SHALL BE PAVED SO AS TO PROVIDE A SMOOTH TRANSITION BETWEEN THE HIGHWAY AND THE DRIVE, (DISTANCE FROM EDGE OF ROADWAY MAY VARY AT EACH DRIVE) AS DIRECTED BY THE ENGINEER.

EXISTING AGGREGATE DRIVES SHALL BE PAVED WITH AN APRON THE WIDTH OF THE 617 BERM OR 2 FT. MINIMUM. THE SLOPE OF THIS APRON SHALL BE THE SAME AS THE ADJACENT PAVEMENT SLOPE OR AS DIRECTED BY THE ENGINEER. ITEM 617 AGGREGATE SHALL BE PLACED ADJACENT TO THIS APRON TO PROVIDE A SMOOTH TRANSITION FROM THE APRON TO THE EXISTING DRIVE, (WIDTH OF THIS 617 APPLICATION MAY VARY) AS DIRECTED BY THE ENGINEER. AN ADDITIONAL QUANTITY OF ITEM 617 HAS BEEN ESTIMATED TO COMPLETE THIS WORK AND IS SHOWN AS AN EXTRA AREA ON THE PAVEMENT & SHOULDER DATA SHEET.

ANY HAZARD OR UNSAFE CONDITION RESULTING FROM THE ABOVE WORK MUST BE CORRECTED IMMEDIATELY, AS DIRECTED BY THE ENGINEER. THE CONTRACTOR IS REMINDED OF SECTIONS 105.01, 107.07 & 614.02A OF THE CONSTRUCTION AND MATERIALS SPECIFICATIONS.

ITEM 614, ASPHALT CONCRETE FOR MAINTAINING TRAFFIC

THE FOLLOWING ESTIMATED QUANTITY HAS BEEN CARRIED TO THE GENERAL SUMMARY TO CONSTRUCT A TEMPORARY ASPHALT WEDGE FROM THE EXISTING PAVEMENT TO THE PLANED SURFACE AT BUTT JOINTS AND OTHER LOCATIONS THAT RESULT IN A DROP-OFF IN EXCESS OF 1.5 INCHES.
THIS QUANTITY SHALL ALSO BE USED AT PLANED SURFACES WHERE A TEMPORARY ASPHALT WEDGE IS NEEDED AROUND CASTINGS, AS DIRECTED BY THE ENGINEER. BEFORE THE ASPHALT CONCRETE RESURFACING IS PLACED, THE TEMPORARY WEDGE SHALL BE REMOVED AND THE COST SHALL BE CONSIDERED INCIDENTAL TO ITEM 614 ASPHALT CONCRETE FOR MAINTAINING TRAFFIC.

PART A
ITEM 614, ASPHALT CONCRETE FOR MAINTAINING TRAFFIC 50 CU YD

PART B
ITEM 614, ASPHALT CONCRETE FOR MAINTAINING TRAFFIC 50 CU YD

ITEM 614, WORK ZONE MARKING SIGN

THE FOLLOWING ESTIMATED QUANTITY HAS BEEN CARRIED TO THE GENERAL SUMMARY FOR USE AS DIRECTED BY THE ENGINEER FOR TEMPORARY WORK ZONE MARKING SIGNS PER THE REQUIREMENTS OF THE CONSTRUCTION AND MATERIALS SPECIFICATIONS, 614.04.

PART A
WORK ZONE MARKING SIGN: (W8-H13-36) NO EDGE LINE = 14 EACH
WORK ZONE MARKING SIGN: (R4-1-24) DO NOT PASS = 25 EACH
WORK ZONE MARKING SIGN: (R4-2-24) PASS WITH CARE = 23 EACH

TOTAL = 62 EACH

PART B
WORK ZONE MARKING SIGN: (W8-H13-36) NO EDGE LINE = 18 EACH
WORK ZONE MARKING SIGN: (R4-1-24) DO NOT PASS = 23 EACH
WORK ZONE MARKING SIGN: (R4-2-24) PASS WITH CARE = 22 EACH

TOTAL = 63 EACH

ITEM 614, MAINTAINING TRAFFIC (LANES OPEN DURING HOLIDAYS OR SPECIAL EVENTS)

NO WORK SHALL BE PERFORMED AND ALL EXISTING LANES SHALL BE OPEN TO TRAFFIC DURING THE FOLLOWING DESIGNATED HOLIDAYS OR EVENTS:

CHRISTMAS	FOURTH OF JULY
NEW YEARS	LABOR DAY
MEMORIAL DAY	THANKSGIVING

THE PERIOD OF TIME THAT THE LANES ARE TO BE OPEN DEPENDS ON THE DAY OF THE WEEK ON WHICH THE HOLIDAY OR EVENT FALLS. THE FOLLOWING SCHEDULE SHALL BE USED TO DETERMINE THIS PERIOD:

DAY OF THE WEEK	TIME ALL LANES MUST BE OPEN TO TRAFFIC
SUNDAY	12:00N FRIDAY THROUGH 6:00 AM MONDAY
MONDAY	12:00N FRIDAY THROUGH 6:00 AM TUESDAY
TUESDAY	12:00N MONDAY THROUGH 6:00 AM WEDNESDAY
WEDNESDAY	12:00N TUESDAY THROUGH 6:00 AM THURSDAY
THURSDAY	12:00N WEDNESDAY THROUGH 6:00 AM MONDAY
FRIDAY	12:00N THURSDAY THROUGH 6:00 AM MONDAY
SATURDAY	12:00N FRIDAY THROUGH 6:00 AM MONDAY

SHOULD THE CONTRACTOR FAIL TO MEET ANY OF THESE REQUIREMENTS, THE CONTRACTOR SHALL BE ASSESSED LIQUIDATED DAMAGES IN ACCORDANCE WITH CMS 108.07.

MAINTAINING TRAFFIC

A MINIMUM OF ONE (1) LANE OF TRAFFIC SHALL BE MAINTAINED AT ALL TIMES USING FLAGGERS EXCEPT AS NOTED IN THE STRUCTURE PLAN NOTES FOR BOTH ASD-89-16.70 AND ASD-302-0244 WHERE DETOURS ARE EXPECTED. BOTH DETOURS MAY BE PERFORMED AT THE SAME TIME.

NO DETOURS ARE ALLOWED UNTIL AFTER THE SCHOOL YEAR IS OUT WHICH IS APPROXIMATELY JUNE 6, 2008.

THE CONTRACTOR IS REQUESTED TO COOPERATE WITH LOCAL FARM OPERATIONS AND ALLOW THE FARM EQUIPMENT TO PASS THROUGH THE WORK AREAS WHICH ARE DETOURED.

ALL WORK AND TRAFFIC CONTROL DEVICES SHALL BE IN ACCORDANCE WITH CMS 614 AND OTHER APPLICABLE PORTIONS OF THE SPECIFICATIONS, AS WELL AS THE OHIO MANUAL OF UNIFORM TRAFFIC CONTROL DEVICES. PAYMENT FOR ALL LABOR, EQUIPMENT, AND MATERIALS SHALL BE INCLUDED IN THE LUMP SUM CONTRACT PRICE FOR ITEM 614, MAINTAINING TRAFFIC, UNLESS SEPARATELY ITEMIZED IN THE PLAN.

CALCULATED CVH CHECKED BAD

GENERAL NOTES

ASD-89-12.15

DESIGN FILE: I:\projects\25673\gen notest.dgn
WORKSTATION: cvanhorn DATE: 11/6/2007

ITEM 253, PAVEMENT REPAIR

THIS ITEM OF WORK SHALL CONSIST OF THE REMOVAL OF THE EXISTING PAVEMENT OR PAVED BERM WHICH MAY BE ASPHALT, BRICK, CONCRETE, OR A COMBINATION OF EACH, IN AREAS OF EXISTING PAVEMENT FAILURE.

THE ENGINEER SHALL DESIGNATE THE LOCATIONS AND LIMITS OF THE AREAS TO BE REPAIRED. PAVEMENT REPAIR SHALL BE PERFORMED AFTER PAVEMENT PLANING AND BEFORE PLACEMENT OF THE INTERMEDIATE AND/OR SURFACE COURSE. THE REPAIR AREAS SHALL BE SAW CUT AND EXCAVATED TO PROVIDE STRAIGHT AND VERTICAL SURFACES AROUND THE PERIMETER OF THE REPAIR AREA. PAVEMENT PLANING MAY BE USED AS AN ALTERNATIVE TO SAW CUTTING AND EXCAVATING. THE PAVEMENT SHALL BE REMOVED WITHIN THE DESIGNATED AREAS BY METHODS WHICH WILL NOT DAMAGE ADJACENT PAVEMENT. THE DEPTH OF REMOVAL SHALL BE SUFFICIENT TO REMOVE ALL DETERIORATED PAVEMENT WITH A MAXIMUM DEPTH OF 6", BASED ON THE PAVEMENT DESIGN AND AN AVERAGE DEPTH OF 4". THE MATERIALS REMOVED SHALL BE DISPOSED OF IN ACCORDANCE WITH 105.16 AND 105.17.

THE CONTRACTOR SHALL BE CAPABLE OF PERFORMING PAVEMENT REPAIRS 2 FEET WIDE.

AFTER REMOVAL OF THE PAVEMENT, IF THE ENGINEER DETERMINES THE SUBBASE OR SUBGRADE HAS FAILED OR IS "PUMPING", THE ENGINEER SHALL DIRECT THE CONTRACTOR TO EXCAVATE THE UNSTABLE MATERIAL AND REPLACE IT WITH ITEM 304 AGGREGATE BASE. THE MAXIMUM DEPTH OF THE EXISTING SUBBASE OR SUBGRADE REMOVED SHALL BE AS DETERMINED BY THE ENGINEER. ITEM 304 AGGREGATE BASE SHALL HAVE A MAXIMUM 4" LIFT. THE GRADE SHALL BE SLOPED SUCH THAT ANY WATER WILL DRAIN TO THE EXISTING UNDERDRAIN OR DITCH. ALL COMPACTION SHALL BE ACHIEVED BY MECHANICAL METHODS TO THE SATISFACTION OF THE ENGINEER. THE MATERIALS REMOVED SHALL BE DISPOSED OF IN ACCORDANCE WITH 105.16 AND 105.17.

AGGREGATE DRAINS OR UNDERDRAINS MAY BE NEEDED AS DIRECTED BY THE ENGINEER.

REPLACEMENT MATERIAL SHALL BE ITEM 301 OR ITEM 448, TYPE 2 MATERIAL AND SHALL BE PLACED AND COMPACTED TO FINISH FLUSH WITH THE ADJACENT PAVEMENT SURFACE. ITEM 301 CAN BE USED WHEN THE DEPTH OF THE REPAIR IS BETWEEN 3" AND 12" WITH A MAXIMUM PAVEMENT LIFT OF 6". ITEM 448 TYPE 2 CAN BE USED WHEN THE DEPTH OF THE REPAIR IS BETWEEN 0" AND 5" WITH A MAXIMUM PAVEMENT LIFT OF 3". ALL EXISTING PAVEMENT AREAS WHICH WILL BE IN CONTACT WITH THE PAVEMENT REPAIR SHALL BE CLEANED AND COATED WITH PG GRADE LIQUID ASPHALT (SIDES AND BOTTOM) AT AN APPLICATION RATE OF 0.25 GAL. PER SQ. YD. ALL COMPACTION SHALL BE ACHIEVED BY MECHANICAL METHODS TO THE SATISFACTION OF THE ENGINEER.

PAYMENT SHALL INCLUDE ALL LABOR, EQUIPMENT, AND MATERIALS NECESSARY TO COMPLETE THE PAVEMENT REPAIR. THE FOLLOWING ESTIMATED QUANTITY IS PROVIDED IN THE GENERAL SUMMARY TO BE USED AS DIRECTED BY THE ENGINEER. PAYMENT WILL BE MADE AT THE UNIT BID PRICE PER CUBIC YARD, (BY TICKET WEIGHT CONVERSION), OF ITEM 253, PAVEMENT REPAIR. THE FOLLOWING ESTIMATED QUANTITIES ARE INCLUDED IN THE GENERAL SUMMARY:

PART A
SR 89 ITEM 253 PAVEMENT REPAIR 700 CU. YD.

PART B
SR 302 ITEM 253 PAVEMENT REPAIR 800 CU. YD.

THE FOLLOWING ITEMS LISTED BELOW ARE ADDITIONAL ITEMS NOT INCLUDED IN ITEM 253. THESE ITEMS SHALL BE USED FOR THE REPAIR AND/OR REPLACEMENT OF DAMAGED SUBBASE/SUBGRADE EXPOSED DURING THE PROCESS OF ITEM 253 PAVEMENT REPAIR WORK INCLUDED IN THIS PLAN. PAYMENT WILL BE EITHER BY CHANGE ORDER OR FORCE ACCOUNT.

ITEM 203 EXCAVATION
ITEM 204 SUBGRADE COMPACTION
ITEM 304 AGGREGATE BASE
ITEM 605 6" UNCLASSIFIED PIPE UNDERDRAINS
ITEM 605 AGGREGATE DRAINS

ITEM 617, COMPACTED AGGREGATE, AS PER PLAN

THIS ITEM OF WORK SHALL CONFORM TO ITEM 617 IN THE CONSTRUCTION AND MATERIALS SPECIFICATIONS BOOK WITH EXCEPTION OF 617.02 (MATERIALS).

THE MATERIAL ON THIS PROJECT SHALL BE THE ASPHALT CONCRETE GRINDINGS RESULTING FROM ITEM 254. THE GRINDINGS USED FOR THIS WORK ARE TO BE PLACED AND COMPACTED AS DESCRIBED IN 617.05 WITH SPECIAL CARE TO CREATE PROPER COMPACTION. 100% OF THIS MATERIAL SHALL PASS A 1.5 INCH SIEVE. THE CONTRACTOR SHALL TAKE SPECIAL CARE TO MEET THE TYPICAL SECTIONS SHOWN IN THE PLANS AND AS DIRECTED BY THE ENGINEER.

SINCE THE ASPHALT CONCRETE GRINDINGS FROM THIS JOB WILL NOT BE A LARGE ENOUGH QUANTITY TO RECONDITION THE AGGREGATE SHOULDERS, THE CONTRACTOR WILL NEED TO SUPPLY THE ADDITIONAL QUANTITY FROM AN APPROVED RAP (RECLAIMED ASPHALT CONCRETE PAVEMENT) PILE OR SUPPLY ITEM 617 COMPACTED AGGREGATE, TYPE A AS SPECIFIED IN THE SPECIFICATIONS BOOK.

PAYMENT FOR ALL THE ABOVE SHALL BE INCLUDED IN THE UNIT PRICE BID PER CU. YD. OF ITEM 617 COMPACTED AGGREGATE, AS PER PLAN.

ITEM 442, ASPHALT CONCRETE INTERMEDIATE COURSE, 9.5MM, TYPE A (448), AS PER PLAN

BEFORE THE LONGITUDINAL JOINT IS EXPOSED TO TRAFFIC, THE CONTRACTOR SHALL ERECT W8-11-36 (UNEVEN LANES) SIGNS. THESE SIGNS SHALL ONLY REMAIN WHILE THE CONDITION EXISTS. PLACEMENT OF THESE SIGNS SHALL BE INCLUDED IN THE UNIT PRICE BID FOR ITEM 614 MAINTAINING TRAFFIC.

ALL OPEN TRANSVERSE JOINTS SHALL BE TAPERED TO MEET EXISTING PAVEMENT BEFORE INTRODUCING TRAFFIC.

REQUIREMENTS OF 442 APPLY EXCEPT AS FOLLOWS:
MIX DESIGN: FOR Ndes USE 50 GYRATIONS, FOR Nmax USE 75 GYRATIONS.
MINIMUM TOTAL PG BINDER CONTENT IS 6.0 PERCENT.
USE A PG 64-22 BINDER.
MAXIMUM RECLAIMED ASPHALT CONCRETE PAVEMENT IS 20 PERCENT.
QUALITY CONTROL: DO NOT PERFORM Nmax IN QUALITY CONTROL TESTING. DO NOT TAKE EXTRA ASPHALT BINDER SAMPLES AS OUTLINED IN CMS 442.05.

ITEM 442, ASPHALT CONCRETE SURFACE COURSE, 9.5 MM, TYPE A (446), AS PER PLAN

ALL LONGITUDINAL PAVEMENT JOINTS SHALL BE CLOSED BEFORE THE END OF EACH WORK DAY. BEFORE THE JOINT IS EXPOSED TO TRAFFIC, THE CONTRACTOR SHALL ERECT W8-11-36 (UNEVEN LANES) SIGNS. THESE SIGNS SHALL ONLY REMAIN WHILE THE CONDITION EXISTS. PLACEMENT OF THESE SIGNS SHALL BE INCLUDED IN THE UNIT PRICE BID FOR ITEM 614 MAINTAINING TRAFFIC.

AFTER PLACING THE SURFACE COURSE IN ONE LANE, THE LONGITUDINAL JOINT SHALL BE TACKED ON THE VERTICAL FACE PRIOR TO PLACING THE ADJACENT SURFACE COURSE. IN ADDITION TO SECTION 401.14 AND STANDARD DRAWING BP-3.1, TRANSVERSE, LONGITUDINAL, FEATHERED AND BUTT JOINTS SHALL BE SEALED WITH A 4 INCH WIDE BAND OF PG BINDER ASPHALT CEMENT AS PER 702.01 ACROSS THE TOP SURFACE. THE COST OF THIS WORK SHALL BE INCLUDED IN THE UNIT PRICE BID FOR THIS ITEM.

ALL OPEN TRANSVERSE JOINTS SHALL BE TAPERED TO MEET EXISTING PAVEMENT BEFORE INTRODUCING TRAFFIC. A "BUMP" SIGN (W8-1-36) SHALL BE ERECTED ON EACH SIDE OF TRANSVERSE JOINTS LEFT OPEN OVER NIGHT, INCLUDING A SPEED ADVISORY SIGN, AS DIRECTED BY THE ENGINEER. THESE SIGNS SHALL BE REMOVED IMMEDIATELY AFTER JOINT HAS BEEN CLOSED. PLACEMENT OF SIGNS SHALL BE INCLUDED IN THE UNIT PRICE BID FOR ITEM 614 MAINTAINING TRAFFIC.

CARE SHALL BE TAKEN TO MATCH EXISTING PAVEMENT ELEVATIONS AT EXISTING PAVED BERMS, DRIVES, INTERSECTIONS, ETC.

REQUIREMENTS OF 442 APPLY EXCEPT AS FOLLOWS:
MIX DESIGN: FOR Ndes USE 50 GYRATIONS, FOR Nmax USE 75 GYRATIONS.
MINIMUM TOTAL PG BINDER CONTENT IS 6.0 PERCENT.
USE A PG 64-22 BINDER.
MAXIMUM RECLAIMED ASPHALT CONCRETE PAVEMENT IS 20 PERCENT.
QUALITY CONTROL: DO NOT PERFORM Nmax IN QUALITY CONTROL TESTING. DO NOT TAKE EXTRA ASPHALT BINDER SAMPLES AS OUTLINED IN CMS 442.05.

ITEM 407, TACK COAT

AS PER 407.06 THE APPLICATION RATE SHALL BE 0.08 GAL. PER SQ. YD. FOR ESTIMATING PURPOSES ONLY. THE RATE OF APPLICATION SHALL BE SUBJECT TO ADJUSTMENT AS DIRECTED BY THE ENGINEER. A COMPLETE PAVEMENT SURFACE COVERAGE SHALL BE EQUIRED. AREAS OF TACK STRIPPED BY CONSTRUCTION EQUIPMENT OR TRAFFIC SHALL BE RE-COATED PRIOR TO PLACING ASPHALT CONCRETE. ALL COSTS AS DESCRIBED ABOVE SHALL BE INCLUDED IN THE UNIT PRICE BID PER GALLON FOR ITEM 407, TACK COAT.

ABANDONMENT OF MONITORING WELL

AN ABANDONED GROUND WATER MONITORING WATER WELL IS PRESENT IN THE WESTBOUND LANE OF STATE ROUTE 302 NEAR THE STATE ROUTE 58 INTERSECTION, AS INDICATED ON SHEET 9. THIS WELL SHALL BE ABANDONED IN ACCORDANCE WITH THE OHIO DEPARTMENT OF NATURAL RESOURCES (ODNR) TECHNICAL GUIDELINES FOR SEALING UNUSED WELLS (APPENDIX 4, SEALING MONITORING WELLS AND BOREHOLES).

THE CONTRACTOR SHALL FURNISH ALL LABOR AND EQUIPMENT NECESSARY TO PERFORM THE ABOVE WORK SHALL BE INCLUDED IN THE UNIT PRICE BID PER EACH:

ITEM SPECIAL - GROUND WATER MONITORING WELL ABANDONMENT

COOPERATION BETWEEN CONTRACTORS

THE CONTRACTOR IS ADVISED OF THE PRESENCE OF POSSIBLY ONE (1) OTHER CONSTRUCTION CONTRACT WITHIN OR IN THE VICINITY OF THE WORK LIMITS OF THIS PROJECT AND 105.08 COOPERATION BETWEEN CONTRACTORS IS REQUIRED. THE PROJECT THAT MAY BE UNDER CONSTRUCTION AT THE SAME TIME IS ASD-604-0.00 PID 25671 A TWO LANE RESURFACING WITH BRIDGE WORK WHICH REQUIRES A DETOUR FOR SOME BRIDGE WORK.

ITEM 604 - CASTINGS ADJUSTED TO GRADE

ANY UNIT OF THIS ITEM MAY BE NON-PERFORMED IF SO DIRECTED BY THE ENGINEER AND THE SURFACE SHALL BE FEATHERED TO MEET THE EXISTING CASTING OR INLET IN A MANNER ACCEPTABLE TO THE ENGINEER. ALL ADJUSTING RINGS SHALL HAVE THE ENGINEER'S APPROVAL BEFORE USING. HOWEVER, IF A UNIT IS THE ADJUSTABLE FRAME TYPE AND CAN BE ADJUSTED USING THE EXISTING FRAME, THEN THE CONTRACTOR IS ONLY ALLOWED TO ADJUST THE FRAME.

UNDER ITEM 604.03, ADJUSTMENT TO GRADE, PARAGRAPH (I), THE CASTING TO

BE ADJUSTED MAY OR MAY NOT HAVE AN EXISTING FRAME. THE WORK SHALL CONSIST OF ADJUSTING THE EXISTING CASTING TO THE SATISFACTION OF THE ENGINEER. IT IS NOT INTENDED TO PLACE NEW FRAMES WHERE NONE CURRENTLY EXIST. THE CONTRACTOR IS REMINDED TO FIELD CHECK ALL ADJUSTMENT TO GRADE ITEMS PRIOR TO BIDDING, AS NO ADDITIONAL COMPENSATION WILL BE GRANTED FOR LABOR AND MATERIALS REQUIRED TO SATISFACTORILY ADJUST CASTINGS WITHOUT FRAMES.

ADJUST VALVE BOXES TO GRADE AS PER ITEM 638.18 IN THE CMS.

ITEM 604 - MONUMENT BOX ADJUSTED TO GRADE

ANY UNIT OF THIS ITEM MAY BE NON-PERFORMED IF SO DIRECTED BY THE ENGINEER AND THE SURFACE SHALL BE FEATHERED TO MEET THE EXISTING CASTING OR INLET IN A MANNER ACCEPTABLE TO THE ENGINEER. ALL ADJUSTING RINGS SHALL HAVE THE ENGINEER'S APPROVAL BEFORE USING. HOWEVER, IF A UNIT IS THE ADJUSTABLE FRAME TYPE AND CAN BE ADJUSTED USING THE EXISTING FRAME, THEN THE CONTRACTOR IS ONLY ALLOWED TO ADJUST THE FRAME.

UNDER ITEM 604.03, ADJUSTMENT TO GRADE, PARAGRAPH (I), THE CASTING TO BE ADJUSTED MAY OR MAY NOT HAVE AN EXISTING FRAME. THE WORK SHALL CONSIST OF ADJUSTING THE EXISTING CASTING TO THE SATISFACTION OF THE ENGINEER. IT IS NOT INTENDED TO PLACE NEW FRAMES WHERE NONE CURRENTLY EXIST. THE CONTRACTOR IS REMINDED TO FIELD CHECK ALL ADJUSTMENT TO GRADE ITEMS PRIOR TO BIDDING, AS NO ADDITIONAL COMPENSATION WILL BE GRANTED FOR LABOR AND MATERIALS REQUIRED TO SATISFACTORILY ADJUST CASTINGS WITHOUT FRAMES.

BRIDGE ROADWAY APPROACH WORK

THE FOLLOWING QUANTITIES ARE REQUIRED FOR THE WORK AS SHOWN IN THE STRUCTURE SUMMARY SHEET:

ASD-302-0089
ITEM 254 PAVEMENT PLANING, ASPHALT CONCRETE (1.50" DEEP) 403 SQ YD
THE TACK COAT AND SURFACE COURSE ARE INCLUDED IN THE PAVEMENT AND SHOULDER DATA SHEET.

ASD-302-0244
ITEM 254 PAVEMENT PLANING, ASPHALT CONCRETE 667 SQ YD
ITEM 442 ASPHALT CONCRETE INTERMEDIATE COURSE, 9.5MM, TYPE A(448), AS PER PLAN 26 CU YD

ITEM 407 TACK COAT FOR INTERMEDIATE COURSE 20 GALLONS
THE TACK COAT AND SURFACE COURSE ARE INCLUDED IN THE PAVEMENT AND SHOULDER DATA SHEET.

ASD-302-0563
ITEM 254 PAVEMENT PLANING, ASPHALT CONCRETE 392 SQ YD
THE TACK COAT AND SURFACE COURSE ARE INCLUDED IN THE PAVEMENT AND SHOULDER DATA SHEET.

PROJECT INTERIM COMPLETION DATES

THE CONTRACTOR HAS BEEN PROVIDED A WINDOW OF TIME FOR THIS PROJECT. THE CONTRACT MAY BEGIN ANYTIME AFTER THE NOTICE TO PROCEED DATE AND MUST BE COMPLETED WITHIN THE 60 CONSECUTIVE CALENDAR DAYS OR BY THE COMPLETION DATE IN THE PROPOSAL, WHICHEVER COMES FIRST. ONCE THE CONTRACTOR BEGINS WORK, THE CONTRACTOR HAS 60 CONSECUTIVE CALENDAR DAYS TO COMPLETE ALL WORK SPECIFIED IN THIS PROJECT.

THE 60 CONSECUTIVE CALENDAR DAYS SHALL BE CONSIDERED AS AN INTERIM COMPLETION DATE. THE CONTRACTOR SHALL BE ASSESSED LIQUIDATED DAMAGES IN THE AMOUNT OF $1500 FOR EACH CALENDAR DAY THAT THE ROADWAY REMAINS UNDER CONSTRUCTION BEYOND THE 60 CONSECUTIVE CALENDAR DAY LIMIT.

GENERAL NOTES

1. IT IS INTENDED THAT THIS DRAWING BE USED FOR TREATMENT OF DROP-OFFS THAT DEVELOP DURING CONSTRUCTION OPERATONS, AND THAT ARE NOT OTHERWISE PROVIDED FOR IN THE CONSTRUCTION PLANS. THE SUGGESTED TREATMENTS ARE INTENDED FOR HIGH VOLUME PROJECTS THAT WILL LAST AT LEAST SEVEN DAYS AND HAVE AN ACTIVE WORK ZONE 1 MILE (1.6 KM) OR LESS IN LENGTH. FOR GUIDANCE ON THE USE OF THIS SHEET, SEE THE TRAFFIC ENGINEERING MANUAL. WHERE THE PLANS DO NOT PROVIDE SPECIFIC ITEMS FOR LABOR, EQUIPMENT, OR MATERIALS TO IMPLEMENT THE DROP-OFF TREATMENTS SPECIFIED HERON, THEY SHALL BE INCLUDED FOR PAYMENT IN THE LUMP SUM BID FOR ITEM 614-MAINTAINING TRAFFIC.
2. WHILE THE NEED FOR CERTAIN ADVISORY SIGNING IS NOTED HERON, IT IS NOT INTENDED THAT THIS BE INDICATIVE OF ALL SIGNING THAT MAY BE REQUIRED TO ADVISE OR WARN MOTORISTS. ALL REQUIREMENTS OF THE OHIO MANUAL OF UNIFORM TRAFFIC CONTROL DEVICES (OMUTCD) MUST BE FULFILLED.
3. IN URBAN OR OTHERWISE HEAVILY DEVELOPED AREAS WHERE PEDESTRIANS AND/OR BICYCLISTS MAY BE PRESENT IN SIGNIFICANT NUMBERS, ADDITIONAL SIGNING AND PROTECTIVE MEASURES OTHER THAN THOSE SHOWN HEREON MAY BE REQUIRED.
4. THE DROP-OFF TREATMENT SELECTED FOR USE AT ANY GIVEN LOCATION SHALL BE AS APPROPRIATE FOR THE PREVAILING CONDITIONS AT THE SITE.
5. WHERE CONCRETE BARRIER IS SPECIFIED, IT SHALL BE IN ACCORDANCE WITH SCD RM-4.2 AND ITEM 622.
6. WHEN DRUMS ARE SPECIFIED FOR A DROP-OFF CONDITION, A MINIMUM NUMBER OF FOUR DRUMS SHALL BE USED. SPACING SHALL BE AS INDICATED IN THE PLANS OR AS SPECIFIED IN THE OMUTCD.
7. WHEN OW-151 (LOW SHOULDER) SIGNS OR OW-155 (SHOULDER DROP-OFF) SIGNS OR OW-171 (UNEVEN LANES) SIGNS ARE REQUIRED, THEY SHALL BE PLACED 750' (250 M) IN ADVANCE OF THE CONDITION, ON ALL INTERSECTING ENTRANCE RAMPS WITHIN THE LIMITS OF THE CONDITION AND IMMEDIATELY BEYOND ALL INTERSECTING ROADWAYS WITHIN THE LIMITS OF THE CONDITION. WHEN THE DROP-OFF CONDITION EXTENDS MORE THAN 0.5 MILE (800M), ADDITIONAL SIGNS SHOULD BE ERECTED AT INTERVALS OF 1.0 MILE (1600 M) OR LESS.
8. FOR LOCATIONS, SUCH AS AT RAMPS, LANE SHIFTS, LANE CLOSURES, ETC., WHERE TRAFFIC IS REQUIRED TO NEGOTIATE A DIFFERENCE IN ELEVATION BETWEEN PAVEMENTS, A 3:1 SLOPE TREATMENT SIMILAR TO THE OPTIONAL WEDGE TREATMENT SHALL BE PROVIDED.
9. PORTABLE CONCRETE BARRIER SHALL BE PLACED ON THE SAME LEVEL AS THE TRAFFIC SURFACE AND SHALL NOT ENCROACH ON LANE WIDTH(S) DESIGNATED AS THE MINIMUM REQUIRED FOR TRAFFIC USE. WHERE DRUMS ARE USED, AND THEIR PRESENCE WOULD REDUCE TRAVELED LANE WIDTHS TO LESS THAN 10' (3.0M), DRUMS MAY BE PLACED ON THE OPPOSITE LEVEL FROM THAT OF TRAFFIC PROVIDED THE DROP-OFF DEPTH DOES NOT EXCEED 5" (125) AND APPROVAL IS GRANTED BY THE PROJECT ENGINEER.
10. PAVEMENT REPAIRS (OR SIMILAR WORK):
    A. LENGTHS GREATER THAN 60' (18 M) - UTILIZE APPROPRIATE TREATMENT FROM CONDITION 1.
    B. LENGTHS OF 60' (18 M) OR LESS - REPAIRS SHALL BE EFFECTED IN ACCORDANCE WITH CMS 255.08. DRUMS MAY BE USED AS A SEPARATOR ADJACENT TO THE TRAVELED LANE.

OPTIONAL WEDGE TREATMENT

(MILLING OR RESURFACING)

1. THIS TREATMENT MAY BE USED WHEN PERMITTED FOR CONDTION 1 ONLY.
2. OW-171 SIGN REQUIRED

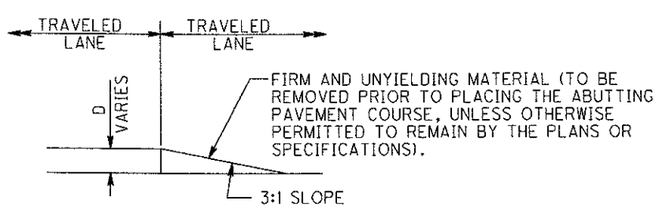

CONDITION I

DROP-OFFS BETWEEN TRAVELED LANES

1. THESE TREATMENTS ARE TO BE USED FOR RESURFACING, PAVEMENT PLANING, EXCAVATION, ETC. BETWEEN OR WITHIN TRAVELED LANES.

D	TREATMENT
≤1½" (<40)	ERECT OW-171 SIGN
>1½"-3" (40-75)	1. LANE CLOSURE UTILIZING DRUMS* AS SHOWN BELOW OR 2. OPTIONAL WEDGE TREATMENT
>3"-5" (>75-125)	LANE CLOSURE UTILIZING DRUMS AS SHOWN BELOW
>5" (>125)	LANE CLOSURE UTILIZING PORTABLE CONCRETE BARRIER AS SHOWN BELOW

* CONES MAY BE USED FOR DAYTIME ONLY CONDITIONS

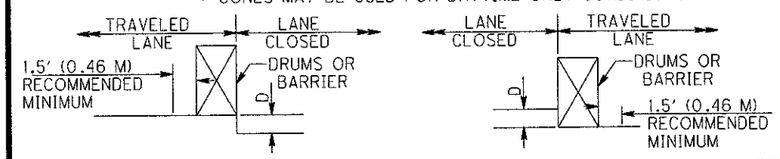

CONDITION II

DROP-OFFS WITHIN GRADED SHOULDER AREA

THE TREATMENTS INDICATED BELOW ARE FOR USE IN CONJUNCTION WITH RESURFACING, PLANING, OR EXCAVATIONS WITHIN THE GRADED SHOULDER AREA.

THE GRADED SHOULDER AREA IS THAT FLAT OR GRADUALLY SLOPING AREA BETWEEN THE EDGE OF A NORMALLY TRAVELED LANE AND THE MORE STEEPLY SLOPING DITCH FORESLOPE OR EMBANKMENT SLOPE. ITS SURFACE MAY BE SOIL OR TURF, AND/OR IT MAY BE INCLUSIVE OF A "TREATED" AREA (IMPROVED WITH MAXIMUM WIDTH SHALL BE CONSIDERED TO BE 12' (3.6 M).

D	TREATMENT
≤1½" (<40)	ERECT OW-155 SIGNS
>1½"-5" (>40-125)	1. IF MINIMUM LANE WIDTH* REQUIREMENTS CAN BE MET, MAINTAIN LANES UTILZING DRUMS AS SHOWN BELOW OR 2. IF MINIMUM LANE WIDTH* REQUIREMENTS CANNOT BE MET, CLOSE ADJACENT LANE UTILIZING DRUMS OR 3. OPTIONAL SHOULDER TREATMENT
>5"-12" (>125-305) DAYLIGHT ONLY	IF MINIMUM LANE WIDTH* REQUIREMENTS CAN BE MET, MAINTAIN LANES UTILIZING DRUMS AS SHOWN BELOW.
>5"-24" (>125-610)	1. IF MINIMUM LANE WIDTH* REQUIREMENTS CAN BE MET, MAINTAIN LANES UTILIZING PORTABLE CONCRETE BARRIER AS SHOWN BELOW. OR 2. IF MINIMUM LANE WIDTH* REQUIREMENTS CANNOT BE MET, CLOSE ADJACENT LANE UTILIZING DRUMS.
>5"-24" (>125-610)	LANE CLOSURE UTILIZING PORTABLE CONCRETE BARRIER AS SHOWN BELOW

*MINIMUM LANE WIDTHS SHALL BE 10' (3.0 M) UNLESS OTHERWISE SPECIFIED IN THE PLANS.

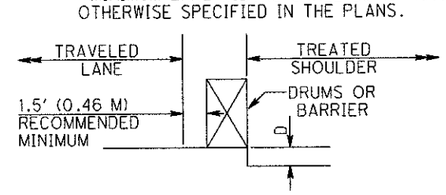

OPTIONAL SHOULDER TREATMENT

1. THIS TREATMENT MAY NOT BE USED WITHIN A BITUMINOUS SHOULDER WHERE A HOT LONGITUDINAL JOINT PER CMS 401.15 IS REQUIRED.
2. OW-151 SIGNS REQUIRED.

CONDITION III

DROP-OFFS BEYOND GRADED SHOULDER OR BACK OF CURB

1. SEE NOTE 2 UNDER CONDITION II.
2. USE CHART A OR B BELOW, AS APPLICABLE.

CHART A

USE FOR:
1. UNCURBED FACILITIES.
2. CURBED FACILITIES, WHERE:
   A. CURBS ARE LESS THAN 6" (150) IN HEIGHT.
   B. CURBS ARE 6" (150) OR GREATER IN HEIGHT AND THE LEGAL SPEED IS GREATER THAN 40 MPH (70 KM/H)

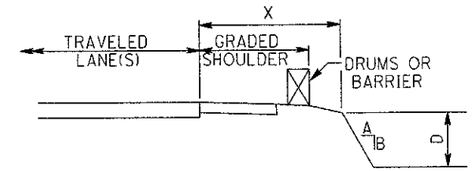

X	D	A/B	Treatment Required	
			Day	Night
0-4' (0-1.2 M)	ANY	ANY	(A)	(A)
4'-30' (1.2 M-9.1 M)	ANY	3:1 OR FLATTER	NONE	NONE
4'-12' (1.2 M-3.6 M)	≤3" (≤75)	STEEPER THAN 3:1	NONE	NONE
4'-12' (1.2 M-3.6 M)	>3"-<12" (>75-<305)	STEEPER THAN 3:1	DRUMS	DRUMS
4'-12' (1.2 M-3.6 M)	>12" (>305)	STEEPER THAN 3:1	DRUMS	BARRIER
>12'-20' (>3.6 M-6.1 M)	>12" (>305)	STEEPER THAN 3:1	NONE	NONE
>12'-20' (>3.6 M-6.1 M)	>12"-<24" (>305-<610)	STEEPER THAN 3:1	DRUMS	DRUMS
>12'-20' (>3.6 M-6.1 M)	>24" (>610)	STEEPER THAN 3:1	DRUMS	BARRIER
>20'-30' (>6.1 M-9.1 M)	<24" (<610)	STEEPER THAN 3:1	NONE	NONE
>20'-30' (>6.1 M-9.1 M)	>24" (>610)	STEEPER THAN 3:1	DRUMS	BARRIER
>30' (>9.1 M)	ANY	ANY	NONE	NONE
(A) USE TREATMENT SPECIFIED UNDER CONDITION II				

CHART B

USE FOR: CURBED FACILITIES, WHERE THE CURB IS 6" (150) OR GREATER IN HEIGHT AND THE LEGAL SPEED IS 40 MPH (70 KM/H) OR LESS.

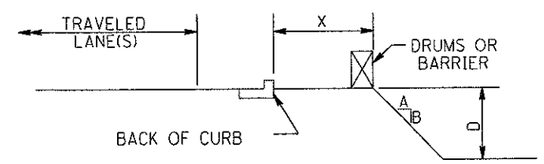

X	D	A/B	TREATMENT REQUIRED	
			DAY	NIGHT
0-10' (0-3.0 M)	<12" (<305)	ANY	NONE	DRUMS
0-10' (0-3.0 M)	>12" (>305)	ANY	DRUMS	DRUMS
>10' (>3.0 M)	ANY	ANY	NONE	NONE

NOTE: ALL METRIC DIMENSIONS (IN BRACKETS ( )) ARE IN MILLIMETERS UNLESS OTHERWISE NOTED.

08-07-01

DROP-OFFS IN WORK ZONES

OFFICE OF TRAFFIC ENGINEERING

ASD-89-12.15

DESIGN FILE: i:\projects\25673\drop offs.dgn
WORKSTATION: cvanhorn DATE: 11/2/2007

ITEM SPECIAL, MAILBOX SUPPORT SYSTEM

THIS ITEM OF WORK SHALL CONSIST OF THE REMOVAL OF EXISTING NON-STANDARD MAILBOX SUPPORTS AND FURNISHING AND ERECTING MAILBOX SUPPORTS AND ANY ASSOCIATED HARDWARE IN ACCORDANCE WITH THE DETAILS SHOWN, AND ATTACHING AN OWNER SUPPLIED MAILBOX, AT LOCATIONS DETERMINED BY THE ENGINEER.

IN ABSENCE OF A NEW BOX SUPPLIED BY THE OWNER THE CONTRACTOR SHALL SALVAGE THE EXISTING BOX AND PLACE IT ON THE NEW SUPPORT. DUE CARE SHALL BE EXERCISED IN SUCH AN OPERATION, THE CONTRACTOR SHALL BE RESPONSIBLE FOR REPAIRING OR REPLACING ANY BOX DAMAGED BY IMPROPER HANDLING, AS JUDGED AND DIRECTED BY THE ENGINEER.

THE BOX SHALL BE SECURELY AND NEATLY ATTACHED BY THE CONTRACTOR TO THE NEW SUPPORT. THE CONTRACTOR SHALL SUPPLY ALL NECESSARY ATTACHMENT HARDWARE (NUTS, BOLTS, PLATES, SPACERS AND WASHERS) AS NECESSARY TO ACCOMODATE THE COMPLETE INSTALLATION. SUPPORT HARDWARE SHALL ACCOMODATE EITHER A SINGLE OR A DOUBLE MAILBOX INSTALLATION, AND NO MORE THAN TWO MAILBOXES MAY BE MOUNTED ON A SINGLE POST. [HARDWARE SHALL BE COMMERCIAL GRADE GALVANIZED STEEL.]

WOOD POSTS SHALL BE NOMINAL 4 IN. x 4 IN. (S4S) OR 4½IN. DIAMETER ROUND, AND CONFORM TO 710.14. STEEL POSTS SHALL BE NOMINAL PIPE SIZE 2 IN. I.D., AND CONFORM TO AASHTO M 181.

POSTS SHALL BE SET AS PER THE FIRST PARAGRAPH OF 606.03, AND SHALL IN NO INSTANCE BE ENCASED IN CONCRETE.

THE CONTRACTOR SHALL BE RESPONSIBLE FOR COORDINATING WORK WITH THE LOCAL POST MASTER AND NOTIFYING THE PROPERTY OWNERS PRIOR TO WORK.

GROUP MAILBOX SUPPORTS SHALL BE PLACED ON 3 FT. CENTERS AND THE TURNOUT LENGTHENED TO ACCOMODATE THE GROUPING.

WHERE GUARDRAIL EXISTS, MAILBOXES AND THEIR SUPPORTS SHALL BE PLACED BEHIND THE GUARDRAIL. SUPPORTS MUST STILL MEET THE BREAKAWAY REQUIREMENTS LISTED ABOVE.

THE FOLLOWING ESTIMATED QUANTITIES HAVE BEEN CARRIED TO THE GENERAL SUMMARY TO BE USED AS DESCRIBED ABOVE.

ITEM SPECIAL-MAILBOX SUPPORT SYSTEM, SINGLE	
PART A - S.R. 89	1 EACH
PART B - S.R. 302	9 EACH
ITEM SPECIAL-MAILBOX SUPPORT SYSTEM, DOUBLE	
PART A - S.R. 89	3 EACH
PART B - S.R. 302	0 EACH

MAILBOX APPROACHES

THE MAILBOX APPROACHES ON SR 89 SHALL BE PAVED WITH 1.50" ITEM 442 SURFACE COURSE AND MAILBOX APPROACHES ON SR 302 SHALL BE PAVED WITH 1.50" ITEM 448 SURFACE COURSE. THEY SHALL CONFORM AS MUCH AS PRACTICAL TO STANDARD DRAWING BP-4.1 OR AS DIRECTED BY THE ENGINEER.

GRADING SHALL BE PERFORMED IN THESE AREAS TO OBTAIN A BASE WHICH WILL ALLOW THE FINISHED GRADE TO BE FLUSH WITH ADJACENT PAVEMENT. A QUANTITY OF ITEM 617 COMPACTED AGGREGATE, TYPE A, AS PER PLAN HAS BEEN PROVIDED FOR AREAS WHERE THE SHOULDER IS LOW PRIOR TO GRADING AND/OR LOW AREAS CAUSED BY THE REMOVAL OF UNSUITABLE MATERIAL. QUANTITIES TO PERFORM THIS WORK HAVE BEEN INCLUDED IN THE GENERAL SUMMARY AND ARE ESTIMATED AS FOLLOWS.

ITEM 209 - GRADING MAILBOX APPROACHES	
PART A - S.R. 89	59 EACH
PART B - S.R. 302	48 EACH
ITEM 617 - COMPACTED AGGREGATE, AS PER PLAN	
PART A - S.R. 89	708 CU YD
PART B - S.R. 302	576 CU YD

FOR DETAILS NOT SHOWN SEE STANDARD DRAWING BP-4.1

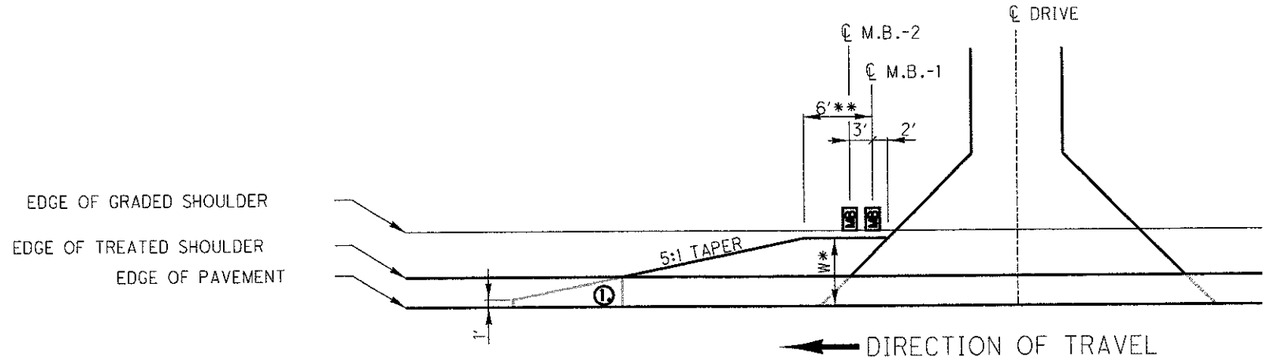

(1) END MAILBOX TURNOUT AT EDGE OF TREATED SHOULDER OR 1' WHICH EVER IS GREATER.

W* NOTES
1) WHERE EXISTING STANDARD MAILBOX POSTS ARE BEHIND GUARDRAIL AND ARE TO REMAIN IN PLACE, TURNOUT WIDTH SHALL EXTEND TO FACE OF GUARDRAIL.
2) WHERE NO GUARDRAIL IS REQUIRED, TURNOUT WIDTH SHALL EXTEND TO FACE OF EXISTING STANDARD MAILBOX WITH MAILBOX REMAINING IN PLACE.
3) IF THE MAILBOX IS SPECIFIED TO BE REMOVED AND REERECTED OR REPLACED, WHERE GUARDRAIL IS REQUIRED, TURNOUT WIDTH SHALL EXTEND TO FACE OF GUARDRAIL AND MAILBOX SHALL BE INSTALLED BEHIND THE GUARDRAIL.
4) IF THE MAILBOX IS SPECIFIED TO BE REMOVED AND REERECTED OR REPLACED, WHERE NO GUARDRAIL IS REQUIRED, TURNOUT WIDTH SHALL BE 6 FT. MINIMUM, EXCEPT WHERE FIELD CONDITIONS WILL NOT PERMIT.

** NOTE
1) 6' FOR SINGLE MAILBOX SUPPORT, ADD 3 FT. FOR EACH ADDITIONAL MAILBOX.

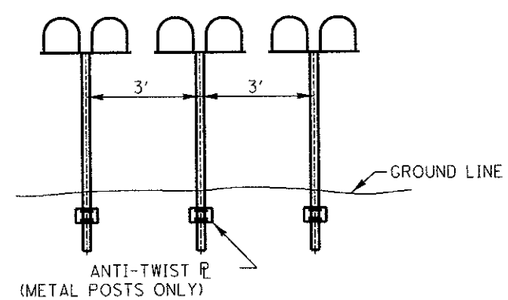

GROUP MAILBOX INSTALLATION

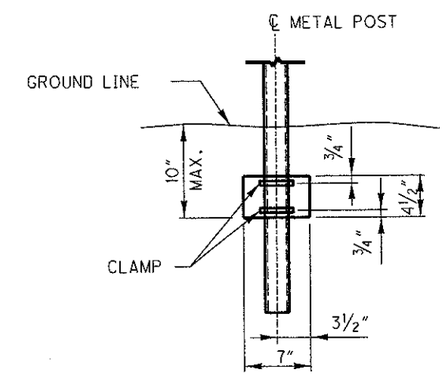

ANTI-TWIST PLATE

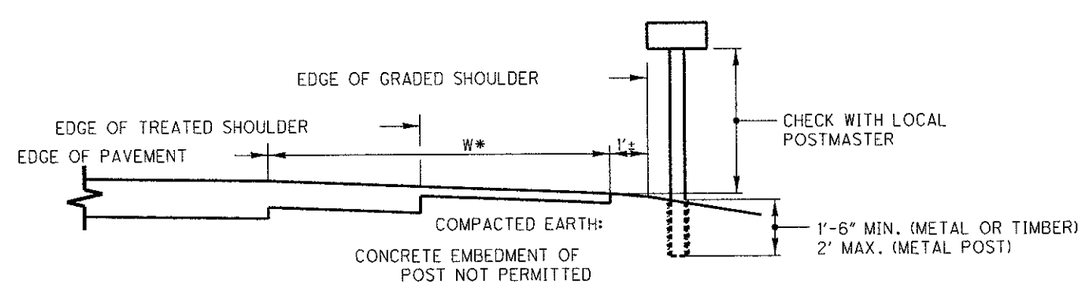

CROSS SECTION / ELEVATION VIEW

CALCULATED CVH CHECKED BAD

MAILBOX FACILITIES

ASD-89-12.15

DESIGN FILE: I:\projects\25673\mailbox.dgn
WORKSTATION: cvanhorn DATE: 11/2/2007

SHEET NUMBER										OFFICE CALCS	ITEM	ITEM EXT.	TOTAL	UNIT	DESCRIPTION	REF. SHEET
4	6	9	12	13	24	25	27	29	54							
															ROADWAY	
					LUMP						201	11000	LUMP		CLEARING AND GRUBBING	
							1				202	20010	1	EACH	HEADWALL REMOVED	
			482								202	30001	482	SQ FT	WALK REMOVED, AS PER PLAN	12
							60				202	35100	60	FT	PIPE REMOVED, 24" AND UNDER	
							16				202	35600	16	FT	PIPE REMOVED FOR REUSE, OVER 24"	
							215				202	38000	215	FT	GUARDRAIL REMOVED	
				14			2				202	42000	16	EACH	ANCHOR ASSEMBLY REMOVED, TYPE A	
								37			203	10000	37	CU YD	EXCAVATION	
								195			203	20000	195	CU YD	EMBANKMENT	
				230							203	20001	230	CU YD	EMBANKMENT, AS PER PLAN	14
										87	204	10000	87	SQ YD	SUBGRADE COMPACTION	
				40.13							209	15001	40.13	STA	RESHAPING UNDER GUARDRAIL, AS PER PLAN	14
		30.48									209	60500	30.48	MILE	LINEAR GRADING	
	107										209	80000	107	EACH	GRADING MAILBOX APPROACHES	
		11							2		604	39500	13	EACH	MONUMENT BOX ADJUSTED TO GRADE	
				2800			300				606	13000	3100	FT	GUARDRAIL, TYPE 5	
				14			1				606	22010	15	EACH	ANCHOR ASSEMBLY, TYPE E-98	
				4			1				606	26500	5	EACH	ANCHOR ASSEMBLY, TYPE T	
			482								608	52001	482	SQ FT	CURB RAMP, AS PER PLAN	12
		300									618	40101	300	FT	RUMBLE STRIPS, (ASPHALT CONCRETE), AS PER PLAN	11
	10						1				SPECIAL	69050100	11	EACH	MAILBOX SUPPORT SYSTEM, SINGLE	6
	3										SPECIAL	69050200	3	EACH	MAILBOX SUPPORT SYSTEM, DOUBLE	6
							1				SPECIAL	69050350	1	EACH	MAILBOX REMOVED AND RESET	25
		1									SPECIAL	69065300	1	EACH	GROUND WATER MONITORING WELL ABANDONMENT	4
															EROSION CONTROL	
						2					659	00100	2	EACH	SOIL ANALYSIS TEST	
						80					659	00300	80	CU YD	TOPSOIL	
						720					659	10000	720	SQ YD	SEEDING AND MULCHING	
						36					659	14000	36	SQ YD	REPAIR SEEDING AND MULCHING	
						36					659	15000	36	SQ YD	INTER-SEEDING	
						0.1					659	20000	0.10	TON	COMMERCIAL FERTILIZER	
						0.2					659	31000	0.20	ACRE	LIME	
						4					659	35000	4	M. GAL	WATER	
							11				670	00700	11	SQ YD	DITCH EROSION PROTECTION	
															DRAINAGE	
							37				603	04600	37	FT	12" CONDUIT, TYPE C	
							40				603	06400	40	FT	15" CONDUIT, TYPE D	
							16				603	20700	16	FT	48" CONDUIT, TYPE A, 706.02	
		1									604	09000	1	EACH	CATCH BASIN ADJUSTED TO GRADE	

CALC'D | CHK | CHECKED | MJS

GENERAL SUMMARY

ASD-89-12.15

SHEET NUMBER									OFFICE CALCS	ITEM	ITEM EXT.	TOTAL	UNIT	DESCRIPTION	REF. SHEET
3	4	6	9		13	22		27							
														PAVEMENT	
	1500									253	02000	1500	CU YD	PAVEMENT REPAIR	
	403		1314							254	01000	1717	SQ YD	PAVEMENT PLANING, ASPHALT CONCRETE (1.50")	
	1059									254	01000	1059	SQ YD	PAVEMENT PLANING, ASPHALT CONCRETE	
									35	304	20000	35	CU YD	AGGREGATE BASE	
			17874						7	407	10000	17881	GALLON	TACK COAT	
	20									407	14000	20	GALLON	TACK COAT FOR INTERMEDIATE COURSE	
			14629							408	10000	14629	GALLON	PRIME COAT	
			9310						5	442	00201	9315	CU YD	ASPHALT CONCRETE SURFACE COURSE, 9.5MM, TYPE A (446), AS PER PLAN	4
	26									442	20101	26	CU YD	ASPHALT CONCRETE INTERMEDIATE COURSE, 9.5MM, TYPE A (448), AS PER PLAN	4
		1284	1524							617	10101	2808	CU YD	COMPACTED AGGREGATE, AS PER PLAN	4
			36573							617	20000	36573	SQ YD	SHOULDER PREPARATION	
														MAINTENANCE OF TRAFFIC	
125										614	12460	125	EACH	WORK ZONE MARKING SIGN	
100										614	13000	100	CU YD	ASPHALT CONCRETE FOR MAINTAINING TRAFFIC	
						15.30				614	21500	15.3	MILE	WORK ZONE CENTER LINE, CLASS II, 642 PAINT	
														TRAFFIC CONTROL	
						657				202	54000	657	EACH	RAISED PAVEMENT MARKER REMOVED	
						657				621	00100	657	EACH	RPM	
					103			5		626	00100	108	EACH	BARRIER REFLECTOR, TYPE A	
						30.60				642	00100	30.60	MILE	EDGE LINE, TYPE 1	
						15.30				642	00300	15.30	MILE	CENTER LINE, TYPE 1	
						620				644	00500	620	FT	STOP LINE	
						454				644	00600	454	FT	CROSSWALK LINE	
						4				644	01000	4	EACH	RAILROAD SYMBOL MARKING	
														STRUCTURE ASD-89-1670 SFN 0303704	
														SEE STRUCTURE SUMMARY ON SHEET 42	
														STRUCTURE ASD-302-0089 SFN 0305197	
														SEE STRUCTURE SUMMARY ON SHEET 42	
														STRUCTURE ASD-302-0154 SFN 0305235	
														SEE STRUCTURE SUMMARY ON SHEET 42	
														STRUCTURE ASD-302-0244 SFN 0305278	
														SEE STRUCTURE SUMMARY ON SHEET 42	
														STRUCTURE ASD-302-0563 SFN 0305294	
														SEE STRUCTURE SUMMARY ON SHEET 42	
										614	11000	LUMP		MAINTAINING TRAFFIC	
										619	16010	2	MONTH	FIELD OFFICE, TYPE B	
										623	10000	LUMP		CONSTRUCTION LAYOUT STAKES	
										624	10000	LUMP		MOBILIZATION	

CALC'D CVH
CHECKED MJS

GENERAL SUMMARY

ASD-89-12.15

* - FOR TYPICALS, SEE SHEETS 10

PART	ROUTE	LOG POINT TO LOG POINT (STRAIGHT LINE MILEAGE)		LENGTH MILE	LENGTH FEET	WIDTH FEET AVG.	* TYPICAL	PAVEMENT AREA (SQ YD)	254 PAVEMENT PLANING, ASPHALT CONCRETE (1.50") (SQ YD)	407 TACK COAT @ 0.08 GAL/SY (GALLON)	442 ASPHALT CONCRETE SURFACE COURSE, 9.5MM, TYPE A (446), AS PER PLAN (INCH)	442 (CU.YD.)	618 RUMBLE STRIPS, (ASPHALT CONCRETE), AS PER PLAN (FT)	604 MONUMENT BOX ADJUSTED TO GRADE (EACH)	604 CATCH BASIN ADJUSTED TO GRADE (EACH)	SPECIAL GROUND WATER MONITORING WELL ABANDONMENT (EACH)	209 LINEAR GRADING (MILE)	AGGREGATE SHOULDER PROPOSED WIDTH SL (FT)	AGGREGATE SHOULDER PROPOSED WIDTH SR (FT)	AGGREGATE SHOULDER AREA (SQ YD)	408 PRIME COAT @ 0.40 GAL/SY (GALLON)	617 COMPACTED AGGREGATE, AS PER PLAN 1.5 INCHES AVG. THICKNESS (CU YD)	617 SHOULDER PREPARATION (SQ.YD)
A	SR 89	12.15	12.35	0.20	1056	32.0	1	3755		300	1.5	156	300				0.40	2	2	469	188	20	469
		12.35	15.14	2.79	14731	24.0	1	39283		3143	1.5	1637					5.58	2	2	6547	2619	273	6547
		15.14	15.15	0.01	53	32.0	2	188	188	15	1.5	8											
		15.15	15.17	0.02	106	36.0	2	422	422	34	1.5	18											
		15.17	15.57	0.40	2112	27.0	1	6336		507	1.5	264					0.80	2	2	939	375	39	939
		15.57	18.60	3.03	15998	26.0	1	46218		3697	1.5	1926		9			6.06	2	2	7110	2844	296	7110
	EXTRA AREA FOR INTERS., DRIVES, + MAILBOXES							2418		193	1.5	101											
	EXTRA AREA FOR UNPAVED DRIVES																			654	262	27	654
B	SR 302	0.00	8.82	8.82	46569.6	23.5	1	121598		9728	1.5	5067					17.64	2	2	20698	8279	862	20698
		8.82	8.85	0.03	158.4	40.0	2	704	704	56	1.5	29		2	1	1							
	EXTRA AREA FOR INTERS., DRIVES, + MAILBOXES							2518		201	1.5	105											
	EXTRA AREA FOR UNPAVED DRIVES																			156	62	7	156
	TOTALS							223440	1314	17874		9310	300	11	1	1	30.48			36573	14629	1524	36573

CALC BY CVH
CHKD BY BAD

PAVEMENT & SHOULDER DATA

ASD-89-12.15

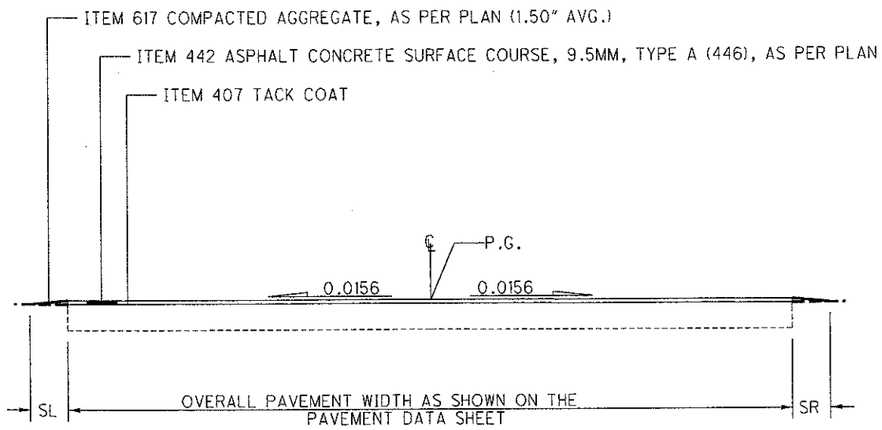

TYPICAL 1

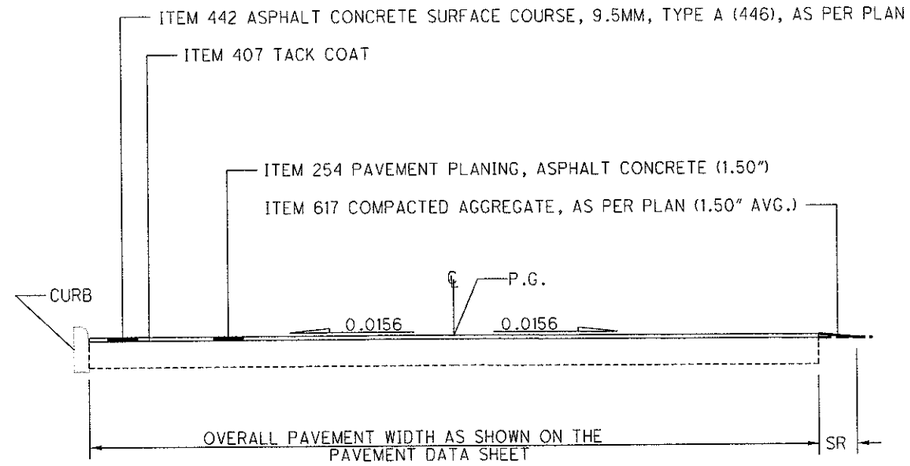

TYPICAL 2

CALCULATED CVH
CHECKED BAD

TYPICAL SECTIONS

ASD-89-12.15

DESIGN FILE: I:\projects\25673\typicals.dgn
WORKSTATION: cvanhorn DATE: 11/2/2007

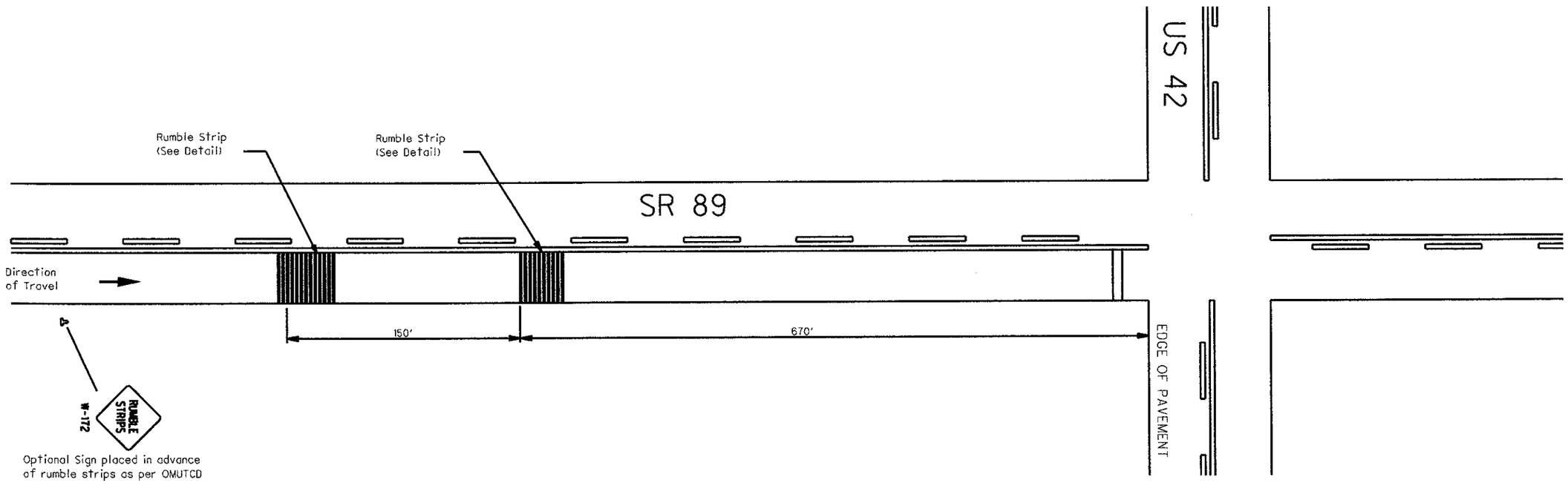

NOTES

1) Relative placement of rumble strips is tied to the edge of pavement

2) Provision should be made to allow bicyclists a path around the rumble strips. Consider construction of 4 ft. wide paved shoulder in this area if no shoulder exists. If curb and gutter exist, do not use gutter width as a bike path (see Typical Rumble Strip details).

3) Intersecting roadways or urban situations may require modification of the rumble strip placement guidelines shown, and alternative treatments may be considered.

4) Rumble strips increase traffic noise levels. Opposition from nearby residents should be considered. If this is a concern, raised asphalt or other materials may be considered in lieu of grooved rumble strips.

5) If rumble strips are inappropriate, alternative treatments, such as one or more of the following, should be considered:
- Illumination of the grade crossing;
- Raised pavement markers in accordance with the stop approach detail shown in Standard Construction Drawing TC-65.11;
- Other standard Warning Signs;
- Additional reflective material on the Crossbuck and/or its support;
- Delineators or Object Markers.

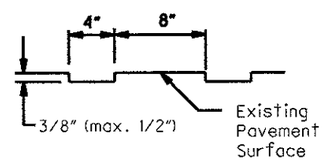

TYPICAL GROOVE DETAIL

The proposed rumble strips shall consist of parallel grooves cut at one foot intervals

All dimensions shown are nominal and should be considered to be + 1/8 inch.

Each groove shall be cut to a depth of approximately 3/8 inch with allowance for pavement surface irregularities and variations, Width of the groove at the pavement surface is to be 4 inches.

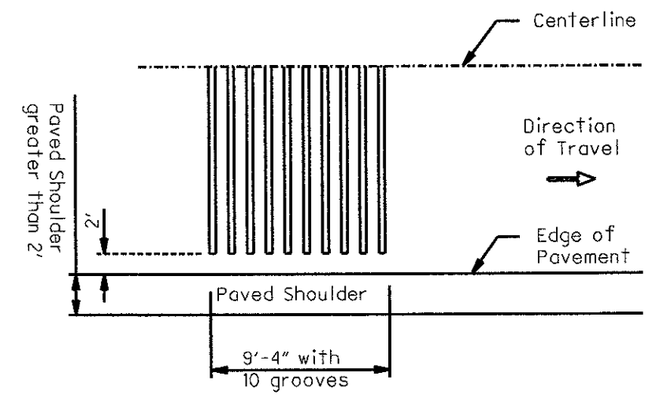

TYPICAL RUMBLE STRIP

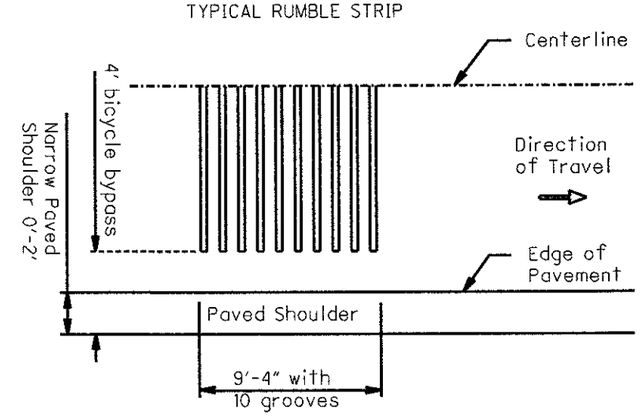

TYPICAL RUMBLE STRIP
FOR NARROWER PAVED SHOULDERS

CALCULATED CVH
CHECKED BAD

ADVANCE WARNING FOR INTERSECTION RUMBLE STRIPS AT SR 89 AND US 42

ASD-89-12.15

ITEM 202, WALK REMOVED, AS PER PLAN

ITEM 202, WALK REMOVED IS INTENDED TO REMOVE THE EXISTING WALK, EMBANKMENT, STEPS, PAVEMENT, AND CURB RAMPS WHILE REPLACING THESE AREAS WITH CURB RAMPS WITH TRUNCATED DOMES AND CURB (IF APPLICABLE). PAYMENT SHALL INCLUDE ALL LABOR, EQUIPMENT, AND MATERIALS NECESSARY TO REMOVE THE ABOVE LISTED ITEMS.

ITEM 608, CURB RAMP, AS PER PLAN

ITEM 608, CURB RAMP, AS PER PLAN IS INTENDED TO REPLACE THE EXISTING WALK, PAVEMENT, EMBANKMENT, STEPS, AND CURB RAMPS WITH CURB RAMPS WITH TRUNCATED DOMES AND CURB (IF APPLICABLE). PAYMENT SHALL INCLUDE ALL LABOR, EQUIPMENT, EMBANKMENT, GRADING, SEEDING, AND MATERIALS NECESSARY TO COMPLETE THE IMPROVEMENT EXCEPT WALK REMOVED, CURB REMOVED, AND CURB WILL BE PAID FOR SEPARATELY. THE FOLLOWING ESTIMATED QUANTITIES ARE PROVIDED IN THE GENERAL SUMMARY TO BE USED AS DIRECTED.

"DESIGN D - DIAGONAL RAMPS" ARE DISCOURAGED FOR NEW CONSTRUCTION AND EXISTING DIAGONAL RAMPS SHOULD BE RETROFITTED WITH TWO PERPENDICULAR RAMPS, WHEN PRACTICABLE.

LOCATION	ITEM	DESCRIPTION	UNIT	CORNER LOCATION	TOTAL
CONGRESS	202	WALK REMOVED, AS PER PLAN	SQ FT	SW	124
CONGRESS	202	WALK REMOVED, AS PER PLAN	SQ FT	NW	173
CONGRESS	202	WALK REMOVED, AS PER PLAN	SQ FT	SE	35
CONGRESS	202	WALK REMOVED, AS PER PLAN	SQ FT	NE	70
MIDDLE	202	WALK REMOVED, AS PER PLAN	SQ FT	SW	40
MIDDLE	202	WALK REMOVED, AS PER PLAN	SQ FT	NW	40
				TOTAL	482

LOCATION	ITEM	DESCRIPTION	UNIT	CORNER LOCATION	TOTAL
CONGRESS	202	CURB RAMP, AS PER PLAN	SQ FT	SW	124
CONGRESS	202	CURB RAMP, AS PER PLAN	SQ FT	NW	173
CONGRESS	202	CURB RAMP, AS PER PLAN	SQ FT	SE	35
CONGRESS	202	CURB RAMP, AS PER PLAN	SQ FT	NE	70
MIDDLE	202	CURB RAMP, AS PER PLAN	SQ FT	SW	40
MIDDLE	202	CURB RAMP, AS PER PLAN	SQ FT	NW	40
				TOTAL	482

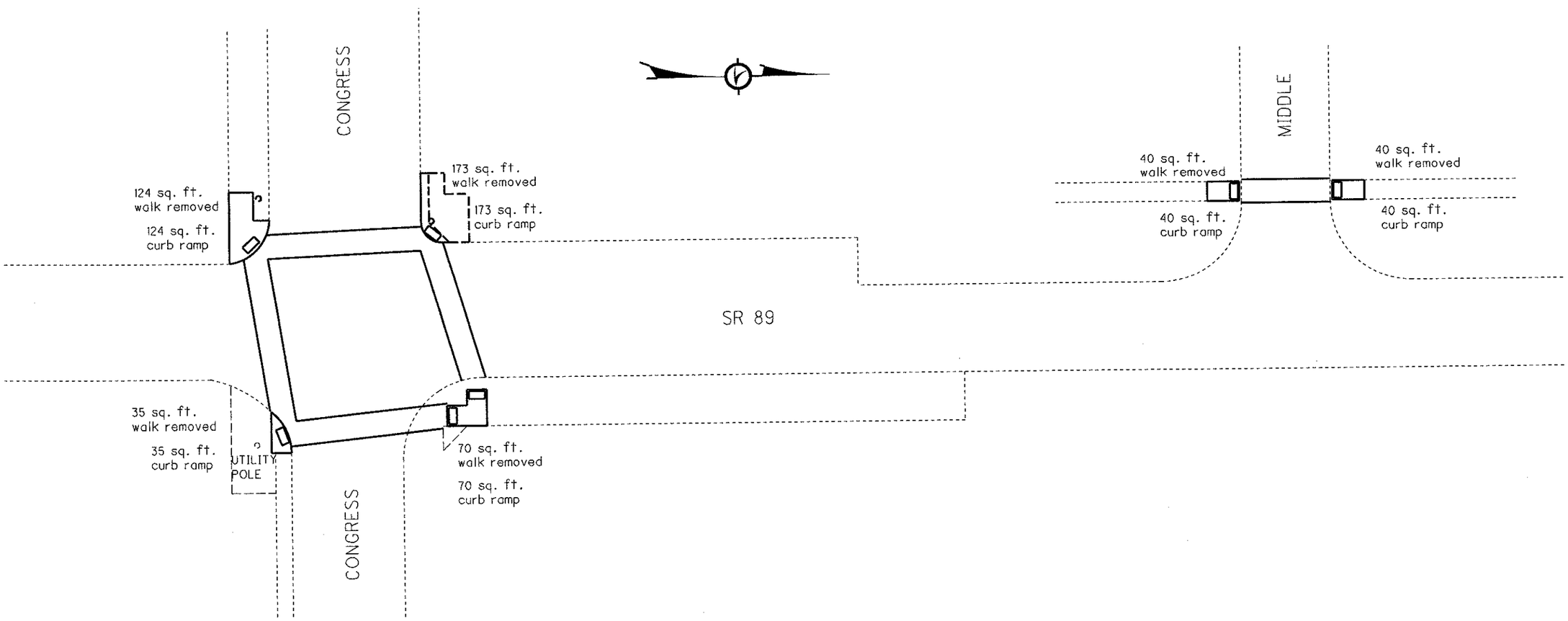

CALCULATED CVH
CHECKED BAD

VILLAGE OF PLOK CURB RAMPS WITH TRUNCATED DOMES

ASD-89-12.15

12
56

DESIGN FILE: I:\projects\25673\curb rampsl.dgn
WORKSTATION: cvanhorn DATE: 11/2/2007

PART	LOCATION	Sheet Number				202		203	209		606			606		606			626	
						ANCHOR ASSEMBLY REMOVED, TYPE A		EMBANKMENT, AS PER PLAN	RESHAPING UNDER GUARDRAIL, AS PER PLAN		GUARDRAIL, TYPE 5			ANCHOR ASSEMBLY, TYPE E-98		ANCHOR ASSEMBLY, TYPE T			BARRIER REFLECTOR, TYPE A	
						EACH		CU YD	STA		FT			EACH		EACH			EACH	
A	ASD-89-1670	11				2		20	1.50					2					4	
B	ASD-302-0089	12				2		20	1.50					2					10	
B	ASD-302-0154	13				3		30	2.75					3					15	
B	ASD-302-0244	14				4		20	2.38		62.5			2		2			28	
B	ASD-302-0564	15				3		30	2.25					3					14	
B	ASD-302-7.84	16						10	6.50		525			1		1			7	
B	ASD-302-8.03	17						100	23.25		2,212.5			1		1			25	
	TOTAL					14		230	40.13		2800			14		4			103	

CALC'D
CVH
CHKED
BAD

GUARDRAIL SUB-SUMMARY

ASD-89-12.15

CONNECTING GUARDRAIL TO EXISTING RAIL

IN LOCATIONS WHERE TYPE 5 GUARDRAIL, TERMINAL ASSEMBLIES, ETC. ARE TO BE CONNECTED TO EXISTING RAIL SOME MODIFICATIONS MAY BE REQUIRED, INCLUDING EXTRA POSTS, DRILLING HOLES AND POSSIBLY PARTIAL SECTIONS OF ADDITIONAL RAIL ELEMENTS. THE COST OF THIS ADDITIONAL WORK SHALL BE INCLUDED IN THE UNIT BID PRICE FOR TYPE 5 GUARDRAIL. IF ADDITIONAL PORTIONS OF RAIL ELEMENT ARE USED THE LINEAL MEASUREMENT OF THIS ADDITIONAL PORTION SHALL BE ADDED FOR PAYMENT.

CONNECTION BETWEEN EXISTING AND PROPOSED GUARDRAIL

WHEN IT IS NECESSARY TO SPLICE PROPOSED GUARDRAIL TO EXISTING GUARDRAIL, ONLY THE EXISTING GUARDRAIL SHALL BE CUT, DRILLED, OR PUNCHED. THE CONNECTION SHALL BE MADE USING A "W-BEAM RAIL SPLICE" AS SHOWN ON STANDARD CONSTRUCTION DRAWING GR-1.1. PAYMENT SHALL BE INCLUDED IN THE CONTRACT PRICE FOR THE RESPECTIVE GUARDRAIL ITEMS.

GUARDRAIL REPAIR AND/OR REPLACEMENT

THE FOLLOWING ITEMS LISTED BELOW SHALL BE USED FOR THE REPAIR AND/OR REPLACEMENT OF DAMAGED GUARDRAIL NOTICED DURING THE COMPLETION OF OTHER WORK INCLUDED IN THIS PLAN. THE ABOVE WORK SHALL BE COMPLETED AS DIRECTED BY THE ENGINEER.

ITEM 202, GUARDRAIL REMOVED
ITEM 202, ANCHOR ASSEMBLY REMOVED, TYPE E-98
ITEM 606, GUARDRAIL, TYPE 5
ITEM 606, ANCHOR ASSEMBLY, TYPE E-98
ITEM 209 RESHAPING UNDER GUARDRAIL

GUARDRAIL REPLACEMENT

NO HAZARD SHALL BE LEFT UNPROTECTED EXCEPT FOR THE ACTUAL TIME NECESSARY TO REMOVE GUARDRAIL, INSTALL EMBANKMENT, GRADE AND REINSTALL GUARDRAIL IN A CONTINUOUS OPERATION. THE REMOVAL OF ALL GUARDRAIL SHALL AT ALL TIMES BE AS DIRECTED BY THE ENGINEER. NO GUARDRAIL SHALL BE REMOVED UNTIL THE REPLACEMENT MATERIAL IS ON SITE, READY FOR INSTALLATION. FAILURE TO COMPLY WITH THIS REQUIREMENT SHALL BE DEEMED SUFFICIENT CAUSE TO ORDER WORK SUSPENDED ON THIS PROJECT UNTIL SUCH TIME THAT THE ENGINEER IS ASSURED OF SAID COMPLIANCE.

LOCATIONS OF GUARDRAIL

THE GUARDRAIL PROTECTION PROVIDED IN THIS PLAN SHALL BE LOCATED IN THE FIELD TO ASSURE THAT THE INSTALLATION WILL AFFORD THE MAXIMUM PROTECTION FOR TRAFFIC. THIS LOCATION SHALL BE POSITIONED AS FAR AS POSSIBLE FROM THE EDGE OF PAVEMENT WHILE MAINTAINING PROPER GRADE IN FRONT OF GUARDRAIL AS PER STANDARD DRAWINGS AND PLAN DETAILS.

ITEM 202 - ANCHOR ASSEMBLY REMOVED, TYPE A

THIS ITEM SHALL INCLUDE THE REMOVAL OF THE EXISTING TYPE A, ANCHOR ASSEMBLY INCLUDING ALL POSTS, HARDWARE, RAIL ELEMENTS, AND CONCRETE ANCHORS. ALL ITEMS REMOVED SHALL BECOME THE PROPERTY OF THE CONTRACTOR AND SHALLBE PROPERLY DISPOSED OF.

THE EXISTING CONCRETE ANCHOR AND CONCRETE AT POSTS SHALL BE REMOVED ENTIRELY. ALL HOLES REMAINING AFTER REMOVAL SHALL BE FILLED WITH GRANULAR MATERIAL OR EXCESS MATERIAL RESULTING FROM GUARDRAIL CONSTRUCTION. ALL FILL MATERIAL SHALL BE THOROUGHLY COMPACTED AND LEVELED, AS DIRECTED BY THE ENGINEER.

PAYMENT FOR ALL OF THE ABOVE SHALL BE INCLUDED IN THE UNIT BID PRICE FOR ITEM 202, ANCHOR ASSEMBLY REMOVED, TYPE A.

ITEM 203 - EMBANKMENT, AS PER PLAN

AT SPECIFIED LOCATIONS AND LOCATIONS AS DIRECTED BY THE ENGINEER, EMBANKMENT SHALL BE PLACED AS TO PROVIDE A SUITABLE AREA TO CONSTRUCT GUARDRAIL AND TO PROVIDE STRUCTURAL INTEGRITY OF THE ROADWAY SHOULDER.

EMBANKMENT MATERIAL SHALL BE LIMITED TO CMS ITEM 304 LIMESTONE.

AREAS WHERE EMBANKMENT MATERIAL IS TO BE PLACED SHALL BE SCALPED. THE REQUIREMENTS FOR BENCHING SHALL BE WAIVED. THE DEPTH OF LAYERS IN WHICH THE EMBANKMENT IS PLACED SHALL BE LIMITED TO EIGHT (8) INCHES IN THICKNESS. THE METHOD OF COMPACTION AND EQUIPMENT USED SHALL BE SUFFICIENT TO COMPACT 95% OF STANDARD PROCTOR TO THE SATISFACTION OF THE ENGINEER.

THE METHOD OF MEASUREMENT FOR EMBANKMENT MATERIAL SHALL BE BY THE NUMBER OF CUBIC YARDS CONVERTED BY TICKET WEIGHT IN THE CARRIER AT THE WORK SITE, IN LIEU OF THE REQUIREMENTS OF 203.09. PAYMENT FOR ACCEPTED QUANTITIES WILL BE MADE AT THE CONTRACT UNIT BID PRICE PER CUBIC YARD FOR ITEM 203 - EMBANKMENT, AS PER PLAN AND SHALL INCLUDE ALL WORK DESCRIBED ABOVE.

ITEM 209 - RESHAPING UNDER GUARDRAIL, AS PER PLAN

THIS ITEM SHALL BE USED AT LOCATIONS INDICATED IN THE PLANS.

THIS WORK SHALL BE COMPLETED AT LOCATIONS SPECIFIED FOR WORK AS WELL AS PER CMS 209.05 AND AS DESCRIBED HEREIN, AND SHALL AT ALL TIMES BE AS DIRECTED BY THE ENGINEER.

THE AREA IN FRONT OF, UNDER, AND BEHIND THE GUARDRAIL SHALL BE GRADED AND RESHAPED TO PROVIDE AN AREA THAT HAS A SLOPE OF 10:1 MAXIMUM (SEE DETAIL BELOW AS WELL AS THE GUARDRAIL DETAIL SHEETS FOR FURTHER DETAILS AND INFORMATION OF THE LIMITS OF THIS WORK).

EXCESS MATERIAL RESULTING SHALL BE USED ELSEWHERE FOR THIS ITEM IF SO DIRECTED OR DISPOSED OF PROPERLY. IF EXTRA MATERIAL IS REQUIRED IT SHALL BE PAID FOR WITH ITEM 203 - EMBANKMENT, AS PER PLAN. THIS WORK SHALL NOT BE STARTED UNTIL AFTER THE RESURFACING AND BERM WORK HAS BEEN COMPLETED.

THE ABOVE WORK SHALL BE PAID FOR PER STATION WITH ITEM 209, RESHAPING UNDER GUARDRAIL, AS PER PLAN WITH THE EXCEPTION OF ANY EXTRA MATERIAL REQUIRED TO MEET THE SLOPE REQUIREMENTS WHICH SHALL BE PAID BY ITEM 203 - EMBANKMENT, AS PER PLAN.

TYPICAL SECTION "TYPE 5"

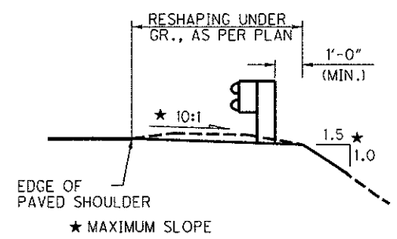

TYPICAL SECTION "TYPE 5"

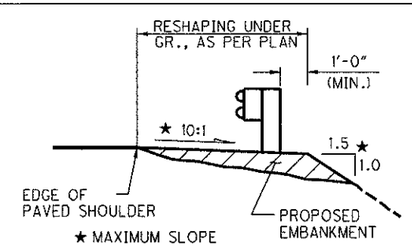

ITEM 606 - ANCHOR ASSEMBLY, TYPE E-98

THIS ITEM SHALL CONSIST OF FURNISHING AND INSTALLING EITHER OF THE FOLLOWING GUARDRAIL END TERMINALS.

1) THE ET-2000 (1997) MANUFACTURED BY TRINITY INDUSTRY, 1170 N. STATE ST., GIRARD, OHIO 44420 (TELEPHONE: 330-545-4373).

THE LENGTH OF THE ET-2000 (1997) SYSTEM IS CONSIDERED TO BE 50 FEET (15.24 m), INCLUSIVE OF TWO 25 FOOT (7.62 m) LONG RAIL ELEMENTS. INSTALLATION SHALL BE AT THE LOCATIONS SPECIFIED IN THE PLANS, IN ACCORDANCE WITH THE MANUFACTURER'S SPECIFICATIONS AS DETAILED ON THE FOLLOWING PRE-APPROVED SHOP DRAWINGS:

DWG. #	DRAWING NAME	DWG./REV. DATE	ODOT APPROVAL DATE
SS265M	ET-2000 (1997) PLAN, ELEVATION AND SECTIONS	6/20/97	3/6/98
SS142	ET2000 PLUS 50'-0" PLAN, ELEVATION AND SECTION 25'-0" RAIL, SLEEVE W/PL POSTS 1-4	4/12/00	7/31/00
SS141	ET-2000 PLUS PLAN, ELEVATION & SECTION 25'-0" RAIL, HBA POSTS 1-4	2/29/00	7/31/00
SS158	ET-2000 PLUS 50'-0" WITH 12'-6" PANELS & HBA POSTS 1-4 PLAN, ELEVATION & SECTION	5/22/00	7/31/00

2) THE SKT-350 MANUFACTURED BY ROAD SYSTEMS, INC., 2516 MALLORY LANE, STOW, OHIO 44224 (TELEPHONE: 330-346-0721)

THE LENGTH OF THE SKT-350 SYSTEM IS CONSIDERED TO BE 50'-0" (15.24 m), INCLUSIVE OF FOUR 12'-6" (3.81m) LONG RAIL ELEMENTS. INSTALLATION SHALL BE AT THE LOCATIONS SPECIFIED IN THE PLANS, IN ACCORDANCE WITH THE MANUFACTURER'S SPECIFICATIONS AS DETAILED ON THE FOLLOWING PRE-APPROVED SHOP DRAWINGS:

DWG. #	DRAWING NAME	DWG./REV. DATE	ODOT APPROVAL DATE
SKT-4M	SEQUENTIAL KINKING TERMINAL (SKT-350) ASSEMBLY WITH 4 FOUNDATION TUBES	12/11/97	3/6/98

THE FACE OF THE TYPE E-98 IMPACT HEAD SHALL BE COVERED WITH A SHEET OF TYPE G REFLECTIVE SHEETING, PER CMS 730.19, APPROXIMATELY 18" x 18" (450mm X 450mm).

THE CONTRACTOR MAY USE A SALVAGED EXTRUDER WHEN ASSEMBLING THE ITEM 606 ANCHOR ASSEMBLY, TYPE E-98. ALL WELDS ON THE EXTERIOR OF THE SALVAGED EXTRUDER SHALL NOT BE DAMAGED AND THE FEEDER SHUTE SHALL NOT BE BENT.

REFER TO THE MANUFACTURER'S INSTRUCTION REGARDING THE INSTALLATION OF, AND THE GRADING AROUND, THE FOUNDATION TUBES AND GROUND STRUT. THE TOP OF ANY FOUNDATION TUBE SHOULD BE LESS THAN 4 INCHES (100mm) ABOVE THE GROUND. THE PLACEMENT OF THE FOUNDATION TUBES SHOULD BE AN APPROPRIATE DEPTH BELOW THE LEVEL LINE IN ORDER TO MAINTAIN THE FINISHED GUARDRAIL HEIGHT OF 27¾ INCHES (706mm) FROM THE EDGE OF THE SHOULDER.

ON SITE GRADING IS REQUIRED IF THE TOP OF THE FOUNDATION TUBES OR TOP OF THE GROUND STRUT DOES NOT PROJECT MORE THAN 4 INCHES (100mm) ABOVE THE GROUND LINE.

PAYMENT FOR THE ABOVE WORK SHALL BE MADE AT THE UNIT PRICE BID FOR ITEM 606, ANCHOR ASSEMBLY, TYPE E-98, EACH, AND SHALL INCLUDE ALL LABOR, TOOLS, EQUIPMENT AND MATERIALS NECESSARY TO CONSTRUCT A COMPLETE AND FUNCTIONAL ANCHOR ASSEMBLY SYSTEM, INCLUDING ALL RELATED TRANSITIONS, REFLECTIVE SHEETING, HARDWARE, GRADING, EMBANKMENT AND EXCAVATION NOT SEPARATELY SPECIFIED, AS REQUIRED BY THE MANUFACTURER.

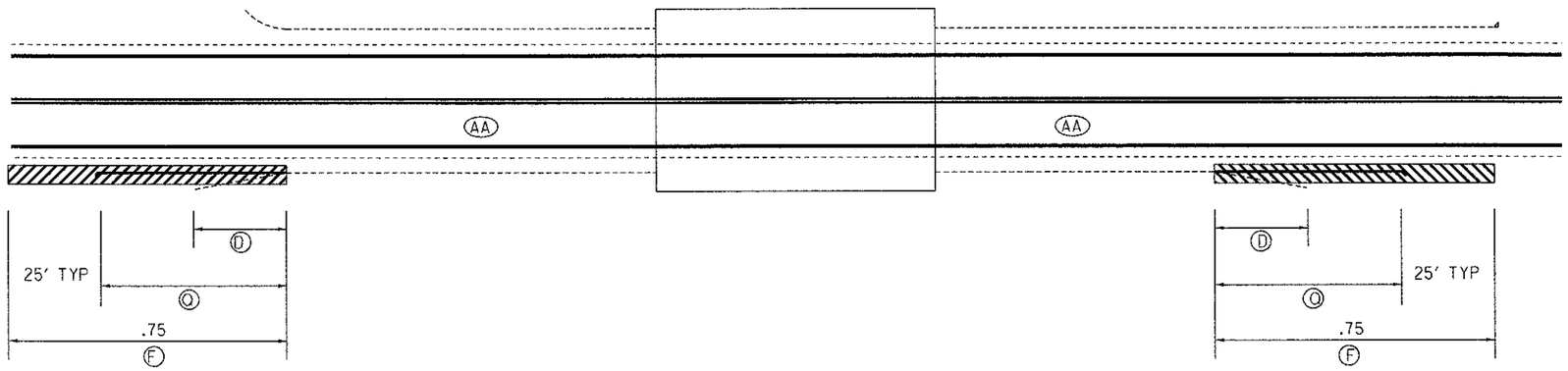

LOCATION	ITEM	DESCRIPTION	UNIT	QUANTITIY		TOTAL
				LEFT	RIGHT	
D	202	ANCHOR ASSEMBLY REMOVED, TYPE A	EACH		2	2
	203	EMBANKMENT, AS PER PLAN	CU YD		20	20
F	209	RESHAPING UNDER GUARDRAIL, AS PER PLAN	STA		1.50	1.50
Q	606	ANCHOR ASSEMBLY, TYPE E-98	EACH		2	2
AA	626	BARRIER REFLECTOR, TYPE A	EACH		4	4

ALL QUANTITIES CARRIED TO GUARDRAIL SUB-SUMMARY SHEET, SHEET 13.

TYPICAL SECTION "TYPE 5"

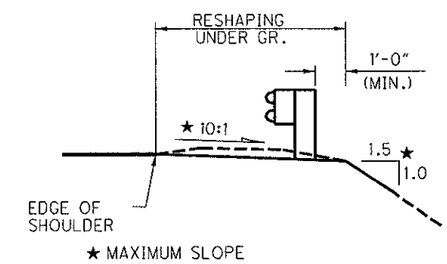

TYPICAL SECTION "TYPE 5"

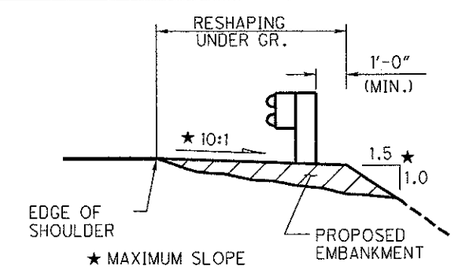

TYPICAL SECTION "E-98"

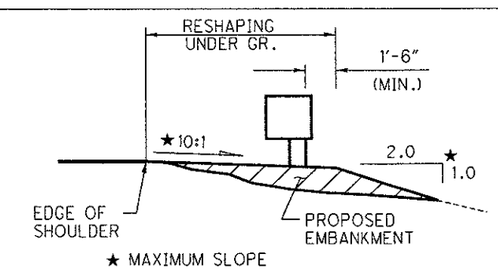

CALCULATED CVH
CHECKED BAD

GUARDRAIL DETAIL
ASD-89-1670 S.L.M. 16.70

ASD-89-12.15

DESIGN FILE: I:\projects\25673\grail.dgn
WORKSTATION: cvanhorn DATE: 11/6/2007

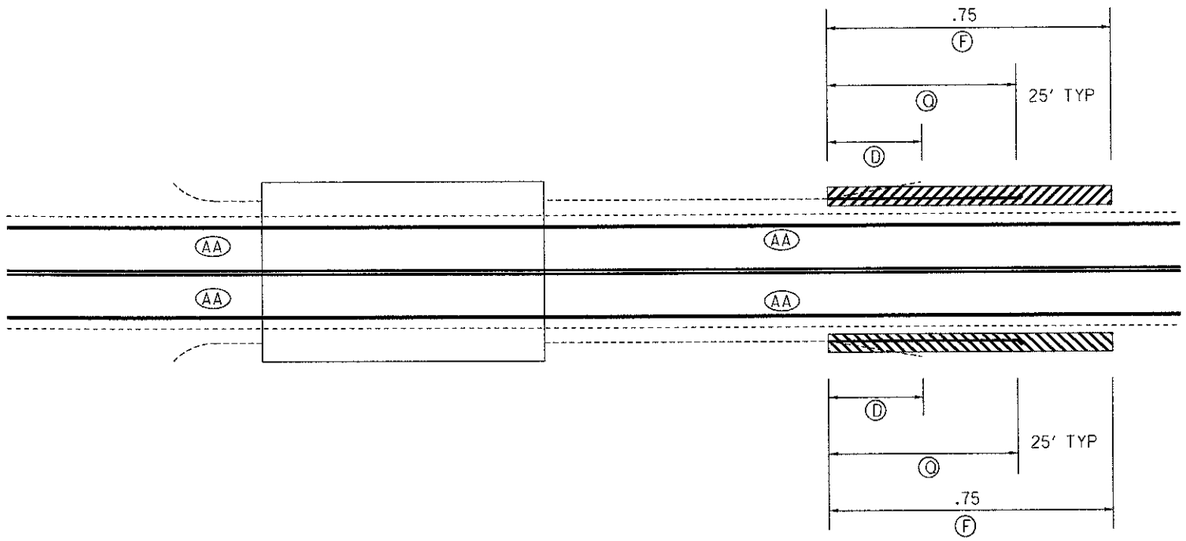

LOCATION	ITEM	DESCRIPTION	UNIT	QUANTITIY		TOTAL
				LEFT	RIGHT	
D	202	ANCHOR ASSEMBLY REMOVED, TYPE A	EACH	1	1	2
	203	EMBANKMENT, AS PER PLAN	CU YD	10	10	20
F	209	RESHAPING UNDER GUARDRAIL, AS PER PLAN	STA	.75	.75	1.50
Q	606	ANCHOR ASSEMBLY, TYPE E-98	EACH	1	1	2
AA	626	BARRIER REFLECTOR, TYPE A	EACH	5	5	10

ALL QUANTITIES CARRIED TO GUARDRAIL SUB-SUMMARY SHEET, SHEET 13.

TYPICAL SECTION "TYPE 5"

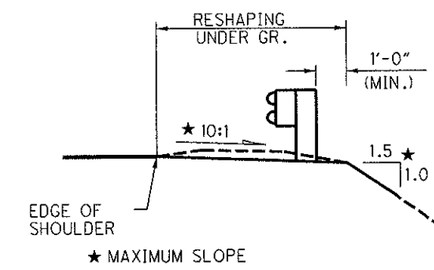

TYPICAL SECTION "TYPE 5"

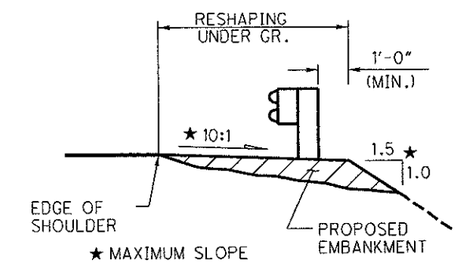

TYPICAL SECTION "E-98"

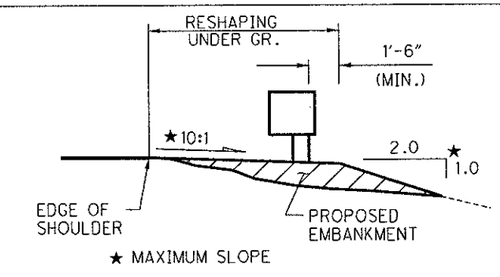

CALCULATED CVH
CHECKED BAD

GUARDRAIL DETAIL
ASD-302-0089 S.L.M. 0.89

ASD-89-12.15

DESIGN FILE: I:\projects\25673\grail.dgn
WORKSTATION: cvanhorn DATE: 11/6/2007

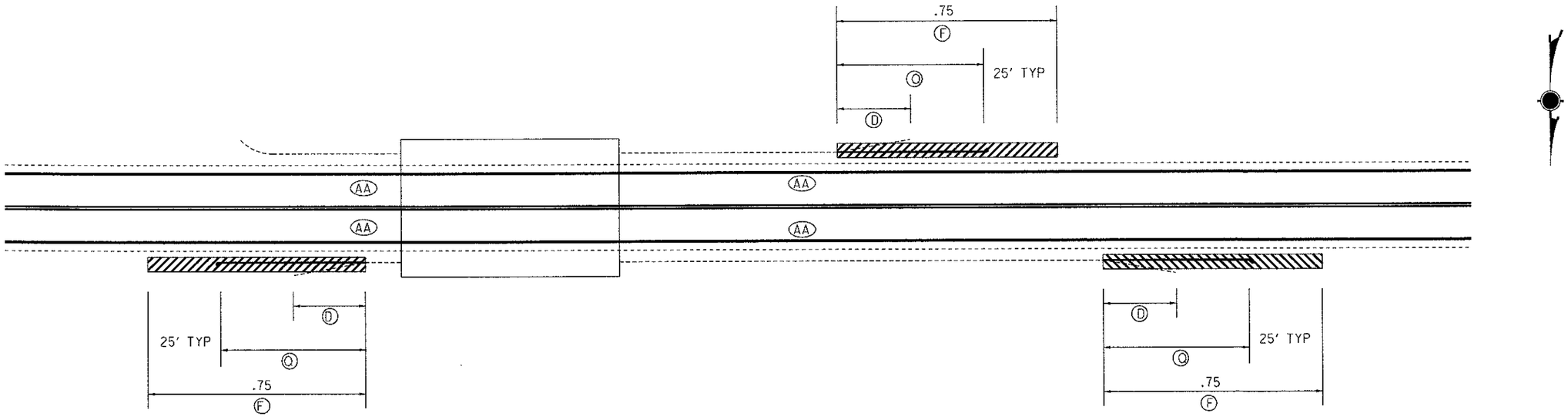

LOCATION	ITEM	DESCRIPTION	UNIT	QUANTITIY		TOTAL
				LEFT	RIGHT	
D	202	ANCHOR ASSEMBLY REMOVED, TYPE A	EACH	1	2	3
	203	EMBANKMENT, AS PER PLAN	CU YD	10	20	30
F	209	RESHAPING UNDER GUARDRAIL, AS PER PLAN	STA	.75	1.50	2.25
Q	606	ANCHOR ASSEMBLY, TYPE E-98	EACH	1	2	3
AA	626	BARRIER REFLECTOR, TYPE A	EACH	5	10	15

ALL QUANTITIES CARRIED TO GUARDRAIL SUB-SUMMARY SHEET, SHEET 13.

TYPICAL SECTION "TYPE 5"

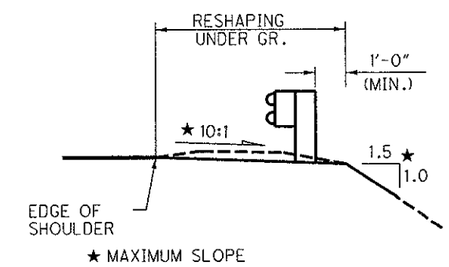

TYPICAL SECTION "TYPE 5"

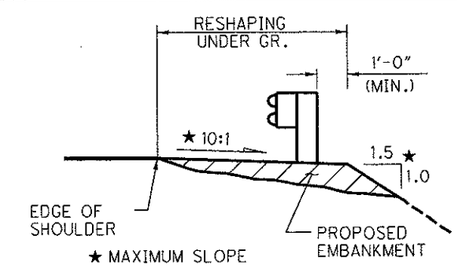

TYPICAL SECTION "E-98"

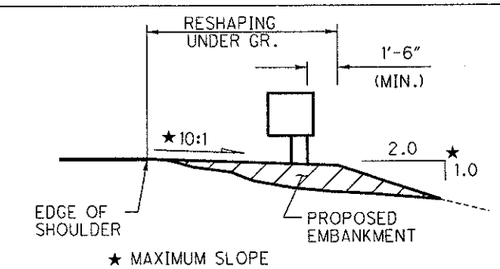

CALCULATED CVH
CHECKED BAD

GUARDRAIL DETAIL
ASD-302-0154 S.L.M. 1.54

ASD-89-12.15

DESIGN FILE: I:\projects\25673\grail.dgn
WORKSTATION: cvanhorn DATE: 11/6/2007

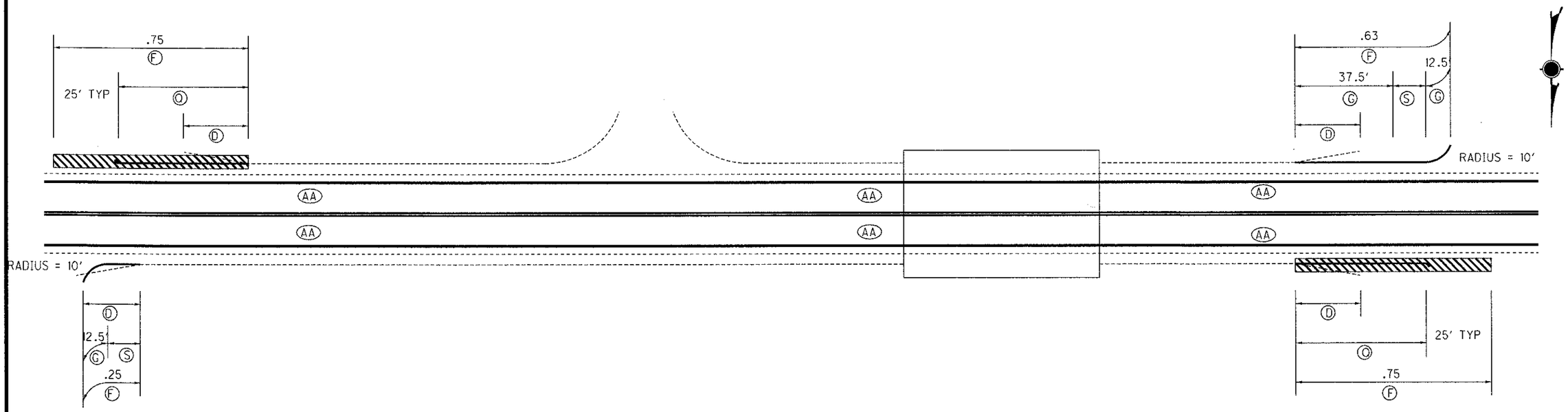

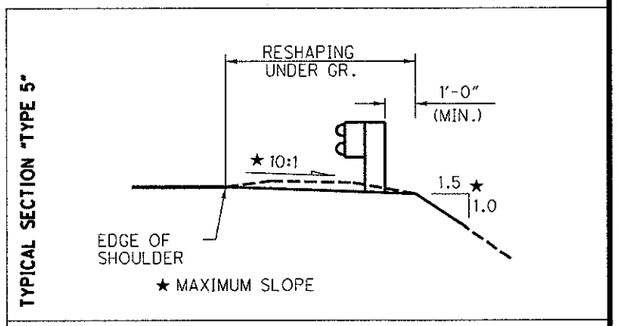

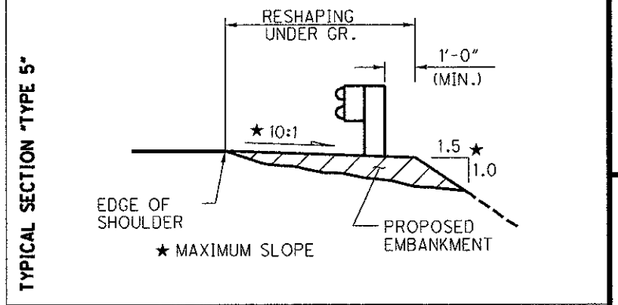

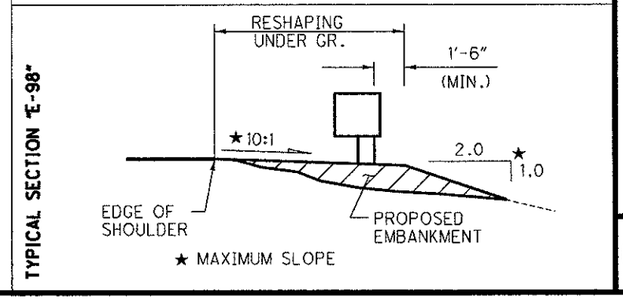

LOCATION	ITEM	DESCRIPTION	UNIT	QUANTITIY		TOTAL
				LEFT	RIGHT	
D	202	ANCHOR ASSEMBLY REMOVED, TYPE A	EACH	2	2	4
	203	EMBANKMENT, AS PER PLAN	CU YD	10	10	20
F	209	RESHAPING UNDER GUARDRAIL, AS PER PLAN	STA	1.38	1.00	2.38
G	606	GUARDRAIL, TYPE 5	FT	50	12.5	62.5
Q	606	ANCHOR ASSEMBLY, TYPE E-98	EACH	1	1	2
S	606	ANCHOR ASSEMBLY, TYPE T	EACH	1	1	2
AA	626	BARRIER REFLECTOR, TYPE A	EACH	14	14	28

ALL QUANTITIES CARRIED TO GUARDRAIL SUB-SUMMARY SHEET, SHEET 13.

CALCULATED CVH
CHECKED BAD

GUARDRAIL DETAIL
ASD-302-0244 S.L.M. 2.44

ASD-89-12.15

DESIGN FILE: I:\projects\25673\grail.dgn
WORKSTATION: cvanhorn DATE: 11/6/2007

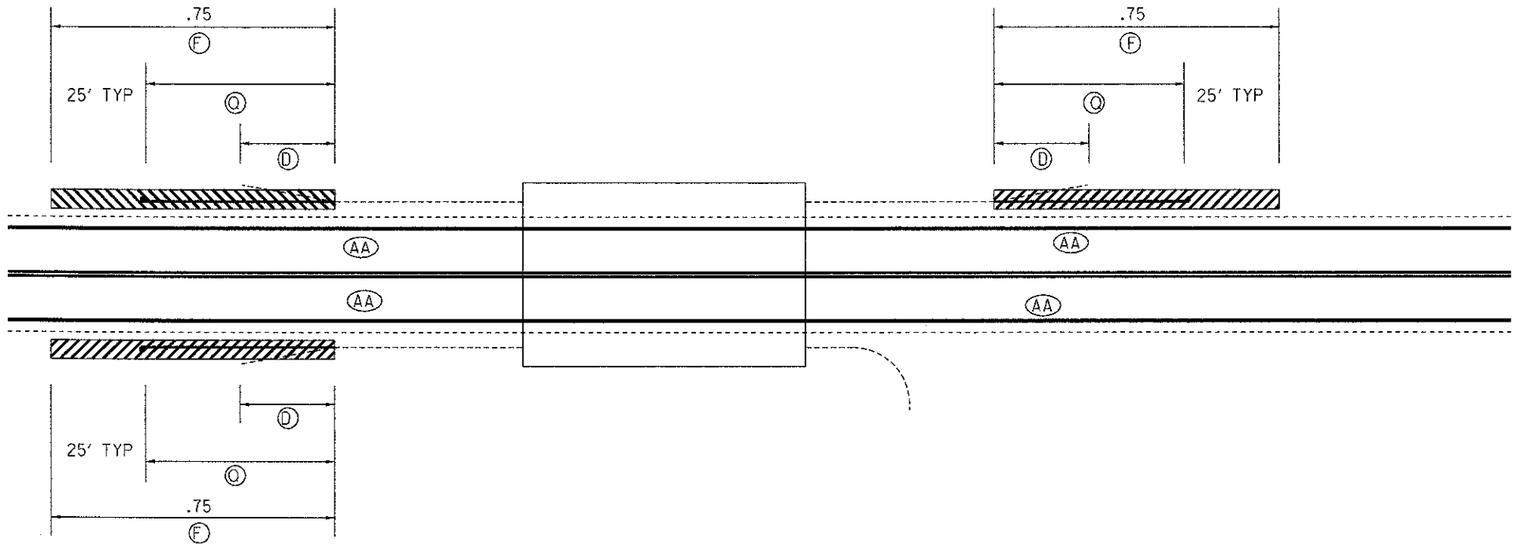

LOCATION	ITEM	DESCRIPTION	UNIT	QUANTITIY		TOTAL
				LEFT	RIGHT	
D	202	ANCHOR ASSEMBLY REMOVED, TYPE A	EACH	2	1	3
	203	EMBANKMENT, AS PER PLAN	CU YD	20	10	30
F	209	RESHAPING UNDER GUARDRAIL, AS PER PLAN	STA	1.50	.75	2.25
Q	606	ANCHOR ASSEMBLY, TYPE E-98	EACH	2	1	3
AA	626	BARRIER REFLECTOR, TYPE A	EACH	8	6	14

ALL QUANTITIES CARRIED TO GUARDRAIL SUB-SUMMARY SHEET, SHEET 13.

TYPICAL SECTION "TYPE 5"

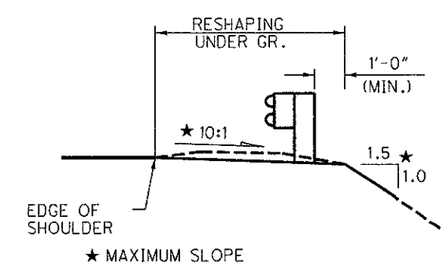

TYPICAL SECTION "TYPE 5"

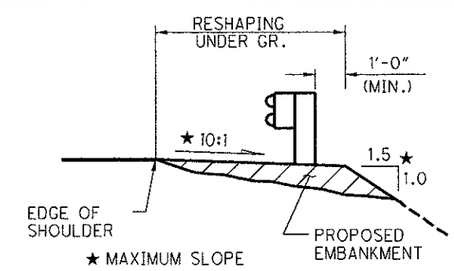

TYPICAL SECTION "E-98"

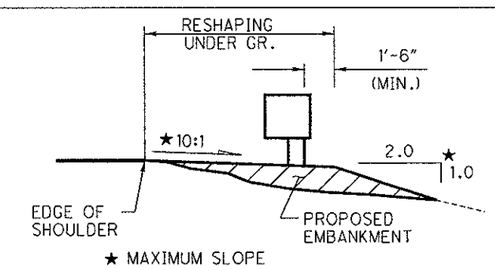

CALCULATED CVH
CHECKED BAD

GUARDRAIL DETAIL
ASD-302-0564 S.L.M. 5.64

ASD-89-12.15

DESIGN FILE: I:\projects\25673\grail.dgn
WORKSTATION: cvanhorn DATE: 11/6/2007

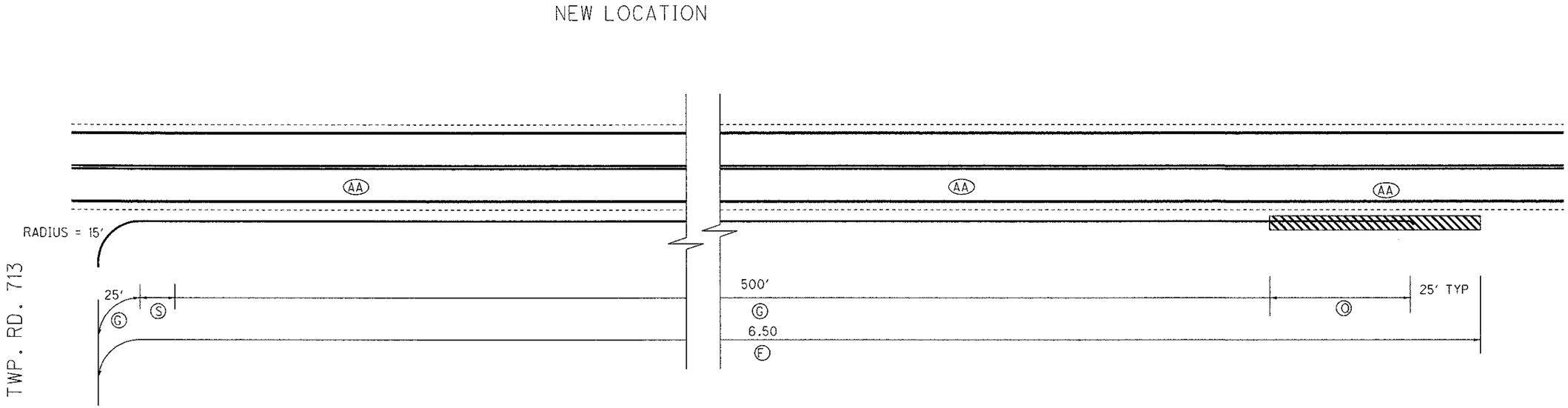

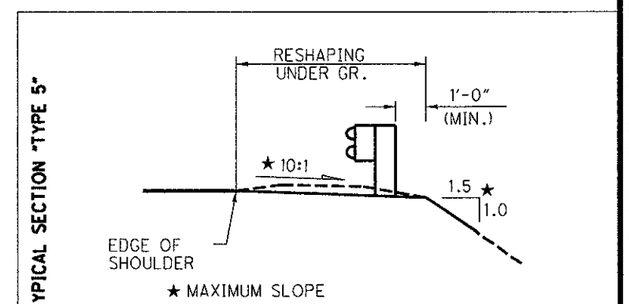

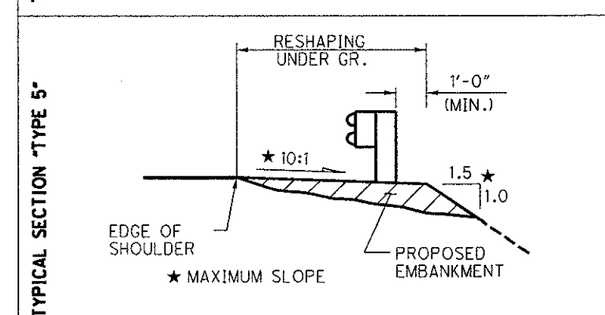

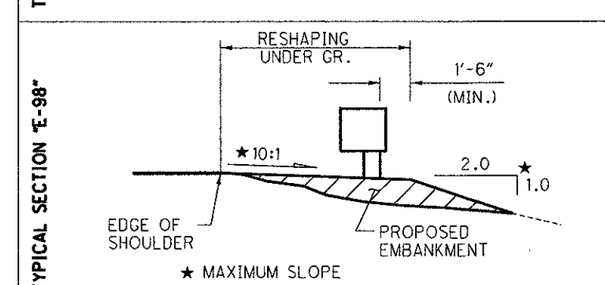

LOCATION	ITEM	DESCRIPTION	UNIT	QUANTITIY		TOTAL
				LEFT	RIGHT	
	203	EMBANKMENT, AS PER PLAN	CU YD		10	10
F	209	RESHAPING UNDER GUARDRAIL, AS PER PLAN	STA		6.50	6.50
G	606	GUARDRAIL, TYPE 5	FT		525	525
Q	606	ANCHOR ASSEMBLY, TYPE E-98	EACH		1	1
S	606	ANCHOR ASSEMBLY, TYPE T	EACH		1	1
AA	626	BARRIER REFLECTOR, TYPE A	EACH		7	7

ALL QUANTITIES CARRIED TO GUARDRAIL SUB-SUMMARY SHEET, SHEET 13.

CALCULATED CVH
CHECKED BAD

GUARDRAIL DETAIL
ASD-302-7.84 S.L.M.

ASD-89-12.15

DESIGN FILE: I:\projects\25673\grail.dgn
WORKSTATION: cvanhorn DATE: 11/6/2007

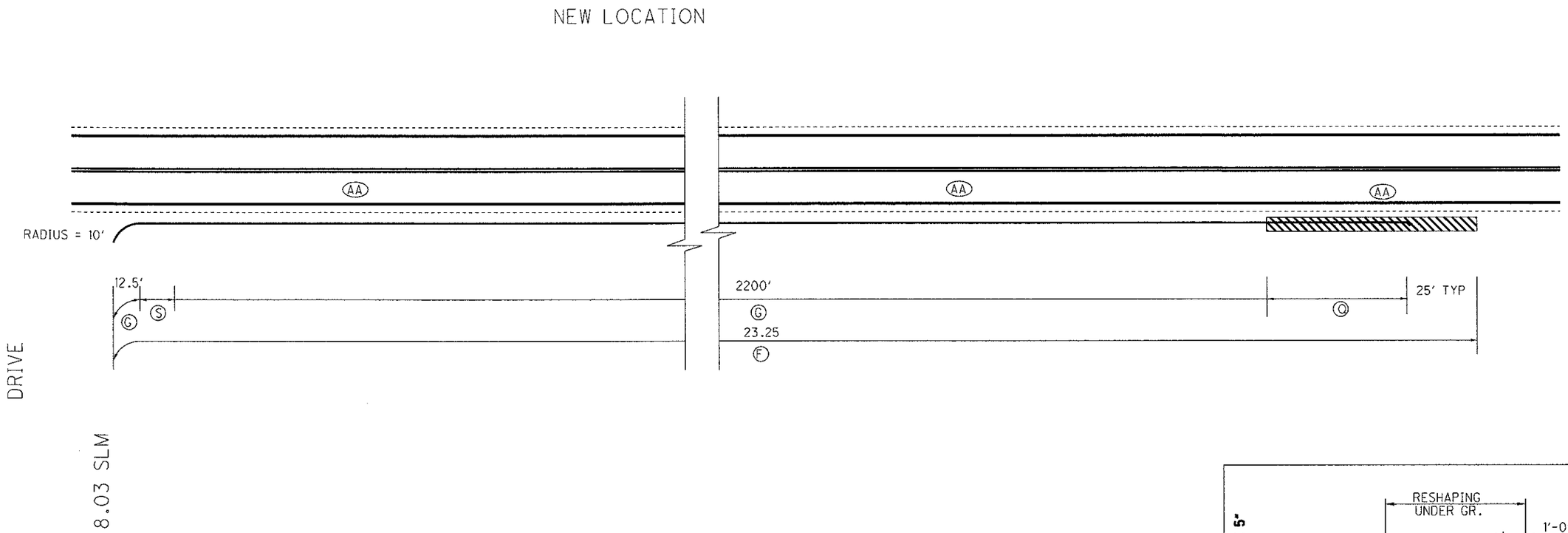

LOCATION	ITEM	DESCRIPTION	UNIT	QUANTITIY		TOTAL
				LEFT	RIGHT	
	203	EMBANKMENT, AS PER PLAN	CU YD		100	100
F	209	RESHAPING UNDER GUARDRAIL, AS PER PLAN	STA		23.25	23.25
G	606	GUARDRAIL, TYPE 5	FT		2212.5	2212.5
Q	606	ANCHOR ASSEMBLY, TYPE E-98	EACH		1	1
S	606	ANCHOR ASSEMBLY, TYPE T	EACH		1	1
AA	626	BARRIER REFLECTOR, TYPE A	EACH		25	25

ALL QUANTITIES CARRIED TO GUARDRAIL SUB-SUMMARY SHEET, SHEET 13.

TYPICAL SECTION "TYPE 5"

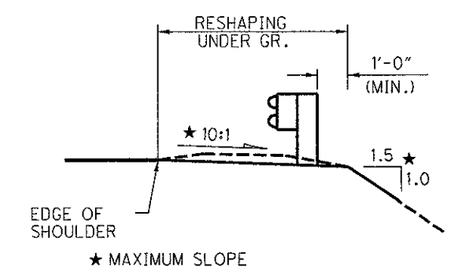

TYPICAL SECTION "TYPE 5"

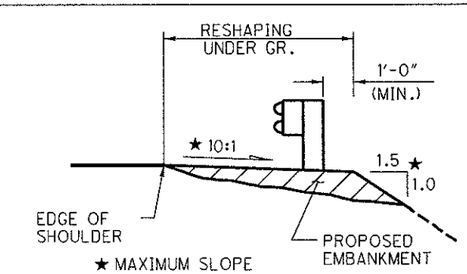

TYPICAL SECTION "E-98"

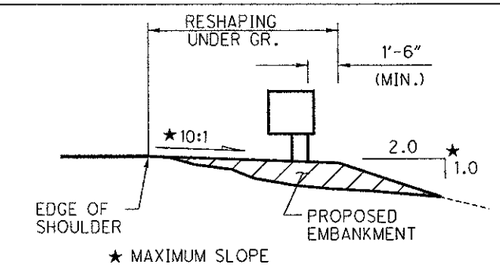

CALCULATED CVH
CHECKED BAD

GUARDRAIL DETAIL
ASD-302-8.03 S.L.M.

ASD-89-12.15

DESIGN FILE: I:\projects\25673\grail.dgn
WORKSTATION: cvanhorn DATE: 11/6/2007

AUXILIARY & LONG LINE MARKINGS

PART	COUNTY	ROUTE	STATION SLM FROM	STATION SLM TO	HIGHWAY MILES	614 WORK ZONE LANE LINE, CLASS I, 642 PAINT	614 WORK ZONE CENTER LINE, CLASS II, 642 PAINT	614 WORK ZONE CHANNELIZING LINE, CLASS I, 642 PAINT	614 WORK ZONE STOP LINE, CLASS I, 642 PAINT	642, TYPE 1 EDGE LINE TOTAL (PAY QUANTITY) (WHITE)	642, TYPE 1 EDGE LINE TOTAL (PAY QUANTITY) (YELLOW)	642, TYPE 1 LANE LINE	642, TYPE 1 CENTER LINE SOLID LINE EQUIVALENT	642, TYPE 1 CENTER LINE TOTAL (PAY QUANTITY)	644 AUXILIARY MARKINGS (740.04) CHANNELIZING LINE 8"	STOP LINE 24"	CROSSWALK LINE 12"	TRANSVERSE LINE (WHITE) 24"	TRANSVERSE LINE (YELLOW) 24"	ISLAND MARKING	RAILROAD SYMBOL MARKING	SCHOOL SYMBOL MARKING 72 INCH	SCHOOL SYMBOL MARKING 96 INCH	PARKING LOT STALL MARKING	LANE ARROW LEFT	LANE ARROW RIGHT	LANE ARROW THROUGH	LANE ARROW COMBINATION	WORD ON PAVEMENT "ONLY" 72 INCH	WORD ON PAVEMENT "ONLY" 96 INCH	DOTTED LINE, 4"	HANDICAP SYMBOL MARKING	SPECIAL AIR SPEED ZONE MARKING
					MILE	MILE	MILE	FT	FT	MILE	MILE	MILE	MILE	MILE	FT	FT	FT	FT	FT	SQ FT	EACH	EACH		FT	EACH				EACH		FT	EACH	EACH
A	ASHLAND	SR 89	12.15	18.60	6.45		6.45			12.90			7.24	6.45		248	216				2											
B	ASHLAND	SR 302	0.00	8.85	8.85		8.85			17.70			12.95	8.85		372	238				2											
				TOTAL	15.30		15.30			30.60				15.30		620	454				4											

RAISED PAVEMENT MARKERS

PART	COUNTY	ROUTE	STATION SLM FROM	STATION SLM TO	DETAIL	202 RAISED PAVEMENT MARKER REMOVED EACH	621 RPM EACH	PRISMATIC RETRO-REFLECTOR TYPES ONE-WAY WHITE EACH	TWO-WAY YELLOW / YELLOW	TWO-WAY WHITE / RED	TWO-WAY YELLOW / RED	TWO-WAY BLUE / BLUE	REMARKS
A	ASHLAND	SR 89	12.15	12.35	6	27	27	16	11				STOP APPROACH @ US 42
			12.35	13.33	GAP	65	65		65				CONTINUOUS ROUTE TREATMENT
			13.33	13.67	8	22	22		22				THRU APPROACHES @ SR 302
			13.67	14.69	GAP	65	65		65				CONTINUOUS ROUTE TREATMENT
			14.69	17.62	GAP	124	124		124				CONTINUOUS ROUTE TREATMENT
			17.62	17.85	16	24	24		24				CURVE @ 20 FT. SPACINGS
			17.85	18.43	GAP	44	44		44				CONTINUOUS ROUTE TREATMENT
			18.43	18.6	8/16	11	11		11				THRU APPROACH @ SR 58 (S. APPR.) & CURVE @ 20'
B	ASHLAND	SR 302	0.00	2.66	GAP	170	170		170				CONTINUOUS ROUTE TREATMENT
			2.66	3.07	15	51	51		51				REVERSE CURVE
			3.07	3.92	GAP	58	58		58				CONTINUOUS ROUTE TREATMENT
			3.92	4.12	6	27	27	16	11				STOP APPR. @ US 42(SOUTH JUNCT.)
			4.12	4.32	6	27	27	16	11				STOP APPR. @ US 42(NORTH JUNCT.)
			4.32	5.09	GAP	56	56		56				CONTINUOUS ROUTE TREATMENT
			5.09	5.49	6	54	54	32	22				STOP APPROACHES @ SR 89
			5.49	8.16	GAP	179	179		179				CONTINUOUS ROUTE TREATMENT
			8.16	8.39	15	30	30		30				CURVE
			8.39	8.65	GAP	16	16		16				CONTINUOUS ROUTE TREATMENT
			8.65	8.85	6	27	27	16	11				STOP APPROACH @ SR 58
			SUBTOTAL PART A			603	603	16	366				
			SUBTOTAL PART B			54	54	32	615				
				TOTAL		657	657	48	981				

DETAIL	DESCRIPTION
1	MULTILANE UNDIVIDED TYPICAL SPACING
2	TAPERED ACCEL. LANE
3	DECELERATION LANE
4	PARALLEL ACCEL LANE
5	MULTILANE DIVIDED/EXPRESSWAY
6	STOP APPROACH
7	2 LANE APPR. WITH TURN LANE
8	THROUGH APPROACH
9	3 LANE APPR. WITH TURN LANE
10	3 LANE DIVIDED TO 2 LANE TRANSITION
11	3 LANE UNDIVIDED TO 2 LANE TRANSITION
12	TWO LNAE NARROW BRIDGE
13	TWO WAY LEFT TURN LANE
14	ONE LANE BRIDGE
15	HORIZONTAL CURVE
16	HORIZONTAL CURVE ALT.
17	STOP APPROACH ALT.
18	FIRE HYDRANT
GAP	CENTER LINE AT 80 FT. TYP.

NOTES

1. THE SCHOOLS IN POLK AND NANKIN ARE CLOSED. DO NOT INSTALL SCHOOL MARKINGS

CALC BY CVH
CHKD BY BAD

PAVEMENT MARKING SUMMARY

ASD-89-12.15

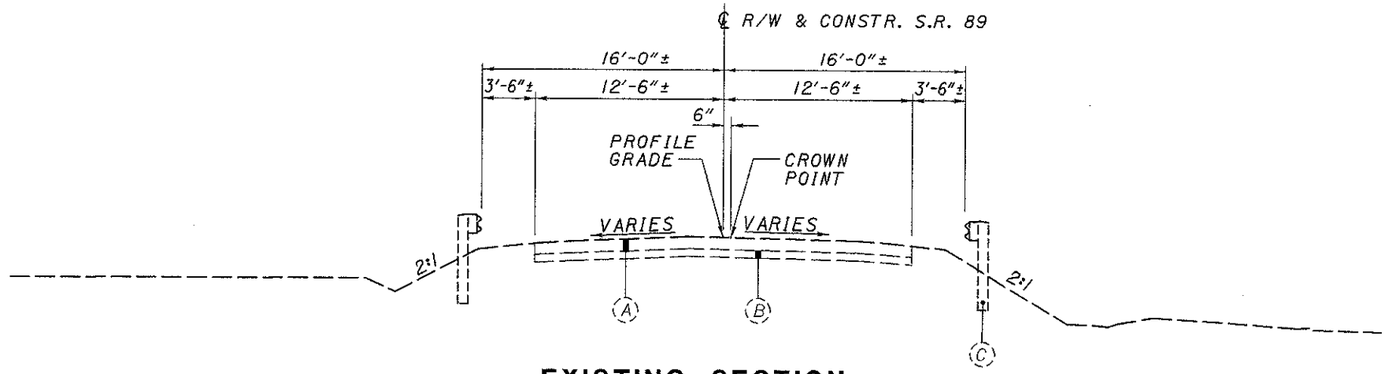

EXISTING SECTION

STA. 237+00 TO STA. 241+50 = 450 FT.
TOTAL LENGTH = 450 FT.

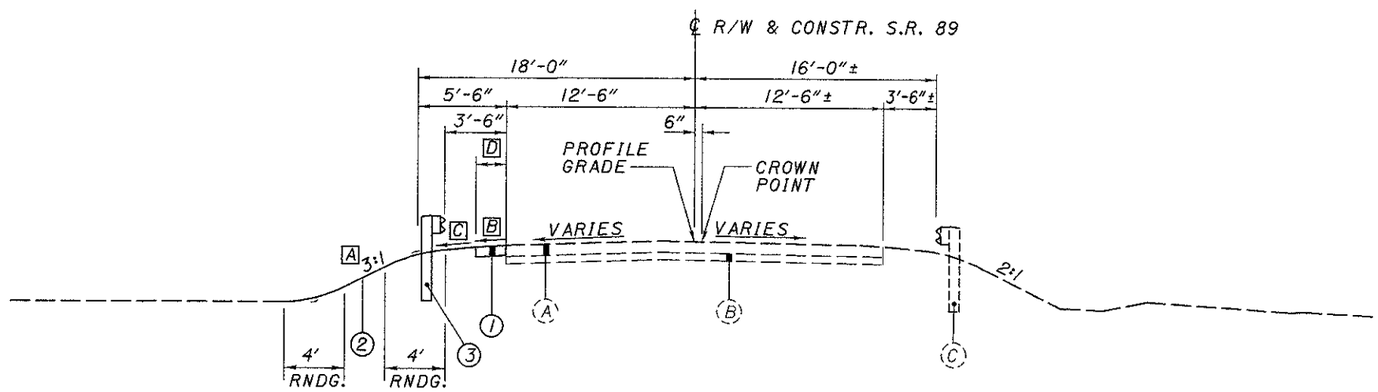

NORMAL SHOULDER SECTION

STA. 237+00 TO STA. 241+50 LT. = 450 FT.
TOTAL LENGTH = 450 FT.

[A] SEE CROSS SECTIONS
[B] 0.06 CROSS SLOPE
[C] 0.08 CROSS SLOPE
[D] 2'-0" TREATED SHOULDER WIDTH

NOTE
TYPICAL SECTIONS SHOWN ARE PRIOR TO RESURFACING.

PROPOSED LEGEND

1. ITEM 304 - 8" AGGREGATE BASE
2. ITEM 659 - SEEDING AND MULCHING
3. ITEM 606 - GUARDRAIL, TYPE 5

EXISTING LEGEND

A. 9"± ASPHALT CONCRETE
B. AGGREGATE BASE
C. GUARDRAIL

TYPICAL SECTIONS- ASD-89-16.70

ASD-89-12.15

DESIGN FILE: $$$$$.DGNFILESPECIFICATIONS$$$$$
WORKSTATION: $TERMINAL$ DATE: $$$$$DATE$$$$$

ROUNDING
THE ROUNDING AT SLOPE BREAKPOINTS SHOWN ON THE TYPICAL SECTIONS APPLY TO ALL CROSS-SECTIONS EVEN THOUGH OTHERWISE SHOWN.

UTILITIES
LISTED BELOW ARE ALL UTILITIES LOCATED WITHIN THE PROJECT CONSTRUCTION LIMITS TOGETHER WITH THEIR RESPECTIVE OWNERS:

Electric
Ohio Edison Company
Julie Bell-Rogers
1717 Ashland Road
Mansfield, Ohio 44905
419-521-6185

Telephone
Verizon
James Sauber
1534 SR 511 South
Ashland, Ohio 44805
419-282-6551

Cable
Time Warner Cable
David Baker
1575 Lexington Avenue
Mansfield, Ohio 44901
419-756-6091, ext 5109

Water
Rural Lorain County Water Authority
Jim Truesdell
42401 SR 303, Box 567
LaGrange, Ohio 44050
440-355-6060

THE LOCATION OF THE UNDERGROUND UTILITIES SHOWN ON THE PLANS ARE AS OBTAINED FROM THE OWNERS AS REQUIRED BY SECTION 153.64 O.R.C.

ELEVATION DATUM
ALL ELEVATIONS ARE BASED ON U.S.G.S. DATUM.

WORK LIMITS
THE WORK LIMITS SHOWN ON THESE PLANS ARE FOR PHYSICAL CONSTRUCTION ONLY. PROVIDE THE INSTALLATION AND OPERATION OF ALL WORK ZONE TRAFFIC CONTROL DEVICES REQUIRED BY THESE PLANS WHETHER INSIDE OR OUTSIDE THESE WORK LIMITS.

CLEARING AND GRUBBING

REMOVE ALL TREES AND STUMPS SPECIFICALLY MARKED FOR REMOVAL WITHIN THE CONSTRUCTION LIMITS UNDER THE LUMP SUM BID FOR ITEM 201, CLEARING AND GRUBBING. THE FOLLOWING IS AN APPROXIMATE ESTIMATE OF THE NUMBER OF TREES AND STUMPS TO BE REMOVED.

SIZES	NO. TREES	NO. STUMPS	TOTAL
18"	0	1	1
30"	0	0	0
48"	0	0	0
60"	0	0	0

REVIEW OF DRAINAGE FACILITIES
BEFORE ANY WORK IS STARTED ON THE PROJECT AND AGAIN BEFORE FINAL ACCEPTANCE BY THE STATE, REPRESENTATIVES OF THE STATE AND THE CONTRACTOR, ALONG WITH LOCAL REPRESENTATIVES, SHALL MAKE AN INSPECTION OF ALL EXISTING SEWERS WHICH ARE TO REMAIN IN SERVICE AND WHICH MAY BE AFFECTED BY THE WORK. THE CONDITION OF THE EXISTING CONDUITS AND THEIR APPUTENANCE SHALL BE DETERMINED FROM FIELD OBSERVATIONS. RECORDS OF THE INSPECTION SHALL BE KEPT IN WRITING BY THE STATE.

ALL NEW CONDUITS, INLETS, CATCH BASINS, AND MANHOLES CONSTRUCTED AS A PART OF THE PROJECT SHALL BE FREE OF ALL FOREIGN MATTER AND IN A CLEAN CONDITION BEFORE THE PROJECT WILL BE ACCEPTED BY THE STATE.

ALL EXISTING SEWERS INSPECTED INITIALLY BY THE ABOVE MENTIONED PARTIES SHALL BE MAINTAINED AND LEFT IN A CONDITION REASONABLY COMPARABLE TO THAT DETERMINED BY THE ORIGINAL INSPECTION. ANY CHANGE IN THE CONDITION RESULTING FROM THE CONTRACTOR'S OPERATIONS SHALL BE CORRECTED BY THE CONTRACTOR TO THE SATISFACTION OF THE ENGINEER.

PAYMENT FOR ALL OPERATIONS DESCRIBED ABOVE SHALL BE INCLUDED IN THE CONTRACT PRICE FOR THE PERTINENT 603 CONDUIT ITEMS.

CROSSINGS AND CONNECTIONS TO EXISTING PIPES AND UTILITIES
WHERE PLANS PROVIDE FOR A PROPOSED CONDUIT TO BE CONNECTED TO, OR CROSS OVER OR UNDER AN EXISTING SEWER OR UNDERGROUND UTILITY, THE CONTRACTOR SHALL LOCATE THE EXISTING PIPES OR UTILITIES BOTH AS TO LINE AND GRADE BEFORE STARTING TO LAY THE PROPOSED CONDUIT.

IF IT IS DETERMINED THAT THE ELEVATION OF THE EXISTING CONDUIT, OR EXISTING APPURTENANCE TO BE CONNECTED, DIFFERS FROM THE PLAN ELEVATION OR RESULTS IN A CHANGE IN THE PLAN CONDUIT SLOPE, THE ENGINEER SHALL BE NOTIFIED BEFORE STARTING CONSTRUCTION OF ANY PORTION OF THE PROPOSED CONDUIT WHICH WILL BE AFFECTED BY THE VARIANCE IN THE EXISTING ELEVATIONS.

IF IT IS DETERMINED THAT THE PROPOSED CONDUIT WILL INTERSECT AN EXISTING SEWER OR UNDERGROUND UTILITY IF CONSTRUCTED AS SHOWN ON THE PLAN, THE ENGINEER SHALL BE NOTIFIED BEFORE STARTING CONSTRUCTION OF ANY PORTION OF THE CONDUIT WHICH WOULD BE AFFECTED BY THE INTERFERENCE WITH AN EXISTING FACILITY.

PAYMENT FOR ALL THE OPERATIONS DESCRIBED ABOVE SHALL BE INCLUDED IN THE CONTRACT PRICE FOR THE PERTINENT 603 CONDUIT ITEM.

MONUMENT ASSEMBLIES
CONSTRUCT MONUMENT ASSEMBLIES IN ACCORDANCE WITH THE DETAILS SHOWN ON THE STANDARD CONSTRUCTION DRAWINGS AND AT THE LOCATIONS ON SHEET 54.

SEEDING AND MULCHING

THE FOLLOWING QUANTITIES ARE PROVIDED TO PROMOTE GROWTH AND CARE OF PERMANENT SEEDED AREAS:

659, SOIL ANALYSIS TEST 2 EACH

659, TOPSOIL 80 CU. YD.
(111 CU. YD./1000 SQ. YD.)(720 SQ. YD.) = 79.9 CU. YD.

659, SEEDING AND MULCHING 720 SQ. YD.

659, REPAIR SEEDING AND MULCHING 36 SQ. YD
(0.05)(720 SQ. YD.) = 36.0 SQ. YD.

659, INTER-SEEDING 36 SQ. YD.
(0.05)(720 SQ. YD.) = 36.0 SQ. YD.

659, COMMERCIAL FERTILIZER .1 TON
(1 TON/7410 SQ. YD.)(720 SQ. YD.) + (1 TON/11111 SQ. YD.)(36 SQ. YD.) = .10 TON

659, LIME .2 ACRE
(1 ACRE/4840 SQ. YD.)(720 SQ. YD.) = .15 ACRE

659, WATER 4 M. GAL.
(0.0054 M. GAL./1 SQ. YD.)(720 SQ. YD.) + (0.0027 M. GAL./1 SQ. YD.)(36 SQ. YD.) = 3.98 M. GAL.

SEEDING AND MULCHING SHALL BE APPLIED TO ALL AREAS OF EXPOSED SOIL BETWEEN THE RIGHT-OF-WAY LINES, AND WITHIN LINES COVERED BY WORK AGREEMENT OR SLOPE EASEMENT. QUANTITY CALCULATIONS FOR SEEDING AND MULCHING ARE BASED ON THESE LIMITS.

THE SEEDING AND MULCHING QUANTITY TOTALS LISTED ABOVE ARE CARRIED TO THE GENERAL SUMMARY.

PIPE CONNECTIONS TO CORRUGATED METAL STRUCTURES

CONNECTIONS OF PROPOSED LONGITUDINAL DRAINAGE TO CORRUGATED METAL STRUCTURES SHALL BE MADE BY MEANS OF A SHOP FABRICATED OR FIELD WELDED STUB ON THE STRUCTURE. THE STUB SHALL MEET THE REQUIREMENTS OF 707 AND HAVE A MINIMUM LENGTH OF 2 FEET AND A MINIMUM WALL THICKNESS 0.064 INCHES.

THE LOCATION AND ELEVATION OF THE STUB ARE TO BE CONSIDERED APPROXIMATE AND MAY BE ADJUSTED BY THE ENGINEER TO AVOID CUTTING THROUGH JOINTS IN THE STRUCTURE.

THE FIELD WELDED JOINT, IF USED, SHALL BE THOROUGHLY CLEANED AND REGALVANIZED OR OTHERWISE SUITABLY REPAIRED. WELDING SHALL MEET THE REQUIREMENTS OF 513.21.

A MASONRY COLLAR, AS PER STANDARD DRAWING DM-1.1, WILL BE REQUIRED TO CONNECT THE LONGITUDINAL DRAINAGE TO THE STUB, WHEN PIPE OTHER THAN CORRUGATED METAL IS PROVIDED FOR THE LONGITUDINAL DRAINAGE.

PAYMENT FOR CUTTING INTO THE STRUCTURE AND PROVIDING THE CONNECTION DESCRIBED, SHALL BE INCLUDED IN THE CONTRACT PRICE FOR ITEM 603 OR 522.

ITEM SPECIAL - MAILBOX REMOVED AND RESET

THIS WORK SHALL CONSIST OF REMOVING AND STORING THE EXISTING MAILBOX AND AND REATTACHING THE EXISTING MAILBOX AT THE LOCATIONS SPECIFIED IN THE PLAN, OR OTHERWISE ESTABLISHED BY THE ENGINEER.

THE MAILBOX SHALL BE SECURELY AND NEATLY ATTACHED BY THE CONTRACTOR TO THE NEW SUPPORT.

DUE CARE SHALL BE EXERCISED IN SUCH AN OPERATION, AND THE CONTRACTOR SHALL BE RESPONSIBLE FOR REPAIRING OR REPLACING ANY BOX DAMAGED BY IMPROPER HANDLING ON HIS PART, AS JUDGED BY THE ENGINEER.

MAILBOXES, REMOVED AND RESET IN PLACE, WILL BE PAID FOR AT THE CONTRACT UNIT PRICE PER EACH, FOR ITEM SPECIAL, MAILBOX REMOVED AND RESET.

ENVIRONMENTAL COMMITMENTS

1. THIS PROJECT IS WITHIN THE KNOWN SUMMER BREEDING RANGE OF THE FEDERAL ENDANGERED INDIANA BAT. UNAVOIDABLE CUTTING OF TREES DEFINED AS POTENTIAL HABITAT FOR THE INDIANA BAT (I.E. LIVING OR STANDING DEAD TREES OR SNAGS WITH EXFOLIATING, PEELING OR LOOSE BARK, SPLIT TRUNKS AND/OR BRANCHES, OR CAVITIES) WILL BE PERFORMED ONLY BEFORE APRIL 15 OR AFTER SEPTEMBER 15 WHEN THE SPECIES WOULD NOT BE USING SUCH HABITAT.

2. ALL PERTINENT CONDITIONS CONTAINED WITHIN THE ARMY CORPS OF ENGINEERS' NATIONWIDE PERMIT #3 SHALL BE FOLLOWED BY THE CONTRACTOR DURING CONSTRUCTION ACTIVITIES.

3. BANK STABILIZATION WILL BE LIMITED TO REGRADING OF THE BANKS FOR THE TOE-OF-SLOPE (IN STREAM) TO THE TOP OF BANK AND WILL INCLUDE PLACEMENT OF ROCK CHANNEL PROTECTION WHERE REQUIRED. STABILIZATION WILL BE LIMITED TO 50 LINEAR FEET FROM ENDS OF NEW CULVERT. THIS WILL EXCLUDE WORK SUCH AS WIDENING, DEEPENING OR RELOCATION. THIS STABILIZATION AND/OR SURFACE WATER/VEGETATION IMPACTS WILL BE KEPT TO A MINIMUM.

4. THE SPECIFICATIONS SET FORTH IN THE MOST CURRENT VERSION OF ODOT'S CONSTRUCTION AND MATERIAL SPECIFICATIONS, LOCATION AND DESIGN MANUAL AND STANDARD DRAWINGS WILL BE USED TO ENSURE ADEQUATE EROSION AND SEDIMENT CONTROL DURING CONSTRUCTION.

5. THE CONTRACTOR SHALL TAKE ALL PRECAUTIONS TO AVOID AND/OR LIMIT DEMOLITION DEBRIS FROM ENTERING STREAMS. ANY MATERIAL THAT DOES FALL INTO STREAMS SHALL BE REMOVED AS SOON AS POSSIBLE. IMPACTS TO THE STREAM WILL BE AVOIDED, MINIMIZED, AND/OR MITIGATED WHERE REASONABLE OR PRACTICABLE.

6. WRITTEN PERMISSION WILL BE OBTAINED FOR ANY IN-STREAM BLASTING FROM THE CHIEF OF ODNR'S DIVISION OF WILDLIFE IN ACCORDANCE WITH OHIO REVISED CODE SECTION 1533.58.

7. WHEN STREAMS BANKS, AND RIPARIAN AREAS ARE DISTURBED, THEY SHOULD BE RE-SEEDED OR PLANTED WITH NATIVE RIPARIAN VEGETATION IMMEDIATELY AFTER THE WORK IS COMPLETED.

CALCULATED GTS
CHECKED DCM

GENERAL NOTES

ASD-89-12.15

DESIGN FILE: I:\projects\25673\Struct\1215GN001.dgn
WORKSTATION: dvousden DATE: 11/6/2007

ITEM 614 - MAINTAINING TRAFFIC
DETOUR LIMITATION:

FOR STRUCTURE ASD-89-16.70, TWO WAY TRAFFIC SHALL BE MAINTAINED AT ALL TIMES, EXCEPT FOR A PERIOD NOT TO EXCEED EIGHTEEN (18) CONSECUTIVE CALENDAR DAYS. THROUGH TRAFFIC WILL BE DETOURED AS SHOWN ON THIS SHEET.

THE CONTRACTOR SHALL NOTIFY THE ODOT DISTRICT THREE ROADWAY SERVICES MANAGER, IN WRITING, A MINIMUM OF FOURTEEN (14) DAYS IN ADVANCE OF THE DATE THE DETOUR IS NEEDED. THE STATE OF OHIO WILL INSTALL, MAINTAIN AND SUBSEQUENTLY REMOVE THE DETOUR SIGNING.

THE CONTRACTOR SHALL ALSO NOTIFY, IN WRITING, THE FOLLOWING AGENCIES AT LEAST TEN (10) DAYS PRIOR TO THE TIME WHEN THE S.R. 89 DETOUR WILL BE IMPLEMENTED:

TOWNSHIP TRUSTEES (TWP. ROADS ONLY)
LOCAL FIRE DEPARTMENTS(S)
LOCAL SCHOOL DISTRICT(S)
COUNTY SHERIFF

THE CONTRACTOR SHALL BE RESPONSIBLE FOR FURNISHING, INSTALLING, MAINTAINING AND REMOVING THE GATES AND BARRICADES AT THE APPROXIMATE WORK LIMITS OF THE PROJECT, AND THE ADVANCE WARNING SIGNS AS SHOWN ON STANDARD CONSTRUCTION DRAWING MT-101.60.

INTERIM COMPLETION DATE:

THE EIGHTEEN (18) CONSECUTIVE CALENDAR DAYS SHALL BE CONSIDERED AN INTERIM COMPLETION DATE, AND FOR EACH CALENDAR DAY BEYOND THE EIGHTEEN (18) CONSECUTIVE CALENDAR DAYS THAT THE ROADWAY REMAINS CLOSED TO TRAFFIC, THE CONTRACTOR SHALL BE ASSESSED LIQUIDATED DAMAGES IN ACCORDANCE WITH CMS 108.07.

ACCESS TO ADJACENT PROPERTIES SHALL BE MAINTAINED AT ALL TIMES, AS PER SECTION 614.02 (A).

ALL WORK AND TRAFFIC CONTROL DEVICES SHALL BE IN ACCORDANCE WITH 614 AND OTHER APPLICABLE PORTIONS OF THE SPECIFICATION, AS WELL AS THE OHIO MANUAL OF UNIFORM TRAFFIC CONTROL DEVICES. PAYMENT FOR ALL LABOR, EQUIPMENT AND MATERIALS SHALL BE INCLUDED IN THE LUMP SUM CONTRACT PRICE FOR ITEM 614, MAINTAINING TRAFFIC, UNLESS SEPARATELY ITEMIZED IN THE PLAN.

PROJECT DETOUR LIMITATIONS
THE ROADWAY SHALL NOT BE CLOSED TO TRAFFIC FOR THE REMOVAL OR MODIFICATION OF THE EXISTING STRUCTURE OR CONDUIT UNTIL PRECAST STRUCTURE MATERIAL (EG.: CONDUIT, ETC.) NECESSARY TO PLACE THE ROADWAY BACK INTO SERVICE HAVE BEEN TESTED, APPROVED AND ARE READY FOR DELIVERY TO THE PROJECT SITE.

SHOULD THE CONTRACTOR FAIL TO MEET ANY OF THESE REQUIREMENTS, THE CONTRACTOR SHALL BE ASSESSED LIQUIDATED DAMAGES IN ACCORDANCE WITH CMS 108.07.

NOTICE OF CLOSURE SIGNS
THESE SIGNS SHALL BE ERECTED BY THE CONTRACTOR AT LEAST ONE WEEK IN ADVANCE OF THE SCHEDULED ROAD CLOSURE. THE SIGNS SHALL BE ERECTED ON THE RIGHT-HAND SIDE OF THE ROAD FACING TRAFFIC. THEY SHALL BE PLACED SO AS NOT TO INTERFERE WITH THE VISIBILITY OF ANY OTHER TRAFFIC CONTROL SIGNS. THEY SHOULD BE ERECTED AT THE POINT OF CLOSURE. PAYMENT FOR THIS WORK SHALL BE INCLUDED IN THE LUMP SUM BID FOR ITEM 614, MAINTAINING TRAFFIC, AND IT SHALL INCLUDE FURNISHING, ERECTING, MAINTAINING AND REMOVING THE SIGNS AND SUPPORTS.

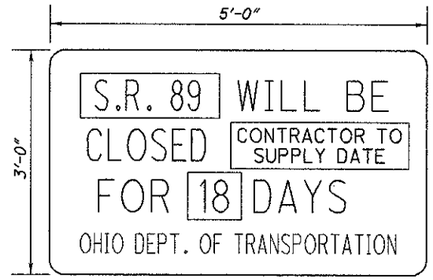

W20-H14-60

MAINTENANCE OF LOCAL DETOUR ROUTE
A LOCAL DETOUR ROUTE, OTHER THAN THE OFFICIAL SIGNED ODOT DETOUR ROUTE, WILL BE SELECTED BY AGREEMENT BETWEEN ODOT AND LOCAL GOVERNMENTAL AGENCIES PRIOR TO THE HIGHWAY CLOSURE.

DURING THE TIME THAT TRAFFIC IS DETOURED, THE CONTRACTOR SHALL MAINTAIN THIS ROUTE IN A CONDITION WHICH IS REASONABLY SMOOTH AND FREE FROM HOLES, RUTS, RIDGES, BUMPS, DUST AND STANDING WATER. ONCE THE DETOUR IS REMOVED AND TRAFFIC RETURNED TO ITS NORMAL PATTERN, THE DESIGNATED LOCAL DETOUR ROUTE SHALL BE RESTORED TO A CONDITION THAT IS EQUIVALENT TO THAT WHICH EXISTED PRIOR TO ITS USE FOR THIS PURPOSE. ALL SUCH WORK SHALL BE PERFORMED WHEN AND AS DIRECTED BY THE ENGINEER. THE DESIGNATED LOCAL DETOUR ROUTE IS TO BE REVIEWED AND REPAIRED PRIOR TO THE ASPHALT CONTRACTOR OR SUBCONTRACTOR LEAVING THE PROJECT.

PAYMENT FOR THE WORK NECESSARY TO REPAIR THESE LOCAL ROADS WILL BE PERFORMED BY EITHER CHANGE ORDER OR FORCE ACCOUNT.

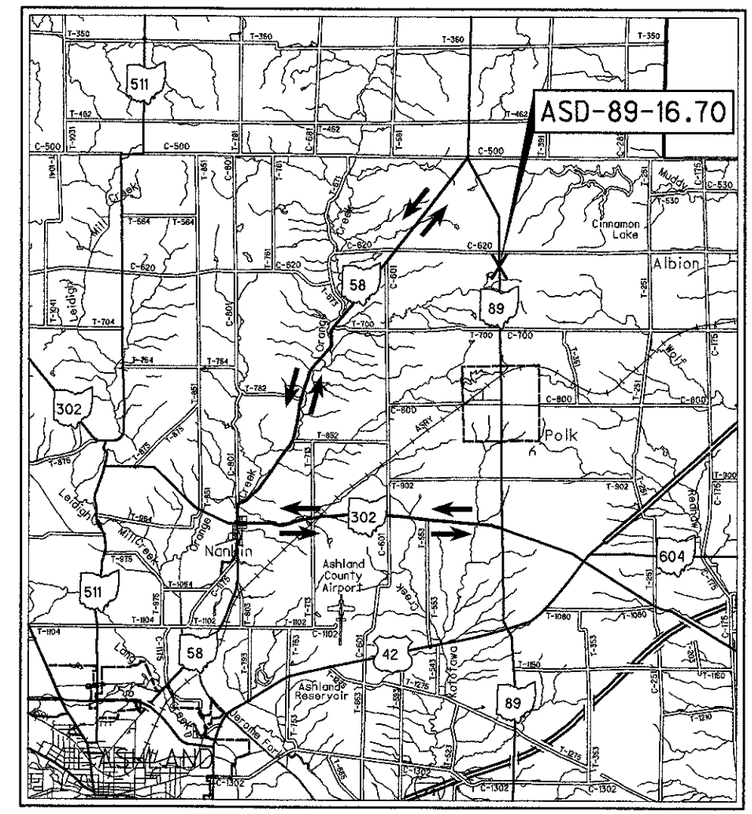

STATE DETOUR MAP

SCALE IN MILES
0 1 2 3 4

MAP LEGEND

X - PROJECT LOCATION

- OFFICIAL STATE SIGNED DETOUR

CALCULATED GTS
CHECKED DCM

MAINTENANCE OF TRAFFIC NOTES

ASD-89-12.15

DESIGN FILE: I:\projects\25673\Struct\1215GN001.dgn
WORKSTATION: dvousden DATE: 10/31/2007

REF NO.	SHEET NO.	STATION FROM	STATION TO	SIDE	202 GUARDRAIL REMOVED	202 ANCHOR ASSEMBLY REMOVED, TYPE A	202 HEADWALL REMOVED	202 PIPE REMOVED, 24" AND UNDER	202 PIPE REMOVED FOR REUSE, OVER 24"	603 12" CONDUIT, TYPE C	603 15" CONDUIT, TYPE D	603 48" CONDUIT, TYPE A 706.02	606 GUARDRAIL, TYPE 5	606 ANCHOR ASSEMBLY, TYPE E-98	606 ANCHOR ASSEMBLY, TYPE T	626 BARRIER REFLECTOR, TYPE A	670 DITCH EROSION PROTECTION	SPECIAL MAILBOX SUPPORT SYSTEM, SINGLE	SPECIAL MAILBOX REMOVED AND RESET
					FEET	EACH	EACH	FEET	FEET	FEET	FEET	FEET	FEET	EACH	EACH	EACH	SQ. YD.	EACH	EACH
D-1	28	237+22.80	237+62.70	LT.							40						11		
D-2	28	238+55.80	238+89.50	LT.						37									
D-3	28	238+96.20		LT.								16							
G-1	28	237+54.50	241+12.50	LT.									300	1	1	5			
R-1	28	237+65	240+30	LT.	215	2													
R-2	28	237+27	237+52	LT.				25											
R-3	28	238+55.80	238+87.50	LT.				35											
R-4	28	237+20.70		LT.														1	1
R-5	28	238+96.20		LT.			1												
R-6	28	238+96.20		LT.					16										
TOTALS CARRIED TO GENERAL SUMMARY					215	2	1	60	16	37	40	16	300	1	1	5	11	1	1

CALCULATED GTS
CHECKED DCM

ESTIMATED QUANTITIES - ASD-89-16.70

ASD-89-12.15

DESIGN FILE: I:\projects\25673\Struct\25673EQ001.DGN
WORKSTATION: dvousden DATE: 11/1/2007

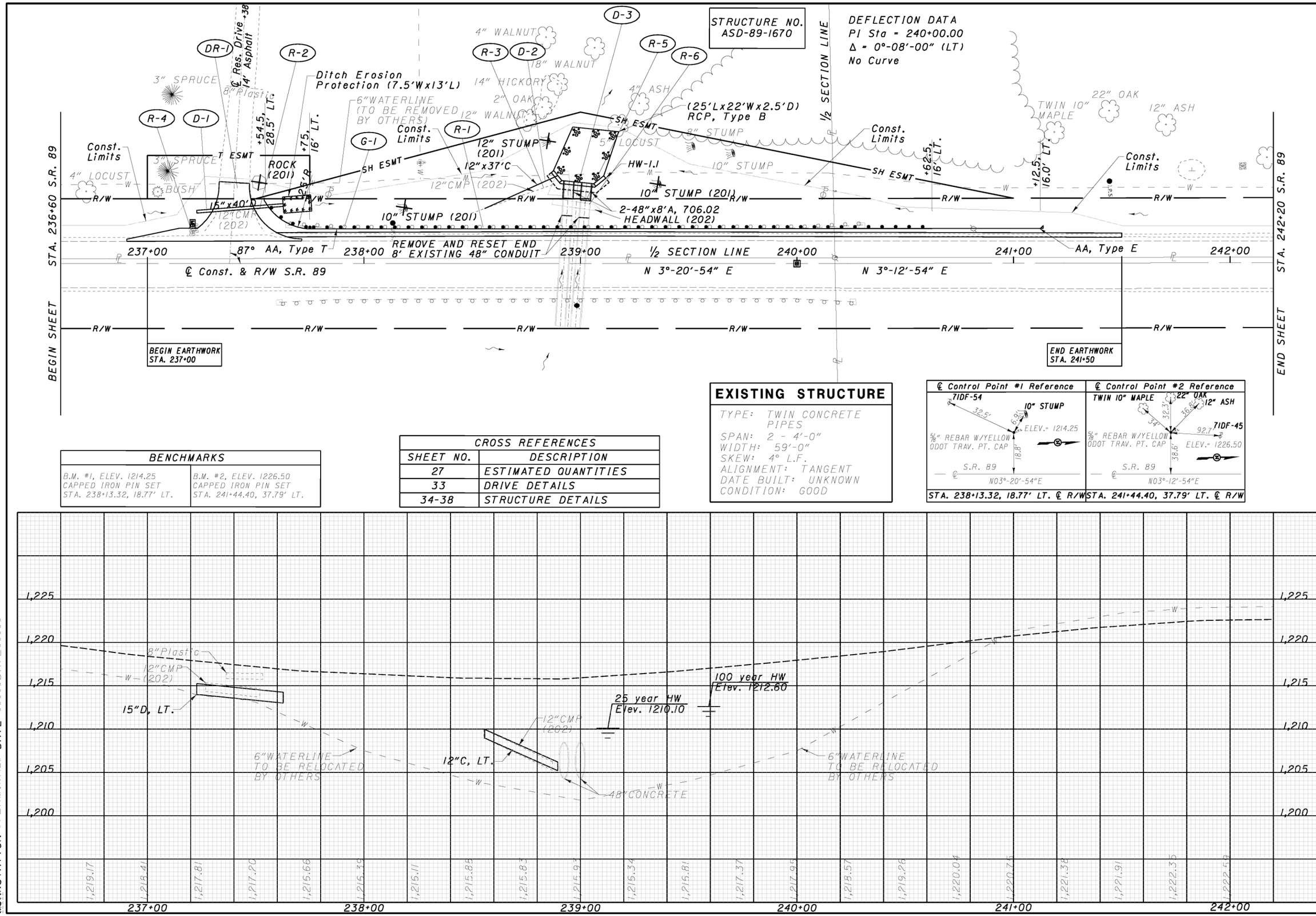

BENCHMARKS	
B.M. #1, ELEV. 1214.25 CAPPED IRON PIN SET STA. 238+13.32, 18.77' LT.	B.M. #2, ELEV. 1226.50 CAPPED IRON PIN SET STA. 241+44.40, 37.79' LT.

CROSS REFERENCES	
SHEET NO.	DESCRIPTION
27	ESTIMATED QUANTITIES
33	DRIVE DETAILS
34-38	STRUCTURE DETAILS

EXISTING STRUCTURE

TYPE: TWIN CONCRETE PIPES
SPAN: 2 - 4'-0"
WIDTH: 59'-0"
SKEW: 4° L.F.
ALIGNMENT: TANGENT
DATE BUILT: UNKNOWN
CONDITION: GOOD

HORIZONTAL SCALE IN FEET 0 10 20 40

CALCULATED DJV
CHECKED DCM

PLAN AND PROFILE - ASD-89-16.70
STA. 236+60 TO STA. 242+20

ASD-89-12.15

DESIGN FILE: $$$$$.DGNFILESPECIFICATIONS$$$$$
WORKSTATION: $TERMINAL$ DATE: $$$$$DATE$$$$$

REVISED BY: DJV REVISED ON: 11/9/07

SEEDING END WIDTH	SEEDING SQ. YDS.		END AREA CUT	END AREA FILL	VOLUME CUT	VOLUME FILL
25			1	2		
	-54	DRIVE CORRECTION			15	0
	36				1	4
18			1	12		
	25				1	6
0			1	0		
	7	SHEET TOTAL			17	10
	720	GRAND TOTAL			37	195

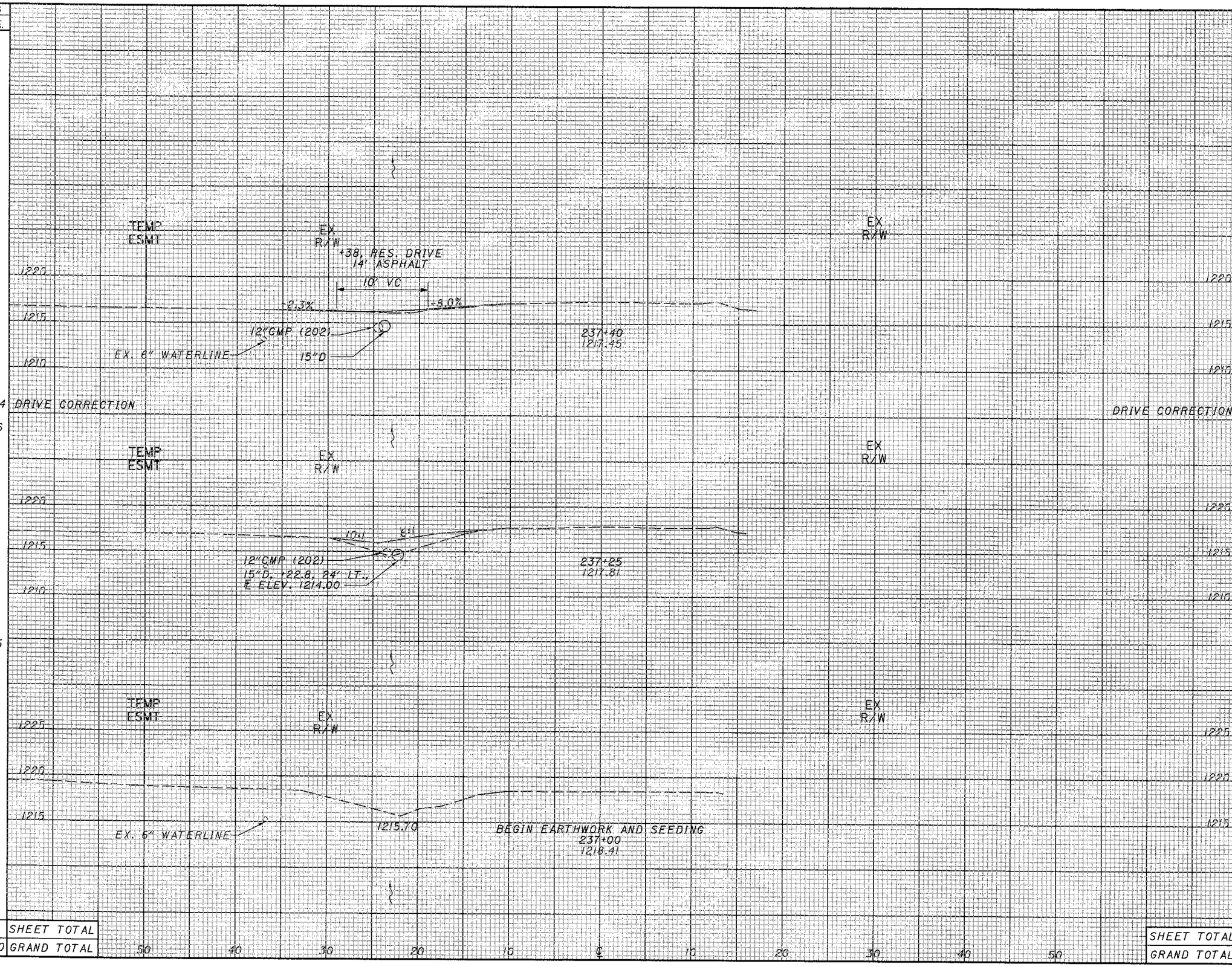

CALCULATED DJV
CHECKED DCM

CROSS SECTIONS - ASD-89-16.70
STA. 237+00 TO STA. 237+40

ASD-89-12.15

29
56

DESIGN FILE: I:\projects\25673\Struct\1670gx.dgn
WORKSTATION: dvousden DATE: 11/1/2007

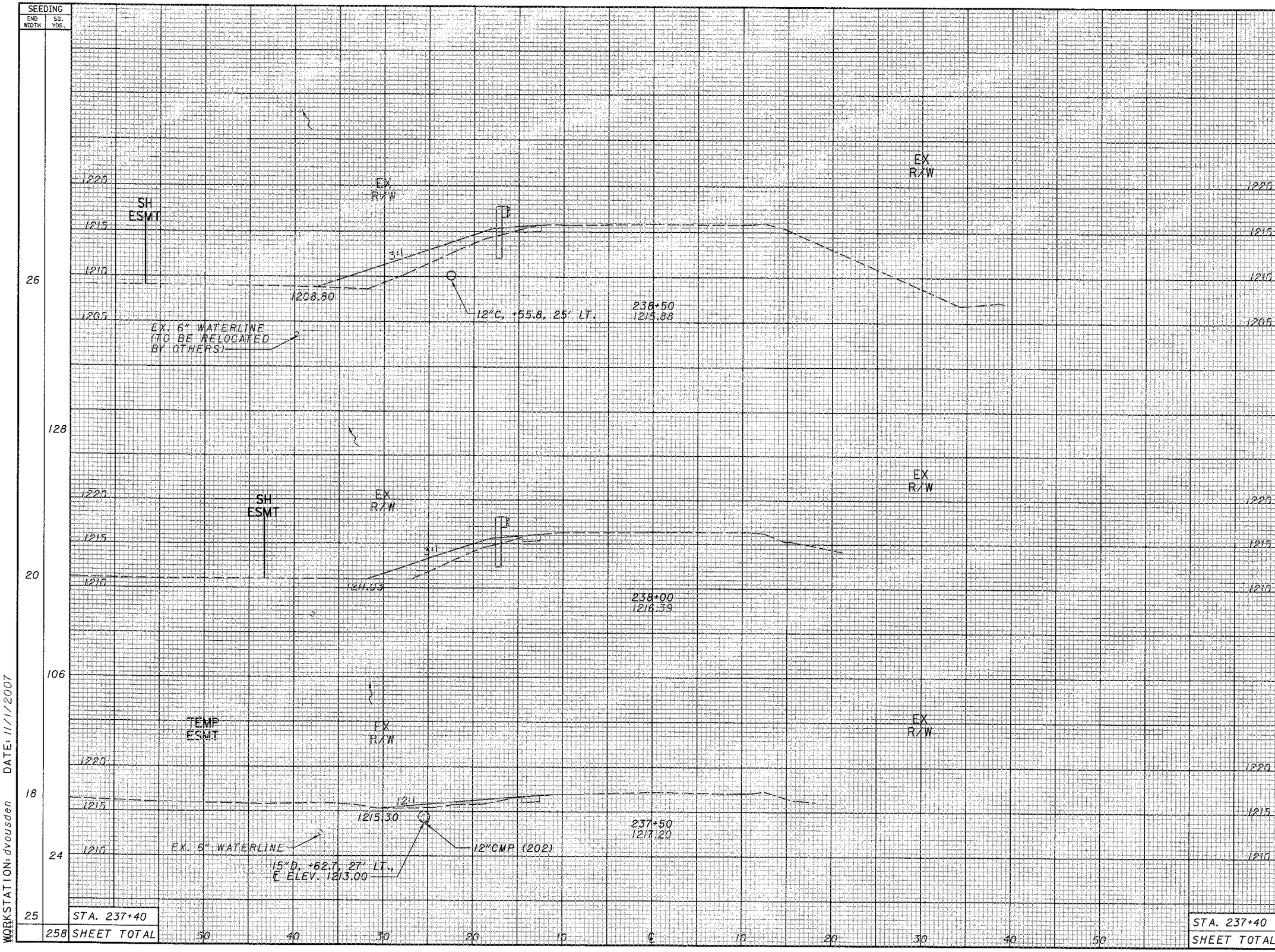

END AREA CUT	END AREA FILL	VOLUME CUT	VOLUME FILL
1	29		
		2	43
1	17		
		2	20
1	5		
		0	1
STA. 237+40	1	2	
SHEET TOTAL		4	64

CALCULATED DJV
CHECKED DCM

CROSS SECTIONS - ASD-89-16.70
STA. 237+50 TO STA. 238+50

ASD-89-12.15

30
56

DESIGN FILE: I:\projects\25673\Struct\1670gx.dgn
WORKSTATION: dvousden DATE: 11/1/2007

SEEDING END WIDTH	SEEDING SQ. YDS.
21	
	133
27	
	147
26	
	280

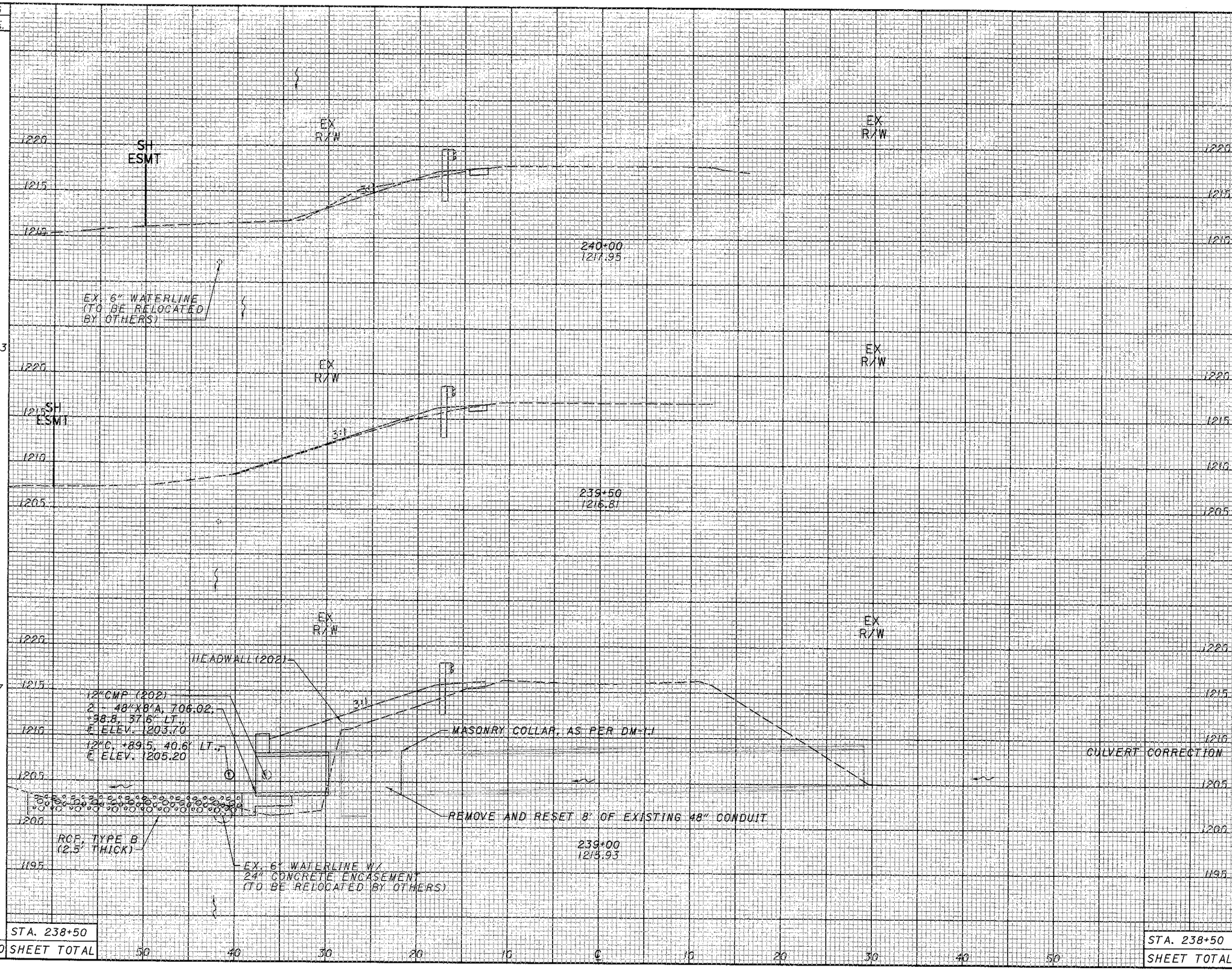

	END AREA CUT	END AREA FILL	VOLUME CUT	VOLUME FILL
	4	3		
			5	8
	1	6		
			1	45
	0	42	0	-23
			1	66
STA. 238+50	1	29		
SHEET TOTAL			7	96

CALCULATED DJV
CHECKED DCM

CROSS SECTIONS - ASD-89-16.70
STA. 239+00 TO STA. 240+00

ASD-89-12.15

31/56

DESIGN FILE: I:\projects\25673\Struct\1670gx.dgn
WORKSTATION: dvousden DATE: 11/1/2007

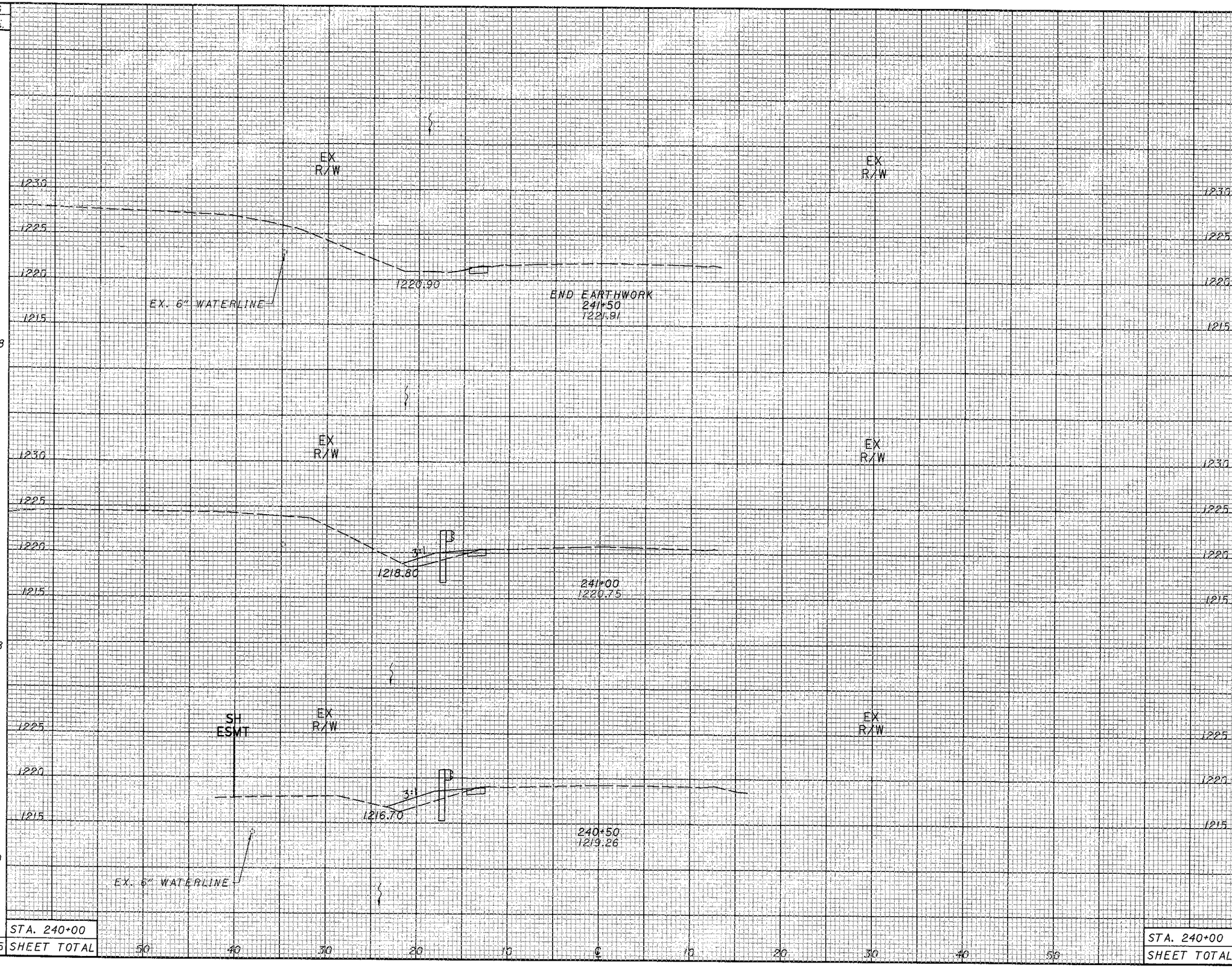

SEEDING END WIDTH	SEEDING SQ. YDS.		END AREA CUT	END AREA FILL	VOLUME CUT	VOLUME FILL
0			1	0		
	28				2	5
10			1	5		
	58				2	11
11			1	7		
	89				5	9
21		STA. 240+00	4	3		
	175	SHEET TOTAL			9	25

CALCULATED DJV
CHECKED DCM

CROSS SECTIONS - ASD-89-16.70
STA. 240+50 TO STA. 241+50

ASD-89-12.15

32/56

DESIGN FILE: i:\projects\25673\Struct\670gx.dgn
WORKSTATION: dvousden DATE: 11/1/2007

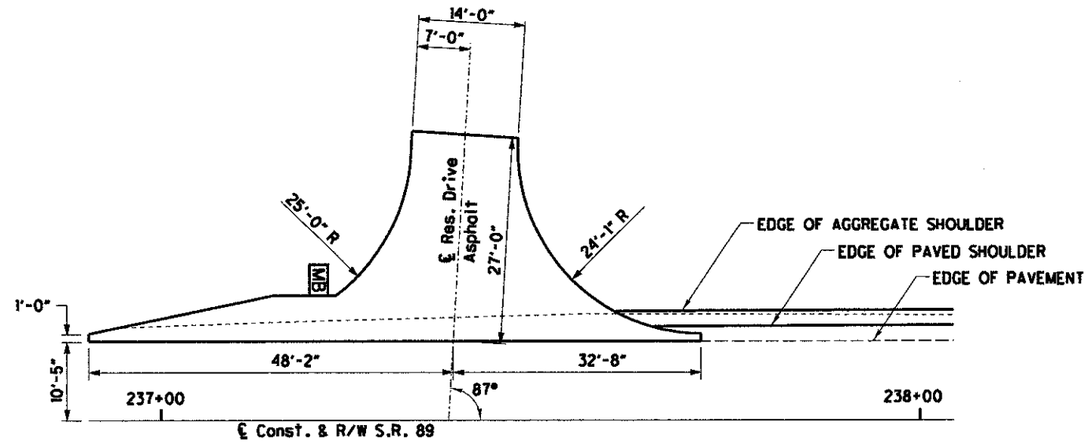

CADD MEASURED AREA = 784 SQ. FT.

℄ CONSTR. & R/W
STA. 237+38, DR-1

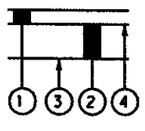

1. ITEM 442 - 2" ASPHALT CONCRETE SURFACE COURSE 9.5 MM, TYPE A (446), AS PER PLAN
2. ITEM 304 - 6" AGGREGATE BASE
3. ITEM 204 - SUBGRADE COMPACTION
4. ITEM 407 - TACK COAT @ 0.08 GAL./S.Y.

DR-1 DRIVEWAY COMPOSITION

NOTES:

FOR DRIVE QUANTITIES, SEE OFFICE CALCS ON SHEET 7 & 8

FOR ADDITIONAL DRIVE INFORMATION OR DETAILS NOT SHOWN, SEE STANDARD CONSTRUCTION DRAWING BP-4.1.

CALCULATED GTS
CHECKED DCM

DRIVE DETAILS

ASD-89-12.15

DESIGN FILE: I:\projects\25673\25673gm.dgn
WORKSTATION: cvanhorn DATE: 11/6/2007

STRUCTURE NO.
ASD-89-1670

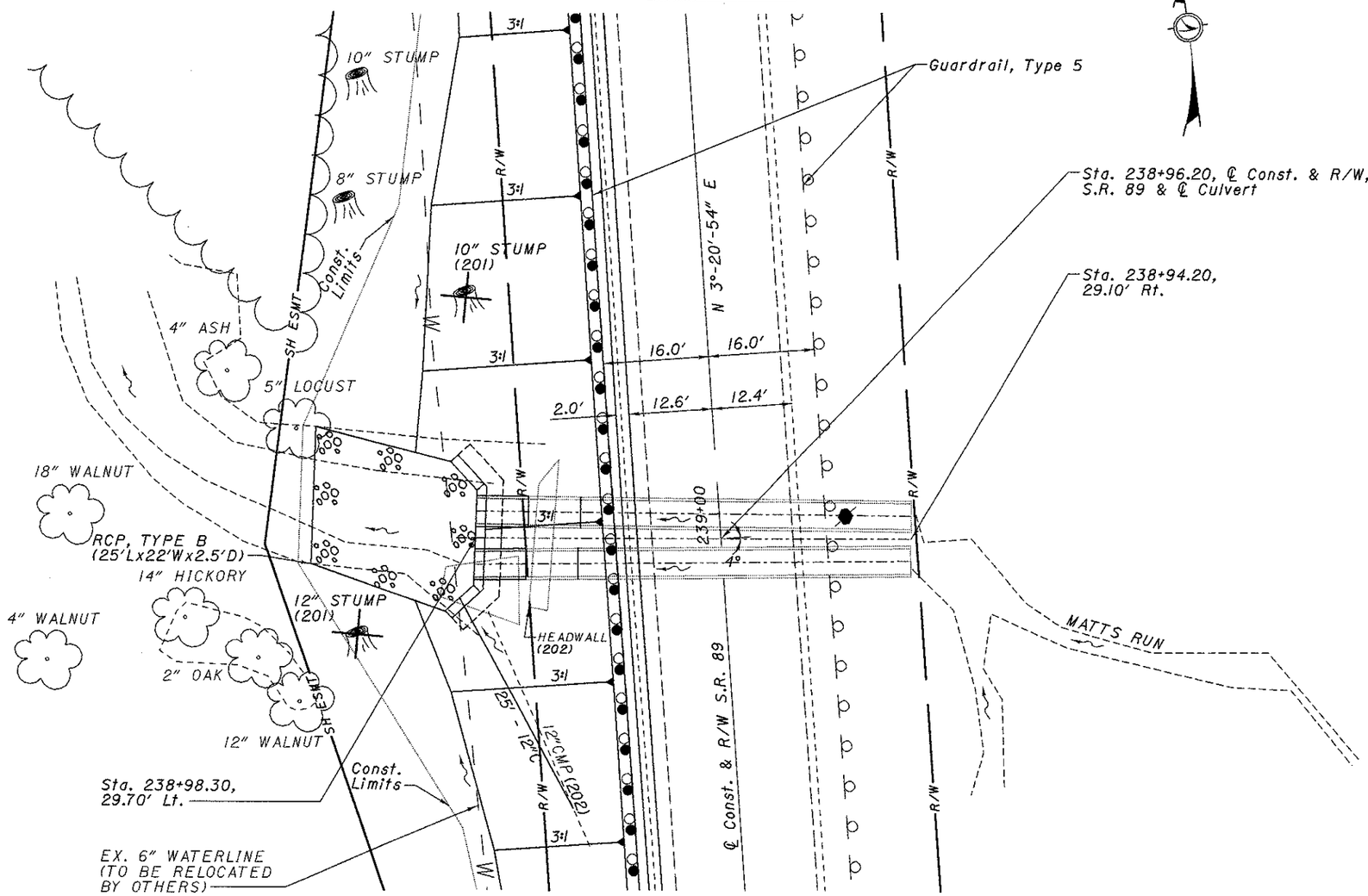

EXISTING STRUCTURE

TYPE: TWIN CONCRETE PIPES
SPAN: 2 - 4'-0"
WIDTH: 59'-0"
SKEW: 4° L.F.
ALIGNMENT: TANGENT
DATE BUILT: UNKNOWN
CONDITION: GOOD

HYDRAULIC DATA

Drainage Area	=	223 Ac.
Q_{25}	=	196 cfs
HW_{25}	=	1210.10
V_{25}	=	13.30 fps
Q_{100}	=	281 cfs
HW_{100}	=	1212.60
V_{100}	=	14.80 fps

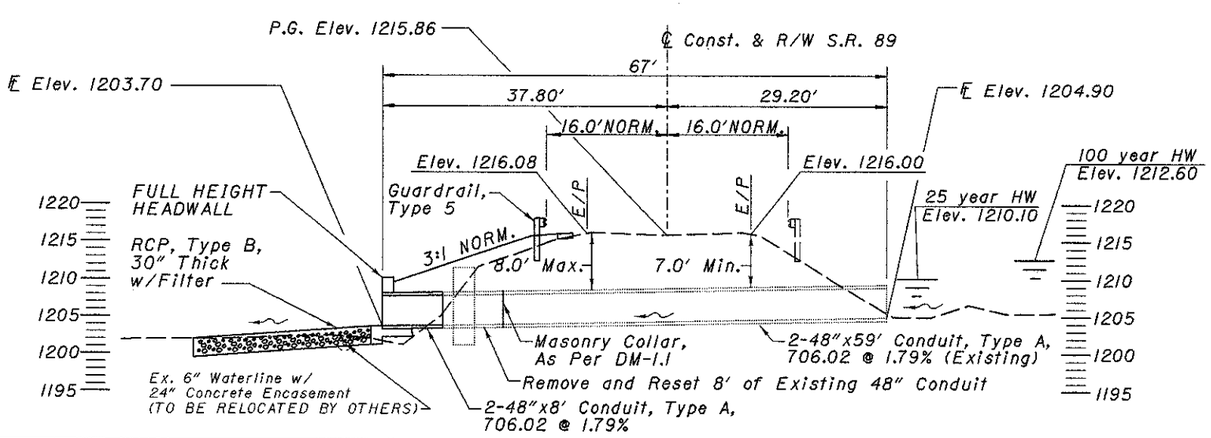

NOTES:

NO BUILDINGS, RESIDENCES OR BUSINESS ESTABLISHMENTS LIE IN THE BASE FLOOD PLAIN, AND NO FLOOD HAZARD EXISTS.

EXISTING STRUCTURE TO BE EXTENDED, FULL HEIGHT HEADWALL CONSTRUCTED, AND ROCK CHANNEL PROTECTION INSTALLED.

ROAD TO BE CLOSED DURING CONSTRUCTION AND TRAFFIC TO BE DETOURED.

EARTHWORK LIMITS SHOWN ARE APPROXIMATE, ACTUAL SLOPES SHALL CONFORM TO PLAN CROSS SECTIONS.

DESIGN AGENCY
ODOT DISTRICT THREE
OFFICE OF PRODUCTION

DESIGNED	DRAWN	REVIEWED	DATE
DJV	DJV	RDN	9/07
CHECKED	REVISED	STRUCTURE FILE NUMBER	
DCM		0303704	

CULVERT DETAIL
ASD-89-1670
OVER MATTS RUN

ASD-89-12.15

1/5

34/56

DESIGN FILE: I:\projects\25673\Struct\1670sp.dgn
WORKSTATION: dvousden DATE: 11/1/2007

GENERAL NOTES

DESIGN SPECIFICATIONS: THIS STANDARD DRAWING CONFORMS TO "STANDARD SPECIFICATIONS FOR HIGHWAY BRIDGES" ADOPTED BY THE AMERICAN ASSOCIATION OF STATE HIGHWAY AND TRANSPORTATION OFFICIALS, 2002, INCLUDING THE 2003, 2004, 2005 AND 2006 INTERIM SPECIFICATIONS AND THE ODOT BRIDGE DESIGN MANUAL.

DESIGN DATA: THE FOLLOWING DESIGN DATA IS ASSUMED:

CONCRETE CLASS C - COMPRESSIVE STRENGTH 4000 PSI (FOOTING, WINGWALL AND HEADWALL)

REINFORCING STEEL - ASTM A615, A616, OR A617 GRADE 60 MINIMUM YIELD STRENGTH 60,000 PSI (ALL REINFORCING SHALL BE EPOXY COATED)

BACKFILL LIMITATION: WHEN THE DESIGN HEIGHT IS GREATER THAN 10 FT, THE BACKFILL BEHIND THE WINGWALLS SHALL NOT BE PLACED HIGHER THAN THE ELEVATION OF THE SOIL ABOVE THE TOE. WHEN THE SOIL ABOVE THE TOE IS AT ITS FINISHED ELEVATION, THE REMAINDER OF THE BACKFILL MAY BE PLACED.

SEALING OF HEADWALL AND WINGWALLS: ALL EXPOSED HEADWALL AND WINGWALL CONCRETE SHALL BE SEALED WITH EPOXY-URETHANE SEALER. THE LIMITS SHALL BE AS SHOWN IN THE DIAGRAMS BELOW. PAYMENT FOR THE EPOXY-URETHANE SEALER SHALL BE PER ITEM 512 - SEALING OF CONCRETE SURFACES (EPOXY-URETHANE).

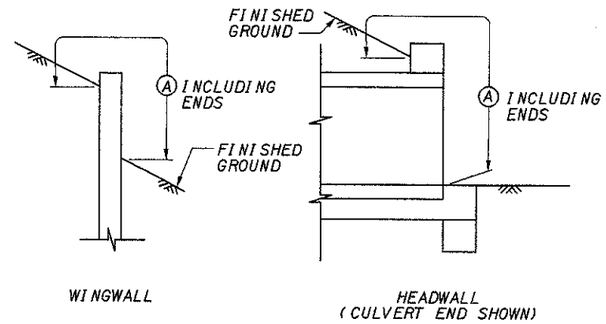

LIMITS OF ITEM 512-SEALING CONCRETE SURFACES

Ⓐ - SEAL ENTIRE CONCRETE SURFACE AREA

ITEM 503-UNCLASSIFIED EXCAVATION (WINGWALL/FOOTING): EXCAVATION LIMITS FOR THE PROPOSED STRUCTURE SHALL BE AS DEFINED IN 503. EXCAVATION OUTSIDE THESE LIMITS NECESSARY TO INSTALL THE PROPOSED STRUCTURE SHALL BE INCLUDED IN ALL NECESSARY 511 ITEMS.

ITEM 511-CLASS C CONCRETE, RET WALL/WINGWALL, ABOVE FT, AS PER PLAN: ITEM 511-CLASS C CONCRETE, FOOTING, AS PER PLAN: THE COARSE AGGREGATE FOR THESE ITEMS SHALL BE LIMESTONE.

BASIS OF PAYMENT: ALL LABOR, EQUIPMENT AND INCIDENTALS REQUIRED TO CONSTRUCT THE FOOTINGS, HEADWALLS AND WINGWALLS SHALL BE INCLUDED WITH THE ABOVE LISTED 511 - CLASS C CONCRETE ITEMS. PAYMENT FOR REINFORCING STEEL SHALL BE INCLUDED WITH ITEM 509 - EPOXY COATED REINFORCING STEEL.

ESTIMATED QUANTITIES

ITEM	ITEM EXT	TOTAL	UNIT	DESCRIPTION
503	11100	LUMP		COFFERDAMS, CRIBS AND SHEETING
503	21300	LUMP		UNCLASSIFIED EXCAVATION (WINGWALL FOOTING)
509	10000	1596	LB.	EPOXY COATED REINFORCING STEEL
511	46001	7.5	CU. YD.	CLASS C CONCRETE, RET WALL/WINGWALL, ABOVE FT, AS PER PLAN
511	46501	10.5	CU. YD.	CLASS C CONCRETE, FOOTING, AS PER PLAN
512	10100	20	SQ. YD.	SEALING OF CONCRETE SURFACES (EPOXY-URETHANE)
601	32100	51	CU. YD.	ROCK CHANNEL PROTECTION, TYPE B WITH FILTER
				TOTALS CARRIED TO STRUCTURE SUMMARY

DESIGN AGENCY: ODOT DISTRICT THREE OFFICE OF PRODUCTION

DESIGNED DJV | DRAWN GTS | REVIEWED RDN | DATE 9/07

CHECKED DCM | REVISED | STRUCTURE FILE NUMBER 0303704

CULVERT DETAILS
ASD-89-1670
OVER MATTS RUN

ASD-89-12.15

2/5

35/56

DESIGN FILE: I:\projects\25673\Struct\1670sd.dgn
WORKSTATION: dvousden DATE: 11/1/2007

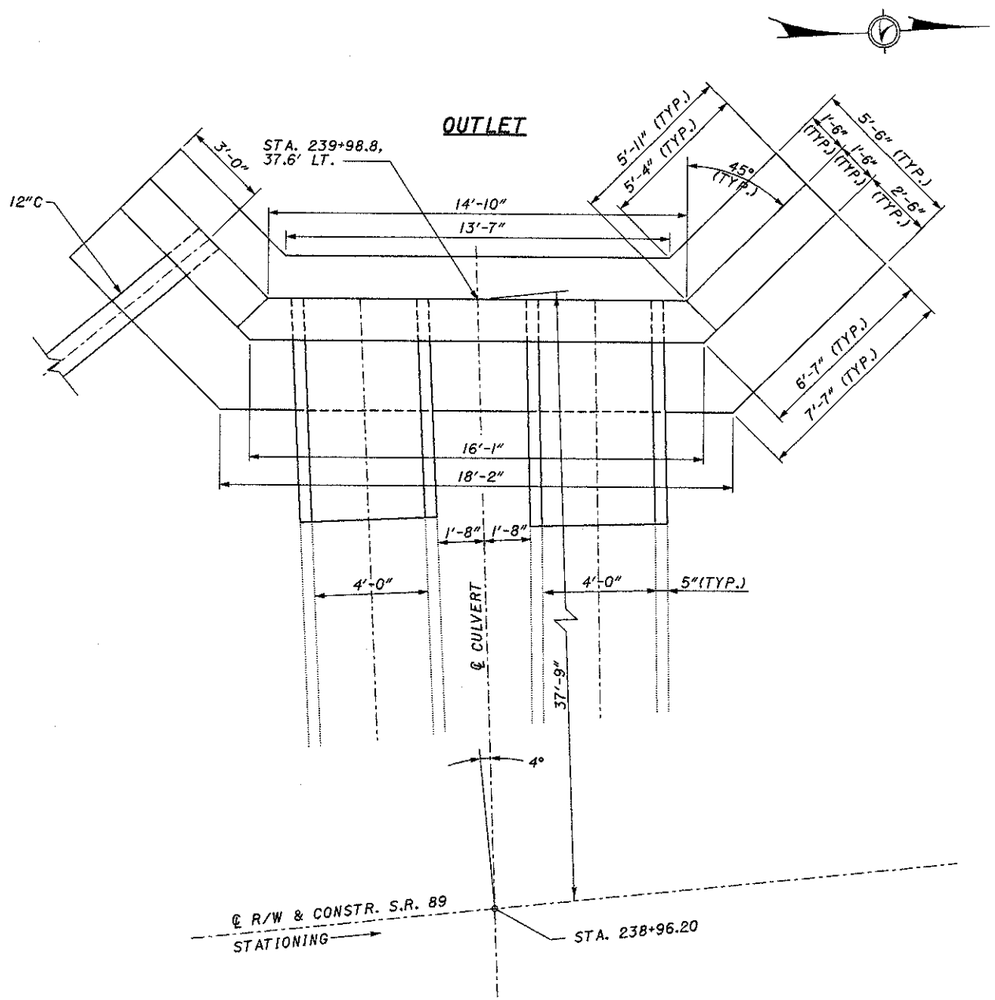

CULVERT & WINGWALL LAYOUT

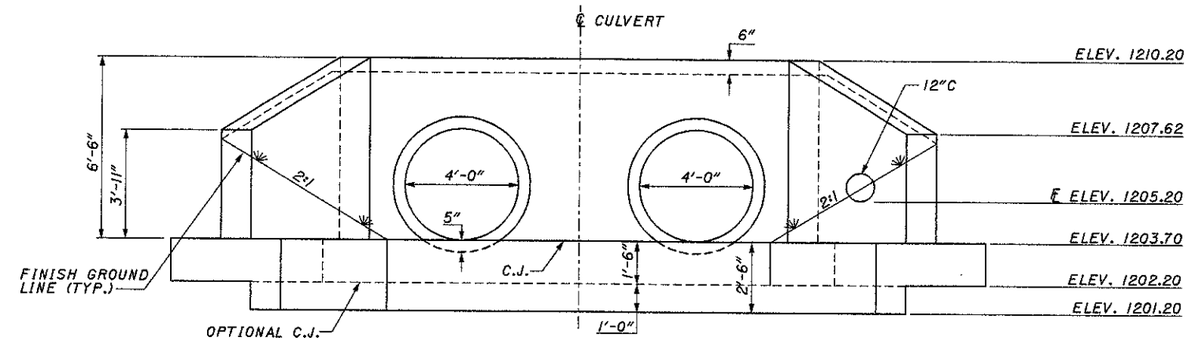

OUTLET ELEVATION

LEGEND

STA. STATION
C.J. CONSTRUCTION JOINT
℄ CENTERLINE
TYP. TYPICAL
MIN. MINIMUM

DESIGN AGENCY: ODOT DISTRICT THREE OFFICE OF PRODUCTION

DESIGNED	DRAWN	REVIEWED	DATE
DJV	GTS	RDW	9/07
CHECKED	REVISED	STRUCTURE FILE NUMBER	
DCM		0303704	

CULVERT DETAILS
ASD-89-1670
OVER MATTS RUN

ASD-89-12.15

3/5

36/56

DESIGN FILE: i:\projects\25673\Struct\1670sd.dgn
WORKSTATION: dvousden DATE: 11/1/2007

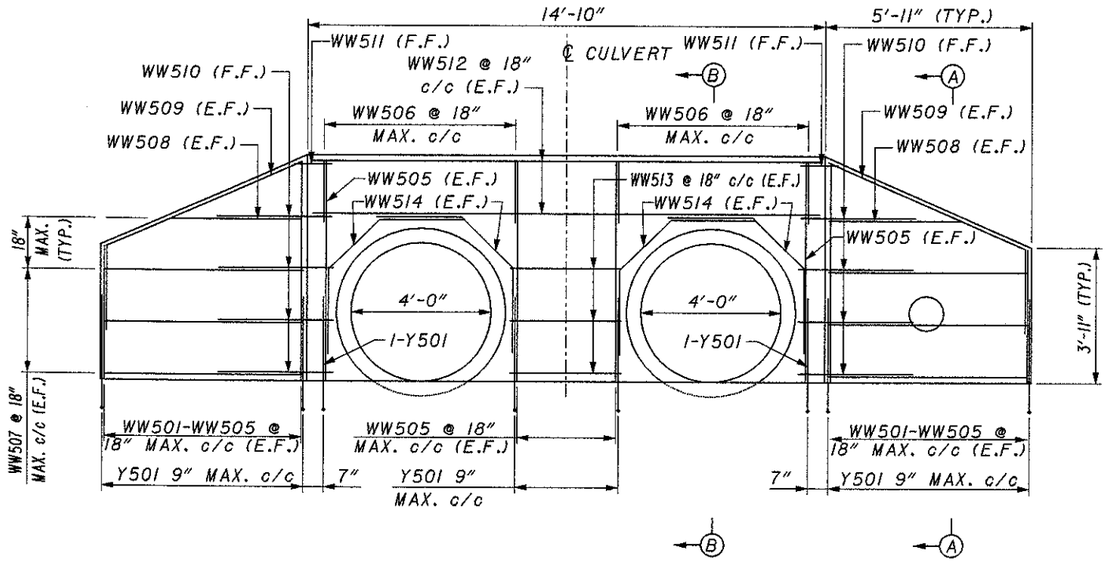

WINGWALL ELEVATION

(FOOTING NOT SHOWN)

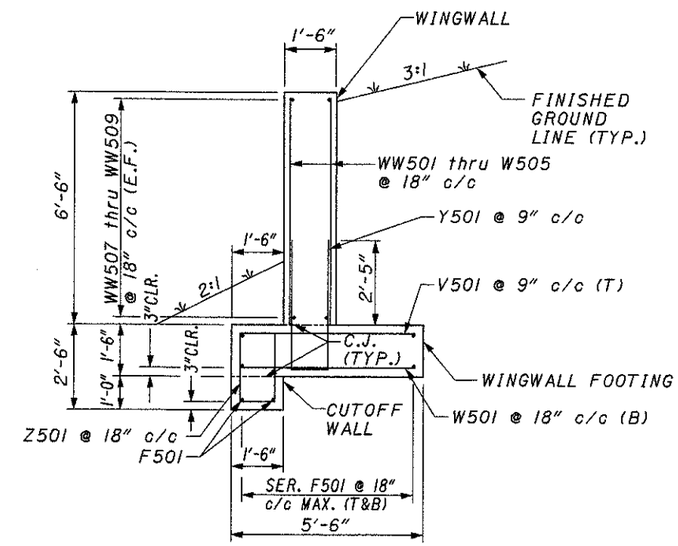

SECTION A-A

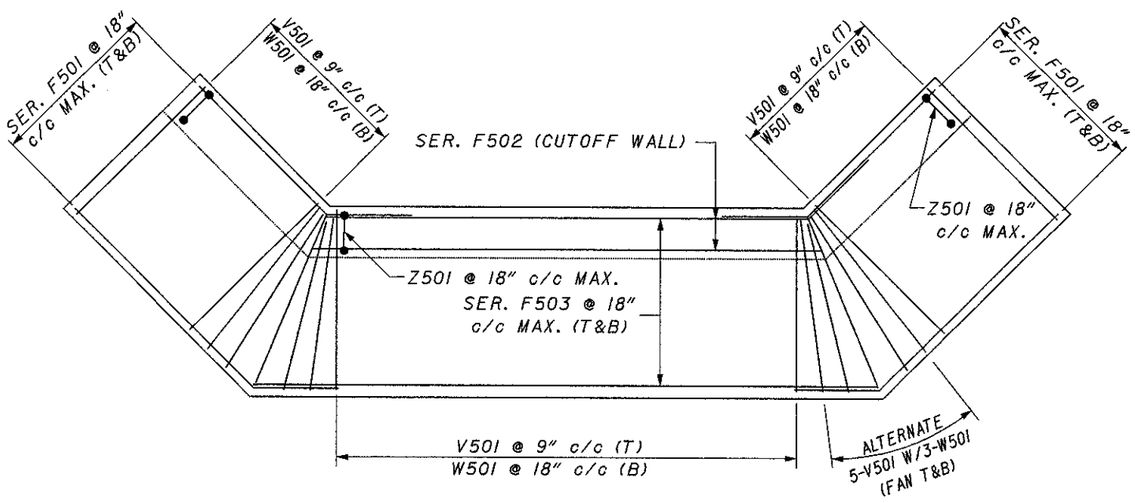

FOOTING PLAN

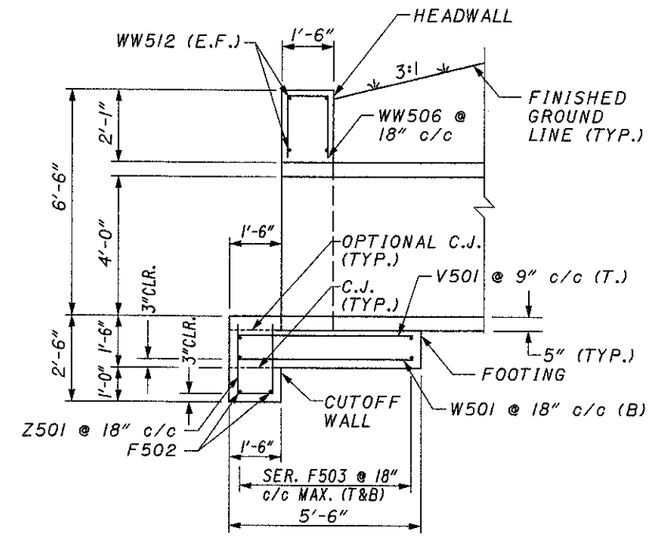

SECTION B-B

(CULVERT END SHOWN)

NOTES

1. FOR CULVERT LOCATION PLAN, SEE SHEET 3/5.
2. THE BAR SIZE NUMBER IS SPECIFIED ON THE PLANS IN THE BAR MARK COLUMN. THE FIRST DIGIT INDICATES THE BAR SIZE NUMBER. FOR EXAMPLE, WW501 IS A NO. 5 BAR. BAR DIMENSIONS SHOWN ARE OUT TO OUT. ALL REINFORCING STEEL SHALL BE EPOXY COATED.
3. THE LAP SPLICE LENGTHS USED IN THESE DETAILS ARE AS FOLLOWS: 2'-5" FOR #5 BARS.
4. FIELD BEND THE REINFORCING STEEL TO ALLOW FOR PLACEMENT OF THE PROPOSED CONDUIT THROUGH THE WINGWALL.

LEGEND

C.J.	CONSTRUCTION JOINT	SER.	SERIES
CLR.	CLEAR	STR.	STRAIGHT
DIA.	DIAMETER	(T)	TOP
E.F.	EACH FACE	(B)	BOTTOM
F.F.	FAR FACE	T&B	TOP AND BOTTOM
N.F.	NEAR FACE	TYP.	TYPICAL
MAX.	MAXIMUM	INC.	INCREMENT
MIN.	MINIMUM		

DESIGN AGENCY
ODOT DISTRICT THREE
OFFICE OF PRODUCTION

DATE	REVIEWED	DRAWN	REVISED	DESIGNED	CHECKED
9/07	RDM	GTS		DJV	DCM

STRUCTURE FILE NUMBER: 0303704

CULVERT DETAILS
ASD-89-1670
OVER MATTS RUN

ASD-89-12.15

4/5

37/56

DESIGN FILE: I:\projects\25673\Struct\1670sd.dgn
WORKSTATION: dvousden DATE: 11/1/2007

OUTLET HEADWALL REINFORCING STEEL LIST

BAR MARK	NO.	LENGTH	WEIGHT (LBS.)	TYPE	BAR TYPE DIMENSIONS A	B	C	D	E	INC.
WINGWALLS										
Y501	25	8'-3"	215	5	3'-8"	1'-2"				
WW501	4	3'-10"	16	STR.						
WW502	4	4'-5"	18	STR.						
WW503	4	5'-1"	21	STR.						
WW504	4	5'-8"	24	STR.						
WW505	14	6'-4"	92	STR.						
WW506	10	4'-5"	46	5	1'-9"	1'-2"				
WW507	12	5'-7"	70	STR.						
WW508	4	3'-9"	16	STR.						
WW509	4	8'-7"	36	3	6'-2"	1'-0"	2'-3"			
WW510	8	4'-3"	35	3	3'-0"	11"	11"			
WW511	2	2'-2"	5	3	11"	11"	11"			
WW512	4	14'-6"	60	STR.						
WW513	6	3'-2"	20	STR.						
WW514	8	6'-11"	58	20	1'-9"	1'-9"	2'-1"	1'-9"	1'-9"	
	SUBTOTAL		732							
FOOTING & CUTOFF WALL										
V501	45	5'-2"	242	STR.						
W501	24	5'-2"	129	STR.						
Z501	22	5'-1"	117	5	2'-1"	1'-2"				
	4	7'-7"			5'-2"					
F501	SERIES	TO	180	3	TO	1'-9"	1'-9"			6 1/4"
	OF 5	9'-8"			7'-3"					
	1	13'-10"								
F502	SERIES	TO	30	STR.						9"
	OF 2	14'-7"								
	2	13'-10"								
F503	SERIES	TO	166	STR.						1'-0 1/4"
	OF 5	17'-11"								
SUBTOTAL			864							
GRAND TOTAL TO SHEET 2/5			1596							

NOTES

1. THE BAR SIZE NUMBER IS SPECIFIED ON THE PLANS IN THE BAR MARK COLUMN. THE FIRST DIGIT INDICATES THE BAR SIZE NUMBER. FOR EXAMPLE, WW501 IS A NO. 5 BAR. BAR DIMENSIONS SHOWN ARE OUT TO OUT. ALL REINFORCING STEEL SHALL BE EPOXY COATED.
2. THE LAP SPLICE LENGTHS USED IN THESE DETAILS ARE AS FOLLOWS: 2'-5" FOR #5 BARS

LEGEND

STR. STRAIGHT

BENDING DIAGRAMS

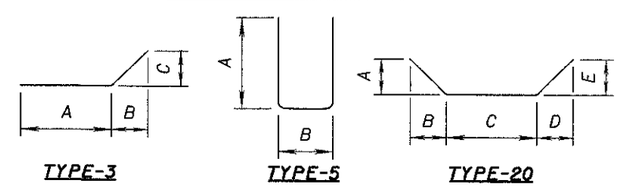

DESIGN FILE: I:\projects\25673\Struct\670sd.dgn
WORKSTATION: dvousden DATE: 11/1/2007

DESIGN AGENCY
ODOT DISTRICT THREE
OFFICE OF PRODUCTION

DESIGNED DJV | CHECKED DCM | DRAWN GTS | REVISED | REVIEWED RDN | DATE 9/07 | STRUCTURE FILE NUMBER 0303704

CULVERT DETAILS
ASD-89-1670
OVER WATTS RUN

ASD-89-12.15

5/5

38/56

REFERENCES SHALL BE MADE TO STANDARD DRAWINGS:

BP-3.1	DATED	10/19/07
MT-97.10	DATED	9/05/06
MT-101.60	DATED	9/20/06
MT-105.10	DATED	10/18/02
MT-105.11	DATED	10/18/02

DESIGN SPECIFICATIONS:

THIS STRUCTURE CONFORMS TO "STANDARD SPECIFICATIONS FOR HIGHWAY BRIDGES" ADOPTED BY THE AMERICAN ASSOCIATION OF STATE HIGHWAY AND TRANSPORTATION OFFICIALS, 2002, INCLUDING THE 2003, 2004, 2005 AND 2006 SPECIFICATIONS AND THE ODOT BRIDGE DESIGN MANUAL.

EXISTING STRUCTURE VERIFICATION:

DETAILS AND DIMENSIONS SHOWN ON THESE PLANS PERTAINING TO THE EXISTING STRUCTURES HAVE BEEN OBTAINED FROM PLANS OF THE EXISTING STRUCTURES AND FROM FIELD OBSERVATIONS AND MEASUREMENTS. CONSEQUENTLY, THEY ARE INDICATIVE OF THE EXISTING STRUCTURES AND THE PROPOSED WORK BUT THEY SHALL BE CONSIDERED TENTATIVE AND APPROXIMATE. THE CONTRACTOR IS REFERRED TO CMS SECTIONS 102.05 AND 105.02.

BASE CONTRACT BID PRICES UPON A RECOGNITION OF THE UNCERTAINTIES DESCRIBED ABOVE AND UPON A PRE BID EXAMINATION OF THE EXISTING STRUCTURES. HOWEVER, THE DEPARTMENT WILL PAY FOR ALL PROJECT WORK BASED UPON ACTUAL DETAILS AND DIMENSIONS THAT HAVE BEEN VERIFIED IN THE FIELD.

EXISTING PLANS:

THE ORIGINAL CONSTRUCTION PLANS OF THE EXISTING BRIDGES ARE AVAILABLE UPON REQUEST AT THE DISTRICT 3 OFFICE OF THE OHIO DEPARTMENT OF TRANSPORTATION, ASHLAND, OH.

DESIGN DATA:

CONCRETE CLASS C - COMPRESSIVE STRENGTH 4,000 PSI
CONCRETE CLASS S - COMPRESSIVE STRENGTH 4,500 PSI

DECK PROTECTION METHOD:

WATERPROOFING AND ASPHALT CONCRETE OVERLAY

PLACING ASPHALT CONCRETE FEATHERING ON APPROACHES TO BRIDGES:

SPECIAL CARE SHALL BE TAKEN, WHEN PLACING THE ASPHALT CONCRETE FEATHERING TO EFFECT A SMOOTH TRANSITION FROM THE EXISTING APPROACH PAVEMENT TO THE BRIDGE DECK OR APPROACH SLAB. THE CONTRACTOR'S ATTENTION IS CALLED TO STANDARD DRAWING BP-3.1 FOR REQUIRED TOLERANCES; SPECIFICALLY, THE CONTRACTOR SHALL PROVIDE A 600:1 TAPER RATE FOR PLANING OPERATIONS.

CUT LINE CONSTRUCTION JOINT PREPARATION:

SAW CUT BOUNDARIES OF PROPOSED CONCRETE REMOVALS 1 INCH DEEP. REMOVE CONCRETE TO A ROUGH SURFACE. LEAVE THE EXISTING REINFORCING STEEL IN PLACE. PRIOR TO CONCRETE PLACEMENT ABRASIVELY CLEAN JOINT SURFACES AND EXISTING EXPOSED REINFORCEMENT TO REMOVE LOOSE AND DISINTEGRATED CONCRETE AND LOOSE RUST.THOROUGHLY CLEAN THE JOINT SURFACE AND EXPOSED REINFORCEMENT OF ALL DIRT, DUST, RUST OR OTHER FOREIGN MATERIAL BY THE USE OF WATER, AIR UNDER PRESSURE, OR OTHER METHODS THAT PRODUCE SATISFACTORY RESULTS. EXISTING REINFORCING STEEL DOES NOT HAVE TO HAVE A BRIGHT STEEL FINISH, BUT REMOVE ALL PACK AND LOOSE RUST. THOROUGHLY DRENCH EXISTING CONCRETE SURFACES WITH CLEAN WATER AND ALLOW TO DRY TO A DAMP CONDITION BEFORE PLACING CONCRETE.

ITEM 202 - PORTIONS OF STRUCTURE REMOVED, AS PER PLAN:

THESE ITEMS SHALL BE USED AT LOCATIONS IN THE PLAN.

THE USE OF EXPLOSIVES, HEADACHE BALLS AND/OR HOE-RAMS WILL NOT BE PERMITTED. THE METHOD OF REMOVAL AND THE WEIGHT OF THE HAMMER SHALL BE APPROVED BY THE ENGINEER.

THE EXISTING REINFORCING STEEL SHALL BE PRESERVED AS INDICATED IN THE PLANS. EXISTING CONCRETE SHALL BE REMOVED IN A MANNER THAT WILL NOT CUT, ELONGATE, OR DAMAGE THE EXISTING REINFORCING STEEL TO BE PRESERVED. CHIPPING HAMMERS NO HEAVIER THAN 90 POUND CLASS.

PAYMENT FOR ALL OF THE ABOVE SHALL BE AT THE UNIT PRICE BID PER CUBIC YARD FOR THE ABOVE ITEM, WHICH WILL INCLUDE ALL LABOR, EQUIPMENT, MATERIALS AND INCIDENTALS NECESSARY TO COMPLETE THE ABOVE WORK.

ITEM 202 - REMOVAL MISC.: CONCRETE

THIS ITEM SHALL BE USED AT LOCATIONS INDICATED IN THE PLAN.

THE 1" THICK CONCRETE OVERLAY ON TOP OF THE BACKWALLS SHALL BE REMOVED BY HAND CHIPPING. THE SIZE OF THE CHIPPING HAMMER SHALL BE APPROVED BY THE ENGINEER.

PAYMENT FOR ALL OF THE ABOVE SHALL BE AT THE UNIT PRICE BID PER SQUARE YARD FOR THE ABOVE WHICH WILL INCLUDE ALL LABOR, EQUIPMENT, MATERIALS AND INCIDENTALS NECESSARY TO COMPLETE THE ABOVE WORK.

ITEM 511 - CLASS S CONCRETE, MISC.: CURB REPAIR:

ITEM 511 - CLASS C CONCRETE, ABUTMENT, AS PER PLAN (REPAIR):

THESE ITEMS SHALL BE USED AT LOCATIONS INDICATED IN THE PLAN.

THE COARSE AGGREGATE SHALL BE LIMESTONE.

PAYMENT FOR ALL OF THE ABOVE SHALL BE AT THE UNIT PRICE BID PER CUBIC YARD FOR EACH OF THE ABOVE WHICH WILL INCLUDE ALL LABOR, EQUIPMENT, MATERIALS AND INCIDENTALS NECESSARY TO COMPLETE THE ABOVE WORK.

ITEM 516 - JOINT SEALER, AS PER PLAN:

THIS ITEM SHALL BE USED AT LOCATIONS INDICATED IN THE PLAN TO SEAL THE OPENING IN THE CURB AND FACE OF PARAPET AT THE EXPANSION JOINT. THE SEAL SHALL BE EVAZOTE 50, AS MANUFACTURED BY E-POXY ENGINEERED MATERIALS LLC, 10 BROADWAY, ALBANY, NEW YORK 12202, TELEPHONE 1-888-999-2463 OR EQUAL.

THE SEAL SHALL BE CEMENTED IN WITH AN ADHESIVE AS RECOMMENDED BY THE MANUFACTURER OF THE JOINT SEAL. ALL LAITANCES OR SURFACE CONTAMINANTS SHALL BE REMOVED TO INSURE MAXIMUM ADHESION. THE CONTRACTOR SHALL ESTABLISH THE SEAL SIZE AND INSTALL IT AS RECOMMENDED BY THE MANUFACTURER.

PAYMENT FOR ALL OF THE ABOVE SHALL BE AT THE UNIT PRICE BID PER FOOT FOR THE ABOVE WHICH WILL INCLUDE ALL LABOR, EQUIPMENT, MATERIALS AND INCIDENTALS NECESSARY TO COMPLETE THE ABOVE WORK.

ITEM 614 - MAINTAINING TRAFFIC:

ON STRUCTURES ASD-302-0089, ASD-302-0154 AND ASD-302-0563 TWO WAY TRAFFIC SHALL BE MAINTAINED AT ALL TIMES EXCEPT DURING WORKING HOURS WHEN ONE LANE MAY BE CLOSED USING FLAGGERS, AS PER STANDARD DRAWING MT-97.10.

ALL WORK AND TRAFFIC CONTROL DEVICES SHALL BE IN ACCORDANCE WITH 614 AND OTHER APPLICABLE PORTIONS OF THE CONSTRUCTION AND MATERIAL SPECIFICATIONS AS WELL AS IN ACCORDANCE WITH PART 7 OF THE OMUTCD. PAYMENT FOR ALL LABOR, EQUIPMENT, MATERIALS, AND INCIDENTALS NECESSARY TO PROVIDE THIS METHOD OF TRAFFIC CONTROL SHALL BE INCLUDED IN THE LUMP SUM BID FOR ITEM 614 MAINTAINING TRAFFIC, UNLESS SEPARATELY ITEMIZED IN THE PLAN.

ITEM 614 - MAINTAINING TRAFFIC

DETOUR LIMITATION AND INTERIM COMPLETION DATE:

TWO WAY TRAFFIC ON STRUCTURE ASD-302-0244 SHALL BE MAINTAINED AT ALL TIMES, EXCEPT FOR A PERIOD NOT TO EXCEED EIGHTEEN (18) CONSECUTIVE CALENDAR DAYS, THROUGH TRAFFIC WILL BE DETOURED AS SHOWN ON THIS SHEET.

THE CONTRACTOR SHALL NOTIFY THE O.D.O.T. DISTRICT THREE ROADWAY SERVICES MANAGER, IN WRITING, A MINUMUM OF FOURTEEN (14) DAYS IN ADVANCE OF THE DATE THE DETOUR IS NEEDED. THE STATE OF OHIO WILL INSTALL, MAINTAIN AND SUBSEQUENTLY REMOVE THE DETOUR SIGNING.

THE CONTRACTOR SHALL BE RESPONSIBLE FOR FURNISHING, INSTALLING, MAINTAINING AND REMOVING THE GATES AND BARRICADES AT THE APPROXIMATE WORK LIMITS OF THE PROJECT, AND THE ADVANCE WARNING SIGNS AS SHOWN ON STANDARD CONSTRUCTION DRAWING MT-101.60.

THE EIGHTEEN (18) CONSECUTIVE CALENDAR DAYS SHALL BE CONSIDERED AS AN INTERIM COMPLETION DATE (SECTION 108) AND FOR EACH CALENDAR DAY BEYOND THE EIGHTEEN (18) DAYS THAT THE ROADWAY REMAINS CLOSED TO TRAFFIC, THE CONTRACTOR WILL BE ASSESSED LIQUIDATED DAMAGES, AS PER SECTION 108.07 OF THE CONSTRUCTION AND MATERIALS SPECIFICATIONS.

ACCESS TO ADJACENT PROPERTIES SHALL BE MAINTAINED AT ALL TIMES AS PER 614.02 (d).

ALL WORK AND TRAFFIC CONTROL DEVICES SHALL BE IN ACCORDANCE WITH CMS 614 AND OTHER APPLICABLE PORTIONS OF THE SPECIFICATIONS, AS WELL AS THE OHIO MANUAL OF UNIFORM TRAFFIC CONTROL DEVICES. PAYMENT FOR ALL LABOR, EQUIPMENT AND MATERIALS SHALL BE INCLUDED IN THE LUMP SUM CONTRACT PRICE FOR ITEM 614, MAINTAINING TRAFFIC, UNLESS SEPARATELY ITEMIZED IN THE PLAN.

NOTICE OF CLOSURE SIGNS

THESE SIGNS SHALL BE ERECTED BY THE CONTRACTOR AT LEAST ONE WEEK IN ADVANCE OF THE SCHEDULED ROAD CLOSURE. THE SIGNS SHALL BE ERECTED ON THE RIGHT HAND SIDE OF THE ROAD FACING TRAFFIC. THEY SHALL BE LOCATED IN THE FIELD SO AS NOT TO INTERFERE WITH ANY PERMANENT SIGNS. ON THIS PROJECT, THEY SHOULD BE ERECTING AT THE POINT OF CLOSURE. PAYMENT FOR THIS WORK SHALL BE INCLUDED IN THE LUMP SUM BID FOR ITEM 614, MAINTAINING TRAFFIC AND SHALL INCLUDE FURNISHING, ERECTING, MAINTAINING, AND REMOVING THE SIGNS INCLUDING SUPPORTS.

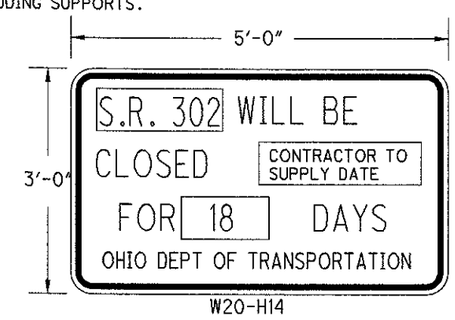

MAINTENANCE OF LOCAL DETOUR ROUTE

A LOCAL MAINTENANCE ROUTE, OTHER THAN THE OFFICIAL SIGNED ODOT DETOUR ROUTE, WILL BE DESIGNATED BY AGREEMENT BETWEEN ODOT AND LOCAL GOVERNMENTAL AGENCIES PRIOR TO THE HIGHWAY CLOSURE.

DURING THE TIME THAT TRAFFIC IS DETOURED, THE CONTRACTOR SHALL MAINTAIN THIS ROUTE IN A CONDITION WHICH IS REASONABLY SMOOTH AND FREE FROM HOLES, RUTS, RIDGES, BUMPS, DUST AND STANDING WATER. ONCE THE DETOUR IS REMOVED AND TRAFFIC RETURNED TO ITS NORMAL PATTERN, THE DESIGNATED LOCAL MAINTENANCE ROUTE SHALL BE RESTORED TO A CONDITION THAT IS EQUIVALENT TO THAT WHICH EXISTED PRIOR TO ITS USE FOR THIS PURPOSE. ALL SUCH WORK SHALL BE PERFORMED WHEN AND AS DIRECTED BY THE ENGINEER. THE DESIGNATED LOCAL DETOUR ROUTE IS TO BE REVIEWED AND REPAIRED PRIOR TO THE ASPHALT CONTRACTOR OR SUBCONTRACTOR LEAVING THE PROJECT.

PAYMENT FOR THE WORK NECESSARY TO REPAIR THESE LOCAL ROADS WILL BE PERFORMED BY EITHER CHANGE ORDER OR FORCE ACCOUNT.

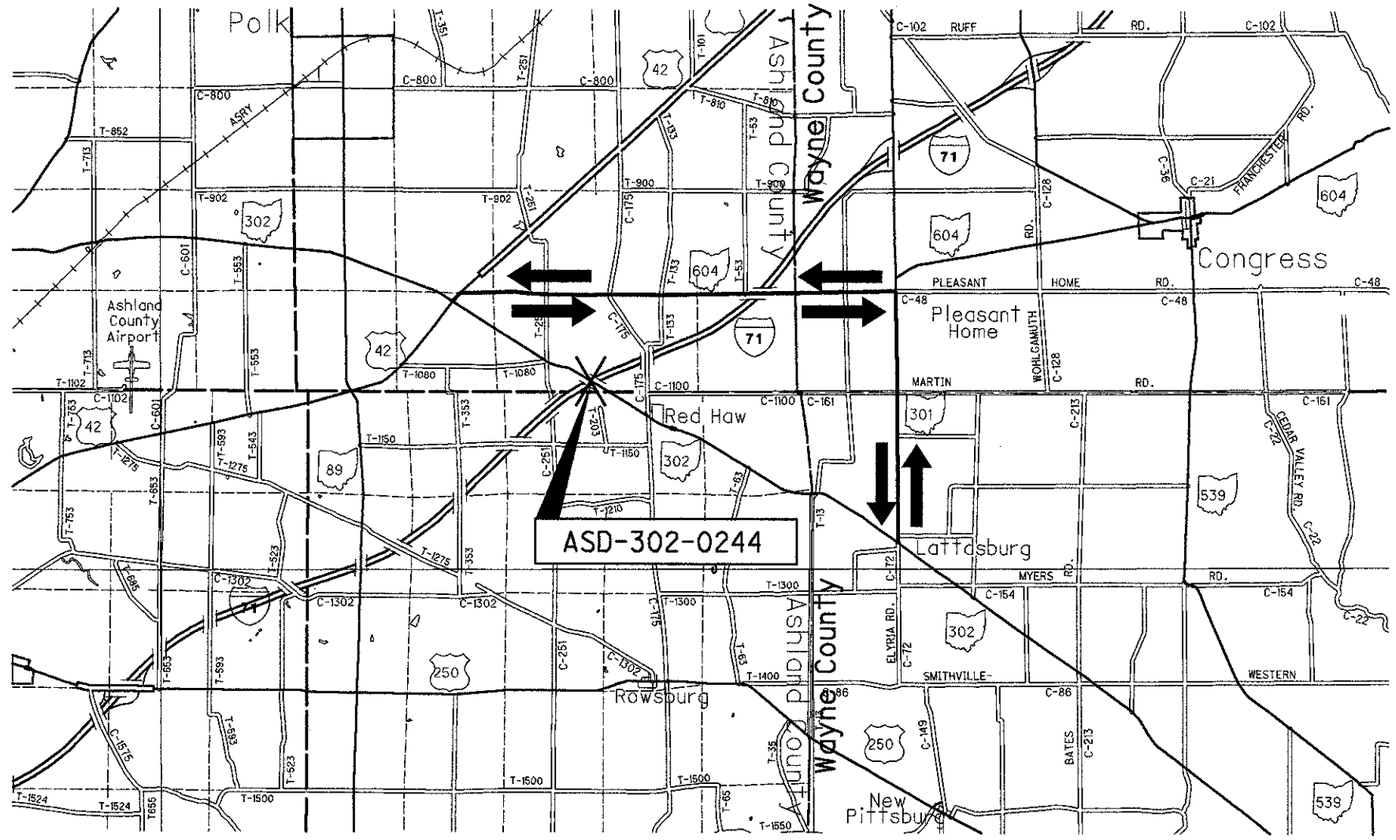

DETOUR MAP

LEGEND

X - PROJECT LOCATION

⇄ - OFFICIAL SIGNED DETOUR

0 1 2 3

SCALE OF MILES

CALCULATED DCM
CHECKED DJV

MAINTAINING TRAFFIC NOTES AND DETOUR MAP

ASD-89-12.15

NAD11~1\X\25973\55\14.3\→CNV~UE*\X8~A~8~3.CCA
10/31/2007 09:03:11 AM
C:\Documents and Settings\dcm\Desktop\

ASD-89-1670 SFN 0303704

ITEM	EXTENSION	QUANTITY	UNIT	DESCRIPTION	REFERENCE SHEET
503	11100	LUMP		COFFERDAMS, CRIBS AND SHEETING	
503	21300	LUMP		UNCLASSIFIED EXCAVATION (WINGWALL FOOTING)	
509	10000	1596	LB	EPOXY COATED REINFORCING STEEL	
511	46001	7.5	CU YD	CLASS C CONCRETE, RET WALL/WINGWALL, ABOVE FT, AS PER PLAN	35
511	46501	10.5	CU YD	CLASS C CONCRETE, FOOTING, AS PER PLAN	35
512	10100	20	SQ YD	SEALING OF CONCRETE SURFACES (EPOXY-URETHANE)	
601	32100	51	CU YD	ROCK CHANNEL PROTECTION, TYPE B WITH FILTER	

ASD-302-0089 SFN 0305197

ITEM	EXTENSION	QUANTITY	UNIT	DESCRIPTION	REFERENCE SHEET
202	98300	4	SQ YD	REMOVAL MISC.: CONCRETE	40
254	01000	67	SQ YD	PAVEMENT PLANING, ASPHALT CONCRETE	
407	10000	5	GAL	TACK COAT	
442	00201	4	CU YD	ASPHALT CONCRETE SURFACE COURSE, 9.5MM, TYPE A (446), AS PER PLAN	4

ASD-302-0154 SFN 0305235

ITEM	EXTENSION	QUANTITY	UNIT	DESCRIPTION	REFERENCE SHEET
512	10100	74	SQ YD	SEALING OF CONCRETE SURFACES (EPOXY-URETHANE)	
512	33010	198	SQ YD	TYPE 3 WATERPROOFING	
SPECIAL	51631300	70	FT	POLYMER MODIFIED ASPHALT EXPANSION JOINT SYSTEM	46

ASD-302-0244 SFN 0305278

ITEM	EXTENSION	QUANTITY	UNIT	DESCRIPTION	REFERENCE SHEET
202	11301	8	CU YD	PORTIONS OF STRUCTURE REMOVED, AS PER PLAN	39
254	01000	953	SQ YD	PAVEMENT PLANING, ASPHALT CONCRETE	
407	10000	66	GAL	TACK COAT	
407	14000	25	GAL	TACK COAT FOR INTERMEDIATE COURSE	
442	20101	34	CU YD	ASPHALT CONCRETE INTERMEDIATE COURSE, 9.5MM, TYPE A (448), AS PER PLAN	4
442	00201	34	CU YD	ASPHALT CONCRETE SURFACE COURSE, 9.5MM, TYPE A (446), AS PER PLAN	4
511	34450	7	CU YD	CLASS S CONCRETE, MISC.: CURB REPAIR	40
511	45701	1	CU YD	CLASS C CONCRETE, ABUTMENT, AS PER PLAN (REPAIR)	40
516	13200	8	SQ FT	½" PREFORMED EXPANSION JOINT FILLER	
516	31001	19	FT	JOINT SEALER, AS PER PLAN	40
SPECIAL	51631300	56	FT	POLYMER MODIFIED ASPHALT EXPANSION JOINT SYSTEM	51

ASD-302-0563 SFN 0305294

ITEM	EXTENSION	QUANTITY	UNIT	DESCRIPTION	REFERENCE SHEET
407	10000	23	GAL	TACK COAT	
442	00201	12	CU YD	ASPHALT CONCRETE SURFACE COURSE, 9.5MM, TYPE A (446), AS PER PLAN	4
512	10100	19	SQ YD	SEALING OF CONCRETE SURFACES (EPOXY-URETHANE)	
SPECIAL	51631300	70	FT	POLYMER MODIFIED ASPHALT EXPANSION JOINT SYSTEM	53

DESIGN FILE: I:\projects\256738\Structl\bridgerehab\strsum1.dgn
WORKSTATION: dmollens DATE: 10/31/2007

DESIGN AGENCY
ODOT DISTRICT THREE
OFFICE OF PRODUCTION

REVIEWED RDN DATE 9/07
DRAWN DCM REVISED
DESIGNED DCM CHECKED DJV

STRUCTURE SUMMARY

ASD-89-12.15

	BRIDGE DECK DATA								ROADWAY DATA		
	COUNTY, ROUTE, BRIDGE NO.	LOCATION	STRUCTURE TYPE	LENGTH (BRIDGE DECK)	WIDTH	BRIDGE DECK AREA	SKEW	EXISTING WEARING SURFACE	EXISTING PAVEMENT WIDTH	EXISTING APPROACH SLAB WIDTH	EXISTING APPROACH SLAB LENGTH
				FT.	FT.	SQ.YD.			FT.	FT.	FT.
	+ ASD-89-1465	OVER KATOTAWA CREEK	TWIN CONCRETE PIPES					ASPHALT	24'±		
	++ ASD-89-1670	OVER MATTS RUN	TWIN CONCRETE PIPES					ASPHALT	26'±		
	* ASD-302-0089	OVER MUDDY FORK	3 SPAN CONCRETE SLAB	92'-6"±	32'	329	10° RF	CONCRETE	23'-6"±	20'	15'
	+ ASD-302-0120	OVER SMALL CREEK	CORRUGATED METAL PIPE					ASPHALT	23'-6"±		
	++ ASD-302-0154	OVER REDHAW CREEK	SINGLE SPAN PRESTRESS	59'-4"±	30'	198	31° RF	ASPHALT	23'-6"±	30'	25'
	** ASD-302-0244	OVER I-71	4 SPAN STEEL BEAM	307'-3"±	24'	820	31° LF	CONCRETE	23'-6"±	24'	25'
	● ASD-302-0563	OVER KATOTAWA CREEK	SINGLE SPAN PRESTRESS	35'-2"±	34'	133	12° LF	ASPHALT	23'-6"±	34'	20'

\+ PAVE OVER STRUCTURE (NO STRUCTURE WORK) (SEE ROADWAY PLANS FOR PAVING QUANTITIES)

++ PAVE OVER STRUCTURE (SEE DETAILS IN THE PLAN FOR STRUCTURE WORK) (SEE ROADWAY PLANS FOR PAVING QUANTITIES)

* PLANE 1" DEEP ON APPROACH SLABS AND 1½" DEEP FOR 75 FT. ON BOTH APPROACHES. OMIT RESURFACING ON THE BRIDGE DECK, BUTT JOINT AT THE BRIDGE DECK. (SEE DETAILS IN THE PLAN FOR STRUCTURE WORK) (SEE ROADWAY PLANS FOR PAVING QUANTITIES)
ASD-302-0089 ITEM 254 - PAVEMENT PLANING, ASPHALT CONCRETE: 67 SQUARE YARDS (CARRIED TO GENERAL SUMMARY SHEET, SHEET NO. 42)

** TAPER THE PAVING FROM 1½" DEEP TO 3" DEEP IN 150' FOR A 23'-6"± WIDTH AT THE APPROACH TO THE BRIDGE DECK. PAVE 3" DEEP ACROSS THE BRIDGE DECK FULL WIDTH. TAPER THE PAVING FROM 3" DEEP TO 1½" DEEP IN 150' FOR A 23'-6"± WIDTH BEYOND THE BRIDGE DECK. (SEE DETAILS IN THE PLAN FOR STRUCTURE WORK). (SEE ROADWAY PLANS FOR PAVING QUANTITIES).

● TAPER THE PLANING FROM 0" DEEP TO 1½" DEEP IN 75' FOR A 23'-6"± WIDTH AT THE APPROACH TO THE APPROACH SLABS. PLANE 1½" DEEP ACROSS THE APPROACH SLABS AND BRIDGE DECK FOR A 34' WIDTH. TAPER THE PLANING FROM 1½" DEEP TO 0" DEEP IN 75' FOR A 23-6"±' WIDTH BEYOND THE APPROACH SLAB. PAVE FULL WIDTH OVER THE STRUCTURE (SEE DETAILS IN THE PLAN FOR STRUCTURE WORK). (SEE ROADWAY PLANS FOR PAVING QUANTITIES):
ASD-302-0563 ITEM 254 - PAVEMENT PLANING, ASPHALT CONRETE: 284 SQUARE YARDS (CARRIED TO GENERAL SUMMARY SHEET, SHEET NO. 42)

DESIGN FILE: I:\projects\256736\Struct\bridgerehab\brtreat.dgn
WORKSTATION: dmollens DATE: 10/31/2007

DESIGN AGENCY
ODOT DISTRICT THREE
OFFICE OF PRODUCTION

DATE 9/07
REVIEWED RDN
STRUCTURE FILE NUMBER

DRAWN DCM
REVISED

DESIGNED DCM
CHECKED DJV

BRIDGE TREATMENT

ASD-89-12.15

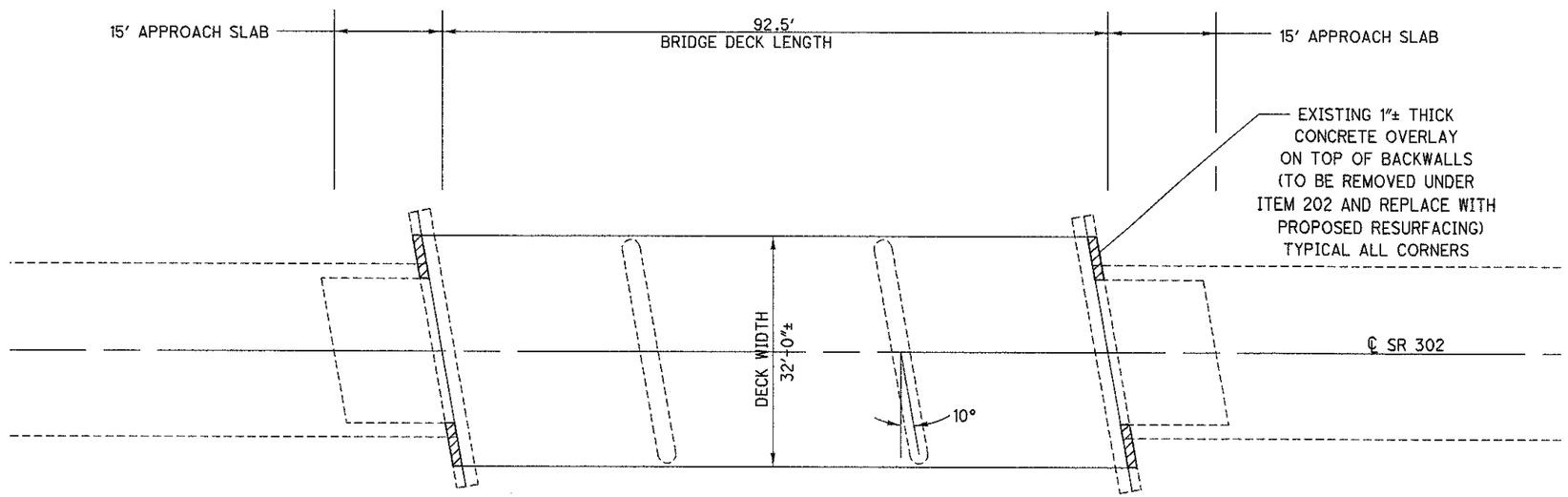

PLAN VIEW

AREA OF CONCRETE TO BE REMOVED ON TOP OF BACKWALL USING ITEM 202

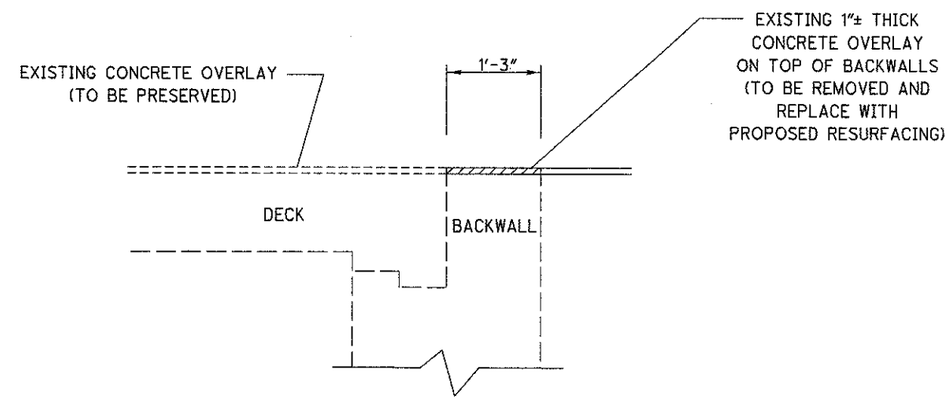

TYPICAL ABUTMENT SECTION

(6'-1"± LONG REMOVAL AREA PER LOCATION)

ITEM	QUANTITY	UNIT	DESCRIPTION
202	4	SQ YD	REMOVAL MISC.: CONCRETE
254	67	SQ YD	PAVEMENT PLANING, ASPHALT CONCRETE
407	5	GAL	TACK COAT
442	4	CU YD	ASPHALT CONCRETE SURFACE COURSE, 9.5MM, TYPE A (446), AS PER PLAN

ALL QUANTITIES CARRIED TO STRUCTURE SUMMARY SHEET

NOTES:

1) GUARDRAIL NOT SHOWN.

2) REMOVE THE 1"± THICK OVERLAY CONCRETE ON TOP OF THE BACKWALLS WITH ITEM 202 AND PAVE OVER THE BACKWALLS WITH ROADWAY ASPHALT.

DESIGN AGENCY
ODOT DISTRICT THREE
OFFICE OF PRODUCTION

DESIGNED DCM | CHECKED DJV | DRAWN DCM | REVISED | REVIEWED RDN | DATE 9/07 | STRUCTURE FILE NUMBER 0305197

PLAN VIEW
ASD-302-0089 OVER MUDDY FORK

ASD-89-12.15

1/1

44/56

DESIGN FILE: I:\projects\25673\Struct\bridgerehab\302_0089str1.dgn
WORKSTATION:dmollens DATE:10/31/2007

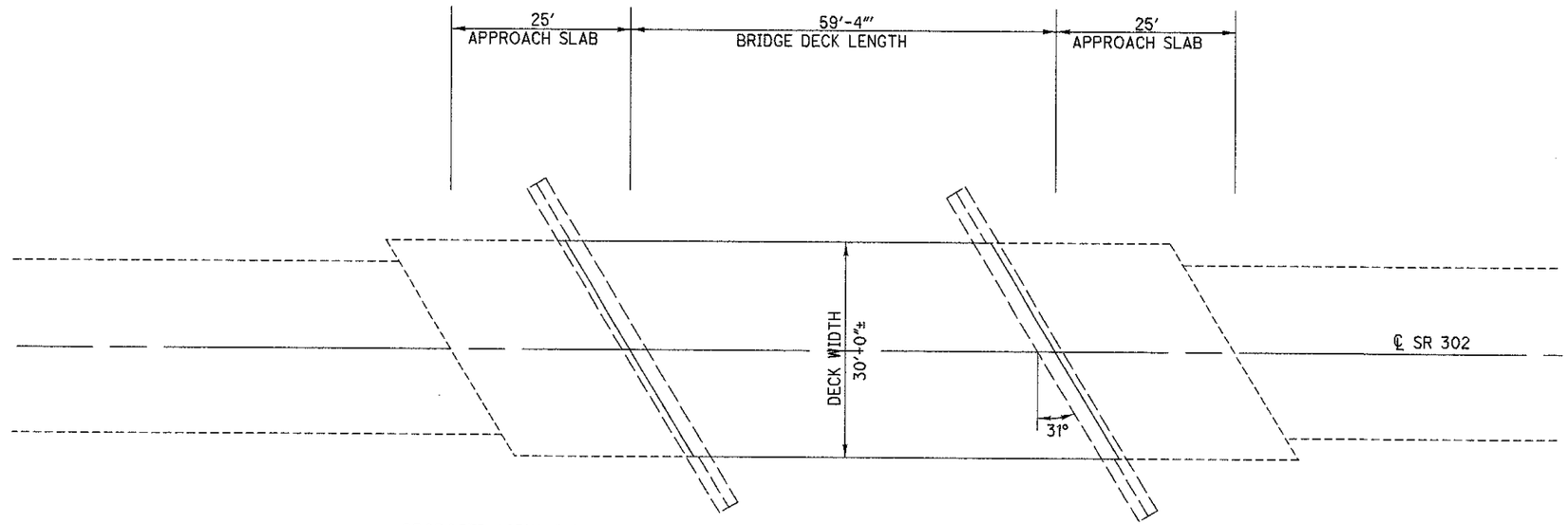

PLAN VIEW

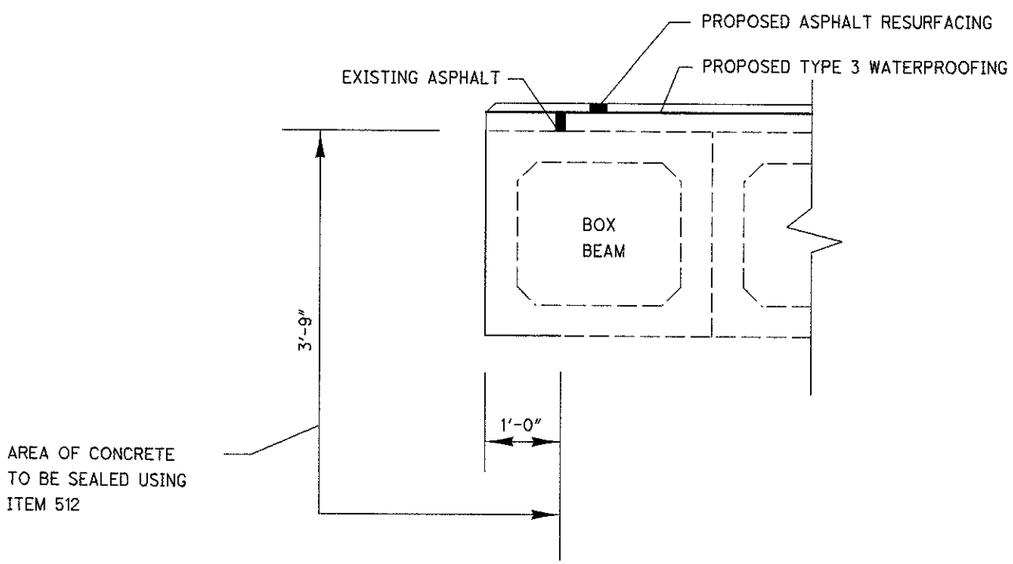

TYPICAL BOX BEAM

(SEALING LENGTH=58'-0"±)

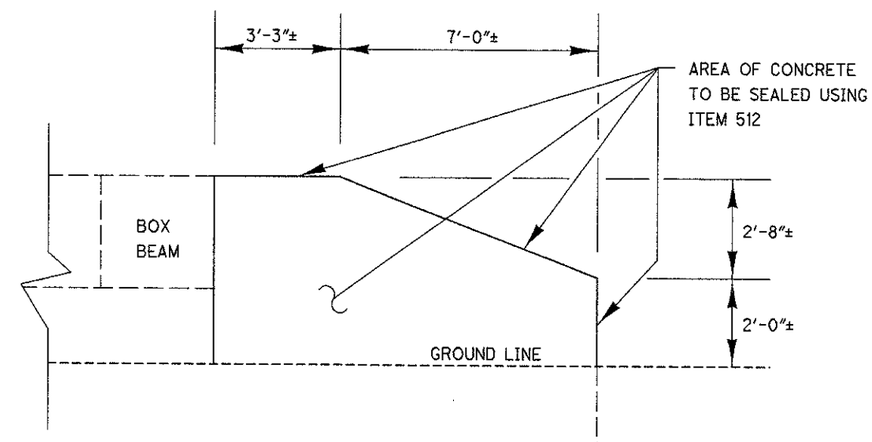

TYPICAL WINGWALL SEALING

(WINGWALLS =1'-6" THICK)

ITEM	QUANTITY	UNIT	DESCRIPTION
512	74	SQ YD	SEALING OF CONCRETE SURFACES (EPOXY-URETHANE)
512	198	SQ YD	TYPE 3 WATERPROOFING
SPECIAL	70	FT	POLYMER MODIFIED ASPHALT EXPANSION JOINT SYSTEM

ALL QUANTITIES CARRIED TO STRUCTURE SUMMARY SHEET

NOTES:

1) GUARDRAIL NOT SHOWN.

2) SEAL EDGE OF BOX BEAMS AND WINGWALLS AS PER DETAILS ABOVE USING ITEM 512.

3) PLACE TYPE 3 WATERPROOFING ON EXISTING DECK ASPHALT PRIOR TO RESURFACING.

4) PLACE A POLYMER MODIFIED ASPHALT EXPANSION JOINT SYSTEM AT EACH ABUTMENT AS DETAILED ON SHEET 2/2.

DESIGN AGENCY
ODOT DISTRICT THREE
OFFICE OF PRODUCTION

REVIEWED RDN
DATE 9/07
STRUCTURE FILE NUMBER 0305235

DRAWN DCM
REVISED

DESIGNED DCM
CHECKED DJV

PLAN VIEW
ASD-302-0154 OVER REDHAW CREEK

ASD-89-12.15

1 / 2

45 / 56

DESIGN FILE: i:\projects\25673\Struct\bridgerehab\302_0154str1.dgn
WORKSTATION:dmollens DATE:10/31/2007

GENERAL NOTES AND DETAILS FOR POLYMER MODIFIED ASPHALT EXPANSION JOINT SYSTEM

ITEM SPECIAL - POLYMER-MODIFIED ASPHALT EXPANSION JOINT SYSTEM

THIS ITEM WILL BE USED TO SEAL THE EXPANSION/CONTRACTION JOINTS AS PER THESE DETAILS AND THE MANUFACTURER'S REQUIREMENTS USING A POLYMER-MODIFIED ASPHALT SYSTEM. THE PRIME CONTRACTOR WILL OBTAIN THE SERVICES OF ONE OF THE FOLLOWING APPROVED APPLICATORS WHO WILL FURNISH AND INSTALL THE NEW BRIDGE EXPANSION JOINT SYSTEM AFTER ALL PAVING ON THE AFFECTED BRIDGE(S) HAS BEEN COMPLETED.

PRODUCT NAME	SUPPLIER	ADDRESS	PHONE NO.
THORMA-JOINT	DYNAMIC SURFACE APPLICATIONS, LTD	373 VILLAGE RD. PENNSDALE, PA 17756	(570)546-6041
MATRIX 502	CRAFCO INC.	420 N. ROOSEVELT AVE. CHANDLER, AZ 85226	(800)528-8242
EXPANDEX JOINT SYSTEM	WATSON-BOWMAN ACME	95 PINEVIEW DR. AMHERST, NY 14228	(716)691-7566
APJ ASPHALTIC PLUG EXPANSION JOINT	WYOMING EQUIPMENT SALES	281 SIXTH STREET P.O. BOX 287 WEST WYOMING, PA 18644	(570)693-2810

MATERIALS:

BRIDGING PLATE:

MILD STEEL 1/8" OR 1/4" THICK PLATE, 8" WIDE OR 18 GAUGE ALUMINUM, 8" WIDE.

BINDER:

TYPE:	POLYMER MODIFIED ASPHALT
SOFTENING POINT:	180 DEGREES F. MIN.
FLOW:	3 mm. MAX. AT 140 DEGREES F.
PENETRATION:	9 mm. MAX. AT 77 DEGREES F. 1 mm. MIN AT 0 DEGREES F. ASTM D 3407
DUCTILITY:	40 cm. MIN. ASTM D 113
RESILIENCE:	60% MIN. AT 77 DEGREES F.
TENSILE ADHESION:	700% MIN.
SPECIFIC GRAVITY:	1.10 * 0.05
POURING TEMP:	350 - 390 DEGREES F.

AGGREGATE:

TYPE:	CRUSHED, DOUBLE WASHED, AND DRIED GRANITE OR BASALT
GRADATION	THE GRADATION OF THE AGGREGATE VARIES BY MANUFACTURER AND WILL BE AS PER THE MANUFACTURER'S RECOMMENDATIONS FOR THE SYSTEM BEING USED ON THIS PROJECT.

BACKER ROD:

THE BACKER SHALL BE A CLOSED CELL FOAM EXPANSION JOINT FILLER CAPABLE OF WITHSTANDING THE PLACEMENT TEMPERATURE OF THE POLYMER MODIFIED ASPHALT.

NOTE: PRIOR TO PLACEMENT OF ANY PORTION OF THE JOINT SYSTEM, THE PROJECT ENGINEER MUST HAVE CERTIFIED TEST DATA MEETING ALL THE MINIMUM REQUIREMENTS OF ALL THE MATERIALS OF THE JOINT SYSTEM.

INSTALLATION PROCEDURES:

SAWING AND SURFACE PREPARATION:

AFTER ALL PAVING OPERATIONS ARE COMPLETE, THE OVERLAY IS TO BE TRANSVERSELY SAW CUT FULL DEPTH NO LESS THAN TWO INCHES DEEP (20" CENTERED OVER JOINT OPENING, UNLESS OTHERWISE NOTED). REMOVE ALL MATERIAL, INCLUDING WATER-PROOFING MATERIAL, BETWEEN SAW CUTS. THOROUGHLY CLEAN AND DRY EXPOSED CONCRETE, STEEL, AND CUT SURFACES USING COMPRESSED AIR AND A HOT COMPRESSED AIR (HCA) LANCE. THE LANCE MUST PRODUCE A FLAME RETARDED AIR STREAM TEMPERATURE OF 3000 DEGREES F. AT A VELOCITY OF 3,000 FEET PER SECOND WITH 15 PSIG CHAMBER PRESSURE. IF THERE IS AN INTERRUPTION DUE TO WEATHER OR OTHER CAUSES, THE OPERATION WILL BE REPEATED WITH THE HCA LANCE IMMEDIATELY BEFORE THE BINDER COAT OPERATION. ALSO, 6 INCHES OF THE ROAD SURFACE ON EITHER SIDE OF THE JOINT WILL BE DRIED SO THAT A SUITABLE SURFACE FOR BITUMEN ADHESION IS OBTAINED.

SEALING OF EXPANSION JOINT: (PRE-STRESSED BOX OR CONCRETE SLAB)

THE EXPANSION JOINT GAP IS TO BE SEALED AND A BRIDGING PLATE CENTERED ALONG IT. A VERY NARROW GAP WILL BE SEALED BY POURING HOT BINDER INTO THE GAP. GAPS OF 1/8" OR MORE WILL FIRST BE FILLED WITH AN APPROPRIATELY SIZED BACKER ROD. THE BACKER ROD WILL BE INSTALLED SO THAT IT IS BETWEEN 1/8" AND 1-1/8" BELOW THE TOP OF THE EXISTING GAP. THE GAP WILL THEN BE FILLED WITH BINDER.

BOND BREAKER:

SPREAD BINDER OVER SURFACE AREA WHERE THE METAL BRIDGING PLATE WILL BE PLACED. CENTER THE BRIDGING PLATE OVER THE EXISTING JOINT AND BED INTO THE HOT BINDER. BUTT JOINT THE BRIDGING PLATES TO ACCOMODATE THE ENTIRE JOINT LENGTH. SPIKE HOLES WILL BE DRILLED AT 1 FOOT INTERVALS ALONG THE LONGITUDINAL CENTERLINE OF THE PLATES. SECURE BRIDGING PLATE WITH NAILS OR SPIKES. SEAL BUTT JOINTS WITH HOT BINDER AND ALLOW BINDER TO SETUP BEFORE NEXT OPERATION. WHEN ALUMINUM BRIDGING PLATES ARE USED, ONLY THE BINDER IS REQUIRED TO SECURE THE INDIVIDUAL PLATES.

BINDER COAT:

SEAL ALL PREPARED, EXPOSED SURFACES OF THE JOINT WITH BINDER. POUR THE HOT BINDER OVER THE FLOOR AREA OF THE JOINT AND SPREAD TO COAT ALL EXPOSED SURFACES. THE BINDER WILL BE A MINIMUM OF 1/32" THICK ON THE BOTTOM OF THE JOINT CAVITY, WITH POOLS OF GREATER THICKNESS WHERE SURFACE IRREGULARITIES EXIST. THE BINDER APPLICATION TEMPERATURE WILL BE BETWEEN 350 AND 390 DEGREES F. THE BINDER WILL NOT BE ALLOWED TO BE HEATED ABOVE 410 DEGREES F. NOR ALLOWED TO EXCEED 390 DEGREES F. FOR MORE THAN 1 HOUR. A DOUBLE JACKETED OIL MELTER WILL BE USED TO HEAT THE BINDER. THE MELTER WILL BE EQUIPPED WITH A CONTINUOUS AGITATION SYSTEM, TEMPERATURE CONTROLS, AND A CALIBRATED THERMOMETER. ALSO A SYSTEM FOR ACCURATELY MEASURING THE WEIGHTS OF THE BINDER AND THE AGGREGATE WILL BE REQUIRED.

BUILD-UP OF JOINT LAYERS:

AGGREGATE PREPARATION:

HEAT THE AGGREGATE TO A TEMPERATURE OF 275 TO 325 DEGREES F., WITH A SUITABLE ROTATING DRUM WITH ATTACHED HEAT SOURCE OR A HOT COMPRESSED AIR LANCE, TO REMOVE DUST AND MOISTURE.

AGGREGATE PROPORTION AND LAYER THICKNESS:

MIX THE AGGREGATE WITH THE BINDER SUCH THAT THE MINIMUM AGGREGATE CONTENT BY WEIGHT WILL BE 68%. THE HEATED AGGREGATE AND BINDER WILL BE COMBINED IN LAYERS, UNLESS PATENTED INSTALLATION REQUIRES DIFFERENTLY, NOT LESS THAN 3/4 OF AN INCH NOR EXCEEDING 2-1/2 INCHES. THE THICKNESS OF EACH LAYER CAN BE VARIED WITHIN THESE LIMITS, TO ACHIEVE THE REQUIRED JOINT THICKNESS (MIN. 2 INCHES). THE OBJECTIVE IS TO COAT EACH STONE AND FILL THE VOIDS WHILE AVOIDING AN EXCESS OF BINDER. THIS WILL ACHIEVE THE MAXIMUM CONTENT OF STONE CONSISTENT WITH ALL STONES BEING COATED WITH BINDER. RAKE THE MIXTURE TO MIX AND LEVEL.

THE TOP LAYER THICKNESS WILL VARY BETWEEN 1/2 INCH AND ONE (1) INCH. IN PREPARING THE TOP LAYER, THE RATIO OF AGGREGATE TO BINDER WILL BE APPROXIMATELY 6:1 BY WEIGHT. OVERFILL THE TOP LAYER AND COMPACT TO THE LEVEL OF THE ADJACENT SURFACES USING A ROLLER OR VIBRATORY PLATE COMPACTOR. IMMEDIATELY AFTER COMPLETION OF THE COMPACTION, POUR SUFFICIENT BINDER OVER THE JOINT TO FILL THE SURFACE VOIDS AND COAT THE SURFACE STONE. DUST THE FINISHED JOINT WITH A FINE, DRY AGGREGATE TO PREVENT TACKINESS.

MAINTENANCE OF TRAFFIC:

IF NECESSARY TO FACILITATE TRAFFIC MAINTENANCE, THE JOINT WILL BE INSTALLED IN TWO (2) HALF-WIDTH PHASES. DURING PHASE 1 APPROXIMATELY HALF OF THE TOTAL JOINT WILL BE INSTALLED. DURING PHASE 2, A MINIMUM OF TWO (2) INCHES OF THE PHASE 1 JOINT WILL BE REMOVED, AT OR NEAR THE CENTERLINE, WITH THE REMAINDER OF THE JOINT INSTALLED. IN ALL CASES, OPERATIONS WILL BE SCHEDULED SO THAT ALL LANES CAN BE OPEN TO TRAFFIC DURING ALL NON-WORKING HOURS.

TESTING:

CERTIFICATION WILL BE SUPPLIED FOR EACH PROJECT SHOWING BINDER COMPLIANCE WITH REQUIRED PROPERTIES. A ONE QUART SAMPLE OF BINDER WILL BE RETRIEVED FROM EACH BRIDGE FOR FURTHER TESTING BY THE O.D.O.T OFFICE OF MATERIALS MANAGEMENT.

METHOD OF MEASUREMENT AND BASIS OF PAYMENT:

THE DEPARTMENT WILL MEASURE THE JOINT BY THE NUMBER OF FEET AND WILL PAY FOR ACCEPTED QUANTITIES AT THE CONTRACT PRICE AS: ITEM SPECIAL, POLYMER MODIFIED ASPHALT EXPANSION JONT SYSTEM.

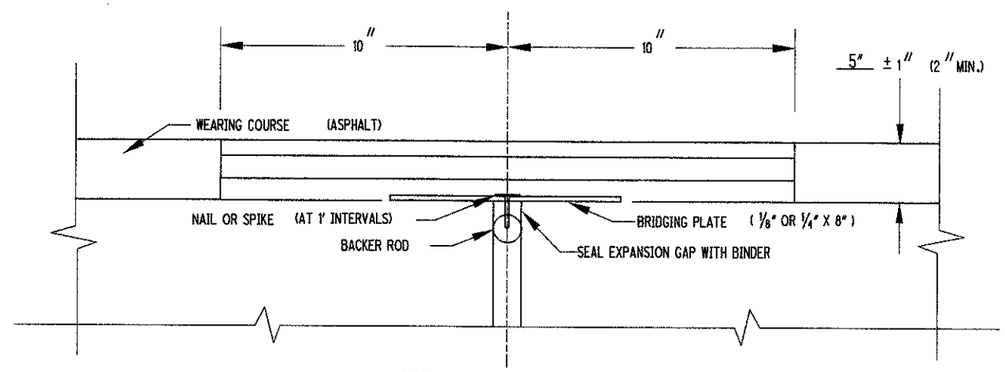

TYPICAL PRESTRESSED BOX BEAM

ASD-302-0154 SFN 0305235			
ITEM	DESCRIPTION	UNIT	QUANTITY
SPECIAL	POLYMER MODIFIED ASPHALT EXPANSION JOINT SYSTEM	FT	70

QUANTITY CARRIED TO SHEET NO. 1/2.

QUANTITY CARRIED TO SHEET NO. 1/2.

DESIGN FILE: I:\projects\25673\Struct\bridgerehab\302_0154str2.dgn
WORKSTATION: dmollens DATE: 10/31/2007

DESIGNED	DATE REVISED	CALCULATED
MAM	10-29-96	DCM
DRAWN	10-17-03	CHECKED
MAM	04-15-05	DJV

POLYMER MODIFIED ASPHALT EXPANSION JOINT SYSTEM
ASD-302-0154 OVER REDHAW CREEK

ASD-89-12.15

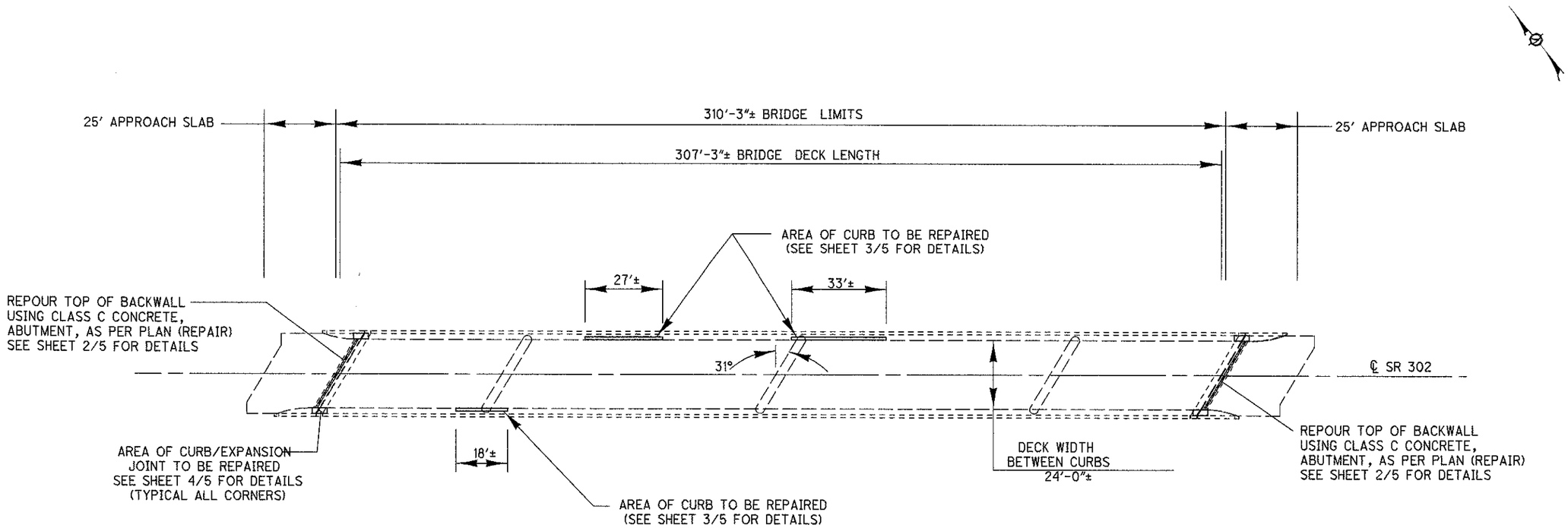

PLAN VIEW

ITEM	QUANTITY	UNIT	DESCRIPTION
202	8	CU YD	PORTIONS OF STRUCTURE REMOVED, AS PER PLAN
254	953	CU YD	PAVEMENT PLANING, ASPHALT CONCRETE
407	66	GAL	TACK COAT
407	25	GAL	TACK COAT FOR INTERMEDIATE COURSE
442	34	CU YD	ASPHALT CONCRETE INTERMEDIATE COURSE, 9.5MM, TYPE A (448), AS PER PLAN
442	34	CU YD	ASPHALT CONCRETE SURFACE COURSE, 9.5MM, TYPE A (446), AS PER PLAN
511	7	CU YD	CLASS S CONCRETE, MISC.: CURB REPAIR
511	1	CU YD	CLASS C CONCRETE, ABUTMENT, AS PER PLAN (REPAIR)
516	8	SQ FT	½" PREFORMED EXPANSION JOINT FILLER
516	19	FT	JOINT SEALER, AS PER PLAN
SPECIAL	56	FT	POLYMER MODIFIED ASPHALT EXPANSION JOINT SYSTEM

ALL QUANTITIES CARRIED TO STRUCTURE SUMMARY SHEET

NOTES:

1) APPROACH GUARDRAIL NOT SHOWN.

2) REPAIR CURBS AT AREAS INDICATED ABOVE. SEE SHEET 3/5 FOR DETAILS.

3) REPOUR TOP 6" OF BACKWALL FROM CURB TO CURB AS DETAILED ON SHEET 2/5.

4) PLACE A POLYMER MODIFIED ASPHALT EXPANSION JOINT SYSTEM AT EACH ABUTMENT AS DETAILED ON SHEET 5/5.

5) REPAIR CURB/EXPANSION JOINT AREAS AS PER DETAILS ON SHEET 4/5.

6) PAVE OVER BRIDGE DECK WITH 3" OF ASPHALT, SEE ROADWAY PLANS FOR QUANTITIES.

7) TAPER ASPHALT AT EACH SCUPPER LOCATION TO DRAIN INTO SCUPPER.

8) ALL EXISTING REINFORCING STEEL TO BE PRESERVED.

DESIGN AGENCY
ODOT DISTRICT THREE
OFFICE OF PRODUCTION

DESIGNED DCM | DRAWN DCM | REVIEWED RDN | DATE 9/07
CHECKED DJV | REVISED | STRUCTURE FILE NUMBER 0305278

PLAN VIEW
ASD-302-0244 OVER I-71

ASD-89-12.15

1/5

47/56

DESIGN FILE: I:\projects\25673\Structl\bridgerehab\302_0244str1.dgn
WORKSTATION: dmollens DATE: 10/31/2007

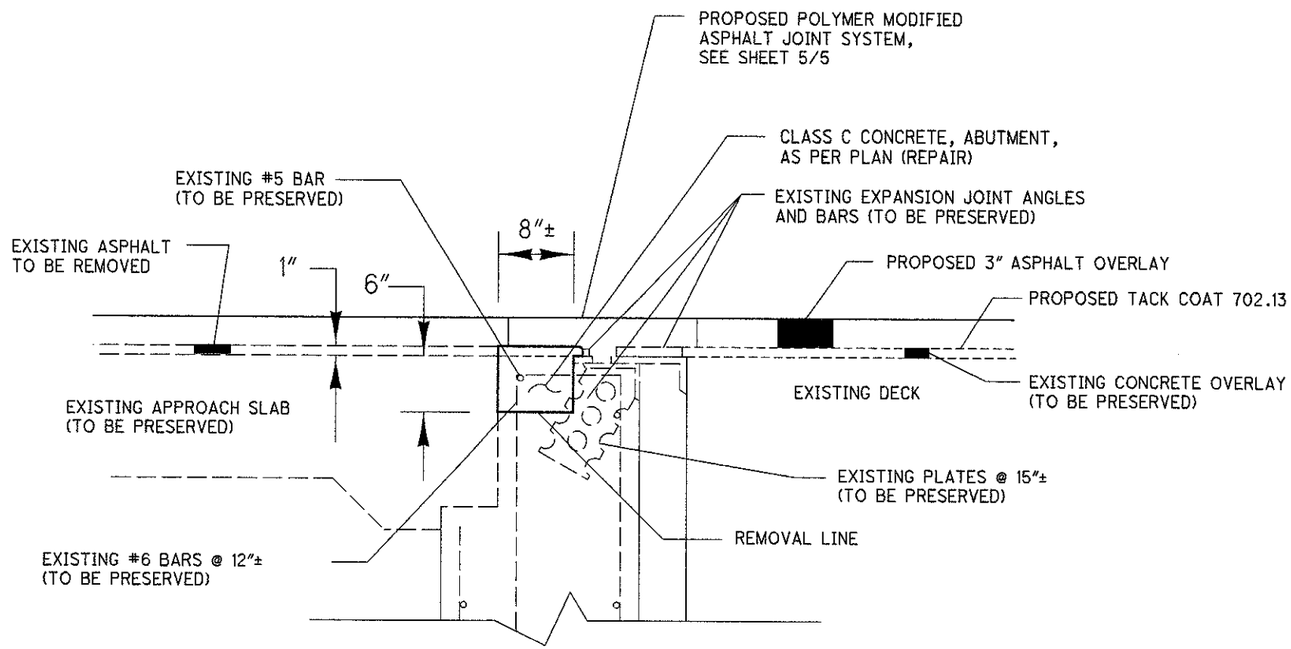

TYPICAL ABUTMENT SECTION

(28'± OF REPAIR LENGTH PER ABUTMENT)

ITEM	QUANTITY	UNIT	DESCRIPTION
202	1	CU YD	PORTIONS OF STRUCTURE REMOVED, AS PER PLAN
511	1	CU YD	CLASS C CONCRETE, ABUTMENT, AS PER PLAN (REPAIR)

ALL QUANTITIES CARRIED TO SHEET 1/5.

NOTES:

1) ALL EXISTING REINFORCING STEEL TO BE PRESERVED

DESIGN FILE: i:\projects\25673\Structt\bridgerehab\302_0244str1.dgn
WORKSTATION: dmollens DATE: 10/31/2007

DESIGN AGENCY
ODOT DISTRICT THREE
OFFICE OF PRODUCTION

DESIGNED	DRAWN	REVIEWED	DATE
DCM	DCM	RDN	9/07
CHECKED	REVISED	STRUCTURE FILE NUMBER	
DJV		0305278	

BACKWALL REPAIR
ASD-302-0244 OVER I-71

ASD-89-12.15

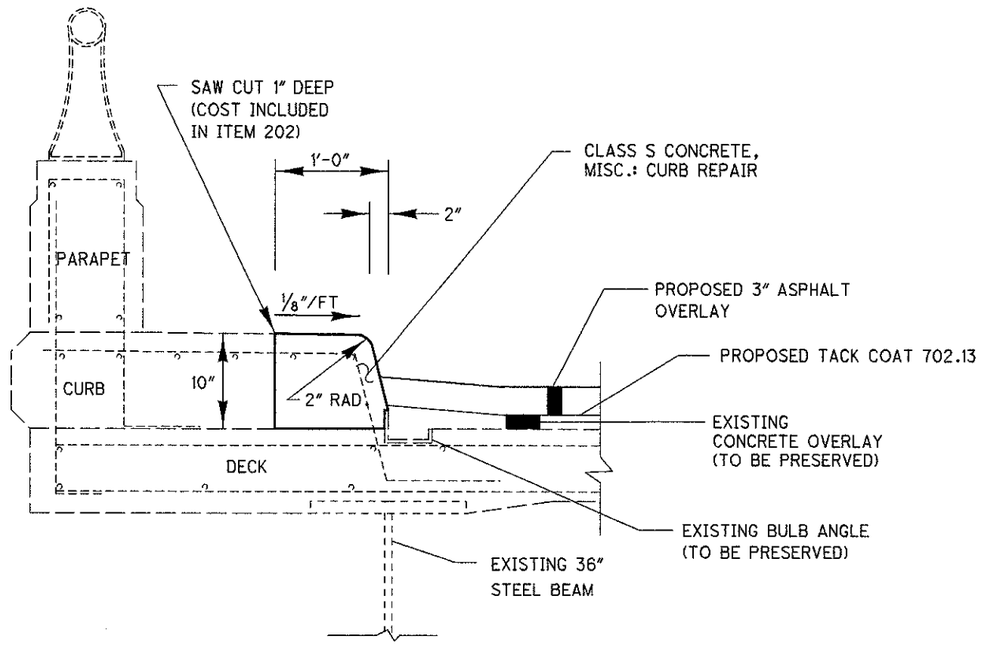

TYPICAL CURB REPAIR SECTION

(78'± OF CURB REPAIR LENGTH)

ITEM	QUANTITY	UNIT	DESCRIPTION
202	3	CU YD	PORTIONS OF STRUCTURE REMOVED, AS PER PLAN
511	3	CU YD	CLASS S CONCRETE, MISC.: CURB REPAIR

ALL QUANTITIES CARRIED TO SHEET 1/5.

NOTES:

1) ALL EXISTING REINFORCING STEEL TO BE PRESERVED

DESIGN FILE: I:\projects\25673\Structure\bridgerehab\302_0244str1.dgn
WORKSTATION: dmollens DATE: 10/31/2007

DESIGN AGENCY
ODOT DISTRICT THREE
OFFICE OF PRODUCTION

DESIGNED	DRAWN	REVIEWED	DATE
DCM	DCM	RDN	9/07
CHECKED	REVISED	STRUCTURE FILE NUMBER	
DJV		0305278	

CURB REPAIR
ASD-302-0244 OVER I-71

ASD-89-12.15

LEGEND

L.R. LEFT REAR
R.R. RIGHT REAR
L.F. LEFT FORWARD
R.F. RIGHT FORWARD

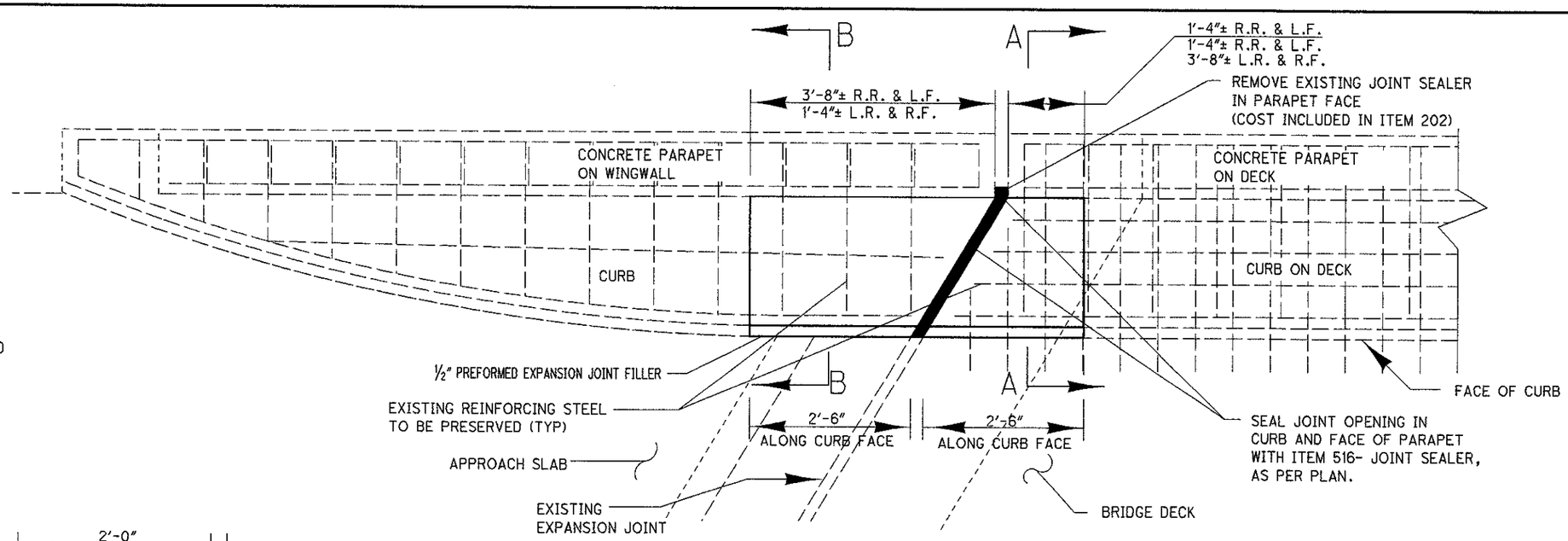

PLAN VIEW OF CURB AT EXPANSION JOINT (TYPICAL ALL CORNERS)

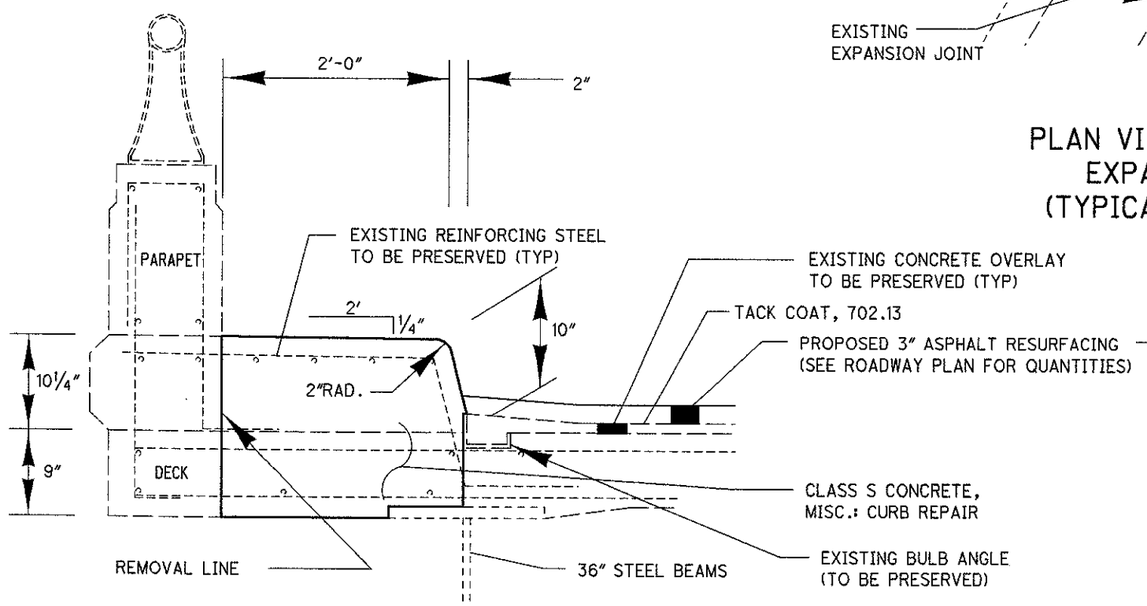

SECTION A-A

(2'-6" AVG. LENGTH)

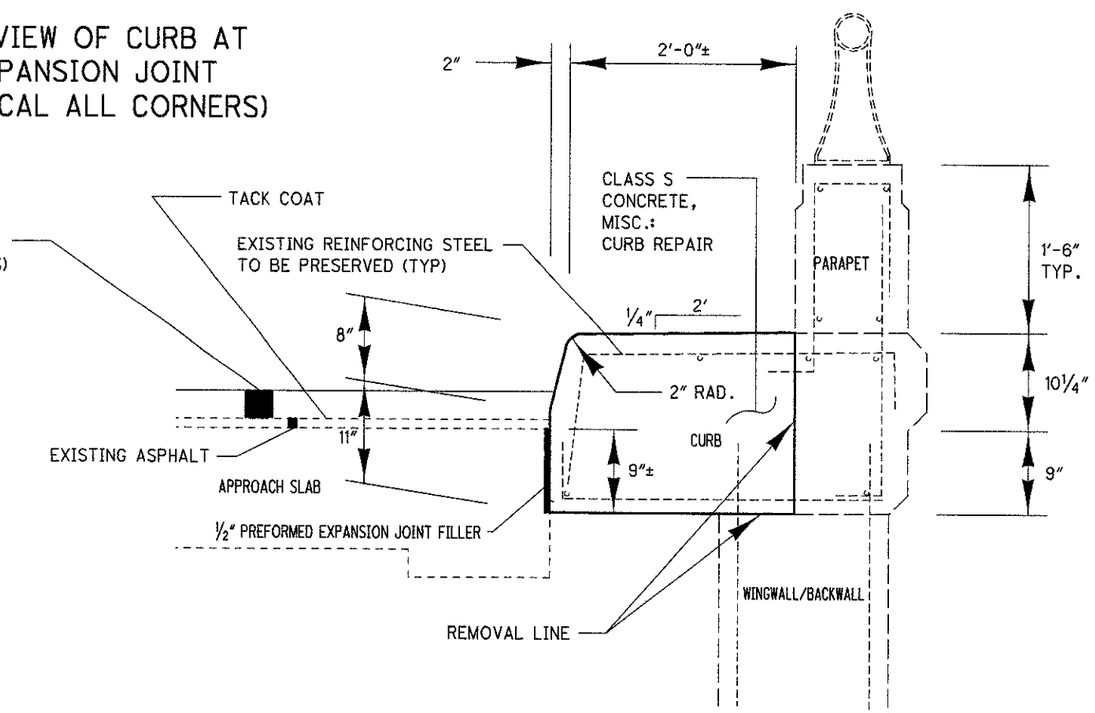

SECTION B-B

(2'-6" AVG. LENGTH)

ITEM	QUANTITY	UNIT	DESCRIPTION
202	4	CU YD	PORTIONS OF STRUCTURE REMOVED, AS PER PLAN
511	4	CU YD	CLASS S CONCRETE, MISC.: CURB REPAIR
516	19	FT	JOINT SEALER, AS PER PLAN
516	8	SQ FT	½" PREFORMED EXPANSION JOINT FILLER

ALL QUANTITIES CARRIED TO SHEET 1/5

NOTES:

1) ALL EXISTING REINFORCING STEEL TO BE PRESERVED

DESIGN FILE: I:\projects\25673\Structf\bridgerehab\302_0244str3.dgn
WORKSTATION: dmollens DATE: 10/31/2007

DESIGN AGENCY: ODOT DISTRICT THREE OFFICE OF PRODUCTION

DESIGNED DCM | CHECKED DJV | DRAWN DCM | REVISED | REVIEWED RDN | DATE 9/07 | STRUCTURE FILE NUMBER 0305278

CURB/EXPANSION JOINT REPAIR
ASD-302-0244 OVER I-71

ASD-89-12.15

4 / 5

50 / 56

GENERAL NOTES AND DETAILS FOR POLYMER MODIFIED ASPHALT EXPANSION JOINT SYSTEM

ITEM SPECIAL - POLYMER-MODIFIED ASPHALT EXPANSION JOINT SYSTEM

THIS ITEM WILL BE USED TO SEAL THE EXPANSION/CONTRACTION JOINTS AS PER THESE DETAILS AND THE MANUFACTURER'S REQUIREMENTS USING A POLYMER-MODIFIED ASPHALT SYSTEM. THE PRIME CONTRACTOR WILL OBTAIN THE SERVICES OF ONE OF THE FOLLOWING APPROVED APPLICATORS WHO WILL FURNISH AND INSTALL THE NEW BRIDGE EXPANSION JOINT SYSTEM AFTER ALL PAVING ON THE AFFECTED BRIDGE(S) HAS BEEN COMPLETED.

PRODUCT NAME	SUPPLIER	ADDRESS	PHONE NO.
THORMA-JOINT	DYNAMIC SURFACE APPLICATIONS, LTD	373 VILLAGE RD. PENNSDALE, PA 17756	(570)546-6041
MATRIX 502	CRAFCO INC.	420 N. ROOSEVELT AVE. CHANDLER, AZ 85226	(800)528-8242
EXPANDEX JOINT SYSTEM	WATSON-BOWMAN ACME	95 PINEVIEW DR. AMHERST, NY 14228	(716)691-7566
APJ ASPHALTIC PLUG EXPANSION JOINT	WYOMING EQUIPMENT SALES	281 SIXTH STREET P.O. BOX 287 WEST WYOMING, PA 18644	(570)693-2810

MATERIALS:

BRIDGING PLATE:

MILD STEEL 1/8" OR 1/4" THICK PLATE, 8" WIDE OR 18 GAUGE ALUMINUM, 8" WIDE.

BINDER:

TYPE:	POLYMER MODIFIED ASPHALT
SOFTENING POINT:	180 DEGREES F. MIN.
FLOW:	3 mm. MAX. AT 140 DEGREES F.
PENETRATION:	9 mm. MAX. AT 77 DEGREES F. 1 mm. MIN AT 0 DEGREES F. ASTM D 3407
DUCTILITY:	40 cm. MIN. ASTM D 113
RESILIENCE:	60% MIN. AT 77 DEGREES F.
TENSILE ADHESION:	700% MIN.
SPECIFIC GRAVITY:	1.10 * 0.05
POURING TEMP:	350 - 390 DEGREES F.

AGGREGATE:

TYPE:	CRUSHED, DOUBLE WASHED, AND DRIED GRANITE OR BASALT
GRADATION	THE GRADATION OF THE AGGREGATE VARIES BY MANUFACTURER AND WILL BE AS PER THE MANUFACTURER'S RECOMMENDATIONS FOR THE SYSTEM BEING USED ON THIS PROJECT.

BACKER ROD:

THE BACKER SHALL BE A CLOSED CELL FOAM EXPANSION JOINT FILLER CAPABLE OF WITHSTANDING THE PLACEMENT TEMPERATURE OF THE POLYMER MODIFIED ASPHALT.

NOTE: PRIOR TO PLACEMENT OF ANY PORTION OF THE JOINT SYSTEM, THE PROJECT ENGINEER MUST HAVE CERTIFIED TEST DATA MEETING ALL THE MINIMUM REQUIREMENTS OF ALL THE MATERIALS OF THE JOINT SYSTEM.

INSTALLATION PROCEDURES:

SAWING AND SURFACE PREPARATION:

AFTER ALL PAVING OPERATIONS ARE COMPLETE, THE OVERLAY IS TO BE TRANSVERSELY SAW CUT FULL DEPTH NO LESS THAN TWO INCHES DEEP (20" CENTERED OVER JOINT OPENING, UNLESS OTHERWISE NOTED). REMOVE ALL MATERIAL, INCLUDING WATER-PROOFING MATERIAL, BETWEEN SAW CUTS. THOROUGHLY CLEAN AND DRY EXPOSED CONCRETE, STEEL, AND CUT SURFACES USING COMPRESSED AIR AND A HOT COMPRESSED AIR (HCA) LANCE. THE LANCE MUST PRODUCE A FLAME RETARDED AIR STREAM TEMPERATURE OF 3000 DEGREES F. AT A VELOCITY OF 3,000 FEET PER SECOND WITH 15 PSIG CHAMBER PRESSURE. IF THERE IS AN INTERRUPTION DUE TO WEATHER OR OTHER CAUSES, THE OPERATION WILL BE REPEATED WITH THE HCA LANCE IMMEDIATELY BEFORE THE BINDER COAT OPERATION. ALSO, 6 INCHES OF THE ROAD SURFACE ON EITHER SIDE OF THE JOINT WILL BE DRIED SO THAT A SUITABLE SURFACE FOR BITUMEN ADHESION IS OBTAINED.

SEALING OF EXPANSION JOINT: (PRE-STRESSED BOX OR CONCRETE SLAB)

THE EXPANSION JOINT GAP IS TO BE SEALED AND A BRIDGING PLATE CENTERED ALONG IT. A VERY NARROW GAP WILL BE SEALED BY POURING HOT BINDER INTO THE GAP. GAPS OF 1/8" OR MORE WILL FIRST BE FILLED WITH AN APPROPRIATELY SIZED BACKER ROD. THE BACKER ROD WILL BE INSTALLED SO THAT IT IS BETWEEN 1/8" AND 1-1/8" BELOW THE TOP OF THE EXISTING GAP. THE GAP WILL THEN BE FILLED WITH BINDER.

BOND BREAKER:

SPREAD BINDER OVER SURFACE AREA WHERE THE METAL BRIDGING PLATE WILL BE PLACED. CENTER THE BRIDGING PLATE OVER THE EXISTING JOINT AND BED INTO THE HOT BINDER. BUTT JOINT THE BRIDGING PLATES TO ACCOMODATE THE ENTIRE JOINT LENGTH. SPIKE HOLES WILL BE DRILLED AT 1 FOOT INTERVALS ALONG THE LONGITUDINAL CENTERLINE OF THE PLATES. SECURE BRIDGING PLATE WITH NAILS OR SPIKES. SEAL BUTT JOINTS WITH HOT BINDER AND ALLOW BINDER TO SETUP BEFORE NEXT OPERATION. WHEN ALUMINUM BRIDGING PLATES ARE USED, ONLY THE BINDER IS REQUIRED TO SECURE THE INDIVIDUAL PLATES.

BINDER COAT:

SEAL ALL PREPARED, EXPOSED SURFACES OF THE JOINT WITH BINDER. POUR THE HOT BINDER OVER THE FLOOR AREA OF THE JOINT AND SPREAD TO COAT ALL EXPOSED SURFACES. THE BINDER WILL BE A MINIMUM OF 1/32" THICK ON THE BOTTOM OF THE JOINT CAVITY, WITH POOLS OF GREATER THICKNESS WHERE SURFACE IRREGULARITIES EXIST. THE BINDER APPLICATION TEMPERATURE WILL BE BETWEEN 350 AND 390 DEGREES F. THE BINDER WILL NOT BE ALLOWED TO BE HEATED ABOVE 410 DEGREES F. NOR ALLOWED TO EXCEED 390 DEGREES F. FOR MORE THAN 1 HOUR. A DOUBLE JACKETED OIL MELTER WILL BE USED TO HEAT THE BINDER. THE MELTER WILL BE EQUIPPED WITH A CONTINUOUS AGITATION SYSTEM, TEMPERATURE CONTROLS, AND A CALIBRATED THERMOMETER. ALSO A SYSTEM FOR ACCURATELY MEASURING THE WEIGHTS OF THE BINDER AND THE AGGREGATE WILL BE REQUIRED.

BUILD-UP OF JOINT LAYERS:

AGGREGATE PREPARATION:

HEAT THE AGGREGATE TO A TEMPERATURE OF 275 TO 325 DEGREES F., WITH A SUITABLE ROTATING DRUM WITH ATTACHED HEAT SOURCE OR A HOT COMPRESSED AIR LANCE, TO REMOVE DUST AND MOISTURE.

AGGREGATE PROPORTION AND LAYER THICKNESS:

MIX THE AGGREGATE WITH THE BINDER SUCH THAT THE MINIMUM AGGREGATE CONTENT BY WEIGHT WILL BE 68%. THE HEATED AGGREGATE AND BINDER WILL BE COMBINED IN LAYERS, UNLESS PATENTED INSTALLATION REQUIRES DIFFERENTLY, NOT LESS THAN 3/4 OF AN INCH NOR EXCEEDING 2-1/2 INCHES. THE THICKNESS OF EACH LAYER CAN BE VARIED WITHIN THESE LIMITS, TO ACHIEVE THE REQUIRED JOINT THICKNESS (MIN. 2 INCHES). THE OBJECTIVE IS TO COAT EACH STONE AND FILL THE VOIDS WHILE AVOIDING AN EXCESS OF BINDER. THIS WILL ACHIEVE THE MAXIMUM CONTENT OF STONE CONSISTENT WITH ALL STONES BEING COATED WITH BINDER. RAKE THE MIXTURE TO MIX AND LEVEL.

THE TOP LAYER THICKNESS WILL VARY BETWEEN 1/2 INCH AND ONE (1) INCH. IN PREPARING THE TOP LAYER, THE RATIO OF AGGREGATE TO BINDER WILL BE APPROXIMATELY 6:1 BY WEIGHT. OVERFILL THE TOP LAYER AND COMPACT TO THE LEVEL OF THE ADJACENT SURFACES USING A ROLLER OR VIBRATORY PLATE COMPACTOR. IMMEDIATELY AFTER COMPLETION OF THE COMPACTION, POUR SUFFICIENT BINDER OVER THE JOINT TO FILL THE SURFACE VOIDS AND COAT THE SURFACE STONE. DUST THE FINISHED JOINT WITH A FINE, DRY AGGREGATE TO PREVENT TACKINESS.

MAINTENANCE OF TRAFFIC:

IF NECESSARY TO FACILITATE TRAFFIC MAINTENANCE, THE JOINT WILL BE INSTALLED IN TWO (2) HALF-WIDTH PHASES. DURING PHASE 1 APPROXIMATELY HALF OF THE TOTAL JOINT WILL BE INSTALLED. DURING PHASE 2, A MINIMUM OF TWO (2) INCHES OF THE PHASE 1 JOINT WILL BE REMOVED, AT OR NEAR THE CENTERLINE, WITH THE REMAINDER OF THE JOINT INSTALLED. IN ALL CASES, OPERATIONS WILL BE SCHEDULED SO THAT ALL LANES CAN BE OPEN TO TRAFFIC DURING ALL NON-WORKING HOURS.

TESTING:

CERTIFICATION WILL BE SUPPLIED FOR EACH PROJECT SHOWING BINDER COMPLIANCE WITH REQUIRED PROPERTIES. A ONE QUART SAMPLE OF BINDER WILL BE RETRIEVED FROM EACH BRIDGE FOR FURTHER TESTING BY THE O.D.O.T OFFICE OF MATERIALS MANAGEMENT.

METHOD OF MEASUREMENT AND BASIS OF PAYMENT:

THE DEPARTMENT WILL MEASURE THE JOINT BY THE NUMBER OF FEET AND WILL PAY FOR ACCEPTED QUANTITIES AT THE CONTRACT PRICE AS: ITEM SPECIAL, POLYMER MODIFIED ASPHALT EXPANSION JONT SYSTEM.

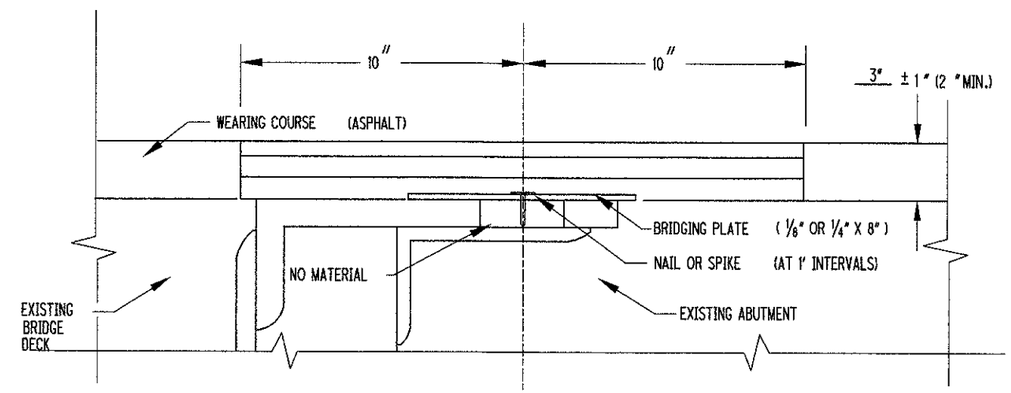

TYPICAL STEEL BEAM EXPANSION JOINT

ASD-302-0244 SFN 0305278			
ITEM	DESCRIPTION	UNIT	QUANTITY
SPECIAL	POLYMER MODIFIED ASPHALT EXPANSION JOINT SYSTEM	FT	56

QUANTITY CARRIED TO SHEET NO. 1/5

CALCULATED DCM | CHECKED DJV
DATE REVISED 10-26-98 10-17-03 04-16-05
DESIGNED MAM | DRAWN MAM

POLYMER MODIFIED ASPHALT EXPANSION JOINT SYSTEM
ASD-302-0244 OVER I-71

ASD-89-12.15

5 / 5
51 / 56

DESIGN FILE: I:\projects\25673\Struct\bridgerehab\302_0244str2.dgn
WORKSTATION: dmollens DATE: 10/31/2007

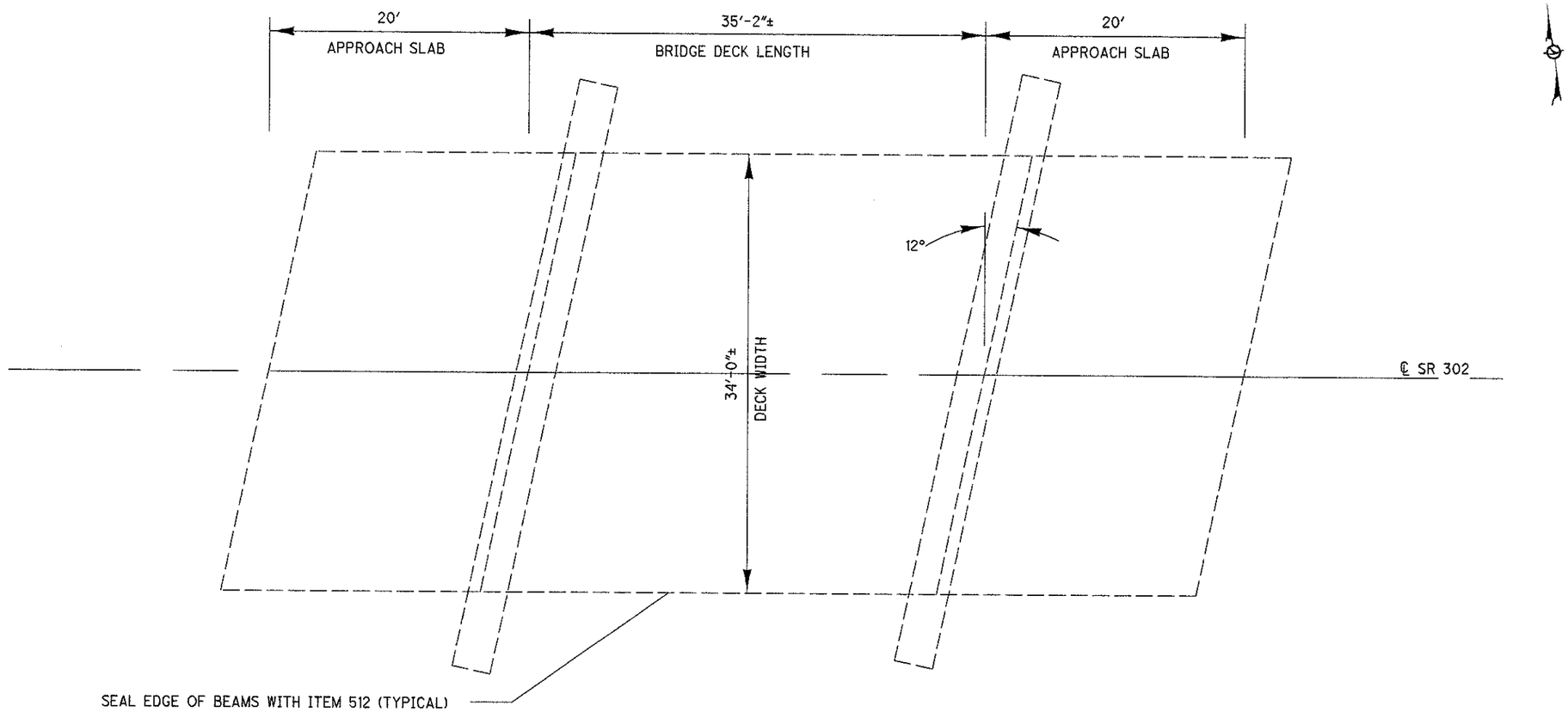

PLAN VIEW

NOTES:

1) GUARDRAIL NOT SHOWN.

2) SEAL EDGE OF BOX BEAMS AS PER DETAILS ABOVE USING ITEM 512.

3) PLACE A POLYMER MODIFIED ASPHALT EXPANSION JOINT SYSTEM AT EACH ABUTMENT AS DETAILED ON SHEET 2/2.

ITEM	QUANTITY	UNIT	DESCRIPTION
407	23	GAL	TACK COAT
442	12	CU YD	ASPHALT CONCRETE SURFACE COURSE, 9.5MM, TYPE A (446), AS PER PLAN
512	19	SQ YD	SEALING OF CONCRETE SURFACES (EPOXY-URETHANE)
SPECIAL	70	FT	POLYMER MODIFIED ASPHALT EXPANSION JOINT SYSTEM

ALL QUANTITIES CARRIED TO STRUCTURE SUMMARY SHEET

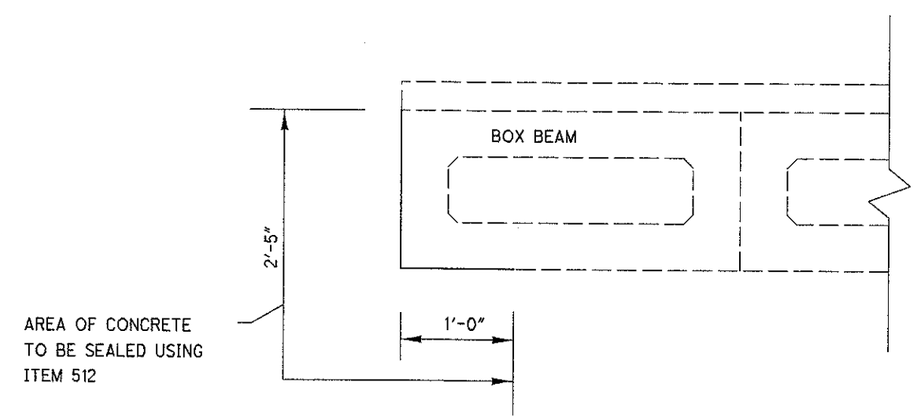

TYPICAL BOX BEAM SEALING

(SEALING LENGTH=34'-0"±)

DESIGN FILE: i:\projects\25673\Struct\bridgerehab\302_0563stri.dgn
WORKSTATION: dmollens DATE: 10/31/2007

DESIGN AGENCY
ODOT DISTRICT THREE
OFFICE OF PRODUCTION

DESIGNED	DRAWN	REVIEWED	DATE
DCM	DCM	RDN	9/07
CHECKED	REVISED	STRUCTURE FILE NUMBER	
DJV		0305294	

PLAN VIEW
ASD-302-0563 OVER KATOTAWA CREEK

ASD-89-12.15

GENERAL NOTES AND DETAILS FOR POLYMER MODIFIED ASPHALT EXPANSION JOINT SYSTEM

ITEM SPECIAL - POLYMER-MODIFIED ASPHALT EXPANSION JOINT SYSTEM

THIS ITEM WILL BE USED TO SEAL THE EXPANSION/CONTRACTION JOINTS AS PER THESE DETAILS AND THE MANUFACTURER'S REQUIREMENTS USING A POLYMER-MODIFIED ASPHALT SYSTEM. THE PRIME CONTRACTOR WILL OBTAIN THE SERVICES OF ONE OF THE FOLLOWING APPROVED APPLICATORS WHO WILL FURNISH AND INSTALL THE NEW BRIDGE EXPANSION JOINT SYSTEM AFTER ALL PAVING ON THE AFFECTED BRIDGE(S) HAS BEEN COMPLETED.

PRODUCT NAME	SUPPLIER	ADDRESS	PHONE NO.
THORMA-JOINT	DYNAMIC SURFACE APPLICATIONS, LTD	373 VILLAGE RD. PENNSDALE, PA 17756	(570)546-6041
MATRIX 502	CRAFCO INC.	420 N. ROOSEVELT AVE. CHANDLER, AZ 85226	(800)528-8242
EXPANDEX JOINT SYSTEM	WATSON-BOWMAN ACME	95 PINEVIEW DR. AMHERST, NY 14228	(716)691-7566
APJ ASPHALTIC PLUG EXPANSION JOINT	WYOMING EQUIPMENT SALES	281 SIXTH STREET P.O. BOX 287 WEST WYOMING, PA 18644	(570)693-2810

MATERIALS:

BRIDGING PLATE:

MILD STEEL 1/8" OR 1/4" THICK PLATE, 8" WIDE OR 18 GAUGE ALUMINUM, 8" WIDE.

BINDER:

TYPE:	POLYMER MODIFIED ASPHALT
SOFTENING POINT:	180 DEGREES F. MIN.
FLOW:	3 mm. MAX. AT 140 DEGREES F.
PENETRATION:	9 mm. MAX. AT 77 DEGREES F. 1 mm. MIN AT 0 DEGREES F. ASTM D 3407
DUCTILITY:	40 cm. MIN. ASTM D 113
RESILIENCE:	60% MIN. AT 77 DEGREES F.
TENSILE ADHESION:	700% MIN.
SPECIFIC GRAVITY:	1.10 * 0.05
POURING TEMP:	350 - 390 DEGREES F.

AGGREGATE:

TYPE:	CRUSHED, DOUBLE WASHED, AND DRIED GRANITE OR BASALT
GRADATION	THE GRADATION OF THE AGGREGATE VARIES BY MANUFACTURER AND WILL BE AS PER THE MANUFACTURER'S RECOMMENDATIONS FOR THE SYSTEM BEING USED ON THIS PROJECT.

BACKER ROD:

THE BACKER SHALL BE A CLOSED CELL FOAM EXPANSION JOINT FILLER CAPABLE OF WITHSTANDING THE PLACEMENT TEMPERATURE OF THE POLYMER MODIFIED ASPHALT.

NOTE: PRIOR TO PLACEMENT OF ANY PORTION OF THE JOINT SYSTEM, THE PROJECT ENGINEER MUST HAVE CERTIFIED TEST DATA MEETING ALL THE MINIMUM REQUIREMENTS OF ALL THE MATERIALS OF THE JOINT SYSTEM.

INSTALLATION PROCEDURES:

SAWING AND SURFACE PREPARATION:

AFTER ALL PAVING OPERATIONS ARE COMPLETE, THE OVERLAY IS TO BE TRANSVERSELY SAW CUT FULL DEPTH NO LESS THAN TWO INCHES DEEP (20" CENTERED OVER JOINT OPENING, UNLESS OTHERWISE NOTED). REMOVE ALL MATERIAL, INCLUDING WATER-PROOFING MATERIAL, BETWEEN SAW CUTS. THOROUGHLY CLEAN AND DRY EXPOSED CONCRETE, STEEL, AND CUT SURFACES USING COMPRESSED AIR AND A HOT COMPRESSED AIR (HCA) LANCE. THE LANCE MUST PRODUCE A FLAME RETARDED AIR STREAM TEMPERATURE OF 3000 DEGREES F. AT A VELOCITY OF 3,000 FEET PER SECOND WITH 15 PSIG CHAMBER PRESSURE. IF THERE IS AN INTERRUPTION DUE TO WEATHER OR OTHER CAUSES, THE OPERATION WILL BE REPEATED WITH THE HCA LANCE IMMEDIATELY BEFORE THE BINDER COAT OPERATION. ALSO, 6 INCHES OF THE ROAD SURFACE ON EITHER SIDE OF THE JOINT WILL BE DRIED SO THAT A SUITABLE SURFACE FOR BITUMEN ADHESION IS OBTAINED.

SEALING OF EXPANSION JOINT: (PRE-STRESSED BOX OR CONCRETE SLAB)

THE EXPANSION JOINT GAP IS TO BE SEALED AND A BRIDGING PLATE CENTERED ALONG IT. A VERY NARROW GAP WILL BE SEALED BY POURING HOT BINDER INTO THE GAP. GAPS OF 1/8" OR MORE WILL FIRST BE FILLED WITH AN APPROPRIATELY SIZED BACKER ROD. THE BACKER ROD WILL BE INSTALLED SO THAT IT IS BETWEEN 1/8" AND 1-1/8" BELOW THE TOP OF THE EXISTING GAP. THE GAP WILL THEN BE FILLED WITH BINDER.

BOND BREAKER:

SPREAD BINDER OVER SURFACE AREA WHERE THE METAL BRIDGING PLATE WILL BE PLACED. CENTER THE BRIDGING PLATE OVER THE EXISTING JOINT AND BED INTO THE HOT BINDER. BUTT JOINT THE BRIDGING PLATES TO ACCOMODATE THE ENTIRE JOINT LENGTH. SPIKE HOLES WILL BE DRILLED AT 1 FOOT INTERVALS ALONG THE LONGITUDINAL CENTERLINE OF THE PLATES. SECURE BRIDGING PLATE WITH NAILS OR SPIKES. SEAL BUTT JOINTS WITH HOT BINDER AND ALLOW BINDER TO SETUP BEFORE NEXT OPERATION. WHEN ALUMINUM BRIDGING PLATES ARE USED, ONLY THE BINDER IS REQUIRED TO SECURE THE INDIVIDUAL PLATES.

BINDER COAT:

SEAL ALL PREPARED, EXPOSED SURFACES OF THE JOINT WITH BINDER. POUR THE HOT BINDER OVER THE FLOOR AREA OF THE JOINT AND SPREAD TO COAT ALL EXPOSED SURFACES. THE BINDER WILL BE A MINIMUM OF 1/32" THICK ON THE BOTTOM OF THE JOINT CAVITY, WITH POOLS OF GREATER THICKNESS WHERE SURFACE IRREGULARITIES EXIST. THE BINDER APPLICATION TEMPERATURE WILL BE BETWEEN 350 AND 390 DEGREES F. THE BINDER WILL NOT BE ALLOWED TO BE HEATED ABOVE 410 DEGREES F. NOR ALLOWED TO EXCEED 390 DEGREES F. FOR MORE THAN 1 HOUR. A DOUBLE JACKETED OIL MELTER WILL BE USED TO HEAT THE BINDER. THE MELTER WILL BE EQUIPPED WITH A CONTINUOUS AGITATION SYSTEM, TEMPERATURE CONTROLS, AND A CALIBRATED THERMOMETER. ALSO A SYSTEM FOR ACCURATELY MEASURING THE WEIGHTS OF THE BINDER AND THE AGGREGATE WILL BE REQUIRED.

BUILD-UP OF JOINT LAYERS:

AGGREGATE PREPARATION:

HEAT THE AGGREGATE TO A TEMPERATURE OF 275 TO 325 DEGREES F., WITH A SUITABLE ROTATING DRUM WITH ATTACHED HEAT SOURCE OR A HOT COMPRESSED AIR LANCE, TO REMOVE DUST AND MOISTURE.

AGGREGATE PROPORTION AND LAYER THICKNESS:

MIX THE AGGREGATE WITH THE BINDER SUCH THAT THE MINIMUM AGGREGATE CONTENT BY WEIGHT WILL BE 68%. THE HEATED AGGREGATE AND BINDER WILL BE COMBINED IN LAYERS, UNLESS PATENTED INSTALLATION REQUIRES DIFFERENTLY, NOT LESS THAN 3/4 OF AN INCH NOR EXCEEDING 2-1/2 INCHES. THE THICKNESS OF EACH LAYER CAN BE VARIED WITHIN THESE LIMITS, TO ACHIEVE THE REQUIRED JOINT THICKNESS (MIN. 2 INCHES). THE OBJECTIVE IS TO COAT EACH STONE AND FILL THE VOIDS WHILE AVOIDING AN EXCESS OF BINDER. THIS WILL ACHIEVE THE MAXIMUM CONTENT OF STONE CONSISTENT WITH ALL STONES BEING COATED WITH BINDER. RAKE THE MIXTURE TO MIX AND LEVEL.

THE TOP LAYER THICKNESS WILL VARY BETWEEN 1/2 INCH AND ONE (1) INCH. IN PREPARING THE TOP LAYER, THE RATIO OF AGGREGATE TO BINDER WILL BE APPROXIMATELY 6:1 BY WEIGHT. OVERFILL THE TOP LAYER AND COMPACT TO THE LEVEL OF THE ADJACENT SURFACES USING A ROLLER OR VIBRATORY PLATE COMPACTOR. IMMEDIATELY AFTER COMPLETION OF THE COMPACTION, POUR SUFFICIENT BINDER OVER THE JOINT TO FILL THE SURFACE VOIDS AND COAT THE SURFACE STONE. DUST THE FINISHED JOINT WITH A FINE, DRY AGGREGATE TO PREVENT TACKINESS.

MAINTENANCE OF TRAFFIC:

IF NECESSARY TO FACILITATE TRAFFIC MAINTENANCE, THE JOINT WILL BE INSTALLED IN TWO (2) HALF-WIDTH PHASES. DURING PHASE 1 APPROXIMATELY HALF OF THE TOTAL JOINT WILL BE INSTALLED. DURING PHASE 2, A MINIMUM OF TWO (2) INCHES OF THE PHASE 1 JOINT WILL BE REMOVED, AT OR NEAR THE CENTERLINE, WITH THE REMAINDER OF THE JOINT INSTALLED. IN ALL CASES, OPERATIONS WILL BE SCHEDULED SO THAT ALL LANES CAN BE OPEN TO TRAFFIC DURING ALL NON-WORKING HOURS.

TESTING:

CERTIFICATION WILL BE SUPPLIED FOR EACH PROJECT SHOWING BINDER COMPLIANCE WITH REQUIRED PROPERTIES. A ONE QUART SAMPLE OF BINDER WILL BE RETRIEVED FROM EACH BRIDGE FOR FURTHER TESTING BY THE O.D.O.T OFFICE OF MATERIALS MANAGEMENT.

METHOD OF MEASUREMENT AND BASIS OF PAYMENT:

THE DEPARTMENT WILL MEASURE THE JOINT BY THE NUMBER OF FEET AND WILL PAY FOR ACCEPTED QUANTITIES AT THE CONTRACT PRICE AS: ITEM SPECIAL, POLYMER MODIFIED ASPHALT EXPANSION JONT SYSTEM.

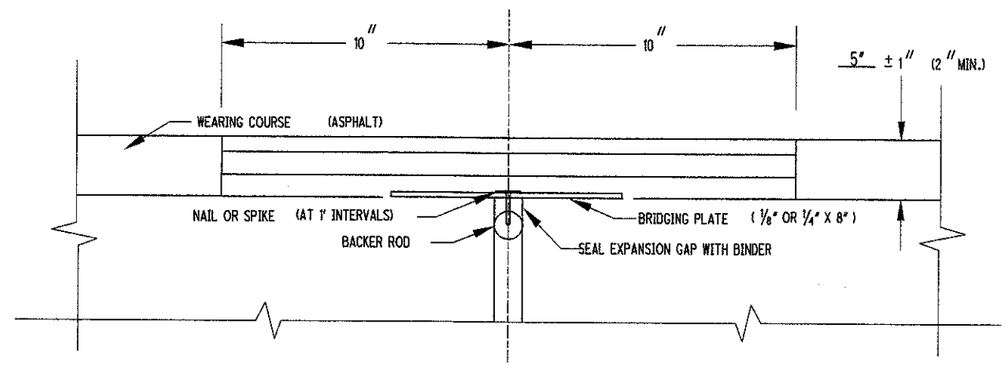

TYPICAL PRESTRESSED BOX BEAM

ASD-302-0563 SFN 0305294

ITEM	DESCRIPTION	UNIT	QUANTITY
SPECIAL	POLYMER MODIFIED ASPHALT EXPANSION JOINT SYSTEM	FT	70

QUANTITY CARRIED TO SHEET NO. 2/2

CALCULATED DCM
CHECKED DJV
DATE REVISED 10-28-96 10-17-03 04-15-05
DESIGNED MAM
DRAWN MAM

POLYMER MODIFIED ASPHALT EXPANSION JOINT SYSTEM
ASD-302-0563 OVER KATOTAWA CREEK

ASD-89-12.15

DESIGN FILE: I:\projects\25673\Struct\bridgerehab\302 0563str2.dgn
WORKSTATION:dmollens
DATE:10/31/2007

ASD-89-16.70
ASHLAND COUNTY
JACKSON TOWNSHIP
SECTION 7
T-23-N, R-15-W

MONUMENT LEGEND

- EXISTING R/W MONUMENT BOX
- PROPOSED R/W MONUMENT BOX
- EXISTING CONCRETE MONUMENT
- PROPOSED CONCRETE MONUMENT
- RAILROAD SPIKE FOUND
- RAILROAD SPIKE SET
- I.R.F. IRON PIN FOUND
- I.R.F. IRON PIN FOUND W/ ID CAP
- I.R.S. IRON PIN SET W/ ID CAP
- I.P.F. IRON PIPE FOUND
- I.P.S. IRON PIPE SET
- P.K.F. P.K. NAIL FOUND
- P.K.S. P.K. NAIL SET

NOTES:

1. THE EXISTING CENTERLINE OF R/W AND CONSTRUCTION S.R. 89 WAS DETERMINED USING:

   ODOT R/W PLANS:
   ICH 454 SEC. C
   ASHLAND COUNTY

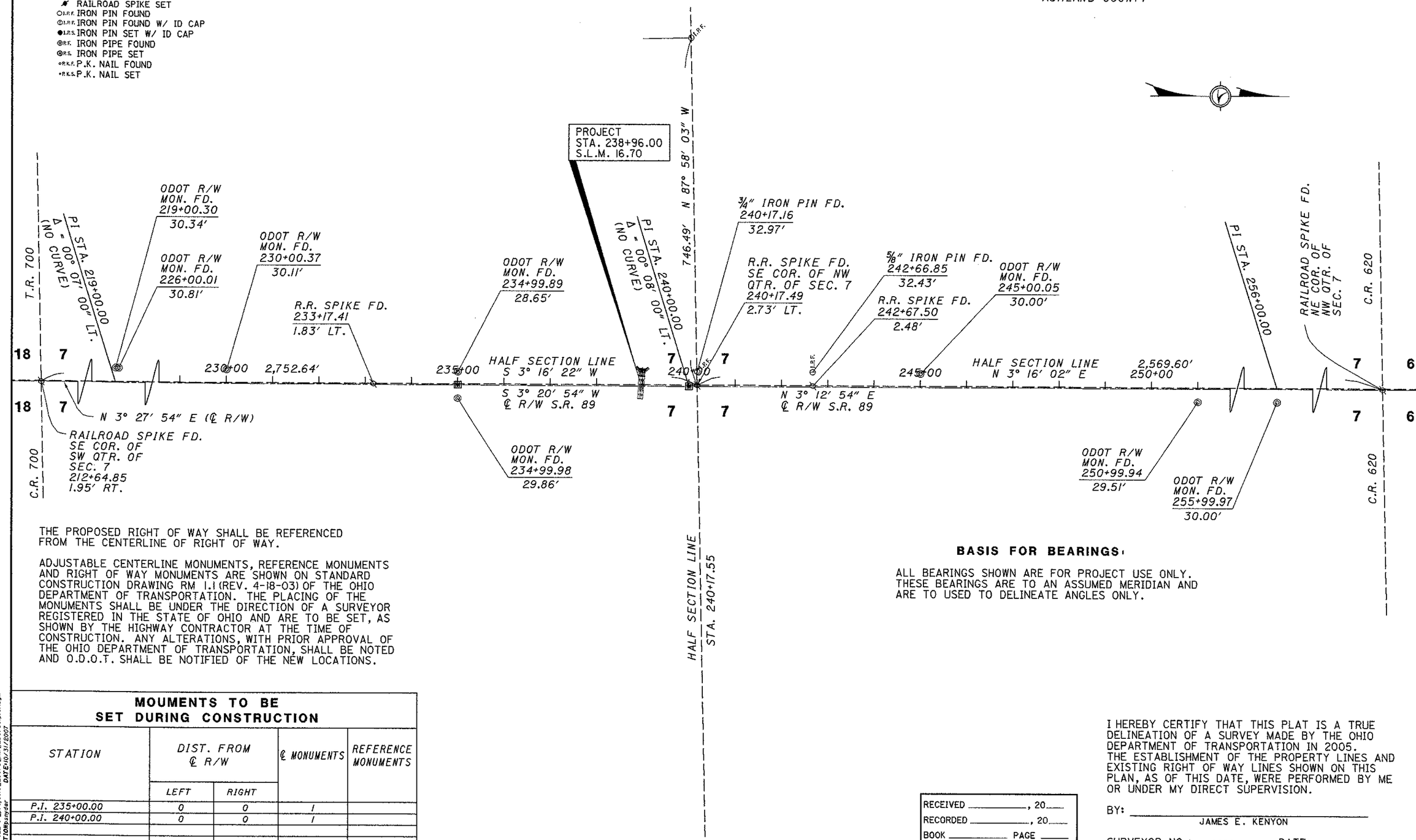

THE PROPOSED RIGHT OF WAY SHALL BE REFERENCED FROM THE CENTERLINE OF RIGHT OF WAY.

ADJUSTABLE CENTERLINE MONUMENTS, REFERENCE MONUMENTS AND RIGHT OF WAY MONUMENTS ARE SHOWN ON STANDARD CONSTRUCTION DRAWING RM 1.1 (REV. 4-18-03) OF THE OHIO DEPARTMENT OF TRANSPORTATION. THE PLACING OF THE MONUMENTS SHALL BE UNDER THE DIRECTION OF A SURVEYOR REGISTERED IN THE STATE OF OHIO AND ARE TO BE SET, AS SHOWN BY THE HIGHWAY CONTRACTOR AT THE TIME OF CONSTRUCTION. ANY ALTERATIONS, WITH PRIOR APPROVAL OF THE OHIO DEPARTMENT OF TRANSPORTATION, SHALL BE NOTED AND O.D.O.T. SHALL BE NOTIFIED OF THE NEW LOCATIONS.

BASIS FOR BEARINGS:

ALL BEARINGS SHOWN ARE FOR PROJECT USE ONLY. THESE BEARINGS ARE TO AN ASSUMED MERIDIAN AND ARE TO USED TO DELINEATE ANGLES ONLY.

MOUMENTS TO BE SET DURING CONSTRUCTION

STATION	DIST. FROM ℄ R/W		℄ MONUMENTS	REFERENCE MONUMENTS
	LEFT	RIGHT		
P.I. 235+00.00	0	0	1	
P.I. 240+00.00	0	0	1	
TOTAL (CARRIED TO GEN. SUM.)			2	

RECEIVED _____, 20____
RECORDED _____, 20____
BOOK _____ PAGE _____

COUNTY RECORDER

I HEREBY CERTIFY THAT THIS PLAT IS A TRUE DELINEATION OF A SURVEY MADE BY THE OHIO DEPARTMENT OF TRANSPORTATION IN 2005. THE ESTABLISHMENT OF THE PROPERTY LINES AND EXISTING RIGHT OF WAY LINES SHOWN ON THIS PLAN, AS OF THIS DATE, WERE PERFORMED BY ME OR UNDER MY DIRECT SUPERVISION.

BY: _____
JAMES E. KENYON

SURVEYOR NO.: 6891 DATE: _____

SCALE IN FEET: 0 50 100 200

PID NO. 81075

R/W DESIGNER PWS
R/W REVIEWER JEK

CENTERLINE PLAT

ASD-89-16.70

1/3

54/56

DESIGN FILE: I:\Projects\82567.3\RW\82567.3cplat.dgn
WORKSTATION: psnyder DATE: 10/31/2007

UTILITY NAMES

POWER: OHIO EDISON
76 SOUTH MAIN ST.
AKRON, OH. 44308
PHONE: (330) 384-5180

TELE: VERIZON
83 TOWNSEND AVE.
NORWALK, OH. 44857
PHONE: (419) 744-3617

WATER: RURAL LORAIN COUNTY WATER AUTHORITY
42401 S.R. 303, BOX 567
LAGRANGE, OH. 44050
PHONE: (440) 355-6060

NOTES: THE LOCATION OF THE UNDERGROUND UTILITIES SHOWN ON THE PLANS ARE OBTAINED FROM THE OWNER OF THE UTILITIES AS REQUIRED BY SECTION 153.64 O.R.C.

ASD-89-16.70
ASHLAND COUNTY
JACKSON TOWNSHIP
SECTION 7
T-23-N, R-15-W

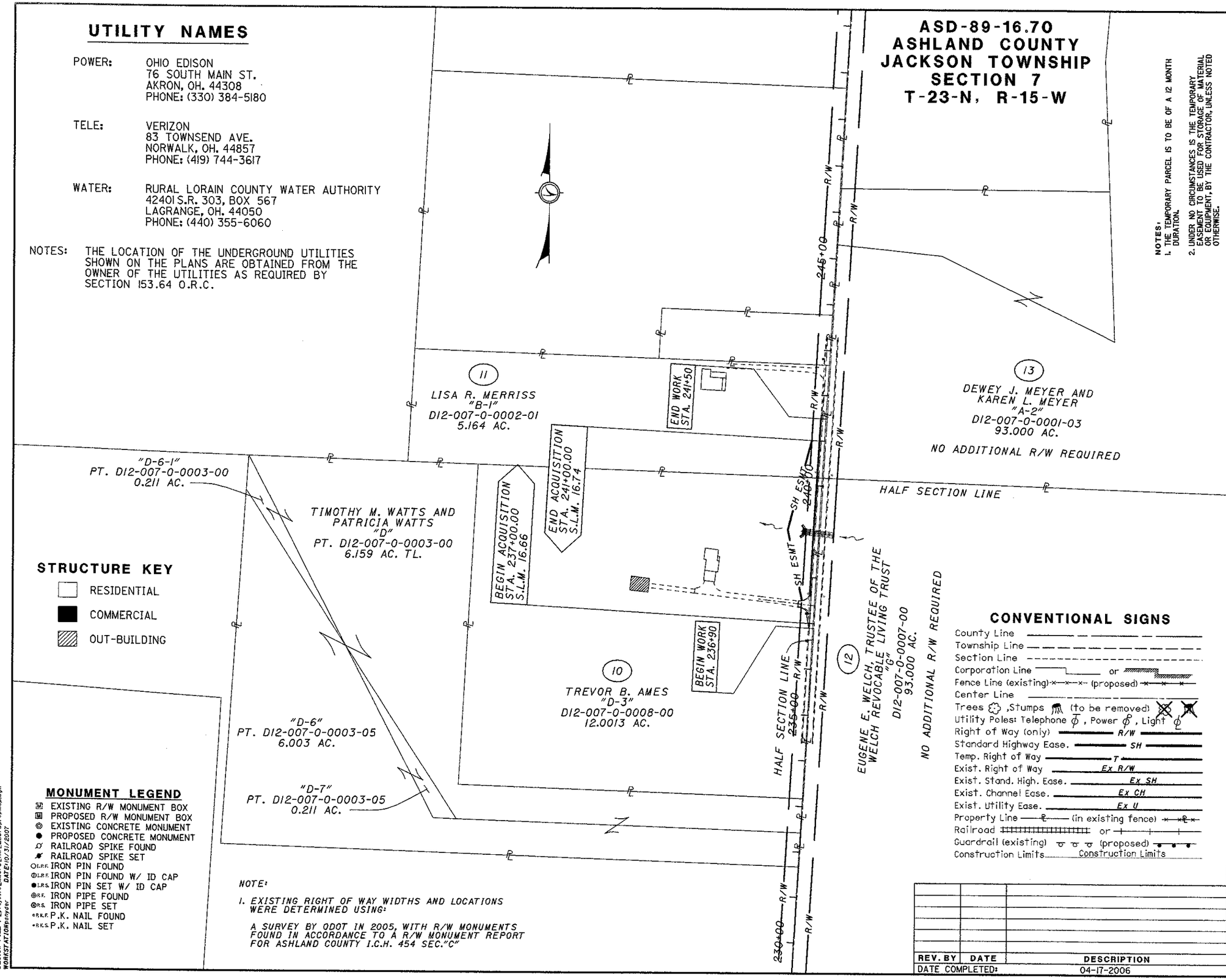

NOTES:
1. THE TEMPORARY PARCEL IS TO BE OF A 12 MONTH DURATION.
2. UNDER NO CIRCUMSTANCES IS THE TEMPORARY EASEMENT TO BE USED FOR STORAGE OF MATERIAL OR EQUIPMENT, BY THE CONTRACTOR, UNLESS NOTED OTHERWISE.

STRUCTURE KEY

- RESIDENTIAL
- COMMERCIAL
- OUT-BUILDING

MONUMENT LEGEND

- EXISTING R/W MONUMENT BOX
- PROPOSED R/W MONUMENT BOX
- EXISTING CONCRETE MONUMENT
- PROPOSED CONCRETE MONUMENT
- RAILROAD SPIKE FOUND
- RAILROAD SPIKE SET
- I.R.F. IRON PIN FOUND
- I.R.F. IRON PIN FOUND W/ ID CAP
- I.R.S. IRON PIN SET W/ ID CAP
- P.F. IRON PIPE FOUND
- P.S. IRON PIPE SET
- P.K.F. P.K. NAIL FOUND
- P.K.S. P.K. NAIL SET

NOTE:

1. EXISTING RIGHT OF WAY WIDTHS AND LOCATIONS WERE DETERMINED USING:

A SURVEY BY ODOT IN 2005, WITH R/W MONUMENTS FOUND IN ACCORDANCE TO A R/W MONUMENT REPORT FOR ASHLAND COUNTY I.C.H. 454 SEC."C"

CONVENTIONAL SIGNS

- County Line
- Township Line
- Section Line
- Corporation Line or
- Fence Line (existing) (proposed)
- Center Line
- Trees, Stumps (to be removed)
- Utility Poles: Telephone, Power, Light
- Right of Way (only) — R/W
- Standard Highway Ease. — SH
- Temp. Right of Way — T
- Exist. Right of Way — Ex R/W
- Exist. Stand. High. Ease. — Ex SH
- Exist. Channel Ease. — Ex CH
- Exist. Utility Ease. — Ex U
- Property Line (in existing fence)
- Railroad or
- Guardrail (existing) (proposed)
- Construction Limits — Construction Limits

REV. BY	DATE	DESCRIPTION

DATE COMPLETED: 04-17-2006

P.I.D. 81075

SUMMARY OF ADDITIONAL RIGHT OF WAY

GRANTEE: ALL RIGHT OF WAY ACQUIRED IN THE NAME OF THE STATE OF OHIO UNLESS OTHERWISE SHOWN.

ALL AREAS IN ACRES

NET RESIDUE = RECORD AREA - TOTAL PRO - NET TAKE

PARCEL NO.	OWNER	SHEET NO.	OWNER'S RECORD BOOK	OWNER'S RECORD PAGE	AUDITOR'S PARCEL NO.	TAX MAP PAR.	RECORD AREA	TOTAL P.R.O.	GROSS TAKE	P.R.O. INTAKE	NET TAKE	STRUCTURE	NET RESIDUE LEFT	NET RESIDUE RIGHT	TYPE FUND	REMARKS & PERSONALTY	AS ACQUIRED BOOK	AS ACQUIRED PAGE
1-9	NOT USED																	
10SH	TREVOR B. AMES	2,3	379	514	DI2-007-0-0008-00	D-3	12.0013	0.445	0.313	0.168	0.145	NONE	11.4113	-	STATE			
10T		3	518	502					0.032	-	0.032	NONE			STATE	LANDSCAPE ROCK		
11SH	LISA R. MERRISS	2,3	544	399	DI2-007-0-0002-01	B-1	5.164	0.155	0.068	0.052	0.016	NONE	4.983	-	STATE			
12	EUGENE E. WELCH, TRUSTEE OF THE WELCH REVOCABLE LIVING TRUST, DATED DECEMBER 12, 2002 AND ESTHER J. WELCH, TRUSTEE OF THE WELCH REVOCABLE LIVING TRUST, DATED DECEMBER 12, 2002	2,3	0306	0329	DI2-007-0-0007-00	G	93.000	1.056	-	-	-	-	-	91.944		NO ADDIT. R/W REQUIRED		
13	DEWEY J. MEYER AND KAREN L. MEYER	2,3	0121	0827	DI2-007-0-0001-03	A-2	66.232	0.382	-	-	-	-	-	65.850		NO ADDIT. R/W REQUIRED		

TOTAL NUMBER OF:
2 OWNERSHIPS W/ STRUCTURES INVOLVED
3 OWNERSHIPS W/ "P" ITEMS
0 OWNERSHIP
0 PARCELS
0 TOTAL TAKES

R/W DESIGNER: PWG
R/W REVIEWER: JEK

PID NO. 81075

0 50 100 200
SCALE IN FEET

PROPERTY MAP & SUMMARY OF ADDITONAL RIGHT OF WAY

ASD-89-16.70

2 / 3

55 / 56

DESIGN FILE: I:\projects\82567\RW\82567prpmap.dgn
WORKSTATION: kpayder DATE: 10/31/2007

ASD-89-16.70
ASHLAND COUNTY
JACKSON TOWNSHIP
SECTION 7
T-23-N, R-15-W

STRUCTURE KEY

- RESIDENTIAL
- COMMERCIAL
- OUT-BUILDING

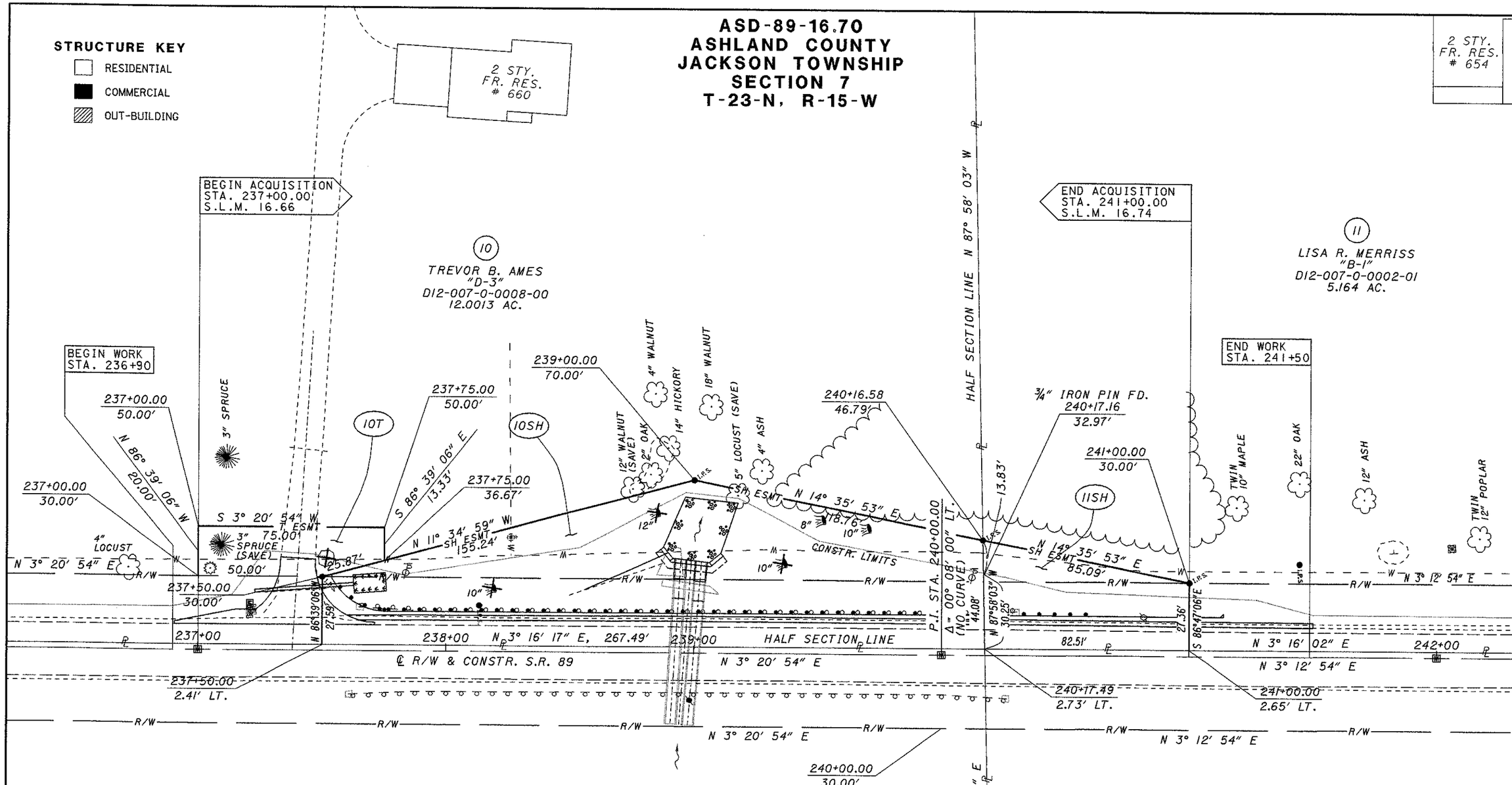

NOTES:

1. EXISTING RIGHT OF WAY STATIONING, WIDTHS AND LOCATIONS WERE DETERMINED USING:

   A SURVEY BY ODOT IN 2005, WITH R/W MONUMENTS FOUND IN ACCORDANCE TO A R/W MONUMENT REPORT FOR ASHLAND COUNTY I.C.H. 454 SEC. "C"

2. STATIONS AND OFFSETS ARE FROM THE CENTERLINE OF RIGHT OF WAY AND CONSTRUCTION.

3. REFER TO SHEET 1 OF 3 FOR MONUMENT LEGEND, TABLE AND NOTE.

REV. BY	DATE	DESCRIPTION
PWS	06-28-06	TURNED ON MISSING LEVELS

DATE COMPLETED: 04-17-2006

SCALE IN FEET: 0 10 20 40

PID NO. 81075

R/W DESIGNER PMS
R/W REVIEWER JEK

RIGHT OF WAY PLAN

ASD-89-16.70

3/3

56/56

DESIGN FILE: I:\Projects\25673\RW\25673rwplan.dgn
WORKSTATION: snyder DATE: 10/31/2007