ASD - SR-604-0.00; WAY-604-(0.00)(4.
080102 PID - 25671
Dist 3 2/13/2008

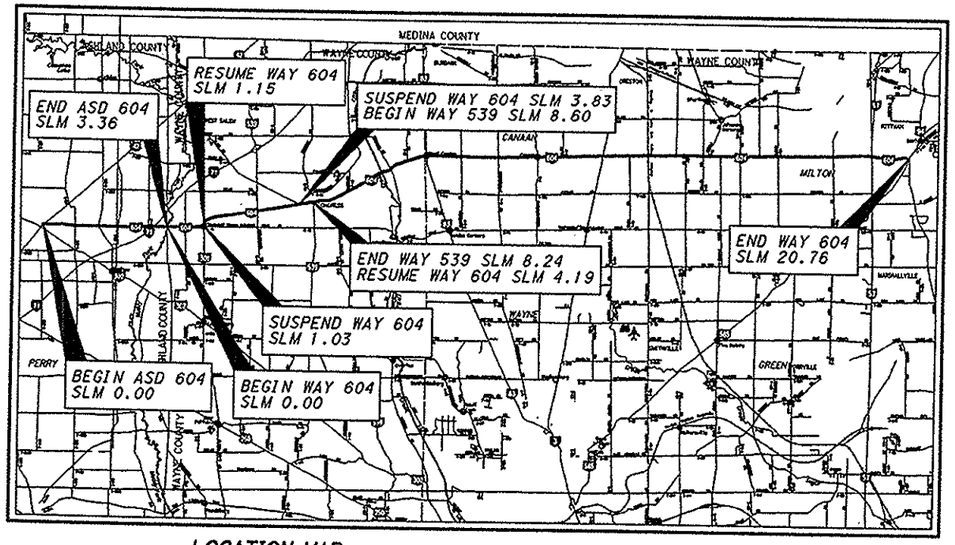

LOCATION MAP

LATITUDE: N 40°55'44" LONGITUDE: W 81°56'58"

SCALE IN MILES

0 2 4 6 8

N

PORTION TO BE IMPROVED
INTERSTATE & DIVIDED HIGHWAY
UNDIVIDED STATE & FEDERAL ROUTES
OTHER ROADS

STATE OF OHIO
DEPARTMENT OF TRANSPORTATION

ASD-604-0.00
WAY-604-(0.00) (4.19)
WAY-539-8.24

JACKSON TOWNSHIP
CONGRESS TOWNSHIP
CANAAN TOWNSHIP

MILTON TOWNSHIP
CHIPPEWA TOWNSHIP
VILLAGE OF CONGRESS

INDEX OF SHEETS:

1	-	TITLE SHEET
2	-	STRAIGHT LINE DIAGRAM / DESIGN DESIGNATION
3-5	-	GENERAL NOTES
6	-	DROP OFFS IN WORK ZONE
7	-	MAILBOX FACILITIES
8-8A	-	GENERAL SUMMARY
9	-	PAVEMENT & SHOULDER DATA
10	-	TYPICAL SECTIONS
11	-	GUARDRAIL GENERAL NOTES
12	-	ROADWAY SUB-SUMMARY
13-30	-	GUARDRAIL DETAILS
31-31A	-	PAVEMENT MARKING / RPM SUB-SUMMARY
32-34	-	STRUCTURE SUMMARY
35-36	-	STRUCTURE GENERAL NOTES
36-37	-	MAINTAINING TRAFFIC NOTES & DETOUR MAP
38	-	BRIDGE TREATMENT
39-40	-	STRUCTURE ASD-604-0156
41	-	STRUCTURE WAY-604-0001
42-45	-	STRUCTURE WAY-604-0065
46	-	STRUCTURE WAY-604-0626
47-49	-	STRUCTURE WAY-604-0899
50-51	-	STRUCTURE WAY-604-1307
52	-	STRUCTURE WAY-604-1713
53-54	-	STRUCTURE WAY-604-1811

PROJECT DESCRIPTION

THIS PROJECT INCLUDES PAVEMENT PLANING, PAVEMENT REPAIR, RESURFACING WITH ASPHALT CONCRETE, ADJUSTING CASTINGS, GUARDRAIL RECONSTRUCTION, STRUCTURE MAINENTANCE, AND PLACEMENT OF PAVEMENT MARKINGS.

PROJECT LENGTH = 24 MILES

PROJECT EARTH DISTURBED AREA:	N/A ACRES
ESTIMATED CONTRACTOR EARTH DISTRUBED AREA:	N/A ACRES
NOTICE OF INTENT EARTH DISTURBED AREA:	N/A ACRES

2005 SPECIFICATIONS

THE STANDARD SPECIFICATIONS OF THE STATE OF OHIO, DEPARTMENT OF TRANSPORTATION, INCLUDING CHANGES AND SUPPLEMENTAL SPECIFICATIONS LISTED IN THE PROPOSAL SHALL GOVERN THIS IMPROVEMENT.

I HEREBY APPROVE THESE PLANS AND DECLARE THAT THE MAKING OF THIS IMPROVEMENT WILL REQUIRE THE CLOSING TO TRAFFIC OF THE HIGHWAY AND THAT PROVISIONS FOR THE MAINTENANCE AND SAFETY OF TRAFFIC WILL BE AS SET FORTH ON THE PLANS AND ESTIMATES.

APPROVED John Hart
DATE 11/16/07 DISTRICT DEPUTY DIRECTOR

APPROVED James G. Beasley
DATE 11-26-07 DIRECTOR, DEPARTMENT OF TRANSPORTATION

STRUCTURE/CULVERT ENGINEERS SEAL:

STATE OF OHIO
DAVID C. MOLLENSHOTT
E-50210
REGISTERED
PROFESSIONAL ENGINEER

SIGNED: David C. Mollenshott
DATE: 11/16/07

ROADWAY ENGINEERS SEAL:

STATE OF OHIO
BRUCE A. DALTON
E-53790
REGISTERED
PROFESSIONAL ENGINEER

SIGNED: Bruce A. Dalton
DATE: 11-16-07

STANDARD CONSTRUCTION DRAWINGS

BP-3.1	10/19/07	MT-97.10	9/05/06
BP-4.1	7/16/04	MT-97.12	9/05/06
		MT-99.20m	1/30/95
DM-4.3	7/19/02	MT-101.60	9/20/06
DM-4.4	7/19/02	MT-105.10	10/18/02
		MT-105.11	10/18/02
GR-1.1	7/16/04		
GR-2.1	1/16/04	TC-41.20	1/19/01
GR-6.3	1/16/04	TC-42.20	7/16/04
		TC-52.10	1/19/07
RM-1.1	4/21/06	TC-52.20	1/19/07
DS-1-92	7/18/03	TC-65.10	1/21/05
		TC-65.11	1/21/05
		TC-71.10	1/19/07
		TC-73.10	1/19/01

SUPPLEMENTAL SPECIFICATIONS

800	10/19/07
832	4/25/06
848	4/15/05

SPECIAL PROVISIONS

NWP#3	11/5/07

REVISED: 11/16/07

UNDERGROUND UTILITIES
TWO WORKING DAYS
BEFORE YOU DIG
CALL 1-800-362-2764 (TOLL FREE)
OHIO UTILITIES PROTECTION SERVICE
NON-MEMBERS
MUST BE CALLED DIRECTLY

PLAN PREPARED BY:

DISTRICT THREE PRODUCTION DEPARTMENT

FEDERAL PROJECT NO. E032(089)

PID NO. 25671

CONSTRUCTION PROJECT NO.

RAILROAD INVOLVEMENT WHEELING & L.E.

ASD-604-0.00
WAY-604-(0.00) (4.19)
WAY-539-8.24

DESIGN FILE: I:\projects\25671\Roadway\sheets\25671GT001.dgn
WORKSTATION: ksalay DATE: 11/16/2007

DESIGN FILE: I:\projects\25671\Roadway\sheets\25671GB001.dgn
WORKSTATION: ksalay DATE: 11/19/2007

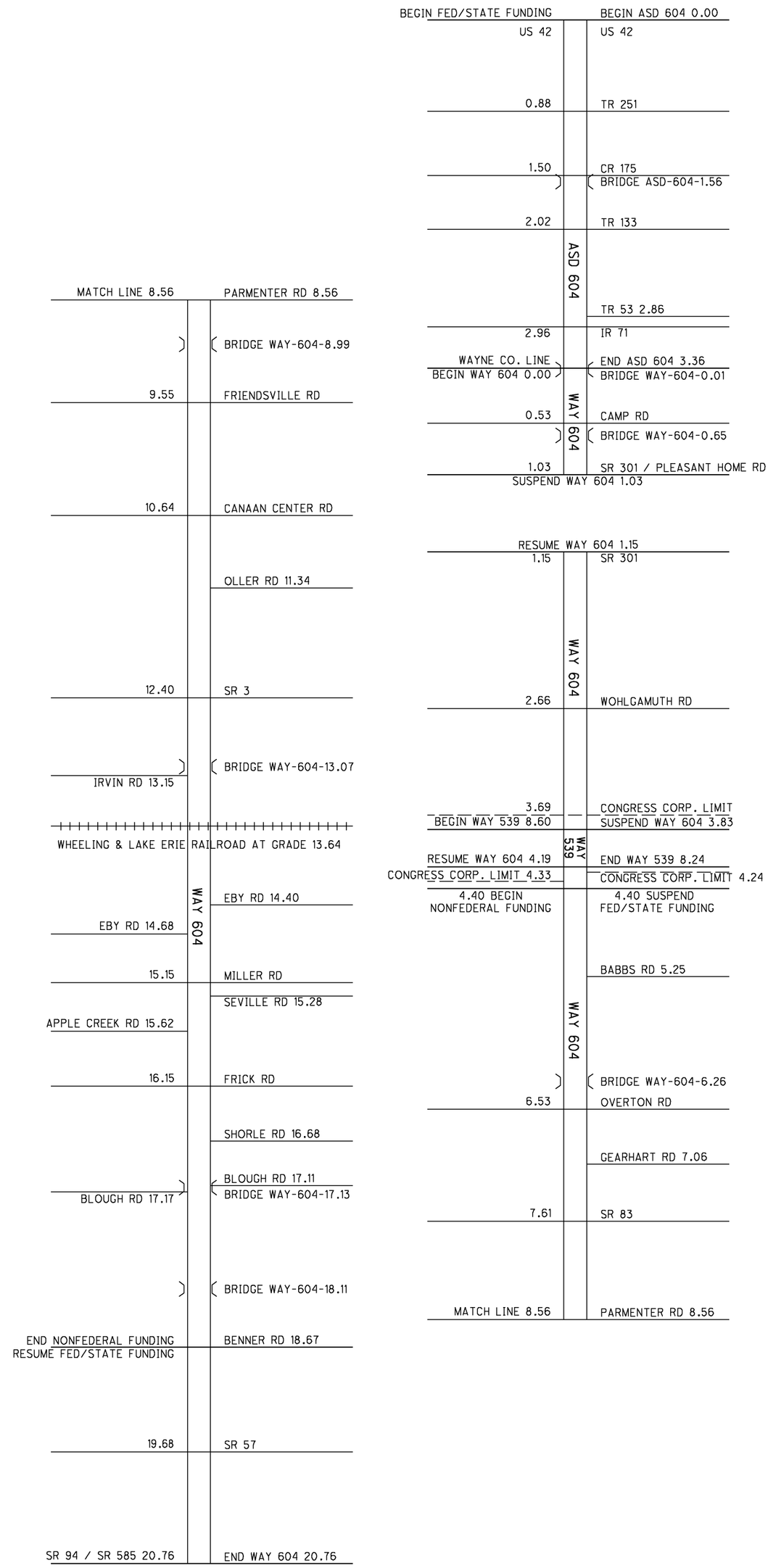

DESIGN DESIGNATION

	ASD-604-0.00 TO WAY-604-4.19	WAY-539-8.24 TO 8.60	WAY-604-4.19 TO 7.61	WAY-604-7.61 TO 12.4	WAY-604-12.4 TO 19.68	WAY-604-19.68 TO 20.76
CURRENT ADT (2008) =	760	1500	190	1670	2680	1740
DESIGN YEAR ADT (2020) =	940	1700	1360	1900	3300	2030
DESIGN HOURLY VOLUME (2008) =	110	190	160	210	330	220
DIRECTIONAL DISTRIBUTION =	0.53	0.55	0.53	0.55	0.53	0.62
TRUCKS (24 HOUR B&C) =	0.05	0.09	0.06	0.09	0.05	0.12

DESIGN SPEED / LEGAL SPEED..... 45 MPH WAY-604-3.69 TO 4.33
DESIGN SPEED / LEGAL SPEED..... 45 MPH WAY-604-10.25 TO 11.00
DESIGN SPEED / LEGAL SPEED..... 55 MPH ALL OTHER LOCATIONS
DESIGN FUNCTIONAL CLASSIFICATION:
RURAL MINOR COLLECTOR WAY-604-4.19 TO 18.67
RURAL MAJOR COLLECTOR ALL OTHER LOCATIONS
NHS PROJECT..... NO

REVISED: 11/16/07

STRAIGHT LINE DIAGRAM / DESIGN DESIGNATION

CALCULATED KRB
CHECKED BAD

GENERAL

PROGRESSION OF WORK

GUARDRAIL SHALL BE REMOVED PRIOR TO ANY EMBANKMENT WORK AT THE GUARDRAIL RUN. GUARDRAIL WORK SHALL BE DONE AFTER RESURFACING AND BERM WORK SO AS TO ESTABLISH PROPER GRADES FROM WHICH TO CONSTRUCT THE RAIL.

ROUTINE MAINTENANCE

BETWEEN THE TIME THAT BIDS ARE TAKEN AND THE START OF CONSTRUCTION, THE MAINTAINING AGENCY MAY ENTER UPON THE PROJECT AND PERFORM ROUTINE MAINTENANCE SUCH AS CRACK SEALING, PATCHING, AND BERM AND SHOULDER REPAIR. THE EFFECTS, IF ANY, OF THE PERFORMANCE OF ROUTINE MAINTENANCE SHALL BE CONSIDERED AS INHERENT IN WORK OF THE CHARACTER PROVIDED FOR IN THE PLAN AND THE RESULTING CONDITIONS SHALL NOT BE CONSIDERED AS DIFFERING MATERIALLY FROM THOSE EXISTING AT THE TIME BIDS WERE TAKEN.

WORK LIMITS

THE WORK LIMITS SHOWN ON THESE PLANS ARE FOR PHYSICAL CONSTRUCTION ONLY. THE INSTALLATION AND OPERATION OF ALL TEMPORARY TRAFFIC CONTROL AND TEMPORARY TRAFFIC CONTROL DEVICES REQUIRED BY THESE PLANS SHALL BE PROVIDED BY THE CONTRACTOR WHETHER INSIDE OR OUTSIDE THESE WORK LIMITS.

CONVERSION OF METRIC STANDARD DRAWINGS

THE METRIC STANDARD DRAWINGS REFERENCED IN THIS PLAN SHALL BE CONVERTED TO ENGLISH UNITS USING THE SI (METRIC) TO ENGLISH CONVERSION FACTORS PROVIDED IN SECTION 109.02 OF THE 2005 CMS. CONVERSIONS SHALL BE APPROXIMATELY PRECISE AND SHALL REFLECT STANDARD INDUSTRY ENGLISH VALUES WHERE SUITABLE.

UTILITIES

LISTED BELOW ARE ALL UTILITIES LOCATED WITHIN THE PROJECT CONSTRUCTION LIMITS TOGETHER WITH THEIR RESPECTIVE OWNERS.

GAS
GATHERCO INC.
5772 DRESSLER ROAD NW
NORTH CANTON, OHIO 44720
330-498-9553

ELECTRIC
OHIO EDISON COMPANY
1910 W. MARKET ST., BLDG 1
AKRON, OH 44313
330-384-3861

TELEPHONE
DOYLESTOWN TELEPHONE CO.
28 EAST MARION STREET
DOYLESTOWN, OHIO 44230
330-658-6666

VERIZON
6223 NORWALK ROAD
MEDINA, OHIO 44256
330-722-9580

CITY OFFICIALS
VILLAGE OF CRESTON
100 NORTH MAIN STREET
CRESTON, OHIO 44217
330-435-5019

VILLAGE OF DOYLESTOWN
24 SOUTH PORTAGE STREET
DOYLESTOWN, OHIO 44230
330-658-2181

VILLAGE OF WEST SALEM, WATER
WEST SALEM VILLAGE HALL
WEST SALEM, OHIO 44287
419-853-4411

COUNTY
WAYNE COUNTY ENGINEER
3151 WEST OLD LINCOLN WAY
WOOSTER, OHIO 44691
330-287-5500

THE AFOREMENTIONED UTILITY COMPANIES AND AGENCIES HAVE VARIOUS FACILITIES IN THE AREA THAT WILL REMAIN IN PLACE DURING CONSTRUCTION.

COORDINATION OF WORK BETWEEN CONTRACTORS

THE CONTRACTOR SHOULD BE AWARE THAT THERE IS A BRIDGE REHABILITATION PROJECT IDENTIFIED AS ASD-604-2.94 PID 18226 THAT IS LOCATED WITHIN THE PROJECT AND IS SCHEDULED TO BEGIN THE DETOUR AFTER THE COMPLETION OF THIS RESURFACING PROJECT. COORDINATION OF WORK IS THE RESPONSIBILITY OF THE CONTRACTOR.

COOPERATION BETWEEN CONTRACTORS

THE CONTRACTOR IS ADVISED OF THE PRESENCE OF POSSIBLY ONE (1) OTHER CONSTRUCTION CONTRACT WITHIN OR IN THE VICINITY OF THE WORK LIMITS OF THIS PROJECT AND 105.08 COOPERATION BETWEEN CONTRACTORS IS REQUIRED. THE PROJECT THAT MAY BE UNDER CONSTRUCTION AT THE SAME TIME IS ASD-89-12.15 PID 25673 A TWO LANE RESURFACING WITH BRIDGE WORK WHICH REQUIRES A DETOUR FOR SOME BRIDGE WORK.

ROADWAY

ITEM 209 - LINEAR GRADING

THE CONTRACTOR IS REQUIRED TO PERFORM LINEAR GRADING ON THE GRADED SHOULDER: IT IS ANTICIPATED THAT THERE ARE AREAS WHERE THE GRADED SHOULDER IS AT A HIGHER ELEVATION THAN THE ADJACENT PROPOSED PAVEMENT. A 10:1 SLOPE SHALL BE ESTABLISHED, OR AS DIRECTED BY THE ENGINEER, WHEN PERFORMING ITEM 209 LINEAR GRADING. THE INTENT IS TO PROVIDE AN UNOBSTRUCTED AND POSITIVE FLOW OF STORM WATER FROM THE PAVEMENT TO THE DITCH. THE LINEAR GRADING SHALL BE PERFORMED AFTER THE INTERMEDIATE COURSE HAS BEEN COMPLETED AND BEFORE THE SURFACE COURSE IS PLACED. ALL LABOR AND EQUIPMENT NECESSARY TO PERFORM THE ABOVE WORK SHALL BE INCLUDED IN THE UNIT PRICE BID PER MILE FOR ITEM 209 LINEAR GRADING.

ITEM 604 - CASTINGS ADJUSTED TO GRADE

THE SURFACE SHALL BE FEATHERED TO MEET THE EXISTING CASTING OR INLET IN A MANNER ACCEPTABLE TO THE ENGINEER. ALL ADJUSTING RINGS SHALL HAVE THE ENGINEER'S APPROVAL BEFORE USING. HOWEVER, IF A UNIT IS THE ADJUSTABLE FRAME TYPE AND CAN BE ADJUSTED USING THE EXISTING FRAME, THEN THE CONTRACTOR IS ONLY ALLOWED TO ADJUST THE FRAME.

UNDER ITEM 604.03, ADJUSTMENT TO GRADE, PARAGRAPH (1), THE CASTING TO BE ADJUSTED MAY OR MAY NOT HAVE AN EXISTING FRAME. THE WORK SHALL CONSIST OF ADJUSTING THE EXISTING CASTING TO THE SATISFACTION OF THE ENGINEER. IT IS NOT INTENDED TO PLACE NEW FRAMES WHERE NONE CURRENTLY EXIST. THE CONTRACTOR IS REMINDED TO FIELD CHECK ALL ADJUSTMENT TO GRADE ITEMS PRIOR TO BIDDING, AS NO ADDITIONAL COMPENSATION WILL BE GRANTED FOR LABOR AND MATERIALS REQUIRED TO SATISFACTORILY ADJUST CASTINGS WITHOUT FRAMES.

THE APPROXIMATE LOCATIONS ARE: ASHLAND COUNTY AT SLM 1.55, WAYNE COUNTY AT SLM 4.90, SLM 6.30, SLM 17.25 AND SLM 17.57. THE QUANTITIES ARE SHOWN ON SHEET 9.

PAVEMENT

ITEM 407, TACK COAT
ITEM 407, TACK COAT FOR INTERMEDIATE COURSE

AS PER 407.06 THE APPLICATION RATES SHALL BE 0.08 GAL. PER SQ. YD. PRIOR TO THE INTERMEDIATE COURSE AND SHALL BE 0.03 GAL PER SQ. YD. PRIOR TO THE SURFACE COURSE FOR ESTIMATING PURPOSES ONLY. THE RATE OF APPLICATION SHALL BE SUBJECT TO ADJUSTMENT AS DIRECTED BY THE ENGINEER. A COMPLETE PAVEMENT SURFACE COVERAGE SHALL BE REQUIRED. AREAS OF TACK STRIPPED BY CONSTRUCTION EQUIPMENT OR TRAFFIC SHALL BE RE-COATED PRIOR TO PLACING ASPHALT CONCRETE. ALL COST AS DESCRIBED ABOVE SHALL BE INCLUDED IN THE UNIT PRICE BID PER GALLON FOR ITEM 407, TACK COAT AND ITEM 407 TACK COAT FOR INTERMEDIATE COURSE.

ITEM 442, ASPHALT CONCRETE SURFACE COURSE, 9.5 MM, TYPE A (446), AS PER PLAN

ALL LONGITUDINAL PAVEMENT JOINTS SHALL BE CLOSED BEFORE THE END OF EACH WORK DAY. BEFORE THE JOINT IS EXPOSED TO TRAFFIC, THE CONTRACTOR SHALL ERECT W8-11-36 (UNEVEN LANES) SIGNS. THESE SIGNS SHALL ONLY REMAIN WHILE THE CONDITION EXISTS. PLACEMENT OF THESE SIGNS SHALL BE INCLUDED IN THE UNIT PRICE BID FOR ITEM 614 MAINTAINING TRAFFIC.

AFTER PLACING THE SURFACE COURSE IN ONE LANE, THE LONGITUDINAL JOINT SHALL BE TACKED ON THE VERTICAL FACE PRIOR TO PLACING THE ADJACENT SURFACE COURSE. IN ADDITION TO SECTION 401.14 AND STANDARD DRAWING BP-3.1, TRANSVERSE, LONGITUDINAL, FEATHERED AND BUTT JOINTS SHALL BE SEALED WITH A 4 INCH WIDE BAND OF PG BINDER ASPHALT CEMENT AS PER 702.01 ACROSS THE TOP SURFACE. THE COST OF THIS WORK SHALL BE INCLUDED IN THE UNIT PRICE BID FOR THIS ITEM.

ALL OPEN TRANSVERSE JOINTS SHALL BE TAPERED TO MEET EXISTING PAVEMENT BEFORE INTRODUCING TRAFFIC. A "BUMP" SIGN (W8-1-36) SHALL BE ERECTED ON EACH SIDE OF TRANSVERSE JOINTS LEFT OPEN OVER NIGHT, INCLUDING A SPEED ADVISORY SIGN, AS DIRECTED BY THE ENGINEER. THESE SIGNS SHALL BE REMOVED IMMEDIATELY AFTER JOINT HAS BEEN CLOSED. PLACEMENT OF SIGNS SHALL BE INCLUDED IN THE UNIT PRICE BID FOR ITEM 614 MAINTAINING TRAFFIC.

CARE SHALL BE TAKEN TO MATCH EXISTING PAVEMENT ELEVATIONS AT EXISTING PAVED BERMS, DRIVES, INTERSECTIONS, ETC.

REQUIREMENTS OF 442 APPLY EXCEPT AS FOLLOWS:
MIX DESIGN: FOR Ndes USE 50 GYRATIONS, FOR Nmax USE 75 GYRATIONS.
MINIMUM TOTAL PG BINDER CONTENT IS 6.0 PERCENT.
USE A PG 64-22 BINDER.
MAXIMUM RECLAIMED ASPHALT CONCRETE PAVEMENT IS 20 PERCENT.
QUALITY CONTROL: DO NOT PERFORM Nmax IN QUALITY CONTROL TESTING. DO NOT TAKE EXTRA ASPHALT BINDER SAMPLES AS OUTLINED IN CMS 442.05.

PAVEMENT

ITEM 253, PAVEMENT REPAIR

THIS ITEM OF WORK SHALL CONSIST OF THE REMOVAL OF THE EXISTING PAVEMENT OR PAVED BERM WHICH MAY BE ASPHALT, BRICK, CONCRETE, OR A COMBINATION OF EACH, IN AREAS OF EXISTING PAVEMENT FAILURE. CORING HAS BEEN PERFORMED TO HELP DETERMINE THE COMPONENTS THAT MAY BE ENCOUNTERED DURING THIS ITEM OF WORK. THE PAVEMENT CORING INFORMATION IS SHOWN ON PLAN SHEET 4.

THE ENGINEER SHALL DESIGNATE THE LOCATIONS AND LIMITS OF THE AREAS TO BE REPAIRED. PAVEMENT REPAIR SHALL BE PERFORMED AFTER PAVEMENT PLANING AND BEFORE PLACEMENT OF THE INTERMEDIATE AND/OR SURFACE COURSE. THE REPAIR AREAS SHALL BE SAW CUT AND EXCAVATED TO PROVIDE STRAIGHT AND VERTICAL SURFACES AROUND THE PERIMETER OF THE REPAIR AREA. PAVEMENT PLANING MAY BE USED AS AN ALTERNATIVE TO SAW CUTTING AND EXCAVATING. THE PAVEMENT SHALL BE REMOVED WITHIN THE DESIGNATED AREAS BY METHODS WHICH WILL NOT DAMAGE ADJACENT PAVEMENT. THE DEPTH OF REMOVAL SHALL BE SUFFICIENT TO REMOVE ALL DETERIORATED PAVEMENT WITH A MAXIMUM DEPTH OF 4.25", BASED ON THE PAVEMENT DESIGN AND AN AVERAGE DEPTH OF 2.125". THE MATERIALS REMOVED SHALL BE DISPOSED OF IN ACCORDANCE WITH 105.16 AND 105.17.

THE CONTRACTOR SHALL BE CAPABLE OF PERFORMING PAVEMENT REPAIRS 2 FEET WIDE.

AFTER REMOVAL OF THE PAVEMENT, IF THE ENGINEER DETERMINES THE SUBBASE OR SUBGRADE HAS FAILED OR IS "PUMPING", THE ENGINEER SHALL DIRECT THE CONTRACTOR TO EXCAVATE THE UNSTABLE MATERIAL AND REPLACE IT WITH ITEM 304 AGGREGATE BASE. THE MAXIMUM DEPTH OF THE EXISTING SUBBASE OR SUBGRADE REMOVED SHALL BE AS DETERMINED BY THE ENGINEER. ITEM 304 AGGREGATE BASE SHALL HAVE A MAXIMUM 4" LIFT. THE GRADE SHALL BE SLOPED SUCH THAT ANY WATER WILL DRAIN TO THE EXISTING UNDERDRAIN OR DITCH. ALL COMPACTION SHALL BE ACHIEVED BY MECHANICAL METHODS TO THE SATISFACTION OF THE ENGINEER. THE MATERIALS REMOVED SHALL BE DISPOSED OF IN ACCORDANCE WITH 105.16 AND 105.17.

AGGREGATE DRAINS OR UNDERDRAINS MAY BE NEEDED AS DIRECTED BY THE ENGINEER.

REPLACEMENT MATERIAL SHALL BE ITEM 301 OR ITEM 448, TYPE 2 MATERIAL AND SHALL BE PLACED AND COMPACTED TO FINISH FLUSH WITH THE ADJACENT PAVEMENT SURFACE. ITEM 301 CAN BE USED WHEN THE DEPTH OF THE REPAIR IS BETWEEN 3" AND 12" WITH A MAXIMUM PAVEMENT LIFT OF 6". ITEM 448 TYPE 2 CAN BE USED WHEN THE DEPTH OF THE REPAIR IS BETWEEN 0" AND 5" WITH A MAXIMUM PAVEMENT LIFT OF 3". ALL EXISTING PAVEMENT AREAS WHICH WILL BE IN CONTACT WITH THE PAVEMENT REPAIR SHALL BE CLEANED AND COATED WITH PG GRADE LIQUID ASPHALT (SIDES AND BOTTOM) AT AN APPLICATION RATE OF 0.25 GAL. PER SQ. YD. ALL COMPACTION SHALL BE ACHIEVED BY MECHANICAL METHODS TO THE SATISFACTION OF THE ENGINEER.

PAYMENT SHALL INCLUDE ALL LABOR, EQUIPMENT, AND MATERIALS NECESSARY TO COMPLETE THE PAVEMENT REPAIR. THE FOLLOWING ESTIMATED QUANTITY IS PROVIDED IN THE GENERAL SUMMARY TO BE USED AS DIRECTED BY THE ENGINEER. PAYMENT WILL BE MADE AT THE UNIT BID PRICE PER CUBIC YARD, (BY TICKET WEIGHT CONVERSION), OF ITEM 253, PAVEMENT REPAIR. THE FOLLOWING ESTIMATED QUANTITIES ARE INCLUDED IN THE GENERAL SUMMARY:

SR 604/ SR 539 ITEM 253 PAVEMENT REPAIR
FED/STATE = 1915 CU. YD.
NONFEDERAL = 2810 CU. YD.

THE FOLLOWING ITEMS LISTED BELOW ARE ADDITIONAL ITEMS NOT INCLUDED IN ITEM 253. THESE ITEMS SHALL BE USED FOR THE REPAIR AND/OR REPLACEMENT OF DAMAGED SUBBASE/SUBGRADE EXPOSED DURING THE PROCESS OF ITEM 253 PAVEMENT REPAIR WORK INCLUDED IN THIS PLAN. PAYMENT WILL BE EITHER BY CHANGE ORDER OR FORCE ACCOUNT.

ITEM 203 EXCAVATION
ITEM 204 SUBGRADE COMPACTION
ITEM 304 AGGREGATE BASE
ITEM 605 6" UNCLASSIFIED PIPE UNDERDRAINS
ITEM 605 AGGREGATE DRAINS

ITEM 254 PATCHING PLANED SURFACE

AN ESTIMATED QUANTITY OF ITEM 254, PATCHING PLANED SURFACE HAS BEEN SET UP TO BE USED AS DIRECTED BY THE ENGINEER AS DESCRIBED IN CMS 254.04. THE LIMIT OF THE PATCHING DEPTH IS 0 TO 2 IN.

REVISED: 11/16/07

PAVEMENT

ITEM 254, PAVEMENT PLANING, ASPHALT CONCRETE

THE INTENT OF THE PLANING IS TO MILL 1.5 INCHES AT THE CENTER OF PAVEMENT AT NON-CURBED AREAS AND 2 INCHES AT THE EDGE OF PAVEMENT. THE PAVEMENT SLOPE SHALL BE 0.016 PREFERRED AND 0.010 MINIMUM, CONTINUOUS BETWEEN THE CROWN AND THE PROPOSED EDGELINE/SHOULDER. THE MILLING DEPTH SHALL BE CONTROLLED FROM THE CENTER OF PAVEMENT IN CONFORMANCE WITH THE ABOVE GUIDELINES.

SPECIAL ATTENTION SHALL BE GIVEN TO SUPERELEVATED CURVES. THE SUPERELEVATION SHALL BE MAINTAINED AND/OR RESTORED, IF NECESSARY, AS DIRECTED BY THE ENGINEER. IF THERE IS NO INFORMATION IN THE PLANS TO CHANGE THE SUPERELEVATION, THE INTENT IS TO MAINTAIN THE EXISTING SUPERELEVATION.

THE CONTRACTOR SHALL MAINTAIN POSITIVE DRAINAGE INTO ALL CATCH BASINS AND INLETS.

AN AUTOMATIC MILLING HEAD PROFILE CONTROL HAVING A MINIMUM 30 FT. SKI-ARM SHALL BE USED DURING THE PLANING OPERATION.

ABOVE CONDITIONS DO NOT APPLY TO PLANING PERFORMED IN AREAS AS DIRECTED BY THE ENGINEER TO ELIMINATE ADVERSE SURFACE DISTORTION OR TO PROVIDE A SATISFACTORY GRADE AT CASTINGS. THESE AREAS INCLUDE MATERIAL DISPLACED BY RUTTING OR SHOVING ASPHALT. SURFACE PATCHES, CONCRETE PATCHING, TRANSVERSE BUMPS, PAVEMENT AT RAILROADS, CASTINGS, ETC. PLANING OF THESE AREAS SHALL BE PERFORMED THROUGHOUT THE PROJECT PRIOR TO PAVING. AREAS TO BE PLANED WILL BE DESIGNATED BY THE ENGINEER.

THE PROGRESSION OF THE PLANING SHALL PROCEED IN SUCH A MANNER THAT NORMAL TRAFFIC WILL NOT BE REQUIRED TO RUN OVER THE PLANED ROADWAY SURFACE MORE THAN FOURTEEN (14) CALENDAR DAYS. THE 14 CALENDAR DAYS SHALL BE CONSIDERED AN INTERIM COMPLETION DATE (SECTION 108), AND FOR EACH CALENDAR DAY BEYOND THE 14 DAYS THAT THE ROADWAY REMAINS EXPOSED TO THE PLANED SURFACE, THE CONTRACTOR WILL BE ASSESSED LIQUIDATED DAMAGES AS PER 108.07. PLANED AREAS WHICH CREATE A LONGITUDINAL JOINT BETWEEN TRAVELED LANES SHALL BE COMPLETED IN SUCH A MANNER SO AS TO REMOVE THE JOINT BEFORE THE END OF EACH DAY'S WORK. BEFORE THIS JOINT IS EXPOSED TO TRAFFIC, THE CONTRACTOR SHALL ERECT W8-9A SIGNS (UNEVEN LANES). THESE SIGNS SHALL REMAIN ONLY WHEN THE CONDITION EXISTS.

THE AMOUNT OF GRINDINGS RESULTING FROM THIS WORK MAY PRODUCE UNEXPECTED VOLUMES OF GRINDINGS DUE TO THE EXISTING TRANSVERSE SLOPE OF THE PAVEMENT.

PAYMENT SHALL INCLUDE ALL LABOR, EQUIPMENT, AND MATERIALS NECESSARY TO COMPLETE THE PAVEMENT PLANING, ASPHALT CONCRETE. PAYMENT WILL BE MADE AT THE UNIT BID PRICE PER SQUARE YARD OF PAVEMENT PLANING, ASPHALT CONCRETE. NO ADDITIONAL COMPENSATION WILL BE GRANTED FOR UNEXPECTED VOLUMES OF ASPHALT GRINDINGS.

ITEM 442, ASPHALT CONCRETE INTERMEDIATE COURSE, 9.5MM, TYPE A (448), AS PER PLAN (VARIABLE THICKNESS)

THIS ITEM SHALL BE USED FOR CORRECTION OF CROWN, PROFILE AND ANY OTHER IRREGULARITIES.

BEFORE THE LONGITUDINAL JOINT IS EXPOSED TO TRAFFIC, THE CONTRACTOR SHALL ERECT W8-11-36 (UNEVEN LANES) SIGNS. THESE SIGNS SHALL ONLY REMAIN WHILE THE CONDITION EXISTS. PLACEMENT OF THESE SIGNS SHALL BE INCLUDED IN THE UNIT PRICE BID FOR ITEM 614 MAINTAINING TRAFFIC.

ALL OPEN TRANSVERSE JOINTS SHALL BE TAPERED TO MEET EXISTING PAVEMENT BEFORE INTRODUCING TRAFFIC.

REQUIREMENTS OF 442 APPLY EXCEPT AS FOLLOWS:
MIX DESIGN: FOR Ndes USE 50 GYRATIONS, FOR Nmax USE 75 GYRATIONS.
MINIMUM TOTAL PG BINDER CONTENT IS 6.0 PERCENT.
USE A PG 64-22 BINDER.
MAXIMUM RECLAIMED ASPHALT CONCRETE PAVEMENT IS 20 PERCENT.
QUALITY CONTROL: DO NOT PERFORM Nmax IN QUALITY CONTROL TESTING. DO NOT TAKE EXTRA ASPHALT BINDER SAMPLES AS OUTLINED IN CMS 442.05.

ITEM 442, ASPHALT CONCRETE SURFACE COURSE, 9.5 MM, TYPE A (448) (DRIVEWAYS), AS PER PLAN

THIS ITEM IS TO BE USED TO CREATE A SMOOTH TRANSITION FROM THE COMPLETED SURFACE COURSE OF THE PAVED SHOULDER TO THE EXISTING PAVED DRIVEWAYS. THIS ITEM SHALL BE AS DIRECTED BY THE ENGINEER. ALL LABOR, EQUIPMENT, AND MATERIALS REQUIRED TO CREATE A SMOOTH TRANSITION SHALL BE INCLUDED IN THE UNIT PRICE BID FOR ITEM 442 ASPHALT CONCRETE SURFACE COURSE, 9.5 MM, TYPE A (448) (DRIVEWAYS), AS PER PLAN.

PAVEMENT

REQUIREMENTS OF 442 APPLY EXCEPT AS FOLLOWS:
MIX DESIGN: FOR Ndes USE 50 GYRATIONS, FOR Nmax USE 75 GYRATIONS.
MINIMUM TOTAL PG BINDER CONTENT IS 6.0 PERCENT.
USE A PG 64-22 BINDER.
MAXIMUM RECLAIMED ASPHALT CONCRETE PAVEMENT IS 20 PERCENT.
QUALITY CONTROL: DO NOT PERFORM Nmax IN QUALITY CONTROL TESTING. DO NOT TAKE EXTRA ASPHALT BINDER SAMPLES AS OUTLINED IN CMS 442.05.

ITEM 617, COMPACTED AGGREGATE, AS PER PLAN

THIS ITEM OF WORK SHALL CONFORM TO ITEM 617 IN THE CONSTRUCTION AND MATERIALS SPECIFICATIONS BOOK WITH EXCEPTION OF 617.02 (MATERIALS).

THE MATERIAL ON THIS PROJECT SHALL BE THE ASPHALT CONCRETE GRINDINGS RESULTING FROM ITEM 254. THE GRINDINGS USED FOR THIS WORK ARE TO BE PLACED AND COMPACTED AS DESCRIBED IN 617.05 WITH SPECIAL CARE TO CREATE PROPER COMPACTION. 100% OF THIS MATERIAL SHALL PASS A 1.5 INCH SIEVE. THE CONTRACTOR SHALL TAKE SPECIAL CARE TO MEET THE TYPICAL SECTIONS SHOWN IN THE PLANS AND AS DIRECTED BY THE ENGINEER.

PAYMENT FOR ALL THE ABOVE SHALL BE INCLUDED IN THE UNIT PRICE BID PER CU. YD. OF ITEM 617 COMPACTED AGGREGATE, AS PER PLAN.

INTERSECTIONS AND DRIVES

RURAL-INTERSECTIONS SHALL BE PAVED TO THE END OF THE RADII OR AS DIRECTED BY THE ENGINEER. (TO PROVIDE A SMOOTH TRANSITION BETWEEN THE TWO HIGHWAYS, AND TO ELIMINATE WATER POCKETS).

URBAN-INTERSECTIONS SHALL BE PAVED TO THE BACK OF CROSSWALKS OR AS DIRECTED BY THE ENGINEER. (TO PROVIDE A SMOOTH TRANSITION BETWEEN THE TWO HIGHWAYS, AND TO ELIMINATE WATER POCKETS).

EXISTING PAVED DRIVES SHALL BE PAVED SO AS TO PROVIDE A SMOOTH TRANSITION BETWEEN THE HIGHWAY AND THE DRIVE, (DISTANCE FROM EDGE OF ROADWAY MAY VARY AT EACH DRIVE) AS DIRECTED BY THE ENGINEER.

EXISTING AGGREGATE DRIVES SHALL BE PAVED WITH AN APRON THE WIDTH OF THE 617 BERM OR 2 FT. MINIMUM. THE SLOPE OF THIS APRON SHALL BE THE SAME AS THE ADJACENT PAVEMENT SLOPE OR AS DIRECTED BY THE ENGINEER. ITEM 617 AGGREGATE SHALL BE PLACED ADJACENT TO THIS APRON TO PROVIDE A SMOOTH TRANSITION FROM THE APRON TO THE EXISTING DRIVE, (WIDTH OF THIS 617 APPLICATION MAY VARY) AS DIRECTED BY THE ENGINEER. AN ADDITIONAL QUANTITY HAS BEEN ESTIMATED TO COMPLETE THIS WORK AND IS SHOWN ON THE "PAVEMENT AND SHOULDER DATA" SHEET.

ANY HAZARD OR UNSAFE CONDITION RESULTING FROM THE ABOVE WORK MUST BE CORRECTED IMMEDIATELY, AS DIRECTED BY THE ENGINEER. THE CONTRACTOR IS REMINDED OF SECTIONS 105.01, 107.07 & 614.02A OF THE CONSTRUCTION AND MATERIALS SPECIFICATIONS.

PAVEMENT CORING INFORMATION

CO/ROUTE/SLM	ASPHALT DEPTH	LOCATION/ WHEEL TRACK	DIRECTION
ASD-604-0.50	12.0"	INSIDE	EB
ASD-604-0.50	12.5"	OUTSIDE	EB
ASD-604-0.50	7.0"	SHOULDER	EB
ASD-604-1.00	11.0"	INSIDE	EB
ASD-604-2.00	12.0"	OUTSIDE	EB
ASD-604-3.00	7.5"	INSIDE	EB
ASD-604-3.40	8.0"	OUTSIDE	EB
ASD-604-3.40	8.8"	SHOULDER	EB
WAY-604-0.90	7.0"	INSIDE	EB
WAY-604-0.90	7.0"	OUTSIDE	EB
WAY-604-5.50	9.0"	INSIDE	EB
WAY-604-5.50	9.0"	OUTSIDE	EB
WAY-604-9.00	8.0"	INSIDE	EB
WAY-604-9.00	9.0"	OUTSIDE	EB
WAY-604-9.00	9.0"	SHOULDER	EB
WAY-604-13.60	8.0"	INSIDE	EB
WAY-604-13.60	10.0"	OUTSIDE	EB
WAY-604-13.60	8.0"	SHOULDER	EB
WAY-604-17.00	11.0"	INSIDE	EB
WAY-604-17.00	10.0"	OUTSIDE	EB
WAY-604-17.00	9.0"	SHOULDER	EB
WAY-604-19.00	10.0"	INSIDE	WB
WAY-604-19.00	13.0"	OUTSIDE	WB
WAY-604-19.00	7.5"	SHOULDER	WB

PAVEMENT

RAILROAD CROSSING INFORMATION

OWNER OF RAILROAD: WHEELING & LAKE ERIE RAILWAY CO.
CROSSING: AT-GRADE
NO. OF TRACKS: 1

THE IDENTIFICATION OF THE CROSSING KNOWN AS:
RR MILE POST: 0111.58
AARDOT NO.: 473531C

RAILROAD CROSSINGS

PRIOR TO ANY WORK AT RAILROAD CROSSINGS THE CONTRACTOR SHALL CONTACT THE AFFECTED RAILROAD AUTHORITY SO AS TO MAKE THEM AWARE OF THE PROGRESS AND SCHEDULE OF WORK. THE CONTRACTOR SHALL COOPERATE WITH THE RAILROAD SO AS TO ELIMINATE ANY SAFETY CONCERNS. FLAGGING WILL BE REQUIRED BY THE RAILROAD. ODOT WILL BE RESPONSIBLE FOR PAYING THE RAILROAD FOR ALL FLAGGING COSTS. REFER TO THE RAILROAD SPECIAL CLAUSES IN THE PROPOSAL.

THE CROWN SHALL BE WORKED OUT OF THE RESURFACED PAVEMENT ON EACH SIDE OF THE RAILROAD CROSSING, BEGINNING 50 FEET FROM THE NEAREST RAIL, BY RAISING THE EDGES OF THE RESURFACED PAVEMENT TO MEET THE PLATFORM ELEVATION.

SUSPEND AND RESUME RESURFACING AT THE HEADER TIE, AS DIRECTED BY THE ENGINEER.

GENERAL RAILROAD CROSSING DETAIL

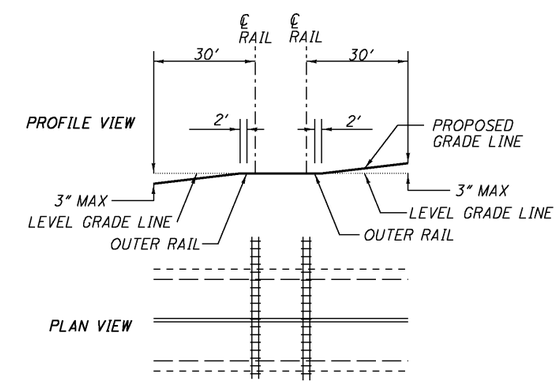

DETAIL - PAVING AT RAILROAD CROSSING

BUTT JOINT/BEGIN AND END RESURFACING AS DIRECTED BY THE ENGINEER

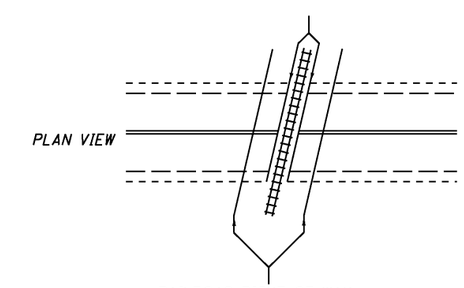

NOTE:
1.) DO NOT DISTURB RAILROAD GATES

2.) RE-INSTALL PAVEMENT MARKINGS

3.) RAILROAD MAY DIRECT ENGINEER ON THE LOCATION OF BUTT JOINTS. OTHERWISE OMIT AND RESUME RESURFACING AT HEADER TIE.

REVISED: 11/16/07

CALCULATED KRB CHECKED BAD

GENERAL NOTES

ASD-604-0.00
WAY-604-(0.00) (4.19)
WAY-539-8.24

DESIGN FILE: I:\projects\25671\Roadway\sheets\25671GN002.dgn
WORKSTATION: ksalay DATE: 11/15/2007

ENVIRONMENTAL COMMITMENTS

1. THIS PROJECT IS WITHIN THE KNOWN SUMMER BREEDING RANGE OF THE FEDERAL ENDANGERED INDIANA BAT. UNAVOIDABLE CUTTING OF TREES DEFINED AS POTENTIAL HABITAT FOR THE INDIANA BAT (i.e. LIVING OR STANDING DEAD TREES OR SNAGS WITH EXFOLIATING, PEELING OR LOOSE BARK, SPLIT TRUNKS AND/OR BRANCHES, OR CAVITIES) WILL BE PERFORMED ONLY BEFORE APRIL 15 OR AFTER SEPTEMBER 15 WHEN THE SPECIES WOULD NOT BE USING SUCH HABITAT. THE ABOVE DETERMINATION OF NO IMPACTS ON FEDERALLY LISTED SPECIES IS IN ACCORDANCE WITH THE LETTER OF AGREEMENT ON ENDAGERED SPECIES COORDINATION SIGNED BY USFWS ON FEBRUARY 4, 1998.

2. BANK STABILIZATION WILL BE LIMITED TO REGRADING OF THE BANKS FOR THE TOE-OF-SLOPE (IN STREAM) TO THE TOP OF BANK AND WILL INCLUDE PLACEMENT OF ROCK CHANNEL PROTECTION WHERE REQUIRED. THIS WILL EXCLUDE WORK SUCH AS WIDENING, DEEPENING OR RELOCATION. THIS STABILIZATION AND/OR SURFACE WATER/VEGETATION IMPACTS WILL BE KEPT TO A MINIMUM.

3. IN-STREAM WORK (THE PLACEMENT OF PERMANENT FILL MATERIALS BELOW ORDINARY HIGH WATER MARK) WILL BE LIMITED WHERE PRACTICABLE AND ONLY CLEAN NON-ERODIBLE MATERIAL WILL BE USED.

4. THE SPECIFICATIONS SET FORTH IN THE MOST CURRENT VERSION OF ODOT'S CONSTRUCTION AND MATERIAL SPECIFICATIONS, LOCATION AND DESIGN MANUAL AND STANDARD DRAWINGS WILL BE USED TO ENSURE ADEQUATE EROSION AND SEDIMENT CONTROL DURING CONSTRUCTION.

5. THE CONTRACTOR SHALL TAKE ALL PRECAUTIONS TO AVOID AND/OR LIMIT DEMOLITION DEBRIS FROM ENTERING STREAMS. ANY MATERIAL THAT DOES FALL INTO STREAMS SHALL BE REMOVED AS SOON AS POSSIBLE. IMPACTS TO THE STREAM WILL BE AVOIDED, MINIMIZED, AND/OR MITIGATED WHERE REASONABLE OR PRACTICABLE.

6. WRITTEN PERMISSION WILL BE OBTAINED FOR ANY IN-STREAM BLASTING FROM THE CHIEF OF ODNR'S DIVISION OF WILDLIFE IN ACCORDANCE WITH OHIO REVISED CODE SECTION 1533.58.

7. WHEN STREAMS BANKS, AND RIPARIAN AREAS ARE DISTURBED, THEY SHOULD BE RE-SEEDED OR PLANTED WITH NATIVE RIPARIAN VEGETATION IMMEDIATELY AFTER THE WORK IS COMPLETED.

MAINTENANCE OF TRAFFIC

BUTT JOINTS

BUTT JOINTS SHALL NOT BE CUT AND LEFT OPEN TO TRAFFIC. THEY SHALL BE FILLED IN WITH A TEMPORARY ASPHALT CONCRETE WEDGE OF SUFFICIENT LENGTH, AS DIRECTED BY THE ENGINEER.

CONSTRUCTION "BUMP" (W8-1-36) AND "ADVISORY SPEED" (W13-1-24) SIGNS SHALL BE ERECTED AND MAINTAINED DURING THE PERIOD THE BUTT JOINT IS LEFT OPEN. THESE SIGNS SHALL BE PAID FOR UNDER THE LUMP SUM ITEM FOR ITEM 614 MAINTAINING TRAFFIC.

ITEM 614, MAINTAINING TRAFFIC

A MINIMUM OF ONE (1) LANE OF TRAFFIC SHALL BE MAINTAINED AT ALL TIMES USING FLAGGERS EXCEPT AS NOTED IN THE STRUCTURE PLAN NOTES FOR BOTH WAY-604-0065 AND WAY-604-0899. BOTH STRUCTURES MAY BE UNDER CONSTRUCTION AT THE SAME TIME.

ALL WORK AND TRAFFIC CONTROL DEVICES SHALL BE IN ACCORDANCE WITH CMS 614 AND OTHER APPLICABLE PORTIONS OF THE SPECIFICATIONS, AS WELL AS THE OHIO MANUAL OF UNIFORM TRAFFIC CONTROL DEVICES. PAYMENT FOR ALL LABOR, EQUIPMENT, AND MATERIALS SHALL BE INCLUDED IN THE LUMP SUM CONTRACT PRICE FOR ITEM 614, MAINTAINING TRAFFIC, UNLESS SEPARATELY ITEMIZED IN THE PLAN.

PLACEMENT OF ASPHALT CONCRETE

TWO-WAY TRAFFIC SHALL BE MAINTAINED AT ALL TIMES EXCEPT THAT ONE-WAY TRAFFIC WILL BE PERMITTED FOR MINIMUM PERIODS OF TIME CONSISTENT WITH THE REQUIREMENTS OF THE SPECIFICATIONS FOR PROTECTION OF COMPLETED ASPHALT CONCRETE COURSES.

ITEM 614, ASPHALT CONCRETE FOR MAINTAINING TRAFFIC

THE FOLLOWING ESTIMATED QUANTITY HAS BEEN CARRIED TO THE GENERAL SUMMARY TO CONSTRUCT A TEMPORARY ASPHALT WEDGE FROM THE EXISTING PAVEMENT TO THE PLANED SURFACE AT BUTT JOINTS AND OTHER LOCATIONS THAT RESULT IN A DROP-OFF IN EXCESS OF 1.5 INCHES, AS DIRECTED BY THE ENGINEER. THIS QUANTITY SHALL ALSO BE USED AT PLANED SURFACES WHERE A TEMPORARY ASPHALT WEDGE IS NEEDED AROUND CASTINGS, AS DIRECTED BY THE ENGINEER. BEFORE THE ASPHALT CONCRETE RESURFACING IS PLACED, THE TEMPORARY WEDGE SHALL BE REMOVED AND THE COST SHALL BE CONSIDERED INCIDENTAL TO ITEM 614 ASPHALT CONCRETE FOR MAINTAINING TRAFFIC.

ITEM 614, ASPHALT CONCRETE FOR MAINTAINING TRAFFIC
FED/STATE = 40 CU. YD.
NONFEDERAL = 60 CU. YD.

ITEM 614, MAINTAINING TRAFFIC (LANES OPEN DURING HOLIDAYS OR SPECIAL EVENTS)

NO WORK SHALL BE PERFORMED AND ALL EXISTING LANES SHALL BE OPEN TO TRAFFIC DURING THE FOLLOWING DESIGNATED HOLIDAYS OR EVENTS:

CHRISTMAS	FOURTH OF JULY
NEW YEARS	LABOR DAY
MEMORIAL DAY	THANKSGIVING

THE PERIOD OF TIME THAT THE LANES ARE TO BE OPEN DEPENDS ON THE DAY OF THE WEEK ON WHICH THE HOLIDAY OR EVENT FALLS. THE FOLLOWING SCHEDULE SHALL BE USED TO DETERMINE THIS PERIOD:

DAY OF THE WEEK	TIME ALL LANES MUST BE OPEN TO TRAFFIC
SUNDAY	12:00N FRIDAY THROUGH 6:00 AM MONDAY
MONDAY	12:00N FRIDAY THROUGH 6:00 AM TUESDAY
TUESDAY	12:00N MONDAY THROUGH 6:00 AM WEDNESDAY
WEDNESDAY	12:00N TUESDAY THROUGH 6:00 AM THURSDAY
THURSDAY	12:00N WEDNESDAY THROUGH 6:00 AM MONDAY
FRIDAY	12:00N THURSDAY THROUGH 6:00 AM MONDAY
SATURDAY	12:00N FRIDAY THROUGH 6:00 AM MONDAY

NO EXTENSIONS OF TIME SHALL BE GRANTED FOR DELAYS IN MATERIAL DELIVERIES, UNLESS SUCH DELAYS ARE INDUSTRY-WIDE, OR FOR LABOR STRIKES, UNLESS SUCH STRIKES ARE AREA-WIDE.

SHOULD THE CONTRACTOR FAIL TO MEET ANY OF THESE REQUIREMENTS, THE CONTRACTOR SHALL BE ASSESSED LIQUIDATED DAMAGES IN ACCORDANCE WITH CMS 108.07.

MAINTENANCE OF TRAFFIC

ITEM 614, WORK ZONE MARKING SIGN

THE FOLLOWING ESTIMATED QUANTITY HAS BEEN CARRIED TO THE GENERAL SUMMARY FOR USE AS DIRECTED BY THE ENGINEER FOR TEMPORARY WORK ZONE MARKING SIGNS PER THE REQUIREMENTS OF THE CONSTRUCTION AND MATERIALS SPECIFICATIONS, 614.04.

WORK ZONE MARKING SIGN: (W8-H13-36) NO EDGE LINE
FED/STATE = 23 EACH
NONFEDERAL = 39 EACH

WORK ZONE MARKING SIGN: (R4-1-24) DO NOT PASS
FED/STATE = 25 EACH
NONFEDERAL = 29 EACH

WORK ZONE MARKING SIGN: (R4-2-24) PASS WITH CARE
FED/STATE = 21 EACH
NONFEDERAL = 29 EACH

TOTAL FED/STATE = 69 EACH
TOTAL NONFEDERAL = 97 EACH

REVISED: 11/16/07

GENERAL NOTES

1. IT IS INTENDED THAT THIS DRAWING BE USED FOR TREATMENT OF DROP-OFFS THAT DEVELOP DURING CONSTRUCTION OPERATONS, AND THAT ARE NOT OTHERWISE PROVIDED FOR IN THE CONSTRUCTION PLANS. THE SUGGESTED TREATMENTS ARE INTENDED FOR HIGH VOLUME PROJECTS THAT WILL LAST AT LEAST SEVEN DAYS AND HAVE AN ACTIVE WORK ZONE 1 MILE (1.6 KM) OR LESS IN LENGTH. FOR GUIDANCE ON THE USE OF THIS SHEET, SEE THE TRAFFIC ENGINEERING MANUAL. WHERE THE PLANS DO NOT PROVIDE SPECIFIC ITEMS FOR LABOR, EQUIPMENT, OR MATERIALS TO IMPLEMENT THE DROP-OFF TREATMENTS SPECIFIED HERON, THEY SHALL BE INCLUDED FOR PAYMENT IN THE LUMP SUM BID FOR ITEM 614-MAINTAINING TRAFFIC.

2. WHILE THE NEED FOR CERTAIN ADVISORY SIGNING IS NOTED HERON, IT IS NOT INTENDED THAT THIS BE INDICATIVE OF ALL SIGNING THAT MAY BE REQUIRED TO ADVISE OR WARN MOTORISTS. ALL REQUIREMENTS OF THE OHIO MANUAL OF UNIFORM TRAFFIC CONTROL DEVICES (OMUTCD) MUST BE FULFILLED.

3. IN URBAN OR OTHERWISE HEAVILY DEVELOPED AREAS WHERE PEDESTRIANS AND/OR BICYCLISTS MAY BE PRESENT IN SIGNIFICANT NUMBERS, ADDITIONAL SIGNING AND PROTECTIVE MEASURES OTHER THAN THOSE SHOWN HEREON MAY BE REQUIRED.

4. THE DROP-OFF TREATMENT SELECTED FOR USE AT ANY GIVEN LOCATION SHALL BE AS APPROPRIATE FOR THE PREVAILING CONDITIONS AT THE SITE.

5. WHERE CONCRETE BARRIER IS SPECIFIED, IT SHALL BE IN ACCORDANCE WITH SCD RM-4.2 AND ITEM 622.

6. WHEN DRUMS ARE SPECIFIED FOR A DROP-OFF CONDITION, A MINIMUM NUMBER OF FOUR DRUMS SHALL BE USED. SPACING SHALL BE AS INDICATED IN THE PLANS OR AS SPECIFIED IN THE OMUTCD.

7. WHEN W8-9 (LOW SHOULDER) SIGNS OR W8-9A (SHOULDER DROP-OFF) SIGNS OR W8-1871 (UNEVEN LANES) SIGNS ARE REQUIRED, THEY SHALL BE PLACED 750' (250 M) IN ADVANCE OF THE CONDITION, ON ALL INTERSECTING ENTRANCE RAMPS WITHIN THE LIMITS OF THE CONDITION AND IMMEDIATELY BEYOND ALL INTERSECTING ROADWAYS WITHIN THE LIMITS OF THE CONDITION. WHEN THE DROP-OFF CONDITION EXTENDS MORE THAN 0.5 MILE (800M), ADDITIONAL SIGNS SHOULD BE ERECTED AT INTERVALS OF 1.0 MILE (1600 M) OR LESS.

8. FOR LOCATIONS, SUCH AS AT RAMPS, LANE SHIFTS, LANE CLOSURES, ETC., WHERE TRAFFIC IS REQUIRED TO NEGOTIATE A DIFFERENCE IN ELEVATION BETWEEN PAVEMENTS, A 3:1 SLOPE TREATMENT SIMILAR TO THE OPTIONAL WEDGE TREATMENT SHALL BE PROVIDED.

9. PORTABLE CONCRETE BARRIER SHALL BE PLACED ON THE SAME LEVEL AS THE TRAFFIC SURFACE AND SHALL NOT ENCROACH ON LANE WIDTH(S) DESIGNATED AS THE MINIMUM REQUIRED FOR TRAFFIC USE. WHERE DRUMS ARE USED, AND THEIR PRESENCE WOULD REDUCE TRAVELED LANE WIDTHS TO LESS THAN 10' (3.0M), DRUMS MAY BE PLACED ON THE OPPOSITE LEVEL FROM THAT OF TRAFFIC PROVIDED THE DROP-OFF DEPTH DOES NOT EXCEED 5" (125) AND APPROVAL IS GRANTED BY THE PROJECT ENGINEER.

10. PAVEMENT REPAIRS (OR SIMILAR WORK):
    A. LENGTHS GREATER THAN 60' (18 M) - UTILIZE APPROPRIATE TREATMENT FROM CONDITION 1.
    B. LENGTHS OF 60' (18 M) OR LESS - REPAIRS SHALL BE EFFECTED IN ACCORDANCE WITH CMS 255.08. DRUMS MAY BE USED AS A SEPARATOR ADJACENT TO THE TRAVELED LANE.

OPTIONAL WEDGE TREATEMENT

(MILLING OR RESURFACING)

1. THIS TREATMENT MAY BE USED WHEN PERMITTED FOR CONDTION 1 ONLY.
2. W8-9A SIGN REQUIRED

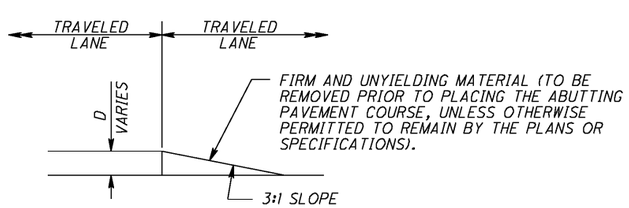

CONDITION I

DROP-OFFS BETWEEN TRAVELED LANES

1. THESE TREATMENTS ARE TO BE USED FOR RESURFACING, PAVEMENT PLANING, EXCAVATION, ETC. BETWEEN OR WITHIN TRAVELED LANES.

D	TREATMENT
≤1½" (≤40)	ERECT W8-11 SIGN
>1½"-3" (40-75)	1. LANE CLOSURE UTILIZING DRUMS* AS SHOWN BELOW OR 2. OPTIONAL WEDGE TREATMENT
>3"-5" (>75-125)	LANE CLOSURE UTILIZING DRUMS AS SHOWN BELOW
>5" (>125)	LANE CLOSURE UTILIZING PORTABLE CONCRETE BARRIER AS SHOWN BELOW

* CONES MAY BE USED FOR DAYTIME ONLY CONDITIONS

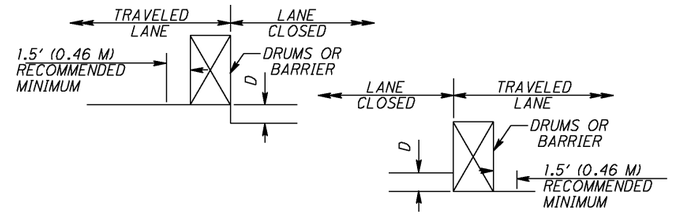

CONDITION II

DROP-OFFS WITHIN GRADED SHOULDER AREA

THE TREATMENTS INDICATED BELOW ARE FOR USE IN CONJUNCTION WITH RESURFACING, PLANING, OR EXCAVATIONS WITHIN THE GRADED SHOULDER AREA.

THE GRADED SHOULDER AREA IS THAT FLAT OR GRADUALLY SLOPING AREA BETWEEN THE EDGE OF A NORMALLY TRAVELED LANE AND THE MORE STEEPLY SLOPING DITCH FORESLOPE OR EMBANKMENT SLOPE. ITS SURFACE MAY BE SOIL OR TURF, AND/OR IT MAY BE INCLUSIVE OF A "TREATED" AREA (IMPROVED WITH MAXIMUM WIDTH SHALL BE CONSIDERED TO BE 12' (3.6 M).

D	TREATMENT
<1½" (<40)	ERECT W8-9A SIGNS
>1½"-5" (>40-125)	1. IF MINIMUM LANE WIDTH* REQUIREMENTS CAN BE MET, MAINTAIN LANES UTILZING DRUMS AS SHOWN BELOW OR 2. IF MINIMUM LANE WIDTH* REQUIREMENTS CANNOT BE MET, CLOSE ADJACENT LANE UTILIZING DRUMS OR 3. OPTIONAL SHOULDER TREATMENT
>5"-12" (>125-305) DAYLIGHT ONLY	IF MINIMUM LANE WIDTH* REQUIREMENTS CAN BE MET, MAINTAIN LANES UTILIZING DRUMS AS SHOWN BELOW.
>5"-24" (>125-610)	1. IF MINIMUM LANE WIDTH* REQUIREMENTS CAN BE MET, MAINTAIN LANES UTILIZING PORTABLE CONCRETE BARRIER AS SHOWN BELOW. OR 2. IF MINIMUM LANE WIDTH* REQUIREMENTS CANNOT BE MET, CLOSE ADJACENT LANE UTILIZING DRUMS.
>5"-24" (>125-610)	LANE CLOSURE UTILIZING PORTABLE CONCRETE BARRIER AS SHOWN BELOW

*MINIMUM LANE WIDTHS SHALL BE 10' (3.0 M) UNLESS OTHERWISE SPECIFIED IN THE PLANS.

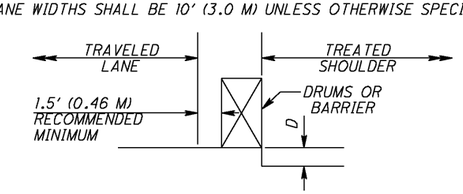

OPTIONAL SHOULDER TREATMENT

1. THIS TREATMENT MAY NOT BE USED WITHIN A BITUMINOUS SHOULDER WHERE A HOT LONGITUDINAL JOINT PER CMS 401.15 IS REQUIRED.

2. W8-9 SIGNS REQUIRED.

CONDITION III

DROP-OFFS BEYOND GRADED SHOULDER OR BACK OF CURB

1. SEE NOTE 2 UNDER CONDITION II.
2. USE CHART A OR B BELOW, AS APPLICABLE.

CHART A

USE FOR: 1. UNCURBED FACILITIES.
2. CURBED FACILITIES, WHERE:
   A. CURBS ARE LESS THAN 6" (150) IN HEIGHT.
   B. CURBS ARE 6" (150) OR GREATER IN HEIGHT AND THE LEGAL SPEED IS GREATER THAN 40 MPH (70 KM/H)

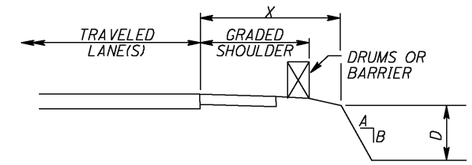

X	D	A/B	Treatment Required	
			Day	Night
0-4' (0-1.2 M)	ANY	ANY	(A)	(A)
4'-30' (1.2 M-9.1 M)	ANY	3:1 OR FLATTER	NONE	NONE
4'-12' (1.2 M-3.6 M)	≤3" (≤75)	STEEPER THAN 3:1	NONE	NONE
4'-12' (1.2 M-3.6 M)	>3"-<12" (>75-<305)	STEEPER THAN 3:1	DRUMS	DRUMS
4'-12' (1.2 M-3.6 M)	>12" (>305)	STEEPER THAN 3:1	DRUMS	BARRIER
>12'-20' (>3.6 M-6.1 M)	>12" (>305)	STEEPER THAN 3:1	NONE	NONE
>12'-20' (>3.6 M-6.1 M)	>12"-<24" (>305-<610)	STEEPER THAN 3:1	DRUMS	DRUMS
>12'-20' (>3.6 M-6.1 M)	>24" (>610)	STEEPER THAN 3:1	DRUMS	BARRIER
>20'-30' (>6.1 M-9.1 M)	<24" (<610)	STEEPER THAN 3:1	NONE	NONE
>20'-30' (>6.1 M-9.1 M)	>24" (>610)	STEEPER THAN 3:1	DRUMS	BARRIER
>30' (>9.1 M)	ANY	ANY	NONE	NONE
(A) USE TREATMENT SPECIFIED UNDER CONDITION II				

CHART B

USE FOR: CURBED FACILITIES, WHERE THE CURB IS 6" (150) OR GREATER IN HEIGHT AND THE LEGAL SPEED IS 40 MPH (70 KM/H) OR LESS.

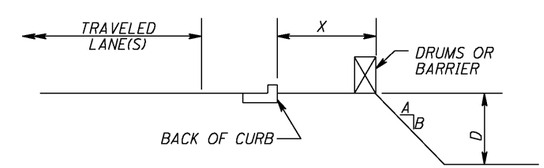

X	D	A/B	TREATMENT REQUIRED	
			DAY	NIGHT
0-10' (0-3.0 M)	<12" (<305)	ANY	NONE	DRUMS
0-10' (0-3.0 M)	>12" (>305)	ANY	DRUMS	DRUMS
>10' (>3.0 M)	ANY	ANY	NONE	NONE

NOTE: ALL METRIC DIMENSIONS (IN BRACKETS ( )) ARE IN MILLIMETERS UNLESS OTHERWISE NOTED.

DESIGN FILE: I:\projects\25671\Roadway\sheets\25671MM001.dgn
WORKSTATION: ksalay DATE: 11/9/2007

08-07-01

DROP-OFFS IN WORK ZONES

OFFICE OF TRAFFIC ENGINEERING

ASD-604-0.00
WAY-604-(0.00) (4.19)
WAY-539-8.24

ITEM SPECIAL, MAILBOX SUPPORT SYSTEM

THIS ITEM OF WORK SHALL CONSIST OF THE REMOVAL OF EXISTING NON-STANDARD MAILBOX SUPPORTS AND FURNISHING AND ERECTING MAILBOX SUPPORTS AND ANY ASSOCIATED HARDWARE IN ACCORDANCE WITH THE DETAILS SHOWN, AND ATTACHING AN OWNER SUPPLIED MAILBOX, AT LOCATIONS DETERMINED BY THE ENGINEER.

IN ABSENCE OF A NEW BOX SUPPLIED BY THE OWNER THE CONTRACTOR SHALL SALVAGE THE EXISTING BOX AND PLACE IT ON THE NEW SUPPORT. DUE CARE SHALL BE EXERCISED IN SUCH AN OPERATION, THE CONTRACTOR SHALL BE RESPONSIBLE FOR REPAIRING OR REPLACING ANY BOX DAMAGED BY IMPROPER HANDLING, AS JUDGED AND DIRECTED BY THE ENGINEER.

THE BOX SHALL BE SECURELY AND NEATLY ATTACHED BY THE CONTRACTOR TO THE NEW SUPPORT. THE CONTRACTOR SHALL SUPPLY ALL NECESSARY ATTACHMENT HARDWARE (NUTS, BOLTS, PLATES, SPACERS AND WASHERS) AS NECESSARY TO ACCOMODATE THE COMPLETE INSTALLATION. SUPPORT HARDWARE SHALL ACCOMODATE EITHER A SINGLE OR A DOUBLE MAILBOX INSTALLATION, AND NO MORE THAN TWO MAILBOXES MAY BE MOUNTED ON A SINGLE POST. [HARDWARE SHALL BE COMMERCIAL GRADE GALVANIZED STEEL.]

WOOD POSTS SHALL BE NOMINAL 4 IN. x 4 IN. (S4S) OR 4½ IN. DIAMETER ROUND, AND CONFORM TO 710.14. STEEL POSTS SHALL BE NOMINAL PIPE SIZE 2 IN. I.D., AND CONFORM TO AASHTO M 181.

POSTS SHALL BE SET AS PER THE FIRST PARAGRAPH OF 606.03, AND SHALL IN NO INSTANCE BE ENCASED IN CONCRETE.

THE CONTRACTOR SHALL BE RESPONSIBLE FOR COORDINATING WORK WITH THE LOCAL POST MASTER AND NOTIFYING THE PROPERTY OWNERS PRIOR TO WORK.

GROUP MAILBOX SUPPORTS SHALL BE PLACED ON 3 FT. CENTERS AND THE TURNOUT LENGTHENED TO ACCOMODATE THE GROUPING.

WHERE GUARDRAIL EXISTS, MAILBOXES AND THEIR SUPPORTS SHALL BE PLACED BEHIND THE GUARDRAIL. SUPPORTS MUST STILL MEET THE BREAKAWAY REQUIREMENTS LISTED ABOVE.

THE FOLLOWING ESTIMATED QUANTITIES HAVE BEEN CARRIED TO THE GENERAL SUMMARY TO BE USED AS DESCRIBED ABOVE.

ITEM SPECIAL-MAILBOX SUPPORT SYSTEM, SINGLE
ASD S.R. 604 ..... FED/STATE = 5 EACH
WAY S.R. 604 ..... FED/STATE = 32 EACH
..... NONFEDERAL = 32 EACH
WAY S.R. 539 ..... FED/STATE = 3 EACH

ITEM SPECIAL-MAILBOX SUPPORT SYSTEM, DOUBLE
ASD S.R. 604 ..... 0 EACH
WAY S.R. 604 ..... FED/STATE = 2 EACH
..... NONFEDERAL = 4 EACH
WAY S.R. 539 ..... 0 EACH

MAILBOX APPROACHES

THE MAILBOX APPROACHES SHALL BE PAVED WITH 0.75" ITEM 442 INTERMEDIATE COURSE AND 1.25" ITEM 442 SURFACE COURSE. THEY SHALL CONFORM AS MUCH AS PRACTICAL TO STANDARD DRAWING BP-4.1 OR AS DIRECTED BY THE ENGINEER.

GRADING SHALL BE PERFORMED IN THESE AREAS TO OBTAIN A BASE WHICH WILL ALLOW THE FINISHED GRADE TO BE FLUSH WITH ADJACENT PAVEMENT. A QUANTITY OF ITEM 617 COMPACTED AGGREGATE, AS PER PLAN HAS BEEN PROVIDED FOR AREAS WHERE THE SHOULDER IS LOW PRIOR TO GRADING AND/OR LOW AREAS CAUSED BY THE REMOVAL OF UNSUITABLE MATERIAL. QUANTITIES TO PERFORM THIS WORK HAVE BEEN INCLUDED IN THE GENERAL SUMMARY AND ARE ESTIMATED AS FOLLOWS.

ITEM 209 - GRADING MAILBOX APPROACHES:
S.R. 604/ S.R. 539 ..... FED/STATE = 46 EACH
..... NONFEDERAL = 54 EACH

ITEM 617 - COMPACTED AGGREGATE, AS PER PLAN
S.R. 604/ S.R. 539 ..... FED/STATE = 92 CU. YD.
..... NONFEDERAL = 108 CU. YD.

LOCATIONS OF MAILBOX SUPPORT SYSTEM TO BE REPLACED

ADDRESSES AND/OR LOCATIONS OF MAILBOX SUPPORT SYSTEM TO BE REPLACED:

SINGLE SUPPORT SYSTEMS
306 ASD 604 - EAST OF US 42
248 ASD 604 - EAST OF US 42
240 ASD 604 - EAST OF US 42
237 ASD 604 - EAST OF US 42
69 ASD 604 - EAST OF US 42

11091 WAY 604 - EAST OF ASD CO. LINE
10936 WAY 604 - EAST OF ASD CO. LINE
10470 WAY 604 - EAST OF ASD CO. LINE
10435 WAY 604 - EAST OF ASD CO. LINE
10407 WAY 604 - EAST OF ASD CO. LINE
10351 WAY 604 - EAST OF ASD CO. LINE
10256 WAY 604 - EAST OF ASD CO. LINE
10245 WAY 604 - EAST OF ASD CO. LINE
9508 WAY 604 - EAST OF SR 301 OVERLAP
9373 WAY 604 - EAST OF SR 301 OVERLAP
8202 WAY 604 - EAST OF SR 301 OVERLAP
8122 WAY 604 - EAST OF SR 301 OVERLAP
7941 WAY 604 - EAST OF SR 301 OVERLAP
7849 WAY 604 - EAST OF SR 301 OVERLAP
5137 WAY 604 - EAST OF SR 539 OVERLAP
4618 WAY 604 - EAST OF SR 539 OVERLAP
3524 WAY 604 - EAST OF SR 539 OVERLAP
3356 WAY 604 - EAST OF SR 539 OVERLAP
UNMARKED WAY 604 - EAST OF SR 539 OVERLAP
3268 WAY 604 - EAST OF SR 539 OVERLAP
3180 WAY 604 - EAST OF SR 539 OVERLAP
1524 WAY 604 - EAST OF SR 83
920 WAY 604 - EAST OF SR 83
122 WAY 604 - EAST OF SR 83
246 WAY 604 - EAST OF SR 83
275 WAY 604 - EAST OF SR 83
456 WAY 604 - EAST OF SR 83
575 WAY 604 - EAST OF SR 83
819 WAY 604 - EAST OF SR 83
869 WAY 604 - EAST OF SR 83
873 WAY 604 - EAST OF SR 83
1252 WAY 604 - EAST OF SR 83
1340 WAY 604 - EAST OF SR 83
1380 WAY 604 - EAST OF SR 83
1403 WAY 604 - EAST OF SR 83
1454 WAY 604 - EAST OF SR 83
2200 WAY 604 - EAST OF SR 83
3787 WAY 604 - EAST OF SR 3
5190 WAY 604 - EAST OF SR 3
6471 WAY 604 - EAST OF SR 3
7574 WAY 604 - EAST OF SR 3
7628 WAY 604 - EAST OF SR 3
8452 WAY 604 - EAST OF SR 3
8868 WAY 604 - EAST OF SR 3
10177 WAY 604 - EAST OF SR 3
10471 WAY 604 - EAST OF SR 3
11000 WAY 604 - EAST OF CR 57-A
11146 WAY 604 - EAST OF CR 57-A
11244 WAY 604 - EAST OF CR 57-A
11340 WAY 604 - EAST OF CR 57-A
11420 WAY 604 - EAST OF CR 57-A
11524 WAY 604 - EAST OF CR 57-A
11899 WAY 604 - EAST OF CR 57-A
11944 WAY 604 - EAST OF CR 57-A
12186 WAY 604 - EAST OF SR 57
12402 WAY 604 - EAST OF SR 57
12432 WAY 604 - EAST OF SR 57
12493 WAY 604 - EAST OF SR 57
12541 WAY 604 - EAST OF SR 57
12611 WAY 604 - EAST OF SR 57
12865 WAY 604 - EAST OF SR 57
12913 WAY 604 - EAST OF SR 57
12945 WAY 604 - EAST OF SR 57
13039 WAY 604 - EAST OF SR 57

113 WAY 539 - OVERLAP WITH SR 604
111 WAY 539 - OVERLAP WITH SR 604
105 WAY 539 - OVERLAP WITH SR 604

DOUBLE SUPPORT SYSTEMS
5986 WAY 604 - EAST OF SR 539 OVERLAP
1252 WAY 604 - EAST OF SR 83
2200 WAY 604 - EAST OF SR 83 (2 SUPPORTS)
12611 WAY 604 - EAST OF SR 57
12694 WAY 604 - EAST OF SR 57

FOR DETAILS NOT SHOWN SEE STANDARD DRAWING BP-4.1

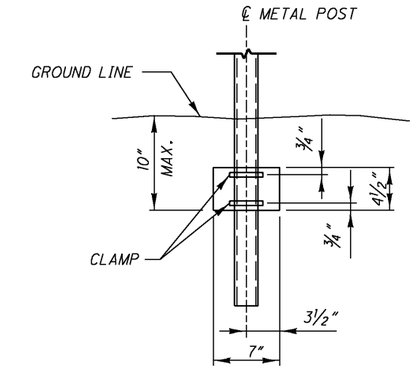

ANTI-TWIST PLATE

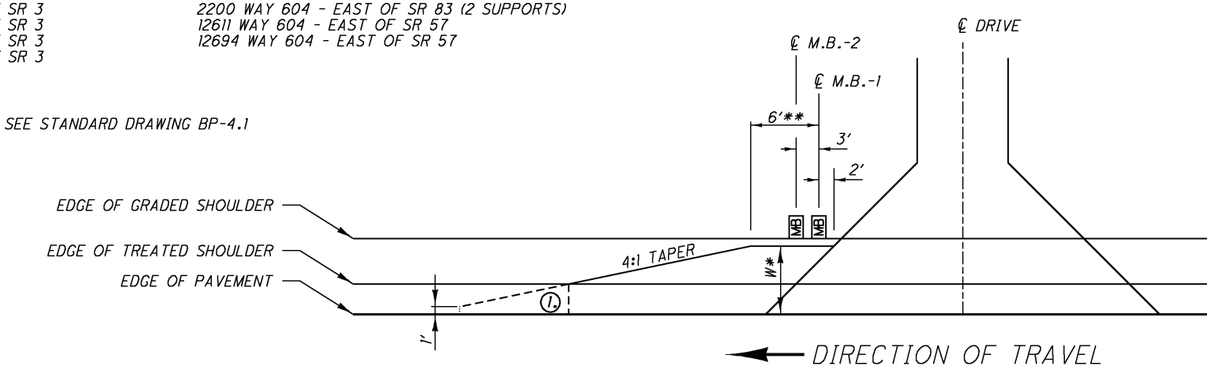

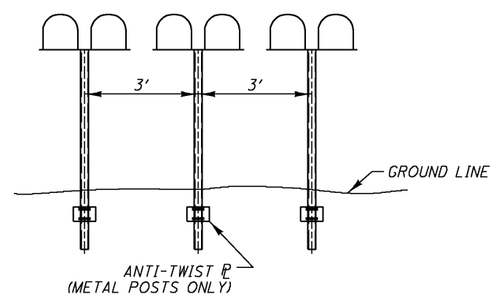

GROUP MAILBOX INSTALLATION

(1) END MAILBOX TURNOUT AT EDGE OF TREATED SHOULDER OR 1' WHICH EVER IS GREATER.

W* NOTES
1) WHERE EXISTING STANDARD MAILBOX POSTS ARE BEHIND GUARDRAIL AND ARE TO REMAIN IN PLACE, TURNOUT WIDTH SHALL EXTEND TO FACE OF GUARDRAIL.
2) WHERE NO GUARDRAIL IS REQUIRED, TURNOUT WIDTH SHALL EXTEND TO FACE OF EXISTING STANDARD MAILBOX WITH MAILBOX REMAINING IN PLACE.
3) IF THE MAILBOX SUPPORT IS SPECIFIED TO BE REMOVED AND REERECTED OR REPLACED, WHERE GUARDRAIL IS REQUIRED, TURNOUT WIDTH SHALL EXTEND TO FACE OF GUARDRAIL AND MAILBOX SHALL BE INSTALLED BEHIND THE GUARDRAIL.
4) IF THE MAILBOX SUPPORT IS SPECIFIED TO BE REMOVED AND REERECTED OR REPLACED, WHERE NO GUARDRAIL IS REQUIRED, TURNOUT WIDTH SHALL BE 6 FT. MINIMUM, EXCEPT WHERE FIELD CONDITIONS WILL NOT PERMIT.

** NOTE
1) 6' FOR SINGLE MAILBOX SUPPORT, ADD 3 FT. FOR EACH ADDITIONAL MAILBOX.

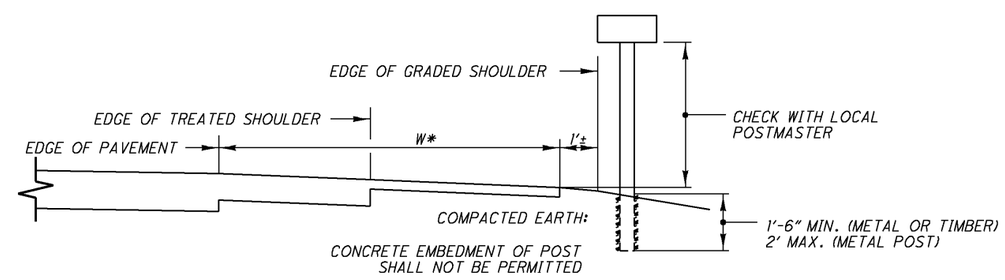

CROSS SECTION / ELEVATION VIEW

REVISED: 11/16/07

CALCULATED KRB CHECKED BAD

MAILBOX FACILITIES

ASD-604-0.00
WAY-604-(0.00) (4.19)
WAY-539-8.24

DESIGN FILE: I:\projects\25671\Roadway\sheets\25671GM001.dgn
WORKSTATION: ksalay DATE: 11/19/2007

SHEET NUMBER																						
FED/STATE							NONFEDERAL							FED/	NONFED	ITEM	ITEM	TOTAL	UNIT	DESCRIPTION	REF.
3	5	7	9	12	31	38	3	5	7	9	12	31A	38	STATE			EXT.				SHEET
																				ROADWAY	
				987.5							1025			987.5	1025	202	38200	2012.5	FT	GUARDRAIL REMOVED FOR REUSE	
				275							1587.5			275	1587.5	202	38201	1862.5	FT	GUARDRAIL REMOVED FOR REUSE, AS PER PLAN	11
				4							1			4	1	202	42000	5	EACH	ANCHOR ASSEMBLY REMOVED, TYPE A	
											2			0	2	202	42010	2	EACH	ANCHOR ASSEMBLY REMOVED, TYPE E	
				12							19			12	19	202	42620	31	EACH	ANCHOR ASSEMBLY REMOVED FOR REUSE, TYPE E-98	
											4			0	4	202	47000	4	EACH	BRIDGE TERMINAL ASSEMBLY REMOVED	
					710							1101		710	1101	202	54000	1811	EACH	RAISED PAVEMENT MARKER REMOVED	
				119							300			119	300	203	10001	419	CU YD	EXCAVATION, AS PER PLAN	11
				1044							982			1044	982	203	20001	2026	CU YD	EMBANKMENT, AS PER PLAN	11
				57.88							55.58			57.88	55.58	209	15001	113.46	STATION	RESHAPING UNDER GUARDRAIL, AS PER PLAN	11
			19.46							28.54				19.46	28.54	209	60500	48	MILE	LINEAR GRADING	
		46							54					46	54	209	80000	100	EACH	GRADING MAILBOX APPROACHES	
			2							8				2	8	604	39500	10	EACH	MONUMENT BOX ADJUSTED TO GRADE	
				1650							712.5			1650	712.5	606	13000	2362.5	FT	GUARDRAIL, TYPE 5	
											1862.5			0	1862.5	606	13070	1862.5	FT	GUARDRAIL, TYPE 5A, USING 9 FOOT POSTS	
				987.5							1025			987.5	1025	606	16500	2012.5	FT	GUARDRAIL REBUILT, TYPE 5	
				9							2			9	2	606	22010	11	EACH	ANCHOR ASSEMBLY, TYPE E-98	
											2			0	2	606	26500	2	EACH	ANCHOR ASSEMBLY, TYPE T	
				12							19			12	19	606	28050	31	EACH	ANCHOR ASSEMBLY REBUILT, TYPE E-98	
				4										4	0	606	32160	4	EACH	BRIDGE TERMINAL ASSEMBLY, TYPE TST	
											4			0	4	606	35140	4	EACH	BRIDGE TERMINAL ASSEMBLY, TYPE 4	
				1512.5							356.5			1512.5	356.5	606	98000	1869	FT	GUARDRAIL, MISC.: ADJUST HEIGHT, EXISTING GUARDRAIL, TYPE 5	11
		40							32					40	32	SPECIAL	69050100	72	EACH	MAILBOX SUPPORT SYSTEM, SINGLE	7
		2							4					2	4	SPECIAL	69050200	6	EACH	MAILBOX SUPPORT SYSTEM, DOUBLE	7
																				PAVEMENT	
1915							2810							1915	2810	253	02000	4725	CU YD	PAVEMENT REPAIR	
						1844							511	1844	511	254	01000	2355	SQ YD	PAVEMENT PLANING, ASPHALT CONCRETE	
										156235				0	156235	254	01000	156235	SQ YD	PAVEMENT PLANING, ASPHALT CONCRETE (1.5")	
										1563				0	1563	254	01600	1563	SQ YD	PATCHING PLANED SURFACE	
			10920							16040				10920	16040	407	10000	26960	GALLON	TACK COAT	
			4063							5968				4063	5968	407	14000	10031	GALLON	TACK COAT FOR INTERMEDIATE COURSE	
			9488							13905				9488	13905	408	10000	23393	GALLON	PRIME COAT	
			4702							6908				4702	6908	442	00201	11610	CU YD	ASPHALT CONCRETE SURFACE COURSE, 9.5 MM, TYPE A (446), AS PER PLAN	4
			60							86				60	86	442	10511	146	CU YD	ASPHALT CONCRETE SURFACE COURSE, 9.5 MM, TYPE A (448) (DRIVEWAYS), APP	4
			2822							4145				2822	4145	442	20101	6967	CU YD	ASPHALT CONCRETE INTERMEDIATE COURSE, 9.5 MM, TYPE A (448), AS PER PLAN	4
		92	989						108	1448				1081	1556	617	10101	2637	CU YD	COMPACTED AGGREGATE, AS PER PLAN	4
			23719							34761				23719	34761	617	20000	58480	SQ YD	SHOULDER PREPARATION	
																				TRAFFIC CONTROL	
					710							1101		710	1101	621	00100	1811	EACH	RPM	
				78							108			78	108	626	00100	186	EACH	BARRIER REFLECTOR, TYPE A	
					19.46							28.54		19.46	28.54	642	00100	48	MILE	EDGE LINE, TYPE 1	
					9.73							14.27		9.73	14.27	642	00300	24	MILE	CENTER LINE, TYPE 1	
					560							664		560	664	644	00500	1224	FT	STOP LINE	
																				MAINTENANCE OF TRAFFIC	
	69							97						69	97	614	12460	166	EACH	WORK ZONE MARKING SIGN	
	40							60						40	60	614	13000	100	CU YD	ASPHALT CONCRETE FOR MAINTAINING TRAFFIC	
					19.46							39.6		19.46	39.6	614	21500	59.06	MILE	WORK ZONE CENTER LINE, CLASS II, 642 PAINT	
					360							443		360	443	614	26200	803	FT	WORK ZONE STOP LINE, CLASS I, 642 PAINT	

REVISED: 11/16/07

CALC'D KRB CHECKED BAD

GENERAL SUMMARY

ASD-604-0.00 WAY-604-(0.00) (4.19) WAY-539-8.24

SHEET NUMBER																					
FED/STATE							NONFEDERAL														
3	5	7	9	12	31	38	3	5	7	9	12	31A	38	FED/ STATE	NONFED	ITEM	ITEM EXT.	TOTAL	UNIT	DESCRIPTION	REF. SHEET
																				STRUCTURES	
																				STRUCTURE SUMMARY: ASD-604-0156 (SFN 0306118)	32
																				STRUCTURE SUMMARY: WAY-604-0001 (SFN 8506302)	32
																				STRUCTURE SUMMARY: WAY-604-0065 (SFN 8506337)	32
																				STRUCTURE SUMMARY: WAY-604-0626 (SFN 8506418)	33
																				STRUCTURE SUMMARY: WAY-604-0899 (SFN 8506426)	33
																				STRUCTURE SUMMARY: WAY-604-1307 (SFN 8506523)	34
																				STRUCTURE SUMMARY: WAY-604-1713 (SFN 8506574)	34
																				STRUCTURE SUMMARY: WAY-604-1811 (SFN 8506701)	34
																614	11000	LUMP		MAINTAINING TRAFFIC	
																619	16010	5	MONTH	FIELD OFFICE, TYPE B	
																624	10000	LUMP		MOBILIZATION	

CALC'D KRB CHECKED BAD

GENERAL SUMMARY

ASD-604-0.00 WAY-604-(0.00) (4.19)
WAY-539-8.24

REVISED: 11/16/07

* - FOR TYPICALS, SEE SHEET 10

CALC BY: KRB
CHKD BY: BAD

CO.	ROUTE	LOG POINT TO LOG POINT (STRAIGHT LINE MILEAGE)		LENGTH MILE	LENGTH FEET	WIDTH FEET AVG.	* TYPICAL	PAVEMENT AREA SQ. YD.	254 PAVEMENT PLANING, ASPHALT CONCRETE (1.50") SQ.YD.	254 PATCHING PLANED SURFACE SQ.YD.	407 TACK COAT @ 0.08 GAL/SY GALLON	407 TACK COAT FOR INTERM. COURSE @ 0.03 GAL/SY GALLON	442 ASPHALT CONCRETE SURFACE COURSE, 9.5 MM, TYPE A (446), AS PER PLAN INCH	442 CU.YD.	442 ASPHALT CONCRETE INTERMEDIATE COURSE, 9.5 MM, TYPE A (448), AS PER PLAN (VAR. THICKNESS) INCH	442 CU.YD.	442 ASPHALT CONCRETE SURFACE COURSE, 9.5MM, TYPE A (448) (DRIVEWAYS), AS PER PLAN INCH	442 CU.YD.	604 MONUMENT BOX ADJUSTED TO GRADE EACH			AGGREGATE SHOULDER PROPOSED WIDTH SL FT	AGGREGATE SHOULDER PROPOSED WIDTH SR FT	AGGREGATE SHOULDER AREA SQ. YD.	209 LINEAR GRADING MILE	408 PRIME COAT @ 0.40 GAL/SY GALLON	617 COMPACTED AGGREGATE, AS PER PLAN 1.5 INCHES AVG. THICKNESS CU. YD.	617 SHOULDER PREPARATION SQ.YD.
	FED/STATE FUNDING																												
ASD	604	0.00	3.36	3.36	17741	24.0	1	47,309			3,785	1,419	1.25	1,643	0.75	986			2			2.0	2.0	7,885	6.72	3,154	329	7,885
WAY	604	0.00	1.03	1.03	5438	23.5	1	14,199			1,136	426	1.25	493	0.75	296						2.0	2.0	2,417	2.06	967	101	2,417
WAY	604	1.15	3.83	2.68	14150	22.0	1	34,589			2,767	1,038	1.25	1,201	0.75	721						2.0	2.0	6,289	5.36	2,516	262	6,289
WAY	604	4.19	4.40	0.21	1109	23.0	1	2,834			227	85	1.25	98	0.75	59						2.0	2.0	493	0.42	197	21	493
WAY	604	18.67	20.76	2.09	11035	24.0	1	29,427			2,354	883	1.25	1,022	0.75	613						2.0	2.0	4,904	4.18	1,962	204	4,904
WAY	539	8.24	8.60	0.36	1901	23.0	1	4,858			389	146	1.25	169	0.75	101						2.0	2.0	845	0.72	338	35	845
	NONFEDERAL FUNDING																												
WAY	604	4.40	7.61	3.21	16949	23.0	1	43,314			3,465	1,299	1.25	1,504	0.75	902			4			2.0	2.0	7,533	6.42	3,013	314	7,533
WAY	604	7.61	18.67	11.06	58397	23.5	2	152,481	152,481	1,525	12,198	4,574	1.25	5,294	0.75	3,177			4			2.0	2.0	25,954	22.12	10,382	1,081	25,954
	FED/STATE FUNDING																												
	EXTRA AREA FOR INTERS., DRIVES, + MAILBOXES							2195			176	66	1.25	76	0.75	46												
	EXTRA AREA FOR UNPAVED DRIVES							1080			86						2	60						886		354	37	886
	NONFEDERAL FUNDING																												
	EXTRA AREA FOR INTERS., DRIVES, + MAILBOXES							3159	3754	38	253	95	1.25	110	0.75	66												
	EXTRA AREA FOR UNPAVED DRIVES							1554			124						2	86						1274		510	53	1274
	TOTALS: FED/STATE			**9.73**	**51374**						**10,920**	**4,063**		**4,702**		**2,822**		**60**	**2**						**19.46**	**9488**	**989**	**23,719**
	TOTALS: NONFEDERAL			**14.27**	**75346**				**156,235**	**1,563**	**16,040**	**5,968**		**6,908**		**4,145**		**86**	**8**						**28.54**	**13,905**	**1,448**	**34,761**

REVISED: 11/16/07

PAVEMENT & SHOULDER DATA

ASD-604-0.00 WAY-604-(0.00)
WAY-539-8.24
(4.19)

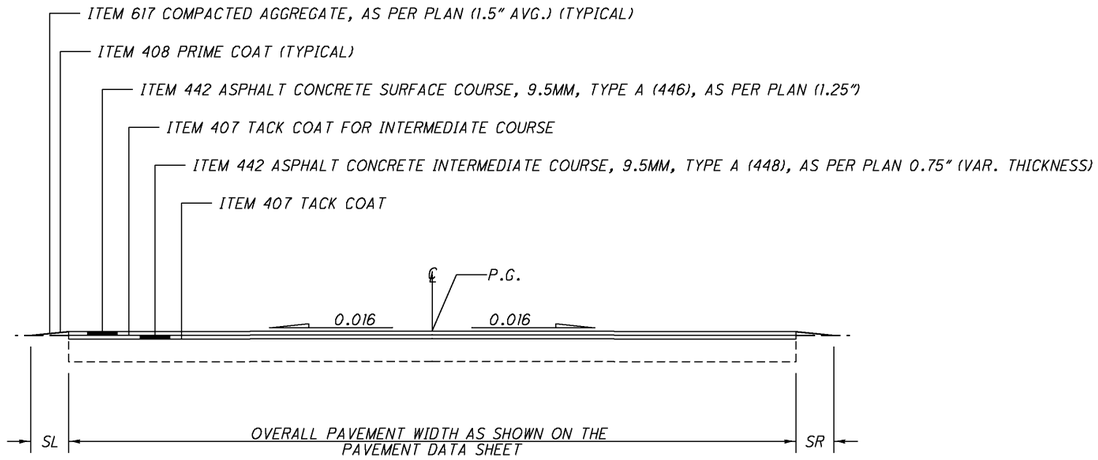

TYPICAL 1

ASD-604-0.00 TO 3.36
WAY-604-0.00 TO 1.03
WAY-604-1.15 TO 3.83
WAY-604-4.19 TO 7.61
WAY-604-18.67 TO 20.76
WAY-539-8.24 TO 8.60

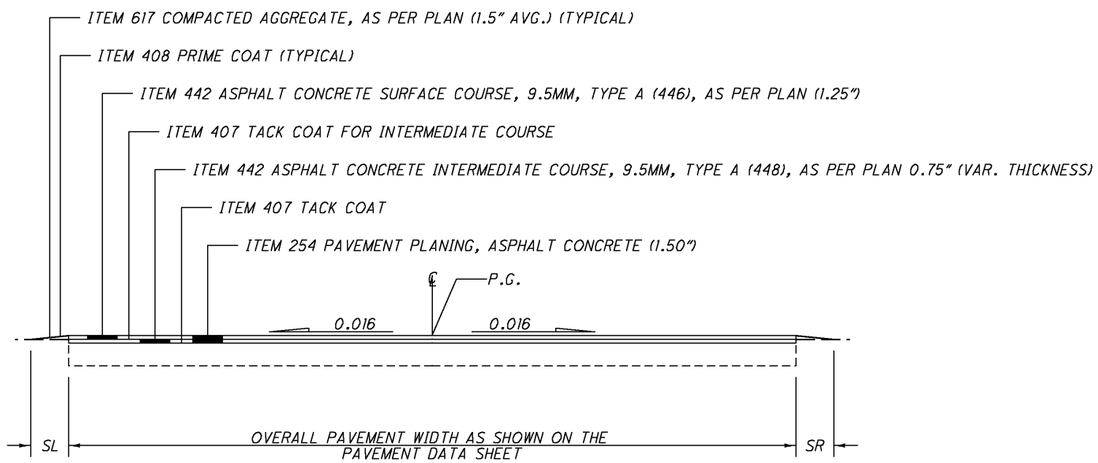

TYPICAL 2

WAY-604-7.61 TO 18.67

DESIGN FILE: I:\projects\25671\Roadway\sheets\25671GY001.dgn
WORKSTATION: ksalay DATE: 11/9/2007

CALCULATED KRB
CHECKED BAD

TYPICAL SECTIONS

ASD-604-0.00
WAY-604-(0.00) (4.19)
WAY-539-8.24

ITEM 202 - ANCHOR ASSEMBLY REMOVED FOR REUSE, TYPE E-98

THIS ITEM CONSISTS OF REMOVING AN EXISTING ANCHOR ASSEMBLY, AND SALVAGING FOR REUSE AT A LOCATION SHOWN ON THE PLANS. THE RESULTING HOLES SHALL BE BACKFILLED AND COMPACTED. ELEMENTS THAT ARE NOT SALVAGEABLE SHALL BE DISPOSED OF PER 202.02.

ITEM 202 - GUARDRAIL REMOVED FOR REUSE, AS PER PLAN

THIS ITEM SHALL CONSIST OF THE REMOVAL OF THE EXISTING GUARDRAIL AS PER 202.09. THE RAIL ELEMENT SHALL BE STORED BY THE CONTRACTOR FOR REUSE, AS SHOWN BELOW.

THE EXISTING RAIL ELEMENT SHALL BE PLACED ON THE GROUND ADJACENT TO NEW GUARDRAIL POST. THE RAIL ELEMENT MAY REQUIRE TO BE FASTENED TO THE POST TO FACILITATE PLACEMENT OF EMBANKMENT. THE CONTRACTOR MAY DETERMINE THIS METHOD OF FASTENING. THE ITEMS DESCRIBED ABOVE AND SHOWN BELOW (NOT INCLUDING NEW RAIL, 9 FOOT POSTS, AND EMBANKMENT) SHALL BE PAID FOR UNDER THE UNIT BID PRICE FOR ITEM 202 - GUARDRAIL REMOVED FOR REUSE, AS PER PLAN.

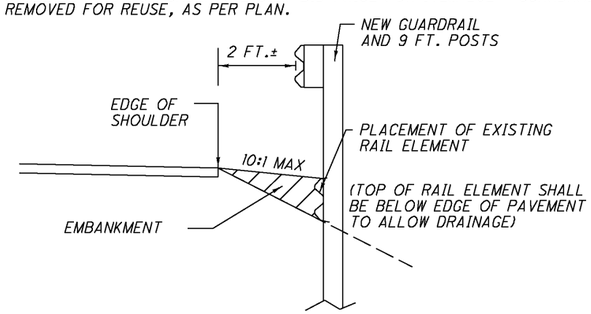

ITEM 203 - EXCAVATION, AS PER PLAN

THE INTENT OF THIS ITEM IS TO RE-ESTABLISH THE EXISTING DITCH WHICH WAS PARTIALLY FILLED WHEN THE NEW EMBANKMENT, AS PER PLAN ITEM WAS CONSTRUCTED. THE DITCH IS TO BE CONSTRUCTED AROUND THE NEW EMBANKMENT AND IS TO MATCH THE WIDTH OF THE EXISTING ADJOINING DITCH.

THIS ITEM SHALL INCLUDE SEEDING AND MULCHING, AND WATER CONSTRUCTED AS PER CMS 659. PAYMENT FOR THIS WORK TO BE INCLUDED IN THE UNIT PRICE BID PER CUBIC YARD FOR ITEM 203, EXCAVATION, AS PER PLAN, AND SHALL INCLUDE ALL LABOR, EQUIPMENT, AND MATERIALS NECESSARY.

ITEM 203 - EMBANKMENT, AS PER PLAN

AT SPECIFIED LOCATIONS AND AT LOCATIONS AS DIRECTED BY THE ENGINEER, EMBANKMENT SHALL BE PLACED AS TO PROVIDE A SUITABLE AREA TO CONSTRUCT GUARDRAIL AND TO PROVIDE STRUCTURAL INTEGRITY OF THE ROADWAY SHOULDER.

EMBANKMENT MATERIAL SHALL BE LIMITED TO CMS 304 LIMESTONE.

AREAS WHERE EMBANKMENT MATERIAL IS TO BE PLACED SHALL BE SCALPED. THE REQUIREMENTS FOR BENCHING SHALL BE WAIVED. THE DEPTHS OF LAYERS IN WHICH THE EMBANKMENTS ARE PLACED SHALL BE LIMITED TO EIGHT (8) INCHES IN THICKNESS. THE METHOD OF COMPACTION AND EQUIPMENT USED SHALL BE SUFFICIENT TO COMPACT TO 95% OF STANDARD PROCTOR TO THE SATISFACTION OF THE ENGINEER.

THE METHOD OF MEASUREMENT FOR EMBANKMENT MATERIAL SHALL BE BY THE NUMBER OF CUBIC YARDS CONVERTED BY TICKET WEIGHT IN THE CARRIER AT THE WORK SITE, IN LIEU OF THE REQUIREMENTS OF 203.09, AND PAYMENT FOR ACCEPTED QUANTITIES WILL BE MADE AT THE CONTRACT UNIT BID PRICE PER CUBIC YARD FOR ITEM 203 EMBANKMENT, AS PER PLAN AND SHALL INCLUDE ALL WORK DESCRIBED ABOVE.

ITEM 209 - RESHAPING UNDER GUARDRAIL, AS PER PLAN

THIS ITEM SHALL BE USED AT LOCATIONS INDICATED IN THE PLANS.

THIS WORK SHALL BE COMPLETED AT LOCATIONS SPECIFIED FOR WORK AS WELL AS PER CMS 209.05 AND AS DESCRIBED HEREIN, AND SHALL AT ALL TIMES BE AS DIRECTED BY THE ENGINEER.

THE AREA IN FRONT OF, UNDER, AND BEHIND THE GUARDRAIL SHALL BE GRADED AND RESHAPED TO PROVIDE AN AREA THAT HAS A SLOPE OF 10:1 MAXIMUM (SEE DETAIL BELOW AS WELL AS THE GUARDRAIL DETAIL SHEETS FOR FURTHER DETAILS AND INFORMATION OF THE LIMITS OF THIS WORK).

EXCESS MATERIAL RESULTING SHALL BE USED ELSEWHERE FOR THIS ITEM IF SO DIRECTED OR DISPOSED OF PROPERLY. IF EXTRA MATERIAL IS REQUIRED IT SHALL BE PAID FOR WITH ITEM 203 - EMBANKMENT, AS PER PLAN. THIS WORK SHALL NOT BE STARTED UNTIL AFTER THE RESURFACING AND BERM WORK HAS BEEN COMPLETED.

THE ABOVE WORK SHALL BE PAID FOR PER STATION WITH ITEM 209, RESHAPING UNDER GUARDRAIL, AS PER PLAN WITH THE EXCEPTION OF ANY EXTRA MATERIAL REQUIRED TO MEET THE SLOPE REQUIREMENTS WHICH SHALL BE PAID BY ITEM 203 - EMBANKMENT, AS PER PLAN.

ITEM 606 - ANCHOR ASSEMBLY, TYPE E-98
ITEM 606 - ANCHOR ASSEMBLY REBUILT, TYPE E-98

THIS ITEM SHALL CONSIST OF EITHER REUSING SALVAGED ELEMENTS FROM AN EXISTING ANCHOR ASSEMBLY OR PROVIDING A NEW ANCHOR ASSEMBLY, AND CONSTRUCTING A COMPLETE AND FUNCTIONAL ANCHOR ASSEMBLY AT A LOCATION SHOWN IN THE PLANS.

THE ANCHOR ASSEMBLY SHALL BE RECONSTRUCTED AS PER THE FOLLOWING GUARDRAIL END TERMINALS:

1) THE ET-2000 (1997) MANUFACTURED BY TRINITY INDUSTRY, 1170 N. STATE ST., GIRARD, OHIO 44420 (TELEPHONE: 330-545-4373).

THE LENGTH OF THE ET-2000 (1997) SYSTEM IS CONSIDERED TO BE 50 FEET (15.24 m), INCLUSIVE OF TWO 25 FOOT (7.62 m) LONG RAIL ELEMENTS. INSTALLATION SHALL BE AT THE LOCATIONS SPECIFIED IN THE PLANS, IN ACCORDANCE WITH THE MANUFACTURER'S SPECIFICATIONS AS DETAILED ON THE FOLLOWING PRE-APPROVED SHOP DRAWINGS:

DWG. #	DRAWING NAME	DWG./REV. DATE	ODOT APPROVAL DATE
SS265M	SRT-350 (12.5, 8 Post) Slotted Rail Terminal Post Layout and Erection Details	6/20/97	3/6/98
SS142	Slotted Rail Terminal SRT-350 Post Layout and Erection Details (12.5, 9 Post)	4/12/00	7/31/00
SS141	ET-2000 PLUS PLAN, ELEVATION & SECTION 25'-0" RAIL, HBA POSTS 1-4	2/29/00	7/31/00
SS158	ET-2000 PLUS 50'-0" WITH 12'-6" PANELS & HBA POSTS 1-4 PLAN, ELEVATION & SECTION	5/22/00	7/31/00

2) THE SKT-350 MANUFACTURED BY ROAD SYSTEMS, INC., 2516 MALLORY LANE, STOW, OHIO 44224 (TELEPHONE: 330-346-0721)

THE LENGTH OF THE SKT-350 SYSTEM IS CONSIDERED TO BE 50'-0" (15.24 m), INCLUSIVE OF FOUR 12'-6" (3.81m) LONG RAIL ELEMENTS. INSTALLATION SHALL BE AT THE LOCATIONS SPECIFIED IN THE PLANS, IN ACCORDANCE WITH THE MANUFACTURER'S SPECIFICATIONS AS DETAILED ON THE FOLLOWING PRE-APPROVED SHOP DRAWINGS:

DWG. #	DRAWING NAME	DWG./REV. DATE	ODOT APPROVAL DATE
SKT-4M	FOUNDATION TUBES SEQUENTIAL KINKING TERMINAL (SKT-350) ASSEMBLY WITH 4	12/11/97	3/6/98

THE FACE OF THE TYPE E-98 IMPACT HEAD SHALL BE COVERED WITH A SHEET OF TYPE G REFLECTIVE SHEETING, PER CMS 730.19, APPROXIMATELY 18" x 18" (450mm X 450mm).

THE CONTRACTOR MAY USE A SALVAGED EXTRUDER WHEN ASSEMBLING THE ITEM 606 ANCHOR ASSEMBLY, TYPE E-98. ALL WELDS ON THE EXTERIOR OF THE SALVAGED EXTRUDER SHALL NOT BE DAMAGED AND THE FEEDER SHUTE SHALL NOT BE BENT.

REFER TO THE MANUFACTURER'S INSTRUCTION REGARDING THE INSTALLATION OF, AND THE GRADING AROUND, THE FOUNDATION TUBES AND GROUND STRUT. THE TOP OF ANY FOUNDATION TUBE SHOULD BE LESS THAN 4 INCHES (100mm) ABOVE THE GROUND. THE PLACEMENT OF THE FOUNDATION TUBES SHOULD BE AN APPROPRIATE DEPTH BELOW THE LEVEL LINE IN ORDER TO MAINTAIN THE FINISHED GUARDRAIL HEIGHT OF 27¾ INCHES (706mm) FROM THE EDGE OF THE SHOULDER.

ON SITE GRADING IS REQUIRED IF THE TOP OF THE FOUNDATION TUBES OR TOP OF THE GROUND STRUT DOES NOT PROJECT MORE THAN 4 INCHES (100mm) ABOVE THE GROUND LINE.

PAYMENT FOR THE ABOVE WORK SHALL BE MADE AT THE UNIT PRICE BID FOR ITEM 606, ANCHOR ASSEMBLY REBUILT, TYPE E-98, EACH, AND SHALL INCLUDE ALL LABOR, TOOLS, EQUIPMENT AND MATERIALS NECESSARY TO CONSTRUCT A COMPLETE AND FUNCTIONAL ANCHOR ASSEMBLY SYSTEM, INCLUDING ALL RELATED TRANSITIONS, REFLECTIVE SHEETING, HARDWARE, GRADING, EMBANKMENT AND EXCAVATION NOT SEPARATELY SPECIFIED, AS REQUIRED BY THE MANUFACTURER.

ITEM 606 - GUARDRAIL, MISC.: ADJUST HEIGHT, EXISTING GUARDRAIL, TYPE 5

WHERE DESIGNATED ON THE PLAN, THE EXISTING GUARDRAIL, TYPE 5 SHALL BE RAISED OR LOWERED ON THE EXISTING WOOD POSTS AS PER STANDARD DRAWING GR-2.1 SO AS TO OBTAIN THE STANDARD 27.75 IN. HEIGHT. THE RAIL SHALL BE REATTACHED TO THE POSTS USING NEW POST BOLTS. FOR RAIL THAT REQUIRES BEING LOWERED THE POSTS SHALL BE CUT OR TRIMMED AND THE TOPS SHALL BE TREATED.

THE RAIL SHALL BE DISMANTLED ONLY TO THE EXTENT NECESSARY TO FIELD BORE NEW BOLT HOLES IN THE WOOD POSTS, AND TO RECONNECT THE RAIL AND BLOCK TO EXISTING POSTS.

THE EXISTING TYPE "E" ANCHOR ASSEMBLIES THAT ARE TO REMAIN SHALL NOT BE ADJUSTED. THE LAST RAIL ELEMENT SHALL BE TRANSITIONED TO MEET THESE ASSEMBLIES.

PAYMENT FOR ALL OF THE ABOVE SHALL BE AT THE UNIT PRICE BID FOR ITEM 606, GUARDRAIL MISC.: ADJUST HEIGHT, EXISTING GUARDRAIL, TYPE 5, WHICH WILL INCLUDE ALL LABOR, EQUIPMENT, MATERIALS AND INCIDENTALS NECESSARY TO COMPLETE THE ABOVE WORK.

CONNECTING GUARDRAIL TO EXISTING RAIL

IN LOCATIONS WHERE TYPE 5 GUARDRAIL, TERMINAL ASSEMBLIES, ETC. ARE TO BE CONNECTED TO EXISTING RAIL SOME MODIFICATIONS MAY BE REQUIRED, INCLUDING EXTRA POSTS, DRILLING HOLES AND POSSIBLY PARTIAL SECTIONS OF ADDITIONAL RAIL ELEMENTS. THE COST OF THIS ADDITIONAL WORK SHALL BE INCLUDED IN THE UNIT BID PRICE FOR TYPE 5 GUARDRAIL. IF ADDITIONAL PORTIONS OF RAIL ELEMENT ARE USED THE LINEAL MEASUREMENT OF THIS ADDITIONAL PORTION SHALL BE ADDED FOR PAYMENT.

CONNECTION BETWEEN EXISTING AND PROPOSED GUARDRAIL

WHEN IT IS NECESSARY TO SPLICE PROPOSED GUARDRAIL TO EXISTING GUARDRAIL, ONLY THE EXISTING GUARDRAIL SHALL BE CUT, DRILLED, OR PUNCHED. THE CONNECTION SHALL BE MADE USING A "W-BEAM RAIL SPLICE" AS SHOWN ON STANDARD CONSTRUCTION DRAWING GR-1.1. PAYMENT SHALL BE INCLUDED IN THE CONTRACT PRICE FOR THE RESPECTIVE GUARDRAIL ITEMS.

LOCATIONS OF GUARDRAIL

THE GUARDRAIL PROTECTION PROVIDED IN THIS PLAN SHALL BE LOCATED IN THE FIELD TO ASSURE THAT THE INSTALLATION WILL AFFORD THE MAXIMUM PROTECTION FOR TRAFFIC. THIS LOCATION SHALL BE POSITIONED AS FAR AS POSSIBLE FROM THE EDGE OF PAVEMENT WHILE MAINTAINING PROPER GRADE IN FRONT OF GUARDRAIL AS PER STANDARD DRAWINGS AND PLAN DETAILS.

SUGGESTED SEQUENCE OF GUARDRAIL WORK:

1. GUARDRAIL WORK IS TO BEGIN AFTER THE LINEAR GRADING IS COMPLETED AND THE 617 MATERIAL IS PLACED.
2. REMOVE THE GUARDRAIL FOR REUSE.
3. PERFORM THE RESHAPING UNDER GUARDRAIL INCLUDING COMPLETING THE EMBANKMENT, AS PER PLAN.
4. REBUILD/CONSTRUCT THE GUARDRAIL RUN.
5. INSTALL BARRIER REFLECTORS.

REVISED: 11/16/07

CALCULATED KRB CHECKED BAD

GUARDRAIL GENERAL NOTES

ASD-604-0.00
WAY-604-(0.00) (4.19)
WAY-539-8.24

DESIGN FILE: I:\projects\25671\Roadway\sheets\25671GR_GN.dgn
WORKSTATION: ksolay DATE: 11/15/2007

SHEET	LOCATION	202 GUARDRAIL REMOVED FOR REUSE (FT)	202 GUARDRAIL REMOVED FOR REUSE, AS PER PLAN (FT)	202 ANCHOR ASSEMBLY REMOVED, TYPE A (EACH)	202 ANCHOR ASSEMBLY REMOVED, TYPE E (EACH)	202 ANCHOR ASSEMBLY REMOVED FOR REUSE, TYPE E-98 (EACH)	202 BRIDGE TERMINAL ASSEMBLY REMOVED (EACH)	203 EXCAVATION, AS PER PLAN (CU YD)	203 EMBANKMENT, AS PER PLAN (CU YD)	209 RESHAPING UNDER GUARDRAIL, AS PER PLAN (STATION)	606 GUARDRAIL, TYPE 5 (FT)	606 GUARDRAIL, TYPE 5A, USING 9 FOOT POSTS (FT)	606 GUARDRAIL REBUILT, TYPE 5 (FT)	606 ANCHOR ASSEMBLY, TYPE E-98 (EACH)	606 ANCHOR ASSEMBLY, TYPE T (EACH)	606 ANCHOR ASSEMBLY REBUILT, TYPE E-98 (EACH)	606 BRIDGE TERMINAL ASSEMBLY, TYPE TST (EACH)	606 BRIDGE TERMINAL ASSEMBLY, TYPE 4 (EACH)	606 GUARDRAIL, MISC.: ADJUST HEIGHT, EXISTING GUARDRAIL, TYPE 5 (FT)	626 BARRIER REFLECTOR, TYPE A (EACH)
FED/STATE FUNDING																					
13	ASD-604-1.56					3			45	5.50	87.5					3			175	10	
14	ASD-604-1.90								400	13.50	1050			4						15	
15	ASD-604-2.81			4					66	3.00				4						8	
16	ASD-604-2.96	987.5				1			188	20.50			987.5			1			987.5	23	
17	ASD-604-3.29					2			6	2.50						2			100	3	
18	WAY-604-0.01		25			2			158	5.25	50			1		2			250	9	
19	WAY-604-0.65		250			4		119	181	7.63	462.5					4	4			10	
NONFEDERAL FUNDING																					
20	WAY-604-4.92	450		1		2		75	317	6.75			450	1		2				9	
21	WAY-604-6.01		1175			1		75	75	12.50		1175				1				14	
22	WAY-604-6.26					3			110	2.25						3				12	
23	WAY-604-6.75		387.5			2				8.38		687.5				2				9	
24	WAY-604-8.99					4			122	3.63	62.5					4				10	
25	WAY-604-10.35	175	12.5			2			146	4.25	25		175	1		2				9	
26	WAY-604-10.53	125				2			54	4.75	100		125			2			100	8	
27	WAY-604-10.99	275				2		150	87	6.38			275			2			212.5	9	
28	WAY-604-13.07				1	1	2		71	4.00	312.5				1	1		2		12	
29	WAY-604-17.13						2			0.44								2	44	8	
30	WAY-604-18.11		12.5		1					2.25	212.5				1					8	
TOTAL	**FED/STATE**	**987.5**	**275**	**4**		**12**		**119**	**1044**	**57.88**	**1650**		**987.5**	**9**		**12**	**4**		**1512.5**	**78**	
TOTAL	**NONFEDERAL**	**1025**	**1587.5**	**1**	**2**	**19**	**4**	**300**	**982**	**55.58**	**712.5**	**1862.5**	**1025**	**2**	**2**	**19**		**4**	**356.5**	**108**	

CALC'D KRB
CHECKED
BAD

ROADWAY SUB-SUMMARY

ASD-604-0.00 WAY-604-(0.00) (4.19) WAY-539-8.24

REVISED: 11/16/07

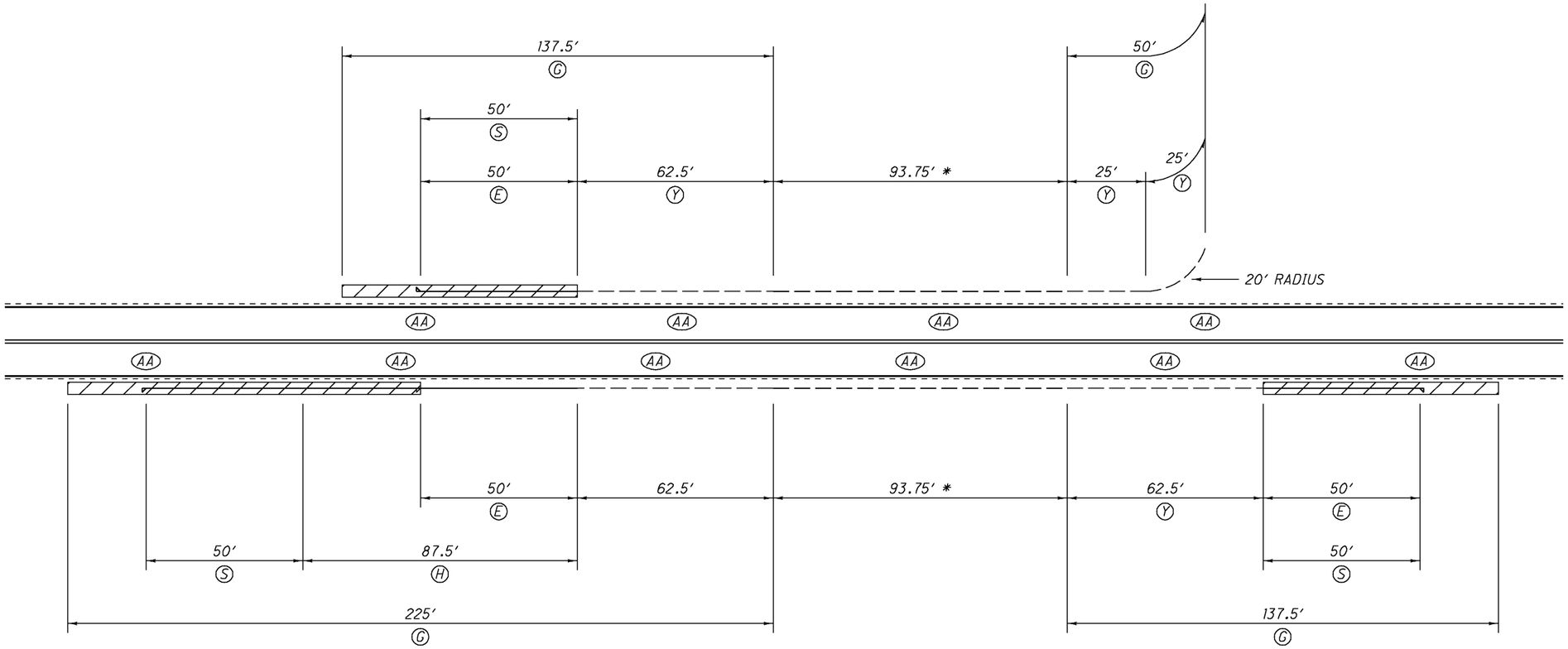

NOTES:
1) * GUARDRAIL WITH TUBULAR BACKUP

LOCATION	ITEM	DESCRIPTION	UNIT	QUANTITY		TOTAL
				LEFT	RIGHT	
E	202	ANCHOR ASSEMBLY REMOVED FOR REUSE, TYPE E-98	EACH	1	2	3
	203	EMBANKMENT, AS PER PLAN	CU YD	17	28	45
G	209	RESHAPING UNDER GUARDRAIL, AS PER PLAN	STATION	1.875	3.625	5.50
H	606	GUARDRAIL, TYPE 5	FT		87.5	87.5
S	606	ANCHOR ASSEMBLY REBUILT, TYPE E-98	EACH	1	2	3
Y	606	GUARDRAIL, MISC.: ADJUST HEIGHT, EXISTING GUARDRAIL, TYPE 5	FT	112.5	62.5	175
AA	626	BARRIER REFLECTOR, TYPE A	EACH	4	6	10

ALL QUANTITIES CARRIED TO ROADWAY SUB-SUMMARY, SHEET 12.

TYPICAL SECTION "TYPE 5"

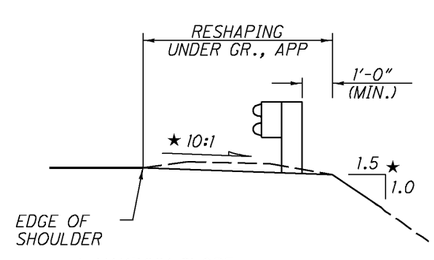

TYPICAL SECTION "TYPE 5"

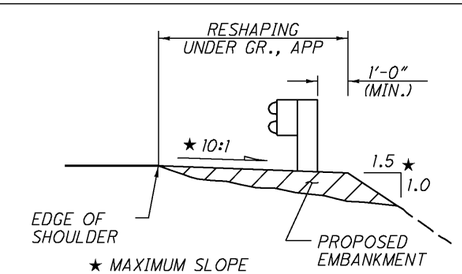

TYPICAL SECTION "E-98"

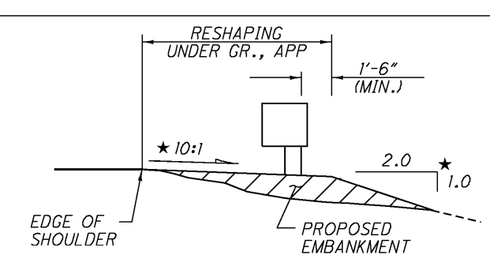

HORIZONTAL SCALE IN FEET
0 10 20 40

CALCULATED KRB
CHECKED BAD

GUARDRAIL DETAIL
ASD 604 - SLM 1.56

ASD-604-0.00
WAY-604-(0.00) (4.19)
WAY-539-8.24

DESIGN FILE: I:\projects\25671\Roadway\sheets\25671GR001.dgn
WORKSTATION: ksalay DATE: 11/9/2007

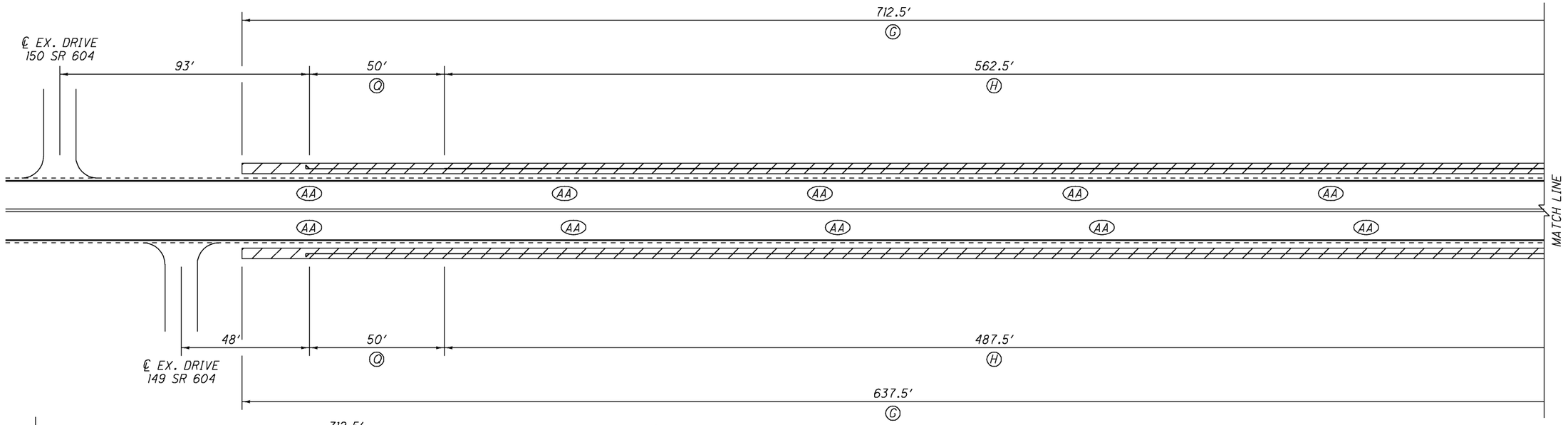

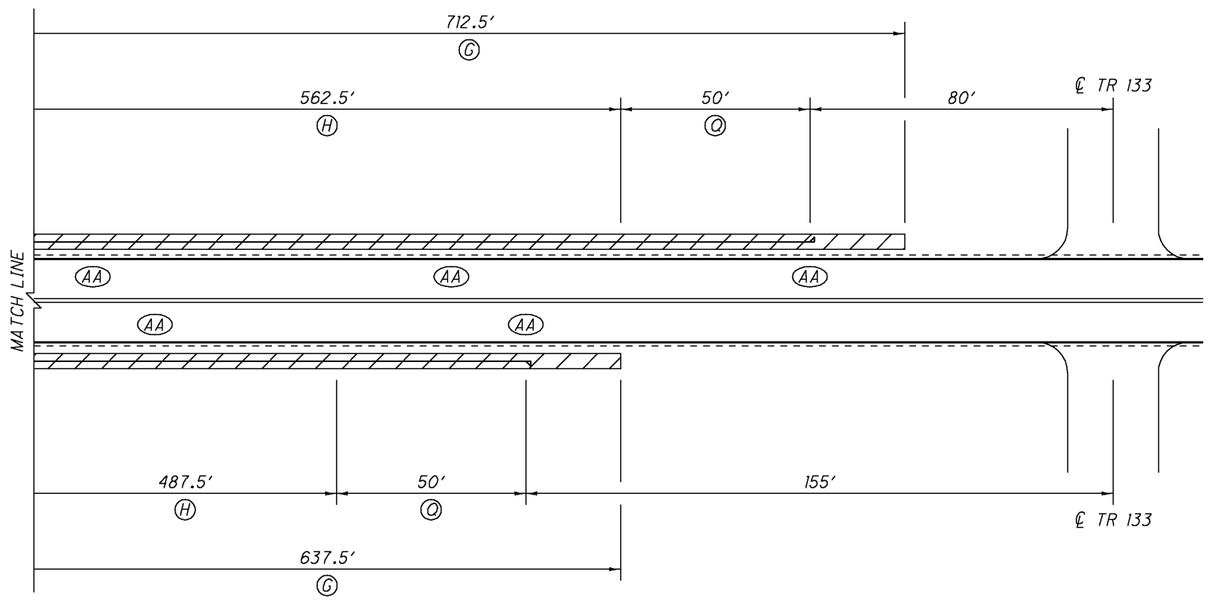

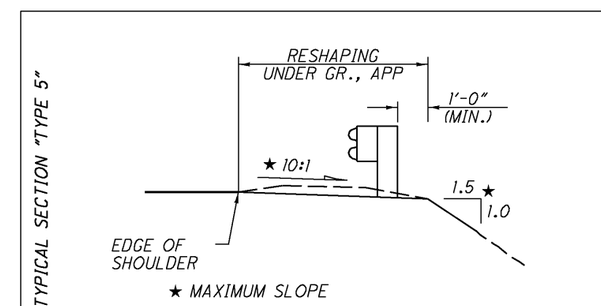

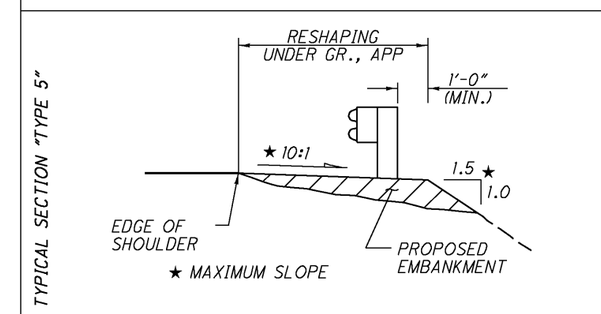

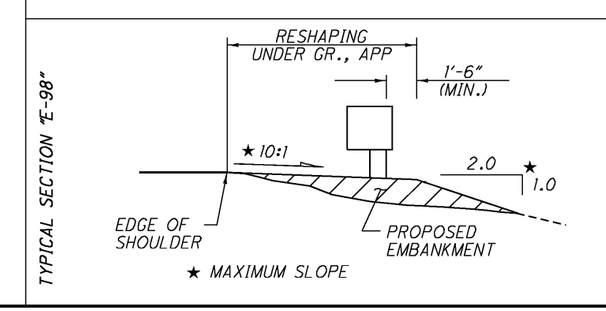

LOCATION	ITEM	DESCRIPTION	UNIT	QUANTITY LEFT	QUANTITY RIGHT	TOTAL
	203	EMBANKMENT, AS PER PLAN	CU YD	211	189	400
G	209	RESHAPING UNDER GUARDRAIL, AS PER PLAN	STATION	7.125	6.375	13.50
H	606	GUARDRAIL, TYPE 5	FT	562.5	487.5	1050
O	606	ANCHOR ASSEMBLY, TYPE E-98	EACH	2	2	4
AA	626	BARRIER REFLECTOR, TYPE A	EACH	8	7	15

ALL QUANTITIES CARRIED TO ROADWAY SUB-SUMMARY, SHEET 12.

HORIZONTAL SCALE IN FEET 0 10 20 40

CALCULATED KRB
CHECKED BAD

GUARDRAIL DETAIL
ASD 604 - SLM 1.90

ASD-604-0.00
WAY-604-(0.00) (4.19)
WAY-539-8.24

DESIGN FILE: I:\projects\25671\Roadway\sheets\25671GR002.dgn
WORKSTATION: ksalay DATE: 11/9/2007

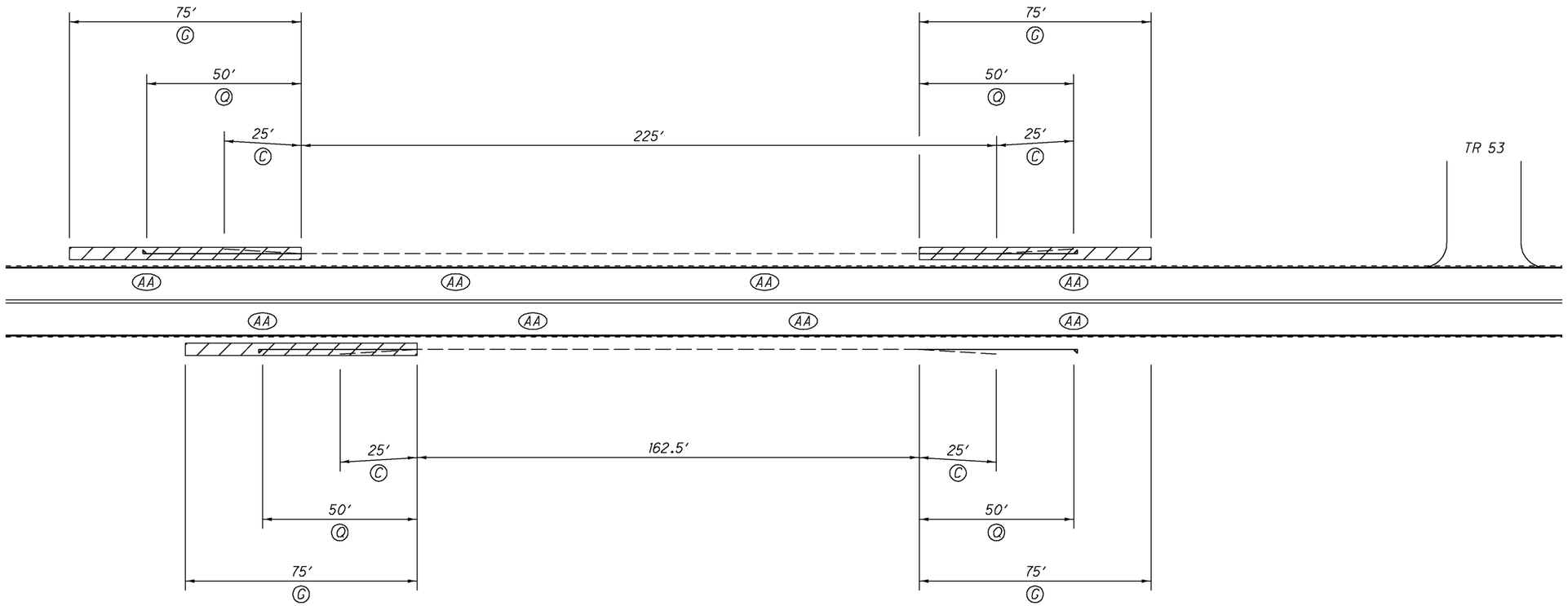

LOCATION	ITEM	DESCRIPTION	UNIT	QUANTITY LEFT	QUANTITY RIGHT	TOTAL
C	202	ANCHOR ASSEMBLY REMOVED, TYPE A	EACH	2	2	4
	203	EMBANKMENT, AS PER PLAN	CU YD	44	22	66
G	209	RESHAPING UNDER GUARDRAIL, AS PER PLAN	STATION	1.50	1.50	3.00
Q	606	ANCHOR ASSEMBLY, TYPE E-98	EACH	2	2	4
AA	626	BARRIER REFLECTOR, TYPE A	EACH	4	4	8

ALL QUANTITIES CARRIED TO ROADWAY SUB-SUMMARY, SHEET 12.

TYPICAL SECTION "E-98"

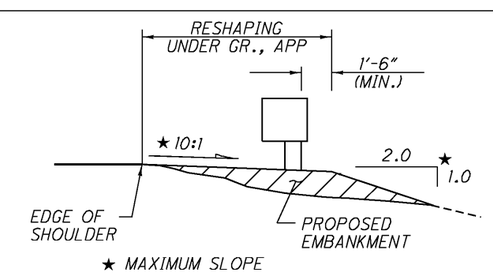

HORIZONTAL SCALE IN FEET
0 10 20 40

CALCULATED KRB
CHECKED BAD

GUARDRAIL DETAIL
ASD 604 - SLM 2.81

ASD-604-0.00
WAY-604-(0.00) (4.19)
WAY-539-8.24

DESIGN FILE: I:\projects\25671\Roadway\sheets\25671GR003.dgn
WORKSTATION: ksalay DATE: 11/9/2007

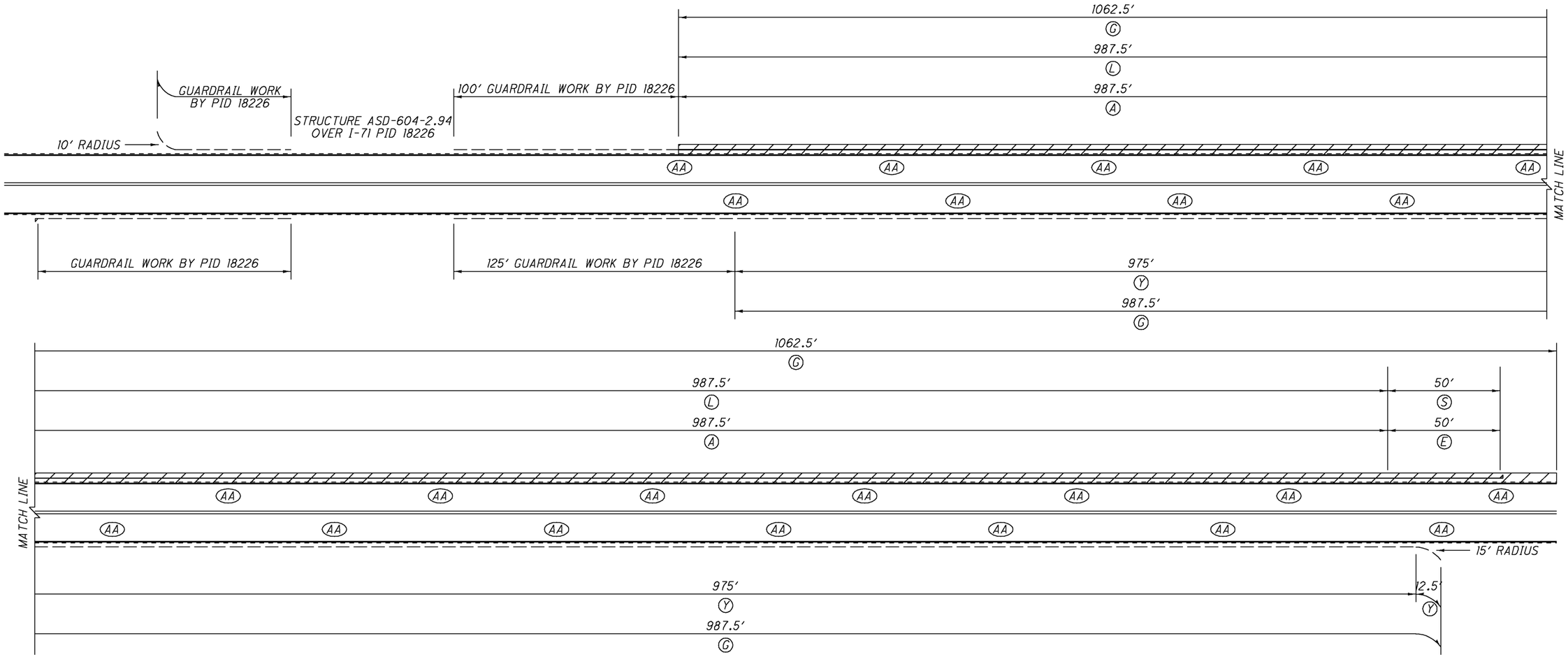

LOCATION	ITEM	DESCRIPTION	UNIT	QUANTITY LEFT	QUANTITY RIGHT	TOTAL
A	202	GUARDRAIL REMOVED FOR REUSE	FT	987.5		987.5
E	202	ANCHOR ASSEMBLY REMOVED FOR REUSE, TYPE E-98	EACH	1		1
	203	EMBANKMENT, AS PER PLAN	CU YD	188		188
G	209	RESHAPING UNDER GUARDRAIL, AS PER PLAN	STATION	10.625	9.875	20.50
L	606	GUARDRAIL REBUILT, TYPE 5	FT	987.5		987.5
S	606	ANCHOR ASSEMBLY REBUILT, TYPE E-98	EACH	1		1
Y	606	GUARDRAIL, MISC.: ADJUST HEIGHT, EXISTING GUARDRAIL, TYPE 5	FT		987.5	987.5
AA	626	BARRIER REFLECTOR, TYPE A	EACH	12	11	23

NOTES:
1) PID 18226 ASD-604-2.94 IS A STRUCTURE WIDENING AND REHABILITATION PROJECT WHICH WILL BE CONSTRUCTED AFTER THIS RESURFACING PROJECT IS COMPLETED. SEE COORDINATION OF CONTRACTORS NOTE.

ALL QUANTITIES CARRIED TO ROADWAY SUB-SUMMARY, SHEET 12.

TYPICAL SECTION "E-98"

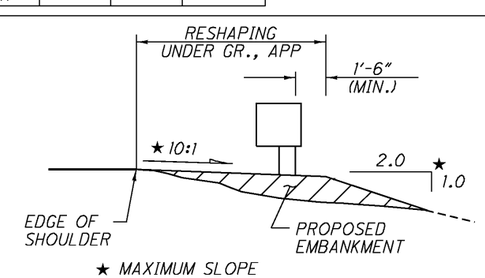

TYPICAL SECTION "TYPE 5"

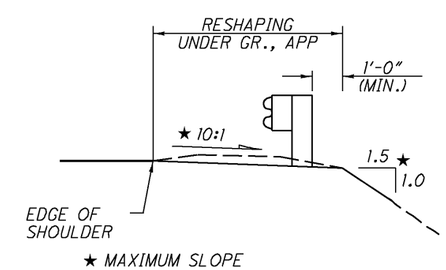

TYPICAL SECTION "TYPE 5"

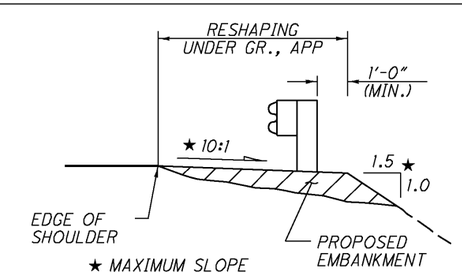

DESIGN FILE: I:\projects\25671\Roadway\sheets\25671GR004.dgn
WORKSTATION: ksalay DATE: 11/9/2007

HORIZONTAL SCALE IN FEET 0 10 20 40

CALCULATED KRB CHECKED BAD

GUARDRAIL DETAIL
ASD 604 - SLM 2.96

ASD-604-0.00
WAY-604-(0.00) (4.19)
WAY-539-8.24

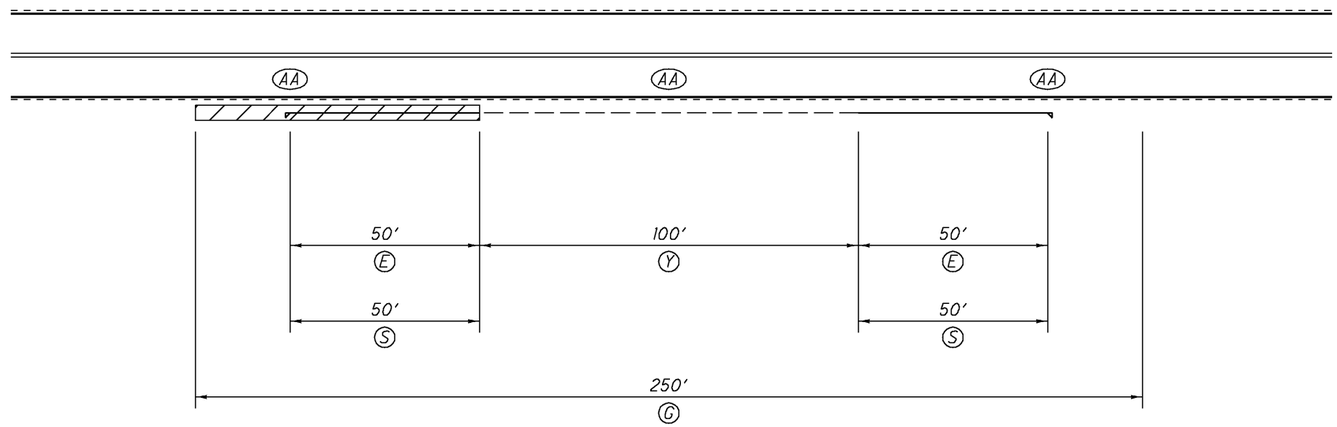

LOCATION	ITEM	DESCRIPTION	UNIT	QUANTITY		TOTAL
				LEFT	RIGHT	
E	202	ANCHOR ASSEMBLY REMOVED FOR REUSE, TYPE E-98	EACH		2	2
	203	EMBANKMENT, AS PER PLAN	CU YD		6	6
G	209	RESHAPING UNDER GUARDRAIL, AS PER PLAN	STATION		2.50	2.50
S	606	ANCHOR ASSEMBLY REBUILT, TYPE E-98	EACH		2	2
Y	606	GUARDRAIL, MISC.: ADJUST HEIGHT, EXISTING GUARDRAIL, TYPE 5	FT		100	100
AA	626	BARRIER REFLECTOR, TYPE A	EACH		3	3

ALL QUANTITIES CARRIED TO ROADWAY SUB-SUMMARY, SHEET 12.

TYPICAL SECTION "TYPE 5"

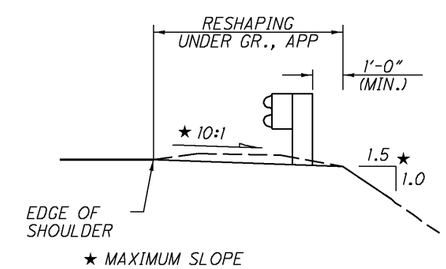

TYPICAL SECTION "E-98"

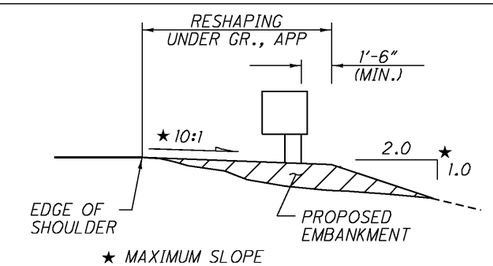

HORIZONTAL SCALE IN FEET
0 10 20 40

CALCULATED KRB
CHECKED BAD

GUARDRAIL DETAIL
ASD 604 - SLM 3.29

ASD-604-0.00
WAY-604-(0.00) (4.19)
WAY-539-8.24

DESIGN FILE: I:\projects\25671\Roadway\sheets\25671GR005.dgn
WORKSTATION: ksalay DATE: 11/9/2007

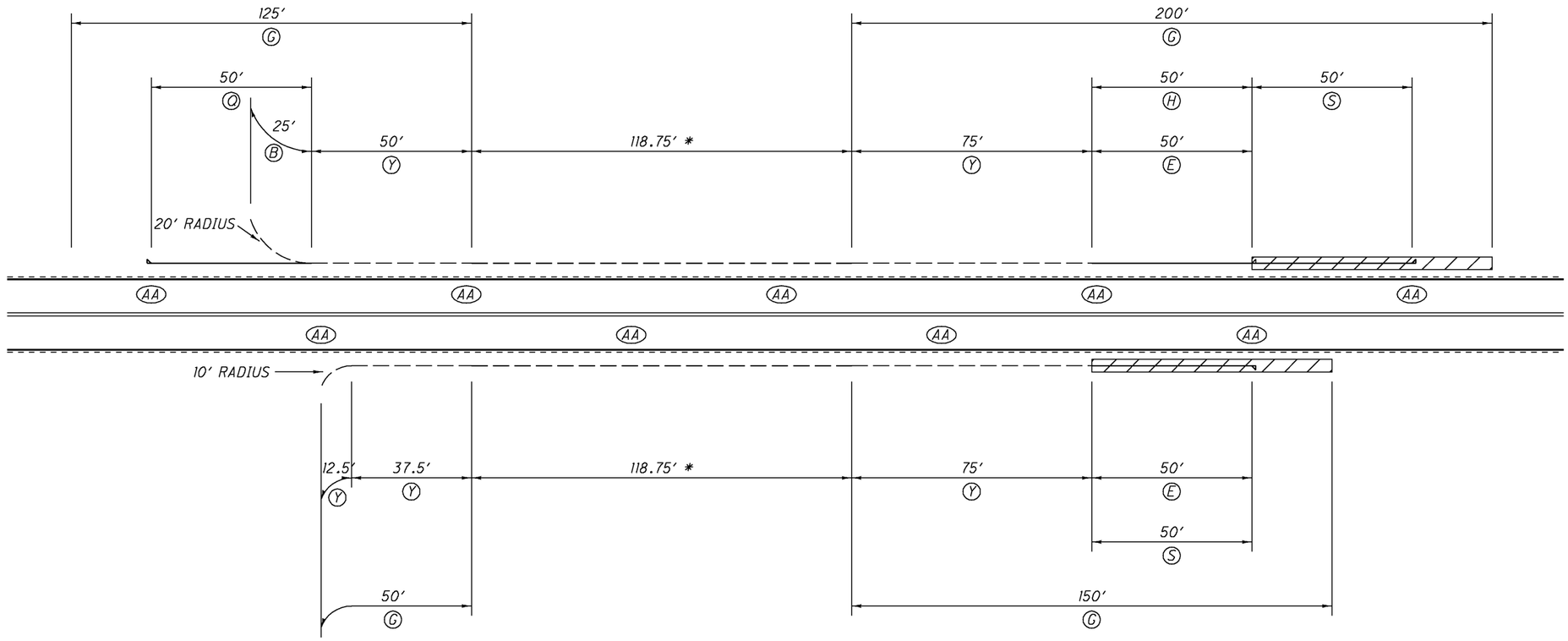

NOTES:
1) * GUARDRAIL WITH TUBULAR BACKUP

LOCATION	ITEM	DESCRIPTION	UNIT	QUANTITY LEFT	QUANTITY RIGHT	TOTAL
B	202	GUARDRAIL REMOVED FOR REUSE, AS PER PLAN	FT	25		25
E	202	ANCHOR ASSEMBLY REMOVED FOR REUSE, TYPE E-98	EACH	1	1	2
	203	EMBANKMENT, AS PER PLAN	CU YD	83	75	158
G	209	RESHAPING UNDER GUARDRAIL, AS PER PLAN	STATION	3.25	2.00	5.25
H	606	GUARDRAIL, TYPE 5	FT	50		50
Q	606	ANCHOR ASSEMBLY, TYPE E-98	EACH	1		1
S	606	ANCHOR ASSEMBLY REBUILT, TYPE E-98	EACH	1	1	2
Y	606	GUARDRAIL, MISC.: ADJUST HEIGHT, EXISTING GUARDRAIL, TYPE 5	FT	125	125	250
AA	626	BARRIER REFLECTOR, TYPE A	EACH	5	4	9

ALL QUANTITIES CARRIED TO ROADWAY SUB-SUMMARY, SHEET 12.

TYPICAL SECTION "TYPE 5"

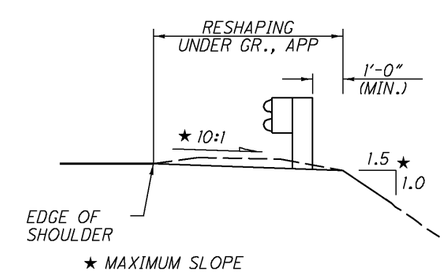

TYPICAL SECTION "E-98"

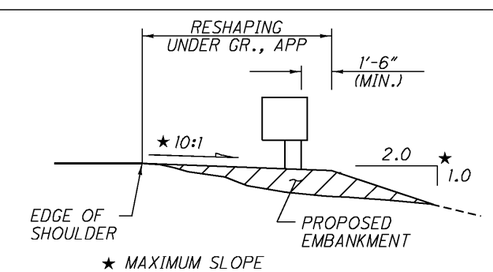

HORIZONTAL SCALE IN FEET
0 10 20 40

CALCULATED KRB
CHECKED BAD

GUARDRAIL DETAIL
WAY 604 - SLM 0.01

ASD-604-0.00
WAY-604-(0.00) (4.19)
WAY-539-8.24

DESIGN FILE: I:\projects\25671\Roadway\sheets\25671GR006.dgn
WORKSTATION: ksalay DATE: 11/9/2007

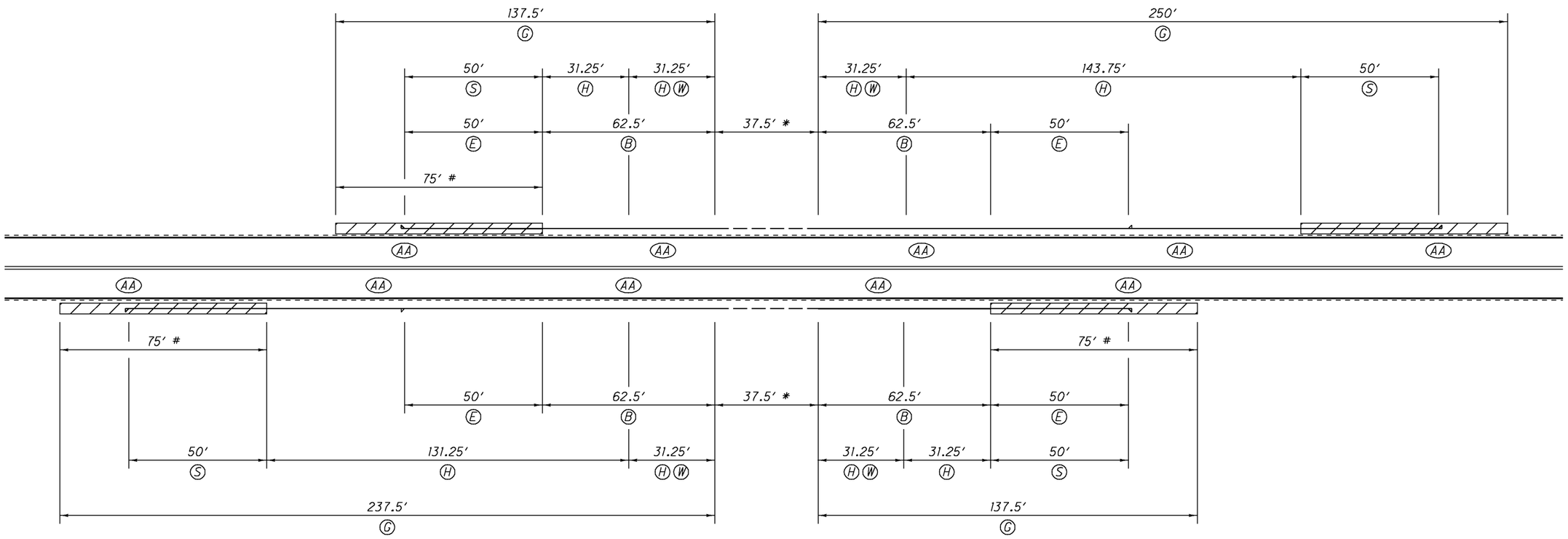

NOTES:
1) * TST RAILING, SEE SHEETS 42-45 FOR FURTHER DETAILS.

LOCATION	ITEM	DESCRIPTION	UNIT	QUANTITY		TOTAL
				LEFT	RIGHT	
B	202	GUARDRAIL REMOVED FOR REUSE, AS PER PLAN	FT	125	125	250
E	202	ANCHOR ASSEMBLY REMOVED FOR REUSE, TYPE E-98	EACH	2	2	4
#	203	EXCAVATION, AS PER PLAN	CU YD	44	75	119
	203	EMBANKMENT, AS PER PLAN	CU YD	114	67	181
G	209	RESHAPING UNDER GUARDRAIL, AS PER PLAN	STATION	3.875	3.75	7.63
H	606	GUARDRAIL, TYPE 5	FT	237.5	225	462.5
S	606	ANCHOR ASSEMBLY REBUILT, TYPE E-98	EACH	2	2	4
W	606	BRIDGE TERMINAL ASSEMBLY, TYPE TST	EACH	2	2	4
AA	626	BARRIER REFLECTOR, TYPE A	EACH	5	5	10

ALL QUANTITIES CARRIED TO ROADWAY SUB-SUMMARY, SHEET 12.

TYPICAL SECTION "TYPE 5"

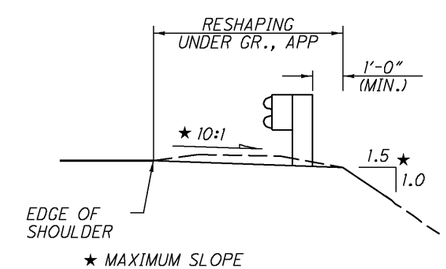

TYPICAL SECTION "E-98"

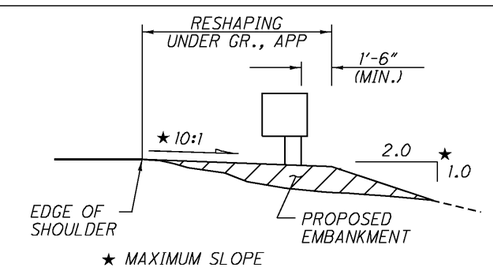

HORIZONTAL SCALE IN FEET
0 10 20 40

CALCULATED KRB
CHECKED BAD

GUARDRAIL DETAIL
WAY 604 - SLM 0.65

ASD-604-0.00
WAY-604-(0.00) (4.19)
WAY-539-8.24

DESIGN FILE: I:\projects\25671\Roadway\sheets\25671GR007.dgn
WORKSTATION: ksalay DATE: 11/9/2007

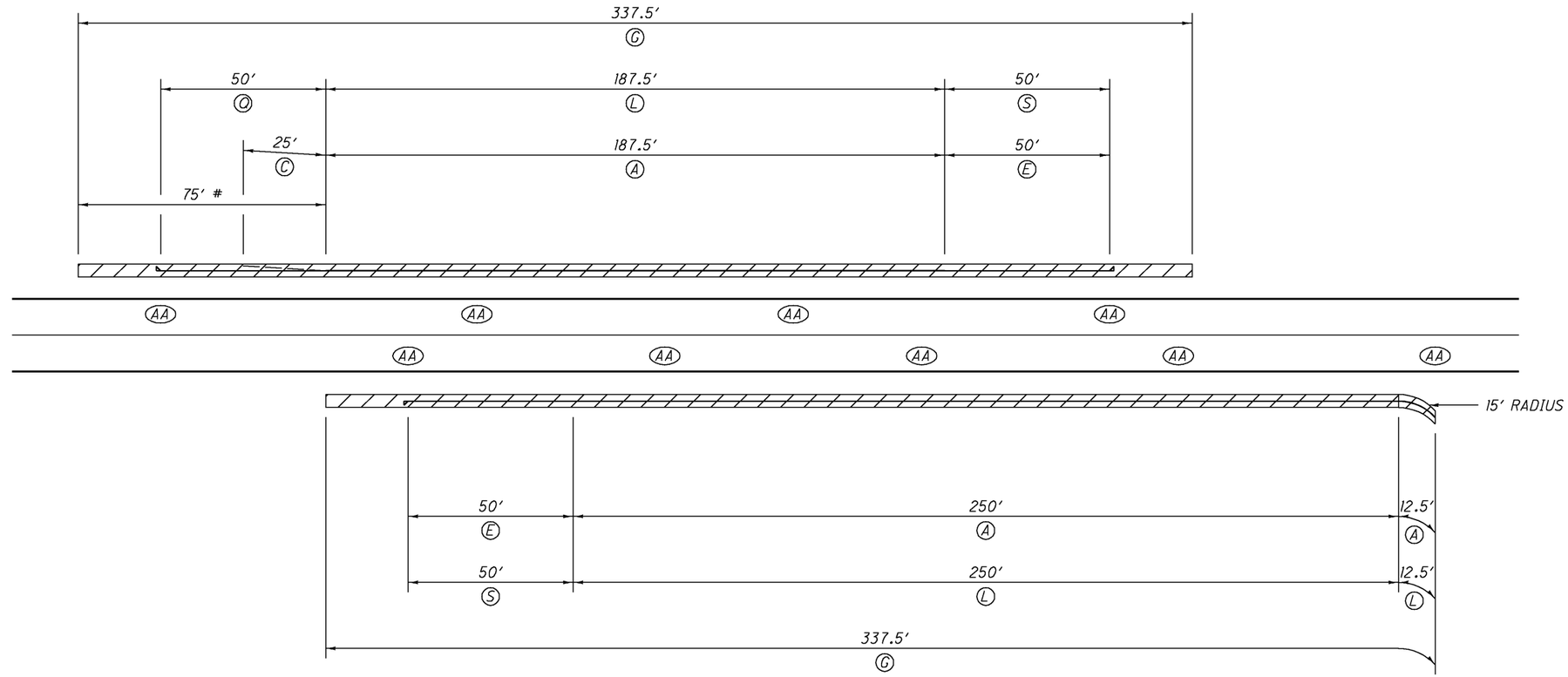

LOCATION	ITEM	DESCRIPTION	UNIT	QUANTITY		TOTAL
				LEFT	RIGHT	
A	202	GUARDRAIL REMOVED FOR REUSE	FT	187.5	262.5	450
C	202	ANCHOR ASSEMBLY REMOVED, TYPE A	EACH	1		1
E	202	ANCHOR ASSEMBLY REMOVED FOR REUSE, TYPE E-98	EACH	1	1	2
#	203	EXCAVATION, AS PER PLAN	CU YD	75		75
	203	EMBANKMENT, AS PER PLAN	CU YD	213	104	317
G	209	RESHAPING UNDER GUARDRAIL, AS PER PLAN	STATION	3.375	3.375	6.75
L	606	GUARDRAIL REBUILT, TYPE 5	FT	187.5	262.5	450
Q	606	ANCHOR ASSEMBLY, TYPE E-98	EACH	1		1
S	606	ANCHOR ASSEMBLY REBUILT, TYPE E-98	EACH	1	1	2
AA	626	BARRIER REFLECTOR, TYPE A	EACH	4	5	9

ALL QUANTITIES CARRIED TO ROADWAY SUB-SUMMARY, SHEET 12.

TYPICAL SECTION "TYPE 5"

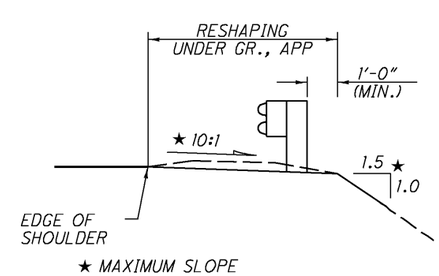

TYPICAL SECTION "TYPE 5"

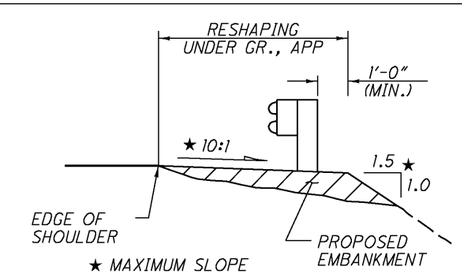

TYPICAL SECTION "E-98"

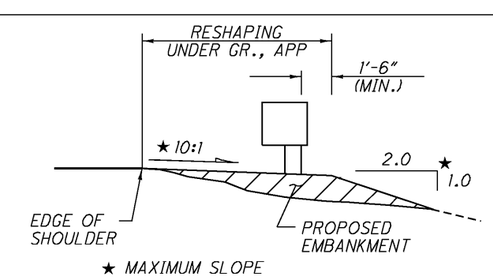

DESIGN FILE: I:\projects\25671\Roadway\sheets\25671GR008.dgn
WORKSTATION: ksalay DATE: 11/9/2007

HORIZONTAL SCALE IN FEET 0 10 20 40

CALCULATED KRB CHECKED BAD

GUARDRAIL DETAIL
WAY 604 - SLM 4.92

ASD-604-0.00
WAY-604-(0.00) (4.19)
WAY-539-8.24

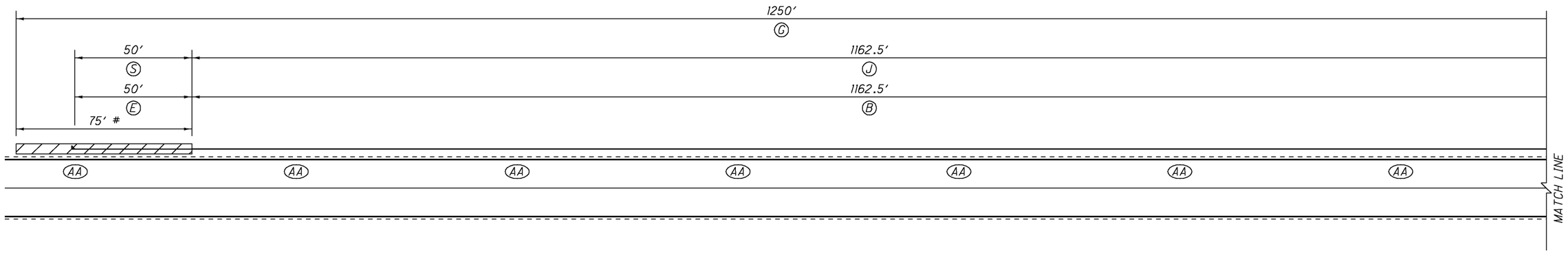

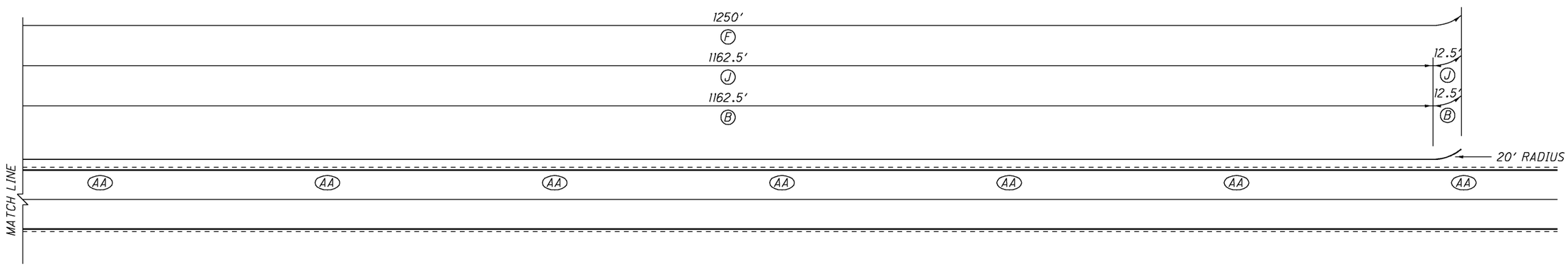

LOCATION	ITEM	DESCRIPTION	UNIT	QUANTITY LEFT	QUANTITY RIGHT	TOTAL
B	202	GUARDRAIL REMOVED FOR REUSE, AS PER PLAN	FT	1175		1175
E	202	ANCHOR ASSEMBLY REMOVED FOR REUSE, TYPE E-98	EACH	1		1
#	203	EXCAVATION, AS PER PLAN	CU YD	75		75
	203	EMBANKMENT, AS PER PLAN	CU YD	75		75
G	209	RESHAPING UNDER GUARDRAIL, AS PER PLAN	STATION	12.50		12.50
J	606	GUARDRAIL, TYPE 5A, USING 9 FOOT POSTS	FT	1175		1175
S	606	ANCHOR ASSEMBLY REBUILT, TYPE E-98	EACH	1		1
AA	626	BARRIER REFLECTOR, TYPE A	EACH	14		14

ALL QUANTITIES CARRIED TO ROADWAY SUB-SUMMARY, SHEET 12.

TYPICAL SECTION "TYPE 5"

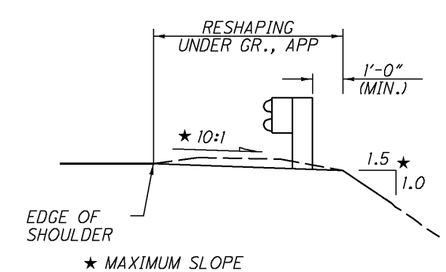

TYPICAL SECTION "E-98"

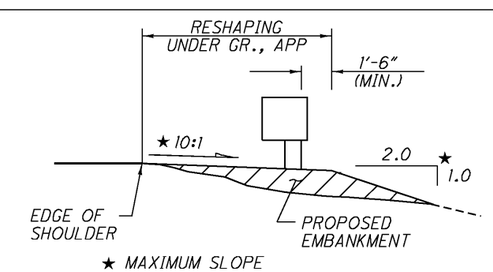

HORIZONTAL SCALE IN FEET 0 10 20 40

CALCULATED KRB
CHECKED BAD

GUARDRAIL DETAIL
WAY 604 - SLM 6.01

ASD-604-0.00
WAY-604-(0.00) (4.19)
WAY-539-8.24

DESIGN FILE: I:\projects\25671\Roadway\sheets\25671GR009.dgn
WORKSTATION: ksalay DATE: 11/9/2007

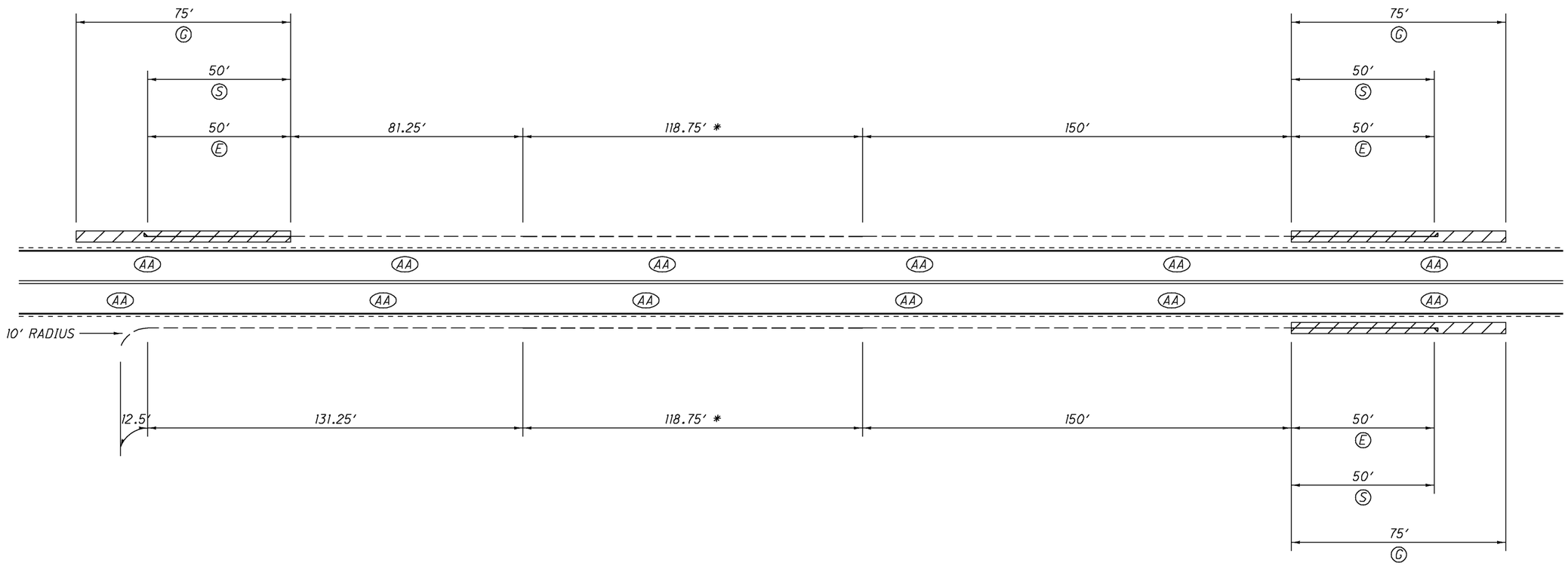

NOTES:
1) * GUARDRAIL WITH TUBULAR BACKUP

LOCATION	ITEM	DESCRIPTION	UNIT	QUANTITY		TOTAL
				LEFT	RIGHT	
E	202	ANCHOR ASSEMBLY REMOVED FOR REUSE, TYPE E-98	EACH	2	1	3
	203	EMBANKMENT, AS PER PLAN	CU YD	43	67	110
G	209	RESHAPING UNDER GUARDRAIL, AS PER PLAN	STATION	1.50	0.75	2.25
S	606	ANCHOR ASSEMBLY REBUILT, TYPE E-98	EACH	2	1	3
AA	626	BARRIER REFLECTOR, TYPE A	EACH	6	6	12

ALL QUANTITIES CARRIED TO ROADWAY SUB-SUMMARY, SHEET 12.

TYPICAL SECTION "E-98"

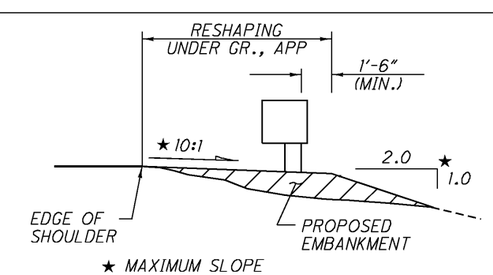

HORIZONTAL SCALE IN FEET
0 10 20 40

CALCULATED KRB
CHECKED BAD

GUARDRAIL DETAIL
WAY 604 - SLM 6.26

ASD-604-0.00
WAY-604-(0.00) (4.19)
WAY-539-8.24

DESIGN FILE: I:\projects\25671\Roadway\sheets\25671GR010.dgn
WORKSTATION: ksalay DATE: 11/9/2007

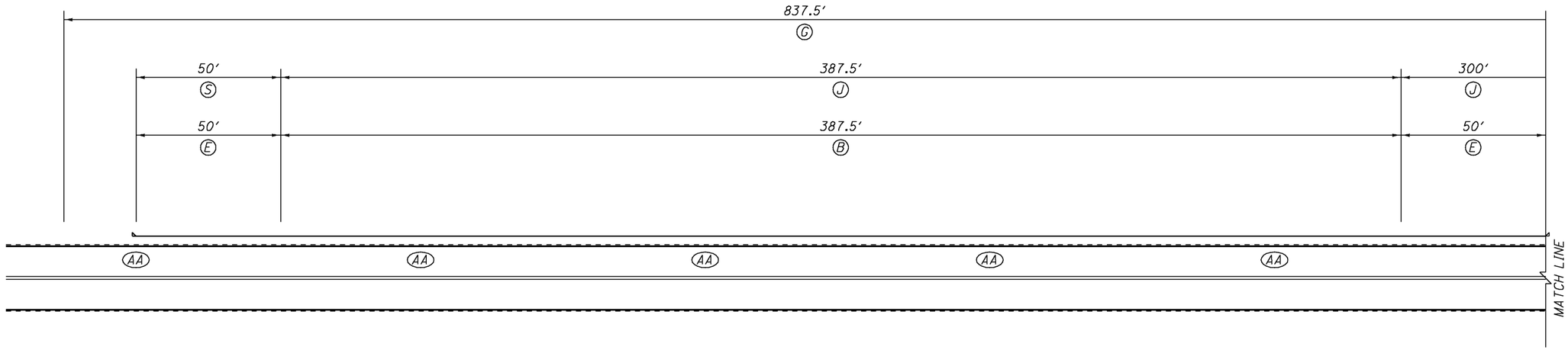

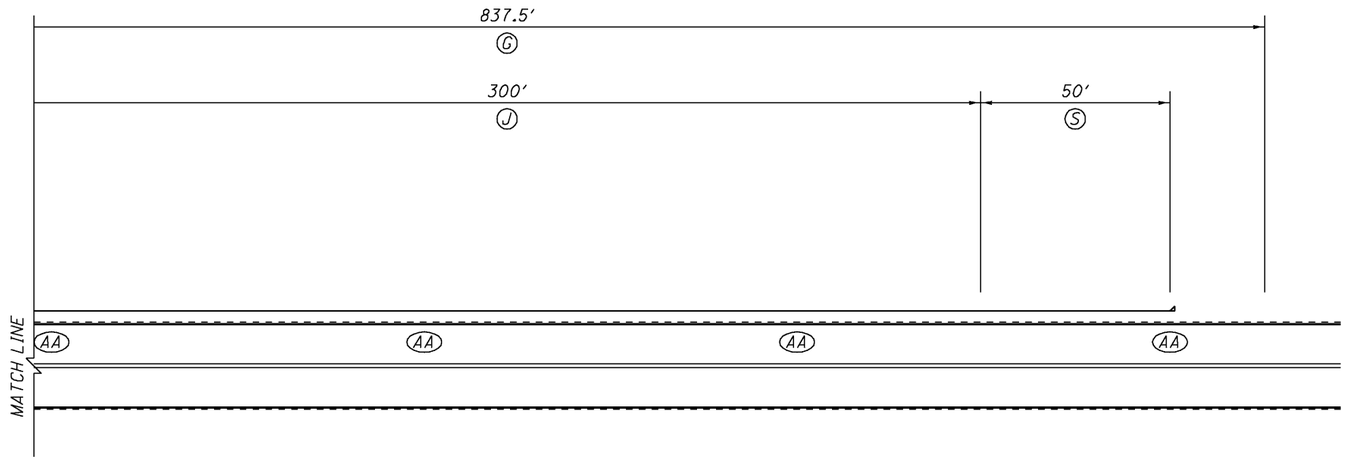

LOCATION	ITEM	DESCRIPTION	UNIT	QUANTITY		TOTAL
				LEFT	RIGHT	
B	202	GUARDRAIL REMOVED FOR REUSE, AS PER PLAN	FT	387.5		387.5
E	202	ANCHOR ASSEMBLY REMOVED FOR REUSE, TYPE E-98	EACH	2		2
G	209	RESHAPING UNDER GUARDRAIL, AS PER PLAN	STATION	8.375		8.38
J	606	GUARDRAIL, TYPE 5A, USING 9 FOOT POSTS	FT	687.5		687.5
S	606	ANCHOR ASSEMBLY REBUILT, TYPE E-98	EACH	2		2
AA	626	BARRIER REFLECTOR, TYPE A	EACH	9		9

ALL QUANTITIES CARRIED TO ROADWAY SUB-SUMMARY, SHEET 12.

TYPICAL SECTION "TYPE 5"

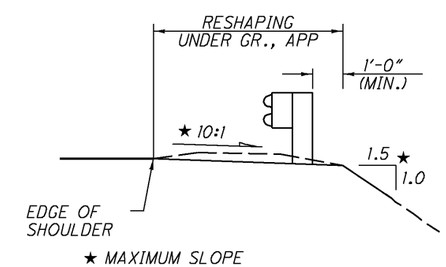

TYPICAL SECTION "E-98"

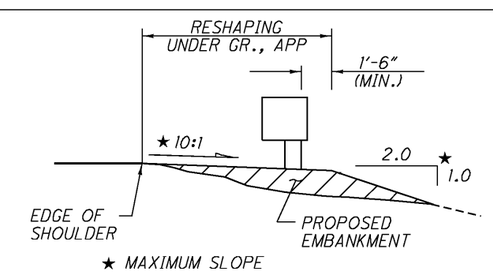

HORIZONTAL SCALE IN FEET
0 10 20 40

CALCULATED KRB
CHECKED BAD

GUARDRAIL DETAIL
WAY 604 - SLM 6.75

ASD-604-0.00
WAY-604-(0.00) (4.19)
WAY-539-8.24

DESIGN FILE: I:\projects\25671\Roadway\sheets\25671GR011.dgn
WORKSTATION: ksalay DATE: 11/9/2007

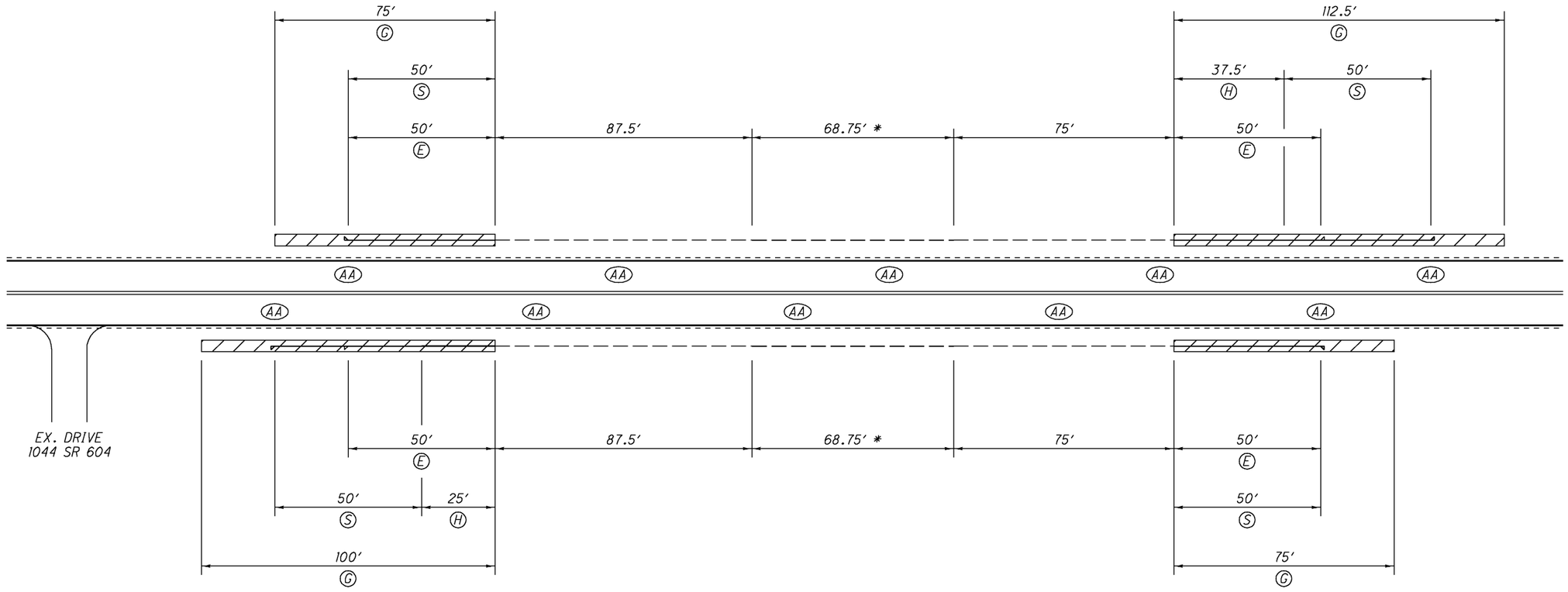

NOTES:
1) * GUARDRAIL WITH TUBULAR BACKUP

LOCATION	ITEM	DESCRIPTION	UNIT	QUANTITY		TOTAL
				LEFT	RIGHT	
E	202	ANCHOR ASSEMBLY REMOVED FOR REUSE, TYPE E-98	EACH	2	2	4
	203	EMBANKMENT, AS PER PLAN	CU YD	78	44	122
G	209	RESHAPING UNDER GUARDRAIL, AS PER PLAN	STATION	1.875	1.75	3.63
H	606	GUARDRAIL, TYPE 5	FT	37.5	25	62.5
S	606	ANCHOR ASSEMBLY REBUILT, TYPE E-98	EACH	2	2	4
AA	626	BARRIER REFLECTOR, TYPE A	EACH	5	5	10

ALL QUANTITIES CARRIED TO ROADWAY SUB-SUMMARY, SHEET 12.

TYPICAL SECTION "TYPE 5"

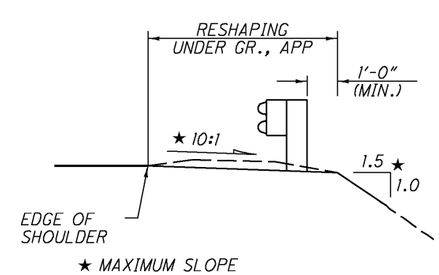

TYPICAL SECTION "TYPE 5"

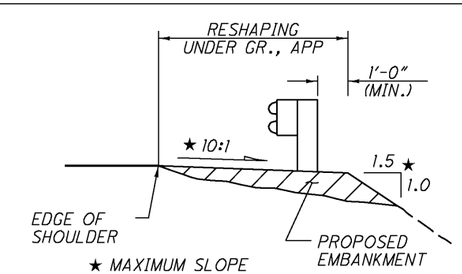

TYPICAL SECTION "E-98"

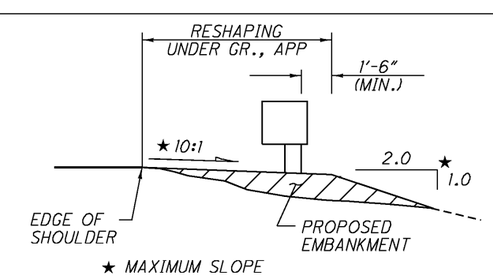

HORIZONTAL SCALE IN FEET
0 10 20 40

CALCULATED KRB
CHECKED BAD

GUARDRAIL DETAIL
WAY 604 - SLM 8.99

ASD-604-0.00
WAY-604-(0.00) (4.19)
WAY-539-8.24

DESIGN FILE: I:\projects\25671\Roadway\sheets\25671GR012.dgn
WORKSTATION: ksalay DATE: 11/9/2007

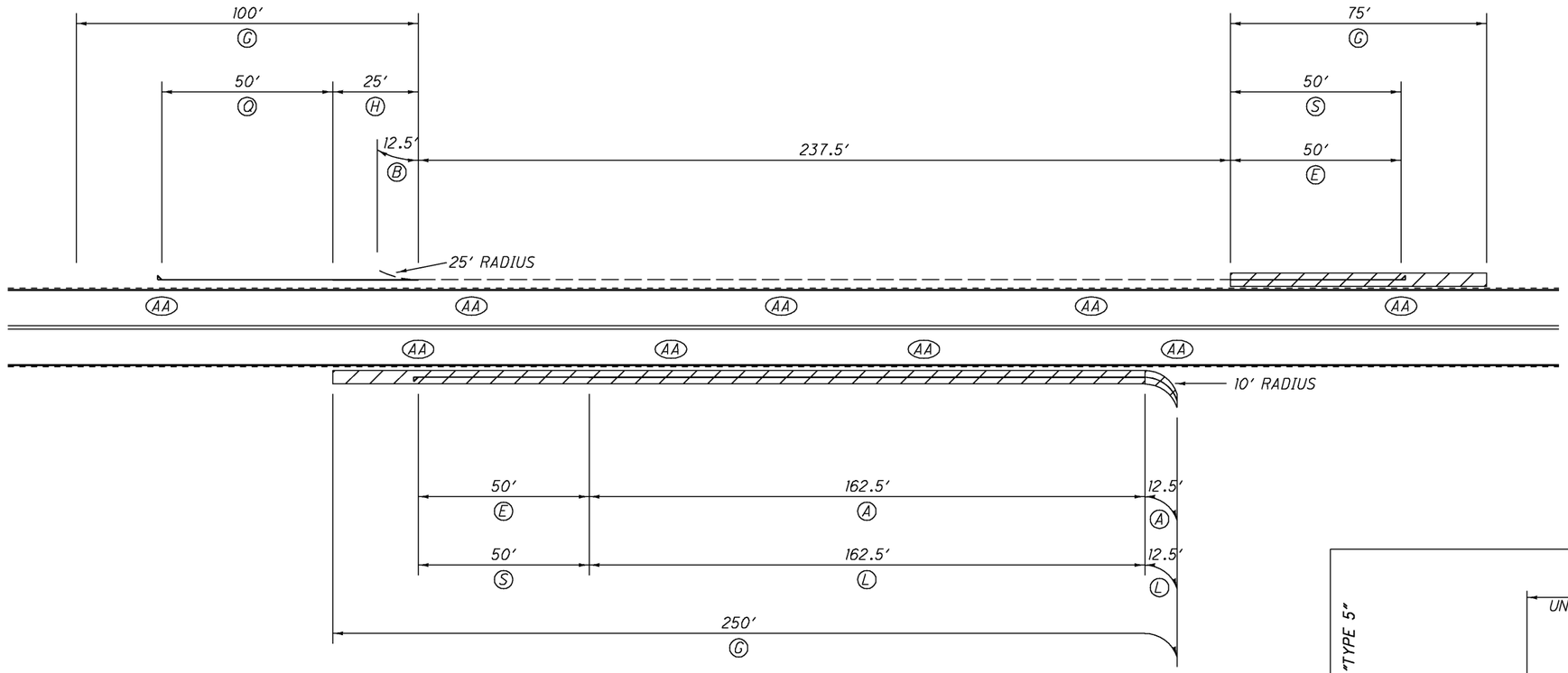

LOCATION	ITEM	DESCRIPTION	UNIT	QUANTITY LEFT	QUANTITY RIGHT	TOTAL
A	202	GUARDRAIL REMOVED FOR REUSE	FT		175	175
B	202	GUARDRAIL REMOVED FOR REUSE, AS PER PLAN	FT	12.5		12.5
E	202	ANCHOR ASSEMBLY REMOVED FOR REUSE, TYPE E-98	EACH	1	1	2
	203	EMBANKMENT, AS PER PLAN	CU YD	14	132	146
G	209	RESHAPING UNDER GUARDRAIL, AS PER PLAN	STATION	1.75	2.50	4.25
H	606	GUARDRAIL, TYPE 5	FT	25		25
L	606	GUARDRAIL REBUILT, TYPE 5	FT		175	175
Q	606	ANCHOR ASSEMBLY, TYPE E-98	EACH	1		1
S	606	ANCHOR ASSEMBLY REBUILT, TYPE E-98	EACH	1	1	2
AA	626	BARRIER REFLECTOR, TYPE A	EACH	5	4	9

ALL QUANTITIES CARRIED TO ROADWAY SUB-SUMMARY, SHEET 12.

TYPICAL SECTION "TYPE 5"

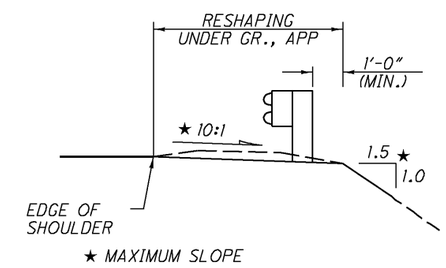

TYPICAL SECTION "TYPE 5"

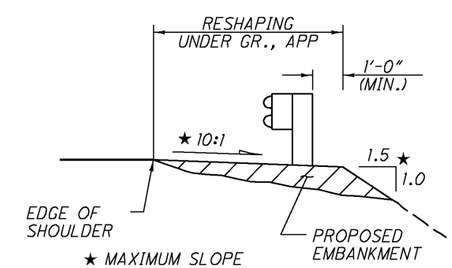

TYPICAL SECTION "E-98"

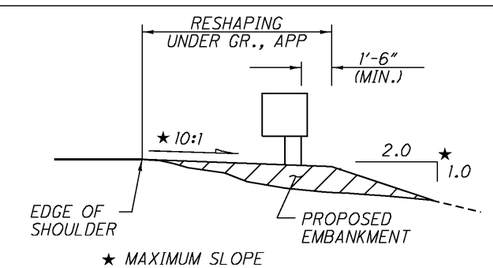

HORIZONTAL SCALE IN FEET 0 10 20 40

CALCULATED KRB
CHECKED BAD

GUARDRAIL DETAIL
WAY 604 - SLM 10.35

ASD-604-0.00
WAY-604-(0.00) (4.19)
WAY-539-8.24

DESIGN FILE: I:\projects\25671\Roadway\sheets\25671GR013.dgn
WORKSTATION: ksalay DATE: 11/9/2007

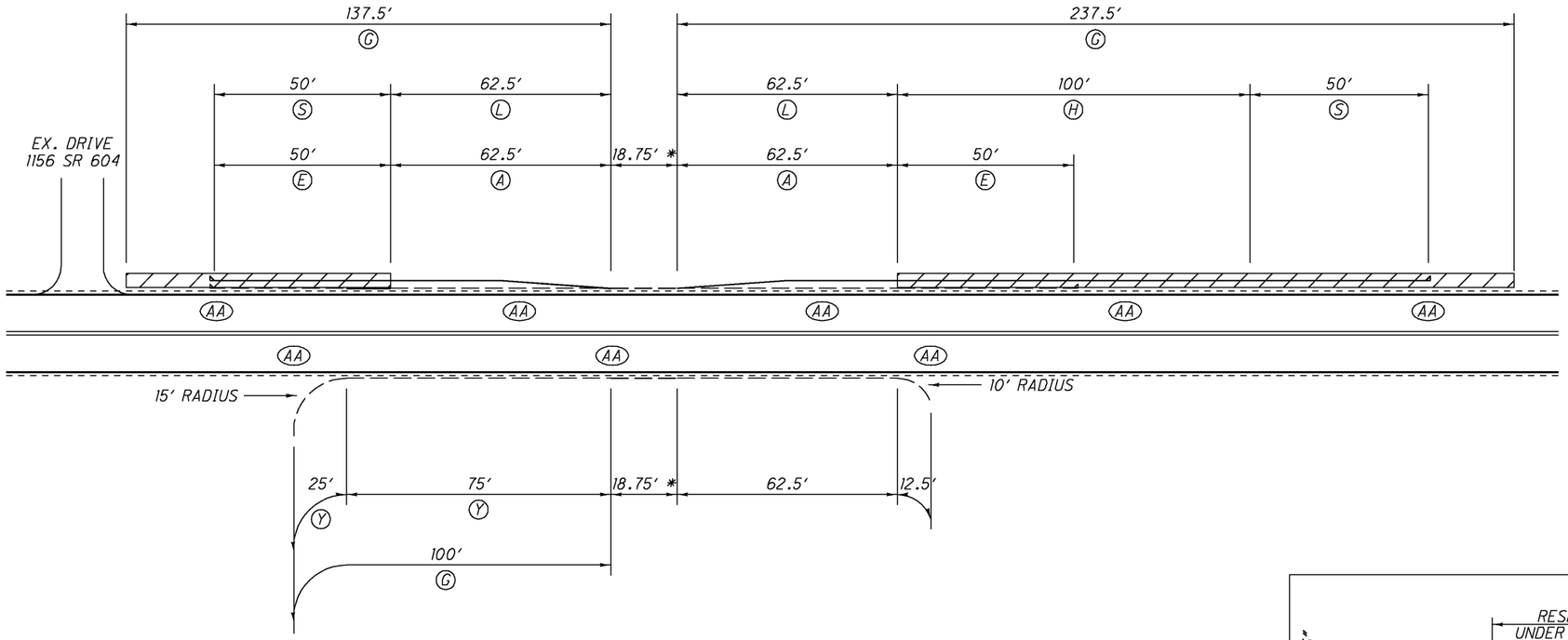

NOTES:
1) * GUARDRAIL WITH TUBULAR BACKUP
2) MINIMUM 4′ OFFSET FROM EDGE LINE FOR GUARDRAIL PLACED ON LEFT

LOCATION	ITEM	DESCRIPTION	UNIT	QUANTITY		TOTAL
				LEFT	RIGHT	
A	202	GUARDRAIL REMOVED FOR REUSE	FT	125		125
E	202	ANCHOR ASSEMBLY REMOVED FOR REUSE, TYPE E-98	EACH	2		2
	203	EMBANKMENT, AS PER PLAN	CU YD	54		54
G	209	RESHAPING UNDER GUARDRAIL, AS PER PLAN	STATION	3.75	1.00	4.75
H	606	GUARDRAIL, TYPE 5	FT	100		100
L	606	GUARDRAIL REBUILT, TYPE 5	FT	125		125
S	606	ANCHOR ASSEMBLY REBUILT, TYPE E-98	EACH	2		2
Y	606	GUARDRAIL, MISC.: ADJUST HEIGHT, EXISTING GUARDRAIL, TYPE 5	FT		100	100
AA	626	BARRIER REFLECTOR, TYPE A	EACH	5	3	8

ALL QUANTITIES CARRIED TO ROADWAY SUB-SUMMARY, SHEET 12.

TYPICAL SECTION "TYPE 5"

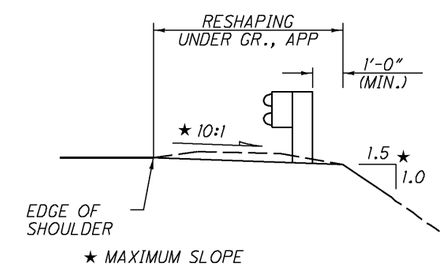

TYPICAL SECTION "TYPE 5"

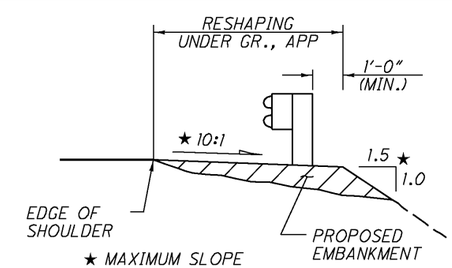

TYPICAL SECTION "E-98"

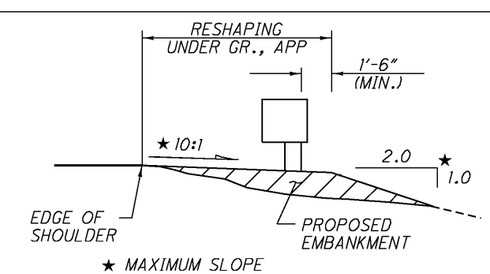

HORIZONTAL SCALE IN FEET 0 10 20 40

CALCULATED KRB
CHECKED BAD

GUARDRAIL DETAIL
WAY 604 - SLM 10.53

ASD-604-0.00
WAY-604-(0.00) (4.19)
WAY-539-8.24

DESIGN FILE: I:\projects\25671\Roadway\sheets\25671GR014.dgn
WORKSTATION: ksalay DATE: 11/9/2007

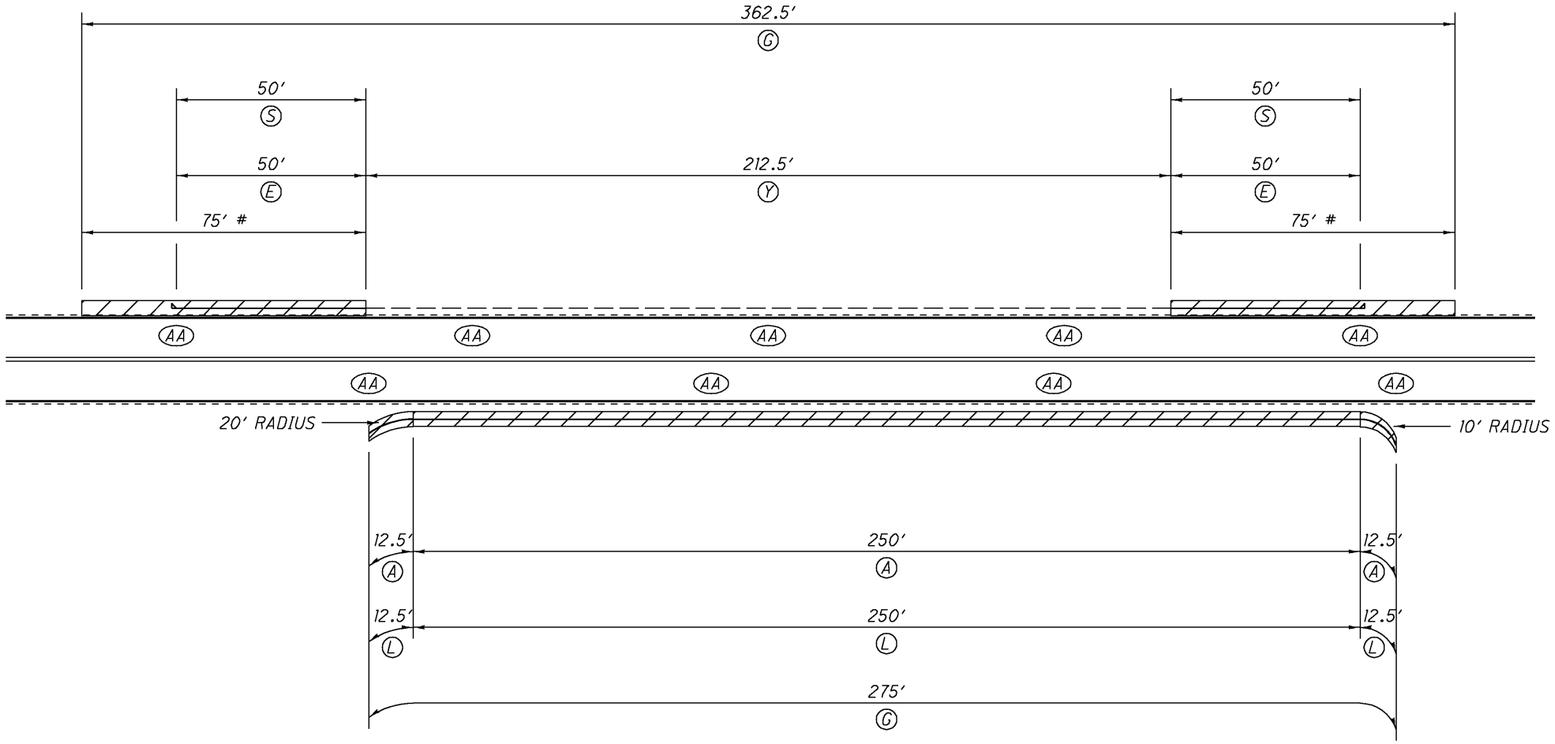

LOCATION	ITEM	DESCRIPTION	UNIT	QUANTITY LEFT	QUANTITY RIGHT	TOTAL
A	202	GUARDRAIL REMOVED FOR REUSE	FT		275	275
E	202	ANCHOR ASSEMBLY REMOVED FOR REUSE, TYPE E-98	EACH	2		2
#	203	EXCAVATION, AS PER PLAN	CU YD	150		150
	203	EMBANKMENT, AS PER PLAN	CU YD	67	20	87
G	209	RESHAPING UNDER GUARDRAIL, AS PER PLAN	STATION	3.625	2.75	6.38
L	606	GUARDRAIL REBUILT, TYPE 5	FT		275	275
S	606	ANCHOR ASSEMBLY REBUILT, TYPE E-98	EACH	2		2
Y	606	GUARDRAIL, MISC.: ADJUST HEIGHT, EXISTING GUARDRAIL, TYPE 5	FT	212.5		212.5
AA	626	BARRIER REFLECTOR, TYPE A	EACH	5	4	9

ALL QUANTITIES CARRIED TO ROADWAY SUB-SUMMARY, SHEET 12.

TYPICAL SECTION "TYPE 5"

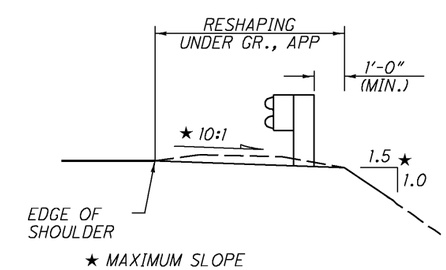

TYPICAL SECTION "TYPE 5"

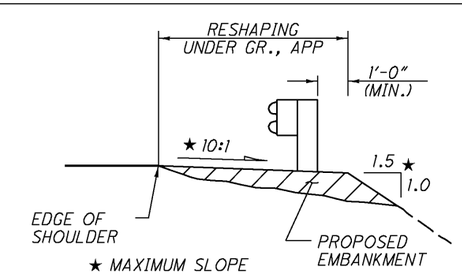

TYPICAL SECTION "E-98"

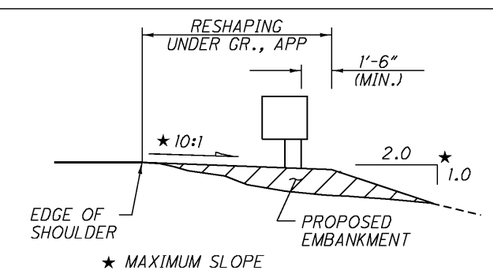

HORIZONTAL SCALE IN FEET 0 10 20 40

CALCULATED KRB
CHECKED BAD

GUARDRAIL DETAIL
WAY 604 - SLM 10.99

ASD-604-0.00
WAY-604-(0.00) (4.19)
WAY-539-8.24

DESIGN FILE: I:\projects\25671\Roadway\sheets\25671GR015.dgn
WORKSTATION: ksalay DATE: 11/9/2007

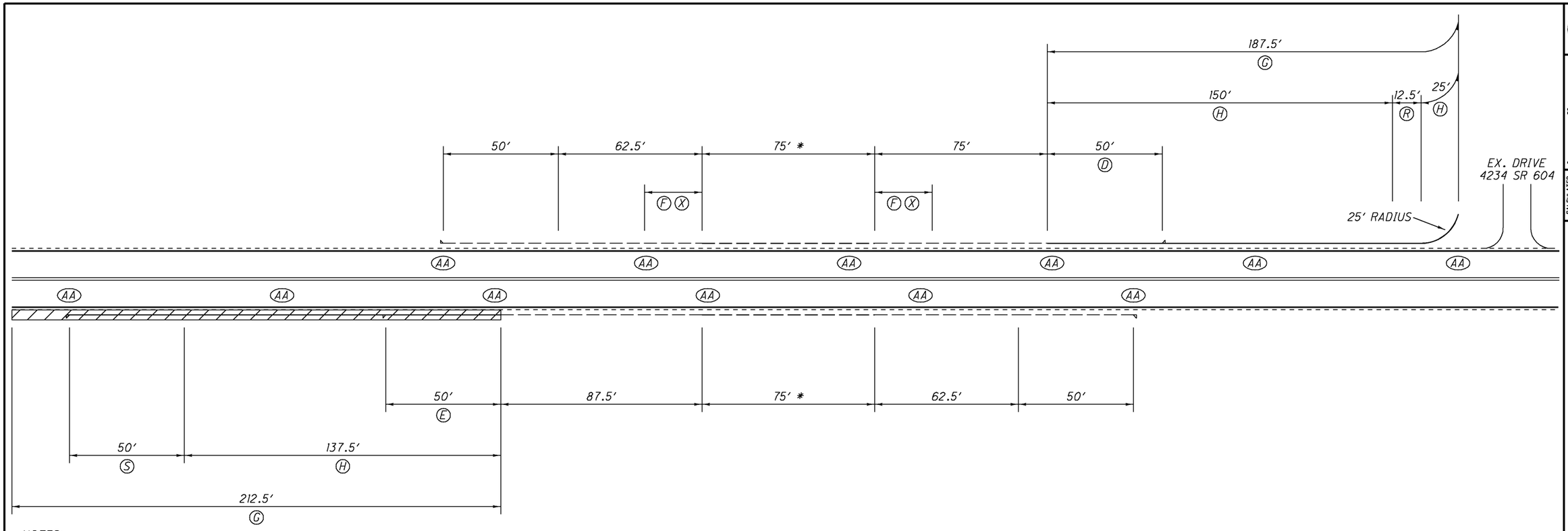

NOTES:
1) * GUARDRAIL WITH TUBULAR BACKUP

LOCATION	ITEM	DESCRIPTION	UNIT	QUANTITY LEFT	QUANTITY RIGHT	TOTAL
D	202	ANCHOR ASSEMBLY REMOVED, TYPE E	EACH	1		1
E	202	ANCHOR ASSEMBLY REMOVED FOR REUSE, TYPE E-98	EACH		1	1
F	202	BRIDGE TERMINAL ASSEMBLY REMOVED	EACH	2		2
	203	EMBANKMENT, AS PER PLAN	CU YD		71	71
G	209	RESHAPING UNDER GUARDRAIL, AS PER PLAN	STATION	1.875	2.125	4.00
H	606	GUARDRAIL, TYPE 5	FT	175	137.5	312.5
R	606	ANCHOR ASSEMBLY, TYPE T	EACH	1		1
S	606	ANCHOR ASSEMBLY REBUILT, TYPE E-98	EACH		1	1
X	606	BRIDGE TERMINAL ASSEMBLY, TYPE 4	EACH	2		2
AA	626	BARRIER REFLECTOR, TYPE A	EACH	6	6	12

ALL QUANTITIES CARRIED TO ROADWAY SUB-SUMMARY, SHEET 12.

TYPICAL SECTION "TYPE 5"

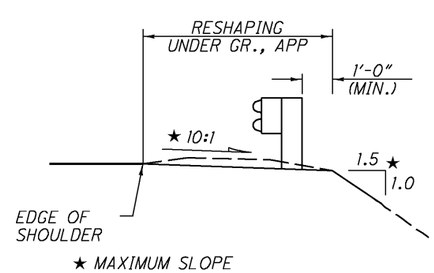

TYPICAL SECTION "TYPE 5"

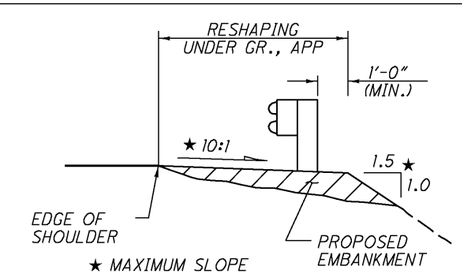

TYPICAL SECTION "E-98"

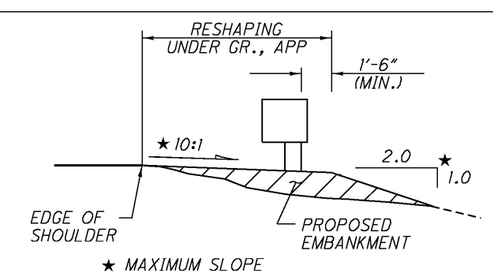

HORIZONTAL SCALE IN FEET 0 10 20 40

CALCULATED KRB
CHECKED BAD

GUARDRAIL DETAIL
WAY 604 - SLM 13.07

ASD-604-0.00
WAY-604-(0.00) (4.19)
WAY-539-8.24

DESIGN FILE: I:\projects\25671\Roadway\sheets\25671GR016.dgn
WORKSTATION: ksalay DATE: 11/9/2007

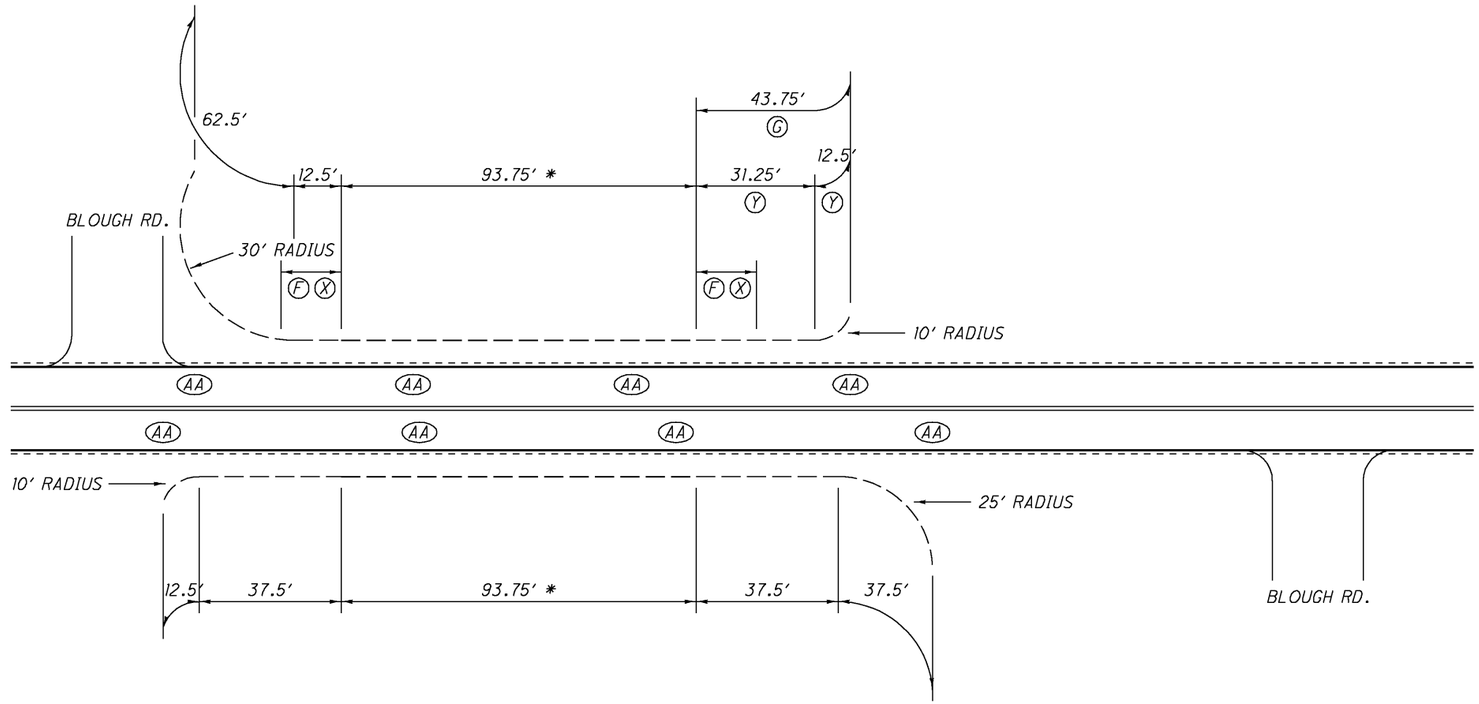

NOTES:
1) * GUARDRAIL WITH TUBULAR BACKUP

LOCATION	ITEM	DESCRIPTION	UNIT	QUANTITY		TOTAL
				LEFT	RIGHT	
F	202	BRIDGE TERMINAL ASSEMBLY REMOVED	EACH	2		2
G	209	RESHAPING UNDER GUARDRAIL, AS PER PLAN	STATION	0.44		0.44
X	606	BRIDGE TERMINAL ASSEMBLY, TYPE 4	EACH	2		2
Y	606	GUARDRAIL, MISC.: ADJUST HEIGHT, EXISTING GUARDRAIL, TYPE 5	FT	44		44
AA	626	BARRIER REFLECTOR, TYPE A	EACH	4	4	8

ALL QUANTITIES CARRIED TO ROADWAY SUB-SUMMARY, SHEET 12.

TYPICAL SECTION "TYPE 5"

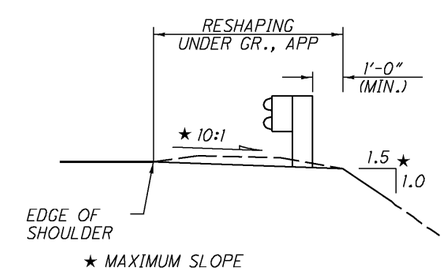

HORIZONTAL SCALE IN FEET
0 10 20 40

CALCULATED KRB
CHECKED BAD

GUARDRAIL DETAIL
WAY 604 - SLM 17.13

ASD-604-0.00
WAY-604-(0.00) (4.19)
WAY-539-8.24

DESIGN FILE: I:\projects\25671\Roadway\sheets\25671GR017.dgn
WORKSTATION: ksalay DATE: 11/9/2007

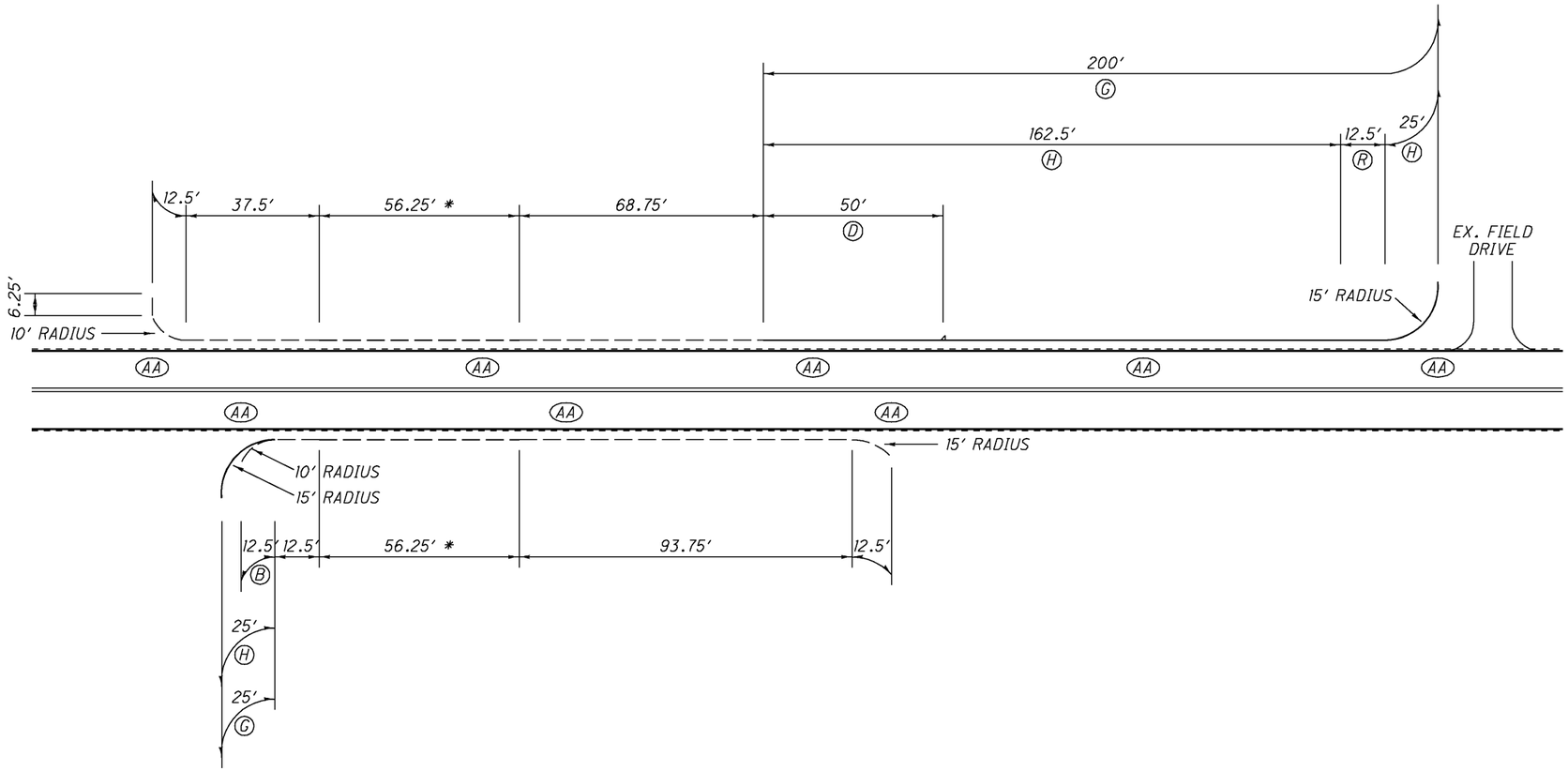

NOTES:
1) * GUARDRAIL WITH TUBULAR BACKUP

LOCATION	ITEM	DESCRIPTION	UNIT	QUANTITY		TOTAL
				LEFT	RIGHT	
B	202	GUARDRAIL REMOVED FOR REUSE, AS PER PLAN	FT		12.5	12.5
D	202	ANCHOR ASSEMBLY REMOVED, TYPE E	EACH	1		1
G	209	RESHAPING UNDER GUARDRAIL, AS PER PLAN	STATION	2.00	0.25	2.25
H	606	GUARDRAIL, TYPE 5	FT	187.5	25	212.5
R	606	ANCHOR ASSEMBLY, TYPE T	EACH	1		1
AA	626	BARRIER REFLECTOR, TYPE A	EACH	5	3	8

ALL QUANTITIES CARRIED TO ROADWAY SUB-SUMMARY, SHEET 12.

TYPICAL SECTION "TYPE 5"

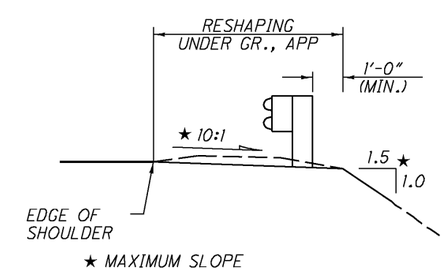

HORIZONTAL SCALE IN FEET
0 10 20 40

CALCULATED KRB
CHECKED BAD

GUARDRAIL DETAIL
WAY 604 - SLM 18.11

ASD-604-0.00
WAY-604-(0.00) (4.19)
WAY-539-8.24

DESIGN FILE: I:\projects\25671\Roadway\sheets\25671GR018.dgn
WORKSTATION: ksalay DATE: 11/9/2007

AUXILIARY & LONG LINE MARKINGS

ROUTE	COUNTY	SLM FROM	SLM TO	HIGHWAY MILES	614 WORK ZONE LANE LINE, CLASS I, 642 PAINT	614 WORK ZONE CENTER LINE, CLASS II, 642 PAINT	614 WORK ZONE CHANNELIZING LINE, CLASS I, 642 PAINT	614 WORK ZONE STOP LINE, CLASS I, 642 PAINT	614 WORK ZONE STOP LINE, CLASS III, 642 PAINT	642, TYPE 1 EDGE LINE TOTAL (PAY QUANTITY) (WHITE)	642, TYPE 1 EDGE LINE TOTAL (PAY QUANTITY) (YELLOW)	642, TYPE 1 LANE LINE	642, TYPE 1 CENTER LINE SOLID LINE EQUIVALENT	642, TYPE 1 CENTER LINE TOTAL (PAY QUANTITY)
					MILE	MILE	FT	FT	FT	MILE	MILE	MILE	MILE	MILE
SR 604	ASHLAND	0.00	3.36	3.36		6.72		74		6.72			2.605	3.36
SR 604	WAYNE	0.00	1.03	1.03		2.06		54		2.06			1.078	1.03
SR 604	WAYNE	1.15	3.83	2.68		5.36		80		5.36			3.796	2.68
SR 539	WAYNE	8.24	8.60	0.36		0.72				0.72			0.720	0.36
SR 604	WAYNE	4.19	4.40	0.21		0.42				0.42			0.420	0.21
SR 604	WAYNE	18.67	20.76	2.09		4.18		152		4.18			4.053	2.09
	SUBTOTAL SR 604 ASHLAND			**3.36**		**6.72**		**74**		**6.72**			**2.605**	**3.36**
	SUBTOTAL SR 604 WAYNE			**6.01**		**12.02**		**286**		**12.02**			**9.346**	**6.01**
	SUBTOTAL SR 539 WAYNE			**0.36**		**0.72**				**0.72**			**0.720**	**0.36**
			TOTAL	**9.73**		**19.46**		**360**		**19.46**			**12.671**	**9.73**

ROUTE	644 AUXILIARY MARKINGS (740.04) CHANNELIZING LINE 8"	STOP LINE 24"	CROSSWALK LINE 12"	TRANSVERSE/ DIAGONAL LINE (WHITE) 24"	TRANSVERSE/ DIAGONAL LINE (YELLOW) 24"	ISLAND MARKING	RAILROAD SYMBOL MARKING	SCHOOL SYMBOL MARKING 72 INCH	SCHOOL SYMBOL MARKING 96 INCH	PARKING LOT STALL MARKING	LANE ARROW LEFT	LANE ARROW RIGHT	LANE ARROW THROUGH	LANE ARROW COMBINATION	WORD ON PAVEMENT "ONLY" 72 INCH	WORD ON PAVEMENT "ONLY" 96 INCH	DOTTED LINE, 4"	HANDICAP SYMBOL MARKING	SPECIAL AIR SPEED ZONE MARKING
	FT	FT	FT	FT	FT	SQ FT	EACH	EACH		FT	EACH				EACH		FT	EACH	EACH
SR 604		196																	
SR 604		76																	
SR 604		89																	
SR 539		123																	
SR 604																			
SR 604		76																	
SUBTOTAL SR 604 ASHLAND		**196**																	
SUBTOTAL SR 604 WAYNE		**241**																	
SUBTOTAL SR 539 WAYNE		**123**																	
TOTAL		**560**																	

RAISED PAVEMENT MARKERS

ROUTE	COUNTY	STATION/SLM FROM	STATION/SLM TO	DETAIL	202 RAISED PAVEMENT MARKER REMOVED	621 RPM	PRISMATIC RETRO-REFLECTOR TYPES ONE-WAY WHITE	TWO-WAY YELLOW / YELLOW	TWO-WAY WHITE / RED	TWO-WAY YELLOW / RED	TWO-WAY BLUE / BLUE	REMARKS
					EACH	EACH	EACH					
SR 604	ASHLAND	0.00	0.20	6	27	27	16	11				STOP APPROACH @ US 42
SR 604	ASHLAND	0.20	3.36	GAP	211	211		211				CONTINUOUS ROUTE TREATMENT
SR 604	WAYNE	0.00	0.83	GAP	57	57		57				CONTINUOUS ROUTE TREATMENT
SR 604	WAYNE	0.83	1.03	6	27	27	16	11				STOP APPROACH @ SR 301 (WEST JUNCTION)
SR 604	WAYNE	1.15	1.47	6/15	30	30	16	14				STOP APPROACH @ SR 301 (EAST JUNCTION) & CURVE
SR 604	WAYNE	1.47	3.66	GAP	144	144		144				CONTINUOUS ROUTE TREATMENT
SR 604	WAYNE	3.66	3.83	8	11	11		11				THRU APPROACH @ SR 539 (W. JCT)
SR 604	WAYNE	4.19	4.36	8	11	11		11				THRU APPROACH @ SR 539 (E. JCT)
SR 604	WAYNE	4.36	4.40	GAP	3	3		3				CONTINUOUS ROUTE TREATMENT
SR 604	WAYNE	18.67	18.84	17	27	27	16	11				STOP APPROACH @ CR 57A
SR 604	WAYNE	18.84	19.48	GAP	40	40		40				CONTINUOUS ROUTE TREATMENT
SR 604	WAYNE	19.48	19.88	6	54	54	32	22				STOP APPROACHES @ SR 57
SR 604	WAYNE	19.88	20.50	GAP	41	41		41				CONTINUOUS ROUTE TREATMENT
SR 604	WAYNE	20.50	20.76	17	27	27	16	11				CURVE & STOP APPROACH @ SR 585
	SUBTOTAL SR 604 ASHLAND				238	238	16	222				
	SUBTOTAL SR 604 WAYNE				472	472	96	376				
			TOTAL		**710**	**710**						

DETAIL	DESCRIPTION
1	MULTILANE UNDIVIDED TYPICAL SPACING
2	TAPERED ACCEL. LANE
3	DECELERATION LANE
4	PARALLEL ACCEL LANE
5	MULTILANE DIVIDED/EXPRESSWAY
6	STOP APPROACH
7	2 LANE APPR. WITH TURN LANE
8	THROUGH APPROACH
9	3 LANE APPR. WITH TURN LANE
10	3 LANE DIVIDED TO 2 LANE TRANSITION
11	3 LANE UNDIVIDED TO 2 LANE TRANSITION
12	TWO LANE NARROW BRIDGE
13	TWO WAY LEFT TURN LANE
14	ONE LANE BRIDGE
15	HORIZONTAL CURVE
16	HORIZONTAL CURVE ALT.
17	STOP APPROACH ALT.
18	FIRE HYDRANT
GAP	CENTER LINE AT 80 FT. TYP.

NOTES

1) THE LANES SHALL BE STRIPED AT 11'

2) WORK ZONE STOP LINES SHALL BE INSTALLED AT THE FOLLOWING LOCATIONS:
- SR 604 / US 42 INTERSECTION
- SR 604 / SR 301 INTERSECTION
- SR 604 / SR 83 INTERSECTION
- SR 604 / SR 3 INTERSECTION
- SR 604 / CR 57A INTERSECTION
- SR 604 / SR 57 INTERSECTION
- SR 604 / SR 585 INTERSECTION

3) FOR ALL WORK ZONE MARKINGS, THE 642 PAINT USED SHALL BE TYPE 1.

REVISED: 11/16/07

CALC BY KRB
CHKD BY BAD

FED/STATE - PAVEMENT MARKING / RPM SUB-SUMMARY

ASD-604-0.00 WAY-604-(0.00) (4.19)
WAY-539-8.24

AUXILIARY & LONG LINE MARKINGS

ROUTE	COUNTY	SLM FROM	SLM TO	HIGHWAY MILES	614 WORK ZONE LANE LINE, CLASS I, 642 PAINT	614 WORK ZONE CENTER LINE, CLASS II, 642 PAINT	614 WORK ZONE CHANNELIZING LINE, CLASS I, 642 PAINT	614 WORK ZONE STOP LINE, CLASS I, 642 PAINT	614 WORK ZONE STOP LINE, CLASS III, 642 PAINT	642, TYPE 1 EDGE LINE TOTAL (PAY QUANTITY) (WHITE)	642, TYPE 1 EDGE LINE TOTAL (PAY QUANTITY) (YELLOW)	642, TYPE 1 LANE LINE	642, TYPE 1 CENTER LINE SOLID LINE EQUIVALENT	642, TYPE 1 CENTER LINE TOTAL (PAY QUANTITY)
					MILE	MILE	FT	FT	FT	MILE	MILE	MILE	MILE	MILE
SR 604	WAYNE	4.40	7.61	3.21		6.42		86		6.42			5.736	3.21
SR 604	WAYNE	7.61	18.67	11.06		33.18		357		22.12			11.962	11.06
	SUBTOTAL SR 604 WAYNE			14.27		39.60		443		28.54			17.698	14.27
			TOTAL	14.27		39.60		443		28.54			17.698	14.27

ROUTE	644 AUXILIARY MARKINGS (740.04) CHANNELIZING LINE 8"	STOP LINE 24"	CROSSWALK LINE 12"	TRANSVERSE/ DIAGONAL LINE (WHITE) 24"	TRANSVERSE/ DIAGONAL LINE (YELLOW) 24"	ISLAND MARKING	RAILROAD SYMBOL MARKING	SCHOOL SYMBOL MARKING 72 INCH	SCHOOL SYMBOL MARKING 96 INCH	PARKING LOT STALL MARKING	LANE ARROW LEFT	LANE ARROW RIGHT	LANE ARROW THROUGH	LANE ARROW COMBINATION	WORD ON PAVEMENT "ONLY" 72 INCH	WORD ON PAVEMENT "ONLY" 96 INCH	DOTTED LINE, 4"	HANDICAP SYMBOL MARKING	SPECIAL AIR SPEED ZONE MARKING
	FT	FT	FT	FT	FT	SQ FT	EACH	EACH		FT	EACH				EACH		FT	EACH	EACH
SR 604		104																	
SR 604		560																	
SUBTOTAL SR 604 WAYNE		664																	
TOTAL		664																	

RAISED PAVEMENT MARKERS

ROUTE	COUNTY	STATION/SLM FROM	STATION/SLM TO	DETAIL	202 RAISED PAVEMENT MARKER REMOVED	621 RPM	PRISMATIC RETRO-REFLECTOR TYPES ONE-WAY WHITE	TWO-WAY YELLOW / YELLOW	TWO-WAY WHITE / RED	TWO-WAY YELLOW / RED	TWO-WAY BLUE / BLUE	REMARKS
					EACH	EACH	EACH					
SR 604	WAYNE	4.40	4.45	GAP	3	3		3				CONTINUOUS ROUTE TREATMENT
SR 604	WAYNE	4.45	4.73	16	53	53		53				REVERSE CURVE @ 20 FT. SPACINGS
SR 604	WAYNE	4.73	5.89	GAP	77	77		77				CONTINUOUS ROUTE TREATMENT
SR 604	WAYNE	5.89	6.23	16	54	54		54				REVERSE CURVE @ 20 FT. SPACINGS
SR 604	WAYNE	6.23	6.35	15	7	7		7				CONTINUOUS ROUTE TREATMENT
SR 604	WAYNE	6.35	6.75	16	60	60		60				4-CURVES (WINDING ROAD)
SR 604	WAYNE	6.75	7.41	GAP	45	45		45				CONTINUOUS ROUTE TREATMENT
SR 604	WAYNE	7.41	7.61	6	27	27	16	11				STOP APPROACH @ SR 83 (W. JCT)
SR 604	WAYNE	7.61	7.81	6	27	27	16	11				STOP APPROACH @ SR 83 (E. JCT)
SR 604	WAYNE	7.81	12.20	GAP	286	286		286				CONTINUOUS ROUTE TREATMENT
SR 604	WAYNE	12.20	12.60	6	54	54	32	22				STOP APPROACHES @ SR 3
SR 604	WAYNE	12.60	18.50	GAP	381	381		381				CONTINUOUS ROUTE TREATMENT
SR 604	WAYNE	18.50	18.67	17	27	27	16	11				STOP APPROACH @ CR 57A
	SUBTOTAL SR 604 WAYNE				1101	1101	80	1021				
			TOTAL		1,101	1,101						

DETAIL	DESCRIPTION
1	MULTILANE UNDIVIDED TYPICAL SPACING
2	TAPERED ACCEL. LANE
3	DECELERATION LANE
4	PARALLEL ACCEL LANE
5	MULTILANE DIVIDED/EXPRESSWAY
6	STOP APPROACH
7	2 LANE APPR. WITH TURN LANE
8	THROUGH APPROACH
9	3 LANE APPR. WITH TURN LANE
10	3 LANE DIVIDED TO 2 LANE TRANSITION
11	3 LANE UNDIVIDED TO 2 LANE TRANSITION
12	TWO LANE NARROW BRIDGE
13	TWO WAY LEFT TURN LANE
14	ONE LANE BRIDGE
15	HORIZONTAL CURVE
16	HORIZONTAL CURVE ALT.
17	STOP APPROACH ALT.
18	FIRE HYDRANT
GAP	CENTER LINE AT 80 FT. TYP.

NOTES

1) THE LANES SHALL BE STRIPED AT 11'

2) WORK ZONE STOP LINES SHALL BE INSTALLED AT THE FOLLOWING LOCATIONS:
- SR 604 / US 42 INTERSECTION
- SR 604 / SR 301 INTERSECTION
- SR 604 / SR 83 INTERSECTION
- SR 604 / SR 3 INTERSECTION
- SR 604 / CR 57A INTERSECTION
- SR 604 / SR 57 INTERSECTION
- SR 604 / SR 585 INTERSECTION

3) FOR ALL WORK ZONE MARKINGS, THE 642 PAINT USED SHALL BE TYPE 1.

CALC BY KRB
CHKD BY BAD

NONFEDERAL - PAVEMENT MARKING / RPM SUB-SUMMARY

ASD-604-0.00 WAY-604-(0.00) (4.19)
WAY-539-8.24

REVISED: 11/16/07

ASD-604-0156 SFN 0306118 FED/STATE

ITEM	EXTENSION	QUANTITY	UNIT	DESCRIPTION	REFERENCE SHEET
254	01000	296	SQ YD	PAVEMENT PLANING, ASPHALT CONCRETE	
407	10000	37	GALLON	TACK COAT	
407	14000	14	GALLON	TACK COAT FOR INTERMEDIATE COURSE	
442	00201	16	CU YD	ASPHALT CONCRETE SURFACE COURSE, 9.5MM, TYPE A (446), AS PER PLAN	3
442	20101	10	CU YD	ASPHALT CONCRETE INTERMEDIATE COURSE, 9.5MM, TYPE A (448), AS PER PLAN	4
512	10100	88	SQ YD	SEALING OF CONCRETE SURFACES (EPOXY-URETHANE)	
SPECIAL	51631300	70	FT	POLYMER MODIFIED ASPHALT EXPANSION JOINT SYSTEM	40

WAY-604-0001 SFN 8506302 FED/STATE

ITEM	EXTENSION	QUANTITY	UNIT	DESCRIPTION	REFERENCE SHEET
503	11100	LUMP		COFFERDAMS, CRIBS AND SHEETING	
509	10000	1908	POUND	EPOXY COATED REINFORCING STEEL	
511	43201	9.2	CU YD	CLASS C CONCRETE, PIER, AS PER PLAN	36

WAY-604-0065 SFN 8506337 FED/STATE

ITEM	EXTENSION	QUANTITY	UNIT	DESCRIPTION	REFERENCE SHEET
202	11301	2	CU YD	PORTIONS OF STRUCTURE REMOVED, AS PER PLAN (ABUTMENT/WINGWALL REPAIR)	35
202	11301	12	CU YD	PORTIONS OF STRUCTURE REMOVED, AS PER PLAN (DECK EDGE)	35
202	38500	75	FT	BRIDGE RAILING REMOVED	
509	10000	1987	POUND	EPOXY COATED REINFORCED STEEL	
511	34401	11	CU YD	CLASS S CONCRETE, SUPERSTRUCTURE, AS PER PLAN	36
511	45701	2	CU YD	CLASS C CONCRETE, ABUTMENT, AS PER PLAN	36
517	70000	73.33	FT	RAILING (TWIN STEEL TUBE)	
SPECIAL	51822300	81	FT	STEEL DRIP STRIP	36
848	10001	103	SQ YD	MICRO SILICA MODIFIED CONCRETE OVERLAY USING HYDRODEMOLITION, AS PER PLAN (2½" THICK)	36
848	20000	81	SQ YD	SURFACE PREPARATION USING HYDRODEMOLITION	
848	30001	3	CU YD	MICRO SILICA MODIFIED CONCRETE OVERLAY (VARIABLE THICKNESS) MATERIAL ONLY, AS PER PLAN	36
848	50000	3	SQ YD	HAND CHIPPING	
848	50100	LUMP		TEST SLAB	
848	50200	1	CU YD	FULL-DEPTH REPAIR	
848	50320	103	SQ YD	EXISTING CONCRETE OVERLAY REMOVED (1½" NOMINAL THICKNESS)	
848	50340	4	SQ YD	REMOVAL OF DEBONDED OR DETERIORATED EXISTING VARIABLE THICKNESS CONCRETE OVERLAY	

REVISED: 11-16-07

DESIGN AGENCY
DISTRICT THREE
OFFICE OF PRODUCTION

REVIEWED RDN DATE 11/07
DRAWN GTS REVISED
DESIGNED GTS CHECKED DJV

STRUCTURE SUMMARY

ASD-604-0.00
WAY-604-(0.00) (4.19)
WAY-539-8.24

DESIGN FILE: I:\projects\25671\Struct\strsum1.dgn
WORKSTATION: ksalay DATE: 11/19/2007

WAY-604-0626 SFN 8506418 NONFEDERAL

ITEM	EXTENSION	QUANTITY	UNIT	DESCRIPTION	REFERENCE SHEET
512	10400	392	SQ YD	TREATING OF CONCRETE BRIDGE DECK WITH SRS	

WAY-604-0899 SFN 8506426 NONFEDERAL

ITEM	EXTENSION	QUANTITY	UNIT	DESCRIPTION	REFERENCE SHEET
202	98300	14	SQ YD	REMOVAL MISC.: CONCRETE	35
512	10100	66	SQ YD	SEALING OF CONCRETE SURFACES (EPOXY-URETHANE)	
512	73500	5	SQ YD	TREATING CONCRETE BRIDGE DECKS WITH GRAVITY FED RESIN	36
614	12800	324	EACH	WORK ZONE RAISED PAVEMENT MARKER	
614	13202	14	EACH	BARRIER REFLECTOR, TYPE A2	
614	21000	.06	MILE	WORK ZONE CENTER LINE, CLASS 1 (SOLID DOUBLE)	
614	22000	.04	MILE	WORK ZONE EDGE LINE, CLASS 1 (WHITE)	
614	26000	24	FT	WORK ZONE STOP LINE, CLASS 1	
848	10001	220	SQ YD	MICRO SILICA MODIFIED CONCRETE OVERLAY USING HYDRODEMOLITION, AS PER PLAN (2½" THICK)	35
848	20000	220	SQ YD	SURFACE PREPARATION USING HYDRODEMOLITION	
848	30001	7	CU YD	MICRO SILICA MODIFIED CONCRETE OVERLAY (VARIABLE THICKNESS) MATERIAL ONLY, AS PER PLAN	36
848	50000	7	SQ YD	HAND CHIPPING	
848	50100	LUMP		TEST SLAB	
848	50200	1	CU YD	FULL-DEPTH REPAIR	
848	50321	220	SQ YD	EXISTING CONCRETE OVERLAY REMOVED, AS PER PLAN (1½" NOMINAL THICKNESS)	36
848	50340	11	SQ YD	REMOVAL OF DEBONDED OR DETERIORATED EXISTING VARIABLE THICKNESS CONCRETE OVERLAY	

REVISED: 11-16-07

DESIGN FILE: I:\projects\25671\Struct\strsum2.dgn
WORKSTATION: ksalay DATE: 11/19/2007

DESIGN AGENCY
DISTRICT THREE
OFFICE OF PRODUCTION

DESIGNED	DRAWN	REVIEWED	DATE
GTS	GTS	RDN	11/07
CHECKED	REVISED		
DJV			

STRUCTURE SUMMARY

ASD-604-0.00
WAY-604-(0.00) (4.19)
WAY-539-8.24

WAY-604-1307 SFN 8506523 NONFEDERAL

ITEM	EXTENSION	QUANTITY	UNIT	DESCRIPTION	REFERENCE SHEET
254	01000	330	SQ YD	PAVEMENT PLANING, ASPHALT CONCRETE	
407	10000	26	GALLON	TACK COAT	
407	14000	10	GALLON	TACK COAT FOR INTERMEDIATE COURSE	
442	00201	11	CU YD	ASPHALT CONCRETE SURFACE COURSE, 9.5MM, TYPE A (446), AS PER PLAN	3
442	20101	7	CU YD	ASPHALT CONCRETE INTERMEDIATE COURSE, 9.5MM, TYPE A (448), AS PER PLAN	4
512	10100	66	SQ YD	SEALING OF CONCRETE SURFACES (EPOXY-URETHANE)	
SPECIAL	51631300	57	FT	POLYMER MODIFIED ASPHALT EXPANSION JOINT SYSTEM	57

WAY-604-1713 SFN 8506574 NONFEDERAL

ITEM	EXTENSION	QUANTITY	UNIT	DESCRIPTION	REFERENCE SHEET
202	98300	16	SQ YD	REMOVAL MISC.: CONCRETE	
512	10100	74	SQ YD	SEALING OF CONCRETE SURFACES (EPOXY-URETHANE)	
512	10400	340	SQ YD	TREATING OF CONCRETE BRIDGE DECK WITH SRS	

WAY-604-1811 SFN 8506701 NONFEDERAL

ITEM	EXTENSION	QUANTITY	UNIT	DESCRIPTION	REFERENCE SHEET
254	01000	289	SQ YD	PAVEMENT PLANING, ASPHALT CONCRETE	
407	10000	23	GALLON	TACK COAT	
407	14000	9	GALLON	TACK COAT FOR INTERMEDIATE COURSE	
442	00201	10	CU YD	ASPHALT CONCRETE SURFACE COURSE, 9.5MM, TYPE A (446), AS PER PLAN	3
442	20101	6	CU YD	ASPHALT CONCRETE INTERMEDIATE COURSE, 9.5MM, TYPE A (448), AS PER PLAN	4
512	10100	61	SQ YD	SEALING OF CONCRETE SURFACES (EPOXY-URETHANE)	
SPECIAL	51631300	61	FT	POLYMER MODIFIED ASPHALT EXPANSION JOINT SYSTEM	54

REVISED: 11-16-07

DESIGN FILE: I:\projects\25671\Structl\strsum3.dgn
WORKSTATION: ksclay DATE: 11/19/2007

DESIGN AGENCY
DISTRICT THREE
OFFICE OF PRODUCTION

DESIGNED GTS | CHECKED DJV | DRAWN GTS | REVISED | REVIEWED RDN | DATE 11/07

STRUCTURE SUMMARY

ASD-604-0.00
WAY-604-(0.00) (4.19)
WAY-539-8.24

REFERENCES SHALL BE MADE TO STANDARD DRAWINGS:

BP-3.1	DATED	10/19/07	MT-95.40	DATED	10/20/06
DS-1-92	DATED	7/18/03	MT-96.10	DATED	4/19/02
TST-1-99	DATED	10/17/03	MT-96.20	DATED	4/19/02
MT-97.10	DATED	9/05/06	MT-96.25	DATED	4/20/01
TC-41.20	DATED	1/19/01	MT-101.20	DATED	10/18/02
TC-52.10	DATED	1/19/07	MT-101.60	DATED	9/20/06
TC-52.20	DATED	1/19/07	MT-105.10	DATED	10/18/02
			MT-105.11	DATED	10/18/02

DESIGN SPECIFICATIONS:

THIS STRUCTURE CONFORMS TO "STANDARD SPECIFICATIONS FOR HIGHWAY BRIDGES" ADOPTED BY THE AMERICAN ASSOCIATION OF STATE HIGHWAY AND TRANSPORTATION OFFICIALS, 2002, INCLUDING THE 2003, 2004, 2005 AND 2006 SPECIFICATIONS AND THE ODOT BRIDGE DESIGN MANUAL.

EXISTING STRUCTURE VERIFICATION:

DETAILS AND DIMENSIONS SHOWN ON THESE PLANS PERTAINING TO THE EXISTING STRUCTURES HAVE BEEN OBTAINED FROM PLANS OF THE EXISTING STRUCTURES AND FROM FIELD OBSERVATIONS AND MEASUREMENTS. CONSEQUENTLY, THEY ARE INDICATIVE OF THE EXISTING STRUCTURES AND THE PROPOSED WORK BUT THEY SHALL BE CONSIDERED TENTATIVE AND APPROXIMATE. THE CONTRACTOR IS REFERRED TO CMS SECTIONS 102.05 AND 105.02.

BASE CONTRACT BID PRICES UPON A RECOGNITION OF THE UNCERTAINTIES DESCRIBED ABOVE AND UPON A PRE BID EXAMINATION OF THE EXISTING STRUCTURES. HOWEVER, THE DEPARTMENT WILL PAY FOR ALL PROJECT WORK BASED UPON ACTUAL DETAILS AND DIMENSIONS THAT HAVE BEEN VERIFIED IN THE FIELD.

EXISTING PLANS:

THE ORIGINAL CONSTRUCTION PLANS OF THE EXISTING BRIDGES ARE AVAILABLE UPON REQUEST AT THE DISTRICT 3 OFFICE OF THE OHIO DEPARTMENT OF TRANSPORTATION, ASHLAND, OH.

STRUCTURE #	PLAN NAME	DATE
ASD-604-0156	ASD-604-1.55	1992
WAY-604-0001	ASD-604-3.29, WAY-604-0.00	1962
WAY-604-0065	WAY-604-(0.60)(6.21)	1954
	ASD/WAY/MED-604/42/421	1983
WAY-604-0626	WAY-604-10.042	1999
WAY-604-0899	WAY-604-8.92	1964
WAY-604-1307	WAY-604-(13.01)(18.10)	1984
WAY-604-1713	WAY-604-8.92	1964
WAY-604-1811	WAY-604-(13.01)(18.10)	1984

DESIGN DATA:

CONCRETE CLASS C - COMPRESSIVE STRENGTH 4,000 PSI
CONCRETE CLASS S - COMPRESSIVE STRENGTH 4,500 PSI

DECK PROTECTION METHOD:

MICRO-SILICA MODIFIED CONCRETE OVERLAY
STEEL DRIP STRIP
SOLUBLE REACTIVE SILICATE SEALING
GRAVITY FED RESIN

PLACING ASPHALT CONCRETE FEATHERING ON APPROACHES TO BRIDGES:

SPECIAL CARE SHALL BE TAKEN, WHEN PLACING THE ASPHALT CONCRETE FEATHERING TO EFFECT A SMOOTH TRANSITION FROM THE EXISTING APPROACH PAVEMENT TO THE BRIDGE DECK OR APPROACH SLAB. THE CONTRACTOR'S ATTENTION IS CALLED TO STANDARD DRAWING BP-3.1 FOR REQUIRED TOLERANCES; SPECIFICALLY, THE CONTRACTOR SHALL PROVIDE A 600:1 TAPER RATE FOR PLANING OPERATIONS.

CUT LINE CONSTRUCTION JOINT PREPARATION:

SAW CUT BOUNDARIES OF PROPOSED CONCRETE REMOVALS 1 INCH DEEP. REMOVE CONCRETE TO A ROUGH SURFACE. LEAVE THE EXISTING REINFORCING STEEL IN PLACE. PRIOR TO CONCRETE PLACEMENT ABRASIVELY CLEAN JOINT SURFACES AND EXISTING EXPOSED REINFORCEMENT TO REMOVE LOOSE AND DISINTEGRATED CONCRETE AND LOOSE RUST.THOROUGHLY CLEAN THE JOINT SURFACE AND EXPOSED REINFORCEMENT OF ALL DIRT, DUST, RUST OR OTHER FOREIGN MATERIAL BY THE USE OF WATER, AIR UNDER PRESSURE, OR OTHER METHODS THAT PRODUCE SATISFACTORY RESULTS. EXISTING REINFORCING STEEL DOES NOT HAVE TO HAVE A BRIGHT STEEL FINISH, BUT REMOVE ALL PACK AND LOOSE RUST. THOROUGHLY DRENCH EXISTING CONCRETE SURFACES WITH CLEAN WATER AND ALLOW TO DRY TO A DAMP CONDITION BEFORE PLACING CONCRETE.

ITEM 202-REMOVAL MISC.: CONCRETE:

THIS ITEM SHALL BE USED AT LOCATIONS INDICATED IN THE PLAN.

THE 1" THICK CONCRETE OVERLAY ON TOP OF THE BACKWALLS SHALL BE REMOVED BY HAND CHIPPING. THE SIZE OF THE CHIPPING HAMMER SHALL BE APPROVED BY THE ENGINEER.

PAYMENT FOR ALL OF THE ABOVE SHALL BE AT THE UNIT PRICE BID PER SQUARE YARD FOR THE ABOVE WHICH WILL INCLUDE ALL LABOR, EQUIPMENT, MATERIALS AND INCIDENTALS NECESSARY TO COMPLETE THE ABOVE WORK.

ITEM 202 - PORTIONS OF STRUCTURE REMOVED, AS PER PLAN (ABUTMENT/WINGWALL REPAIR):
ITEM 202 - PORTIONS OF STRUCTURE REMOVED, AS PER PLAN (DECK EDGE):

THESE ITEMS SHALL BE USED AT LOCATIONS IN THE PLAN.

THE USE OF EXPLOSIVES, HEADACHE BALLS AND/OR HOE-RAMS WILL NOT BE PERMITTED. THE METHOD OF REMOVAL AND THE WEIGHT OF THE HAMMER SHALL BE APPROVED BY THE ENGINEER.

THE EXISTING REINFORCING STEEL SHALL BE PRESERVED AS INDICATED IN THE PLANS. EXISTING CONCRETE SHALL BE REMOVED IN A MANNER THAT WILL NOT CUT, ELONGATE, OR DAMAGE THE EXISTING REINFORCING STEEL TO BE PRESERVED. CHIPPING HAMMERS NO HEAVIER THAN 90 POUND CLASS.

PAYMENT FOR ALL OF THE ABOVE SHALL BE AT THE UNIT PRICE BID PER CUBIC YARD FOR THE ABOVE ITEMS, WHICH WILL INCLUDE ALL LABOR, EQUIPMENT, MATERIALS AND INCIDENTALS NECESSARY TO COMPLETE THE ABOVE WORK.

ITEM 511 - CLASS S CONCRETE, SUPERSTRUCTURE, AS PER PLAN:
ITEM 511 - CLASS C CONCRETE, ABUTMENT, AS PER PLAN:
ITEM 511 - CLASS C CONCRETE, PIER, AS PER PLAN:

THESE ITEMS SHALL BE USED AT LOCATIONS INDICATED IN THE PLAN.

THE COARSE AGGREGATE SHALL BE LIMESTONE.

ALL EXISTING SURFACES TO WHICH THE CONCRETE IS TO BOND SHALL BE CLEANED BY ABRASIVE BLASTING. THESE SURFACES SHALL BE MADE FREE OF SPALLS, LAITANCE, AND OTHER CONTAMINANTS DETRIMENTAL TO ACHIEVING AN ADEQUATE BOND.

PAYMENT FOR ALL OF THE ABOVE SHALL BE AT THE UNIT PRICE BID PER CUBIC YARD FOR EACH OF THE ABOVE WHICH WILL INCLUDE ALL LABOR, EQUIPMENT, MATERIALS AND INCIDENTALS NECESSARY TO COMPLETE THE ABOVE WORK.

ITEM 512 - TREATING CONCRETE BRIDGE DECKS WITH GRAVITY FED RESIN:

THIS ITEM SHALL CONSIST OF FURNISHING THE NECESSARY LABOR, MATERIALS AND EQUIPMENT NEEDED FOR SURFACE PREPARATION, MIXING AND PLACING THE SEAL ONTO THE CONSTRUCTION JOINT FORMED ALONG THE NEW OVERLAY.

THE SEAL SHALL BE APPLIED 2 INCHES ON EACH SIDE OF THE JOINT.

PAYMENT FOR ALL OF THE ABOVE SHALL BE AT THE UNIT PRICE BID PER SQUARE YARD FOR ITEM 512-TREATING CONCRETE BRIDGE DECKS WITH GRAVITY FED RESIN WHICH SHALL INCLUDE ALL LABOR, EQUIPMENT, MATERIALS AND INCIDENTALS NECESSARY TO COMPLETE THE ABOVE WORK.

ITEM SPECIAL - STEEL DRIP STRIP:

THIS ITEM SHALL BE USED AT LOCATIONS IN THE PLAN.

FOR DETAILS AND NOTES, SEE THE PLANS AND STANDARD DRAWING DS-1-92.

PAYMENT FOR ALL OF THE ABOVE SHALL BE AT THE UNIT PRICE BID PER FOOT FOR THE ABOVE ITEM, WHICH WILL INCLUDE ALL LABOR, EQUIPMENT, MATERIALS AND INCIDENTALS NECESSARY TO COMPLETE THE ABOVE WORK.

ITEM 848 - MICRO SILICA MODIFIED CONCRETE OVERLAY (VARIABLE THICKNESS), MATERIAL ONLY, AS PER PLAN

THE COARSE AGGREGATE SHALL BE LIMESTONE.

PAYMENT FOR ALL OF THE ABOVE SHALL BE AT THE UNIT PRICE BID PER CUBIC YARD FOR THE ABOVE ITEMS WHICH SHALL INCLUDE ALL LABOR, EQUIPMENT, MATERIALS, AND INCIDENTALS NECESSARY TO COMPLETE THE ABOVE WORK.

ITEM 848 - EXISTING CONCRETE OVERLAY REMOVED, AS PER PLAN (1½" NOMINAL THICKNESS)

THIS ITEM SHALL BE USED TO REMOVE THE EXISTING OVERLAY AS PER DETAILS IN THE PLAN.

THE EXISTING OVERLAY SHALL BE SAW CUT 1" DEEP AT THE LOCATIONS SHOWN IN THE PLAN.

PAYMENT FOR ALL OF THE ABOVE SHALL BE AT THE UNIT PRICE BID PER SQUARE YARD FOR THE ABOVE ITEMS WHICH SHALL INCLUDE ALL LABOR, EQUIPMENT, MATERIALS, AND INCIDENTALS NECESSARY TO COMPLETE THE ABOVE WORK.

ITEM 848 - MICRO SILICA MODIFIED CONCRETE OVERLAY USING HYDRODEMOLITION, AS PER PLAN (2½" THICK)

THE COARSE AGGREGATE SHALL BE LIMESTONE.

THE SURFACE FINISH REQUIREMENTS SHALL BE AS PER CMS 511.19 AND 511.20 IN LIEU OF THAT WHICH IS SPECIFIED IN SUPPLEMENTAL SPECIFICATION 848.

SEE THE SUPPLEMENTAL SPECIFICATION FOR DETAILS.

PAYMENT FOR ALL OF THE ABOVE SHALL BE AT THE UNIT PRICE BID PER SQUARE YARD FOR THE ABOVE ITEMS WHICH SHALL INCLUDE ALL LABOR, EQUIPMENT, MATERIALS, AND INCIDENTALS NECESSARY TO COMPLETE THE ABOVE WORK.

ITEM 614 - MAINTAINING TRAFFIC:

TWO WAY TRAFFIC SHALL BE MAINTAINED AT ALL TIMES EXCEPT THAT THROUGH TRAFFIC ON STRUCTURE WAY-604-0899 SHALL HAVE A SIGNALIZED CLOSURE AS SHOWN ON SHEET 49 FOR A MAXIMUM OF 28 CONSECUTIVE CALENDAR DAYS (TOTAL BOTH PHASES). THE 28 CONSECUTIVE DAYS SHALL BE CONSIDERED AS AN INTERIM COMPLETION DATE (SECTION 108) AND FOR EACH CALENDAR DAY BEYOND THE 28 CALENDAR DAYS THAT THE HIGHWAY REMAINS IN A SIGNALIZED CLOSURE, THE CONTRACTOR WILL BE ASSESSED LIQUIDATED DAMAGES AS PER 108.07.

NO EQUIPMENT OR MATERIAL SHALL BE LOCATED OTHER THAN BEHIND THE DRUMS.

ALL WORK AND TRAFFIC CONTROL DEVICES SHALL BE IN ACCORDANCE WITH 614 AND OTHER APPLICABLE PORTIONS OF THE CONSTRUCTION AND MATERIAL SPECIFICATIONS AS WELL AS IN ACCORDANCE WITH PART 7 OF THE OMUTCD. PAYMENT FOR ALL LABOR, EQUIPMENT, MATERIALS, AND INCIDENTALS NECESSARY TO PROVIDE THIS METHOD OF TRAFFIC CONTROL SHALL BE INCLUDED IN THE LUMP SUM BID FOR ITEM 614 MAINTAINING TRAFFIC, UNLESS SEPARATELY ITEMIZED IN THE PLAN.

(CONTINUED)

DESIGN FILE: I:@projects@2567@Struct@strnotes2.dgn
WORKSTATION: ksalay DATE: 11/9/2007

ITEM 614 - MAINTAINING TRAFFIC: (CONTINUED)

DETOUR LIMITATION AND INTERIM COMPLETION DATE:

TWO WAY TRAFFIC ON STRUCTURE WAY-604-0065 SHALL BE MAINTAINED AT ALL TIMES, EXCEPT FOR A PERIOD NOT TO EXCEED FORTY FIVE (45) CONSECUTIVE CALENDAR DAYS, THROUGH TRAFFIC WILL BE DETOURED AS SHOWN ON THIS SHEET.

THE ROAD SHALL ONLY BE CLOSED BETWEEN JUNE 9, 2008 AND AUGUST 15, 2008.

THE CONTRACTOR SHALL NOTIFY THE O.D.O.T. DISTRICT THREE ROADWAY SERVICES MANAGER, IN WRITING, A MINUMUM OF FOURTEEN (14) DAYS IN ADVANCE OF THE DATE THE DETOUR IS NEEDED. THE STATE OF OHIO WILL INSTALL, MAINTAIN AND SUBSEQUENTLY REMOVE THE DETOUR SIGNING.

THE CONTRACTOR SHALL BE RESPONSIBLE FOR FURNISHING, INSTALLING, MAINTAINING AND REMOVING THE GATES AND BARRICADES AT THE APPROXIMATE WORK LIMITS OF THE PROJECT, AND THE ADVANCE WARNING SIGNS AS SHOWN ON STANDARD CONSTRUCTION DRAWING MT-101.60.

THE FORTY FIVE (45) CONSECUTIVE CALENDAR DAYS SHALL BE CONSIDERED AS AN INTERIM COMPLETION DATE (SECTION 108) AND FOR EACH CALENDAR DAY BEYOND THE FORTY FIVE (45) DAYS THAT THE ROADWAY REMAINS CLOSED TO TRAFFIC, THE CONTRACTOR WILL BE ASSESSED LIQUIDATED DAMAGES, AS PER SECTION 108.07 OF THE CONSTRUCTION AND MATERIALS SPECIFICATIONS.

ACCESS TO ADJACENT PROPERTIES SHALL BE MAINTAINED AT ALL TIMES AS PER 614.02 (a).

FOR ALL OTHER LOCATIONS: TWO WAY TRAFFIC SHALL BE MAINTAINED AT ALL TIMES EXCEPT DURING WORKING HOURS WHEN ONE LANE MAY BE CLOSED USING FLAGGERS, AS PER STANDARD DRAWING MT-97.10.

ALL WORK AND TRAFFIC CONTROL DEVICES SHALL BE IN ACCORDANCE WITH CMS 614 AND OTHER APPLICABLE PORTIONS OF THE SPECIFICATIONS, AS WELL AS THE OHIO MANUAL OF UNIFORM TRAFFIC CONTROL DEVICES. PAYMENT FOR ALL LABOR, EQUIPMENT AND MATERIALS SHALL BE INCLUDED IN THE LUMP SUM CONTRACT PRICE FOR ITEM 614, MAINTAINING TRAFFIC, UNLESS SEPARATELY ITEMIZED IN THE PLAN.

NOTICE OF CLOSURE SIGNS:

THESE SIGNS SHALL BE ERECTED BY THE CONTRACTOR AT LEAST ONE WEEK IN ADVANCE OF THE SCHEDULED ROAD CLOSURE. THE SIGNS SHALL BE ERECTED ON THE RIGHT HAND SIDE OF THE ROAD FACING TRAFFIC. THEY SHALL BE LOCATED IN THE FIELD SO AS NOT TO INTERFERE WITH ANY PERMANENT SIGNS. ON THIS PROJECT, THEY SHOULD BE ERECTED AT THE POINT OF CLOSURE. PAYMENT FOR THIS WORK SHALL BE INCLUDED IN THE LUMP SUM BID FOR ITEM 614, MAINTAINING TRAFFIC AND SHALL INCLUDE FURNISHING, ERECTING, MAINTAINING, AND REMOVING THE SIGNS INCLUDING SUPPORTS.

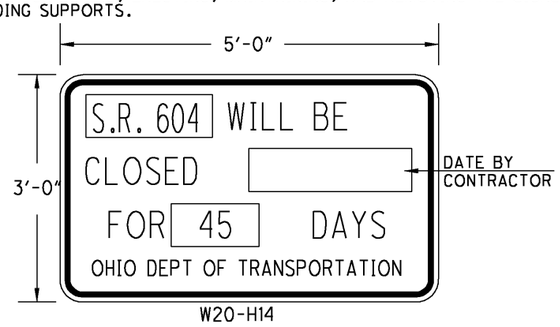

W20-H14

MAINTENANCE OF LOCAL DETOUR ROUTE

A LOCAL MAINTENANCE ROUTE, OTHER THAN THE OFFICIAL SIGNED ODOT DETOUR ROUTE, WILL BE DESIGNATED BY AGREEMENT BETWEEN ODOT AND LOCAL GOVERNMENTAL AGENCIES PRIOR TO THE HIGHWAY CLOSURE.

DURING THE TIME THAT TRAFFIC IS DETOURED, THE CONTRACTOR SHALL MAINTAIN THIS ROUTE IN A CONDITION WHICH IS REASONABLY SMOOTH AND FREE FROM HOLES, RUTS, RIDGES, BUMPS, DUST AND STANDING WATER. ONCE THE DETOUR IS REMOVED AND TRAFFIC RETURNED TO ITS NORMAL PATTERN, THE DESIGNATED LOCAL MAINTENANCE ROUTE SHALL BE RESTORED TO A CONDITION THAT IS EQUIVALENT TO THAT WHICH EXISTED PRIOR TO ITS USE FOR THIS PURPOSE. ALL SUCH WORK SHALL BE PERFORMED WHEN AND AS DIRECTED BY THE ENGINEER. THE DESIGNATED LOCAL DETOUR ROUTE IS TO BE REVIEWED AND REPAIRED PRIOR TO THE ASPHALT CONTRACTOR OR SUBCONTRACTOR LEAVING THE PROJECT.

PAYMENT FOR THE WORK NECESSARY TO REPAIR THESE LOCAL ROADS WILL BE PERFORMED BY EITHER CHANGE ORDER OR FORCE ACCOUNT.

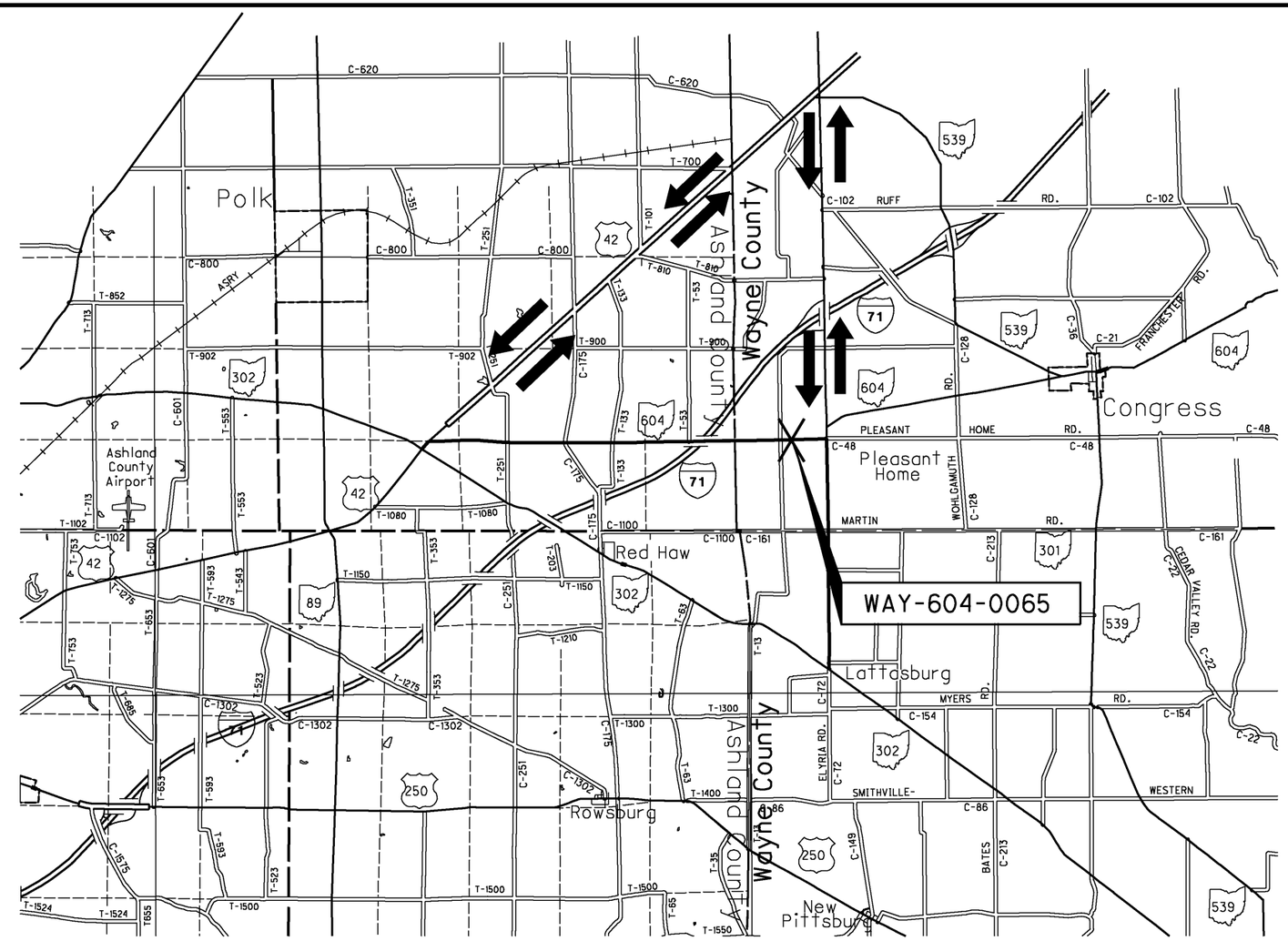

DETOUR MAP

LEGEND

X - PROJECT LOCATION

⇄ - OFFICIAL SIGNED DETOUR

0 1 2 3

SCALE OF MILES

CALCULATED DCM
CHECKED DJV

MAINTAINING TRAFFIC NOTES AND DETOUR MAP

ASD-604-0.00
WAY-604-(0.00) (4.19)
WAY-539-8.24

DESIGN FILE: I:\projects\25671\structl\strnotes3.dgn
WORKSTATION: ksalay DATE: 11/9/2007

		BRIDGE DECK DATA							ROADWAY DATA		
	COUNTY, ROUTE, BRIDGE NO.	LOCATION	STRUCTURE TYPE	LENGTH (BRIDGE DECK)	WIDTH	BRIDGE DECK AREA	SKEW	EXISTING WEARING SURFACE	EXISTING PAVEMENT WIDTH	EXISTING APPROACH SLAB WIDTH	EXISTING APPROACH SLAB LENGTH
				FT.	FT.	SQ.YD.			FT.	FT.	FT.
●	ASD-604-0156	OVER RED HAW CREEK	3- SPAN PRESTRESS	88.64	30	296	30°	ASPHALT	24	30	25
**	ASD-604-0296	OVER I-71	4- SPAN STEEL BEAM	406.56	24	1085	46.8°	CONCRETE	24	24	25
*	WAY-604-0001	OVER MUDDY FORK OF MOHICAN RIVER	3- SPAN STEEL BEAM	111.33	32	396	0°	CONCRETE	23.5	20	25
***	WAY-604-0065	OVER BRANCH OF MUDDY FORK OF MOHICAN RIVER	SINGLE SPAN CONCRETE SLAB	32.30	28.58	103	30°	CONCRETE	23.5	16	15
***	WAY-604-0626	OVER KILLBUCK CREEK	3- SPAN CONCRETE SLAB	111.75	31.5	392	0°	CONCRETE	23	31'-6"	25
++	WAY-604-0899	OVER LITTLE KILLBUCK CREEK	3- SPAN CONCRETE SLAB	60	36	240	0°	CONCRETE	23.5	20	25
+	WAY-604-1036	OVER TRIB. OF KILLBUCK CREEK	METAL PIPE ARCH					ASPHALT	23.5		
+	WAY-604-1053	OVER TRIB. OF KILLBUCK CREEK	METAL PIPE ARCH					ASPHALT	23.5		
●●	WAY-604-1307	OVER CHIPPEWA CREEK	SINGLE SPAN PRESTRESS	66.16	28	206	5°	ASPHALT	23.5	28	20
++	WAY-604-1713	OVER CHIPPEWA CREEK	3- SPAN CONCRETE SLAB	86.25	35.5	340	30°	CONCRETE	23.5	20	25
+	WAY-604-1725	OVER DITCH	CONCRETE BOX					ASPHALT	24		
●●	WAY-604-1811	OVER SMALL CREEK	SINGLE SPAN PRESTRESS	53.08	28	165	23°	ASPHALT	24	28	20

\+ PLANE AND PAVE OVER STRUCTURE (NO STRUCTURE WORK). (SEE ROADWAY PLANS FOR PLANING AND PAVING QUANTITIES)

++ BUTT JOINT AT BRIDGE DECK. OMIT RESURFACING ON THE BRIDGE DECK. (SEE DETAILS IN THE PLAN FOR STRUCTURE WORK. SEE ROADWAY PLANS FOR PLANING AND PAVING QUANTITIES)

* PLANE 1½" DEEP ON APPROACH SLABS AND FOR 75 FT. ON BOTH APPROACHES. OMIT RESURFACING ON THE BRIDGE DECK, BUTT JOINT AT THE BRIDGE DECK. (SEE DETAILS IN THE PLAN FOR STRUCTURE WORK) (SEE ROADWAY PLANS FOR PAVING QUANTITIES)
WAY-604-0001 ITEM 254 - PAVEMENT PLANING, ASPHALT CONCRETE: 522 SQUARE YARDS (CARRIED TO GENERAL SUMMARY SHEET, SHEET NO. 8) FED/STATE

** PLANE 1½" DEEP ON APPROACH SLABS AND FOR 75 FT. ON BOTH APPROACHES. OMIT RESURFACING ON THE BRIDGE DECK, BUTT JOINT AT THE BRIDGE DECK. (NO STRUCTURE WORK) (SEE ROADWAY PLANS FOR PAVING QUANTITIES)
ASD-604-0296 ITEM 254 - PAVEMENT PLANING, ASPHALT CONCRETE: 533 SQUARE YARDS (CARRIED TO GENERAL SUMMARY SHEET, SHEET NO. 8) FED/STATE

*** PLANE 1" DEEP ON APPROACH SLABS AND 1½" DEEP FOR 75 FT. ON BOTH APPROACHES. OMIT RESURFACING ON THE BRIDGE DECK, BUTT JOINT AT THE BRIDGE DECK. (SEE DETAILS IN THE PLAN FOR STRUCTURE WORK) (SEE ROADWAY PLANS FOR PAVING QUANTITIES)
WAY-604-0065 ITEM 254 - PAVEMENT PLANING, ASPHALT CONCRETE: 522 SQUARE YARDS (CARRIED TO GENERAL SUMMARY SHEET, SHEET NO. 8) FED/STATE
WAY-604-0626 ITEM 254 - PAVEMENT PLANING, ASPHALT CONCRETE: 511 SQUARE YARDS (CARRIED TO GENERAL SUMMARY SHEET, SHEET NO. 8) NONFEDERAL

● PLANE 1" DEEP ON THE BRIDGE DECK AND FOR 50 FT. ON BOTH APPROACHES. (SEE DETAILS IN THE PLAN FOR STRUCTURE WORK) (SEE ROADWAY PLANS FOR PAVING QUANTITIES)
ASD-604-0156 ITEM 254 - PAVEMENT PLANING, ASPHALT CONCRETE: 267 SQUARE YARDS (CARRIED TO GENERAL SUMMARY SHEET, SHEET NO. 8) FED/STATE

●● PLANE AND PAVE OVER STRUCTURE (SEE DETAILS IN PLAN FOR STRUCTURE WORK). (SEE ROADWAY PLANS FOR PLANING AND PAVING QUANTITIES)

REVISED: 11-16-07

DESIGN FILE: I:\projects\25671\Struct\brtreat.dgn
WORKSTATION: ksalay DATE: 11/19/2007

DESIGN AGENCY
DISTRICT THREE
OFFICE OF PRODUCTION

DESIGNED DCM | CHECKED DJV | DRAWN DCM | REVISED | REVIEWED RDN | DATE 11/07 | STRUCTURE FILE NUMBER

BRIDGE TREATMENT

ASD-604-0.00
WAY-604-(0.00) (4.19)
WAY-539-8.24

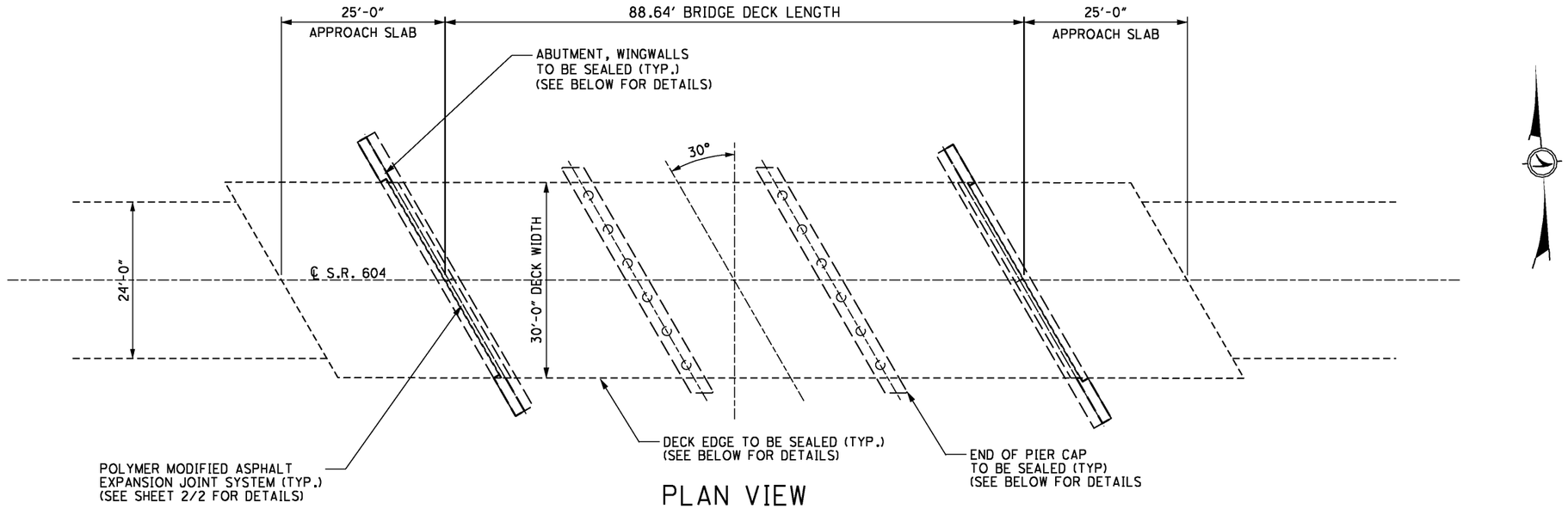

PLAN VIEW

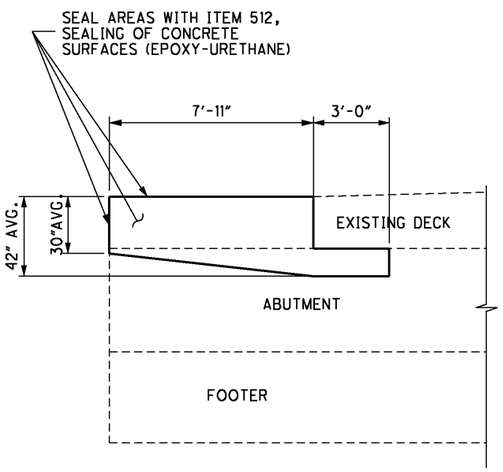

TYPICAL WINGWALL SECTION

(WINGWALLS ARE 1'-6" WIDE)

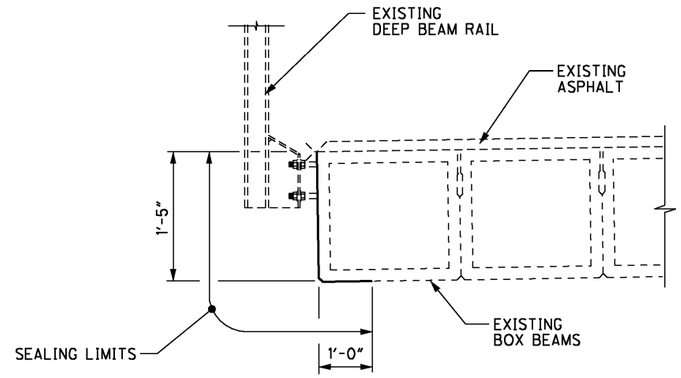

TYPICAL DECK EDGE SEALING

(BEAM SEALING LENGTH = 88'-8"±)

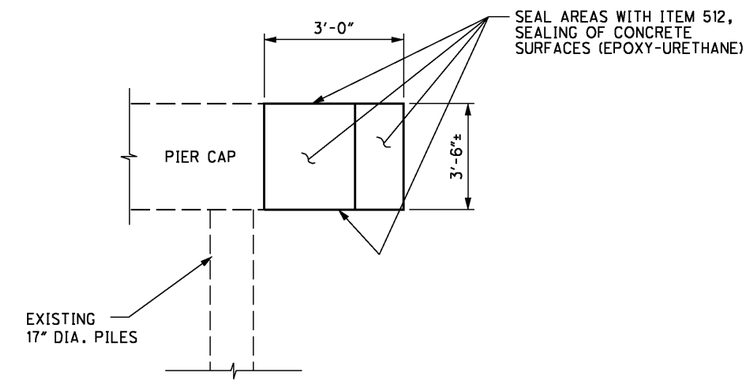

TYPICAL PIER CAP SEALING

(PIER CAP WIDTH=3'-0")

ITEM	QUANTITY	UNIT	DESCRIPTION
254	296	SQ YD	PAVEMENT PLANING, ASPHALT CONCRETE
407	37	GALLON	TACK COAT
407	14	GALLON	TACK COAT FOR INTERMEDIATE COURSE
442	16	CU YD	ASPHALT CONCRETE SURFACE COURSE, 9.5MM, TYPE A (446), AS PER PLAN
442	10	CU YD	ASPHALT CONCRETE INTERMEDIATE COURSE, 9.5MM, TYPE A (448), AS PER PLAN
512	88	SQ YD	SEALING OF CONCRETE SURFACES (EPOXY-URETHANE)
SPECIAL	70	FT	POLYMER MODIFIED ASPHALT EXPANSION JOINT SYSTEM

ALL QUANTITIES CARRIED TO STRUCTURE SUMMARY SHEET

NOTES:

1) GUARDRAIL NOT SHOWN.
2) SEAL DECK EDGE WITH ITEM 512.
3) PLACE A POLYMER MODIFIED ASPHALT EXPANSION JOINT SYSTEM AT EACH ABUTMENT AS DETAILED ON SHEET 2/2.
4) SEAL ABUTMENT FACE, PIER CAP AND ALL EXPOSED AREAS OF WINGWALLS AS DETAILED ON THIS SHEET.

DESIGN AGENCY
DISTRICT THREE
OFFICE OF PRODUCTION

DESIGNED	DRAWN	REVIEWED	DATE
GTS	GTS	RDN	11-07
CHECKED	REVISED	STRUCTURE FILE NUMBER	
DJV		0306118	

PLAN VIEW
ASD-604-0156 OVER REDHAW CREEK

ASD-604-0.00
WAY-604-(0.00) (4.19)
WAY-539-8.24

1 / 2

39
54

DESIGN FILE=PROJECTS\25671\STRUCT\ASD604000\ASD604-0156SD1.DGN
WORKSTATION=
DISPLAY DATE=1/9/2007

GENERAL NOTES AND DETAILS FOR POLYMER MODIFIED ASPHALT EXPANSION JOINT SYSTEM

ITEM SPECIAL - POLYMER-MODIFIED ASPHALT EXPANSION JOINT SYSTEM

THIS ITEM WILL BE USED TO SEAL THE EXPANSION/CONTRACTION JOINTS AS PER THESE DETAILS AND THE MANUFACTURER'S REQUIREMENTS USING A POLYMER-MODIFIED ASPHALT SYSTEM. THE PRIME CONTRACTOR WILL OBTAIN THE SERVICES OF ONE OF THE FOLLOWING APPROVED APPLICATORS WHO WILL FURNISH AND INSTALL THE NEW BRIDGE EXPANSION JOINT SYSTEM AFTER ALL PAVING ON THE AFFECTED BRIDGE(S) HAS BEEN COMPLETED.

PRODUCT NAME	SUPPLIER	ADDRESS	PHONE NO.
THORMA-JOINT	DYNAMIC SURFACE APPLICATIONS, LTD	373 VILLAGE RD. PENNSDALE, PA 17756	(570)546-6041
MATRIX 502	CRAFCO INC.	420 N. ROOSEVELT AVE. CHANDLER, AZ 85226	(800)528-8242
EXPANDEX JOINT SYSTEM	WATSON-BOWMAN ACME	95 PINEVIEW DR. AMHERST, NY 14228	(716)691-7566
APJ ASPHALTIC PLUG EXPANSION JOINT	WYOMING EQUIPMENT SALES	281 SIXTH STREET P.O. BOX 287 WEST WYOMING, PA 18644	(570)693-2810

MATERIALS:

BRIDGING PLATE:

MILD STEEL 1/8" OR 1/4" THICK PLATE, 8" WIDE OR 18 GAUGE ALUMINUM, 8" WIDE.

BINDER:

TYPE:	POLYMER MODIFIED ASPHALT
SOFTENING POINT:	180 DEGREES F. MIN.
FLOW:	3 mm. MAX. AT 140 DEGREES F.
PENETRATION:	9 mm. MAX. AT 77 DEGREES F. 1 mm. MIN AT 0 DEGREES F. ASTM D 3407
DUCTILITY:	40 cm. MIN. ASTM D 113
RESILIENCE:	60% MIN. AT 77 DEGREES F.
TENSILE ADHESION:	700% MIN.
SPECIFIC GRAVITY:	1.10 * 0.05
POURING TEMP:	350 - 390 DEGREES F.

AGGREGATE:

TYPE:	CRUSHED, DOUBLE WASHED, AND DRIED GRANITE OR BASALT
GRADATION	THE GRADATION OF THE AGGREGATE VARIES BY MANUFACTURER AND WILL BE AS PER THE MANUFACTURER'S RECOMMENDATIONS FOR THE SYSTEM BEING USED ON THIS PROJECT.

BACKER ROD:

THE BACKER SHALL BE A CLOSED CELL FOAM EXPANSION JOINT FILLER CAPABLE OF WITHSTANDING THE PLACEMENT TEMPERATURE OF THE POLYMER MODIFIED ASPHALT.

NOTE: PRIOR TO PLACEMENT OF ANY PORTION OF THE JOINT SYSTEM, THE PROJECT ENGINEER MUST HAVE CERTIFIED TEST DATA MEETING ALL THE MINIMUM REQUIREMENTS OF ALL THE MATERIALS OF THE JOINT SYSTEM.

INSTALLATION PROCEDURES:

SAWING AND SURFACE PREPARATION:

AFTER ALL PAVING OPERATIONS ARE COMPLETE, THE OVERLAY IS TO BE TRANSVERSELY SAW CUT FULL DEPTH NO LESS THAN TWO INCHES DEEP (20" CENTERED OVER JOINT OPENING, UNLESS OTHERWISE NOTED). REMOVE ALL MATERIAL, INCLUDING WATER-PROOFING MATERIAL, BETWEEN SAW CUTS. THOROUGHLY CLEAN AND DRY EXPOSED CONCRETE, STEEL, AND CUT SURFACES USING COMPRESSED AIR AND A HOT COMPRESSED AIR (HCA) LANCE. THE LANCE MUST PRODUCE A FLAME RETARDED AIR STREAM TEMPERATURE OF 3000 DEGREES F. AT A VELOCITY OF 3,000 FEET PER SECOND WITH 15 PSIG CHAMBER PRESSURE. IF THERE IS AN INTERRUPTION DUE TO WEATHER OR OTHER CAUSES, THE OPERATION WILL BE REPEATED WITH THE HCA LANCE IMMEDIATELY BEFORE THE BINDER COAT OPERATION. ALSO, 6 INCHES OF THE ROAD SURFACE ON EITHER SIDE OF THE JOINT WILL BE DRIED SO THAT A SUITABLE SURFACE FOR BITUMEN ADHESION IS OBTAINED.

SEALING OF EXPANSION JOINT: (PRE-STRESSED BOX OR CONCRETE SLAB)

THE EXPANSION JOINT GAP IS TO BE SEALED AND A BRIDGING PLATE CENTERED ALONG IT. A VERY NARROW GAP WILL BE SEALED BY POURING HOT BINDER INTO THE GAP. GAPS OF 1/8" OR MORE WILL FIRST BE FILLED WITH AN APPROPRIATELY SIZED BACKER ROD. THE BACKER ROD WILL BE INSTALLED SO THAT IT IS BETWEEN 1/8" AND 1-1/8" BELOW THE TOP OF THE EXISTING GAP. THE GAP WILL THEN BE FILLED WITH BINDER.

BOND BREAKER:

SPREAD BINDER OVER SURFACE AREA WHERE THE METAL BRIDGING PLATE WILL BE PLACED. CENTER THE BRIDGING PLATE OVER THE EXISTING JOINT AND BED INTO THE HOT BINDER. BUTT JOINT THE BRIDGING PLATES TO ACCOMODATE THE ENTIRE JOINT LENGTH. SPIKE HOLES WILL BE DRILLED AT 1 FOOT INTERVALS ALONG THE LONGITUDINAL CENTERLINE OF THE PLATES. SECURE BRIDGING PLATE WITH NAILS OR SPIKES. SEAL BUTT JOINTS WITH HOT BINDER AND ALLOW BINDER TO SETUP BEFORE NEXT OPERATION. WHEN ALUMINUM BRIDGING PLATES ARE USED, ONLY THE BINDER IS REQUIRED TO SECURE THE INDIVIDUAL PLATES.

BINDER COAT:

SEAL ALL PREPARED, EXPOSED SURFACES OF THE JOINT WITH BINDER. POUR THE HOT BINDER OVER THE FLOOR AREA OF THE JOINT AND SPREAD TO COAT ALL EXPOSED SURFACES. THE BINDER WILL BE A MINIMUM OF 1/32" THICK ON THE BOTTOM OF THE JOINT CAVITY, WITH POOLS OF GREATER THICKNESS WHERE SURFACE IRREGULARITIES EXIST. THE BINDER APPLICATION TEMPERATURE WILL BE BETWEEN 350 AND 390 DEGREES F. THE BINDER WILL NOT BE ALLOWED TO BE HEATED ABOVE 410 DEGREES F. NOR ALLOWED TO EXCEED 390 DEGREES F. FOR MORE THAN 1 HOUR. A DOUBLE JACKETED OIL MELTER WILL BE USED TO HEAT THE BINDER. THE MELTER WILL BE EQUIPPED WITH A CONTINUOUS AGITATION SYSTEM, TEMPERATURE CONTROLS, AND A CALIBRATED THERMOMETER. ALSO A SYSTEM FOR ACCURATELY MEASURING THE WEIGHTS OF THE BINDER AND THE AGGREGATE WILL BE REQUIRED.

BUILD-UP OF JOINT LAYERS:

AGGREGATE PREPARATION:

HEAT THE AGGREGATE TO A TEMPERATURE OF 275 TO 325 DEGREES F., WITH A SUITABLE ROTATING DRUM WITH ATTACHED HEAT SOURCE OR A HOT COMPRESSED AIR LANCE, TO REMOVE DUST AND MOISTURE.

AGGREGATE PROPORTION AND LAYER THICKNESS:

MIX THE AGGREGATE WITH THE BINDER SUCH THAT THE MINIMUM AGGREGATE CONTENT BY WEIGHT WILL BE 68%. THE HEATED AGGREGATE AND BINDER WILL BE COMBINED IN LAYERS, UNLESS PATENTED INSTALLATION REQUIRES DIFFERENTLY, NOT LESS THAN 3/4 OF AN INCH NOR EXCEEDING 2-1/2 INCHES. THE THICKNESS OF EACH LAYER CAN BE VARIED WITHIN THESE LIMITS, TO ACHIEVE THE REQUIRED JOINT THICKNESS (MIN. 2 INCHES). THE OBJECTIVE IS TO COAT EACH STONE AND FILL THE VOIDS WHILE AVOIDING AN EXCESS OF BINDER. THIS WILL ACHIEVE THE MAXIMUM CONTENT OF STONE CONSISTENT WITH ALL STONES BEING COATED WITH BINDER. RAKE THE MIXTURE TO MIX AND LEVEL.

THE TOP LAYER THICKNESS WILL VARY BETWEEN 1/2 INCH AND ONE (1) INCH. IN PREPARING THE TOP LAYER, THE RATIO OF AGGREGATE TO BINDER WILL BE APPROXIMATELY 6:1 BY WEIGHT. OVERFILL THE TOP LAYER AND COMPACT TO THE LEVEL OF THE ADJACENT SURFACES USING A ROLLER OR VIBRATORY PLATE COMPACTOR. IMMEDIATELY AFTER COMPLETION OF THE COMPACTION, POUR SUFFICIENT BINDER OVER THE JOINT TO FILL THE SURFACE VOIDS AND COAT THE SURFACE STONE. DUST THE FINISHED JOINT WITH A FINE, DRY AGGREGATE TO PREVENT TACKINESS.

MAINTENANCE OF TRAFFIC:

IF NECESSARY TO FACILITATE TRAFFIC MAINTENANCE, THE JOINT WILL BE INSTALLED IN TWO (2) HALF-WIDTH PHASES. DURING PHASE 1 APPROXIMATELY HALF OF THE TOTAL JOINT WILL BE INSTALLED. DURING PHASE 2, A MINIMUM OF TWO (2) INCHES OF THE PHASE 1 JOINT WILL BE REMOVED, AT OR NEAR THE CENTERLINE, WITH THE REMAINDER OF THE JOINT INSTALLED. IN ALL CASES, OPERATIONS WILL BE SCHEDULED SO THAT ALL LANES CAN BE OPEN TO TRAFFIC DURING ALL NON-WORKING HOURS.

TESTING:

CERTIFICATION WILL BE SUPPLIED FOR EACH PROJECT SHOWING BINDER COMPLIANCE WITH REQUIRED PROPERTIES. A ONE QUART SAMPLE OF BINDER WILL BE RETRIEVED FROM EACH BRIDGE FOR FURTHER TESTING BY THE O.D.O.T OFFICE OF MATERIALS MANAGEMENT.

METHOD OF MEASUREMENT AND BASIS OF PAYMENT:

THE DEPARTMENT WILL MEASURE THE JOINT BY THE NUMBER OF FEET AND WILL PAY FOR ACCEPTED QUANTITIES INCLUDING THE REMOVAL OF THE EXISTING POLYMER JOINT AT THE CONTRACT PRICE AS: ITEM SPECIAL, FEET, POLYMER MODIFIED ASPHALT EXPANSION JONT SYSTEM.

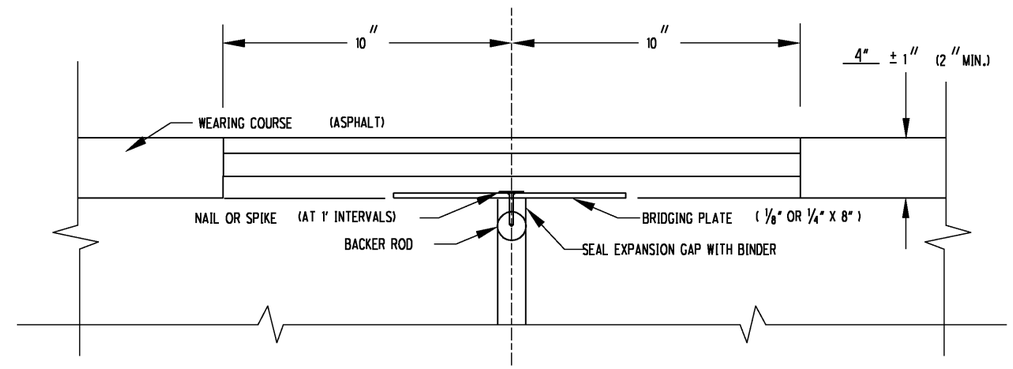

TYPICAL PRESTRESSED BOX BEAM

ASD-604-0156 SFN 0306118

ITEM	DESCRIPTION	UNIT	QUANTITY
SPECIAL	POLYMER MODIFIED ASPHALT EXPANSION JOINT SYSTEM	FT	70

QUANTITY CARRIED TO SHEET NO. 1/2.

DESIGNED	DATE REVISED	CALCULATED
MAM	10-28-96	GTS
DRAWN	10-17-03	CHECKED
MAM	04-15-05	DJV

POLYMER MODIFIED ASPHALT EXPANSION JOINT SYSTEM

ASD-604-0156 OVER REDHAW CREEK

ASD-604-0.00
WAY-604-(0.00) (4.19)
WAY-539-8.24

2 / 2

40 / 54

DESIGN FILE=PROJECTS\25871\STRUCT\ASD604000\ASD604-0156SD2.DGN
WORKSTATION=LAY DATE=1/9/2007

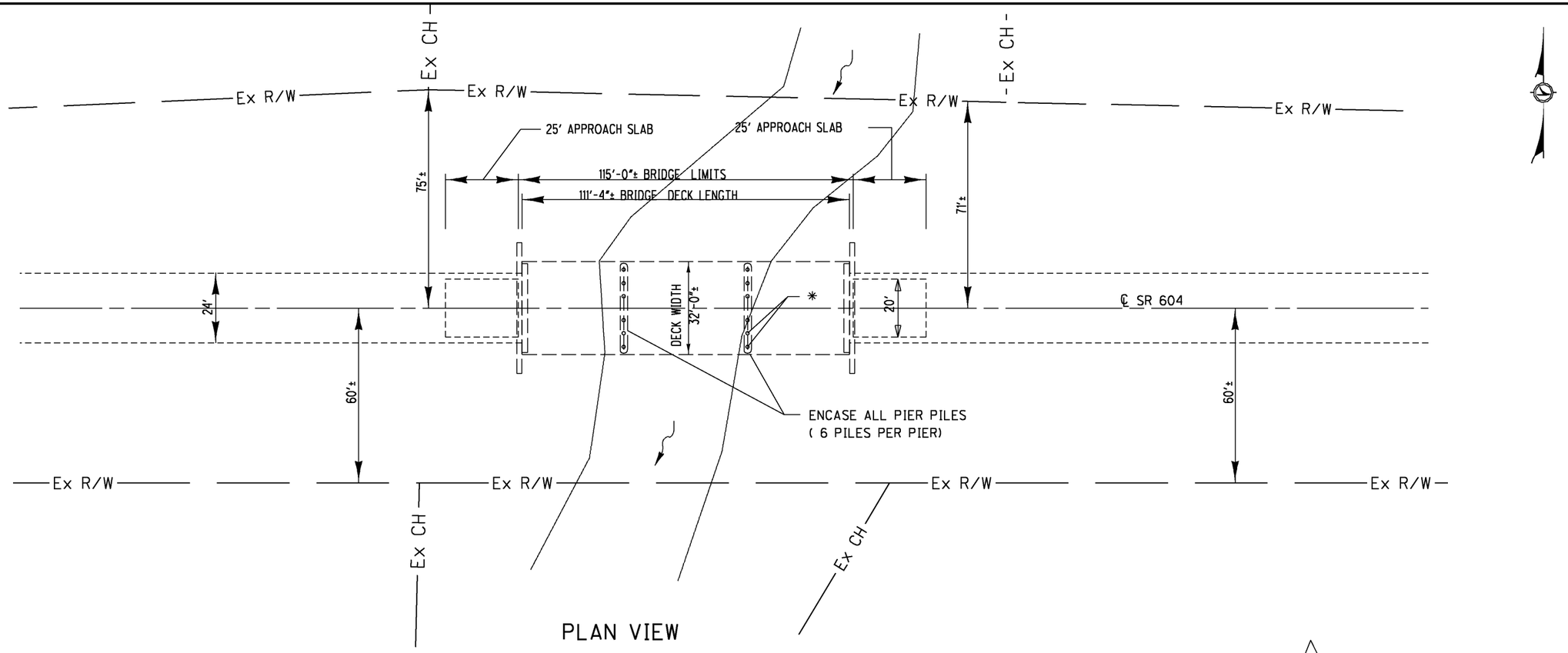

PLAN VIEW

REINFORCING TABLE				
MARK	LENGTH	SHAPE	NUMBER	WEIGHT
P401	3'-0"	BENT	240	481
P501	9'-6"	STR.	144	1427
			TOTAL	1908

BENDING DIAGRAM

P401

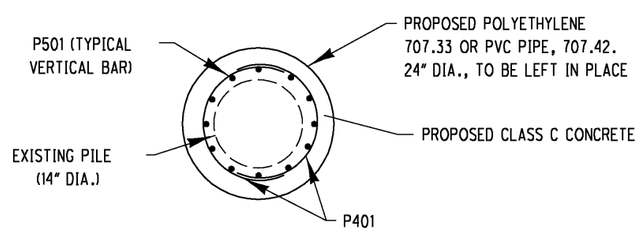

SECTION A-A

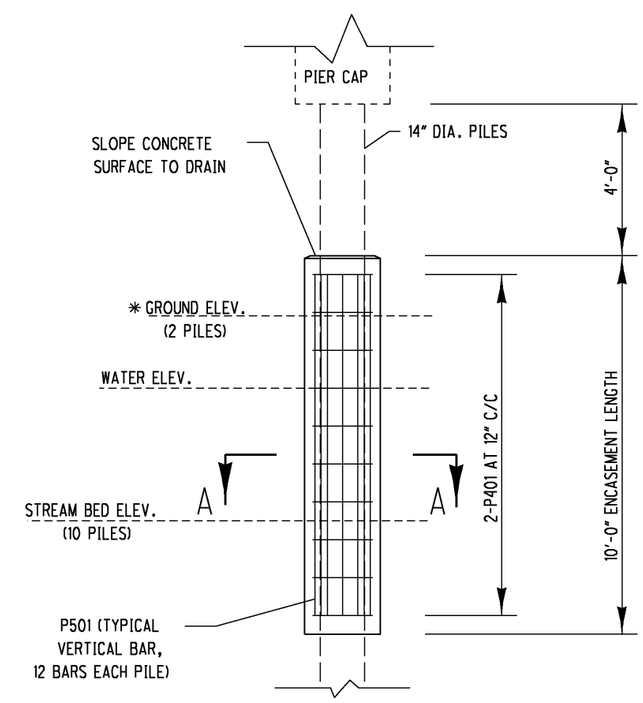

TYPICAL PILE ENCASEMENT
(12 PILES TOTAL)

NOTES:

1) GUARDRAIL NOT SHOWN.

2) ENCASE ALL PIER PILES AS PER DETAILS.

ITEM	QUANTITY	UNIT	DESCRIPTION
503	LUMP		COFFERDAMS, CRIBS AND SHEETING
509	1908	POUND	EPOXY COATED REINFORCING STEEL
511	9.2	CU YD	CLASS C CONCRETE, PIER, AS PER PLAN

ALL QUANTITIES CARRIED TO STRUCTURE SUMMARY SHEET

DESIGN FILE: I:\projects\25671\Struct\ASD604000\way604-0001str1.dgn
WORKSTATION: ksalay DATE: 11/9/2007

DESIGN AGENCY
DISTRICT THREE
OFFICE OF PRODUCTION

DESIGNED	DRAWN	REVIEWED	DATE
DCM	DCM	RDN	11-07
CHECKED	REVISED	STRUCTURE FILE NUMBER	
DJV		8506302	

PLAN VIEW
WAY-604-0001 OVER MUDDY FORK OF MOHICAN RIVER

ASD-604-0.00
WAY-604-(0.00) (4.19)
WAY-539-8.24

1 / 1

41 / 54

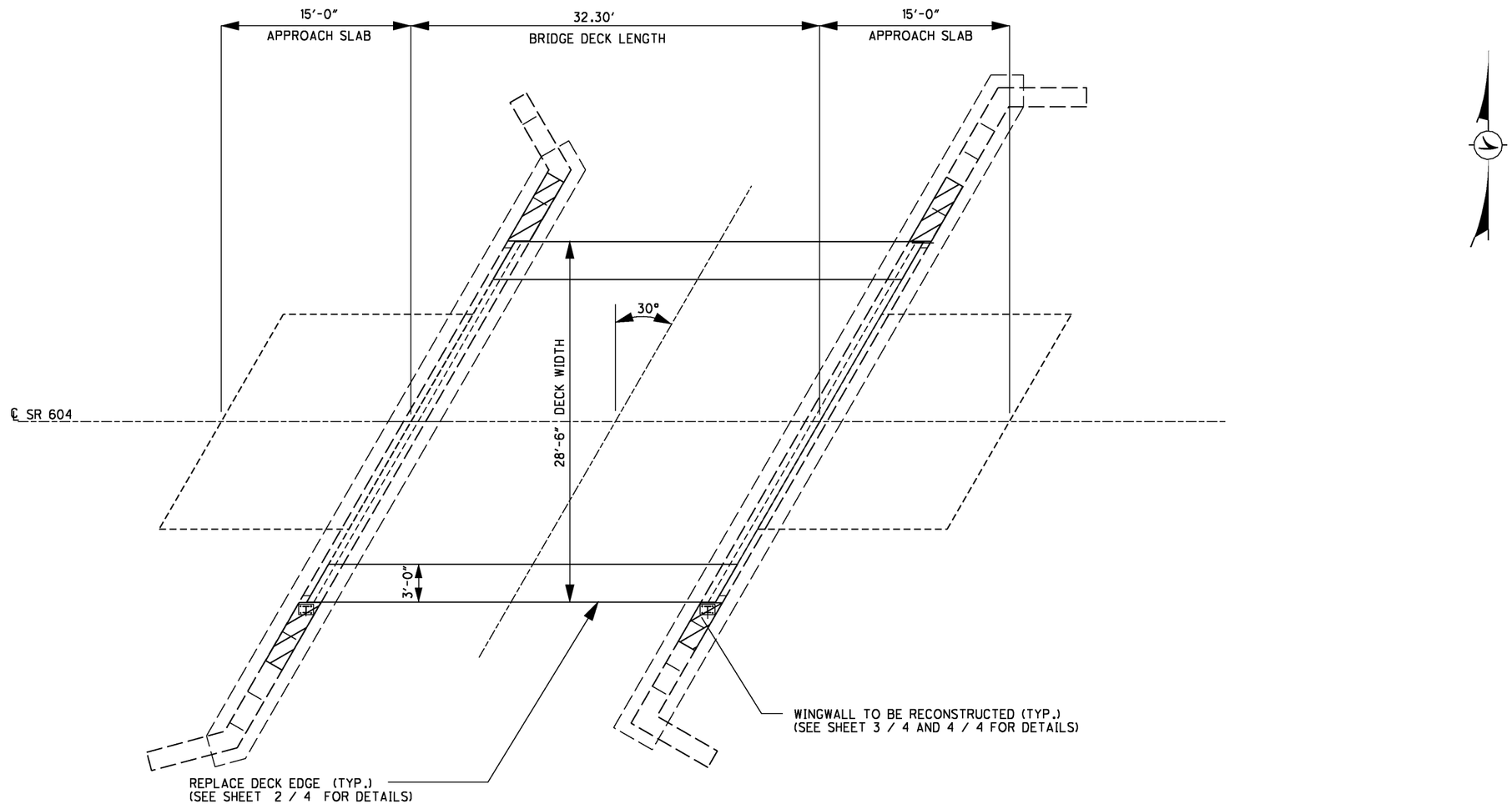

PLAN VIEW

ITEM	QUANTITY	UNIT	DESCRIPTION
202	2	CU YD	PORTIONS OF STRUCTURE REMOVED, AS PER PLAN (ABUTMENT/WINGWALL REPAIR)
202	12	CU YD	PORTIONS OF STRUCTURE REMOVED, AS PER PLAN (DECK EDGE)
202	75	FT	BRIDGE RAILING REMOVED
509	1987	POUND	EPOXY COATED REINFORCING STEEL
511	11	CU YD	CLASS S CONCRETE, SUPERSTRUCTURE, AS PER PLAN
511	2	CU YD	CLASS C CONCRETE, ABUTMENT, AS PER PLAN
517	73.33	FT	RAILING (TWIN STEEL TUBE)
SPECIAL	81	FT	STEEL DRIP STRIP
848	103	SQ YD	MICRO SILICA MODIFIED CONCRETE OVERLAY USING HYDRODEMOLITION, AS PER PLAN (2½" THICK)
848	81	SQ YD	SURFACE PREPARATION USING HYDRODEMOLITION
848	3	CU YD	MICRO SILICA MODIFIED CONCRETE OVERLAY (VARIABLE THICKNESS), MATERIAL ONLY, AS PER PLAN
848	3	SQ YD	HAND CHIPPING
848	LUMP		TEST SLAB
848	1	CU YD	FULL-DEPTH REPAIR
848	103	SQ YD	EXISTING CONCRETE OVERLAY REMOVED (1½" NOMINAL THICKNESS)
848	4	SQ YD	REMOVAL OF DEBONDED OR DETERIORATED EXISTING VARIABLE THICKNESS CONCRETE OVERLAY

ALL QUANTITIES CARRIED TO STRUCTURE SUMMARY SHEET.

NOTES:

1) THE EXISTING APPROACH RAIL IS NOT SHOWN.

2) THE EXISTING CONCRETE OVERLAY ON THE ENTIRE BRIDGE DECK SHALL BE REMOVED USING ITEM 848-EXISTING CONCRETE OVERLAY REMOVED (1½" NOMINAL THICKNESS). AN ADDITIONAL 1" OF EXISTING CONCRETE DECK OVER THE ENTIRE BRIDGE DECK EXCEPT FOR THE NEW DECK EDGES SHALL BE REMOVED USING ITEM 848- SURFACE PREPARATION USING HYDRODEMOLITION.

3) THE DECK EDGES SHALL BE REPLACED AS PER DETAILS ON SHEET 2/4.

4) THE WINGWALLS SHALL BE RECONSTRUCTED AS PER DETAILS ON SHEET 3 /4 AND 4/4.

5) THE ENTIRE BRIDGE DECK SHALL BE OVERLAYED USING ITEM 848- MICRO SILICA MODIFIED CONCRETE OVERLAY USING HYDRODEMOLITION, AS PER PLAN (2½INCH THICKNESS).

DESIGN FILE=PROJECTS\25671\STRUCT\ASD604000\WAY604-0065SD1.DGN
WORKSTATION=LAY DATE=1/9/2007

DESIGN AGENCY
DISTRICT THREE
OFFICE OF PRODUCTION

DESIGNED	DRAWN	REVIEWED	DATE
GTS	GTS	RDN	11/07
CHECKED	REVISED	STRUCTURE FILE NUMBER	
DJV		8506337	

PLAN VIEW
WAY-604-0065 OVER BRANCH OF MUDDY FORK OF MOHICAN RIVER

ASD-604-0.00
WAY-604-(10.00)(4.19)
WAY-539-8.24

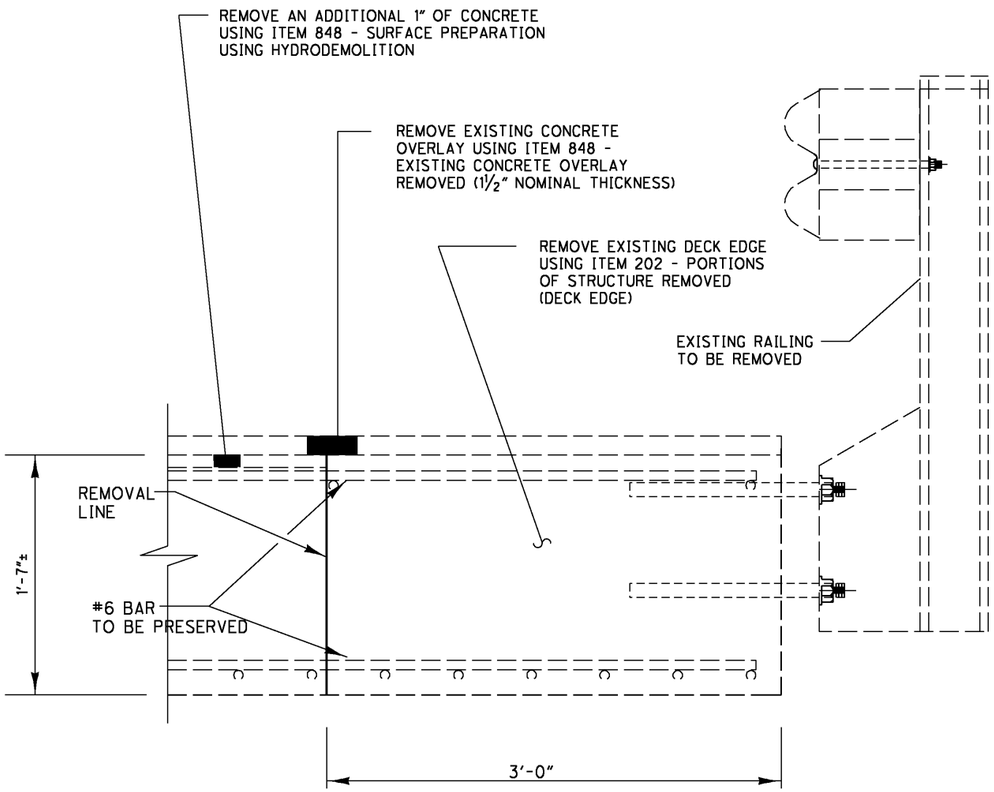

EXISTING DECK EDGE

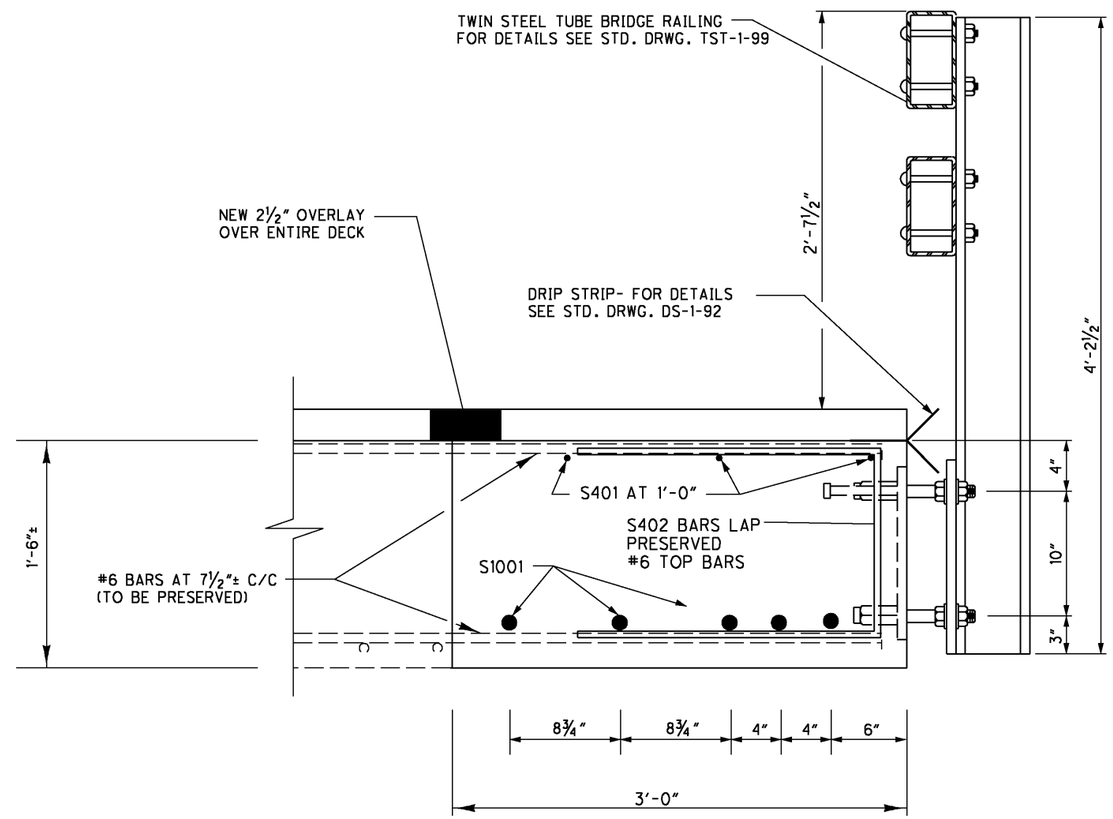

DECK EDGE REPLACEMENT

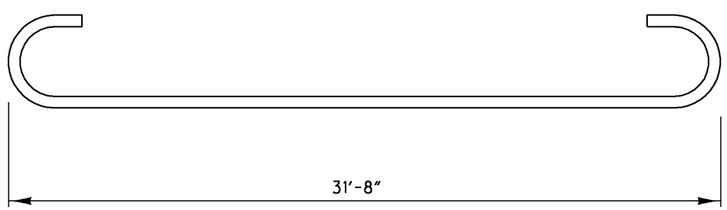

S1001

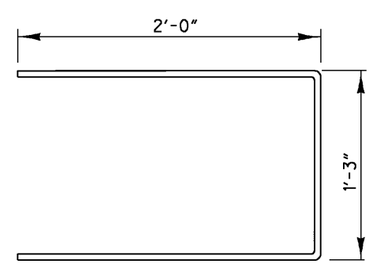

S402

DECK LENGTH = 32'-3½"
SKEW = 30°

ITEM	QUANTITY	UNIT	DESCRIPTION
202	12	CU YD	PORTIONS OF STRUCTURE REMOVED, AS PER PLAN (DECK EDGE)
202	75	FT	BRIDGE RAILING REMOVED
509	1884	POUND	EPOXY COATED REINFORCING STEEL
511	11	CU YD	CLASS S CONCRETE, SUPERSTRUCTURE, AS PER PLAN
517	73.33	FT	RAILING (TWIN STEEL TUBE)
SPECIAL	81	FT	STEEL DRIP STRIP

ALL QUANTITIES CARRIED TO SHEET 1/4.

REINFORCING TABLE

MARK	NUMBER	LENGTH	WEIGHT (LBS)	TYPE
S401	6	31'-8"	127	S
S402	80	5'-1"	272	B
S1001	10	34'-6"	1485	B
		TOTAL	1884	

DESIGN AGENCY
DISTRICT 3
OFFICE OF PRODUCTION

DESIGNED DCM | DRAWN DCM | REVIEWED RDN | DATE 11/07
CHECKED DJV | REVISED | STRUCTURAL FILE NUMBER 8506337

DECK EDGE REPLACEMENT
WAY-604-0065 OVER BRANCH OF MUDDY FORK OF MOHICAN RIVER

ASD-604-0.00
WAY-604-(0.00)(4.19)
WAY-539-8.24

2/4

43/54

DESIGN FILE: i:\projects\25671\Structure\ASD604000\WAY604-0065sd2.dgn
WORKSTATION: ksalay DATE: 11/9/2007

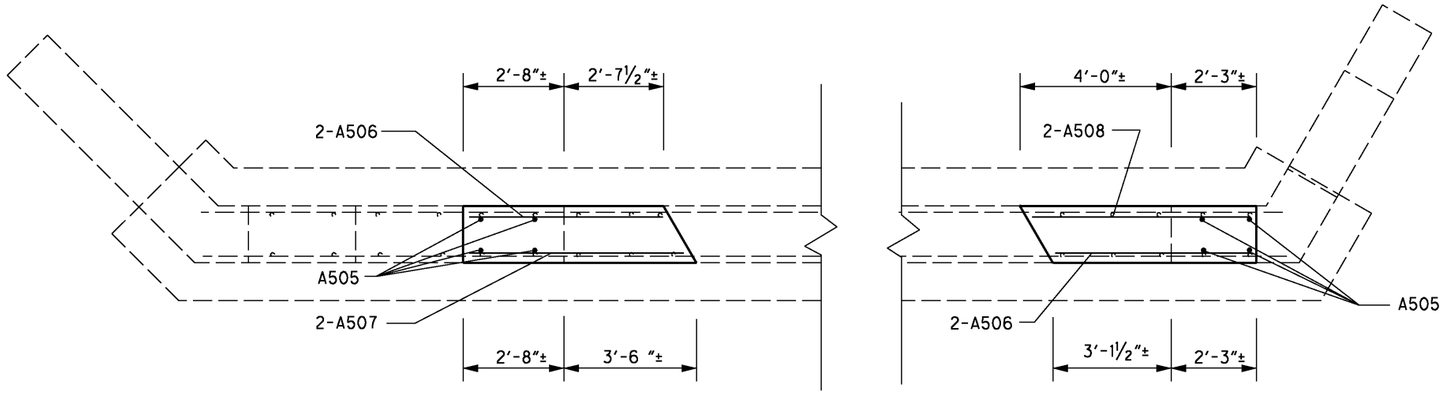

PLAN VIEW

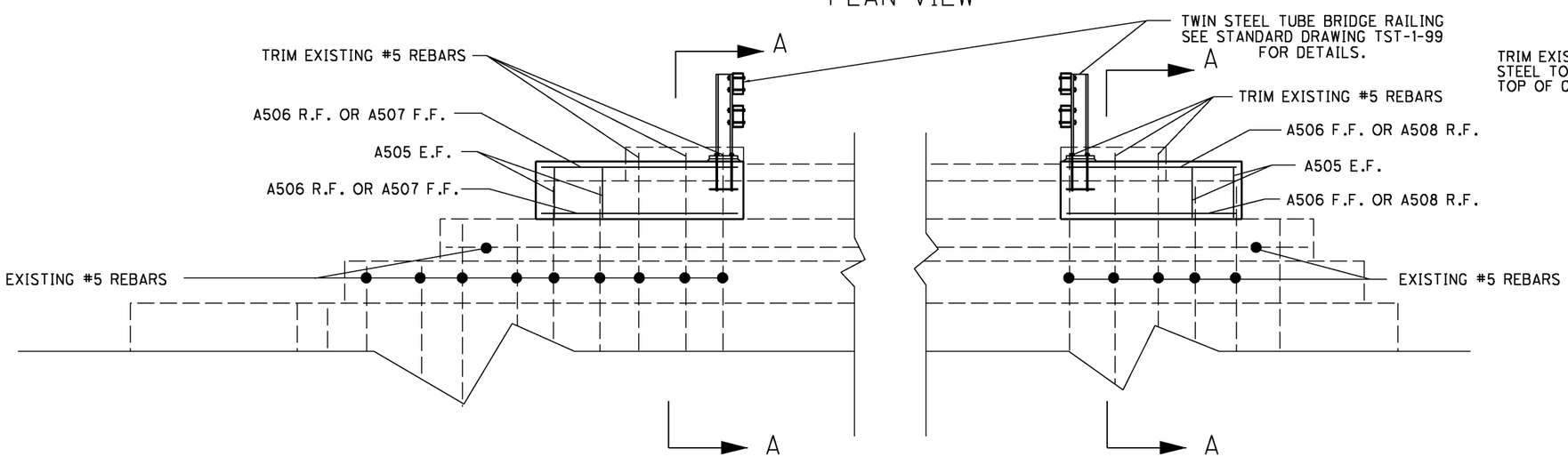

ELEVATION VIEW

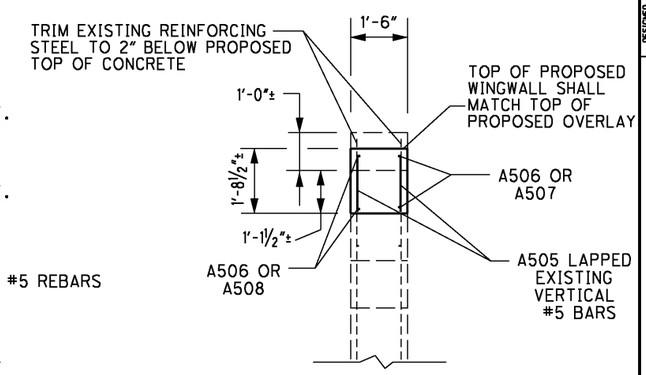

SECTION A-A

TYPICAL ALL FOUR CORNERS

ITEM	QUANTITY	UNIT	DESCRIPTION
202	1	CU YD	PORTIONS OF STRUCTURE REMOVED, AS PER PLAN (ABUTMENT/WINGWALL REPAIR)
509	58	POUND	EPOXY COATED REINFORCING STEEL
511	1	CU YD	CLASS C CONCRETE, ABUTMENT, AS PER PLAN

ALL QUANTITIES CARRIED TO SHEET 1/4.

REINFORCING TABLE

MARK	NUMBER	LENGTH	WEIGHT (LBS)	TYPE
A505	8	1'-6"	13	STRAIGHT
A506	4	5'-1"	21	STRAIGHT
A507	2	5'-8"	12	STRAIGHT
A508	2	5'-9"	12	STRAIGHT
		TOTAL	58	

DESIGN FILE: I:\projects\25671\Struct\ASD604000\WAY604-0065sd3.dgn
WORKSTATION: ksalay DATE: 11/9/2007

DESIGN AGENCY
DISTRICT 3
OFFICE OF PRODUCTION

DESIGNED	DRAWN	REVIEWED	DATE
DCM	DCM	DJV	11/07
CHECKED	REVISED	STRUCTURAL FILE NUMBER	
DJV		8506337	

REAR WINGWALL RECONSTRUCTION
WAY-604-0065 OVER BRANCH OF MUDDY FORK OF MOHICAN RIVER

ASD-604-0.00
WAY-604-(0.00)(4.19)
WAY-539-8.24

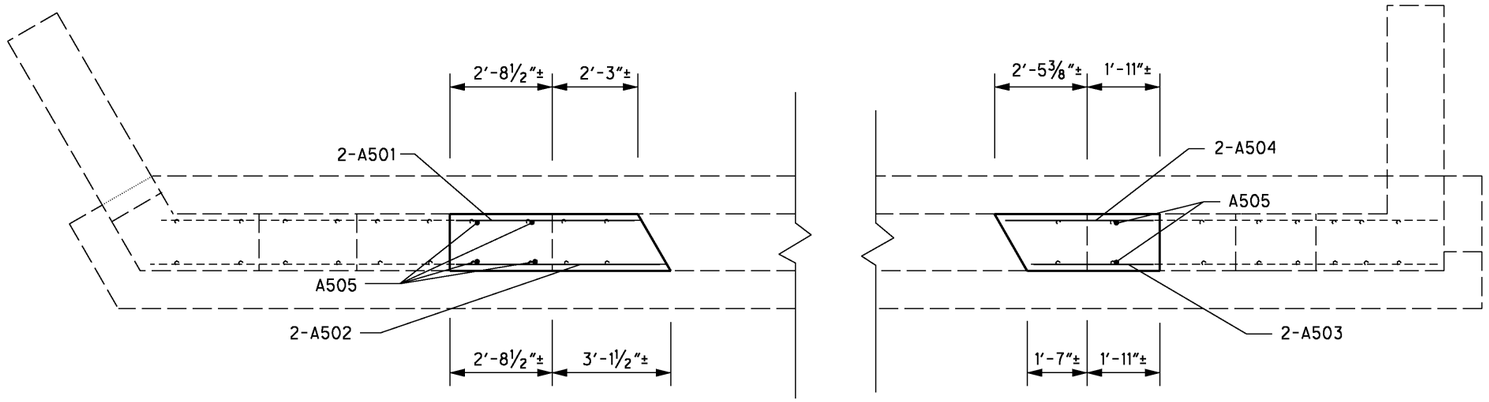

PLAN VIEW

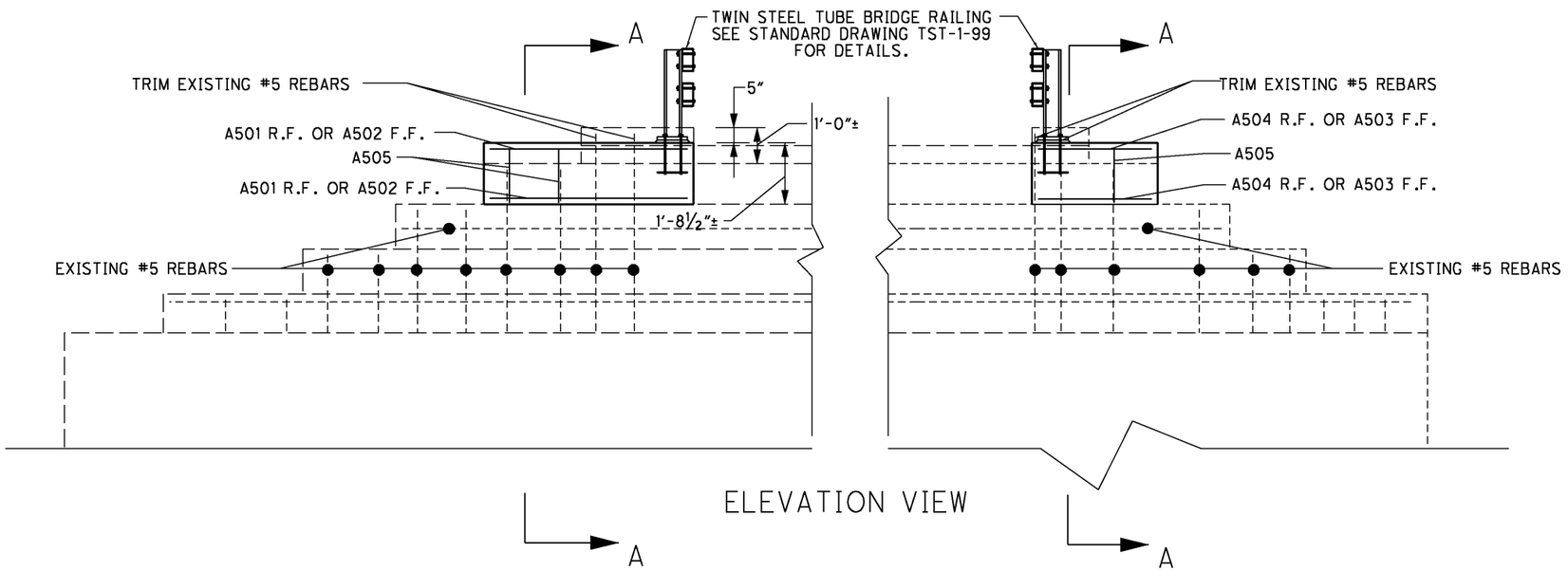

ELEVATION VIEW

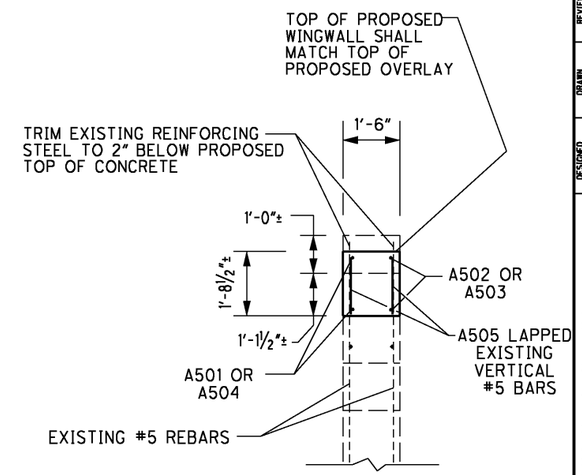

SECTION A-A

ITEM	QUANTITY	UNIT	DESCRIPTION
202	1	CU YD	PORTIONS OF STRUCTURE REMOVED, AS PER PLAN (ABUTMENT/WINGWALL REPAIR)
509	45	POUND	EPOXY COATED REINFORCING STEEL
511	1	CU YD	CLASS C CONCRETE, ABUTMENT, AS PER PLAN

ALL QUANTITIES CARRIED TO SHEET 1/4.

REINFORCING TABLE

MARK	NUMBER	LENGTH	WEIGHT (LBS)	TYPE
A501	2	4'-8"	10	STRAIGHT
A502	2	5'-4"	11	STRAIGHT
A503	2	3'-2"	7	STRAIGHT
A504	2	3'-11"	8	STRAIGHT
A505	6	1'-6"	9	STRAIGHT
		TOTAL	45	

DESIGN FILE: I:\projects\25671\Struct\ASD604000\WAY604-0065sd4.dgn
WORKSTATION: ksalay DATE: 11/9/2007

DESIGN AGENCY
DISTRICT 3
OFFICE OF PRODUCTION

DESIGNED	DRAWN	REVIEWED	DATE
DCM	DCM	RDN	11/07
CHECKED	REVISED	STRUCTURAL FILE NUMBER	
DJV		8506337	

FORWARD WINGWALL RECONSTRUCTION
WAY-604-0065 OVER BRANCH OF MUDDY FORK OF MOHICAN RIVER

ASD-604-0.00
WAY-604-(0.00)(4.19)
WAY-539-8.24

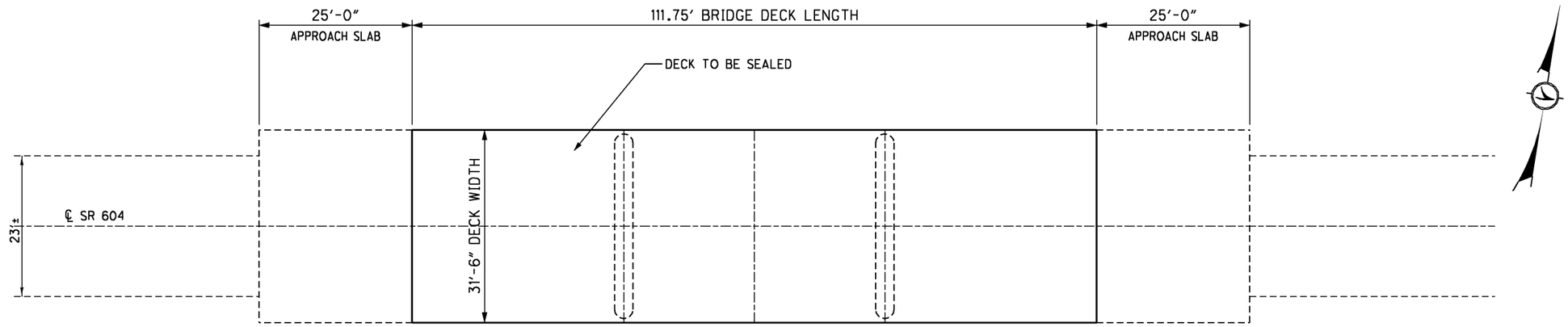

PLAN VIEW

ITEM	QUANTITY	UNIT	DESCRIPTION
512	392	SQ YD	TREATING OF CONCRETE BRIDGE DECK WITH SRS

ALL QUANTITIES CARRIED TO STRUCTURE SUMMARY SHEET

NOTES:

1) GUARDRAIL NOT SHOWN.
2) SEAL DECK WITH ITEM 512.

DESIGN AGENCY
DISTRICT THREE
OFFICE OF PRODUCTION

DESIGNED GTS | CHECKED DJV | DRAWN GTS | REVISED | REVIEWED RDN | DATE 11-07 | STRUCTURE FILE NUMBER 8506418

PLAN VIEW
WAY-604-0626 OVER KILLBUCK CREEK

ASD-604-0.00
WAY-604-(0.00) (4.19)
WAY-539-8.24

1 / 1

46 / 54

DESIGN FILE PROJECTS\25671\STRUCT\ASD604000\WAY604-0626SD.DGN
WORKSTATION DATE 1/9/2007
PLOT SCALE 1:1
PLOT DATE

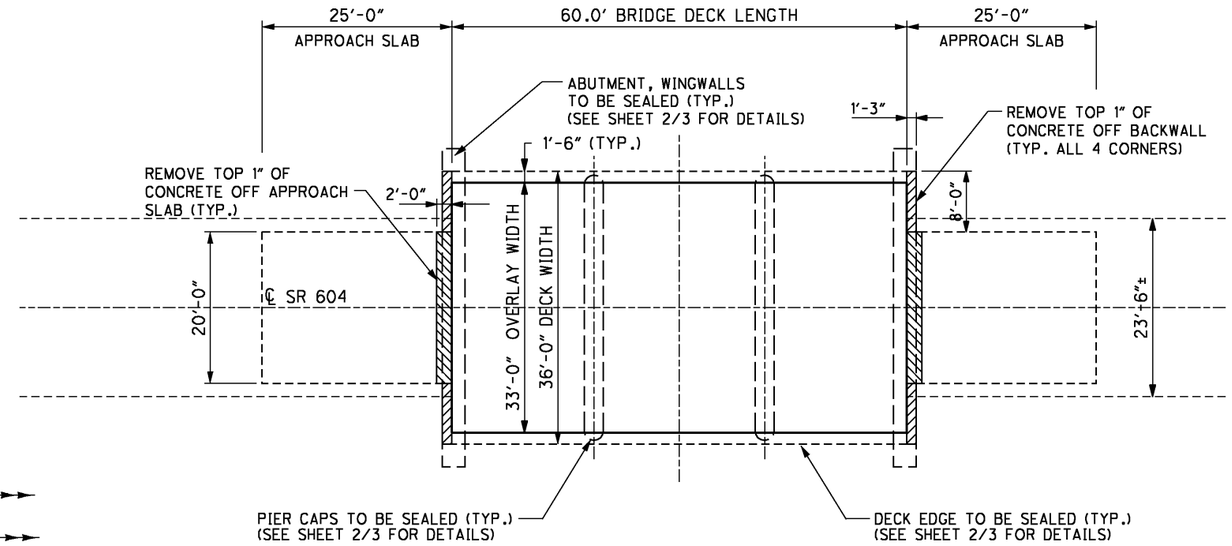

PLAN VIEW

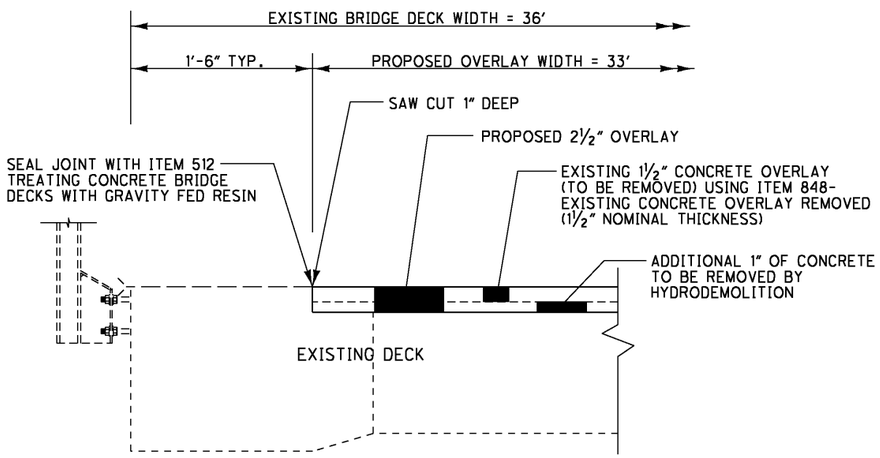

OVERLAY DETAIL

ITEM	QUANTITY	UNIT	DESCRIPTION
202	14	SQ YD	REMOVAL MISC.: CONCRETE
512	5	SQ YD	TREATING CONCRETE BRIDGE DECKS WITH GRAVITY FED RESIN
848	220	SQ YD	MICRO SILICA MODIFIED CONCRETE OVERLAY USING HYDRODEMOLITION, AS PER PLAN (2½" THICK)
848	220	SQ YD	SURFACE PREPARATION USING HYDRODEMOLITION
848	7	CU YD	MICRO SILICA MODIFIED CONCRETE OVERLAY (VARIABLE THICKNESS), MATERIAL ONLY, AS PER PLAN
848	7	SQ YD	HAND CHIPPING
848	LUMP		TEST SLAB
848	1	CU YD	FULL-DEPTH REPAIR
848	220	SQ YD	EXISTING CONCRETE OVERLAY REMOVED, AS PER PLAN (1½" NOMINAL THICKNESS)
848	11	SQ YD	REMOVAL OF DEBONDED OR DETERIORATED EXISTING VARIABLE THICKNESS CONCRETE OVERLAY

ALL QUANTITIES CARRIED TO STRUCTURE SUMMARY SHEET

NOTES:

1. GUARDRAIL NOT SHOWN.
2. THE EXISTING CONCRETE OVERLAY AND DECK SURFACES 33'-0" WIDE SHALL BE REMOVED USING ITEM 848-EXISTING CONCRETE OVERLAY REMOVED (1½" NOMINAL THICKNESS) AND AN ADDITIONAL 1" OF EXISTING CONCRETE DECK OVER THE 33'-0" WIDTH SHALL BE REMOVED USING ITEM 848-SURFACE PREPARATION USING HYDRODEMOLITION.
3. REMOVE CONCRETE OVERLAY OFF THE TOP OF THE BACKWALL AND A PORTION OF THE APPROACH SLAB WITH ITEM 202-REMOVAL MISC.: CONCRETE.
4. 33'-0" OF THE BRIDGE DECK SHALL BE OVERLAYED USING ITEM 848-MICRO SILICA MODIFIED CONCRETE OVERLAY USING HYDRODEMOLITION (2½" THICKNESS).
5. SEAL OVERLAY JOINT 4" WIDE, 2" ON EACH SIDE OF JOINT USING ITEM 512-TREATING CONCRETE BRIDGE DECKS WITH GRAVITY FED RESIN.
6. THE DECK EDGES, ENDS OF THE PIER CAPS, AND ALL EXPOSED AREAS OF THE WINGWALLS SHALL BE SEALED AS DETAILED ON SHEET 2/3 USING ITEM 512.

DESIGN AGENCY
DISTRICT THREE
OFFICE OF PRODUCTION

DESIGNED GTS | CHECKED DJV | DRAWN GTS | REVISED | REVIEWED RDN | DATE 11-07 | STRUCTURE FILE NUMBER 8506426

PLAN VIEW
WAY-604-0899 OVER LITTLE KILLBUCK CREEK

ASD-604-0.00
WAY-604-(0.00) (4.19)
WAY-539-8.24

1 / 3

47 / 54

DESIGN FILE=PROJECTS\25671\STRUCT\ASD604000\WAY604-0899SD1.DGN
WORKSTATION=
LAY DATE=1/9/2007

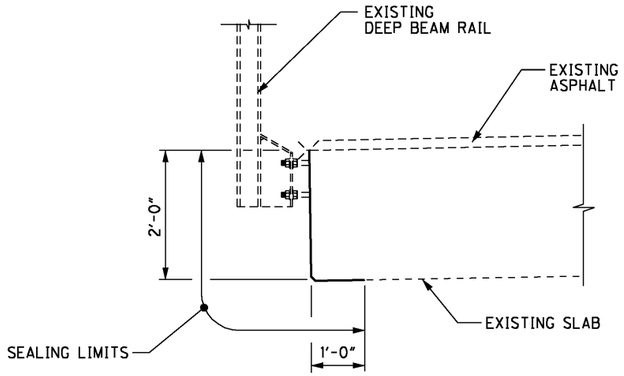

TYPICAL DECK EDGE SEALING

(BEAM SEALING LENGTH = 60'-0"±)

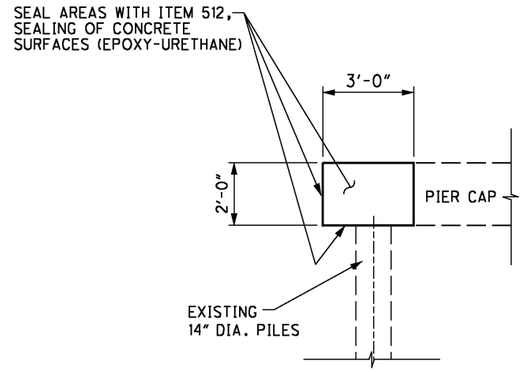

TYPICAL PIER CAP SEALING

(PIER CAP WIDTH = 2'-6")

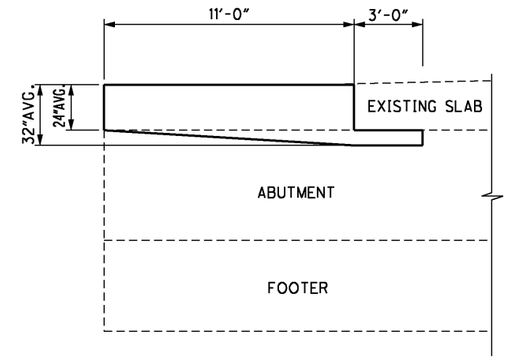

TYPICAL WINGWALL SECTION

(WINGWALLS ARE 1'-3" WIDE)

ITEM	QUANTITY	UNIT	DESCRIPTION
512	66	SQ YD	SEALING OF CONCRETE SURFACES (EPOXY-URETHANE)

ALL QUANTITIES CARRIED TO STRUCTURE SUMMARY SHEET

NOTES:

1) SEAL ABUTMENT FACE, PIER CAP AND ALL EXPOSED AREAS OF WINGWALLS AS DETAILED ON THIS SHEET.

DESIGN AGENCY
DISTRICT THREE
OFFICE OF PRODUCTION

DESIGNED	CHECKED	DRAWN	REVISED	REVIEWED	DATE	STRUCTURE FILE NUMBER
GTS	DJV	GTS		RDN	11-07	8506426

SEALING DETAILS
WAY-604-0899 OVER LITTLE KILLBUCK CREEK

ASD-604-0.00
WAY-604-(0.00) (4.19)
WAY-539-8.24

DESIGN FILE=PROJECTS\25671\STRUCT\ASD604000\WAY604-0899SD2.DGN
WORKSTATION=GTS DATE=1/9/2007

SIGNAL TIMING

A TWO PHASE CONTROLLER WITH CABINET CAPABLE OF BEING SET WITH THE FOLLOWING SPLITS SHALL BE FURNISHED

CYCLE LENGTH: 60 SECONDS

	GREEN	AMBER	RED
PHASE A	15	5	10
PHASE B	15	5	10

THE ABOVE TIMING MAYBE CHANGED WITH THE APPROVAL OF THE ENGINEER

FOR DETAILS NOT SHOWN SEE STANDARD DRAWINGS

MT-96.10, MT-96.20, MT-96.25, MT-101.20

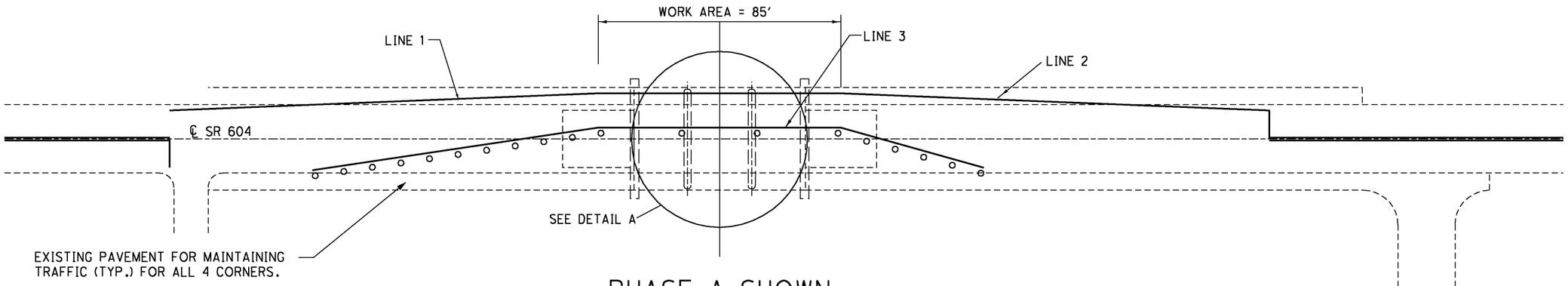

PHASE A SHOWN
PHASE B SIMILAR

WORK ZONE RAISED PAVEMENT MARKERS (TYPE A)				
		SPACING	QTY. (WHITE)	QTY. (YELLOW)
PHASE A	LINE 1= 235'	5'-0"	48	48
	LINE 2= 150'	5'-0"	30	
	LINE 3= 85'	5'-0"	18	18
PHASE B	LINE 1= 235'	5'-0"	48	48
	LINE 2= 150'	5'-0"	30	
	LINE 3= 85'	5'-0"	18	18
		TOTAL	192	132

ITEM	QUANTITY	UNIT	DESCRIPTION
614	324	EACH	WORK ZONE RAISED PAVEMENT MARKER
614	14	EACH	BARRIER REFLECTOR, TYPE A2
614	.06	MILE	WORK ZONE CENTER LINE, CLASS 1 (SOLID DOUBLE)
614	.04	MILE	WORK ZONE EDGE LINE, CLASS 1 (WHITE)
614	24	FT.	WORK ZONE STOP LINE, CLASS 1

ALL QUANTITIES CARRIED TO STRUCTURE SUMMARY SHEET.

NOTES:

1) THE EXISTING BRIDGE RAILING AND GUARDRAIL ARE NOT SHOWN IN THE PLAN VIEW

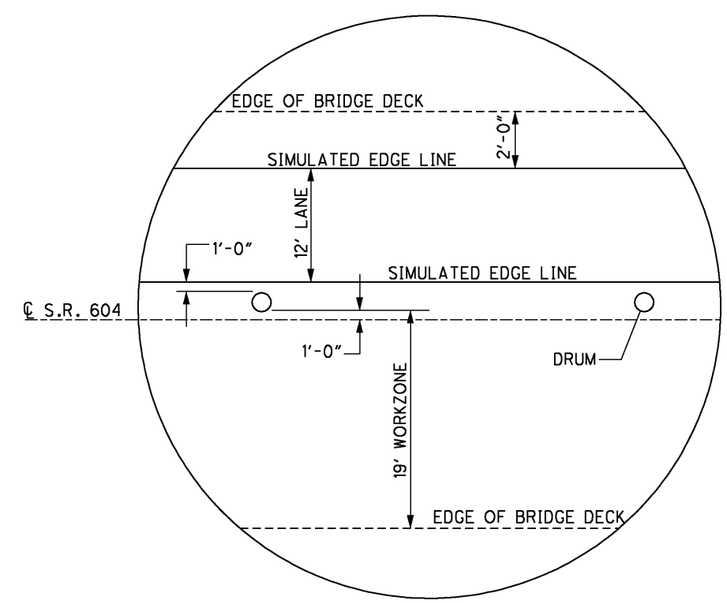

DETAIL A

DESIGN FILE: I:\projects\25671\B\Struct\ASD604000\WAY604-0899sd3.dgn
WORKSTATION: ksalay DATE: 11/9/2007

DESIGN AGENCY
DISTRICT 3
OFFICE OF PRODUCTION

DESIGNED	DRAWN	REVIEWED	DATE
GTS	GTS	RDN	11-07
CHECKED	REVISED	STRUCTURAL FILE NUMBER	
DJV		8506426	

PLAN VIEW
WAY-604-0899 OVER LITTLE KILLBUCK CREEK

ASD-604-0.00
WAY-604-(0.00) (4.19)
WAY-539-8.24

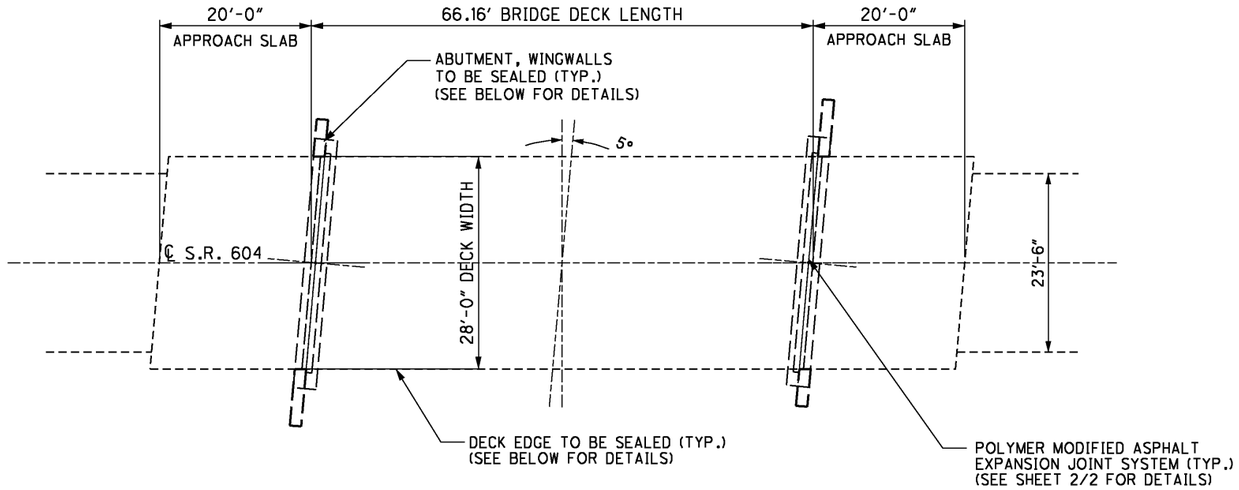

PLAN VIEW

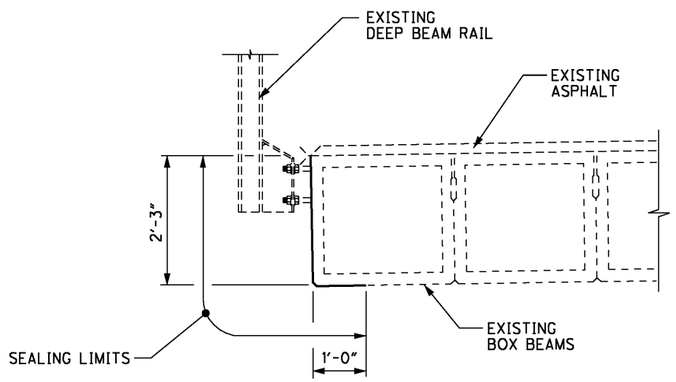

TYPICAL DECK EDGE SEALING

(BEAM SEALING LENGTH = 66'-2"±)

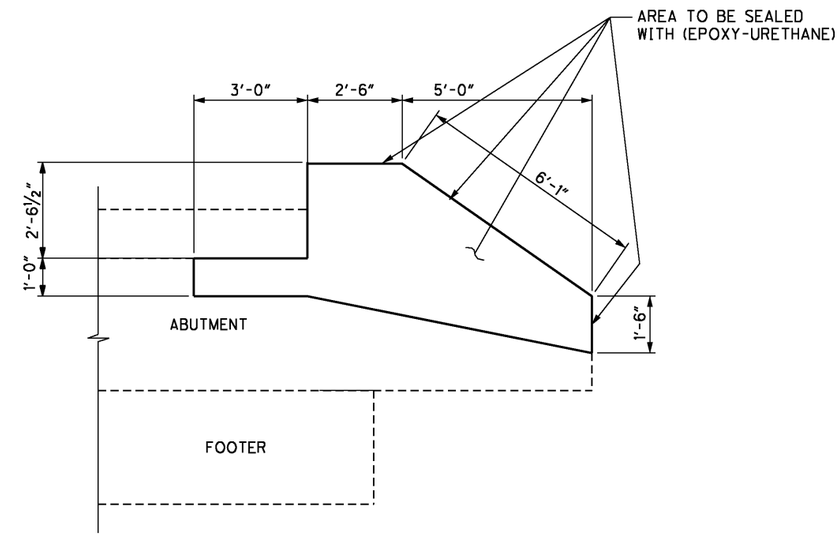

TYPICAL WINGWALL SECTION

(WINGWALLS ARE 1'-6" WIDE)

ITEM	QUANTITY	UNIT	DESCRIPTION
254	330	SQ YD	PAVEMENT PLANING, ASPHALT CONCRETE
407	26	GALLON	TACK COAT
407	10	GALLON	TACK COAT FOR INTERMEDIATE COURSE
442	11	CU YD	ASPHALT CONCRETE SURFACE COURSE, 9.5MM, TYPE A (446), AS PER PLAN
442	7	CU YD	ASPHALT CONCRETE INTERMEDIATE COURSE, 9.5MM, TYPE A (448), AS PER PLAN
512	66	SQ YD	SEALING OF CONCRETE SURFACES (EPOXY-URETHANE)
SPECIAL	57	FT	POLYMER MODIFIED ASPHALT EXPANSION JOINT SYSTEM

ALL QUANTITIES CARRIED TO STRUCTURE SUMMARY SHEET

NOTES:

1) GUARDRAIL NOT SHOWN.
2) SEAL DECK EDGE WITH ITEM 512.
4) SEAL ABUTMENT FACE AND ALL EXPOSED AREAS OF WINGWALLS AS DETAILED ON THIS SHEET.
3) PLACE A POLYMER MODIFIED ASPHALT EXPANSION JOINT SYSTEM AT EACH ABUTMENT AS DETAILED ON SHEET 2/2.

DESIGN AGENCY
DISTRICT THREE
OFFICE OF PRODUCTION

DESIGNED	DRAWN	REVIEWED	DATE
GTS	GTS	RDN	11-07
CHECKED	REVISED	STRUCTURE FILE NUMBER	
DJV		8506523	

PLAN VIEW
WAY-604-1307 OVER CHIPPEWA CREEK

ASD-604-0.00
WAY-604-(0.00) (4.19)
WAY-539-8.24

1 / 2

50 / 54

DESIGN FILE: E:\PROJECTS\25671\STRUCT\ASD604000\WAY604-1307SD1.DGN
WORKSTATION: DATE: 1/9/2007

GENERAL NOTES AND DETAILS FOR POLYMER MODIFIED ASPHALT EXPANSION JOINT SYSTEM

ITEM SPECIAL - POLYMER-MODIFIED ASPHALT EXPANSION JOINT SYSTEM

THIS ITEM WILL BE USED TO SEAL THE EXPANSION/CONTRACTION JOINTS AS PER THESE DETAILS AND THE MANUFACTURER'S REQUIREMENTS USING A POLYMER-MODIFIED ASPHALT SYSTEM. THE PRIME CONTRACTOR WILL OBTAIN THE SERVICES OF ONE OF THE FOLLOWING APPROVED APPLICATORS WHO WILL FURNISH AND INSTALL THE NEW BRIDGE EXPANSION JOINT SYSTEM AFTER ALL PAVING ON THE AFFECTED BRIDGE(S) HAS BEEN COMPLETED.

PRODUCT NAME	SUPPLIER	ADDRESS	PHONE NO.
THORMA-JOINT	DYNAMIC SURFACE APPLICATIONS, LTD	373 VILLAGE RD. PENNSDALE, PA 17756	(570)546-6041
MATRIX 502	CRAFCO INC.	420 N. ROOSEVELT AVE. CHANDLER, AZ 85226	(800)528-8242
EXPANDEX JOINT SYSTEM	WATSON-BOWMAN ACME	95 PINEVIEW DR. AMHERST, NY 14228	(716)691-7566
APJ ASPHALTIC PLUG EXPANSION JOINT	WYOMING EQUIPMENT SALES	281 SIXTH STREET P.O. BOX 287 WEST WYOMING, PA 18644	(570)693-2810

MATERIALS:

BRIDGING PLATE:

MILD STEEL 1/8" OR 1/4" THICK PLATE, 8" WIDE OR 18 GAUGE ALUMINUM, 8" WIDE.

BINDER:

TYPE:	POLYMER MODIFIED ASPHALT
SOFTENING POINT:	180 DEGREES F. MIN.
FLOW:	3 mm. MAX. AT 140 DEGREES F.
PENETRATION:	9 mm. MAX. AT 77 DEGREES F. 1 mm. MIN AT 0 DEGREES F. ASTM D 3407
DUCTILITY:	40 cm. MIN. ASTM D 113
RESILIENCE:	60% MIN. AT 77 DEGREES F.
TENSILE ADHESION:	700% MIN.
SPECIFIC GRAVITY:	1.10 * 0.05
POURING TEMP:	350 - 390 DEGREES F.

AGGREGATE:

TYPE:	CRUSHED, DOUBLE WASHED, AND DRIED GRANITE OR BASALT
GRADATION	THE GRADATION OF THE AGGREGATE VARIES BY MANUFACTURER AND WILL BE AS PER THE MANUFACTURER'S RECOMMENDATIONS FOR THE SYSTEM BEING USED ON THIS PROJECT.

BACKER ROD:

THE BACKER SHALL BE A CLOSED CELL FOAM EXPANSION JOINT FILLER CAPABLE OF WITHSTANDING THE PLACEMENT TEMPERATURE OF THE POLYMER MODIFIED ASPHALT.

NOTE: PRIOR TO PLACEMENT OF ANY PORTION OF THE JOINT SYSTEM, THE PROJECT ENGINEER MUST HAVE CERTIFIED TEST DATA MEETING ALL THE MINIMUM REQUIREMENTS OF ALL THE MATERIALS OF THE JOINT SYSTEM.

INSTALLATION PROCEDURES:

SAWING AND SURFACE PREPARATION:

AFTER ALL PAVING OPERATIONS ARE COMPLETE, THE OVERLAY IS TO BE TRANSVERSELY SAW CUT FULL DEPTH NO LESS THAN TWO INCHES DEEP (20" CENTERED OVER JOINT OPENING, UNLESS OTHERWISE NOTED). REMOVE ALL MATERIAL, INCLUDING WATER-PROOFING MATERIAL, BETWEEN SAW CUTS. THOROUGHLY CLEAN AND DRY EXPOSED CONCRETE, STEEL, AND CUT SURFACES USING COMPRESSED AIR AND A HOT COMPRESSED AIR (HCA) LANCE. THE LANCE MUST PRODUCE A FLAME RETARDED AIR STREAM TEMPERATURE OF 3000 DEGREES F. AT A VELOCITY OF 3,000 FEET PER SECOND WITH 15 PSIG CHAMBER PRESSURE. IF THERE IS AN INTERRUPTION DUE TO WEATHER OR OTHER CAUSES, THE OPERATION WILL BE REPEATED WITH THE HCA LANCE IMMEDIATELY BEFORE THE BINDER COAT OPERATION. ALSO, 6 INCHES OF THE ROAD SURFACE ON EITHER SIDE OF THE JOINT WILL BE DRIED SO THAT A SUITABLE SURFACE FOR BITUMEN ADHESION IS OBTAINED.

SEALING OF EXPANSION JOINT: (PRE-STRESSED BOX OR CONCRETE SLAB)

THE EXPANSION JOINT GAP IS TO BE SEALED AND A BRIDGING PLATE CENTERED ALONG IT. A VERY NARROW GAP WILL BE SEALED BY POURING HOT BINDER INTO THE GAP. GAPS OF 1/8" OR MORE WILL FIRST BE FILLED WITH AN APPROPRIATELY SIZED BACKER ROD. THE BACKER ROD WILL BE INSTALLED SO THAT IT IS BETWEEN 1/8" AND 1-1/8" BELOW THE TOP OF THE EXISTING GAP. THE GAP WILL THEN BE FILLED WITH BINDER.

BOND BREAKER:

SPREAD BINDER OVER SURFACE AREA WHERE THE METAL BRIDGING PLATE WILL BE PLACED. CENTER THE BRIDGING PLATE OVER THE EXISTING JOINT AND BED INTO THE HOT BINDER. BUTT JOINT THE BRIDGING PLATES TO ACCOMODATE THE ENTIRE JOINT LENGTH. SPIKE HOLES WILL BE DRILLED AT 1 FOOT INTERVALS ALONG THE LONGITUDINAL CENTERLINE OF THE PLATES. SECURE BRIDGING PLATE WITH NAILS OR SPIKES. SEAL BUTT JOINTS WITH HOT BINDER AND ALLOW BINDER TO SETUP BEFORE NEXT OPERATION. WHEN ALUMINUM BRIDGING PLATES ARE USED, ONLY THE BINDER IS REQUIRED TO SECURE THE INDIVIDUAL PLATES.

BINDER COAT:

SEAL ALL PREPARED, EXPOSED SURFACES OF THE JOINT WITH BINDER. POUR THE HOT BINDER OVER THE FLOOR AREA OF THE JOINT AND SPREAD TO COAT ALL EXPOSED SURFACES. THE BINDER WILL BE A MINIMUM OF 1/32" THICK ON THE BOTTOM OF THE JOINT CAVITY, WITH POOLS OF GREATER THICKNESS WHERE SURFACE IRREGULARITIES EXIST. THE BINDER APPLICATION TEMPERATURE WILL BE BETWEEN 350 AND 390 DEGREES F. THE BINDER WILL NOT BE ALLOWED TO BE HEATED ABOVE 410 DEGREES F. NOR ALLOWED TO EXCEED 390 DEGREES F. FOR MORE THAN 1 HOUR. A DOUBLE JACKETED OIL MELTER WILL BE USED TO HEAT THE BINDER. THE MELTER WILL BE EQUIPPED WITH A CONTINUOUS AGITATION SYSTEM, TEMPERATURE CONTROLS, AND A CALIBRATED THERMOMETER. ALSO A SYSTEM FOR ACCURATELY MEASURING THE WEIGHTS OF THE BINDER AND THE AGGREGATE WILL BE REQUIRED.

BUILD-UP OF JOINT LAYERS:

AGGREGATE PREPARATION:

HEAT THE AGGREGATE TO A TEMPERATURE OF 275 TO 325 DEGREES F., WITH A SUITABLE ROTATING DRUM WITH ATTACHED HEAT SOURCE OR A HOT COMPRESSED AIR LANCE, TO REMOVE DUST AND MOISTURE.

AGGREGATE PROPORTION AND LAYER THICKNESS:

MIX THE AGGREGATE WITH THE BINDER SUCH THAT THE MINIMUM AGGREGATE CONTENT BY WEIGHT WILL BE 68%. THE HEATED AGGREGATE AND BINDER WILL BE COMBINED IN LAYERS, UNLESS PATENTED INSTALLATION REQUIRES DIFFERENTLY, NOT LESS THAN 3/4 OF AN INCH NOR EXCEEDING 2-1/2 INCHES. THE THICKNESS OF EACH LAYER CAN BE VARIED WITHIN THESE LIMITS, TO ACHIEVE THE REQUIRED JOINT THICKNESS (MIN. 2 INCHES). THE OBJECTIVE IS TO COAT EACH STONE AND FILL THE VOIDS WHILE AVOIDING AN EXCESS OF BINDER. THIS WILL ACHIEVE THE MAXIMUM CONTENT OF STONE CONSISTENT WITH ALL STONES BEING COATED WITH BINDER. RAKE THE MIXTURE TO MIX AND LEVEL.

THE TOP LAYER THICKNESS WILL VARY BETWEEN 1/2 INCH AND ONE (1) INCH. IN PREPARING THE TOP LAYER, THE RATIO OF AGGREGATE TO BINDER WILL BE APPROXIMATELY 6:1 BY WEIGHT. OVERFILL THE TOP LAYER AND COMPACT TO THE LEVEL OF THE ADJACENT SURFACES USING A ROLLER OR VIBRATORY PLATE COMPACTOR. IMMEDIATELY AFTER COMPLETION OF THE COMPACTION, POUR SUFFICIENT BINDER OVER THE JOINT TO FILL THE SURFACE VOIDS AND COAT THE SURFACE STONE. DUST THE FINISHED JOINT WITH A FINE, DRY AGGREGATE TO PREVENT TACKINESS.

MAINTENANCE OF TRAFFIC:

IF NECESSARY TO FACILITATE TRAFFIC MAINTENANCE, THE JOINT WILL BE INSTALLED IN TWO (2) HALF-WIDTH PHASES. DURING PHASE 1 APPROXIMATELY HALF OF THE TOTAL JOINT WILL BE INSTALLED. DURING PHASE 2, A MINIMUM OF TWO (2) INCHES OF THE PHASE 1 JOINT WILL BE REMOVED, AT OR NEAR THE CENTERLINE, WITH THE REMAINDER OF THE JOINT INSTALLED. IN ALL CASES, OPERATIONS WILL BE SCHEDULED SO THAT ALL LANES CAN BE OPEN TO TRAFFIC DURING ALL NON-WORKING HOURS.

TESTING:

CERTIFICATION WILL BE SUPPLIED FOR EACH PROJECT SHOWING BINDER COMPLIANCE WITH REQUIRED PROPERTIES. A ONE QUART SAMPLE OF BINDER WILL BE RETRIEVED FROM EACH BRIDGE FOR FURTHER TESTING BY THE O.D.O.T OFFICE OF MATERIALS MANAGEMENT.

METHOD OF MEASUREMENT AND BASIS OF PAYMENT:

THE DEPARTMENT WILL MEASURE THE JOINT BY THE NUMBER OF FEET AND WILL PAY FOR ACCEPTED QUANTITIES INCLUDING THE REMOVAL OF THE EXISTING POLYMER JOINT AT THE CONTRACT PRICE AS: ITEM SPECIAL, FEET, POLYMER MODIFIED ASPHALT EXPANSION JONT SYSTEM.

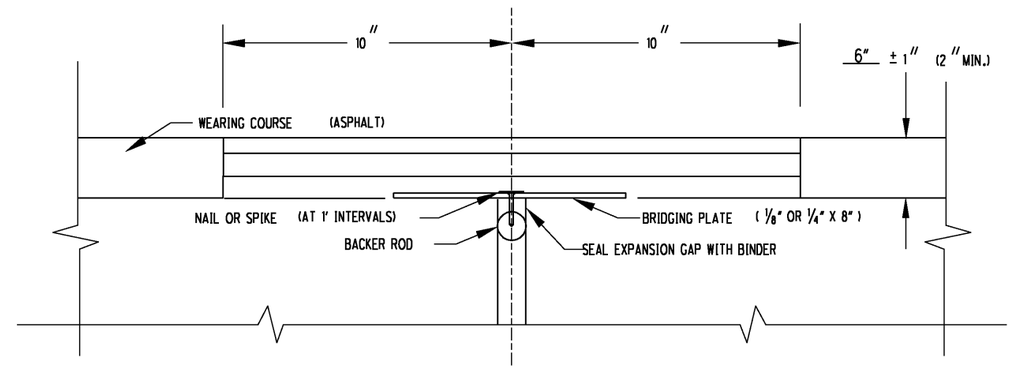

TYPICAL PRESTRESSED BOX BEAM

WAY-604-1307 SFN 8506523			
ITEM	DESCRIPTION	UNIT	QUANTITY
SPECIAL	POLYMER MODIFIED ASPHALT EXPANSION JOINT SYSTEM	FT	57

QUANTITY CARRIED TO SHEET NO. 1/2.

DESIGN FILE=PROJECTS\25871\STRUCT\ASD604000\WAY604-1307SD2.DGN
WORKSTATION=LAY DATE=1/9/2007

CALCULATED GTS CHECKED DJV
DATE REVISED 10-28-96 10-17-03 04-15-05
DESIGNED MAM DRAWN MAM

POLYMER MODIFIED ASPHALT EXPANSION JOINT SYSTEM
WAY-604-1307 OVER CHIPPEWA CREEK

ASD-604-0.00
WAY-604-(0.00) (4.19)
WAY-539-8.24

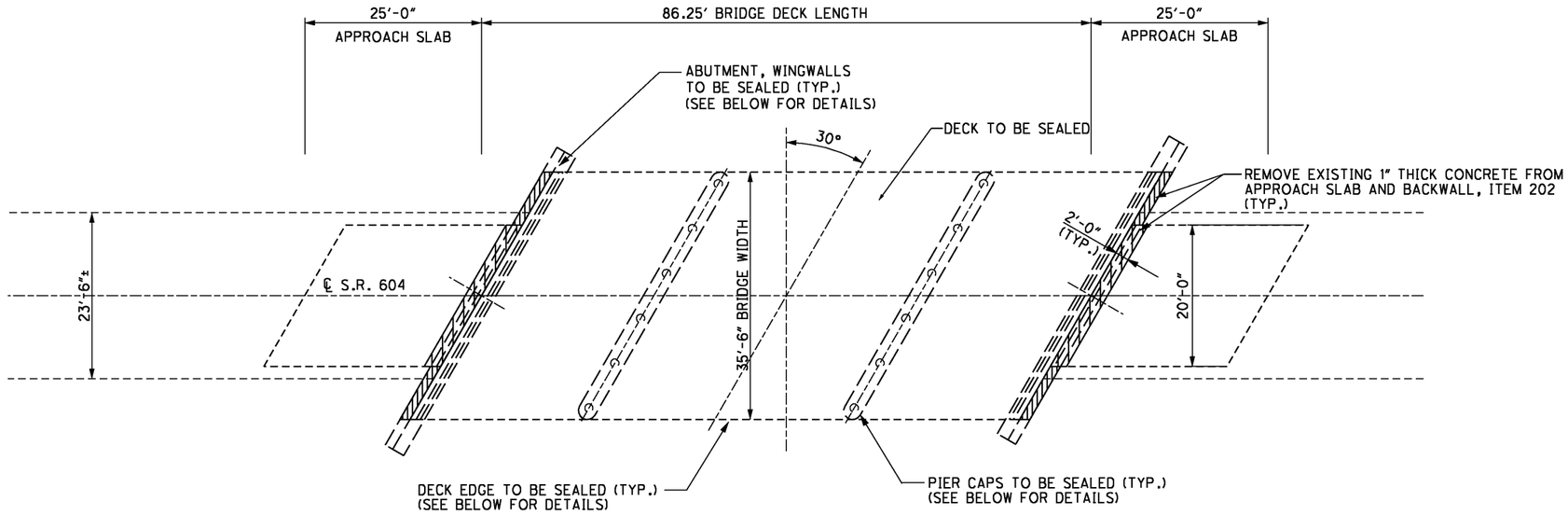

PLAN VIEW

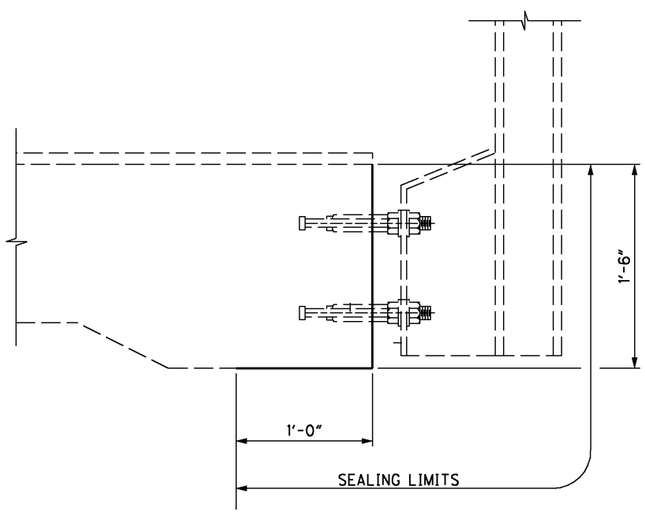

TYPICAL DECK EDGE SEALING
(BEAM SEALING LENGTH = 86'-3"±)

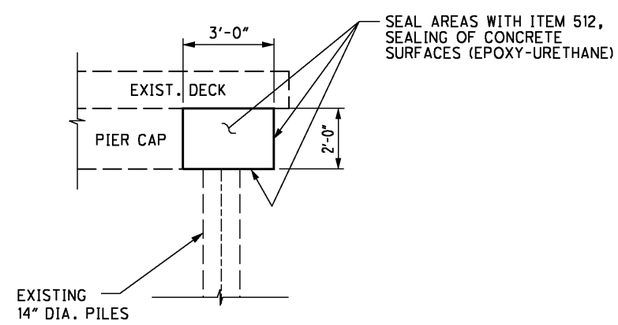

TYPICAL PIER CAP SEALING
(PIER CAP WIDTH=2'-6")

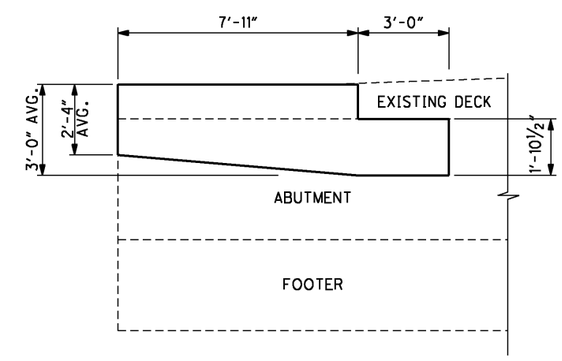

TYPICAL WINGWALL SECTION
(WINGWALLS ARE 1'-3" WIDE)

ITEM	QUANTITY	UNIT	DESCRIPTION
202	16	SQ YD	REMOVAL MISC.: CONCRETE
512	74	SQ YD	SEALING OF CONCRETE SURFACES (EPOXY-URETHANE)
512	340	SQ YD	TREATING OF CONCRETE BRIDGE DECK WITH SRS

ALL QUANTITIES CARRIED TO STRUCTURE SUMMARY SHEET

NOTES:

1) GUARDRAIL NOT SHOWN.
2) REMOVE EXISTING CONCRETE 1" THICK FROM APPROACH SLAB AND BACKWALL, ITEM 202-REMOVAL MISC.:CONCRETE
2) SEAL DECK EDGE WITH ITEM 512-SEALING OF CONCRETE SURFACES (EPOXY-URETHANE).
3) SEAL ENTIRE BRIDGE DECK WITH ITEM 512-TREATING OF CONCRETE BRIDGE DECK WITH SRS.
4) SEAL ABUTMENT FACE, PIER CAP AND ALL EXPOSED AREAS OF WINGWALLS AS DETAILED ON THIS SHEET.

DESIGN FILE=PROJECTS\25671\STRUCT\ASD604000\WAY604-1713SD.DGN
WORKSTATION=
PLAY DATE=1/9/2007

DESIGN AGENCY
DISTRICT THREE
OFFICE OF PRODUCTION

DESIGNED	DRAWN	REVIEWED	DATE
GTS	GTS	RDN	11-07
CHECKED	REVISED	STRUCTURE FILE NUMBER	
DJV		8506574	

PLAN VIEW
WAY-604-1713 OVER CHIPPEWA CREEK

ASD-604-0.00
WAY-604-(0.00) (4.19)
WAY-539-8.24

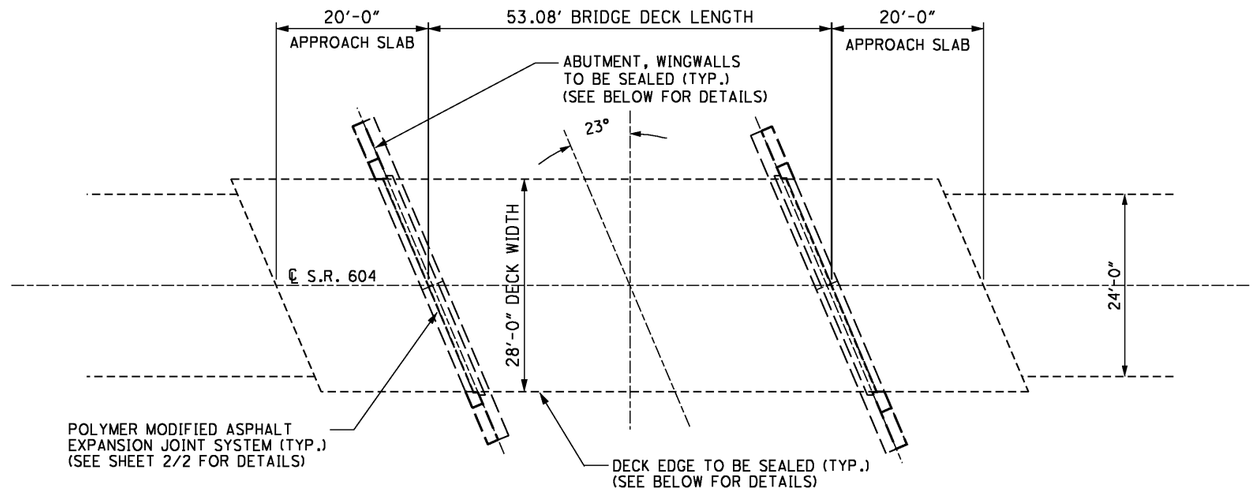

PLAN VIEW

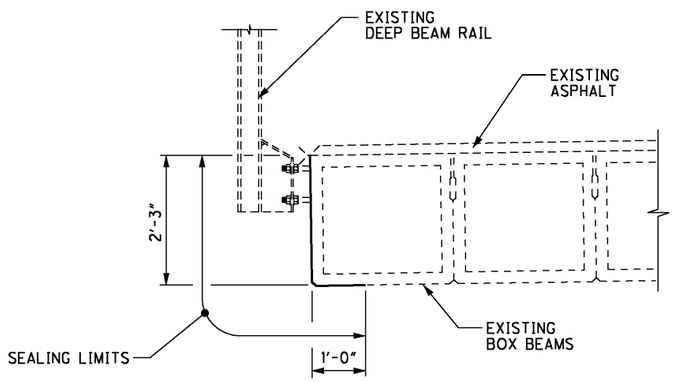

TYPICAL DECK EDGE SEALING

(BEAM SEALING LENGTH = 53'-0"±)

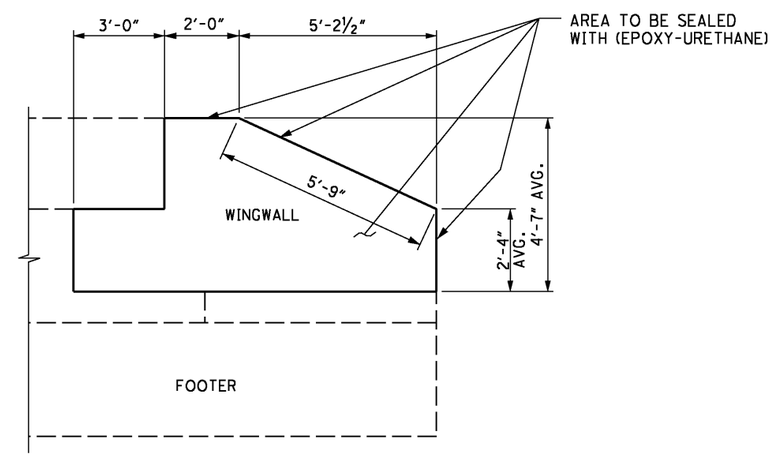

TYPICAL WINGWALL SECTION

(WINGWALLS ARE 1'-6" WIDE)

ITEM	QUANTITY	UNIT	DESCRIPTION
254	289	SQ YD	PAVEMENT PLANING, ASPHALT CONCRETE
407	23	GALLON	TACK COAT
407	9	GALLON	TACK COAT FOR INTERMEDIATE COURSE
442	10	CU YD	ASPHALT CONCRETE SURFACE COURSE, 9.5MM, TYPE A (446), AS PER PLAN
442	6	CU YD	ASPHALT CONCRETE INTERMEDIATE COURSE, 9.5MM, TYPE A (448), AS PER PLAN
512	61	SQ YD	SEALING OF CONCRETE SURFACES (EPOXY-URETHANE)
SPECIAL	61	FT	POLYMER MODIFIED ASPHALT EXPANSION JOINT SYSTEM

ALL QUANTITIES CARRIED TO STRUCTURE SUMMARY SHEET

NOTES:

1) GUARDRAIL NOT SHOWN.
2) SEAL DECK EDGE WITH ITEM 512.
3) PLACE A POLYMER MODIFIED ASPHALT EXPANSION JOINT SYSTEM AT EACH ABUTMENT AS DETAILED ON SHEET 2/2.

DESIGN FILE: PROJECTS\25671\STRUCT\ASD604000\WAY604-18115D1.DGN
WORKSTATION: DATE: 1/9/2007

DESIGN AGENCY
DISTRICT THREE
OFFICE OF PRODUCTION

DESIGNED	DRAWN	REVIEWED	DATE
GTS	GTS	RDN	11-07
CHECKED	REVISED	STRUCTURE FILE NUMBER	
DJV		8506701	

PLAN VIEW
WAY-604-1811 OVER SMALL CREEK

ASD-604-0.00
WAY-604-(0.00) (4.19)
WAY-539-8.24

1 / 2

53
54

GENERAL NOTES AND DETAILS FOR POLYMER MODIFIED ASPHALT EXPANSION JOINT SYSTEM

ITEM SPECIAL - POLYMER-MODIFIED ASPHALT EXPANSION JOINT SYSTEM

THIS ITEM WILL BE USED TO SEAL THE EXPANSION/CONTRACTION JOINTS AS PER THESE DETAILS AND THE MANUFACTURER'S REQUIREMENTS USING A POLYMER-MODIFIED ASPHALT SYSTEM. THE PRIME CONTRACTOR WILL OBTAIN THE SERVICES OF ONE OF THE FOLLOWING APPROVED APPLICATORS WHO WILL FURNISH AND INSTALL THE NEW BRIDGE EXPANSION JOINT SYSTEM AFTER ALL PAVING ON THE AFFECTED BRIDGE(S) HAS BEEN COMPLETED.

PRODUCT NAME	SUPPLIER	ADDRESS	PHONE NO.
THORMA-JOINT	DYNAMIC SURFACE APPLICATIONS, LTD	373 VILLAGE RD. PENNSDALE, PA 17756	(570)546-6041
MATRIX 502	CRAFCO INC.	420 N. ROOSEVELT AVE. CHANDLER, AZ 85226	(800)528-8242
EXPANDEX JOINT SYSTEM	WATSON-BOWMAN ACME	95 PINEVIEW DR. AMHERST, NY 14228	(716)691-7566
APJ ASPHALTIC PLUG EXPANSION JOINT	WYOMING EQUIPMENT SALES	281 SIXTH STREET P.O. BOX 287 WEST WYOMING, PA 18644	(570)693-2810

MATERIALS:

BRIDGING PLATE:

MILD STEEL 1/8" OR 1/4" THICK PLATE, 8" WIDE OR 18 GAUGE ALUMINUM, 8" WIDE.

BINDER:

TYPE:	POLYMER MODIFIED ASPHALT
SOFTENING POINT:	180 DEGREES F. MIN.
FLOW:	3 mm. MAX. AT 140 DEGREES F.
PENETRATION:	9 mm. MAX. AT 77 DEGREES F. 1 mm. MIN AT 0 DEGREES F. ASTM D 3407
DUCTILITY:	40 cm. MIN. ASTM D 113
RESILIENCE:	60% MIN. AT 77 DEGREES F.
TENSILE ADHESION:	700% MIN.
SPECIFIC GRAVITY:	1.10 * 0.05
POURING TEMP:	350 - 390 DEGREES F.

AGGREGATE:

TYPE:	CRUSHED, DOUBLE WASHED, AND DRIED GRANITE OR BASALT
GRADATION	THE GRADATION OF THE AGGREGATE VARIES BY MANUFACTURER AND WILL BE AS PER THE MANUFACTURER'S RECOMMENDATIONS FOR THE SYSTEM BEING USED ON THIS PROJECT.

BACKER ROD:

THE BACKER SHALL BE A CLOSED CELL FOAM EXPANSION JOINT FILLER CAPABLE OF WITHSTANDING THE PLACEMENT TEMPERATURE OF THE POLYMER MODIFIED ASPHALT.

NOTE: PRIOR TO PLACEMENT OF ANY PORTION OF THE JOINT SYSTEM, THE PROJECT ENGINEER MUST HAVE CERTIFIED TEST DATA MEETING ALL THE MINIMUM REQUIREMENTS OF ALL THE MATERIALS OF THE JOINT SYSTEM.

INSTALLATION PROCEDURES:

SAWING AND SURFACE PREPARATION:

AFTER ALL PAVING OPERATIONS ARE COMPLETE, THE OVERLAY IS TO BE TRANSVERSELY SAW CUT FULL DEPTH NO LESS THAN TWO INCHES DEEP (20" CENTERED OVER JOINT OPENING, UNLESS OTHERWISE NOTED). REMOVE ALL MATERIAL, INCLUDING WATER-PROOFING MATERIAL, BETWEEN SAW CUTS. THOROUGHLY CLEAN AND DRY EXPOSED CONCRETE, STEEL, AND CUT SURFACES USING COMPRESSED AIR AND A HOT COMPRESSED AIR (HCA) LANCE. THE LANCE MUST PRODUCE A FLAME RETARDED AIR STREAM TEMPERATURE OF 3000 DEGREES F. AT A VELOCITY OF 3,000 FEET PER SECOND WITH 15 PSIG CHAMBER PRESSURE. IF THERE IS AN INTERRUPTION DUE TO WEATHER OR OTHER CAUSES, THE OPERATION WILL BE REPEATED WITH THE HCA LANCE IMMEDIATELY BEFORE THE BINDER COAT OPERATION. ALSO, 6 INCHES OF THE ROAD SURFACE ON EITHER SIDE OF THE JOINT WILL BE DRIED SO THAT A SUITABLE SURFACE FOR BITUMEN ADHESION IS OBTAINED.

SEALING OF EXPANSION JOINT: (PRE-STRESSED BOX OR CONCRETE SLAB)

THE EXPANSION JOINT GAP IS TO BE SEALED AND A BRIDGING PLATE CENTERED ALONG IT. A VERY NARROW GAP WILL BE SEALED BY POURING HOT BINDER INTO THE GAP. GAPS OF 1/8" OR MORE WILL FIRST BE FILLED WITH AN APPROPRIATELY SIZED BACKER ROD. THE BACKER ROD WILL BE INSTALLED SO THAT IT IS BETWEEN 1/8" AND 1-1/8" BELOW THE TOP OF THE EXISTING GAP. THE GAP WILL THEN BE FILLED WITH BINDER.

BOND BREAKER:

SPREAD BINDER OVER SURFACE AREA WHERE THE METAL BRIDGING PLATE WILL BE PLACED. CENTER THE BRIDGING PLATE OVER THE EXISTING JOINT AND BED INTO THE HOT BINDER. BUTT JOINT THE BRIDGING PLATES TO ACCOMODATE THE ENTIRE JOINT LENGTH. SPIKE HOLES WILL BE DRILLED AT 1 FOOT INTERVALS ALONG THE LONGITUDINAL CENTERLINE OF THE PLATES. SECURE BRIDGING PLATE WITH NAILS OR SPIKES. SEAL BUTT JOINTS WITH HOT BINDER AND ALLOW BINDER TO SETUP BEFORE NEXT OPERATION. WHEN ALUMINUM BRIDGING PLATES ARE USED, ONLY THE BINDER IS REQUIRED TO SECURE THE INDIVIDUAL PLATES.

BINDER COAT:

SEAL ALL PREPARED, EXPOSED SURFACES OF THE JOINT WITH BINDER. POUR THE HOT BINDER OVER THE FLOOR AREA OF THE JOINT AND SPREAD TO COAT ALL EXPOSED SURFACES. THE BINDER WILL BE A MINIMUM OF 1/32" THICK ON THE BOTTOM OF THE JOINT CAVITY, WITH POOLS OF GREATER THICKNESS WHERE SURFACE IRREGULARITIES EXIST. THE BINDER APPLICATION TEMPERATURE WILL BE BETWEEN 350 AND 390 DEGREES F. THE BINDER WILL NOT BE ALLOWED TO BE HEATED ABOVE 410 DEGREES F. NOR ALLOWED TO EXCEED 390 DEGREES F. FOR MORE THAN 1 HOUR. A DOUBLE JACKETED OIL MELTER WILL BE USED TO HEAT THE BINDER. THE MELTER WILL BE EQUIPPED WITH A CONTINUOUS AGITATION SYSTEM, TEMPERATURE CONTROLS, AND A CALIBRATED THERMOMETER. ALSO A SYSTEM FOR ACCURATELY MEASURING THE WEIGHTS OF THE BINDER AND THE AGGREGATE WILL BE REQUIRED.

BUILD-UP OF JOINT LAYERS:

AGGREGATE PREPARATION:

HEAT THE AGGREGATE TO A TEMPERATURE OF 275 TO 325 DEGREES F., WITH A SUITABLE ROTATING DRUM WITH ATTACHED HEAT SOURCE OR A HOT COMPRESSED AIR LANCE, TO REMOVE DUST AND MOISTURE.

AGGREGATE PROPORTION AND LAYER THICKNESS:

MIX THE AGGREGATE WITH THE BINDER SUCH THAT THE MINIMUM AGGREGATE CONTENT BY WEIGHT WILL BE 68%. THE HEATED AGGREGATE AND BINDER WILL BE COMBINED IN LAYERS, UNLESS PATENTED INSTALLATION REQUIRES DIFFERENTLY, NOT LESS THAN 3/4 OF AN INCH NOR EXCEEDING 2-1/2 INCHES. THE THICKNESS OF EACH LAYER CAN BE VARIED WITHIN THESE LIMITS, TO ACHIEVE THE REQUIRED JOINT THICKNESS (MIN. 2 INCHES). THE OBJECTIVE IS TO COAT EACH STONE AND FILL THE VOIDS WHILE AVOIDING AN EXCESS OF BINDER. THIS WILL ACHIEVE THE MAXIMUM CONTENT OF STONE CONSISTENT WITH ALL STONES BEING COATED WITH BINDER. RAKE THE MIXTURE TO MIX AND LEVEL.

THE TOP LAYER THICKNESS WILL VARY BETWEEN 1/2 INCH AND ONE (1) INCH. IN PREPARING THE TOP LAYER, THE RATIO OF AGGREGATE TO BINDER WILL BE APPROXIMATELY 6:1 BY WEIGHT. OVERFILL THE TOP LAYER AND COMPACT TO THE LEVEL OF THE ADJACENT SURFACES USING A ROLLER OR VIBRATORY PLATE COMPACTOR. IMMEDIATELY AFTER COMPLETION OF THE COMPACTION, POUR SUFFICIENT BINDER OVER THE JOINT TO FILL THE SURFACE VOIDS AND COAT THE SURFACE STONE. DUST THE FINISHED JOINT WITH A FINE, DRY AGGREGATE TO PREVENT TACKINESS.

MAINTENANCE OF TRAFFIC:

IF NECESSARY TO FACILITATE TRAFFIC MAINTENANCE, THE JOINT WILL BE INSTALLED IN TWO (2) HALF-WIDTH PHASES. DURING PHASE 1 APPROXIMATELY HALF OF THE TOTAL JOINT WILL BE INSTALLED. DURING PHASE 2, A MINIMUM OF TWO (2) INCHES OF THE PHASE 1 JOINT WILL BE REMOVED, AT OR NEAR THE CENTERLINE, WITH THE REMAINDER OF THE JOINT INSTALLED. IN ALL CASES, OPERATIONS WILL BE SCHEDULED SO THAT ALL LANES CAN BE OPEN TO TRAFFIC DURING ALL NON-WORKING HOURS.

TESTING:

CERTIFICATION WILL BE SUPPLIED FOR EACH PROJECT SHOWING BINDER COMPLIANCE WITH REQUIRED PROPERTIES. A ONE QUART SAMPLE OF BINDER WILL BE RETRIEVED FROM EACH BRIDGE FOR FURTHER TESTING BY THE O.D.O.T OFFICE OF MATERIALS MANAGEMENT.

METHOD OF MEASUREMENT AND BASIS OF PAYMENT:

THE DEPARTMENT WILL MEASURE THE JOINT BY THE NUMBER OF FEET AND WILL PAY FOR ACCEPTED QUANTITIES INCLUDING THE REMOVAL OF THE EXISTING POLYMER JOINT AT THE CONTRACT PRICE AS: ITEM SPECIAL, FEET, POLYMER MODIFIED ASPHALT EXPANSION JONT SYSTEM.

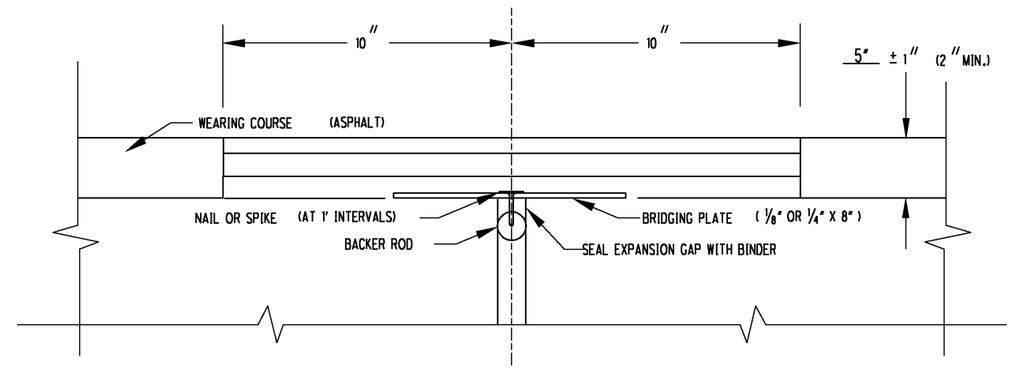

TYPICAL PRESTRESSED BOX BEAM

WAY-604-1811 SFN 8506701			
ITEM	DESCRIPTION	UNIT	QUANTITY
SPECIAL	POLYMER MODIFIED ASPHALT EXPANSION JOINT SYSTEM	FT	61

QUANTITY CARRIED TO SHEET NO. 1/2.

DESIGN FILE=PROJECTS\25671\STRUCT\ASD604000\WAY604-1811SD2.DGN
WORKSTATION=DATE=1/9/2007

CALCULATED GTS CHECKED DJV
DATE REVISED 10-28-96 10-17-03 04-15-05
DESIGNED MAM DRAWN MAM

POLYMER MODIFIED ASPHALT EXPANSION JOINT SYSTEM
WAY-604-1811 OVER SMALL CREEK

ASD-604-0.00
WAY-604-(0.00) (4.19)
WAY-539-8.24

SPECIAL PROVISIONS

WATERWAY PERMITS
FOR

CRS: ASD - SR604-0.00 (25671)

U.S. ARMY CORPS OF ENGINEERS
PERMIT NUMBER:
#3

OHIO EPA
PERMIT NUMBER: N/A

EFFECTIVE DATE: November 5, 2007

NATIONWIDE PERMIT #3 – MAINTENANCE

(a) The repair, rehabilitation, or replacement of any previously authorized, currently serviceable, structure, or fill, or of any currently serviceable structure or fill authorized by 33 CFR 330.3, provided that the structure or fill is not to be put to uses differing from those uses specified or contemplated for it in the original permit or the most recently authorized modification. Minor deviations in the structure's configuration or filled area, including those due to changes in materials, construction techniques, or current construction codes or safety standards that are necessary to make the repair, rehabilitation, or replacement are authorized. This NWP authorizes the repair, rehabilitation, or replacement of those structures or fills destroyed or damaged by storms, floods, fire or other discrete events, provided the repair, rehabilitation, or replacement is commenced, or is under contract to commence, within two years of the date of their destruction or damage. In cases of catastrophic events, such as hurricanes or tornadoes, this two-year limit may be waived by the district engineer, provided the permittee can demonstrate funding, contract, or other similar delays.

(b) This NWP also authorizes the removal of accumulated sediments and debris in the vicinity of and within existing structures (e.g., bridges, culverted road crossings, water intake structures, etc.) and the placement of new or additional riprap to protect the structure. The removal of sediment is limited to the minimum necessary to restore the waterway in the immediate vicinity of the structure to the approximate dimensions that existed when the structure was built, but cannot extend further than 200 feet in any direction from the structure. This 200 foot limit does not apply to maintenance dredging to remove accumulated sediments blocking or restricting outfall and intake structures or to maintenance dredging to remove accumulated sediments from canals associated with outfall and intake structures. All dredged or excavated materials must be deposited and retained in an upland area unless otherwise specifically approved by the district engineer under separate authorization. The placement of riprap must be the minimum necessary to protect the structure or to ensure the safety of the structure. Any bank stabilization measures not directly associated with the structure will require a separate authorization from the district engineer.

(c) This NWP also authorizes temporary structures, fills, and work necessary to conduct the maintenance activity. Appropriate measures must be taken to maintain normal downstream flows and minimize flooding to the maximum extent practicable, when temporary structures, work, and discharges, including cofferdams, are necessary for construction activities, access fills, or dewatering of construction sites. Temporary fills must consist of materials, and be placed in a manner, that will not be eroded by expected high flows. Temporary fills must be removed in their entirety and the affected areas returned to pre-construction elevations. The areas affected by temporary fills must be revegetated, as appropriate.

(d) This NWP does not authorize maintenance dredging for the primary purpose of navigation or beach restoration. This NWP does not authorize new stream channelization or stream relocation projects.

Notification: For activities authorized by paragraph (b) of this NWP, the permittee must submit a pre-construction notification to the district engineer prior to commencing the activity (see general condition 27). Where maintenance dredging is proposed, the pre-construction notification must include information regarding the original design capacities and configurations of the outfalls, intakes, small impoundments, and canals. **(Sections 10 and 404)**

Note: This NWP authorizes the repair, rehabilitation, or replacement of any previously authorized structure or fill that does not qualify for the Clean Water Act Section 404(f) exemption for maintenance.

Nationwide 3 Specific Regional Conditions:

WATER QUALITY CERTIFICATION

Pursuant to Section 401 of the Federal Water Pollution Control Act, 33 U.S.C. Section 1341; Ohio Revised Code Chapters 119 and 6111; Ohio `Admtnistrati e'Ge e. (QAG) Chapters 3745-1, 3745-32, and 3745-47; and, Corps regional conditions public noticed on October 20, 2006, the director of the Ohio Environmental Protection Agency hereby certifies that the above referenced replacement Nationwide Permits (NWPs) I - as proposed in the March 12, 2007, *Federal Register* will comply with the applicable provisions of Sections 301, 302, 303, 306, and 307 of the Federal Water Pollution Control Act. These Certifications are specifically limited to 401 Certifications with respect to water pollution and do not relieve the applicant of further certifications or permits as may be necessary under applicable state and federal laws and/or local ordinances. Corps of Engineers Civil Works Projects in the State of Ohio are subject to the general and special limitations and conditions of this certification.

Water Quality Certification - Special Conditions:
The Ohio State Certification General Limitations and Conditions apply to this nationwide permit except as modified below:

Ohio State Certification Special Limitations and Conditions:

1 Bridge Replacement:

a. This Certification shall only authorize minor deviations from the existing structure's centerline, unless these deviations are necessary to follow current safety standards.

b. Bridge replacements shall not result in additional lanes unless necessary to follow current safety standards.

2. Maintenance or repair of existing fills (stabilization projects):

a. Minor Deviations from the original filled area are authorized provided these minor deviations are necessary to accommodate safety standards and/or new construction practices/methods/techniques and/or new materials available which

are necessary for the rehabilitationlreplacementlrepair; and,

b. This nationwide shall not authorize the replacement of existing structures that are open to the flow of water with structures that are not open to the flow of water.

3. Replacement vertical bulkheads:

a. For ship channels and harbors adjacent to federal navigation channels within the following harbors: Sandusky Harbor, Huron Harbor, Vermilion Harbor, Lorain Harbor, *Conneaut Harbor, Port Clinton Harbor, Rocky River Harbor,* Cleveland Harbor, Fairport Harbor, Ashtabula Harbor, and Toledo Harbor, 1,000 feet of existing vertical bulkheads may be replaced if recessed areas for aquatic habitat, or other aquatic habitat improvements, are incorporated within the design and construction of the replacement vertical bulkhead;

b. For all other areas, except Lake Erie, Lake Erie Islands, or Sandusky Bay, up to 1,000 feet of existing vertical bulkheads may be replaced. Toe stone shall be placed at the base of these replacement vertical bulkheads except in areas where the shoreline is composed of bedrock and slopes are predominately greater than 75 percent;

c. Replacement vertical bulkheads are not to be placed more than an average of one foot waterward of the intersection of the ordinary high water level of the waterbody and the existing shoreline;

d. Minor dredging necessary for the installation of the replacement vertical bulkhead is authorized;

e. Placement of fill between the replacement vertical bulkhead and existing shoreline is authorized; and

f. Toe stone shall be placed at the base of these replacement vertical bulkheads except in areas where the original shoreline is composed of bedrock and slopes are predominately greater than 75 percent or where the placement of toe stone would interfere with shipping activity. When required, *toe stone* shall be placed *at an average rate of* one-third *the total height of* the replacement vertical bulkhead at a 2:1 slope.

4. Removal of accumulated sediment:

a. Removal of accumulated sediment shall occur only once per year, except in cases of emergency situations that threaten life or property.

b. Removal of accumulated sediments shall be limited to low-flow conditions whenever practicable, except in cases of emergency situations that threaten life or property.

NATIONWIDE PERMIT CONDITIONS

GENERAL CONDITIONS:

The following general conditions must be followed in order for any authorization by a NWP to be valid:

1. Navigation.

(a) No activity may cause more than a minimal adverse effect on navigation.

(b) Any safety lights and signals prescribed by the U.S. Coast Guard, through regulations or otherwise, must be installed and maintained at the permittee's expense on authorized facilities in navigable waters of the United States.

(c) The permittee understands and agrees that, if future operations by the United States require the removal, relocation, or other alteration, of the structure or work herein authorized, or if, in the opinion of the Secretary of the Army or his authorized representative, said structure or work shall cause unreasonable obstruction to the free navigation of the navigable waters, the permittee will be required, upon due notice from the Corps of Engineers, to remove, relocate, or alter the structural work or obstructions caused thereby, without expense to the United States. No claim shall be made against the United States on account of any such removal or alteration.

2. Aquatic Life Movements. No activity may substantially disrupt the necessary life cycle movements of those species of aquatic life indigenous to the waterbody, including those species that normally migrate through the area, unless the activity's primary purpose is to impound water. Culverts placed in streams must be installed to maintain low flow conditions.

3. Spawning Areas. Activities in spawning areas during spawning seasons must be avoided to the maximum extent practicable. Activities that result in the physical destruction (e.g., through excavation, fill, or downstream smothering by substantial turbidity) of an important spawning area are not authorized.

4. Migratory Bird Breeding Areas. Activities in waters of the United States that serve as breeding areas for migratory birds must be avoided to the maximum extent practicable.

5. Shellfish Beds. No activity may occur in areas of concentrated shellfish populations, unless the activity is directly related to a shellfish harvesting activity authorized by NWPs 4 and 48.

6. Suitable Material. No activity may use unsuitable material (e.g., trash, debris, car bodies, asphalt, etc.). Material used for construction or discharged must be free from toxic pollutants in toxic amounts (see Section 307 of the Clean Water Act).

7. Water Supply Intakes. No activity may occur in the proximity of a public water supply intake, except where the activity is for the repair or improvement of public water supply intake structures or adjacent bank stabilization.

8. Adverse Effects From Impoundments. If the activity creates an impoundment of water,

adverse effects to the aquatic system due to accelerating the passage of water, and/or restricting its flow must be minimized to the maximum extent practicable.

9. Management of Water Flows. To the maximum extent practicable, the pre-construction course, condition, capacity, and location of open waters must be maintained for each activity, including stream channelization and storm water management activities, except as provided below. The activity must be constructed to withstand expected high flows. The activity must not restrict or impede the passage of normal or high flows, unless the primary purpose of the activity is to impound water or manage high flows. The activity may alter the pre-construction course, condition, capacity, and location of open waters if it benefits the aquatic environment (e.g., stream restoration or relocation activities).

10. Fills Within 100-Year Floodplains. The activity must comply with applicable FEMA-approved state or local floodplain management requirements.

11. Equipment. Heavy equipment working in wetlands or mudflats must be placed on mats, or other measures must be taken to minimize soil disturbance.

12. Soil Erosion and Sediment Controls. Appropriate soil erosion and sediment controls must be used and maintained in effective operating condition during construction, and all exposed soil and other fills, as well as any work below the ordinary high water mark or high tide line, must be permanently stabilized at the earliest practicable date. Permittees are encouraged to perform work within waters of the United States during periods of low-flow or no-flow.

13. Removal of Temporary Fills. Temporary fills must be removed in their entirety and the affected areas returned to pre-construction elevations. The affected areas must be revegetated, as appropriate.

14. Proper Maintenance. Any authorized structure or fill shall be properly maintained, including maintenance to ensure public safety.

15. Wild and Scenic Rivers. No activity may occur in a component of the National Wild and Scenic River System, or in a river officially designated by Congress as a "study river" for possible inclusion in the system while the river is in an official study status, unless the appropriate Federal agency with direct management responsibility for such river, has determined in writing that the proposed activity will not adversely affect the Wild and Scenic River designation or study status. Information on Wild and Scenic Rivers may be obtained from the appropriate Federal land management agency in the area (e.g., National Park Service, U.S. Forest Service, Bureau of Land Management, U.S. Fish and Wildlife Service).

16. Tribal Rights. No activity or its operation may impair reserved tribal rights, including, but not limited to, reserved water rights and treaty fishing and hunting rights.

17. Endangered Species.

(a) No activity is authorized under any NWP which is likely to jeopardize the continued existence of a threatened or endangered species or a species proposed for such designation, as identified under the Federal Endangered Species Act (ESA), or which will destroy or adversely modify the critical habitat of such species. No activity is authorized under any NWP which "may affect" a listed species or critical habitat, unless Section 7 consultation addressing the effects of the proposed activity has been completed.
(b) Federal agencies should follow their own procedures for complying with the requirements of the ESA. Federal permittees must provide the district engineer with the appropriate documentation to demonstrate compliance with those requirements.
(c) Non-federal permittees shall notify the district engineer if any listed species or designated critical habitat might be affected or is in the vicinity of the project, or if the project is located in designated critical habitat, and shall not begin work on the activity until notified by the district engineer that the requirements of the ESA have been satisfied and that the activity is authorized. For activities that might affect Federally-listed endangered or threatened species or designated critical habitat, the pre-construction notification must include the name(s) of the endangered or threatened species that may be affected by the proposed work or that utilize the designated critical habitat that may be affected by the proposed work. The district engineer will determine whether the proposed activity "may affect" or will have "no effect" to listed species and designated critical habitat and will notify the non-Federal applicant of the Corps' determination within 45 days of receipt of a complete pre-construction notification. In cases where the non-Federal applicant has identified listed species or critical habitat that might be affected or is in the vicinity of the project, and has so notified the Corps, the applicant shall not begin work until the Corps has provided notification the proposed activities will have "no effect" on listed species or critical habitat, or until Section 7 consultation has been completed.
(d) As a result of formal or informal consultation with the FWS or NMFS the district engineer may add species-specific regional endangered species conditions to the NWPs.
(e) Authorization of an activity by a NWP does not authorize the "take" of a threatened or endangered species as defined under the ESA. In the absence of separate authorization (e.g., an ESA Section 10 Permit, a Biological Opinion with "incidental take" provisions, etc.) from the U.S. FWS or the NMFS, both lethal and non-lethal "takes" of protected species are in violation of the ESA. Information on the location of threatened and endangered species and their critical habitat can be obtained directly from the offices of the U.S. FWS and NMFS or their world wide Web pages at http://www.fws.gov/ and http://www.noaa.gov/fisheries.html respectively.

18. Historic Properties.

(a) In cases where the district engineer determines that the activity may affect properties listed, or eligible for listing, in the National Register of Historic Places, the activity is not authorized, until the requirements of Section 106 of the National Historic Preservation Act (NHPA) have been satisfied.
(b) Federal permittees should follow their own procedures for complying with the requirements of Section 106 of the National Historic Preservation Act. Federal permittees must provide the district engineer with the appropriate documentation to demonstrate

compliance with those requirements.
(c) Non-federal permittees must submit a pre-construction notification to the district engineer if the authorized activity may have the potential to cause effects to any historic properties listed, determined to be eligible for listing on, or potentially eligible for listing on the National Register of Historic Places, including previously unidentified properties. For such activities, the pre-construction notification must state which historic properties may be affected by the proposed work or include a vicinity map indicating the location of the historic properties or the potential for the presence of historic properties. Assistance regarding information on the location of or potential for the presence of historic resources can be sought from the State Historic Preservation Officer or Tribal Historic Preservation Officer, as appropriate, and the National Register of Historic Places (see 33 CFR 330.4(g)). The district engineer shall make a reasonable and good faith effort to carry out appropriate identification efforts, which may include background research, consultation, oral history interviews, sample field investigation, and field survey. Based on the information submitted and these efforts, the district engineer shall determine whether the proposed activity has the potential to cause an effect on the historic properties. Where the non-Federal applicant has identified historic properties which the activity may have the potential to cause effects and so notified the Corps, the non-Federal applicant shall not begin the activity until notified by the district engineer either that the activity has no potential to cause effects or that consultation under Section 106 of the NHPA has been completed.
(d) The district engineer will notify the prospective permittee within 45 days of receipt of a complete pre-construction notification whether NHPA Section 106 consultation is required. Section 106 consultation is not required when the Corps determines that the activity does not have the potential to cause effects on historic properties (see 36 CFR 800.3(a)). If NHPA section 106 consultation is required and will occur, the district engineer will notify the non-Federal applicant that he or she cannot begin work until Section 106 consultation is completed.
(e) Prospective permittees should be aware that section 110k of the NHPA (16 U.S.C. 470h-2(k)) prevents the Corps from granting a permit or other assistance to an applicant who, with intent to avoid the requirements of Section 106 of the NHPA, has intentionally significantly adversely affected a historic property to which the permit would relate, or having legal power to prevent it, allowed such significant adverse effect to occur, unless the Corps, after consultation with the Advisory Council on Historic Preservation (ACHP), determines that circumstances justify granting such assistance despite the adverse effect created or permitted by the applicant. If circumstances justify granting the assistance, the Corps is required to notify the ACHP and provide documentation specifying the circumstances, explaining the degree of damage to the integrity of any historic properties affected, and proposed mitigation. This documentation must include any views obtained from the applicant, SHPO/THPO, appropriate Indian tribes if the undertaking occurs on or affects historic properties on tribal lands or affects properties of interest to those tribes, and other parties known to have a legitimate interest in the impacts to the permitted activity on historic properties.

19. Designated Critical Resource Waters. Critical resource waters include, NOAA-designated

marine sanctuaries, National Estuarine Research Reserves, state natural heritage sites, and outstanding national resource waters or other waters officially designated by a state as having particular environmental or ecological significance and identified by the district engineer after notice and opportunity for public comment. The district engineer may also designate additional critical resource waters after notice and opportunity for comment.

(a) Discharges of dredged or fill material into waters of the United States are not authorized by NWPs 7, 12, 14, 16, 17, 21, 29, 31, 35, 39, 40, 42, 43, 44, 49, and 50 for any activity within, or directly affecting, critical resource waters, including wetlands adjacent to such waters.

(b) For NWPs 3, 8, 10, 13, 15, 18, 19, 22, 23, 25, 27, 28, 30, 33, 34, 36, 37, and 38, notification is required in accordance with general condition 27, for any activity proposed in the designated critical resource waters including wetlands adjacent to those waters. The district engineer may authorize activities under these NWPs only after it is determined that the impacts to the critical resource waters will be no more than minimal.

20. Mitigation. The district engineer will consider the following factors when determining appropriate and practicable mitigation necessary to ensure that adverse effects on the aquatic environment are minimal:

(a) The activity must be designed and constructed to avoid and minimize adverse effects, both temporary and permanent, to waters of the United States to the maximum extent practicable at the project site (i.e., on site).

(b) Mitigation in all its forms (avoiding, minimizing, rectifying, reducing, or compensating) will be required to the extent necessary to ensure that the adverse effects to the aquatic environment are minimal.

(c) Compensatory mitigation at a minimum one-for-one ratio will be required for all wetland losses that exceed 1/10 acre and require pre-construction notification, unless the district engineer determines in writing that some other form of mitigation would be more environmentally appropriate and provides a project-specific waiver of this requirement. For wetland losses of 1/10 acre or less that require pre-construction notification, the district engineer may determine on a case-by-case basis that compensatory mitigation is required to ensure that the activity results in minimal adverse effects on the aquatic environment. Since the likelihood of success is greater and the impacts to potentially valuable uplands are reduced, wetland restoration should be the first compensatory mitigation option considered.

(d) For losses of streams or other open waters that require pre-construction notification, the district engineer may require compensatory mitigation, such as stream restoration, to ensure that the activity results in minimal adverse effects on the aquatic environment.

(e) Compensatory mitigation will not be used to increase the acreage losses allowed by the acreage limits of the NWPs. For example, if an NWP has an acreage limit of 1/2 acre, it cannot be used to authorize any project resulting in the loss of greater than 1/2 acre of waters of the United States, even if compensatory mitigation is provided that replaces or restores some of the lost waters. However, compensatory mitigation can and should be used, as necessary, to ensure that a project already meeting the established acreage limits also satisfies the minimal impact requirement associated with the NWPs.

(f) Compensatory mitigation plans for projects in or near streams or other open waters will normally include a requirement for the establishment, maintenance, and legal protection (e.g., conservation easements) of riparian areas next to open waters. In some cases, riparian areas may be the only compensatory mitigation required. Riparian areas should consist of native species. The width of the required riparian area will address documented water quality or aquatic habitat loss concerns. Normally, the riparian area will be 25 to 50 feet wide on each side of the stream, but the district engineer may require slightly wider riparian areas to address documented water quality or habitat loss concerns. Where both wetlands and open waters exist on the project site, the district engineer will determine the appropriate compensatory mitigation (e.g., riparian areas and/or wetlands compensation) based on what is best for the aquatic environment on a watershed basis. In cases where riparian areas are determined to be the most appropriate form of compensatory mitigation, the district engineer may waive or reduce the requirement to provide wetland compensatory mitigation for wetland losses.

(g) Permittees may propose the use of mitigation banks, in-lieu fee arrangements or separate activity-specific compensatory mitigation. In all cases, the mitigation provisions will specify the party responsible for accomplishing and/or complying with the mitigation plan.

(h) Where certain functions and services of waters of the United States are permanently adversely affected, such as the conversion of a forested or scrub-shrub wetland to a herbaceous wetland in a permanently maintained utility line right-of-way, mitigation may be required to reduce the adverse effects of the project to the minimal level.

21. Water Quality. Where States and authorized Tribes, or EPA where applicable, have not previously certified compliance of an NWP with CWA Section 401, individual 401 Water Quality Certification must be obtained or waived (see 33 CFR 330.4(c)). The district engineer or State or Tribe may require additional water quality management measures to ensure that the authorized activity does not result in more than minimal degradation of water quality.

22. Coastal Zone Management. In coastal states where an NWP has not previously received a state coastal zone management consistency concurrence, an individual state coastal zone management consistency concurrence must be obtained, or a presumption of concurrence must occur (see 33 CFR 330.4(d)). The district engineer or a State may require additional measures to ensure that the authorized activity is consistent with state coastal zone management requirements.

23. Regional and Case-By-Case Conditions. The activity must comply with any regional conditions that may have been added by the Division Engineer (see 33 CFR 330.4(e)) and with any case specific conditions added by the Corps or by the state, Indian Tribe, or U.S. EPA in its section 401 Water Quality Certification, or by the state in its Coastal Zone Management Act consistency determination.

24. Use of Multiple Nationwide Permits. The use of more than one NWP for a single and complete project is prohibited, except when the acreage loss of waters of the United States authorized by the NWPs does not exceed the acreage limit of the NWP with the highest specified

acreage limit. For example, if a road crossing over tidal waters is constructed under NWP 14, with associated bank stabilization authorized by NWP 13, the maximum acreage loss of waters of the United States for the total project cannot exceed 1/3-acre.

25. Transfer of Nationwide Permit Verifications. If the permittee sells the property associated with a nationwide permit verification, the permittee may transfer the nationwide permit verification to the new owner by submitting a letter to the appropriate Corps district office to validate the transfer. A copy of the nationwide permit verification must be attached to the letter, and the letter must contain the following statement and signature: "When the structures or work authorized by this nationwide permit are still in existence at the time the property is transferred, the terms and conditions of this nationwide permit, including any special conditions, will continue to be binding on the new owner(s) of the property. To validate the transfer of this nationwide permit and the associated liabilities associated with compliance with its terms and conditions, have the transferee sign and date below."

(Transferee)

(Date)

26. Compliance Certification. Each permittee who received an NWP verification from the Corps must submit a signed certification regarding the completed work and any required mitigation. The certification form must be forwarded by the Corps with the NWP verification letter and will include:

(a) A statement that the authorized work was done in accordance with the NWP authorization, including any general or specific conditions;

(b) A statement that any required mitigation was completed in accordance with the permit conditions; and

(c) The signature of the permittee certifying the completion of the work and mitigation.

27. Pre-Construction Notification.

(a) Timing. Where required by the terms of the NWP, the prospective permittee must notify the district engineer by submitting a pre-construction notification (PCN) as early as possible. The district engineer must determine if the PCN is complete within 30 calendar days of the date of receipt and, as a general rule, will request additional information necessary to make the PCN complete only once. However, if the prospective permittee does not provide all of the requested information, then the district engineer will notify the prospective permittee that the PCN is still incomplete and the PCN review process will not commence until all of the requested information has been received by the district engineer. The prospective permittee shall not begin the activity until either:

(1) He or she is notified in writing by the district engineer that the activity may proceed under the NWP with any special conditions imposed by the district or division engineer; or

(2) Forty-five calendar days have passed from the district engineer's receipt of the complete PCN and the prospective permittee has not received written notice from the district or division engineer. However, if the permittee was required to notify the Corps pursuant to general condition 17 that listed species or critical habitat might affected or in the vicinity of the project, or to notify the Corps pursuant to general condition 18 that the activity may have the potential to cause effects to historic properties, the permittee cannot begin the activity until receiving written notification from the Corps that is "no effect" on listed species or "no potential to cause effects" on historic properties, or that any consultation required under Section 7 of the Endangered Species Act (see 33 CFR 330.4(f)) and/or Section 106 of the National Historic Preservation (see 33 CFR 330.4(g)) is completed. Also, work cannot begin under NWPs 21, 49, or 50 until the permittee has received written approval from the Corps. If the proposed activity requires a written waiver to exceed specified limits of an NWP, the permittee cannot begin the activity until the district engineer issues the waiver. If the district or division engineer notifies the permittee in writing that an individual permit is required within 45 calendar days of receipt of a complete PCN, the permittee cannot begin the activity until an individual permit has been obtained. Subsequently, the permittee's right to proceed under the NWP may be modified, suspended, or revoked only in accordance with the procedure set forth in 33 CFR 330.5(d)(2).

(b) Contents of Pre-Construction Notification: The PCN must be inwriting and include the following information:

(1) Name, address and telephone numbers of the prospective permittee;

(2) Location of the proposed project;

(3) A description of the proposed project; the project's purpose;

direct and indirect adverse environmental effects the project would cause; any other NWP(s), regional general permit(s), or individual permit(s) used or intended to be used to authorize any part of the proposed project or any related activity. The description should be sufficiently detailed to allow the district engineer to determine that the adverse effects of the project will be minimal and to determine the need for compensatory mitigation. Sketches should be provided when necessary to show that the activity complies with the terms of the NWP. (Sketches usually clarify the project and when provided result in a quicker decision);

(4) The PCN must include a delineation of special aquatic sites and other waters of the United States on the project site. Wetland delineations must be prepared in accordance with the current method required by the Corps. The permittee may ask the Corps to delineate the special aquatic sites and other waters of the United States, but there may be a delay if the Corps does the delineation, especially if the project site is large or contains many waters of the United States. Furthermore, the 45 day period will not start until the delineation has been submitted to or completed by the Corps, where appropriate;

(5) If the proposed activity will result in the loss of greater than 1/10 acre of wetlands and a PCN is required, the prospective permittee must submit a statement describing how the mitigation requirement will be satisfied. As an alternative, the prospective permittee may submit a conceptual or detailed mitigation plan.

(6) If any listed species or designated critical habitat might be affected or is in the vicinity of the project, or if the project is located in designated critical habitat, for

non-Federal applicants the PCN must include the name(s) of those endangered or threatened species that might be affected by the proposed work or utilize the designated critical habitat that may be affected by the proposed work. Federal applicants must provide documentation demonstrating compliance with the Endangered Species Act; and

(7) For an activity that may affect a historic property listed on, determined to be eligible for listing on, or potentially eligible for listing on, the National Register of Historic Places, for non-Federal applicants the PCN must state which historic property may be affected by the proposed work or include a vicinity map indicating the location of the historic property. Federal applicants must provide documentation demonstrating compliance with Section 106 of the National Historic Preservation Act.

(c) Form of Pre-Construction Notification: The standard individual permit application form (Form ENG 4345) may be used, but the completed application form must clearly indicate that it is a PCN and must include all of the information required in paragraphs (b)(1) through (7) of this general condition. A letter containing the required information may also be used.

(d) Agency Coordination:

(1) The district engineer will consider any comments from Federal and state agencies concerning the proposed activity's compliance with the terms and conditions of the NWPs and the need for mitigation to reduce the project's adverse environmental effects to a minimal level.

(2) For all NWP 48 activities requiring pre-construction notification and for other NWP activities requiring pre-construction notification to the district engineer that result in the loss of greater than 1/2-acre of waters of the United States, the district engineer will immediately provide (e.g., via facsimile transmission, overnight mail, or other expeditious manner) a copy of the PCN to the appropriate Federal or state offices (U.S. FWS, state natural resource or water quality agency, EPA, State Historic Preservation Officer (SHPO) or Tribal Historic Preservation Office (THPO), and, if appropriate, the NMFS). With the exception of NWP 37, these agencies will then have 10 calendar days from the date the material is transmitted to telephone or fax the district engineer notice that they intend to provide substantive, site-specific comments. If so contacted by an agency, the district engineer will wait an additional 15 calendar days before making a decision on the pre-construction notification. The district engineer will fully consider agency comments received within the specified time frame, but will provide no response to the resource agency, except as provided below. The district engineer will indicate in the administrative record associated with each pre-construction notification that the resource agencies' concerns were considered. For NWP 37, the emergency watershed protection and rehabilitation activity may proceed immediately in cases where there is an unacceptable hazard to life or a significant loss of property or economic hardship will occur. The district engineer will consider any comments received to decide whether the NWP 37 authorization should be modified, suspended, or revoked in accordance with the procedures at 33 CFR 330.5.

(3) In cases of where the prospective permittee is not a Federal agency, the district engineer will provide a response to NMFS within 30 calendar days of receipt of any Essential Fish Habitat conservation recommendations, as required by Section 305(b)(4)(B) of the Magnuson-Stevens Fishery Conservation and Management Act.

(4) Applicants are encouraged to provide the Corps multiple copies of pre-construction notifications to expedite agency coordination.

(5) For NWP 48 activities that require reporting, the district engineer will provide a copy of each report within 10 calendar days of receipt to the appropriate regional office of the NMFS.

(e) District Engineer's Decision: In reviewing the PCN for the proposed activity, the district engineer will determine whether the activity authorized by the NWP will result in more than minimal individual or cumulative adverse environmental effects or may be contrary to the public interest. If the proposed activity requires a PCN and will result in a loss of greater than 1/10 acre of wetlands, the prospective permittee should submit a mitigation proposal with the PCN. Applicants may also propose compensatory mitigation for projects with smaller impacts. The district engineer will consider any proposed compensatory mitigation the applicant has included in the proposal in determining whether the net adverse environmental effects to the aquatic environment of the proposed work are minimal. The compensatory mitigation proposal may be either conceptual or detailed. If the district engineer determines that the activity complies with the terms and conditions of the NWP and that the adverse effects on the aquatic environment are minimal, after considering mitigation, the district engineer will notify the permittee and include any conditions the district engineer deems necessary. The district engineer must approve any compensatory mitigation proposal before the permittee commences work. If the prospective permittee elects to submit a compensatory mitigation plan with the PCN, the district engineer will expeditiously review the proposed compensatory mitigation plan. The district engineer must review the plan within 45 calendar days of receiving a complete PCN and determine whether the proposed mitigation would ensure no more than minimal adverse effects on the aquatic environment. If the net adverse effects of the project on the aquatic environment (after consideration of the compensatory mitigation proposal) are determined by the district engineer to be minimal, the district engineer will provide a timely written response to the applicant. The response will state that the project can proceed under the terms and conditions of the NWP. If the district engineer determines that the adverse effects of the proposed work aremore than minimal, then the district engineer will notify the applicant either:

(1) That the project does not qualify for authorization under the NWP and instruct the applicant on the procedures to seek authorization under an individual permit;

(2) that the project is authorized under the NWP subject to the applicant's submission of a mitigation plan that would reduce the adverse effects on the aquatic environment to the minimal level; or

(3) that the project is authorized under the NWP with specific modifications or conditions. Where the district engineer determines that mitigation is required to ensure no more than minimal adverse effects occur to the aquatic environment, the activity will be authorized within the 45-day PCN period. The authorization

will include the necessary conceptual or specific mitigation or a requirement that the applicant submit a mitigation plan that would reduce the adverse effects on the aquatic environment to the minimal level. When mitigation is required, no work in waters of the United States may occur until the district engineer has approved a specific mitigation plan.

28. Single and Complete Project. The activity must be a single and complete project. The same NWP cannot be used more than once for the same single and complete project.

FURTHER INFORMATION

1. District Engineers have authority to determine if an activity complies with the terms and conditions of an NWP.
2. NWPs do not obviate the need to obtain other federal, state, or local permits, approvals, or authorizations required by law.
3. NWPs do not grant any property rights or exclusive privileges.
4. NWPs do not authorize any injury to the property or rights of others.
5. NWPs do not authorize interference with any existing or proposed Federal project

DEFINITIONS

Best management practices (BMPs): Policies, practices, procedures, or structures implemented to mitigate the adverse environmental effects on surface water quality resulting from development. BMPs are categorized as structural or non-structural.

Compensatory mitigation: The restoration, establishment (creation), enhancement, or preservation of aquatic resources for the purpose of compensating for unavoidable adverse impacts which remain after all appropriate and practicable avoidance and minimization has been achieved.

Currently serviceable: Useable as is or with some maintenance, but not so degraded as to essentially require reconstruction.

Discharge: The term "discharge" means any discharge of dredged or fill material.

Enhancement: The manipulation of the physical, chemical, or biological characteristics of an aquatic resource to heighten, intensify, or improve a specific aquatic resource function(s). Enhancement results in the gain of selected aquatic resource function(s), but may also lead to a decline in other aquatic resource function(s). Enhancement does not result in a gain in aquatic resource area.

Ephemeral stream: An ephemeral stream has flowing water only during, and for a short duration after, precipitation events in a typical year. Ephemeral stream beds are located above the water table year-round. Groundwater is not a source of water for the stream. Runoff from rainfall is the primary source of water for stream flow.

Establishment (creation): The manipulation of the physical, chemical, or biological characteristics present to develop an aquatic resource that did not previously exist at an upland site. Establishment results in a gain in aquatic resource area.

Historic Property:. Any prehistoric or historic district, site (including archaeological site), building, structure, or other object included in, or eligible for inclusion in, the National Register of Historic Places maintained by the Secretary of the Interior. This term includes artifacts, records, and remains that are related to and located within such properties. The term includes properties of traditional religious and cultural importance to an Indian tribe or Native Hawaiian organization and that meet the National Register criteria (36 CFR part 60).

Independent utility: A test to determine what constitutes a single and complete project in the Corps regulatory program. A project is considered to have independent utility if it would be constructed absent the construction of other projects in the project area. Portions of a multi-phase project that depend upon other phases of the project do not have independent utility. Phases of a project that would be constructed even if the other phases were not built can be considered as separate single and complete projects with independent utility.

Intermittent stream: An intermittent stream has flowing water during certain times of the year, when groundwater provides water for stream flow. During dry periods, intermittent streams may not have flowing water. Runoff from rainfall is a supplemental source of water for stream flow.

Loss of waters of the United States: Waters of the United States that are permanently adversely affected by filling, flooding, excavation, or drainage because of the regulated activity. Permanent adverse effects include permanent discharges of dredged or fill material that change an aquatic area to dry land, increase the bottom elevation of a waterbody, or change the use of a waterbody. The acreage of loss of waters of the United States is a threshold measurement of the impact to jurisdictional waters for determining whether a project may qualify for an NWP; it is not a net threshold that is calculated after considering compensatory mitigation that may be used to offset losses of aquatic functions and services. The loss of stream bed includes the linear feet of stream bed that is filled or excavated. Waters of the United States temporarily filled, flooded, excavated, or drained, but restored to pre-construction contours and elevations after construction, are not included in the measurement of loss of waters of the United States. Impacts resulting from activities eligible for exemptions under Section 404(f) of the Clean Water Act are not considered when calculating the loss of waters of the United States.

Non-tidal wetland: A non-tidal wetland is a wetland that is not subject to the ebb and flow of tidal waters. The definition of a wetland can be found at 33 CFR 328.3(b). Non-tidal wetlands contiguous to tidal waters are located landward of the high tide line (i.e., spring high tide line).

Open water: For purposes of the NWPs, an open water is any area that in a year with normal patterns of precipitation has water flowing or standing above ground to the extent that an ordinary high water mark can be determined. Aquatic vegetation within the area of standing or

flowing water is either non-emergent, sparse, or absent. Vegetated shallows are considered to be open waters. Examples of "open waters" include rivers, streams, lakes, and ponds.

Ordinary High Water Mark: An ordinary high water mark is a line on the shore established by the fluctuations of water and indicated by physical characteristics, or by other appropriate means that consider the characteristics of the surrounding areas (see 33 CFR 328.3(e)).

Perennial stream: A perennial stream has flowing water year-round during a typical year. The water table is located above the stream bed for most of the year. Groundwater is the primary source of water for stream flow. Runoff from rainfall is a supplemental source of water for stream flow.

Practicable: Available and capable of being done after taking into consideration cost, existing technology, and logistics in light of overall project purposes.

Pre-construction notification: A request submitted by the project proponent to the Corps for confirmation that a particular activity is authorized by nationwide permit. The request may be a permit application, letter, or similar document that includes information about the proposed work and its anticipated environmental effects. Pre-construction notification may be required by the terms and conditions of a nationwide permit, or by regional conditions. A pre-construction notification may be voluntarily submitted in cases where pre-construction notification is not required and the project proponent wants confirmation that the activity is authorized by nationwide permit.

Preservation: The removal of a threat to, or preventing the decline of, aquatic resources by an action in or near those aquatic resources. This term includes activities commonly associated with the protection and maintenance of aquatic resources through the implementation of appropriate legal and physical mechanisms. Preservation does not result in a gain of aquatic resource area or functions.

Re-establishment: The manipulation of the physical, chemical, or biological characteristics of a site with the goal of returning natural/historic functions to a former aquatic resource. Re-establishment results in rebuilding a former aquatic resource and results in a gain in aquatic resource area.

Rehabilitation: The manipulation of the physical, chemical, or biological characteristics of a site with the goal of repairing natural/historic functions to a degraded aquatic resource. Rehabilitation results in a gain in aquatic resource function, but does not result in a gain in aquatic resource area.

Restoration: The manipulation of the physical, chemical, or biological characteristics of a site with the goal of returning natural/historic functions to a former or degraded aquatic resource. For the purpose of tracking net gains in aquatic resource area, restoration is divided into two categories: re-establishment and rehabilitation.

Riffle and pool complex: Riffle and pool complexes are special aquatic sites under the 404(b)(1) Guidelines. Riffle and pool complexes sometimes characterize steep gradient sections of streams. Such stream sections are recognizable by their hydraulic characteristics. The rapid movement of water over a course substrate in riffles results in a rough flow, a turbulent surface, and high dissolved oxygen levels in the water. Pools are deeper areas associated with riffles. A slower stream velocity, a streaming flow, a smooth surface, and a finer substrate characterize pools.

Riparian areas: Riparian areas are lands adjacent to streams, lakes, and estuarine-marine shorelines. Riparian areas are transitional between terrestrial and aquatic ecosystems, through which surface and subsurface hydrology connects waterbodies with their adjacent uplands. Riparian areas provide a variety of ecological functions and services and help improve or maintain local water quality. (See general condition 20.)

Shellfish seeding: The placement of shellfish seed and/or suitable substrate to increase shellfish production. Shellfish seed consists of immature individual shellfish or individual shellfish attached to shells or shell fragments (i.e., spat on shell). Suitable substrate may consist of shellfish shells, shell fragments, or other appropriate materials placed into waters for shellfish habitat.

Single and complete project: The term "single and complete project" is defined at 33 CFR 330.2(i) as the total project proposed or accomplished by one owner/developer or partnership or other association of owners/developers. A single and complete project must have independent utility (see definition). For linear projects, a "single and complete project" is all crossings of a single water of the United States (i.e., a single waterbody) at a specific location. For linear projects crossing a single waterbody several times at separate and distant locations, each crossing is considered a single and complete project. However, individual channels in a braided stream or river, or individual arms of a large, irregularly shaped wetland or lake, etc., are not separate waterbodies, and crossings of such features cannot be considered separately.

Stormwater management: Stormwater management is the mechanism for controlling stormwater runoff for the purposes of reducing downstream erosion, water quality degradation, and flooding and mitigating the adverse effects of changes in land use on the aquatic environment.

Stormwater management facilities: Stormwater management facilities are those facilities, including but not limited to, stormwater retention and detention ponds and best management practices, which retain water for a period of time to control runoff and/or improve the quality (i.e., by reducing the concentration of nutrients, sediments, hazardous substances and other pollutants) of stormwater runoff.

Stream bed: The substrate of the stream channel between the ordinary high water marks. The substrate may be bedrock or inorganic particles that range in size from clay to boulders. Wetlands contiguous to the stream bed, but outside of the ordinary high water marks, are not

considered part of the stream bed.

Stream channelization: The manipulation of a stream's course, condition, capacity, or location that causes more than minimal interruption of normal stream processes. A channelized stream remains a water of the United States.

Structure: An object that is arranged in a definite pattern of organization. Examples of structures include, without limitation, any pier, boat dock, boat ramp, wharf, dolphin, weir, boom, breakwater, bulkhead, revetment, riprap, jetty, artificial island, artificial reef, permanent mooring structure, power transmission line, permanently moored floating vessel, piling, aid to navigation, or any other manmade obstacle or obstruction.

Tidal wetland: A tidal wetland is a wetland (i.e., water of the United States) that is inundated by tidal waters. The definitions of a wetland and tidal waters can be found at 33 CFR 328.3(b) and 33 CFR 328.3(f), respectively. Tidal waters rise and fall in a predictable and measurable rhythm or cycle due to the gravitational pulls of the moon and sun. Tidal waters end where the rise and fall of the water surface can no longer be practically measured in a predictable rhythm due to masking by other waters, wind, or other effects. Tidal wetlands are located channelward of the high tide line, which is defined at 33 CFR 328.3(d).

Vegetated shallows: Vegetated shallows are special aquatic sites under the 404(b)(1) Guidelines. They are areas that are permanently inundated and under normal circumstances have rooted aquatic vegetation, such as seagrasses in marine and estuarine systems and a variety of vascular rooted plants in freshwater systems.

Waterbody: For purposes of the NWPs, a waterbody is a jurisdictional water of the United States that, during a year with normal patterns of precipitation, has water flowing or standing above ground to the extent that an ordinary high water mark (OHWM) or other indicators of jurisdiction can be determined, as well as any wetland area (see 33 CFR 328.3(b)). If a jurisdictional wetland is adjacent--meaning bordering, contiguous, or neighboring--to a jurisdictional waterbody displaying an OHWM or other indicators of jurisdiction, that waterbody and its adjacent wetlands are considered together as a single aquatic unit (see 33 CFR 328.4(c)(2)). Examples of "waterbodies" include streams, rivers, lakes, ponds, and wetlands.

REGIONAL GENERAL CONDITIONS

OHIO STATE CERTIFICATION GENERAL LIMITATIONS AND CONDITIONS (WATER QUALITY CERTIFICATION)

A. STREAMS

1) Temporary or permanent impacts to streams are limited to 500 linear feet, of which no more than 200 linear feet can be impacts to intermittent or perennial streams [except for NWPs 3, 12, 13, 20, 21, 27, 32, 37, 38, 41, 45 and 47]. Impacts shall be measured linearly from upstream to downstream, including the length of permanent or temporary stream impoundments, when calculating the total length of stream impacts [except for NWP 12,

for which impacts shall be measured bank-to-bank];

2) Temporary or permanent impacts to water bodies meeting any of the criteria set forth in a through d below, are prohibited [except for NWP 3, 20, 27, 32, 37, 38, 45, and 47 or maintenance activities covered under NWP 7 and12]:

a. Exceptional Warmwater Habitat, Cold Water Habitat, Seasonal Salmonid, or any equivalent designation;

b. Waters bodies with an antidegradation category of Superior High Quality Water, Outstanding National Resource Waters or Outstanding High Quality Waters; and,

c. General high quality water bodies, such as Killbuck Creek in Coshocton County and Pymatuning Creek in Ashtabula County, which harbor federally listed threatened andlor endangered species.

For an alphabetical listing of the Superior High Quality Waters, go to

http://www.epa.state.oh. usfdsw/rules/antidegHQiistJulyO3.pdf

3) Stream reconstruction activities shall maintain or enhance the habitat values of the stream as determined by an appropriate habitat assessment method and adhere to "natural channel design" principles. Natural channel design means a technique that integrates knowledge of natural stream processes to create a stable stream that maintains its form and function over time and achieves a targeted habitat or biological endpoint.

4) Stream or buffer improvements and/or mitigative measures required by the Corps shall address the following:

a. In order of priority, these measures shall focus on the following:

i. the stream segment being impacted;
ii. upstream segments and tributaries; the receiving stream

The measures should, to the extent practicable, consider the causes and sources of impairment of the stream where the measures would be undertaken if the stream is listed as impaired in the most recent final report submitted to the United States Environmental Protection Agency by the director of Ohio EPA to fulfill the requirements of Section 303(d) of the Clean Water Act. The current list of impaired streams, as of the date of this certification, can be found at on Ohio EPA's web site at:

http://www.epa.state.oh.usldsw/tmdl/20041ntReportlfinal_20041R_appB_2.pdf

b. If the applicant cannot find appropriate mitigation on streams listed in Section "a" above, mitigation shall be in the Ohio EPA 8-digit watershed.

c. Vegetative buffers on both stream banks shall be of an appropriate length (at least the length of the impacted stream segment), and, if practicable,

i. Provide a minimum width of 25 feet for preservation of existing vegetative buffers; or,

ii. Provide a minimum width of 50 feet for re-vegetating buffers cleared during construction.

iii. Buffer width is measured from the top of bank or level of bankfull discharge.

d. Vegetated buffers shall be planted, or restored, as soon as practicable after in-stream work is complete and shall extend to the top of both stream banks, or beyond as stipulated by the Corps or Ohio EPA, using native tree and shrub species with rapid growth characteristics,

e. Impacts to existing vegetative buffers shall be minimized to the *maximum extent* practicable. *Entry* to *surface waters* shall be through a single point of access on each side of the stream whenever practicable to minimize disturbance to buffer vegetation;

5) In-stream activities shall not result in the permanent destabilization of the stream banks or stream bed. The stream bed and substrates shall be restored to conditions that existed prior to work.

6) In-stream work shall be conducted during low-flow conditions whenever practicable in order to minimize adverse impacts to water quality away from the project site, except in emergency situations that threaten human life or property.

7) Culverts

a. For an individual stream, the combined length of an existing culvert and culvert extension shall not exceed 500 linear feet, and the individual culvert extension shall not exceed 200 linear feet if installed on an intermittent or perennial stream, or 500 linear feet if installed on an ephemeral stream.

b. For new road construction, flood plain culverts shall be installed where the flood prone area is greater than twice the width of the stream at Ordinary High Water Mark (OHWM).

c. New Culverts on Low Gradient Streams (<3% slope)

i. Culverts shall be installed at the existing streambed slope, not exceeding three percent, to allow for the natural movement of bedload and aquatic organisms.

ii. The culvert base or invert for intermittent and perennial streams with bottom substrate shall be installed below the sediment to allow natural channel bottom to develop and to be retained. The channel bottom substrate shall be similar to and contiguous with the immediate upstream and downstream reaches of the stream. The culvert shall be designed and sized to accommodate bankfull discharge and match the existing depth of flow to facilitate the passage of aquatic organisms.

iii. *For* perennial *and* intermittent *streams*, culverts with *less than* three percent grade or not installed on bedrock shall have the lower 10 percent of all culvert bottoms buried below the existing stream grade. Hydraulic design shall be based upon the remaining open portion of the culvert.

8) Compensatory mitigation for linear projects (e.g., highways) in streams may be mitigated for by the following, in descending order of practicability:

a. Stream impacts associated with a linear project may be mitigated on-site, defined as within one mile of the linear project, and within the samel4-digit watershed as shown in OAC 3745-1-54(F)(2); or,

b. Stream impacts associated with a linear project may be mitigated at a single stream mitigation location or stream mitigation bank acceptable to the director, within each Ohio EPA 8-digit watershed in which such impacts occur; or,

c. If no stream mitigation bank, acceptable to the director, is located within one or more of the Ohio EPA 8-digit watersheds in which the impact occurs, then mitigation may occur in another Ohio EPA 8-digit watershed impacted by the linear project; at a single stream mitigation location, or a stream mitigation bank, acceptable to the director; or,

d. If no stream mitigation bank exists within any of the watersheds connected with the linear project, then mitigation should occur within the watershed in which the largest impacts (in terms of area) occur.

B. WETLANDS

1) Temporary or permanent impacts to Category 3 wetlands are prohibited [except for NWP 27].

2) Temporary or permanent impacts to Category 1 and 2 wetlands are limited to a maximum total of one-half acre [except for NWP 20, 21, 27, 32, 37, 38, 45, and 47].

3) Wetland Mitigation

a. Ohio state certification for the use of any NWP to authorize the activities associated with the construction and or development of new mitigation banks is denied. Banks that have been approved for operation by the director of Ohio EPA may utilize NWPs for approved activities.

b. Wetland mitigation shall adhere to the requirements set forth in Ohio EPA's Wetland Water Quality Standards [OAC Chapter 3745-1].

c. When it is determined that use of a mitigation bank is the best option, mitigation shall only be authorized at those mitigation banks having an active instrument signed by the director of Ohio EPA.

4) Discharges or diversions of storm water into wetlands shall not negatively alter the wetland's natural hydrologic regime as required by OAC Rule 3745-1-51 (Wetland Narrative Criteria) and shall meet warmwater habitat chemical criteria as required by OAC Rule 3745-1-52 (Numeric Chemical Criteria for Waste Water Discharges to Wetlands) unless the applicant has obtained alternate criteria from the director.

C. LAKE ERIE

1) No nationwide permit may be used to divert water from outside of the Lake Erie drainage basin.

2) Temporary or permanent impacts to Lake Erie coastal wetlands, including coastal wetlands located on Lake Erie Islands and Sandusky Bay are prohibited [except for NWP 3 and 27].

3) Disposal of Dredge Material from Lake Erie, Lake Erie Islands, and Sandusky Bay.

a. Dredged material that is greater than 60 percent sand (0.063 mm grain size), as determined by grain size analysis, shall be disposed of in the littoral drift, downdrift of the project site.

b. Dredged material that is less than 60 percent sand and is below the *75th percentile of the surficial* background *sediment contamination* concentrations of the basin proposed for disposal (as identified in "Surficial Sediment Contamination in Lakes Erie and Ontario, (Table 1) 2002, Journal of Great Lakes Research Volume 28(3) pages 437-450 by Christopher H. Marvin et al) may be disposed of in the open lake.

c. Sand and gravel suitable for nearshore disposal shall not be entombed by any structure, but should be removed prior to construction, and placed in the littoral system, downdrift of the project site.

D. GENERAL

1) NWPs cannot be combined to increase any of the aforementioned limitations.

2) Ohio state certification for the use of any NWP to authorize the activities associated with the construction and or development of new mitigation banks that do not possess a mitigation banking agreement signed by the director of Ohio EPA is denied. Banks that have been approved for operation by the director of Ohio EPA may utilize NWPs for approved activities.

3) Authorization under this Certification does not relieve the permittee from the responsibility of obtaining any other federal, state or local permits, approvals or authorizations required by law, including without limitation, National Pollutant Discharge Elimination System (NPDES) permits including general or individual stormwater permits, or Permits to Install (PTIs).

4) In nationwide permits where the district engineer has been granted authority to waive certain requirements, the corresponding limitations and conditions of this certification shall apply unless written authorization from the director of Ohio EPA is obtained to authorize additional impacts.

5) To the extent that this condition does not conflict with the Construction General Storm Water Permit in effect at the time of application, peak rates of runoff from an area after development may be no greater than the peak rates of runoff from the same area before development for all twenty-four-hour storms from one to one-hundred-year frequency.

6) To the extent that this condition does not conflict with the Construction General Storm Water Permit in effect at the time of application, locally required post development stormwater ponds shall incorporate specific design features for water quality such as those listed in Ohio's Rainwater and Land Development, Ohio's Standards for Storm Water Management, Land Development *and Urban Stream Protection, 3"d Edition (2006), available at* http://www.dnr.state.oh.us/soilandwater/Rainwater.htm, to the extent allowed by local stormwater requirements. These features include, but are not limited to, infiltration trenches, extended detention, wet pools, forebays, aquatic benches and vegetated shallows, optimum flow length, reverse flow pipe, optimum pool depth, shading and buffer plants, and runoff reuse.

7) To the extent that this condition does not conflict with the Construction General Storm Water Permit in effect at the time of application, the Best Management Practices (BMPs) listed below shall be utilized with all NWPs when applicable.

a. Only suitable material, free of toxic contaminants in other than trace quantities, shall be used as fill material;

b. The use of asphalt and rubber tires as fill is prohibited under this permit;

c. Upon the cessation of temporary impacts authorized under a NWP, any hydric topsoil removed from a trench shall be separated and saved for later placement as the topmost back fill layer when the trench is refilled;

d. The stockpiling of side-cast dredged material in wetlands in excess of three months is not authorized;

e. The applicant shall comply with all final stabilization requirements contained in applicable NPDES construction stormwater permits for the site;

f. Construction equipment shall not be placed below the Ordinary High Water Mark (OHWM) of any surface water, except when no other alternative is practicable;

g. All dredged material placed at an upland site shall be controlled so *that sediment runoff to* adjacent *surface waters is* minimized to *the* maximum extent practicable; and,

h. BMPs shall be installed and maintained to minimize sediment runoff to adjacent surface waters.

8) Representatives from Ohio EPA, Division of Surface Water will be allowed to inspect the authorized activity at any time deemed necessary to insure that it is being or has been accomplished in accordance with the terms and conditions of this water quality certification. This includes, but is not limited to, access to and copies of any records any records that must be kept under the conditions of this certification; and, authorization to sample and/or monitor any discharge activity or mitigation site. Ohio EPA will make a reasonable attempt to notify the applicant of its intention to inspect the site in advance of that inspection.