MICROFILMED
JAN 3 1995

F.H.W.A. REGION	STATE	PROJECT		
5	OHIO			

ASHLAND COUNTY
ASD-604-1.55 - PART I

STATE OF OHIO
DEPARTMENT OF TRANSPORTATION
ASD-604-1.55 - PART I
JACKSON TOWNSHIP
ASHLAND COUNTY

FOR PART II, SEE WAY-301-2.51

BRS-486(1)

DESIGN DESIGNATION

CURRENT ADT (1991)	420
DESIGN YR. ADT (2011)	550
D.H.V. (2011)	55
D	55%
T	4%
V (DESIGN SPEED)	60 M.P.H.
LEGAL SPEED LIMIT	55 M.P.H.
FUNCTIONAL CLASSIFICATION	RURAL MAJOR COLLECTOR
DESIGN EXCEPTIONS	NONE

CONVENTIONAL SIGNS

PROPERTY LINE — IN EXISTING FENCE
COMMON OWNERSHIP LINE
ORIGINAL TOWNSHIP LOT LINE
CORPORATION LINE
CENTER LINE
RIGHT OF WAY LINE EXISTING — PROPOSED — TEMPORARY
LIMITED ACCESS LINE (EXISTING)
LIMITED ACCESS AND RIGHT OF WAY LINE (EXISTING)
SEWER EASEMENT LINE
FENCE LINE EXISTING — PROPOSED
GUARD RAIL EXISTING — PROPOSED
RAILROAD EXISTING — PROPOSED
TREES
UTILITY POLES LIGHT TELEPHONE POWER COMBINATION
OIL LINE
WATER LINE EXISTING — PROPOSED
GAS LINE
CONDUITS ELECTRICAL — TELEPHONE
FIRE HYDRANT EXISTING — PROPOSED
STORM SEWER EXISTING — PROPOSED
SANITARY SEWER EXISTING — PROPOSED
CATCH BASIN OR INLET EXISTING — ADJUSTED TO GRADE — PROPOSED
MANHOLE EXISTING — ADJUSTED TO GRADE — PROPOSED STORM — SANITARY
UTILITY VALVE — ADJUSTED TO GRADE — PROPOSED
SIGNS EXISTING — PROPOSED

SHEET INDEX

TITLE SHEET	1
TYPICAL SECTIONS	2
GENERAL NOTES AND MAINTENANCE OF TRAFFIC DETAILS	3, 3A, 3B
CALCULATIONS & GENERAL SUMMARY	4
PLAN AND PROFILE	5
CROSS SECTIONS	6-9
STRUCTURES (OVER 20' SPAN)	10-20
RIGHT-OF-WAY	21-22

LINE DATA

BEGIN PROJECT	STA. 81+80.41
END PROJECT	STA. 83+19.22
TOTAL PROJECT LENGTH =	138.81 L.F. OR 0.026 MI.
BEGIN WORK	STA. 80+50.00
END WORK	STA. 84+50.00
TOTAL WORK LENGTH =	400.00 L.F. OR 0.076 MI.

PROJECT: ASD-604-1.55 ASHLAND COUNTY
DATE OF LETTING_____ 19___, CONTRACT NO. _____

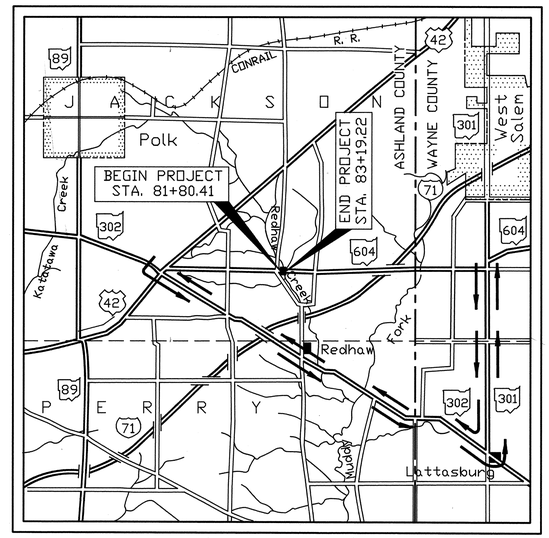

LOCATION MAP

0 1 2
SCALE IN MILES

DETOUR ROUTE

Portion to be improved _____
State & Federal _____
Other Roads _____

SCALES

Plan Approach Roadway___Horizontal 0 20 40 Vertical 0 5 10
Cross Section Horizontal 0 5 10 Vertical 0 5 10

ALL OTHER SHEETS AS SHOWN

1991 SPECIFICATIONS

The standard specifications of the State of Ohio, Department of Transportation, including changes and supplemental specifications listed in the proposal shall govern this improvement.

I hereby approve these plans and declare that the making of this improvement will require the closing to traffic of the highway and that detours will be provided as indicated on this sheet.

Approved Phillip A. Harwood
Date 5/22/91 District Deputy Director of Transportation

Approved B.D. Hackenberry/WTE
Date 7/12/91 Engineer, Bureau of Bridges and Structural Design

Approved _____
Date 8-29-91 Deputy Director, Planning and Design

Approved _____
Date 8/29/91 Director, Department of Transportation

STRUCTURE PLANS REVIEWED BY:
Burgess & Niple, Limited
Engineers and Architects

FOR PARTS I & II

SUPPLEMENTAL SPECIFICATIONS	
852	6-10-87
952	12-14-88
802	4-13-90
836	11-12-85
942	11-27-89
944	5-13-91
940	6-10-87

PREPARED BY:
CENTRAL ENGINEERING, INC.
CIVIL & STRUCTURAL ENGINEERS
13477 PROSPECT RD., SUITE 101B
STRONGSVILLE, OH. 44136
(216) 238-9699

TWO WORKING DAYS BEFORE YOU DIG
CALL
OHIO UTILITIES PROTECTION SERVICE
800-362-2764 (TOLL FREE)
NON MEMBERS MUST BE CALLED DIRECTLY

SUPPLEMENTAL PRINTS OF STANDARD CONSTRUCTION DRAWINGS - PARTS I & II

BP-5	10-1-87	BP-2	1-11-85				
BP-6	10-1-87						
GR-1.1	5-6-91	DBR-2-73	4-10-73	AS-1-81	11-27-81	TC-41.10	8-29-84
GR-1.2	5-6-91	PSBD-1-81	6-20-89			TC-41.20	3-26-79
GR-2.1	5-6-91			MT-99.10	11-14-86	TC-52.10	4-3-79
GR-2.2	5-6-91	MC-1	6-13-69	MT-101.60	4-1-90	TC-52.20	4-3-79
GR-3.4	5-6-91	MC-4	7-26-76			TC-42.20	3-26-79
GR-4.1	5-6-91	MC-11	8-1-78	LA-1	6-1-79		
GR-4.2	5-6-91						

STATE OF OHIO
CATHY L. BECKER
53235
REGISTERED PROFESSIONAL ENGINEER

Department of Transportation
Federal Highway Administration
Approved:
DIVISION ADMINISTRATOR DATE

TYPICAL SECTIONS

TYPE 404 on 611

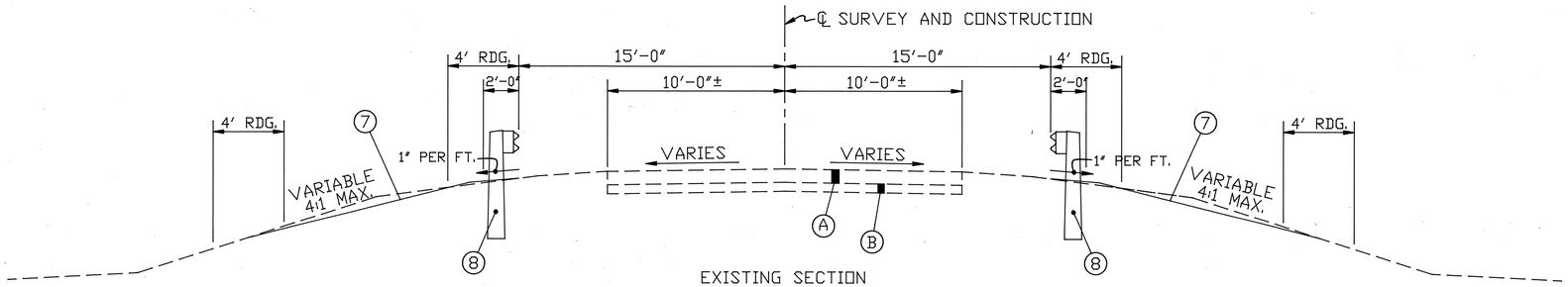

EXISTING SECTION

LIMITS OF PROPOSED GUARDRAIL:
STA. 80+93.77 TO STA. 84+05.86

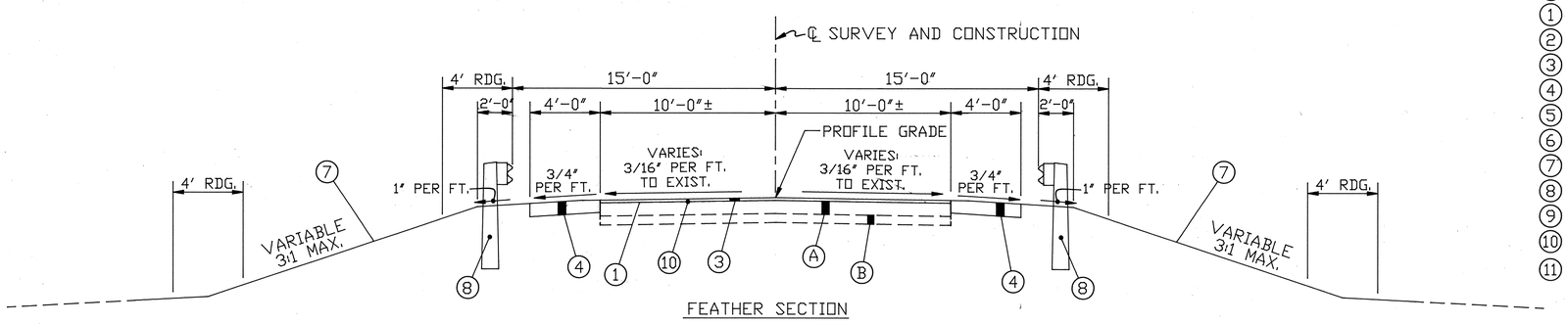

FEATHER SECTION

STA. 81+50.00 TO STA. 81+80.41 = 30.41 LIN. FT.
STA. 83+19.22 TO STA. 83+50.00 = 30.78 LIN. FT.
61.19 LIN. FT.

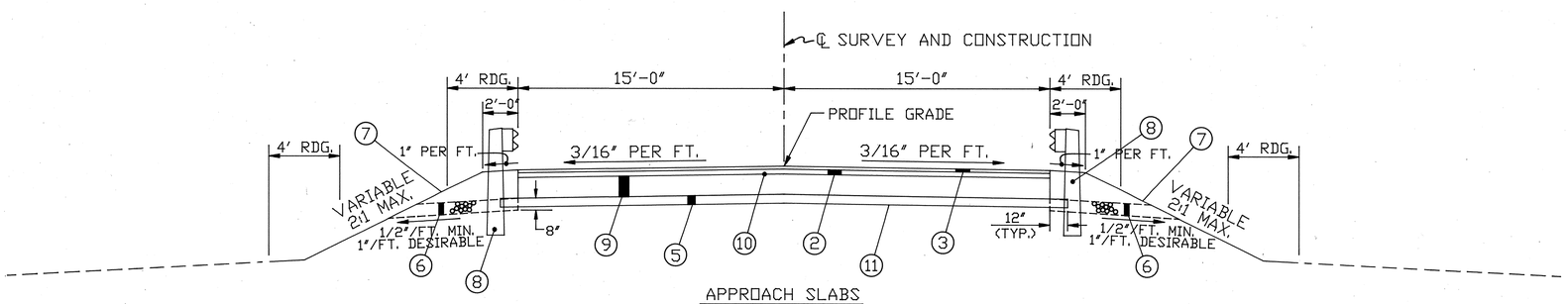

APPROACH SLABS

STA. 81+80.41 TO STA. 82+05.41 = 25.00 LIN. FT.
STA. 82+94.22 TO STA. 83+19.22 = 25.00 LIN. FT.
50.00 LIN. FT.

LEGEND

- (A) EXISTING PAVEMENT - 6"± ASPHALT CONCRETE
- (B) EXISTING PAVEMENT - WATERBOUND MACADAM
- (1) ITEM 202 - WEARING COURSE REMOVED
- (2) ITEM 403 - ASPHALT CONCRETE, AC-20 (VARIES: 1-3/4" MINIMUM)
- (3) ITEM 404 - 1-1/4" ASPHALT CONCRETE, AC-20
- (4) ITEM 304 - 8" AGGREGATE BASE, AS PER PLAN
- (5) ITEM 304 - 6" AGGREGATE BASE, AS PER PLAN
- (6) ITEM 605 - AGGREGATE DRAIN
- (7) ITEM 659 - SEEDING AND MULCHING (SEE GENERAL NOTE)
- (8) ITEM 606 - GUARDRAIL, TYPE 5
- (9) ITEM 611 - REINFORCED CONCRETE APPROACH SLAB (T=15")
- (10) ITEM 407 - TACK COAT (SEE GENERAL NOTE)
- (11) ITEM 203 - SUBGRADE COMPACTION

GENERAL NOTES

CALC. BY CB	DATE 12-3-90
CHKD. BY HW	DATE 2.4.91

F.H.W.A. REGION	STATE	PROJECT	
5	OHIO		

ASHLAND COUNTY
ASD-604-1.55

FIELD OFFICE - PARTS I & II

ONLY ONE (1) FIELD OFFICE IS REQUIRED FOR BOTH PARTS OF THIS PROJECT.

UNDERGROUND UTILITIES

THE LOCATIONS OF THE UNDERGROUND UTILITIES SHOWN ON THE PLANS ARE AS OBTAINED FROM THE OWNERS OF THE UTILITY AS REQUIRED BY SECTION 153.64 ORC.

UTILITY OWNERSHIP

THE FOLLOWING UTILITIES AND OWNERS ARE LOCATED WITHIN THE WORK LIMITS OF THIS PROJECT:

HOLMES-WAYNE ELECTRIC CO-OP (ELECTRIC)
P.O. BOX 112
MILLERSBURG, OHIO 44654
(216) 674-1055

ROUNDING OF CORNERS SHOWN ON CROSS SECTIONS

THE ROUNDED CORNERS SHOWN ON THE TYPICAL SECTIONS APPLY TO ALL CROSS SECTIONS EVEN THOUGH OTHERWISE SHOWN ON THESE PLANS.

CONTINGENCY QUANTITIES

THE CONTRACTOR SHALL NOT ORDER MATERIALS OR PERFORM WORK LISTED IN THE GENERAL SUMMARY FOR ITEMS DESIGNATED BY PLAN NOTE TO BE USED "AS DIRECTED BY THE ENGINEER" UNLESS AUTHORIZED BY THE ENGINEER. THE ACTUAL WORK LOCATIONS AND QUANTITIES USED AT THE ENGINEER'S DISCRETION SHALL BE MADE A MATTER OF RECORD BY INCORPORATION INTO THE FINAL CHANGE ORDER GOVERNING COMPLETION OF THIS PROJECT.

LOCATION OF GUARDRAIL

THE LOCATIONS OF GUARDRAIL RUNS, AS SHOWN IN THESE PLANS, ARE SUBJECT TO ADJUSTMENT PRIOR TO FINAL ACCEPTANCE. THE ENGINEER SHALL BE SATISFIED THAT ALL INSTALLATIONS WILL AFFORD MAXIMUM PROTECTION FOR TRAFFIC.

SEEDING

QUANTITIES FOR SEEDING ARE CALCULATED FOR THE SOIL AREAS BETWEEN TEN (10) FEET OUTSIDE THE WORK LIMITS, AS SHOWN ON THE CROSS SECTIONS, OR TO THE RIGHT-OF-WAY LINE, IF SUCH LINE IS LESS THAN (10) FEET FROM THE WORK LIMITS.

TEMPORARY PAVEMENT MARKINGS:

THE FOLLOWING ESTIMATED QUANTITY HAS BEEN CARRIED TO THE GENERAL SUMMARY FOR USE AS DIRECTED BY THE ENGINEER:

614 - TEMPORARY CENTERLINE, CLASS II 0.04 M.I.
SEE MT-99.10 FOR REQUIREMENTS

THIS ITEM MAY BE NON-PERFORMED IF THE 642 PAVEMENT MARKINGS ARE IN PLACE PRIOR TO OPENING THE ROAD TO TRAFFIC.

ITEM 304 - AGGREGATE BASE, AS PER PLAN

MATERIALS FURNISHED FOR THIS ITEM SHALL EXCLUDE ALL SLAG EXCEPT GRANULATED SLAG OR CRUSHED AIR-COOLED BLAST FURNACE SLAG.

CLEARING AND GRUBBING

ALTHOUGH THERE ARE NO TREES AND/OR STUMPS SPECIFICALLY MARKED FOR REMOVAL WITHIN THE LIMITS OF THIS PROJECT, A LUMP SUM QUANTITY HAS BEEN INCLUDED IN THE GENERAL SUMMARY FOR ITEM 201 CLEARING AND GRUBBING. ALL PROVISIONS AS SET FORTH IN THE SPECIFICATIONS UNDER THIS ITEM SHALL BE INCLUDED IN THE LUMP SUM PRICE BID FOR ITEM 201, CLEARING AND GRUBBING.

ITEM 614 - MAINTAINING TRAFFIC
DETOUR LIMITATION AND INTERIM COMPLETION DATE:

TWO-WAY TRAFFIC SHALL BE MAINTAINED AT ALL TIMES, EXCEPT FOR A PERIOD NOT TO EXCEED 90 CONSECUTIVE CALENDAR DAYS, THROUGH TRAFFIC WILL BE DETOURED AS SHOWN ON SHEET NO. 1. THIS DETOUR PERIOD SHALL NOT BE CONCURRENT WITH THE DETOUR PERIOD FOR PART II (WAY-301-2.51). THE CONTRACTOR SHALL NOTIFY THE DISTRICT TRAFFIC ENGINEER IN WRITING A MINIMUM OF SEVEN (7) DAYS IN ADVANCE OF THE DATE THE DETOUR IS NEEDED. THE STATE OF OHIO WILL INSTALL, MAINTAIN AND SUBSEQUENTLY REMOVE THE DETOUR SIGNING.

THE CONTRACTOR SHALL BE RESPONSIBLE FOR FURNISHING, INSTALLING, MAINTAINING AND REMOVING THE GATES AND BARRICADES AND THE ADVANCE WARNING SIGNS AS SHOWN ON STANDARD DRAWING MT-101.60. SEE SHEET NO. 5 FOR LOCATIONS OF GATES AND BARRICADES.

THE 90 CONSECUTIVE CALENDAR DAYS SHALL BE CONSIDERED AS AN INTERIM COMPLETION DATE (SECTION 108) AND FOR EACH CALENDAR DAY BEYOND THE 90 CONSECUTIVE CALENDAR DAYS THAT THE ROADWAY REMAINS CLOSED TO TRAFFIC, THE CONTRACTOR WILL BE ASSESSED LIQUIDATED DAMAGES, AS PER SECTION 108.07 OF THE CONSTRUCTION AND MATERIAL SPECIFICATIONS.

THE PROPOSED DRIVE AT STATION 83+51 SHALL BE CONSTRUCTED PRIOR TO CLOSING THE ROAD WITH GATES AND BARRICADES.

WATERING PERMANENT SEEDED AREAS

THE FOLLOWING ESTIMATED QUANTITY IS TO BE USED AS DIRECTED BY THE ENGINEER TO PROMOTE GROWTH AND TO CARE FOR THE PERMANENT SEEDED AREAS, AS PER 659.09:

659	WATER	4 M GAL.

TEMPORARY SOIL EROSION AND SEDIMENT CONTROL

THE FOLLOWING ESTIMATED QUANTITY IS TO BE USED AS DIRECTED BY THE ENGINEER, FOR TEMPORARY EROSION AND SEDIMENT CONTROL MEASURES:

207	STRAW OR HAY BALES	50 EACH

EROSION CONTROL

ITEM 601 IS PROVIDED IN THE PLANS FOR EROSION CONTROL. ROCK OF A STABLE NATURE WILL NOT BE REMOVED IN ORDER TO PLACE ANY OF THIS ITEM. THE ENGINEER SHALL CHECK AND NON-PERFORM QUANTITIES OR ADJUST LOCATIONS AND QUANTITIES FOR THIS ITEM WHERE INDICATED BY FIELD CONDITIONS DURING CONSTRUCTION.

ITEM 407 - TACK COAT

THE RATE OF APPLICATION OF 407 TACK COAT SHALL BE SUBJECT TO ADJUSTMENT, AS PER THE ENGINEER. PLAN QUANTITIES INDICATE AVERAGE APPLICATION RATES OF 0.10 GALLONS PER SQUARE YARD OF TACK FOR ESTIMATING PURPOSES ONLY.

FARM DRAINS

ALL FARM DRAINS, WHICH ARE ENCOUNTERED DURING CONSTRUCTION, SHALL BE PROVIDED WITH UNOBSTRUCTED OUTLETS UNDER THE DIRECTION OF THE ENGINEER. EXISTING COLLECTORS WHICH ARE LOCATED BELOW THE ROADWAY DITCH ELEVATIONS, AND WHICH CROSS THE ROADWAY, SHALL BE REPLACED WITHIN THE CONSTRUCTION LIMITS BY ITEM 603 CONDUIT, TYPE B, ONE COMMERCIAL SIZE LARGER THAN THE EXISTING CONDUIT.

EXISTING COLLECTORS AND ISOLATED FARM DRAINS, WHICH ARE ENCOUNTERED ABOVE THE ELEVATION OF THE ROADWAY DITCHES, SHALL BE OUTLETTED INTO THE ROADWAY DITCH BY 603 TYPE F CONDUIT. THE OPTIMUM OUTLET ELEVATION SHALL BE, IF POSSIBLE, ONE FOOT ABOVE THE FLOWLINE ELEVATION OF THE DITCH. LATERAL TILE FIELDS WHICH CROSS THE ROADWAY SHALL BE INTERCEPTED BY 603, TYPE E CONDUIT, AND CARRIED IN A LONGITUDINAL DIRECTION TO AN ADEQUATE OUTLET OR ROADWAY CROSSING.

THE LOCATION, TYPE, SIZE AND GRADE OF REQUIRED REPLACEMENTS SHALL BE DETERMINED BY THE ENGINEER DURING CONSTRUCTION, AND PAYMENT SHALL BE MADE ON FINAL MEASUREMENTS.

THE FOLLOWING ESTIMATED QUANTITIES HAVE BEEN INCLUDED IN THE GENERAL SUMMARY FOR THE WORK NOTED ABOVE:

ITEM 603	8" CONDUIT, TYPE B	50 LIN. FT.
ITEM 603	6" CONDUIT, TYPE E	50 LIN. FT.
ITEM 603	6" CONDUIT, TYPE F	50 LIN. FT.
ITEM 601	ROCK CHANNEL PROTECTION TYPE D WITH FILTER	5 CU. YDS.

NECESSARY BENDS OR BRANCHES SHALL BE INCLUDED FOR PAYMENT IN THE PERTINENT CONDUIT ITEM.

NONE OF THE ABOVE MATERIALS SHALL BE ORDERED BY THE CONTRACTOR UNTIL AUTHORIZED BY THE ENGINEER.

MONUMENTS, AS PER PLAN

MONUMENTS SHALL BE CONSTRUCTED IN ACCORDANCE WITH DETAILS SHOWN ON SHEET NO. 21 AND STANDARD CONSTRUCTION DRAWING MC-1. FOR LOCATIONS, SEE SHEET NO. 22.

TEMPORARY STREAM CROSSING FORDS

WHEN STREAM CROSSING FORDS ARE REQUIRED FOR EQUIPMENT CROSSINGS, THE CROSSING SHALL CONSIST OF CLEAN NON-TOXIC GRANULAR OR ROCK MATERIAL, PROPERLY MAINTAINED TO PREVENT EROSION WITH PROVISIONS FOR CONVEYANCE OF ANTICIPATED HIGH FLOWS. THE CROSSING SHALL FOLLOW *PART 330.5 SPECIFIC CATEGORIES OF DISCHARGES PERMITTED, PARAGRAPH (A)(14) MINOR ROAD CROSSING FILLS* OF THE *FEDERAL REGISTER--CORPS OF ENGINEERS FINAL REGULATIONS CURRENT EDITION.*

JOINT SEALERS

ALL REFERENCES TO 705.01 or 705.02 APPEARING ON STANDARD DRAWINGS OR IN THE PLANS SHALL BE CONSIDERED TO READ 705.04.

CONNECTION TO EXISTING PIPE

WHERE PLANS PROVIDE FOR PROPOSED CONDUIT TO BE CONNECTED TO OR TO CROSS EITHER OVER OR UNDER AN EXISTING SEWER, IT SHALL BE THE RESPONSIBILITY OF THE CONTRACTOR TO LOCATE THE EXISTING PIPE BOTH AS TO LINE & GRADE BEFORE HE STARTS TO LAY THE PROPOSED CONDUIT. ALL RELATED COSTS TO BE INCLUDED IN THE 603 CONDUIT ITEM.

TEMPORARY SIGN SUPPORT REQUIREMENTS

A. PLACEMENT OF SIGNS WHICH WILL REMAIN MORE THAN ONE DAY:

1) LATERAL PLACEMENT TO NEAREST EDGE OF SIGNS SHALL BE AS FOLLOWS:

a) ON THE RIGHT SIDE OF THE ROAD FOR APPROACHING TRAFFIC (EXCEPT FOR DUAL MOUNTED SIGNS AND SIGNS DESIGNATED IN THE PLANS FOR LEFT SIDE MOUNTING).

b) CURBED ROADWAY - MINIMUM 2 FT. BEHIND FACE OF CURB.

c) UNCURBED ROADWAY-12 FT. FROM EDGE OF TRAFFIC LANE OR 6 FT. FROM EDGE OF PAVED OR USEABLE SHOULDER, WHICHEVER IS GREATER.

d) BEHIND GUARDRAIL OR BARRIER - PREFERABLY 2 FT. BEHIND FACE OF GUARDRAIL (MINIMUM 1 FT.) FOR SIGNS ON CLASS A SUPPORTS: 4 FT. FOR CLASS B OR C SUPPORTS 1 FT. BEHIND FACE OF CONCRETE BARRIER UNLESS BARRIER TOP MOUNTING IS REQUIRED BY THE PLAN.

2) VERTICAL CLEARANCE OF SIGNS, MEASURED ABOVE ROADWAY ELEVATION; SHALL BE AS FOLLOWS:

a) RURAL - 5 FT. WHEN PARKED CARS, CONSTRUCTION EQUIPMENT, ETC WILL NOT OBSCURE SIGN VISIBILITY.

b) RURAL AREAS WITH PARKED CARS OR CONSTRUCTION EQUIPMENT - 7 FT.

c) URBAN - 7 FT.

d) CARE SHALL BE TAKEN TO ASSURE THAT SIGNS WILL NOT BE OBSCURED BY CONSTRUCTION EQUIPMENT, TREES, WEEDS OR OTHER OBSTACLES. BRUSH, WEEDS OR GRASS WITHIN THE RIGHT OF WAY SHALL BE TRIMMED AS NECESSARY. SIGNS SHALL NORMALLY BE VISIBLE TO TRAFFIC 400 TO 600 FT. IN ADVANCE OF THE SIGN.

3) SUPPORTS FOR SIGNS WHICH WILL REMAIN IN PLACE MORE THAN ONE DAY SHALL BE FIXED RATHER THAN PORTABLE EXCEPT IN SITUATIONS WHERE THE SIGN MUST REST ON PERMANENT PAVEMENT OR OTHER SURFACE WHICH WOULD BE DAMAGED BY INSERTION OF POST TYPE SUPPORTS.

B. PLACEMENT OF SIGNS WHICH WILL REMAIN FOR ONE DAY OR LESS:

1) SAME AS A-1 ABOVE EXECPT THAT SIGNS MAY BE PLACED ON THE ROADWAY ONLY IF THEY DO NOT INTRUDE INTO A TRAFFIC LANE IN USE.

2) MINIMUM OF 1 FT. ABOVE ROADWAY

C. CLASSES OF SUPPORTS:

ALL TEMPORARY SIGN SUPPORTS SHALL BE OF THE FOLLOWING TYPES:

1) CLASS A:

SUPPORTS SHALL BE USED FOR EXPOSED LOCATIONS ON HIGHWAYS WHERE TRAFFIC APPROACH SPEEDS OF 40 MPH AND HIGHER ARE ENCOUNTERED. THEY ARE ALSO SUITABLE FOR USE IN ALL OTHER LOCATIONS.

2) CLASS B:

SUPPORTS SHALL BE USED FOR EXPOSED LOCATIONS ON HIGHWAYS WHERE TRAFFIC APPROACH SPEEDS OF LESS THAN 40 MPH ARE ENCOUNTERED. THEY ARE ALSO SUITABLE FOR USE IN ALL APPLICATIONS DEFINED FOR CLASS C SUPPORTS.

3) CLASS C:

SUPPORTS MAY ONLY BE USED WHERE FULLY PROTECTED BY GUARDRAIL, CONCRETE BARRIER AND IN LOCATIONS POSITIVELY PROTECTED FROM TRAFFIC SUCH AS ON RETAINING WALLS OR WHERE TRAFFIC APPROACH SPEEDS ARE LESS THAN 25 MPH.

D. TRAFFIC APPROACH SPEEDS:

TRAFFIC APPROACH SPEEDS SHALL BE THE LOCALLY POSTED SPEED (NOT ADVISORY SPEED SIGNS) OR THE MEASURED ACTUAL (85TH PERCENTILE) SPEED (IF AVAILABLE) OF APPROACHING TRAFFIC, WHICHEVER IS HIGHER, ADJACENT TO THE SIGN LOCATION.

TABLE

APPROACH SPEED (MPH)	COMPLETELY PROTECTED BY GUARDRAIL OR BARRIER	PARTLY PROTECTED BY GUARDRAIL OR BARRIER ✳	GREATER THAN 30' FROM EDGE OF PAVEMENT	WITHIN 30' FROM EDGE OF PAVEMENT
40 AND HIGHER	A, B OR C	A OR B	A OR B ✳✳	A ONLY
26 TO 39	A, B OR C	A OR B	A OR B	A OR B
0 TO 25	A, B OR C	A, B OR C	A, B OR C	A, B OR C

✳ IF SUPPORTS ARE BEHIND GUARDRAIL BUT NOT FULLY 5.5' BEHIND FACE OF RAIL OR IF SIGN IS NOT 1' BEHIND FACE OF CONCRETE BARRIER.

✳✳ 30' CRITERION IS BASED UPON STRAIGHT ROADWAY AND A SLOPE OF 6:1 OR FLATTER. SUPPORTS ON THE OUTSIDE OF CURVES OR LOCATED DOWN A SLOPE (STEEPER THAN 6:1) WILL REQUIRE USE OF CLASS A SUPPORTS.

E. BALLASTING

BALLASTING OF PORTABLE SUPPORTS SHALL BE WITH SANDBAGS PLACED WITHIN 1 FT. OF THE GROUND. IN NO CASE SHALL HARD OBJECTS BE USED FOR BALLAST.

F. STRENGTH OF SIGN SUPPORTS

THE CONTRACTOR SHALL CHOOSE SIGN SUPPORTS OF ADEQUATE STRENGTH AND WITH ADEQUATE FOUNDATIONS AND ANCHORAGE TO SUPPORT THE SIGN SIZES ERECTED. PROPRIETARY DEVICES SHALL NOT BE LOADED BEYOND THE LIMITS RECOMMENDED BY THE MANUFACTURER. SLIP BASE TYPE BREAKAWAY BEAM CONNECTIONS SHALL BE AT LEAST PARTIALLY EMBEDDED IN CONCRETE CONSISTING OF A 1 FT. DEEP BY 12" DIAMETER COLLAR. SIGN SUPPORTS WHICH FAIL UNDER TYPICAL WIND LOAD CONDITIONS SHALL BE IMMEDIATELY MODIFIED OR REPLACED WITH A SUPPORT OF ADEQUATE STRENGTH.

G. PROHIBITED SUPPORTS

THE FOLLOWING SUPPORT TYPES SHALL NOT BE PERMITTED ON PROJECTS:

1) SUPPORTS FABRICATED FROM AUTOMOTIVE AXLE DIFFERENTIAL ASSEMBLIES AND SIMILARLY HEAVY ASSEMBLIES WHICH CANNOT BE CONSIDERED BREAKAWAY TYPE.

2) SUPPORTS CONSISTING OF VERTICAL POSTS WITH ANGLED BRACES MADE FROM DRIVEPOST OR OTHER RIGID ELEMENTS.

CLASS A SUPPORTS

FIXED SUPPORTS

1) ALL #2, #3, AND #4 POST WHEN INSTALLED SINGLY OR IN PAIRS ACCORDING TO THE DETAILS OF TC-41.20. THE NUMBER OF SUPPORTS SHALL BE AS SHOWN ON TC-52.10 AND TC-52.20.

2) THE FOLLOWING POST TYPES, WHEN INSTALLED SINGLY, BY IMBEDMENT OR DRIVING INTO EARTH TO A DEPTH OF ABOUT 42 INCHES:

a) - UP TO 4" X 4" WOOD

b) - UP TO 2 INCH DIAMETER SCHEDULE 40 STEEL PIPE

c) - UP TO 3 INCH DIAMETER SCHEDULE 40 ALUMINUM PIPE

d) - UP TO 2¼INCH SQUARE, 12 GAUGE WALL, PUNCHED STEEL POST

e) - UP TO 6" X 8" WOOD WITH BREAKAWAY HOLES SHOWN BELOW

3) THE FOLLOWING POST TYPES WHEN INSTALLED IN PAIRS WITH LESS THAN 7 FT. BETWEEN POSTS, BY IMBEDMENT OR DRIVING INTO EARTH TO A DEPTH OF ABOUT 42 INCHES:

a) - UP TO 4" X 4" WOOD

b) - UP TO 2 INCH DIAMETER SCHEDULE 40 STEEL PIPE

c) - UP TO 3 INCH DIAMETER SCHEDULE 40 ALUMINUM PIPE

d) - UP TO 2 INCH SQUARE, 14 GAUGE WALL, PUNCHED STEEL POST

4) FIXED TYPE III BARRICADES:

5) ALL BREAKAWAY CONNECTION BEAM SUPPORTS, WHEN INSTALLED ACCORDING TO THE PROPER DETAILS SHOWN ON TC-41.10 WITH A MINIMUM CLEAR DISTANCE BETWEEN SUPPORTS OF 7 FT. FOR SUPPORTS LARGER THAN W6 X 9.

6) ANY BREAKAWAY POST OR POST AND CONNECTION WHICH HAS BEEN CRASH TESTED AND APPROVED BY THE FHWA AS SATISFYING THE BREAKAWAY CRITERIA DESCRIBED IN 630.06.

(CONTINUED ON 210511)

ALL WORK AND TRAFFIC CONTROL DEVICES SHALL BE IN ACCORDANCE WITH 614 AND OTHER APPLICABLE PORTIONS OF THE C & M SPECIFICATIONS AS WELL AS IN ACCORDANCE WITH PART 7 OF THE OMUTCD. PAYMENT FOR ALL LABOR, EQUIPMENT AND MATERIALS TO PROVIDE THIS METHOD OF TRAFFIC CONTROL SHALL BE INCLUDED IN THE LUMP SUM BID FOR 614 MAINTAINING TRAFFIC, UNLESS SEPARATELY ITEMIZED IN THE PLAN.

REVISED BY: CN DATE: 4/24/91

210510	DATE 05/07/90
TEMPORARY SIGN SUPPORT	
PLAN INSERT SHEET	

WCC

ASHLAND COUNTY
ASD-604-1.55

CLASS A SUPPORTS

FIXED

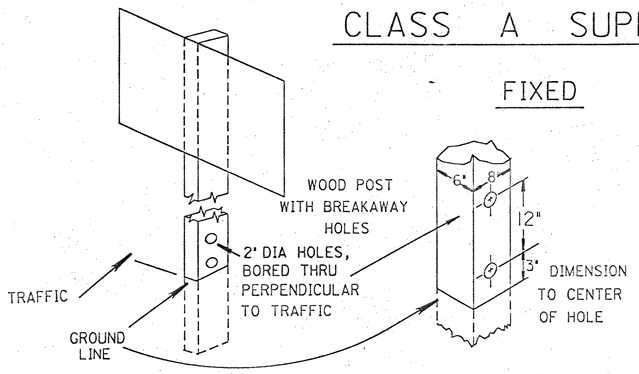

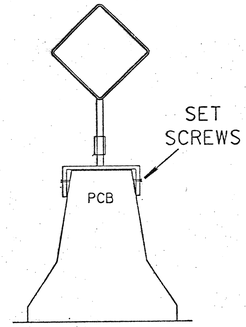

PORTABLE

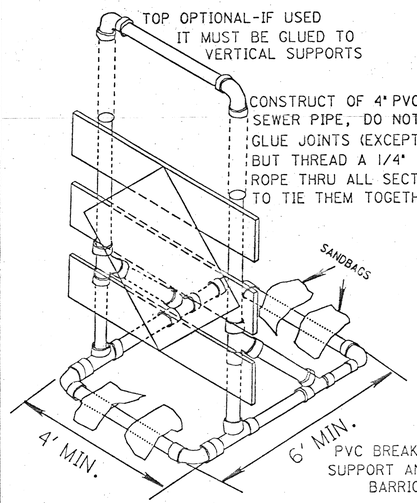

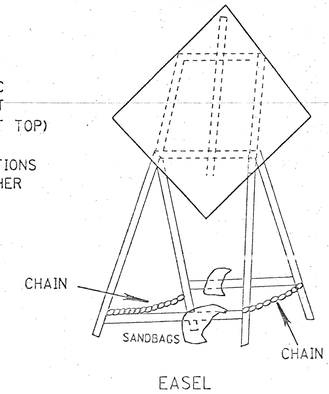

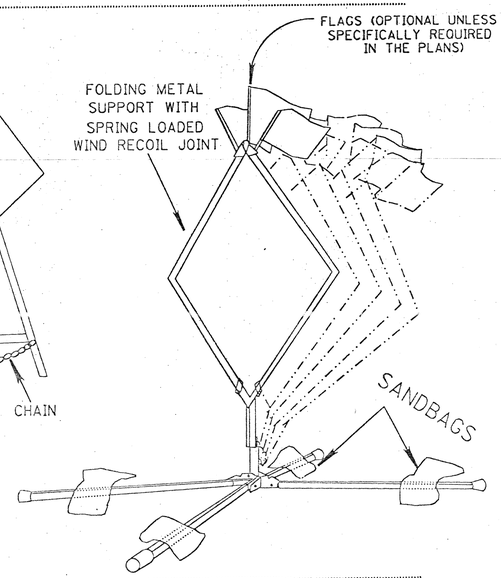

STUBBING STANDARD

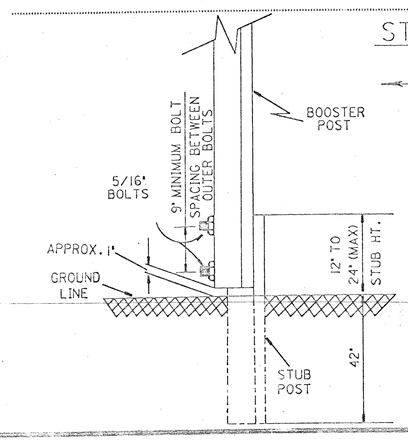

NOTES

1. FOR USE WITH #3 POST OR SMALLER ONLY
2. BOLTS SHALL BE STEEL OR ALUMINUM
3. A MINIMUM OF TWO FASTENERS SHALL BE USED PER ASSEMBLY
4. BOOSTER POST SHALL BE MOUNTED BEHIND STUB POST
5. BOOSTER POST SHALL BE THE SAME OR 1 LB./FT. LESS THAN STUB POST

CLASS B SUPPORTS

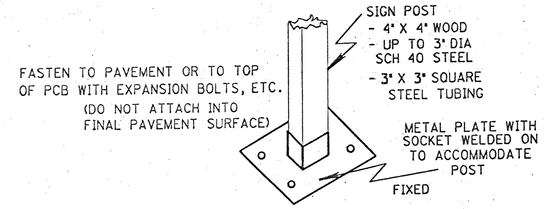

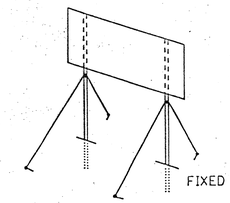

ANY CLASS A SIGN POST WITH GUY WIRES ADDED TO INCREASE SIGN CARRYING ABILITY. (GUY WIRES SHALL NOT BE HEAVIER THAN 1/8" DIA. BRAIDED CABLE. GUY ANCHORS SHALL NOT EXTEND MORE THAN 6" ABOVE GROUND SURFACE).

CLASS C SUPPORTS

1. ALL BEAM TYPE SUPPORTS WITHOUT BREAKAWAY CONNECTIONS.
2. SUPPORTS SIMILAR TO BUT LARGER THAN PERMITTED FOR CLASS A OR B.
3. THE STEEL DRUM(S) SHOWN BELOW MAY BE USED ONLY WHEN LOCATED BEHIND GUARDRAIL OR BARRIER.

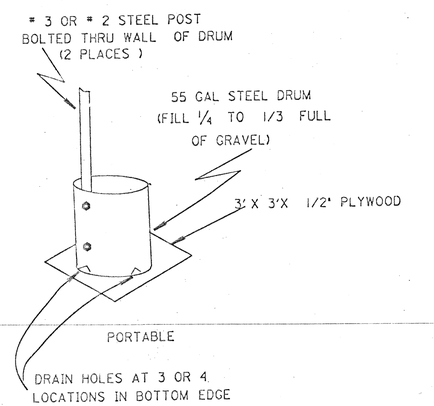

ALL WORK AND TRAFFIC CONTROL DEVICES SHALL BE IN ACCORDANCE WITH 614 AND OTHER APPLICABLE PORTIONS OF THE C & M SPECIFICATIONS AS WELL AS IN ACCORDANCE WITH PART 7 OF THE OMUTCD. PAYMENT FOR ALL LABOR, EQUIPMENT AND MATERIALS TO PROVIDE THIS METHOD OF TRAFFIC CONTROL SHALL BE INCLUDED IN THE LUMP SUM BID FOR 614 MAINTAINING TRAFFIC, UNLESS SEPARATELY ITEMIZED IN THE PLAN.

REVISED BY: CN	DATE: 4/24/91
210511	DATE 05/07/90
TEMPORARY SIGN SUPPORT	
PLAN INSERT SHEET	

WCC

CALCULATIONS

ITEM 203 - SUBGRADE COMPACTION
A = 2 x (30.0' x 25.0') = 1500 sq. ft. = 166.7 sq. yds. — USE 167 SQ. YDS.

ITEM 202 - WEARING COURSE REMOVED
A = (30.41' + 30.78') x 20.0' = 1223.8 sq. ft. = 136.0 sq. yds. — USE 136 SQ. YDS.

ITEM 404 - ASPHALT CONCRETE
V = (1500 sq. ft. + 1223.8 sq. ft.) x 1.25/12 x 1/27 = 10.5 cu. yds. — USE 11 CU. YDS.

ITEM 403 - ASPHALT CONCRETE
V = 1500 sq. ft. x 2.125" avg./12 x 1/27 = 9.8 cu. yds. — USE 10 CU. YDS.

ITEM 407 - TACK COAT
V = (1500 sq. ft. + 1223.8 sq. ft.) x 1/9 x 0.1 gal./sq. yd. = 30.3 gal. — USE 30 GAL.

ITEM 304 - 6" AGGREGATE BASE, AS PER PLAN
V = 32.0' x 25.0' x 0.5' x 2 x 1/27 = 29.6 cu. yds. — USE 30 CU. YDS.

ITEM 304 - 8" AGGREGATE BASE, AS PER PLAN
V = 4.0' x (30.41' + 30.78') x 8/12 x 2 x 1/27 = 12.1 cu. yds. — USE 12 CU. YDS.

ITEM 605 - AGGREGATE DRAINS
Sta. 81+85 Lt. = 7 l.f.
Sta. 81+95 Rt. = 8 l.f.
Sta. 82+95 Lt. = 10 l.f.
Sta. 83+15 Rt. = 7 l.f.
32 Lin. Ft. — USE 32 LIN. FT.

ITEM 659 - WATER
V = 1999 sq. yds. x 9 x 120/1000 x 1/1000 x 2 = 4.3 M Gal. — USE 4 M GAL. (To General Note)

ITEM 659 - COMMERCIAL FERTILIZER
1999 sq. yds. x 9 x 20/1000 x 1/2000 = 0.180 tons — USE 0.18 TONS

ITEM 601 - ROCK CHANNEL PROTECTION
TYPE "D", 1'-6" THICK, WITH FILTER
West Bank: 59' avg. length x 22.5' avg. along slope = 1328 sq. ft.
East Bank: 55' avg. length x 24.5' avg. along slope = 1348 sq. ft.
2676 sq. ft.
2676 sq. ft. x 1.5' thick / 27 = 148.7 cu. yds. — USE 149 CU. YDS.

ITEM 202 - PAVEMENT REMOVED (CONCRETE APPROACH SLAB)
Sta. 81+91±: Width = 20'±
Sta. 82+05.41: Width = 22.4'±
1/2 (20' + 22.4') x 14.4' / 9 = 33.9 sq. yds.
Sta. 82+94.22: Width = 24'±
Sta. 83+19.22: Width = 20.4'±
1/2 (24' + 20.4') x 25.0' / 9 = 61.7 sq. yds.
95.6 sq. yds. — USE 96 SQ. YDS.

ITEM 614 - TEMPORARY CENTERLINE, CLASS II
L = [(Sta. 83+50.00) - (Sta. 81+50.00)] x 1/5280 = 0.038 MI. — USE 0.04 MI. (TO GENERAL NOTE)

GENERAL SUMMARY

SHEET NUMBER 3	4	5	9	22	PARTICIPATION			ITEM	ITEM EXT.	GRAND TOTAL	UNIT	DESCRIPTION
												- ROADWAY -
LUMP								201	11000	LUMP		CLEARING AND GRUBBING
	96							202	23000	96	S.Y.	PAVEMENT REMOVED
	136							202	23500	136	S.Y.	WEARING COURSE REMOVED
		404						202	38000	404	L.F.	GUARDRAIL REMOVED
		105	416					203	12000	521	C.Y.	EXCAVATION NOT INCLUDING EMBANKMENT CONSTRUCTION
		231	113					203	20000	344	C.Y.	EMBANKMENT
	167							203	50000	167	S.Y.	SUBGRADE COMPACTION
				2				604	38501	2	EACH	MONUMENT ASSEMBLY, AS PER PLAN
		262.50						606	13000	262.50	L.F.	GUARDRAIL, TYPE 5
		3						606	25000	3	EACH	ANCHOR ASSEMBLY, TYPE A
		1						606	26500	1	EACH	ANCHOR ASSEMBLY, TYPE T
		4						606	35140	4	EACH	BRIDGE TERMINAL ASSEMBLY, TYPE 4
												- EROSION CONTROL -
50								207	70000	50	EACH	STRAW OR HAY BALES
5	149							601	32300	154	C.Y.	ROCK CHANNEL PROTECTION, TYPE D WITH FILTER
		1488	511					659	10000	1999	S.Y.	SEEDING AND MULCHING
	0.18							659	20000	0.18	TON	COMMERCIAL FERTILIZER
4								659	35000	4	M GAL.	WATER
												- DRAINAGE -
50								603	01400	50	L.F.	6" CONDUIT, TYPE E
50								603	01500	50	L.F.	6" CONDUIT, TYPE F
50								603	01800	50	L.F.	8" CONDUIT, TYPE B
	32							605	31100	32	L.F.	AGGREGATE DRAIN
												- PAVEMENT -
	42	57						304	20001	99	C.Y.	AGGREGATE BASE, AS PER PLAN
	10							403	20000	10	C.Y.	ASPHALT CONCRETE, AC-20
	11							404	20000	11	C.Y.	ASPHALT CONCRETE, AC-20
	30							407	10000	30	GAL.	TACK COAT
		166						611	25001	166	S.Y.	REINFORCED CONCRETE APPROACH SLAB (T=15"), AS PER PLAN (SEE NOTE ON SH. 12)
												- TRAFFIC CONTROL -
0.04								614	21400	0.04	MI.	TEMPORARY CENTER LINE, CLASS II
		0.08						642	00090	0.08	MI.	EDGE LINE
		0.04						642	00290	0.04	MI.	CENTER LINE
		7						802	00100	7	EACH	BARRIER REFLECTOR, TYPE A
												STRUCTURES, 20' SPAN AND OVER
												ASD-604-0156, SEE SHEET 11
LUMP								614	11000	LUMP		MAINTAINING TRAFFIC
								619	15000	LUMP		FIELD OFFICE, TYPE A (One Field office for both parts)
								623	10000	LUMP		CONSTRUCTION LAYOUT STAKES
								624	10000	LUMP		MOBILIZATION

F.H.W.A. REGION	STATE	PROJECT	
5	OHIO		

5 / 22

ASHLAND COUNTY
ASD-604-1.55

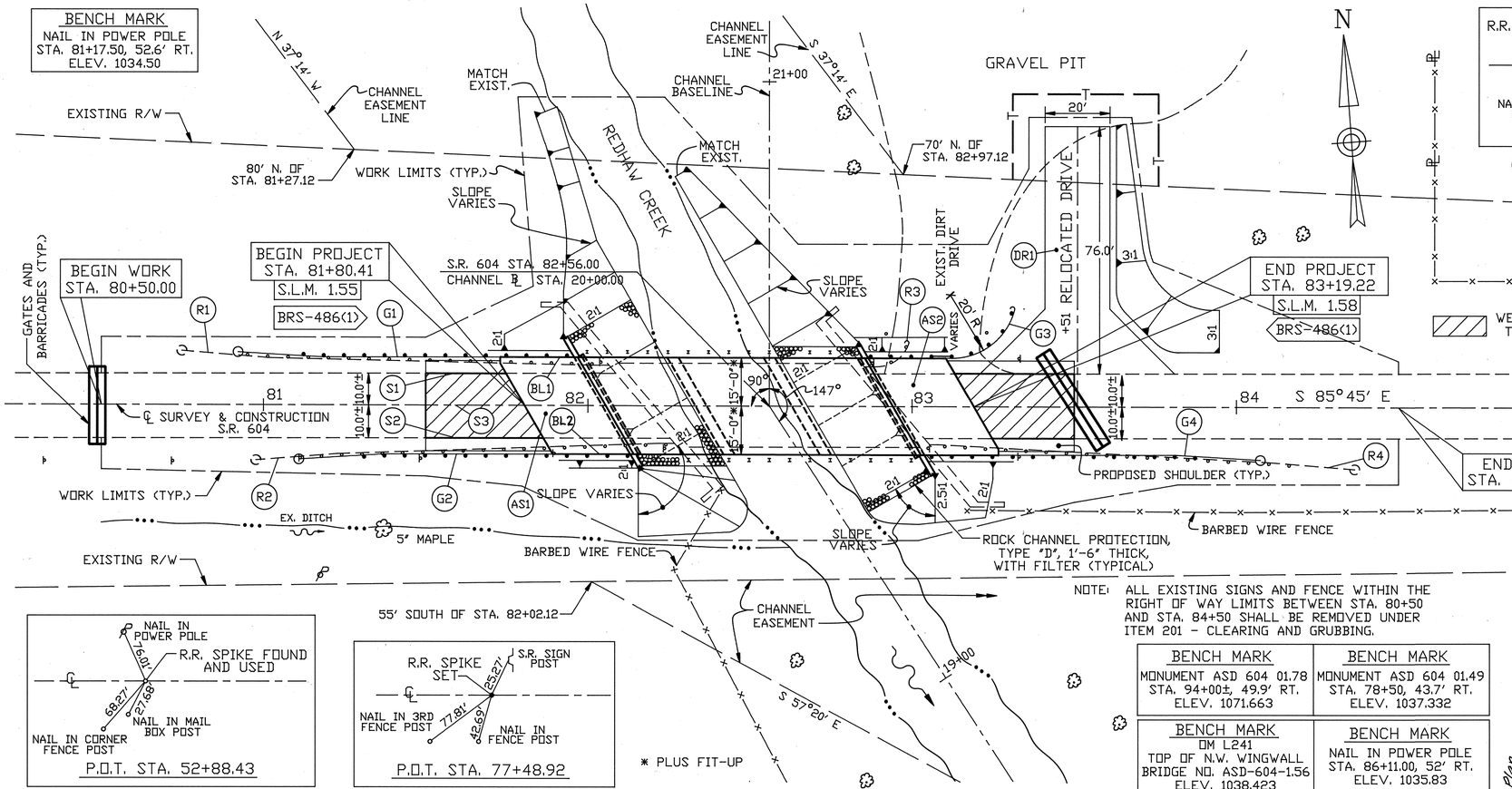

NOTE: ALL EXISTING SIGNS AND FENCE WITHIN THE RIGHT OF WAY LIMITS BETWEEN STA. 80+50 AND STA. 84+50 SHALL BE REMOVED UNDER ITEM 201 - CLEARING AND GRUBBING.

BENCH MARK	BENCH MARK
MONUMENT ASD 604 01.78 STA. 94+00±, 49.9' RT. ELEV. 1071.663	MONUMENT ASD 604 01.49 STA. 78+50, 43.7' RT. ELEV. 1037.332
BENCH MARK	**BENCH MARK**
DM L241 TOP OF N.W. WINGWALL BRIDGE NO. ASD-604-1.56 ELEV. 1038.423	NAIL IN POWER POLE STA. 86+11.00, 52' RT. ELEV. 1035.83

EXISTING STRUCTURE

TYPE: SIMPLE SPAN STEEL BEAMS WITH CONCRETE DECK ON FULL-HEIGHT ABUTMENTS
SPAN: 71'-9 1/8"± (CLEAR)
ROADWAY: 24'-0"± F/F CURBS
LOADING: H-15-33
SKEW: 40° RIGHT FORWARD
WEARING SURFACE: ASPHALT
APPROACH SLABS: AS-35 (25'-0" LONG) (T=14-1/2")

ALIGNMENT: TANGENT
SUPERELEVATION: NONE
STRUCTURE FILE NO.: 0306096
DATE BUILT: 1940
CONDITION: MARGINAL

PROPOSED STRUCTURE

TYPE: PRECAST PRESTRESSED CONCRETE BOX BEAMS W/CAPPED PILE PIERS & ABUTMENTS
SPANS: 28.0', 28.0', 28.0' C/C BEARINGS
ROADWAY: 30'-0" F/F RAILS
LOADING: HS20-44 AND ALT. MILITARY
SKEW: 30° RIGHT FORWARD
WEARING SURFACE: ASPHALT CONCRETE
APPROACH SLABS: AS-1-81 (25' LONG)
ALIGNMENT: TANGENT
SUPERELEVATION: NONE
CROWN: 3/16" PER FT.

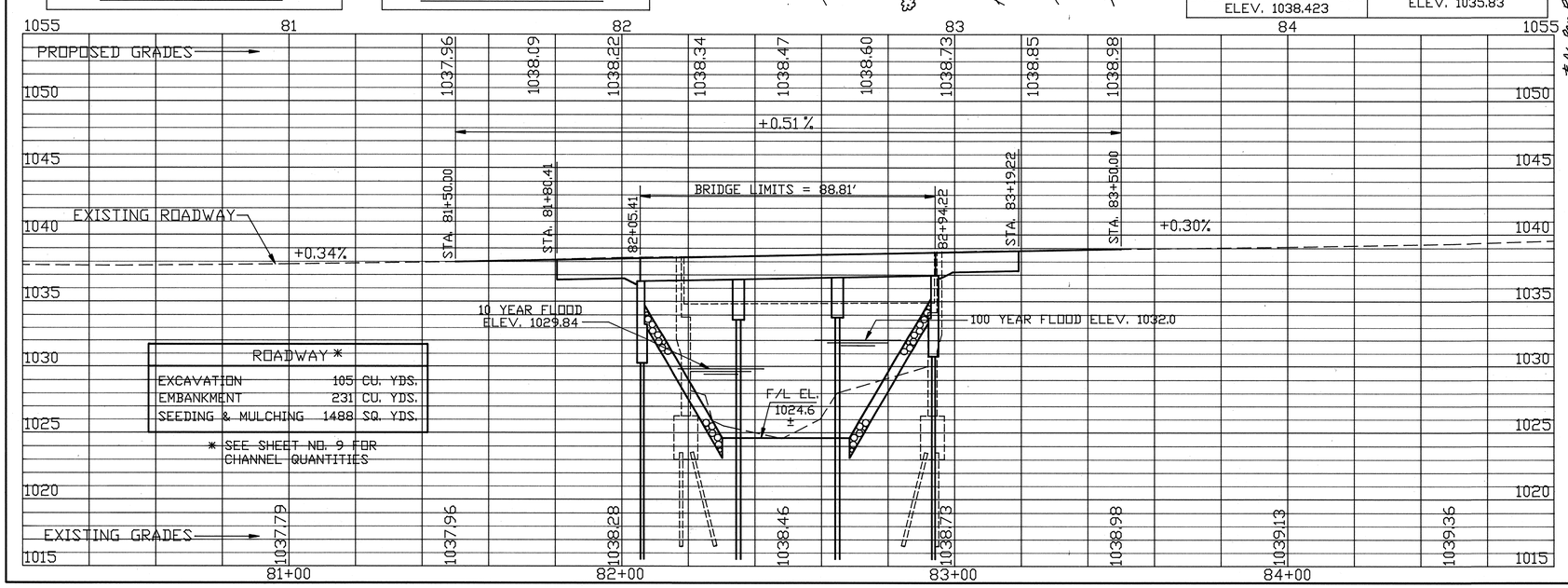

ROADWAY *		
EXCAVATION	105	CU. YDS.
EMBANKMENT	231	CU. YDS.
SEEDING & MULCHING	1488	SQ. YDS.

* SEE SHEET NO. 9 FOR CHANNEL QUANTITIES

* AS PER PLAN

ESTIMATED QUANTITIES

REF. NO.	STATION TO STATION	SIDE	202 GUARDRAIL REMOVED	606 GUARDRAIL TYPE 5	606 BRIDGE TERMINAL ASSEMBLY TYPE '4'	606 ANCHOR ASSEMBLY TYPE 'A'	606 ANCHOR ASSEMBLY TYPE 'T'	611 REINF. CONC. APPROACH SLAB T=15" *	802 BARRIER REFLECTORS TYPE 'A'	304 10" AGGREGATE BASE, AS PER PLAN	642 EDGE LINE (WHITE)	642 CENTERLINE (DASHED SINGLE)	SEE SHEET NO.
			L.F.	L.F.	E.A.	E.A.	E.A.	S.Y.	E.A.	C.Y.	MI.	MI.	
R1	80+75 TO 82+06	L	133										
R2	80+98 TO 82+26	R	128										
R3	82+65 TO 82+99	L	14										
R4	83+05 TO 84+37	R	131										
G1	80+93.77 TO 81+93.77	L		75.00	1	1							
G2	81+12.11 TO 82+12.11	R		75.00	1	1							
G3	82+87.52 TO 83+31±	L		37.50*	1	1	1						
G4	83+05.86 TO 84+05.86	R		75.00	1	1							
AS1	81+80.41 TO 82+05.41							83					
AS2	82+94.22 TO 83+19.22							83					
BL1	81+18.77 TO 83+12.52	L							3				
BL2	81+37.11 TO 83+80.66	R							4				
DR1	83+51.00	L								57			
S1	81+50 TO 83+50	L									0.04		
S2	81+50 TO 83+50	R									0.04		
S3	81+50 TO 83+50	C/L										0.04	
TOTALS			404	262.50	4	3	1	166	7	57	0.08	0.04	

* INCLUDES 25.00 LIN. FT. AT A 20' RADIUS

PLAN AND PROFILE

F.H.W.A. REGION	STATE	PROJECT	
5	OHIO		

6
22

ASHLAND COUNTY
ASD-604-1.55

CALC. BY: CB DATE: 12-1-90
CHKD. BY: BP DATE: 12-3-90

SEEDING	
WIDTH	AREA
48	140
35	192
34	186
33 AHEAD / BACK 0	

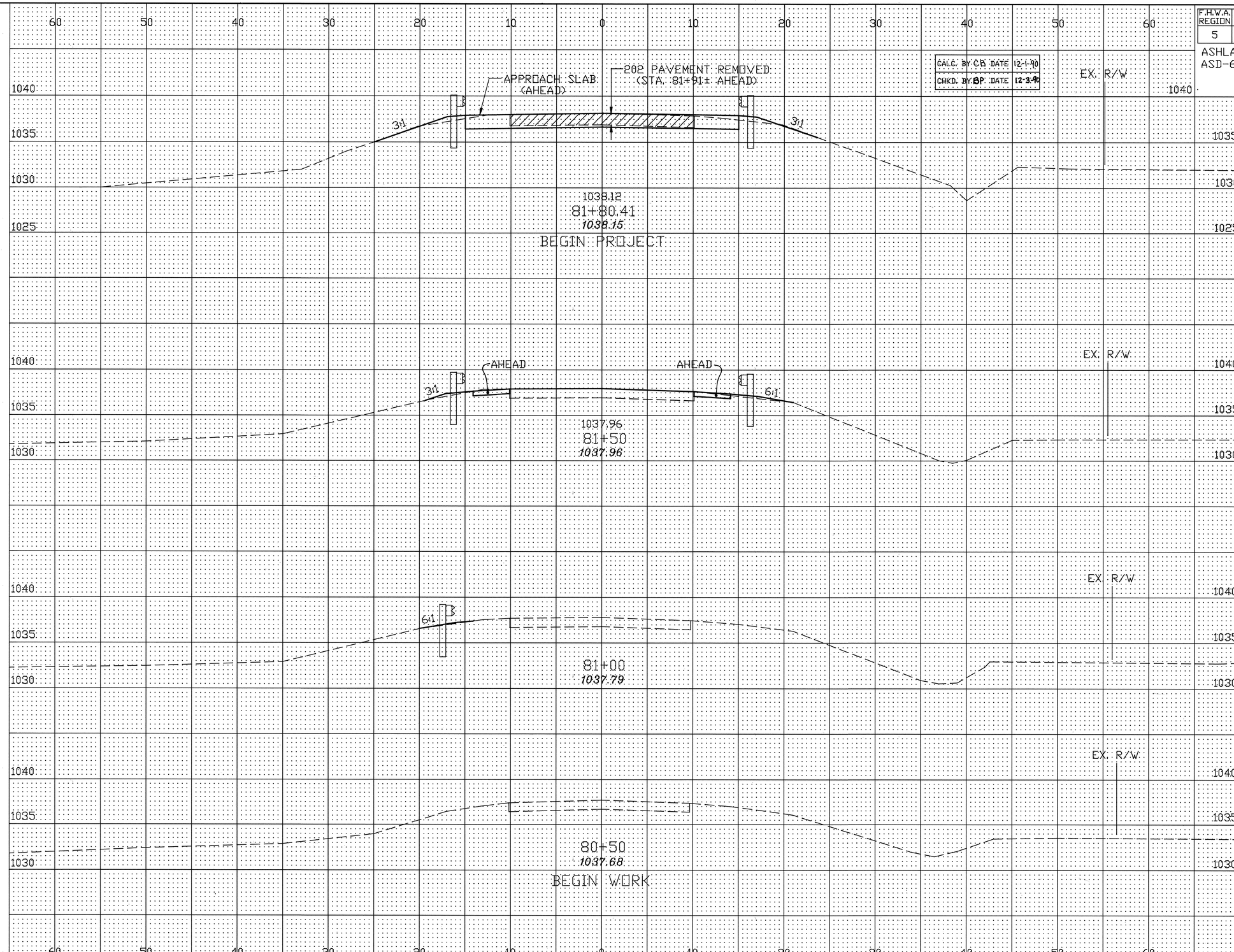

EARTHWORK			
AREA		VOLUME	
CUT	FILL	CUT	FILL
61	3		
AHEAD			
BACK			
6	3		
		6	3
5	2		
AHEAD			
BACK			
0	2		
		0	2
0	0		
0	0		

ROADWAY CROSS SECTIONS

F.H.W.A. REGION	STATE	PROJECT	
5	OHIO		

7
22

ASHLAND COUNTY
ASD-604-1.55

CALC. BY CD DATE 12-1-10
CHKD. BY BP DATE 12-3-10

SEEDING	
WIDTH	AREA
77	226
86 AHEAD	
BACK 0	
0 AHEAD	
BACK 76	176

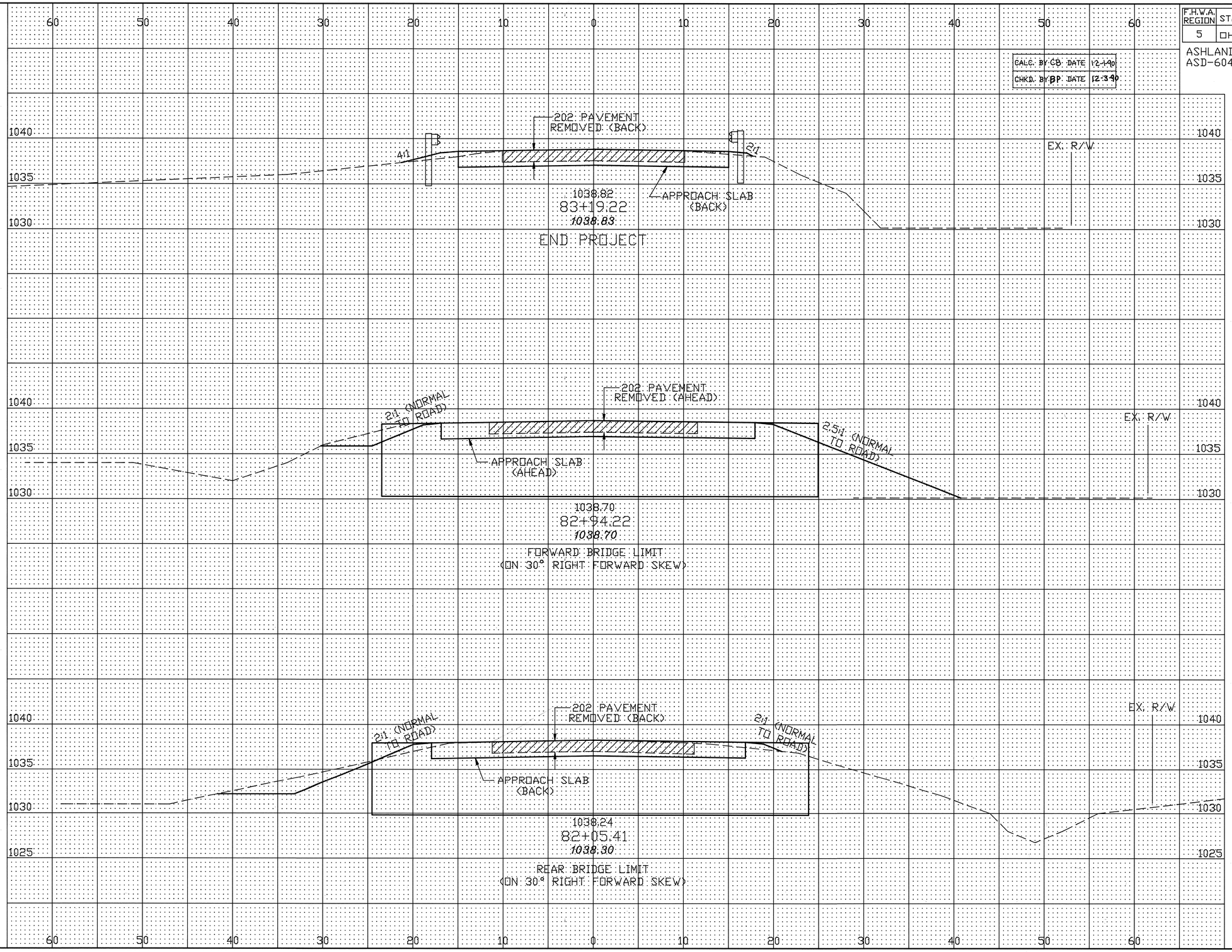

EARTHWORK			
AREA		VOLUME	
CUT	FILL	CUT	FILL
5	3		
AHEAD			
BACK			
36	3		
		36	24
42	48		
AHEAD			
BACK			
0	0		
0	0		
AHEAD			
BACK			
51	5		
		52	4

ROADWAY CROSS SECTIONS

F.H.W.A. REGION	STATE	PROJECT	
5	OHIO		

8
22

ASHLAND COUNTY
ASD-604-1.55

CALC. BY CD DATE 12-1-90
CHKD. BY BP DATE 12-3-90

SEEDING	
WIDTH	AREA
0	
AHEAD	
BACK	
20	
	194
50	
	206
24	
	172

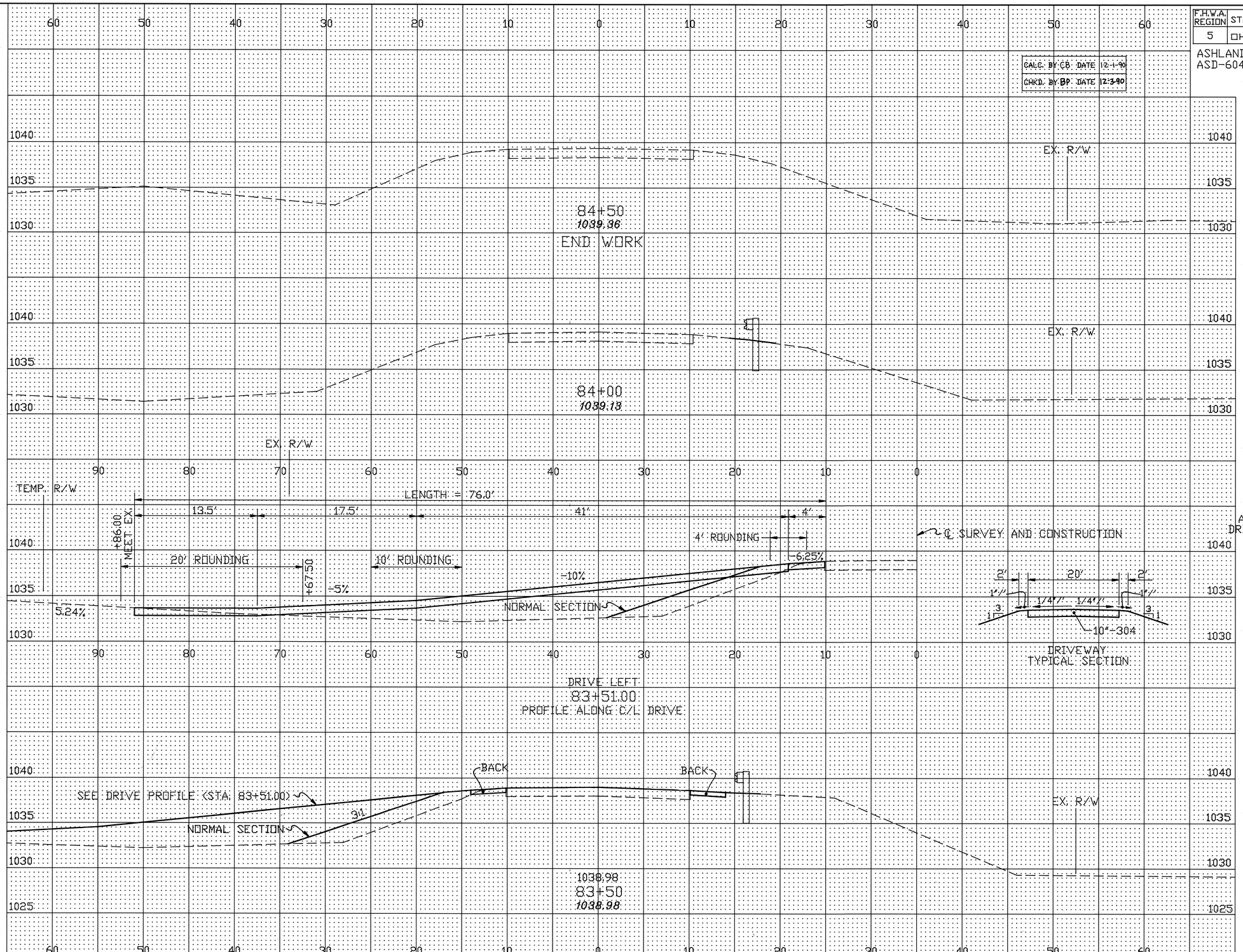

EARTHWORK			
AREA		VOLUME	
CUT	FILL	CUT	FILL
0	0		
0	0		
		ADD FOR DRIVE LEFT — 5	157
		0	24
0	26		
AHEAD			
BACK			
5	26		
		6	17

ROADWAY CROSS SECTIONS

F.H.W.A. REGION	STATE	PROJECT	
5	OHIO		

9
22

ASHLAND COUNTY
ASD-604-1.55

SEEDING	
WIDTH	AREA
0	
	161
58	
	228
24	
AHEAD	
BACK	
22	
	61
0	
AHEAD	
BACK	
22	
	61
0	

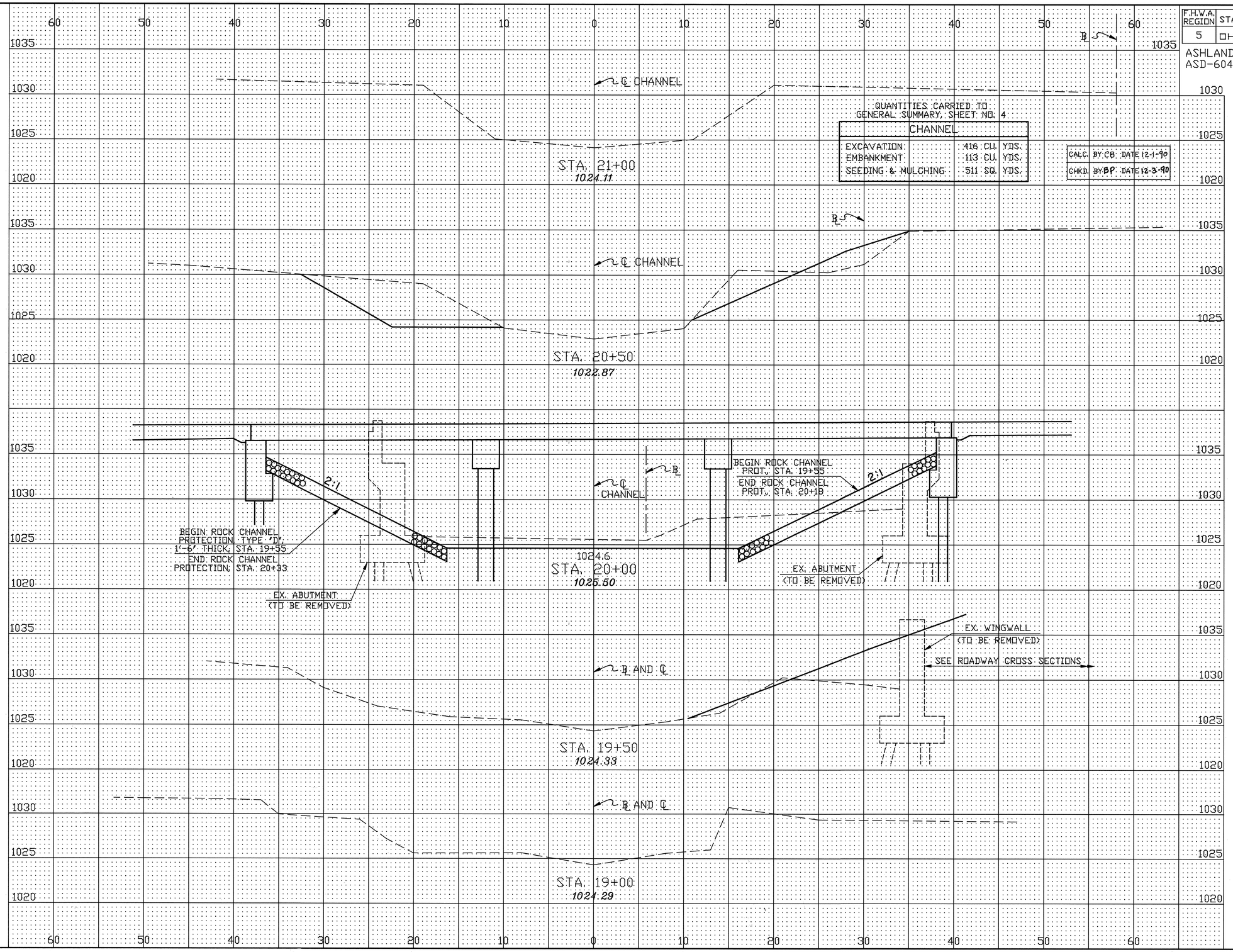

QUANTITIES CARRIED TO GENERAL SUMMARY, SHEET NO. 4

CHANNEL		
EXCAVATION	416	CU. YDS.
EMBANKMENT	113	CU. YDS.
SEEDING & MULCHING	511	SQ. YDS.

CALC. BY CB DATE 12-1-90
CHKD. BY BP DATE 12-3-90

EARTHWORK			
AREA		VOLUME	
CUT	FILL	CUT	FILL
0	0		
		78	14
84	15		
		207	23
139	10		
		130	43
1	36		
		1	33
0	0		

CHANNEL CROSS SECTIONS

F.H.W.A. REGION	STATE	PROJECT		
5	OHIO			

10 / 22

ASHLAND COUNTY
ASD-604-1.55

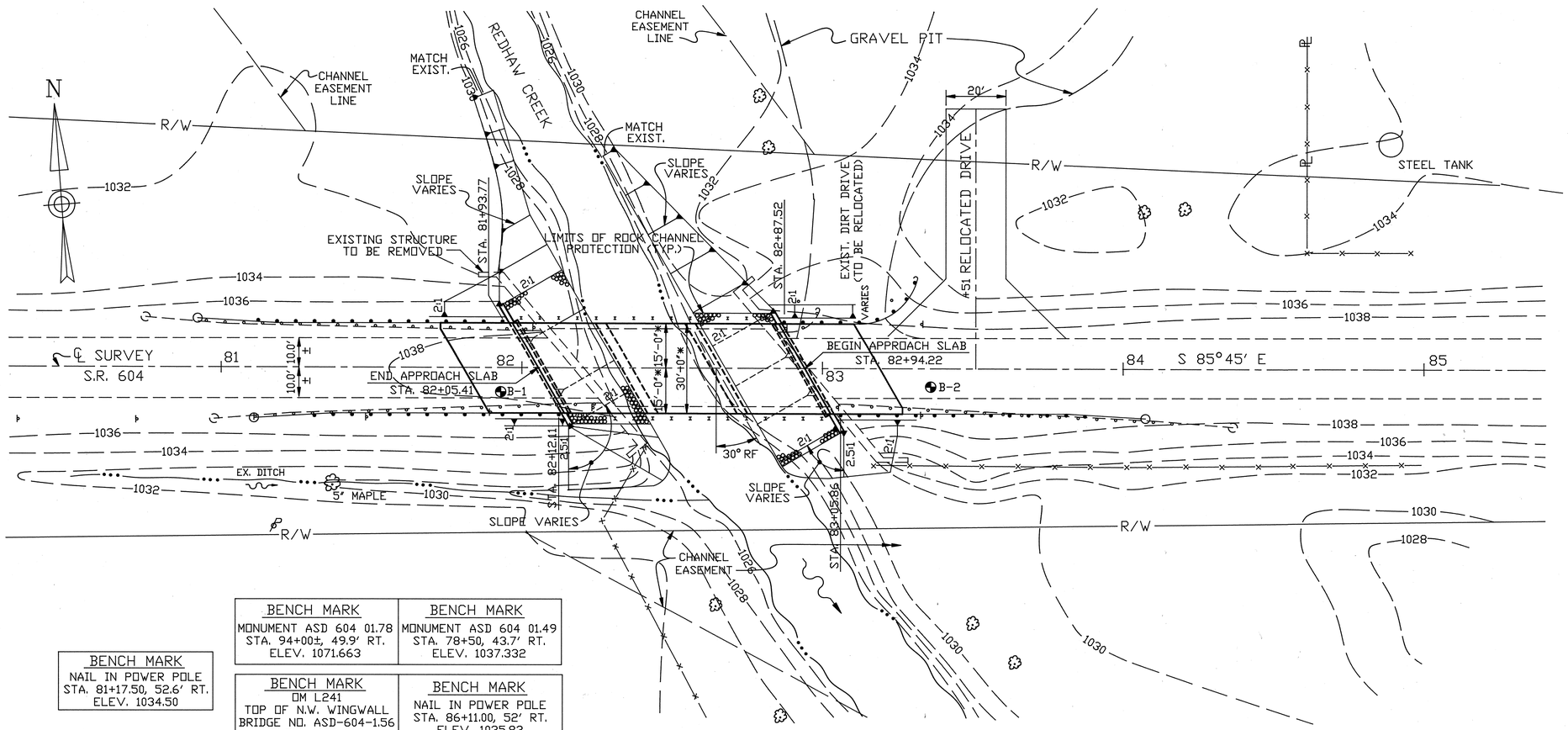

PLAN

* PLUS FIT-UP

BENCH MARK	BENCH MARK
MONUMENT ASD 604 01.78 STA. 94+00±, 49.9' RT. ELEV. 1071.663	MONUMENT ASD 604 01.49 STA. 78+50, 43.7' RT. ELEV. 1037.332
BENCH MARK OM L241 TOP OF N.W. WINGWALL BRIDGE NO. ASD-604-1.56 ELEV. 1038.423	BENCH MARK NAIL IN POWER POLE STA. 86+11.00, 52' RT. ELEV. 1035.83

BENCH MARK
NAIL IN POWER POLE
STA. 81+17.50, 52.6' RT.
ELEV. 1034.50

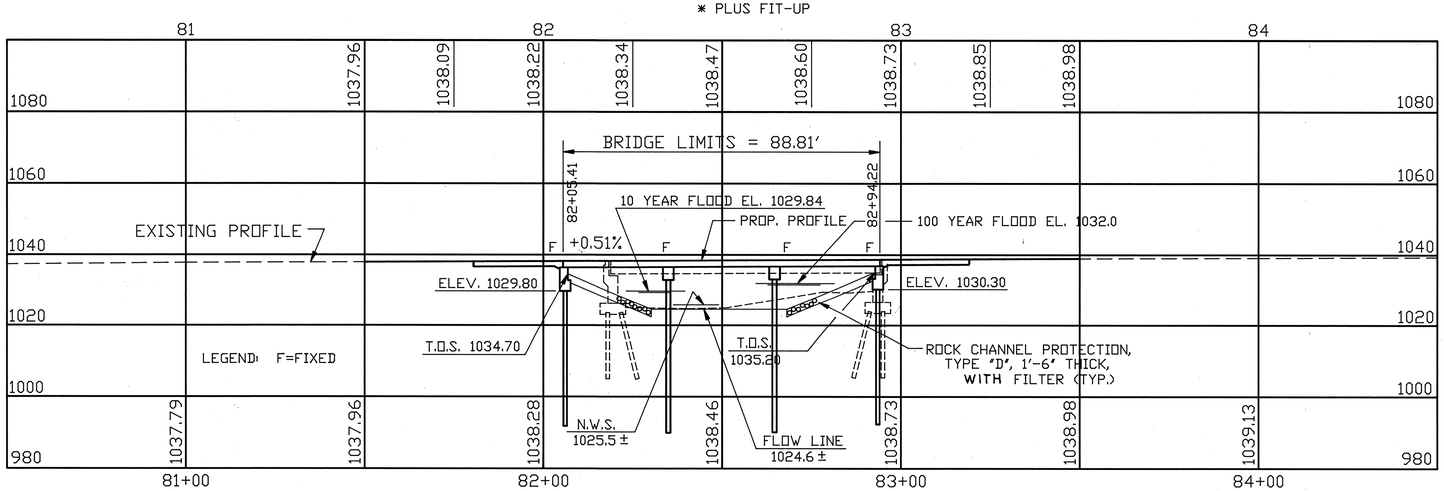

PROFILE ALONG C/L SURVEY

NOTE: EARTHWORK LIMITS SHOWN ARE APPROXIMATE. ACTUAL SLOPES SHALL CONFORM TO PLAN CROSS SECTIONS.

FOUNDATION DATA:

ABUTMENTS: 12" DIA. CAST-IN-PLACE PILES WITH AN ESTIMATED PAY LENGTH OF 40 FEET.

PIERS: 14" DIA. CAST-IN-PLACE PILES WITH AN ESTIMATED PAY LENGTH OF 45 FEET.

BORINGS

REVIEWED BY BURGESS & NIPLE, LTD.

TDT 5-91

DESIGN TRAFFIC DATA

CURRENT ADT (1991) = 420
DESIGN YEAR ADT (2011) = 550

HYDRAULIC DATA

DRAINAGE AREA = 5.51 SQ. MI.

Q_{10} (DESIGN YEAR) = 992 c.f.s.
V_{10} = 5.70 f.p.s.
CLEARANCE TO 10 YR. HIGH WATER = 6.5 FT. +/-

Q_{100} = 1,843 c.f.s.
V_{100} = 6.85 f.p.s.
CLEARANCE TO 100 YR. HIGH WATER = 4.3 FT. +/-

EXISTING STRUCTURE

TYPE: SIMPLE SPAN STEEL BEAMS WITH CONCRETE DECK ON FULL-HEIGHT ABUTMENTS
SPAN: 71'-9 1/8"± (CLEAR)
ROADWAY: 24'-0"± F/F CURBS
LOADING: H-15-33
SKEW: 40° RIGHT FORWARD
WEARING SURFACE: ASPHALT
APPROACH SLABS: AS-35 (25'-0" LONG) (T=14-1/2")
ALIGNMENT: TANGENT
SUPERELEVATION: NONE
STRUCTURE FILE NO.: 0306096
DATE BUILT: 1940
CONDITION: MARGINAL

PROPOSED STRUCTURE

TYPE: PRECAST PRESTRESSED CONCRETE BOX BEAMS WITH CAPPED PILE PIERS & ABUTMENTS
SPANS: 28.0', 28.0', 28.0' C/C BEARINGS
ROADWAY: 30'-0" F/F RAILS
LOADING: HS20-44 AND ALT. MILITARY
SKEW: 30° RIGHT FORWARD
WEARING SURFACE: ASPHALT CONCRETE (2-1/2" MIN.)
APPROACH SLABS: AS-1-81 (25' LONG)
ALIGNMENT: TANGENT
SUPERELEVATION: NONE
CROWN: 3/16" PER FT.

CENTRAL ENGINEERING, INC. 1 / 11
CIVIL & STRUCTURAL ENGINEERS

SITE PLAN

BRIDGE NO. ASD-604-0156
OVER REDHAW CREEK

STA. 82+05.41
TO STA. 82+94.22

ASHLAND COUNTY

DRAWN	TRACED	CHECKED	REVIEWED	REVISED
C.B.	S.C.	H.W.	DSK	

F.H.W.A. REGION	STATE	PROJECT		
5	OHIO			

11 / 22

ASHLAND COUNTY
ASD-604-1.55

CALC. BY CB	DATE 1-17-91
CHKD. BY HA	DATE 1-18-91

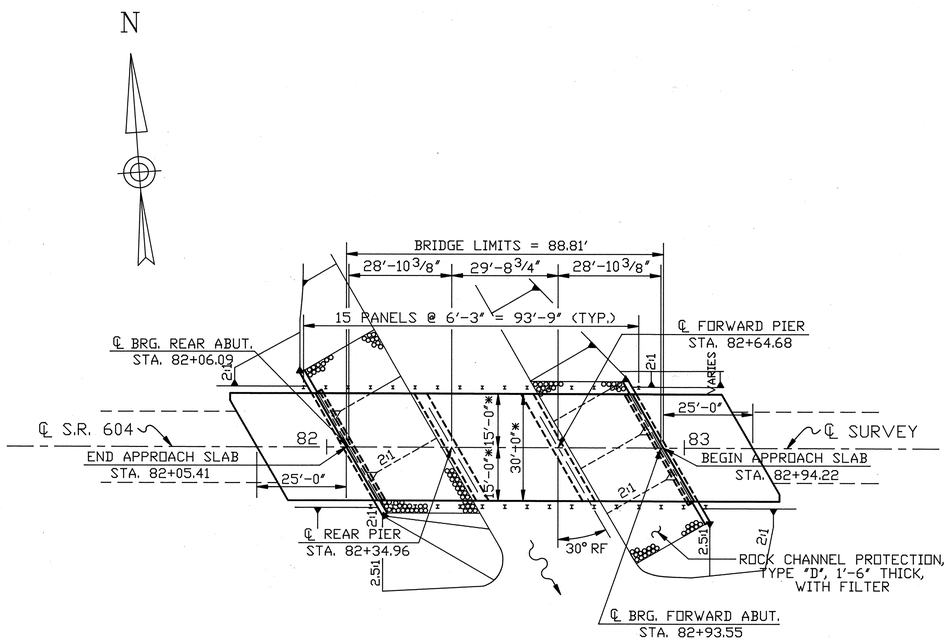

PLAN

* PLUS FIT-UP

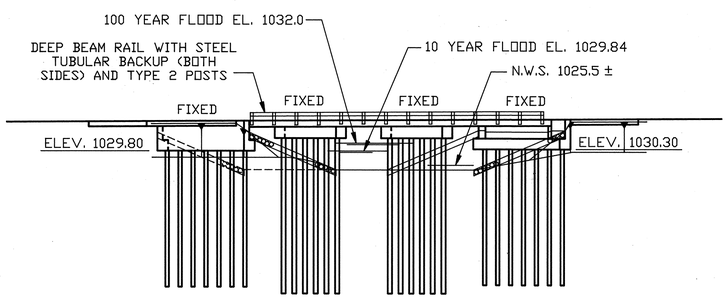

ELEVATION

ESTIMATED QUANTITIES

ITEM	ITEM EXT.	TOTAL	UNIT	DESCRIPTION	ABUT.	PIERS	SUPER.	GEN.
202	11002	LUMP	SUM	STRUCTURE REMOVED, OVER 20 FOOT SPAN				LUMP
403	20000	14	CU. YD.	ASPHALT CONCRETE, AC-20			14	
404	20000	11	CU. YD.	ASPHALT CONCRETE, AC-20			11	
503	21300	LUMP	SUM	UNCLASSIFIED EXCAVATION	LUMP*			
505	11100	LUMP	SUM	PILE DRIVING EQUIPMENT MOBILIZATION				LUMP
507	22200	560	LIN. FT.	12" CAST-IN-PLACE REINFORCED CONCRETE PILES	560			
507	42200	540	LIN. FT.	14" CAST-IN-PLACE REINFORCED CONCRETE PILES		540		
SPECIAL	507 71200	136	LIN. FT.	PILE ENCASEMENT		136		
509	15800	11232	LB.	EPOXY COATED REINFORCING STEEL, GRADE 60	6855	3773	604	
511	34003	4	CU. YD.	CLASS S CONCRETE, HIGH EARLY STRENGTH, AS PER PLAN			4	
511	42501	29	CU. YD.	CLASS C CONCRETE, PIER CAP, AS PER PLAN		29		
511	44201	28	CU. YD.	CLASS C CONCRETE, ABUTMENT NOT INCLUDING FOOTING, AS PER PLAN	28			
511	46501	33	CU. YD.	CLASS C CONCRETE, FOOTING, AS PER PLAN	33			
512	55800	312	SQ. YD.	TYPE "D" WATERPROOFING			312	
SPECIAL	512 67500	52	SQ. YD.	SEALING OF CONCRETE SURFACES (SEE PROPOSAL NOTE)		14	38	
SPECIAL	512 67502	41	SQ. YD.	SEALING OF CONCRETE SURFACES, EPOXY (SEE PROPOSAL NOTE)	41			
515	50300	30	EACH	PRESTRESSED CONCRETE BOX BEAM (B17-36) (16-30' LENGTH) (SEE PROPOSAL NOTE)			30	
516	13600	98	SQ. FT.	1" PREFORMED EXPANSION JOINT FILLER			98	
516	31011	70	LIN. FT.	2" DEEP JOINT SEALER, AS PER PLAN			70	
SPECIAL	516 31200	70	LIN. FT.	SAWING AND SEALING BITUMINOUS CONCRETE JOINTS			70	
516	41100	60	EACH	1/8-INCH PREFORMED BEARING PAD, 711.21			60	
516	43100	120	EACH	ELASTOMERIC BEARING WITH INTERNAL LAMINATES ONLY (NEOPRENE) 6"x8"x1" (50 DUROMETER)			120	
517	72300	187.5	LIN. FT.	RAILING (DEEP BEAM RAIL WITH STEEL TUBULAR BACKUP AND TYPE 2 STEEL POSTS AND ANCHOR BOLTS)			187.5	
518	21200	25	CU. YD.	POROUS BACKFILL WITH FILTER FABRIC	25			
SPECIAL	518 22200	149	SQ. FT.	STEEL DRIP STRIP			149	

* Estimated to be 99 Cu. Yd.

CENTRAL ENGINEERING, INC. 2 / 11
CIVIL & STRUCTURAL ENGINEERS

GENERAL PLAN & ELEVATION
AND ESTIMATED QUANTITIES

BRIDGE NO. ASD-604-0156
OVER REDHAW CREEK

STA. 82+05.41
TO STA. 82+94.22

ASHLAND COUNTY

DRAWN	TRACED	CHECKED	REVIEWED	REVISED
C.B.	S.C.	H.W.	DSC	

GENERAL NOTES

REFERENCES

REFERENCE SHALL BE MADE TO STANDARD DRAWINGS:

AS-1-81	DATED	11-27-81
DBR-2-73	DATED	4-10-73
PSBD-1-81	DATED	6-20-89

AND TO SUPPLEMENTAL SPECIFICATIONS:

836	DATED	11-12-85
942	DATED	11-27-89
944	DATED	6-24-89

DESIGN SPECIFICATIONS:

THIS STRUCTURE CONFORMS TO "STANDARD SPECIFICATIONS FOR HIGHWAY BRIDGES" ADOPTED BY THE AMERICAN ASSOCIATION OF STATE HIGHWAY AND TRANSPORTATION OFFICIALS, 1989, INTERIM SPECIFICATIONS FOR 1990, AND THE OHIO "SUPPLEMENT" TO THESE SPECIFICATIONS.

DESIGN DATA:

DESIGN LOADING - HS20-44 AND THE ALTERNATE MILITARY LOADING

CONCRETE CLASS C - COMPRESSIVE STRENGTH 4000 P.S.I.

CONCRETE CLASS S - COMPRESSIVE STRENGTH 4500 P.S.I.

REINFORCING STEEL, ASTM A615, A616, A617
GRADE 60 - YIELD STRENGTH 60,000 P.S.I.
GRADE 40 - YIELD STRENGTH 40,000 P.S.I. (BOX BEAMS ONLY)

CONCRETE FOR PRESTRESSED BEAMS -
UNIT STRESS 2200 P.S.I. COMPRESSION
444 P.S.I. TENSION

PRESTRESSING STRAND, ASTM A416
F's = 270,000 P.S.I.
INITIAL STRESS = 0.70 F's

ABUTMENT PILING:

ABUTMENT PILING BENDING STRESS MAY APPROACH, REACH OR EXCEED YIELD STRESS.

DECK PROTECTION METHOD:

DECK PROTECTION METHOD: TYPE "D" WATERPROOFING WITH 2-1/2" MIN. ASPHALT CONCRETE OVERLAY, STEEL DRIP STRIP, AND SEALING OF CONCRETE SURFACES.

EXISTING STRUCTURE TO BE REMOVED:

THE EXISTING STRUCTURE SHALL BE REMOVED WHEN NO LONGER NEEDED TO MAINTAIN TRAFFIC. SUITABLE WASTE MASONRY MAY BE PLACED AS BANK PROTECTION AS DIRECTED BY THE ENGINEER.

PILE DESIGN LOADS:

PILE DESIGN LOADS: THE DESIGN LOAD FOR THE ABUTMENT PILES IS 40 TONS PER PILE AND THE DESIGN LOAD FOR THE PIER PILES IS 40 TONS PER PILE.

UTILITIES:

INFORMATION SHOWN IN THE PLANS CONCERNING TYPE AND LOCATION OF UNDERGROUND UTILITIES IS NOT GUARANTEED TO BE ACCURATE OR ALL INCLUSIVE. THE CONTRACTOR IS RESPONSIBLE FOR MAKING HIS OWN DETERMINATION AS TO THE TYPE AND LOCATION OF UNDERGROUND UTILITIES AS MAY BE NECESSARY TO AVOID DAMAGE THERETO.

SEALING OF CONCRETE SURFACES

A CONCRETE SEALER SHALL BE APPLIED TO THE ABUTMENTS, PIERS AND BEAM FASCIA AS SHOWN ON SHEETS 7, 8, AND 9. SEE THE PROPOSAL NOTE FOR SURFACE PREPARATION REQUIREMENTS, APPLICATION RATES, MATERIAL REQUIREMENTS AND APPLICATION PROCEDURES.

ITEM SPECIAL - PILE ENCASEMENT

ALL PILES FOR THE CAPPED PILE PIERS SHALL BE ENCASED IN ITEM 511 CLASS "C" CONCRETE. THE CONCRETE SHALL BE PLACED WITHIN A FORM THAT CONSISTS OF POLYETHYLENE PIPE (SUPPLEMENTAL SPECIFICATION 944 DATED 6-24-89) OR PVC PIPE (SUPPLEMENTAL SPECIFICATION 942 DATED 11-27-89). THE ENCASEMENT SHALL EXTEND FROM 3 FEET BELOW THE FINISHED GROUND SURFACE UP TO THE CONCRETE PIER CAP AND SHALL BE POSITIONED SO THAT AT LEAST 3 INCHES OF CONCRETE COVER IS PROVIDED AROUND THE EXTERIOR OF THE PILE.

THE LENGTH OF PILE ENCASEMENT SHALL BE MEASURED IN FEET ALONG THE LENGTH OF THE PILE. THIS ITEM INCLUDES ALL WORK AND MATERIALS NECESSARY TO FURNISH THE REQUIRED ENCASEMENT. PAYMENT WILL BE MADE AT THE CONTRACT UNIT PRICE PER LINEAR FOOT OF ENCASEMENT APPROVED IN PLACE.

PREFORMED BEARING PADS

PREFORMED BEARING PADS 6" x 8" x 1/8" SHALL BE USED WHERE NEEDED AS SHIMS FOR PROPER SEATING OF PRESTRESSED BEAMS.

CAST-IN-PLACE CONCRETE

COARSE AGGREGATE SHALL BE LIMESTONE OR SLAG.

ELASTOMERIC TEST PAD

THE ELASTOMERIC BEARING MANUFACTURER SHALL SUPPLY A PLAIN ELASTOMERIC PAD FOR TESTING PURPOSES. THE PAD SHALL BE FURNISHED FROM THE SAME BATCH OF NEOPRENE THAT IS USED IN THE FABRICATION OF THE LAMINATED ELASTOMERIC BEARINGS AND THE FABRICATOR SHALL CERTIFY THE IDENTITY OF THE ELASTOMER. THE PAD SHALL HAVE A 1/2 INCH THICKNESS, AND SHALL HAVE MINIMUM LENGTH AND WIDTH DIMENSIONS OF 6 INCHES. PAYMENT FOR THE TEST PAD WILL BE INCLUDED IN THE PRICE BID FOR THE BEARINGS.

EMBANKMENT CONSTRUCTION

THE EMBANKMENTS SHALL BE CONSTRUCTED TO THE LEVEL OF THE SUBGRADE AFTER WHICH EXCAVATIONS MAY BE MADE FOR THE ABUTMENTS AND THE PIER AND ABUTMENT PILES DRIVEN. REMOVALS OF PORTIONS OF THE EXISTING STRUCTURE NECESSARY TO FACILITATE PILE DRIVING SHALL BE MADE PRIOR TO EMBANKMENT CONSTRUCTION.

REINFORCING BAR SPLICE LENGTHS

REINFORCING BAR SPLICE LENGTH SHALL CONFORM TO THE MINIMUM LENGTHS SPECIFIED IN 509.08 OF THE C.M.S. UNLESS OTHERWISE NOTED ON THE PLANS.

PILE REMOVAL

TO AVOID INTERFERENCE WITH DRIVING PROPOSED PILES, EXISTING PILES WHERE NECESSARY SHALL BE REMOVED. VOIDS LEFT BY PILE REMOVAL SHALL IMMEDIATELY BE FILLED WITH CLEAN NATURAL SAND MEETING THE REQUIREMENTS OF 703.02 FOR NATURAL SAND. COST FOR PILE REMOVAL AND VOID FILLING SHALL BE INCLUDED IN 202 FOR PAYMENT.

UNCLASSIFIED EXCAVATION

EXCAVATION IN ADDITION TO THE STRUCTURE EXCAVATIONS SHOWN IN DETAIL "A" NECESSARY TO CONSTRUCT THE PROPOSED STRUCTURE SHALL BE INCLUDED WITH 202, 203 OR 518 FOR PAYMENT.

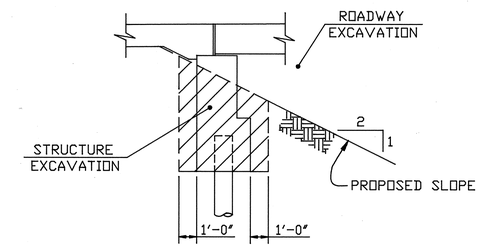

STRUCTURE EXCAVATION
DETAIL A

CENTRAL ENGINEERING, INC. 3 / 11
CIVIL & STRUCTURAL ENGINEERS

GENERAL NOTES

BRIDGE NO. ASD-604-0156
OVER REDHAW CREEK

STA. 82+05.41
TO STA. 82+94.22

ASHLAND COUNTY

DRAWN	TRACED	CHECKED	REVIEWED	REVISED
C.B.	S.C.	H.W.	DSC	

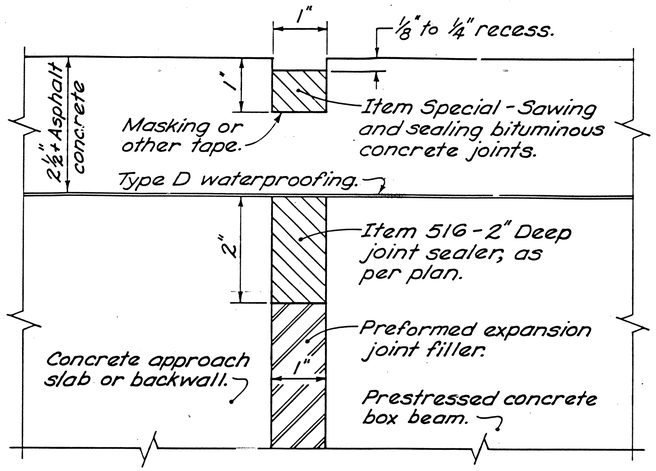

SEALING OF JOINTS AT ABUTMENTS

ITEM SPECIAL - SAWING AND SEALING BITUMINOUS CONCRETE JOINTS

1) Description:

This work shall consist of cutting and sealing transverse joints on the new bituminous concrete overlay of box beam bridges. Bituminous concrete joints shall be constructed directly over, and in line with, the existing underlying transverse abutment joint of the box beams.

2) Materials:

The joint sealant shall meet the requirements of ASTM Specification D3405, Joint sealants, Hot-poured, for Concrete and Aspalt Pavements. Acceptable alternate materials are:

Roof-Flex 176, polyurethane, as produced by the Carboline Company, 350 Hanley Industrial Court, St. Louis, Missouri 63144 (Roger Zubal, 614-877-3406); a silicone sealant meeting Federal Specifications TT-S-001543A Class A (one-part silicone sealants) and TT-S-00230C Class A (one-component sealants), such as those manufactured by General Electric, Silicone Products Division, 6155 Rockside Rd., Rockside Square I, Independence, Ohio 44131 (John Fromholtz, 216-447-1750) or Dow Corning, 3737 Park East, Beachwood, Ohio 44122 (Robert Ruppel, 216-464-2330); or Sof-Seal, a cold-applied, low-modulus, two-component polymeric compound horizontal sealant as manufactured by W. R. Meadows, Inc., P.O. Box 543, Elgin, Illinois 60121 (Robert Cameron, 312-683-4500). Sealant will be accepted on the basis of the manufacturer's certification that it conforms to the requirements of these specifications.

3) Construction Details:

A) General: The contractor shall conduct his operation so that the cutting, cleaning and sealing of transverse joints is a continuous operation that will be performed as soon as practical after the paving, but no later than four (4) days after placement of the asphalt concrete surface course. Traffic shall not be allowed to knead together or damage the joint cut prior to sealing.

B) Cutting of Transverse Joints: The contractor shall saw or rout transverse joints to the dimensions shown in the details on this sheet. The cut joints shall lie directly above each box beam abutment joint. The joint location shall be marked on the new asphalt surface with a chalk line, or by some other acceptable method, before cutting. Details of the method for locating and accurately marking the proposed cuts shall be subject to the approval of the Engineer prior to starting any surfacing or paving operations.

The blade or blades shall be of such size that the full width and depth of the cut can be made with one pass. Dry or wet cutting will be allowed. Joints shall extend the full width of the bridge.

C) Cleaning Joints: Dry sawed joints shall be thoroughly cleaned with a sufficient amount of compressed air to remove any dirt, dust, or deleterious matter. Wet sawed joints shall be washed clean of all cuttings by flushing with a jet of water and with other tools as necessary. After flushing, the joint shall be blown out with compressed air. When the surfaces are thoroughly clean and dry, and just prior to placing the joint sealer, compressed air having a pressure of at least 90 p.s.i. shall be used to blow out the joint and remove all traces of dust.

In the event freshly cut joints become contaminated before they are sealed, they shall be recleaned of all foreign material by high pressure water jet.

D) Sealing Joints: The joint shall be thoroughly dried before the sealant is placed. After cleaning and drying, a bond-breaker (tape) shall be applied to the bottom of the groove.

Hot-poured joint sealant material shall be heated in a kettle or melter constructed as a double boiler, with the space between the inner and outer shells filled with oil or other heat transfer medium. Positive temperature control and mechanical agitation shall be provided. Heating must be in strict accordance with the manufacturer's recommendation. Joint sealer material shall never be kept heated at the pouring temperature for more than four (4) hours and shall never be reheated. Sealer left in the applicator at the end of a day's work shall be removed and discarded.

Hot-poured sealant shall be applied immediately through a nozzle, which must project into the sawed joint, filling from the bottom up. The seal shall completely fill the joint in such a manner that, after cooling, the level of the sealer will not be higher than 1/8" below the pavement surface. Any depression in the cooled seal greater than 3/16" shall be brought up to the specified limit by further addition of hot-poured sealant. Care shall be taken in the sealing of the joints so that the final appearance will present a neat fine line.

The cold applied sealant materials (polyurethane, silicone, and polymeric compounds) shall be installed as per manufacturers' recommendations, or as directed by the Engineer. The sealant shall be installed when the ambient temperature is 40 degrees F or higher. Traffic shall not be allowed on the joint for one hour after application of the sealant.

4) Method of Measurement:

The quantity to be paid for under this item will be the number of linear feet of joints sawed and sealed as per the above requirements.

5) Basis of Payment:

The unit price per linear foot for Item Special - "Sawing and sealing bituminous concrete joints" shall include the cost of all labor, materials, and equipment necessary to complete the work, including the furnishing and placing of the joint sealer material.

ITEM 516 - 2" DEEP JOINT SEALER, AS PER PLAN

This item shall meet the material (para. 2) and sealing (para. 3D) specifications of Item Special - Sawing and sealing bituminous concrete joints.

F.H.W.A. REGION	STATE	PROJECT		
5	OHIO			

14 / 22

ASHLAND COUNTY
ASD-604-1.55

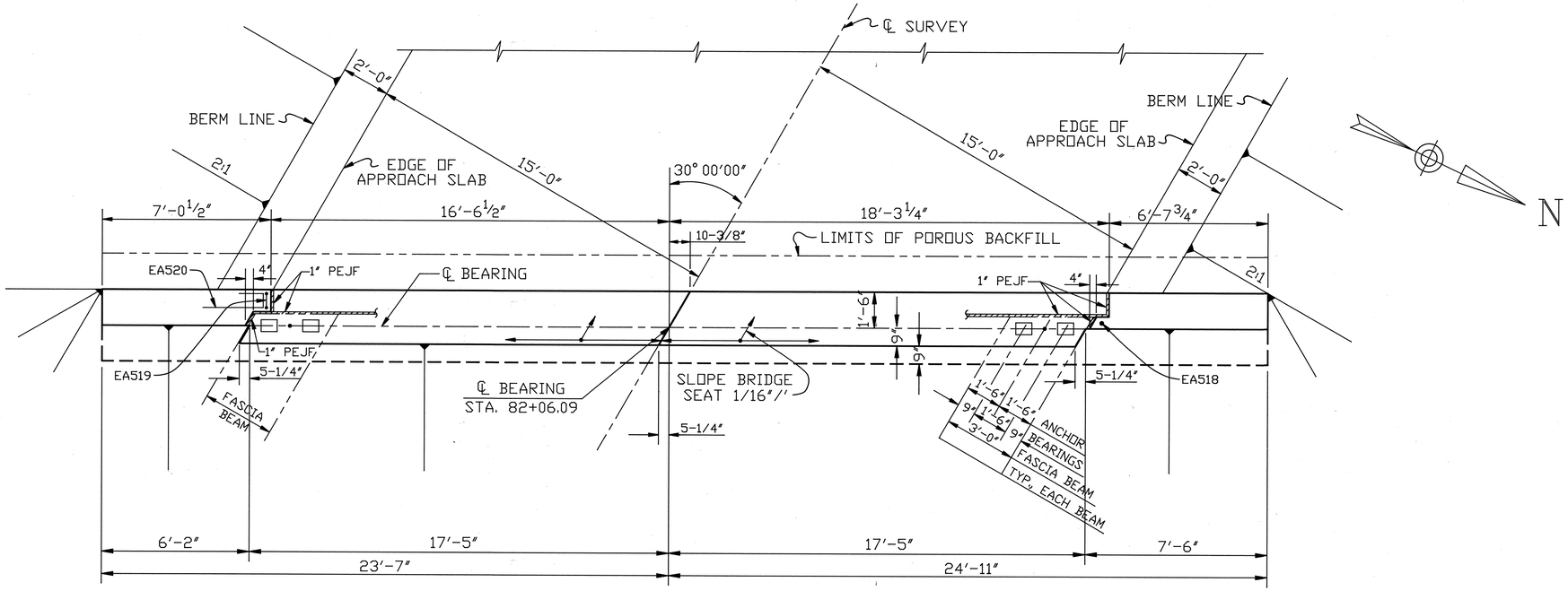

PLAN

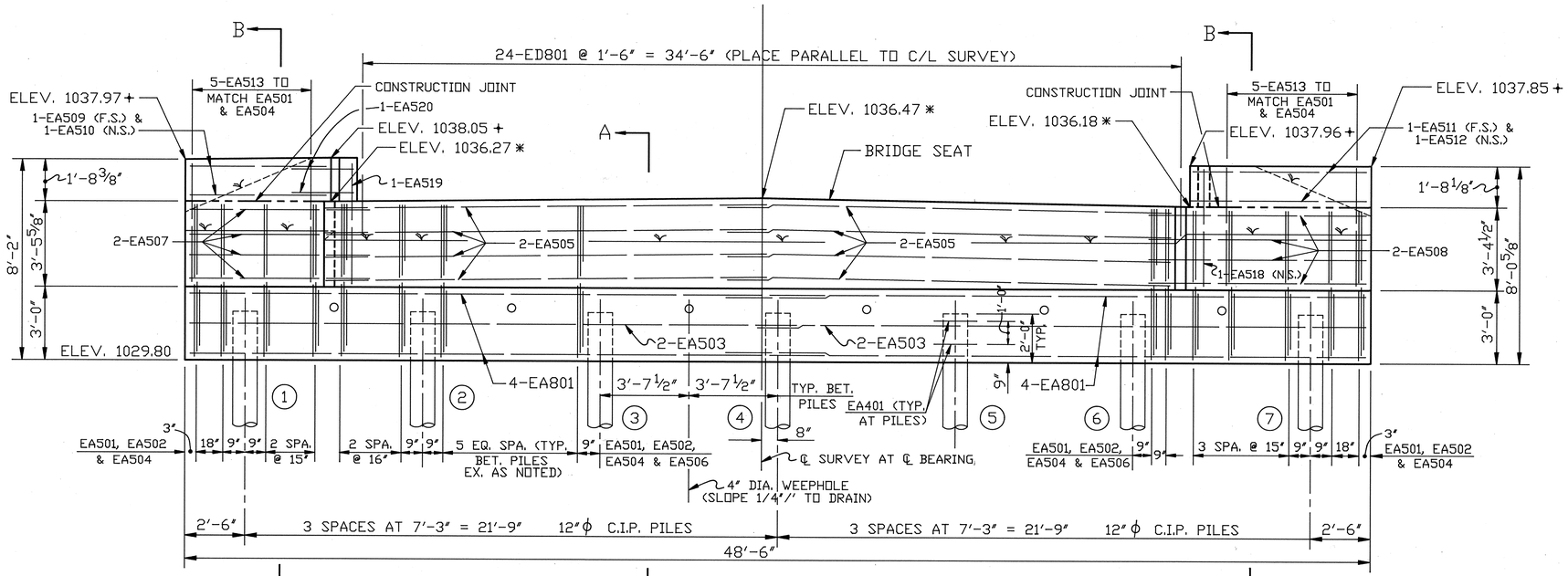

ELEVATION

* ELEVATIONS AT ℄ BEARINGS
\+ ELEVATIONS ON FACE OF BACKWALL

NOTES:

LAP LENGTHS ARE AS FOLLOWS:
EA503 - 1'-11" MIN.
EA505 - 1'-11" MIN.
EA801 - 4'-3" MIN.

FOR SECTIONS A & B AND ADDITIONAL NOTES, SEE SHEET 7 / 11.

CENTRAL ENGINEERING, INC. 5 / 11
CIVIL & STRUCTURAL ENGINEERS

REAR ABUTMENT

BRIDGE NO. ASD-604-0156
OVER REDHAW CREEK

STA. 82+05.41
TO STA. 82+94.22

ASHLAND COUNTY

DRAWN	TRACED	CHECKED	REVIEWED	REVISED
C.B.	S.C.	H.W.	DSC	

F.H.W.A. REGION	STATE	PROJECT	
5	OHIO		

15 / 22

ASHLAND COUNTY
ASD-604-1.55

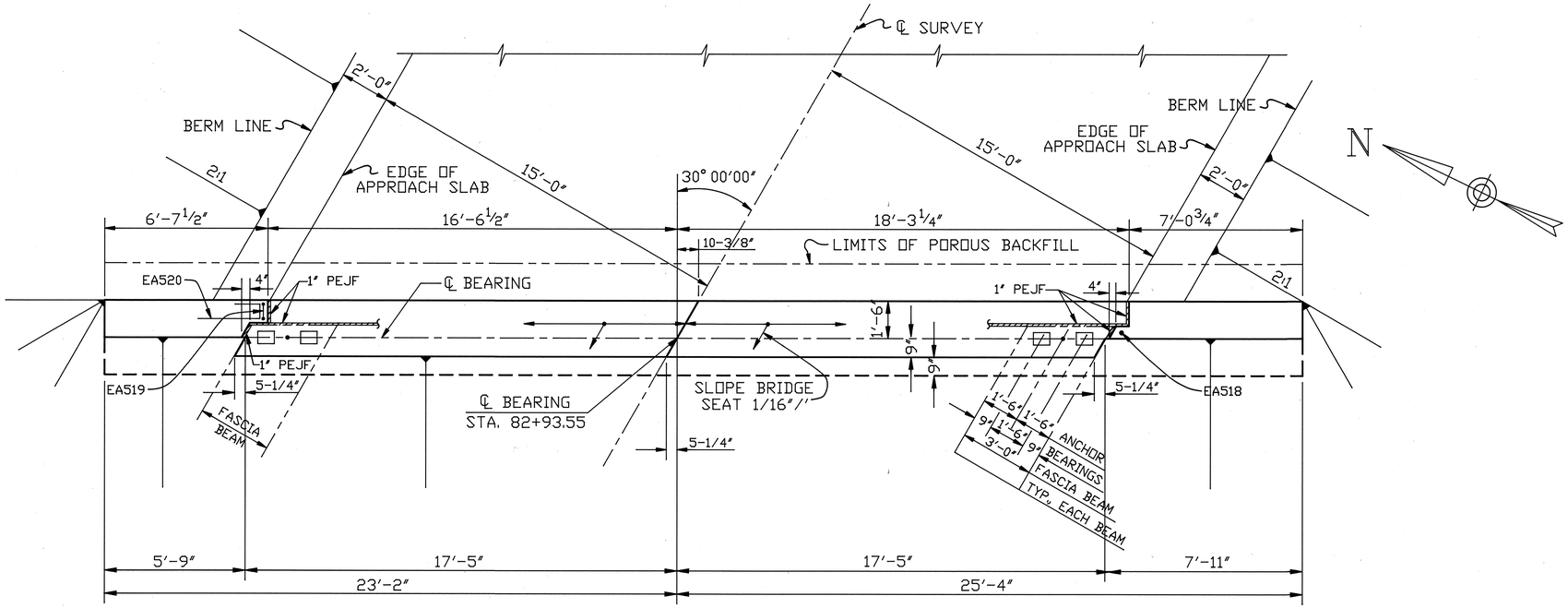

PLAN

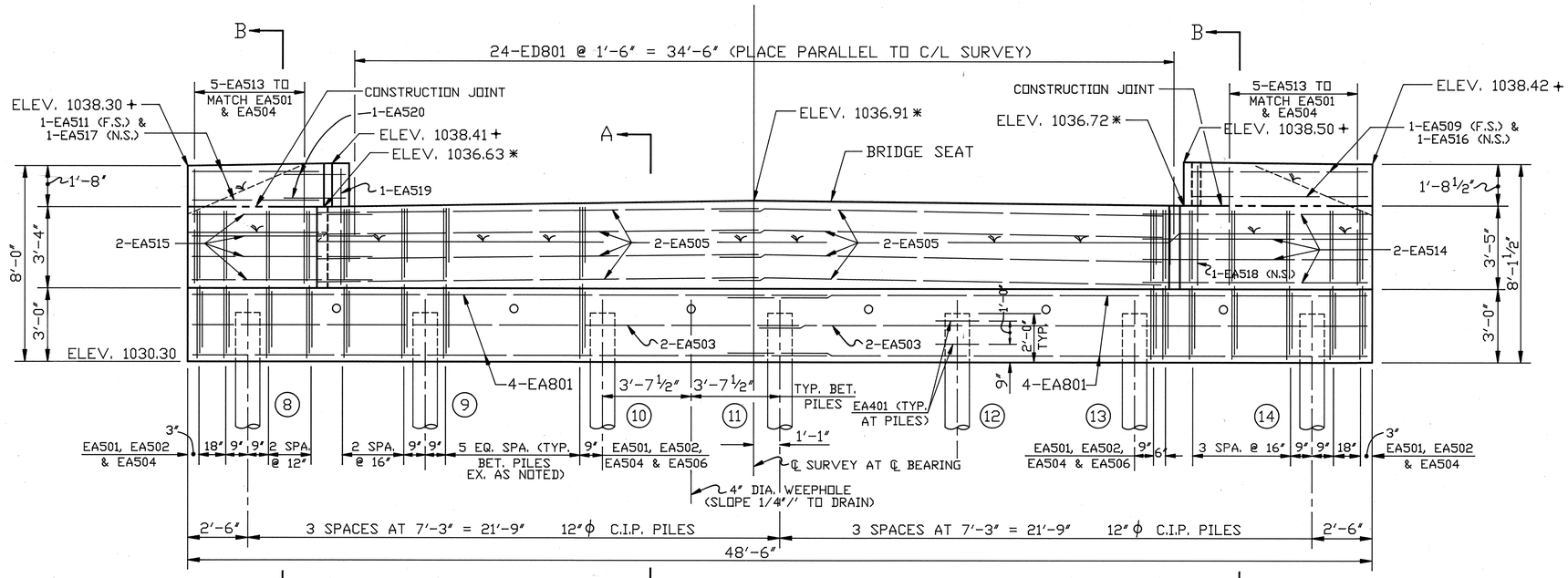

ELEVATION

* ELEVATIONS AT ℄ BEARINGS
\+ ELEVATIONS ON FACE OF BACKWALL

NOTES:

LAP LENGTHS ARE AS FOLLOWS:
EA503 - 1'-11" MIN.
EA505 - 1'-11" MIN.
EA801 - 4'-3" MIN.

FOR SECTIONS A & B AND ADDITIONAL NOTES, SEE SHEET 7 / 11.

CENTRAL ENGINEERING, INC. 6 / 11
CIVIL & STRUCTURAL ENGINEERS

FORWARD ABUTMENT

BRIDGE NO. ASD-604-0156
OVER REDHAW CREEK

STA. 82+05.41
TO STA. 82+94.22

ASHLAND COUNTY

DRAWN	TRACED	CHECKED	REVIEWED	REVISED
C.B.	S.C.	H.W.	DSC	

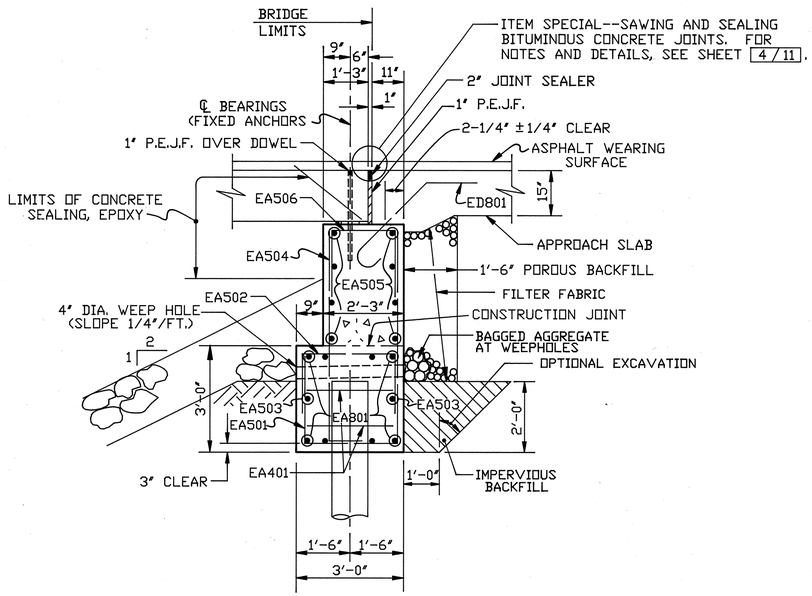

SECTION A-A
(GRADE NOT SHOWN)

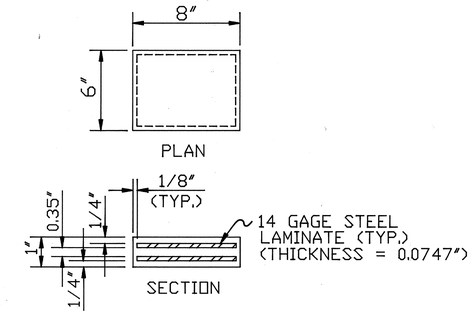

LAMINATED ELASTOMERIC BEARING DETAIL

50 DUROMETER

DEAD LOAD REACTION = 4.5^{k}
LIVE LOAD REACTION = 10.0^{k}
MAXIMUM DESIGN LOAD = 14.5^{k}

TOLERANCES:
INDIVIDUAL ELASTOMERIC LAYER THICKNESS: ± 20% OF DESIGN VALUE (NOT TO EXCEED ±1/8")

PLAN DIMENSION	-0, +1/4"
DESIGN THICKNESS	-0, +1/8"
EDGE COVER OF EMBEDDED LAMINATES	-0, +1/8"

BASIS OF PAYMENT: THE UNIT BID PRICE SHALL INCLUDE ALL MATERIALS, LABOR AND INCIDENTALS NECESSARY TO FURNISH AND INSTALL FIXED LAMINATED ELASTOMERIC BEARINGS. PAYMENT WILL BE MADE AT THE CONTRACT PRICE FOR ITEM 516, EACH, ELASTOMERIC BEARING WITH INTERNAL LAMINATES ONLY (NEOPRENE) (6" x 8" x 1").

NOTES:

POROUS BACKFILL, 1'-6" THICK, COMPOSED ENTIRELY OF GRAVEL, SHALL EXTEND UP TO THE PLANE OF THE SUBGRADE, TO 1'-0" BELOW PROPOSED GROUND SURFACE AND LATERALLY TO THE ENDS OF THE WINGWALLS. TWO (2) CU. FT. OF BAGGED NO. 3 AGGREGATE SHALL BE PLACED AT EACH WEEPHOLE. FILTER FABRIC CONFORMING TO 712.09, TYPE A SHALL BE PLACED BETWEEN THE POROUS BACKFILL AND SOIL BACKFILL. BAGGED AGGREGATE AND FILTER FABRIC SHALL BE INCLUDED WITH POROUS BACKFILL FOR PAYMENT.

BRIDGE SEAT REINFORCING: REINFORCING STEEL IN THE BRIDGE SEAT SHALL BE ACCURATELY PLACED TO AVOID INTERFERENCE WITH THE DRILLING OF THE ANCHOR BAR HOLES.

WINGWALL CONCRETE ABOVE THE BRIDGE SEAT CONSTRUCTION JOINT SHALL NOT BE PLACED UNTIL AFTER THE BEAMS ARE SET AND THE 1" PREFORMED EXPANSION JOINT FILLERS ARE IN PLACE.

FOR LOCATIONS OF SECTIONS A, B, AND C, SEE SHEETS 5/11 AND 6/11.

FOR REINFORCEMENT SCHEDULE, SEE SHEET 11/11.

THE FOLLOWING ABBREVIATIONS ARE USED:
N.S. = NEAR SIDE
F.S. = FAR SIDE
MIN. = MINIMUM
TYP. = TYPICAL
ELEV. = ELEVATION
BET. = BETWEEN
EX. = EXCEPT
DIA. = DIAMETER

FOR FIXED ANCHOR DOWEL DETAIL, SEE SHEET 10/11.

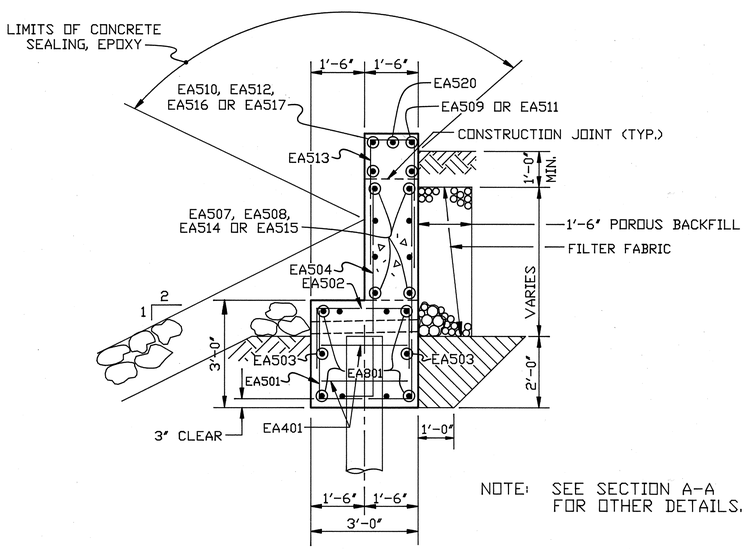

NOTE: SEE SECTION A-A FOR OTHER DETAILS.

SECTION B-B
(GRADE NOT SHOWN)

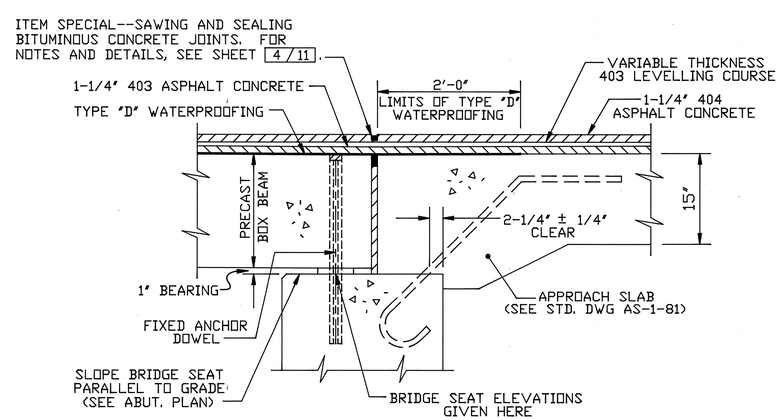

ABUTMENT BEARING DETAIL
(GRADE NOT SHOWN)

CENTRAL ENGINEERING, INC. 7/11
CIVIL & STRUCTURAL ENGINEERS

ABUTMENT DETAILS
BRIDGE NO. ASD-604-0156
OVER REDHAW CREEK

STA. 82+05.41
TO STA. 82+94.22

ASHLAND COUNTY

DRAWN	TRACED	CHECKED	REVIEWED	REVISED
C.B.	S.C.	H.W.	DSC	

F.H.W.A. REGION	STATE	PROJECT	
5	OHIO		

ASHLAND COUNTY
ASD-604-1.55

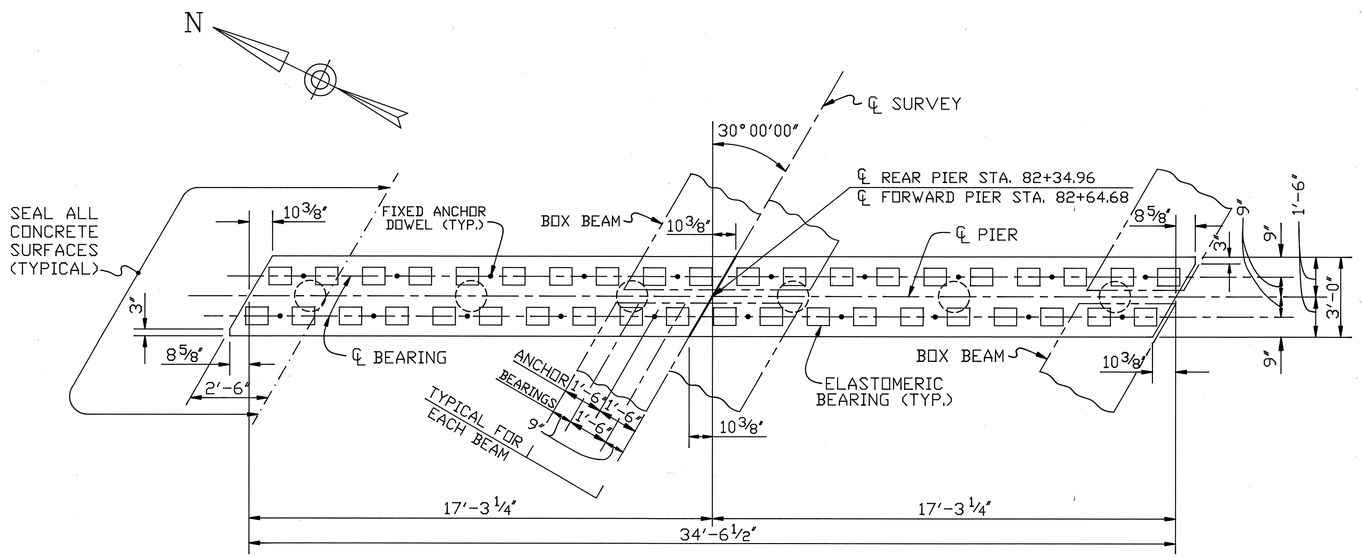

PLAN

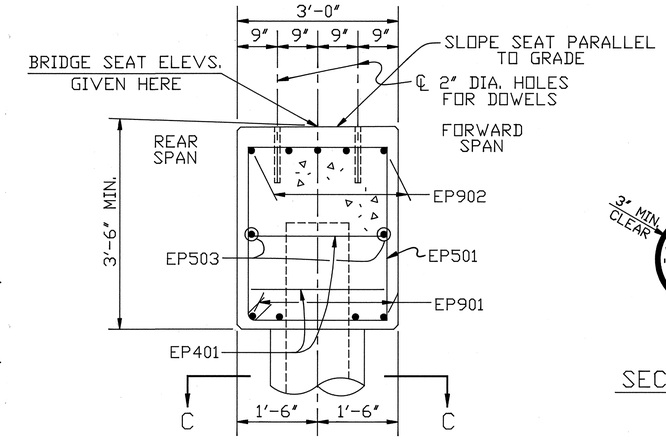

SECTION A-A

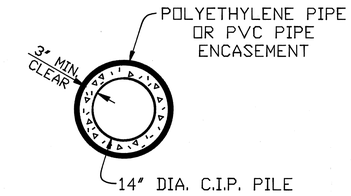

SECTION C-C

NOTES:

LAP LENGTHS ARE AS FOLLOWS:
EP503 - 1'-11" MIN.
EP901 - 5'-11" MIN.
EP902 - 7'-1" MIN.

BRIDGE SEAT REINFORCING: REINFORCING STEEL IN THE BRIDGE SEAT SHALL BE ACCURATELY PLACED TO AVOID INTERFERENCE WITH THE DRILLING OF THE ANCHOR BAR HOLES.

PILE ENCASEMENT SHALL BE PROVIDED. SEE GENERAL NOTES FOR PILE ENCASEMENT NOTE ON SHEET 3/11.

FOR REINFORCEMENT SCHEDULE, SEE SHEET 11/11.

SEE SHEET 7/11 FOR LAMINATED ELASTOMERIC BEARING DETAILS.

THE FOLLOWING ABBREVIATIONS ARE USED:
MIN. = MINIMUM
TYP. = TYPICAL
ELEV. = ELEVATION
BET. = BETWEEN
R.P. = REAR PIER
F.P. = FORWARD PIER
DIA. = DIAMETER

FOR FIXED ANCHOR DOWEL DETAIL, SEE SHEET 10/11.

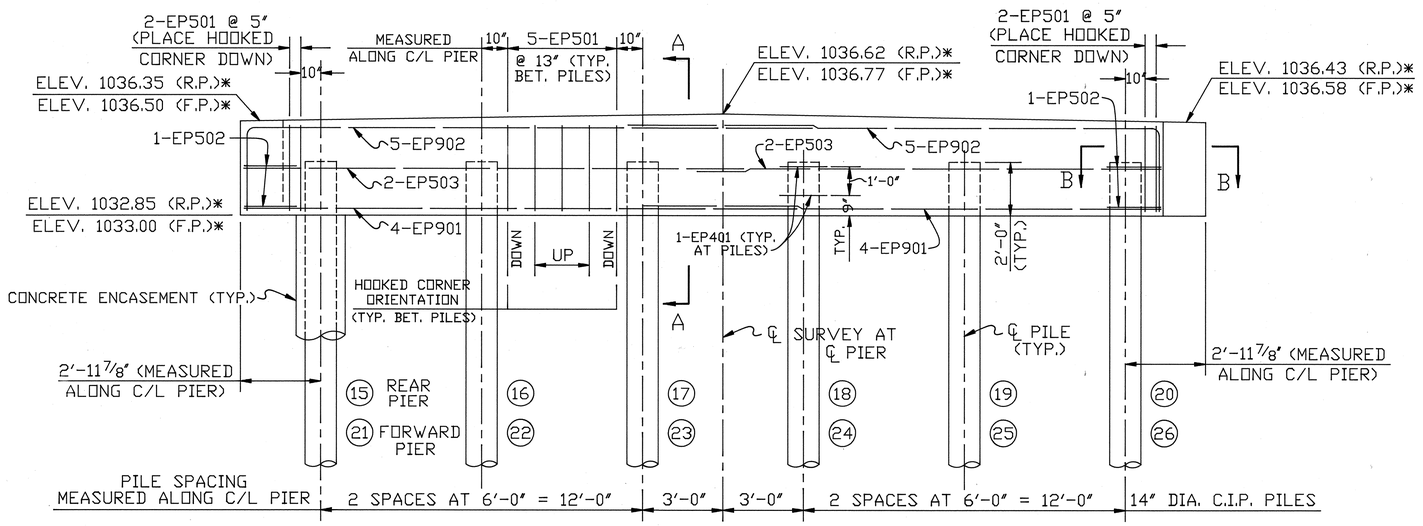

ELEVATION

* ELEVATIONS GIVEN AT ℄ PIER

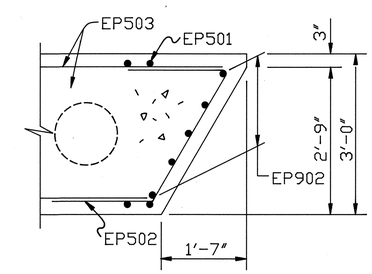

SECTION B-B

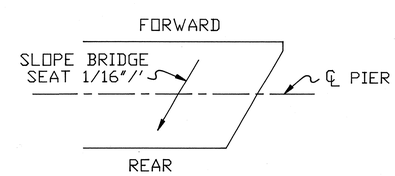

PART PLAN (BRIDGE SEAT)

CENTRAL ENGINEERING, INC. 8 / 11
CIVIL & STRUCTURAL ENGINEERS

PIER DETAILS

BRIDGE NO. ASD-604-0156
OVER REDHAW CREEK

STA. 82+05.41
TO STA. 82+94.22

ASHLAND COUNTY

DRAWN	TRACED	CHECKED	REVIEWED	REVISED
C.B.	S.C.	H.W.	CSC	

ASHLAND COUNTY
ASD-604-1.55

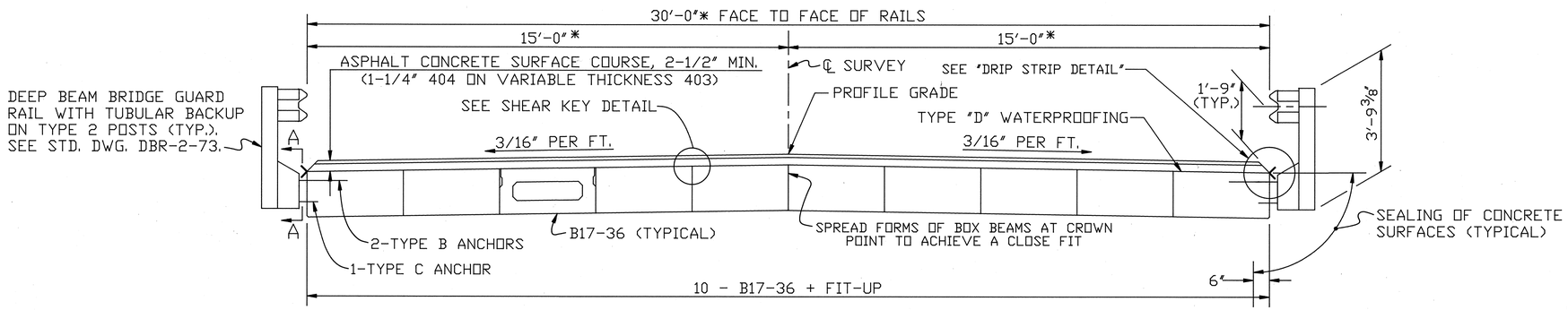

TYPICAL SECTION THROUGH DECK

* - PLUS FIT-UP

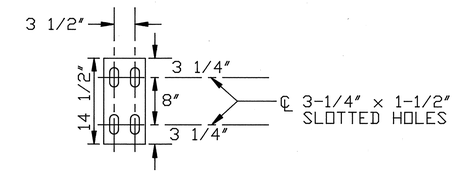

SECTION A-A

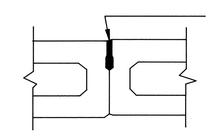

SHEAR KEYS SHALL BE MORTARED ON A FINISHED PLANE BETWEEN THE TOP EDGES OF THE ADJACENT BEAMS WHERE VERTICAL OFFSET (WITHIN TOLERANCE) OCCURS.

SHEAR KEY DETAIL

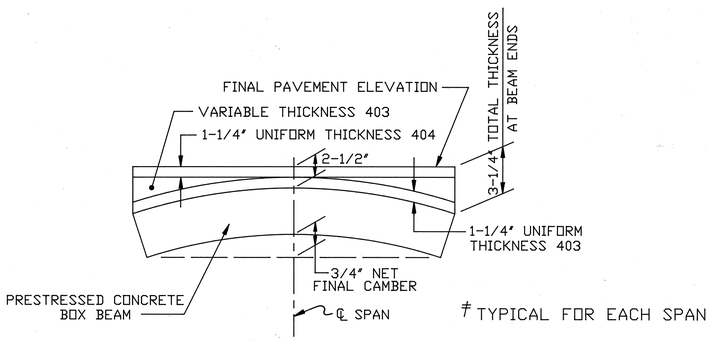

#ASPHALT THICKNESS DIAGRAM

(COMPENSATION FOR NET CURVATURE)

CALCULATED CAMBER OF BEAMS AT TIME OF PAVING, INCLUDING ALLOWANCE FOR CAMBER GROWTH DUE TO CREEP IS 7/8". ESTIMATED DEFLECTION OF BEAMS DUE TO WEIGHT OF SURFACE COURSE AND RAILING IS 1/8". NET CAMBER IS 3/4". MIDDLE ORDINATE OF VERTICAL CURVE IS ZERO. NET CURVATURE IS 3/4", WHICH IS MORE THAN NECESSARY TO PLACE THE 404 FINISHING COURSE PARALLEL TO THE PROPOSED ROADWAY SURFACE. TO COMPENSATE FOR THIS EXCESS CURVATURE, THE 403 LEVELLING COURSE SHALL BE THICKENED FROM 1-1/4" AT MIDSPAN TO 2" AT SPAN ENDS FOR EACH SPAN.

ASPHALT CONCRETE SURFACE COURSE SHALL CONSIST OF A VARIABLE THICKNESS OF 403 AND 1-1/4" THICKNESS OF 404. THE 403 SHALL BE PLACED IN TWO OPERATIONS. THE FIRST COURSE SHALL BE OF 1-1/4" UNIFORM THICKNESS. THE SECOND COURSE SHALL BE FEATHERED TO PLACE THE SURFACE PARALLEL TO AND 1-1/4" BELOW FINAL PAVEMENT SURFACE ELEVATION.

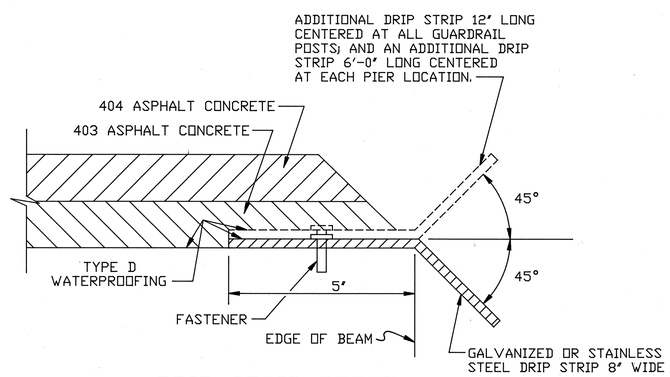

DRIP STRIP DETAIL

NOTE: PRIOR TO APPLYING TYPE D WATERPROOFING, A BENT DRIP STRIP SHALL BE INSTALLED ALONG THE EDGES OF THE DECK AS SHOWN. THE STRIPS SHALL BE FASTENED AT 1'-6" C/C MAXIMUM WITH 1-1/4" x 5/32" x 1/4" FLAT HEAD DRIVE PIN AND WASHER (LENGTH x SHANK DIA. x HEAD DIA.) OR #10 GALVANIZED SCREWS AND EXPANSION ANCHORS SUBJECT TO THE APPROVAL OF THE ENGINEER. THE STRIPS SHALL BE PLACED THE FULL LENGTH OF THE DECK. WHERE SPLICES ARE REQUIRED, A 3" MINIMUM LAP SHALL BE USED WITH A FASTENER THROUGH THE LAP. STEEL FOR THE GALVANIZED STRIPS SHALL BE 8" x 0.105" AND SHALL MEET THE REQUIREMENTS OF ASTM A568. GALVANIZING SHALL BE IN ACCORDANCE WITH 711.02. STAINLESS STEEL SHALL BE 20 GUAGE ASTM A167 TYPE 304 MILL FINISH. PAYMENT SHALL BE AT THE CONTRACT PRICE BID FOR ITEM SPECIAL, SQ. FT., STEEL DRIP STRIP, WHICH SHALL INCLUDE ALL MATERIALS, LABOR, TOOLS, AND INCIDENTALS NECESSARY TO COMPLETE THE ITEM.

NOTES:

CONCRETE STRESSES FOR PRESTRESSED CONCRETE BEAMS:
MIN. CONCRETE STRENGTH @ 28 DAYS: Fc' = 5500 PSI
MIN. CONCRETE STRENGTH @ TIME OF INITIAL PRESTRESS: Fc' = 4000 PSI

PRESTRESSING STRANDS ARE 1/2" DIA., 270K SEVEN WIRE UNCOATED STRESS RELIEVED STRANDS.
As = 0.153 SQ. IN.
INITIAL TENSION = 28920 POUNDS PER PRESTRESSING STRAND

FOR PRESTRESSED CONCRETE BOX BEAM BRIDGE DETAILS NOT SHOWN, SEE STANDARD DRAWING PSBD-1-81, SHEETS 1 THROUGH 4.

SHOP DRAWINGS OF THE BEAMS SHALL SHOW COMPLETE DETAILS OF THE BEAM REINFORCING.

FOR ADDITIONAL DETAILS AND NOTES, SEE SHEET 10/11 .

CENTRAL ENGINEERING, INC. 9/11
CIVIL & STRUCTURAL ENGINEERS

SUPERSTRUCTURE DETAILS

BRIDGE NO. ASD-604-0156
OVER REDHAW CREEK

STA. 82+05.41
TO STA. 82+94.22

ASHLAND COUNTY

DRAWN	TRACED	CHECKED	REVIEWED	REVISED
C.B.	S.C.	H.W.	DSC	

F.H.W.A. REGION	STATE	PROJECT	
5	OHIO		

ASHLAND COUNTY
ASD-604-1.55

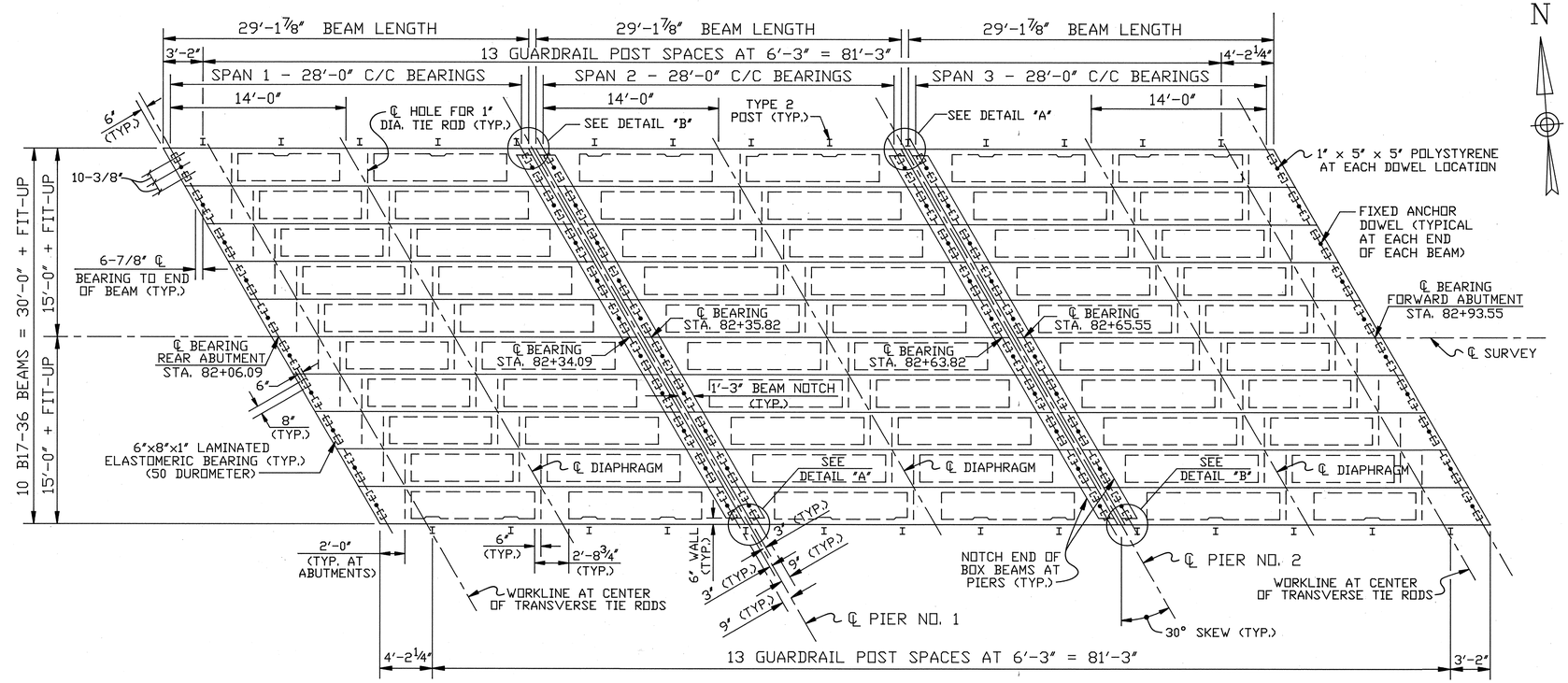

PLAN - PRESTRESSED BOX BEAMS

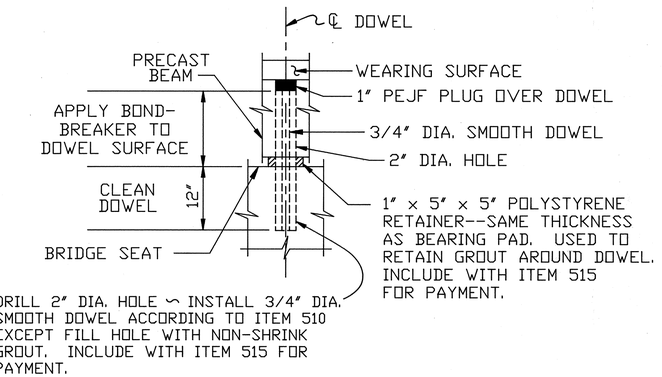

FIXED ANCHOR DOWEL DETAIL

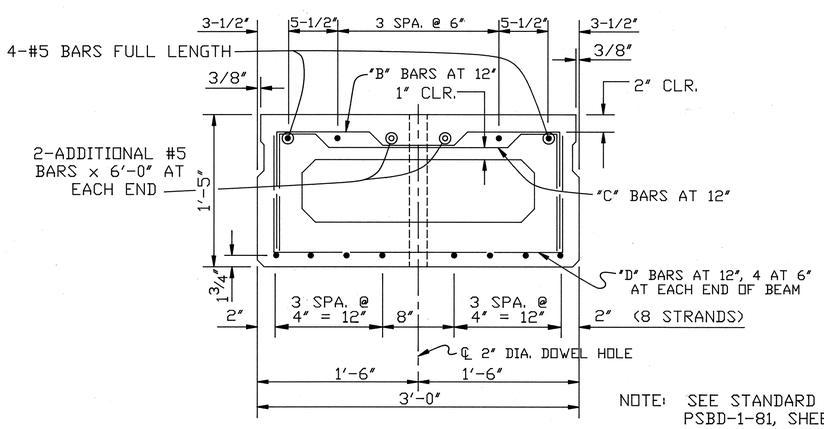

B17-36 BOX BEAM DETAILS

NOTE: SEE STANDARD DRAWING PSBD-1-81, SHEETS 1 AND 3 OF 4 FOR REINFORCING BARS.

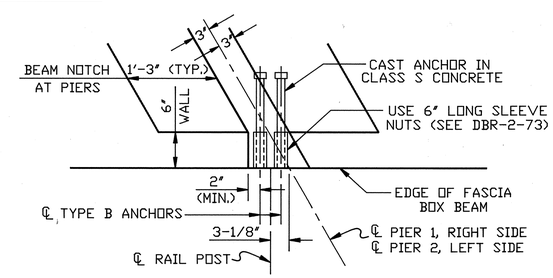

DETAIL "A"

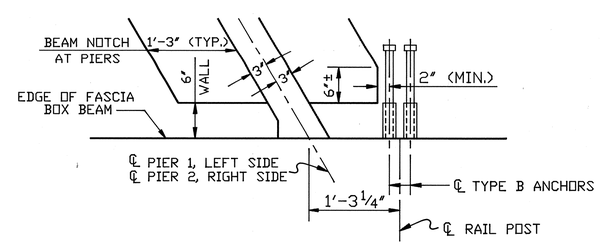

DETAIL "B"

NOTES:

REFERRING TO STANDARD DRAWING PSBD-1-81, SHEET 4 OF 4, SECTION A-A, THE FOLLOWING BAR MARKS DESIGNATE THE DESCRIBED REINFORCEMENT BARS AS PLACED IN THE CAST-IN-PLACE CONCRETE BEAM CONTINUITY CONNECTION OVER THE PIERS:

ES401 ~ NO. 4 BARS (HOOKED @ ENDS) WHICH LAP WITH BEAM BARS.
ES402 ~ NO. 4 BARS (STRAIGHT) WHICH RUN THE FULL WIDTH OF THE BRIDGE AT THE TOP OF BEAM NOTCH.
ES601 ~ NO. 6 BARS (STRAIGHT) WHICH RUN THE FULL WIDTH OF BRIDGE AT THE BOTTOM OF BEAM NOTCH.

FOR ADDITIONAL DETAILS AND NOTES, SEE SHEET 9 / 11 .

CENTRAL ENGINEERING, INC. 10 / 11
CIVIL & STRUCTURAL ENGINEERS

SUPERSTRUCTURE DETAILS
BRIDGE NO. ASD-604-0156
OVER REDHAW CREEK

STA. 82+05.41
TO STA. 82+94.22

ASHLAND COUNTY

DRAWN	TRACED	CHECKED	REVIEWED	REVISED
C.B.	S.C.	H.W.	DSC	

REINFORCING SCHEDULE

MARK	NUMBER	# R.ABUT.	# F.ABUT.	LENGTH	WEIGHT	TYPE	A	B	C
ABUTMENTS (EPOXY COATED REINFORCING STEEL)									
EA401	28	14	14	8′-9″	164	11	1′-9″	2′-6″	
EA501	80	40	40	10′-11″	911	17	5′-11″	2′-8″	2′-7″
EA502	80	40	40	5′-9″	480	6	2′-8″	1′-8″	
EA503	8	4	4	25′-0″	209	STR.			
EA504	80	40	40	6′-9″	563	3	5′-11″	11″	
EA505	32	16	16	18′-3″	609	STR.			
EA506	58	29	29	5′-4″	323	6	1′-11″	1′-10″	
EA507	8	8		8′-11″	74	STR.			
EA508	8	8		9′-5″	79	STR.			
EA509	4	2	2	6′-8″	28	STR.			
EA510	2	2		5′-7″	12	STR.			
EA511	4	2	2	6′-3″	26	STR.			
EA512	2	2		6′-11″	14	STR.			
EA513	20	10	10	10′-7″	221	6	1′-2″	4′-10″	
EA514	8		8	9′-10″	82	STR.			
EA515	8		8	8′-6″	71	STR.			
EA516	2		2	7′-4″	15	STR.			
EA517	2		2	5′-2″	11	STR.			
EA518	2	1	1	5′-0″	10	STR.			
EA519	2	1	1	10′-1″	21	6	8″	4′-10″	
EA520	4	2	2	3′-10″	16	17	2′-6″	7″	1′-0″
EA801	32	16	16	26′-3″	2243	STR.			
ED801	48	24	24	5′-3″	673	8	2′-11″	1′-5″	12
EPOXY COATED BARS = 6855 LBS.									

REINFORCING SCHEDULE

MARK	NUMBER	LENGTH	WEIGHT	TYPE	SERIES INCR.	A	B	C
PIERS (EPOXY COATED REINFORCING STEEL)								
EP401	24	9′-3″	148	11		1′-9″	2′-8″	
EP501	58	12′-3″	741	11		2′-8″	3′-2″	
EP502	8	6′-6″	54	30		1′-10″	3′-1″	6-7/8
EP503	8	18′-0″	150	STR.				
EP901	16	20′-1″	1093	STR.				
EP902	20	23′-4″	1587	3		20′-7″	3′-0″	
EPOXY COATED BARS = 3773 LBS.								
SUPERSTRUCTURE (EPOXY COATED REINFORCING STEEL)								
ES401	120	4′-0″	321	2		3′-0″		
ES402	8	33′-6″	179	STR.				
ES602	2	34′-6″	104	STR.				
EPOXY COATED BARS = 604 LBS.								

BENDING DIAGRAMS

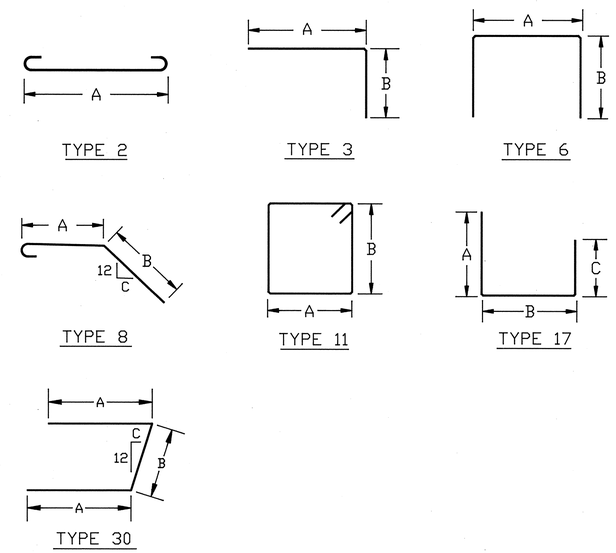

NOTE:

ALL REINFORCING BAR MARKS PREFIXED "E" SHALL BE EPOXY COATED.

CENTRAL ENGINEERING, INC. 11 / 11
CIVIL & STRUCTURAL ENGINEERS

REINFORCING SCHEDULE

BRIDGE NO. ASD-604-0156
OVER REDHAW CREEK

STA. 82+05.41
TO STA. 82+94.22

ASHLAND COUNTY

DRAWN	TRACED	CHECKED	REVIEWED	REVISED
C.B.	S.C.	H.W.	DSC	

F.H.W.A. REGION	STATE	PROJECT	
5	OHIO		

21 / 22

ASHLAND COUNTY
ASD-604-1.55

1 / 2

PROPERTY MAP

ASHLAND COUNTY
JACKSON TOWNSHIP
TOWNSHIP NO. 23
RANGE 15
SECTIONS 27 AND 34

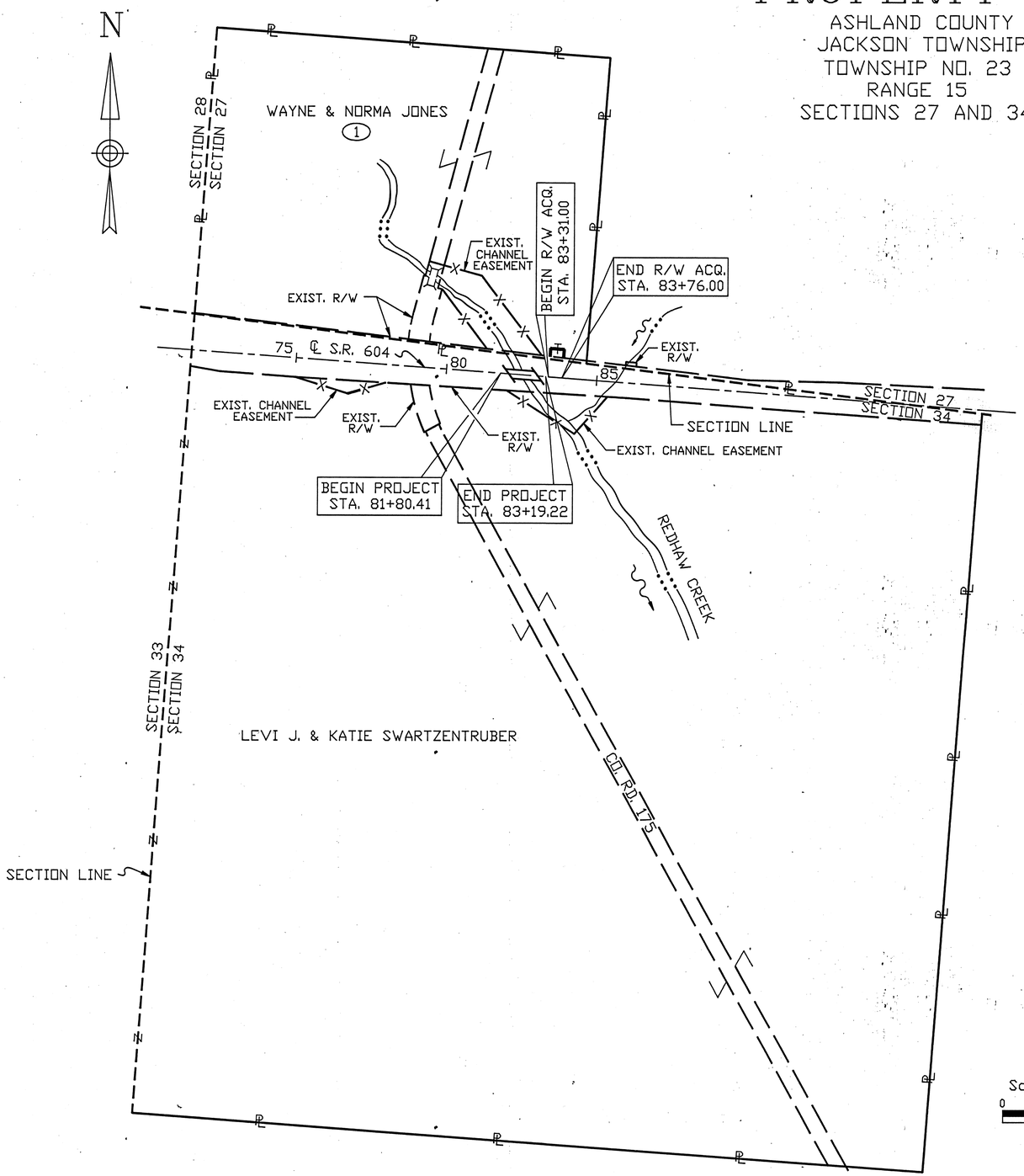

UTILITY OWNERSHIPS

HOLMES-WAYNE ELECTRIC CO-OP (ELECTRIC)
P. O. BOX 112
MILLERSBURG, OHIO 44654
216-674-1055

THE LOCATIONS OF UNDERGROUND UTILITIES SHOWN ON THE PLANS ARE AS OBTAINED FROM THE OWNERS OF THE UTILITY AS REQUIRED BY SECTION 153.64 O.R.C.

DETAIL OF MONUMENT ASSEMBLY, AS PER PLAN

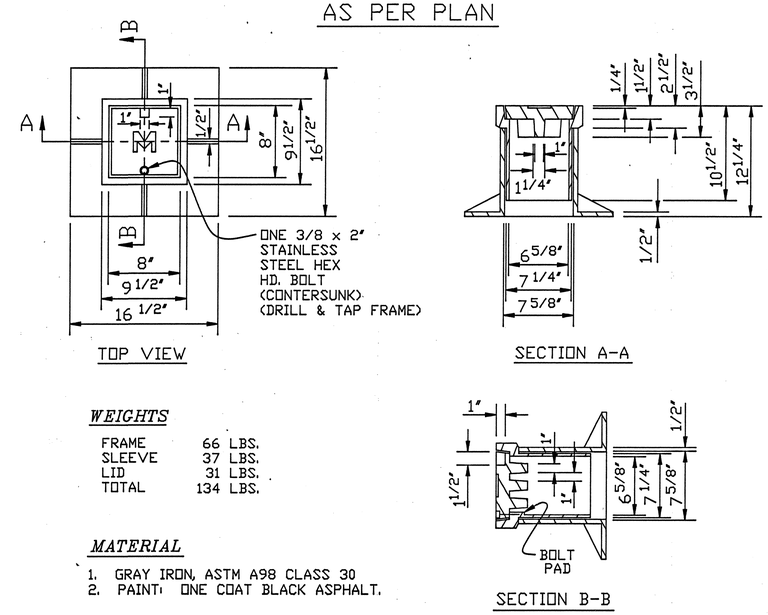

WEIGHTS

FRAME	66 LBS.
SLEEVE	37 LBS.
LID	31 LBS.
TOTAL	134 LBS.

MATERIAL

1. GRAY IRON, ASTM A98 CLASS 30
2. PAINT: ONE COAT BLACK ASPHALT.

SEE MC-1 FOR DETAILS NOT SHOWN.
MONUMENT ASSEMBLIES ARE SHOWN ON STANDARD CONSTRUCTION DRAWING MC-1 (REV. 6-13-69) OF THE DEPARTMENT OF TRANSPORTATION. THE PLACING OF THE MONUMENTS SHALL BE UNDER THE DIRECTION OF A REGISTERED SURVEYOR AND ARE TO BE SET AS SHOWN BY THE HIGHWAY CONTRACTOR AT THE TIME OF CONSTRUCTION.

PLAN COMPLETION DATE: 5-16-91

REV	DATE	DESCRIPTION

RIGHT-OF-WAY

F.H.W.A. REGION	STATE	PROJECT	
5	OHIO		

22/22

ASHLAND COUNTY
ASD-604-1.55

2/2

ASHLAND COUNTY
JACKSON TOWNSHIP
TOWNSHIP NO. 23
RANGE NO. 15
SECTIONS 27 AND 34

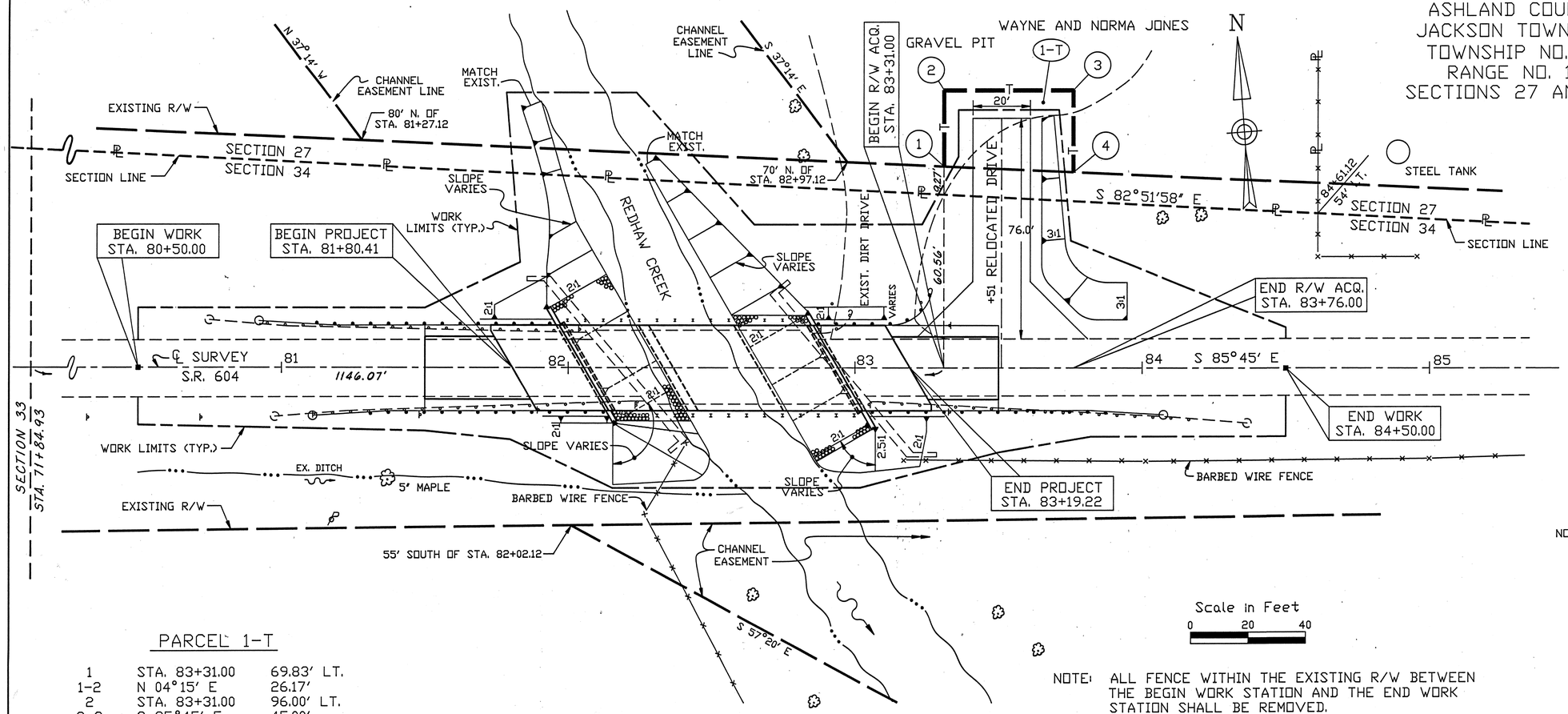

DETAIL PLAN

Scale in Feet
0 20 40

MONUMENT ASSEMBLY, AS PER PLAN TO BE PLACED ON CENTERLINE OF SURVEY AT THE FOLLOWING LOCATIONS	
STA. 80+50.00	1
STA. 84+50.00	1
TOTAL	2

■ INDICATES CENTERLINE MONUMENT

NOTE: FOR MONUMENT ASSEMBLY DETAILS, SEE SHEET 1 OF 2.

NOTE: ALL FENCE WITHIN THE EXISTING R/W BETWEEN THE BEGIN WORK STATION AND THE END WORK STATION SHALL BE REMOVED.

NOTE: FOR PLAN SHOWING EXISTING R/W, SEE HIGHWAY PLAN S.H. 825, SECTION A, DATED 1940. & Channel Easement

PARCEL 1-T

1	STA. 83+31.00	69.83' LT.
1-2	N 04°15' E	26.17'
2	STA. 83+31.00	96.00' LT.
2-3	S 85°45' E	45.00'
3	STA. 83+76.00	96.00' LT.
3-4	S 04°15' W	28.17'
4	STA. 83+76.00	67.83' LT.
4-1	N 83°12'19" W	45.04'

TOTAL NUMBER OF
__1__OWNERSHIPS
__0__TOTAL TAKES
__0__OWNERSHIPS W/STRUCTURES
__0__OWNERSHIPS W/ "P" ITEMS

SUMMARY OF ADDITIONAL RIGHT-OF-WAY

STATE R/W NO. 03568(0)
P.I.D. NO. 7582

PARCEL	OWNER	SHEET NO.	OWNERS RECORD BOOK	OWNERS RECORD PAGE	RECORD AREA	TOTAL PRO	GROSS TAKE	PRO IN TAKE	NET TAKE	STRUC-TURE	NET RESIDUE LEFT	NET RESIDUE RIGHT	TYPE FUND	REMARKS AND PERSONALTY	AS ACQUIRED BOOK	AS ACQUIRED PAGE
1-T	WAYNE AND NORMA JONES	2	525	365	32 AC		0.028		0.028				STATE	PERMANENT PARCEL NO. D12-027-0-0004-00 RECONSTRUCT DRIVE	571	639

RECEIVED
MAY 20 1991
DEPT. OF TRANSPORTATION
District 3
NEW LISBON

PLAN COMPLETION DATE: 5-16-91

REV	DATE	DESCRIPTION
KLP	7-1-91	PER LC DERA

TE-118
4087-8-72

ASHLAND COUNTY
ASD-604-1.55
BRS-486(1)

GEOLOGY OF THE SITE

THE STRUCTURE SITE IS LOCATED IN THE MODERATELY ROLLING GLACIATED PORTION OF THE MISSISSIPPI VALLEY PLAIN REGION, IN A NARROW VALLEY OF AND OVER REDHAW CREEK, IN AN AREA WHERE RELATIVELY DEEP ALLUVIAL DEPOSITS OVERLIE BEDROCK OF MISSISSIPPIAN AGE.

EXPLORATION

THE EXPLORATION CONSISTED OF TWO DRIVE SAMPLE BORINGS MADE BY MEANS OF A MECHANICALLY-POWERED HOLLOW STEM ROTARY EARTH AUGER MOUNTED ON A MOBILE PLATFORM, PERFORMED ON SEPTEMBER 27 AND 28, 1990.

INVESTIGATIONAL FINDINGS AND OBSERVATIONS

THE TEST BORINGS ENCOUNTERED INTERVALS OF EXTREMELY LOOSE TO EXTREMELY DENSE UNSTRATIFIED BASIC SILTS AND SANDS MODIFIED WITH GRAVELS THAT GRADUALLY INCREASE (ERRATIC AT TIMES) IN DENSITY WITH INCREASE IN DEPTH. TEST BORING B-1 WAS TERMINATED AT 56.0 FOOT DEPTH, ELEVATION 982.1 FEET AFTER PENETRATING IN EXCESS OF 5.0 FEET REQUIRING IN EXCESS OF 75 BLOWS PER FOOT IN THE STANDARD PENETRATION TEST. TEST BORING B-2 WAS DISCONTINUED AT 60.0 FOOT DEPTH, ELEVATION 978.9 FEET AFTER PENETRATING 20.0 FEET OF MATERIAL REQUIRING IN EXCESS OF 26 BLOWS PER FOOT IN THE STANDARD PENETRATION TEST.

FREE WATER WAS ENCOUNTERED IN BORING B-1 AT ELEVATION 1026.0 FEET.

BOULDERY INTERVALS WERE ENCOUNTERED IN THE TEST BORINGS NEAR OR AT THE BOTTOM OF THE BORING.

NO TEST PENETRATED BEDROCK SURFACE.

LEGEND

- Auger Boring Location - Plan View.
- Press and / or Drive Sample and / or Core Boring Location - Plan View.
- Drive Rod Penetration Resistance Sounding Location - Plan View.
- Capped Pile
- Footing
- Footing on Pile
- TR — Top of Rock
- Horizontal Bar on Boring Log Indicates the Depth the Sample Was Taken.
- X/Y/Z — Figures Beside the Boring Log in Profile Indicate the Number of Blows for Standard Penetration Test.
  - X = Number of Blows for First 6 inches.
  - Y = Number of Blows for Second 6 inches.
  - Z = Number of Blows for Third 6 inches.
- Drive Rod Penetration Resistance Sounding Log - Profile
- Casing
- Resistance "R" < 10,000 lbs.
- Resistance "R" > 10,000 lbs.
- Z — Indicates Final Measurement of Penetration, in Inches.
- W — Indicates Free Water Elevation.
- Indicates Static Water Elevation.

SYMBOLS OF ROCK TYPES

- Coal
- Weathered Mudstone or Claystone
- Mudstone or Claystone
- Weathered Shale
- Shale
- Weathered Siltstone
- Siltstone
- Weathered Sandstone
- Sandstone
- Leached Dolomite
- Dolomite
- Leached Limestone
- Limestone
- Boulders or Cobbles

GENERAL INFORMATION

Drive Rod Penetration Sounding Tests

Drive rod penetration resistance tests constitute driving a 1.315-inch diameter steel rod, with a 45° cone point, into the ground, using a 122-pound drop-hammer with a free fall of five feet. At one or two-foot depth intervals, a measurement is taken to determine the amount of penetration achieved in three hammer drops. This reading is converted to an empirical value for capacity "R", in thousands of pounds (which is a measure of both the point resistance and frictional resistance on the rod), by using charts prepared by the Ohio Department of Highways, Bureau of Bridges, on the basis of correlation study of rod penetration with past performance of pile driving. For interpretation, a graph is prepared by plotting the value "R" against the depth at which the reading was taken, and connecting the plotted points. The curve so obtained reflects the density of subsurface materials in a manner that can be readily compared with data from similar tests at other locations on the structure site. From this comparison, the overall uniformity of subsurface condition may be evaluated.

Drive Sample Borings - Drive-Press Sample Borings

Drive sample borings are made by means of a rotary-type drill rig, employing a 2" O.D., 1-3/8" I.D. sampler, at 2-1/2 and / or 5-foot depth intervals, driven by means of a 140 - pound drop-hammer with a free fall of 30 inches. The number of blows required to drive the sampler 18 inches is considered the standard penetration test.

Drive-press sample borings are made by means of a rotary-type drill rig, employing a 2" O.D., 1-3/8" I.D. drive sampler, and 3" O.D. thin-wall press sampler. The press sampler is advanced by continuous uniform pressure, applied by the drill rig.

The boring log sheets show a graphic plot of the information obtained, including depth and elevation of the sample, number of blows for the standard penetration tests in three 6-inch increments, depth of press samples, field sample number, sample description - based on laboratory tests and the Casagrande AC classification system - and gradation, plasticity, and moisture content determinations. Results of strength and consolidation testing, if performed, appear on separate enclosures.

At depths where materials are bouldery or gravelly to the extent that the sampler can not be driven, a wash sample is procured for visual classification, in order to determine the general character of the material. These samples are not considered sufficiently representative to warrant laboratory testing.

Particle Size Definitions

Boulders	12"	Cobbles	3"	Gravel	2.0mm (No. 10 sieve)	Coarse Sand	0.42mm (No. 40 sieve)	Fine Sand	0.074mm (No. 200 sieve)	Silt	0.005mm	Clay

NOTE - ALL AVAILABLE SOIL AND BEDROCK INFORMATION WHICH CAN BE CONVENIENTLY SHOWN ON THE STRUCTURE FOUNDATION INVESTIGATION SHEETS HAS BEEN SO REPORTED. ADDITIONAL SUBSURFACE INVESTIGATIONS MAY HAVE BEEN MADE TO STUDY SOME SPECIAL ASPECT OF THE PROJECT. COPIES OF THIS DATA, IF ANY, MAY BE INSPECTED IN THE DISTRICT DEPUTY DIRECTOR'S OFFICE, THE BUREAU OF TESTS AT 1600 WEST BROAD STREET, THE PAVEMENT AND SOILS SECTION OF THE BUREAU OF LOCATION AND DESIGN OR IN THE BRIDGE BUREAU AT 25 SOUTH FRONT STREET.

REVISED 11/16/90

NOTE: Information shown by this subsurface investigation was obtained solely for the use in establishing design controls for the project. The State of Ohio does not guarantee the accuracy of this data and it is not to be construed as a part of the plans governing construction of the project.

OHIO DEPARTMENT OF TRANSPORTATION
DIVISION OF HIGHWAYS — TESTING LABORATORY
1600 WEST BROAD STREET, COLUMBUS, OHIO 43223

STRUCTURE FOUNDATION INVESTIGATION
BRIDGE NO. ASD-604-0156
OVER REDHAW CREEK
SEC. ASD-604-1.55

CHECKED BY	REVIEWED BY	DATE
A.F.	R.D.R.	10/20/89

F.H.W.A. REGION	STATE	PROJECT	
5	OHIO		

ASHLAND COUNTY
ASD-604-1.55

2/3

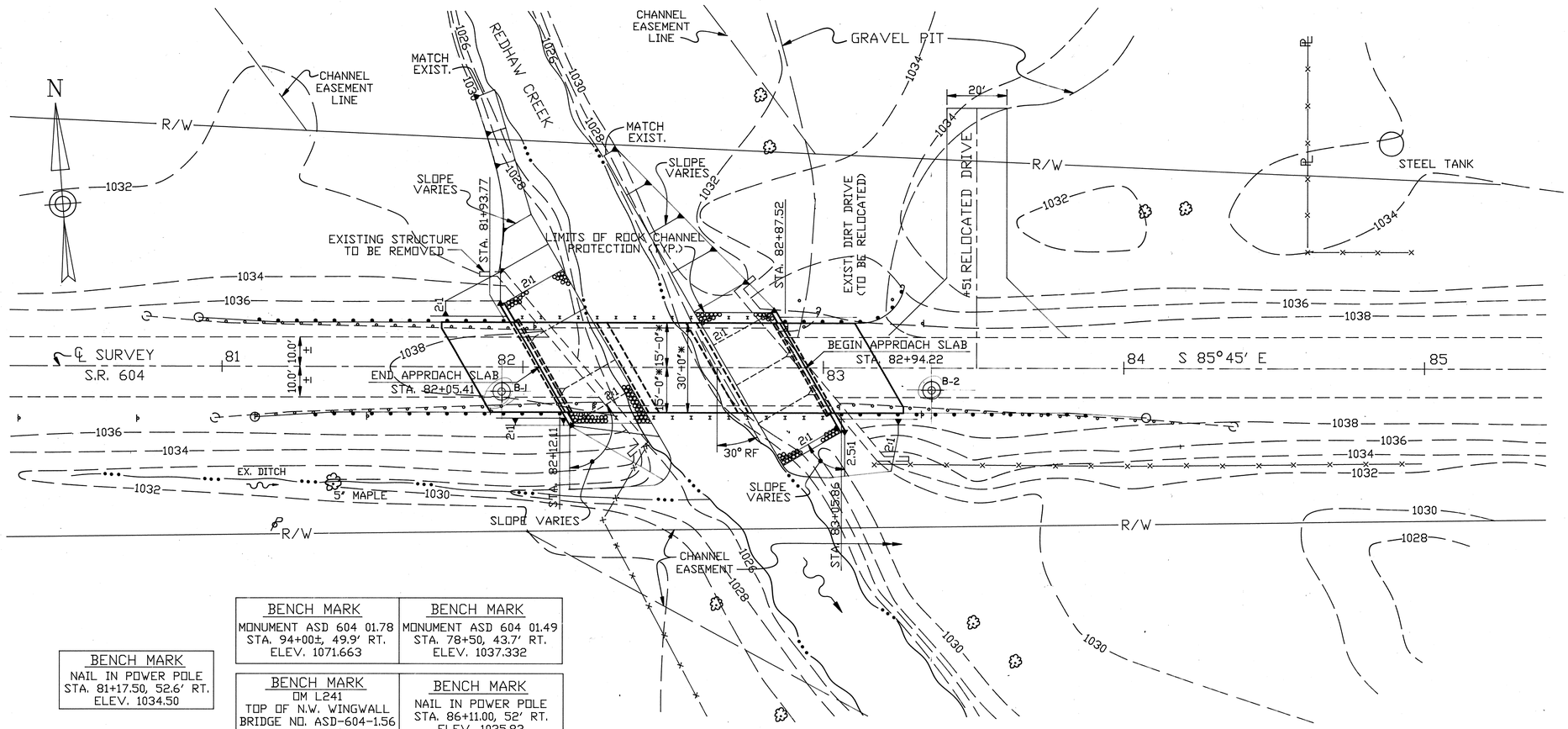

PLAN

* PLUS FIT-UP

BENCH MARK	BENCH MARK
MONUMENT ASD 604 01.78 STA. 94+00±, 49.9' RT. ELEV. 1071.663	MONUMENT ASD 604 01.49 STA. 78+50, 43.7' RT. ELEV. 1037.332
BENCH MARK DM L241 TOP OF N.W. WINGWALL BRIDGE NO. ASD-604-1.56 ELEV. 1038.423	BENCH MARK NAIL IN POWER POLE STA. 86+11.00, 52' RT. ELEV. 1035.83

BENCH MARK
NAIL IN POWER POLE
STA. 81+17.50, 52.6' RT.
ELEV. 1034.50

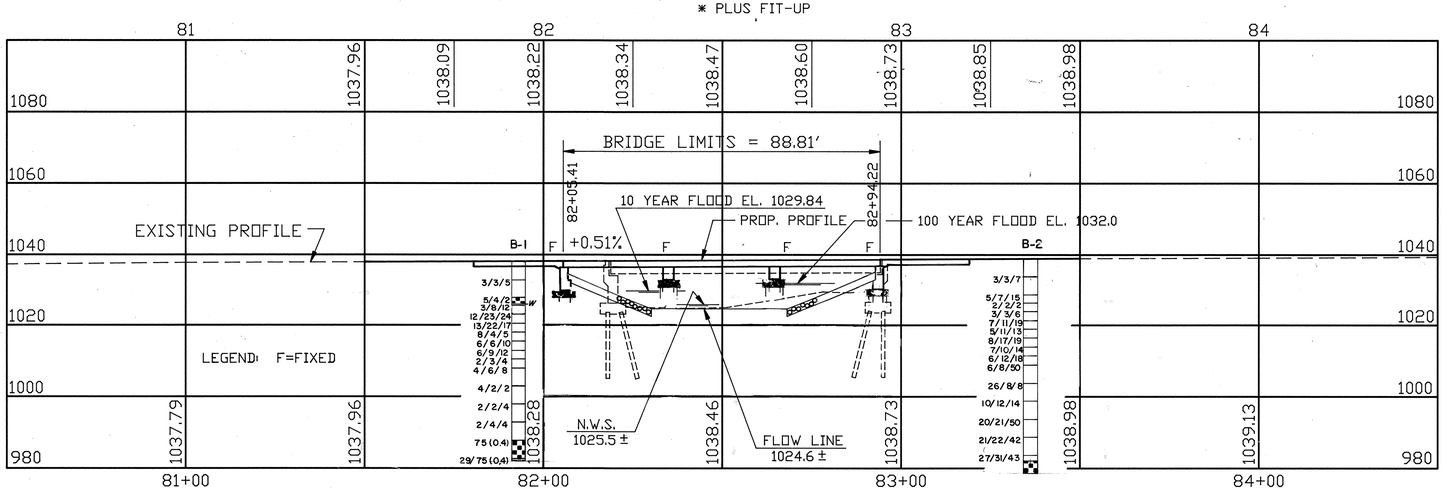

PROFILE ALONG C/L SURVEY

NOTE: EARTHWORK LIMITS SHOWN ARE APPROXIMATE. ACTUAL SLOPES SHALL CONFORM TO PLAN CROSS SECTIONS.

FOUNDATION DATA:

ABUTMENTS: 12" DIA. CAST-IN-PLACE PILES WITH AN ESTIMATED PAY LENGTH OF 40 FEET.

PIERS: 14" DIA. CAST-IN-PLACE PILES WITH AN ESTIMATED PAY LENGTH OF 45 FEET.

REVISED 11/16 /90

DESIGN TRAFFIC DATA

CURRENT ADT (1991) = 420
DESIGN YEAR ADT (2011) = 550

HYDRAULIC DATA

DRAINAGE AREA = 5.51 SQ. MI.

Q_{10} (DESIGN YEAR) = 992 c.f.s.
V_{10} = 5.70 f.p.s.
CLEARANCE TO 10 YR. HIGH WATER = 6.5 FT. +/-

Q_{100} = 1,843 c.f.s.
V_{100} = 6.85 f.p.s.
CLEARANCE TO 100 YR. HIGH WATER = 4.3 FT. +/-

EXISTING STRUCTURE

TYPE: SIMPLE SPAN STEEL BEAMS WITH CONCRETE DECK ON FULL-HEIGHT ABUTMENTS
SPAN: 71'-9 1/8"± (CLEAR)
ROADWAY: 24'-0"± F/F CURBS
LOADING: H-15-33
SKEW: 40° RIGHT FORWARD
WEARING SURFACE: ASPHALT
APPROACH SLABS: AS-35 (25'-0" LONG) (T=14-1/2")
ALIGNMENT: TANGENT
SUPERELEVATION: NONE
STRUCTURE FILE NO.: 0306096
DATE BUILT: 1940
CONDITION: MARGINAL

PROPOSED STRUCTURE

TYPE: PRECAST PRESTRESSED CONCRETE BOX BEAMS WITH CAPPED PILE PIERS & ABUTMENTS
SPANS: 28.0', 28.0', 28.0' C/C BEARINGS
ROADWAY: 30'-0" F/F RAILS
LOADING: HS20-44 AND ALT. MILITARY
SKEW: 30° RIGHT FORWARD
WEARING SURFACE: ASPHALT CONCRETE (2-1/2" MIN.)
APPROACH SLABS: AS-1-81 (25' LONG)
ALIGNMENT: TANGENT
SUPERELEVATION: NONE
CROWN: 3/16" PER FT.

OHIO DEPARTMENT OF TRANSPORTATION
DIVISION OF HIGHWAYS-TESTING LABORATORY
1600 WEST BROAD STREET COLUMBUS, OHIO 43223

STRUCTURE FOUNDATION INVESTIGATION
BRIDGE NO. ASD-604-0156
OVER REDHAW CREEK
SEC. ASD-604-1.55

PLAN AND PROFILE

DRAWN BY	CHECKED BY	REVIEWED BY	DATE
A.E.	A.F.	R.D.R.	10/20/89

TE - 122
400 - 12 - 78

LOG OF BORING

Date Started 9/27/89 | Sampler Type SS | Dia. 1 3/8" | Water Elev. 1026.0'
Date Completed 9/28/89 | Casing: Length | Dia.
Boring No. B-1 | Station & Offset 81+93, 8' RT. (REAR ABUTMENT) | Surface Elev. 1038.0'

Elev.	Depth	Std. Pen. (N)	Rec. ft.	Loss ft.	Description	Sample No.	% Agg.	% C.S.	% F.S.	% Silt	% Clay	L.L.	P.I.	W.C.	SHTL Class.
1038.0	0														
1036.9		AUGERED			ASPHALT AND SUBBASE	-	-	-	-	-	-	-	-	-	VISUAL
	2														
	4														
1033.0															
	6	3/3/5			BROWN SILTY CLAY W/STONE FRAGMENT AND ROOTS	1	-	-	-	-	-	-	-	10	VISUAL
	8														
1028.0	10														
1025.5	12	5/4/2			GRAYISH BROWN SILTY GRAVELLY SAND W/COBBLES	2	22	18	31	24	5	NP	NP	16	A-2-4
1023.0	14	3/8/12			GRAY SILTY GRAVELLY SAND	3	34	15	25	20	6	NP	NP	11	A-2-4
1020.5	16	12/23/24			GRAY SILTY GRAVELLY SAND	4	23	14	27	29	7	NP	NP	10	A-4A
1018.0	18	13/22/17			GRAY GRAVELLY SANDY SILT	5	15	9	24	36	16	NP	NP	20	A-4A
1015.5	20	8/4/5			GRAY SANDY SILT	6	6	6	15	42	31	20	4	15	A-4A
1013.0	22	6/6/10			GRAY SANDY SILT	7	7	6	16	38	33	22	7	13	A-4A
1010.5	24	6/9/12			GRAY SANDY SILT	8	14	7	13	34	32	22	6	15	A-4A
1008.0	26	2/3/4			GRAY SANDY GRAVELLY SILT	9	21	7	13	33	26	23	6	17	A-4A
	28	4/6/8			GRAY SILTY SANDY GRAVEL	10	54	24	10	11	1	NP	NP	11	A-1-A
	30														
1003.0	32	4/2/2			GRAY SANDY GRAVEL (SAND HEAVED 3.0' IN FLIGHTS)	11	66	25	7	1	1	NP	NP	16	A-1-A
	34														
998.0	36	2/2/4			GRAY GRAVELLY SILT	12	15	5	6	33	41	22	4	24	A-4A
	38														
993.0	40	2/4/4			GRAY SILTY GRAVELLY SAND	13	35	36	14	13	2	NP	NP	17	A-1-B
	42														
988.0	44	75(0.4)			GRAY SILTY SANDY GRAVEL WITH COBBLES — BOULDERY ZONE	14	54	14	8	20	4	NP	NP	7	A-1-B
	46														
983.0	48	29/75(0.4)			GRAY GRAVELLY SANDY SILT	15	24	12	14	42	8	NP	NP	9	A-4A
982.1	50				BOTTOM OF BORING										
	52														
	54														
	56														
	58														
	60														

LOG OF BORING

Date Started 9/27/89 | Sampler Type SS | Dia. 1 3/8" | Water Elev. –
Date Completed 9/28/89 | Casing: Length | Dia.
Boring No. B-2 | Station & Offset 83+36, 6' RT. (FORWARD ABUTMENT) | Surface Elev. 1038.9'

Elev.	Depth	Std. Pen. (N)	Rec. ft.	Loss ft.	Description	Sample No.	% Agg.	% C.S.	% F.S.	% Silt	% Clay	L.L.	P.I.	W.C.	SHTL Class.
1038.9	0														
1038.4		AUGERED			ASPHALT										VISUAL
	2														
	4														
1033.9															
	6	3/3/7			GRAY AND BROWN SANDY CLAY	1	4	5	12	38	41	32	13	17	A-6A
	8														
1028.9	10														
	12	5/7/15			BROWN AND GRAY GRAVELLY SANDY SILT	2	16	10	20	36	18	NP	NP	20	A-4A
1026.4	14	2/2/2			BROWN AND GRAY SANDY SILT	3	13	21	21	30	15	NP	NP	23	A-4A
1023.9	16	3/3/6			BROWNISH GRAY SILTY GRAVELLY SAND	4	34	18	23	20	5	NP	NP	17	A-1-B
1021.4	18	7/11/19			GRAY SILTY SANDY GRAVEL	5	49	12	14	20	5	NP	NP	12	A-1-B
1018.9	20														
	22	5/11/13			GRAY SILTY GRAVELLY SAND	6	27	23	23	20	7	NP	NP	12	A-2-4
1016.4	24	8/17/19			GRAY SILTY GRAVELLY SAND	7	28	34	20	15	3	NP	NP	13	A-1-B
1013.9	26	7/10/14			GRAY GRAVELLY SANDY SILT	8	15	9	15	39	22	20	4	16	A-4A
1011.4	28	6/12/18			GRAY SANDY SILT	9	8	7	14	45	26	20	5	14	A-4A
1008.9	30	6/8/50			GRAY SANDY SILT	10	11	7	17	38	27	22	7	14	A-4A
	32														
	34														
1003.9	36	26/8/8			GRAY SILTY SANDY GRAVEL	11	43	20	18	14	5	NP	NP	14	A-1-B
	38														
998.9	40														
	42	10/12/14			GRAY SANDY SILT	12	10	8	14	38	30	25	7	17	A-4A
	44														
993.9	46	20/21/50			GRAY SILTY SANDY GRAVEL	13	51	11	11	23	4	NP	NP	12	A-2-4
	48														
988.9	50														
	52	21/22/42			GRAY SILTY SANDY GRAVEL	14	26	15	12	28	9	NP	NP	13	A-4A
	54														
983.9	56														
982.4		27/31/43			GRAY SANDY SILT	15	0	17	14	65	4	NP	NP	17	A-4B
	58		1.5	2.0	BOULDERY ZONE										
978.9	60				BOTTOM OF BORING										
	62														

REVISED 11/16/90

OHIO DEPARTMENT OF TRANSPORTATION
DIVISION OF HIGHWAYS - TESTING LABORATORY
1600 WEST BROAD STREET COLUMBUS, OHIO 43223

STRUCTURE FOUNDATION INVESTIGATION
BRIDGE NO. ASD-604-0156
OVER REDHAW CREEK
SEC. ASD-604-1.55

BORING DATA

TYPED BY	CHECKED BY	REVIEWED BY	DATE
L.A.O.	A.F.	R.D.R	10/20/89