ATB-90-14.24, Pt 1/ATB-84-20.50
PID - 25199
10/21/2009
O:\ODOT\ATB\25199\roadway\sheets\25199GT001.dgn 6/5/2009 9:31:08 AM DENNIS
DIST 04
090460

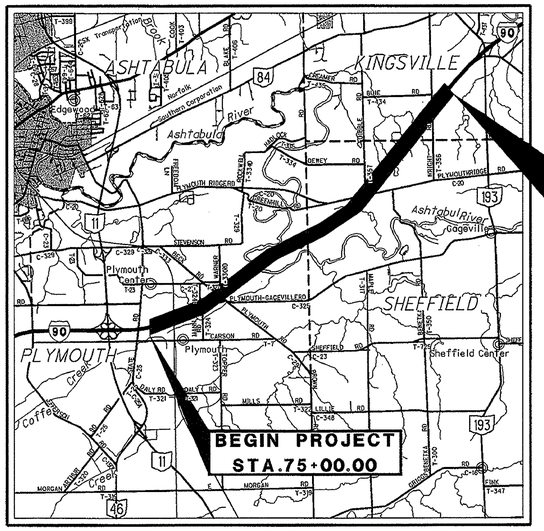

LOCATION MAP

LATITUDE: 41°51'50" N LONGITUDE: 80°42'30" W

SCALE IN MILES
0 1 2 3 4

N

PORTION TO BE IMPROVED
INTERSTATE HIGHWAY
STATE & FEDERAL ROUTES
COUNTY & TOWNSHIP ROADS
OTHER ROADS

DESIGN DESIGNATION (I-90)

SEE SHEETS 2-3 FOR SIDE ROAD DESIGN DESIGNATIONS AND DESIGN EXCEPTIONS

CURRENT ADT (2008)	26,730
DESIGN YEAR ADT (2028)	36,750
DESIGN HOURLY VOLUME (2028)	3675
DIRECTIONAL DISTRIBUTION	0.55
TRUCKS (24 HOUR B&C)	0.42
DESIGN SPEED	70 MPH
LEGAL SPEED	65 MPH
DESIGN FUNCTIONAL CLASSIFICATION:	
NHS PROJECT	YES

DESIGN EXCEPTIONS

NONE

UNDERGROUND UTILITIES
CONTACT BOTH SERVICES
CALL TWO WORKING DAYS
BEFORE YOU DIG
CALL
1-800-362-2764
(TOLL FREE)
OHIO UTILITIES PROTECTION SERVICE
NON-MEMBERS
MUST BE CALLED DIRECTLY
OIL & GAS PRODUCERS PROTECTIVE
SERVICE CALL: 1-800-925-0988

PLAN PREPARED BY:
Palmer PALMER ENGINEERING
ENGINEERING 11300 CORNELL PARK DR CINCINNATI, OH 45242
WINCHESTER • NASHVILLE • LOUISVILLE
CINCINNATI • HURRI CANE

ENGINEERS SEAL:
FOR ALL SHEETS EXCEPT AS NOTED
STATE OF OHIO DENNIS C JENNINGS E 59444 REGISTERED PROFESSIONAL ENGINEER
SIGNED:
DATE: 6/5/09

ENGINEERS SEAL:
MAINLINE STRUCTURES (SH293-SH346 &SH362-SH423)
STATE OF OHIO HERBERT KOGER, JR. E-50539 REGISTERED PROFESSIONAL ENGINEER
SIGNED:
DATE: 6/8/09

ENGINEERS SEAL:
OVERHEAD STRUCTURES (SH347-SH361 &SH424-SH435)
STATE OF OHIO BRONSON J FUNKE E-61820 REGISTERED PROFESSIONAL ENGINEER
SIGNED:
DATE: 6/5/09

STATE OF OHIO

DEPARTMENT OF TRANSPORTATION

ATB-90-14.25 PART 1

RECONSTRUCTION OF THE EXISTING SEPARATED CROSSING WITH THE NORFOLK SOUTHERN RAILROAD ASHTABULA COUNTY

PLYMOUTH/SHEFFIELD KINGSVILLE TOWNSHIPS

(FOR PART 2 SEE ATB-84-20.50)

INDEX OF SHEETS:

TITLE SHEET	1
SCHEMATIC PLAN	2 - 4
BENCHMARKS & CENTERLINE CONTROL	5
TYPICAL SECTIONS	6 - 10
GENERAL NOTES	11 - 12
ENVIRONMENTAL COMMITMENT NOTES	12A
MAINTENANCE OF TRAFFIC	13 - 89
GENERAL SUMMARY	90 - 92
ESTIMATED QUANTITIES	93 - 104
PROJECT SITE PLAN	105 - 107
PLAN AND PROFILE (I-90)	108 - 132
CROSS SECTIONS (I-90)	133 - 243
PLAN AND PROFILE (PLYMOUTH ROAD)	244
CROSS SECTIONS (PLYMOUTH ROAD)	245 - 247
PLAN AND PROFILE (PLYMOUTH-RIDGE ROAD)	248 - 249
SUPERELEVATION TABLES	250 - 263
DETAILS	264 - 268
STORM SEWER PROFILES	269
CULVERT DETAILS	270 - 275
CHANNEL DETAILS (GABION WALL)	276 - 277
DRAINAGE DETAILS	278 - 279
TRAFFIC CONTROL	280 - 292
STRUCTURES OVER 20'	
ATB-90-1450 L/R	293 - 346
ATB-90-1525	347 - 361
ATB-90-1583 L/R	362 - 423
ATB-90-1764	424 - 430
ATB-90-1905	431 - 435
RIGHT OF WAY	436 - 437
SOIL PROFILES	

PART 1 AND PART 2

STANDARD CONSTRUCTION DRAWINGS

BP-1.1	7/28/00	F-2.1	7/28/00	MH-1.1	7/19/02	MT-95.40	4/17/09	MT-105.10	1/16/09
BP-3.1	10/19/07	F-3.1	7/28/00	MH-1.2	1/20/06	MT-95.50	4/17/09	MT-120.00	1/16/09
BP-4.1	7/16/04	GR-1.1	7/16/04	RM-4.1	10/20/06	MT-95.70	4/17/09	TC-41.10	10/19/07
BP-5.1	7/28/00	GR-2.1	1/16/04	RM-4.2	10/19/07	MT-95.71	4/17/09	TC-41.20	1/19/01
BP-9.1	4/15/05	GR-3.1	1/19/07	RM-4.3	1/19/07	MT-95.82	9/05/06	TC-42.10	1/19/07
CB-2.2	7/15/05	GR-3.2	1/19/07	RM-4.5	1/19/07	MT-96.11	1/16/06	TC-42.20	7/16/04
CB-2.1	7/15/05	GR-4.1	4/18/03	RM-4.6	1/16/04	MT-97.10	9/05/06	TC-51.11	4/20/01
CB-3.1	7/15/05	GR-4.2	1/19/07	AS-1-81	7/19/02	MT-97.12	4/17/09	TC-51.12	4/20/01
CB-3.2	7/15/05	GR-5.1	4/18/03	SBR-1	7/19/02	MT-99.20	1/16/09	TC-52.10	1/19/07
DM-1.1	4/21/06	GR-5.2	1/16/04	EXJ-4-87	7/19/02	MT-100.00	1/16/09	TC-52.20	1/19/07
DM-1.2	10/21/05	GR-5.3	1/16/04	GSD-1-96	7/19/02	MT-101.20	10/18/02	TC-61.10	1/19/01
DM-1.4	4/21/06	GR-6.1	4/18/03	PCB-91	7/19/02	MT-101.70	1/16/09	TC-65.10	1/21/05
DM-4.1	7/19/02	GR-6.2	4/18/03	SICD-1-96	7/19/02	MT-101.90	1/16/09	TC-65.11	1/21/05
DM-4.3	4/17/09	HW-1.1	1/21/05	SBR-1-99	7/19/02	MT-102.10	4/17/09	TC-71.10	1/16/09
DM-4.4	4/17/09	HW-2.1	4/21/06	MT-35.10	4/20/01	MT-102.20	4/17/09	TC-73.10	1/19/01
DM-5.1	7/19/02	HW-2.2	4/21/06	MT-95.30	4/17/09	MT-102.30	4/17/09	TC-82.10	4/19/02

SUPPLEMENTAL SPECIFICATIONS

800-2008	7/17/09
802	1/16/09
832	5/5/09
838	4/15/05
880	7/18/08

SPECIAL PROVISIONS

NWP#3	6/05/09

PROJECT DESCRIPTION

MAJOR PAVEMENT REHABILITATION OF APPROXIMATELY 5.25 MILES OF INTERSTATE 90, FROM SLM 14.29 TO SLM 19.54, PROJECT INCLUDES NEW PAVEMENT, GUARDRAIL, DRAINAGE STRUCTURES AND TRAFFIC CONTROL. REHABILITATE 4 MAINLINE AND 3 OVERHEAD BRIDGES.

PROJECT EARTH DISTURBED AREA: 144.8 ACRES
ESTIMATED CONTRACTOR EARTH DISTRUBED AREA: 11.9 ACRES
NOTICE OF INTENT EARTH DISTURBED AREA: 156.7 ACRES

LIMITED ACCESS

THIS IMPROVEMENT IS ESPECIALLY DESIGNED FOR THROUGH TRAFFIC AND HAS BEEN DECLARED A LIMITED ACCESS HIGHWAY OR FREEWAY BY ACTION OF THE DIRECTOR IN ACCORDANCE WITH THE PROVISIONS OF SECTION 5511.02 OF THE OHIO REVISED CODE.

2008 SPECIFICATIONS

THE STANDARD SPECIFICATIONS OF THE STATE OF OHIO, DEPARTMENT OF TRANSPORTATION, INCLUDING CHANGES AND SUPPLEMENTAL SPECIFICATIONS LISTED IN THE PROPOSAL SHALL GOVERN THIS IMPROVEMENT.

FOR I-90:

I HEREBY APPROVE THESE PLANS AND DECLARE THAT THE MAKING OF THIS IMPROVEMENT WILL NOT REQUIRE THE CLOSING TO TRAFFIC OF THE HIGHWAY AND THAT PROVISIONS FOR THE MAINTENANCE AND SAFETY OF TRAFFIC WILL BE AS SET FORTH ON THE PLANS AND ESTIMATES.

FOR OVERHEAD BRIDGES:

I HEREBY APPROVE THESE PLANS AND DECLARE THAT THE MAKING OF THIS IMPROVEMENT WILL REQUIRE THE CLOSING TO TRAFFIC OF THE HIGHWAY AND THAT DETOURS WILL BE PROVIDED AS INDICATED ON SHEET 20

UNDER AUTHORITY OF SECTION 4511.21, DIVISION (H) OF THE OHIO REVISED CODE, THE REVISED PRIMA FACIE SPEED LIMITS AS INDICATED HEREIN ARE DETERMINED TO BE REASONABLE AND SAFE, AND ARE HEREBY ESTABLISHED FOR THE DURATION OF THIS PROJECT. THE PRIMA FACIE SPEED LIMIT OR LIMITS HEREBY ESTABLISHED SHALL BECOME EFFECTIVE WHEN APPROPRIATE SIGNS GIVING NOTICE THEREOF ARE ERECTED.

APPROVED
DATE 6.9.09 DISTRICT DEPUTY DIRECTOR

APPROVED
DATE 6-26-09 DIRECTOR, DEPARTMENT OF TRANSPORTATION

FEDERAL PROJECT NO. E032101
PID NO. 25199
CONSTRUCTION PROJECT NO.
RAILROAD INVOLVEMENT NORFOLK SOUTHERN
ATB-90-14.25

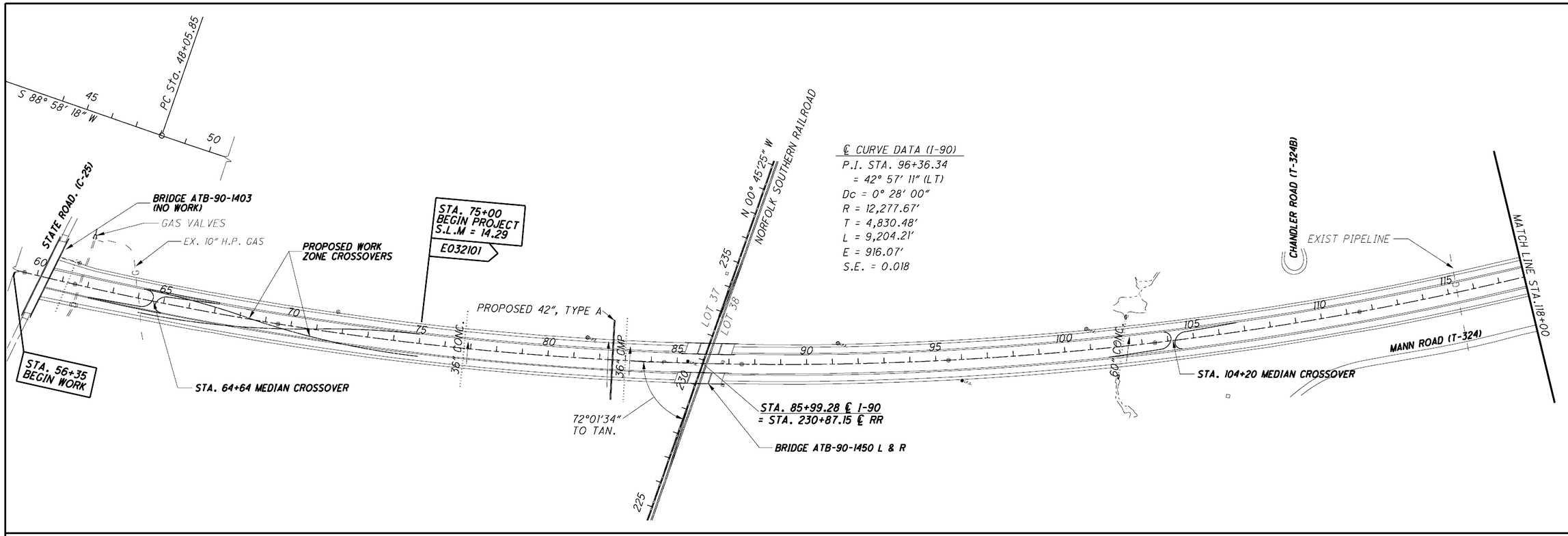

DESIGN DESIGNATION (PLYMOUTH ROAD)

CURRENT ADT (2008)	1520
DESIGN YEAR ADT (2028)	1810
DESIGN HOURLY VOLUME (2028)	217
DIRECTIONAL DISTRIBUTION	0.55
TRUCKS (24 HOUR B&C)	0.04
DESIGN SPEED	60 MPH
LEGAL SPEED	55 MPH
DESIGN FUNCTIONAL CLASSIFICATION: COLLECTOR (RURAL)	
NHS PROJECT	NO

DESIGN EXCEPTIONS	SHEET	APPROVED
STOPPING SIGHT DISTANCE	PP26	5/23/07

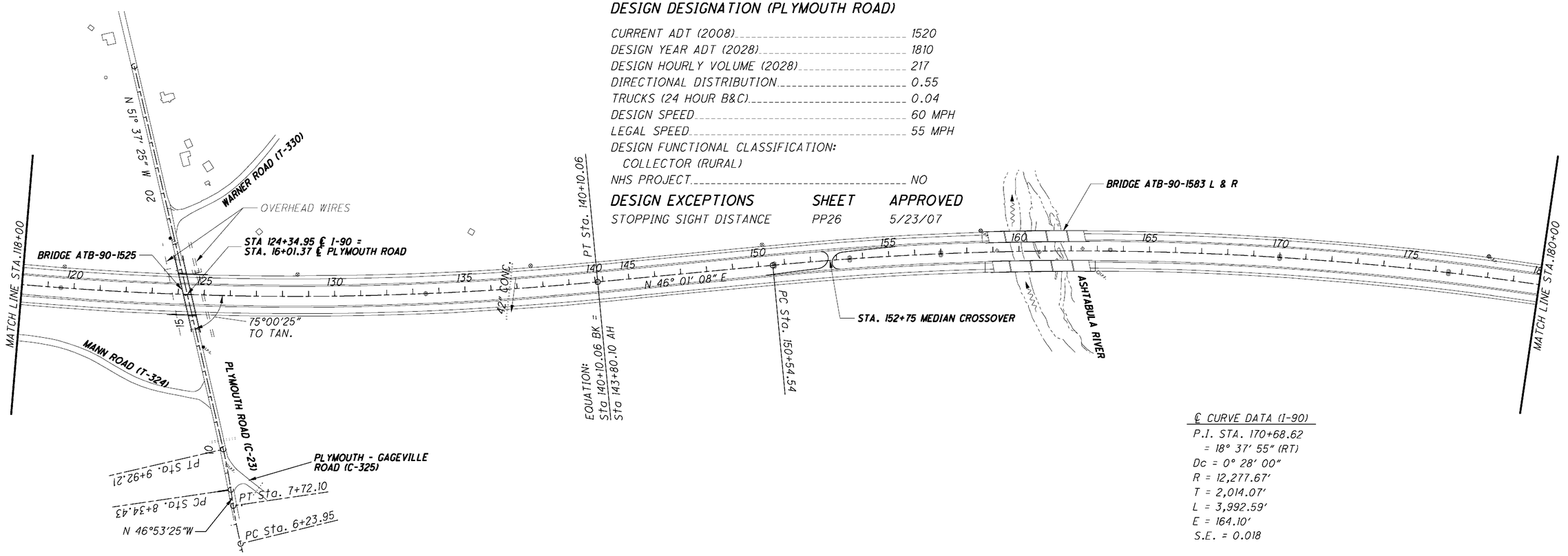

℄ CURVE DATA (I-90)
P.I. STA. 170+68.62
= 18° 37' 55" (RT)
Dc = 0° 28' 00"
R = 12,277.67'
T = 2,014.07'
L = 3,992.59'
E = 164.10'
S.E. = 0.018

SCHEMATIC PLAN

ATB-90-14.25

Palmer ENGINEERING
PALMER ENGINEERING
11300 CORNELL PARK DR
CINCINNATI, OH 45242

O:\ODOT\ATB\25199\roadway\sheets\25199GB001.dgn 6/6/2009 8:54:12 AM DENNIS

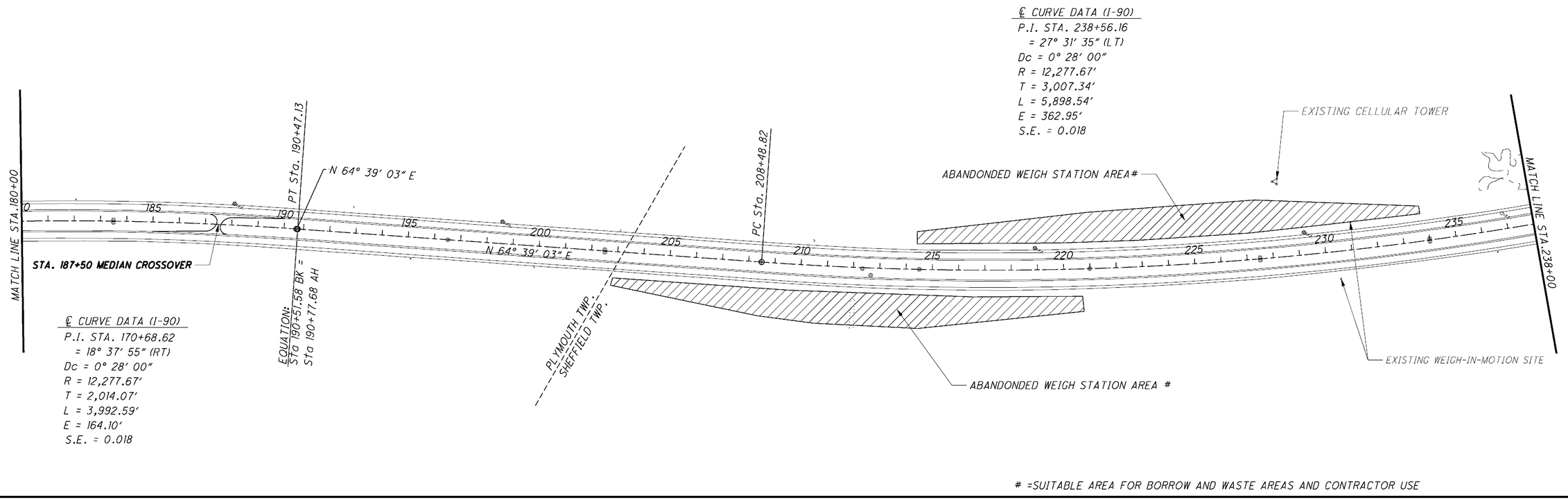

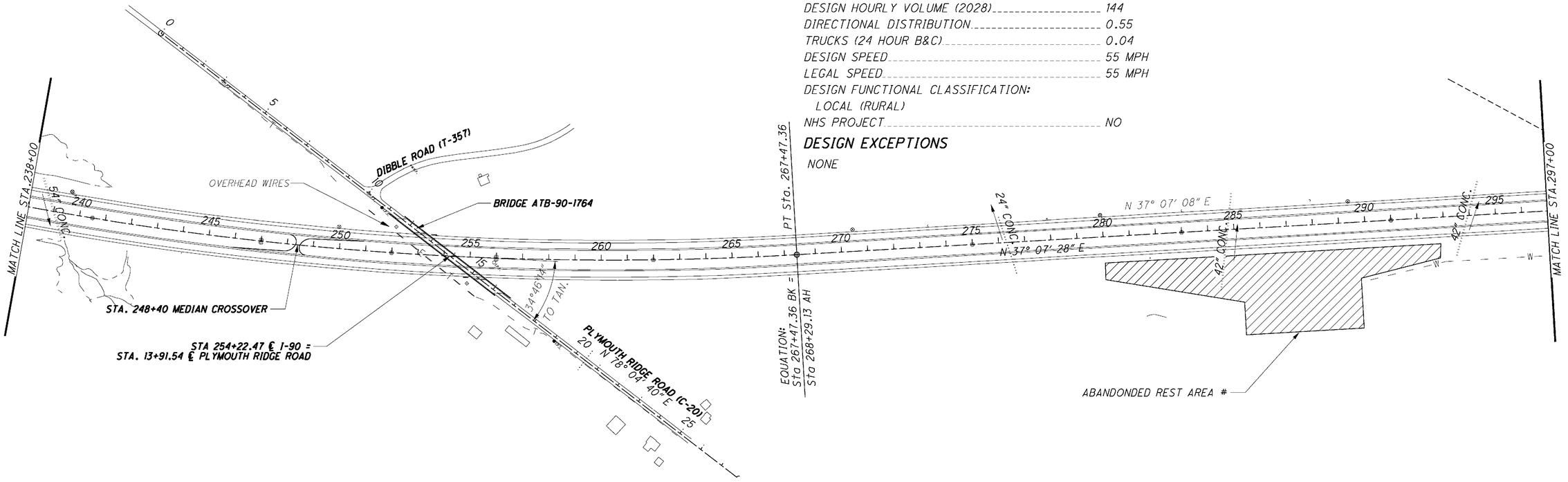

SCHEMATIC PLAN

ATB-90-14.25

Palmer ENGINEERING
PALMER ENGINEERING
11300 CORNELL PARK DR
CINCINNATI, OH 45242
O:\ODOT\ATB\25199\roadway\sheets\25199GB002.dgn 6/6/2009 8:54:16 AM DENNIS

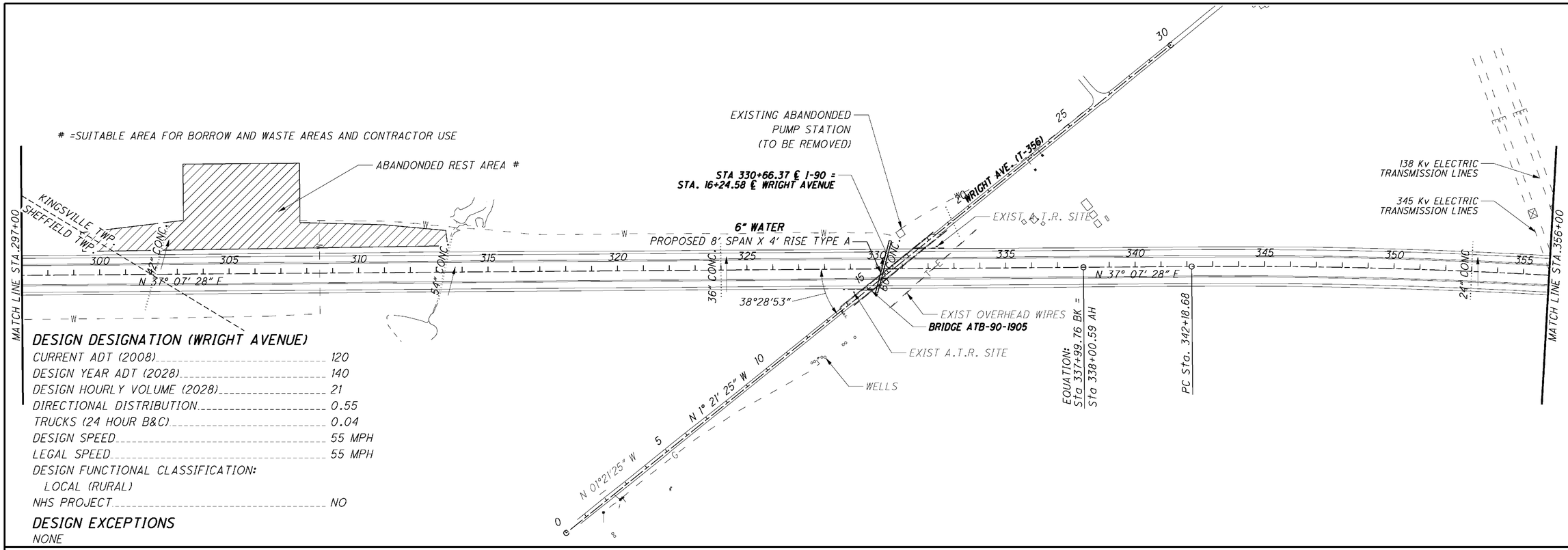

DESIGN DESIGNATION (WRIGHT AVENUE)

CURRENT ADT (2008)	120
DESIGN YEAR ADT (2028)	140
DESIGN HOURLY VOLUME (2028)	21
DIRECTIONAL DISTRIBUTION	0.55
TRUCKS (24 HOUR B&C)	0.04
DESIGN SPEED	55 MPH
LEGAL SPEED	55 MPH
DESIGN FUNCTIONAL CLASSIFICATION: LOCAL (RURAL)	
NHS PROJECT	NO

DESIGN EXCEPTIONS

NONE

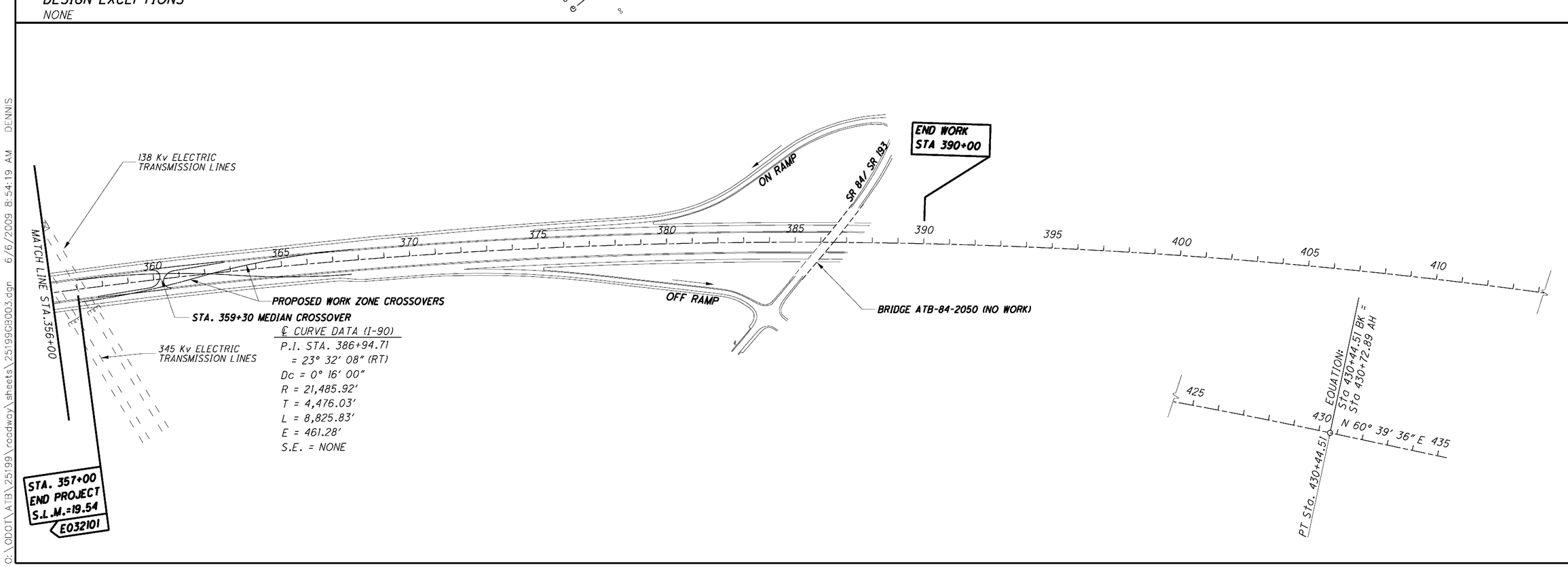

SCHEMATIC PLAN

ATB-90-14.25

Palmer ENGINEERING
PALMER ENGINEERING
11300 CORNELL PARK DR
CINCINNATI, OH 45242

O:\ODOT\ATB\25199\roadway\sheets\25199GB003.dgn 6/6/2009 8:54:19 AM DENNIS

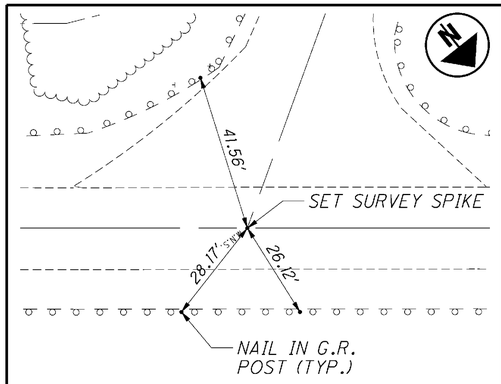

PLYMOUTH ROAD STA. 12+00 1"=20'

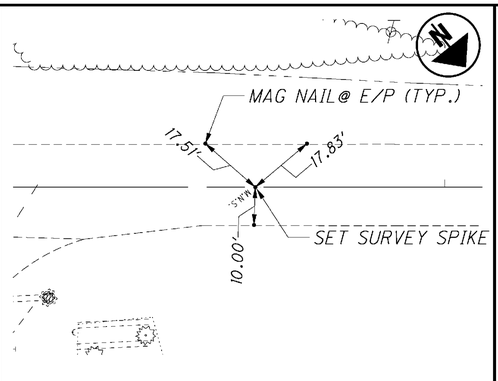

PLYMOUTH ROAD STA. 20+00 1"=20'

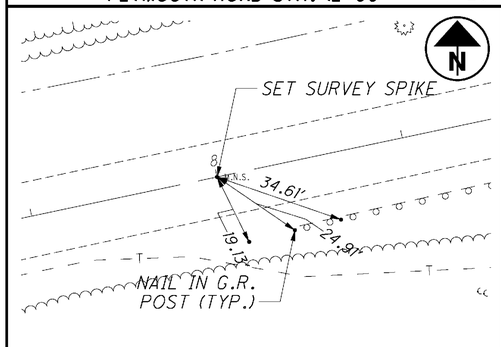

PLYMOUTH-RIDGE ROAD STA. 8+00 1"=20'

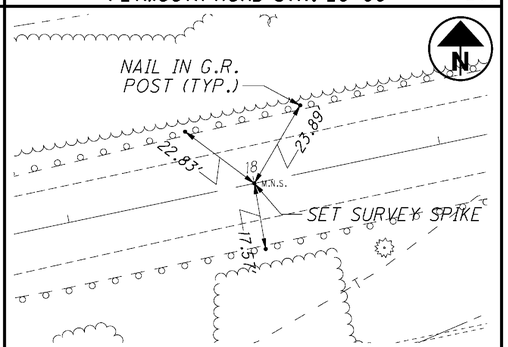

PLYMOUTH-RIDGE ROAD STA. 18+00 1"=20'

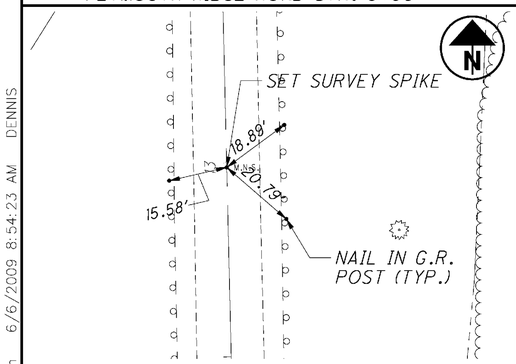

WRIGHT AVE. STA. 13+00 1"=20'

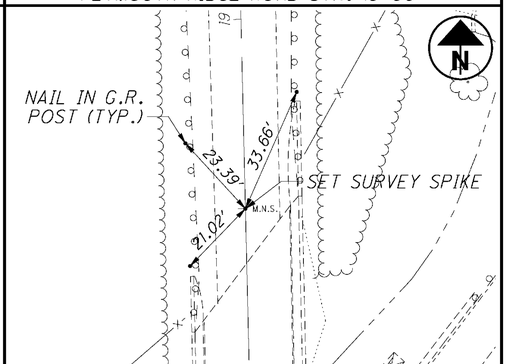

WRIGHT AVE. STA. 18+50 1"=20'

BENCHMARKS

STA 61+49.39-83.81 LT
ALUMINUM DISK IN TOP
OF BARRIER WALL
ELEV. = 850.79

STA 71+73.23-80.73 LT
# 5 REBAR W/ODOT CAP
ELEV. = 860.96

STA 81+48.97-80.36 LT
# 5 REBAR W/ODOT CAP
ELEV. = 879.03
STA 91+22.50-80.25 LT
# 5 REBAR W/ODOT CAP
ELEV. = 878.04

STA 100+90.97-80.75 LT
# 5 REBAR W/ODOT CAP
ELEV. = 859.54

STA 119+58.67-81.71 LT
# 5 REBAR W/ODOT CAP
ELEV. = 837.56

STA 128+58.25-83.50 LT
# 5 REBAR W/ODOT CAP
ELEV. = 834.07

STA 137+57.91-83.49 LT
# 5 REBAR W/ODOT CAP
ELEV. = 831.56

STA 150+20.80-82.48 LT
# 5 REBAR W/ODOT CAP
ELEV. = 819.79

STA 158+55.59-82.87 LT
# 5 REBAR W/ODOT CAP
ELEV. = 808.93

STA 177+95.64-81.02
# 5 REBAR W/ODOT CAP
ELEV. = 838.89

STA 188+07.00-81.02 LT
# 5 REBAR W/ODOT CAP
ELEV. = 858.73

STA 198+54.08-83.15 LT
# 5 REBAR W/ODOT CAP
ELEV. = 878.01

STA 218+91.55-82.90 LT
# 5 REBAR W/ODOT CAP
ELEV. = 890.44

STA 229+25.36-85.23 LT
# 5 REBAR W/ODOT CAP
ELEV. = 879.06

STA 239+57.56-85.93 LT
# 5 REBAR W/ODOT CAP
ELEV. = 870.16

STA 249+91.87-83.07 LT
# 5 REBAR W/ODOT CAP
ELEV. = 877.27

STA 270+46.92-83.10 LT
# 5 REBAR W/ODOT CAP
ELEV. = 879.49

STA 279+93.17-82.57
# 5 REBAR W/ODOT CAP
ELEV. = 866.39

STA 289+39.80-80.75 LT
# 5 REBAR W/ODOT CAP
ELEV. = 851.49

STA 298+83.95-82.99
# 5 REBAR W/ODOT CAP
ELEV. = 835.74

STA 317+89.47-89.67 LT
# 5 REBAR W/ODOT CAP
ELEV. = 819.49

STA 327+58.70-82.97
# 5 REBAR W/ODOT CAP
ELEV. = 816.21

STA 337+23.66-82.27 LT
# 5 REBAR W/ODOT CAP
ELEV. = 813.96

STA 346+88.88-83.71 LT
# 5 REBAR W/ODOT CAP
ELEV. = 809.65

STA 356+29.92-83.87 LT
# 5 REBAR W/ODOT CAP
ELEV. = 805.92

STA 405+63.42-85.09 LT
# 5 REBAR W/ODOT CAP
ELEV. = 760.27

I-90 - CENTERLINE REFERENCE CONCRETE MONUMENTS

STA 61+49.69-0.21 LT	STA 227+50.00-4.96 RT
STA 69+49.82-0.07 RT	STA 227+50.00-5.00 LT
STA 84+49.91-0.12 RT	STA 233+99.85-4.89 RT
STA 87+49.78-0.09 LT	STA 233+99.85-5.04 LT
STA 95+49.31-0.01 RT	STA 240+49.71-0.05 LT
STA 103+49.36-0.10 RT	STA 246+99.60-5.11 RT
STA 111+49.40-0.05 LT	STA 246+99.62-4.94 LT
STA 119+49.49-0.04 RT	STA 251+99.42-0.33 RT
STA 133+49.38-0.04 RT	STA 255+99.34-5.20 RT
STA 140+13.10-0.00 RT	STA 255+99.38-4.69 LT
STA 150+60.49-4.99 RT	STA 261+99.20-0.08 RT
STA 150+60.46-5.00 LT	STA 267+45.45-0.00 RT
STA 153+50.25-5.09 RT	STA 275+00.25-0.02 RT
STA 153+50.29-4.90 LT	STA 283+00.22-0.08 LT
STA 157+00.19-5.02 RT	STA 291+00.18-0.01 LT
STA 157+00.16-5.07 LT	STA 299+00.19-0.04 RT
STA 163+50.00-4.82 LT	STA 307+00.00-0.01 LT
STA 169+99.67-4.90 RT	STA 314+99.95-0.04 RT
STA 169+99.79-5.01 LT	STA 322+99.87-0.08 RT
STA 176+49.54-4.73 RT	STA 328+49.89-0.07 RT
STA 176+49.49-5.22 LT	STA 332+49.81-0.06 RT
STA 183+49.33-4.87 RT	STA 337+99.76-0.10 RT
STA 183+49.39-5.13 LT	STA 342+16.16-0.00 RT
STA 190+51.59-0.00 RT	STA 350+00.01-0.03 RT
STA 196+50.71-0.04 LT	STA 356+99.97-0.13 RT
STA 202+50.53-5.00 RT	STA 363+99.92-0.25 RT
STA 202+50.49-5.00 LT	STA 370+99.87-0.09 RT
STA 208+45.24-0.00 RT	STA 378+00.20-0.08 LT
STA 212+33.51-3.67 RT	STA 394+00.05-0.28 LT
STA 212+66.13-28.01 RT	STA 402+00.11-0.47 LT
STA 214+50.25-0.08 LT	STA 409+00.16-0.58 LT
STA 221+00.13-0.03 LT	

CALCULATED | CHECKED

CENTERLINE REFERENCES AND BENCHMARKS

ATB-90-14.25

Palmer ENGINEERING
PALMER ENGINEERING
11300 CORNELL PARK DR
CINCINNATI, OH 45242

O:\ODOT\ATB\25199\roadway\sheets\25199GB004.dgn 6/6/2009 8:54:23 AM DENNIS

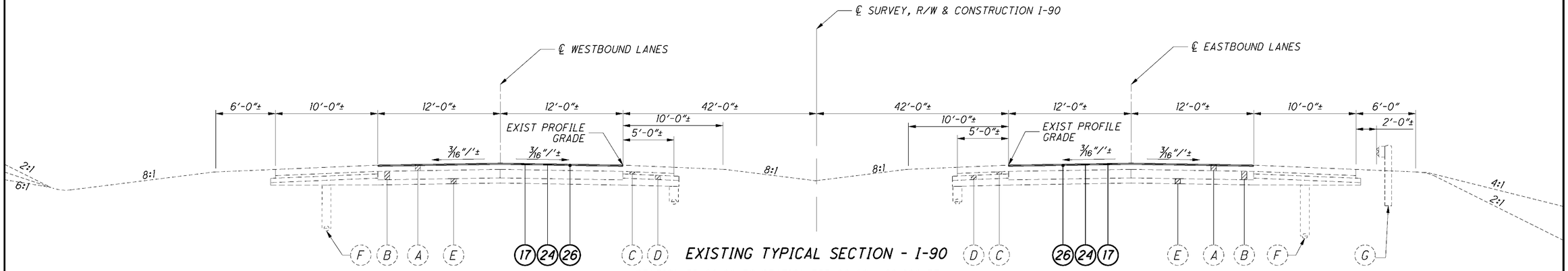

EXISTING TYPICAL SECTION - I-90

STATION 75+00.00 TO STATION 357+00.00 = 28,200 FT.

(DEDUCT 232.76 FT. FOR BRIDGE ATB-90-1450 L & R)#
(DEDUCT 370.04 FT. FOR STATION EQUATION 140+10.06 BK. = 143+80.10 AH.)
(DEDUCT 422.48 FT. FOR BRIDGE ATB-90-1583 L & R)##
(DEDUCT 26.10 FT. FOR STATION EQUATION 190+51.58 BK. = 190+77.68 AH.)
(DEDUCT 81.77 FT. FOR STATION EQUATION 267+47.36 BK. = 268+29.13 AH.)
(DEDUCT 0.83 FT. FOR STATION EQUATION 337+99.76 BK. = 338+00.59 AH.)

TOTALS: 27,066.02 FT.

(STATION 84+73.63 TO STATION 87+05.53 BRIDGE ATB-90-1450R AND APPROACHES = 231.90 FT.)
(STATION 85+06.37 TO STATION 87+39.98 BRIDGE ATB-90-1450L AND APPROACHES = 233.61 FT.)
(STATION 158+72.77 TO STATION 162+96.85 BRIDGE ATB-90-1583R AND APPROACHES = 424.08 FT.)
(STATION 158+58.06 TO STATION 162+78.93 BRIDGE ATB-90-1583L AND APPROACHES = 420.87 FT.)

RESURFACING M.O.T. TRANSITIONS

(SEE SHEET 17)

EASTBOUND - STATION 60+85.00 TO STATION 75+00.00 = 1415.00 FT.
WESTBOUND - STATION 56+35.00 TO STATION 75+00.00 = 1865.00 FT.

EASTBOUND - STATION 357+00.00 TO STATION 390+00.00 = 3300.00 FT.
WESTBOUND - STATION 357+00.00 TO STATION 370+69.00 = 1369.00 FT.

NOTES:

CONVENTIONAL BUILDUP FOR INFORMATION ONLY
ITEM 442 - 1 1/2 " ASPHALT CONCRETE SURFACE COURSE, 12.5MM, TYPE A (446)
ITEM 407 - TACK COAT FOR INTERMEDIATE COURSE
ITEM 442 - 1 1/2 " ASPHALT CONCRETE INTERMEDIATE COURSE, 19MM, TYPE A (446)
ITEM 302 - 10" ASPHALT CONCRETE BASE
ITEM 304 - 6" AGGREGATE BASE

EXISTING LEGEND:

- (A) 5 3/4" ± ASPHALT CONCRETE
- (B) 10"± REINFORCED PORTLAND CEMENT CONCRETE PAVEMENT
- (C) 3"± ASPHALT CONCRETE BASE COURSE
- (D) 5"± STABILIZED CRUSHED AGGREGATE SHOULDERS
- (E) SUBBASE (VARIABLE THICKNESS)
- (F) 6" PIPE UNDERDRAIN
- (G) EXISTING GURADRAIL
- (H) ASPHALT CONCRETE
- (I) BITUMINOUS SEAL COAT
- (J) 5" CRUSHED AGGREGATE BASE
- (K) 4" SUBBASE
- (L) AGGREGATE DRAIN

PROPOSED ITEM LEGEND

- (1) ITEM 880 - 13" ASPHALT CONCRETE (7 YEAR WARRANTY) #
- (2) ITEM 408 - PRIME COAT
- (3) ITEM 304 - 6" AGGREGATE BASE, AS PER PLAN
- (4) ITEM 206 - CURING COAT
- (5) ITEM 206 - 14" CEMENT STABILIZED SUBGRADE
- (6) ITEM 605 - 6" SHALLOW PIPE UNDERDRAIN
- (7) ITEM 605 - 6" BASE PIPE UNDERDRAIN
- (8) ITEM 617 - 2" COMPACTED AGGREGATE, TYPE A, AS PER PLAN
- (9) ITEM 408 - PRIME COAT, AS PER PLAN
- (10) ITEM 605 - GUARDRAIL, TYPE 5
- (11) ITEM 622 - SINGLE SLOPE CONCRETE BARRIER, TYPE D
- (12) ITEM 448 - 2" ASPHALT CONCRETE INTERMEDIATE COURSE, UNDER GUARDRAIL, AS PER PLAN
- (13) ITEM 659 - SEEDING AND MUCLHING
- (14) ITEM 615 - 13" PAVEMENT FOR MAINTAINING TRAFFIC, CLASS 1, AS PER PLAN
- (15) ITEM 411 - STABLIZED CRUSHED AGGREGATE, AS PER PLAN (THICKNESS NOTED)
- (16) ITEM 526 - REINFORCED CONCRETE APPROACH SLAB (T=15"), AS PER PLAN
- (17) ITEM 448 - 1 1/4" ASPHALT CONCRETE SURFACE COURSE, TYPE 1, PG64-22
- (18) ITEM 407 - TACK COAT FOR INTERMEDIATE COURSE
- (19) ITEM 448 - 1 3/4" ASPHALT CONCRETE INTERMEDIATE COURSE, TYPE 2, PG64-22
- (20) ITEM 302 - 6" ASPHALT CONCRETE BASE, PG64-22
- (21) ITEM 204 - SUBGRADE COMPACTION
- (22) ITEM 304 - 8" AGGREGATE BASE, AS PER PLAN
- (23) ITEM 422 - SINGLE CHIP SEAL WITH POLYMER BINDER
- (24) ITEM 254 - 1 1/4" PAVEMENT PLANING, ASPHALT CONCRETE
- (25) ITEM 605 - AGGREGATE DRAINS
- (26) ITEM 407 - TACK COAT
- (27) ITEM 448 - 0" MIN 1 3/4" MAX ASPHALT CONCRETE INTERMEDIATE COURSE, TYPE 2, PG64-22
- (28) ITEM 617 - COMPACTED AGGREGATE, TYPE A, AS PER PLAN
- (29) ITEM 609 - CURB TYPE 4-C
- (30) ITEM 609 - ASPHALT CONCRETE CURB, TYPE 1

Palmer ENGINEERING
PALMER ENGINEERING
11300 CORNELL PARK DR
CINCINNATI, OH 45242

O:\ODOT\ATB\25199\roadway\sheets\25199GY001.dgn 6/6/2009 8:54:27 AM DENNIS

EXISTING TYPICAL SECTIONS

ATB-90-14.25

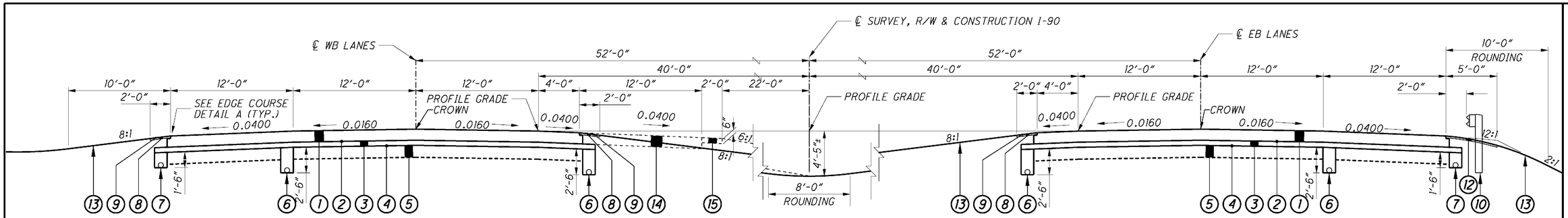

FOR SIDESLOPES SEE SHEET 8

NORMAL SECTION - I-90

STATION 144+68.10 TO STATION 149+66.54 = 498.44 FT.

STATION 191+61.23 TO STATION 207+60.82 = 1,599.59 FT.

STATION 269+17.13 TO STATION 357+00.00 = 8,782.04 FT.
(DEDUCT 0.83 FT. FOR STATION EQUATION 337+99.76 BK. = 338+00.59 AH.)

TOTALS: 10,880.07 FT.

FOR SIDESLOPES SEE SHEET 8

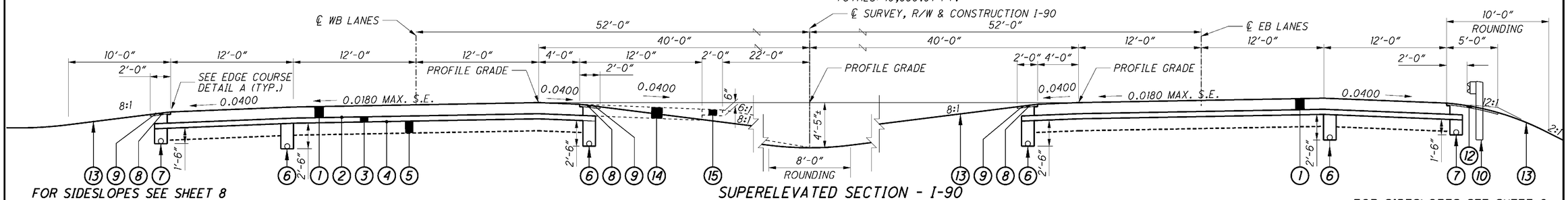

FOR SIDESLOPES SEE SHEET 8

SUPERELEVATED SECTION - I-90

FOR SIDESLOPES SEE SHEET 8

STATION 75+00.00 TO STATION 144+68.10 = 6,365.30 FT.
(DEDUCT 370.04 FT. FOR STATION EQUATION 140+10.06 BK. = 143+80.10 AH.)
(DEDUCT FOR BRIDGE ATB-90-1450 L & R = 232.76 FT.)#

STATION 149+66.54 TO STATION 191+61.23 = 3,746.11 FT. (OPPOSITE HAND)
(DEDUCT 26.10 FT. FOR STATION EQUATION 190+51.58 BK. = 190+77.68 AH.)
(DEDUCT FOR BRIDGE ATB-90-1583 L & R = 422.48 FT.)##

STATION 207+60.82 TO STATION 269+17.13 = 6,074.54 FT.
(DEDUCT 81.77 FT. FOR STATION EQUATION 267+47.36 BK. = 268+29.13 AH.)

TOTALS: 16,185.95 FT.

FOR LEGEND SEE SHEET 6
FOR SUPERELEVATION RATES SEE S.E. TABLES, SHEETS 250-263

(STATION 84+73.57 TO STATION 87+05.42 BRIDGE ATB-90-1450R AND APPROACHES = 231.85 FT.)
(STATION 85+06.55 TO STATION 87+39.96 BRIDGE ATB-90-1450L AND APPROACHES = 233.41 FT.)
(STATION 158+72.77 TO STATION 162+96.85 BRIDGE ATB-90-1583R AND APPROACHES = 424.08 FT.)
(STATION 158+58.06 TO STATION 162+78.93 BRIDGE ATB-90-1583L AND APPROACHES = 420.87 FT.)

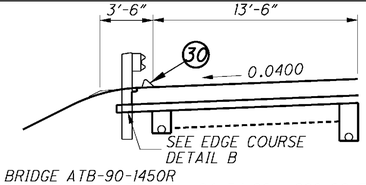

BRIDGE ATB-90-1450R
STA. 81+74.66 TO STA. 84+54.66 = 280.00 FT.
STA. 87+08.60 TO STA. 89+88.60 = 280.00 FT.

BRIDGE ATB-90-1450L
STA. 82+23.32 TO STA. 85+03.32 = 280.00 FT.
STA. 87+58.90 TO STA. 90+38.90 = 280.00 FT.

BRIDGE ATB-90-1583R
STA. 157+78.00 TO STA. 158+66.54 = 88.54 FT.

BRIDGE ATB-90-1583L
STA. 157+78.00 TO STA. 158+42.17 = 64.17 FT.

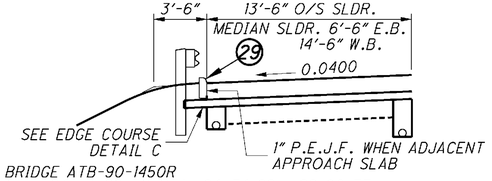

BRIDGE ATB-90-1450R
STA. 84+54.66 TO STA. 84+74.66 = 20.00 FT.
STA. 84+68.31 TO STA. 84+88.31 = 20.00 FT. (MEDIAN SIDE)
STA. 86+88.60 TO STA. 87+08.60 = 20.00 FT.

BRIDGE ATB-90-1450L
STA. 85+03.32 TO STA. 85+23.32 = 20.00 FT.
STA. 87+22.89 TO STA. 87+42.89 = 20.00 FT. (MEDIAN SIDE)
STA. 87+38.90 TO STA. 87+58.90 = 20.00 FT.

BRIDGE ATB-90-1583R
STA.158+66.54 TO STA. 158+86.54 = 20.00 FT.
STA.158+58.17 TO STA. 158+78.17 = 20.00 FT. (MEDIAN SIDE)
STA.162+92.79 TO STA. 163+12.79 = 20.00 FT.

BRIDGE ATB-90-1583L
STA. 158+42.17 TO STA. 158+62.17 = 20.00 FT.
STA. 162+74.82 TO STA. 162+94.82 = 20.00 FT. (MEDIAN SIDE)
STA. 162+65.39 TO STA. 162+85.39 = 20.00 FT.

SHOULDER DETAILS - MAINLINE BRIDGE APPROACHES

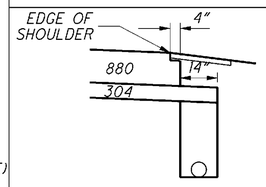

DETAIL A

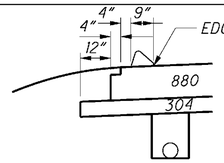

DETAIL B

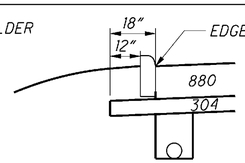

DETAIL C

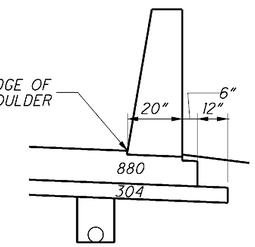

DETAIL D

EDGE COURSE DETAILS

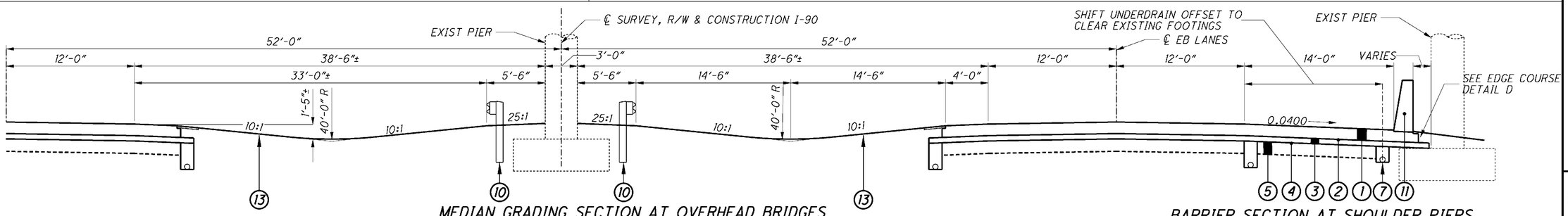

MEDIAN GRADING SECTION AT OVERHEAD BRIDGES

BARRIER SECTION AT SHOULDER PIERS

TYPICAL SECTIONS I-90

ATB-90-14.25

Palmer ENGINEERING
PALMER ENGINEERING
11300 CORNELL PARK DR
ENGINEERING CINCINNATI, OH 45242

O:\ODOT\ATB\25199\roadway\sheets\25199GY002.dgn 6/6/2009 8:54:30 AM DENNIS

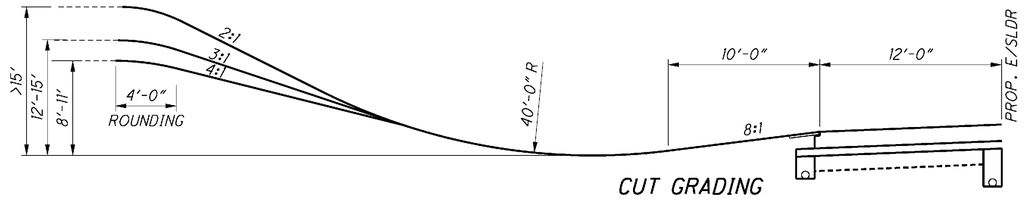

CUT GRADING

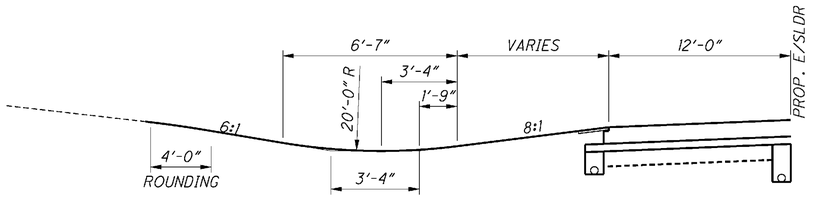

SHALLOW CUT/LOW FILL GRADING

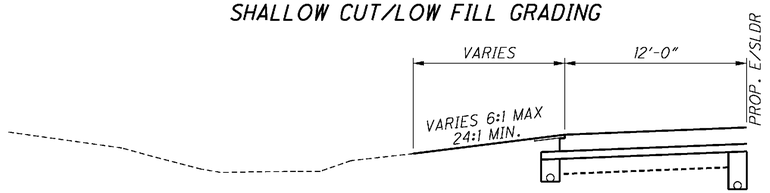

MINOR FILL

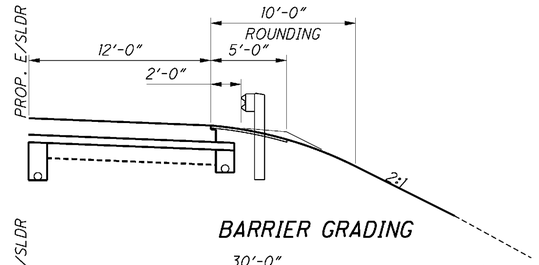

BARRIER GRADING

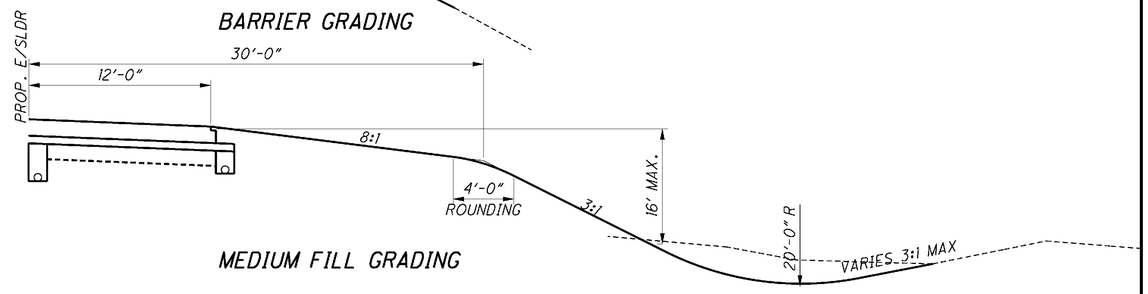

MEDIUM FILL GRADING

FOR INTEGRAL APPROACH SLAB BARRIER DETAIL, SEE ATB-90-1583 BRIDGE PLANS

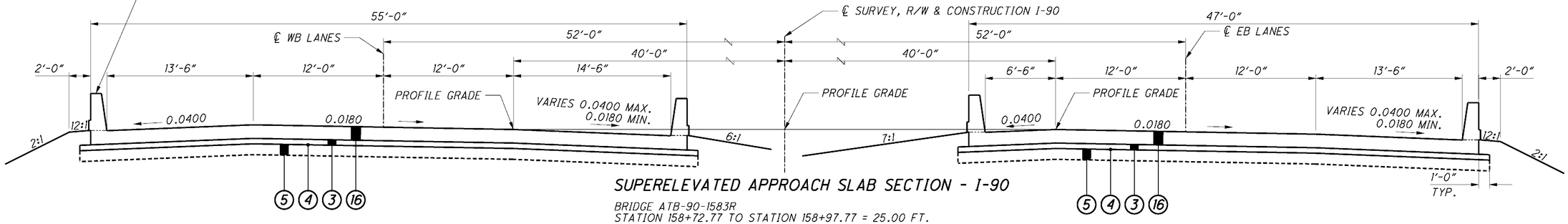

SUPERELEVATED APPROACH SLAB SECTION - I-90

BRIDGE ATB-90-1583R
STATION 158+72.77 TO STATION 158+97.77 = 25.00 FT.
STATION 162+71.85 TO STATION 162+96.85 = 25.00 FT.

BRIDGE ATB-90-1583L
STATION 158+58.06 TO STATION 158+83.06 = 25.00 FT.
STATION 162+53.93 TO STATION 162+78.93 = 25.00 FT.

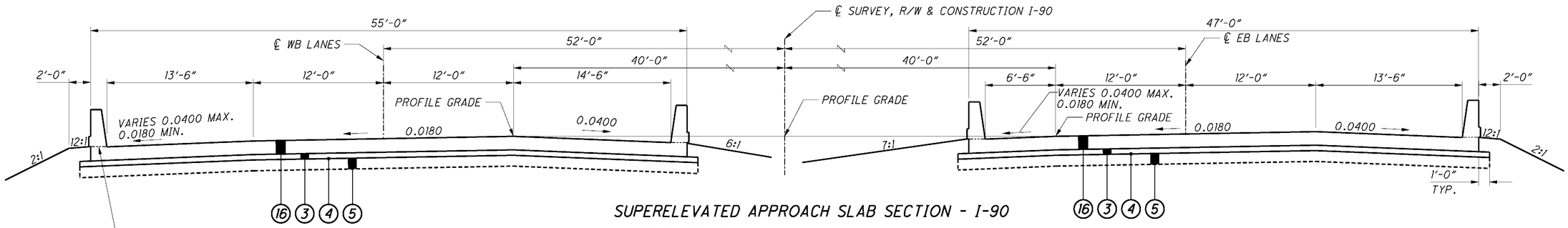

SUPERELEVATED APPROACH SLAB SECTION - I-90

BRIDGE ATB-90-1450R
STATION 84+73.57 TO STATION 84+98.57 = 25.00 FT.
STATION 86+80.42 TO STATION 87+05.42 = 25.00 FT.

BRIDGE ATB-90-1450L
STATION 85+06.55 TO STATION 85+31.55 = 25.00 FT.
STATION 87+14.96 TO STATION 87+39.96 = 25.00 FT.

FOR INTEGRAL APPROACH SLAB BARRIER DETAIL, SEE ATB-90-1450 BRIDGE PLANS

FOR LEGEND SEE SHEET 6

TYPICAL SECTIONS I-90

ATB-90-14.25

Palmer ENGINEERING
PALMER ENGINEERING
11300 CORNELL PARK DR
CINCINNATI, OH 45242

O:\ODOT\ATB\25199\roadway\sheets\25199GY003.dgn 6/6/2009 8:54:34 AM DENNIS

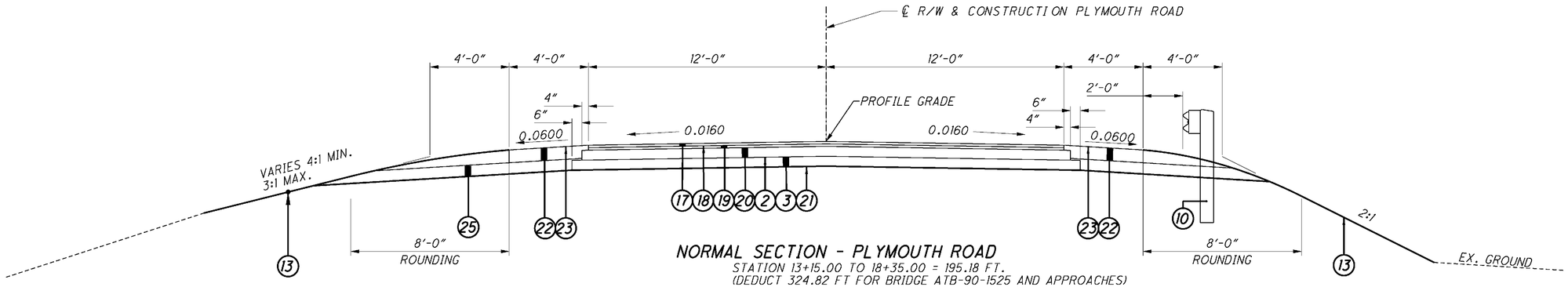

NORMAL SECTION - PLYMOUTH ROAD

STATION 13+15.00 TO 18+35.00 = 195.18 FT.
(DEDUCT 324.82 FT FOR BRIDGE ATB-90-1525 AND APPROACHES)

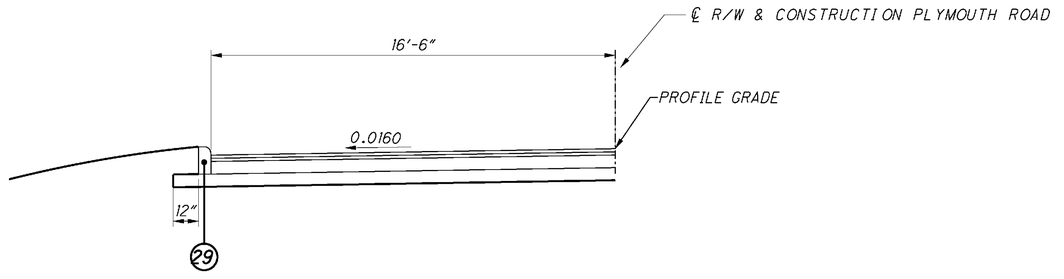

PARTIAL CURBED SECTION

STATION 14+31.00 TO 14+44.63 RT.
STATION 14+23.00 TO 14+53.47 LT.
STATION 17+54.25 TO 17+76.00 RT.
STATION 17+63.09 TO 17+85.00 LT.

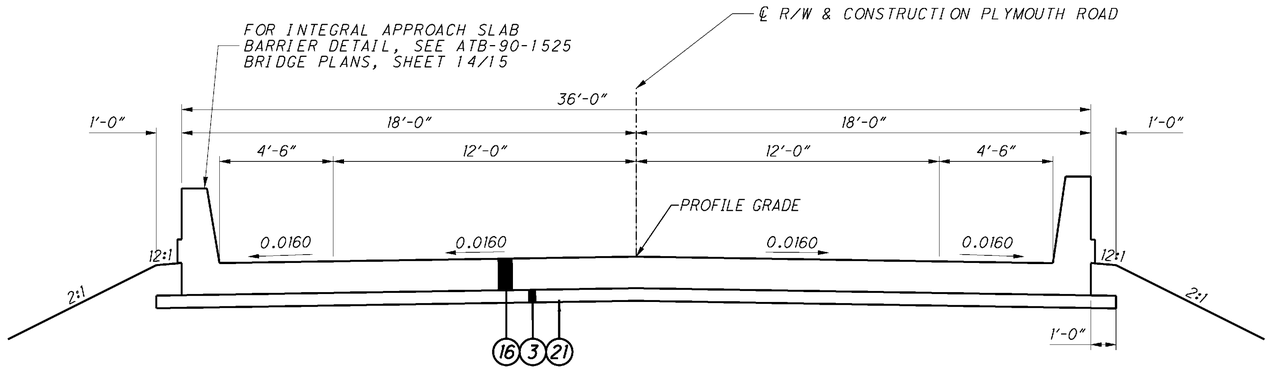

APPROACH SLAB SECTION - PLYMOUTH ROAD

STATION 14+38.95 TO STATION 14+63.95 = 25.00 FT.
STATION 17+38.78 TO STATION 17+63.78 = 25.00 FT.

AGGREGATE DRAIN LOCATIONS		
STATION	SIDE	LENGTH
13+25.00	RT	16
13+50.00	LT	16
13+75.00	RT	16
14+00.00	LT	12
14+25.00	RT	10
17+50.00	LT	12
17+75.00	RT	12
18+00.00	LT	16
18+25.00	RT	16
TOTAL		126

FOR LEGEND SEE SHEET 6

TYPICAL SECTIONS-PLYMOUTH ROAD

ATB-90-14.25

Palmer ENGINEERING
PALMER ENGINEERING
11300 CORNELL PARK DR
CINCINNATI, OH 45242

O:\ODOT\ATB\25199\roadway\sheets\25199GY100.dgn 6/6/2009 8:54:36 AM DENNIS

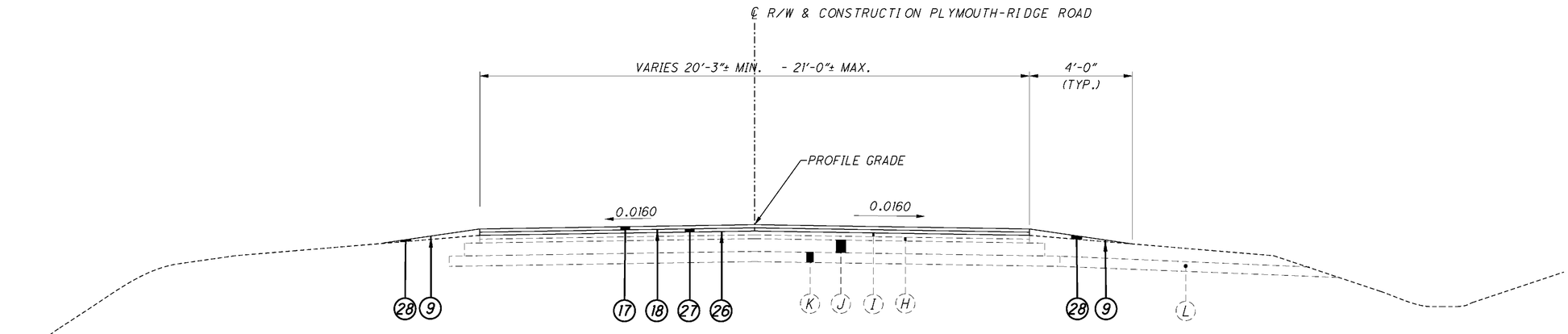

NORMAL SECTION - PLYMOUTH-RIDGE ROAD

STATION 10+40.00 TO STATION 17+45.00 = 235.26 FT.
(DEDUCT 469.74 FT. FOR BRIDGE ATB-90-1764)

FOR LEGEND SEE SHEET 6

TYPICAL SECTIONS PLYMOUTH-RIDGE ROAD

ATB-90-14.25

Palmer ENGINEERING
PALMER ENGINEERING
11300 CORNELL PARK DR
CINCINNATI, OH 45242

O:\ODOT\ATB\25199\roadway\sheets\25199GY200.dgn 6/6/2009 8:54:38 AM DENNIS

ROUNDING

THE ROUNDING AT SLOPE BREAKPOINTS SHOWN ON THE TYPICAL SECTIONS APPLY TO ALL CROSS-SECTIONS EVEN THOUGH OTHERWISE SHOWN.

UTILITIES

LISTED BELOW ARE ALL UTILITIES LOCATED WITHIN THE PROJECT CONSTRUCTION LIMITS TOGETHER WITH THEIR RESPECTIVE OWNERS:

DOMINION EAST OHIO
ATTN: MARGARET BEVEL
1201 EAST 55TH STREET
CLEVELAND, OH 44103
(330) 664-2494

OHIO AMERICAN WATER
ATTN: BILL DINGLEDINE
2905 NORTH BEND ROAD
ASHTABULA, OH 44004
(440) 997-7566

WINDSTREAM
ATTN: SUSAN PETTI
4616 PARK AVENUE
ASHTABULA, OH 44004
(440) 993-1655

LEVEL 3 COMMUNICATIONS
ATTN: JOHN STRZALKA
4000 CHESTER AVENUE
CLEVELAND, OH 44103
(216) 233-8558

C.E.I.
ATTN: RALPH NOWAK
6896 MILLER ROAD
BRECKSVILLE, OH 44141
(440) 593-7434

ASHTABULA COUNTY
ATTN: BARRY FRENCH
25 WEST JEFFERSON STREET
JEFFERSON, OH
(440) 576-3724

TIME WARNER CABLE
ATTN: LARRY BOCK
7757 AUBURN ROAD, SUIT 8
PAINESVILLE, OH 44077
(216) 575-8016

THE LOCATION OF THE UNDERGROUND UTILITIES SHOWN ON THE PLANS ARE AS OBTAINED FROM THE OWNERS AS REQUIRED BY SECTION 153.64 O.R.C.

THE UNDERGROUND UTILITIES ON THIS PLAN HAVE BEEN LOCATED BY USING A SUBSURFACE UTILITY ENGINEERING COMPANY (SUE). IF THERE ARE ANY DISCREPANCIES BETWEEN FIELD MARKINGS AND WHAT THE PLAN INDICATES, PLEASE CONTACT STEVE JONES, DISTRICT UTILITY COORDINATOR, (330) 786-4818, PRIOR TO ANY SUBSURFACE WORK BEING INITIATED.

EXISTING PLANS

EXISTING ORIGINAL CONSTRUCTION PLANS ENTITLED ATB-1-12.89, ATB-1-15.73, ATB-1-19.20, & ATB-90-18.30 MAY BE INSPECTED IN THE ODOT DISTRICT 4 OFFICE IN AKRON.

ELEVATION DATUM

ALL ELEVATIONS ARE ORTHOMETRIC HEIGHTS USING THE NORTH AMERICAN VERTICAL DATUM OF 1988 (NAVD 88) AND THE GEOID03 GEOID. HORIZONTAL POSITIONS ARE BASED ON THE OHIO STATE PLANE NORTH ZONE, A LAMBERT CONFORMAL CONIC MAP PROJECTION, THE NORTH AMERICAN DATUM OF 1983 ADJUSTED TO THE NATIONAL SPATIAL REFERENCE SYSTEM OF 2007 (NAD 83 (NSRS 2007)), AND THE GRS80 ELLIPSOID.

WORK LIMITS

THE WORK LIMITS SHOWN ON THESE PLANS ARE FOR PHYSICAL CONSTRUCTION ONLY. PROVIDE THE INSTALLATION AND OPERATION OF ALL WORK ZONE TRAFFIC CONTROL AND WORK ZONE TRAFFIC CONTROL DEVICES REQUIRED BY THESE PLANS WHETHER INSIDE OR OUTSIDE THESE WORK LIMITS.

PROTECTION OF RIGHT-OF-WAY LANDSCAPING

PRIOR TO BEGINNING WORK, THE CONTRACTOR, THE PROJECT ENGINEER, AND A REPRESENTATIVE OF THE MAINTAINING AGENCY WILL REVIEW AND RECORD ALL LANDSCAPING ITEMS WITHIN THE RIGHT OF WAY (BOTH WITHIN AND OUTSIDE THE CONSTRUCTION LIMITS) A RECORD OF THIS REVIEW WILL BE KEPT IN THE PROJECT ENGINEER'S FILES. PRIOR TO FINAL ACCEPTANCE, A FINAL REVIEW OF LANDSCAPING ITEMS WILL BE MADE.

CONSTRICT ALL ACTIVITIES, EQUIPMENT STORAGE, AND STAGING TO WITHIN THE CONSTRUCTION LIMITS. UNLESS OTHERWISE IDENTIFIED IN THE PLANS OR PROPOSAL, THE CONSTRUCTION LIMITS ARE IDENTIFIED AS 30 FEET FROM THE EDGE OF PAVEMENT.

SUBMIT A WRITTEN REQUEST TO THE PROJECT ENGINEER TO USE ANY AREA OUTSIDE THESE LIMITS. THE DOCUMENT SUBMITTED MUST CLEARLY IDENTIFY THE AREA AND EXPLAIN THE PROPOSED USE AND RESTORATION OF THE AREA. EXCEPT AS INDICATED ON SHEET ___ USE OF THESE AREAS FOR DISPOSAL OF WASTE MATERIAL AND CONSTRUCTION DEBRIS, EXCAVATION OF BORROW MATERIAL AND PLACEMENT OF PORTABLE PLANTS IS PROHIBITED. THE REQUEST MUST BE APPROVED, IN WRITING, BEFORE THE CONTRACTOR HAS PERMISSION TO USE THE AREA.

ANY ITEMS DAMAGED BEYOND THE CONSTRUCTION LIMITS AS DEFINED ABOVE WILL BE REPLACED IN KIND OR AS APPROVED BY THE PROJECT ENGINEER.

CLEARING AND GRUBBING

ALTHOUGH THERE ARE NO TREES OR STUMPS SPECIFICALLY MARKED FOR REMOVAL WITHIN THE LIMITS OF THE PROJECT, A LUMP SUM QUANTITY IS INCLUDED IN THE GENERAL SUMMARY FOR ITEM 201, CLEARING AND GRUBBING. ALL PROVISIONS AS SET FORTH IN THE SPECIFICATIONS UNDER THIS ITEM ARE INCLUDED IN THE LUMP SUM PRICE BID FOR ITEM 201, CLEARING AND GRUBBING.

SMALL TREES, LESS THAN 12 INCHES IN DIAMETER, AND SHRUBS IDENTIFIED IN THE MAPPING HAVE BEEN MARKED AS REMOVALS IN THE PLANS.

BENCHING OF FOUNDATION SLOPES

ALTHOUGH CROSS-SECTIONS INDICATE SPECIFIC DIMENSIONS FOR PROPOSED BENCHING OF THE EMBANKMENT FOUNDATIONS IN CERTAIN AREAS, NO WAIVER OF THE SPECIFICATIONS IS INTENDED. BENCH ALL OTHER SLOPED EMBANKMENT AREAS AS SET FORTH IN 203.05. NO ADDITIONAL PAYMENT WILL BE MADE FOR BENCHING REQUIRED UNDER THE PROVISIONS OF 203.05.

ITEM 204 - PROOF ROLLING

THE FOLLOWING QUANTITY IS PROVIDED IN THE GENERAL SUMMARY TO ADDRESS LOCATIONS REQUIRING PROOF ROLLING. PROOF ROLLING SHALL BE DONE IN THE AREA OF CEMENT STABILIZED SUBGRADE TO VERIFY STABILITY. THE ESTIMATED QUANTITY REFLECTS 1 HOUR OF PROOF ROLLING PER 2000 S.Y. OF CEMENT STABLIZIED SUBGRADE.

ITEM 204 - PROOF ROLLING 121 HOURS.

ADDITIONAL SOIL INFORMATION

THE SOIL PROFILE AND/OR STRUCTURE FOUNDATION INVESTIGATIONS SHEETS CONTAIN ALL AVAILABLE SOIL AND BEDROCK INFORMATION WHICH CAN BE CONVENIENTLY SHOWN. ADDITIONAL SUBSURFACE INVESTIGATION INFORMATION IS AVAILABLE FROM ODOT DISTRICT 4 OFFICE IN AKRON.

FENCE LENGTHS

THE LENGTHS OF FENCE SHOWN IN THE PLANS ARE HORIZONTAL DIMENSIONS. MEASUREMENTS OF THE FINAL QUANTITIES WILL BE IN ACCORDANCE WITH ITEM 607.

SEEDING AND MULCHING

SEEDING AND MULCHING SHALL BE APPLIED TO ALL AREAS OF EXPOSED SOIL BETWEEN THE RIGHT-OF-WAY LINES, AND WITHIN THE CONSTRUCTION LIMITS FOR AREAS OUTSIDE THE RIGHT-OF-WAY LINES COVERED BY WORK AGREEMENT OR SLOPE EASEMENT. QUANTITY CALCULATIONS FOR SEEDING AND MULCHING ARE BASED ON THESE LIMITS.

CONTRACTOR'S USE OF ODOT RIGHT-OF-WAY

HIRE AN ECOLOGICAL ENVIRONMENTAL CONSULTANT TO CERTIFY THAT THE PROPOSED BORROW AND WASTE OPERATIONS WILL NOT IMPACT "THE WATERS OF THE UNITED STATES" OR A ISOLATED WETLAND(S) OR TO OBTAIN AN U.S. ARMY CORPS OF ENGINEERS 404 PERMIT AND AN OHIO EPA 401 PERMIT, PER THE REQUIREMENTS OF CONSTRUCTION AND MATERIAL SPECIFICATIONS 105.16.

THE WASTE AND BORROW AREAS SHOWN ON THE PLANS HAVE BEEN INVESTIGATED AND ARE NOT IN THE FEMA FLOODPLAIN ZONE.

THE CONTRACTOR SHALL NOT BORROW FROM A SITE KNOWN OR SUSPECTED OF HAVING CONTAMINATED SOIL OR WATER.

ITEM SPECIAL - FILL AND PLUG EXISTING CONDUIT

THIS ITEM SHALL CONSIST OF THE CONSTRUCTION OF BULKHEADS IN AN EXISTING CONDUIT AND FILLING THE AREA THUS SEALED OFF WITH LEAN GROUT, ITEM 613, SAND OR OTHER MATERIAL APPROVED BY THE ENGINEER.

BULKHEADS SHALL BE LOCATED AT THE LIMITS OF THE AREA TO BE FILLED AS INDICATED ON THE PLANS. THE BULKHEADS SHALL CONSIST OF BRICK OR CONCRETE MASONRY WITH A MINIMUM THICKNESS OF 12 INCHES.

THE FILL MATERIAL SHALL BE PUMPED INTO PLACE, OR PLACED BY OTHER MEANS APPROVED BY THE ENGINEER, SO THAT, AFTER SETTLEMENT, AT LEAST 90 PERCENT OF THE CROSS-SECTIONAL AREA OF THE CONDUIT, FOR ITS ENTIRE LENGTH, SHALL BE FILLED. THE LENGTH OF FILLED AND PLUGGED CONDUIT TO BE PAID FOR SHALL BE THE ACTUAL NUMBER OF FEET (MEASURED ALONG THE CENTERLINE OF EACH CONDUIT FROM OUTER FACE TO OUTER FACE OF BULKHEADS) FILLED AND PLUGGED AS DESCRIBED ABOVE.

IN LIEU OF FILLING AND PLUGGING THE EXISTING CONDUIT, THE PIPE MAY BE CRUSHED AND BACKFILLED IN ACCORDANCE WITH THE PROVISIONS OF 203, OR IT MAY BE REMOVED. THE LENGTH, MEASURED AS PROVIDED ABOVE, SHALL BE PAID FOR AT THE CONTRACT PRICE PER FOOT FOR, ITEM SPECIAL, FILL AND PLUG EXISTING CONDUIT.

SPRING DRAINS

THE FOLLOWING ESTIMATED QUANTITIES HAVE BEEN CARRIED TO THE GENERAL SUMMARY FOR USE AS DIRECTED BY THE ENGINEER FOR DRAINING ANY SPRINGS SHOWN IN THE PLAN OR ENCOUNTERED DURING CONSTRUCTION. THE FOLLOWING TYPES OF PIPES MAY BE USED: 707.33, 707.41, 707.42 or 707.45 PERFORATED PER 707.31.

SPRING DRAINS SHALL BE CONSTRUCTED AS SHOWN ON STANDARD CONSTRUCTION DRAWING DM-1.1 AND PAID FOR AT THE CONTRACT PRICE FOR:

605, 6" UNCLASSIFIED PIPE UNDERDRAINS FOR SPRINGS
100 FT.
605, AGGREGATE DRAINS FOR SPRINGS 100 FT.
604, PRECAST REINFORCED CONCRETE OUTLET 5 EACH

STORM WATER POLLUTION PREVENTION PLAN

THE FOLLOWING ESTIMATED QUANTITIES HAVE BEEN CARRIED TO THE GENERAL SUMMARY FOR STORM WATER POLLUTION PREVENTION AND EROSION CONTROL:

ITEM 832, STORM WATER POLLUTION PREVENTION PLAN, LUMP
ITEM 832, EROSION CONTROL, 125,000 EACH

ITEM 603 - CONDUIT BORED OR JACKED

WHERE IT IS SPECIFIED THAT A CONDUIT BE INSTALLED BY THE METHOD OF BORING OR JACKING, NO TRENCH EXCAVATION SHALL BE CLOSER THAN 68 FEET TO THE EDGE OF PAVEMENT. PROVIDE A 0.50 INCH UNGALVANIZED CASING PIPE CONFORMING TO 748.06 THAT HAS JOINTS WITH A CIRCUMFERENCIAL FULLY PENETRATING B-U4B WELD THAT IS PERFORMED BY AN ODOT APPROVED FIELD WELDER. THE INSTALLED CASING PIPE IS THE STORM WATER CONVEYANCE CARRIER UNLESS OTHERWISE SPECIFIED IN THE PLANS. HYDROSTATIC TESTING IS NOT REQUIRED FOR THE CASING PIPE.

REVIEW OF DRAINAGE FACILITIES

BEFORE ANY WORK IS STARTED ON THE PROJECT AND AGAIN BEFORE FINAL ACCEPTANCE BY THE STATE, REPRESENTATIVES OF THE STATE AND THE CONTRACTOR, ALONG WITH LOCAL REPRESENTATIVES, SHALL MAKE AN INSPECTION OF ALL EXISTING SEWERS WHICH ARE TO REMAIN IN SERVICE AND WHICH MAY BE AFFECTED BY THE WORK. THE CONDITION OF THE EXISTING CONDUITS AND THEIR APPURTENANCE SHALL BE DETERMINED FROM FIELD OBSERVATIONS. RECORDS OF THE INSPECTION SHALL BE KEPT IN WRITING BY THE STATE.

ALL NEW CONDUITS, INLETS, CATCH BASINS, AND MANHOLES CONSTRUCTED AS A PART OF THE PROJECT SHALL BE FREE OF ALL FOREIGN MATTER AND IN A CLEAN CONDITION BEFORE THE PROJECT WILL BE ACCEPTED BY THE STATE.

ALL EXISTING SEWERS INSPECTED INITIALLY BY THE ABOVE MENTIONED PARTIES SHALL BE MAINTAINED AND LEFT IN A CONDITION REASONABLY COMPARABLE TO THAT DETERMINED BY THE ORIGINAL INSPECTION. ANY CHANGE IN THE CONDITION RESULTING FROM THE CONTRACTOR'S OPERATIONS SHALL BE CORRECTED BY THE CONTRACTOR TO THE SATISFACTION OF THE ENGINEER.

PAYMENT FOR ALL OPERATIONS DESCRIBED ABOVE SHALL BE INCLUDED IN THE CONTRACT PRICE FOR THE PERTINENT 603 CONDUIT ITEMS.

ITEM SPECIAL - PIPE CLEANOUT

THIS WORK SHALL CONSIST OF REMOVING SEDIMENT AND DEBRIS FROM THE EXISTING DRAINAGE CONDUITS SPECIFIED IN THE PLANS. ALL MATERIAL REMOVED SHALL BE DISPOSED OF AS PER 105.16 AND 105.17. ALL SEWERS SHALL BE CLEANED OUT TO THE SATISFACTION OF THE ENGINEER.

CLEANOUT OF THE PIPE SHALL BE PAID FOR AT THE UNIT PRICE BID FOR ITEM SPECIAL - PIPE CLEANOUT. THIS PRICE SHALL INCLUDE THE COST FOR MATERIAL, EQUIPMENT, LABOR, AND ALL INCIDENTALS REQUIRED TO COMPLETE THE CLEANOUT.

BORROW MATERIAL

IDENTIFICATION OF BORROW AREAS ON THE PLANS DOES NOT INDICATE THAT THE MATERIAL AVAILABLE FROM THESE AREAS MEETS THE REQUIREMENTS OF CMS 203.

CALCULATED | CHECKED

GENERAL NOTES

ATB-90-14.25

Palmer ENGINEERING
PALMER ENGINEERING
11300 CORNELL PARK DR
CINCINNATI, OH 45242

O:\ODOT\ATB\25199\roadway\sheets\25199GN001.dgn 6/6/2009 8:54:39 AM DENNIS

PART-WIDTH CONSTRUCTION

BECAUSE OF THE NECESSITY TO BUILD THIS PROJECT UNDER TRAFFIC AND TO CONSTRUCT THE FULL PAVEMENT WIDTH IN STAGES, EXERCISE CARE TO PREVENT THE CONSTRUCTION OF A BUTT JOINT IN THE BASE COURSES. LAP LONGITUDINAL JOINTS AS SHOWN ON STANDARD CONSTRUCTION DRAWING BP-3.1.

ITEM 880 - ASPHALT CONCRETE WITH WARRANTY

INDIVIDUAL LIFT THICKNESSES AND STEP WIDTHS SHOWN IN THE PLAN ARE THE PLAN LINES AND DIMENSIONS USED FOR QUANTITY CALCULATION. THEY ARE NOT THE REQUIRED LIFTS OR STEPS FOR ACTUAL CONSTRUCTION BUT NO ADJUSTMENT WILL BE MADE TO THE PLAN QUANTITY DUE TO DIFFERENT LIFT THICKNESSES AND/OR STEP WIDTHS WHEN A UNIFORM THICKNESS IS SPECIFIED.

ITEM 304 AGGREGATE BASE, AS PER PLAN

GRANULATED SLAG (GS) SHALL NOT BE PERMITTED FOR THIS ITEM. ALL OTHER REQUIREMENTS OF SECTIONS 304 AND 703.17 OF THE CONSTRUCTION AND MATERIAL SPECIFICATIONS SHALL STILL BE APPLICABLE.

ITEM 408 - PRIME COAT, AS PER PLAN

THE CONTRACTOR WILL APPLY "MC-70" AT A RATE OF 0.4 GALLONS PER SQUARE YARD, OR AS DETERMINED BY THE ENGINEER, TO THE COMPLETED COMPACTED AGGREGATE SHOULDER.

THE CONTRACTOR SHALL PROVIDE A SHIELD TO PREVENT THE SPRAYING OR DRIFTING OF LIQUID PRIME COAT MATERIAL ONTO THE EDGE OF THE PAVEMENT OR EDGELINE. CARE ALSO SHALL BE TAKEN TO AVOID SPRAYING LIQUID PRIME COAT MATERIAL ONTO DRIVEWAY APRONS, MAILBOX APPROACHES OR ANY PEDESTRIAN AREAS. THE ATTENTION OF THE CONTRACTOR IS DIRECTED TO 107.10 OF THE SPECIFICATIONS.

AN ESTIMATED QUANTITY OF 9639 GAL. HAS BEEN CARRIED TO THE GENERAL SUMMARY FOR THIS WORK.

ITEM 617 COMPACTED AGGREGATE, AS PER PLAN

IN LOW SHOULDER AREAS EXCEEDING 1", OR AS DIRECTED BY THE ENGINEER, RECYCLED ASPHALT PAVEMENT (RAP) SHALL BE USED IN AREAS ADJACENT TO THE PAVED BERM. THE RAP SHALL HAVE A MINIMUM PG CONTENT OF 4.5% AND MEET THE FOLLOWING GRADATION. ONCE THE STOCKPILE MEETS THE GRADATION, THE PG CONTENT OF THE RAP SHALL BE DETERMINED PER 441.03. THE RAP ANALYSIS MUST BE SUBMITTED TO THE ENGINEER FOR APPROVAL 2 WEEKS PRIOR TO USE. METHOD OF MEASUREMENT SHALL BE AS PER 617.06. PLACEMENT AND COMPACTION SHALL MEET THE REQUIREMENTS OF ITEM 617. ALL MATERIALS, LABOR, EQUIPMENT, TOOLS AND INCIDENTALS NECESSARY TO COMPLETE THE WORK SHALL BE INCLUDED IN THE UNIT PRICE BID FOR ITEM 617 COMPACTED AGGREGATE, AS PER PLAN.

MODIFIED GRADATION SHALL APPLY:

SIEVE	TOTAL PERCENT PASSING
1-½"	100
¾"	50-100
NO. 4	35-70
NO. 30	9-33
NO. 200	0-13

AN ESTIMATED QUANTITY OF 1335 CU. YD. HAS BEEN CARRIED TO THE GENERAL SUMMARY FOR THIS WORK.

PAVING UNDER GUARDRAIL

THIS OPERATION SHALL INCLUDE PREPARATION OF THE GRADED SHOULDER USING 209, LINEAR GRADING, AND PAVING UNDER THE GUARDRAIL USING 448 ASPHALT CONCRETE INTERMEDIATE COURSE, TYPE 1, PG 64-22, UNDER GUARDRAIL, AS PER PLAN.

ITEM 209, LINEAR GRADING, SHALL CONSIST OF EXCAVATING EXISTING MATERIAL, PLACING GRANULAR MATERIAL AND APPLYING HERBICIDE AS SPECIFIED IN THE PLANS AND IN ACCORDANCE WITH THE FOLLOWING:

ALL COLLECTED DEBRIS, ASPHALT AND TOPSOIL, INCLUDING RHIZOMES, ROOTS AND OTHER VEGETATIVE PLANT MATERIAL SHALL BE REMOVED AND DISPOSED OF AS SPECIFIED IN 105.17.

THE REMOVED MATERIAL SHALL BE REPLACED WITH COMPACTABLE GRANULAR MATERIAL CONFORMING TO 703.16 PLACED TO GRADE AS DETAILED ON THE TYPICAL SECTION OR AS APPROVED BY THE ENGINEER.

HERBICIDE SHALL BE EPA APPROVED FOR PAVING UNDER GUARDRAIL. IT SHALL BE APPLIED TO THE PREPARED AREA AFTER FINAL LEVELING AND GRADING HAS BEEN COMPLETED. THE APPLICATION SHALL BE JUST PRIOR TO PAVING AND SHALL STRICTLY ADHERE TO THE MANUFACTURER'S INSTRUCTIONS.

EACH SUCCESSFUL BIDDER MUST BE LICENSED BY THE OHIO DEPARTMENT OF AGRICULTURE AS A COMMERCIAL APPLICATOR AND ALL PERSONS INVOLVED IN THE ACTUAL SPRAYING SHALL BE LICENSED AS COMMERCIAL OPERATORS IN THE APPROPRIATE SPRAY CATEGORY.

HERBICIDE LABEL, MATERIAL SAFETY DATA SHEET AND COPY OF APPLICATORS LICENSES SHALL BE SUBMITTED TO THE ENGINEER FOR VERIFICATION PRIOR TO COMMENCING WORK.

ALL EQUIPMENT, MATERIALS AND LABOR REQUIRED TO PERFORM THE WORK OUTLINED ABOVE SHALL BE INCLUDED FOR PAYMENT UNDER ITEM 209, LINEAR GRADING, AS PER PLAN.

PAVING UNDER GUARDRAIL SHALL CONSIST OF PLACING ITEM 448 TO THE DEPTH SPECIFIED. PAVING MAY BE PLACED UNDER EXISTING OR PROPOSED GUARDRAIL USING ONE OF THE FOLLOWING METHODS:

METHOD A
1) SET GUARDRAIL POSTS
   [OMIT IF EXISTING GUARDRAIL IS TO REMAIN]
2) PLACE ITEM 448

METHOD B
1) PLACE ITEM 448
2) BORE ASPHALT AT POST LOCATIONS
   (MAY BE OMITTED IF STEEL POSTS ARE USED)
3) SET GUARDRAIL POSTS
4) PATCH AROUND POSTS. THE MATERIALS USED FOR PATCHING SHALL BE AN ASPHALT CONCRETE APPROVED BY THE ENGINEER. PATCHED AREAS SHALL BE COMPACTED USING EITHER HAND OR MECHANICAL METHODS. FINISHED SURFACES SHALL BE SMOOTH AND SLOPED TO DRAIN AWAY FROM THE POSTS

ALL EQUIPMENT, MATERIALS AND LABOR REQUIRED TO PERFORM THE WORK OUTLINED ABOVE, WITH THE EXCEPTION OF SETTING GUARDRAIL POSTS, SHALL BE INCLUDED FOR PAYMENT UNDER ITEM 448, ASPHALT CONCRETE, INTERMEDIATE COURSE, TYPE 1, PG 64-22, UNDER GUARDRAIL, AS PER PLAN.

CONNECTION BETWEEN EXISTING AND PROPOSED GUARDRAIL

WHEN IT IS NECESSARY TO SPLICE PROPOSED GUARDRAIL TO EXISTING GUARDRAIL, ONLY THE EXISTING GUARDRAIL SHALL BE CUT, DRILLED, OR PUNCHED. THE CONNECTION SHALL BE MADE USING A "W-BEAM RAIL SPLICE" AS SHOWN IN AASHTO M 180. PAYMENT SHALL BE INCLUDED IN THE CONTRACT PRICE FOR THE RESPECTIVE GUARDRAIL ITEMS.

ITEM 606 - ANCHOR ASSEMBLY, TYPE B-98

THIS ITEM SHALL CONSIST OF FURNISHING AND INSTALLING EITHER OF THE FOLLOWING GUARDRAIL END TERMINALS, OR AN APPROVED EQUAL AS LISTED ON ROADWAY ENGINEERING'S WEB PAGE AT WWW.DOT.STATE.OH.US/DRRC/ UNDER ROADSIDE SAFETY DEVICES FOR APPROVED GUARDRAIL END TREATMENTS:

1) THE SRT-350, GUARDRAIL END TERMINAL AS MANUFACTURED BY TRINITY INDUSTRY, 1170 N. STATE STREET, GIRARD, OHIO 44420 (TELEPHONE: 330-545-4373).

THE LENGTH OF THE SRT-350 SYSTEM IS CONSIDERED TO BE 37'-6", INCLUSIVE OF THREE 12'-6" LONG RAIL ELEMENTS. INSTALLATION SHALL BE AT THE LOCATIONS SPECIFIED IN THE PLANS, IN ACCORDANCE WITH THE MANUFACTURER'S SPECIFICATIONS AS DETAILED ON THE FOLLOWING PRE-APPROVED SHOP DRAWINGS:

DWG. #	DRAWING NAME	DWG./REV. DATE	ODOT APPROVAL DATE
SS444 SS444M	SLOTTED RAIL TERMINAL POST LAYOUT AND ERECTION DETAILS SRT-350 (12.5, 8 POST)	7/12/99 Rev. 1 7/12/99	8/27/1999
SS425M	SLOTTED RAIL TERMINAL SRT-350 POST LAYOUT AND ERECTION DETAILS (12.5, 9 POST)	6/21/97 Rev. 1	3/6/1998

2) THE FLEAT-350 MANUFACTURED BY ROAD SYSTEMS, INC., 2516 MALLORY LANE, STOW, OHIO, 44224, (TELEPHONE: 330-346-0721).

THE LENGTH OF THE FLEAT-350 IS CONSIDERED TO BE 37'-6", INCLUSIVE OF THREE 12'-6" LONG RAIL ELEMENTS. INSTALLATION SHALL BE AT THE LOCATIONS SPECIFIED IN THE PLANS, IN ACCORDANCE WITH THE MANUFACTURER'S SPECIFICATIONS AS DETAILED ON THE FOLLOWING PRE-APPROVED SHOP DRAWINGS:

DWG. #	DRAWING NAME	DWG./REV. DATE	ODOT APPROVAL DATE
FLT-M	FLARED ENERGY ABSORBING TERMINAL (FLEAT350) ASSEMBLY	35901	7/31/1998

REFER TO THE MANUFACTURER'S INSTRUCTION REGARDING THE INSTALLATION OF, AND THE GRADING AROUND, THE FOUNDATION TUBES AND GROUND STRUT. THE TOP OF ANY FOUNDATION TUBE SHOULD BE LESS THAN 4-INCHES ABOVE THE GROUND. THE PLACEMENT OF THE FOUNDATION TUBES SHOULD BE AN APPROPRIATE DEPTH BELOW THE LEVEL LINE IN ORDER TO MAINTAIN THE FINISHED GUARDRAIL HEIGHT OF 27-3/4-INCHES FROM THE EDGE OF THE SHOULDER.

ON-SITE GRADING IS REQUIRED IF THE TOP OF THE FOUNDATION TUBES OR TOP OF THE GROUND STRUT DOES PROJECT MORE THAN 4 INCHES ABOVE THE GROUND LINE.

THE FACE OF THE TYPE B-98 IMPACT HEAD SHALL BE COVERED WITH TYPE G REFLECTIVE SHEETING, PER CMS 730.19: APPROXIMATELY 36" W X 12" H FOR THE SRT-350 AND 14" W X 20" H FOR THE FLEAT.

(NOTE CONTINUED)

PAYMENT FOR THE ABOVE WORK SHALL BE MADE AT THE UNIT PRICE BID FOR ITEM 606, ANCHOR ASSEMBLY, TYPE B-98, EACH, AND SHALL INCLUDE ALL LABOR, TOOLS, EQUIPMENT AND MATERIALS NECESSARY TO CONSTRUCT A COMPLETE AND FUNCTIONAL ANCHOR ASSEMBLY SYSTEM, INCLUDING REFLECTIVE SHEETING AND ALL RELATED HARDWARE, GRADING, EMBANKMENT AND EXCAVATION NOT SEPARATELY SPECIFIED, AS REQUIRED BY THE MANUFACTURER.

ITEM SPECIAL - MISC.: VERTICAL CLEARANCE

AFTER ALL CONSTRUCTION HAS BEEN COMPLETED, A REGISTERED SURVEYOR WILL TAKE VERTICAL CLEARANCE MEASUREMENTS AT LOCATIONS INDICATED ON THE APPROVED ODOT FORM (AVAILABLE IN THE DISTRICT 4 STRUCTURES AND PAVEMENT OFFICE). THE FINAL MEASUREMENTS SHALL BE RECORDED ON THE FORM AND SUBMITTED TO THE PROJECT ENGINEER AND THE DISTRICT 4 STRUCTURES AND PAVEMENT ENGINEER. THE RECORD SHALL BEAR THE SEAL OF THE LECENSED SURVEYOR WHO HAS TAKEN THE MEASUREMENTS. THIS WORK SHALL BE PERFORMED AT THE FOLLOWING STRUCTURES:

ATB-90-1450R (OVER RAILROAD)
ATB-90-1450L (OVER RAILROAD)
ATB-90-1525 (PLYMOUTH RD. OVER I-90)
ATB-90-1764 (PLYMOUTH RIDGE OVER I-90)
ATB-90-1905 (WRIGHT AVE. OVER I-90)

THE FOLLOWING QUANTITY HAS BEEN CARRIED TO THE GENERAL SUMMARY:
SPECIAL - MISC.: VERTICAL CLEARANCE, 5 EACH

ITEM 606 - GUARDRAIL, AS PER PLAN

CONSTRUCT GUARDRAIL POSTS ANCHORED IN CONCRETE PER SCD GR-2.2 FOR LOCATIONS OF REDUCED COVER AT THE BOX CULVERT AT STATION 330+25. (SEE SHEET 272) APPROXIMATELY 4 POSTS SHALL BE ENCASED IN CONCRETE PER GR-2.2. ALL OTHER PERTINENT REQUIREMENTS OF ITEM 606 SHALL APPLY. THE WHOLE RUN OF GUARDRAIL SHALL BE PAID AS ITEM 606, GUARDRAIL TYPE 5, AS PER PLAN.

TRAFFIC CONTROL GENERAL NOTES

ITEM 630 REMOVAL OF GROUND MOUNTED BEAM SUPPORT AND DISPOSAL, AS PER PLAN

THIS ITEM INVOLVES THE REMOVAL OF BEAM SUPPORT FOUNDATIONS FROM LARGE SPEED LIMIT SIGNS REMOVED PRIOR TO JULY 1, 2009. THE BEAM SUPPORTS WERE REMOVED WITH THE SIGNS. REMOVE THE FOUNDATIONS AND ANY REMAINING EMBEDDED BEAM SUPPORTS AND BREAKAWAY BEAM CONNECTIONS PER 630.12

SIGN PLACEMENT

THE EXACT LOCATIONS OF SIGNS ARE TO BE STAKED AND CHECKED BY THE ENGINEER PRIOR TO PLACEMENT TO INSURE CLEARANCE OF DRIVES, ROADWAYS AND OTHER OBSTACLES. IF THERE ARE ANY CONFLICTS, THEY ARE TO BE ADJUSTED AS DIRECTED BY THE ENGINEER. PAYMENT FOR THIS IS INCIDENTAL TO ALL 630 ITEMS.

CALCULATED | CHECKED

GENERAL NOTES

ATB-90-14.25

Palmer ENGINEERING
PALMER ENGINEERING
11300 CORNELL PARK DR
CINCINNATI, OH 45242

O:\ODOT\ATB\25199\roadway\sheets\25199GN002.dgn 6/6/2009 8:54:44 AM DENNIS

WATERWAY PERMIT DETERMINATION (404/401) - ODOT PROJECTS

ALL PROJECTS INVOLVING JURISDICTIONAL WATERS OF THE UNITED STATES (STREAMS, RIVERS, NON- ISOLATED WETLANDS) AND/OR ISOLATED WETLANDS ARE SUBJECT TO REGULATION UNDER SECTIONS 404 AND 401 OF THE CLEAN WATER ACT, AND POSSIBLY OHIO EPA ISOLATED WETLAND LAW. THE OHIO DEPARTMENT OF TRANSPORTATION - OFFICE OF ENVIRONMENTAL SERVICES (OES) AND/OR THE UNITED STATES ARMY CORPS OF ENGINEERS (USACE) HAS DETERMINED THAT THE PROJECT MEETS THE CRITERIA OF NATIONWIDE PERMIT (NWP) 3 - MAINTENANCE; BASED ON THE ANTICIPATED IMPACTS TO STREAM(S) AND/OR WETLAND(S). THE WATERWAY PERMIT WILL BE INCLUDED WITH THE CONSTRUCTION PLANS AS SPECIAL PROVISIONS. ALL CONDITIONS OF THE WATERWAY PERMIT SHALL BE ADHERED TO THROUGHOUT CONSTRUCTION.

SCENIC RIVER AVOIDANCE

ASHTABULA RIVER IS DESIGNATED A STATE SCENIC RIVER AT THIS SECTION. UNDER NO CIRCUMSTANCES SHALL ANY EQUIPMENT (BACKHOE, EARTH MOVING EQUIPMENT, ETC.) AND/OR MATERIALS ENTER THE RIVER, MOVE EQUIPMENT OR MATERIALS WITHIN THE RIVER, OR OTHERWISE IMPACT THIS WATERWAY, WITH THE EXCEPTION OF THE TEMPORARY CAUSEWAY CONSTRUCTION. HOWEVER WATERCRAFT (CANOE, FLOTATION DEVICE, ETC.) WITH THE PRIOR APPROVAL BY THE ENGINEER, SHALL BE PERMITTED IN THE RIVER FOR CONSTRUCTION OPERATIONS SUCH AS MANPOWER TRANSPORT OR SEALING OF CONCRETE OPERATIONS. SHOULD ANY CONSTRUCTION MATERIALS AND/OR DEMOLITION DEBRIS FALL INTO THE RIVER, ALL WORK SHALL BE STOPPED, AND ALL DEBRIS/MATERIAL, ETC. SHALL BE REMOVED IMMEDIATELY, AND IN SUCH A WAY AS TO MINIMIZE TURBIDITY THAT COULD DEGRADE WATER QUALITY AND ADVERSELY AFFECT AQUATIC PLANT AND ANIMAL LIFE.

IN EACH CASE WHERE THERE IS AN INCIDENT OF HAZARDOUS MATERIAL FALLING OR MIGRATING INTO THE RIVER, THE CONTRACTOR SHALL, AS SOON AS POSSIBLE, NOTIFY THE ENGINEER/SUPERVISOR AND THE FOLLOWING AGENCIES:

OHIO DEPARTMENT OF NATURAL RESOURCES
DIVISION OF NATURAL AREAS & PRESERVES
11027 HOPKINS ROAD
GARRETTSVILLE, OHIO 44231
(330) 527-4184
ATTN: STEVE ROLOSON

OHIO EPA SPILL REPORTING
24 HOUR EMERGENCY SERVICE
CALL: 1-800-282-9387

PROVIDE AS MUCH OF THE FOLLOWING INFORMATION AS POSSIBLE:

1. TIME OBSERVED
2. LOCATION
3. MATERIAL RELEASED
4. PROBABLE SOURCE
5. VOLUME & DURATION
6. PRESENT & ANTICIPATED MOVEMENT OF CONTAMINANT
7. PERSONNEL ON SCENE
8. ACTIONS ALREADY INITIATED
9. PERSON(S) ON THE SCENE TO CONTACT

THE UNDERSIDE OF ALL AFFECTED STRUCTURES SHALL BE CAREFULLY EXAMINED FOR THE PRESENCE OF BATS, ESPECIALLY FROM APRIL 1 TO SEPTEMBER 30. IF ANY BATS ARE FOUND ROOSTING ON THE UNDERSIDE OF ANY BRIDGES, THE UNITED STATES FISH AND WILDLIFE SERVICE, ECOLOGICAL SERVICES DIVISION, THE OHIO DEPARTMENT OF TRANSPORTATION, OFFICE OF ENVIRONMENTAL SERVICES, AND THE OHIO DEPARTMENT OF TRANSPORTATION DISTRICT 4 ENVIRONMENTAL SECTION, SHALL BE CONTACTED OR PROVIDED WITH INFORMATION.

BEST MANAGEMENT PRACTICES FOR SOIL EROSION AND SEDIMENT CONTROL

WATER COLUMN AND SEDIMENTATION IMPACTS SHALL BE KEPT TO A MINIMUM THROUGH THE USE OF BEST MANAGEMENT PRACTICES FOR SOIL EROSION AND SEDIMENT CONTROL. ALL SOIL EROSION AND SEDIMENT CONTROL PRACTICES SHALL BE IN PLACE PRIOR TO ANY GRADING OR FILLING OPERATIONS AND INSTALLATION OF PROPOSED STRUCTURES OR UTILITIES. THEY SHALL REMAIN IN PLACE UNTIL CONSTRUCTION IS COMPLETE AND THE AREA IS STABILIZED AS ACCEPTED BY THE ENGINEER.

MECHANICAL EQUIPMENT OPERATION AT STREAM CHANNEL

THE CONTRACTOR SHALL TAKE ALL PRECAUTIONS NECESSARY TO PREVENT ANY INCIDENTAL DISCHARGES ASSOCIATED WITH THE EXCAVATION AND HAULING OF MATERIAL FROM THE RIVER CHANNEL. THIS PERTAINS TO ANY EXCAVATION OPERATION SUCH AS, FOUNDATION PIER OR ABUTMENT EXCAVATION, CHANNEL CLEAN OUT, EXCAVATION FOR ROCK CHANNEL PROTECTION AND REMOVAL OF ANY TEMPORARY FILL ASSOCIATED WITH CONSTRUCTION OPERATIONS. THE MECHANICAL EQUIPMENT USED TO EXECUTE THE WORK AUTHORIZED HEREIN SHALL BE OPERATED IN SUCH A WAY AS TO MINIMIZE TURBIDITY THAT COULD DEGRADE WATER QUALITY AND ADVERSELY AFFECT AQUATIC PLANT AND ANIMAL LIFE.

ENDANGERED SPECIES HABITAT

THIS PROJECT IS WITHIN THE RANGE OF THE FEDERALLY ENDANGERED INDIANA BAT (MYOTIS SODALIS) AND MAY IMPACT SUMMER ROOSTING HABITAT FOR THIS SPECIES. THE SUMMER ROOSTING HABITAT FOR THE INDIANA BAT CONSISTS OF LIVING OR DEAD TREES OR SNAGS WITH EXFOLIATING, PEELING OR LOOSE BARK, SPLIT TRUNKS AND/OR BRANCHES OR CAVITIES. THEREFORE, ANY UNAVOIDABLE CUTTING OF SUCH TREES WILL BE PERFORMED ONLY AFTER SEPTEMBER 30 AND BEFORE APRIL 1.

FALSEWORK, TEMPORARY BRACING, PROTECTIVE STRUCTURES FOR DECK REPLACEMENT, AND CONTAINMENT SYSTEMS

THE CONTRACTOR SHALL PROVIDE ALL NECESSARY TEMPORARY SUPPORTS UNDER THE STRUCTURE DURING REMOVAL, RECONSTRUCTION, AND CONSTRUCTION OPERATIONS, AS REQUIRED TO MAINTAIN A COMPLETELY STABLE STRUCTURE AT ALL TIMES. IF, IN THE OPINION OF THE ENGINEER, ADDITIONAL SUPPORTS ARE REQUIRED, THEY SHALL BE PROVIDED BY THE CONTRACTOR ENTIRELY AT THE CONTRACTOR'S EXPENSE.

IN ORDER TO PROTECT THE RIVER AGAINST DAMAGE FROM FALLING MATERIAL, DEBRIS AND OTHER DEMOLITION OPERATIONS, WHILE SUPERSTRUCTURE CONCRETE IS BEING REMOVED OR WHILE THE CONTRACTOR IS WORKING OVERHEAD, THE CONTRACTOR SHALL FURNISH AND ERECT A TEMPORARY PROTECTIVE STRUCTURE UNDER THE SPANS THAT ARE DIRECTLY OVER THE RIVER AREA PLUS ENOUGH ADDITIONAL COVERAGE IN THE AREA TO PREVENT ANY FALLING MATERIAL FROM ANY SPAN FROM REACHING THESE AREAS.

IN ADDITION TO THE TEMPORARY PROTECTIVE STRUCTURE, THE CONTRACTOR SHALL PROVIDE PLASTIC SHEETING, BURLAP, AND/OR ABSORBABLE MATERIAL, OR OTHER APPROVED METHODS TO PREVENT WATER FROM FALLING INTO THE RIVER. THIS COLLECTION SYSTEM SHALL BE ERECTED IN SUCH A MANNER THAT WILL PREVENT WATER/CONCRETE SLURRY FROM ESCAPING THE CONTAINMENT SYSTEM DURING THE SLURRY REMOVAL.

THE PROTECTIVE STRUCTURES SHALL BE CONSTRUCTED TO THE APPROVAL OF THE ENVIRONMENTAL AND CONSTRUCTION ENGINEER. THE CONTRACTOR SHALL PROVIDE 4 SETS OF PROTECTIVE STRUCTURE PLANS AT LEAST THIRTY (30) DAYS PRIOR TO THE START OF ERECTING THE PROTECTIVE STRUCTURE. THE FLOORING AND SIDING OF THE STRUCTURES SHALL HAVE NO CRACKS OR OPENINGS THROUGH WHICH MATERIAL PARTICLES MAY FALL. AS A MINIMUM, TWO LAYERS OF ¾" (INCH PLYWOOD WITH LAPPED JOINTS OR AN EQUIVALENT DESIGN SHALL BE PLACED BETWEEN THE LOWER FLANGES OF THE STRUCTURAL STEEL BEAMS ABOVE THE RIVER. THE PROTECTION IN ALL CASES SHALL EXTEND BEYOND THE EXISTING AND/OR NEW EXTERIOR STRUCTURAL STEEL BEAMS A SUFFICIENT DISTANCE TO PROTECT UNDER THE EXISTING SIDEWALK/GUARDRAIL AND PROPOSED PARAPETS, AND SHALL HAVE SIDE WALLS EXTENDING UP TO 4 FEET MINIMUM. SIDEWALLS SHALL BE BRACED SUBSTANTIALLY TO RESIST WIND LOADS. DURING SAW CUTTING AND DECK REMOVAL OPERATIONS, TEMPORARY SHIELDS ATTACHED TO THE SIDE WALLS AND EXTENDING 3 FEET ABOVE THE TOP OF THE SIDEWALK, SHALL BE INSTALLED TO THE LIMITS AS DIRECTED BY THE ENGINEER. TEMPORARY SHIELDS SHALL BE REMOVED IMMEDIATELY AFTER THEY HAVE SERVED THEIR PURPOSE. DEBRIS SHALL NOT BE PERMITTED TO COLLECT ON THE PROTECTIVE STRUCTURES.

WHEN SUPPORTING THE PROTECTIVE STRUCTURES FROM THE STEEL WORK OF THE BRIDGE(S), ALL CONNECTIONS THERETO SHALL BE MADE BY MEANS OF APPROVED CLAMPS ON BOTH SIDES OF THE BEAM FLANGE. THE DRILLING OF HOLES IN THE STEEL WORK, OR WELDING THERETO, FOR THIS PURPOSE WILL NOT BE PERMITTED. NO PORTION OF THE TEMPORARY SUPPORT SYSTEM AND/OR PROTECTIVE STRUCTURES (INCLUDING CONNECTION DEVICES) SHALL EXTEND MORE THAN 30 INCHES (2.5 FEET) BELOW THE BOTTOM FLANGE OF THE STEEL STRINGERS OR COVER PLATES THAT IS OVER THE RIVER. THE CONTRACTOR SHALL NOTIFY THE PUBLIC INFORMATION OFFICE EIGHTEEN (18) DAYS IN ADVANCE OF THE WORK.

AFTER THE FALSEWORK, TEMPORARY BRACING, AND PROTECTIVE STRUCTURES HAVE SERVED THEIR PURPOSE, AND WHEN SO DIRECTED BY THE ENGINEER, THEY SHALL BE REMOVED. PROTECTIVE STRUCTURES, INCLUDING SIDEWALLS, SHALL NOT BE REMOVED UNTIL THE PARAPETS ARE COMPLETED. ALL MATERIALS SHALL BECOME THE PROPERTY OF THE CONTRACTOR AND SHALL BE REMOVED FROM THE SITE AND DISPOSED OF BY THE CONTRACTOR AT THE CONTRACTOR'S OWN EXPENSE.

DETAILS OF THE FALSEWORK, TEMPORARY BRACING, PROTECTIVE STRUCTURES, AND COLLECTION SYSTEM FOR CATCHING BROKEN CONCRETE AND OTHER MATERIALS SHALL BE SUBMITTED, IN QUADRUPLET, TO THE ENGINEER FOR SUBSEQUENT SUBMISSION TO THE DISTRICT ENVIRONMENTAL COORDINATOR AND NORTHEAST OHIO REGIONAL SCENIC RIVER MANAGER, ODNR FOR REVIEW AND ACCEPTANCE THIRTY (30) DAYS PRIOR TO IT'S ERECTION. DETAILS SHALL INCLUDE THE EXISTING AND PROPOSED TEMPORARY UNDER CLEARANCES TO THE RIVER. THIS ITEM OF WORK SHALL BE PAID FOR UNDER THE LUMP SUM ITEM 614 MAINTENANCE OF TRAFFIC.

SCENIC RIVER COMMITMENTS
THE OHIO DEPARTMENT OF NATURAL RESOURCES (ODNR) NORTHEAST(NE) OHIO SCENIC RIVER MANAGER AND ASSISTANT MANAGER SHALL BE INVITED TO THE PRECONSTUCTRUCTION MEETING FOR THE PROJECT. FOURTEEN(14) DAYS ADVANCE NOTICE OF THE PROJECT PRE-CONSTRUCTION MEETING IS REQUIRED BY ODNR NORTHEAST OHIO SCENIC RIVER MANAGER/ASSISTANT MANAGER. THE PRECONSTRUCTION MEETING NOTIFICATION SHALL BE SENT TO STEVE ROLOSON ODNR NE OHIO SCENIC RIVER MANAGER AT steve.roloson@dnr.state.oh.us AND TO MATTHEW SMITH, ODNR NE OHIO ASSISTANT SCENIC RIVER MANAGER AT matthew.smith@dnr.state.oh.us

SCENIC RIVER COMMITMENTS
IDLE CONSTRUCTION EQUIPMENT, PETROCHEMICALS AND TOXIC/HAZARDOUS MATERIALS SHALL NOT BE STORED IN THE ASHTABULA STATE SCENIC RIVER FLOODPLAIN OR NEAR ANY DRAINAGE WAYS, DITCHES OR STREAMS THAT COULD CONVEY SUCH MATERIALS TO THE ASHTABULA STATE SCENIC RIVER.
PETROCHEMICALS AND TOXIC/HAZARDOUS MATERIALS SHALL NOT BE DISCHARGED INTO THE ASHTABULA STATE SCENIC RIVER, ITS FLOODPLAIN OR ANY DRAINAGE WAYS, DITCHES OR STREAMS.
REFUELING OF EQUIPMENT SHALL NOT OCCUR IN THE FLOODPLAIN OR NEAR ANY DRAINAGE WAYS, DITCHES OR STREAMS. A SPILL CONTAINMENT AND CLEANUP PLAN SHALL BE GENERATED AND SUBMITTED TO THE ENGINEER FOR ACCEPTANCE PRIOR TO THE START OF THE PROJECT CONSTRUCTION
ALL IN STREAM WORK SHALL BE CONDUCTED DURING LOW FLOW CONDITIONS THAT IS TYPICALLY IN THE PERIOD FROM AUGUST 1 THROUGH OCTOBER 31. STREAM BOTTOM ELEVATIONS SHALL BE DETERMINED BEFORE ANY IN-STREAM WORK COMMENCES TO ENSURE THAT ALL FILL MATERIAL AND DEBRIS IS COMPLETELY REMOVED BEFORE CONSTRUCTION IS COMPLETED. ANY TEMPORARY FILL MATERIAL SHALL CONSIST OF ONLY C;LEAN, NON-ERODIBLE BROKEN ROCK. CONCRETE RUBBLE, ASPHALT PAVEMENT AND OTHER DEMOLITION DEBRIS SHALL NOT BE PERMITTED FOR EITHER TEMPORARY USES FOR PERMANENT SLOPE STABILIZATION. ANY DISTURBED AREAS IN THE STREAM BOTTOM SHALL BE RETURNED TO PRE-CONSTRUCTION CONTOURS.
ROCK CHANNEL PROTECTION SHALL CONSIST ONLY OF CLEAN ROCK FREE OF ANY TOXIC OR FINE MATERIAL. THE USE OF BROKEN CONCRETE, ASPHALT PAVING, OR OTHER RUBBLE SHALL NOT BE PERMITTED AS ROCK CHANNEL PROTECTION. ALL EXISTING CONCRETE RUBBLE SHALL BE REMOVED FROM THE PROJECT SITE AS PART OF THIS PROJECT AND PROPERLY DISPOSED OF OR RECYCLED AT AN APPROVED LOCATION. ALL FILL MATERIAL USED AS ROCK CHANNEL PROTECTION WORK PLATFORMS OR COFFERDAMS SHALL BE A MINIMUM OF THREE INCHES IN DIAMETER AND BE WASHED TO REMOVE FINE PARTICULATE MATTER(CLAY, SILT, SAND AND SOIL). ANY WORK PLATFORMS SHALL BE KEPT TO THE ABSOLUTE MINIMUM SIZE NEEDED TO FACILITATEIN-STREAM WORK. IN-STREAM WORK SHALL BE CONDUCTED THROUGH THE USE OF WATER DIVERSIONS(SHEET PILING, MEMBRANE DAMS, ETC) WHICHEVER POSSIBLE AND AVOID THE PLACEMENT OF EARTHEN FILL. ANY ROCK FILL SHALL BE COMPLETELY REMOVED FROM THE STREAMBED IMMEDIATELY UPON COMPLETION OF IN-STREAM WORK
ALL STREAMBANK VEGETATION SHALL BE LEFT UNDISTURBED TO THE MAXIMUM EXTENT PRACTIBLE. AREAS WHERE VEGETATION IS REMOVED SHALL BE RE-VEGETATED WITH NATIVE TREE SPECIES. ANY DISTURBED STREAMBANKS SHALL BE RETURNED TO PREVIOUSLY EXISTING CONTOURS AND ELEVATIONS. A NATIVE TREE SPECIES LIST IS AVAILABLE UPON REQUEST FROM THE DIVISION OF NATURAL AREAS AND PRESERVES SCENIC RIVERS PROGRAM. TREES SHALL BE ONE INCH IN DIAMETER AND BALLED/BURLAP NURSERY STOCK. AFTER A FULL GROWING SEASON FOR THE TREES, ANY STAKES AND GUIDE WIRES SHALL BE REMOVED AND PROPERLY DISPOSED OF. ANY TREES THAT DIE DURING THE FIRST GROWING SEASON SHALL BE REPLACED.
CUTTING OR CLEARING OF RIPARIAN VEGETATION WITHIN 1000 FEET OF THE ASHTABULA STATE SCENIC RIVER BEYOND THE EXISTING RIGHT-OF-WAY SHALL BE PROHIBITED, HOWEVER VERTICAL TRIMMING IS PERMITTED WHERE NECESSARY. CARE SHALL BE TAKEN NOT TO GIRDLE OR SCUFF TREE TRUNKS OR DAMAGE ANY STANDING TREES.
IF DEWATERING IS NECESSARY, ALL WASTEWATER SHALL BE PUMPED ONTO A VEGETATED AREA A SUFFUCIENT DISTANCE FROM THE ASHTABULA STATE SCENIC RIVER TO ALLOW FOR COMPLETE INFILTRATION. NO WASTEWATER SHALL BE DISCHARGED DIRECTLY INTO THE ASHTABULA STATE SCENIC RIVER OR ANY OTHER DRAINAGE WAYS, DITCHES OR STREAMS. ALL STORM WATER DRAINAGE SHALL BE DIRECTED ONTO A VEGETATED AREA TO ALLOW COMPLETE INFILTRATION. IF DISCHARGE TO A VEGETATED AREA IS NOT FEASIBLE, THEN WASTEWATER SHALL BE DISCHARGED INTO A SEDIMENT FILTER BAG OR INTO A TEMPORARY DETENTION/RETENTION POND WITH SUFFICIENT RETENTION TIME TO PERMIT FOR THE SETTLING OF ALL SUSPENDED SOLIDS.
ALL DEMOLITION DEBRIS WITHIN 1000 FEET OF THE ASHTABULA STATE SCENIS RIVER SHALL BE IMMEDIATELY REMOVED AND DISPOSED AT AN APPROVED UPLAND SITE. DISPOSAL OF DEMOLITION DEBRIS IN WETLANDS, FLOODPLAINS OR WITHIN 1000 FEET OF THE ASHTABULA STATE SCENIC RIVER IS PROHIBITED

CALCULATED | CHECKED

ENVIRONMENTAL COMMITMENT NOTES

ATB-90-14.26

12A
437

Palmer ENGINEERING
PALMER ENGINEERING
11300 CORNELL PARK DR
CINCINNATI, OH 45242

O:\ODOT\ATB\25199\roadway\sheets\25199GN003.dgn 6/6/2009 8:54:48 AM DENNIS

MAINTENANCE OF TRAFFIC

THIS ITEM SHALL CONSIST OF MAINTENANCE OF TRAFFIC ON EXISTING ROADWAYS AND RAMPS IN ACCORDANCE WITH CMS 614 AND THE OHIO MANUAL OF UNIFORM TRAFFIC CONTROL DEVICES FOR STREETS AND HIGHWAYS, CURRENT EDITION, LATEST REVISION, THE SPECIFICATIONS AND THE FOLLOWING:

1. A MINIMUM OF TWO (2) ELEVEN (11) FOOT LANES IN EACH DIRECTION SHALL BE MAINTAINED ON THE EXISTING PAVEMENT, COMPLETED PAVEMENT AND TEMPORARY PAVEMENT DURING CONSTRUCTION OF THE WORK, EXCEPT AS NOTED IN PHASES 1 & 2, WHICH WILL BE CONSTRUCTED AT NIGHT. LANE CLOSURES SHALL ADHERE TO THE LANE CLOSURE (1-90) NOTE.

2. THE CONTRACTOR SHALL INFORM THE DISTRICT OFFICE (330) 786-2211, EIGHTEEN (18) DAYS PRIOR TO THE BEGINNING OF WORK.

3. CONES SHALL NOT BE ACCEPTABLE TRAFFIC CONTROL DEVICES FOR LANE RESTRICTIONS OR LANE REDUCTIONS THAT ARE IN OPERATION ONE-HALF HOUR AFTER SUNSET OR ONE HALF-HOUR BEFORE SUNRISE. ALL NIGHTTIME LANE RESTRICTIONS SHALL REQUIRE DRUMS OR BARRICADES AT A MAXIMUM SPACING OF FIFTY (50) FEET. WEIGHTED CHANNELIZERS MAY BE USED IN ACCORDANCE WITH THE ADDITIONAL NOTE HEREIN.

4. THE CONTRACTOR SHALL FURNISH, ERECT, MAINTAIN AND SUBSEQUENTLY REMOVE ALL FLAGS, BARRICADES, SIGNS, SIGN SUPPORTS AND FURNISH AND MAINTAIN ALL FLAGGERS, WATCHERS AND INCIDENTALS RELATED THERETO.

5. ALL FULL DEPTH PAVEMENT REMOVAL AND REPLACEMENT OPERATIONS SHALL BE COMPLETED THE SAME DAY THE EXCAVATION IS MADE. IF THE CONTRACTOR CANNOT COMPLETE THE WORK, THE EXCAVATION SHALL BE BACKFILLED OR PROTECTED AS PER SHEET 89.

6. AN ESTIMATED QUANTITY OF 1240 FEET OF ITEM 622 PORTABLE CONCRETE BARRIER, 50", BRIDGE-MOUNTED, AS PER PLAN AND AN ESTIMATED QUANTITY OF 88,610 FEET OF ITEM 622 PORTABLE CONCRETE BARRIER, 50" AS PER PLAN HAVE BEEN PROVIDED FOR THIS PROJECT. THE BARRIER SHALL BE PLACED AS SHOWN ON BRIDGE PHASED CONSTRUCTION SHEETS (SHEETS 8/53 AND 8/61) WHEN WORK IS BEING DONE ON THE BRIDGE.

7. NO FULL DEPTH BRIDGE REPAIR SHALL BE PERFORMED OVER AN OPEN LANE. A SAFETY NET OR PLATFORM SHALL BE REQUIRED TO PROTECT THE ROADWAY, RAILROAD OR STREAM DURING THE REMOVAL OF THE EXISTING CONCRETE PARAPET AND DECK. THE CONTRACTOR SHALL PROVIDE A SAFETY NET OR PLATFORM OF SUITABLE STRENGTH ON THE UNDERSIDE OF THE DECK. THE DESIGN OF THE NET OR PLATFORM SHALL CONFORM WITH OSHA REQUIREMENTS AND THE APPROVAL OF THE ENGINEER AND SHALL REMAIN IN PLACE UNTIL THE WORK HAS BEEN COMPLETED AND ACCEPTED OR AS DIRECTED BY THE ENGINEER. THE CONTRACTOR SHALL SUBMIT A DEMOLITION PLAN AND SAFETY NET OR PLATFORM DESIGN 10 DAYS PRIOR TO COMMENCING ANY DEMOLITION FOR APPROVAL BY THE ENGINEER. THE SUBMITTAL SHALL BE IN WRITING TO THE DISTRICT CONSTRUCTION ENGINEER WITH A COPY TO THE PROJECT ENGINEER.

8. UNDER NO CIRCUMSTANCES SHALL THE CONTRACTOR BE PERMITTED TO HAVE SUCCESSIVE WORK ZONES UNLESS THE DISTANCE BETWEEN THE DRUMS, BARRICADES OR CONES EXCEEDS TWO (2) MILES.

9. ONLY DURING OFF-PEAK PERIODS (ie ANY PERIOD OTHER THAN 6-8AM AND 3-6PM) SHALL THE CONTRACTOR INSTALL AND SUBSEQUENTLY RESET ALL TRAFFIC CONTROL NECESSARY FOR THE WORK ZONE FOR EACH CONSTRUCTION PHASE.

10. A QUANTITY OF 500 CU. YDS. OF 614 ASPHALT CONCRETE FOR MAINTAINING TRAFFIC SHALL BE PROVIDED FOR USE IN MAINTAINING PAVEMENT, SHOULDERS AND OTHER LOCATIONS AS DIRECTED BY THE ENGINEER.

11. PRIOR TO OPENING TO TRAFFIC EACH LANE SHALL BE IN A SAFE, PASSABLE CONDITION. ALL TRANSVERSE JOINTS SHALL EXTEND ACROSS THE FULL LANE AND SHOULDER WIDTH AND EACH LANE SHALL BE FREE FROM UNEVEN LONGITUDINAL JOINTS. THE CONTRACTOR SHALL PROVIDE ASPHALT WEDGES FOR TRANSVERSE JOINTS WHEREVER THERE ARE PAVEMENT ELEVATION DIFFERENCES.

12. A QUANTITY OF 20 EACH, ITEM 614 WORK ZONE MARKING SIGN, HAS BEEN INCLUDED IN THE PLAN. THIS QUANTITY SHALL INCLUDE, BUT NOT BE LIMITED TO, THE FOLLOWING SIGNS: W8-1 [BUMP], W8-H13 [NO EDGE LINES], W8-11 [UNEVEN LANES SYMBOL]. THESE QUANTITIES SHALL BE AS PER 614.04.

WORKSITE TRAFFIC SUPERVISOR

SUBJECT TO APPROVAL OF THE ENGINEER, THE CONTRACTOR SHALL EMPLOY AND IDENTIFY (SOMEONE OTHER THAN THE SUPERINTENDENT) A CERTIFIED WORKSITE TRAFFIC SUPERVISOR (WTS) BEFORE STARTING WORK IN THE FIELD. THE WTS MAY BE CERTIFIED FROM ONE OF THE FOLLOWING ORGANIZATIONS:

1. AMERICAN TRAFFIC SAFETY SERVICE ASSOCIATION (ATSSA), PHONE NUMBER 1-800-272-8772, CERTIFIED TRAFFIC CONTROL SUPERVISOR (TCS).

2. NATIONAL HIGHWAY INSTITUTE, DESIGN AND OPERATION OF WORK ZONE TRAFFIC CONTROL, PHONE NUMBER 1-703-235-0528.

3. THE OHIO CONTRACTORS ASSOCIATION, TRAFFIC CONTROL SUPERVISOR (OCA/TCS) WORK ZONE CLASS, ONLY IF TAKEN AFTER MAY 5, 2004, PHONE NUMBER 1-614-599-7915.

4. OHIO LABORERS TRAINING, TRAFFIC CONTROL SUPERVISORS CLASS, PHONE NUMBER 1-740-599-7915.

A COPY OF EACH WTSS CERTIFICATION AND 24-HOUR CONTACT INFORMATION SHALL BE PROVIDED TO THE ENGINEER AT THE PRECONSTRUCTION CONFERENCE. IF THE DESIGNATED WTS WILL NOT BE AVAILABLE FULL TIME (24/7) THE CONTRACTOR MAY DESIGNATE AN ALTERNATE WTS TO BE AVAILABLE WHEN THE PRIMARY IS OFF DUTY. EACH WTS SHALL HAVE A CURRENT WTS CERTIFICATION (WITH AN EXPIRATION DATE NO MORE THAN 5 YEARS FROM THE DATE OF ISSUE) FROM ANY OF THE APPROVED ORGANIZATIONS.

THE WTS POSITION HAS THE RESPONSIBILITY OF MONITORING TRAFFIC CONTROL DEFICIENCIES FOR THE ENTIRE WORK ZONE. THE DUTIES OF THE WTS ARE AS FOLLOWS:

1. BE AVAILABLE ON A 24-HOUR PER DAY BASIS, AND BE ABLE TO BE ON SITE FOR ALL EMERGENCY TRAFFIC CONTROL NEEDS WITHIN ONE HOUR OF NOTIFICATION BY POLICE OR PROJECT STAFF AND BE PREPARED TO EFFECT CORRECTIVE MEASURES IMMEDIATELY ON EXISTING WORK ZONE TRAFFIC CONTROL DEVICES.

2. ATTEND PRECONSTRUCTION MEETING AND ALL PROJECT MEETINGS WHERE TRAFFIC CONTROL MANAGEMENT IS DISCUSSED.

3. BE AVAILABLE FOR MEETINGS OR DISCUSSIONS WITH THE ENGINEER UPON REQUEST OR WITHIN 36 HOURS.

4. BE AWARE OF, AND COORDINATE IF NECESSARY, ALL TRAFFIC CONTROL OPERATIONS, INCLUDING THOSE OF SUBCONTRACTORS AND SUPPLIERS.

5. COORDINATE PROJECT ACTIVITIES WITH ALL LAW ENFORCEMENT OFFICERS (LEOS). A WTS SHALL ALSO BE THE MAIN CONTACT PERSON WITH THE LEOS WHILE THEY ARE ON THE PROJECT.

6. COORDINATE MEETINGS WITH ODOT PERSONNEL, LEOS AND OTHER APPLICABLE ENTITIES BEFORE EACH PLAN PHASE SWITCH TO DISCUSS WORK ZONE TRAFFIC CONTROL.

7. ENSURE COMPLIANCE WITH THE CONTRACT DOCUMENTS FOR SIGNS, BARRICADES, TEMPORARY CONCRETE BARRIER, PAVEMENT MARKINGS, PORTABLE MESSAGE SIGNS, AND OTHER TRAFFIC CONTROL DEVICES ON A DAILY BASIS; AND FACILITATE ANY CORRECTIVE ACTION NECESSARY.

8. NOTIFY THE CONTRACTOR OF THE NEED FOR CLEANING AND MAINTENANCE OF ALL TRAFFIC CONTROL DEVICES, INCLUDING THE COVERING AND REMOVAL OF INAPPLICABLE SIGNS.

9. INSPECT, EVALUATE, PROPOSE NECESSARY MODIFICATIONS TO, AND DOCUMENT THE EFFECTIVENESS OF, THE TRAFFIC CONTROL DEVICES AND/OR TRAFFIC OPERATIONS ON A DAILY BASIS (7 DAYS A WEEK). IN ADDITION, A WEEKLY NIGHT INSPECTION OF THE WORK ZONE SETUP FOR DAYTIME WORK OPERATIONS; AND ONE DAYTIME INSPECTION PER WEEK FOR NIGHTTIME PROJECTS. THIS SHALL INCLUDE (BUT NOT BE LIMITED TO) DOCUMENTATION ON THE FOLLOWING PROJECT EVENTS:

   A. INITIAL TRAFFIC CONTROL SETUP (DAY AND NIGHT REVIEW).

   B. DAILY TRAFFIC CONTROL SETUP AND REMOVAL.

   C. WHEN CONSTRUCTION STAGING CAUSES A CHANGE IN THE TRAFFIC CONTROL SETUP.

   D. CRASH OCCURRENCES WITHIN THE CONSTRUCTION AREA.

   E. REMOVAL OF TRAFFIC CONTROL DEVICES AT THE END OF A PHASE OR PROJECT.

   F. ALL OTHER EMERGENCY TRAFFIC CONTROL NEEDS.

10. COMPLETE THE DEPARTMENT APPROVED LONG TERM INSPECTION FORM (CA-D-8) AFTER EACH INSPECTION AS REQUIRED IN # 9 AND SUBMIT IT TO THE ENGINEER THE FOLLOWING WORK DAY. THESE REPORTS SHALL INCLUDE A CHECKLIST OF ALL TRAFFIC CONTROL MAINTENANCE ITEMS TO BE REVIEWED. A COPY OF THE FORM WILL BE PROVIDED AT THE PRE-CONSTRUCTION MEETING. ANY DEFICIENCIES OBSERVED SHALL BE NOTED, ALONG WITH RECOMMENDED CORRECTIVE ACTIONS AND THE DATES BY WHICH SUCH CORRECTIONS WERE, OR WILL BE, COMPLETED. A COPY OF THIS DOCUMENT CAN BE FOUND IN THE DEPARTMENT OF TRANSPORTATION CONSTRUCTION INSPECTION FORMS MANUAL DATED 10/15/06 OR CURRENT REVISION.

11. VERIFY THAT ALL FLAGGING OPERATIONS ARE BEING CONDUCTED PER THE OHIO MANUAL OF UNIFORM TRAFFIC CONTROL DEVICES.

12. HAVE COPIES OF THE ODOT TEMPORARY TRAFFIC CONTROL MANUAL AND APPLICABLE STANDARDS AND SPECIFICATIONS INCLUDED IN THE CONTRACT DOCUMENTS AVAILABLE AT ALL TIMES ON THE PROJECT.

THE DEPARTMENT WILL NOT PAY THE UNIT PRICE BID FOR THE WTS FOR ANY DAY ON WHICH THE CONTRACTOR FAILS TO PERFORM THE DUTIES SET FORTH ABOVE. SHOULD THE CONTRACTOR'S FAILURE TO PERFORM ANY OF THE DUTIES DESCRIBED ABOVE RESULT IN A MAINTENANCE OF TRAFFIC SAFETY ISSUE, THE DEPARTMENT WILL DEDUCT THE PRORATED DAILY AMOUNT FOR ITEM 614 MAINTENANCE OF TRAFFIC FROM THE CONTRACTOR'S NEXT SCHEDULED ESTIMATE.

IF THREE OR MORE FAILURES TO PERFORM THE DUTIES SET FORTH ABOVE OCCUR, THE WTS SHALL BE IMMEDIATELY REMOVED FROM THE WORK IN ACCORDANCE WITH C&MS 108.05. THE FOLLOWING ESTIMATED QUANTITY HAS BEEN INCLUDED FOR THE WORKSITE TRAFFIC SUPERVISOR:

ITEM 614 WORKSITE TRAFFIC SUPERVISOR 24 MONTHS

LANE CLOSURES (1-90)

DURATION OF LANE CLOSURES AND RESTRICTIONS SHALL BE AS PER THE PERMITTED LANE CLOSURE CHART. THE PERMITTED LANE CLOSURE CHART USED FOR THIS PROJECT SHALL BE THE MOST CURRENT CHART AVAILABLE ON THE DATE THIS PROJECT SELLS.

THE CHART CAN BE FOUND AT:
http://plcm.dot.state.oh.us

SHOULD THE CONTRACTOR FAIL TO MEET ANY OF THE REQUIREMENTS IN THE CHART, THE CONTRACTOR SHALL BE ASSESSED LIQUIDATED DAMAGES IN THE AMOUNT OF $14,000 PER HOUR OR PORTION THEREOF THAT THE LANE REDUCTION REMAINS BEYOND THE SPECIFIED LIMIT.

SEQUENCE OF CONSTRUCTION

PHASE 1:

REBUILD MEDIAN SHOULDER OF EASTBOUND LANES WITH PAVEMENT FOR MAINTENANCE OF TRAFFIC. THIS WORK IS TO BE DONE AT NIGHT. MAINTAIN ONE EASTBOUND LANE DURING CONSTRUCTION AS SHOWN ON SHEET 23.

TRAFFIC CONTROL SHALL BE IN ACCORDANCE WITH STANDARD DRAWINGS MT-95.30 AND MT-95.50. LENGTH OF WORK ZONE SHALL BE THE LENGTH THAT CAN BE CONSTRUCTED DURING THE NIGHTTIME PERIOD.

CONSTRUCT MEDIAN CROSSOVERS AS SHOWN ON SHEETS 25-36. MAINTAIN ONE EASTBOUND AND WESTBOUND LANE. DURING THIS WORK CLOSE OFF CROSSOVERS WITH DRUMS AT 10' c/c WHEN NOT WORKING.

TRAFFIC CONTROL SHALL BE IN ACCORDANCE WITH MT-95.30 AND MT-95.50. SHOULDER TO BE CLOSED WITH BARRELS AT 10' c/c DURING THE DAY.

PHASE 2:

REBUILD EASTBOUND OUTSIDE SHOULDER WITH PAVEMENT FOR MAINTENANCE OF TRAFFIC. THIS WORK IS TO BE DONE AT NIGHT. MAINTAIN ONE EASTBOUND LANE DURING CONSTRUCTION AS SHOWN ON SHEET 23.

TRAFFIC CONTROL SHALL BE IN ACCORDANCE WITH STANDARD DRAWINGS MT-95.30 AND MT-95.50. LENGTH OF WORK ZONE SHALL BE THE LENGTH THAT CAN BE CONSTRUCTED DURING THE NIGHTTIME PERIOD.

(SEQUENCE OF CONSTRUCTION NOTE CONT'D NEXT SHEET)

PALMER ENGINEERING
11300 CORNELL PARK DR
ENGINEERING CINCINNATI, OH 45242

O:\ODOT\ATB\25199\mot\sheets\25199MN001.dgn 6/6/2009 8:54:52 AM DENNIS

CALCULATED | CHECKED

MAINTENANCE OF TRAFFIC GENERAL NOTES

ATB-90-14.25

PHASE 3:

SHIFT EASTBOUND LANES PER MT-102.20, AND PLACE BARRIER FOR CONTRA-FLOW OPERATION. MOVE WESTBOUND INSIDE (PASSING) LANE TO EASTBOUND PAVEMENT FOR CONTRA-FLOW OPERATION. PLACE BARRIER ON WESTBOUND LANES AND CONSTRUCT PORTION OF PERMANENT PAVEMENT AND TEMPORARY PAVEMENT, AS WELL AS FIRST STAGE OF BRIDGE CONSTRUCTION ALONG THE MAINLINE. CONSTRUCT MIDDLE PORTION OF THE CULVERT AT STATION 330+25 (SEE CULVERT DETAIL SHEET 272 FOR PHASE CONSTRUCTION LIMITS).

REFER TO THE TYPICAL SECTIONS SHOWN ON SHEET 23.

TRAFFIC CONTROL SHALL BE IN ACCORDANCE WITH THE PHASE DETAILS, SHEETS 37-51, AND STANDARD DRAWINGS MT-95.70, MT-95.82, MT-101.70, AND MT-102.10. PLAN INSERT SHEETS 209573 AND 209930 SHALL BE USED.

PHASE 4:

CONTRA-FLOW OPERATION ON THE EASTBOUND PAVEMENT SHALL REMAIN THE SAME IN THIS PHASE. SHIFT WESTBOUND LANE ON THE WESTBOUND PAVEMENT OVER TO THE PERMANENT PAVEMENT AND TEMPORARY PAVEMENT CONSTRUCTED IN PHASE 3. MOVE BARRIER ON WESTBOUND PAVEMENT TO THE LOCATION INDICATED (THIS BARRIER WILL REMAIN IN THE SAME LOCATION FOR PHASE 5). CONSTRUCT THE REMAINDER OF PERMANENT WESTBOUND PAVEMENT, AS WELL AS THE SECOND STAGE OF BRIDGE CONSTRUCTION ALONG THE MAINLINE. CONSTRUCT REMAINDER OF OUTLET PORTION OF THE CULVERT AT STATION 330+25 (SEE CULVERT DETAIL SHEET FOR PHASE CONSTRUCTION LIMITS).

CONSTRUCTION ON THE WESTBOUND BRIDGES AND PAVEMENT IS SUBSTANTIALLY COMPLETED.

REFER TO THE TYPICAL SECTIONS SHOWN ON SHEET 24.

TRAFFIC CONTROL SHALL BE IN ACCORDANCE WITH THE PHASE DETAILS, SHEETS 53-67, AND STANDARD DRAWINGS MT-95.70, MT-95.82, MT-101.70, AND MT-102.10. PLAN INSERT SHEETS 209573 AND 209930 SHALL BE USED.

PHASE 5:

MOVE BOTH WESTBOUND LANES BACK TO THE NEWLY CONSTRUCTED WESTBOUND PAVEMENT AND SHOULDER. DIRECT EASTBOUND TRAFFIC TO THE CROSSOVER AND TO A PORTION OF THE WESTBOUND PAVEMENT AND TEMPORARY PAVEMENT. CONSTRUCT THE ENTIRETY OF THE EASTBOUND BRIDGES AND PAVEMENT, ALONG WITH PERMANENT TRAFFIC CONTROL AND SIGNAGE. CONSTRUCT REMAINDER OF INLET PORTION OF THE CULVERT AT STATION 330+25 (SEE CULVERT DETAIL SHEET FOR PHASE CONSTRUCTION LIMITS).

REFER TO THE TYPICAL SECTIONS SHOWN ON SHEET 24.

TRAFFIC CONTROL SHALL BE IN ACCORDANCE WITH THE PHASE DETAILS, SHEETS 68-82, AND STANDARD DRAWINGS MT-95.71 AND MT-101.70. PLAN INSERT SHEETS 209573 AND 209930 SHALL BE USED.

PHASE 6:

MOVE EASTBOUND LANES TO THE EASTBOUND PAVEMENT AND BRIDGES COMPLETED IN PHASE 5. REMOVE TEMPORARY PAVEMENT FROM THE WESTBOUND PAVEMENT, REMOVE TEMPORARY MEDIAN CROSSOVERS AND GRADE THE MEDIAN TO FINAL GRADES. REMOVE BARRIER FROM WESTBOUND LANES AND PAINT FINAL TRAFFIC CONTROL MARKINGS. SHIFT WESTBOUND TRAFFIC TO PERMANENT LOCATION.

REFER TO THE TYPICAL SECTIONS SHOWN ON SHEET 24.

MAINLINE I-90 WORK TO BE DONE ANYTIME DURING PHASE 1-PHASE 6:

THE FOLLOWING WORK SHALL BE DONE AT ANYTIME DURING PHASE 1 THRU 6:

A) CONSTRUCT CULVERT AT STA. 82+50 BY BORING AND JACKING. PLUG & FILL THE EXISTING 36" CMP
B) CONSTRUCT CULVERT EXTENSIONS AT 102+22
C) REPAIR EROSION AND INSTALL DRAINAGE CONDUIT OFF PAVEMENT, STA. 148+00 LEFT.
D) REPAIR EROSION STA. 153+75 LEFT.
E) CONSTRUCT DRAINAGE AT 165+75 RIGHT.
F) CONSTRUCT SLOPE REPAIR AT BRIGE ATB-90-1563 R/L.

OVERHEAD BRIDGE WORK:

PLYMOUTH ROAD (ATB-90-1525)
PLYMOUTH ROAD SHALL BE CLOSED AND DETOURED AS SHOWN ON SHEET 20. DETOUR SIGNAGE TO BE ERECTED AND MAINTAINED BY THE CONTRACTOR. OZEU PAINT SYSTEM REPAIRS SHALL BE MADE DURING THE APPROPRIATE MAINLINE MOT PHASE.

PLYMOUTH RIDGE ROAD (ATB-90-1764)
PLYMOUTH RIDGE ROAD SHALL BE CLOSED AND DETOURED AS SHOWN ON SHEET 20. DETOUR SIGNAGE TO BE ERECTED AND MAINTAINED BY THE CONTRACTOR. OZEU PAINT SYSTEM REPAIRS SHALL BE MADE DURING THE APPROPRIATE MAINLINE MOT PHASE.

WRIGHT AVENUE (ATB-90-1905)
WRIGHT AVENUE SHALL BE CONSTRUCTED UNDER TRAFFIC USING MT 97.10 AND MT-97.11. OZEU PAINT SYSTEM REPAIRS SHALL BE MADE DURING THE APPROPRIATE MAINLINE MOT PHASE.

ITEM 615 - PAVEMENT FOR MAINTAINING TRAFFIC, CLASS A, AS PER PLAN

IN ADDITION TO THE REQUIREMENTS OF 615, THIS ITEM REPLACES THE 7 INCHES OF ITEM 301 ASPHALT CONCRETE BASE AND THE 4 INCHES OF ITEM 304 AGGREGATE BASE WITH 9 INCHES OF ITEM 302 ASPHALT CONCRETE BASE . RIGID TEMPORARY PAVEMENT SHALL BE CLASS C CONCRETE CONFORMING TO ITEM 452 IN LIEU OF CLASS F CONCRETE.

ON THIS PROJECT THE CLASS A PAVEMENT FOR MAINTAINING TRAFFIC SHALL BE 18 FEET WIDE AND THE ROADWAY WIDTH SHALL NOT BE LESS THEN 22 FEET OUT TO OUT OF SHOULDERS; AND 30 FEET WIDE WITH THE ROADWAY WIDTH NOT BE LESS THEN 34 FEET OUT TO OUT OF SHOULDERS. THE ALIGNMENT AND PAVEMENT TYPICAL SECTION SHALL BE AS DETAILED ON SHEETS 7, 25 & 26. THE EXISTING PAVEMENT/SHOULDER SHALL BE SAWCUT AS PER 203.04(E)

THE FOLLOWING ESTIMATED QUANTITIES HAVE BEEN INCLUDED IN THE GENERAL SUMMARY TO BE USED IN CONSTRUCTING THE PAVEMENT FOR MAINTAINING TRAFFIC, CLASS A, AS PER PLAN.

615, ROADS FOR MAINTAINING TRAFFIC, LUMP SUM
615, PAVEMENT FOR MAINTAINING TRAFFIC, CLASS A, AS PER PLAN 103,340 S.Y.
616, WATER, 66 M GAL
411, STABILIZED CRUSHED AGGREGATE, 1000 CU. YD.

UPON COMPLETION OF THE PROJECT, THE CONTRACTOR SHALL REMOVE THE PAVEMENT FOR MAINTAINING TRAFFIC INCLUDING ANY TEMPORARY DRAINAGE FACILITIES. THE AFFECTED EXISTING EARTH MEDIAN AND PAVED SHOULDERS SHALL BE RESTORED TO THEIR ORIGINAL CONDITION AS DIRECTED BY THE ENGINEER AND PAVEMENT FOR MAINTAINING TRAFFIC SHALL NOT BE OPENED TO TRAFFIC UNTIL ALL WORK ZONE TRAFFIC CONTROL DEVICES, SIGNS, PAVEMENT MARKINGS AND PORTABLE CONCRETE BARRIERS HAVE BEEN ERECTED AND APPROVED BY THE ENGINEER.

ALTHOUGH ESTIMATES FOR TEMPORARY EXCAVATION, EMBANKMENT AND TEMPORARY DRAINAGE FACILITIES MAY BE SHOWN ON THE PLAN DETAILS, THESE ITEMS SHALL BE CONSIDERED INCIDENTAL TO, AND INCLUDED WITH PAYMENT FOR ITEM 615 ROADS FOR MAINTAINING TRAFFIC.

CONTRACTOR'S EQUIPMENT - OPERATION AND STORAGE

A QUALIFIED FLAGGER SHALL BE EMPLOYED WHERE THE CONTRACTOR'S EQUIPMENT MUST MERGE WITH THE TRAFFIC STREAM. THE CONTRACTOR'S EQUIPMENT SHALL BE EQUIPPED WITH AT LEAST ONE AMBER FLASHING LIGHT. PAVERS, ROLLERS AND OTHER EQUIPMENT MAY BE PARKED IN AREAS ALONG THE HIGHWAY WHEN PAVING OPERATIONS ARE SCHEDULED TO CONTINUE WITHIN THE NEXT WORKDAY. OTHERWISE THE EQUIPMENT SHALL BE STORED AT A STORAGE AREA OUTSIDE THE R/W, THE LOCATION OF WHICH SHALL HAVE PRIOR APPROVAL OF THE ENGINEER. WHEN PARKING ALONG THE HIGHWAY THE EQUIPMENT SHALL BE PLACED AND DELINEATED AS PER 614.03. NO EQUIPMENT SHALL BE PARKED IN THE MEDIAN OF THE HIGHWAY. ADEQUATE BARRICADES AND LIGHTS SHALL BE PLACED ON THE PAVEMENT SIDE OF THE EQUIPMENT TO IDENTIFY THE LIMITS OF THE EQUIPMENT. ALL OTHER EQUIPMENT, INCLUDING PRIVATE VEHICLES, SHALL BE STORED AT THE APPROVED CONTRACTOR'S STORAGE AREA. NO EQUIPMENT SHALL BE PARKED ON PRIVATE PROPERTY UNLESS PRIOR APPROVAL OF THE OWNER AND THE PROJECT ENGINEER/ SUPERVISOR HAS BEEN GRANTED.

DETOUR NOTIFICATION [CITY/COUNTY]

THE CONTRACTOR SHALL ADVISE THE ODOT DISTRICT OFFICE (330-786-3148) AND ASHTABULA COUNTY (440-576-3707) EIGHTEEN (18) DAYS IN ADVANCE OF WHEN THE DETOUR ROUTE SHOULD BE IN EFFECT. ALL WORK ZONE DEVICES REQUIRED SHALL BE FURNISHED, ERECTED, MAINTAINED, AND SUBSEQUENTLY REMOVED BY THE CONTRACTOR. PAYMENT FOR ALL WORK ASSOCIATED WITH THE DETOUR SHALL BE INCLUDED UNDER THE LUMP SUM BID FOR ITEM 614, DETOUR SIGNING.

SIGNS AT ADJACENT ROAD INTERSECTIONS

THE CONTRACTOR SHALL, IN ADDITION TO THE GENERAL REQUIREMENTS OF ITEM 614 ON THE PROJECT PERFORM THE FOLLOWING: PROVIDE, ERECT, AND MAINTAIN STANDARD 48"X30" SIZE "ROAD CLOSED" SIGNS, SIGN SUPPORTS, BARRICADES, GATES AND LIGHTS, AS DETAILED IN SCD MT-101.60 AT THE FOLLOWING LOCATIONS DURING PERIOD(S) IN WHICH THE AFFECTED ROADS ARE CLOSED TO TRAFFIC:
WARNER RD. AT SEVEN HILLS
SHEFFIELD RD AT PLYMOUTH RD
PLYMOUTH GAGEVILLE RD. AT PLYMOUTH RD
CARSON RD. AT PLYMOUTH RD

SIGN SUPPORTS FOR "ROAD CLOSED" SIGNS SHALL BE AS DETAILED IN THE OHIO MANUAL OF UNIFORM TRAFFIC CONTROL DEVICES. PAYMENT FOR PROVIDING, ERECTING, MAINTAINING, AND REMOVING SIGNS AND SIGN SUPPORTS SHALL BE INCLUDED IN THE LUMP SUM PRICE BID FOR ITEM 614 MAINTAINING TRAFFIC.

ITEM 614 - LAW ENFORCEMENT OFFICER WITH PATROL CAR

USE OF LAW ENFORCEMENT OFFICERS (LEOS) BY CONTRACTORS OTHER THAN THE USES SPECIFIED IN THIS NOTE WILL NOT GENERALLY BE PERMITTED AT PROJECT COST UNLESS PRIOR APPROVAL HAS BEEN OBTAINED FROM THE ENGINEER. LEOS SHOULD NOT BE USED WHERE THE OHIO MANUAL OF UNIFORM TRAFFIC CONTROL DEVICES (OMUTCD) INTENDS THAT FLAGGERS BE USED.

IN ADDITION TO THE REQUIREMENTS OF CMS 614 AND THE OMUTCD, A UNIFORMED LEO WITH AN OFFICIAL PATROL CAR (CAR WITH TOP-MOUNTED EMERGENCY FLASHING LIGHTS AND COMPLETE MARKINGS OF THE APPROPRIATE LAW ENFORCEMENT AGENCY) SHOULD BE PROVIDED FOR CONTROLLING TRAFFIC FOR THE FOLLOWING TASKS:

FOR LANE CLOSURES: DURING INITIAL SET-UP PERIODS, TEAR DOWN PERIODS, SUBSTANTIAL SHIFTS OF A CLOSURE POINT OR WHEN NEW LANE CLOSURE ARRANGEMENTS ARE INITIATED. IN GENERAL, LEOS SHOULD BE POSITIONED AT THE POINT OF LANE RESTRICTION OR ROAD CLOSURE AND TO MANUALLY CONTROL TRAFFIC MOVEMENTS THROUGH INTERSECTIONS IN WORK ZONES.

DURING THE ENTIRE ADVANCE PREPARATION AND CLOSURE SEQUENCE WHERE COMPLETE BLOCKAGE OF TRAFFIC IS REQUIRED.

LEOS SHOULD NOT FORGO THEIR TRAFFIC CONTROL RESPONSIBILITIES TO APPREHEND MOTORISTS FOR ROUTINE TRAFFIC VIOLATIONS. HOWEVER, IF A MOTORIST'S ACTIONS ARE CONSIDERED TO BE RECKLESS, THEN PURSUIT OF THE MOTORIST IS APPROPRIATE.

THE LEOS WORK AT THE DIRECTION OF THE ENGINEER. THE CONTRACTOR IS RESPONSIBLE FOR SECURING THE SERVICES OF THE LEOS AND COMMUNICATING THE INTENTIONS OF THE PLANS WITH RESPECT TO DUTIES OF THE LEOS. THE ENGINEER SHALL HAVE FINAL CONTROL OVER THE LEOS' DUTIES AND PLACEMENT, AND WILL RESOLVE ANY ISSUES THAT MAY ARISE BETWEEN THE TWO PARTIES. THE CONTRACTOR SHALL PROVIDE THE ENGINEER WITH A LIST OF THE APPROPRIATE LAW ENFORCEMENT AGENCY(IES), INCLUDING ADDRESS AND TELEPHONE NUMBER.

THE LEO SHOULD REPORT IN TO THE CONTRACTOR PRIOR TO THE START OF THE SHIFT TO RECEIVE INSTRUCTIONS REGARDING SPECIFIC WORK ASSIGNMENTS DURING THE SHIFT. THE LEO IS EXPECTED TO STAY AT THE PROJECT SITE FOR THE ENTIRE DURATION OF THE SHIFT. SHOULD IT BE NECESSARY TO LEAVE THE PROJECT SITE, THE LEO SHOULD NOTIFY THE ENGINEER. THE CONTRACTOR SHALL PROVIDE THE LEO WITH A TWO-WAY COMMUNICATION DEVICE WHICH SHALL BE RETURNED TO THE CONTRACTOR AT THE END OF THE SHIFT.

LAW ENFORCEMENT OFFICERS (WITH PATROL CAR) REQUIRED BY THE TRAFFIC MAINTENANCE TASKS ABOVE SHALL BE PAID FOR ON A UNIT PRICE (HOURLY) BASIS UNDER ITEM 614, LAW ENFORCEMENT OFFICER (WITH PATROL CAR). THE FOLLOWING ESTIMATED QUANTITY HAS BEEN CARRIED TO THE GENERAL SUMMARY.

ITEM 614, LAW ENFORCEMENT OFFICER WITH PATROL CAR 100 HOURS

THE HOURS PAID SHALL INCLUDE MINIMUM SHOW-UP TIME REQUIRED BY THE LAW ENFORCEMENT AGENCY INVOLVED.

ANY ADDITIONAL COSTS (ADMINISTRATIVE OR OTHERWISE) INCURRED BY THE CONTRACTOR TO OBTAIN THE SERVICES OF AN LEO ARE INCLUDED WITH THE BID UNIT PRICE FOR ITEM 614, LAW ENFORCEMENT OFFICER WITH PATROL CAR.

CALCULATED | CHECKED

MAINTENANCE OF TRAFFIC GENERAL NOTES

ATB-90-14.25

Palmer ENGINEERING
PALMER ENGINEERING
11300 CORNELL PARK DR
CINCINNATI, OH 45242

O:\ODOT\ATB\25199\mot\sheets\25199MN002.dgn 6/6/2009 8:54:57 AM DENNIS

ITEM 614 - PORTABLE CHANGEABLE MESSAGE SIGN, AS PER PLAN

THE CONTRACTOR SHALL FURNISH, INSTALL, MAINTAIN AND REMOVE, WHEN NO LONGER NEEDED, 2 PORTABLE CHANGEABLE MESSAGE SIGNS [PCMS], ON SITE, FOR THE DURATION OF TIME SPECIFIED IN THIS NOTE, EACH SIGN SHALL BE OF A TYPE SHOWN ON A LIST OF APPROVED PCMS UNITS MAINTAINED BY THE DIRECTOR. THIS LIST IS AVAILABLE ON THE ODOT WEBSITE AT HTTP://WWW.DOT.STATE.OH.US/DIVISIONS/CONSTURCTIONMGT/MATERIALS/PAGES/PORTABLE-CHANGEABLE.ASPX. THE CLASS I UNITS SHALL HAVE A MINIMUM LEGIBILITY DISTANCE OF 1250 FEET.

EACH SIGN SHALL BE TRAILER MOUNTED AND EQUIPPED WITH A FUNCTIONAL DIMMING MECHANISM TO DIM THE SIGN DURING DARKNESS AND A TAMPER AND VANDAL PROOF ENCLOSURE. EACH SIGN SHALL BE PROVIDED WITH APPROPRIATE TRAINING AND OPERATION INSTRUCTIONS TO ENABLE ON-SITE PERSONNEL TO OPERATE AND TROUBLESHOOT THE UNIT. THE SIGN SHALL ALSO BE CAPABLE OF BEING POWERED BY AN ELECTRICAL SERVICE DROP FROM A LOCAL UTILITY COMPANY. PCMS TRAILERS SHOULD BE DELINEATED ON A PERMANENT BASIS BY AFFIXING RETROREFLECTIVE MATERIAL, IN A CONTINUOUS LINE ON THE FACE OF THE TRAILER AS SEEN BY ONCOMING ROAD USERS.

PLACEMENT, OPERATION, MAINTENANCE AND ALL ACTIVATION OF THE SIGNS BY THE CONTRACTOR SHALL BE AS DIRECTED BY THE ENGINEER. THE PCMS SHALL BE LOCATED IN A HIGHLY VISIBLE POSITION YET PROTECTED FROM TRAFFIC. THE PCMS SHOULD NOT BE LOCATED IN THE MEDIAN OF THE HIGHWAY UNLESS IT IS PROTECTED FROM BOTH DIRECTIONS OF TRAFFIC. THE PCMS SHOULD BE LOCATED BEHIND GUARDRAIL WHEREVER POSSIBLE. THE CONTRACTOR SHALL, AT THE DIRECTION OF THE ENGINEER, RELOCATE THE PCMS TO IMPROVE THE VISIBILITY OR ACCOMMODATE CHANGED CONDITIONS. WHEN NOT IN USE, THE PCMS WILL BE OFF, FACING AWAY FROM ALL TRAFFIC AND SHALL DISPLAY ONE OR MORE HIGH INTENSITY YELLOW REFLECTIVE SHEETING SURFACES OF 9-INCH BY 15-INCH MINIMUM SIZE FACING TRAFFIC.

THE ENGINEER SHALL BE PROVIDED ACCESS TO EACH SIGN UNIT AND SHALL BE PROVIDED WITH APPROPRIATE TRAINING AND OPERATION INSTRUCTIONS TO ENABLE PERSONNEL TO OPERATE AND TROUBLESHOOT THE UNIT AND TO REVISE SIGN MESSAGES, IF NECESSARY.

ALL MESSAGES TO BE DISPLAYED ON THE SIGN WILL BE PROVIDED BY THE CONTRACTOR. A LIST OF ALL PROPOSED PREPROGRAMMED MESSAGES WILL BE GIVEN TO THE ENGINEER PRIOR TO CONSTRUCTION. THE SIGN SHALL HAVE TWO DIFFERENT MEMORIES [PROM AND RAM] AND CAPABILITY TO STORE UP TO 99 MESSAGES IN EACH MEMORY. MESSAGE MEMORY OR PRE-PROGRAMMED DISPLAYS SHALL NOT BE LOST AS A RESULT OF POWER FAILURES TO THE ON-BOARD COMPUTER. THE SIGN LEGEND SHALL BE CAPABLE OF BEING CHANGED IN THE FIELD. IN ORDER TO CONVEY A MAXIMUM OF INFORMATION AT A SINGLE GLANCE, ONLY THREE LINE PRESENTATION FORMATS WITH A MAXIMUM OF SIX MESSAGE PHASES WILL BE PERMITTED. NORMALLY, ONLY A MAXIMUM OF THREE MESSAGE PHASES SHOULD BE EMPLOYED. PCMS FORMAT SHALL PERMIT THE COMPLETE MESSAGE FOR EACH PHASE TO BE READ AT LEAST ONCE.

THE PCMS SHALL CONTAIN AN ACCURATE CLOCK AND PROGRAMMING LOGIC WHICH WILL ALLOW THE SIGN TO BE ACTIVATED, DE-ACTIVATED OR MESSAGES CHANGED AUTOMATICALLY AT DIFFERENT TIMES OF THE DAY FOR DIFFERENT DAYS OF THE WEEK.

THE PCMS SHALL CONTAIN A CELLULAR TELEPHONE DATA LINK WHICH WILL [IN ACTIVE CELLULAR AREAS] ALLOW REMOTE SIGN ACTIVATION, DEACTIVATION, MESSAGE CHANGES, MESSAGE ADDITIONS AND REVISIONS TO TIME OF DAY PROGRAMS. THE SYSTEM SHALL ALSO PERMIT VERIFICATION OF CURRENT AND PROGRAMMED MESSAGES.

THE PCMS UNIT SHALL BE MAINTAINED IN GOOD WORKING ORDER BY THE CONTRACTOR IN ACCORDANCE WITH THE PROVISIONS OF 614. THE CONTRACTOR SHALL, PRIOR TO ACTIVATING THE UNIT, MAKE ARRANGEMENTS WITH AN AUTHORIZED SERVICE AGENT FOR THE PCMS TO ASSURE PROMPT SERVICE IN THE EVENT OF FAILURE. ANY FAILURE SHALL NOT RESULT IN THE SIGN BEING OUT OF SERVICE FOR MORE THAN 12 HOURS INCLUDING WEEKENDS. FAILURE TO COMPLY MAY RESULT IN AN ORDER TO STOP WORK AND OPEN ALL TRAFFIC LANES AND/OR IN THE DEPARTMENT TAKING APPROPRIATE ACTION TO SAFELY CONTROL TRAFFIC AND THE ENTIRE COST TO CONTROL TRAFFIC ACCRUED BY THE DEPARTMENT WILL BE DEDUCTED FROM MONEYS DUE, OR TO BECOME DUE THE CONTRACTOR ON HIS CONTRACT.

THE CONTRACTOR SHALL BE RESPONSIBLE FOR 24 HOURS PER DAY OPERATION AND MAINTENANCE OF THESE SIGNS ON THE PROJECT FOR THE DURATION OF THE PHASES. THE REQUIREMENT TO FURNISH, INSTALL, MAINTAIN AND REMOVE A PCMS UNIT ON THIS PROJECT SHALL NOT IN ANY WAY RELIEVE THE CONTRACTOR OF HIS RESPONSIBILITIES AS OUTLINED IN 614.02.

PAYMENT FOR THE ABOVE DESCRIBED ITEM SHALL BE AT THE CONTRACT UNIT PRICE BID FOR EACH SIGN MONTH OF ITEM 614 PORTABLE CHANGEABLE MESSAGE SIGN, AS PER PLAN AND SHALL INCLUDE ALL LABOR, MATERIALS, EQUIPMENT, FUELS, LUBRICATING OILS, SOFTWARE, HARDWARE AND INCIDENTALS TO PERFORM THE ABOVE DESCRIBED WORK.

ITEM 614 PORTABLE CHANGEABLE MESSAGE SIGN, AS PER PLAN 42 SIGN MONTH

ADVANCED NOTICE TO PAVE

THE CONTRACTOR SHALL SUBMIT FOR APPROVAL TO THE DISTRICT CONSTRUCTION ENGINEER A DETAILED SCHEDULE 15 DAYS PRIOR TO THE PLACEMENT OF THE OVERLAY COURSES, ON HOW THEY PROPOSE TO PROSECUTE THE PAVING OPERATIONS. THE DETAILS SHALL SHOW THE ORDER OF PERFORMANCE OF EACH STAGE (START TO FINISH) OF THE WORK INCLUDING THE MAINTENANCE OF TRAFFIC THAT WILL BE USED.

614 WORK ZONE PAVEMENT MARKINGS, AS PER PLAN

IN ADDITION TO THE REQUIREMENTS OF 614.11, ALL CLASS I EDGE LINES, LANE LINES, CENTER LINES AND DOTTED LINES SHALL BE 6 INCHES WIDE AND CHANNELIZING MARKINGS SHALL BE 8 INCHES WIDE. THE APPLICATION RATES FOR THESE LINES SHALL BE 1.5 TIMES THE RATES SPECIFIED FOR 4 INCH LINES IN TABLE 614.11-1.

DETOUR DURATION

THE MAXIMUM LENGTH OF TIME FOR THE DETOUR ROUTE TO BE IN EFFECT SHALL BE 120 CONSECUTIVE DAYS. CONSTRUCTION WORK MAY BE PERFORMED BEFORE AND AFTER THE DETOUR LIMITATION DATES, BUT THERE SHALL BE NO RESTRICTIONS (LANE WIDTH REDUCTIONS, TEMPORARY ROADWAYS, OR ONE WAY TRAFFIC) TO THROUGH OR LOCAL TRAFFIC. IT SHALL BE THE RESPONSIBILITY OF THE CONTRACTOR TO SCHEDULE AND PERFORM THE CONSTRUCTION WORK WITHIN THE DETOUR LIMITATION TIME. THE FAILURE OF THE CONTRACTOR TO MEET THE DETOUR LIMITATION DATES WILL CAUSE SEPARATE DISINCENTIVES OF $1400.00 PER CALENDAR DAY OF OVERRUN OF DETOUR LIMITATION TIME TO BE ASSESSED.

ALTERNATE MAINTENANCE OF TRAFFIC PLANS

IF THE CONTRACTOR SO ELECTS, HE MAY SUBMIT ALTERNATE METHODS FOR THE MAINTENANCE OF TRAFFIC, PROVIDED THE INTENT OF THE ABOVE PROVISIONS IS FOLLOWED AND NO ADDITIONAL INCONVENIENCE TO THE TRAVELING PUBLIC RESULTS THERE FROM. NO ALTERNATE PLANS SHALL BE PLACED IN EFFECT UNTIL APPROVAL HAS BEEN GRANTED IN WRITING BY THE ODOT DISTRICT CONSTRUCTION ENGINEER.

DUST CONTROL

THE CONTRACTOR SHALL FURNISH AND APPLY WATER FOR DUST CONTROL AS DIRECTED BY THE ENGINEER. THE FOLLOWING ESTIMATED QUANTITIES HAVE BEEN INCLUDED FOR DUST CONTROL PURPOSES:

ITEM 616, WATER 526 M. GAL

DRUM REQUIREMENTS

IN ADDITION TO THE REQUIREMENTS OF THE PLANS, SPECIFICATION AND PROPOSAL, DRUMS FURNISHED BY THE CONTRACTOR SHALL BE NEW AND UNUSED AT THE TIME OF ARRIVAL ON THE PROJECT. ANY DRUMS BROUGHT ON THE PROJECT, WHICH HAVE PREVIOUSLY BEEN USED ELSEWHERE, WILL NOT BE ACCEPTED.

PAYMENT FOR DRUMS SHALL BE INCLUDED IN THE LUMP SUM PRICE BID FOR MAINTAINING TRAFFIC UNLESS SEPARATELY ITEMIZED.

ITEM 614, WORK ZONE SPEED LIMIT SIGN

THE CONTRACTOR SHALL FURNISH, INSTALL, MAINTAIN, COVER DURING SUSPENSION OF WORK, AND SUBSEQUENTLY REMOVE WORK ZONE SPEED LIMIT (R2-1) (55 SPEED LIMIT) SIGNS AND SUPPORTS WITHIN THE WORK LIMITS IN ACCORDANCE WITH THE FOLLOWING REQUIREMENTS:

THE CONTRACTOR SHALL COVER OR REMOVE ANY EXISTING SPEED LIMIT SIGNS WITHIN THE REDUCED SPEED ZONE. THESE SIGNS SHALL BE RESTORED DURING SUSPENSION OR TERMINATION OF THE REDUCED SPEED LIMIT. THE EXPENSE OF COVERING OR REMOVAL AND RESTORATION OF EXISTING SPEED LIMIT OR MINIMUM SPEED LIMIT SIGNS SHALL BE INCLUDED IN THE PAY ITEM FOR THE WORK ZONE SPEED LIMIT SIGNS.

THE WORK ZONE SPEED LIMIT SIGNS MAY BE ERECTED OR UNCOVERED NO MORE THAN FOUR HOURS BEFORE THE ACTUAL START OF WORK. THE SIGNS SHALL BE REMOVED OR COVERED NO LATER THAN FOUR HOURS FOLLOWING RESTORATION OF ALL LANES TO TRAFFIC WITH NO RESTRICTIONS, OR SOONER AS DIRECTED BY THE ENGINEER. TEMPORARY SIGN COVERING AND UNCOVERING DUE TO TEMPORARY LANE RESTORATIONS SHALL BE GUIDED BY THE FOUR-HOUR LIMITATIONS STATED ABOVE. SUCH LANE RESTORATIONS SHOULD BE EXPECTED TO REMAIN IN EFFECT FOR 30 OR MORE DAYS, SUCH AS DURING WINTER SHUT-DOWNS. CLEANUP WORK AND OTHER WORK BEYOND THE SHOULDER SUCH AS SEEDING, TO BE PERFORMED AFTER RESTORATION OF ALL FULL-WIDTH LANES AND SHOULDERS TO TRAFFIC, DOES NOT CONSTITUTE A CONDITION WARRANTING A SPEED REDUCTION. THEREFORE, WHEN ACTIVITY IS LIMITED TO SUCH WORK, THE SPEED LIMIT IN EFFECT SHALL BE THE NORMAL SPEED LIMIT FOR THE SITE.

CONSTRUCTION AND MATERIALS SPECIFICATIONS, ITEM 614, PARAGRAPH 614.02(B) INDICATES THAT THE TWO DIRECTIONS OF A DIVIDED HIGHWAY ARE CONSIDERED SEPARATE HIGHWAY SECTIONS. THEREFORE, IF THE WORK ON A MULTI-LANE DIVIDED HIGHWAY IS LIMITED TO ONLY ONE DIRECTION, SPEED REDUCTION IN THE DIRECTION OF THE WORK DOES NOT AUTOMATICALLY CONSTITUTE SPEED REDUCTION IN THE OPPOSITE DIRECTION. SPEED LIMIT REDUCTION IN THE OPPOSITE DIRECTION, IN SUCH CASE, IS APPROPRIATE ONLY IF CONDITIONS ARE EXPECTED TO HAVE AN IMPACT ON THE DIRECTIONAL TRAFFIC FLOW, AS DIRECTED BY THE ENGINEER.

ON PROJECTS FOR WHICH THE ACTIVITY OR ROADWAY RESTRICTION IS LIMITED TO ONE SECTION OF THE PROJECT FOR AT LEAST THIRTY DAYS AND THEN IS MOVED TO ANOTHER SECTION OF THE PROJECT UPON COMPLETION OF WORK IN THE FIRST SECTION, THE SPEED LIMIT REDUCTION SHALL BE LIMITED TO ONLY THE ACTIVE PORTION OF THE PROJECT AT THE GIVEN TIME. SIGNING FOR A SPEED LIMIT REDUCTION, AS WELL AS ALL OTHER ADVANCE CONSTRUCTION SIGNING, SHALL BE RELOCATED WHEN THE CONCENTRATION OF ACTIVITY IS RELOCATED.

ON PROJECTS FOR WHICH SPEED REDUCTION IS CALLED FOR ON MORE THAN ONE ROADWAY, THE DISPLAY OF REDUCED SPEED LIMIT SIGNING ON A GIVEN ROADWAY SHALL BE DEPENDANT ON THE SCHEDULING OF WORK ACTIVITY ON THE GIVEN ROADWAY.

SPEED REDUCTION (W3-5) SIGNS SHALL BE ERECTED IN ADVANCE OF THE SPEED REDUCTION, APPROXIMATELY 1250 FEET ON MULTI-LANE HIGHWAYS AND 500 FEET ON 2-LANE HIGHWAYS.

A SIGN(S) TO INDICATE THE RESUMPTION OF THE STATUTORY SPEED LIMIT SHALL BE ERECTED AT THE END OF ANY REDUCED SPEED ZONE, TYPICALLY AT THE POINT WHERE ROADWAY AND SHOULDER WIDTHS RETURN TO NORMAL. ON UNDIVIDED ROADWAYS, THE R2-1 (SPEED LIMIT) SIGN SHALL BE USED. ON DIVIDED HIGHWAYS WHERE THE SPEED LIMIT VARIES BY VEHICLE TYPE, THE R2-1 (SPEED LIMIT) SIGN AND THE R2-H2A (TRUCK SPEED LIMIT) SIGNS SHALL BE MOUNTED SIDE-BY-SIDE ON SEPARATE SUPPORTS. THE CONTRACTOR MAY USE SIGNS AND SUPPORTS IN USED, BUT GOOD CONDITION, PROVIDED THE SIGNS MEET CURRENT ODOT SPECIFICATIONS. SIGN FACES SHALL BE REFLECTORIZED WITH TYPE G SHEETING COMPLYING WITH THE REQUIREMENTS OF CMS 730.19.

WORK ZONE SPEED LIMIT SIGNS SHALL BE MOUNTED ON TWO ITEM 630, GROUND MOUNTED SUPPORTS, NO. 3 POSTS.

WORK ZONE SPEED LIMIT SIGNS AND SUPPORTS WILL BE MEASURED AS THE NUMBER OF SIGN INSTALLATIONS, INCLUDING THE SIGNS AND NECESSARY SUPPORTS. IF A SIGN AND SUPPORT COMBINATION IS REMOVED AND REERECTED AT ANOTHER LOCATION WITHIN THE PROJECT DUE TO CHANGES IN THE SPEED ZONE DIRECTED BY THE ENGINEER, IT SHALL BE CONSIDERED ANOTHER UNIT.

PAYMENT FOR ACCEPTED QUANTITIES, COMPLETE IN PLACE, WILL BE MADE AT THE CONTRACT UNIT PRICE. PAYMENT SHALL BE FULL COMPENSATION FOR ALL MATERIALS, LABOR, INCIDENTALS AND EQUIPMENT FOR FURNISHING, ERECTING, MAINTAINING, COVERING DURING SUSPENSION OF WORK, AND REMOVING THE SIGNS AND SUPPORTS. THE FOLLOWING ESTIMATED QUANTITY HAS BEEN CARRIED TO THE GENERAL SUMMARY.

ITEM 614, WORK ZONE SPEED LIMIT SIGN 36 EACH

WORK ZONE INCREASED PENALTIES SIGN (R11-H5A)

R11-H5A-48 SIGNS SHALL BE FURNISHED, ERECTED, AND MAINTAINED IN GOOD CONDITION AND/OR REPLACED AS NECESSARY AND SUBSEQUENTLY REMOVED BY THE CONTRACTOR. SIGNS SHALL BE MOUNTED AT THE APPROPRIATE OFFSETS AND ELEVATIONS AS PRESCRIBED BY THE OHIO MANUAL OF UNIFORM TRAFFIC CONTROL DEVICES. THEY SHALL BE MAINTAINED ON SUPPORTS MEETING CURRENT SAFETY CRITERIA.

THE SIGNS MAY BE ERECTED OR UNCOVERED NO MORE THAN FOUR HOURS BEFORE THE ACTUAL START OF WORK. THE SIGNS SHALL BE REMOVED OR COVERED NO LATER THAN FOUR HOURS FOLLOWING RESTORATION OF ALL LANES TO TRAFFIC WITH NO RESTRICTIONS, OR SOONER AS DIRECTED BY THE ENGINEER. TEMPORARY SIGN COVERING AND UNCOVERING DUE TO TEMPORARY LANE RESTORATIONS SHALL BE GUIDED BY THE FOUR-HOUR LIMITATIONS STATED ABOVE. SUCH LANE RESTORATIONS SHOULD BE EXPECTED TO REMAIN IN EFFECT FOR 30 OR MORE CONSECUTIVE CALENDAR DAYS, SUCH AS DURING WINTER SHUT-DOWNS.

(NOTE CONTINUED ON NEXT SHEET)

Palmer ENGINEERING
PALMER ENGINEERING
11300 CORNELL PARK DR
CINCINNATI, OH 45242

O:\ODOT\ATB\25199\not\sheets\25199NN03.dgn 6/6/2009 8:55:01 AM DENNIS

THE CONTRACTOR MAY USE SIGNS AND SUPPORTS IN USED, BUT GOOD, CONDITION PROVIDED THE SIGNS MEET CURRENT ODOT SPECIFICATIONS. SIGN FACES SHALL BE REFLECTORIZED WITH TYPE G SHEETING COMPLYING WITH THE REQUIREMENTS OF CMS 730.19.

WORK ZONE INCREASED PENALTIES SIGNS AND SUPPORTS WILL BE MEASURED AS THE NUMBER OF SIGN INSTALLATIONS, INCLUDING THE SIGN AND NECESSARY SUPPORTS. IF A SIGN AND SUPPORT COMBINATION IS REMOVED AND RE ERECTED AT ANOTHER LOCATION AS DIRECTED BY THE ENGINEER, IT SHALL BE CONSIDERED ANOTHER UNIT.

PAYMENT FOR ACCEPTED QUANTITIES, COMPLETE, IN PLACE WILL BE MADE AT THE CONTRACT UNIT PRICE. PAYMENT SHALL BE FULL COMPENSATION FOR ALL MATERIALS, LABOR, INCIDENTALS AND EQUIPMENT FOR FURNISHING, ERECTING, MAINTAINING, COVERING DURING SUSPENSION OF WORK, AND REMOVAL OF THE SIGN AND SUPPORT.

ITEM 614, WORK ZONE INCREASED PENALTIES SIGN 24 EACH

ITEM 614, BARRIER REFLECTORS AND/OR OBJECT MARKERS

BARRIER REFLECTORS AND/OR OBJECT MARKERS SHALL BE INSTALLED ON ALL PORTABLE CONCRETE BARRIER USED FOR TRAFFIC CONTROL. BARRIER REFLECTORS, OBJECT MARKERS AND THEIR INSTALLATION SHALL CONFORM TO CMS 626, EXCEPT THAT THE SPACING SHALL BE 50 FEET. AN ESTIMATED QUANTITY OF 3349 EACH OF ITEM 614 BARRIER REFLECTOR, TYPE B AND 1170 EACH OF ITEM 614 OBJECT MARKER, 2-WAY HAVE BEEN PROVIDED AND CARRIED TO THE GENERAL SUMMARY.

THE QUANTITY FOR BARRIER REFLECTOR INCLUDES 20% OF THE SUBTOTAL TO REPLACE DAMAGED REFLECTORS. THIS IS INCLUDED OF THE M.O.T. SUBSUMMARY

EARTHWORK FOR MAINTAINING TRAFFIC

THE FOLLOWING QUANTITIES HAVE BEEN INCLUDED IN THE PLAN FOR INFORMATION ONLY:

EXCAVATION FOR MAINTAINING TRAFFIC 29,707 CU. YD.
EMBANKMENT FOR MAINTAINING TRAFFIC 19,547 CU. YD.

WHEN UNDERCUTS ARE NECESSARY FOR MAINLINE PAVEMENT OR EMBANKMENT CONSTRUCTION, EVALUATE THE NEED FOR TEMPORARY ROAD UNDERCUTS IF WITHIN A CLOSE PROXIMITY TO THE MAINLINE UNDERCUTS. A GEOTECHNICAL EVALUATION SHOULD BE CONSIDERED TO DETERMINE IF THE EXISTING SOIL CONDITIONS ARE ADEQUATE TO SUPPORT THE TEMPORARY ROAD. ADDITIONAL SOIL BORINGS ALONG THE TEMPORARY ROAD ARE NOT NORMALLY REQUIRED.

FLOODLIGHTING

FLOODLIGHTING OF THE WORK SITE FOR OPERATIONS CONDUCTED DURING NIGHTTIME PERIODS SHALL BE ACCOMPLISHED SO THAT THE LIGHTS DO NOT CAUSE GLARE TO THE DRIVERS ON THE ROADWAY. TO ENSURE THE ADEQUACY OF THE FLOODLIGHT PLACEMENT, THE CONTRACTOR AND THE ENGINEER SHALL DRIVE THROUGH THE WORK SITE EACH NIGHT WHEN THE LIGHTING IS IN PLACE AND OPERATIVE PRIOR TO COMMENCING ANY WORK. IF GLARE IS DETECTED, THE LIGHT PLACEMENT AND SHIELDING SHALL BE ADJUSTED TO THE SATISFACTION OF THE ENGINEER BEFORE WORK PROCEEDS.

PAYMENT FOR ALL LABOR, EQUIPMENT AND MATERIALS SHALL BE INCLUDED IN THE LUMP SUM CONTRACT PRICE FOR ITEM 614, MAINTAINING TRAFFIC.

ITEM 614, WORK ZONE IMPACT ATTENUATOR FOR 24" WIDE HAZARDS (UNIDIRECTIONAL OR BIDIRECTIONAL)

THIS ITEM SHALL CONSIST OF FURNISHING AND INSTALLING ONE OF THE FOLLOWING IMPACT ATTENUATORS:

1. THE QUADGUARD CZ, (24 INCHES WIDE SIX-BAY) WORK ZONE IMPACT ATTENUATOR MANUFACTURED BY ENERGY ABSORPTION SYSTEMS, INC., 35 EAST WACKER DRIVE, CHICAGO, IL 60601 (TELEPHONE: 312-467-6750).

   THE LENGTH OF THE SIX-BAY QUADGUARD CZ IS 20'-9". INSTALLATION SHALL BE AT THE LOCATIONS SPECIFIED IN THE PLANS, IN ACCORDANCE WITH THE MANUFACTURER'S SPECIFICATIONS AS DETAILED ON THE FOLLOWING PRE-APPROVED SHOP DRAWINGS:

DRAWING NUMBER: QSCZCVR-T4
DRAWING NAME: QUADGUARD CZ SYSTEM FOR CONSTRUCTION ZONES
REVISION DATE: 5/13/99 REV. J
ODOT APPROVAL DATE: 8/27/99

DRAWING NUMBER: 35-40-10
DRAWING NAME: QUADGUARD SYSTEM CONCRETE PAD, CZ, OG
REVISION DATE: 11/19/97 REV. D
ODOT APPROVAL DATE: 8/27/99

DRAWING NUMBER: 35-40-16
DRAWING NAME: QUADGUARD SYSTEM BACKUP ASSEMBLY, CZ, OG
REVISION DATE: 7/30/99 REV. F
ODOT APPROVAL DATE: 8/27/99

DRAWING NUMBER: 354051Z
DRAWING NAME: QUADGUARD CZ SYSTEM NOSE ASSEMBLY, CZ, OG, 24, 30, 36
REVISION DATE: 5/17/99
ODOT APPROVAL DATE: 8/27/99

DRAWING NUMBER: 35-40-18
DRAWING NAME: TRANSITION ASSEMBLY, 4 OFFSET, OG
REVISION DATE: 6/25/99 REV. F
ODOT APPROVAL DATE: 8/27/99

DRAWING NUMBER: 35400260
DRAWING NAME: QUADGUARD SYSTEM PCMB ANCHOR ASSEMBLY
REVISION DATE: 11/19/97 REV. C
ODOT APPROVAL DATE: 8/27/99

2. THE TRACC (TRINITY ATTENUATING CRASH CUSHION) MANUFACTURED BY TRINITY INDUSTRY, 1170 N. STATE STREET, GIRARD, OHIO 44420 (TELEPHONE: 330-545-4373).

   THE TRACC IS 21'-0" LONG AND 2'-7" WIDE. INSTALLATION SHALL BE AT THE LOCATIONS SPECIFIED IN THE PLANS, IN ACCORDANCE WITH THE MANUFACTURER'S SPECIFICATIONS AS DETAILED ON THE FOLLOWING PRE-APPROVED SHOP DRAWINGS:

DRAWING NUMBER: SS450
DRAWING NAME: CRASH-CUSHION ATTENUATING TERMINAL PLAN, ELEVATION & SECTIONS
REVISION DATE: 3/12/99 REV. 1
ODOT APPROVAL DATE: 8/27/99

DRAWING NUMBER: SS455
DRAWING NAME: TRACC TRANSITION TO W-BEAM MEDIAN BARRIER PLAN, ELEVATION & SECTIONS
REVISION DATE: 2/18/99
ODOT APPROVAL DATE: 8/27/99

DRAWING NUMBER: SS461
DRAWING NAME: TRACC TRANSITION TO CONCRETE SAFETY SHAPE BARRIER PLAN, ELEVATION & SECTIONS
REVISION DATE: 6/30/99 REV. 1
ODOT APPROVAL DATE: 8/27/99

DRAWING NUMBER: SS462
DRAWING NAME: TRACC TRANSITION TO CONCRETE BARRIER SINGLE SLOPE PLAN, ELEVATION & SECTIONS
REVISION DATE: 6/30/99
ODOT APPROVAL DATE: 8/27/99

3. THE BARRIER SYSTEMS, INC. TAU-II IMPACT ATTENUATOR, DISTRIBUTED BY ROAD SYSTEMS INC., SALES SUPPORT, 2183 ELM TRACE, AUSTINTOWN, OH 44515, (TELEPHONE 330-799-9291)

   THE TAU-II FOR THIS NOTE IS A PARALLEL 8-BAY UNIT (24' LONG AND 35" WIDE). INSTALLATION SHALL BE AT THE LOCATIONS SPECIFIEDIN THE PLANS, IN ACCORDANCE WITH THE MANUFACTURER'S SPECIFICATIONS AS DETAILED ON THE FOLLOWING PRE-APPROVED SHOP DRAWINGS:

DRAWING NUMBER: A040416
DRAWING NAME: UNIVERSAL TAU-II PARTS LIST
REVISION DATE: 4/22/04
ODOT APPROVAL DATE: 10/16/04

DRAWING NUMBER: A040420
DRAWING NAME: UNIVERSAL TAU-II FOUNDATION, FLUSH MOUNT BACKSTOP
REVISION DATE: 4/28/04
ODOT APPROVAL DATE: 10/16/04

DRAWING NUMBER: A040105
DRAWING NAME: UNIVERSAL TAU-II FOUNDATION, PCB BACKSTOP (REFERENCED ON A04020)
REVISION DATE: 1/07/04
ODOT APPROVAL DATE: 10/16/04

DRAWING NUMBER: BO40239
DRAWING NAME: APPLICATION, FLUSH MOUNT BACKSTOP (TYPICAL FOR PARALLEL 60 MPH UNIT)
REVISION DATE: 4/21/04
ODOT APPROVAL DATE: 10/16/04

THE CONTRACTOR SHALL REPAIR OR REPLACE A DAMAGED UNIT WITHIN 24 HOURS OF A DAMAGING IMPACT.

WHEN BIDIRECTIONAL DESIGNS ARE SPECIFIED, THE CONTRACTOR SHALL SUPPLY APPROPRIATE TRANSITIONS. PAYMENT FOR THE ABOVE WORK SHALL BE MADE AT THE UNIT PRICE BID AND SHALL INCLUDE ALL LABOR, TOOLS, EQUIPMENT AND MATERIALS NECESSARY TO CONSTRUCT, MAINTAIN A COMPLETE AND FUNCTIONAL IMPACT ATTENUATOR SYSTEM, INCLUDING ALL RELATED BACKUPS, TRANSITIONS, LEVELING PADS, HARDWARE AND GRADING, NOT SEPARATELY SPECIFIED, AS REQUIRED BY THE MANUFACTURER.

ITEM 614, WORK ZONE CROSSOVER LIGHTING SYSTEM

THIS WORK SHALL CONSIST OF FURNISHING, ERECTING, OPERATING, MAINTAINING AND REMOVING A WORK ZONE LIGHTING SYSTEM FOR A SINGLE CROSSOVER, OR OVERLAPPING A PAIR OF CROSSOVERS. THE SYSTEM SHALL BE AS SHOWN ON SCD MT-100.00. THE CONTRACTOR SHALL ARRANGE FOR AND PAY FOR POWER. ALL MATERIALS AND CONSTRUCTION SHALL COMPLY WITH APPLICABLE PORTIONS OF 625 AND 725 EXCEPT: THE PERFORMANCE TEST OF 625.19F, AND CERTIFIED DRAWING REQUIREMENT OF 625.04, ARE WAIVED AND USED MATERIALS IN GOOD CONDITION ARE ACCEPTABLE.

POLES MAY BE LESS THAN 30 FT FROM THE EDGE OF PAVEMENT WHEN BEHIND GUARDRAIL. ADDITIONAL POLE LINES, CABLES AND APPURTENANCES NECESSARY TO FURNISH POWER TO THE LIGHTING SYSTEM SHALL BE INCLUDED IN THIS ITEM. SERVICE POLES SHALL BE POSITIONED WITH THE SAME CONSTRAINTS AS THE LIGHTING POLES AS A MINIMUM.

PAYMENT WILL BE MADE AT THE UNIT PRICE PER EACH FOR ITEM 614, WORK ZONE CROSSOVER LIGHTING SYSTEM THROUGHOUT ALL PHASES OF WORK WHEN THE CROSSOVER ROADWAYS ARE USED.

ITEM 614, ITEM 614, WORK ZONE CROSSOVER LIGHTING SYSTEM 2 EACH

ITEM 622, PORTABLE CONCRETE BARRIER, 32"

3000 FEET OF ITEM 622 PORTABLE CONCRETE BARRIER, 32" HAS BEEN PROVIDED FOR PROTECTION OF THE RAILROAD BALLAST. THE STRUCTURE SLM 14.50 MAY BE ACCESSED VIA CARSON ROAD. PLEASE REFER TO SPECIAL CLAUSES IN THE PROPOSAL REGARDING WORK ON RAILROAD PROPERTY. VEHICLES AND EQUIPMENT WILL NOT BE ALLOWED TO ENCROACH THE RAILROAD BALLAST. BOTH THE EAST AND WEST ACCESS ROADS MAY BE USED. THE PORTABLE CONCRETE BARRIER IS TO BE USED AS DIRECTED BY THE PROJECT ENGINEER.

CALCULATED | CHECKED

MAINTENANCE OF TRAFFIC GENERAL NOTES

ATB-90-14.25

Palmer ENGINEERING
PALMER ENGINEERING
11300 CORNELL PARK DR
CINCINNATI, OH 45242

C:\ODOT\ATB\25199\mot\sheets\25199MN004.dgn 6/6/2009 8:55:06 AM DENNIS

ITEM 614 - WORK ZONE RAISED PAVEMENT MARKER, AS PER PLAN

WORK ZONE RAISED PAVEMENT MARKERS, AS PER PLAN, AND THEIR INSTALLATION SHALL CONFORM TO CMS 614 OR CMS 621 AS SPECIFIED HEREIN.

RAISED PAVEMENT MARKERS IN USE DURING THE SNOW-PLOWING SEASON SHALL CONFORM TO 621.

RAISED PAVEMENT MARKERS IN USE DURING THE NON-SNOW-PLOW SEASON SHALL CONFORM TO EITHER 614 OR TO 621.

THE SNOW-PLOWING SEASON SHALL RUN FROM NOVEMBER 1" THROUGH MARCH 30".

IF PROJECT DELAYS, NOT THE FAULT OF ODOT, CAUSE THE WORK TO EXTEND INTO THE SNOW-PLOWING SEASON, THE CONTRACTOR SHALL BE RESPONSIBLE FOR REPLACING WORK ZONE RAISED PAVEMENT MARKERS (WZRPMS) CONFORMING TO CMS 614, WITH RAISED PAVEMENT MARKERS CONFORMING TO 621, AS DETERMINED BY THE ENGINEER, AT THE CONTRACTOR'S EXPENSE.

THIS ITEM SHALL INCLUDE PURCHASE, INSTALLATION AND REMOVAL OF ITEM 614 WORK ZONE RAISED PAVEMENT MARKER, AS PER PLAN, INCLUDING FILLING OF ANY DEPRESSIONS CREATED IN THE PAVEMENT AS PER CMS 202.10.

RESURFACING OF THE TRANSITION AREAS SHALL BE PERFORMED AT THE TIME THAT THE SURFACE COURSE IS BEING APPLIED TO THE ENTIRE PROJECT. PRIOR TO APPLICATION OF THE SURFACE COURSE ON THE PROJECT, THE SURFACE COURSE OF THE EXISTING PAVEMENT WITHIN THE TRANSITION AREA SHALL BE REMOVED TO A DEPTH EQUIVALENT TO THE DEPTH OF THE PROPOSED SURFACE COURSE, AS DETERMINED BY THE ENGINEER. THE FOLLOWING BID ITEMS ARE INCLUDED IN THE PLANS:

ITEM 254 PAVEMENT PLANING, ASPHALT CONCRETE
21,197 SQUARE YARDS
ITEM 614 WORK ZONE RAISED PAVEMENT MARKER, AS PER PLAN
2488 EACH

PAYMENT FOR RESURFACING WITHIN THE TRANSITION AREA SHALL BE PAID FOR UNDER THE APPROPRIATE BID ITEMS FOR THE WORK REQUIRED, AS PROVIDED FOR IN THE PLANS.

ITEM 614 - WORK ZONE RAISED PAVEMENT MARKERS ON CONCRETE SURFACES

RAISED PAVEMENT MARKERS IN WORK ZONES, INSTALLED ONTO CONCRETE SURFACES, SHALL BE ITEM 614 WORK ZONE RAISED PAVEMENT MARKERS. WZRPMS ARE INTENDED FOR USE ONLY DURING THE NON-SNOWPLOWING SEASON. WZRPMS SHALL NOT BE PROVIDED DURING THE SNOW-PLOWING SEASON.

THE SNOW-PLOWING SEASON SHALL RUN FROM NOVEMBER 1" THROUGH MARCH 30".

WHERE A TEMPORARY ALIGNMENT WILL REMAIN IN USE THROUGH THE WINTER, THE WZRPMS SHALL BE REMOVED PRIOR TO THE BEGINNING OF THE SNOW-PLOWING SEASON AND REPLACED APPROXIMATELY APRIL 1, OR AS OTHERWISE DETERMINED BY THE ENGINEER. THIS ITEM SHALL INCLUDE PURCHASE, INSTALLATION AND REMOVAL OF ITEM 614 WORK ZONE RAISED PAVEMENT MARKERS.

CONCRETE BARRIER DELINEATION

OBJECT MARKERS SHALL BE INSTALLED ON ALL PERMANENT CONCRETE BARRIER, LOCATED WITHIN 5 FEET OF THE EDGE OF THE ADJACENT TRAVEL LANE. OBJECT MARKER SPACING SHALL BE 50 FEET.

AN ESTIMATED QUANTITY OF 63 EACH OF ITEM 614 OBJECT MARKER, 1-WAY HAS BEEN PROVIDED AND CARRIED TO THE GENERAL SUMMARY.

GUARDRAIL DELINEATION

OBJECT MARKERS SHALL BE INSTALLED ON ALL GUARDRAIL LOCATED WITHIN 5 FEET OF THE EDGE OF THE ADJACENT TRAVEL LANE. GUARDRAIL-MOUNTING OF OBJECT MARKERS SHALL BE MADE BY INSTALLING THE OBJECT MARKERS ON THE EXTENSION BLOCKS RATHER THAN DIRECTLY ONTO THE GUARD-RAIL ITSELF. OBJECT MARKER SPACING SHALL BE APPROX-IMATELY 50 FEET.

PAYMENT SHALL BE INCLUDED TO 619 MOT AND INCLUDE ALL MATERIAL, LABOR, INCIDENTALS AND EQUIPMENT NECESSARY FOR FURNISHING, INSTALLING, MAINTAINING AND REMOVING OBJECT MARKERS.

AN ESTIMATED QUANTITY OF 251 EACH OF ITEM 614 OBJECT MARKERS, 1-WAY HAS BEEN PROVIDED AND CARRIED TO THE GENERAL SUMMARY.

ITEM 622, PORTABLE CONCRETE BARRIER (BRIDGE MOUNTED), 50", AS PER PLAN

THIS WORK SHALL CONSIST OF FURNISHING, MAINTAINING, AND SUBSEQUENTLY REMOVING A 50-INCH PORTABLE CONCRETE BARRIER (PCB) AT THE LOCATIONS SHOWN ON THE PLANS. FOR DETAILS SEE SCD RM-4.1. PLEASE NOTE THAT SCD RM-4.1 WAS UPDATED 10-20-06 TO PROVIDE A PCB WHICH IS COMPATIBLE WITH NCHRP 350 CRITERIA.

PORTABLE CONCRETE BARRIER, 32 INCHES HIGH WITH AN 18-INCH MINIMUM HEIGHT GLARE SCREEN MAY BE USED AT THE OPTION OF THE CONTRACTOR. THE GLARE SCREEN SHALL BE CON-STRUCTED USING ONE OF THE SCREENS PROVIDED ON THE APPROVED LIST, AVAILABLE ON THE OFFICE OF MATERIAL MANAGEMENT WEB PAGE AT HTTP://WWW.DOT.STATE.OH.US/TESTLAB/APPLISTS/MISC/GLARESCREEN.HTM.

PADDLE OR INTERMITTENT TYPE GLARE SCREENS SHALL BE DESIGNED USING A 20 DEGREE CUT-OFF ANGLE BASED ON TAN-GENT ALIGNMENT. THAT SPACING SHALL BE USED THROUGHOUT THE BARRIER LENGTH WITHOUT REGARD TO BARRIER CURVATURE.

THE GLARE SCREEN SYSTEM SHALL BE SECURELY FASTENED TO THE 32-INCH PORTABLE CONCRETE BARRIER USING THE HARD-WARE AND PROCEDURES SPECIFIED BY THE MANUFACTURER.

FOR DIRECTIONS ON HOW TO INSTALL THE GLARE SCREEN AND THE BARRIER, SEE THE MANUFACTURER'S INSTRUCTIONS.

PAYMENT SHALL INCLUDE ALL LABOR, MATERIAL, AND EQUIP-MENT NECESSARY TO PERFORM THE WORK AND SHALL BE PAID FOR AT THE CONTRACT PRICE PER FOOT FOR ITEM 622, PORTABLE CONCRETE BARRIER, 50 INCH, AS PER PLAN.

CONCRETE BARRIER DELINEATION AS PER PLAN

INCREASED DELINEATION, AS SPECIFIED HEREIN, SHALL BE IN-STALLED ON ALL CONCRETE BARRIER, PERMANENT OR TEMP-ORARY, LOCATED WITHIN 5 FEET OF THE EDGE OF THE TRA-VELED LANE UNDER EITHER OF THE FOLLOWING CONDITIONS:

ALONG TAPERS AND TRANSITION AREAS

ALONG CURVES (OUTSIDE ONLY) WITH DEGREE OF CURVATURE GREATER THAN OR EQUAL TO 3 DEGREES

THE INCREASED DELINEATION SHALL CONSIST OF EITHER LINEAR DELINEATION PANELS OR THE TRIPLE STACKING OF WORK ZONE BARRIER REFLECTORS.

THE LINEAR DELINEATION PANELS SHALL CONSIST OF PANELS OF DELINEATION, APPROXIMATELY 34 INCHES LONG AND 6- INCHES WIDE AND SHALL BE "CRIMPED". PANELS SHALL BE PROVIDED AT THE RATE OF ONE PER SECTION OF PORTABLE CONCRETE BARRIER, OR ONE PANEL EVERY 10 FEET ON PER- MANENT BARRIER, SPACED EVENLY ALONG THE LENGTH OF THE RUN. THE PANELS SHALL BE MOUNTED SUCH THAT THE TOPS OF THE PANELS ARE 26 INCHES FROM THE BASE OF THE CONCRETE BARRIER.

TRIPLE STACKED BARRIER REFLECTORS SHALL CONSIST OF THREE BARRIER REFLECTORS STACKED VERTICALLY IN THEIR ATTACHMENT TO CONCRETE BARRIER. THERE SHALL BE NO OPEN SPACE BETWEEN THE ADJACENT BARRIER REFLECTORS. THE TOP OF THE MIDDLE BARRIER REFLECTOR SHALL BE LO- CATED 26 IN ABOVE THE PAVEMENT.

PAYMENT SHALL BE FULL COMPENSATION FOR ALL MATERIAL, LABOR, INCIDENTALS AND EQUIPMENT NECESSARY FOR FURN-ISHING, INSTALLING, MAINTAINING AND REMOVING DELINEATION, AS PER PLAN.

THE FOLLOWING ESTIMATED QUANTITY HAS BEEN INCLUDED IN THE PLANS:

614	LINEAR DELINEATION	1110 FEET

ALONG RUNS OF CONCRETE BARRIER WHERE THIS ITEM IS PRO-VIDED, THE QUANTITY SHALL BE MEASURED AS THE ENTIRE LENGTH OF THE RUN BEING DELINEATED, INCLUDING THE SPACES BETWEEN THE INDIVIDUAL PANELS OR STACKS OF BARRIER REFLECTORS.

WEIGHTED CHANNELIZERS

THE WEIGHTED CHANNELIZER SHALL BE PREDOMINATELY ORANGE IN COLOR AND SHALL BE MADE OF A LIGHTWEIGHT, FLEXIBLE, AND DEFORMABLE MATERIAL. THEY SHALL BE AT LEAST 42 INCHES IN HEIGHT WITH A WEIGHTED BASE. THEY MAY HAVE A "HANDLE" OR LIFTING DEVICE WHICH EXTENDS ABOVE THE 42 INCH MINIMUM HEIGHT.

THE MARKINGS ON THE WEIGHTED CHANNELIZER SHALL BE HORIZONTAL, CIRCUMFERENTIAL, ALTERNATING ORANGE AND WHITE RETROREFLECTIVE STRIPES 6 INCHES WIDE. EACH WEIGHTED CHANNELIZER SHALL HAVE A MINIMUM OF TWO ORANGE AND TWO WHITE STRIPES. ANY NON-RETROREFLECTIVE SPACES BETWEEN THE HORIZONTAL ORANGE AND WHITE STRIPES SHALL NOT EXCEED 2 INCHES WIDE. THE WEIGHTED CHAN-NELIZER SHALL HAVE A 4-INCH MINIMUM WIDTH, REGARDLESS OF ORIENTATION.

ON FREEWAYS AND MULTILANE HIGHWAYS:
USE OF WEIGHTED CHANNELIZERS ON FREEWAYS AND MULTILANE HIGHWAYS SHALL BE LIMITED TO SHORT-TERM OPERATION, GENERALLY TWELVE HOURS OR LESS, FOR EITHER DAY OR NIGHT. UPON COMPLETION OF WORK WITHIN THE ABOVE NOTED TIME PERIOD, THE WEIGHTED CHANNELIZERS SHALL BE REMOVED. THE WEIGHTED CHANNELIZERS MAY AGAIN BE PLACED ON THE HIGHWAY WHEN THE WORK IS TO RESUME ON THE FOL-LOWING DAY OR NIGHT. ANY LANE CLOSURE USING CHAN-NELIZATION DEVICES, EXPECTED TO REMAIN FOR MORE THAN TWELVE HOURS, SHALL REQUIRE THE USE OF DRUMS OR BARRIERS.

WHEN USED AT NIGHT, WEIGHTED CHANNELIZERS SHALL ONLY BE PLACED IN THE "TANGENT AREA". THE "TANGENT AREA" IS DEFINED AS THE AREA AFTER THE TRANSITION TAPER WHERE THE WORK TAKES PLACE. DRUMS SHALL BE USED IN THE TRANSITION TAPERS FOR NIGHT OPERATIONS.

ON OTHER HIGHWAYS:
THERE ARE NO DURATIONS OF WORK RESTRICTIONS FOR USE OF WEIGHTED CHANNELIZERS ON ALL OTHER TYPES OF HIGHWAYS, DAY OR NIGHT. ON THESE ROADWAYS THE WEIGHTED CHAN-NELIZER MAY BE USED IN THE TRANSITION TAPERS AS WELL AS IN THE TANGENT AREAS, DAY OR NIGHT.

MAXIMUM SPACING OF THE WEIGHTED CHANNELIZER SHALL BE 40 FEET.

STEPS SHOULD BE TAKEN TO ENSURE THAT THE WEIGHTED CHANNELIZERS WILL NOT BE BLOWN OVER OR DISPLACED BY WIND OR MOVING TRAFFIC. BALLASTS SHOULD NOT PRESENT A HAZARD IF THE WEIGHTED CHANNELIZERS ARE INADVERTENTLY STRUCK, NOR SHOULD THEY AFFECT THE VISIBILITY OF THE WEIGHTED CHANNELIZERS. ALL BALLASTS USED SHOULD BE IN ACCORDANCE WITH THE MANUFACTURER'S SPECIFICATIONS.

Palmer ENGINEERING
PALMER ENGINEERING
11300 CORNELL PARK DR
CINCINNATI, OH 45242

O:\ODOT\ATB\25199\root\sheets\25199MN005.dgn 6/6/2009 8:55:10 AM DENNIS

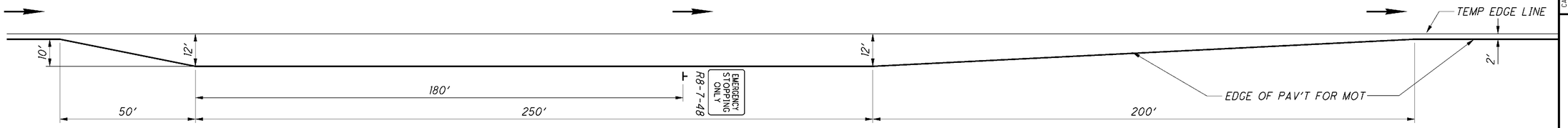

EMERGENCY PULL-OFF DETAIL (SEE PLAN SHEETS FOR LOCATIONS)

SCENIC RIVER CLOSURE

WHEN CLOSURE OF THE RIVER IS REQUIRED, THE CONTRACTOR SHALL PLACE, AT THE CLOSURE POINT, BUOYS ACROSS THE WIDTH OF THE RIVER. BUOYS SHALL BE SPACED AT APPROXIMATELY TEN (10) FEET AND SHALL BE STRUNG ON A NYLON ROPE, ABOVE THE PLANE OF THE RIVER ORDINARY HIGH WATER MARK, SECURELY ANCHORED ON EACH BANK AT THIS LOCATION. EQUIPMENT SHALL NOT BE PERMITTED IN THE RIVER FOR ANY TIME FOR ANY PROCEDURE. WATER CRAFT (CANOES, FLOTATION DEVICES, ETC.) SHALL BE PERMITTED FOR USE FOR THIS PROCEDURE WITH THE NOTIFICATION AND APPROVAL BY THE ENGINEER/SUPERVISOR. THE CLOSURE POINT SHALL BE UPSTREAM OF THE CONSTRUCTION ACTIVITY AND SHALL BE AT A POINT TO ALLOW READY ASHTABULA RIVER TRAFFIC. THIS POINT SHALL BE AT THE APPROVAL OF THE ENGINEER. ADDITIONALLY, A SIGN, AS DETAILED BELOW, SHALL BE ERECTED (MOUNTING HEIGHT = 7') AT THE CLOSURE POINT AND PLACED ABOVE THE PLANE OF THE RIVER ORDINARY HIGH WATER MARK AT THIS LOCATION.

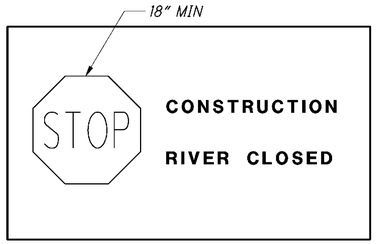

5' X 3' RED ON WHITE

WORK ZONE GUARDRAIL CONSTRUCTION

THE GUARDRAIL SHALL BE TYPE 5 AS SPECIFIED IN ACCORDANCE WITH ITEM 606, EXCEPT THAT USED MATERIAL IN GOOD CONDITION WILL BE PERMITTED.

LOCATIONS AND QUANTITIES ARE SUMMARIZED IN THE TABLE AT RIGHT.

TEMPORARY GUARDRAIL FOR PHASE 3 & PHASE 4 FOR CONTRA FLOW, AND FOR PHASE 5 FOR E.B. LANES CROSSED OVER SHALL BE ATTACHED TO THE NORMAL TRAILING ENDS OF THE BRIDGE PARAPETS, AND SHALL BE REMOVED UPON PROJECT OR PHASE COMPLETION.

TEMPORARY GUARDRAIL NOTED FOR PHASE 4 FOR "W.B. SINGLE LANE" IS AN INCREASE IN THE L.O.N. FOR PERMANENT GUARDRAIL AT THOSE LOCATIONS. CONTRACTOR MAY CHOOSE TO LEAVE THE TEMPORARY GUARDRAIL IN PLACE, PROVIDED IT IS INSTALLED WITH ALL NEW MATERIAL. PAYMENT WILL STILL BE MADE FOR THE REQUIRED PERMANENT GUARDRAIL LENGTH SHOWN ON THE ROADWAY PLANS, AND NO ADDITIONAL PAYMENT FOR THE EXTRA WORK ZONE GUARDRAIL LEFT IN PLACE AS PERMANENT, EXCEPT AS NOTED HERON FOR PAYMENT FOR ITEM 614 WORK ZONE GUARDRAIL.

TEMPORARY GUARDRAIL FOR PHASE 5 EB CROSSED OVER LANES AT OVERHEAD BRIDGE PIERS SHALL BE ATTACHED TO THE BEGINING OF THE PERMANENT GUARDRAIL RUN. THE TYPE T TERMINAL PROPOSED AT THAT LOCATION SHALL BE DEFERRED. DEFER THE CONSTRUCTION OF THE PERMANENT TYPE A TERMINAL FOR THE OPPOSITE SIDE IF IT CONFLICTS WITH THE TYPE B-98 TERMINAL. THE TEMPORARY GUARDRAIL SHALL BE REMOVED AND THE TYPE T TERMINAL SHALL BE CONSTRUCTED AFTER PHASE 5 IS COMPLETED.

PAYMENT FOR ALL MATERIALS, INCLUDING BRIDGE TERMINAL AND END TERMINAL ASSEMBLIES, REMOVAL AND RESTORATION SHALL BE MADE UNDER ITEM SPECIAL - WORK ZONE GUARDRAIL

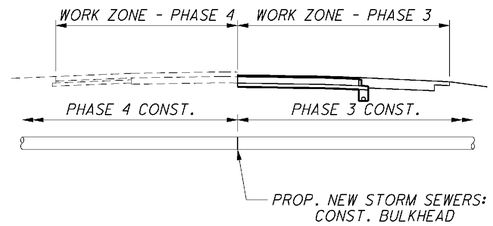

EASTBOUND LANES
STORM SEWER CONSTRUCTION PHASING DETAIL

LOCATION	LENGTH OF NEED	STATION OF PARAPET END	BEGIN STATION OF PERM. GUARDRAIL (W/O TYPE T TERMI.)	STATION BRIDGE TERMINAL ASSEMBLY TYPE 1	END TERMINAL ASSEMBLY TYPE B-98	SPECIAL: WORK ZONE GUARDRAIL TYPE 5	FOR INFO. ONLY: BRIDGE TERMINAL ASSEMBLY, TYPE 1	FOR INFO. ONLY: END TERMINAL ASSEMBLY, TYPE B-98	614: OBJECT MARKER, ONE WAY	614: BARRIER REFLECTOR, TYPE B
						FEET	EACH	EACH	EACH	EACH
PHASE 3 & PHASE 4 FOR CONTRAFLOW										
BRIDGE ATB-90-1450 R - MEDIAN SIDE EXIST PARAPET	236.10	88+97.70		88+95.60	91+45.60	212.50	1	1	6	6
BRIDGE ATB-90-1583 R - MEDIAN SIDE EXIST PARAPET	236.10	162+81.00		162+78.90	165+35.15	218.75	1	1	7	7
PHASE 4 FOR WB SINGLE LANE *										
BRIDGE ATB-90-1450 L - MEDIAN SIDE PROP PARAPET	239.35	87+22.89		87+20.79	90+02.04	243.75	1	1	7	7
BRIDGE ATB-90-1583 L - MEDIAN SIDE PROP PARAPET	239.35	162+74.81		162+72.71	165+53.96	243.75	1	1	7	7
PHASE 5 FOR EB CROSSED OVER LANES										
BRIDGE ATB-90-1450 L - MEDIAN SIDE PROP PARAPET	239.35	85+07.31		85+09.41	82+53.16	218.75	1	1	7	7
BRIDGE ATB-90-1583 L - MEDIAN SIDE PROP PARAPET	239.35	158+71.98		158+74.08	156+17.83	218.75	1	1	7	7
PHASE 5 FOR EB CROSSED OVER LANES @ OVERHEAD BRIDGE MEDIAN PIERS										
BRIDGE ATB-90-1525 PLYMOUTH ROAD	87.50		123+94.00		122+94.00	62.50		1	3	3
BRIDGE ATB-90-1764 PLYMOUTH-RIDGE ROAD	87.50		253+75.00		252+75.00	62.50		1	3	3
BRIDGE ATB-90-1905 WRIGHT AVENUE	87.50		330+20.50		329+20.50	62.50		1	3	3
TOTALS CARRIED TO GENERAL SUMMARY						**1543.75**			**50**	**50**

***CONTRACTOR MAY LEAVE LONGER GUARDRAIL RUN FOR M.O.T. IN PLACE IN LIEU OF REQUIRED L.O.N.**

CALCULATED | CHECKED

MAINTENANCE OF TRAFFIC GENERAL NOTES & DETAILS

ATB-90-14.25

Palmer ENGINEERING
11300 CORNELL PARK DR
CINCINNATI, OH 45242
O:\ODOT\ATB\25199\mot\sheets\25199MN006.dgn 6/6/2009 8:55:14 AM DENNIS

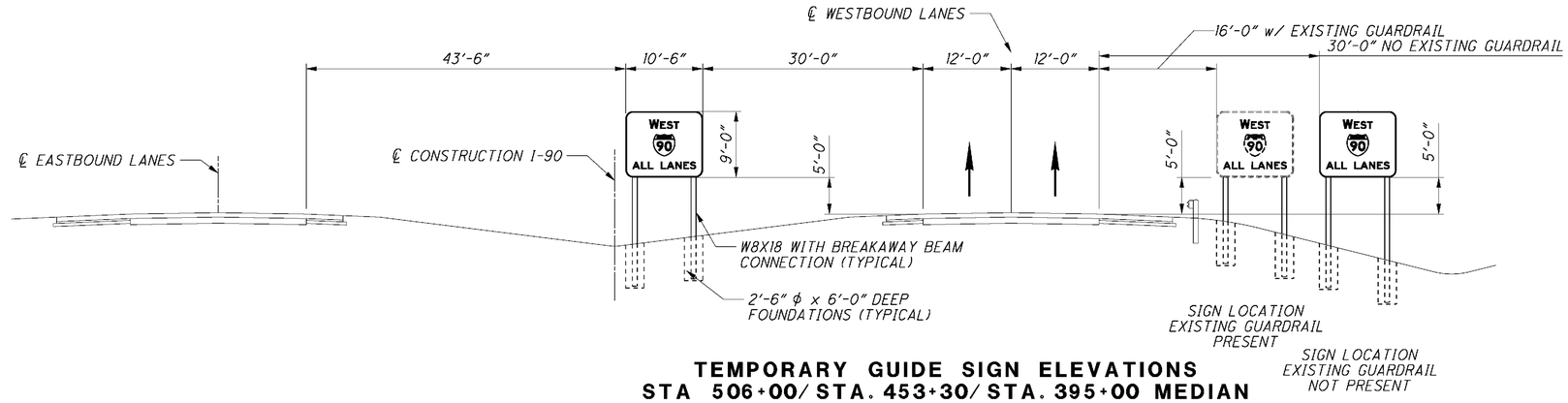

TEMPORARY GUIDE SIGN ELEVATIONS
STA 506+00/ STA. 453+30/ STA. 395+00 MEDIAN

LOCATIONS TO BE ADJUSTED IN THE FIELD

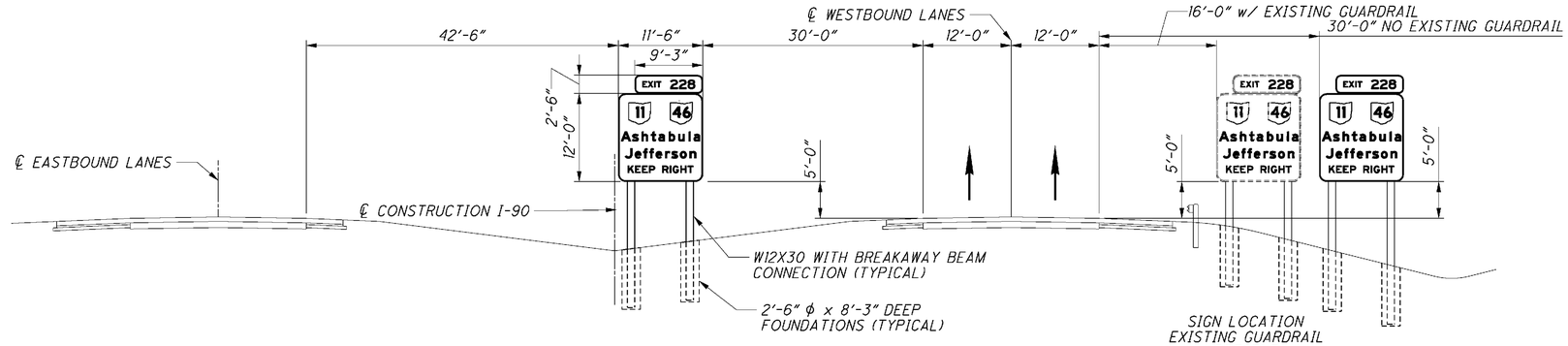

TEMPORARY GUIDE SIGN ELEVATIONS
STA 493+00/ STA. 440+00
STA. 413+70/ STA. 395+00 RT.

LOCATIONS TO BE ADJUSTED IN THE FIELD

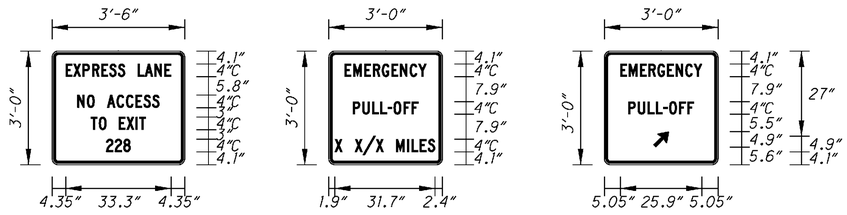

SPECIAL SIGN DESIGNS

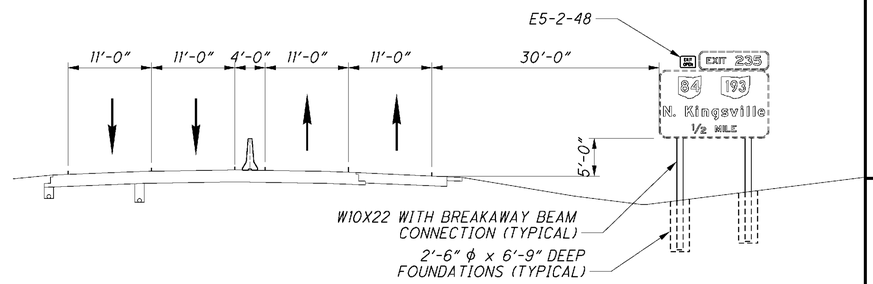

TEMPORARY GUIDE SIGN RELOCATION ELEVATIONS
PHASE 5
STA. 328+50/ STA. 345+50

CALCULATED | CHECKED

MAINTENANCE OF TRAFFIC - DETAILS

ATB-90-14.25

Palmer ENGINEERING
PALMER ENGINEERING
11300 CORNELL PARK DR
ENGINEERING CINCINNATI, OH 45242

O:\ODOT\ATB\25199\mot\sheets\25199MM001.dgn 6/6/2009 8:55:17 AM DENNIS

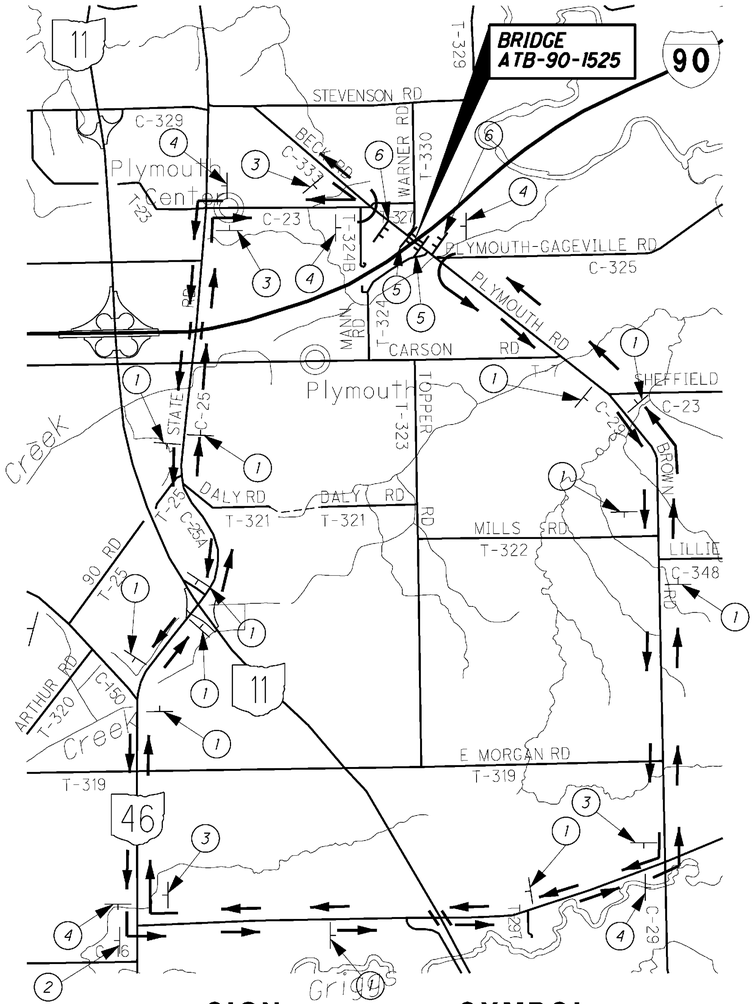

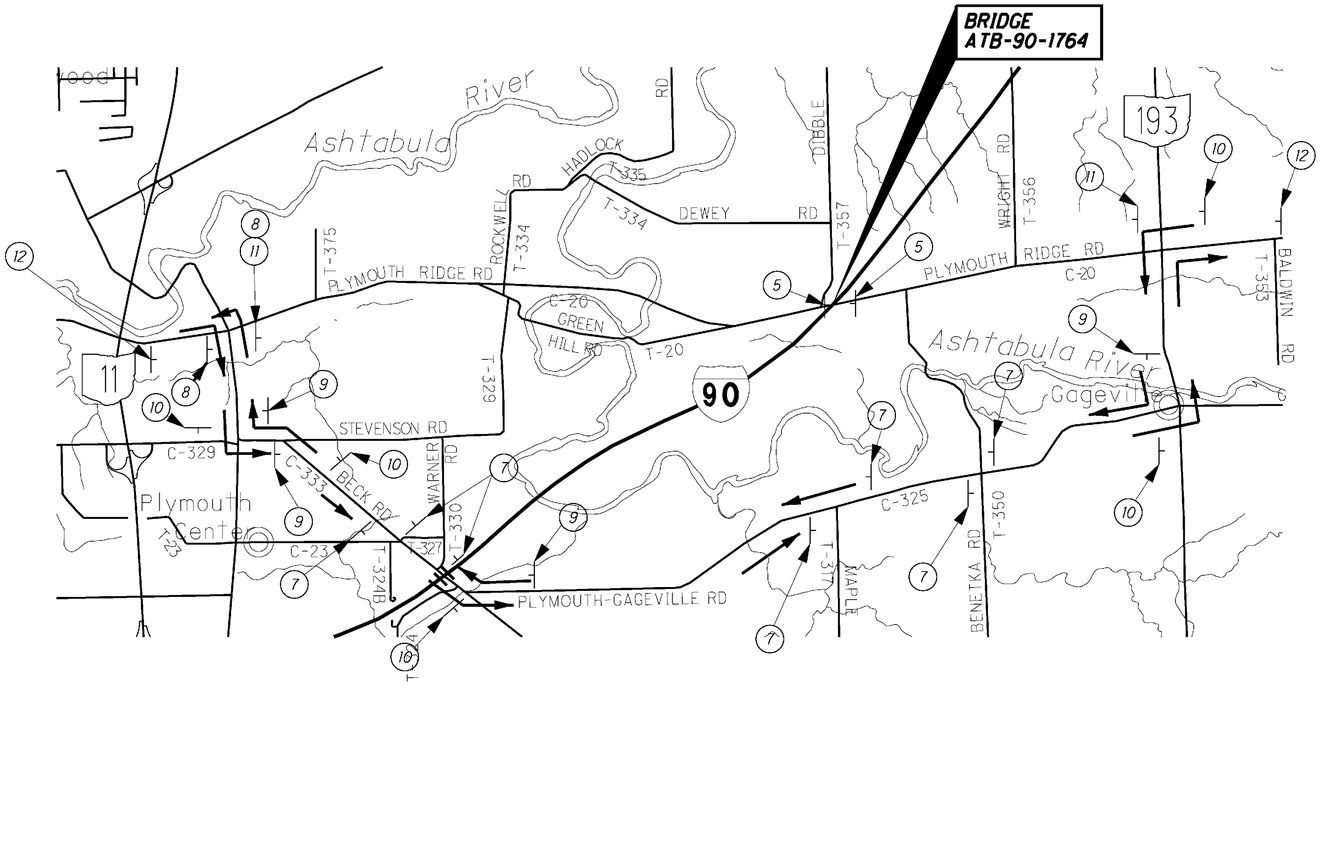

SIGN	SYMBOL	SIGN	SYMBOL	SIGN	SYMBOL	SIGN	SYMBOL
DETOUR / PLYMOUTH RD ↑ — M4-8-24 D3-1-30 M6-3-21	1	DETOUR / PLYMOUTH RD ↰ — M4-8-24 D3-1-30 M5-1L-24	4	DETOUR / PLYMOUTH-RIDGE RD ↑ — M4-8-24 D3-1-30 M6-3-21	7	DETOUR / PLYMOUTH-RIDGE RD ↰ — M4-8-24 D3-1-30 M5-1L-24	10
DETOUR / PLYMOUTH RD → — M4-8-24 D3-1-30 M6-1R-21	2	ROAD CLOSED — R11-2-48	5	DETOUR / PLYMOUTH-RIDGE RD → — M4-8-24 D3-1-30 M6-1R-21	8	PLYMOUTH-RIDGE RD / ROAD CLOSED X.X MILES AHEAD LOCAL TRAFFIC ONLY — D-40-24 R11-3A-60	11
DETOUR / PLYMOUTH RD ↱ — M4-8-24 D3-1-30 M5-1R-24	3	PLYMOUTH RD. / ROAD CLOSED X.X MILES AHEAD LOCAL TRAFFIC ONLY — D-40-24 R11-3A-60	6	DETOUR / PLYMOUTH-RIDGE RD ↱ — M4-8-24 D3-1-30 M5-1R-24	9	DETOUR AHEAD — W-20-2	12

PLYMOUTH ROAD DETOUR
PLYMOUTH-RIDGE ROAD DETOUR

ATB-90-14.25

Palmer ENGINEERING
PALMER ENGINEERING
11300 CORNELL PARK DR
ENGINEERING CINCINNATI, OH 45242

O:\ODOT\ATB\25199\mot\sheets\25199MD001.dgn 6/6/2009 8:55:22 AM DENNIS

SHEET NO.	PHASE	LOCATION FROM	LOCATION TO	STATION EQ CORRECTION	REMARKS	614 WORK ZONE EDGE LINE, CLASS 1, AS PER PLAN (Y) MILE	614 WORK ZONE EDGE LINE, CLASS 1, AS PER PLAN (W) MILE	614 WORK ZONE LANE LINE, CLASS 1, AS PER PLAN (W) MILE	614 WORK ZONE CHANNELIZING LINE, CLASS 1, AS PER PLAN (W) FEET	614 WORK ZONE DOTTED LINE, CLASS 2, AS PER PLAN (W) FEET	614	614	614 OBJECT MARKER, TWO WAY EACH	614 OBJECT MARKER, ONE WAY EACH	614 BARRIER REFLECTOR, TYPE B EACH	614 WORK ZONE IMPACT ATTENUATOR EACH		SPECIAL LINEAR DELINIATION FEET	622 PORTABLE CONCRETE BARRIER BRIDGE MOUNTED, 50" AS PER PLAN	622 PORTABLE CONCRETE BARRIER, 50" AS PER PLAN FEET
					PHASE 2															
	2	75+00.00	357+00.00	-478.74	REPAINT EDGE LINE ALONG MEDIAN	5.25														
					PHASE 3															
	3	58+00.00	67+00.00		WB									19	19	1				900
	3	64+03.00	71+00.00		EB-CONTRAFLOW TAPER										15					700
	3	69+00.00	71+00.00		EB-CONTRAFLOW TAPER													200		
	3	71+00.00	361+10.00	-478.74	EB-CONTRAFLOW								572		1144					28540
	3	74+75.00	330+00.00	-477.91	WB-SINGLE LANE									502	502				620	24430
	3	330+00.00	380+00.00	-0.83	WB-SINGLE LANE									101	101	1				5000
	3	330+00.00	331+75.00															175		
	3	330+00.00	332+00.00		CONTRAFLOW- CULVERT CONST									5	5	1		200		200
	3	56+35.00	58+00.00						330											
	3	58+00.00	380+00.00	-478.74	WB-SINGLE LANE	6.01														
	3	58+00.00	75+00.00		XOVER		0.32													
	3	56+35.00	75+00.00		XOVER	0.35														
	3	60+85.00	74+00.00		EB TRANSITION	0.25	0.25		1315											
	3	74+00.00	75+00.00		EB	0.02	0.02	0.02												
	3	75+00.00	357+00.00	-478.74	EB & WB CONTRAFLOW	10.50	10.50	5.25												
	3	357+00.00	358+00.00		EB	0.02	0.02	0.02												
	3	358+00.00	371+15.00		EB TRANSITION	0.25	0.25		1315											
	3	357+00.00	382+50.00		XOVER	0.48														
	3	357+00.00	380+00.00		XOVER		0.44													
	3	380+00.00	382+50.00		WB SPLIT				500											
	3	382+50.00	390+00.00		WB SPLIT				750											
	3	361+65.00	367+00.00		WB		0.10													
	3	367+00.00	374+85.00		WB					785										
	3	374+85.00	382+50.00		WB		0.14													
	3	374+85.00	382+50.00		WB - ENT RAMP				765											
					PHASE 4															
	4	74+65.00	84+25.00		WB - CHANGES FROM PHASE 3									21	21					960
	4	74+65.00	76+00.00		WB - CHANGES FROM PHASE 3													135		
	4	84+20.00	158+00.00	-370.04	WB - CHANGES FROM PHASE 3									142	142				200	6810
	4	87+50.00	89+50.00		WB - CHANGES FROM PHASE 3													200		
	4	158+00.00	358+48.75	-108.70	WB - CHANGES FROM PHASE 3									400	400	1			420	19530
	4	163+00.00	165+00.00		WB - CHANGES FROM PHASE 3													200		
	4	70+72.50	363+47.00	-478.74	WB - CHANGES FROM PHASE 3	5.45	5.45													
	4				BARRIER REF. REPL. ON PCB NOT RESET(20%)										236					
					PHASE 5															
	5	71+00.00	368+70.00	-478.74	XOVER								1							
	5	71+00.00	74+65.00		PCB CHANGES									9	9					370
	5	357+00.00	368+70.00		PCB CHANGES															1170
	5	71+00.00	368+70.00		ADD OBJECT MARKERS/ BARRIER REFLECTORS								597		597					
	5	61+00.00	81+30.00		EB XOVER	0.38	0.38		2030											
	5	62+15.00	74+00.00		WB TRANS	0.22	0.22		1185											
	5	74+00.00	81+30.00		WB	0.14	0.14	0.14												
	5	81+30.00	350+70.00	-478.74	XOVER WB & EB	10.02	10.02	10.02												
	5	350+70.00	370+69.00		EB XOVER	0.38			1999											
	5	350+70.00	368+00.00		EB XOVER		0.33													
	5	350+70.00	358+00.00		WB	0.14	0.14	0.14												
	5	358+00.00	369+85.00		WB TRANS	0.22			1185											
	5	360+00.00	365+15.00		WB TRANS		0.10													
					BARRIER REF. REPL. ON PCB NOT RESET(20%)										113					
					PHASE 6															
	6	75+00.00	357+00.00	-478.74	PREMARKING	10.50	10.50	10.50												
TOTALS CARRIED TO GENERAL SUMMARY						**89.90**		**26.09**	**11374**	**785**			**1170**	**1199**	**3304**	**4**		**1110**	**1240**	**88610**

CALCULATED | CHECKED

MAINTENANCE OF TRAFFIC SUBSUMMARY

ATB-90-14.25

Palmer ENGINEERING
PALMER ENGINEERING
11300 CORNELL PARK DR
CINCINNATI, OH 45242

C:\ODOT\ATB\25199\mot\sheets\25199MS001.dgn 6/6/2009 8:55:25 AM DENNIS

ITEM 614 - OBJECT MARKERS - EXISTING/PROPOSED GUARDRAIL AND BARRIERS

PHASE	LOCATION		REMARKS	SPACING	614	614
					OBJECT MARKER, ONE WAY FOR GUARDRAIL	OBJECT MARKER, ONE WAY FOR BARRIER/PARAPET
	FROM	TO			EACH	EACH
			FOR OBJECT MARKERS FOR PROPOSED PORTABLE CONCRETE BARRIER			
			AND WORK ZONE GUARDRAIL, SEE SEPERATE SUBSUMMARIES			
			PHASE 3&4			
3&4	68+00	104+62	EB EXIST GR & BRIDGE PARAPET- OUTSIDE SHOULDER	50	70	5
3&4	84+50	87+00	CONTRAFLOW EXIST GR & BRIDGE PARAPET- MEDIAN SHOULDER	50	1	5
3&4	122+54	124+73	EB EXIST GR & BARRIER -OUTSIDE SHOULDER	50	3	3
3&4	155+00	165+84	EB EXIST GR & BRIDGE PARAPET- OUTSIDE SHOULDER	50	15	8
3&4	158+50	162+80	CONTRAFLOW EXIST GR & BRIDGE PARAPET- MEDIAN SHOULDER	50	2	8
3&4	195+18	199+85	EB EXIST GR - OUTSIDE SHOULDER	50	11	
3&4	236+51	244+03	EB EXIST GR - OUTSIDE SHOULDER	50	17	
3&4	253+46	255+63	EB EXIST GR & BARRIER -OUTSIDE SHOULDER	50	3	3
3&4	327+16	329+85	EB EXIST GR & BARRIER -OUTSIDE SHOULDER	50	4	3
			PHASE 5			
5	68+00	104+50	WB PROP GR & BRIDGE PARAPET- OUTSIDE SHOULDER	50	70	4
5	85+09	88+00	CONTRAFLOW PROP GR & BRIDGE PARAPET- MEDIAN SHOULDER	50	3	4
5	123+79	125+50	WB PROP GR & BARRIER- OUTSIDE SHOULDER	50	3	2
5	156+92	164+50	WB PROP GR & BRIDGE PARAPET- OUTSIDE SHOULDER	50	9	8
5	158+00	163+50	CONTRAFLOW PROP GR & BRIDGE PARAPET- MEDIAN SHOULDER	50	4	8
5	175+13	180+50	WB PROP GR - OUTSIDE SHOULDER	50	12	
5	187+13	191+25	WB PROP GR - OUTSIDE SHOULDER	50	10	
5	252+50	254+25	WB PROP GR & BARRIER- OUTSIDE SHOULDER	50	3	2
5	273+37	277+50	WB PROP GR - OUTSIDE SHOULDER	50	10	
5	283+87	285+75	WB PROP GR - OUTSIDE SHOULDER	50	5	
5	331+41	333+00	WB PROP GR & BARRIER- OUTSIDE SHOULDER	50	5	
				SUBTOTAL	260	63
			TOTAL CARRIED TO GENERAL SUMMARY		323	

ITEM 614 - WORK ZONE RAISED PAVEMENT MARKERS

PHASE	LOCATION		STATION EQ CORRECTION	REMARKS	SPACING	614	614
						RPM, W	RPM, Y
	FROM	TO				EACH	EACH
				PHASE 3&4			
3&4	60+85.00	74+00.00		EB SHIFT - EDGE LINE (Y)	20		66
3&4	60+85.00	74+00.00		EB SHIFT - CHANNEL/LANE LINE (W)	20	66	
3&4	60+85.00	74+00.00		EB SHIFT - EDGE LINE (W)	20	66	
3&4	74+00.00	358+00.00	-478.74	EB - LANE LINE	120	233	
3&4	358+00.00	371+15.00		EB SHIFT - EDGE LINE (Y)	20		66
3&4	358+00.00	371+15.00		EB SHIFT - CHANNEL/LANE LINE (W)	20	66	
3&4	358+00.00	371+15.00		EB SHIFT - EDGE LINE (W)	20	66	
3&4	61+14.00	78+00.00		WB XOVER - EDGE LINE (Y)	20		85
3&4	61+14.00	78+00.00		WB XOVER - EDGE LINE (W)	20	85	
3&4	354+00.00	370+80.00		WB XOVER - EDGE LINE (Y)	20		84
3&4	354+00.00	370+80.00		WB XOVER - EDGE LINE (W)	20	84	
3&4	380+00.00	390+00.00		WB SPLIT - CHANNEL LINE (EACH SIDE OF LINE)	20	100	
				PHASE 5			
5	61+00.00	81+30.00		EB XOVER - EDGE LINE (Y)	20		102
5	61+00.00	81+30.00		EB XOVER - CHANNEL/LANE LINE (W)	20	102	
5	61+00.00	81+30.00		EB XOVER - EDGE LINE (W)	20	102	
5	81+30.00	350+70.00	-478.74	EB - LANE LINE	120	221	
5	350+70.00	370+69.00		EB XOVER - EDGE LINE (Y)	20		100
5	350+70.00	370+69.00		EB XOVER - CHANNEL/LANE LINE (W)	20	100	
5	350+70.00	370+69.00		EB XOVER - EDGE LINE (W)	20	100	
5	62+15.00	74+00.00		WB SHIFT - EDGE LINE (Y)	20		60
5	62+15.00	74+00.00		WB SHIFT - CHANNEL/LANE LINE (W)	20	60	
5	62+15.00	74+00.00		WB SHIFT - EDGE LINE (W)	20	60	
5	73+00.00	358+00.00	-478.74	WB - LANE LINE	120	234	
5	358+00.00	369+85.00		WB SHIFT - EDGE LINE (Y)	20		60
5	358+00.00	369+85.00		WB SHIFT - CHANNEL/LANE LINE (W)	20	60	
5	358+00.00	369+85.00		WB SHIFT - EDGE LINE (W)	20	60	
				TOTAL CARRIED TO GENERAL SUMMARY		2488	

CALCULATED | CHECKED

MAINTENANCE OF TRAFFIC SUBSUMMARY

ATB-90-14.25

Palmer ENGINEERING
PALMER ENGINEERING
11300 CORNELL PARK DR
CINCINNATI, OH 45242

O:\ODOT\ATB\25199\mot\sheets\25199MS002.dgn 6/6/2009 8:55:27 AM DENNIS

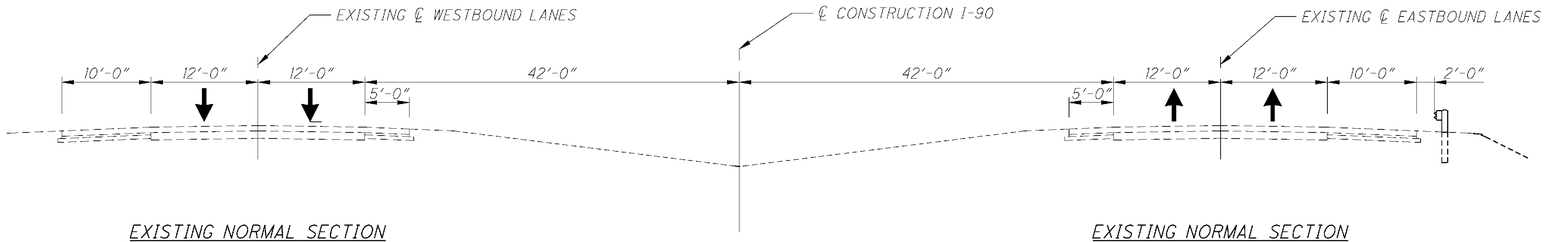

EXISTING NORMAL SECTION

EXISTING NORMAL SECTION

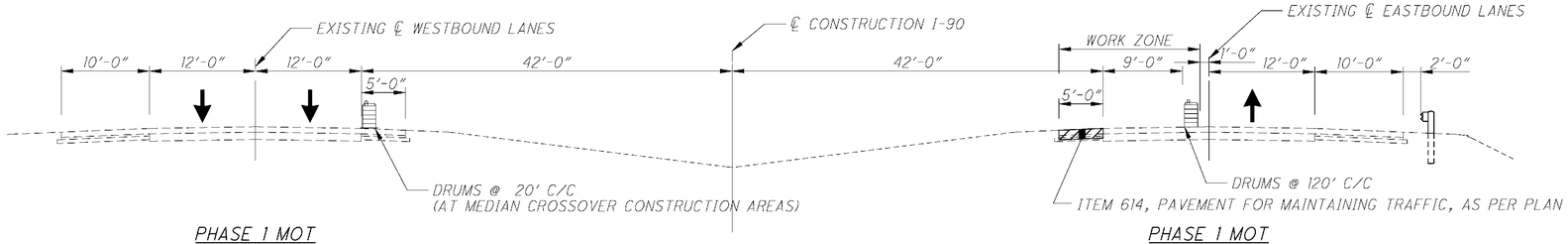

PHASE 1 MOT

NONE

PHASE 1 MOT

CONSTRUCT PAVEMENT FOR MAINTAINING TRAFFIC ON
THE MEDIAN SHOULDER & CONSTRUCT EMERGENCY PULLOFFS
AT NIGHT WITH INSIDE LANE CLOSED
CONSTRUCT MEDIAN CROSSOVERS

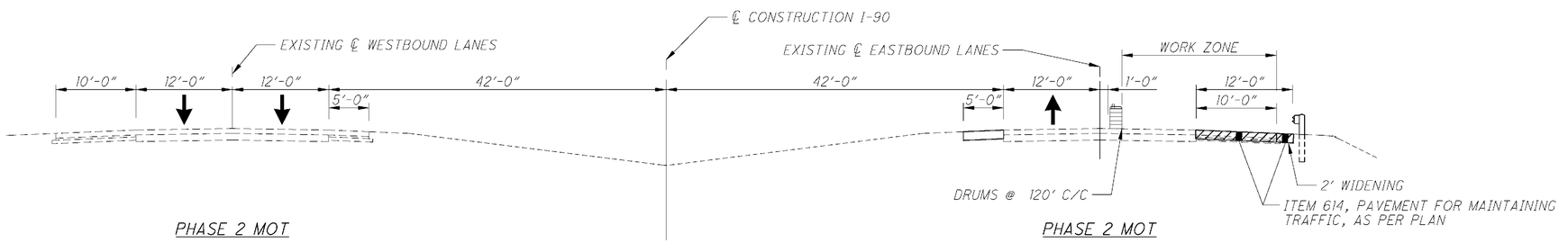

PHASE 2 MOT

NONE

PHASE 2 MOT

CONSTRUCT PAVEMENT FOR MAINTAINING TRAFFIC ON
THE OUTSIDE SHOULDER & CONSTRUCT EMERGENCY PULLOFFS
AT NIGHT WITH OUTSIDE LANE CLOSED

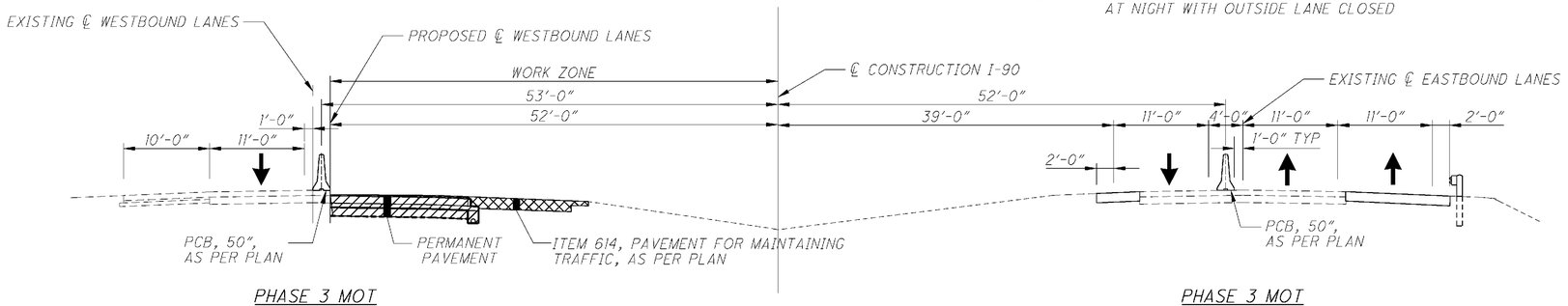

PHASE 3 MOT

ALLOW THE HIGH SPEED LANE TO CROSS OVER
INTO EASTBOUND INSIDE CONSTRUCT HALF OF THE
NEW FULL DEPTH WESTBOUND TYPICAL INCLUDING
SHOULDER AND TRAVELED LANE,TEMPORARY PAVEMENT &
EMERGENCY PULLOFFS ON THE INSIDE.

PHASE 3 MOT

SHIFT EASTBOUND CENTERLINE 11' TO THE OUTSIDE TO
ACCOMMODATE THE HIGH SPEED LANE WESTBOUND TRAFFIC.
MAINTAIN 2 EASTBOUND LANES AND 1 WEST BOUND LANE WITH
3-11' LANES WITH 2' OUTSIDE SHOULDERS AND 1' OFFSET FROM BARRIER.

MAINTENANCE OF TRAFFIC TYPICALS

ATB-90-14.50

Palmer ENGINEERING
PALMER ENGINEERING
11300 CORNELL PARK DR
ENGINEERING CINCINNATI, OH 45242

O:\ODOT\ATB\25199\mot\sheets\25199MY001.dgn 6/6/2009 8:55:30 AM DENNIS

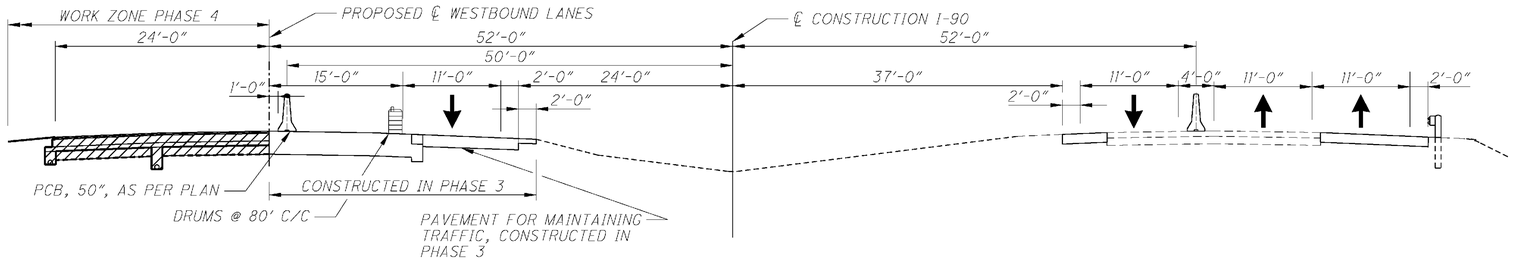

PHASE 4 MOT

MAINTAIN THE WEST BOUND HIGH SPEED LANE ON THE EASTBOUND INSIDE. SHIFT THE SLOW LANE WESTBOUND TRAFFIC TO THE NEW TEMPORARY PAVEMENT ON THE INSIDE WESTBOUND. CONSTRUCT HALF OF THE NEW FULL DEPTH WESTBOUND TYPICAL INCLUDING SHOULDER AND TRAVELED LANE & EMERGENCY PULLOFF ON THE OUTSIDE

PHASE 4 MOT

SAME AS PHASE 3

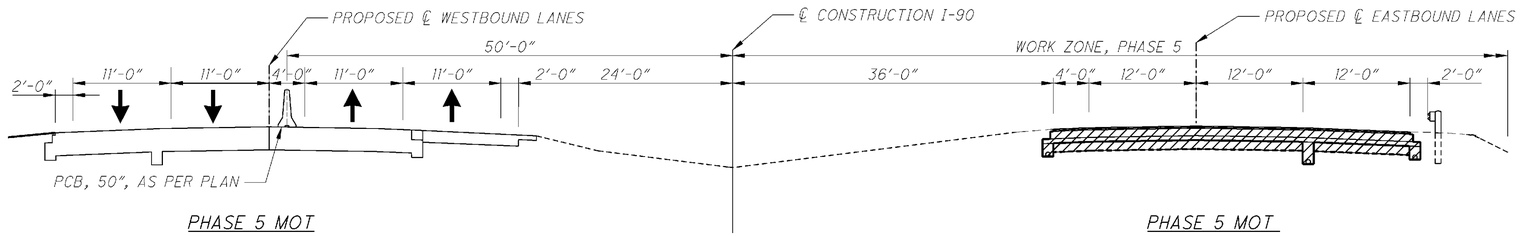

PHASE 5 MOT

SHIFT WESTBOUND TRAFFIC TO THE 2-11' WESTBOUND OUTSIDE LANES AND MAINTAIN WESTBOUND LANES WITH A 2' OUTSIDE SHOULDER AND 1' BARRIER OFFSET. SHIFT EASTBOUND TRAFFIC TO THE 2-11' INSIDE WESTBOUND LANES WITH 2' OUTSIDE SHOULDER AND 1' BARRIER OFFSET.

PHASE 5 MOT

CROSSOVER EASTBOUND TRAFFIC TO WESTBOUND LANES. CONSTRUCT EASTBOUND FULL DEPTH TYPICAL SECTION

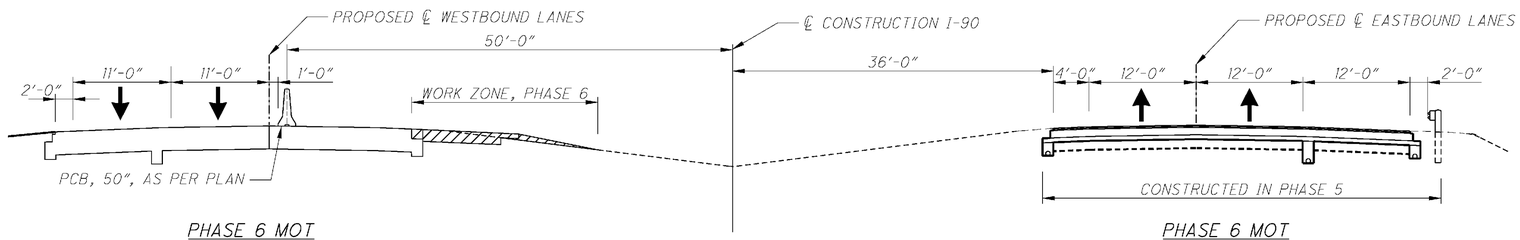

PHASE 6 MOT

RETURN EASTBOUND TRAFFIC BACK TO THE EASTBOUND SIDE AND REMOVE THE WESTBOUND TEMPORARY PAVEMENT AND REGRADE THE MEDIAN. REMOVE PCB AND INSTALL PERMANENT PAVEMENT MARKINGS AND TRAFFIC CONTROL SHIFT EB TRAFFIC TO FINAL CONFIGURATION

PHASE 6 MOT

INSTALL PERMANENT PAVEMENT MARKINGS AND TRAFFIC CONTROL SHIFT EASTBOUND TRAFFIC BACK TO THE EASTBOUND SIDE

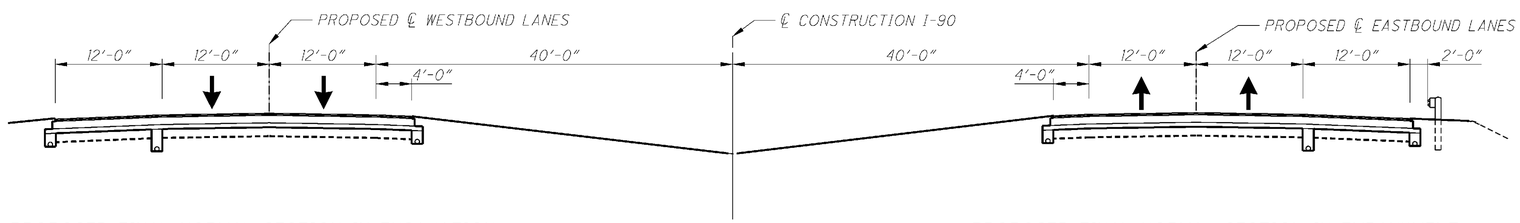

PROPOSED FINAL NORMAL SECTION IN EXCAVATION

PROPOSED FINAL NORMAL SECTION IN EMBANKMENT

MAINTENANCE OF TRAFFIC TYPICALS

ATB-90-14.50

24
437

Palmer ENGINEERING
PALMER ENGINEERING
11300 CORNELL PARK DR
CINCINNATI, OH 45242

C:\ODOT\ATB\25199\mot\sheets\25199MY002.dgn 6/6/2009 8:55:32 AM DENNIS

℄ CURVE DATA. W.B. X-OVER

P.I.= Sta. 12+04.02
= 7° 28′ 13″ (RT)
Dc = 1° 50′ 00″
R = 3,125.22′
T = 204.02′
L = 407.47′
E = 6.65′
C = 407.18′
C.B. = N 85° 12′ 01″ E

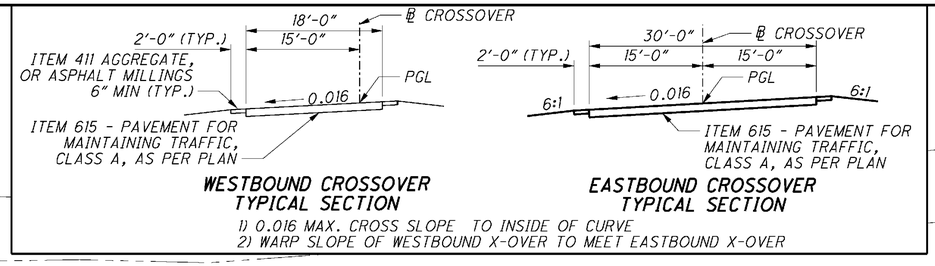

℄ CURVE DATA. E.B. X-OVER

P.I.= Sta. 18+92.76
D = 7° 30′ 46″ (RT)
Dc = 1° 50′ 00″
R = 3,125.22′
T = 205.19′
L = 409.79′
E = 6.73′
emax = 0.016
C = 409.50′
C.B. = N 72° 38′ 34″ E

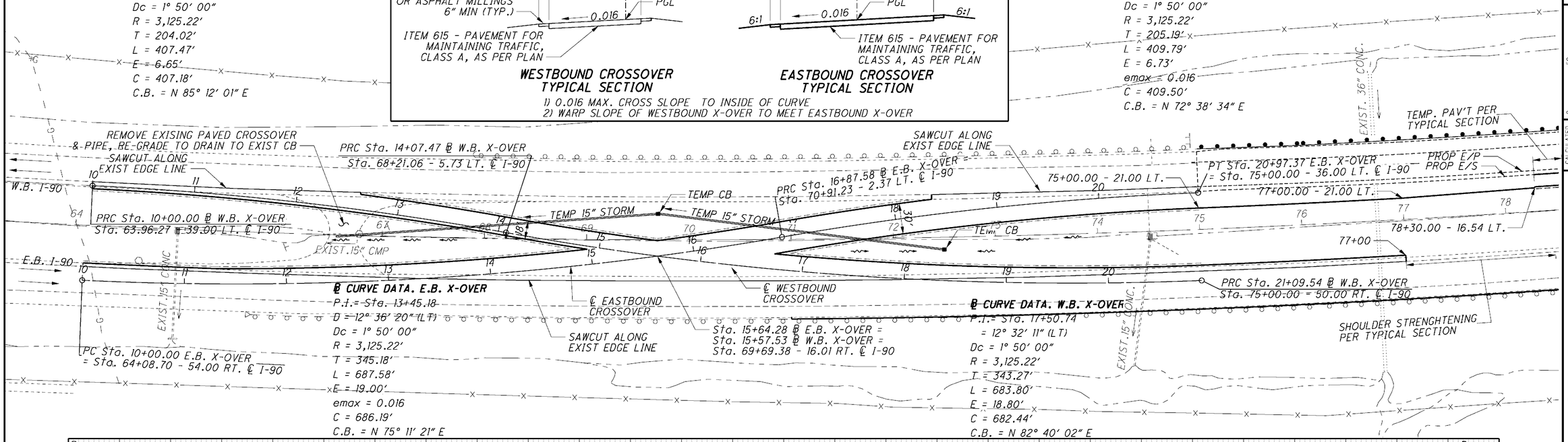

℄ CURVE DATA. E.B. X-OVER

P.I.= Sta. 13+45.18
D = 12° 36′ 20″ (LT)
Dc = 1° 50′ 00″
R = 3,125.22′
T = 345.18′
L = 687.58′
E = 19.00′
emax = 0.016
C = 686.19′
C.B. = N 75° 11′ 21″ E

℄ CURVE DATA. W.B. X-OVER

P.I.= Sta. 17+50.74
= 12° 32′ 11″ (LT)
Dc = 1° 50′ 00″
R = 3,125.22′
T = 343.27′
L = 683.80′
E = 18.80′
C = 682.44′
C.B. = N 82° 40′ 02″ E

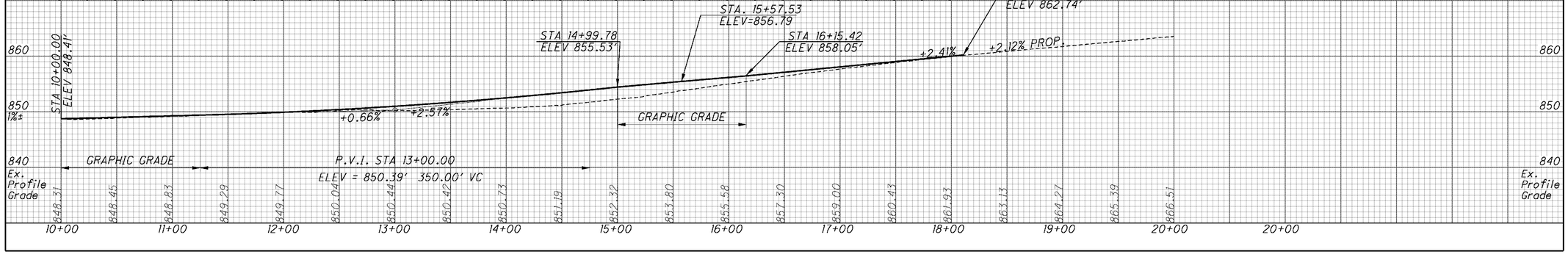

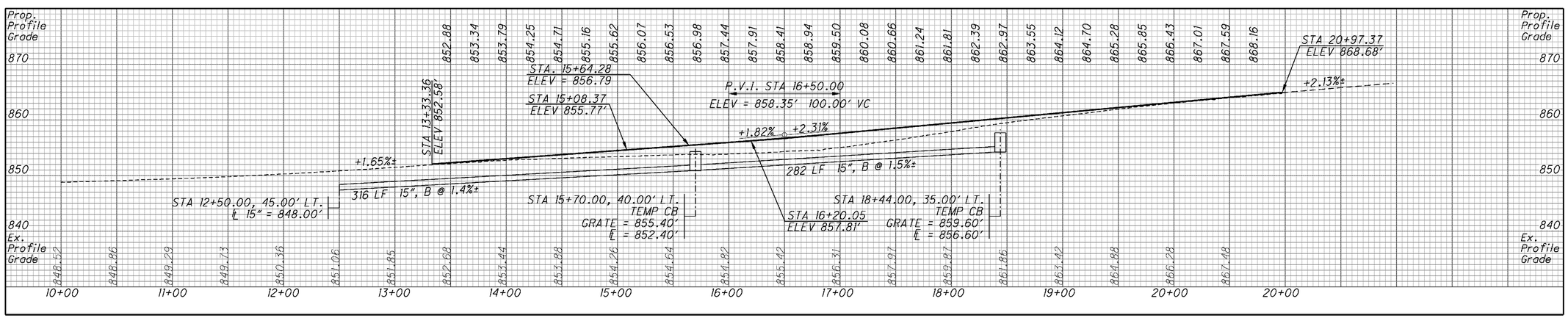

Palmer ENGINEERING
PALMER ENGINEERING
11300 CORNELL PARK DR
CINCINNATI, OH 45242

O:\ODOT\ATB\25199\mot\sheets\25199MH001.dgn 6/6/2009 8:55:37 AM DENNIS

HORIZONTAL SCALE IN FEET
0 50 100
CALCULATED CML
CHECKED

PLAN AND PROFILE CROSSOVERS - BEGIN PROJECT

ATB-90-14.25

℄ CURVE DATA. E.B. X-OVER
P.I.= Sta. 53+08.14
D = 11° 15′ 44″ (RT)
Dc = 1° 50′ 00″
R = 3,125.22′
T = 308.14′
L = 614.30′
E = 15.15′
C = 613.31′
C.B. = N 46° 42′ 20″ E

℄ CURVE DATA. W.B. X-OVER
P.I.= Sta. 57+75.55
D = 11° 23′ 11″ (RT)
Dc = 1° 50′ 00″
R = 3,125.22′
T = 311.56′
L = 621.07′
E = 15.49′
C = 620.05′
C.B. = N 38° 15′ 40″ E

TEMP. PAV'T PER TYPICAL SECTION
PC Sta. 50+00.00 E.B. X-OVER = Sta. 357+00.00 - 36.00 LT. ℄ I-90
353+70.00 - 23.00 LT.
PROP E/P
PROP E/S
355+00.00 - 23.00 LT.
357+00.00 - 23.00 LT.
353+75
PC Sta. 50+00.00 W.B. X-OVER = Sta. 357+00.00 - 50.00 RT. ℄ I-90
E.B. I-90
SHOULDER STRENGHTENING PER TYPICAL SECTION
SAWCUT ALONG EXIST EDGE LINE
REMOVE EXISING PAVED CROSSOVER & RE-GRADE TO DRAIN TO TEMP CB
EXIST 15" CONC
℄ EASTBOUND CROSSOVER
℄ WESTBOUND CROSSOVER
TEMP CB & 15" STORM
12" STORM
PRC Sta. 54+63.99 ℄ W.B. X-OVER = Sta. 361+62.55 - 10.64 RT. ℄ I-90
TEMP CB
Sta.55+22.18 ℄ E.B. X-OVER = Sta.55+22.34 ℄ W.B. X-OVER = Sta.362+19.99 - 1.26′ RT. ℄ I-90
PRC Sta. 56+14.30 ℄ E.B.X-OVER = Sta. 363+10.87 - 15.50 RT. ℄ I-90
SAWCUT ALONG EXIST EDGE LINE
PT Sta. 60+85.06 W.B. X-OVER = Sta. 367+79.93 - 42.00 LT. ℄ I-90
W.B. I-90
PT Sta. 60+73.18 E.B. X-OVER = 367+68.47 - 54.00 RT. ℄ I-90
SAWCUT ALONG EXIST EDGE LINE

℄ CURVE DATA. W.B. X-OVER
P.I.= Sta. 52+32.42
D = 8° 30′ 23″ (LT)
Dc = 1° 50′ 00″
R = 3,125.22′
T = 232.42′
L = 463.99′
E = 8.63′
C = 463.56′
C.B. = N 36° 49′ 17″ E

℄ CURVE DATA. E.B. X-OVER
P.I.= Sta. 58+44.15
D = 8° 24′ 46″ (LT)
Dc = 1° 50′ 00″
R = 3,125.22′
T = 229.85′
L = 458.88′
E = 8.44′
C = 458.47′
C.B. = N 48° 07′ 49″ E

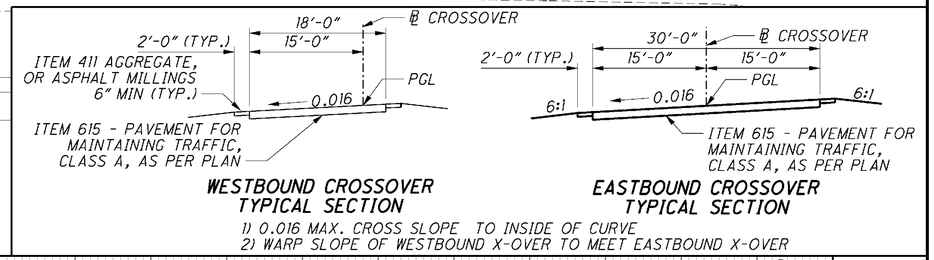

WESTBOUND CROSSOVER TYPICAL SECTION

EASTBOUND CROSSOVER TYPICAL SECTION

1) 0.016 MAX. CROSS SLOPE TO INSIDE OF CURVE
2) WARP SLOPE OF WESTBOUND X-OVER TO MEET EASTBOUND X-OVER

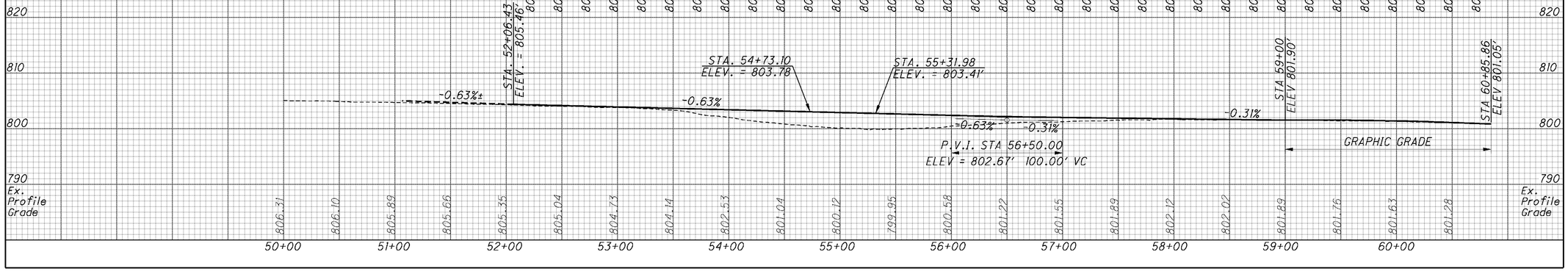

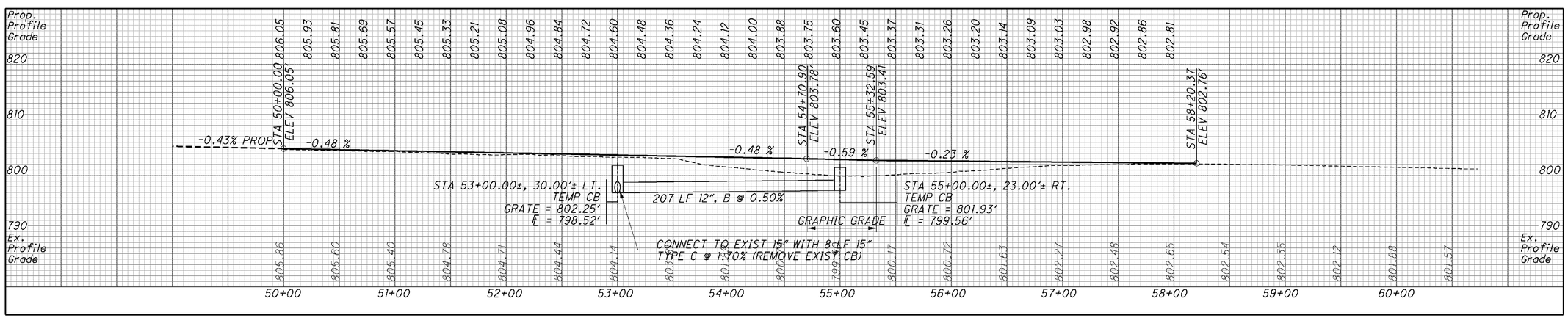

HORIZONTAL SCALE IN FEET
0 30 100

CALCULATED CML CHECKED

PLAN AND PROFILE CROSSOVERS - END PROJECT

ATB-90-14.25

Palmer ENGINEERING
PALMER ENGINEERING
11300 CORNELL PARK DR
ENGINEERING CINCINNATI, OH 45242

O:\ODOT\ATB\25199\mot\sheets\25199MH002.dgn 6/6/2009 8:55:41 AM DENNIS

SUPERELEVATION INFORMATION

WESTBOUND

	SLOPE
STA. 13+62.47	1.60%
STA. 14+07.47	0.00%
STA. 14+52.47	-1.60%

EASTBOUND

	SLOPE
STA. 16+42.57	-1.60% (L) 1.60% (R)
STA. 16+87.57	-0.00%
STA. 17+32.57	1.60% (L) 1.60% (R)

HORIZONTAL SCALE IN FEET
0 10 20 40

CALCULATED DPF CHECKED

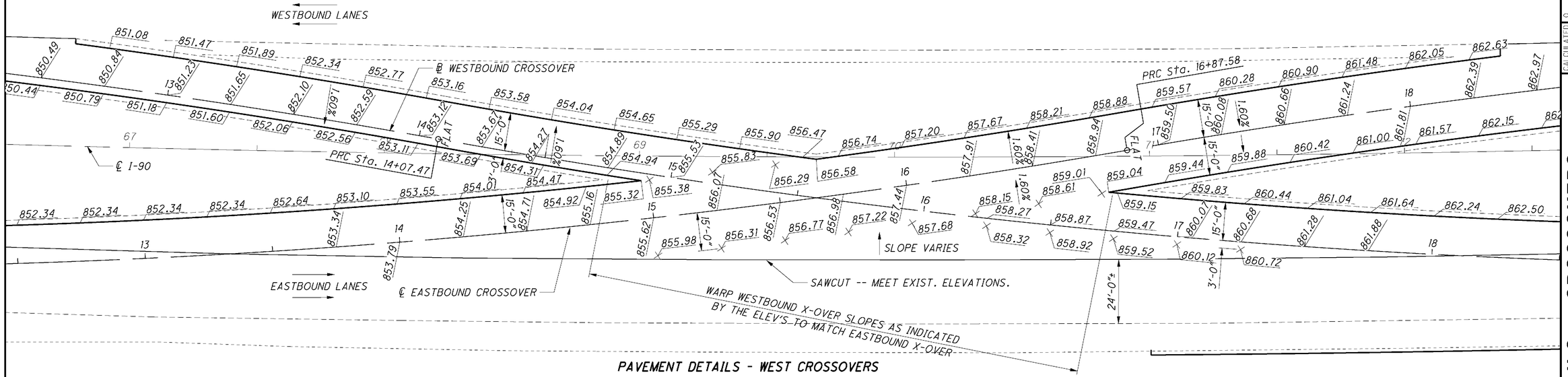

PAVEMENT DETAILS - WEST CROSSOVERS

SUPERELEVATION INFORMATION

WESTBOUND

	SLOPE
STA. 54+18.99	-1.60%
STA. 54+63.99	-0.00%
STA. 55+08.99	1.60%

EASTBOUND

	SLOPE
STA. 55+69.30	1.60% (L) -1.60% (R)
STA. 56+14.30	0.00%
STA. 56+59.30	-1.60% (L) 1.60% (R)

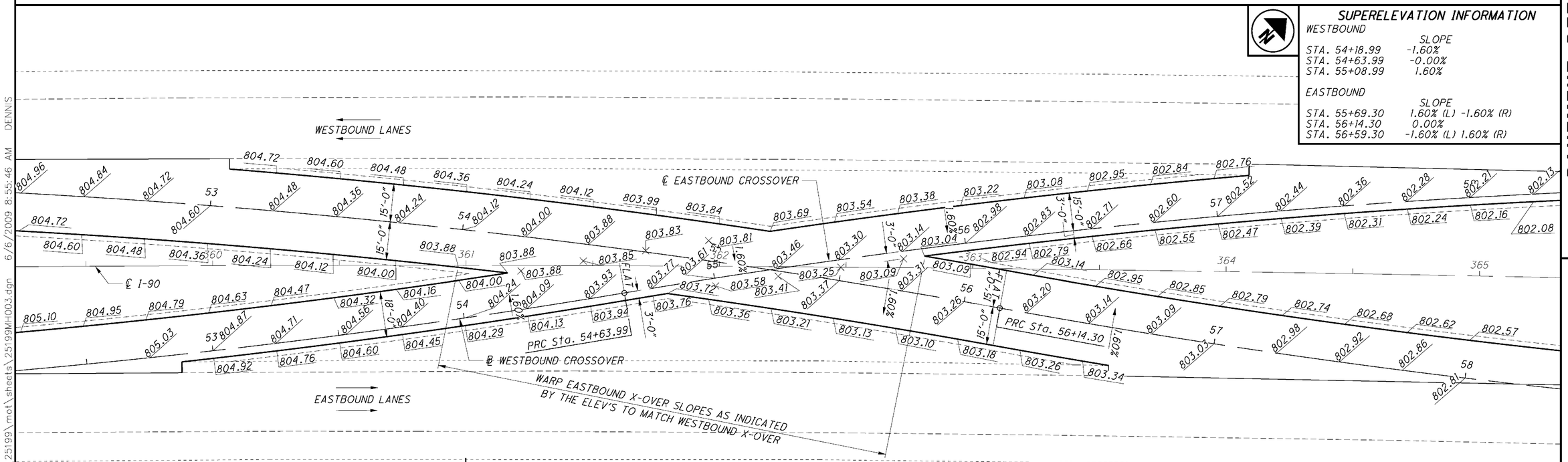

PAVEMENT DETAILS - EAST CROSSOVERS

PAVEMENT DETAILS - CROSSOVERS

ATB-90-14.25

Palmer ENGINEERING
PALMER ENGINEERING
11300 CORNELL PARK DR
ENGINEERING CINCINNATI, OH 45242

O:\ODOT\ATB\25199\mot\sheets\25199MH003.dgn 6/6/2009 8:55:46 AM DENNIS

PALMER ENGINEERING
11300 CORNELL PARK DR
CINCINNATI, OH 45242

O:\ODOT\ATB\25199\mot\sheets\25199XM001.dgn 6/6/2009 8:55:50 AM DENNIS

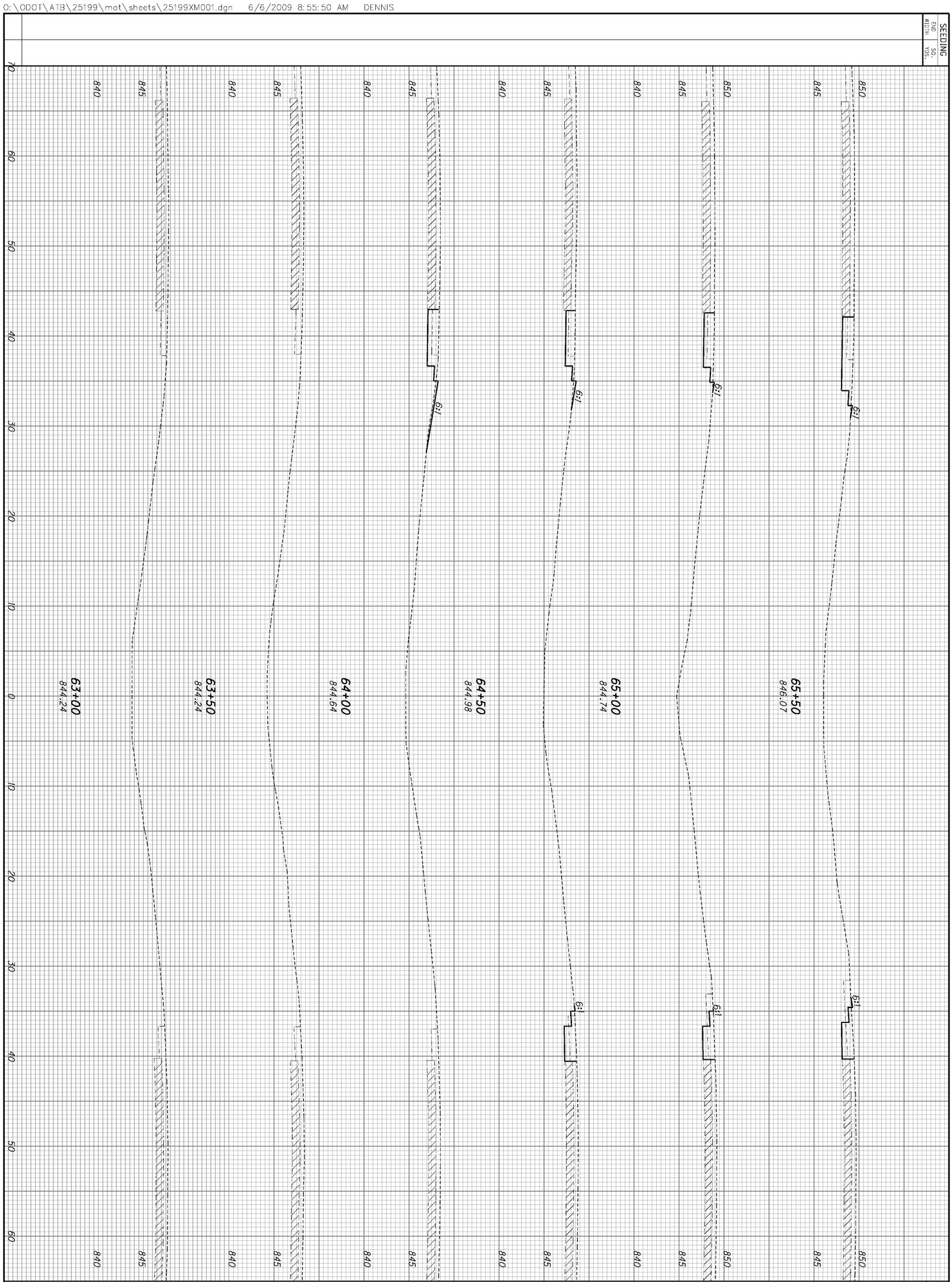

ATB-90-14.25

CROSS SECTIONS - CROSS OVER/BEGIN PROJECT
STA. 63+00 TO STA. 65+50

CALCULATED
CHECKED

Palmer ENGINEERING
PALMER ENGINEERING
11300 CORNELL PARK DR
CINCINNATI, OH 45242

O:\ODOT\ATB\25199\mot\sheets\25199XM001.dgn 6/6/2009 8:55:51 AM DENNIS

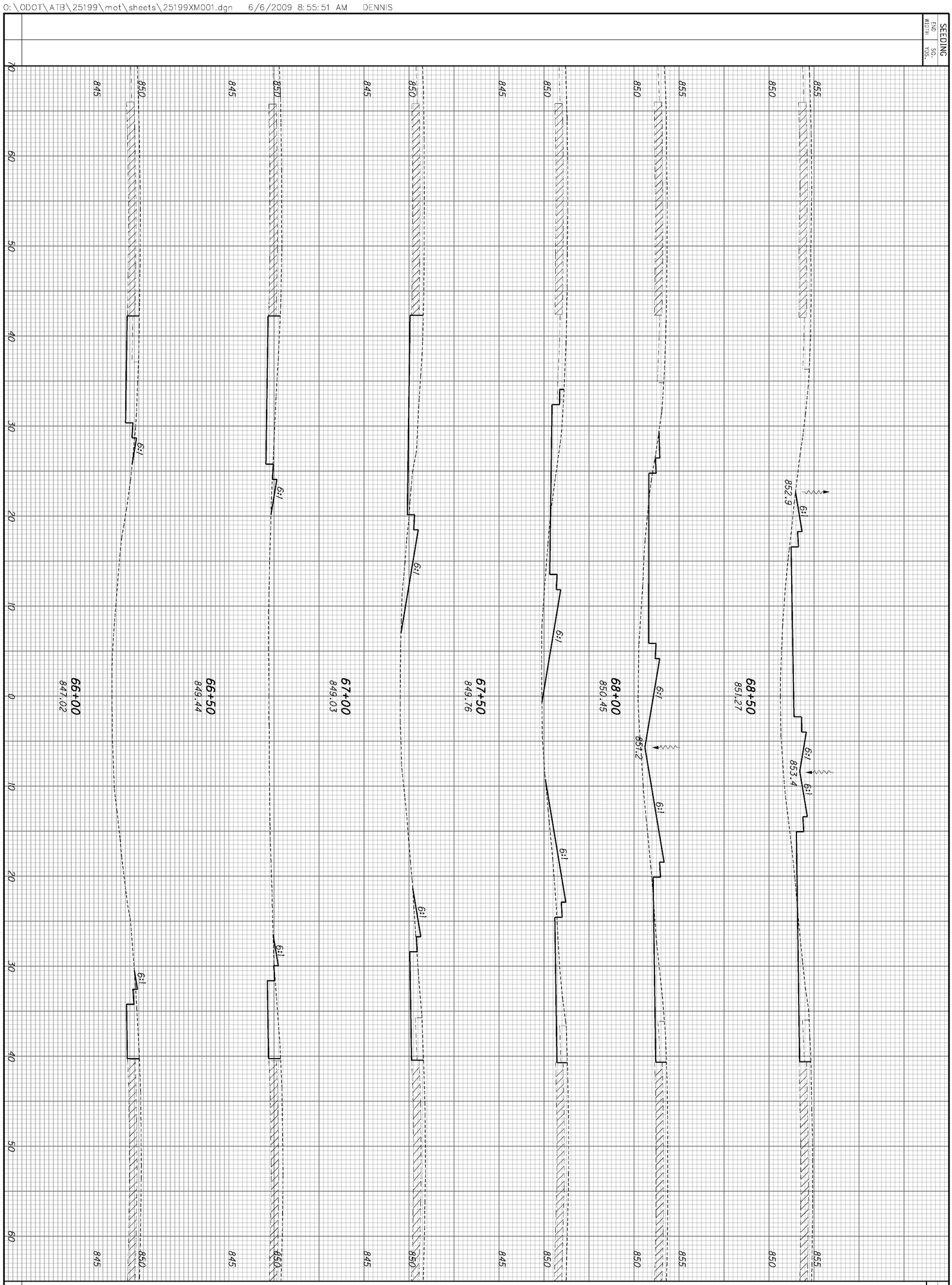

29
437

ATB-90-14.25

CROSS SECTIONS - CROSS OVER/BEGIN PROJECT
STA. 66+00 TO STA. 68+50

CALCULATED

CHECKED

PALMER ENGINEERING
11300 CORNELL PARK DR
CINCINNATI, OH 45242

O:\ODOT\ATB\25199\mot\sheets\25199XM001.dgn 6/6/2009 8:55:53 AM DENNIS

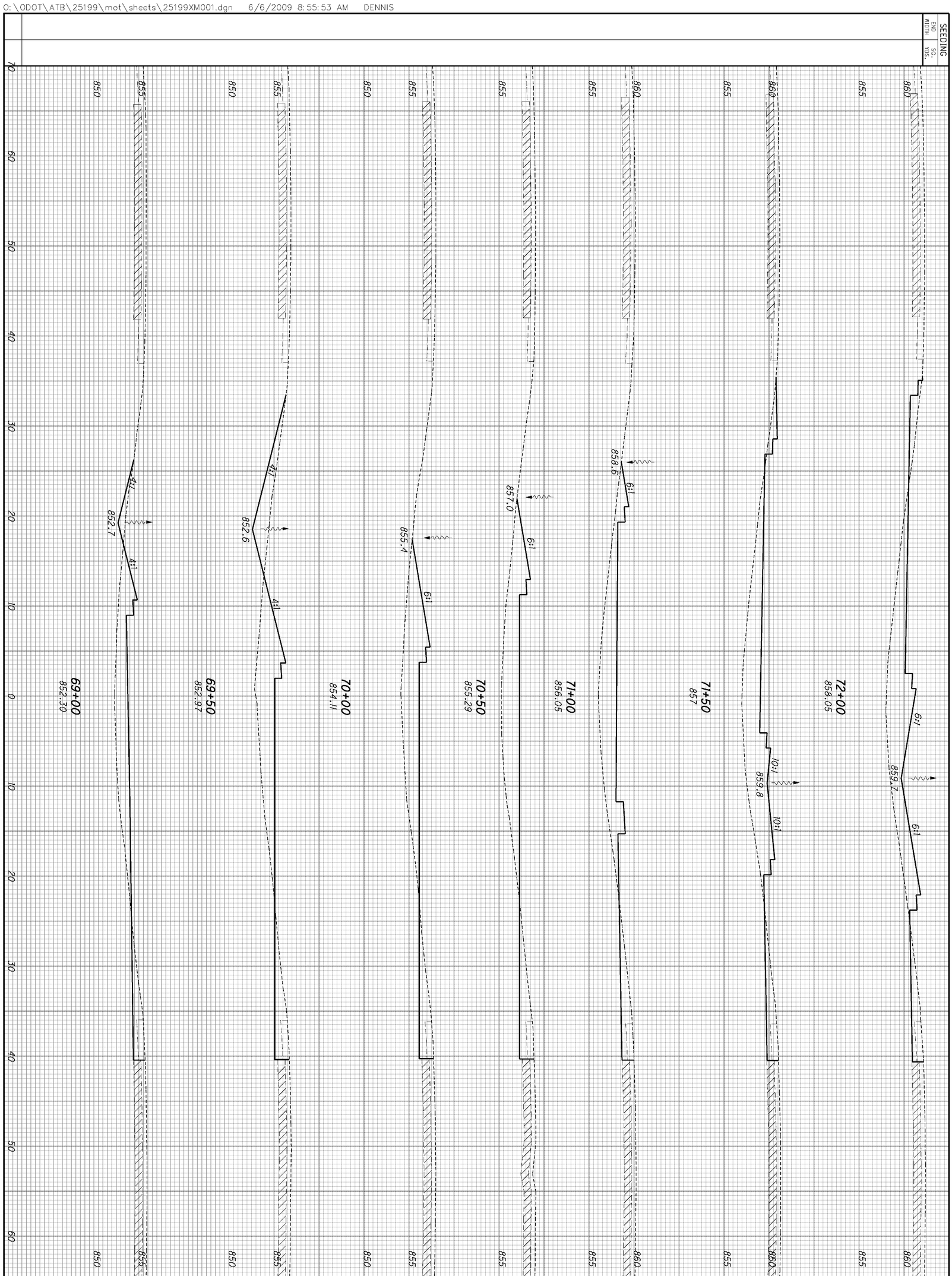

30 / 437	ATB-90-14.25	CROSS SECTIONS - CROSS OVER/BEGIN PROJECT STA. 69+00 TO STA. 72+00	CALCULATED CHECKED

PALMER ENGINEERING
11300 CORNELL PARK DR
CINCINNATI, OH 45242

O:\ODOT\ATB\25199\mot\sheets\25199XM001.dgn 6/6/2009 8:55:54 AM DENNIS

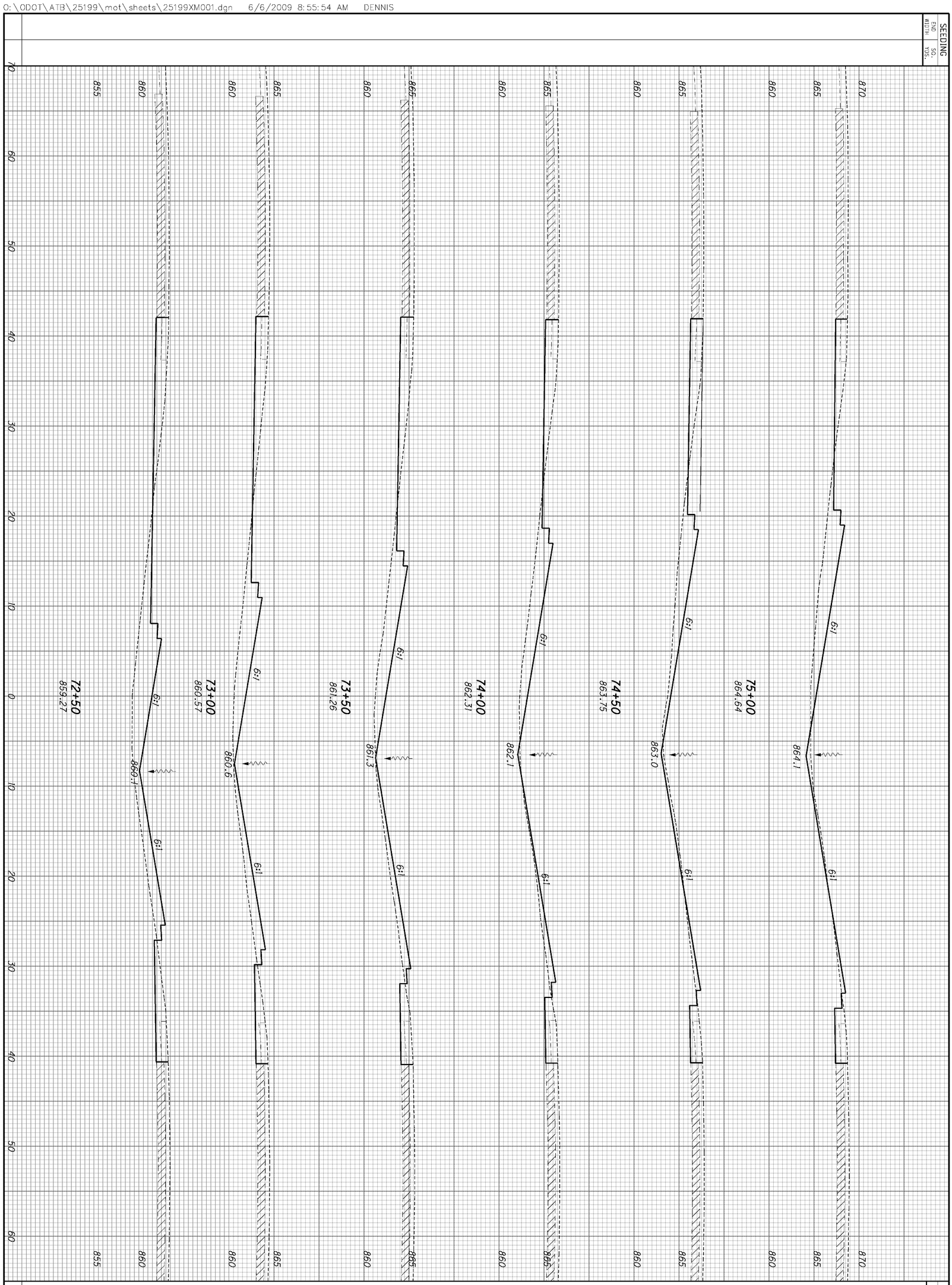

ATB-90-14.25

CROSS SECTIONS - CROSS OVER/BEGIN PROJECT
STA. 72+50 TO STA. 75+00

CALCULATED

CHECKED

PALMER ENGINEERING
11300 CORNELL PARK DR
CINCINNATI, OH 45242

O:\ODOT\ATB\25199\mot\sheets\25199XM001.dgn 6/6/2009 8:55:56 AM DENNIS

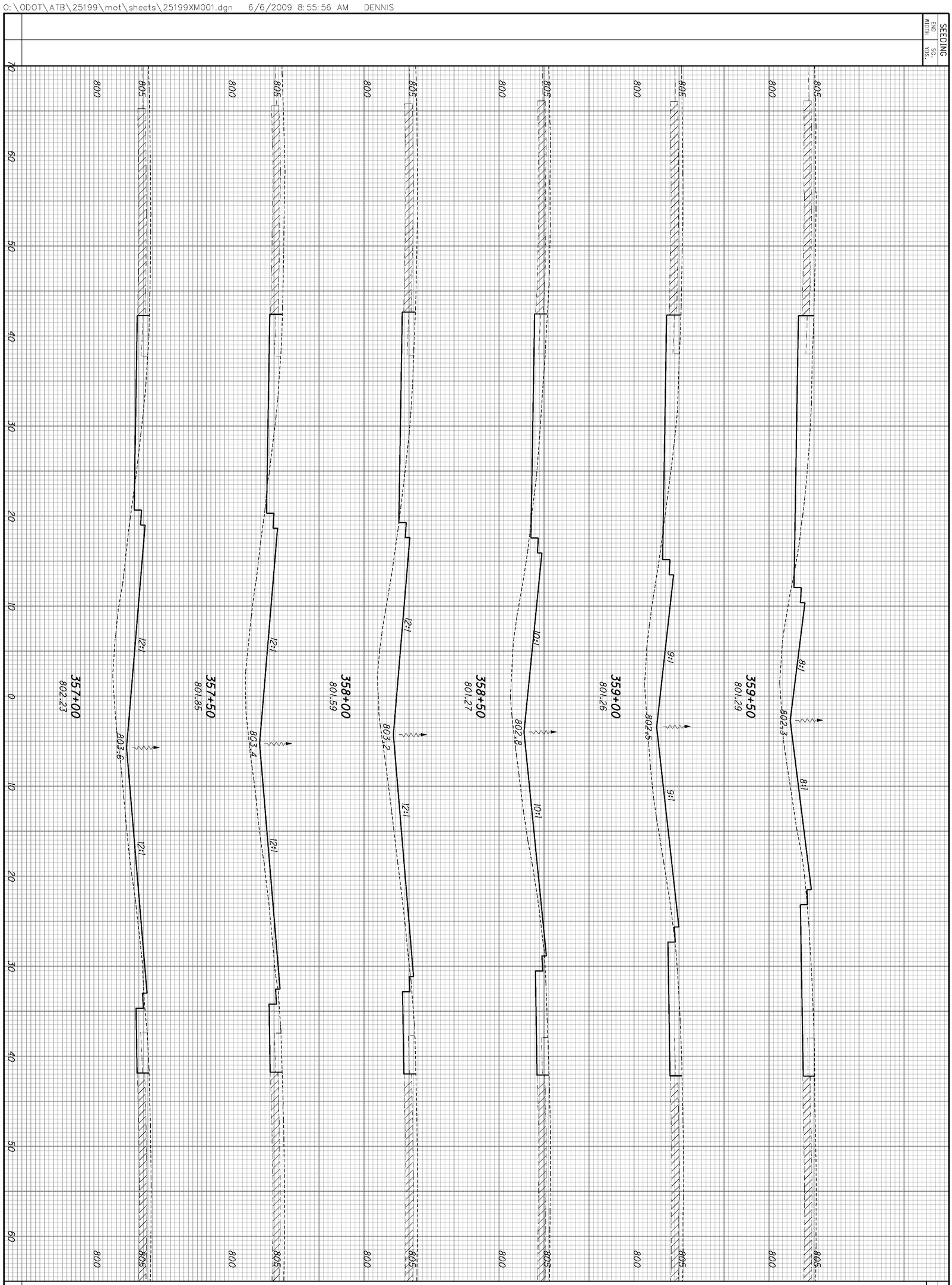

32 / 437	ATB-90-14.25	CROSS SECTIONS - CROSS OVER/BEGIN PROJECT STA. 357+00 TO STA. 359+50

CALCULATED

CHECKED

Palmer ENGINEERING
PALMER ENGINEERING
11300 CORNELL PARK DR
CINCINNATI, OH 45242

O:\ODOT\ATB\25199\mot\sheets\25199XM001.dgn 6/6/2009 8:55:57 AM DENNIS

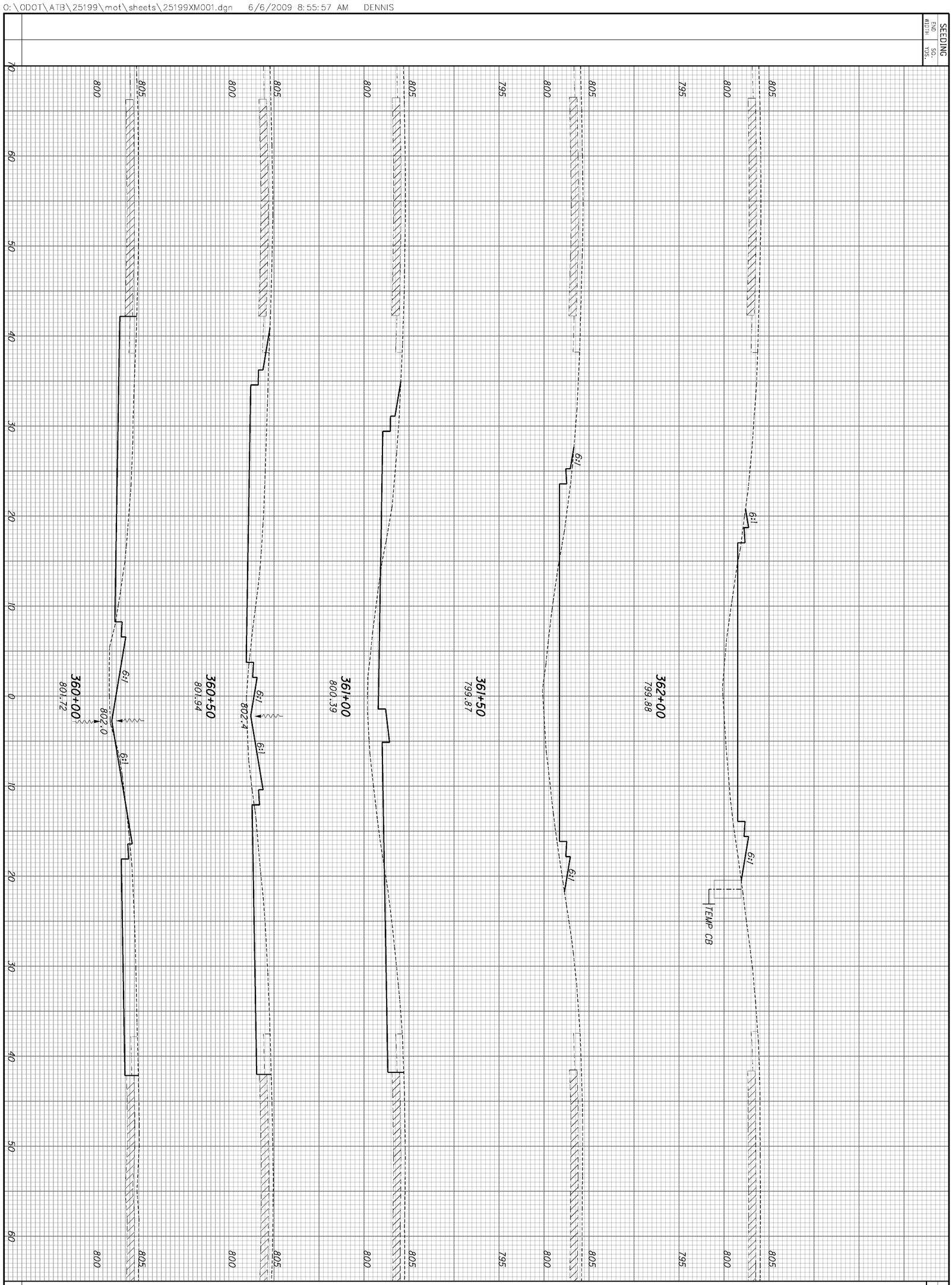

ATB-90-14.25

CROSS SECTIONS - CROSS OVER/BEGIN PROJECT
STA. 360+00 TO STA. 362+00

CALCULATED

CHECKED

PALMER ENGINEERING
11300 CORNELL PARK DR
CINCINNATI, OH 45242

O:\ODOT\ATB\25199\mot\sheets\25199XM001.dgn 6/6/2009 8:55:59 AM DENNIS

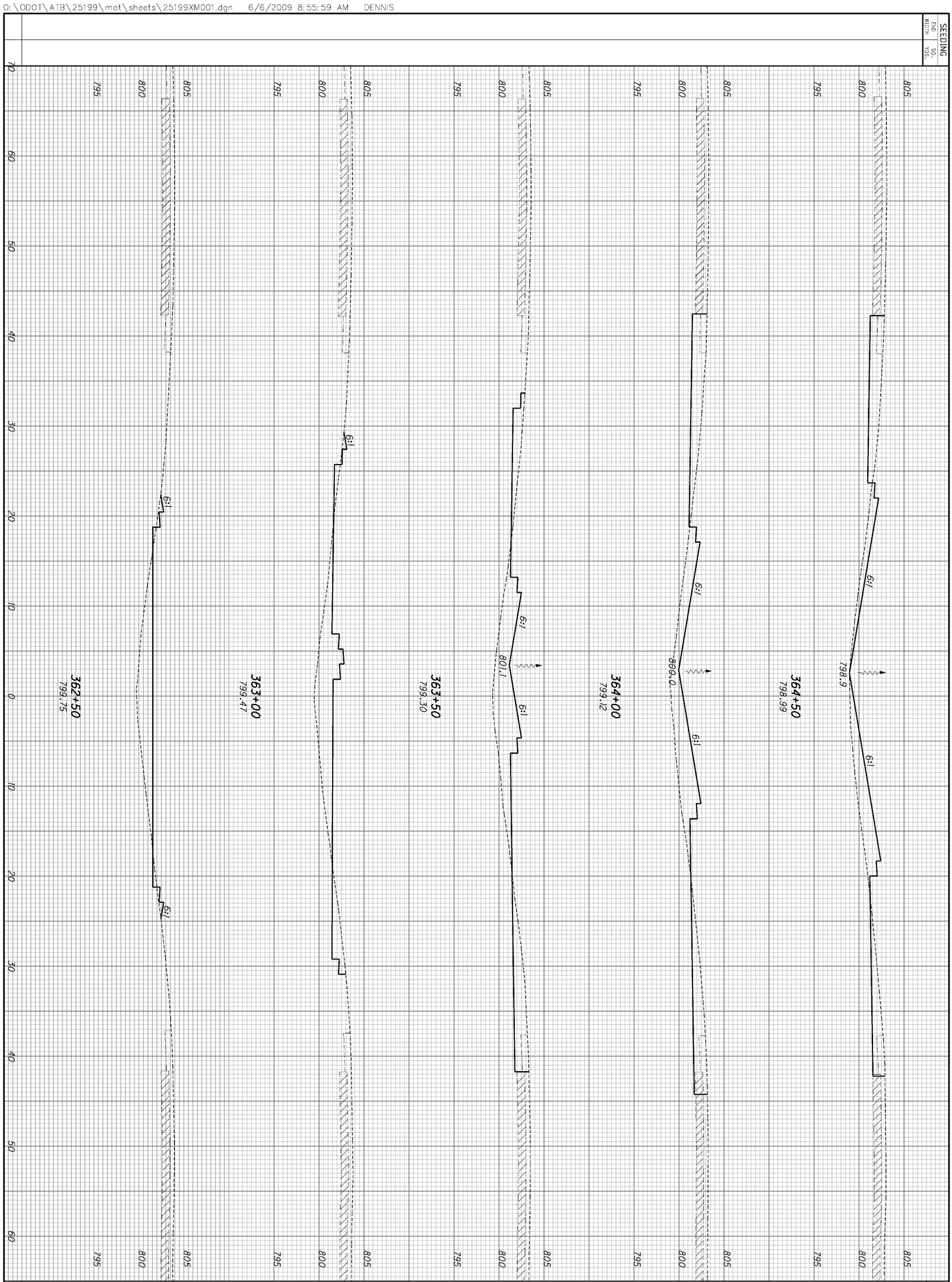

ATB-90-14.25

CROSS SECTIONS - CROSS OVER/BEGIN PROJECT
STA. 362+50 TO STA. 364+50

CALCULATED

CHECKED

PALMER ENGINEERING
11300 CORNELL PARK DR
CINCINNATI, OH 45242

O:\ODOT\ATB\25199\mot\sheets\25199XM001.dgn 6/6/2009 8:56:00 AM DENNIS

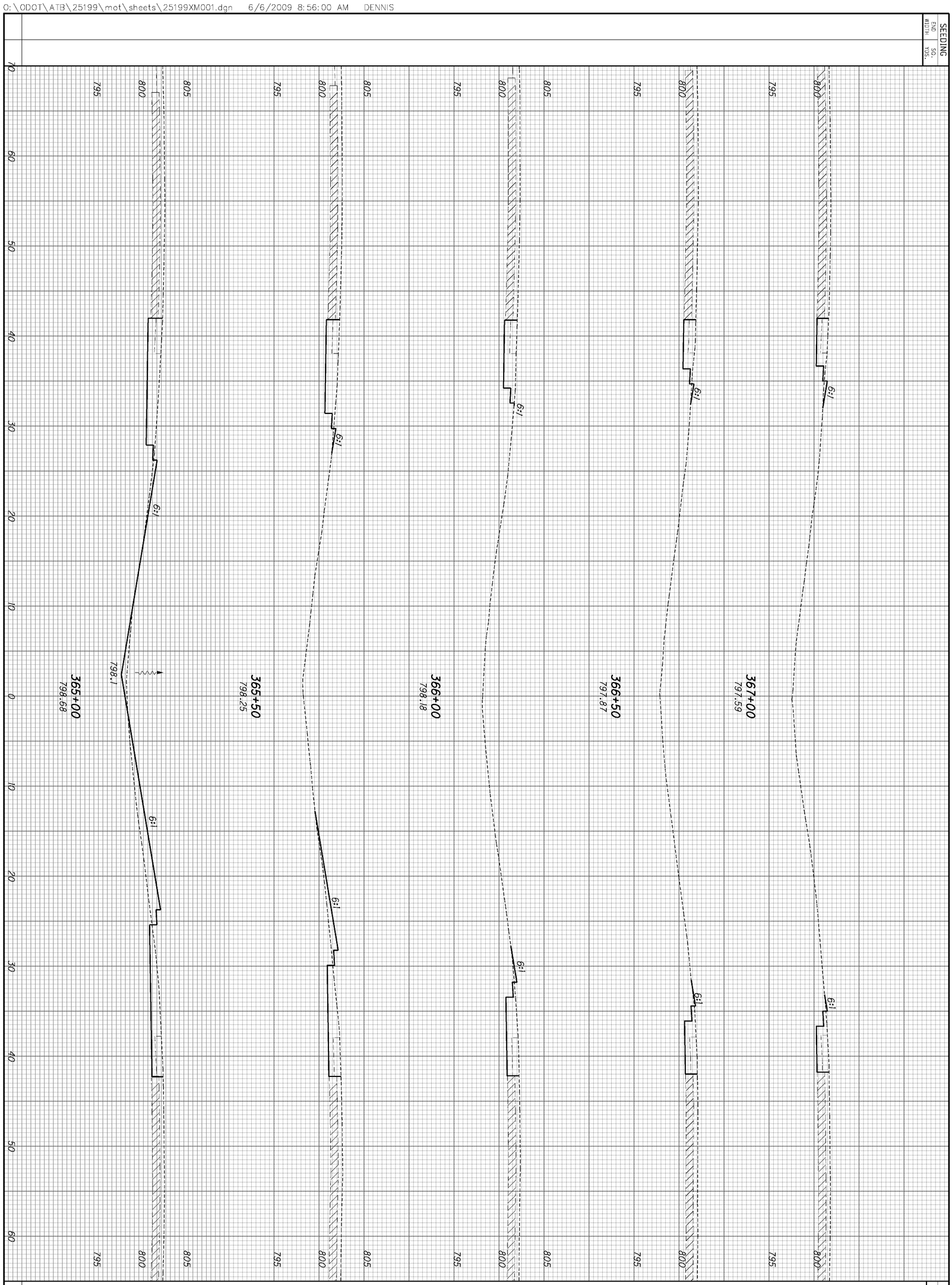

END AREA
CUT
FILL
VOLUME
CUT
FILL

35
437

ATB-90-14.25

CROSS SECTIONS - CROSS OVER/BEGIN PROJECT
STA. 365+00 TO STA. 367+00

CALCULATED
CHECKED

PALMER ENGINEERING
11300 CORNELL PARK DR
CINCINNATI, OH 45242

O:\ODOT\ATB\25199\mot\sheets\25199XM001.dgn 6/6/2009 8:56:01 AM DENNIS

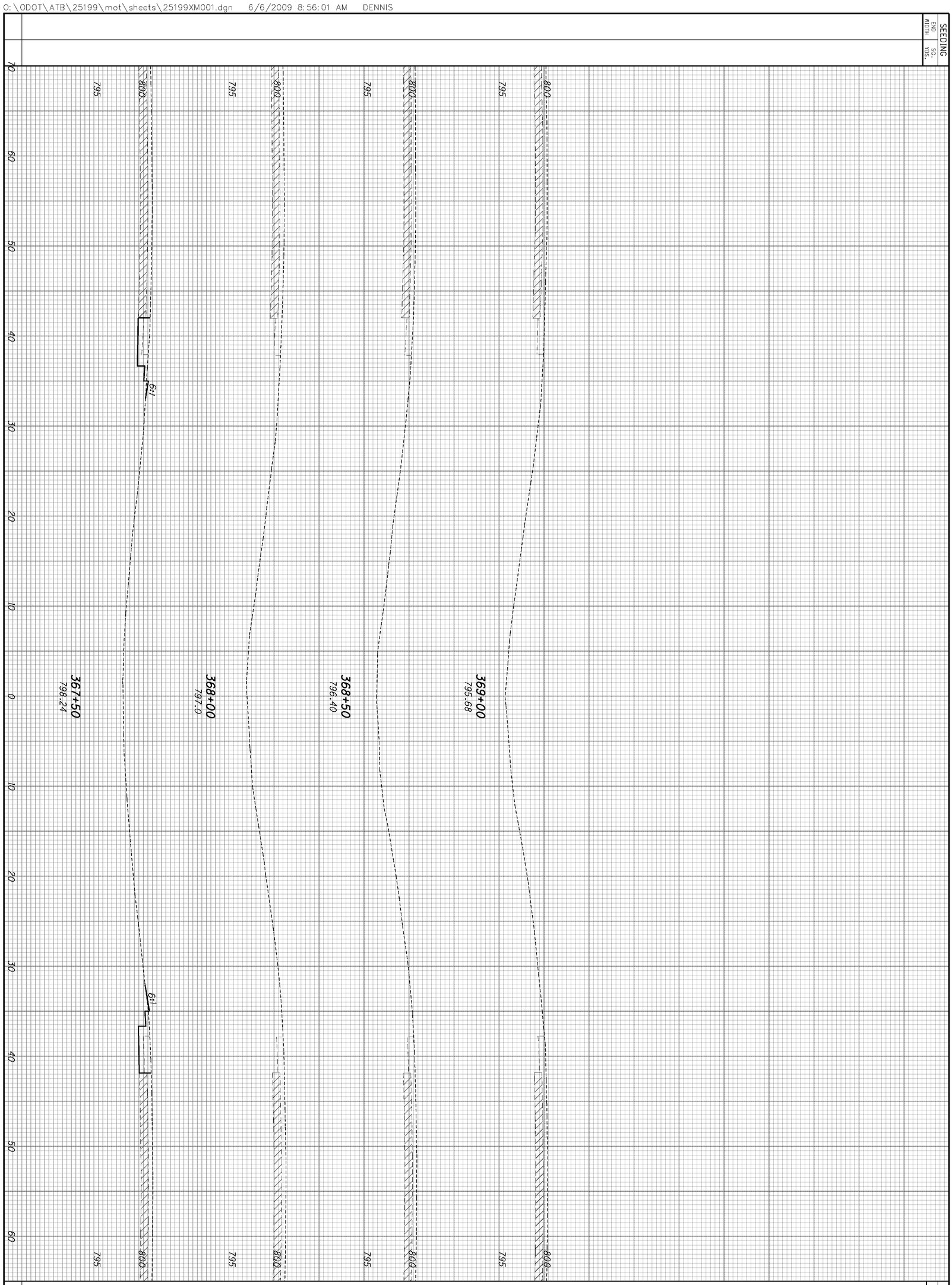

ATB-90-14.25

CROSS SECTIONS - CROSS OVER/BEGIN PROJECT
STA. 367+50 TO STA. 369+00

CALCULATED

CHECKED

Palmer ENGINEERING
PALMER ENGINEERING
11300 CORNELL PARK DR
CINCINNATI, OH 45242

O:\ODOT\ATB\25199\mot\sheets\25199MP300.dgn 6/6/2009 8:56:06 AM DENNIS

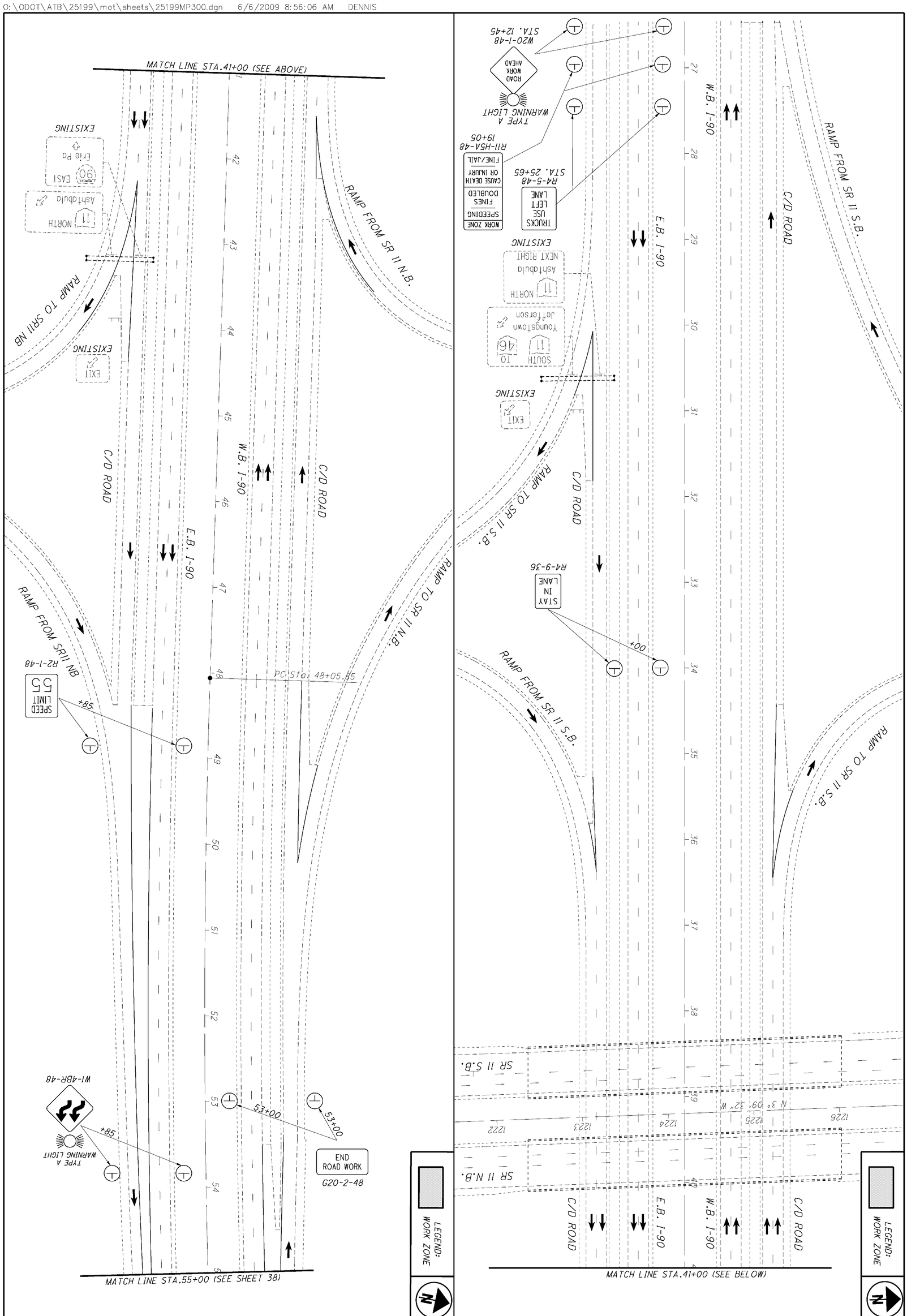

37 / 437	ATB-90-14.25	MAINTENANCE OF TRAFFIC PHASE 3 STA. 27+00 TO STA. 55+00	CALCULATED DPF CHECKED	0 50 25 100 HORIZONTAL SCALE IN FEET

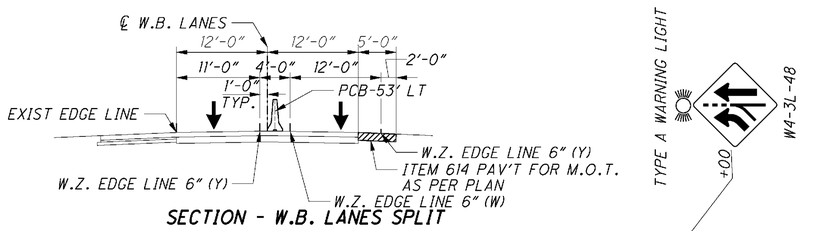

SECTION - W.B. LANES SPLIT

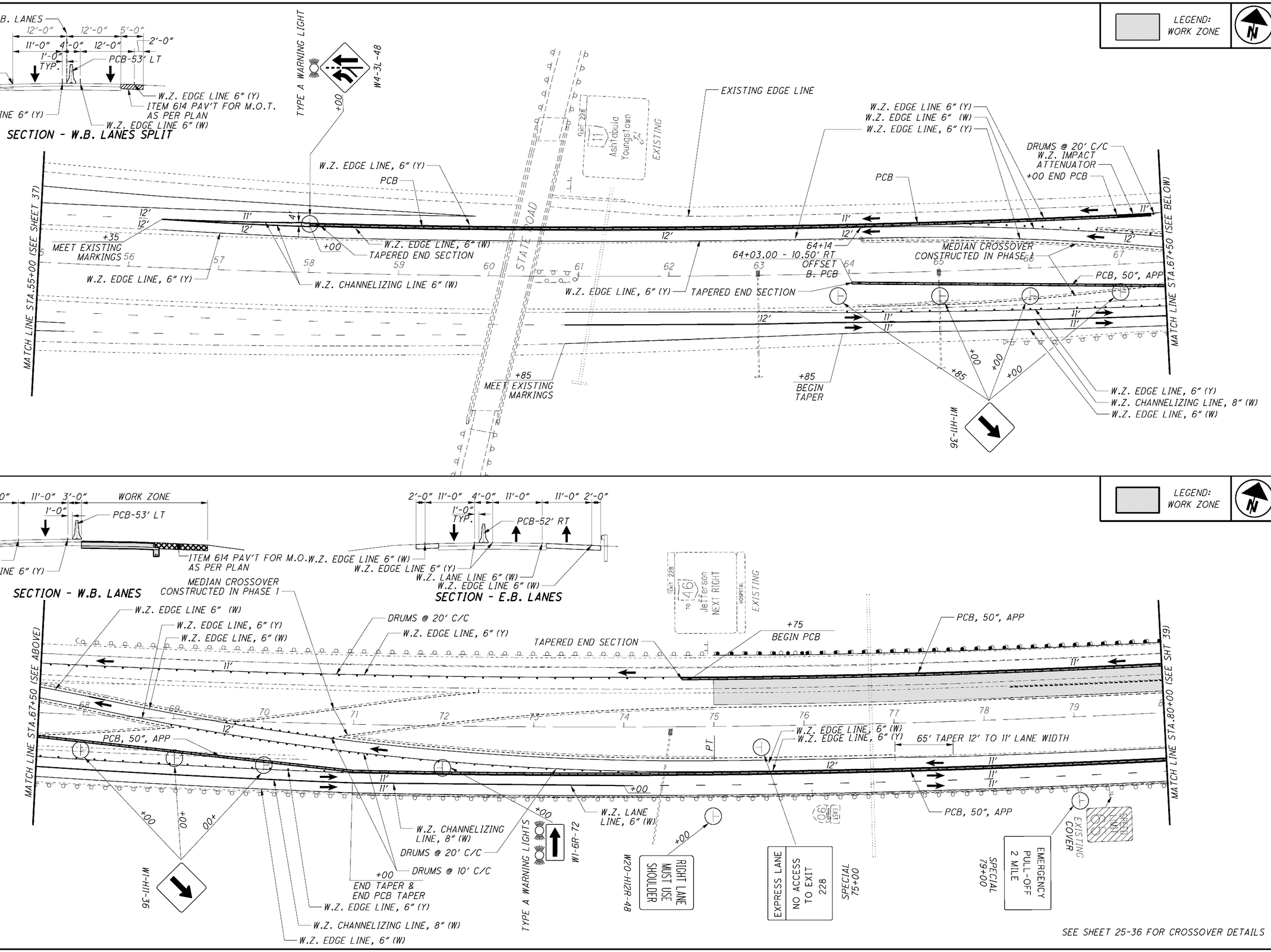

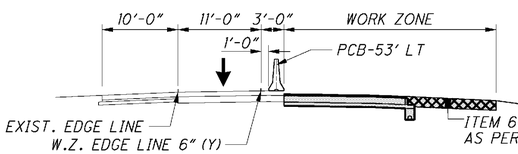

SECTION - W.B. LANES

SECTION - E.B. LANES

SEE SHEET 25-36 FOR CROSSOVER DETAILS

HORIZONTAL SCALE IN FEET
0 25 50 100

CALCULATED DPF CHECKED

MAINTENANCE OF TRAFFIC PHASE 3
STA. 55+00 TO STA. 80+00

ATB-90-14.25

38
437

Palmer ENGINEERING
PALMER ENGINEERING
11300 CORNELL PARK DR
CINCINNATI, OH 45242

O:\ODOT\ATB\25199\mot\sheets\25199MP301.dgn 6/6/2009 8:56:09 AM DENNIS

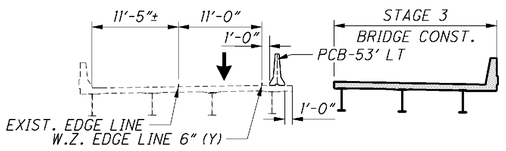

BRIDGE SECTION - W.B. LANES

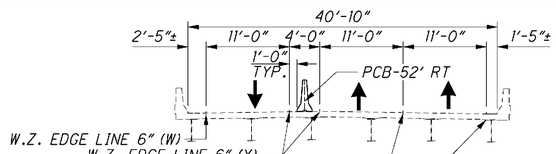

BRIDGE SECTION - E.B. LANES

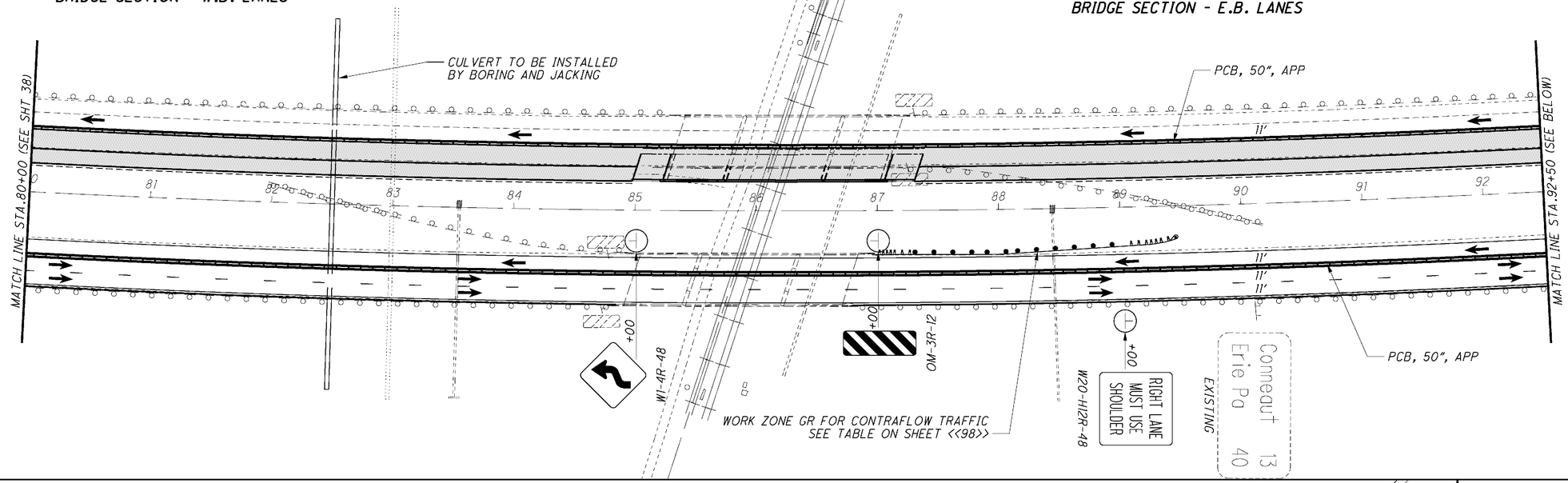

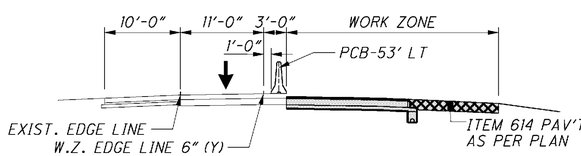

SECTION - W.B. LANES

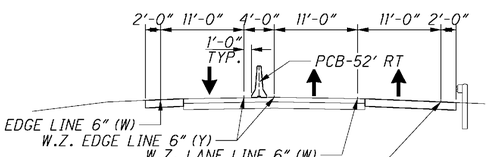

SECTION - E.B. LANES

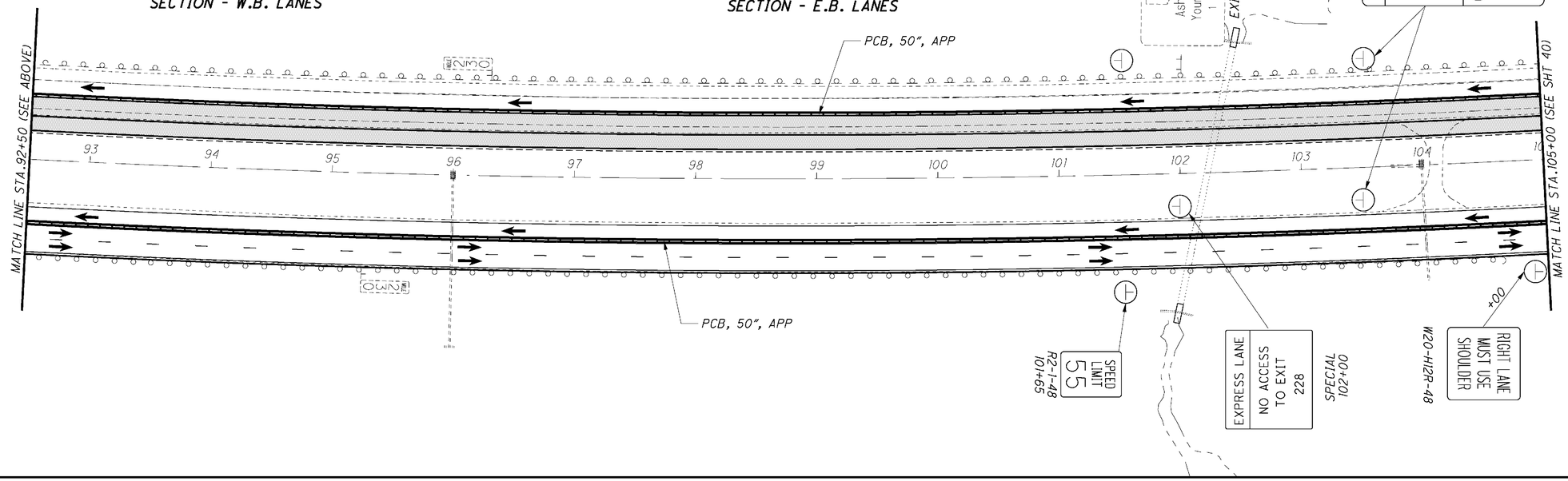

LEGEND: WORK ZONE

HORIZONTAL SCALE IN FEET
0 25 50 100

CALCULATED DPF
CHECKED

MAINTENANCE OF TRAFFIC PHASE 3
STA. 80+00 TO STA. 105+00

ATB-90-14.25

39
437

Palmer ENGINEERING
PALMER ENGINEERING
11300 CORNELL PARK DR
ENGINEERING CINCINNATI, OH 45242

O:\ODOT\ATB\25199\mot\sheets\25199MP302.dgn 6/6/2009 8:56:12 AM DENNIS

SECTION - W.B. LANES

SECTION - E.B. LANES

HORIZONTAL SCALE IN FEET
0 25 50 100

CALCULATED DPF
CHECKED

MAINTENANCE OF TRAFFIC PHASE 3
STA. 105+00 TO STA. 130+00

ATB-90-14.25

Palmer ENGINEERING
PALMER ENGINEERING
11300 CORNELL PARK DR
CINCINNATI, OH 45242

O:\ODOT\ATB\25199\mot\sheets\25199MP303.dgn 6/6/2009 8:56:16 AM DENNIS

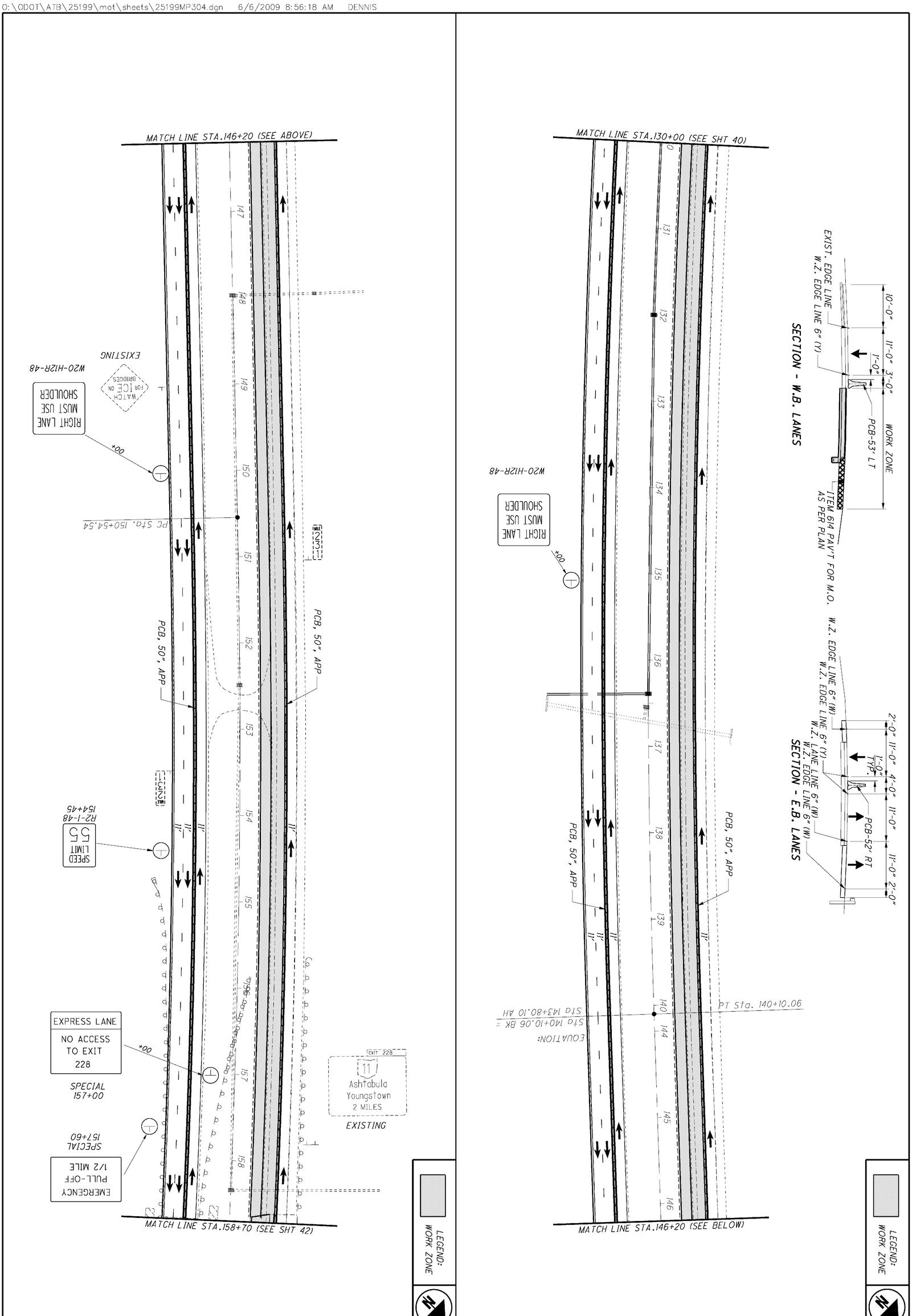

41 / 437	ATB-90-14.25	MAINTENANCE OF TRAFFIC PHASE 3 STA. 130+00 TO STA. 158+70	CALCULATED DPF CHECKED	0 50 25 100 HORIZONTAL SCALE IN FEET

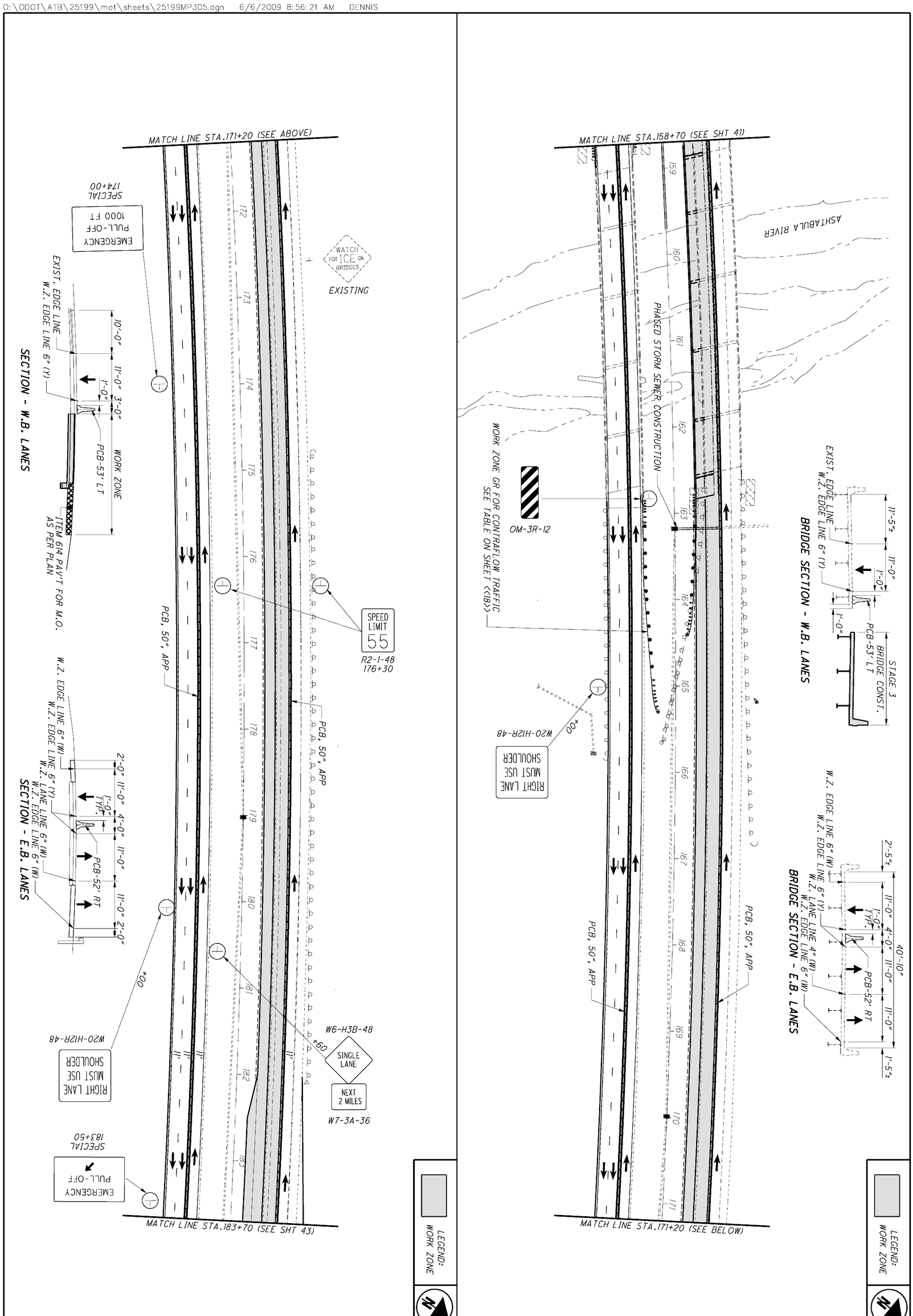

42 / 437	ATB-90-14.25	MAINTENANCE OF TRAFFIC PHASE 3 STA. 158+70 TO STA. 183+70	CALCULATED DPF CHECKED	0 50 25 100 HORIZONTAL SCALE IN FEET

PALMER ENGINEERING
11300 CORNELL PARK DR
CINCINNATI, OH 45242

O:\ODOT\ATB\25199\mot\sheets\25199MP306.dgn 6/6/2009 8:56:24 AM DENNIS

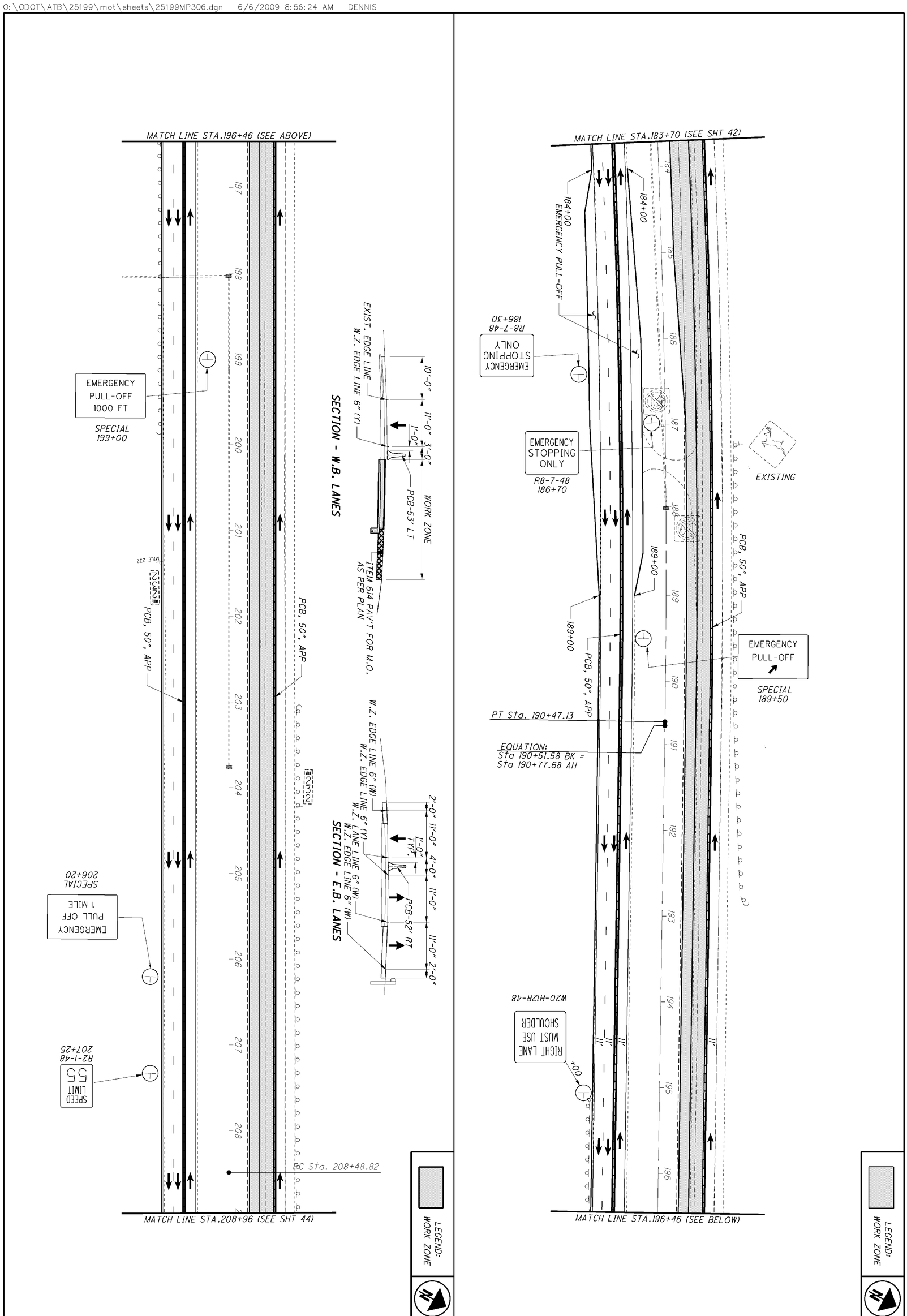

ATB-90-14.25

MAINTENANCE OF TRAFFIC PHASE 3
STA. 183.70 TO STA. 208+96

CALCULATED DPF
CHECKED

0 50
25 100
HORIZONTAL SCALE IN FEET

PALMER ENGINEERING
11300 CORNELL PARK DR
CINCINNATI, OH 45242

O:\ODOT\ATB\25199\mot\sheets\25199MP307.dgn 6/6/2009 8:56:27 AM DENNIS

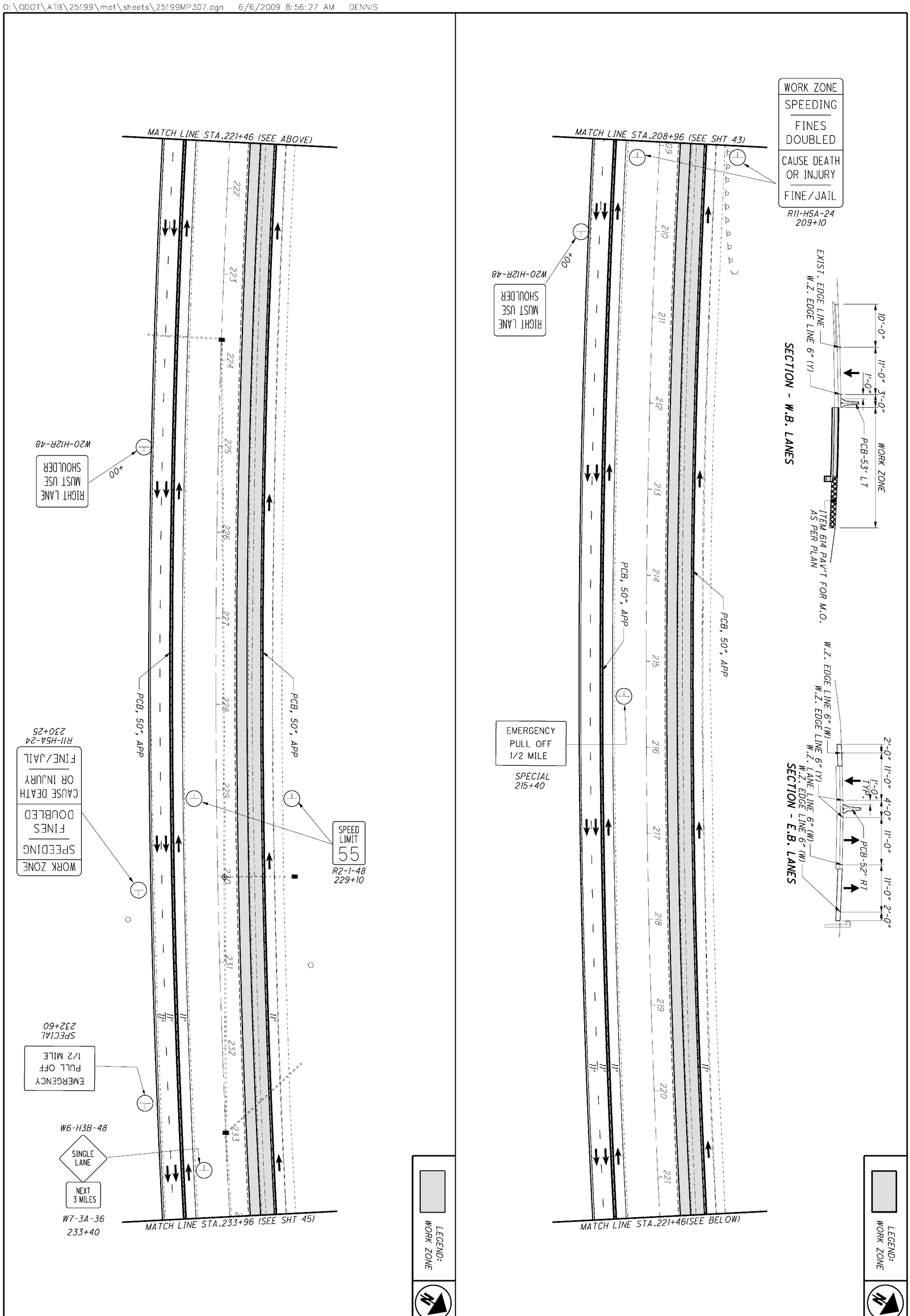

ATB-90-14.25

MAINTENANCE OF TRAFFIC PHASE 3
STA. 208+96 TO STA. 233+96

CALCULATED DPF
CHECKED

0 25 50 100
HORIZONTAL SCALE IN FEET

PALMER ENGINEERING
11300 CORNELL PARK DR
CINCINNATI, OH 45242

O:\ODOT\ATB\25199\mot\sheets\25199MP308.dgn 6/6/2009 8:56:29 AM DENNIS

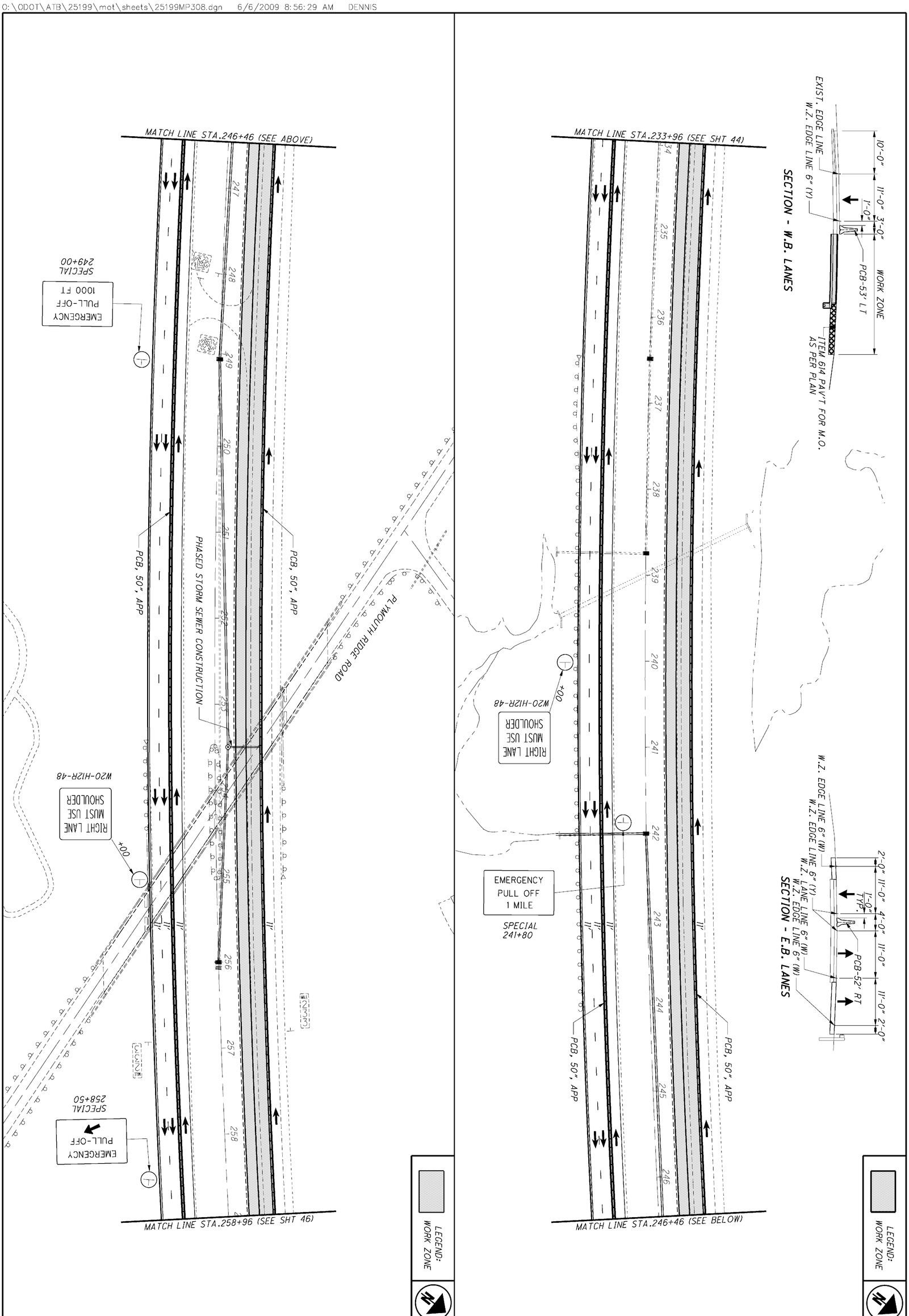

ATB-90-14.25

MAINTENANCE OF TRAFFIC PHASE 3
STA. 233+96 TO STA. 258+96

CALCULATED DPF
CHECKED

0 50
25 100
HORIZONTAL SCALE IN FEET

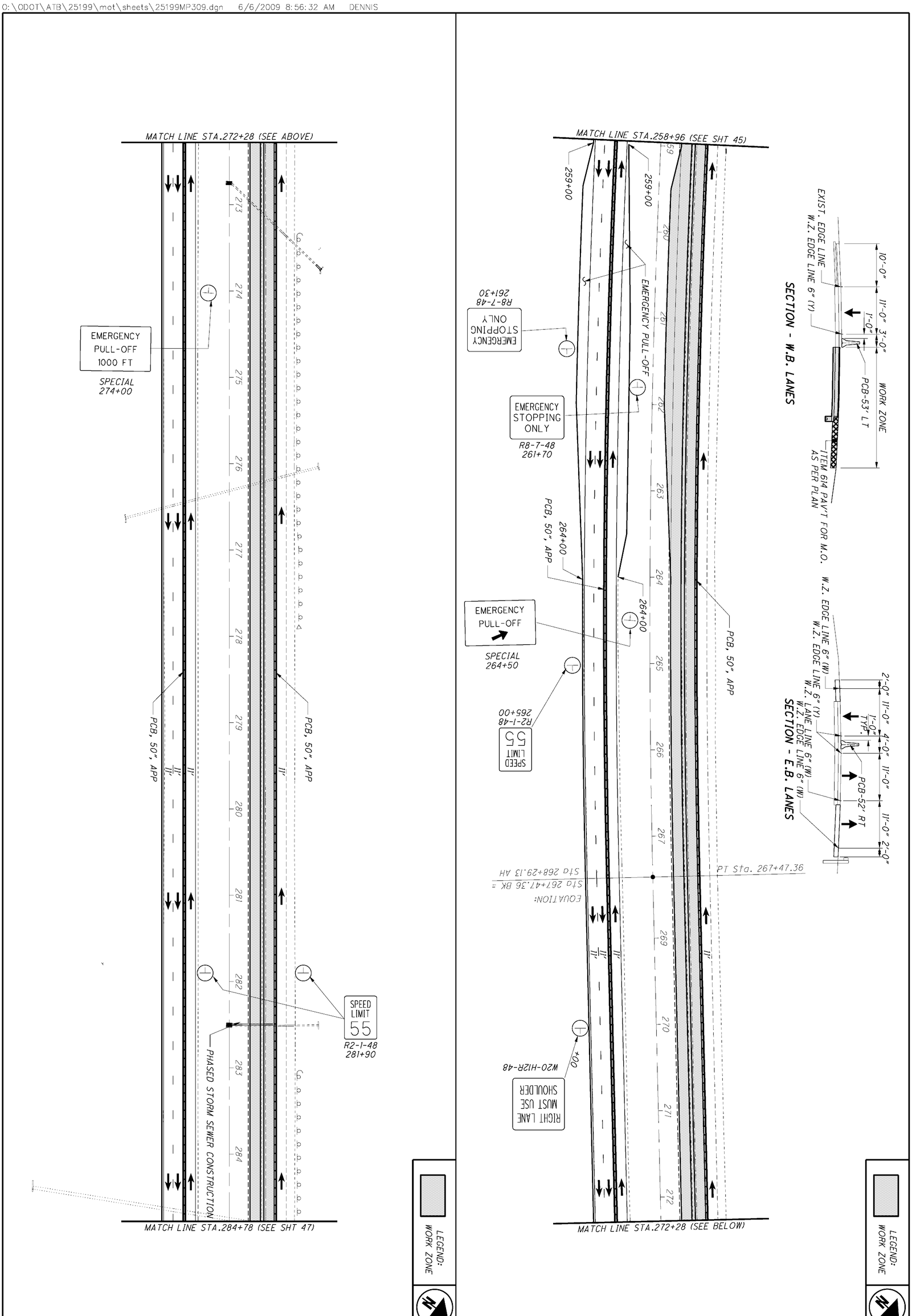

MAINTENANCE OF TRAFFIC PHASE 3
STA. 258+96 TO STA. 284+78

CALCULATED DPF
CHECKED

0 50
25 100
HORIZONTAL SCALE IN FEET

Palmer ENGINEERING
PALMER ENGINEERING
11300 CORNELL PARK DR
CINCINNATI, OH 45242

O:\ODOT\ATB\25199\mot\sheets\25199MP310.dgn 6/6/2009 8:56:35 AM DENNIS

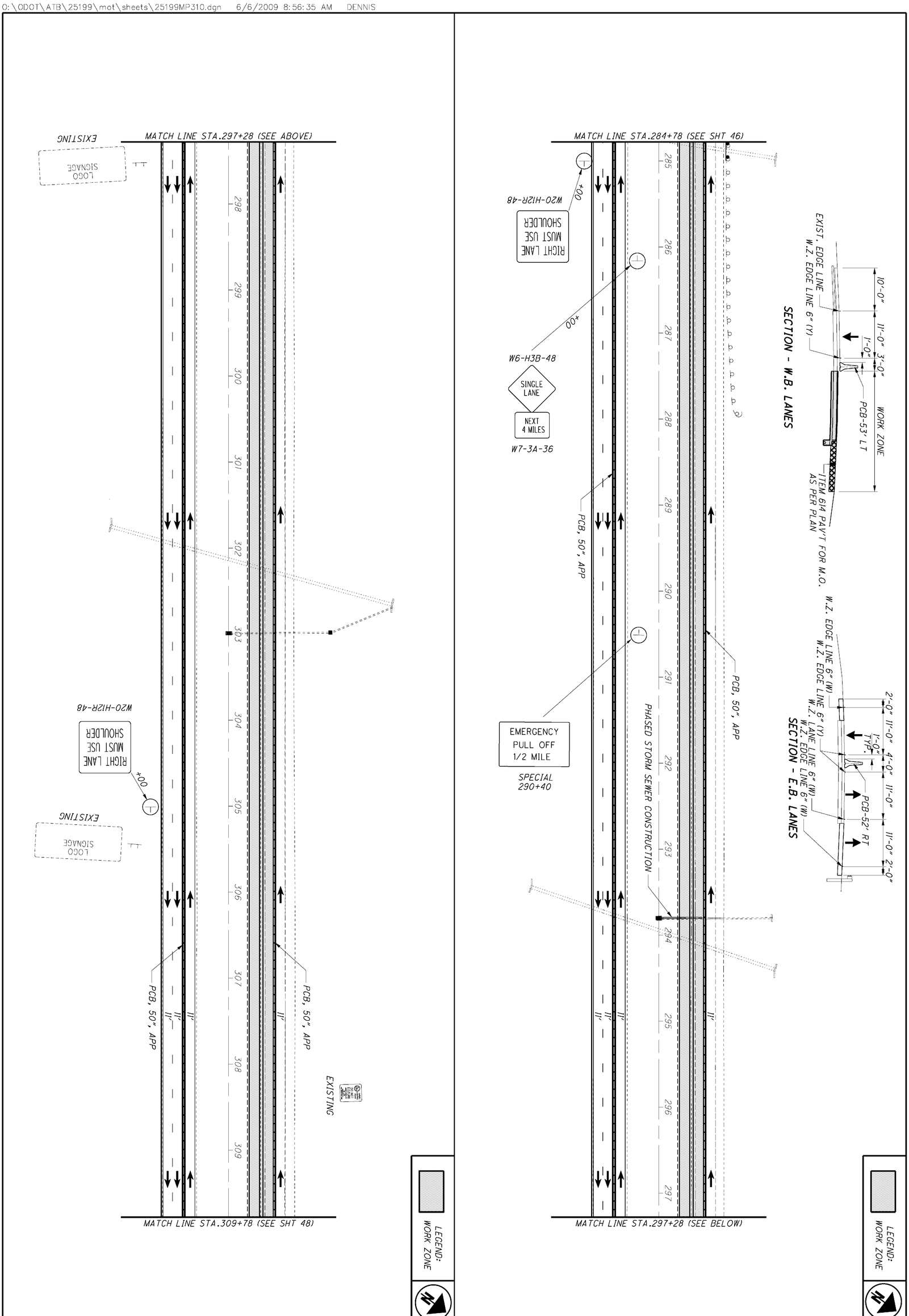

ATB-90-14.25

MAINTENANCE OF TRAFFIC PHASE 3
STA. 284+78 TO STA. 309+78

CALCULATED DPF
CHECKED

0 50
25 100
HORIZONTAL SCALE IN FEET

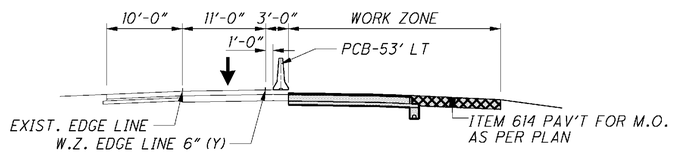

SECTION - W.B. LANES

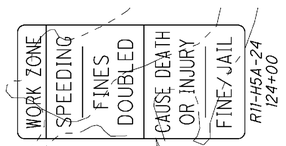

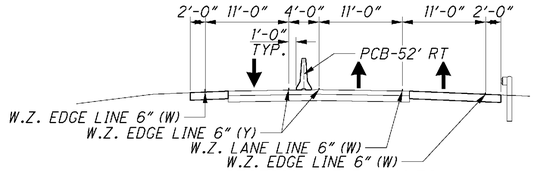

SECTION - E.B. LANES

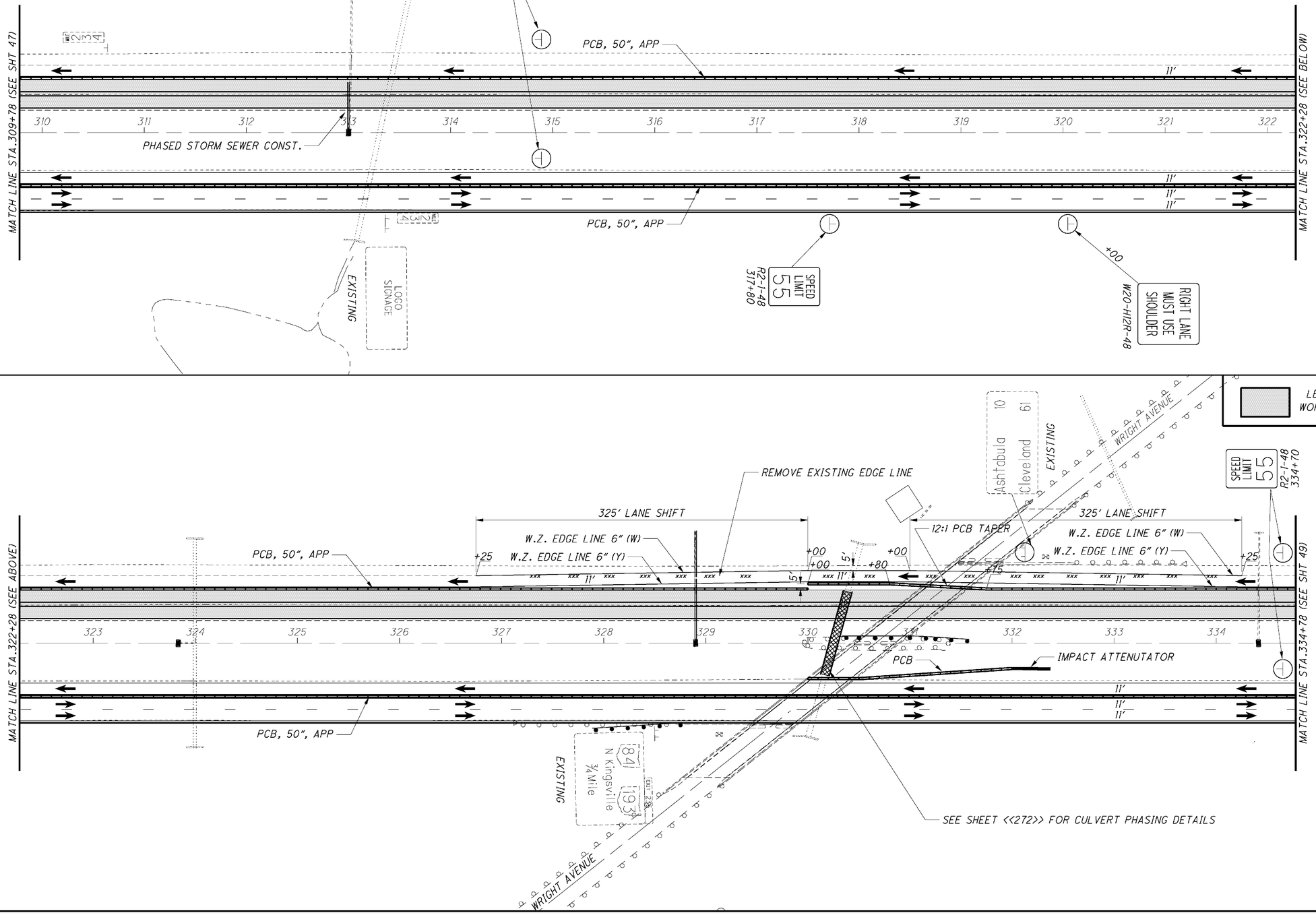

HORIZONTAL SCALE IN FEET

CALCULATED DPF CHECKED

MAINTENANCE OF TRAFFIC PHASE 3
STA. 309+78 TO STA. 334+78

ATB-90-14.25

48
437

Palmer ENGINEERING
PALMER ENGINEERING
11300 CORNELL PARK DR
CINCINNATI, OH 45242

C:\ODOT\ATB\25199\mot\sheets\25199MP311.dgn 6/6/2009 8:56:37 AM DENNIS

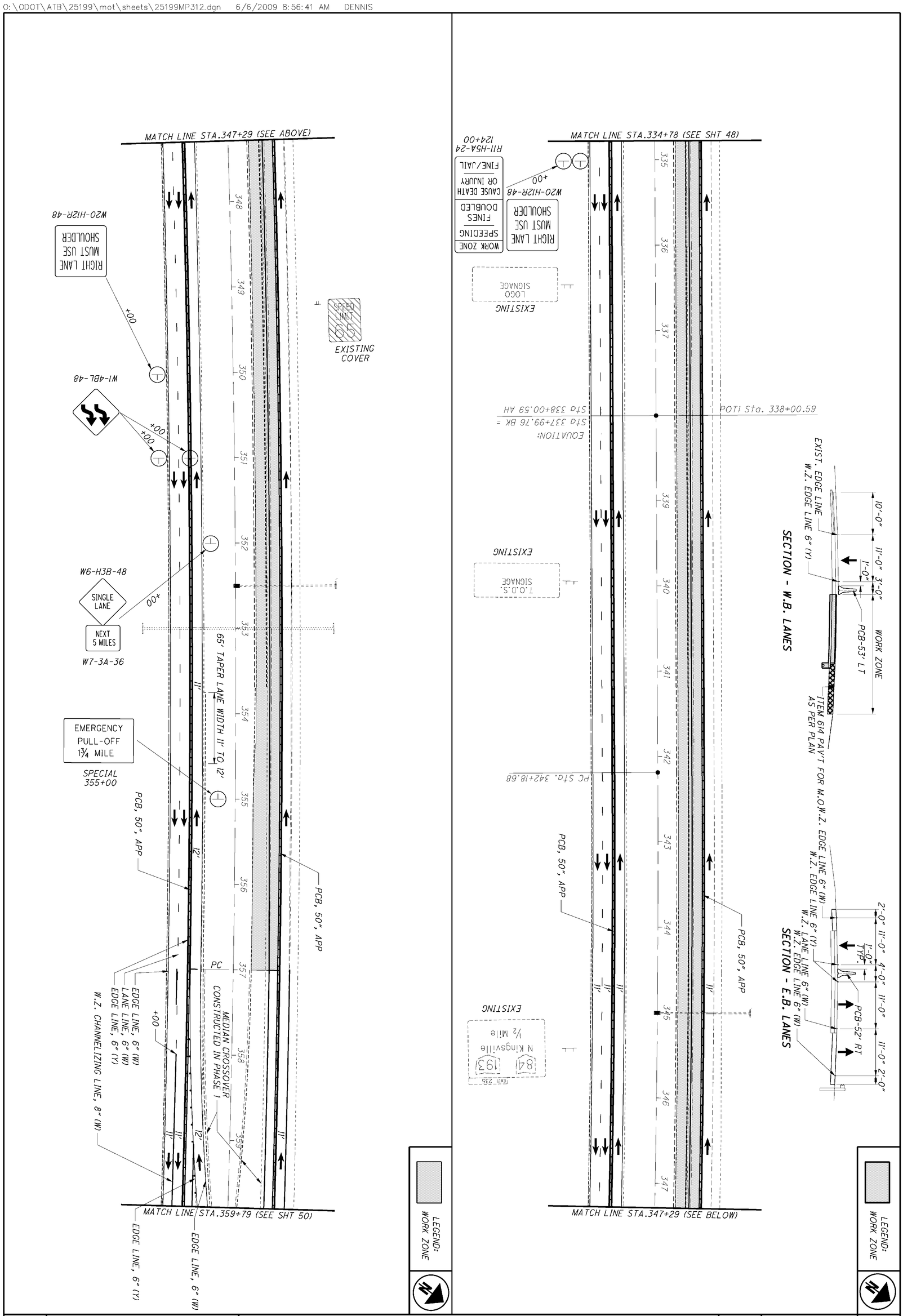

MAINTENANCE OF TRAFFIC PHASE 3
STA. 334+78 TO STA. 359+79

CALCULATED DPF
CHECKED

HORIZONTAL SCALE IN FEET
0 25 50 100

LEGEND: WORK ZONE

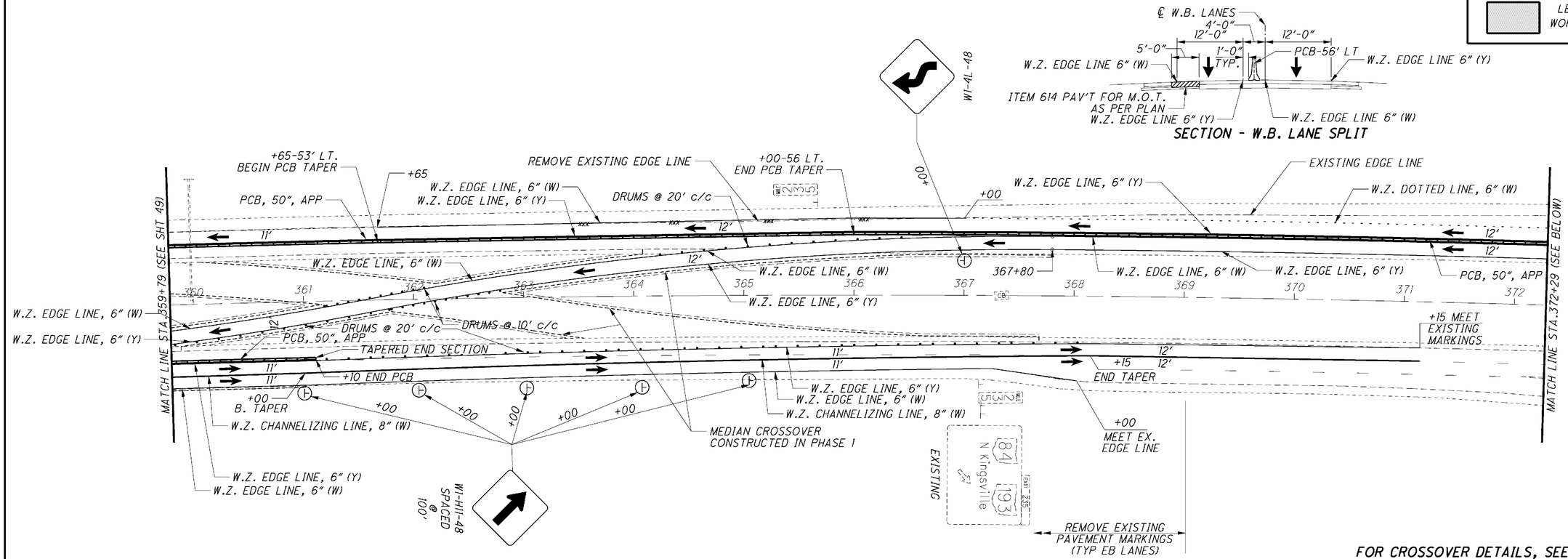

FOR CROSSOVER DETAILS, SEE SHEETS 25-36

LEGEND: WORK ZONE

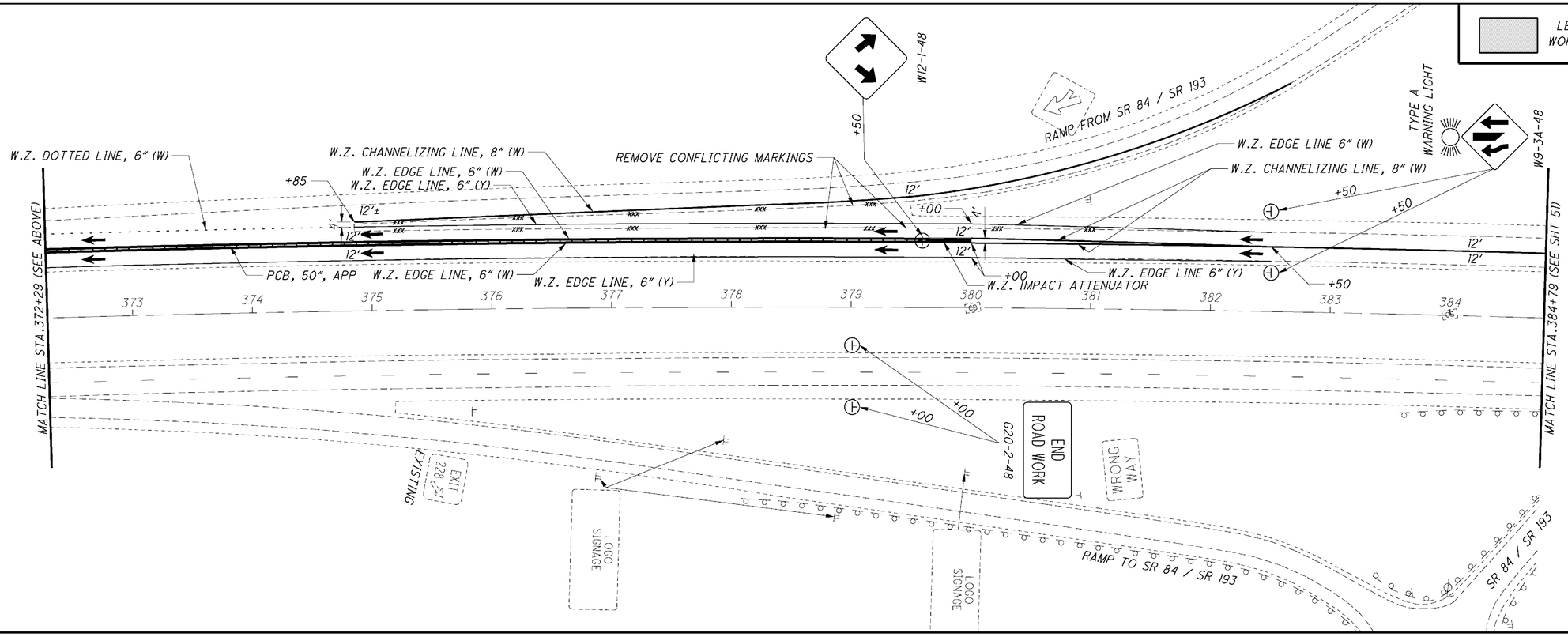

HORIZONTAL SCALE IN FEET
0 25 50 100

CALCULATED DPF CHECKED

MAINTENANCE OF TRAFFIC PHASE 3
STA. 359+79 TO STA. 384+79

ATB-90-14.25

Palmer ENGINEERING
PALMER ENGINEERING
11300 CORNELL PARK DR
CINCINNATI, OH 45242

O:\ODOT\ATB\25199\mot\sheets\25199MP313.dgn 6/6/2009 8:59:58 AM DENNIS

MATCH LINE STA.397+29 (SEE ABOVE)

MATCH LINE STA.384+79 (SEE SHT 50)

S.R. 84/S.R. 193

W.Z. CHANNELIZING LINE, 8" W

12"

12"

TYPE A WARNING LIGHT

+50

W9-3A-48

1/2 MILE

W16-3A-30

+00

+00

+00

STAY IN LANE

R4-9-36

RAMP FROM S.R. 84/S.R. 193

EXIT 235

84 193

N Kingsville

EXISTING

FIELD ADJUST PLACEMENT WITH EXIST. EXIT SIGN

RAMP TO S.R. 84/S.R. 193

EXIT 228

11 Ashtabula

46 Jefferson

KEEP RIGHT

SPECIAL

+00

EXIT 228

EXISTING

90 WEST

ALL LANES

SPECIAL

+00

+10

TRUCKS USE RIGHT LANE

R4-5-48

MATCH LINE STA.397+29 (SEE BELOW)

LEGEND: WORK ZONE

LEGEND: WORK ZONE

SIGNAGE LAYOUT CONTINUED ON SHEET 52

Palmer ENGINEERING
PALMER ENGINEERING
11300 CORNELL PARK DR
CINCINNATI, OH 45242

O:\ODOT\ATB\25199\mot\sheets\25199MH300.dgn 6/6/2009 9:00:04 AM DENNIS

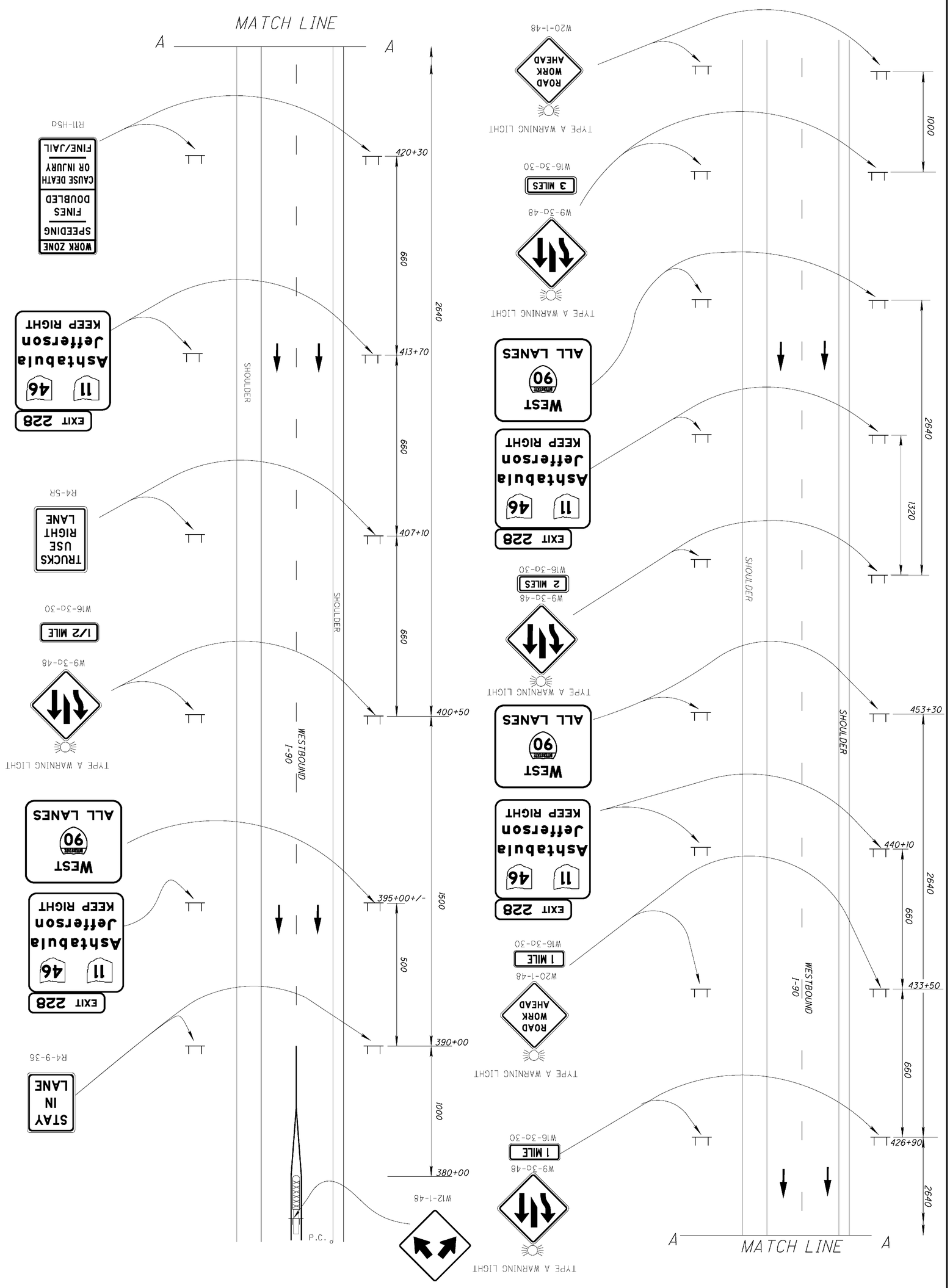

52 / 437	**ATB-90-14.25**	**MAINTENANCE OF TRAFFIC - SIGNAGE SCHEMATIC** **WESTBOUND LEAD IN SIGNS - PHASE 3 & 4**

CALCULATED DPF
CHECKED

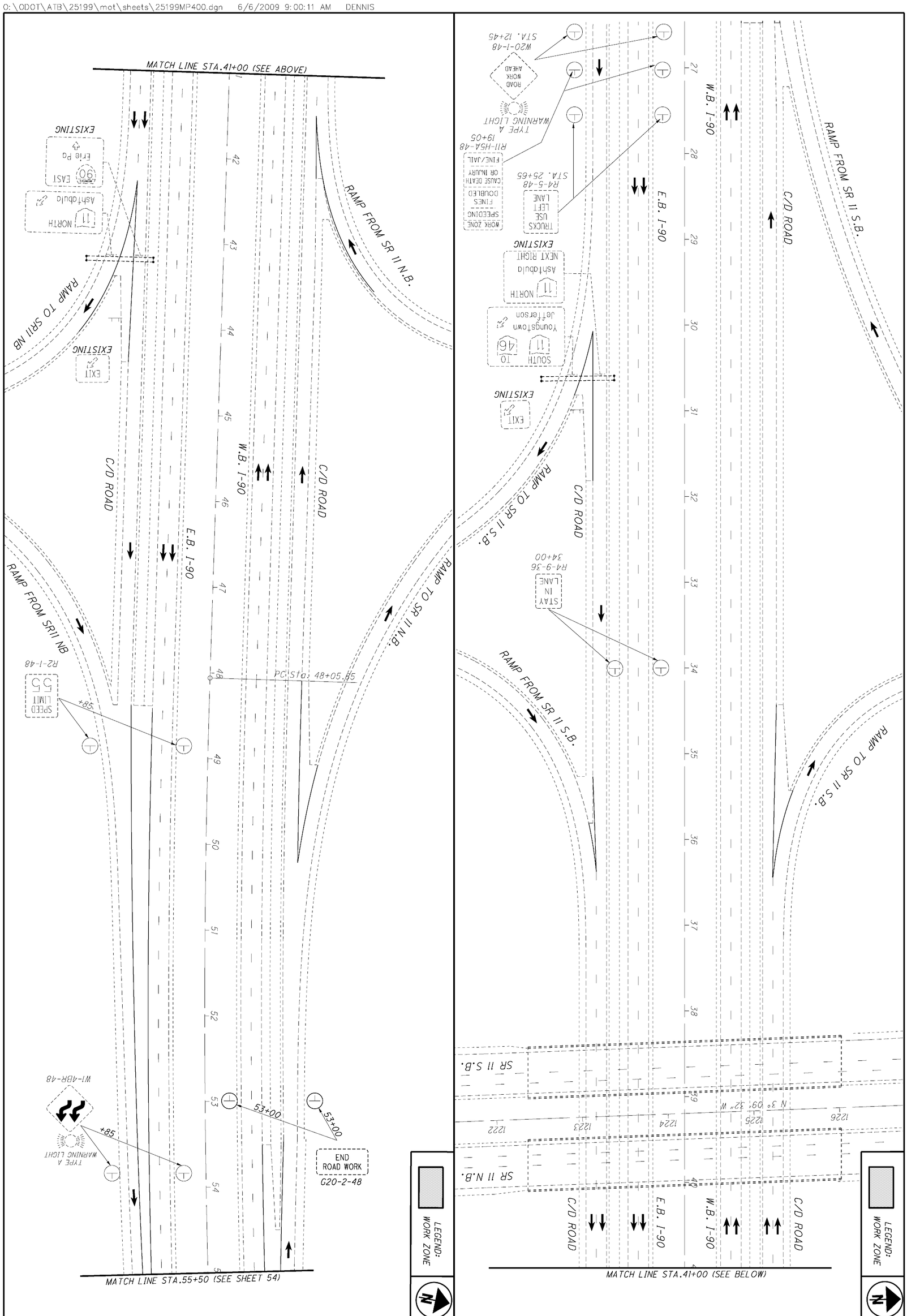

53 / 437	ATB-90-14.25	MAINTENANCE OF TRAFFIC PHASE 4 STA. 27+00 TO STA. 55+00	CALCULATED DPF CHECKED 0 50 25 100 HORIZONTAL SCALE IN FEET

Palmer ENGINEERING PALMER ENGINEERING 11300 CORNELL PARK DR CINCINNATI, OH 45242
O:\ODOT\ATB\25199\mot\sheets\25199MP401.dgn 6/6/2009 9:00:14 AM DENNIS

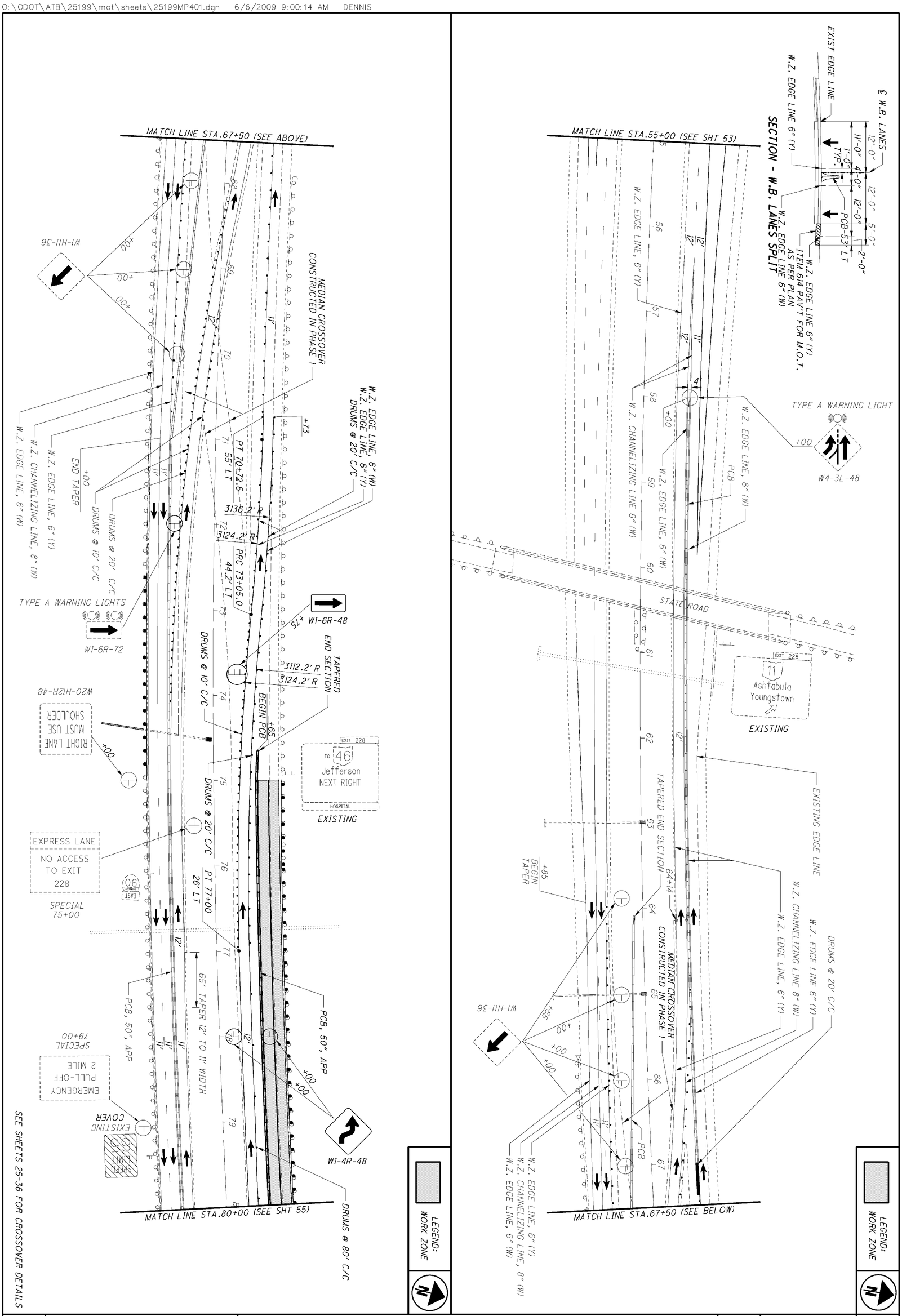

54 / 437	ATB-90-14.25	MAINTENANCE OF TRAFFIC PHASE 4 STA. 55+00 TO STA. 80+00	CALCULATED DPF CHECKED	0 25 50 100 HORIZONTAL SCALE IN FEET

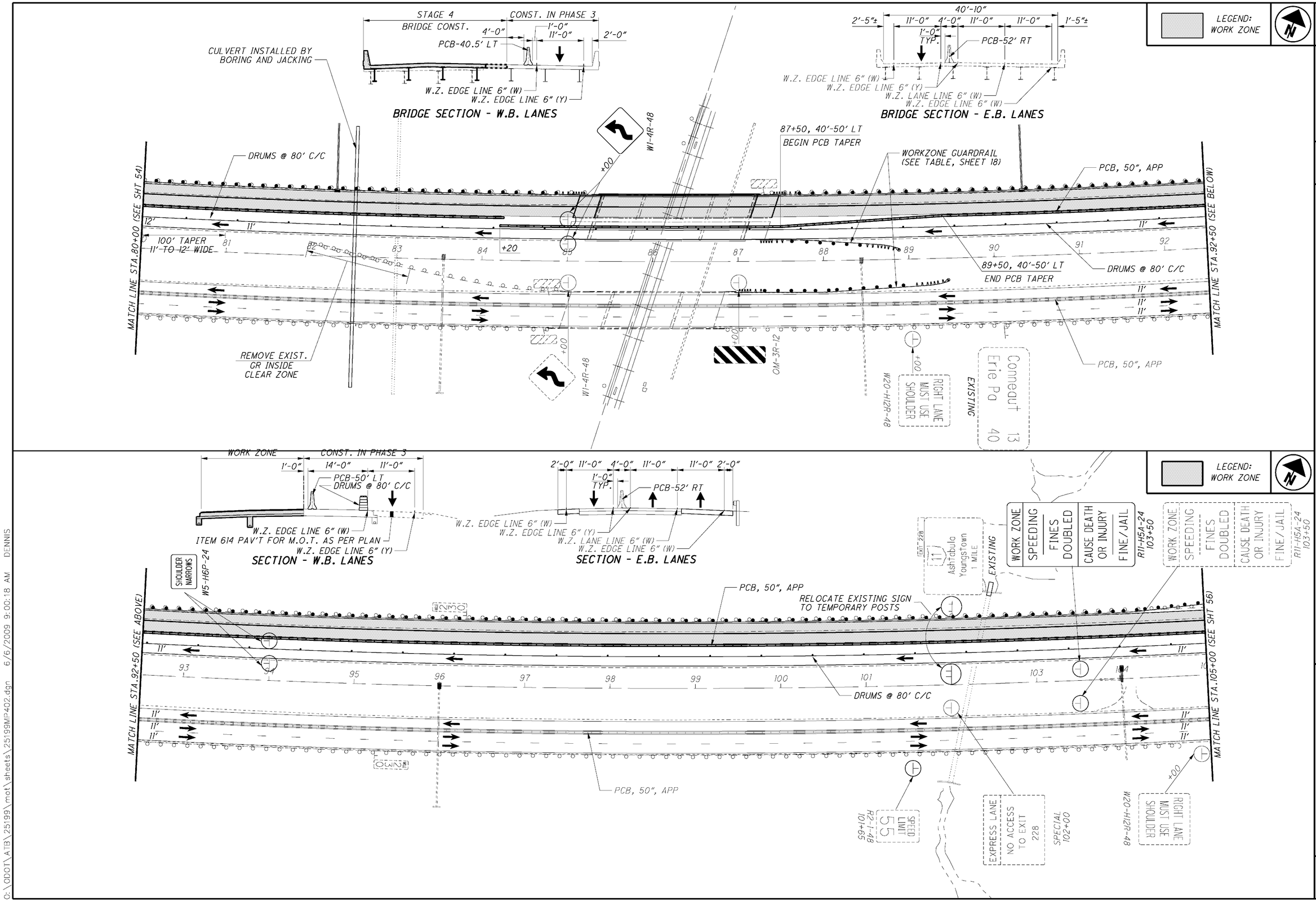
STAGE 4
CONST. IN PHASE 3
BRIDGE CONST.
4'-0"
1'-0"
11'-0"
2'-0"
PCB-40.5' LT
CULVERT INSTALLED BY BORING AND JACKING
W.Z. EDGE LINE 6" (W)
W.Z. EDGE LINE 6" (Y)
BRIDGE SECTION - W.B. LANES
40'-10"
2'-5"±
11'-0"
4'-0"
11'-0"
11'-0"
1'-5"±
1'-0" TYP.
PCB-52' RT
W.Z. EDGE LINE 6" (W)
W.Z. EDGE LINE 6" (Y)
W.Z. LANE LINE 6" (W)
W.Z. EDGE LINE 6" (W)
BRIDGE SECTION - E.B. LANES
LEGEND: WORK ZONE
HORIZONTAL SCALE IN FEET
CALCULATED DPF
CHECKED
DRUMS @ 80' C/C
W1-4R-48
87+50, 40'-50' LT
BEGIN PCB TAPER
WORKZONE GUARDRAIL (SEE TABLE, SHEET 18)
PCB, 50", APP
MATCH LINE STA.80+00 (SEE SHT 54)
12'
11'
100' TAPER
11'-TO-12' WIDE
81
82
83
84
+20
85
86
87
88
89
90
91
92
89+50, 40'-50' LT
END PCB TAPER
DRUMS @ 80' C/C
MATCH LINE STA.92+50 (SEE BELOW)
REMOVE EXIST. GR INSIDE CLEAR ZONE
OM-3R-12
W20-H12R-48
RIGHT LANE MUST USE SHOULDER
EXISTING
Conneaut 13
Erie Pa 40
PCB, 50", APP
MAINTENANCE OF TRAFFIC PHASE 4
STA. 80+00 TO STA. 105+00
ATB-90-14.25
55
437
WORK ZONE
CONST. IN PHASE 3
1'-0"
14'-0"
11'-0"
PCB-50' LT
DRUMS @ 80' C/C
W.Z. EDGE LINE 6" (W)
ITEM 614 PAV'T FOR M.O.T. AS PER PLAN
W.Z. EDGE LINE 6" (Y)
SECTION - W.B. LANES
2'-0" 11'-0" 4'-0" 11'-0" 11'-0" 2'-0"
1'-0" TYP.
PCB-52' RT
W.Z. EDGE LINE 6" (W)
W.Z. EDGE LINE 6" (Y)
W.Z. LANE LINE 6" (W)
W.Z. EDGE LINE 6" (W)
SECTION - E.B. LANES
LEGEND: WORK ZONE
SHOULDER NARROWS
W5-H6P-24
MATCH LINE STA.92+50 (SEE ABOVE)
11'
93
94
95
96
97
98
99
100
101
PCB, 50", APP
RELOCATE EXISTING SIGN TO TEMPORARY POSTS
DRUMS @ 80' C/C
103
104
MATCH LINE STA.105+00 (SEE SHT 56)
PCB, 50", APP
SHEET 228
11
Ashtabula
Youngstown
1 MILE
EXISTING
WORK ZONE
SPEEDING
FINES DOUBLED
CAUSE DEATH OR INJURY
FINE/JAIL
R11-H5A-24
103+50
SPEED LIMIT 55
R2-1-48
101+69
EXPRESS LANE
NO ACCESS TO EXIT 228
SPECIAL
102+00
W20-H12R-48
RIGHT LANE MUST USE SHOULDER
Palmer ENGINEERING
PALMER ENGINEERING
11300 CORNELL PARK DR
ENGINEERING CINCINNATI, OH 45242
O:\ODOT\ATB\25199\mot\sheets\25199MP402.dgn 6/6/2009 9:00:18 AM DENNIS

LEGEND: WORK ZONE

HORIZONTAL SCALE IN FEET
0 25 50 100

CALCULATED DPF
CHECKED

MAINTENANCE OF TRAFFIC PHASE 4
STA. 105+00 TO STA. 130+00

ATB-90-14.25

56
437

PALMER ENGINEERING
11300 CORNELL PARK DR
ENGINEERING CINCINNATI, OH 45242

O:\ODOT\ATB\25199\mot\sheets\25199MP403.dgn 6/6/2009 9:00:22 AM DENNIS

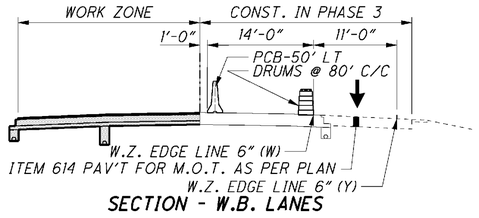

SECTION - W.B. LANES

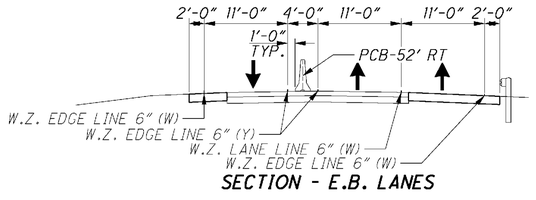

SECTION - E.B. LANES

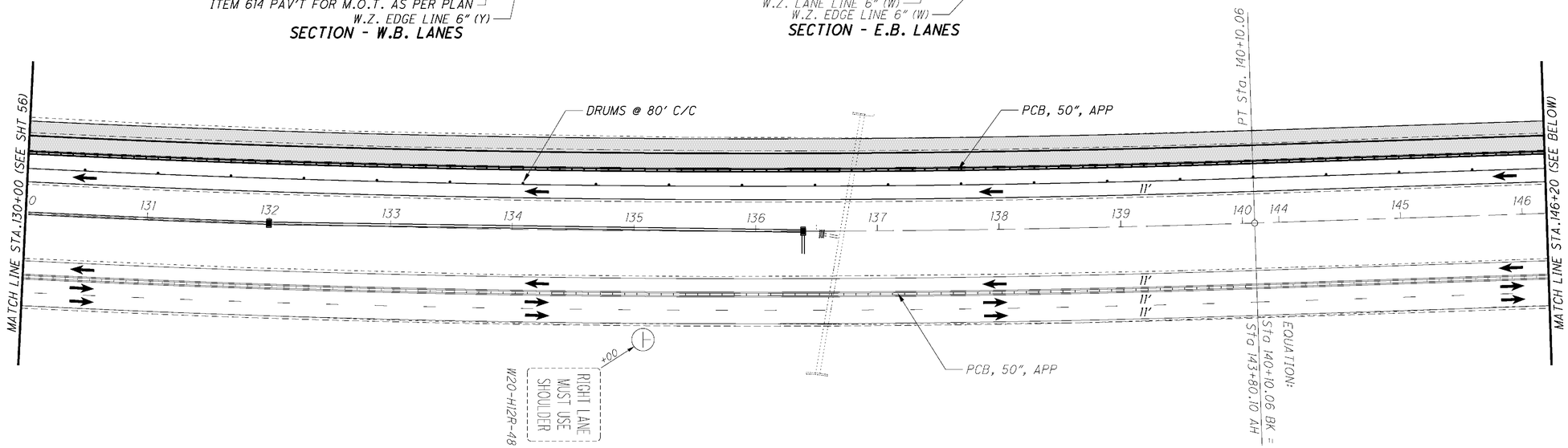

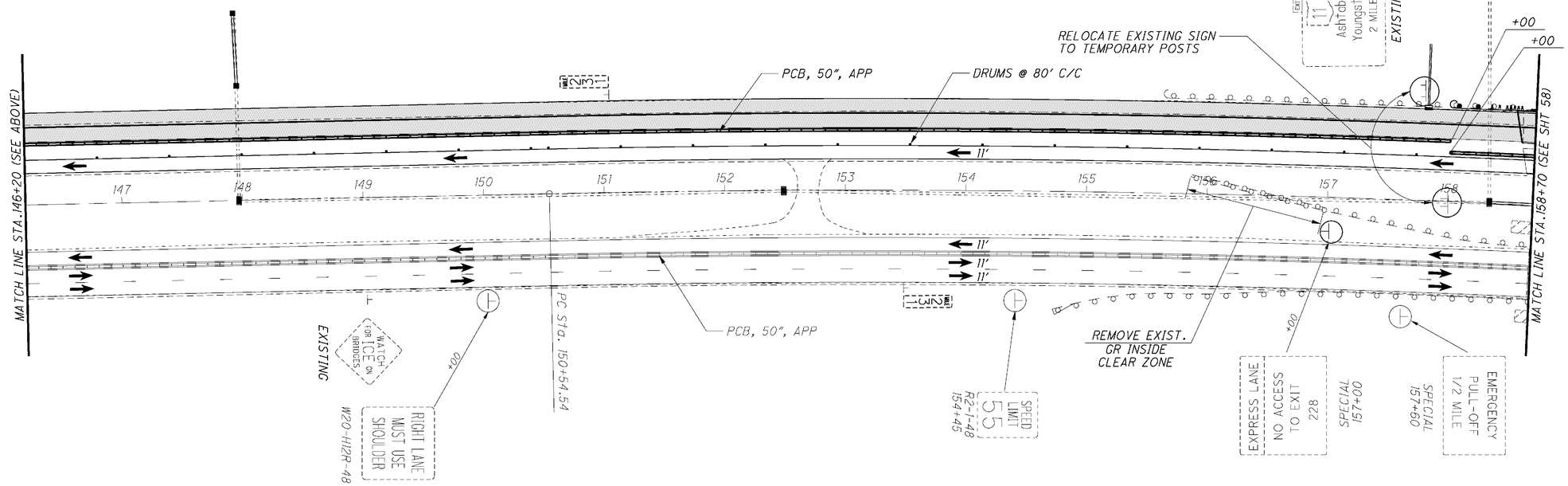

LEGEND: WORK ZONE

HORIZONTAL SCALE IN FEET
0 25 50 100

CALCULATED DPF CHECKED

MAINTENANCE OF TRAFFIC PHASE 4
STA. 130+00 TO STA. 158+70

ATB-90-14.25

57
437

Palmer ENGINEERING
PALMER ENGINEERING
11300 CORNELL PARK DR
CINCINNATI, OH 45242

O:\ODOT\ATB\25199\mot\sheets\25199MP404.dgn 6/6/2009 9:00:25 AM DENNIS

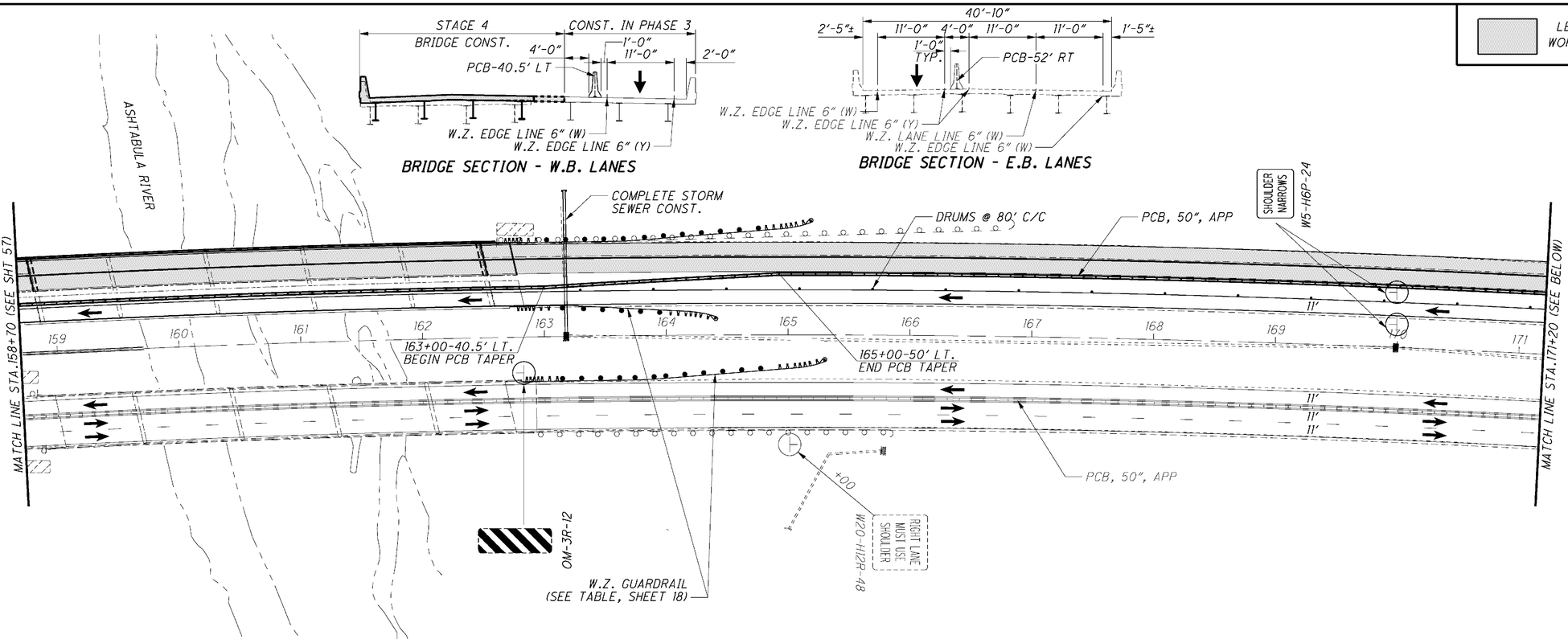

Palmer ENGINEERING
PALMER ENGINEERING
11300 CORNELL PARK DR
CINCINNATI, OH 45242

O:\ODOT\ATB\25199\mot\sheets\25199MP405.dgn 6/6/2009 9:00:28 AM DENNIS

LEGEND:
WORK ZONE

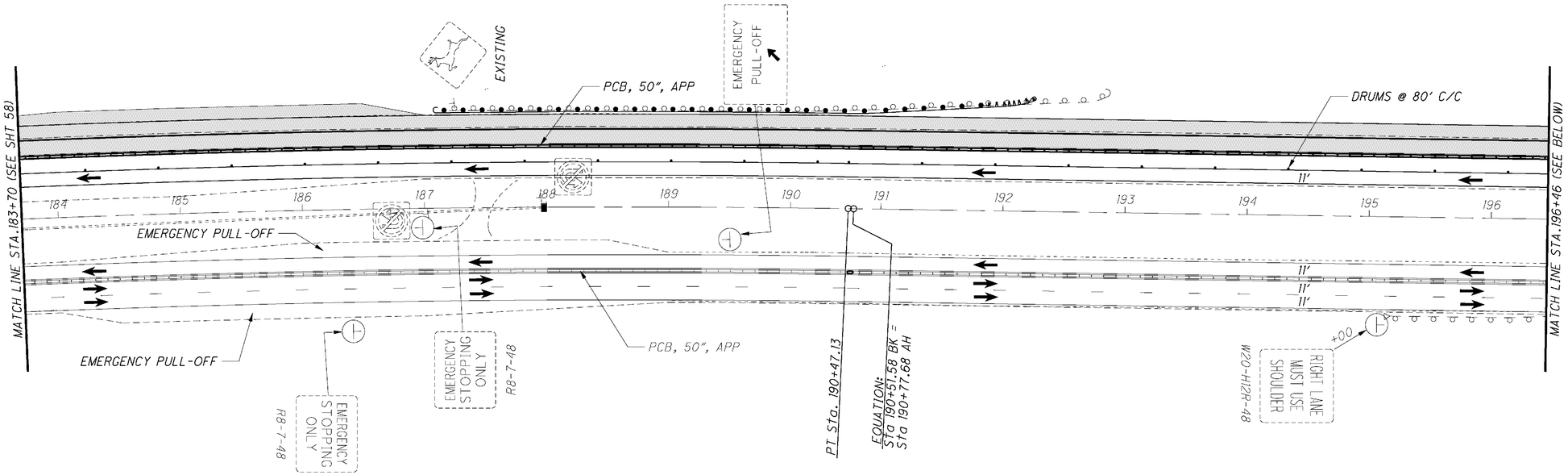

HORIZONTAL SCALE IN FEET
0 25 50 100

CALCULATED DPF
CHECKED

MAINTENANCE OF TRAFFIC PHASE 4
STA. 183+70 TO STA. 208+96

ATB-90-14.25

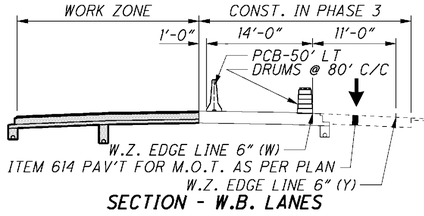

SECTION - W.B. LANES

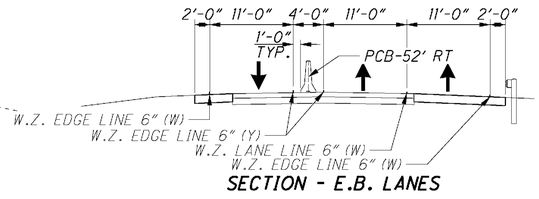

SECTION - E.B. LANES

LEGEND:
WORK ZONE

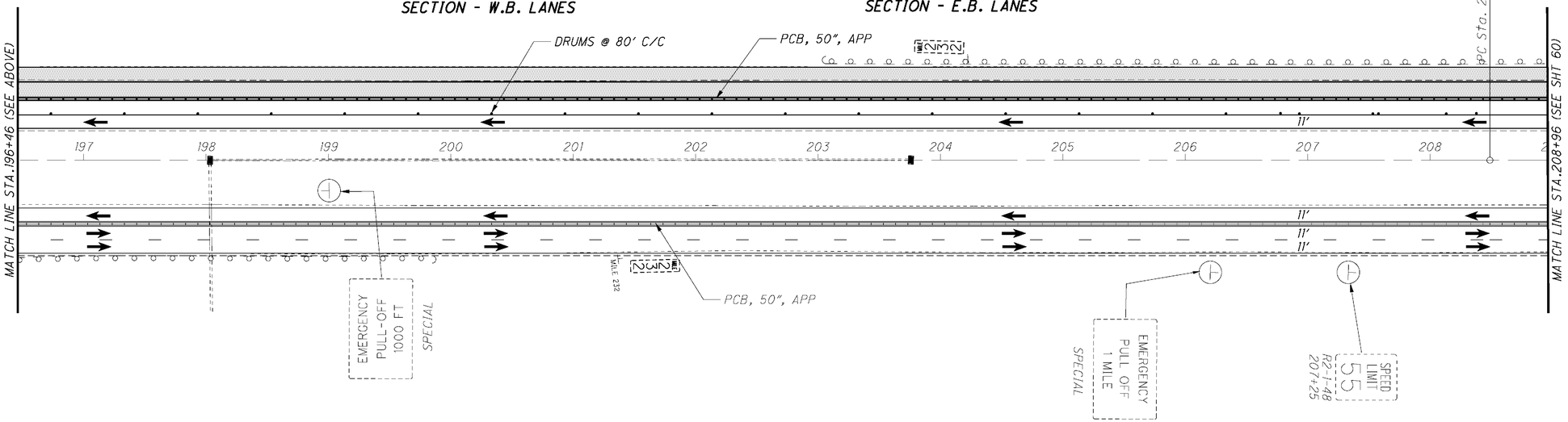

Palmer ENGINEERING
PALMER ENGINEERING
11300 CORNELL PARK DR
ENGINEERING CINCINNATI, OH 45242

O:\ODOT\ATB\25199\mot\sheets\25199MP406.dgn 6/6/2009 9:00:31 AM DENNIS

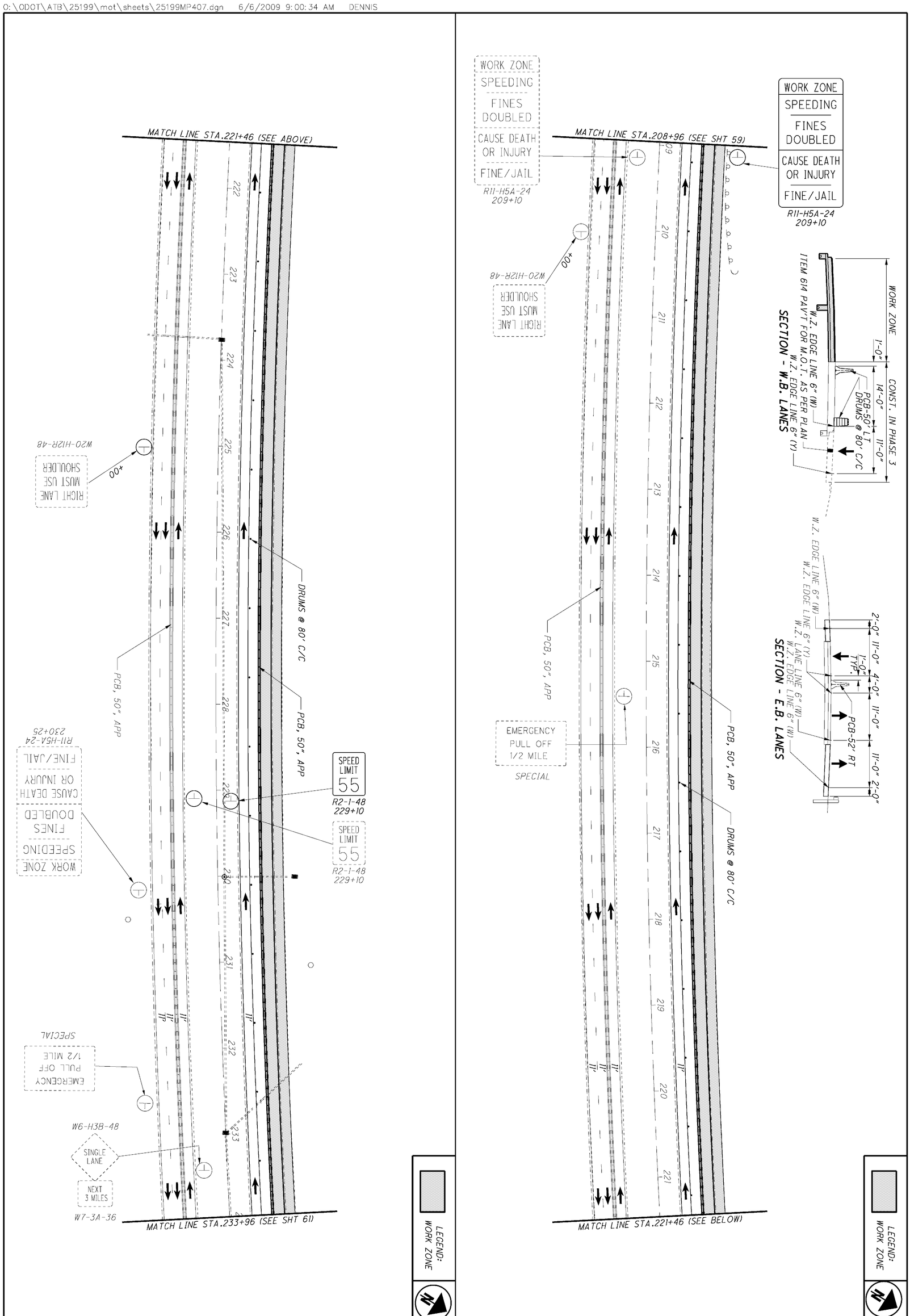

60 / 437	ATB-90-14.25	MAINTENANCE OF TRAFFIC PHASE 4 STA. 208+96 TO STA. 233+96	CALCULATED DPF CHECKED	0 50 25 100 HORIZONTAL SCALE IN FEET

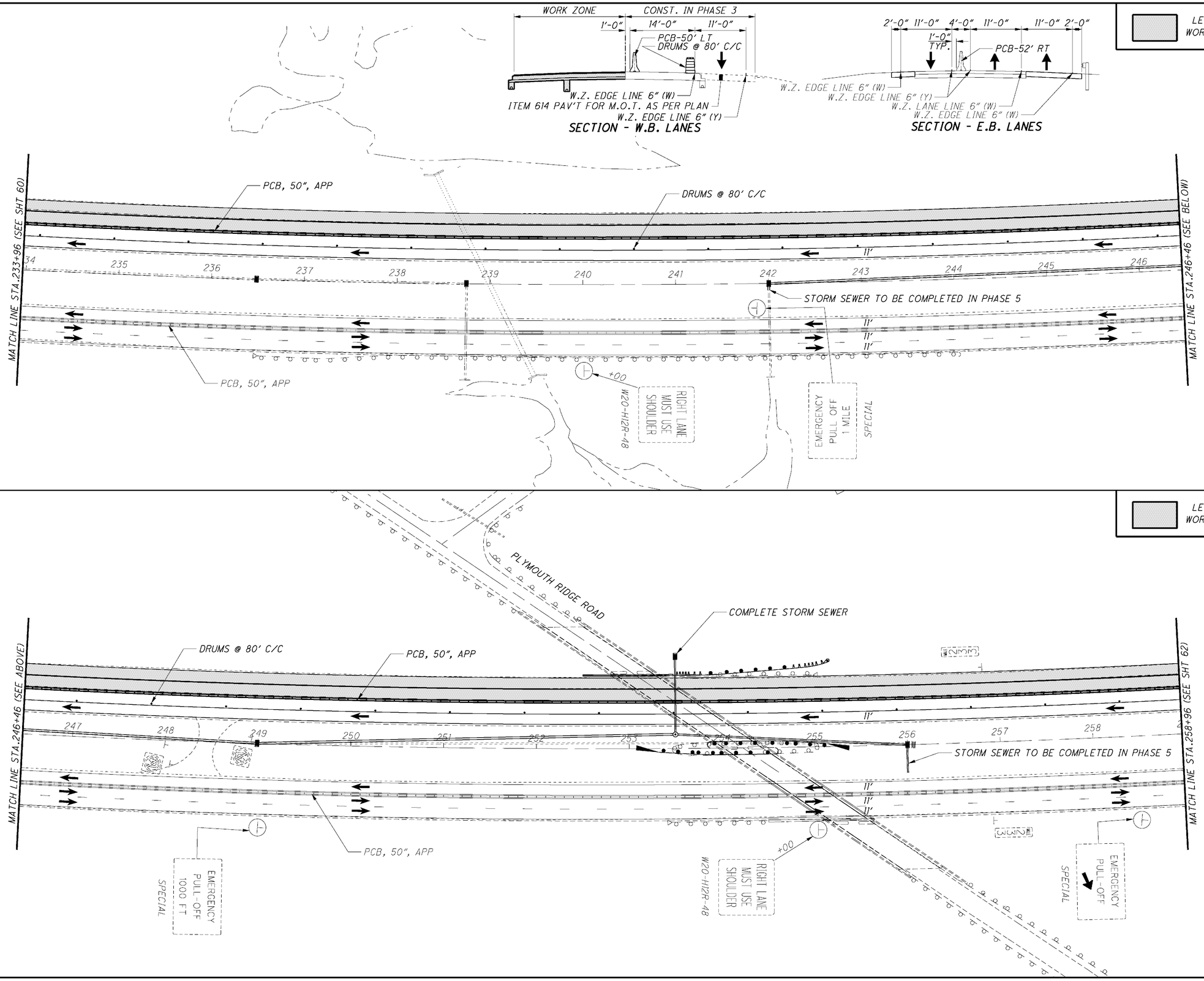

Palmer ENGINEERING
PALMER ENGINEERING
11300 CORNELL PARK DR
ENGINEERING CINCINNATI, OH 45242

O:\ODOT\ATB\25199\mot\sheets\25199MP408.dgn 6/6/2009 9:00:36 AM DENNIS

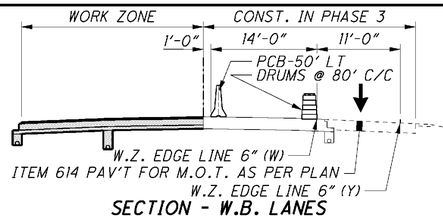

SECTION - W.B. LANES

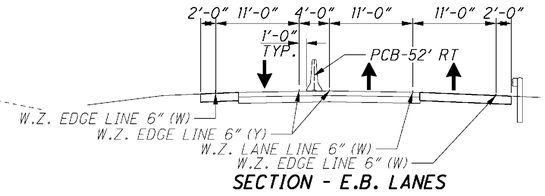

SECTION - E.B. LANES

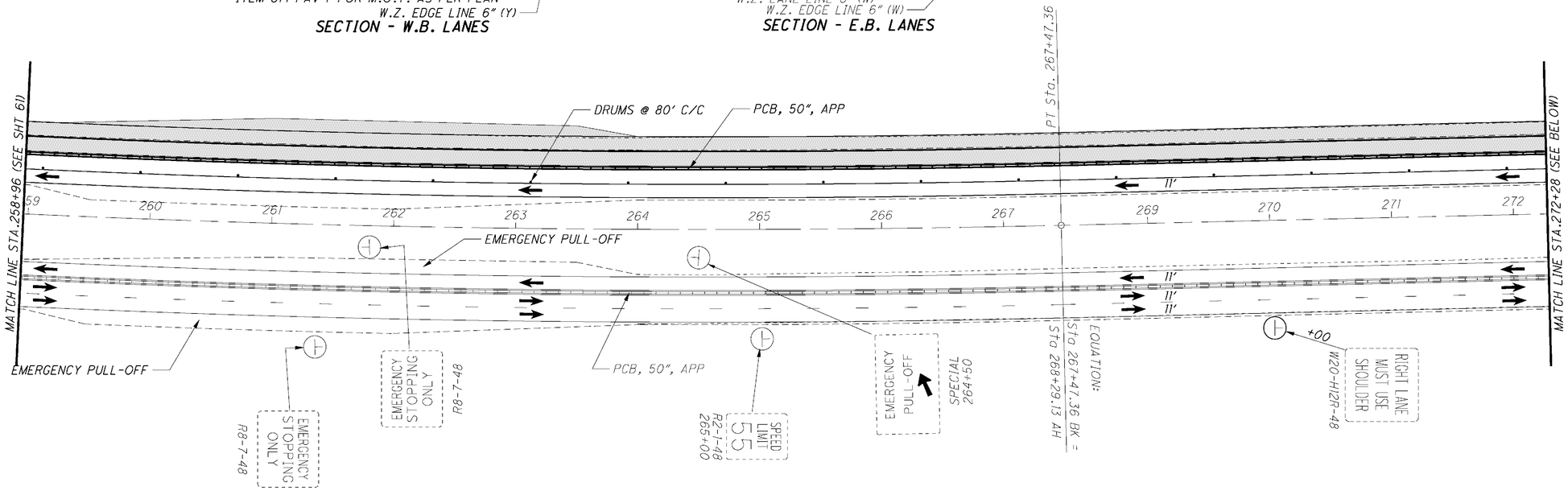

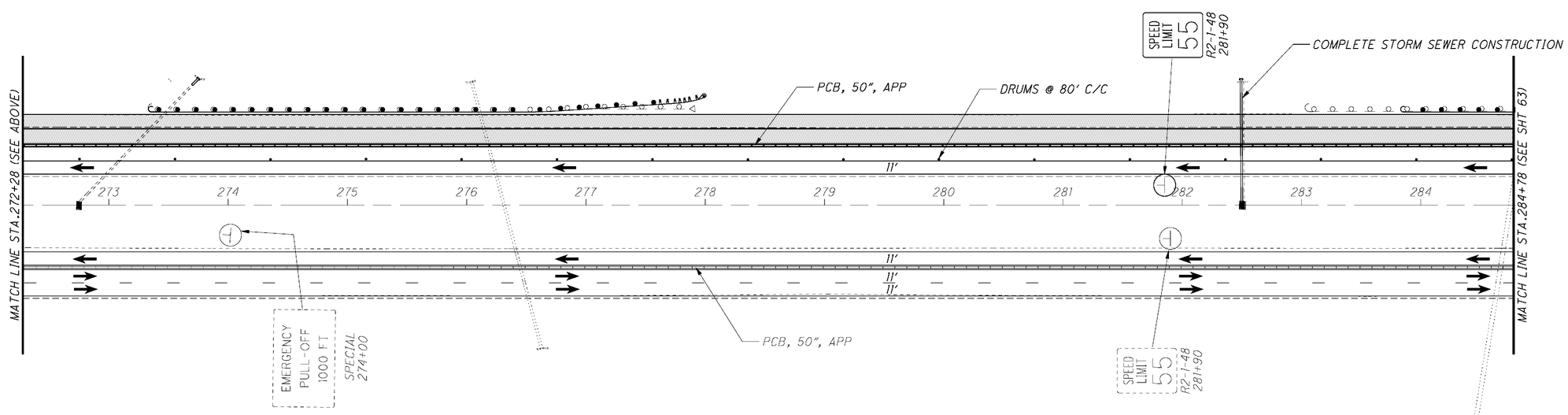

LEGEND: WORK ZONE

HORIZONTAL SCALE IN FEET
0 25 50 100

CALCULATED DPF
CHECKED

MAINTENANCE OF TRAFFIC PHASE 4
STA. 258+96 TO STA. 284+78

ATB-90-14.25

62
437

Palmer ENGINEERING
PALMER ENGINEERING
11300 CORNELL PARK DR
CINCINNATI, OH 45242

O:\ODOT\ATB\25199\mot\sheets\25199MP409.dgn 6/6/2009 9:00:40 AM DENNIS

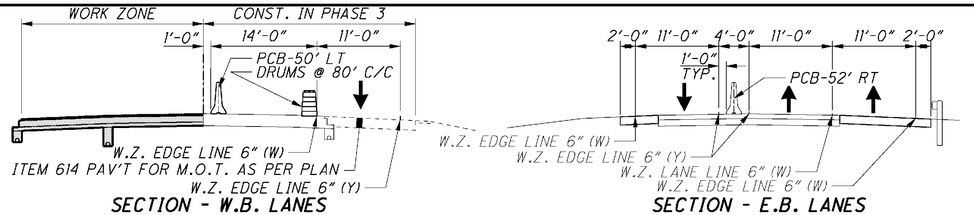

SECTION - W.B. LANES

SECTION - E.B. LANES

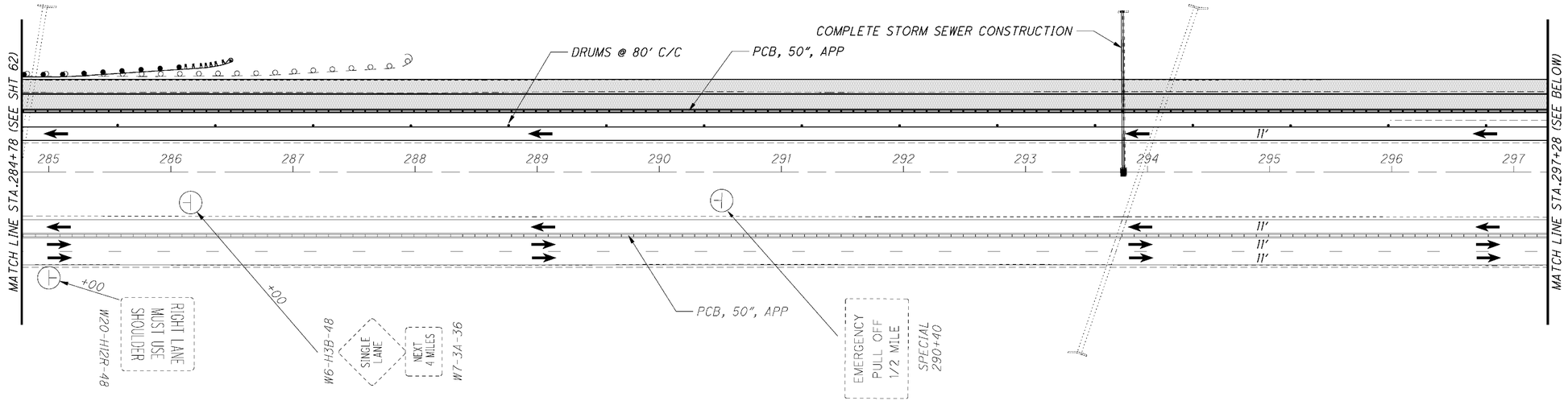

LEGEND: WORK ZONE

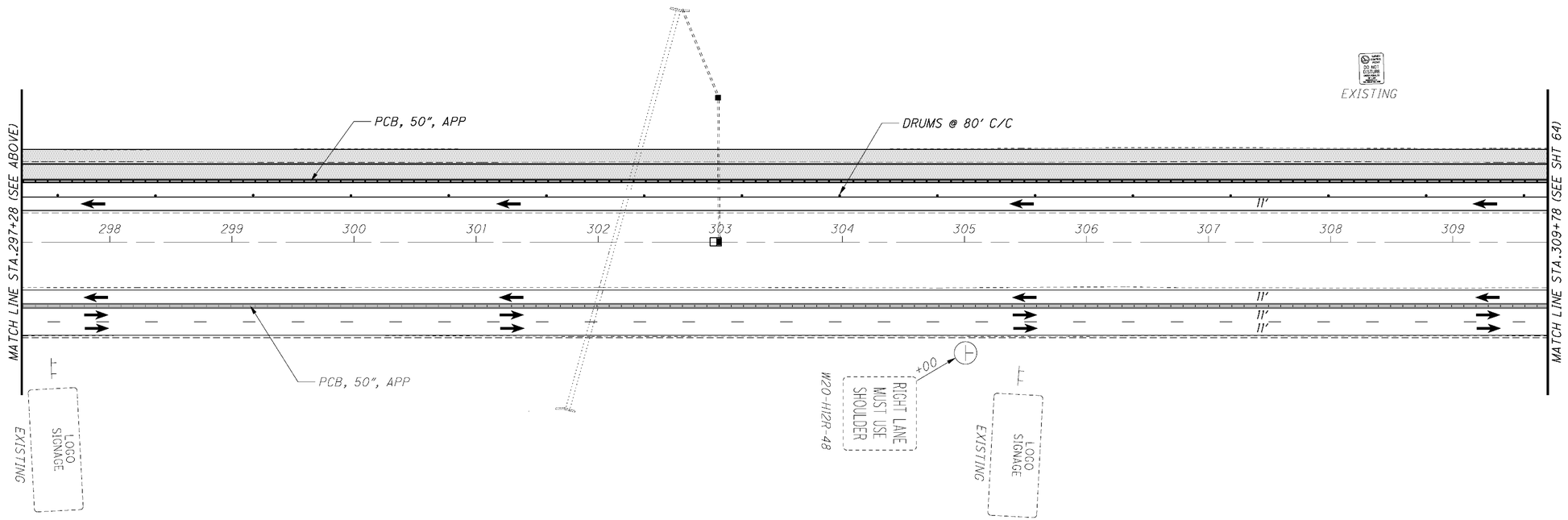

LEGEND: WORK ZONE

HORIZONTAL SCALE IN FEET
0 25 50 100

CALCULATED DPF
CHECKED

MAINTENANCE OF TRAFFIC PHASE 4
STA. 284+78 TO STA. 309+78

ATB-90-14.25

PALMER ENGINEERING
11300 CORNELL PARK DR
ENGINEERING CINCINNATI, OH 45242

O:\ODOT\ATB\25199\root\sheets\25199MP410.dgn 6/6/2009 9:00:43 AM DENNIS

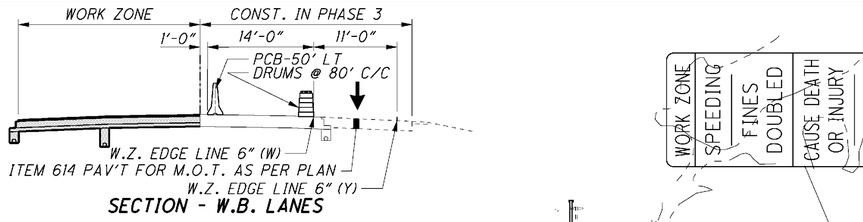

SECTION - W.B. LANES

SECTION - E.B. LANES

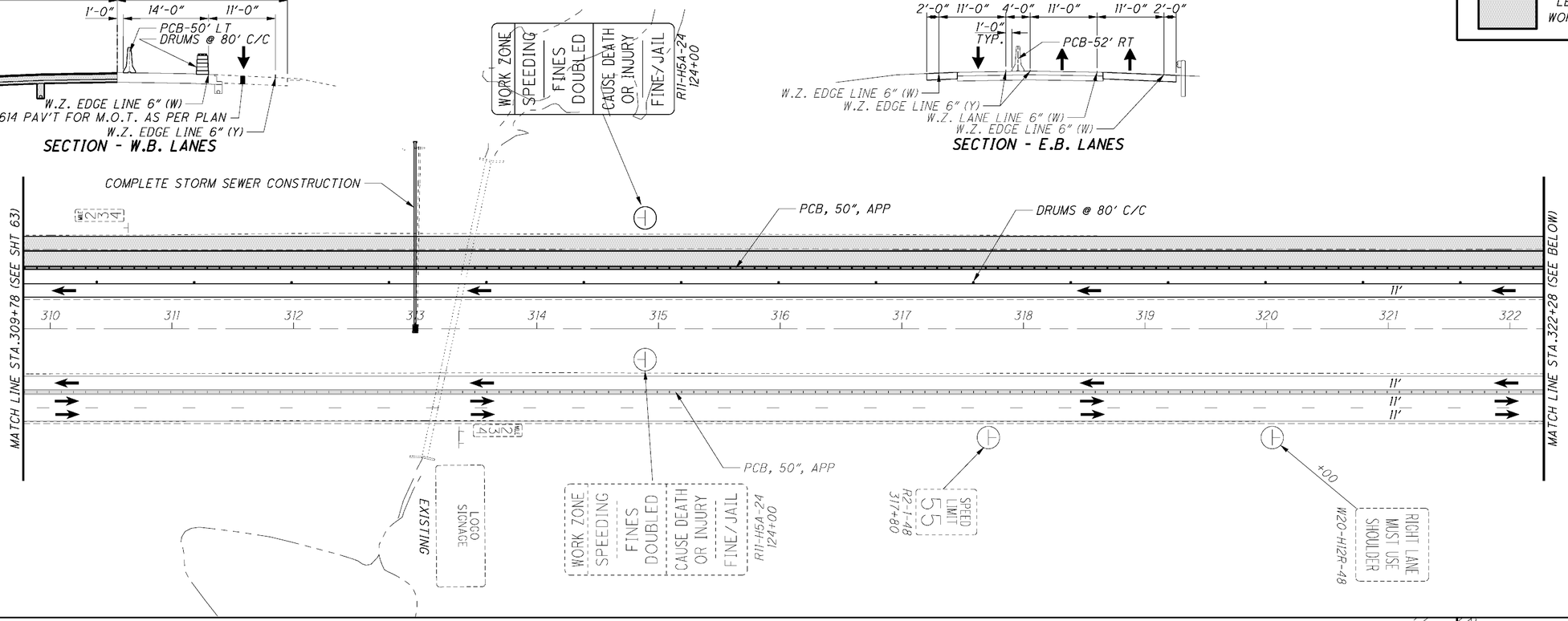

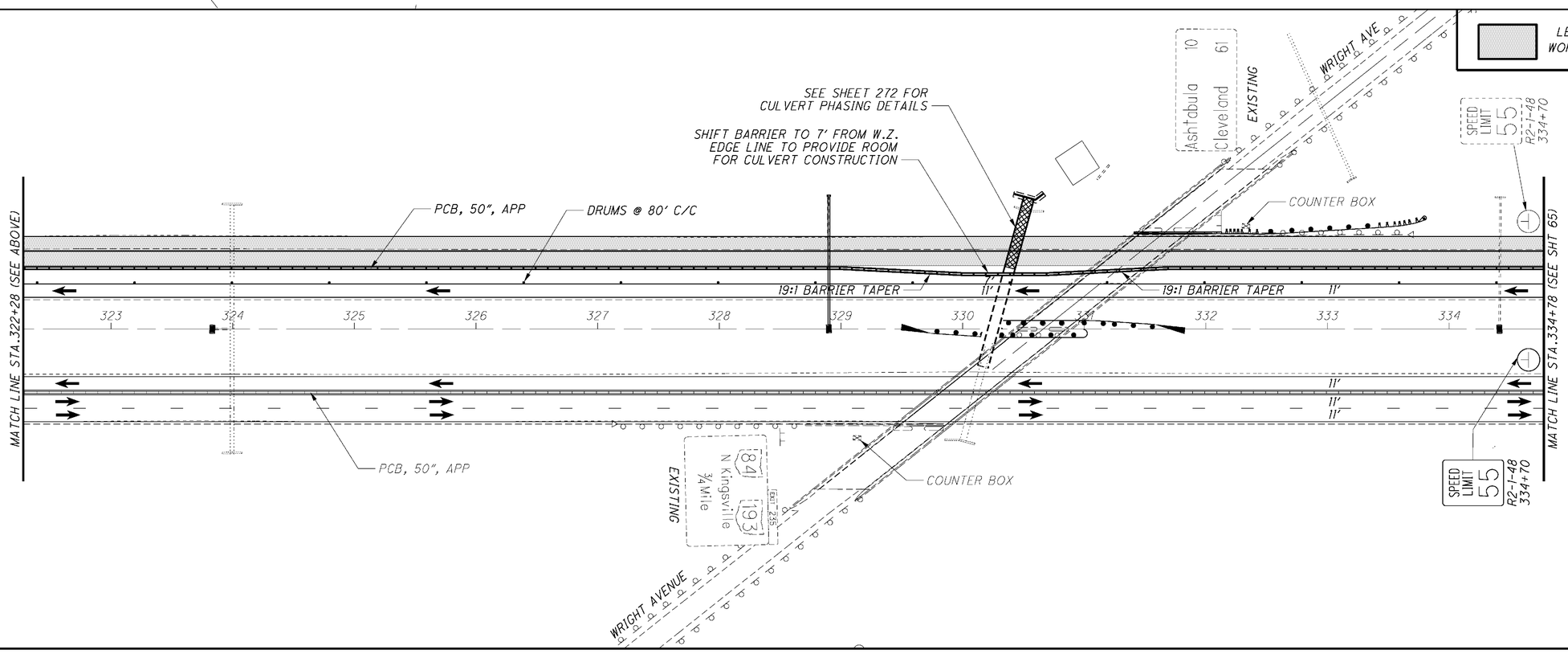

LEGEND: WORK ZONE

HORIZONTAL SCALE IN FEET
0 25 50 100

CALCULATED DPF
CHECKED

MAINTENANCE OF TRAFFIC PHASE 4
STA. 309+78 TO STA. 334+78

ATB-90-14.25

64
437

Palmer ENGINEERING
PALMER ENGINEERING
11300 CORNELL PARK DR
CINCINNATI, OH 45242

O:\ODOT\ATB\25199\root\sheets\25199MP411.dgn 6/6/2009 9:00:46 AM DENNIS

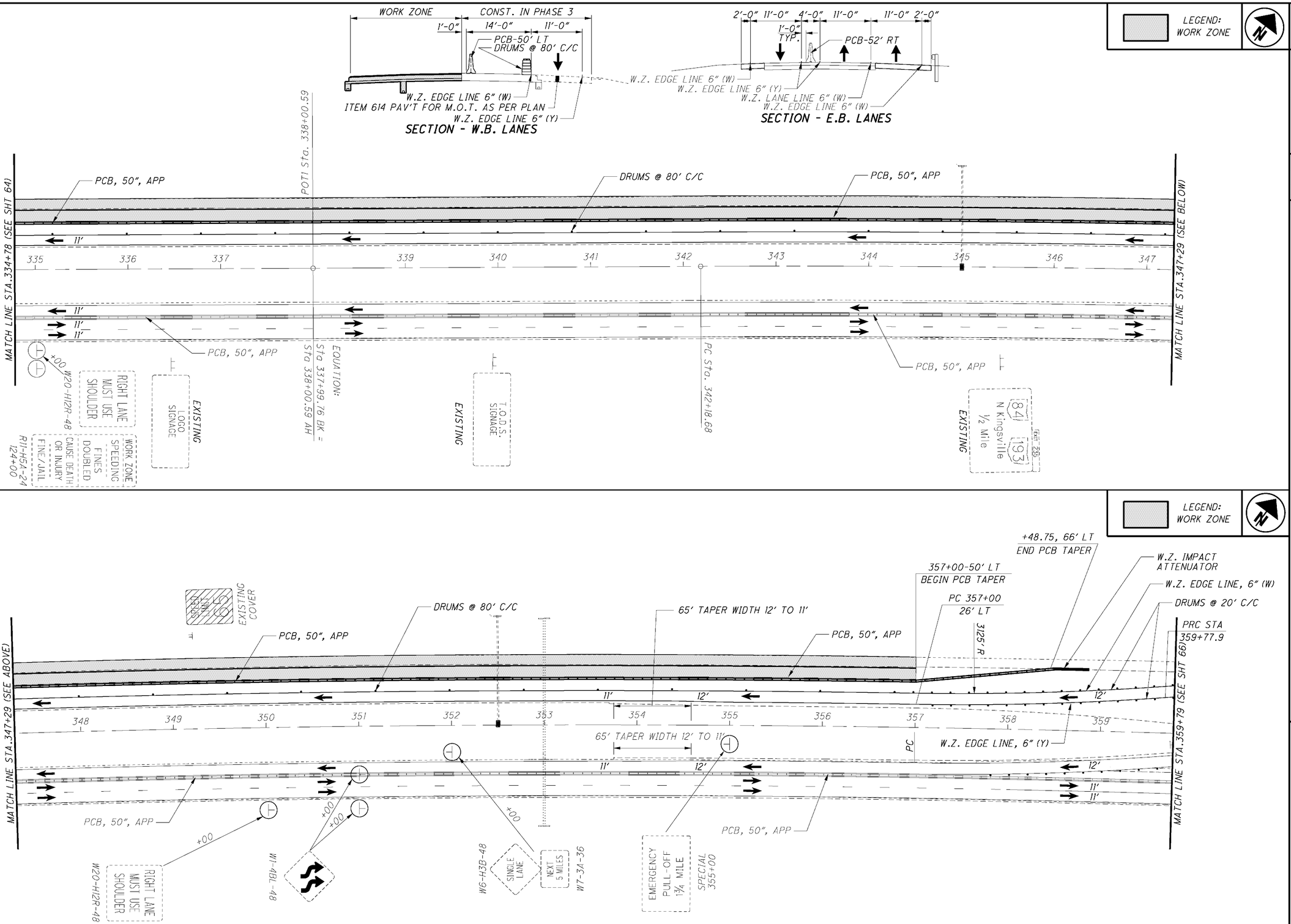

PALMER ENGINEERING
11300 CORNELL PARK DR
ENGINEERING CINCINNATI, OH 45242

O:\ODOT\ATB\25199\root\sheets\25199MP412.dgn 6/6/2009 9:00:48 AM DENNIS

Palmer ENGINEERING
PALMER ENGINEERING
11300 CORNELL PARK DR
CINCINNATI, OH 45242
O:\ODOT\ATB\25199\mot\sheets\25199MP413.dgn 6/6/2009 9:00:51 AM DENNIS

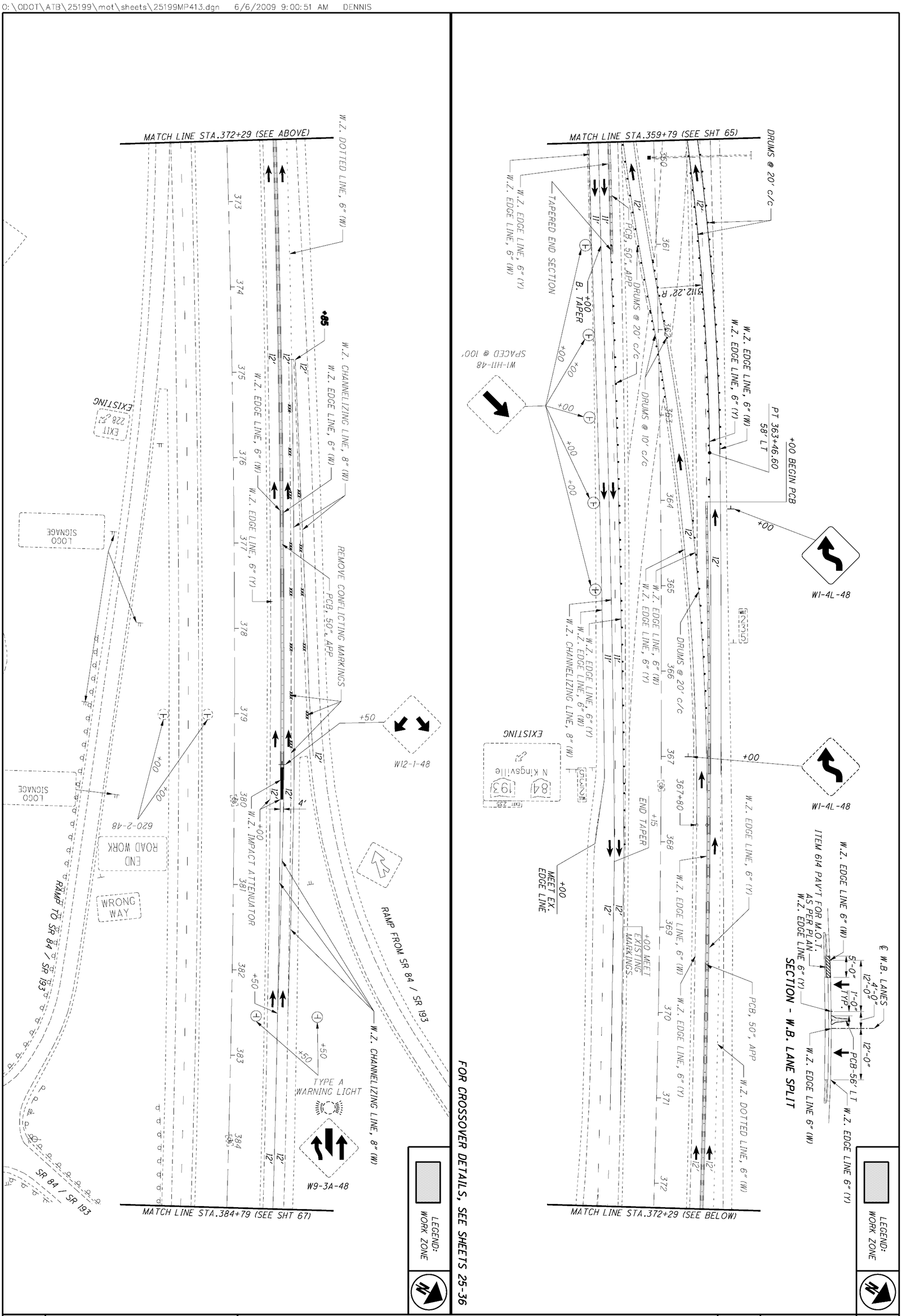

ATB-90-14.25

MAINTENANCE OF TRAFFIC PHASE 4
STA. 359+79 TO STA. 384+79

CALCULATED DPF
CHECKED

0 25 50 100
HORIZONTAL SCALE IN FEET

MATCH LINE STA.397+29 (SEE ABOVE)

TYPE A WARNING LIGHT

W9-3A-48

1/2 MILE

W16-3A-30

EXIT 235
84 193
N Kingsville

EXISTING

TRUCKS USE RIGHT LANE

R4-5-48

MATCH LINE STA.384+79 (SEE SHT 66)

S.R. 84/S.R. 193

W.Z. CHANNELIZING LINE, 8" W

STAY IN LANE

R4-9-36

RAMP FROM S.R. 84/S.R. 193

FIELD ADJUST PLACEMENT WITH EXIST. EXIT SIGN

RAMP TO S.R. 84/S.R. 193

EXIT 228
11 Ashtabula
46 Jefferson
KEEP RIGHT

SPECIAL

EXIT 228

EXISTING

90 WEST
ALL LANES

SPECIAL

MATCH LINE STA.397+29 (SEE BELOW)

LEGEND: WORK ZONE

SIGNAGE LAYOUT CONTINUED ON SHEET 52

PALMER ENGINEERING
11300 CORNELL PARK DR
CINCINNATI, OH 45242

O:\ODOT\ATB\25199\mot\sheets\25199MP500.dgn 6/6/2009 9:00:57 AM DENNIS

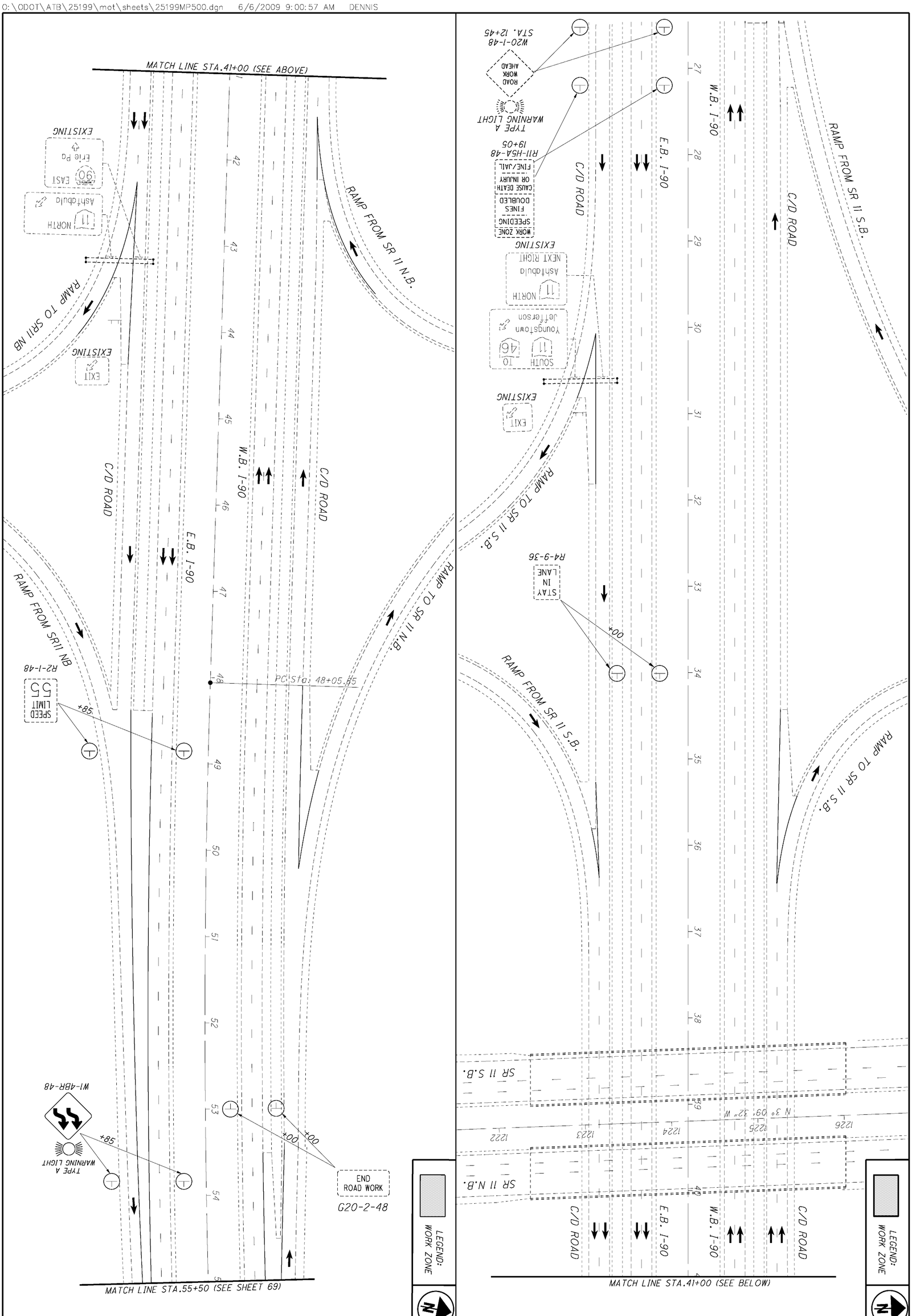

68 / 437	ATB-90-14.25	MAINTENANCE OF TRAFFIC PHASE 5 STA. 27+00 TO STA. 55+00	CALCULATED DPF CHECKED 0 50 25 100 HORIZONTAL SCALE IN FEET

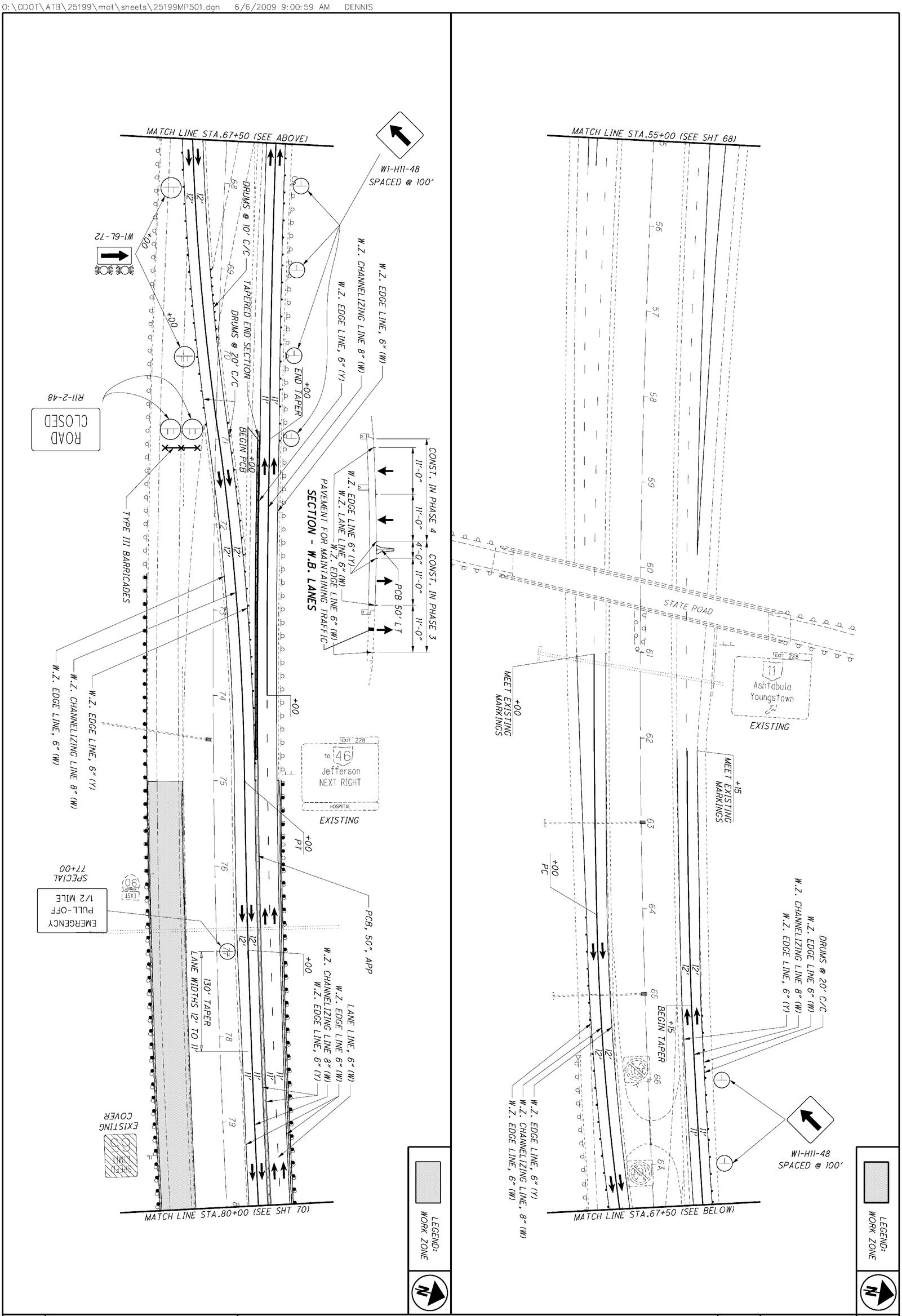

69 / 437	ATB-90-14.25	MAINTENANCE OF TRAFFIC PHASE 5 STA. 55+00 TO STA. 80+00	CALCULATED DPF CHECKED	0 50 25 100 HORIZONTAL SCALE IN FEET

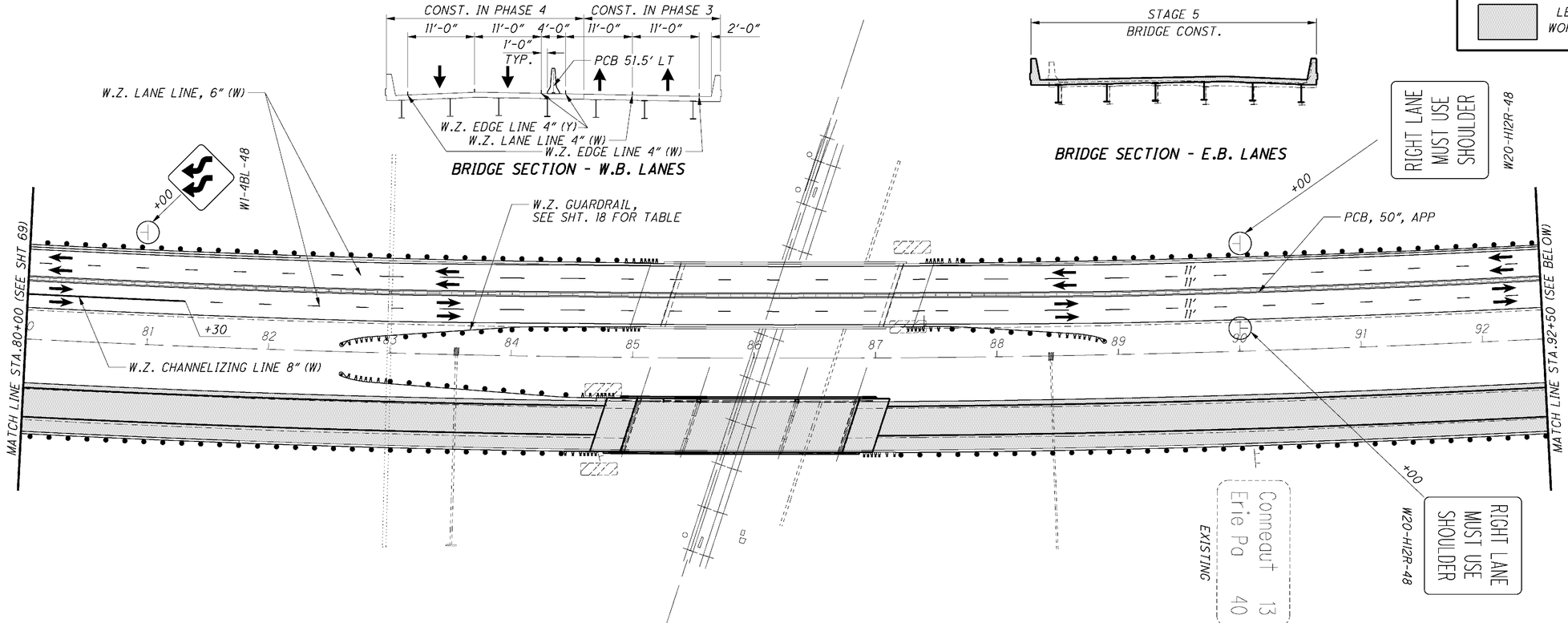

Palmer ENGINEERING
PALMER ENGINEERING
11300 CORNELL PARK DR
CINCINNATI, OH 45242

O:\ODOT\ATB\25199\mot\sheets\25199MP502.dgn 6/6/2009 9:01:03 AM DENNIS

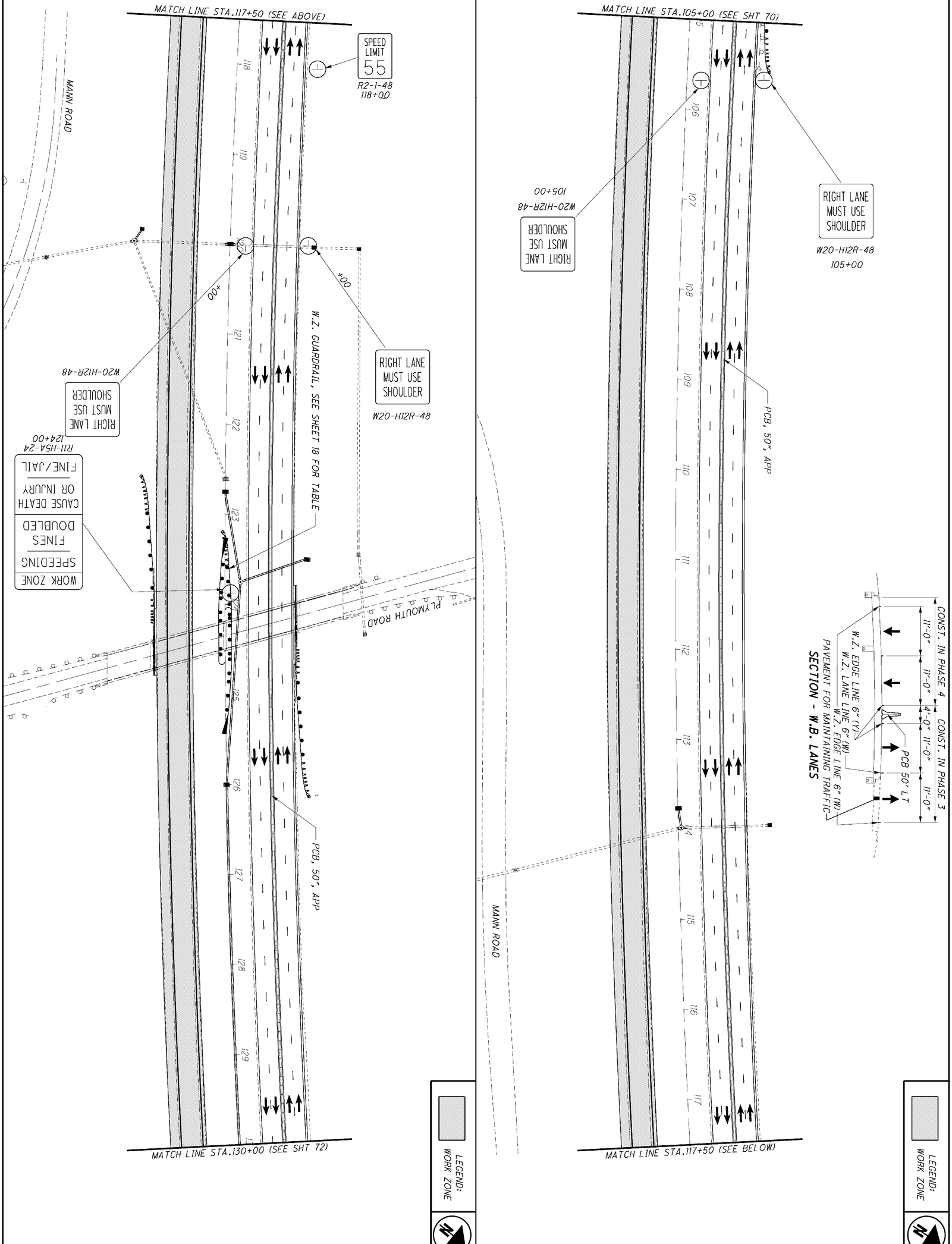

SECTION - W.B. LANES

71 / 437	**ATB-90-14.25**	**MAINTENANCE OF TRAFFIC PHASE 5** **STA. 105+00 TO STA. 130+00**	CALCULATED DPF CHECKED 0 50 25 100 HORIZONTAL SCALE IN FEET

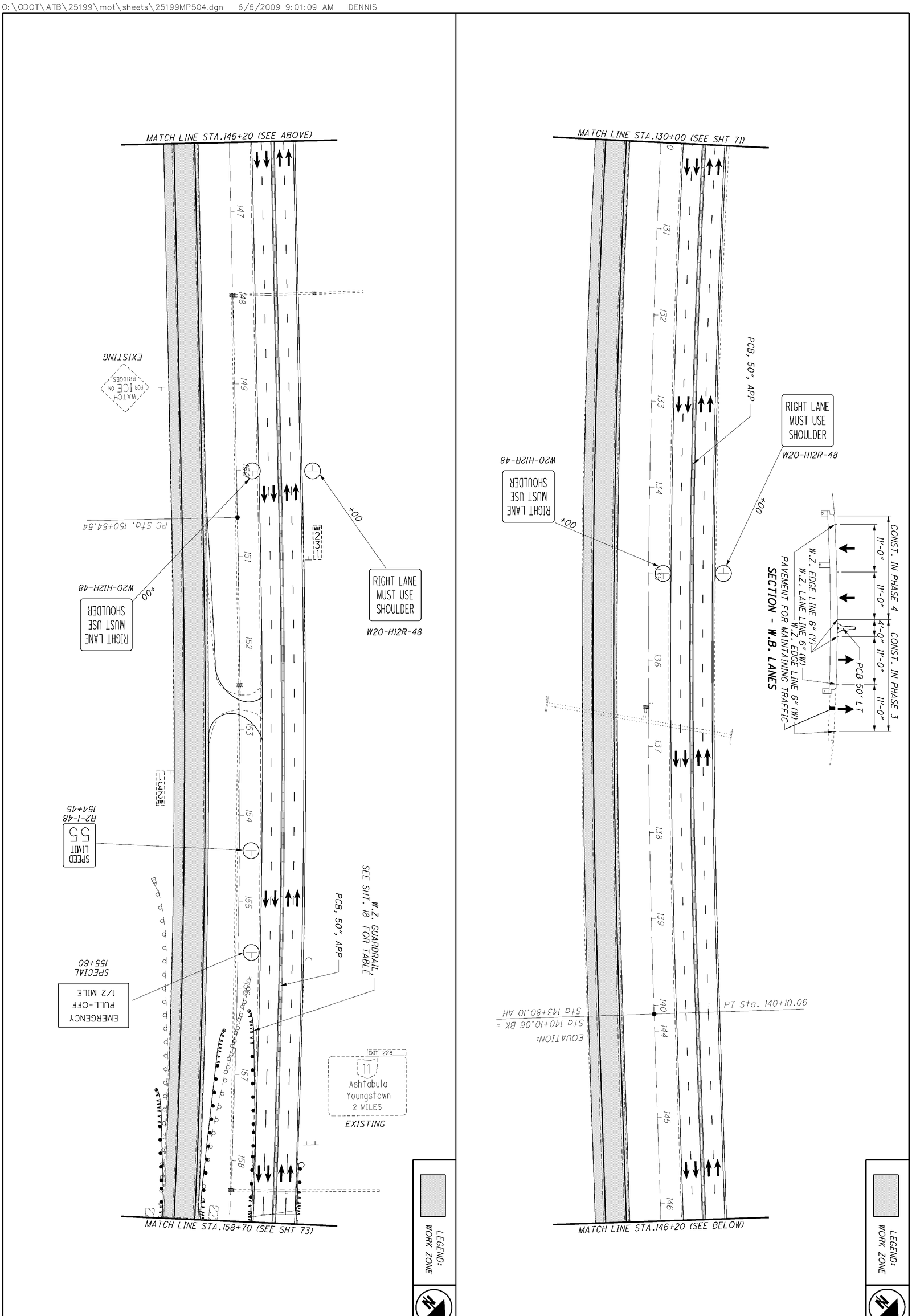

72 / 437	ATB-90-14.25	MAINTENANCE OF TRAFFIC PHASE 5 STA. 130+00 TO STA. 158+70	CALCULATED DPF CHECKED 0 50 25 100 HORIZONTAL SCALE IN FEET

PALMER ENGINEERING
11300 CORNELL PARK DR
CINCINNATI, OH 45242

O:\ODOT\ATB\25199\mot\sheets\25199MP505.dgn 6/6/2009 9:01:12 AM DENNIS

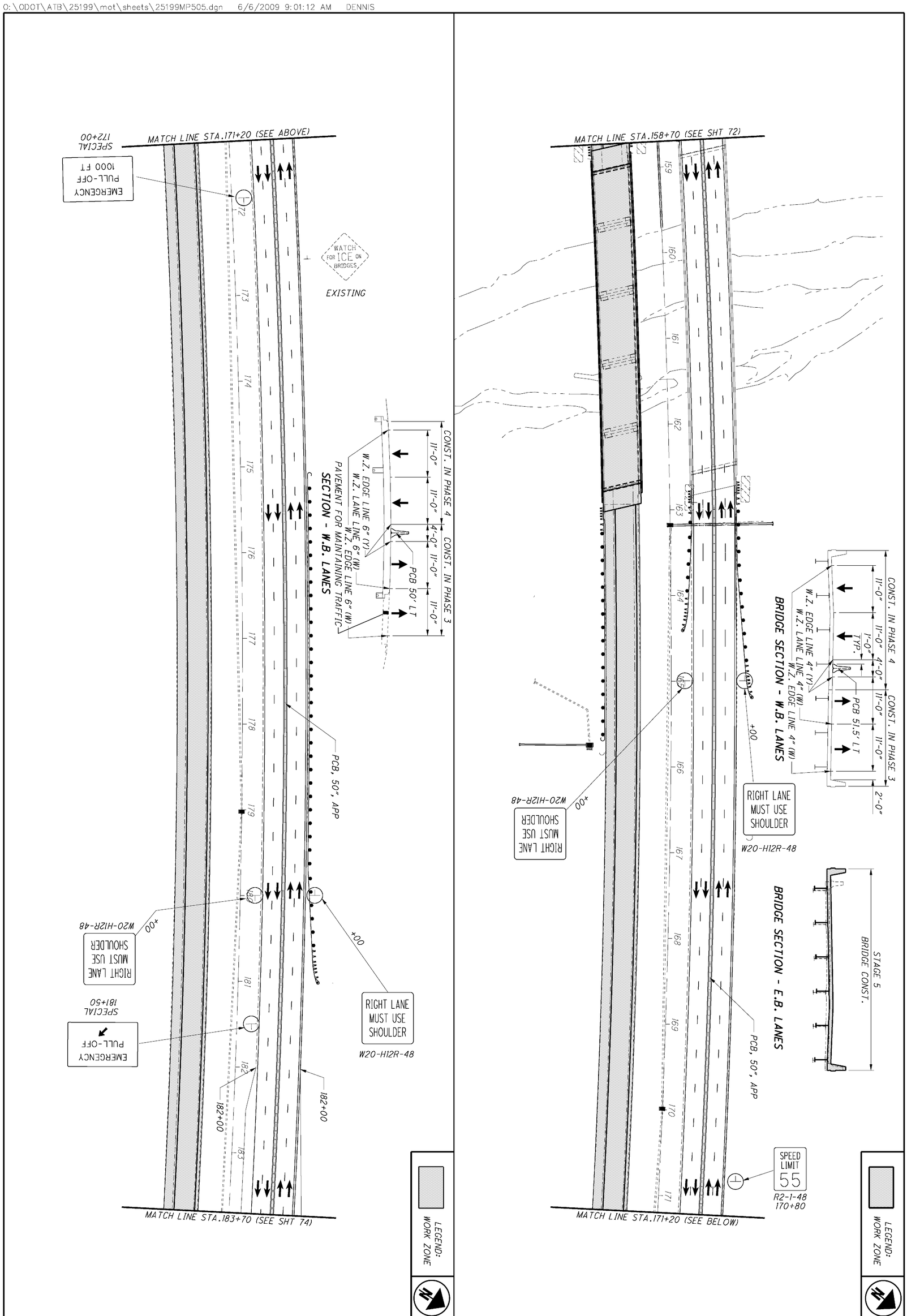

ATB-90-14.25

MAINTENANCE OF TRAFFIC PHASE 5
STA. 158+70 TO STA. 183+70

CALCULATED DPF
CHECKED

0 50
25 100
HORIZONTAL SCALE IN FEET

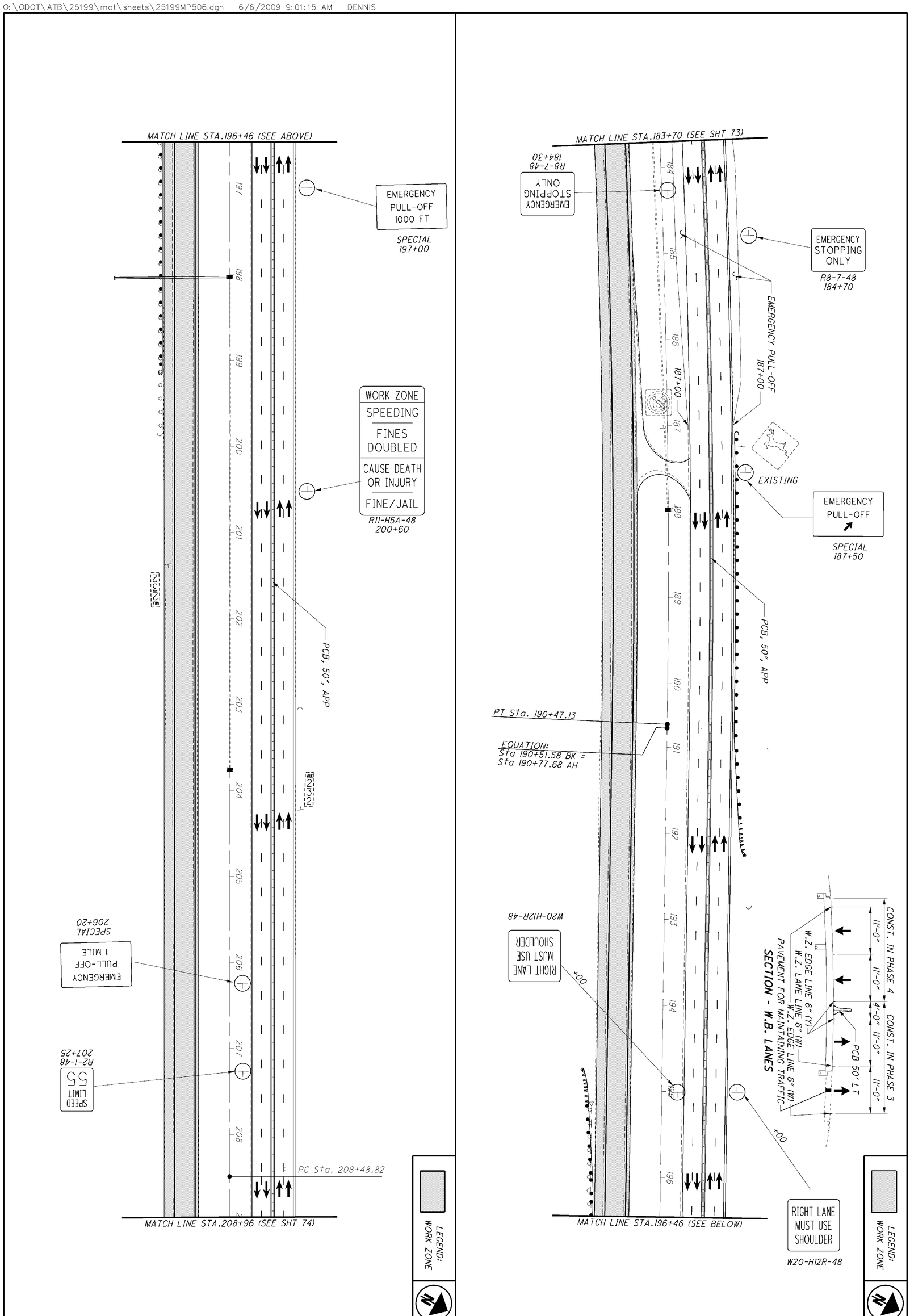

74
437

ATB-90-14.25

MAINTENANCE OF TRAFFIC PHASE 5
STA. 183+70 TO STA. 208+96

CALCULATED DPF
CHECKED

0 50
25 100
HORIZONTAL SCALE IN FEET

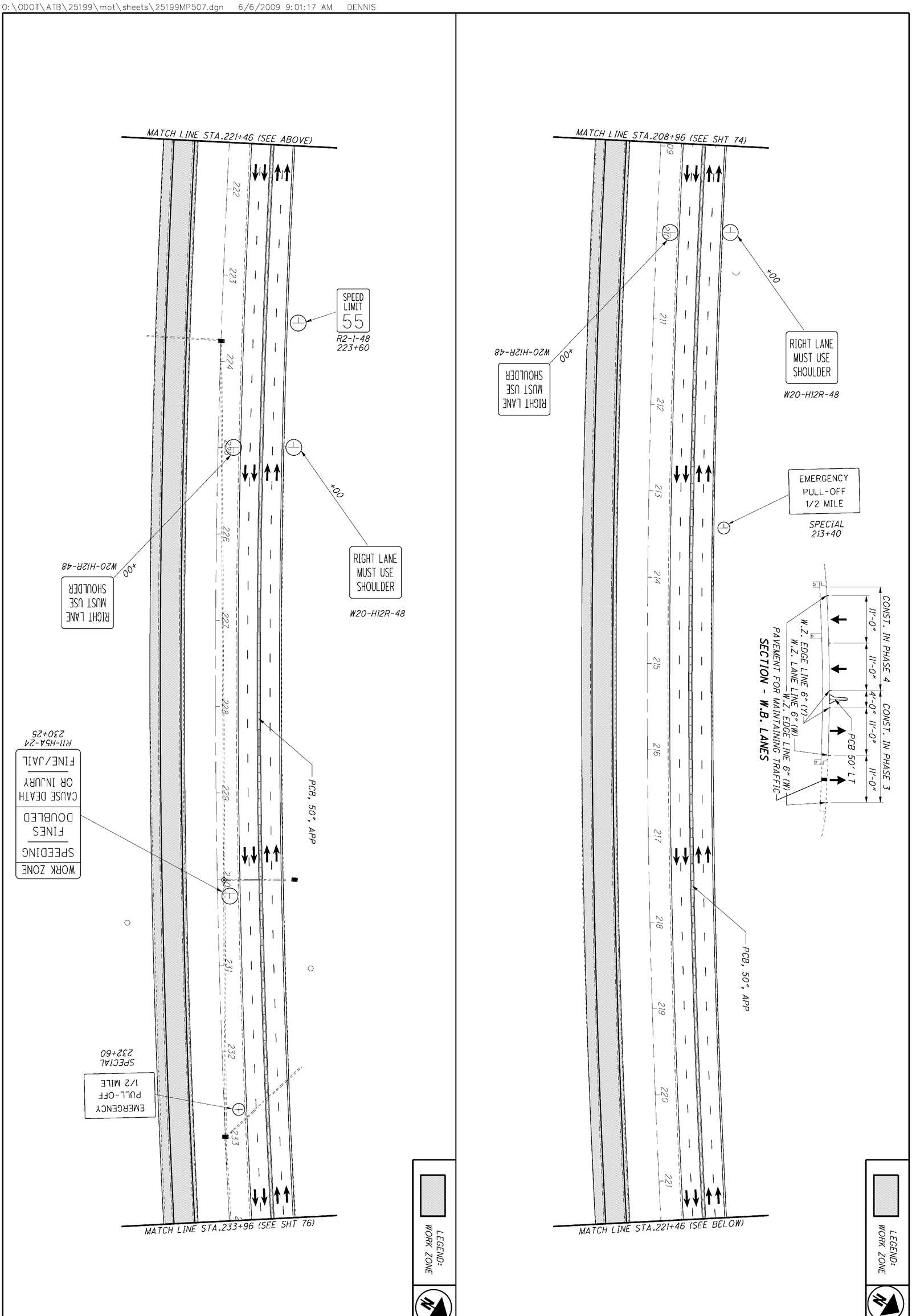

ATB-90-14.25

MAINTENANCE OF TRAFFIC PHASE 5
STA. 208+96 TO STA. 233+96

CALCULATED DPF
CHECKED

0 50
25 100
HORIZONTAL SCALE IN FEET

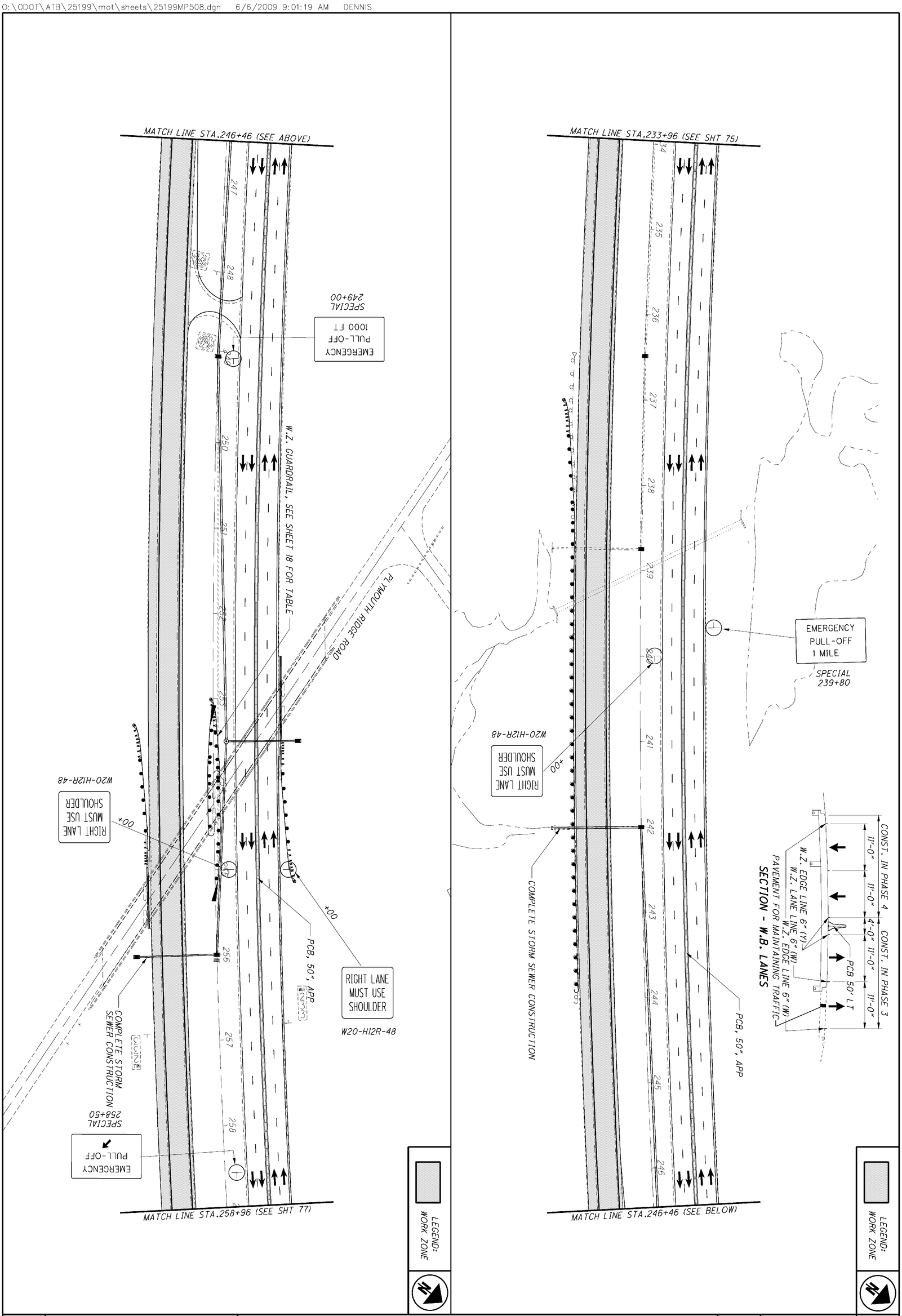

76 / 437	ATB-90-14.25	MAINTENANCE OF TRAFFIC PHASE 5 STA. 233+96 TO STA. 258+96	CALCULATED DPF CHECKED 0 50 25 100 HORIZONTAL SCALE IN FEET

PALMER ENGINEERING
11300 CORNELL PARK DR
CINCINNATI, OH 45242

O:\ODOT\ATB\25199\mot\sheets\25199MP509.dgn 6/6/2009 9:01:22 AM DENNIS

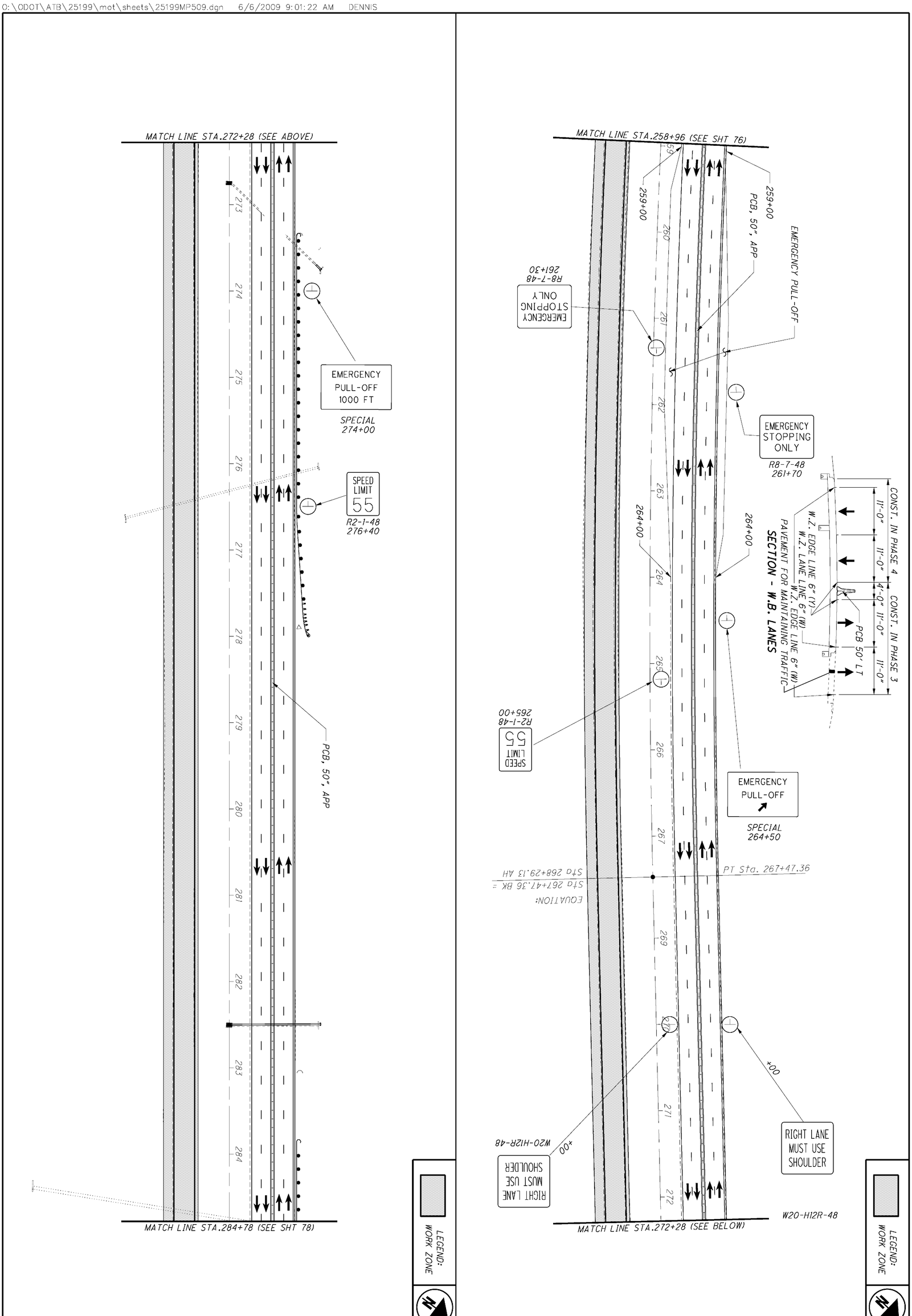

ATB-90-14.25

MAINTENANCE OF TRAFFIC PHASE 5
STA. 258+96 TO STA. 284+78

CALCULATED DPF
CHECKED

0 25 50 100
HORIZONTAL SCALE IN FEET

PALMER ENGINEERING
11300 CORNELL PARK DR
CINCINNATI, OH 45242

O:\ODOT\ATB\25199\mot\sheets\25199MP510.dgn 6/6/2009 9:01:25 AM DENNIS

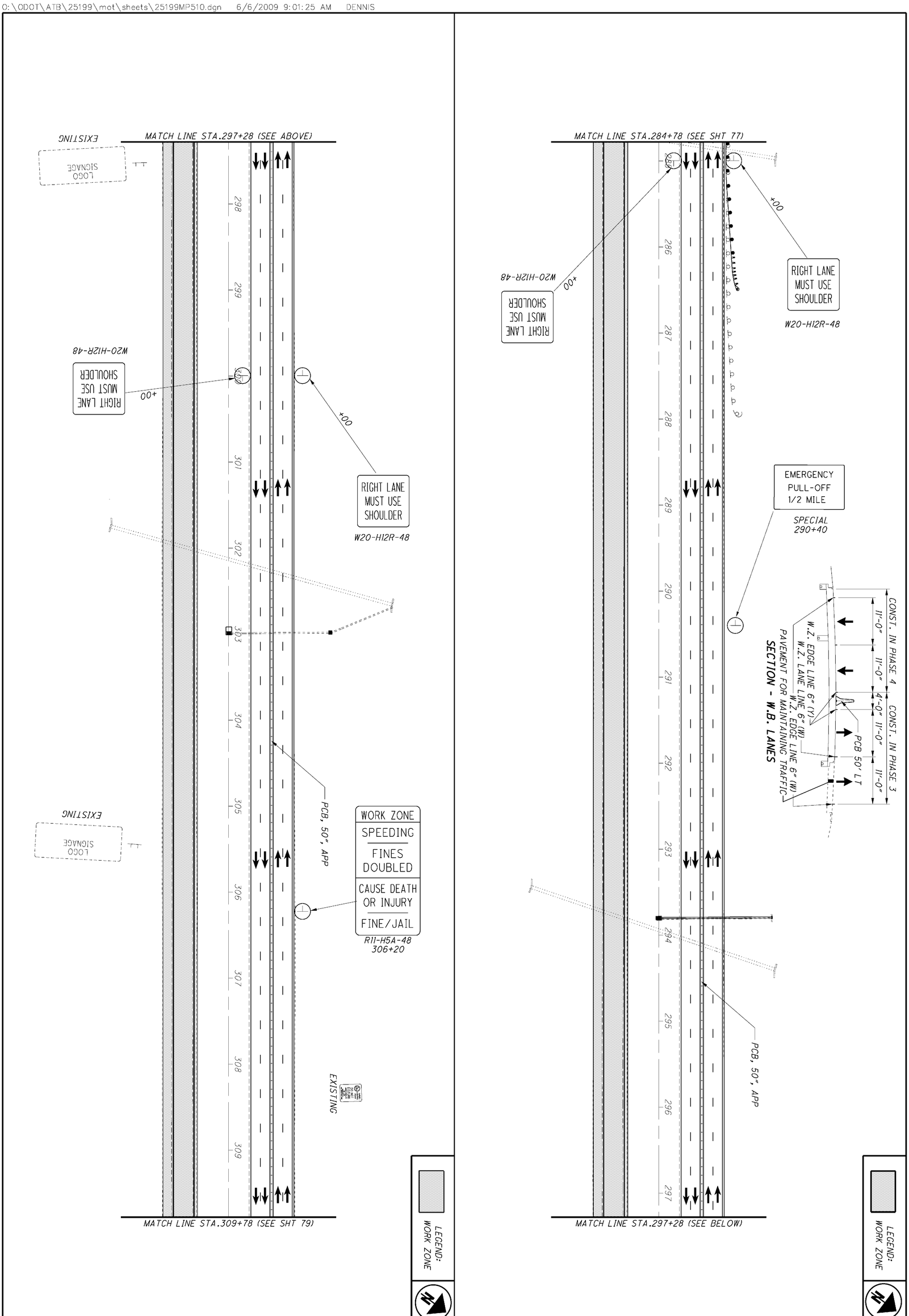

78
437

ATB-90-14.25

MAINTENANCE OF TRAFFIC PHASE 5
STA. 284+78 TO STA. 309+78

CALCULATED DPF
CHECKED

0 50
25 100
HORIZONTAL SCALE IN FEET

Palmer ENGINEERING
PALMER ENGINEERING
11300 CORNELL PARK DR
CINCINNATI, OH 45242

O:\ODOT\ATB\25199\mot\sheets\25199MP511.dgn 6/6/2009 9:01:27 AM DENNIS

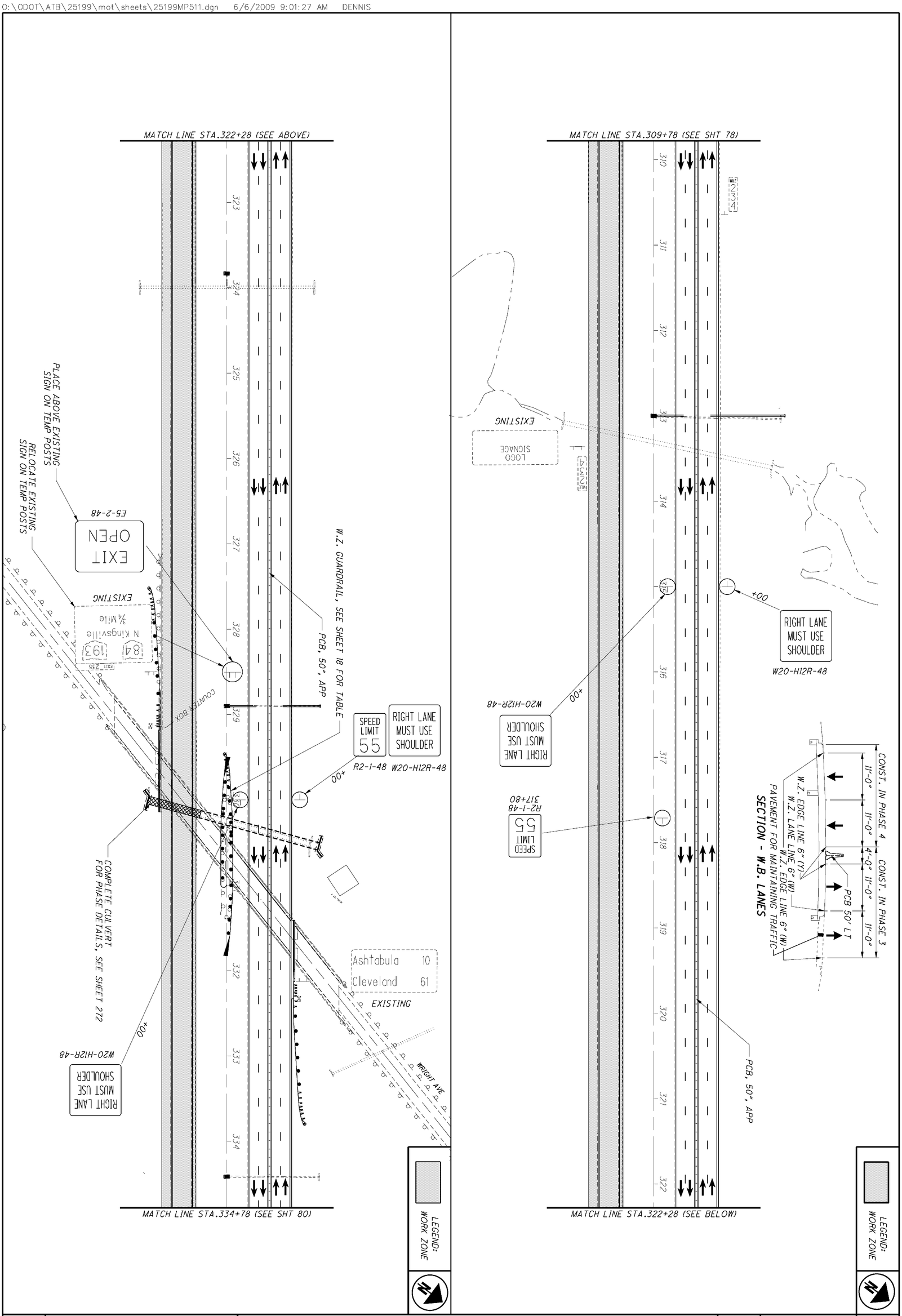

79 / 437	ATB-90-14.25	MAINTENANCE OF TRAFFIC PHASE 5 STA. 309+78 TO STA. 334+78	CALCULATED DPF CHECKED	0 50 25 100 HORIZONTAL SCALE IN FEET

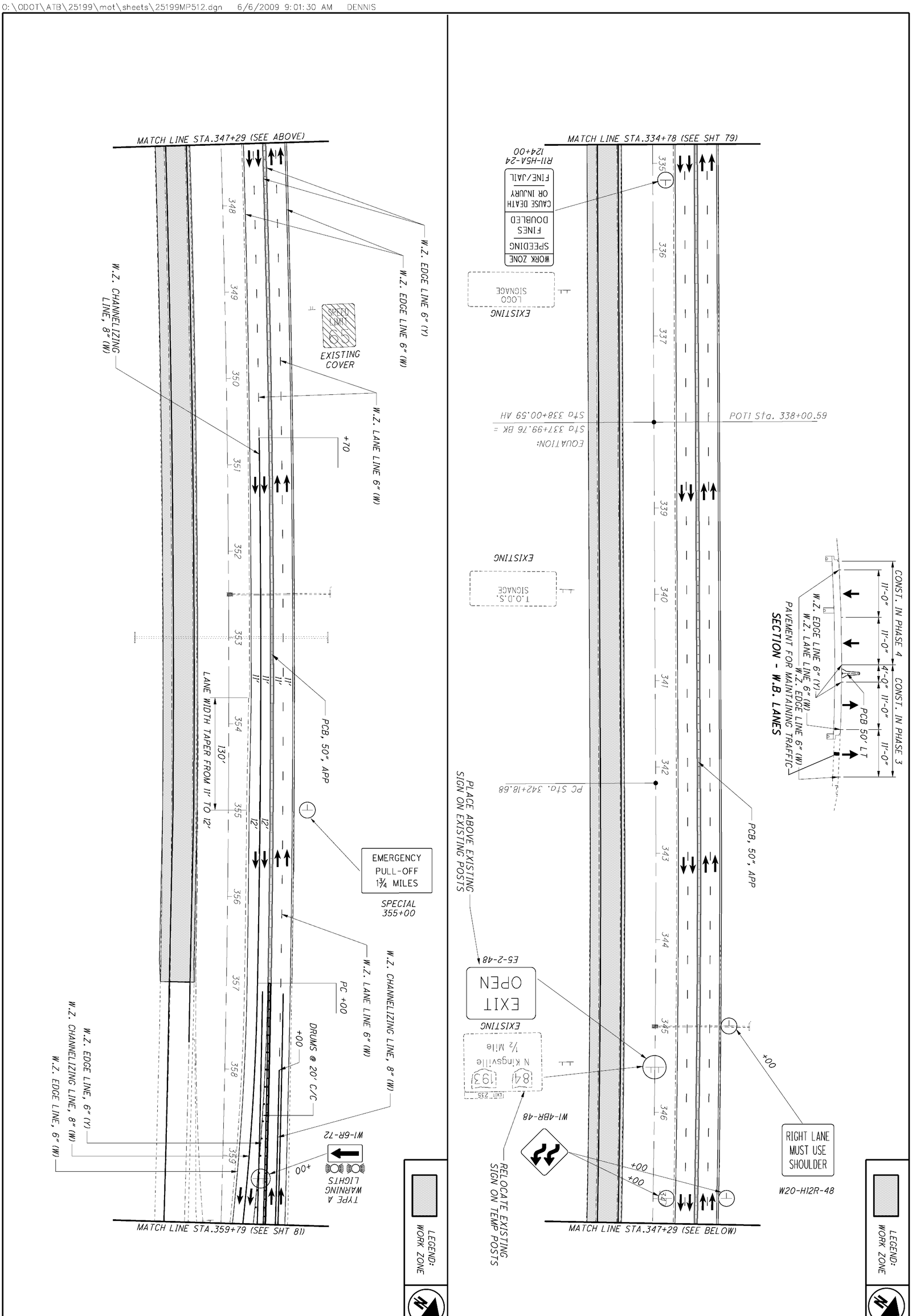

80
437

ATB-90-14.25

MAINTENANCE OF TRAFFIC PHASE 5
STA. 334+78 TO STA. 359+79

CALCULATED DPF
CHECKED

0 50
25 100
HORIZONTAL SCALE IN FEET

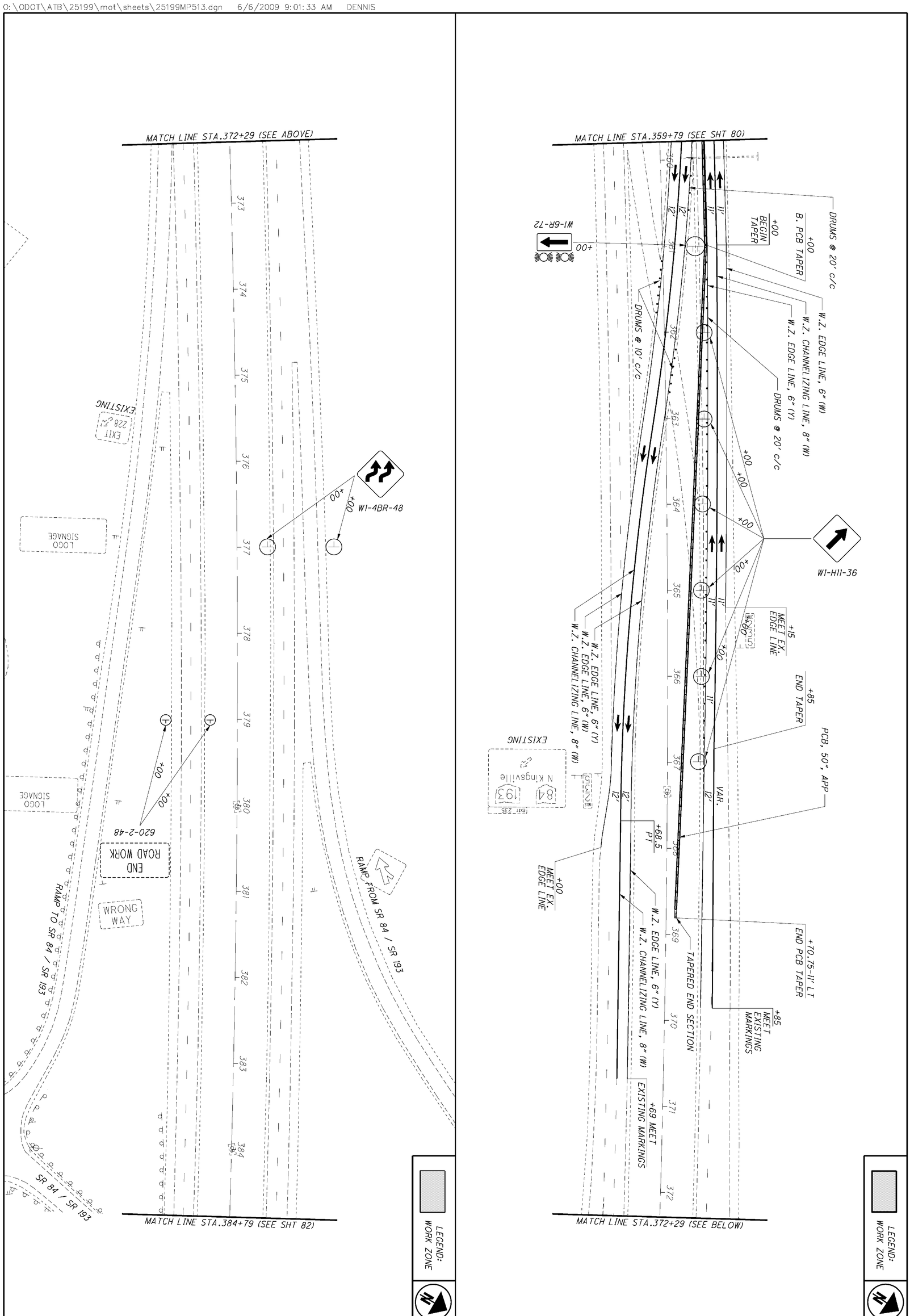

81 / 437	ATB-90-14.25	MAINTENANCE OF TRAFFIC PHASE 5 STA. 359+79 TO STA. 384+79	CALCULATED DPF CHECKED 0 50 25 100 HORIZONTAL SCALE IN FEET

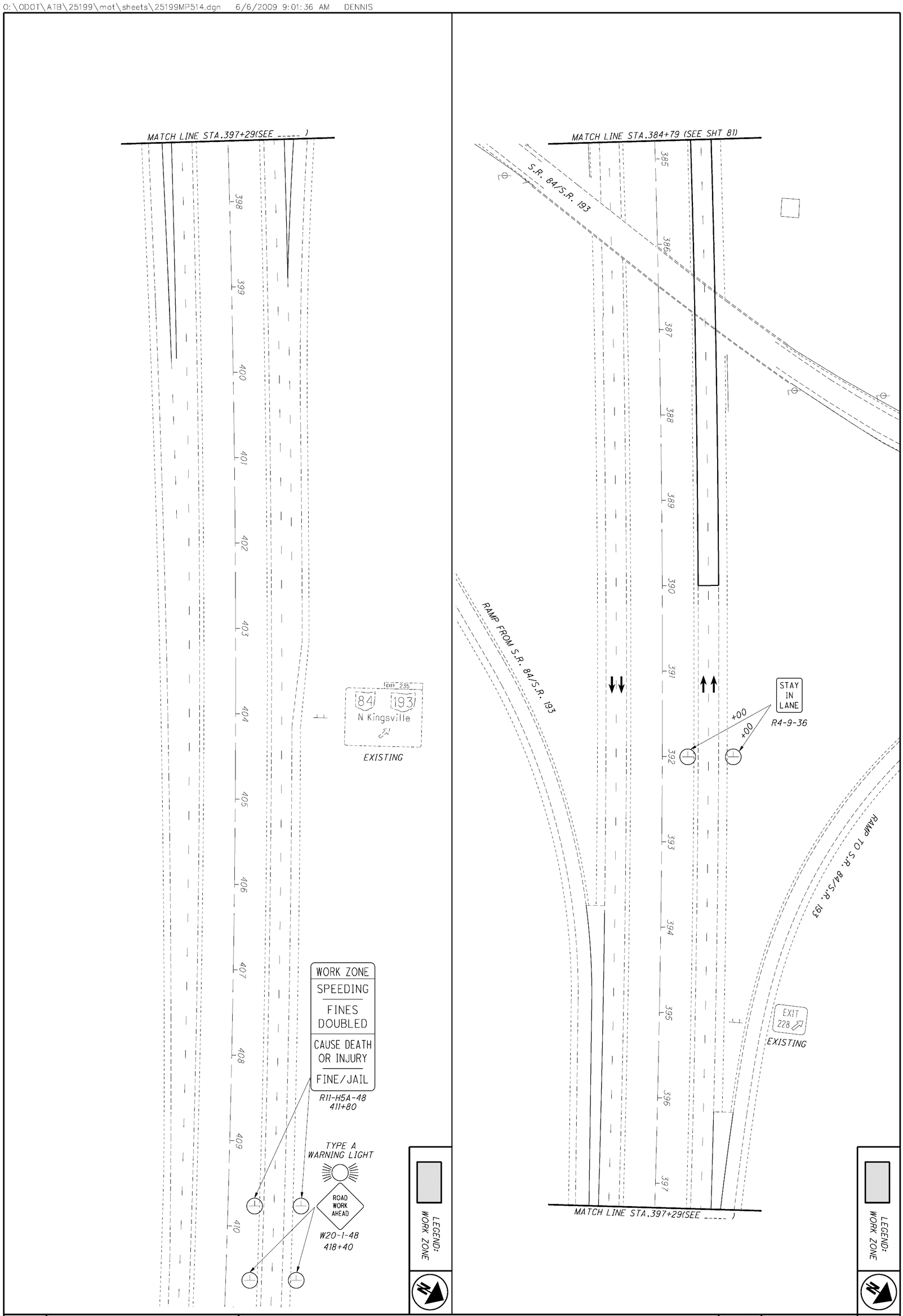

MAINTENANCE OF TRAFFIC PHASE 5
STA. 384+79 TO STA.411+00

CALCULATED DPF
CHECKED

0
HORIZONTAL SCALE IN FEET

PALMER ENGINEERING
11300 CORNELL PARK DR
CINCINNATI, OH 45242

O:\ODOT\ATB\25199\mot\sheets\PIS_209573.dgn 6/6/2009 9:01:39 AM DENNIS

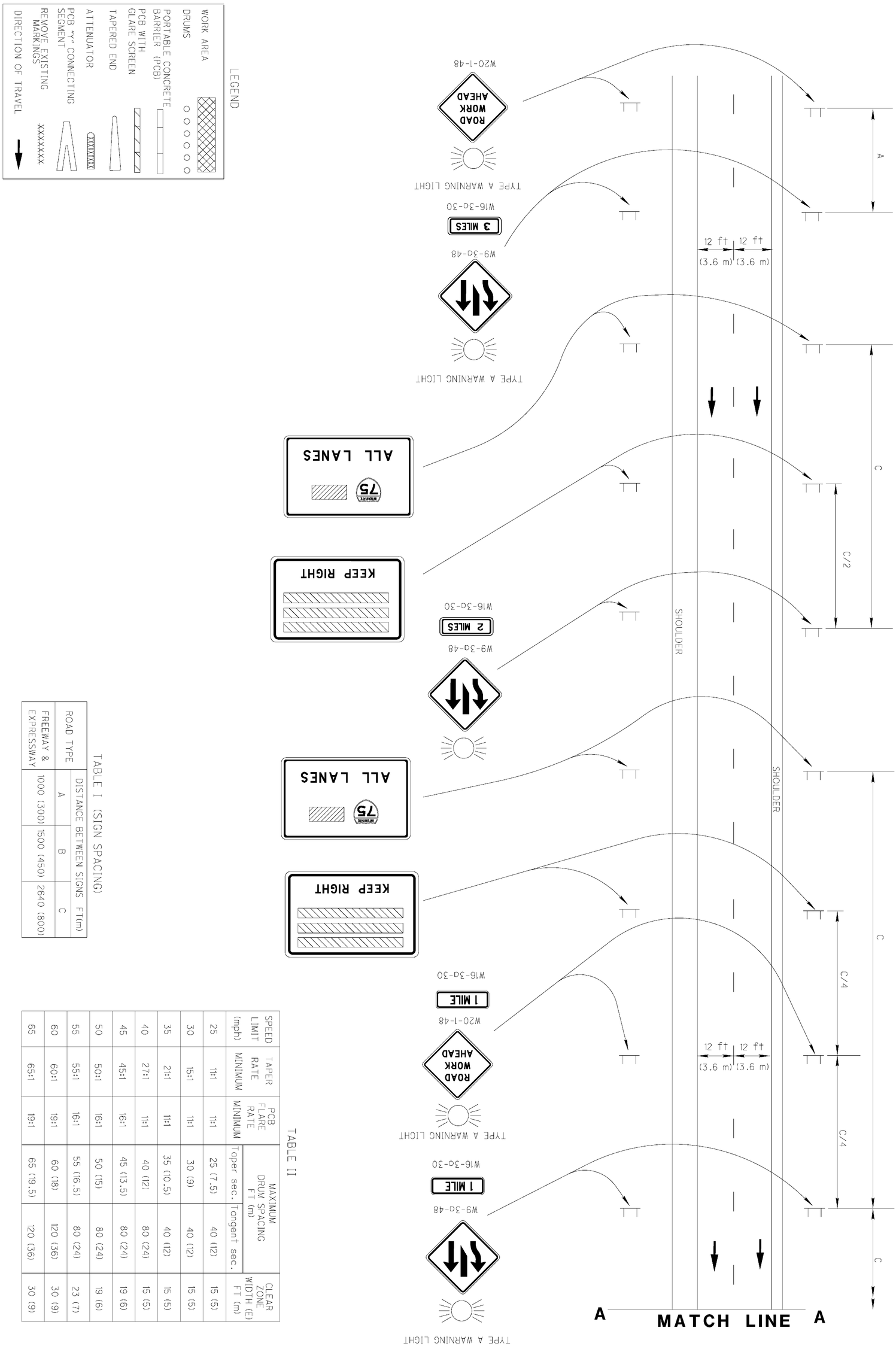

TABLE I (SIGN SPACING)

ROAD TYPE	DISTANCE BETWEEN SIGNS FT(m)		
	A	B	C
FREEWAY & EXPRESSWAY	1000 (300)	1500 (450)	2640 (800)

TABLE II

SPEED LIMIT (mph)	TAPER RATE MINIMUM	PCB FLARE RATE MINIMUM	MAXIMUM DRUM SPACING FT (m)		CLEAR ZONE WIDTH (E) FT (m)
			Taper sec.	Tangent sec.	
25	1:1	1:1	25 (7.5)	40 (12)	15 (5)
30	1.5:1	1:1	30 (9)	40 (12)	15 (5)
35	2:1	1:1	35 (10.5)	40 (12)	15 (5)
40	2.7:1	1:1	40 (12)	80 (24)	15 (5)
45	4.5:1	1.6:1	45 (13.5)	80 (24)	19 (6)
50	5.0:1	1.6:1	50 (15)	80 (24)	19 (6)
55	5.5:1	1.6:1	55 (16.5)	80 (24)	23 (7)
60	6.0:1	1.9:1	60 (18)	120 (36)	30 (9)
65	6.5:1	1.9:1	65 (19.5)	120 (36)	30 (9)

PLAN INSERT SHEET
MEDIAN CROSSOVER OF EXPRESS LANE LONG DISTANCE

PID NUMBER 209573 | REVISION DATE 1/18/08 | CHECKED | DESIGNED SHB | REVIEWED LAM

OFFICE OF TRAFFIC ENGINEERING

LEGEND

WORK AREA

DRUMS

RPMs

PCB WITH GLARE SCREEN

TAPERED END

ATTENUATOR

REMOVE EXISTING MARKINGS

DIRECTION OF TRAVEL

TABLE I (SIGN SPACING)

ROAD TYPE	DISTANCE BETWEEN SIGNS FT(m)		
	A	B	C
FREEWAY & EXPRESSWAY	1000 (300)	1500 (450)	2640 (800)

TABLE II

SPEED LIMIT (mph)	TAPER RATE MINIMUM	PCB FLARE RATE MINIMUM	MAXIMUM DRUM SPACING FT (m)		CLEAR ZONE WIDTH (E) FT (m)
			Taper sec.	Tangent sec.	
25	11:1	11:1	25 (7.5)	40 (12)	15 (5)
30	15:1	11:1	30 (9)	40 (12)	15 (5)
35	21:1	11:1	35 (10.5)	40 (12)	15 (5)
40	27:1	11:1	40 (12)	80 (24)	15 (5)
45	45:1	16:1	45 (13.5)	80 (24)	19 (6)
50	50:1	16:1	50 (15)	80 (24)	19 (6)
55	55:1	16:1	55 (16.5)	80 (24)	23 (7)
60	60:1	19:1	60 (18)	120 (36)	30 (9)
65	65:1	19:1	65 (19.5)	120 (36)	30 (9)

Palmer ENGINEERING
PALMER ENGINEERING
11300 CORNELL PARK DR
ENGINEERING CINCINNATI, OH 45242

O:\ODOT\ATB\25199\mot\sheets\PIS_209573.dgn 6/6/2009 9:01:40 AM DENNIS

OFFICE OF TRAFFIC ENGINEERING

DESIGNED SHB
REVIEWED LAM
CHECKED

REVISION DATE 1/18/08

PIS NUMBER 209573

PLAN INSERT SHEET

MEDIAN CROSSOVER OF EXPRESS LANE
LONG DISTANCE

ATB-90-14.25

PALMER ENGINEERING
11300 CORNELL PARK DR
CINCINNATI, OH 45242

O:\ODOT\ATB\25199\mot\sheets\PIS_209573.dgn 6/6/2009 9:01:41 AM DENNIS

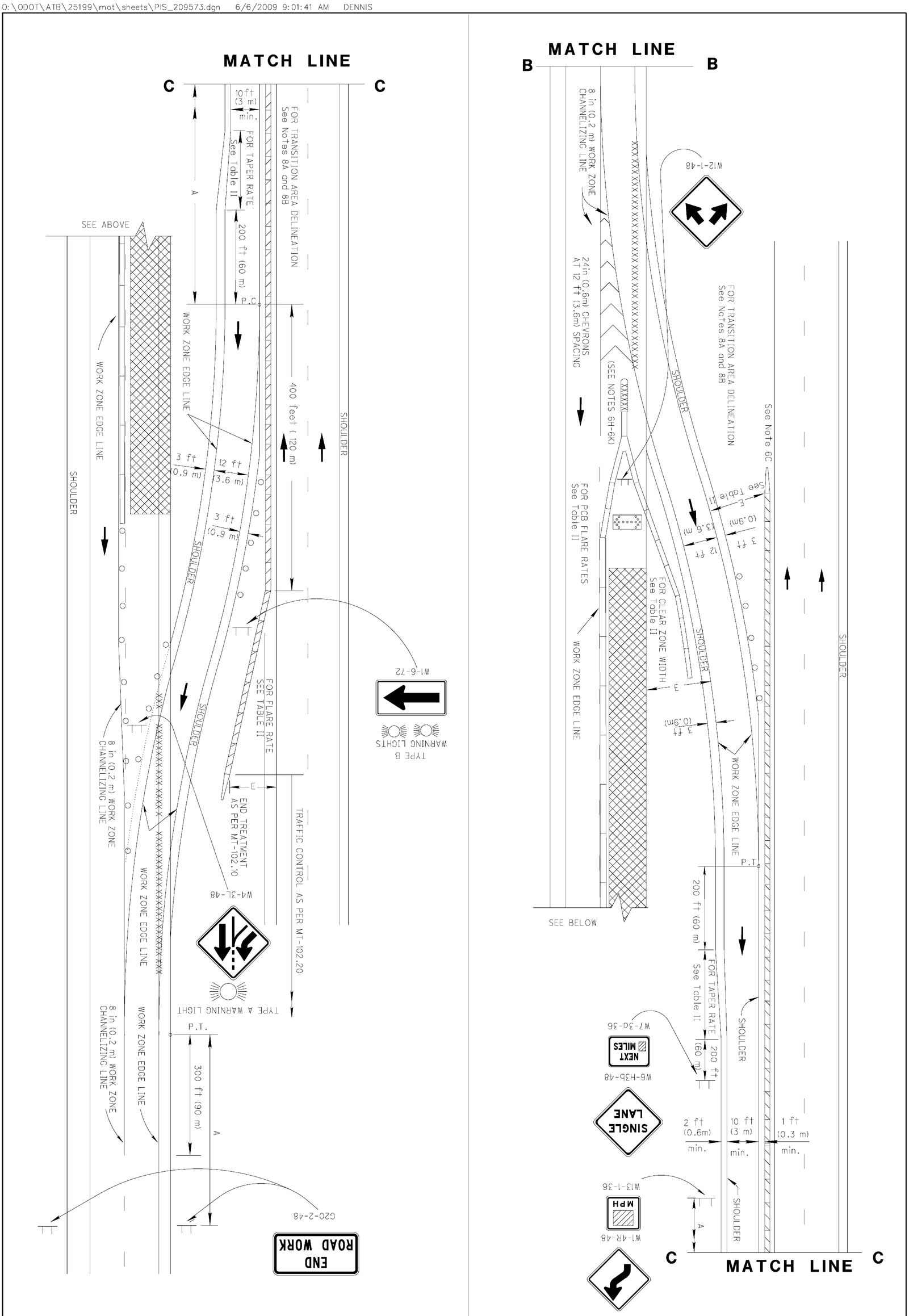

GENERAL NOTES:

GENERAL

1A. This Standard Construction Drawing presents information which is applicable to crossover design. Additional information, applicable to Maintenance of Traffic on multilane highways can be found on the MT-95.30 and MT-95.40 series drawings, on MT-95.50 and on the MT-102 series drawings.

1B. Standard Construction Drawing MT-101.70 shall be used with this drawing.

DESIGN SPEED

2. The design speed used for taper rates should typically be the permanent legal speed. However, on construction projects for which the speed limit is reduced, the reduced speed may be used in determining the taper rate when the taper is not the first active construction area within the project.

TAPERS

3. The minimum acceptable length of taper shall be determined by multiplying the width of offset by the taper rate. The taper rate is provided in Table II.

SIGNING

4A. The advisory speed plaque (W13-1) shall be used when specified in the plans.

4B. The spacing between work zone signs, as shown in Table I, are minimums. Maximum spacing should not be greater than 1.5 times the distances shown in Table I.

4C. Sign spacing should be adjusted to avoid conflict with existing signs. Minimum spacing to existing signs shall be 200 feet (60m) for speeds of 45 mph or less and a minimum of 400 feet (120m) for speeds 50 mph or greater.

4D. Sign locations should be adjusted to provide adequate sight distance for the existing vertical and horizontal roadway alignment.

4E. If the tangent distance along the temporary diversion is less than 2000 feet (600 m), place the second Reverse Curve (W1-4) sign at the mid-point of the tangent.

4F. If the tangent distance along the temporary diversion is 600 feet (180 m) or less, then the double Reverse Curve sign (W24-1) may be used in place of the first Reverse Curve sign, eliminating the need for the second Reverse Curve sign.

4G. The W6-H3b sign shall be provided along directional single-lane roadways over 3 miles (4.8 km). Spacing of the W6-H3b shall be at approximatly 1 mile (1.6 km).

4H. Diagramatic guide signs and Interchange guide signs shall be provided as detailed in the plans.

4J. The guide signs shall have white legends on green background, similar to the D2 and E6 series signs and the E4-H1 sign. However these signs shall be flat sheet signs on sign posts. The size of the signs shall be as specified in the plans.

4K. Signing for exit ramps located within the limits of the crossover lane should be as shown in the plan. Signing shall specify which exits are not accessable from the crossover lane.

4L. Additional information shall be provided in the form of fixed signs and/or changeable message boards as called for in the plans.

4M. Sign spacing on major conventional highways shall be as called for in Table I for freeway & expressway spacing unless otherwise determined by the Engineer.

PAVEMENT MARKING

5A. The existing conflicting pavement markings and reflectors from the raised pavement markers shall be removed and the appropriate color work zone edge lines shall be applied.

5B. Work zone edge lines shall be provided along the tangent section when called for in the plans.

5C. Work zone pavement markings which would conflict with the final traffic lanes shall be removable (CMS 740.06 Type I) tape unless the area will be resurfaced prior to project completion.

5D. After completion of the work, pavement markings other than CMS 740.06, Type I shall be removed in accordance with CMS 641.10. The original markings and raised pavement marker reflectors shall be restored at no additional cost unless separately itemized in the plans.

5E. Edge lines shall be of the appropriate color for the direction of travel. If the temprary edge lines are located on the same alignment as existing lines, the temporary lines may be painted over top of the existing lines (with subsequent over painting if necessary during the life of the work stage to maintian day and night color) if other than on the final surface. If on the final surface, all marking shall be removable tape as per 5F above.

5F. A 12 inch (0.3 m) channelizing line shall be provided in between the crossover lane and the through lane in advance of the "exit" gore, as shown on sheet 2 of 4. All other channelizing lines shown on this drawing shall be of standard 8 inch (0.2 m) width.

5G. If the intended location of the beginning of the channelizing line, as called for in the detail, is on a curve, then the beginning of the channelizing line should be relocated upstream a distance of 500 feet (150 m).

5H. If the beginning of the channelizing line would be located near an exit ramp, then the beginning of the channelizing line shall be relocated upstream a distance of 1000 feet in advance of the beginning of the exit ramp deceleration lane.

PORTABLE CONCRETE BARRIER

6A. The portable concrete barrier (PCB) near the exiting crossover, shall extend straight on the permanent roadway to 400 feet (120 m) beyond the PC of the crossover. The PCB shall then be flared at the rate specified in Table II.

6B. The PCB shall be 32 inches (813 mm), fitted with glare screen, or may be 50 inches (1270 mm) high if NCHRP 350 compliant.

6C. PCB end treatment shall be by impact attenuator if located within the clear zone of approaching traffic.

6D. PCB end treatment may be by tapered ends if located beyond the clear zone of approaching traffic.

6E. When used, impact attenuators shall be installed parallel to traffic. The last full section of PCB, adjacent to the impact attenuator shall be located parallel to traffic. For installation procedures, refer to manufacturer's installation instructions.

6F. No reflectors or other channelizing devices shall be permitted on the face of the PCB facing the exiting crossover, from PC to end of barrier.

6G. Where portable concrete barrier (PCB) is provided at the gore, the impact attenuators shall be installed parallel to mainline traffic.

6H. Where the impact attenuator is intended to apply to two barriers within the gore, one from the a through lane and one from the crossover, the two barriers shall be joined to form one unit using a PCB "Y" connecting segment. For the "Y" details, see Roadway Plan Insert Sheet "Portable Concrete Barrier 'Y' Connector Segment".

PCB cont.

Contractors may choose to install a wide impact attenuator in lieu of utlizing the concrete "Y" segment. For example, a wide impact attenuator at a minimum of 48 inches (1200 mm) wide and rated for the design speed of the roadway could be installed in place of the aforementioned (1) work zone impact attenuator (2) PCB "Y" connector segment and (3) one standard PCB section. However, if contractors use this connection method, the wider impact attenuator must still be crashworthy in accordance with NCHRP Report 350, or MASH-08 and installed as per manufacturer's instructions.

The contractor shall repair or replace a damaged unit within 24 hours of a damaging impact.

6J. Where a PCB "Y" connecting segment is provided, one standard section of PCB shall be provided between the "Y" connecting segment and the impact atenuator.

6K. Connection of the Impact attenuator to the PCB shall be by positive connection. Appropriate crashworthy transitions between the impact attenuator and the first PCB shall be installed.

6L. For installation procedures for the PCB and for the impact attenuator, refer to manufacturers' installation instructions.

6M. For details on delineation of Portable Concrete Barrier, see Standard Construction Drawing MT-101.70.

6H. PCB shall also be provided along the crossover where the work is within the clear zone of the crossover. The PCB within the gore, along the right side of the crossover lane should be flared as per Table II, with the upstream end of the PCB placed adjacent to the mainline PCB.

6J. For details on delineation of Portable Concrete Barrier, see Standard Construction Drawing MT-101.70.

DRUMS

7A. Drums along the crossover curves shall be spaced at 20 feet (6 m) C-C.

7B. Drums used to close off a crossover shall be spaced at 10 feet (3 m) C-C.

7C. All other drum spacing shall be as per Table II.

7D. Drums located along the crossover ramps should be placed on the aggregate shoulder as much as possible in order to maximize the width of pavement open to traffic.

TRANSITION AREA DELINEATION

8A. Transition area delineation shall be provided, as called for in PIS 209930 or 209931, or as otherwise called for in the plans.

8B. Additionally, RPMs at 20 feet (6 m) spacing shall be provided beside the channelizing line located between the crossover lane and the through lanes.

LIGHTING

9. Work zone lighting shall be provided as per Standard Construction Drawing MT-100.00.

GEOMETIRCS

10. Geometrics of the crossover shall be as called for in the plans.

EXISTING LONGITUDINAL RUMBLE STRIPES

11. Existing longitudinal rumble stripes, located within the alignment of the crossover, shall be eliminated by pavement planing and resurfacing.

PALMER ENGINEERING
11300 CORNELL PARK DR
CINCINNATI, OH 45242

O:\ODOT\ATB\25199\mot\sheets\PIS_209573.dgn 6/6/2009 9:01:42 AM DENNIS

OFFICE OF TRAFFIC ENGINEERING

DESIGNED SHB | REVIEWED LAM

REVISION DATE 4/17/09 | CHECKED

PIS NUMBER 209573

PLAN INSERT SHEET

MEDIAN CROSSOVER OF EXPRESS LANE
LONG DISTANCE

ATB-90-14.25

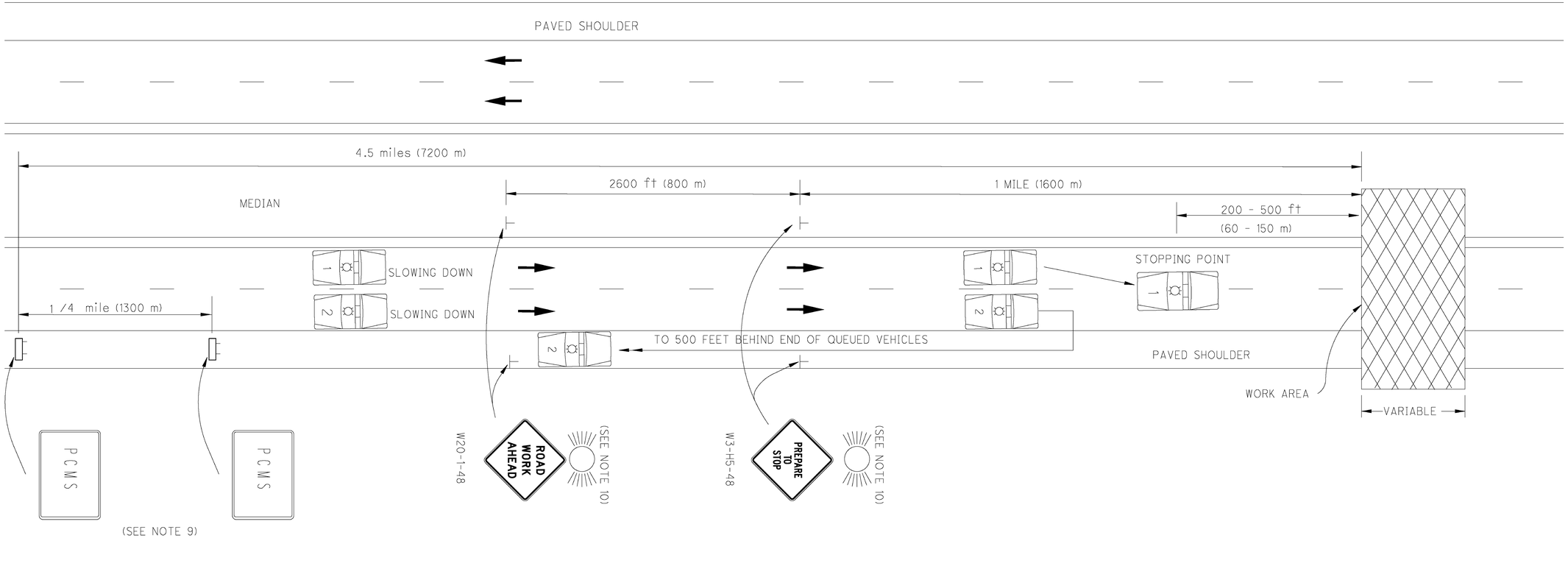

1. This type of highway closure shall be used for all construction, maintenance and utility operations when the duration of closure will not exceed 15 minutes.

2. A minimum of two Law Enforement Officers (LEO) with patrol cars per direction shall be provided to block traffic and pace motorists to a stop. The number of patrol cars shall equal the number of lanes closed on the highway.

3. Patrol cars, with lights flashing, should enter the stream of traffic at approximately three (3) miles before the point of closure. At approximately two (2) miles before the point of closure, they should begin the gradual slow down. Traffic shall be brought to a complete stop a safe distance, between 200 feet and 500 feet (60 and 150 m), from the work area. This slowing operation shall take no more than ten (10) minutes. After traffic has been stopped, one patrol car shall travel along the roadway shoulder 500 feet (150 m) behind the end of the queued vehicles.

4. The contractor shall not begin work until traffic has been brought to a complete stop.

5. All entrance ramps located between the stopped traffic and the work area shall be closed.

6. After the highway has been closed and reopened via this procedure, both of the following requirements shall have been met before implementation of another short duration closure, except with the approval of the engineer:
   A. A minimum period of 15 minutes shall have elapsed
   B. The queued traffic shall have dissipated

7. The time frame for stopping traffic shall be specified in the plans or by the District District Deputy Director.

8. The public shall be given advance notice of the upcomming closure by providing Portable Changeable Message signs at the site at least one week in advance of the scheduled closing. Closure information should also be provided through the news media.

9. Two ODOT approved Portable Changeable Message Signs, Class 1, shall be provided. The first message sign shall be placed at approximately 4.5 miles in advance of the closure or as directed by the engineer. The second message sign shall be placed at approximately one quarter mile beyond the first message sign. The first message sign shall read ROAD CLOSED AHEAD (0.8 sec.), PREPARE TO STOP (0.8 sec.), (Black screen for 0.3 sec.) The second message sign shall read ROAD CLOSED AHEAD (0.8 sec.), "EXPECT 30 MIN. DELAY" (0.8 sec.), (Black screen for 0.3 sec.)

10. The contractor shall erect and maintian 48 inch "ROAD WORK AHEAD" and "PREPARE TO STOP" signs on each side of the highway. During night operations, each sign shall be illuminated with one (1) Type A flashing warning light or two (2) flares. The flares shall be replaced if if they burn out.

0:\ODOT\ATB\25199\mot\sheets\PIS_209960.dgn 6/6/2009 9:01:48 AM DENNIS

OFFICE OF TRAFFIC ENGINEERING

DESIGNED SHB | REVIEWED LAM

REVISION DATE 01/18/08 | CHECKED

PIS NUMBER 209960

PLAN INSERT SHEET

SHORT-DURATION CLOSURE OF MULTI-LANE DIVIDED HIGHWAY

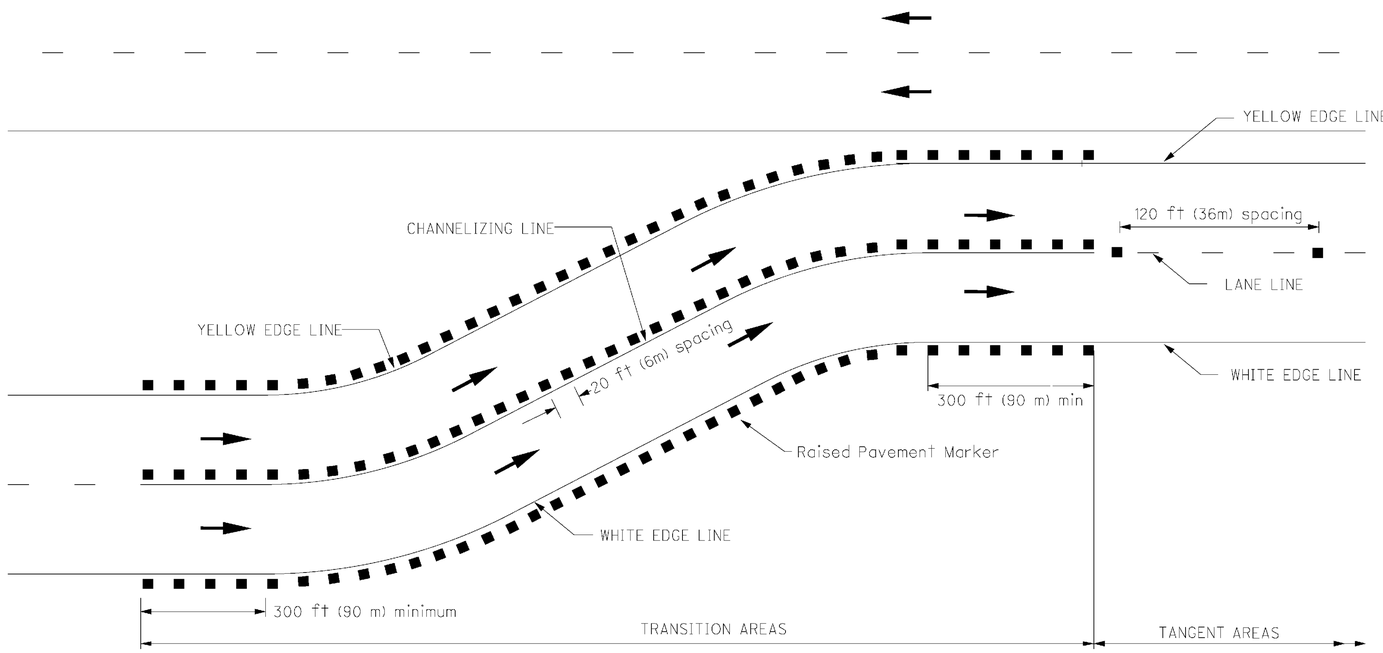

WORK ZONE DELINEATION FOR CROSSOVERS

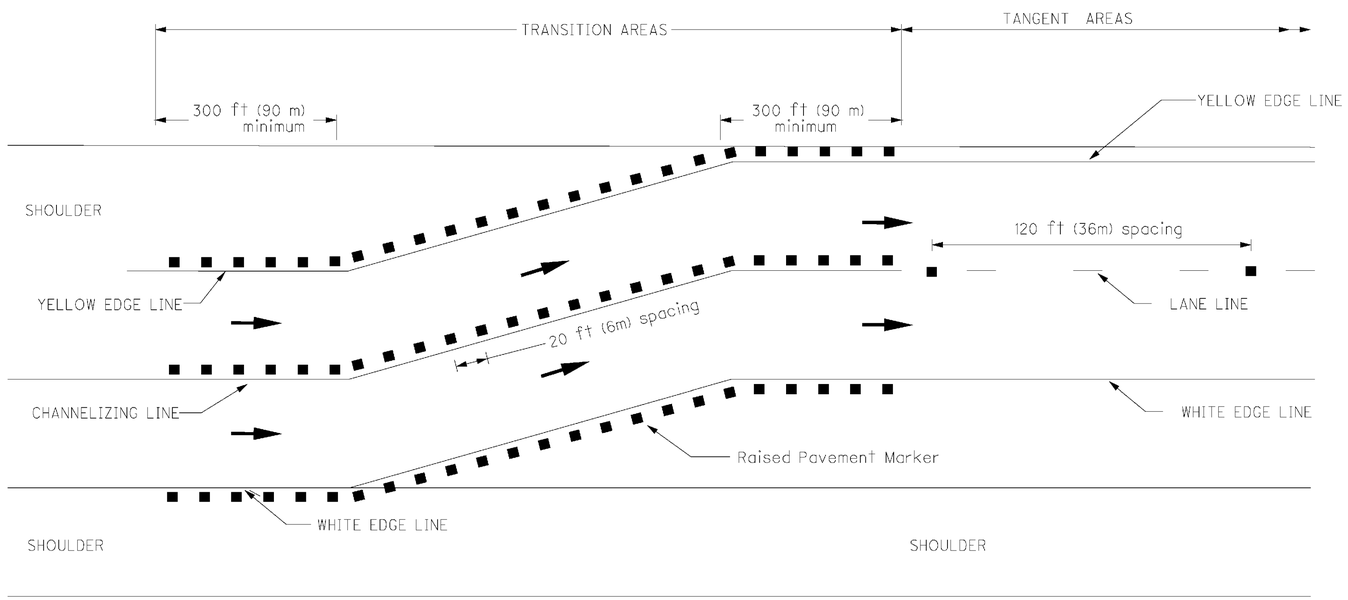

WORK ZONE DELINEATION FOR LANE SHIFTS

LEGEND

■ RPM

→ DIRECTION OF TRAVEL

NOTES

1. This drawing presents delineation procedures for freeways and expressways on asphalt surfaces. Procedures are provided for transition areas and for tangent areas. The procedures for transition areas apply to crossovers and to lane shifts of 4 feet (1.2 m) or greater. Delineation of transition areas for shifts of less than 4 inches (1.2 m)shall be as per the tangent area delineation.

2. Raised Pavement Markers shall meet the following seasonal specifications:

   a) Raised Pavement Markers in place during the normal construction season may be either 621 Raised Pavement Markers or 614 Work Zone Raised Pavement Markers (WZRPMs). The normal construction season with regard to use of WZRPMs shall be the period from April 1 through October 15.

   b) At locations where it is intended that Raised Pavement Markers will winter over, 621 Raised Pavement Markers shall be provided.

   c) At locations where it is intended that work will continue beyond October 15 but will be completed prior to the beginning of snow-plowing season, 614 WZRPMs may remain in place until such time. Snow-plowing season shall be as specified in the plans. If snow-plowing season is not specified in the plans, it shall be assumed that snow-plowing season runs from October 16 through March 31. If project delays, not the fault of ODOT, cause work to extend into the snow-plowing season, the contractor shall be responsible for replacing WZRPMs with 621 Raised Pavement Markers, as determined by the Engineer, at the contrator's expense.

3. All material furnished shall be listed on the Department's Prequalified Lists.

4. The geometrics of the crossover shall be as shown in the plans. Additional details are provided in Standard Construction Drawing MT-95.70.

5. See Standard Construction Drawings MT-102.10 and MT-102.20 for more details concerning lane shifts.

6. Spacing of raised pavement markers (RPMs) shall be at 20 feet (6 m) center-to-center for all long-line marking within transition areas. Within tangent areas RPMs shall be provided only along the lane lines, spaced at 120 foot (36 m) center-to-center.

7. The RPMs shall be 1-way, facing oncomming traffic, and shall be white or yellow to match the color of the associated line marking.

8. Along the edge lines, the RPMs shall be offset a maximum of 4 inches (100 mm) to the outside of the lines. Along the channelizing lines, the RPMs shall be offset to the left of the lines by no more than 1 inch (25 mm). Along the lane lines the RPMs shall be centered between dashes.

9. The RPMs shall be removed when they are no longer appropriate.

10. Holes resulting from removal of 621 RPMs shall be filled as per 621.08. If removal of the 621 RPMs does not take place immediately after the highlighted alignment becomes invalid, the reflectors within the 621 RPMs shall be removed.

11. Following removal of 621 RPMs resurfacing of the transition shall be performed. The resurfacing shall be performed at the time the surface course is being applied. In preparation for resurfacing, the existing pavement shall be removed to a depth necessary to match the level of the intermediate course of the proposed pavement.

OFFICE OF TRAFFIC ENGINEERING

DESIGNED | REVIEWED LAM | REVISION DATE 4/17/09 | CHECKED | PIS NUMBER 209930

PLAN INSERT SHEET

WORK ZONE DELINEATION ON ASPHALT SURFACES

ATB-90-14.25

1 / 1

88 / 437

Palmer ENGINEERING
PALMER ENGINEERING
11300 CORNELL PARK DR
CINCINNATI, OH 45242

O:\ODOT\ATB\25199\mot\sheets\PIS_209930.dgn 6/6/2009 9:01:51 AM DENNIS

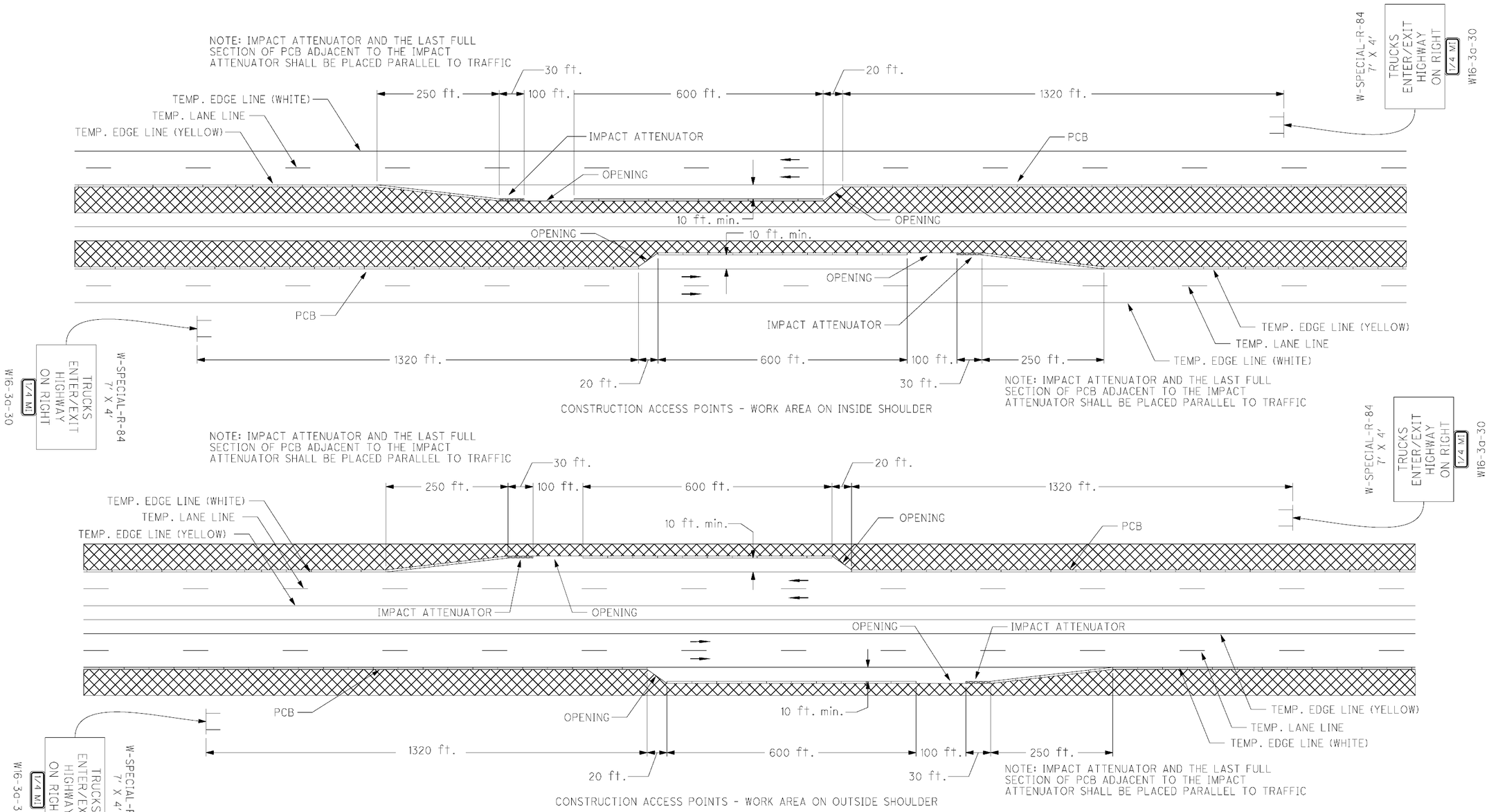

18.50	T 5.94	1.65	R 6.38	2.05	U 6.37	2.06	C 6.37	1.65	K 6.50	1.65	S 6.38	18.50												
6.67	E 5.94	1.65	N 6.38	1.67	T 5.94	1.65	E 5.94	1.65	R 5.94	0.55	/ 6.47	1.10	E 5.94	1.65	X 6.94	1.65	I 1.60	1.65	T 5.94	6.67				
14.96	H 6.38	2.05	I 1.60	2.05	G 6.38	2.05	H 6.37	1.65	W 8.44	0.56	A 8.00	0.55	Y 8.00	14.96										
13.21	O 6.69	2.05	N 6.37	8.00	R 6.38	2.05	I 1.60	2.05	G 6.38	2.05	H 6.37	1.65	T 5.94	13.21										

W-SPECIAL; NO BORDER, BLACK ON ORANGE;
"TRUCKS" E MOD; "ENTER/EXIT" E MOD;
"HIGHWAY" E MOD; "ON RIGHT" E MOD;
TABLE OF WIDTHS AND SPACES

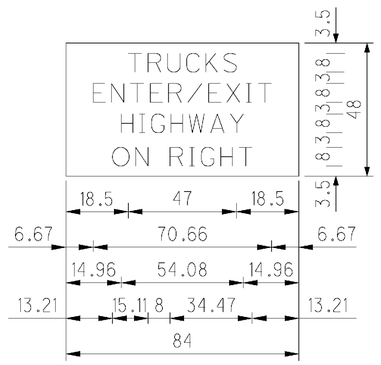

CONSTRUCTION ACCESS POINTS

Construction access point locations may be selected by the Contractor with the approval of the Engineer. The locations shall be selected for good sight distance and ease of access for entering vehicles (avoid locations just beyond crest vertical curves, on overhead structures, on upgrades, etc.). In the event that the Engineer determines that an access point does not function in a safe manner, he/she shall order it immediately closed at no cost to the State. Access points may be relocated subject to the approval of the Engineer, as necessary to accomplish construction activites.

All costs for relocation of portable concrete barrier, installation, repair, replacement and removal of impact attenuators, grading for access drives and related costs shall be included in the lump sum bid for Item 614 Maintaining Traffic.

Palmer ENGINEERING
PALMER ENGINEERING
11300 CORNELL PARK DR
ENGINEERING CINCINNATI, OH 45242

O:\ODOT\ATB\25199\root\sheets\PIS_209563_041709.dgn 6/6/2009 9:01:54 AM DENNIS

OFFICE OF TRAFFIC ENGINEERING

DESIGNED RAS | REVIEWED LAM
REVISION DATE 04/17/09 | CHECKED

PIS NUMBER 209563

PLAN INSERT SHEET

CONSTRUCTION ACCESS POINTS

ATB-90-14.25

SHEET NUMBER												PARTICIPATION		ITEM	ITEM EXT.	GRAND TOTAL	UNIT	DESCRIPTION	SEE SHEET NO.
11	12	94	95	96	98	99	103	104			OFFICE CALCS								
																		ROADWAY	
														201	11000	LUMP		CLEARING AND GRUBBING	
		14												202	20010	14	EACH	HEADWALL REMOVED	
		144350												202	23000	144350	SQ YD	PAVEMENT REMOVED	
		686												202	30700	686	FT	CONCRETE BARRIER REMOVED	
		265												202	32600	265	FT	GUTTER REMOVED	
		3504												202	35100	3504	FT	PIPE REMOVED, 24" AND UNDER	
		251												202	35200	251	FT	PIPE REMOVED, OVER 24"	
		12708												202	38000	12708	FT	GUARDRAIL REMOVED	
		6												202	42000	6	EACH	ANCHOR ASSEMBLY REMOVED, TYPE A	
		10												202	42010	10	EACH	ANCHOR ASSEMBLY REMOVED, TYPE E	
		11												202	42040	11	EACH	ANCHOR ASSEMBLY REMOVED, TYPE T	
		4												202	42206	4	EACH	ANCHOR ASSEMBLY REMOVED	
		22												202	47000	22	EACH	BRIDGE TERMINAL ASSEMBLY REMOVED	
		3												202	58000	3	EACH	MANHOLE REMOVED	
		42												202	58100	42	EACH	CATCH BASIN REMOVED	
		283												SPECIAL	20270000	283	FT	FILL AND PLUG EXISTING CONDUIT	11
		60												SPECIAL	20270100	60	FT	PIPE CLEANOUT	11
								814						202	75000	814	FT	FENCE REMOVED	
				195330										203	10000	195330	CU YD	EXCAVATION	
				67186										203	20000	67186	CU YD	EMBANKMENT	
											3678			204	10000	3678	SQ YD	SUBGRADE COMPACTION	
121														204	45000	121	HOUR	PROOF ROLLING	
											9029			206	10500	9029	TON	CEMENT	
											260588			206	11000	260588	SQ YD	CURING COAT	
											260588			206	15000	260588	SQ YD	CEMENT STABILIZED SUBGRADE	
														206	30000	LUMP		CONTRACTOR DESIGNED CHEMICALLY STABILIZED SUBGRADE	
			11287.50											606	13000	11287.50	FT	GUARDRAIL, TYPE 5	
			112.50											606	13001	112.50	FT	GUARDRAIL, TYPE 5, AS PER PLAN	12
			19											606	22000	19	EACH	ANCHOR ASSEMBLY, TYPE B-98	
			6											606	25000	6	EACH	ANCHOR ASSEMBLY, TYPE A	
			16											606	26500	16	EACH	ANCHOR ASSEMBLY, TYPE T	
			18											606	35000	18	EACH	BRIDGE TERMINAL ASSEMBLY, TYPE 1	
			4											606	35100	4	EACH	BRIDGE TERMINAL ASSEMBLY, TYPE 2	
								868						607	15000	868	FT	FENCE, TYPE 47	
								375						622	10160	375	FT	CONCRETE BARRIER, SINGLE SLOPE, TYPE D	
								6						622	25000	6	EACH	CONCRETE BARRIER END SECTION, TYPE D	
								6						622	25050	6	EACH	CONCRETE BARRIER, END ANCHOR, REINFORCED, TYPE D	
	5													SPECIAL	69098000	5	EACH	MISC.:VERTICAL CLEARANCE	12
																		EROSION CONTROL	
							68							601	21050	68	SQ YD	TIED CONCRETE BLOCK MAT, TYPE 1	
					59	98								601	32100	157	CU YD	ROCK CHANNEL PROTECTION, TYPE B WITH FILTER	
					81	6								601	32200	87	CU YD	ROCK CHANNEL PROTECTION, TYPE C WITH FILTER	
				5										659	00100	5	EACH	SOIL ANALYSIS TEST	
				49851										659	00300	49851	CU YD	TOPSOIL	
				449107										659	10000	449107	SQ YD	SEEDING AND MULCHING	
				22455										659	14000	22455	SQ YD	REPAIR SEEDING AND MULCHING	
				22455										659	15000	22455	SQ YD	INTER-SEEDING	
				62.65										659	20000	62.65	TON	COMMERCIAL FERTILIZER	
				92.79										659	31000	92.79	ACRE	LIME	
				2486										659	35000	2486	M GAL	WATER	
				112										659	40000	112	M SQ FT	MOWING	
						1004								670	00500	1004	SQ YD	SLOPE EROSION PROTECTION	
						19237								670	00710	19237	SQ YD	DITCH EROSION PROTECTION MAT, TYPE A	
						4241								670	00760	4241	SQ YD	DITCH EROSION PROTECTION MAT, TYPE F	
						2223								670	00770	2223	SQ YD	DITCH EROSION PROTECTION MAT, TYPE G	
LUMP														832	15000	LUMP		STORM WATER POLLUTION PREVENTION PLAN	
125000														832	30000	125000	EACH	EROSION CONTROL	

CALCULATED | CHECKED

GENERAL SUMMARY

ATB-90-14.25

Palmer ENGINEERING
PALMER ENGINEERING
11300 CORNELL PARK DR
CINCINNATI, OH 45242

C:\ODOT\ATB\25199\roadway\sheets\25199GG001.dgn 6/6/2009 9:01:57 AM DENNIS

SHEET NUMBER												PARTICIPATION		ITEM	ITEM EXT.	GRAND TOTAL	UNIT	DESCRIPTION	SEE SHEET NO.
9	11	12	95	98	99	103	104				OFFICE CALCS								
																		DRAINAGE	
					LUMP									503	11100	LUMP		COFFERDAMS, CRIBS AND SHEETING	
					LUMP									503	21300	LUMP		UNCLASSIFIED EXCAVATION	
					2836									509	10000	2836	POUND	EPOXY COATED REINFORCING STEEL	
					34									511	46200	34	CU YD	CLASS C CONCRETE	
					63									512	10100	63	SQ YD	SEALING OF CONCRETE SURFACES (EPOXY-URETHANE)	
					509									512	33000	509	SQ YD	TYPE 2 WATERPROOFING	
					26									516	13600	26	SQ FT	1" PREFORMED EXPANSION JOINT FILLER	
					8									518	21200	8	CU YD	POROUS BACKFILL WITH FILTER FABRIC	
				6.8	38.2									602	20000	45.0	CU YD	CONCRETE MASONRY	
						1268								603	00900	1268	FT	6" CONDUIT, TYPE B	
						3006								603	01500	3006	FT	6" CONDUIT, TYPE F	
				68										603	04400	68	FT	12" CONDUIT, TYPE B	
				46										603	04600	46	FT	12" CONDUIT, TYPE C	
				67										603	05200	67	FT	12" CONDUIT, TYPE F, 707.05 (TYPE C), OR 707.21	
				340										603	05900	340	FT	15" CONDUIT, TYPE B	
				169										603	06100	169	FT	15" CONDUIT, TYPE C	
				174										603	06100	174	FT	15" CONDUIT, TYPE C, 706.02	
				655										603	06700	655	FT	15" CONDUIT, TYPE F, 707.05 (TYPE C), OR 707.21	
				491										603	07400	491	FT	18" CONDUIT, TYPE B	
				498										603	07600	498	FT	18" CONDUIT, TYPE C	
				28										603	07600	28	FT	18" CONDUIT, TYPE C, 706.02	
				81										603	08900	81	FT	21" CONDUIT, TYPE B	
				28										603	09100	28	FT	21" CONDUIT, TYPE C, 706.02	
				59										603	09700	59	FT	21" CONDUIT, TYPE F, 707.05 (TYPE C), OR 707.21	
				972										603	10400	972	FT	24" CONDUIT, TYPE B	
				966										603	10600	966	FT	24" CONDUIT, TYPE C	
				648										603	10600	648	FT	24" CONDUIT, TYPE C, 706.02	
				232										603	11200	232	FT	24" CONDUIT, TYPE F, 707.05 (TYPE C), OR 707.21	
				8										603	13600	8	FT	30" CONDUIT, TYPE C, 706.02	
					36									603	19200	36	FT	42" CONDUIT, TYPE A	
					32									603	23600	32	FT	60" CONDUIT, TYPE A, 706.02	
					208									603	94800	208	FT	8' X 4' CONDUIT, TYPE A, 706.05	
					270									603	96600	270	FT	CONDUIT, BORED OR JACKED: 42" TYPE A	
				6										604	00400	6	EACH	CATCH BASIN, NO. 3	
				4										604	00800	4	EACH	CATCH BASIN, NO. 3A	
				40										604	01200	40	EACH	CATCH BASIN, NO. 4	
				7										604	01600	7	EACH	CATCH BASIN, NO. 5	
				5										604	31500	5	EACH	MANHOLE, NO. 3	
	5					34								604	36600	39	EACH	PRECAST REINFORCED CONCRETE OUTLET	
						110179								605	11100	110179	FT	6" SHALLOW PIPE UNDERDRAINS	
						812								605	13300	812	FT	6" UNCLASSIFIED PIPE UNDERDRAINS	
	100													605	13402	100	FT	6" UNCLASSIFIED PIPE UNDERDRAINS FOR SPRINGS	
						54784								605	14000	54784	FT	6" BASE PIPE UNDERDRAINS	
126														605	31100	126	FT	AGGREGATE DRAINS	
	100													605	32200	100	FT	AGGREGATE DRAINS FOR SPRINGS	
																		PAVEMENT	
											90			302	46000	90	CU YD	ASPHALT CONCRETE BASE, PG64-22	
							14				44047			304	20001	44061	CU YD	AGGREGATE BASE, AS PER PLAN	12
											1626			407	10000	1626	GALLON	TACK COAT	
											26			407	14000	26	GALLON	TACK COAT FOR INTERMEDIATE COURSE	
											97861			408	10000	97861	GALLON	PRIME COAT	
											9547			408	10001	9547	GALLON	PRIME COAT, AS PER PLAN	12
											149			422	10000	149	SQ YD	SINGLE CHIP SEAL	

CALCULATED | CHECKED

GENERAL SUMMARY

ATB-90-14.25

Palmer ENGINEERING
PALMER ENGINEERING
11300 CORNELL PARK DR
CINCINNATI, OH 45242

O:\ODOT\ATB\25199\roadway\sheets\25199GG002.dgn 6/6/2009 9:02:00 AM DENNIS

SHEET NUMBER												PARTICIPATION		ITEM	ITEM EXT.	GRAND TOTAL	UNIT	DESCRIPTION	SEE SHEET NO.
13	14	15	16	17	18	21	22		95	104	OFFICE CALCS								
																		PAVEMENT (CONTINUED)	
											38			448	46050	38	CU YD	ASPHALT CONCRETE INTERMEDIATE COURSE, TYPE 2, PG64-22	
									325					448	46061	325	CU YD	ASPHALT CONCRETE INTERMEDIATE COURSE, TYPE 1, UNDER GUARDRAIL, PG64-22, AS PER PLAN	12
											771			448	47020	771	CU YD	ASPHALT CONCRETE SURFACE COURSE, TYPE 1, PG64-22	
										1273				609	10000	1273	FT	ASPHALT CONCRETE CURB, TYPE 1	
										440				609	24510	440	FT	CURB, TYPE 4-C	
											1323			617	10100	1323	CU YD	COMPACTED AGGREGATE	
											20			618	40600	20	MILE	RUMBLE STRIPS, (ASPHALT CONCRETE)	
											89267			880	15000	89267	CU YD	ASPHALT CONCRETE (7 YEAR WARRANTY)	
																		TRAFFIC CONTROL	
																		SEE SHEET	**280**
																		GABION WALL & SLOPE REPAIR	
																		SEE SHEET	**277**
																		BUILDING DEMOLISHED	
														202	56001	LUMP		BUILDING DEMOLISHED, AS PER PLAN, 1 STORY BRICK UTILITY BUILDING	266
																		STRUCTURES OVER 20' SPAN	
																		ATB-90-1450 R/L SEE SHEET	**298/299**
																		ATB-90-1525 SEE SHEET	**349**
																		ATB-90-1583 R/L SEE SHEET	**367/368**
																		ATB-90-1764 SEE SHEET	**426**
																		ATB-90-1905 SEE SHEET	**433**
																		MAINTENANCE OF TRAFFIC	
				21197										254	01000	21197	SQ YD	PAVEMENT PLANING, ASPHALT CONCRETE	
											1000			411	10000	1000	CU YD	STABILIZED CRUSHED AGGREGATE	
	100													614	11100	100	HOUR	LAW ENFORCEMENT OFFICER WITH PATROL CAR	14
24														614	11500	24	MONTH	WORKSITE TRAFFIC SUPERVISOR	13
					1543.75									SPECIAL	61412200	1543.75	FT	WORK ZONE GUARDRAIL	18
						4								614	12336	4	EACH	WORK ZONE IMPACT ATTENUATOR (UNIDIRECTIONAL)	
														614	12420	LUMP		DETOUR SIGNING	
20														614	12460	20	EACH	WORK ZONE MARKING SIGN	
		36												614	12470	36	EACH	WORK ZONE SPEED LIMIT SIGN	
			24											614	12484	24	EACH	WORK ZONE INCREASED PENALTIES SIGN	
			2											614	12756	2	EACH	WORK ZONE CROSSOVER LIGHTING SYSTEM	
							2488							614	12801	2488	EACH	WORK ZONE RAISED PAVEMENT MARKER, AS PER PLAN	17
500														614	13000	500	CU YD	ASPHALT CONCRETE FOR MAINTAINING TRAFFIC	
					50	3304								614	13100	3354	EACH	BARRIER REFLECTOR	
						1110								SPECIAL	61413170	1110	FT	LINEAR DELINEATION	17
					50	1199	323							614	13350	1572	EACH	OBJECT MARKER, ONE WAY	
						1170								614	13360	1170	EACH	OBJECT MARKER, TWO WAY	
		42												614	18601	42	SIGN MNTH	PORTABLE CHANGEABLE MESSAGE SIGN, AS PER PLAN	15
						26.09								614	20001	26.09	MILE	WORK ZONE LANE LINE, CLASS I, AS PER PLAN	15
						89.90								614	22001	89.90	MILE	WORK ZONE EDGE LINE, CLASS I, AS PER PLAN	15
						11374								614	23001	11374	FT	WORK ZONE CHANNELIZING LINE, CLASS I, AS PER PLAN	15
						785								614	24000	785	FT	WORK ZONE DOTTED LINE, CLASS I	
														615	10000	LUMP		ROADS FOR MAINTAINING TRAFFIC	
											103340			615	35001	103340	SQ YD	PAVEMENT FOR MAINTAINING TRAFFIC, AS PER PLAN	14
	66	526												616	10000	592	M GAL	WATER	
			3000											622	40020	3000	FT	PORTABLE CONCRETE BARRIER, 32"	
						88610								622	40031	88610	FT	PORTABLE CONCRETE BARRIER, 50", AS PER PLAN	17
						1240								622	40047	1240	FT	PORTABLE CONCRETE BARRIER, 50", BRIDGE MOUNTED, AS PER PLAN	17
														SPECIAL	10810000	LUMP		CPM PROGRESS SCHEDULE	
														614	11000	LUMP		MAINTAINING TRAFFIC	
														619	16020	24	MONTH	FIELD OFFICE, TYPE C	
														623	10000	LUMP		CONSTRUCTION LAYOUT STAKES	
														624	10000	LUMP		MOBILIZATION	

CALCULATED | CHECKED

GENERAL SUMMARY

ATB-90-14.25

Palmer ENGINEERING
PALMER ENGINEERING
11300 CORNELL PARK DR
ENGINEERING CINCINNATI, OH 45242

O:\ODOT\ATB\25199\roadway\sheets\25199GG003.dgn 6/8/2009 7:28:02 PM DENNIS

ESTIMATED QUANTITIES - REMOVALS

CALCULATED CML | CHECKED DPF

REF. NO.	SHEET NO.	STATION FROM	STATION TO	SIDE	202 - REMOVALS																	
					PAVEMENT	GUARDRAIL	ANCHOR ASSEMBLY, TYPE A	ANCHOR ASSEMBLY, TYPE E	ANCHOR ASSEMBLY (B-98)	ANCHOR ASSEMBLY, TYPE T	BRIDGE TERMINAL ASSEMBLY	CONCRETE BARRIER	PIPE, 24" AND UNDER	PIPE, OVER 24"	CATCH BASIN	MANHOLE	SPL - PLUG AND FILL EXISTING CONDUIT	GUTTER		HEADWALL	SPL - PIPE CLEANOUT (20' PER LOCATION - REMOVAL OF SEDIMENT FROM CULVERT OUTLET)	
					SY	FT	EACH	EACH	EACH	EACH	EACH	FY	FT	FT	EACH	EACH	FT	FT		EACH	FT	
R1	108	66+42.5	66+76.6	CL									34									
R2	109	74+52.2	-	RT											1							
R3	109	72+60.1	84+79.3	RT		1182					1											
R4	109-110	75+02.5	85+26.8	LT		987					1											
R5	109	81+97.0	84+91.7	RT		232	1				1											
R6	109	82+99.4	-	RT & LT										40			283			2		
R7	109	83+54.8	-	CL & RT									157		1					1		
R8	109	74+39.5	74+31.8	RT									47									
R9	110	88+44.4	-	CL & RT									156		1							
R10	110	87+23.4	90+17.9	RT & LT		232	1				1											
R11	110-111	87+35.6	105+48.3	LT		1725		1			1											
R12	110-111	86+82.8	104+62.3	RT		1729				1	1											
R13	110	95+99.7	-	RT & LT									140		1					1		
R14	111	102+49.0	-	LT										5						1		
R15	111	101+94.3	-	RT										8						1		
R16	111	103+99.3	-	CL									94		1							
R17	112	113+74.2	113+95.4	CL									19		1							
R18	112	119+86.0	119+99.6	RT									12		1							
R19	112	113+97.2	-	LT											1							
R20	112	113+98.0	-	CL												1						
R21	112	119+87.7	119+99.6	RT												1						
R22	112	120+01.0	-	LT											1							
R23	112	120+01.0	-	LT											1							
R24	112-113	119+99.6	122+61.0	RT									280		1							
R25	113	122+50.1	124+73.4	RT		22		1			1	114										
R26	113	123+66.2	125+10.8	CL		300																
R27	113	123+96.0	126+08.8	LT		36	1				1	114										
R28	115	163+18.0		LT									106		1					1		
R29	114	136+54.2	-	CL											1							
R30	114	147+97.2		CL											1							
R31	114	147+96.9	-	LT									57		1							
R32	115	152+48.9	-	CL											1							
R33	115	153+63.5	156+27.1	LT														265				
R34	115	154+72.7	158+90.8	RT		356	1				1											
R35	115	155+66.3	158+65.0	LT		249				1	1											
R36	115	155+86.0	158+82.4	RT & LT		234	1				1											
R37	115	158+26.5	-	CL									169		1							
R38	115-116	163+18.2	165+83.8	RT		216				1	1											
R39	115-116	162+69.5	165+65.8	RT & LT		234	1				1											
R40	116	165+00.1	165+77.8	RT									113		1					1		
R41	115-116	162+61.2	166+84.1	LT		348			1		1											
R42	116	169+98.8	-												1							
R43	116-117	174+81.2	182+03.6	LT		660		1		1												
R44	117	179+02.1	-	CL											1							
R45	117	187+98.0	-	CL											1							
R46	117-118	187+20.9	192+84.6	LT		514			1	1												
R47	118	195+18.2	199+84.7	RT		404		1		1												
R48	118	198+02.3	198+05.2	RT									122		1					1		
R49	119	203+06.5	210+43.1	LT		687			1	1												
R50	119	203+75.8	-	CL											1							
R51	120	223+76.3	-	CL											1							
R52	121	230+02.1	-	LT											1							
R53	121	230+01.0	-	CL												1						
R54	121	232+98.5	-	CL											1							
R55	121	236+48.4	-	CL											1							
R56	121-122	236+51.6	244+02.8	RT		689		1		1												
R57	121	238+30.0	-	LT																	20	
R58	122	238+74.6	-	CL											1							
R59	122	241+99.7	242+01.9	RT									98		1					1		
R60	122	242+01.6	248+97.0	CL									695		1							
R61	122-123	248+99.0	256+06.5	CL									707		1							
TOTALS CARRIED TO SUBSUMMARY SHEET 94					0	11036	6	5	3	8	14	228	3006	53	31	3	283	265		10	20	

ATB-90-14.25

93
437

Palmer ENGINEERING
PALMER ENGINEERING
11300 CORNELL PARK DR
CINCINNATI, OH 45242

O:\ODOT\ATB\25199\roadway\sheets\25199GS001.dgn 6/6/2009 9:02:05 AM DENNIS

ESTIMATED QUANTITIES - REMOVALS

CALCULATED CML
CHECKED

ATB-90-14.25

REF. NO.	SHEET NO.	STATION FROM	STATION TO	SIDE	202 - REMOVALS: PAVEMENT SY	GUARDRAIL FT	ANCHOR ASSEMBLY, TYPE A EACH	ANCHOR ASSEMBLY, TYPE E EACH	ANCHOR ASSEMBLY (B-98) EACH	ANCHOR ASSEMBLY, TYPE T EACH	BRIDGE TERMINAL ASSEMBLY EACH	CONCRETE BARRIER FY	PIPE, 24" AND UNDER FT	PIPE, OVER 24" FT	CATCH BASIN EACH	MANHOLE EACH	SPL - PLUG AND FILL EXISTING CONDUIT FT	GUTTER FT			HEADWALL EACH	SPL - PIPE CLEANOUT 120' PER LOCATION - REMOVAL OF SEDIMENT FROM CULVERT OUTLET) FT
R62	123	253+41.1	255+62.9	RT		19		1			1	115										
R63	123	252+79.9	255+04.2	LT		22		1			1	115										
R64	123	253+46.7	255+04.2	CL		329																
R65	112	120+00		CL									8									
R66		NOT USED																				
R67	124	273+75.0		LT									8								1	
R68	124	272+75.0	-	CL											1							
R69	124-125	273+33.2	277+86.7	LT		391		1		1												
R70	125	282+51.4	-	LT									101		1						1	
R71	125	283+06.0	287+95.6	LT		440			1	1												
R72	126	293+80.5	293+80.9	LT									129		1						1	
R73	127	302+99.0	-	CL											1							
R74	127	313+00.0	-	CL & LT									146		1						1	
R75		NOT USED		LT																		
R76	128	323+83.3	-	CL											1							
R77	129	327+11.8	329+85.0	RT		72		1			1	114										
R78	129	328+90.1	-	CL									106		1							
R79	129	329+94.8	331+38.5	CL		302																
R80	129	330+25.0	-	RT&LT										198								
R81	129	331+47.6	333+70.8	LT		22		1			1	114										
R82		NOT USED		LT																		
R83	129	334+41.4	-	CL											1							
R84	129	334+42.0	-	LT																		20
R85	130	345+00.0	-	CL											1							
R86	131	352+50.0	-	CL											1							
R87	131	359+98.1	-	CL											1							
R88	114	136+50.0	-	RT																		20
R90	244	13+89.0	14+50.0	RT		11				1	1											
R91	244	13+99.2	14+59.0	LT		22					1											
R92	244	17+50.0	18+08.8	RT		21					1											
R93	244	17+59.0	18+17.3	LT		21					1											
		PAVEMENT REMOVAL (W=24')																				
		75+00.00	84+73.63	RT	2596																	
		87+05.53	140+10.06	RT	14145																	
		143+80.10	158+72.77	RT	3980																	
		162+96.85	190+51.58	RT	7346																	
		190+77.68	267+47.36	RT	20452																	
		268+29.13	337+99.76	RT	18588																	
		338+00.59	357+00.00	RT	5065																	
		75+00.00	85+06.37	LT	2684																	
		87+39.98	140+10.06	LT	14054																	
		143+80.10	158+58.06	LT	3941																	
		162+78.93	190+51.58	LT	7394																	
		190+77.68	267+47.36	LT	20452																	
		268+29.13	337+99.76	LT	18588																	
		338+00.59	357+00.00	LT	5065																	
TOTALS THIS SHEET					144350	1672	0	5	1	3	8	458	498	198	11	0	0	0			4	40
TOTALS CARRIED FROM SUBSUMMARY SHEET 93					0	11036	6	5	3	8	14	228	3006	53	31	3	283	265			10	20
TOTALS CARRIED TO GENERAL SUMMARY					144350	12708	6	10	4	11	22	686	3504	251	42	3	283	265			14	60

Palmer ENGINEERING
PALMER ENGINEERING
11300 CORNELL PARK DR
ENGINEERING CINCINNATI, OH 45242

O:\ODOT\ATB\25199\roadway\sheets\25199GS002.dgn 6/6/2009 9:02:08 AM DENNIS

ESTIMATED QUANTITIES - GUARDRAIL

CALCULATED DPF
CHECKED CML

REF. NO.	SHEET NO.	STATION FROM	STATION TO	SIDE	606	GUARDRAIL, TYPE 5	GUARDRAIL, TYPE 5, AS PER PLAN	ANCHOR ASSEMBLY, TYPE B-98	ANCHOR ASSEMBLY, TYPE T	ANCHOR ASSEMBLY, TYPE A		BRIDGE TERMINAL ASSEMBLY, TYPE 1	BRIDGE TERMINAL ASSEMBLY, TYPE 2		448 2" ASPHALT CONCRETE INTERMEDIATE COURSE, UNDER GUARDRAIL, AS PER PLAN							
						FT	FT	EACH	EACH	EACH		EACH	EACH		CU. YD.							
G1	109	72+58.02	84+76.77	RT		1218.75						1			38							
G2	109-110	75+00.42	85+25.42	LT		1025.00							1		32							
G3	109	82+59.16	84+90.41	RT		193.75		1				1										
G4	110-111	86+86.49	104+61.49	RT		1762.50			1				1		55							
G5	110	87+20.79	88+89.54	LT		131.25		1				1										
G6	110-111	87+36.79	105+55.54	LT		1781.25		1				1			56							
G7	113	122+57.35	124+26.10	RT		131.25		1				1			5							
G8	113	123+26.00	124+63.50	MED.		100.00			1	1												
G9	113	124+06.50	125+44.00	MED.		100.00			1	1												
G10	113	124+44.90	126+13.65	LT		131.25		1				1			5							
G11	115	156+49.02	158+80.27	RT		193.75		1				1										
G12	115	157+19.89	158+88.64	RT		131.25		1				1			5							
G13	115	158+01.77	158+64.27	LT		50.00			1				1		2							
G14	115-116	162+63.28	165+07.03	LT		206.25		1				1			8							
G15	115-116	162+72.72	164+41.47	LT		131.25		1				1										
G16	115-116	162+90.68	165+65.68	RT		262.50			1				1		8							
G17	116-117	175+12.50	181+00.00	LT		537.50		1	1						18							
G18	117-118	187+12.50	192+25.00	LT		462.50		1	1						16							
G19	118	194+75.00	199+12.50	RT		387.50		1	1						14							
G20	121-122	237+00.00	243+87.50	RT		637.50		1	1						21							
G21	123	253+29.35	254+98.10	RT		131.25		1				1			5							
G22	123	253+07.50	254+57.50	MED.		112.50			1	1												
G23	123	253+87.50	255+37.50	MED.		112.50			1	1												
G24	123	253+45.90	255+14.65	LT		131.25		1				1			5							
G25	124-125	273+37.50	278+00.00	LT		412.50		1	1						14							
G26	125	283+87.50	286+50.00	LT		212.50		1	1						8							
G27	129	327+51.35	329+20.10	RT		131.25		1				1			5							
G28	129	329+49.00	329+86.50	MED.			112.50		1	1												
G29	129	330+33.00	331+83.00	MED.		112.50			1	1												
G30	129	332+10.90	333+79.65	LT		131.25		1				1			5							
G31	244	13+89.00	14+46.73	RT		56.25			1			1										
G32	244	13+99.20	14+55.57	LT		56.25						1										
G33	244	17+52.15	18+08.80	RT		56.25						1										
G34	244	17+60.99	18+17.30	LT		56.25						1										
TOTALS CARRIED TO GENERAL SUMMARY						11287.50	112.50	19	16	6		18	4		325							

ATB-90-14.25

Palmer ENGINEERING
11300 CORNELL PARK DR.
CINCINNATI, OH 45242

C:\ODOT\ATB\25199\roadway\sheets\25199GS003.dgn 6/6/2009 9:02:10 AM DENNIS

SHEET NO.	STATION		203 EXCAVATION	203 EMBANKMENT	659 SEEDING AND MULCHING
	FROM	TO	CY	CY	
133	73+00.00	75+00.00	1087	1338	1328
134	75+50.00	77+00.00	2284	2222	3409
135	77+50.00	79+00.00	2571	2821	3726
136	79+50.00	81+00.00	2826	3423	4169
137	81+50.00	82+50.00	2053	2460	3020
138	83+00.00	84+50.00	1659	2222	3178
139	84+89.85	87+22.61	107	464	857
140 *	87+50.00	89+00.00	1483	2741	3071
141	89+50.00	90+50.00	1194	3045	2989
142	91+00.00	92+00.00	1462	3185	3205
143	92+50.00	93+50.00	1533	3094	3008
144	94+00.00	95+00.00	1550	2681	2786
145 *	95+50.00	96+50.00	1680	2520	2987
146	97+00.00	98+00.00	1473	2370	3019
147	98+50.00	99+50.00	488	886	2228
148	100+00.00	101+00.00	1171	1627	2681
149	101+50.00	103+50.00	1949	3411	4010
150	104+00.00	106+50.00	426	2233	4995
151	107+00.00	109+50.00	889	1331	5901
152	110+00.00	112+50.00	1589	365	5825
153	113+00.00	115+50.00	1567	316	5678
154	116+00.00	118+50.00	2382	355	6381
155	119+00.00	121+50.00	1611	244	5934
156	122+00.00	124+50.00	5435	5	5687
157	125+00.00	126+50.00	4194	0	3981
158	127+00.00	128+00.00	3369	0	3589
159	128+50.00	129+50.00	3316	47	3819
160	130+00.00	131+50.00	4065	147	5242
161	132+00.00	133+50.00	2865	220	4783
162	134+00.00	135+50.00	2698	271	4928
163	136+00.00	137+50.00	1763	206	4177
164	138+00.00	139+50.00	509	469	3334
165	140+00.00	145+00.00	360	654	2950
166	145+50.00	147+50.00	318	1099	3762
167	148+00.00	150+00.00	1228	1699	4583
168	150+50.00	151+50.00	744	100	2861
169	152+00.00	153+00.00	1526	86	3100
170	153+50.00	154+50.00	2559	2	4767
171	155+00.00	156+00.00	2833	12	4255
172	156+50.00	158+50.00	1234	295	3922
173 *	158+65.38	162+87.84	232	675	643
174 *	163+00.00	165+50.00	2151	1519	5108
175	166+00.00	168+00.00	1747	2	3865
176	168+50.00	169+50.00	1222	0	2833
177	170+00.00	171+50.00	1469	1	3745
178	172+00.00	173+50.00	1371	6	3502
179	174+00.00	175+50.00	1337	244	4125
		COLUMN TOTALS	83589	53113	177946

SHEET NO.	STATION		203 EXCAVATION	203 EMBANKMENT	659 SEEDING AND MULCHING
	FROM	TO	CY	CY	
180	176+00.00	178+00.00	1327	81	3394
181	178+50.00	180+00.00	1147	321	2910
182	180+50.00	183+00.00	2541	1599	5040
183	183+50.00	186+00.00	1903	928	4562
184	186+50.00	189+00.00	1961	346	4146
185	189+50.00	192+00.00	1361	166	4453
186	192+50.00	195+00.00	1065	144	3810
187	195+50.00	198+00.00	934	353	3461
188	198+50.00	201+00.00	838	307	3336
189	201+50.00	204+50.00	852	410	3900
190	205+00.00	207+50.00	1600	1472	5215
191	208+00.00	210+50.00	1381	845	5209
192	211+00.00	213+50.00	805	698	4822
193	214+00.00	216+50.00	1069	437	4833
194	217+00.00	219+50.00	1219	625	4967
195	220+00.00	222+50.00	1028	463	4728
196	223+00.00	226+00.00	1205	249	4326
197	226+50.00	229+00.00	1040	238	3748
198	229+50.00	232+00.00	1249	172	3851
199	232+50.00	235+00.00	1384	208	4072
200	235+50.00	238+00.00	1389	136	4318
201	238+50.00	241+00.00	1196	107	3758
202	241+50.00	244+00.00	1094	129	3308
203	244+50.00	247+00.00	1118	202	3484
204	248+00.00	250+00.00	2049	363	4145
205	250+50.00	252+50.00	2549	75	4602
206	253+00.00	254+50.00	3725	42	3875
207	255+00.00	256+50.00	4718	12	3866
208	257+00.00	259+00.00	4572	0	4367
209	259+50.00	262+00.00	3506	0	5213
210	262+50.00	265+00.00	2016	42	4442
211	265+50.00	268+50.00	1640	179	5073
212	269+00.00	271+50.00	1198	210	4414
213	272+00.00	274+50.00	1226	208	4269
214	275+00.00	277+50.00	1570	91	4219
215	278+00.00	280+50.00	2355	17	4878
216	281+00.00	283+50.00	2961	41	5556
217	284+00.00	286+50.00	2572	94	5578
218	287+00.00	289+50.00	2604	23	6573
219	290+00.00	292+50.00	3594	53	6947
220	293+00.00	295+00.00	2871	83	5581
221 *	295+50.00	298+00.00	2820	55	6297
222	298+50.00	301+00.00	2218	64	4905
223	301+50.00	304+00.00	1339	159	4190
224	304+50.00	307+00.00	1062	125	3482
225	307+50.00	310+00.00	1065	153	3622
		COLUMN TOTALS	84936	12725	205745

SHEET NO.	STATION		203 EXCAVATION	203 EMBANKMENT	659 SEEDING AND MULCHING
	FROM	TO	CY	CY	
226	310+50.00	313+00.00	1720	121	5256
227	313+50.00	316+00.00	1259	106	3850
228	316+50.00	319+00.00	1009	117	3214
229	319+50.00	322+00.00	942	129	3322
230	322+50.00	325+00.00	986	85	3241
231	325+50.00	328+00.00	2000	27	4147
232	328+50.00	330+50.00	4550	30	3937
233	331+00.00	333+00.00	3447	88	4500
234	333+50.00	336+00.00	1471	42	3918
235	336+50.00	339+00.00	1567	59	4819
236	339+50.00	341+00.00	1024	56	3244
237 *	341+50.00	343+00.00	1125	35	3808
238	343+50.00	345+00.00	845	73	2549
239 *	345+50.00	347+50.00	996	47	2938
240 *	348+00.00	350+50.00	1357	8	3506
241	351+50.00	353+00.00	1239	92	4437
242	354+00.00	356+50.00	880	83	3366
243	357+00.00	358+50.00	137	30	858
	PLYMOUTH ROAD				
245	12+50.00	13+50.00	26	3	67
246	14+38.95	17+38.17	161	59	198
247	17+63.77	19+00.00	107	98	241
		COLUMN TOTALS	26848	1388	65416

TOTALS CARRIED TO GENERAL SUMMARY		
203 - EXCAVATION	195373	CU. YD.
203 - EMBANKMENT	67226	CU. YD.
659 - SEEDING AND MULCHING	449107	SQ. YD.
659- REPAIR SEEDING AND MULCHING	22455	SQ. YD.
659 - INTER-SEEDING	22455	SQ. YD.
659 - TOPSOIL	49851	CU. YD.
659 - SOIL ANALYSIS TEST	5	EACH
659 -COMMERCIAL FERTILIZER	62.65	TON
659 - LIME	92.79	ACRE
659 - WATER	2486	M GAL
659 - MOWING	112	M SF

FOR ADDITIONAL EROSION PROTECTION AT MAINLINE BRIDGES, SEE SHEET 99

(###) = Circled #'s have been revised to reflect the correct total

* = The sheet totals for these sheets are correct as shown here, but are not correct on the individual sheet.

CALCULATED DPF CHECKED

ESTIMATED QUANTITIES - EARTHWORK AND SEEDING

ATB-90-14.25

96/437

PALMER ENGINEERING
11300 CORNELL PARK DR
CINCINNATI, OH 45242

O:\ODOT\ATB\25199\roadway\sheets\25199GSOOA.dgn 9/14/2009 3:15:45 PM don-f

ESTIMATED QUANTITIES - DRAINAGE

CALCULATED DPF
CHECKED

REF. NO.	SHEET NO.	STATION FROM	STATION TO	SIDE	602	601		603																	604				
					CONCRETE MASONRY	ROCK CHANNEL PROTECTION, TYPE B, WITH FILTER	ROCK CHANNEL PROTECTION, TYPE C, WITH FILTER	12" CONDUIT, TYPE B	12" CONDUIT, TYPE C	12" CONDUIT, TYPE F, 707.05 (TYPE C), OR 707.21	15" CONDUIT, TYPE B	15" CONDUIT, TYPE C	15" CONDUIT, TYPE C, 706.02	15" CONDUIT, TYPE F, 707.05 (TYPE C), OR 707.21	18" CONDUIT, TYPE B	18" CONDUIT, TYPE C	18" CONDUIT, TYPE C, 706.02	21" CONDUIT, TYPE B		21" CONDUIT, TYPE C, 706.02	21" CONDUIT, TYPE F, 707.05 (TYPE C), OR 707.21	24" CONDUIT, TYPE B	24" CONDUIT, TYPE C	24" CONDUIT, TYPE C, 706.02	24" CONDUIT, TYPE F, 707.05 (TYPE C), OR 707.21	30" CONDUIT, TYPE C, 706.02	CATCH BASIN, TYPE 3A	CATCH BASIN, TYPE 3	CATCH BASIN, TYPE 4	CATCH BASIN, TYPE 5	MANHOLE, TYPE 3
					CY	CY	CY	FT	FT	FT	FT	FT	FT	FT	FT	FT	FT	FT		FT	FT	FT	FT	FT	FT	FT	EACH	EACH	EACH	EACH	EACH
D1	109	74+51.60		RT									4															1		
D2	109	74+39.50	74+31.80	RT	0.27		1.3							47																	
D3	109	81+82.66		RT	0.27		1.3							90														1			
D4	109	82+31.32		LT	0.27		1.3							87														1			
D5	110	89+80.60		RT	0.27		1.3							88														1			
D6	110	90+30.90		LT	0.27		1.3							85														1			
D7	110	96+00.00		RT	0.27		1.3				84			72															1		
D8	111	104+00.00		RT	0.33		1.3								109														1		
D9	112	113+75.00		CL												23													1		
D10	112	113+98.00		LT																			4	4		4					1
D11	112	113+97.20		LT																			4	4						1	
D12	112	120+01.00		LT																			4	4	4					1	
D13	112	120+00.90		LT																			4	4	4				1		
D14	112	119+86.00		RT								15																		1	
D15	112	119+99.60		RT																			4	4		4					1
D16	113	122+75.00		CL								101																	1		
D17	113	123+75.00		LT												225															1
D18	113	123+50.00		LT							78																			1	
D19	113	126+00.00		CL																				600					1		
D20	113	132+00.00		CL																			439						1		
D21	114	136+39.00		CL	0.46		1.3															117							1		
D22	114	147+97.20		CL																			4	4					1		
D23	114	147+95.00		LT		59																			57					1	
D24	114	147+96.90		LT																			4	4						1	
D25	115	152+48.90		CL																			8	8					1		
D26	115	153+75.00		LT			53																								
D27	115	157+81.00		RT	0.27		1.3					30																1			
D28	115	157+81.00		LT	0.27		1.3					10		104														1			
D29	115	158+34.00		CL	0.46																		40	4	98				1		
D30	115	163+18.00		LT	0.46		1.3													4		84			42				1		
D31	116	165+75.00		RT	0.27		1.3					13		82															1		
D32	116	169+98.80		CL													4			4									1		
D33	117	179+02.10		CL									4				4												1		
D34	117	187+98.00		CL									4																1		
D35	118	198+03.20		RT	0.39		2.7						4					81			59								1		
D36	119	203+75.80		CL									4																1		
D37	120	223+76.30		CL									4																1		
D38	121	230+01.00		LT									8				4														1
D39	121	230+01.00		LT									4																	1	
D40	121	232+98.50		CL													4			4									1		
D41	121	236+48.40		CL																8									1		
D42	122	238+74.60		CL																8									1		
D43	122	242+00.00		RT	0.46		1.3															76			27				1		
D44	122	248+99.00		CL																		695							1		
D45	123	253+50.00		LT																			451								1
D46	123	253+50.00		LT							84																		1		
D47	123	256+00.00		CL												250													1		
D48	123	256+00.00		RT							94																		1		
D49	124	272+75.00		CL													4												1		
D50	124	273+75.00		LT	0.33		1.3										8														
TOTALS CARRIED TO SUBSUMMARY, SHEET 98					5.3	59	74	0	0	0	340	169	36	655	109	498	28	81		28	59	972	966	640	232	8	0	6	29	7	5

ATB-90-14.25

Palmer ENGINEERING
PALMER ENGINEERING
11300 CORNELL PARK DR.
CINCINNATI, OH 45242

C:\ODOT\ATB\25199\roadway\sheets\25199GS005.dgn 6/6/2009 9:02:17 AM DENNIS

ESTIMATED QUANTITIES - DRAINAGE

CALCULATED DPF
CHECKED

REF. NO.	SHEET NO.	STATION FROM	STATION TO	SIDE	602	601		603																		604				
					CONCRETE MASONRY	ROCK CHANNEL PROTECTION, TYPE B, WITH FILTER	ROCK CHANNEL PROTECTION, TYPE C, WITH FILTER	12" CONDUIT, TYPE B	12" CONDUIT, TYPE C	12" CONDUIT, TYPE F, 707.05 (TYPE C), OR 707.21	15" CONDUIT, TYPE B	15" CONDUIT, TYPE C	15" CONDUIT, TYPE C, 706.02	15" CONDUIT, TYPE F	18" CONDUIT, TYPE B	18" CONDUIT, TYPE C	18" CONDUIT, TYPE C, 706.02	21" CONDUIT, TYPE B		21" CONDUIT, TYPE C, 706.02	21" CONDUIT, TYPE F	24" CONDUIT, TYPE B	24" CONDUIT, TYPE C	24" CONDUIT, TYPE C, 706.02	24" CONDUIT, TYPE F	30" CONDUIT, TYPE C, 706.02	CATCH BASIN, TYPE 3A	CATCH BASIN, TYPE 3	CATCH BASIN, TYPE 4	CATCH BASIN, TYPE 5	MANHOLE, TYPE 3
					CY	CY	CY	FT	FT	FT	FT	FT	FT	FT	FT	FT	FT	FT		FT	FT	FT	FT	FT	FT	FT	EACH	EACH	EACH	EACH	EACH
D51	125	282+50.00		LT	0.33		1.3								102													1		
D52	126	293+80.00		LT	0.33		1.3								129													1		
D53	127	302+99.00		CL									4															1		
D54	127	302+98.30		LT									8															1		
D55	127	313+00.00		RT	0.33		1.3								151													1		
D56	128	323+83.00		CL									4															1		
D57	129	328+90		CL	0.27		1.3						110															1		
D58	112	120+00.00		CL																				8				1		
D59	129	334+41.40		CL									4															1		
D60	130	345+00.50		CL									4															1		
D61	131	352+50.30		CL									4															1		
D80	244	14+33.50	PLYMOUTH RD	LT	0.21		1.3		46	32																	1				
D81	244	14+25.00	PLYMOUTH RD	RT				34																			1				
D82	244	17+74.00	PLYMOUTH RD	RT				34																			1				
D83	244	17+83.00	PLYMOUTH RD	LT						35																	1				
TOTALS THIS SHEET					1.5	0	7	68	46	67	0	0	138	0	382	0	0	0		0	0	0	0	8	0	0	4	0	11	0	0
TOTALS FROM SUBSUMMARY, SHEET 97					5.3	59	74	0	0	0	340	169	36	655	109	498	28	81		28	59	972	966	640	232	8	0	6	29	7	5
TOTALS CARRIED TO GENERAL SUMMARY					6.8	59	81	68	46	67	340	169	174	655	491	498	28	81		28	59	972	966	648	232	8	4	6	40	7	5

ATB-90-14.25

Palmer ENGINEERING
PALMER ENGINEERING
11300 CORNELL PARK DR
CINCINNATI, OH 45242

C:\ODOT\ATB\25199\roadway\sheets\25199GS006.dgn 6/6/2009 9:02:19 AM DENNIS

DITCH EROSION CONTROL SUBSUMMARY

REF. NO.	SHEET NO.	STATION FROM	STATION TO	SIDE	LENGTH	WIDTH	670 - DITCH EROSION PROTECTION MAT TYPE A	TYPE F	TYPE G		
							SY	SY	SY		
EC1	109	74+57.00	84+88.00	CL	1031	12	1375				
EC2	110	87+20.00	95+95.00	CL	875	12	1167				
EC3	110-111	96+00.00	103+94.00	CL	794	12	1059				
EC4	111	105+50.00	108+18.00	RT	275	13.5	413				
EC5	111-112	108+00.00	119+85.00	RT	1185	13.5	1778				
EC6	114	139+00.00	146+75.00	RT	775	9			775		
EC7	114-115	146+75.00	156+40.00	RT	965	13.5			1448		
EC8	115	152+50.00	156+30.00	LT	380	15	633				
EC9	115-116	163+23.00	169+98.00	CL	675	17		1275			
EC10	116-117	165+80.00	181+50.00	RT	1570	17		2966			
EC11	117	179+07.00	187+00.00	CL	793	12	1057				
EC12	117-118	186+00.00	193+00.00	RT	700	13.5	1050				
EC13	117-118	188+03.00	198+03.00	CL	1000	12	1333				
EC14	121	232+25.00	235+50.00	LT	330	17	623				
EC15	124	269+00.00	273+00.00	RT	400	13.5	600				
EC16	124-125	272+77.00	282+49.00	CL	972	12	1296				
EC17	125-126	277+98.00	293+40.00	RT	1542	20	3427				
EC18	126	288+62.00	293+00.00	LT	438	7.5	365				
EC19	126	293+90.00	300+50.00	RT	660	20	1467				
EC20	126-127	293+80.00	302+94.00	CL	914	12	1219				
EC21	130	340+50.00	343+00.00	RT	250	13.5	375				
TOTALS CARRIED TO GENERAL SUMMARY							19237	4241	2223		

SLOPE EROSION CONTROL SUBSUMMARY

LOCATION	SHEET NO.	STATION FROM	STATION TO	SIDE	PLAN AREA	670 SLOPE EROSION PROTECTION MAT
					SF	SY
BRIDGE ATB-90-14.50						
RT. BRIDGE - REAR RT.	109	84+77.00	84+97.00	RT	290	32
RT. BRIDGE - FWD RT.	110	86+66.00	86+86.00	RT	290	32
LT. BRIDGE - REAR LT.	110	85+25.00	85+45.00	LT	290	32
LT. BRIDGE - FWD LT.	110	87+17.00	87+37.00	LT	290	32
BRIDGE ATB-90-14.50						
REAR RT.	133	14+45.00	14+92.00	RT	1670	186
FWD RT.	133	17+00.00	17+37.00	RT	880	98
REAR LT.	133	14+53.50	15+04.00	LT	1630	181
FWD LT.	133	17+12.00	17+53.00	LT	840	93
BRIDGE ATB-90-15.83						
RT. BRIDGE - REAR RT.	244	158+89.00	159+09.00	RT	290	32
RT. BRIDGE - FWD RT.	244	162+72.00	162+92.00	RT	290	32
LT. BRIDGE - REAR LT.	244	158+65.00	158+85.00	LT	290	32
LT. BRIDGE - FWD LT.	244	162+14.00	162+62.00	LT	2000	222
TOTALS CARRIED TO GENERAL SUMMARY						1004

CULVERT SUBSUMMARY

SHEET NO.	CULVERT LOCATION	503 COFFERDAMS, CRIBS AND SHEETING (FOR CULVERT)	503 UNCLASSIFIED EXCVATION	509 EPOXY COATED REINFORCING STEEL	511 CLASS C CONCRETE, (RETAINING WALL OR WINGWALL)	512 SEALING OF CONCRETE SURFACES (EPOXY-URETHANE)	512 TYPE 2 WATERPROOFING	516 1" PREFORMED EXPANSION JOINT FILLER	518 POROUS BACKFILL WITH FILTER FABRIC		601 ROCK CHANNEL PROTECTION, WITH FILTER, TYPE B	601 ROCK CHANNEL PROTECTION, WITH FILTER, TYPE C	602 CONCRETE MASONRY	603 42" TYPE A	603 BORED AND JACKED 42" TYPE A	603 60" TYPE A, 706.02	603 8" X 4" CONDUIT, TYPE A, 706.05
		LUMP	LUMP	LB	CY	SY	SY	SF	CY		CY	CY	CY	FT	FT	FT	FT
270	82+50.00											6	13.4	36	270		
271	102+22.35										19		24.8			32	
272	330+25.00	1	1	2836	34	63	509	26	8		79						208
TOTALS CARRIED TO GENERAL SUMMARY		1	1	2836	34	63	509	26	8		98	6	38.2	36	270	32	208

CALCULATED DPF CHECKED CML

ESTIMATED QUANTITIES - EROSION CONTROL CULVERT SUMMARY

ATB-90-14.25

99 / 437

PALMER ENGINEERING 11300 CORNELL PARK DR ENGINEERING CINCINNATI, OH 45242

O:\ODOT\ATB\25199\roadway\sheets\25199GS007.dgn 6/6/2009 9:02:21 AM DENNIS

ESTIMATED QUANTITIES - UNDERDRAINS

CALCULATED CML
CHECKED DPF

REF. NO.	SHEET NO.	STATION FROM	STATION TO	SIDE	603 6" CONDUIT, TYPE B FT.	603 6" CONDUIT, TYPE F FT.	603	604 PRECAST REINFORCED CONCRETE OUTLET EACH	601 TIED CONCRETE BLOCK MAT, TYPE 1 SY	605 6" SHALLOW PIPE UNDERDRAIN FT.	605 6" BASE PIPE UNDERDRAIN FT.	605 6" UNCLASSIFIED UNDERDRAIN FT.	605	TRENCH DEPTH UNCLASSIFIED UNDERDRAIN - BEGIN STATION INCHES	TRENCH DEPTH UNCLASSIFIED UNDERDRAIN - END STATION INCHES	BENDS & BRANCHES FOR INFORMATION ONLY 6" TEE EA.	6" WYE EA.	6" CROSS EA.	6" X 45° BEND EA.	6" X 90° BEND EA.	EA.	EA.	SEE DETAIL	REMARKS
UD-1	109	75+01.00	84+64.00	RT		23		1	2		963			18		1			1				E	OUTLET AT CB-3
UD-2	109	75+01.00	84+67.00	RT	10					966				30						1			E	(DETAIL L)
UD-3	109	74+80.00	84+77.00	RT		40				997				30					1				D	
UD-4	109	74+90.00	84+98.00	LT		55				1,008				30					1				D	
UD-5	109-110	75+01.00	85+09.00	LT	10					1,008				30						1			E	(DETAIL L)
UD-6	109-110	75+01.00	85+12.00	LT		23		1	2		1,011			18		1			1				E	OUTLET AT CB-3
UD-7	110	86+99.00	96+00.00	RT		22		1	2		901			18		1	1		1				A	OUTLET AT CB-3
UD-8	110	87+03.00	96+00.00	RT	12					897				30		1							A	
UD-9	110	87+13.00	96+00.00	RT		33				887				30		1							B	
UD-10	110	87+36.00	96+00.00	LT		33				864				30		1							B	
UD-11	110	87+47.00	96+00.00	LT	12					853				30		1							A	(DETAIL L)
UD-12	110	87+51.00	96+00.00	LT		22		1	2		849			18		1	1		1				A	OUTLET AT CB-3
UD-13	110-111	96+00.00	103+99.00	RT		13		1	2		799			18		1	1		1				A	
UD-14	110-111	96+00.00	103+99.00	RT	12					799				30		1							A	
UD-15	110-111	96+00.00	103+99.00	RT		44				799				30		1							B	
UD-16	110-111	96+00.00	103+99.00	LT		20				799				30		1							B	
UD-17	110-111	96+00.00	103+99.00	LT	12					799				30		1							A	
UD-18	110-111	96+00.00	103+99.00	LT		14		1	2		799			18		1	1		1				A	
UD-19	111-112	103+99.00	114+00.00	RT	12						1,001			18		1							C	
UD-20	111-112	103+99.00	114+00.00	RT	28					1,001				30				1					C	
UD-21	111-112	103+99.00	114+00.00	RT		36				1,001				30		1	1		1				C	
UD-22	111-112	103+99.00	114+00.00	LT		30				1,001				30		1							B	
UD-23	111-112	103+99.00	114+00.00	LT	12					1,001				30		1							A	
UD-24	111-112	103+99.00	114+00.00	LT		25					1,001			18		1	1		1				A	
UD-25	112-113	114+00.00	125+13.00	RT	12						1,113			18		1							F	
UD-26	112-113	114+00.00	125+13.00	RT	28					1,113				30				1					F	
UD-27	112-113	114+00.00	125+13.00	RT		100				1,113				30		1	1		2				F	
UD-28	112-113	114+00.00	125+13.00	LT		100				1,113				30		1	1		2				F	
UD-29	112-113	114+00.00	125+13.00	LT	28					1,113				30				1					F	
UD-30	112-113	114+00.00	125+13.00	LT	12						1,113			18		1							F	
UD-31	113	125+13.00	129+04.40	RT							391			18										
UD-32	113	125+13.00	129+04.40	RT						391				30										
UD-33	113	125+13.00	129+04.40	RT						391				30										
UD-34	113	125+13.00	129+04.40	LT						391				30										
UD-35	113	125+13.00	129+04.40	LT						391				30										
UD-36	113	125+13.00	129+04.40	LT							391			18										
UD-37	113-114	129+04.40	136+50.00	RT		32		1	2		746			18		1	1		1				A	HIGH POINT
UD-38	113-114	129+04.40	136+50.00	RT	12					746				30		1							A	129+04.40
UD-39	113-114	129+04.40	136+39.00	RT		33				735				30		1							B	
UD-40	113-114	129+04.40	136+39.00	LT		33				735				30		1							B	
UD-41	113-114	129+04.40	136+50.00	LT	12					746				30		1							A	
UD-42	113-114	129+04.40	136+50.00	LT		25		1	2		746			18		1	1		1				A	
UD-43	114	136+50.00	147+97.00	RT	12						1,147			18		1							F	
UD-44	114	136+50.00	147+97.00	RT	28					1,147				30				1					F	
UD-45	114	136+54.00	147+97.00	RT		33				1,143				30		1	1		1				F	
UD-46	114	136+39.00	147+97.00	LT		33				1,158				30		1							B	
UD-47	114	136+39.00	147+97.00	LT	12					1,158				30		1							A	
UD-48	114	136+50.00	147+97.00	LT		19					1,147			18		1	1		1				A	
UD-49	114-115	147+97.00	157+81.00	RT							984			18									K	OUTLET @ CB
UD-50	114-115	147+97.00	157+81.00	RT	12					984				30		1							K	
UD-51	114-115	147+97.00	157+81.00	RT		65				984				30			1		1				H	
UD-52	114-115	147+97.00	157+81.00	LT		65				984				30			1		1				H	
UD-53	114-115	147+97.00	157+81.00	LT	12					984				30		1							K	
UD-54	114-115	147+97.00	157+81.00	LT							984			18									K	
UD-55	115	157+81.00	158+75.00	RT							94			18										
UD-56	115	157+81.00	158+73.00	RT						92				30										
UD-57	115	157+81.00	158+68.00	RT						87				30										
UD-58	115	157+81.00	158+60.00	LT						79				30										
UD-59	115	157+81.00	158+54.00	LT						73				30										
UD-60	115	157+81.00	158+52.00	LT							71			18										
TOTALS CARRIED TO SUBSUMMARY SHEET 103					300	971		8	16	32,531	16,251	0												

ATB-90-14.25

Palmer ENGINEERING
PALMER ENGINEERING
11300 CORNELL PARK DR
CINCINNATI, OH 45242

C:\ODOT\ATB\25199\roadway\sheets\25199GS008.dgn 6/6/2009 9:02:24 AM DENNIS

ESTIMATED QUANTITIES - UNDERDRAINS

CALCULATED CML | CHECKED DPF

REF. NO.	SHEET NO.	STATION FROM	STATION TO	SIDE	603 6" CONDUIT, TYPE B FT.	603 6" CONDUIT, TYPE F FT.		604 PRECAST REINFORCED CONCRETE OUTLET EACH	601 TIED CONCRETE BLOCK MAT, TYPE 1 SY	605 6" SHALLOW PIPE UNDERDRAIN FT.	605 6" BASE PIPE UNDERDRAIN FT.	605 6" UNCLASSIFIED UNDERDRAIN FT.		TRENCH DEPTH INCHES	UNCLASSIFIED UNDERDRAIN - BEGIN STATION INCHES	UNCLASSIFIED UNDERDRAIN - END STATION INCHES	BENDS & BRANCHES FOR INFORMATION ONLY 6" TEE EA.	6" WYE EA.	6" CROSS EA.	6" X 45° BEND EA.	6" X 90° BEND EA.			SEE DETAIL	REMARKS
UD-61	115	162+94.00	163+17.00	RT								23			27	30								
UD-62	115	162+84.00	163+18.00	LT								34			26	30								
UD-63	115-116	163+03.00	169+99.00	RT		60		1	2		696			18			1			1				E
UD-64	115-116	163+03.00	169+99.00	RT	12					696				30							1			E
UD-65	115-116	163+18.00	169+99.00	RT		33				681				30			1							B
UD-66	115-116	163+18.00	169+99.00	LT		33				681				30			1							B
UD-67	115-116	162+78.00	169+99.00	LT	12					721				30							1			E
UD-68	115-116	162+78.00	169+99.00	LT		14		1	2		721			18			1			1				E
UD-69	116-117	169+99.00	179+02.00	RT	12						903			18			1							G
UD-70	116-117	169+99.00	179+02.00	RT	28					903				30					1					G
UD-71	116-117	169+99.00	179+02.00	RT		33				903				30			1	1		1				G
UD-72	116-117	169+99.00	179+02.00	LT		33				903				30			1	1		1				G
UD-73	116-117	169+99.00	179+02.00	LT	28					903				30					1					G
UD-74	116-117	169+99.00	179+02.00	LT	12						903			18			1							G
UD-75	117	179+02.00	187+98.00	RT	12						896			18			1							G
UD-76	117	179+02.00	187+98.00	RT	28					896				30					1					G
UD-77	117	179+02.00	187+98.00	RT		33				896				30			1	1		1				G
UD-78	117	179+02.00	187+98.00	LT		33				896				30			1							B
UD-79	117	179+02.00	187+98.00	LT	12					896				30			1							A
UD-80	117	179+02.00	187+98.00	LT		14		1	2		896			18			1	1		1				A
UD-81	117-118	187+98.00	198+03.00	RT	12						1,005			18			1							G
UD-82	117-118	187+98.00	198+03.00	RT	28					1,005				30					1					G
UD-83	117-118	187+98.00	198+03.00	RT		33				1,005				30			1	1		1				G
UD-84	117-118	187+98.00	198+03.00	LT		33				1,005				30			1							B
UD-85	117-118	187+98.00	198+03.00	LT	12					1,005				30			1							A
UD-86	117-118	187+98.00	198+03.00	LT		12		1	2		1,005			18			1	1		1				A
UD-87	118-119	198+03.00	204+00.00	RT		12		1	2		597			18			1	1		1				A
UD-88	118-119	198+03.00	204+00.00	RT	12					597				30			1							A
UD-89	118-119	198+03.00	203+76.00	RT		33				573				30			1							B
UD-90	118-119	198+03.00	203+76.00	LT		33				573				30			1	1		1				G
UD-91	118-119	198+03.00	204+00.00	LT	28					597				30					1					G
UD-92	118-119	198+03.00	204+00.00	LT	12					597	597			18			1							G
UD-93	119-120	204+00.00	213+77.70	RT		44		1	2		978			18			1	1		1				A
UD-94	119-120	204+00.00	213+77.70	RT	12					978				30			1							A
UD-95	119-120	203+76.00	213+77.70	RT		33				1,002				30			1							B
UD-96	119-120	203+76.00	213+77.70	LT		33				1,002				30			1							B
UD-97	119-120	204+00.00	213+77.70	LT	12					978				30			1							A
UD-98	119-120	204+00.00	213+77.70	LT		27		1	2		978			18			1	1		1				A
UD-99	120	213+79.70	223+76.00	RT	12						996			18			1							C	HIGH POINT
UD-100	120	213+79.70	223+76.00	RT	28					996				30					1					C	213+77.70
UD-101	120	213+79.70	223+76.00	RT		33				996				30			1	1		1				C	
UD-102	120	213+79.70	223+76.00	LT		33				996				30			1	1		1				C	
UD-103	120	213+79.70	223+76.00	LT	28					996				30					1					C	
UD-104	120	213+79.70	223+76.00	LT	12						996			18			1							C	
UD-105	120-121	223+76.00	232+99.00	RT	12						923			18			1							C	
UD-106	120-121	223+76.00	232+99.00	RT	28					923				30					1					C	
UD-107	120-121	223+76.00	232+99.00	RT		33				923				30			1	1		1				C	
UD-108	120-121	223+76.00	232+99.00	LT		33				923				30			1	1		1				G	
UD-109	120-121	223+76.00	232+99.00	LT	28					923				30					1					G	
UD-110	120-121	223+76.00	232+99.00	LT	12						923			18			1							G	
UD-111	121-122	232+99.00	238+77.00	RT		15		1	2		578			18			1	1		1				A	
UD-112	121-122	232+99.00	238+77.00	RT	12					578				30			1							A	
UD-113	121-122	232+99.00	238+77.00	RT		33				578				30			1							B	
UD-114	121-122	232+99.00	238+77.00	LT		33				578				30			1							B	
UD-115	121-122	232+99.00	238+77.00	LT	12					578				30			1							A	
UD-116	121-122	232+99.00	238+77.00	LT		34		1	2		578			18			1	1		1				A	
UD-117	122	238+77.00	248+99.00	RT							1,022			18											TRANSITION
UD-118	122	238+77.00	248+99.00	RT						1,022				30											AT LOW POINT
UD-119	122	238+77.00	248+99.00	RT						1,022				30											(SHARED CONDUIT)
UD-120	122	238+77.00	248+99.00	LT						1,022				30											
TOTALS CARRIED TO SUBSUMMARY SHEET 103					**468**	**826**		**9**	**18**	**33,946**	**16,191**	**57**													

ATB-90-14.25

Palmer ENGINEERING
PALMER ENGINEERING
11300 CORNELL PARK DR.
CINCINNATI, OH 45242

C:\ODOT\ATB\25199\roadway\sheets\25199GS009.dgn 6/6/2009 9:02:27 AM DENNIS

ESTIMATED QUANTITIES - UNDERDRAINS

CALCULATED CML
CHECKED DPF

REF. NO.	SHEET NO.	STATION FROM	STATION TO	SIDE	603 6" CONDUIT, TYPE B FT.	603 6" CONDUIT, TYPE F FT.		604 PRECAST REINFORCED CONCRETE OUTLET EACH	601 TIED CONCRETE BLOCK MAT, TYPE 1 SY	605 6" SHALLOW PIPE UNDERDRAIN FT.	605 6" BASE PIPE UNDERDRAIN FT.	605 6" UNCLASSIFIED UNDERDRAIN FT.		TRENCH DEPTH INCHES	UNCLASSIFIED UNDERDRAIN - BEGIN STATION INCHES	UNCLASSIFIED UNDERDRAIN - END STATION INCHES	BENDS & BRANCHES FOR INFORMATION ONLY 6" TEE EA.	6" WYE EA.	6" CROSS EA.	6" X 45° BEND EA.	6" X 90° BEND EA.			SEE DETAIL	REMARKS
UD-121	122	238+77.00	248+99.00	LT						1,022				30										
UD-122	122	238+77.00	248+99.00	LT							1,022			18										
UD-123	122-123	248+99.00	256+60.00	RT	12						761			18			1							C	
UD-124	122-123	248+99.00	256+60.00	RT	28					761				30					1					C	
UD-125	122-123	248+99.00	256+00.00	RT		33				701				30			1	1		1				C	
UD-126	122-123	248+99.00	256+00.00	LT		33				701				30			1	1		1				G	
UD-127	122-123	248+99.00	253+50.00	LT	28					451				30					1					G	
UD-128	122-123	248+99.00	253+50.00	LT	12						451			18			1							G	
UD-129	123	256+00.00	262+96.60	RT		18					697			18			1	1		1				A	262+96.60
UD-130	123	256+00.00	262+96.60	RT	12					697				30			1							A	UD H.P
UD-131	123	256+00.00	262+96.60	RT		33				697				30			1							B	"
UD-132	123	256+00.00	262+96.60	LT		33				697				30			1							B	"
UD-133	123	253+50.00	262+96.60	LT	12					947				30			1							A	"
UD-134	123	253+50.00	262+96.60	LT		18					947			18			1	1		1				A	"
UD-135	123-124	262+96.60	272+75.00	RT	12						978			18			1							G	HIGH POINT
UD-136	123-124	262+96.60	272+75.00	RT	28					978				30					1					G	
UD-137	123-124	262+96.60	272+75.00	RT		33				978				30			1	1		1				G	
UD-138	123-124	262+96.60	272+75.00	LT		33				978				30			1							B	
UD-139	123-124	262+96.60	273+00.00	LT	12					1,003				30			1							A	
UD-140	123-124	262+96.60	273+00.00	LT		22		1	2		1,003			18			1	1		1				A	
UD-141	124-125	272+75.00	282+50.00	RT		33		1	2		975			18			1	1		1				A	
UD-142	124-125	272+75.00	282+50.00	RT	12					975				30			1							A	
UD-143	124-125	272+75.00	282+50.00	RT		33				975				30			1							B	
UD-144	124-125	272+75.00	282+50.00	LT		33				975				30			1							B	
UD-145	124-125	273+00.00	282+50.00	LT	12					950				30			1							A	
UD-146	124-125	273+00.00	282+50.00	LT		23		1	2		950			18			1	1		1				A	
UD-147	125-126	282+50.00	292+50.00	RT		37		1	2		1,000			18			1	1		1				A	
UD-148	125-126	282+50.00	292+50.00	RT	12					1,000				30			1							A	
UD-149	125-126	282+50.00	293+80.00	RT		33				1,130				30			1							B	
UD-150	125-126	282+50.00	293+80.00	LT		33				1,130				30			1							B	
UD-151	125-126	282+50.00	293+80.00	LT	12					1,130				30			1							A	
UD-152	125-126	282+50.00	293+80.00	LT		48		1	2		1,130			18			1	1		1				A	
UD-153	126-127	292+50.00	302+99.00	RT		42		1	2		1,049			18			1	1		1				A	
UD-154	126-127	292+50.00	302+99.00	RT	12					1,049				30			1							A	
UD-155	126-127	293+80.00	302+99.00	RT		33				919				30			1							B	
UD-156	126-127	293+80.00	302+99.00	LT		33				919				30			1							B	
UD-157	126-127	293+80.00	302+99.00	LT	12					919				30			1							A	
UD-158	126-127	293+80.00	302+99.00	LT		24		1	2		919			18			1	1		1				A	
UD-159	127	302+99.00	313+00.00	RT		24		1	2		1,001			18			1	1		1				A	
UD-160	127	302+99.00	313+00.00	RT	12					1,001				30			1							A	
UD-161	127	302+99.00	313+00.00	RT		33				1,001				30			1							B	
UD-162	127	302+99.00	313+00.00	LT		33				1,001				30			1							B	
UD-163	127	302+99.00	313+00.00	LT	12					1,001				30			1							A	
UD-164	127	302+99.00	313+00.00	LT		51		1	2		1,001			18			1	1		1				A	
UD-165	127-128	313+00.00	323+83.00	RT		19		1	2		1,083			18			1	1		1				A	
UD-166	127-128	313+00.00	323+83.00	RT	12					1,083				30			1							A	
UD-167	127-128	313+00.00	323+83.00	RT		33				1,083				30			1							B	
UD-168	127-128	313+00.00	323+83.00	LT		33				1,083				30			1							B	
UD-169	127-128	313+00.00	323+83.00	LT	12					1,083				30			1							A	
UD-170	127-128	313+00.00	323+83.00	LT		19		1	2		1,083			18			1	1		1				A	
UD-171	128-129	323+83.00	329+84.00	RT		12		1	2		601			18			1			1				I	
UD-172	128-129	323+83.00	329+84.00	RT	12					601				30			1							I	
UD-173	128-129	323+83.00	329+84.00	RT	28					601				30							1			I	
UD-174	128-129	323+83.00	330+27.00	LT						644				30							1			I	
UD-175	128-129	323+83.00	330+27.00	LT						644				30			1							I	
UD-176	128-129	323+83.00	330+27.00	LT				1	2		644			18			1			1				I	
UD-177	129	330+10.00	330+47.00	RT								37			14	18									
UD-178	129	330+13.00	330+47.00	RT								34			26	30									
UD-179	129	330+22.00	330+47.00	RT								25			27	30									
UD-180	129	330+47.00	334+27.00	RT		24		1	2		127	253		18	6	18	1	1		1				G	427 H.P.
TOTALS CARRIED TO SUBSUMMARY SHEET 103					316	942		14	28	33,508	17,422	349													

ATB-90-14.25

Palmer ENGINEERING
PALMER ENGINEERING
11300 CORNELL PARK DR.
CINCINNATI, OH 45242

C:\ODOT\ATB\25199\roadway\sheets\25199GS010.dgn 6/6/2009 9:02:30 AM DENNIS

ESTIMATED QUANTITIES - UNDERDRAINS

CALCULATED CML
CHECKED DPF

REF. NO.	SHEET NO.	STATION FROM	STATION TO	SIDE	603 6" CONDUIT, TYPE B FT.	603 6" CONDUIT, TYPE F FT.		604 PRECAST REINFORCED CONCRETE OUTLET EACH	601 TIED CONCRETE BLOCK MAT, TYPE 1 SY	605 6" SHALLOW PIPE UNDERDRAIN FT.	605 6" BASE PIPE UNDERDRAIN FT.	605 6" UNCLASSIFIED UNDERDRAIN FT.		TRENCH DEPTH INCHES	UNCLASSIFIED UNDERDRAIN - BEGIN STATION INCHES	UNCLASSIFIED UNDERDRAIN - END STATION INCHES	BENDS & BRANCHES FOR INFORMATION ONLY 6" TEE EA.	6" WYE EA.	6" CROSS EA.	6" X 45° BEND EA.	6" X 90° BEND EA.			SEE DETAIL	REMARKS
UD-181	129-130	330+47.00	334+27.00	RT	12					227		153			22	30			1					G	334+27 H.P.
UD-182	129-130	330+47.00	334+27.00	RT	28					127		253			18	30	1							G	
UD-183	129-130	330+53.00	334+27.00	LT	28					374				30							1			I	
UD-184	129-130	330+53.00	334+27.00	LT	12					374				30			1							I	
UD-185	129-130	330+53.00	334+27.00	LT		31		1	2		374			18			1			2				I	
UD-186	129-130	334+27.00	345+00.00	RT	12						1,073			18			1							G	
UD-187	129-130	334+27.00	345+00.00	RT	28					1,073				30					1					G	
UD-188	129-130	334+27.00	345+00.00	RT		33				1,073				30			1	1		1				G	
UD-189	129-130	334+27.00	345+00.00	LT		33				1,073				30			1							B	
UD-190	129-130	334+27.00	345+00.00	LT	12					1,073				30			1							A	
UD-191	130-131	334+27.00	345+00.00	LT		24		1	2		1,073			18			1	1		1				A	
UD-192	130-131	345+00.00	352+50.00	RT	12						750			18			1							G	
UD-193	130-131	345+00.00	352+50.00	RT	28					750				30					1					G	
UD-194	130-131	345+00.00	352+50.00	RT		33				750				30			1	1		1				G	
UD-195	130-131	345+00.00	352+50.00	LT		33				750				30			1							B	
UD-196	130-131	345+00.00	352+50.00	LT	12					750				30			1							A	
UD-197	130-131	345+00.00	352+50.00	LT		20		1	2		750			18			1	1		1				A	
UD-198	131	352+50.00	357+00.00	RT		10					450			18											CONNECT TO
UD-199	131	352+50.00	357+00.00	RT		10				450				30											EXISTING
UD-200	131	352+50.00	357+00.00	RT		10				450				30											UNDERDRAINS
UD-201	131	352+50.00	357+00.00	LT		10				450				30											"
UD-202	131	352+50.00	357+00.00	LT		10				450				30											"
UD-203	131	352+50.00	357+00.00	LT		10					450			18											"
TOTALS THIS SHEET					184	267		3	6	10,194	4,920	406													
TOTALS CARRIED FROM SUBSUMMARY SHEET 100					300	971		8	16	32,531	16,251	0													
TOTALS CARRIED FROM SUBSUMMARY SHEET 101					468	826		9	18	33,946	16,191	57													
TOTALS CARRIED FROM SUBSUMMARY SHEET 102					316	942		14	28	33,508	17,422	349													
TOTALS CARRIED TO GENERAL SUMMARY					1,268	3,006		34	68	110,179	54,784	812													

ATB-90-14.25

Palmer ENGINEERING
PALMER ENGINEERING
11300 CORNELL PARK DR.
CINCINNATI, OH 45242

C:\ODOT\ATB\25199\roadway\sheets\25199GS011.dgn 6/6/2009 9:03:38 AM DENNIS

BARRIER AND CURB SUBSUMMARY

REF. NO.	SHEET NO.	STATION FROM	STATION TO	SIDE	622 CONCRETE BARRIER, SINGLE SLOPE, TYPE D FT	622 CONCRETE BARRIER, END SECTION TYPE D, REINFORCED EACH	622 CONCRETE BARRIER, END ANCHOR, REINFORCED TYPE D EACH	622	609 CURB, TYPE 1 FT	609 CURB, TYPE 4C FT
C1	109	81+74.66	84+74.66	RT					280	20
C2	109-110	82+23.32	85+23.32	LT					280	20
C3	109	84+68.31	84+88.31	RT						20
C4	110	86+88.60	89+88.60	RT					280	20
C5	110	87+22.89	87+42.89	LT						20
C6	110	87+38.90	90+38.90	LT					280	20
C7	113	123+79.00	124+67.00	LT	54	1	1			20
C8	113	124+04.00	124+78.00	RT	40	1	1			20
C9	115	157+78.00	158+86.54	RT					89	20
C10	115	157+78.00	158+62.17	LT					64	20
C11	115	158+58.17	158+78.17	RT						20
C12	115	162+65.39	162+85.39	LT						20
C13	115	162+74.82	162+94.82	LT						20
C14	115	162+92.79	163+12.79	RT						20
C15	123	252+50.00	253+68.00	LT	84	1	1			20
C16	123	254+76.00	255+67.00	RT	57	1	1			20
C17	129	328+98.00	330+14.00	RT	82	1	1			20
C18	129	331+41.00	332+33.00	LT	58	1	1			20
C30	244	14+24.63	14+44.63	RT						20
C31	244	14+33.47	14+53.47	LT						20
C32	244	17+54.25	17+74.25	RT						20
C33	244	17+63.09	17+83.09	LT						20
TOTALS CARRIED TO GENERAL SUMMARY					375	6	6		1273	440

FENCE SUBSUMMARY

REF. NO.	SHEET NO.	STATION FROM	STATION TO	SIDE	202 FENCE REMOVED FT	607 FENCE, TYPE 47 FT		
F1	109-110	84+84.4	85+10.7	RT	100	114		
F2	110	85+01.4	85+23.0	RT/LT	32	59		
F3	110	85+39.5	86+03.0	LT	128	138		
F4	110	85+96.3	86+72.2	RT	149	162		
F5	110	86+86.6	87+06.2	RT/LT	73	59		
F6	110	86+94.0	87+23.5	LT	147	158		
F10	244	14+28.0	14+62.8	RT	57	57		
F11	244	14+62.0	14+71.9	LT	51	47		
F12	244	17+30.3	17+39.0	RT	32	31		
F13	244	17+40.6	17+59.0	LT	45	43		
TOTALS CARRIED TO GENERAL SUMMARY					814	868		

DRIVE SUBSUMMARY

REF. NO.	SHEET NO.	STATION FROM	SIDE	AREA	304 AGGREGATE BASE, AS PER PLAN DEPTH (IN)	304 AGGREGATE BASE, AS PER PLAN FT
DR1	244	13+82.0	RT	566	8	14
TOTALS CARRIED TO GENERAL SUMMARY						14

CALCULATED DPF
CHECKED CML

ESTIMATED QUANTITIES
CURB/BARRIER/CULVERT/FENCE

ATB-90-14.25

Palmer ENGINEERING
PALMER ENGINEERING
11300 CORNELL PARK DR
ENGINEERING CINCINNATI, OH 45242

O:\ODOT\ATB\25199\roadway\sheets\25199GS012.dgn 6/6/2009 9:03:41 AM DENNIS

STA. 56+35
BEGIN WORK

STATE ROAD. (C-25)

STA. 75+00
BEGIN PROJECT
S.L.M = 14.29

E032101

PROPOSED 42", TYPE A

36" CONC.

36" CMP

NORFOLK SOUTHERN RAILROAD

BRIDGE ATB-90-1450 L & R

CHANDLER ROAD (T-324B)

MANN ROAD (T-324)

60" CONC.

MATCH LINE STA. 118+00

RESIDENTIAL

WARNER ROAD (T-330)

BRIDGE ATB-90-1525

MANN ROAD (T-324)

PLYMOUTH ROAD (C-23)

PLYMOUTH - GAGEVILLE ROAD (C-325)

42" CONC.

BRIDGE ATB-90-1583 L & R

ASHTABULA RIVER

MATCH LINE STA. 180+00

FIELD

WOODED

BRUSH

Ex LA-R/W

Ex R/W

Ex CH

NOTE: PROPOSED DRAINAGE PATTERNS ARE SAME AS EXISTING

HORIZONTAL SCALE IN FEET
0 100 200 400

PROJECT SITE PLAN

ATB-90-14.25

105
437

Palmer ENGINEERING
PALMER ENGINEERING
11300 CORNELL PARK DR
ENGINEERING CINCINNATI, OH 45242

C:\ODOT\ATB\25199\drainage\sheets\25199DE001.dgn 6/6/2009 9:03:48 AM DENNIS

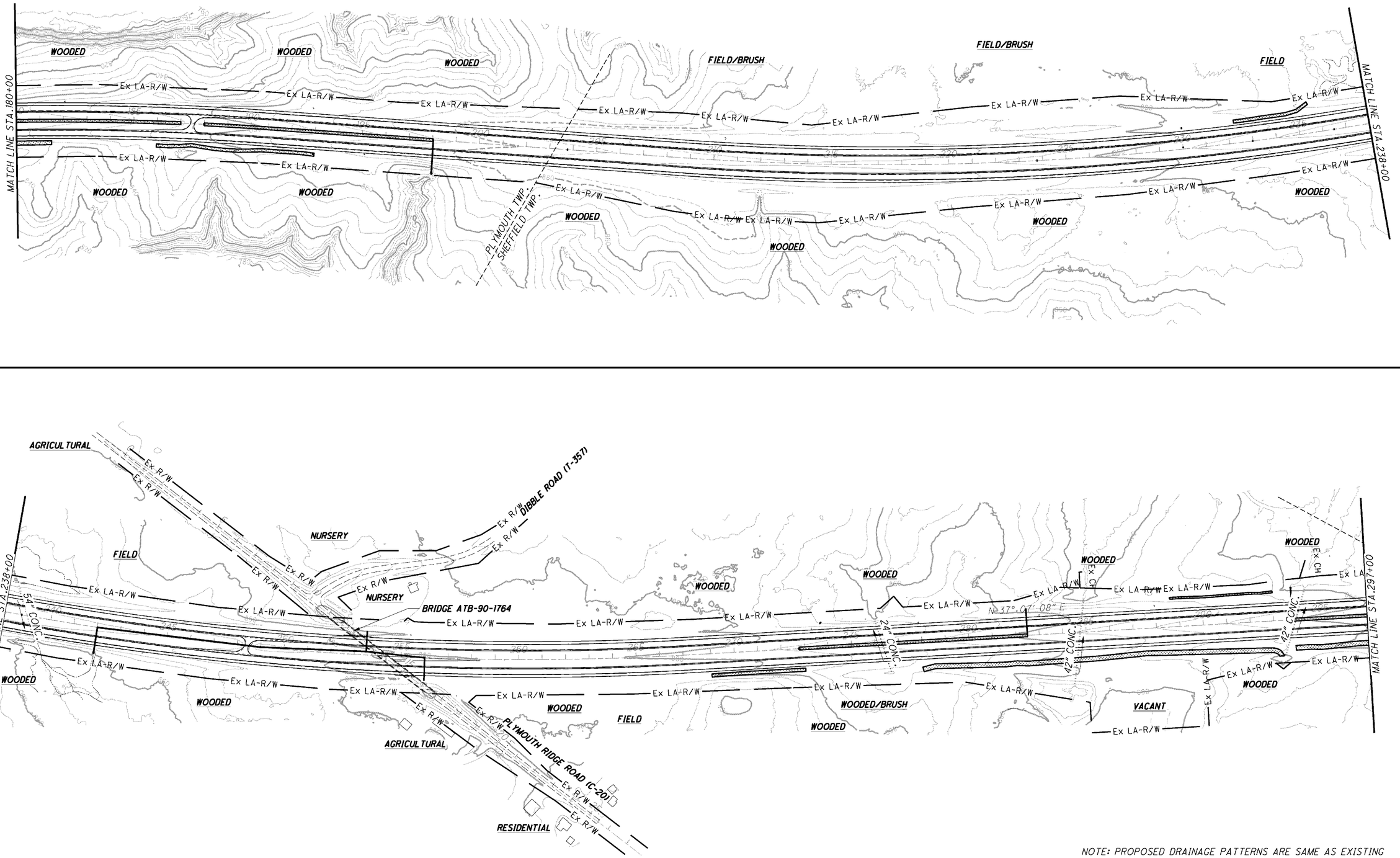

NOTE: PROPOSED DRAINAGE PATTERNS ARE SAME AS EXISTING

HORIZONTAL SCALE IN FEET
0 100 200 400

PROJECT SITE PLAN

ATB-90-14.25

106
437

Palmer ENGINEERING
PALMER ENGINEERING
11300 CORNELL PARK DR
CINCINNATI, OH 45242

O:\ODOT\ATB\25199\drainage\sheets\25199DE002.dgn 6/6/2009 9:04:16 AM DENNIS

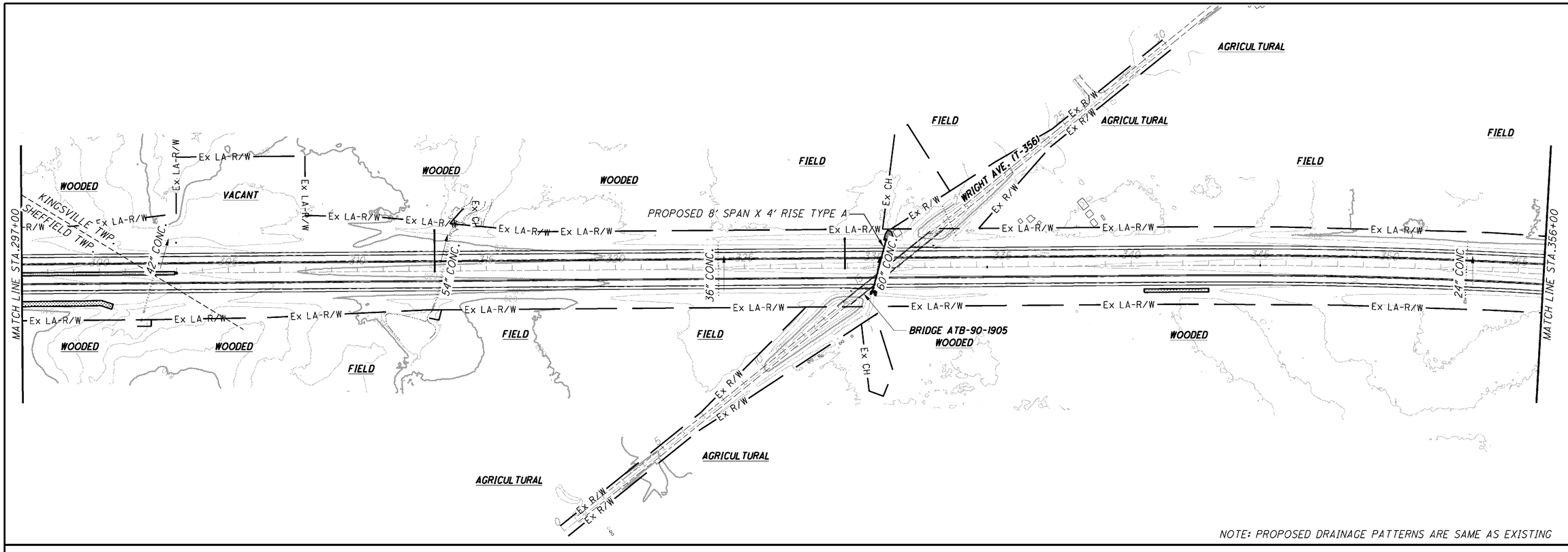

NOTE: PROPOSED DRAINAGE PATTERNS ARE SAME AS EXISTING

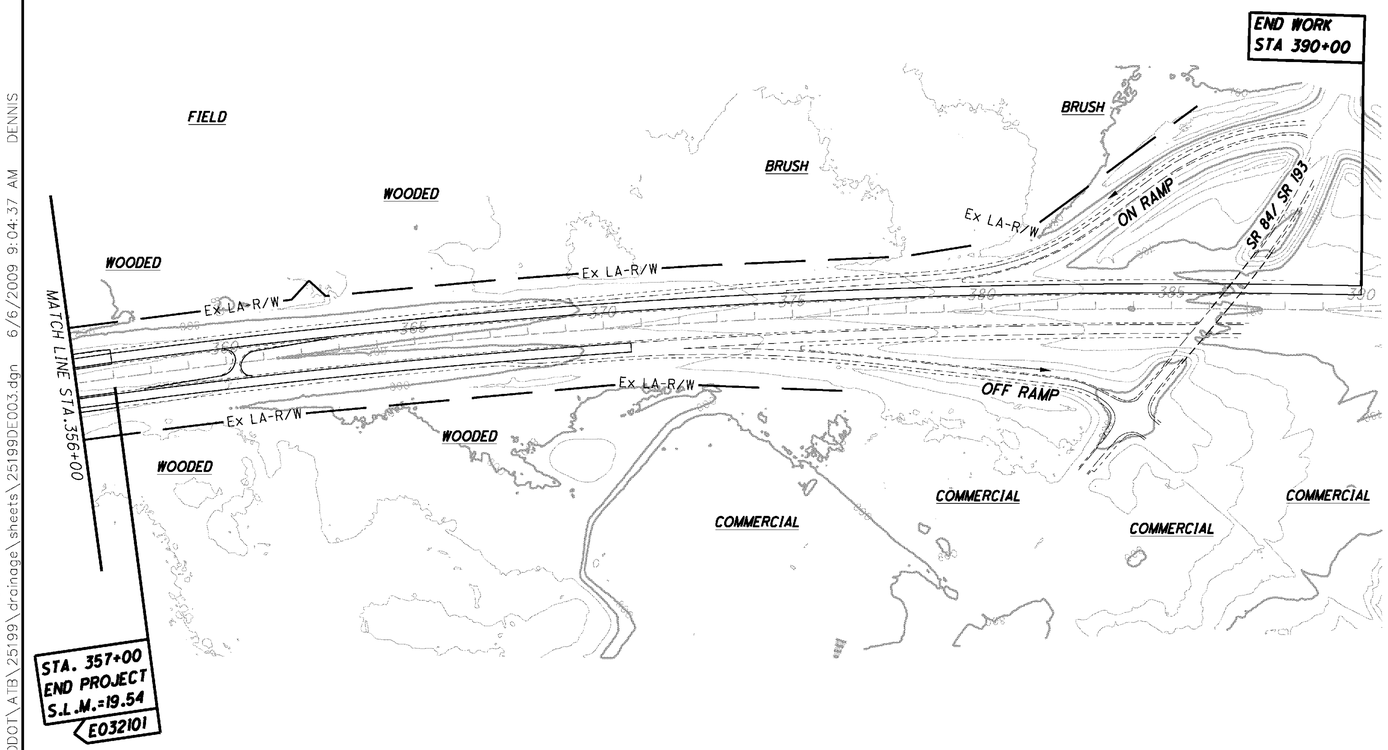

ESTIMATED QUANTITIES:

ITEM 832, STORM WATER POLLUTION PREVENTION PLAN, LUMP
ITEM 832, EROSION CONTROL, 125,000 EACH

PROJECT DESCRIPTION:

MAJOR PAVEMENT REHABILITATION OF APPROXIMATELY 5.25 MILES OF INTERSTATE 90, FROM SLM 14.29 TO SLM 19.54, PROJECT INCLUDES NEW PAVEMENT, GUARDRAIL, DRAINAGE STRUCTURES AND TRAFFIC CONTROL. REHABILITATE 4 MAINLINE AND 3 OVERHEAD BRIDGES.

REFER TO THE GENERAL NOTES FOR ADDITIONAL TEMPORARY EROSION CONTROL INFORMATION.

USGS QUADRANGLES - ASHTABULA SOUTH & GAUGEVILLE, OH

LATITUDE: 41°51'50 N LONGITUDE: 80°42'30" W

PROJECT DATA	
TOTAL AREA (RIGHT OF WAY)	241.5 Ac.
PROJECT EARTH DISTURBED AREA	144.5 Ac.
ESTIMATED CONTRACTOR DISTURBED AREA	11.9 Ac.
NOTICE OF INTENT EARTH DISTURBED AREA	156.4 Ac.
IMPERVIOUS PAVED AREA FOR PRE-CONSTRUCTION SITE	51.2 Ac.
IMPERVIOUS PAVED AREA FOR POST-CONSTRUCTION SITE	52.7 Ac.
RUNOFF COEFFICIENT FOR PRE-CONSTRUCTION SITE	0.66
RUNOFF COEFFICIENT FOR POST-CONSTRUCTION SITE	0.67
SOIL AND WATER CONSERVATION MAPS	SOIL SURVEY OF ASHTABULA COUNTY,OH
IMMEDIATE RECEIVING WATERS	ASHTABULA RIVER
SUBSEQUENT RECEIVING WATERS	LAKE ERIE

HORIZONTAL SCALE IN FEET
0 100 200 400

PROJECT SITE PLAN

ATB-90-14.25

107
437

Palmer ENGINEERING
PALMER ENGINEERING
11300 CORNELL PARK DR
CINCINNATI, OH 45242

O:\ODOT\ATB\25199\drainage\sheets\25199DE003.dgn 6/6/2009 9:04:37 AM DENNIS

P.I. STA. 96+36.34
Δ = 42° 57' 11" (LT)
Dc = 0° 28' 00"
R = 12,277.67'
T = 4,830.48'
L = 9,204.21'
E = 916.07'

6" HP GAS

Ex LA-R/W

56+35.00 MEET
EXIST WITH BUTT JOINT

STATE ROAD

EXIST. 36" CMP

CONST. LIMITS

TEMP. CB

℄ CONSTRUCTION I-80

TEMP STORM SEWER

24'

59 60 61 62 63 64 65 66 67 68 69 70 71 72

EXIST. 15" CMP

Rt

REMOVE PIPE

+64 ℄ CROSSOVER

PROPOSED MOT CROSSOVER
(SEE SHEETS 25-27)

MATCH LINE STA. 72+50

60+85 MEET
EXIST WITH BUTT JOINT

EXIST. 15" CONC

REMOVE EXIST CROSSOVER

CONST. LIMITS

**BEGIN WORK
STA 56+35**

1¼" PAVEMENT PLANING & RESURFACING

SHEET CROSS REFERENCES	
SHEET	ITEM
25, 27	TEMP. CROSSOVER DETAILS
93-104	ESTIMATED QUANTITIES

880 870 860 850 840 830 820

EXIST. LT. & RT. PGL

EXIST. GROUND @ ℄

848.93 848.64 847.67 846.22 845.16 844.52 844.24 EX. PGL - LT. 848.25 EX. PGL - RT. 848.28 848.33 848.43 848.64 848.52 848.72 848.98 848.79 849.11 849.74 849.15 849.60 846.07 849.62 850.21 847.02 850.22 850.93 849.44 850.96 851.78 849.03 851.81 852.76 849.76 852.81 853.79 850.45 853.81 854.83 851.27 854.83 855.90 852.30 855.87 856.94 852.97 856.90 858.08 854.11 857.95 859.15 855.29 859.09 860.23 856.05 860.21 861.29 857.00 861.26 862.39 EX. PGL - LT. 858.05 862.35 EX. PGL - RT. 863.44 859.27

60+00 61+00 62+00 63+00 64+00 65+00 66+00 67+00 68+00 69+00 70+00 71+00 72+00

HORIZONTAL SCALE IN FEET
0 25 50 100

CALCULATED | CHECKED

PLAN AND PROFILE
IR 90 STA. 59+00 TO STA. 72+50

ATB-90-14.25

108
437

Palmer ENGINEERING
PALMER ENGINEERING
11300 CORNELL PARK DR
ENGINEERING CINCINNATI, OH 45242

O:\ODOT\ATB\25199\roadway\sheets\25199GP001.dgn 6/6/2009 9:04:54 AM DENNIS

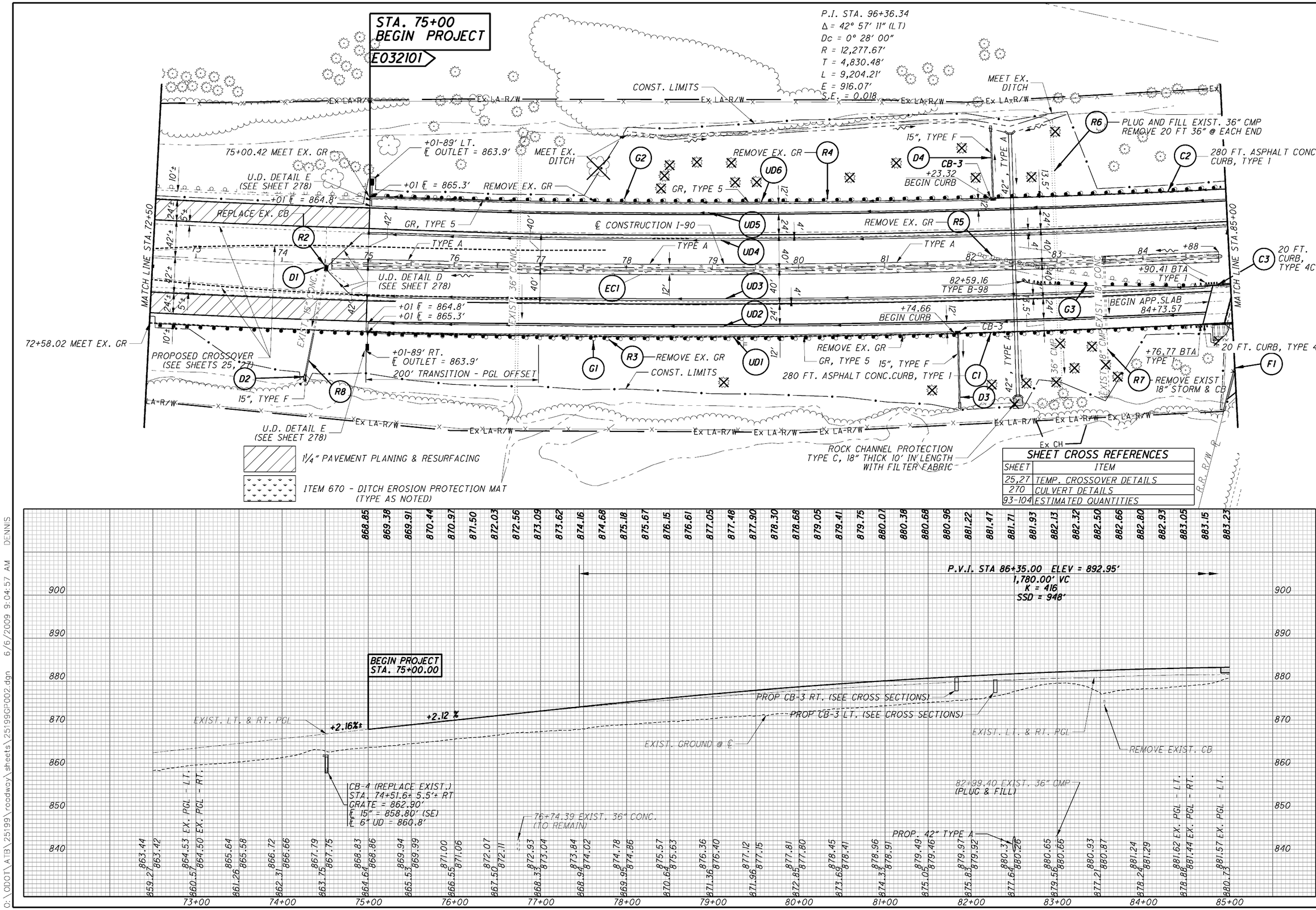

SHEET CROSS REFERENCES	
SHEET	ITEM
25,27	TEMP. CROSSOVER DETAILS
270	CULVERT DETAILS
93-104	ESTIMATED QUANTITIES

HORIZONTAL SCALE IN FEET

CALCULATED

CHECKED

PLAN AND PROFILE
I-90 STA. 72+50 TO STA. 85+00

ATB-90-14.25

Palmer ENGINEERING
PALMER ENGINEERING
11300 CORNELL PARK DR
CINCINNATI, OH 45242

O:\ODOT\ATB\25199\roadway\sheets\25199GP002.dgn 6/6/2009 9:04:57 AM DENNIS

P.I. STA. 96+36.34
Δ = 42° 57' 11" (LT)
Dc = 0° 28' 00"
R = 12,277.67'
T = 4,830.48'
L = 9,204.21'
E = 916.07'
S.E. = 0.018

STA. 85+99.28 ℄ I-90
STA. 230+87.15 ℄ RR

BRIDGE ATB-90-1450 L
BRIDGE ATB-90-1450 R
NORFOLK SOUTHERN RAILROAD
R.R. R/W
Ex LA-R/W
MATCH LINE STA. 85+00
MATCH LINE STA. 97+50
BEGIN APP. SLAB 85+06.55
END APP. SLAB 87+39.96
END APP. SLAB 87+05.42
+25.42 BTA TYPE 2
20 FT. CURB, TYPE 4C
+36.79 BTA TYPE 1
20 FT. CURB, TYPE 4C
+20.79 BTA TYPE 1
+86.49 BTA TYPE 2
72°01'34" TO TAN
+89.54 TYPE B-98
+38.90 END CURB
+88.60 END CURB
280 FT. ASPHALT CONC. CURB, TYPE 1
20 FT. CURB TYPE 4C
GR, TYPE 5
EXIST. UD
CB-3
TYPE A
℄ CONSTRUCTION I-90
REMOVE EX. GR
REMOVE EXIST. 15" STORM
EXIST. 15" CONC
EXIST. 15" CMP
END 24" CONC. NOT FOUND
REMOVE EX. 15" STORM & CB
15", TYPE F
CONST. LIMITS
+00-88' LT. ℄ OUTLET = 866.8'
+00 ℄ = 868.1'
+00 ℄ = 867.6'
+00 ℄ = 867.9'
U.D. DETAIL A (SEE SHEET 278)
U.D. DETAIL B (SEE SHEET 278)
CB-4
REMOVE EX. CB
15" TYPE B
+00 ℄ = 867.9'
+00 ℄ = 868.5'
+00 ℄ = 869.0'
+00-88' RT. ℄ OUTLET = 867.5'
15" TYPE F
REMOVE EX. GR
Ex LA-R/W MEET EX. DITCH

F1 F2 F3 F4 F5 F6
C1 C2 C3 C4 C5 C6
D1 D2 D3 D4 D5 D6 D7
G1 G2 G3 G4 G5 G6
R9 R10 R11 R12 R13
UD1 UD2 UD3 UD4 UD5 UD6 UD7 UD8 UD9 UD10 UD11 UD12 UD13 UD14 UD15 UD16 UD17 UD18
EC1 EC2 EC3

ITEM 670 - DITCH EROSION PROTECTION MAT (TYPE AS NOTED)

ITEM 670 -SLOPE EROSION PROTECTION MAT PER S.C.D. DM-4.1

(F1) (F3) (F4) (F6) LOCATE PROPOSED FENCE 1' OFF RAILROAD RIGHT OF WAY LINE, REPLACE FROM NEW STRUCTURE TO EXISTING FENCE AT L/A R/W LINE.

SHEET CROSS REFERENCES

SHEET	ITEM
93-104	ESTIMATED QUANTITIES

P.V.I. STA 86+35.00 ELEV = 892.95'
1,780.00' VC
K = 416
SSD = 948'

+2.12 %
-2.15 %
BRIDGE ATB-90-1450 R/L
EXISTING 22'-0"
REQ'D 23'-0"
PROVIDED 23'-0"
* BRIDGE DECK ELEV.
PROP CB-3 RT. (SEE CROSS SECTIONS)
PROP CB-3 LT. (SEE CROSS SECTIONS)
REMOVE EXIST. CB
EXIST. LT. & RT. PGL
EXIST. GROUND @ ℄
CB-4
STA. 96+00.00-℄
GRATE = 867.80'
℄ 15" = 862.55' (SE)
℄ 6" UD = 864.5'

EX. PGL - LT.
EX. PGL - RT.

PLAN AND PROFILE
IR 90 STA. 85+00 TO STA. 97+50
ATB-90-14.25

HORIZONTAL SCALE IN FEET
CALCULATED
CHECKED

PALMER ENGINEERING
11300 CORNELL PARK DR
ENGINEERING CINCINNATI, OH 45242

O:\ODOT\ATB\25199\roadway\sheets\25199GP003.dgn 6/6/2009 9:05:02 AM DENNIS

P.I. STA. 96+36.34
Δ = 42° 57' 11" (LT)
Dc = 0° 28' 00"
R = 12,277.67'
T = 4,830.48'
L = 9,204.21'
E = 916.07'
S.E. = 0.018

REMOVE HW AND PORTION OF 60" CULVERT R14
60" TYPE A
+99-90' LT. ℄ OUTLET = 849.6'
MEET EX. DITCH
U.D. DETAIL A (SEE SHEET 278)
CONST. LIMITS
REMOVE EX. GR R11
GR, TYPE 5
+99 ℄ = 850.9'
+99 ℄ = 850.4'
EXIST. UD
+99 ℄ = 850.7'
+55.54 TYPE B-98
TYPE A
℄ CONSTRUCTION I-90
REMOVE EX. CB
U.D. DETAIL B (SEE SHEET 278)
24" CPP
104+20 ℄ CROSSOVER D8
EXIST. 60" CONC
TYPE B
+99 ℄ = 850.7'
REMOVE EXIST 15" CONC
+61.49 TYPE T
+99 ℄ = 851.3'
+50
TYPE A
GR, TYPE 5
+99 ℄ = 851.8'
REMOVE EX. GR R12
60" TYPE A
+99-89' RT. ℄ OUTLET = 850.5'
CONST. LIMITS
REMOVE HW AND PORTION OF 60" CULVERT R15
MEET EX. DITCH
U.D. DETAIL A (SEE SHEET 278)
EC4
EC5
MATCH LINE STA. 97+50
MATCH LINE STA. 110+00
G6 G4 UD16 UD17 UD18 UD13 UD14 UD15 UD19 UD20 UD21 UD22 UD23 UD24 R16

ITEM 670 - DITCH EROSION PROTECTION MAT (TYPE AS NOTED)

SHEET CROSS REFERENCES	
SHEET	ITEM
93-104	ESTIMATED QUANTITIES
271	CULVERT DETAILS

-2.15 %
EXIST. GROUND @ ℄
REMOVE EXIST. CB
102+21.7 EXIST. 60" CONC. (TO REMAIN)
EXIST. LT. & RT. PGL
CB-4
STA. 103+99.00 1.00' LT
GRATE = 851.80'
℄ 15" = 846.66' (SE)
℄ 6" UD = 848.7'
P.V.I. STA 110+00.00 ELEV = 841.98'
600.00' VC
K = 332
-2.15 %
EX. PGL - LT.
EX. PGL - RT.

98+00 99+00 100+00 101+00 102+00 103+00 104+00 105+00 106+00 107+00 108+00 109+00 110+00

HORIZONTAL SCALE IN FEET
CALCULATED
CHECKED

PLAN AND PROFILE
IR-90 STA. 97+50 TO STA. 110+00
ATB-90-14.25

111
437

PALMER ENGINEERING
ENGINEERING CINCINNATI, OH 45242
11300 CORNELL PARK DR
O:\ODOT\ATB\25199\roadway\sheets\25199GP004.dgn 6/6/2009 9:05:07 AM DENNIS

P.I. STA. 96+36.34
Δ = 42° 57' 11" (LT)
Dc = 0° 28' 00"
R = 12,277.67'
T = 4,830.48'
L = 9,204.21'
E = 916.07'
S.E. = 0.018

MATCH LINE STA.110+00

MATCH LINE STA.122+50

Ex LA-R/W

CONST. LIMITS

U.D. DETAIL A (SEE SHEET 278)

U.D. DETAIL B (SEE SHEET 278)

U.D. DETAIL C (SEE SHEET 278)

EXIST. UD

EXIST. 24" CONC (TO REMAIN)

+00 ℄ = 836.6'

+00 ℄ = 836.1'

+00 ℄ = 836.3'

+00 ℄ = 837.0'

+00 ℄ = 837.5'

UD22 UD19 UD20 UD21 UD23 UD24 UD25 UD26 UD27 UD28 UD29 UD30

R17 REMOVE EXIST. CB

CB-4

D9

(REMOVE) EXIST 18" CONC

18" TYPE C

REPLACE EX. MH

R20 D10

TYPE A

EC5

℄ CONSTRUCTION I-90

EXIST. 24" CMP

R19 D11 REPLACE EXIST. CB

R23 D12 REPLACE EXIST. CB

R22 D13 REPLACE EXIST. CB

EXIST. 24" CONC.

D58

CB-4

R65

R24

EXIST 18" CONC

REMOVE EXIST. 18" CONC.

(REMOVE) EXIST.15" CONC.

15" TYPE C

R21

R18 D14

D15

MANN ROAD (T-324)

Ex R/W

EXIST. 30" CONC.

ITEM 670 - DITCH EROSION PROTECTION MAT (TYPE AS NOTED)

SHEET CROSS REFERENCES	
SHEET	ITEM
93-104	ESTIMATED QUANTITIES

HORIZONTAL SCALE IN FEET
0 25 50 100
CALCULATED
CHECKED

PLAN AND PROFILE
IR-90 STA. 110+00 TO STA. 122+50

ATB-90-14.25

112
437

REMOVE EXIST. CB
23 LF 18" TYPE C
-0.35 %
P.V.I. STA 110+00.00 ELEV = 841.98'
600.00' VC
K = 332
CB-4
STA. 113+75.00-℄
GRATE = 836.30'
℄ 18" = 832.84' (SE)
CB-5 (REPLACE EXIST.)
STA. 113+97.2± 101.4'± LT
GRATE = 837.20'
℄ 24" = 832.60' (SE)
℄ 6" UD = 834.6'
MH-3 (REPLACE EXIST.)
STA. 113+98.0± 3.3'± LT
RIM = 836.20'
℄ 30" = 831.07' (SE)
4 LF 30" TYPE C
4 LF 24" TYPE C
℄ 6" UD = 833.5'
EXIST. GROUND @ ℄
CB-5 (REPLACE EXIST.)
STA. 120+01.0± 143.0'± LT
GRATE = 842.20'
℄ 24" = 838.40' (SE)
CB-5 (REPLACE EXIST.)
STA. 120+00.9± 92.8'± LT
GRATE = 835.20'
℄ 24" = 829.60'±
P.V.I. STA 121+00.00 ELEV = 838.19'
280.00' VC
SSD = 1114'
K = 253
EXIST. 24" CONC. (TO REMAIN)
-0.35 %
-1.45 %
EXIST. LT. & RT. PGL
CB-5
STA. 119+86.00 98.00' RT
GRATE = 835.20'
℄ 15" = 828.90' (SE)
15 LF 15" TYPE C @ 7.20%
EXIST. 18" CONC. (REMOVE)
MH-3 (REPLACE EXIST.)
STA. 119+99.6± 106.4'± RT
RIM= 835.85'
℄ 30" = 827.81'±
℄ 15" = 829.05'
4 LF 30" TYPE C
4 LF 24" TYPE C

EX. PGL - LT. / EX. PGL - RT.

110+00 111+00 112+00 113+00 114+00 115+00 116+00 117+00 118+00 119+00 120+00 121+00 122+00

Palmer ENGINEERING
PALMER ENGINEERING
11300 CORNELL PARK DR
CINCINNATI, OH 45242

O:\ODOT\ATB\25199\roadway\sheets\25199GP005.dgn 6/6/2009 9:05:12 AM DENNIS

STA. 124+34.95 ℄ I-90
STA. 16+01.37 ℄ PLYMOUTH RD.

P.I. STA. 96+36.34
Δ = 42° 57' 11" (LT)
Dc = 0° 28' 00"
R = 12,277.67'
T = 4,830.48'
L = 9,204.21'
E = 916.07'
S.E. = 0.018

EXIST. 24" CONC
OVERHEAD TELE. WIRES
+79.00 BEGIN CONC BARR.
REMOVE EX. CB
REMOVE EX. GR & CONC. BARRIER
122+57.35 TYPE B-98
+24 BEGIN CONC BARRIER TYPE D
+26.10 BTA TYPE 1 SINGLE SLOPE CONC BARRIER TYPE D
BRIDGE ATB-90-1525
MATCH LINE STA.122+50
MATCH LINE STA.135+00
PLYMOUTH ROAD
Ex R/W
Ex LA-R/W
CONST. LIMITS
SINGLE SLOPE CONC BARRIER TYPE D
+44.90 BTA TYPE 1
+47 END CONC BARR.
REMOVE EX CONC BARRIER & GR
REMOVE EX GR
+13 ℄ = 830.1'
126+13.65 TYPE B-98
GR. TYPE 5
+13 ℄ = 829.6'
U.D. DETAIL F (SEE SHEET 278)
+13 ℄ = 829.8'
TYPE A
TYPE T
CB-4
15" TYPE C
18" TYPE C
24" TYPE C
+13 ℄ = 830.5'
+13 ℄ = 831.0'
OVERHEAD ELEC. WIRES
+78.00 END CONC. BARR.
+04.42 UD HP
℄ CONSTRUCTION I-90
D16 D17 D18 D19 D20
C7 C8
G7 G8 G9 G10
R24 R25 R26 R27
UD25 UD26 UD27 UD28 UD29 UD30 UD31 UD32 UD33 UD34 UD35 UD36 UD37 UD38 UD39 UD40 UD41 UD42

SHEET CROSS REFERENCES	
SHEET	ITEM
265	MEDIAN BARRIER DETAILS
93-104	ESTIMATED QUANTITIES
244	PLYMOUTH RD. PLAN/PROFILE

LOW WIRE-ELEC. ELEV. 862.9
BRIDGE ATB-90-1525
LOW WIRE-TELE. ELEV. 855.8±
MINIMUM VERTICAL CLEARANCES - EASTBOUND
EXIST. 14'-8"± PROVIDED 16'-8"
REQ'D 16'-6" (CONST. 14'-8"±)
MINIMUM VERTICAL CLEARANCES - WESTBOUND
EXIST. 16'-3"± PROVIDED 18'-10"
REQ'D 16'-6" (CONST. 16'-3"±)
SSD = 1264'
P.V.I. STA 128+50.00 ELEV = 835.90'
400.00' VC
SSD = 1264'
K = 394
EXIST. LT. & RT. PGL
EXIST. GROUND @ ℄
+0.65 %
-0.37 %
-1.45 %
CB-4
STA. 122+75.00-℄
GRATE = 831.00'
℄ 15" = 828.75'
101 L.F. 15" TYPE C @ 0.30%
REMOVE EXIST. CB
225' LF 18" TYPE C @ 0.30%
P.V.I. STA 124+40.00 ELEV = 833.25'
380.00' VC
K = 181
MH-3
STA. 123+75.00 17.00' LT
GRATE = 833.70'
℄ 18" = 828.20'
℄ 15" = 828.45'
CB-4
STA. 126+00.00-℄
GRATE = 829.80'
℄ 24" = 827.03'
℄ 18" = 827.53
℄ 6" UD = 829.3'
600 L.F. 24" TYPE C @ 0.30%, 706.02
439 L.F. 24", TYPE C @ 0.30%
CB-4
STA. 132+00.00-℄
GRATE = 830.20'
℄ 24" = 825.23'
EX. PGL - LT.
EX. PGL - RT.

123+00 124+00 125+00 126+00 127+00 128+00 129+00 130+00 131+00 132+00 133+00 134+00 135+00

HORIZONTAL SCALE IN FEET
0 25 50 100
CALCULATED
CHECKED

PLAN AND PROFILE
IR 90 STA. 112+50 TO STA. 135+00

ATB-90-14.25

113
437

PALMER ENGINEERING
11300 CORNELL PARK DR
ENGINEERING CINCINNATI, OH 45242
O:\ODOT\ATB\25199\roadway\sheets\25199GP006.dgn 6/6/2009 9:05:17 AM DENNIS

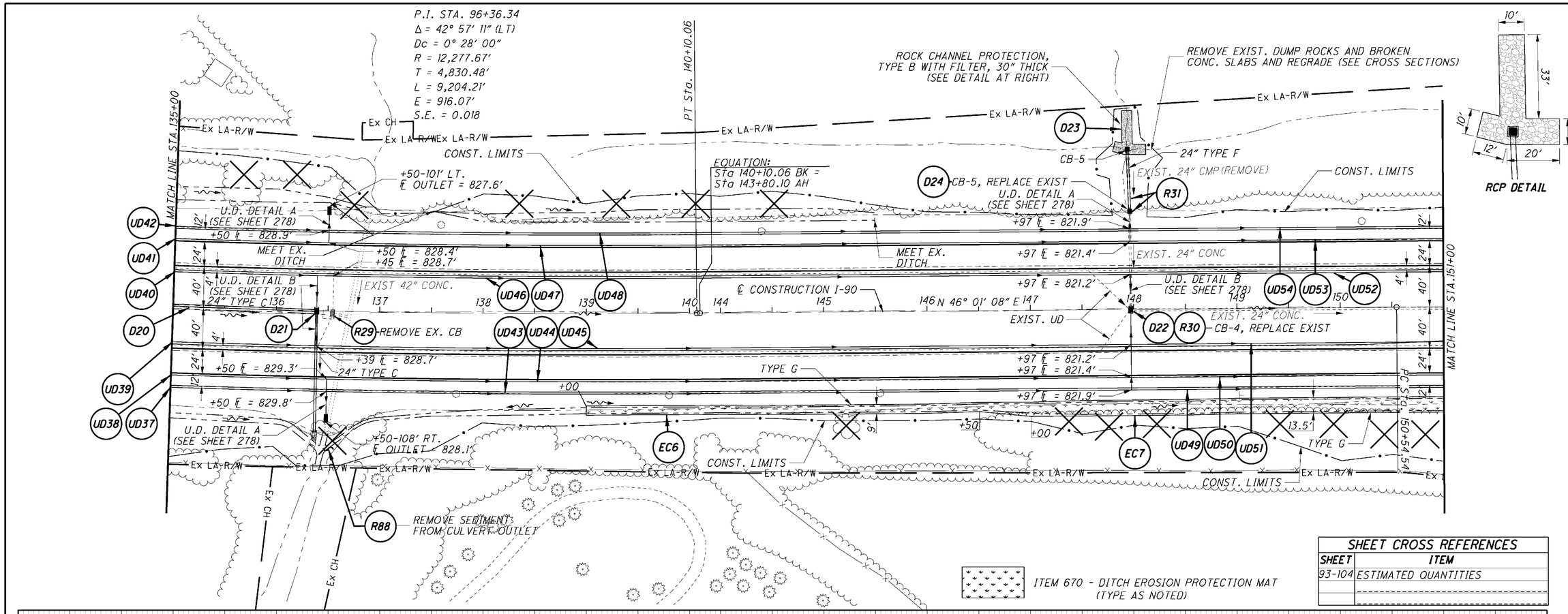

SHEET CROSS REFERENCES	
SHEET	ITEM
93-104	ESTIMATED QUANTITIES

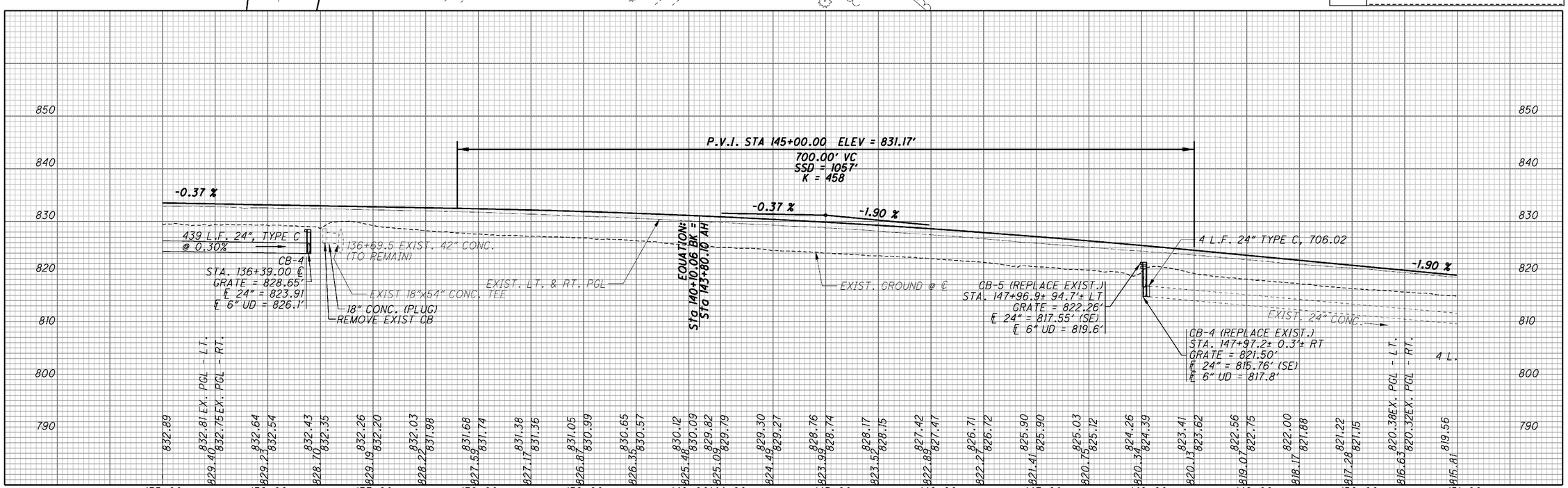

PLAN AND PROFILE
IR 90 STA. 135+00 TO STA. 151+00

ATB-90-14.25

CALCULATED
CHECKED

Palmer ENGINEERING
PALMER ENGINEERING
11300 CORNELL PARK DR
CINCINNATI, OH 45242

O:\ODOT\ATB\25199\roadway\sheets\25199GP007.dgn 6/6/2009 9:05:22 AM DENNIS

P.I. STA. 170+68.62
Δ = 18° 37' 55" (RT)
Dc = 0° 28' 00"
R = 12,277.67'
T = 2,014.07'
L = 3,992.59'
E = 164.10'
S.E. = 0.018

ITEM 670 - DITCH EROSION PROTECTION MAT (TYPE AS NOTED)

ITEM 670 -SLOPE EROSION PROTECTION MAT PER S.C.D. DM-4.1

SHEET CROSS REFERENCES	
SHEET	ITEM
93-104	ESTIMATED QUANTITIES

HORIZONTAL SCALE IN FEET
0 25 50 100
CALCULATED
CHECKED

PLAN AND PROFILE
IR 90 STA. 151+00 TO STA. 163+50
ATB-90-14.25

PALMER ENGINEERING
11300 CORNELL PARK DR
ENGINEERING CINCINNATI, OH 45242

O:\ODOT\ATB\25199\roadway\sheets\25199GP008.dgn 6/6/2009 9:05:26 AM DENNIS

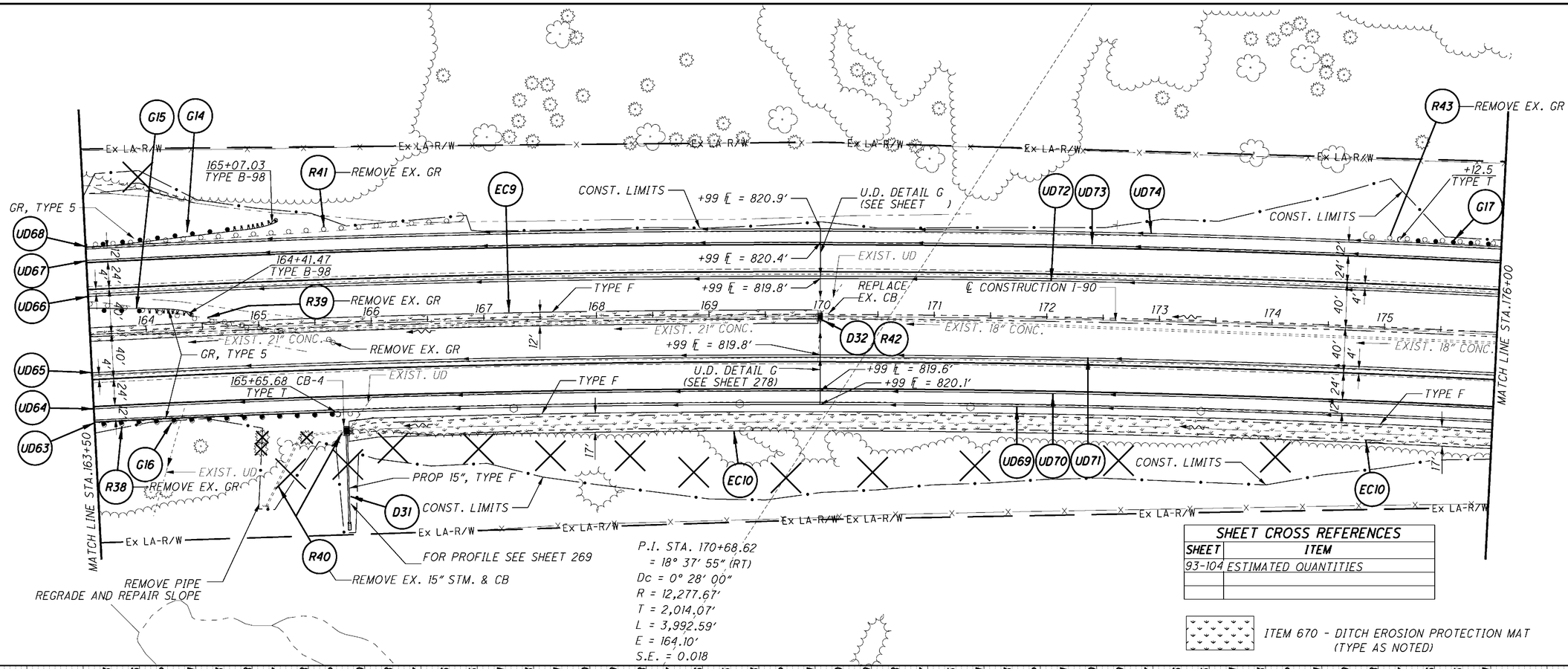

P.I. STA. 170+68.62
= 18° 37' 55" (RT)
Dc = 0° 28' 00"
R = 12,277.67'
T = 2,014.07'
L = 3,992.59'
E = 164.10'
S.E. = 0.018

SHEET CROSS REFERENCES	
SHEET	ITEM
93-104	ESTIMATED QUANTITIES

ITEM 670 - DITCH EROSION PROTECTION MAT
(TYPE AS NOTED)

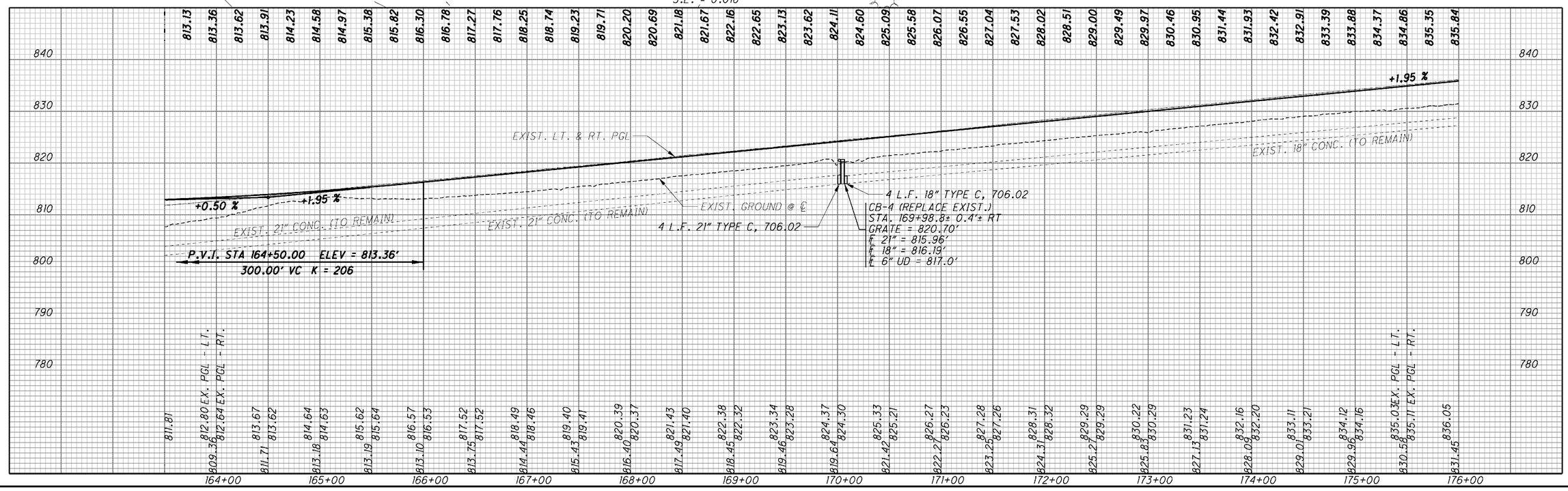

PLAN AND PROFILE
IR 90 STA. 163+50 TO STA. 176+00
ATB-90-14.25

HORIZONTAL SCALE IN FEET
0 100
CALCULATED
CHECKED

Palmer ENGINEERING
PALMER ENGINEERING 11300 CORNELL PARK DR CINCINNATI, OH 45242

G:\ODOT\ATB\25199\roadway\sheets\25199GP009.dgn 6/6/2009 9:05:32 AM DENNIS

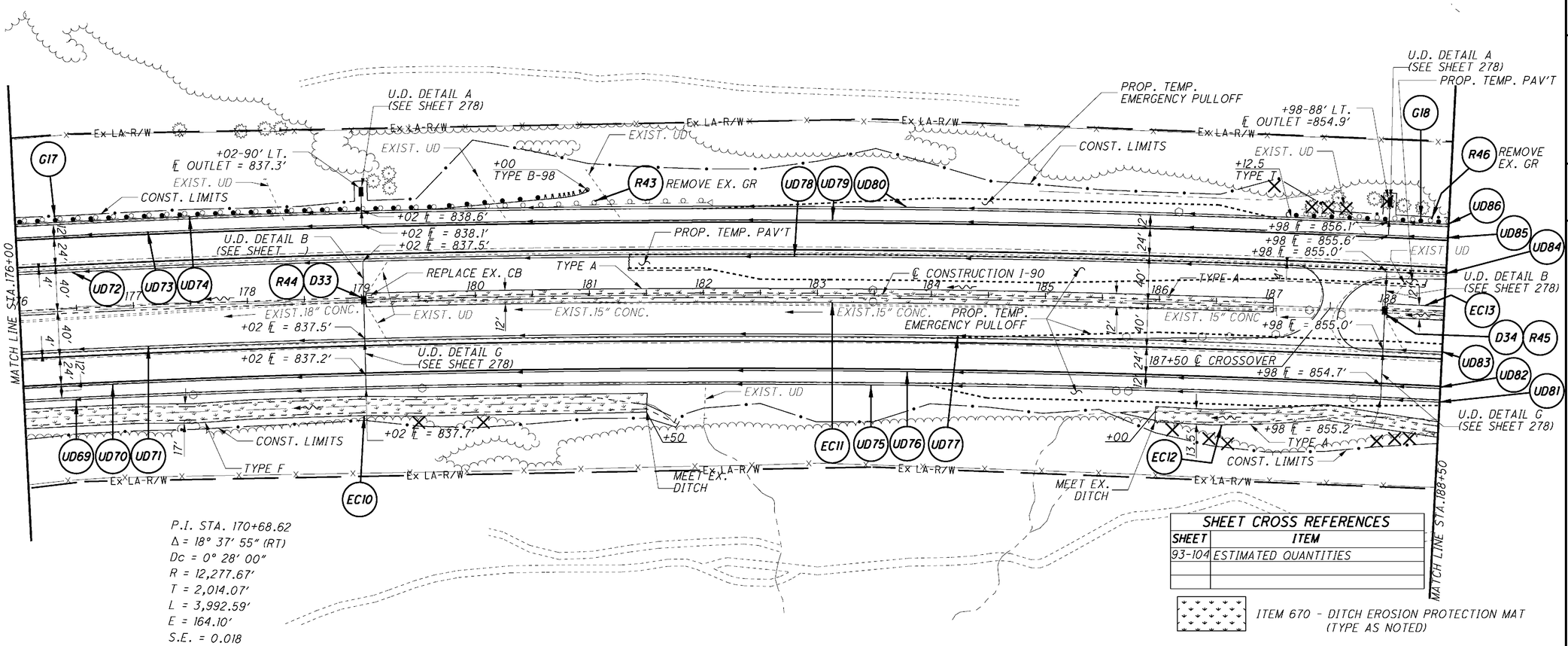

P.I. STA. 170+68.62
Δ = 18° 37' 55" (RT)
Dc = 0° 28' 00"
R = 12,277.67'
T = 2,014.07'
L = 3,992.59'
E = 164.10'
S.E. = 0.018

SHEET CROSS REFERENCES	
SHEET	ITEM
93-104	ESTIMATED QUANTITIES

ITEM 670 - DITCH EROSION PROTECTION MAT (TYPE AS NOTED)

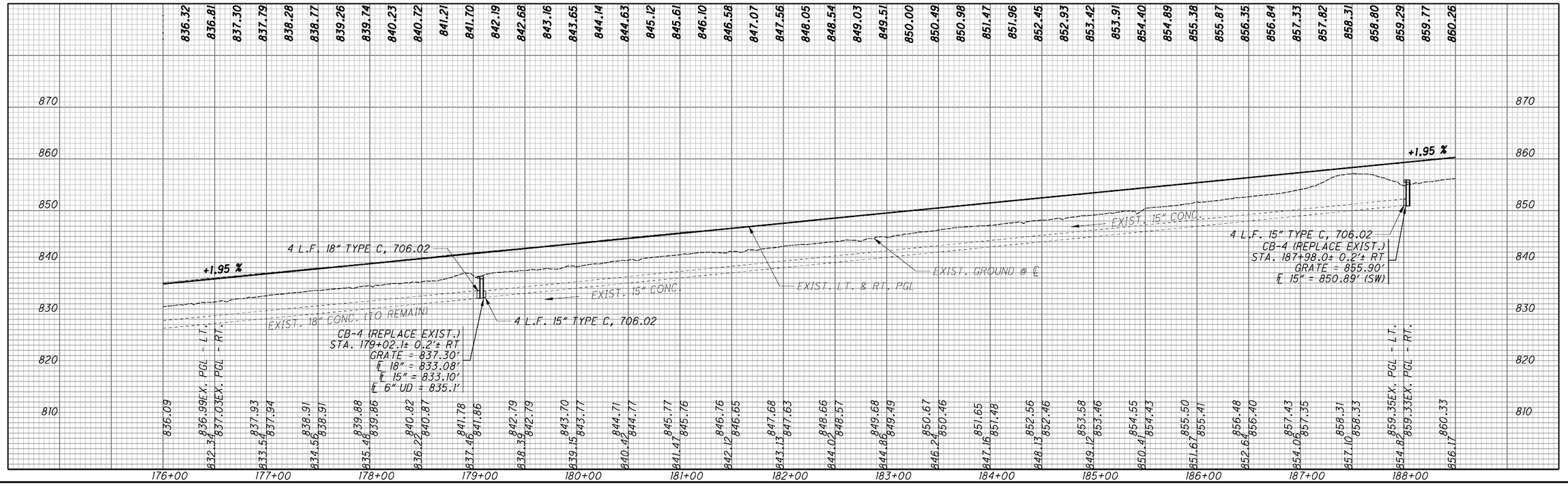

PALMER ENGINEERING
ENGINEERING CINCINNATI, OH 45242
11300 CORNELL PARK DR

O:\ODOT\ATB\25199\roadway\sheets\25199GP010.dgn 6/6/2009 9:05:37 AM DENNIS

HORIZONTAL SCALE IN FEET
0 25 50 100
CALCULATED
CHECKED

PLAN AND PROFILE
IR 90 STA. 176+00 TO STA. 188+50

ATB-90-14.25

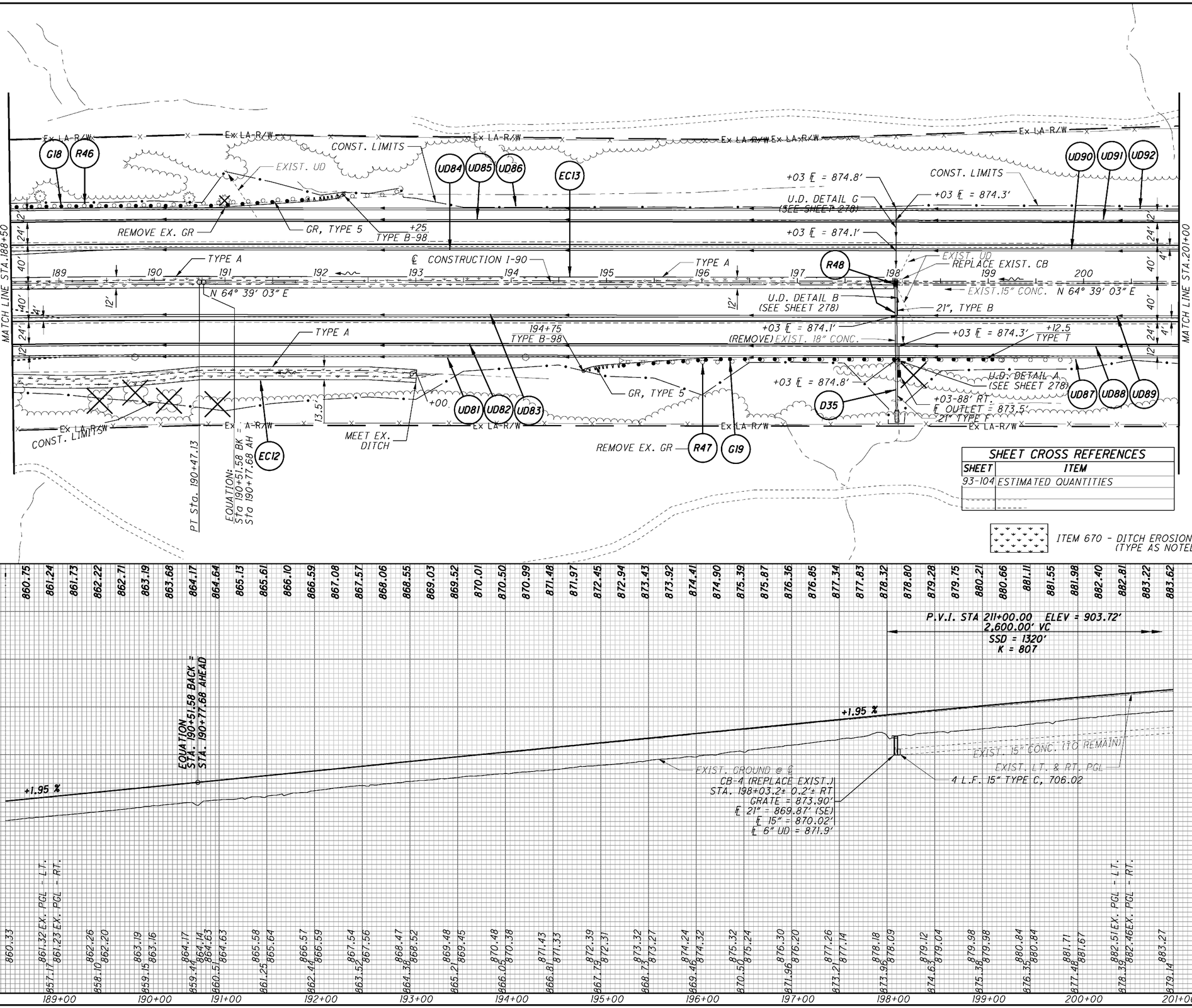

P.I. STA. 170+68.62
= 18° 37' 55" (RT)
Dc = 0° 28' 00"
R = 12,277.67'
T = 2,014.07'
L = 3,992.59'
E = 164.10'
S.E. = 0.018

SHEET CROSS REFERENCES	
SHEET	ITEM
93-104	ESTIMATED QUANTITIES

ITEM 670 - DITCH EROSION PROTECTION MAT (TYPE AS NOTED)

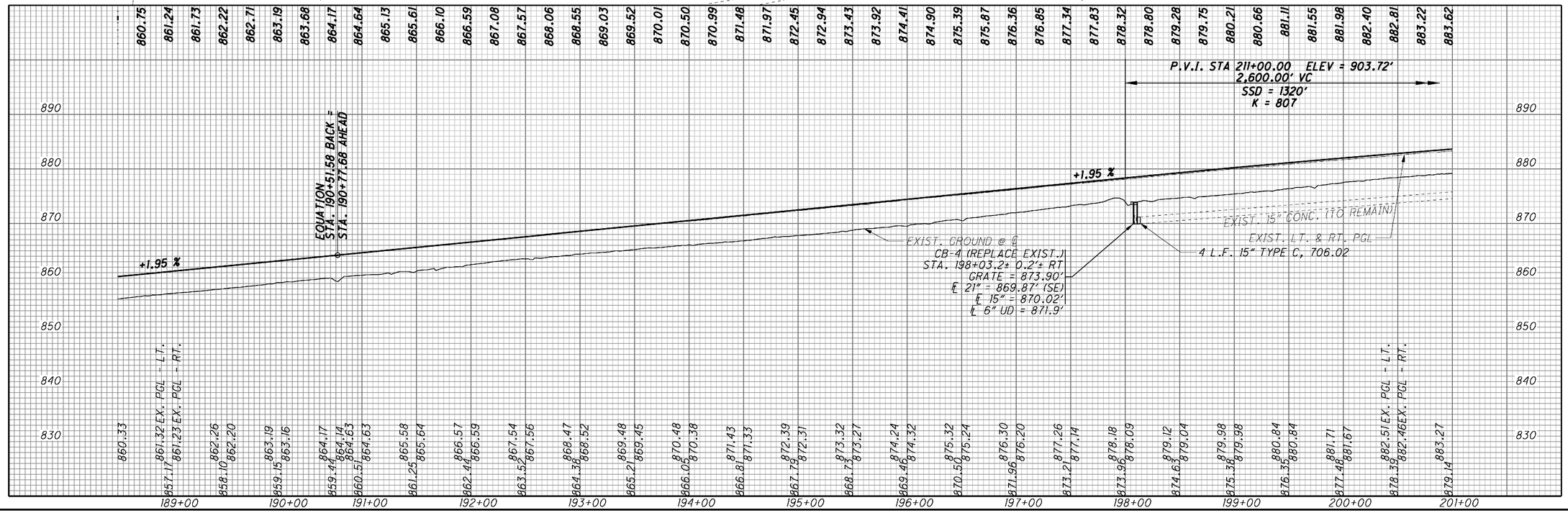

PALMER ENGINEERING
ENGINEERING CINCINNATI, OH 45242
1300 CORNELL PARK DR

O:\ODOT\ATB\25199\roadway\sheets\25199GP011.dgn 6/6/2009 9:05:41 AM DENNIS

HORIZONTAL SCALE IN FEET
0 25 50 100
CALCULATED
CHECKED

PLAN AND PROFILE
IR 90 STA. 188+50 TO STA. 201+00

ATB-90-14.25

P.I. STA. 238+56.16
= 27° 31' 35" (LT)
Dc = 0° 28' 00"
R = 12,277.67'
T = 3,007.34'
L = 5,898.54'
E = 362.95'
S.E. = 0.018

HORIZONTAL SCALE IN FEET
0 25 50 100

CALCULATED | CHECKED

PLAN AND PROFILE
IR 90 STA. 201+00 TO STA. 213+50

ATB-90-14.25

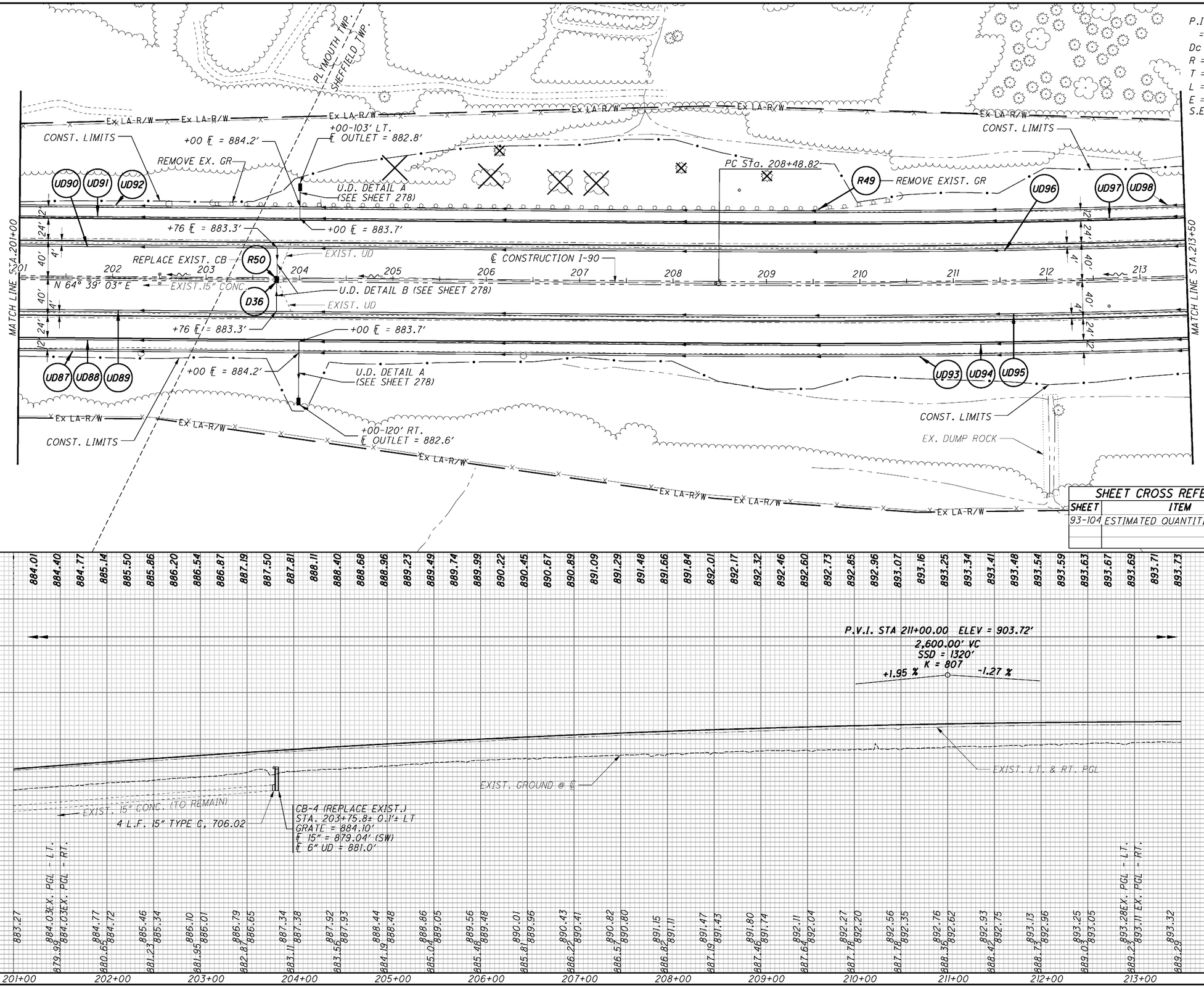

SHEET CROSS REFERENCES

SHEET	ITEM
93-104	ESTIMATED QUANTITIES

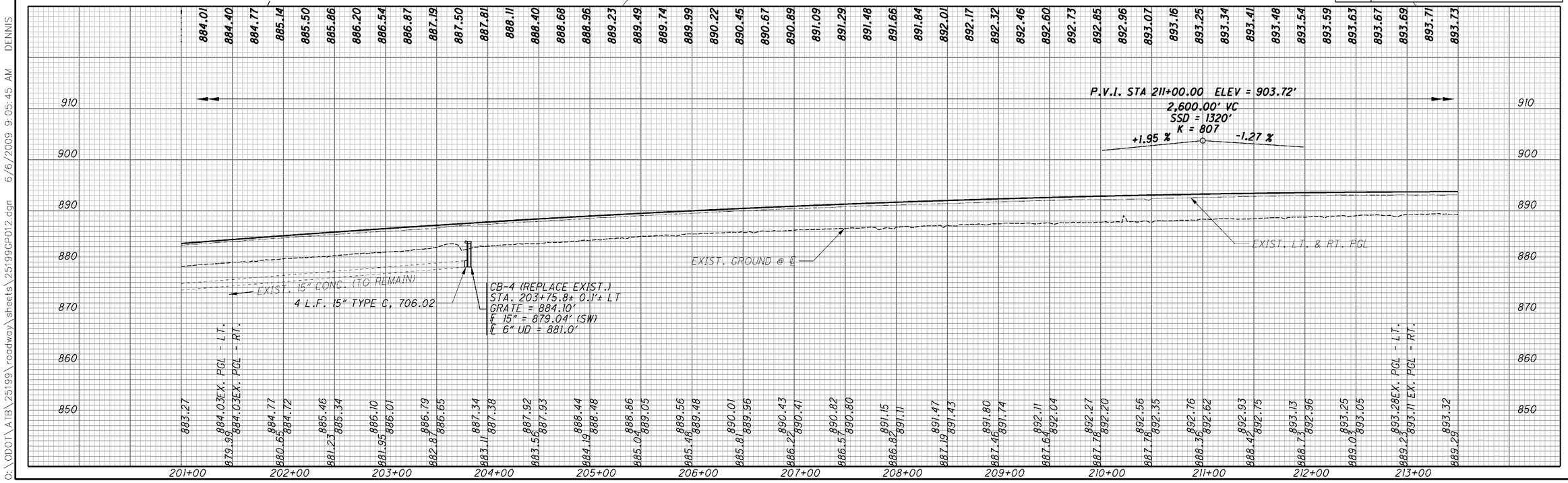

PALMER ENGINEERING
11300 CORNELL PARK DR
ENGINEERING CINCINNATI, OH 45242

O:\ODOT\ATB\25199\roadway\sheets\25199GP012.dgn 6/6/2009 9:05:45 AM DENNIS

P.I. STA. 238+56.16
= 27° 31' 35" (LT)
Dc = 0° 28' 00"
R = 12,277.67'
T = 3,007.34'
L = 5,898.54'
E = 362.95'
S.E. = 0.018

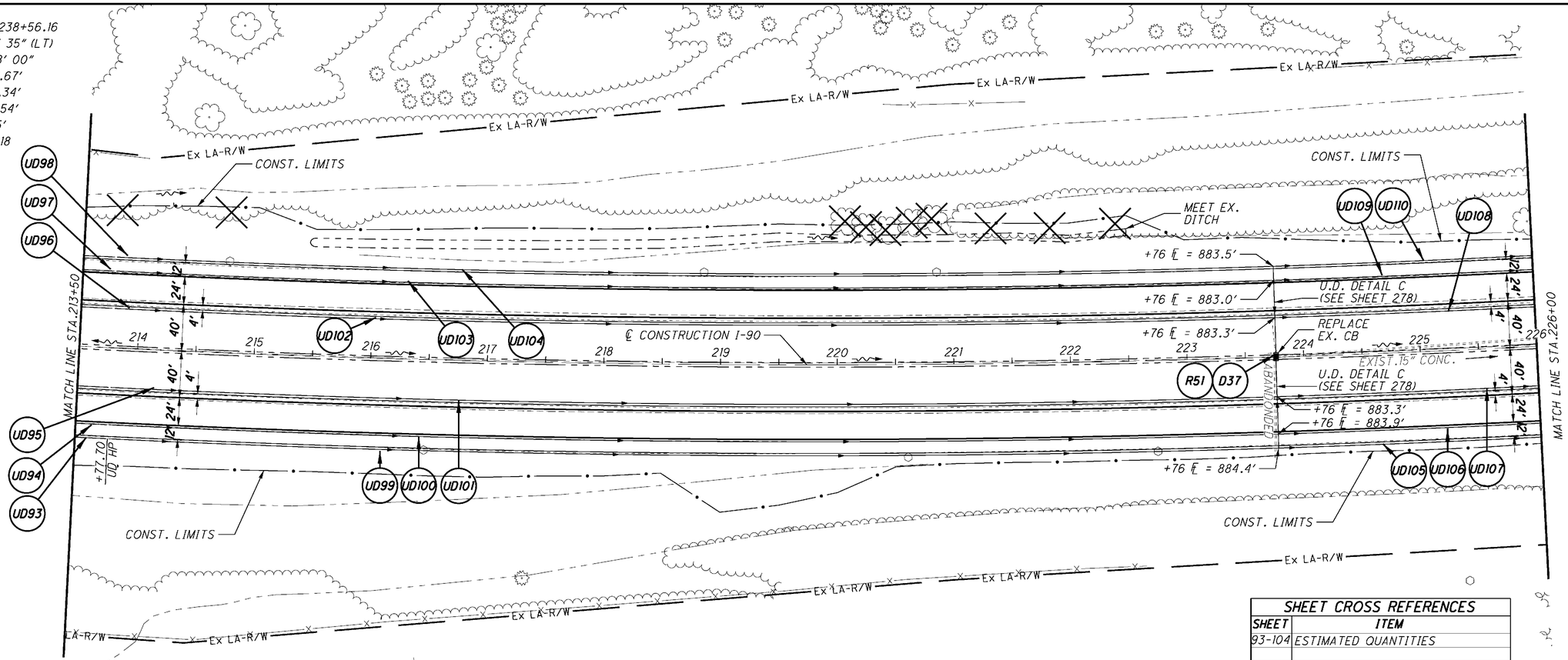

SHEET CROSS REFERENCES	
SHEET	ITEM
93-104	ESTIMATED QUANTITIES

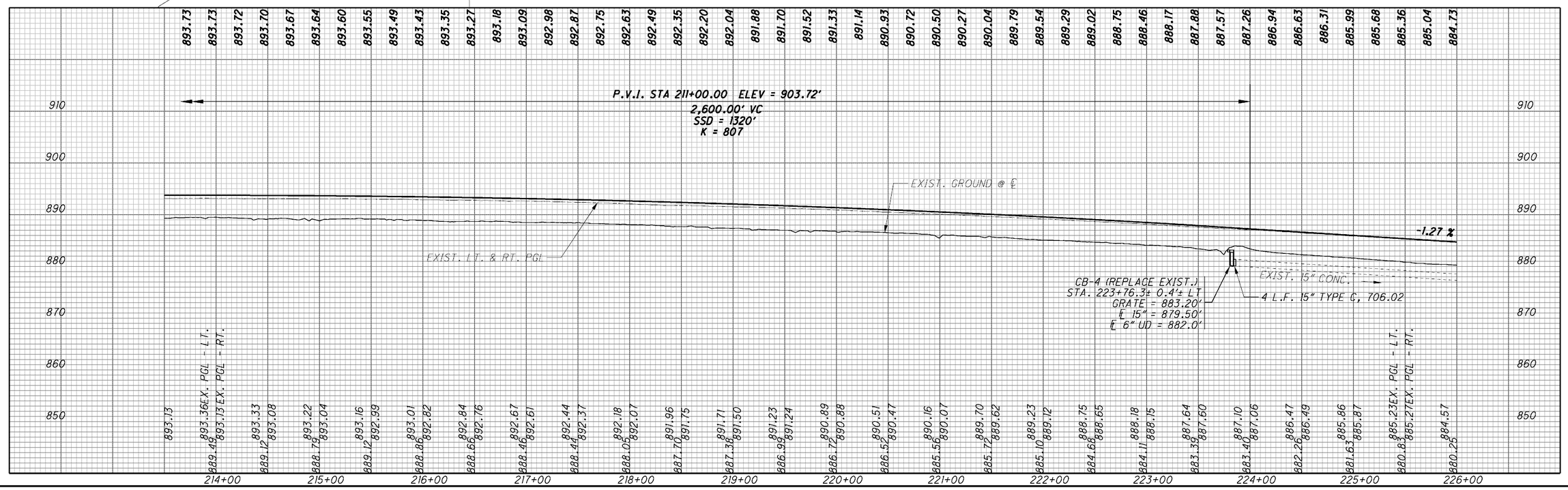

PLAN AND PROFILE
IR 90 STA. 213+50 TO STA. 226+00
ATB-90-14.25

HORIZONTAL SCALE IN FEET
0 25 50 100
CALCULATED
CHECKED

Palmer ENGINEERING
PALMER ENGINEERING
11300 CORNELL PARK DR
ENGINEERING CINCINNATI, OH 45242

O:\ODOT\ATB\25199\roadway\sheets\25199GP013.dgn 6/6/2009 9:05:49 AM DENNIS

Palmer ENGINEERING
PALMER ENGINEERING
11300 CORNELL PARK DR
CINCINNATI, OH 45242

O:\ODOT\ATB\25199\roadway\sheets\25199GP014.dgn 6/6/2009 9:05:52 AM DENNIS

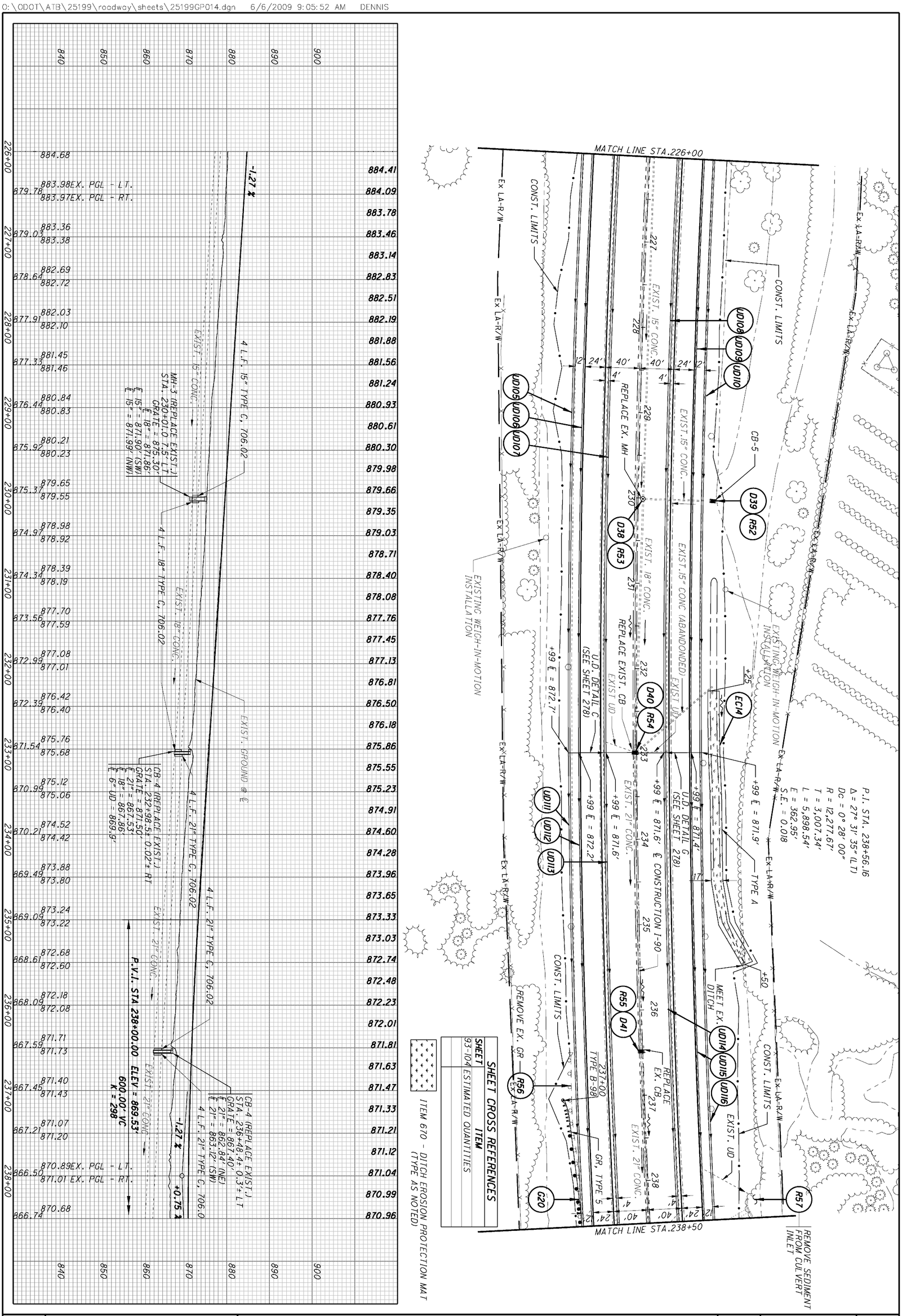

121 / 437	ATB-90-14.25	PLAN AND PROFILE IR 90 STA. 226+00 TO STA. 238+50	CALCULATED CHECKED	0 25 50 100 HORIZONTAL SCALE IN FEET

Palmer ENGINEERING
PALMER ENGINEERING
11300 CORNELL PARK DR
CINCINNATI, OH 45242

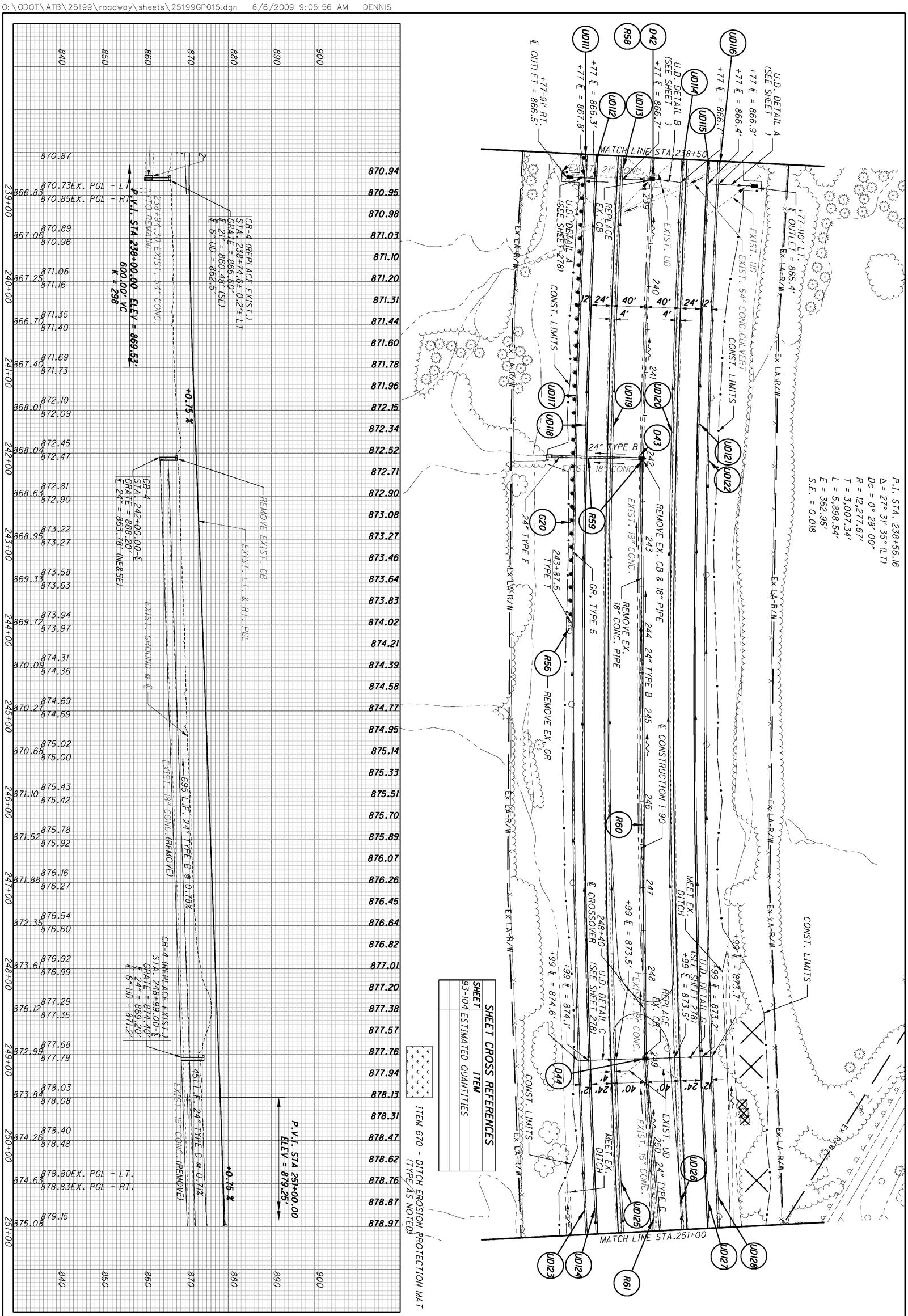

122 / 437	ATB-90-14.25	PLAN AND PROFILE IR 90 STA. 238+50 TO STA. 251+00	CALCULATED / CHECKED HORIZONTAL SCALE IN FEET

Palmer ENGINEERING
PALMER ENGINEERING
11300 CORNELL PARK DR
CINCINNATI, OH 45242

O:\ODOT\ATB\25199\roadway\sheets\25199GP016.dgn 6/6/2009 9:06:01 AM DENNIS

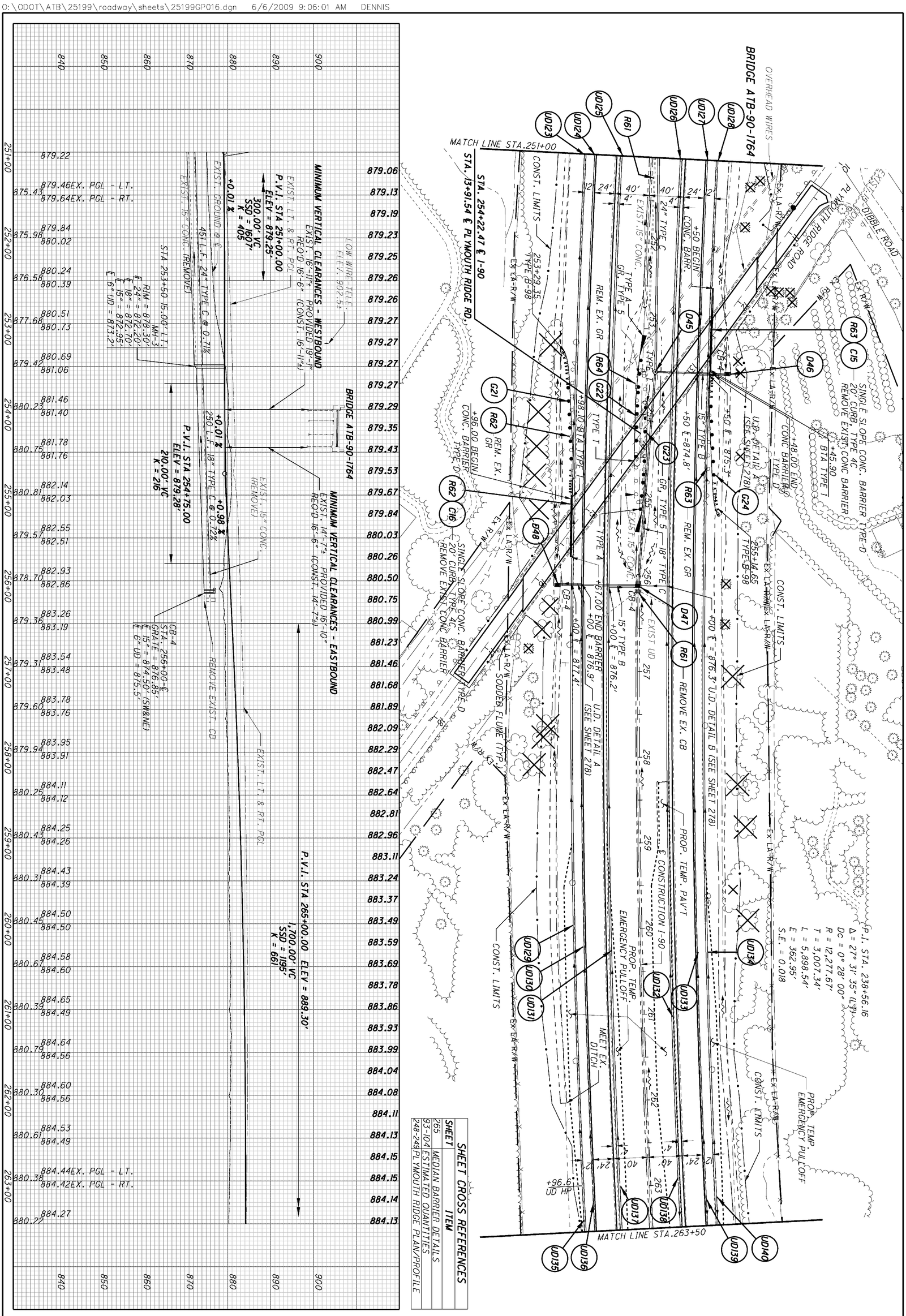

123 / 437	ATB-90-14.25	PLAN AND PROFILE IR 90 STA. 251+00 TO STA. 263+50	CALCULATED / CHECKED HORIZONTAL SCALE IN FEET

P.I. STA. 238+56.16
Δ = 27° 31' 35" (LT)
Dc = 0° 28' 00"
R = 12,277.67'
T = 3,007.34'
L = 5,898.54'
E = 362.95'
S.E. = 0.018

PT Sta. 267+47.36

MATCH LINE STA.263+50

MATCH LINE STA.276+00

UD138 UD139 UD140 UD135 UD136 UD137 UD141 UD142 UD143 UD144 UD145 UD146

R67 D50 R69 G25 D49 R68 EC16 EC15

Ex LA-R/W

CONST. LIMITS

PROP. TEMP. PAV'T

PROP. TEMP. EMERGENCY PULLOFF

℄ CONSTRUCTION I-90

MEET EX. DITCH

+00-98' LT. ℄ OUTLET = 872.8'

U.D. DETAIL A (SEE SHEET 278)

+00 ℄ = 874.1'

+00 ℄ = 873.7'

+75 ℄ = 873.8'

273+37.50 TYPE T

EXIST UD

REMOVE EX. GR

18", TYPE C

GR, TYPE 5

EXIST. 18" CONC.

U.D. DETAIL B (SEE SHEET 278)

REPLACE EX. CB TYPE A

N 37° 07' 28" E

U.D. DETAIL G (SEE SHEET 278)

+75 ℄ = 874.5'

+75 ℄ = 873.8'

+75 ℄ = 874.0'

TYPE A

EQUATION:
Sta 267+47.36 BK =
Sta 268+29.13 AH

+00

13.5'

264 265 266 267 269 270 271 272 273 274 275

+77

24' 12' 40' 4'

SHEET CROSS REFERENCES

SHEET	ITEM
93-104	ESTIMATED QUANTITIES

ITEM 670 - DITCH EROSION PROTECTION MAT (TYPE AS NOTED)

884.10 884.07 884.03 883.97 883.91 883.84 883.76 883.66 883.56 883.45 883.33 883.21 883.07 882.92 882.76 882.47 882.29 882.09 881.89 881.68 881.46 881.23 880.99 880.74 880.48 880.21 879.94 879.65 879.35 879.05 878.73 878.41 878.07 877.73 877.37 877.01 876.64 876.26 875.87 875.47 875.07 874.67 874.28 873.88 873.48 873.08

900 890 880 870 860 850 840

P.V.I. STA 265+00.00 ELEV = 889.30'
1,700.00' VC
SSD = 1195'
K = 661

+0.98 % -1.59 % -1.59 %

EXIST. GROUND @ ℄

EXIST. LT. & RT. PGL

EQUATION
STA. 267+47.36 BACK =
STA. 268+29.13 AHEAD

CB-4 (REPLACE EXIST.)
STA. 272+75.0± 0.4'± RT
GRATE = 873.48'
℄ 18" = 869.98' (N)
℄ 6" UD = 872.0'

4 L.F. 21" TYPE C, 706.02
8 LF 18" TYPE C, 706.02 @ 1.8%±

HW 2.1 or 2.2
273+75.00-106' LT
℄ 18" = 867.36

884.31 884.14EX. PGL - LT. 884.15EX. PGL - RT. 880.15 880.00 883.95 883.99 879.88 883.76 883.79 879.67 883.50 883.51 883.22 879.44 883.27 879.09 883.00 883.02 878.72 882.71 882.69 877.98 882.25 882.28 877.72 881.87 881.83 877.37 881.43 881.42 877.07 880.97 880.99 876.44 880.48 880.48 875.93 879.97 879.82 875.30 879.36 879.49 874.94 878.81 878.96 874.34 878.25 878.30 873.91 877.49 877.65 873.00 876.97 876.98 872.06 876.31 876.32 871.17 875.58 875.57 869.78 874.82 874.82 873.97EX. PGL - LT. 874.07EX. PGL - RT. 869.68 873.21 868.78

264+00 265+00 266+00 267+00 269+00 270+00 271+00 272+00 273+00 274+00 275+00 276+00

PALMER ENGINEERING
11300 CORNELL PARK DR
ENGINEERING CINCINNATI, OH 45242

C:\ODOT\ATB\25199\roadway\sheets\25199GP017.dgn 6/6/2009 9:06:06 AM DENNIS

HORIZONTAL SCALE IN FEET
0 25 50 100

CALCULATED CHECKED

PLAN AND PROFILE
IR 90 STA. 263+50 TO STA. 276+00

ATB-90-14.25

ITEM 670 - DITCH EROSION PROTECTION MAT (TYPE AS NOTED)

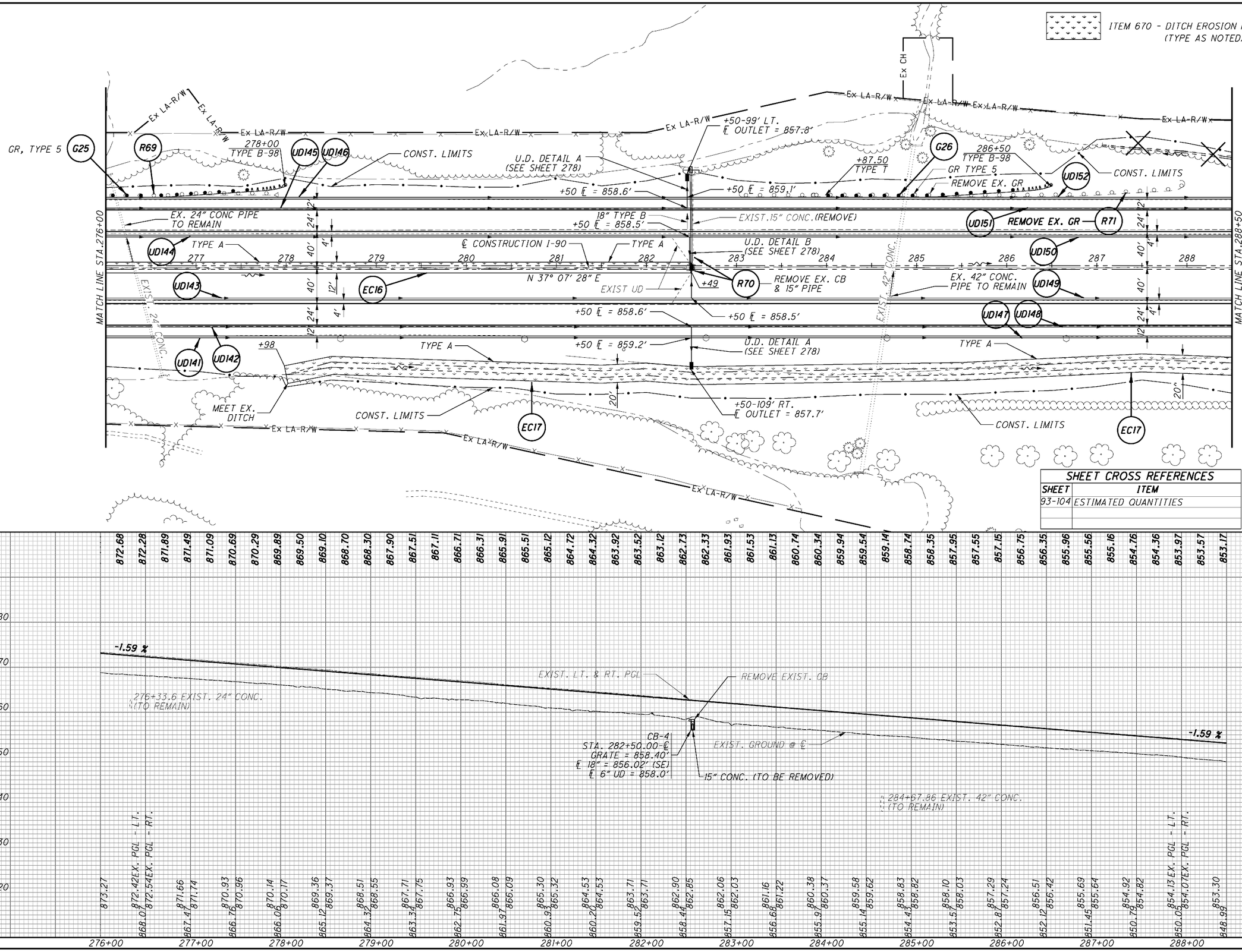

SHEET CROSS REFERENCES	
SHEET	ITEM
93-104	ESTIMATED QUANTITIES

HORIZONTAL SCALE IN FEET
0 25 50 100
CALCULATED
CHECKED

PLAN AND PROFILE
IR 90 STA. 276+00 TO STA. 288+50

ATB-90-14.25

125
437

Palmer ENGINEERING
11300 CORNELL PARK DR
CINCINNATI, OH 45242

O:\ODOT\ATB\25199\roadway\sheets\25199GP018.dgn 6/6/2009 9:06:11 AM DENNIS

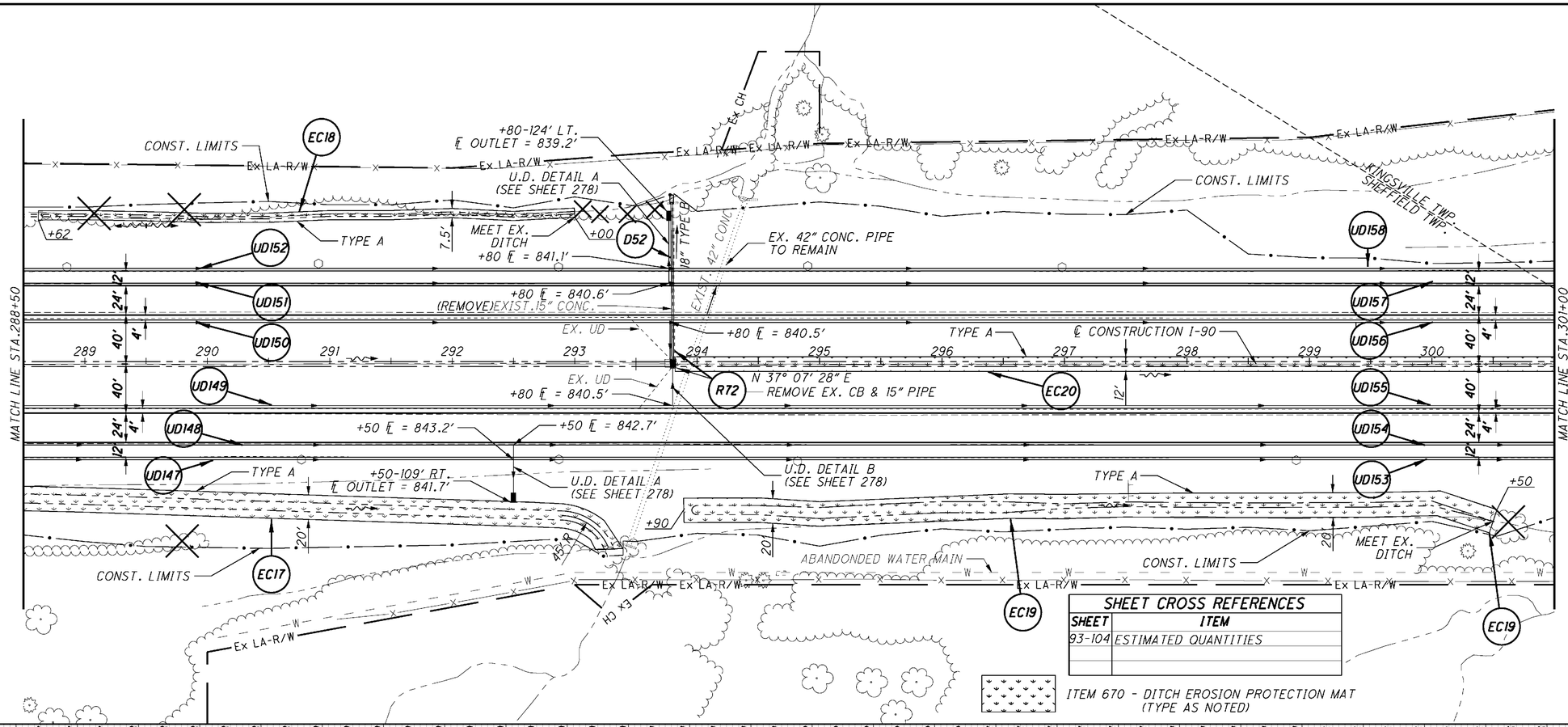

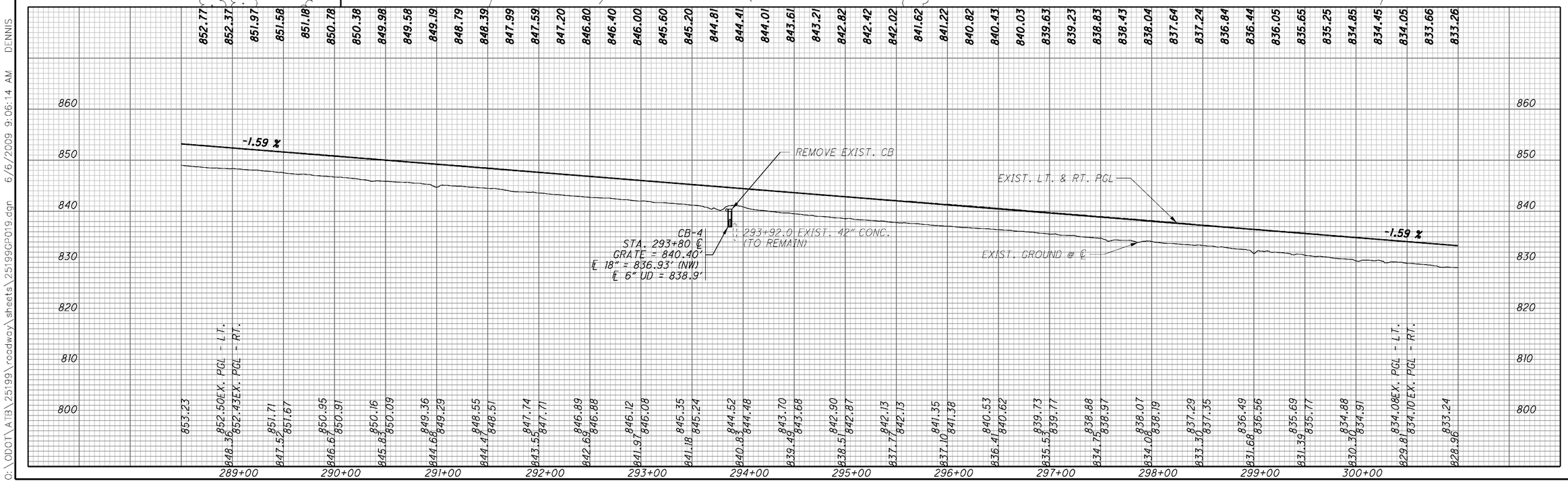

HORIZONTAL SCALE IN FEET
0 25 50 100
CALCULATED
CHECKED

PLAN AND PROFILE
IR 90 STA. 288+50 TO STA. 301+00

ATB-90-14.25

126
437

Palmer ENGINEERING
PALMER ENGINEERING
11300 CORNELL PARK DR
ENGINEERING CINCINNATI, OH 45242

O:\ODOT\ATB\25199\roadway\sheets\25199GP019.dgn 6/6/2009 9:06:14 AM DENNIS

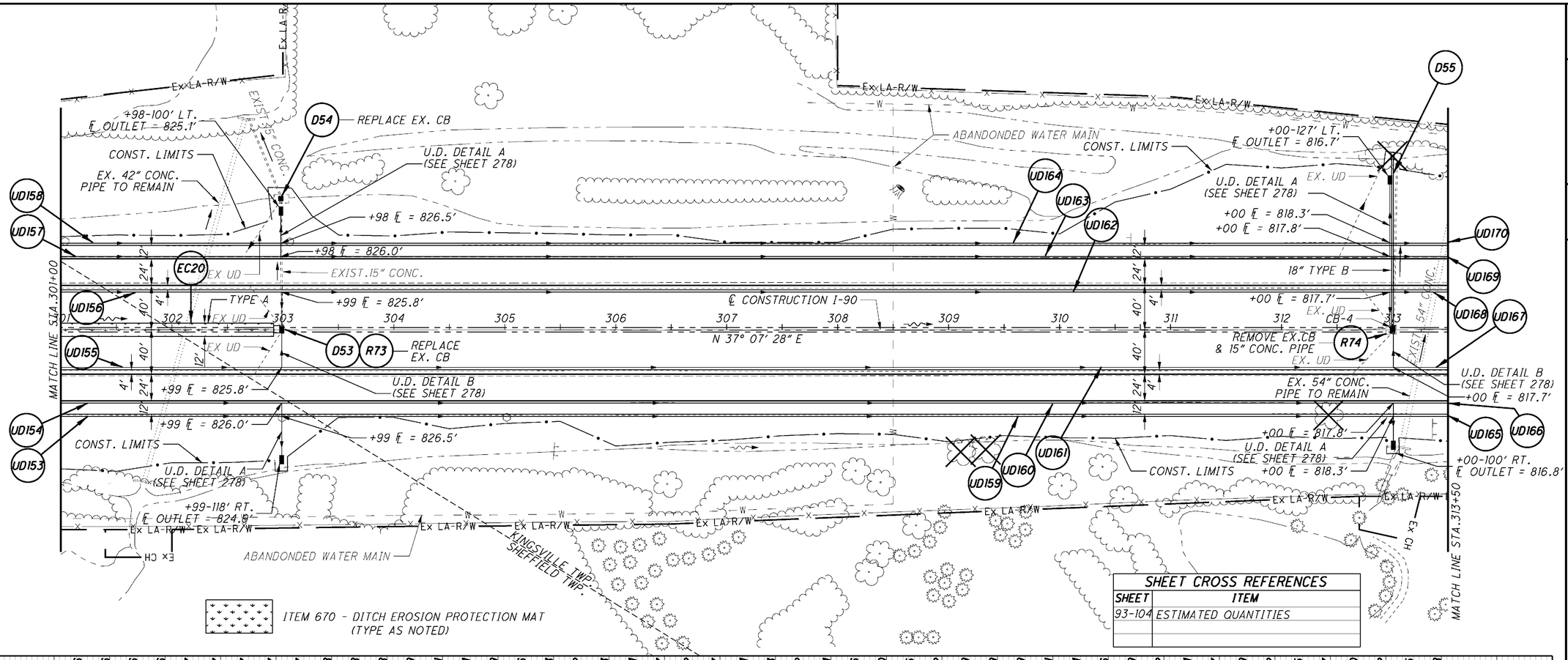

SHEET CROSS REFERENCES

SHEET	ITEM
93-104	ESTIMATED QUANTITIES

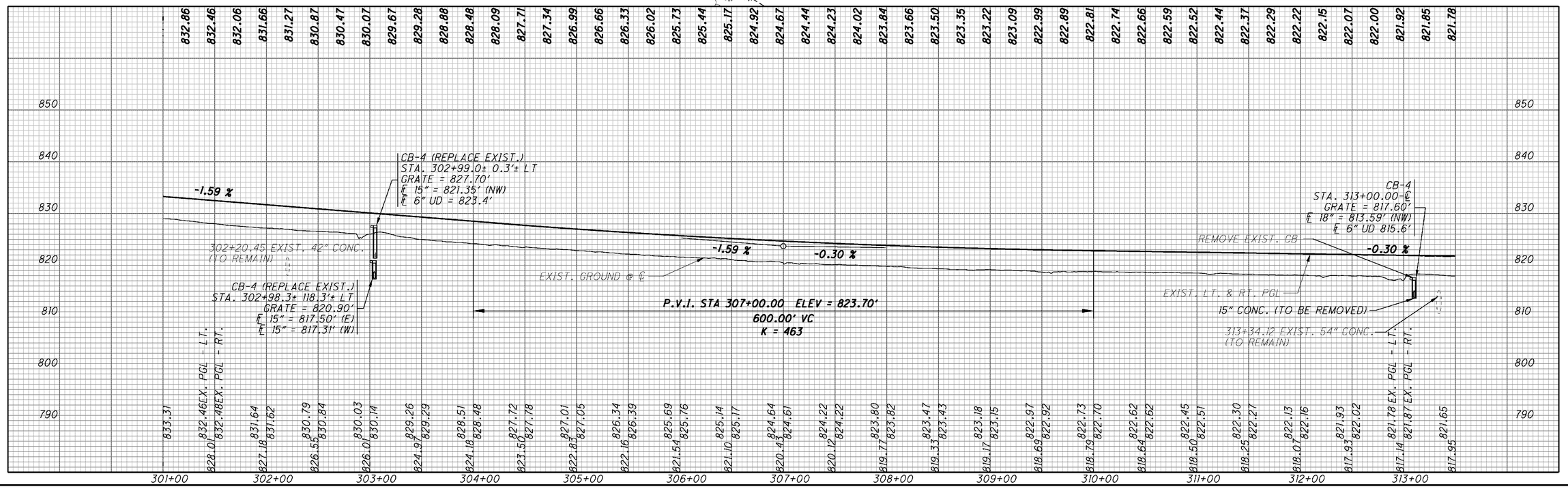

Palmer ENGINEERING
PALMER ENGINEERING
11300 CORNELL PARK DR
ENGINEERING CINCINNATI, OH 45242

O:\ODOT\ATB\25199\roadway\sheets\25199GP020.dgn 6/6/2009 9:06:18 AM DENNIS

HORIZONTAL SCALE IN FEET
0 25 50 100
CALCULATED
CHECKED

PLAN AND PROFILE
IR 90 STA. 301+00 TO STA. 313+50

ATB-90-14.25

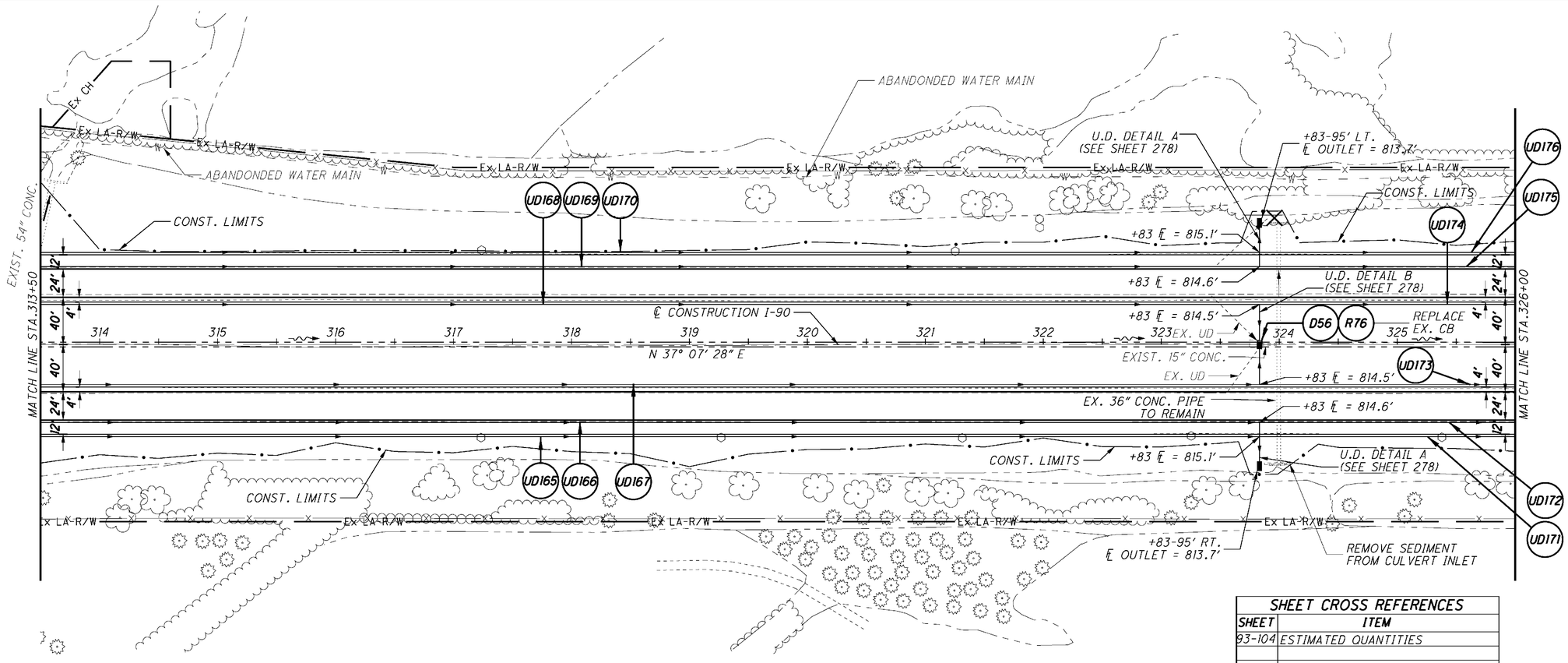

SHEET CROSS REFERENCES	
SHEET	ITEM
93-104	ESTIMATED QUANTITIES

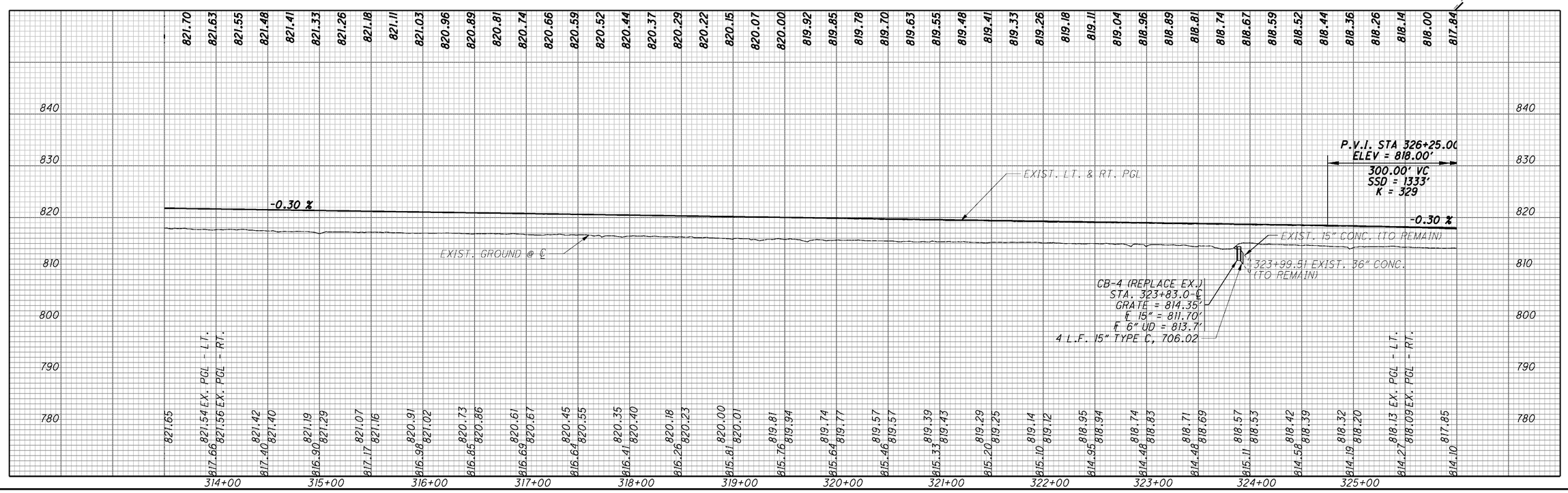

PALMER ENGINEERING
11300 CORNELL PARK DR
CINCINNATI, OH 45242
O:\ODOT\ATB\25199\roadway\sheets\25199GP021.dgn 6/6/2009 9:06:22 AM DENNIS

HORIZONTAL SCALE IN FEET
0 25 50 100
CALCULATED
CHECKED

PLAN AND PROFILE
IR 90 STA. 313+50 TO STA. 326+00

ATB-90-14.25

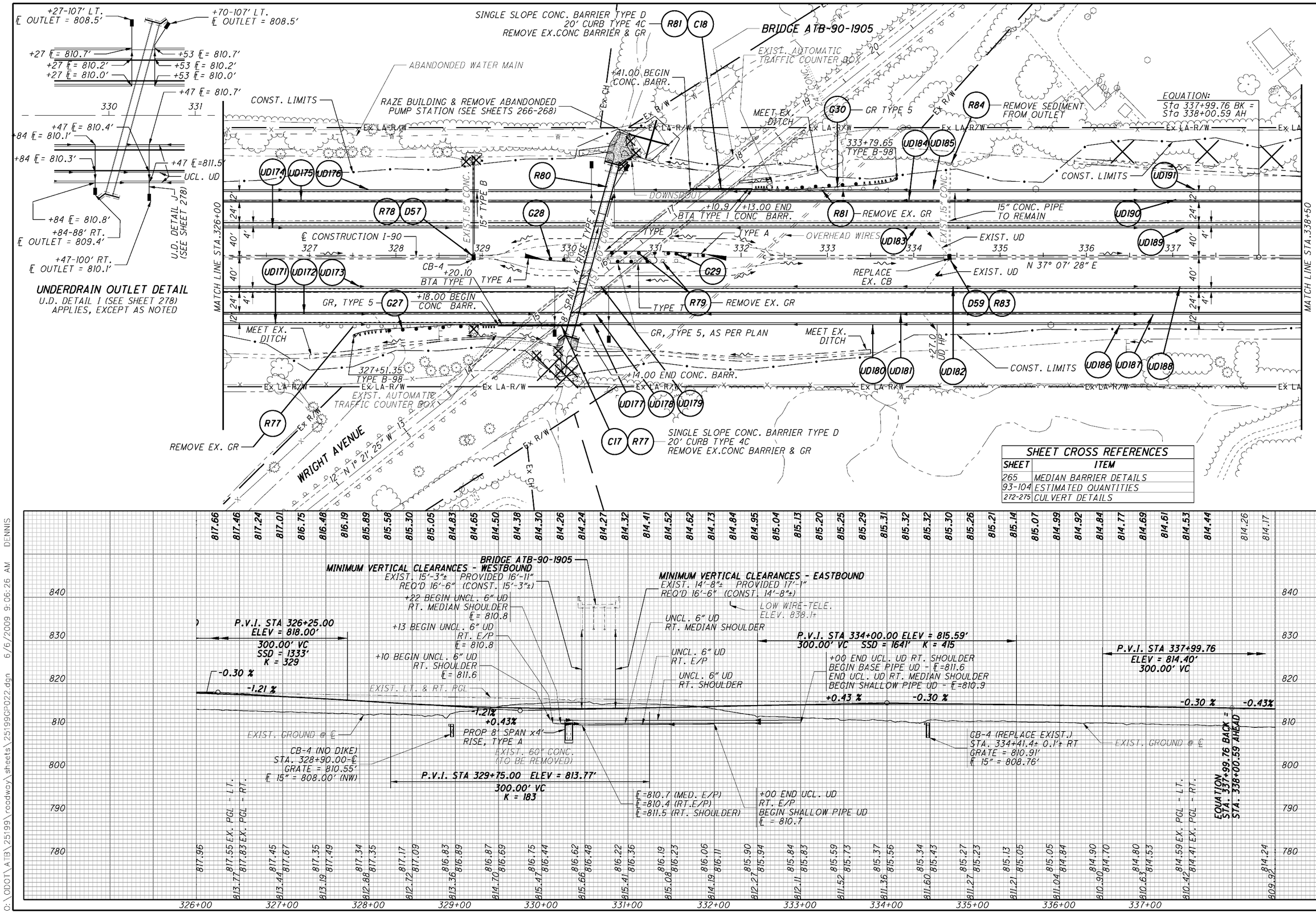

SHEET CROSS REFERENCES	
SHEET	ITEM
265	MEDIAN BARRIER DETAILS
93-104	ESTIMATED QUANTITIES
272-275	CULVERT DETAILS

HORIZONTAL SCALE IN FEET
0 25 50 100
CALCULATED
CHECKED

PLAN AND PROFILE
IR 90 STA. 326+00 TO STA. 338+50
ATB-90-14.25

Palmer ENGINEERING
PALMER ENGINEERING
11300 CORNELL PARK DR
CINCINNATI, OH 45242

O:\ODOT\ATB\25199\roadway\sheets\25199GP022.dgn 6/6/2009 9:06:26 AM DENNIS

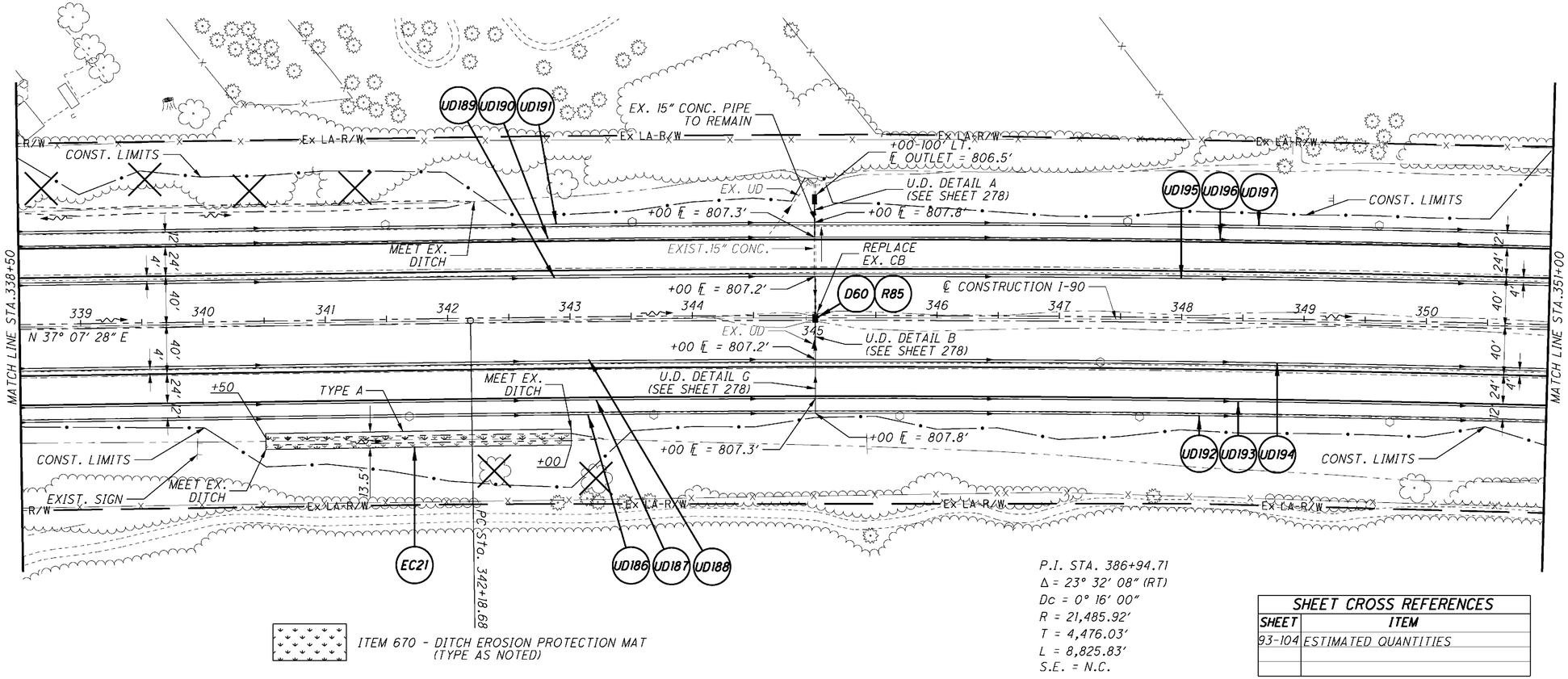

ITEM 670 - DITCH EROSION PROTECTION MAT (TYPE AS NOTED)

P.I. STA. 386+94.71
Δ = 23° 32' 08" (RT)
Dc = 0° 16' 00"
R = 21,485.92'
T = 4,476.03'
L = 8,825.83'
S.E. = N.C.

SHEET CROSS REFERENCES	
SHEET	ITEM
93-104	ESTIMATED QUANTITIES

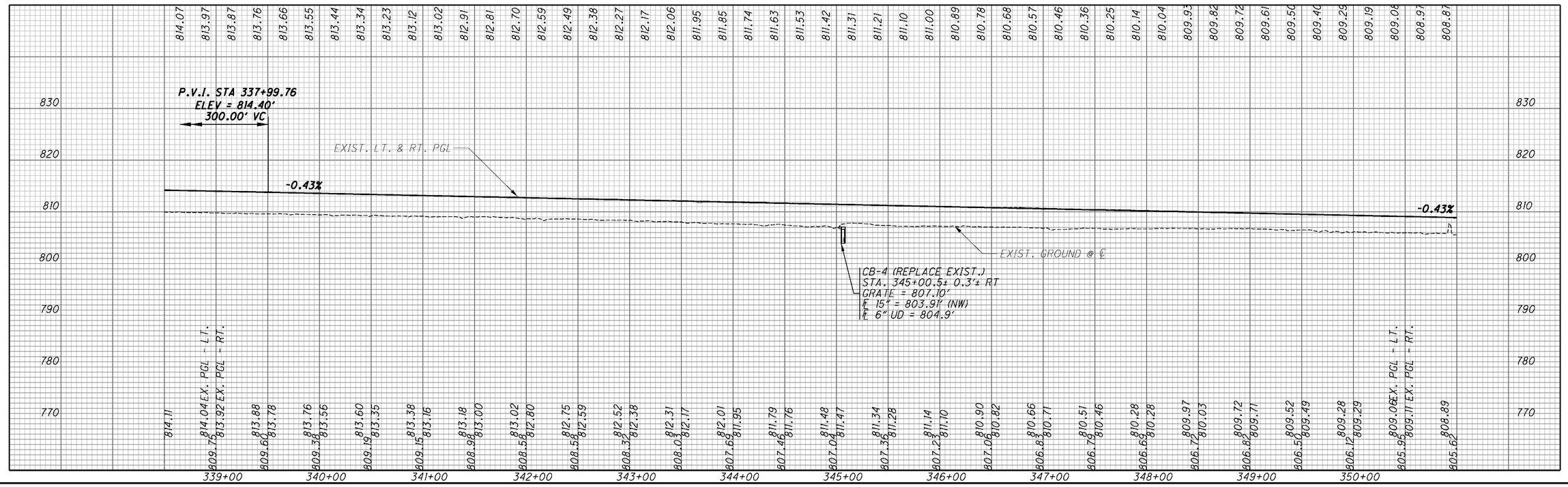

HORIZONTAL SCALE IN FEET
0 25 50 100
CALCULATED
CHECKED

PLAN AND PROFILE
IR 90 STA. 338+50 TO STA. 351+00
ATB-90-14.25

Palmer ENGINEERING
PALMER ENGINEERING
11300 CORNELL PARK DR
ENGINEERING CINCINNATI, OH 45242

O:\ODOT\ATB\25199\roadway\sheets\25199GP023.dgn 6/6/2009 9:06:32 AM DENNIS

END PROJECT
STA 357+00
℄ E032101

MATCH LINE STA.351+00

MATCH LINE STA.363+50

+50-96' LT.
℄ OUTLET = 803.5'
U.D. DETAIL A
(SEE SHEET 278)

Ex LA-R/W

CONST. LIMITS
+50 ℄ = 804.7'
EXIST. UD

MEET EX. DITCH

+50 ℄ = 804.2'

EXIST. 15" CONC.

EXIST. 24" CONC.

+50 ℄ = 804.0'

REPLACE EX. CB

U.D. DETAIL B
(SEE SHEET 278)

+50 ℄ = 804.0'

+50 ℄ = 804.2'

+50 ℄ = 804.7'

U.D. DETAIL G
(SEE SHEET 278)

CONST. LIMITS

200' TRANSITION

CONNECT TO EXIST. UD'S

HIGH TENSION ELECTRIC WIRES

CONNECT TO EXIST. UD'S

+30 ℄ CROSSOVER

℄ CONSTRUCTION I-90

TEMP. CB

EX. 15" CONC PIPE TO REMAIN

CONST. LIMITS

TEMP. CB & PIPE

PROPOSED MOT CROSSOVER
(SEE SHEETS 25-27)

CONST. LIMITS

UD197 UD196 UD195 UD194 UD193 UD192

UD202 UD201 UD203 UD200 UD199 UD198

D61 R86 R87

352 353 354 355 356 357 358 359 360 361 362 363

40' 42' 24' 12' 4'

P.I. STA. 386+94.71
= 23° 32' 08" (RT)
Dc = 0° 16' 00"
R = 21,485.92'
T = 4,476.03'
L = 8,825.83'
E = 461.28'
S.E. = N.C.

SHEET CROSS REFERENCES	
SHEET	ITEM
26-27	TEMP. CROSSOVER DETAILS
93-104	ESTIMATED QUANTITIES

1¼" PAVEMENT PLANING & RESURFACING

LOW WIRE-345 Kv ELEC. ELEV. 864.3±

LOW WIRE-138 Kv ELEC. ELEV. 840.3±

END PROJECT
STA.357+00.00

-0.43%

-0.43%

-0.45%±

EXIST. LT. & RT. PGL

℄ 353+00.05 EXIST. 24" CONC. (TO REMAIN)

EXIST. GROUND @ ℄

CB-4 (REPLACE EXIST.)
STA. 352+50.3± 1.5'± LT
GRATE = 804.00'
℄ 15" = 798.55' (NW)
℄ 6" UD = 800.60'

P.V.I. STA. 357+00.00
ELEV = 806.31' (NO. V.C.)

808.88 808.76 EX. PGL - LT. 805.17 808.70 EX. PGL - RT. 808.50 805.00 808.43 808.29 804.57 808.28 808.05 804.30 808.25 807.93 803.38 808.01 807.71 803.87 807.76 807.49 803.60 807.51 807.29 803.25 807.30 807.07 802.78 807.12 806.84 802.63 806.88 806.67 802.36 806.67 806.27 802.23 806.35 806.05 801.85 806.09 805.84 801.59 805.89 805.59 801.27 805.69 805.33 801.26 805.48 805.10 801.29 805.28 804.90 801.72 805.08 804.75 801.94 804.86 804.51 800.38 804.58 804.24 799.87 804.33 804.02 799.88 804.14 803.84 799.75 803.98 803.59 EX. PGL - LT. 799.47 803.78 EX. PGL - RT. 803.47 799.30

830 820 810 800 790 780 770

351+00 352+00 353+00 354+00 355+00 356+00 357+00 358+00 359+00 360+00 361+00 362+00 363+00

HORIZONTAL SCALE IN FEET
0 25 50 100

CALCULATED | CHECKED

PLAN AND PROFILE
IR 90 STA. 351+00 TO STA. 363+50

ATB-90-14.25

131
437

Palmer ENGINEERING
PALMER ENGINEERING
11300 CORNELL PARK DR
CINCINNATI, OH 45242

O:\ODOT\ATB\25199\roadway\sheets\25199GP024.dgn 6/6/2009 9:06:35 AM DENNIS

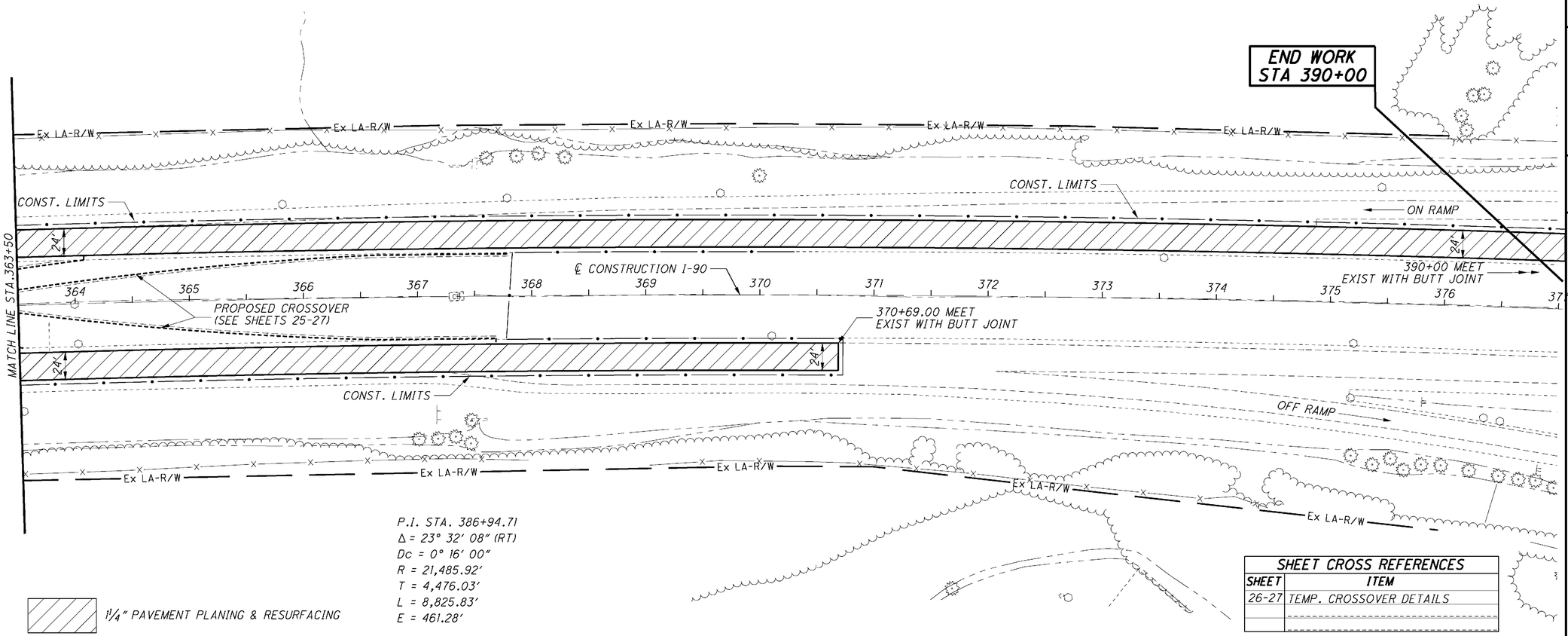

P.I. STA. 386+94.71
Δ = 23° 32' 08" (RT)
Dc = 0° 16' 00"
R = 21,485.92'
T = 4,476.03'
L = 8,825.83'
E = 461.28'

1¼" PAVEMENT PLANING & RESURFACING

SHEET CROSS REFERENCES	
SHEET	ITEM
26-27	TEMP. CROSSOVER DETAILS

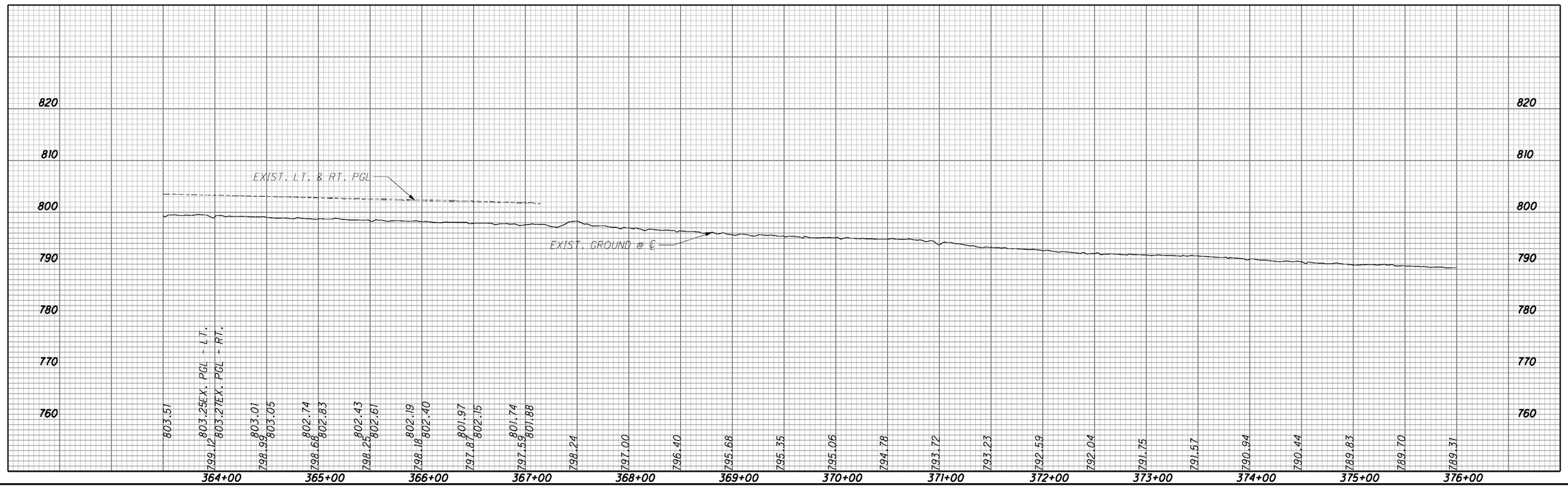

HORIZONTAL SCALE IN FEET
0 25 50 100
CALCULATED
CHECKED

PLAN AND PROFILE
IR 90 STA. 363+50 TO STA. 377+00
ATB-90-14.25

Palmer ENGINEERING
PALMER ENGINEERING
11300 CORNELL PARK DR
ENGINEERING CINCINNATI, OH 45242

O:\ODOT\ATB\25199\roadway\sheets\25199GP025.dgn 6/6/2009 9:06:39 AM DENNIS

SEEDING	
END WIDTH	SQ. YDS.
146	578
62	333
58	289
46	128
0	
	1,328

END AREA	
CUT	FILL
281	240
203	230
322	399
145	201
225	345
98	172
91	159
0	0
1,087	1,338

VOLUME	
CUT	FILL
449	435

CALCULATED

CHECKED

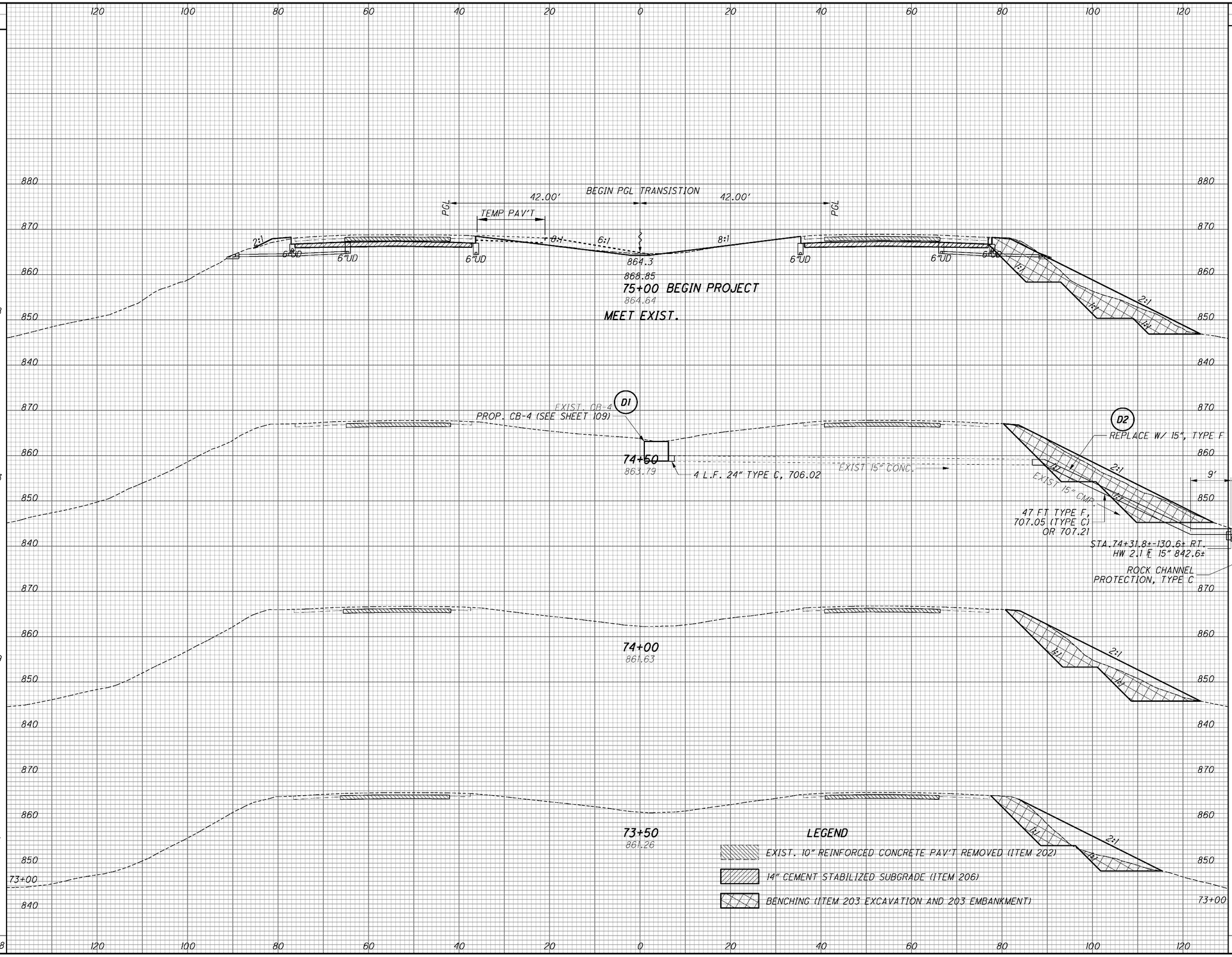

CROSS SECTIONS
STA. 73+50 TO STA. 75+00

ATB-90-14.25

133
437

Palmer ENGINEERING
PALMER ENGINEERING
11300 CORNELL PARK DR
CINCINNATI, OH 45242

O:\ODOT\ATB\25199\roadway\sheets\25199XS001.dgn 6/6/2009 9:06:47 AM DENNIS

CROSS SECTIONS
STA. 75+50 TO STA. 77+00

ATB-90-14.25

CALCULATED | CHECKED

SEEDING END WIDTH	SEEDING SQ. YDS.	END AREA CUT	END AREA FILL	VOLUME CUT	VOLUME FILL
155	864	308	337	590	612
156	867	330	324	588	588
156	853	305	311	564	544
151	825	304	276	542	478
	3,409			2,284	2,222

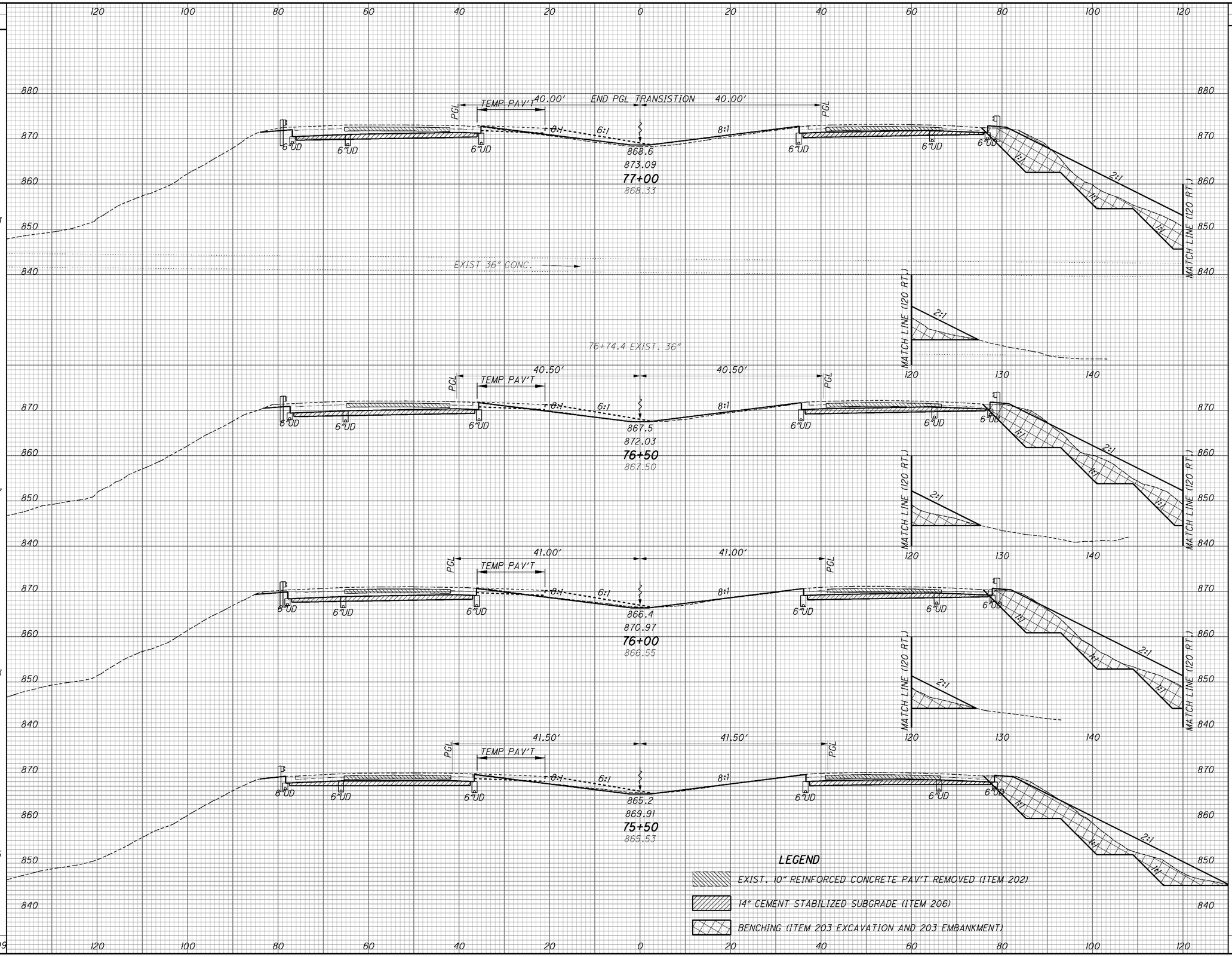

Palmer ENGINEERING
PALMER ENGINEERING
11300 CORNELL PARK DR
ENGINEERING CINCINNATI, OH 45242

O:\ODOT\ATB\25199\roadway\sheets\25199XS001.dgn 6/6/2009 9:06:49 AM DENNIS

SEEDING END WIDTH	SEEDING SQ. YDS.	END AREA CUT	END AREA FILL	VOLUME CUT	VOLUME FILL
180	992	371	427	669	764
177	956	352	398	638	716
167	906	336	375	645	688
159	872	360	368	619	653
	3,726			2,571	2,821

CALCULATED

CHECKED

CROSS SECTIONS
STA. 77+50 TO STA. 79+00

ATB-90-14.25

135
437

Palmer ENGINEERING
PALMER ENGINEERING
11300 CORNELL PARK DR
ENGINEERING CINCINNATI, OH 45242

O:\ODOT\ATB\25199\roadway\sheets\25199XS001.dgn 6/6/2009 9:06:52 AM DENNIS

SEEDING END WIDTH	SEEDING SQ. YDS.	END AREA CUT	END AREA FILL	VOLUME CUT	VOLUME FILL
195	1069	429	516	733	922
190	1058	362	480	706	869
191	1036	400	459	707	831
182	1006	363	438	680	801
4,169				2,826	3,423

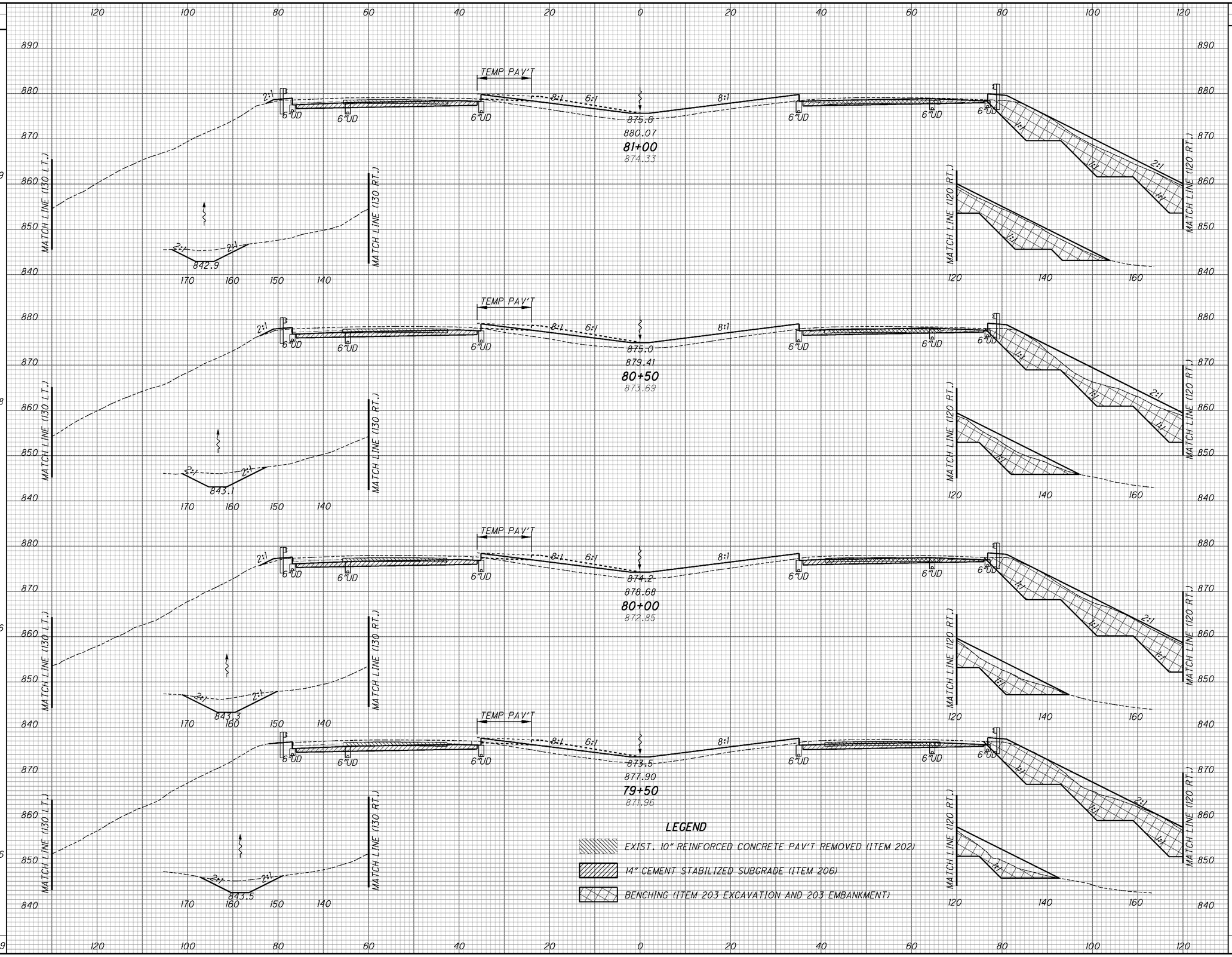

CALCULATED

CHECKED

CROSS SECTIONS
STA. 79+50 TO STA. 81+00

ATB-90-14.25

136
437

Palmer ENGINEERING
PALMER ENGINEERING
11300 CORNELL PARK DR
ENGINEERING CINCINNATI, OH 45242

O:\ODOT\ATB\25199\roadway\sheets\25199XS001.dgn 6/6/2009 9:06:55 AM DENNIS

CROSS SECTIONS
STA. 81+50 TO STA. 82+50

ATB-90-14.25

137
437

CALCULATED | CHECKED

SEEDING END WIDTH	SEEDING SQ. YDS.	END AREA CUT	END AREA FILL	VOLUME CUT	VOLUME FILL
170	928	303	341	549	649
164	1003	290	360	687	833
197	1089	453	540	817	978
3,020				2,053	2,460

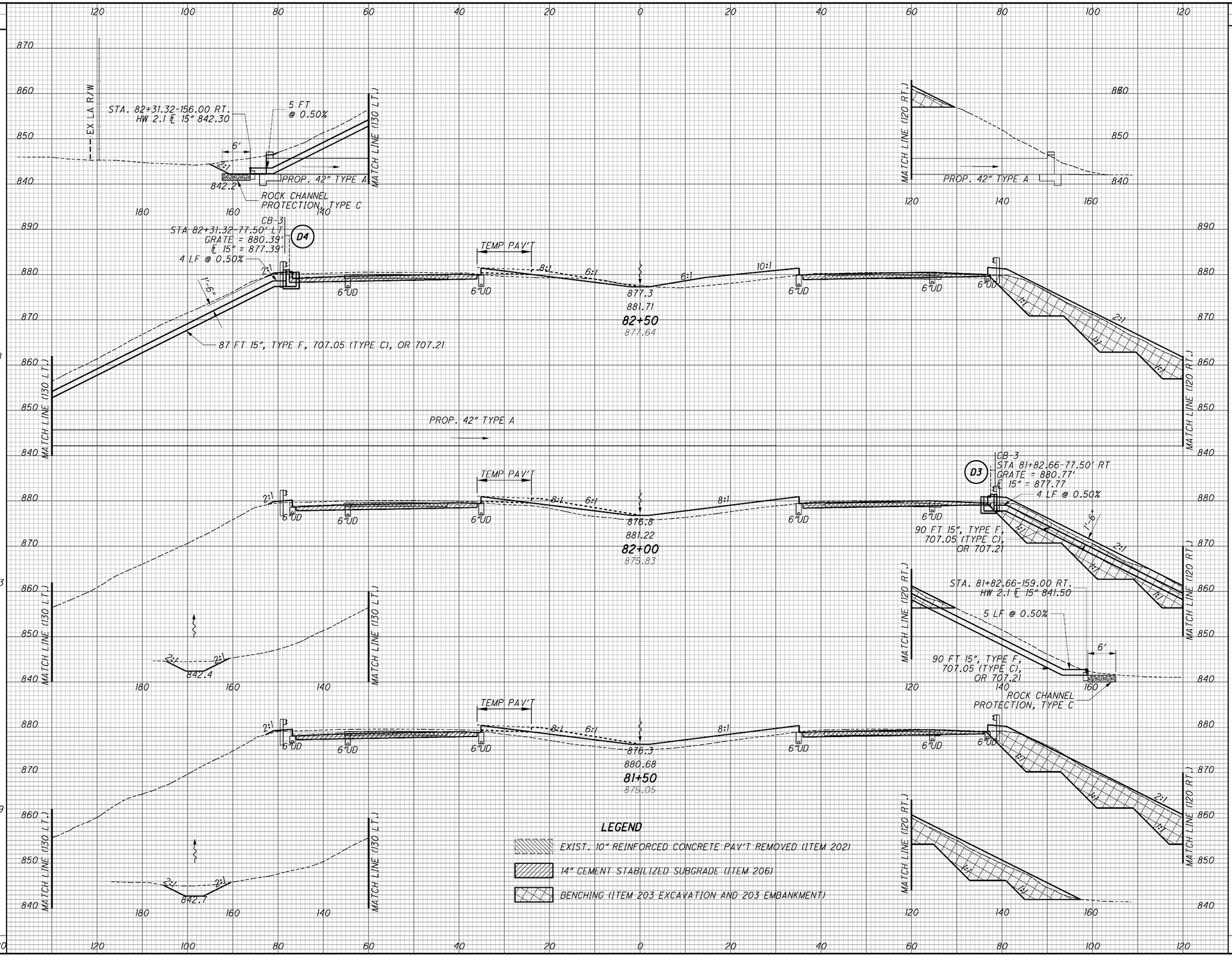

Palmer ENGINEERING
11300 CORNELL PARK DR
CINCINNATI, OH 45242

O:\ODOT\ATB\25199\roadway\sheets\25199XS001.dgn 6/6/2009 9:06:58 AM DENNIS

SEEDING		END AREA		VOLUME	
END WIDTH	SQ. YDS.	CUT	FILL	CUT	FILL
100	556	19	77	31	141
100	783	15	76	386	559
182	936	402	528	667	848
155	903	318	388	575	674
	3,178			1,659	2,222

CALCULATED

CHECKED

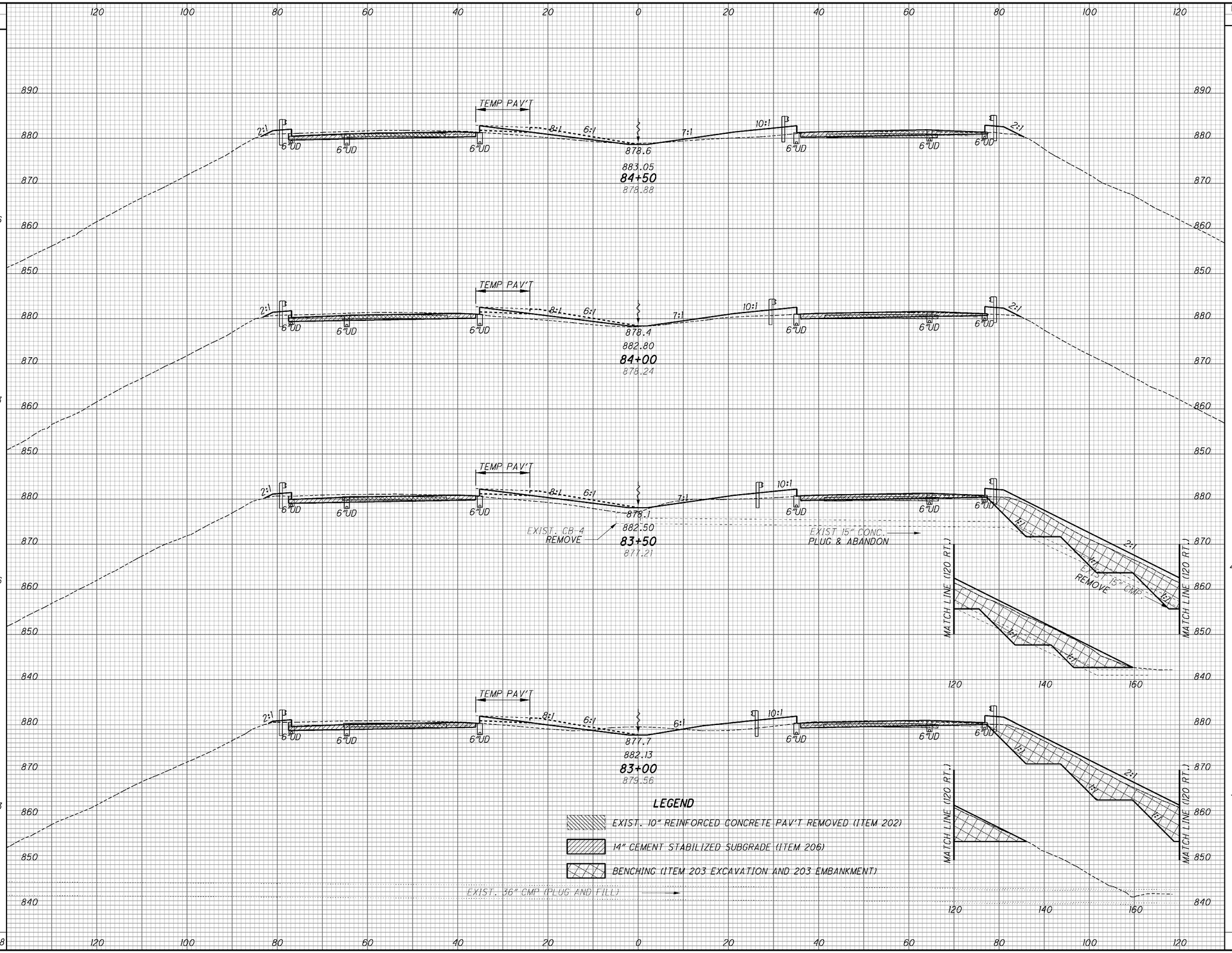

CROSS SECTIONS
STA. 83+00 TO STA. 84+50

ATB-90-14.25

138
437

Palmer ENGINEERING
PALMER ENGINEERING
11300 CORNELL PARK DR
CINCINNATI, OH 45242

O:\ODOT\ATB\25199\roadway\sheets\25199XS001.dgn 6/6/2009 9:07:00 AM DENNIS

SEEDING			END AREA		VOLUME		
	END WIDTH	SQ. YDS.	CUT	FILL	CUT	FILL	
87		224	46	42	30	171	
74	AHEAD	0	19	328	0	0	
73	BACK	221	34	417	34	210	
86		412	39	35	43	83	
		857			107	464	

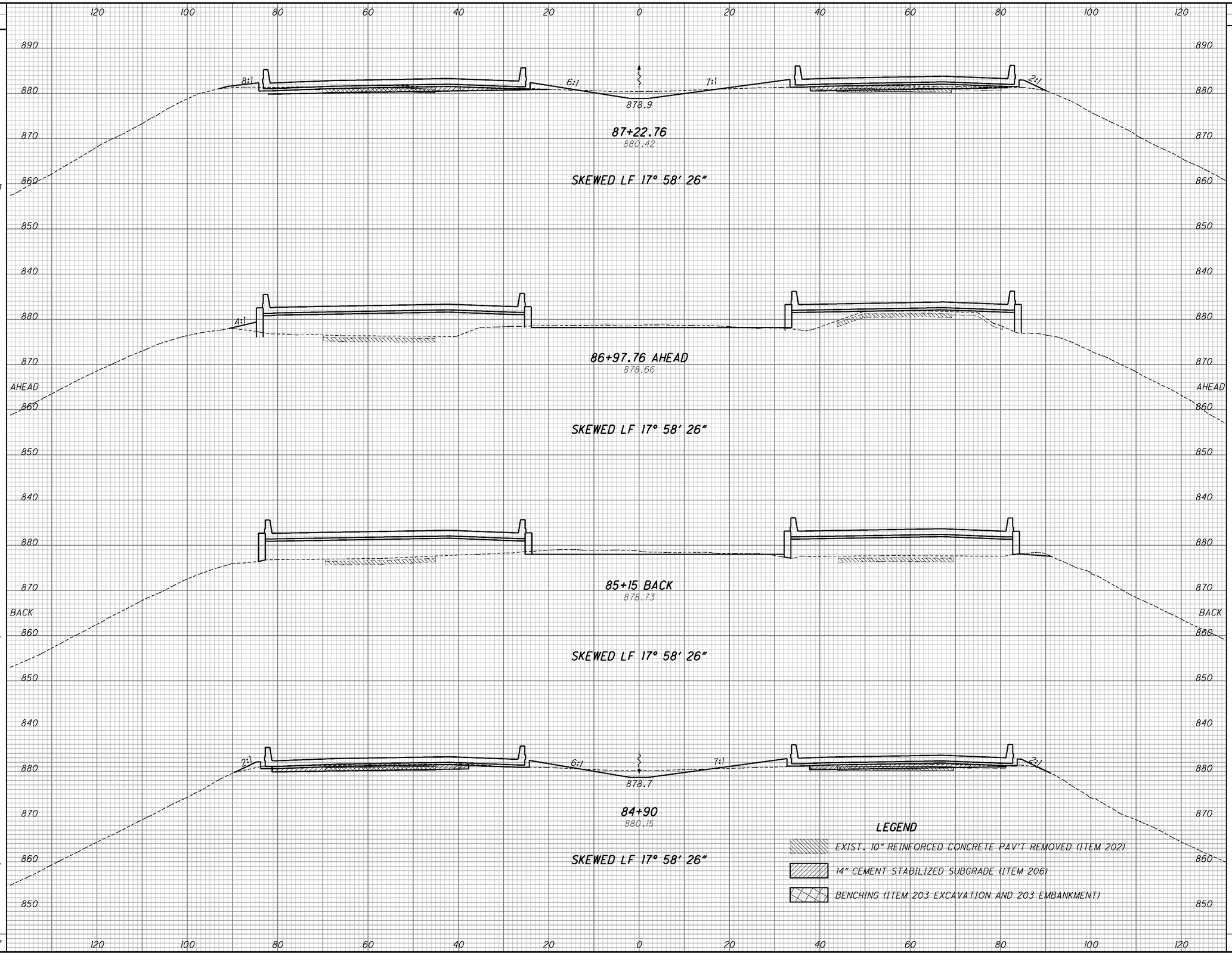

CALCULATED

CHECKED

CROSS SECTIONS
STA. 84+89.85 TO STA. 87+22.61

ATB-90-14.25

139
437

Palmer ENGINEERING
PALMER ENGINEERING
11300 CORNELL PARK DR
ENGINEERING CINCINNATI, OH 45242

O:\ODOT\ATB\25199\roadway\sheets\25199XS001.dgn 6/6/2009 9:07:03 AM DENNIS

SEEDING		END AREA		VOLUME	
END WIDTH	SQ. YDS.	CUT	FILL	CUT	FILL
177	1011	268	543	549	1066
187	1000	325	608	595	1042
173	769	317	518	308	565
104	291	15	92	31	68
	3,071			1,452	2,741

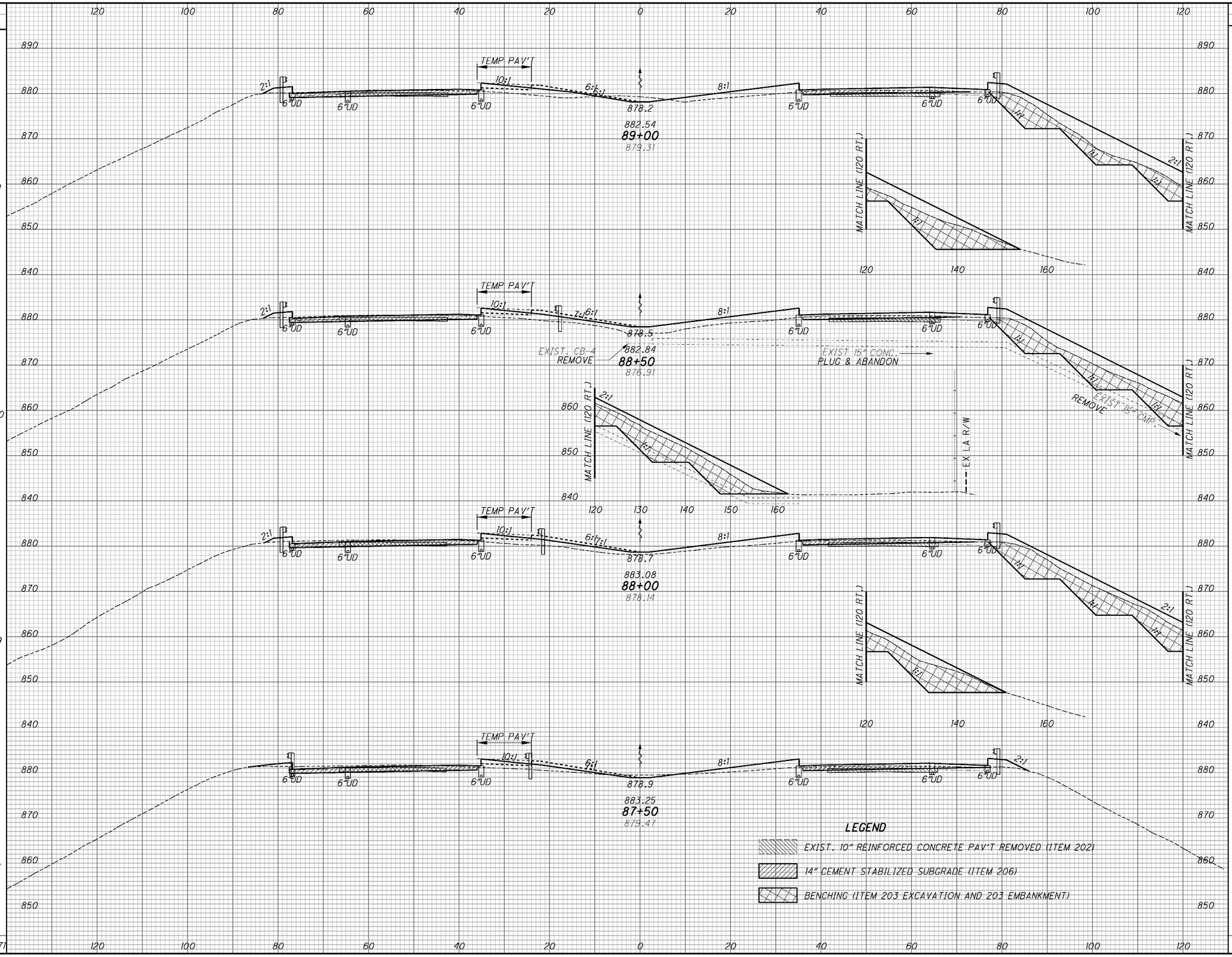

CALCULATED

CHECKED

CROSS SECTIONS
STA. 87+50 TO STA. 89+00

ATB-90-14.25

140
437

Palmer ENGINEERING
PALMER ENGINEERING
11300 CORNELL PARK DR
CINCINNATI, OH 45242

C:\ODOT\ATB\25199\roadway\sheets\25199XS001.dgn 6/6/2009 9:07:05 AM DENNIS

SEEDING	
END WIDTH	SQ. YDS.
	1006
	181
	997
	178
	986
	2,989

END AREA	
CUT	FILL
	240
	244
	362
	147
	384
	1,194

VOLUME	
CUT	FILL
	573
	448
	1039
	549
	1006
	537
	1000
	3,045

CALCULATED

CHECKED

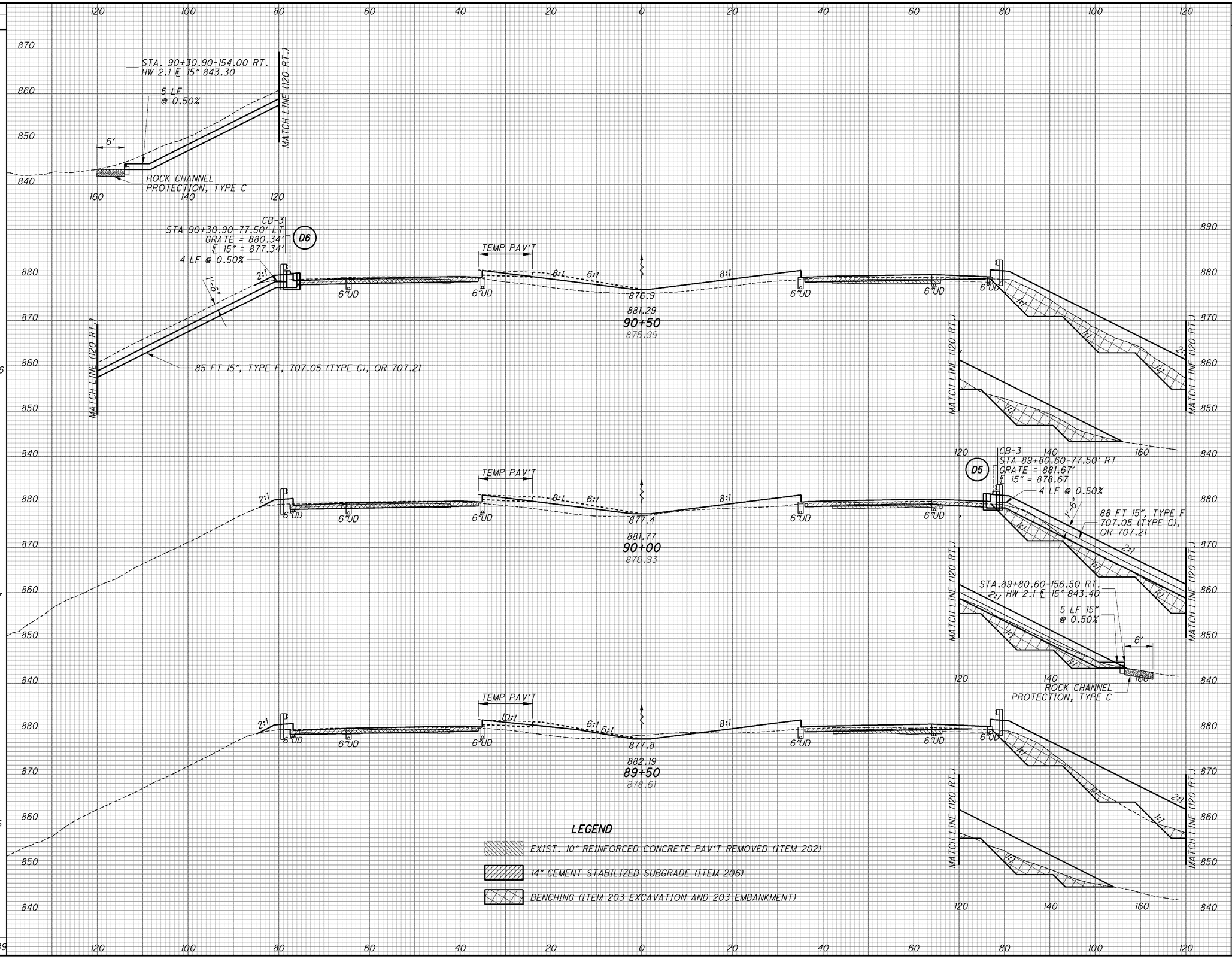

CROSS SECTIONS
STA. 89+50 TO STA. 90+50

ATB-90-14.25

Palmer ENGINEERING
PALMER ENGINEERING
11300 CORNELL PARK DR
CINCINNATI, OH 45242

O:\ODOT\ATB\25199\roadway\sheets\25199XS001.dgn 6/6/2009 9:07:07 AM DENNIS

CROSS SECTIONS

STA. 91+00.00 TO STA. 92+00.00

ATB-90-14.25

142
437

CALCULATED | CHECKED

SEEDING END WIDTH	SEEDING SQ. YDS.	END AREA CUT	END AREA FILL	VOLUME CUT	VOLUME FILL
175	1028	273	553	506	1042
195	1108	274	572	494	1071
204	1069	260	585	462	1072
	3,205			1,462	3,185

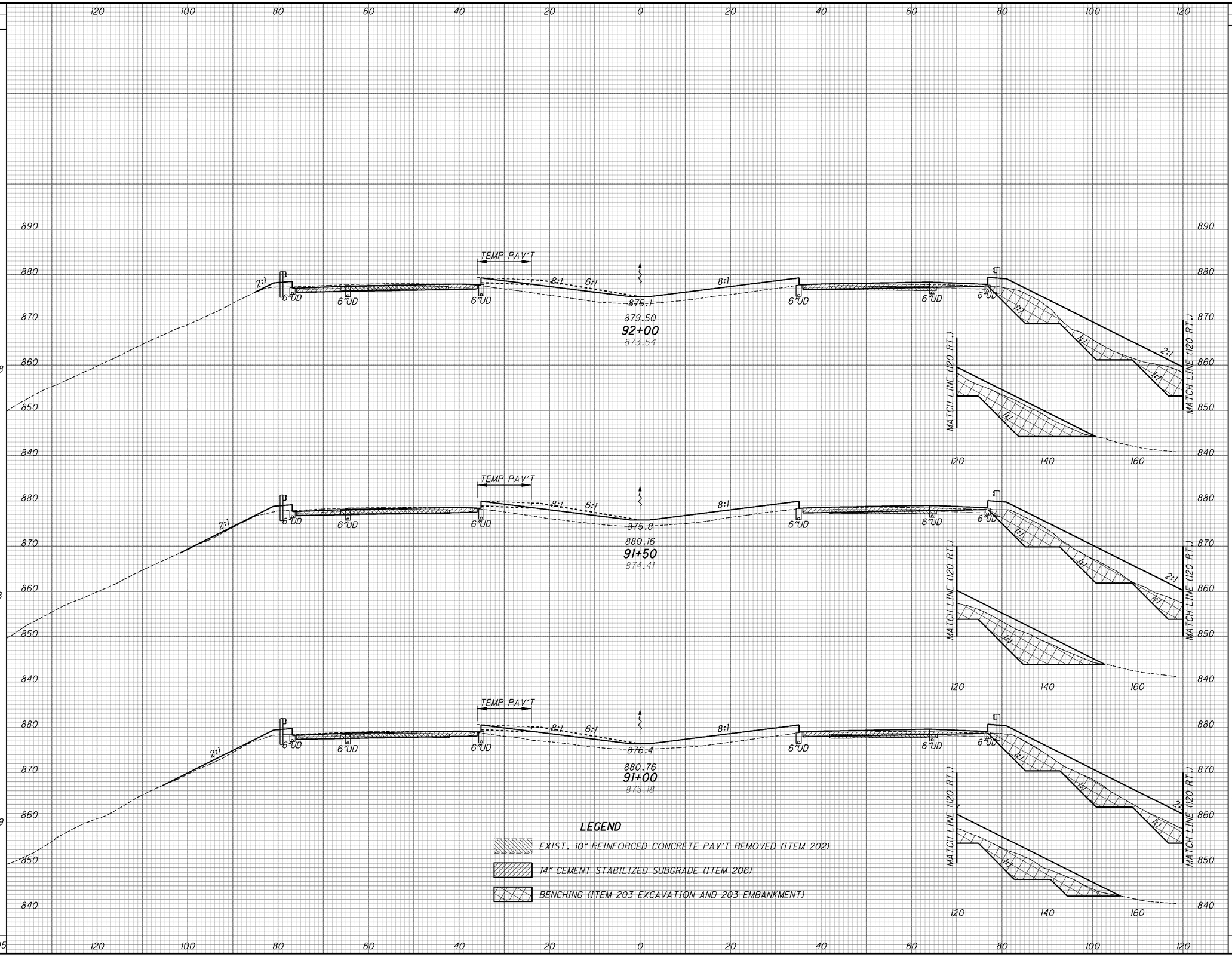

Palmer ENGINEERING
PALMER ENGINEERING
11300 CORNELL PARK DR
CINCINNATI, OH 45242

O:\ODOT\ATB\25199\roadway\sheets\25199XS001.dgn 6/6/2009 9:07:10 AM DENNIS

SEEDING	
END WIDTH	SQ. YDS.
172	1014
193	1022
175	972
	3,008

END AREA	
CUT	FILL
274	532
249	555
306	573

VOLUME	
CUT	FILL
484	1006
513	1045
536	1043
1,533	3,094

CALCULATED

CHECKED

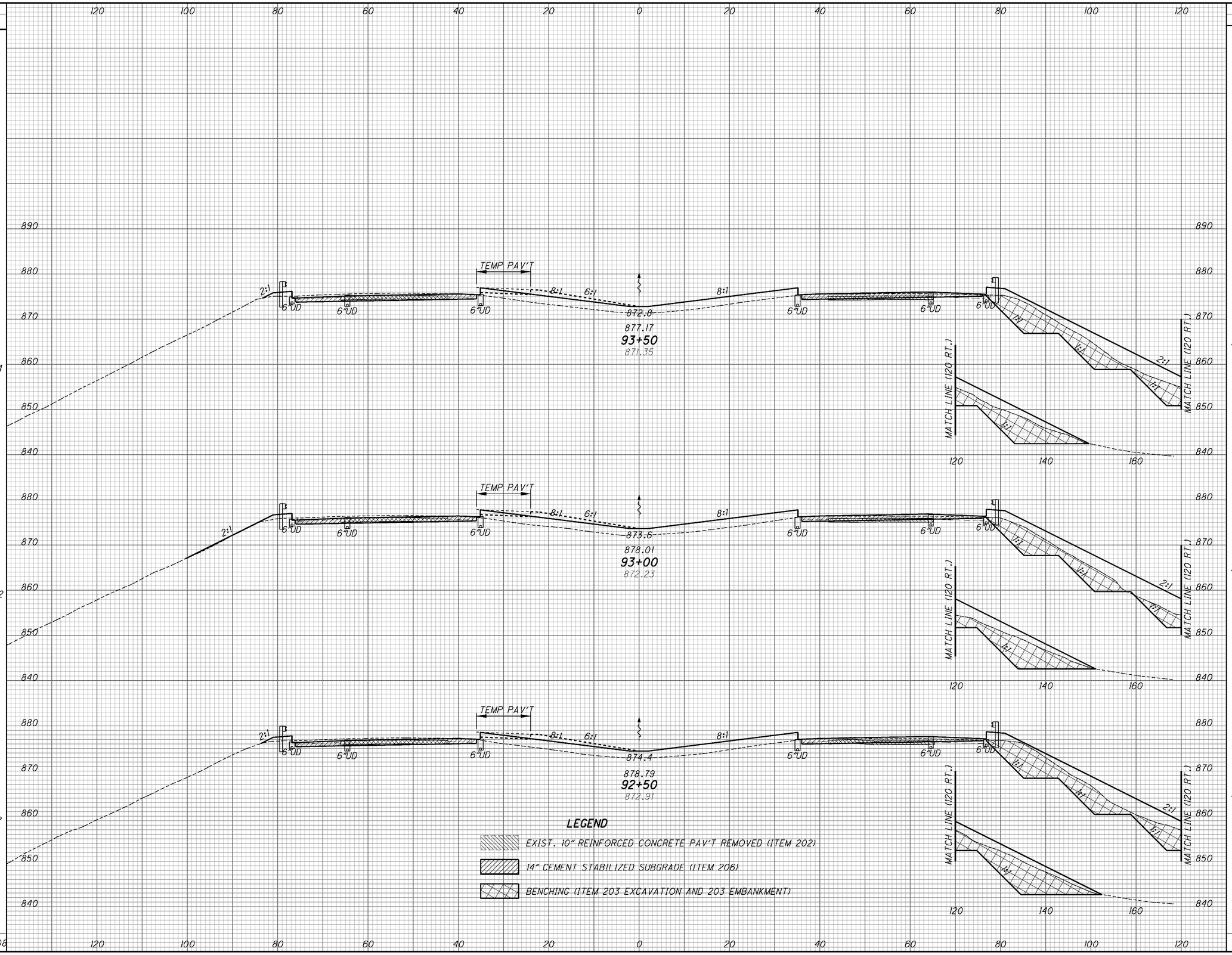

CROSS SECTIONS

STA. 92+50.00 TO STA. 93+50.00

ATB-90-14.25

143
437

Palmer ENGINEERING
PALMER ENGINEERING
11300 CORNELL PARK DR
CINCINNATI, OH 45242

O:\ODOT\ATB\25199\roadway\sheets\25199XS001.dgn 6/6/2009 9:07:12 AM DENNIS

SEEDING		END AREA		VOLUME			
END WIDTH	SQ. YDS.	CUT	FILL	CUT	FILL	CALCULATED	CHECKED
167	917	320	470	528	853		
163	922	250	451	500	877		
169	947	289	496	522	951		
	2,786			1,550	2,681		

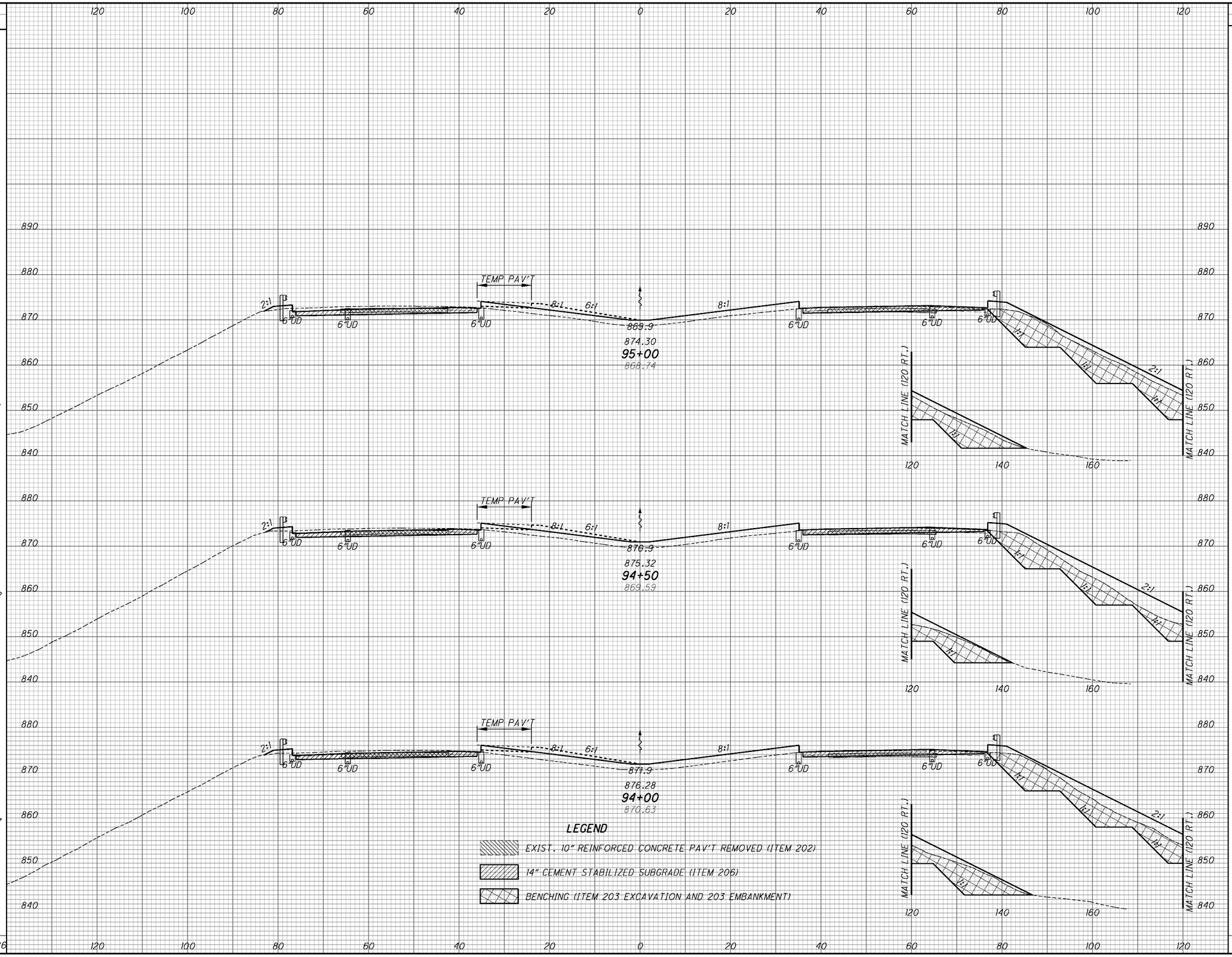

CROSS SECTIONS
STA. 94+00.00 TO STA. 95+00.00

ATB-90-14.25

144
437

Palmer ENGINEERING
PALMER ENGINEERING
11300 CORNELL PARK DR
ENGINEERING CINCINNATI, OH 45242

O:\ODOT\ATB\25199\roadway\sheets\25199XS001.dgn 6/6/2009 9:07:14 AM DENNIS

SEEDING		END AREA		VOLUME			
END WIDTH	SQ. YDS.	CUT	FILL	CUT	FILL	CALCULATED	CHECKED
184	1053	296	440				
				568	829		
195	1006	318	455				
				555			
167	928	281	450				
				557	852		
2,987				1,680	1,681		

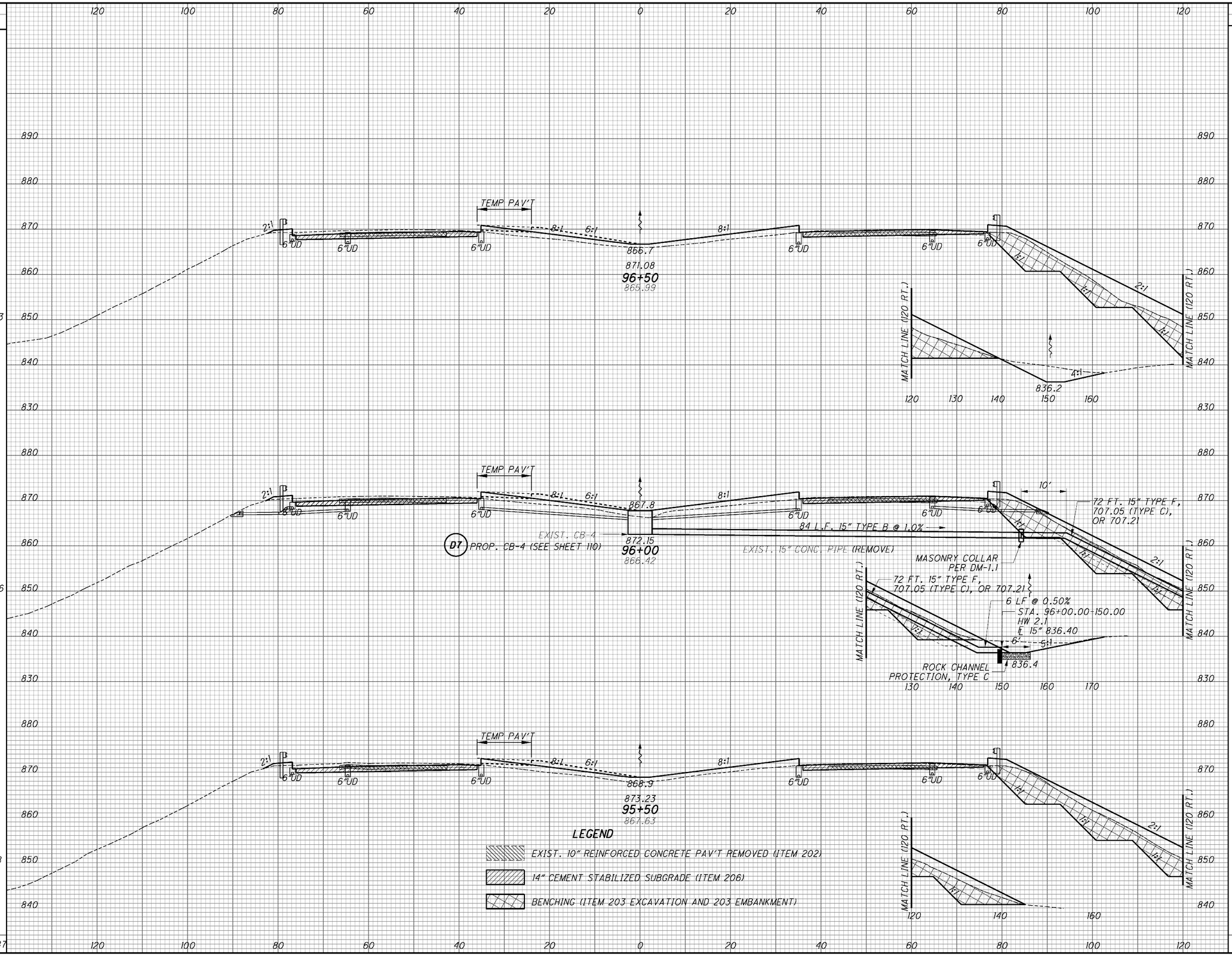

CROSS SECTIONS
STA. 95+50.00 TO STA. 96+50.00

ATB-90-14.25

145
437

Palmer ENGINEERING
PALMER ENGINEERING
11300 CORNELL PARK DR
ENGINEERING CINCINNATI, OH 45242

O:\ODOT\ATB\25199\roadway\sheets\25199XS001.dgn 6/6/2009 9:07:16 AM DENNIS

SEEDING END WIDTH	SEEDING SQ. YDS.	END AREA CUT	END AREA FILL	VOLUME CUT	VOLUME FILL
177	994	264	394	481	751
181	1008	256	417	477	799
182	1017	260	446	515	820
	3,019			1,473	2,370

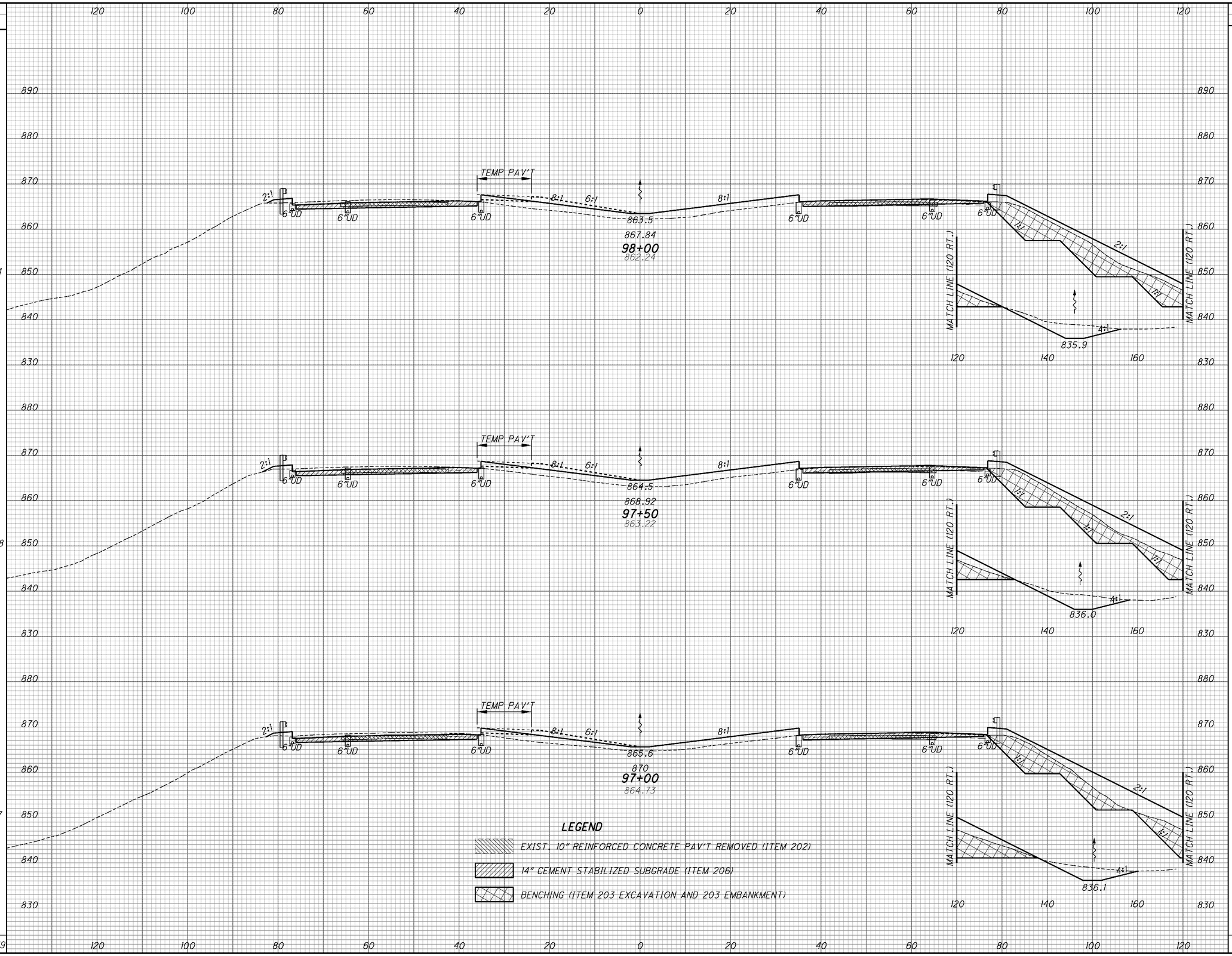

CALCULATED

CHECKED

CROSS SECTIONS
STA. 97+00.00 TO STA. 98+00.00

ATB-90-14.25

146
437

Palmer ENGINEERING
PALMER ENGINEERING
11300 CORNELL PARK DR
CINCINNATI, OH 45242

O:\ODOT\ATB\25199\roadway\sheets\25199XS001.dgn 6/6/2009 9:07:19 AM DENNIS

SEEDING		END AREA		VOLUME		CALCULATED	CHECKED
END WIDTH	SQ. YDS.	CUT	FILL	CUT	FILL		
127	708	54	109	101	203		
128	692	54	110	96	210		
121	828	49	117	291	473		
	2,228			488	886		

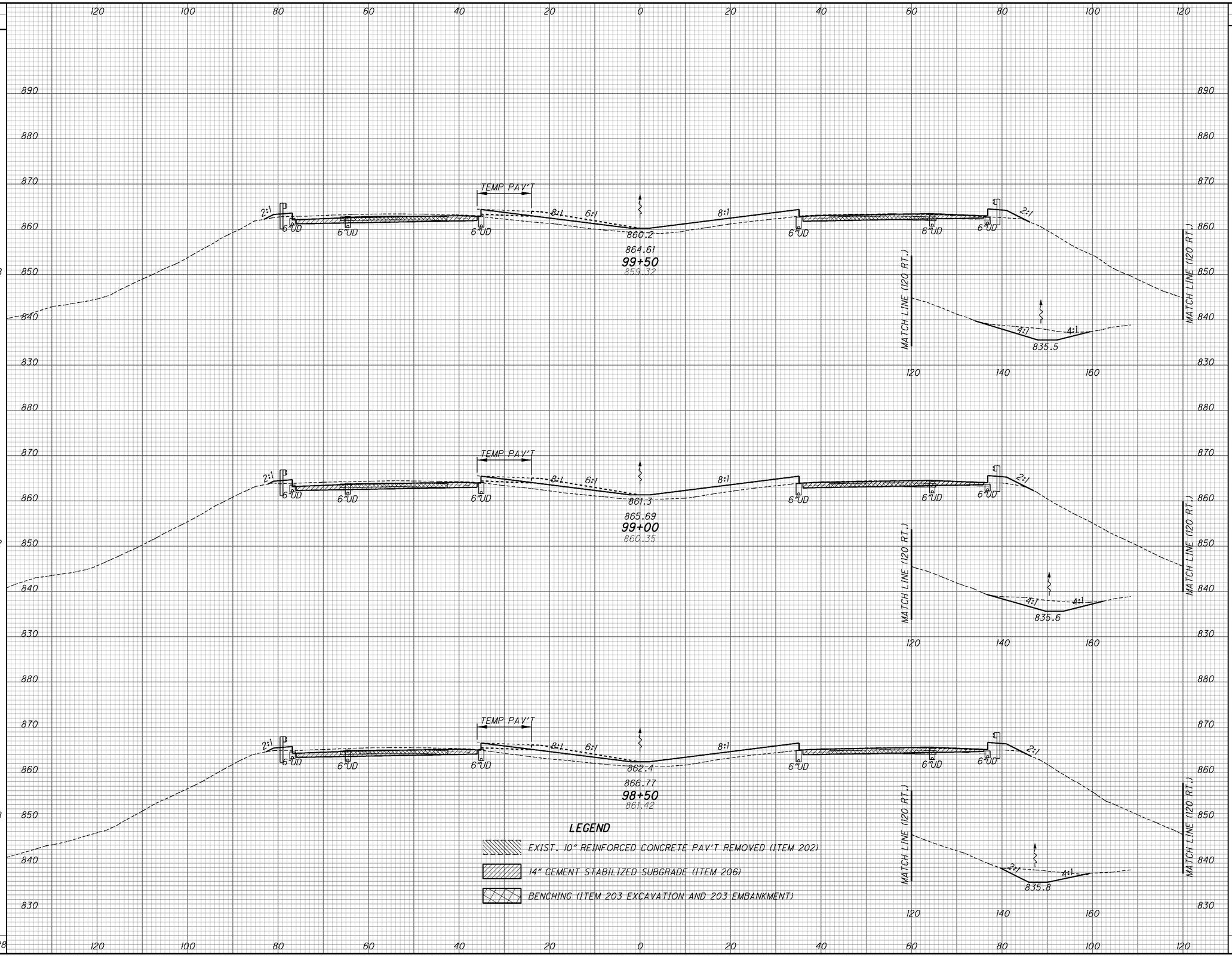

LEGEND

- EXIST. 10" REINFORCED CONCRETE PAV'T REMOVED (ITEM 202)
- 14" CEMENT STABILIZED SUBGRADE (ITEM 206)
- BENCHING (ITEM 203 EXCAVATION AND 203 EMBANKMENT)

CROSS SECTIONS
STA. 98+50.00 TO STA. 99+50.00

ATB-90-14.25

147
437

Palmer ENGINEERING
PALMER ENGINEERING
11300 CORNELL PARK DR
ENGINEERING CINCINNATI, OH 45242

C:\ODOT\ATB\25199\roadway\sheets\25199XS001.dgn 6/6/2009 9:07:21 AM DENNIS

SEEDING		END AREA		VOLUME	
END WIDTH	SQ. YDS.	CUT	FILL	CUT	FILL
162	917	220	347	445	644
168	939	261	348	458	602
170	825	234	302	268	381
	2,681			1,171	1,627

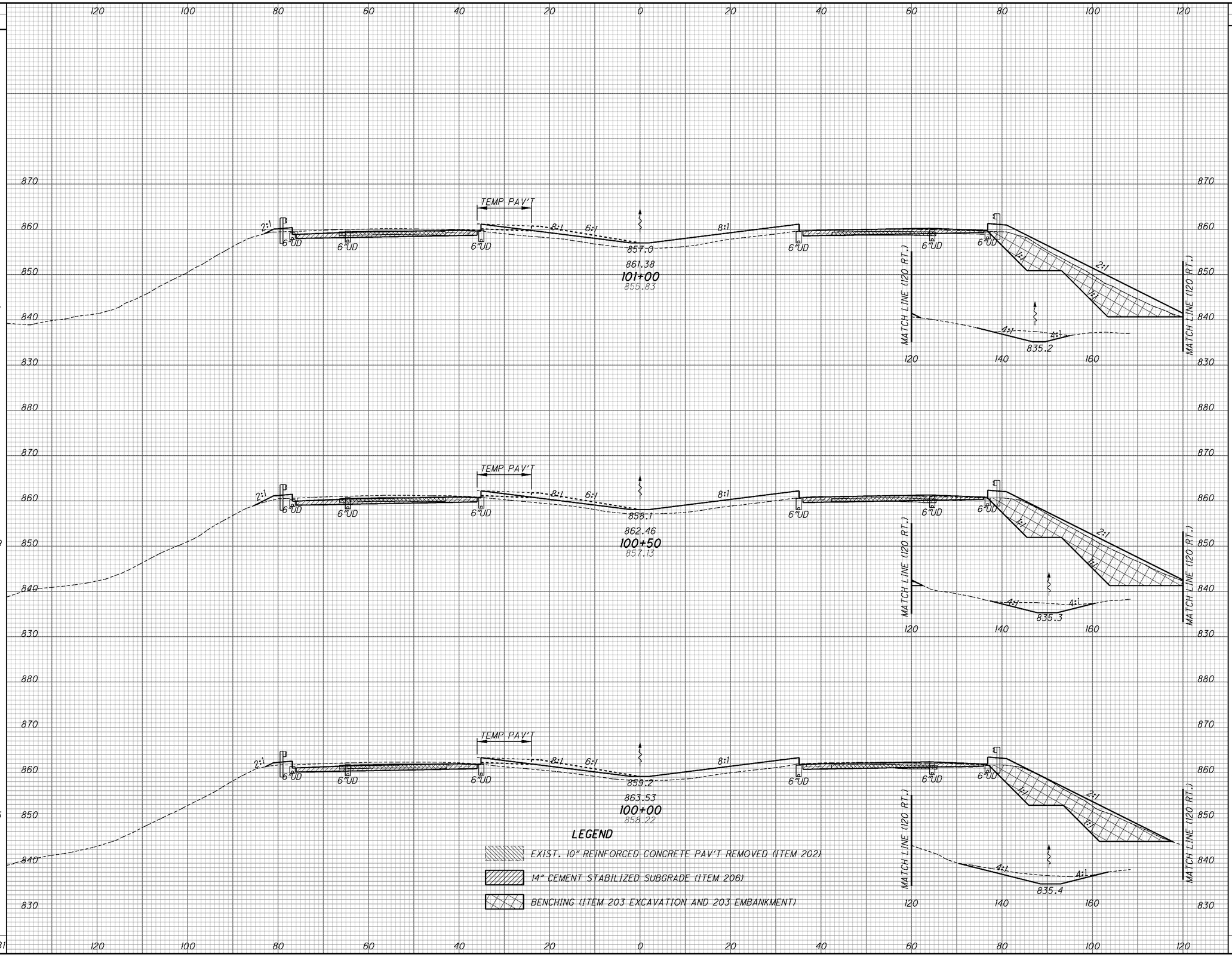

CALCULATED

CHECKED

CROSS SECTIONS

STA. 100+00.00 TO STA. 101+00.00

ATB-90-14.25

148
437

Palmer ENGINEERING
PALMER ENGINEERING
11300 CORNELL PARK DR
CINCINNATI, OH 45242

O:\ODOT\ATB\25199\roadway\sheets\25199XS001.dgn 6/6/2009 9:07:23 AM DENNIS

SEEDING END WIDTH	SEEDING SQ. YDS.	END AREA CUT	END AREA FILL	VOLUME CUT	VOLUME FILL
92	525	24	131	62	278
97	708	43	169	347	646
158	939	331	528	625	1010
180	944	343	562	515	838
160	894	213	343	400	639
	4,010			1,949	3,411

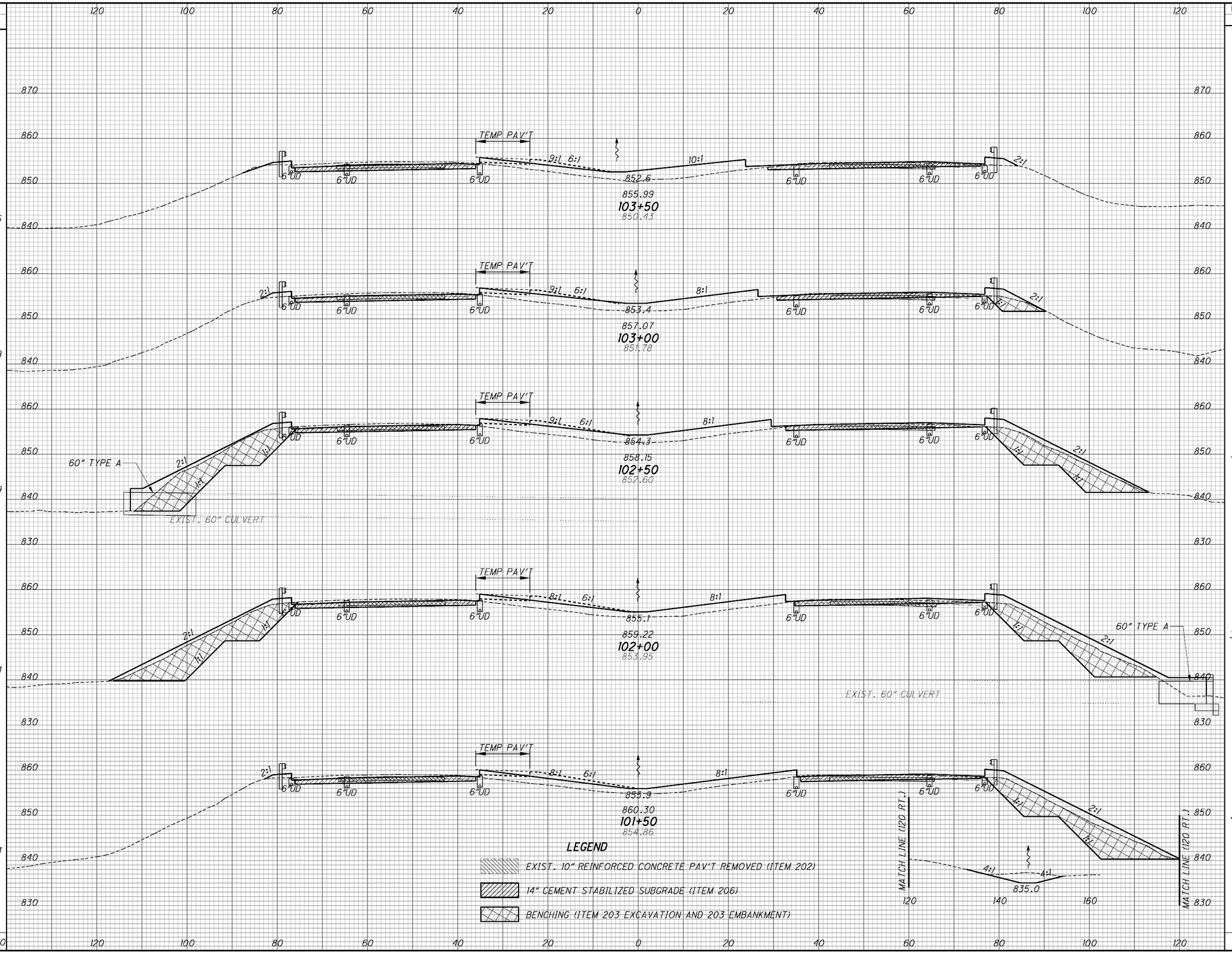

LEGEND

EXIST. 10" REINFORCED CONCRETE PAV'T REMOVED (ITEM 202)

14" CEMENT STABILIZED SUBGRADE (ITEM 206)

BENCHING (ITEM 203 EXCAVATION AND 203 EMBANKMENT)

CALCULATED

CHECKED

CROSS SECTIONS STA. 101+50.00 TO STA. 103+50.00

ATB-90-14.25

149
437

Palmer ENGINEERING
PALMER ENGINEERING
11300 CORNELL PARK DR
CINCINNATI, OH 45242

O:\ODOT\ATB\25199\roadway\sheets\25199XS001.dgn 6/6/2009 9:07:25 AM DENNIS

SEEDING	
END WIDTH	SQ. YDS.
192	1089
200	1122
204	967
144	667
96	581
113	569
	4,995

END AREA	
CUT	FILL
68	200
52	265
54	274
27	235
29	147
28	119

VOLUME	
CUT	FILL
111	431
98	499
75	471
52	354
52	246
48	232
436	2,233

CALCULATED

CHECKED

LEGEND

EXIST. 10" REINFORCED CONCRETE PAV'T REMOVED (ITEM 202)

14" CEMENT STABILIZED SUBGRADE (ITEM 206)

BENCHING (ITEM 203 EXCAVATION AND 203 EMBANKMENT)

106+50 — 844.32 — 849.53

106+00 — 845.25 — 850.60

105+50 — 846.17 — 851.68

105+00 — 847.18 — 852.76

104+50 — 848.55 — 853.84

104+00 — 851.30 — 854.91

PROP. CB-4 (SEE SHEET 111) D8

EXIST. CB

EXIST. 15" CONC. PIPE (REMOVE)

15" CONC

109 FT 18" TYPE B @ 0.54%

HW-2.1 or 2.2 E 18"= 846.07

ROCK CHANNEL PROTECTION, TYPE C

MATCH LINE (110 RT.)

CROSS SECTIONS STA. 104+00.00 TO STA. 106+50.00

ATB-90-14.25

150
437

Palmer ENGINEERING
PALMER ENGINEERING
11300 CORNELL PARK DR
CINCINNATI, OH 45242

O:\ODOT\ATB\25199\roadway\sheets\25199XS001.dgn 6/6/2009 9:07:28 AM DENNIS

SEEDING END WIDTH	SEEDING SQ. YDS.	END AREA CUT	END AREA FILL	VOLUME CUT	VOLUME FILL
180	956	128	48	182	112
164	939	68	73	133	166
174	956	81	116	146	252
170	953	79	121	148	219
173	1022	81	116	146	252
195	1075	77	156	134	330
	5,901			889	1,331

LEGEND

EXIST. 10" REINFORCED CONCRETE PAV'T REMOVED (ITEM 202)

14" CEMENT STABILIZED SUBGRADE (ITEM 206)

BENCHING (ITEM 203 EXCAVATION AND 203 EMBANKMENT)

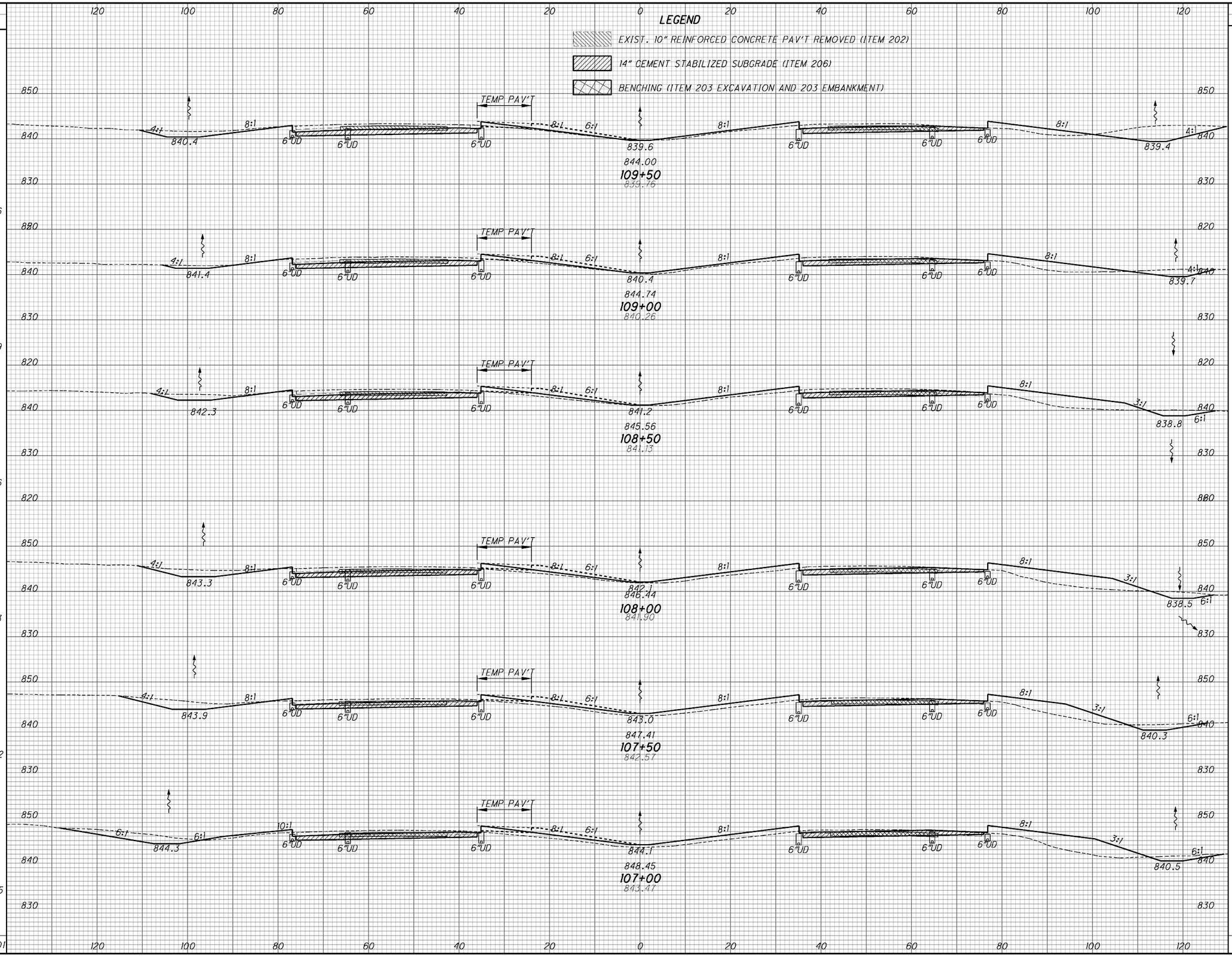

CALCULATED

CHECKED

CROSS SECTIONS

STA. 107+00.00 TO STA. 109+50.00

ATB-90-14.25

151
437

Palmer ENGINEERING
PALMER ENGINEERING
11300 CORNELL PARK DR
ENGINEERING CINCINNATI, OH 45242

O:\ODOT\ATB\25199\roadway\sheets\25199XS001.dgn 6/6/2009 9:07:31 AM DENNIS

SEEDING END WIDTH	SEEDING SQ. YDS.	END AREA CUT	END AREA FILL	VOLUME CUT	VOLUME FILL
177	975	154	26	282	51
174	958	151	29	269	51
171	953	140	26	255	52
172	975	136	30	261	58
179	981	146	33	269	70
174	983	145	42	253	83
5,825				1,589	365

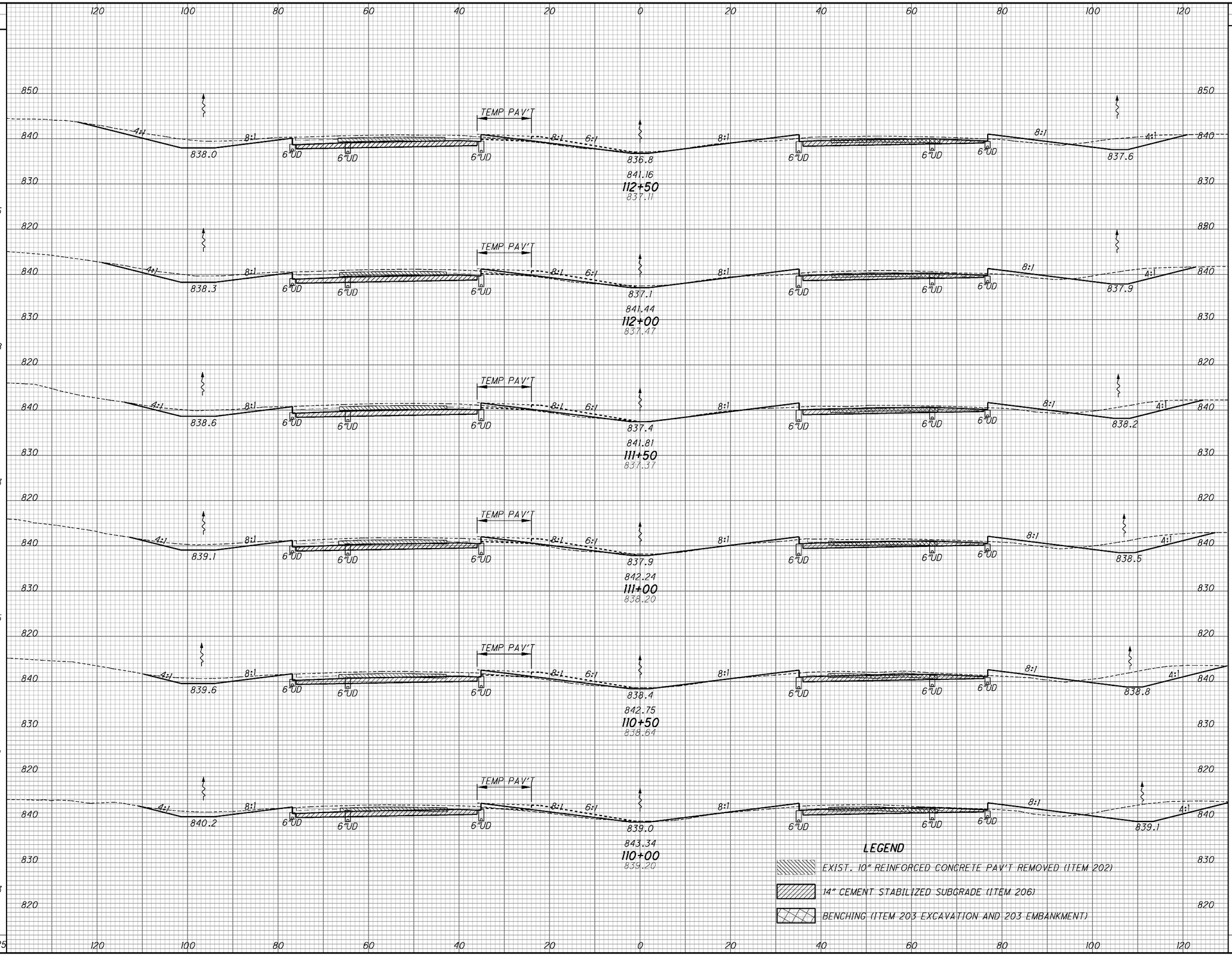

CALCULATED

CHECKED

CROSS SECTIONS
STA. 110+00.00 TO STA. 112+50.00

ATB-90-14.25

152
437

Palmer ENGINEERING
11300 CORNELL PARK DR
ENGINEERING CINCINNATI, OH 45242

O:\ODOT\ATB\25199\roadway\sheets\25199XS001.dgn 6/6/2009 9:07:34 AM DENNIS

SEEDING END WIDTH	SEEDING SQ. YDS.	END AREA CUT	END AREA FILL	VOLUME CUT	VOLUME FILL
181	967	155	34	277	59
167	903	144	30	253	54
158	906	129	28	250	51
168	944	141	27	251	53
172	972	130	30	257	51
178	986	148	25	279	48
5,678				1,567	316

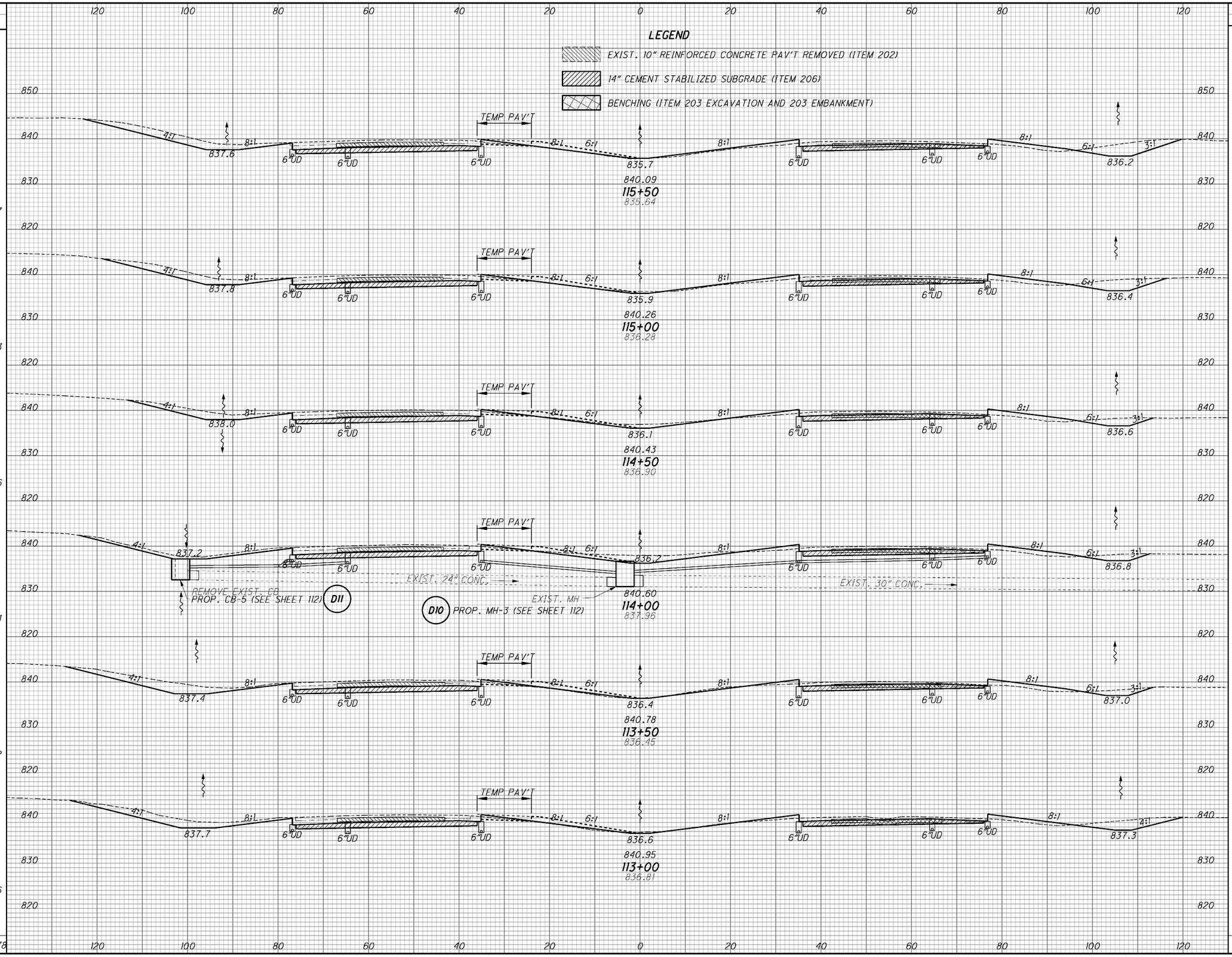

CALCULATED

CHECKED

CROSS SECTIONS STA. 113+00.00 TO STA. 115+50.00

ATB-90-14.25

153
437

Palmer ENGINEERING
PALMER ENGINEERING
11300 CORNELL PARK DR
CINCINNATI, OH 45242

O:\ODOT\ATB\25199\roadway\sheets\25199XS001.dgn 6/6/2009 9:39:14 AM DENNIS

SEEDING	
END WIDTH	SQ. YDS.
198	1106
200	1100
196	1061
186	1036
187	1047
190	1031
	6,381

LEGEND

EXIST. 10" REINFORCED CONCRETE PAV'T REMOVED (ITEM 202)

14" CEMENT STABILIZED SUBGRADE (ITEM 206)

BENCHING (ITEM 203 EXCAVATION AND 203 EMBANKMENT)

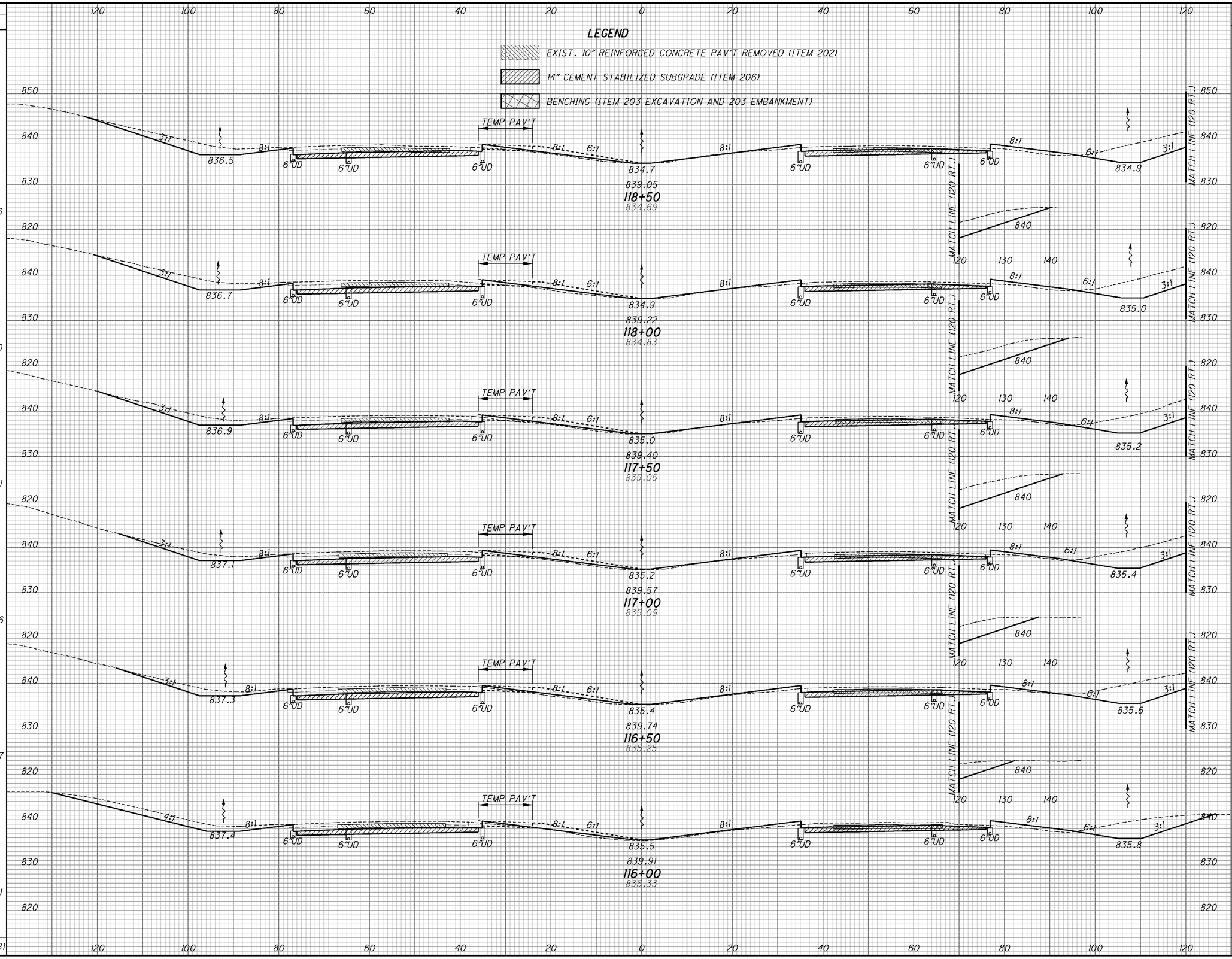

END AREA	
CUT	FILL
232	31
249	34
240	29
213	32
200	31
190	34

VOLUME	
CUT	FILL
446	60
453	58
419	57
382	58
362	60
320	62
2,382	355

CALCULATED

CHECKED

CROSS SECTIONS
STA. 116+00.00 TO STA. 118+50.00

ATB-90-14.25

154
437

Palmer ENGINEERING
PALMER ENGINEERING
11300 CORNELL PARK DR
ENGINEERING CINCINNATI, OH 45242

O:\ODOT\ATB\25199\roadway\sheets\25199XS001.dgn 6/6/2009 9:39:17 AM DENNIS

CROSS SECTIONS
STA. 119+00.00 TO STA. 121+50.00

ATB-90-14.25

155
437

CALCULATED | CHECKED

SEEDING END WIDTH	SEEDING SQ. YDS.	END AREA CUT	END AREA FILL	VOLUME CUT	VOLUME FILL
182	1022	206	5	319	15
186	978	138	11	225	29
166	942	104	20	191	50
173	958	102	34	217	58
172	981	132	28	283	45
181	1053	174	20	376	47
	5,934			1,611	244

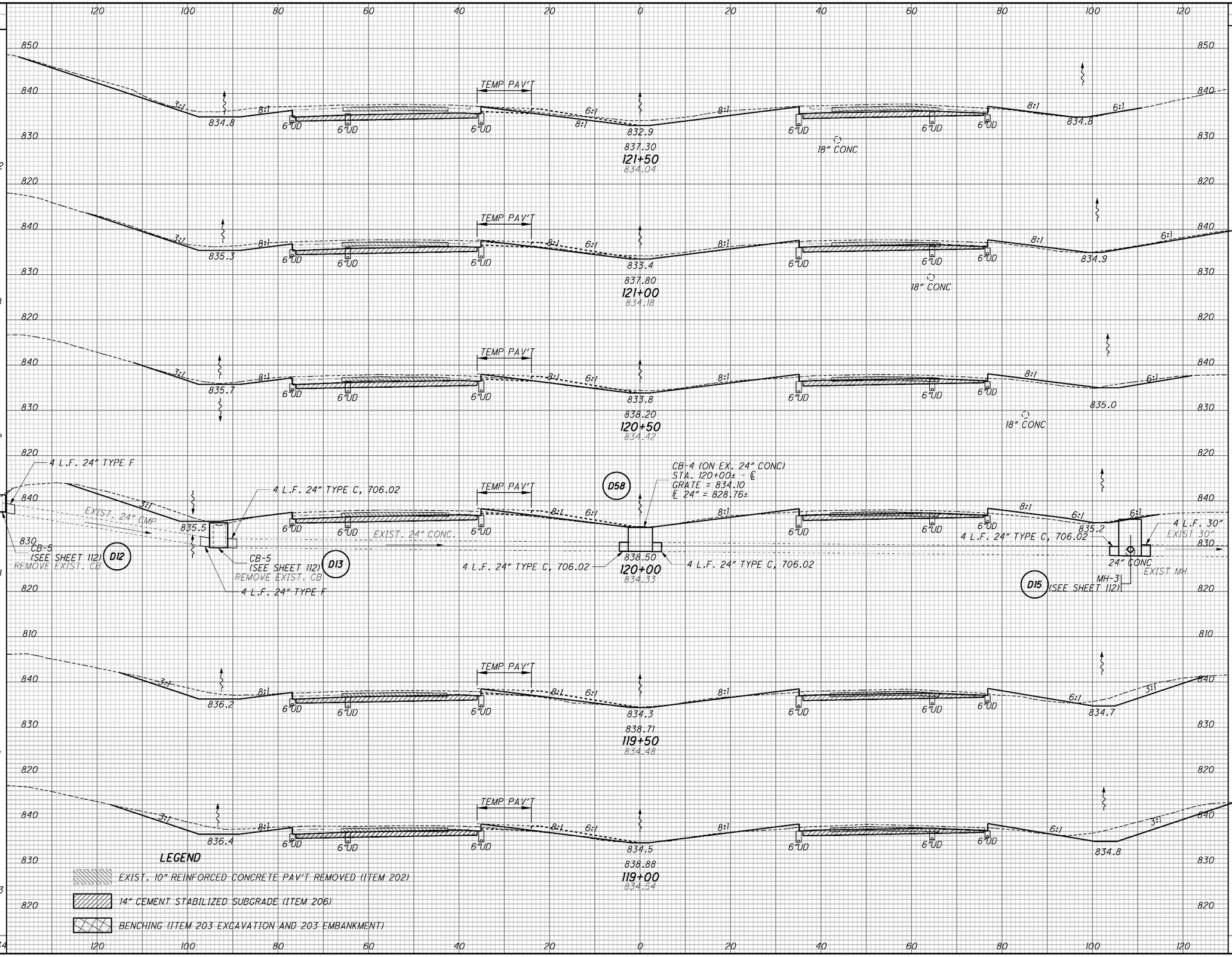

LEGEND

EXIST. 10" REINFORCED CONCRETE PAV'T REMOVED (ITEM 202)

14" CEMENT STABILIZED SUBGRADE (ITEM 206)

BENCHING (ITEM 203 EXCAVATION AND 203 EMBANKMENT)

Palmer ENGINEERING
PALMER ENGINEERING
11300 CORNELL PARK DR
CINCINNATI, OH 45242

O:\ODOT\ATB\25199\roadway\sheets\25199XS001.dgn 6/6/2009 9:39:19 AM DENNIS

CROSS SECTIONS
STA. 122+00.00 TO STA. 124+50.00

SEEDING END WIDTH	SEEDING SQ. YDS.
139	775
140	883
178	992
179	1028
191	1017
175	992
	5,687

END AREA CUT	END AREA FILL	VOLUME CUT	VOLUME FILL
569	0	1038	0
552	0	1104	0
641	0	1116	0
565	0	964	0
476	0	731	0
314	0	482	5
		5,435	5

CALCULATED

CHECKED

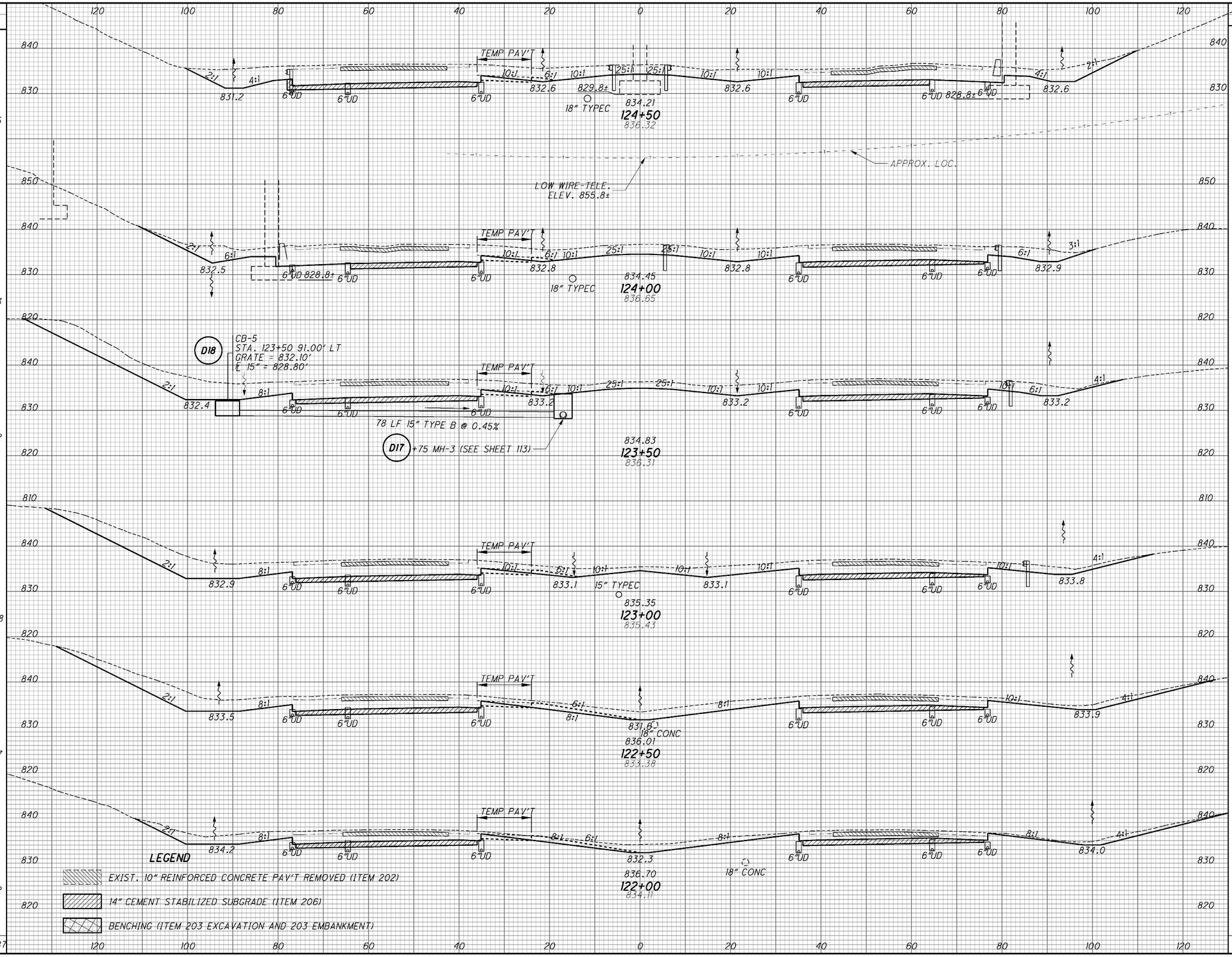

ATB-90-14.25

156
437

Palmer PALMER ENGINEERING
ENGINEERING CINCINNATI, OH 45242
11300 CORNELL PARK DR

O:\ODOT\ATB\25199\roadway\sheets\25199XS001.dgn 6/6/2009 9:39:22 AM DENNIS

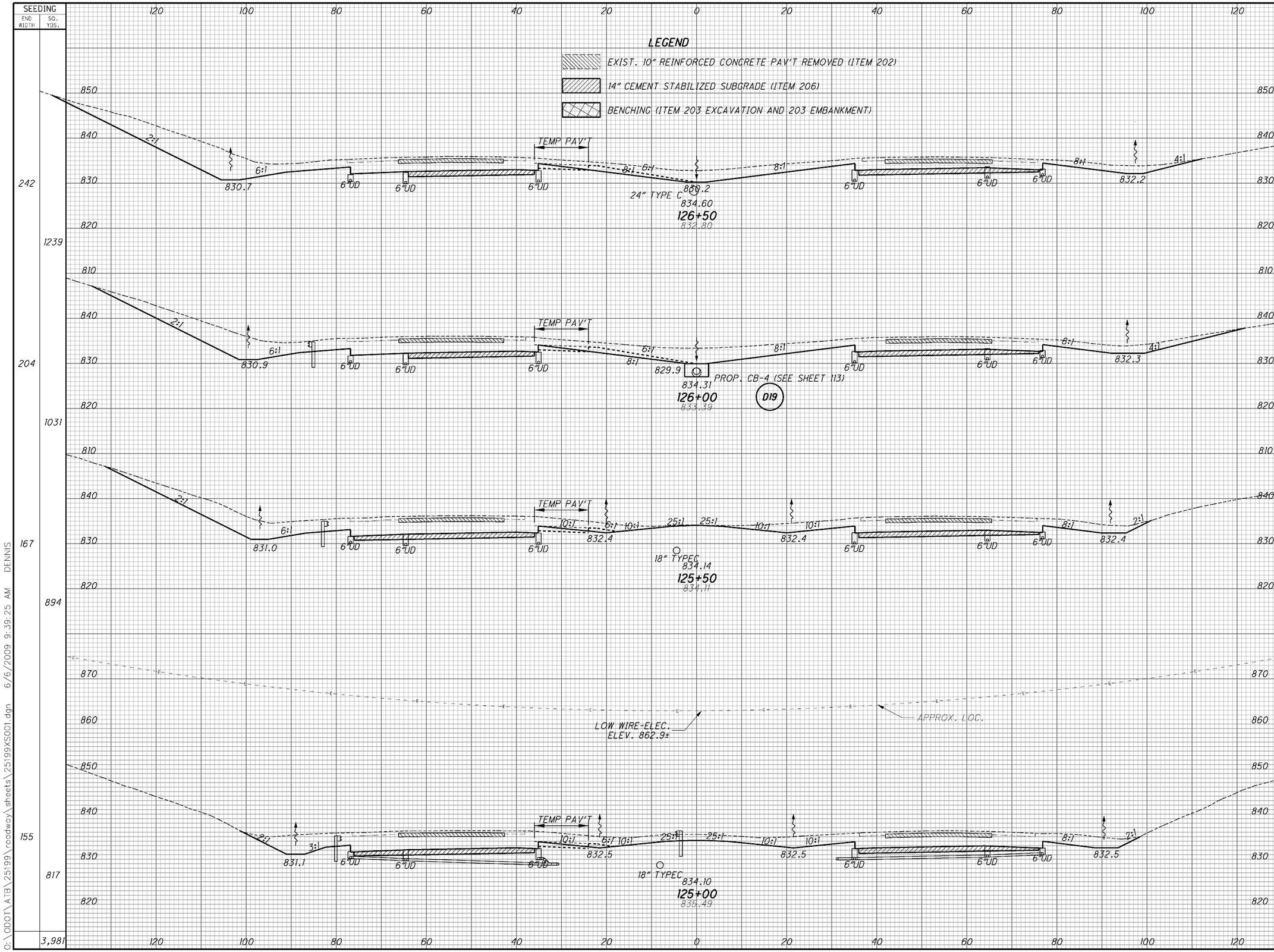

SEEDING END WIDTH	SEEDING SQ. YDS.	END AREA CUT	END AREA FILL	VOLUME CUT	VOLUME FILL
242		591	0		
	1239			1133	0
204		632	0		
	1031			1084	0
167		539	0		
	894			975	0
155		514	0		
	817			1002	0
	3,981			4,194	0

CALCULATED

CHECKED

CROSS SECTIONS
STA. 125+00.00 TO STA. 126+50.00

ATB-90-14.25

Palmer ENGINEERING
11300 CORNELL PARK DR
CINCINNATI, OH 45242

O:\ODOT\ATB\25199\roadway\sheets\25199XS001.dgn 6/6/2009 9:39:25 AM DENNIS

SEEDING END WIDTH	SEEDING SQ. YDS.	END AREA CUT	END AREA FILL	VOLUME CUT	VOLUME FILL
214	1175	595	1	1141	0
209	1161	637	0	1135	0
209	1253	589	0	1093	0
	3,589			3,369	0

CALCULATED

CHECKED

LEGEND

EXIST. 10" REINFORCED CONCRETE PAV'T REMOVED (ITEM 202)

14" CEMENT STABILIZED SUBGRADE (ITEM 206)

BENCHING (ITEM 203 EXCAVATION AND 203 EMBANKMENT)

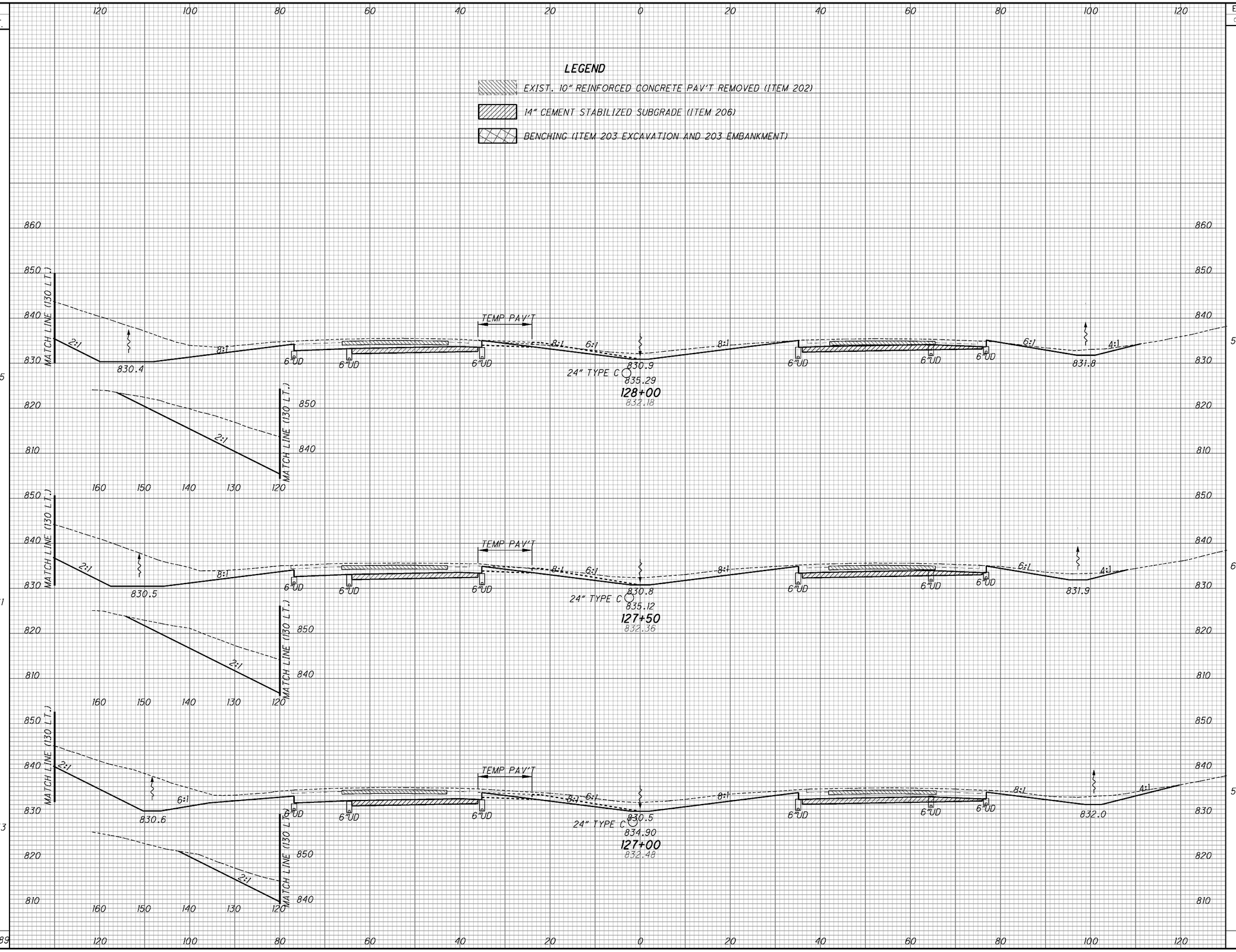

CROSS SECTIONS STA. 127+00.00 TO STA. 128+00.00

ATB-90-14.25

158
437

Palmer ENGINEERING
PALMER ENGINEERING
11300 CORNELL PARK DR
CINCINNATI, OH 45242

O:\ODOT\ATB\25199\roadway\sheets\25199XS001.dgn 6/6/2009 9:39:27 AM DENNIS

CROSS SECTIONS
STA. 128+50.00 TO STA. 129+50.00

ATB-90-14.25

159
437

SEEDING END WIDTH	SEEDING SQ. YDS.	END AREA CUT	END AREA FILL	VOLUME CUT	VOLUME FILL
231	1308	601	17	1110	27
240	1292	597	11	1104	15
225	1219	595	5	1102	5
	3,819			3,316	47

CALCULATED

CHECKED

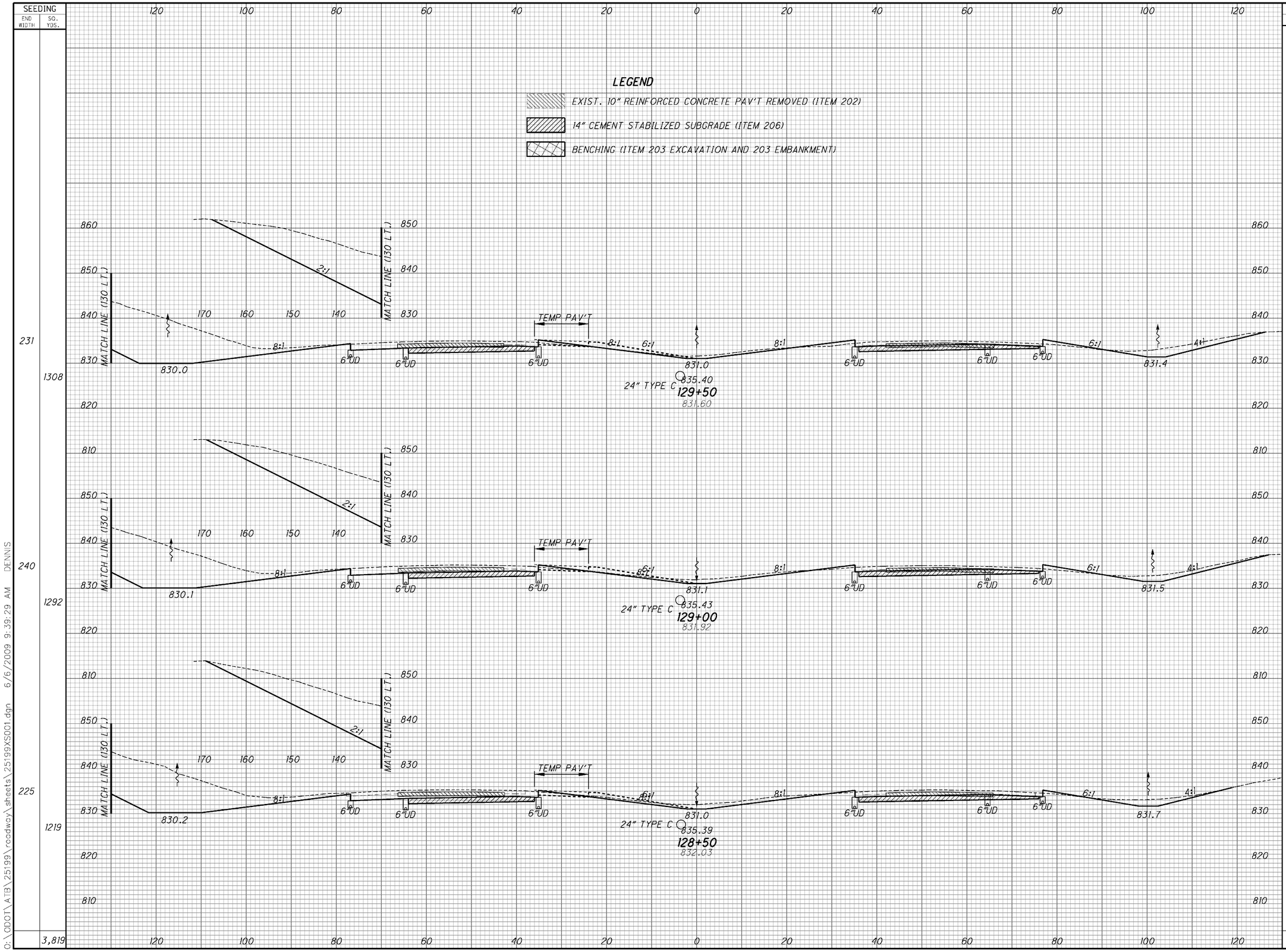

Palmer ENGINEERING
PALMER ENGINEERING
11300 CORNELL PARK DR
ENGINEERING CINCINNATI, OH 45242

C:\ODOT\ATB\25199\roadway\sheets\25199XS001.dgn 6/6/2009 9:39:29 AM DENNIS

SEEDING END WIDTH	SEEDING SQ. YDS.	END AREA CUT	END AREA FILL	VOLUME CUT	VOLUME FILL
224	1278	406	20	867	37
236	1328	530	19	1004	38
242	1333	554	22	1075	38
238	1303	607	19	1119	34
	5,242			4,065	147

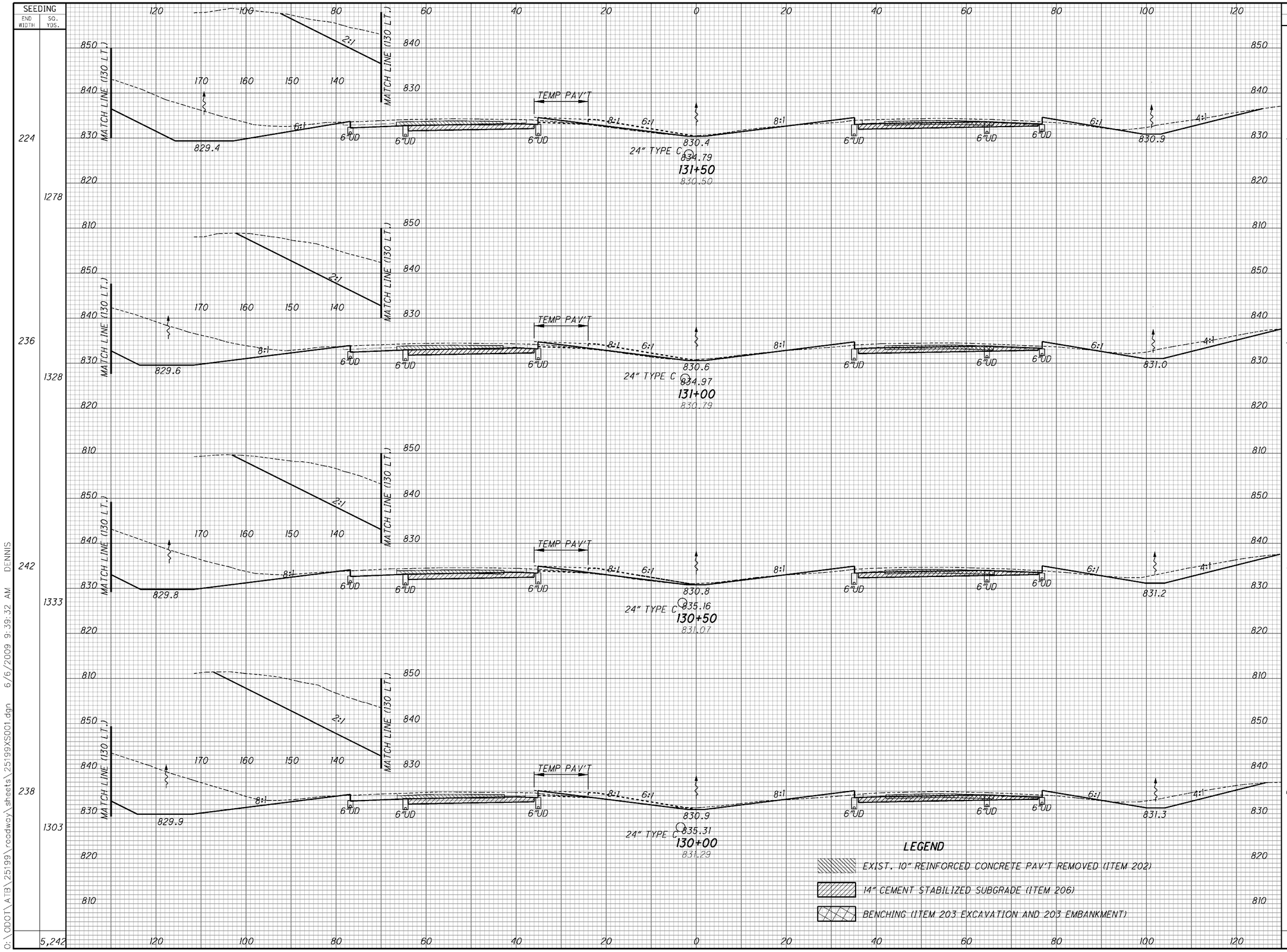

CALCULATED

CHECKED

CROSS SECTIONS

STA. 130+00.00 TO STA. 131+50.00

ATB-90-14.25

160
437

Palmer ENGINEERING
PALMER ENGINEERING
11300 CORNELL PARK DR
ENGINEERING CINCINNATI, OH 45242

C:\ODOT\ATB\25199\roadway\sheets\25199XS001.dgn 6/6/2009 9:39:32 AM DENNIS

SEEDING	
END WIDTH	SQ. YDS.
210	1175
213	1197
218	1197
213	1214
	4,783

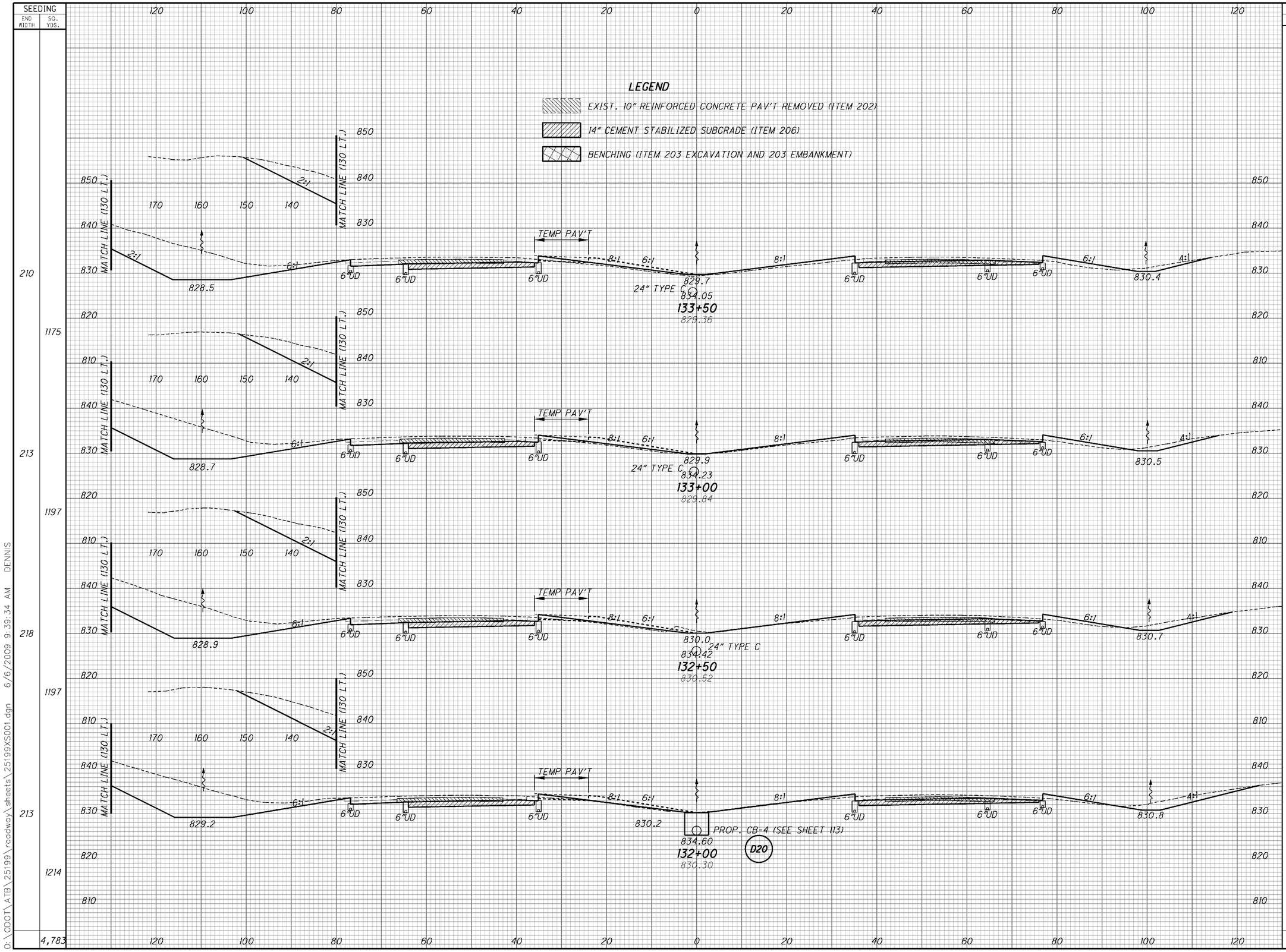

END AREA	
CUT	FILL
346	46
388	37
398	28
385	21
728	60
725	45
732	38
2,865	220

VOLUME	
CUT	FILL
680	77

CALCULATED

CHECKED

CROSS SECTIONS
STA. 132+00.00 TO STA. 133+50.00

ATB-90-14.25

Palmer ENGINEERING
PALMER ENGINEERING
11300 CORNELL PARK DR
CINCINNATI, OH 45242

O:\ODOT\ATB\25199\roadway\sheets\25199XS001.dgn 6/6/2009 9:39:34 AM DENNIS

SEEDING	
END WIDTH	SQ. YDS.
236	1344
248	1281
213	1156
203	1147
	4,928

LEGEND

EXIST. 10" REINFORCED CONCRETE PAV'T REMOVED (ITEM 202)

14" CEMENT STABILIZED SUBGRADE (ITEM 206)

BENCHING (ITEM 203 EXCAVATION AND 203 EMBANKMENT)

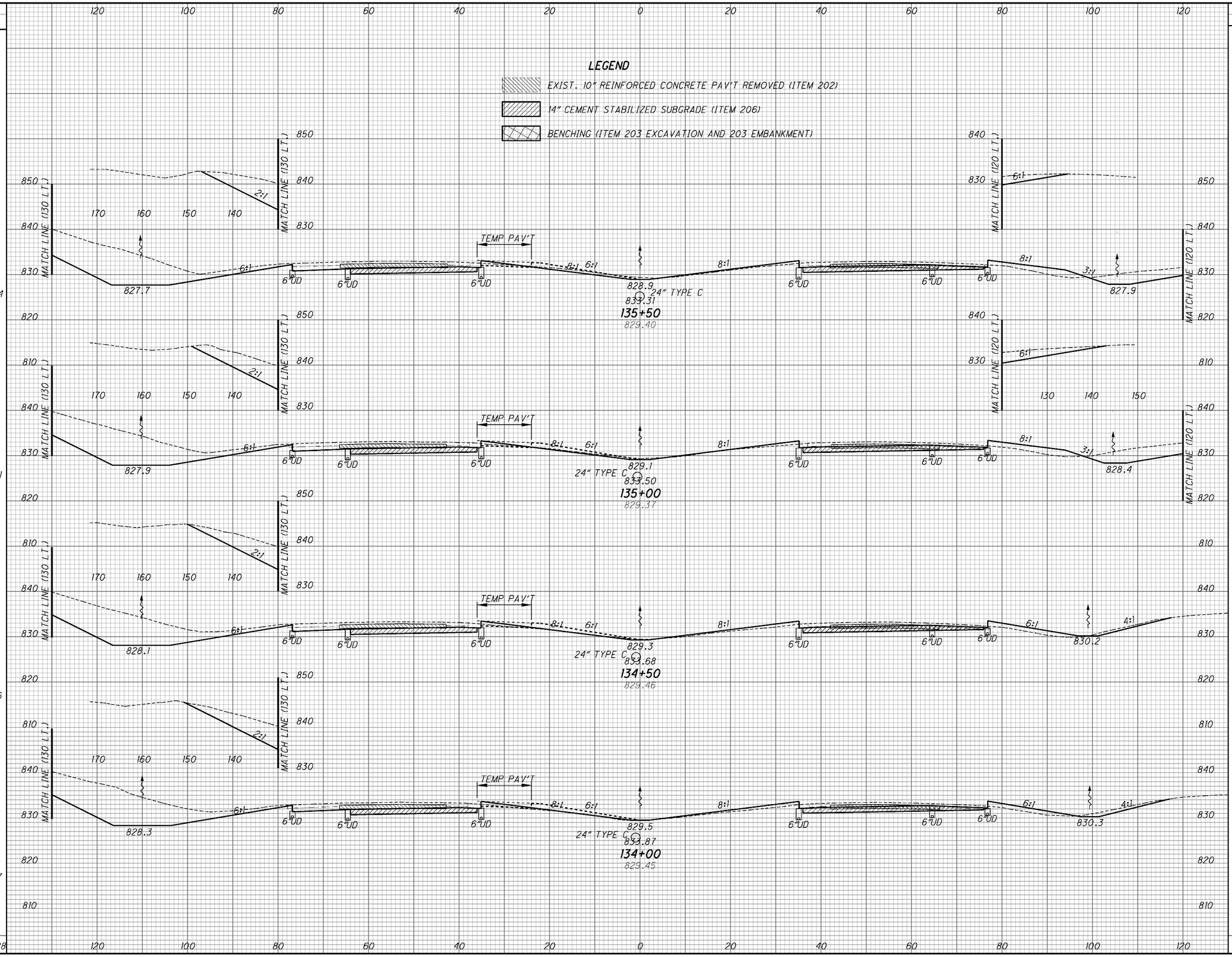

END AREA	
CUT	FILL
399	35
418	34
327	36
339	35
2,698	271

VOLUME	
CUT	FILL
756	64
690	66
617	66
635	75

CALCULATED

CHECKED

CROSS SECTIONS

STA. 134+00.00 TO STA. 135+50.00

ATB-90-14.25

162
437

Palmer ENGINEERING
PALMER ENGINEERING
11300 CORNELL PARK DR
CINCINNATI, OH 45242

O:\ODOT\ATB\25199\roadway\sheets\25199XS001.dgn 6/6/2009 9:39:37 AM DENNIS

SEEDING END WIDTH	SEEDING SQ. YDS.
158	883
160	908
167	1097
228	1289
	4,177

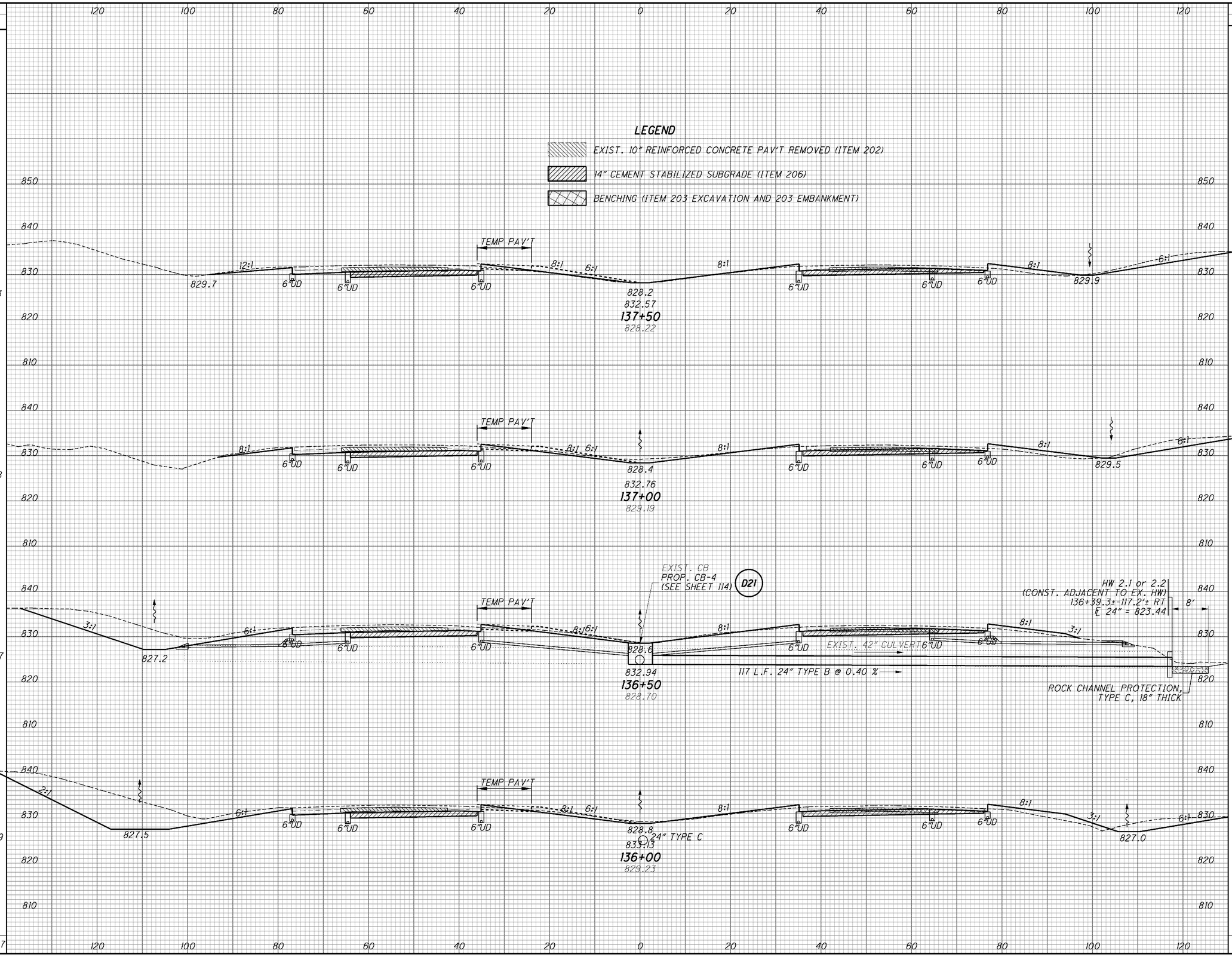

END AREA CUT	END AREA FILL	VOLUME CUT	VOLUME FILL
	28		
		204	49
	25		
		328	41
228	20		
		536	51
228	36		
		695	65
		1,763	206

CALCULATED

CHECKED

CROSS SECTIONS STA. 136+00.00 TO STA. 137+50.00

ATB-90-14.25

163
437

Palmer ENGINEERING
PALMER ENGINEERING
11300 CORNELL PARK DR
ENGINEERING CINCINNATI, OH 45242

O:\ODOT\ATB\25199\roadway\sheets\25199XS001.dgn 6/6/2009 9:39:39 AM DENNIS

SEEDING		END AREA		VOLUME		CALCULATED	CHECKED
END WIDTH	SQ. YDS.	CUT	FILL	CUT	FILL		
156	828	58	87	107	151		
142	814	57	76	113	138		
151	836	65	73	131	111		
150	856	77	46	158	69		
	3,334			509	469		

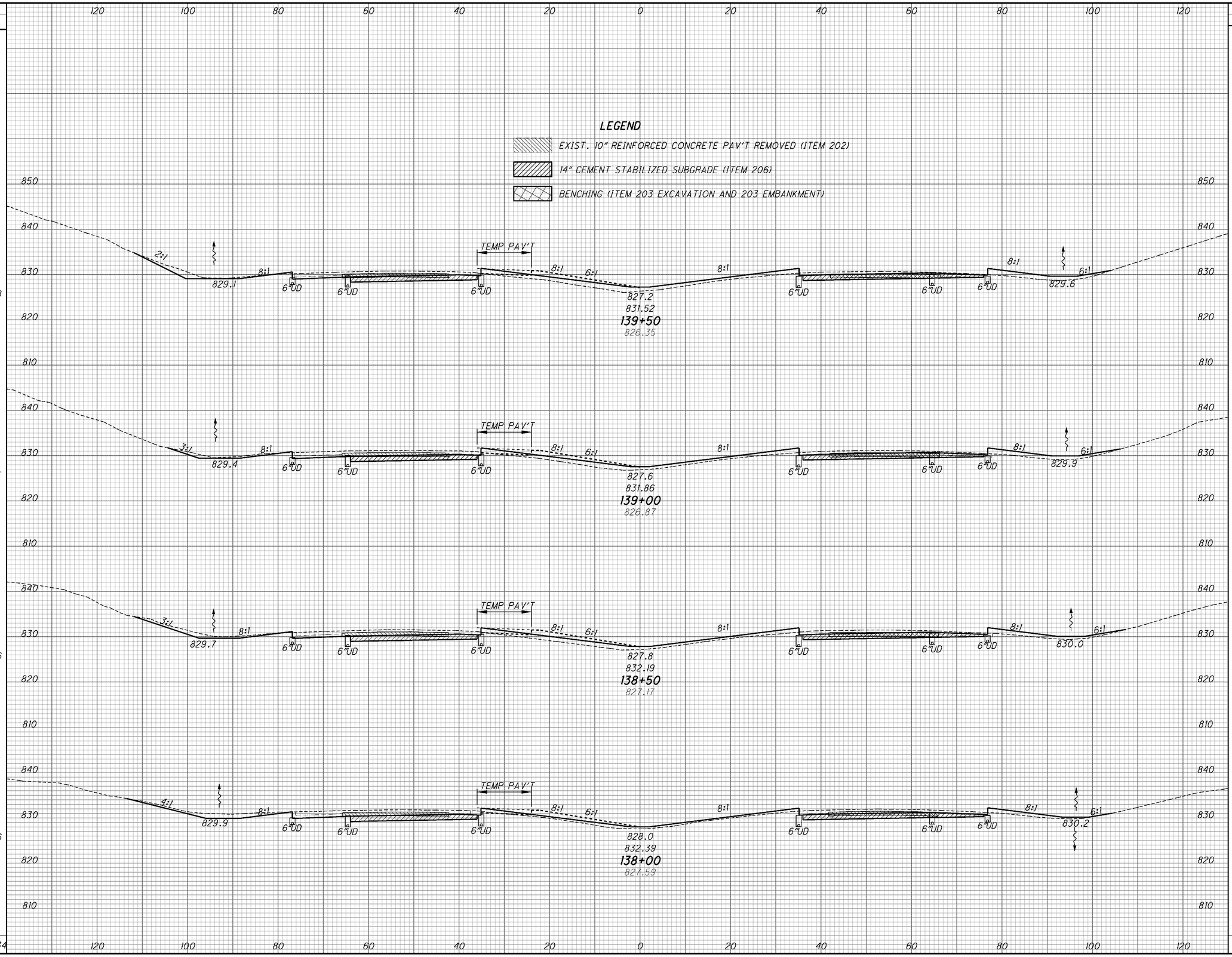

CROSS SECTIONS
STA. 138+00.00 TO STA. 139+50.00

ATB-90-14.25

Palmer ENGINEERING
PALMER ENGINEERING
11300 CORNELL PARK DR
CINCINNATI, OH 45242

O:\ODOT\ATB\25199\roadway\sheets\25199XS001.dgn 6/6/2009 9:39:41 AM DENNIS

SEEDING			END AREA		VOLUME		
	END WIDTH	SQ. YDS.	CUT	FILL	CUT	FILL	
145		814	48	118			
148		808	55	103	96	204	
143		484	51	89	99	177	
148		844	56	97	60	103	
		2,950			105	170	
					360	654	

CALCULATED

CHECKED

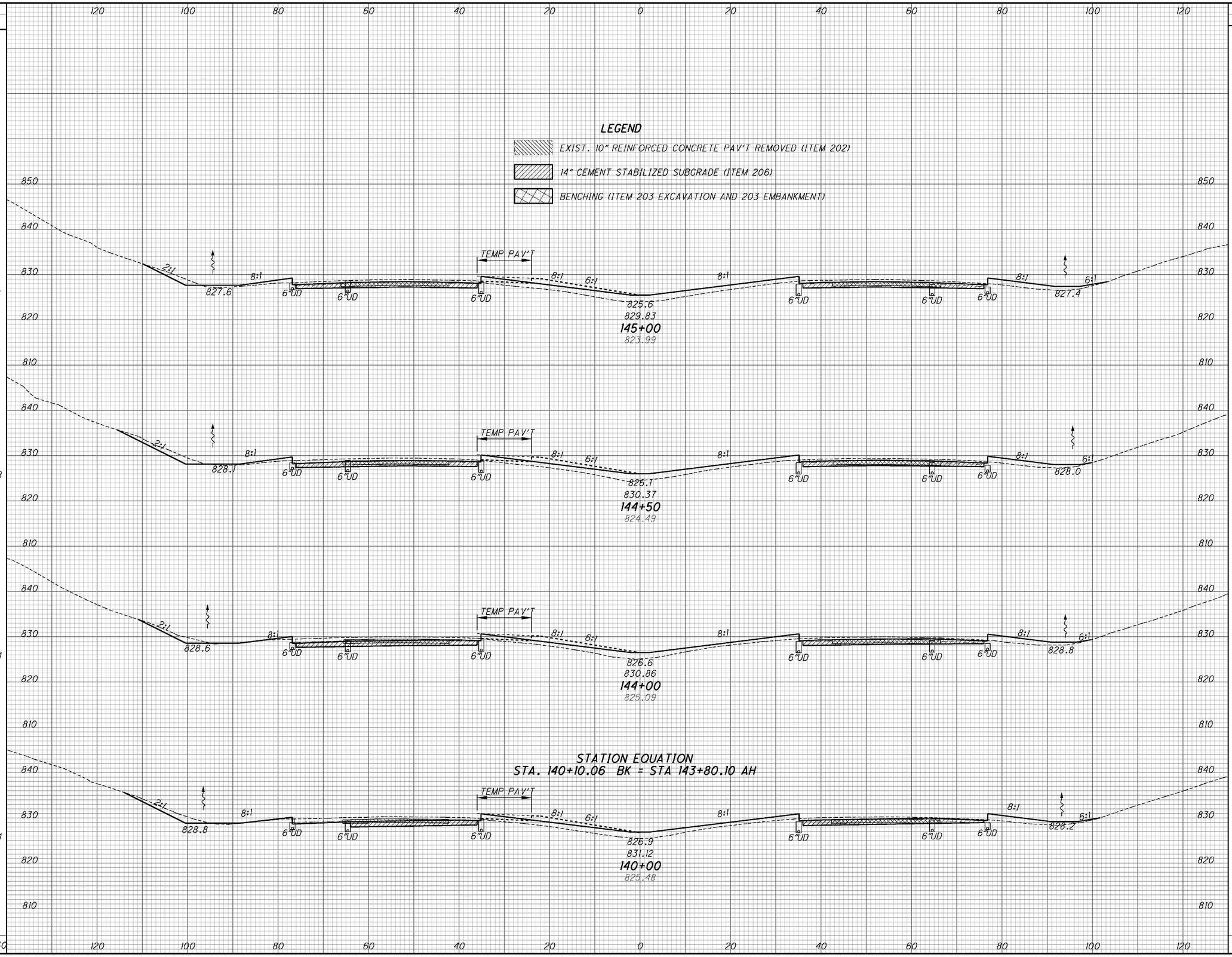

CROSS SECTIONS
STA. 140+00.00 TO STA. 145+00.00

ATB-90-14.25

165
437

Palmer ENGINEERING
PALMER ENGINEERING
11300 CORNELL PARK DR
CINCINNATI, OH 45242

O:\ODOT\ATB\25199\roadway\sheets\25199XS001.dgn 6/6/2009 9:39:44 AM DENNIS

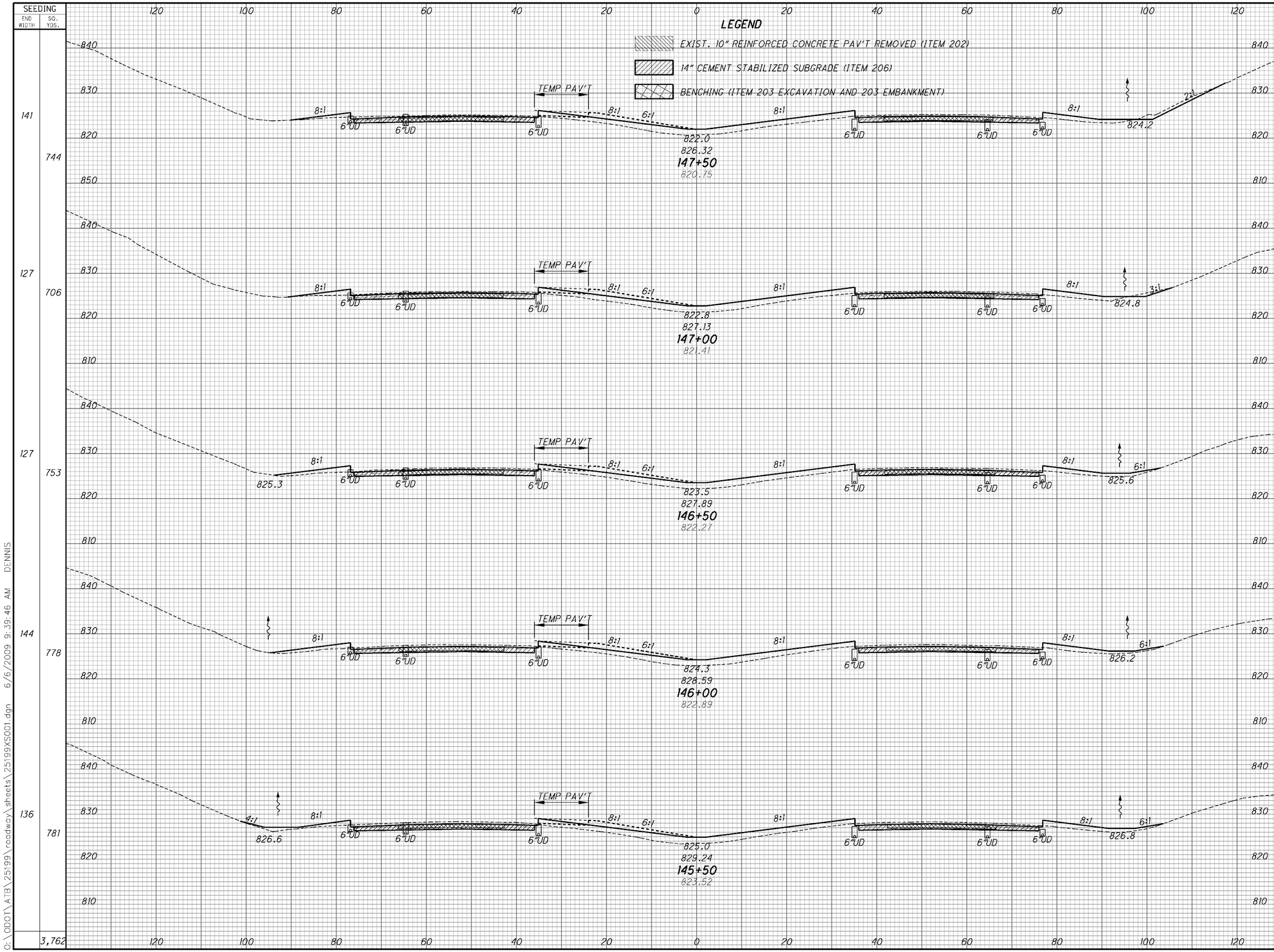

CALCULATED

CHECKED

CROSS SECTIONS
STA. 145+50.00 TO STA. 147+50.00

ATB-90-14.25

Palmer ENGINEERING
PALMER ENGINEERING
11300 CORNELL PARK DR
CINCINNATI, OH 45242

O:\ODOT\ATB\25199\roadway\sheets\25199XS001.dgn 6/6/2009 9:39:46 AM DENNIS

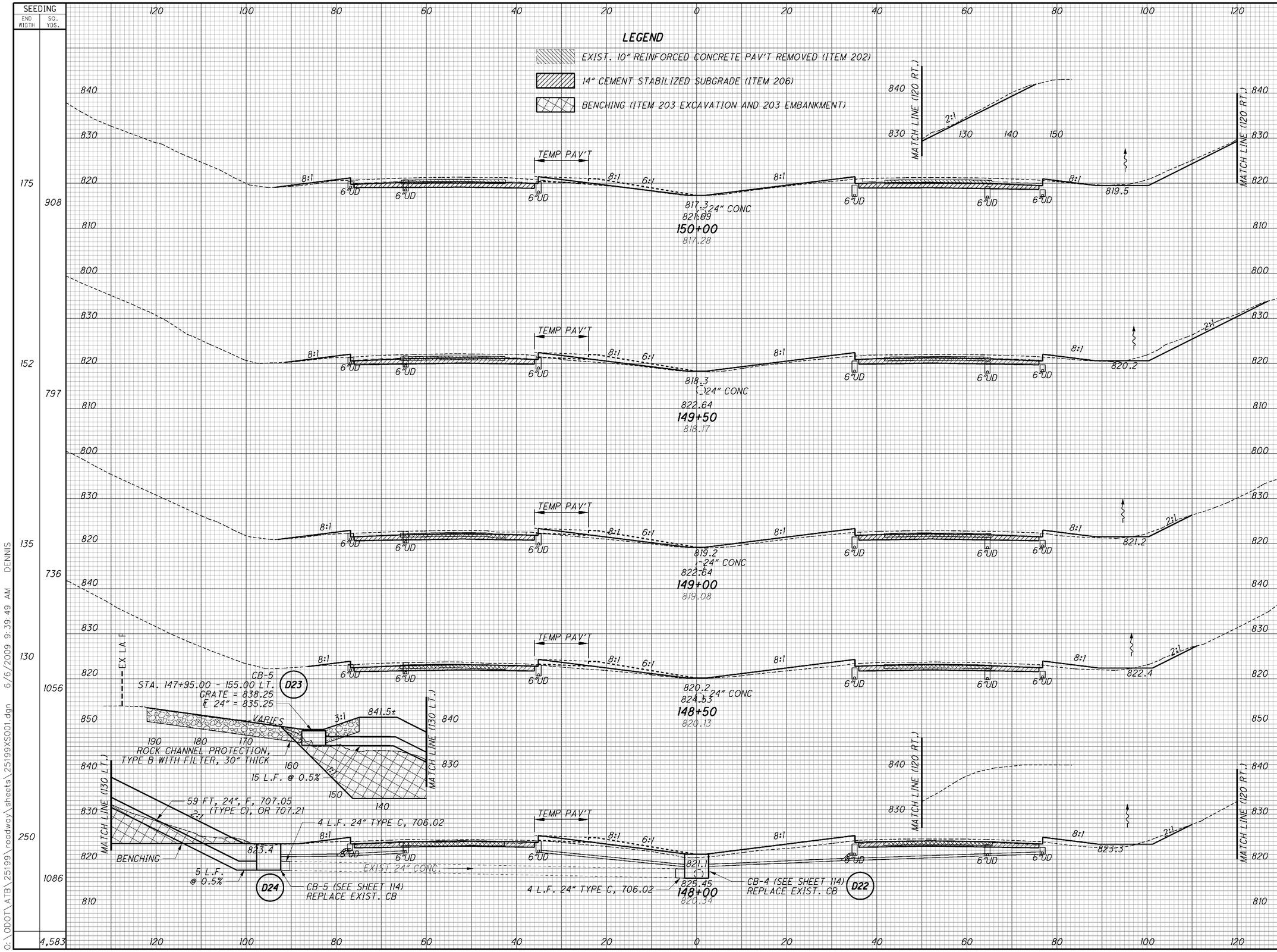

SEEDING END WIDTH	SEEDING SQ. YDS.	END AREA CUT	END AREA FILL	VOLUME CUT	VOLUME FILL
175	908	94	24		
				164	58
152	797	83	39		
				128	81
135	736	55	49		
				101	98
130	1056	54	57		
				425	706
250	1086	405	706		
				410	756
	4,583			1,228	1,699

CALCULATED

CHECKED

CROSS SECTIONS
STA. 148+00.00 TO STA. 150+00.00

ATB-90-14.25

Palmer ENGINEERING
PALMER ENGINEERING
11300 CORNELL PARK DR
CINCINNATI, OH 45242

O:\ODOT\ATB\25199\roadway\sheets\25199XS001.dgn 6/6/2009 9:39:49 AM DENNIS

SEEDING		END AREA		VOLUME		CALCULATED	CHECKED
END WIDTH	SQ. YDS.	CUT	FILL	CUT	FILL		
171	961	175	13	298	28		
175	950	146	17	247	33		
167	950	121	19	199	39		
	2,861			744	100		

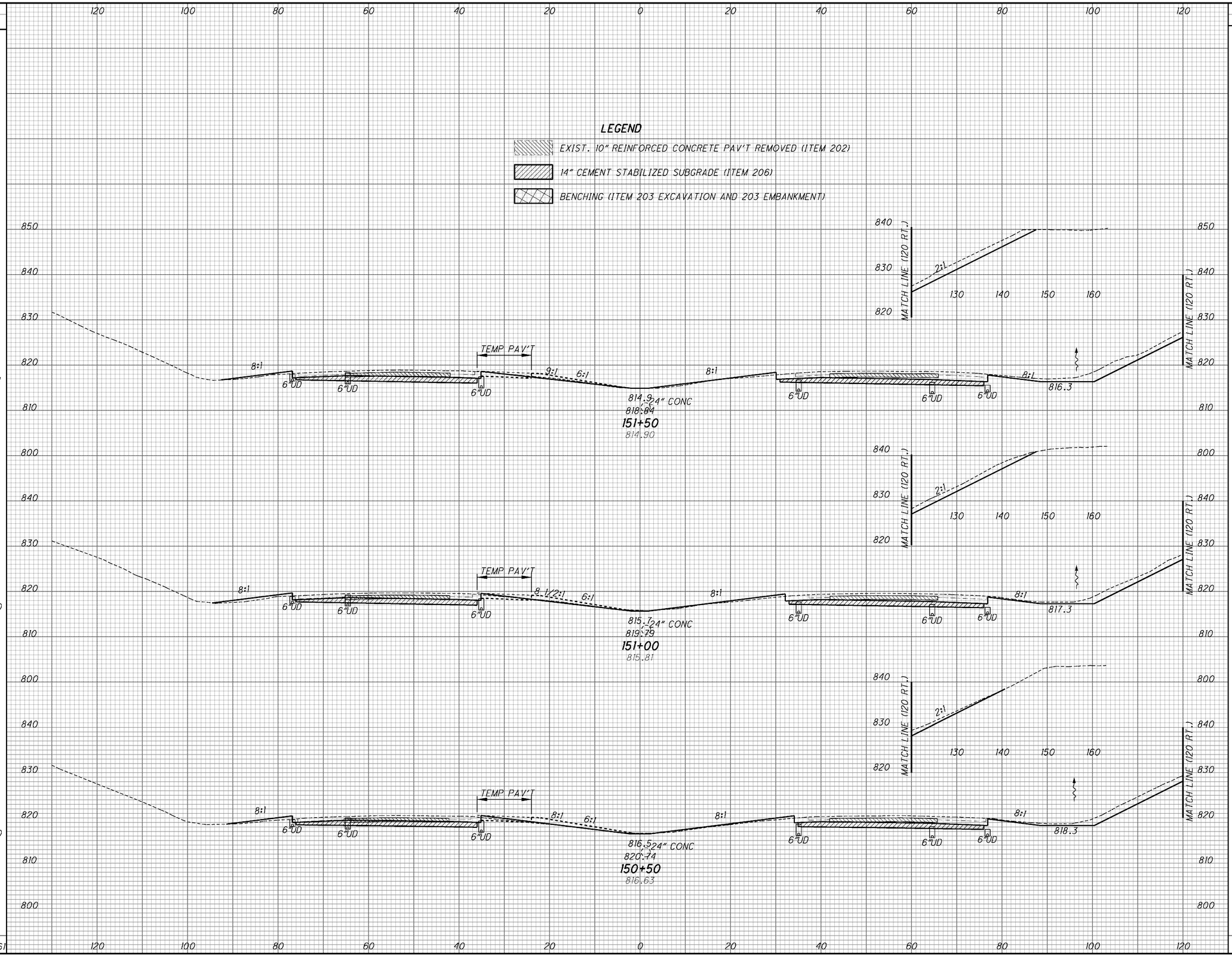

Palmer ENGINEERING
PALMER ENGINEERING
11300 CORNELL PARK DR
CINCINNATI, OH 45242

C:\ODOT\ATB\25199\roadway\sheets\25199XS001.dgn 6/6/2009 9:39:51 AM DENNIS

CROSS SECTIONS
STA. 150+50.00 TO STA. 151+50.00

ATB-90-14.25

SEEDING		END AREA		VOLUME		
END WIDTH	SQ. YDS.	CUT	FILL	CUT	FILL	
267	1239	390	2	617	23	
179	942	277	23	502	36	
160	919	264	16	407	27	
	3,100			1,526	86	

CALCULATED

CHECKED

LEGEND

EXIST. 10" REINFORCED CONCRETE PAV'T REMOVED (ITEM 202)

14" CEMENT STABILIZED SUBGRADE (ITEM 206)

BENCHING (ITEM 203 EXCAVATION AND 203 EMBANKMENT)

120 100 80 60 40 20 0 20 40 60 80 100 120

MATCH LINE (130 LT.) — 2:1 — 170 160 150 140 — MATCH LINE (130 LT.)

MATCH LINE (120 RT.) — 2:1 — 130 140 150 160 — EX LA R/W

814.4 — 8:1 — 6"UD — 6"UD — 6"UD — 8:1 — 12:1 — 813.3 — 816.00 24" CONC — **153+00** — 814.00 — 6"UD — 6"UD — 6"UD — 8:1 — 813.5 — MATCH LINE (120 RT.)

MATCH LINE (120 RT.) — 2:1 — 130 140 150 160 — MATCH LINE (120 RT.)

6:1 — 815.4 — 8:1 — 6"UD — 6"UD — 6"UD — TEMP PAV'T — 6:1 — 814.0 — 816.95 — **152+50** — 814.46 — 24" CONC — CB-4 (SEE SHEET 115) REPLACE EXIST. CB — D25 — 6"UD — 8:1 — 6"UD — 6"UD — 814.5 — MATCH LINE (120 RT.)

MATCH LINE (120 RT.) — 2:1 — 130 140 150 160 — MATCH LINE (120 RT.)

8:1 — 6"UD — 6"UD — 6"UD — TEMP PAV'T — 9:1 6:1 — 814.1 — 817.90 — **152+00** — 813.74 — 24" CONC — 8:1 — 6"UD — 6"UD — 6"UD — 8:1 — 815.4 — MATCH LINE (120 RT.)

120 100 80 60 40 20 0 20 40 60 80 100 120

CROSS SECTIONS

STA. 152+00.00 TO STA. 153+00.00

ATB-90-14.25

169
437

Palmer ENGINEERING
PALMER ENGINEERING
11300 CORNELL PARK DR
CINCINNATI, OH 45242

O:\ODOT\ATB\25199\roadway\sheets\25199XS001.dgn 6/6/2009 9:39:54 AM DENNIS

SEEDING		END AREA		VOLUME	
END WIDTH	SQ. YDS.	CUT	FILL	CUT	FILL
313	1700	566	0	950	0
299	1578	459	0	837	0
269	1489	445	0	772	2
	4,767			2,559	2

CALCULATED

CHECKED

LEGEND

EXIST. 10" REINFORCED CONCRETE PAV'T REMOVED (ITEM 202)

14" CEMENT STABILIZED SUBGRADE (ITEM 206)

BENCHING (ITEM 203 EXCAVATION AND 203 EMBANKMENT)

154+50
810.07
809.1-24" CONC
813.17

154+00
810.89
810.2-24" CONC
814.10

153+50
812.06
811.3-24" CONC
815.08

MATCH LINE (120 LT.)

TEMP PAV'T

6"UD

811.6 812.5 813.5 810.7 811.6 812.6

CROSS SECTIONS
STA. 153+50.00 TO STA. 154+50.00

ATB-90-14.25

170
437

Palmer ENGINEERING
PALMER ENGINEERING
11300 CORNELL PARK DR
ENGINEERING CINCINNATI, OH 45242

C:\ODOT\ATB\25199\roadway\sheets\25199XS001.dgn 6/6/2009 9:39:56 AM DENNIS

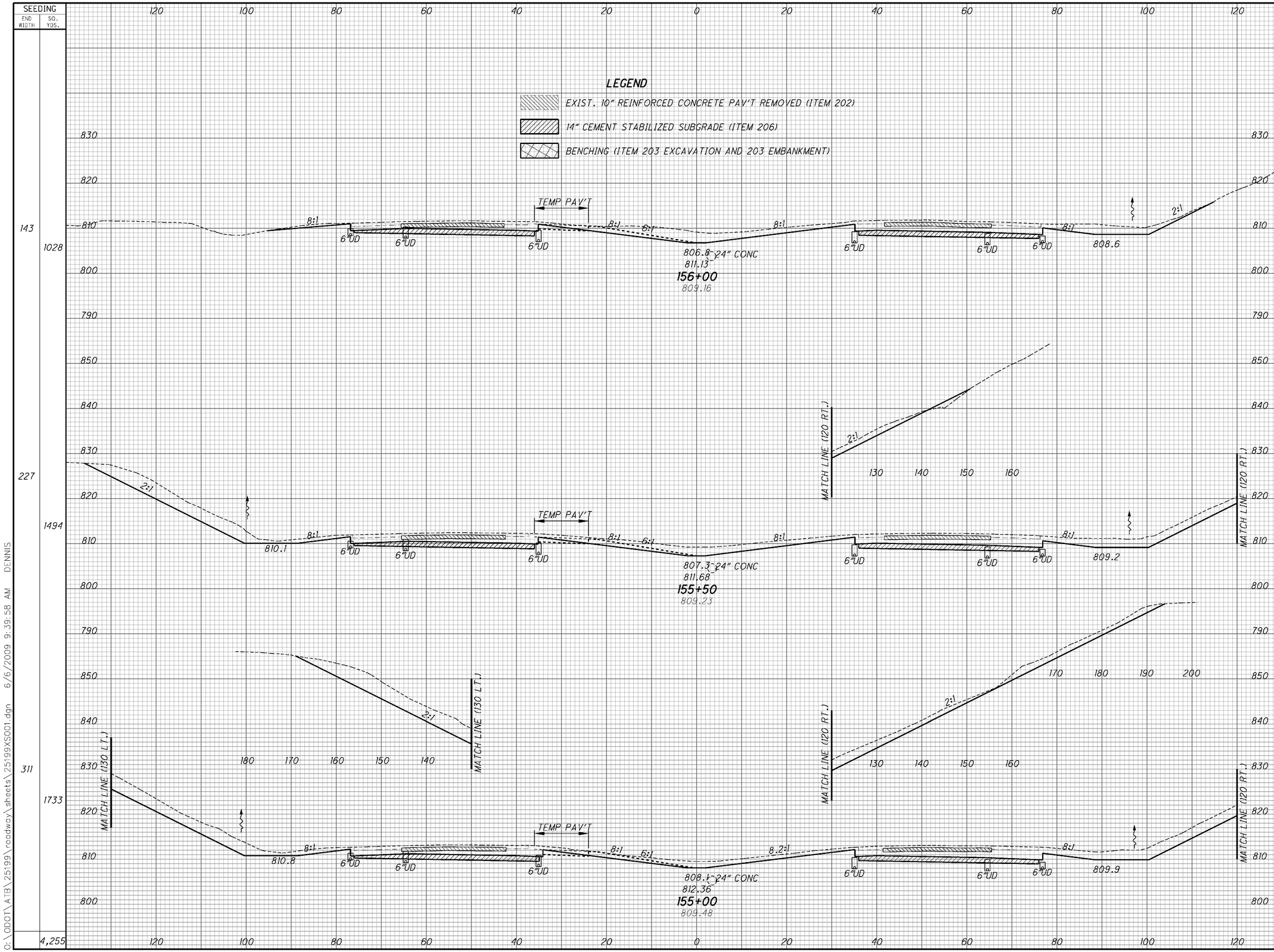

SEEDING END WIDTH	SEEDING SQ. YDS.	END AREA CUT	END AREA FILL	VOLUME CUT	VOLUME FILL
143	1028	295	0		
				704	6
227	1494	466	6		
				1018	6
311	1733	633	0		
				1111	0
	4,255			2,833	12

CALCULATED

CHECKED

CROSS SECTIONS
STA. 155+00.00 TO STA. 156+00.00

ATB-90-14.25

Palmer ENGINEERING
PALMER ENGINEERING
11300 CORNELL PARK DR
CINCINNATI, OH 45242

O:\ODOT\ATB\25199\roadway\sheets\25199XS001.dgn 6/6/2009 9:39:58 AM DENNIS

SEEDING END WIDTH	SEEDING SQ. YDS.	END AREA CUT	END AREA FILL	VOLUME CUT	VOLUME FILL
101	678	27	68	62	131
143	764	40	74	107	99
132	822	76	33	233	42
164	858	176	12	361	17
145	800	214	7	471	6
	3,922			1,234	295

CALCULATED

CHECKED

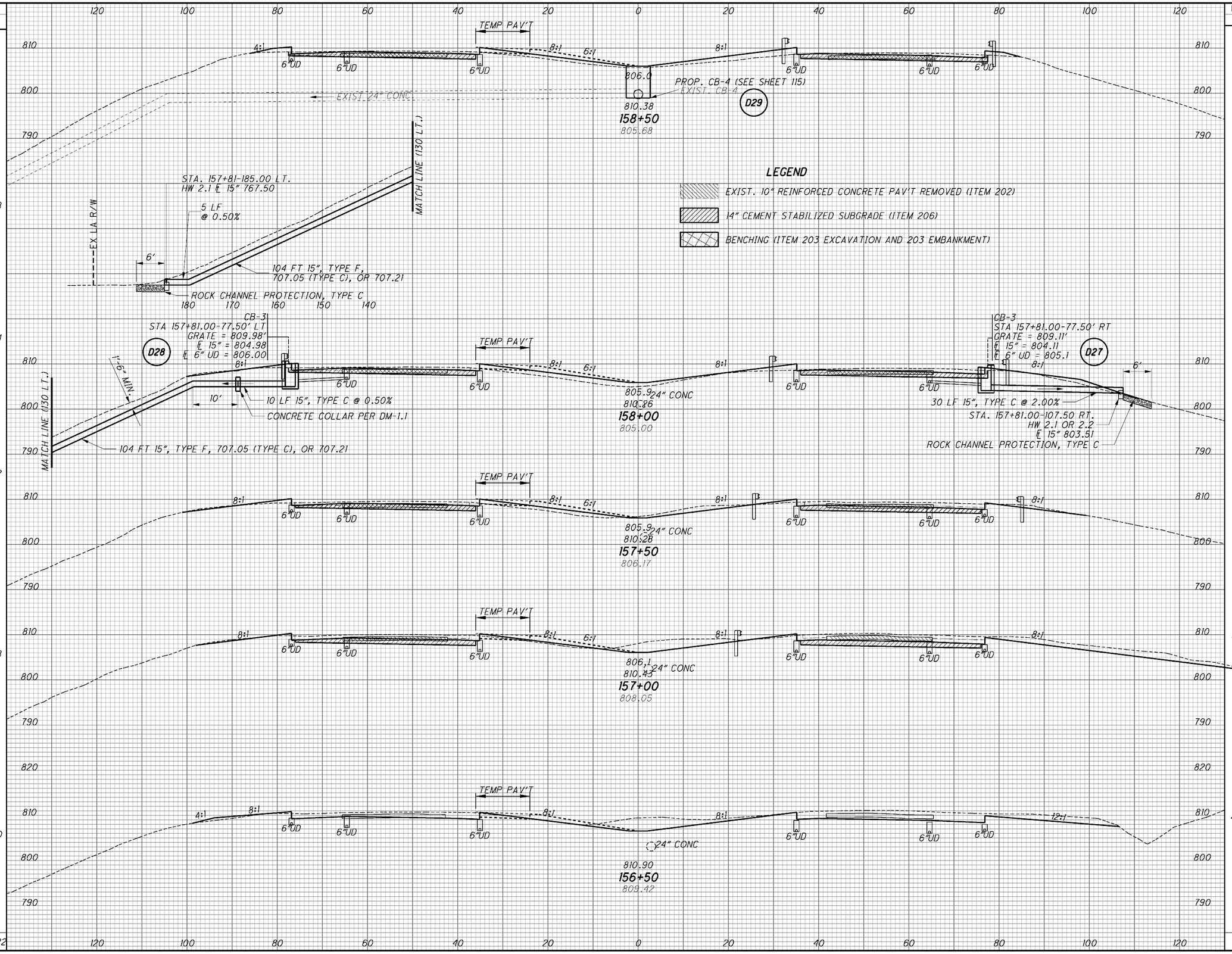

CROSS SECTIONS
STA. 156+50.00 TO STA. 158+50.00

ATB-90-14.25

172
437

Palmer ENGINEERING
PALMER ENGINEERING
11300 CORNELL PARK DR
ENGINEERING CINCINNATI, OH 45242

C:\ODOT\ATB\25199\roadway\sheets\25199XS001.dgn 6/6/2009 9:40:01 AM DENNIS

SEEDING END WIDTH	SEEDING SQ. YDS.
134	275
64 AHEAD	0
75 BACK	214
79	154
	643

LEGEND

EXIST. 10" REINFORCED CONCRETE PAV'T REMOVED (ITEM 202)

14" CEMENT STABILIZED SUBGRADE (ITEM 206)

BENCHING (ITEM 203 EXCAVATION AND 203 EMBANKMENT)

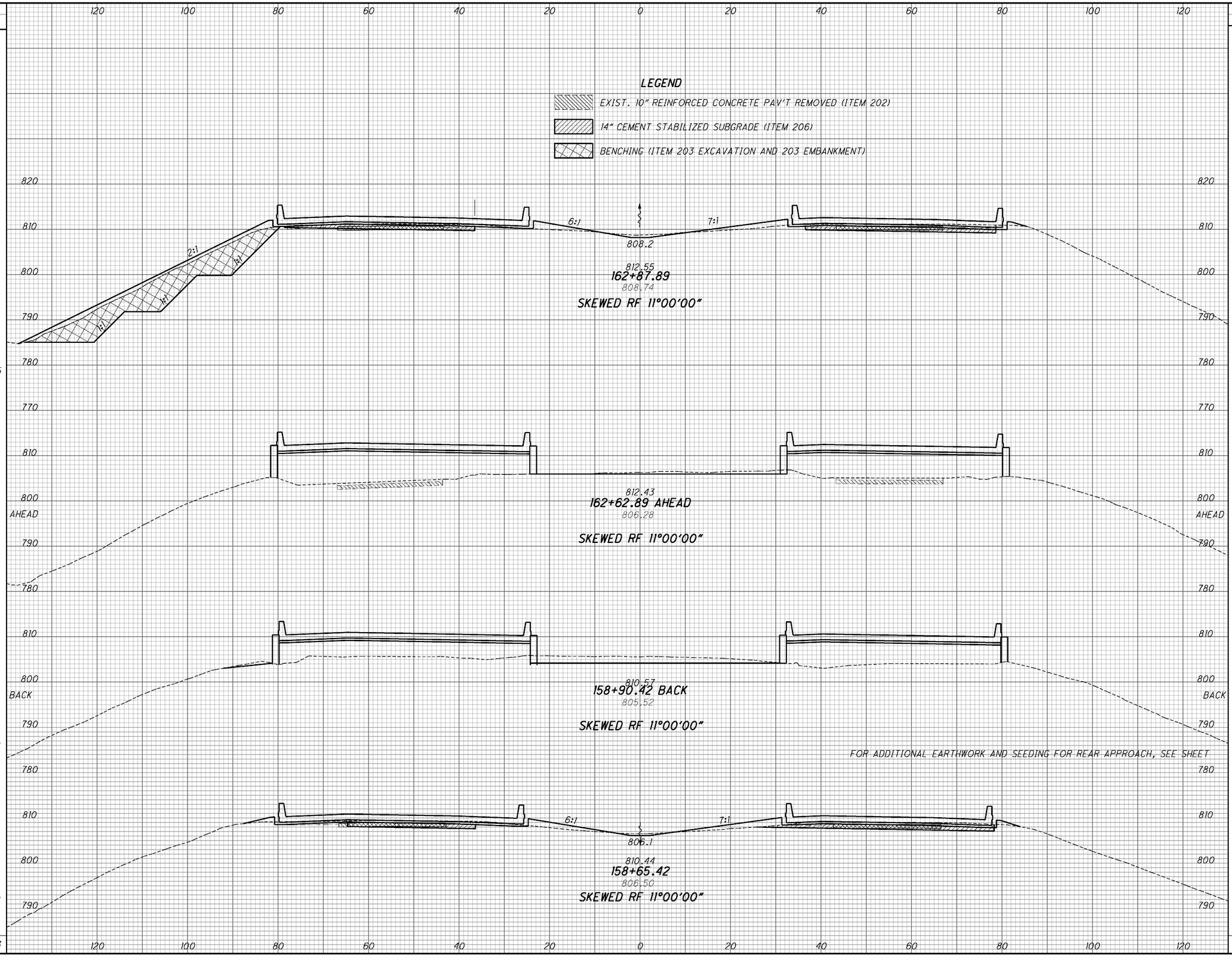

FOR ADDITIONAL EARTHWORK AND SEEDING FOR REAR APPROACH, SEE SHEET

END AREA CUT	END AREA FILL	VOLUME CUT	VOLUME FILL
304	343	150	430
20	587	0	0
72	417	59	213
54	44	23	32
		215	675

CALCULATED

CHECKED

CROSS SECTIONS

STA. 158+65.38 TO STA. 162+87.84

ATB-90-14.25

173
437

Palmer ENGINEERING
PALMER ENGINEERING
11300 CORNELL PARK DR
ENGINEERING CINCINNATI, OH 45242

O:\ODOT\ATB\25199\roadway\sheets\25199XS001.dgn 6/6/2009 9:40:03 AM DENNIS

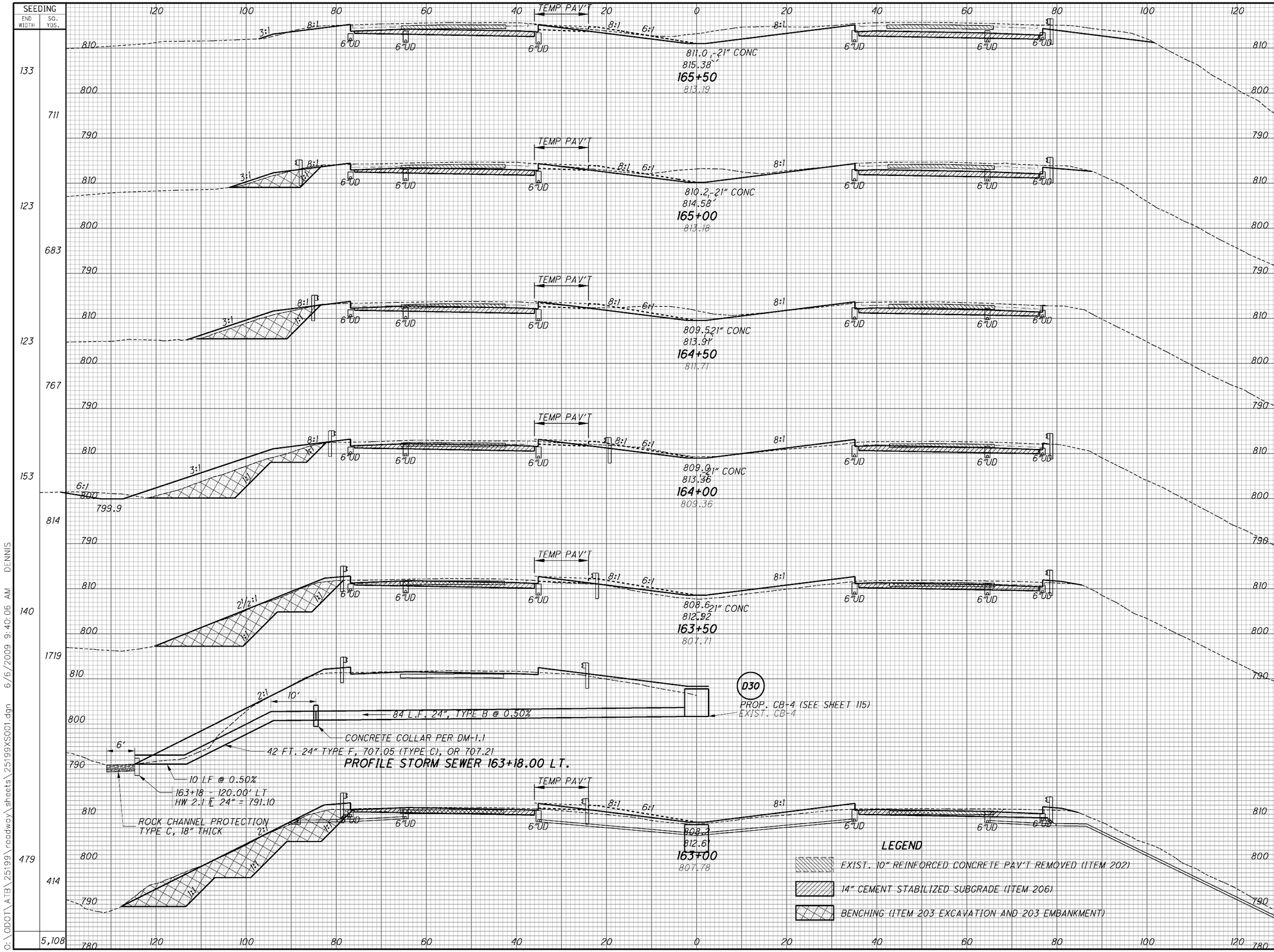

SEEDING END WIDTH	SEEDING SQ. YDS.	END AREA CUT	END AREA FILL	VOLUME CUT	VOLUME FILL
133		227	2		
	711			398	45
123		203	47		
	683			381	142
123		208	107		
	767			380	276
153		202	191		
	814			391	399
140		220	240		
	1719			468	510
479		285	311		
	414			133	147
	5,108			2,018	1,372

CALCULATED

CHECKED

CROSS SECTIONS
STA. 163+00.00 TO STA. 165+50.00

ATB-90-14.25

Palmer ENGINEERING
PALMER ENGINEERING
11300 CORNELL PARK DR
CINCINNATI, OH 45242

O:\ODOT\ATB\25199\roadway\sheets\25199XS001.dgn 6/6/2009 9:40:06 AM DENNIS

SEEDING		END AREA		VOLUME		CALCULATED	CHECKED
END WIDTH	SQ. YDS.	CUT	FILL	CUT	FILL		
159	858	204	0	347	0		
150	794	171	0	302	0		
136	758	156	0	323	0		
137	733	193	0	372	0		
127	722	209	0	403	2		
	3,865			1,747	2		

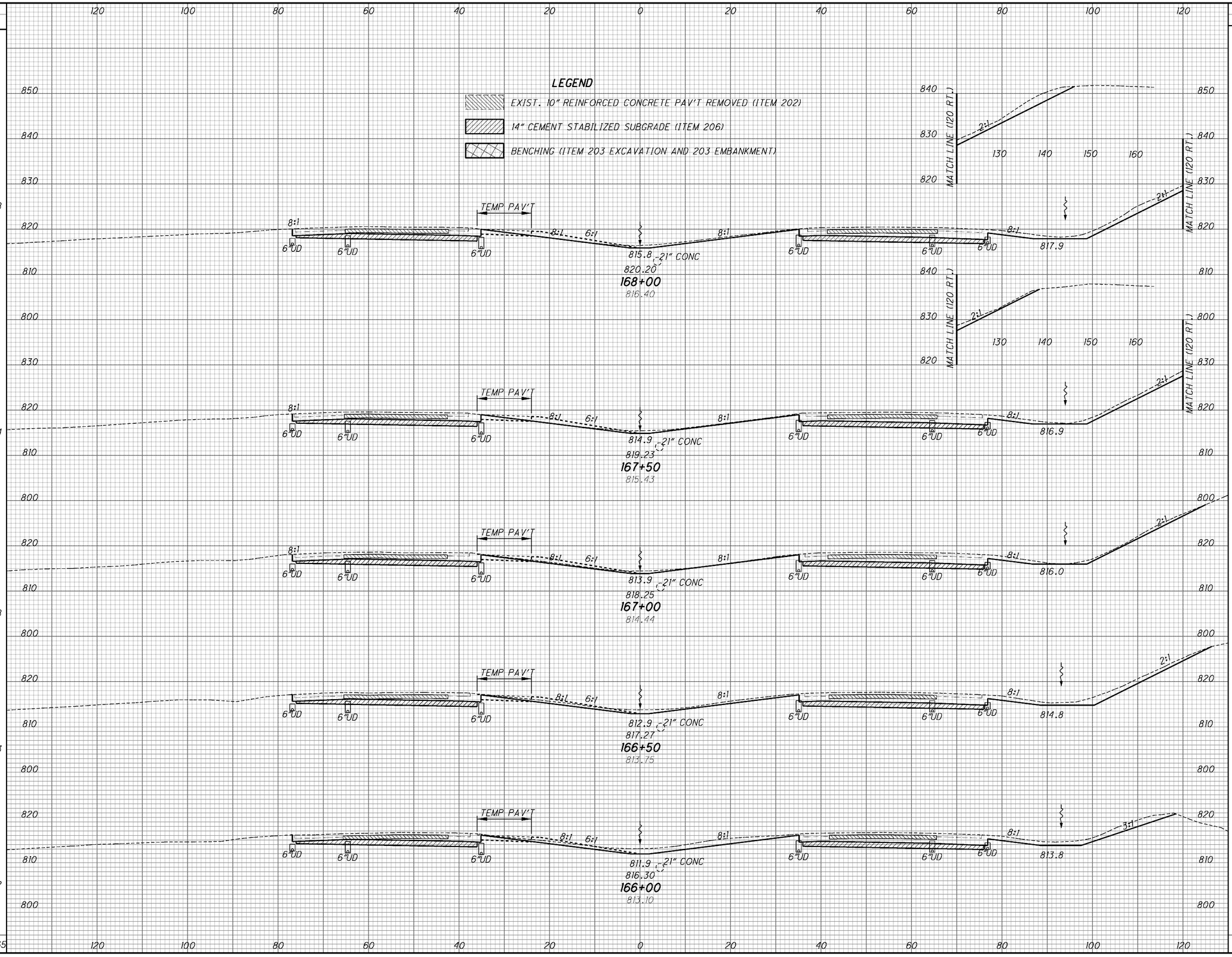

CROSS SECTIONS
STA. 166+00.00 TO STA. 168+00.00

ATB-90-14.25

175
437

Palmer ENGINEERING
PALMER ENGINEERING
11300 CORNELL PARK DR
CINCINNATI, OH 45242

O:\ODOT\ATB\25199\roadway\sheets\25199XS001.dgn 6/6/2009 9:40:09 AM DENNIS

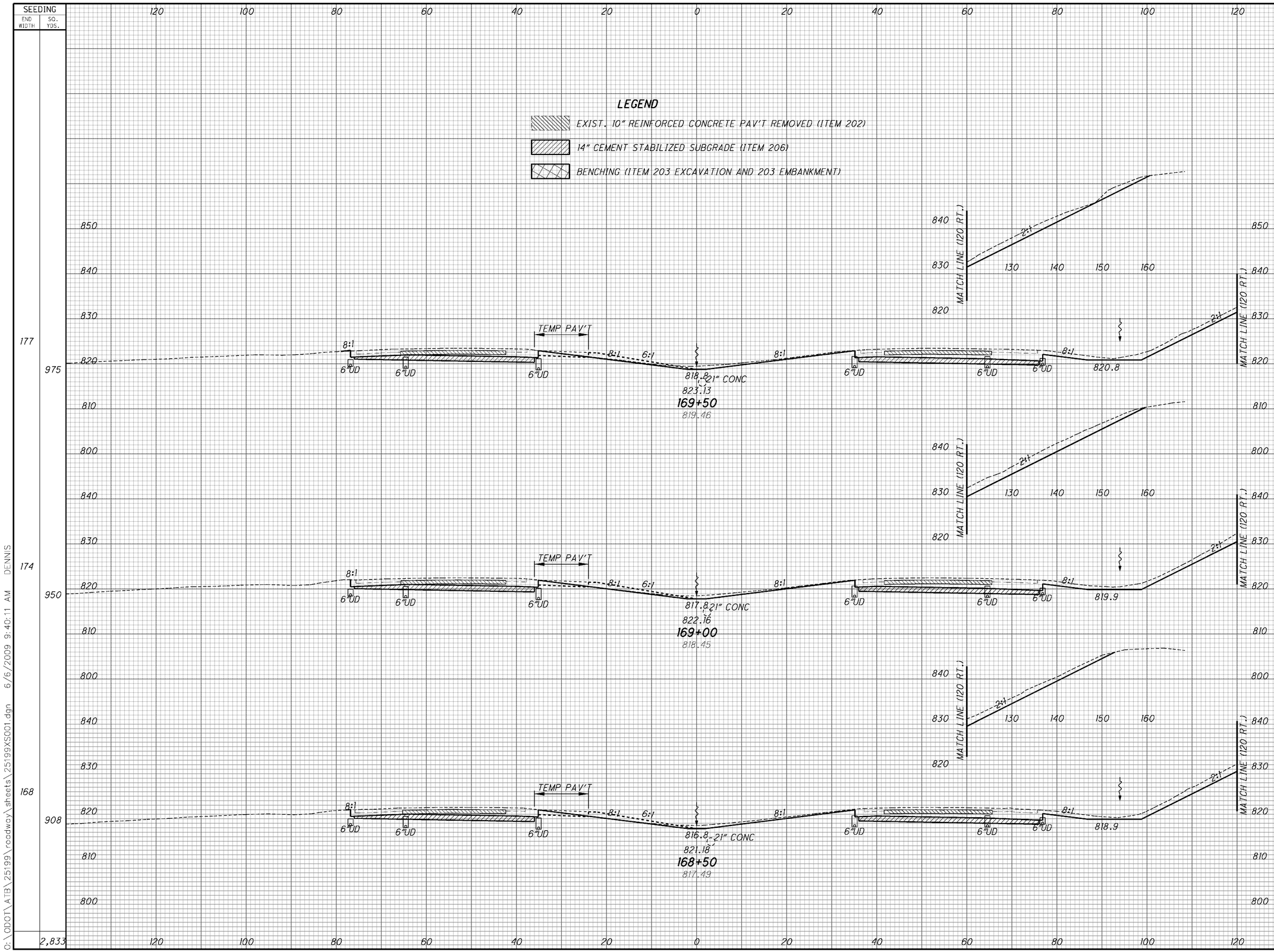

SEEDING END WIDTH	SEEDING SQ. YDS.	END AREA CUT	END AREA FILL	VOLUME CUT	VOLUME FILL
177	975	219	0		
				419	0
174	950	233	0		
				415	0
168	908	215	0		
				388	0
	2,833			1,222	0

CALCULATED

CHECKED

CROSS SECTIONS
STA. 168+50.00 TO STA. 169+50.00

ATB-90-14.25

Palmer ENGINEERING
PALMER ENGINEERING
11300 CORNELL PARK DR
CINCINNATI, OH 45242

O:\ODOT\ATB\25199\roadway\sheets\25199XS001.dgn 6/6/2009 9:40:11 AM DENNIS

SEEDING END WIDTH	SEEDING SQ. YDS.
159	889
161	906
165	958
180	992
	3,745

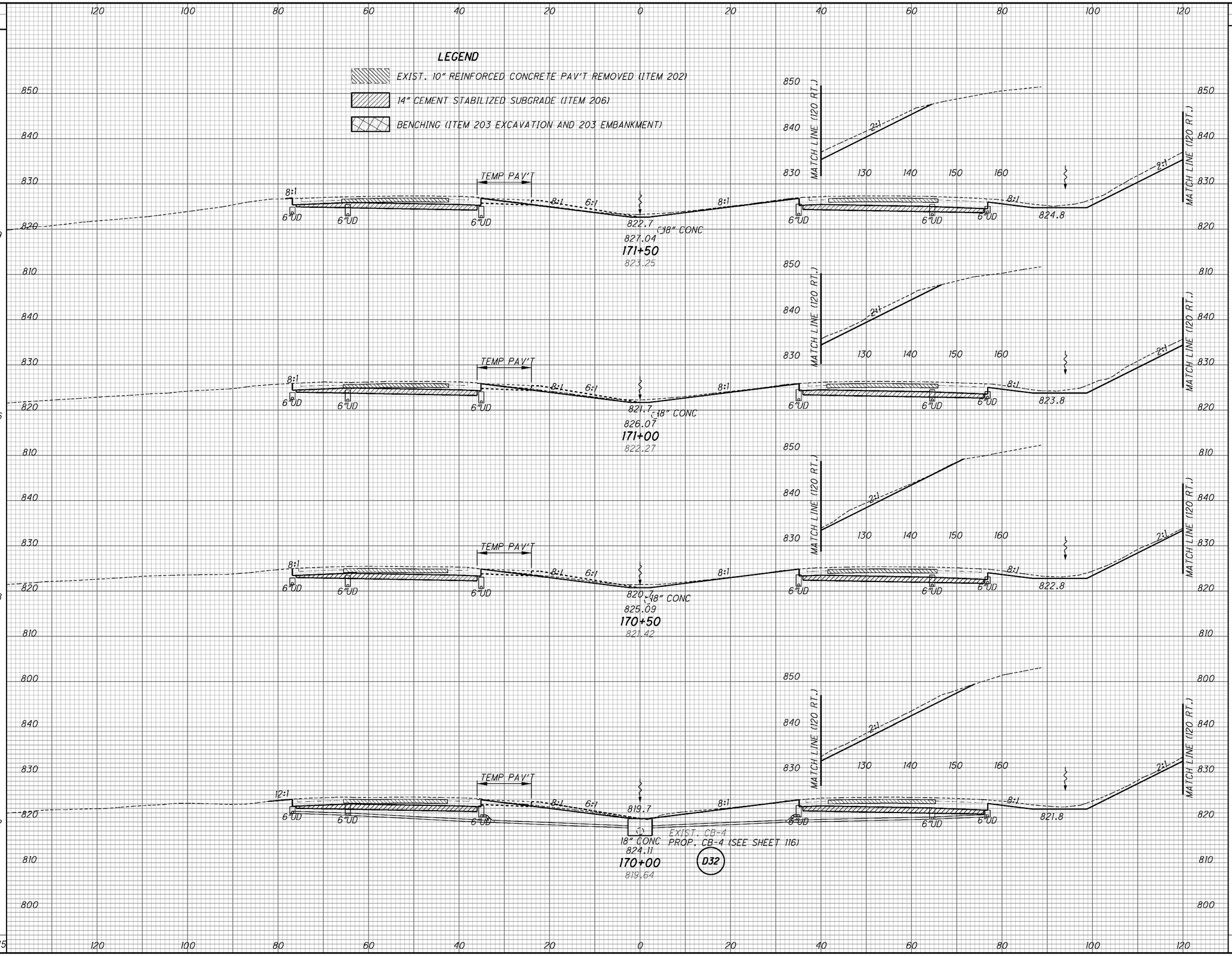

END AREA CUT	END AREA FILL	VOLUME CUT	VOLUME FILL
202	0		
		374	0
202	0		
		352	0
178	0		
		352	0
203	0		
		391	1
		1,469	1

CALCULATED

CHECKED

CROSS SECTIONS
STA. 170+00.00 TO STA. 171+50.00

ATB-90-14.25

177
437

Palmer ENGINEERING
PALMER ENGINEERING
11300 CORNELL PARK DR
CINCINNATI, OH 45242

O:\ODOT\ATB\25199\roadway\sheets\25199XS001.dgn 6/6/2009 9:40:14 AM DENNIS

SEEDING	
END WIDTH	SQ. YDS.
164	908
163	872
151	850
155	872
	3,502

LEGEND

EXIST. 10" REINFORCED CONCRETE PAV'T REMOVED (ITEM 202)

14" CEMENT STABILIZED SUBGRADE (ITEM 206)

BENCHING (ITEM 203 EXCAVATION AND 203 EMBANKMENT)

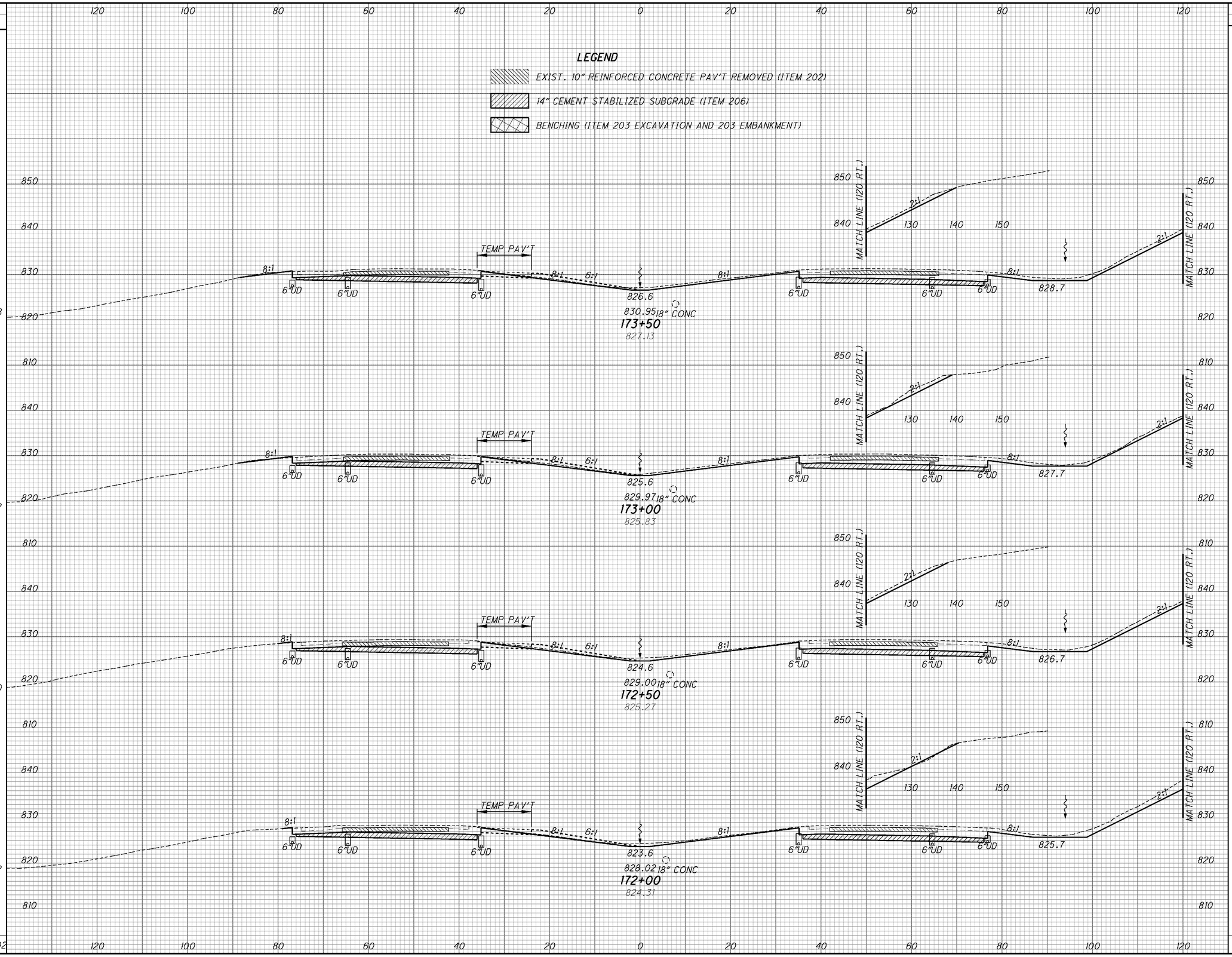

END AREA	
CUT	FILL
181	0
176	1
183	0
190	2

VOLUME	
CUT	FILL
331	1
332	1
345	2
363	2
1,371	6

CALCULATED

CHECKED

CROSS SECTIONS

STA. 172+00.00 TO STA. 173+50.00

ATB-90-14.25

178
437

Palmer ENGINEERING
PALMER ENGINEERING
11300 CORNELL PARK DR
ENGINEERING CINCINNATI, OH 45242

O:\ODOT\ATB\25199\roadway\sheets\25199XS001.dgn 6/6/2009 9:40:17 AM DENNIS

SEEDING		END AREA		VOLUME	
END WIDTH	SQ. YDS.	CUT	FILL	CUT	FILL
127	925	147	3	297	90
206	1072	174	94	333	114
180	1086	185	28	355	33
211	1042	199	8	352	7
	4,125			1,337	244

CALCULATED

CHECKED

LEGEND

EXIST. 10" REINFORCED CONCRETE PAV'T REMOVED (ITEM 202)

14" CEMENT STABILIZED SUBGRADE (ITEM 206)

BENCHING (ITEM 203 EXCAVATION AND 203 EMBANKMENT)

120 100 80 60 40 20 0 20 40 60 80 100 120

850 840 830 820 810

TEMP PAV'T

2:1 3:1 10:1 8:1 6:1

6"UD

830.5

834.86 18" CONC

175+50

830.58

832.6

829.5

833.88 18" CONC

175+00

829.96

831.6

828.5

832.91 18" CONC

174+50

829.01

830.6

827.6

831.93 18" CONC

174+00

828.09

829.6

MATCH LINE (120 RT.)

130 140 150

CROSS SECTIONS STA. 174+00.00 TO STA. 175+50.00

ATB-90-14.25

STA.

179
437

Palmer ENGINEERING
PALMER ENGINEERING
11300 CORNELL PARK DR
ENGINEERING CINCINNATI, OH 45242

O:\ODOT\ATB\25199\roadway\sheets\25199XS001.dgn 6/6/2009 9:40:19 AM DENNIS

SEEDING END WIDTH	SEEDING SQ. YDS.	END AREA CUT	END AREA FILL	VOLUME CUT	VOLUME FILL
119	686	134	13	264	22
128	686	151	11	274	17
119	661	145	8	262	16
119	669	137	9	259	16
122	692	143	8	268	10
	3,394			1,327	81

CALCULATED

CHECKED

LEGEND

EXIST. 10" REINFORCED CONCRETE PAV'T REMOVED (ITEM 202)

14" CEMENT STABILIZED SUBGRADE (ITEM 206)

BENCHING (ITEM 203 EXCAVATION AND 203 EMBANKMENT)

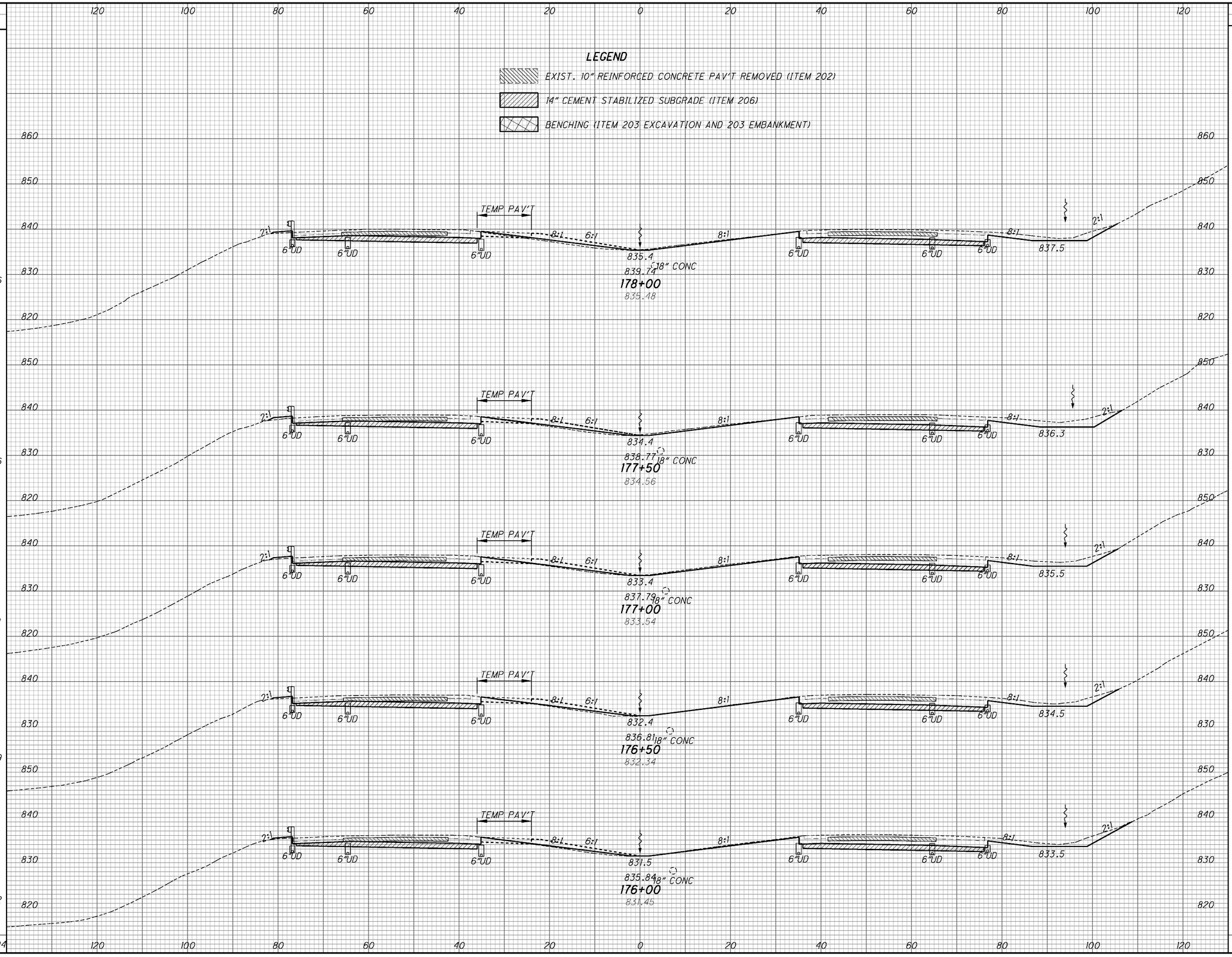

CROSS SECTIONS STA. 176+00.00 TO STA. 178+00.00

ATB-90-14.25

180
437

Palmer ENGINEERING
PALMER ENGINEERING
11300 CORNELL PARK DR
CINCINNATI, OH 45242

O:\ODOT\ATB\25199\roadway\sheets\25199XS001.dgn 6/6/2009 9:40:22 AM DENNIS

SEEDING		END AREA		VOLUME	
END WIDTH	SQ. YDS.	CUT	FILL	CUT	FILL
183	861	303	270	406	256
127	708	135	6		
128	683	249	14		
118	658	134	10		
		246	24		
		132	16		
		246	27		
2,910				1,147	321

CALCULATED

CHECKED

LEGEND

EXIST. 10" REINFORCED CONCRETE PAV'T REMOVED (ITEM 202)

14" CEMENT STABILIZED SUBGRADE (ITEM 206)

BENCHING (ITEM 203 EXCAVATION AND 203 EMBANKMENT)

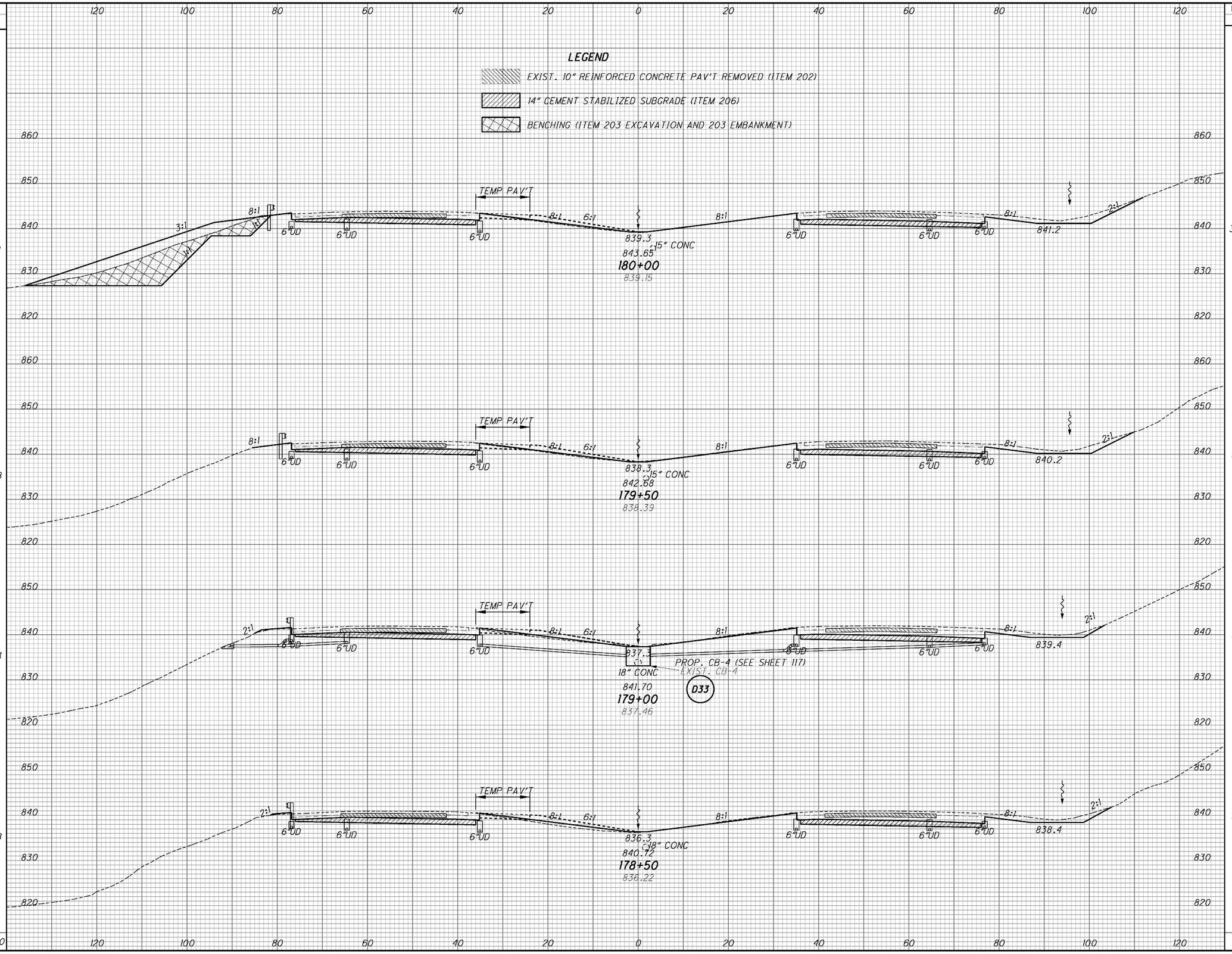

CROSS SECTIONS

STA. 178+50.00 TO STA. 180+00.00

ATB-90-14.25

181
437

Palmer ENGINEERING
PALMER ENGINEERING
11300 CORNELL PARK DR
ENGINEERING CINCINNATI, OH 45242

O:\ODOT\ATB\25199\roadway\sheets\25199XS001.dgn 6/6/2009 9:40:24 AM DENNIS

SEEDING END WIDTH	SEEDING SQ. YDS.
157	806
133	750
137	792
148	831
151	886
168	975
	5,040

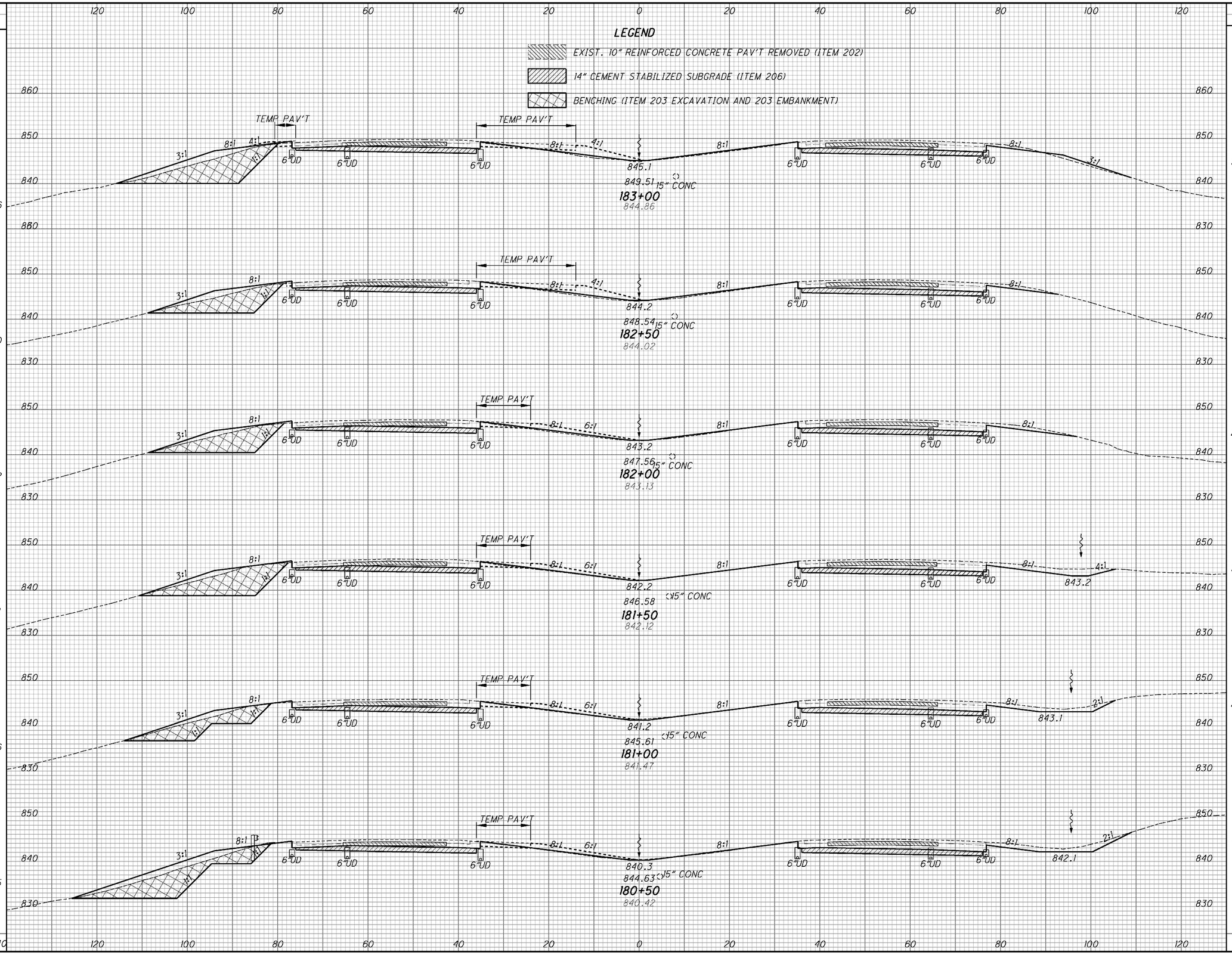

END AREA CUT	END AREA FILL	VOLUME CUT	VOLUME FILL
225	176	385	275
191	121	362	220
200	117	414	231
248	133	423	212
209	96	435	250
261	174	522	411
		2,541	1,599

CALCULATED

CHECKED

CROSS SECTIONS

STA. 180+50.00 TO STA. 183+00.00

ATB-90-14.25

182
437

Palmer ENGINEERING
PALMER ENGINEERING
11300 CORNELL PARK DR
ENGINEERING CINCINNATI, OH 45242

C:\ODOT\ATB\25199\roadway\sheets\25199XS001.dgn 6/6/2009 9:40:27 AM DENNIS

SEEDING	
END WIDTH	SQ. YDS.
135	700
117	678
127	700
125	728
137	850
169	906
	4,562

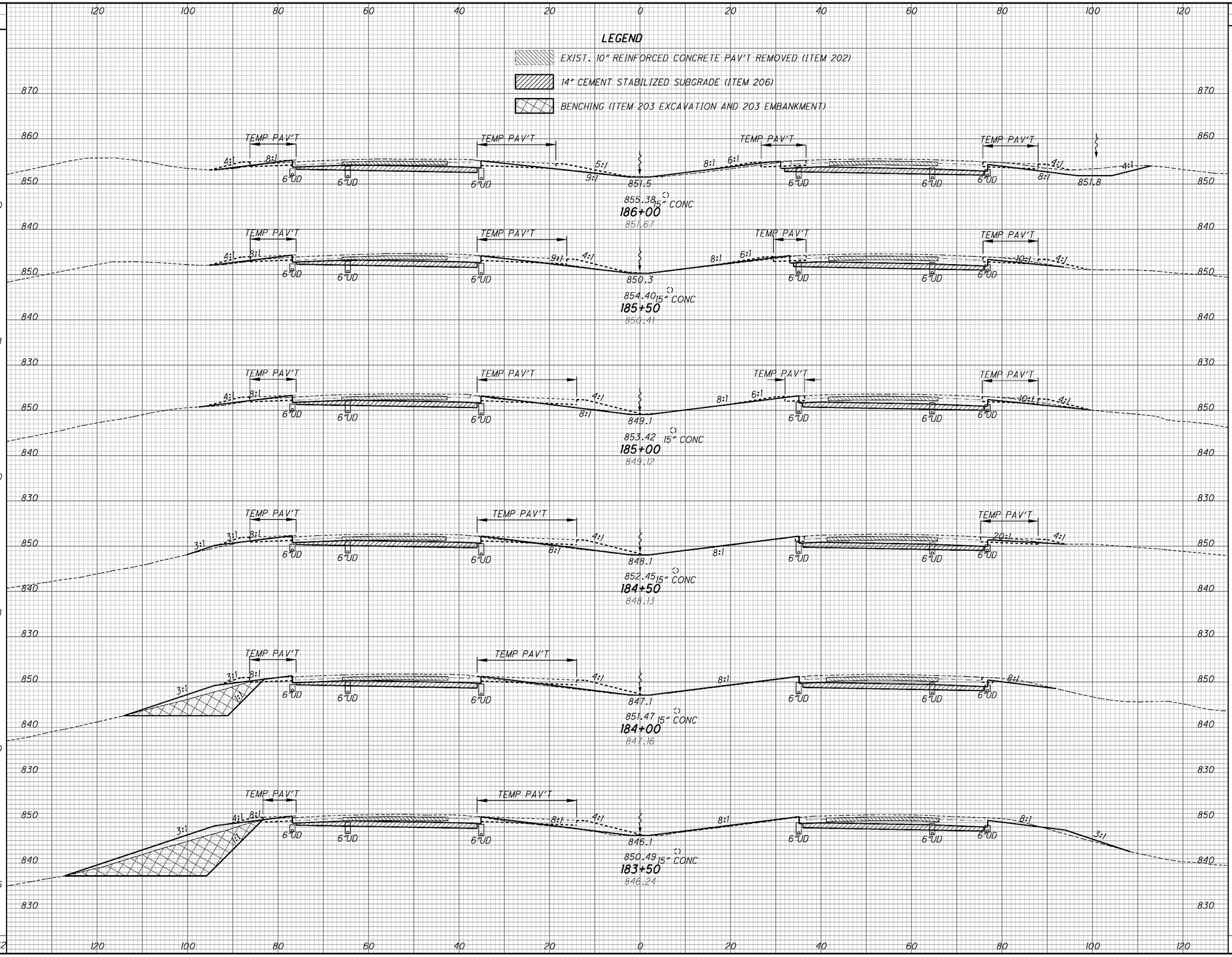

END AREA	
CUT	FILL
147	14
114	9
116	5
109	12
206	127
297	253

VOLUME	
CUT	FILL
242	21
213	13
208	16
291	129
466	352
483	397
1,903	928

CALCULATED

CHECKED

CROSS SECTIONS
STA. 183+50.00 TO STA. 186+00.00

ATB-90-14.25

183
437

Palmer ENGINEERING
PALMER ENGINEERING
11300 CORNELL PARK DR
CINCINNATI, OH 45242

O:\ODOT\ATB\25199\roadway\sheets\25199XS001.dgn 6/6/2009 9:40:30 AM DENNIS

SEEDING END WIDTH	SEEDING SQ. YDS.	END AREA CUT	END AREA FILL	VOLUME CUT	VOLUME FILL
124	675	132	22	248	45
119	669	135	26	257	54
122	544	142	32	352	32
74	650	238	3	435	83
160	839	231	87	374	100
142	769	172	21	295	32
	4,146			1,961	346

CALCULATED

CHECKED

LEGEND

EXIST. 10" REINFORCED CONCRETE PAV'T REMOVED (ITEM 202)

14" CEMENT STABILIZED SUBGRADE (ITEM 206)

BENCHING (ITEM 203 EXCAVATION AND 203 EMBANKMENT)

857.4
861.24
189+00
857.17

856.7
860.26
188+50
856.17

855.9
859.29
188+00
854.82
PROP. CB-4 (SEE SHEET 117)
D34

858.31
187+50
857.10
15" CONC

854.0
857.33
187+00
854.02
15" CONC

852.8
856.35
186+50
852.65
15" CONC

CROSS SECTIONS STA. 186+50.00 TO STA. 189+00.00

ATB-90-14.25

184
437

PALMER ENGINEERING
11300 CORNELL PARK DR
ENGINEERING CINCINNATI, OH 45242

O:\ODOT\ATB\25199\roadway\sheets\25199XS001.dgn 6/6/2009 9:40:32 AM DENNIS

SEEDING END WIDTH	SEEDING SQ. YDS.	END AREA CUT	END AREA FILL	VOLUME CUT	VOLUME FILL
144	844	119	6	222	15
160	944	121	10	233	41
180	429	131	34	114	20
143	781	126	10	256	21
138	747	150	12	276	30
131	708	149	20	260	39
	4,453			1,361	166

CALCULATED

CHECKED

CROSS SECTIONS
STA. 189+50.00 TO STA. 192+00.00

ATB-90-14.25

185
437

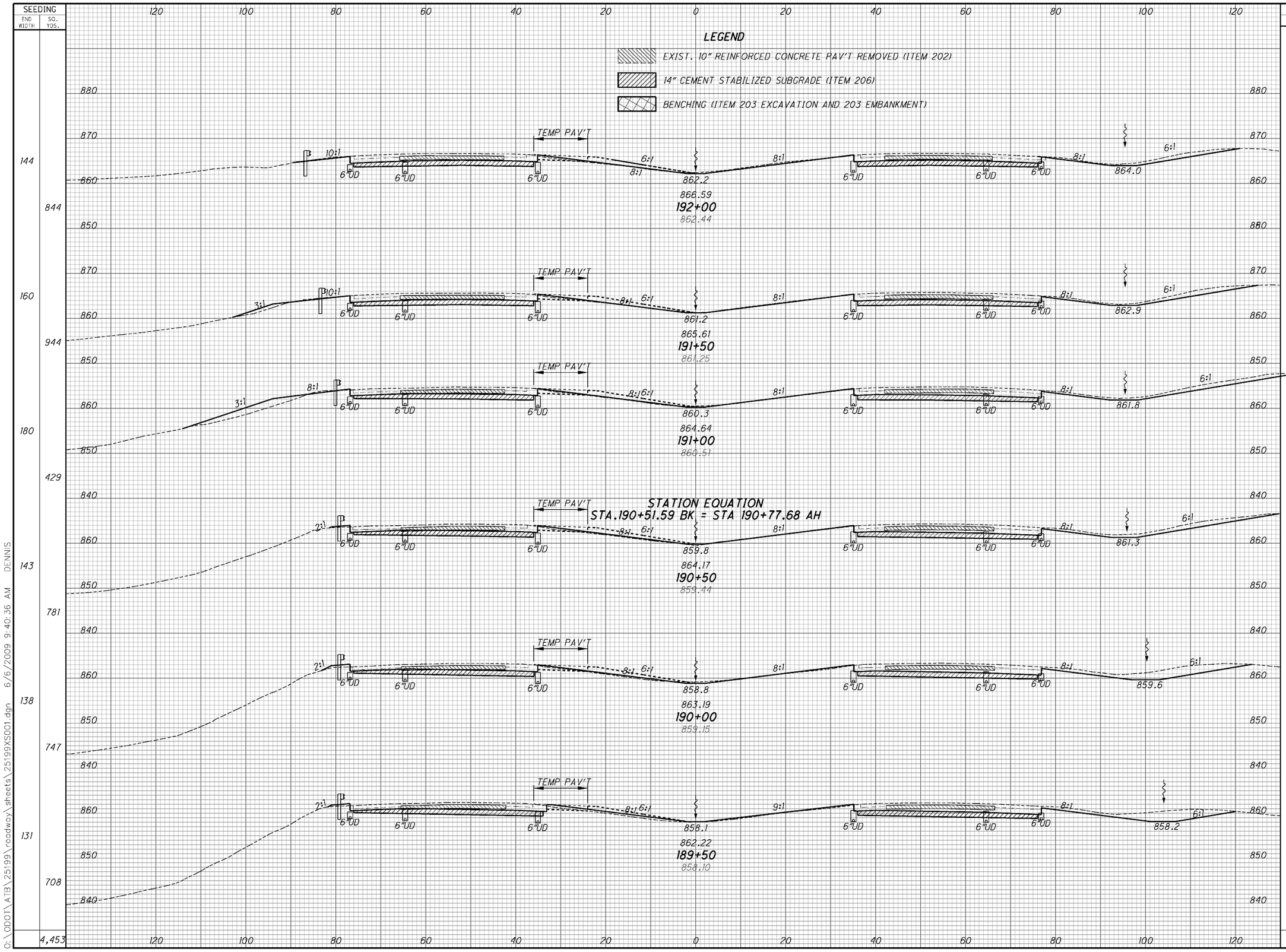

Palmer ENGINEERING
PALMER ENGINEERING
11300 CORNELL PARK DR
CINCINNATI, OH 45242

O:\ODOT\ATB\25199\roadway\sheets\25199XS001.dgn 6/6/2009 9:40:36 AM DENNIS

SEEDING END WIDTH	SEEDING SQ. YDS.
104	544
92	519
95	536
98	653
137	769
140	789
	3,810

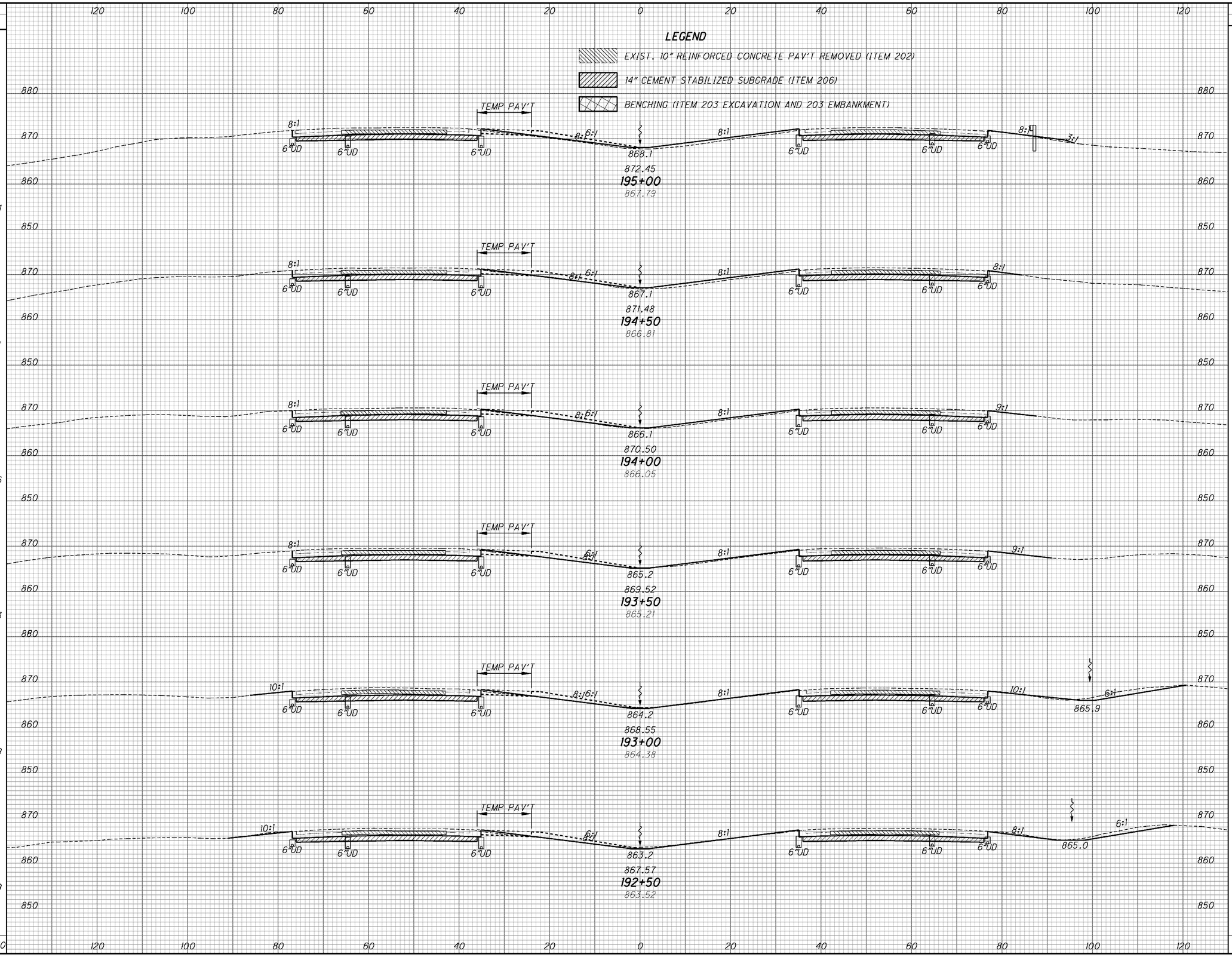

END AREA CUT	END AREA FILL	VOLUME CUT	VOLUME FILL
81	30	151	47
83	21	154	33
84	15	158	23
87	10	181	18
108	9	206	13
114	5	215	10
		1,065	144

CALCULATED

CHECKED

CROSS SECTIONS

STA. 192+50.00 TO STA. 195+00.00

ATB-90-14.25

186
437

Palmer ENGINEERING
PALMER ENGINEERING
11300 CORNELL PARK DR
CINCINNATI, OH 45242

O:\ODOT\ATB\25199\roadway\sheets\25199XS001.dgn 6/6/2009 9:40:39 AM DENNIS

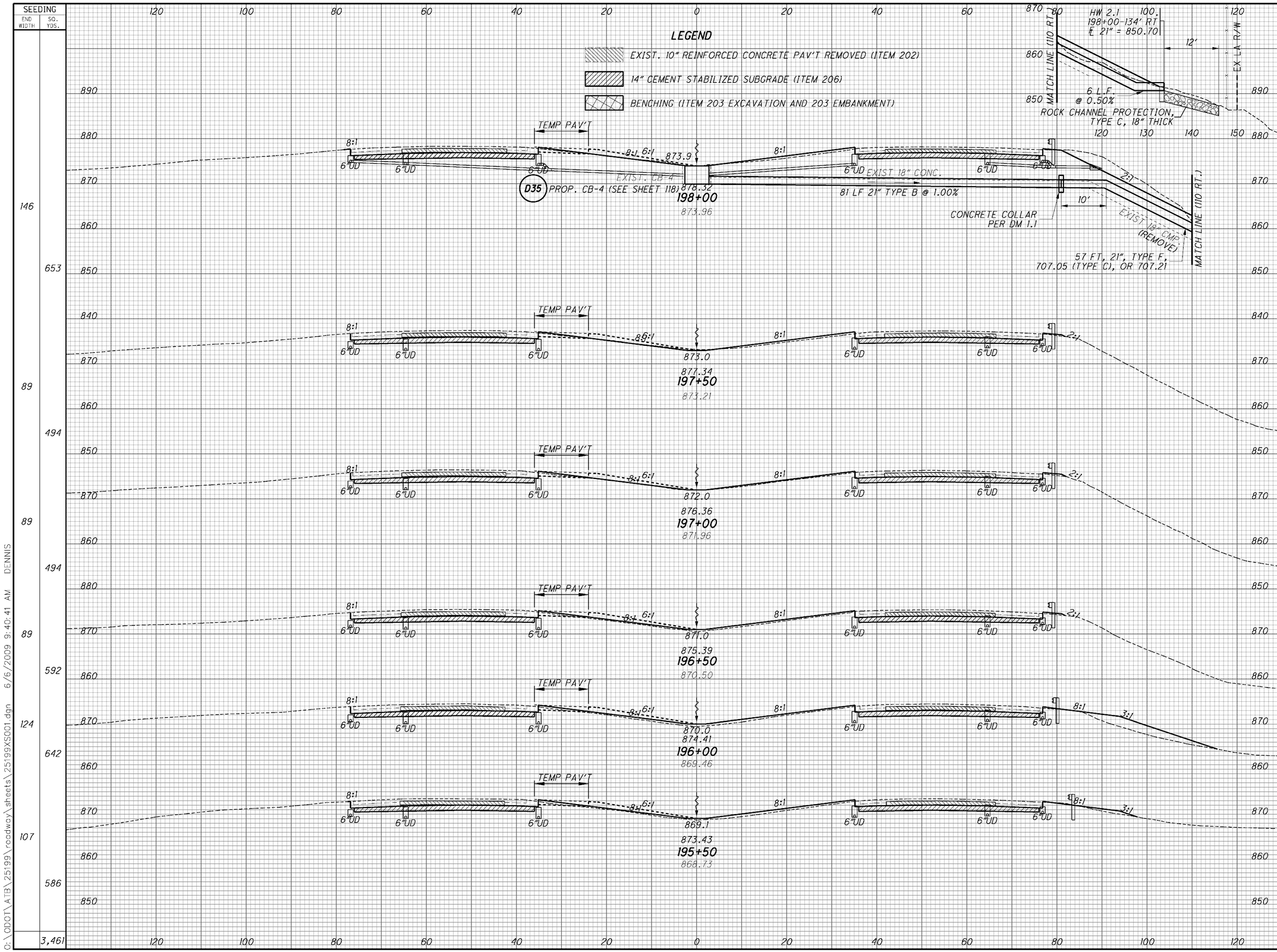

SEEDING END WIDTH	SEEDING SQ. YDS.	END AREA CUT	END AREA FILL	VOLUME CUT	VOLUME FILL
146		129	49		
	653			197	59
89		83	14		
	494			149	25
89		78	13		
	494			145	33
89		78	23		
	592			146	85
124		80	69		
	642			148	94
107		80	32		
	586			149	57
	3,461			934	353

CALCULATED

CHECKED

CROSS SECTIONS
STA. 195+50.00 TO STA. 198+00.00

ATB-90-14.25

Palmer ENGINEERING
PALMER ENGINEERING
11300 CORNELL PARK DR
CINCINNATI, OH 45242

O:\ODOT\ATB\25199\roadway\sheets\25199XS001.dgn 6/6/2009 9:40:41 AM DENNIS

SEEDING END WIDTH	SEEDING SQ. YDS.	END AREA CUT	END AREA FILL	VOLUME CUT	VOLUME FILL
89	492	69	19	130	31
88	517	71	15	130	33
98	544	69	21	129	50
98	547	70	34	130	63
99	553	70	34	132	58
100	683	73	29	187	72
	3,336			838	307

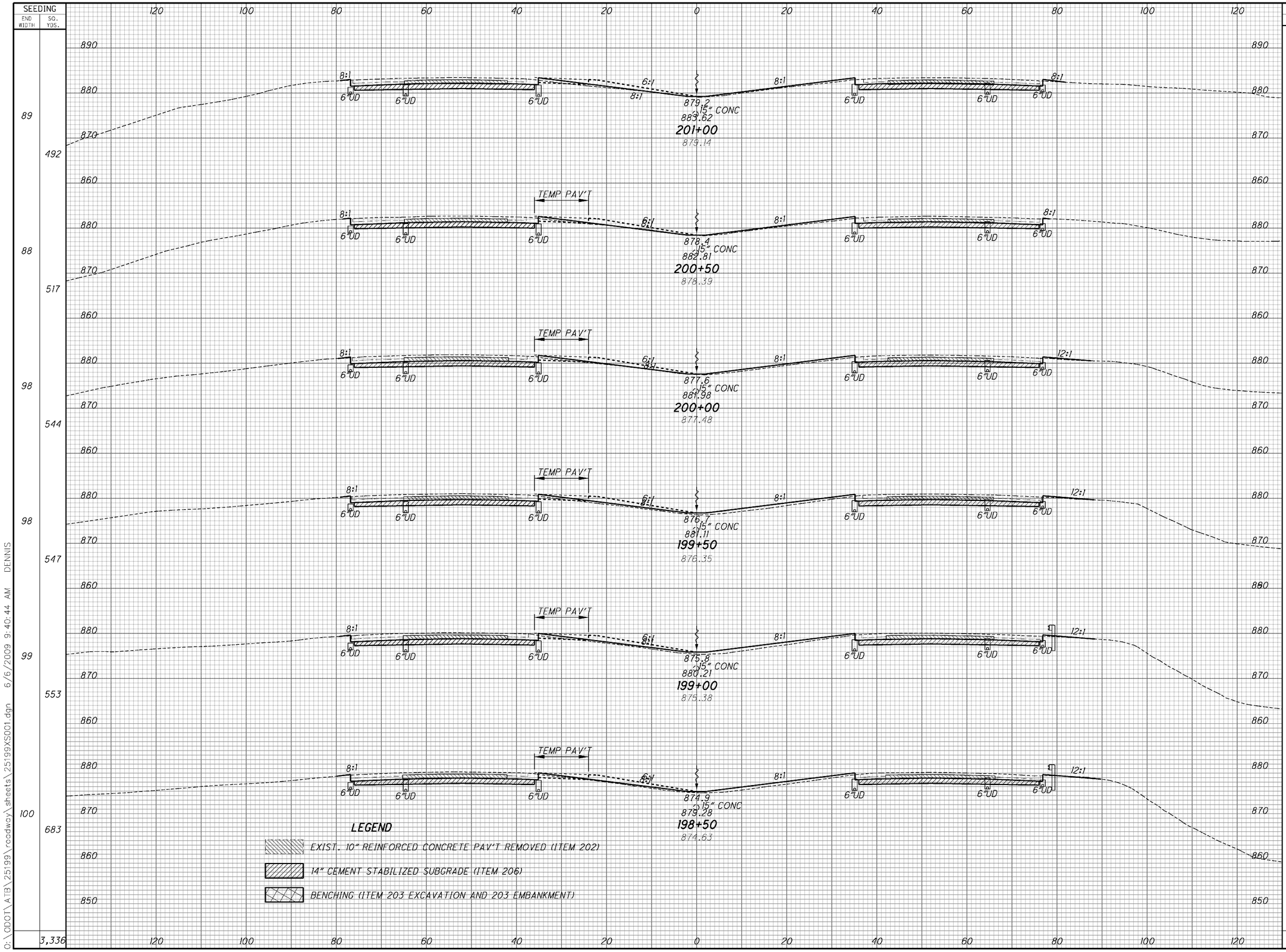

CALCULATED

CHECKED

CROSS SECTIONS

STA. 198+50.00 TO STA. 201+00.00

ATB-90-14.25

188
437

Palmer ENGINEERING
PALMER ENGINEERING
11300 CORNELL PARK DR
CINCINNATI, OH 45242

O:\ODOT\ATB\25199\roadway\sheets\25199XS001.dgn 6/6/2009 9:40:44 AM DENNIS

SEEDING END WIDTH	SEEDING SQ. YDS.	END AREA CUT	END AREA FILL	VOLUME CUT	VOLUME FILL
143	714	80	49	138	86
114	581	69	44	122	71
95	522	62	32	116	60
93	525	63	33	116	57
96	528	62	28	117	51
94	522	64	27	119	46
94	508	65	24	124	39
	3,900			852	410

CALCULATED

CHECKED

LEGEND

EXIST. 10" REINFORCED CONCRETE PAV'T REMOVED (ITEM 202)

14" CEMENT STABILIZED SUBGRADE (ITEM 206)

BENCHING (ITEM 203 EXCAVATION AND 203 EMBANKMENT)

120 100 80 60 40 20 0 20 40 60 80 100 120

900 890 880 870

TEMP PAV'T

3:1 8:1 6:1

6"UD

884.0
888.40
204+50
883.56

883.4
887.81
204+00
883.11

882.8
15" CONC
887.19
+15.8 PROP. CB-4 (SEE SHEET 119)
EXIST. CB-4
D36
203+50
882.87

882.2
15" CONC
886.54
203+00
881.95

881.5
15" CONC
885.86
202+50
881.23

880.8
15" CONC
885.14
202+00
880.65

880.0
15" CONC
884.40
201+50
879.99

CROSS SECTIONS
STA. 201+50.00 TO STA. 204+50.00
ATB-90-14.25

189
437

Palmer ENGINEERING
PALMER ENGINEERING
11300 CORNELL PARK DR
CINCINNATI, OH 45242

C:\ODOT\ATB\25199\roadway\sheets\25199XS001.dgn 6/6/2009 9:40:47 AM DENNIS

LEGEND

EXIST. 10" REINFORCED CONCRETE PAV'T REMOVED (ITEM 202)

14" CEMENT STABILIZED SUBGRADE (ITEM 206)

BENCHING (ITEM 203 EXCAVATION AND 203 EMBANKMENT)

SEEDING END WIDTH	SEEDING SQ. YDS.	END AREA CUT	END AREA FILL	VOLUME CUT	VOLUME FILL
168	900	188	133	327	253
156	881	164	140	304	270
161	892	165	151	289	288
160	878	147	159	253	275
156	850	126	138	235	234
150	814	128	115	192	152
	5,215			1,600	1,472

CALCULATED

CHECKED

CROSS SECTIONS

STA. 205+00.00 TO STA. 207+50.00

ATB-90-14.25

190
437

PALMER ENGINEERING
11300 CORNELL PARK DR
CINCINNATI, OH 45242

O:\ODOT\ATB\25199\roadway\sheets\25199XS001.dgn 6/6/2009 9:40:50 AM DENNIS

SEEDING	
END WIDTH	SQ. YDS.
123	642
108	772
170	950
172	964
175	950
167	931
	5,209

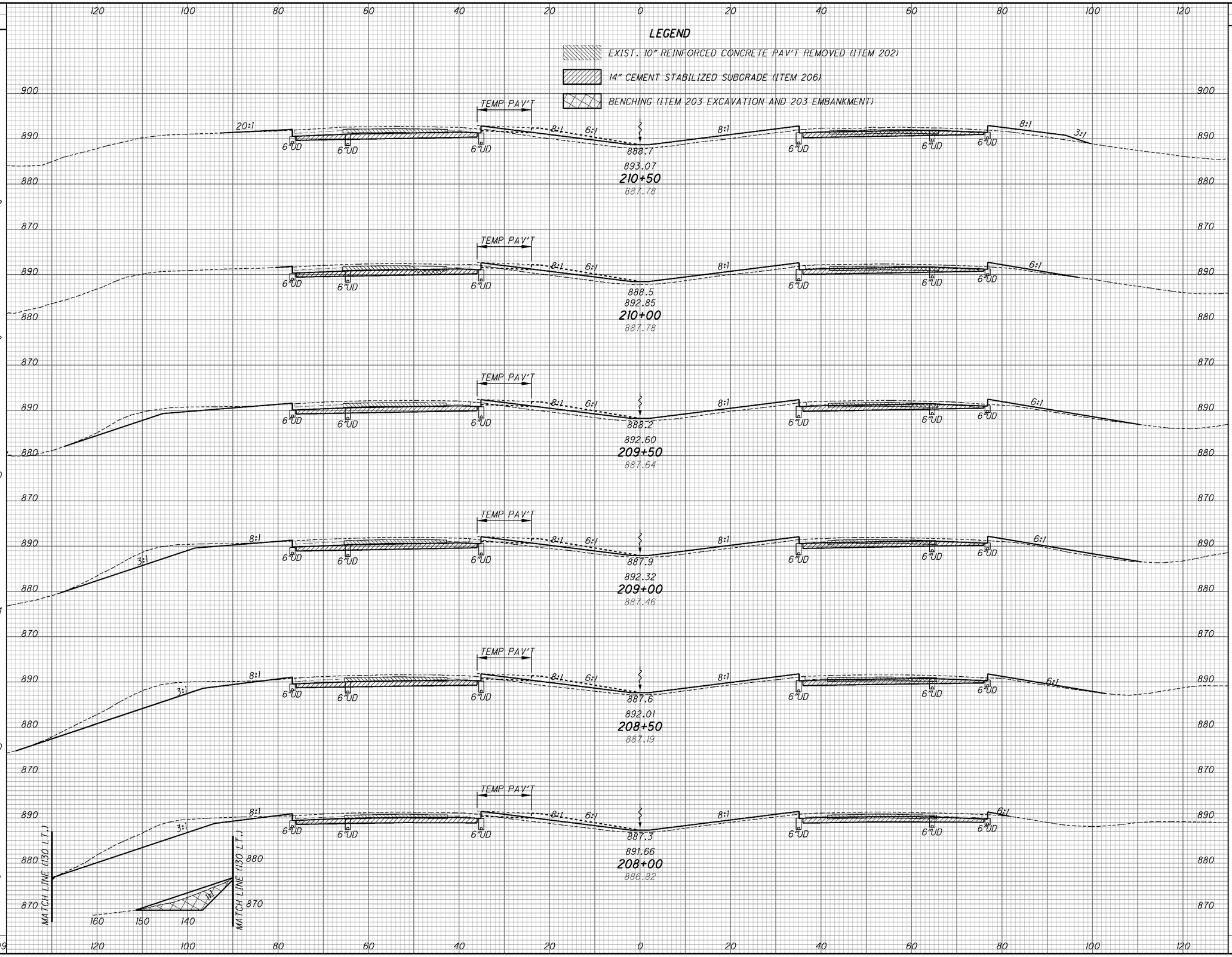

END AREA	
CUT	FILL
61	79
64	64
98	68
117	61
155	55
187	103

VOLUME	
CUT	FILL
116	133
150	122
199	119
252	107
316	146
348	218
1,381	845

CALCULATED

CHECKED

CROSS SECTIONS
208+00.00 TO STA. 210+50.00

ATB-90-14.25

191
437

Palmer ENGINEERING
PALMER ENGINEERING
11300 CORNELL PARK DR
CINCINNATI, OH 45242

O:\ODOT\ATB\25199\roadway\sheets\25199XS001.dgn 6/6/2009 9:40:54 AM DENNIS

SEEDING END WIDTH	SEEDING SQ. YDS.
149	828
149	881
168	908
159	797
128	711
128	697
	4,822

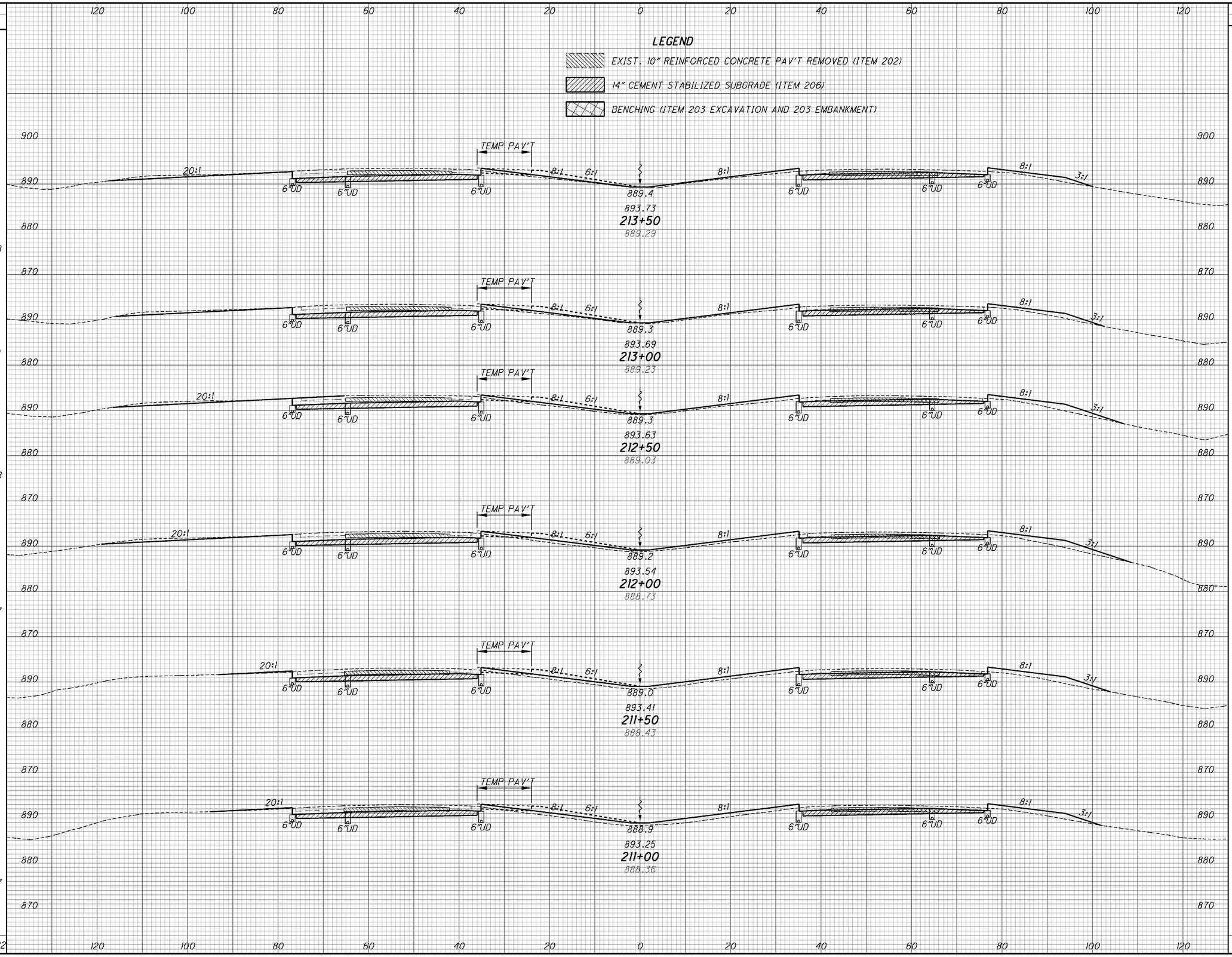

END AREA CUT	END AREA FILL	VOLUME CUT	VOLUME FILL
81	37		
		150	74
81	43		
		150	93
81	58		
		149	116
80	68		
		130	132
61	75		
		113	139
61	76		
		113	144
		805	698

CALCULATED

CHECKED

CROSS SECTIONS
STA. 211+00.00 TO STA. 213+50.00

ATB-90-14.25

192
437

Palmer ENGINEERING
PALMER ENGINEERING
11300 CORNELL PARK DR
CINCINNATI, OH 45242

O:\ODOT\ATB\25199\roadway\sheets\25199XS001.dgn 6/6/2009 9:40:56 AM DENNIS

Palmer ENGINEERING
PALMER ENGINEERING
11300 CORNELL PARK DR
CINCINNATI, OH 45242

O:\ODOT\ATB\25199\roadway\sheets\25199XS001.dgn 6/6/2009 9:40:59 AM DENNIS

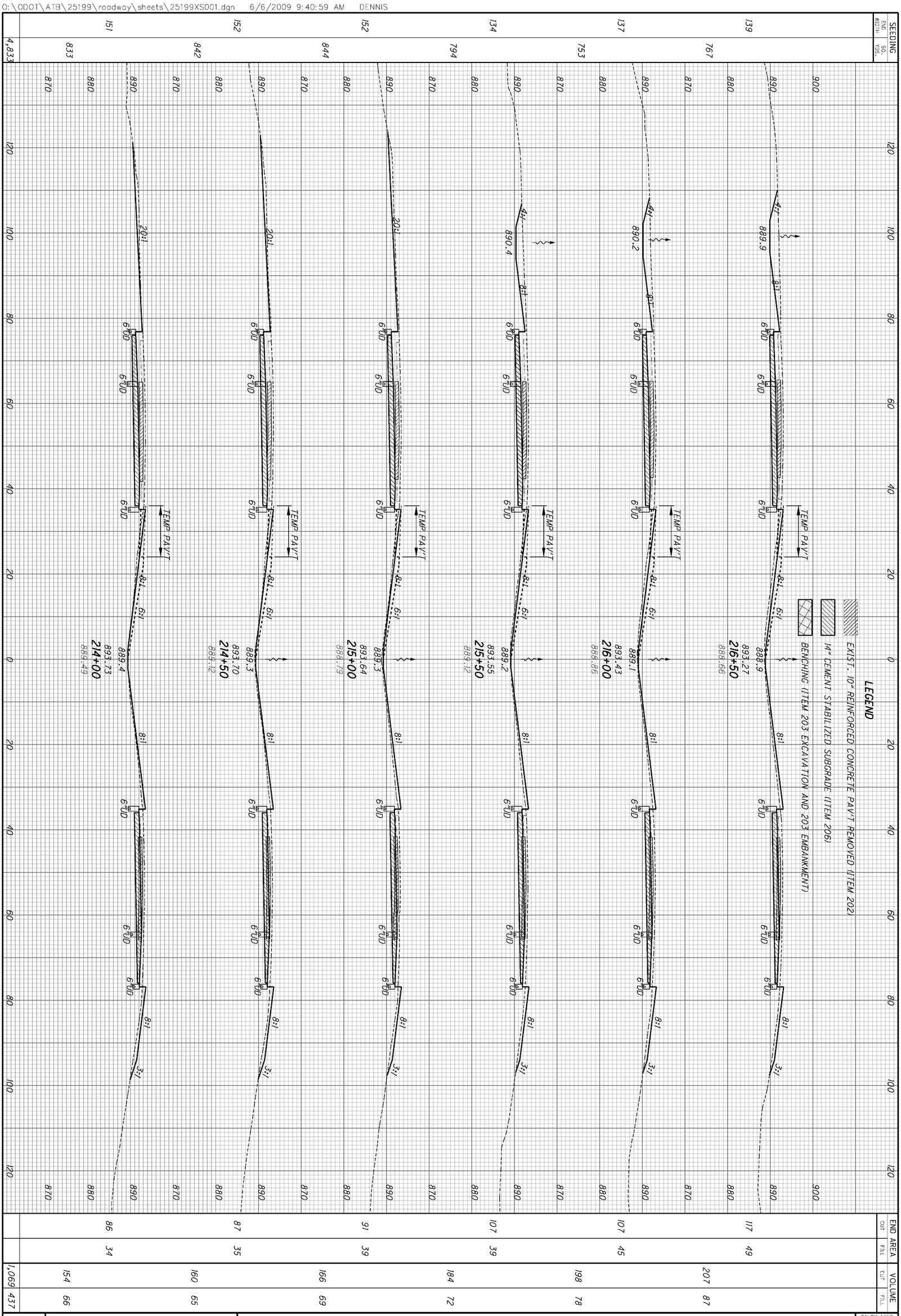

193 / 437	ATB-90-14.25	CROSS SECTIONS STA. 214+00.00 TO STA. 216+50.00

CALCULATED

CHECKED

SEEDING END WIDTH	SEEDING SQ. YDS.	END AREA CUT	END AREA FILL	VOLUME CUT	VOLUME FILL
169	950	98	84	183	171
173	861	99	101	192	134
137	767	108	44	201	77
139	775	110	39	209	70
140	808	117	37	217	81
151	806	118	50	217	92
	4,967			1,219	625

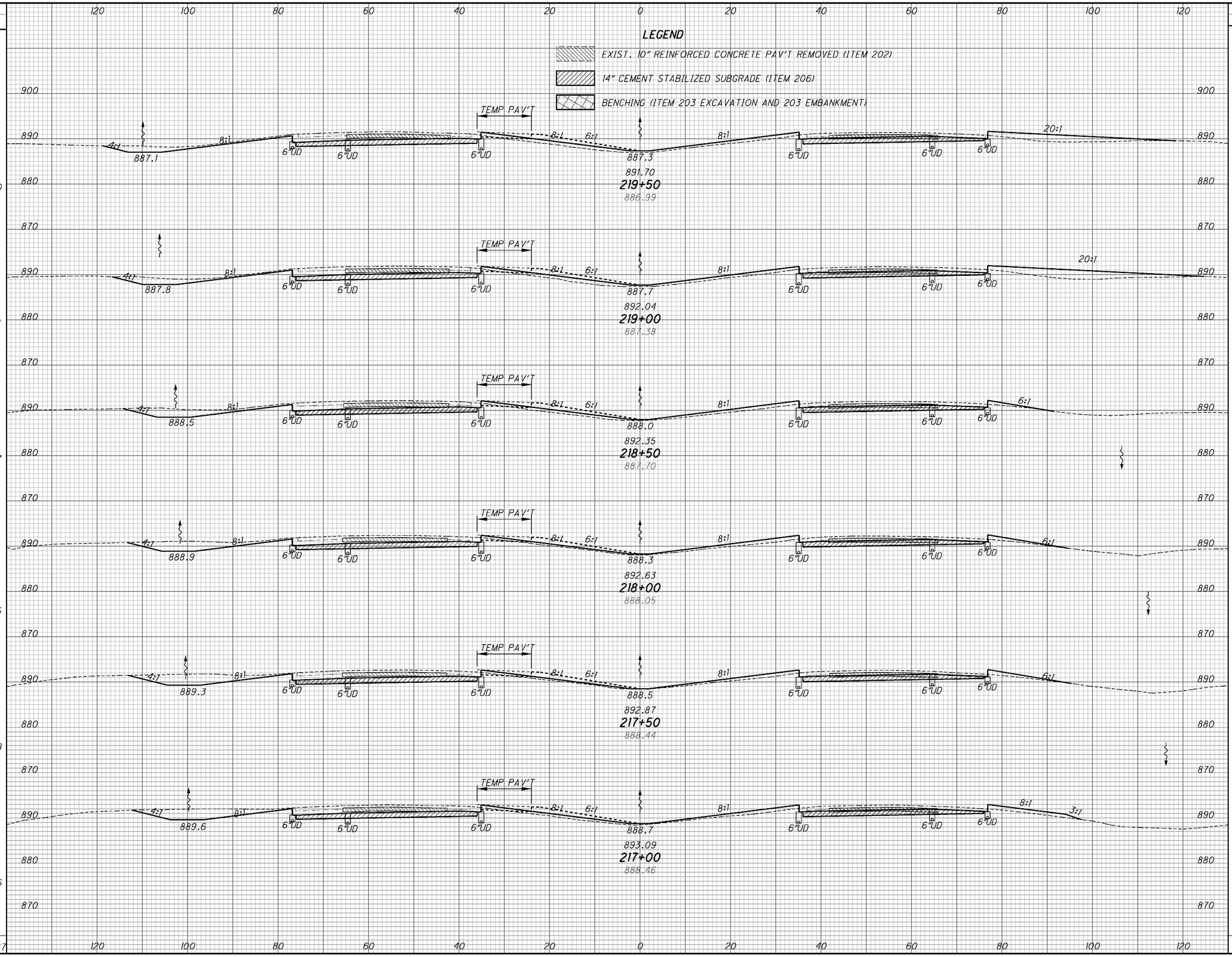

CALCULATED

CHECKED

CROSS SECTIONS

STA. 217+00.00 TO STA. 219+50.00

ATB-90-14.25

194
437

Palmer ENGINEERING
PALMER ENGINEERING
11300 CORNELL PARK DR
CINCINNATI, OH 45242

O:\ODOT\ATB\25199\roadway\sheets\25199XS001.dgn 6/6/2009 9:41:02 AM DENNIS

SEEDING END WIDTH	SEEDING SQ. YDS.	END AREA CUT	END AREA FILL	VOLUME CUT	VOLUME FILL
137	747	96	29	179	59
132	733	97	35	178	60
132	742	94	30	170	56
135	750	89	30	163	63
135	831	87	37	164	91
164	925	90	61	174	134
	4,728			1,028	463

CALCULATED

CHECKED

LEGEND

EXIST. 10" REINFORCED CONCRETE PAV'T REMOVED (ITEM 202)

14" CEMENT STABILIZED SUBGRADE (ITEM 206)

BENCHING (ITEM 203 EXCAVATION AND 203 EMBANKMENT)

120 100 80 60 40 20 0 20 40 60 80 100 120

900 890 880 870

TEMP PAV'T

6:1 8:1 12:1 8:1 6:1 8:1 20:1

6"UD

885.0 884.6

889.02
222+50
884.68

885.2 885.2

889.54
222+00
885.10

885.4 885.7

890.04
221+50
885.72

885.9 886.1

890.50
221+00
885.56

886.3 886.6

890.93
220+50
886.52

886.7 887.0

891.33
220+00
886.72

CROSS SECTIONS
220+00.00 TO STA. 222+50.00

ATB-90-14.25

195
437

Palmer ENGINEERING
PALMER ENGINEERING
11300 CORNELL PARK DR
CINCINNATI, OH 45242

O:\ODOT\ATB\25199\roadway\sheets\25199XS001.dgn 6/6/2009 9:41:05 AM DENNIS

SEEDING	
END WIDTH	SQ. YDS.
102	575
105	583
105	589
107	606
111	631
116	642
115	700
	4,326

LEGEND

EXIST. 10" REINFORCED CONCRETE PAV'T REMOVED (ITEM 202)

14" CEMENT STABILIZED SUBGRADE (ITEM 206)

BENCHING (ITEM 203 EXCAVATION AND 203 EMBANKMENT)

TEMP PAV'T

12:1 8:1 6:1 8:1 8:1

6"UD

880.4
884.73
15" CONC
226+00
880.25

881.0
885.36
15" CONC
225+50
880.83

881.6
885.99
15" CONC
225+00
881.63

882.3
886.63
15" CONC
224+50
882.26

882.9
881.26
+76.3 PROP. CB-4 (SEE SHEET 120)
EXIST. CB-4 (REMOVE)
D37
224+00
883.40

883.5
887.88
223+50
883.39

884.1
888.46
223+00
884.11

END AREA		VOLUME	
CUT	FILL	CUT	FILL
92	20	171	41
93	24	172	38
93	17	172	29
93	15	180	22
102	9	177	27
90	20	164	42
87	25	169	50
		1,205	249

CALCULATED

CHECKED

CROSS SECTIONS
STA. 223+00.00 TO STA. 226+00.00

ATB-90-14.25

196
437

Palmer ENGINEERING
PALMER ENGINEERING
11300 CORNELL PARK DR
CINCINNATI, OH 45242

O:\ODOT\ATB\25199\roadway\sheets\25199XS001.dgn 6/6/2009 9:41:08 AM DENNIS

SEEDING END WIDTH	SEEDING SQ. YDS.	END AREA CUT	END AREA FILL	VOLUME CUT	VOLUME FILL
117	631	94	23	173	41
110	642	92	22	170	47
121	664	91	29	173	46
118	628	96	21	178	34
108	600	96	16	175	33
108	583	93	20	171	37
3,748				1,040	238

CALCULATED

CHECKED

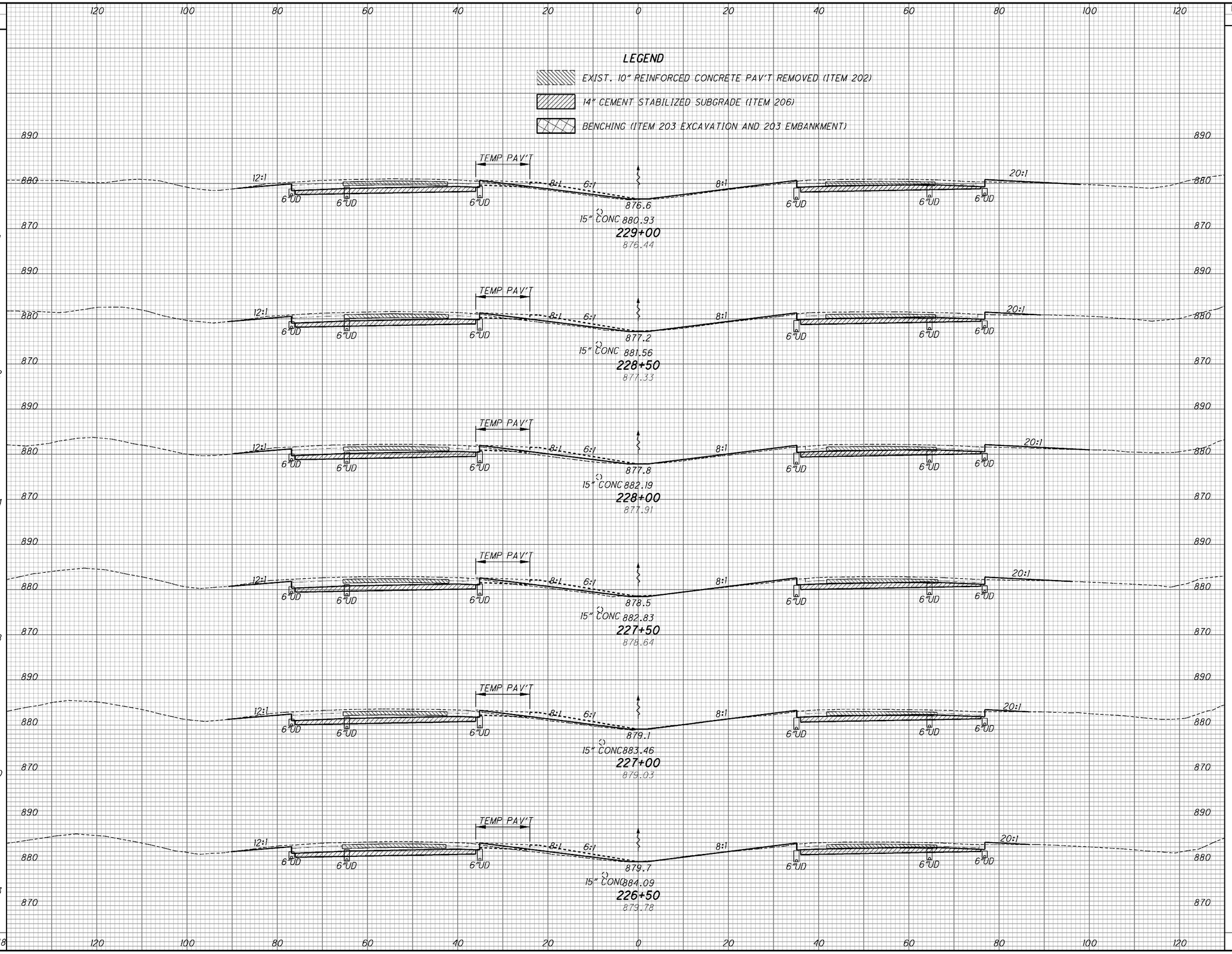

CROSS SECTIONS

STA. 226+50.00 TO STA. 229+00.00

ATB-90-14.25

197
437

PALMER ENGINEERING
11300 CORNELL PARK DR
ENGINEERING CINCINNATI, OH 45242

O:\ODOT\ATB\25199\roadway\sheets\25199XS001.dgn 6/6/2009 9:41:11 AM DENNIS

SEEDING		END AREA		VOLUME	
END WIDTH	SQ. YDS.	CUT	FILL	CUT	FILL
122	694	139	19	258	30
128	683	139	14	248	25
118	644	128	14	208	26
114	622	97	14	180	28
110	594	98	16	179	28
104	614	96	15	176	35
	3,851			1,249	172

CALCULATED

CHECKED

LEGEND

EXIST. 10" REINFORCED CONCRETE PAV'T REMOVED (ITEM 202)

14" CEMENT STABILIZED SUBGRADE (ITEM 206)

BENCHING (ITEM 203 EXCAVATION AND 203 EMBANKMENT)

TEMP PAV'T

874.6 — 6"UD — 6"UD — 6"UD — 872.8 — 18" CONC 877.13

232+00

872.99

TEMP PAV'T

875.3 — 6"UD — 6"UD — 6"UD — 873.4 — 18" CONC 877.76

231+50

873.56

TEMP PAV'T

875.9 — 6"UD — 6"UD — 6"UD — 874.0 — 18" CONC 878.40

231+00

874.34

TEMP PAV'T

6"UD — 6"UD — 6"UD — 874.7 — 18" CONC 879.03

230+50

874.97

D39

CB-5
STA. 230+01.0± 96'± LT
GRATE = 876.10
E 15" = 873.00

TEMP PAV'T

6"UD — 6"UD EXIST. 15" CONC. PIPE 6"UD — 875.3

REMOVE EXIST. CB

4 L.F. 15" TYPE C, 706.02

4 L.F. 15" TYPE C, 706.02

879.66

EXIST. MANHOLE (REMOVE)
PROP. MH-3 (SEE SHEET 121)

D38

230+00

875.37

TEMP PAV'T

6"UD — 6"UD — 6"UD — 875.9 — 15" CONC 880.30

229+50

875.92

CROSS SECTIONS

STA. 229+50.00 TO STA. 232+00.00

ATB-90-14.25

198
437

Palmer ENGINEERING
PALMER ENGINEERING
11300 CORNELL PARK DR
CINCINNATI, OH 45242

O:\ODOT\ATB\25199\roadway\sheets\25199XS001.dgn 6/6/2009 9:41:14 AM DENNIS

SEEDING END WIDTH	SEEDING SQ. YDS.	END AREA CUT	END AREA FILL	VOLUME CUT	VOLUME FILL
128	689	140	16	239	36
120	669	118	23	223	42
121	667	123	23	225	36
119	664	120	16	223	29
120	689	120	15	228	31
128	694	126	18	246	34
	4,072			1,384	208

CALCULATED

CHECKED

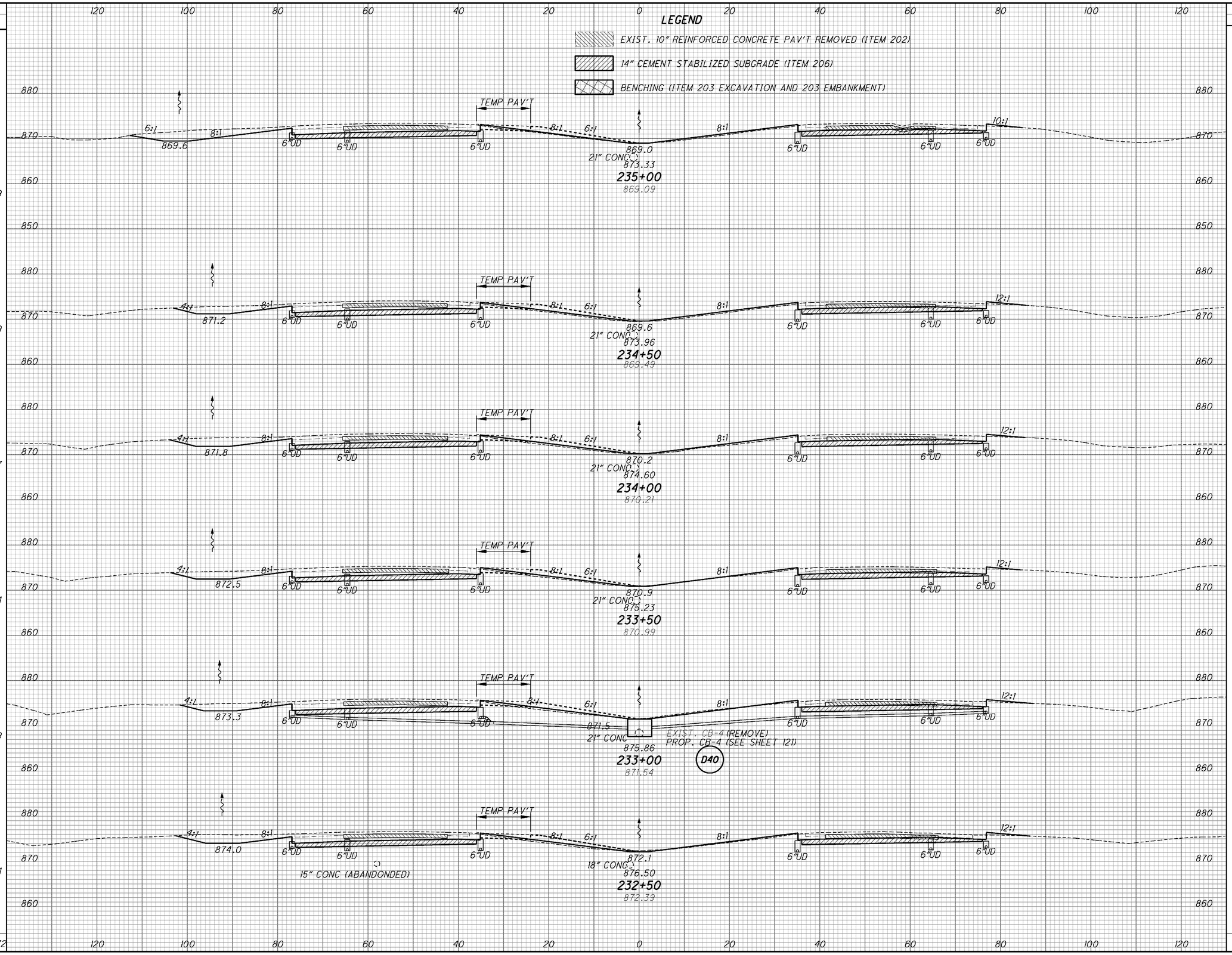

PALMER ENGINEERING
11300 CORNELL PARK DR
ENGINEERING CINCINNATI, OH 45242

O:\ODOT\ATB\25199\roadway\sheets\25199XS001.dgn 6/6/2009 9:41:16 AM DENNIS

CROSS SECTIONS
232+50.00 TO STA. 235+00.00

ATB-90-14.25

SEEDING END WIDTH	SEEDING SQ. YDS.	END AREA CUT	END AREA FILL	VOLUME CUT	VOLUME FILL
121	694	122	9	235	17
129	772	131	9	242	28
149	758	130	21	242	25
124	703	131	6	236	16
129	697	123	11	209	23
122	694	103	13	225	27
	4,318			1,389	136

CALCULATED

CHECKED

LEGEND

EXIST. 10" REINFORCED CONCRETE PAV'T REMOVED (ITEM 202)

14" CEMENT STABILIZED SUBGRADE (ITEM 206)

BENCHING (ITEM 203 EXCAVATION AND 203 EMBANKMENT)

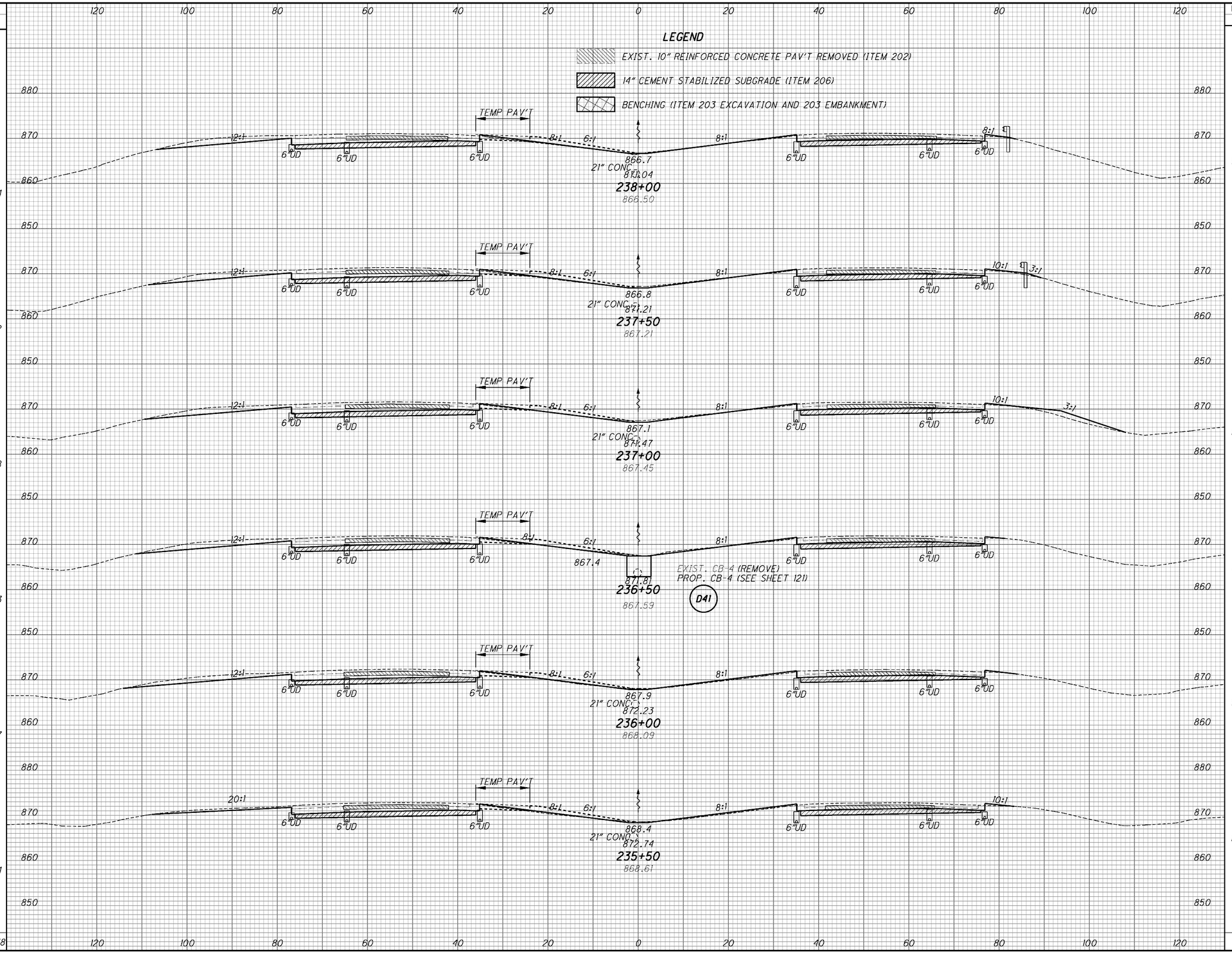

CROSS SECTIONS
235+50.00 TO STA. 238+00.00

ATB-90-14.25

200
437

PALMER ENGINEERING
11300 CORNELL PARK DR
CINCINNATI, OH 45242

O:\ODOT\ATB\25199\roadway\sheets\25199XS001.dgn 6/6/2009 9:41:19 AM DENNIS

SEEDING END WIDTH	SEEDING SQ. YDS.	END AREA CUT	END AREA FILL	VOLUME CUT	VOLUME FILL
102	581	96	12	178	24
107	597	96	13	184	19
108	619	103	7	200	13
115	647	114	7	211	15
118	653	115	9	208	18
117	661	110	10	215	18
	3,758			1,196	107

CALCULATED

CHECKED

LEGEND

EXIST. 10" REINFORCED CONCRETE PAV'T REMOVED (ITEM 202)

14" CEMENT STABILIZED SUBGRADE (ITEM 206)

BENCHING (ITEM 203 EXCAVATION AND 203 EMBANKMENT)

TEMP PAV'T

871.78
241+00
867.40

871.44
240+50
868.70

871.20
240+00
867.25

871.03
239+50
867.06

870.95
239+00
866.83

870.96
238+50
866.74

867.4 | 867.1 | 866.8 | 866.7 | 866.6 | 866.6

+74.6 PROP. CB-4 (SEE SHEET 122)
EXIST. CB-4 (REMOVE)
042

EXIST. 54" CULVERT

EXIST. 54" CULVERT

EXIST. 21" CONC.

4 L.F. 21" TYPE C, 706.02

CROSS SECTIONS 238+50.00 TO STA. 241+00.00

ATB-90-14.25

STA. 238+50.00 TO STA. 241+00.00

201
437

Palmer ENGINEERING
PALMER ENGINEERING
11300 CORNELL PARK DR
CINCINNATI, OH 45242

O:\ODOT\ATB\25199\roadway\sheets\25199XS001.dgn 6/6/2009 9:41:22 AM DENNIS

PALMER ENGINEERING
11300 CORNELL PARK DR
CINCINNATI, OH 45242

O:\ODOT\ATB\25199\roadway\sheets\25199XS001.dgn 6/6/2009 9:41:25 AM DENNIS

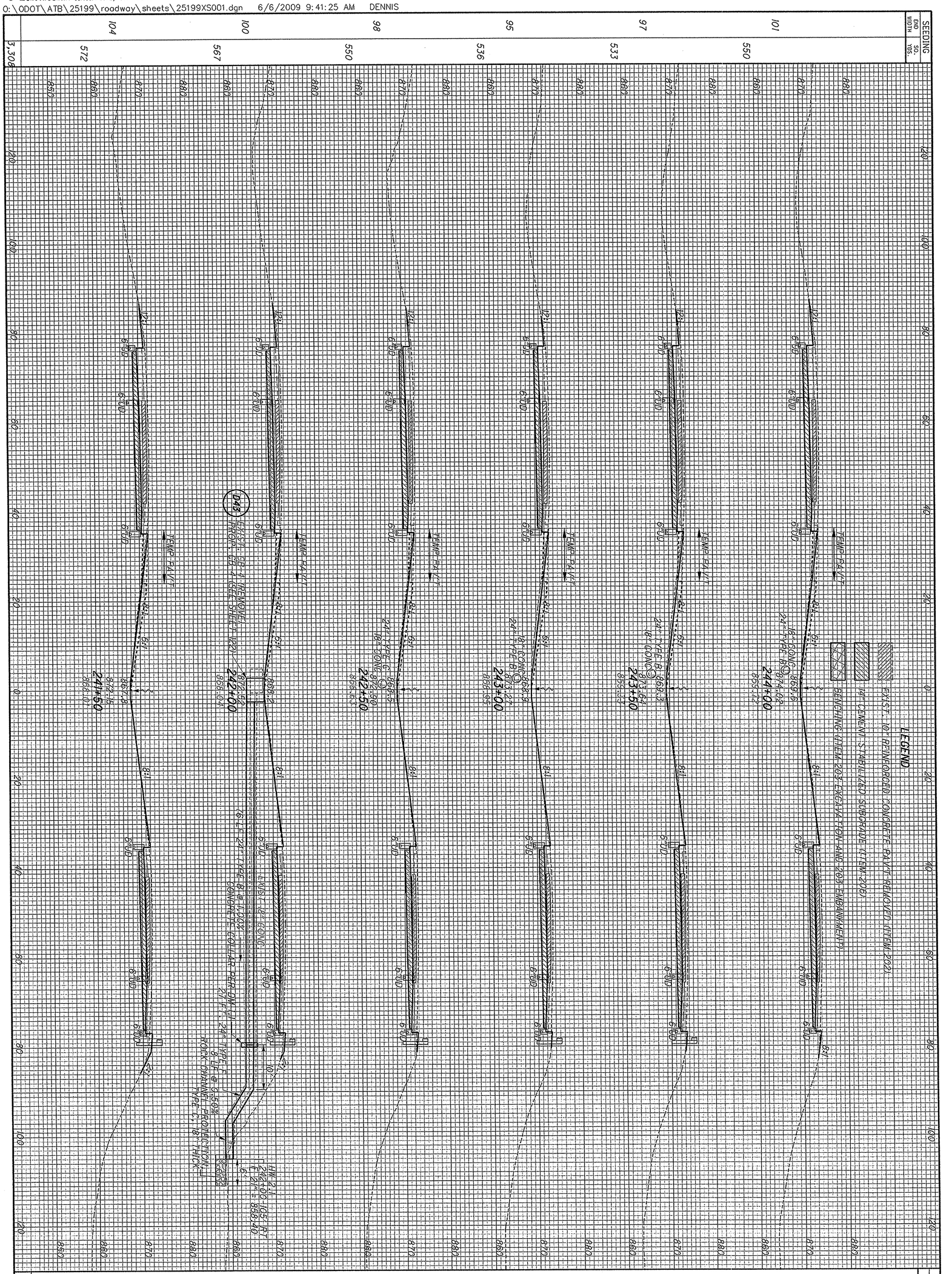

SEEDING	
END WIDTH	
SQ. YDS.	3,308

END AREA		
	CUT	FILL
96		11
100		9
98		10
97		16
102		13
102		9

VOLUME		
	CUT	FILL
1,094	177	129
	181	22
	183	19
	180	18
	184	24
	189	26
		20

202
437

ATB-90-14.25

CROSS SECTIONS
STA. 241+50.00 TO STA. 244+00.00

CALCULATED

CHECKED

SEEDING END WIDTH	SEEDING SQ. YDS.
99	558
102	589
110	603
107	589
105	578
103	567
	3,484

LEGEND

EXIST. 10" REINFORCED CONCRETE PAV'T REMOVED (ITEM 202)

14" CEMENT STABILIZED SUBGRADE (ITEM 206)

BENCHING (ITEM 203 EXCAVATION AND 203 EMBANKMENT)

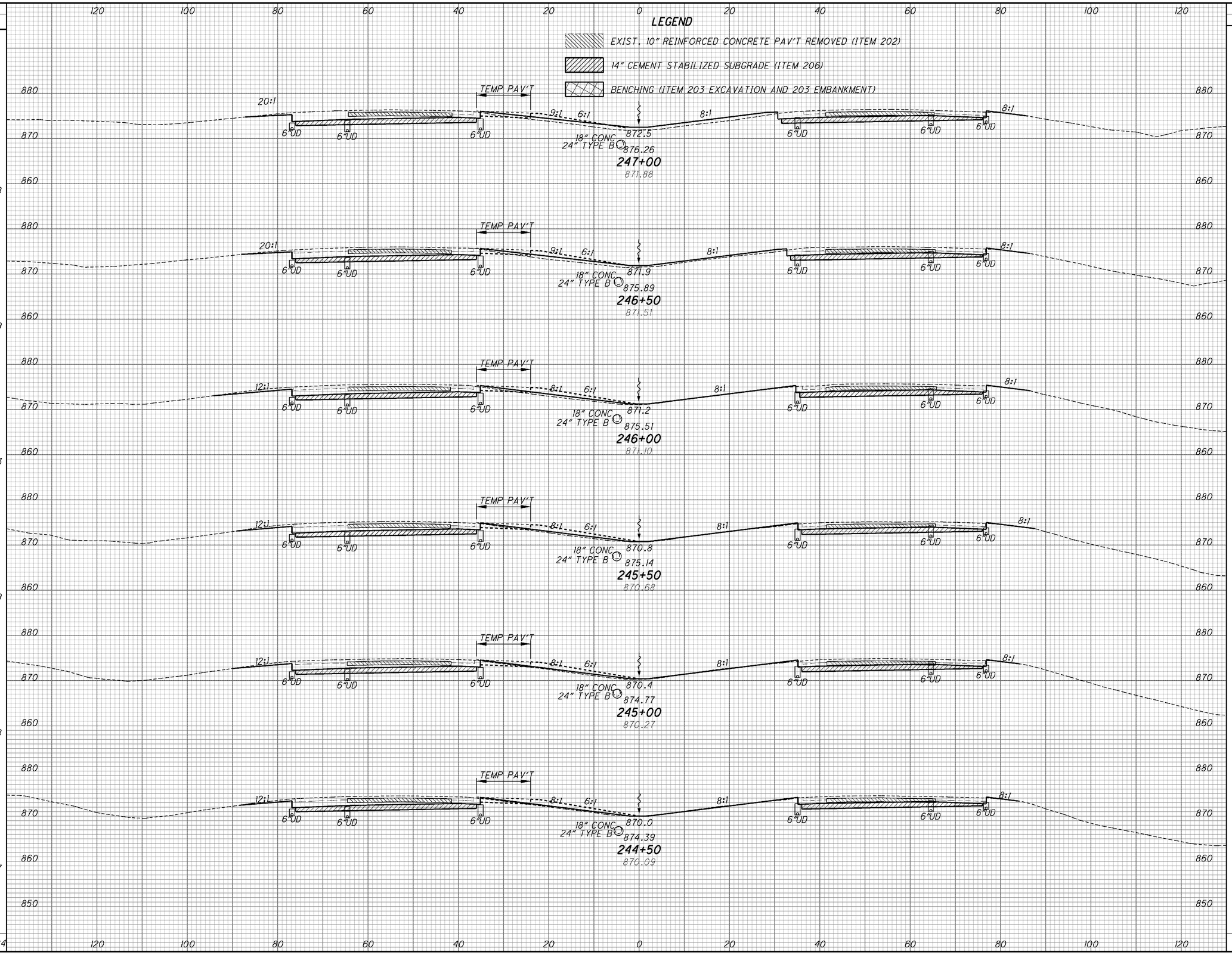

END AREA CUT	END AREA FILL	VOLUME CUT	VOLUME FILL
104	45	192	71
103	32	190	45
103	16	185	27
97	13	181	23
98	11	183	19
99	9	187	17
		1,118	202

CALCULATED

CHECKED

CROSS SECTIONS
244+50.00 TO STA. 247+00.00

ATB-90-14.25

203
437

Palmer ENGINEERING
PALMER ENGINEERING
11300 CORNELL PARK DR
CINCINNATI, OH 45242

O:\ODOT\ATB\25199\roadway\sheets\25199XS001.dgn 6/6/2009 9:43:55 AM DENNIS

SEEDING END WIDTH	SEEDING SQ. YDS.	END AREA CUT	END AREA FILL	VOLUME CUT	VOLUME FILL
145		200	36		
	822			390	75
151		221	45		
	822			414	76
145		225	38		
	686			452	35
102		263	0		
	631			368	24
125		134	26		
	628			226	68
101		111	47		
	556			199	85
	4,145			2,049	363

CALCULATED

CHECKED

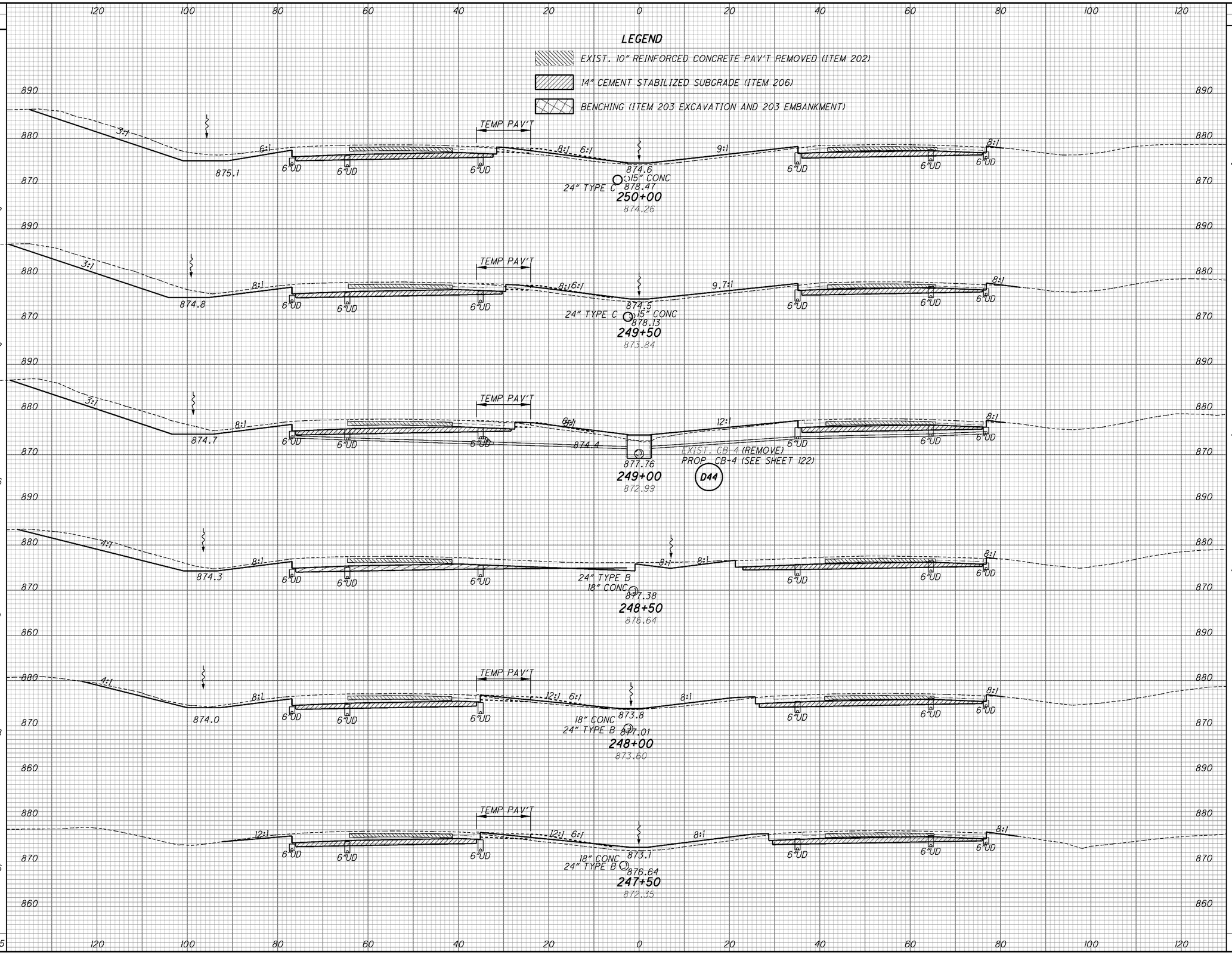

CROSS SECTIONS

STA. 247+50.00 TO STA. 250+00.00

ATB-90-14.25

204
437

Palmer ENGINEERING
PALMER ENGINEERING
11300 CORNELL PARK DR
CINCINNATI, OH 45242

O:\ODOT\ATB\25199\roadway\sheets\25199XS001.dgn 6/6/2009 9:43:57 AM DENNIS

SEEDING END WIDTH	SEEDING SQ. YDS.
142	794
144	947
197	1019
170	956
174	886
	4,602

LEGEND

EXIST. 10" REINFORCED CONCRETE PAV'T REMOVED (ITEM 202)

14" CEMENT STABILIZED SUBGRADE (ITEM 206)

BENCHING (ITEM 203 EXCAVATION AND 203 EMBANKMENT)

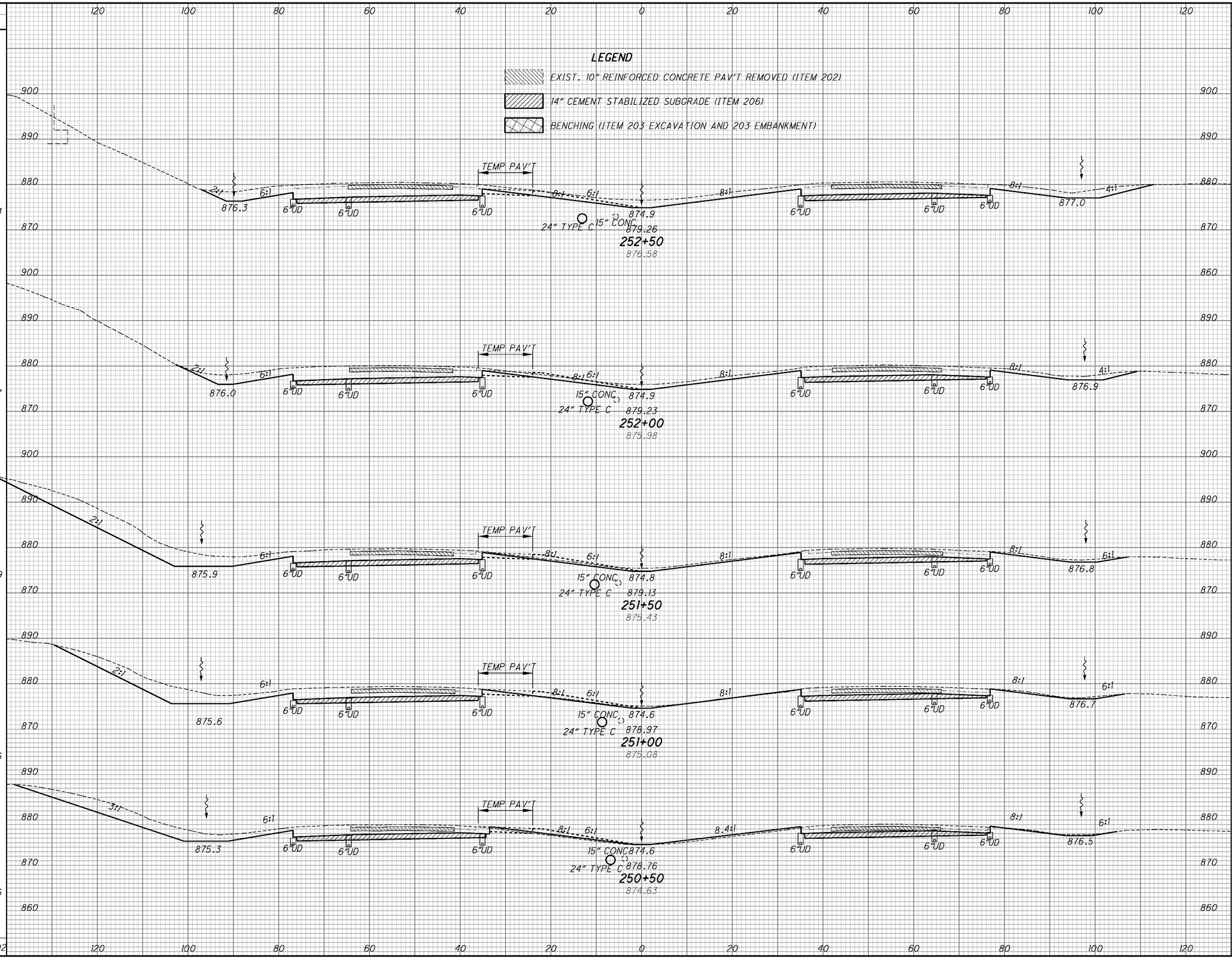

END AREA CUT	END AREA FILL	VOLUME CUT	VOLUME FILL
353	0		
		582	0
275	0		
		585	0
357	0		
		556	2
243	2		
		433	21
224	21		
		393	52
		2,549	75

CALCULATED

CHECKED

CROSS SECTIONS
STA. 250+50.00 TO STA. 252+50.00

ATB-90-14.25

205
437

Palmer ENGINEERING
PALMER ENGINEERING
11300 CORNELL PARK DR
ENGINEERING CINCINNATI, OH 45242

O:\ODOT\ATB\25199\roadway\sheets\25199XS001.dgn 6/6/2009 9:44:00 AM DENNIS

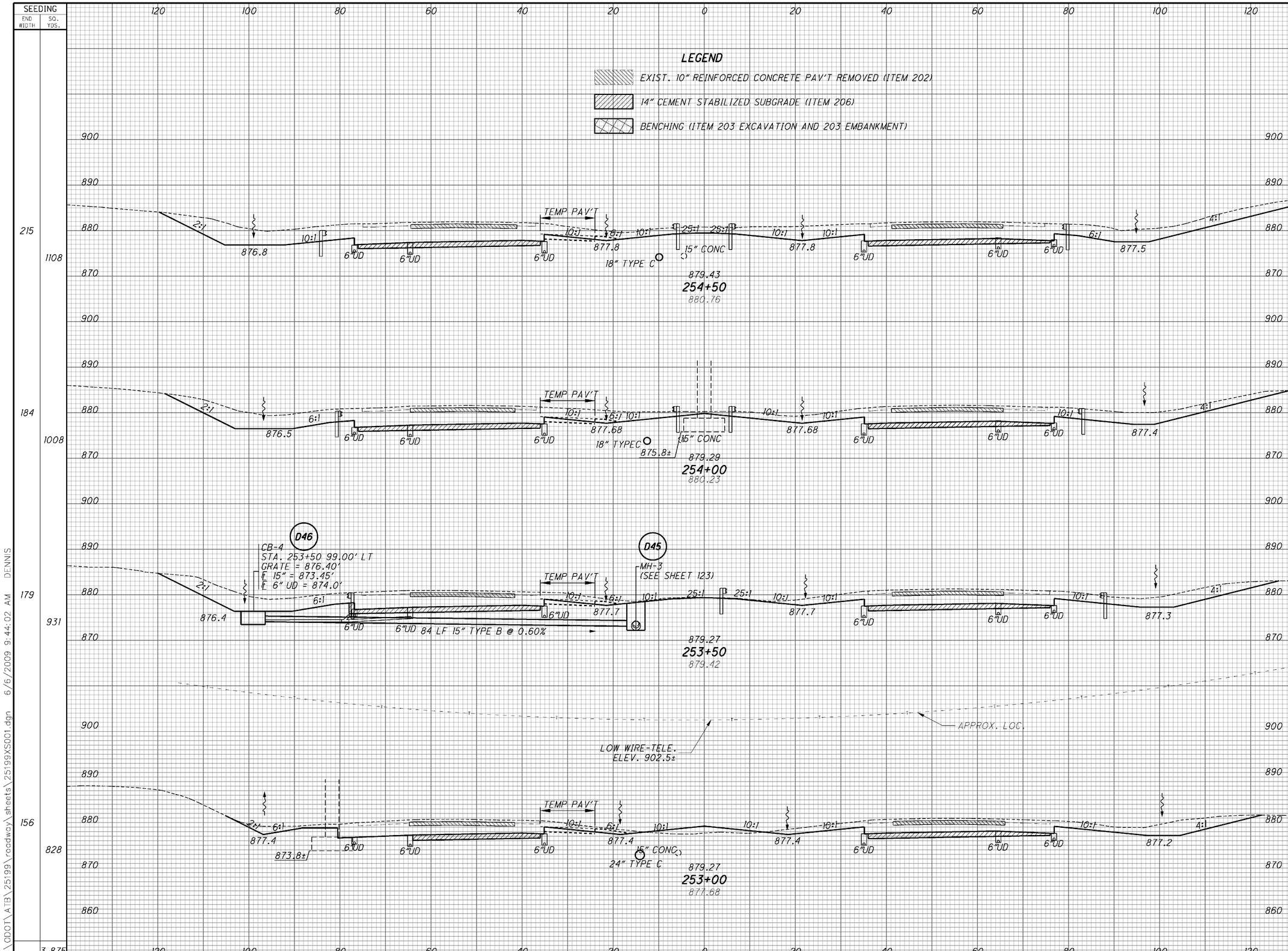

SEEDING END WIDTH	SEEDING SQ. YDS.	END AREA CUT	END AREA FILL	VOLUME CUT	VOLUME FILL
215	1108	698	0		
				1207	0
184	1008	607	0		
				1035	0
179	931	511	0		
				815	21
156	828	369	23		
				668	21
	3,875			3,725	42

CALCULATED

CHECKED

CROSS SECTIONS
STA. 253+00.00 TO STA. 254+50.00

ATB-90-14.25

Palmer ENGINEERING
PALMER ENGINEERING
11300 CORNELL PARK DR
CINCINNATI, OH 45242

O:\ODOT\ATB\25199\roadway\sheets\25199XS001.dgn 6/6/2009 9:44:02 AM DENNIS

SEEDING	
END WIDTH	SQ. YDS.
153	897
170	894
152	950
190	1125
	3,866

END AREA	
CUT	FILL
588	0
657	0
578	6
670	0

VOLUME	
CUT	FILL
1153	0
1144	6
1155	6
1266	0
4,718	12

CALCULATED

CHECKED

LEGEND

EXIST. 10" REINFORCED CONCRETE PAV'T REMOVED (ITEM 202)

14" CEMENT STABILIZED SUBGRADE (ITEM 206)

BENCHING (ITEM 203 EXCAVATION AND 203 EMBANKMENT)

TEMP PAV'T

878.3 — 6"UD — 6"UD — 6"UD — 876.6 — 6"UD — 6"UD — 6"UD — 879.4

880.99

256+50

879.36

D47

PROP. CB-4

TEMP PAV'T (SEE SHEET 123)

878.0 — 6"UD — 6"UD — 6"UD — 876.1

880.50

256+00

878.70

CB-4
STA. 256+00-94.00' RT
GRATE = 878.90'
E 15" = 875.50'
F 6"UD = 876.0'

D48

EXIST. ABUTMENT

878.9

94 LF 15" TYPE B @ 0.53%

TEMP PAV'T

877.3 — 6"UD — 6"UD — 6"UD — 878.4 — 15" CONC — 18" TYPE C — 878.4 — 6"UD — 6"UD — 6"UD — 875.3± — 879.2

880.03

255+50

879.57

TEMP PAV'T

877.2 — 6"UD — 6"UD — 6"UD — 878.1 — 18" TYPE C — 15" CONC — 878.1 — 6"UD — 6"UD — 6"UD — 877.7

879.67

255+00

880.81

CROSS SECTIONS

STA. 255+00.00 TO STA. 256+50.00

ATB-90-14.25

207
437

Palmer ENGINEERING
PALMER ENGINEERING
11300 CORNELL PARK DR
CINCINNATI, OH 45242

O:\ODOT\ATB\25199\roadway\sheets\25199XS001.dgn 6/6/2009 9:44:05 AM DENNIS

SEEDING END WIDTH	SEEDING SQ. YDS.
161	889
159	875
156	878
160	872
154	853
	4,367

LEGEND

EXIST. 10" REINFORCED CONCRETE PAV'T REMOVED (ITEM 202)

14" CEMENT STABILIZED SUBGRADE (ITEM 206)

BENCHING (ITEM 203 EXCAVATION AND 203 EMBANKMENT)

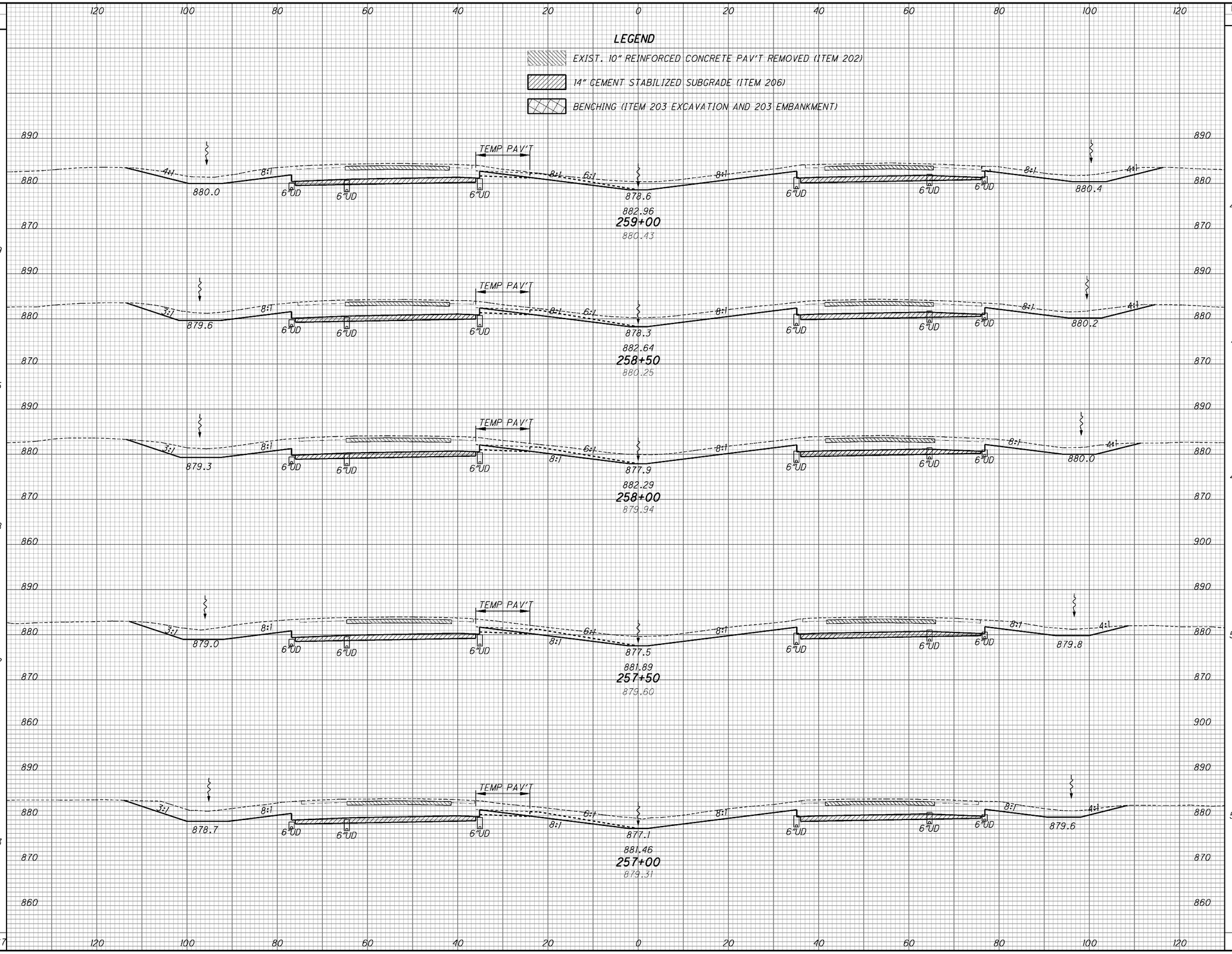

END AREA CUT	END AREA FILL	VOLUME CUT	VOLUME FILL
406	0	784	0
441	0	846	0
473	0	909	0
509	0	980	0
550	0	1053	0
		4,572	0

CALCULATED

CHECKED

CROSS SECTIONS

STA. 257+00.00 TO STA. 259+00.00

ATB-90-14.25

208
437

Palmer ENGINEERING
PALMER ENGINEERING
11300 CORNELL PARK DR
ENGINEERING CINCINNATI, OH 45242

C:\ODOT\ATB\25199\roadway\sheets\25199XS001.dgn 6/6/2009 9:44:07 AM DENNIS

SEEDING END WIDTH	SEEDING SQ. YDS.	END AREA CUT	END AREA FILL	VOLUME CUT	VOLUME FILL
146	808	229	0	443	0
145	825	250	0	492	0
152	856	281	0	554	0
156	894	317	0	609	0
166	922	341	0	674	0
166	908	387	0	734	0
5,213				3,506	0

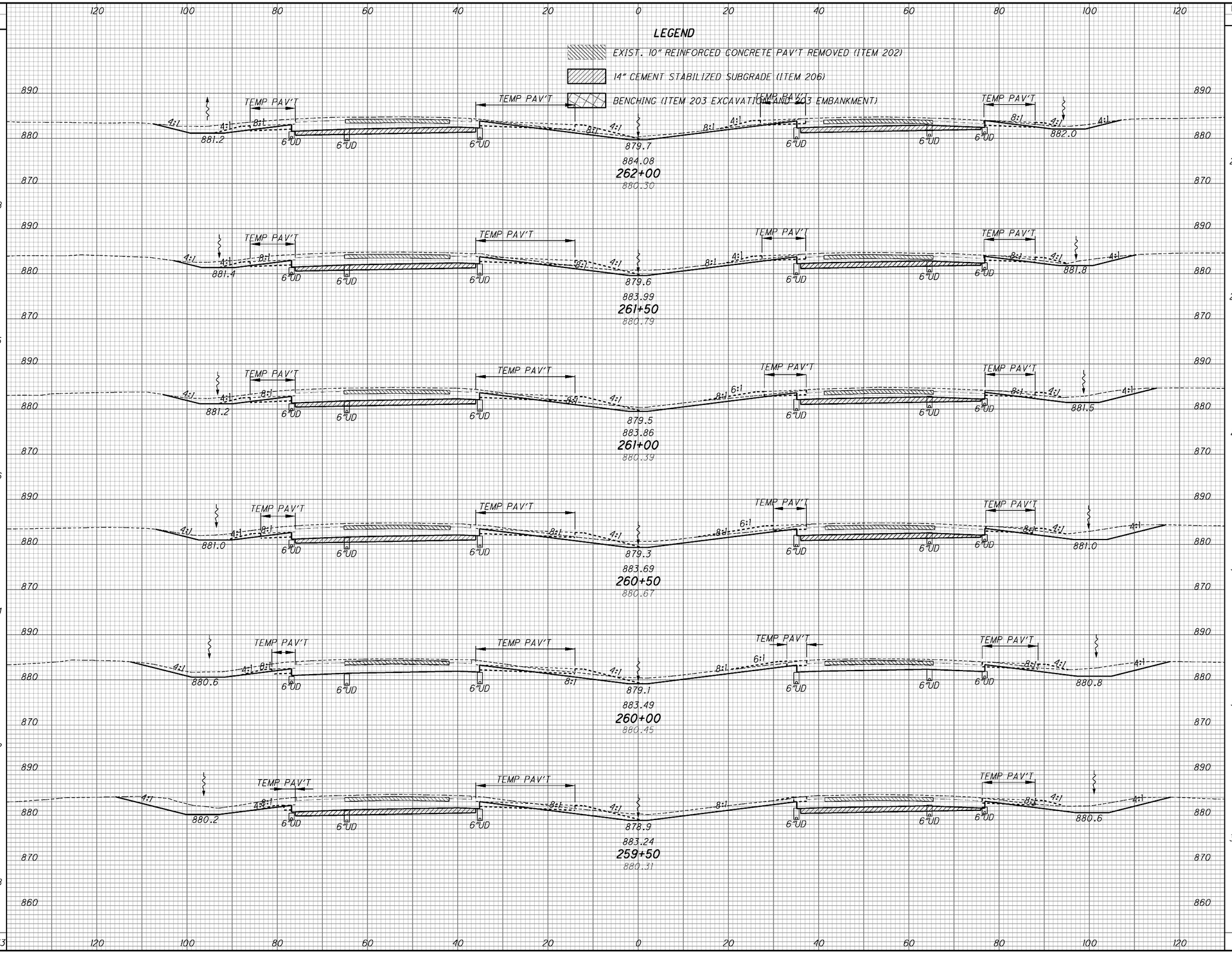

CALCULATED | CHECKED

CROSS SECTIONS
259+50.00 TO STA. 262+00.00

ATB-90-14.25

209
437

Palmer ENGINEERING
PALMER ENGINEERING
11300 CORNELL PARK DR
CINCINNATI, OH 45242

O:\ODOT\ATB\25199\roadway\sheets\25199XS001.dgn 6/6/2009 9:44:10 AM DENNIS

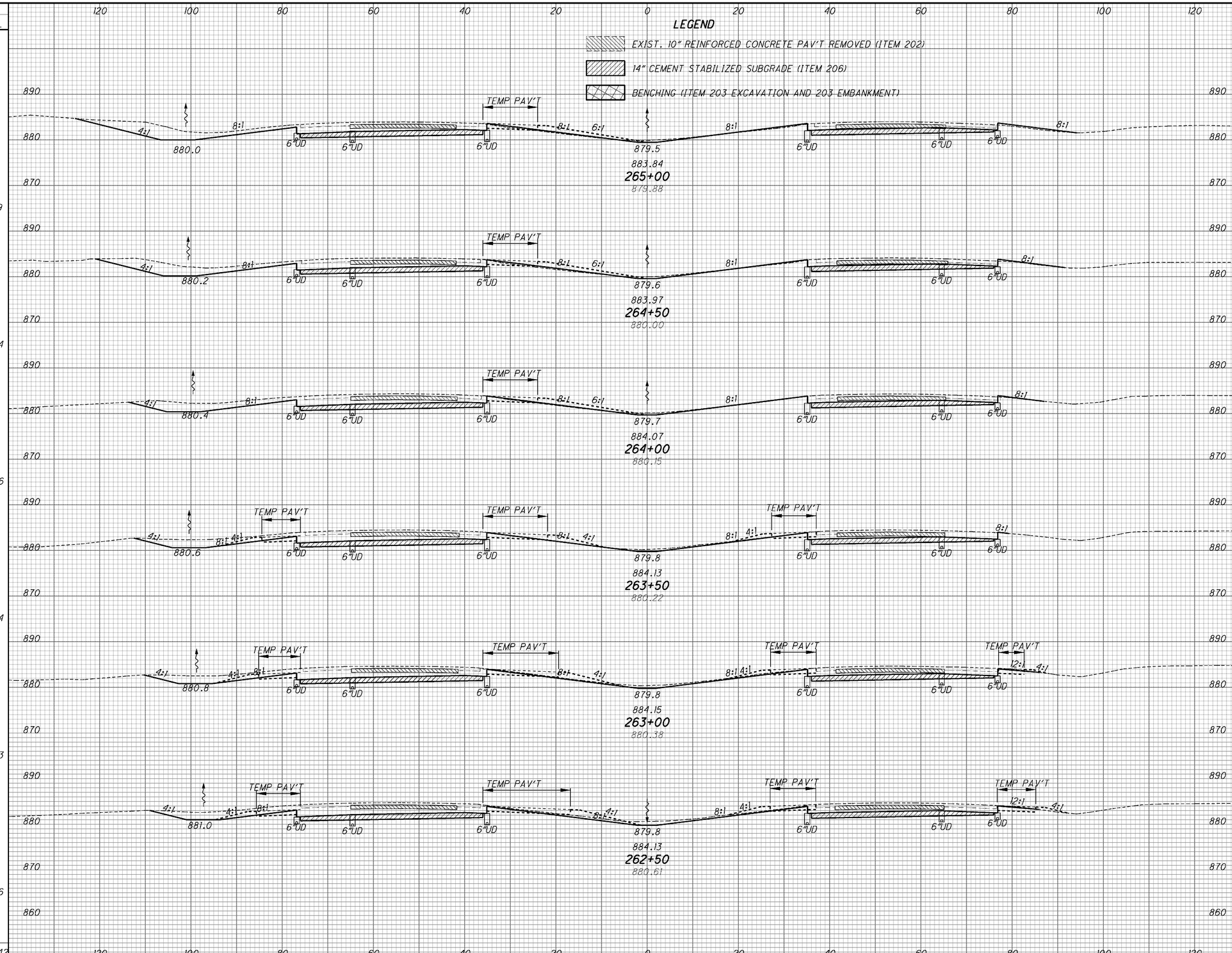

SEEDING END WIDTH	SEEDING SQ. YDS.	END AREA CUT	END AREA FILL	VOLUME CUT	VOLUME FILL
151		170	13		
	819			312	22
144		168	11		
	764			304	15
131		161	5		
	706			304	5
123		168	0		
	694			330	0
127		188	0		
	703			364	0
126		205	0		
	756			402	0
	4,442			2,016	42

CALCULATED

CHECKED

CROSS SECTIONS
STA. 262+50.00 TO STA. 265+00.00

ATB-90-14.25

Palmer ENGINEERING
PALMER ENGINEERING
11300 CORNELL PARK DR
CINCINNATI, OH 45242

O:\ODOT\ATB\25199\roadway\sheets\25199XS001.dgn 6/6/2009 9:44:12 AM DENNIS

SEEDING END WIDTH	SEEDING SQ. YDS.	END AREA CUT	END AREA FILL	VOLUME CUT	VOLUME FILL
148	337	123	26	91	19
143	850	113	25	226	39
180	1011	145	20	299	38
184	1014	178	21	347	37
181	972	197	19	351	26
169	889	182	9	326	20
5,073				1,640	179

CALCULATED

CHECKED

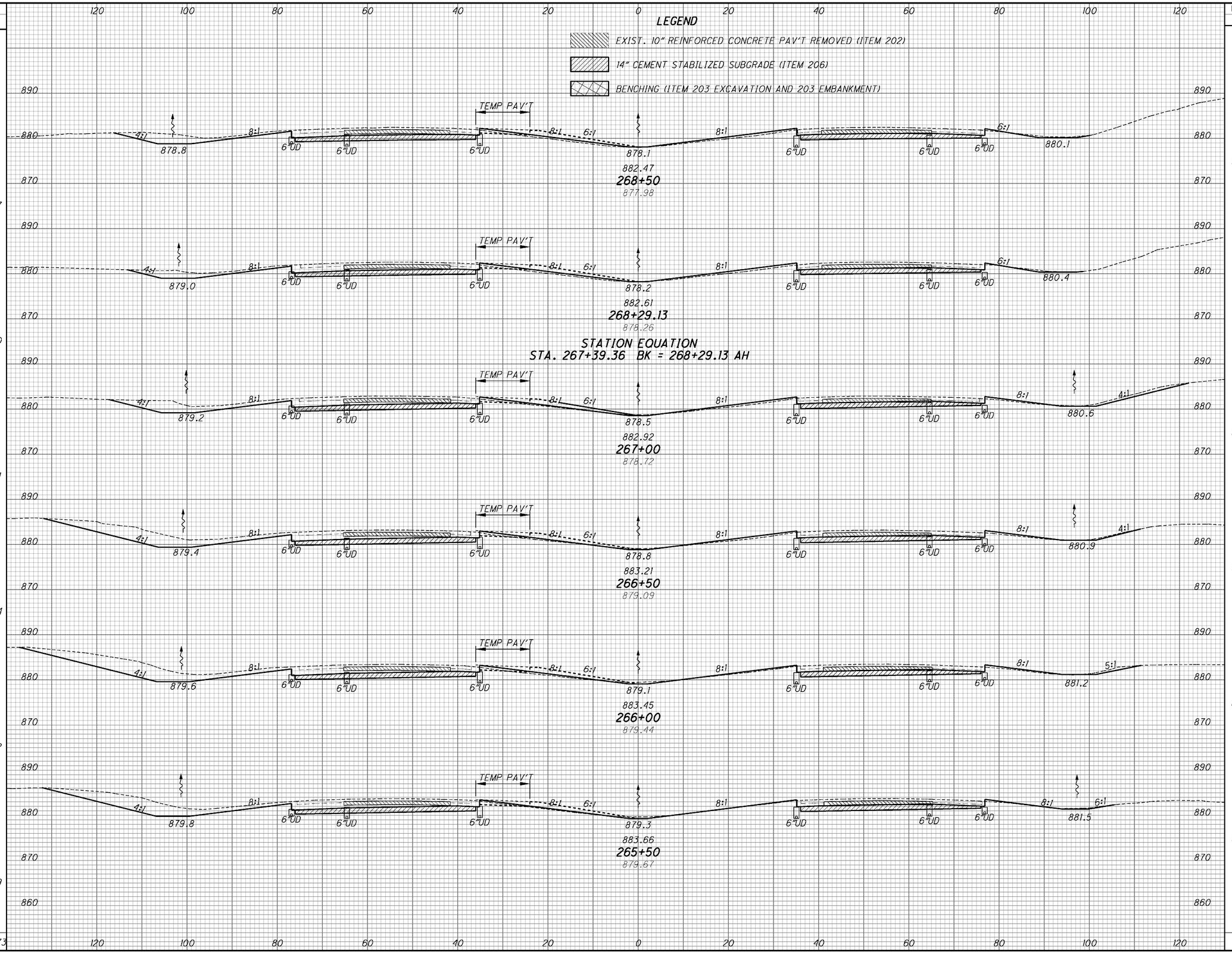

CROSS SECTIONS
265+50.00 TO STA. 268+50.00

ATB-90-14.25

STA.

211
437

PALMER ENGINEERING
11300 CORNELL PARK DR
ENGINEERING CINCINNATI, OH 45242

O:\ODOT\ATB\25199\roadway\sheets\25199XS001.dgn 6/6/2009 9:44:15 AM DENNIS

Palmer ENGINEERING
PALMER ENGINEERING
11300 CORNELL PARK DR
CINCINNATI, OH 45242

O:\ODOT\ATB\25199\roadway\sheets\25199XS001.dgn 6/6/2009 9:44:18 AM DENNIS

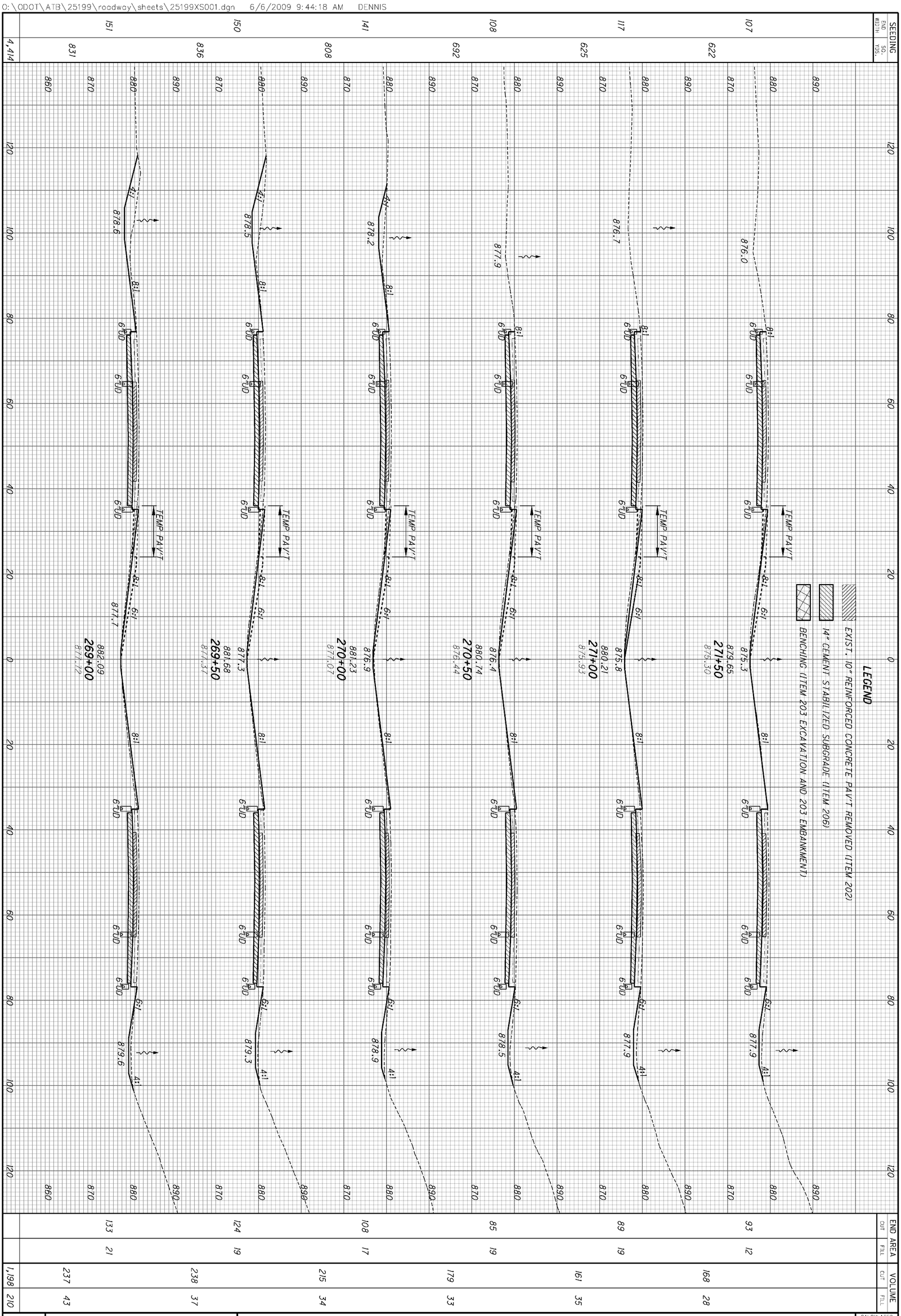

212 / 437	ATB-90-14.25	CROSS SECTIONS STA. 269+00.00 TO STA. 271+50.00

CALCULATED

CHECKED

SEEDING	
END WIDTH	SQ. YDS.
124	708
131	719
128	717
130	717
128	733
136	675
	4,269

LEGEND

EXIST. 10" REINFORCED CONCRETE PAV'T REMOVED (ITEM 202)

14" CEMENT STABILIZED SUBGRADE (ITEM 206)

BENCHING (ITEM 203 EXCAVATION AND 203 EMBANKMENT)

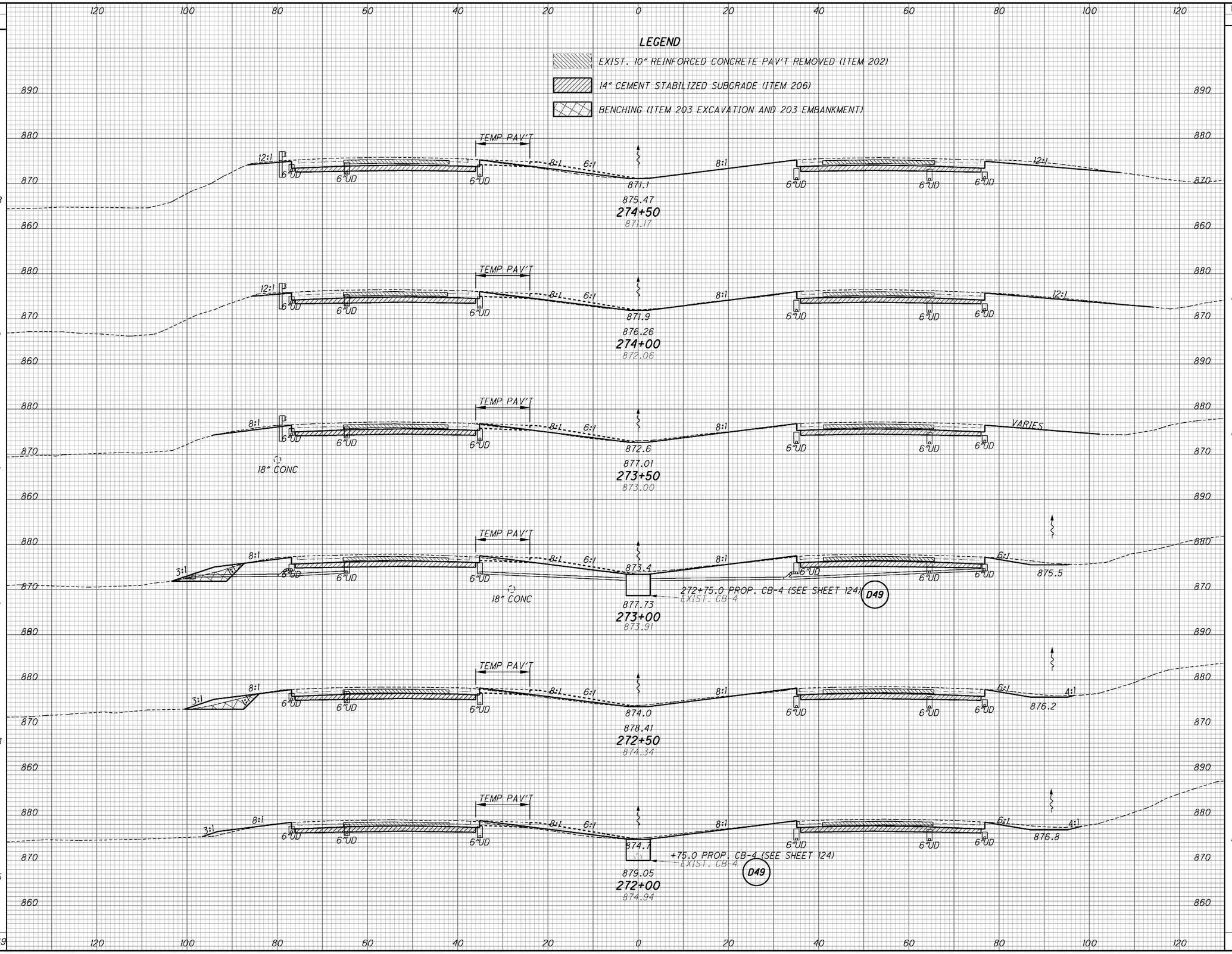

END AREA		VOLUME	
CUT	FILL	CUT	FILL
121	7	214	12
109	6	196	10
103	5	210	39
124	37	225	70
118	39	202	51
100	16	179	26
		1,226	208

CALCULATED

CHECKED

CROSS SECTIONS
272+00.00 TO STA. 274+50.00

ATB-90-14.25

213
437

Palmer ENGINEERING
PALMER ENGINEERING
11300 CORNELL PARK DR
CINCINNATI, OH 45242

O:\ODOT\ATB\25199\roadway\sheets\25199XS001.dgn 6/6/2009 9:44:20 AM DENNIS

SEEDING END WIDTH	SEEDING SQ. YDS.	END AREA CUT	END AREA FILL	VOLUME CUT	VOLUME FILL
137	753	161	0	293	4
134	733	156	4	284	7
130	708	151	4	268	14
125	683	139	11	251	22
121	667	132	12	242	24
119	675	129	14	232	20
	4,219			1,570	91

LEGEND

EXIST. 10" REINFORCED CONCRETE PAV'T REMOVED (ITEM 202)

14" CEMENT STABILIZED SUBGRADE (ITEM 206)

BENCHING (ITEM 203 EXCAVATION AND 203 EMBANKMENT)

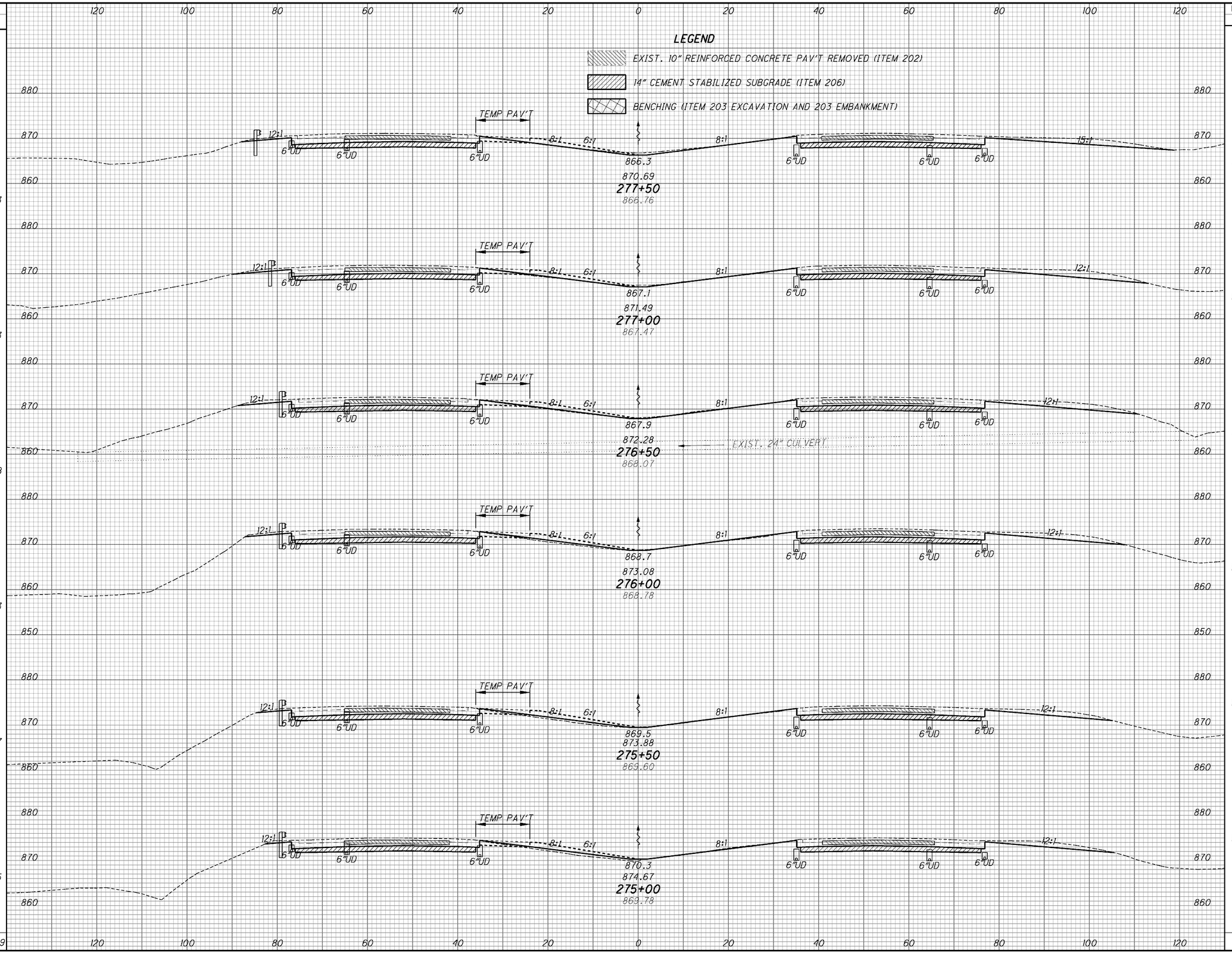

CALCULATED

CHECKED

CROSS SECTIONS 275+00.00 TO STA. 277+50.00

ATB-90-14.25

STA.

214
437

PALMER ENGINEERING
11300 CORNELL PARK DR
ENGINEERING CINCINNATI, OH 45242

O:\ODOT\ATB\25199\roadway\sheets\25199XS001.dgn 6/6/2009 9:44:23 AM DENNIS

LEGEND

EXIST. 10" REINFORCED CONCRETE PAV'T REMOVED (ITEM 202)

14" CEMENT STABILIZED SUBGRADE (ITEM 206)

BENCHING (ITEM 203 EXCAVATION AND 203 EMBANKMENT)

SEEDING END WIDTH	SEEDING SQ. YDS.	END AREA CUT	END AREA FILL	VOLUME CUT	VOLUME FILL
151	836	266	0	479	0
150	831	251	0	445	2
149	819	230	1	414	3
146	800	218	2	394	3
142	803	208	1	333	5
147	789	152	4	290	4
4,878				2,355	17

CALCULATED

CHECKED

CROSS SECTIONS

STA. 278+00.00 TO STA. 280+50.00

ATB-90-14.25

215
437

PALMER ENGINEERING
11300 CORNELL PARK DR
CINCINNATI, OH 45242

O:\ODOT\ATB\25199\roadway\sheets\25199XS001.dgn 6/6/2009 9:44:25 AM DENNIS

Palmer ENGINEERING
PALMER ENGINEERING
11300 CORNELL PARK DR
CINCINNATI, OH 45242

O:\ODOT\ATB\25199\roadway\sheets\25199XS001.dgn 6/6/2009 9:44:28 AM DENNIS

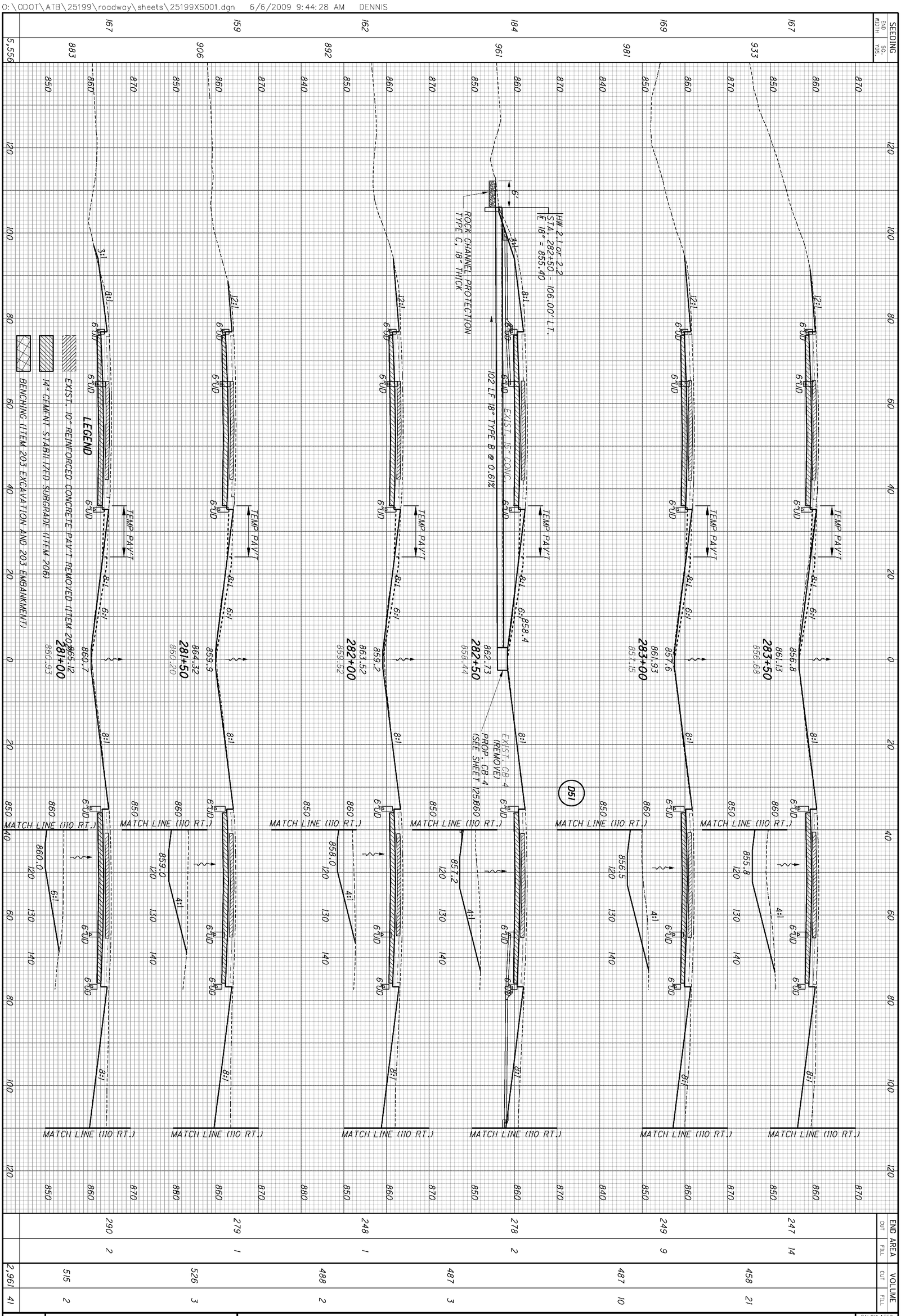

216
437

ATB-90-14.25

CROSS SECTIONS
STA. 281+00.00 TO STA. 283+50.00

CALCULATED

CHECKED

SEEDING END WIDTH	SEEDING SQ. YDS.	END AREA CUT	END AREA FILL	VOLUME CUT	VOLUME FILL
169	939	216	4	419	5
169	942	237	2	447	4
170	931	246	3	441	14
165	922	230	13	415	24
167	922	219	13	412	23
165	922	226	12	438	24
5,578				2,572	94

CALCULATED

CHECKED

LEGEND

EXIST. 10" REINFORCED CONCRETE PAV'T REMOVED (ITEM 202)

14" CEMENT STABILIZED SUBGRADE (ITEM 206)

BENCHING (ITEM 203 EXCAVATION AND 203 EMBANKMENT)

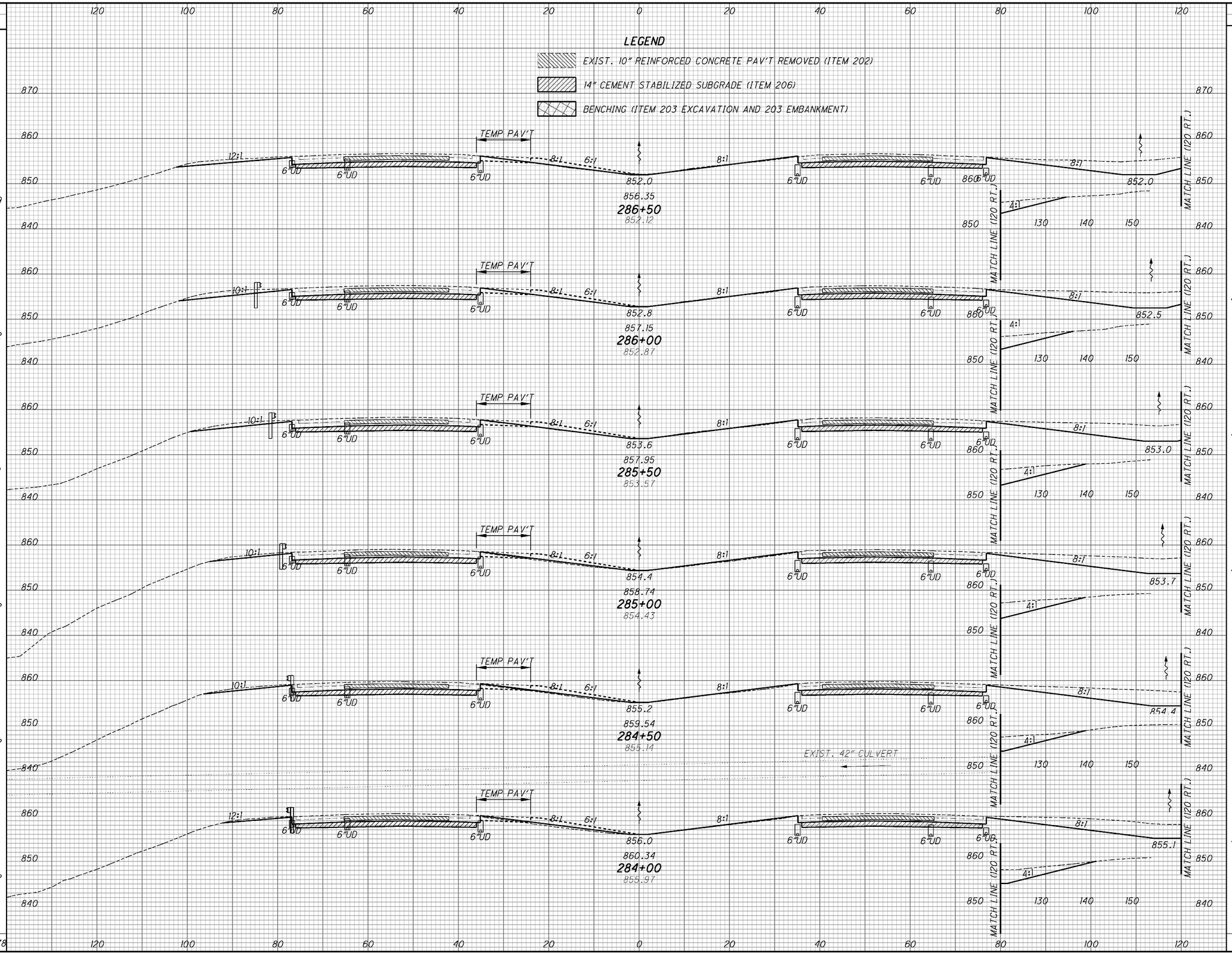

CROSS SECTIONS

STA. 284+00.00 TO STA. 286+50.00

ATB-90-14.25

Palmer ENGINEERING
PALMER ENGINEERING
11300 CORNELL PARK DR
CINCINNATI, OH 45242

C:\ODOT\ATB\25199\roadway\sheets\25199XS001.dgn 6/6/2009 9:44:31 AM DENNIS

SEEDING END WIDTH	SEEDING SQ. YDS.	END AREA CUT	END AREA FILL	VOLUME CUT	VOLUME FILL
207	1133	289	2	515	4
201	1103	267	2	471	5
196	1092	241	3	417	4
197	1100	210	2	394	3
199	1114	215	1	403	2
202	1031	220	1	404	5
6,573				2,604	23

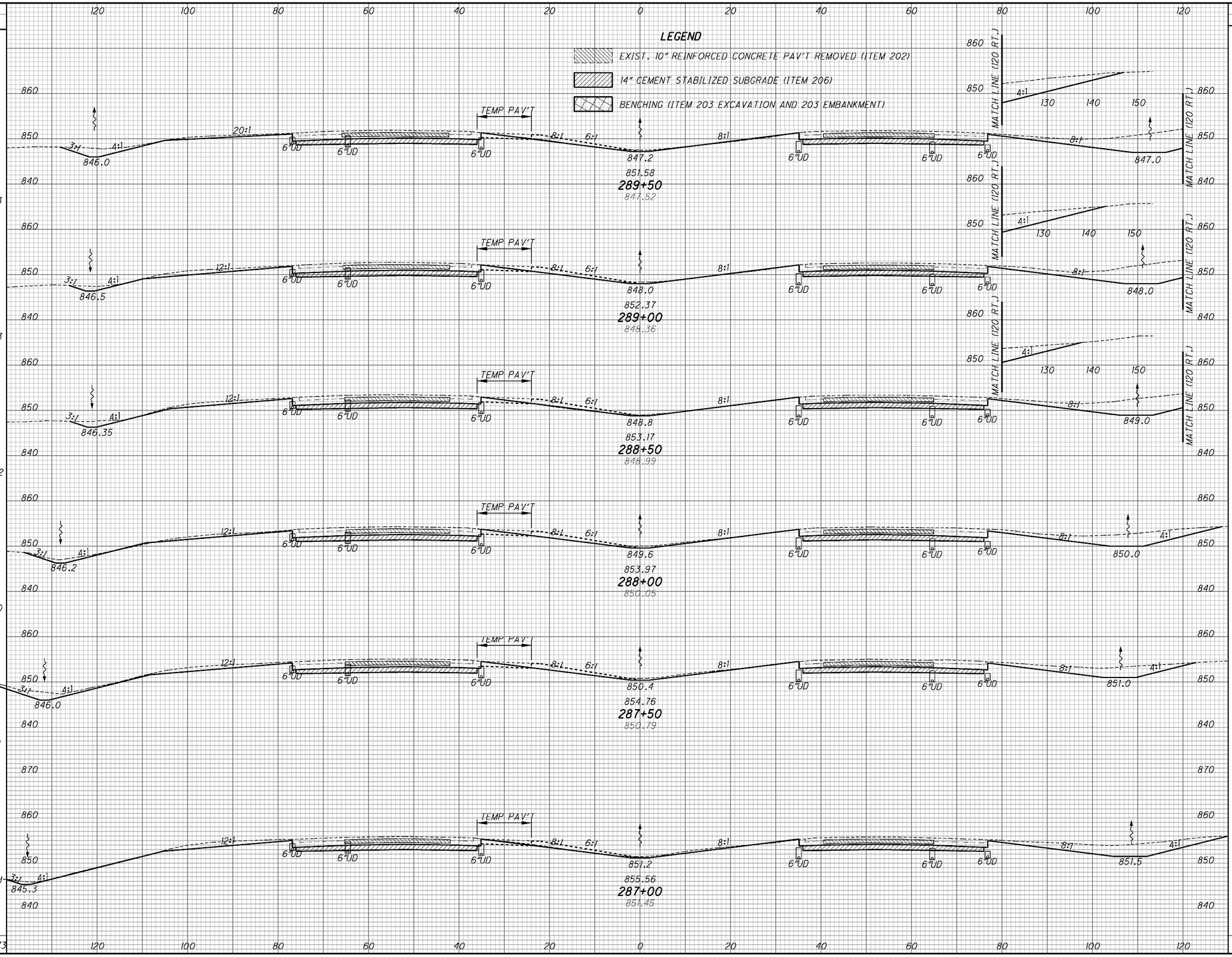

CALCULATED

CHECKED

CROSS SECTIONS
287+00.00 TO STA. 289+50.00

ATB-90-14.25

218
437

PALMER ENGINEERING
11300 CORNELL PARK DR
ENGINEERING CINCINNATI, OH 45242

O:\ODOT\ATB\25199\roadway\sheets\25199XS001.dgn 6/6/2009 9:44:34 AM DENNIS

SEEDING END WIDTH	SEEDING SQ. YDS.	END AREA CUT	END AREA FILL	VOLUME CUT	VOLUME FILL
200	1139	360	9	656	17
210	1158	348	9	617	13
207	1153	318	5	586	9
208	1167	314	4	591	5
212	1172	324	2	588	4
210	1158	311	3	556	5
6,947				3,594	53

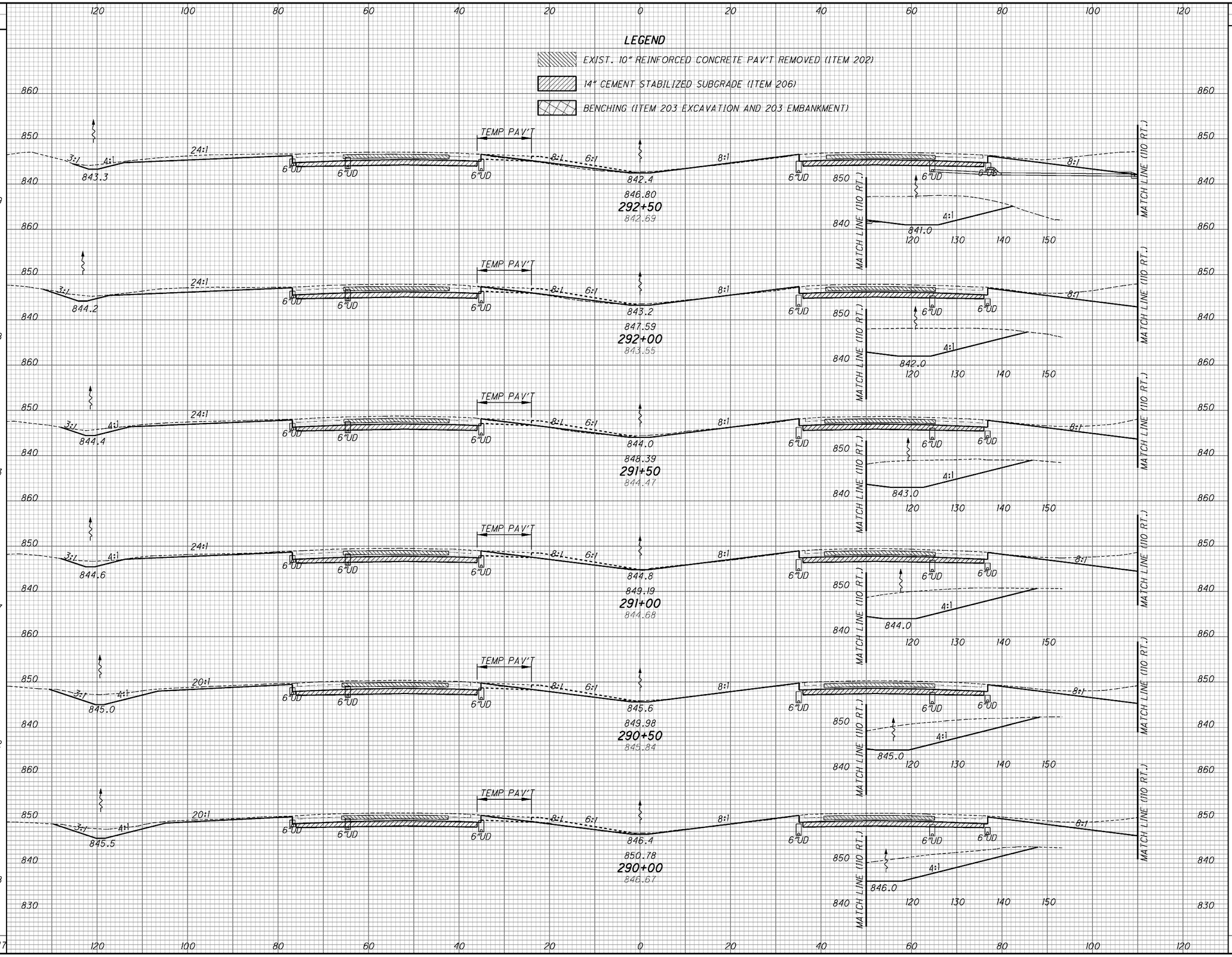

CALCULATED

CHECKED

CROSS SECTIONS

STA. 290+00.00 TO STA. 292+50.00

ATB-90-14.25

219
437

Palmer ENGINEERING
PALMER ENGINEERING
11300 CORNELL PARK DR
CINCINNATI, OH 45242

O:\ODOT\ATB\25199\roadway\sheets\25199XS001.dgn 6/6/2009 9:44:37 AM DENNIS

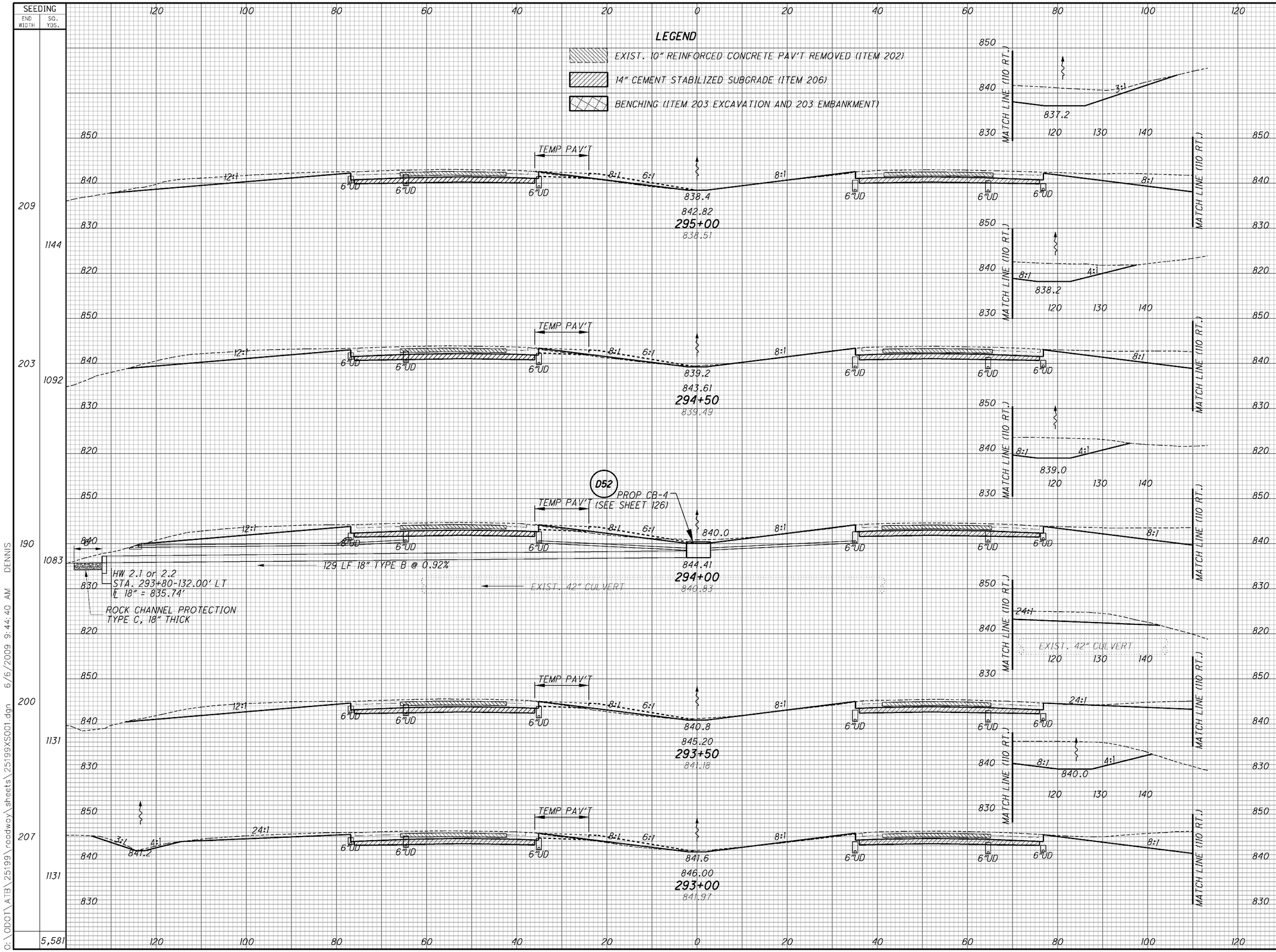

SEEDING END WIDTH	SEEDING SQ. YDS.	END AREA CUT	END AREA FILL	VOLUME CUT	VOLUME FILL
209	1144	309	8		
				568	14
203	1092	304	7		
				576	14
190	1083	318	8		
				521	18
200	1131	245	11		
				550	19
207	1131	349	10		
				656	18
	5,581			2,871	83

CALCULATED

CHECKED

CROSS SECTIONS
STA. 293+00.00 TO STA. 295+00.00

ATB-90-14.25

Palmer ENGINEERING
PALMER ENGINEERING
11300 CORNELL PARK DR
CINCINNATI, OH 45242

O:\ODOT\ATB\25199\roadway\sheets\25199XS001.dgn 6/6/2009 9:44:40 AM DENNIS

Palmer ENGINEERING
PALMER ENGINEERING
11300 CORNELL PARK DR
CINCINNATI, OH 45242

O:\ODOT\ATB\25199\roadway\sheets\25199XS001.dgn 6/6/2009 9:44:43 AM DENNIS

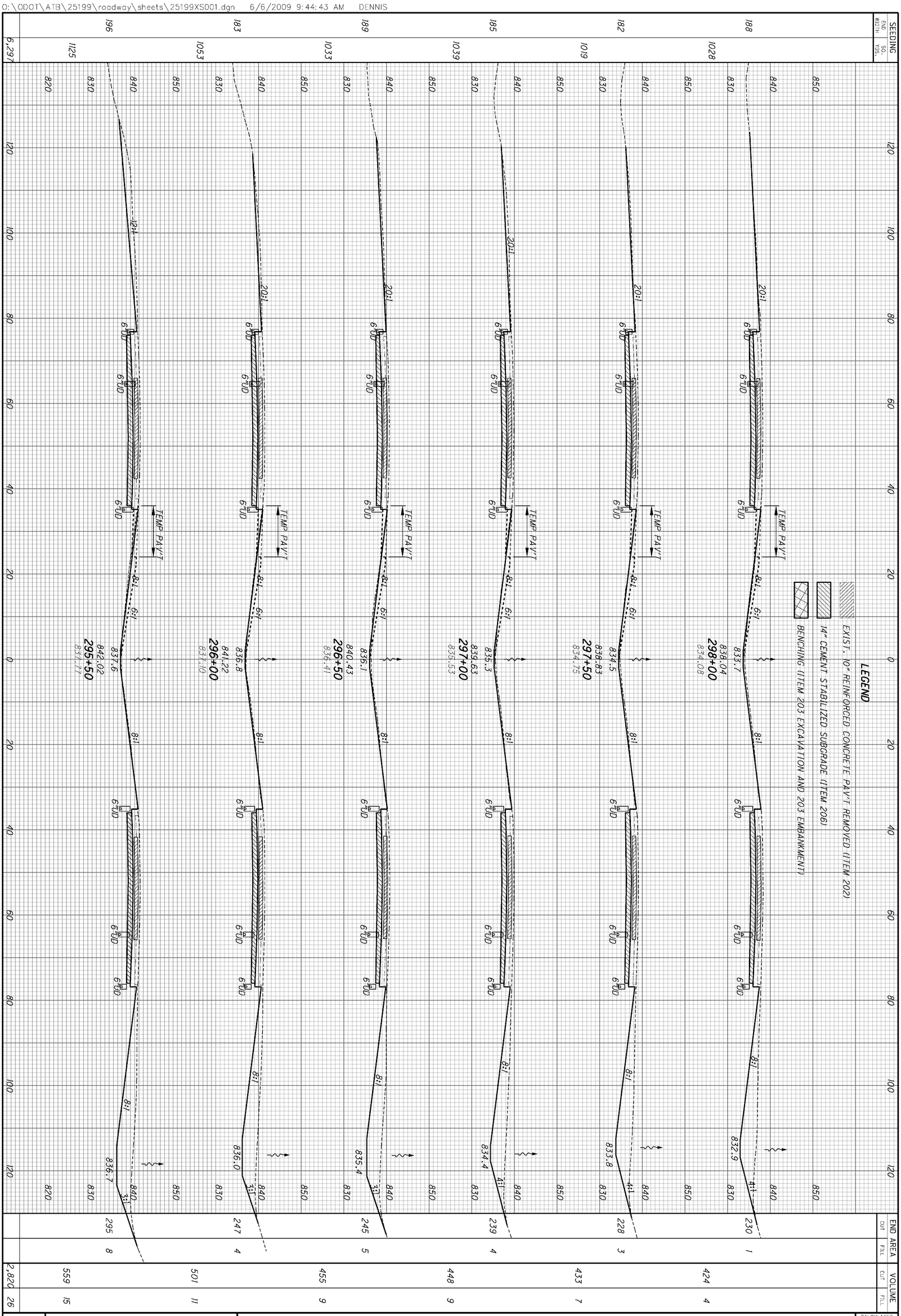

221 / 437	ATB-90-14.25	CROSS SECTIONS STA. 295+50.00 TO STA. 298+00.00

CALCULATED

CHECKED

LEGEND

EXIST. 10" REINFORCED CONCRETE PAV'T REMOVED (ITEM 202)

14" CEMENT STABILIZED SUBGRADE (ITEM 206)

BENCHING (ITEM 203 EXCAVATION AND 203 EMBANKMENT)

SEEDING END WIDTH	SEEDING SQ. YDS.	END AREA CUT	END AREA FILL	VOLUME CUT	VOLUME FILL
136	761	141	15	281	24
138	764	163	11	338	17
137	786	203	7	383	10
146	822	210	4	391	6
150	833	211	3	404	5
150	939	224	2	421	2
	4,905			2,218	64

CALCULATED

CHECKED

CROSS SECTIONS

STA. 298+50.00 TO STA. 301+00.00

ATB-90-14.25

222
437

Palmer ENGINEERING
PALMER ENGINEERING
11300 CORNELL PARK DR
ENGINEERING CINCINNATI, OH 45242

O:\ODOT\ATB\25199\roadway\sheets\25199XS001.dgn 6/6/2009 9:44:45 AM DENNIS

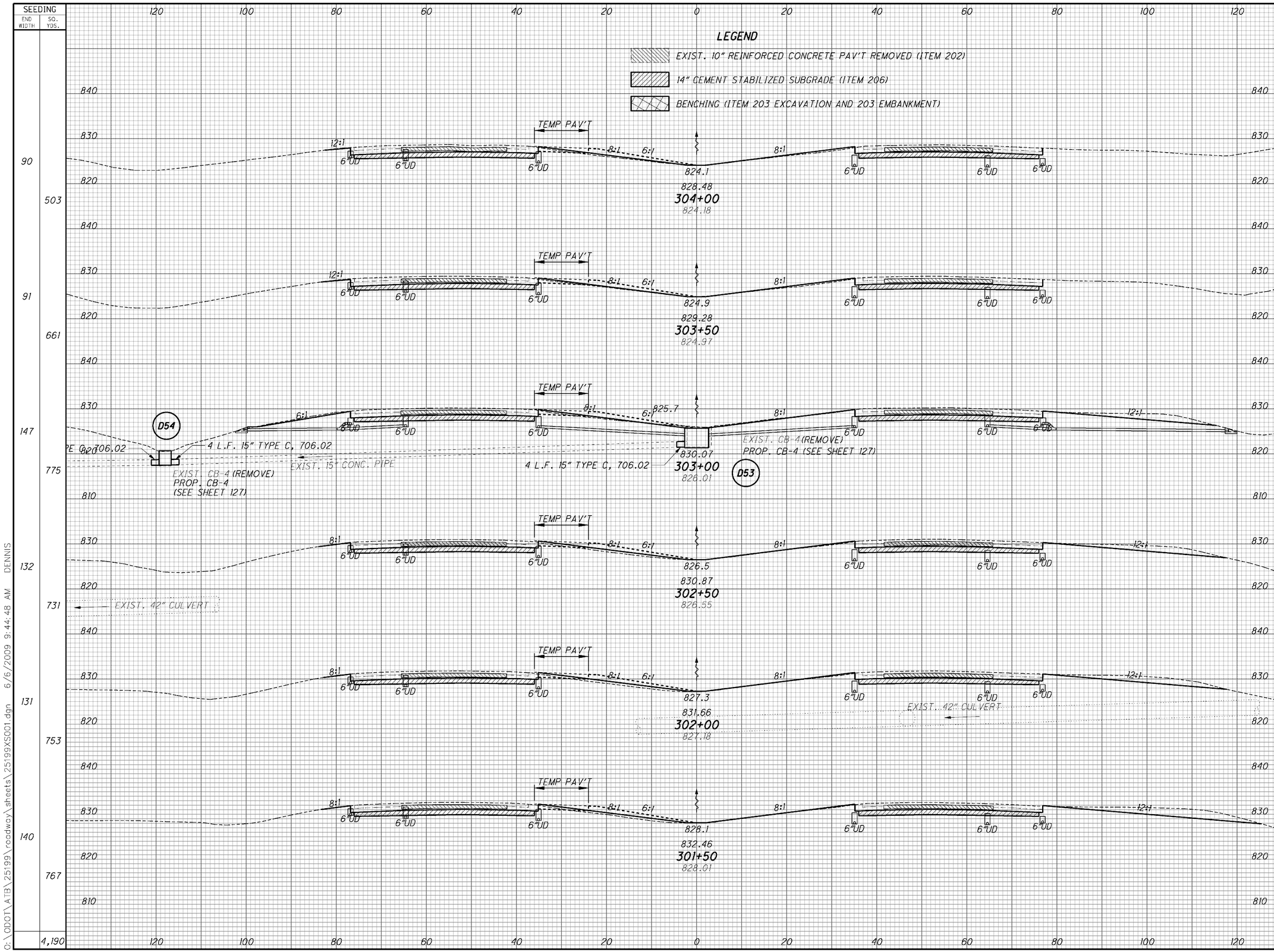

SEEDING END WIDTH	SEEDING SQ. YDS.	END AREA CUT	END AREA FILL	VOLUME CUT	VOLUME FILL
90		93	13		
	503			172	23
91		93	12		
	661			207	18
147		131	8		
	775			231	23
132		119	17		
	731			223	33
131		122	19		
	753			244	33
140		142	17		
	767			262	29
	4,190			1,339	159

CALCULATED

CHECKED

CROSS SECTIONS
STA. 301+50.00 TO STA. 304+00.00

ATB-90-14.25

Palmer ENGINEERING
PALMER ENGINEERING
11300 CORNELL PARK DR
CINCINNATI, OH 45242

O:\ODOT\ATB\25199\roadway\sheets\25199XS001.dgn 6/6/2009 9:44:48 AM DENNIS

SEEDING END WIDTH	SEEDING SQ. YDS.	END AREA CUT	END AREA FILL	VOLUME CUT	VOLUME FILL
105	606	95	11	177	18
113	639	97	8	180	16
117	592	98	10	179	18
96	542	95	10	176	22
99	564	95	14	176	26
104	539	95	14	174	25
	3,482			1,062	125

CALCULATED

CHECKED

LEGEND

EXIST. 10" REINFORCED CONCRETE PAV'T REMOVED (ITEM 202)

14" CEMENT STABILIZED SUBGRADE (ITEM 206)

BENCHING (ITEM 203 EXCAVATION AND 203 EMBANKMENT)

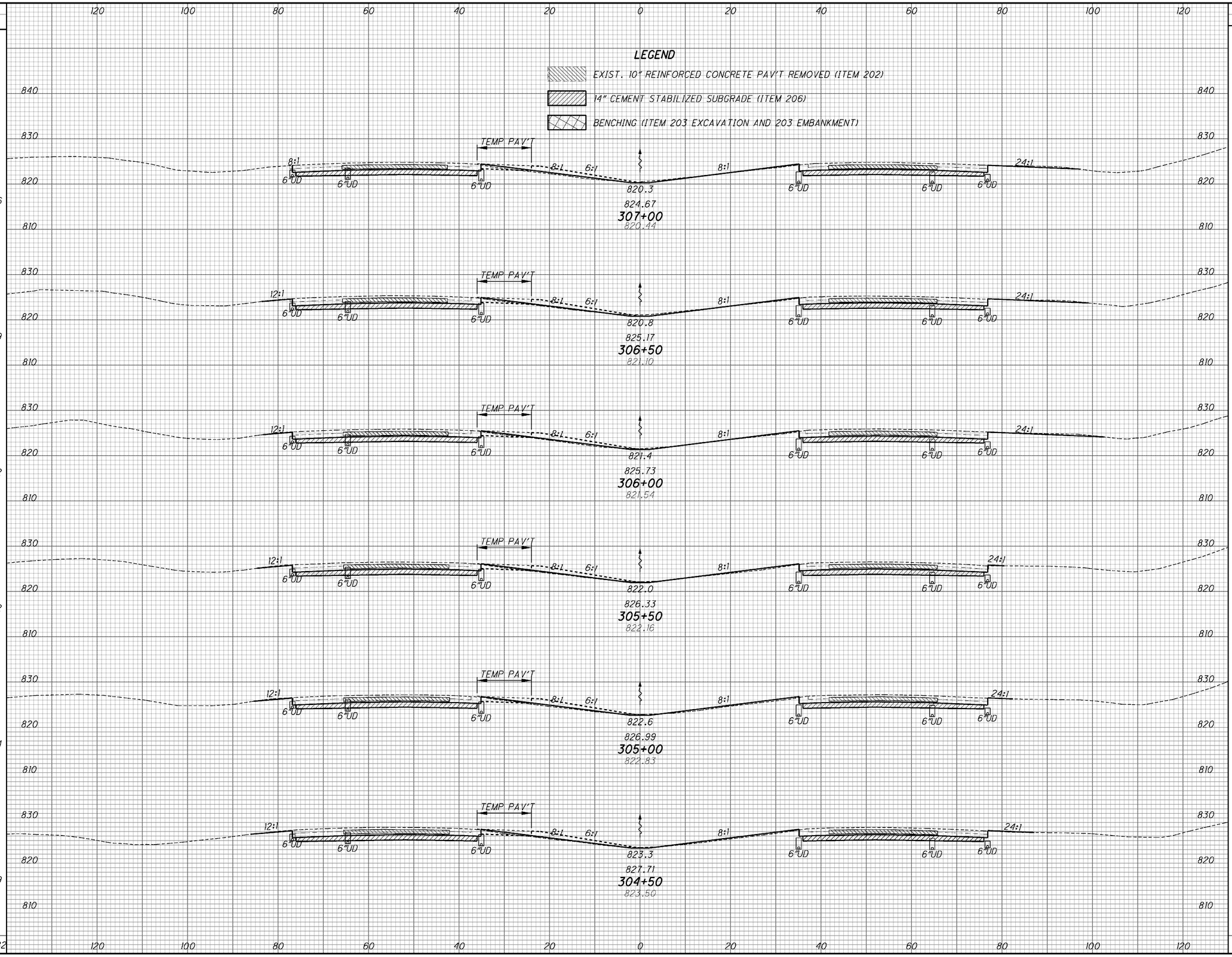

CROSS SECTIONS STA. 304+50.00 TO STA. 307+00.00

ATB-90-14.25

224
437

Palmer ENGINEERING
PALMER ENGINEERING
11300 CORNELL PARK DR
CINCINNATI, OH 45242

O:\ODOT\ATB\25199\roadway\sheets\25199XS001.dgn 6/6/2009 9:44:51 AM DENNIS

SEEDING END WIDTH	SEEDING SQ. YDS.	END AREA CUT	END AREA FILL	VOLUME CUT	VOLUME FILL
111	625	102	10	182	22
114	647	95	14	182	24
119	639	102	12	180	30
111	583	92	20	170	32
99	556	92	14	174	24
101	572	96	12	177	21
	3,622			1,065	153

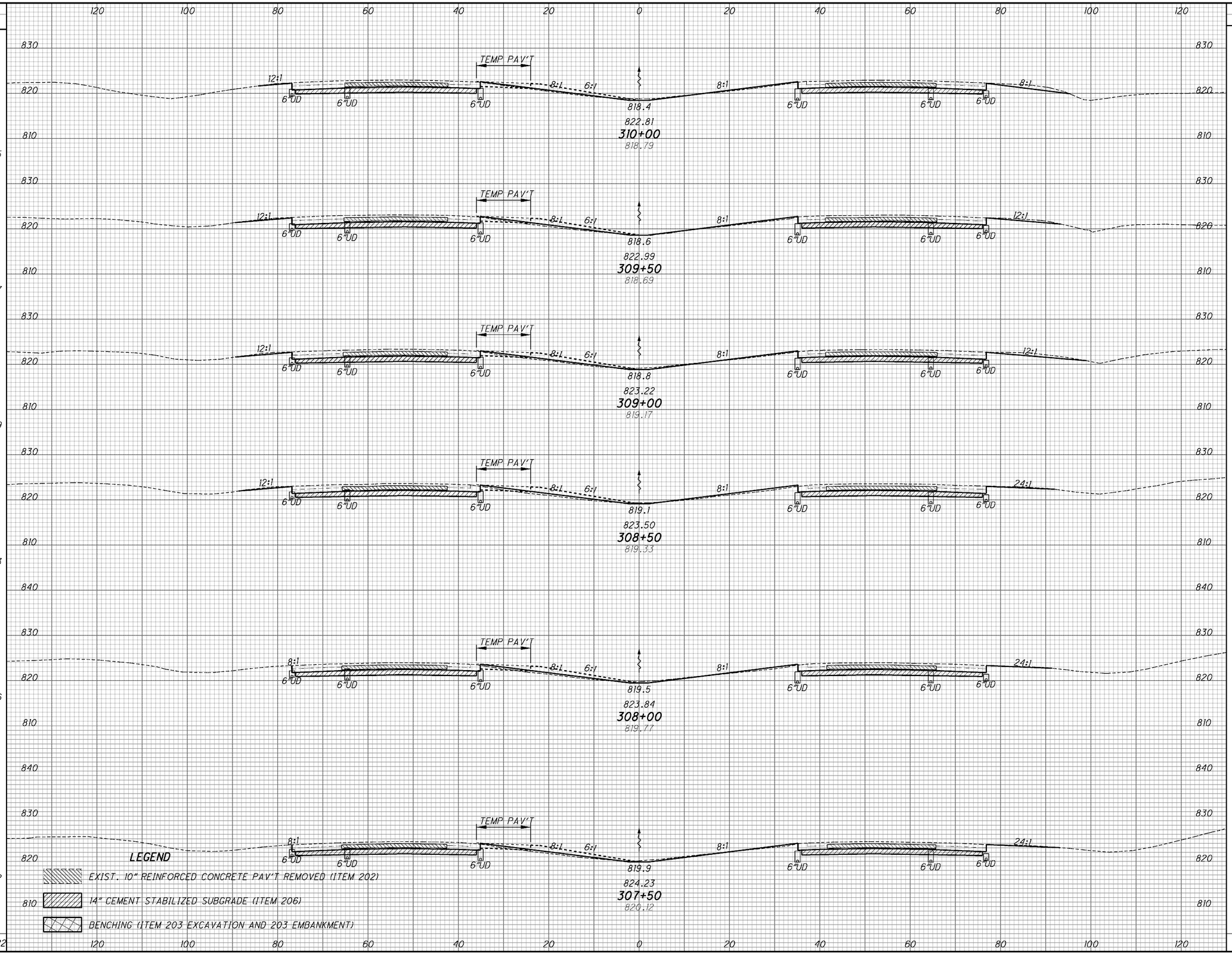

CALCULATED

CHECKED

CROSS SECTIONS STA. 307+50.00 TO STA. 310+00.00

ATB-90-14.25

225
437

PALMER ENGINEERING
11300 CORNELL PARK DR
ENGINEERING CINCINNATI, OH 45242

O:\ODOT\ATB\25199\roadway\sheets\25199XS001.dgn 6/6/2009 9:44:54 AM DENNIS

SEEDING END WIDTH	SEEDING SQ. YDS.	END AREA CUT	END AREA FILL	VOLUME CUT	VOLUME FILL
169	953	191	9	379	17
174	950	219	9	355	20
168	953	165	12	309	23
175	900	169	13	262	21
149	803	114	10	213	20
140	697	116	12	202	20
	5,256			1,720	121

ROCK CHANNEL PROTECTION TYPE C, 18" THICK
HW 2.1 or 2.2
STA 313+00.00-154.00' LT.
E =812.35

MATCH LINE (120 LT.)

MATCH LINE (120 LT.)

LEGEND

EXIST. 10" REINFORCED CONCRETE PAV'T REMOVED (ITEM 202)

14" CEMENT STABILIZED SUBGRADE (ITEM 206)

BENCHING (ITEM 203 EXCAVATION AND 203 EMBANKMENT)

TEMP PAV'T

EXIST. 15" CONC.

151 LF 18" TYPE B @ 0.82%

EXIST. CB-4 (REMOVE)
PROP. CB-4 (SEE SHEET 127) D55

313+00
821.92
817.14

312+50
822.07
817.93

312+00
822.22
818.07

311+50
822.37
818.25

311+00
822.52
818.50

310+50
822.66
818.64

817.6
817.7
817.8
818.0
818.1
818.3

CALCULATED

CHECKED

CROSS SECTIONS
STA. 310+50.00 TO STA. 313+00.00

ATB-90-14.25

226
437

Palmer ENGINEERING
PALMER ENGINEERING
11300 CORNELL PARK DR
CINCINNATI, OH 45242

O:\ODOT\ATB\25199\roadway\sheets\25199XS001.dgn 6/6/2009 9:44:56 AM DENNIS

SEEDING END WIDTH	SEEDING SQ. YDS.	END AREA CUT	END AREA FILL	VOLUME CUT	VOLUME FILL
89	522	89	9	166	17
99	544	91	9	167	19
97	553	89	12	170	20
102	564	94	10	175	18
101	739	94	10	246	16
165	928	171	7	335	16
	3,850			1,259	106

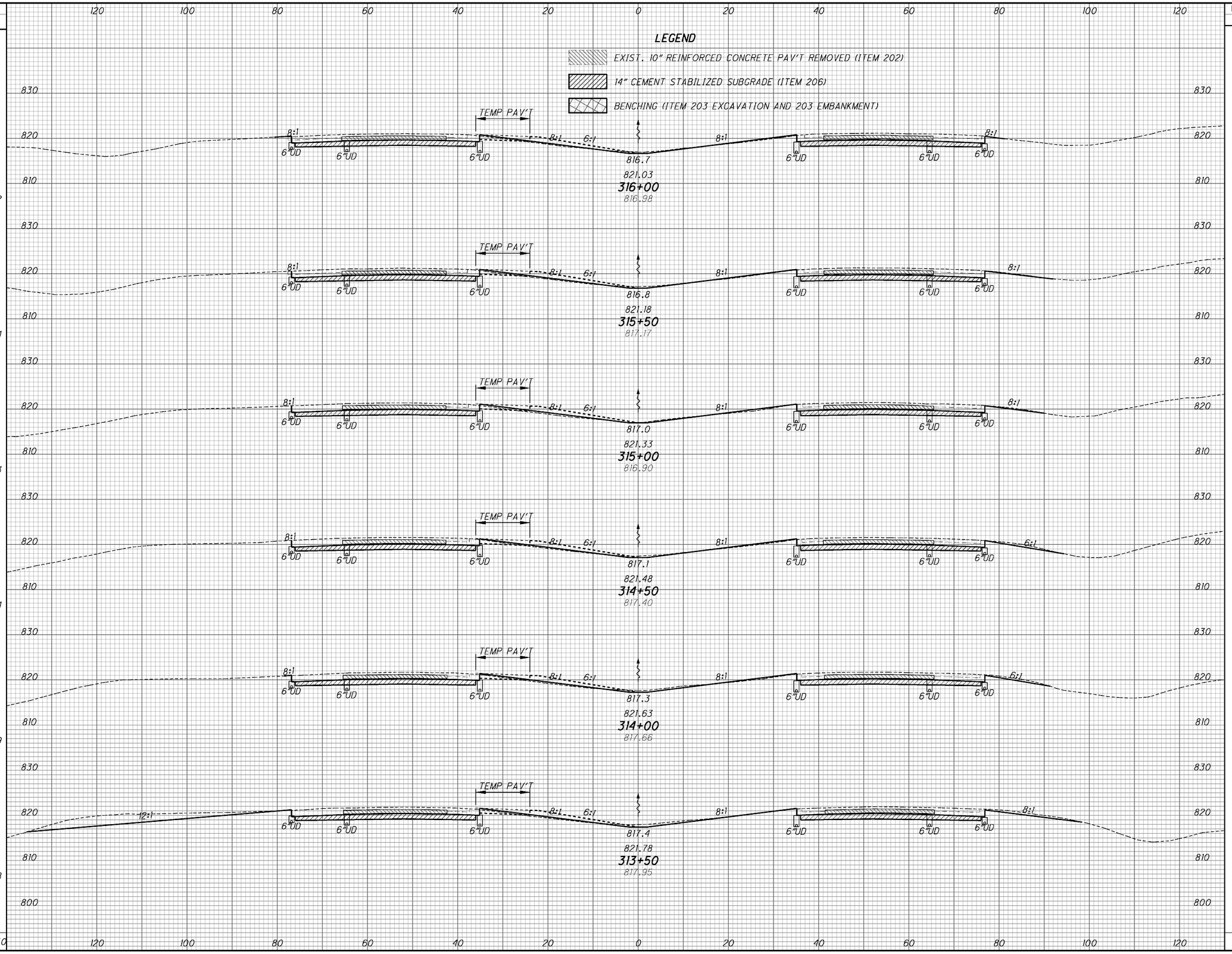

CALCULATED

CHECKED

CROSS SECTIONS

STA. 313+50.00 TO STA. 316+00.00

ATB-90-14.25

227
437

Palmer ENGINEERING
PALMER ENGINEERING
11300 CORNELL PARK DR
CINCINNATI, OH 45242

O:\ODOT\ATB\25199\roadway\sheets\25199XS001.dgn 6/6/2009 9:44:59 AM DENNIS

SEEDING END WIDTH	SEEDING SQ. YDS.	END AREA CUT	END AREA FILL	VOLUME CUT	VOLUME FILL
110	578	87	11	165	19
98	539	91	9	170	17
96	522	93	10	170	21
92	525	91	13	169	21
97	536	92	10	169	20
96	514	90	12	166	19
	3,214			1,009	117

CALCULATED

CHECKED

LEGEND

EXIST. 10" REINFORCED CONCRETE PAV'T REMOVED (ITEM 202)

14" CEMENT STABILIZED SUBGRADE (ITEM 206)

BENCHING (ITEM 203 EXCAVATION AND 203 EMBANKMENT)

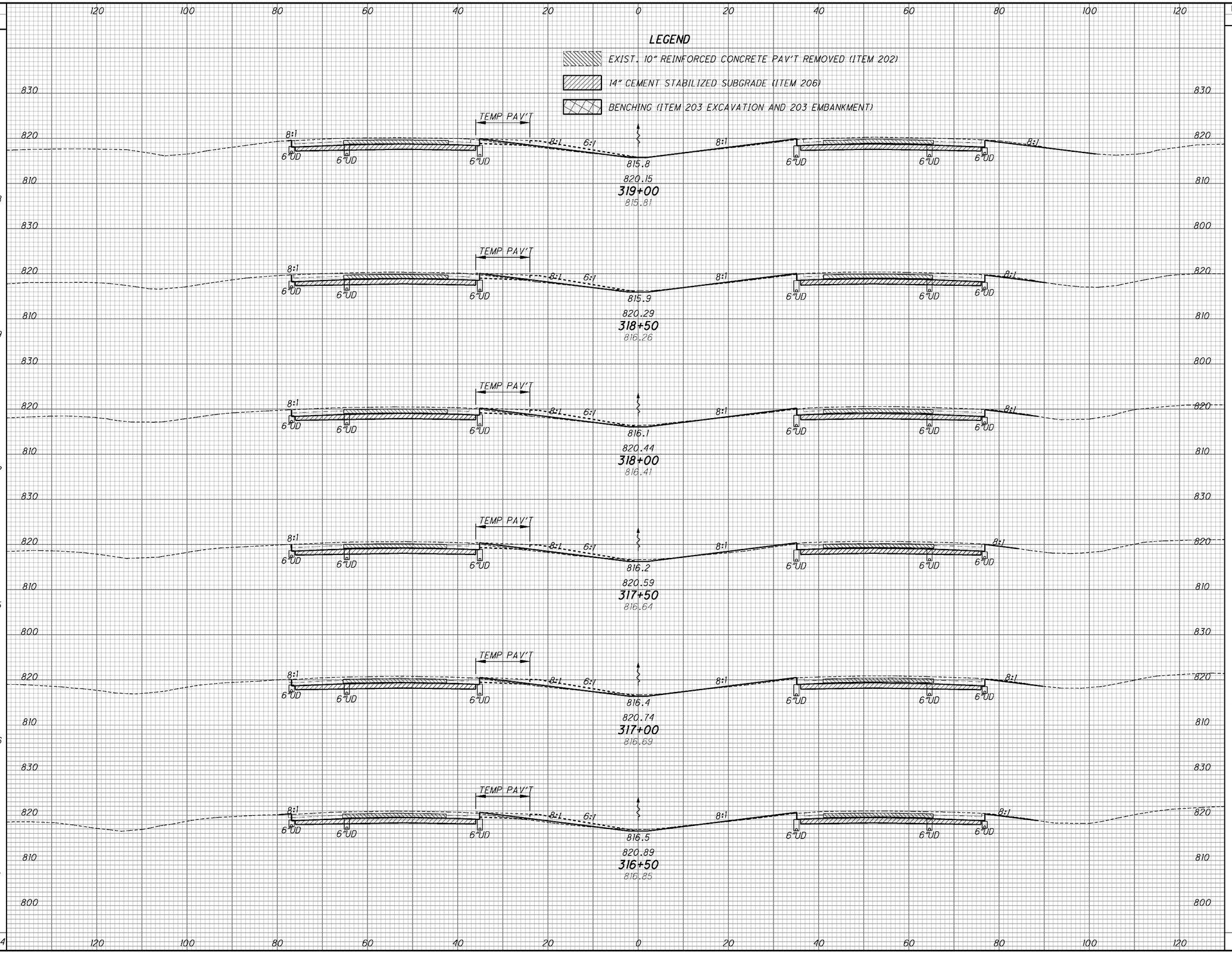

CROSS SECTIONS

STA. 316+50.00 TO STA. 319+00.00

ATB-90-14.25

228
437

Palmer ENGINEERING
PALMER ENGINEERING
11300 CORNELL PARK DR
CINCINNATI, OH 45242

O:\ODOT\ATB\25199\roadway\sheets\25199XS001.dgn 6/6/2009 9:45:02 AM DENNIS

LEGEND

EXIST. 10" REINFORCED CONCRETE PAV'T REMOVED (ITEM 202)

14" CEMENT STABILIZED SUBGRADE (ITEM 206)

BENCHING (ITEM 203 EXCAVATION AND 203 EMBANKMENT)

SEEDING END WIDTH	SEEDING SQ. YDS.	END AREA CUT	END AREA FILL	VOLUME CUT	VOLUME FILL
92	533	84	9	155	19
100	539	83	12	152	24
94	542	81	13	155	22
101	564	87	11	161	21
102	561	87	12	159	22
100	583	85	12	160	21
	3,322			942	129

CALCULATED

CHECKED

CROSS SECTIONS

STA. 319+50.00 TO STA. 322+00.00

ATB-90-14.25

229
437

PALMER ENGINEERING
11300 CORNELL PARK DR
ENGINEERING CINCINNATI, OH 45242

O:\ODOT\ATB\25199\roadway\sheets\25199XS001.dgn 6/6/2009 9:45:04 AM DENNIS

SEEDING END WIDTH	SEEDING SQ. YDS.
93	542
102	536
91	519
96	536
97	561
105	547
	3,241

LEGEND

EXIST. 10" REINFORCED CONCRETE PAV'T REMOVED (ITEM 202)

14" CEMENT STABILIZED SUBGRADE (ITEM 206)

BENCHING (ITEM 203 EXCAVATION AND 203 EMBANKMENT)

TEMP PAV'T

814.0
818.36
325+00
814.19

814.1
818.52
324+50
814.58

814.3
818.67
324+00
815.11

EXIST. 36" CULVERT

+83.0 PROP. CB-4 (SEE SHEET 128)
EXIST. CB-4 (REMOVE)

D56

814.4
818.81
323+50
814.48

814.6
818.96
323+00
814.48

814.7
819.11
322+50
814.95

END AREA CUT	END AREA FILL
88	6
96	5
96	6
84	10
82	10
88	7

VOLUME CUT	VOLUME FILL
171	10
177	11
167	15
154	18
158	16
159	15
986	85

CALCULATED

CHECKED

CROSS SECTIONS

STA. 322+50.00 TO STA. 325+00.00

ATB-90-14.25

230
437

Palmer ENGINEERING
PALMER ENGINEERING
11300 CORNELL PARK DR
CINCINNATI, OH 45242

O:\ODOT\ATB\25199\roadway\sheets\25199XS001.dgn 6/6/2009 9:45:07 AM DENNIS

SEEDING	
END WIDTH	SQ. YDS.
138	808
153	861
157	761
117	617
105	567
99	533
	4,147

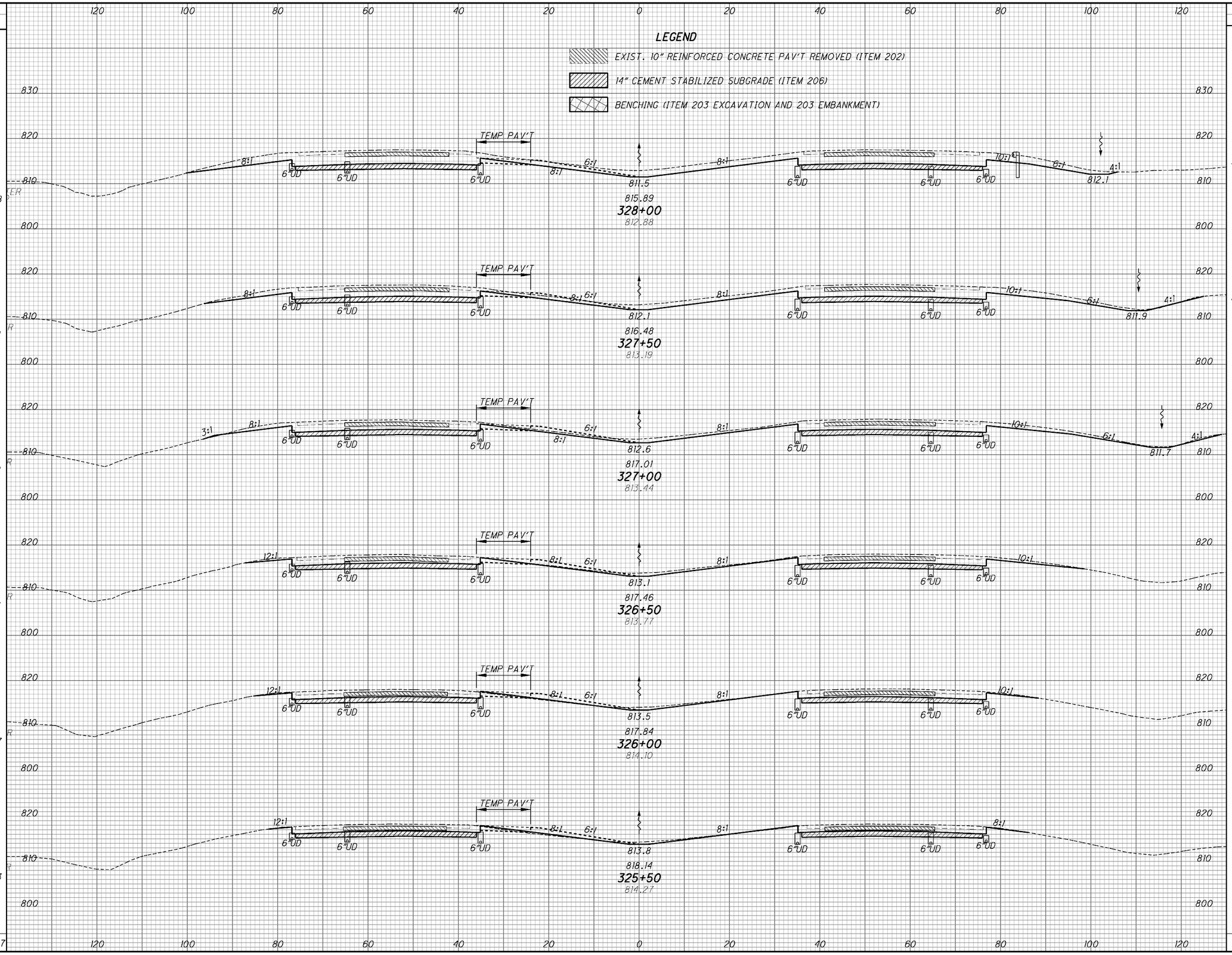

END AREA	
CUT	FILL
363	0
279	0
213	1
149	0
114	4
100	7

VOLUME	
CUT	FILL
594	0
455	1
335	1
244	4
198	10
174	11
2,000	27

CALCULATED

CHECKED

CROSS SECTIONS

325+50.00 TO STA. 328+00.00

STA.

ATB-90-14.25

Palmer ENGINEERING
PALMER ENGINEERING
11300 CORNELL PARK DR
CINCINNATI, OH 45242

O:\ODOT\ATB\25199\roadway\sheets\25199XS001.dgn 6/6/2009 9:45:10 AM DENNIS

SEEDING END WIDTH	SEEDING SQ. YDS.
187	878
129	761
145	789
139	756
133	753
	3,937

LEGEND

EXIST. 10" REINFORCED CONCRETE PAV'T REMOVED (ITEM 202)

14" CEMENT STABILIZED SUBGRADE (ITEM 206)

BENCHING (ITEM 203 EXCAVATION AND 203 EMBANKMENT)

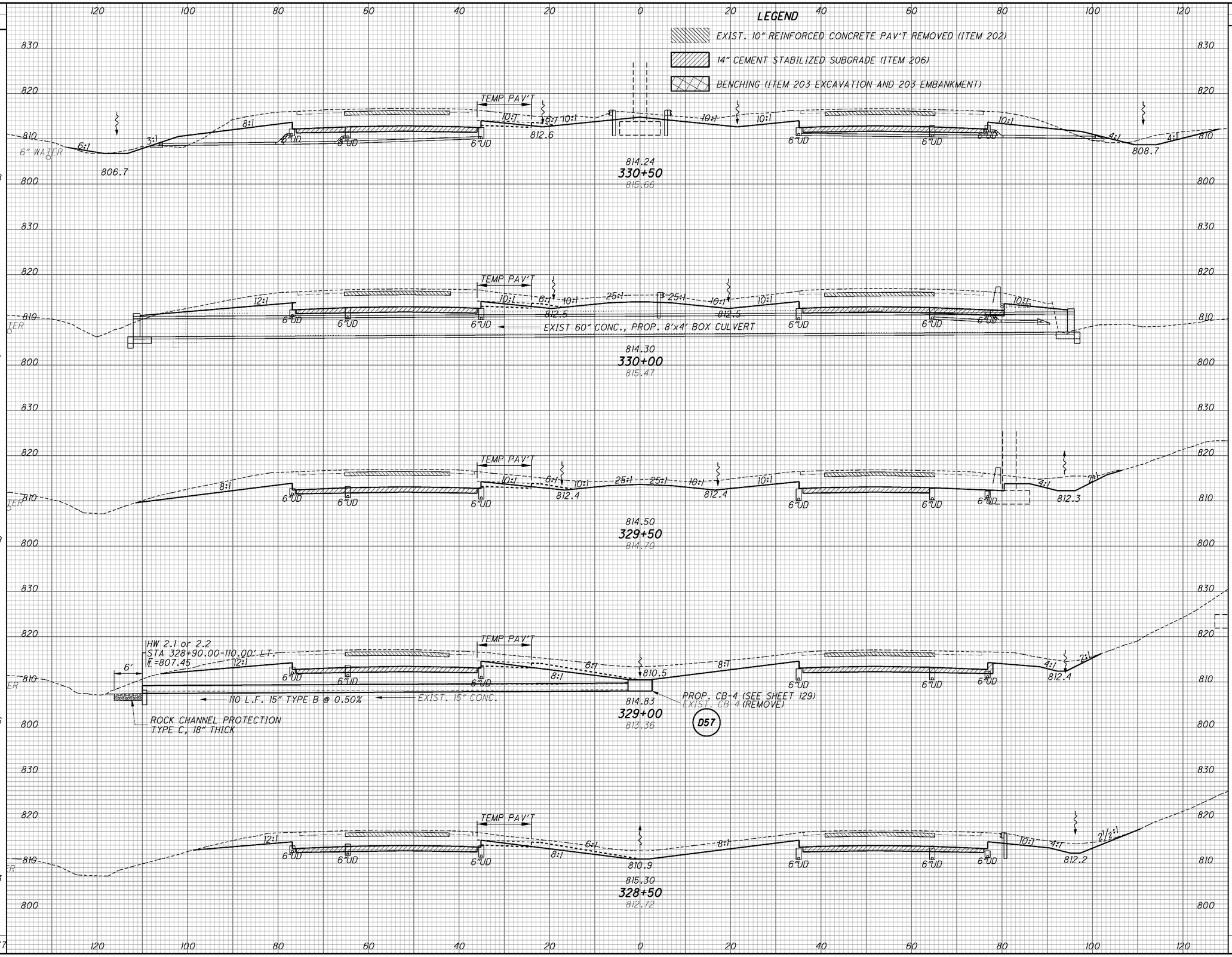

END AREA CUT	END AREA FILL	VOLUME CUT	VOLUME FILL
502	33		
		948	30
522	0		
		973	0
529	0		
		979	0
528	0		
		902	0
445	0		
		748	0
		4,529	30

CALCULATED

CHECKED

CROSS SECTIONS

STA. 328+50.00 TO STA. 330+50.00

ATB-90-14.25

232
437

Palmer ENGINEERING
PALMER ENGINEERING
11300 CORNELL PARK DR
ENGINEERING CINCINNATI, OH 45242

C:\ODOT\ATB\25199\roadway\sheets\25199XS001.dgn 6/6/2009 9:45:13 AM DENNIS

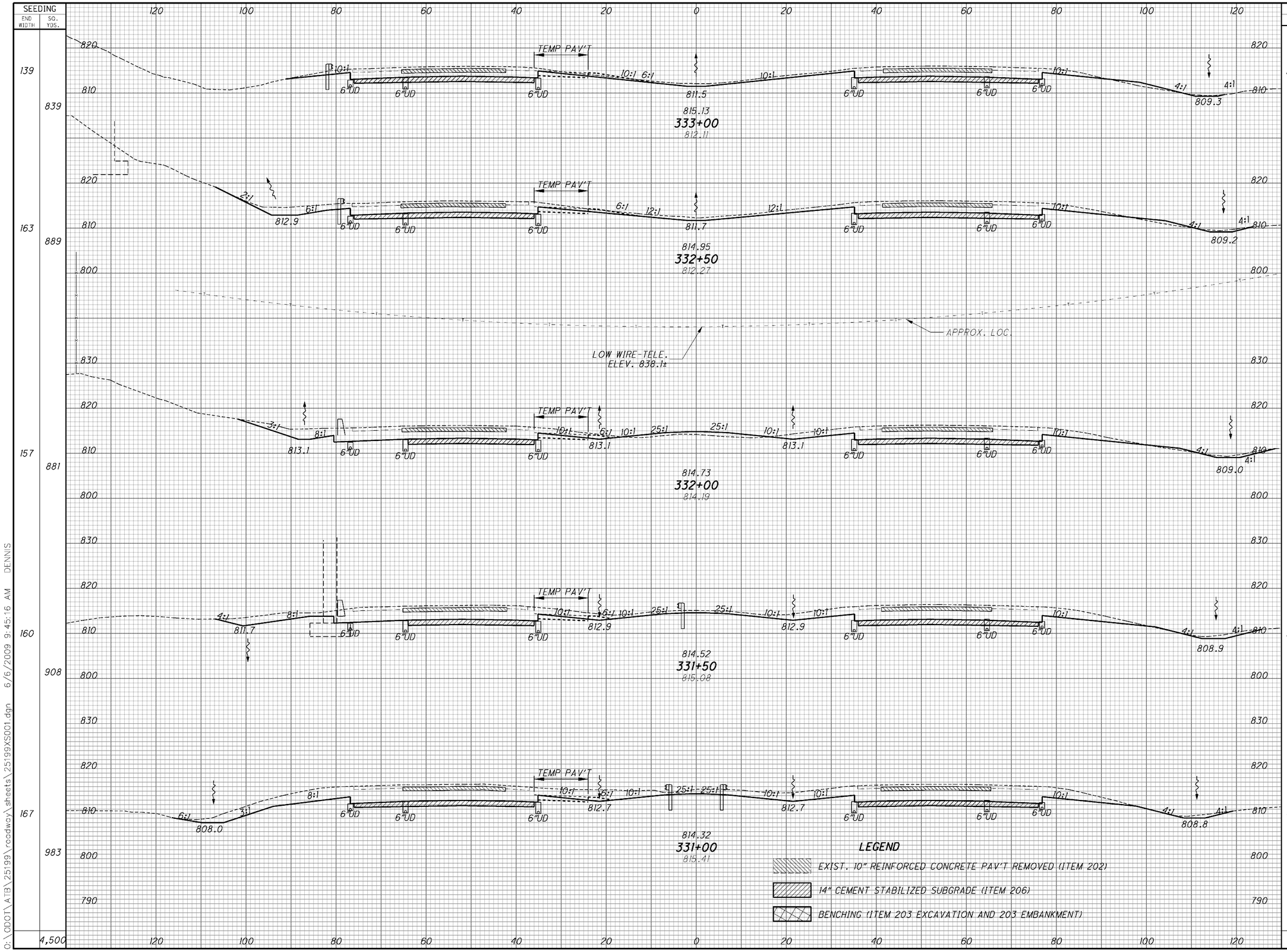

END AREA CUT	END AREA FILL	VOLUME CUT	VOLUME FILL
229	7		
		502	11
313	6		
		581	25
314	22		
		647	21
385	1		
		804	1
484	0		
		913	30
		3,447	88

CALCULATED

CHECKED

CROSS SECTIONS
STA. 331+00.00 TO STA. 333+00.00

ATB-90-14.25

Palmer ENGINEERING
PALMER ENGINEERING
11300 CORNELL PARK DR
CINCINNATI, OH 45242

O:\ODOT\ATB\25199\roadway\sheets\25199XS001.dgn 6/6/2009 9:45:16 AM DENNIS

SEEDING END WIDTH	SEEDING SQ. YDS.	END AREA CUT	END AREA FILL	VOLUME CUT	VOLUME FILL
140	658	125	1	204	4
97	558	95	4	179	8
104	619	98	5	199	7
119	644	117	3	232	4
113	683	134	1	285	7
133	756	174	6	372	12
	3,918			1,471	42

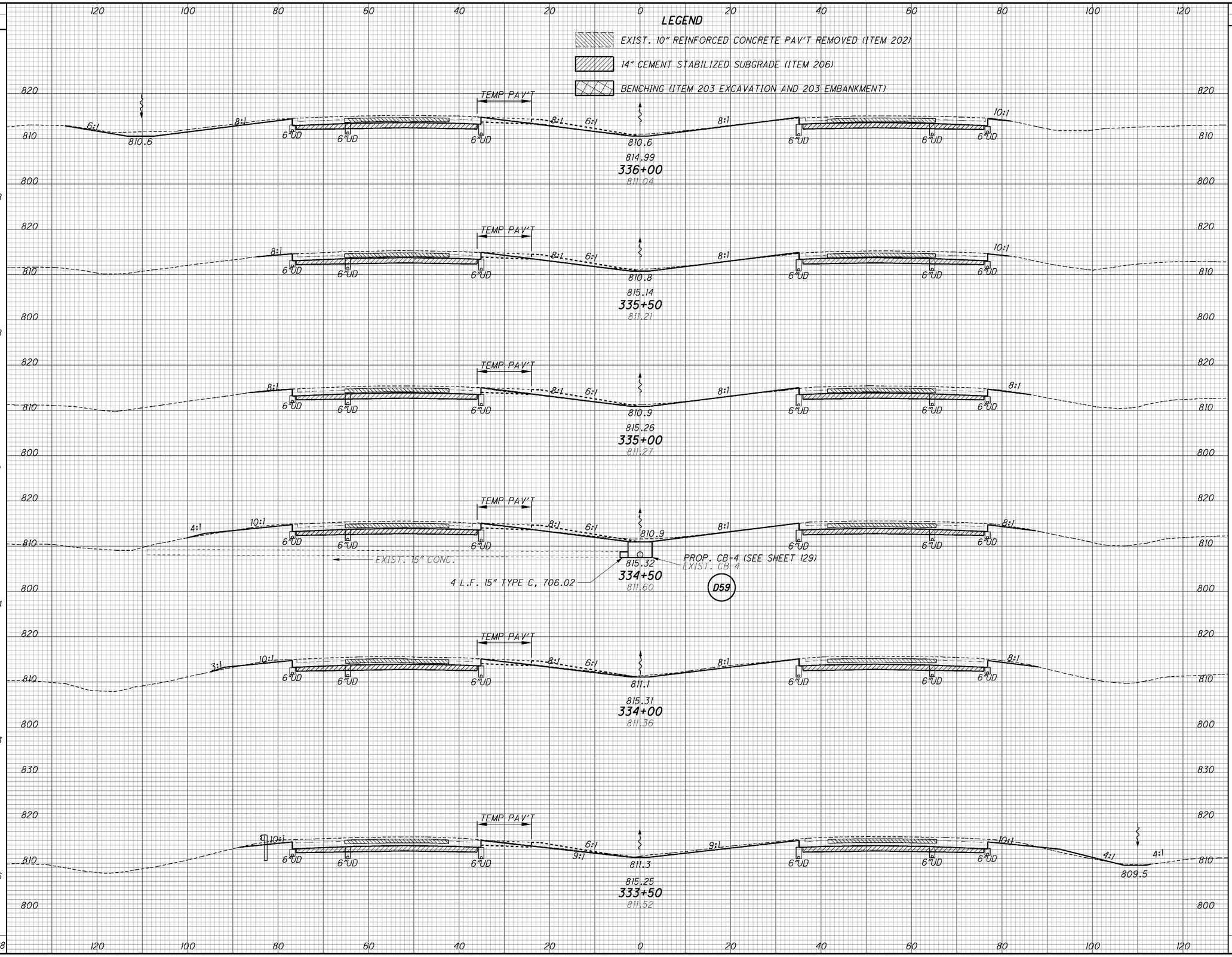

CALCULATED

CHECKED

CROSS SECTIONS

333+50.00 TO STA. 336+00.00

STA. 333+50.00 TO STA. 336+00.00

ATB-90-14.25

234
437

Palmer ENGINEERING
PALMER ENGINEERING
11300 CORNELL PARK DR
CINCINNATI, OH 45242

O:\ODOT\ATB\25199\roadway\sheets\25199XS001.dgn 6/6/2009 9:45:19 AM DENNIS

LEGEND

EXIST. 10" REINFORCED CONCRETE PAV'T REMOVED (ITEM 202)

14" CEMENT STABILIZED SUBGRADE (ITEM 206)

BENCHING (ITEM 203 EXCAVATION AND 203 EMBANKMENT)

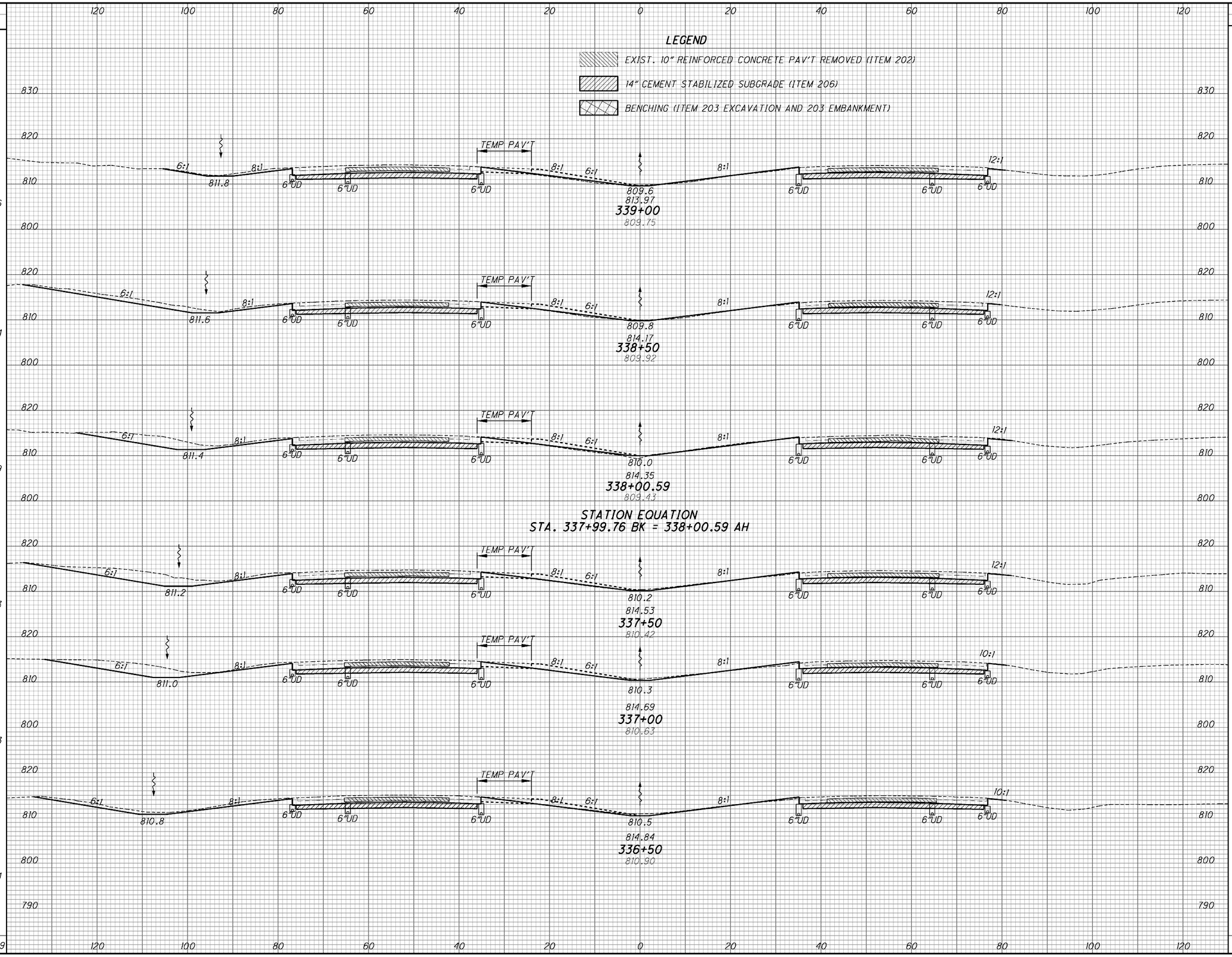

SEEDING END WIDTH	SEEDING SQ. YDS.	END AREA CUT	END AREA FILL	VOLUME CUT	VOLUME FILL
117	756	107	10	221	17
155	804	132	8	258	14
138	829	150	7	290	11
157	833	165	5	299	8
143	803	158	4	265	6
146	794	128	2	234	3
	4,819			1,567	59

CALCULATED

CHECKED

CROSS SECTIONS

STA. 336+50.00 TO STA. 339+00.00

ATB-90-14.25

235
437

Palmer ENGINEERING
PALMER ENGINEERING
11300 CORNELL PARK DR
CINCINNATI, OH 45242

O:\ODOT\ATB\25199\roadway\sheets\25199XS001.dgn 6/6/2009 9:45:21 AM DENNIS

SEEDING END WIDTH	SEEDING SQ. YDS.	END AREA CUT	END AREA FILL	VOLUME CUT	VOLUME FILL
167	944	154	3	286	7
173	847	154	4	269	12
132	747	136	9	248	18
137	706	131	11	221	19
	3,244			1,024	56

CALCULATED

CHECKED

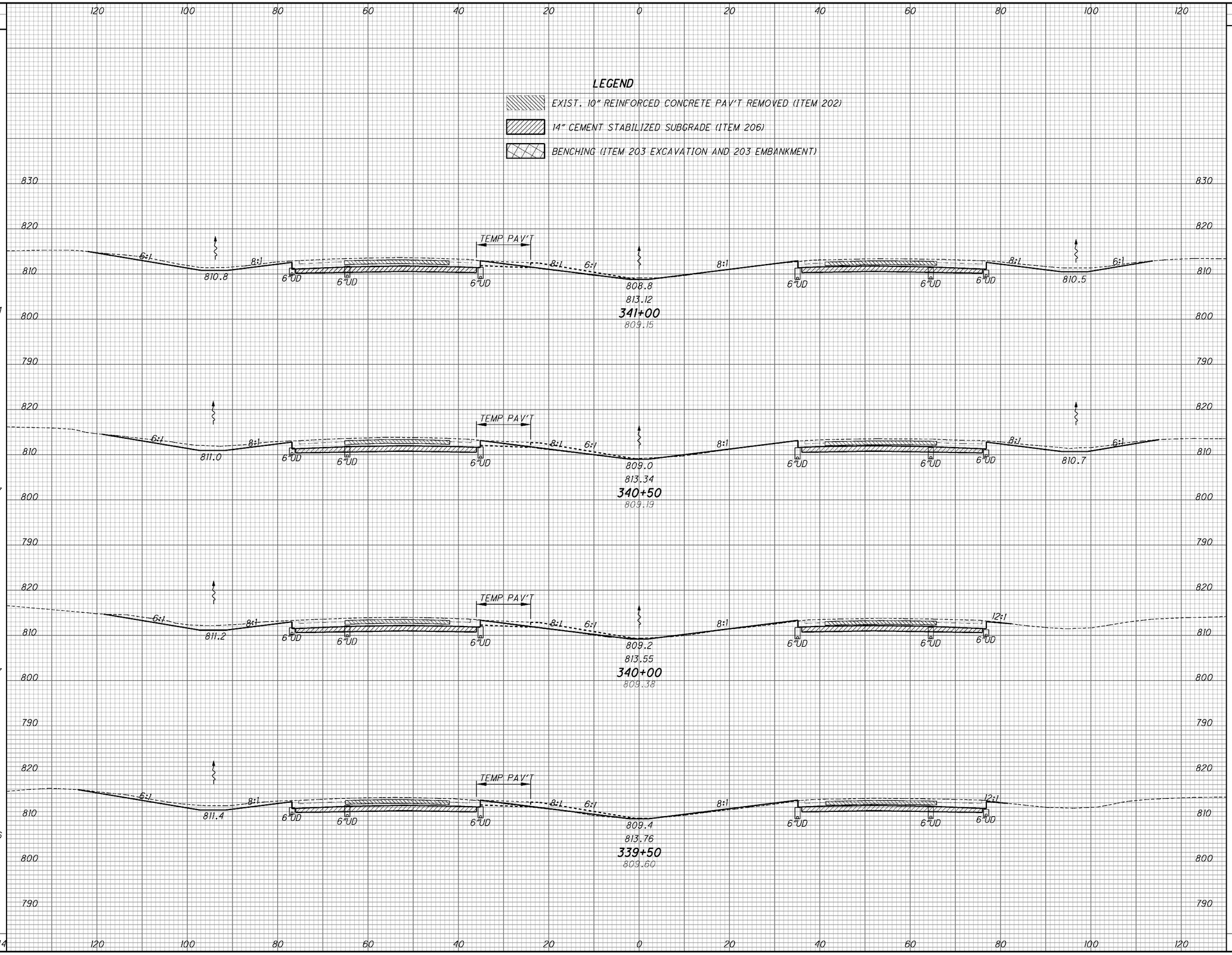

CROSS SECTIONS STA. 339+50.00 TO STA. 341+00.00

ATB-90-14.25

236
437

Palmer ENGINEERING
PALMER ENGINEERING
11300 CORNELL PARK DR
CINCINNATI, OH 45242

O:\ODOT\ATB\25199\roadway\sheets\25199XS001.dgn 6/6/2009 9:45:24 AM DENNIS

SEEDING END WIDTH	SEEDING SQ. YDS.	END AREA CUT	END AREA FILL	VOLUME CUT	VOLUME FILL
158	872	144	7	267	13
156	953	144	6	282	11
187	1019	161	6	291	7
180	964	154	2	285	4
3,808				1,125	31

CALCULATED

CHECKED

LEGEND

EXIST. 10" REINFORCED CONCRETE PAV'T REMOVED (ITEM 202)

14" CEMENT STABILIZED SUBGRADE (ITEM 206)

BENCHING (ITEM 203 EXCAVATION AND 203 EMBANKMENT)

120 100 80 60 40 20 0 20 40 60 80 100 120

830 820 810 800 790

TEMP PAV'T

12:1 6:1 8:1 6"UD

808.0
812.27
343+00
808.32

809.7

808.2
812.49
342+50
808.58

809.9

808.4
812.70
342+00
808.58

810.2 810.1

808.6
812.91
341+50
808.98

810.4 810.3

CROSS SECTIONS STA. 341+50.00 TO STA. 343+00.00

ATB-90-14.25

237
437

Palmer ENGINEERING
PALMER ENGINEERING
11300 CORNELL PARK DR
ENGINEERING CINCINNATI, OH 45242

O:\ODOT\ATB\25199\roadway\sheets\25199XS001.dgn 6/6/2009 9:45:26 AM DENNIS

SEEDING	
END WIDTH	SQ. YDS.
102	597
113	619
110	600
106	733
	2,549

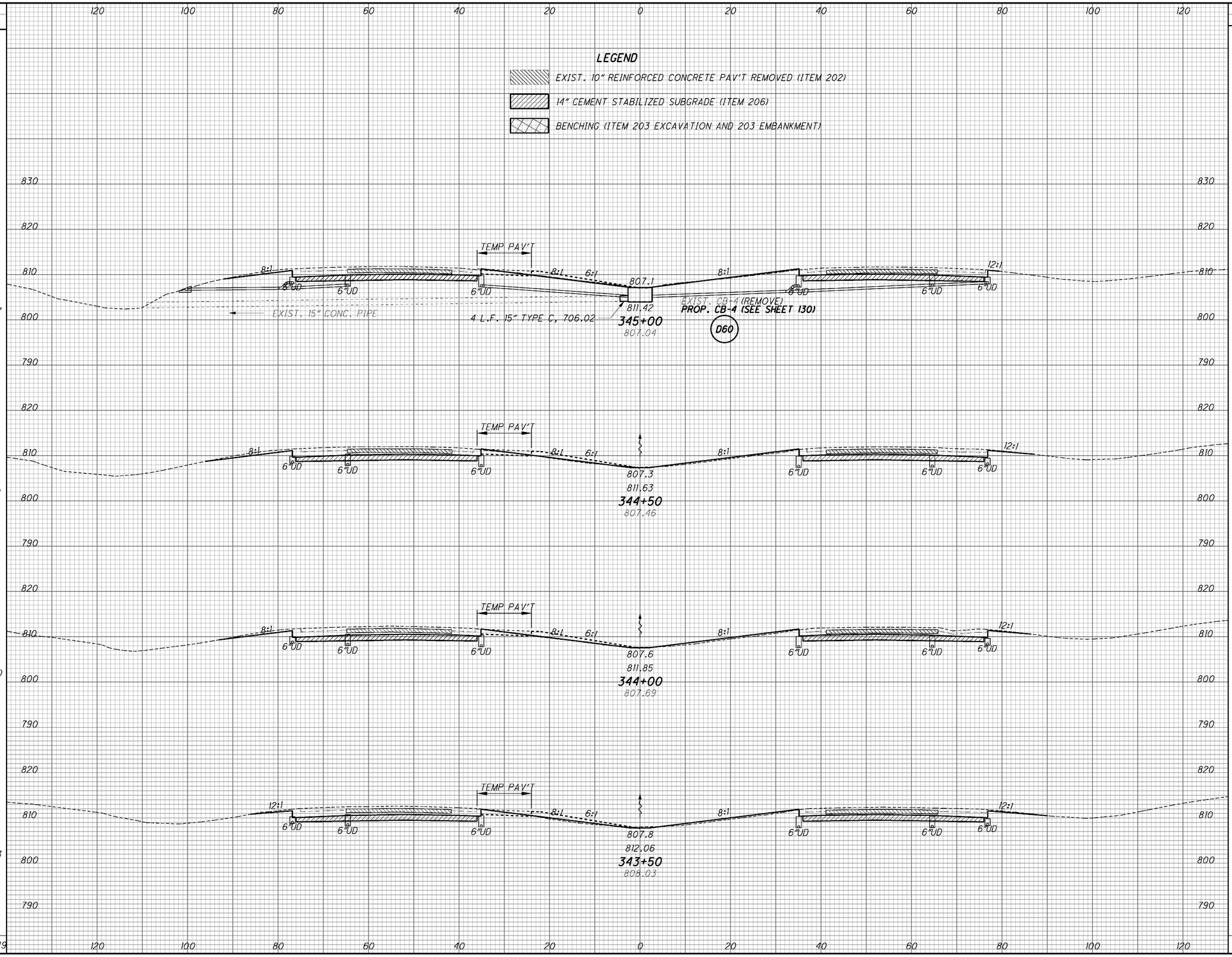

END AREA	
CUT	FILL
107	5
110	11
108	10
113	13

VOLUME	
CUT	FILL
201	14
202	20
204	21
238	18
845	73

CALCULATED

CHECKED

CROSS SECTIONS
343+50.00 TO STA. 345+00.00

ATB-90-14.25

238
437

Palmer ENGINEERING
PALMER ENGINEERING
11300 CORNELL PARK DR
CINCINNATI, OH 45242

O:\ODOT\ATB\25199\roadway\sheets\25199XS001.dgn 6/6/2009 9:45:29 AM DENNIS

SEEDING END WIDTH	SEEDING SQ. YDS.	END AREA CUT	END AREA FILL	VOLUME CUT	VOLUME FILL
106	597	113	0	202	4
109	597	105	4	195	6
106	597	106	3	198	10
109	583	108	8	201	15
101	564	109	9	200	12
	2,938			996	47

CALCULATED

CHECKED

LEGEND

EXIST. 10" REINFORCED CONCRETE PAV'T REMOVED (ITEM 202)

14" CEMENT STABILIZED SUBGRADE (ITEM 206)

BENCHING (ITEM 203 EXCAVATION AND 203 EMBANKMENT)

120 100 80 60 40 20 0 20 40 60 80 100 120

820 810 800 790

TEMP PAV'T

12:1 8:1 6:1

6"UD

806.1
810.36
347+50
806.79

806.3
810.57
347+00
806.83

806.5
810.78
346+50
807.06

806.7
810.99
346+00
807.25

806.9
811.21
345+50
807.36

CROSS SECTIONS STA. 345+50.00 TO STA. 347+50.00

ATB-90-14.25

239
437

Palmer ENGINEERING
PALMER ENGINEERING
11300 CORNELL PARK DR
CINCINNATI, OH 45242

O:\ODOT\ATB\25199\roadway\sheets\25199XS001.dgn 6/6/2009 9:45:31 AM DENNIS

SEEDING END WIDTH	SEEDING SQ. YDS.
96	561
106	589
106	589
106	592
107	589
105	586
3,506	

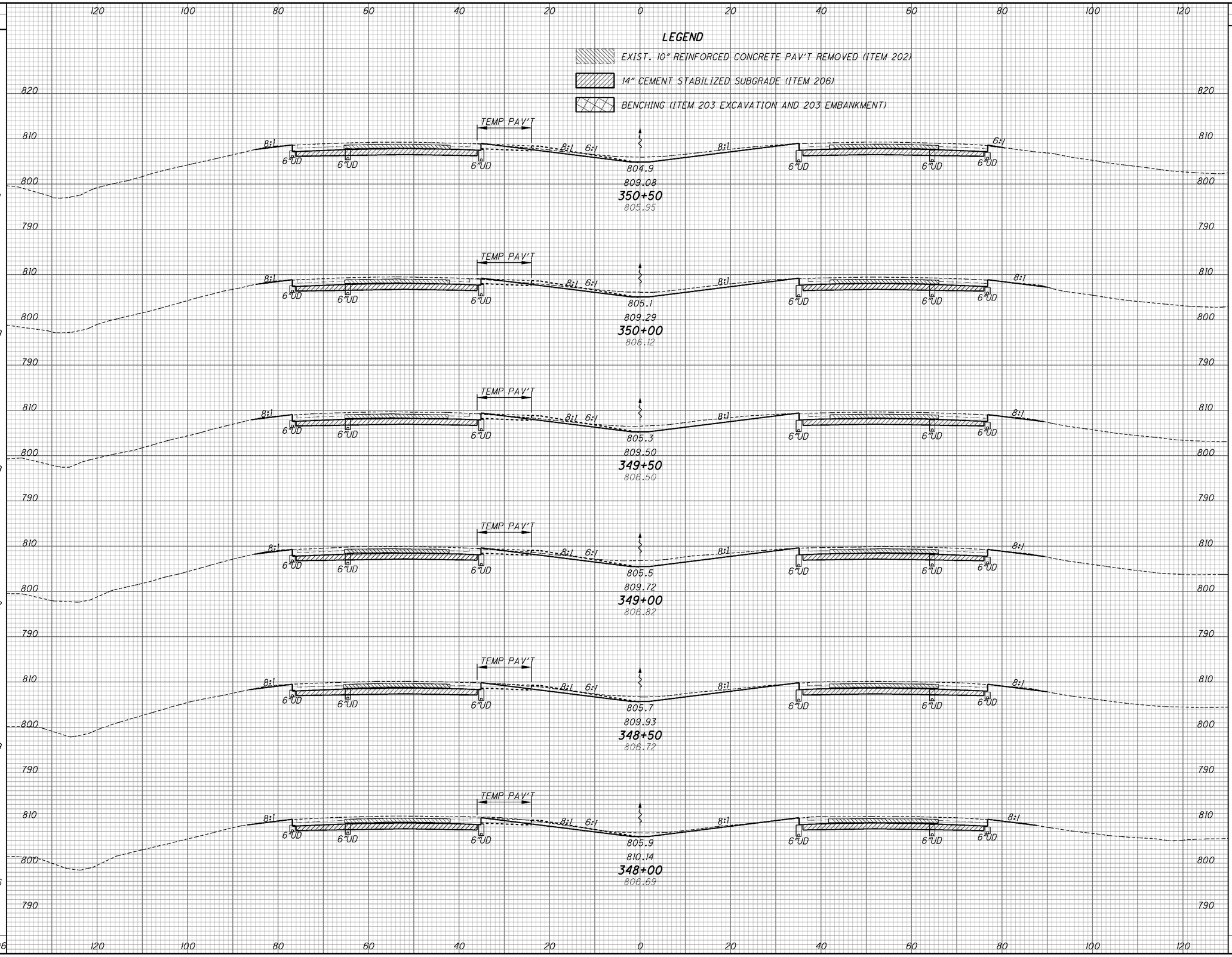

END AREA CUT	END AREA FILL	VOLUME CUT	VOLUME FILL
118	1	219	2
118	1	221	2
121	1	234	1
131	1	240	1
128	0	228	1
119	1	215	1
		1,544	8

CALCULATED

CHECKED

CROSS SECTIONS

STA. 348+00.00 TO STA. 350+50.00

ATB-90-14.25

240
437

Palmer ENGINEERING
PALMER ENGINEERING
11300 CORNELL PARK DR
CINCINNATI, OH 45242

O:\ODOT\ATB\25199\roadway\sheets\25199XS001.dgn 6/6/2009 9:45:34 AM DENNIS

SEEDING END WIDTH	SEEDING SQ. YDS.	END AREA CUT	END AREA FILL	VOLUME CUT	VOLUME FILL
99	567	83	9	156	14
105	564	86	7	162	12
98	717	89	6	191	14
160	908	117	9	241	15
167	939	143	7	256	21
171	742	134	16	233	16
	4,437			1,239	92

CALCULATED

CHECKED

LEGEND

EXIST. 10" REINFORCED CONCRETE PAV'T REMOVED (ITEM 202)

14" CEMENT STABILIZED SUBGRADE (ITEM 206)

BENCHING (ITEM 203 EXCAVATION AND 203 EMBANKMENT)

TEMP PAV'T

803.6
807.80
353+50
803.98

803.8
808.01
353+00
804.30

804.0
EXIST. 24" CULVERT
EXIST. CB-4 (REMOVE)
PROP. CB-4 (SEE SHEET 131) D61
4 L.F. 15" TYPE C, 706.02
EXIST. 15" CONC. PIPE
808.23
352+50
804.57

804.3
808.44
352+00
805.00

804.5
808.65
351+50
805.17

804.7
808.86
351+00
805.62

8:1 6:1 3:1 4:1 6"UD

CROSS SECTIONS
STA. 351+00.00 TO STA. 353+50.00

ATB-90-14.25

241
437

Palmer ENGINEERING
PALMER ENGINEERING
11300 CORNELL PARK DR
ENGINEERING CINCINNATI, OH 45242

O:\ODOT\ATB\25199\roadway\sheets\25199XS001.dgn 6/6/2009 9:45:36 AM DENNIS

SEEDING END WIDTH	SEEDING SQ. YDS.
97	561
105	575
102	558
99	558
102	561
100	553
	3,366

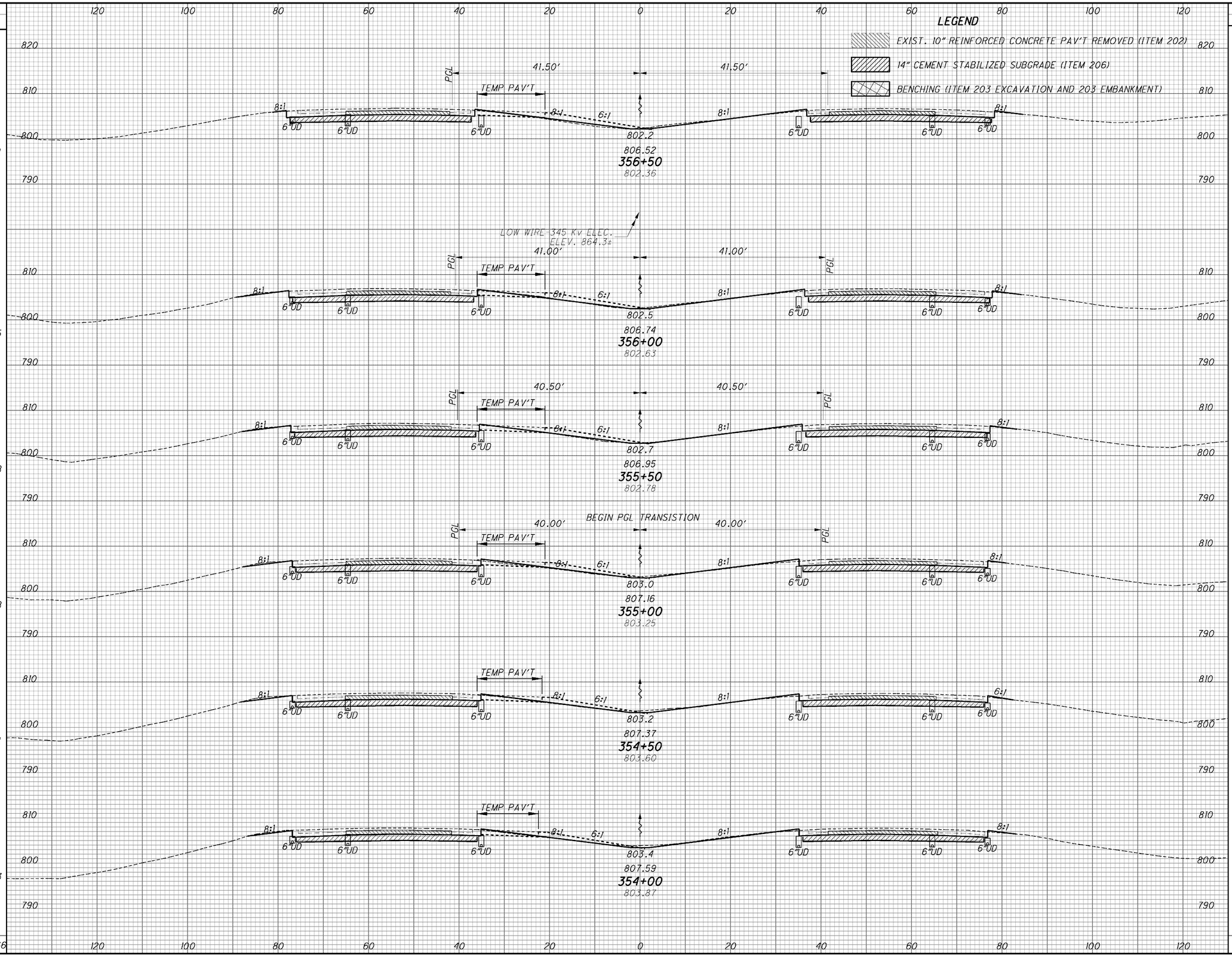

END AREA CUT	END AREA FILL	VOLUME CUT	VOLUME FILL
78	10		
		147	14
80	5		
		143	11
75	7		
		139	17
76	11		
		145	17
81	7		
		152	11
83	5		
		154	13
		880	83

CALCULATED

CHECKED

CROSS SECTIONS
354+00.00 TO STA. 356+50.00

ATB-90-14.25

Palmer ENGINEERING
PALMER ENGINEERING
11300 CORNELL PARK DR
CINCINNATI, OH 45242

O:\ODOT\ATB\25199\roadway\sheets\25199XS001.dgn 6/6/2009 9:45:39 AM DENNIS

SEEDING		END AREA		VOLUME		CALCULATED	CHECKED
END WIDTH	SQ. YDS.	CUT	FILL	CUT	FILL		
0	0			0	10		
106	294			0	0		
	564			70	11		
	858			137	20		
				137	30		

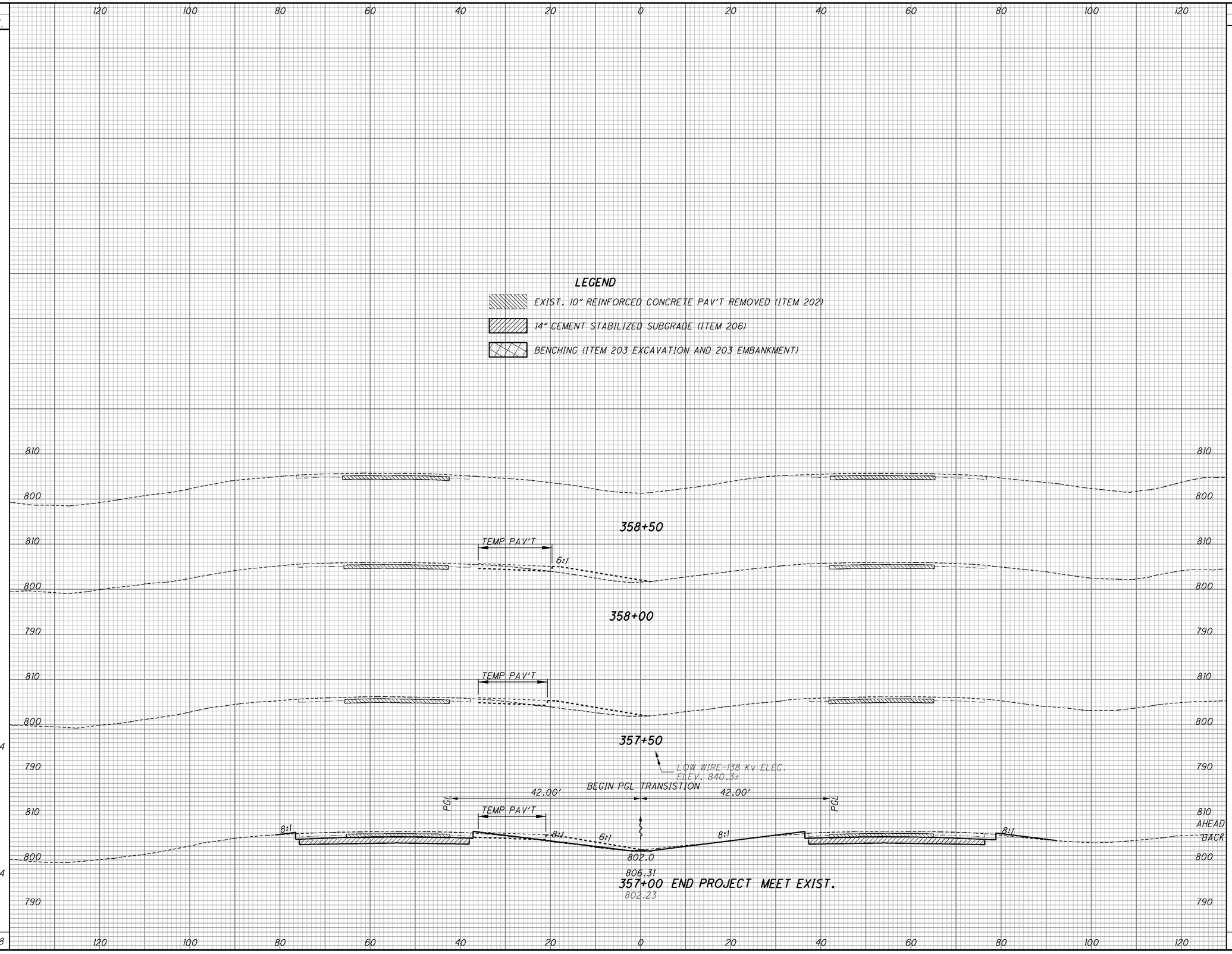

CROSS SECTIONS
STA. 357+00.00 TO STA. 358+50.00

ATB-90-14.25

243
437

Palmer ENGINEERING
PALMER ENGINEERING
11300 CORNELL PARK DR
ENGINEERING CINCINNATI, OH 45242

O:\ODOT\ATB\25199\roadway\sheets\25199XS001.dgn 6/6/2009 9:45:42 AM DENNIS

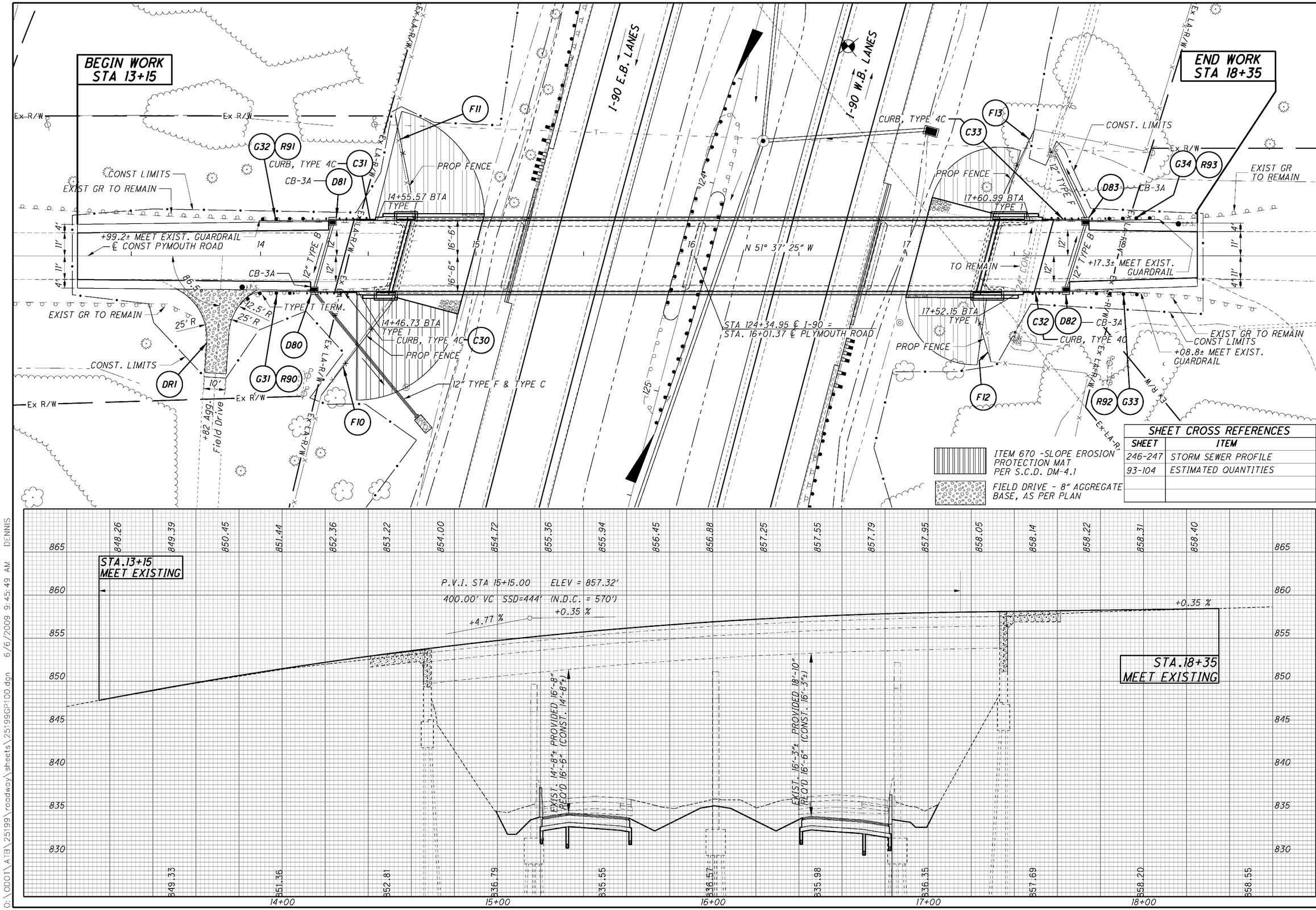

SHEET CROSS REFERENCES	
SHEET	ITEM
246-247	STORM SEWER PROFILE
93-104	ESTIMATED QUANTITIES

HORIZONTAL SCALE IN FEET 0 10 20

CALCULATED

CHECKED

PLAN AND PROFILE
PLYMOUTH ROAD

ATB-90-14.25

Palmer ENGINEERING
PALMER ENGINEERING
11300 CORNELL PARK DR
CINCINNATI, OH 45242

O:\ODOT\ATB\25199\roadway\sheets\25199GP100.dgn 6/6/2009 9:45:49 AM DENNIS

PALMER ENGINEERING
11300 CORNELL PARK DR
CINCINNATI, OH 45242

O:\ODOT\ATB\25199\roadway\sheets\25199XS100.dgn 6/6/2009 9:45:53 AM DENNIS

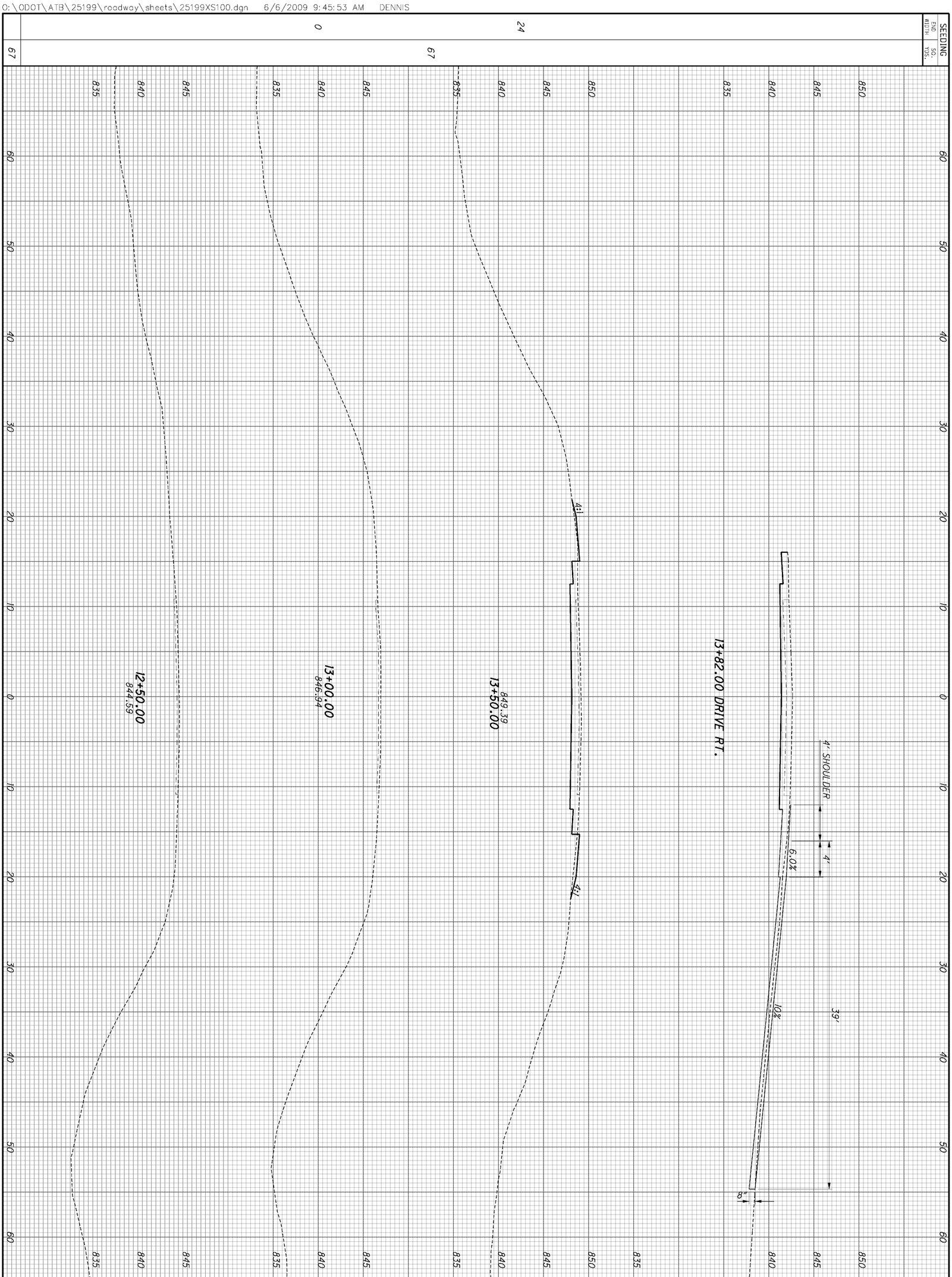

245
437

ATB-90-14.25

CROSS SECTIONS, PLYMOUTH ROAD
STA. 12+50 TO STA. 13+50

CALCULATED

CHECKED

SEEDING	
END WIDTH	SQ. YDS.
0	
0	
17	
12	
181	
198	

END AREA	
CUT	FILL
0	201
0	117
	25
	55
	136
	161

VOLUME	
CUT	FILL
	54
0	
5	
59	

CALCULATED

CHECKED

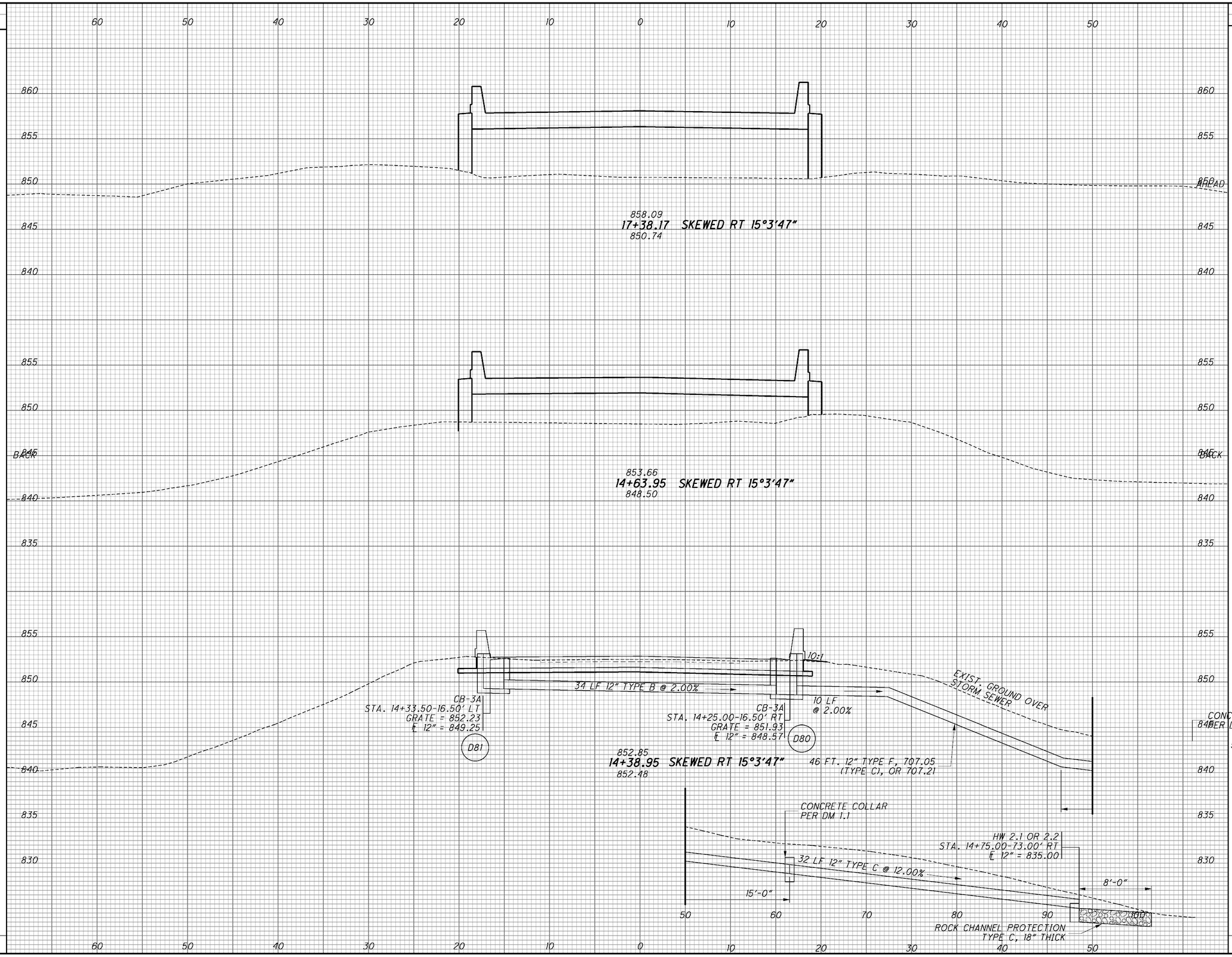

CROSS SECTIONS, PLYMOUTH ROAD STA. 14+38.95 TO STA. 17+38.17

ATB-90-14.25

Palmer ENGINEERING
PALMER ENGINEERING
11300 CORNELL PARK DR
ENGINEERING CINCINNATI, OH 45242

O:\ODOT\ATB\25199\roadway\sheets\25199XS100.dgn 6/6/2009 9:45:55 AM DENNIS

PALMER ENGINEERING
11300 CORNELL PARK DR
CINCINNATI, OH 45242

O:\ODOT\ATB\25199\roadway\sheets\25199XS100.dgn 6/6/2009 9:45:56 AM DENNIS

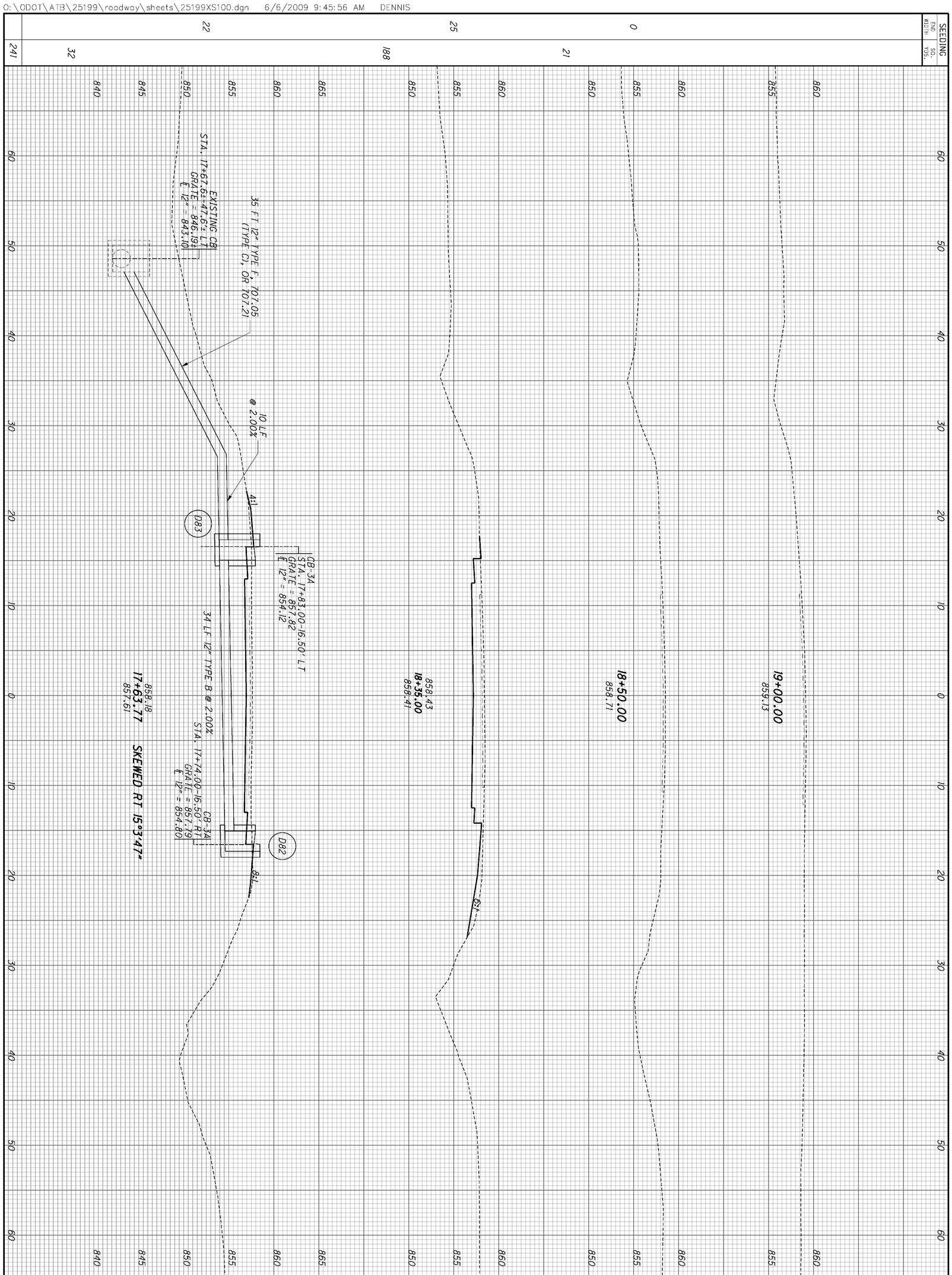

ATB-90-14.25	CROSS SECTIONS, PLYMOUTH ROAD STA. 17+63.77 TO STA. 19+00	CALCULATED CHECKED

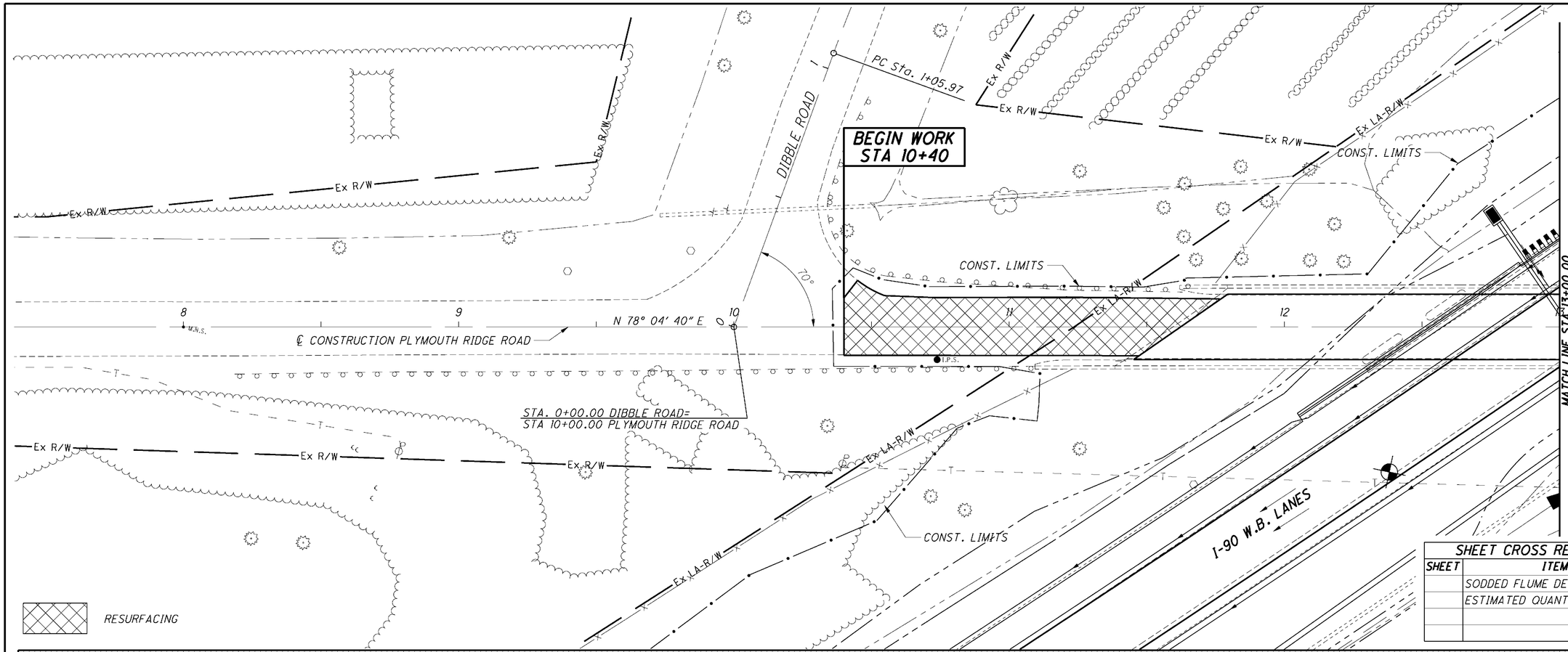

SHEET CROSS REFERENCES	
SHEET	ITEM
	SODDED FLUME DETAILS
	ESTIMATED QUANTITIES

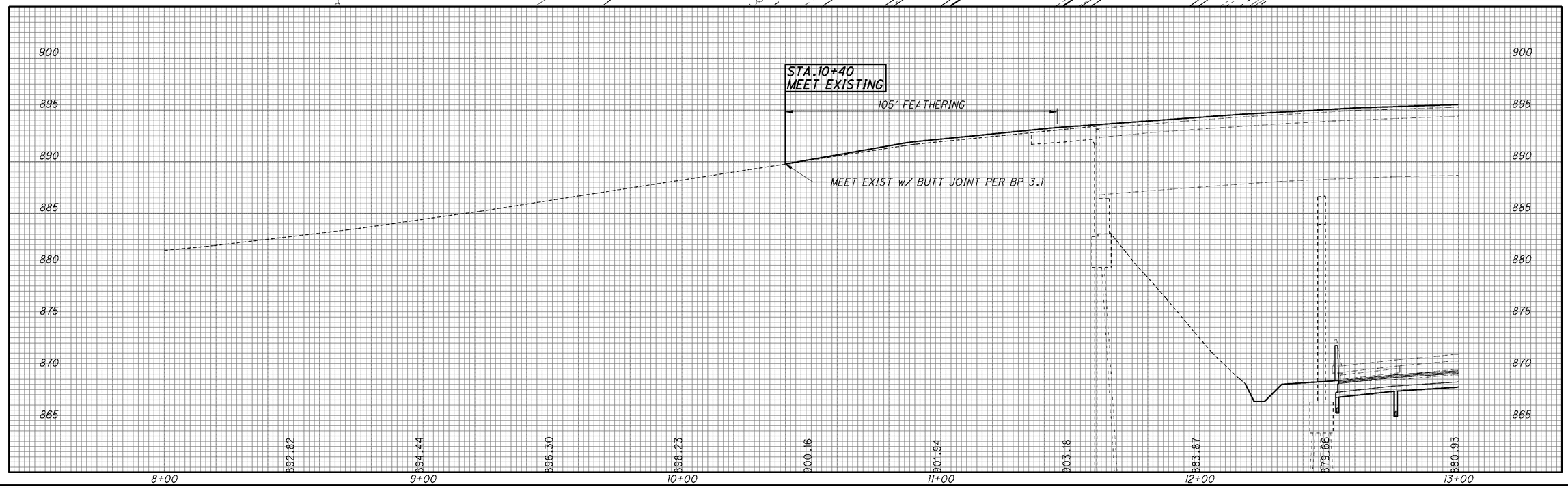

HORIZONTAL SCALE IN FEET
0 10 20 40
CALCULATED
CHECKED

PLAN AND PROFILE
PLYMOUTH RIDGE ROAD

ATB-90-14.25

248
437

Palmer ENGINEERING
PALMER ENGINEERING
11300 CORNELL PARK DR
ENGINEERING CINCINNATI, OH 45242

O:\ODOT\ATB\25199\roadway\sheets\25199GP200.dgn 6/6/2009 9:46:01 AM DENNIS

SHEET CROSS REFERENCES	
SHEET	ITEM
	SODDED FLUME DETAILS
	ESTIMATED QUANTITIES

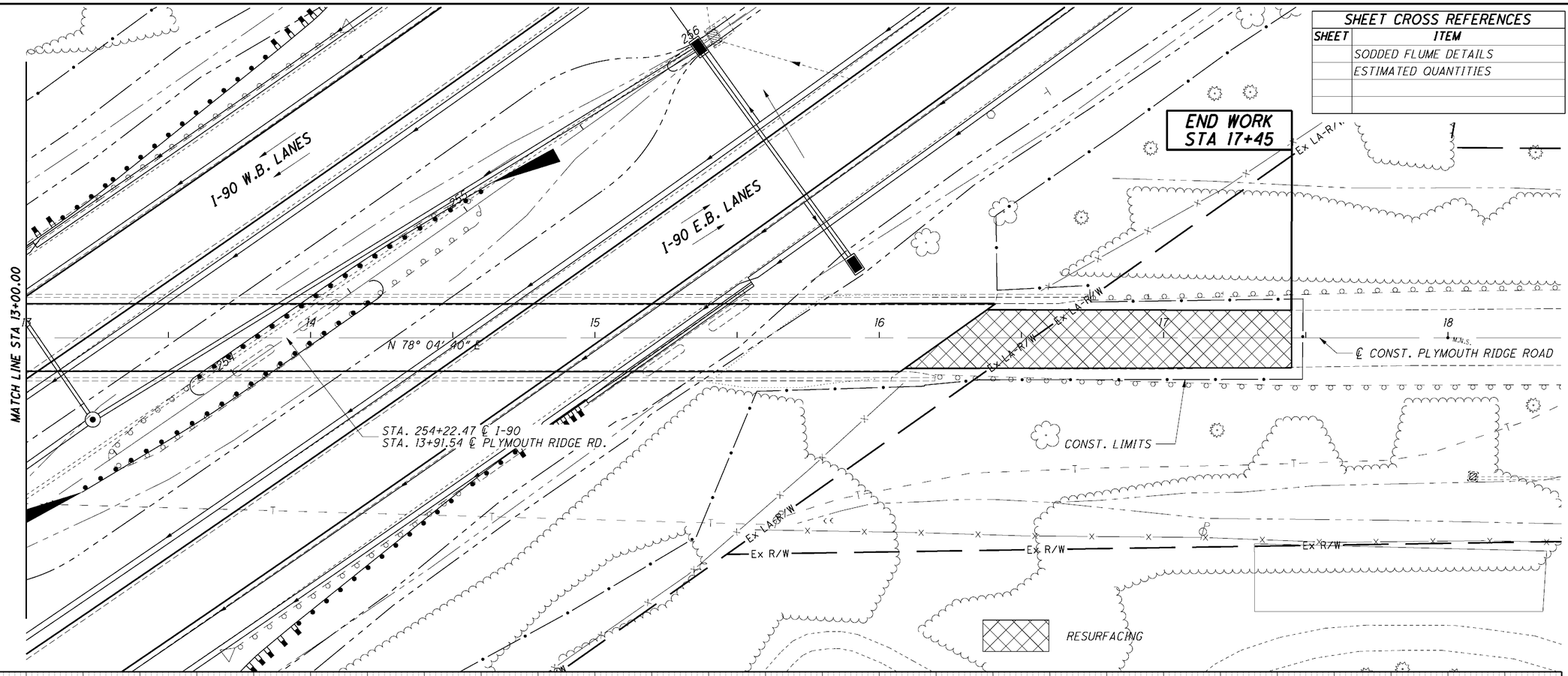

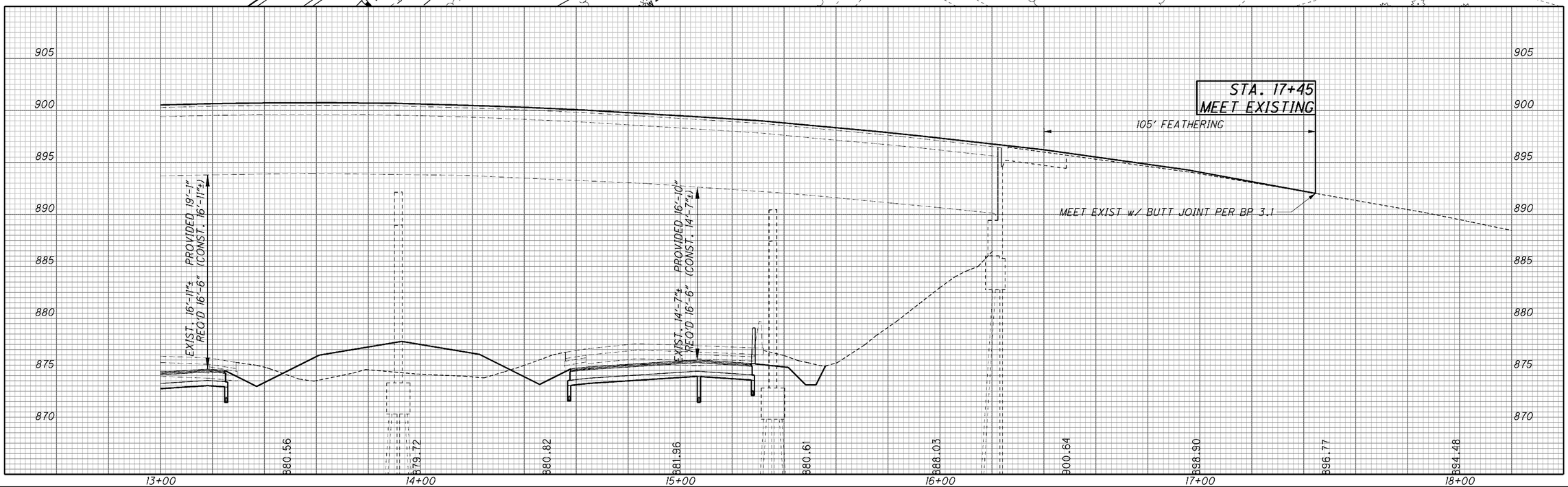

PLAN AND PROFILE
PLYMOUTH RIDGE ROAD

ATB-90-14.25

249
437

HORIZONTAL SCALE IN FEET
0 10 20 40

CALCULATED | CHECKED

Palmer ENGINEERING
PALMER ENGINEERING
11300 CORNELL PARK DR
ENGINEERING CINCINNATI, OH 45242

O:\ODOT\ATB\25199\roadway\sheets\25199GP201.dgn 6/6/2009 9:46:04 AM DENNIS

SUPERELEVATION TABLE

P.I. STA. 96+36.34 | Dc = 0° 28′ 00″

REMARKS	WESTBOUND OUTSIDE EDGE - ELEVATION	ELEVATION CORRECTION	CROSS SLOPE	TRANSITION RATE	WIDTH	WESTBOUND CENTERLINE OF LANES ELEVATION	ELEVATION CORRECTION	CROSS SLOPE	TRANSITION RATE	WIDTH	WESTBOUND INSIDE EDGE (PROFILE GRADE) ELEVATION	OFFSET	STATION	EASTBOUND INSIDE EDGE (PROFILE GRADE) OFFSET	ELEVATION	EASTBOUND CENTERLINE OF LANES WIDTH	TRANSITION RATE	CROSS SLOPE	ELEVATION CORRECTION	ELEVATION	EASTBOUND OUTSIDE EDGE - WIDTH	TRANSITION RATE	CROSS SLOPE	ELEVATION CORRECTION	ELEVATION	REMARKS
													PC STA.48+05.85													
END N.C.	868.85	0.00	-0.0160	250:1	12.00	869.04	0.19	0.0160	250:1	12.00	868.85	-42.00±	75+00.00 R 1	42.00±	868.85	12.00		0.0160	0.19	869.04	12.00	250:1	-0.0160	0.00	868.85	END N.C.
	869.28	-0.10	-0.0160	↑	12.00	869.47	0.09	0.0077	↑	12.00	869.38	-41.75	75+25.00 R 1	41.75	869.38	12.00		0.0160	0.19	869.57	12.00	↑	-0.0077	0.10	869.48	
½ FLAT	869.67	-0.19	-0.0160		12.00	869.87	0.00	0.0000		12.00	869.87	-41.52	75+48.00 R 1	41.52	869.87	12.00		0.0160	0.19	870.06	12.00		-0.0000	0.19	870.06	½ FLAT
	869.71	-0.20	-0.0160		12.00	869.90	-0.01	-0.0007	↓	12.00	869.91	-41.50	75+50.00 R 1	41.50	869.91	12.00		0.0160	0.19	870.10	12.00		0.0007	0.20	870.11	
	870.14	-0.30	-0.0160		12.00	870.33	-0.11	-0.0090	250:1	12.00	870.44	-41.25	75+75.00 R 1	41.25	870.44	12.00		0.0160	0.19	870.63	12.00		0.0090	0.30	870.74	
REV. CROWN	870.50	-0.38	-0.0160		12.00	870.69	-0.19	-0.0160	400:1	12.00	870.89	-41.04	75+96.00 R 1	41.04	870.89	12.00	400:1	0.0160	0.19	871.08	12.00		0.0160	0.38	871.27	REV. CROWN
	870.57	-0.40	-0.0167	↓	12.00	870.77	-0.20	-0.0167	↕	12.00	870.97	-41.00	76+00.00 R 1	41.00	870.97	12.00	↕	0.0167	0.20	871.17	12.00	↓	0.0167	0.40	871.37	
FULL S.E.	870.71	-0.43	-0.0180	250:1	12.00	870.92	-0.22	-0.0180	400:1	12.00	871.14	-40.92	76+08.00 R 1	40.92	871.14	12.00	400:1	0.0180	0.22	871.36	12.00	250:1	0.0180	0.43	871.57	FULL S.E.
	871.07	-0.43	-0.0180		12.00	871.28	-0.22	-0.0180		12.00	871.50	-40.75	76+25.00 R 1	40.75	871.50	12.00		0.0180	0.22	871.72	12.00		0.0180	0.43	871.93	
	871.60	-0.43	-0.0180		12.00	871.82	-0.22	-0.0180		12.00	872.03	-40.50	76+50.00 R 1	40.50	872.03	12.00		0.0180	0.22	872.25	12.00		0.0180	0.43	872.46	
	872.13	-0.43	-0.0180		12.00	872.35	-0.22	-0.0180		12.00	872.56	-40.25	76+75.00 R 1	40.25	872.56	12.00		0.0180	0.22	872.78	12.00		0.0180	0.43	872.99	
	872.66	-0.43	-0.0180		12.00	872.88	-0.22	-0.0180		12.00	873.09	-40.00	77+00.00 R 1	40.00	873.09	12.00		0.0180	0.22	873.31	12.00		0.0180	0.43	873.53	
	873.19	-0.43	-0.0180		12.00	873.41	-0.22	-0.0180		12.00	873.62	-40.00	77+25.00 R 1	40.00	873.62	12.00		0.0180	0.22	873.84	12.00		0.0180	0.43	874.06	
	873.72	-0.43	-0.0180		12.00	873.94	-0.22	-0.0180		12.00	874.16	-40.00	77+50.00 R 1	40.00	874.16	12.00		0.0180	0.22	874.37	12.00		0.0180	0.43	874.59	
	874.24	-0.43	-0.0180		12.00	874.46	-0.22	-0.0180		12.00	874.68	-40.00	77+75.00 R 1	40.00	874.68	12.00		0.0180	0.22	874.89	12.00		0.0180	0.43	875.11	
	874.75	-0.43	-0.0180		12.00	874.96	-0.22	-0.0180		12.00	875.18	-40.00	78+00.00 R 1	40.00	875.18	12.00		0.0180	0.22	875.40	12.00		0.0180	0.43	875.61	
	875.24	-0.43	-0.0180		12.00	875.46	-0.22	-0.0180		12.00	875.67	-40.00	78+25.00 R 1	40.00	875.67	12.00		0.0180	0.22	875.89	12.00		0.0180	0.43	876.10	
	875.71	-0.43	-0.0180		12.00	875.93	-0.22	-0.0180		12.00	876.15	-40.00	78+50.00 R 1	40.00	876.15	12.00		0.0180	0.22	876.36	12.00		0.0180	0.43	876.58	
	876.17	-0.43	-0.0180		12.00	876.39	-0.22	-0.0180		12.00	876.61	-40.00	78+75.00 R 1	40.00	876.61	12.00		0.0180	0.22	876.82	12.00		0.0180	0.43	877.04	
	876.62	-0.43	-0.0180		12.00	876.84	-0.22	-0.0180		12.00	877.05	-40.00	79+00.00 R 1	40.00	877.05	12.00		0.0180	0.22	877.27	12.00		0.0180	0.43	877.48	
	877.05	-0.43	-0.0180		12.00	877.27	-0.22	-0.0180		12.00	877.48	-40.00	79+25.00 R 1	40.00	877.48	12.00		0.0180	0.22	877.70	12.00		0.0180	0.43	877.91	
	877.47	-0.43	-0.0180		12.00	877.68	-0.22	-0.0180		12.00	877.90	-40.00	79+50.00 R 1	40.00	877.90	12.00		0.0180	0.22	878.11	12.00		0.0180	0.43	878.33	
	877.87	-0.43	-0.0180		12.00	878.08	-0.22	-0.0180		12.00	878.30	-40.00	79+75.00 R 1	40.00	878.30	12.00		0.0180	0.22	878.51	12.00		0.0180	0.43	878.73	
	878.25	-0.43	-0.0180		12.00	878.47	-0.22	-0.0180		12.00	878.68	-40.00	80+00.00 R 1	40.00	878.68	12.00		0.0180	0.22	878.90	12.00		0.0180	0.43	879.11	
	878.62	-0.43	-0.0180		12.00	878.84	-0.22	-0.0180		12.00	879.05	-40.00	80+25.00 R 1	40.00	879.05	12.00		0.0180	0.22	879.27	12.00		0.0180	0.43	879.48	
	878.98	-0.43	-0.0180		12.00	879.19	-0.22	-0.0180		12.00	879.41	-40.00	80+50.00 R 1	40.00	879.41	12.00		0.0180	0.22	879.62	12.00		0.0180	0.43	879.84	
	879.32	-0.43	-0.0180		12.00	879.53	-0.22	-0.0180		12.00	879.75	-40.00	80+75.00 R 1	40.00	879.75	12.00		0.0180	0.22	879.96	12.00		0.0180	0.43	880.18	
	879.64	-0.43	-0.0180		12.00	879.86	-0.22	-0.0180		12.00	880.07	-40.00	81+00.00 R 1	40.00	880.07	12.00		0.0180	0.22	880.29	12.00		0.0180	0.43	880.51	
	879.95	-0.43	-0.0180		12.00	880.17	-0.22	-0.0180		12.00	880.38	-40.00	81+25.00 R 1	40.00	880.38	12.00		0.0180	0.22	880.60	12.00		0.0180	0.43	880.82	
	880.25	-0.43	-0.0180		12.00	880.46	-0.22	-0.0180		12.00	880.68	-40.00	81+50.00 R 1	40.00	880.68	12.00		0.0180	0.22	880.89	12.00		0.0180	0.43	881.11	
	880.53	-0.43	-0.0180		12.00	880.74	-0.22	-0.0180		12.00	880.96	-40.00	81+75.00 R 1	40.00	880.96	12.00		0.0180	0.22	881.17	12.00		0.0180	0.43	881.39	
	880.79	-0.43	-0.0180		12.00	881.01	-0.22	-0.0180		12.00	881.22	-40.00	82+00.00 R 1	40.00	881.22	12.00		0.0180	0.22	881.44	12.00		0.0180	0.43	881.66	
	881.04	-0.43	-0.0180		12.00	881.26	-0.22	-0.0180		12.00	881.47	-40.00	82+25.00 R 1	40.00	881.47	12.00		0.0180	0.22	881.69	12.00		0.0180	0.43	881.91	
	881.28	-0.43	-0.0180		12.00	881.49	-0.22	-0.0180		12.00	881.71	-40.00	82+50.00 R 1	40.00	881.71	12.00		0.0180	0.22	881.92	12.00		0.0180	0.43	882.14	
	881.50	-0.43	-0.0180		12.00	881.71	-0.22	-0.0180		12.00	881.93	-40.00	82+75.00 R 1	40.00	881.93	12.00		0.0180	0.22	882.14	12.00		0.0180	0.43	882.36	
	881.70	-0.43	-0.0180		12.00	881.92	-0.22	-0.0180		12.00	882.13	-40.00	83+00.00 R 1	40.00	882.13	12.00		0.0180	0.22	882.35	12.00		0.0180	0.43	882.56	
	881.89	-0.43	-0.0180		12.00	882.11	-0.22	-0.0180		12.00	882.32	-40.00	83+25.00 R 1	40.00	882.32	12.00		0.0180	0.22	882.54	12.00		0.0180	0.43	882.75	
	882.07	-0.43	-0.0180		12.00	882.28	-0.22	-0.0180		12.00	882.50	-40.00	83+50.00 R 1	40.00	882.50	12.00		0.0180	0.22	882.71	12.00		0.0180	0.43	882.93	
	882.23	-0.43	-0.0180		12.00	882.44	-0.22	-0.0180		12.00	882.66	-40.00	83+75.00 R 1	40.00	882.66	12.00		0.0180	0.22	882.87	12.00		0.0180	0.43	883.09	
	882.37	-0.43	-0.0180		12.00	882.59	-0.22	-0.0180		12.00	882.80	-40.00	84+00.00 R 1	40.00	882.80	12.00		0.0180	0.22	883.02	12.00		0.0180	0.43	883.23	
	882.50	-0.43	-0.0180		12.00	882.72	-0.22	-0.0180		12.00	882.93	-40.00	84+25.00 R 1	40.00	882.93	12.00		0.0180	0.22	883.15	12.00		0.0180	0.43	883.36	
	882.61	-0.43	-0.0180		12.00	882.83	-0.22	-0.0180		12.00	883.05	-40.00	84+50.00 R 1	40.00	883.05	12.00		0.0180	0.22	883.26	12.00		0.0180	0.43	883.48	
	882.71	-0.43	-0.0180		12.00	882.93	-0.22	-0.0180		12.00	883.15	-40.00	84+75.00 R 1	40.00	883.15	12.00		0.0180	0.22	883.36	12.00		0.0180	0.43	883.58	
	882.80	-0.43	-0.0180		12.00	883.02	-0.22	-0.0180		12.00	883.23	-40.00	85+00.00 R 1	40.00	883.23	12.00		0.0180	0.22	883.45	12.00		0.0180	0.43	883.66	
	882.87	-0.43	-0.0180		12.00	883.08	-0.22	-0.0180		12.00	883.30	-40.00	85+25.00 R 1	40.00	883.30	12.00		0.0180	0.22	883.52	12.00		0.0180	0.43	883.73	
	882.92	-0.43	-0.0180		12.00	883.14	-0.22	-0.0180		12.00	883.36	-40.00	85+50.00 R 1	40.00	883.36	12.00		0.0180	0.22	883.57	12.00		0.0180	0.43	883.79	
	882.96	-0.43	-0.0180		12.00	883.18	-0.22	-0.0180		12.00	883.40	-40.00	85+75.00 R 1	40.00	883.40	12.00		0.0180	0.22	883.61	12.00		0.0180	0.43	883.83	
	882.99	-0.43	-0.0180		12.00	883.20	-0.22	-0.0180		12.00	883.42	-40.00	86+00.00 R 1	40.00	883.42	12.00		0.0180	0.22	883.64	12.00		0.0180	0.43	883.85	
	883.00	-0.43	-0.0180		12.00	883.21	-0.22	-0.0180		12.00	883.43	-40.00	86+25.00 R 1	40.00	883.43	12.00		0.0180	0.22	883.65	12.00		0.0180	0.43	883.86	
	882.99	-0.43	-0.0180		12.00	883.21	-0.22	-0.0180		12.00	883.42	-40.00	86+50.00 R 1	40.00	883.42	12.00		0.0180	0.22	883.64	12.00		0.0180	0.43	883.86	
	882.97	-0.43	-0.0180		12.00	883.19	-0.22	-0.0180		12.00	883.40	-40.00	86+75.00 R 1	40.00	883.40	12.00		0.0180	0.22	883.62	12.00		0.0180	0.43	883.84	
	882.94	-0.43	-0.0180		12.00	883.15	-0.22	-0.0180		12.00	883.37	-40.00	87+00.00 R 1	40.00	883.37	12.00		0.0180	0.22	883.58	12.00		0.0180	0.43	883.80	
	882.89	-0.43	-0.0180		12.00	883.10	-0.22	-0.0180		12.00	883.32	-40.00	87+25.00 R 1	40.00	883.32	12.00		0.0180	0.22	883.53	12.00		0.0180	0.43	883.75	
	882.82	-0.43	-0.0180		12.00	883.04	-0.22	-0.0180		12.00	883.25	-40.00	87+50.00 R 1	40.00	883.25	12.00		0.0180	0.22	883.47	12.00		0.0180	0.43	883.68	
	882.74	-0.43	-0.0180		12.00	882.96	-0.22	-0.0180		12.00	883.17	-40.00	87+75.00 R 1	40.00	883.17	12.00		0.0180	0.22	883.39	12.00		0.0180	0.43	883.60	

CALCULATED JF | CHECKED

SUPERELEVATION TABLE
IR-90

ATB-90-14.25

250
437

Palmer ENGINEERING
11300 CORNELL PARK DR
ENGINEERING CINCINNATI, OH 45242

O:\ODOT\ATB\25199\roadway\sheets\25199GE001.dgn 6/6/2009 9:46:07 AM DENNIS

SUPERELEVATION TABLE

P.I. STA. 96+36.34 | Dc = 0° 28′ 00″

REMARKS	WESTBOUND OUTSIDE EDGE - ELEVATION	ELEVATION CORRECTION	CROSS SLOPE	TRANSITION RATE	WIDTH	WESTBOUND CENTERLINE OF LANES ELEVATION	ELEVATION CORRECTION	CROSS SLOPE	TRANSITION RATE	WIDTH	WESTBOUND INSIDE EDGE (PROFILE GRADE) ELEVATION	OFFSET	STATION	EASTBOUND INSIDE EDGE (PROFILE GRADE) OFFSET	ELEVATION	EASTBOUND CENTERLINE OF LANES WIDTH	TRANSITION RATE	CROSS SLOPE	ELEVATION CORRECTION	ELEVATION	EASTBOUND OUTSIDE EDGE - WIDTH	TRANSITION RATE	CROSS SLOPE	ELEVATION CORRECTION	ELEVATION	REMARKS
	882.64	-0.43	-0.0180		12.00	882.86	-0.22	-0.0180		12.00	883.08	-40.00	88+00.00 R 1	40.00	883.08	12.00		0.0180	0.22	883.29	12.00		0.0180	0.43	883.51	
	882.53	-0.43	-0.0180		12.00	882.75	-0.22	-0.0180		12.00	882.97	-40.00	88+25.00 R 1	40.00	882.97	12.00		0.0180	0.22	883.18	12.00		0.0180	0.43	883.40	
	882.41	-0.43	-0.0180		12.00	882.62	-0.22	-0.0180		12.00	882.84	-40.00	88+50.00 R 1	40.00	882.84	12.00		0.0180	0.22	883.06	12.00		0.0180	0.43	883.27	
	882.27	-0.43	-0.0180		12.00	882.48	-0.22	-0.0180		12.00	882.70	-40.00	88+75.00 R 1	40.00	882.70	12.00		0.0180	0.22	882.92	12.00		0.0180	0.43	883.13	
	882.11	-0.43	-0.0180		12.00	882.33	-0.22	-0.0180		12.00	882.54	-40.00	89+00.00 R 1	40.00	882.54	12.00		0.0180	0.22	882.76	12.00		0.0180	0.43	882.98	
	881.94	-0.43	-0.0180		12.00	882.16	-0.22	-0.0180		12.00	882.37	-40.00	89+25.00 R 1	40.00	882.37	12.00		0.0180	0.22	882.59	12.00		0.0180	0.43	882.80	
	881.76	-0.43	-0.0180		12.00	881.97	-0.22	-0.0180		12.00	882.19	-40.00	89+50.00 R 1	40.00	882.19	12.00		0.0180	0.22	882.40	12.00		0.0180	0.43	882.62	
	881.55	-0.43	-0.0180		12.00	881.77	-0.22	-0.0180		12.00	881.99	-40.00	89+75.00 R 1	40.00	881.99	12.00		0.0180	0.22	882.20	12.00		0.0180	0.43	882.42	
	881.34	-0.43	-0.0180		12.00	881.55	-0.22	-0.0180		12.00	881.77	-40.00	90+00.00 R 1	40.00	881.77	12.00		0.0180	0.22	881.99	12.00		0.0180	0.43	882.20	
	881.11	-0.43	-0.0180		12.00	881.32	-0.22	-0.0180		12.00	881.54	-40.00	90+25.00 R 1	40.00	881.54	12.00		0.0180	0.22	881.76	12.00		0.0180	0.43	881.97	
	880.86	-0.43	-0.0180		12.00	881.08	-0.22	-0.0180		12.00	881.29	-40.00	90+50.00 R 1	40.00	881.29	12.00		0.0180	0.22	881.51	12.00		0.0180	0.43	881.73	
	880.60	-0.43	-0.0180		12.00	880.82	-0.22	-0.0180		12.00	881.03	-40.00	90+75.00 R 1	40.00	881.03	12.00		0.0180	0.22	881.25	12.00		0.0180	0.43	881.47	
	880.33	-0.43	-0.0180		12.00	880.54	-0.22	-0.0180		12.00	880.76	-40.00	91+00.00 R 1	40.00	880.76	12.00		0.0180	0.22	880.97	12.00		0.0180	0.43	881.19	
	880.03	-0.43	-0.0180		12.00	880.25	-0.22	-0.0180		12.00	880.47	-40.00	91+25.00 R 1	40.00	880.47	12.00		0.0180	0.22	880.68	12.00		0.0180	0.43	880.90	
	879.73	-0.43	-0.0180		12.00	879.94	-0.22	-0.0180		12.00	880.16	-40.00	91+50.00 R 1	40.00	880.16	12.00		0.0180	0.22	880.38	12.00		0.0180	0.43	880.59	
	879.41	-0.43	-0.0180		12.00	879.62	-0.22	-0.0180		12.00	879.84	-40.00	91+75.00 R 1	40.00	879.84	12.00		0.0180	0.22	880.06	12.00		0.0180	0.43	880.27	
	879.07	-0.43	-0.0180		12.00	879.29	-0.22	-0.0180		12.00	879.50	-40.00	92+00.00 R 1	40.00	879.50	12.00		0.0180	0.22	879.72	12.00		0.0180	0.43	879.94	
	878.72	-0.43	-0.0180		12.00	878.94	-0.22	-0.0180		12.00	879.15	-40.00	92+25.00 R 1	40.00	879.15	12.00		0.0180	0.22	879.37	12.00		0.0180	0.43	879.58	
	878.35	-0.43	-0.0180		12.00	878.57	-0.22	-0.0180		12.00	878.79	-40.00	92+50.00 R 1	40.00	878.79	12.00		0.0180	0.22	879.00	12.00		0.0180	0.43	879.22	
	877.97	-0.43	-0.0180		12.00	878.19	-0.22	-0.0180		12.00	878.41	-40.00	92+75.00 R 1	40.00	878.41	12.00		0.0180	0.22	878.62	12.00		0.0180	0.43	878.84	
	877.58	-0.43	-0.0180		12.00	877.79	-0.22	-0.0180		12.00	878.01	-40.00	93+00.00 R 1	40.00	878.01	12.00		0.0180	0.22	878.23	12.00		0.0180	0.43	878.44	
	877.17	-0.43	-0.0180		12.00	877.38	-0.22	-0.0180		12.00	877.60	-40.00	93+25.00 R 1	40.00	877.60	12.00		0.0180	0.22	877.81	12.00		0.0180	0.43	878.03	
	876.74	-0.43	-0.0180		12.00	876.96	-0.22	-0.0180		12.00	877.17	-40.00	93+50.00 R 1	40.00	877.17	12.00		0.0180	0.22	877.39	12.00		0.0180	0.43	877.60	
	876.30	-0.43	-0.0180		12.00	876.51	-0.22	-0.0180		12.00	876.73	-40.00	93+75.00 R 1	40.00	876.73	12.00		0.0180	0.22	876.95	12.00		0.0180	0.43	877.16	
	875.84	-0.43	-0.0180		12.00	876.06	-0.22	-0.0180		12.00	876.28	-40.00	94+00.00 R 1	40.00	876.28	12.00		0.0180	0.22	876.49	12.00		0.0180	0.43	876.71	
	875.37	-0.43	-0.0180		12.00	875.59	-0.22	-0.0180		12.00	875.80	-40.00	94+25.00 R 1	40.00	875.80	12.00		0.0180	0.22	876.02	12.00		0.0180	0.43	876.24	
	874.89	-0.43	-0.0180		12.00	875.10	-0.22	-0.0180		12.00	875.32	-40.00	94+50.00 R 1	40.00	875.32	12.00		0.0180	0.22	875.53	12.00		0.0180	0.43	875.75	
	874.38	-0.43	-0.0180		12.00	874.60	-0.22	-0.0180		12.00	874.82	-40.00	94+75.00 R 1	40.00	874.82	12.00		0.0180	0.22	875.03	12.00		0.0180	0.43	875.25	
	873.87	-0.43	-0.0180		12.00	874.08	-0.22	-0.0180		12.00	874.30	-40.00	95+00.00 R 1	40.00	874.30	12.00		0.0180	0.22	874.52	12.00		0.0180	0.43	874.73	
	873.34	-0.43	-0.0180		12.00	873.55	-0.22	-0.0180		12.00	873.77	-40.00	95+25.00 R 1	40.00	873.77	12.00		0.0180	0.22	873.99	12.00		0.0180	0.43	874.20	
	872.80	-0.43	-0.0180		12.00	873.01	-0.22	-0.0180		12.00	873.23	-40.00	95+50.00 R 1	40.00	873.23	12.00		0.0180	0.22	873.45	12.00		0.0180	0.43	873.66	
	872.26	-0.43	-0.0180		12.00	872.48	-0.22	-0.0180		12.00	872.69	-40.00	95+75.00 R 1	40.00	872.69	12.00		0.0180	0.22	872.91	12.00		0.0180	0.43	873.12	
	871.72	-0.43	-0.0180		12.00	871.94	-0.22	-0.0180		12.00	872.15	-40.00	96+00.00 R 1	40.00	872.15	12.00		0.0180	0.22	872.37	12.00		0.0180	0.43	872.59	
	871.18	-0.43	-0.0180		12.00	871.40	-0.22	-0.0180		12.00	871.61	-40.00	96+25.00 R 1	40.00	871.61	12.00		0.0180	0.22	871.83	12.00		0.0180	0.43	872.05	
	870.64	-0.43	-0.0180		12.00	870.86	-0.22	-0.0180		12.00	871.08	-40.00	96+50.00 R 1	40.00	871.08	12.00		0.0180	0.22	871.29	12.00		0.0180	0.43	871.51	
	870.11	-0.43	-0.0180		12.00	870.32	-0.22	-0.0180		12.00	870.54	-40.00	96+75.00 R 1	40.00	870.54	12.00		0.0180	0.22	870.75	12.00		0.0180	0.43	870.97	
	869.57	-0.43	-0.0180		12.00	869.78	-0.22	-0.0180		12.00	870.00	-40.00	97+00.00 R 1	40.00	870.00	12.00		0.0180	0.22	870.21	12.00		0.0180	0.43	870.43	
	869.03	-0.43	-0.0180		12.00	869.24	-0.22	-0.0180		12.00	869.46	-40.00	97+25.00 R 1	40.00	869.46	12.00		0.0180	0.22	869.68	12.00		0.0180	0.43	869.89	
	868.49	-0.43	-0.0180		12.00	868.70	-0.22	-0.0180		12.00	868.92	-40.00	97+50.00 R 1	40.00	868.92	12.00		0.0180	0.22	869.14	12.00		0.0180	0.43	869.35	
	867.95	-0.43	-0.0180		12.00	868.17	-0.22	-0.0180		12.00	868.38	-40.00	97+75.00 R 1	40.00	868.38	12.00		0.0180	0.22	868.60	12.00		0.0180	0.43	868.81	
	867.41	-0.43	-0.0180		12.00	867.63	-0.22	-0.0180		12.00	867.84	-40.00	98+00.00 R 1	40.00	867.84	12.00		0.0180	0.22	868.06	12.00		0.0180	0.43	868.28	
	866.87	-0.43	-0.0180		12.00	867.09	-0.22	-0.0180		12.00	867.30	-40.00	98+25.00 R 1	40.00	867.30	12.00		0.0180	0.22	867.52	12.00		0.0180	0.43	867.74	
	866.33	-0.43	-0.0180		12.00	866.55	-0.22	-0.0180		12.00	866.77	-40.00	98+50.00 R 1	40.00	866.77	12.00		0.0180	0.22	866.98	12.00		0.0180	0.43	867.20	
	865.80	-0.43	-0.0180		12.00	866.01	-0.22	-0.0180		12.00	866.23	-40.00	98+75.00 R 1	40.00	866.23	12.00		0.0180	0.22	866.44	12.00		0.0180	0.43	866.66	
	865.26	-0.43	-0.0180		12.00	865.47	-0.22	-0.0180		12.00	865.69	-40.00	99+00.00 R 1	40.00	865.69	12.00		0.0180	0.22	865.90	12.00		0.0180	0.43	866.12	
	864.72	-0.43	-0.0180		12.00	864.93	-0.22	-0.0180		12.00	865.15	-40.00	99+25.00 R 1	40.00	865.15	12.00		0.0180	0.22	865.37	12.00		0.0180	0.43	865.58	
	864.18	-0.43	-0.0180		12.00	864.39	-0.22	-0.0180		12.00	864.61	-40.00	99+50.00 R 1	40.00	864.61	12.00		0.0180	0.22	864.83	12.00		0.0180	0.43	865.04	
	863.64	-0.43	-0.0180		12.00	863.86	-0.22	-0.0180		12.00	864.07	-40.00	99+75.00 R 1	40.00	864.07	12.00		0.0180	0.22	864.29	12.00		0.0180	0.43	864.50	
	863.10	-0.43	-0.0180		12.00	863.32	-0.22	-0.0180		12.00	863.53	-40.00	100+00.00 R 1	40.00	863.53	12.00		0.0180	0.22	863.75	12.00		0.0180	0.43	863.97	
	862.56	-0.43	-0.0180		12.00	862.78	-0.22	-0.0180		12.00	862.99	-40.00	100+25.00 R 1	40.00	862.99	12.00		0.0180	0.22	863.21	12.00		0.0180	0.43	863.43	
	862.02	-0.43	-0.0180		12.00	862.24	-0.22	-0.0180		12.00	862.46	-40.00	100+50.00 R 1	40.00	862.46	12.00		0.0180	0.22	862.67	12.00		0.0180	0.43	862.89	
	861.49	-0.43	-0.0180		12.00	861.70	-0.22	-0.0180		12.00	861.92	-40.00	100+75.00 R 1	40.00	861.92	12.00		0.0180	0.22	862.13	12.00		0.0180	0.43	862.35	
	860.95	-0.43	-0.0180		12.00	861.16	-0.22	-0.0180		12.00	861.38	-40.00	101+00.00 R 1	40.00	861.38	12.00		0.0180	0.22	861.59	12.00		0.0180	0.43	861.81	
	860.41	-0.43	-0.0180		12.00	860.62	-0.22	-0.0180		12.00	860.84	-40.00	101+25.00 R 1	40.00	860.84	12.00		0.0180	0.22	861.06	12.00		0.0180	0.43	861.27	
	859.87	-0.43	-0.0180		12.00	860.08	-0.22	-0.0180		12.00	860.30	-40.00	101+50.00 R 1	40.00	860.30	12.00		0.0180	0.22	860.52	12.00		0.0180	0.43	860.73	

CALCULATED | CHECKED

SUPERELEVATION TABLE
IR-90

ATB-90-14.25

Palmer ENGINEERING
11300 CORNELL PARK DR
ENGINEERING CINCINNATI, OH 45242

O:\ODOT\ATB\25199\roadway\sheets\25199GE002.dgn 6/6/2009 9:46:14 AM DENNIS

SUPERELEVATION TABLE

P.I. STA. 96+36.34 | Dc = 0° 28′ 00″

REMARKS	WESTBOUND OUTSIDE EDGE - ELEVATION	ELEVATION CORRECTION	CROSS SLOPE	TRANSITION RATE	WIDTH	WESTBOUND CENTERLINE OF LANES ELEVATION	ELEVATION CORRECTION	CROSS SLOPE	TRANSITION RATE	WIDTH	WESTBOUND INSIDE EDGE (PROFILE GRADE) ELEVATION	OFFSET	STATION	EASTBOUND INSIDE EDGE (PROFILE GRADE) OFFSET	ELEVATION	EASTBOUND CENTERLINE OF LANES WIDTH	TRANSITION RATE	CROSS SLOPE	ELEVATION CORRECTION	ELEVATION	EASTBOUND OUTSIDE EDGE - WIDTH	TRANSITION RATE	CROSS SLOPE	ELEVATION CORRECTION	ELEVATION	REMARKS
	859.33	-0.43	-0.0180		12.00	859.55	-0.22	-0.0180		12.00	859.76	-40.00	101+75.00 R 1	40.00	859.76	12.00		0.0180	0.22	859.98	12.00		0.0180	0.43	860.19	
	858.79	-0.43	-0.0180		12.00	859.01	-0.22	-0.0180		12.00	859.22	-40.00	102+00.00 R 1	40.00	859.22	12.00		0.0180	0.22	859.44	12.00		0.0180	0.43	859.66	
	858.25	-0.43	-0.0180		12.00	858.47	-0.22	-0.0180		12.00	858.68	-40.00	102+25.00 R 1	40.00	858.68	12.00		0.0180	0.22	858.90	12.00		0.0180	0.43	859.12	
	857.71	-0.43	-0.0180		12.00	857.93	-0.22	-0.0180		12.00	858.15	-40.00	102+50.00 R 1	40.00	858.15	12.00		0.0180	0.22	858.36	12.00		0.0180	0.43	858.58	
	857.18	-0.43	-0.0180		12.00	857.39	-0.22	-0.0180		12.00	857.61	-40.00	102+75.00 R 1	40.00	857.61	12.00		0.0180	0.22	857.82	12.00		0.0180	0.43	858.04	
	856.64	-0.43	-0.0180		12.00	856.85	-0.22	-0.0180		12.00	857.07	-40.00	103+00.00 R 1	40.00	857.07	12.00		0.0180	0.22	857.28	12.00		0.0180	0.43	857.50	
	856.10	-0.43	-0.0180		12.00	856.31	-0.22	-0.0180		12.00	856.53	-40.00	103+25.00 R 1	40.00	856.53	12.00		0.0180	0.22	856.75	12.00		0.0180	0.43	856.96	
	855.56	-0.43	-0.0180		12.00	855.77	-0.22	-0.0180		12.00	855.99	-40.00	103+50.00 R 1	40.00	855.99	12.00		0.0180	0.22	856.21	12.00		0.0180	0.43	856.42	
	855.02	-0.43	-0.0180		12.00	855.24	-0.22	-0.0180		12.00	855.45	-40.00	103+75.00 R 1	40.00	855.45	12.00		0.0180	0.22	855.67	12.00		0.0180	0.43	855.88	
	854.48	-0.43	-0.0180		12.00	854.70	-0.22	-0.0180		12.00	854.91	-40.00	104+00.00 R 1	40.00	854.91	12.00		0.0180	0.22	855.13	12.00		0.0180	0.43	855.35	
	853.94	-0.43	-0.0180		12.00	854.16	-0.22	-0.0180		12.00	854.37	-40.00	104+25.00 R 1	40.00	854.37	12.00		0.0180	0.22	854.59	12.00		0.0180	0.43	854.81	
	853.40	-0.43	-0.0180		12.00	853.62	-0.22	-0.0180		12.00	853.84	-40.00	104+50.00 R 1	40.00	853.84	12.00		0.0180	0.22	854.05	12.00		0.0180	0.43	854.27	
	852.87	-0.43	-0.0180		12.00	853.08	-0.22	-0.0180		12.00	853.30	-40.00	104+75.00 R 1	40.00	853.30	12.00		0.0180	0.22	853.51	12.00		0.0180	0.43	853.73	
	852.33	-0.43	-0.0180		12.00	852.54	-0.22	-0.0180		12.00	852.76	-40.00	105+00.00 R 1	40.00	852.76	12.00		0.0180	0.22	852.97	12.00		0.0180	0.43	853.19	
	851.79	-0.43	-0.0180		12.00	852.00	-0.22	-0.0180		12.00	852.22	-40.00	105+25.00 R 1	40.00	852.22	12.00		0.0180	0.22	852.44	12.00		0.0180	0.43	852.65	
	851.25	-0.43	-0.0180		12.00	851.46	-0.22	-0.0180		12.00	851.68	-40.00	105+50.00 R 1	40.00	851.68	12.00		0.0180	0.22	851.90	12.00		0.0180	0.43	852.11	
	850.71	-0.43	-0.0180		12.00	850.93	-0.22	-0.0180		12.00	851.14	-40.00	105+75.00 R 1	40.00	851.14	12.00		0.0180	0.22	851.36	12.00		0.0180	0.43	851.57	
	850.17	-0.43	-0.0180		12.00	850.39	-0.22	-0.0180		12.00	850.60	-40.00	106+00.00 R 1	40.00	850.60	12.00		0.0180	0.22	850.82	12.00		0.0180	0.43	851.04	
	849.63	-0.43	-0.0180		12.00	849.85	-0.22	-0.0180		12.00	850.06	-40.00	106+25.00 R 1	40.00	850.06	12.00		0.0180	0.22	850.28	12.00		0.0180	0.43	850.50	
	849.09	-0.43	-0.0180		12.00	849.31	-0.22	-0.0180		12.00	849.53	-40.00	106+50.00 R 1	40.00	849.53	12.00		0.0180	0.22	849.74	12.00		0.0180	0.43	849.96	
	848.56	-0.43	-0.0180		12.00	848.77	-0.22	-0.0180		12.00	848.99	-40.00	106+75.00 R 1	40.00	848.99	12.00		0.0180	0.22	849.20	12.00		0.0180	0.43	849.42	
	848.02	-0.43	-0.0180		12.00	848.23	-0.22	-0.0180		12.00	848.45	-40.00	107+00.00 R 1	40.00	848.45	12.00		0.0180	0.22	848.66	12.00		0.0180	0.43	848.88	
	847.49	-0.43	-0.0180		12.00	847.70	-0.22	-0.0180		12.00	847.92	-40.00	107+25.00 R 1	40.00	847.92	12.00		0.0180	0.22	848.14	12.00		0.0180	0.43	848.35	
	846.98	-0.43	-0.0180		12.00	847.19	-0.22	-0.0180		12.00	847.41	-40.00	107+50.00 R 1	40.00	847.41	12.00		0.0180	0.22	847.62	12.00		0.0180	0.43	847.84	
	846.49	-0.43	-0.0180		12.00	846.70	-0.22	-0.0180		12.00	846.92	-40.00	107+75.00 R 1	40.00	846.92	12.00		0.0180	0.22	847.13	12.00		0.0180	0.43	847.35	
	846.01	-0.43	-0.0180		12.00	846.23	-0.22	-0.0180		12.00	846.44	-40.00	108+00.00 R 1	40.00	846.44	12.00		0.0180	0.22	846.66	12.00		0.0180	0.43	846.88	
	845.56	-0.43	-0.0180		12.00	845.77	-0.22	-0.0180		12.00	845.99	-40.00	108+25.00 R 1	40.00	845.99	12.00		0.0180	0.22	846.21	12.00		0.0180	0.43	846.42	
	845.12	-0.43	-0.0180		12.00	845.34	-0.22	-0.0180		12.00	845.56	-40.00	108+50.00 R 1	40.00	845.56	12.00		0.0180	0.22	845.77	12.00		0.0180	0.43	845.99	
	844.71	-0.43	-0.0180		12.00	844.92	-0.22	-0.0180		12.00	845.14	-40.00	108+75.00 R 1	40.00	845.14	12.00		0.0180	0.22	845.36	12.00		0.0180	0.43	845.57	
	844.31	-0.43	-0.0180		12.00	844.53	-0.22	-0.0180		12.00	844.74	-40.00	109+00.00 R 1	40.00	844.74	12.00		0.0180	0.22	844.96	12.00		0.0180	0.43	845.17	
	843.93	-0.43	-0.0180		12.00	844.15	-0.22	-0.0180		12.00	844.36	-40.00	109+25.00 R 1	40.00	844.36	12.00		0.0180	0.22	844.58	12.00		0.0180	0.43	844.80	
	843.57	-0.43	-0.0180		12.00	843.79	-0.22	-0.0180		12.00	844.00	-40.00	109+50.00 R 1	40.00	844.00	12.00		0.0180	0.22	844.22	12.00		0.0180	0.43	844.44	
	843.23	-0.43	-0.0180		12.00	843.45	-0.22	-0.0180		12.00	843.66	-40.00	109+75.00 R 1	40.00	843.66	12.00		0.0180	0.22	843.88	12.00		0.0180	0.43	844.09	
	842.91	-0.43	-0.0180		12.00	843.12	-0.22	-0.0180		12.00	843.34	-40.00	110+00.00 R 1	40.00	843.34	12.00		0.0180	0.22	843.56	12.00		0.0180	0.43	843.77	
	842.61	-0.43	-0.0180		12.00	842.82	-0.22	-0.0180		12.00	843.04	-40.00	110+25.00 R 1	40.00	843.04	12.00		0.0180	0.22	843.25	12.00		0.0180	0.43	843.47	
	842.32	-0.43	-0.0180		12.00	842.54	-0.22	-0.0180		12.00	842.75	-40.00	110+50.00 R 1	40.00	842.75	12.00		0.0180	0.22	842.97	12.00		0.0180	0.43	843.19	
	842.06	-0.43	-0.0180		12.00	842.27	-0.22	-0.0180		12.00	842.49	-40.00	110+75.00 R 1	40.00	842.49	12.00		0.0180	0.22	842.70	12.00		0.0180	0.43	842.92	
	841.81	-0.43	-0.0180		12.00	842.03	-0.22	-0.0180		12.00	842.24	-40.00	111+00.00 R 1	40.00	842.24	12.00		0.0180	0.22	842.46	12.00		0.0180	0.43	842.67	
	841.58	-0.43	-0.0180		12.00	841.80	-0.22	-0.0180		12.00	842.01	-40.00	111+25.00 R 1	40.00	842.01	12.00		0.0180	0.22	842.23	12.00		0.0180	0.43	842.45	
	841.37	-0.43	-0.0180		12.00	841.59	-0.22	-0.0180		12.00	841.81	-40.00	111+50.00 R 1	40.00	841.81	12.00		0.0180	0.22	842.02	12.00		0.0180	0.43	842.24	
	841.18	-0.43	-0.0180		12.00	841.40	-0.22	-0.0180		12.00	841.62	-40.00	111+75.00 R 1	40.00	841.62	12.00		0.0180	0.22	841.83	12.00		0.0180	0.43	842.05	
	841.01	-0.43	-0.0180		12.00	841.23	-0.22	-0.0180		12.00	841.44	-40.00	112+00.00 R 1	40.00	841.44	12.00		0.0180	0.22	841.66	12.00		0.0180	0.43	841.88	
	840.86	-0.43	-0.0180		12.00	841.08	-0.22	-0.0180		12.00	841.29	-40.00	112+25.00 R 1	40.00	841.29	12.00		0.0180	0.22	841.51	12.00		0.0180	0.43	841.72	
	840.73	-0.43	-0.0180		12.00	840.94	-0.22	-0.0180		12.00	841.16	-40.00	112+50.00 R 1	40.00	841.16	12.00		0.0180	0.22	841.37	12.00		0.0180	0.43	841.59	
	840.61	-0.43	-0.0180		12.00	840.83	-0.22	-0.0180		12.00	841.04	-40.00	112+75.00 R 1	40.00	841.04	12.00		0.0180	0.22	841.26	12.00		0.0180	0.43	841.48	
	840.52	-0.43	-0.0180		12.00	840.73	-0.22	-0.0180		12.00	840.95	-40.00	113+00.00 R 1	40.00	840.95	12.00		0.0180	0.22	841.16	12.00		0.0180	0.43	841.38	
	840.43	-0.43	-0.0180		12.00	840.65	-0.22	-0.0180		12.00	840.86	-40.00	113+25.00 R 1	40.00	840.86	12.00		0.0180	0.22	841.08	12.00		0.0180	0.43	841.29	
	840.34	-0.43	-0.0180		12.00	840.56	-0.22	-0.0180		12.00	840.78	-40.00	113+50.00 R 1	40.00	840.78	12.00		0.0180	0.22	840.99	12.00		0.0180	0.43	841.21	
	840.26	-0.43	-0.0180		12.00	840.47	-0.22	-0.0180		12.00	840.69	-40.00	113+75.00 R 1	40.00	840.69	12.00		0.0180	0.22	840.91	12.00		0.0180	0.43	841.12	
	840.17	-0.43	-0.0180		12.00	840.39	-0.22	-0.0180		12.00	840.60	-40.00	114+00.00 R 1	40.00	840.60	12.00		0.0180	0.22	840.82	12.00		0.0180	0.43	841.04	
	840.09	-0.43	-0.0180		12.00	840.30	-0.22	-0.0180		12.00	840.52	-40.00	114+25.00 R 1	40.00	840.52	12.00		0.0180	0.22	840.73	12.00		0.0180	0.43	840.95	
	840.00	-0.43	-0.0180		12.00	840.21	-0.22	-0.0180		12.00	840.43	-40.00	114+50.00 R 1	40.00	840.43	12.00		0.0180	0.22	840.65	12.00		0.0180	0.43	840.86	
	839.91	-0.43	-0.0180		12.00	840.13	-0.22	-0.0180		12.00	840.34	-40.00	114+75.00 R 1	40.00	840.34	12.00		0.0180	0.22	840.56	12.00		0.0180	0.43	840.78	
	839.83	-0.43	-0.0180		12.00	840.04	-0.22	-0.0180		12.00	840.26	-40.00	115+00.00 R 1	40.00	840.26	12.00		0.0180	0.22	840.47	12.00		0.0180	0.43	840.69	
	839.74	-0.43	-0.0180		12.00	839.96	-0.22	-0.0180		12.00	840.17	-40.00	115+25.00 R 1	40.00	840.17	12.00		0.0180	0.22	840.39	12.00		0.0180	0.43	840.60	

CALCULATED | CHECKED

SUPERELEVATION TABLE
IR-90

ATB-90-14.25

Palmer ENGINEERING
11300 CORNELL PARK DR
ENGINEERING CINCINNATI, OH 45242

O:\ODOT\ATB\25199\roadway\sheets\25199GE003.dgn 6/6/2009 9:46:20 AM DENNIS

SUPERELEVATION TABLE

P.I. STA. 96+36.34 | Dc = 0° 28′ 00″

REMARKS	WESTBOUND OUTSIDE EDGE - ELEVATION	ELEVATION CORRECTION	CROSS SLOPE	TRANSITION RATE	WIDTH	WESTBOUND CENTERLINE OF LANES ELEVATION	ELEVATION CORRECTION	CROSS SLOPE	TRANSITION RATE	WIDTH	WESTBOUND INSIDE EDGE (PROFILE GRADE) ELEVATION	OFFSET	STATION	EASTBOUND INSIDE EDGE (PROFILE GRADE) OFFSET	ELEVATION	EASTBOUND CENTERLINE OF LANES WIDTH	TRANSITION RATE	CROSS SLOPE	ELEVATION CORRECTION	ELEVATION	EASTBOUND OUTSIDE EDGE - WIDTH	TRANSITION RATE	CROSS SLOPE	ELEVATION CORRECTION	ELEVATION	REMARKS
	839.65	-0.43	-0.0180		12.00	839.87	-0.22	-0.0180		12.00	840.09	-40.00	115+50.00 R 1	40.00	840.09	12.00		0.0180	0.22	840.30	12.00		0.0180	0.43	840.52	
	839.57	-0.43	-0.0180		12.00	839.78	-0.22	-0.0180		12.00	840.00	-40.00	115+75.00 R 1	40.00	840.00	12.00		0.0180	0.22	840.22	12.00		0.0180	0.43	840.43	
	839.48	-0.43	-0.0180		12.00	839.70	-0.22	-0.0180		12.00	839.91	-40.00	116+00.00 R 1	40.00	839.91	12.00		0.0180	0.22	840.13	12.00		0.0180	0.43	840.35	
	839.39	-0.43	-0.0180		12.00	839.61	-0.22	-0.0180		12.00	839.83	-40.00	116+25.00 R 1	40.00	839.83	12.00		0.0180	0.22	840.04	12.00		0.0180	0.43	840.26	
	839.31	-0.43	-0.0180		12.00	839.52	-0.22	-0.0180		12.00	839.74	-40.00	116+50.00 R 1	40.00	839.74	12.00		0.0180	0.22	839.96	12.00		0.0180	0.43	840.17	
	839.22	-0.43	-0.0180		12.00	839.44	-0.22	-0.0180		12.00	839.65	-40.00	116+75.00 R 1	40.00	839.65	12.00		0.0180	0.22	839.87	12.00		0.0180	0.43	840.09	
	839.14	-0.43	-0.0180		12.00	839.35	-0.22	-0.0180		12.00	839.57	-40.00	117+00.00 R 1	40.00	839.57	12.00		0.0180	0.22	839.78	12.00		0.0180	0.43	840.00	
	839.05	-0.43	-0.0180		12.00	839.27	-0.22	-0.0180		12.00	839.48	-40.00	117+25.00 R 1	40.00	839.48	12.00		0.0180	0.22	839.70	12.00		0.0180	0.43	839.91	
	838.96	-0.43	-0.0180		12.00	839.18	-0.22	-0.0180		12.00	839.40	-40.00	117+50.00 R 1	40.00	839.40	12.00		0.0180	0.22	839.61	12.00		0.0180	0.43	839.83	
	838.88	-0.43	-0.0180		12.00	839.09	-0.22	-0.0180		12.00	839.31	-40.00	117+75.00 R 1	40.00	839.31	12.00		0.0180	0.22	839.53	12.00		0.0180	0.43	839.74	
	838.79	-0.43	-0.0180		12.00	839.01	-0.22	-0.0180		12.00	839.22	-40.00	118+00.00 R 1	40.00	839.22	12.00		0.0180	0.22	839.44	12.00		0.0180	0.43	839.66	
	838.70	-0.43	-0.0180		12.00	838.92	-0.22	-0.0180		12.00	839.14	-40.00	118+25.00 R 1	40.00	839.14	12.00		0.0180	0.22	839.35	12.00		0.0180	0.43	839.57	
	838.62	-0.43	-0.0180		12.00	838.83	-0.22	-0.0180		12.00	839.05	-40.00	118+50.00 R 1	40.00	839.05	12.00		0.0180	0.22	839.27	12.00		0.0180	0.43	839.48	
	838.53	-0.43	-0.0180		12.00	838.75	-0.22	-0.0180		12.00	838.96	-40.00	118+75.00 R 1	40.00	838.96	12.00		0.0180	0.22	839.18	12.00		0.0180	0.43	839.40	
	838.45	-0.43	-0.0180		12.00	838.66	-0.22	-0.0180		12.00	838.88	-40.00	119+00.00 R 1	40.00	838.88	12.00		0.0180	0.22	839.09	12.00		0.0180	0.43	839.31	
	838.36	-0.43	-0.0180		12.00	838.58	-0.22	-0.0180		12.00	838.79	-40.00	119+25.00 R 1	40.00	838.79	12.00		0.0180	0.22	839.01	12.00		0.0180	0.43	839.22	
	838.27	-0.43	-0.0180		12.00	838.49	-0.22	-0.0180		12.00	838.71	-40.00	119+50.00 R 1	40.00	838.71	12.00		0.0180	0.22	838.92	12.00		0.0180	0.43	839.14	
	838.18	-0.43	-0.0180		12.00	838.40	-0.22	-0.0180		12.00	838.61	-40.00	119+75.00 R 1	40.00	838.61	12.00		0.0180	0.22	838.83	12.00		0.0180	0.43	839.05	
	838.07	-0.43	-0.0180		12.00	838.29	-0.22	-0.0180		12.00	838.50	-40.00	120+00.00 R 1	40.00	838.50	12.00		0.0180	0.22	838.72	12.00		0.0180	0.43	838.93	
	837.93	-0.43	-0.0180		12.00	838.15	-0.22	-0.0180		12.00	838.36	-40.00	120+25.00 R 1	40.00	838.36	12.00		0.0180	0.22	838.58	12.00		0.0180	0.43	838.80	
	837.77	-0.43	-0.0180		12.00	837.98	-0.22	-0.0180		12.00	838.20	-40.00	120+50.00 R 1	40.00	838.20	12.00		0.0180	0.22	838.42	12.00		0.0180	0.43	838.63	
	837.58	-0.43	-0.0180		12.00	837.80	-0.22	-0.0180		12.00	838.01	-40.00	120+75.00 R 1	40.00	838.01	12.00		0.0180	0.22	838.23	12.00		0.0180	0.43	838.44	
	837.37	-0.43	-0.0180		12.00	837.58	-0.22	-0.0180		12.00	837.80	-40.00	121+00.00 R 1	40.00	837.80	12.00		0.0180	0.22	838.02	12.00		0.0180	0.43	838.23	
	837.13	-0.43	-0.0180		12.00	837.35	-0.22	-0.0180		12.00	837.56	-40.00	121+25.00 R 1	40.00	837.56	12.00		0.0180	0.22	837.78	12.00		0.0180	0.43	838.00	
	836.87	-0.43	-0.0180		12.00	837.09	-0.22	-0.0180		12.00	837.30	-40.00	121+50.00 R 1	40.00	837.30	12.00		0.0180	0.22	837.52	12.00		0.0180	0.43	837.73	
	836.58	-0.43	-0.0180		12.00	836.80	-0.22	-0.0180		12.00	837.02	-40.00	121+75.00 R 1	40.00	837.02	12.00		0.0180	0.22	837.23	12.00		0.0180	0.43	837.45	
	836.27	-0.43	-0.0180		12.00	836.49	-0.22	-0.0180		12.00	836.70	-40.00	122+00.00 R 1	40.00	836.70	12.00		0.0180	0.22	836.92	12.00		0.0180	0.43	837.14	
	835.94	-0.43	-0.0180		12.00	836.15	-0.22	-0.0180		12.00	836.37	-40.00	122+25.00 R 1	40.00	836.37	12.00		0.0180	0.22	836.58	12.00		0.0180	0.43	836.80	
	835.58	-0.43	-0.0180		12.00	835.79	-0.22	-0.0180		12.00	836.01	-40.00	122+50.00 R 1	40.00	836.01	12.00		0.0180	0.22	836.23	12.00		0.0180	0.43	836.44	
	835.23	-0.43	-0.0180		12.00	835.45	-0.22	-0.0180		12.00	835.66	-40.00	122+75.00 R 1	40.00	835.66	12.00		0.0180	0.22	835.88	12.00		0.0180	0.43	836.10	
	834.92	-0.43	-0.0180		12.00	835.14	-0.22	-0.0180		12.00	835.35	-40.00	123+00.00 R 1	40.00	835.35	12.00		0.0180	0.22	835.57	12.00		0.0180	0.43	835.78	
	834.64	-0.43	-0.0180		12.00	834.86	-0.22	-0.0180		12.00	835.08	-40.00	123+25.00 R 1	40.00	835.08	12.00		0.0180	0.22	835.29	12.00		0.0180	0.43	835.51	
	834.40	-0.43	-0.0180		12.00	834.62	-0.22	-0.0180		12.00	834.83	-40.00	123+50.00 R 1	40.00	834.83	12.00		0.0180	0.22	835.05	12.00		0.0180	0.43	835.27	
	834.19	-0.43	-0.0180		12.00	834.41	-0.22	-0.0180		12.00	834.63	-40.00	123+75.00 R 1	40.00	834.63	12.00		0.0180	0.22	834.84	12.00		0.0180	0.43	835.06	
	834.02	-0.43	-0.0180		12.00	834.24	-0.22	-0.0180		12.00	834.45	-40.00	124+00.00 R 1	40.00	834.45	12.00		0.0180	0.22	834.67	12.00		0.0180	0.43	834.88	
	833.88	-0.43	-0.0180		12.00	834.10	-0.22	-0.0180		12.00	834.31	-40.00	124+25.00 R 1	40.00	834.31	12.00		0.0180	0.22	834.53	12.00		0.0180	0.43	834.75	
	833.78	-0.43	-0.0180		12.00	833.99	-0.22	-0.0180		12.00	834.21	-40.00	124+50.00 R 1	40.00	834.21	12.00		0.0180	0.22	834.42	12.00		0.0180	0.43	834.64	
	833.71	-0.43	-0.0180		12.00	833.92	-0.22	-0.0180		12.00	834.14	-40.00	124+75.00 R 1	40.00	834.14	12.00		0.0180	0.22	834.35	12.00		0.0180	0.43	834.57	
	833.67	-0.43	-0.0180		12.00	833.89	-0.22	-0.0180		12.00	834.10	-40.00	125+00.00 R 1	40.00	834.10	12.00		0.0180	0.22	834.32	12.00		0.0180	0.43	834.54	
	833.67	-0.43	-0.0180		12.00	833.89	-0.22	-0.0180		12.00	834.10	-40.00	125+25.00 R 1	40.00	834.10	12.00		0.0180	0.22	834.32	12.00		0.0180	0.43	834.53	
	833.70	-0.43	-0.0180		12.00	833.92	-0.22	-0.0180		12.00	834.14	-40.00	125+50.00 R 1	40.00	834.14	12.00		0.0180	0.22	834.35	12.00		0.0180	0.43	834.57	
	833.77	-0.43	-0.0180		12.00	833.99	-0.22	-0.0180		12.00	834.20	-40.00	125+75.00 R 1	40.00	834.20	12.00		0.0180	0.22	834.42	12.00		0.0180	0.43	834.64	
	833.88	-0.43	-0.0180		12.00	834.09	-0.22	-0.0180		12.00	834.31	-40.00	126+00.00 R 1	40.00	834.31	12.00		0.0180	0.22	834.52	12.00		0.0180	0.43	834.74	
	834.01	-0.43	-0.0180		12.00	834.23	-0.22	-0.0180		12.00	834.44	-40.00	126+25.00 R 1	40.00	834.44	12.00		0.0180	0.22	834.66	12.00		0.0180	0.43	834.88	
	834.17	-0.43	-0.0180		12.00	834.39	-0.22	-0.0180		12.00	834.60	-40.00	126+50.00 R 1	40.00	834.60	12.00		0.0180	0.22	834.82	12.00		0.0180	0.43	835.04	
	834.33	-0.43	-0.0180		12.00	834.54	-0.22	-0.0180		12.00	834.76	-40.00	126+75.00 R 1	40.00	834.76	12.00		0.0180	0.22	834.97	12.00		0.0180	0.43	835.19	
	834.46	-0.43	-0.0180		12.00	834.68	-0.22	-0.0180		12.00	834.90	-40.00	127+00.00 R 1	40.00	834.90	12.00		0.0180	0.22	835.11	12.00		0.0180	0.43	835.33	
	834.59	-0.43	-0.0180		12.00	834.80	-0.22	-0.0180		12.00	835.02	-40.00	127+25.00 R 1	40.00	835.02	12.00		0.0180	0.22	835.23	12.00		0.0180	0.43	835.45	
	834.69	-0.43	-0.0180		12.00	834.91	-0.22	-0.0180		12.00	835.12	-40.00	127+50.00 R 1	40.00	835.12	12.00		0.0180	0.22	835.34	12.00		0.0180	0.43	835.56	
	834.78	-0.43	-0.0180		12.00	835.00	-0.22	-0.0180		12.00	835.21	-40.00	127+75.00 R 1	40.00	835.21	12.00		0.0180	0.22	835.43	12.00		0.0180	0.43	835.65	
	834.86	-0.43	-0.0180		12.00	835.07	-0.22	-0.0180		12.00	835.29	-40.00	128+00.00 R 1	40.00	835.29	12.00		0.0180	0.22	835.50	12.00		0.0180	0.43	835.72	
	834.91	-0.43	-0.0180		12.00	835.13	-0.22	-0.0180		12.00	835.35	-40.00	128+25.00 R 1	40.00	835.35	12.00		0.0180	0.22	835.56	12.00		0.0180	0.43	835.78	
	834.96	-0.43	-0.0180		12.00	835.17	-0.22	-0.0180		12.00	835.39	-40.00	128+50.00 R 1	40.00	835.39	12.00		0.0180	0.22	835.60	12.00		0.0180	0.43	835.82	
	834.98	-0.43	-0.0180		12.00	835.20	-0.22	-0.0180		12.00	835.41	-40.00	128+75.00 R 1	40.00	835.41	12.00		0.0180	0.22	835.63	12.00		0.0180	0.43	835.85	
	834.99	-0.43	-0.0180		12.00	835.21	-0.22	-0.0180		12.00	835.43	-40.00	129+00.00 R 1	40.00	835.43	12.00		0.0180	0.22	835.64	12.00		0.0180	0.43	835.86	

CALCULATED | CHECKED

SUPERELEVATION TABLE
IR-90

ATB-90-14.25

Palmer ENGINEERING
11300 CORNELL PARK DR
ENGINEERING CINCINNATI, OH 45242

O:\ODOT\ATB\25199\roadway\sheets\25199GE004.dgn 6/6/2009 9:47:35 AM DENNIS

SUPERELEVATION TABLE

P.I. STA. 96+36.34 | Dc = 0° 28′ 00″

REMARKS	WESTBOUND OUTSIDE EDGE - ELEVATION	ELEVATION CORRECTION	CROSS SLOPE	TRANSITION RATE	WIDTH	WESTBOUND CENTERLINE OF LANES ELEVATION	ELEVATION CORRECTION	CROSS SLOPE	TRANSITION RATE	WIDTH	WESTBOUND INSIDE EDGE (PROFILE GRADE) ELEVATION	OFFSET	STATION	EASTBOUND INSIDE EDGE (PROFILE GRADE) OFFSET	ELEVATION	EASTBOUND CENTERLINE OF LANES WIDTH	TRANSITION RATE	CROSS SLOPE	ELEVATION CORRECTION	ELEVATION	EASTBOUND OUTSIDE EDGE - WIDTH	TRANSITION RATE	CROSS SLOPE	ELEVATION CORRECTION	ELEVATION	REMARKS
	834.99	-0.43	-0.0180		12.00	835.20	-0.22	-0.0180		12.00	835.42	-40.00	129+25.00 R 1	40.00	835.42	12.00		0.0180	0.22	835.64	12.00		0.0180	0.43	835.85	
	834.97	-0.43	-0.0180		12.00	835.18	-0.22	-0.0180		12.00	835.40	-40.00	129+50.00 R 1	40.00	835.40	12.00		0.0180	0.22	835.62	12.00		0.0180	0.43	835.83	
	834.93	-0.43	-0.0180		12.00	835.15	-0.22	-0.0180		12.00	835.36	-40.00	129+75.00 R 1	40.00	835.36	12.00		0.0180	0.22	835.58	12.00		0.0180	0.43	835.79	
	834.88	-0.43	-0.0180		12.00	835.09	-0.22	-0.0180		12.00	835.31	-40.00	130+00.00 R 1	40.00	835.31	12.00		0.0180	0.22	835.53	12.00		0.0180	0.43	835.74	
	834.81	-0.43	-0.0180		12.00	835.03	-0.22	-0.0180		12.00	835.24	-40.00	130+25.00 R 1	40.00	835.24	12.00		0.0180	0.22	835.46	12.00		0.0180	0.43	835.67	
	834.73	-0.43	-0.0180		12.00	834.94	-0.22	-0.0180		12.00	835.16	-40.00	130+50.00 R 1	40.00	835.16	12.00		0.0180	0.22	835.37	12.00		0.0180	0.43	835.59	
	834.63	-0.43	-0.0180		12.00	834.85	-0.22	-0.0180		12.00	835.06	-40.00	130+75.00 R 1	40.00	835.06	12.00		0.0180	0.22	835.28	12.00		0.0180	0.43	835.50	
	834.54	-0.43	-0.0180		12.00	834.76	-0.22	-0.0180		12.00	834.97	-40.00	131+00.00 R 1	40.00	834.97	12.00		0.0180	0.22	835.19	12.00		0.0180	0.43	835.40	
	834.45	-0.43	-0.0180		12.00	834.66	-0.22	-0.0180		12.00	834.88	-40.00	131+25.00 R 1	40.00	834.88	12.00		0.0180	0.22	835.10	12.00		0.0180	0.43	835.31	
	834.36	-0.43	-0.0180		12.00	834.57	-0.22	-0.0180		12.00	834.79	-40.00	131+50.00 R 1	40.00	834.79	12.00		0.0180	0.22	835.00	12.00		0.0180	0.43	835.22	
	834.26	-0.43	-0.0180		12.00	834.48	-0.22	-0.0180		12.00	834.70	-40.00	131+75.00 R 1	40.00	834.70	12.00		0.0180	0.22	834.91	12.00		0.0180	0.43	835.13	
	834.17	-0.43	-0.0180		12.00	834.39	-0.22	-0.0180		12.00	834.60	-40.00	132+00.00 R 1	40.00	834.60	12.00		0.0180	0.22	834.82	12.00		0.0180	0.43	835.04	
	834.08	-0.43	-0.0180		12.00	834.30	-0.22	-0.0180		12.00	834.51	-40.00	132+25.00 R 1	40.00	834.51	12.00		0.0180	0.22	834.73	12.00		0.0180	0.43	834.94	
	833.99	-0.43	-0.0180		12.00	834.20	-0.22	-0.0180		12.00	834.42	-40.00	132+50.00 R 1	40.00	834.42	12.00		0.0180	0.22	834.63	12.00		0.0180	0.43	834.85	
	833.89	-0.43	-0.0180		12.00	834.11	-0.22	-0.0180		12.00	834.33	-40.00	132+75.00 R 1	40.00	834.33	12.00		0.0180	0.22	834.54	12.00		0.0180	0.43	834.76	
	833.80	-0.43	-0.0180		12.00	834.02	-0.22	-0.0180		12.00	834.23	-40.00	133+00.00 R 1	40.00	834.23	12.00		0.0180	0.22	834.45	12.00		0.0180	0.43	834.67	
	833.71	-0.43	-0.0180		12.00	833.93	-0.22	-0.0180		12.00	834.14	-40.00	133+25.00 R 1	40.00	834.14	12.00		0.0180	0.22	834.36	12.00		0.0180	0.43	834.57	
	833.62	-0.43	-0.0180		12.00	833.83	-0.22	-0.0180		12.00	834.05	-40.00	133+50.00 R 1	40.00	834.05	12.00		0.0180	0.22	834.27	12.00		0.0180	0.43	834.48	
	833.53	-0.43	-0.0180		12.00	833.74	-0.22	-0.0180		12.00	833.96	-40.00	133+75.00 R 1	40.00	833.96	12.00		0.0180	0.22	834.17	12.00		0.0180	0.43	834.39	
	833.43	-0.43	-0.0180		12.00	833.65	-0.22	-0.0180		12.00	833.87	-40.00	134+00.00 R 1	40.00	833.87	12.00		0.0180	0.22	834.08	12.00		0.0180	0.43	834.30	
	833.34	-0.43	-0.0180		12.00	833.56	-0.22	-0.0180		12.00	833.77	-40.00	134+25.00 R 1	40.00	833.77	12.00		0.0180	0.22	833.99	12.00		0.0180	0.43	834.20	
	833.25	-0.43	-0.0180		12.00	833.46	-0.22	-0.0180		12.00	833.68	-40.00	134+50.00 R 1	40.00	833.68	12.00		0.0180	0.22	833.90	12.00		0.0180	0.43	834.11	
	833.16	-0.43	-0.0180		12.00	833.37	-0.22	-0.0180		12.00	833.59	-40.00	134+75.00 R 1	40.00	833.59	12.00		0.0180	0.22	833.80	12.00		0.0180	0.43	834.02	
	833.06	-0.43	-0.0180		12.00	833.28	-0.22	-0.0180		12.00	833.50	-40.00	135+00.00 R 1	40.00	833.50	12.00		0.0180	0.22	833.71	12.00		0.0180	0.43	833.93	
	832.97	-0.43	-0.0180		12.00	833.19	-0.22	-0.0180		12.00	833.40	-40.00	135+25.00 R 1	40.00	833.40	12.00		0.0180	0.22	833.62	12.00		0.0180	0.43	833.84	
	832.88	-0.43	-0.0180		12.00	833.10	-0.22	-0.0180		12.00	833.31	-40.00	135+50.00 R 1	40.00	833.31	12.00		0.0180	0.22	833.53	12.00		0.0180	0.43	833.74	
	832.79	-0.43	-0.0180		12.00	833.00	-0.22	-0.0180		12.00	833.22	-40.00	135+75.00 R 1	40.00	833.22	12.00		0.0180	0.22	833.43	12.00		0.0180	0.43	833.65	
	832.69	-0.43	-0.0180		12.00	832.91	-0.22	-0.0180		12.00	833.13	-40.00	136+00.00 R 1	40.00	833.13	12.00		0.0180	0.22	833.34	12.00		0.0180	0.43	833.56	
	832.60	-0.43	-0.0180		12.00	832.82	-0.22	-0.0180		12.00	833.03	-40.00	136+25.00 R 1	40.00	833.03	12.00		0.0180	0.22	833.25	12.00		0.0180	0.43	833.47	
	832.51	-0.43	-0.0180		12.00	832.73	-0.22	-0.0180		12.00	832.94	-40.00	136+50.00 R 1	40.00	832.94	12.00		0.0180	0.22	833.16	12.00		0.0180	0.43	833.37	
	832.42	-0.43	-0.0180		12.00	832.63	-0.22	-0.0180		12.00	832.85	-40.00	136+75.00 R 1	40.00	832.85	12.00		0.0180	0.22	833.07	12.00		0.0180	0.43	833.28	
	832.33	-0.43	-0.0180		12.00	832.54	-0.22	-0.0180		12.00	832.76	-40.00	137+00.00 R 1	40.00	832.76	12.00		0.0180	0.22	832.97	12.00		0.0180	0.43	833.19	
	832.23	-0.43	-0.0180		12.00	832.45	-0.22	-0.0180		12.00	832.67	-40.00	137+25.00 R 1	40.00	832.67	12.00		0.0180	0.22	832.88	12.00		0.0180	0.43	833.10	
	832.14	-0.43	-0.0180		12.00	832.36	-0.22	-0.0180		12.00	832.57	-40.00	137+50.00 R 1	40.00	832.57	12.00		0.0180	0.22	832.79	12.00		0.0180	0.43	833.00	
	832.05	-0.43	-0.0180		12.00	832.26	-0.22	-0.0180		12.00	832.48	-40.00	137+75.00 R 1	40.00	832.48	12.00		0.0180	0.22	832.70	12.00		0.0180	0.43	832.91	
	831.95	-0.43	-0.0180		12.00	832.17	-0.22	-0.0180		12.00	832.38	-40.00	138+00.00 R 1	40.00	832.38	12.00		0.0180	0.22	832.60	12.00		0.0180	0.43	832.82	
	831.84	-0.43	-0.0180		12.00	832.06	-0.22	-0.0180		12.00	832.27	-40.00	138+25.00 R 1	40.00	832.27	12.00		0.0180	0.22	832.49	12.00		0.0180	0.43	832.71	
	831.72	-0.43	-0.0180		12.00	831.93	-0.22	-0.0180		12.00	832.15	-40.00	138+50.00 R 1	40.00	832.15	12.00		0.0180	0.22	832.37	12.00		0.0180	0.43	832.58	
	831.58	-0.43	-0.0180		12.00	831.80	-0.22	-0.0180		12.00	832.01	-40.00	138+75.00 R 1	40.00	832.01	12.00		0.0180	0.22	832.23	12.00		0.0180	0.43	832.44	
	831.43	-0.43	-0.0180		12.00	831.65	-0.22	-0.0180		12.00	831.86	-40.00	139+00.00 R 1	40.00	831.86	12.00		0.0180	0.22	832.08	12.00		0.0180	0.43	832.29	
	831.27	-0.43	-0.0180		12.00	831.48	-0.22	-0.0180		12.00	831.70	-40.00	139+25.00 R 1	40.00	831.70	12.00		0.0180	0.22	831.91	12.00		0.0180	0.43	832.13	
	831.09	-0.43	-0.0180		12.00	831.30	-0.22	-0.0180		12.00	831.52	-40.00	139+50.00 R 1	40.00	831.52	12.00		0.0180	0.22	831.74	12.00		0.0180	0.43	831.95	
	830.90	-0.43	-0.0180		12.00	831.11	-0.22	-0.0180		12.00	831.33	-40.00	139+75.00 R 1	40.00	831.33	12.00		0.0180	0.22	831.54	12.00		0.0180	0.43	831.76	
END FULL S.E.	830.77	-0.43	-0.0180	250:1	12.00	830.99	-0.22	-0.0180	400:1	12.00	831.21	-40.00	139+90.06 R 1	40.00	831.21	12.00	400:1	0.0180	0.22	831.42	12.00	250:1	0.0180	0.43	831.64	END FULL S.E.
	830.73	-0.39	-0.0163	↑	12.00	830.93	-0.20	-0.0163	400:1	12.00	831.12	-40.00	140+00.00 R 1	40.00	831.12	12.00	400:1	0.0163	0.20	831.32	12.00	↑	0.0163	0.39	831.51	
REV. CROWN	830.72	-0.38	-0.0160		12.00	830.91	-0.19	-0.0160	250:1	12.00	831.10	-40.00	140+02.06 R 1	40.00	831.10	12.00		0.0160	0.19	831.30	12.00		0.0160	0.38	831.49	REV. CROWN
									↑		STATION EQUATION 140+10.06 BK.=143+80.10 AH.															
PT	830.68	-0.35	-0.0160		12.00	830.88	-0.16	-0.0133		12.00	831.04	-40.00	143+80.10 R 2	40.00	831.04	12.00		0.0160	0.19	831.23	12.00		0.0133	0.35	831.39	PT
	830.59	-0.27	-0.0160		12.00	830.78	-0.08	-0.0067		12.00	830.86	-40.00	144+00.00 R 2	40.00	830.86	12.00		0.0160	0.19	831.05	12.00		0.0067	0.27	831.13	
½ FLAT	830.48	-0.19	-0.0160		12.00	830.67	0.00	0.0000		12.00	830.67	-40.00	144+20.10 R 2	40.00	830.67	12.00		0.0160	0.19	830.86	12.00		0.0000	0.19	830.86	½ FLAT
	830.45	-0.17	-0.0160		12.00	830.64	0.02	0.0016		12.00	830.62	-40.00	144+25.00 R 2	40.00	830.62	12.00		0.0160	0.19	830.81	12.00		-0.0016	0.17	830.79	
	830.30	-0.07	-0.0160	↓	12.00	830.49	0.12	0.0100	↓	12.00	830.37	-40.00	144+50.00 R 2	40.00	830.37	12.00		0.0160	0.19	830.57	12.00	↓	-0.0100	0.07	830.45	
BEGIN N.C.	830.18	0.00	-0.0160	250:1	12.00	830.38	0.19	0.0160	250:1	12.00	830.18	-40.00	144+68.10 R 2	40.00	830.18	12.00		0.0160	0.19	830.38	12.00	250:1	-0.0160	0.00	830.18	BEGIN N.C.

CALCULATED | CHECKED

SUPERELEVATION TABLE
IR-90

ATB-90-14.25

Palmer ENGINEERING
PALMER ENGINEERING
11300 CORNELL PARK DR
ENGINEERING CINCINNATI, OH 45242

O:\ODOT\ATB\25199\roadway\sheets\25199GE005.dgn 6/6/2009 9:47:41 AM DENNIS

SUPERELEVATION TABLE

P.I. STA. 170+68.62 | Dc = 0° 28′ 00″

REMARKS	WESTBOUND OUTSIDE EDGE - ELEVATION	ELEVATION CORRECTION	CROSS SLOPE	TRANSITION RATE	WIDTH	WESTBOUND CENTERLINE OF LANES ELEVATION	ELEVATION CORRECTION	CROSS SLOPE	TRANSITION RATE	WIDTH	WESTBOUND INSIDE EDGE (PROFILE GRADE) ELEVATION	OFFSET	STATION	EASTBOUND INSIDE EDGE (PROFILE GRADE) OFFSET	ELEVATION	EASTBOUND CENTERLINE OF LANES WIDTH	TRANSITION RATE	CROSS SLOPE	ELEVATION CORRECTION	ELEVATION	EASTBOUND OUTSIDE EDGE - WIDTH	TRANSITION RATE	CROSS SLOPE	ELEVATION CORRECTION	ELEVATION	REMARKS
END N.C.	822.32	0.00	-0.0160	250:1	12.00	822.52	0.19	0.0160		12.00	822.32	-40.00	149+66.54 R 2	40.00	822.32	12.00	250:1	0.0160	0.19	822.52	12.00	250:1	-0.0160	0.00	822.32	END N.C.
	822.20	0.03	-0.0132	↑	12.00	822.36	0.19	0.0160		12.00	822.16	-40.00	149+75.00 R 2	40.00	822.16	12.00	↑	0.0132	0.16	822.32	12.00	↑	-0.0160	-0.03	822.13	
	821.82	0.13	-0.0048		12.00	821.88	0.19	0.0160		12.00	821.69	-40.00	150+00.00 R 2	40.00	821.69	12.00		0.0048	0.06	821.75	12.00		-0.0160	-0.13	821.56	
½ FLAT	821.61	0.19	0.0000		12.00	821.61	0.19	0.0160		12.00	821.41	-40.00	150+14.54 R 2	40.00	821.41	12.00		0.0000	0.00	821.41	12.00		-0.0160	-0.19	821.22	½ FLAT
	821.45	0.23	0.0035		12.00	821.41	0.19	0.0160		12.00	821.22	-40.00	150+25.00 R 2	40.00	821.22	12.00		-0.0035	-0.04	821.17	12.00		-0.0160	-0.23	820.98	
	821.08	0.33	0.0118		12.00	820.93	0.19	0.0160		12.00	820.74	-40.00	150+50.00 R 2	40.00	820.74	12.00		-0.0118	-0.14	820.60	12.00		-0.0160	-0.33	820.41	
PC	821.01	0.35	0.0133		12.00	820.85	0.19	0.0160		12.00	820.65	-40.00	150+54.54 R 2	40.00	820.65	12.00		-0.0133	-0.16	820.49	12.00		-0.0160	-0.35	820.30	PC
REV. CROWN	820.89	0.38	0.0160		12.00	820.70	0.19	0.0160		12.00	820.50	-40.00	150+62.54 R 2	40.00	820.50	12.00	250:1	-0.0160	-0.19	820.31	12.00		-0.0160	-0.38	820.12	REV. CROWN
FULL S.E.	820.71	0.43	0.0180	250:1	12.00	820.49	0.22	0.0180	400:1	12.00	820.28	-40.00	150+74.54 R 2	40.00	820.28	12.00	400:1	-0.0180	-0.22	820.06	12.00	250:1	-0.0180	-0.43	819.84	FULL S.E.
	820.70	0.43	0.0180		12.00	820.48	0.22	0.0180		12.00	820.27	-40.00	150+75.00 R 2	40.00	820.27	12.00		-0.0180	-0.22	820.05	12.00		-0.0180	-0.43	819.84	
	820.23	0.43	0.0180		12.00	820.01	0.22	0.0180		12.00	819.79	-40.00	151+00.00 R 2	40.00	819.79	12.00		-0.0180	-0.22	819.58	12.00		-0.0180	-0.43	819.36	
	819.75	0.43	0.0180		12.00	819.54	0.22	0.0180		12.00	819.32	-40.00	151+25.00 R 2	40.00	819.32	12.00		-0.0180	-0.22	819.10	12.00		-0.0180	-0.43	818.89	
	819.28	0.43	0.0180		12.00	819.06	0.22	0.0180		12.00	818.84	-40.00	151+50.00 R 2	40.00	818.84	12.00		-0.0180	-0.22	818.63	12.00		-0.0180	-0.43	818.41	
	818.80	0.43	0.0180		12.00	818.59	0.22	0.0180		12.00	818.37	-40.00	151+75.00 R 2	40.00	818.37	12.00		-0.0180	-0.22	818.15	12.00		-0.0180	-0.43	817.94	
	818.33	0.43	0.0180		12.00	818.11	0.22	0.0180		12.00	817.90	-40.00	152+00.00 R 2	40.00	817.90	12.00		-0.0180	-0.22	817.68	12.00		-0.0180	-0.43	817.46	
	817.85	0.43	0.0180		12.00	817.64	0.22	0.0180		12.00	817.42	-40.00	152+25.00 R 2	40.00	817.42	12.00		-0.0180	-0.22	817.21	12.00		-0.0180	-0.43	816.99	
	817.38	0.43	0.0180		12.00	817.16	0.22	0.0180		12.00	816.95	-40.00	152+50.00 R 2	40.00	816.95	12.00		-0.0180	-0.22	816.73	12.00		-0.0180	-0.43	816.52	
	816.91	0.43	0.0180		12.00	816.69	0.22	0.0180		12.00	816.47	-40.00	152+75.00 R 2	40.00	816.47	12.00		-0.0180	-0.22	816.26	12.00		-0.0180	-0.43	816.04	
	816.43	0.43	0.0180		12.00	816.22	0.22	0.0180		12.00	816.00	-40.00	153+00.00 R 2	40.00	816.00	12.00		-0.0180	-0.22	815.78	12.00		-0.0180	-0.43	815.57	
	815.96	0.43	0.0180		12.00	815.74	0.22	0.0180		12.00	815.53	-40.00	153+25.00 R 2	40.00	815.53	12.00		-0.0180	-0.22	815.31	12.00		-0.0180	-0.43	815.09	
	815.48	0.43	0.0180		12.00	815.27	0.22	0.0180		12.00	815.05	-40.00	153+50.00 R 2	40.00	815.05	12.00		-0.0180	-0.22	814.84	12.00		-0.0180	-0.43	814.62	
	815.01	0.43	0.0180		12.00	814.79	0.22	0.0180		12.00	814.58	-40.00	153+75.00 R 2	40.00	814.58	12.00		-0.0180	-0.22	814.36	12.00		-0.0180	-0.43	814.15	
	814.54	0.43	0.0180		12.00	814.32	0.22	0.0180		12.00	814.10	-40.00	154+00.00 R 2	40.00	814.10	12.00		-0.0180	-0.22	813.89	12.00		-0.0180	-0.43	813.67	
	814.06	0.43	0.0180		12.00	813.85	0.22	0.0180		12.00	813.63	-40.00	154+25.00 R 2	40.00	813.63	12.00		-0.0180	-0.22	813.41	12.00		-0.0180	-0.43	813.20	
	813.61	0.43	0.0180		12.00	813.39	0.22	0.0180		12.00	813.17	-40.00	154+50.00 R 2	40.00	813.17	12.00		-0.0180	-0.22	812.96	12.00		-0.0180	-0.43	812.74	
	813.18	0.43	0.0180		12.00	812.96	0.22	0.0180		12.00	812.75	-40.00	154+75.00 R 2	40.00	812.75	12.00		-0.0180	-0.22	812.53	12.00		-0.0180	-0.43	812.32	
	812.79	0.43	0.0180		12.00	812.57	0.22	0.0180		12.00	812.36	-40.00	155+00.00 R 2	40.00	812.36	12.00		-0.0180	-0.22	812.14	12.00		-0.0180	-0.43	811.93	
	812.43	0.43	0.0180		12.00	812.22	0.22	0.0180		12.00	812.00	-40.00	155+25.00 R 2	40.00	812.00	12.00		-0.0180	-0.22	811.78	12.00		-0.0180	-0.43	811.57	
	812.11	0.43	0.0180		12.00	811.89	0.22	0.0180		12.00	811.68	-40.00	155+50.00 R 2	40.00	811.68	12.00		-0.0180	-0.22	811.46	12.00		-0.0180	-0.43	811.24	
	811.82	0.43	0.0180		12.00	811.60	0.22	0.0180		12.00	811.39	-40.00	155+75.00 R 2	40.00	811.39	12.00		-0.0180	-0.22	811.17	12.00		-0.0180	-0.43	810.95	
	811.56	0.43	0.0180		12.00	811.34	0.22	0.0180		12.00	811.13	-40.00	156+00.00 R 2	40.00	811.13	12.00		-0.0180	-0.22	810.91	12.00		-0.0180	-0.43	810.70	
	811.34	0.43	0.0180		12.00	811.12	0.22	0.0180		12.00	810.90	-40.00	156+25.00 R 2	40.00	810.90	12.00		-0.0180	-0.22	810.69	12.00		-0.0180	-0.43	810.47	
	811.14	0.43	0.0180		12.00	810.93	0.22	0.0180		12.00	810.71	-40.00	156+50.00 R 2	40.00	810.71	12.00		-0.0180	-0.22	810.50	12.00		-0.0180	-0.43	810.28	
	810.99	0.43	0.0180		12.00	810.77	0.22	0.0180		12.00	810.55	-40.00	156+75.00 R 2	40.00	810.55	12.00		-0.0180	-0.22	810.34	12.00		-0.0180	-0.43	810.12	
	810.86	0.43	0.0180		12.00	810.65	0.22	0.0180		12.00	810.43	-40.00	157+00.00 R 2	40.00	810.43	12.00		-0.0180	-0.22	810.21	12.00		-0.0180	-0.43	810.00	
	810.77	0.43	0.0180		12.00	810.55	0.22	0.0180		12.00	810.34	-40.00	157+25.00 R 2	40.00	810.34	12.00		-0.0180	-0.22	810.12	12.00		-0.0180	-0.43	809.91	
	810.71	0.43	0.0180		12.00	810.50	0.22	0.0180		12.00	810.28	-40.00	157+50.00 R 2	40.00	810.28	12.00		-0.0180	-0.22	810.06	12.00		-0.0180	-0.43	809.85	
	810.69	0.43	0.0180		12.00	810.47	0.22	0.0180		12.00	810.26	-40.00	157+75.00 R 2	40.00	810.26	12.00		-0.0180	-0.22	810.04	12.00		-0.0180	-0.43	809.82	
	810.70	0.43	0.0180		12.00	810.48	0.22	0.0180		12.00	810.26	-40.00	158+00.00 R 2	40.00	810.26	12.00		-0.0180	-0.22	810.05	12.00		-0.0180	-0.43	809.83	
	810.74	0.43	0.0180		12.00	810.52	0.22	0.0180		12.00	810.31	-40.00	158+25.00 R 2	40.00	810.31	12.00		-0.0180	-0.22	810.09	12.00		-0.0180	-0.43	809.87	
	810.81	0.43	0.0180		12.00	810.60	0.22	0.0180		12.00	810.38	-40.00	158+50.00 R 2	40.00	810.38	12.00		-0.0180	-0.22	810.16	12.00		-0.0180	-0.43	809.95	
	810.92	0.43	0.0180		12.00	810.71	0.22	0.0180		12.00	810.49	-40.00	158+75.00 R 2	40.00	810.49	12.00		-0.0180	-0.22	810.27	12.00		-0.0180	-0.43	810.06	
	811.05	0.43	0.0180		12.00	810.83	0.22	0.0180		12.00	810.61	-40.00	159+00.00 R 2	40.00	810.61	12.00		-0.0180	-0.22	810.40	12.00		-0.0180	-0.43	810.18	
	811.17	0.43	0.0180		12.00	810.96	0.22	0.0180		12.00	810.74	-40.00	159+25.00 R 2	40.00	810.74	12.00		-0.0180	-0.22	810.52	12.00		-0.0180	-0.43	810.31	
	811.30	0.43	0.0180		12.00	811.08	0.22	0.0180		12.00	810.86	-40.00	159+50.00 R 2	40.00	810.86	12.00		-0.0180	-0.22	810.65	12.00		-0.0180	-0.43	810.43	
	811.42	0.43	0.0180		12.00	811.21	0.22	0.0180		12.00	810.99	-40.00	159+75.00 R 2	40.00	810.99	12.00		-0.0180	-0.22	810.77	12.00		-0.0180	-0.43	810.56	
	811.55	0.43	0.0180		12.00	811.33	0.22	0.0180		12.00	811.11	-40.00	160+00.00 R 2	40.00	811.11	12.00		-0.0180	-0.22	810.90	12.00		-0.0180	-0.43	810.68	
	811.67	0.43	0.0180		12.00	811.46	0.22	0.0180		12.00	811.24	-40.00	160+25.00 R 2	40.00	811.24	12.00		-0.0180	-0.22	811.02	12.00		-0.0180	-0.43	810.81	
	811.80	0.43	0.0180		12.00	811.58	0.22	0.0180		12.00	811.36	-40.00	160+50.00 R 2	40.00	811.36	12.00		-0.0180	-0.22	811.15	12.00		-0.0180	-0.43	810.93	

CALCULATED | CHECKED

SUPERELEVATION TABLE
IR-90

ATB-90-14.25

Palmer ENGINEERING
11300 CORNELL PARK DR
ENGINEERING CINCINNATI, OH 45242

O:\ODOT\ATB\25199\roadway\sheets\25199GE006.dgn 6/6/2009 9:47:48 AM DENNIS

SUPERELEVATION TABLE

P.I. STA. 170+68.62 | Dc = 0° 28′ 00″

REMARKS	WESTBOUND OUTSIDE EDGE - ELEVATION	ELEVATION CORRECTION	CROSS SLOPE	TRANSITION RATE	WIDTH	WESTBOUND CENTERLINE OF LANES ELEVATION	ELEVATION CORRECTION	CROSS SLOPE	TRANSITION RATE	WIDTH	WESTBOUND INSIDE EDGE (PROFILE GRADE) ELEVATION	OFFSET	STATION	EASTBOUND INSIDE EDGE (PROFILE GRADE) OFFSET	ELEVATION	EASTBOUND CENTERLINE OF LANES WIDTH	TRANSITION RATE	CROSS SLOPE	ELEVATION CORRECTION	ELEVATION	EASTBOUND OUTSIDE EDGE - WIDTH	TRANSITION RATE	CROSS SLOPE	ELEVATION CORRECTION	ELEVATION	REMARKS
	811.92	0.43	0.0180		12.00	811.71	0.22	0.0180		12.00	811.49	-40.00	160+75.00 R 2	40.00	811.49	12.00		-0.0180	-0.22	811.27	12.00		-0.0180	-0.43	811.06	
	812.05	0.43	0.0180		12.00	811.83	0.22	0.0180		12.00	811.61	-40.00	161+00.00 R 2	40.00	811.61	12.00		-0.0180	-0.22	811.40	12.00		-0.0180	-0.43	811.18	
	812.17	0.43	0.0180		12.00	811.96	0.22	0.0180		12.00	811.74	-40.00	161+25.00 R 2	40.00	811.74	12.00		-0.0180	-0.22	811.52	12.00		-0.0180	-0.43	811.31	
	812.30	0.43	0.0180		12.00	812.08	0.22	0.0180		12.00	811.86	-40.00	161+50.00 R 2	40.00	811.86	12.00		-0.0180	-0.22	811.65	12.00		-0.0180	-0.43	811.43	
	812.42	0.43	0.0180		12.00	812.21	0.22	0.0180		12.00	811.99	-40.00	161+75.00 R 2	40.00	811.99	12.00		-0.0180	-0.22	811.77	12.00		-0.0180	-0.43	811.56	
	812.55	0.43	0.0180		12.00	812.33	0.22	0.0180		12.00	812.11	-40.00	162+00.00 R 2	40.00	812.11	12.00		-0.0180	-0.22	811.90	12.00		-0.0180	-0.43	811.68	
	812.67	0.43	0.0180		12.00	812.46	0.22	0.0180		12.00	812.24	-40.00	162+25.00 R 2	40.00	812.24	12.00		-0.0180	-0.22	812.02	12.00		-0.0180	-0.43	811.81	
	812.80	0.43	0.0180		12.00	812.58	0.22	0.0180		12.00	812.36	-40.00	162+50.00 R 2	40.00	812.36	12.00		-0.0180	-0.22	812.15	12.00		-0.0180	-0.43	811.93	
	812.92	0.43	0.0180		12.00	812.71	0.22	0.0180		12.00	812.49	-40.00	162+75.00 R 2	40.00	812.49	12.00		-0.0180	-0.22	812.27	12.00		-0.0180	-0.43	812.06	
	813.05	0.43	0.0180		12.00	812.83	0.22	0.0180		12.00	812.61	-40.00	163+00.00 R 2	40.00	812.61	12.00		-0.0180	-0.22	812.40	12.00		-0.0180	-0.43	812.18	
	813.19	0.43	0.0180		12.00	812.97	0.22	0.0180		12.00	812.75	-40.00	163+25.00 R 2	40.00	812.75	12.00		-0.0180	-0.22	812.54	12.00		-0.0180	-0.43	812.32	
	813.36	0.43	0.0180		12.00	813.14	0.22	0.0180		12.00	812.92	-40.00	163+50.00 R 2	40.00	812.92	12.00		-0.0180	-0.22	812.71	12.00		-0.0180	-0.43	812.49	
	813.56	0.43	0.0180		12.00	813.34	0.22	0.0180		12.00	813.13	-40.00	163+75.00 R 2	40.00	813.13	12.00		-0.0180	-0.22	812.91	12.00		-0.0180	-0.43	812.69	
	813.79	0.43	0.0180		12.00	813.57	0.22	0.0180		12.00	813.36	-40.00	164+00.00 R 2	40.00	813.36	12.00		-0.0180	-0.22	813.14	12.00		-0.0180	-0.43	812.92	
	814.05	0.43	0.0180		12.00	813.83	0.22	0.0180		12.00	813.62	-40.00	164+25.00 R 2	40.00	813.62	12.00		-0.0180	-0.22	813.40	12.00		-0.0180	-0.43	813.19	
	814.34	0.43	0.0180		12.00	814.13	0.22	0.0180		12.00	813.91	-40.00	164+50.00 R 2	40.00	813.91	12.00		-0.0180	-0.22	813.69	12.00		-0.0180	-0.43	813.48	
	814.66	0.43	0.0180		12.00	814.45	0.22	0.0180		12.00	814.23	-40.00	164+75.00 R 2	40.00	814.23	12.00		-0.0180	-0.22	814.02	12.00		-0.0180	-0.43	813.80	
	815.02	0.43	0.0180		12.00	814.80	0.22	0.0180		12.00	814.58	-40.00	165+00.00 R 2	40.00	814.58	12.00		-0.0180	-0.22	814.37	12.00		-0.0180	-0.43	814.15	
	815.40	0.43	0.0180		12.00	815.18	0.22	0.0180		12.00	814.97	-40.00	165+25.00 R 2	40.00	814.97	12.00		-0.0180	-0.22	814.75	12.00		-0.0180	-0.43	814.53	
	815.81	0.43	0.0180		12.00	815.59	0.22	0.0180		12.00	815.38	-40.00	165+50.00 R 2	40.00	815.38	12.00		-0.0180	-0.22	815.16	12.00		-0.0180	-0.43	814.95	
	816.25	0.43	0.0180		12.00	816.04	0.22	0.0180		12.00	815.82	-40.00	165+75.00 R 2	40.00	815.82	12.00		-0.0180	-0.22	815.61	12.00		-0.0180	-0.43	815.39	
	816.73	0.43	0.0180		12.00	816.51	0.22	0.0180		12.00	816.30	-40.00	166+00.00 R 2	40.00	816.30	12.00		-0.0180	-0.22	816.08	12.00		-0.0180	-0.43	815.86	
	817.22	0.43	0.0180		12.00	817.00	0.22	0.0180		12.00	816.78	-40.00	166+25.00 R 2	40.00	816.78	12.00		-0.0180	-0.22	816.57	12.00		-0.0180	-0.43	816.35	
	817.70	0.43	0.0180		12.00	817.49	0.22	0.0180		12.00	817.27	-40.00	166+50.00 R 2	40.00	817.27	12.00		-0.0180	-0.22	817.06	12.00		-0.0180	-0.43	816.84	
	818.19	0.43	0.0180		12.00	817.98	0.22	0.0180		12.00	817.76	-40.00	166+75.00 R 2	40.00	817.76	12.00		-0.0180	-0.22	817.54	12.00		-0.0180	-0.43	817.33	
	818.68	0.43	0.0180		12.00	818.47	0.22	0.0180		12.00	818.25	-40.00	167+00.00 R 2	40.00	818.25	12.00		-0.0180	-0.22	818.03	12.00		-0.0180	-0.43	817.82	
	819.17	0.43	0.0180		12.00	818.95	0.22	0.0180		12.00	818.74	-40.00	167+25.00 R 2	40.00	818.74	12.00		-0.0180	-0.22	818.52	12.00		-0.0180	-0.43	818.31	
	819.66	0.43	0.0180		12.00	819.44	0.22	0.0180		12.00	819.23	-40.00	167+50.00 R 2	40.00	819.23	12.00		-0.0180	-0.22	819.01	12.00		-0.0180	-0.43	818.79	
	820.15	0.43	0.0180		12.00	819.93	0.22	0.0180		12.00	819.71	-40.00	167+75.00 R 2	40.00	819.71	12.00		-0.0180	-0.22	819.50	12.00		-0.0180	-0.43	819.28	
	820.64	0.43	0.0180		12.00	820.42	0.22	0.0180		12.00	820.20	-40.00	168+00.00 R 2	40.00	820.20	12.00		-0.0180	-0.22	819.99	12.00		-0.0180	-0.43	819.77	
	821.12	0.43	0.0180		12.00	820.91	0.22	0.0180		12.00	820.69	-40.00	168+25.00 R 2	40.00	820.69	12.00		-0.0180	-0.22	820.48	12.00		-0.0180	-0.43	820.26	
	821.61	0.43	0.0180		12.00	821.40	0.22	0.0180		12.00	821.18	-40.00	168+50.00 R 2	40.00	821.18	12.00		-0.0180	-0.22	820.96	12.00		-0.0180	-0.43	820.75	
	822.10	0.43	0.0180		12.00	821.88	0.22	0.0180		12.00	821.67	-40.00	168+75.00 R 2	40.00	821.67	12.00		-0.0180	-0.22	821.45	12.00		-0.0180	-0.43	821.24	
	822.59	0.43	0.0180		12.00	822.37	0.22	0.0180		12.00	822.16	-40.00	169+00.00 R 2	40.00	822.16	12.00		-0.0180	-0.22	821.94	12.00		-0.0180	-0.43	821.73	
	823.08	0.43	0.0180		12.00	822.86	0.22	0.0180		12.00	822.65	-40.00	169+25.00 R 2	40.00	822.65	12.00		-0.0180	-0.22	822.43	12.00		-0.0180	-0.43	822.21	
	823.57	0.43	0.0180		12.00	823.35	0.22	0.0180		12.00	823.13	-40.00	169+50.00 R 2	40.00	823.13	12.00		-0.0180	-0.22	822.92	12.00		-0.0180	-0.43	822.70	
	824.06	0.43	0.0180		12.00	823.84	0.22	0.0180		12.00	823.62	-40.00	169+75.00 R 2	40.00	823.62	12.00		-0.0180	-0.22	823.41	12.00		-0.0180	-0.43	823.19	
	824.54	0.43	0.0180		12.00	824.33	0.22	0.0180		12.00	824.11	-40.00	170+00.00 R 2	40.00	824.11	12.00		-0.0180	-0.22	823.90	12.00		-0.0180	-0.43	823.68	
	825.03	0.43	0.0180		12.00	824.82	0.22	0.0180		12.00	824.60	-40.00	170+25.00 R 2	40.00	824.60	12.00		-0.0180	-0.22	824.38	12.00		-0.0180	-0.43	824.17	
	825.52	0.43	0.0180		12.00	825.30	0.22	0.0180		12.00	825.09	-40.00	170+50.00 R 2	40.00	825.09	12.00		-0.0180	-0.22	824.87	12.00		-0.0180	-0.43	824.66	
	826.01	0.43	0.0180		12.00	825.79	0.22	0.0180		12.00	825.58	-40.00	170+75.00 R 2	40.00	825.58	12.00		-0.0180	-0.22	825.36	12.00		-0.0180	-0.43	825.15	
	826.50	0.43	0.0180		12.00	826.28	0.22	0.0180		12.00	826.07	-40.00	171+00.00 R 2	40.00	826.07	12.00		-0.0180	-0.22	825.85	12.00		-0.0180	-0.43	825.63	
	826.99	0.43	0.0180		12.00	826.77	0.22	0.0180		12.00	826.55	-40.00	171+25.00 R 2	40.00	826.55	12.00		-0.0180	-0.22	826.34	12.00		-0.0180	-0.43	826.12	
	827.47	0.43	0.0180		12.00	827.26	0.22	0.0180		12.00	827.04	-40.00	171+50.00 R 2	40.00	827.04	12.00		-0.0180	-0.22	826.83	12.00		-0.0180	-0.43	826.61	
	827.96	0.43	0.0180		12.00	827.75	0.22	0.0180		12.00	827.53	-40.00	171+75.00 R 2	40.00	827.53	12.00		-0.0180	-0.22	827.32	12.00		-0.0180	-0.43	827.10	
	828.45	0.43	0.0180		12.00	828.24	0.22	0.0180		12.00	828.02	-40.00	172+00.00 R 2	40.00	828.02	12.00		-0.0180	-0.22	827.80	12.00		-0.0180	-0.43	827.59	
	828.94	0.43	0.0180		12.00	828.72	0.22	0.0180		12.00	828.51	-40.00	172+25.00 R 2	40.00	828.51	12.00		-0.0180	-0.22	828.29	12.00		-0.0180	-0.43	828.08	
	829.43	0.43	0.0180		12.00	829.21	0.22	0.0180		12.00	829.00	-40.00	172+50.00 R 2	40.00	829.00	12.00		-0.0180	-0.22	828.78	12.00		-0.0180	-0.43	828.56	
	829.92	0.43	0.0180		12.00	829.70	0.22	0.0180		12.00	829.49	-40.00	172+75.00 R 2	40.00	829.49	12.00		-0.0180	-0.22	829.27	12.00		-0.0180	-0.43	829.05	
	830.41	0.43	0.0180		12.00	830.19	0.22	0.0180		12.00	829.97	-40.00	173+00.00 R 2	40.00	829.97	12.00		-0.0180	-0.22	829.76	12.00		-0.0180	-0.43	829.54	
	830.89	0.43	0.0180		12.00	830.68	0.22	0.0180		12.00	830.46	-40.00	173+25.00 R 2	40.00	830.46	12.00		-0.0180	-0.22	830.25	12.00		-0.0180	-0.43	830.03	
	831.38	0.43	0.0180		12.00	831.17	0.22	0.0180		12.00	830.95	-40.00	173+50.00 R 2	40.00	830.95	12.00		-0.0180	-0.22	830.73	12.00		-0.0180	-0.43	830.52	
	831.87	0.43	0.0180		12.00	831.66	0.22	0.0180		12.00	831.44	-40.00	173+75.00 R 2	40.00	831.44	12.00		-0.0180	-0.22	831.22	12.00		-0.0180	-0.43	831.01	
	832.36	0.43	0.0180		12.00	832.14	0.22	0.0180		12.00	831.93	-40.00	174+00.00 R 2	40.00	831.93	12.00		-0.0180	-0.22	831.71	12.00		-0.0180	-0.43	831.50	
	832.85	0.43	0.0180		12.00	832.63	0.22	0.0180		12.00	832.42	-40.00	174+25.00 R 2	40.00	832.42	12.00		-0.0180	-0.22	832.20	12.00		-0.0180	-0.43	831.98	

CALCULATED

CHECKED

SUPERELEVATION TABLE
IR-90

ATB-90-14.25

256
437

Palmer ENGINEERING
11300 CORNELL PARK DR
ENGINEERING CINCINNATI, OH 45242

O:\ODOT\ATB\25199\roadway\sheets\25199GE007.dgn 6/6/2009 9:47:54 AM DENNIS

SUPERELEVATION TABLE

P.I. STA. 170+68.62 | Dc = 0° 28′ 00″

REMARKS	WESTBOUND OUTSIDE EDGE - ELEVATION	ELEVATION CORRECTION	CROSS SLOPE	TRANSITION RATE	WIDTH	WESTBOUND CENTERLINE OF LANES ELEVATION	ELEVATION CORRECTION	CROSS SLOPE	TRANSITION RATE	WIDTH	WESTBOUND INSIDE EDGE (PROFILE GRADE) ELEVATION	OFFSET	STATION	EASTBOUND INSIDE EDGE (PROFILE GRADE) OFFSET	ELEVATION	EASTBOUND CENTERLINE OF LANES WIDTH	TRANSITION RATE	CROSS SLOPE	ELEVATION CORRECTION	ELEVATION	EASTBOUND OUTSIDE EDGE - WIDTH	TRANSITION RATE	CROSS SLOPE	ELEVATION CORRECTION	ELEVATION	REMARKS
	833.34	0.43	0.0180		12.00	833.12	0.22	0.0180		12.00	832.91	-40.00	174+50.00 R 2	40.00	832.91	12.00		-0.0180	-0.22	832.69	12.00		-0.0180	-0.43	832.47	
	833.83	0.43	0.0180		12.00	833.61	0.22	0.0180		12.00	833.39	-40.00	174+75.00 R 2	40.00	833.39	12.00		-0.0180	-0.22	833.18	12.00		-0.0180	-0.43	832.96	
	834.31	0.43	0.0180		12.00	834.10	0.22	0.0180		12.00	833.88	-40.00	175+00.00 R 2	40.00	833.88	12.00		-0.0180	-0.22	833.67	12.00		-0.0180	-0.43	833.45	
	834.80	0.43	0.0180		12.00	834.59	0.22	0.0180		12.00	834.37	-40.00	175+25.00 R 2	40.00	834.37	12.00		-0.0180	-0.22	834.15	12.00		-0.0180	-0.43	833.94	
	835.29	0.43	0.0180		12.00	835.08	0.22	0.0180		12.00	834.86	-40.00	175+50.00 R 2	40.00	834.86	12.00		-0.0180	-0.22	834.64	12.00		-0.0180	-0.43	834.43	
	835.78	0.43	0.0180		12.00	835.56	0.22	0.0180		12.00	835.35	-40.00	175+75.00 R 2	40.00	835.35	12.00		-0.0180	-0.22	835.13	12.00		-0.0180	-0.43	834.92	
	836.27	0.43	0.0180		12.00	836.05	0.22	0.0180		12.00	835.84	-40.00	176+00.00 R 2	40.00	835.84	12.00		-0.0180	-0.22	835.62	12.00		-0.0180	-0.43	835.40	
	836.76	0.43	0.0180		12.00	836.54	0.22	0.0180		12.00	836.32	-40.00	176+25.00 R 2	40.00	836.32	12.00		-0.0180	-0.22	836.11	12.00		-0.0180	-0.43	835.89	
	837.25	0.43	0.0180		12.00	837.03	0.22	0.0180		12.00	836.81	-40.00	176+50.00 R 2	40.00	836.81	12.00		-0.0180	-0.22	836.60	12.00		-0.0180	-0.43	836.38	
	837.73	0.43	0.0180		12.00	837.52	0.22	0.0180		12.00	837.30	-40.00	176+75.00 R 2	40.00	837.30	12.00		-0.0180	-0.22	837.09	12.00		-0.0180	-0.43	836.87	
	838.22	0.43	0.0180		12.00	838.01	0.22	0.0180		12.00	837.79	-40.00	177+00.00 R 2	40.00	837.79	12.00		-0.0180	-0.22	837.57	12.00		-0.0180	-0.43	837.36	
	838.71	0.43	0.0180		12.00	838.49	0.22	0.0180		12.00	838.28	-40.00	177+25.00 R 2	40.00	838.28	12.00		-0.0180	-0.22	838.06	12.00		-0.0180	-0.43	837.85	
	839.20	0.43	0.0180		12.00	838.98	0.22	0.0180		12.00	838.77	-40.00	177+50.00 R 2	40.00	838.77	12.00		-0.0180	-0.22	838.55	12.00		-0.0180	-0.43	838.34	
	839.69	0.43	0.0180		12.00	839.47	0.22	0.0180		12.00	839.26	-40.00	177+75.00 R 2	40.00	839.26	12.00		-0.0180	-0.22	839.04	12.00		-0.0180	-0.43	838.82	
	840.18	0.43	0.0180		12.00	839.96	0.22	0.0180		12.00	839.74	-40.00	178+00.00 R 2	40.00	839.74	12.00		-0.0180	-0.22	839.53	12.00		-0.0180	-0.43	839.31	
	840.66	0.43	0.0180		12.00	840.45	0.22	0.0180		12.00	840.23	-40.00	178+25.00 R 2	40.00	840.23	12.00		-0.0180	-0.22	840.02	12.00		-0.0180	-0.43	839.80	
	841.15	0.43	0.0180		12.00	840.94	0.22	0.0180		12.00	840.72	-40.00	178+50.00 R 2	40.00	840.72	12.00		-0.0180	-0.22	840.51	12.00		-0.0180	-0.43	840.29	
	841.64	0.43	0.0180		12.00	841.43	0.22	0.0180		12.00	841.21	-40.00	178+75.00 R 2	40.00	841.21	12.00		-0.0180	-0.22	840.99	12.00		-0.0180	-0.43	840.78	
	842.13	0.43	0.0180		12.00	841.91	0.22	0.0180		12.00	841.70	-40.00	179+00.00 R 2	40.00	841.70	12.00		-0.0180	-0.22	841.48	12.00		-0.0180	-0.43	841.27	
	842.62	0.43	0.0180		12.00	842.40	0.22	0.0180		12.00	842.19	-40.00	179+25.00 R 2	40.00	842.19	12.00		-0.0180	-0.22	841.97	12.00		-0.0180	-0.43	841.76	
	843.11	0.43	0.0180		12.00	842.89	0.22	0.0180		12.00	842.68	-40.00	179+50.00 R 2	40.00	842.68	12.00		-0.0180	-0.22	842.46	12.00		-0.0180	-0.43	842.24	
	843.60	0.43	0.0180		12.00	843.38	0.22	0.0180		12.00	843.16	-40.00	179+75.00 R 2	40.00	843.16	12.00		-0.0180	-0.22	842.95	12.00		-0.0180	-0.43	842.73	
	844.08	0.43	0.0180		12.00	843.87	0.22	0.0180		12.00	843.65	-40.00	180+00.00 R 2	40.00	843.65	12.00		-0.0180	-0.22	843.44	12.00		-0.0180	-0.43	843.22	
	844.57	0.43	0.0180		12.00	844.36	0.22	0.0180		12.00	844.14	-40.00	180+25.00 R 2	40.00	844.14	12.00		-0.0180	-0.22	843.93	12.00		-0.0180	-0.43	843.71	
	845.06	0.43	0.0180		12.00	844.85	0.22	0.0180		12.00	844.63	-40.00	180+50.00 R 2	40.00	844.63	12.00		-0.0180	-0.22	844.41	12.00		-0.0180	-0.43	844.20	
	845.55	0.43	0.0180		12.00	845.33	0.22	0.0180		12.00	845.12	-40.00	180+75.00 R 2	40.00	845.12	12.00		-0.0180	-0.22	844.90	12.00		-0.0180	-0.43	844.69	
	846.04	0.43	0.0180		12.00	845.82	0.22	0.0180		12.00	845.61	-40.00	181+00.00 R 2	40.00	845.61	12.00		-0.0180	-0.22	845.39	12.00		-0.0180	-0.43	845.17	
	846.53	0.43	0.0180		12.00	846.31	0.22	0.0180		12.00	846.10	-40.00	181+25.00 R 2	40.00	846.10	12.00		-0.0180	-0.22	845.88	12.00		-0.0180	-0.43	845.66	
	847.02	0.43	0.0180		12.00	846.80	0.22	0.0180		12.00	846.58	-40.00	181+50.00 R 2	40.00	846.58	12.00		-0.0180	-0.22	846.37	12.00		-0.0180	-0.43	846.15	
	847.50	0.43	0.0180		12.00	847.29	0.22	0.0180		12.00	847.07	-40.00	181+75.00 R 2	40.00	847.07	12.00		-0.0180	-0.22	846.86	12.00		-0.0180	-0.43	846.64	
	847.99	0.43	0.0180		12.00	847.78	0.22	0.0180		12.00	847.56	-40.00	182+00.00 R 2	40.00	847.56	12.00		-0.0180	-0.22	847.34	12.00		-0.0180	-0.43	847.13	
	848.48	0.43	0.0180		12.00	848.27	0.22	0.0180		12.00	848.05	-40.00	182+25.00 R 2	40.00	848.05	12.00		-0.0180	-0.22	847.83	12.00		-0.0180	-0.43	847.62	
	848.97	0.43	0.0180		12.00	848.75	0.22	0.0180		12.00	848.54	-40.00	182+50.00 R 2	40.00	848.54	12.00		-0.0180	-0.22	848.32	12.00		-0.0180	-0.43	848.11	
	849.46	0.43	0.0180		12.00	849.24	0.22	0.0180		12.00	849.03	-40.00	182+75.00 R 2	40.00	849.03	12.00		-0.0180	-0.22	848.81	12.00		-0.0180	-0.43	848.59	
	849.95	0.43	0.0180		12.00	849.73	0.22	0.0180		12.00	849.51	-40.00	183+00.00 R 2	40.00	849.51	12.00		-0.0180	-0.22	849.30	12.00		-0.0180	-0.43	849.08	
	850.44	0.43	0.0180		12.00	850.22	0.22	0.0180		12.00	850.00	-40.00	183+25.00 R 2	40.00	850.00	12.00		-0.0180	-0.22	849.79	12.00		-0.0180	-0.43	849.57	
	850.92	0.43	0.0180		12.00	850.71	0.22	0.0180		12.00	850.49	-40.00	183+50.00 R 2	40.00	850.49	12.00		-0.0180	-0.22	850.28	12.00		-0.0180	-0.43	850.06	
	851.41	0.43	0.0180		12.00	851.20	0.22	0.0180		12.00	850.98	-40.00	183+75.00 R 2	40.00	850.98	12.00		-0.0180	-0.22	850.76	12.00		-0.0180	-0.43	850.55	
	851.90	0.43	0.0180		12.00	851.68	0.22	0.0180		12.00	851.47	-40.00	184+00.00 R 2	40.00	851.47	12.00		-0.0180	-0.22	851.25	12.00		-0.0180	-0.43	851.04	
	852.39	0.43	0.0180		12.00	852.17	0.22	0.0180		12.00	851.96	-40.00	184+25.00 R 2	40.00	851.96	12.00		-0.0180	-0.22	851.74	12.00		-0.0180	-0.43	851.53	
	852.88	0.43	0.0180		12.00	852.66	0.22	0.0180		12.00	852.45	-40.00	184+50.00 R 2	40.00	852.45	12.00		-0.0180	-0.22	852.23	12.00		-0.0180	-0.43	852.01	
	853.37	0.43	0.0180		12.00	853.15	0.22	0.0180		12.00	852.93	-40.00	184+75.00 R 2	40.00	852.93	12.00		-0.0180	-0.22	852.72	12.00		-0.0180	-0.43	852.50	
	853.86	0.43	0.0180		12.00	853.64	0.22	0.0180		12.00	853.42	-40.00	185+00.00 R 2	40.00	853.42	12.00		-0.0180	-0.22	853.21	12.00		-0.0180	-0.43	852.99	
	854.34	0.43	0.0180		12.00	854.13	0.22	0.0180		12.00	853.91	-40.00	185+25.00 R 2	40.00	853.91	12.00		-0.0180	-0.22	853.70	12.00		-0.0180	-0.43	853.48	
	854.83	0.43	0.0180		12.00	854.62	0.22	0.0180		12.00	854.40	-40.00	185+50.00 R 2	40.00	854.40	12.00		-0.0180	-0.22	854.18	12.00		-0.0180	-0.43	853.97	
	855.32	0.43	0.0180		12.00	855.10	0.22	0.0180		12.00	854.89	-40.00	185+75.00 R 2	40.00	854.89	12.00		-0.0180	-0.22	854.67	12.00		-0.0180	-0.43	854.46	
	855.81	0.43	0.0180		12.00	855.59	0.22	0.0180		12.00	855.38	-40.00	186+00.00 R 2	40.00	855.38	12.00		-0.0180	-0.22	855.16	12.00		-0.0180	-0.43	854.95	
	856.30	0.43	0.0180		12.00	856.08	0.22	0.0180		12.00	855.87	-40.00	186+25.00 R 2	40.00	855.87	12.00		-0.0180	-0.22	855.65	12.00		-0.0180	-0.43	855.43	
	856.79	0.43	0.0180		12.00	856.57	0.22	0.0180		12.00	856.35	-40.00	186+50.00 R 2	40.00	856.35	12.00		-0.0180	-0.22	856.14	12.00		-0.0180	-0.43	855.92	
	857.27	0.43	0.0180		12.00	857.06	0.22	0.0180		12.00	856.84	-40.00	186+75.00 R 2	40.00	856.84	12.00		-0.0180	-0.22	856.63	12.00		-0.0180	-0.43	856.41	
	857.76	0.43	0.0180		12.00	857.55	0.22	0.0180		12.00	857.33	-40.00	187+00.00 R 2	40.00	857.33	12.00		-0.0180	-0.22	857.12	12.00		-0.0180	-0.43	856.90	
	858.25	0.43	0.0180		12.00	858.04	0.22	0.0180		12.00	857.82	-40.00	187+25.00 R 2	40.00	857.82	12.00		-0.0180	-0.22	857.60	12.00		-0.0180	-0.43	857.39	
	858.74	0.43	0.0180		12.00	858.52	0.22	0.0180		12.00	858.31	-40.00	187+50.00 R 2	40.00	858.31	12.00		-0.0180	-0.22	858.09	12.00		-0.0180	-0.43	857.88	
	859.23	0.43	0.0180		12.00	859.01	0.22	0.0180		12.00	858.80	-40.00	187+75.00 R 2	40.00	858.80	12.00		-0.0180	-0.22	858.58	12.00		-0.0180	-0.43	858.36	
	859.72	0.43	0.0180		12.00	859.50	0.22	0.0180		12.00	859.29	-40.00	188+00.00 R 2	40.00	859.29	12.00		-0.0180	-0.22	859.07	12.00		-0.0180	-0.43	858.85	

CALCULATED | CHECKED

SUPERELEVATION TABLE
IR-90

ATB-90-14.25

257
437

Palmer ENGINEERING
11300 CORNELL PARK DR
CINCINNATI, OH 45242

O:\ODOT\ATB\25199\roadway\sheets\25199GE008.dgn 6/6/2009 9:48:00 AM DENNIS

SUPERELEVATION TABLE

P.I. STA. 170+68.62 | Dc = 0° 28′ 00″

REMARKS	WESTBOUND OUTSIDE EDGE - ELEVATION	ELEVATION CORRECTION	CROSS SLOPE	TRANSITION RATE	WIDTH	WESTBOUND CENTERLINE OF LANES ELEVATION	ELEVATION CORRECTION	CROSS SLOPE	TRANSITION RATE	WIDTH	WESTBOUND INSIDE EDGE (PROFILE GRADE) ELEVATION	OFFSET	STATION	EASTBOUND INSIDE EDGE (PROFILE GRADE) OFFSET	ELEVATION	EASTBOUND CENTERLINE OF LANES WIDTH	TRANSITION RATE	CROSS SLOPE	ELEVATION CORRECTION	ELEVATION	EASTBOUND OUTSIDE EDGE - WIDTH	TRANSITION RATE	CROSS SLOPE	ELEVATION CORRECTION	ELEVATION	REMARKS
	860.21	0.43	0.0180		12.00	859.99	0.22	0.0180		12.00	859.77	-40.00	188+25.00 R 2	40.00	859.77	12.00		-0.0180	-0.22	859.56	12.00		-0.0180	-0.43	859.34	
	860.69	0.43	0.0180		12.00	860.48	0.22	0.0180		12.00	860.26	-40.00	188+50.00 R 2	40.00	860.26	12.00		-0.0180	-0.22	860.05	12.00		-0.0180	-0.43	859.83	
	861.18	0.43	0.0180		12.00	860.97	0.22	0.0180		12.00	860.75	-40.00	188+75.00 R 2	40.00	860.75	12.00		-0.0180	-0.22	860.53	12.00		-0.0180	-0.43	860.32	
	861.67	0.43	0.0180		12.00	861.46	0.22	0.0180		12.00	861.24	-40.00	189+00.00 R 2	40.00	861.24	12.00		-0.0180	-0.22	861.02	12.00		-0.0180	-0.43	860.81	
	862.16	0.43	0.0180		12.00	861.94	0.22	0.0180		12.00	861.73	-40.00	189+25.00 R 2	40.00	861.73	12.00		-0.0180	-0.22	861.51	12.00		-0.0180	-0.43	861.30	
	862.65	0.43	0.0180		12.00	862.43	0.22	0.0180		12.00	862.22	-40.00	189+50.00 R 2	40.00	862.22	12.00		-0.0180	-0.22	862.00	12.00		-0.0180	-0.43	861.78	
	863.14	0.43	0.0180		12.00	862.92	0.22	0.0180		12.00	862.71	-40.00	189+75.00 R 2	40.00	862.71	12.00		-0.0180	-0.22	862.49	12.00		-0.0180	-0.43	862.27	
	863.63	0.43	0.0180		12.00	863.41	0.22	0.0180		12.00	863.19	-40.00	190+00.00 R 2	40.00	863.19	12.00		-0.0180	-0.22	862.98	12.00		-0.0180	-0.43	862.76	
	864.11	0.43	0.0180		12.00	863.90	0.22	0.0180		12.00	863.68	-40.00	190+25.00 R 2	40.00	863.68	12.00		-0.0180	-0.22	863.47	12.00		-0.0180	-0.43	863.25	
END FULL S.E.	864.16	0.43	0.0180	250:1	12.00	863.94	0.22	0.0180	400:1	12.00	863.72	-40.00	190+27.13 R 2	40.00	863.72	12.00	400:1	-0.0180	-0.22	863.51	12.00	250:1	-0.0180	-0.43	863.29	END FULL S.E.
REV. CROWN	864.34	0.38	0.0160		12.00	864.15	0.19	0.0160		12.00	863.96	-40.00	190+39.13 R 2	40.00	863.96	12.00	250:1	-0.0160	-0.19	863.77	12.00		-0.0160	-0.38	863.57	REV. CROWN
PT	864.47	0.35	0.0133		12.00	864.31	0.19	0.0160		12.00	864.11	-40.00	190+47.13 R 2	40.00	864.11	12.00		-0.0133	-0.16	863.95	12.00		-0.0160	-0.35	863.76	PT
	864.51	0.34	0.0124		12.00	864.36	0.19	0.0160		12.00	864.17	-40.00	190+50.00 R 2	40.00	864.17	12.00		-0.0124	-0.15	864.02	12.00		-0.0160	-0.34	863.83	
													STATION EQUATION 190+51.58 BK = 190+77.68 AH.														
	864.54	0.33	0.0118		12.00	864.39	0.19	0.0160		12.00	864.20	-40.00	190+77.68 R 3	40.00	864.20	12.00		-0.0118	-0.14	864.06	12.00		-0.0160	-0.33	863.87	
	864.88	0.24	0.0044		12.00	864.83	0.19	0.0160		12.00	864.64	-40.00	191+00.00 R 3	40.00	864.64	12.00		-0.0044	-0.05	864.58	12.00		-0.0160	-0.24	864.39	
½ FLAT	865.09	0.19	-0.0000		12.00	865.09	0.19	0.0160		12.00	864.90	-40.00	191+13.23 R 3	40.00	864.90	12.00		0.0000	0.00	864.90	12.00		-0.0160	-0.19	864.70	½ FLAT
	865.27	0.15	-0.0039		12.00	865.32	0.19	0.0160		12.00	865.13	-40.00	191+25.00 R 3	40.00	865.13	12.00		0.0039	0.05	865.17	12.00		-0.0160	-0.15	864.98	
	865.66	0.04	-0.0123		12.00	865.81	0.19	0.0160		12.00	865.61	-40.00	191+50.00 R 3	40.00	865.61	12.00		0.0123	0.15	865.76	12.00		-0.0160	-0.04	865.57	
BEGIN N.C.	865.83	0.00	-0.0160	250:1	12.00	866.03	0.19	0.0160		12.00	865.83	-40.00	191+61.23 R 3	40.00	865.83	12.00	250:1	0.0160	0.19	866.03	12.00	250:1	-0.0160	0.00	865.83	BEGIN N.C.

CALCULATED | CHECKED

SUPERELEVATION TABLE
IR-90

ATB-90-14.25

258
437

PALMER ENGINEERING
11300 CORNELL PARK DR
ENGINEERING CINCINNATI, OH 45242

O:\ODOT\ATB\25199\roadway\sheets\25199GE009.dgn 6/6/2009 9:48:07 AM DENNIS

SUPERELEVATION TABLE

P.I. STA. 238+56.16 | Dc = 0° 28′ 00″

REMARKS	WESTBOUND OUTSIDE EDGE - ELEVATION	ELEVATION CORRECTION	CROSS SLOPE	TRANSITION RATE	WIDTH	WESTBOUND CENTERLINE OF LANES ELEVATION	ELEVATION CORRECTION	CROSS SLOPE	TRANSITION RATE	WIDTH	WESTBOUND INSIDE EDGE (PROFILE GRADE) ELEVATION	OFFSET	STATION	EASTBOUND INSIDE EDGE (PROFILE GRADE) OFFSET	ELEVATION	EASTBOUND CENTERLINE OF LANES WIDTH	TRANSITION RATE	CROSS SLOPE	ELEVATION CORRECTION	ELEVATION	EASTBOUND OUTSIDE EDGE - WIDTH	TRANSITION RATE	CROSS SLOPE	ELEVATION CORRECTION	ELEVATION	REMARKS
END N.C.	891.37	0.00	-0.0160	250:1	12.00	891.57	0.19	0.0160	250:1	12.00	891.37	-40.00	207+60.82 R 3	40.00	891.37	12.00		0.0160	0.19	891.57	12.00	250:1	-0.0160	0.00	891.37	END N.C.
	891.43	-0.06	-0.0160	↑	12.00	891.62	0.14	0.0113	↑	12.00	891.48	-40.00	207+75.00 R 3	40.00	891.48	12.00		0.0160	0.19	891.67	12.00	↑	-0.0113	0.06	891.54	
	891.51	-0.16	-0.0160	↑	12.00	891.70	0.04	0.0029	↑	12.00	891.66	-40.00	208+00.00 R 3	40.00	891.66	12.00		0.0160	0.19	891.86	12.00	↑	-0.0029	0.16	891.82	
½ FLAT	891.54	-0.19	-0.0160	↑	12.00	891.73	0.00	0.0000	↑	12.00	891.73	-40.00	208+08.82 R 3	40.00	891.73	12.00		0.0160	0.19	891.92	12.00	↑	-0.0000	0.19	891.92	½ FLAT
	891.58	-0.26	-0.0160	↑	12.00	891.77	-0.06	-0.0054	↑	12.00	891.84	-40.00	208+25.00 R 3	40.00	891.84	12.00		0.0160	0.19	892.03	12.00	↑	0.0054	0.26	892.10	
PC	891.65	-0.35	-0.0160	↑	12.00	891.84	-0.16	-0.0133	↑	12.00	892.00	-40.00	208+48.82 R 3	40.00	892.00	12.00		0.0160	0.19	892.19	12.00	↑	0.0133	0.35	892.35	PC
	891.65	-0.36	-0.0160	↑	12.00	891.84	-0.16	-0.0137	↑	12.00	892.01	-40.00	208+50.00 R 3	40.00	892.01	12.00		0.0160	0.19	892.20	12.00	↑	0.0137	0.36	892.36	
REV. CROWN	891.67	-0.38	-0.0160	↓	12.00	891.86	-0.19	-0.0160	250:1	12.00	892.05	-40.00	208+56.82 R 3	40.00	892.05	12.00		0.0160	0.19	892.24	12.00	↓	0.0160	0.38	892.44	REV. CROWN
FULL S.E.	891.70	-0.43	-0.0180	250:1	12.00	891.91	-0.22	-0.0180	400:1	12.00	892.13	-40.00	208+68.82 R 3	40.00	892.13	12.00	400:1	0.0180	0.22	892.34	12.00	250:1	0.0180	0.43	892.56	FULL S.E.
	891.73	-0.43	-0.0180		12.00	891.95	-0.22	-0.0180		12.00	892.17	-40.00	208+75.00 R 3	40.00	892.17	12.00		0.0180	0.22	892.38	12.00		0.0180	0.43	892.60	
	891.89	-0.43	-0.0180		12.00	892.10	-0.22	-0.0180		12.00	892.32	-40.00	209+00.00 R 3	40.00	892.32	12.00		0.0180	0.22	892.53	12.00		0.0180	0.43	892.75	
	892.03	-0.43	-0.0180		12.00	892.25	-0.22	-0.0180		12.00	892.46	-40.00	209+25.00 R 3	40.00	892.46	12.00		0.0180	0.22	892.68	12.00		0.0180	0.43	892.89	
	892.17	-0.43	-0.0180		12.00	892.38	-0.22	-0.0180		12.00	892.60	-40.00	209+50.00 R 3	40.00	892.60	12.00		0.0180	0.22	892.81	12.00		0.0180	0.43	893.03	
	892.30	-0.43	-0.0180		12.00	892.51	-0.22	-0.0180		12.00	892.73	-40.00	209+75.00 R 3	40.00	892.73	12.00		0.0180	0.22	892.94	12.00		0.0180	0.43	893.16	
	892.42	-0.43	-0.0180		12.00	892.63	-0.22	-0.0180		12.00	892.85	-40.00	210+00.00 R 3	40.00	892.85	12.00		0.0180	0.22	893.06	12.00		0.0180	0.43	893.28	
	892.53	-0.43	-0.0180		12.00	892.74	-0.22	-0.0180		12.00	892.96	-40.00	210+25.00 R 3	40.00	892.96	12.00		0.0180	0.22	893.18	12.00		0.0180	0.43	893.39	
	892.63	-0.43	-0.0180		12.00	892.85	-0.22	-0.0180		12.00	893.07	-40.00	210+50.00 R 3	40.00	893.07	12.00		0.0180	0.22	893.28	12.00		0.0180	0.43	893.50	
	892.73	-0.43	-0.0180		12.00	892.95	-0.22	-0.0180		12.00	893.16	-40.00	210+75.00 R 3	40.00	893.16	12.00		0.0180	0.22	893.38	12.00		0.0180	0.43	893.60	
	892.82	-0.43	-0.0180		12.00	893.04	-0.22	-0.0180		12.00	893.25	-40.00	211+00.00 R 3	40.00	893.25	12.00		0.0180	0.22	893.47	12.00		0.0180	0.43	893.69	
	892.90	-0.43	-0.0180		12.00	893.12	-0.22	-0.0180		12.00	893.34	-40.00	211+25.00 R 3	40.00	893.34	12.00		0.0180	0.22	893.55	12.00		0.0180	0.43	893.77	
	892.98	-0.43	-0.0180		12.00	893.19	-0.22	-0.0180		12.00	893.41	-40.00	211+50.00 R 3	40.00	893.41	12.00		0.0180	0.22	893.63	12.00		0.0180	0.43	893.84	
	893.04	-0.43	-0.0180		12.00	893.26	-0.22	-0.0180		12.00	893.48	-40.00	211+75.00 R 3	40.00	893.48	12.00		0.0180	0.22	893.69	12.00		0.0180	0.43	893.91	
	893.10	-0.43	-0.0180		12.00	893.32	-0.22	-0.0180		12.00	893.54	-40.00	212+00.00 R 3	40.00	893.54	12.00		0.0180	0.22	893.75	12.00		0.0180	0.43	893.97	
	893.15	-0.43	-0.0180		12.00	893.37	-0.22	-0.0180		12.00	893.59	-40.00	212+25.00 R 3	40.00	893.59	12.00		0.0180	0.22	893.80	12.00		0.0180	0.43	894.02	
	893.20	-0.43	-0.0180		12.00	893.41	-0.22	-0.0180		12.00	893.63	-40.00	212+50.00 R 3	40.00	893.63	12.00		0.0180	0.22	893.85	12.00		0.0180	0.43	894.06	
	893.23	-0.43	-0.0180		12.00	893.45	-0.22	-0.0180		12.00	893.67	-40.00	212+75.00 R 3	40.00	893.67	12.00		0.0180	0.22	893.88	12.00		0.0180	0.43	894.10	
	893.26	-0.43	-0.0180		12.00	893.48	-0.22	-0.0180		12.00	893.69	-40.00	213+00.00 R 3	40.00	893.69	12.00		0.0180	0.22	893.91	12.00		0.0180	0.43	894.13	
	893.28	-0.43	-0.0180		12.00	893.50	-0.22	-0.0180		12.00	893.71	-40.00	213+25.00 R 3	40.00	893.71	12.00		0.0180	0.22	893.93	12.00		0.0180	0.43	894.15	
	893.29	-0.43	-0.0180		12.00	893.51	-0.22	-0.0180		12.00	893.73	-40.00	213+50.00 R 3	40.00	893.73	12.00		0.0180	0.22	893.94	12.00		0.0180	0.43	894.16	
	893.30	-0.43	-0.0180		12.00	893.52	-0.22	-0.0180		12.00	893.73	-40.00	213+75.00 R 3	40.00	893.73	12.00		0.0180	0.22	893.95	12.00		0.0180	0.43	894.16	
	893.30	-0.43	-0.0180		12.00	893.51	-0.22	-0.0180		12.00	893.73	-40.00	214+00.00 R 3	40.00	893.73	12.00		0.0180	0.22	893.94	12.00		0.0180	0.43	894.16	
	893.29	-0.43	-0.0180		12.00	893.50	-0.22	-0.0180		12.00	893.72	-40.00	214+25.00 R 3	40.00	893.72	12.00		0.0180	0.22	893.93	12.00		0.0180	0.43	894.15	
	893.27	-0.43	-0.0180		12.00	893.48	-0.22	-0.0180		12.00	893.70	-40.00	214+50.00 R 3	40.00	893.70	12.00		0.0180	0.22	893.91	12.00		0.0180	0.43	894.13	
	893.24	-0.43	-0.0180		12.00	893.46	-0.22	-0.0180		12.00	893.67	-40.00	214+75.00 R 3	40.00	893.67	12.00		0.0180	0.22	893.89	12.00		0.0180	0.43	894.10	
	893.21	-0.43	-0.0180		12.00	893.42	-0.22	-0.0180		12.00	893.64	-40.00	215+00.00 R 3	40.00	893.64	12.00		0.0180	0.22	893.85	12.00		0.0180	0.43	894.07	
	893.16	-0.43	-0.0180		12.00	893.38	-0.22	-0.0180		12.00	893.60	-40.00	215+25.00 R 3	40.00	893.60	12.00		0.0180	0.22	893.81	12.00		0.0180	0.43	894.03	
	893.12	-0.43	-0.0180		12.00	893.33	-0.22	-0.0180		12.00	893.55	-40.00	215+50.00 R 3	40.00	893.55	12.00		0.0180	0.22	893.76	12.00		0.0180	0.43	893.98	
	893.06	-0.43	-0.0180		12.00	893.27	-0.22	-0.0180		12.00	893.49	-40.00	215+75.00 R 3	40.00	893.49	12.00		0.0180	0.22	893.71	12.00		0.0180	0.43	893.92	
	892.99	-0.43	-0.0180		12.00	893.21	-0.22	-0.0180		12.00	893.43	-40.00	216+00.00 R 3	40.00	893.43	12.00		0.0180	0.22	893.64	12.00		0.0180	0.43	893.86	
	892.92	-0.43	-0.0180		12.00	893.14	-0.22	-0.0180		12.00	893.35	-40.00	216+25.00 R 3	40.00	893.35	12.00		0.0180	0.22	893.57	12.00		0.0180	0.43	893.78	
	892.84	-0.43	-0.0180		12.00	893.06	-0.22	-0.0180		12.00	893.27	-40.00	216+50.00 R 3	40.00	893.27	12.00		0.0180	0.22	893.49	12.00		0.0180	0.43	893.70	
	892.75	-0.43	-0.0180		12.00	892.97	-0.22	-0.0180		12.00	893.18	-40.00	216+75.00 R 3	40.00	893.18	12.00		0.0180	0.22	893.40	12.00		0.0180	0.43	893.62	
	892.66	-0.43	-0.0180		12.00	892.87	-0.22	-0.0180		12.00	893.09	-40.00	217+00.00 R 3	40.00	893.09	12.00		0.0180	0.22	893.30	12.00		0.0180	0.43	893.52	
	892.55	-0.43	-0.0180		12.00	892.77	-0.22	-0.0180		12.00	892.98	-40.00	217+25.00 R 3	40.00	892.98	12.00		0.0180	0.22	893.20	12.00		0.0180	0.43	893.42	
	892.44	-0.43	-0.0180		12.00	892.66	-0.22	-0.0180		12.00	892.87	-40.00	217+50.00 R 3	40.00	892.87	12.00		0.0180	0.22	893.09	12.00		0.0180	0.43	893.30	
	892.32	-0.43	-0.0180		12.00	892.54	-0.22	-0.0180		12.00	892.75	-40.00	217+75.00 R 3	40.00	892.75	12.00		0.0180	0.22	892.97	12.00		0.0180	0.43	893.19	
	892.19	-0.43	-0.0180		12.00	892.41	-0.22	-0.0180		12.00	892.63	-40.00	218+00.00 R 3	40.00	892.63	12.00		0.0180	0.22	892.84	12.00		0.0180	0.43	893.06	

CALCULATED | CHECKED

SUPERELEVATION TABLE
I-90
ATB-90-14.25

259
437

Palmer ENGINEERING
11300 CORNELL PARK DR
CINCINNATI, OH 45242

O:\ODOT\ATB\25199\roadway\sheets\25199GE010.dgn 6/6/2009 9:48:10 AM DENNIS

SUPERELEVATION TABLE

P.I. STA. 238+56.16 | Dc = 0° 28′ 00″

REMARKS	WESTBOUND OUTSIDE EDGE - ELEVATION	ELEVATION CORRECTION	CROSS SLOPE	TRANSITION RATE	WIDTH	WESTBOUND CENTERLINE OF LANES ELEVATION	ELEVATION CORRECTION	CROSS SLOPE	TRANSITION RATE	WIDTH	WESTBOUND INSIDE EDGE (PROFILE GRADE) ELEVATION	OFFSET	STATION	EASTBOUND INSIDE EDGE (PROFILE GRADE) OFFSET	ELEVATION	EASTBOUND CENTERLINE OF LANES WIDTH	TRANSITION RATE	CROSS SLOPE	ELEVATION CORRECTION	ELEVATION	EASTBOUND OUTSIDE EDGE - WIDTH	TRANSITION RATE	CROSS SLOPE	ELEVATION CORRECTION	ELEVATION	REMARKS
	892.06	-0.43	-0.0180		12.00	892.28	-0.22	-0.0180		12.00	892.49	-40.00	218+25.00 R 3	40.00	892.49	12.00		0.0180	0.22	892.71	12.00		0.0180	0.43	892.92	
	891.92	-0.43	-0.0180		12.00	892.13	-0.22	-0.0180		12.00	892.35	-40.00	218+50.00 R 3	40.00	892.35	12.00		0.0180	0.22	892.57	12.00		0.0180	0.43	892.78	
	891.77	-0.43	-0.0180		12.00	891.98	-0.22	-0.0180		12.00	892.20	-40.00	218+75.00 R 3	40.00	892.20	12.00		0.0180	0.22	892.42	12.00		0.0180	0.43	892.63	
	891.61	-0.43	-0.0180		12.00	891.83	-0.22	-0.0180		12.00	892.04	-40.00	219+00.00 R 3	40.00	892.04	12.00		0.0180	0.22	892.26	12.00		0.0180	0.43	892.47	
	891.44	-0.43	-0.0180		12.00	891.66	-0.22	-0.0180		12.00	891.88	-40.00	219+25.00 R 3	40.00	891.88	12.00		0.0180	0.22	892.09	12.00		0.0180	0.43	892.31	
	891.27	-0.43	-0.0180		12.00	891.49	-0.22	-0.0180		12.00	891.70	-40.00	219+50.00 R 3	40.00	891.70	12.00		0.0180	0.22	891.92	12.00		0.0180	0.43	892.14	
	891.09	-0.43	-0.0180		12.00	891.31	-0.22	-0.0180		12.00	891.52	-40.00	219+75.00 R 3	40.00	891.52	12.00		0.0180	0.22	891.74	12.00		0.0180	0.43	891.95	
	890.90	-0.43	-0.0180		12.00	891.12	-0.22	-0.0180		12.00	891.33	-40.00	220+00.00 R 3	40.00	891.33	12.00		0.0180	0.22	891.55	12.00		0.0180	0.43	891.77	
	890.70	-0.43	-0.0180		12.00	890.92	-0.22	-0.0180		12.00	891.14	-40.00	220+25.00 R 3	40.00	891.14	12.00		0.0180	0.22	891.35	12.00		0.0180	0.43	891.57	
	890.50	-0.43	-0.0180		12.00	890.72	-0.22	-0.0180		12.00	890.93	-40.00	220+50.00 R 3	40.00	890.93	12.00		0.0180	0.22	891.15	12.00		0.0180	0.43	891.36	
	890.29	-0.43	-0.0180		12.00	890.50	-0.22	-0.0180		12.00	890.72	-40.00	220+75.00 R 3	40.00	890.72	12.00		0.0180	0.22	890.94	12.00		0.0180	0.43	891.15	
	890.07	-0.43	-0.0180		12.00	890.28	-0.22	-0.0180		12.00	890.50	-40.00	221+00.00 R 3	40.00	890.50	12.00		0.0180	0.22	890.72	12.00		0.0180	0.43	890.93	
	889.84	-0.43	-0.0180		12.00	890.06	-0.22	-0.0180		12.00	890.27	-40.00	221+25.00 R 3	40.00	890.27	12.00		0.0180	0.22	890.49	12.00		0.0180	0.43	890.70	
	889.61	-0.43	-0.0180		12.00	889.82	-0.22	-0.0180		12.00	890.04	-40.00	221+50.00 R 3	40.00	890.04	12.00		0.0180	0.22	890.25	12.00		0.0180	0.43	890.47	
	889.36	-0.43	-0.0180		12.00	889.58	-0.22	-0.0180		12.00	889.79	-40.00	221+75.00 R 3	40.00	889.79	12.00		0.0180	0.22	890.01	12.00		0.0180	0.43	890.23	
	889.11	-0.43	-0.0180		12.00	889.33	-0.22	-0.0180		12.00	889.54	-40.00	222+00.00 R 3	40.00	889.54	12.00		0.0180	0.22	889.76	12.00		0.0180	0.43	889.98	
	888.85	-0.43	-0.0180		12.00	889.07	-0.22	-0.0180		12.00	889.29	-40.00	222+25.00 R 3	40.00	889.29	12.00		0.0180	0.22	889.50	12.00		0.0180	0.43	889.72	
	888.59	-0.43	-0.0180		12.00	888.80	-0.22	-0.0180		12.00	889.02	-40.00	222+50.00 R 3	40.00	889.02	12.00		0.0180	0.22	889.24	12.00		0.0180	0.43	889.45	
	888.31	-0.43	-0.0180		12.00	888.53	-0.22	-0.0180		12.00	888.75	-40.00	222+75.00 R 3	40.00	888.75	12.00		0.0180	0.22	888.96	12.00		0.0180	0.43	889.18	
	888.03	-0.43	-0.0180		12.00	888.25	-0.22	-0.0180		12.00	888.46	-40.00	223+00.00 R 3	40.00	888.46	12.00		0.0180	0.22	888.68	12.00		0.0180	0.43	888.90	
	887.74	-0.43	-0.0180		12.00	887.96	-0.22	-0.0180		12.00	888.17	-40.00	223+25.00 R 3	40.00	888.17	12.00		0.0180	0.22	888.39	12.00		0.0180	0.43	888.61	
	887.44	-0.43	-0.0180		12.00	887.66	-0.22	-0.0180		12.00	887.88	-40.00	223+50.00 R 3	40.00	887.88	12.00		0.0180	0.22	888.09	12.00		0.0180	0.43	888.31	
	887.14	-0.43	-0.0180		12.00	887.36	-0.22	-0.0180		12.00	887.57	-40.00	223+75.00 R 3	40.00	887.57	12.00		0.0180	0.22	887.79	12.00		0.0180	0.43	888.00	
	886.83	-0.43	-0.0180		12.00	887.04	-0.22	-0.0180		12.00	887.26	-40.00	224+00.00 R 3	40.00	887.26	12.00		0.0180	0.22	887.48	12.00		0.0180	0.43	887.69	
	886.51	-0.43	-0.0180		12.00	886.73	-0.22	-0.0180		12.00	886.94	-40.00	224+25.00 R 3	40.00	886.94	12.00		0.0180	0.22	887.16	12.00		0.0180	0.43	887.37	
	886.19	-0.43	-0.0180		12.00	886.41	-0.22	-0.0180		12.00	886.63	-40.00	224+50.00 R 3	40.00	886.63	12.00		0.0180	0.22	886.84	12.00		0.0180	0.43	887.06	
	885.88	-0.43	-0.0180		12.00	886.09	-0.22	-0.0180		12.00	886.31	-40.00	224+75.00 R 3	40.00	886.31	12.00		0.0180	0.22	886.53	12.00		0.0180	0.43	886.74	
	885.56	-0.43	-0.0180		12.00	885.78	-0.22	-0.0180		12.00	885.99	-40.00	225+00.00 R 3	40.00	885.99	12.00		0.0180	0.22	886.21	12.00		0.0180	0.43	886.43	
	885.24	-0.43	-0.0180		12.00	885.46	-0.22	-0.0180		12.00	885.68	-40.00	225+25.00 R 3	40.00	885.68	12.00		0.0180	0.22	885.89	12.00		0.0180	0.43	886.11	
	884.93	-0.43	-0.0180		12.00	885.14	-0.22	-0.0180		12.00	885.36	-40.00	225+50.00 R 3	40.00	885.36	12.00		0.0180	0.22	885.58	12.00		0.0180	0.43	885.79	
	884.61	-0.43	-0.0180		12.00	884.83	-0.22	-0.0180		12.00	885.04	-40.00	225+75.00 R 3	40.00	885.04	12.00		0.0180	0.22	885.26	12.00		0.0180	0.43	885.48	
	884.29	-0.43	-0.0180		12.00	884.51	-0.22	-0.0180		12.00	884.73	-40.00	226+00.00 R 3	40.00	884.73	12.00		0.0180	0.22	884.94	12.00		0.0180	0.43	885.16	
	883.98	-0.43	-0.0180		12.00	884.19	-0.22	-0.0180		12.00	884.41	-40.00	226+25.00 R 3	40.00	884.41	12.00		0.0180	0.22	884.63	12.00		0.0180	0.43	884.84	
	883.66	-0.43	-0.0180		12.00	883.88	-0.22	-0.0180		12.00	884.09	-40.00	226+50.00 R 3	40.00	884.09	12.00		0.0180	0.22	884.31	12.00		0.0180	0.43	884.53	
	883.35	-0.43	-0.0180		12.00	883.56	-0.22	-0.0180		12.00	883.78	-40.00	226+75.00 R 3	40.00	883.78	12.00		0.0180	0.22	883.99	12.00		0.0180	0.43	884.21	
	883.03	-0.43	-0.0180		12.00	883.24	-0.22	-0.0180		12.00	883.46	-40.00	227+00.00 R 3	40.00	883.46	12.00		0.0180	0.22	883.68	12.00		0.0180	0.43	883.89	
	882.71	-0.43	-0.0180		12.00	882.93	-0.22	-0.0180		12.00	883.14	-40.00	227+25.00 R 3	40.00	883.14	12.00		0.0180	0.22	883.36	12.00		0.0180	0.43	883.58	
	882.40	-0.43	-0.0180		12.00	882.61	-0.22	-0.0180		12.00	882.83	-40.00	227+50.00 R 3	40.00	882.83	12.00		0.0180	0.22	883.04	12.00		0.0180	0.43	883.26	
	882.08	-0.43	-0.0180		12.00	882.29	-0.22	-0.0180		12.00	882.51	-40.00	227+75.00 R 3	40.00	882.51	12.00		0.0180	0.22	882.73	12.00		0.0180	0.43	882.94	
	881.76	-0.43	-0.0180		12.00	881.98	-0.22	-0.0180		12.00	882.19	-40.00	228+00.00 R 3	40.00	882.19	12.00		0.0180	0.22	882.41	12.00		0.0180	0.43	882.63	
	881.45	-0.43	-0.0180		12.00	881.66	-0.22	-0.0180		12.00	881.88	-40.00	228+25.00 R 3	40.00	881.88	12.00		0.0180	0.22	882.09	12.00		0.0180	0.43	882.31	
	881.13	-0.43	-0.0180		12.00	881.35	-0.22	-0.0180		12.00	881.56	-40.00	228+50.00 R 3	40.00	881.56	12.00		0.0180	0.22	881.78	12.00		0.0180	0.43	881.99	
	880.81	-0.43	-0.0180		12.00	881.03	-0.22	-0.0180		12.00	881.24	-40.00	228+75.00 R 3	40.00	881.24	12.00		0.0180	0.22	881.46	12.00		0.0180	0.43	881.68	
	880.50	-0.43	-0.0180		12.00	880.71	-0.22	-0.0180		12.00	880.93	-40.00	229+00.00 R 3	40.00	880.93	12.00		0.0180	0.22	881.14	12.00		0.0180	0.43	881.36	
	880.18	-0.43	-0.0180		12.00	880.40	-0.22	-0.0180		12.00	880.61	-40.00	229+25.00 R 3	40.00	880.61	12.00		0.0180	0.22	880.83	12.00		0.0180	0.43	881.04	
	879.86	-0.43	-0.0180		12.00	880.08	-0.22	-0.0180		12.00	880.30	-40.00	229+50.00 R 3	40.00	880.30	12.00		0.0180	0.22	880.51	12.00		0.0180	0.43	880.73	
	879.55	-0.43	-0.0180		12.00	879.76	-0.22	-0.0180		12.00	879.98	-40.00	229+75.00 R 3	40.00	879.98	12.00		0.0180	0.22	880.19	12.00		0.0180	0.43	880.41	
	879.23	-0.43	-0.0180		12.00	879.45	-0.22	-0.0180		12.00	879.66	-40.00	230+00.00 R 3	40.00	879.66	12.00		0.0180	0.22	879.88	12.00		0.0180	0.43	880.09	
	878.91	-0.43	-0.0180		12.00	879.13	-0.22	-0.0180		12.00	879.35	-40.00	230+25.00 R 3	40.00	879.35	12.00		0.0180	0.22	879.56	12.00		0.0180	0.43	879.78	
	878.60	-0.43	-0.0180		12.00	878.81	-0.22	-0.0180		12.00	879.03	-40.00	230+50.00 R 3	40.00	879.03	12.00		0.0180	0.22	879.24	12.00		0.0180	0.43	879.46	
	878.28	-0.43	-0.0180		12.00	878.50	-0.22	-0.0180		12.00	878.71	-40.00	230+75.00 R 3	40.00	878.71	12.00		0.0180	0.22	878.93	12.00		0.0180	0.43	879.14	
	877.96	-0.43	-0.0180		12.00	878.18	-0.22	-0.0180		12.00	878.40	-40.00	231+00.00 R 3	40.00	878.40	12.00		0.0180	0.22	878.61	12.00		0.0180	0.43	878.83	
	877.65	-0.43	-0.0180		12.00	877.86	-0.22	-0.0180		12.00	878.08	-40.00	231+25.00 R 3	40.00	878.08	12.00		0.0180	0.22	878.30	12.00		0.0180	0.43	878.51	
	877.33	-0.43	-0.0180		12.00	877.55	-0.22	-0.0180		12.00	877.76	-40.00	231+50.00 R 3	40.00	877.76	12.00		0.0180	0.22	877.98	12.00		0.0180	0.43	878.19	
	877.01	-0.43	-0.0180		12.00	877.23	-0.22	-0.0180		12.00	877.45	-40.00	231+75.00 R 3	40.00	877.45	12.00		0.0180	0.22	877.66	12.00		0.0180	0.43	877.88	

CALCULATED | CHECKED

SUPERELEVATION TABLE
I-90
ATB-90-14.25

260
437

Palmer ENGINEERING
11300 CORNELL PARK DR
ENGINEERING CINCINNATI, OH 45242

O:\ODOT\ATB\25199\roadway\sheets\25199GE011.dgn 6/6/2009 9:48:16 AM DENNIS

SUPERELEVATION TABLE

P.I. STA. 238+56.16 | Dc = 0° 28′ 00″

REMARKS	WESTBOUND OUTSIDE EDGE - ELEVATION	ELEVATION CORRECTION	CROSS SLOPE	TRANSITION RATE	WIDTH	WESTBOUND CENTERLINE OF LANES ELEVATION	ELEVATION CORRECTION	CROSS SLOPE	TRANSITION RATE	WIDTH	WESTBOUND INSIDE EDGE (PROFILE GRADE) ELEVATION	OFFSET	STATION	EASTBOUND INSIDE EDGE (PROFILE GRADE) OFFSET	ELEVATION	EASTBOUND CENTERLINE OF LANES WIDTH	TRANSITION RATE	CROSS SLOPE	ELEVATION CORRECTION	ELEVATION	EASTBOUND OUTSIDE EDGE - WIDTH	TRANSITION RATE	CROSS SLOPE	ELEVATION CORRECTION	ELEVATION	REMARKS
	876.70	-0.43	-0.0180		12.00	876.91	-0.22	-0.0180		12.00	877.13	-40.00	232+00.00 R 3	40.00	877.13	12.00		0.0180	0.22	877.35	12.00		0.0180	0.43	877.56	
	876.38	-0.43	-0.0180		12.00	876.60	-0.22	-0.0180		12.00	876.81	-40.00	232+25.00 R 3	40.00	876.81	12.00		0.0180	0.22	877.03	12.00		0.0180	0.43	877.25	
	876.06	-0.43	-0.0180		12.00	876.28	-0.22	-0.0180		12.00	876.50	-40.00	232+50.00 R 3	40.00	876.50	12.00		0.0180	0.22	876.71	12.00		0.0180	0.43	876.93	
	875.75	-0.43	-0.0180		12.00	875.96	-0.22	-0.0180		12.00	876.18	-40.00	232+75.00 R 3	40.00	876.18	12.00		0.0180	0.22	876.40	12.00		0.0180	0.43	876.61	
	875.43	-0.43	-0.0180		12.00	875.65	-0.22	-0.0180		12.00	875.86	-40.00	233+00.00 R 3	40.00	875.86	12.00		0.0180	0.22	876.08	12.00		0.0180	0.43	876.30	
	875.11	-0.43	-0.0180		12.00	875.33	-0.22	-0.0180		12.00	875.55	-40.00	233+25.00 R 3	40.00	875.55	12.00		0.0180	0.22	875.76	12.00		0.0180	0.43	875.98	
	874.80	-0.43	-0.0180		12.00	875.01	-0.22	-0.0180		12.00	875.23	-40.00	233+50.00 R 3	40.00	875.23	12.00		0.0180	0.22	875.45	12.00		0.0180	0.43	875.66	
	874.48	-0.43	-0.0180		12.00	874.70	-0.22	-0.0180		12.00	874.91	-40.00	233+75.00 R 3	40.00	874.91	12.00		0.0180	0.22	875.13	12.00		0.0180	0.43	875.35	
	874.17	-0.43	-0.0180		12.00	874.38	-0.22	-0.0180		12.00	874.60	-40.00	234+00.00 R 3	40.00	874.60	12.00		0.0180	0.22	874.81	12.00		0.0180	0.43	875.03	
	873.85	-0.43	-0.0180		12.00	874.06	-0.22	-0.0180		12.00	874.28	-40.00	234+25.00 R 3	40.00	874.28	12.00		0.0180	0.22	874.50	12.00		0.0180	0.43	874.71	
	873.53	-0.43	-0.0180		12.00	873.75	-0.22	-0.0180		12.00	873.96	-40.00	234+50.00 R 3	40.00	873.96	12.00		0.0180	0.22	874.18	12.00		0.0180	0.43	874.40	
	873.22	-0.43	-0.0180		12.00	873.43	-0.22	-0.0180		12.00	873.65	-40.00	234+75.00 R 3	40.00	873.65	12.00		0.0180	0.22	873.86	12.00		0.0180	0.43	874.08	
	872.90	-0.43	-0.0180		12.00	873.12	-0.22	-0.0180		12.00	873.33	-40.00	235+00.00 R 3	40.00	873.33	12.00		0.0180	0.22	873.55	12.00		0.0180	0.43	873.76	
	872.59	-0.43	-0.0180		12.00	872.81	-0.22	-0.0180		12.00	873.03	-40.00	235+25.00 R 3	40.00	873.03	12.00		0.0180	0.22	873.24	12.00		0.0180	0.43	873.46	
	872.31	-0.43	-0.0180		12.00	872.52	-0.22	-0.0180		12.00	872.74	-40.00	235+50.00 R 3	40.00	872.74	12.00		0.0180	0.22	872.96	12.00		0.0180	0.43	873.17	
	872.04	-0.43	-0.0180		12.00	872.26	-0.22	-0.0180		12.00	872.48	-40.00	235+75.00 R 3	40.00	872.48	12.00		0.0180	0.22	872.69	12.00		0.0180	0.43	872.91	
	871.80	-0.43	-0.0180		12.00	872.02	-0.22	-0.0180		12.00	872.23	-40.00	236+00.00 R 3	40.00	872.23	12.00		0.0180	0.22	872.45	12.00		0.0180	0.43	872.66	
	871.58	-0.43	-0.0180		12.00	871.79	-0.22	-0.0180		12.00	872.01	-40.00	236+25.00 R 3	40.00	872.01	12.00		0.0180	0.22	872.23	12.00		0.0180	0.43	872.44	
	871.38	-0.43	-0.0180		12.00	871.59	-0.22	-0.0180		12.00	871.81	-40.00	236+50.00 R 3	40.00	871.81	12.00		0.0180	0.22	872.03	12.00		0.0180	0.43	872.24	
	871.20	-0.43	-0.0180		12.00	871.41	-0.22	-0.0180		12.00	871.63	-40.00	236+75.00 R 3	40.00	871.63	12.00		0.0180	0.22	871.85	12.00		0.0180	0.43	872.06	
	871.04	-0.43	-0.0180		12.00	871.25	-0.22	-0.0180		12.00	871.47	-40.00	237+00.00 R 3	40.00	871.47	12.00		0.0180	0.22	871.69	12.00		0.0180	0.43	871.90	
	870.90	-0.43	-0.0180		12.00	871.12	-0.22	-0.0180		12.00	871.33	-40.00	237+25.00 R 3	40.00	871.33	12.00		0.0180	0.22	871.55	12.00		0.0180	0.43	871.76	
	870.78	-0.43	-0.0180		12.00	871.00	-0.22	-0.0180		12.00	871.21	-40.00	237+50.00 R 3	40.00	871.21	12.00		0.0180	0.22	871.43	12.00		0.0180	0.43	871.65	
	870.69	-0.43	-0.0180		12.00	870.90	-0.22	-0.0180		12.00	871.12	-40.00	237+75.00 R 3	40.00	871.12	12.00		0.0180	0.22	871.33	12.00		0.0180	0.43	871.55	
	870.61	-0.43	-0.0180		12.00	870.83	-0.22	-0.0180		12.00	871.04	-40.00	238+00.00 R 3	40.00	871.04	12.00		0.0180	0.22	871.26	12.00		0.0180	0.43	871.47	
	870.56	-0.43	-0.0180		12.00	870.77	-0.22	-0.0180		12.00	870.99	-40.00	238+25.00 R 3	40.00	870.99	12.00		0.0180	0.22	871.20	12.00		0.0180	0.43	871.42	
	870.52	-0.43	-0.0180		12.00	870.74	-0.22	-0.0180		12.00	870.96	-40.00	238+50.00 R 3	40.00	870.96	12.00		0.0180	0.22	871.17	12.00		0.0180	0.43	871.39	
	870.51	-0.43	-0.0180		12.00	870.73	-0.22	-0.0180		12.00	870.94	-40.00	238+75.00 R 3	40.00	870.94	12.00		0.0180	0.22	871.16	12.00		0.0180	0.43	871.37	
	870.52	-0.43	-0.0180		12.00	870.74	-0.22	-0.0180		12.00	870.95	-40.00	239+00.00 R 3	40.00	870.95	12.00		0.0180	0.22	871.17	12.00		0.0180	0.43	871.38	
	870.55	-0.43	-0.0180		12.00	870.77	-0.22	-0.0180		12.00	870.98	-40.00	239+25.00 R 3	40.00	870.98	12.00		0.0180	0.22	871.20	12.00		0.0180	0.43	871.41	
	870.60	-0.43	-0.0180		12.00	870.82	-0.22	-0.0180		12.00	871.03	-40.00	239+50.00 R 3	40.00	871.03	12.00		0.0180	0.22	871.25	12.00		0.0180	0.43	871.46	
	870.67	-0.43	-0.0180		12.00	870.89	-0.22	-0.0180		12.00	871.10	-40.00	239+75.00 R 3	40.00	871.10	12.00		0.0180	0.22	871.32	12.00		0.0180	0.43	871.54	
	870.76	-0.43	-0.0180		12.00	870.98	-0.22	-0.0180		12.00	871.20	-40.00	240+00.00 R 3	40.00	871.20	12.00		0.0180	0.22	871.41	12.00		0.0180	0.43	871.63	
	870.88	-0.43	-0.0180		12.00	871.09	-0.22	-0.0180		12.00	871.31	-40.00	240+25.00 R 3	40.00	871.31	12.00		0.0180	0.22	871.53	12.00		0.0180	0.43	871.74	
	871.01	-0.43	-0.0180		12.00	871.23	-0.22	-0.0180		12.00	871.44	-40.00	240+50.00 R 3	40.00	871.44	12.00		0.0180	0.22	871.66	12.00		0.0180	0.43	871.88	
	871.17	-0.43	-0.0180		12.00	871.38	-0.22	-0.0180		12.00	871.60	-40.00	240+75.00 R 3	40.00	871.60	12.00		0.0180	0.22	871.82	12.00		0.0180	0.43	872.03	
	871.34	-0.43	-0.0180		12.00	871.56	-0.22	-0.0180		12.00	871.78	-40.00	241+00.00 R 3	40.00	871.78	12.00		0.0180	0.22	871.99	12.00		0.0180	0.43	872.21	
	871.53	-0.43	-0.0180		12.00	871.75	-0.22	-0.0180		12.00	871.96	-40.00	241+25.00 R 3	40.00	871.96	12.00		0.0180	0.22	872.18	12.00		0.0180	0.43	872.39	
	871.72	-0.43	-0.0180		12.00	871.93	-0.22	-0.0180		12.00	872.15	-40.00	241+50.00 R 3	40.00	872.15	12.00		0.0180	0.22	872.37	12.00		0.0180	0.43	872.58	
	871.90	-0.43	-0.0180		12.00	872.12	-0.22	-0.0180		12.00	872.34	-40.00	241+75.00 R 3	40.00	872.34	12.00		0.0180	0.22	872.55	12.00		0.0180	0.43	872.77	
	872.09	-0.43	-0.0180		12.00	872.31	-0.22	-0.0180		12.00	872.52	-40.00	242+00.00 R 3	40.00	872.52	12.00		0.0180	0.22	872.74	12.00		0.0180	0.43	872.96	
	872.28	-0.43	-0.0180		12.00	872.49	-0.22	-0.0180		12.00	872.71	-40.00	242+25.00 R 3	40.00	872.71	12.00		0.0180	0.22	872.93	12.00		0.0180	0.43	873.14	
	872.47	-0.43	-0.0180		12.00	872.68	-0.22	-0.0180		12.00	872.90	-40.00	242+50.00 R 3	40.00	872.90	12.00		0.0180	0.22	873.11	12.00		0.0180	0.43	873.33	
	872.65	-0.43	-0.0180		12.00	872.87	-0.22	-0.0180		12.00	873.08	-40.00	242+75.00 R 3	40.00	873.08	12.00		0.0180	0.22	873.30	12.00		0.0180	0.43	873.52	
	872.84	-0.43	-0.0180		12.00	873.05	-0.22	-0.0180		12.00	873.27	-40.00	243+00.00 R 3	40.00	873.27	12.00		0.0180	0.22	873.49	12.00		0.0180	0.43	873.70	
	873.03	-0.43	-0.0180		12.00	873.24	-0.22	-0.0180		12.00	873.46	-40.00	243+25.00 R 3	40.00	873.46	12.00		0.0180	0.22	873.67	12.00		0.0180	0.43	873.89	
	873.21	-0.43	-0.0180		12.00	873.43	-0.22	-0.0180		12.00	873.64	-40.00	243+50.00 R 3	40.00	873.64	12.00		0.0180	0.22	873.86	12.00		0.0180	0.43	874.08	
	873.40	-0.43	-0.0180		12.00	873.62	-0.22	-0.0180		12.00	873.83	-40.00	243+75.00 R 3	40.00	873.83	12.00		0.0180	0.22	874.05	12.00		0.0180	0.43	874.26	
	873.59	-0.43	-0.0180		12.00	873.80	-0.22	-0.0180		12.00	874.02	-40.00	244+00.00 R 3	40.00	874.02	12.00		0.0180	0.22	874.23	12.00		0.0180	0.43	874.45	
	873.77	-0.43	-0.0180		12.00	873.99	-0.22	-0.0180		12.00	874.21	-40.00	244+25.00 R 3	40.00	874.21	12.00		0.0180	0.22	874.42	12.00		0.0180	0.43	874.64	
	873.96	-0.43	-0.0180		12.00	874.18	-0.22	-0.0180		12.00	874.39	-40.00	244+50.00 R 3	40.00	874.39	12.00		0.0180	0.22	874.61	12.00		0.0180	0.43	874.82	
	874.15	-0.43	-0.0180		12.00	874.36	-0.22	-0.0180		12.00	874.58	-40.00	244+75.00 R 3	40.00	874.58	12.00		0.0180	0.22	874.80	12.00		0.0180	0.43	875.01	
	874.33	-0.43	-0.0180		12.00	874.55	-0.22	-0.0180		12.00	874.77	-40.00	245+00.00 R 3	40.00	874.77	12.00		0.0180	0.22	874.98	12.00		0.0180	0.43	875.20	
	874.52	-0.43	-0.0180		12.00	874.74	-0.22	-0.0180		12.00	874.95	-40.00	245+25.00 R 3	40.00	874.95	12.00		0.0180	0.22	875.17	12.00		0.0180	0.43	875.39	
	874.71	-0.43	-0.0180		12.00	874.92	-0.22	-0.0180		12.00	875.14	-40.00	245+50.00 R 3	40.00	875.14	12.00		0.0180	0.22	875.36	12.00		0.0180	0.43	875.57	

CALCULATED | CHECKED

SUPERELEVATION TABLE
I-90
ATB-90-14.25

261
437

Palmer ENGINEERING
11300 CORNELL PARK DR
ENGINEERING CINCINNATI, OH 45242

O:\ODOT\ATB\25199\roadway\sheets\25199GE012.dgn 6/6/2009 9:48:23 AM DENNIS

SUPERELEVATION TABLE

P.I. STA. 238+56.16 | Dc = 0° 28′ 00″

REMARKS	WESTBOUND OUTSIDE EDGE - ELEVATION	ELEVATION CORRECTION	CROSS SLOPE	TRANSITION RATE	WIDTH	WESTBOUND CENTERLINE OF LANES ELEVATION	ELEVATION CORRECTION	CROSS SLOPE	TRANSITION RATE	WIDTH	WESTBOUND INSIDE EDGE (PROFILE GRADE) ELEVATION	OFFSET	STATION	EASTBOUND INSIDE EDGE (PROFILE GRADE) OFFSET	ELEVATION	EASTBOUND CENTERLINE OF LANES WIDTH	TRANSITION RATE	CROSS SLOPE	ELEVATION CORRECTION	ELEVATION	EASTBOUND OUTSIDE EDGE - WIDTH	TRANSITION RATE	CROSS SLOPE	ELEVATION CORRECTION	ELEVATION	REMARKS
	874.90	-0.43	-0.0180		12.00	875.11	-0.22	-0.0180		12.00	875.33	-40.00	245+75.00 R 3	40.00	875.33	12.00		0.0180	0.22	875.54	12.00		0.0180	0.43	875.76	
	875.08	-0.43	-0.0180		12.00	875.30	-0.22	-0.0180		12.00	875.51	-40.00	246+00.00 R 3	40.00	875.51	12.00		0.0180	0.22	875.73	12.00		0.0180	0.43	875.95	
	875.27	-0.43	-0.0180		12.00	875.48	-0.22	-0.0180		12.00	875.70	-40.00	246+25.00 R 3	40.00	875.70	12.00		0.0180	0.22	875.92	12.00		0.0180	0.43	876.13	
	875.46	-0.43	-0.0180		12.00	875.67	-0.22	-0.0180		12.00	875.89	-40.00	246+50.00 R 3	40.00	875.89	12.00		0.0180	0.22	876.10	12.00		0.0180	0.43	876.32	
	875.64	-0.43	-0.0180		12.00	875.86	-0.22	-0.0180		12.00	876.07	-40.00	246+75.00 R 3	40.00	876.07	12.00		0.0180	0.22	876.29	12.00		0.0180	0.43	876.51	
	875.83	-0.43	-0.0180		12.00	876.05	-0.22	-0.0180		12.00	876.26	-40.00	247+00.00 R 3	40.00	876.26	12.00		0.0180	0.22	876.48	12.00		0.0180	0.43	876.69	
	876.02	-0.43	-0.0180		12.00	876.23	-0.22	-0.0180		12.00	876.45	-40.00	247+25.00 R 3	40.00	876.45	12.00		0.0180	0.22	876.66	12.00		0.0180	0.43	876.88	
	876.20	-0.43	-0.0180		12.00	876.42	-0.22	-0.0180		12.00	876.64	-40.00	247+50.00 R 3	40.00	876.64	12.00		0.0180	0.22	876.85	12.00		0.0180	0.43	877.07	
	876.39	-0.43	-0.0180		12.00	876.61	-0.22	-0.0180		12.00	876.82	-40.00	247+75.00 R 3	40.00	876.82	12.00		0.0180	0.22	877.04	12.00		0.0180	0.43	877.25	
	876.58	-0.43	-0.0180		12.00	876.79	-0.22	-0.0180		12.00	877.01	-40.00	248+00.00 R 3	40.00	877.01	12.00		0.0180	0.22	877.23	12.00		0.0180	0.43	877.44	
	876.76	-0.43	-0.0180		12.00	876.98	-0.22	-0.0180		12.00	877.20	-40.00	248+25.00 R 3	40.00	877.20	12.00		0.0180	0.22	877.41	12.00		0.0180	0.43	877.63	
	876.95	-0.43	-0.0180		12.00	877.17	-0.22	-0.0180		12.00	877.38	-40.00	248+50.00 R 3	40.00	877.38	12.00		0.0180	0.22	877.60	12.00		0.0180	0.43	877.82	
	877.14	-0.43	-0.0180		12.00	877.35	-0.22	-0.0180		12.00	877.57	-40.00	248+75.00 R 3	40.00	877.57	12.00		0.0180	0.22	877.79	12.00		0.0180	0.43	878.00	
	877.32	-0.43	-0.0180		12.00	877.54	-0.22	-0.0180		12.00	877.76	-40.00	249+00.00 R 3	40.00	877.76	12.00		0.0180	0.22	877.97	12.00		0.0180	0.43	878.19	
	877.51	-0.43	-0.0180		12.00	877.73	-0.22	-0.0180		12.00	877.94	-40.00	249+25.00 R 3	40.00	877.94	12.00		0.0180	0.22	878.16	12.00		0.0180	0.43	878.38	
	877.70	-0.43	-0.0180		12.00	877.91	-0.22	-0.0180		12.00	878.13	-40.00	249+50.00 R 3	40.00	878.13	12.00		0.0180	0.22	878.35	12.00		0.0180	0.43	878.56	
	877.88	-0.43	-0.0180		12.00	878.09	-0.22	-0.0180		12.00	878.31	-40.00	249+75.00 R 3	40.00	878.31	12.00		0.0180	0.22	878.53	12.00		0.0180	0.43	878.74	
	878.04	-0.43	-0.0180		12.00	878.26	-0.22	-0.0180		12.00	878.47	-40.00	250+00.00 R 3	40.00	878.47	12.00		0.0180	0.22	878.69	12.00		0.0180	0.43	878.91	
	878.19	-0.43	-0.0180		12.00	878.41	-0.22	-0.0180		12.00	878.62	-40.00	250+25.00 R 3	40.00	878.62	12.00		0.0180	0.22	878.84	12.00		0.0180	0.43	879.05	
	878.32	-0.43	-0.0180		12.00	878.54	-0.22	-0.0180		12.00	878.76	-40.00	250+50.00 R 3	40.00	878.76	12.00		0.0180	0.22	878.97	12.00		0.0180	0.43	879.19	
	878.44	-0.43	-0.0180		12.00	878.66	-0.22	-0.0180		12.00	878.87	-40.00	250+75.00 R 3	40.00	878.87	12.00		0.0180	0.22	879.09	12.00		0.0180	0.43	879.30	
	878.54	-0.43	-0.0180		12.00	878.76	-0.22	-0.0180		12.00	878.97	-40.00	251+00.00 R 3	40.00	878.97	12.00		0.0180	0.22	879.19	12.00		0.0180	0.43	879.41	
	878.63	-0.43	-0.0180		12.00	878.85	-0.22	-0.0180		12.00	879.06	-40.00	251+25.00 R 3	40.00	879.06	12.00		0.0180	0.22	879.28	12.00		0.0180	0.43	879.49	
	878.70	-0.43	-0.0180		12.00	878.92	-0.22	-0.0180		12.00	879.13	-40.00	251+50.00 R 3	40.00	879.13	12.00		0.0180	0.22	879.35	12.00		0.0180	0.43	879.56	
	878.76	-0.43	-0.0180		12.00	878.97	-0.22	-0.0180		12.00	879.19	-40.00	251+75.00 R 3	40.00	879.19	12.00		0.0180	0.22	879.40	12.00		0.0180	0.43	879.62	
	878.80	-0.43	-0.0180		12.00	879.01	-0.22	-0.0180		12.00	879.23	-40.00	252+00.00 R 3	40.00	879.23	12.00		0.0180	0.22	879.44	12.00		0.0180	0.43	879.66	
	878.82	-0.43	-0.0180		12.00	879.04	-0.22	-0.0180		12.00	879.25	-40.00	252+25.00 R 3	40.00	879.25	12.00		0.0180	0.22	879.47	12.00		0.0180	0.43	879.69	
	878.83	-0.43	-0.0180		12.00	879.05	-0.22	-0.0180		12.00	879.26	-40.00	252+50.00 R 3	40.00	879.26	12.00		0.0180	0.22	879.48	12.00		0.0180	0.43	879.70	
	878.83	-0.43	-0.0180		12.00	879.05	-0.22	-0.0180		12.00	879.26	-40.00	252+75.00 R 3	40.00	879.26	12.00		0.0180	0.22	879.48	12.00		0.0180	0.43	879.70	
	878.83	-0.43	-0.0180		12.00	879.05	-0.22	-0.0180		12.00	879.27	-40.00	253+00.00 R 3	40.00	879.27	12.00		0.0180	0.22	879.48	12.00		0.0180	0.43	879.70	
	878.84	-0.43	-0.0180		12.00	879.05	-0.22	-0.0180		12.00	879.27	-40.00	253+25.00 R 3	40.00	879.27	12.00		0.0180	0.22	879.48	12.00		0.0180	0.43	879.70	
	878.84	-0.43	-0.0180		12.00	879.05	-0.22	-0.0180		12.00	879.27	-40.00	253+50.00 R 3	40.00	879.27	12.00		0.0180	0.22	879.49	12.00		0.0180	0.43	879.70	
	878.84	-0.43	-0.0180		12.00	879.06	-0.22	-0.0180		12.00	879.27	-40.00	253+75.00 R 3	40.00	879.27	12.00		0.0180	0.22	879.49	12.00		0.0180	0.43	879.70	
	878.86	-0.43	-0.0180		12.00	879.08	-0.22	-0.0180		12.00	879.29	-40.00	254+00.00 R 3	40.00	879.29	12.00		0.0180	0.22	879.51	12.00		0.0180	0.43	879.73	
	878.91	-0.43	-0.0180		12.00	879.13	-0.22	-0.0180		12.00	879.35	-40.00	254+25.00 R 3	40.00	879.35	12.00		0.0180	0.22	879.56	12.00		0.0180	0.43	879.78	
	878.99	-0.43	-0.0180		12.00	879.21	-0.22	-0.0180		12.00	879.43	-40.00	254+50.00 R 3	40.00	879.43	12.00		0.0180	0.22	879.64	12.00		0.0180	0.43	879.86	
	879.10	-0.43	-0.0180		12.00	879.32	-0.22	-0.0180		12.00	879.53	-40.00	254+75.00 R 3	40.00	879.53	12.00		0.0180	0.22	879.75	12.00		0.0180	0.43	879.97	
	879.24	-0.43	-0.0180		12.00	879.46	-0.22	-0.0180		12.00	879.67	-40.00	255+00.00 R 3	40.00	879.67	12.00		0.0180	0.22	879.89	12.00		0.0180	0.43	880.10	
	879.41	-0.43	-0.0180		12.00	879.62	-0.22	-0.0180		12.00	879.84	-40.00	255+25.00 R 3	40.00	879.84	12.00		0.0180	0.22	880.05	12.00		0.0180	0.43	880.27	
	879.60	-0.43	-0.0180		12.00	879.82	-0.22	-0.0180		12.00	880.03	-40.00	255+50.00 R 3	40.00	880.03	12.00		0.0180	0.22	880.25	12.00		0.0180	0.43	880.47	
	879.83	-0.43	-0.0180		12.00	880.04	-0.22	-0.0180		12.00	880.26	-40.00	255+75.00 R 3	40.00	880.26	12.00		0.0180	0.22	880.47	12.00		0.0180	0.43	880.69	
	880.07	-0.43	-0.0180		12.00	880.29	-0.22	-0.0180		12.00	880.50	-40.00	256+00.00 R 3	40.00	880.50	12.00		0.0180	0.22	880.72	12.00		0.0180	0.43	880.93	
	880.31	-0.43	-0.0180		12.00	880.53	-0.22	-0.0180		12.00	880.75	-40.00	256+25.00 R 3	40.00	880.75	12.00		0.0180	0.22	880.96	12.00		0.0180	0.43	881.18	
	880.56	-0.43	-0.0180		12.00	880.77	-0.22	-0.0180		12.00	880.99	-40.00	256+50.00 R 3	40.00	880.99	12.00		0.0180	0.22	881.21	12.00		0.0180	0.43	881.42	
	880.80	-0.43	-0.0180		12.00	881.01	-0.22	-0.0180		12.00	881.23	-40.00	256+75.00 R 3	40.00	881.23	12.00		0.0180	0.22	881.45	12.00		0.0180	0.43	881.66	
	881.03	-0.43	-0.0180		12.00	881.24	-0.22	-0.0180		12.00	881.46	-40.00	257+00.00 R 3	40.00	881.46	12.00		0.0180	0.22	881.68	12.00		0.0180	0.43	881.89	
	881.25	-0.43	-0.0180		12.00	881.46	-0.22	-0.0180		12.00	881.68	-40.00	257+25.00 R 3	40.00	881.68	12.00		0.0180	0.22	881.90	12.00		0.0180	0.43	882.11	
	881.46	-0.43	-0.0180		12.00	881.68	-0.22	-0.0180		12.00	881.89	-40.00	257+50.00 R 3	40.00	881.89	12.00		0.0180	0.22	882.11	12.00		0.0180	0.43	882.32	
	881.66	-0.43	-0.0180		12.00	881.88	-0.22	-0.0180		12.00	882.09	-40.00	257+75.00 R 3	40.00	882.09	12.00		0.0180	0.22	882.31	12.00		0.0180	0.43	882.53	
	881.85	-0.43	-0.0180		12.00	882.07	-0.22	-0.0180		12.00	882.29	-40.00	258+00.00 R 3	40.00	882.29	12.00		0.0180	0.22	882.50	12.00		0.0180	0.43	882.72	
	882.04	-0.43	-0.0180		12.00	882.25	-0.22	-0.0180		12.00	882.47	-40.00	258+25.00 R 3	40.00	882.47	12.00		0.0180	0.22	882.69	12.00		0.0180	0.43	882.90	
	882.21	-0.43	-0.0180		12.00	882.43	-0.22	-0.0180		12.00	882.64	-40.00	258+50.00 R 3	40.00	882.64	12.00		0.0180	0.22	882.86	12.00		0.0180	0.43	883.08	
	882.38	-0.43	-0.0180		12.00	882.59	-0.22	-0.0180		12.00	882.81	-40.00	258+75.00 R 3	40.00	882.81	12.00		0.0180	0.22	883.02	12.00		0.0180	0.43	883.24	
	882.53	-0.43	-0.0180		12.00	882.75	-0.22	-0.0180		12.00	882.96	-40.00	259+00.00 R 3	40.00	882.96	12.00		0.0180	0.22	883.18	12.00		0.0180	0.43	883.39	
	882.67	-0.43	-0.0180		12.00	882.89	-0.22	-0.0180		12.00	883.11	-40.00	259+25.00 R 3	40.00	883.11	12.00		0.0180	0.22	883.32	12.00		0.0180	0.43	883.54	

CALCULATED | CHECKED

SUPERELEVATION TABLE
I-90
ATB-90-14.25

262
437

Palmer ENGINEERING
11300 CORNELL PARK DR
ENGINEERING CINCINNATI, OH 45242

O:\ODOT\ATB\25199\roadway\sheets\25199GE013.dgn 6/6/2009 9:48:30 AM DENNIS

SUPERELEVATION TABLE

P.I. STA. 238+56.16 | Dc = 0° 28′ 00″

REMARKS	WESTBOUND OUTSIDE EDGE - ELEVATION	ELEVATION CORRECTION	CROSS SLOPE	TRANSITION RATE	WIDTH	WESTBOUND CENTERLINE OF LANES ELEVATION	ELEVATION CORRECTION	CROSS SLOPE	TRANSITION RATE	WIDTH	WESTBOUND INSIDE EDGE (PROFILE GRADE) ELEVATION	OFFSET	STATION	EASTBOUND INSIDE EDGE (PROFILE GRADE) OFFSET	ELEVATION	EASTBOUND CENTERLINE OF LANES WIDTH	TRANSITION RATE	CROSS SLOPE	ELEVATION CORRECTION	ELEVATION	EASTBOUND OUTSIDE EDGE - WIDTH	TRANSITION RATE	CROSS SLOPE	ELEVATION CORRECTION	ELEVATION	REMARKS
	882.81	-0.43	-0.0180		12.00	883.03	-0.22	-0.0180		12.00	883.24	-40.00	259+50.00 R 3	40.00	883.24	12.00		0.0180	0.22	883.46	12.00		0.0180	0.43	883.67	
	882.94	-0.43	-0.0180		12.00	883.15	-0.22	-0.0180		12.00	883.37	-40.00	259+75.00 R 3	40.00	883.37	12.00		0.0180	0.22	883.58	12.00		0.0180	0.43	883.80	
	883.05	-0.43	-0.0180		12.00	883.27	-0.22	-0.0180		12.00	883.49	-40.00	260+00.00 R 3	40.00	883.49	12.00		0.0180	0.22	883.70	12.00		0.0180	0.43	883.92	
	883.16	-0.43	-0.0180		12.00	883.38	-0.22	-0.0180		12.00	883.59	-40.00	260+25.00 R 3	40.00	883.59	12.00		0.0180	0.22	883.81	12.00		0.0180	0.43	884.03	
	883.26	-0.43	-0.0180		12.00	883.48	-0.22	-0.0180		12.00	883.69	-40.00	260+50.00 R 3	40.00	883.69	12.00		0.0180	0.22	883.91	12.00		0.0180	0.43	884.12	
	883.35	-0.43	-0.0180		12.00	883.56	-0.22	-0.0180		12.00	883.78	-40.00	260+75.00 R 3	40.00	883.78	12.00		0.0180	0.22	884.00	12.00		0.0180	0.43	884.21	
	883.43	-0.43	-0.0180		12.00	883.64	-0.22	-0.0180		12.00	883.86	-40.00	261+00.00 R 3	40.00	883.86	12.00		0.0180	0.22	884.07	12.00		0.0180	0.43	884.29	
	883.50	-0.43	-0.0180		12.00	883.71	-0.22	-0.0180		12.00	883.93	-40.00	261+25.00 R 3	40.00	883.93	12.00		0.0180	0.22	884.14	12.00		0.0180	0.43	884.36	
	883.56	-0.43	-0.0180		12.00	883.77	-0.22	-0.0180		12.00	883.99	-40.00	261+50.00 R 3	40.00	883.99	12.00		0.0180	0.22	884.20	12.00		0.0180	0.43	884.42	
	883.61	-0.43	-0.0180		12.00	883.82	-0.22	-0.0180		12.00	884.04	-40.00	261+75.00 R 3	40.00	884.04	12.00		0.0180	0.22	884.25	12.00		0.0180	0.43	884.47	
	883.65	-0.43	-0.0180		12.00	883.86	-0.22	-0.0180		12.00	884.08	-40.00	262+00.00 R 3	40.00	884.08	12.00		0.0180	0.22	884.30	12.00		0.0180	0.43	884.51	
	883.68	-0.43	-0.0180		12.00	883.90	-0.22	-0.0180		12.00	884.11	-40.00	262+25.00 R 3	40.00	884.11	12.00		0.0180	0.22	884.33	12.00		0.0180	0.43	884.54	
	883.70	-0.43	-0.0180		12.00	883.92	-0.22	-0.0180		12.00	884.13	-40.00	262+50.00 R 3	40.00	884.13	12.00		0.0180	0.22	884.35	12.00		0.0180	0.43	884.57	
	883.72	-0.43	-0.0180		12.00	883.93	-0.22	-0.0180		12.00	884.15	-40.00	262+75.00 R 3	40.00	884.15	12.00		0.0180	0.22	884.36	12.00		0.0180	0.43	884.58	
	883.72	-0.43	-0.0180		12.00	883.93	-0.22	-0.0180		12.00	884.15	-40.00	263+00.00 R 3	40.00	884.15	12.00		0.0180	0.22	884.37	12.00		0.0180	0.43	884.58	
	883.71	-0.43	-0.0180		12.00	883.93	-0.22	-0.0180		12.00	884.14	-40.00	263+25.00 R 3	40.00	884.14	12.00		0.0180	0.22	884.36	12.00		0.0180	0.43	884.58	
	883.70	-0.43	-0.0180		12.00	883.91	-0.22	-0.0180		12.00	884.13	-40.00	263+50.00 R 3	40.00	884.13	12.00		0.0180	0.22	884.34	12.00		0.0180	0.43	884.56	
	883.67	-0.43	-0.0180		12.00	883.89	-0.22	-0.0180		12.00	884.10	-40.00	263+75.00 R 3	40.00	884.10	12.00		0.0180	0.22	884.32	12.00		0.0180	0.43	884.54	
	883.64	-0.43	-0.0180		12.00	883.85	-0.22	-0.0180		12.00	884.07	-40.00	264+00.00 R 3	40.00	884.07	12.00		0.0180	0.22	884.29	12.00		0.0180	0.43	884.50	
	883.59	-0.43	-0.0180		12.00	883.81	-0.22	-0.0180		12.00	884.03	-40.00	264+25.00 R 3	40.00	884.03	12.00		0.0180	0.22	884.24	12.00		0.0180	0.43	884.46	
	883.54	-0.43	-0.0180		12.00	883.76	-0.22	-0.0180		12.00	883.97	-40.00	264+50.00 R 3	40.00	883.97	12.00		0.0180	0.22	884.19	12.00		0.0180	0.43	884.40	
	883.48	-0.43	-0.0180		12.00	883.69	-0.22	-0.0180		12.00	883.91	-40.00	264+75.00 R 3	40.00	883.91	12.00		0.0180	0.22	884.13	12.00		0.0180	0.43	884.34	
	883.41	-0.43	-0.0180		12.00	883.62	-0.22	-0.0180		12.00	883.84	-40.00	265+00.00 R 3	40.00	883.84	12.00		0.0180	0.22	884.05	12.00		0.0180	0.43	884.27	
	883.32	-0.43	-0.0180		12.00	883.54	-0.22	-0.0180		12.00	883.76	-40.00	265+25.00 R 3	40.00	883.76	12.00		0.0180	0.22	883.97	12.00		0.0180	0.43	884.19	
	883.23	-0.43	-0.0180		12.00	883.45	-0.22	-0.0180		12.00	883.66	-40.00	265+50.00 R 3	40.00	883.66	12.00		0.0180	0.22	883.88	12.00		0.0180	0.43	884.10	
	883.13	-0.43	-0.0180		12.00	883.35	-0.22	-0.0180		12.00	883.56	-40.00	265+75.00 R 3	40.00	883.56	12.00		0.0180	0.22	883.78	12.00		0.0180	0.43	884.00	
	883.02	-0.43	-0.0180		12.00	883.24	-0.22	-0.0180		12.00	883.45	-40.00	266+00.00 R 3	40.00	883.45	12.00		0.0180	0.22	883.67	12.00		0.0180	0.43	883.89	
	882.90	-0.43	-0.0180		12.00	883.12	-0.22	-0.0180		12.00	883.33	-40.00	266+25.00 R 3	40.00	883.33	12.00		0.0180	0.22	883.55	12.00		0.0180	0.43	883.77	
	882.77	-0.43	-0.0180		12.00	882.99	-0.22	-0.0180		12.00	883.21	-40.00	266+50.00 R 3	40.00	883.21	12.00		0.0180	0.22	883.42	12.00		0.0180	0.43	883.64	
	882.64	-0.43	-0.0180		12.00	882.85	-0.22	-0.0180		12.00	883.07	-40.00	266+75.00 R 3	40.00	883.07	12.00		0.0180	0.22	883.28	12.00		0.0180	0.43	883.50	
	882.49	-0.43	-0.0180		12.00	882.70	-0.22	-0.0180		12.00	882.92	-40.00	267+00.00 R 3	40.00	882.92	12.00		0.0180	0.22	883.14	12.00		0.0180	0.43	883.35	
	882.33	-0.43	-0.0180		12.00	882.55	-0.22	-0.0180		12.00	882.76	-40.00	267+25.00 R 3	40.00	882.76	12.00		0.0180	0.22	882.98	12.00		0.0180	0.43	883.19	
END FULL S.E.	882.32	-0.43	-0.0180	250:1	12.00	882.53	-0.22	-0.0180	400:1	12.00	882.75	-40.00	267+27.36 R 3	40.00	882.75	12.00	400:1	0.0180	0.22	882.96	12.00	250:1	0.0180	0.43	883.18	END FULL S.E.
REV. CROWN	882.28	-0.38	-0.0160		12.00	882.48	-0.19	-0.0160	250:1	12.00	882.67	-40.00	267+39.36 R 3	40.00	882.67	12.00		0.0160	0.19	882.86	12.00		0.0160	0.38	883.05	REV. CROWN
													STATION EQUATION 267+47.36 BK.= 268+29.13 AH.												
PT	882.26	-0.35	-0.0160		12.00	882.45	-0.16	-0.0133		12.00	882.61	-40.00	268+29.13 R 4	40.00	882.61	12.00		0.0160	0.19	882.81	12.00		0.0133	0.35	882.97	PT
	882.20	-0.27	-0.0160		12.00	882.39	-0.08	-0.0064		12.00	882.47	-40.00	268+50.00 R 4	40.00	882.47	12.00		0.0160	0.19	882.66	12.00		0.0064	0.27	882.74	
½ FLAT	882.14	-0.19	-0.0160		12.00	882.33	0.00	0.0000		12.00	882.33	-40.00	268+69.13 R 4	40.00	882.33	12.00		0.0160	0.19	882.52	12.00		-0.0000	0.19	882.52	½ FLAT
	882.12	-0.17	-0.0160		12.00	882.31	0.02	0.0020		12.00	882.29	-40.00	268+75.00 R 4	40.00	882.29	12.00		0.0160	0.19	882.48	12.00		-0.0020	0.17	882.45	
	882.02	-0.07	-0.0160		12.00	882.22	0.12	0.0103		12.00	882.09	-40.00	269+00.00 R 4	40.00	882.09	12.00		0.0160	0.19	882.28	12.00		-0.0103	0.07	882.16	
BEGIN N.C.	881.96	0.00	-0.0160	250:1	12.00	882.15	0.19	0.0160	250:1	12.00	881.96	-40.00	269+17.13 R 4	40.00	881.96	12.00		0.0160	0.19	882.15	12.00	250:1	-0.0160	0.00	881.96	BEGIN N.C.

CALCULATED JF | CHECKED

SUPERELEVATION TABLE
I-90
ATB-90-14.25

263
437

Palmer ENGINEERING
11300 CORNELL PARK DR
CINCINNATI, OH 45242

O:\ODOT\ATB\25199\roadway\sheets\25199GE014.dgn 6/6/2009 9:48:37 AM DENNIS

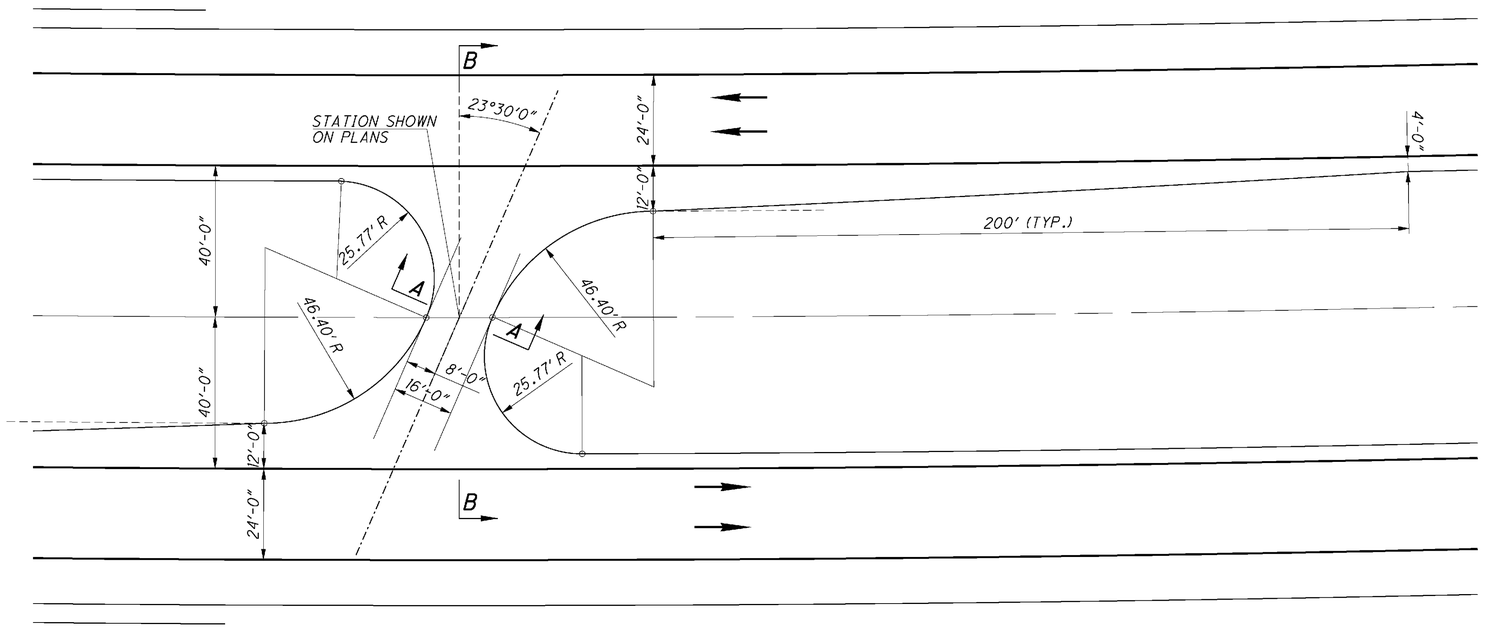

MEDIAN CROSSOVER DETAIL

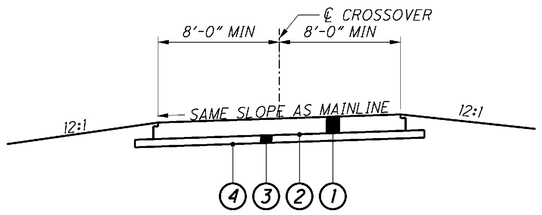

SECTION A-A

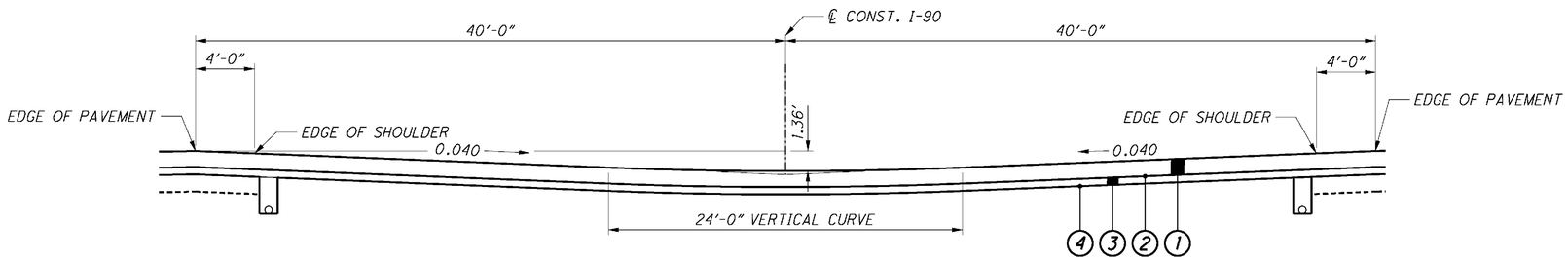

SECTION B-B

FOR ITEM LEGEND SEE SHEET 6

CALCULATED | CHECKED

MISCELLANEOUS DETAILS

ATB-90-14.25

264
437

Palmer ENGINEERING
PALMER ENGINEERING
11300 CORNELL PARK DR
ENGINEERING CINCINNATI, OH 45242

O:\ODOT\ATB\25199\roadway\sheets\25199GA001.dgn 6/6/2009 9:48:43 AM DENNIS

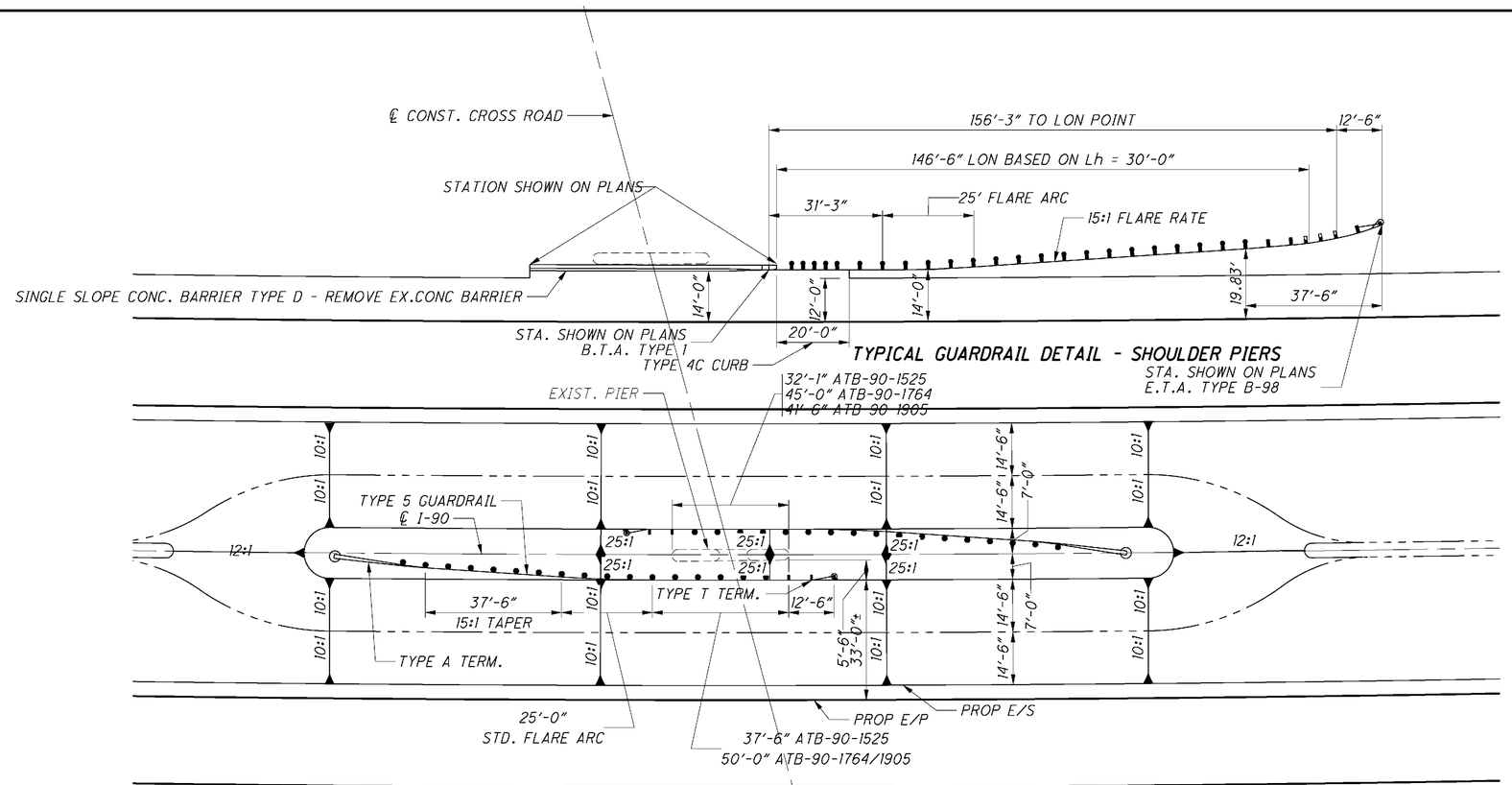

DETAIL -- MEDIAN PIER PROTECTION/GRADING

CALCULATED | CHECKED

GUARDRAIL / BARRIER DETAILS

ATB-90-14.25

265
437

Palmer ENGINEERING
PALMER ENGINEERING
11300 CORNELL PARK DR
CINCINNATI, OH 45242

O:\ODOT\ATB\25199\roadway\sheets\25199GR001.dgn 6/6/2009 9:48:45 AM DENNIS

ITEM 202 BUILDING DEMOLISHED, AS PER PLAN

THE BUILDING TO BE RAZED IS AN ABANDONED POTABLE WATER LIFT STATION FORMERLY SERVING ROADSIDE REST AREAS THAT HAVE SINCE BEEN REMOVED. THE BUILDING AND WATERLINES AND APPURTENANCES WERE CONSTRUCTED IN 1971. SEE SHEETS 267-268 FOR SELECTED ORIGINAL CONSTRUCTION DRAWINGS. FOR A COMPLETE SET, SEE PLANS ENTITLED ATB-90-18.30 (1-90-2(14)86) AT ODOT DISTRICT 4. THERE ARE NO ACTIVE UTILITIES SERVING THE BUILDING TO BE RAZED.

A HAZARDOUS MATERIAL ASSESSMENT REPORT WAS MADE JULY 1,2008.

CHRYSOTILE ASBESTOS WAS FOUND IN BLACK COLORED WINDOW CAULKING.

LEAD PAINT WAS FOUND ON THE METAL ENTRY DOOR AND GATE VALVES, ALONG WITH SMALL CONCENTRATIONS OF LEAD IN THE STORAGE TANK.

THE PRESENCE OF FLUORESCENT LIGHT BALLASTS, TUBES AND MERCURY SWITCHES WAS OBSERVED IN THE BUILDING.

REPLACE THE CMS SECTION 202.06 WITH THE FOLLOWING

BUILDINGS AND APPURTENANCES DESIGNATED FOR DEMOLITION DO NOT NEED A NOTICE OF POSSESSION AND APPROVAL TO PROCEED FROM THE ENGINEER. SCHEDULE AND PERFORM THE DEMOLITION UNDER THE ENGINEER5/32S DIRECTION.

THE CONTRACTOR MAY NOT USE THE BUILDING TO BE RAZED FOR ANY PURPOSE.

REMOVE FOUNDATIONS, FLOORS, FLOOR SLABS, PITS, AND WELLS IN THEIR ENTIRETY.

COMPLETELY REMOVE ALL TANKS AND CLEAR BUILDING OF ALL MATERIALS, DEBRIS, TANKS, WOOD OR METAL PARTITIONS, AND WOOD FLOORS SO ONLY MASONRY WALLS AND CONCRETE FLOORS REMAIN. BREAK UP AND REMOVE ALL FLOOR SLABS UNDER WHICH A PIT, WELL, CISTERN, OR TANK EXISTS. BREAK UP BASEMENT FLOORS TO BE LEFT IN PLACE, AND SEAL REMAINING DRAINS WITH MASONRY OR WITH PRECAST CLAY OR CONCRETE STOPPERS.

CONTRACTOR TO TAKE OWNERSHIP OF ALL MATERIALS,.

AFTER COMPLETING DEMOLITION WORK AND OBTAINING THE ENGINEER'S APPROVAL, IMMEDIATELY BACKFILL THE CAVITY CREATED BY THE REMOVAL ITEM ACCORDING TO 202.02, GRADE TO DRAIN AS NOTED. SEEDING AND MULCHING SHALL BE PAID SEPARATELY.

NOTIFICATION OF EPA

IN ACCORDANCE WITH THE NATIONAL EMISSIONS STANDARD FOR HAZARDOUS AIR POLLUTANTS (NESHAPS) SECTION 61.145(B); THE CONTRACTOR SHALL NOTIFY THE EPA REGIONAL OFFICE OF THE DEMOLITION OPERATIONS 10 WORKING DAYS BEFORE THE START DATE. NOTIFICATION MUST BE MAILED OR HAND DELIVERED, FAXED NOTIFICATIONS ARE NOT ACCEPTABLE.

IN ADDITION TO FILING THE NOTIFICATION, THE CONTRACTOR SHALL HAVE AN INDIVIDUAL TRAINED IN THE PROVISIONS OF NESHAPS (40CFR PART 61, SUBPART M) ON SITE DURING THE DEMOLITION AND EVIDENCE THAT THE REQUIRED TRAINING HAS BEEN ACCOMPLISHED BY THIS PERSON. THIS SHALL BE AVAILABLE DURING NORMAL BUSINESS HOURS. NOTE: DISPOSAL OF DEMOLITION DEBRIS - SECTION 5525.22 O.R.C. "IN

ACCORDANCE WITH THE LAW, THE CONTRACTOR MUST INFORM THE DEPARTMENT OF TRANSPORTATION ON THE METHOD FOR DISPOSAL OF DEMOLITION DEBRIS PRIOR TO THE START OF WORK."

HORIZONTAL SCALE IN FEET
0 5 10 20
CALCULATED | CHECKED

REMOVAL DETAILS - EXISTING LIFT STATION

ATB-90-14.25

266
437

PALMER ENGINEERING
11300 CORNELL PARK DR
CINCINNATI, OH 45242

C:\ODOT\ATB\25199\roadway\sheets\25199GM001.dgn 6/6/2009 9:48:49 AM DENNIS

ROOF FRAMING PLAN
SCALE 1/4"= 1'-0"

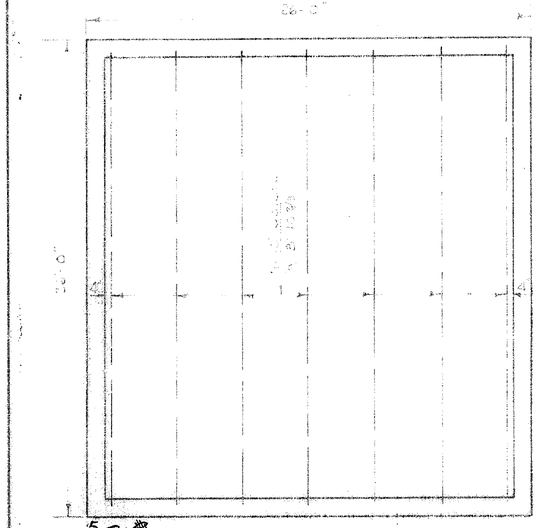

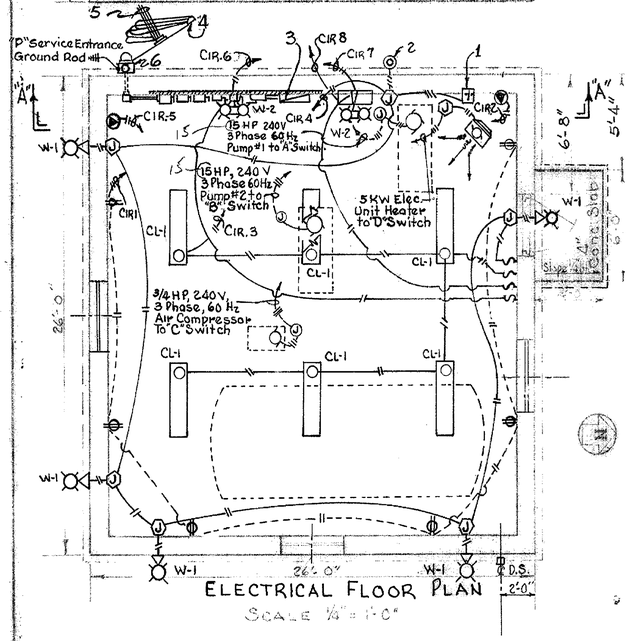

ELECTRICAL FLOOR PLAN
SCALE 1/4" = 1'-0"

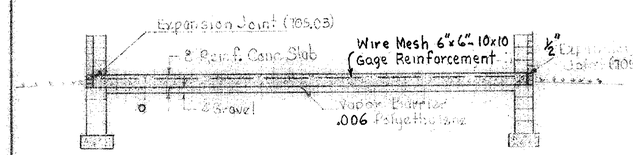

SLAB FLOOR CONSTRUCTION

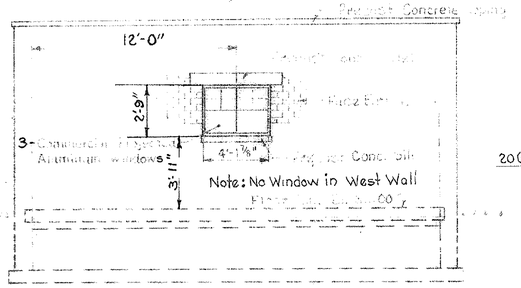

TYPICAL ELEVATION
(EAST, WEST & SOUTH)

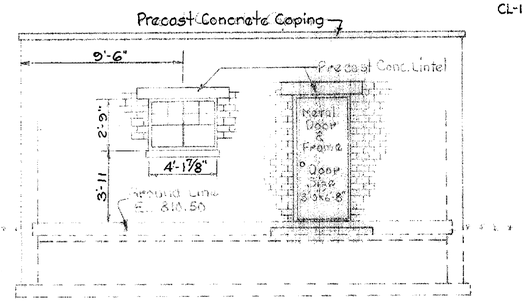

NORTH ELEVATION
SCALE ¼"=1'-0"

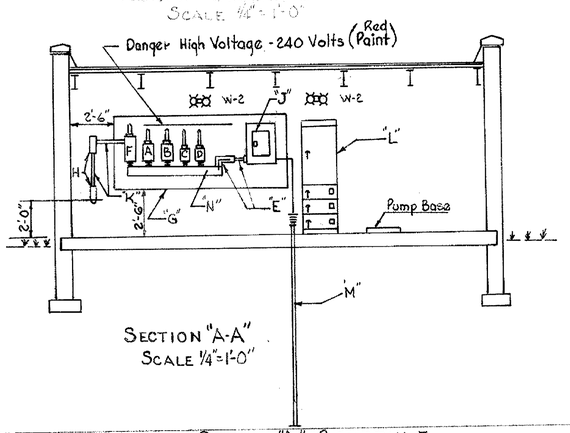

SECTION "A-A"
SCALE 1/4"=1'-0"

PANEL "A" SCHEDULE
12 POLES 120/240 VOLTS 1 - PHASE, 3 WIRE, 60 Hz, MAIN BREAKER 2 POLE 100A

CIRCUIT NUMBER	CIRCUIT USE	LOCATION	HP/FLA	WATTS	BREAKER POLES	BREAKER T-AMPS
1	Duplex Receptacles	Wall	-	1080	1	20
2	30 Amp Single Receptacle	N.W. Wall	-	7200	2	30
3	Light Fixtures	Ceiling	-	600	1	20
4	Light Fixtures	Exterior	-	500	1	20
5	30 Amp Single Receptacle	South Wall	-	7200	2	30
6	Light Fixture	Over Switches	-	200	1	15
7	Light Fixture	Over Control Panel	-	200	1	15
8	Auto-con Control	Control Panel	-		1	20
9	Spare	—	-	-	1	20
10	Spare	—	-	-	1	20

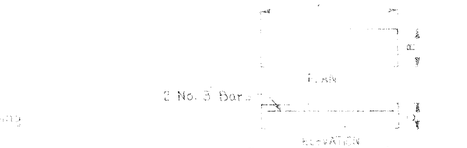

PRECAST CONCRETE ITEMS
Not to Scale

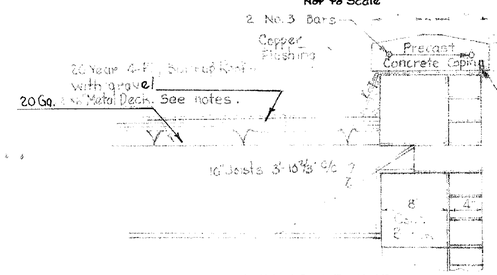

LIGHTING LEGEND

W-1 100 Watt Outdoor Weatherproof Outlet Wall Mounted
W-2 2-100 Watt Wall Mounted Outlet
CL-1 2 Lamp 40 Watt Rapid Start 4' Flourescent Ceiling Light
15 Amp 110-Volt Duplex Receptacle, Grounding Type, 30" from Floor, Wall Mounted
30 Amp 220 Volt Duplex Receptacle, Grounding Type, 30" from Floor, Wall Mounted

Electric Motor, 3-Phase
Electric Motor, 1-Phase
Conduits Exposed
Conduits Concealed
Home Run Exposed
Home Run Concealed
Junction Box
Single Pole, Switch Mount

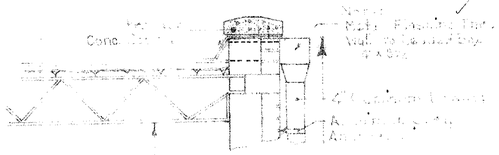

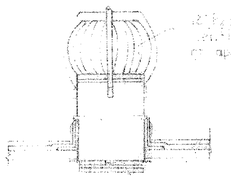

ROOF FAN DETAIL
SCALE 1"=1'-0"

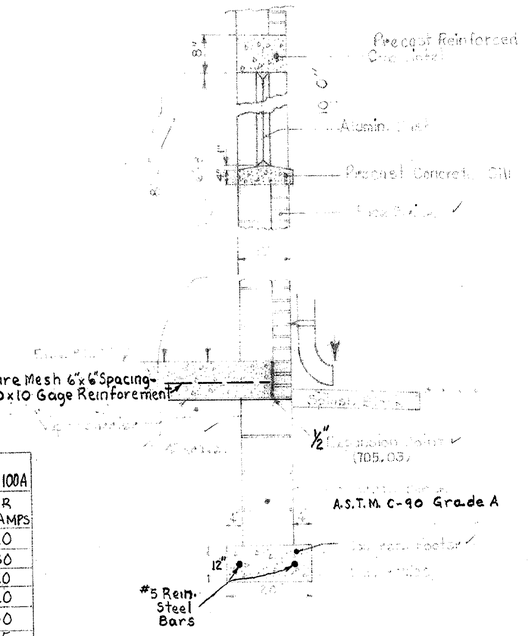

WALL COMPOSITION
SCALE ½"=1'-0"

SECTION "A" DESCRIPTION

"A" 3 #6 RHH/THHN, 1¼"x6" Long Nipple, Lockable, Nema 1, Safety Switch To Pump No 1.

"B" 3 #6 RHH/THHN, 1½"x6" Long Nipple, Lockable, Nema 1, Safety Switch to Pump No. 2.

"C" 3 #12 RHH/THHN, ¾"x6" Long Nipple, Lockable, Nema 1, Safety Switch To Air Compressor.

"D" 3 #12 RHH/THHN, ¾"x6" Long Nipple, Lockable, Nema 1, Safety Switch To Electric Heater.

"E" 3 #1/0 RHH/THHN 2"x4" Long Nipple into 2"LB" Fitting. Feed To Lighting Panel "A".

"F" 4-#1/0 RHH/THHN, 2" Diameter x6" Long Nipple, Lockable, Nema 1, 100 Amp., 4 Pole, 3-100 Amp Fused Safety Switch.

"G" ¾" A.D. Exterior Plywood Panel Mounting Board

"H" Crouse-Hinds, 2" "LB" Fittings Cat No. LB-69, Mark 9, with neoprene Gasket and Blank Covers

"J" 120/240 Volt, 1 Phase, 60 Hz 12-Poles, 100 Amps. Main Circuit Breaker-2 Pole, Surface Mount (Lighting Panel "A") 3-Wire,

"K" 4 #1/0 RHH/THHN, 2" Conduit to Service Disconnect Switch

"L" Nema 1 Enclosure, Autocon Control Panel 24"x73"x 9"

"M" 1" Dia. x10'-0" Ground Rod as per Ohio Highway Specification 625.10 For Panel Only
For Service Ground Rod See Specification "General Notes." Electrical, Item 4 Service Entrance, Paragraph (b).

"N" Raceway Type Square D. Square Duct 6"x6"x120", (Cut to required length. Cat No. LD-610 or Westinghouse, General Electric or an approved equal.

"P" Service Entrance Ground Rod, refer to Electrical Item 4 Service Entrance, paragraph (B)

ELECTRIC FLOOR PLAN DESCRIPTION

1 Hand-off Auto Selector Switch Mount @ 5'-0" off Fin. Floor Elev.

2 Photo Electric Cell

3 120/240 Volt, 1 Phase, 60 Hz NQOB, 12 Poles, 100 Amps Main Circuit Breaker - 2 Pole Lighting Panel "A" Surface Mount. 3-Wire,

4 2" Dia. Galv. Steel Mast and Weather Head w/Bracket, 4 Wire Insulator & Pipe Clamps Furnished & Installed by Electrical Contractor

5 120/240 Volt, 3 Phase, 60 Hz 4 Wire Delta Overhead Service by Cleveland Electric Illuminating Co. 100 Amp. Service.

6 Meter Socket & Meter furnished by C.E.I. Company and Installed by the Electrical Contractor. Mount Meter 5'-0" @ to Finished Floor Elev.

CALCULATED | CHECKED

REMOVAL DETAILS - LIFT STATION
EXISTING PLANS

ATB-90-14.25

267
437

LIFT STATION DETAILS

Palmer ENGINEERING
PALMER ENGINEERING
11300 CORNELL PARK DR
CINCINNATI, OH 45242

O:\ODOT\ATB\25199\roadway\sheets\25199GM002.dgn 6/6/2009 9:48:52 AM DENNIS

BRUNING 44-560 10-63

FED. RD. DIVISION	STATE	PROJECT	
2	OHIO	I-90-2(14)86	

17A / 19

ATB-90-18.90
ASHTABULA COUNTY
CONTRACT 1

CALCULATED | CHECKED

REMOVAL DETAILS - LIFT STATION EXISTING PLANS

ATB-90-14.25

268 / 437

SERVICE

120/240 V, 3 ϕ, 4 Wire Delta
60 Hz

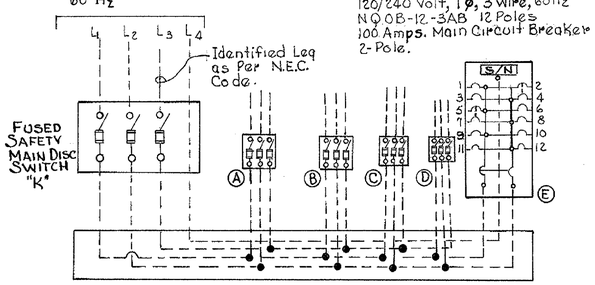

LIGHTING PANEL "A"

120/240 Volt, 1 ϕ, 3 Wire, 60 Hz
NQOB-12-3AB 12 Poles
100 Amps. Main Circuit Breaker
2-Pole.

PANEL BOARD CIRCUITS

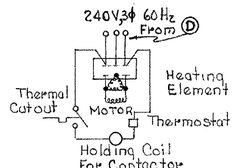

5 KW ELECTRIC UNIT HEATER

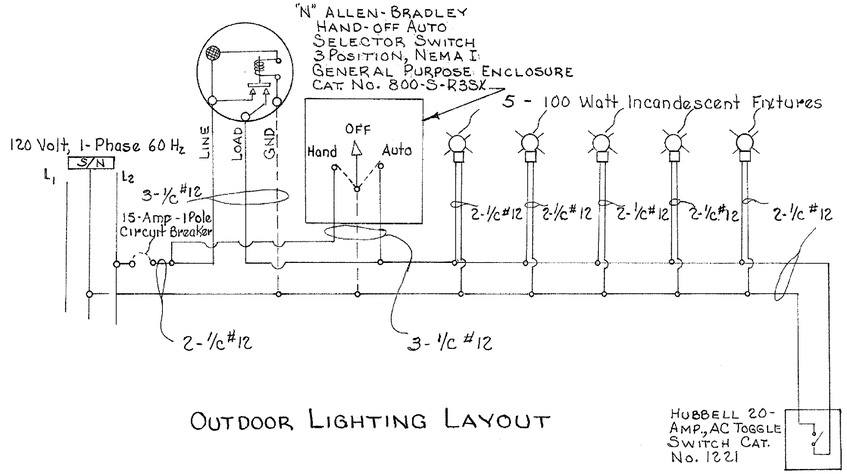

OUTDOOR LIGHTING LAYOUT

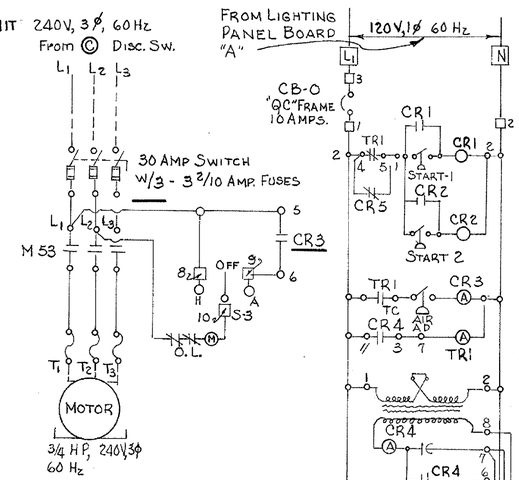

AIR COMPRESSOR

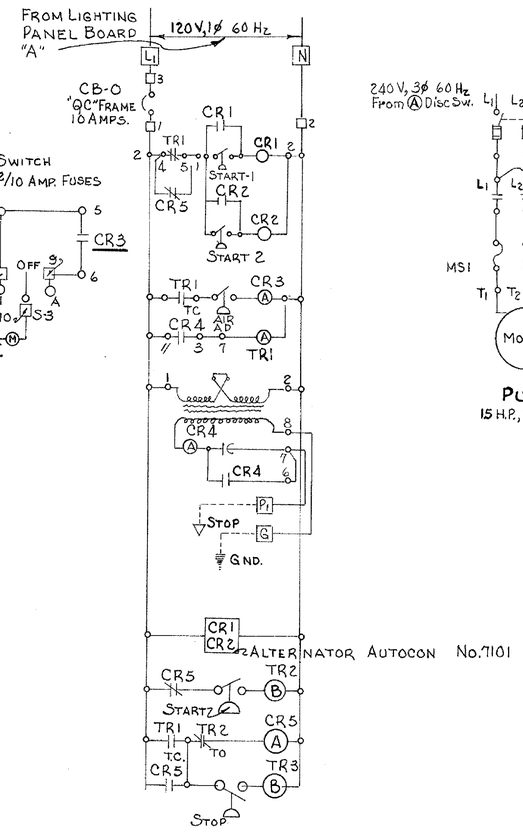

NOTE: Autocon Schematic Shown. If alternate system is used Contractor shall furnish 8 Copies of Schematic Proposed

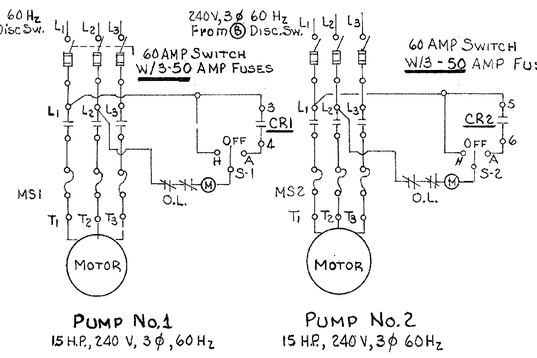

PUMP No. 1
15 H.P., 240 V, 3 ϕ, 60 Hz

PUMP No. 2
15 H.P., 240 V, 3 ϕ 60 Hz

PUMP CONTROL WIRING

LOW SUCTION PROTECTION (TANKTROL)

ELECTRICAL SCHEMATIC

Palmer ENGINEERING
PALMER ENGINEERING
11300 CORNELL PARK DR
CINCINNATI, OH 45242

O:\ODOT\ATB\25199\roadway\sheets\25199GM003.dgn 6/6/2009 9:49:12 AM DENNIS

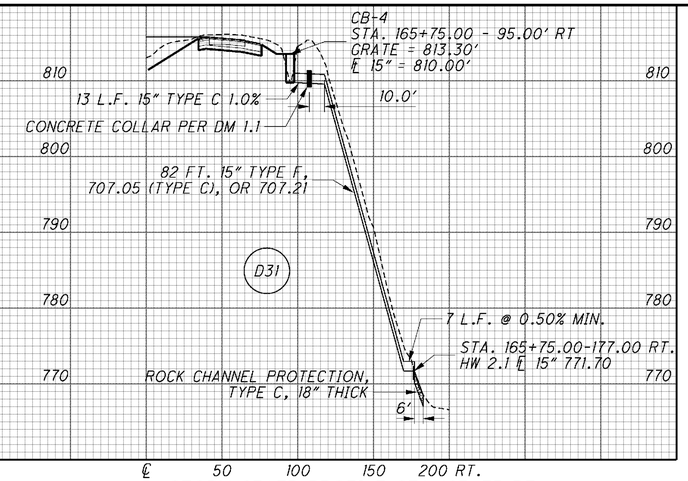

STORM SEWER PROFILE STA 165+75 RT.

CALCULATED | CHECKED

STORM SEWER PROFILES

ATB-90-14.25

269
437

Palmer ENGINEERING
PALMER ENGINEERING
11300 CORNELL PARK DR
CINCINNATI, OH 45242

O:\ODOT\ATB\25199\drainage\sheets\25199DF001.dgn 6/6/2009 9:49:29 AM DENNIS

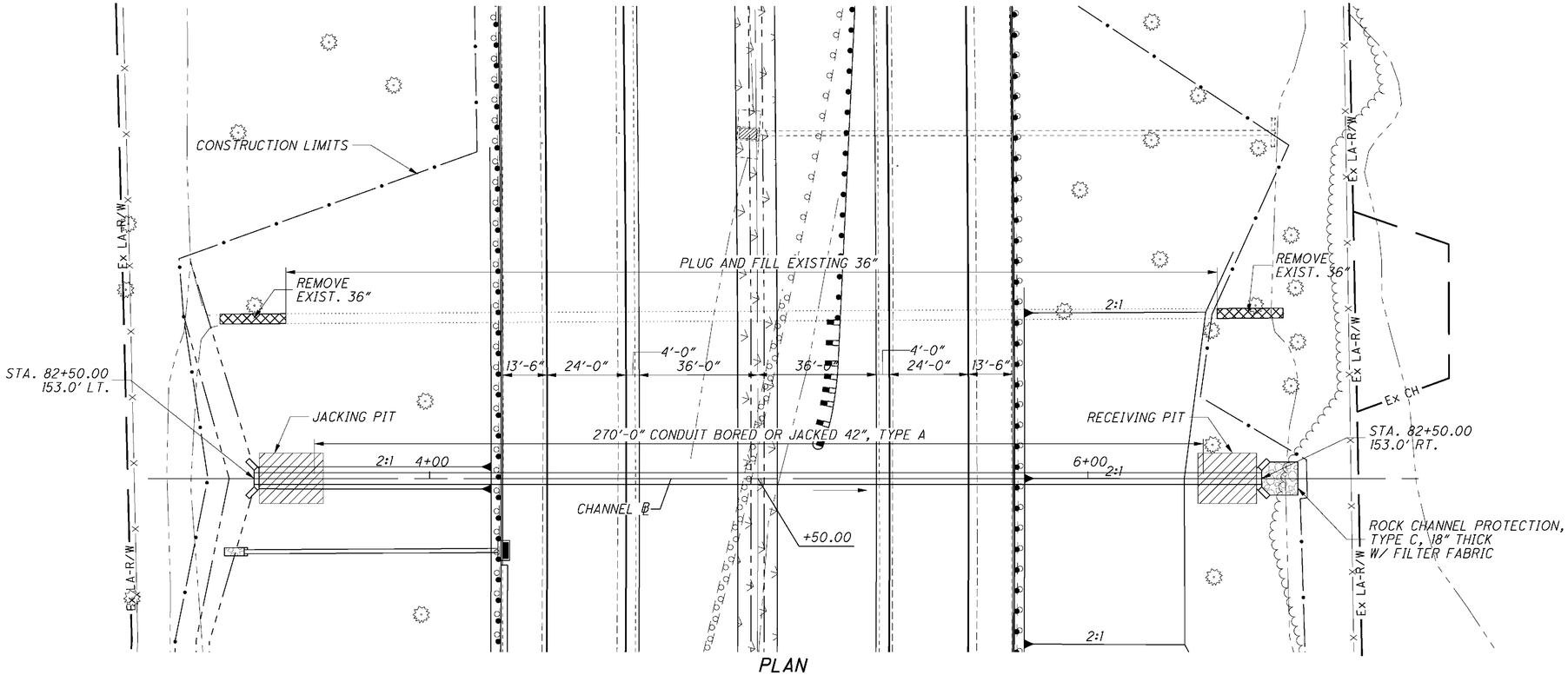

PLAN

ESTIMATED QUANTITIES - CARRIED TO CULVERT SUBSUMMARY			
ITEM	TOTAL	UNIT	DESCRIPTION
601	6	CU YD	ROCK CHANNEL PROTECTION, WITH FILTER, TYPE C
602	13.4	CU YD	CONCRETE MASONRY
603	270	FT	CONDUIT BORED OR JACKED, 42" TYPE A
603	36	FT	42" CONDUIT, TYPE A
			FOR REMOVAL QUANTITIES, SEE SHEET 93 & 109

HYDRAULIC DESIGN DATA	
DRAINAGE AREA	= 29 AC.
Q_{50}	= 46 CFS
Q_{100}	= 54 CFS
HW_{50}	= 847.4
HW_{100}	= 848.5
V_{50}	= 7.6 FPS
V_{100}	= 8.1 FPS

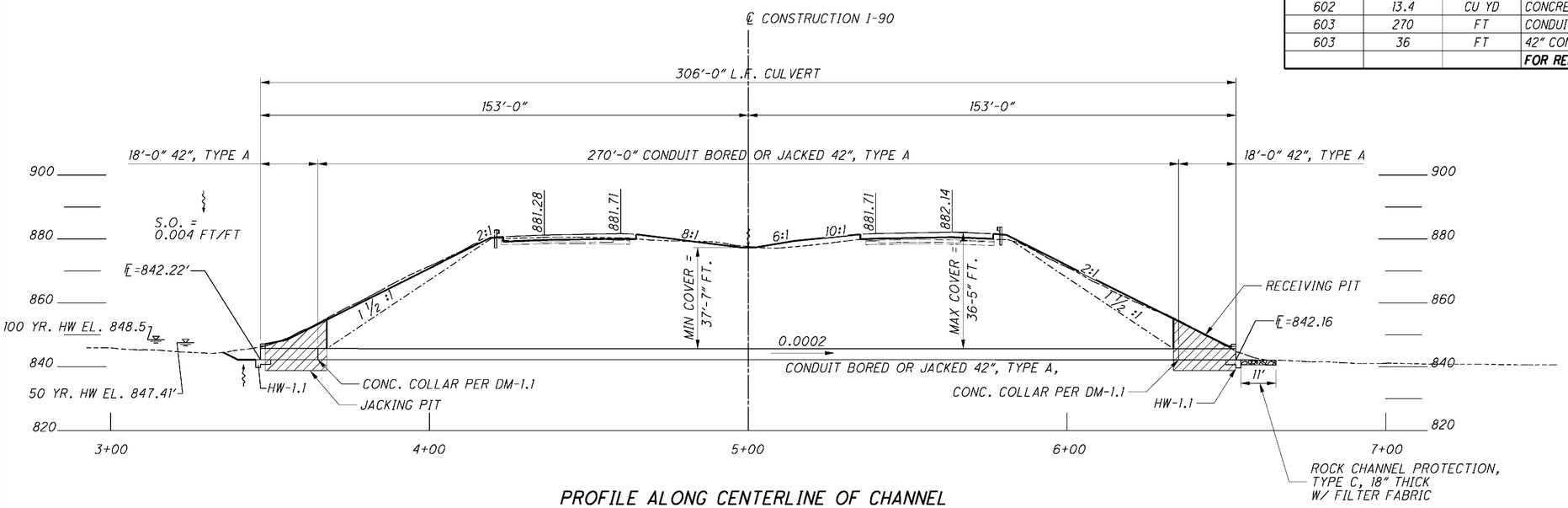

PROFILE ALONG CENTERLINE OF CHANNEL

HORIZONTAL SCALE IN FEET
0 10 20 40
CALCULATED
CHECKED

CULVERT DETAIL STA. 82+50.00

ATB-90-14.25

270
437

Palmer ENGINEERING
PALMER ENGINEERING
11300 CORNELL PARK DR
ENGINEERING CINCINNATI, OH 45242

O:\ODOT\ATB\25199\drainage\sheets\251990C001.dgn 6/6/2009 9:49:32 AM DENNIS

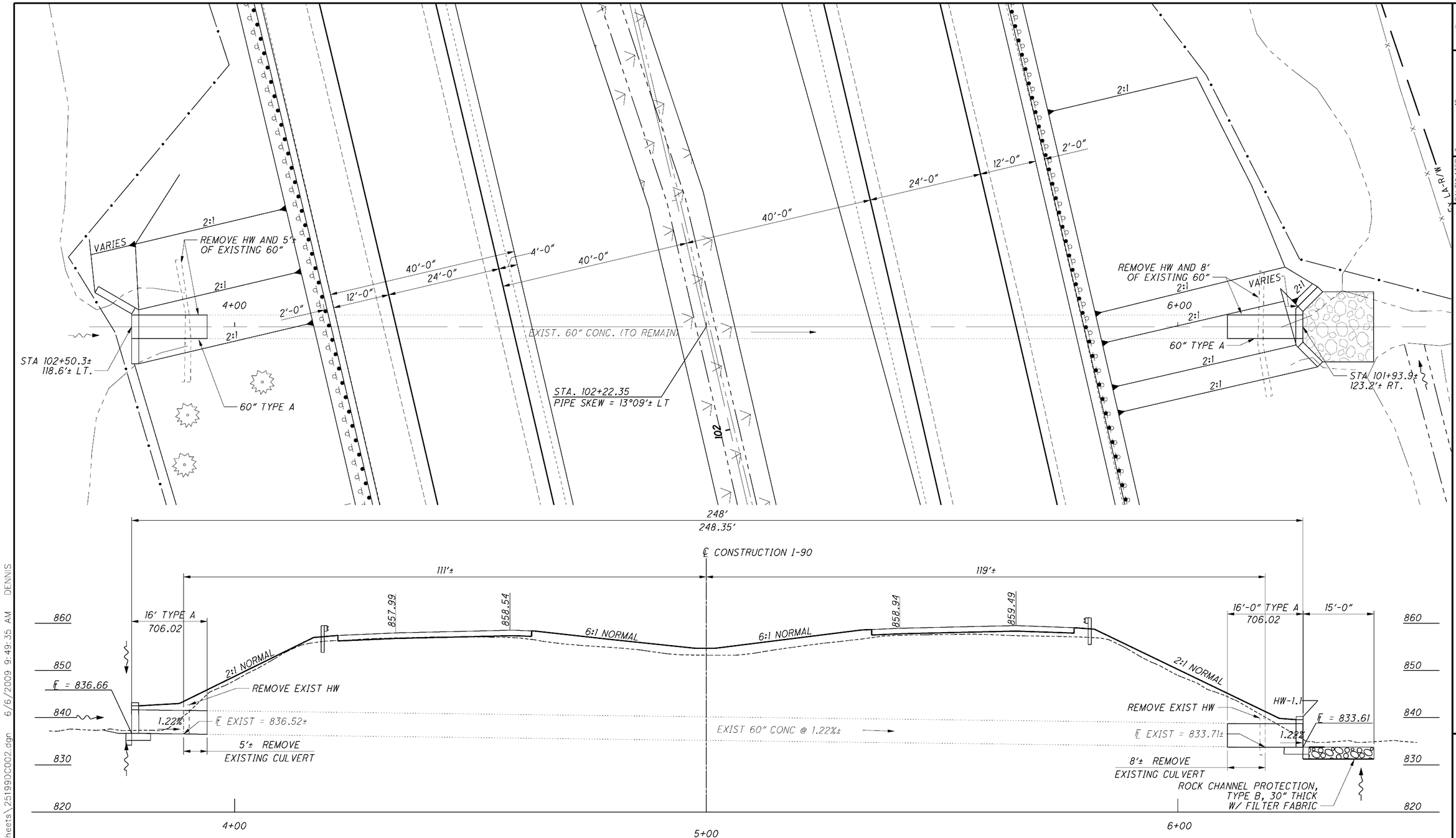

PROFILE ALONG CENTERLINE OF CULVERT

EXISTING STRUCTURE
TYPE: CONCRETE
SIZE: 60" DIA
SKEW: 13°08'±
DATE BUILT: 1958
CONDITION: GOOD

HYDRAULIC DESIGN DATA	
Area=0.453 Sq.Mile	
Q_{50}	= 202 cfs
Q_{100}	= 235 cfs
HW_{50}	= 843.4
HW_{100}	= 844.5
V_{50}	= 16.9 fps
V_{100}	= 17.5 fps

ESTIMATED QUANTITIES - CARRIED TO CULVERT SUBSUMMARY

ITEM	TOTAL	UNIT	DESCRIPTION
601	19	CU YD	ROCK CHANNEL PROTECTION, WITH FILTER, TYPE B
602	24.8	CU YD	CONCRETE MASONRY
603	32	FT	60" CONDUIT TYPE A, 706.02
			FOR REMOVAL QUANTITIES, SEE SHEET 93 & 111

HORIZONTAL SCALE IN FEET
0 5 10 20
CALCULATED
CHECKED

CULVERT DETAIL STA. 102+22.35

ATB-90-14.25

Palmer ENGINEERING
PALMER ENGINEERING
11300 CORNELL PARK DR
ENGINEERING CINCINNATI, OH 45242

O:\ODOT\ATB\25199\drainage\sheets\25199DC002.dgn 6/6/2009 9:49:35 AM DENNIS

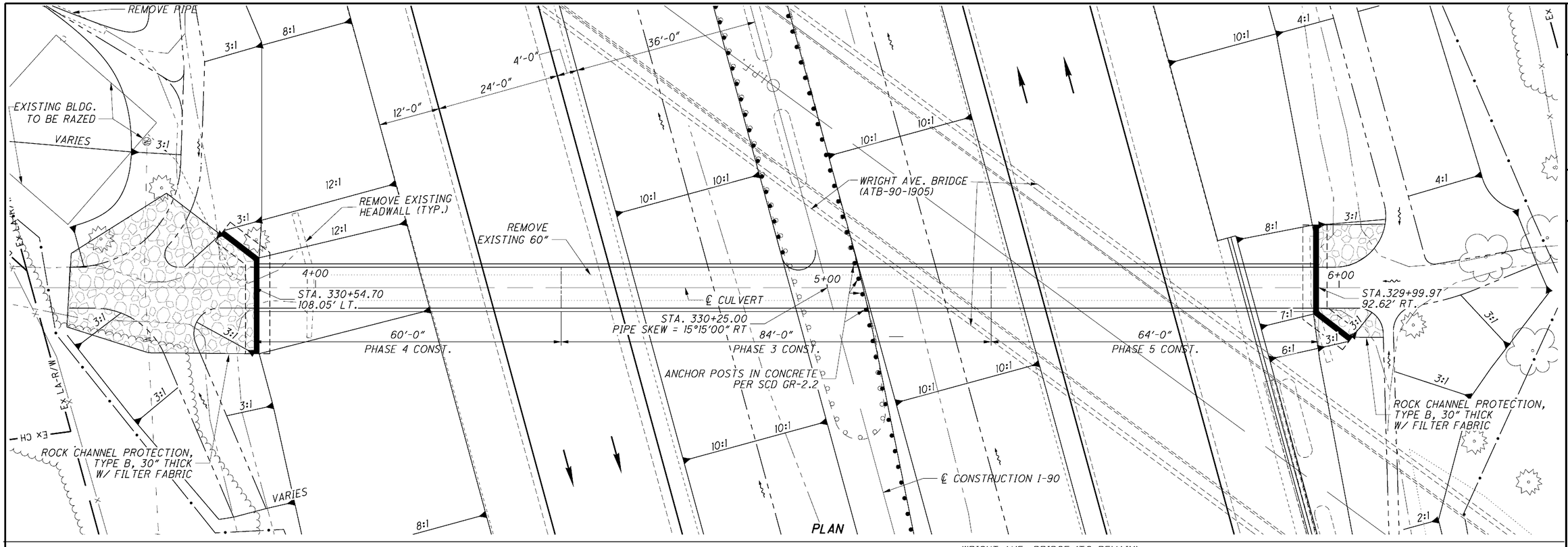

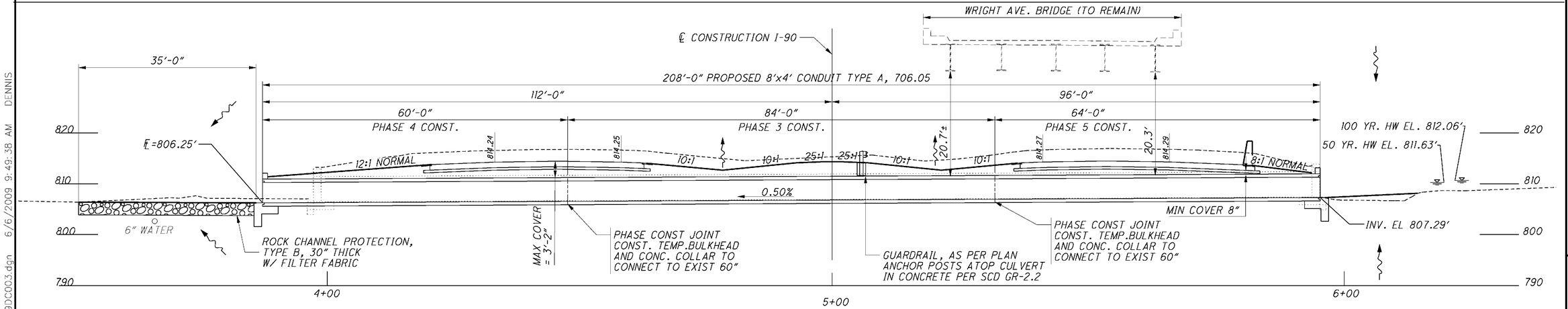

PROFILE ALONG CENTERLINE OF CHANNEL

EXISTING STRUCTURE

TYPE: RCP
SIZE: 60" DIA
SKEW: 15°15'19"
DATE BUILT: 1958
CONDITION: CRACKED

HYDRAULIC DESIGN DATA

Drainage Area	= 169 Ac.
Q_{50}	= 154 cfs
Q_{100}	= 180 cfs
HW_{50}	= 811.63
HW_{100}	= 812.06
V_{50}	= 9.57 fps
V_{100}	= 10.04 fps

ESTIMATED QUANTITIES - CARRIED TO CULVERT SUBSUMMARY

ITEM	TOTAL	UNIT	DESCRIPTION
503	1	LUMP	COFFERDAMS, CRIBS AND SHEETING (FOR CULVERT)
503	1	LUMP	UNCLASSIFIED EXCAVATION
509	2,836	POUND	EPOXY COATED REINFORCING STEEL
511	34	CU YD	CLASS C CONCRETE, RETAINING WALL OR WINGWALL,INCL FOOTING
512	63	SQ YD	SEALING OF CONCRETE SURFACES (EPOXY-URETHANE)
512	509	SQ YD	TYPE 2 WATERPROOFING
516	26	SQ FT	1" PREFORMED EXPANSION JOINT FILLER
518	8	CU YD	POROUS BACKFILL WITH FILTER FABRIC
601	79	CU YD	ROCK CHANNEL PROTECTION, WITH FILTER, TYPE B
603	208	FT	8'x4' CONDUIT, TYPE A 706.05
			FOR REMOVAL QUANTITIES, SEE SHEET 94 & 129

HORIZONTAL SCALE IN FEET
0 10 20
CALCULATED
CHECKED

CULVERT DETAIL
STA. 330+25.00

ATB-90-14.25

272
437

Palmer ENGINEERING
PALMER ENGINEERING
11300 CORNELL PARK DR
CINCINNATI, OH 45242

O:\ODOT\ATB\25199\drainage\sheets\25199DC003.dgn 6/6/2009 9:49:38 AM DENNIS

DESIGN DATA

THE FOLLOWING DESIGN DATA IS ASSUMED:

INTERNAL ANGLE OF FRICTION (ϕ) = 30 DEGREES
COEFFICIENT OF FRICTION (μ) = 0.30
UNIT WEIGHT OF SOIL = 120 PCF
UNIT WEIGHT OF CONCRETE = 150 PCF
SLOPE OF BACKFILL = 2:1 (TYPE A & B HEADWALLS ONLY)
HEIGHT OF LIVE LOAD SURCHARGE = 2 FT (TYPE C HEADWALLS ONLY)
MAXIMUM FOUNDATION BEARING PRESSURE = 2000 P.S.F.

CONCRETE CLASS C - COMPRESSIVE STRENGTH 4000 PSI
(FOOTING, WINGWALL AND FORESLOPE WALL)

REINFORCING STEEL - ASTM A615, A616, OR A617
GRADE 60 MINIMUM YIELD STRENGTH
60,000 PSI (ALL REINFORCING SHALL BE
EPOXY COATED)

HEADWALLS ARE DESIGNED AND DETAILED IN ACCORDANCE WITH ODOT PLAN INSERT AND DESIGN DATA SHEETS FOR BOX CULVERT HEADWALLS.

PRECAST WINGWALLS, HEADWALLS AND FOOTERS

AT THE OPTION OF THE CONTRACTOR, A PRECAST WINGWALL, HEADWALL, OR FOOTER MAY BE FURNISHED PER ITEM 602.03 PRECAST STRUCTURES. THE PRECAST OPTION FURNISHED WILL MEET THE CAST-IN-PLACE STRUCTURAL DESIGN LOADINGS, DESIGN HEIGHT, AND DESIGN LENGTH DIMENSIONS.

FULL COMPENSATION FOR THE PRECAST WINGWALL, HEADWALL, OR FOOTER IS THE NUMBER OF CUBIC YARDS OF ITEM 511 OR SUPPLEMENTAL SPECIFICATION 898, AND POUNDS OF ITEM 509 FOR THE CORRESPONDING CAST-IN-PLACE STRUCTURE.

ITEM 503 COFFERDAMS, CRIBS AND SHEETING (FOR CULVERT)

PROVIDE SHEETING AND SHORING TO SUPPORT ROADWAY AT PHASE CONSTRUCTION JOINTS. ITEM INCLUDES BULKHEADS AND CONCRETE COLLARS AS SHOWN TO CONNECT BOX CULVERT TO EXISTING 60" CONCRETE AT THE PHASE JOINTS.

POROUS BACKFILL WITH FILTER FABRIC

POROUS BACKFILL WITH FILTER FABRIC, 1'-6" THICK SHALL BE PLACED BEHIND THE WINGWALLS ONLY AND SHALL EXTEND TO 12" BELOW THE EMBANKMENT SURFACE. GEOTEXTILE FABRIC SHALL BE PLACED BETWEEN THE POROUS BACKFILL AND REPLACED EXCAVATION ADJACENT TO THE STRUCTURE. IT SHALL TURN UNDER THE BOTTOM OF THE POROUS BACKFILL AND RETURN 6" ABOVE THE TOP ELEVATION OF THE WEEPHOLE.

WEEPHOLES SHALL BE PLACED 6" TO 12" ABOVE THE NORMAL WATER ELEVATION OR GROUND LINE AND SHALL HAVE A MAXIMUM SPACING OF 10'-0". A MINIMUM OF ONE WEEPHOLE SHALL BE PROVIDED PER WINGWALL.

FORESLOPE WALL ANCHOR DOWELS:

ANCHOR PER CMS 510 WITH NONSHRINK, NONMETALLIC GROUT CONFORMING TO CMS 705.20 AND TO A DEPTH OF 5 ". PAYMENT FOR DOWEL HOLES, GROUT AND INSTALLATION SHALL BE INCLUDED WITH ITEM 511. AS AN ALTERNATIVE TO RESIN BONDING, THREADED INSERTS OR NONPROTRUDING MECHANICAL CONNECTORS CAST INTO THE CULVERT BY THE MANUFACTURER MAY BE USED PROVIDED THEY CAN RESIST AN ULTIMATE PULL-OUT STRENGTH OF 12 KIPS AND MAINTAIN A MINIMUM COVER OF 3INCHES AT THE BOTTOM OF THE CULVERT SLAB. MECHANICAL CONNECTORS MUST PROVIDE AN "L-SHAPED" BAR INSIDE THE CULVERT WITH A MINIMUM HORIZONTAL LENGTH OF 12 INCHES. PAYMENT FOR INSERTS OR MECHANICAL CONNECTORS SHALL BE INCLUDED WITH ITEM 603.

PREFORMED EXPANSION JOINT FILLER:

PREFORMED EXPANSION JOINT FILLER (PEJF) CONFORMING TO CMS 705.03, 1 INCH THICK, SHALL BE PLACED ABOVE THE FOOTING BETWEEN THE SIDES OF THE BOX CULVERT AND THE ENDS OF THE WINGWALLS. PAYMENT FOR MATERIALS AND INSTALLATION SHALL BE INCLUDED WITH ITEM 516 - 1" PREFORMED EXPANSION JOINT FILLER.

SEALING OF FORESLOPE WALL AND WINGWALLS

ALL EXPOSED FORESLOPE WALL AND WINGWALL CONCRETE SHALL BE SEALED WITH EPOXY-URETHANE SEALER. THE LIMITS SHALL BE AS SHOWN IN THE DIAGRAMS BELOW. PAYMENT FOR THE EPOXY-URETHANE SEALER SHALL BE PER ITEM 512 - SEALING OF CONCRETE SURFACES.

WATERPROOFING:

TYPE 2 WATERPROOFING, PER CMS 512.09 AND 711.25, SHALL EXTEND VERTICALLY DOWN THE ENTIRE SIDES OF THE PRECAST CULVERT SECTIONS FOR ALL PORTIONS OF THE CULVERT WHICH SHALL BE IN CONTACT WITH THE BACKFILL. PAYMENT FOR THE MEMBRANE WATERPROOFING SHALL BE AT THE CONTRACT PRICE BID PER SQUARE YARD FOR ITEM 512 - TYPE 2 WATERPROOFING.

IF PAVEMENT IS NOT PLACED DIRECTLY ON TOP OF THE CULVERT, TYPE 2 WATERPROOFING, PER CMS 512.09 AND 711.25 SHALL BE APPLIED TO THE ENTIRE TOP SURFACE OF THE PRECAST CULVERT SECTIONS AND SHALL EXTEND ONE FOOT VERTICALLY DOWN THE SIDES FOR ALL PORTIONS OF THE CULVERT WHICH SHALL BE IN CONTACT WITH THE BACKFILL. PAYMENT FOR THE MEMBRANE WATERPROOFING SHALL BE AT THE CONTRACT PRICE BID PER SQUARE YARD FOR ITEM 512 - TYPE 2 WATERPROOFING.

IF PAVEMENT IS TO BE USED DIRECTLY ON TOP OF THE CULVERT, TYPE 3 WATERPROOFING, PER CMS 512.10 AND 711.29 SHALL BE APPLIED TO THE ENTIRE TOP SURFACE OF THE PRECAST CULVERT SECTIONS AND SHALL EXTEND ONE FOOT VERTICALLY DOWN THE SIDES FOR ALL PORTIONS OF THE CULVERT WHICH SHALL BE IN CONTACT WITH THE BACKFILL. PAYMENT FOR THE MEMBRANE WATERPROOFING SHALL BE AT THE CONTRACT PRICE BID PER SQUARE YARD FOR ITEM 512 - TYPE 3 WATERPROOFING.

BASIS OF PAYMENT:

ALL LABOR, EQUIPMENT AND INCIDENTALS REQUIRED TO CONSTRUCT THE FOOTING, CUTOFF WALL, WINGWALLS AND FORESLOPE WALL SHALL BE INCLUDED WITH ITEM 511 - CLASS C CONCRETE (RET-WALL/ WINGWALL- INCLUDING FOOTING). PAYMENT FOR REINFORCING STEEL SHALL BE INCLUDED WITH ITEM 509 - EPOXY COATED REINFORCING STEEL.

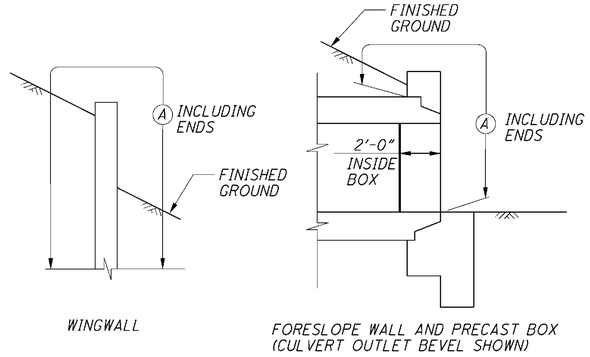

LIMITS OF ITEM 512-SEALING CONCRETE SURFACES

Ⓐ SEAL ENTIRE CONCRETE SURFACE AREA

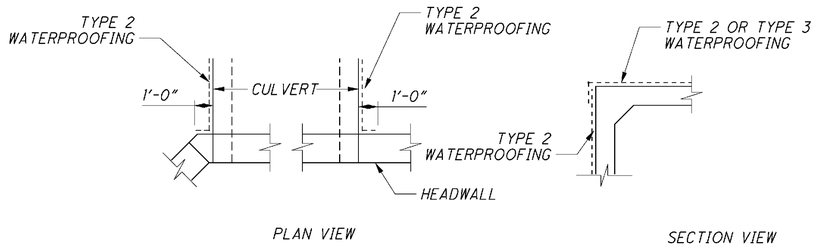

WATERPROOFING DETAILS

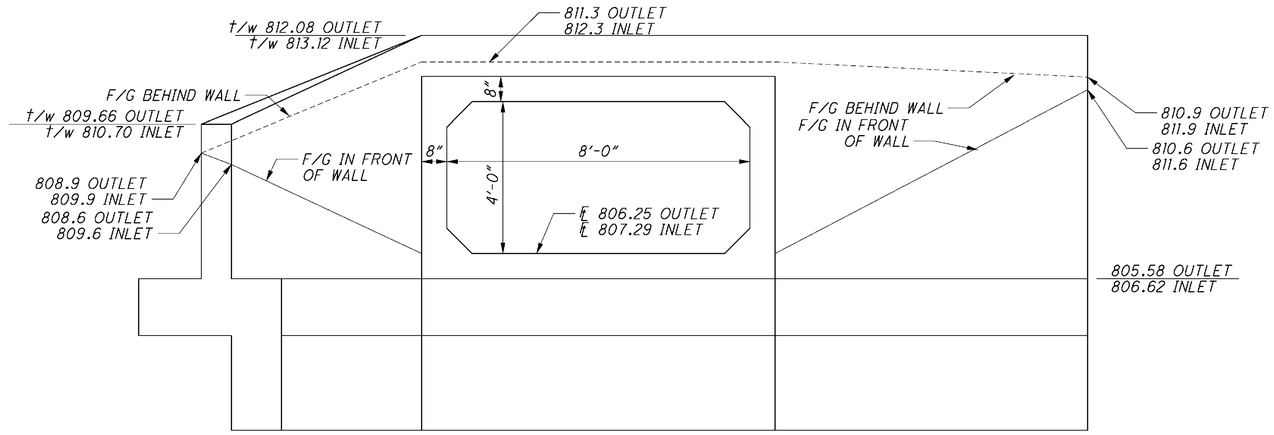

WINGWALL ELEVATION VIEW

Palmer ENGINEERING
PALMER ENGINEERING
11300 CORNELL PARK DR
CINCINNATI, OH 45242

O:\ODOT\ATB\25199\drainage\sheets\25199DN001.dgn 6/6/2009 9:49:41 AM DENNIS

CALCULATED | CHECKED

GENERAL NOTES & DETAILS
CULVERT STATION 300+25

ATB-90-14.25

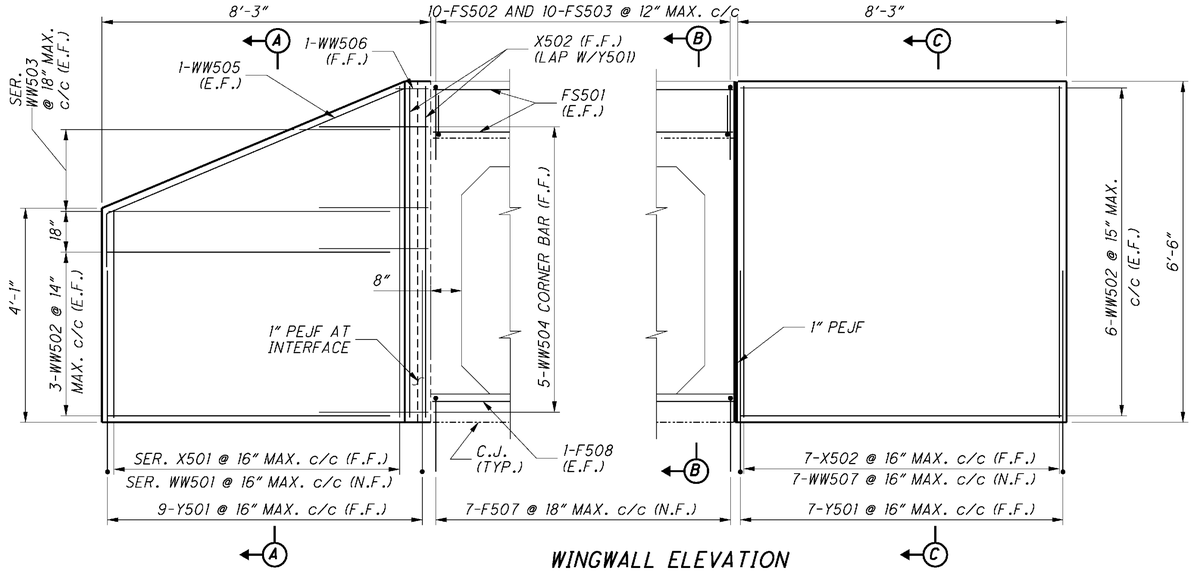

WINGWALL ELEVATION
(FOOTING NOT SHOWN)

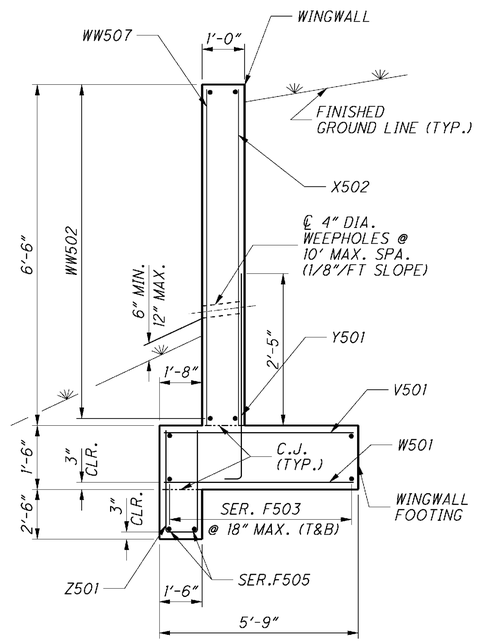

SECTION C-C
(POROUS BACKFILL NOT SHOWN FOR CLARITY)

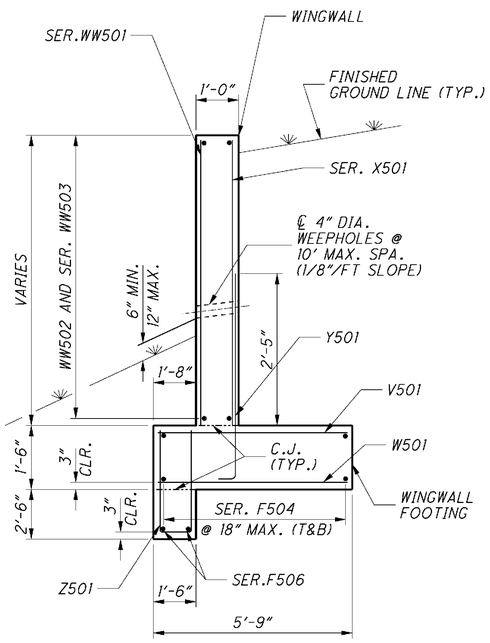

SECTION A-A
(POROUS BACKFILL NOT SHOWN FOR CLARITY)

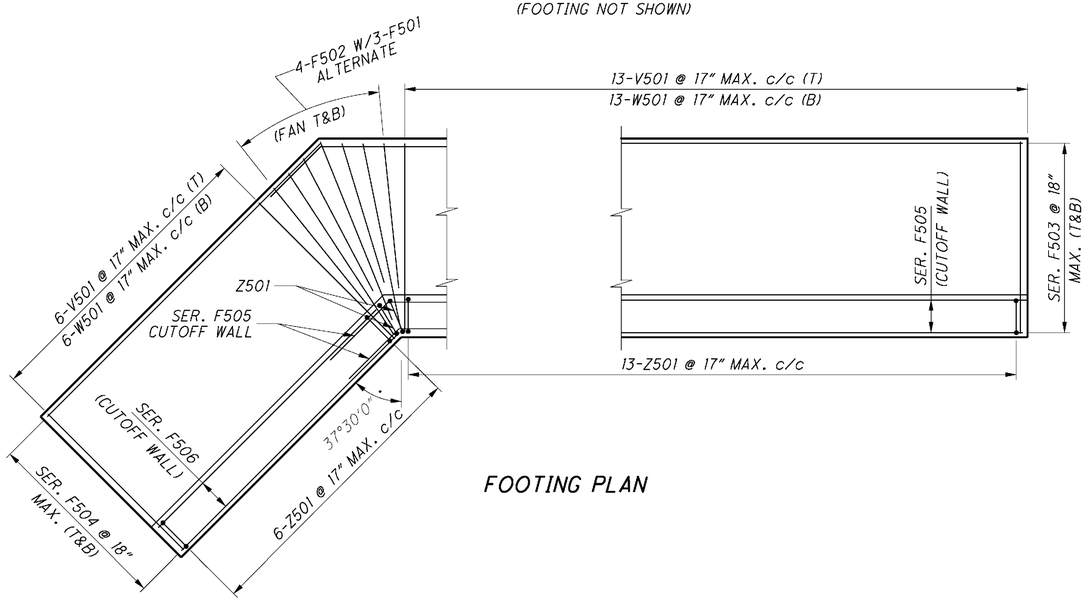

FOOTING PLAN

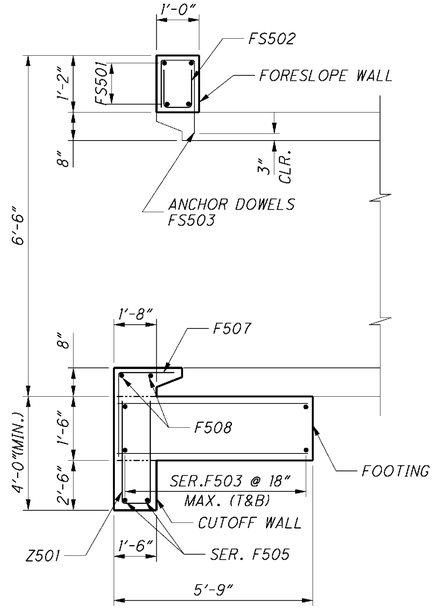

SECTION B-B
(CULVERT INLET BEVEL SHOWN)

NOTES

1. FOR CULVERT LOCATION PLAN, SEE SHEET 272/xx.
2. FOR PRECAST BOX CULVERT DETAILS, SEE SHEET 273/xx.
3. THE BAR SIZE NUMBER IS SPECIFIED ON THE PLANS IN THE BAR MARK COLUMN. THE FIRST DIGIT INDICATES THE BAR SIZE NUMBER. FOR EXAMPLE, WW501 IS A NO.5 BAR. BAR DIMENSIONS SHOWN ARE OUT TO OUT. ALL REINFORCING STEEL SHALL BE EPOXY COATED.
4. THE LAP SPLICE LENGTHS USED IN THESE DETAILS ARE AS FOLLOWS: 2'-5" FOR #5 BARS; 2'-11" FOR #6 BARS.

LEGEND:

C.J.	CONSTRUCTION JOINT	N.F.	NEAR FACE
CLR.	CLEAR	SER.	SERIES
DIA.	DIAMETER	STR.	STRAIGHT
E.F.	EACH FACE	(T)	TOP
F.F.	FAR FACE	(B)	BOTTOM
MAX.	MAXIMUM	T&B	TOP AND BOTTOM
MIN.	MINIMUM	TYP.	TYPICAL
PEJF	PREFORMED EXPANSION JOINT FILLER	INC.	INCREMENT

PALMER ENGINEERING
ENGINEERING CINCINNATI, OH 45242
11300 CORNELL PARK DR

O:\ODOT\ATB\25199\drainage\sheets\25199DC004.dgn 6/6/2009 9:49:45 AM DENNIS

CALCULATED | CHECKED

CULVERT WINGWALL DETAILS STATION 330+25

ATB-90-14.25

HEADWALL REINFORCING SCHEDULE

BAR MARK	NUMBER	LENGTH	WEIGHT (LBS.)	TYPE	BAR TYPE DIMENSIONS A	B	C	D	INC.
					WINGWALLS				
	1	3'- 10"							
X501	SERIES	TO	38	STR.					0'- 5"
	of 7	6'- 4"							
X502	9	6'- 4"	60	STR.					
Y501	16	4'- 0"	68	1	0'- 6"	3'- 8"			
	1	3'- 10"							
WW501	SERIES	TO	38	STR.					0'- 5"
	of 7	6'- 4"							
WW502	18	7'- 11"	149	STR.					
	2	3'- 2"							
WW503	SERIES	TO	24	STR.					4'- 9"
	of 2	7'- 11"							
WW504	5	3'- 7"	19	2	0'- 7"	0'- 2 1/2"	2'- 2"	2'- 10"	
WW505	2	10'- 8"	23	3	2'- 5"	2'- 3"	7'- 11"		
WW506	1	1'- 2"	2	8	0'- 7"	0'- 3"			
WW507	7	6'- 4"	47	STR.					
					FOOTING & CUTOFF WALL				
V501	19	5'- 5"	108	STR.					
W501	19	5'- 5"	108	STR.					
Z501	21	8'- 2"	179	5	3'- 7"	1'- 2"			
F501	6	4'- 11"	31	STR.					
F502	8	3'- 10"	32	STR.					
	2	19'- 2"			16'- 9 "				
F503	SERIES	TO	213	3	TO	1'- 7 1/4"	1'- 10 "		0'- 7 1/2"
	of 5	21'- 8"			19'- 2 1/2"				
	2	7'- 4"							
F504	SERIES	TO	90	STR.					0'- 7 1/2"
	of 5	9'- 10"							
	1	19'- 2"			16'- 9 "				
F505	SERIES	TO	41	3	TO	1'- 7 1/4"	1'- 10 "		0'- 7"
	2	19'- 9"			17'- 3 1/4"				
	1	7'- 4"							
F506	SERIES	TO	16	STR.					0'- 7"
	2	7'- 11"							
F507	7	3'- 5"	25	1	1'- 8"	1'- 10"			
F508	2	9'- 0"	19	STR.					
					FORESLOPE WALL				
FS501	4	9'- 0"	38	STR.					
FS502	10	2'- 1"	22	5	0'- 10"	0'- 8"			
FS503	10	2'- 8"	28	7	0'- 10"	0'- 8"	1'- 5"		
		TOTAL PER HEADWALL	1,418						
		TOTAL	2,836						

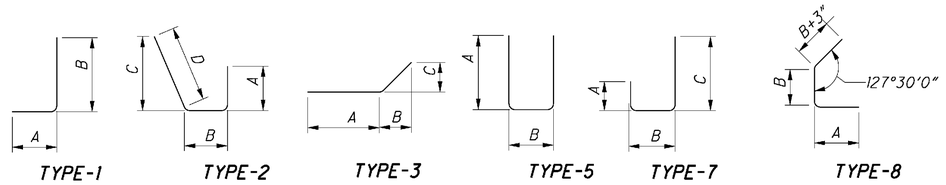

CALCULATED | CHECKED

CULVERT REINFORCING STEEL LIST
STATION 330+25

ATB-90-14.25

275
437

Palmer ENGINEERING
PALMER ENGINEERING
11300 CORNELL PARK DR
CINCINNATI, OH 45242

O:\ODOT\ATB\25199\drainage\sheets\25199RL001.dgn 6/6/2009 9:49:47 AM DENNIS

PROPOSED WORK:

1. CLEAR THE WORK AREA OF ALL TREES, STUMPS, VEGETATION, AND FOREIGN MATERIAL.

2. EXCAVATE TO THE GRADES SHOWN TO CONSTRUCT THE GABION WALL AND INSTALL THE GABIONS AS DETAILED IN THE PLANS.

3. PLACE FILTER FABRIC BEHIND THE GABION RETAINING WALL AS SHOWN AND BACKFILL WITH STRUCTURAL BACKFILL.

4. EXCAVATE THE EXISTING SLOPE FAILURE AREA AND CONSTRUCT BENCHES AS SHOWN.

5. INSTALL UNDER DRAINS, CHIMNEY DRAINS AND PROPOSED EMBANKMENT

6. TRENCH AND PLACE 24" STORM SEWER DOWN SLOPE. CONSTRUCT OUTLET THRU GABION WALL.

7. PLACE GABION MATTRESS COLLAR BEHIND WALL.

8. RESTORE AND FINE GRADE. SEED AND MULCH THE AREA AND PLACE CRUSHED AGGREGATE SLOPE PROTECTION (SEE BRIDGE PLANS).

NOTES:

1. SUBSURFACE SOILS AND BEDROCK INFORMATION, AND CREEK HYDRAULIC INFORMATION IS INCLUDED IN THE PLANS. IN GENERAL, THE RIVERBED IN THE FLOODPLAIN IS A THIN (1.5 - 4 FT.) LAYER OF SEDIMENT OVER SHALE, WHILE THE MAIN CHANNEL OF THE RIVER ALONG THE PROPOSED GABION WALL IS A SHALE BED.

2. ROCK CHANNEL PROTECTION, AS PER PLAN, SHALL BE USED AT THE ENDS OF THE GABIONS TO PROTECT THE GABION WALL AND PROVIDE A SMOOTH TRANSITION TO THE EXISTING GROUND.

3. THE END OF THE GABION WALL AND THE ROCK CHANNEL PROTECTION SHALL MEET THE EXISTING GRADE. GRADING TO MATCH THE EXISTING GROUND AT THESE LOCATIONS WILL BE CONSIDERED INCIDENTAL TO ITEM 838 GABIONS WITH ADDITIONAL COATING (ANCHORED), AS PER PLAN.

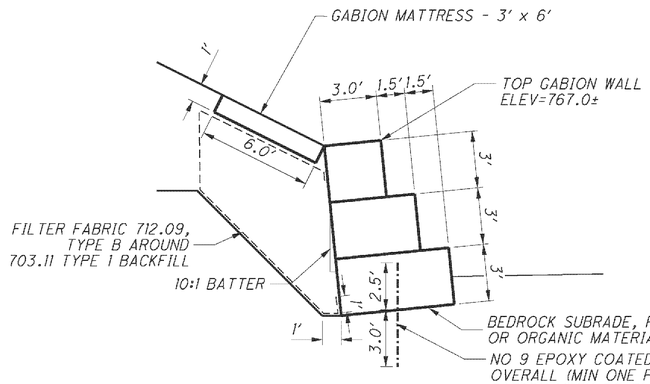

GABION WALL AND MATTRESS DETAIL

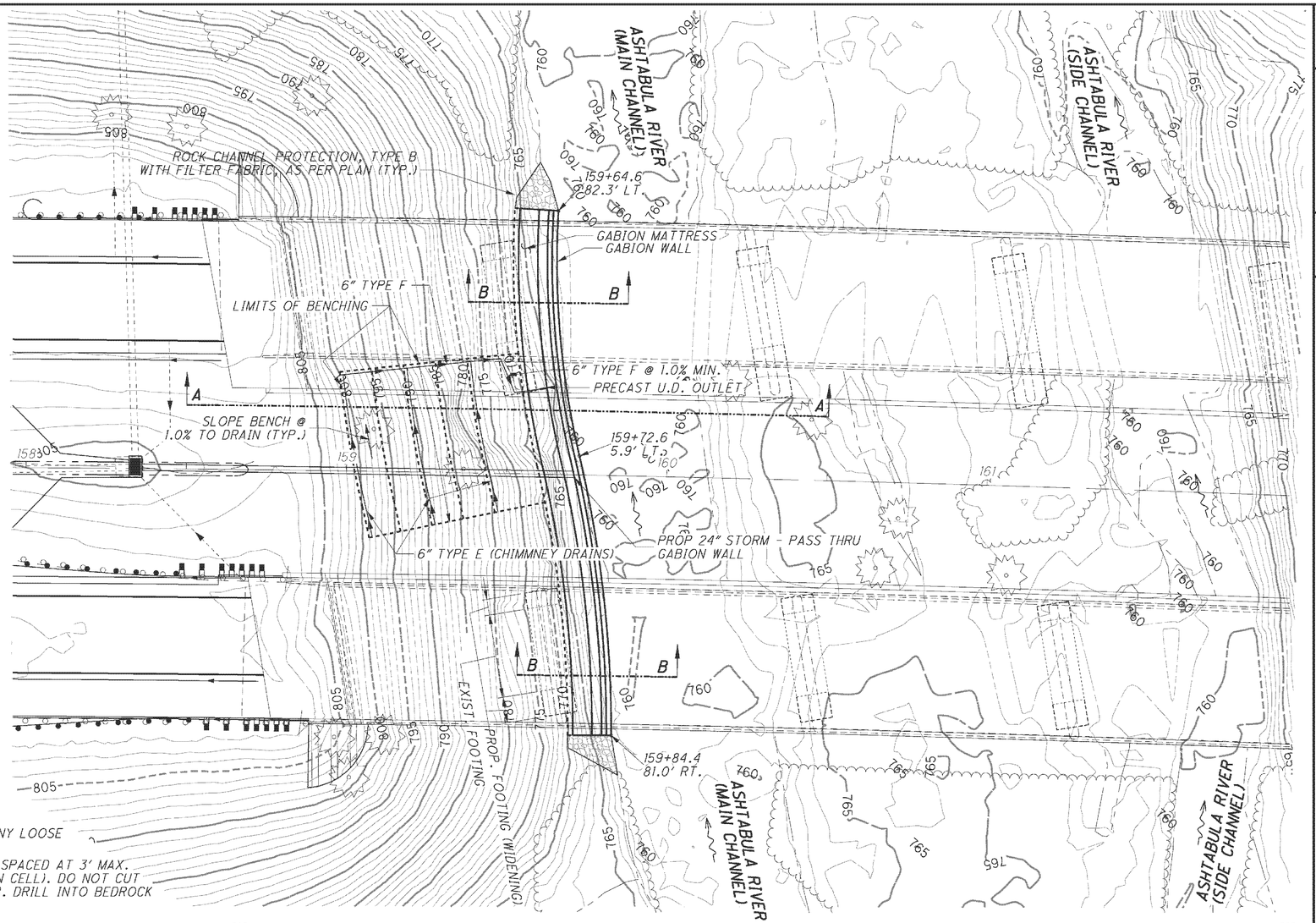

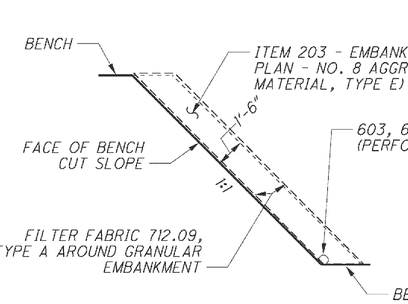

CHIMMNEY DRAIN DETAIL

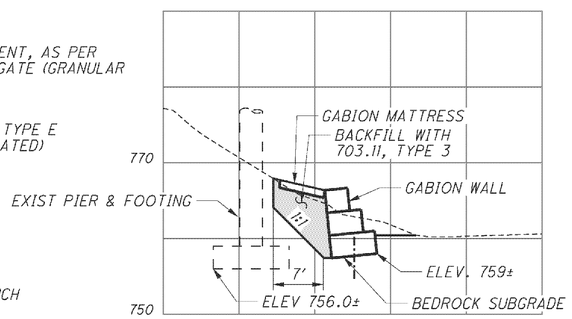

SECTION B-B 1"=10'

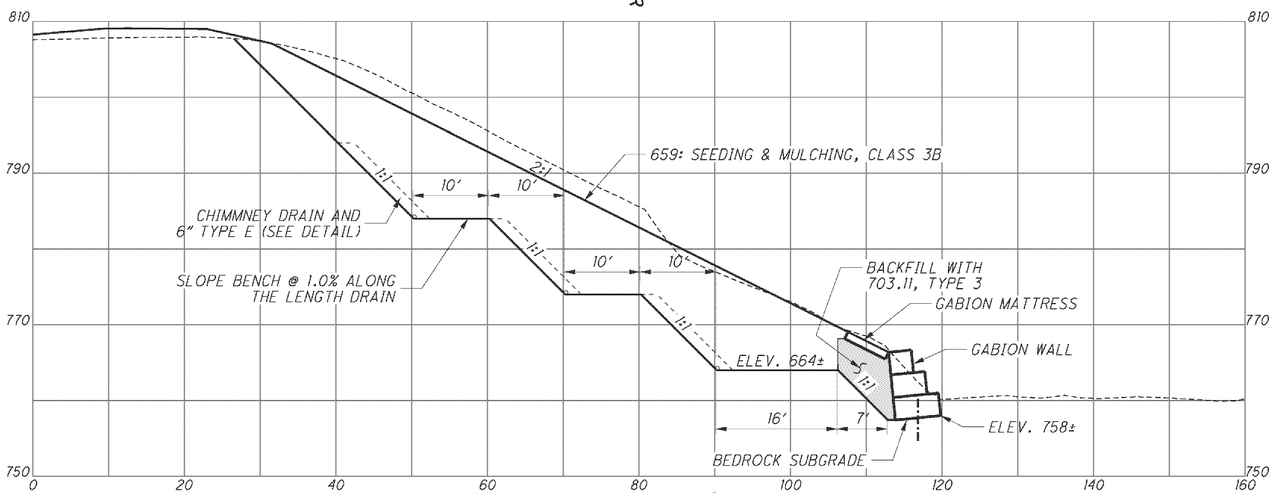

SECTION A-A (20' LT. OF ℄ I-90) 1"=10'

PALMER ENGINEERING
11300 CORNELL PARK DR
ENGINEERING CINCINNATI, OH 45242

O:\CDOT\ATB\25199\drainage\sheets\25199D001.dgn 6/6/2009 10:53:25 AM DENNIS

HORIZONTAL SCALE IN FEET
0 10 20 40
CALCULATED
CHECKED

EROSION CONTROL DETAILS
GABION DETAILS - ASHTABULA RIVER

ATB-90-14.25

GENERAL

THE CONTRACTOR SHALL COMPLY WITH THE UNITED STATES ARMY CORP. OF ENGINEER'S NATIONWIDE PERMIT APPLICATION AND GUIDELINES FOR THIS PROJECT.

THE CONTRACTOR SHALL TAKE ALL NECESSARY PRECAUTIONS TO ENSURE NO DAMAGE TO EXISTING OR PROPOSED STRUCTURE IS CAUSED BY THE EXECUTION OF THEIR WORK.

PRIOR TO THE START OF THE WORK THE CONTRACTOR SHALL INSTALL FILTER FABRIC FENCE TO PREVENT LOSS OF SOIL, AND DELINEATE ACTIVE WORK AREAS.

FINAL SLOPES SHALL BE CONSTRUCTED AT A MAXIMUM OF 2:1, UNLESS SHOWN OTHERWISE.

ALL MATERIAL DEEMED UNUSABLE FOR BACKFILLING OR SITE GRADING BY THE ENGINEER (E.G. ORGANICS OR DEBRIS, SUCH AS ROCK FRAGMENTS, CONCRETE RUBBLE, ETC. WHICH ARE LARGER THAN 6"), SHALL BE REMOVED FROM THE SITE AND PROPERLY DISPOSED OF BY THE CONTRACTOR.

ITEM 503 UNCLASSIFIED EXCAVATION (FOR GABIONS). AS PER PLAN

THE WORK IN THIS ITEM SHALL BE PER ITEM 503 OF THE CMS AND AS FOLLOWS:

EXCAVATE TO SUITABLE BEDROCK FOUNDATION AS SHOWN, AS DIRECTED BY THE ENGINEER. EXCAVATE THE SHALE BEDROCK AS NECESSARY TO CONSTRUCT THE GABIONS AT THE REQUIRED WALL BATTER. BEDROCK SUBGRADE SHALL BE FREE OF LOOSE OR ORGANIC MATERIAL. FILL ANY VOIDS IN BEDROCK SUBGRADE WITH GROUT OR ITEM 703.11 TYPE 3 AGGREGATE TO CREATE A SMOOTH BEARING SURFACE FOR THE GABIONS.

BACKFILL THE AREA SHOWN BEHIND THE GABION WALL AND BELOW THE GABION MATTRESS WITH ITEM 703.11, TYPE 3. FILTER FABRIC, ITEM 712.09, TYPE B SHALL BE PLACED AROUND THE LIMITS OF THE 703.11 BACKFILL.

PAYMENT FOR THE ABOVE WORK, INCLUDING BACKFILL AND FILTER FABRIC, ALONG WITH EXCAVATING AND SHAPING THE COMPETENT BEDROCK SUBGRADE SHALL BE INCLUDED WITH ITEM 503 UNCLASSIFIED EXCAVATION (FOR GABIONS). AS PER PLAN

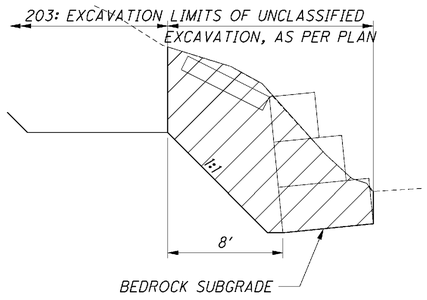

UNCLASSIFIED EXCAVATION LIMITS

ITEM 503 COFFERDAMS. CRIBS AND SHEETING (FOR GABIONS). AS PER PLAN

THE WORK IN THIS ITEM SHALL BE PER ITEM 503 OF THE CMS AND AS FOLLOWS:

THIS ITEM SHALL INCLUDE AN INSIDE LINING OF FILTER FABRIC (712.09, TYPE B) FENCE TO PREVENT THE DISCHARGE OF SEDIMENT INTO THE ASHTABULA RIVER.

THE CONTRACTOR SHALL MANAGE THE CONSTRUCTION OF GABIONS AND ROCK CHANNEL PROTECTION IN A MANNER WHICH CONSIDERS ALL REQUIRED EXCAVATION, ALL APPLICABLE PERMITS, AND THE HYDRAULICS OF THE ASHTABULA RIVER. THE FLOWS AND WATER ELEVATIONS IN THE RIVER CAN VARY AND WILL AFFECT THE DESIGN ON THE SIZE OF THE COFFERDAMS, CRIBS AND SHEETING. THE TOP OF COFFERDAM SHALL BE AT LEAST 1' ABOVE THE HIGH WATER EXPECTED TO OCCUR DURING CONSTRUCTION OF THE GABION WALL AND SLIP REPAIR.

THE CONTRACTOR SHALL PREPARE AND SUBMIT TO THE ENGINEER A RIVER FLOW MANAGEMENT PLAN. HE SHALL ALSO SUBMIT 4 COPIES OF THE FLOW MANAGEMENT PLAN TO THE DISTRICT 4 ENVIRONMENTAL COORDINATOR FOR SUBMISSION TO THE OEPA, DIVISION OF SURFACE WATER. THIS PLAN SHALL ADDRESS THE CONTRACTOR'S PROPOSED METHODS FOR MANAGING RIVER FLOW, ALONG WITH PROPOSED COFFERDAMS, AS NECESSARY TO PROVIDE A SAFE AND CLEAN WORKING ENVIRONMENT, AND TO AVOID DISCHARGING EXCAVATED MATERIALS INTO THE RIVER.

NO SEPARATE PAYMENT WILL BE MADE FOR THE ABOVE AND ANY INCIDENTALS TO MANAGE THE WORK AREA, AND MAINTAIN RIVER FLOWS, AND COMPLY WITH THE REQUIREMENTS SHALL BE INCLUDED IN THE COST OF ITEM 503 COFFERDAMS, CRIBS AND SHEETING (FOR GABIONS), AS PER PLAN.

GABIONS WITH ADDITIONAL COATING, AS PER PLAN

THE WORK IN THIS ITEM SHALL BE PER SUPPLEMENTAL SPECIFICATION 838 "GABIONS", DATED 4/15/05, AS MODIFIED BELOW.

THE GABIONS SHALL BE GALVANIZED AND PVC COATED DOUBLE TWIST WIRE MESH FITTED WITH DIAPHRAGMS.

WELDED GABIONS ARE NOT PERMITTED.

AGGREGATE FILL MATERIAL FOR BASKETS SHALL BE ROCK OR BROKEN STONE. RPCC SHALL NOT BE USED.

EXCAVATION AND BACKFILL FOR GABIONS WILL BE PAID SEPARATELY PER ITEM 503 UNCLASSIFIED EXCAVATION (FOR GABIONS), AS PER PLAN.

ALL GABIONS SHALL BEAR ON A CLEAN COMPETENT SURFACE; THE GABIONS ARE DESIGNED FOR AN ALLOWABLE BEARING CAPACITY OF 1,500 POUNDS PER SQUARE FOOT.

AGGREGATE FILL MATERIAL FOR BASKETS SHALL BE ROCK OR BROKEN STONE CONFORMING TO 703.19 B. RPCC SHALL NOT BE USED. THE GABIONS SHALL BE HAND FILLED.

FIELD FIT GABION BASKETS AS REQUIRED, ALWAYS KEEP FRONT EDGE TOGETHER AND TAPER REAR OF UNIT AS NEEDED. IF CAPS BETWEEN UNITS ARE OVER 4", USE MESH TO FILL, MAKE ALL CONNECTIONS OF GABIONS AS PER MANUFACTURER'S RECOMMENDATION FOR CURVED SECTIONS, LONGER RADII CAN BE PERFORMED BY CONNECTING. MULTIPLE UNITS TOGETHER, END TO END, AND BENDING AROUND THE RADIUS.

THE GABIONS SHALL BE ANCHORED AS DETAILED IN THE PLANS. THE CONTRACTOR SHALL INSTALL EPOXY COATED REINFORCING STEEL IN THE BOTTOM ROW OF THE GABION BASKETS, AS SHOWN IN THE PLANS. DO NOT CUT GABION MESH IN ORDER TO PLACE THE REBAR ANCHOR. DRILL HOLES INTO BEDROCK AND GROUT REBAR INTO THE DRILL HOLES WITH MORTAR PER ITEM 705.22. ALL GROUT SHALL BE INSTALLED IN ACCORDANCE WITH THE MANUFACTURER'S INSTRUCTIONS AND RECOMMENDATIONS. THE CONTRACTOR CAN PROPOSE AN ALTERNATIVE BASE ANCHORING SCHEME, FOR APPROVAL BY THE ENGINEER.

AT LOCATIONS WHERE EXISTING OR PROPOSED PIPE WILL BE ROUTED THROUGH THE GABION WALL, BASKETS SHALL BE LACED FRONT TO BACK AT FOUR EVENLY SPACED LOCATIONS AROUND THE CIRCUMFERENCE OF THE PIPES. PIPES SHALL EXTEND THROUGH THE WALL SUCH THAT DISCHARGE FALLS ON PVC COATED BASKETS OR THE RIVER BED.

PAYMENT FOR THE ABOVE SHALL BE AT THE UNIT PRICE BID PER CUBIC YARD FOR ITEM 838 GABIONS WITH ADDITIONAL COATING, AS PER PLAN, AND SHALL INCLUDE ALL LABOR, EQUIPMENT, MATERIALS AND INCIDENTALS, INCLUDING ANCHORING SYSTEM, NECESSARY TO COMPLETE THE ABOVE WORK.

SPECIAL BENCHING SLOPE DRAINS

PLACE SPECIAL BENCHING SLOPE DRAINS AT THE LOCATIONS SHOWN ON THE PLAN & DETAIL SHEETS. THESE DRAINS SHALL CONSIST OF ITEM 203 GRANULAR EMBANKMENT, AS PER PLAN (NO. 8 STONE), ITEM 690 GEOTEXTILE FABRIC, 712.09 TYPE A, AND ITEM 603 CONDUIT TYPE E, 707.31 (PERFORATED). THE TYPE E CONDUIT SHALL BE PERFORATED AS PER CONDUIT FOR ITEM 605 UNCLASSIFIED PIPE UNDERDRAINS. THE GRANULAR EMBANKMENT SHALL BE PLACED IN LIFTS AS THE SPECIAL BENCHING BACKFILL IS CONSTRUCTED. TRANSVERSE OUTLET DRAINS SHALL BE PROVIDED AT THE LOCATIONS SHOWN ON THE PLAN & DETAIL SHEETS. THESE OUTLET DRAINS SHALL CONSIST OF ITEM 603 CONDUIT TYPE F, 707.33 WITH ITEM 604 PRECAST REINFORCED CONCRETE OUTLETS.

ITEM 203 - GRANULAR EMBANKMENT, AS PER PLAN

FURNISH DURABLE, NATURAL AGGREGATE NO. 8 SIZE. PLACE THE AGGREGATE AT THE THICKNESS AND SLOPE AS SHOWN ON SHEET 276 .

ROCK CHANNEL PROTECTION, WITH FILTER, TYPE B, AS PER PLAN

FURNISH ONLY CLEAN ROCK (FREE OF ANY TOXIC OR FINE MATERIAL). THE USE OF BROKEN CONCRETE, ASPHALT PAVING, OR OTHER RUBBLE WILL NOT BE PERMITTED. ALL EXISTING CONCRETE RUBBLE SHALL B E REMOVED FROM THE PROJECT SITE AS PART OF THIS PROJECT AND PROPERLY DISPOSED OF OR RECYCLED AT AN APPROVED LOCATION. ALL MATERIAL SHALL BE A MINIMUM OF THREE INCHES IN DIAMETER AND BE WASHED TO REMOVE FINE PARTICULATE MATTER (CLAY, SILT, SAND AND SOIL).

GABION WALL AND SLOPE REPAIR GENERAL SUMMARY

ITEM	EXT	TOTAL	UNIT	DESCRIPTION
203	10000	1700	CU YD	EXCAVATION
203	20000	1360	CU YD	EMBANKMENT
203	35001	850	CU YD	GRANULAR EMBANKMENT, AS PER PLAN
503	11101	LUMP		COFFERDAMS, CRIBS AND SHEETING (FOR GABIONS), AS PER PLAN
503	21101	550	CU YD	UNCLASSIFIED EXCAVATION, (FOR GABIONS), AS PER PLAN
601	32101	21	CU YD	ROCK CHANNEL PROTECTION, WITH FILTER, TYPE B, AS PER PLAN
603	01400	150	FT	6" CONDUIT TYPE E, 707.31 (PERFORATED)
603	01500	70	FT	6" CONDUIT, TYPE F, 707.33
604	36600	1	EACH	PRECAST REINFORCED CONCRETE OUTLET
690E12010	SPECIAL	391	SY	GEOTEXTILE FABRIC, 712.09 TYPE A
838	20751	284	CY	GABIONS WITH ADDITIONAL COATING, AS PER PLAN

CALCULATED | CHECKED

GENERAL NOTES & ESTIMATED QUANTITIES
ATB-90-1583 - GABION WALLS AND SLOPE REPAIR

ATB-90-14.25

277
437

Palmer ENGINEERING
PALMER ENGINEERING
11300 CORNELL PARK DR
CINCINNATI, OH 45242

O:\ODOT\ATB\25199\drainage\sheets\25199DN002.dgn 6/6/2009 9:50:00 AM DENNIS

UNDERDRAIN DETAILS

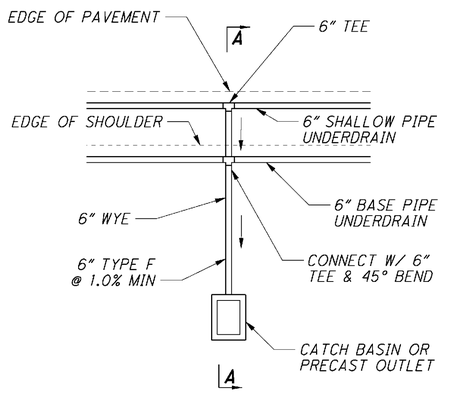

DETAIL A

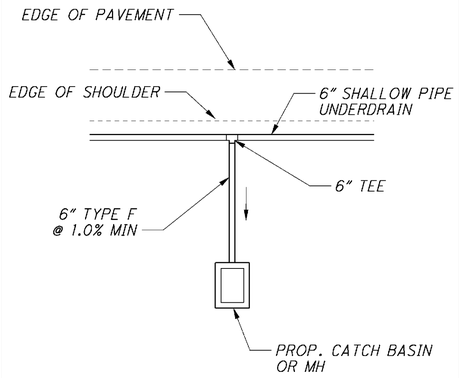

DETAIL B

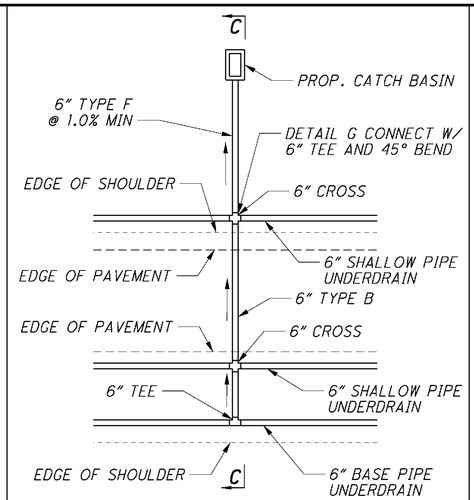

DETAIL C/G

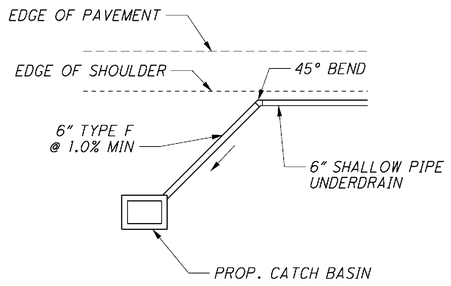

DETAIL D

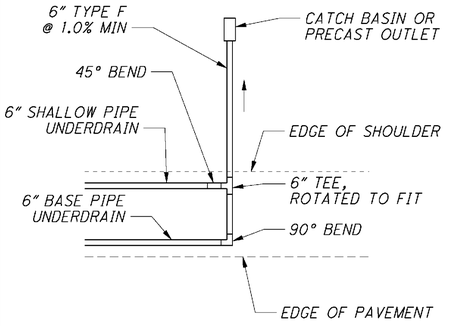

DETAIL E

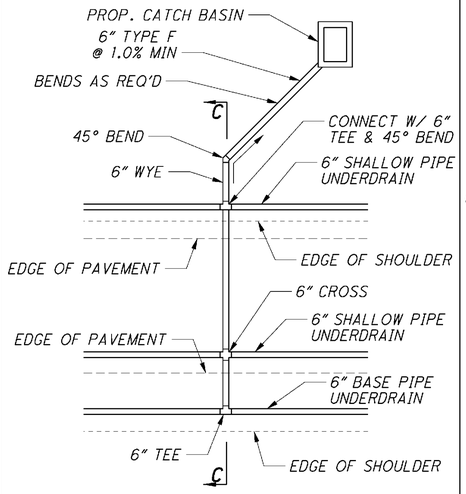

DETAIL F

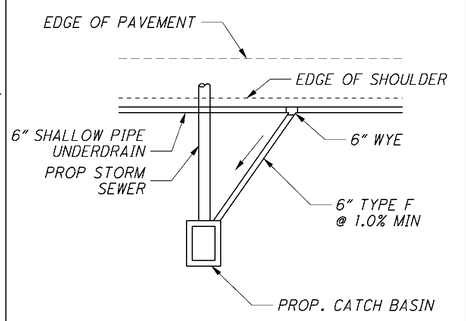

DETAIL H

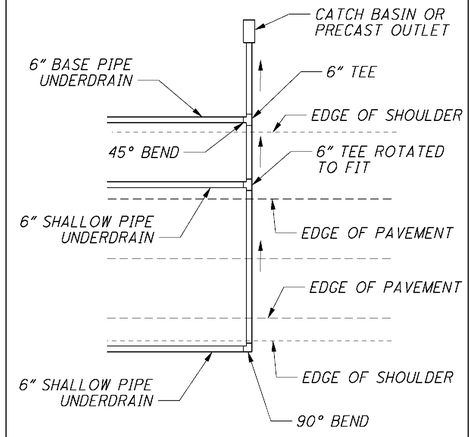

DETAIL I

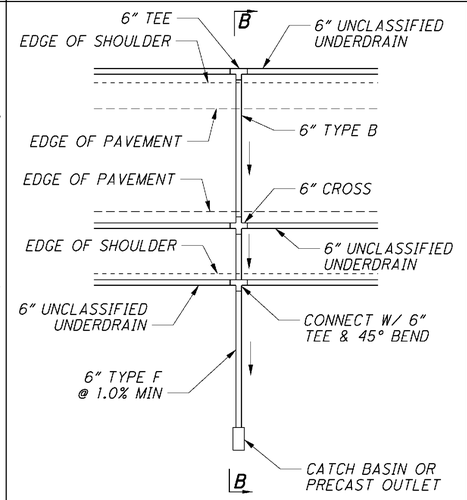

DETAIL J

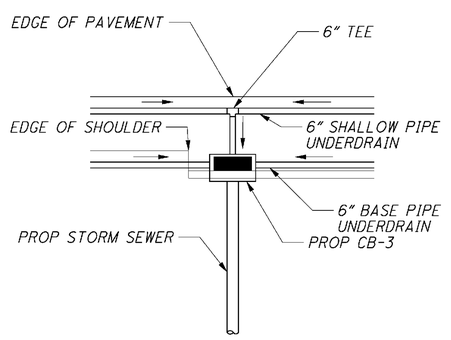

DETAIL K

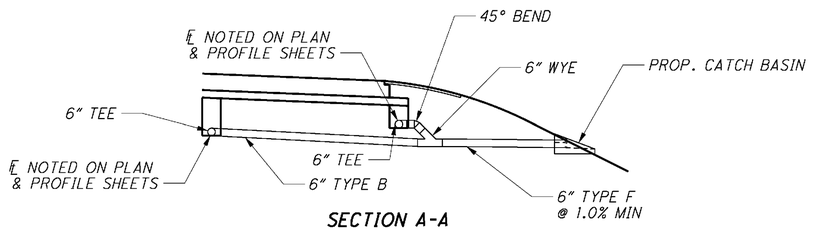

SECTION A-A

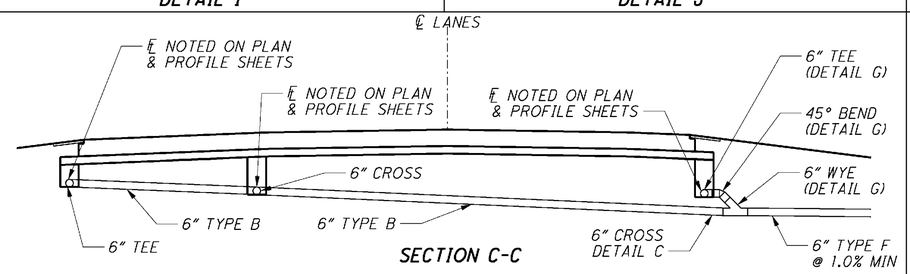

SECTION C-C

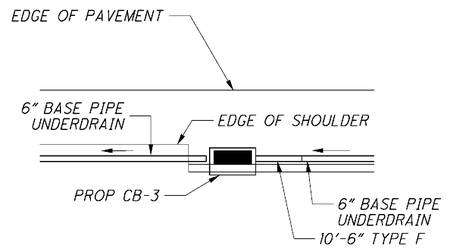

STA. 81+83 RT.
STA. 82+28 LT.
STA. 89+80 RT.
STA. 90+35 LT.

DETAIL L

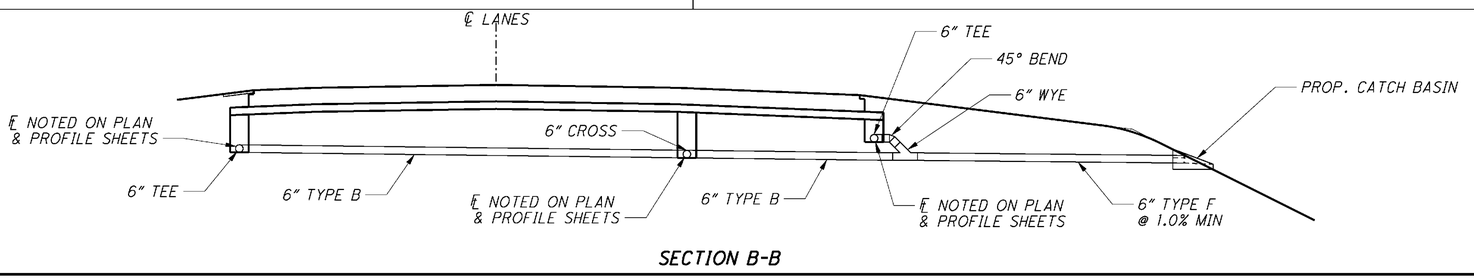

SECTION B-B

ATB-90-14.25

Palmer ENGINEERING
PALMER ENGINEERING
11300 CORNELL PARK DR
CINCINNATI, OH 45242

O:\ODOT\ATB\25199\drainage\sheets\25199DD002.dgn 6/6/2009 9:50:04 AM DENNIS

SLOPE PROTECTION SYSTEM

THE SLOPE PROTECTION SYSTEM IS TO BE INSTALLED PER MANUFACTURER'S SPECIFICATIONS AND BASED ON MANUFACTURER PROVIDED DESIGN.

THE FOLLOWING ITEMS SHALL BE USED TO INSTALL THE SLOPE PROTECTION SYSTEM ACCORDING TO THE DETAILS AS SHOWN ON THIS SHEET. THE SLOPE PROTECTION SYSTEM SHALL BE INSTALLED ON THE SLOPES IDENTIFIED ON THE SLOPE REPAIR DETAILS.

ALL MATERIALS, LABOR, EQUIPMENT, TOOLS AND INCIDENTALS NECESSARY TO COMPLETE THIS WORK SHALL BE INCLUDED IN THE UNIT BID PRICE FOR THE PERTINENT ITEM. THE FOLLOWING QUANTITIES HAVE BEEN CARRIED TO THE GENERAL SUMMARY:

203, GRANULAR MATERIAL TYPE E AS PER PLAN, 2 ____ CU YD

204, GEOTEXTILE FABRIC TYPE D, NONWOVEN ____ SQ YD

SPECIAL, MISC.: GEOWEB SLOPE PROTECTION SYSTEM (GW30V6) _____ SQ YD

670, SLOPE EROSION PROTECTION MAT, TYPE E _____ SQ YD

ITEM SPECIAL - MISC.: GEOWEB SLOPE PROTECTION SYSTEM (CW30V6)

THIS ITEM SHALL CONSIST OF FURNISHING AND INSTALLING THE GEOWEB SLOPE PROTECTION SYSTEM (GW30V6) MANUFACTURED BY PRESTO PRODUCTS COMPANY, PO BOX 2399, APPLETON, WI, 54912-2399, 800-558-3525. THE SYSTEM SHALL BE INSTALLED IN ACCORDANCE WITH THE MANUFACTURER'S SPECIFICATIONS INCLUDING, BUT NOT LIMITED TO ATRA ANCHORS.

ODOT WILL ACCEPT AN ALTERNATIVE IF THE FOLLOWING CONDITIONS ARE MET:

1. THE SYSTEM IS SIMILAR TO THE BASIC GEOMETRY, MATERIAL, AND COMPONENTS OF GEOWEB (I.E. DESIGNED TO CONFINE GRANULAR MATERIAL IN CELLS, SAME HEIGHT, ANCHORAGE SYSTEM, DRAINAGE CHARACTERICS, ETC)

2. GEOTEXTILE FABRIC UNDER THE SLOPE PROTECTION IS REQUIRED

3. A SAMPLE OF THE MATERIAL IS SUBMITTED FOR ODOT REVIEW, MINIMUM SIZE 3'x3'

4. THE INFILL VOLUME OF THE GRANUALR MATERIAL IS WITHIN 5% OF THE SPECIFICATIONS OF THE GEOWEB

5. MANUFACTURER'S SPECIFICATIONS ARE SUBMITTED

6. DOCUMENTATION (PREPARED AND STAMPED BY A REGISTERED PROFESSIONAL ENGINEER) STATING THAT THE SYSTEM IS EQUIVALENT TO OR EXCEEDS THE SPECIFICATIONS OF THE GEOWEB

7. CALCULATIONS AND A TYPICAL CROSS SECTION OF THE DESIGN OF THE ANCHORAGE SYSTEM FOR THE SLOPE PROTECTION MUST BE PERFORMED BY A REGISTERED PROFESSIONAL ENGINEER AND STAMPED. CALCULATIONS MUST BE SUBMITTED.

THE ODOT PROJECT ENGINEER WILL REVIEW ALL OF THE SUPPLIED INFORMATION AND MAKE A DETERMINATION IF THE MATERIAL IS EQUIVALENT OR EXCEEDS THE GEOWEB. IF IT DOES THEN THE PROJECT ENGINEER WILL APPROVE THE USE OF THE ALTERNATIVE.

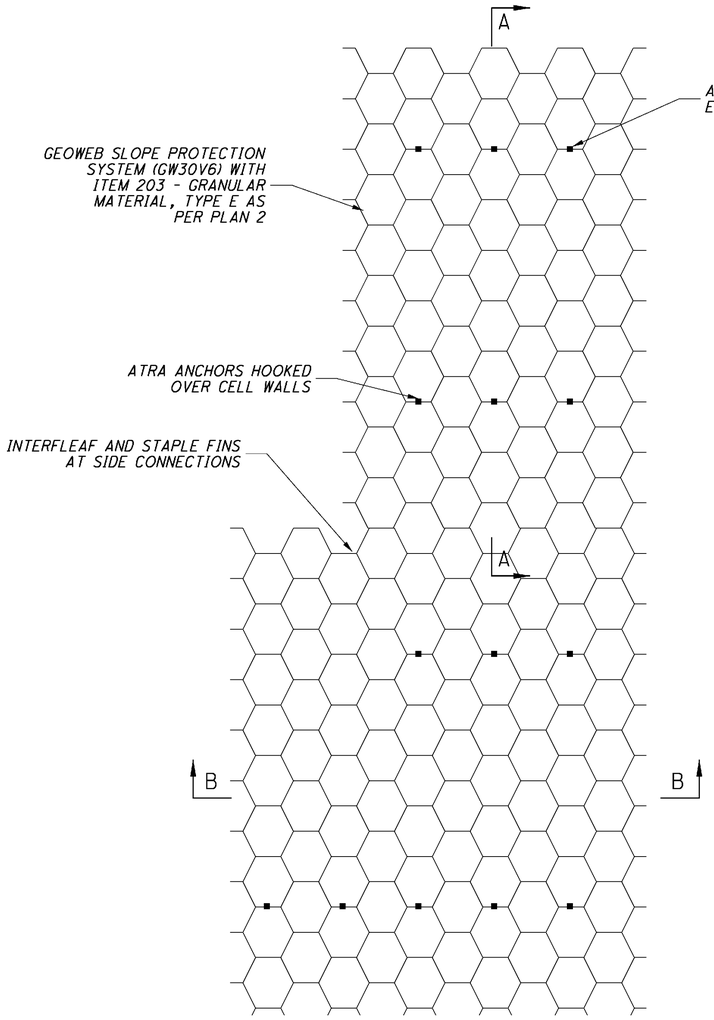

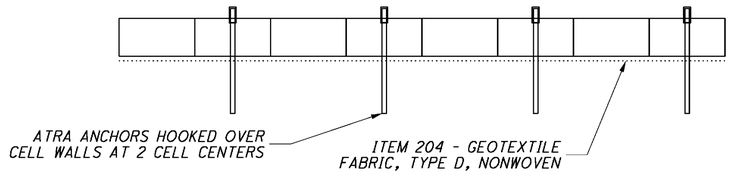

SECTION B-B

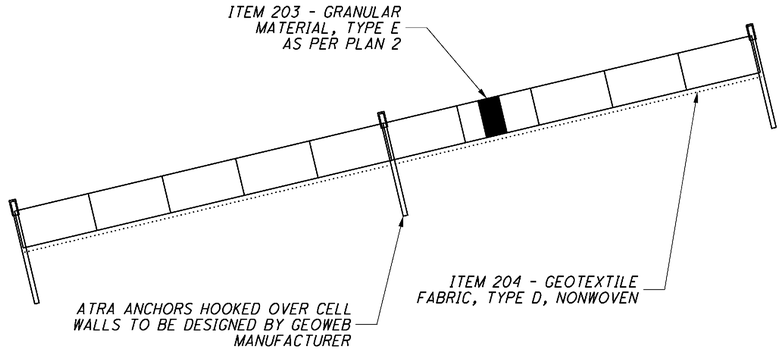

SECTION A-A

ITEM 203 - GRANULAR MATERIAL, TYPE E, AS PER PLAN, NO. 1

No. 57 STONE SHALL BE USED.

ITEM 203 - GRANULAR MATERIAL, TYPE E, AS PER PLAN, NO. 2

THIS ITEM WILL CONSIST OF A MIXTURE OF GRANULAR MATERIAL, TYPE E AND TOPSOIL (CMS SECTION 659) ACCORDING TO THE FOLLOWING PERCENTAGES BY VOLUME:

GRANULAR MATERIAL TYPE E 45%-55%
TOPSOIL 45%-55%

GEOWEB SLOPE COVER DETAIL STA. 71+00 TO STA. 80+50

ATB-90-14.25

0:\ODOT\ATB\25199\admin\PRE-Bid Questions\Slope Repair\25199GN_SLOPE.dgn 10/16/2009 12:07:25 PM dan-f

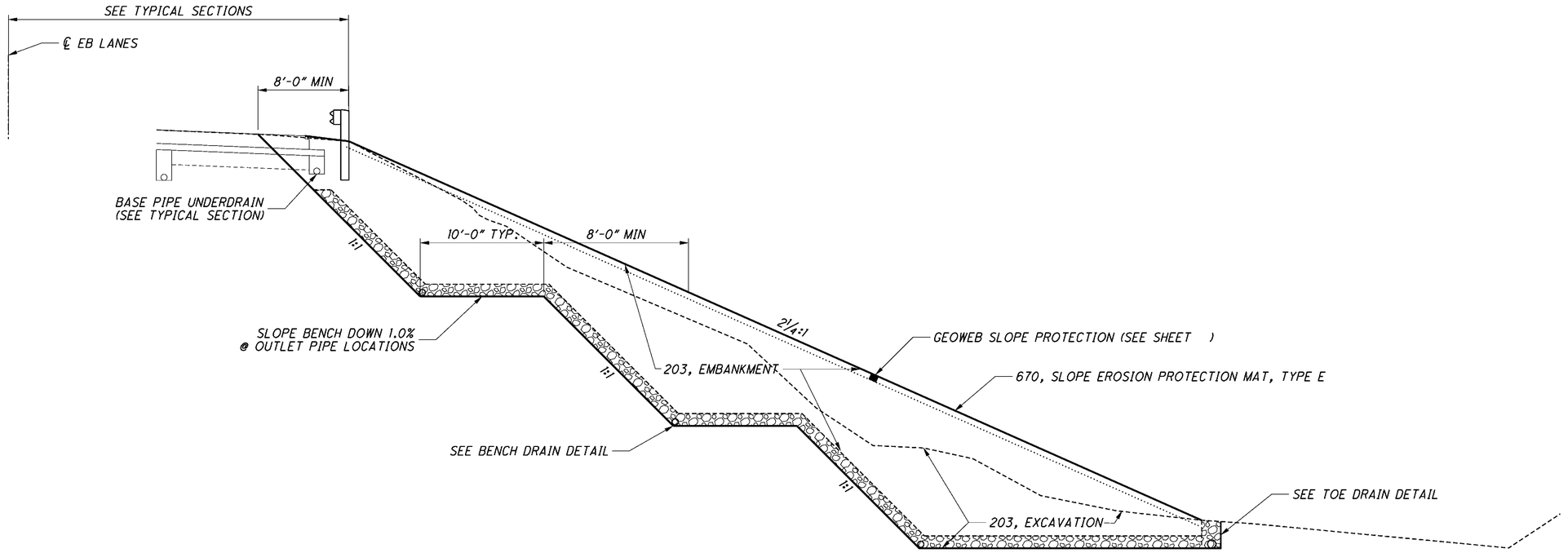

TYPICAL SECTION - SLOPE REPAIR
STA. 71+00 TO STA. 80+50 RT.

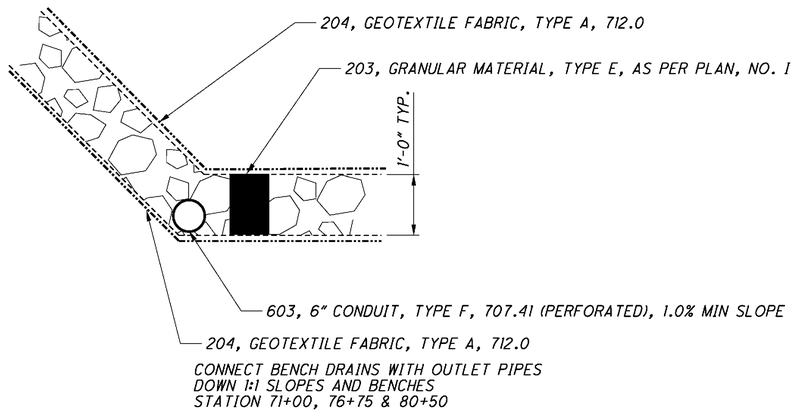

BENCH DRAIN DETAIL

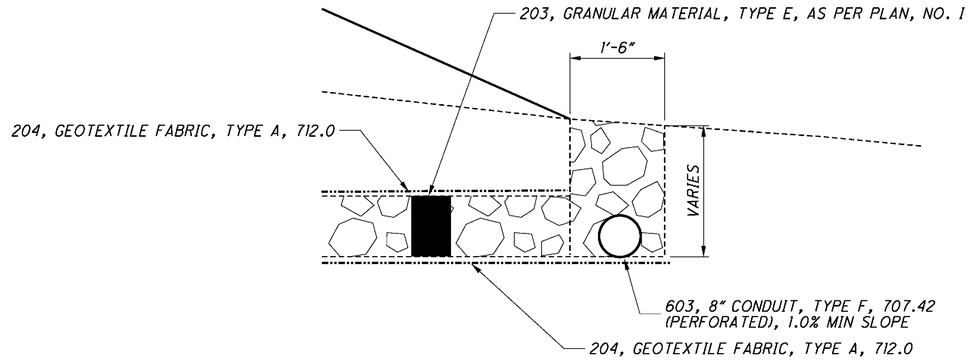

TOE DRAIN DETAIL

SLOPE REPAIR - RT SIDE
STA. 71+00 TO STA. 80+50

ATB-90-14.25

278B
437

0:\ODOT\ATB\25199\admin\PRE-Bid Questions\Slope Repair\25199GY_SLOPE.dgn 10/16/2009 12:07:29 PM dan-f

O:\ODOT\ATB\25199\roadwcy\sheets\25199GP_SLOPE.dgn 10/29/2009 8:47:03 AM cam f

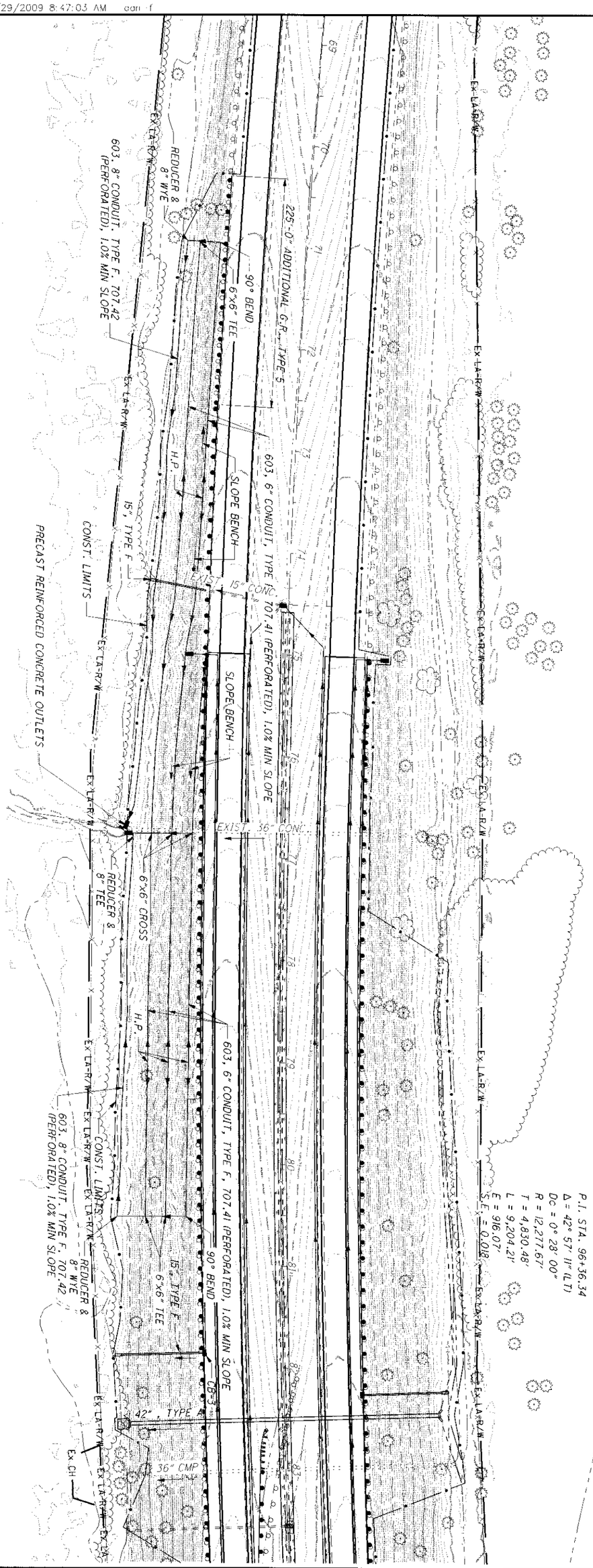

278e 437	ATB-90-14.25	SLOPE REPAIR - RT SIDE PLAN STA. 71+00 TO STA. 80+50	CALCULATED CHECKED	0 25 50 HORIZONTAL SCALE IN FEET

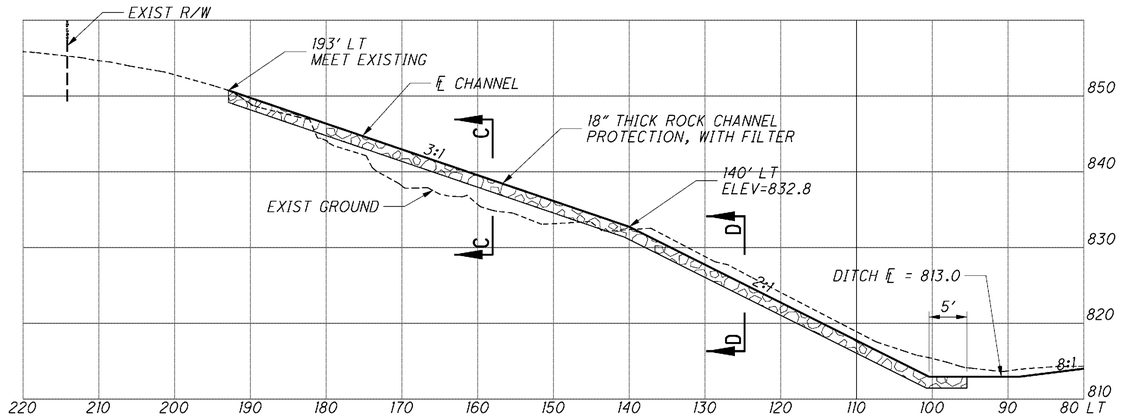

PROFILE 1"=10'

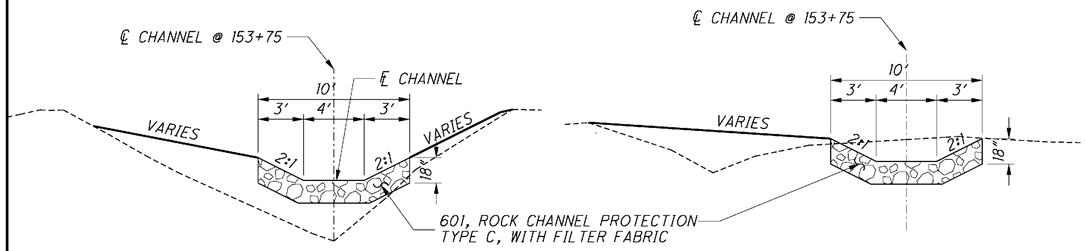

SECTION C-C

SECTION D-D

CHANNEL DETAILS - STA 153+75 LEFT

CALCULATED | CHECKED

DRAINAGE DETAILS

ATB-90-14.25

279
437

Palmer ENGINEERING
PALMER ENGINEERING
11300 CORNELL PARK DR
ENGINEERING CINCINNATI, OH 45242

O:\ODOT\ATB\25199\drainage\sheets\25199DD003.dgn 6/6/2009 9:50:07 AM DENNIS

SHEET NUMBER	PARTICIPATION	ITEM	ITEM EXT.	GRAND TOTAL	UNIT	DESCRIPTION	SEE SHEET NO.
						TRAFFIC CONTROL	
135		620	00500	135	EACH	DELINEATOR, POST MOUNTED	
527		621	00100	527	EACH	RPM	
177		626	00100	177	EACH	BARRIER REFLECTOR	
381		630	02100	381	FT	GROUND MOUNTED SUPPORT, NO. 2 POST	
434		630	03100	434	FT	GROUND MOUNTED SUPPORT, NO. 3 POST	
150		630	07500	150	FT	GROUND MOUNTED SUPPORT, W10X22 BEAM	
80		630	07600	80	FT	GROUND MOUNTED SUPPORT, W10X12 BEAM	
120		630	08000	120	FT	GROUND MOUNTED SUPPORT, W12X30 BEAM	
14		630	09000	14	EACH	BREAKAWAY BEAM CONNECTION	
344		630	80100	344	SQ FT	SIGN, FLAT SHEET	
981		630	80200	981	SQ FT	SIGN, GROUND MOUNTED EXTRUSHEET	
14		630	84500	14	EACH	GROUND MOUNTED BEAM SUPPORT FOUNDATION	
40		630	84900	40	EACH	REMOVAL OF GROUND MOUNTED SIGN AND DISPOSAL	
8		630	85400	8	EACH	REMOVAL OF GROUND MOUNTED MAJOR SIGN AND DISPOSAL	
36		630	86002	36	EACH	REMOVAL OF GROUND MOUNTED POST SUPPORT AND DISPOSAL	
16		630	86102	16	EACH	REMOVAL OF GROUND MOUNTED BEAM SUPPORT AND DISPOSAL	
4		630	86103	4	EACH	REMOVAL OF GROUND MOUNTED BEAM SUPPORT AND DISPOSAL, AS PER PLAN	12
0.46		642	00090	0.46	MILE	EDGE LINE	
0.23		642	00290	0.23	MILE	CENTER LINE	
23.35		644	00100	23.35	MILE	EDGE LINE	
11.75		644	00200	11.75	MILE	LANE LINE	
0.48		646	10000	0.48	MILE	EDGE LINE	
0.24		646	10100	0.24	MILE	LANE LINE	

CALCULATED CML
CHECKED DPF

CONTROL GENERAL SUMMARY

TRAFFIC

ATB-90-14.25

280
437

Palmer ENGINEERING
PALMER ENGINEERING
11300 CORNELL PARK DR.
CINCINNATI, OH 45242

C:\ODOT\ATB\25199\traffic\sheets\25199TC001.dgn 6/8/2009 2:55:49 PM DENNIS

ESTIMATED QUANTITIES - SIGNS

CALCULATED CML | CHECKED DPF

630

SHEET NO.	REFERENCE NO.	LOCATION	STATION	SIDE	CODE	SIZE (INCHES)	GROUND MOUNTED SUPPORT, NO. 2 POST	GROUND MOUNTED SUPPORT, NO. 3 POST		GROUND MOUNTED SUPPORT, W10X22 BEAM	GROUND MOUNTED SUPPORT, W10X12 BEAM	GROUND MOUNTED SUPPORT, W12X30 BEAM	BREAKAWAY BEAM CONNECTION	SIGN, FLAT SHEET	SIGN, GROUND MOUNTED EXTRUSHEET	GROUND MOUNTED BEAM SUPPORT FOUNDATION		REMOVAL OF GROUND MOUNTED SIGN AND DISPOSAL	REMOVAL OF GROUND MOUNTED MAJOR SIGN AND DISPOSAL	REMOVAL OF GROUND MOUNTED POST SUPPORT AND DISPOSAL	REMOVAL OF GROUND MOUNTED BEAM SUPPORT AND DISPOSAL	REMOVAL OF GROUND MOUNTED BEAM SUPPORT AND DISPOSAL, AS PER PLAN
							FT	FT		FT	FT	FT	EA	SQ FT	SQ FT	EA		EA	EA	EA	EA	EA
285	S1	I-90	70+00	RT	M3-2, M1-1	36x18 / 36x36		15.1						13.5								
285	S2	I-90	75+00	LT	E1-H1/D12-17A	120x126 / 30x111				25.4 / 29.1			2		149.1	2			1		2	
285	S3	I-90	76+08	RT														1		1		
285	S4	I-90	79+36	RT																		2
285	S5	I-90	NOT USED																			
285	S6	I-90	NOT USED																			
285	S7	I-90	84+73	RT	I-H25A-12/OM-H3R-12	12x12 /36 x12	11.5							4.0				2		1		
285	S8	I-90	84+73	RT	OM-H3R-12	36x12	11.5							3.0				1		1		
285	S9	I-90	87+31	LT	I-H25A-12/OM-H3R-12	12x12 /36 x12	11.5							4.0				2		1		
285	S10	I-90	87+31	LT	OM-H3R-12	36x12	11.5							3.0				1		1		
285	S11	I-90	90+00	RT	E7-H1	60x168					18.8 / 22.8		2		70.0	2			1		2	
285	S12	I-90	95+26	RT	D10-3	12x48	13.8							4.0				1		1		
285	S13	I-90	96+31	LT	D10-3	12x48	13.8							4.0				1		1		
285	S14	I-90	102+00	LT	E1-H1	144x168 / 111x30						28.1 / 32.1	2		191.1	2			1		2	
285	S15	I-90	103+75	RT	R3-4, R-3-H4a	36x36 / 30x24		13.0 / 13.0						14.0								
285	S16	I-90	104+60	LT	R3-4, R-3-H4a	36x36 / 30x24		13.0 / 13.0						14.0								
286	S17	PLY	14+44	RT	I-H25A-12	12x12	8.2							1.0								
286	S18	PLY	17+60	LT	I-H25A-12	12x12	8.2							1.0								
286	S19	I-90	124+25	RT	I-H25A-12	12x12	8.2							1.0				1		1		
286	S20	I-90	124+50	LT	I-H25A-12	12x12	8.2							1.0				1		1		
286	S21	I-90	149+00	RT	W8-13	48x48		15.0 / 15.3						16.0				1		1		
286	S22	I-90	151+05	LT	D10-3	12x48	13.8							4.0				1		1		
286	S23	I-90	152+25	RT	R3-4, R-3-H4a	36x36 / 30x24		13.0 / 13.0						14.0								
286	S24	I-90	153+25	LT	R3-4, R-3-H4a	36x36 / 30x24		13.0 / 13.0						14.0								
286	S25	I-90	153+53	RT	D10-3	12x48	13.8							4.0				1		1		
286	S26	I-90	158+00	RT	I-H3B	60x18	11.2 / 11.5							7.5								
286	S27	I-90	158+00	LT	E1-H1	144x168 / 111x30						28.1 / 31.2	2		191.1	2			1		2	
286	S28	I-90	158+88	RT	I-H25A-12/OM-H3R-12	12x12 /36 x12	11.5							4.0				2		1		
286	S29	I-90	158+88	RT	OM-H3R-12	36x12	11.5							3.0				1		1		
286	S30	I-90	162+36	LT	I-H25A-12/OM-H3R-12	12x12 /36 x12	11.5							4.0				2		1		
286	S31	I-90	162+36	LT	OM-H3R-12	36x12	11.5							3.0				1		1		
286	S32	I-90	164+00	LT	I-H3B	60x18	11.2 / 11.5							7.5								
286	S33	I-90	172+50	LT	W8-13	48x48		14.8 / 15.1						16.0				1		1		
287	S34	I-90	187+00	RT	R3-4, R-3-H4a	36x36 / 30x24		13.0 / 13.0						14.0				1		1		
287	S35	I-90	187+25	LT	W11-3	48x48		15.6 / 16.0						16.0				1		1		
287	S36	I-90	188+00	LT	R3-4, R-3-H4a	36x36 / 30x24		13.0 / 13.0						14.0				1		1		
287	S37	I-90	201+33	RT	D10-3	12x48	13.8							4.0				1		1		
287	S38	I-90	204+26	LT	D10-3	12x48	13.8							4.0				1		1		
288	S39	I-90	248+00	RT	R3-4, R-3-H4a	36x36 / 30x24		13.0 / 13.0						14.0				1		1		
288	S40	I-90	248+75	LT	R3-4, R-3-H4a	36x36 / 30x24		13.0 / 13.0						14.0				1		1		
288	S41	PLY RDG	10+80	RT	I-H25A-12	12x12	8.2							1.0								
288	S42	PLY RDG	16+90	LT	I-H25A-12	12x12	8.2							1.0								
288	S43	I-90	253+54	LT	I-H25A-12	12x12	8.2							1.0				1		1		
288	S44	I-90	254+83	RT	I-H25A-12	12x12	8.2							1.0				1		1		
288	S45	I-90	256+71	LT	D10-3	12x48	13.8							4.0				1		1		
288	S46	I-90	257+02	RT	D10-3	12x48	13.8							4.0				1		1		
286	S47	I-90	160+50	RT	D3-H3	24x30	6.5							5.0								
285	S48	I-90	64+25	RT	R3-4, R-3-H4a	36x36 / 30x24		13.0 / 13.0						14.0				1		1		
289	S49	I-90	310+65	LT	D10-3	12x48	13.8							4.0				1		1		
289	S50	I-90	313+33	RT	D10-3	12x48	13.8							4.0				1		1		
285	S51	I-90	65+25	LT	R3-4, R-3-H4a	36x36 / 30x24		13.0 / 13.0						14.0				1		1		
TOTALS CARRIED TO SHEET 282							348	367		55	42	120	8	298	601	8		36	4	32	8	2

ATB-90-14.25

281
437

Palmer ENGINEERING
PALMER ENGINEERING
11300 CORNELL PARK DR
CINCINNATI, OH 45242

O:\ODOT\ATB\25199\traffic\sheets\25199TS001.dgn 6/8/2009 2:55:50 PM DENNIS

SHEET NO.	REFERENCE NO.	LOCATION	STATION	SIDE	CODE	SIZE (INCHES)	630 GROUND MOUNTED SUPPORT, NO. 2 POST FT	GROUND MOUNTED SUPPORT, NO. 3 POST FT		GROUND MOUNTED SUPPORT, W10X22 BEAM FT	GROUND MOUNTED SUPPORT, W10X12 BEAM FT	GROUND MOUNTED SUPPORT, W12X30 BEAM FT	BREAKAWAY BEAM CONNECTION EA	SIGN, FLAT SHEET SQ FT	SIGN, GROUND MOUNTED EXTRUSHEET SQ FT	GROUND MOUNTED BEAM SUPPORT FOUNDATION EA		REMOVAL OF GROUND MOUNTED SIGN AND DISPOSAL EA	REMOVAL OF GROUND MOUNTED MAJOR SIGN AND DISPOSAL EA	REMOVAL OF GROUND MOUNTED POST SUPPORT AND DISPOSAL EA	REMOVAL OF GROUND MOUNTED BEAM SUPPORT AND DISPOSAL EA	REMOVAL OF GROUND MOUNTED BEAM SUPPORT AND DISPOSAL, AS PER PLAN EA
290	S52	WRIGHT	14+21	RT	I-H25A-12	12x12	8.2							1.0								
290	S53	WRIGHT	18+45	LT	I-H25A-12	12x12	8.2							1.0								
290	S54	I-90	328+50	RT	E1-H1	174x108 / 111x30				25.5 / 21.9			2		153.6	2			1		2	
290	S55	I-90	329+21	RT	I-H25A-12	12x12	8.2							1.0				1		1		
290	S56	I-90	332+13	LT	I-H25A-12	12x12	8.2							1.0				1		1		
290	S57	I-90	332+10	LT															1		2	
290	S58	-	NOT USED	-																		
290	S59	I-90	340+00	LT	E7-H1	174x60					19.9 / 18.4		2		72.5	2			1		2	
290	S60	I-90	345+50	RT	E1-H1	174x108 / 111x30				23.6 / 23.9			2		153.6	2			1		2	
290	S61	I-90	349+54	LT																		2
290	S62	I-90	359+75	RT	R3-4, R-3-H4a	36x36 / 30x24		13.0 / 13.0						14.0				1		1		
290	S63	I-90	360+00	LT	M3-4, M1-1	36x18 / 36x36		14.6						13.5								
290	S64	I-90	360+75	LT	R3-4, R-3-H4a	36x36 / 30x24		13.0 / 13.0						14.0				1		1		
TOTALS CARRIED FROM SHEET 281							348	367		55	42	120	8	298	601	8		36	4	32	8	2
TOTALS FROM CURRENT SHEET							33	67		95	38	0	6	46	380	6		4	4	4	8	2
TOTALS CARRIED TO GENERAL SUMMARY							381	434		150	80	120	14	344	981	14		40	8	36	16	4

CALCULATED CML
CHECKED DPF

ESTIMATED QUANTITIES - SIGNS

ATB-90-14.25

282
437

Palmer ENGINEERING
11300 CORNELL PARK DR.
ENGINEERING CINCINNATI, OH 45242

C:\ODOT\ATB\25199\traffic\sheets\25199TS002.dgn 6/8/2009 2:55:53 PM DENNIS

SHEET NO.	REFERENCE NO.	STATION FROM	STATION TO	SIDE	LENGTH	DEDUCTION FOR STATION EQ	SPACING	644 EDGE LINE (W) MILE	644 EDGE LINE (Y) MILE	644 LANE LINE (W) MILE	646 EDGE LINE (W) MILE	646 EDGE LINE (Y) MILE	646 LANE LINE (W) MILE	642 EDGE LINE (W) MILE	642 CENTERLINE,DOUBLE SOLID (Y) MILE	620 DELINEATOR, POST MOUNTED EACH	626 BARRIER REFLECTOR, TYPE A EACH	626 BARRIER REFLECTOR, TYPE B EACH	621 - RPM Y/Y EACH	621 - RPM W/R EACH	621 - RPM W EACH	REMARKS
285	PM1	60+85	84+74	RT	2389				0.45													
285	PM2	60+85	84+74	RT	2389					0.45												
285	PM3	60+85	84+74	RT	2389			0.45														
285	PM4	56+35	85+07	LT	2872				0.54													
285	PM5	56+35	85+07	LT	2872					0.54												
285	PM6	56+35	85+07	LT	2872			0.54														
285	PM7	84+74	87+05	RT	231							0.04										
285	PM8	84+74	87+05	RT	231								0.04									
285	PM9	84+74	87+05	RT	231						0.04											
285	PM10	85+07	87+40	LT	233							0.04										
285	PM11	85+07	87+40	LT	233								0.04									
285	PM12	85+07	87+40	LT	233						0.04											
285	PM13	87+05	120+00	RT	3295				0.62													
285	PM14	87+05	120+00	RT	3295					0.62												
285	PM15	87+05	120+00	RT	3295			0.62														
285	PM16	87+40	120+00	LT	3260				0.62													
285	PM17	87+40	120+00	LT	3260					0.62												
285	PM18	87+40	120+00	LT	3260			0.62														
286	PM19	120+00	158+73	RT	3873	-370.04			0.66													
286	PM20	120+00	158+73	RT	3873	-370.04				0.66												
286	PM21	120+00	158+73	RT	3873	-370.04		0.66														
286	PM22	120+00	158+58	LT	3858	-370.04			0.66													
286	PM23	120+00	158+58	LT	3858	-370.04				0.66												
286	PM24	120+00	158+58	LT	3858	-370.04		0.66														
286	PM25	158+73	162+97	RT	424							0.08										
286	PM26	158+73	162+97	RT	424								0.08									
286	PM27	158+73	162+97	RT	424						0.08											
286	PM28	158+58	162+79	LT	421							0.08										
286	PM29	158+58	162+79	LT	421								0.08									
286	PM30	158+58	162+79	LT	421						0.08											
286	PM31	162+97	174+00	RT	1103				0.21													
286	PM32	162+97	174+00	RT	1103					0.21												
286	PM33	162+97	174+00	RT	1103			0.21														
286	PM34	162+79	174+00	LT	1121				0.21													
286	PM35	162+79	174+00	LT	1121					0.21												
286	PM36	162+79	174+00	LT	1121			0.21														
287	PM37	174+00	224+00	RT	5000	-26.10			0.94													
287	PM38	174+00	224+00	RT	5000	-26.10				0.94												
287	PM39	174+00	224+00	RT	5000	-26.10		0.94														
287	PM40	174+00	224+00	LT	5000	-26.10			0.94													
287	PM41	174+00	224+00	LT	5000	-26.10				0.94												
287	PM42	174+00	224+00	LT	5000	-26.10		0.94														
288	PM43	224+00	275+00	RT	5100	-81.74			0.95													
288	PM44	224+00	275+00	RT	5100	-81.74				0.95												
288	PM45	224+00	275+00	RT	5100	-81.74		0.95														
288	PM46	224+00	275+00	LT	5100	-81.74			0.95													
288	PM47	224+00	275+00	LT	5100	-81.74				0.95												
288	PM48	224+00	275+00	LT	5100	-81.74		0.95														
289	PM49	275+00	325+00	RT	5000				0.95													
289	PM50	275+00	325+00	RT	5000					0.95												
289	PM51	275+00	325+00	RT	5000			0.95														
289	PM52	275+00	325+00	LT	5000				0.95													
289	PM53	275+00	325+00	LT	5000					0.95												
289	PM54	275+00	325+00	LT	5000			0.95														
290	PM55	325+00	370+69	RT	4569	-0.83			0.87													
290	PM56	325+00	370+69	RT	4569	-0.83				0.87												
290	PM57	325+00	370+69	RT	4569	-0.83		0.87														
290	PM58	325+00	390+00	LT	6500	-0.83			1.23													
290	PM59	325+00	390+00	LT	6500	-0.83				1.23												
290	PM60	325+00	367+00	LT	4200	-0.83		0.80														
TOTALS CARRIED TO SHEET 283								**23.06**		**11.75**	**0.48**		**0.24**				**0**		**0**			

CALCULATED CML
CHECKED DPF

ESTIMATED QUANTITIES - PAVEMENT MARKING

ATB-90-14.25

283
437

Palmer ENGINEERING
PALMER ENGINEERING
11300 CORNELL PARK DR
CINCINNATI, OH 45242

O:\ODOT\ATB\25199\traffic\sheets\25199TS003.dgn 6/6/2009 9:50:16 AM DENNIS

ESTIMATED QUANTITIES - PAVEMENT MARKING

CALCULATED CML | CHECKED DPF

SHEET NO.	REFERENCE NO.	STATION FROM	STATION TO	SIDE	LENGTH	DEDUCT FOR STATION EQ	SPACING	644 EDGE LINE (W) MILE	644 EDGE LINE (Y) MILE	644 LANE LINE (W) MILE	646 EDGE LINE (W) MILE	646 EDGE LINE (Y) MILE	646 LANE LINE (W) MILE	642 EDGE LINE (W) MILE	642 CENTERLINE, DOUBLE SOLID (Y) MILE	620 DELINEATOR, POST MOUNTED EACH	626 BARRIER REFLECTOR, TYPE A EACH	626 BARRIER REFLECTOR, TYPE B EACH	621 - RPM Y/Y EACH	621 - RPM W/R EACH	621 - RPM W EACH	REMARKS
286	PM61	13+15	18+35	RT	520									0.10								
286	PM62	13+15	18+35	CL	520										0.10							
286	PM63	13+15	18+35	LT	520									0.10								
288	PM64	10+40	17+45	RT	705									0.13								
288	PM65	10+40	17+45	CL	705										0.13							
288	PM66	10+40	17+45	LT	705									0.13								
290	PM67	374+82	390+00	LT	1518			0.29														
285	BR1	72+58.02	104+61.40	RT	3203		100										30	3				
285	BR2	75+00.42	105+55.54	LT	3055		100										29	3				
285	BR3	82+59.16	87+02.24	RT	443		100										2	3				
285	BR4	85+07.31	88+89.54	LT	382		100										2	3				
286	BR5	122+57.35	124+78.00	RT	221		100										1	2				
286	BR6	123+26.10	124+63.20	RT	137		100										3					
286	BR7	124+06.60	125+43.80	LT	137		100										3					
286	BR8	123+79.00	126+13.75	LT	235		100										1	2				
286	BR9	156+49.02	162+84.41	RT	635		100										3	4				
286	BR10	157+19.89	165+65.68	RT	846		100										6	4				
286	BR11	158+01.77	165+07.03	LT	705		100										5	4				
286	BR12	158+71.98	164+41.47	LT	569		100										3	4				
287	BR13	175+12.50	181+00.00	LT	588		100										7					
287	BR14	187+12.50	192+25.00	LT	513	-26.10	100										6					
288	BR15	237+00.00	243+87.50	RT	688		100										8					
288	BR16	252+50.00	255+14.65	LT	265		100										2	2				
288	BR17	253+07.90	254+57.30	RT	149		100										3					
288	BR18	253+29.35	255+67.00	RT	238		100										1	2				
288	BR19	253+87.40	255+36.90	LT	150		100										3					
288-289	BR20	273+37.50	278+00.00	LT	463		100										6					
289	BR21	283+87.50	286+50.00	LT	263		100										4					
290	BR22	327+51.35	330+14.00	RT	263		100										2	2				
290	BR23	329+50.00	330+99.20	RT	149		100										3					
290	BR24	331+41.00	333+79.65	LT	239		100										1	2				
290	BR25	330+33.30	331+82.40	LT	149		100										3					
285-290	-	75+00	357+00	RT / LT	28200.00	-478.71	400									135						
285-290	-	61+00	369+00	RT	30800.00	-478.71	120														253	LANE LINE
285-290	-	56+35	390+00	LT	33365.00	-478.71	120														274	LANE LINE
TOTALS CARRIED FROM SHEET 282								23.06	11.75		0.48	0.24		0.00	0.00	0	0		0			
TOTALS FROM CURRENT SHEET								0.29	0.00		0.00	0.00		0.46	0.23	135	177		527			
TOTALS CARRIED TO GENERAL SUMMARY								23.35	11.75		0.48	0.24		0.46	0.23	135	177		527			

ATB-90-14.25

Palmer ENGINEERING
PALMER ENGINEERING
11300 CORNELL PARK DR
CINCINNATI, OH 45242

O:\ODOT\ATB\25199\traffic\sheets\25199TS004.dgn 6/6/2009 9:50:19 AM DENNIS

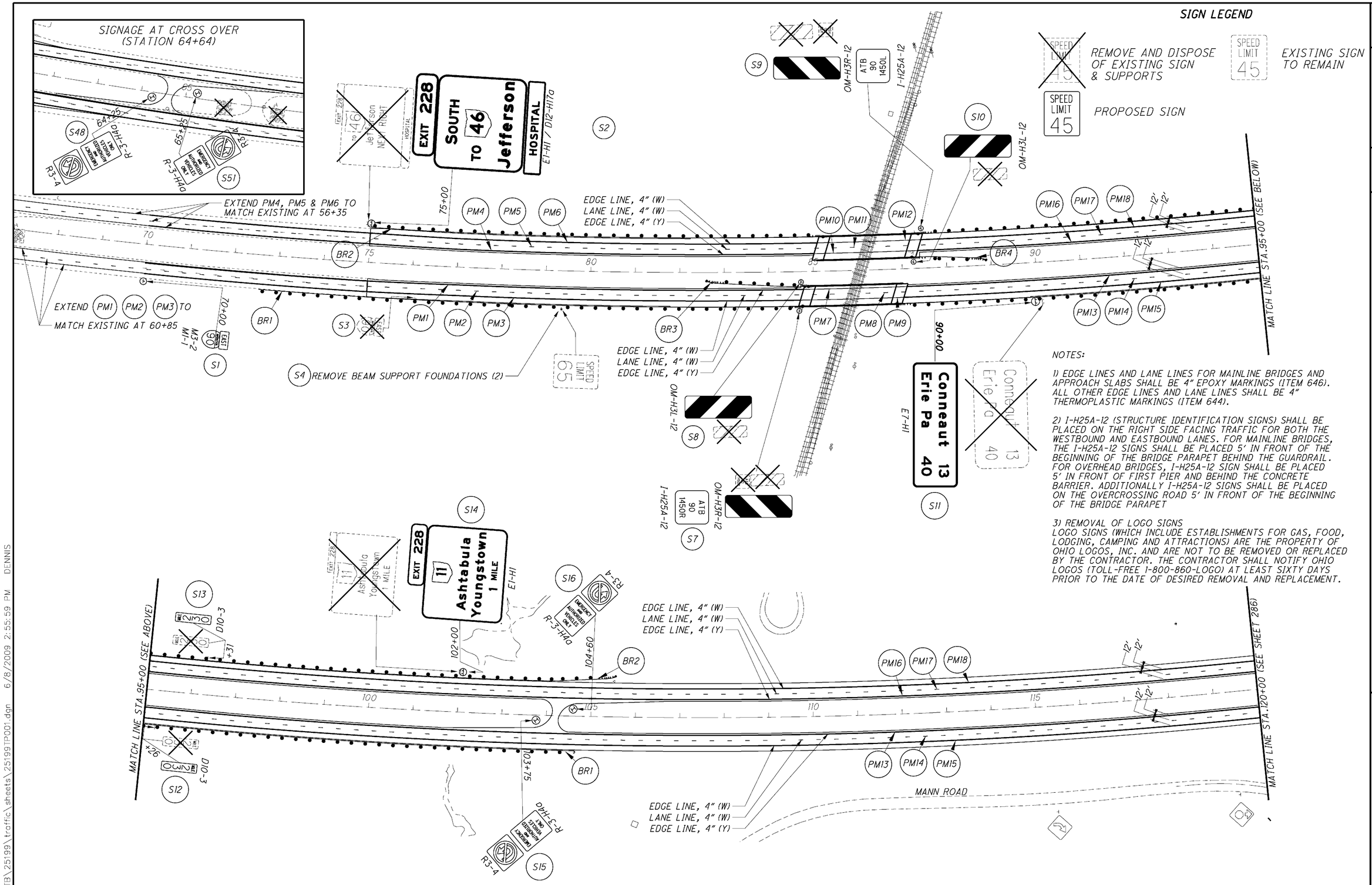

SEE SHEET 12 FOR TRAFFIC CONTROL GENERAL NOTES

SIGN AND PAVEMENT MARKING PLAN (1/6)

ATB-90-14.25

285
437

CALCULATED CML CHECKED DCJ

HORIZONTAL SCALE IN FEET 0 50 100 200

PALMER ENGINEERING 11300 CORNELL PARK DR CINCINNATI, OH 45242

O:\ODOT\ATB\25199\traffic\sheets\25199TP001.dgn 6/8/2009 2:55:59 PM DENNIS

Palmer ENGINEERING
PALMER ENGINEERING
11300 CORNELL PARK DR
CINCINNATI, OH 45242

O:\ODOT\ATB\25199\traffic\sheets\25199TP002.dgn 6/6/2009 9:50:32 AM DENNIS

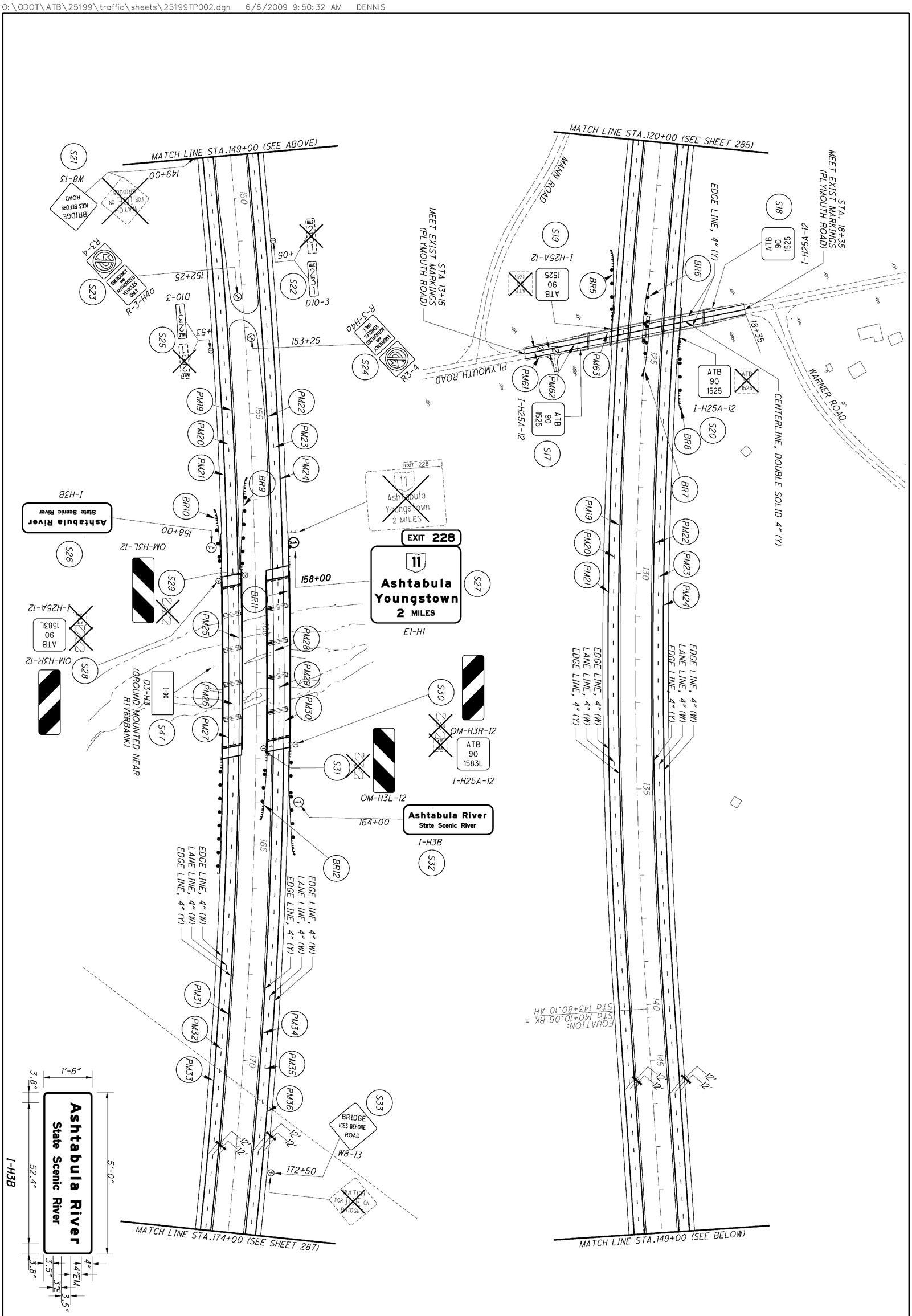

286 / 437	ATB-90-14.25	SIGN AND PAVEMENT MARKING PLAN (2/6)	CALCULATED CML CHECKED DCJ	0 50 100 200 HORIZONTAL SCALE IN FEET

PALMER ENGINEERING
11300 CORNELL PARK DR
CINCINNATI, OH 45242

O:\ODOT\ATB\25199\traffic\sheets\25199TP003.dgn 6/6/2009 9:50:38 AM DENNIS

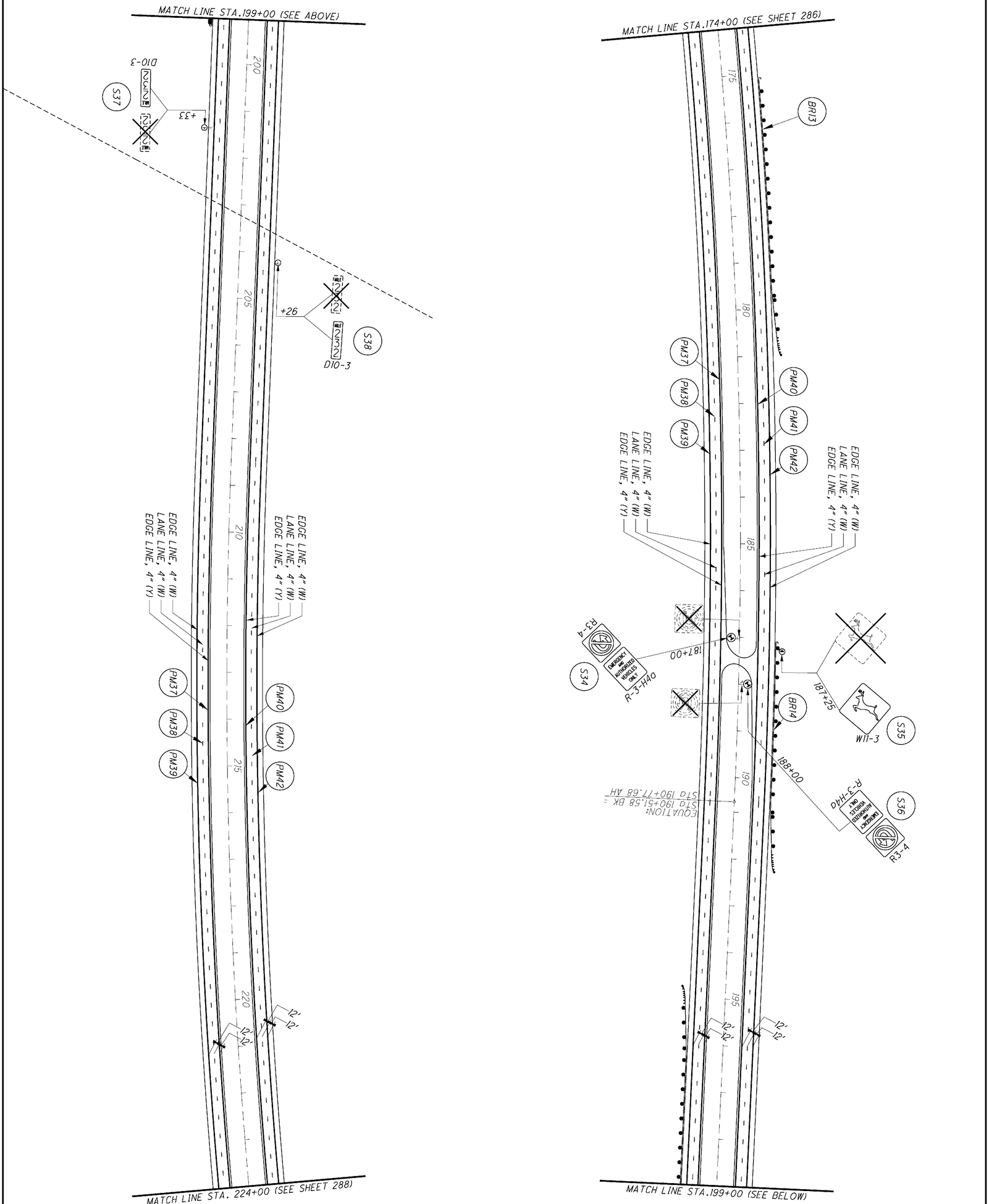

287 / 437	ATB-90-14.25	SIGN AND PAVEMENT MARKING PLAN (3/6)	CALCULATED CML / CHECKED DCJ	0 50 100 200 HORIZONTAL SCALE IN FEET

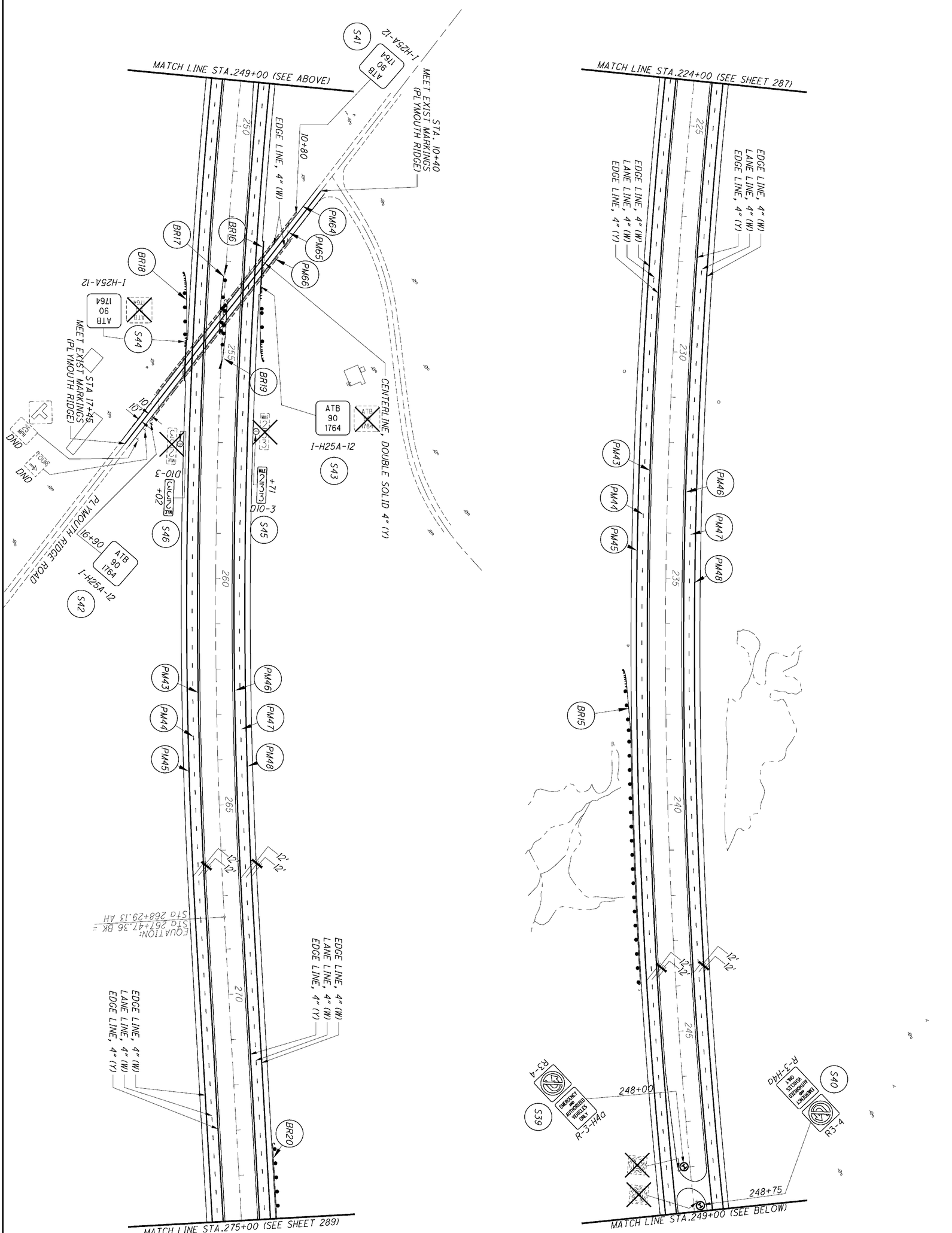

288 / 437	ATB-90-14.25	SIGN AND PAVEMENT MARKING PLAN (4/6)	CALCULATED CML / CHECKED DCJ	0 50 100 200 HORIZONTAL SCALE IN FEET

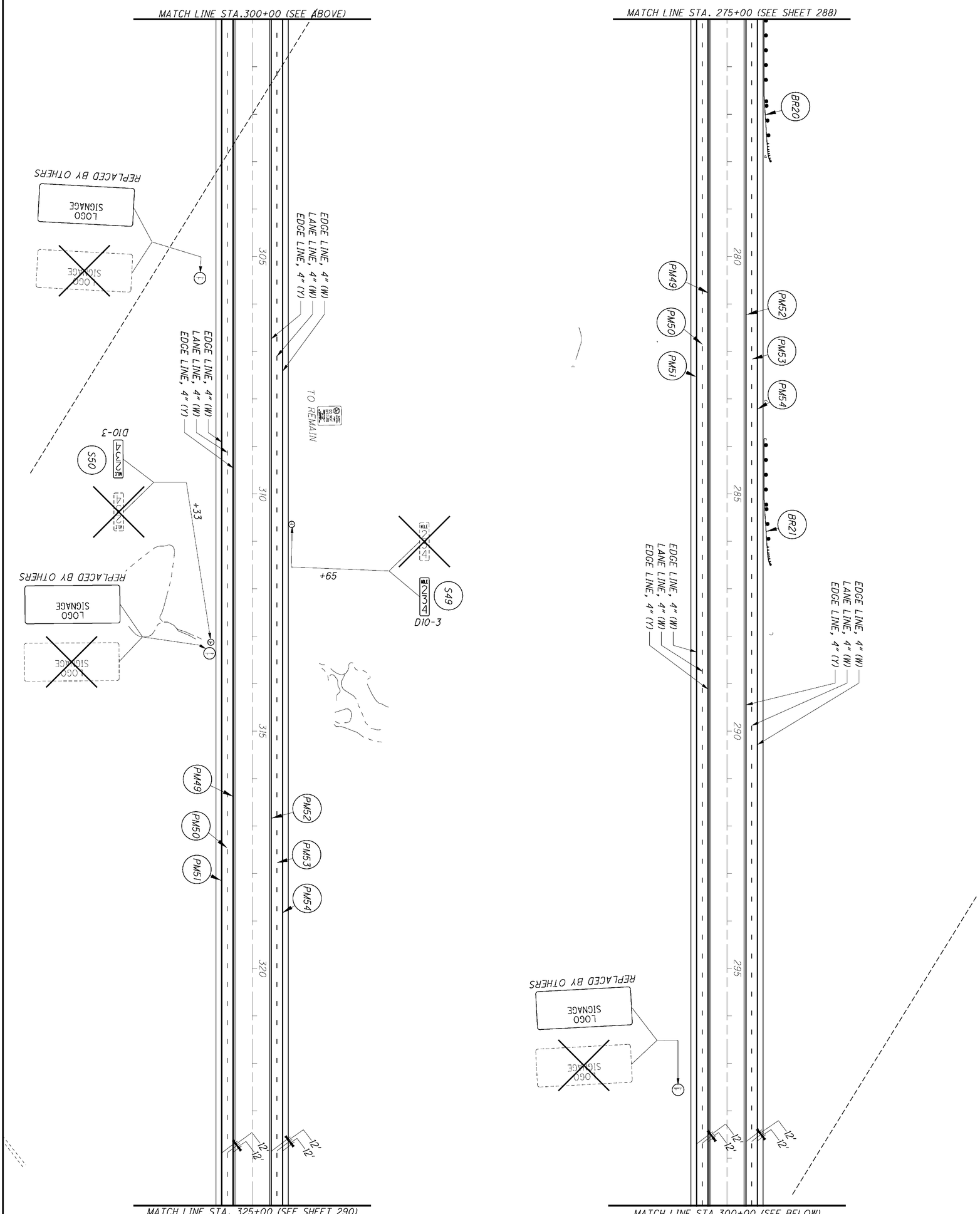
MATCH LINE STA.300+00 (SEE ABOVE)
MATCH LINE STA. 275+00 (SEE SHEET 288)
REPLACED BY OTHERS
LOGO SIGNAGE
EDGE LINE, 4" (W)
LANE LINE, 4" (W)
EDGE LINE, 4" (Y)
TO REMAIN
D10-3
S50
S49
+33
+65
PM49
PM50
PM51
PM52
PM53
PM54
BR20
BR21
305
310
315
320
280
285
290
295
12'
MATCH LINE STA. 325+00 (SEE SHEET 290)
MATCH LINE STA.300+00 (SEE BELOW)

Palmer ENGINEERING
PALMER ENGINEERING
11300 CORNELL PARK DR
CINCINNATI, OH 45242

O:\ODOT\ATB\25199\traffic\sheets\25199TP006.dgn 6/6/2009 9:50:47 AM DENNIS

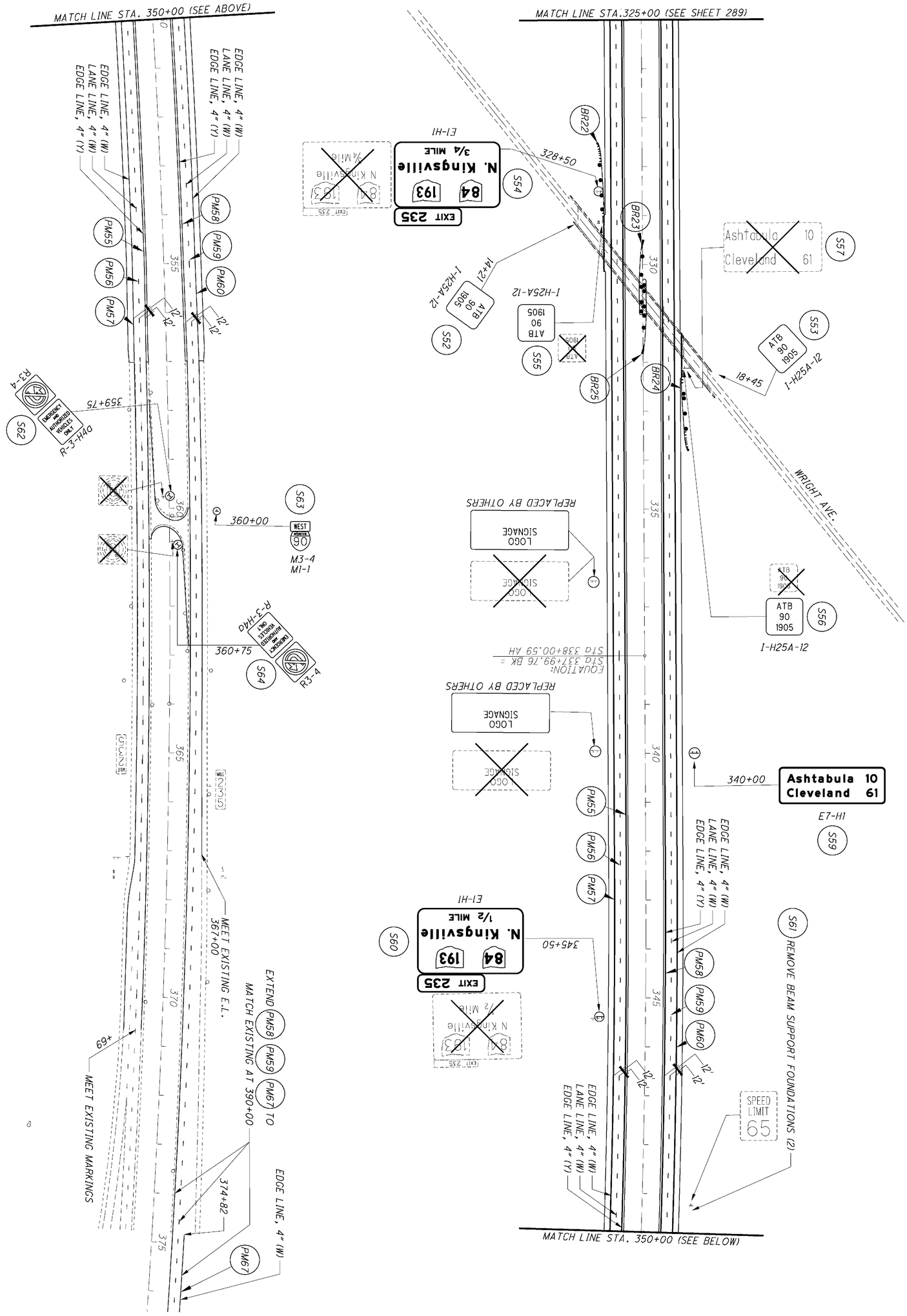

290/437	ATB-90-14.25	SIGN AND PAVEMENT MARKING PLAN (6/6)	CALCULATED CML / CHECKED DCJ	0 100 50 200 HORIZONTAL SCALE IN FEET

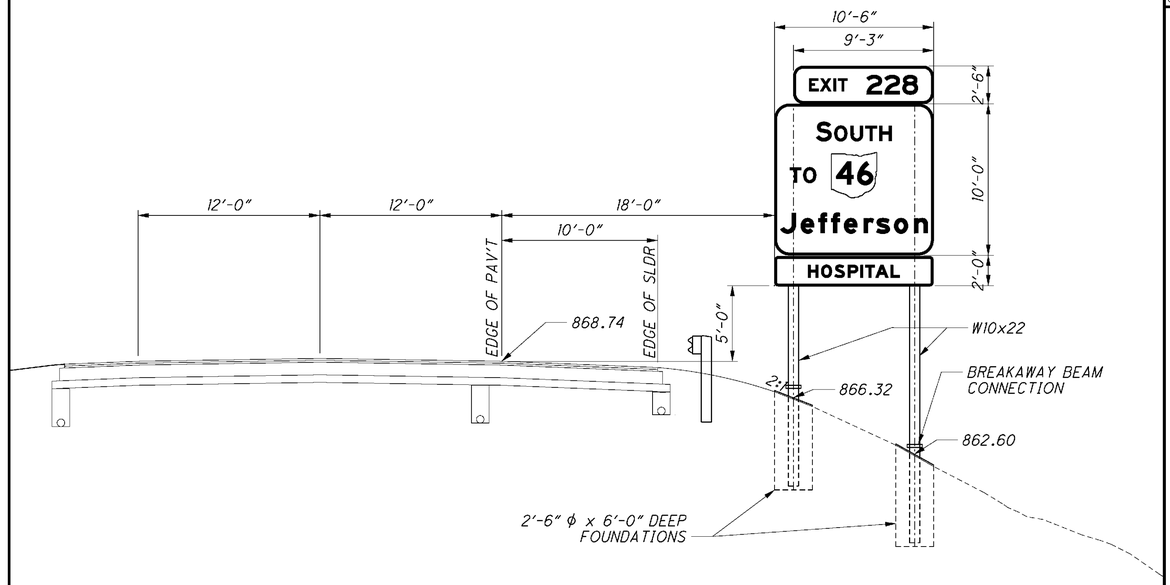

SIGN # S2
75+00 LOOKING WEST

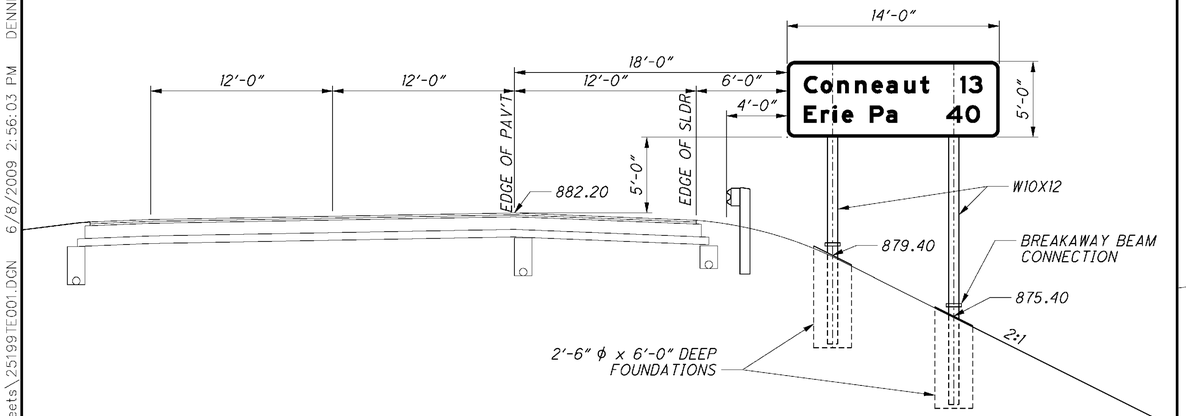

SIGN # S11
90+00 LOOKING EAST

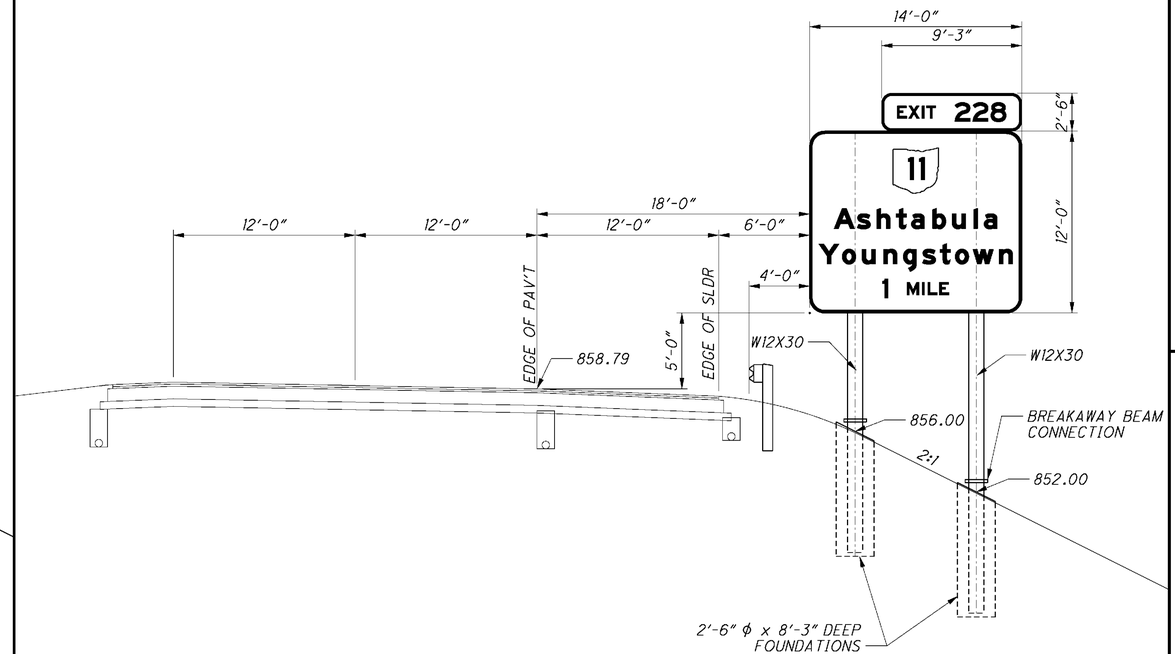

SIGN # S14
102+00 LOOKING WEST

CALCULATED DPF
CHECKED

SIGN ELEVATION VIEWS

ATB-90-14.25

Palmer ENGINEERING
PALMER ENGINEERING
11300 CORNELL PARK DR
CINCINNATI, OH 45242

O:\ODOT\ATB\25199\traffic\sheets\25199TE001.DGN 6/8/2009 2:56:03 PM DENNIS

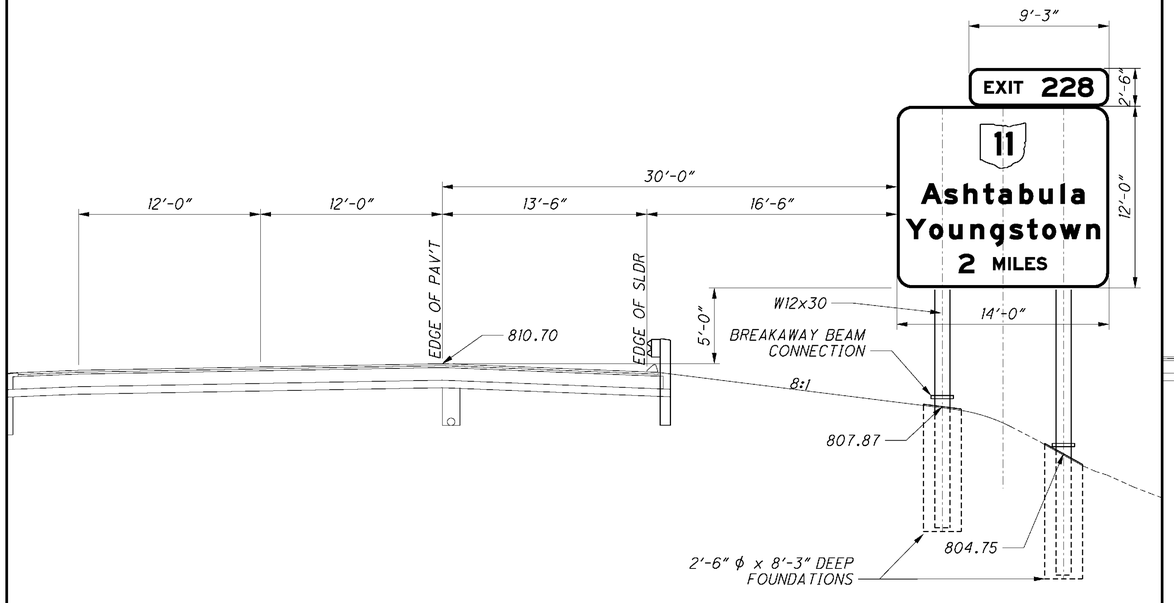

SIGN # S27
158+00 LOOKING WEST

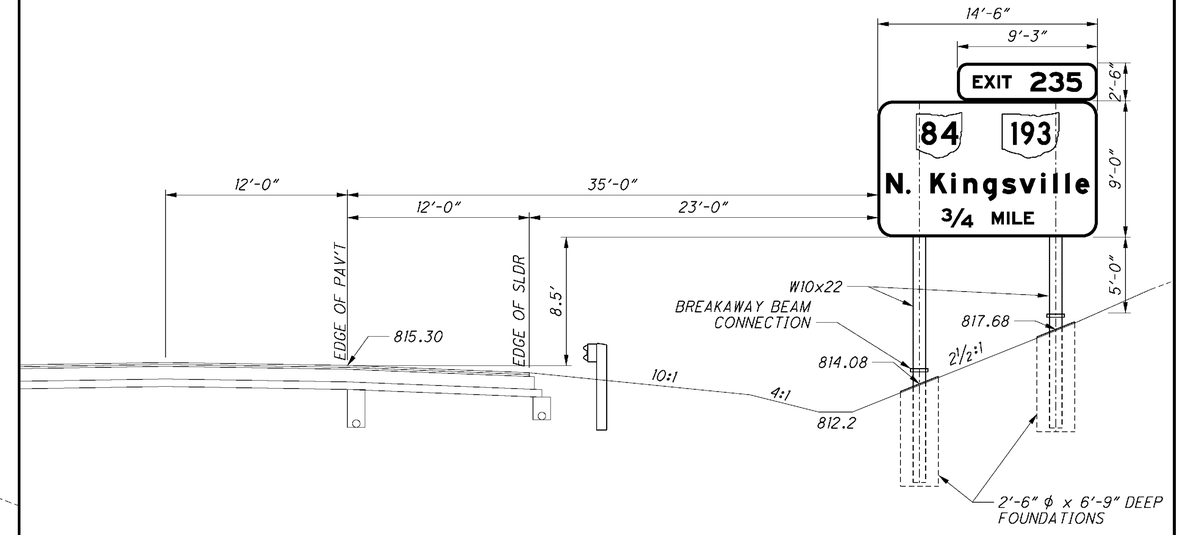

SIGN # S54
328+50 LOOKING EAST

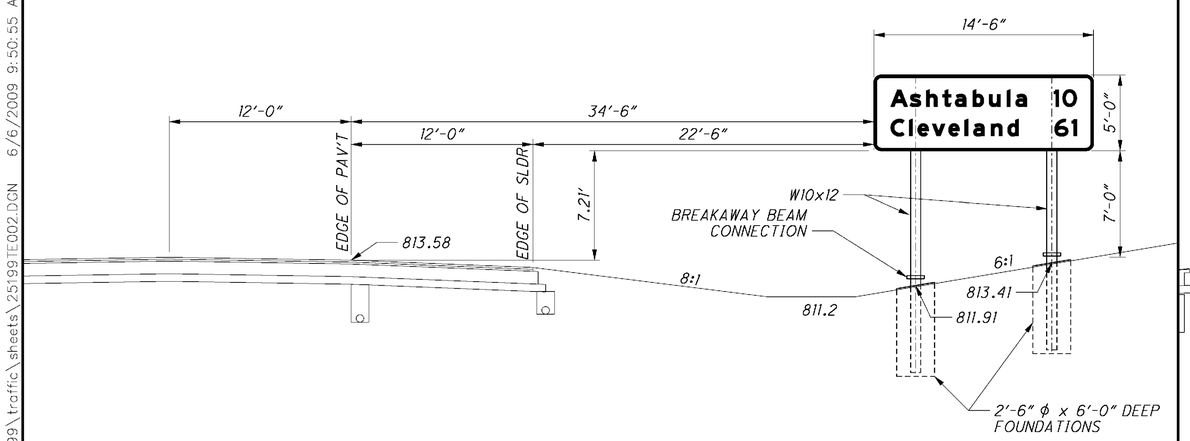

SIGN # S59
340+00 LOOKING WEST

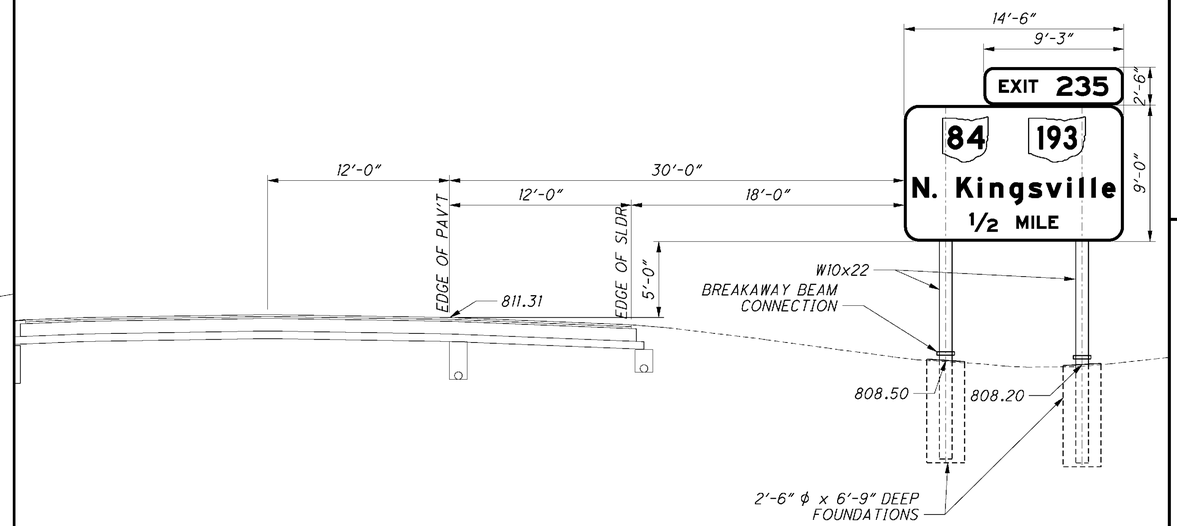

SIGN # S60
345+50 LOOKING EAST

SIGN ELEVATION VIEWS

CALCULATED DPF
CHECKED

ATB-90-14.25

Palmer ENGINEERING
PALMER ENGINEERING
11300 CORNELL PARK DR
CINCINNATI, OH 45242

O:\ODOT\ATB\25199\traffic\sheets\25199TE002.DGN 6/6/2009 9:50:55 AM DENNIS

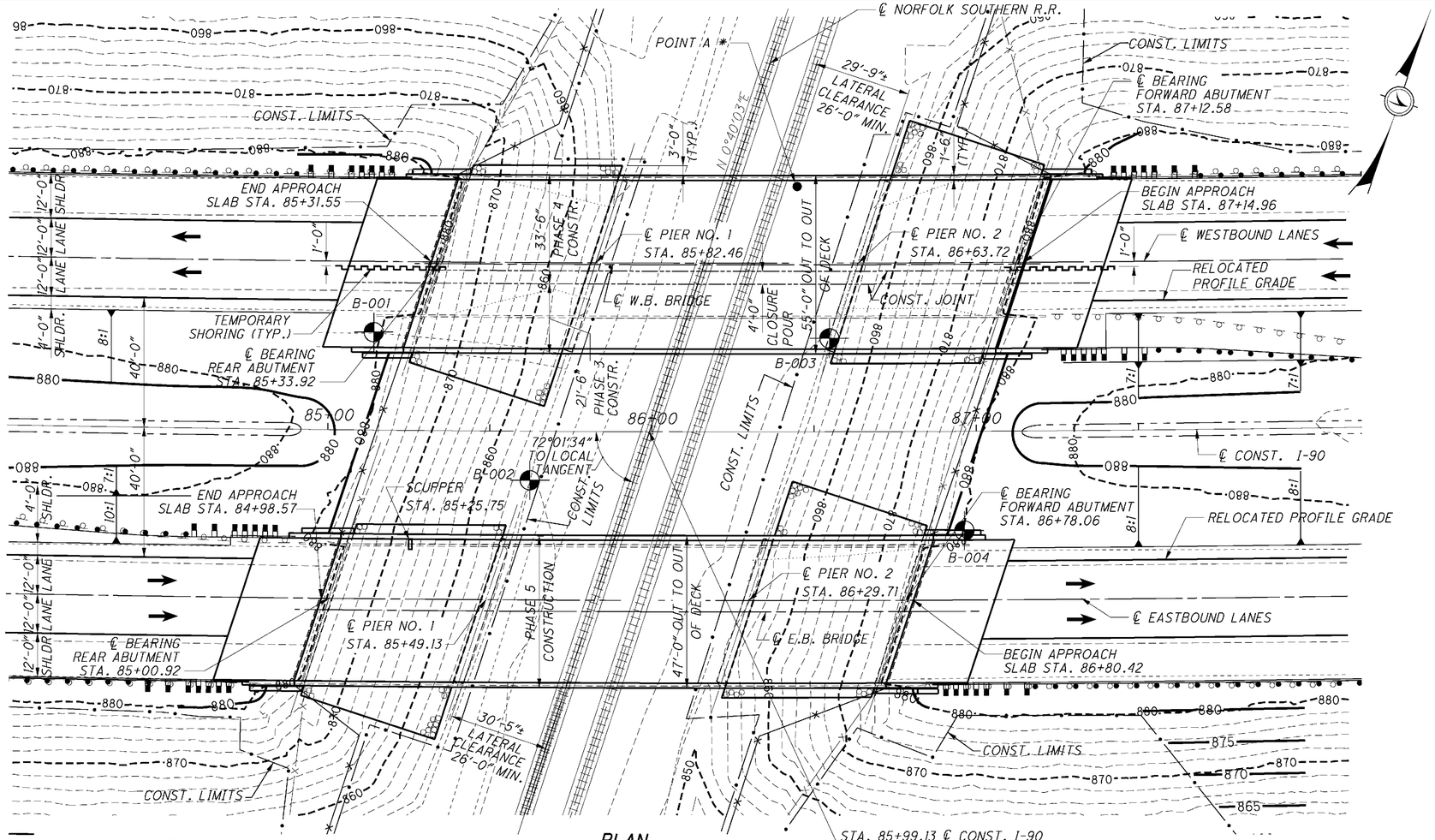

PLAN

NOTE: SEE SHEET (PP3/437) FOR ELEVATIONS TOP OF DECK (LEFT & RIGHT)

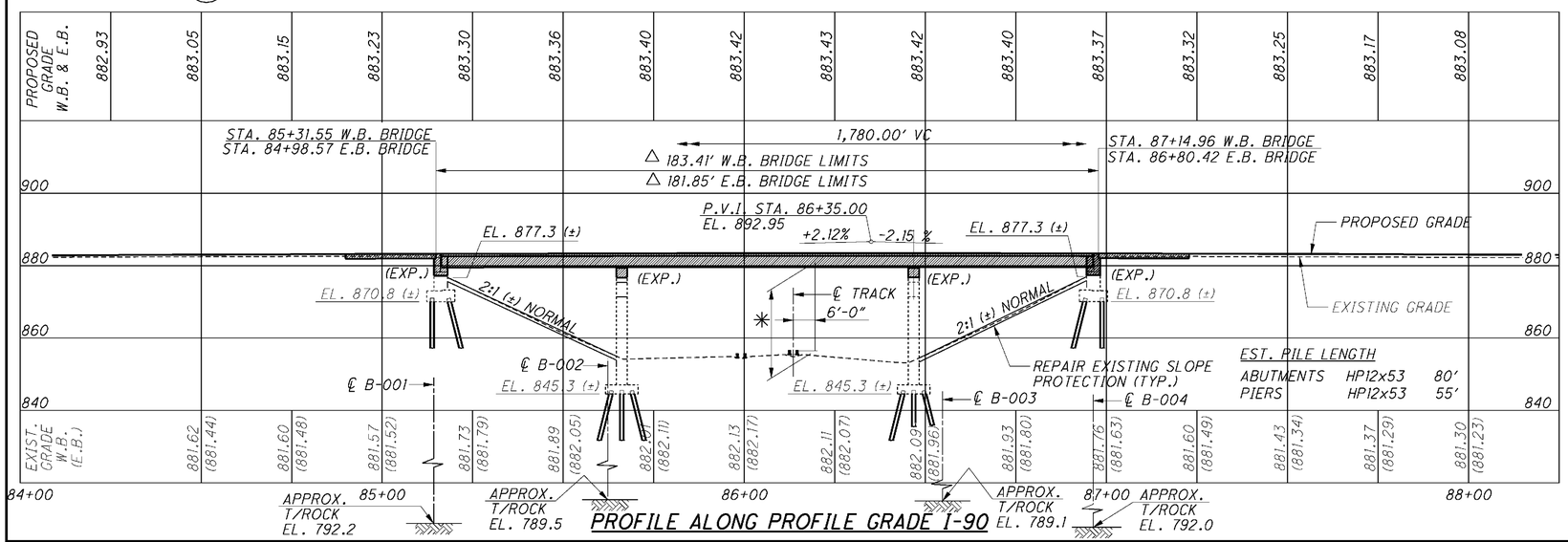

PROFILE ALONG PROFILE GRADE I-90

BENCHMARK DATA

BM #1 STA. 81+48.97	ELEV. 879.03	OFFSET 80.36	LEFT
BM #2 STA. 91+22.50	ELEV. 878.04	OFFSET 80.25	LEFT

FOR ADDITIONAL BENCHMARK INFORMATION, SEE ROADWAY PLAN SHEET (5/437).

NOTES

EARTHWORK LIMITS SHOWN ARE APPROXIMATE. ACTUAL SLOPES SHALL CONFORM TO PLAN CROSS SECTIONS.

FOR CURVE DATA, SEE SHEET 2/52.

FOR LAYOUT OF REFERENCE CHORD, SEE SHEET 3/52.

DESIGN TRAFFIC:
2008 ADT = 26,730 2008 ADTT = 6,200
2028 ADT = 36,750 2028 ADTT = 8,500
DIRECTIONAL DISTRIBUTION = 0.55

LEGEND

✳ 23'-0" REQUIRED VERTICAL CLEARANCE
22'-0" (±) EXISTING VERTICAL CLEARANCE.
23'-3¼" (+) ACTUAL VERTICAL CLEARANCE AT POINT A
⌖ INDICATES SOIL BORING LOCATION
✳✳ MEASURED ALONG REFERENCE CHORD
△ MEASURED ALONG ℄ CONST. I-90

EXISTING STRUCTURE

TYPE: CONTINUOUS STEEL BEAM WITH REINFORCED CONCRETE DECK AND SUBSTRUCTURE.
SPANS: 48'-7 1/4±, 81'-0"±, 48'-7¼"± C/C BEARINGS
ROADWAY: 40'-10¼"(±) TOE/TOE PARAPETS (1'-6⅞"(±) WIDE)
LOADING: HS 20-44
SKEW: 17°58'26" (±) L.F.
APPROACH SLABS: 25'-0" LONG (AS-1-54)
ALIGNMENT: 0°28' (±) CURVE (LEFT)
WEARING SURFACE: 1"(±) MONOLITHIC CONCRETE
CROWN: NORMAL, 0.016 (±)
STRUCTURE FILE NUMBER: 0404179L/0404209R
DATE BUILT: 1959
DISPOSITION: SUPERSTRUCTURE AND PARTIAL SUBSTRUCTURE TO BE REMOVED IN PHASES.

PROPOSED STRUCTURE

PROPOSED WORK: REPLACE CONCRETE DECK, CONVERT ABUTMENTS TO SEMI-INTEGRAL, REPLACE STRUCTURAL STEEL, PATCH AND SEAL CONCRETE SURFACES.
TYPE: CONTINUOUS STEEL BEAM (ASTM A709, GRADE 50W) WITH REINFORCED CONCRETE DECK AND SUBSTRUCTURE.
**SPANS: 48'-4⅞", 80'-11", 48'-6⅞" C/C BEARINGS (W.B.)
48'-6", 80'-11", 48'-5⅝" C/C BEARINGS (E.B.)
ROADWAY: 52'-0" TOE/TOE PARAPET (W.B.)
44'-0" TOE/TOE PARAPET (E.B.)
LOADING: HS25 CASE I AND ALTERNATE MILITARY, AND 60 PSF FUTURE WEARING SURFACE. HS20 FOR SUBSTRUCTURE.
SKEW: 17°56'03" L.F. (W.B.) TO REFERENCE CHORD
18°03'50" L.F. (E.B.) TO REFERENCE CHORD
APPROACH SLABS: 25'-0" LONG (AS-1-81)
ALIGNMENT: 0°28' CURVE (LEFT)
WEARING SURFACE: MONOLITHIC CONCRETE
CROWN: SUPERELEVATED, 0.018
COORDINATES: LATITUDE N 41°49'46"
LONGITUDE W 80°44'54"

DESIGN AGENCY
KCI ASSOCIATES OF OHIO, P.A.
388 S. MAIN ST., SUITE 401
AKRON, OHIO 44311

DRAWN	REVIEWED	DATE
JLS	FJB	6/5/09
DESIGNED	CHECKED	STRUCTURE FILE NUMBER
RKP	HK	0404179L/0404209R
	REVISED	

ASHTABULA COUNTY
LEFT (W.B.)
STA. 85+31.55
STA. 87+14.96

RIGHT (E.B.)
STA. 84+98.57
STA. 86+80.42

SITE PLAN
BRIDGE NO. ATB-90-1450 L&R
I-90 OVER NORFOLK SOUTHERN R.R.

ATB-90-14.25
PID No. 25199

1/52

293/437

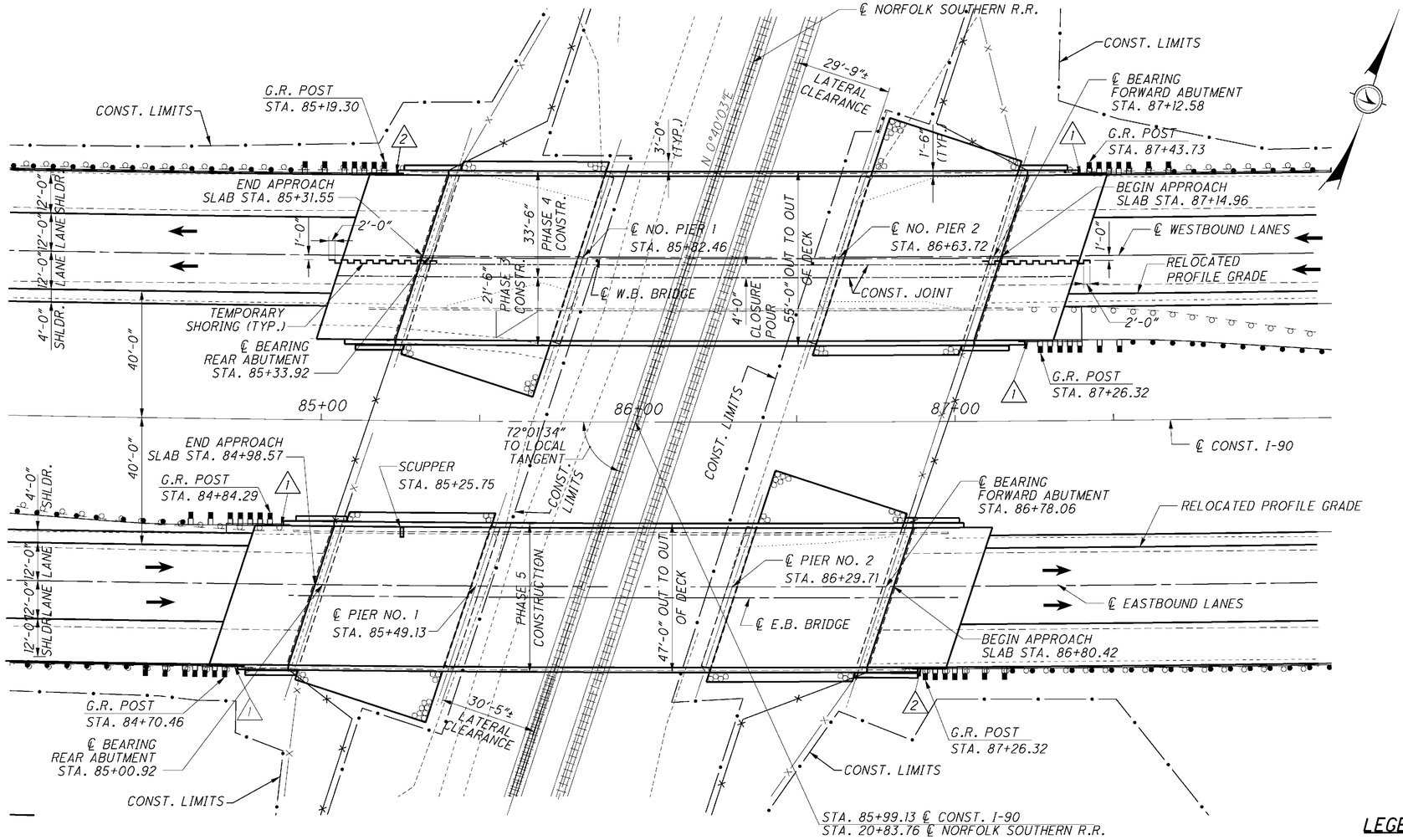

GENERAL PLAN

CURVE DATA ℄ CONST. I-90

P.I. STA. = 96+36.34
△ = 42°57'11" (LT)
Dc = 0°28'00"
R = 12,277.67'
T = 4,830.48'
L = 9,204.21'
E = 916.07'

LEGEND:

1 BRIDGE TERMINAL ASSEMBLY, TYPE 1
2 BRIDGE TERMINAL ASSEMBLY, TYPE 2

NOTES:

(1) FOR GEOMETRIC LAYOUT SEE SHEET 3/52.
(2) FOR ABBREVIATIONS SEE SHEET 5/52.

$FILES

DESIGN AGENCY
KCI ASSOCIATES OF OHIO, P.A.
388 S. MAIN ST., SUITE 401
AKRON, OHIO 44311

DESIGNED RKP | DRAWN JLS | REVIEWED FJB | DATE 6/5/09
CHECKED SLH | REVISED | STRUCTURE FILE NUMBER 0404179L/0404209R

GENERAL PLAN
BRIDGE NO. ATB-90-1450 L & R
I-90 OVER NORFOLK SOUTHERN RAILROAD

ATB-90-14.25
PID No. 25199

2 / 52

294
437

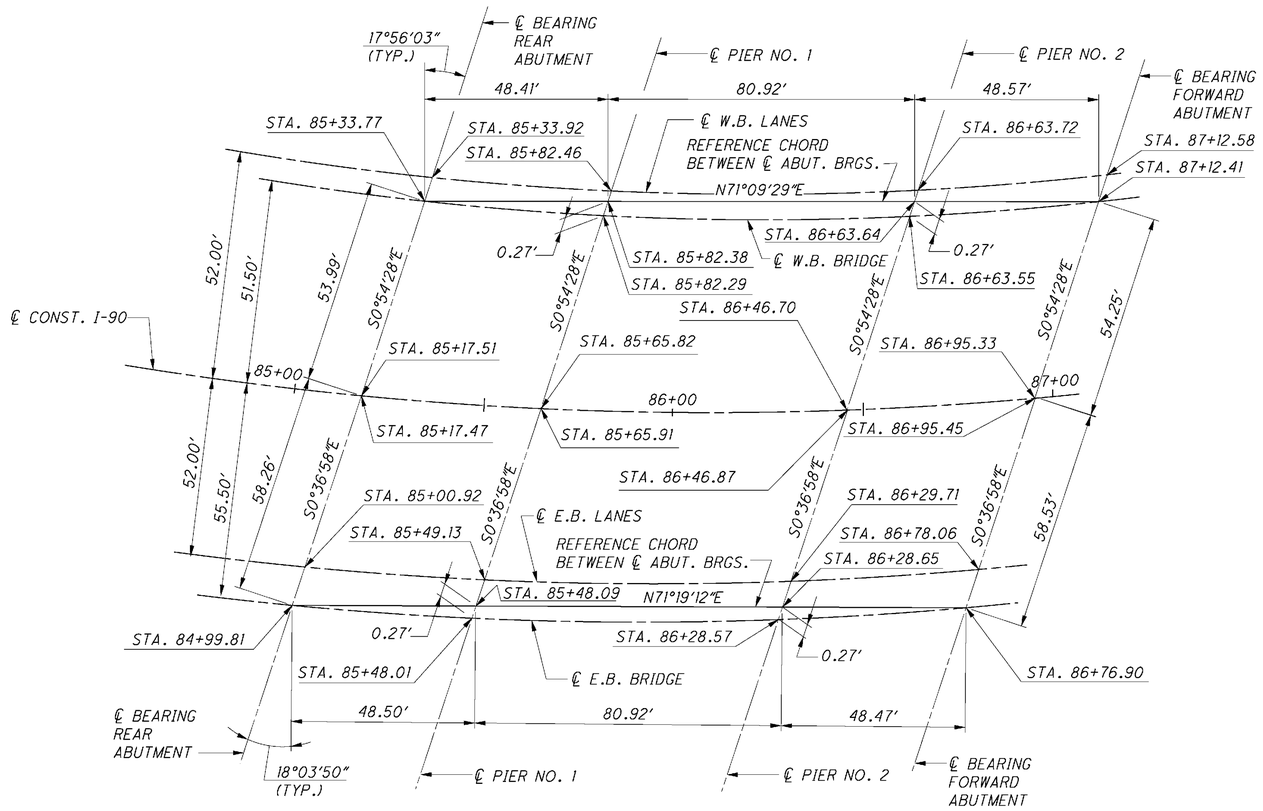

GEOMETRIC LAYOUT DIAGRAM

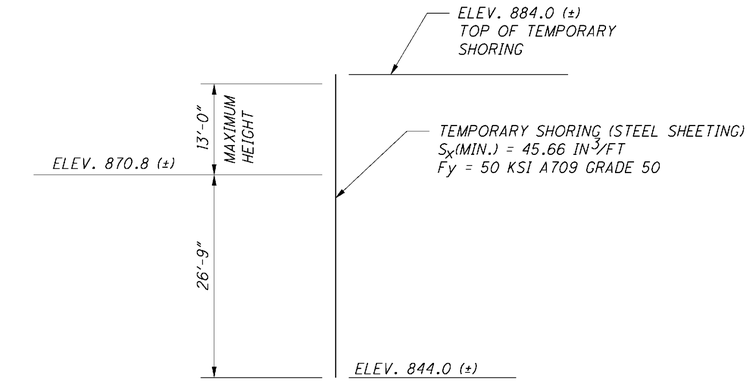

TEMPORARY SHORING DETAIL

NOTES:

1. FOR LOCATION OF TEMPORARY SHORING, SEE SHEET 2/52.
2. THE REFERENCE CHORD IS A LINE FROM ℄ BEARING REAR ABUTMENT TO ℄ BEARING FORWARD ABUTMENT, INTERSECTING THE ℄ EASTBOUND OR ℄ WESTBOUND BRIDGE.
3. FOR ABBREVIATIONS SEE SHEET 5/52.

DESIGN AGENCY
KCI ASSOCIATES OF OHIO, P.A.
388 S. MAIN ST., SUITE 401
AKRON, OHIO 44311

DESIGNED YRY | DRAWN JLS | REVIEWED FJB | DATE 6/5/09
CHECKED SLH | REVISED | STRUCTURE FILE NUMBER 0404179L/0404209R

GEOMETRIC LAYOUT DIAGRAM
BRIDGE NO. ATB-90-1450 L & R
I-90 OVER NORFOLK SOUTHERN RAILROAD

ATB-90-14.25
PID No. 25199

$FILES

STRUCTURE GENERAL NOTES

STANDARD DRAWINGS AND SUPPLEMENTAL SPECIFICATIONS:

REFER TO THE FOLLOWING STANDARD DRAWINGS:

AS-1-81	REVISED 07-19-02	GSD-1-96	REVISED 07-19-02
SBR-1-99	REVISED 07-19-02	PCB-91	REVISED 07-19-02
		SICD-1-96	REVISED 07-19-02

DESIGN SPECIFICATIONS:
THESE STRUCTURES CONFORM TO "STANDARD SPECIFICATIONS FOR HIGHWAY BRIDGES" ADOPTED BY THE AMERICAN ASSOCIATION OF STATE HIGHWAY AND TRANSPORTATION OFFICIALS, 2002, 17TH EDITION AND THE O.D.O.T. BRIDGE DESIGN MANUAL.

THE DESIGN DATA IS AS FOLLOWS:

DESIGN LOADING	-HS25. CASE I AND THE ALTERNATE MILITARY LOADING. FUTURE WEARING SURFACE (FWS) OF 60 PSF. -HS20-44 FOR SUBSTRUCTURE.
DECK PROTECTION METHOD	-EPOXY COATED REINFORCING STEEL, 2½" CONCRETE COVER.
MONOLITHIC WEARING SURFACE	-MONOLITHIC WEARING SURFACE IS ASSUMED, FOR DESIGN PURPOSES, TO BE 1" THICK.

DESIGN STRESS:

CONCRETE CLASS HP 4	-COMPRESSIVE STRENGTH 4500 P.S.I. (SUPERSTRUCTURE).
CONCRETE CLASS C	-COMPRESSIVE STRENGTH 4000 P.S.I. (SUBSTRUCTURE).
REINFORCING STEEL	-ASTM A615, OR A996 - GRADE 60 MINIMUM YIELD STRENGTH 60,000 P.S.I.
STRUCTURAL STEEL	-ASTM A709 GRADE 50W- YIELD STRENGTH 50,000 P.S.I.

SEQUENCE OF CONSTRUCTION

THE WORK TO BE DONE UNDER THIS CONTRACT IS AS SHOWN ON THE CONSTRUCTION PLANS AND IN GENERAL INCLUDES THE FOLLOWING:

1. STAGE REMOVAL OF EXISTING CONCRETE DECK, APPROACH SLABS AND PORTIONS OF ABUTMENTS, WINGWALLS AND PIERS.
2. EXTEND EXISTING SUBSTRUCTURE UNITS FOR BRIDGE WIDENING. (PHASE CONSTRUCTION)
3. CONVERT ABUTMENTS TO SEMI INTEGRAL.
4. STAGE CONSTRUCTION OF NEW CONCRETE DECK, SUPERSTRUCTURES, BARRIERS AND APPROACH SLABS.
5. PATCH EXISTING SUBSTRUCTURE UNITS.
6. SEAL CONCRETE SURFACES.
7. REPAIR CONCRETE SLOPE PROTECTION.

MECHANICAL CONNECTORS:

AN APPROVED TYPE OF MECHANICAL CONNECTOR FOR REINFORCING BARS SHALL BE PROVIDED. INSTALLATION OF CONNECTORS SHALL CONFORM WITH MANUFACTURER'S RECOMMENDED PROCEDURES.

CONNECTORS USED WITH EPOXY COATED BARS SHALL BE EPOXY COATED. COATING USED WITH EPOXY COATED BARS AND SHALL CONFORM TO THE SAME SPECIFICATION. COATINGS WHICH HAVE BEEN DAMAGED OR WHICH OTHERWISE DO NOT MEET SPECIFICATION WITH RESPECT TO COLOR, CONTINUITY, AND UNIFORMITY MAY BE REPAIRED AS DIRECTED BY THE ENGINEER OR THEY SHALL BE REPLACED WITH MATERIAL WHICH MEETS THE SPECIFICATIONS. CONNECTORS SHALL BE INCLUDED IN ITEM 509 FOR PAYMENT.

ITEM 511 CLASS C CONCRETE, PIER ABOVE FOOTING, AS PER PLAN:
ITEM 511 CLASS C CONCRETE, ABUTMENT NOT INCLUDING FOOTING, AS PER PLAN:
ITEM 511 CLASS C CONCRETE, FOOTING, AS PER PLAN:

PRIOR TO PLACEMENT OF NEW CONCRETE. THE EXISTING CONCRETE SURFACE SHALL BE THOROUGHLY CLEANED BY ABRASIVE BLASTING AND/OR OTHER APPROVED METHODS SO THAT IT IS FREE OF LOOSE OR DISINTEGRATED CONCRETE, DUST, LAITANCE, GREASE, RUST AND OTHER FOREIGN MATTER. ALL EXISTING REBARS SHALL BE CLEANED BY WIRE BRUSH OR ABRASIVELY BLASTED TO REMOVE ANY RUST. A BONDING GROUT SHALL BE USED BETWEEN OLD CONCRETE AND NEW CONCRETE. BONDING GROUT IS INCLUDED WITH ITEM 511 - CLASS C CONCRETE, PIER ABOVE FOOTING, AS PER PLAN, ITEM 511 - CLASS C CONCRETE, ABUTMENT NOT INCLUDING FOOTING, AS PER PLAN, OR ITEM 511 - CLASS C CONCRETE, FOOTING AS PER PLAN, FOR PAYMENT.

BONDING GROUT:

THE BONDING GROUT TO BE USED BETWEEN OLD AND NEW CONCRETE SHALL BE "SIKA ARMATEC 110" AS MANUFACTURED BY SIKA CORPORATION, 201 POLITO AVENUE, LYNDHURST, NEW JERSEY 07071; "EUCO NO. 452 EPOXY SYSTEM" AS MANUFACTURED BY THE EUCLID CHEMICAL CO., 19218 REDWOOD ROAD, CLEVELAND, OHIO 44110; "CONCRESSIVE STANDARD LIQUID" AS MANUFACTURED BY MASTER BUILDERS, INC., 23700 CHAGRIN BOULEVARD, CLEVELAND, OHIO 44122; OR AN APPROVED ALTERNATE.

ITEM 512 SEALING OF CONCRETE SURFACES, AS PER PLAN, (PERMANENT GRAFFITI PROTECTION):

APPLY A PERMANENT GRAFFITI COATING QUALIFIED ACCORDING TO SUPPLEMENT 1083 THAT IS COMPATIBLE WITH THE CONCRETE SEALER OVER WHICH IT IS APPLIED. APPLY THE GRAFFITI COATING IN ACCORDANCE WITH THE MANUFACTURER'S PRINTED INSTRUCTIONS.

ITEM 202, PORTIONS OF STRUCTURE REMOVED, OVER 20 FOOT SPAN, AS PER PLAN:

THIS ITEM SHALL INCLUDE THE ELEMENTS INDICATED IN THE PLANS AND GENERAL NOTES AND THAT ARE NOT SEPARATELY LISTED FOR PAYMENT, EXCEPT FOR WEARING COURSE REMOVAL. ITEMS TO BE REMOVED INCLUDE ALL EXISTING MATERIALS BEING REPLACED BY NEW CONSTRUCTION AND MISCELLANEOUS ITEMS THAT ARE NOT SHOWN TO BE INCORPORATED INTO THE FINAL CONSTRUCTION AND ARE DIRECTED TO BE REMOVED BY THE ENGINEER. THE USE OF EXPLOSIVES, HEADACHE BALLS AND/OR HOE-RAMS WILL NOT BE PERMITTED. THE METHOD OF REMOVAL AND THE WEIGHT OF HAMMER SHALL BE APPROVED BY THE ENGINEER. PERFORM ALL WORK IN A MANNER THAT WILL NOT CUT, ELONGATE OR DAMAGE THE EXISTING REINFORCING STEEL TO BE PRESERVED. CHIPPING HAMMERS SHALL NOT BE HEAVIER THAN THE NOMINAL 90-POUND CLASS. PNEUMATIC HAMMERS SHALL NOT BE PLACED IN DIRECT CONTACT WITH REINFORCING STEEL THAT IS TO BE RETAINED IN THE REBUILT STRUCTURE. SUBMIT CONSTRUCTION PLANS IN ACCORDANCE WITH CMS 501.05.

PROTECTION OF TRAFFIC:

THE CONTRACTOR SHALL SUBMIT TO THE RAILWAY DEMOLITION PLANS AND PROCEDURES FOR ALL DEMOLITION WORK ABOVE OR ADJACENT TO THE TRACKS OF THE RAILWAY. THE PLAN AND PROCEDURE SHALL INDICATE THE METHOD OF PROTECTING THE TRACK STRUCTURE, THE SEQUENCE OF DEMOLITION AND THE PROCEDURES AND EQUIPMENT TO BE USED. NO DEBRIS SHALL BE ALLOWED TO INTENTIONALLY FALL TO RAILWAY PROPERTY.

MEASUREMENT & PAYMENT:

THE DEPARTMENT WILL MEASURE THE QUANTITY OF REMOVALS ON A LUMP SUM BASIS. THE DEPARTMENT WILL PAY FOR THE ACCEPTED QUANTITIES OF REMOVALS AT THE CONTRACT PRICE FOR ITEM 202, PORTIONS OF STRUCTURE REMOVED OVER 20 FOOT SPAN, AS PER PLAN.

CUT LINE CONSTRUCTION JOINT PREPARATION:

SAW CUT BOUNDARIES OF PROPOSED CONCRETE REMOVALS 1 INCH DEEP. REMOVE CONCRETE TO A ROUGH SURFACE. LEAVE THE EXISTING REINFORCING STEEL, IF REQUIRED IN THE PLANS, IN PLACE. INSTALL DOWEL BARS IF SPECIFIED. PRIOR TO CONCRETE PLACEMENT ABRASIVELY CLEAN JOINT SURFACES AND EXISTING EXPOSED REINFORCEMENT TO REMOVE LOOSE AND DISINTEGRATED CONCRETE AND LOOSE RUST. THOROUGHLY CLEAN THE JOINT SURFACE AND EXPOSED REINFORCEMENT OF ALL DIRT, DUST, RUST OR OTHER FOREIGN MATERIAL BY THE USE OF WATER, AIR UNDER PRESSURE, OR OTHER METHODS THAT PRODUCE SATISFACTORY RESULTS. EXISTING REINFORCING STEEL DOES NOT HAVE TO HAVE A BRIGHT STEEL FINISH, BUT REMOVE ALL PACK AND LOOSE RUST .THOROUGHLY DRENCH EXISTING CONCRETE SURFACES WITH CLEAN WATER AND ALLOW TO DRY TO A DAMP CONDITION BEFORE PLACING CONCRETE.

SUBSTRUCTURE CONCRETE REMOVAL:

REMOVE CONCRETE BY MEANS OF APPROVED PNEUMATIC HAMMERS EMPLOYING POINTED AND BLUNT CHISEL TOOLS. HYDRAULIC HOE-RAM TYPE HAMMERS WILL NOT BE PERMITTED. THE WEIGHT OF THE HAMMER SHALL NOT BE MORE THAN 35 POUNDS FOR REMOVAL WITHIN 18-INCHES OF PORTIONS TO BE PRESERVED. OUTSIDE THE 18-INCH LIMIT, THE CONTRACTOR MAY USE HAMMERS NOT EXCEEDING 90 POUNDS UPON THE APPROVAL OF THE ENGINEER. DO NOT PLACE PNEUMATIC HAMMERS IN DIRECT CONTACT WITH REINFORCING STEEL THAT IS TO BE RETAINED IN THE REBUILT STRUCTURE.

PILES TO BEDROCK:

DRIVE PILES TO REFUSAL ON BEDROCK. THE DEPARTMENT WILL CONSIDER REFUSAL TO BE OBTAINED BY PENETRATING SOFT BEDROCK FOR SEVERAL INCHES TO A MINIMUM RESISTANCE OF 20 BLOWS PER INCH OR BY CONTACTING HARD BEDROCK AND THE PILE RECEIVING AT LEAST 20 BLOWS. SELECT THE HAMMER SIZE TO ACHIEVE THE REQUIRED DEPTH TO BEDROCK AND REFUSAL. INSTEAD OF DRIVING TO REFUSAL, THE CONTRACTOR MAY PERFORM DYNAMIC LOAD TESTING ACCORDING TO C&MS 523 TO ESTABLISH A DRIVING CRITERIA FOR EACH PILE TYPE AND CAPACITY. ESTABLISH THE DRIVING CRITERIA TO ACHIEVE THE ULTIMATE BEARING VALUE GIVEN BELOW FOR THE PILES. PAYMENT FOR DYNAMIC LOAD TESTING PERFORMED AT THE CONTRACTOR'S OPTION IS INCLUDED IN THE UNIT PRICE PAY ITEM FOR PILES DRIVEN.

LEFT STRUCTURE:
THE ULTIMATE BEARING VALUE IS 73 TONS PER PILE FOR THE HP 12x53 ABUTMENT PILES.
THE ULTIMATE BEARING VALUE IS 132.5 TONS PER PILE FOR THE HP 12x53 PIER PILES.

ABUTMENT PILES:
12 PILES 85 FEET LONG, ORDER LENGTH

PIER PILES:
20 PILES 60 FEET LONG, ORDER LENGTH

RIGHT STRUCTURE:
THE ULTIMATE BEARING VALUE IS 52 TONS PER PILE FOR THE HP 12x53 ABUTMENT PILES.
THE ULTIMATE BEARING VALUE IS 116 TONS PER PILE FOR THE HP 12x53 PIER PILES.

ABUTMENT PILES:
6 PILES 85 FEET LONG, ORDER LENGTH

PIER PILES:
12 PILES 60 FEET LONG, ORDER LENGTH

MAINTENANCE OF TRAFFIC:

TWO LANES OF TRAFFIC WILL BE MAINTAINED AT ALL TIMES IN EACH DIRECTION ON BRIDGES DURING CONSTRUCTION. FOR ADDITIONAL NOTES AND DETAILS SEE MAINTENANCE OF TRAFFIC PLANS SHEETS (13/437) TO (89/437).

RAILROAD CONSTRUCTION CLEARANCE:

NORFOLK SOUTHERN RAILROAD

CONSTRUCTION CLEARANCE:

MAINTAIN A CONSTRUCTION CLEARANCE OF 14 FEET HORIZONTALLY FROM THE CENTER OF TRACKS AND 21.25 FEET VERTICALLY FROM A POINT LEVEL WITH THE TOP OF THE HIGHER RAIL, AND 6 FEET FROM THE CENTER OF TRACKS, AT ALL TIMES.

ITEM 509 REINFORCING STEEL. REPLACEMENT OF EXISTING REINFORCING STEEL AS PER PLAN:

REPLACE ALL EXISTING REINFORCING BARS DEEMED BY THE ENGINEER TO BE UNUSABLE BECAUSE OF CORROSION. THE DEPARTMENT WILL MEASURE THE REPLACEMENT REINFORCING STEEL BY THE NUMBER OF POUNDS ACCEPTED IN PLACE.

REPLACE ALL EXISTING REINFORCING STEEL BARS WHICH ARE TO BE INCORPORATED INTO THE NEW WORK AND ARE DEEMED BY THE ENGINEER TO BE MADE UNUSABLE BY CONCRETE REMOVAL OPERATIONS WITH NEW EPOXY COATED REINFORCING STEEL OF THE SAME SIZE AT NO COST TO THE DEPARTMENT.

A QUANTITY OF 500 POUNDS IS INCLUDED IN THE ESTIMATED QUANTITIES FOR REPLACEMENT OF EXISTING REINFORCING IF REQUIRED.

EXISTING STRUCTURE VERIFICATION:

DETAILS AND DIMENSIONS SHOWN ON THESE PLANS PERTAINING TO THE EXISTING STRUCTURE HAVE BEEN OBTAINED FROM PLANS OF THE EXISTING STRUCTURE AND FROM FIELD OBSERVATIONS AND MEASUREMENTS. CONSEQUENTLY, THEY ARE INDICATIVE OF THE EXISTING STRUCTURE AND THE PROPOSED WORK BUT THEY SHALL BE CONSIDERED TENTATIVE AND APPROXIMATE. THE CONTRACTOR IS REFERRED TO CMS SECTIONS 102.05, 105.02 AND 513.04.

BASE CONTRACT BID PRICES UPON A RECOGNITION OF THE UNCERTAINTIES DESCRIBED ABOVE AND UPON A PREBID EXAMINATION OF THE EXISTING STRUCTURE. HOWEVER, THE DEPARTMENT WILL PAY FOR ALL PROJECT WORK BASED UPON ACTUAL DETAILS AND DIMENSIONS THAT HAVE BEEN VERIFIED IN THE FIELD.

ITEM 509 EPOXY COATED REINFORCING STEEL, AS PER PLAN:

IN ADDITION TO THE PROVISIONS OF ITEM 509, FIELD BEND AND/OR FIELD CUT THE REINFORCING STEEL DESIGNATED IN THE PLANS, AS NECESSARY, IN ORDER TO MAINTAIN THE REQUIRED CLEARANCES AND BAR SPACINGS. REPAIR ALL DAMAGES TO THE EPOXY COATING, AS A RESULT OF THIS WORK, ACCORDING TO 709.00.

ITEM 601 - CRUSHED AGGREGATE SLOPE PROTECTION AS PER PLAN:

THIS ITEM SHALL BE USED FOR THE PLACEMENT OF PROPOSED CRUSHED AGGREGATE SLOPE PROTECTION AS SHOWN IN THE PLANS. IT ALSO INCLUDES REGRADING OF THE EXISTING SLOPE PROTECTION. REGRADING SHALL CONSIST OF RESTORING THE EXISTING EMBANKMENT SURFACES TO THE ORIGINAL SLOPES WITH CRUSHED AGGREGATE SLOPE PROTECTION RE-PLACED ON THE RESTORED EMBANKMENT SURFACES. NEW EMBANKMENT SURFACES SHALL BE PROTECTED AS SPECIFIED IN 601.06. PROTECTION SHALL EXTEND LONGITUDINALLY FROM FACE OF ABUTMENT TO TOE OF SLOPE AND LATERALLY AS INDICATED IN THE PLANS. THE MINIMUM TOTAL THICKNESS OF PROPOSED PROTECTION RESTORED OR NEW SHALL BE 1 FOOT.

PAYMENT:

PAYMENT FOR THE ABOVE WORK SHALL BE AT THE UNIT PRICE BID PER SQUARE YARD OF ITEM 601 (CRUSHED AGGREGATE SLOPE PROTECTION, AS PER PLAN), WHICH SHALL INCLUDE ALL LABOR, EQUIPMENT, MATERIAL AND INCIDENTALS NECESSARY TO COMPLETE THE ABOVE WORK.

PILE SPLICES:

IN LIEU OF USING THE FULL PENETRATION BUTT WELDS SPECIFIED IN CMS 507.09 TO SPLICE STEEL H-PILES, THE CONTRACTOR MAY USE A MANUFACTURED H-PILE SPLICER. FURNISH SPLICERS FROM THE FOLLOWING MANUFACTURER:

ASSOCIATED PILE AND FITTING CORPORATION
262 RUTHERFORD BLVD.
CLIFTON, NEW JERSEY 07014

INSTALL AND WELD THE SPLICER TO THE PILE SECTIONS IN ACCORDANCE WITH THE MANUFACTURER'S WRITTEN ASSEMBLY PROCEDURE SUPPLIED TO THE ENGINEER BEFORE THE WELDING IS PERFORMED.

$FILES

DESIGN AGENCY
KCI ASSOCIATES OF OHIO, P.A.
388 S. MAIN ST., SUITE 401
AKRON, OHIO 44311

DESIGNED	DRAWN	REVIEWED	DATE
EMS	JLS	FJB	6/5/09
CHECKED	REVISED	STRUCTURE FILE NUMBER	
SLH		0404179L/0404209R	

STRUCTURE GENERAL NOTES
BRIDGE NO. ATB-90-1450 L & R
I-90 OVER NORFOLK SOUTHERN RAILROAD

ATB-90-14.25
PID No. 25199

STRUCTURE GENERAL NOTES

ITEM 516 SEMI-INTEGRAL ABUTMENT EXPANSION JOINT SEAL AS PER PLAN:

INSTALL A 3 FOOT WIDE NEOPRENE SHEET AT LOCATIONS SHOWN IN THE PLANS. SECURE THE NEOPRENE SHEETING TO THE CONCRETE WITH 1¼" X #10 GAGE (LENGTH X SHANK DIAMETER) GALVANIZED BUTTON HEAD SPIKES THROUGH A 1 INCH OUTSIDE DIAMETER, #10 GAGE GALVANIZED WASHER. MAXIMUM FASTENER SPACING IS 9 INCHES. USE OF OTHER SIMILAR GALVANIZED DEVICES, WHICH WILL NOT DAMAGE EITHER THE NEOPRENE OR THE CONCRETE, WILL BE SUBJECT TO THE APPROVAL OF THE ENGINEER.

CENTER THE NEOPRENE STRIPS ON ALL JOINTS. FOR HORIZONTAL JOINTS, SECURE THE HORIZONTAL NEOPRENE STRIP BY USING A SINGLE LINE OF FASTENERS, STARTING AT 6 INCHES+/-, FROM THE TOP OF THE NEOPRENE STRIP. FOR THE VERTICAL JOINTS SECURE THE VERTICAL NEOPRENE STRIP BY USING A SINGLE VERTICAL LINE OF FASTENERS, STARTING AT 6 INCHES+/-, FORM THE VERTICAL EDGE OF THE NEOPRENE STRIP NEAREST TO THE CENTERLINE OF ROADWAY. FOR FOR VERTICAL JOINTS, INSTALL 2 ADDITIONAL FASTENERS AT 6 INCHES, CENTER-TO-CENTER, ACROSS THE TOP OF THE NEOPRENE STRIP ON THE SAME SIDE OF THE VERTICAL JOINT AS THE SINGLE VERTICAL ROW OF FASTENERS IS LOCATED.

THE VERTICAL NEOPRENE STRIPS SHALL COMPLETELY OVERLAP THE HORIZONTAL STRIPS. LAP LENGTHS OF THE HORIZONTAL STRIPS THAT ARE NOT VULCANIZED OR ADHESIVE BONDED, SHALL BE AT LEAST 1 FOOT IN LENGTH, OR 6 INCHES IN LENGTH IF THE LAP IS VULCANIZED OR ADHESIVE BONDED. NO LAPS ARE ACCEPTABLE IN VERTICALLY INSTALLED NEOPRENE STRIPS.

THE NEOPRENE SHEETING SHALL BE 3/32" THICK GENERAL PURPOSE, HEAVY DUTY NEOPRENE SHEET WITH NYLON FABRIC REINFORCEMENT. THE SHEETING SHALL BE "FAIRPRENE NUMBER NN-0003" , BY E.I. DUPONT DE NEMOURS AND COMPANY , INC. , "WINGPRENE" BY THE GOODYEAR TIRE AND RUBBER COMPANY, OR AN APPROVED ALTERNATE. THE NEOPRENE SHEETING SHALL CONFORM TO THE FOLLOWING:

DESCRIPTION OF TEST:	ASTM METHOD	REQUIREMENT
THICKNESS, INCHES	D 751	0.094 +/-.01
BREAKING STRENGTH, GRAB, LBS, MINIMUM (LONG. X TRAN.)	D 751	700 X 700
ADHESIVE STRIP,1" WIDE X 2" LONG, LBS MINIMUM	D 751	9
BURST STRENGTH, PSI MINIMUM	D 751	1400
HEAT AGING 70 HR, 212°F , 180° BEND WITHOUT CRACKING	D 2136	NO CRACKING OF COATING
LOW TEMP. BRITTLENESS, 1 HR, -40°F, BEND AROUND ¼" MANDREL	D 2136	NO CRACKING OF COATING

METHOD OF MEASUREMENT:

THE DEPARTMENT WILL MEASURE THE TOTAL LENGTH OF JOINT TO BE SEALED BY THE NUMBER OF FEET.

BASIS OF PAYMENT:

THE DEPARTMENT WILL PAY FOR ACCEPTED QUANTITIES AT THE CONTRACT PRICE FOR ITEM 516, SEMI-INTEGRAL ABUTMENT EXPANSION JOINT SEAL, AS PER PLAN.

NORFOLK SOUTHERN RAILROAD REQUIREMENTS:

UPON COMPLETION OF THE WORK ON RAILROAD PROPERTY, THE CONTRACTOR SHALL REQUEST THE ENGINEER TO ARRANGE A FINAL INSPECTION OF THE PROJECT WTH THE RAILWAY'S DIVISION ENGINEER OR HIS AUTHORIZED REPRESENTATIVE.

REFER TO THE SPECIAL CLAUSES IN THE PROPOSAL FOR REQUIREMENTS REGARDING WORK ON OR ABOVE RAILWAY PROPERTY.

PIER CONSTRUCTION CONSTRAINT:

PRIOR TO THE REMOVAL OF EXISTING DECK AND BEAMS, THE CONTRACTOR IS TO EXCAVATE THE EMBANKMENT IN THE END SPANS IN CONTACT WITH THE PIERS. EXCAVATION SHALL BE 1'-0" FROM FOOTING EDGE AT A 1:1 SLOPE. PAYMENT FOR THE ABOVE WORK SHALL BE INCLUDED IN ITEM 503 - UNCLASSIFIED EXCAVATION, AS PER PLAN.

ASBESTOS NOTIFICATION:

AN ASBESTOS SURVEY OF THE I-90 BRIDGE OVER NORFOLK SOUTHERN RAILROAD AT STATION 14.50 SCHEDULED FOR REHABILITATION WAS CONDUCTED BY A CERTIFIED ASBESTOS HAZARD EVALUATION SPECIALIST. THE SURVEY DETERMINED THAT NO ASBESTOS IS PRESENT ON THE BRIDGE.

A COPY OF OHIO ENVIRONMENTAL PROTECTION AGENCY (OEPA) NOTIFICATION OF DEMOLITION AND RENOVATION FORM, PARTIALLY COMPLETED AND SIGNED BY THE BRIDGE OWNER, WILL BE PROVIDED TO THE SUCCESSFUL BIDDER. THE CONTRACTOR SHALL COMPLETE THE FORM AND SUBMIT IT TO:

OHIO EPA/DAPC
NORTHEAST DISTRICT OFFICE
2110 E. AURORA ROAD
TWINSBURG, OHIO 44087

AT LEAST TEN (10) WORKING DAYS PRIOR TO THE START OF THE DEMOLITION OF THE BRIDGE. THE CONTRACTOR SHALL PROVIDE A COPY OF THE COMPLETED FORM TO THE ENGINEER. INFORMATION REQUIRED ON THE FORM SHALL INCLUDE:
1. THE CONTRACTOR'S NAME AND ADDRESS.
2. THE SCHEDULE DATES FOR THE START AND COMPLETION OF THE BRIDGE REMOVAL.
3. A DESCRIPTION OF THE PLANNED DEMOLITION WORK AND THE METHOD(S) TO BE USED.

A COPY OF THE OEPA FORM IS AVAILABLE FOR INSPECTION AT THE ODOT DISTRICT 4 OFFICE, 2088 SOUTH ARLINGTON ROAD, AKRON, OHIO 44306.

BASIS FOR PAYMENT - THE CONTRACTOR SHALL FURNISH ALL FEES LABOR AND MATERIAL NECESSARY TO COMPLETE AND SUBMIT THE OEPA NOTIFICATION FORM. PAYMENT FOR THIS WORK SHALL BE INCLUDED IN ITEM 202 - PORTIONS OF STRUCTURE REMOVED, OVER 20 FOOT SPAN, AS PER PLAN.

ITEM 520 - PNEUMATICALLY PLACED MORTAR, AS PER PLAN:

PRIOR TO THE SURFACE CLEANING SPECIFIED IN 519.04 AND WITHIN 24 HOURS OF PLACING PATCHING MATERIAL, BLAST CLEAN ALL SURFACES TO BE PATCHED INCLUDING THE EXPOSED REINFORCING STEEL. ACCEPTABLE METHODS INCLUDE HIGH-PRESSURE WATER BLASTING WITH OR WITHOUT ABRASIVES IN THE WATER, ABRASIVE BLASTING WITH CONTAINMENT, OR VACUUM ABRASIVE BLASTING. COST OF THE ABOVE DESCRIBED WORK IS INCLUDED IN ITEM 520 - PNEUMATICALLY PLACED MORTAR, AS PER PLAN.

ITEM 503 - COFFERDAMS, CRIBS, AND SHEETING, AS PER PLAN:

THE DESIGN SHOWN ON THE PLANS FOR TEMPORARY SUPPORT OF EXCAVATION IS ONE REPRESENTATIVE DESIGN THAT MAY BE USED TO CONSTRUCT THE PROJECT. THE CONTRACTOR MAY CONSTRUCT THE DESIGN SHOWN ON THE PLANS OR PREPARE AN ALTERNATE DESIGN TO SUPPORT THE SIDES OF EXCAVATIONS. IF CONSTRUCTING AN ALTERNATE DESIGN FOR TEMPORARY SUPPORT OF EXCAVATION, PREPARE AND PROVIDE PLANS IN ACCORDANCE WITH C&MS 501.05. THE DEPARTMENT WILL PAY FOR THE TEMPORARY SUPPORT OF EXCAVATION AT THE CONTRACT LUMP SUM PRICE FOR COFFERDAMS, CRIBS, AND SHEETING. NO ADDITIONAL PAYMENT WILL BE MADE FOR PROVIDING AN ALTERNATE DESIGN.

DECK PLACEMENT DESIGN ASSUMPTIONS:

THE FOLLOWING ASSUMPTIONS OF CONSTRUCTION MEANS AND METHODS WERE MADE FOR THE ANALYSIS AND DESIGN OF THE SUPERSTRUCTURE. THE CONTRACTOR IS RESPONSIBLE FOR THE DESIGN OF THE FALSEWORK SUPPORT SYSTEM WITHIN THESE PARAMETERS AND WILL ASSUME RESPONSIBILITY FOR SUPERSTRUCTURE ANALYSIS FOR DEVIATION FROM THESE DESIGN ASSUMPTIONS.

AN EIGHT WHEEL FINISHING MACHINE WITH A MAXIMUM WHEEL LOAD OF 1.2 KIPS FOR A TOTAL MACHINE LOAD OF 9.6 KIPS.

A MINIMUM OUT-TO-OUT WHEEL SPACING AT EACH END OF THE MACHINE OF 103".

A MAXIMUM SPACING OF OVERHANG FALSEWORK BRACKETS OF 48 IN.

A MAXIMUM DISTANCE FROM THE CENTERLINE OF THE FASCIA GIRDER TO THE FACE OF THE SAFETY HANDRAIL OF 65".

ITEM 511 - CLASS HP CONCRETE, AS PER PLAN:

THE PROVISIONS OF ITEM 511 SHALL APPLY EXCEPT AS NOTED BELOW.
MIX OPTIONS:
ALL SUPERSTRUCTURE, BRIDGE DECK, APPROACH SLABS AND PARAPET CONCRETE SHALL BE THIS MIX (HP4, AS PER PLAN). THE FOLLOWING PROPORTIONS WILL BE USED AS A STARTING MIX DESIGN.

CONCRETE TABLE
QUANTITIES PER CUBIC YARD
AGGREGATES (SSD)
MIX 4, AS PER PLAN (GGBF SLAG + MICROSILICA)

AGG TYPE	FINE AGG (LB)	#8 COARSE AGG (LB) *	#57 COARSE AGG (LB) *	TOTAL (LB)	CEMENT CONTENT (LB)	GGBF SLAG (LB)	MICRO SILICA (LB)	MAX WATER TO CEMENTITIOUS RATIO	AIR CONTENT +/-2%
GRAVEL	1370	650	790	2810	440	190	30	0.42	6
LIMESTONE	1370	655	800	2820	440	190	30	0.42	6
SLAG	1370	570	695	2635	440	190	30	0.42	6

* ALL COARSE AGGREGATE SHALL HAVE AN ABSORPTION OF 1.00% OR GREATER AS DEFINED PER ASTM C127

BASIS OF PAYMENT:
PAYMENT FOR THE ABOVE COMPLETED AND ACCEPTED QUANTITIES WILL BE MADE AT THE CONTRACT BID PRICE FOR:

ITEM 511- CLASS HP CONCRETE, BRIDGE DECK, AS PER PLAN, CU YD
ITEM 511- CLASS HP CONCRETE, BRIDGE DECK (PARAPET), AS PER PLAN, CU YD

ITEM 526 - REINFORCED CONCRETE APPROACH SLABS, AS PER PLAN:

THE PROVISIONS OF CMS 526 SHALL APPLY EXCEPT AS NOTED BELOW.

CLASS HP CONCRETE, MIX 4, AS PER PLAN, SHALL BE THE ONLY MIX DESIGN OPTION. THE PROPORTIONS FOR THE STARTING MIX DESIGN SHALL BE AS SHOWN FOR ITEM 511- CLASS HP CONCRETE, AS PER PLAN.

ABBREVIATIONS

F.S., F.F.	- FAR SIDE	C.J.	- CONSTRUCTION JOINT
N.S., N.F.	- NEAR SIDE	FWD.	- FORWARD
E.S., E.F.	- EACH SIDE	C.I.P.	- CAST IN PLACE
MIN.	- MINUMUM	STR.	- STRAIGHT
TYP.	- TYPICAL	CONST.	- CONSTRUCTION
DIA.	- DIAMETER	INC.	- INCREMENT
SPA.	- SPACES	SER.	- SERIES
APPR.	- APPROACH	P.E.J.F.	- PREFORMED EXPANSION JOINT FILLER
ABND.	- ABANDONED	F.A.	- FORWARD ABUTMENT
EX.	- EXISTING	R.A.	- REAR ABUTMENT
SPEC.	- SPECIAL	W.B.	- WESTBOUND
W.P.	- WORK POINT	E.B.	- EASTBOUND
ELEV., EL.	- ELEVATION	MAX.	- MAXIMUM
STA.	- STATION	T	- TOP
		B, BOTT.	- BOTTOM

ITEM SPECIAL - GRAFFITI REMOVAL:

ALL GRAFFITI SHALL BE REMOVED AT CONCRETE SURFACE LOCATIONS INDICATED BY THE ENGINEER. THE GRAFFITI SHALL BE REMOVED BY ABRASIVE BLASTING OR CHEMICAL REMOVERS.

THE CHEMICAL REMOVERS TO BE USED SHALL BE "SOYsolv GRAFFITI REMOVER" AS MANUFACTURED BY SOYsolv, 6154 N CR33, TIFFIN, OH 44883; "GR-GR GRAFFITI MAGIC" AS MANUFACTURED BY INTERSTATE PRODUCTS, INC., 3921 SAWYER RD., SARASOTA, FL 34233; "GRAFFITI GOLD REMOVER" AS MANUFACTURED BY GENESIS COATINGS, 2780 LA MIRADA DR., #A, VISTA, CA 92081; OR AN APPROVED ALTERNATE.

PAYMENT FOR ALL OF THE ABOVE SHALL BE BID LUMP SUM FOR ITEM SPECIAL (GRAFFITI REMOVAL) WHICH SHALL INCLUDE ALL LABOR, EQUIPMENT, MATERIAL, AND INCIDENTALS NECESSARY TO COMPLETE THE ABOVE WORK.

$FILES

DESIGN AGENCY
KCI ASSOCIATES OF OHIO, P.A.
388 S. MAIN ST., SUITE 401
AKRON, OHIO 44311

DATE 6/5/09
STRUCTURE FILE NUMBER 0404179L/0404209R
REVIEWED FJB
DRAWN JLS
REVISED
DESIGNED EMS
CHECKED SLH

STRUCTURE GENERAL NOTES
BRIDGE NO. ATB-90-1450 L & R
I-90 OVER NORFOLK SOUTHERN RAILROAD

ATB-90-14.25
PID No. 25199

ESTIMATED QUANTITIES - LEFT STRUCTURE ATB-90-1450 L

ITEM	ITEM EXT.	TOTAL	UNIT	DESCRIPTION	ABUTMENTS	PIERS	SUPER-STRUCTURE	GENERAL	AS PER PLAN SHEET NUMBER
202	11203		LUMP	PORTIONS OF STRUCTURE REMOVED, OVER 20 FOOT SPAN, AS PER PLAN				LUMP	4/52
202	22900	134	SQ YD	APPROACH SLAB REMOVED				134	
503	11101		LUMP	COFFERDAMS, CRIBS AND SHEETING, AS PER PLAN				LUMP	5/52
503	21101	459	CU YD	UNCLASSIFIED EXCAVATION, AS PER PLAN	259	200			5/52
505	11100		LUMP	PILE DRIVING EQUIPMENT MOBILIZATION				LUMP	
507	00200	2220	FT	STEEL PILES HP12X53, FURNISHED *	1020	1200			
507	00250	2060	FT	STEEL PILES HP12X53, DRIVEN *	960	1100			
509	10001	166,286	POUND	EPOXY COATED REINFORCING STEEL, AS PER PLAN *	17,605	50,397	98,284		4/52
509	20001	500	POUND	REINFORCING STEEL, REPLACEMENT OF EXISTING REINFORCING STEEL, AS PER PLAN *				500	4/52
510	10000	612	EACH	DOWEL HOLES WITH NONSHRINK, NONMETALLIC GROUT	224	388			
511	40501	192	CU YD	CLASS C CONCRETE, PIER ABOVE FOOTING, AS PER PLAN		192			4/52
511	44101	55	CU YD	CLASS C CONCRETE, ABUTMENT NOT INCLUDING FOOTING, AS PER PLAN	55				4/52
511	46501	70	CU YD	CLASS C CONCRETE, FOOTING, AS PER PLAN	33	37			4/52
511	50001	349	CU YD	CLASS HP CONCRETE, BRIDGE DECK, AS PER PLAN	56		293		5/52
511	50101	58	CU YD	CLASS HP CONCRETE, BRIDGE DECK (PARAPET), AS PER PLAN			58		5/52
511	52000		LUMP	CLASS HP CONCRETE, TEST SLAB				LUMP	
512	10101	1095	SQ YD	SEALING OF CONCRETE SURFACES (EPOXY-URETHANE), ~~AS PER PLAN~~	85	531	421	58	~~4/52~~
512	33000	74	SQ YD	TYPE 2 WATERPROOFING	74				
512	10300	92	SQ YD	SEALING CONCRETE BRIDGE DECK WITH HMWM RESIN			81	11	
513	10261	223,640	POUND	STRUCTURAL STEEL MEMBERS, LEVEL 3, AS PER PLAN *			223,640		36/52
513	20000	4011	EACH	WELDED STUD SHEAR CONNECTORS *			4011		
516	13900	72	SQ FT	2" PREFORMED EXPANSION JOINT FILLER	72				
516	14021	135	FT	SEMI-INTEGRAL ABUTMENT EXPANSION JOINT SEAL, AS PER PLAN	135				5/52
516	44101	14	EACH	ELASTOMERIC BEARING PAD WITH INTERNAL LAMINATES AND LOAD PLATE (NEOPRENE) 2 13/16"X10"X11" WITH 1/2"X11"X1'-0" LOAD PLATE), AS PER PLAN	14				33/52
516	44100	14	EACH	ELASTOMERIC BEARING PAD WITH INTERNAL LAMINATES AND LOAD PLATE (NEOPRENE) 2 7/8"X11"X1'-10" WITH 2 1/2"X1'-0"X1'-11" LOAD PLATE)		14			
518	21230		LUMP	POROUS BACKFILL WITH FILTER FABRIC	LUMP				
518	40000	127	FT	6" PERFORATED CORRUGATED PLASTIC PIPE	127				
518	40012	56	FT	6" NON-PERFORATED CORRUGATED PLASTIC PIPE	56				
520	11101	95	SQ FT	PNEUMATICALLY PLACED MORTAR, AS PER PLAN	95				5/52
526	25001	302	SQ YD	REINFORCED CONCRETE APPROACH SLABS (T=15"), AS PER PLAN				302	5/52
SPEC	53000200		LUMP	STRUCTURE MISC.: GRAFFITI REMOVAL				LUMP	5/52
601	20001	317	SQ YD	CRUSHED AGGREGATE SLOPE PROTECTION, AS PER PLAN				317	4/52
512	10001	616	SQ YD	SEALING OF CONCRETE SURFACES AS PER PLAN. (PERMANENT GRAFFITI PROTECTION)	85	531			4/52

CALC. BY CMK DATE 03-04-09

CHECKED BY HK DATE 03-06-09

* - SEE PROPOSAL NOTE

KCI ASSOCIATES OF OHIO, P.A.
388 S. MAIN ST., SUITE 401
AKRON, OHIO 44311

DESIGN AGENCY

DESIGNED	DRAWN	CHECKED	QUANTITIES
RKP	JLS	HK	

REVISED

DATE 6/5/09

SUPERSEDE PLT NUMBER 0404179L

ESTIMATED QUANTITIES - LEFT STRUCTURE

BRIDGE NO. ATB-90-1450 L

I-90 OVER NORFOLK SOUTHERN RAILROAD

ATB-90-14.25

PID No. 25199

ESTIMATED QUANTITIES - RIGHT STRUCTURE - ATB-90-1450 R

ITEM	ITEM EXT.	TOTAL	UNIT	DESCRIPTION	ABUTMENTS	PIERS	SUPER-STRUCTURE	GENERAL	AS PER PLAN SHEET NUMBER
202	11203		LUMP	PORTIONS OF STRUCTURE REMOVED, OVER 20 FOOT SPAN, AS PER PLAN				LUMP	4/52
202	22900	134	SQ YD	APPROACH SLAB REMOVED				134	
503	11101		LUMP	COFFERDAMS, CRIBS AND SHEETING, AS PER PLAN				LUMP	5/52
503	21101	413	CU YD	UNCLASSIFIED EXCAVATION, AS PER PLAN	258	155			5/52
505	11100		LUMP	PILE DRIVING EQUIPMENT MOBILIZATION				LUMP	
507	00200	1230	FT	STEEL PILES HP12X53, FURNISHED *	510	720			
507	00250	1140	FT	STEEL PILES HP12X53, DRIVEN *	480	660			
509	10001	137,587	POUND	EPOXY COATED REINFORCING STEEL, AS PER PLAN *	12,686	39,399	85,502		4/52
509	20001	500	POUND	REINFORCING STEEL, REPLACEMENT OF EXISTING REINFORCING STEEL, AS PER PLAN *				500	4/52
510	10000	536	EACH	DOWEL HOLES WITH NONSHRINK, NONMETALLIC GROUT	228	308			
511	40501	133	CU YD	CLASS C CONCRETE, PIER ABOVE FOOTING, AS PER PLAN		133			4/52
511	44101	54	CU YD	CLASS C CONCRETE, ABUTMENT NOT INCLUDING FOOTING, AS PER PLAN	54				4/52
511	46501	42	CU YD	CLASS C CONCRETE, FOOTING, AS PER PLAN	20	22			4/52
511	50001	298	CU YD	CLASS HP CONCRETE, BRIDGE DECK, AS PER PLAN	48		250		5/52
511	50101	58	CU YD	CLASS HP CONCRETE, BRIDGE DECK (PARAPET), ~~AS PER PLAN~~ D K			58		5/52
511	52000		LUMP	CLASS HP CONCRETE, TEST SLAB				LUMP	
512	10101	1030	SQ YD	SEALING OF CONCRETE SURFACES (EPOXY-URETHANE), ~~AS PER PLAN~~	82	471	419	58	~~4/52~~
513	10261	191,455	POUND	STRUCTURAL STEEL MEMBERS, LEVEL 3, AS PER PLAN			191,455		36/52
513	20000	3438	EACH	WELDED STUD SHEAR CONNECTORS			3438		
516	13900	74	SQ FT	2" PREFORMED EXPANSION JOINT FILLER	74				
516	14021	119	FT	SEMI-INTEGRAL ABUTMENT EXPANSION JOINT SEAL, AS PER PLAN.	119				5/52
516	44101	12	EACH	ELASTOMERIC BEARING PAD WITH INTERNAL LAMINATES AND LOAD PLATE (NEOPRENE) 2 5/16"X10"X11" WITH 1/2"X11"X1'-0" LOAD PLATE), AS PER PLAN	12				33/52
516	44100	12	EACH	ELASTOMERIC BEARING PAD WITH INTERNAL LAMINATES AND LOAD PLATE (NEOPRENE) 2 7/8"X11"X1'-10" WITH 2 1/2"X1'-0"X1'-11" LOAD PLATE)		12			
518	12200	1	EACH	SCUPPERS, INCLUDING SUPPORTS			1		
518	21230		LUMP	POROUS BACKFILL WITH FILTER FABRIC	LUMP				
518	40000	114	FT	6" PERFORATED CORRUGATED PLASTIC PIPE	114				
518	40012	29	FT	6" NON-PERFORATED CORRUGATED PLASTIC PIPE	29				
520	11101	138	SQ FT	PNEUMATICALLY PLACED MORTAR, AS PER PLAN	138				5/52
526	25001	257	SQ YD	REINFORCED CONCRETE APPROACH SLABS (T=15"), AS PER PLAN				257	5/52
SPEC	53000200		LUMP	STRUCTURE MISC.: GRAFFITI REMOVAL				LUMP	5/52
601	20001	223	SQ YD	CRUSHED AGGREGATE SLOPE PROTECTION, AS PER PLAN				223	4/52
512	10001	553	SQ YD	SEALING OF CONCRETE SURFACES AS PER PLAN (PERMANENT GRAFFITI PROTECTION)	82	471			4/52

CALC. BY HK DATE 03-03-09

CHECKED BY CMK DATE 03-05-09

* - SEE PROPOSAL NOTE

DESIGN AGENCY
KCI ASSOCIATES OF OHIO, P.A.
308 S. MAIN ST., SUITE 401
AKRON, OHIO 44311

DATE 6/5/09
REVISED FJB
STRUCTURE FILE NUMBER 0404209R

DRAWN JLS
REVISED

DESIGNED RKP
CHECKED CMK

ESTIMATED QUANTITIES -- RIGHT STRUCTURE
ATB-90-1450 R
BRIDGE NO. ATB-90-1450 R
I-90 OVER NORFOLK SOUTHERN RAILROAD

ATB-90-14.25
PID No. 25199

7/52

299
437

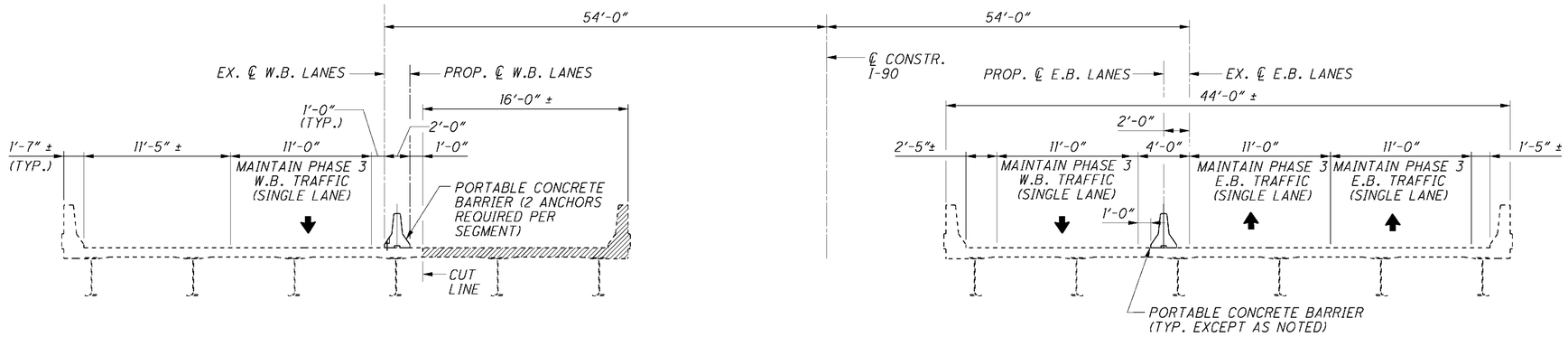

PHASE 3 REMOVAL

PHASE 3 MAINTENANCE OF TRAFFIC

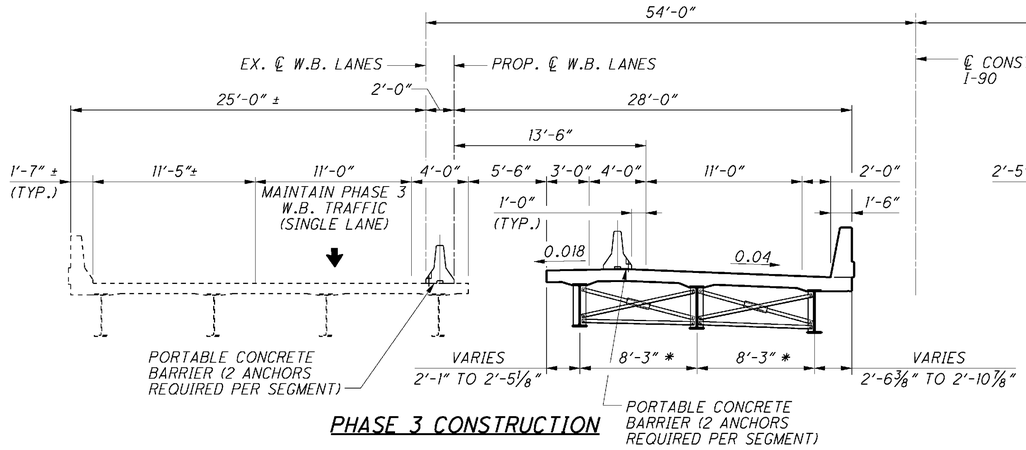

PHASE 3 CONSTRUCTION

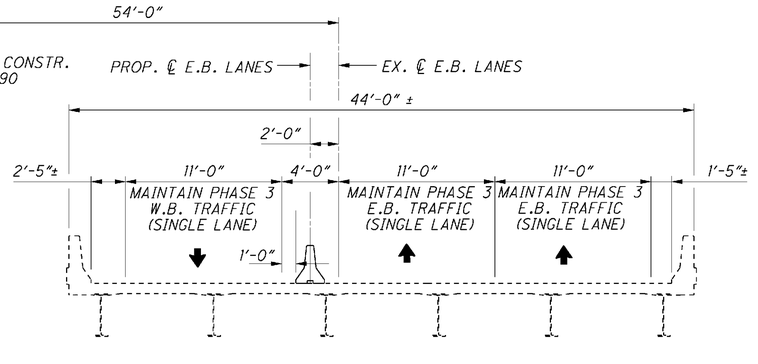

PHASE 3 MAINTENANCE OF TRAFFIC

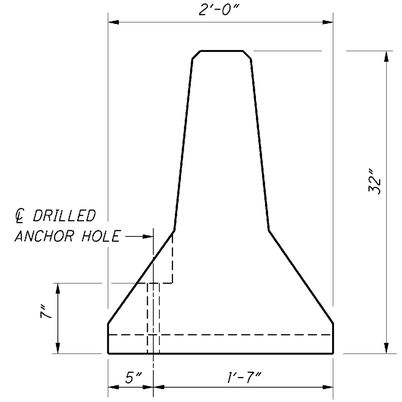

PORTABLE CONCRETE BARRIER DETAIL

ITEM 622 - PORTABLE CONCRETE BARRIER,
32", BRIDGE MOUNTED, AS PER PLAN

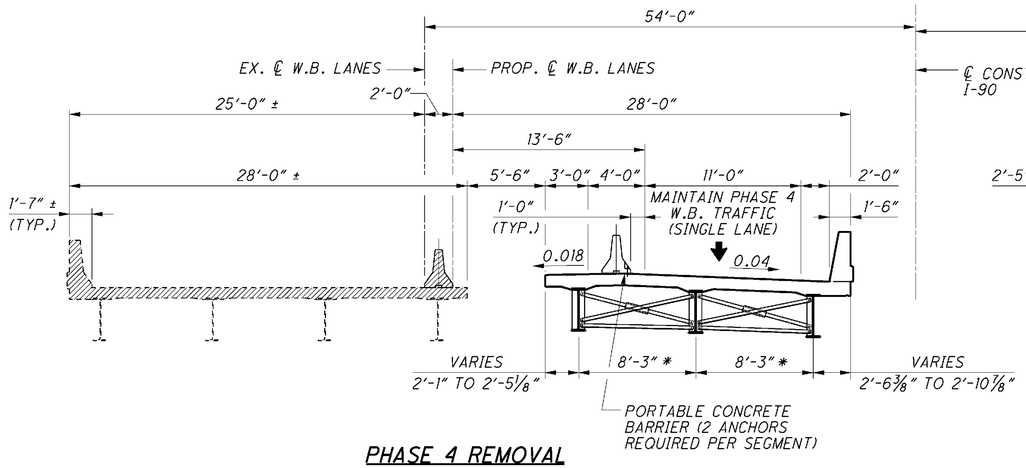

PHASE 4 REMOVAL

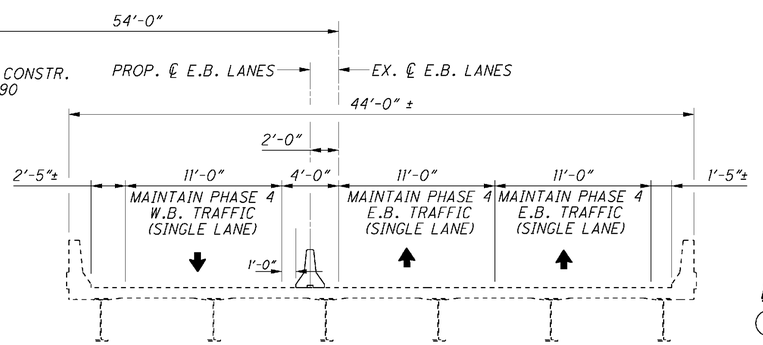

PHASE 4 MAINTENANCE OF TRAFFIC

LEFT (WESTBOUND) STRUCTURE

RIGHT (EASTBOUND) STRUCTURE

LEGEND:

- AREAS OF THE EXISTING STRUCTURE TO BE REMOVED.
- * - BEAMS ARE SPACED PARALLEL TO REFERENCE CHORD.

NOTES:

1. SEE SHEETS (13/437) THRU (89/437) FOR MAINTENANCE OF TRAFFIC.
2. FOR ADDITIONAL STAGE CONSTRUCTION DETAILS, SEE SHEET 9/52.
3. ITEM 622 - PORTABLE CONCRETE BARRIER, 32", BRIDGE MOUNTED, AS PER PLAN, IS CARRIED IN THE ROADWAY QUANTITY.
4. FOR ADDITIONAL DETAILS OF PORTABLE CONCRETE BARRIER, SEE STANDARD DRAWING PCB-91.

STAGE CONSTRUCTION

$FILES

DESIGN AGENCY
KCI ASSOCIATES OF OHIO, P.A.
388 S. MAIN ST., SUITE 401
AKRON, OHIO 44311

DESIGNED	DRAWN	REVIEWED	DATE
RKP	JLS	HK	6-5-09
CHECKED	REVISED	STRUCTURE FILE NUMBER	
SLH		0404179L/0404209R	

STAGE CONSTRUCTION DETAILS
BRIDGE NO. ATB-90-1450 L & R
I-90 OVER NORFOLK SOUTHERN RAILROAD

ATB-90-14.25
PID No. 25199

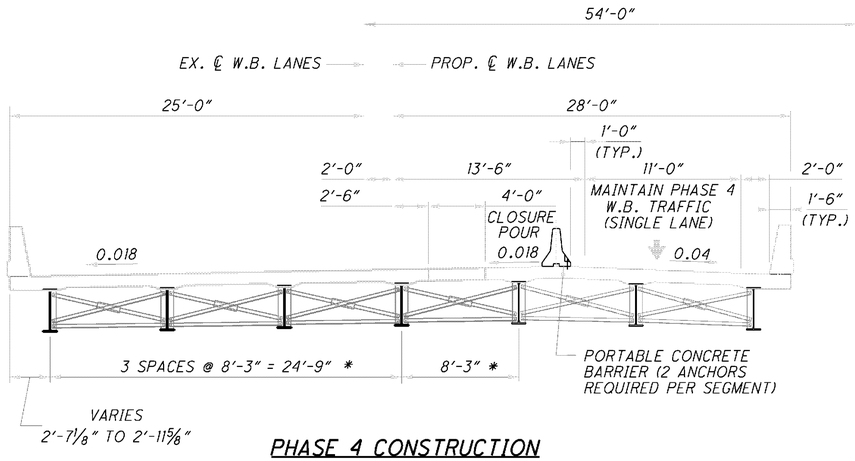

PHASE 4 CONSTRUCTION

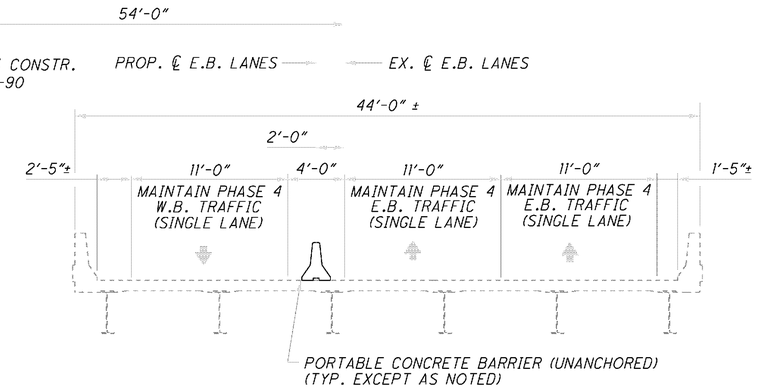

PHASE 4 MAINTENANCE OF TRAFFIC

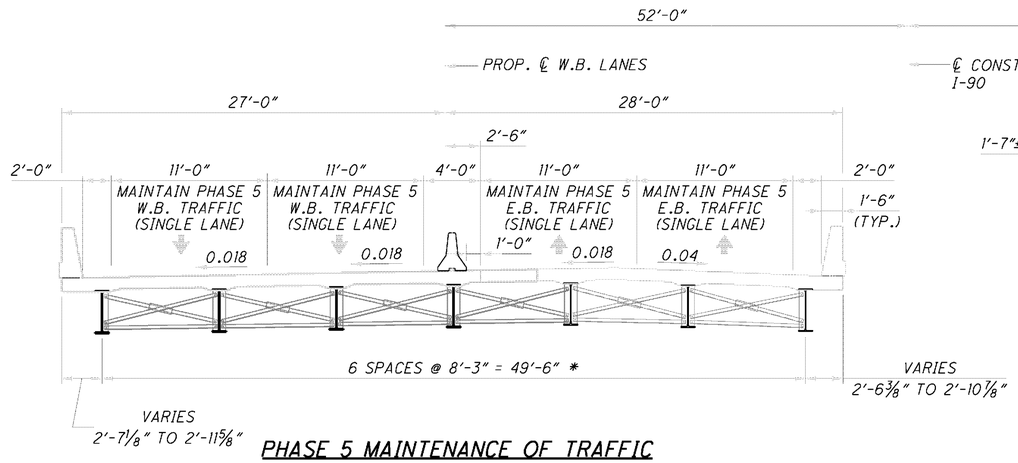

PHASE 5 MAINTENANCE OF TRAFFIC

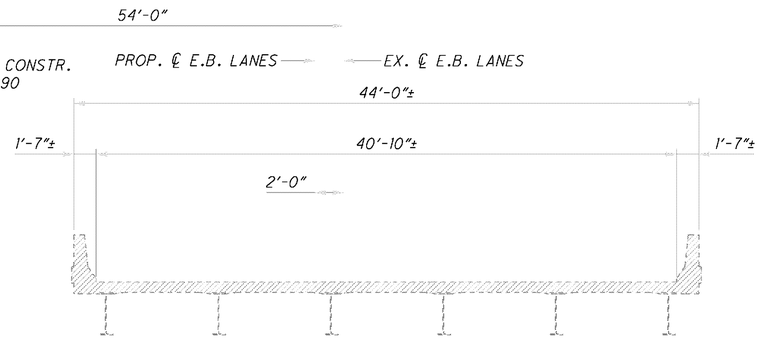

PHASE 5 REMOVAL

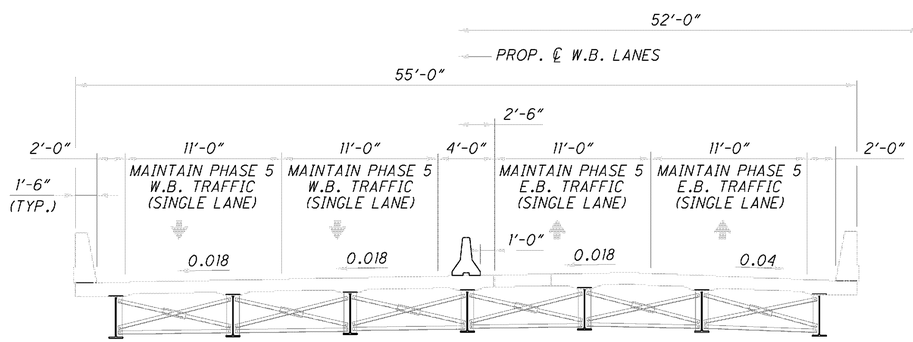

PHASE 5 MAINTENANCE OF TRAFFIC

LEFT (WESTBOUND) STRUCTURE

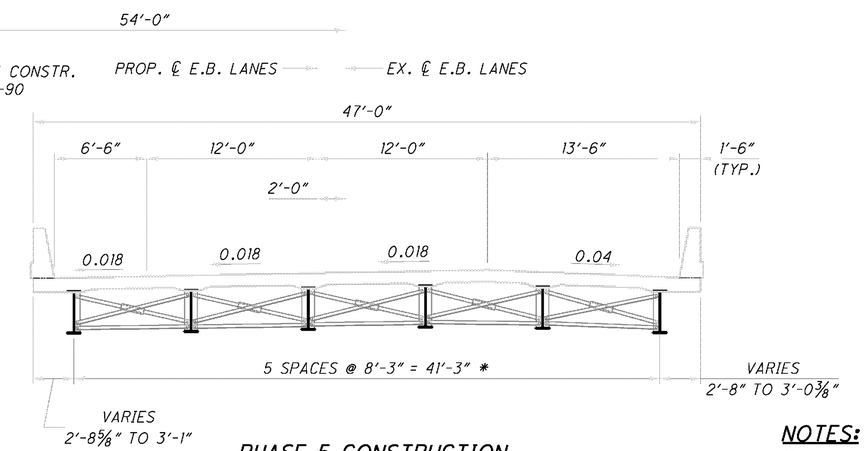

PHASE 5 CONSTRUCTION

RIGHT (EASTBOUND) STRUCTURE

STAGE CONSTRUCTION

LEGEND:

- AREAS OF THE EXISTING STRUCTURE TO BE REMOVED.

* - BEAMS ARE SPACED PARALLEL TO REFERENCE CHORD.

NOTES:

1. SEE SHEETS 13/437 THRU 89/437 FOR MAINTENANCE OF TRAFFIC.
2. FOR ADDITIONAL STAGE CONSTRUCTION DETAILS AND NOTES, SEE SHEET 8/52.

DESIGN AGENCY
KCI ASSOCIATES OF OHIO, P.A.
388 S. MAIN ST., SUITE 401
AKRON, OHIO 44311

DESIGNED RKP | DRAWN JLS | REVIEWED HK | DATE 6-5-09
CHECKED SLH | REVISED | STRUCTURE FILE NUMBER 0404179L/0404209R

STAGE CONSTRUCTION DETAILS
BRIDGE NO. ATB-90-1450 L & R
I-90 OVER NORFOLK SOUTHERN RAILROAD

ATB-90-14.25
PID No. 25199

9/52

301/437

SFILES

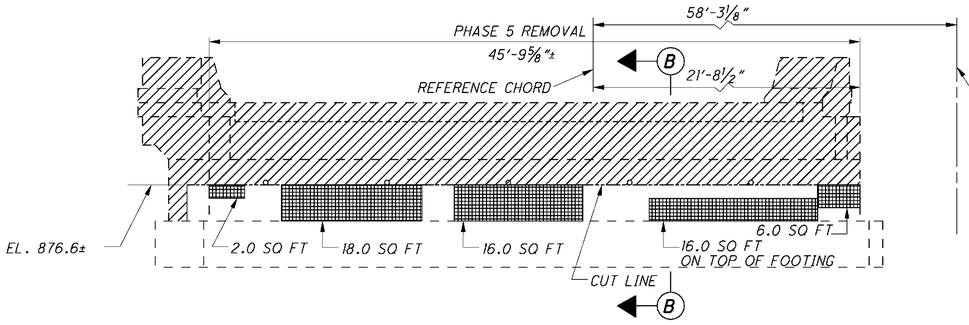

REAR ABUTMENT ELEVATION (RIGHT STRUCTURE)

TOTAL PATCHING = 58.0 SQ FT

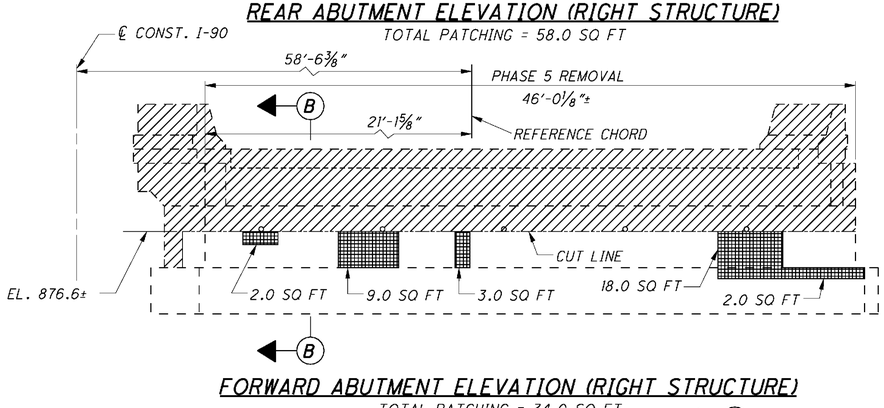

FORWARD ABUTMENT ELEVATION (RIGHT STRUCTURE)

TOTAL PATCHING = 34.0 SQ FT

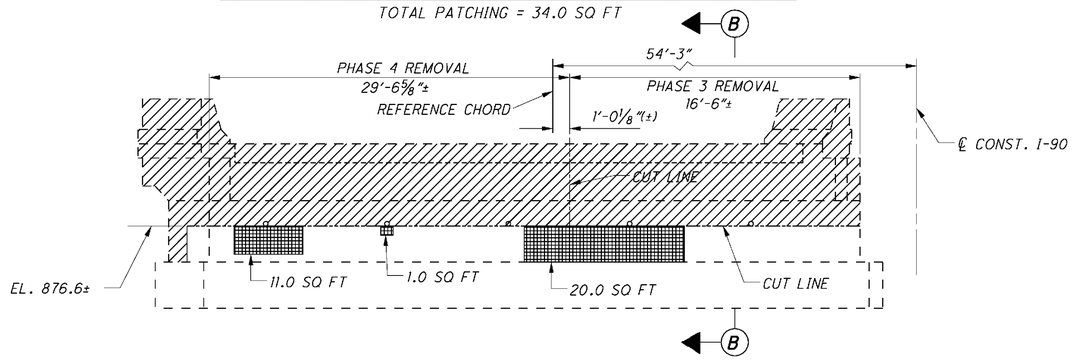

FORWARD ABUTMENT ELEVATION (LEFT STRUCTURE)

TOTAL PATCHING = 32.0 SQ FT

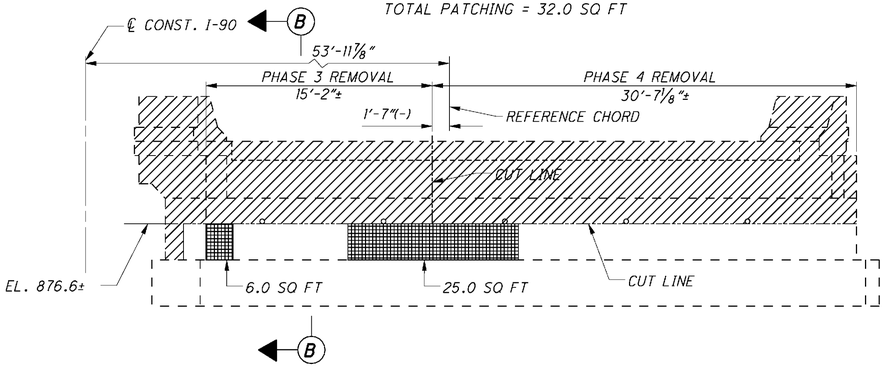

REAR ABUTMENT ELEVATION (LEFT STRUCTURE)

TOTAL PATCHING = 31.0 SQ FT

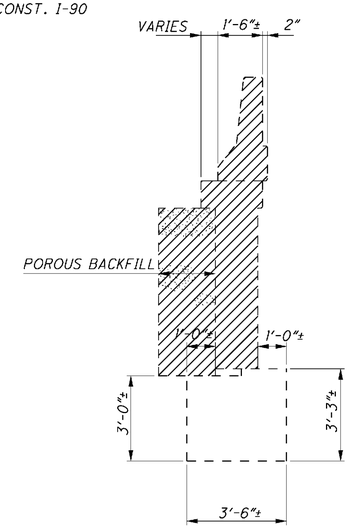

SECTION A-A

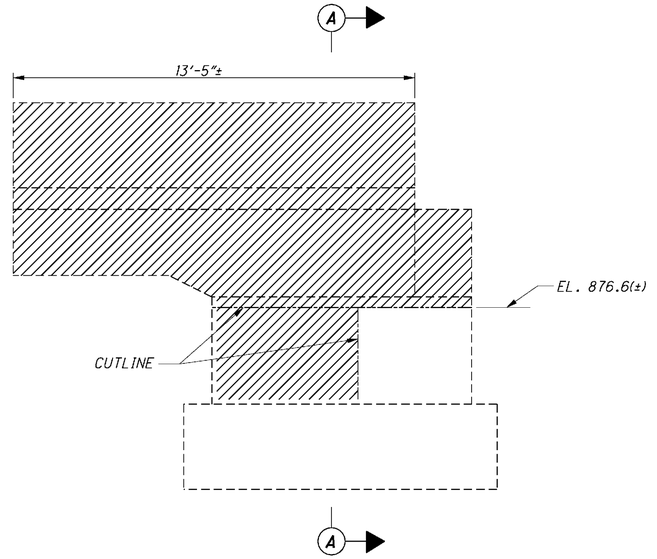

WINGWALL ELEVATION

(LEFT REAR WINGWALL SHOWN, ALL OTHERS SIMILAR)

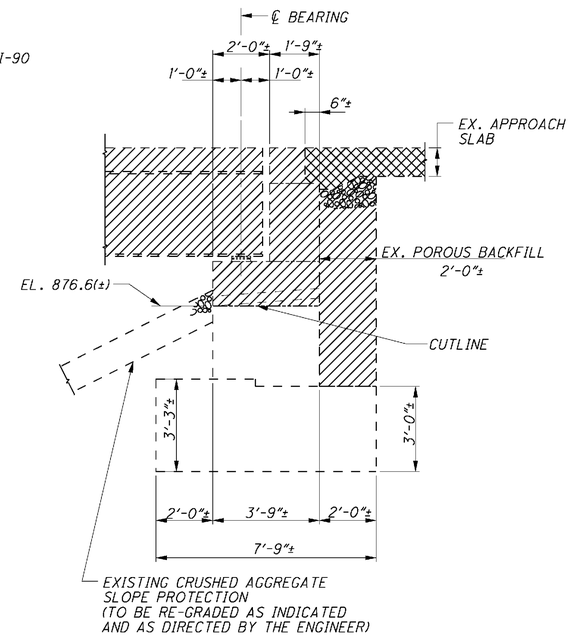

SECTION B-B

PATCHING SUMMARY		
LOCATION	SQ FT	
	LEFT	RIGHT
REAR ABUT.	31.0	58.0
FWD ABUT.	32.0	34.0
SUB-TOTAL	63.0	92.0
TOTAL (SEE NOTE 1)	233	

LEGEND:

INDICATES REMOVAL LIMITS, ITEM 202 - PORTIONS OF STRUCTURE REMOVED, OVER 20 FOOT SPAN, AS PER PLAN

INDICATES LIMITS OF APPROACH SLAB REMOVAL

INDICATES AREA OF PATCHING. REPAIRS SHALL BE PAID FOR UNDER ITEM 520 - PNEUMATICALLY PLACED MORTAR, AS PER PLAN THE AREAS SHOWN ARE APPROXIMATE. FINAL DETERMINATION OF THE AREA TO BE REPAIRED WILL BE MADE BY THE ENGINEER AT TIME OF CONSTRUCTION.

NOTE

(1) PATCHING TOTALS HAVE BEEN INCREASED 50%

(2) FOR ABBREVIATIONS, SEE SHEET 5/52.

DESIGN AGENCY
KCI ASSOCIATES OF OHIO, P.A.
388 S. MAIN ST., SUITE 401
AKRON, OHIO 44311

DESIGNED YRY | DRAWN JLS | CHECKED DLG | REVIEWED FJB | DATE 6/5/09 | REVISED | STRUCTURE FILE NUMBER 0404179L/0404209R

ABUTMENT REMOVAL AND REPAIR DETAILS

BRIDGE NO. ATB-90-1450 L & R
I-90 OVER NORFOLK SOUTHERN RAILROAD

ATB-90-14.25
PID No. 25199

$FILE$

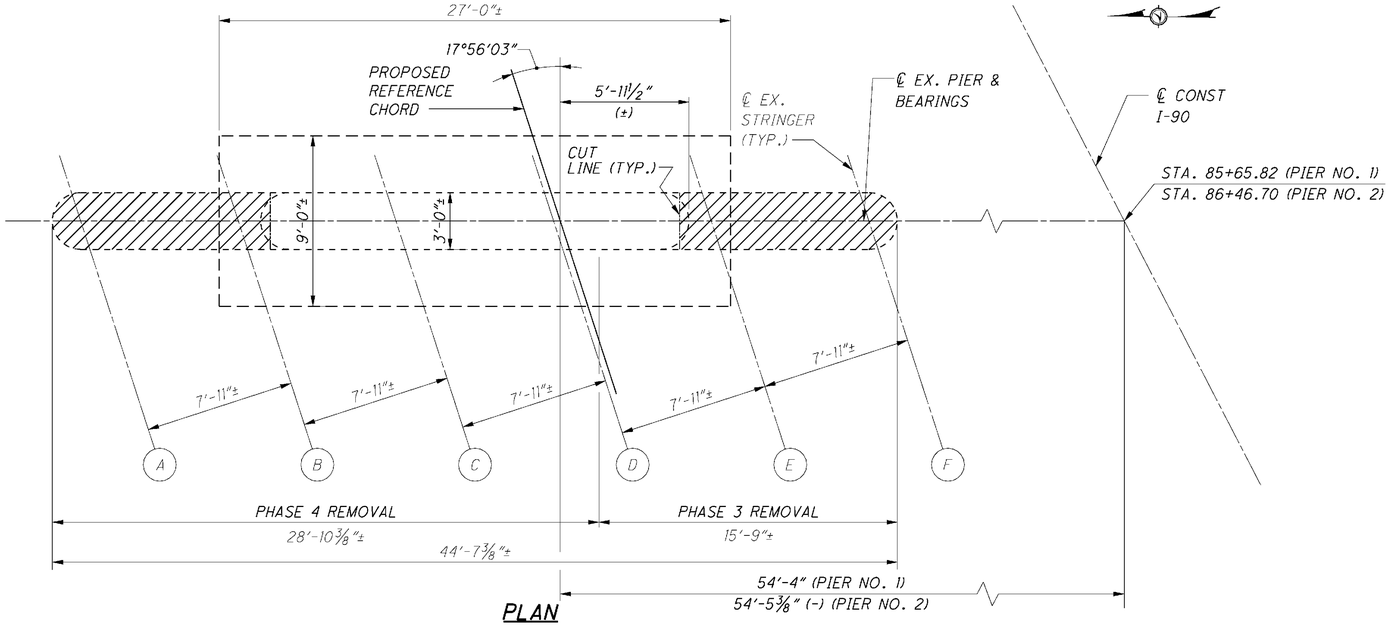

PLAN

(PIER 1 SHOWN, PIER 2 SIMILAR)

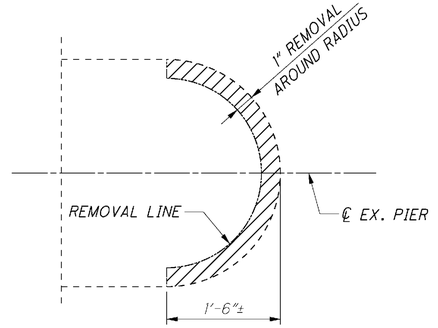

SECTION D-D

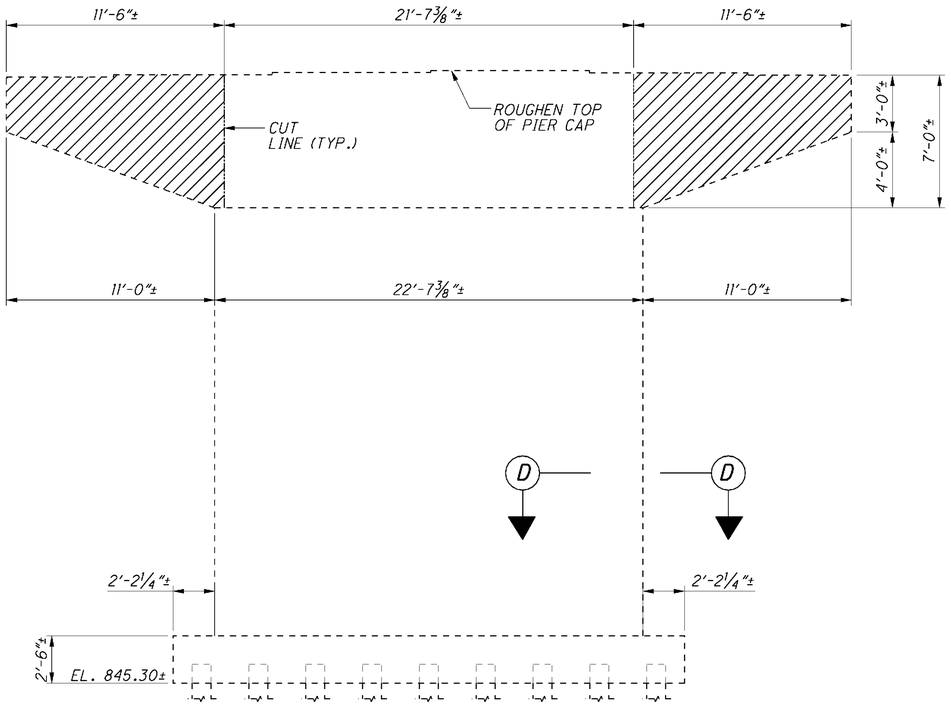

PIER ELEVATION

LEGEND:

INDICATES REMOVAL LIMITS, ITEM 202 - PORTIONS OF STRUCTURE REMOVED, OVER 20 FOOT SPAN, AS PER PLAN

NOTE

(1) FOR ABBREVIATIONS AND NOTES, SEE SHEET 5/52.

DESIGN AGENCY
KCI ASSOCIATES OF OHIO, P.A.
388 S. MAIN ST., SUITE 401
AKRON, OHIO 44311

DESIGNED	DRAWN	REVIEWED	DATE
YRY	JLS	FJB	6/5/09
CHECKED	REVISED	STRUCTURE FILE NUMBER	
DLG		0404179L	

PIER REMOVAL DETAILS - LEFT STRUCTURE
BRIDGE NO. ATB-90-1450 L
I-90 OVER NORFOLK SOUTHERN RAILROAD

ATB-90-14.25
PID No. 25199

$FILES

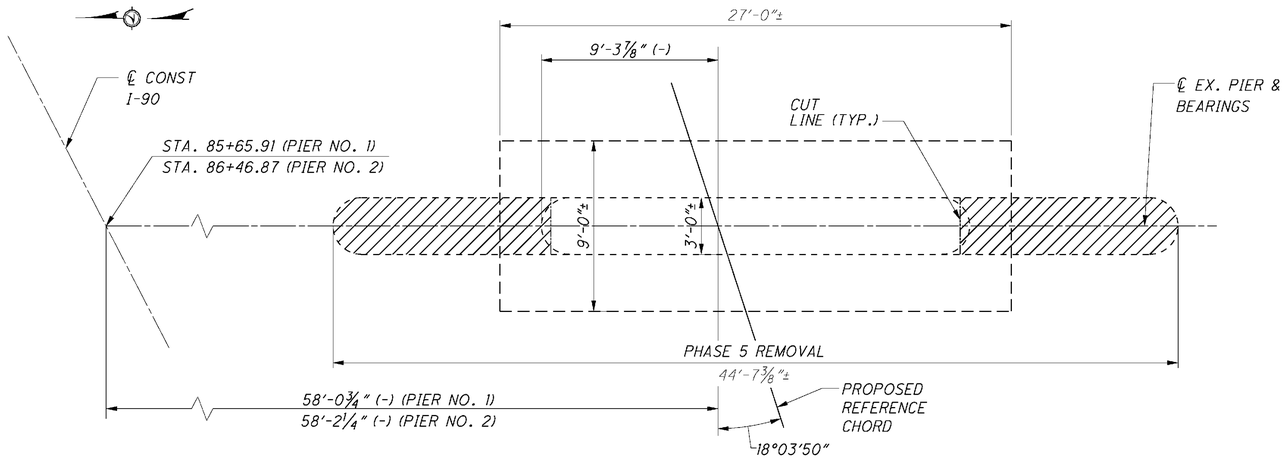

PLAN

(PIER 1 SHOWN, PIER 2 SIMILAR)

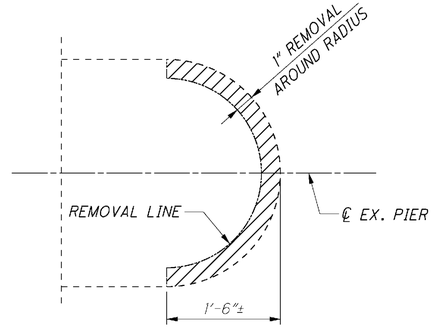

SECTION D-D

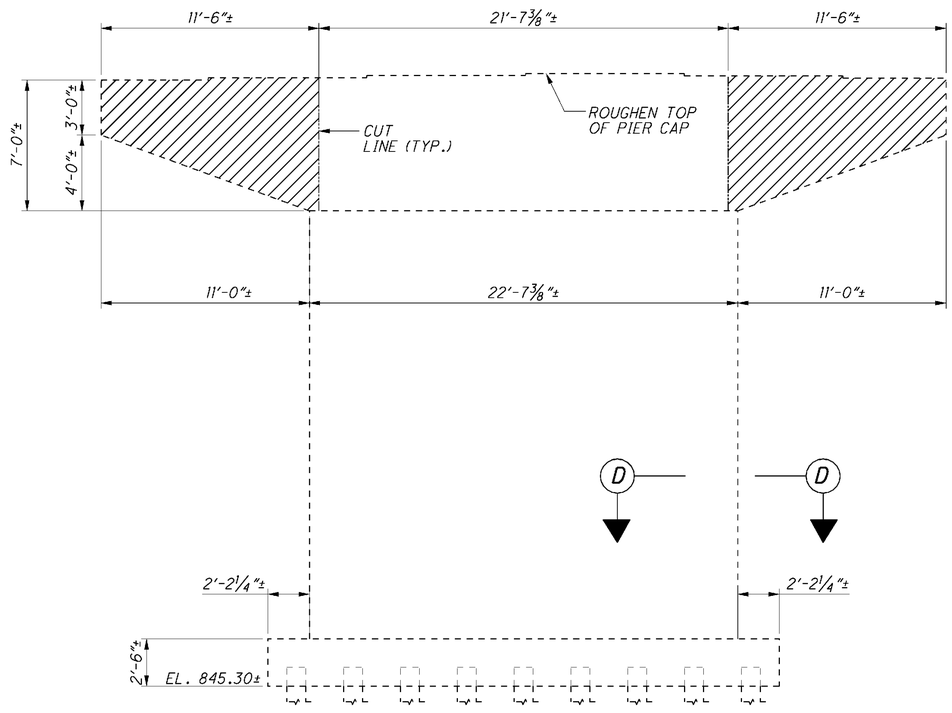

PIER ELEVATION

LEGEND:

INDICATES REMOVAL LIMITS, ITEM 202 - PORTIONS OF STRUCTURE REMOVED, OVER 20 FOOT SPAN, AS PER PLAN

NOTE

(1) FOR ABBREVIATIONS AND NOTES, SEE SHEET 5/52.

DESIGN AGENCY
KCI ASSOCIATES OF OHIO, P.A.
388 S. MAIN ST., SUITE 401
AKRON, OHIO 44311

DESIGNED YRY | DRAWN JLS | CHECKED DLG | REVIEWED FJB | DATE 6/5/09 | REVISED | STRUCTURE FILE NUMBER 0404209R

PIER REMOVAL DETAILS - RIGHT STRUCTURE
BRIDGE NO. ATB-90-1450 R
I-90 OVER NORFOLK SOUTHERN RAILROAD

ATB-90-14.25
PID No. 25199

12/52

304/437

$FILES

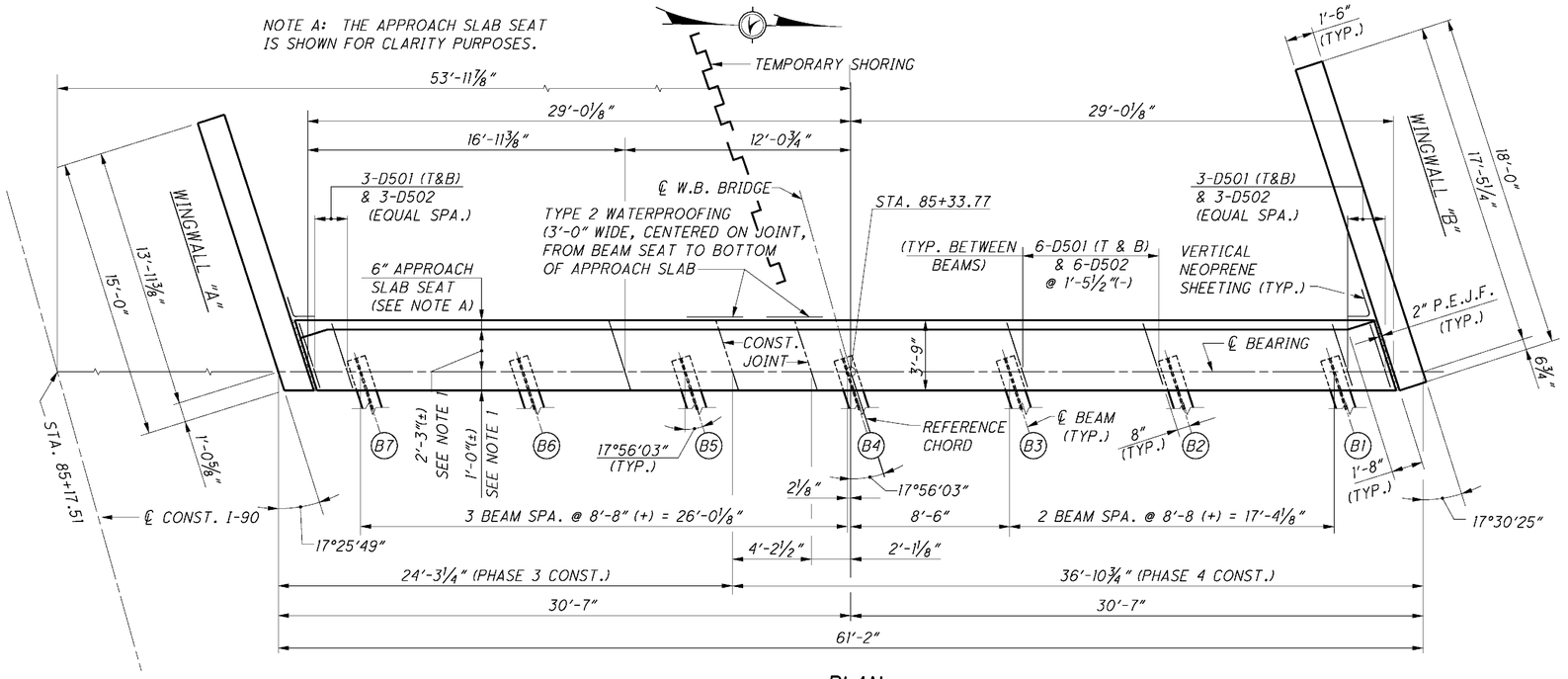

PLAN

(DECK SLAB AND APPROACH SLAB NOT SHOWN)
(FOR LONGITUDINAL REINFORCEMENT, SEE ELEVATION)

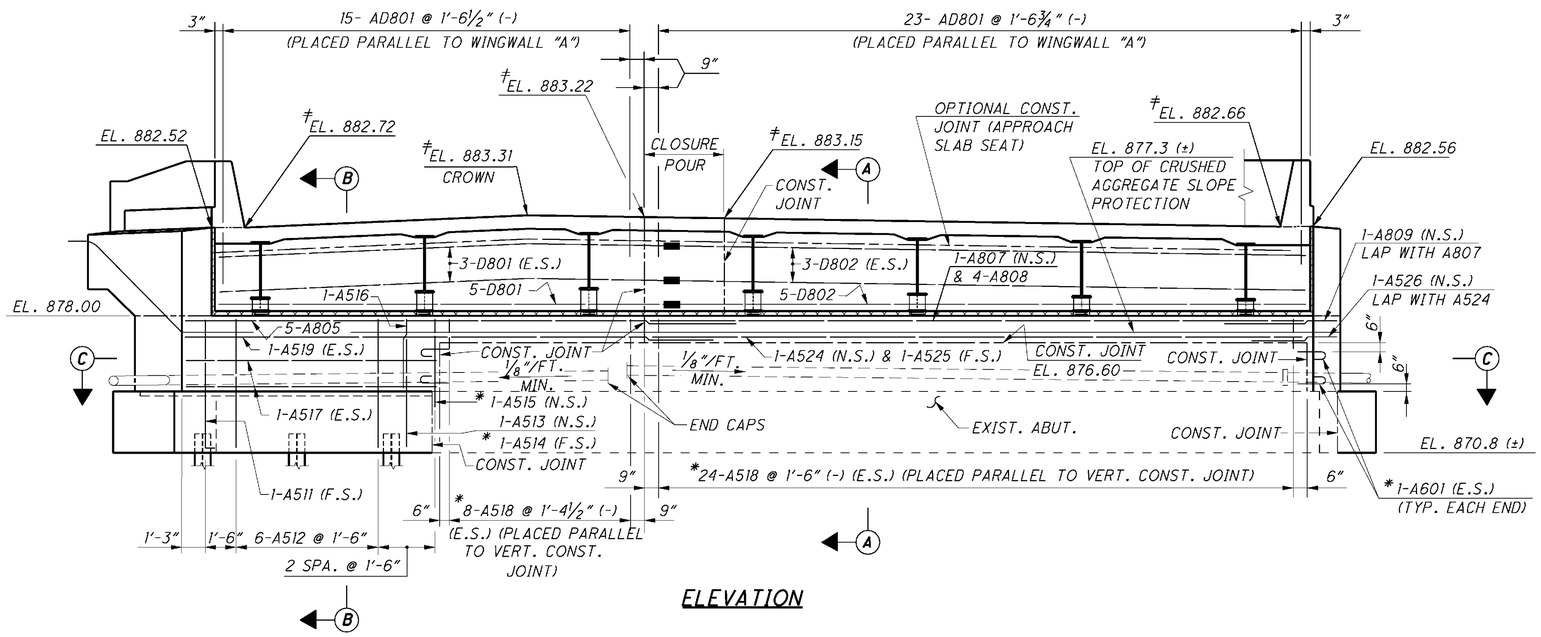

ELEVATION

LEGEND:

- (B1) — BEAM DESIGNATION
- LIMITS OF P.E.J.F.
- LIMITS OF EXPANDED POLYSTYRENE FILLER OR REMOVABLE FORMS.
- ≠ — ELEVATION AT ℄ BEARING.
- * — DENOTES DOWEL BAR GROUTED INTO EXISTING STRUCTURE. (1'-3" FOR #5 BAR AND 1'-6" FOR #6 BAR)
- DENOTES MECHANICAL CONNECTOR

MINIMUM LAP LENGTHS
NO. 5 BAR = 2'-5"
NO. 8 BAR = 4'-11"

NOTES:

1. ℄ BEARING IS NOT PARALLEL TO FRONT FACE OF ABUTMENT. SEE GEOMETRIC LAYOUT DIAGRAM, SHEET 3/52, FOR LOCATION OF ℄ BEARING.
2. ALL REINFORCING BAR MARKS SHALL BE PREFIXED "L".
3. FOR ABUTMENT REMOVAL DETAILS, SEE SHEET 10/52.
4. FOR REAR ABUTMENT FOOTING PLAN, SEE SHEET 14/52.
5. FOR SECTIONS A-A AND B-B, SEE SHEET 17/52.
6. FOR SECTION C-C, SEE SHEET 14/52.
7. ABUTMENT DIAPHRAGM CONCRETE, STEEL SUPERSTRUCTURE, PHASED CONSTRUCTION: PLACE THE CONCRETE IN THE ABUTMENT DIAPHRAGM ENCASING STRUCTURAL STEEL MEMBERS OF AN INDIVIDUAL PHASE SEPARATELY OR WITH THE DECK CONCRETE OF THAT PHASE. IF THE DIAPHRAGM CONCRETE IS PLACED SEPARATELY, ALLOW AT LEAST 48 HOURS OF SET TIME BEFORE PLACING DECK CONCRETE. LOCATE THE HORIZONTAL CONSTRUCTION JOINT BETWEEN THE DIAPHRAGM AND DECK CONCRETE AT THE APPROACH SLAB SEAT.
8. FOR LIMITS OF SEALING CONCRETE SURFACES, SEE SHEET 17/52.
9. FOR WINGWALL DETAILS, SEE SHEET 18/52.
10. FOR BONDING GROUT NOTE, SEE SHEET 4/52.
11. FOR ABBREVIATIONS, SEE SHEET 5/52.

DESIGN AGENCY
KCI ASSOCIATES OF OHIO, P.A.
388 S. MAIN ST., SUITE 401
AKRON, OHIO 44311

DESIGNED	DRAWN	REVIEWED	DATE
SLH	WEB	FJB	6/5/09
CHECKED	REVISED	STRUCTURE FILE NUMBER	
HK		0404179L	

REAR ABUTMENT PLAN AND ELEVATION - LEFT STRUCTURE

BRIDGE NO. ATB-90-1450 L
I-90 OVER NORFOLK SOUTHERN RAILROAD

ATB-90-14.25
PID No. 25199

13/52

305/437

$FILES

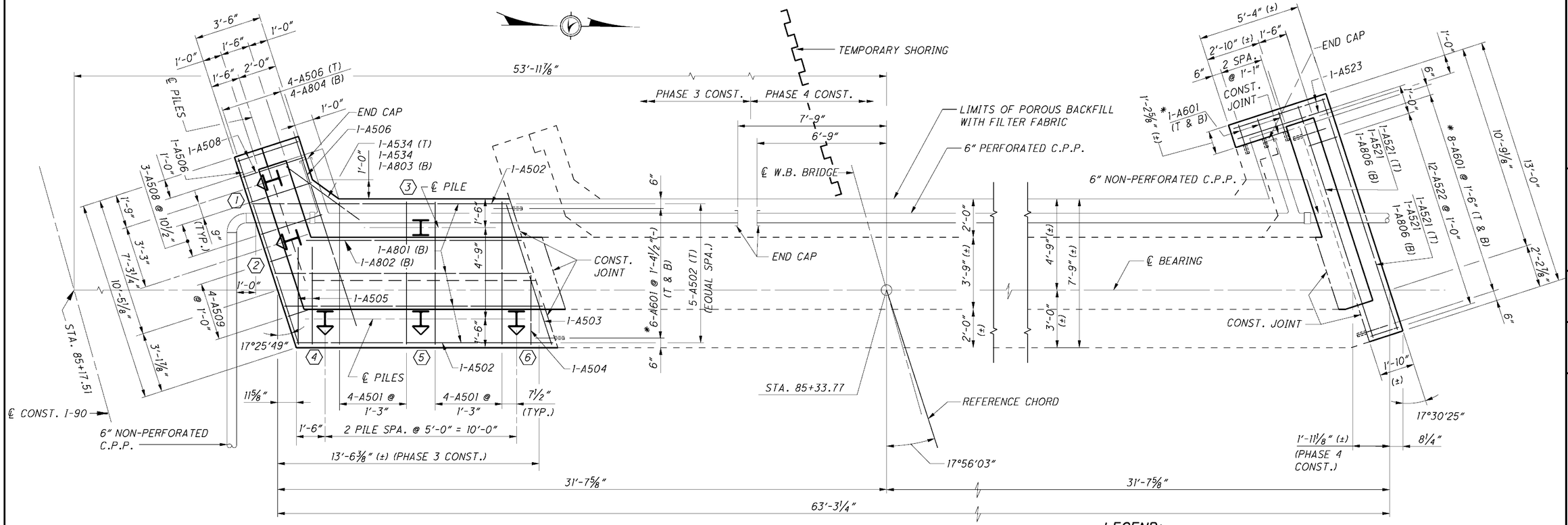

REAR ABUTMENT FOOTING PLAN

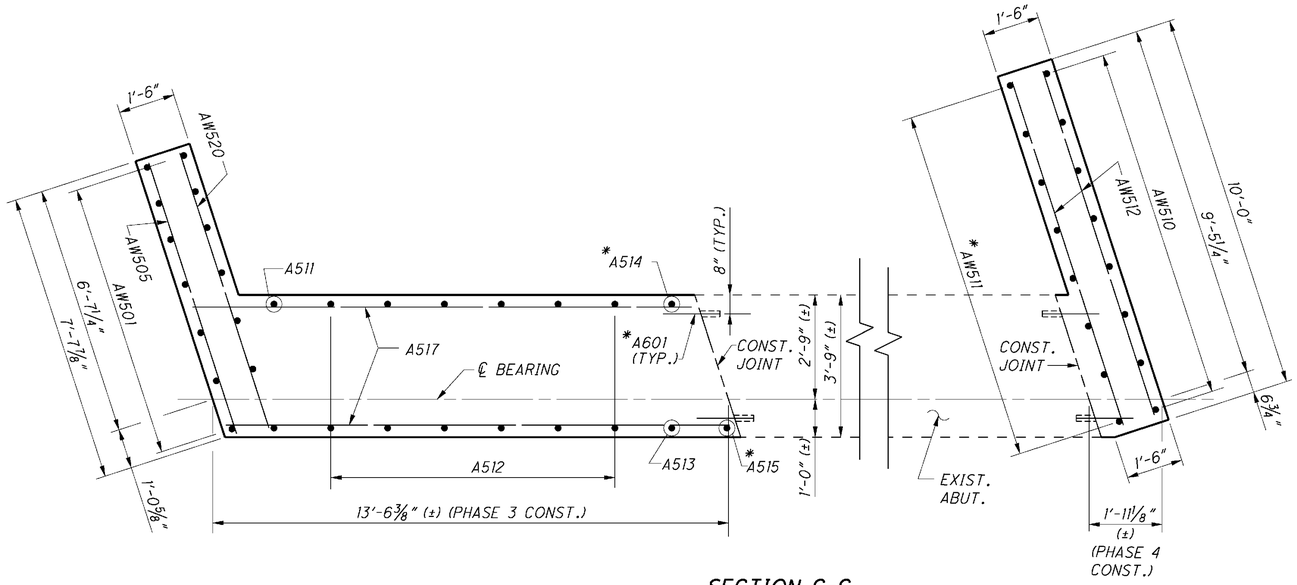

SECTION C-C

MINIMUM LAP LENGTHS
NO. 5 BAR = 2'-5"

LEGEND:

- DENOTES BATTERED PILE (1:4)
- INDICATES PILE IDENTIFICATION NUMBER.
- * DENOTES DOWEL BAR GROUTED INTO EXISTING STRUCTURE. (1'-3" FOR #5 BAR AND 1'-6" FOR #6 BAR.) DOWEL BARS IN THE FOOTING SHALL BE 6" CLEAR FROM THE TOP AND BOTTOM OF EXISTING FOOTING, EXCEPT AS SHOWN IN SECTION P-P, SHEET 26/52.

NOTES:

(1) ALL REINFORCING BAR MARKS SHALL BE PREFIXED "L".

(2) ALL PILES ARE HP 12x52 STEEL PILES.

(3) FOR ABUTMENT PLAN AND ELEVATION, AND LOCATION OF SECTION C-C, SEE SHEET 13/52.

(4) POROUS BACKFILL WITH FILTER FABRIC, 2 FEET THICK SHALL EXTEND TO THE BOTTOM OF THE AGGREGATE BASE, TO 1 FOOT BELOW THE EMBANKMENT SURFACE, AND LATERALLY TO THE ENDS OF THE WINGWALLS.

(5) TERMINATE 6" NON-PERFORATED PIPE AT THE SIDE SLOPE AS SHOWN ON STANDARD DRAWING SICD-1-96, SHEET 4 OF 7. PAYMENT FOR CRUSHED AGGREGATE SLOPE PROTECTION SHALL BE INCLUDED IN ITEM 601 - CRUSHED AGGREGATE SLOPE PROTECTION, AS PER PLAN. TERMINATE 6" NON-PERFORATED PIPE AT THE FRONT SLOPE AS SHOWN ON SHEET 17/52.

(6) FOR ABBREVIATIONS, SEE SHEET 5/52.

(7) FOR CLEANING EXISTING CONCRETE PRIOR TO PLACEMENT OF PROPOSED CONCRETE AND FOR "BONDING GROUT" NOTE, SEE SHEET 4/52.

(8) FOR ADDITIONAL FOOTING REINFORCEMENT, SEE SHEETS 13/52 AND 18/52.

DESIGN AGENCY
KCI ASSOCIATES OF OHIO, P.A.
388 S. MAIN ST., SUITE 401
AKRON, OHIO 44311

DESIGNED	DRAWN	REVIEWED	DATE
HK	WEB	FJB	6/5/09
CHECKED	REVISED	STRUCTURE FILE NUMBER	
CMK		0404179L	

REAR ABUTMENT DETAILS - LEFT STRUCTURE
BRIDGE NO. ATB-90-1450 L
I-90 OVER NORFOLK SOUTHERN RAILROAD

ATB-90-14.25
PID No. 25199

14/52

306
437

$FILES

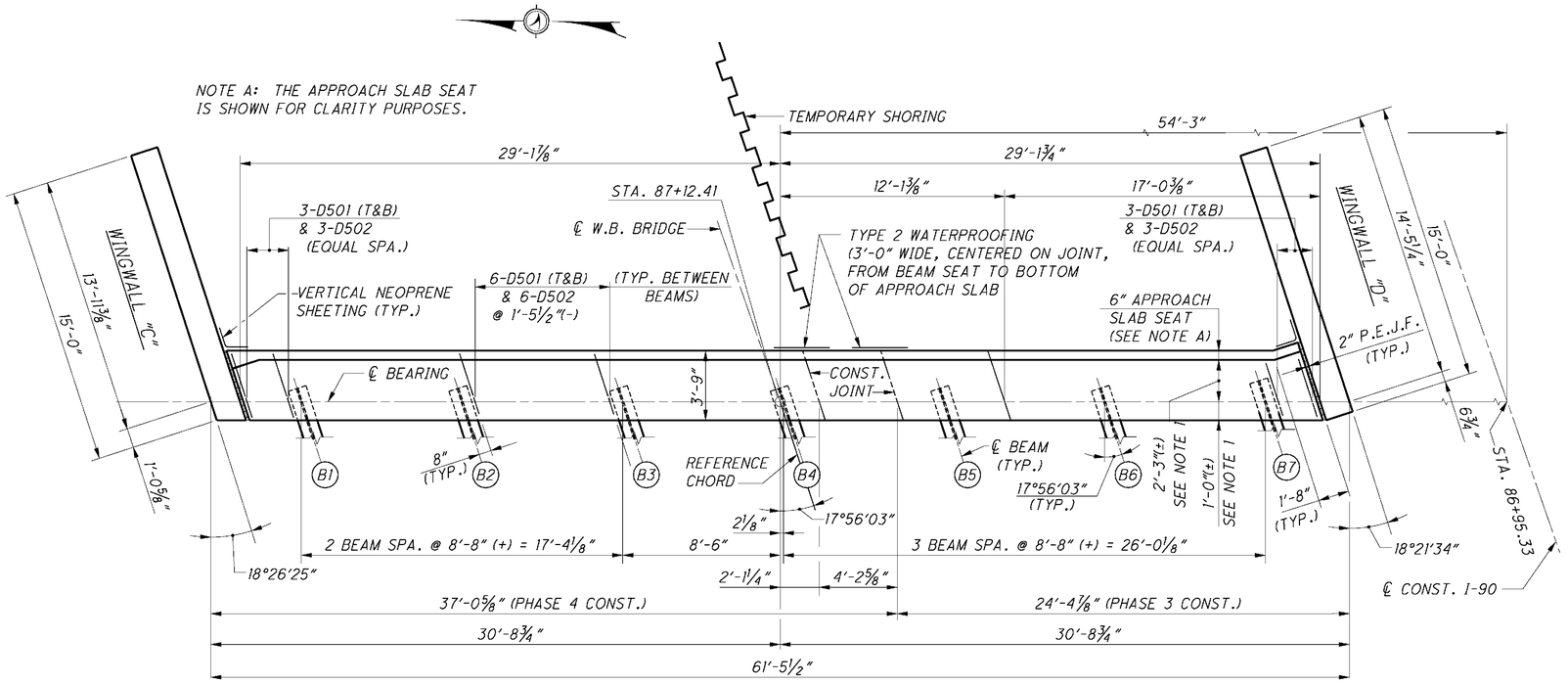

PLAN

(DECK SLAB AND APPROACH SLAB NOT SHOWN)
(FOR LONGITUDINAL REINFORCEMENT, SEE ELEVATION)

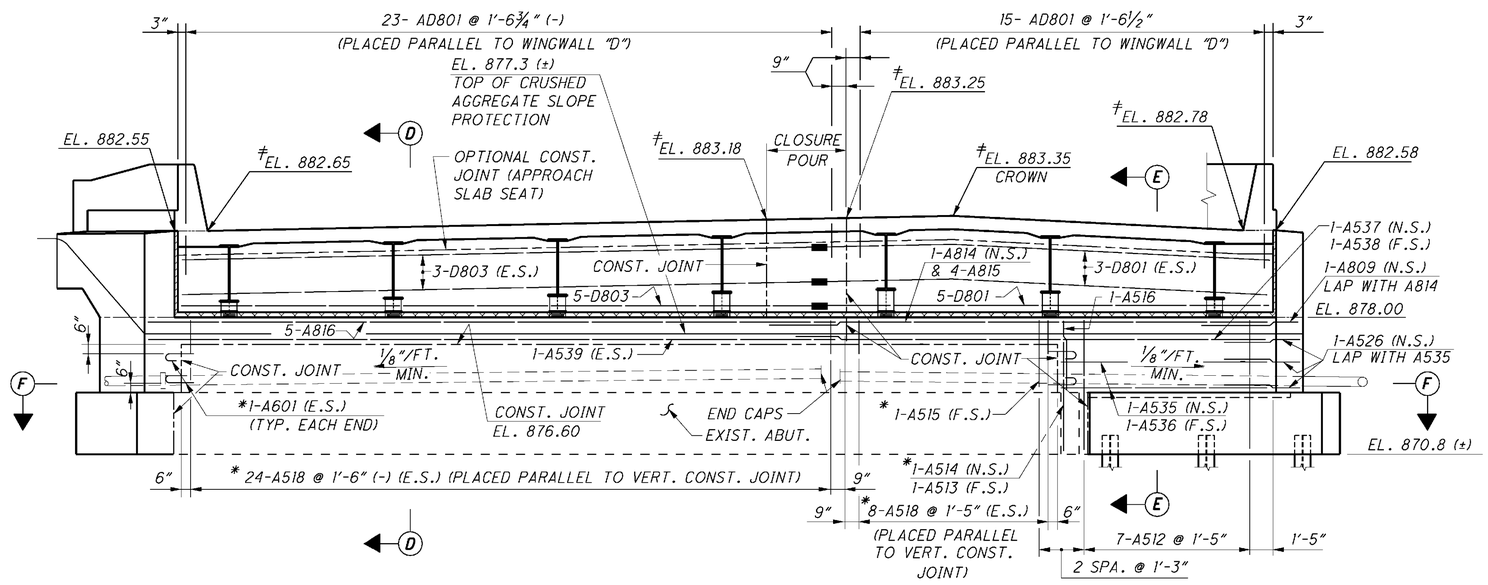

ELEVATION

LEGEND:

- (B1) BEAM DESIGNATION
- LIMITS OF P.E.J.F.
- LIMITS OF EXPANDED POLYSTYRENE FILLER OR REMOVABLE FORMS.
- ≠ ELEVATION AT ℄ BEARING.
- * DENOTES DOWEL BAR GROUTED INTO EXISTING STRUCTURE. (1'-3" FOR #5 BAR AND 1'-6" FOR #6 BAR)
- DENOTES MECHANICAL CONNECTOR

MINIMUM LAP LENGTHS
NO. 5 BAR = 2'-5"
NO. 8 BAR = 4'-11"

NOTES:

1. ℄ BEARING IS NOT PARALLEL TO FRONT FACE OF ABUTMENT. SEE GEOMETRIC LAYOUT DIAGRAM, SHEET 3/52, FOR LOCATION OF ℄ BEARING.
2. ALL REINFORCING BAR MARKS SHALL BE PREFIXED "L".
3. FOR ABUTMENT REMOVAL DETAILS, SEE SHEET 10/52.
4. FOR FORWARD ABUTMENT FOOTING PLAN, SEE SHEET 16/52.
5. FOR SECTIONS D-D AND E-E, SEE SHEET 17/52.
6. FOR SECTION F-F, SEE SHEET 16/52.
7. ABUTMENT DIAPHRAGM CONCRETE, STEEL SUPERSTRUCTURE, PHASED CONSTRUCTION: PLACE THE CONCRETE IN THE ABUTMENT DIAPHRAGM ENCASING STRUCTURAL STEEL MEMBERS OF AN INDIVIDUAL PHASE SEPARATELY OR WITH THE DECK CONCRETE OF THAT PHASE. IF THE DIAPHRAGM CONCRETE IS PLACED SEPARATELY, ALLOW AT LEAST 48 HOURS OF SET TIME BEFORE PLACING DECK CONCRETE. LOCATE THE HORIZONTAL CONSTRUCTION JOINT BETWEEN THE DIAPHRAGM AND DECK CONCRETE AT THE APPROACH SLAB SEAT.
8. FOR LIMITS OF SEALING CONCRETE SURFACES, SEE SHEET 17/52.
9. FOR WINGWALL DETAILS, SEE SHEET 19/52.
10. FOR BONDING GROUT NOTE, SEE SHEET 4/52.
11. FOR ABBREVIATIONS, SEE SHEET 5/52.

DESIGN AGENCY
KCI ASSOCIATES OF OHIO, P.A.
388 S. MAIN ST., SUITE 401
AKRON, OHIO 44311

DESIGNED	DRAWN	REVIEWED	DATE
SLH	WEB	FJB	6/5/09
CHECKED	REVISED	STRUCTURE FILE NUMBER	
HK		0404179L	

FORWARD ABUTMENT PLAN AND ELEVATION - LEFT STRUCTURE

BRIDGE NO. ATB-90-1450 L
I-90 OVER NORFOLK SOUTHERN RAILROAD

ATB-90-14.25
PID No. 25199

15 / 52

307 / 437

$FILES

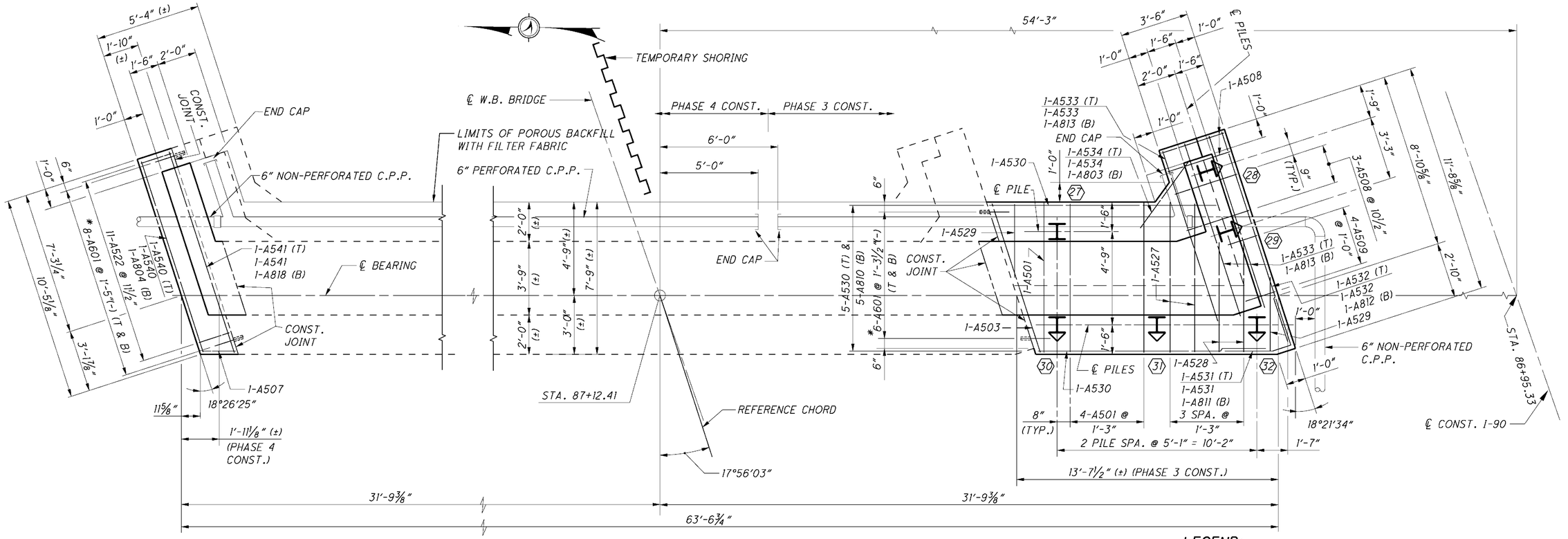

FORWARD ABUTMENT FOOTING PLAN

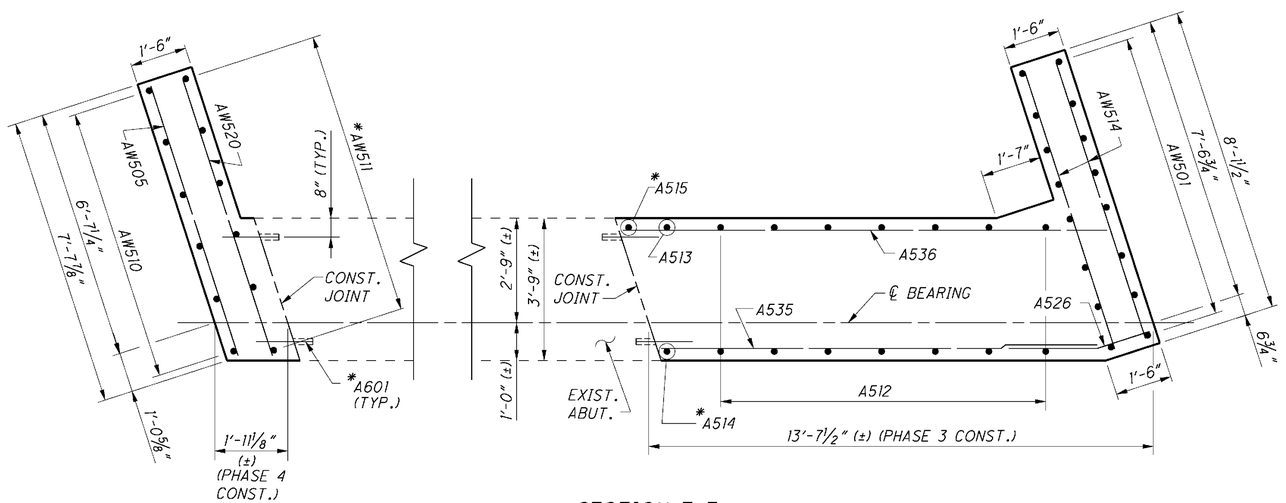

SECTION F-F

MINIMUM LAP LENGTHS
NO. 5 BAR = 2'-5"

LEGEND:

- DENOTES BATTERED PILE (1:4)
- INDICATES PILE IDENTIFICATION NUMBER.
- * DENOTES DOWEL BAR GROUTED INTO EXISTING STRUCTURE. (1'-3" FOR #5 BAR AND 1'-6" FOR #6 BAR.) DOWEL BARS IN THE FOOTING SHALL BE 6" CLEAR FROM THE TOP AND BOTTOM OF EXISTING FOOTING.

NOTES:

1. ALL REINFORCING BAR MARKS SHALL BE PREFIXED "L".
2. ALL PILES ARE HP 12x52 STEEL PILES.
3. FOR ABUTMENT PLAN AND ELEVATION, AND LOCATION OF SECTION F-F, SEE SHEET 15/52 .
4. POROUS BACKFILL WITH FILTER FABRIC, 2 FEET THICK SHALL EXTEND TO THE BOTTOM OF THE AGGREGATE BASE, TO 1 FOOT BELOW THE EMBANKMENT SURFACE, AND LATERALLY TO THE ENDS OF THE WINGWALLS.
5. TERMINATE 6" NON-PERFORATED PIPE AT THE SIDE SLOPE AS SHOWN ON STANDARD DRAWING SICD-1-96, SHEET 4 OF 7. PAYMENT FOR CRUSHED AGGREGATE SLOPE PROTECTION SHALL BE INCLUDED IN ITEM 601 - CRUSHED AGGREGATE SLOPE PROTECTION, AS PER PLAN. TERMINATE 6" NON-PERFORATED PIPE AT THE FRONT SLOPE AS SHOWN ON SHEET 17/52 .
6. FOR ABBREVIATIONS, SEE SHEET 5/52 .
7. FOR CLEANING EXISTING CONCRETE PRIOR TO PLACEMENT OF PROPOSED CONCRETE AND FOR "BONDING GROUT" NOTE, SEE SHEET 4/52 .
8. FOR ADDITIONAL FOOTING REINFORCEMENT, SEE SHEET 15/52 AND 19/52 .

DESIGN AGENCY
KCI ASSOCIATES OF OHIO, P.A.
388 S. MAIN ST., SUITE 401
AKRON, OHIO 44311

DESIGNED	DRAWN	REVIEWED	DATE
HK	WEB	FJB	6/5/09
CHECKED	REVISED	STRUCTURE FILE NUMBER	
CWK		0404179L	

FORWARD ABUTMENT DETAILS - LEFT STRUCTURE
BRIDGE NO. ATB-90-1450 L
I-90 OVER NORFOLK SOUTHERN RAILROAD

ATB-90-14.25
PID No. 25199

16/52

308/437

$FILES

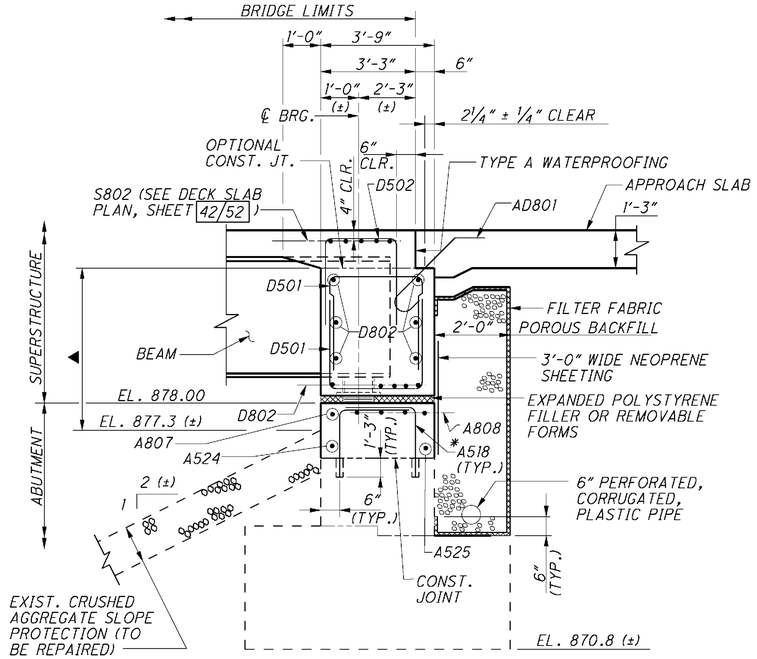

SECTION A-A

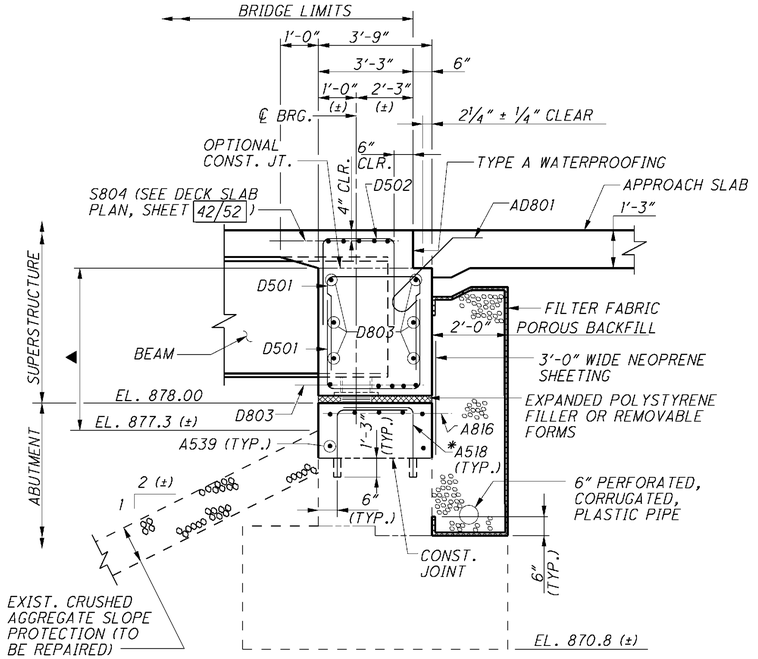

SECTION D-D

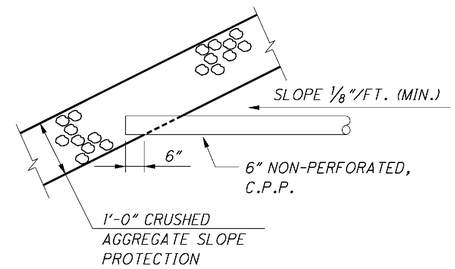

TERMINATION OF 6" PIPE AT THE FRONT SLOPE

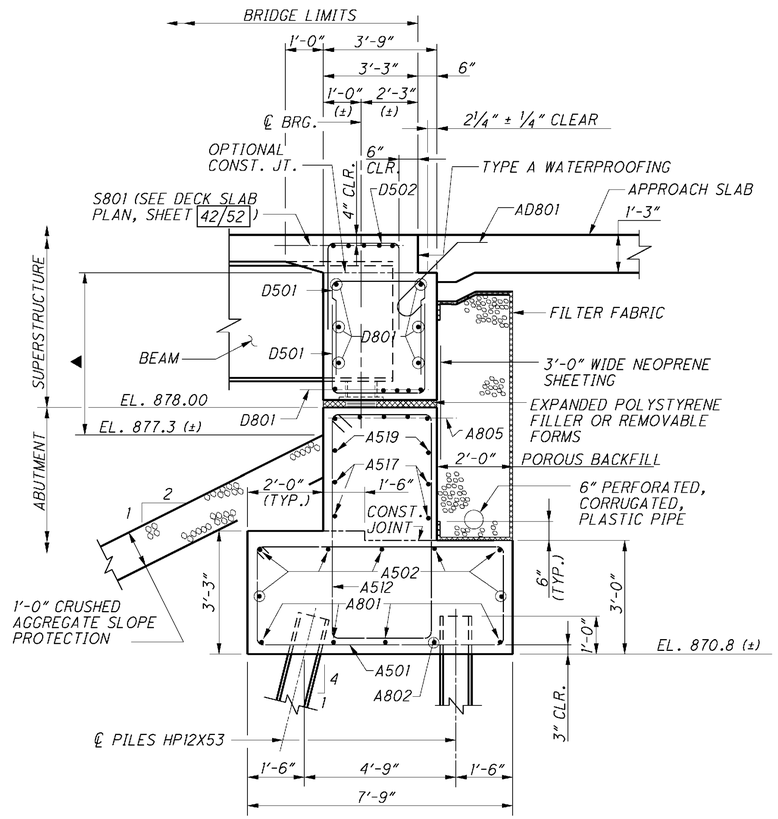

SECTION B-B

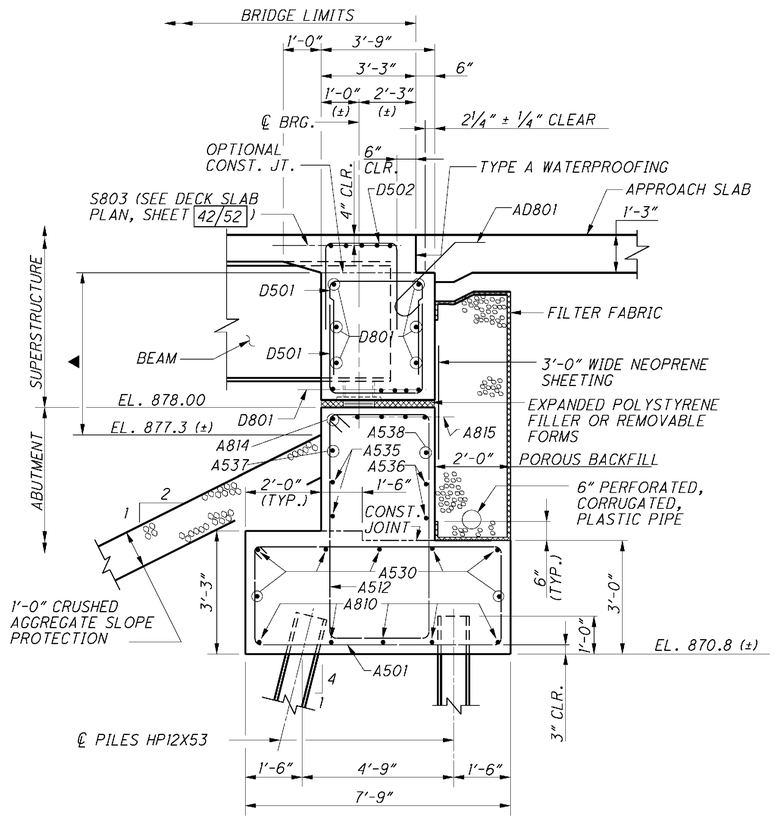

SECTION E-E

LEGEND

▲ LIMITS OF ITEM 512 - SEALING OF CONCRETE SURFACES (EPOXY-URETHANE)

* DENOTES DOWEL BAR GROUTED INTO EXISTING STRUCTURE

NOTES

1. PREFIX "L" SHALL BE ADDED TO ALL REBAR MARKS SHOWN FOR LEFT STRUCTURE.
2. FOR REAR ABUTMENT PLAN AND ELEVATION, LOCATION OF SECTIONS A-A, B-B AND ADDITIONAL NOTES, SEE SHEETS 13/52 AND 14/52.
3. FOR FORWARD ABUTMENT PLAN AND ELEVATION, LOCATION OF SECTIONS D-D, E-E AND ADDITIONAL NOTES, SEE SHEETS 15/52 AND 16/52.
4. TYPE A WATERPROOFING SHALL BE INCLUDED WITH ITEM 526 - REINFORCED CONCRETE APPROACH SLABS (T=15") AS PER PLAN, FOR PAYMENT.
5. FOR ABBREVIATIONS, SEE SHEET 5/52.

DESIGN AGENCY
KCI ASSOCIATES OF OHIO, P.A.
388 S. MAIN ST., SUITE 401
AKRON, OHIO 44311

DESIGNED	DRAWN	REVIEWED	DATE
HK	WEB	FJB	6/5/09
CHECKED	REVISED	STRUCTURE FILE NUMBER	
CMK		0404179L	

ABUTMENT DETAILS - LEFT STRUCTURE
BRIDGE NO. ATB-90-1450 L
1-90 OVER NORFOLK SOUTHERN RAILROAD

ATB-90-14.25
PID No. 25199

$FILES

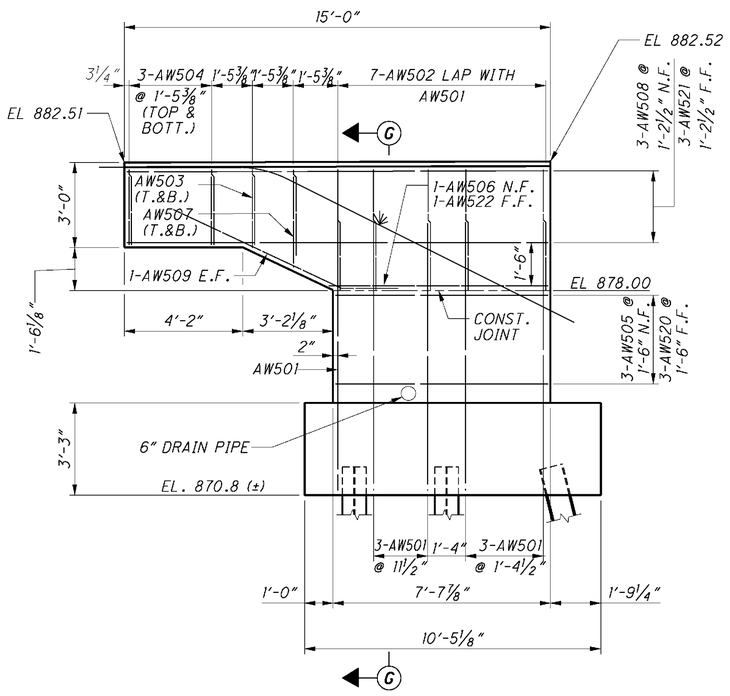

WINGWALL "A" ELEVATION

(PHASE 3 CONST.)

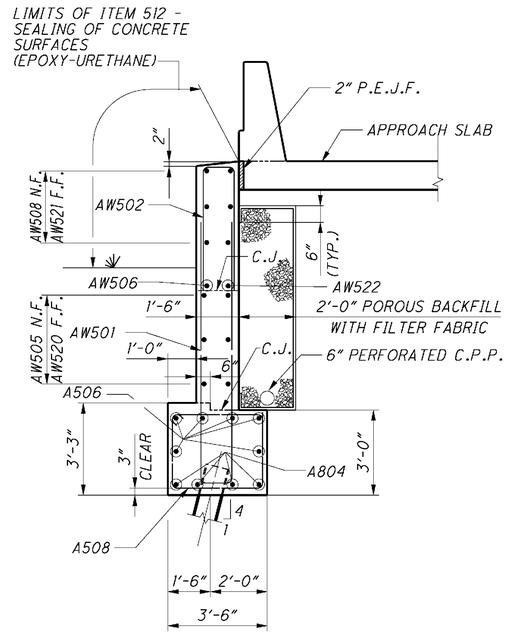

SECTION G-G

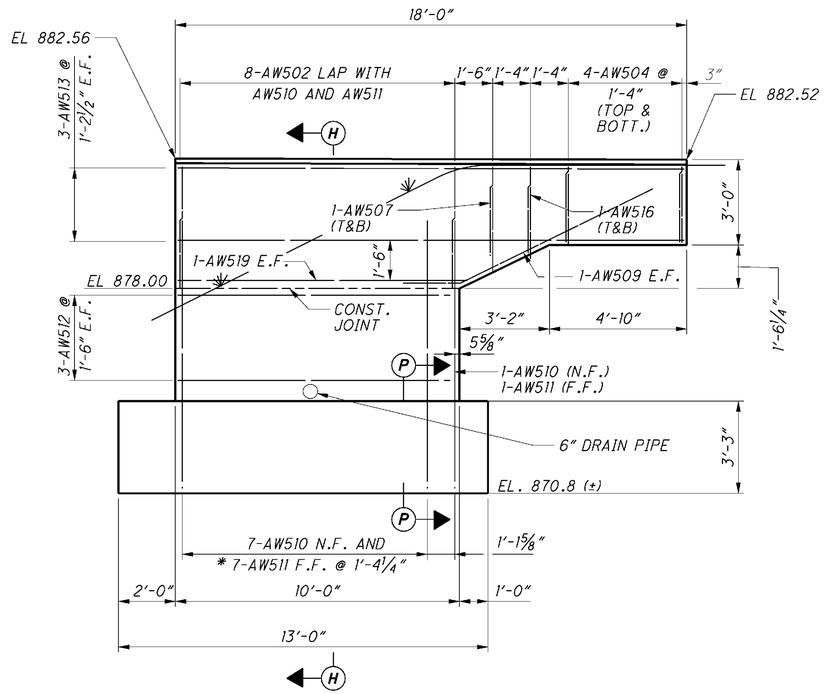

WINGWALL "B" ELEVATION

(PHASE 4 CONST.)

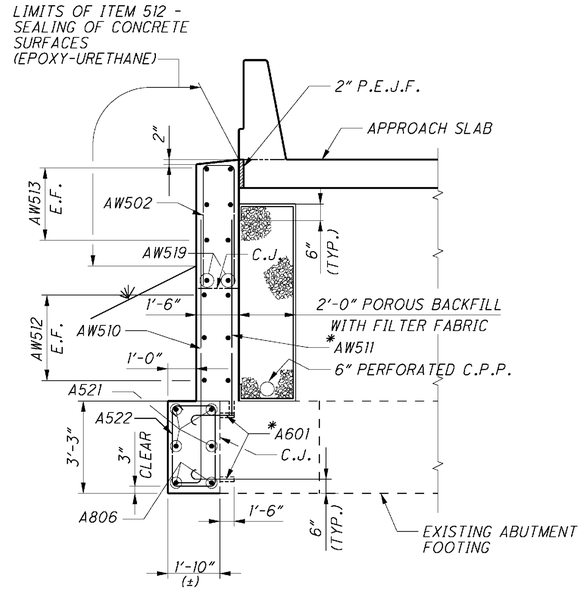

SECTION H-H

MINIMUM LAP LENGTHS
NO. 5 BAR = 2'-5"

LEGEND

* DENOTES DOWEL BAR GROUTED INTO EXISTING STRUCTURE. (1'-3" FOR #5 BAR AND 1'-6" FOR #6 BAR)

NOTES:

1. ALL REINFORCING BAR MARKS SHALL BE PREFIXED "L".
2. FOR ABUTMENT REMOVAL DETAILS, SEE SHEET 10/52.
3. FOR REAR ABUTMENT FOOTING PLAN, SEE SHEET 14/52.
4. FOR ABBREVIATIONS, SEE SHEET 5/52.
5. FOR SECTION P-P, SEE SHEET 26/52.

DESIGN AGENCY
KCI ASSOCIATES OF OHIO, P.A.
388 S. MAIN ST., SUITE 401
AKRON, OHIO 44311

DESIGNED	DRAWN	REVIEWED	DATE
SLH	SAC	FJB	6/5/09
CHECKED	REVISED	STRUCTURE FILE NUMBER	
HK		04041791	

REAR ABUTMENT WINGWALL DETAILS - LEFT STRUCTURE
BRIDGE NO. ATB-90-1450 L
I-90 OVER NORFOLK SOUTHERN RAILROAD

ATB-90-14.25
PID No. 25199

18 / 52

310 / 437

$FILES

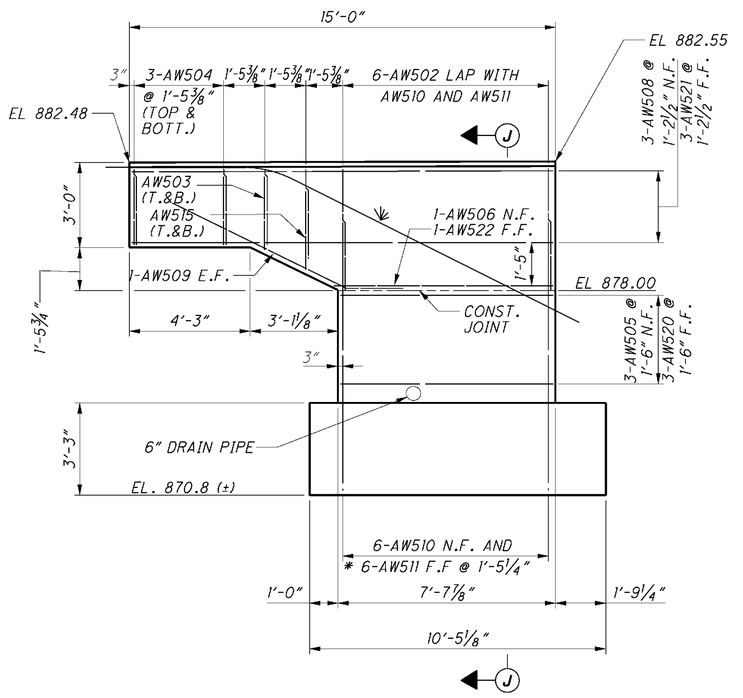

WINGWALL "C" ELEVATION

(PHASE 4 CONST.)

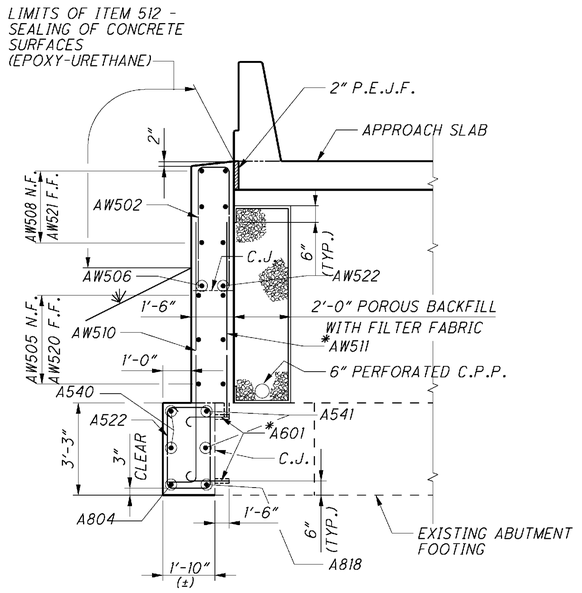

SECTION J-J

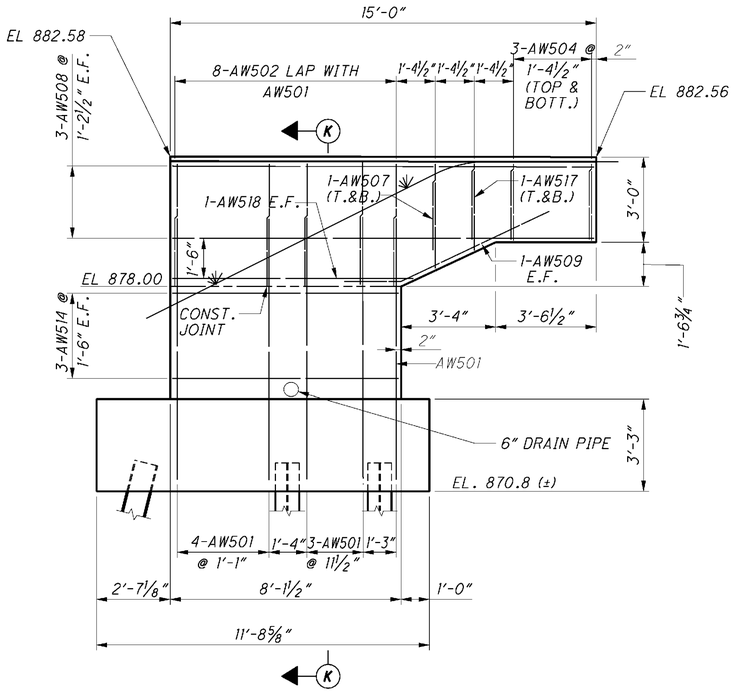

WINGWALL "D" ELEVATION

(PHASE 3 CONST.)

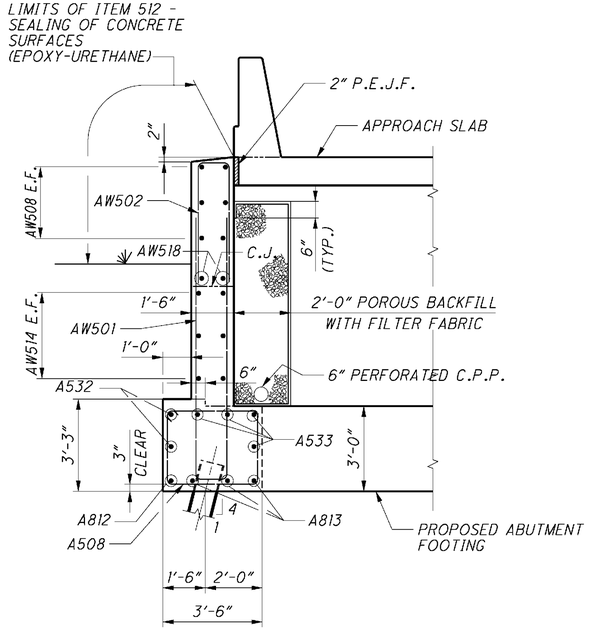

SECTION K-K

MINIMUM LAP LENGTHS
NO. 5 BAR = 2'-5"

LEGEND

* DENOTES DOWEL BAR GROUTED INTO EXISTING STRUCTURE. (1'-3" FOR #5 BAR AND 1'-6" FOR #6 BAR)

NOTES:

1. ALL REINFORCING BAR MARKS SHALL BE PREFIXED "L".
2. FOR ABUTMENT REMOVAL DETAILS, SEE SHEET 10/52.
3. FOR FORWARD ABUTMENT FOOTING PLAN, SEE SHEET 16/52.
4. FOR ABBREVIATIONS, SEE SHEET 5/52.

DESIGN AGENCY
KCI ASSOCIATES OF OHIO, P.A.
388 S. MAIN ST., SUITE 401
AKRON, OHIO 44311

DESIGNED	DRAWN	REVIEWED	DATE
SLH	SAC	FJB	6/5/09
CHECKED	REVISED	STRUCTURE FILE NUMBER	
HK		0404179L	

FORWARD ABUTMENT WINGWALL DETAILS - LEFT STRUCTURE
BRIDGE NO. ATB-90-1450 L
I-90 OVER NORFOLK SOUTHERN RAILROAD

ATB-90-14.25
PID No. 25199

19 / 52

311
437

$FILES

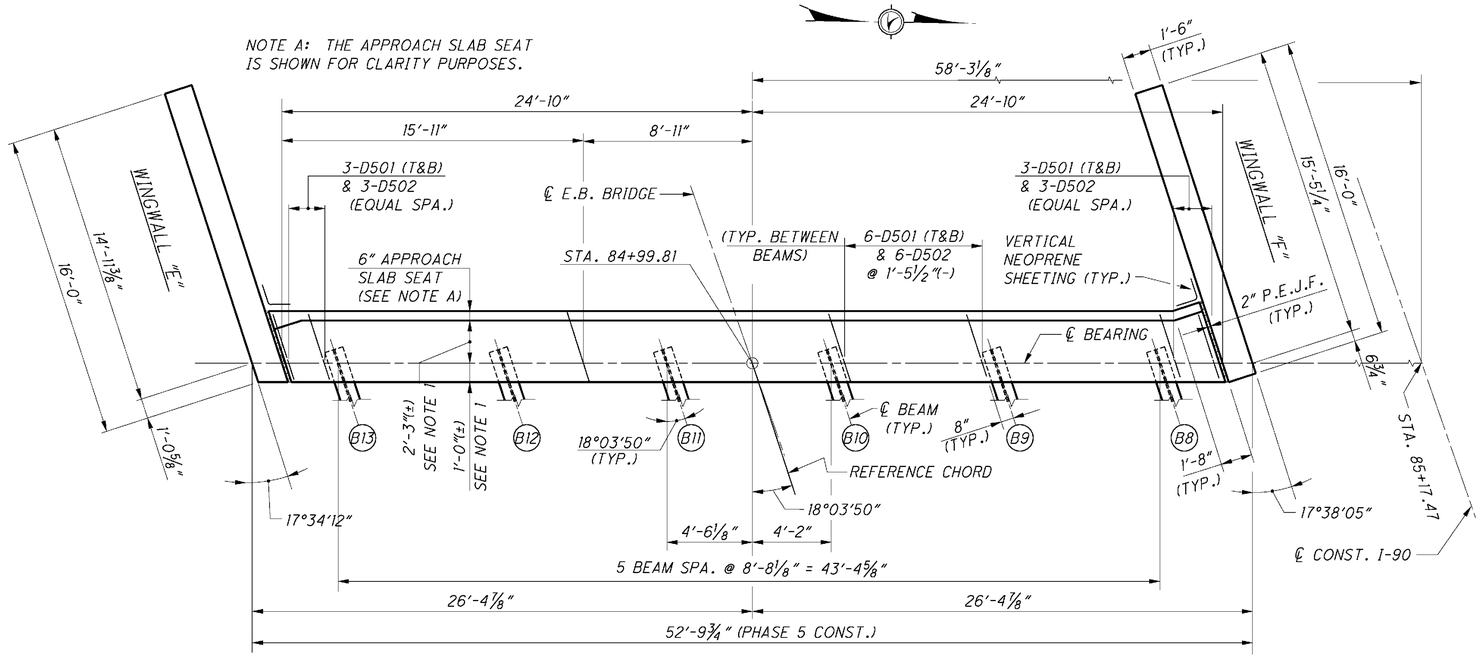

PLAN

(DECK SLAB AND APPROACH SLAB NOT SHOWN)
(FOR LONGITUDINAL REINFORCEMENT, SEE ELEVATION)

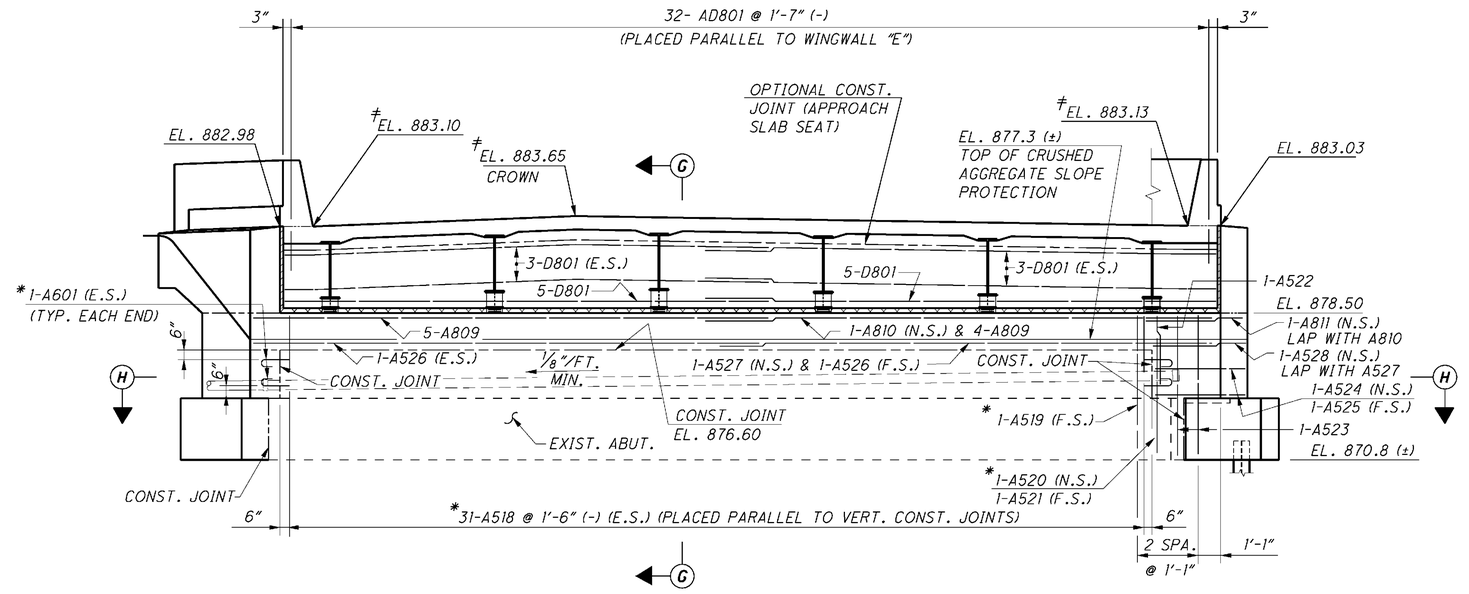

ELEVATION

LEGEND:

- (B8) BEAM DESIGNATION
- LIMITS OF P.E.J.F.
- LIMITS OF EXPANDED POLYSTYRENE FILLER OR REMOVABLE FORMS.
- ≠ ELEVATION AT ℄ BEARING.
- * DENOTES DOWEL BAR GROUTED INTO EXISTING STRUCTURE. (1'-3" FOR #5 BAR AND 1'-6" FOR #6 BAR)

MINIMUM LAP LENGTHS
NO. 5 BAR = 2'-5"
NO. 8 BAR = 4'-11"

NOTES:

1. ℄ BEARING IS NOT PARALLEL TO FRONT FACE OF ABUTMENT. SEE GEOMETRIC LAYOUT DIAGRAM, SHEET 3/52, FOR LOCATION OF ℄ BEARING.
2. ALL REINFORCING BAR MARKS SHALL BE PREFIXED "R".
3. FOR ABUTMENT REMOVAL DETAILS, SEE SHEET 10/52.
4. FOR REAR ABUTMENT FOOTING PLAN, SEE SHEET 21/52.
5. FOR SECTION G-G, SEE SHEET 24/52.
6. FOR SECTION H-H, SEE SHEET 21/52.
7. ABUTMENT DIAPHRAGM CONCRETE, STEEL SUPERSTRUCTURE: PLACE THE CONCRETE ENCASING THE STRUCTURAL STEEL MEMBERS WITH THE DECK CONCRETE OR AT LEAST 48 HOURS BEFORE PLACEMENT OF THE DECK CONCRETE.
8. FOR LIMITS OF SEALING CONCRETE SURFACES, SEE SHEET 24/52.
9. FOR WINGWALL DETAILS, SEE SHEET 25/52.
10. FOR BONDING GROUT NOTE, SEE SHEET 4/52.
11. FOR ABBREVIATIONS, SEE SHEET 5/52.

DESIGN AGENCY
KCI ASSOCIATES OF OHIO, P.A.
388 S. MAIN ST., SUITE 401
AKRON, OHIO 44311

DESIGNED	DRAWN	REVIEWED	DATE
SLH	WEB	FJB	6/5/09
CHECKED	REVISED	STRUCTURE FILE NUMBER	
HK		0404209R	

REAR ABUTMENT PLAN AND ELEVATION - RIGHT STRUCTURE

BRIDGE NO. ATB-90-1450 R
1-90 OVER NORFOLK SOUTHERN RAILROAD

ATB-90-14.25
PID No. 25199

$FILES

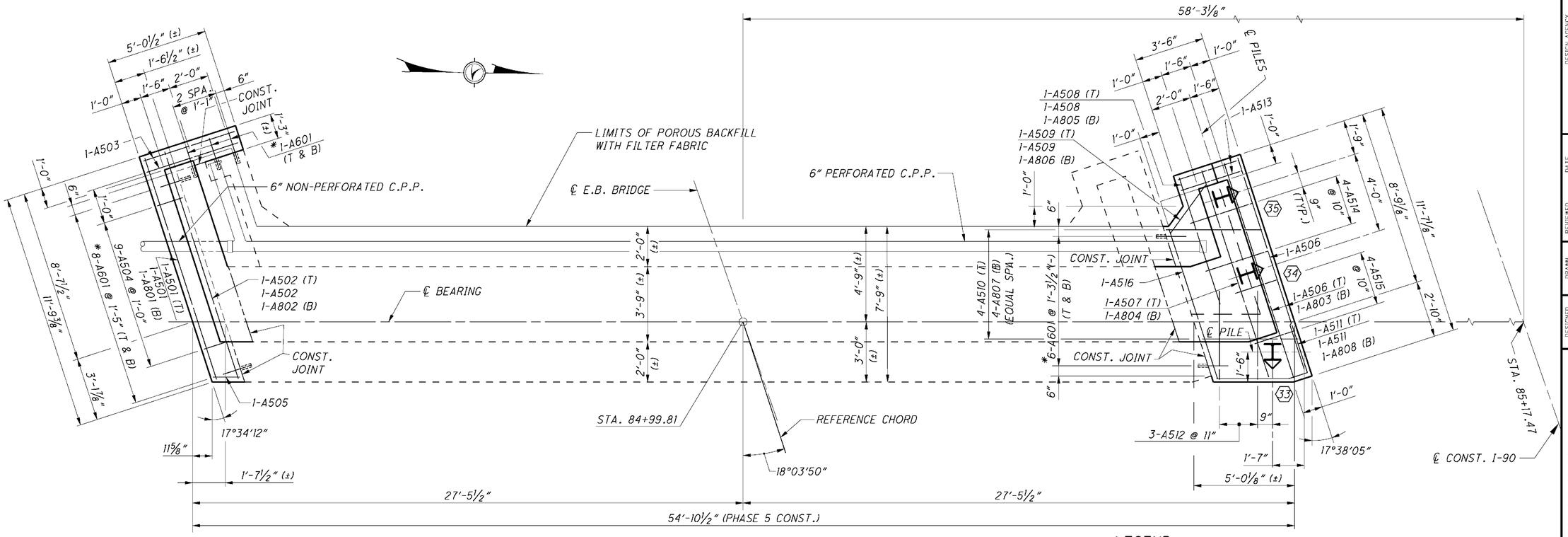

REAR ABUTMENT FOOTING PLAN

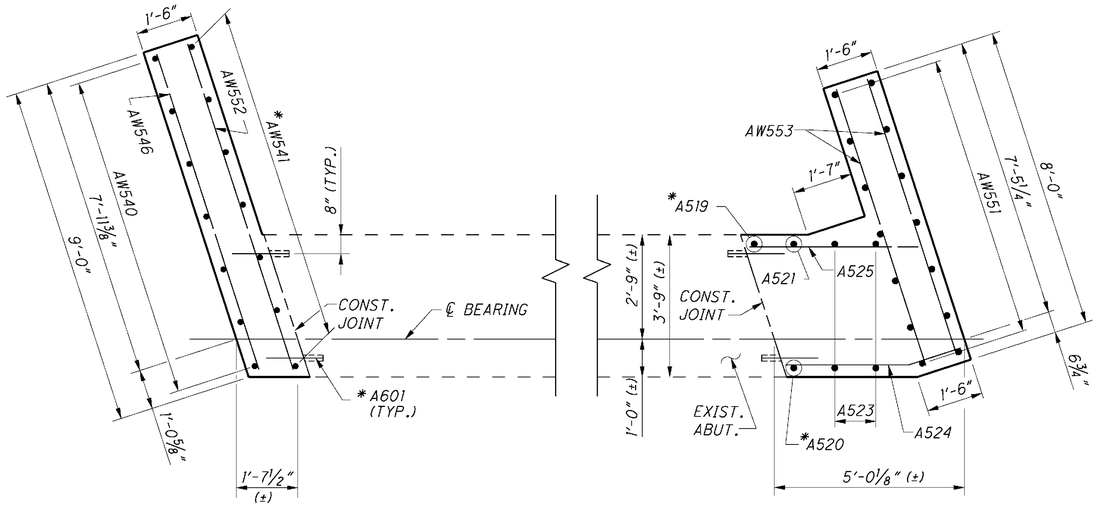

SECTION H-H

LEGEND:

- DENOTES BATTERED PILE (1:4)
- INDICATES PILE IDENTIFICATION NUMBER.
- * DENOTES DOWEL BAR GROUTED INTO EXISTING STRUCTURE. (1'-3" FOR #5 BAR AND 1'-6" FOR #6 BAR). DOWEL BARS IN THE FOOTING SHALL BE 6" CLEAR FROM TOP AND BOTTOM OF EXISTING FOOTING, EXCEPT AS SHOWN IN SECTION P-P, SHEET 26/52.

NOTES:

1. ALL REINFORCING BAR MARKS SHALL BE PREFIXED "R".
2. ALL PILES ARE HP 12x52 STEEL PILES.
3. FOR ABUTMENT PLAN AND ELEVATION, AND LOCATION OF SECTION H-H, SEE SHEET 20/52.
4. POROUS BACKFILL WITH FILTER FABRIC, 2 FEET THICK SHALL EXTEND TO THE BOTTOM OF THE AGGREGATE BASE, TO 1 FOOT BELOW THE EMBANKMENT SURFACE, AND LATERALLY TO THE ENDS OF THE WINGWALLS.
5. TERMINATE 6" NON-PERFORATED PIPE AS SHOWN ON STANDARD DRAWING SICD-1-96, SHEET 4 OF 7. PAYMENT FOR CRUSHED AGGREGATE SLOPE PROTECTION SHALL BE INCLUDED IN ITEM 601 - CRUSHED AGGREGATE SLOPE PROTECTION, AS PER PLAN.
6. FOR ABBREVIATIONS, SEE SHEET 5/52.
7. FOR CLEANING EXISTING CONCRETE PRIOR TO PLACEMENT OF PROPOSED CONCRETE AND FOR "BONDING GROUT" NOTE, SEE SHEET 4/52.
8. FOR ADDITIONAL FOOTING REINFORCEMENT, SEE SHEETS 20/52 AND 25/52.

DESIGN AGENCY
KCI ASSOCIATES OF OHIO, P.A.
388 S. MAIN ST., SUITE 401
AKRON, OHIO 44311

DESIGNED	DRAWN	REVIEWED	DATE
HK	WEB	FJB	6/5/09
CHECKED	REVISED	STRUCTURE FILE NUMBER	
CMK		0404209R	

REAR ABUTMENT DETAILS - RIGHT STRUCTURE

BRIDGE NO. ATB-90-1450 R
I-90 OVER NORFOLK SOUTHERN RAILROAD

ATB-90-14.25
PID No. 25199

$FILES

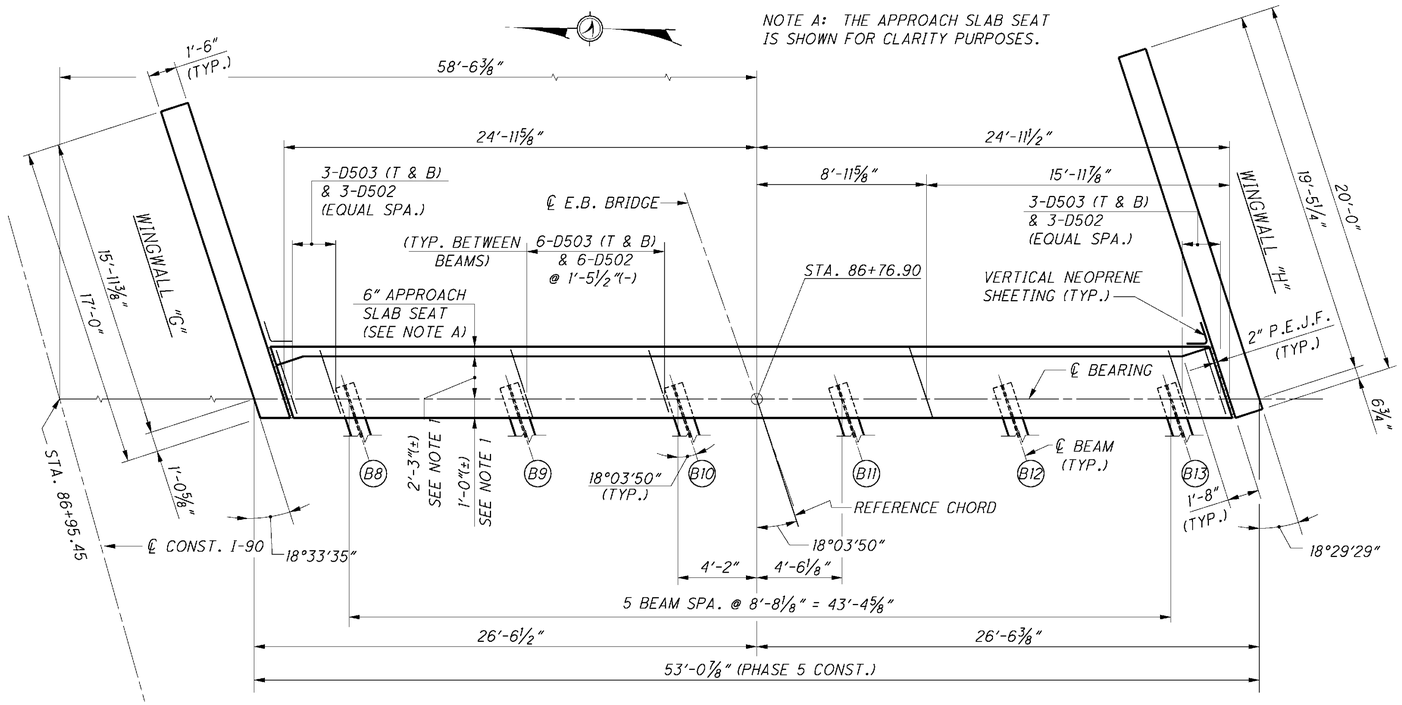

PLAN

(DECK SLAB AND APPROACH SLAB NOT SHOWN)
(FOR LONGITUDINAL REINFORCEMENT, SEE ELEVATION)

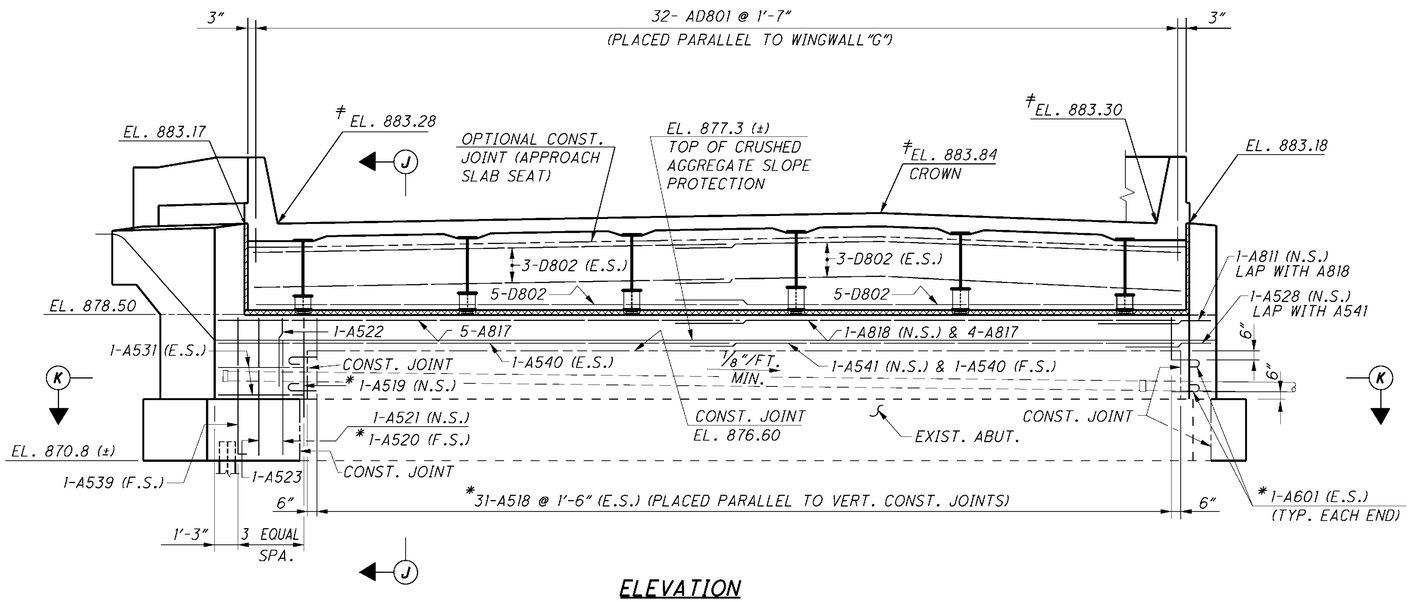

ELEVATION

LEGEND:

- (B8) BEAM DESIGNATION
- LIMITS OF P.E.J.F.
- LIMITS OF EXPANDED POLYSTYRENE FILLER OR REMOVABLE FORMS.
- ≠ ELEVATION AT ℄ BEARING.
- * DENOTES DOWEL BAR GROUTED INTO EXISTING STRUCTURE. (1'-3" FOR #5 BAR AND 1'-6" FOR #6 BAR)

MINIMUM LAP LENGTHS
NO. 5 BAR = 2'-5"
NO. 8 BAR = 4'-11"

NOTES:

1. ℄ BEARING IS NOT PARALLEL TO FRONT FACE OF ABUTMENT. SEE GEOMETRIC LAYOUT DIAGRAM, SHEET 3/52, FOR LOCATION OF ℄ BEARING.
2. ALL REINFORCING BAR MARKS SHALL BE PREFIXED "R".
3. FOR ABUTMENT REMOVAL DETAILS, SEE SHEET 10/52.
4. FOR REAR ABUTMENT FOOTING PLAN, SEE SHEET 23/52.
5. FOR SECTION J-J, SEE SHEET 24/52.
6. FOR SECTION K-K, SEE SHEET 23/52.
7. ABUTMENT DIAPHRAGM CONCRETE, STEEL SUPERSTRUCTURE: PLACE THE CONCRETE ENCASING THE STRUCTURAL STEEL MEMBERS WITH THE DECK CONCRETE OR AT LEAST 48 HOURS BEFORE PLACEMENT OF THE DECK CONCRETE.
8. FOR LIMITS OF SEALING CONCRETE SURFACES, SEE SHEET 24/52.
9. FOR WINGWALL DETAILS, SEE SHEET 26/52.
10. FOR BONDING GROUT NOTE, SEE SHEET 4/52.
11. FOR ABBREVIATIONS, SEE SHEET 5/52.

DESIGN AGENCY
KCI ASSOCIATES OF OHIO, P.A.
388 S. MAIN ST., SUITE 401
AKRON, OHIO 44311

DESIGNED	DRAWN	REVIEWED	DATE
SLH	WEB	FJB	6/5/09
CHECKED	REVISED	STRUCTURE FILE NUMBER	
HK		0404209R	

FORWARD ABUTMENT PLAN AND ELEVATION - RIGHT STRUCTURE

BRIDGE NO. ATB-90-1450 R
1-90 OVER NORFOLK SOUTHERN RAILROAD

ATB-90-14.25
PID No. 25199

$FILES

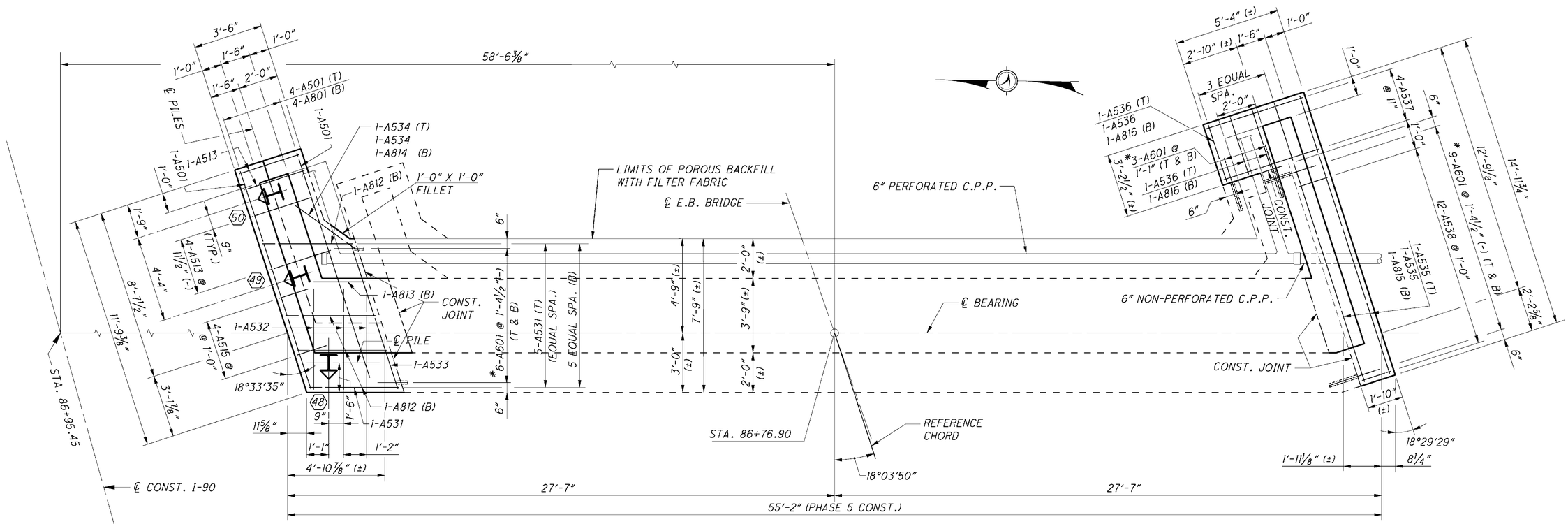

FORWARD ABUTMENT FOOTING PLAN

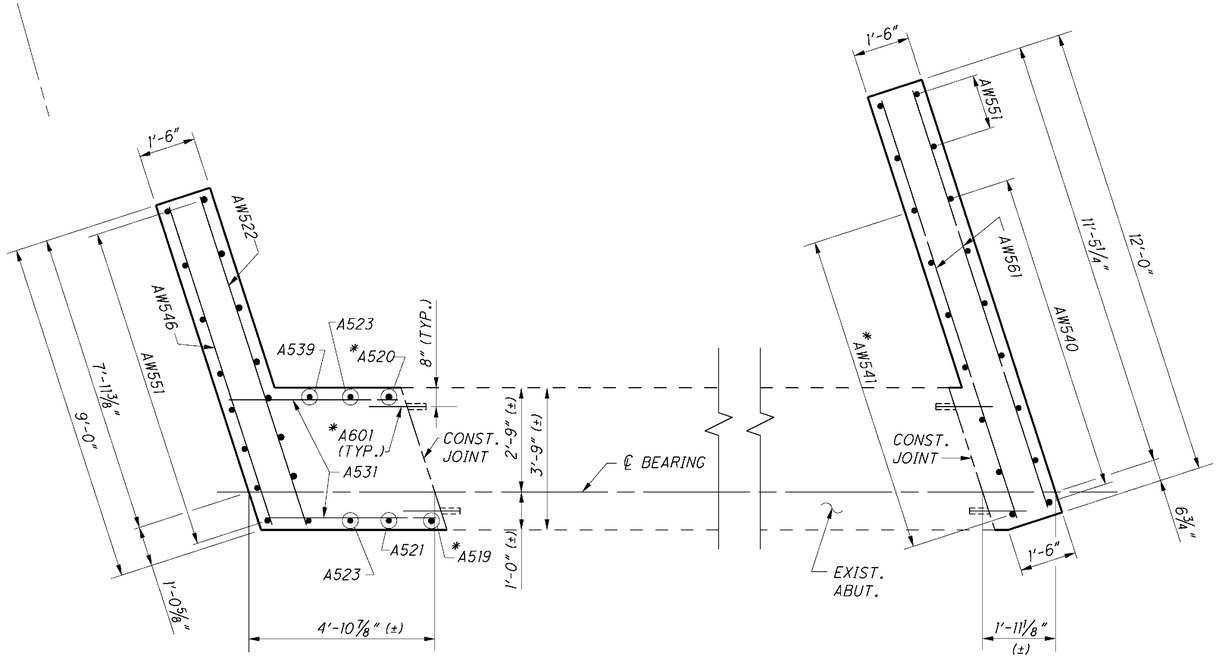

SECTION K-K

LEGEND:

- DENOTES BATTERED PILE (1:4)
- INDICATES PILE IDENTIFICATION NUMBER.
- * DENOTES DOWEL BAR GROUTED INTO EXISTING STRUCTURE. (1'-3" FOR #5 BAR AND 1'-6" FOR #6 BAR.) DOWEL BARS IN THE FOOTING SHALL BE 6" CLEAR FROM THE TOP AND BOTTOM OF EXISTING FOOTING, EXCEPT AS SHOWN IN SECTION P-P, SHEET 26/52.

NOTES:

1. ALL REINFORCING BAR MARKS SHALL BE PREFIXED "R".
2. ALL PILES ARE HP 12x52 STEEL PILES.
3. FOR ABUTMENT PLAN AND ELEVATION, AND LOCATION OF SECTION K-K, SEE SHEET 22/52.
4. POROUS BACKFILL WITH FILTER FABRIC, 2 FEET THICK SHALL EXTEND TO THE BOTTOM OF THE AGGREGATE BASE, TO 1 FOOT BELOW THE EMBANKMENT SURFACE, AND LATERALLY TO THE ENDS OF THE WINGWALLS.
5. TERMINATE 6" NON-PERFORATED PIPE AS SHOWN ON STANDARD DRAWING SICD-1-96, SHEET 4 OF 7. PAYMENT FOR CRUSHED AGGREGATE SLOPE PROTECTION SHALL BE INCLUDED IN ITEM 601 - CRUSHED AGGREGATE SLOPE PROTECTION, AS PER PLAN.
6. FOR ABBREVIATIONS, SEE SHEET 5/52.
7. FOR CLEANING EXISTING CONCRETE PRIOR TO PLACEMENT OF PROPOSED CONCRETE AND FOR "BONDING GROUT" NOTE, SEE SHEET 4/52.
8. FOR ADDITIONAL FOOTING REINFORCEMENT, SEE SHEETS 22/52 AND 26/52.

DESIGN AGENCY
KCI ASSOCIATES OF OHIO, P.A.
388 S. MAIN ST., SUITE 401
AKRON, OHIO 44311

DESIGNED	DRAWN	REVIEWED	DATE
HK	WEB	FJB	6/5/09
CHECKED	REVISED	STRUCTURE FILE NUMBER	
CMK		0404209R	

FORWARD ABUTMENT DETAILS - RIGHT STRUCTURE
BRIDGE NO. ATB-90-1450 R
I-90 OVER NORFOLK SOUTHERN RAILROAD

ATB-90-14.25
PID No. 25199

23/52

315/437

$FILE$

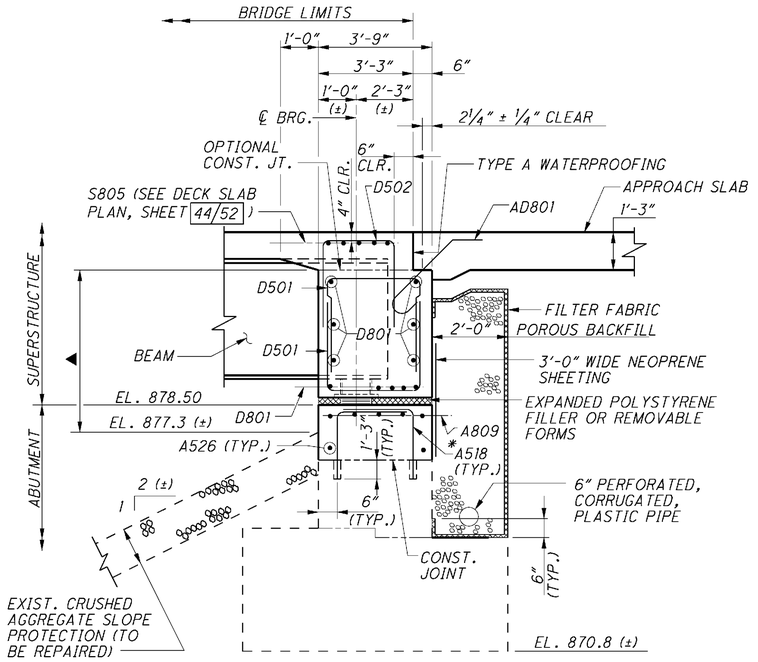

SECTION G-G

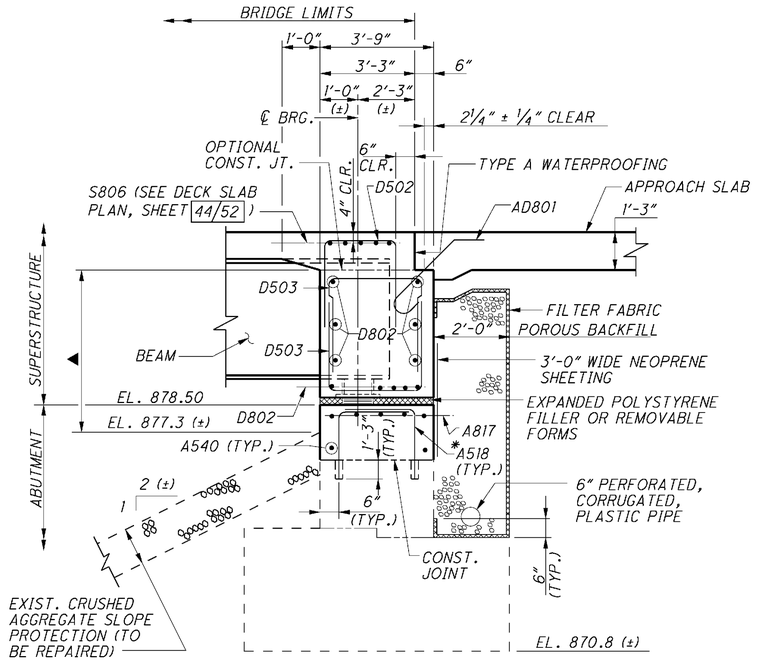

SECTION J-J

LEGEND

▲ LIMITS OF ITEM 512 - SEALING OF CONCRETE SURFACES (EPOXY-URETHANE)

* DENOTES DOWEL BAR GROUTED INTO EXISTING STRUCTURE

NOTES

1. PREFIX "R" SHALL BE ADDED TO ALL REBAR MARKS SHOWN FOR RIGHT STRUCTURE.
2. FOR REAR ABUTMENT PLAN AND ELEVATION, LOCATION OF SECTION G-G AND ADDITIONAL NOTES, SEE SHEETS 20/52 AND 21/52.
3. FOR FORWARD ABUTMENT PLAN AND ELEVATION, LOCATION OF SECTION J-J AND ADDITIONAL NOTES, SEE SHEETS 22/52 AND 23/52.
4. TYPE A WATERPROOFING SHALL BE INCLUDED WITH ITEM 526 - REINFORCED CONCRETE APPROACH SLABS (T=15") AS PER PLAN, FOR PAYMENT.
5. FOR ABBREVIATIONS, SEE SHEET 5/52.

DESIGN AGENCY
KCI ASSOCIATES OF OHIO, P.A.
388 S. MAIN ST., SUITE 401
AKRON, OHIO 44311

DESIGNED	DRAWN	REVIEWED	DATE
HK	WEB	FJB	6/5/09
CHECKED	REVISED	STRUCTURE FILE NUMBER	
CMK		0404209R	

ABUTMENT DETAILS - RIGHT STRUCTURE
BRIDGE NO. ATB-90-1450 R
I-90 OVER NORFOLK SOUTHERN RAILROAD

ATB-90-14.25
PID No. 25199

$FILES

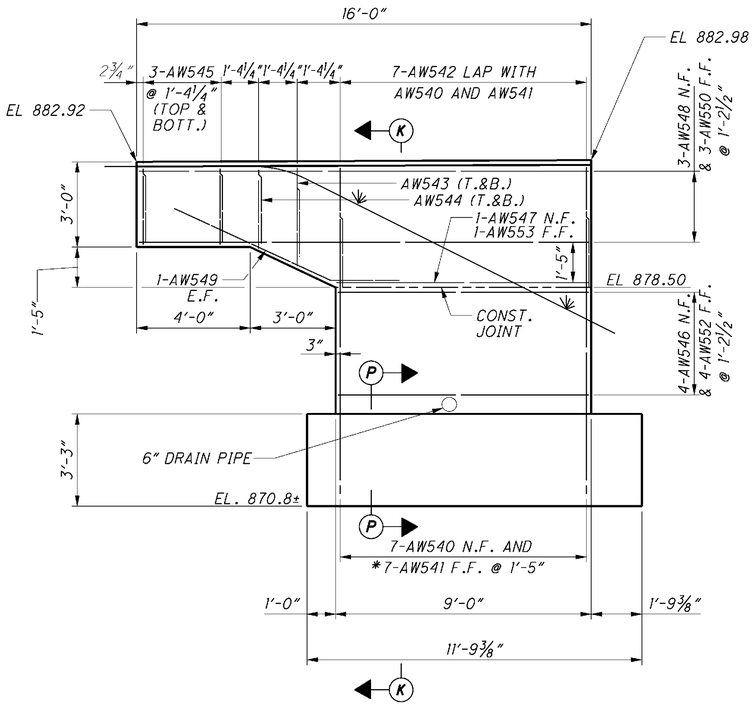

WINGWALL "E" ELEVATION

(PHASE 5 CONST.)

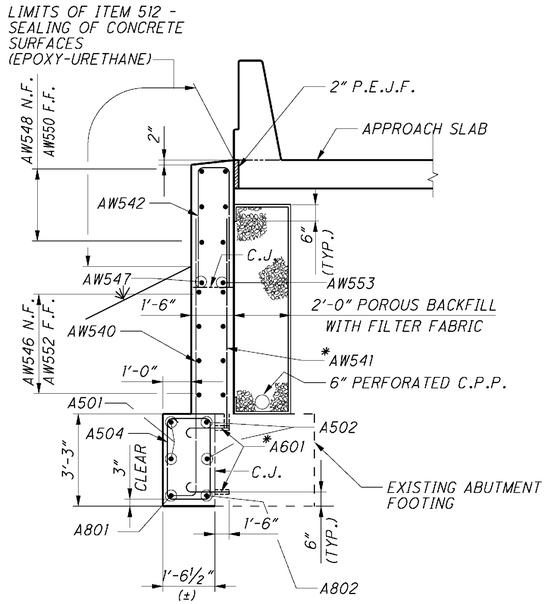

SECTION K-K

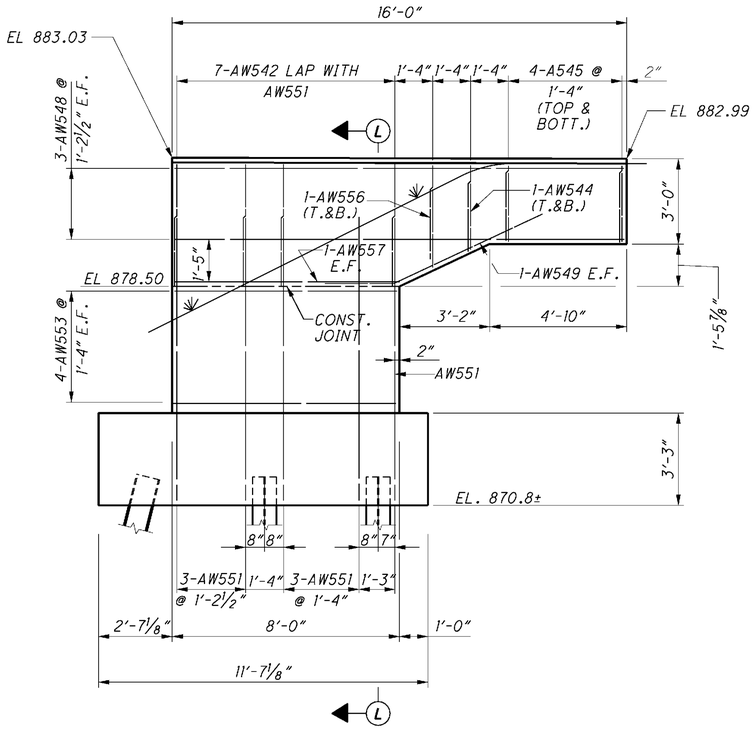

WINGWALL "F" ELEVATION

(PHASE 5 CONST.)

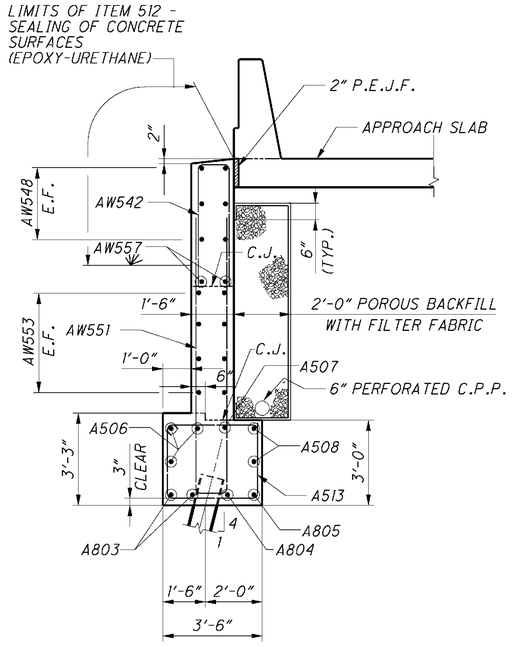

SECTION L-L

MINIMUM LAP LENGTHS
NO. 5 BAR = 2'-5"

LEGEND

* DENOTES DOWEL BAR GROUTED INTO EXISTING STRUCTURE. (1'-3" FOR #5 BAR AND 1'-6" FOR #6 BAR)

NOTES:

1. ALL REINFORCING BAR MARKS SHALL BE PREFIXED "R".
2. FOR ABUTMENT REMOVAL DETAILS, SEE SHEET 10/52.
3. FOR REAR ABUTMENT FOOTING PLAN, SEE SHEET 21/52.
4. FOR ABBREVIATIONS, SEE SHEET 5/52.
5. FOR SECTION P-P, SEE SHEET 26/52.

DESIGN AGENCY
KCI ASSOCIATES OF OHIO, P.A.
388 S. MAIN ST., SUITE 401
AKRON, OHIO 44311

DESIGNED	DRAWN	REVIEWED	DATE
HK	SAC	FJB	6/5/09
CHECKED	REVISED	STRUCTURE FILE NUMBER	
CMK		0404209R	

REAR ABUTMENT WINGWALL DETAILS - RIGHT STRUCTURE
BRIDGE NO. ATB-90-1450 R
I-90 OVER NORFOLK SOUTHERN RAILROAD

ATB-90-14.25
PID No. 25199

$FILES

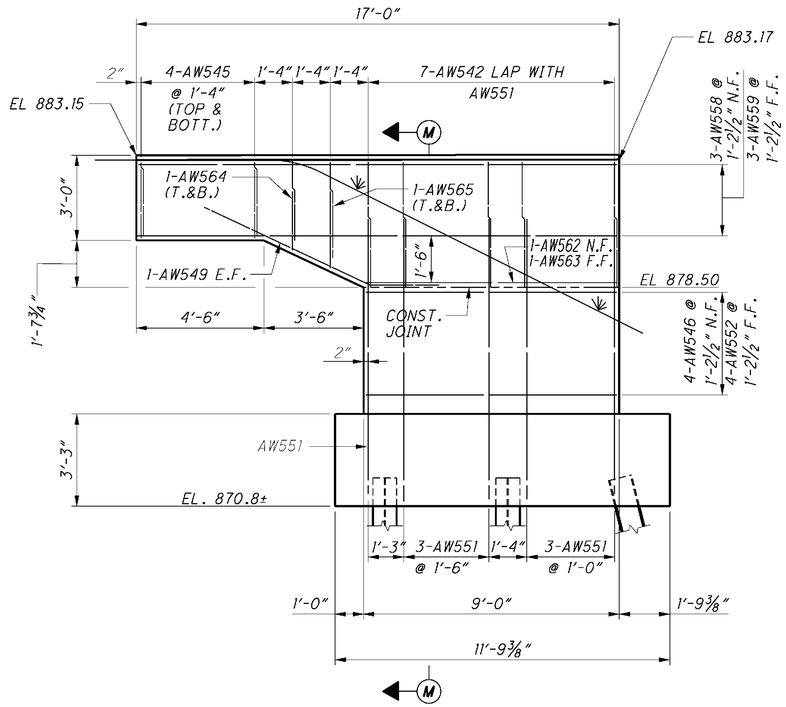

WINGWALL "G" ELEVATION

(PHASE 5 CONST.)

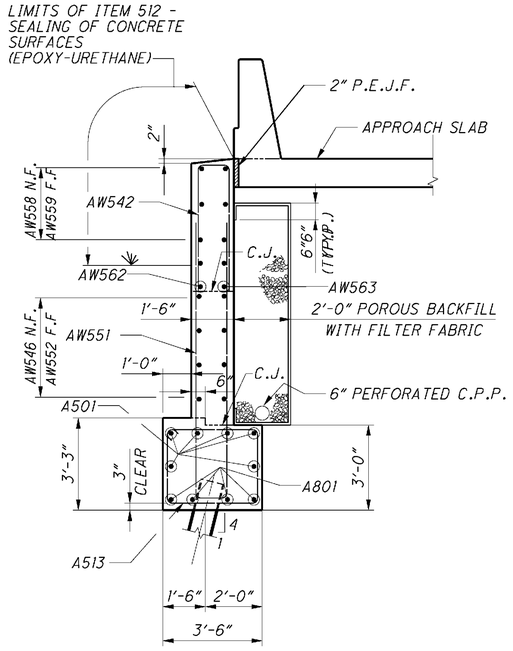

SECTION M-M

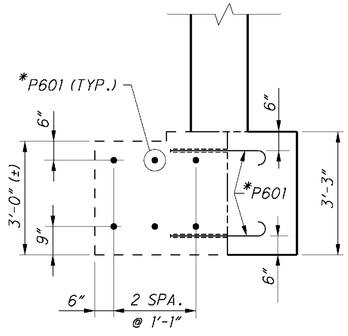

SECTION P-P

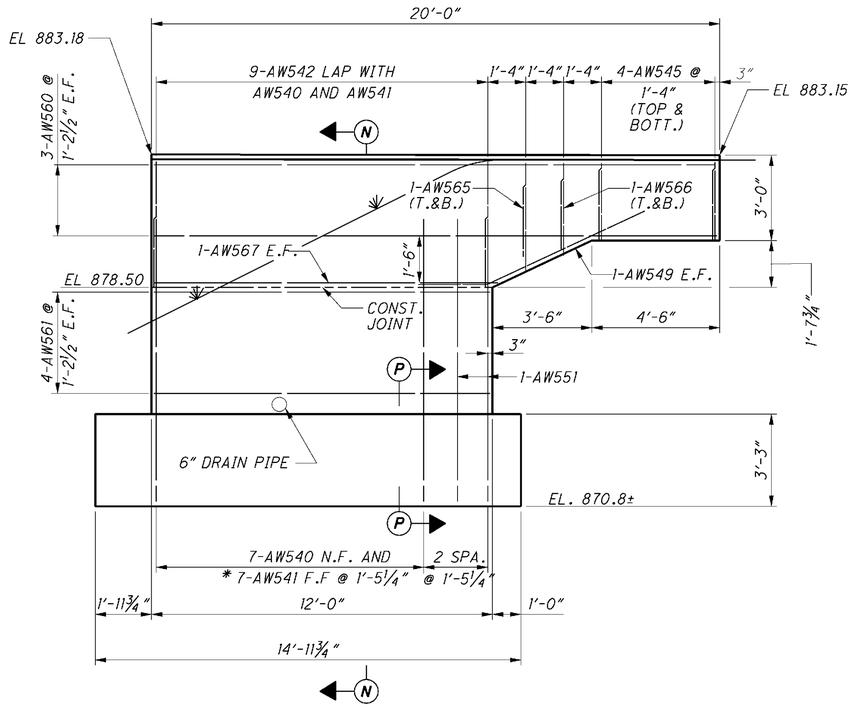

WINGWALL "H" ELEVATION

(PHASE 5 CONST.)

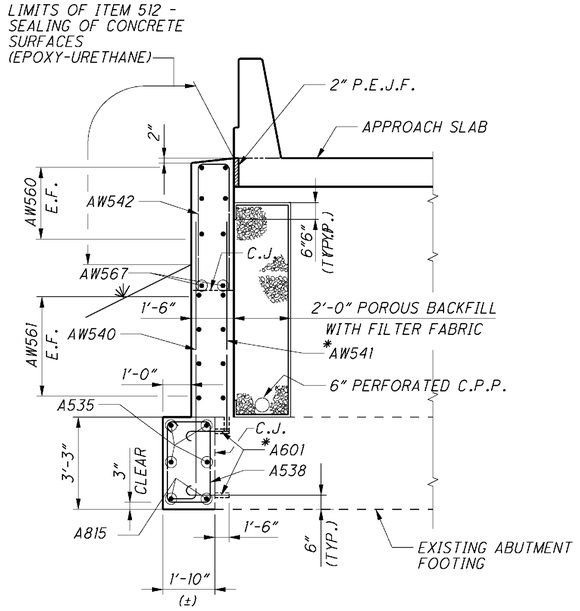

SECTION N-N

MINIMUM LAP LENGTHS
NO. 5 BAR = 2'-5"

LEGEND

* DENOTES DOWEL BAR GROUTED INTO EXISTING STRUCTURE. (1'-3" FOR #5 BAR AND 1'-6" FOR #6 BAR)

NOTES:

1. ALL REINFORCING BAR MARKS SHALL BE PREFIXED "R".
2. FOR ABUTMENT REMOVAL DETAILS, SEE SHEET 10/52.
3. FOR FORWARD ABUTMENT FOOTING PLAN, SEE SHEET 23/52.
4. FOR ABBREVIATIONS, SEE SHEET 5/52.
5. FOR ADDITIONAL LOCATIONS OF SECTION P-P, SEE SHEETS 18/52 AND 25/52.

DESIGN AGENCY
KCI ASSOCIATES OF OHIO, P.A.
388 S. MAIN ST., SUITE 401
AKRON, OHIO 44311

DESIGNED	DRAWN	REVIEWED	DATE
HK	SAC	FJB	6/5/09
CHECKED	REVISED	STRUCTURE FILE NUMBER	
CWK		0404209R	

FORWARD ABUTMENT WINGWALL DETAILS - RIGHT STRUCTURE
BRIDGE NO. ATB-90-1450 R
I-90 OVER NORFOLK SOUTHERN RAILROAD

ATB-90-14.25
PID No. 25199

$FILES

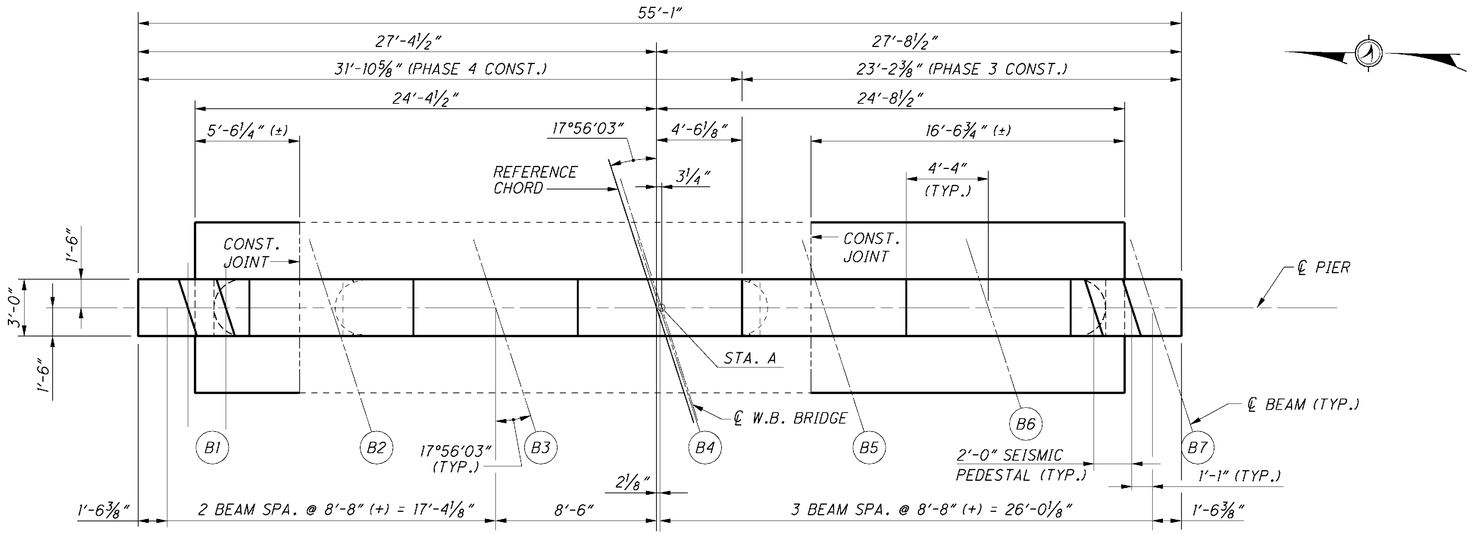

PLAN

MINIMUM LAP LENGTHS
NO. 4 BAR = 1'-11"
NO. 5 BAR = 2'-5"
NO. 11 BAR = 12'-7"

STATIONS AND ELEVATIONS

LOCATION	STA. A	EL. A	EL. B	EL. C	EL. D	EL. E	EL. F	EL. G	EL. H
PIER NO. 1	85+82.29	878.44	878.58	878.73	878.88	879.02	878.88	878.55	870.44
PIER NO. 2	86+63.55	878.43	878.58	878.74	878.89	879.04	878.90	878.58	870.43

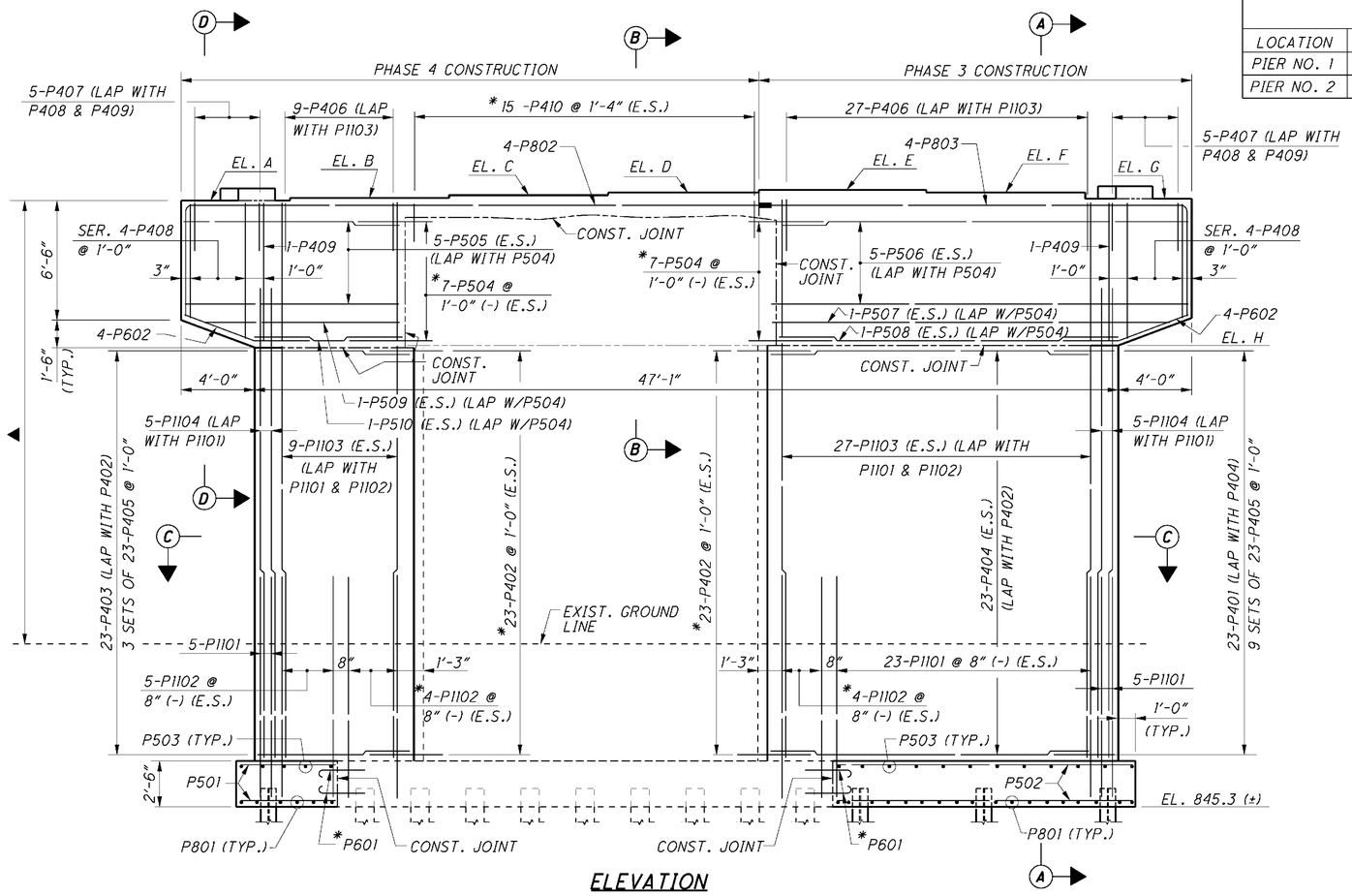

ELEVATION

LEGEND

(B1) BEAM DESIGNATION

* DENOTES DOWEL BAR GROUTED INTO EXISTING STRUCTURE AS FOLLOWS:
NO. 4 BAR = 1'-0" EXCEPT P402 BAR
P402 BAR = 1'-1"
NO. 5 BAR = 1'-3"
NO. 11 BAR = 2'-0"
DOWEL BARS SHALL BE PLACED 6" FROM THE EDGE OF THE EXISTING STRUCTURE, UNLESS NOTED OTHERWISE.

DENOTES MECHANICAL CONNECTOR.

▲ LIMITS OF ITEM 512 - SEALING CONCRETE SURFACES (EPOXY URETHANE)

NOTES

1. ALL REINFORCING BAR MARKS SHALL BE PREFIXED "L".
2. FOR GEOMETRIC LAYOUT DIAGRAM, SEE SHEET 3/52 .
3. FOR SECTION A-A THRU D-D, AND SEISMIC PEDESTAL DETAILS, SEE SHEET 29/52 .
4. ALL PILES ARE HP12x52 STEEL PILES.
5. FOR PILE LAYOUT AND FOOTING PLAN, SEE SHEET 28/52 .
6. FOR ELASTOMERIC BEARING, SEE SHEET 31/52 .
7. FOR CLEANING EXISTING CONCRETE PRIOR TO PLACEMENT OF PROPOSED CONCRETE AND FOR "BONDING GROUT" NOTE, SEE SHEET 4/52 .
8. FOR ABBREVIATIONS, SEE SHEET 5/52 .

DESIGN AGENCY
KCI ASSOCIATES OF OHIO, P.A.
388 S. MAIN ST., SUITE 401
AKRON, OHIO 44311

DESIGNED HIK | DRAWN WEB | CHECKED CMK | REVIEWED FJB | DATE 6/5/09 | REVISED | STRUCTURE FILE NUMBER 0404179L

PIER PLAN AND ELEVATIONS - LEFT STRUCTURE

BRIDGE NO. ATB-90-1450 L
I-90 OVER NORFOLK SOUTHERN RAILROAD

ATB-90-14.25
PID No. 25199

27 / 52

319 / 437

$FILES

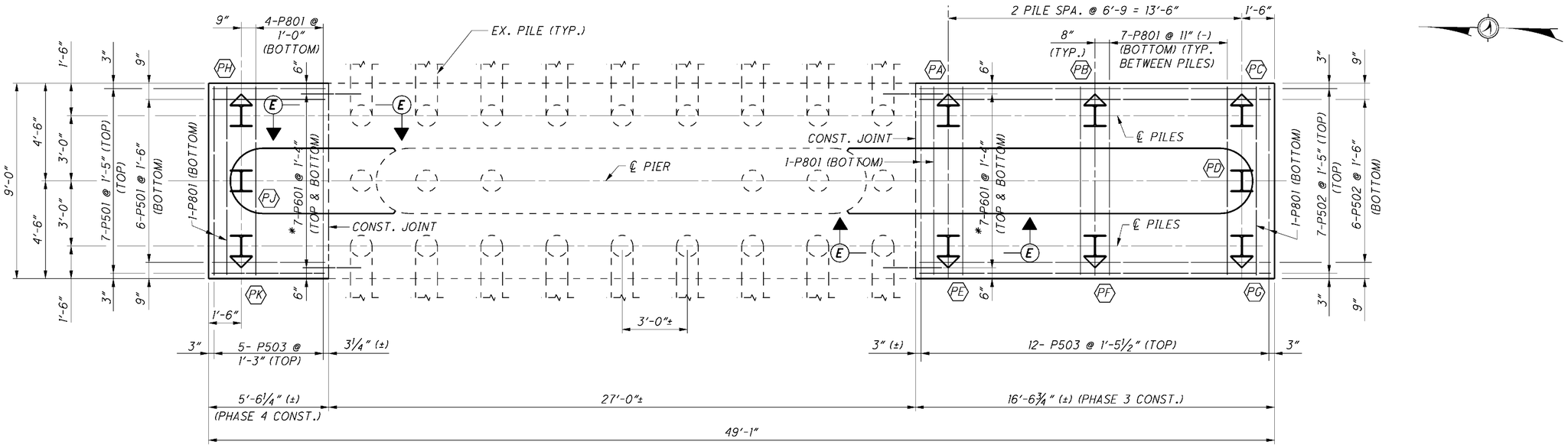

FOOTING PLAN

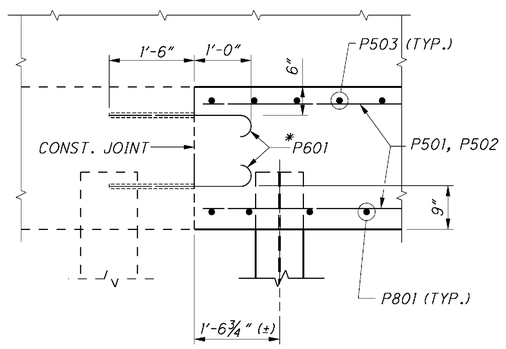

SECTION E-E

(PHASE 3 SHOWN, PHASE 4 SIMILAR)

PILE IDENTIFICATION NUMBER		
LOCATION	PIER NO. 1	PIER NO. 2
PA	7	17
PB	8	18
PC	9	19
PD	10	20
PE	11	21
PF	12	22
PG	13	23
PH	14	24
PJ	15	25
PK	16	26

LEGEND:

- DENOTES BATTERED PILE (1:4)
- INDICATES PILE IDENTIFICATION NUMBER.
- * DENOTES DOWEL BAR GROUTED INTO EXISTING STRUCTURE. (1'-6" FOR #6 BAR.)

NOTES:

1. ALL REINFORCING BAR MARKS SHALL BE PREFIXED "L".
2. ALL PILES ARE HP 12x52 STEEL PILES.
3. FOR PIER PLAN AND ELEVATION, SEE SHEET 27/52.
4. FOR ABBREVIATIONS, SEE SHEET 5/52.

$FILE$

DESIGN AGENCY
KCI ASSOCIATES OF OHIO, P.A.
388 S. MAIN ST., SUITE 401
AKRON, OHIO 44311

DESIGNED	DRAWN	REVIEWED	DATE
HK	WEB	FJB	6/5/09
CHECKED	REVISED	STRUCTURE TILE NUMBER	
CMK		0404179L	

PIER FOOTING DETAILS - LEFT STRUCTURE
BRIDGE NO. ATB-90-1450 L
I-90 OVER NORFOLK SOUTHERN RAILROAD

ATB-90-14.25
PID No. 25199

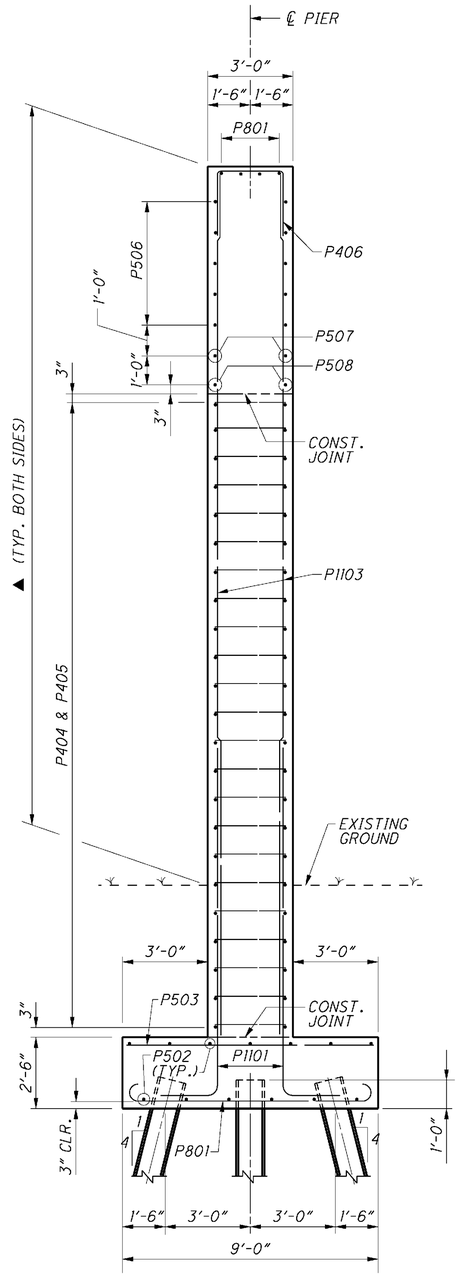

SECTION A-A

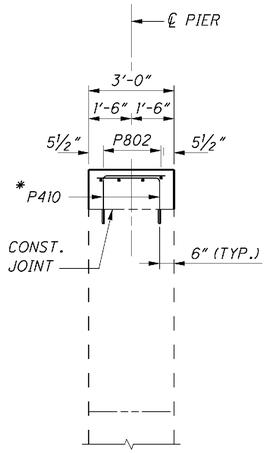

SECTION B-B

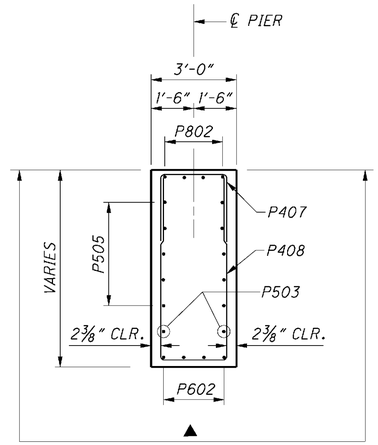

SECTION D-D

MINIMUM LAP LENGTHS
NO. 4 BAR = 1'-11"
NO. 5 BAR = 2'-5"
NO. 11 BAR = 12'-7"

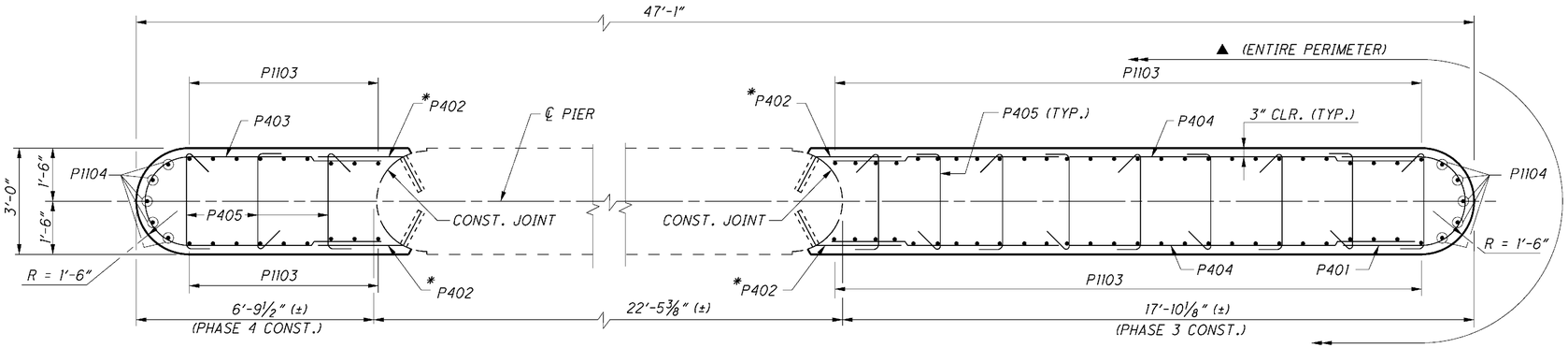

SECTION C-C

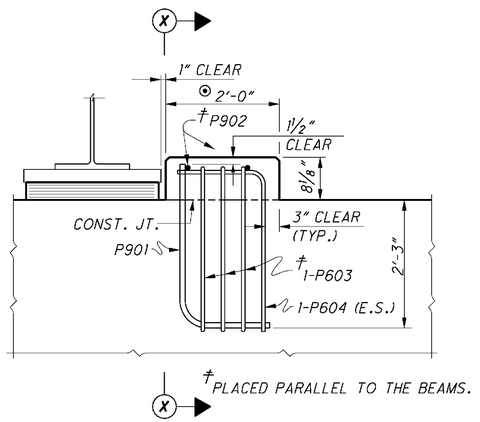

SEISMIC PEDESTAL DETAIL

(FRONT VIEW AT BEAM B1 SHOWN, FRONT VIEW AT BEAM B7 OPPOSITE HAND)

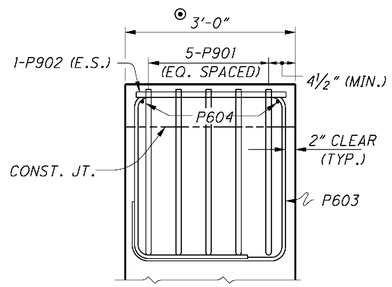

SECTION X-X

NOTES:
THE LOCATION OF THE MAIN REINFORCEMENT IN THE CAP BEAM MAY BE ADJUSTED HORIZONTALLY ±1" TO ACCOMMODATE THE P901 BARS.

⊙ - THE TOP SURFACE OF THE CAP BEAM IN THIS AREA SHALL BE FINISHED WITH A SERRATED TROWEL. THE SERRATIONS SHALL BE ¼" DEEP MINIMUM.

LEGEND

* DENOTES DOWEL BAR GROUTED INTO EXISTING STRUCTURE AS FOLLOWS:
NO. 4 BAR = 1'-0" EXCEPT P402 BAR
P402 BAR = 1'-1"

▲ LIMITS OF ITEM 512 - SEALING CONCRETE SURFACES (EPOXY URETHANE)

NOTES

(1) ALL REINFORCING BAR MARKS SHALL BE PREFIXED "L".

(2) FOR LOCATION OF SECTIONS A-A THROUGH D-D AND ADDITIONAL NOTES, SEE SHEET 27/52.

(3) FOR ABBREVIATIONS, SEE SHEET 5/52.

DESIGN AGENCY
KCI ASSOCIATES OF OHIO, P.A.
388 S. MAIN ST., SUITE 401
AKRON, OHIO 44311

DESIGNED	DRAWN	REVIEWED	DATE
HK	WEB	FJB	6/5/09
CHECKED	REVISED	STRUCTURE FILE NUMBER	
CMK		0404179L	

PIER DETAILS - LEFT STRUCTURE
BRIDGE NO. ATB-90-1450 L
I-90 OVER NORFOLK SOUTHERN RAILROAD

ATB-90-14.25
PID No. 25199

29/52

321
437

$FILES

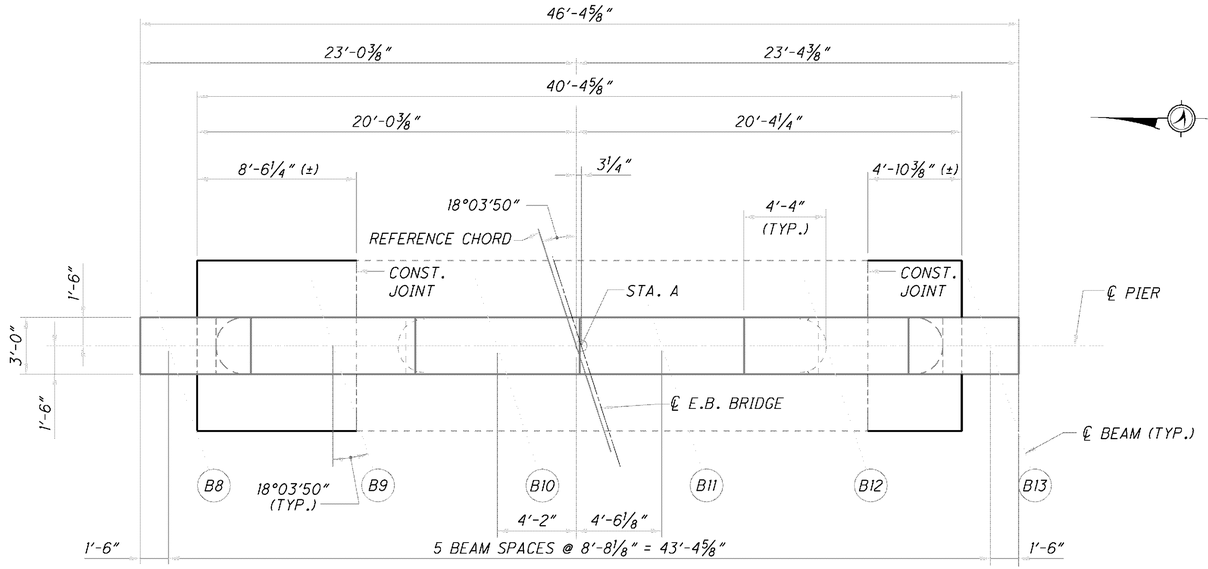

PLAN
(PHASE 5 CONSTRUCTION)

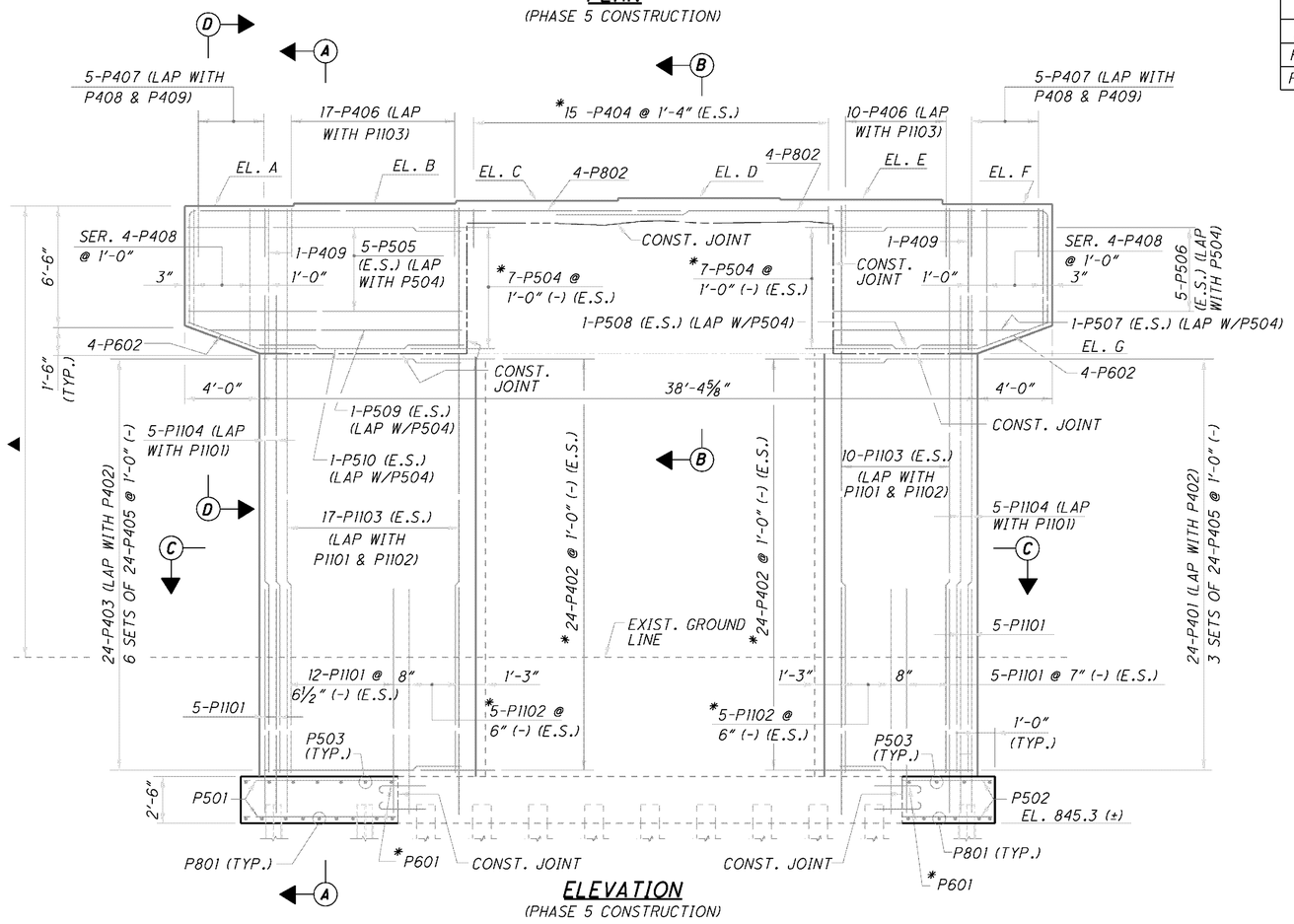

ELEVATION
(PHASE 5 CONSTRUCTION)

MINIMUM LAP LENGTHS
NO. 4 BAR = 1'-11"
NO. 5 BAR = 2'-5"
NO. 8 BAR = 6'-10"
NO. 11 BAR = 10'-3"

STATIONS AND ELEVATIONS

LOCATION	STA. A	EL. A	EL. B	EL. C	EL. D	EL. E	EL. F	EL. G
PIER NO. 1	85+48.01	878.95	879.09	879.24	879.38	879.30	878.97	870.95
PIER NO. 2	86+28.57	879.02	879.16	879.31	879.46	879.39	879.06	871.02

LEGEND

(B8) BEAM DESIGNATION

* DENOTES DOWEL BAR GROUTED INTO EXISTING STRUCTURE AS FOLLOWS:
NO. 4 BAR = 1'-0" EXCEPT P402 BAR
P402 BAR = 1'-1"
NO. 5 BAR = 1'-3"
NO. 11 BAR = 2'-0"
DOWEL BARS SHALL BE PLACED 6" FROM THE EDGE OF THE EXISTING STRUCTURE, UNLESS NOTED OTHERWISE.

▲ LIMITS OF ITEM 512 - SEALING CONCRETE SURFACES (EPOXY URETHANE)

NOTES

1. ALL REINFORCING BAR MARKS SHALL BE PREFIXED "R".
2. FOR GEOMETRIC LAYOUT DIAGRAM, SEE SHEET 3/52 .
3. FOR SECTION A-A THRU D-D, AND SEISMIC PEDESTAL DETAILS, SEE SHEET 32/52.
4. ALL PILES ARE HP12x52 STEEL PILES.
5. FOR PILE LAYOUT AND FOOTING PLAN, SEE SHEET 33/52.
6. FOR ELASTOMERIC BEARING, SEE SHEET 31/52.
7. FOR CLEANING EXISTING CONCRETE PRIOR TO PLACEMENT OF PROPOSED CONCRETE AND FOR "BONDING GROUT" NOTE, SEE SHEET 4/52 .
8. FOR ABBREVIATIONS, SEE SHEET 5/52 .

DESIGN AGENCY
KCI ASSOCIATES OF OHIO, P.A.
388 S. MAIN ST., SUITE 401
AKRON, OHIO 44311

DESIGNED CMK | DRAWN WEB | REVIEWED FJB | DATE 6/5/09
CHECKED HK | REVISED | STRUCTURE TITLE NUMBER 0404209R

PIER PLAN AND ELEVATION - RIGHT STRUCTURE
BRIDGE NO. ATB-90-1450 R
I-90 OVER NORFOLK SOUTHERN RAILROAD

ATB-90-14.25
PID No. 25199

30/52

322/437

$FILES

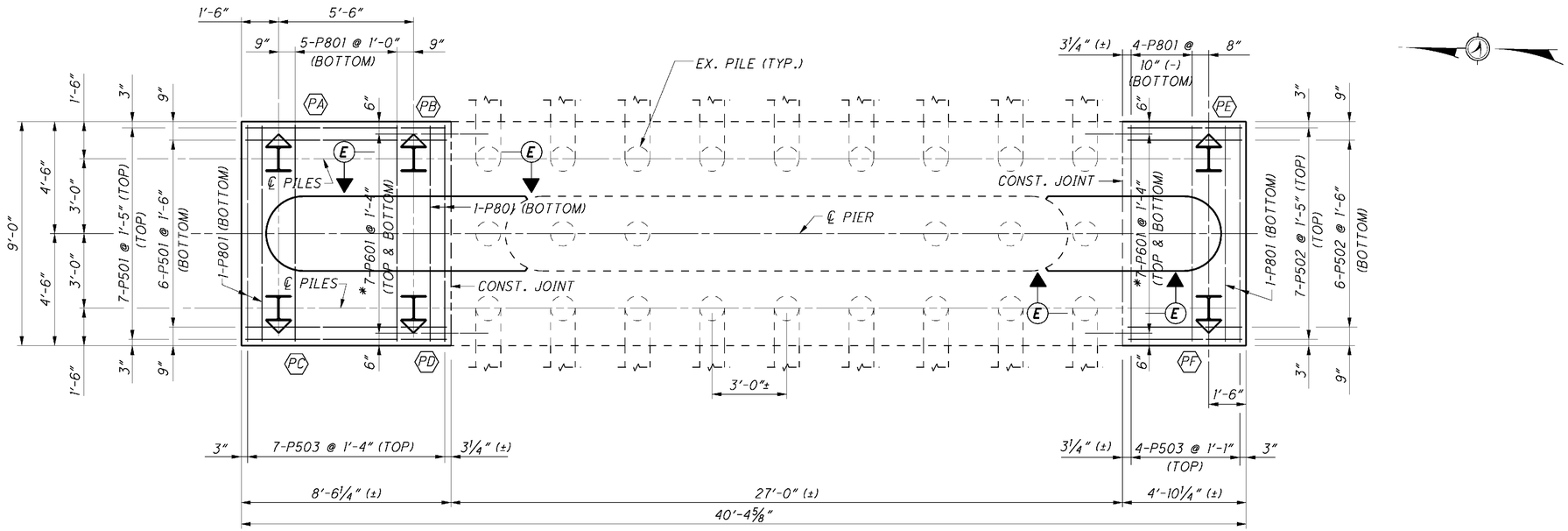

FOOTING PLAN
(PHASE 5 CONSTRUCTION)

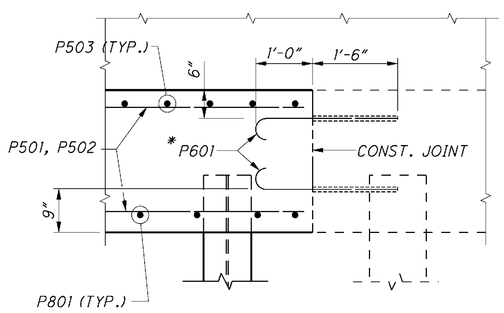

SECTION E-E
(NORTH END SHOWN, SOUTH END SIMILAR)

PILE IDENTIFICATION NUMBER		
LOCATION	PIER NO. 1	PIER NO. 2
PA	36	42
PB	37	43
PC	38	44
PD	39	45
PE	40	46
PF	41	47

LEGEND:

- DENOTES BATTERED PILE (1:4)
- INDICATES PILE IDENTIFICATION NUMBER.
- * DENOTES DOWEL BAR GROUTED INTO EXISTING STRUCTURE. (1'-6" FOR #6 BAR.)

NOTES:

1. ALL REINFORCING BAR MARKS SHALL BE PREFIXED "R".
2. ALL PILES ARE HP 12x52 STEEL PILES.
3. FOR PIER PLAN AND ELEVATION, SEE SHEET 27/52.
4. FOR ABBREVIATIONS, SEE SHEET 5/52.

DESIGN AGENCY
KCI ASSOCIATES OF OHIO, P.A.
388 S. MAIN ST., SUITE 401
AKRON, OHIO 44311

DESIGNED	DRAWN	REVIEWED	DATE
CMK	WEB	FJB	6/5/09
CHECKED	REVISED	STRUCTURE TITLE NUMBER	
HK		0404209R	

PIER FOOTING DETAILS - RIGHT STRUCTURE
BRIDGE NO. ATB-90-1450 R
I-90 OVER NORFOLK SOUTHERN RAILROAD

ATB-90-14.25
PID No. 25199

$FILE$

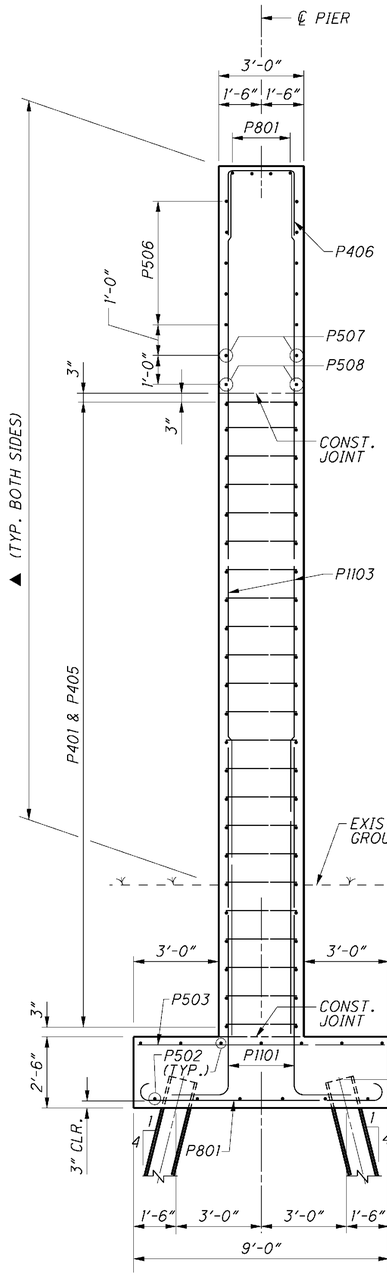

SECTION A-A

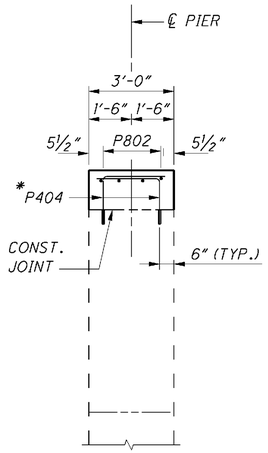

SECTION B-B

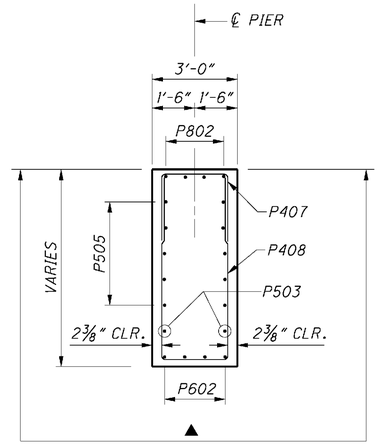

SECTION D-D

MINIMUM LAP LENGTHS
NO. 4 BAR = 1'-11"
NO. 5 BAR = 2'-5"
NO. 11 BAR = 12'-7"

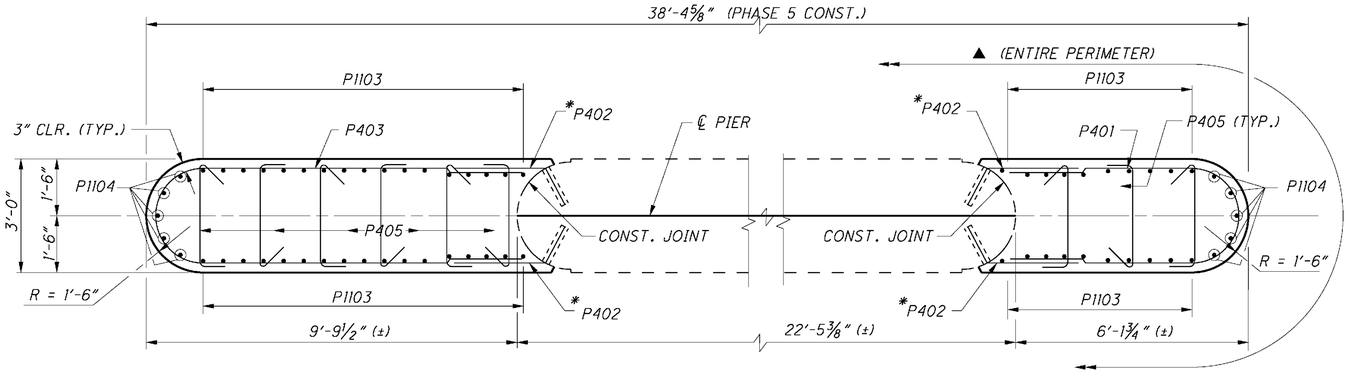

SECTION C-C

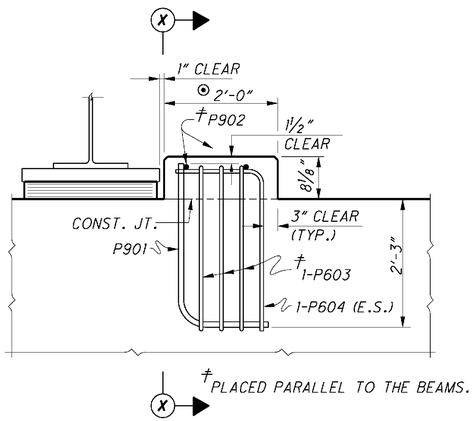

SEISMIC PEDESTAL DETAIL

(FRONT VIEW AT BEAM B8 SHOWN, FRONT VIEW AT BEAM B13 OPPOSITE HAND)

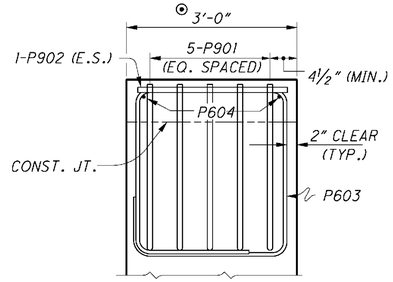

SECTION X-X

NOTES:
THE LOCATION OF THE MAIN REINFORCEMENT IN THE CAP BEAM MAY BE ADJUSTED HORIZONTALLY ±1" TO ACCOMMODATE THE P901 BARS.

⊙ - THE TOP SURFACE OF THE CAP BEAM IN THIS AREA SHALL BE FINISHED WITH A SERRATED TROWEL. THE SERRATIONS SHALL BE ¼" DEEP MINIMUM.

LEGEND

* DENOTES DOWEL BAR GROUTED INTO EXISTING STRUCTURE AS FOLLOWS:
NO. 4 BAR = 1'-0" EXCEPT P402 BAR
P402 BAR = 1'-1"

▲ LIMITS OF ITEM 512 - SEALING CONCRETE SURFACES (EPOXY URETHANE)

NOTES

1. ALL REINFORCING BAR MARKS SHALL BE PREFIXED "R".
2. FOR LOCATION OF SECTIONS A-A THROUGH D-D AND ADDITIONAL NOTES, SEE SHEET 27/52.
3. FOR ABBREVIATIONS, SEE SHEET 5/52.

DESIGN AGENCY
KCI ASSOCIATES OF OHIO, P.A.
388 S. MAIN ST., SUITE 401
AKRON, OHIO 44311

DESIGNED	DRAWN	REVIEWED	DATE
CMK	WEB	FJB	6/5/09
CHECKED	REVISED	STRUCTURE TILE NUMBER	
HK		0404209R	

PIER DETAILS - RIGHT STRUCTURE
BRIDGE NO. ATB-90-1450 R
I-90 OVER NORFOLK SOUTHERN RAILROAD

ATB-90-14.25
PID No. 25199

$FILES

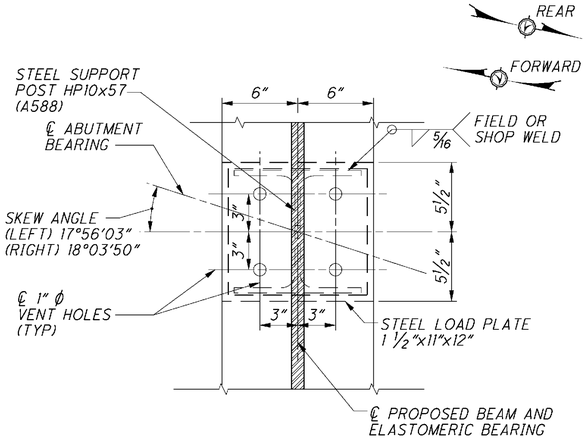

PLAN AT ABUTMENT

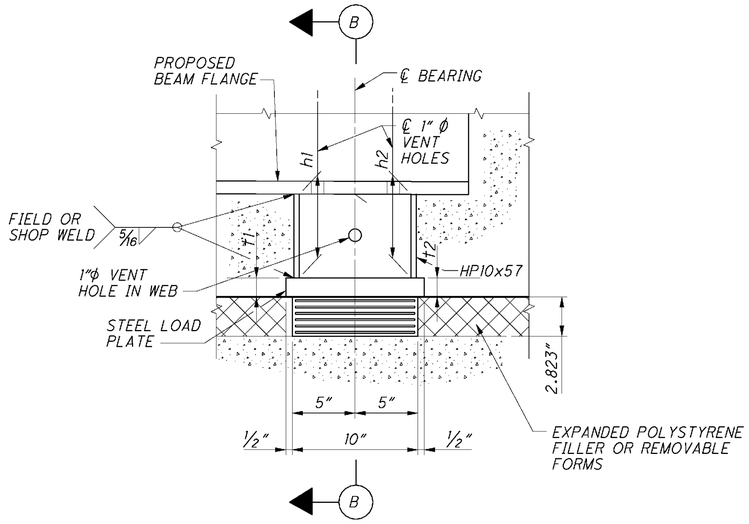

ABUTMENT BEARING ELEVATION

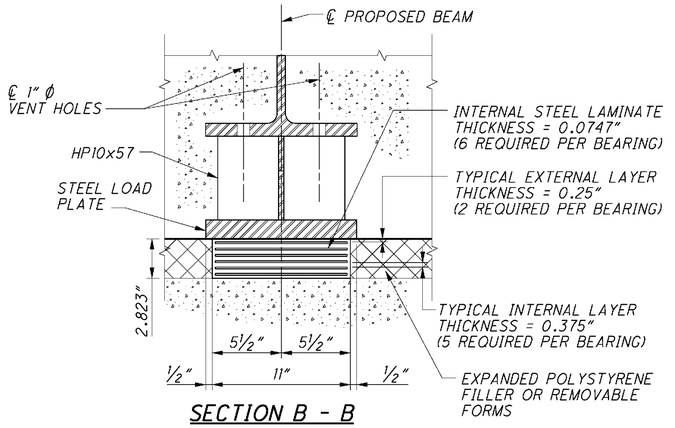

SECTION B - B

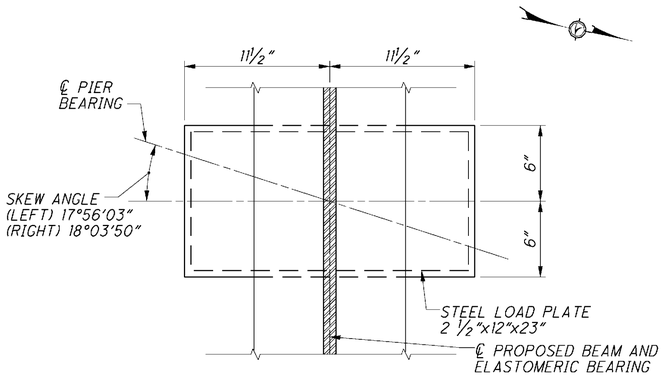

PLAN AT PIERS

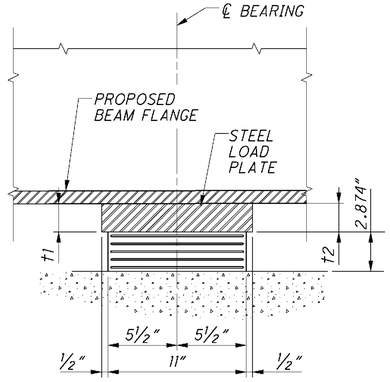

SECTION C - C

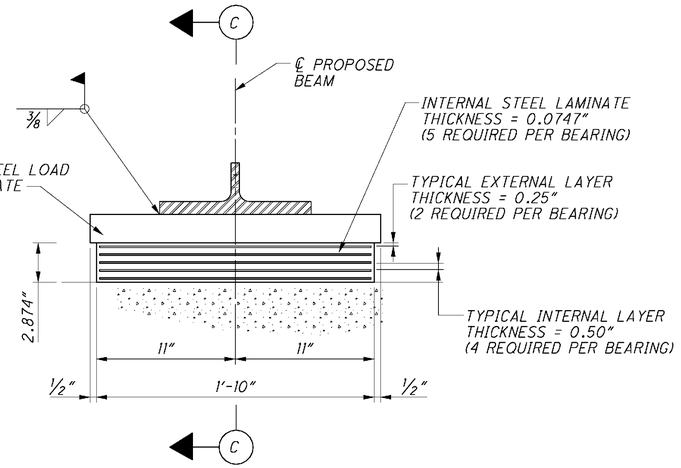

PIER BEARING ELEVATION

LEFT STRUCTURE PEDESTAL DIMENSIONS

	REAR ABUT.		FWD ABUT.	
	h1	h2	h1	h2
BEAM 1	5½"	5½"	5⅜"	5⅜"
BEAM 2	7⅛"	7⅛"	7⅛"	7⅛"
BEAM 3	8¹³⁄₁₆"	8¹³⁄₁₆"	9¹⁄₁₆"	9¹⁄₁₆"
BEAM 4	10⅝"	10⅝"	10⅞"	10⅞"
BEAM 5	12⁵⁄₁₆"	12⁵⁄₁₆"	12¹¹⁄₁₆"	12¹¹⁄₁₆"
BEAM 6	10⅜"	10⅜"	11"	11"
BEAM 7	6⁵⁄₁₆"	6⁵⁄₁₆"	7⅛"	7⅛"

RIGHT STRUCTURE PEDESTAL DIMENSIONS

	REAR ABUT.		FWD ABUT.	
	h1	h2	h1	h2
BEAM 8	5⅛"	5⅛"	6¾"	6¾"
BEAM 9	6¾"	6¾"	8¹¹⁄₁₆"	8¹¹⁄₁₆"
BEAM 10	8⅞"	8⅞"	10½"	10½"
BEAM 11	10⅛"	10⅛"	12⁵⁄₁₆"	12⁵⁄₁₆"
BEAM 12	9¹⁄₁₆"	9¹⁄₁₆"	11⁵⁄₁₆"	11⁵⁄₁₆"
BEAM 13	5"	5"	7⅜"	7⅜"

LEFT STRUCTURE

LOCATION	TYPE	NO.	DEAD LOAD	LIVE LOAD WITHOUT IMPACT	MAXIMUM DESIGN LOAD	LOAD PLATE t1	LOAD PLATE t2
REAR ABUTMENT	EXP.	7	39.3	58.0	97.3	1½"	1½"
PIER 1	EXP.	7	131.0	71.8	202.8	2½"	2½"
PIER 2	EXP.	7	131.2	71.8	203.0	2½"	2½"
FORWARD ABUTMENT	EXP.	7	39.5	58.0	97.5	1½"	1½"

RIGHT STRUCTURE

LOCATION	TYPE	NO.	DEAD LOAD	LIVE LOAD WITHOUT IMPACT	MAXIMUM DESIGN LOAD	LOAD PLATE t1	LOAD PLATE t2
REAR ABUTMENT	EXP.	6	39.3	58.0	97.3	1½"	1½"
PIER 1	EXP.	6	130.5	71.8	202.3	2½"	2½"
PIER 2	EXP.	6	130.5	71.8	202.3	2½"	2½"
FORWARD ABUTMENT	EXP.	6	39.3	58.0	97.3	1½"	1½"

NOTES:

1. DESIGN LOADING: SERVICE LOAD REACTIONS - KIPS
2. ELASTOMERIC BEARINGS: THE ELASTOMER SHALL HAVE A HARDNESS OF 60 DUROMETER. THE BEARINGS WERE DESIGNED UNDER DIVISION I, SECTION 14.6.6 (METHOD A) OF THE AASHTO STANDARD SPECIFICATIONS FOR HIGHWAY BRIDGES.
3. LOAD PLATE: THE STEEL LOAD PLATE (ASTM A709, GRADE 50W) SHALL BE BONDED BY VULCANIZATION TO ELASTOMER DURING THE MOLDING PROCESS. WELDING OF THE SOLE PLATE TO THE STEEL SUPPORT POST OR SUPERSTRUCTURE SHALL BE CONTROLLED SO THAT THE PLATE TEMPERATURE AT THE ELASTOMER BONDED SURFACE SHALL NOT EXCEED 300° F AS DETERMINED BY THE USE OF PYROMETRIC STICKS OR OTHER TEMPERATURE MONITORING DEVICES.
4. BASIS OF PAYMENT: THE UNIT PRICE BID SHALL INCLUDE ALL MATERIALS, LABOR , STEEL SUPPORT POST AND INCIDENTALS NECESSARY TO FURNISH AND INSTALL LAMINATED ELASTOMERIC BEARINGS. PAYMENT WILL BE MADE AT THE CONTRACT PRICE FOR THE APPROPIATE ITEM 516, ELASTOMERIC BEARING WITH INTERNAL LAMINATES AND LOAD PLATE (NEOPRENE), AS PER PLAN.
5. FOR ABBREVATION SEE SHEET 5/52 .
6. BEARING REPOSITIONING: IF THE STEEL IS ERECTED AT AN AMBIENT TEMPERATURE HIGHER THAN 80°F OR LOWER THAN 40°F AND THE BEARING SHEAR DEFLECTION EXCEEDS 1/6 OF THE BEARING HEIGHT AT 60°F(+/-) 10°F, RAISE THE BEAMS OR GIRDERS TO ALLOW THE BEARINGS TO RETURN TO THEIR UNDEFORMED SHAPE AT 60°F(+/-) 10°F.

DESIGN AGENCY
KCI ASSOCIATES OF OHIO, P.A.
388 S. MAIN ST., SUITE 401
AKRON, OHIO 44311

DESIGNED SLH | DRAWN JLS | REVIEWED FJB | DATE 6/5/09
CHECKED RKP | REVISED | STRUCTURE FILE NUMBER 0404179L/0404209R

LAMINATED ELASTOMERIC BEARING DETAILS
BRIDGE NO. ATB-90-1450 L & R
I-90 OVER NORFOLK SOUTHERN RAILROAD

ATB-90-14.25
PID No. 25199

$FILES

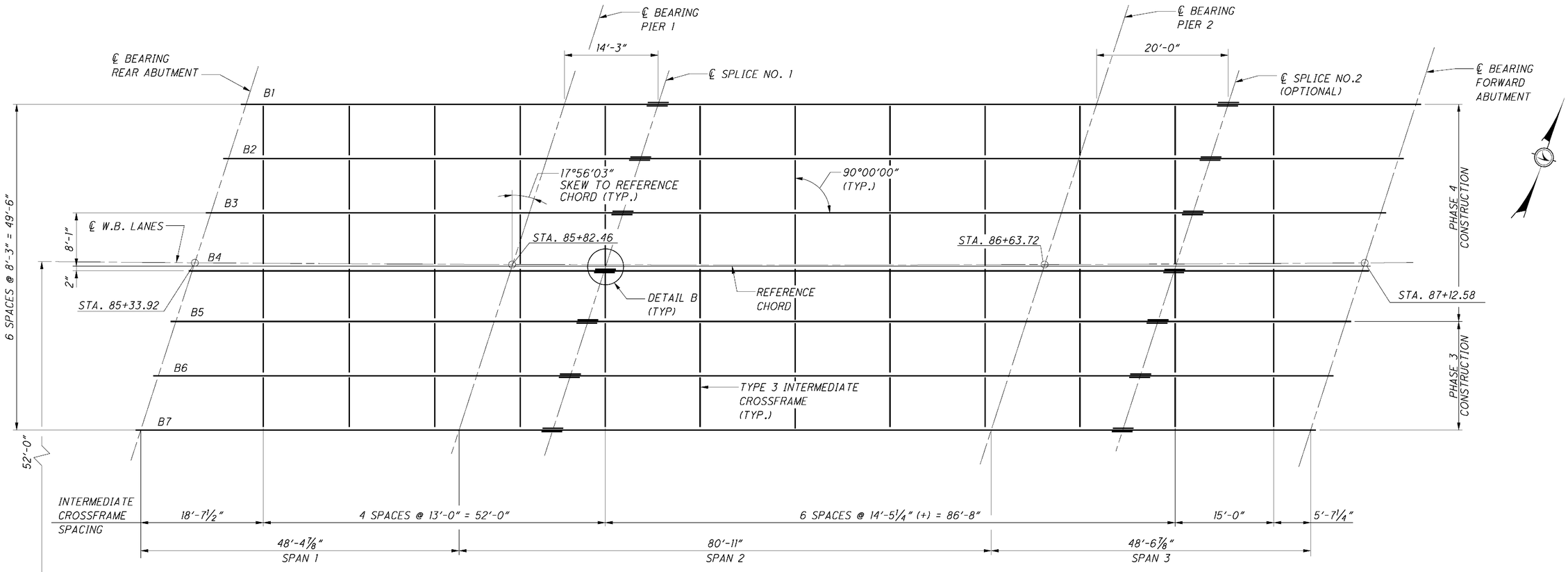

FRAMING PLAN

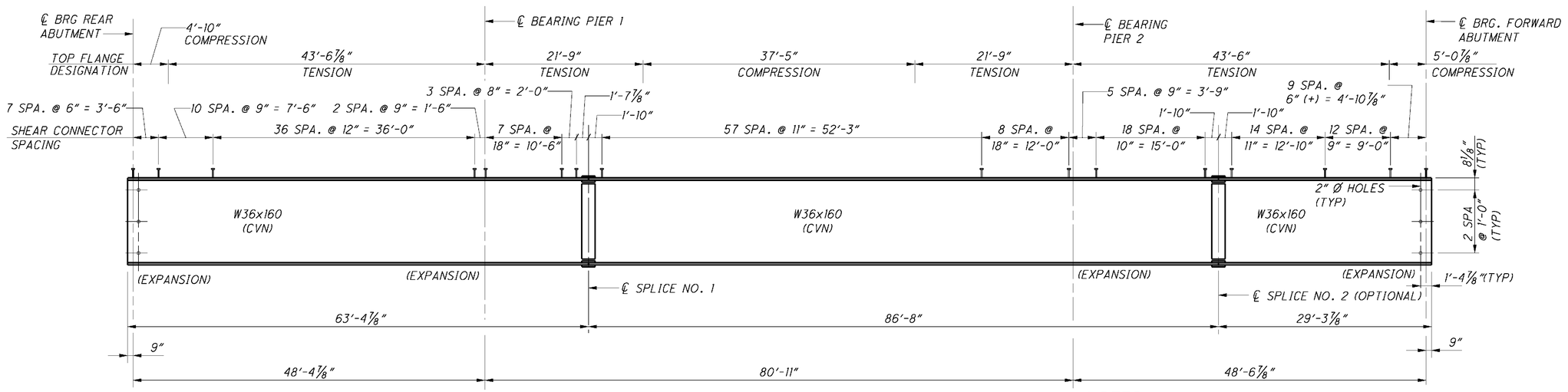

BEAM ELEVATION

NOTES:

1. FOR NOTES, DETAIL B AND SPLICE DETAIL, SEE SHEET 36/52 .
2. INTERMEDIATE CROSSFRAMES BETWEEN BEAMS 4 AND 5 SHALL NOT BE ERECTED UNTIL JUST BEFORE THE DECK SLAB CLOSURE POUR.

DESIGN AGENCY
KCI ASSOCIATES OF OHIO, P.A.
388 S. MAIN ST., SUITE 401
AKRON, OHIO 44311

DESIGNED	DRAWN	REVIEWED	DATE
RKP	JLS	FJB	6/5/09
CHECKED	REVISED	STRUCTURE FILE NUMBER	
SLH		0404179L	

FRAMING PLAN - LEFT STRUCTURE
BRIDGE NO. ATB-90-1450 L
I-90 OVER NORFOLK SOUTHERN RAILROAD

ATB-90-14.25
PID No. 25199

$FILE$

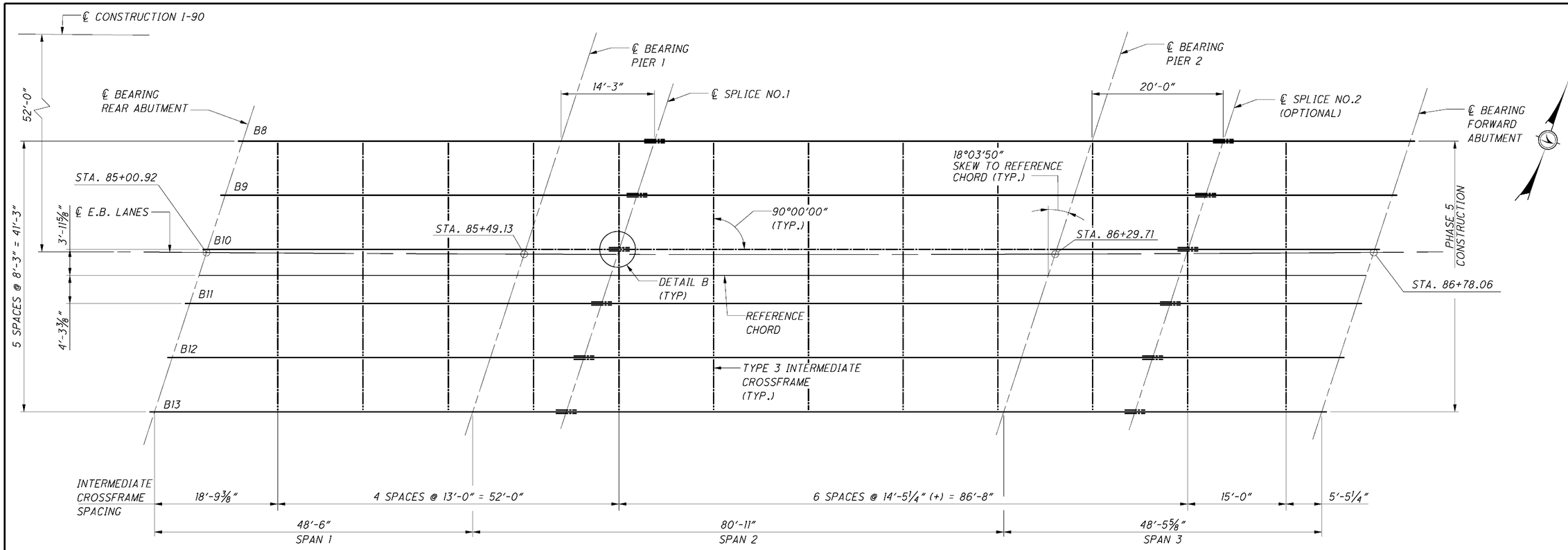

FRAMING PLAN

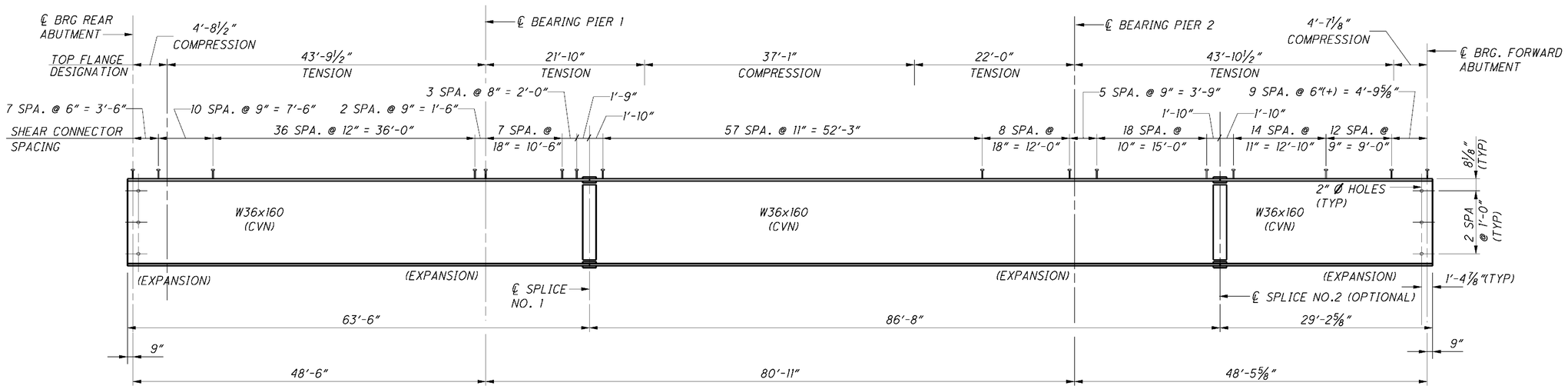

BEAM ELEVATION

NOTES:

(1) FOR NOTES, DETAIL B AND SPLICE DETAIL, SEE SHEET 36/52.

$FILES

DESIGN AGENCY
KCI ASSOCIATES OF OHIO, P.A.
388 S. MAIN ST., SUITE 401
AKRON, OHIO 44311

DESIGNED RKP | DRAWN JLS | CHECKED SLH | REVIEWED FJB | DATE 6/5/09 | REVISED | STRUCTURE FILE NUMBER 0404209R

FRAMING PLAN - RIGHT STRUCTURE
BRIDGE NO. ATB-90-1450 R
I-90 OVER NORFOLK SOUTHERN RAILROAD

ATB-90-14.25
PID No. 25199

35/52

327/437

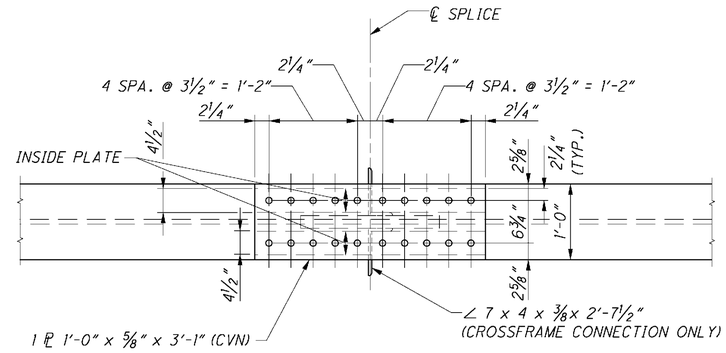

VIEW D-D

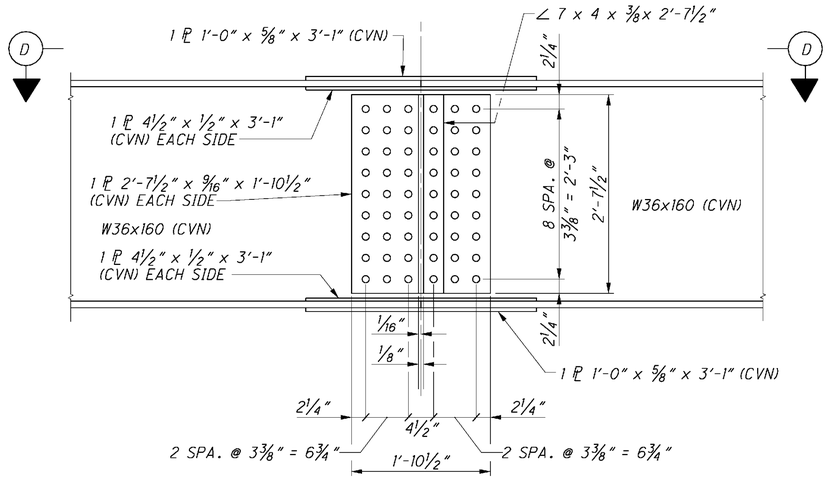

BEAM SPLICE DETAIL

BEAMS B1-B7 (LEFT STRUCTURE)
BEAMS B8-B13 (RIGHT STRUCTURE)

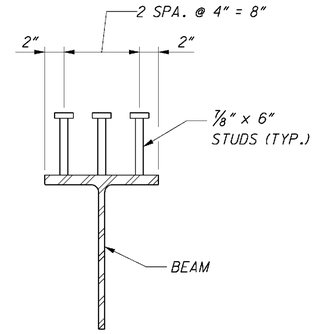

STUD SHEAR CONNECTOR DETAIL

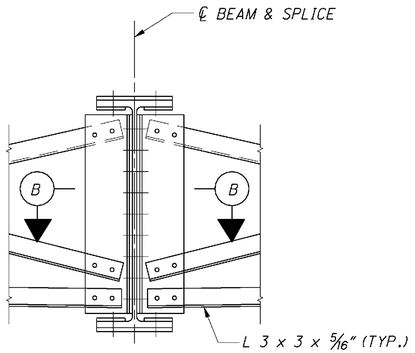

DETAIL B

(CONNECTION ANGLES AT SPLICE)
SEE NOTE (10)

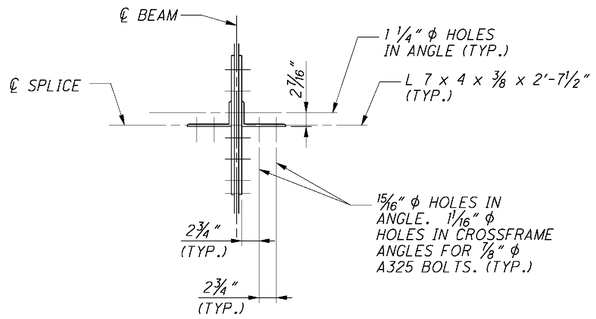

SECTION B - B

NOTES:

1. HIGH STRENGTH BOLTS SHALL BE 1⅛" ϕ A 325 TYPE 3 UNLESS OTHERWISE NOTED.
2. ALL STRUCTURAL STEEL SHALL BE ASTM A709 GRADE 50W.
3. WELD ATTACHMENT OF SUPPORTS FOR CONCRETE DECK FINISHING MACHINE TO AREAS OF THE FASCIA STRINGER FLANGES DESIGNATED "COMPRESSION". DO NOT WELD ATTACHMENTS TO AREAS DESIGNATED "TENSION". FILLET WELDS TO COMPRESSION FLANGES SHALL BE AT LEAST 1" FROM EDGE OF FLANGE, BE NO MORE THAN 2" LONG, AND BE AT LEAST ¼" FOR THICKNESSES UP TO ¾" OR 5/16" FOR GREATER THAN ¾" THICK.
4. CVN: WHERE A SHAPE OR PLATE IS DESIGNATED (CVN), FURNISH MATERIAL THAT MEETS THE MINIMUM NOTCH TOUGHNESS REQUIREMENTS AS SPECIFIED IN 711.01.
5. FOR TRANSVERSE SECTION, SEE SHEET 41/52 AND 43/52 .
6. FOR ELASTOMERIC BEARING DETAILS, SEE SHEET 33/52 .
7. FOR LOCATION OF BEAM SPLICE AND FRAMING PLANS, SEE SHEET 34/52 AND 35/52.
8. FOR ABBREVIATIONS, SEE SHEET 5/52 .
9. PAYMENT FOR DRILLING 2" Ø HOLES IN BEAM WEBS SHALL BE INCLUDED IN ITEM 513 - STRUCTURAL STEEL MEMBERS, LEVEL 3, AS PER PLAN
10. FOR CROSSFRAME DETAILS NOT SHOWN SEE STD DRAWING GSD-1-96.

DESIGN AGENCY
KCI ASSOCIATES OF OHIO, P.A.
388 S. MAIN ST., SUITE 401
AKRON, OHIO 44311

DESIGNED	DRAWN	REVIEWED	DATE
RKP	JLS	FJB	6/5/09
CHECKED	REVISED	STRUCTURE FILE NUMBER	
SLH		0404179L/0404209R	

SUPERSTRUCTURE DETAILS
BRIDGE NO. ATB-90-1450 L & R
I-90 OVER NORFOLK SOUTHERN RAILROAD

ATB-90-14.25
PID No. 25199

$FILES

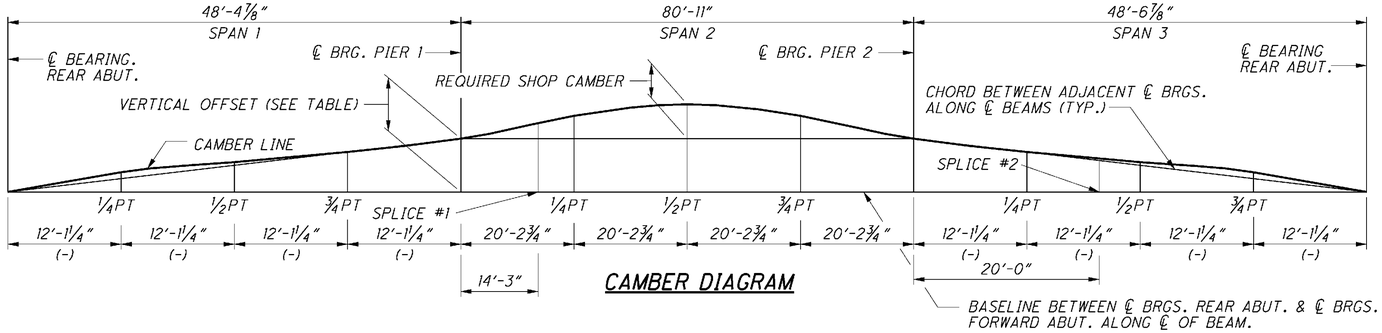

CAMBER DIAGRAM

VERTICAL OFFSETS AT PIERS		
BEAM NO.	PIER 1	PIER 2
1	⅞"	⅞"
2	⅞"	⅞"
3	⅞"	⅞"
4	⅞"	⅞"
5	⅞"	⅞"
6	1 1/16"	1 1/16"
7	1"	1 1/16"

DEFLECTION AND CAMBER TABLE

BEAM B1	SPAN 1					SPAN 2					SPAN 3					
	R.A.	¼PT	½PT	¾PT	PIER 1	SPLICE #1	¼PT	½PT	¾PT	PIER 2	¼PT	SPLICE #2	½PT	¾PT	F.A.	
DEFLECTION DUE TO WEIGHT OF STEEL	0	0	0	0	0	1/16"	1/8"	3/16"	1/8"	0	0	0	0	0	0	
DEFLECTION DUE TO REMAINING DEAD LOAD	0	1/16"	0	-1/16"	0	7/16"	5/8"	1	5/8"	0	-1/16"	0	0	1/16"	0	
VERTICAL CURVE CORRECTION	0	1/16"	1/16"	1/16"	0	1/8"	3/16"	1/4"	3/16"	0	1/16"	1/16"	1/16"	1/16"	0	
HORIZONTAL CURVE CORRECTION	0	0	0	0	0	0	0	0	0	0	0	0	0	0	0	
REQUIRED SHOP CAMBER	0	1/8"	1/16"	0	0	5/8"	15/16"	1 7/16"	15/16"	0	0	1/16"	1/16"	1/8"	0	
BEAM B2, B3, B4 AND B5	**SPAN 1**					**SPAN 2**					**SPAN 3**					
	R.A.	¼PT	½PT	¾PT	PIER 1	SPLICE #1	¼PT	½PT	¾PT	PIER 2	¼PT	SPLICE #2	½PT	¾PT	F.A.	
DEFLECTION DUE TO WEIGHT OF STEEL	0	0	0	0	0	1/16"	1/8"	3/16"	1/8"	0	0	0	0	0	0	
DEFLECTION DUE TO REMAINING DEAD LOAD	0	1/16"	0	-1/16"	0	7/16"	1 1/16"	1 1/16"	1 1/16"	0	-1/16"	0	0	1/16"	0	
VERTICAL CURVE CORRECTION	0	1/16"	1/16"	1/16"	0	1/8"	3/16"	1/4"	3/16"	0	1/16"	1/16"	1/16"	1/16"	0	
HORIZONTAL CURVE CORRECTION	0	0	0	0	0	0	0	0	0	0	0	0	0	0	0	
REQUIRED SHOP CAMBER	0	1/8"	1/16"	0	0	5/8"	1"	1 1/2"	1"	0	0	1/16"	1/16"	1/8"	0	
BEAM B6	**SPAN 1**					**SPAN 2**					**SPAN 3**					
	R.A.	¼PT	½PT	¾PT	PIER 1	SPLICE #1	¼PT	½PT	¾PT	PIER 2	¼PT	SPLICE #2	½PT	¾PT	F.A.	
DEFLECTION DUE TO WEIGHT OF STEEL	0	0	0	0	0	1/16"	1/8"	3/16"	1/8"	0	0	0	0	0	0	
DEFLECTION DUE TO REMAINING DEAD LOAD	0	1/16"	0	-1/16"	0	7/16"	1 1/16"	1 1/16"	1 1/16"	0	-1/16"	0	0	1/16"	0	
VERTICAL CURVE CORRECTION	0	1/16"	1/8"	1/16"	0	3/16"	3/16"	1/4"	3/16"	0	1/16"	1/8"	1/8"	1/16"	0	
HORIZONTAL CURVE CORRECTION	0	0	0	0	0	0	0	0	0	0	0	0	0	0	0	
REQUIRED SHOP CAMBER	0	1/8"	1/8"	0	0	1 1/16"	1"	1 1/2"	1"	0	0	1/8"	1/8"	1/8"	0	
BEAM B7	**SPAN 1**					**SPAN 2**					**SPAN 3**					
	R.A.	¼PT	½PT	¾PT	PIER 1	SPLICE #1	¼PT	½PT	¾PT	PIER 2	¼PT	SPLICE #2	½PT	¾PT	F.A.	
DEFLECTION DUE TO WEIGHT OF STEEL	0	0	0	0	0	1/16"	1/8"	3/16"	1/8"	0	0	0	0	0	0	
DEFLECTION DUE TO REMAINING DEAD LOAD	0	1/16"	0	-1/16"	0	7/16"	5/8"	1	5/8"	0	-1/16"	0	0	1/16"	0	
VERTICAL CURVE CORRECTION	0	1/16"	1/16"	1/16"	0	1/8"	3/16"	1/4"	3/16"	0	1/16"	1/8"	1/8"	1/16"	0	
HORIZONTAL CURVE CORRECTION	0	0	0	0	0	0	0	0	0	0	0	0	0	0	0	
REQUIRED SHOP CAMBER	0	1/8"	1/16"	0	0	5/8"	15/16"	1 7/16"	15/16"	0	0	1/8"	1/8"	1/8"	0	

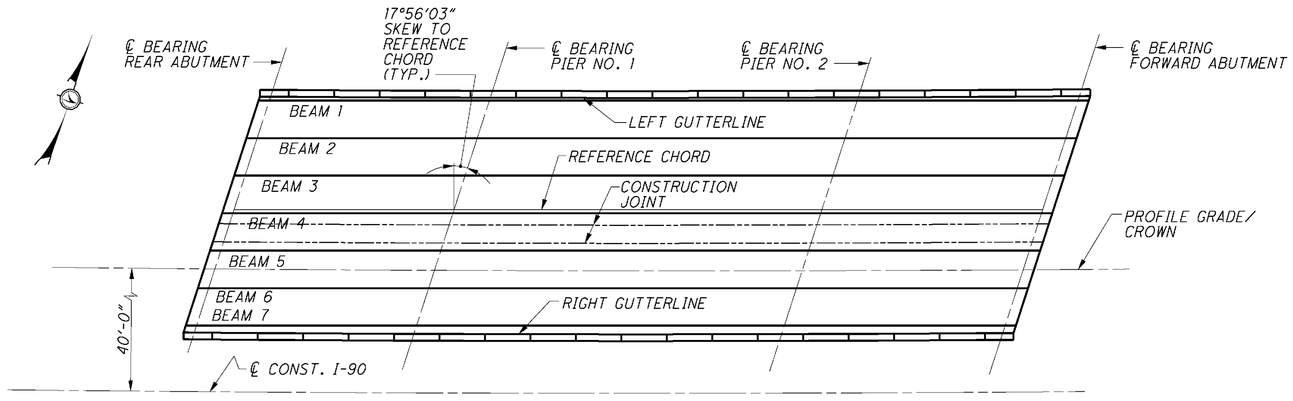

LOCATION KEY

NOTES:

1. DEFLECTION AND ADJUSTMENTS ARE GIVEN TO THE NEAREST 1/16". NEGATIVE VALUES INDICATE DIMENSIONS BELOW THE CHORD LINE.
2. FOR ABBREVIATIONS SEE SHEET 5/52 .

DESIGN AGENCY
KCI ASSOCIATES OF OHIO, P.A.
388 S. MAIN ST., SUITE 401
AKRON, OHIO 44311

DESIGNED SLH | DRAWN JAS | REVIEWED FJB | DATE 6/5/09 | CHECKED RKP | REVISED | STRUCTURE FILE NUMBER 0404179L

CAMBER TABLES - LEFT STRUCTURE

BRIDGE NO. ATB-90-1450 L
I-90 OVER NORFOLK SOUTHERN RAILROAD

ATB-90-14.25
PID No. 25199

$FILES

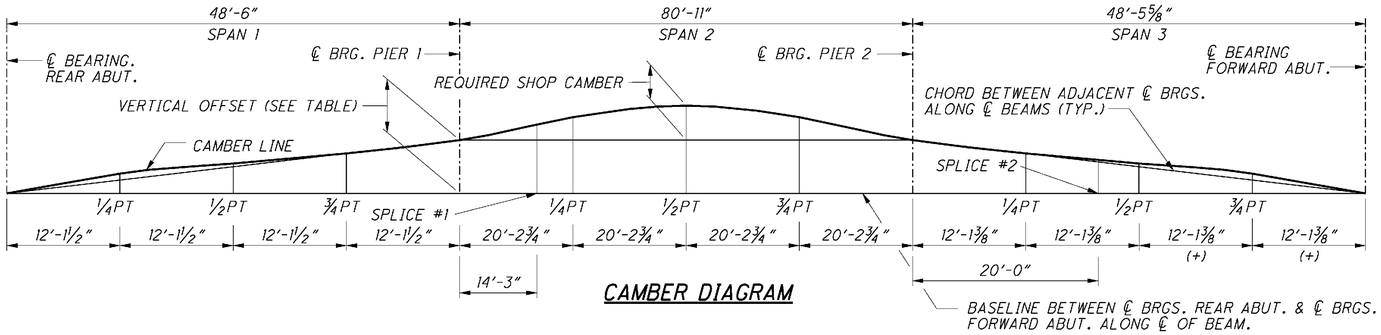

CAMBER DIAGRAM

VERTICAL OFFSETS AT PIERS		
BEAM NO.	PIER 1	PIER 2
8	⅞"	⅞"
9	13/16"	13/16"
10	13/16"	13/16"
11	13/16"	13/16"
12	1"	1"
13	1"	1"

BEAM B8	SPAN 1				SPAN 2					SPAN 3					
	R.A.	¼PT	½PT	¾PT	PIER 1	SPLICE #1	¼PT	½PT	¾PT	PIER 2	¼PT	SPLICE #2	½PT	¾PT	F.A.
DEFLECTION DUE TO WEIGHT OF STEEL	0	0	0	0	0	1/16"	⅛"	3/16"	⅛"	0	0	0	0	0	0
DEFLECTION DUE TO REMAINING DEAD LOAD	0	1/16"	0	-1/16"	0	7/16"	⅝"	1	⅝"	0	-1/16"	0	0	1/16"	0
VERTICAL CURVE CORRECTION	0	1/16"	1/16"	1/16"	0	⅛"	3/16"	¼"	3/16"	0	1/16"	1/16"	1/16"	1/16"	0
HORIZONTAL CURVE CORRECTION	0	0	0	0	0	0	0	0	0	0	0	0	0	0	0
REQUIRED SHOP CAMBER	0	⅛"	1/16"	0	0	⅝"	15/16"	1 7/16"	15/16"	0	0	1/16"	1/16"	⅛"	0

BEAM B9, B10 AND B11	SPAN 1				SPAN 2					SPAN 3					
	R.A.	¼PT	½PT	¾PT	PIER 1	SPLICE #1	¼PT	½PT	¾PT	PIER 2	¼PT	SPLICE #2	½PT	¾PT	F.A.
DEFLECTION DUE TO WEIGHT OF STEEL	0	0	0	0	0	1/16"	⅛"	3/16"	⅛"	0	0	0	0	0	0
DEFLECTION DUE TO REMAINING DEAD LOAD	0	1/16"	0	-1/16"	0	7/16"	11/16"	1 1/16"	11/16"	0	-1/16"	0	0	1/16"	0
VERTICAL CURVE CORRECTION	0	1/16"	1/16"	1/16"	0	⅛"	3/16"	¼"	3/16"	0	1/16"	1/16"	1/16"	1/16"	0
HORIZONTAL CURVE CORRECTION	0	0	0	0	0	0	0	0	0	0	0	0	0	0	0
REQUIRED SHOP CAMBER	0	⅛"	1/16"	0	0	⅝"	1"	1½"	1"	0	0	1/16"	1/16"	⅛"	0

BEAM B12 AND B13	SPAN 1				SPAN 2					SPAN 3					
	R.A.	¼PT	½PT	¾PT	PIER 1	SPLICE #1	¼PT	½PT	¾PT	PIER 2	¼PT	SPLICE #2	½PT	¾PT	F.A.
DEFLECTION DUE TO WEIGHT OF STEEL	0	0	0	0	0	1/16"	⅛"	3/16"	⅛"	0	0	0	0	0	0
DEFLECTION DUE TO REMAINING DEAD LOAD	0	1/16"	0	-1/16"	0	7/16"	11/16"	1 1/16"	11/16"	0	-1/16"	0	0	1/16"	0
VERTICAL CURVE CORRECTION	0	1/16"	⅛"	1/16"	0	⅛"	3/16"	¼"	3/16"	0	1/16"	1/16"	⅛"	1/16"	0
HORIZONTAL CURVE CORRECTION	0	0	0	0	0	0	0	0	0	0	0	0	0	0	0
REQUIRED SHOP CAMBER	0	⅛"	⅛"	0	0	⅝"	1"	1½"	1"	0	0	1/16"	⅛"	⅛"	0

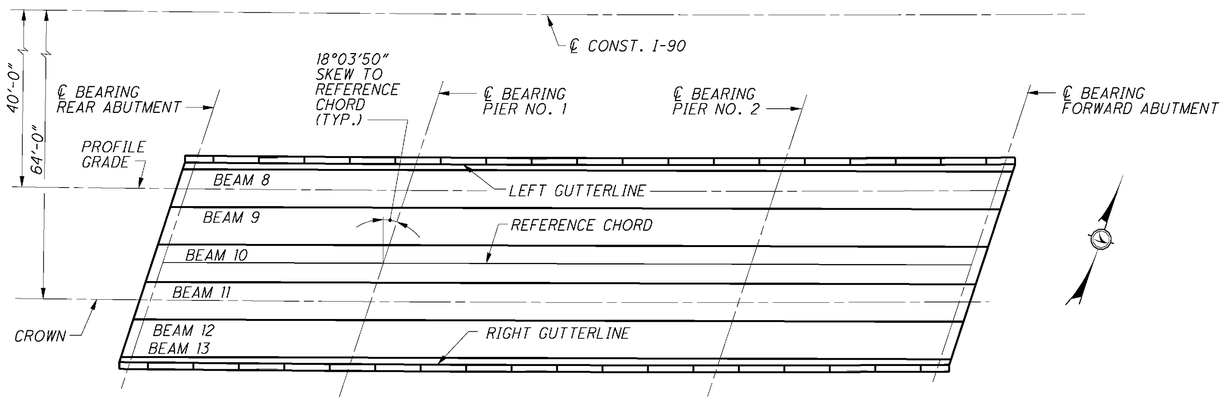

LOCATION KEY

NOTES:

1. DEFLECTION AND ADJUSTMENTS ARE GIVEN TO THE NEAREST 1/16". NEGATIVE VALUES INDICATE DIMENSIONS BELOW THE CHORD LINE.
2. FOR ABBREVIATIONS SEE SHEET 5/52 .

DESIGN AGENCY
KCI ASSOCIATES OF OHIO, P.A.
388 S. MAIN ST., SUITE 401
AKRON, OHIO 44311

DESIGNED SLH | DRAWN JAS | CHECKED RKP | REVIEWED FJB | DATE 6/5/09 | REVISED | STRUCTURE FILE NUMBER 0404209R

CAMBER TABLES - RIGHT STRUCTURE
BRIDGE NO. ATB-90-1450 R
I-90 OVER NORFOLK SOUTHERN RAILROAD

ATB-90-14.25
PID No. 25199

38/52

330
437

$FILES

SCREED ELEVATION TABLE - LEFT STRUCTURE

LOCATION		SPAN 1				SPAN 2				SPAN 3				
		℄ BRG. REAR ABUT.	¼PT	½PT	¾PT	℄ PIER 1	¼PT	½PT	¾PT	℄ PIER 2	¼PT	½PT	¾PT	℄ BRG. FWD. ABUT.
LEFT GUTTER LINE	STATION	85+42.03	85+54.18	85+66.34	85+78.50	85+90.67	86+11.01	86+31.37	86+51.74	86+72.11	86+84.35	86+96.59	87+08.84	87+21.09
	ELEVATION	882.66	882.69	882.71	882.72	882.74	882.81	882.85	882.81	882.73	882.71	882.70	882.68	882.65
LEFT CONSTRUCTION JOINT	STATION	85+33.13	85+45.26	85+57.39	85+69.52	85+81.65	86+01.95	86+22.25	86+42.57	86+62.89	86+75.10	86+87.31	86+99.52	87+11.74
	ELEVATION	883.15	883.18	883.20	883.21	883.23	883.31	883.36	883.32	883.24	883.23	883.22	883.20	883.18
RIGHT CONSTRUCTION JOINT	STATION	85+31.87	85+43.99	85+56.11	85+68.24	85+80.37	86+00.65	86+20.95	86+41.26	86+61.58	86+73.78	86+85.99	86+98.20	87+10.41
	ELEVATION	883.22	883.25	883.27	883.28	883.30	883.39	883.44	883.39	883.32	883.30	883.29	883.28	883.25
CROWN/PROFILE GRADE	STATION	85+30.13	85+42.24	85+54.36	85+66.48	85+78.60	85+98.88	86+19.17	86+39.47	86+59.77	86.71.97	86+84.17	86+96.37	87+08.58
	ELEVATION	883.31	883.34	883.36	883.38	883.40	883.49	883.53	883.49	883.42	883.40	883.39	883.38	883.35
RIGHT GUTTER LINE	STATION	85+25.55	85+37.64	85+49.74	85+61.85	85+73.96	85+94.21	86+14.47	86+34.74	86+55.02	86+67.20	86+79.39	86+91.57	87+03.77
	ELEVATION	882.72	882.75	882.78	882.79	882.81	882.90	882.95	882.91	882.84	882.83	882.82	882.81	882.78

SCREED ELEVATION TABLE - RIGHT STRUCTURE

LOCATION		SPAN 1				SPAN 2				SPAN 3				
		℄ BRG. REAR ABUT.	¼PT	½PT	¾PT	℄ PIER 1	¼PT	½PT	¾PT	℄ PIER 2	¼PT	½PT	¾PT	℄ BRG. FWD. ABUT.
LEFT GUTTER LINE	STATION	85+06.79	85+18.86	85+30.93	85+43.00	85+55.08	85+75.25	85+95.42	86+15.60	86+35.80	86+47.90	86+60.00	86+72.11	86+84.22
	ELEVATION	883.13	883.17	883.20	883.22	883.25	883.34	883.40	883.37	883.31	883.30	883.30	883.29	883.28
PROFILE GRADE LINE	STATION	85+04.72	85+16.78	85+28.85	85+40.92	85+52.99	85+73.14	85+93.30	86+13.47	86+33.66	86+45.75	86+57.85	86+69.95	86+82.05
	ELEVATION	883.25	883.28	883.31	883.33	883.36	883.46	883.52	883.49	883.43	883.42	883.42	883.41	883.39
CROWN	STATION	84+97.12	85+09.15	85+21.19	85+33.23	85+45.28	85+65.39	85+85.50	86+05.63	86+25.77	86+37.84	86+49.91	86+61.99	86+74.06
	ELEVATION	883.65	883.70	883.72	883.75	883.78	883.88	883.94	883.92	883.86	883.85	883.86	883.85	883.84
RIGHT GUTTER LINE	STATION	84+92.85	85+04.87	85+16.90	85+28.92	85+40.96	85+61.04	85+81.13	86+01.24	86+21.35	86+33.41	86+45.46	86+57.52	86+69.59
	ELEVATION	883.10	883.14	883.17	883.20	883.23	883.33	883.40	883.38	883.32	883.32	883.32	883.32	883.30

TOP OF HAUNCH ELEVATION TABLE - LEFT STRUCTURE

LOCATION		SPAN 1				SPAN 2					SPAN 3				
		℄ BRG. REAR ABUT.	¼PT	½PT	¾PT	℄ PIER 1	SPLICE #1	¼PT	½PT	¾PT	℄ PIER 2	¼PT	SPLICE #2	½PT	¾PT	℄ BRG. FWD. ABUT.
BEAM 1	STATION	85+41.59	85+53.77	85+65.95	85+78.12	85+90.30	86+04.64	86+10.66	86+31.01	86+51.37	86+71.72	86+83.94	86+91.85	86+96.16	87+08.38	87+20.59
	ELEVATION	881.98	882.00	882.02	882.03	882.05	882.10	882.12	882.16	882.12	882.04	882.02	882.02	882.01	882.00	881.97
BEAM 2	STATION	85+38.96	85+51.13	85+63.30	85+75.47	85+87.64	86+01.97	86+07.98	86+28.32	86+48.66	86+69.01	86+81.21	86+89.12	86+93.42	87+05.63	87+17.84
	ELEVATION	882.12	882.15	882.17	882.17	882.19	882.25	882.27	882.32	882.27	882.19	882.18	882.17	882.17	882.15	882.12
BEAM 3	STATION	85+36.34	85+48.50	85+60.66	85+72.82	85+84.98	85+99.30	86+05.31	86+25.64	86+45.96	86+66.29	86+78.49	86+86.39	86+90.69	87+02.89	87+15.10
	ELEVATION	882.26	882.29	882.31	882.32	882.34	882.39	882.42	882.46	882.42	882.35	882.33	882.32	882.32	882.30	882.28
BEAM 4	STATION	85+33.72	85+45.87	85+58.02	85+70.17	85+82.32	85+96.63	86+02.64	86+22.95	86+43.27	86+63.58	86+75.77	86+83.67	86+87.97	87+00.16	87+12.35
	ELEVATION	882.41	882.44	882.45	882.46	882.49	882.54	882.57	882.61	882.57	882.50	882.48	882.47	882.47	882.46	882.43
BEAM 5	STATION	85+31.10	85+43.24	85+55.38	85+67.53	85+79.67	85+93.97	85+99.97	86+20.27	86+40.57	86+60.87	86+73.06	86+80.95	86+85.24	86+97.43	87+09.61
	ELEVATION	882.55	882.58	882.60	882.61	882.63	882.69	882.71	882.76	882.72	882.65	882.63	882.63	882.62	882.61	882.58
BEAM 6	STATION	85+28.48	85+40.62	85+52.75	85+64.89	85+77.02	85+91.32	85+97.31	86+17.60	86+37.89	86+58.17	86+70.35	86+78.23	86+82.52	86+94.70	87+06.88
	ELEVATION	882.39	882.43	882.45	882.47	882.49	882.55	882.58	882.63	882.59	882.51	882.50	882.49	882.49	882.47	882.44
BEAM 7	STATION	85+25.87	85+38.00	85+50.12	85+62.25	85+74.38	85+88.66	85+94.65	86+14.93	86+35.20	86+55.47	86+67.64	86+75.52	86+79.81	86+91.98	87+04.15
	ELEVATION	882.05	882.09	882.11	882.14	882.16	882.22	882.24	882.29	882.26	882.19	882.17	882.16	882.16	882.14	882.12

TOP OF HAUNCH ELEVATION TABLE - RIGHT STRUCTURE

LOCATION		SPAN 1				SPAN 2					SPAN 3				
		℄ BRG. REAR ABUT.	¼PT	½PT	¾PT	℄ PIER 1	SPLICE #1	¼PT	½PT	¾PT	℄ PIER 2	¼PT	SPLICE #2	½PT	¾PT	℄ BRG. FWD. ABUT.
BEAM 8	STATION	85+06.32	85+18.41	85+30.50	85+42.59	85+54.68	85+68.89	85+74.85	85+95.02	86+15.20	86+35.37	86+47.45	86+55.31	86+59.53	86+71.61	86+83.69
	ELEVATION	882.45	882.49	882.51	882.53	882.56	882.62	882.65	882.71	882.69	882.63	882.62	882.62	882.62	882.61	882.59
BEAM 9	STATION	85+03.69	85+15.77	85+27.85	85+39.94	85+52.02	85+66.22	85+72.18	85+92.34	86+12.50	86+32.66	86+44.73	86+52.59	86+56.80	86+68.88	86+80.95
	ELEVATION	882.59	882.63	882.66	882.67	882.70	882.77	882.80	882.86	882.84	882.77	882.77	882.77	882.77	882.76	882.75
BEAM 10	STATION	85+01.07	85+13.14	85+25.21	85+37.29	85+49.36	85+63.55	85+69.51	85+89.65	86+09.80	86+29.95	86+42.01	86+49.86	86+54.08	86+66.14	86+78.21
	ELEVATION	882.73	882.77	882.80	882.82	882.85	882.92	882.95	883.01	882.98	882.92	882.92	882.92	882.92	882.91	882.90
BEAM 11	STATION	84+98.45	85+10.51	85+22.58	85+34.64	85+46.71	85+60.89	85+66.84	85+86.98	86+07.11	86+27.24	86+39.30	86+47.14	86+51.36	86+63.41	86+75.47
	ELEVATION	882.87	882.91	882.94	882.96	882.99	883.06	883.09	883.15	883.13	883.07	883.06	883.07	883.07	883.06	883.05
BEAM 12	STATION	84+95.83	85+07.89	85+19.95	85+32.00	85+44.06	85+58.23	85+64.18	85+84.30	86+04.42	86+24.54	86+36.59	86+44.43	86+48.64	86+60.69	86+72.73
	ELEVATION	882.78	882.82	882.86	882.88	882.91	882.99	883.02	883.08	883.06	883.00	882.99	882.99	882.99	882.99	882.97
BEAM 13	STATION	84+93.22	85+05.27	85+17.32	85+29.37	85+41.42	85+55.58	85+61.52	85+81.63	86+01.73	86+21.84	86+33.88	86+41.72	86+45.92	86+57.96	86+70.00
	ELEVATION	882.44	882.48	882.52	882.54	882.58	882.65	882.68	882.75	882.73	882.67	882.66	882.66	882.67	882.66	882.64

NOTES:

1. SCREED ELEVATIONS SHOWN REPRESENT THE THEORETICAL DECK SURFACE LOCATION PRIOR TO DEFLECTIONS CAUSED BY DECK PLACEMENT AND OTHER ANTICIPATED DEAD LOADS.
2. FOR LOCATION OF DECK SCREED AND TOP OF HAUNCH ELEVATIONS, SEE SHEET 41/52 AND 43/52.
3. TOP OF HAUNCH ELEVATIONS SHOWN REPRESENT THE THEORETICAL LOCATION OF THE BOTTOM OF THE DECK ABOVE THE BEAM HAUNCH PRIOR TO DEFLECTIONS CAUSED BY DECK PLACEMENT AND OTHER ANTICIPATED DEAD LOADS.
4. FOR ABBREVIATIONS SEE SHEET 5/52 .

DESIGN AGENCY
KCI ASSOCIATES OF OHIO, P.A.
388 S. MAIN ST., SUITE 401
AKRON, OHIO 44311

DESIGNED SLH | DRAWN JLS | CHECKED RKP | REVIEWED FJB | DATE 6/5/09 | REVISED | STRUCTURE FILE NUMBER 0404179L/0404209R

SCREED AND TOP OF HAUNCH ELEVATIONS
BRIDGE NO. ATB-90-1450 L & R
I-90 OVER NORFOLK SOUTHERN RAILROAD

ATB-90-14.25
PID No. 25199

$FILES

FINAL DECK SURFACE ELEVATION TABLE - LEFT STRUCTURE

LOCATION		SPAN 1					SPAN 2						SPAN 3				
		℄ BRG. REAR ABUT.	¼PT	½PT	¾PT	℄ PIER 1	SPLICE #1	¼PT	½PT	¾PT	℄ PIER 2	¼PT	SPLICE #2	½PT	¾PT	℄ BRG. FWD. ABUT.
LEFT GUTTER LINE	STATION	85+42.03	85+54.18	85+66.34	85+78.50	85+90.67	-	86+11.01	86+31.37	86+51.74	86+72.11	86+84.35	-	86+96.59	87+08.84	87+21.09
	ELEVATION	882.66	882.69	882.71	882.72	882.74	-	882.75	882.75	882.75	882.73	882.72	-	882.70	882.68	882.65
BEAM 1	STATION	85+41.59	85+53.77	85+65.95	85+78.12	85+90.30	86+04.64	86+10.66	86+31.01	86+51.37	86+71.72	86+83.94	86+91.85	86+96.16	87+08.38	87+20.59
	ELEVATION	882.69	882.71	882.73	882.75	882.76	882.77	882.77	882.77	882.77	882.75	882.74	882.73	882.72	882.70	882.68
BEAM 2	STATION	85+38.96	85+51.13	85+63.30	85+75.47	85+87.64	86+01.97	86+07.98	86+28.32	86+48.66	86+69.01	86+81.21	86+89.12	86+93.42	87+05.63	87+17.84
	ELEVATION	882.83	882.85	882.87	882.89	882.90	882.91	882.92	882.92	882.92	882.90	882.89	882.88	882.88	882.86	882.83
BEAM 3	STATION	85+36.34	85+48.50	85+60.66	85+72.82	85+84.98	85+99.30	86+05.31	86+25.64	86+45.96	86+66.29	86+78.49	86+86.39	86+90.69	87+02.89	87+15.10
	ELEVATION	882.97	883.00	883.02	883.04	883.05	883.06	883.06	883.07	883.07	883.06	883.04	883.03	883.03	883.01	882.99
BEAM 4	STATION	85+33.72	85+45.87	85+58.02	85+70.17	85+82.32	85+96.63	86+02.64	86+22.95	86+43.27	86+63.58	86+75.77	86+83.67	86+87.97	87+00.16	87+12.35
	ELEVATION	883.12	883.14	883.16	883.18	883.20	883.21	883.21	883.22	883.22	883.21	883.19	883.19	883.18	883.16	883.14
LEFT CONSTRUCTION JOINT	STATION	85+33.13	85+45.26	85+57.39	85+69.52	85+81.65	-	86+01.95	86+22.25	86+42.57	86+62.89	86+75.10	-	86+87.31	86+99.52	87+11.74
	ELEVATION	883.15	883.18	883.20	883.22	883.23	-	883.25	883.26	883.26	883.24	883.23	-	883.22	883.20	883.18
RIGHT CONSTRUCTION JOINT	STATION	85+31.87	85+43.99	85+56.11	85+68.24	85+80.37	-	86+00.65	86+20.95	86+41.26	86+61.58	86+73.78	-	86+85.99	86+98.20	87+10.41
	ELEVATION	883.22	883.24	883.27	883.29	883.30	-	883.32	883.33	883.33	883.32	883.31	-	883.29	883.27	883.25
BEAM 5	STATION	85+31.10	85+43.24	85+55.38	85+67.53	85+79.67	85+93.97	85+99.97	86+20.27	86+40.57	86+60.87	86+73.06	86+80.95	86+85.24	86+97.43	87+09.61
	ELEVATION	883.26	883.29	883.31	883.33	883.34	883.35	883.36	883.37	883.37	883.36	883.35	883.34	883.33	883.31	883.29
CROWN	STATION	85+30.13	85+42.24	85+54.36	85+66.48	85+78.60	-	85+98.88	86+19.17	86+39.47	86+59.77	86.71.97	-	86+84.17	86+96.37	87+08.58
	ELEVATION	883.31	883.34	883.36	883.38	883.40	-	883.42	883.43	883.43	883.42	883.41	-	883.39	883.37	883.35
BEAM 6	STATION	85+28.48	85+40.62	85+52.75	85+64.89	85+77.02	85+91.32	85+97.31	86+17.60	86+37.89	86+58.17	86+70.35	86+78.23	86+82.52	86+94.70	87+06.88
	ELEVATION	883.10	883.13	883.16	883.18	883.20	883.22	883.22	883.23	883.23	883.22	883.21	883.20	883.20	883.17	883.15
BEAM 7	STATION	85+25.87	85+38.00	85+50.12	85+62.25	85+74.38	85+88.66	85+94.65	86+14.93	86+35.20	86+55.47	86+67.64	86+75.52	86+79.81	86+91.98	87+04.15
	ELEVATION	882.76	882.80	882.82	882.85	882.87	882.89	882.89	882.90	882.91	882.90	882.88	882.87	882.87	882.85	882.83
RIGHT GUTTER LINE	STATION	85+25.55	85+37.64	85+49.74	85+61.85	85+73.96	-	85+94.21	86+14.47	86+34.74	86+55.02	86+67.20	-	86+79.39	86+91.57	87+03.77
	ELEVATION	882.72	882.75	882.78	882.80	882.81	-	882.84	882.85	882.85	882.84	882.83	-	882.82	882.80	882.78

FINAL DECK SURFACE ELEVATION TABLE - RIGHT STRUCTURE

LOCATION		SPAN 1					SPAN 2						SPAN 3				
		℄ BRG. REAR ABUT.	¼PT	½PT	¾PT	℄ PIER 1	SPLICE #1	¼PT	½PT	¾PT	℄ PIER 2	¼PT	SPLICE #2	½PT	¾PT	℄ BRG. FWD. ABUT.
LEFT GUTTER LINE	STATION	85+06.79	85+18.86	85+30.93	85+43.00	85+55.08	-	85+75.25	85+95.42	86+15.60	86+35.80	86+47.90	-	86+60.00	86+72.11	86+84.22
	ELEVATION	883.13	883.17	883.20	883.22	883.25	-	883.28	883.30	883.31	883.31	883.31	-	883.30	883.29	883.28
BEAM 8	STATION	85+06.32	85+18.41	85+30.50	85+42.59	85+54.68	85+68.89	85+74.85	85+95.02	86+15.20	86+35.37	86+47.45	86+55.31	86+59.53	86+71.61	86+83.69
	ELEVATION	883.16	883.19	883.22	883.25	883.27	883.29	883.30	883.32	883.33	883.34	883.33	883.33	883.33	883.32	883.30
PROFILE GRADE LINE	STATION	85+04.72	85+16.78	85+28.85	85+40.92	85+52.99	-	85+73.14	85+93.30	86+13.47	86+33.66	86+45.75	-	86+57.85	86+69.95	86+82.05
	ELEVATION	883.25	883.28	883.31	883.34	883.36	-	883.39	883.44	883.43	883.43	883.43	-	883.42	883.41	883.39
BEAM 9	STATION	85+03.69	85+15.77	85+27.85	85+39.94	85+52.02	85+66.22	85+72.18	85+92.34	86+12.50	86+32.66	86+44.73	86+52.59	86+56.80	86+68.88	86+80.95
	ELEVATION	883.30	883.33	883.36	883.39	883.41	883.44	883.44	883.47	883.48	883.48	883.48	883.48	883.48	883.47	883.46
BEAM 10	STATION	85+01.07	85+13.14	85+25.21	85+37.29	85+49.36	85+63.55	85+69.51	85+89.65	86+09.80	86+29.95	86+42.01	86+49.86	86+54.08	86+66.14	86+78.21
	ELEVATION	883.44	883.48	883.51	883.53	883.56	883.58	883.59	883.61	883.63	883.63	883.63	883.63	883.63	883.62	883.61
BEAM 11	STATION	84+98.45	85+10.51	85+22.58	85+34.64	85+46.71	85+60.89	85+66.84	85+86.98	86+07.11	86+27.24	86+39.30	86+47.14	86+51.36	86+63.41	86+75.47
	ELEVATION	883.58	883.62	883.65	883.68	883.70	883.73	883.73	883.76	883.77	883.78	883.78	883.78	883.78	883.77	883.76
CROWN	STATION	84+97.12	85+09.15	85+21.19	85+33.23	85+45.28	-	85+65.39	85+85.50	86+05.63	86+25.77	86+37.84	-	86+49.91	86+61.99	86+74.06
	ELEVATION	883.65	883.69	883.72	883.75	883.78	-	883.81	883.84	883.86	883.86	883.86	-	883.86	883.85	883.84
BEAM 12	STATION	84+95.83	85+07.89	85+19.95	85+32.00	85+44.06	85+58.23	85+64.18	85+84.30	86+04.42	86+24.54	86+36.59	86+44.43	86+48.64	86+60.69	86+72.73
	ELEVATION	883.49	883.53	883.56	883.60	883.62	883.65	883.66	883.69	883.71	883.71	883.71	883.70	883.70	883.69	883.68
BEAM 13	STATION	84+93.22	85+05.27	85+17.32	85+29.37	85+41.42	85+55.58	85+61.52	85+81.63	86+01.73	86+21.84	86+33.88	86+41.72	86+45.92	86+57.96	86+70.00
	ELEVATION	883.15	883.19	883.23	883.26	883.29	883.32	883.33	883.36	883.37	883.38	883.38	883.38	883.37	883.36	883.35
RIGHT GUTTER LINE	STATION	84+92.85	85+04.87	85+16.90	85+28.92	85+40.96	-	85+61.04	85+81.13	86+01.24	86+21.35	86+33.41	-	86+45.46	86+57.52	86+69.59
	ELEVATION	883.10	883.14	883.17	883.20	883.23	-	883.27	883.29	883.31	883.32	883.32	-	883.32	883.31	883.30

NOTES:

1. FINAL DECK SURFACE ELEVATIONS SHOWN REPRESENT THE DECK SURFACE LOCATION AFTER ALL ANTICIPATED DEAD LOAD DEFLECTIONS HAVE OCCURRED.
2. FOR LOCATION OF FINAL DECK SURFACE ELEVATIONS, SEE SHEET 41/52 AND 43/52.
3. FOR ABBREVIATIONS SEE SHEET 5/52.
4. FOR LOCATION KEY PLAN, SEE SHEET 37/52 AND 38/52.

$FILES

DESIGN AGENCY
KCI ASSOCIATES OF OHIO, P.A.
388 S. MAIN ST., SUITE 401
AKRON, OHIO 44311

DESIGNED SLH | DRAWN JLS | REVIEWED FJB | DATE 6/5/09
CHECKED RKP | REVISED | STRUCTURE TITLE NUMBER 0404179L/0404209R

FINAL DECK SURFACE ELEVATIONS
BRIDGE NO. ATB-90-1450 L & R
I-90 OVER NORFOLK SOUTHERN RAILROAD

ATB-90-14.25
PID No. 25199

40/52

332/437

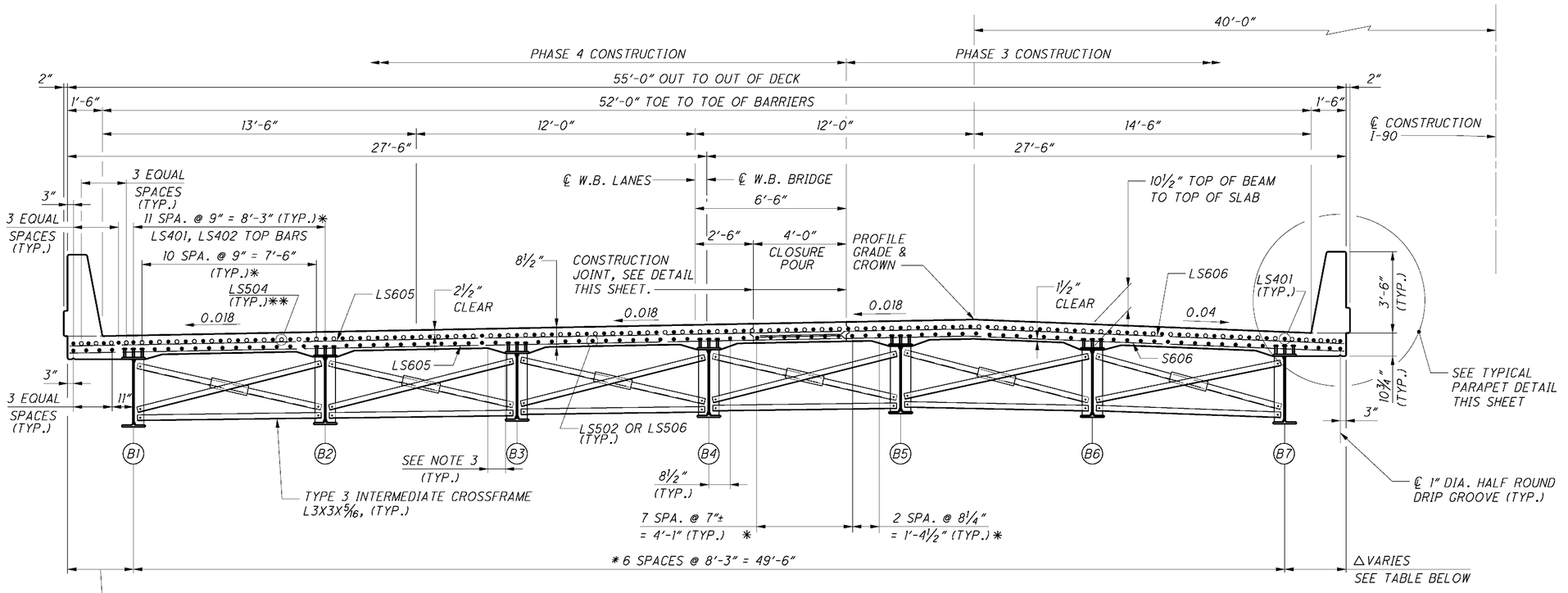

TRANSVERSE SECTION - LEFT STRUCTURE

NOTE: TRANSVERSE DIMENSIONS ARE MEASURED RADIALLY UNLESS OTHERWISE NOTED
* MEASURED PERPENDICULAR TO BEAMS

** ADDITIONAL REINFORCEMENT OVER THE PIERS, (TYP.). SEE DETAIL ON SHEET 42/52.

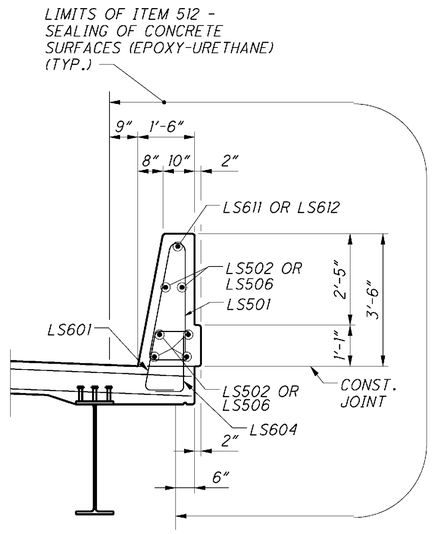

TYPICAL PARAPET DETAIL

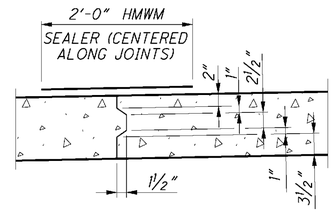

CONSTRUCTION JOINT DETAIL

△ HORIZONTAL OFFSET TO EDGE OF BRIDGE													
LOCATION	℄ BEARING REAR ABUTMENT	¼	½	¾	℄ BEARING PIER 1	¼	½	¾	℄ BEARING PIER 2	¼	½	¾	℄ BEARING FWD. ABUTMENT
LEFT SIDE	2'-10¼"	2'-9⅜"	2'-8⅝"	2'-8"	2'-7⅝"	2'-7⅛"	2'-7⅛"	2'-7½"	2'-8¼"	2'-8⅛"	2'-9⅝"	2'-10⅝"	2'-11⅝"
RIGHT SIDE	2'-6⅜"	2'-7⅜"	2'-8⅜"	2'-9⅛"	2'-9¾"	2'-10½"	2'-10⅞"	2'-10⅞"	2'-10⅜"	2'-10"	2'-9⅜"	2'-8⅝"	2'-7¾"

NOTES:

1. FOR LEFT STRUCTURE SLAB PLAN AND PARAPET PANEL ELEVATION, SEE SHEET 42/52.
2. FOR SCREED AND TOP OF HAUNCH ELEVATIONS, SEE SHEET 39/52.
3. DECK SLAB CONCRETE QUANTITY: THE ESTIMATED QUANTITY OF DECK SLAB CONCRETE IS BASED ON THE CONSTANT DECK SLAB THICKNESS, AS SHOWN, PLUS THE QUANTITY OF CONCRETE THAT FORMS EACH BEAM HAUNCH. THE ESTIMATE ASSUMES A CONSTANT HAUNCH THICKNESS OF INCHES AND A CONSTANT HAUNCH WIDTH OUTSIDE THE EDGE OF EACH BEAM FLANGE OF 9 INCHES. DEVIATE FROM THIS HAUNCH THICKNESS AS NECESSARY TO PLACE THE DECK SURFACE AT THE FINISHED GRADE. THE ALLOWABLE TOLERANCE FOR THE HAUNCH WIDTH OUTSIDE THE EDGE OF EACH BEAM FLANGE IS ± 3 INCHES.

   THE HAUNCH THICKNESS WAS MEASURED AT THE CENTERLINE OF THE BEAM, FROM THE SURFACE OF THE DECK TO THE BOTTOM OF THE TOP FLANGE MINUS THE DECK SLAB THICKNESS. THE AREA OF ALL EMBEDDED STEEL PLATES HAS BEEN DEDUCTED FROM THE HAUNCH QUANTITY IN ACCORDANCE WITH 511.24.
4. ADJUST REINFORCEMENT AS REQUIRED TO PLACE LONGITUDINAL JOINTS.
5. FOR ABBREVIATIONS, SEE SHEET 5/52.
6. FOR FRAMING PLAN, SEE SHEET 34/52.

$FILE$

DESIGN AGENCY
KCI ASSOCIATES OF OHIO, P.A.
388 S. MAIN ST., SUITE 401
AKRON, OHIO 44311

DESIGNED RKP | DRAWN JLS | REVIEWED FJB | DATE 6/5/09
CHECKED SLH | REVISED | STRUCTURE FILE NUMBER 0404179L

TRANSVERSE SECTION - LEFT STRUCTURE
BRIDGE NO. ATB-90-1450 L
I-90 OVER NORFOLK SOUTHERN RAILROAD

ATB-90-14.25
PID No. 25199

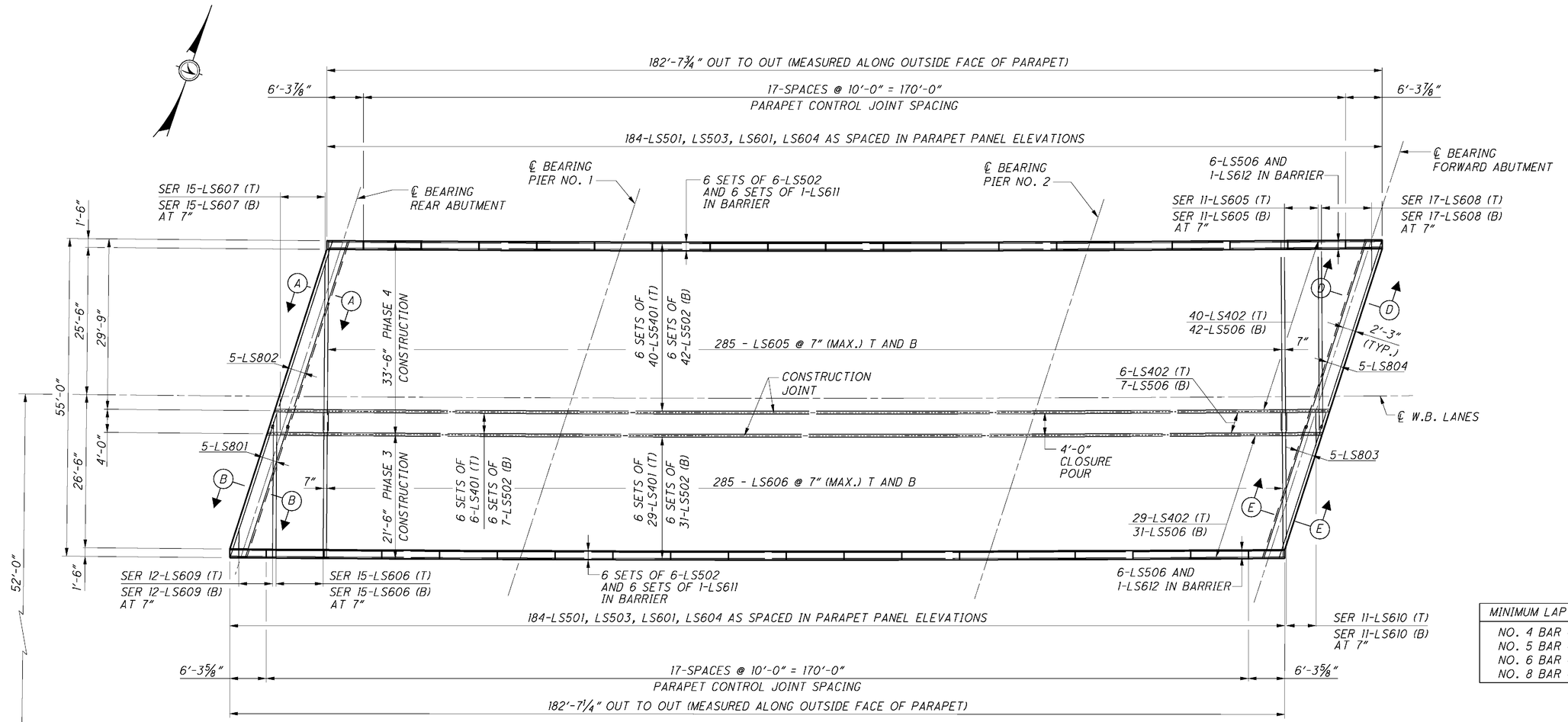

SLAB PLAN

MINIMUM LAP LENGTHS
NO. 4 BAR = 1'-11"
NO. 5 BAR = 2'-5"
NO. 6 BAR = 2'-11"
NO. 8 BAR = 4'-11"

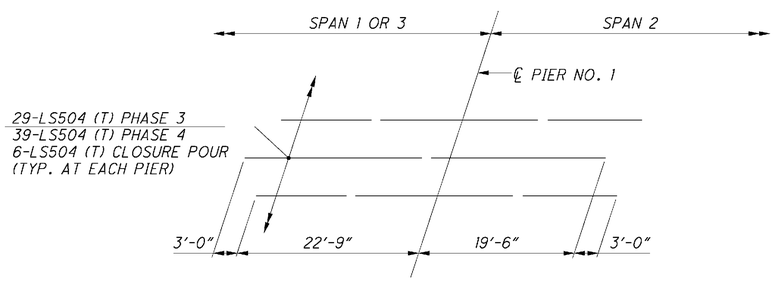

ADDITIONAL REINFORCING OVER PIERS

(PIER NO. 1 REINFORCING SHOWN, PIER NO. 2 SIMILAR, OPPOSITE HAND)

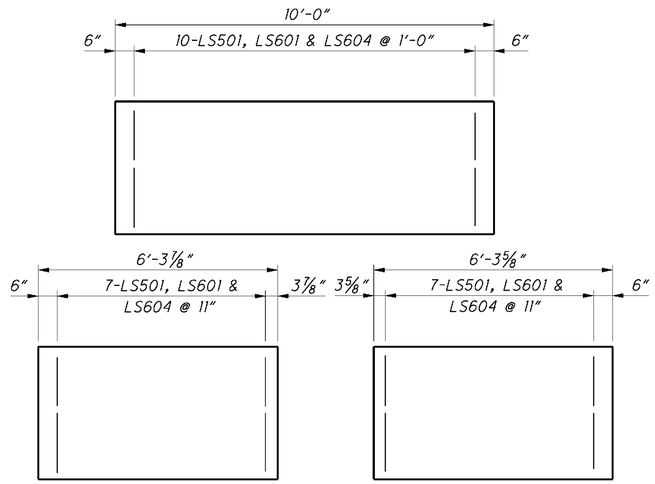

TYPICAL PARAPET PANEL ELEVATIONS

LEGEND

MECHANICAL SPLICE

NOTES:

1. FOR TRANSVERSE SECTION, SEE SHEET 41/52.
2. FOR SECTION A-A, B-B, D-D AND E-E, SEE SHEET 17/52.
3. FOR PHASE CONSTRUCTION JOINTS SEE SHEET 41/52.
4. FOR ABBREVIATIONS, SEE SHEET 5/52.

DESIGN AGENCY
KCI ASSOCIATES OF OHIO, P.A.
388 S. MAIN ST., SUITE 401
AKRON, OHIO 44311

DESIGNED RKP | DRAWN WLS | REVIEWED FJB | DATE 6/5/09
CHECKED SLH | REVISED | STRUCTURE FILE NUMBER 0404179L

SLAB PLAN - LEFT STRUCTURE

BRIDGE NO. ATB-90-1450 L
1-90 OVER NORFOLK SOUTHERN RAILROAD

ATB-90-14.25
PID No. 25199

$FILES

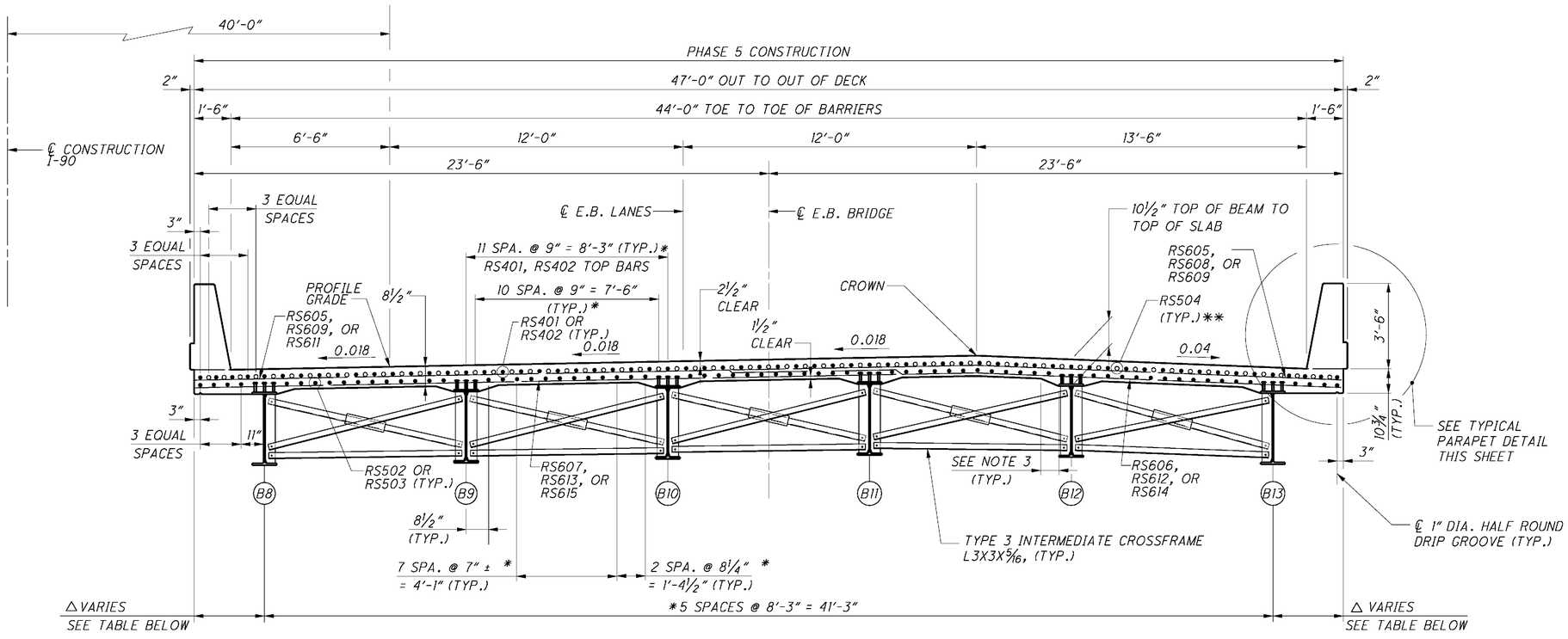

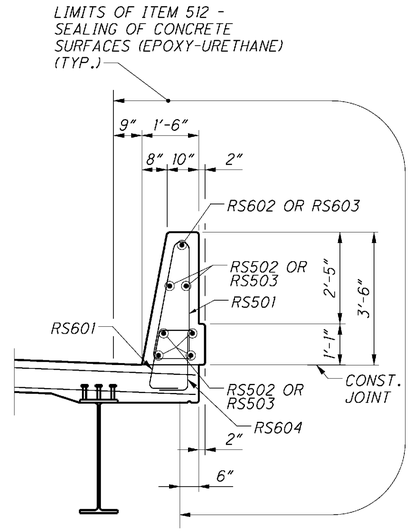

TYPICAL PARAPET DETAIL

TRANSVERSE SECTION - RIGHT STRUCTURE

NOTE: TRANSVERSE DIMENSIONS ARE MEASURED RADIALLY UNLESS OTHERWISE NOTED
* MEASURED PERPENDICULAR TO BEAMS

** ADDITIONAL REINFORCEMENT OVER THE PIERS, (TYP.). SEE DETAIL ON SHEET 44/52.

△ HORIZONTAL OFFSET TO EDGE OF BRIDGE													
LOCATION	℄ BEARING REAR ABUTMENT	¼	½	¾	℄ BEARING PIER 1	¼	½	¾	℄ BEARING PIER 2	¼	½	¾	℄ BEARING FWD. ABUTMENT
LEFT SIDE	2'-11⅞"	2'-11"	2'-10¼"	2'-9⅝"	2'-9⅛"	2'-8⅝"	2'-8⅝"	2'-8⅞"	2'-9⅝"	2'-10¼"	2'-11"	3'-0"	3'-1"
RIGHT SIDE	2'-8"	2'-9"	2'-10"	2'-10¾"	2'-11⅜"	3'-0⅛"	3'-0⅜"	3'-0⅜"	2'-11⅞"	2'-11⅜"	2'-10¾"	2'-10"	2'-9⅛"

NOTES:

1. FOR RIGHT STRUCTURE SLAB PLAN AND PARAPET PANEL ELEVATION, SEE SHEET 42/52 AND 44/52.
2. FOR SCREED AND TOP OF HAUNCH ELEVATIONS, SEE SHEET 39/52.
3. DECK SLAB CONCRETE QUANTITY: THE ESTIMATED QUANTITY OF DECK SLAB CONCRETE IS BASED ON THE CONSTANT DECK SLAB THICKNESS, AS SHOWN, PLUS THE QUANTITY OF CONCRETE THAT FORMS EACH BEAM HAUNCH. THE ESTIMATE ASSUMES A CONSTANT HAUNCH THICKNESS OF INCHES AND A CONSTANT HAUNCH WIDTH OUTSIDE THE EDGE OF EACH BEAM FLANGE OF 9 INCHES. DEVIATE FROM THIS HAUNCH THICKNESS AS NECESSARY TO PLACE THE DECK SURFACE AT THE FINISHED GRADE. THE ALLOWABLE TOLERANCE FOR THE HAUNCH WIDTH OUTSIDE THE EDGE OF EACH BEAM FLANGE IS ± 3 INCHES.

   THE HAUNCH THICKNESS WAS MEASURED AT THE CENTERLINE OF THE BEAM, FROM THE SURFACE OF THE DECK TO THE BOTTOM OF THE TOP FLANGE MINUS THE DECK SLAB THICKNESS. THE AREA OF ALL EMBEDDED STEEL PLATES HAS BEEN DEDUCTED FROM THE HAUNCH QUANTITY IN ACCORDANCE WITH 511.24.
4. FOR ABBREVIATIONS, SEE SHEET 5/52.
5. FOR FRAMING PLAN, SEE SHEET 35/52.

DESIGN AGENCY
KCI ASSOCIATES OF OHIO, P.A.
388 S. MAIN ST., SUITE 401
AKRON, OHIO 44311

DESIGNED RKP | DRAWN JLS | CHECKED SLH | REVIEWED FJB | DATE 6/5/09 | REVISED --- | STRUCTURE TITLE NUMBER 0404209R

TRANSVERSE SECTION - RIGHT STRUCTURE
BRIDGE NO. ATB-90-1450 R
I-90 OVER NORFOLK SOUTHERN RAILROAD

ATB-90-14.25
PID No. 25199

$FILES

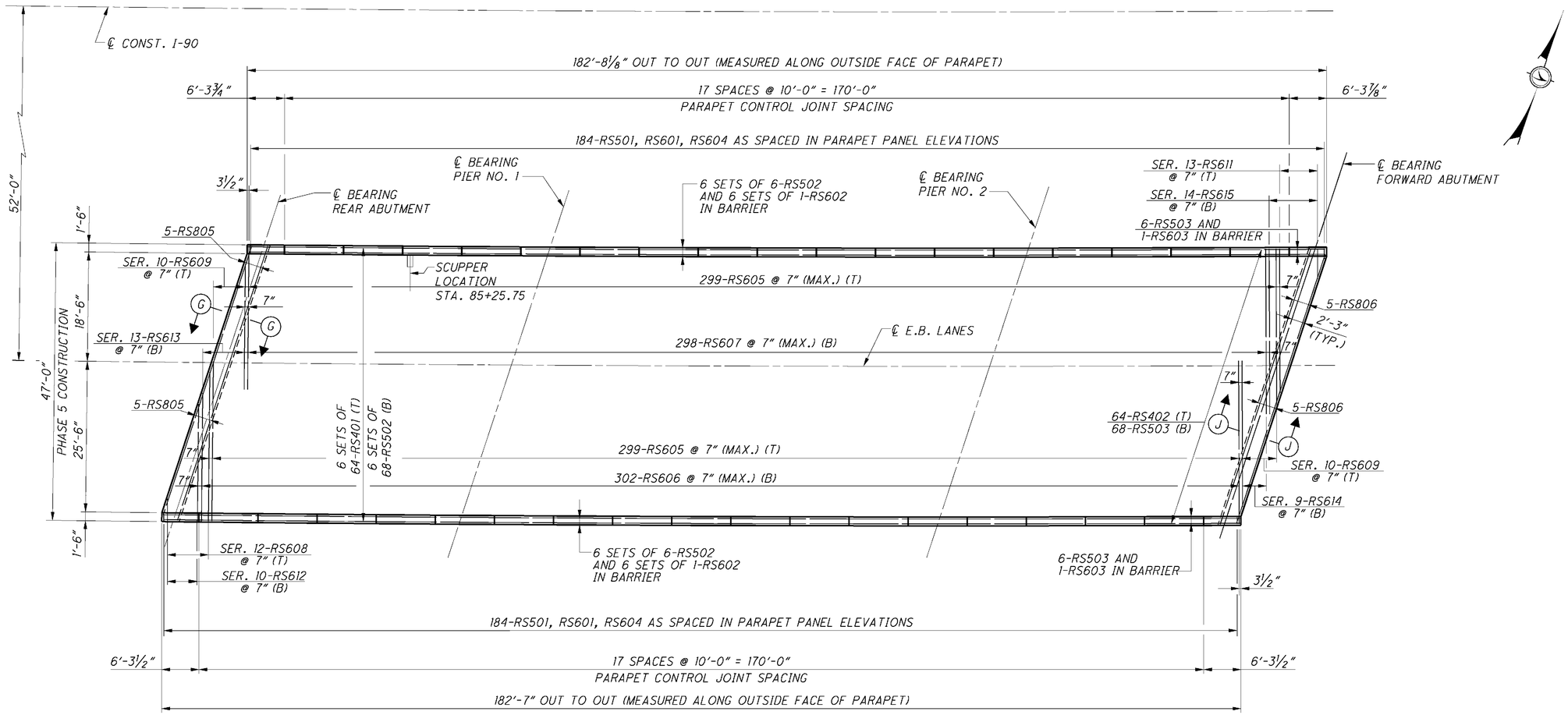

SLAB PLAN

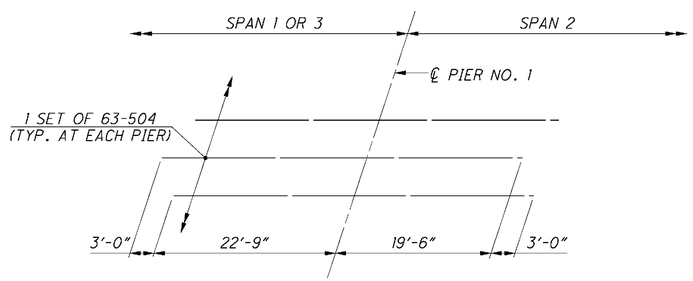

ADDITIONAL REINFORCING OVER PIERS

(PIER NO. 1 REINFORCING SHOWN, PIER NO. 2 SIMILAR, OPPOSITE HAND)

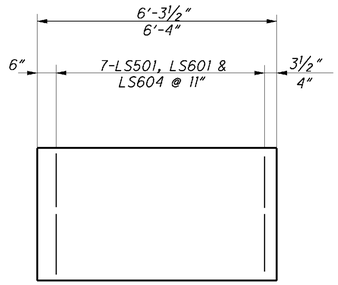

TYPICAL PARAPET PANEL ELEVATION

MINIMUM LAP LENGTHS
NO. 4 BAR = 1'-11"
NO. 5 BAR = 2'-5"
NO. 6 BAR = 2'-11"
NO. 8 BAR = 4'-11"

NOTES:

1. FOR TRANSVERSE SECTION, SEE SHEET 43/52.
2. FOR SECTIONS G-G AND J-J, SEE SHEET 34/52.
3. FOR ABBREVIATIONS, SEE SHEET 5/52.
4. FOR PARAPET PANEL ELEVATIONS NOT SHOWN, SEE SHEET 42/52.

$FILES

DESIGN AGENCY
KCI ASSOCIATES OF OHIO, P.A.
388 S. MAIN ST., SUITE 401
AKRON, OHIO 44311

DESIGNED RKP | DRAWN JLS | CHECKED SLH | REVIEWED FJB | DATE 6/5/09 | REVISED | STRUCTURE TITLE NUMBER 0404209R

SLAB PLAN - RIGHT STRUCTURE
BRIDGE NO. ATB-90-1450 R
I-90 OVER NORFOLK SOUTHERN RAILROAD

ATB-90-14.25
PID No. 25199

44/52

336
437

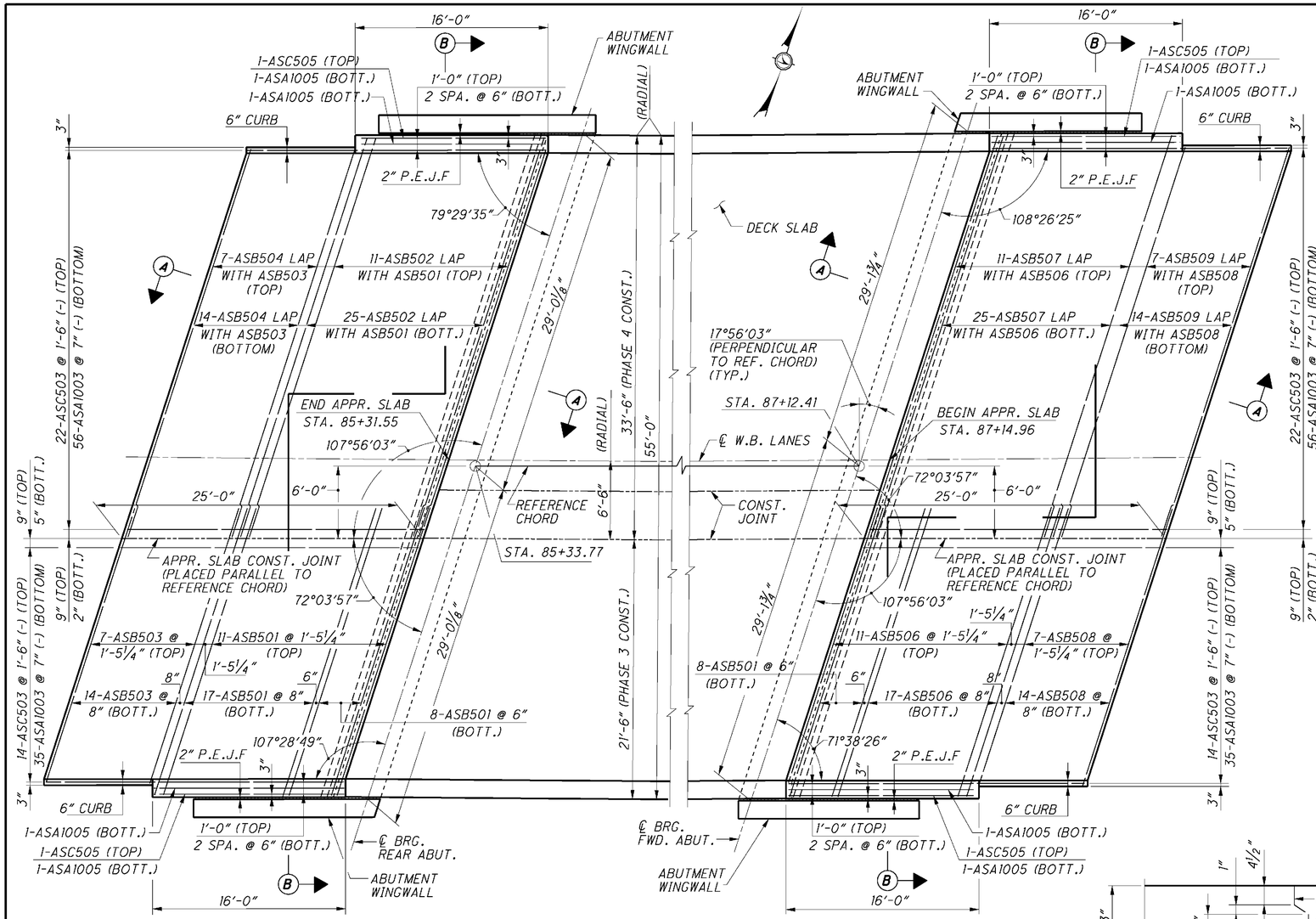

REAR APPROACH SLAB PLAN

FORWARD APPROACH SLAB PLAN

REINFORCING STEEL LIST

MARK	NUMBER REAR PHASE 3	NUMBER REAR PHASE 4	NUMBER FORWARD PHASE 3	NUMBER FORWARD PHASE 4	TOTAL	LENGTH	WEIGHT (LBS.)	TYPE	DIMENSIONS A	B	C	INC.
LASA1003	35	56	35	56	182	25'-11"	20,297	16	24'-6"			
LASA1005	2	2	2	2	8	16'-11"	582	16	15'-6"			
LASB501	36				36	24'-10"	932	STR.				
LASB502		36			36	34'-11"	1311	STR.				
LASB503	21				21	23'-10"	522	STR.				
LASB504		21			21	33'-10"	741	STR.				
LASB506			36		36	25'-1"	942	STR.				
LASB507				36	36	35'-2"	1320	STR.				
LASB508			21		21	24'-1"	527	STR.				
LASB509				21	21	34'-1"	747	STR.				
LASC503	14	22	14	22	72	24'-6"	1840	STR.				
LASC505	1	1	1	1	4	15'-6"	65	STR.				
LASP501	3	3	3	3	12	7'-5"	93	23	1'-1"	3'-2"	3'-0"	
LASP502	3	3	3	3	12	5'-6"	69	25				
LASP503	5	5	5	5	20	5'-6"	115	STR.				
LASP504	6	6	6	6	24	4'-3"	106	STR.				
LASP505	8	8	8	8	32	10'-0"	334	STR.				
LASP601	3	3	3	3	12	3'-9"	68	35	1'-10"	1'-1"	1'-1"	
SERIES LASP603	△	△	△	△	8 SETS OF 11	4'-4" TO 5'-2"	628	1	1'-1"	3'-5" TO 4'-3"		1"
LASP604	3	3	3	3	12	2'-9"	50	1	1'-1"	1'-10"		
LASP607	1	1	1	1	4	4'-9"	29	19	1'-10"	2'-10 1/8"	3"	
LASP608	8	8	8	8	32	4'-4"	208	1	1'-1"	3'-5"		
						TOTAL = 31,526						

△ INDICATES 2 SETS OF 11

NOTE: REINFORCING LIST FOR INFORMATION ONLY.

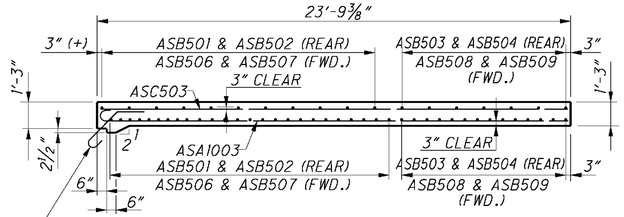

SECTION A-A

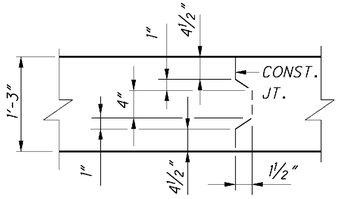

KEYED CONST. JT. DETAIL

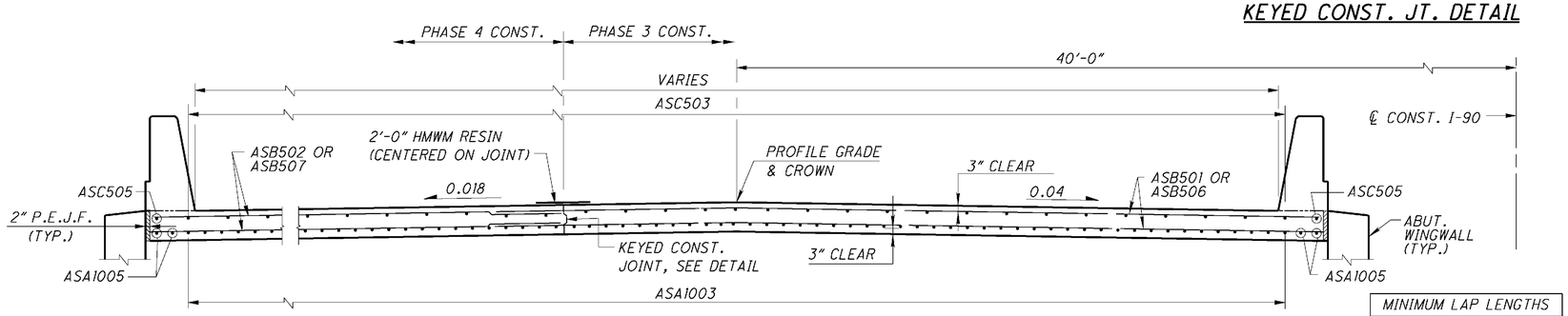

SECTION B-B

MINIMUM LAP LENGTHS
NO. 5 BAR = 2'-5"

NOTES

1. ALL REINFORCING BAR MARKS SHALL BE PREFIXED "L".
2. BAR DIMENSIONS ARE OUT TO OUT UNLESS NOTED OTHERWISE.
3. ALL REINFORCING STEEL TO BE EPOXY COATED.
4. FOR BAR BENDING DIAGRAMS, SEE SHEET 46/52.
5. BAR SIZE AND LOCATION ARE INDICATED IN THE BAR MARK. THE ALPHABETICAL LETTERS INDICATE LOCATION. THE FIRST DIGIT OF THE THREE DIGIT MARK AND THE FIRST TWO DIGITS OF THE FOUR DIGIT MARK INDICATE BAR SIZE NUMBER.

   EXAMPLE:

   ASC 502
   - 502: NO. 5 SIZE BAR
   - ASC: APPROACH SLAB

6. FOR PARAPET DETAILS, SEE SHEET 47/52.
7. FOR ABBREVIATIONS, SEE SHEET 5/52.
8. FOR REFERENCE CHORD LAYOUT, SEE SHEET 3/52.
9. LONGITUDINAL REINFORCEMENT, EXCEPT BARS AT EDGE OF SLAB, SHALL BE PLACED PARALLEL TO THE CONSTRUCTION JOINT.
10. FOR ADDITIONAL DETAILS, SEE STD. DWG. AS-1-81.

DESIGN AGENCY
KCI ASSOCIATES OF OHIO, P.A.
388 S. MAIN ST., SUITE 401
AKRON, OHIO 44311

DESIGNED HK | DRAWN WEB | CHECKED CMK | REVIEWED FJB | DATE 6/5/09 | REVISED | STRUCTURE FILE NUMBER 0404179L

APPROACH SLAB DETAILS - LEFT STRUCTURE

BRIDGE NO. ATB-90-1450 L
1-90 OVER NORFOLK SOUTHERN RAILROAD

ATB-90-14.25
PID No. 25199

45/52

337/437

$FILES

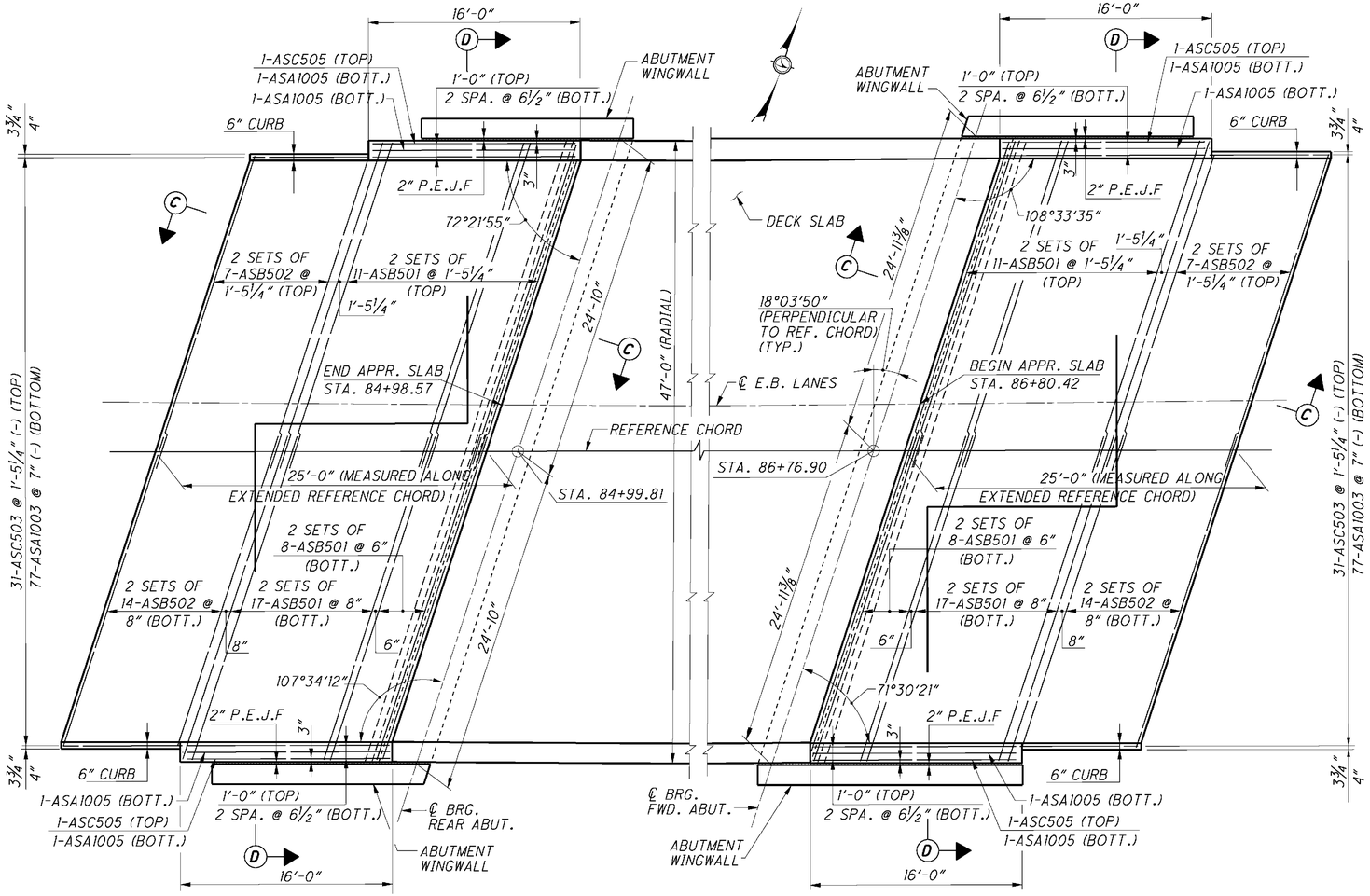

REAR APPROACH SLAB PLAN
(PHASE 5 CONST.)

FORWARD APPROACH SLAB PLAN
(PHASE 5 CONST.)

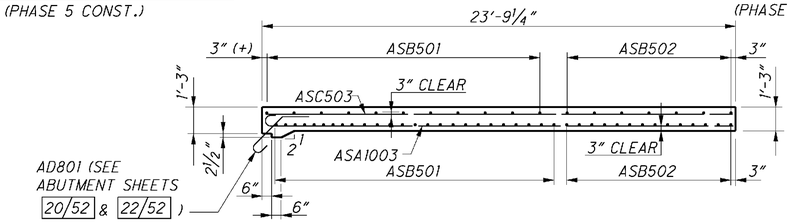

SECTION C-C

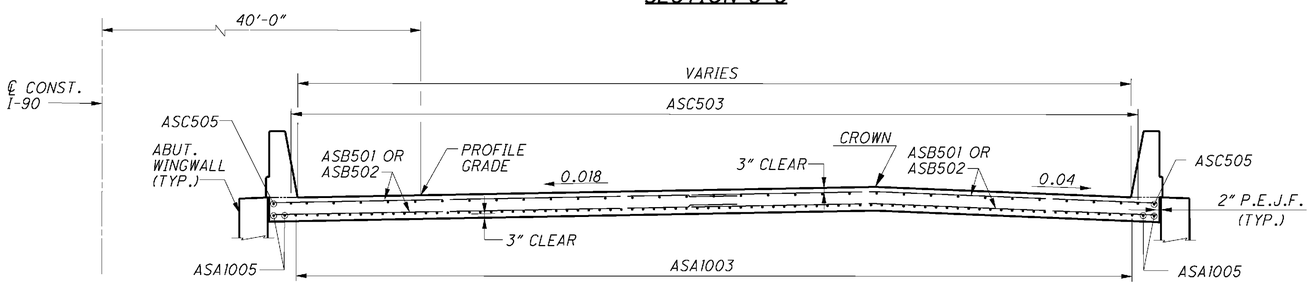

SECTION D-D

MINIMUM LAP LENGTHS
NO. 5 BAR = 2'-5"

REINFORCING STEEL LIST

MARK	NUMBER REAR	NUMBER FORWARD	NUMBER TOTAL	LENGTH	WEIGHT (LBS.)	TYPE	DIMENSIONS A	B	C	INC.
RASA1003	77	77	154	25'-11"	17,174	16	24'-6"			
RASA1005	4	4	8	16'-11"	582	16	15'-6"			
RASB501	72	72	144	25'-8"	3855	STR.				
RASB502	42	42	84	24'-8"	2161	STR.				
RASC503	31	31	62	24'-6"	1584	STR.				
RASC505	2	2	4	15'-6"	65	STR.				
RASP501	6	6	12	7'-5"	93	23	1'-1"	3'-2"	3'-0"	
RASP502	6	6	12	5'-6"	69	25				
RASP503	10	10	20	5'-6"	115	STR.				
RASP504	12	12	24	4'-3"	106	STR.				
RASP505	16	16	32	10'-0"	334	STR.				
RASP601	6	6	12	3'-9"	68	35	1'-10"	1'-1"	1'-1"	
SERIES RASP603	4 SETS OF 11	4 SETS OF 11	8 SETS OF 11	4'-4" TO 5'-2"	628	1	1'-1"	3'-5" TO 4'-3"		1"
RASP604	6	6	12	2'-9"	50	1	1'-1"	1'-10"		
RASP607	2	2	4	4'-9"	29	19	1'-10"	2'-10⅛"	3"	
RASP608	16	16	32	4'-4"	208	1	1'-1"	3'-5"		
				TOTAL = 27,121						

NOTE: REINFORCING LIST FOR INFORMATION ONLY.

TYPE-1

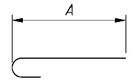

TYPE-16

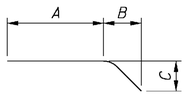

TYPE-19

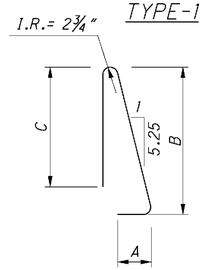

TYPE-23

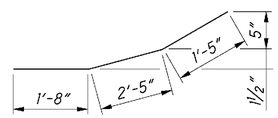

TYPE-25

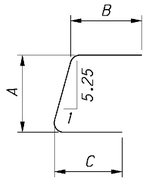

TYPE-35

BENDING DIAGRAMS

NOTES

1. ALL REINFORCING BAR MARKS SHALL BE PREFIXED "R".
2. BAR DIMENSIONS ARE OUT TO OUT UNLESS NOTED OTHERWISE.
3. ALL REINFORCING STEEL TO BE EPOXY COATED.
4. I.R. DENOTES INSIDE RADIUS.
5. BAR SIZE AND LOCATION ARE INDICATED IN THE BAR MARK. THE ALPHABETICAL LETTERS INDICATE LOCATION. THE FIRST DIGIT OF THE THREE DIGIT MARK AND THE FIRST TWO DIGITS OF THE FOUR DIGIT MARK INDICATE BAR SIZE NUMBER.

   EXAMPLE: ASC 502 — NO. 5 SIZE BAR; APPROACH SLAB
6. FOR PARAPET DETAILS, SEE SHEET 47/52.
7. FOR ABBREVIATIONS, SEE SHEET 5/52.
8. FOR REFERENCE CHORD LAYOUT, SEE SHEET 3/52.
9. LONGITUDINAL REINFORCEMENT, EXCEPT BARS AT EDGE OF SLAB, SHALL BE PLACED PARALLEL TO THE REFERENCE CHORD.
10. FOR ADDITIONAL DETAILS, SEE STD. DWG. AS-1-81.

DESIGN AGENCY
KCI ASSOCIATES OF OHIO, P.A.
388 S. MAIN ST., SUITE 401
AKRON, OHIO 44311

DESIGNED HK | DRAWN WEB | CHECKED CMK | REVIEWED FJB | DATE 6/5/09 | REVISED | STRUCTURE FILE NUMBER 0404209R

APROACH SLAB DETAILS - RIGHT STRUCTURE

BRIDGE NO. ATB-90-1450 R
1-90 OVER NORFOLK SOUTHERN RAILROAD

ATB-90-14.25
PID No. 25199

46/52

338/437

$FILES

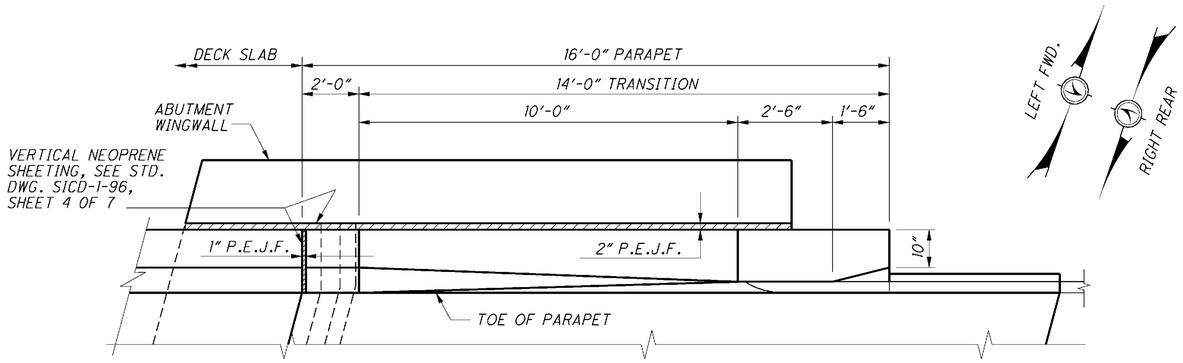

APPROACH SLAB PARAPET PLAN

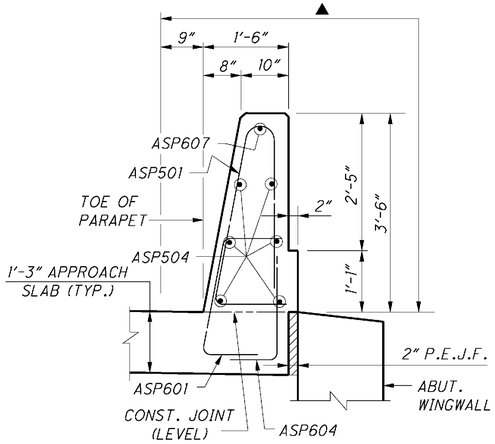

SECTION E-E

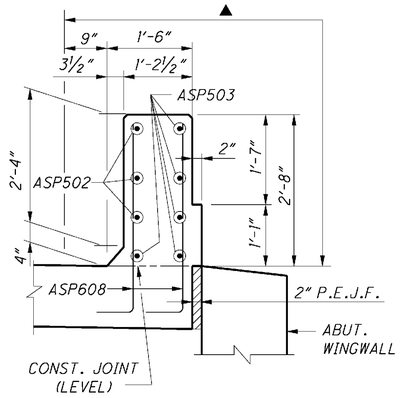

SECTION F-F

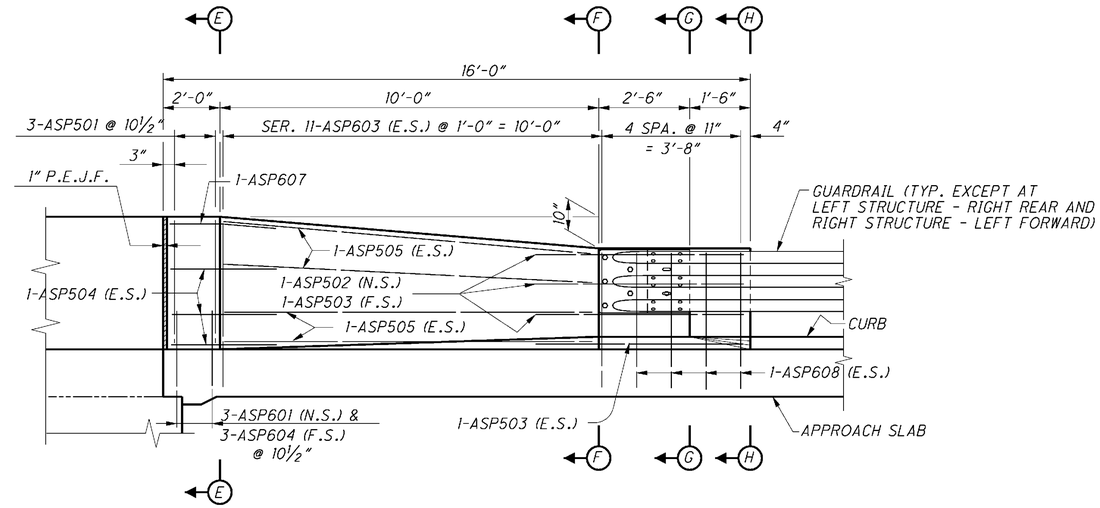

APPROACH SLAB PARAPET ELEVATION

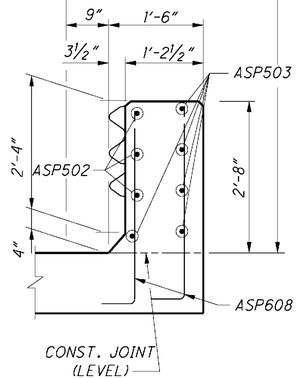

SECTION G-G

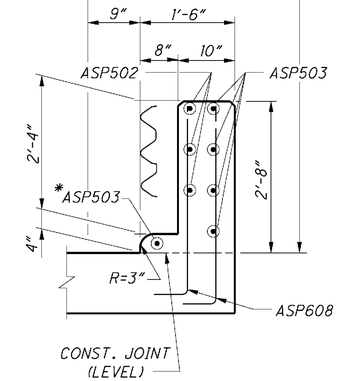

SECTION H-H

*FIELD BEND IF NECESSARY.

LEGEND

▲ LIMITS OF ITEM 512 - SEALING OF CONCRETE SURFACES (EPOXY-URETHANE)

NOTES

1. FOR APPROACH SLAB PLANS, SEE SHEET 45/52 AND 46/52 .
2. FOR ABBREVIATIONS, SEE SHEET 5/52 .
3. THE PARAPET SHALL BE INCLUDED WITH ITEM 526 - REINFORCED CONCRETE APPROACH SLAB, AS PER PLAN, FOR PAYMENT.
4. ALL REINFORCING BAR MARKS SHALL BE PREFIXED AS FOLLOWS:
   LEFT STRUCTURE - "L"
   RIGHT STRUCTURE - "R"

DESIGN AGENCY
KCI ASSOCIATES OF OHIO, P.A.
388 S. MAIN ST., SUITE 401
AKRON, OHIO 44311

DESIGNED	DRAWN	REVIEWED	DATE
HK	WEB	FJB	6/5/09
CHECKED	REVISED	STRUCTURE FILE NUMBER	
CMK		0404179L/0404209R	

APPROACH SLAB PARAPET DETAILS
BRIDGE NO. ATB-90-1450 L & R
I-90 OVER NORFOLK SOUTHERN RAILROAD

ATB-90-14.25
PID No. 25199

47/52

339/437

$FILE$

REINFORCING STEEL LIST

MARK	NUMBER REAR PHASE 3	NUMBER REAR PHASE 4	NUMBER FORWARD PHASE 3	NUMBER FORWARD PHASE 4	TOTAL	LENGTH	WEIGHT (LBS.)	TYPE	DIMENSIONS A	B	C	D	INC
ABUTMENTS													
LA501	8		5		13	20'-7"	279	3	7'-5"	2'-7"			
LA502	7				7	13'-2"	96	STR.					
LA503	1		1		2	21'-5"	45	3	7'-10"	2'-7"			
LA504	1				1	9'-6"	10	2	3'-7"	2'-7"	3'-7"		
LA505	2				2	12'-4"	26	2	5'-0"	2'-7"	5'-0"		
LA506	6				6	10'-1"	63	STR.					
LA507				1	1	9'-5"	10	3	1'-7"	2'-10"			
LA508	5		5		10	12'-1"	126	3	3'-2"	2'-7"			
LA509	4		4		8	5'-4"	45	2	1'-6"	2'-7"	1'-6"		
LA511	1				1	7'-7"	8	1	1'-0"	6'-9"			
LA512	6		7		13	20'-11"	284	3	3'-5"	6'-9"			
LA513	1		1		2	6'-4"	13	1	1'-0"	5'-6"			
LA514	1		1		2	3'-9"	6	STR.					
LA515	1		1		2	5'-0"	10	STR.					
LA516	1		1		2	10'-6"	22	2	3'-8"	3'-5"	3'-8"		
LA517	4				4	13'-2"	55	STR.					
LA518	16	48	16	48	128	5'-4"	712	1	2'-6"	3'-1"			
LA519	2				2	26'-8"	56	STR.					
LA521		4			4	12'-8"	53	STR.					
LA522		12		11	23	9'-3"	222	3	1'-6"	2'-10"			
LA523		2			2	16'-3"	34	3	5'-0"	2'-10"			
LA524		1			1	35'-1"	37	STR.					
LA525		1			1	36'-7"	38	STR.					
LA526		1	3		4	3'-9"	16	19	2'-5"	1'-3"	5"		
LA527			2		2	17'-2"	36	2	7'-5"	2'-7"	7'-5"		
LA528			2		2	13'-6"	28	2	5'-7"	2'-7"	5'-7"		
LA529			2		2	9'-6"	20	2	3'-7"	2'-7"	3'-7"		
LA530			7		7	11'-9"	86	STR.					
LA531			2		2	5'-6"	11	10	2'-3½"	9"	10"	2'-5"	
LA532			2		2	11'-4"	24	STR.					
LA533			4		4	9'-0"	38	STR.					
LA534	2		2		4	5'-0"	21	STR.					
LA535			2		2	11'-6"	24	STR.					
LA536			2		2	12'-9"	27	STR.					
LA537			1		1	25'-3"	26	STR.					
LA538			1		1	26'-10"	28	STR.					
LA539				2	2	36'-9"	77	STR.					
LA540				2	2	10'-1"	21	STR.					
LA541				2	2	10'-8"	22	STR.					
A601	16	26	16	20	78	3'-2"	371	16	2'-6"				
LA801	4				4	13'-2"	141	STR.					
LA802	1				1	11'-3"	30	STR.					
LA803	1		1		2	5'-0"	27	STR.					
LA804	4			1	5	10'-1"	134	STR.					
LA805	5				5	29'-2"	389	STR.					
LA806		2			2	12'-8"	68	STR.					
					SUB-TOTAL =		3915						

* INCLUDES 3 BARS IN CLOSURE POUR
** INCLUDES 6 BARS IN CLOSURE POUR

REINFORCING STEEL LIST

MARK	NUMBER REAR PHASE 3	NUMBER REAR PHASE 4	NUMBER FORWARD PHASE 3	NUMBER FORWARD PHASE 4	TOTAL	LENGTH	WEIGHT (LBS.)	TYPE	DIMENSIONS A	B	C	D	INC
ABUTMENTS													
LA807		1			1	35'-1"	94	STR.					
LA808		4			4	36'-7"	391	STR.					
LA809		1	1		2	6'-3"	33	19	4'-11"	1'-3"	5"		
LA810			5		5	11'-9"	157	STR.					
LA811			1		1	10'-6"	28	10	4'-8"	1'-6"	10"	4'-11"	
LA812			1		1	11'-4"	30	STR.					
LA813			3		3	9'-0"	72	STR.					
LA814			1		1	27'-9"	74	STR.					
LA815			4		4	29'-4"	313	STR.					
LA816				5	5	36'-9"	491	STR.					
LA818					1	10'-8"	28	STR.					
				1									
LAD801	15	* 23	15	* 23	76	5'-1"	1032	18	2'-9"	1'-0"	1'-0"		
LD501	34	** 50	34	** 50	168	9'-2"	4112	2	2'-11"	3'-7"	2'-11"		
LD502	17	* 25	17	* 25	84	7'-3"	1626	2	2'-5"	2'-8"	2'-5"		
LD801	11		11		22	23'-6"	1380	50					
LD802		11			11	33'-10"	994	51					
LD803				11	11	34'-1"	1001	51					
LAW501	7		8		15	19'-9"	309	2	9'-5"	1'-2"	9'-5"		
LAW502	7	8	8	6	29	9'-1"	275	2	4'-1"	1'-2"	4'-1"		
LAW503	2			2	4	6'-3"	26	2	2'-8"	1'-2"	2'-8"		
LAW504	6	8	6	6	26	5'-11"	160	2	2'-6"	1'-2"	2'-6"		
LAW505	3			3	6	7'-3"	45	STR.					
LAW506	1			1	2	7'-4"	15	STR.					
LAW507	2	2	2		6	6'-11"	43	2	3'-0"	1'-2"	3'-0"		
LAW508	3		6	3	12	14'-8"	184	STR.					
LAW509	2	2	2	2	8	7'-7"	63	19	2'-5"	4'-8"	2'-3"		
LAW510		8		6	14	10'-3"	150	1	1'-0"	9'-5"			
LAW511		8		6	14	7'-8"	112	STR.					
LAW512		6			6	9'-8"	60	STR.					
LAW513		6			6	17'-8"	111	STR.					
LAW514			6		6	7'-9"	48	STR.					
LAW515				2	2	6'-9"	14	2	2'-11"	1'-2"	2'-11"		
LAW516		2			2	6'-7"	14	2	2'-10"	1'-2"	2'-10"		
LAW517			2		2	6'-5"	13	2	2'-9"	1'-2"	2'-9"		
LAW518			2		2	7'-10"	16	STR.					
LAW519		2			2	9'-9"	20	STR.					
LAW520	3			3	6	7'-6"	47	STR.					
LAW521	3			3	6	14'-11"	93	STR.					
LAW522	1			1	2	7'-7"	16	STR.					
					TOTAL =		17,605						

NOTE: FOR BAR BENDING DIAGRAMS AND NOTES SEE SHEET 49/52.

DESIGN AGENCY
KCI ASSOCIATES OF OHIO, P.A.
388 S. MAIN ST., SUITE 401
AKRON, OHIO 44311

DESIGNED HK | DRAWN JLS | CHECKED CMK | REVIEWED FJB | DATE 6/5/09 | REVISED | STRUCTURE FILE NUMBER 0404179L

REINFORCING STEEL LIST - LEFT STRUCTURE
BRIDGE NO. ATB-90-1450 L
I-90 OVER NORFOLK SOUTHERN RAILROAD

ATB-90-14.25
PID No. 25199

$FILES

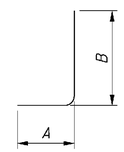

TYPE-1

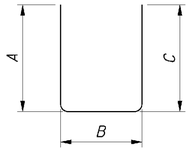

TYPE-2

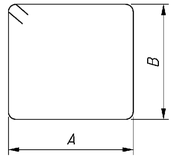

TYPE-3

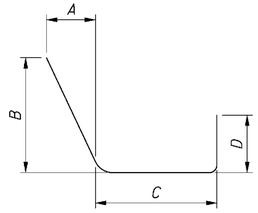

TYPE-10

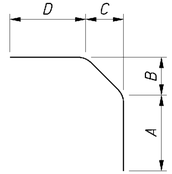

TYPE-13

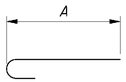

TYPE-16

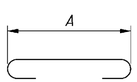

TYPE-17

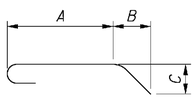

TYPE-18

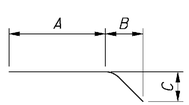

TYPE-19

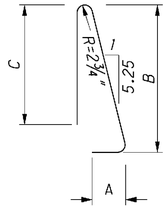

TYPE-23

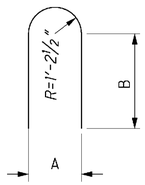

TYPE-24

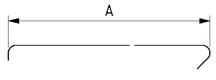

TYPE-32

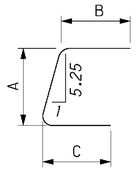

TYPE-35

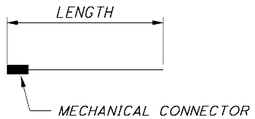

TYPE-50

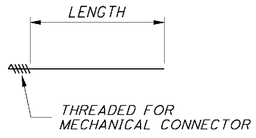

TYPE-51

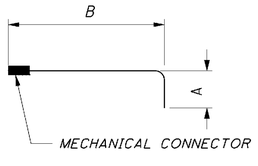

TYPE-52

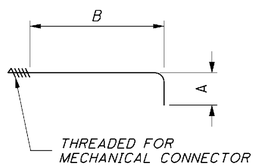

TYPE-53

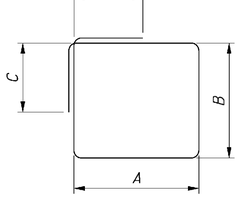

TYPE-54

MECHANICAL CONNECTOR

BENDING DIAGRAMS

NOTES

1. BAR DIMENSIONS ARE OUT TO OUT UNLESS NOTED OTHERWISE.

2. ALL REINFORCING STEEL TO BE EPOXY COATED.

3. R. DENOTES INSIDE RADIUS.

4. BAR SIZE AND LOCATION ARE INDICATED IN THE BAR MARK. THE FIRST ALPHABETICAL LETTER INDICATES STRUCTURE, THE SECOND ALPHABETICAL LETTER INDICATES LOCATION . THE FIRST DIGIT OF THE THREE DIGIT MARK AND THE FIRST TWO DIGITS OF THE FOUR DIGIT MARK INDICATES BAR SIZE NUMBER.

EXAMPLES:

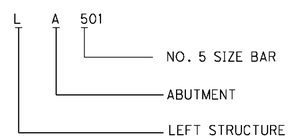

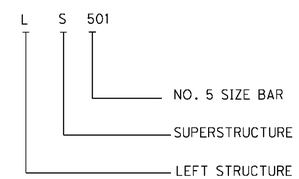

5. FOR ABBREVIATIONS, SEE SHEET 5 52.

$FILES

REINFORCING STEEL LIST - LEFT STRUCTURE

BRIDGE NO. ATB-90-1450 L
1-90 OVER NORFOLK SOUTHERN RAILROAD

DESIGN AGENCY
KCI ASSOCIATES OF OHIO, P.A.
388 S. MAIN ST., SUITE 401
AKRON, OHIO 44311

DESIGNED	DRAWN	REVIEWED	DATE
CMK	RTS	FJB	6/5/09
CHECKED	REVISED	STRUCTURE FILE NUMBER	
HK		0404179L	

ATB-90-14.25
PID No. 25199

REINFORCING STEEL LIST

MARK	NUMBER				TOTAL	LENGTH	WEIGHT (LBS.)	TYPE	DIMENSIONS				
	PIER 1		PIER 2						A	B	C	D	INC
	PHASE 3	PHASE 4	PHASE 3	PHASE 4									
PIERS													
LP401	23		23		46	8'-3"	254	24	2'-6"	2'-2"			
LP402	46	46	46	46	184	3'-6"	430	19	2'-5"	0'-6⅛"	0'-11½"		
LP403		23		23	46	15'-1"	463	24	2'-6"	5'-7"			
LP404	46		46		92	16'-7"	1019	STR.					
LP405	207	69	207	69	552	3'-6"	1291	32	2'-6"				
LP406	27	9	27	9	72	7'-2"	345	2	2'-6"	2'-5"	2'-6"		
LP407	5	5	5	5	20	7'-4"	98	2	2'-6"	2'-7"	2'-6"		
LP408	1 SER. OF 4	1 SER. OF 4	1 SER. OF 4	1 SER. OF 4	4 SER. OF 4	14'-10" TO 17'-1"	171	2	6'-3" TO 7'-4½"	2'-7"	6'-3" TO 7'-4½"		9"
LP409	1	1	1	1	4	17'-8"	47	2	7'-8"	2'-7"	7'-8"		
LP410		30		30	60	4'-5"	177	1	2'-0"	2'-6"			
LP501		13		13	26	5'-2"	140	STR.					
LP502	13		13		26	16'-2"	438	STR.					
LP503	12	5	12	5	34	8'-8"	307	STR.					
LP504	14	14	14	14	56	4'-0"	234	STR.					
LP505		10		10	20	11'-0"	229	STR.					
LP506	10		10		20	19'-1"	398	STR.					
LP507	2		2		4	17'-9"	74	STR.					
LP508	2		2		4	15'-3"	64	STR.					
LP509		2		2	4	9'-8"	40	STR.					
LP510		2		2	4	7'-2"	30	STR.					
LP601	14	14	14	14	56	3'-2"	266	16	2'-6"				
LP602	4	4	4	4	16	6'-6"	156	19	2'-5"	3'-10"	1'-5"		
LP603	3	3	3	3	12	12'-5"	224	54	2'-9½"	2'-10"	1'-0"		
LP604	2	2	2	2	8	4'-2"	50	1	1'-7"	2'-9½"			
LP801	18	6	18	6	48	10'-6"	1346	17	8'-8"				
LP802		4		4	8	37'-6"	801	53	6'-2"	31'-7"			
LP803	4		4		8	29'-0"	619	52	6'-2"	23'-1"			
LP901	5	5	5	5	20	4'-1"	278	1	1'-7"	2'-9½"			
LP902	2	2	2	2	8	2'-9"	75	STR.					
LP1101	51	15	51	15	132	16'-6"	11,572	1	2'-0"	14'-10"			
LP1102	8	8	8	8	32	14'-7"	2479	STR.					
LP1103	54	18	54	18	144	30'-5"	23,271	STR.					
LP1104	5	5	5	5	20	28'-4"	3011	STR.					
					TOTAL =		50,397						

REINFORCING STEEL LIST

MARK	NUMBER			LENGTH	WEIGHT (LBS.)	TYPE	DIMENSIONS				
	PHASE 3	PHASE 4	TOTAL				A	B	C	D	INCR.
SUPERSTRUCTURE											
LS401	174	276	450	30'-0"	9018	STR.					
LS402	29	46	75	13'-10"	693	STR.					
LS501	184	184	368	7'-5"	2847	23	1'-1"	3'-2"	3'-0"		
LS502	222	330	552	30'-0"	17272	STR.					
LS504	58	90	148	45'-3"	6964	STR.					
LS506	31	49	80	16'-10"	1405	STR.					
LS601	184	184	368	3'-7"	1981	35	1'-8"	1'-1"	1'-1"		
LS604	184	184	368	2'-7"	1428	1	1'-1"	1'-8"			
LS605		592	592	33'-0"	29343	STR.					
LS606	600		600	25'-0"	22530	STR.					
LS607		2 SER. OF 15	2 SER. OF 15	4'-2" TO 29'-10"	766	STR.					1'-10"
LS608		2 SER. OF 17	2 SER. OF 17	4'-5" TO 32'-5"	941	STR.					1'-9"
LS609	2 SER. OF 12		2 SER. OF 12	3'-10" TO 24'-0"	502	STR.					1'-10"
LS610	2 SER. OF 11		2 SER. OF 11	4'-6" TO 22'-0"	438	STR.					1'-9"
LS611	6	6	12	30'-10"	541	STR.					
LS612	1	1	2	19'-10"	60	STR.					
LS801	5		5	23'-5"	313	50					
LS802		5	5	33'-11"	453	51					
LS803	5		5	23'-6"	314	50					
LS804		5	5	34'-1"	455	51					
				TOTAL = 98284							

NOTE: FOR BAR BENDING DIAGRAMS AND NOTES SEE SHEET 49/52.

DESIGN AGENCY
KCI ASSOCIATES OF OHIO, P.A.
388 S. MAIN ST., SUITE 401
AKRON, OHIO 44311

DESIGNED RKP | DRAWN RTS | CHECKED HK | REVIEWED FJB | DATE 6/5/09 | REVISED | STRUCTURE FILE NUMBER 0404179L

REINFORCING STEEL LIST - LEFT STRUCTURE

BRIDGE NO. ATB-90-1450 L
1-90 OVER NORFOLK SOUTHERN RAILROAD

ATB-90-14.25
PID No. 25199

$FILES

REINFORCING STEEL LIST

MARK	NUMBER REAR PHASE 5	NUMBER FORWARD PHASE 5	TOTAL	LENGTH	WEIGHT (LBS.)	TYPE	DIMENSIONS A	B	C	D	INC
ABUTMENTS											
RA501	2	6	8	11'-5"	95	STR.					
RA502	2		2	11'-8"	24	STR.					
RA503	2		2	15'-7"	33	3	4'-8"	2'-10"			
RA504	9		9	8'-7"	81	3	1'-2"	2'-10"			
RA505	1		1	8'-9"	9	3	1'-3"	2'-10"			
RA506	3		3	11'-3"	35	STR.					
RA507	1		1	10'-9"	11	STR.					
RA508	2		2	6'-6"	14	STR.					
RA509	2		2	3'-3"	7	STR.					
RA510	4		4	4'-8"	19	STR.					
RA511	2		2	6'-8"	14	10	3'-5"	1'-1"	10"	2'-5"	
RA512	3		3	11'-2"	35	2	4'-5"	2'-7"	5'-5"		
RA513	2	6	8	12'-1"	101	3	3'-2"	2'-7"			
RA514	4		4	8'-8"	36	2	3'-2"	2'-7"	3'-2"		
RA515	4	4	8	6'-10"	57	2	2'-3"	2'-7"	2'-3"		
RA516	1		1	17'-10"	19	2	7'-9"	2'-7"	7'-9"		
RA518	62	62	124	5'-8"	733	1	3'-0"	2'-10"			
RA519	1	1	2	5'-6"	11	STR.					
RA520	1	1	2	3'-10"	8	STR.					
RA521	1	1	2	6'-4"	13	1	1'-0"	5'-6"			
RA522	1	1	2	11'-6"	24	2	4'-2"	3'-5"	4'-2"		
RA523	2	1	3	21'-11"	69	3	3'-5"	7'-3"			
RA524	2		2	4'-8"	10	19	3'-3"	1'-4½"	5½"		
RA525	2		2	4'-5"	9	STR.					
RA526	3		3	27'-6"	86	STR.					
RA527	1		1	26'-0"	27	STR.					
RA528	1	1	2	3'-10"	8	19	2'-5"	1'-4½"	5½"		
RA531		10	10	4'-7"	58	STR.					
RA532		3	3	12'-4"	39	2	5'-0"	2'-7"	5'-0"		
RA533		1	1	21'-5"	22	3	7'-10"	2'-7"			
RA534		2	2	3'-9"	8	STR.					
RA535		4	4	14'-7"	61	STR.					
RA536		4	4	2'-10"	12	STR.					
RA537		4	4	16'-3"	68	3	5'-0"	2'-10"			
RA538		12	12	9'-3"	116	3	1'-6"	2'-10"			
RA539		1	1	8'-1"	8	1	1'-0"	7'-3"			
RA540		3	3	27'-7"	86	STR.					
RA541		1	1	26'-1"	27	STR.					
RA601	42	44	86	3'-2"	409	16	2'-6"				
RA801	1	4	5	11'-5"	152	STR.					
RA802	1		1	11'-8"	31	STR.					
RA803	2		2	11'-3"	60	STR.					
RA804	1		1	10'-9"	29	STR.					
RA805	1		1	6'-6"	17	STR.					
RA806	1		1	3'-3"	9	STR.					
RA807	4		4	4'-8"	50	STR.					
RA808	1		1	9'-1"	24	10	3'-5"	1'-1"	10"	4'-11"	
RA809	9		9	28'-9"	691	STR.					
				SUB-TOTAL =	3537						

REINFORCING STEEL LIST

MARK	NUMBER REAR PHASE 5	NUMBER FORWARD PHASE 5	TOTAL	LENGTH	WEIGHT (LBS.)	TYPE	DIMENSIONS A	B	C	D	INC
ABUTMENTS											
RA810	1		1	27'-3"	73	STR.					
RA811	1	1	2	6'-4"	34	19	4'-11"	1'-4 ½"	5 ½"		
RA812		4	4	4'-7"	49	STR.					
RA813		1	1	2'-7"	7	STR.					
RA814		1	1	3'-9"	10	STR.					
RA815		2	2	14'-7"	78	STR.					
RA816		3	3	2'-10"	23	STR.					
RA817		9	9	28'-10"	693	STR.					
RA818		1	1	27'-4	73	STR.					
RAD801	32	32	64	5'-1"	868	18	2'-9"	1'-0"	1'-0"		
RD501	72		72	9'-4"	701	2	3'-0"	3'-7"	3'-0"		
RD502	36	36	72	7'-3"	544	2	2'-5"	2'-8"	2'-5"		
RD503		72	72	9'-8"	726	2	3'-2"	3'-7"	3'-2"		
RD801	22		22	27'-0"	1586	STR.					
RD802		22	22	27'-2"	1596	STR.					
RAW540	7	7	14	10'-9"	157	1	1'-0"	9'-11"			
RAW541	7	7	14	8'-4"	122	STR.					
RAW542	14	16	30	9'-1"	284	2	4'-1"	1'-2"	4'-1"		
RAW543	2		2	6'-9"	14	2	2'-11"	1'-2"	2'-11"		
RAW544	4		4	6'-3"	26	2	2'-8"	1'-2"	2'-8"		
RAW545	14	14	28	5'-11"	173	2	2'-6"	1'-2"	2'-6"		
RAW546	4	4	8	8'-8"	72	STR.					
RAW547	1		1	8'-9"	9	STR.					
RAW548	9		9	15'-8"	147	STR.					
RAW549	4	4	8	8'-5"	70	19	3'-0"	4'-11"	2'-3 ½"		
RAW550	3		3	15'-11"	50	STR.					
RAW551	7	9	16	20'-9"	346	2	9'-11"	1'-2"	9'-11"		
RAW552	4	4	8	8'-11"	74	STR.					
RAW553	8		8	7'-8"	64	STR.					
RAW554											
RAW555	1		1	9'-0"	9	STR.					
RAW556	2		2	6'-11"	14	2	3'-0"	1'-2"	3'-10"		
RAW557	2		2	7'-9"	16	STR.					
RAW558		3	3	16'-8"	52	STR.					
RAW559		3	3	16'-11"	53	STR.					
RAW560		6	6	19'-8"	123	STR.					
RAW561		8	8	11'-8"	97	STR.					
RAW562		1	1	9'-3"	10	STR.					
RAW563		1	1	9'-6"	10	STR.					
RAW564		2	2	6'-5"	13	2	2'-9"	1'-2"	2'-9"		
RAW565		2	2	7'-1"	15	2	3'-1"	1'-2"	3'-1"		
RAW566		2	2	6'-7"	14	2	2'-10"	1'-2"	2'-10"		
RAW567		2	2	12'-3"	26	STR.					
				TOTAL =	12,686						

NOTE: FOR BAR BENDING DIAGRAMS AND NOTES SEE SHEET 49/52 .

DESIGN AGENCY
KCI ASSOCIATES OF OHIO, P.A.
388 S. MAIN ST., SUITE 401
AKRON, OHIO 44311

DESIGNED HK | DRAWN JLS | CHECKED CMK | REVIEWED FJB | DATE 6/5/09 | REVISED | STRUCTURE FILE NUMBER 0404209R

REINFORCING STEEL LIST - RIGHT STRUCTURE

BRIDGE NO. ATB-90-1450 R
I-90 OVER NORFOLK SOUTHERN RAILROAD

ATB-90-14.25
PID No. 25199

$FILES

REINFORCING STEEL LIST

MARK	NUMBER PIER 1 PHASE 5	NUMBER PIER 2 PHASE 5	TOTAL	LENGTH	WEIGHT (LBS.)	TYPE	DIMENSIONS A	B	C	D	INC
PIERS											
RP401	24	24	48	13'-9"	441	24	2'-6"	4'-11"			
RP402	48	48	96	3'-6"	224	19	2'-5"	0'-6⅛"	0'-11½"		
RP403	24	24	48	21'-1"	676	24	2'-6"	8'-7"			
RP404	30	30	60	5'-1"	204	1	2'-8"	2'-6"			
RP405	216	216	432	3'-6"	1010	32	2'-6"				
RP406	27	27	54	7'-2"	259	2	2'-6"	2'-5"	2'-6"		
RP407	10	10	20	7'-4"	98	2	2'-6"	2'-7"	2'-6"		
RP408	2 SER. OF 4	2 SER. OF 4	4 SER. OF 4	14'-10" TO 17'-1"	171	2	6'-3" TO 7'-4½"	2'-7"	6'-3" TO 7'-4½"		9"
RP409	2	2	4	17'-8"	47	2	7'-8"	2'-7"			
RP501	13	13	26	8'-2"	221	STR.					
RP502	13	13	26	4'-6"	122	STR.					
RP503	11	11	22	8'-8"	199	STR.					
RP504	28	28	56	4'-0"	234	STR.					
RP505	10	10	20	14'-0"	292	STR.					
RP506	10	10	20	10'-4"	216	STR.					
RP507	2	2	4	10'-0"	42	STR.					
RP508	2	2	4	6'-6"	27	STR.					
RP509	2	2	4	12'-8"	53	STR.					
RP510	2	2	4	10'-2"	42	STR.					
RP601	28	28	56	3'-2"	266	16	2'-6"				
RP602	8	8	16	6'-6"	156	19	2'-5"	3'-10"	1'-5"		
RP603	6	6	12	12'-5"	224	51	2'-9½"	2'-10"	1'-0"		
RP604	4	4	8	4'-2"	50	1	1'-7"	2'-9½"			
RP801	15	15	30	10'-6"	841	17	8'-8"	23'-6"			
RP802	8	8	16	29'-5"	1257	1	6'-2"				
RP901	10	10	20	4'-1"	278	1	1'-7"	2'-9½"			
RP902	4	4	8	2'-9"	75	STR.					
RP1101	44	44	88	16'-6"	7714	1	2'-0"	14'-10"			
RP1102	20	20	40	14'-7"	3099	STR.					
RP1103	54	46	108	31'-0"	17,788	STR.					
RP1104	10	54	20	28'-11"	3073	STR.					
			TOTAL =		39,399						

REINFORCING STEEL LIST

MARK	NUMBER PHASE 5	LENGTH	WEIGHT (LBS.)	TYPE	DIMENSIONS A	B	C	D	INCR.
SUPERSTRUCTURE (PHASE 5)									
RS401	384	30'-0"	7695	STR.					
RS402	64	13'-11"	595	STR.					
RS501	368	7'-5"	2847	23	1'-1"	3'-2"	3'-0"		
RS502	480	30'-0"	15,019	STR.					
RS503	80	16'-11"	1412	STR.					
RS504	126	45'-3"	5947	STR.					
RS601	368	3'-5"	1889	35	1'-7"	1'-1"	1'-1"		
RS602	12	30'-0"	541	STR.					
RS603	2	19'-11"	60	STR.					
RS604	368	2'-6"	1382	2	1'-1"	1'-7"			
RS605	598	24'-10"	22,305	STR.					
RS606	302	20'-9"	9412	STR.					
RS607	298	28'-11"	12,943	STR.					
RS608	1 SER. OF 12	4'-3" TO 24'-0"	255	STR.					1'-9½"
RS609	2 SER. OF 10	5'-10" TO 22'-0"	418	STR.					1'-9½"
RS611	1 SER. OF 13	5'-0" TO 26'-0"	303	STR.					1'-9"
RS612	1 SER. OF 10	5'-11" TO 22'-1"	210	STR.					1'-9½"
RS613	1 SER. OF 13	6'-2" TO 27'-8"	330	STR.					1'-9½"
RS614	1 SER. OF 9	3'-8" TO 18'-0"	146	STR.					1'-9½"
RS615	1 SER. OF 14	4'-10" TO 28'-2"	347	STR.					1'-9½"
RS805	10	27'-0	721	STR.					
RS806	10	27'-2"	725	STR.					
	SUB-TOTAL = 85,502								

NOTE: FOR BAR BENDING DIAGRAMS AND NOTES SEE SHEET 49/52.

DESIGN AGENCY
KCI ASSOCIATES OF OHIO, P.A.
388 S. MAIN ST., SUITE 401
AKRON, OHIO 44311

DESIGNED RKP | DRAWN RTS | CHECKED HK | REVIEWED FJB | DATE 6/5/09 | REVISED

STRUCTURE TITLE NUMBER
0404209R

REINFORCING STEEL LIST - RIGHT STRUCTURE

BRIDGE NO. ATB-90-1450 R
I-90 OVER NORFOLK SOUTHERN RAILROAD

ATB-90-14.25
PID No. 25199

52/52

344/437

$FILES

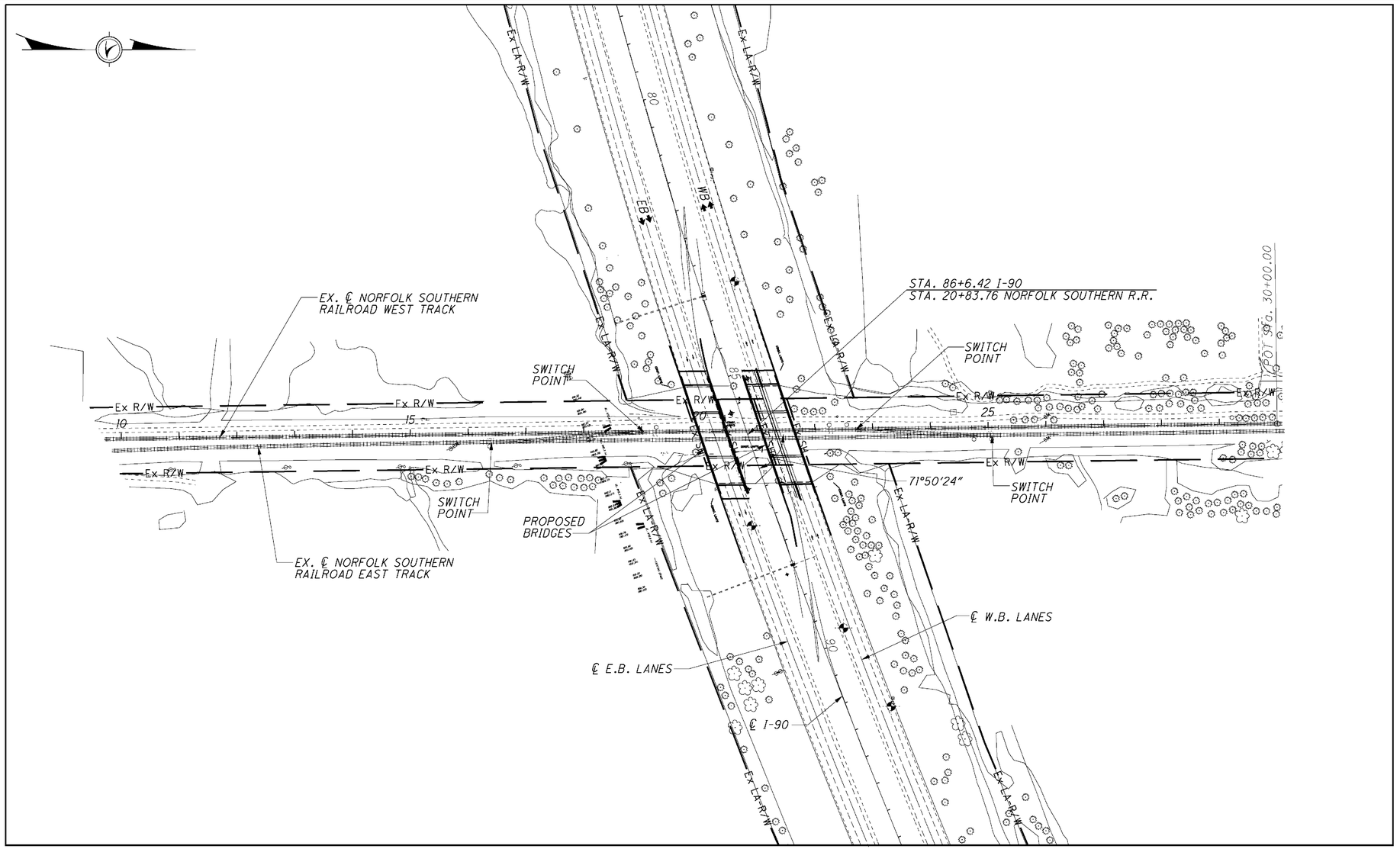

PLAN

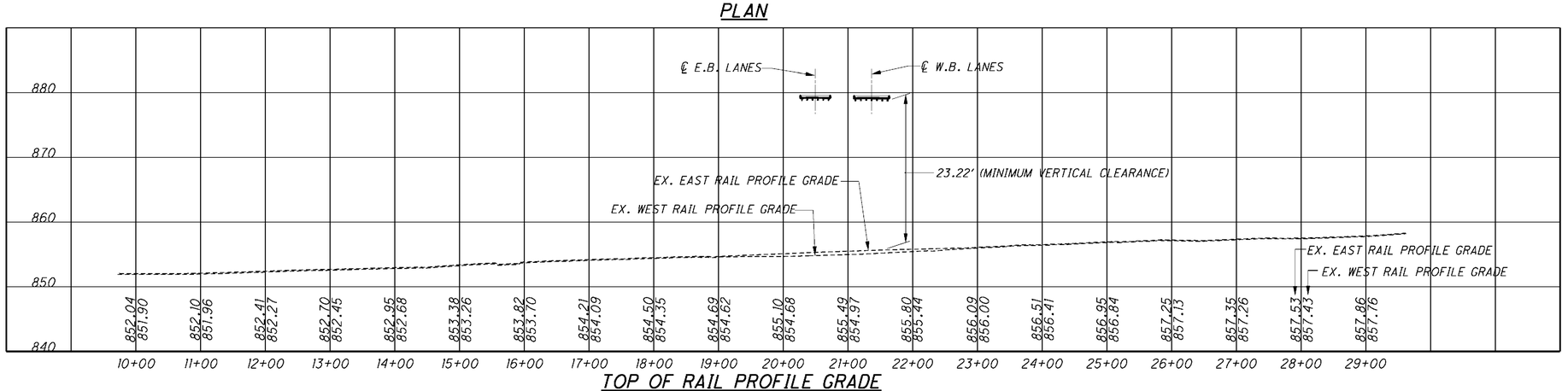

TOP OF RAIL PROFILE GRADE

TRAIN DATA	
DAY THRU TRAINS:	6
DAY SWITCHING TRAINS:	2
NIGHT THRU TRAINS:	8
NIGHT SWITCHING TRAINS:	0

0 50 100 200
HORIZONTAL SCALE IN FEET

CALCULATED EMS
CHECKED YRY

NORFOLK SOUTHERN RAILROAD
SUPPLEMENTAL SITE PLAN

ATB-90-14.25

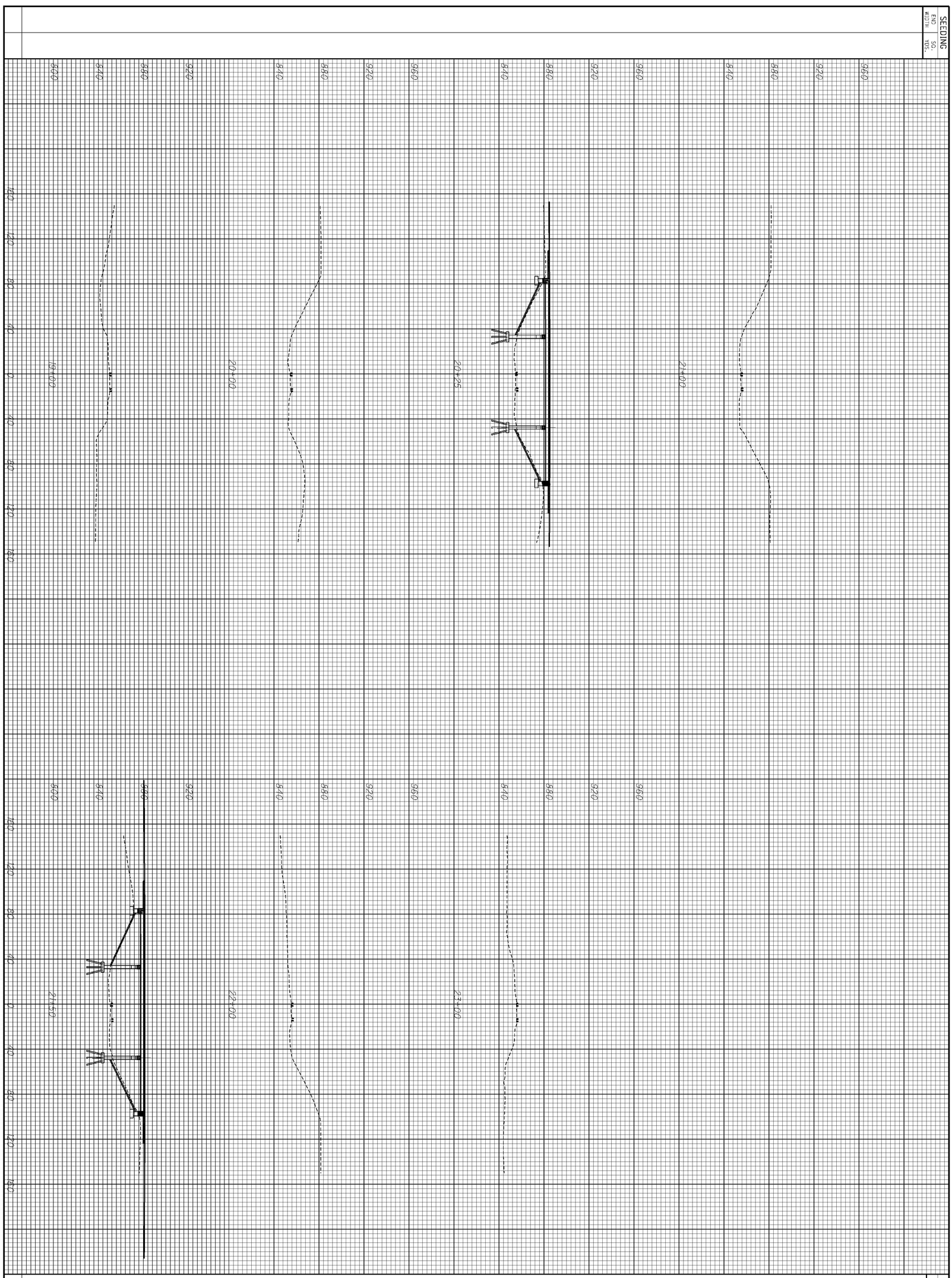

346
437

ATB-90-14.25

NORFOLK SOUTHERN RAILROAD
CROSS SECTIONS

CALCULATED EMS
CHECKED YRY

TRANSVERSE SECTION

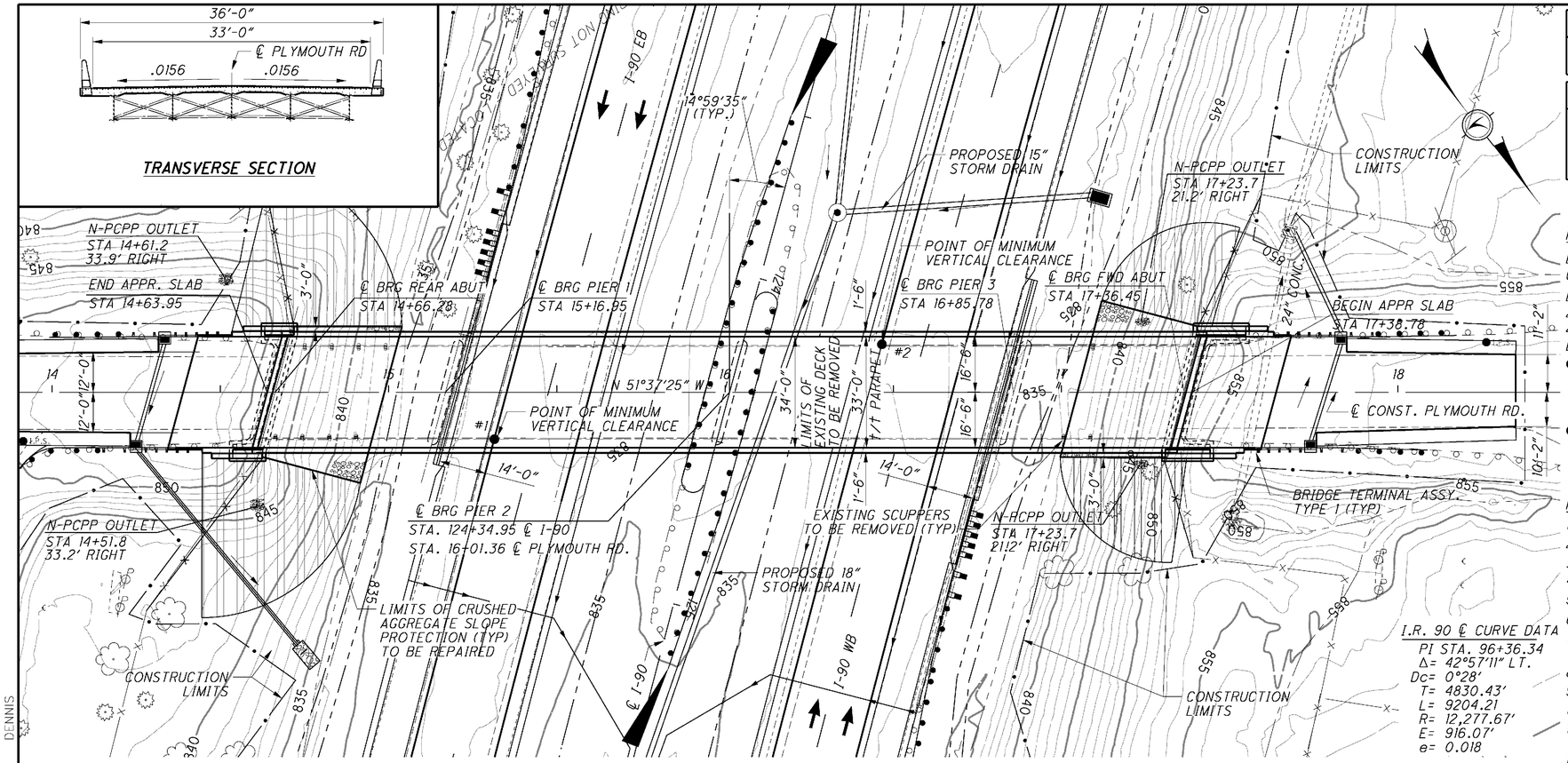

PLAN

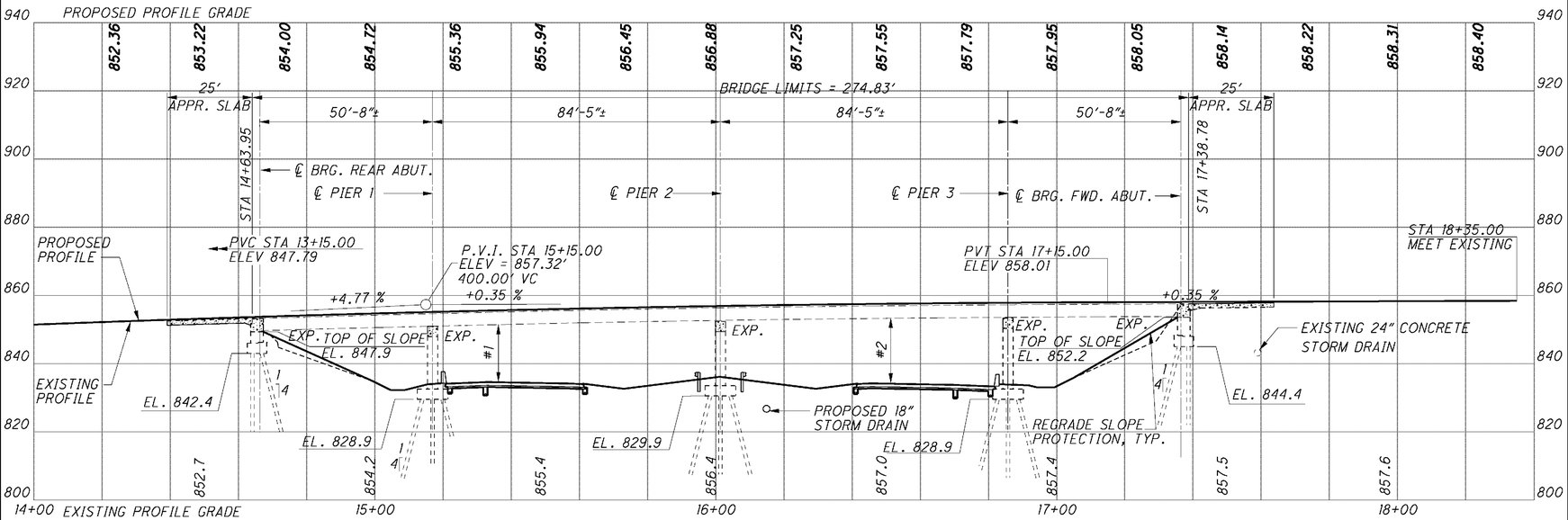

PROFILE ALONG ℄ CONSTRUCTION PLYMOUTH ROAD

BENCHMARK DATA

BM #1 STA. 119+58.67, ELEV. 837.56 , OFFSET 81.71 , LEFT
BM #2 STA. 128+58.25, ELEV. 834.07 , OFFSET 83.50 , LEFT

FIRST GUARDRAIL POST LOCATION

LEFT REAR	STA. 14+49.22
RIGHT REAR	STA. 14+40.38
LEFT FORWARD	STA. 17+67.34
RIGHT FORWARD	STA. 17+58.50

NOTES

EARTHWORK LIMITS SHOWN ARE APPROXIMATE. ACTUAL SLOPES SHALL CONFORM TO PLAN CROSS SECTIONS.

DESIGN TRAFFIC:
2008 ADT = 1520 2008 ADTT = 61
2028 ADT = 1810 2028 ADTT = 72
DIRECTIONAL DISTRIBUTION = 0.55

- #1 16'-6" REQUIRED MINIMUM VERTICAL CLEARANCE
  14'-8"± ACTUAL MINIMUM VERTICAL CLEARANCE (EXISTING)
  16'-8" VERTICAL CLEARANCE PROVIDED (PROPOSED)
  15'-6" TEMPORARY MINIMUM VERTICAL CLEARANCE
- #2 16'-6" REQUIRED MINIMUM VERTICAL CLEARANCE
  16'-3" ACTUAL MINIMUM VERTICAL CLEARANCE (EXISTING)
  18'-10" VERTICAL CLEARANCE PROVIDED (PROPOSED)
  15'-6" TEMPORARY MINIMUM VERTICAL CLEARANCE

PROPOSED WORK

1. RAISE THE EXISTING BEAMS 2".
2. REMOVE AND REPLACE THE REINFORCED CONCRETE DECK.
3. INSTALL WELDED SHEAR STUD CONNECTORS.
4. REMOVE AND REPLACE PIER CAPS.
5. REMOVE EXISTING SCUPPERS.
6. REPLACE THE BEARINGS WITH ELASTOMERIC BEARINGS.
7. REMOVE THE ABUTMENT BACKWALLS AND CONVERT TO SEMI-INTEGRAL ABUTMENTS.
8. CONSTRUCT NEW WINGWALLS.
9. REMOVE AND REPLACE THE APPROACH SLABS.
10. SEAL THE NEW CONCRETE SURFACES.
11. ADD CATCH BASINS TO ALL FOUR CORNERS OF THE STRUCTURE AS SHOWN.
12. REPAIR AND REGRADE ABUTMENT EMBANKMENT SLOPE PROTECTION.

EXISTING STRUCTURE

TYPE: EXISTING 4-SPAN CONTINUOUS, ROLLED STEEL BEAM WITH REINFORCED CONCRETE DECK, ABUTMENTS AND PIERS
SPANS: 50'-8", 84'-5", 84'-5", 50'-8" c/c BEARINGS
ROADWAY: 28'-0" F/F SAFETY CURB
LOADING: H15 (CF-130)
SKEW: 14°59'35" LF
APPROACH SLABS: 25'-0"
WEARING SURFACE: 1" MONOLITHIC CONCRETE
ALIGNMENT: TANGENT
CROWN: 3/16" / ft.
STRUCTURAL FILE NUMBER: 0404233
DATE BUILT: 1958

PROPOSED STRUCTURE

TYPE: EXISTING 4-SPAN CONTINUOUS ROLLED STEEL BEAMS WITH NEW COMPOSITE CONCRETE DECK, SEMI-INTEGRAL ABUTMENTS, WINGWALLS AND PIER CAPS.
SPANS: 50'-8", 84'-5", 84'-5", 50'-8" c/c BEARINGS
ROADWAY: 33'-0" TOE/TOE PARAPET
LOADING: HS25 CASE II AND ALTERNATE MILITARY; 60 PSF FWS
SKEW: 14°59'35" LF
APPROACH SLABS: 25'-0" LONG (AS-1-81)
WEARING SURFACE: 1" MONOLITHIC CONCRETE
ALIGNMENT: TANGENT
CROWN: .0156
COORDINATES: LATITUDE 41°50'03" N
LONGITUDE 80°44'09" W

DESIGN AGENCY
Palmer ENGINEERING
1300 CORNELL PARK DR
CINCINNATI, OHIO 45246

DESIGNED	DRAWN	REVIEWED	DATE
CEJ	VWK	MLJ	1/09
CHECKED	REVISED	STRUCTURE FILE NUMBER	
BJF		0404233	

ASHTABULA COUNTY
STA. 14+63.95
STA. 17+38.78

SITE PLAN
BRIDGE NO. ATB-90-1525
I.R. 90 UNDER PLYMOUTH ROAD

ATB-90-14.25
PID No. 25199

1 / 15

347
437

0:\ODOT\ATB\25199\bridge\ATB090_1525C\sheets\090_1525sp001.dgn 6/6/2009 9:51:10 AM DENNIS

REFERENCE SHALL BE MADE TO THE FOLLOWING STANDARD DRAWINGS

AS-1-81	DATED (REVISED)	07-19-02
SBR-1-99	DATED (REVISED)	07-19-02
SICD-1-96	DATED (REVISED)	07-19-02

DESIGN SPECIFICATIONS THIS STRUCTURE CONFORMS TO "STANDARD SPECIFICATIONS FOR HIGHWAY BRIDGES" ADOPTED BY THE AMERICAN ASSOCIATION OF STATE HIGHWAY AND TRANSPORTATION OFFICIALS, 17TH EDITION (2002), AND THE ODOT BRIDGE DESIGN MANUAL.

DESIGN LOADING

HS25 CASE II AND THE ALTERNATE MILITARY LOADING
FUTURE WEARING SURFACE (FWS) - 60 PSF

DESIGN DATA

ITEM 511 CLASS C CONCRETE, SUBSTRUCTURE - 4000 PSI
ITEM 511 CLASS HP CONCRETE, BRIDGE DECK - 4500 PSI
ITEM 511 CLASS HP CONCRETE, BRIDGE DECK (PARAPET) - 4500 PSI
ITEM 511 CLASS HP CONCRETE, SUPERSTRUCTURE - 4500 PSI
REINFORCING STEEL - ASTM A615, OR A996; GRADE 60
MINIMUM YIELD STRENGTH 60,000 PSI

DECK PROTECTION METHOD

EPOXY COATED REINFORCING STEEL
2½" CONCRETE COVER

MONOLITHIC WEARING SURFACE

MONOLITHIC WEARING SURFACE IS ASSUMED, FOR DESIGN PURPOSES, TO BE 1" THICK.

ITEM 202 PORTIONS OF STRUCTURE REMOVED, OVER 20' SPAN, AS PER PLAN INDICATED IN THE PLANS AND GENERAL NOTES AND THAT ARE NOT SEPARATELY LISTED FOR PAYMENT, EXCEPT FOR WEARING COURSE REMOVAL. ITEMS TO BE REMOVED INCLUDE ALL EXISTING MATERIALS BEING REPLACED BY NEW CONSTRUCTION AND MISCELLANEOUS ITEMS THAT ARE NOT SHOWN TO BE INCORPORATED INTO THE FINAL CONSTRUCTION AND ARE DIRECTED TO BE REMOVED BY THE ENGINEER. THE USE OF EXPLOSIVES, HEADACHE BALLS AND/OR HOE-RAMS WILL NOT BE PERMITTED. THE METHOD OF REMOVAL AND THE WEIGHT OF HAMMER SHALL BE APPROVED BY THE ENGINEER. PERFORM ALL WORK IN A MANNER THAT WILL NOT CUT, ELONGATE OR DAMAGE THE EXISTING REINFORCING STEEL TO BE PRESERVED. CHIPPING HAMMERS SHALL NOT BE HEAVIER THAN THE NOMINAL 90- POUND [CLASS. PNEUMATIC HAMMERS SHALL NOT BE PLACED IN DIRECT CONTACT WITH REINFORCING STEEL THAT IS TO BE RETAINED IN THE REBUILT STRUCTURE. SUBMIT CONSTRUCTION PLANS ACCORDING TO CMS 501.05. THIS ITEM SHALL ALSO INCLUDE REMOVAL OF EXISTING END CROSSFRAMES AND SCUPPERS, DRILLING OF 2" DIAMETER HOLES IN THE BEAM WEBS, AND DRILLING OF 1" DIAMETER HOLES IN THE BEAM FLANGES AT THE ABUTMENTS. THIS ITEM SHALL ALSO INCLUDE PLUGGING THE EXISTING ABUTMENT WEEPHOLES.

PROTECTION OF STEEL SUPPORT SYSTEMS: BEFORE DECK SLAB CUTTING IS PERMITTED, DRAW THE OUTLINE OF PRIMARY STEEL MEMBERS IN CONTACT WITH THE BOTTOM OF THE DECK ON THE SURFACE OF DECK. DRILL SMALL DIAMETER PILOT HOLES 2 INCHES OUTSIDE THESE LINES TO CONFIRM THE LOCATION OF FLANGE EDGES. DECK CUTS OVER OR WITHIN 2 INCHES OF FLANGE EDGES SHALL NOT EXTEND LOWER THAN THE BOTTOM LAYER OF DECK SLAB REINFORCING STEEL. CUTS MADE OUTSIDE 2 INCHES OF FLANGE EDGES MAY EXTEND THE FULL DEPTH OF THE DECK. PERFORM WORK CAREFULLY DURING CUTTING OF THE DECK SLAB TO AVOID DAMAGING STEEL MEMBERS THAT ARE TO BE INCORPORATED INTO THE PROPOSED STRUCTURE. REPLACE OR REPAIR STEEL MEMBERS DAMAGED BY THE DECK SLAB CUTTING OPERATIONS AT NO COST TO THE PROJECT. AT LEAST 7 DAYS BEFORE PERFORMING REPAIR WORK, SUBMIT A PROPOSED REPAIR PLAN, DEVELOPED BY AN OHIO REGISTERED PROFESSIONAL ENGINEER TO THE DIRECTOR. OBTAIN THE DIRECTOR'S APPROVAL BEFORE PERFORMING REPAIR.

REMOVAL METHODS: THE CONTRACTOR MAY REMOVE CONCRETE BY CUTTING AND BY MEANS OF HAND OPERATED PNEUMATIC HAMMERS EMPLOYING POINTED OR BLUNTED CHISEL TYPE TOOLS. FOR REMOVALS OVER STRUCTURAL MEMBERS (PRESTRESSED BOX BEAM, I-BEAM, STEEL BEAM STEEL GIRDER, ETC), THE CONTRACTOR MAY USE A HAMMER HEAVIER THAN 35 POUNDS BUT NOT TO EXCEED 90 POUNDS UNLESS APPROVED BY THE ENGINEER. REMOVAL METHODS OVER STRUCTURAL MEMBERS SHALL ENSURE ADEQUATE DEPTH CONTROL AND PREVENT NICKING OR GOUGING THE PRIMARY STRUCTURAL MEMBERS.

DUE TO THE POSSIBLE PRESENCE OF ATTACHMENTS (E.G., FINISHING MACHINE, SCUPPER AND FORM SUPPORTS, ETC.) TO EXISTING STRUCTURAL MEMBERS, PERFORM WORK CAREFULLY DURING DECK REMOVAL TO AVOID DAMAGING STRUCTURAL MEMBERS THAT ARE TO REMAIN. REPLACE OR REPAIR STRUCTURAL MEMBERS DAMAGED BY THE REMOVAL OPERATIONS AT NO COST TO THE PROJECT. AT LEAST 7 DAYS BEFORE PERFORMING REPAIR WORK, SUBMIT A PROPOSED REPAIR PLAN, DEVELOPED BY AN OHIO REGISTERED PROFESSIONAL ENGINEER TO THE DIRECTOR. OBTAIN THE DIRECTOR'S APPROVAL BEFORE PERFORMING REPAIR.

EXISTING WELDED ATTACHMENTS: REMOVE EXISTING WELDED ATTACHMENTS (E.G., FINISHING MACHINE AND FORM SUPPORTS; AND SUPPORTS FOR SCUPPERS AND BULB ANGLES WHICH ARE TO BE REMOVED) LOCATED IN THE DESIGNATED TENSION PORTIONS OF THE TOP FLANGES OF EXISTING STEEL MEMBERS AND GRIND THE FLANGE SURFACES SMOOTH. CAREFULLY GRIND PARALLEL TO THE FLANGES.

CUT LINE CONSTRUCTION JOINT PREPARATION: SAW CUT BOUNDARIES OF PROPOSED CONCRETE REMOVALS 1 INCH DEEP. REMOVE CONCRETE TO A ROUGH SURFACE. LEAVE THE EXISTING REINFORCING STEEL, IF REQUIRED IN THE PLANS, IN PLACE. INSTALL DOWEL BARS IF SPECIFIED. PRIOR TO CONCRETE PLACEMENT ABRASIVELY CLEAN JOINT SURFACES AND EXISTING EXPOSED REINFORCEMENT TO REMOVE LOOSE AND DISINTEGRATED CONCRETE AND LOOSE RUST. THOROUGHLY CLEAN THE JOINT SURFACE AND EXPOSED REINFORCEMENT OF ALL DIRT, DUST, RUST OR OTHER FOREIGN MATERIAL BY THE USE OF WATER, AIR UNDER PRESSURE, OR OTHER METHODS THAT PRODUCE SATISFACTORY RESULTS. EXISTING REINFORCING STEEL DOES NOT HAVE TO HAVE A BRIGHT STEEL FINISH, BUT REMOVE ALL PACK AND LOOSE RUST. THOROUGHLY DRENCH EXISTING CONCRETE SURFACES WITH CLEAN WATER AND ALLOW TO DRY TO A DAMP CONDITION BEFORE PLACING CONCRETE.

EXISTING WEEPHOLES SHALL BE INJECTED WITH NON SHRINK MORTAR THAT COMPLIES WITH CMS 705.22. MORTAR SHALL BE FINISHED FLUSH WITH THE FACE OF THE ABUTMENT BREASTWALLS.

MEASUREMENT & PAYMENT: THE DEPARTMENT WILL MEASURE THE QUANTITY OF REMOVALS ON A LUMP SUM BASIS. THE DEPARTMENT WILL PAY FOR THE ACCEPTED QUANTITIES OF REMOVALS AT THE CONTRACT PRICE FOR ITEM 202, PORTIONS OF STRUCTURE REMOVED, AS PER PLAN.

ITEM 202 APPROACH SLAB REMOVED, AS PER PLAN
THIS ITEM INCLUDES REMOVAL OF EXISTING ASPHALT ON THE APPROACH SLABS.

ITEM 509 REINFORCING STEEL, REPLACEMENT OF EXISTING REINFORCING STEEL, AS PER PLAN REPLACE ALL EXISTING REINFORCING BARS DEEMED BY THE ENGINEER TO BE UNUSABLE BECAUSE OF CORROSION. THE DEPARTMENT WILL MEASURE THE REPLACEMENT REINFORCING STEEL BY THE NUMBER OF POUNDS ACCEPTED IN PLACE. REPLACE ALL EXISTING REINFORCING STEEL BARS WHICH ARE TO BE INCORPORATED INTO THE NEW WORK AND ARE DEEMED BY THE ENGINEER TO BE MADE UNUSABLE BY CONCRETE REMOVAL OPERATIONS WITH NEW EPOXY COATED REINFORCING STEEL OF THE SAME SIZE AT NO COST TO THE DEPARTMENT.

ITEM 511 - CLASS HP CONCRETE, AS PER PLAN THE PROVISIONS OF ITEM 511 SHALL APPLY EXCEPT AS NOTED BELOW.

MIX OPTIONS: ALL SUPERSTRUCTURE, BRIDGE DECK, APPROACH SLABS AND PARAPET CONCRETE SHALL BE THIS MIX (HP4, AS PER PLAN). THE FOLLOWING PROPORTIONS WILL BE USED AS A STARTING MIX DESIGN.

CONCRETE TABLE
QUANTITIES PER CUBIC YARD
AGGREGATES (SSD)
MIX 4, AS PER PLAN (GGBF SLAG + MICROSILICA)

AGG TYPE	FINE AGG (LB)	#8 COARSE AGG (LB)	#57 COARSE AGG (LB)	TOTAL (LB)	CEMENT CONTENT	GGBF SLAG (LB)	MICRO SILICA (LB)	MAX WATER TO CEMENTITIOUS RATIO	AIR CONTENT ±2%
GRAVEL	1370	650	790	2810	440	190	30	0.42	6
LIMESTONE	1370	655	800	2820	440	190	30	0.42	6
SLAG	1370	570	695	2635	440	190	30	0.42	6

*ALL COARSE AGGREGATE SHALL HAVE AN ABSORPTION OF 1.00% OR GREATER AS DEFINED PER ASTM C127

BASIS OF PAYMENT: PAYMENT FOR THE ABOVE COMPLETED AND ACCEPTED QUANTITIES WILL BE MADE AT THE CONTRACT BID PRICE FOR:

ITEM 511 - CLASS HP CONCRETE, BRIDGE DECK, AS PER PLAN, CU YD

ITEM 511 - CLASS HP CONCRETE, BRIDGE DECK (PARAPET, AS PER PLAN, CU YD

ITEM 511 - CLASS HP CONCRETE, SUPERSTRUCTURE, AS PER PLAN, CU YD

ITEM 514 - FIELD PAINTING, MISC.; REPAIR PAINTING
THIS ITEM SHALL CONSIST OF REPAIRING AREAS OF THE EXISTING STEEL COATING SYSTEM DAMAGED BY REMOVAL OF SCUPPERS, END CROSSFRAMES, ETC. THE COATING SYSTEM SHALL BE OZEU FINISH COAT MATCHING THE EXISTING PAINT COLOR. PAYMENT FOR THIS WORK SHALL INCLUDE ALL LABOR, MATERIALS AND EQUIPMENT NECESSARY TO ACCESS THE REPAIR LOCATIONS, PREPARE THE SURFACE AND APPLY THE COATING.

ITEM 516, JACKING AND TEMPORARY SUPPORT OF SUPERSTRUCTURE, AS PER PLAN: THIS WORK CONSISTS OF RAISING OR REPOSITIONING EXISTING STRUCTURES TO THE DIMENSIONS AND REQUIREMENTS DEFINED IN THE PROJECT PLANS.

SUBMIT CONSTRUCTION PLANS IN ACCORDANCE WITH CMS 501.05.

IF, DURING THE JACKING OPERATIONS, DAMAGE TO THE STRUCTURE IS VISUALLY OBSERVED, IMMEDIATELY CEASE THE JACKING OPERATION AND INSTALL SUPPORTS TO THE SATISFACTION OF THE ENGINEER. ANALYZE THE DAMAGE AND SUBMIT A METHOD OF CORRECTION TO THE ENGINEER FOR APPROVAL. THE DEPARTMENT WILL NOT PAY FOR THE COST OF REQUIRED REPAIRS. THE BRIDGE BEARINGS SHALL BE FULLY SEATED AT ALL CONTACT AREAS. IF FULL SEATING IS NOT ATTAINED, SUBMIT A REPAIR PLAN TO THE ENGINEER. THE DEPARTMENT WILL NOT PAY FOR THE REPAIR COSTS TO ENSURE FULL SEATING ON BEARINGS.

THE DEPARTMENT WILL MEASURE THIS WORK ON A LUMP SUM BASIS.

THE DEPARTMENT WILL PAY FOR THE ACCEPTED QUANTITIES AT THE CONTRACT PRICE FOR ITEM 516, JACKING AND TEMPORARY SUPPORT OF SUPERSTRUCTURE, AS PER PLAN.

ITEM 516, ELASTOMERIC BEARING WITH INTERNAL LAMINATES AND LOAD PLATE (NEOPRENE), AS PER PLAN FOR BEARING PLAN NOTES, SEE SHEET 13/15

DECK PLACEMENT DESIGN ASSUMPTIONS:
THE FOLLOWING ASSUMPTIONS OF CONSTRUCTION MEANS AND METHODS WERE MADE FOR THE ANALYSIS AND DESIGN OF THE SUPERSTRUCTURE. THE CONTRACTOR IS RESPONSIBLE FOR THE DESIGN OF THE FALSEWORK SUPPORT SYSTEM WITHIN THESE PARAMETERS AND WILL ASSUME RESPONSIBILITY FOR SUPERSTRUCTURE ANALYSIS FOR DEVIATION FROM THESE DESIGN ASSUMPTIONS:

AN EIGHT WHEEL FINISHING MACHINE WITH A MAXIMUM WHEEL LOAD OF 1.03 KIPS FOR A TOTAL MACHINE LOAD OF 8.24 KIPS.

A MINIMUM OUT-TO-OUT WHEEL SPACING AT EACH END OF THE MACHINE OF 103".

A MAXIMUM SPACING OF OVERHANG FALSEWORK BRACKETS OF 48 IN.

A MAXIMUM DISTANCE FROM THE CENTERLINE OF THE FASCIA GIRDER TO THE FACE OF THE SAFETY HANDRAIL OF 65".

ITEM 601 - CRUSHED AGGREGATE SLOPE PROTECTION, AS PER PLAN
THIS ITEM SHALL CONSIST OF REGRADING THE ABUTMENT EMBANKMENT SLOPE PROTECTION AND SUPPLEMENTING THE EXISTING SLOPE PROTECTION TO ACHIEVE THE MINIMUM THICKNESS OF 12 INCHES.

0:\ODOT\ATB\25199\bridge\ATB090_1525C\sheets\090_1525GN001.dgn 6/6/2009 9:51:18 AM DENNIS

DESIGN AGENCY
Palmer ENGINEERING
PALMER ENGINEERING
1300 CORNELL PARK DR
CINCINNATI, OHIO 45246

DESIGNED	DRAWN	REVIEWED	DATE
CEJ	SDW	MLJ	1/09
CHECKED	REVISED	STRUCTURE FILE NUMBER	
BJF		0404233	

GENERAL NOTES
BRIDGE NO. ATB-90-1525
I.R. 90 UNDER PLYMOUTH ROAD

ATB-90-14.25
PID No. 25199

ITEM 516 SEMI-INTEGRAL ABUTMENT EXPANSION JOINT SEAL, AS PER PLAN INSTALL A 3 FOOT WIDE NEOPRENE SHEET AT LOCATIONS SHOWN IN THE PLANS. SECURE THE NEOPRENE SHEETING TO THE CONCRETE WITH 1 1/4" X #10 GAGE (LENGTH X SHANK DIAMETER) GALVANIZED BUTTON HEAD SPIKES THROUGH A 1 INCH OUTSIDE DIAMETER, #10 GAGE GALVANIZED WASHER. MAXIMUM FASTENER SPACING IS 9 INCHES. USE OF OTHER SIMILAR GALVANIZED DEVICES, WHICH WILL NOT DAMAGE EITHER THE NEOPRENE OR THE CONCRETE, WILL BE SUBJECT TO THE APPROVAL OF THE ENGINEER.

CENTER THE NEOPRENE STRIPS ON ALL JOINTS. FOR HORIZONTAL JOINTS, SECURE THE HORIZONTAL NEOPRENE STRIP BY USING A SINGLE LINE OF FASTENERS, STARTING AT 6 INCHES, +/-, FROM THE TOP OF THE NEOPRENE STRIP. FOR THE VERTICAL JOINTS SECURE THE VERTICAL NEOPRENE STRIP BY USING A SINGLE VERTICAL LINE OF FASTENERS, STARTING AT 6 INCHES, +/-, FROM THE VERTICAL EDGE OF THE NEOPRENE STRIP NEAREST TO THE CENTERLINE OF ROADWAY. FOR VERTICAL JOINTS, INSTALL 2 ADDITIONAL FASTENERS AT 6 INCHES, CENTER TO CENTER, ACROSS THE TOP OF THE NEOPRENE STRIP ON THE SAME SIDE OF THE VERTICAL JOINT AS THE SINGLE VERTICAL ROW OF FASTENERS IS LOCATED.

THE VERTICAL NEOPRENE STRIPS SHALL COMPLETELY OVERLAP THE HORIZONTAL STRIPS. LAP LENGTHS OF THE HORIZONTAL STRIPS THAT ARE NOT VULCANIZED OR ADHESIVE BONDED, SHALL BE AT LEAST 1 FOOT IN LENGTH, OR 6 INCHES IN LENGTH IF THE LAP IS VULCANIZED OR ADHESIVE BONDED. NO LAPS ARE ACCEPTABLE IN VERTICALLY INSTALLED NEOPRENE STRIPS.

THE NEOPRENE SHEETING SHALL BE 3/32" THICK GENERAL PURPOSE, HEAVY-DUTY NEOPRENE SHEET WITH NYLON FABRIC REINFORCEMENT. THE SHEETING SHALL BE "FAIRPRENE NUMBER NN-0003", BY E. I. DUPONT DE NEMOURS AND COMPANY, INC., "WINGPRENE" BY THE GOODYEAR TIRE AND RUBBER COMPANY, OR AN APPROVED ALTERNATE. THE NEOPRENE SHEETING SHALL CONFORM TO THE FOLLOWING:

DESCRIPTION OF TEST	ASTM METHOD	REQUIREMENT
THICKNESS, INCHES	D751	0.094"± 0.01
BREAKING STRENGTH, GRAB, LBS, MINIMUM (LONG. X TRANS.)	D751	700 X 700
ADHESIVE STRIP, 1" WIDE x 2" LONG, LBS, MINIMUM	D751	9
BURST STRENGTH, PSI, MINIMUM	D751	1400
HEAT AGING, 70 HR 212°F, 180° BEND WITHOUT CRACKING	D2136	NO CRACKING OF COATING
LOW TEMP. BRITTLENESS, 1 HR-40°F, BEND AROUND 1/4" MANDREL	D2136	NO CRACKING OF COATING

METHOD OF MEASUREMENT: THE DEPARTMENT WILL MEASURE THE TOTAL LENGTH OF JOINT TO BE SEALED BY THE NUMBER OF FEET.

BASIS OF PAYMENT: THE DEPARTMENT WILL PAY FOR ACCEPTED QUANTITIES AT THE CONTRACT PRICE FOR ITEM 516, SEMI-INTEGRAL ABUTMENT EXPANSION JOINT SEAL, AS PER PLAN.

ITEM 519 - PATCHING CONCRETE STRUCTURE, AS PER PLAN PRIOR TO THE SURFACE CLEANING SPECIFIED IN 519.04 AND WITHIN 24 HOURS OF PLACING PATCHING MATERIAL, BLAST CLEAN ALL SURFACES TO BE PATCHED INCLUDING THE EXPOSED REINFORCING STEEL. ACCEPTABLE METHODS INCLUDE HIGH-PRESSURE WATER BLASTING WITH OR WITHOUT ABRASIVES IN THE WATER, ABRASIVE BLASTING WITH CONTAINMENT, OR VACUUM ABRASIVE BLASTING. A CONTINGENCY QUANTITY OF 100 SQ FT HAS BEEN INCLUDED TO BE USED AS DIRECTED BY THE ENGINEER.

ITEM	ITEM EXT.	GRAND TOTAL	UNIT	DESCRIPTION	ABUT.	PIER	SUPER STRUCT	GENERAL	SEE SHEET NO.
202	11203	LUMP		PORTIONS OF STRUCTURE REMOVED OVER 20' SPAN, AS PER PLAN				LUMP	2/15
202	22901	169	SQ YD	APPROACH SLAB REMOVED, AS PER PLAN				169	2/15
503	11100	LUMP		COFFERDAMS, CRIBS AND SHEETING				LUMP	
503	21100	741	CU YD	UNCLASSIFIED EXCAVATION	741				
509	10000	104007	LB	EPOXY COATED REINFORCING STEEL	5065	6089	92853		
509	20001	250	LB	REINFORCING STEEL, REPLACEMENT OF EXISTING REINFORCING STEEL, AS PER PLAN		250			2/15
510	10000	178	EACH	DOWEL HOLES WITH NONSHRINK, NONMETALLIC GROUT	178				
511	42500	42	CU YD	CLASS C CONCRETE, PIER CAP		42			
511	46201	53	CU YD	CLASS C CONCRETE, AS PER PLAN	53				5/15
511	50001	315	CU YD	CLASS HP CONCRETE, BRIDGE DECK, AS PER PLAN			315		2/15
511	50101	87	CU YD	CLASS HP CONCRETE, BRIDGE DECK (PARAPET), AS PER PLAN			87		2/15
511	51001	35	CU YD	CLASS HP CONCRETE, SUPERSTRUCTURE, AS PER PLAN			35		2/15
512	10100	904	SQ YD	SEALING OF CONCRETE SURFACES (EPOXY-URETHANE)	39	196	669		
512	33000	16	SQ YD	TYPE 2 WATERPROOFING	16				
513	20000	3435	EACH	WELDED STUD SHEAR CONNECTORS			3435		
514	27700	28	SQ FT	FIELD PAINTING, MISC: REPAIR PAINTING			28		2/15
516	13600	17	SQ FT	1" PREFORMED EXPANSION JOINT FILLER				17	
516	13900	148	SQ FT	2" PREFORMED EXPANSION JOINT FILLER	148				
516	14021	95	FT	SEMI-INTEGRAL ABUTMENT EXPANSION JOINT SEAL, AS PER PLAN	95				3/15
516	44201	10	EACH	ELASTOMERIC BEARINGS WITH INTERNAL LAMINATES AND LOAD PLATE (NEOPRENE), AS PER PLAN (16" X 11")			10		13/15
516	44201	10	EACH	ELASTOMERIC BEARINGS WITH INTERNAL LAMINATES AND LOAD PLATE (NEOPRENE), AS PER PLAN (19" X 14")	10				13/15
516	44201	5	EACH	ELASTOMERIC BEARINGS WITH INTERNAL LAMINATES AND LOAD PLATE (NEOPRENE), AS PER PLAN (18" X 16")		5			13/15
516	47001	LUMP		JACKING AND TEMPORARY SUPPORT OF SUPERSTRUCTURE, AS PER PLAN			LUMP		2/15
518	21200	64	CU YD	POROUS BACKFILL WITH FILTER FABRIC	64				
518	40000	105	FT	6" PERFORATED CORRUGATED PLASTIC PIPE	105				
518	40010	84	FT	6" NON-PERFORATED CORRUGATED PLASTIC PIPE, INCLUDING SPECIALS	84				
519	11101	100	SQ FT	PATCHING CONCRETE STRUCTURE, AS PER PLAN				100	3/15
526	25001	197	SQ YD	REINFORCED CONCRETE APPROACH SLABS (T=15"), AS PER PLAN			197		3,14,15/15
601	20001	400	SQ YD	CRUSHED AGGREGATE SLOPE PROTECTION, AS PER PLAN	400				3/15
						CALUCLATED: CEJ		CHECKED: BJF	

ITEM 526 - REINFORCED CONCRETE APPROACH SLABS, AS PER PLAN THE PROVISIONS OF CMS 526 SHALL APPLY EXCEPT AS NOTED BELOW. CLASS HP CONCRETE, MIX 4, AS PER PLAN, SHALL BE THE ONLY MIX DESIGN OPTION. THE PROPORTIONS FOR THE STARTING MIX DESIGN SHALL BE AS SHOWN FOR ITEM 511 - CLASS HP CONCRETE, AS PER PLAN.

EXISTING STRUCTURE VERIFICATION DETAILS AND DIMENSIONS SHOWN ON THESE PLANS PERTAINING TO THE EXISTING STRUCTURE HAVE BEEN OBTAINED FROM PLANS OF THE EXISTING STRUCTURE AND FROM FIELD OBSERVATIONS AND MEASUREMENTS. CONSEQUENTLY, THEY ARE INDICATIVE OF THE EXISTING STRUCTURE AND THE PROPOSED WORK BUT THEY SHALL BE CONSIDERED TENTATIVE AND APPROXIMATE. THE CONTRACTOR IS REFERRED TO CMS SECTIONS 102.05 AND 105.02.

BASE CONTRACT BID PRICES UPON A RECOGNITION OF THE UNCERTAINTIES DESCRIBED ABOVE AND UPON A PRE BID EXAMINATION OF THE EXISTING STRUCTURE. HOWEVER, THE DEPARTMENT WILL PAY FOR ALL PROJECT WORK BASED UPON ACTUAL DETAILS AND DIMENSIONS THAT HAVE BEEN VERIFIED IN THE FIELD.

INSPECTION OF EXISTING STRUCTURAL STEEL THE ENGINEER WILL VISUALLY INSPECT ALL EXISTING BUTT-WELDED SPLICES AND/OR TOP FLANGE COVER PLATE FILLET WELDS TO ENSURE THE WELDS, PLATES AND BEAMS OR GIRDERS ARE FREE OF DEFECTS AND CRACKS. IF NECESSARY, REMOVE ALL DECK SLAB HAUNCH FORMS IMMEDIATELY ADJACENT TO SUCH WELDS THAT MAY INTERFERE WITH THE ENGINEER'S INSPECTION. THE INSPECTION WILL NOT TAKE PLACE UNTIL THE TOP FLANGES ARE CLEANED ACCORDING TO 511.10, BUT IT WILL BE DONE BEFORE THE DECK SLAB REINFORCEMENT IS INSTALLED. THE DEPARTMENT WILL PAY FOR THE COST ASSOCIATED WITH THIS INSPECTION WITH ITEM 511, SUPERSTRUCTURE CONCRETE. THE ENGINEER WILL REPORT ALL CRACKS FOUND TO THE OFFICE OF CONSTRUCTION ADMINISTRATION, BRIDGE CONSTRUCTION SPECIALIST, ALONG WITH SPECIFIC INFORMATION ON LOCATION OF THE CRACKS, LENGTH, AND DEPTH SO AN EVALUATION AND REPAIR OR REPLACEMENT RECOMMENDATION CAN BE MADE.

DESIGN AGENCY
Palmer PALMER ENGINEERING
1300 CORNELL PARK DR
COLUMBUS, OHIO 43240
614.459.2050

DATE 1/09
REVIEWED MLJ
STRUCTURE FILE NUMBER 0404233
DRAWN SDW
REVISED
DESIGNED CEJ
CHECKED BJF

GENERAL NOTES AND ESTIMATED QUANTITIES
BRIDGE NO. ATB-90-1525
I.R. 90 UNDER PLYMOUTH ROAD

ATB-90-14.25
PID No. 25199

C:\ODOT\ATB\25199\bridge\ATB090_1525C\sheets\090_1525GN002.dgn 6/8/2009 2:56:05 PM DENNIS

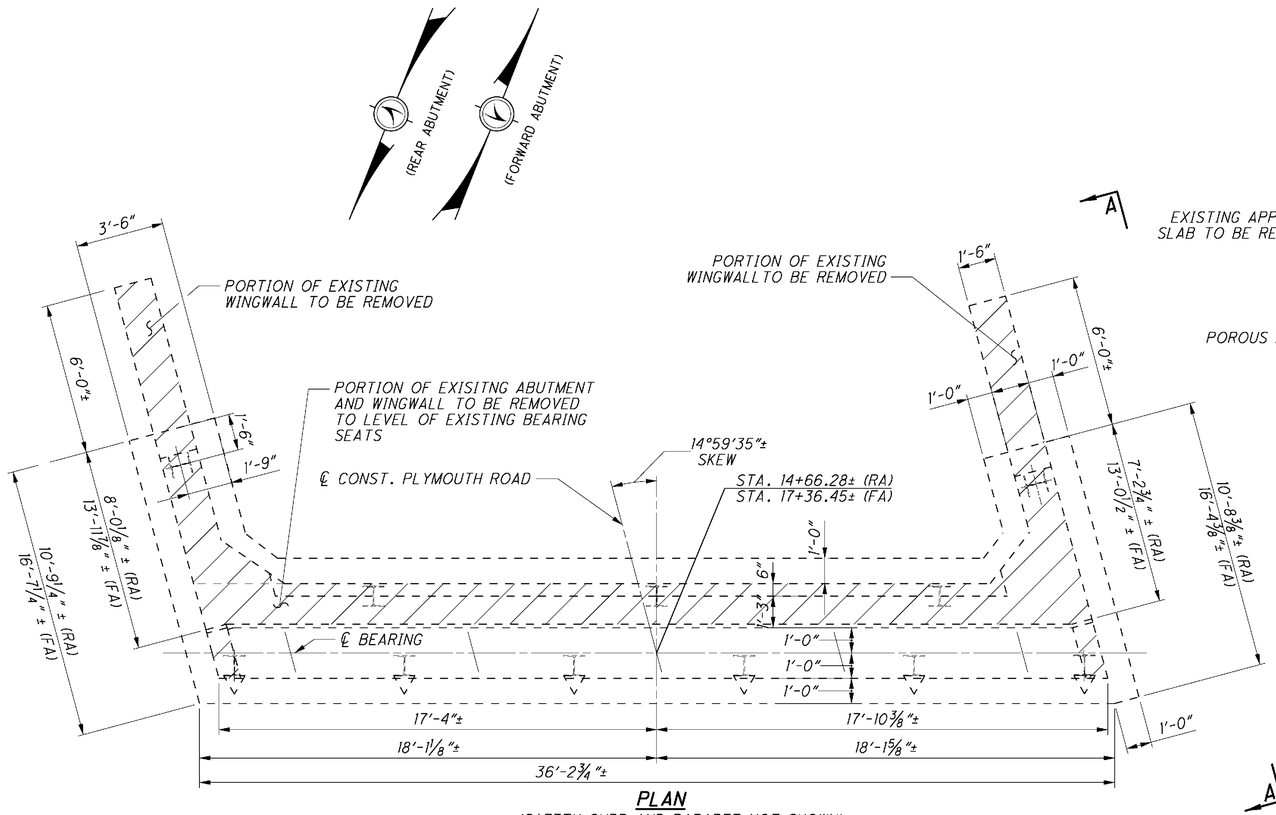

DESIGN AGENCY
Palmer ENGINEERING
1300 CORNELL PARKWAY
SUITE 200
PALMER, ALASKA 99645
907.746.4448

DESIGNED	DRAWN	REVIEWED	DATE
CEJ	VWK	MLJ	1/09
CHECKED	REVISED	STRUCTURE TILE NUMBER	
BJF		0404233	

ABUTMENT REMOVAL DETAILS

BRIDGE NO. ATB-90-1525
I.R. 90 UNDER PLYMOUTH ROAD

ATB-90-14.25

PID No. 25199

4 / 15

350
437

C:\ODOT\ATB\25199\bridge\ATB090_1525C\sheets\090_1525RE001.dgn 6/6/2009 9:51:27 AM DENNIS

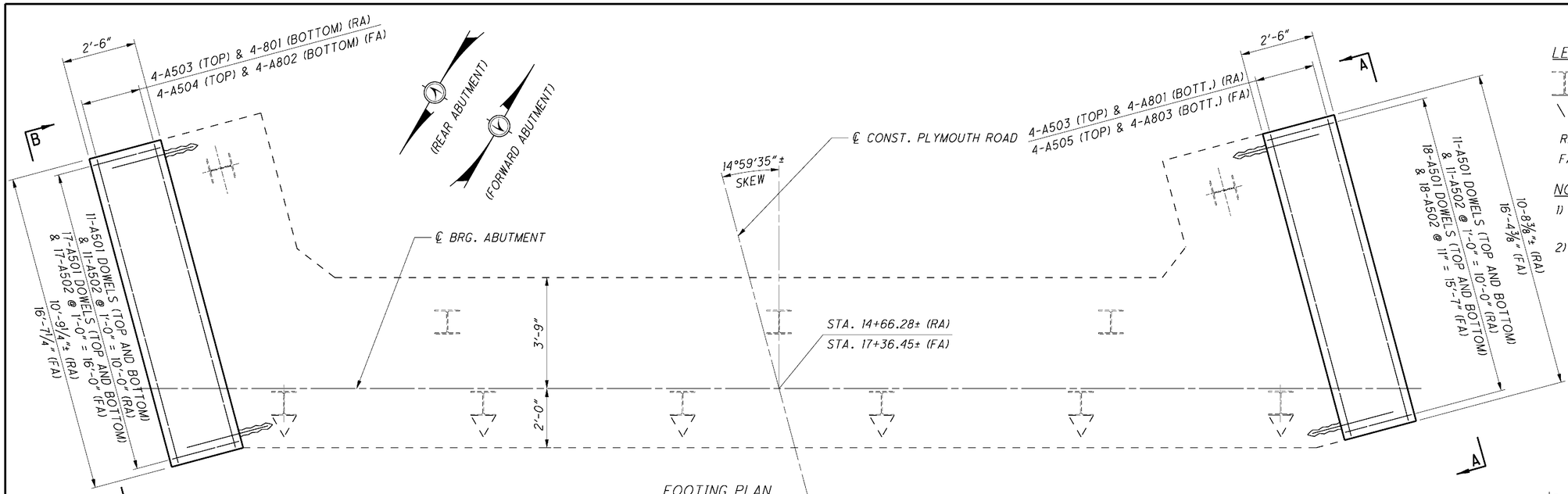

FOOTING PLAN

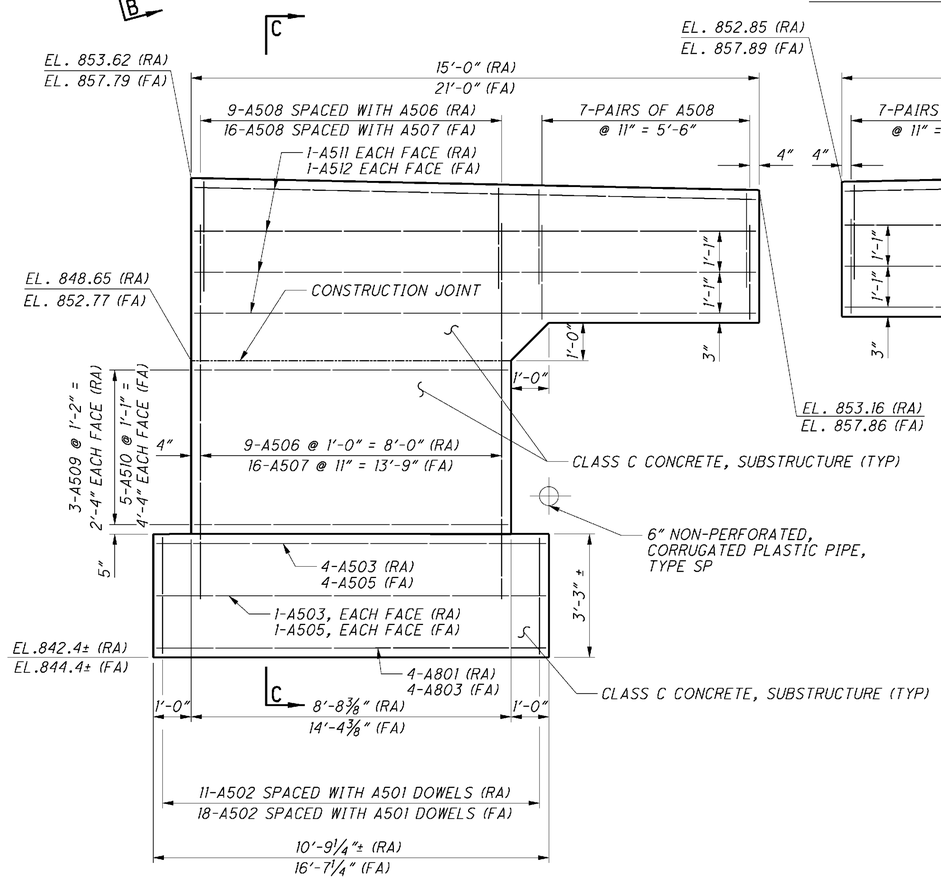

VIEW A-A

VIEW B-B

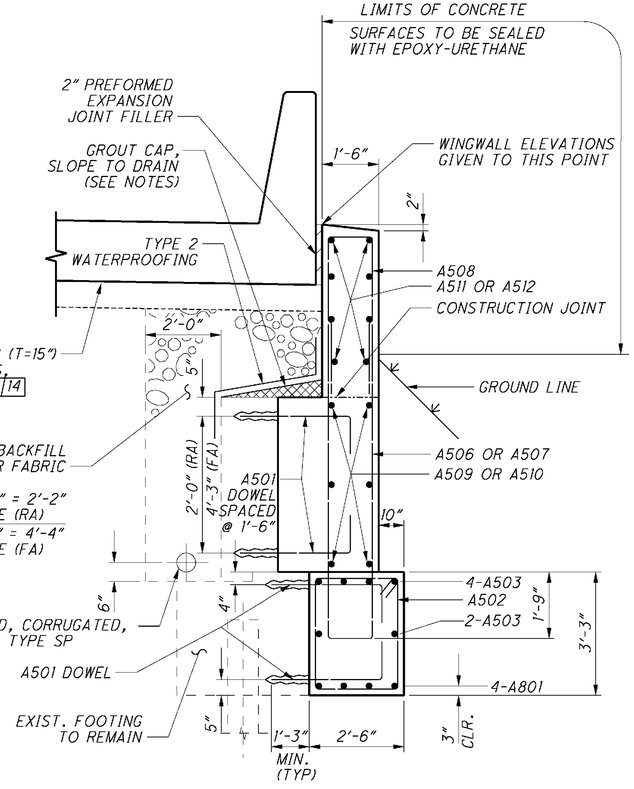

SECTION C-C

(REAR ABUTMENT SHOWN, FORWARD ABUTMENT SIMILAR)

LEGEND

DENOTES PILE BATTER 1:4
ALL PILES 12BP53

RA - REAR ABUTMENT

FA - FORWARD ABUTMENT

NOTES:

1) THE MINIMUM LAP LENGTH FOR A508 IS 2'-0".

2) GROUT SHALL BE AS PER CMS 705.22. CURE ACCORDING TO MANUFACTURER'S RECOMMENDATIONS. INCLUDE GROUT CAP WITH ITEM 511, CLASS C CONCRETE, AS PER PLAN.

DESIGN AGENCY
Palmer ENGINEERING
1300 CORNELL PARK DR
CINCINNATI, OHIO 45246

DESIGNED	DRAWN	REVIEWED	DATE
CEJ	VWK	MLJ	1/09
CHECKED	REVISED	STRUCTURE FILE NUMBER	
BJF		0404233	

ABUTMENT FOOTING DETAILS

BRIDGE NO. ATB-90-1525
I.R. 90 UNDER PLYMOUTH ROAD

ATB-90-14.25

PID No. 25199

O:\ODOT\ATB\25199\bridge\ATB090_1525C\sheets\090_1525ABR001.dgn 6/6/2009 9:51:30 AM DENNIS

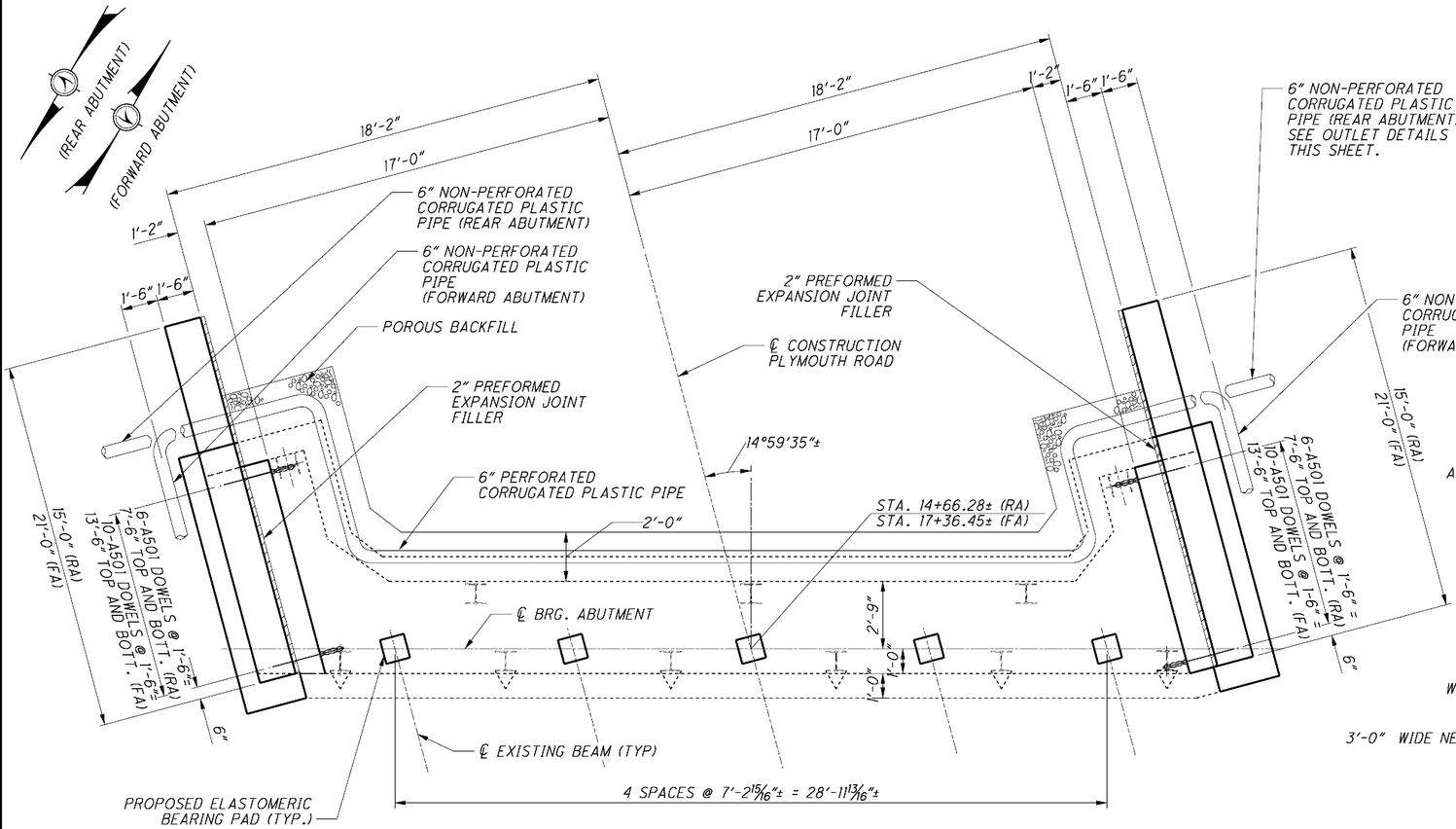

PLAN

(REAR ABUTMENT SHOWN, FORWARD ABUTMENT SIMILAR)

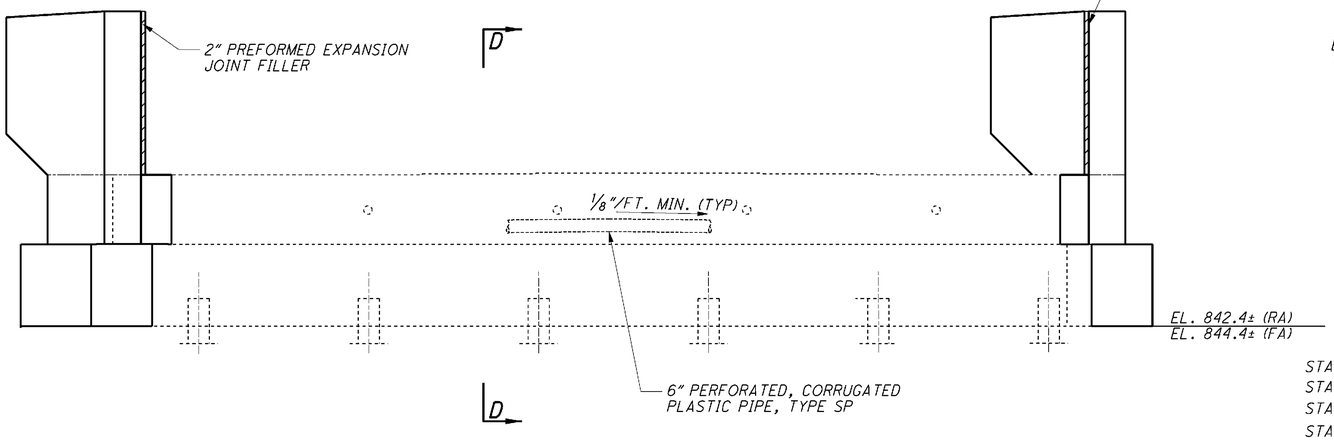

ELEVATION

LEGEND

RA - REAR ABUTMENT
FA - FORWARD ABUTMENT
DENOTES PILE BATTER 1:4
ALL PILES 12BP53

NOTES:

1. POROUS BACKFILL WITH FILTER FABRIC, 2'-0" THICK SHALL EXTEND UP TO THE PLANE OF THE SUBGRADE AND LATERALLY TO 2'-0" BEYOND THE ENDS OF THE WINGWALL FOOTINGS.
2. FOR WINGWALL DETAILS AND FOOTING DETAILS, SEE SHEET 5 | 15
3. FOR END DIAPHRAGM DETAILS, SEE SHEET 10 | 15 AND 11 | 15
4. FOR GENERAL NOTES, SEE SHEETS 2 | 15 AND 3 | 15
5. FOR BEARING PAD DETAILS, SEE SHEET 13 | 15

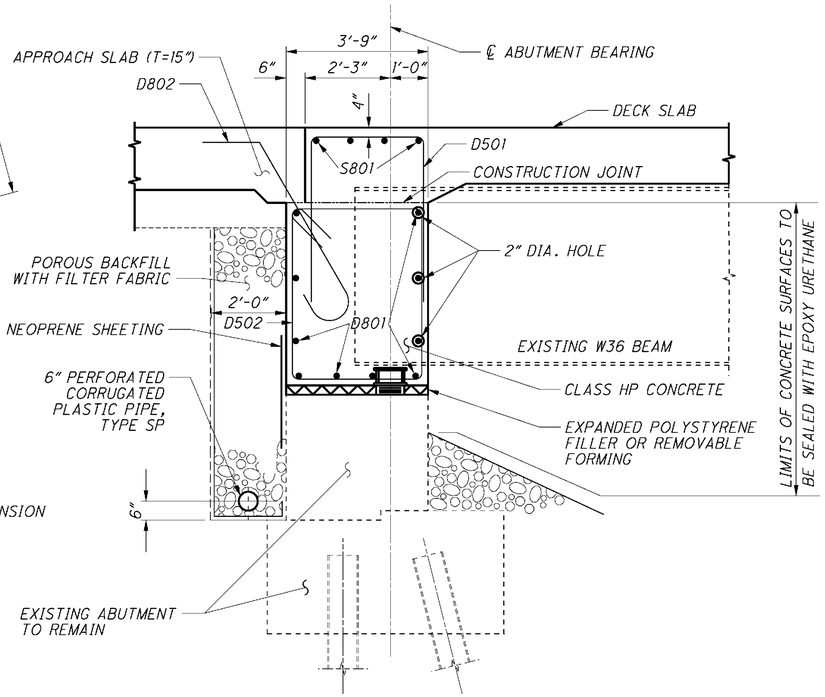

SECTION D-D

(DECK SLAB AND APPROACH SLAB BARS NOT SHOWN)

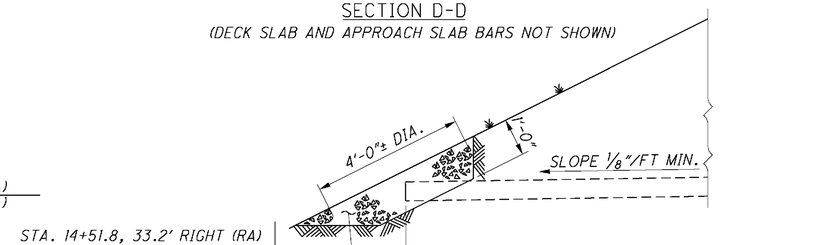

TERMINATION OF 6" N.P.C.P.P. DETAIL

DESIGN AGENCY
Palmer ENGINEERING
1300 CORNELL PARK DR
PLYMOUTH MEETING, PA 19462
610.940.1200 610.940.1211

DESIGNED	DRAWN	REVIEWED	DATE
CEJ	VWK	MLJ	1/09
CHECKED	REVISED	STRUCTURE TITLE NUMBER	
BJF		0404233	

ABUTMENT DETAILS
BRIDGE NO. ATB-90-1525
I.R. 90 UNDER PLYMOUTH ROAD

ATB-90-14.20
PID No. 25199

6 | 15

352
437

C:\ODOT\ATB\25199\bridge\ATB090_1525C\sheets\090_1525AR002.dgn 6/6/2009 9:51:34 AM DENNIS

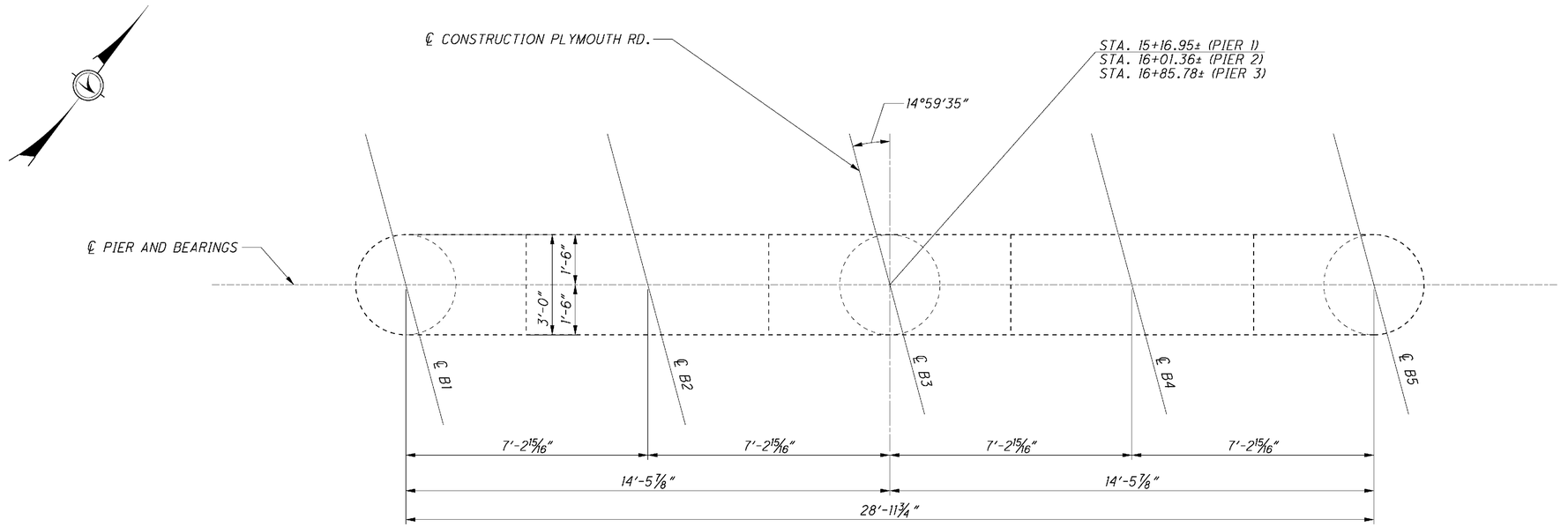

EXISTING PIER PLAN

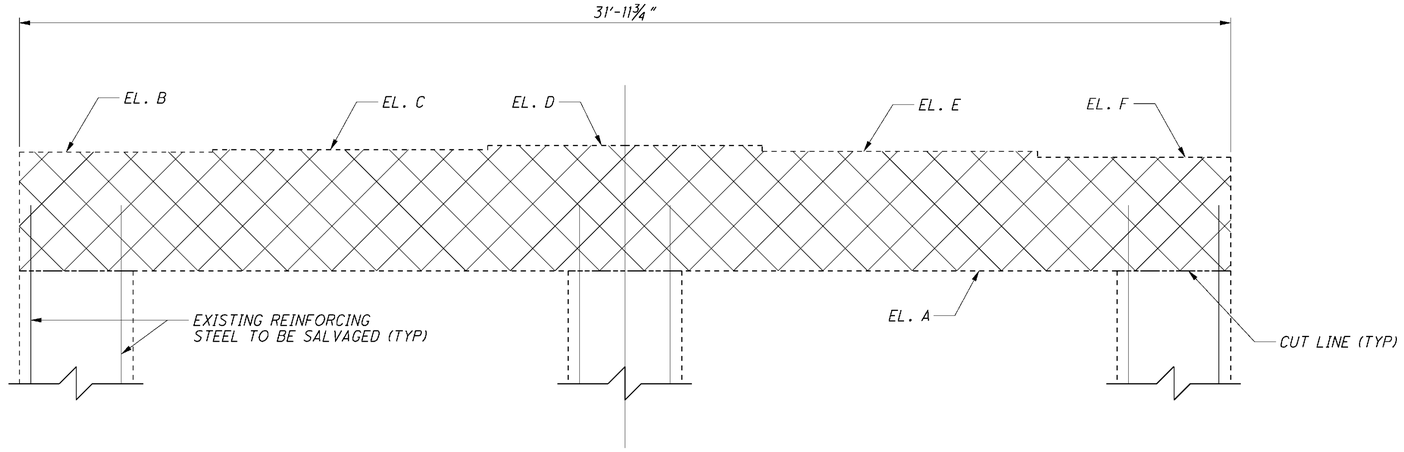

EXISTING PIER CAP ELEVATION
(REMOVAL LIMITS)

EXISTING ELEVATIONS(±)						
LOCATION	A	B	C	D	E	F
PIER 1	846.47	849.65	849.71	849.78	849.62	849.47
PIER 2	848.00	851.12	851.20	851.28	851.14	851.00
PIER 3	849.17	852.23	852.32	852.42	852.30	852.17

LEGEND

— ITEM 202 PORTIONS OF STRUCTURE REMOVED, OVER 20' SPAN, AS PER PLAN

O:\ODOT\ATB\25199\bridge\ATB090_1525C\sheets\090_1525P001.dgn 6/6/2009 9:51:38 AM DENNIS

DESIGN AGENCY
Palmer ENGINEERING
1300 CORNELL PARK DR
BLUE ASH, OHIO 45242
513.489.2255 FAX 513.489.2266

DESIGNED	DRAWN	REVIEWED	DATE
CEJ	SDW	MLJ	1/09
CHECKED	REVISED	STRUCTURE FILE NUMBER	
BJF		0404233	

PIER REMOVAL
BRIDGE NO. ATB-90-1525
I.R. 90 UNDER PLYMOUTH ROAD

ATB-90-14.25
PID No. 25199

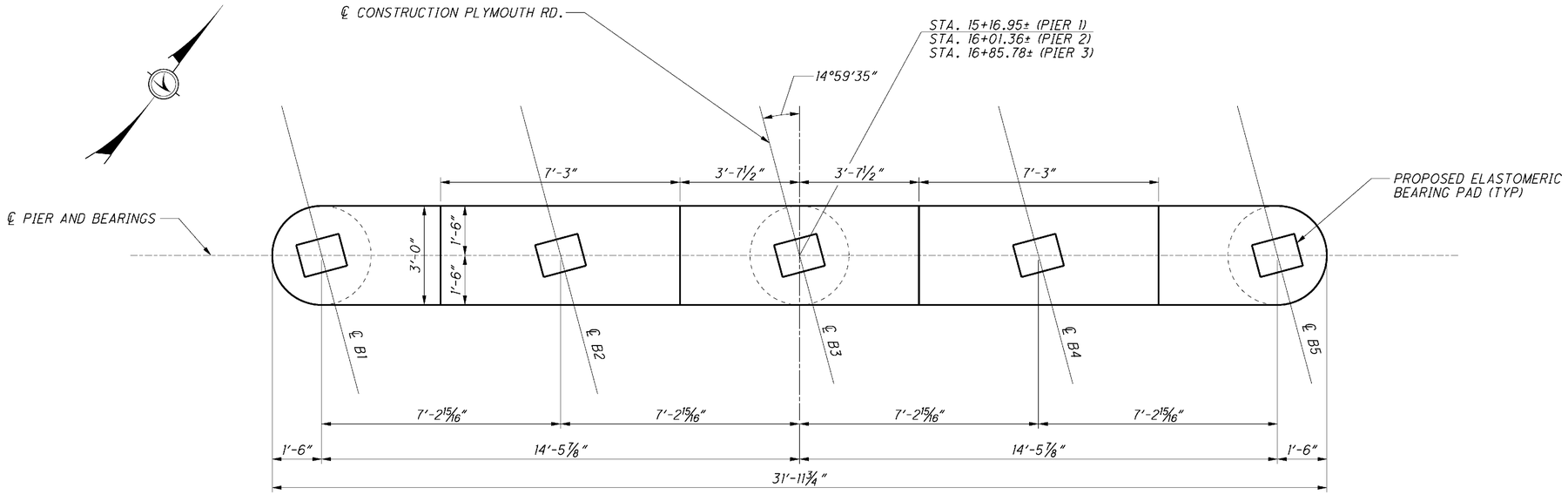

PLAN

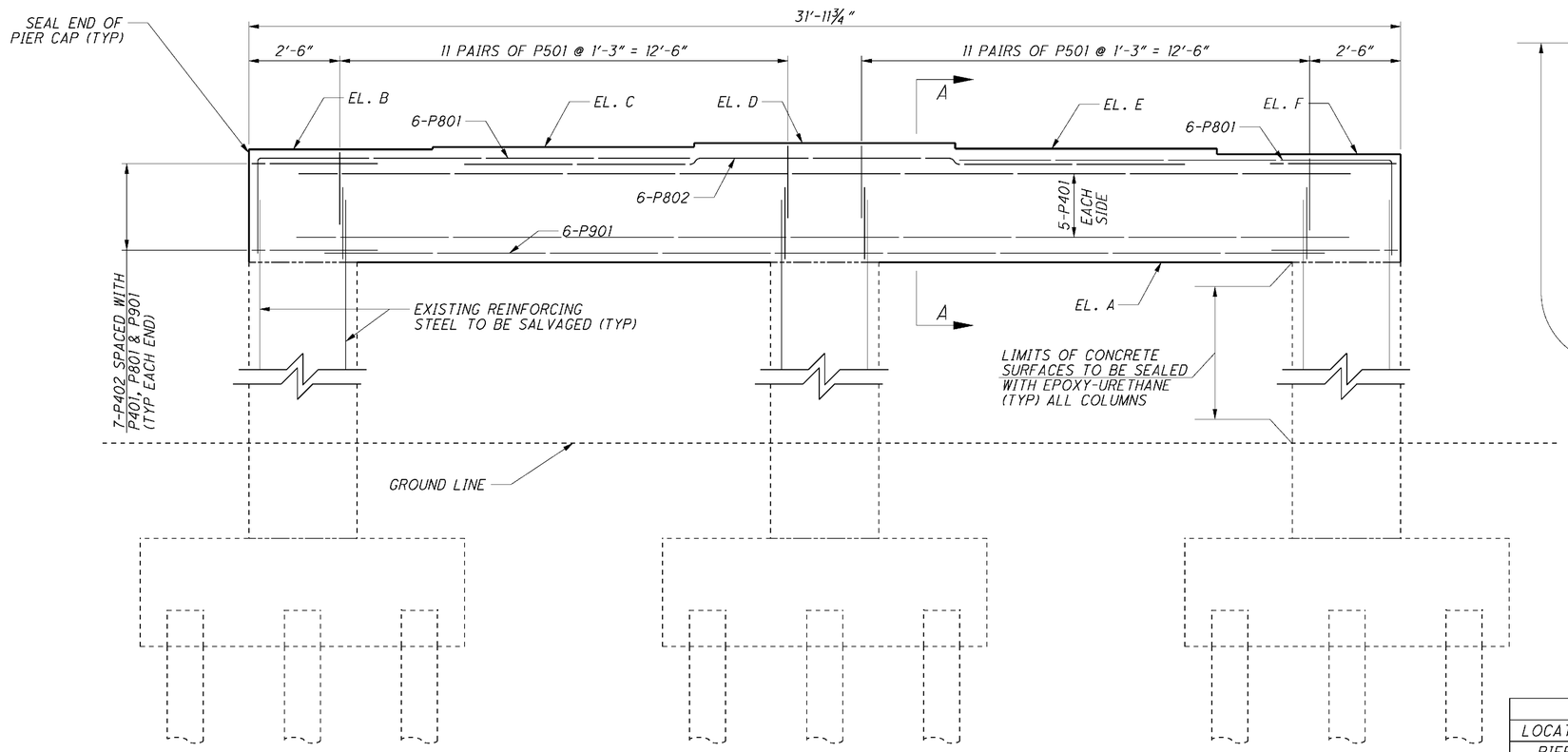

ELEVATION

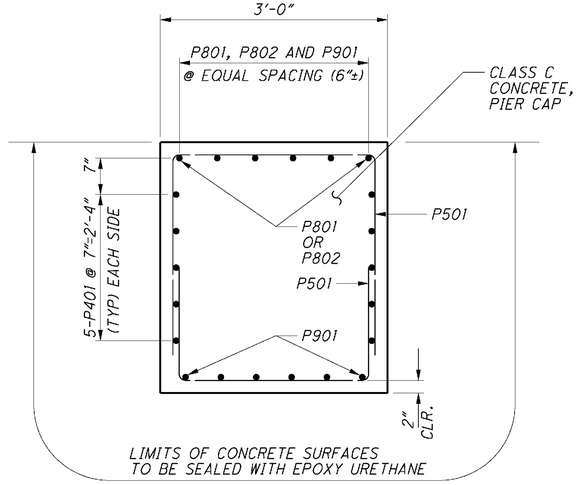

SECTION A-A

LAP LENGTHS:

#5 BARS = 2'-0" MINIMUM

#8 BARS = 1'-3" MINIMUM

NOTES:

1. FOR BEARING PAD DETAILS, SEE SHEET 13 15
2. FOR GENERAL NOTES, SEE SHEET 2 15 AND 3 15

PROPOSED ELEVATIONS						
LOCATION	A	B	C	D	E	F
PIER 1	846.47	850.49	850.56	850.62	850.47	850.31
PIER 2	848.00	852.07	852.15	852.23	852.09	851.95
PIER 3	849.17	853.08	853.17	853.27	853.15	853.03

DESIGN AGENCY
Palmer ENGINEERING
1300 CORNELL PARK DR
PRINCETON, NJ 08540
609.452.8811

DESIGNED	DRAWN	REVIEWED	DATE
CEJ	SDW	MLJ	1/09
CHECKED	REVISED	STRUCTURE FILE NUMBER	
BJF		0404233	

PIER DETAILS
BRIDGE NO. ATB-90-1525
I.R. 90 UNDER PLYMOUTH ROAD

ATB-90-14.25
PID No. 25199

8 / 15

354
437

O:\ODOT\ATB\25199\bridge\ATB090_1525C\sheets\090_1525PI002.dgn 6/6/2009 9:51:40 AM DENNIS

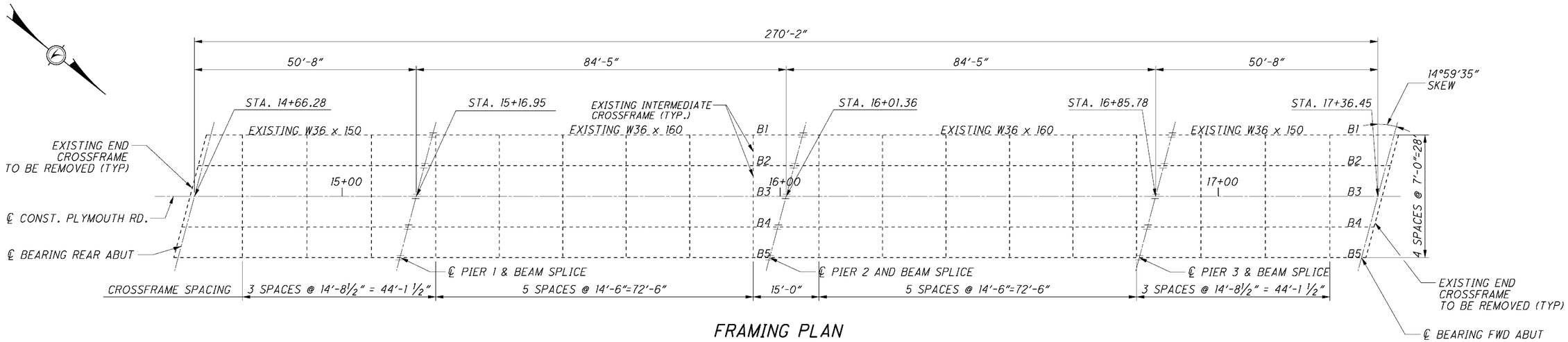

FRAMING PLAN

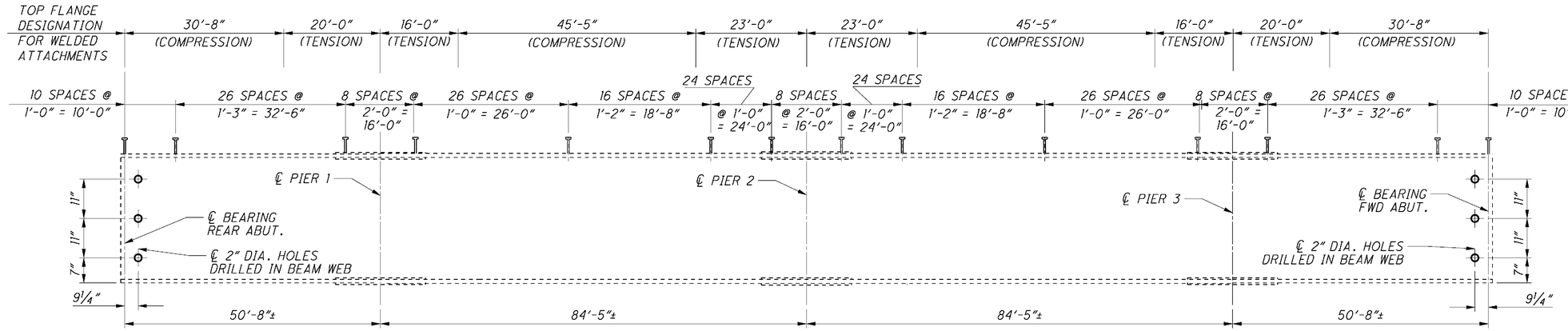

BEAM ELEVATION

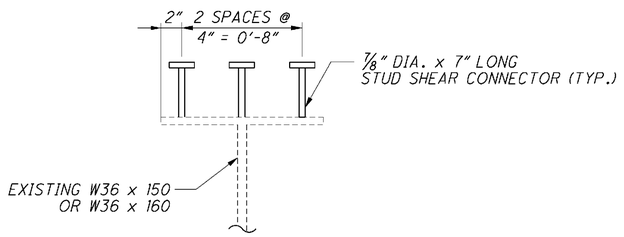

SHEAR STUD CONNECTOR LAYOUT

NOTE: WELDING OF THE STUD SHEAR CONNECTORS IS TO BE IN ACCORDANCE WITH 513.22 OF THE CMS.

NOTES:

1. WELD ATTACHMENT OF SUPPORTS FOR CONCRETE DECK FINISHING MACHINE TO AREAS OF THE FASCIA STRINGER FLANGES DESIGNATED "COMPRESSION". DO NOT WELD ATTACHMENTS TO AREAS DESIGNATED "TENSION". FILLET WELDS TO COMPRESSION FLANGES SHALL BE AT LEAST 1" FROM EDGE OF FLANGE, BE NO MORE THAN 2" LONG, AND BE AT LEAST ¼" FOR THICKNESS UP TO ¾" OR 5/16" FOR GREATER THAN ¾" THICK.
2. THE CONTRACTOR SHALL ADJUST THE LOCATION OF SHEAR CONNECTOR ROWS UP TO 1" TO AVOID CONFLICT WITH THE EDGES OF THE FLANGE PLATES
3. FOR END DIAPHRAGM DETAILS, SEE SHEET 10 / 15
4. FOR BEARING DETAILS, SEE SHEET 13 / 15
5. FOR GENERAL NOTES, SEE SHEETS 2 / 15 AND 3 / 15

DEFLECTION (in.) OF EXISTING BEAMS

	REAR ABUT.	¼	½	¾	PIER 1	¼	½	¾	PIER 2	¼	½	¾	PIER 3	¼	½	¾	FWD. ABUT.
DEFLECTION FROM NON-COMPOSITE DEAD LOAD	0	1/16	1/16	0	0	7/16	5/8	5/16	0	5/16	5/8	7/16	0	0	1/16	1/16	0
DEFLECTION FROM COMPOSITE DEAD LOAD	0	0	0	0	0	1/16	1/8	1/16	0	1/16	1/8	1/16	0	0	0	0	0
TOTAL DEFLECTION FROM DEAD LOAD	0	1/16	1/16	0	0	½	¾	⅜	0	⅜	¾	½	0	0	1/16	1/16	0

O:\ODOT\ATB\25199\bridge\ATB090_1525C\sheets\090_1525DP002.dgn 6/6/2009 9:51:42 AM DENNIS

DESIGN AGENCY
Palmer ENGINEERING
1300 CORNELL PARK DR
CINCINNATI, OHIO 45246
PHONE: 513.771.1600 FAX: 513.771.1601

DATE 1/09
REVIEWED MLJ
STRUCTURE FILE NUMBER 0404233
DRAWN SDW
REVISED
DESIGNED CEJ
CHECKED BJF

FRAMING PLAN
BRIDGE NO. ATB-90-1525
I.R. 90 UNDER PLYMOUTH ROAD

ATB-90-14.25
PID No. 25199

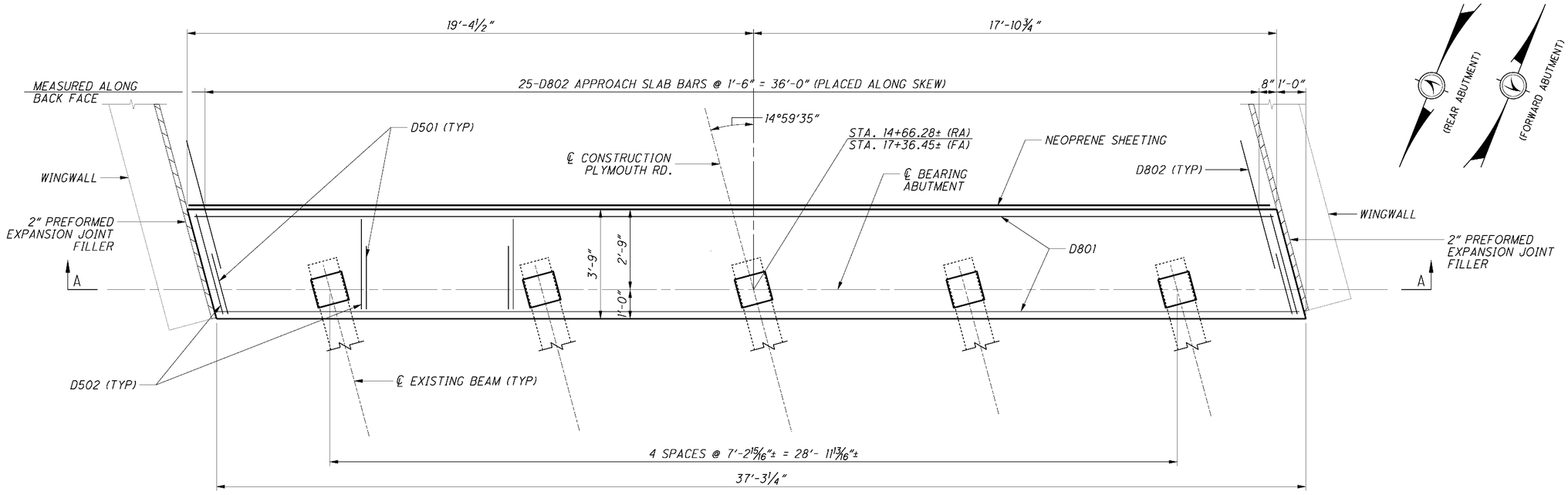

PLAN

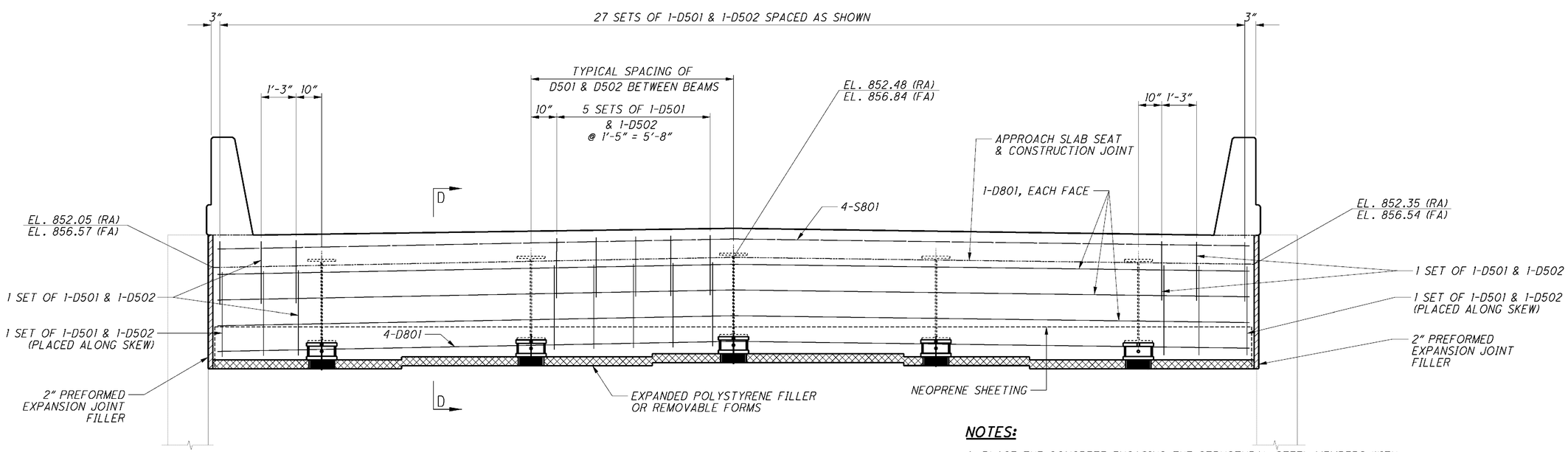

SECTION A-A

NOTES:

1. PLACE THE CONCRETE ENCASING THE STRUCTURAL STEEL MEMBERS WITH DECK CONCRETE OR AT LEAST 48 HOURS BEFORE PLACEMENT OF THE DECK CONCRETE.
2. ELEVATIONS ARE GIVEN ALONG ℄ ABUTMENT BEARINGS.
3. FOR SECTION D-D, SEE SHEET 6 / 15
4. FOR BEARING PAD DETAILS, SEE SHEET 13 / 15
5. FOR GENERAL NOTES, SEE SHEETS 2 / 15 AND 3 / 15

LEGEND
RA - REAR ABUTMENT
FA - FORWARD ABUTMENT

DESIGN AGENCY
Palmer ENGINEERING
1300 CORNELL PARKWAY
CINCINNATI, OHIO 45240

DESIGNED	DRAWN	REVIEWED	DATE
CEJ	SDW	MLJ	1/09
CHECKED	REVISED	STRUCTURE FILE NUMBER	
BJF		0404233	

END DIAPHRAGM DETAILS
BRIDGE NO. ATB-90-1525
I.R. 90 UNDER PLYMOUTH ROAD

ATB-90-14.25
PID No. 25199

10 / 15

356
437

O:\ODOT\ATB\25199\bridge\ATB090_1525C\sheets\090_1525AR003.dgn 6/6/2009 9:51:46 AM DENNIS

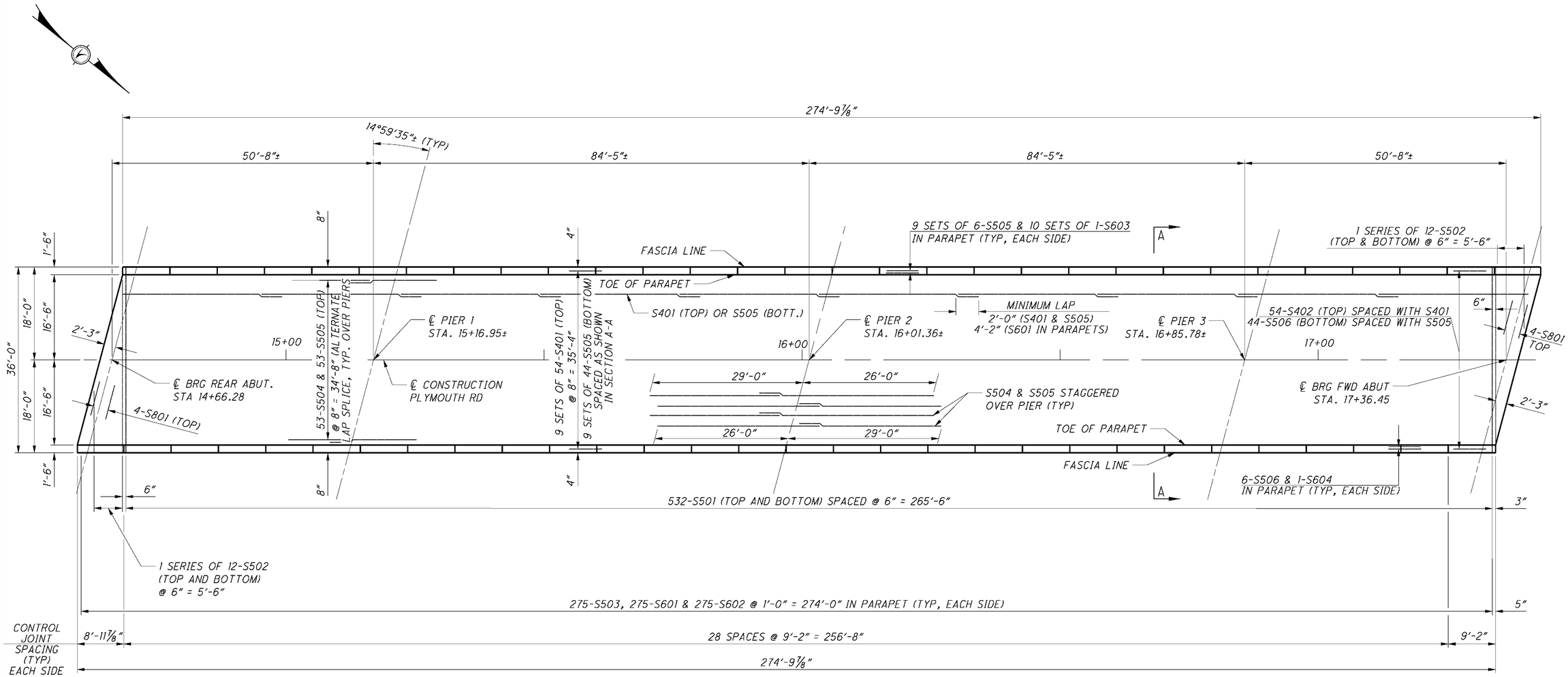

DECK SLAB PLAN

NOTES:

1. SCREED ELEVATIONS SHOWN ARE FOR THE DECK SLAB SURFACE PRIOR TO CONCRETE PLACEMENT. ALLOWANCE HAS BEEN MADE FOR ANTICIPATED CALCULATED DEAD LOAD DEFLECTIONS.
2. SEE STANDARD DRAWING SBR-1-99 FOR DETAILS OF CONTROL JOINTS IN CONCRETE PARAPETS.
3. FOR SECTION A-A, SEE SHEET 12/15
4. FOR END DIAPHRAGM DETAILS, SEE SHEET 10/15
5. FOR GENERAL NOTES, SEE SHEETS 2/15 AND 3/15

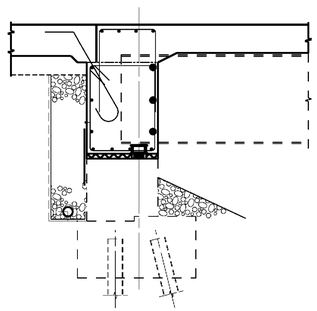

END JOINT DETAIL

REFER TO SHEET 6/15 FOR DETAILS

SCREED ELEVATIONS

	LOCATION	LEFT FASCIA	LEFT TOE OF PARAPET	BEAM 1	BEAM 2	℄ CONSTR. PLYMOUTH RD	BEAM 4	BEAM 5	RIGHT TOE OF PARAPET	RIGHT FASCIA
SPAN 1	℄ BRG. REAR ABUT.	853.60	853.61	853.63	853.68	853.73	853.57	853.40	853.34	853.31
	1/4	853.99	854.00	854.02	854.07	854.12	853.96	853.80	853.74	853.70
	1/2	854.34	854.36	854.38	854.43	854.49	854.33	854.16	854.10	854.06
	3/4	854.68	854.69	854.71	854.77	854.83	854.67	854.51	854.45	854.42
	℄ PIER 1	855.00	855.01	855.04	855.10	855.16	855.00	854.85	854.80	854.79
SPAN 2	1/4	855.54	855.56	855.58	855.64	855.71	855.56	855.41	855.35	855.32
	1/2	856.00	856.03	856.05	856.12	856.19	856.04	855.90	855.84	855.79
	3/4	856.38	856.40	856.42	856.50	856.57	856.43	856.29	856.23	856.20
	℄ PIER 2	856.72	856.72	856.75	856.83	856.91	856.77	856.63	856.58	856.57
SPAN 3	1/4	857.03	857.05	857.08	857.16	857.25	857.11	856.98	856.93	856.90
	1/2	857.30	857.33	857.37	857.46	857.54	857.41	857.29	857.24	857.20
	3/4	857.50	857.52	857.56	857.65	857.74	857.61	857.49	857.44	857.42
	℄ PIER 3	857.65	857.65	857.67	857.77	857.87	857.74	857.62	857.57	857.55
SPAN 4	1/4	857.68	857.70	857.74	857.84	857.94	857.82	857.70	857.66	857.63
	1/2	857.74	857.76	857.80	857.90	858.00	857.89	857.77	857.73	857.71
	3/4	857.79	857.81	857.85	857.95	858.05	857.94	857.82	857.78	857.75
	℄ BRG. FWD. ABUT.	857.83	857.85	857.88	857.99	858.09	857.97	857.86	857.82	857.79

DESIGN AGENCY
Palmer ENGINEERING
1300 CORNELL PARK DR
BLUE ASH, OHIO 45242
DATE 1/09
REVIEWED MLJ
STRUCTURE TITLE NUMBER
DRAWN SDW
REVISED
DESIGNED CEJ
CHECKED BJF

DECK SLAB PLAN
ATB-90-1525
I.R. 90 UNDER PLYMOUTH ROAD

ATB-90-14.25
PID No. 25199

O:\ODOT\ATB\25199\bridge\ATB090_1525C\sheets\090_1525DP001.DGN 6/6/2009 9:52:33 AM DENNIS

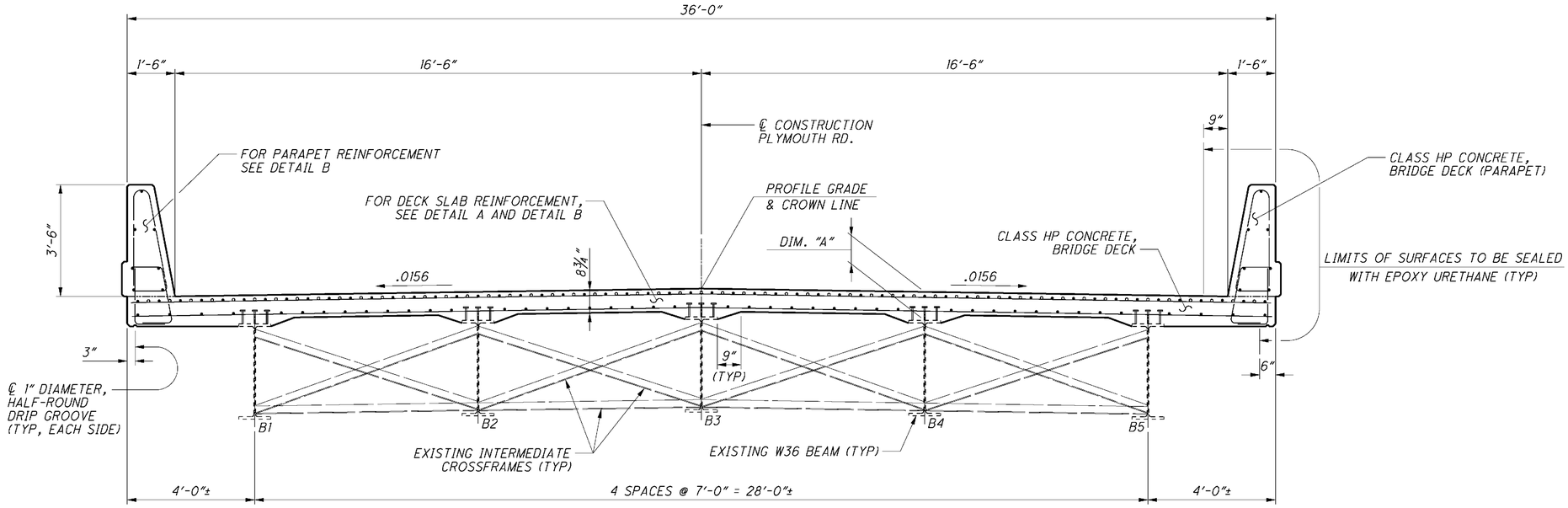

SECTION A-A

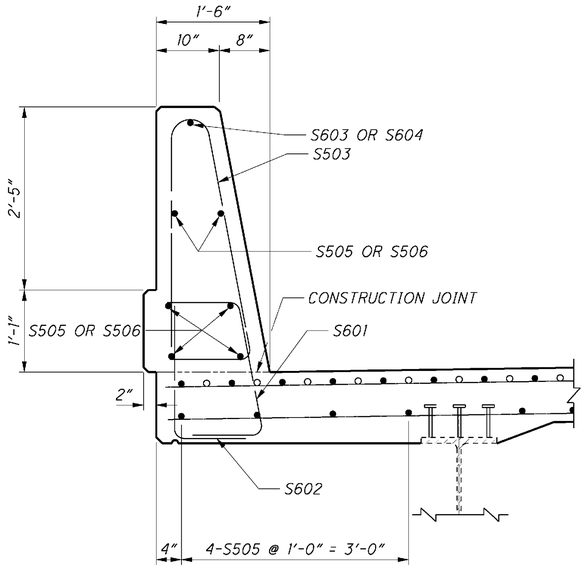

DETAIL B

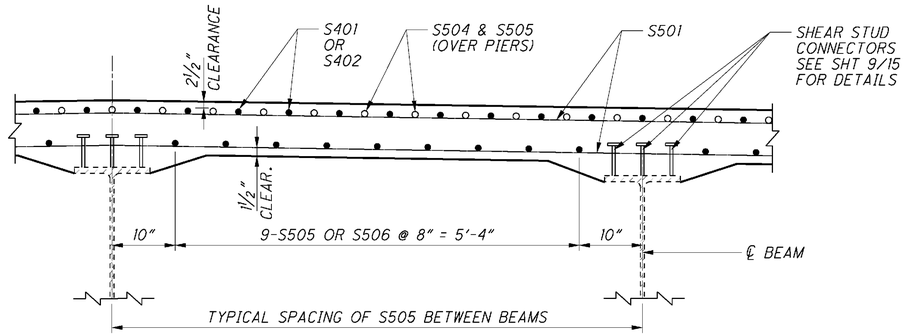

DETAIL A

NOTES:

1. DECK SLAB CONCRETE QUANTITY: THE ESTIMATED QUANTITY OF DECK SLAB CONCRETE IS BASED ON THE CONSTANT DECK SLAB THICKNESS, AS SHOWN, PLUS THE QUANTITY OF CONCRETE THAT FORMS EACH BEAM/GIRDER HAUNCH. THE ESTIMATE ASSUMES A CONSTANT HAUNCH THICKNESS OF 2 INCHES AND A CONSTANT HAUNCH WIDTH OUTSIDE THE EDGE OF EACH BEAM/GIRDER FLANGE OF 9 INCHES. DEVIATE FROM THIS HAUNCH THICKNESS AS NECESSARY TO PLACE THE DECK SURFACE AT THE FINISHED GRADE. THE ALLOWABLE TOLERANCE FOR THE HAUNCH WIDTH OUTSIDE THE EDGE OF EACH BEAM/GIRDER FLANGE IS 3"±.
2. FOR SLAB PLAN AND SCREED ELEVATIONS, SEE SHEET 11 | 15
3. FOR GENERAL NOTES, SEE SHEETS 2 | 15 AND 3 | 15

DIMENSION "A" (IN)					
LOCATION	BEAM 1	BEAM 2	BEAM 3	BEAM 4	BEAM 5
℄ BRG. REAR ABUT.	11 1/8	11 1/8	11 1/8	11 1/8	11
℄ PIER 1	12 5/8	12 5/8	12 5/8	12 5/8	12 1/2
℄ PIER 2	13 1/4	13 1/4	13 1/4	13 1/4	13 1/4
℄ PIER 3	13 3/8	13 3/8	13 3/8	13 3/8	13 3/8
℄ BRG. FWD. ABUT.	12 1/2	12 1/2	12 1/2	12 1/2	12 1/2

DESIGN AGENCY
Palmer ENGINEERING
PALMER ENGINEERING
1300 CORNELL PARKWAY
PITTSBURGH, PENNSYLVANIA 15235

DESIGNED	DRAWN	REVIEWED	DATE
CEJ	SDW	MLJ	1/09
CHECKED	REVISED	STRUCTURE FILE NUMBER	
BJF		0404233	

DECK SLAB DETAIL
BRIDGE NO. ATB-90-1525
I.R. 90 UNDER PLYMOUTH RD.

ATB-90-14.25
PID No. 25199

12 / 15

358
437

O:\ODOT\ATB\25199\bridge\ATB090_1525C\sheets\090_1525TS001.DGN 6/6/2009 9:52:37 AM DENNIS

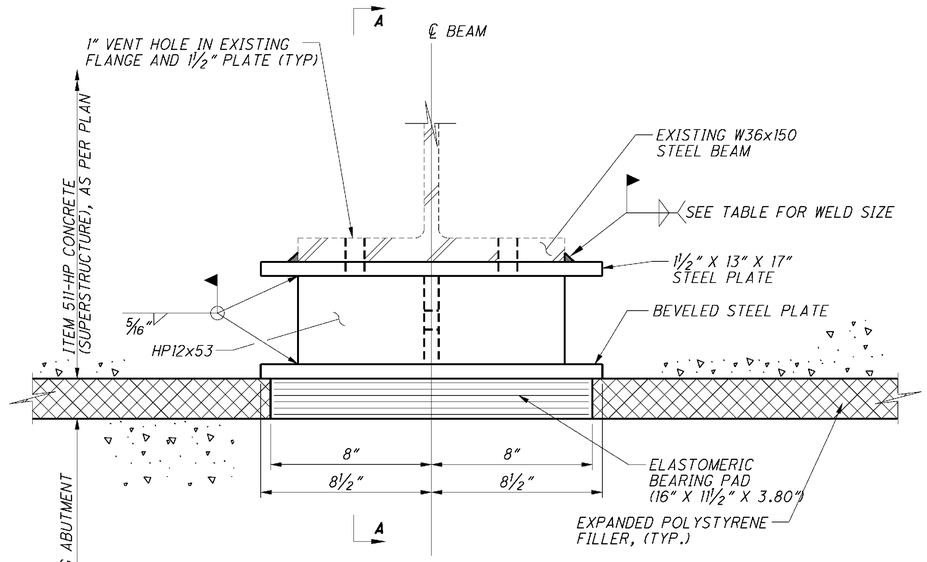

BEAM BEARING @ ABUTMENTS

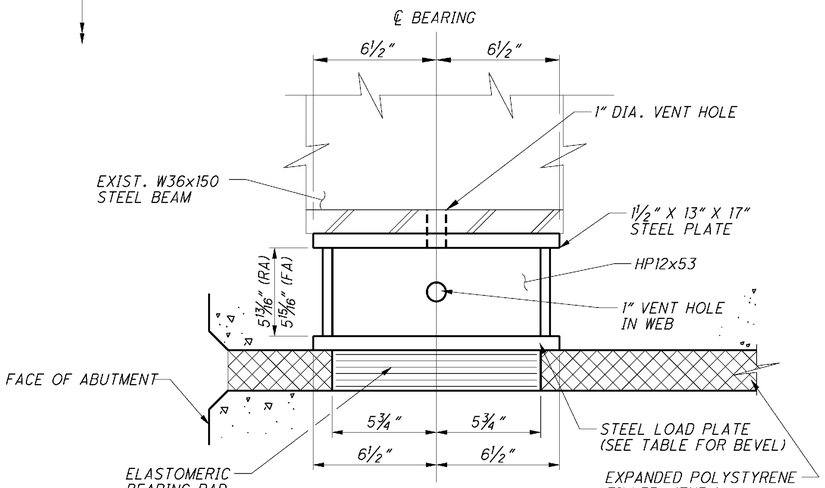

SECTION A-A

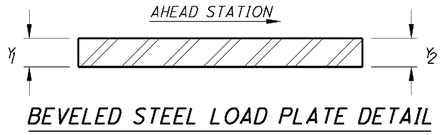

BEVELED STEEL LOAD PLATE DETAIL

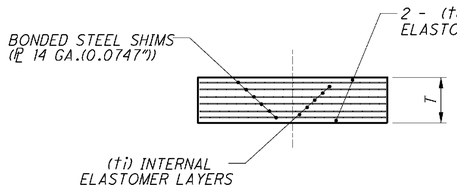

BEARING PAD DETAIL

NOTES:

ELASTOMERIC BEARING PADS SHALL COMPLY WITH ITEM 516 AND AASHTO STANDARD SPECIFICATIONS FOR HIGHWAY BRIDGES, SECTION 18, BEARING DEVICES, DIVISION II, CONSTRUCTION, ARTICLES 18.4.5.1 AND 18.5.6.2. BEARINGS SHALL BE GRADE 3, 50 DUROMETER ELASTOMER, AND SHALL BE SUBJECTED TO THE LOAD TESTING REQUIREMENTS DEFINED IN ARTICLE 18.7.4.5 OF THE AASHTO DOCUMENT LISTED ABOVE. BEARINGS WERE DESIGNED UNDER SECTION 14.6.6 OF SECTION 14, BEARINGS, DIVISION I DESIGN. TESTING SHALL BE INCLUDED IN THE UNIT PRICE BID FOR THE BEARINGS, EACH.

BASIS OF PAYMENT: THE UNIT BID PRICE SHALL INCLUDE ALL MATERIALS, LABOR, AND INCIDENTALS NECESSARY TO FURNISH AND INSTALL LAMINATED ELASTOMERIC BEARINGS. PAYMENT WILL BE AT THE CONTRACT PRICE FOR ITEM 516, ELASTOMERIC BEARINGS.

WELDING:
CONTROL WELDING SO THAT THE PLATE TEMPERATURE AT THE ELASTOMER BONDED SURFACE DOES NOT EXCEED 300° F AS DETERMINED BY USE OF PYROMETRIC STICKS OR OTHER TEMPERATURE MONITORING DEVICES.

THE STEEL LOAD PLATE SHALL BE ASTM A709 GRADE 50 STEEL AND SHALL BE BONDED TO THE ELASTOMER BY VULCANIZATION DURING THE MOLDING PROCESS. THE STEEL HP SECTION SHALL BE ASTM GRADE 36 OR GRADE 50 STEEL.

THE STEEL LOAD PLATES, HP SECTION, AND DRILLING OF 1" VENT HOLES IN THE STEEL LOAD PLATE AND HP SECTION SHALL BE INCLUDED WITH ITEM 516, ELASTOMERIC BEARINGS FOR PAYMENT.

INCLUDE DRILLING OF HOLES IN THE EXISTING BEAM FLANGES UNDER ITEM 202, PORTIONS OF STRUCTURE REMOVED, OVER 20' SPAN, AS PER PLAN.

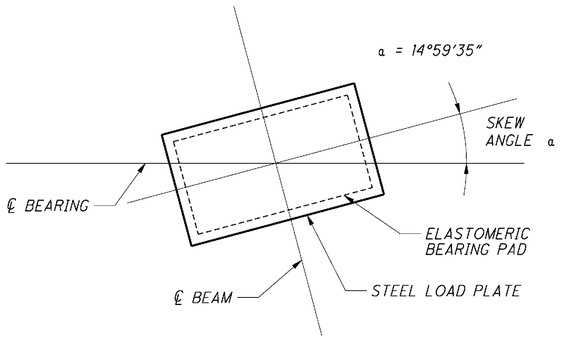

(CLIPPED CORNERS SHALL NOT BE ALLOWED)

LAMINATED ELASTOMERIC BEARINGS ORIENTATION AT ABUTMENTS/PIERS

BEARING LOCATION	BEARING TYPE	NO. REQ'D	DEAD LOAD (KIPS)	LIVE LOAD (KIPS)	TOTAL LOAD (KIPS)	ti	NO. OF ti	te (2 EA.)	NO. OF INT. LAMINATES (14 GAGE)	T	REQUIRED DUROMETER	WELD SIZES	LOAD PLATE BEVEL y1	LOAD PLATE BEVEL y2
REAR ABUT	EXPANSION	5	65.9	54.1	120.0	0.45"	6	0.29"	7	3.80"	50	5/16	1½"	1 13/16"
PIER #1	EXPANSION	5	130.7	79.4	210.1	0.44"	5	0.28"	6	3.21"	50	⅜	2"	2 5/16"
PIER #2	EXPANSION	5	159.6	85.0	244.6	0.44"	6	0.28"	7	3.72"	50	⅜	2"	2¼"
PIER #3	EXPANSION	5	130.7	79.4	210.1	0.44"	5	0.28"	6	3.21"	50	⅜	2"	2⅛"
FWD. ABUT	EXPANSION	5	65.9	54.1	120.0	0.45"	6	0.29"	7	3.80"	50	5/16	1½"	1 9/16"

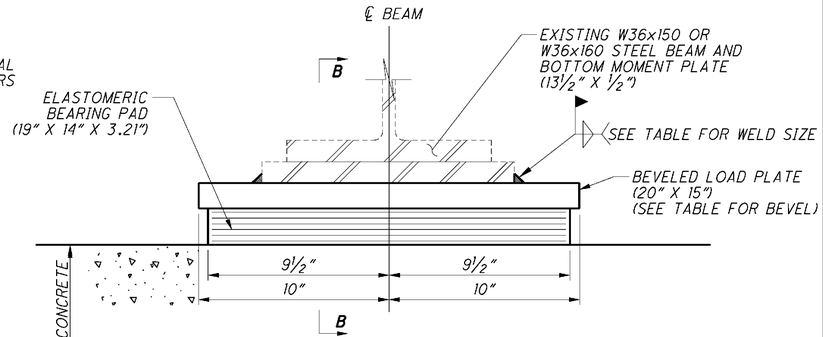

BEAM EXPANSION BEARING @ PIERS 1 & 3

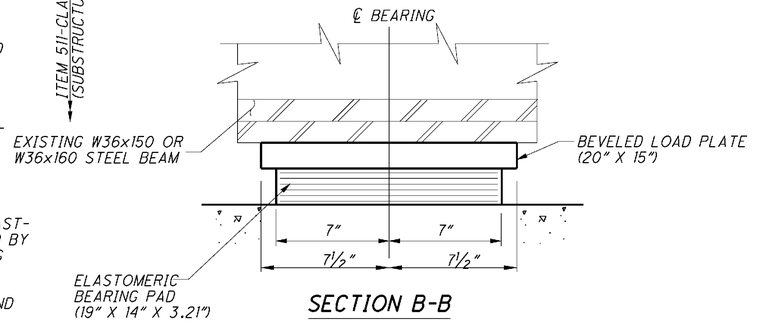

SECTION B-B

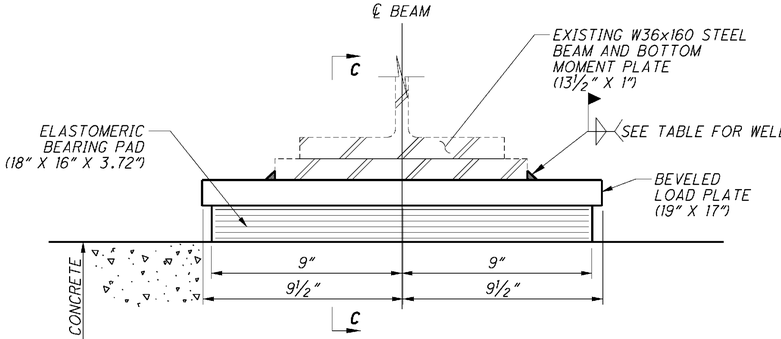

BEAM EXPANSION BEARING @ PIER 2

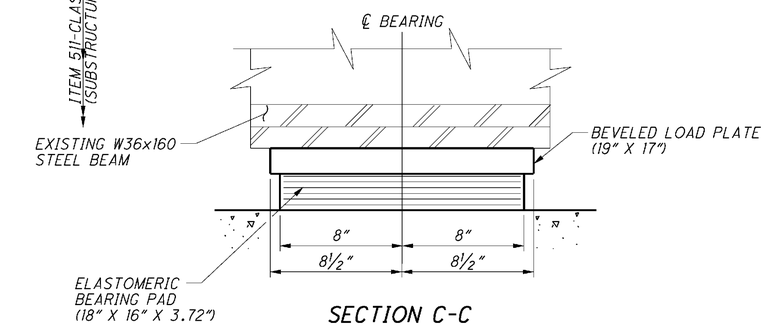

SECTION C-C

DESIGN AGENCY
Palmer ENGINEERING
1300 CORNELL PARK DR
PLYMOUTH MEETING, PA 19462
610.397.1818 FAX 610.397.1819

DESIGNED	DRAWN	REVIEWED	DATE
CEJ	SDW	MLJ	1/09
CHECKED	REVISED	STRUCTURE TITLE NUMBER	
BJF		0404233	

BEARING PAD DETAILS
ATB-90-1525
I.R. 90 UNDER PLYMOUTH ROAD

ATB-90-14.25
PID No. 25199

13 / 15

359
437

C:\ODOT\ATB\25199\bridge\ATB090_1525C\sheets\090_1525BR001.dgn 6/6/2009 9:52:39 AM DENNIS

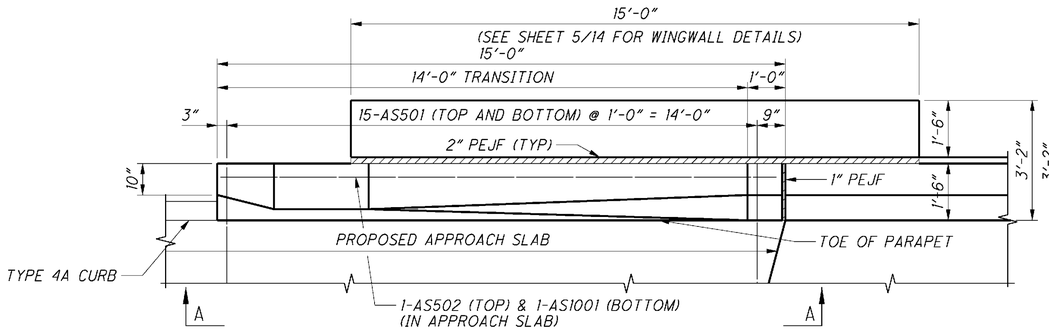

PARTIAL REAR APPROACH SLAB PLAN

(LEFT PARAPET SHOWN, RIGHT PARAPET SIMILAR)

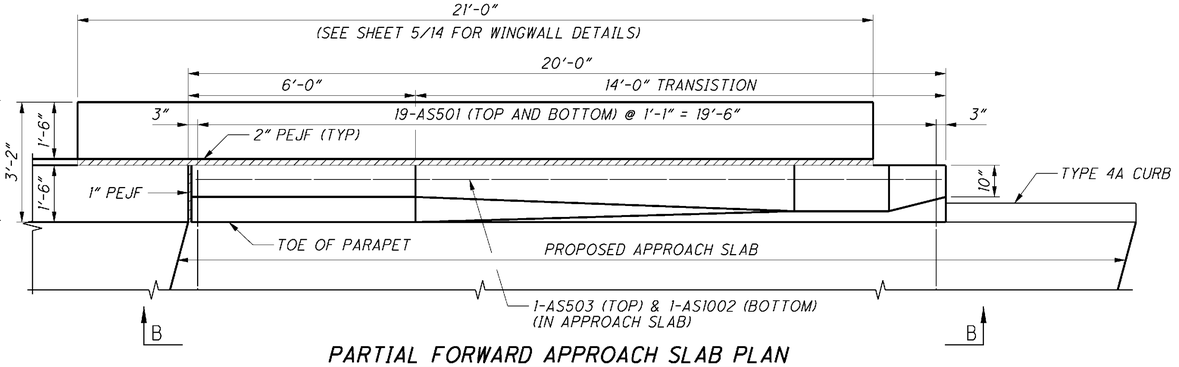

PARTIAL FORWARD APPROACH SLAB PLAN

(LEFT PARAPET SHOWN, RIGHT PARAPET SIMILAR)

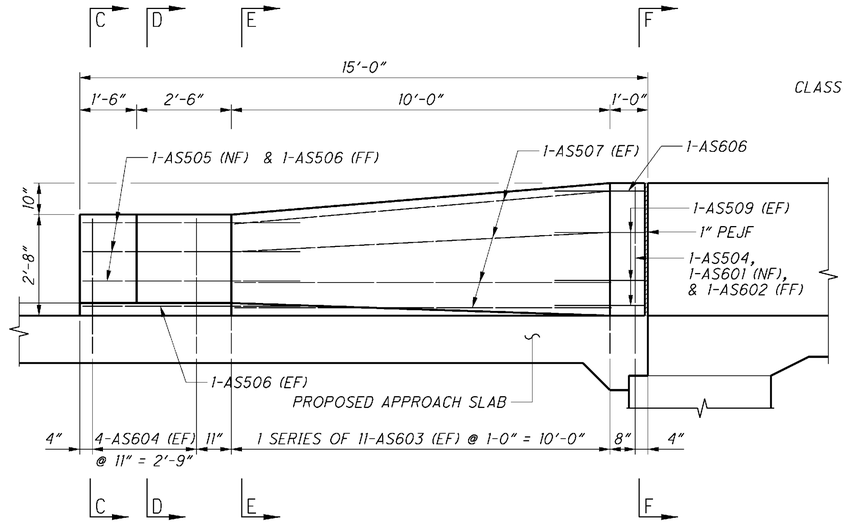

VIEW A-A

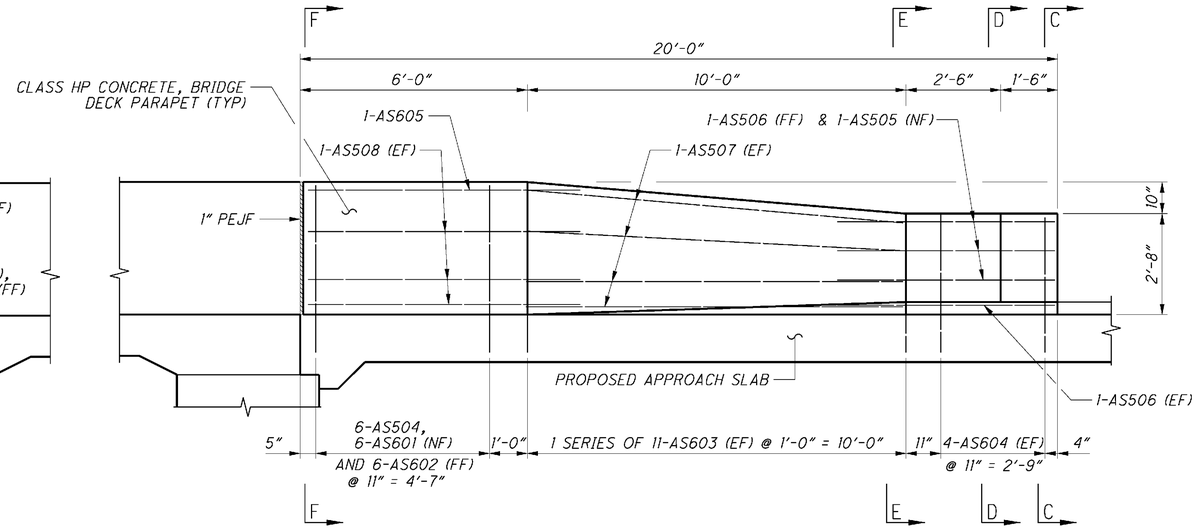

VIEW B-B

NOTES

1.) FOR GUARDRAIL DETAILS, SEE STANDARD CONSTRUCTION DRAWING GR-3.1

2.) FOR ADDITIONAL ABUTMENT DETAILS, SEE SHEET 5/14 AND 6/14

3.) FOR CURB DETAILS, SEE STANDARD CONSTRUCTION DRAWING BP-5.1

4.) FOR ADDITIONAL REINFORCING STEEL IN THE APPROACH SLAB, SEE STANDARD CONSTRUCTION DRAWING AS-1-81

5.) CLASS HP CONCRETE, BRIDGE DECK (PARAPET) IS INCLUDED FOR PAYMENT WITH ITEM 526 REINFORCED CONCRETE APPROACH SLABS (T=15"), AS PER PLAN.

LEGEND

NF - NEARFACE
FF - FAR FACE
EF - EACH FACE
RA - REAR APPROACH
FA - FORWARD APPROACH
PEJF - PREFORMED ELASTOMERIC JOINT FILLER

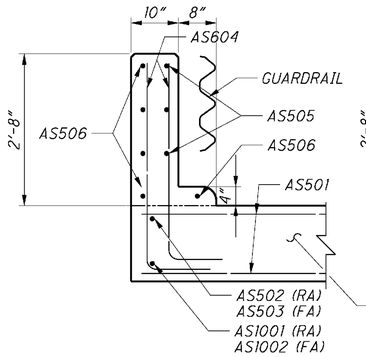

SECTION C-C

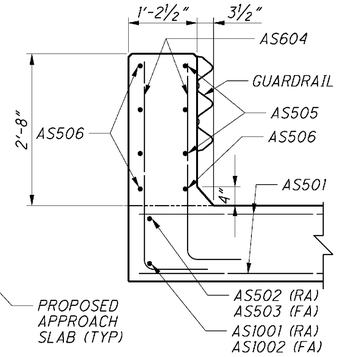

SECTION D-D

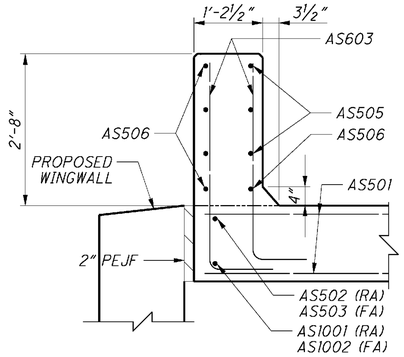

SECTION E-E

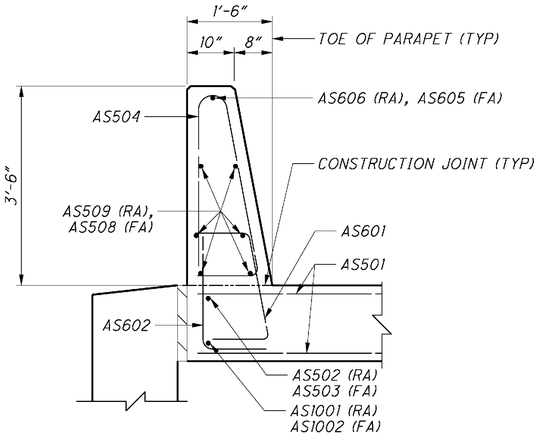

SECTION F-F

DESIGN AGENCY
Palmer ENGINEERING
1300 CORNELL PARKWAY
PITTSBURGH, PA 15220
412.921.8383

DESIGNED	DRAWN	REVIEWED	DATE
CEJ	SDW	MLJ	1/09
CHECKED	REVISED	STRUCTURE FILE NUMBER	
BJF		0404233	

APPROACH SLAB PARAPET DETAILS

BRIDGE NO. ATB-90-1525
I.R. 90 UNDER PLYMOUTH ROAD

ATB-90-14.25
PID No. 25199

14 / 15

360
437

C:\ODOT\ATB\25199\bridge\ATB090_1525C\sheets\090_1525RA001.dgn 6/6/2009 9:52:43 AM DENNIS

MARK	NUMBER			LENGTH	WEIGHT	TYPE	DIMENSIONS						
	REAR	FWD	TOTAL		(LBS.)		A	B	C	D	E	R	INC.
ABUTMENTS													
A501	68	110	178	3'-9"	696	1	10"	3'-1"					
A502	22	35	57	10'-6"	624	3	2'-2"	2'-10"					
A503	12		12	10'-5"	130	STR							
A504		6	6	16'-3"	102	STR							
A505		6	6	16'-0"	100	STR							
A506	18		18	18'-1"	339	2	8'-7"	1'-2"	8'-7"				
A507		32	32	22'-7"	754	2	10'-10"	1'-2"	10'-10"				
A508	46	60	106	6'-11"	765	2	3'-0"	1'-2"	3'-0"				
A509	12		12	8'-4"	104	STR							
A510		20	20	14'-1"	294	STR							
A511	16		16	14'-8"	245	STR							
A512		16	16	20'-8"	345	STR							
A801	8		8	10'-5"	222	STR							
A802		4	4	16'-3"	174	STR							
A803		4	4	16'-0"	171	STR							
SUBTOTAL					**5065**								
PIERS													
P401			30	29'-0"	581	STR							
P402			42	7'-3"	203	24	2'-8"	1'-7"				1'-3 1/2"	
P501			132	8'-5"	1159	2	3'-0"	2'-8"	3'-0"				
P801			36	14'-8"	1410	1	3'-6"	11'-4"					
P802			18	20'-0"	961	STR							
P901			18	29'-0"	1775	STR							
SUBTOTAL					**6089**								

NOTES

1) THE BAR SIZE NUMBER IS SPECIFIED ON THE PLANS IN THE BAR MARK COLUMN COLUMN. THE FIRST DIGIT WHERE THREE DIGITS ARE USED, AND THE FIRST TWO DIGITS WHERE FOUR ARE USED, INDICATES THE BAR SIZE NUMBER. FOR EXAMPLE, S501 IS A NO. 5 BAR. BAR DIMENSIONS SHOWN ARE OUT OT OUT UNLESS OTHERWISE NOTED. 'R' INDICATES INSIDE RADIUS, UNLESS OTHERWISE NOTED.

2) ALL REINFORCING STEEL SHALL BE EPOXY COATED. PAYMENT FOR REINFORCING BARS SHALL BE INCLUDED WITH ITEM 509.

3) 'STR' IN THE TYPE COLUMN INDICATES STRAIGHT BARS.

4) HOOKS ND BENDS SHOWN ON THE BENDING DIAGRAMS THAT ARE NOT DIMENSIONED SHALL BE AS SPECIFIED IN THE C.M.S. REFER TO C.M.S. SECTION 509.05 FOR STANDARD BEND DIMENSIONS.

5) ALL REINFORCING STEEL CLEARANCES ARE 2" UNLESS OTHERWISE NOTED.

6) FOR GENERAL NOTES, SEE SHEET 2 | 15 AND 3 | 15

7) THE TOTAL REINFORCING STEEL IN THE APPROACH SLABS AND APPROACH SLAB PARAPETSIS INCLUDED UNDER ITEM 526 REINFORCED CONCRETE APPROACH SLABS (T=15"), AS PER PLAN FOR PAYMENT

MARK	NUMBER			LENGTH	WEIGHT	TYPE	DIMENSIONS						
	REAR	FWD	TOTAL		(LBS.)		A	B	C	D	E	R	INC.
END DIAPHRAGMS													
D501	26	26	52	7'-2"	389	2	2'-5"	2'-7"	2'-5"				
D502	26	26	52	13'-4"	723	3	3'-5"	3'-0"					
D801	10	10	20	36'-11"	1971	STR							
D802	25	25	50	5'-0"	667	18	2'-9"	1'-0"	1'-0"				
SUBTOTAL					**3750**								
DECK													
	PARAPET	SLAB											
S401		486	486	30'-0"	9739	STR							
S402		54	54	22'-6"	812	STR							
S501		1064	1064	35'-8"	39581	STR							
		4	4	12'-2"									
S502		SERIES	SERIES	TO	1114	STR							1'-10"
		OF 12	OF 12	32'-4"									
S503	550		550	7'-5"	4255	23	1'-1"	3'-2"	3'-0"			2 3/4"	
S504		159	159	27'-0"	4478	STR							
S505	108	555	663	30'-0"	20745	STR							
S506	12	44	56	22'-6"	1314	STR							
S601	550		550	3'-9"	3110	52	1'-9"	4"	1'-1"	1'-1"			
S602	550		550	2'-8"	2212	1	1'-1"	1'-9"					
S603	20		20	30'-0"	905	STR							
S604	2		2	16'-2"	49	STR							
S801		8	8	36'-11"	789	STR							
SUBTOTAL					**89103**								
APPROACH SLAB													
AS501	60	76	136	3'-6"	496	STR							
AS502	2		2	14'-8"	31	STR							
AS503		2	2	19'-8"	41	STR							
AS504	2	12	14	7'-5"	108	23	1'-1"	3'-2"	3'-0"			2 3/4"	
AS505	6	6	12	5'-6"	69	25	1'-8"	2'-5"	1'-4"	1 1/2"	5"		
AS506	10	10	20	5'-6"	115	STR							
AS507	16	16	32	10'-0"	334	STR							
AS508		12	12	7'-6"	94	STR							
AS509	12		12	2'-6"	31	STR							
AS601	2	12	14	3'-9"	79	52	1'-9"	4"	1'-1"	1'-1"			
AS602	2	12	14	2'-9"	58	1	1'1"	1'-10"					
	4	4	8	4'-4"				3'-5"					
AS603	SERIES	SERIES	SERIES	TO	628	1	1'-1"	TO					1"
	OF 11	OF 11	11	5'-2"				4'-3"					
AS604	16	16	32	4'-4"	208	1	1'-1"	3'-5"					
AS605		2	2	7'-6"	23	STR							
AS606	2		2	2'-6"	8	STR							
AS1001	2		2	14'-8"	126	STR							
AS1002		2	2	19'-8"	169	STR							
SUBTOTAL					**2618**								
TOTAL REINFORCING STEEL					**104007**	**(NOT INCLUDING APPROACH SLAB BARS)**							

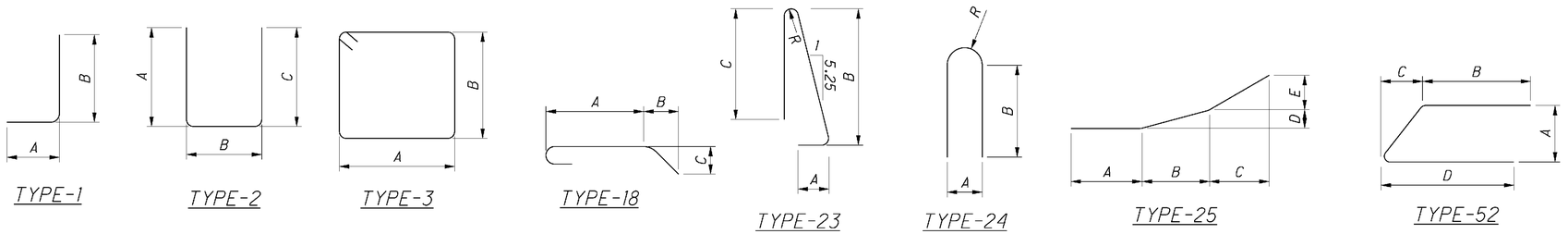

DESIGN AGENCY
Palmer ENGINEERING
1300 CORNELL PARKWAY
CINCINNATI, OHIO 45240

DATE 1/09
REVIEWED MLJ
STRUCTURE TILE NUMBER 0404233
DRAWN SDW
REVISED
DESIGNED CEJ
CHECKED BJF

REINFORCING STEEL
BRIDGE NO. ATB-90-1525
I.R. 90 UNDER PLYMOUTH ROAD

ATB-90-14.25
PID No. 25199

15 / 15

361
437

O:\ODOT\ATB\25199\bridge\ATB090_1525C\sheets\090_1525GN003.dgn 6/6/2009 9:52:46 AM DENNIS

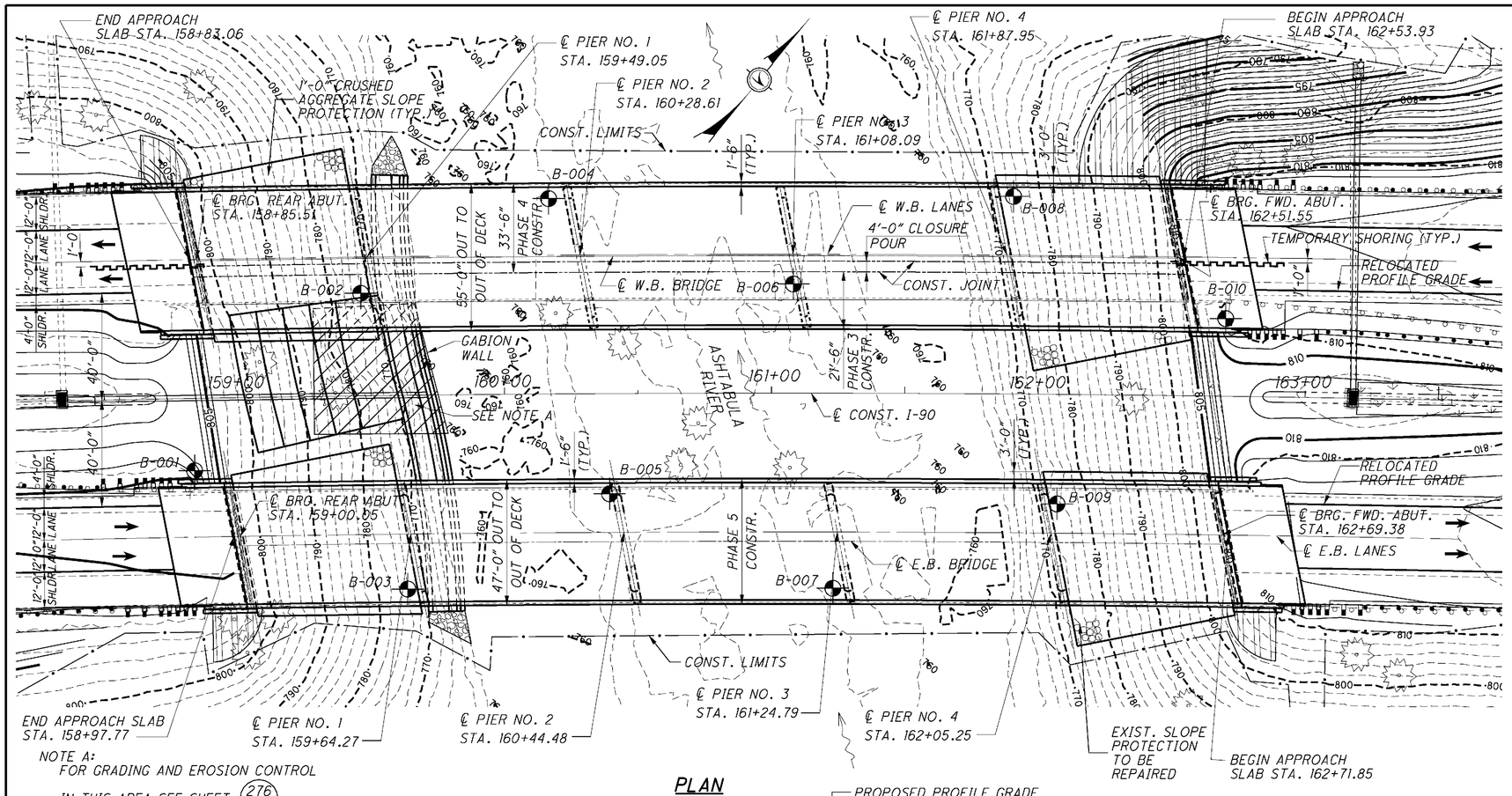

PLAN

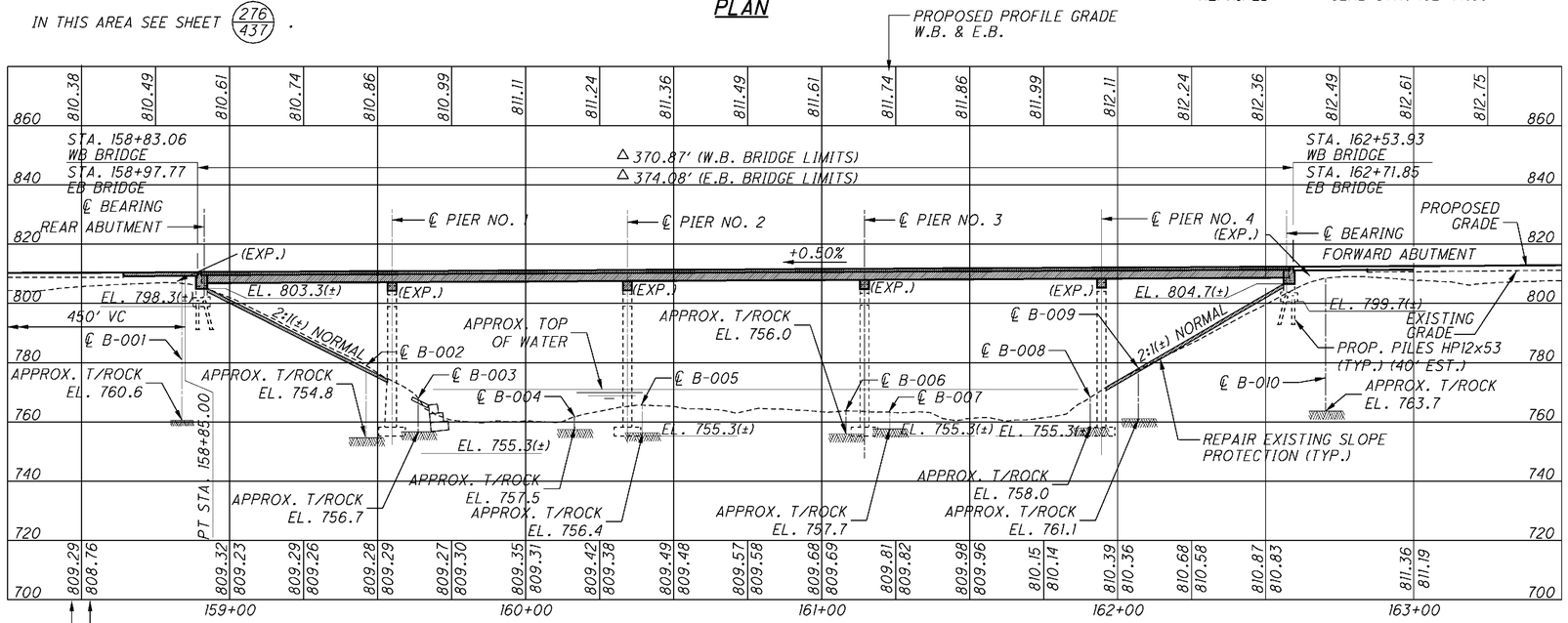

PROFILE ALONG PROFILE GRADE I-90 (LEFT BRIDGE SHOWN)

BENCHMARK DATA

BM #1 STA. 158+55.59	ELEV. 808.93	OFFSET 82.87	LEFT
BM #2 STA. 177+95.64	ELEV. 838.89	OFFSET 81.02	LEFT

FOR ADDITIONAL BENCHMARK INFORMATION, SEE ROADWAY PLAN SHEET 5/437 .

NOTES

EARTHWORK LIMITS SHOWN ARE APPROXIMATE. ACTUAL SLOPES SHALL CONFORM TO PLAN CROSS SECTIONS.

FOR CURVE DATA, SEE SHEET 2/62 .

FOR LAYOUT OF REFERENCE CHORD, SEE SHEET 3/62 .

DESIGN TRAFFIC:
2008 ADT = 26,730 2008 ADTT = 6,200
2028 ADT = 36,750 2028 ADTT = 8,500
DIRECTIONAL DISTRIBUTION = 0.55

LEGEND

- ⊕ INDICATES SOIL BORING LOCATION
- ✳ ✳ MEASURED ALONG REFERENCE CHORD
- △ MEASURED ALONG ℄ CONST. I-90

EXISTING STRUCTURE

TYPE: CONTINUOUS STEEL BEAM WITH REINFORCED CONCRETE DECK AND SUBSTRUCTURE.
SPANS: 64'-0"±, 3 @ 80'-0"±, 64'-0"± (L/R) C/C BEARINGS
ROADWAY: 40'-10¼"(±) TOE/TOE PARAPETS 1'-6⅞"(±) WIDE
LOADING: HS 20-44
SKEW: 11°00'00"(±) R.F.
APPROACH SLABS: 25'-0" LONG (AS-1-54)
ALIGNMENT: 0°28'(±) CURVE (RIGHT)
WEARING SURFACE: 1"(±) MONOLITHIC CONCRETE
CROWN: NORMAL, 0.016 (±)
STRUCTURE FILE NUMBER: 0404268L/0404292R
DATE BUILT: 1959
DISPOSITION: SUPERSTRUCTURE AND PARTIAL SUBSTRUCTURE TO BE REMOVED IN PHASES.

PROPOSED STRUCTURE

PROPOSED WORK: REPLACE CONCRETE DECK, CONVERT ABUTMENTS TO SEMI-INTEGRAL, REPLACE STRUCTURAL STEEL, PATCH AND SEAL CONCRETE SURFACES.
TYPE: CONTINUOUS STEEL BEAM (ASTM A709, GRADE 50W) WITH REINFORCED CONCRETE DECK AND SUBSTRUCTURE.
**SPANS: 63'-11⅜", 80'-0", 79'-9⅝", 80'-1¼", VARIES C/C BEARINGS (W.B.)
64'-1¼", 79'-11⅝", 79'-11¾", 80'-0⅛", 63'-8⅜" C/C BEARINGS (E.B.)
ROADWAY: 52'-0" TOE/TOE PARAPET (W.B.)
44'-0" TOE/TOE PARAPET (E.B.)
LOADING: HS25 CASE I AND ALTERNATE MILITARY, AND 60 PSF FUTURE WEARING SURFACE. HS20 FOR SUBSTRUCTURE
SKEW: 10°52'24" R.F. (W.B.) TO REFERENCE CHORD
10°58'19" R.F. (E.B.) TO REFERENCE CHORD
APPROACH SLABS: 25'-0" LONG (AS-1-81)
ALIGNMENT: 0°28' CURVE (RIGHT)
WEARING SURFACE: MONOLITHIC CONCRETE
CROWN: SUPERELEVATED, 0.018
COORDINATES: LATITUDE N41°50'23"
LONGITUDE W80°43'37"

DESIGN AGENCY
KCI ASSOCIATES OF OHIO, P.A.
388 S. MAIN ST., SUITE 401
AKRON, OHIO 44311

DRAWN	REVIEWED	DATE
JLS	FJB	6/5/09
DESIGNED	CHECKED	
RKP	HK	
REVISED	STRUCTURE FILE NUMBER	
	0404268L/0404292R	

ASHTABULA COUNTY
RIGHT (E.B.)
STA. 158+97.77
STA. 162+71.85

ASHTABULA COUNTY
LEFT (W.B.)
STA.158+83.06
STA.162+53.93

SITE PLAN
BRIDGE NO. ATB-90-1583 L&R
I-90 OVER ASHTABULA RIVER

ATB-90-14.25
PID No. 25199

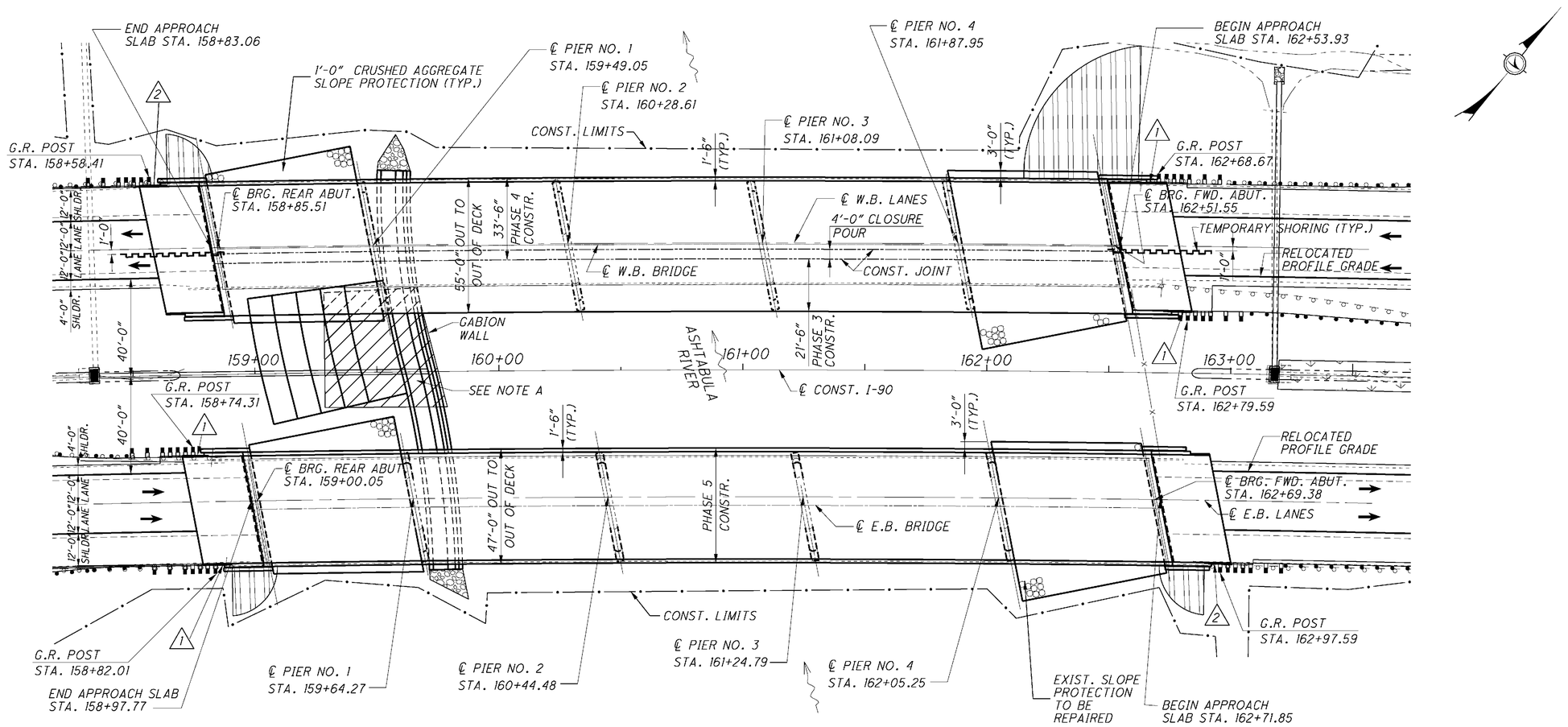

NOTE A:
FOR GRADING AND EROSION CONTROL IN THIS AREA SEE SHEET (276/437).

GENERAL PLAN

CURVE DATA ℄ CONST. I-90

P.I. STA. = 170+68.62
△ = 18°37'55" (RT)
Dc = 0°28'00"
R = 12,277.67'
T = 2,014.07'
L = 3,992.59'
E = 164.10'

LEGEND:

1 BRIDGE TERMINAL ASSEMBLY, TYPE 1
2 BRIDGE TERMINAL ASSEMBLY, TYPE 2

NOTES:

(1) FOR GEOMETRIC LAYOUT SEE SHEET 3/62.
(2) FOR ABBREVIATIONS SEE SHEET 5/62.

DESIGN AGENCY
KCI ASSOCIATES OF OHIO, P.A.
388 S. MAIN ST., SUITE 401
AKRON, OHIO 44311

DESIGNED RKP | DRAWN JLS | REVIEWED FJB | DATE 6/5/09
CHECKED SLH | REVISED | STRUCTURE FILE NUMBER 0404268L/0404292R

GENERAL PLAN
BRIDGE NO. ATB-90-1583 L AND R
I-90 OVER ASHTABULA RIVER

ATB-90-14.25
PID No. 25199

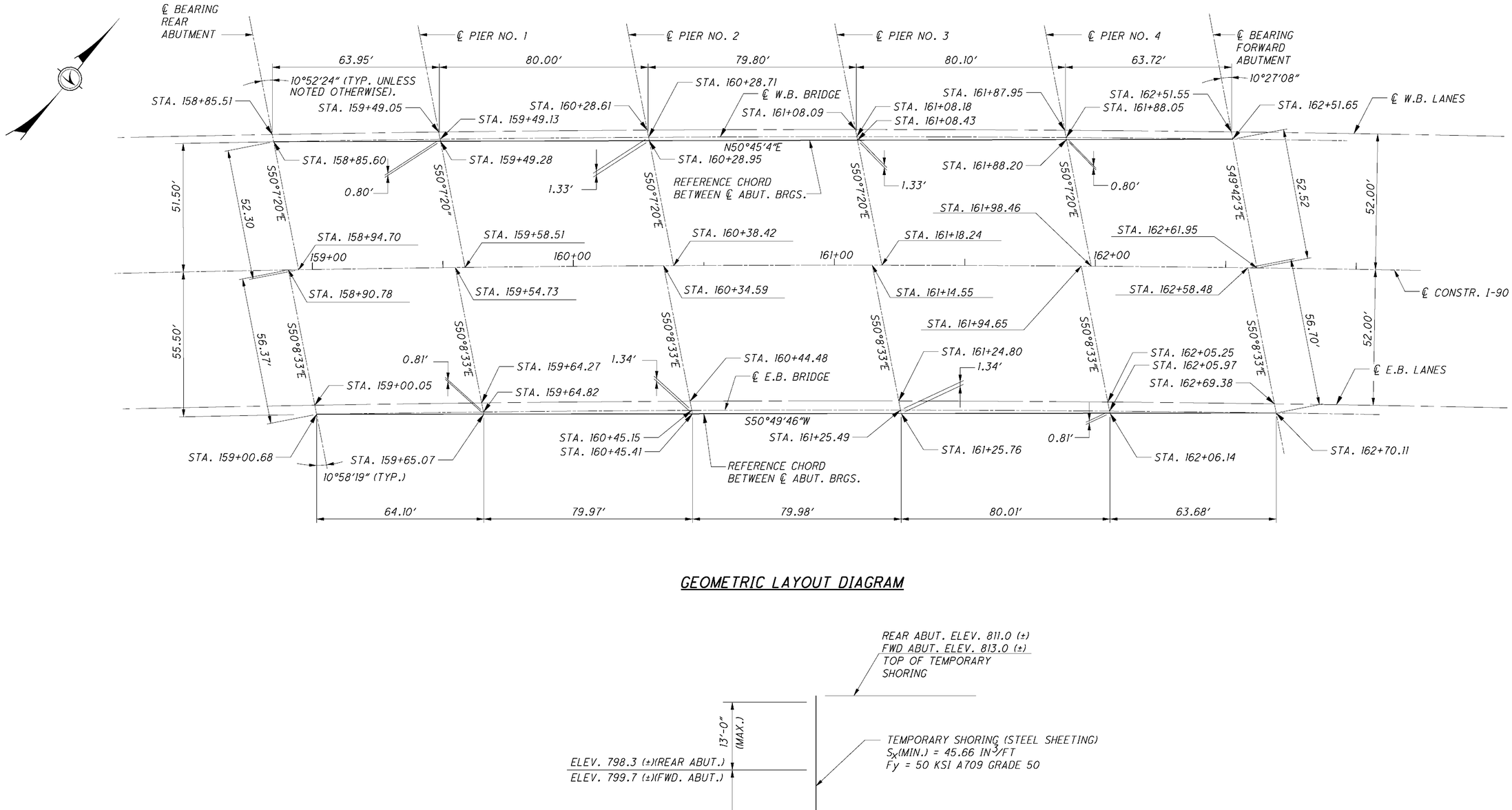

GEOMETRIC LAYOUT DIAGRAM

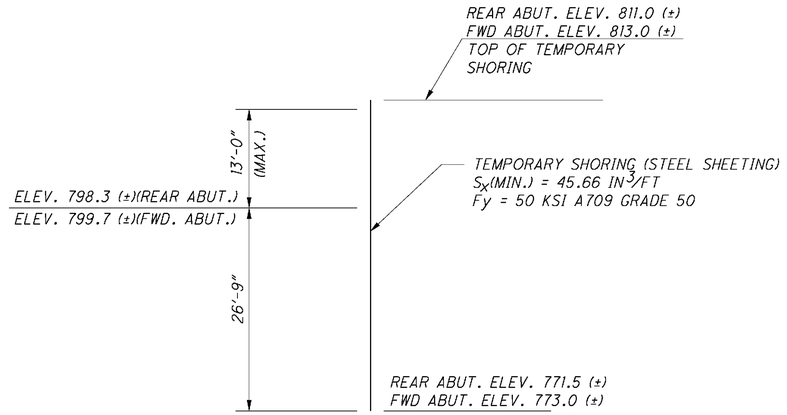

TEMPORARY SHORING DETAIL

NOTES:

1. FOR LOCATION OF TEMPORARY SHORING, SEE SHEET 2/62.
2. THE REFERENCE CHORD IS A LINE FROM ℄ BEARING REAR ABUTMENT TO ℄ BEARING FORWARD ABUTMENT, INTERSECTING THE ℄ EASTBOUND OR ℄ WESTBOUND BRIDGE.
3. FOR ABBREVIATIONS SEE SHEET 5/62.

DESIGN AGENCY
KCI ASSOCIATES OF OHIO, P.A.
388 S. MAIN ST., SUITE 401
AKRON, OHIO 44311

DESIGNED	DRAWN	REVIEWED	DATE
RKP	JLS	FJB	6/5/09
CHECKED	REVISED	STRUCTURE TYPE NUMBER	
HK		0404268L/0404292R	

GEOMETRIC LAYOUT DIAGRAM
BRIDGE NO. ATB-90-1583 L AND R
I-90 OVER ASHTABULA RIVER

ATB-90-14.25
PID No. 25199

STRUCTURE GENERAL NOTES

STANDARD DRAWINGS AND SUPPLEMENTAL SPECIFICATIONS:

REFER TO THE FOLLOWING STANDARD DRAWINGS:

AS-1-81	REVISED 07-19-02	GSD-1-96	REVISED 07-19-02
SBR-1-99	REVISED 07-19-02	PCB-91	REVISED 07-19-02
		SICD-1-96	REVISED 07-19-02

DESIGN SPECIFICATIONS:
THESE STRUCTURES CONFORM TO "STANDARD SPECIFICATIONS FOR HIGHWAY BRIDGES" ADOPTED BY THE AMERICAN ASSOCIATION OF STATE HIGHWAY AND TRANSPORTATION OFFICIALS, 2002, 17TH EDITION AND THE O.D.O.T. BRIDGE DESIGN MANUAL.

THE DESIGN DATA IS AS FOLLOWS:

DESIGN LOADING	-HS25. CASE I AND THE ALTERNATE MILITARY LOADING. FUTURE WEARING SURFACE (FWS) OF 60 PSF. -HS20-44 FOR SUBSTRUCTURE.
DECK PROTECTION METHOD	-EPOXY COATED REINFORCING STEEL, 2½" CONCRETE COVER.
MONOLITHIC WEARING SURFACE	-MONOLITHIC WEARING SURFACE IS ASSUMED, FOR DESIGN PURPOSES, TO BE 1" THICK.

DESIGN STRESS:

CONCRETE CLASS HP4	-COMPRESSIVE STRENGTH 4500 P.S.I. (SUPERSTRUCTURE).
CONCRETE CLASS C	-COMPRESSIVE STRENGTH 4000 P.S.I. (SUBSTRUCTURE).
REINFORCING STEEL	-ASTM A615, OR A996 - GRADE 60 MINIMUM YIELD STRENGTH 60,000 P.S.I.
STRUCTURAL STEEL	-ASTM A709 GRADE 50W- YIELD STRENGTH 50,000 P.S.I.

SEQUENCE OF CONSTRUCTION

THE WORK TO BE DONE UNDER THIS CONTRACT IS AS SHOWN ON THE CONSTRUCTION PLANS AND IN GENERAL INCLUDES THE FOLLOWING:

1. STAGE REMOVAL OF EXISTING CONCRETE DECK, APPROACH SLABS AND PORTIONS OF ABUTMENTS, WINGWALLS AND PIERS.
2. EXTEND EXISTING SUBSTRUCTURE UNITS FOR BRIDGE WIDENING. (PHASE CONSTRUCTION)
3. CONVERT ABUTMENTS TO SEMI INTEGRAL.
4. STAGE CONSTRUCTION OF NEW CONCRETE DECK, SUPERSTRUCTURES, BARRIERS AND APPROACH SLABS.
5. PATCH EXISTING SUBSTRUCTURE UNITS.
6. SEAL CONCRETE SURFACES.
7. REPAIR CONCRETE SLOPE PROTECTION.

MECHANICAL CONNECTORS:

AN APPROVED TYPE OF MECHANICAL CONNECTOR FOR REINFORCING BARS SHALL BE PROVIDED. INSTALLATION OF CONNECTORS SHALL CONFORM WITH MANUFACTURER'S RECOMMENDED PROCEDURES.

CONNECTORS USED WITH EPOXY COATED BARS SHALL BE EPOXY COATED. COATING USED WITH EPOXY COATED BARS AND SHALL CONFORM TO THE SAME SPECIFICATION. COATINGS WHICH HAVE BEEN DAMAGED OR WHICH OTHERWISE DO NOT MEET SPECIFICATION WITH RESPECT TO COLOR, CONTINUITY, AND UNIFORMITY MAY BE REPAIRED AS DIRECTED BY THE ENGINEER OR THEY SHALL BE REPLACED WITH MATERIAL WHICH MEETS THE SPECIFICATIONS. CONNECTORS SHALL BE INCLUDED IN ITEM 509 FOR PAYMENT.

ITEM 202, PORTIONS OF STRUCTURE REMOVED, OVER 20 FOOT SPAN, AS PER PLAN:

THIS ITEM SHALL INCLUDE THE ELEMENTS INDICATED IN THE PLANS AND GENERAL NOTES AND THAT ARE NOT SEPARATELY LISTED FOR PAYMENT, EXCEPT FOR WEARING COURSE REMOVAL. ITEMS TO BE REMOVED INCLUDE ALL EXISTING MATERIALS BEING REPLACED BY NEW CONSTRUCTION AND MISCELLANEOUS ITEMS THAT ARE NOT SHOWN TO BE INCORPORATED INTO THE FINAL CONSTRUCTION AND ARE DIRECTED TO BE REMOVED BY THE ENGINEER. THE USE OF EXPLOSIVES, HEADACHE BALLS AND/OR HOE-RAMS WILL NOT BE PERMITTED. THE METHOD OF REMOVAL AND THE WEIGHT OF HAMMER SHALL BE APPROVED BY THE ENGINEER. PERFORM ALL WORK IN A MANNER THAT WILL NOT CUT, ELONGATE OR DAMAGE THE EXISTING REINFORCING STEEL TO BE PRESERVED. CHIPPING HAMMERS SHALL NOT BE HEAVIER THAN THE NOMINAL 90-POUND CLASS. PNEUMATIC HAMMERS SHALL NOT BE PLACED IN DIRECT CONTACT WITH REINFORCING STEEL THAT IS TO BE RETAINED IN THE REBUILT STRUCTURE. SUBMIT CONSTRUCTION PLANS IN ACCORDANCE WITH CMS 501.05.

MEASUREMENT & PAYMENT:

THE DEPARTMENT WILL MEASURE THE QUANTITY OF REMOVALS ON A LUMP SUM BASIS. THE DEPARTMENT WILL PAY FOR THE ACCEPTED QUANTITIES OF REMOVALS AT THE CONTRACT PRICE FOR ITEM 202, PORTIONS OF STRUCTURE REMOVED OVER 20 FOOT SPAN, AS PER PLAN.

CUT LINE CONSTRUCTION JOINT PREPARATION:

SAW CUT BOUNDARIES OF PROPOSED CONCRETE REMOVALS 1 INCH DEEP. REMOVE CONCRETE TO A ROUGH SURFACE. LEAVE THE EXISTING REINFORCING STEEL, IF REQUIRED IN THE PLANS, IN PLACE. INSTALL DOWEL BARS IF SPECIFIED. PRIOR TO CONCRETE PLACEMENT ABRASIVELY CLEAN JOINT SURFACES AND EXISTING EXPOSED REINFORCEMENT TO REMOVE LOOSE AND DISINTEGRATED CONCRETE AND LOOSE RUST. THOROUGHLY CLEAN THE JOINT SURFACE AND EXPOSED REINFORCEMENT OF ALL DIRT, DUST, RUST OR OTHER FOREIGN MATERIAL BY THE USE OF WATER, AIR UNDER PRESSURE, OR OTHER METHODS THAT PRODUCE SATISFACTORY RESULTS. EXISTING REINFORCING STEEL DOES NOT HAVE TO HAVE A BRIGHT STEEL FINISH, BUT REMOVE ALL PACK AND LOOSE RUST.THOROUGHLY DRENCH EXISTING CONCRETE SURFACES WITH CLEAN WATER AND ALLOW TO DRY TO A DAMP CONDITION BEFORE PLACING CONCRETE.

SUBSTRUCTURE CONCRETE REMOVAL:

REMOVE CONCRETE BY MEANS OF APPROVED PNUEUMATIC HAMMERS EMPLOYING POINTED AND BLUNT CHISEL TOOLS. HYDRAULIC HOE-RAM TYPE HAMMERS WILL NOT BE PERMITTED. THE WEIGHT OF THE HAMMER SHALL NOT BE MORE THAN 35 POUNDS FOR REMOVAL WITHIN 18-INCHES OF PORTIONS TO BE PRESERVED. OUTSIDE THE 18-INCH LIMIT, THE CONTRACTOR MAY USE HAMMERS NOT EXCEEDING 90 POUNDS UPON THE APPROVAL OF THE ENGINEER. DO NOT PLACE PNEUMATIC HAMMERS IN DIRECT CONTACT WITH REINFORCING STEEL THAT IS TO BE RETAINED IN THE REBUILT STRUCTURE.

PILES TO BEDROCK:

DRIVE PILES TO REFUSAL ON BEDROCK. THE DEPARTMENT WILL CONSIDER REFUSAL TO BE OBTAINED BY PENETRATING SOFT BEDROCK FOR SEVERAL INCHES TO A MINIMUM RESISTANCE OF 20 BLOWS PER INCH OR BY CONTACTING HARD BEDROCK AND THE PILE RECIEVING AT LEAST 20 BLOWS. SELECT THE HAMMER SIZE TO ACHIEVE THE REQUIRED DEPTH TO BEDROCK AND REFUSAL. INSTEAD OF DRIVING TO REFUSAL, THE CONTRACTOR MAY PERFORM DYNAMIC LOAD TESTING ACCORDING TO C&MS 523 TO ESTABLISH A DRIVING CRITERIA FOR EACH PILE TYPE AND CAPACITY. ESTABLISH THE DRIVING CRITERIA TO ACHIEVE THE ULTIMATE BEARING VALUE GIVEN BELOW FOR THE PILES. PAYMENT FOR DYNAMIC LOAD TESTING PERFORMED AT THE CONTRACTOR'S OPTION IS INCLUDED IN THE UNIT PRICE PAY ITEM FOR PILES DRIVEN.

LEFT STRUCTURE:
THE ULTIMATE BEARING VALUE IS 85 TONS PER PILE FOR THE HP12x53 ABUTMENT PILES.

ABUTMENT PILES:
12 PILES 45 FEET LONG, ORDER LENGTH

FOUNDATION BEARING PRESSURE:
PIER FOOTINGS, AS DESIGNED PRODUCE A MAXIMUM BEARING PRESSURE OF 6.0 TONS PER SQUARE FOOT. THE ALLOWABLE BEARING PRESSURE IS 8.0 TONS PER SQUARE FOOT.

RIGHT STRUCTURE
THE ULTIMATE BEARING VALUE IS 92 TONS PER PILE FOR THE HP12x53 ABUTMENT PILES.

ABUTMENT PILES:
6 PILES 45 FEET LONG, ORDER LENGTH

FOUNDATION BEARING PRESSURE:
PIER FOOTINGS, AS DESIGNED PRODUCE A MAXIMUM BEARING PRESSURE OF 6.5 TONS PER SQUARE FOOT. THE ALLOWABLE BEARING PRESSURE IS 8.0 TONS PER SQUARE FOOT.

MAINTENANCE OF TRAFFIC:

TWO LANES OF TRAFFIC WILL BE MAINTAINED AT ALL TIMES IN EACH DIRECTION ON BRIDGES DURING CONSTRUCTION. FOR ADDITIONAL NOTES AND DETAILS SEE MAINTENANCE OF TRAFFIC PLANS SHEETS (13/437) TO (89/437) .

ITEM 509 REINFORCING STEEL. REPLACEMENT OF EXISTING REINFORCING STEEL AS PER PLAN:

REPLACE ALL EXISTING REINFORCING BARS DEEMED BY THE ENGINEER TO BE UNUSABLE BECAUSE OF CORROSION. THE DEPARTMENT WILL MEASURE THE REPLACEMENT REINFORCING STEEL BY THE NUMBER OF POUNDS ACCEPTED IN PLACE.

REPLACE ALL EXISTING REINFORCING STEEL BARS WHICH ARE TO BE INCORPORATED INTO THE NEW WORK AND ARE DEEMED BY THE ENGINEER TO BE MADE UNUSABLE BY CONCRETE REMOVAL OPERATIONS WITH NEW EPOXY COATED REINFORCING STEEL OF THE SAME SIZE AT NO COST TO THE DEPARTMENT.

A QUANTITY OF 500 POUNDS IS INCLUDED IN THE ESTIMATED QUANTITIES FOR REPLACEMENT OF EXISTING REINFORCING IF REQUIRED.

EXISTING STRUCTURE VERIFICATION:

DETAILS AND DIMENSIONS SHOWN ON THESE PLANS PERTAINING TO THE EXISTING STRUCTURE HAVE BEEN OBTAINED FROM PLANS OF THE EXISTING STRUCTURE AND FROM FIELD OBSERVATIONS AND MEASUREMENTS. CONSEQUENTLY, THEY ARE INDICATIVE OF THE EXISTING STRUCTURE AND THE PROPOSED WORK BUT THEY SHALL BE CONSIDERED TENTATIVE AND APPROXIMATE. THE CONTRACTOR IS REFERRED TO CMS SECTIONS 102.05, 105.02 AND 513.04.

BASE CONTRACT BID PRICES UPON A RECOGNITION OF THE UNCERTAINTIES DESCRIBED ABOVE AND UPON A PREBID EXAMINATION OF THE EXISTING STRUCTURE. HOWEVER, THE DEPARTMENT WILL PAY FOR ALL PROJECT WORK BASED UPON ACTUAL DETAILS AND DIMENSIONS THAT HAVE BEEN VERIFIED IN THE FIELD.

ITEM 509 EPOXY COATED REINFORCING STEEL, AS PER PLAN:

IN ADDITION TO THE PROVISIONS OF ITEM 509, FIELD BEND AND/OR FIELD CUT THE REINFORCING STEEL DESIGNATED IN THE PLANS, AS NECESSARY, IN ORDER TO MAINTAIN THE REQUIRED CLEARANCES AND BAR SPACINGS. REPAIR ALL DAMAGES TO THE EPOXY COATING, AS A RESULT OF THIS WORK, ACCORDING TO 709.00.

ITEM 601 - CRUSHED AGGREGATE SLOPE PROTECTION AS PER PLAN:

THIS ITEM SHALL BE USED FOR THE PLACEMENT OF PROPOSED CRUSHED AGGREGATE SLOPE PROTECTION AS SHOWN IN THE PLANS. IT ALSO INCLUDES REGRADING OF THE EXISTING SLOPE PROTECTION. REGRADING SHALL CONSIST OF RESTORING THE EXISTING EMBANKMENT SURFACES TO THE ORIGINAL SLOPES WITH CRUSHED AGGREGATE SLOPE PROTECTION RE-PLACED ON THE RESTORED EMBANKMENT SURFACES. NEW EMBANKMENT SURFACES SHALL BE PROTECTED AS SPECIFIED IN 601.06. PROTECTION SHALL EXTEND LONGITUDINALLY FROM FACE OF ABUTMENT TO TOE OF SLOPE AND LATERALLY AS INDICATED IN THE PLANS. THE MINIMUM TOTAL THICKNESS OF PROPOSED PROTECTION RESTORED OR NEW SHALL BE 1 FOOT.

PAYMENT:

PAYMENT FOR THE ABOVE WORK SHALL BE AT THE UNIT PRICE BID PER SQUARE YARD OF ITEM 601 (CRUSHED AGGREGATE SLOPE PROTECTION, AS PER PLAN), WHICH SHALL INCLUDE ALL LABOR, EQUIPMENT, MATERIAL AND INCIDENTALS NECESSARY TO COMPLETE THE ABOVE WORK.

ITEM 511 CLASS C CONCRETE, PIER ABOVE FOOTING, AS PER PLAN:
ITEM 511 CLASS C CONCRETE, ABUTMENT NOT INCLUDING FOOTING, AS PER PLAN:
ITEM 511 CLASS C CONCRETE, FOOTING, AS PER PLAN:

PRIOR TO PLACEMENT OF NEW CONCRETE. THE EXISTING CONCRETE SURFACE SHALL BE THOROUGHLY CLEANED BY ABRASIVE BLASTING AND/OR OTHER APPROVED METHODS SO THAT IT IS FREE OF LOOSE OR DISINTEGRATED CONCRETE, DUST, LAITANCE, GREASE, RUST AND OTHER FOREIGN MATTER. ALL EXISTING REBARS SHALL BE CLEANED BY WIRE BRUSH OR ABRASIVELY BLASTED TO REMOVE ANY RUST. A BONDING GROUT SHALL BE USED BETWEEN OLD CONCRETE AND NEW CONCRETE. BONDING GROUT IS INCLUDED WITH ITEM 511 - CLASS C CONCRETE, PIER ABOVE FOOTING, AS PER PLAN, ITEM 511 - CLASS C CONCRETE, ABUTMENT NOT INCLUDING FOOTING, AS PER PLAN, OR ITEM 511 - CLASS C CONCRETE, FOOTING AS PER PLAN, FOR PAYMENT.

BONDING GROUT:

THE BONDING GROUT TO BE USED BETWEEN OLD AND NEW CONCRETE SHALL BE "SIKA ARMATEC 110" AS MANUFACTURED BY SIKA CORPORATION, 201 POLITO AVENUE, LYNDHURST, NEW JERSEY 07071; "EUCO NO. 452 EPOXY SYSTEM" AS MANUFACTURED BY THE EUCLID CHEMICAL CO., 19218 REDWOOD ROAD, CLEVELAND, OHIO 44110; "CONCRESSIVE STANDARD LIQUID" AS MANUFACTURED BY MASTER BUILDERS, INC., 23700 CHAGRIN BOULEVARD, CLEVELAND, OHIO 44122; OR AN APPROVED ALTERNATE.

DESIGN AGENCY
KCI ASSOCIATES OF OHIO, P.A.
388 S. MAIN ST., SUITE 401
AKRON, OHIO 44311

DESIGNED EMS | DRAWN JLS | CHECKED SLH | REVIEWED FJB | DATE 6/5/09 | REVISED | STRUCTURE FILE NUMBER 0404268L/0404292R

GENERAL NOTES
BRIDGE NO. ATB-90-1583 L AND R
I-90 OVER ASHTABULA RIVER

ATB-90-14.25
PID No. 25199

STRUCTURE GENERAL NOTES

ITEM 516 SEMI-INTEGRAL ABUTMENT EXPANSION JOINT SEAL AS PER PLAN:

INSTALL A 3 FOOT WIDE NEOPRENE SHEET AT LOCATIONS SHOWN IN THE PLANS. SECURE THE NEOPRENE SHEETING TO THE CONCRETE WITH 1¼" X #10 GAGE (LENGTH X SHANK DIAMETER) GALVANIZED BUTTON HEAD SPIKES THROUGH A 1 INCH OUTSIDE DIAMETER, #10 GAGE GALVANIZED WASHER. MAXIMUM FASTENER SPACING IS 9 INCHES. USE OF OTHER SIMILAR GALVANIZED DEVICES, WHICH WILL NOT DAMAGE EITHER THE NEOPRENE OR THE CONCRETE, WILL BE SUBJECT TO THE APPROVAL OF THE ENGINEER.

CENTER THE NEOPRENE STRIPS ON ALL JOINTS. FOR HORIZONTAL JOINTS, SECURE THE HORIZONTAL NEOPRENE STRIP BY USING A SINGLE LINE OF FASTENERS, STARTING AT 6 INCHES+/-, FROM THE TOP OF THE NEOPRENE STRIP. FOR THE VERTICAL JOINTS SECURE THE VERTICAL NEOPRENE STRIP BY USING A SINGLE VERTICAL LINE OF FASTENERS, STARTING AT 6 INCHES+/-, FORM THE VERTICAL EDGE OF THE NEOPRENE STRIP NEAREST TO THE CENTERLINE OF ROADWAY. FOR FOR VERTICAL JOINTS, INSTALL 2 ADDITIONAL FASTENERS AT 6 INCHES, CENTER-TO-CENTER, ACROSS THE TOP OF THE NEOPRENE STRIP ON THE SAME SIDE OF THE VERTICAL JOINT AS THE SINGLE VERTICAL ROW OF FASTENERS IS LOCATED.

THE VERTICAL NEOPRENE STRIPS SHALL COMPLETELY OVERLAP THE HORIZONTAL STRIPS. LAP LENGTHS OF THE HORIZONTAL STRIPS THAT ARE NOT VULCANIZED OR ADHESIVE BONDED, SHALL BE AT LEAST 1 FOOT IN LENGTH, OR 6 INCHES IN LENGTH IF THE LAP IS VULCANIZED OR ADHESIVE BONDED. NO LAPS ARE ACCEPTABLE IN VERTICALLY INSTALLED NEOPRENE STRIPS.

THE NEOPRENE SHEETING SHALL BE 3/32" THICK GENERAL PURPOSE, HEAVY DUTY NEOPRENE SHEET WITH NYLON FABRIC REINFORCEMENT. THE SHEETING SHALL BE "FAIRPRENE NUMBER NN-0003" , BY E.I. DUPONT DE NEMOURS AND COMPANY , INC. , "WINGPRENE" BY THE GOODYEAR TIRE AND RUBBER COMPANY, OR AN APPROVED ALTERNATE. THE NEOPRENE SHEETING SHALL CONFORM TO THE FOLLOWING:

DESCRIPTION OF TEST:	ASTM METHOD	REQUIREMENT
THICKNESS, INCHES	D 751	0.094 +/-.01
BREAKING STRENGTH, GRAB, LBS, MINIMUM (LONG. X TRAN.)	D 751	700 X 700
ADHESIVE STRIP,1" WIDE X 2" LONG, LBS MINIMUM	D 751	9
BURST STRENGTH, PSI MINIMUM	D 751	1400
HEAT AGING 70 HR, 212°F , 180° BEND WITHOUT CRACKING	D 2136	NO CRACKING OF COATING
LOW TEMP. BRITTLENESS, 1 HR, -40°F, BEND AROUND ¼" MANDREL	D 2136	NO CRACKING OF COATING

METHOD OF MEASUREMENT:

THE DEPARTMENT WILL MEASURE THE TOTAL LENGTH OF JOINT TO BE SEALED BY THE NUMBER OF FEET.

BASIS OF PAYMENT:

THE DEPARTMENT WILL PAY FOR ACCEPTED QUANTITIES AT THE CONTRACT PRICE FOR ITEM 516, SEMI-INTEGRAL ABUTMENT EXPANSION JOINT SEAL, AS PER PLAN.

FOOTINGS:

FOOTINGS SHALL EXTEND A MINIMUM OF 3 INCHES INTO BEDROCK OR TO THE ELEVATION SHOWN, WHICHEVER IS LOWER.

PIER CONSTRUCTION CONSTRAINT:

PRIOR TO THE REMOVAL OF EXISTING DECK AND BEAMS, THE CONTRACTOR IS TO EXCAVATE THE EMBANKMENT IN THE END SPANS IN CONTACT WITH THE PIERS. EXCAVATION SHALL BE 1'-0" FROM FOOTING EDGE AT A 1:1 SLOPE. PAYMENT FOR THE ABOVE WORK SHALL BE INCLUDED IN ITEM 503 - UNCLASSIFIED EXCAVATION, AS PER PLAN.

PILE SPLICES

IN LIEU OF USING THE FULL PENETRATION BUTT WELDS SPECIFIED IN CMS 507.09 TO SPLICE STEEL H-PILES, THE CONTRACTOR MAY USE A MANUFACTURED H-PILE SPLICER. FURNISH SPLICERS FROM THE FOLLOWING MANUFACTURER:

ASSOCIATED PILE AND FITTING CORPORATION
262 RUTHERFORD BLVD.
CLIFTON, NEW JERSEY 07014

INSTALL AND WELD THE SPLICER TO THE PILE SECTIONS IN ACCORDANCE WITH THE MANUFACTURER'S WRITTEN ASSEMBLY PROCEDURE SUPPLIED TO THE ENGINEER BEFORE THE WELDING IS PERFORMED.

ASBESTOS NOTIFICATION:

AN ASBESTOS SURVEY OF THE I-90 BRIDGE OVER THE ASHTABULA RIVER AT STATION 15.83 SCHEDULED FOR REHABILITATION WAS CONDUCTED BY A CERTIFIED ASBESTOS HAZARD EVALUATION SPECIALIST. THE SURVEY DETERMINED THAT NO ASBESTOS IS PRESENT ON THE BRIDGE.

A COPY OF OHIO ENVIRONMENTAL PROTECTION AGENCY (OEPA) NOTIFICATION OF DEMOLITION AND RENOVATION FORM, PARTIALLY COMPLETED AND SIGNED BY THE BRIDGE OWNER, WILLBE PROVIDED TO THE SUCCESSFUL BIDDER. THE CONTRACTOR SHALL COMPLETE THE FORM AND SUBMIT IT TO:

OHIO EPA/DAPC
NORTHEAST DISTRICT OFFICE
2110 E. AURORA ROAD
TWINSBURG, OHIO 44087

AT LEAST TEN (10) WORKING DAYS PRIOR TO THE START OF THE DEMOLITION OF THE BRIDGE. THE CONTRACTOR SHALL PROVIDE A COPY OF THE COMPLETED FORM TO THE ENGINEER. INFORMATION REQUIRED ON THE FORM SHALL INCLUDE:
1. THE CONTRACTOR'S NAME AND ADDRESS.
2. THE SCHEDULE DATES FOR THE START AND COMPLETION OF THE BRIDGE REMOVAL.
3. A DESCRIPTION OF THE PLANNED DEMOLITION WORK AND THE METHOD(S) TO BE USED.

A COPY OF THE OEPA FORM IS AVAILABLE FOR INSPECTION AT THE ODOT DISTRICT 4 OFFICE, 2088 SOUTH ARLINGTON ROAD, AKRON, OHIO 44306.

BASIS FOR PAYMENT - THE CONTRACTOR SHALL FURNISH ALL FEES LABOR AND MATERIAL NECESSARY TO COMPLETE AND SUBMIT THE OEPA NOTIFICATION FORM. PAYMENT FOR THIS WORK SHALL BE INCLUDED IN ITEM 202 - PORTIONS OF STRUCTURE REMOVED, OVER 20 FOOT SPAN, AS PER PLAN.

ITEM 520 - PNEUMATICALLY PLACED MORTAR, AS PER PLAN:

PRIOR TO THE SURFACE CLEANING SPECIFIED IN 519.04 AND WITHIN 24 HOURS OF PLACING PATCHING MATERIAL, BLAST CLEAN ALL SURFACES TO BE PATCHED INCLUDING THE EXPOSED REINFORCING STEEL. ACCEPTABLE METHODS INCLUDE HIGH-PRESSURE WATER BLASTING WITH OR WITHOUT ABRASIVES IN THE WATER, ABRASIVE BLASTING WITH CONTAINMENT, OR VACUUM ABRASIVE BLASTING. COST OF THE ABOVE DESCRIBED WORK IS INCLUDED IN ITEM 520 - PNEUMATICALLY PLACED MORTAR, AS PER PLAN.

ITEM 503 - COFFERDAMS, CRIBS, AND SHEETING, AS PER PLAN:

THE DESIGN SHOWN ON THE PLANS FOR TEMPORARY SUPPORT OF EXCAVATION IS ONE REPRESENTATIVE DESIGN THAT MAY BE USED TO CONSTRUCT THE PROJECT. THE CONTRACTOR MAY CONSTRUCT THE DESIGN SHOWN ON THE PLANS OR PREPARE AN ALTERNATE DESIGN TO SUPPORT THE SIDES OF EXCAVATIONS. IF CONSTRUCTING AN ALTERNATE DESIGN FOR TEMPORARY SUPPORT OF EXCAVATION, PREPARE AND PROVIDE PLANS IN ACCORDANCE WITH C&MS 501.05. THE DEPARTMENT WILL PAY FOR THE TEMPORARY SUPPORT OF EXCAVATION AT THE CONTRACT LUMP SUM PRICE FOR COFFERDAMS, CRIBS, AND SHEETING. NO ADDITIONAL PAYMENT WILL BE MADE FOR PROVIDING AN ALTERNATE DESIGN.

DECK PLACEMENT DESIGN ASSUMPTIONS:

THE FOLLOWING ASSUMPTIONS OF CONSTRUCTION MEANS AND METHODS WERE MADE FOR THE ANALYSIS AND DESIGN OF THE SUPERSTRUCTURE. THE CONTRACTOR IS RESPONSIBLE FOR THE DESIGN OF THE FALSEWORK SUPPORT SYSTEM WITHIN THESE PARAMETERS AND WILL ASSUME RESPONSIBILITY FOR SUPERSTRUCTURE ANALYSIS FOR DEVIATION FROM THESE DESIGN ASSUMPTIONS.

AN EIGHT WHEEL FINISHING MACHINE WITH A MAXIMUM WHEEL LOAD OF 1.2 KIPS FOR A TOTAL MACHINE LOAD OF 9.6 KIPS.

A MINIMUM OUT-TO-OUT WHEEL SPACING AT EACH END OF THE MACHINE OF 103".

A MAXIMUM SPACING OF OVERHANG FALSEWORK BRACKETS OF 48 IN.

A MAXIMUM DISTANCE FROM THE CENTERLINE OF THE FASCIA GIRDER TO THE FACE OF THE SAFETY HANDRAIL OF 65".

ITEM 511 - CLASS HP CONCRETE, AS PER PLAN:

THE PROVISIONS OF ITEM 511 SHALL APPLY EXCEPT AS NOTED BELOW.
MIX OPTIONS:
ALL SUPERSTRUCTURE, BRIDGE DECK, APPROACH SLABS AND PARAPET CONCRETE SHALL BE THIS MIX (HP4, AS PER PLAN). THE FOLLOWING PROPORTIONS WILL BE USED AS A STARTING MIX DESIGN.

CONCRETE TABLE
QUANTITIES PER CUBIC YARD
AGGREGATES (SSD)
MIX 4, AS PER PLAN (GGBF SLAG + MICROSILICA)

AGG TYPE	FINE AGG (LB)	#8 COARSE AGG (LB) *	#57 COARSE AGG (LB) *	TOTAL (LB)	CEMENT CONTENT (LB)	GGBF SLAG (LB)	MICRO SILICA (LB)	MAX WATER TO CEMENTITIOUS RATIO	AIR CONTENT +/-2%
GRAVEL	1370	650	790	2810	440	190	30	0.42	6
LIMESTONE	1370	655	800	2820	440	190	30	0.42	6
SLAG	1370	570	695	2635	440	190	30	0.42	6

* ALL COARSE AGGREGATE SHALL HAVE AN ABSORPTION OF 1.00% OR GREATER AS DEFINED PER ASTM C127

BASIS OF PAYMENT:
PAYMENT FOR THE ABOVE COMPLETED AND ACCEPTED QUANTITIES WILL BE MADE AT THE CONTRACT BID PRICE FOR:

ITEM 511- CLASS HP CONCRETE, BRIDGE DECK, AS PER PLAN, CU YD
ITEM 511- CLASS HP CONCRETE, BRIDGE DECK (PARAPET), AS PER PLAN, CU YD

ITEM 526 - REINFORCED CONCRETE APPROACH SLABS, AS PER PLAN:

THE PROVISIONS OF CMS 526 SHALL APPLY EXCEPT AS NOTED BELOW.

CLASS HP CONCRETE, MIX 4, AS PER PLAN, SHALL BE THE ONLY MIX DESIGN OPTION. THE PROPORTIONS FOR THE STARTING MIX DESIGN SHALL BE AS SHOWN FOR ITEM 511- CLASS HP CONCRETE, AS PER PLAN.

ABBREVIATIONS

F.S.	- FAR SIDE	C.J.	- CONSTRUCTION JOINT
N.S.	- NEAR SIDE	FWD.	- FORWARD
E.S.	- EACH SIDE	C.I.P.	- CAST IN PLACE
MIN.	- MINUMUM	STR.	- STRAIGHT
TYP.	- TYPICAL	CONST.	- CONSTRUCTION
DIA.	- DIAMETER	INC.	- INCREMENT
SPA.	- SPACES	SER.	- SERIES
APPR.	- APPROACH	P.E.J.F.	- PREFORMED EXPANSION JOINT FILLER
ABND.	- ABANDONED	F.A.	- FORWARD ABUTMENT
EX.	- EXISTING	R.A.	- REAR ABUTMENT
SPEC.	- SPECIAL	W.B.	- WESTBOUND
W.P.	- WORK POINT	E.B.	- EASTBOUND
ELEV., EL.	- ELEVATION	MAX.	- MAXIMUM
STA.	- STATION	T	- TOP
N.F.	- NEAR FACE	B, BOTT.	- BOTTOM
F.F.	- FAR FACE		
E.F.	- EACH FACE		

DESIGN AGENCY
KCI ASSOCIATES OF OHIO, P.A.
388 S. MAIN ST., SUITE 401
AKRON, OHIO 44311

DESIGNED EMS | DRAWN JLS | CHECKED SLH | REVIEWED FJB | DATE 6/5/09 | REVISED | STRUCTURE FILE NUMBER 0404268L/0404292R

GENERAL NOTES
BRIDGE NO. ATB-90-1583 L AND R
I-90 OVER ASHTABULA RIVER

ATB-90-14.25
PID No. 25199

ESTIMATED QUANTITIES - LEFT STRUCTURE - ATB-90-1583 L

ITEM	ITEM EXT.	TOTAL	UNIT	DESCRIPTION	ABUTMENTS	PIERS	SUPER-STRUCTURE	GENERAL	AS PER PLAN SHEET NUMBER
202	11203		LUMP	PORTIONS OF STRUCTURE REMOVED, OVER 20 FOOT SPAN, AS PER PLAN				LUMP	4/62
202	22900	134	SQ YD	APPROACH SLAB REMOVED				134	
503	11101		LUMP	COFFERDAMS, CRIBS AND SHEETING, AS PER PLAN				LUMP	5/62
503	21101	871	CU YD	UNCLASSIFIED EXCAVATION, AS PER PLAN	374	497			5/62
503	31120	44	CU YD	SHALE EXCAVATION		44			
505	11100		LUMP	PILE DRIVING EQUIPMENT MOBILIZATION				LUMP	
507	00200	585	FT	STEEL PILES HP12X53, FURNISHED ✳	585				
507	00250	520	FT	STEEL PILES HP12X53, DRIVEN ✳	520				
509	10001	381,551	POUND	EPOXY COATED REINFORCING STEEL, AS PER PLAN ✳	15,586	165,980	199,985		4/62
509	20001	500	POUND	REINFORCING STEEL, REPLACEMENT OF EXISTING REINFORCING STEEL, AS PER PLAN ✳				500	4/62
510	10000	1284	EACH	DOWEL HOLES WITH NONSHRINK, NONMETALLIC GROUT	220	1064			
511	40501	572	CU YD	CLASS C CONCRETE, PIER ABOVE FOOTING, AS PER PLAN		572			4/62
511	44101	79	CU YD	CLASS C CONCRETE, ABUTMENT NOT INCLUDING FOOTING, AS PER PLAN	79				4/62
511	46501	130	CU YD	CLASS C CONCRETE, FOOTING, AS PER PLAN	34	96			4/62
511	50001	640	CU YD	CLASS HP CONCRETE, BRIDGE DECK, AS PER PLAN	50		590		5/62
511	50101	117	CU YD	CLASS HP CONCRETE, BRIDGE DECK (PARAPET), AS PER PLAN			117		5/62
511	52000		LUMP	CLASS HP CONCRETE, TEST SLAB				LUMP	
512	10100	2759	SQ YD	SEALING OF CONCRETE SURFACES (EPOXY-URETHANE)	121	1718	861	59	
512	10300	176	SQ YD	SEALING CONCRETE BRIDGE DECK WITH HMWM RESIN			165	11	
512	33000	9	SQ YD	TYPE 2 WATERPROOFING	9				
513	10261	576,464	POUND	STRUCTURAL STEEL MEMBER, LEVEL 3, AS PER PLAN ✳			576,464		38/62
513	20000	7728	EACH	WELDED STUD SHEAR CONNECTORS ✳			7728		
516	13900	69	SQ FT	2" PREFORMED EXPANSION JOINT FILLER	69				
516	14021	131	FT	SEMI-INTEGRAL ABUTMENT EXPANSION JOINT SEAL, AS PER PLAN	131				5/62
516	44301	14	EACH	ELASTOMERIC BEARING PAD WITH INTERNAL LAMINATES AND LOAD PLATE (NEOPRENE) $4\frac{1}{8}$"x1'-2"x1'-6" WITH $1\frac{1}{2}$"x1'-3"x1'-7" (LOAD PLATE), AS PER PLAN	14				33/62
516	44200	28	EACH	ELASTOMERIC BEARING PAD WITH INTERNAL LAMINATES AND LOAD PLATE (NEOPRENE) $3\frac{7}{16}$"x1'-0"x2'-4" WITH $2\frac{3}{4}$"x1'-1"x2'-5" (LOAD PLATE)		28			
518	21230		LUMP	POROUS BACKFILL WITH FILTER FABRIC	LUMP				
518	40000	143	FT	6" PERFORATED CORRUGATED PLASTIC PIPE	143				
518	40012	44	FT	6" NON-PERFORATED CORRUGATED PLASTIC PIPE	44				
520	11101	171	SQ FT	PNEUMATICALLY PLACED MORTAR, AS PER PLAN	171				5/62
526	25001	302	SQ YD	REINFORCED CONCRETE APPROACH SLABS (T=15"), AS PER PLAN				302	5/62
601	20001	466	SQ YD	CRUSHED AGGREGATE SLOPE PROTECTION, AS PER PLAN				466	4/62

✳ SEE PROPOSAL NOTE

CALC. BY HK DATE 3/09

CHECKED BY CMK DATE 3/09

DESIGN AGENCY
KCI ASSOCIATES OF OHIO, P.A.
388 S. MAIN ST., SUITE 401
AKRON, OHIO 44311

DESIGNED RKP | DRAWN JLS | REVIEWED FJB | DATE 6/5/09 | CHECKED CMK | REVISED | STRUCTURE FILE NUMBER 04042681

ESTIMATED QUANTITIES - LEFT STRUCTURE

BRIDGE NO. ATB-90-1583 L
I-90 OVER ASHTABULA RIVER

ATB-90-14.25
PID No. 25199

ESTIMATED QUANTITIES - RIGHT STRUCTURE - ATB-90-1583 R

ITEM	ITEM EXT.	TOTAL	UNIT	DESCRIPTION	ABUTMENTS	PIERS	SUPER-STRUCTURE	GENERAL	AS PER PLAN SHEET NUMBER
202	11203		LUMP	PORTIONS OF STRUCTURE REMOVED, OVER 20 FOOT SPAN, AS PER PLAN				LUMP	4/62
202	22900	134	SQ YD	APPROACH SLAB REMOVED				134	
503	11101		LUMP	COFFERDAMS, CRIBS AND SHEETING, AS PER PLAN				LUMP	5/62
503	21101	652	CU YD	UNCLASSIFIED EXCAVATION, AS PER PLAN	367	285			5/62
503	31120	52	CU YD	SHALE EXCAVATION		52			
505	11100		LUMP	PILE DRIVING EQUIPMENT MOBILIZATION				LUMP	
507	00200	270	FT	STEEL PILES HP12X53, FURNISHED *	270				
507	00250	240	FT	STEEL PILES HP12X53, DRIVEN *	240				
509	10001	321,158	POUND	EPOXY COATED REINFORCING STEEL, AS PER PLAN *	12478	134,910	173,770		4/62
509	20001	500	POUND	REINFORCING STEEL, REPLACEMENT OF EXISTING REINFORCING STEEL, AS PER PLAN *				500	4/62
510	10000	1299	EACH	DOWEL HOLES WITH NONSHRINK, NONMETALLIC GROUT	219	1080			
511	40501	385	CU YD	CLASS C CONCRETE, PIER ABOVE FOOTING, AS PER PLAN		385			4/62
511	44101	57	CU YD	CLASS C CONCRETE, ABUTMENT NOT INCLUDING FOOTING, AS PER PLAN	57				4/62
511	46501	78	CU YD	CLASS C CONCRETE, FOOTING, AS PER PLAN	20	58			4/62
511	50001	571	CU YD	CLASS HP CONCRETE, BRIDGE DECK, AS PER PLAN			571		5/62
511	50101	118	CU YD	CLASS HP CONCRETE, BRIDGE DECK (PARAPET), AS PER PLAN			118		5/62
511	52000		LUMP	CLASS HP CONCRETE, TEST SLAB				LUMP	
512	10100	2415	SQ YD	SEALING OF CONCRETE SURFACES (EPOXY-URETHANE)	111	1381	864	59	
513	10261	493,826	POUND	STRUCTURAL STEEL MEMBER, LEVEL 3, AS PER PLAN *			493,826		38/62
513	20000	6642	EACH	WELDED STUD SHEAR CONNECTORS *			6642		
516	13900	72	SQ FT	2" PREFORMED EXPANSION JOINT FILLER	72				
516	14021	117	FT	SEMI-INTEGRAL ABUTMENT EXPANSION JOINT SEAL, AS PER PLAN	117				5/62
516	44301	12	EACH	ELASTOMERIC BEARING PAD WITH INTERNAL LAMINATES AND LOAD PLATE (NEOPRENE) 4 1/8"x1'-2"x1'-6" WITH 1 1/2"x1'-3"x1'-7" (LOAD PLATE), AS PER PLAN	12				33/62
516	44200	24	EACH	ELASTOMERIC BEARING PAD WITH INTERNAL LAMINATES AND LOAD PLATE (NEOPRENE) 3 7/16"x1'-0"x2'-4" WITH 2 3/4"x1'-1"x2'-5" (LOAD PLATE)		24			
518	21230		LUMP	POROUS BACKFILL WITH FILTER FABRIC	LUMP				
518	40000	118	FT	6" PERFORATED CORRUGATED PLASTIC PIPE	118				
518	40012	21	FT	6" NON-PERFORATED CORRUGATED PLASTIC PIPE	21				
520	11101	114	SQ FT	PNEUMATICALLY PLACED MORTAR, AS PER PLAN	114				5/61
526	25001	257	SQ YD	REINFORCED CONCRETE APPROACH SLABS (T=15"), AS PER PLAN				257	5/61
601	20001	324	SQ YD	CRUSHED AGGREGATE SLOPE PROTECTION, AS PER PLAN				324	4/61

* SEE PROPOSAL NOTE

CALC. BY	HK	DATE	3/09
CHECKED BY	CMK	DATE	3/09

DESIGN AGENCY
KCI ASSOCIATES OF OHIO, P.A.
388 S. MAIN ST., SUITE 401
AKRON, OHIO 44311

DESIGNED	DRAWN	REVIEWED	DATE
RKP	JLS	FJB	6/5/09
CHECKED	REVISED	STRUCTURE FILE NUMBER	
CMK		0404292R	

ESTIMATED QUANTITIES - RIGHT STRUCTURE
BRIDGE NO. ATB-90-1583 R
I-90 OVER ASHTABULA RIVER

ATB-90-14.25
PID No. 25199

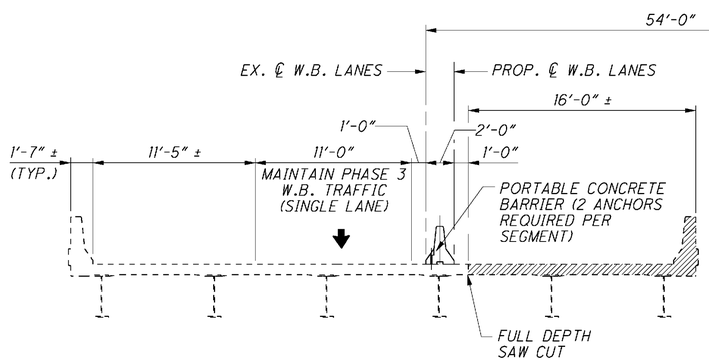

PHASE 3 REMOVAL

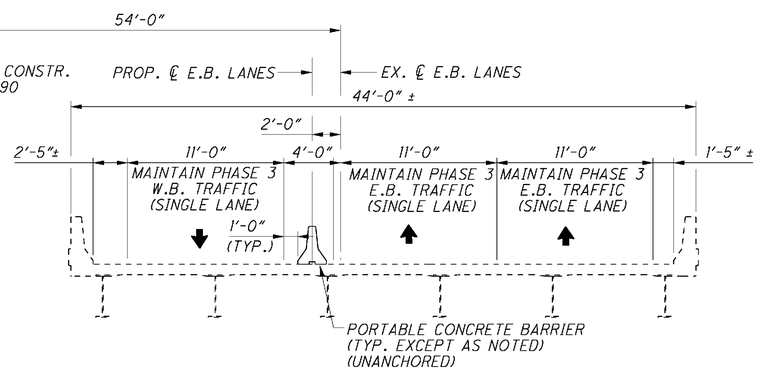

PHASE 3 MAINTENANCE OF TRAFFIC

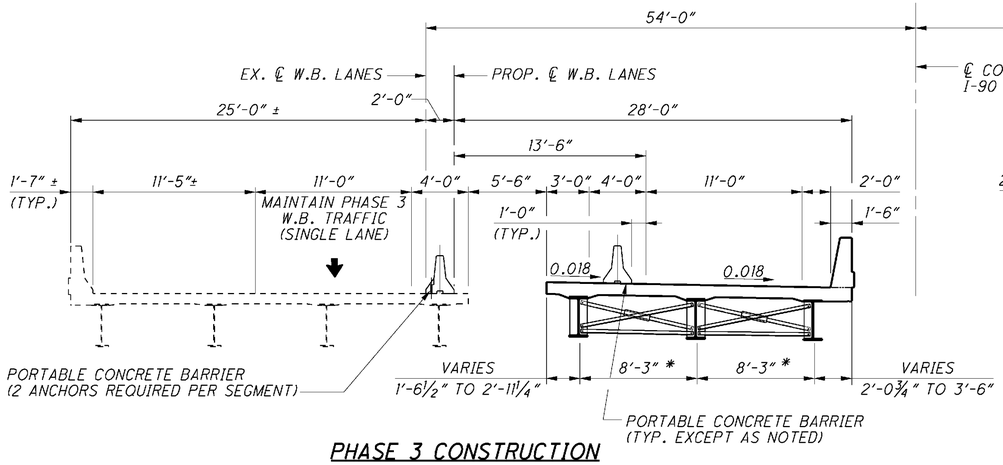

PHASE 3 CONSTRUCTION

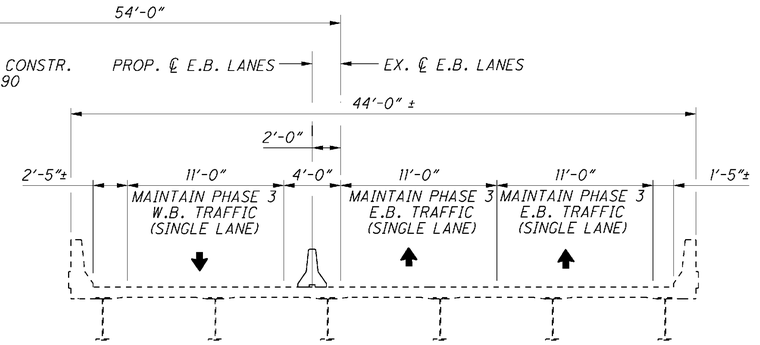

PHASE 3 MAINTENANCE OF TRAFFIC

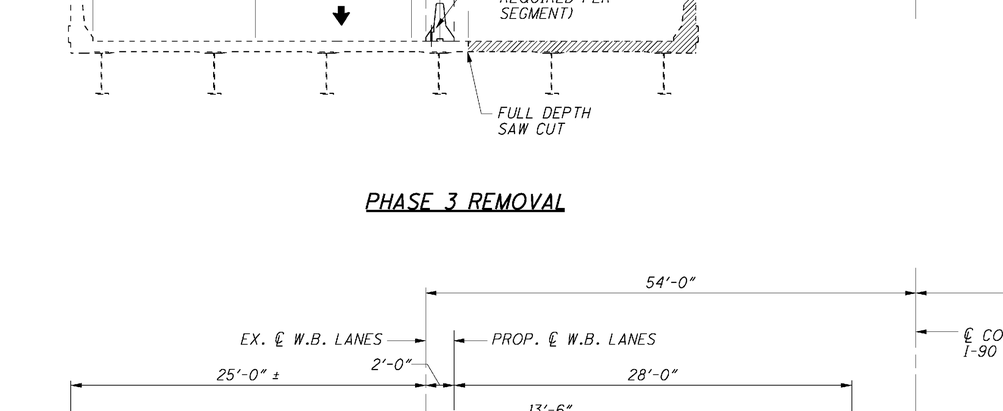

PHASE 4 REMOVAL

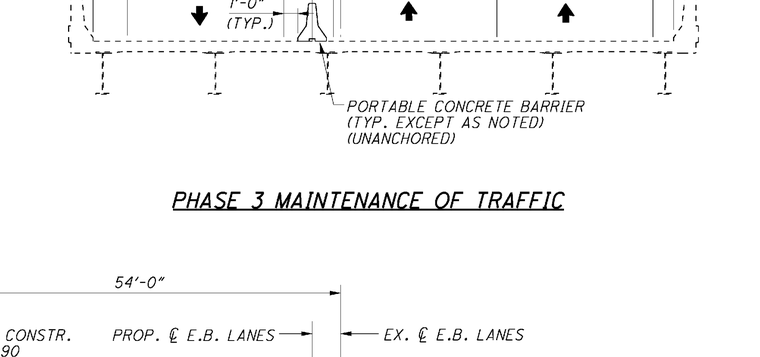

PHASE 4 MAINTENANCE OF TRAFFIC

LEFT (WESTBOUND) STRUCTURE

RIGHT (EASTBOUND) STRUCTURE

LEGEND:

- AREAS OF THE EXISTING STRUCTURE TO BE REMOVED.
- * - BEAMS ARE SPACED PARALLEL TO REFERENCE CHORD.

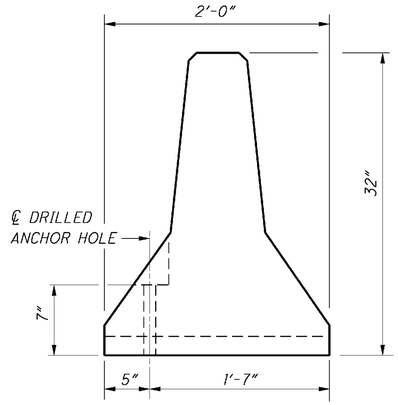

PORTABLE CONCRETE BARRIER DETAIL

ITEM 622 - PORTABLE CONCRETE BARRIER, 32", BRIDGE MOUNTED, AS PER PLAN

NOTES:

1. SEE SHEETS 13/437 THRU 89/437 FOR MAINTENANCE OF TRAFFIC.
2. FOR ADDITIONAL STAGE CONSTRUCTION DETAILS, SEE SHEET 9/62.
3. ITEM 622 - PORTABLE CONCRETE BARRIER, 32", BRIDGE MOUNTED, AS PER PLAN, IS CARRIED IN THE ROADWAY QUANTITY.
4. FOR ADDITIONAL DETAILS OF PORTABLE CONCRETE BARRIER, SEE STANDARD DRAWING PCB-91.

STAGE CONSTRUCTION

DESIGN AGENCY
KCI ASSOCIATES OF OHIO, P.A.
388 S. MAIN ST., SUITE 401
AKRON, OHIO 44311

DESIGNED RKP | DRAWN JLS | CHECKED SLH | REVIEWED FJB | DATE 6/5/09 | REVISED --- | STRUCTURE FILE NUMBER 0404268L/0404292R

STAGE CONSTRUCTION DETAILS
BRIDGE NO. ATB-90-1583 L AND R
I-90 OVER ASHTABULA RIVER

ATB-90-14.25
PID No. 25199

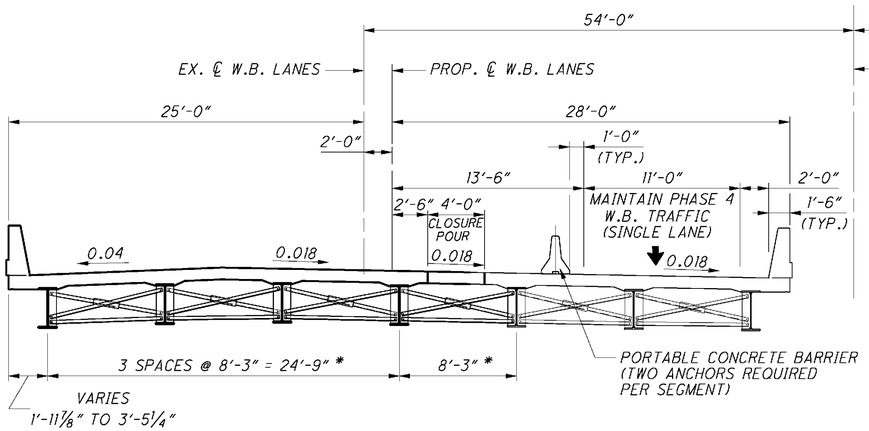

PHASE 4 CONSTRUCTION

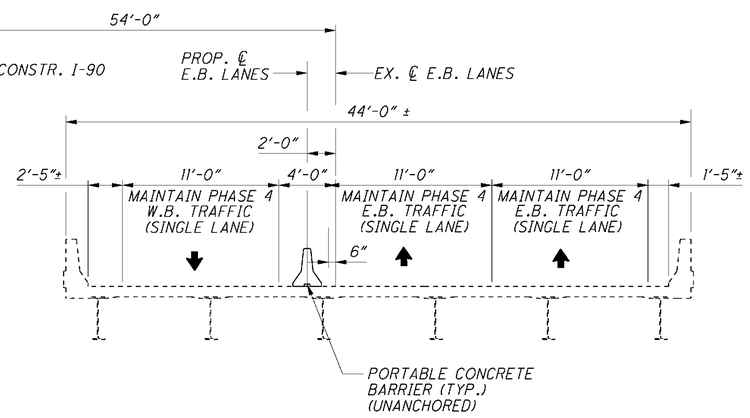

PHASE 4 MAINTENANCE OF TRAFFIC

LEGEND:

- AREAS OF THE EXISTING STRUCTURE TO BE REMOVED.
- * - BEAMS ARE SPACED PARALLEL TO REFERENCE CHORD.

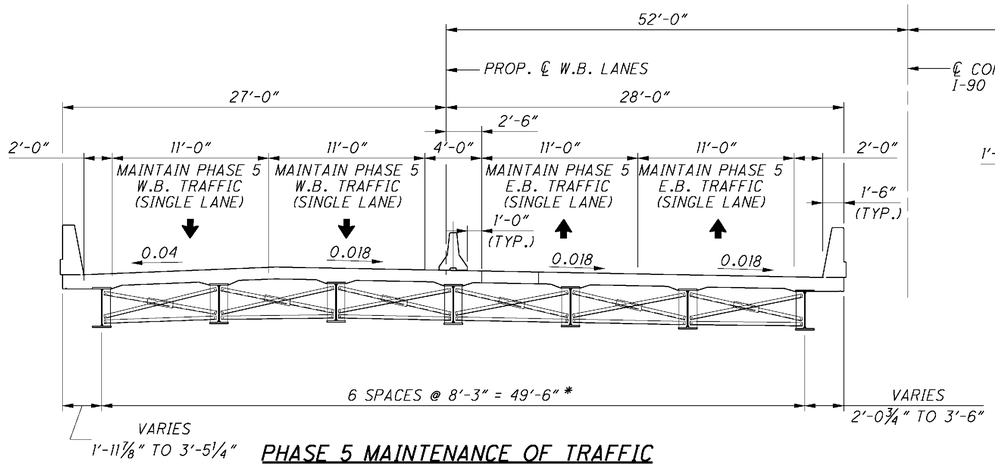

PHASE 5 MAINTENANCE OF TRAFFIC

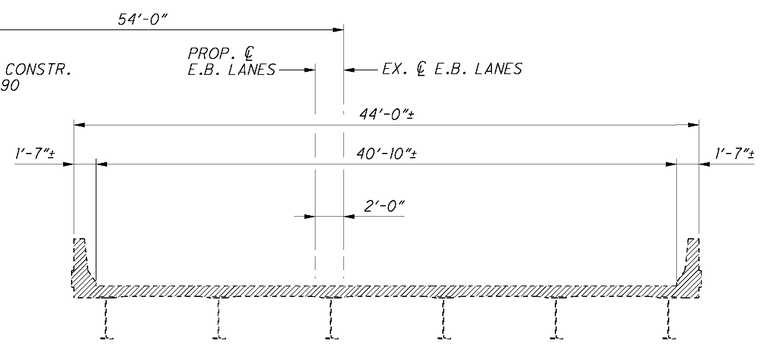

PHASE 5 REMOVAL

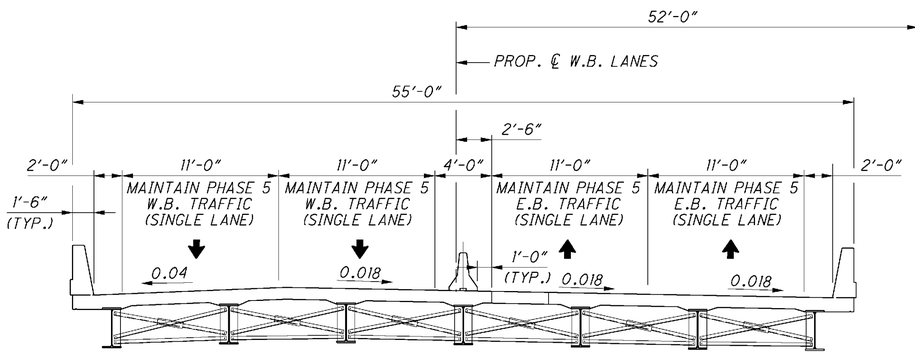

PHASE 5 MAINTENANCE OF TRAFFIC
LEFT (WESTBOUND) STRUCTURE

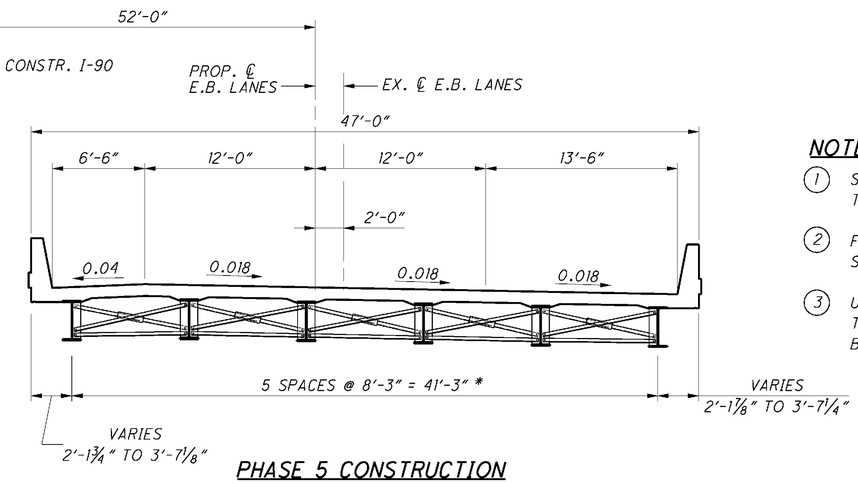

PHASE 5 CONSTRUCTION
RIGHT (EASTBOUND) STRUCTURE

NOTES:

1. SEE SHEETS (13/437) THRU (89/437) FOR MAINTENANCE OF TRAFFIC.
2. FOR ADDITIONAL STAGE CONSTRUCTION DETAILS, SEE SHEET 8/62.
3. USE NON-SHRINKING GROUT TO FILL THE VOIDS IN THE PROPOSED DECK FROM THE PORTABLE CONCRETE BARRIER ANCHORS.

STAGE CONSTRUCTION

DESIGN AGENCY
KCI ASSOCIATES OF OHIO, P.A.
388 S. MAIN ST., SUITE 401
AKRON, OHIO 44311

DESIGNED	DRAWN	REVIEWED	DATE
RKP	JLS	FJB	6/5/09
CHECKED	REVISED	STRUCTURE FILE NUMBER	
SLH	---	0404268L/0404292R	

STAGE CONSTRUCTION DETAILS
BRIDGE NO. ATB-90-1583 L AND R
I-90 OVER ASHTABULA RIVER

ATB-90-14.25
PID No. 25199

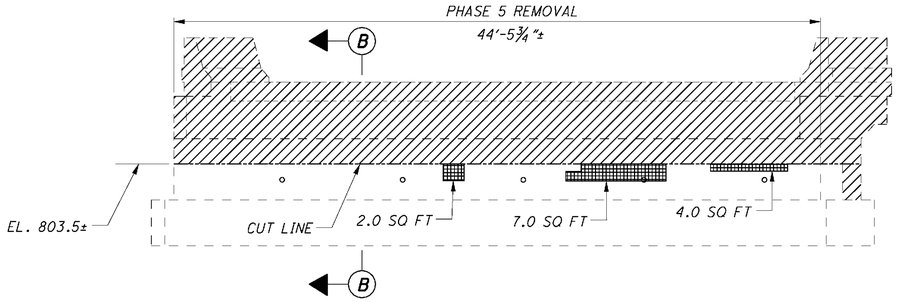

REAR ABUTMENT ELEVATION (RIGHT STRUCTURE)

TOTAL PATCHING = 13.0 SQ FT

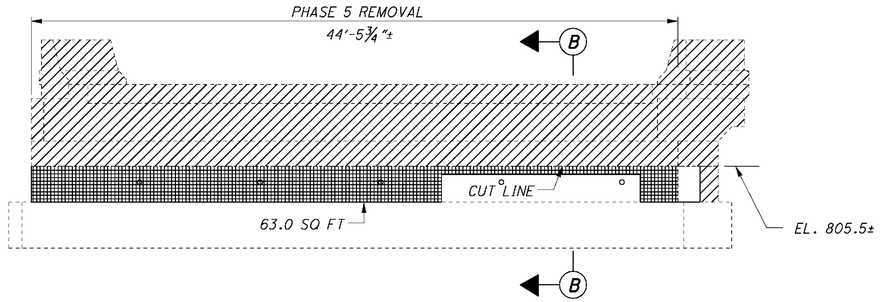

FORWARD ABUTMENT ELEVATION (RIGHT STRUCTURE)

TOTAL PATCHING = 63.0 SQ FT

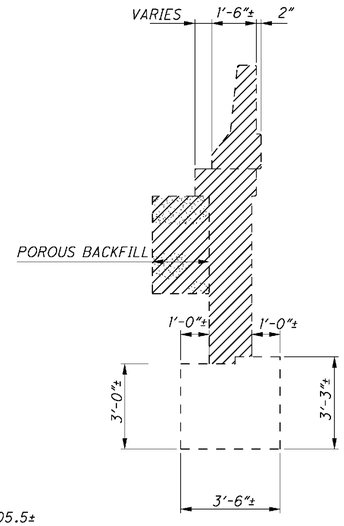

SECTION A-A

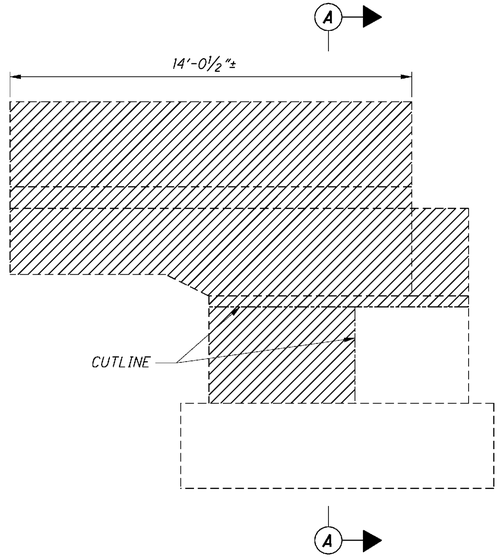

WINGWALL ELEVATION

(LEFT REAR WINGWALL SHOWN, ALL OTHERS SIMILAR)

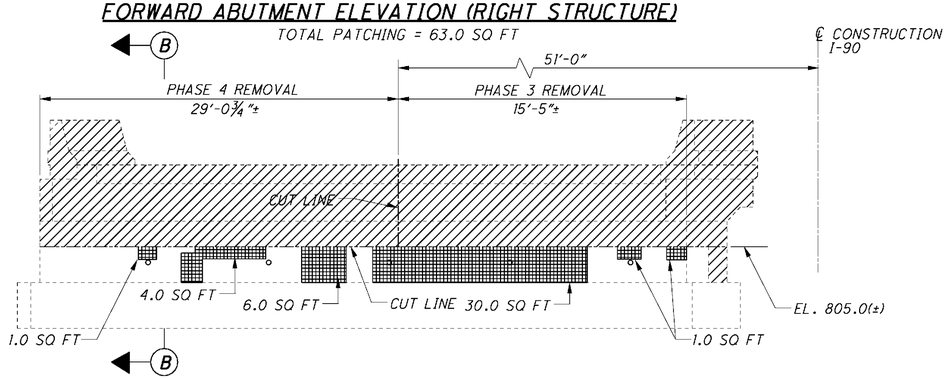

FORWARD ABUTMENT ELEVATION (LEFT STRUCTURE)

TOTAL PATCHING = 43.0 SQ FT

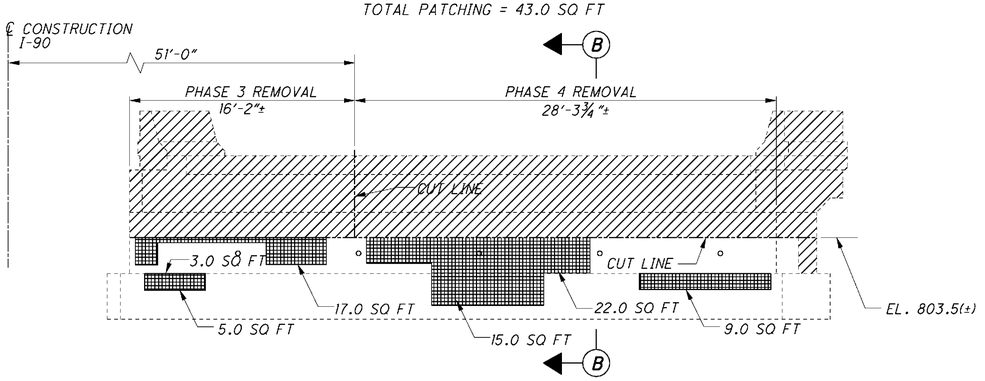

REAR ABUTMENT ELEVATION (LEFT STRUCTURE)

TOTAL PATCHING = 71.0 SQ FT

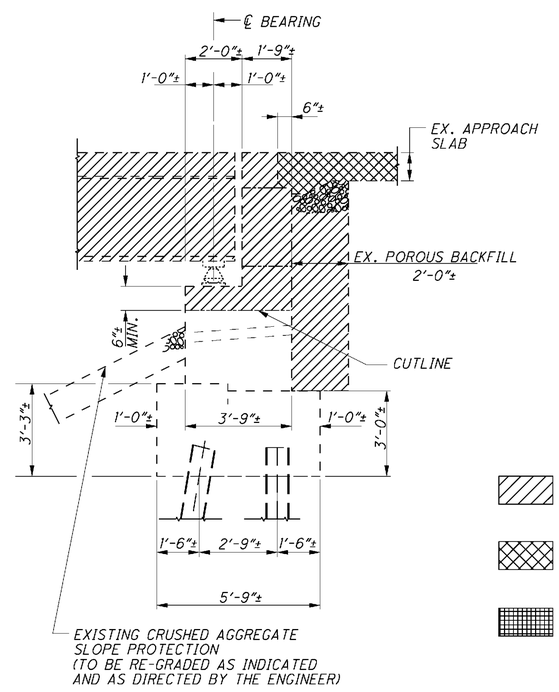

SECTION B-B

PATCHING SUMMARY		
LOCATION	SQ FT	
	LEFT	RIGHT
REAR ABUT.	71.0	13.0
FWD ABUT.	43.0	63.0
SUB-TOTAL	114.0	76.0
TOTAL (SEE NOTE 1)	285.0	

LEGEND:

INDICATES REMOVAL LIMITS, ITEM 202 - PORTIONS OF STRUCTURE REMOVED, OVER 20 FOOT SPAN, AS PER PLAN

INDICATES LIMITS OF APPROACH SLAB REMOVAL

INDICATES AREA OF PATCHING. REPAIRS SHALL BE PAID FOR UNDER ITEM 520 - PNEUMATICALLY PLACED MORTAR, AS PER PLAN THE AREAS SHOWN ARE APPROXIMATE. FINAL DETERMINATION OF THE AREA TO BE REPAIRED WILL BE MADE BY THE ENGINEER AT TIME OF CONSTRUCTION.

NOTE

1. PATCHING TOTALS HAVE BEEN INCREASED 50%
2. FOR ABBREVIATIONS, SEE SHEET 5/62.

DESIGN AGENCY
KCI ASSOCIATES OF OHIO, P.A.
388 S. MAIN ST., SUITE 401
AKRON, OHIO 44311

DESIGNED YRY | DRAWN JLS | REVIEWED FJB | DATE 6/5/09
CHECKED DLG | REVISED | STRUCTURE FILE NUMBER 0404268L/0404292R

ABUTMENT REMOVAL AND REPAIR DETAILS

BRIDGE NO. ATB-90-1583 L AND R
I-90 OVER ASHTABULA RIVER

ATB-90-14.25
PID No. 25199

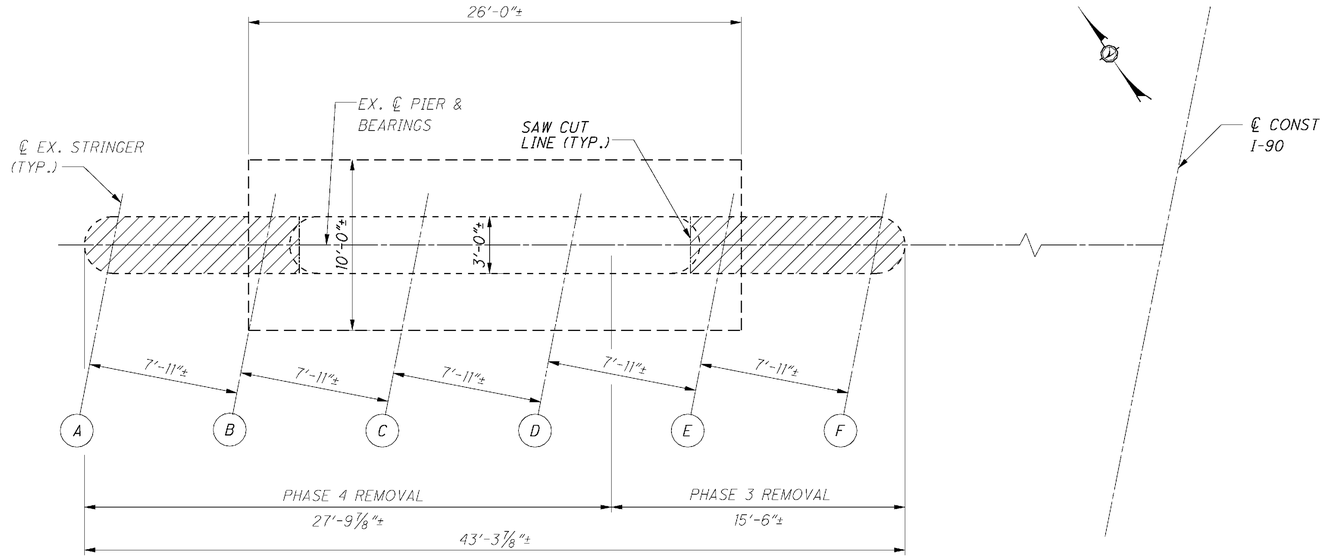

PLAN

(PIER 1 SHOWN, PIERS 2, 3 & 4 SIMILAR)

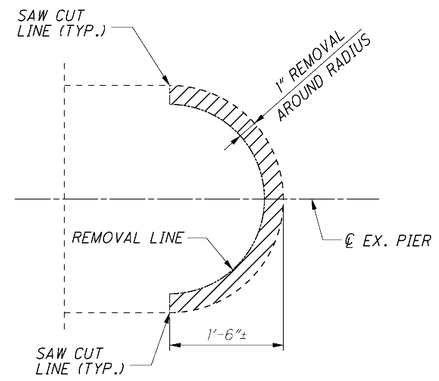

SECTION D-D

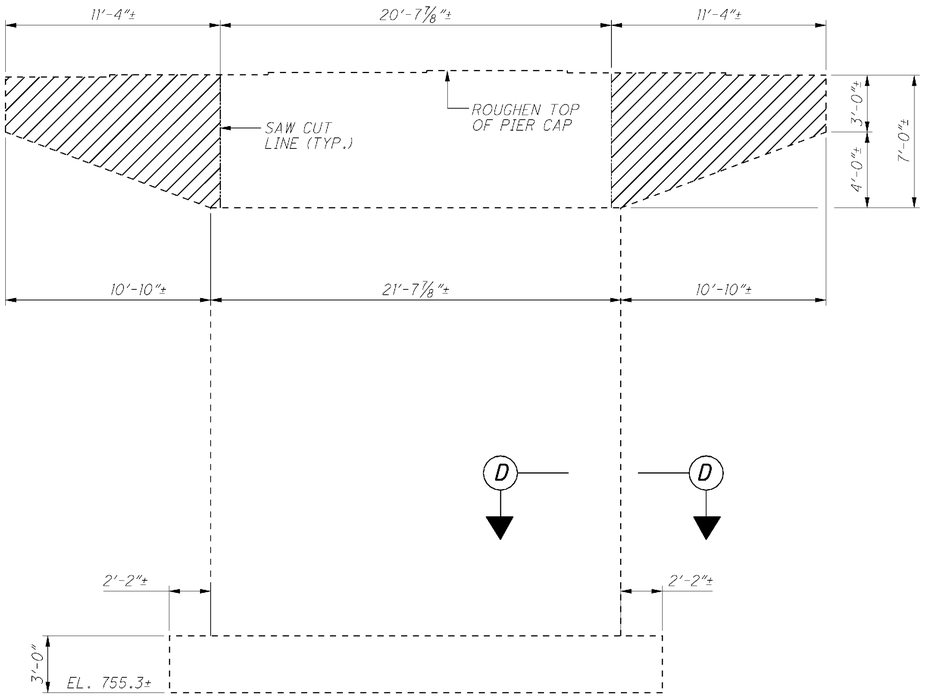

PIER ELEVATION

LEGEND:

INDICATES REMOVAL LIMITS, ITEM 202 - PORTIONS OF STRUCTURE REMOVED, OVER 20 FOOT SPAN, AS PER PLAN

NOTE

1. FOR ABBREVIATIONS AND NOTES, SEE SHEET 5/62.

DESIGN AGENCY
KCI ASSOCIATES OF OHIO, P.A.
388 S. MAIN ST., SUITE 401
AKRON, OHIO 44311

DESIGNED	DRAWN	REVIEWED	DATE
YRY	JLS	FJB	6/5/09
CHECKED	REVISED	STRUCTURE FILE NUMBER	
DLG	---	0404268L	

PIER REMOVAL DETAILS - LEFT STRUCTURE

BRIDGE NO. ATB-90-1583 L
I-90 OVER ASHTABULA RIVER

ATB-90-14.25
PID No. 25199

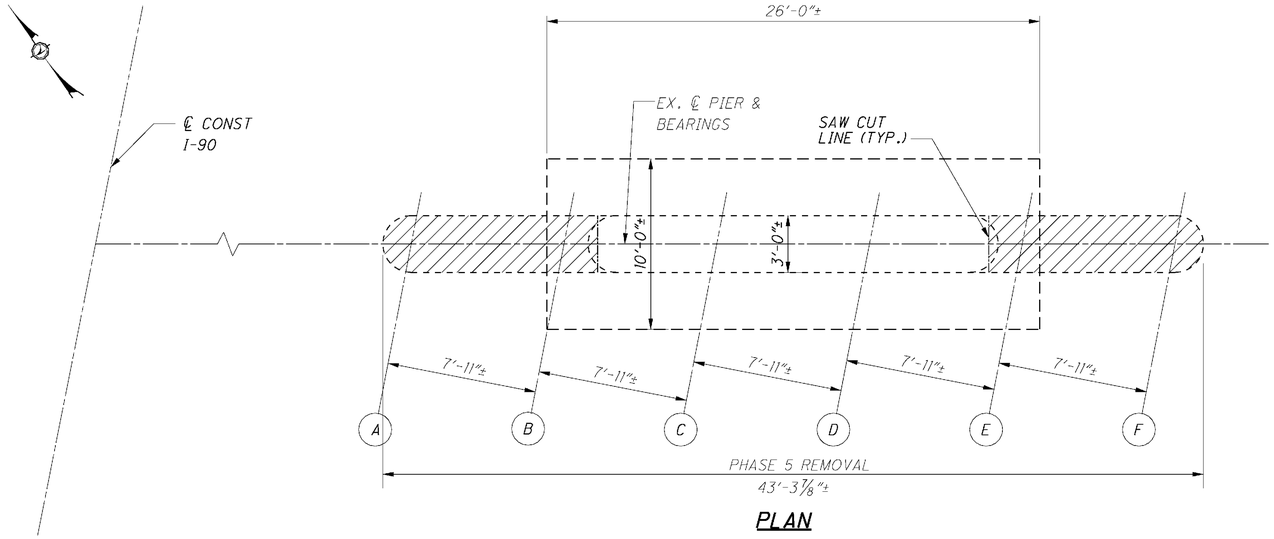

PLAN

(PIER 1 SHOWN, PIERS 2, 3 & 4 SIMILAR)

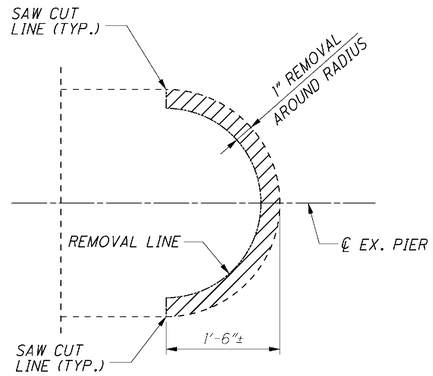

SECTION D-D

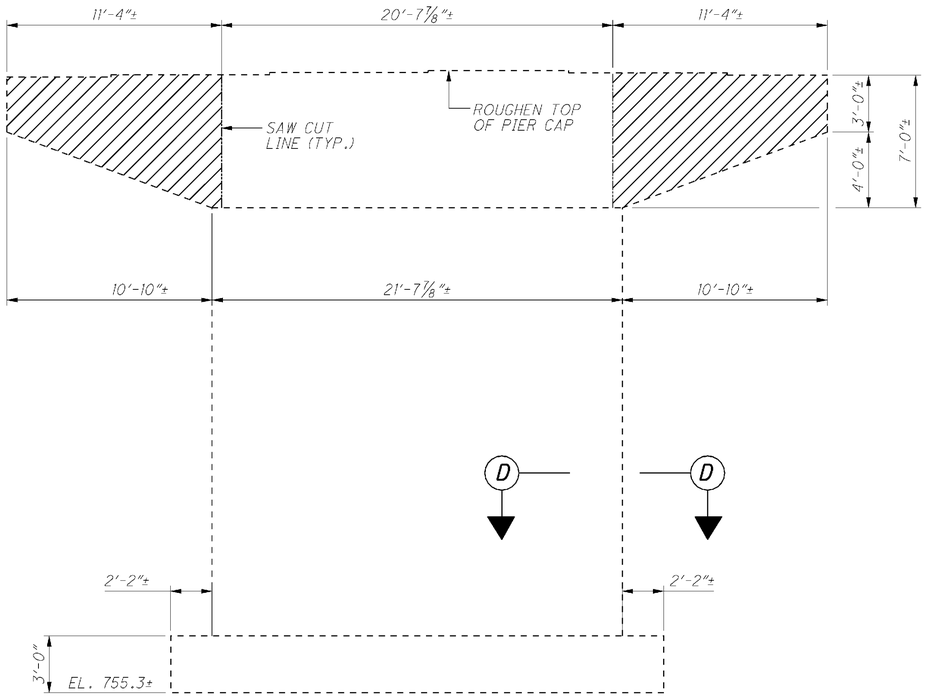

PIER ELEVATION

LEGEND:

INDICATES REMOVAL LIMITS, ITEM 202 - PORTIONS OF STRUCTURE REMOVED, OVER 20 FOOT SPAN, AS PER PLAN

NOTE

1. FOR ABBREVIATIONS AND NOTES, SEE SHEET 5/62.

DESIGN AGENCY
KCI ASSOCIATES OF OHIO, P.A.
388 S. MAIN ST., SUITE 401
AKRON, OHIO 44311

DESIGNED YRY | DRAWN JLS | REVIEWED FJB | DATE 6/5/09
CHECKED DLG | REVISED --- | STRUCTURE FILE NUMBER 0404292R

PIER REMOVAL DETAILS - RIGHT STRUCTURE

BRIDGE NO. ATB-90-1583 R
I-90 OVER ASHTABULA RIVER

ATB-90-14.25
PID No. 25199

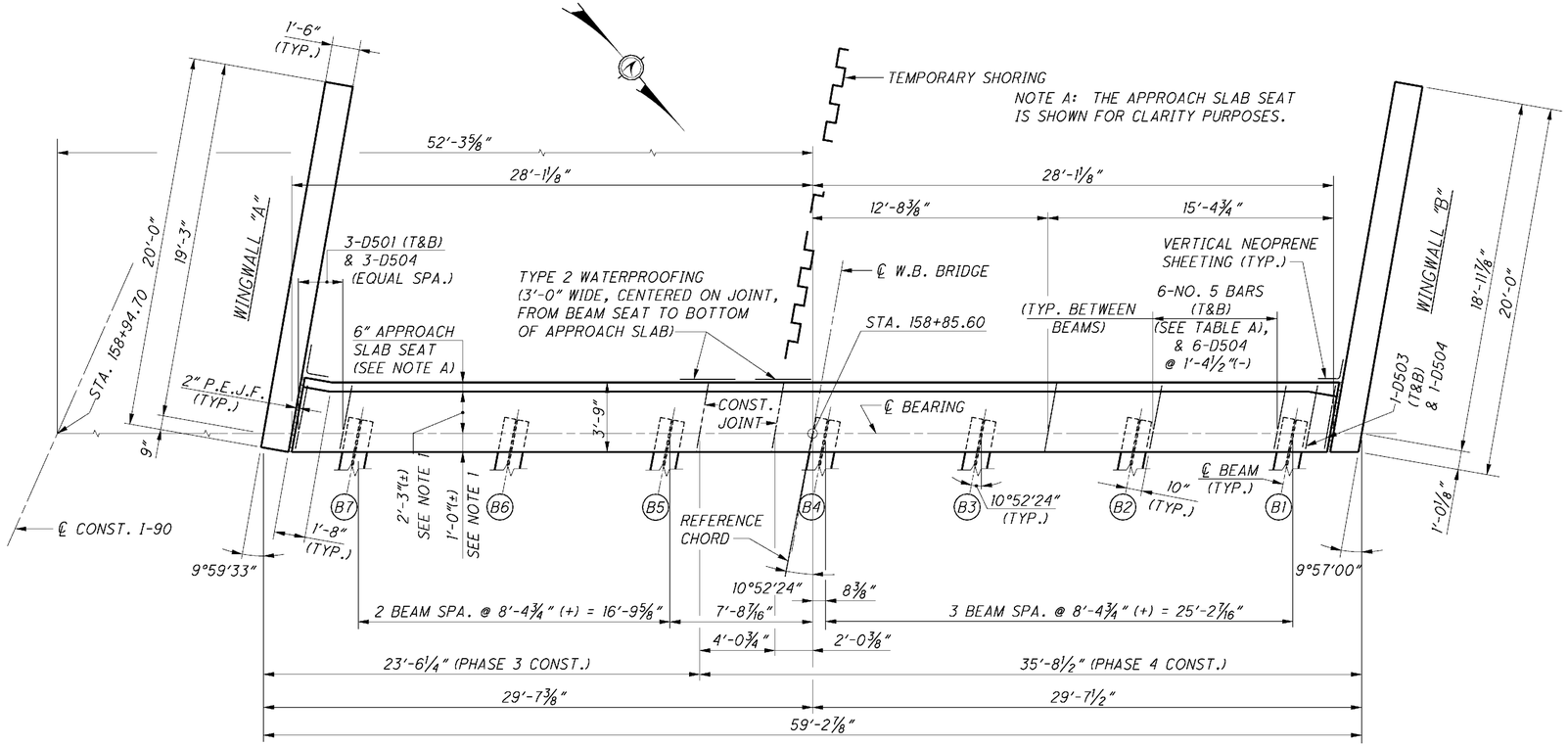

PLAN

(DECK SLAB AND APPROACH SLAB NOT SHOWN)
(FOR LONGITUDINAL REINFORCEMENT, SEE ELEVATION)

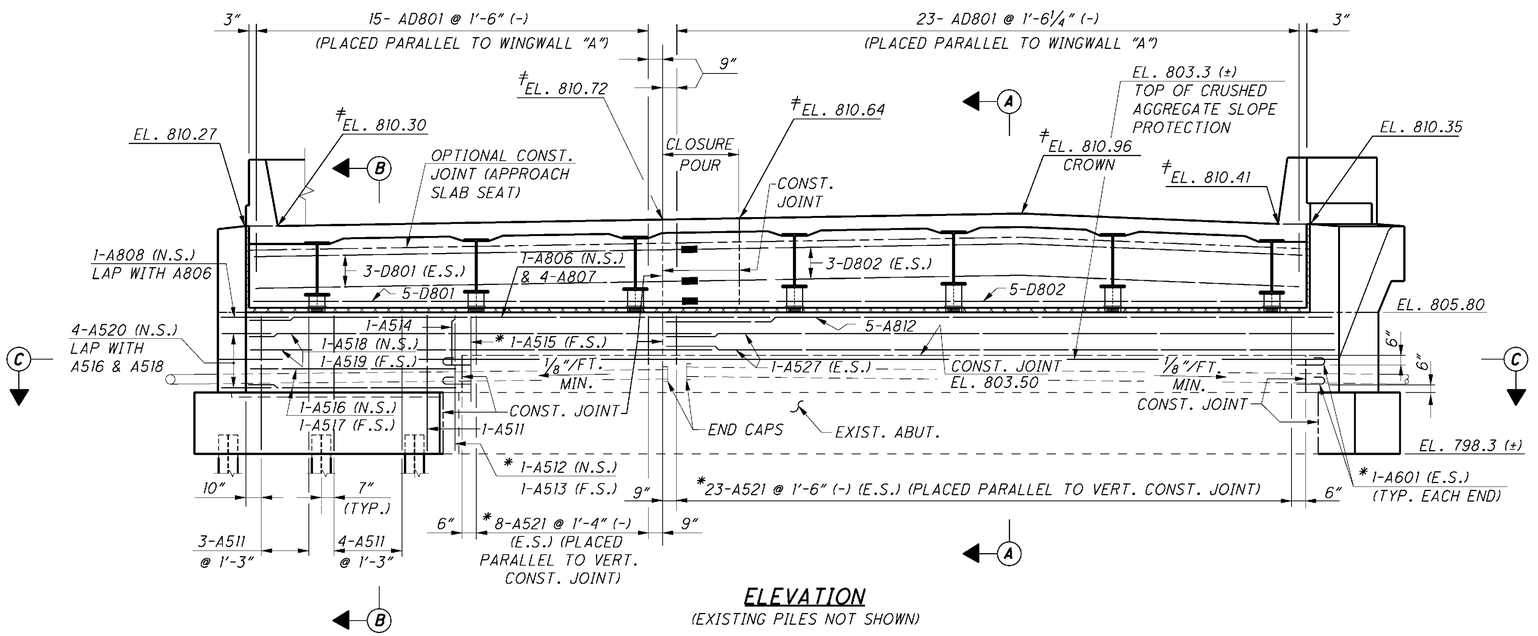

ELEVATION

(EXISTING PILES NOT SHOWN)

TABLE A	
LOCATION	BAR MARK
BEAM B1 - BEAM B2	D503
BEAM B2 - BEAM B3	D502
BEAM B3 - BEAM B4	D502
• BEAM B4 - BEAM B5	D502
BEAM B5 - BEAM B6	D502
BEAM B6 - BEAM B7	D501

• ONE BAR (T&B) IN PHASE 3 AND FIVE BARS (T&B) IN PHASE 4.

LEGEND:

- (B1) BEAM DESIGNATION
- LIMITS OF P.E.J.F.
- LIMITS OF EXPANDED POLYSTYRENE FILLER OR REMOVABLE FORMS.
- ≠ ELEVATION AT ℄ BEARING.
- * DENOTES DOWEL BAR GROUTED INTO EXISTING STRUCTURE. (1'-3" FOR #5 BAR AND 1'-6" FOR #6 BAR)
- DENOTES MECHANICAL CONNECTOR

MINIMUM LAP LENGTHS
NO. 5 BAR = 2'-5"
NO. 8 BAR = 4'-11"

NOTES:

1. ℄ BEARING IS NOT PARALLEL TO FRONT FACE OF ABUTMENT. SEE GEOMETRIC LAYOUT DIAGRAM, SHEET 3/62, FOR LOCATION OF ℄ BEARING.
2. ALL REINFORCING BAR MARKS SHALL BE PREFIXED "L".
3. FOR ABUTMENT REMOVAL DETAILS, SEE SHEET 10/62.
4. FOR REAR ABUTMENT FOOTING PLAN, SEE SHEET 14/62.
5. FOR SECTIONS A-A AND B-B, SEE SHEET 17/62.
6. FOR SECTION C-C, SEE SHEET 14/62.
7. ABUTMENT DIAPHRAGM CONCRETE, STEEL SUPERSTRUCTURE, PHASED CONSTRUCTION: PLACE THE CONCRETE IN THE ABUTMENT DIAPHRAGM ENCASING STRUCTURAL STEEL MEMBERS OF AN INDIVIDUAL PHASE SEPARATELY OR WITH THE DECK CONCRETE OF THAT PHASE. IF THE DIAPHRAGM CONCRETE IS PLACED SEPARATELY, ALLOW AT LEAST 48 HOURS OF SET TIME BEFORE PLACING DECK CONCRETE. LOCATE THE HORIZONTAL CONSTRUCTION JOINT BETWEEN THE DIAPHRAGM AND DECK CONCRETE AT THE APPROACH SLAB SEAT.
8. FOR LIMITS OF SEALING CONCRETE SURFACES, SEE SHEET 17/62.
9. FOR WINGWALL DETAILS, SEE SHEET 18/62.
10. FOR BONDING GROUT NOTE, SEE SHEET 4/62.
11. FOR ABBREVIATIONS, SEE SHEET 5/62.

DESIGN AGENCY
KCI ASSOCIATES OF OHIO, P.A.
388 S. MAIN ST., SUITE 401
AKRON, OHIO 44311

DESIGNED SLH | DRAWN WEB | REVIEWED FJB | DATE 6/5/09
CHECKED HK | REVISED | STRUCTURE FILE NUMBER 04042681

REAR ABUTMENT PLAN AND ELEVATION - LEFT STRUCTURE

BRIDGE NO. ATB-90-1583 L
I-90 OVER ASHTABULA RIVER

ATB-90-14.25
PID No. 25199

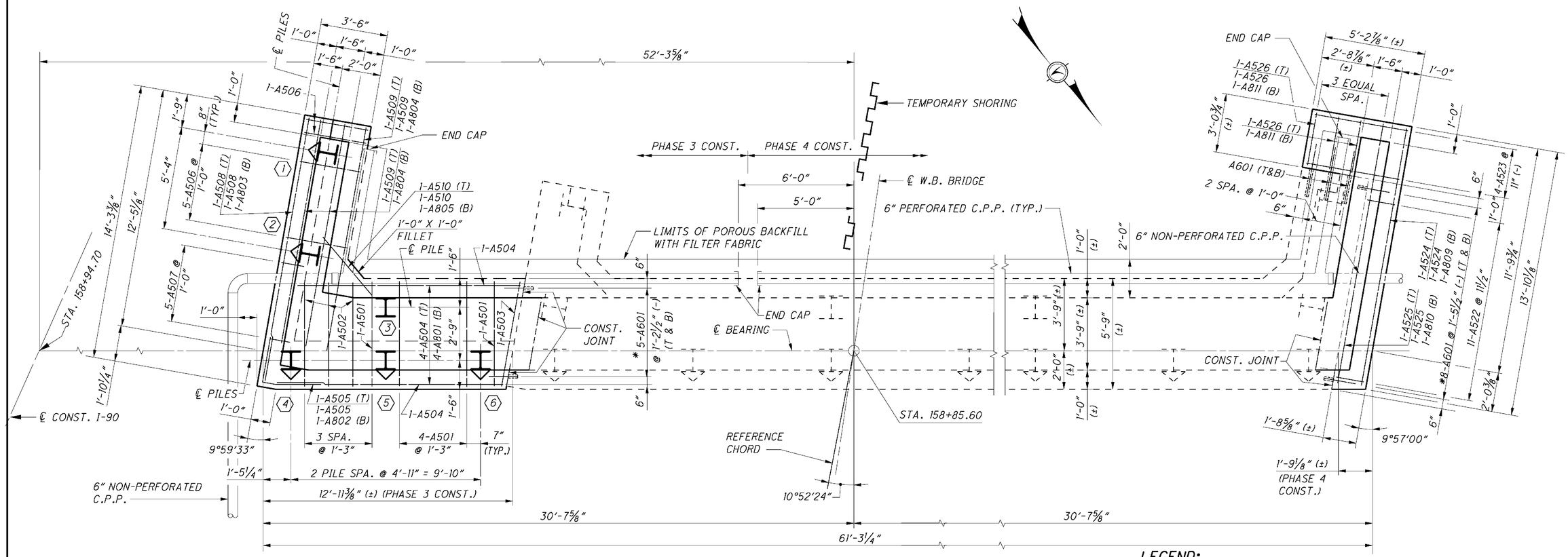

REAR ABUTMENT FOOTING PLAN

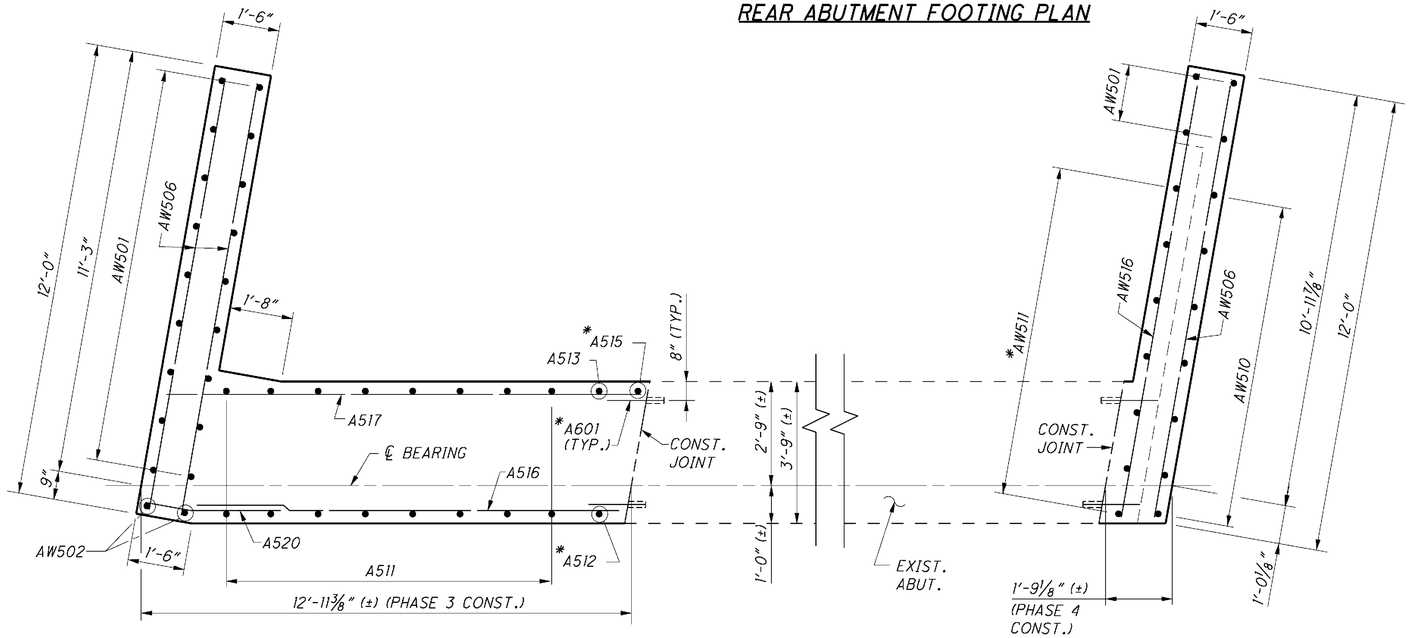

SECTION C-C

MINIMUM LAP LENGTHS
NO. 5 BAR = 2'-5"

LEGEND:

- DENOTES BATTERED PILE (1:4)
- INDICATES PILE IDENTIFICATION NUMBER.
- * DENOTES DOWEL BAR GROUTED 1'-6" INTO EXISTING STRUCTURE. (1'-3" FOR #5 BAR AND 1'-6" FOR #6 BAR) DOWEL BARS IN THE FOOTING SHALL BE 6" CLEAR FROM THE TOP AND BOTTOM OF EXISTING FOOTING.

NOTES:

1. ALL REINFORCING BAR MARKS SHALL BE PREFIXED "L".
2. ALL PILES ARE HP 12x53 STEEL PILES.
3. FOR ABUTMENT PLAN AND ELEVATION, AND LOCATION OF SECTION C-C, SEE SHEET 13/62 .
4. POROUS BACKFILL WITH FILTER FABRIC, 2 FEET THICK SHALL EXTEND TO THE BOTTOM OF THE AGGREGATE BASE, TO 1 FOOT BELOW THE EMBANKMENT SURFACE, AND LATERALLY TO THE ENDS OF THE WINGWALLS.
5. TERMINATE 6" NON-PERFORATED PIPE AT THE SIDE SLOPE AS SHOWN ON STANDARD DRAWING SICD-1-96, SHEET 4 OF 7. PAYMENT FOR CRUSHED AGGREGATE SLOPE PROTECTION SHALL BE INCLUDED IN ITEM 601 - CRUSHED AGGREGATE SLOPE PROTECTION, AS PER PLAN. TERMINATE 6" NON-PERFORATED PIPE AT THE FRONT SLOPE AS SHOWN ON SHEET 17/62 .
6. FOR ABBREVIATIONS, SEE SHEET 5/62 .
7. FOR CLEANING EXISTING CONCRETE PRIOR TO PLACEMENT OF PROPOSED CONCRETE AND FOR "BONDING GROUT" NOTE, SEE SHEET 4/62 .
8. FOR ADDITIONAL FOOTING REINFORCEMENT, SEE SHEETS 13/62 AND 18/62 .

DESIGN AGENCY
KCI ASSOCIATES OF OHIO, P.A.
388 S. MAIN ST., SUITE 401
AKRON, OHIO 44311

DESIGNED	DRAWN	REVIEWED	DATE
SLH	WEB	FJB	6/5/09
CHECKED	REVISED	STRUCTURE FILE NUMBER	
HK		04042681	

REAR ABUTMENT DETAILS - LEFT STRUCTURE

BRIDGE NO. ATB-90-1583 L
I-90 OVER ASHTABULA RIVER

ATB-90-14.25
PID No. 25199

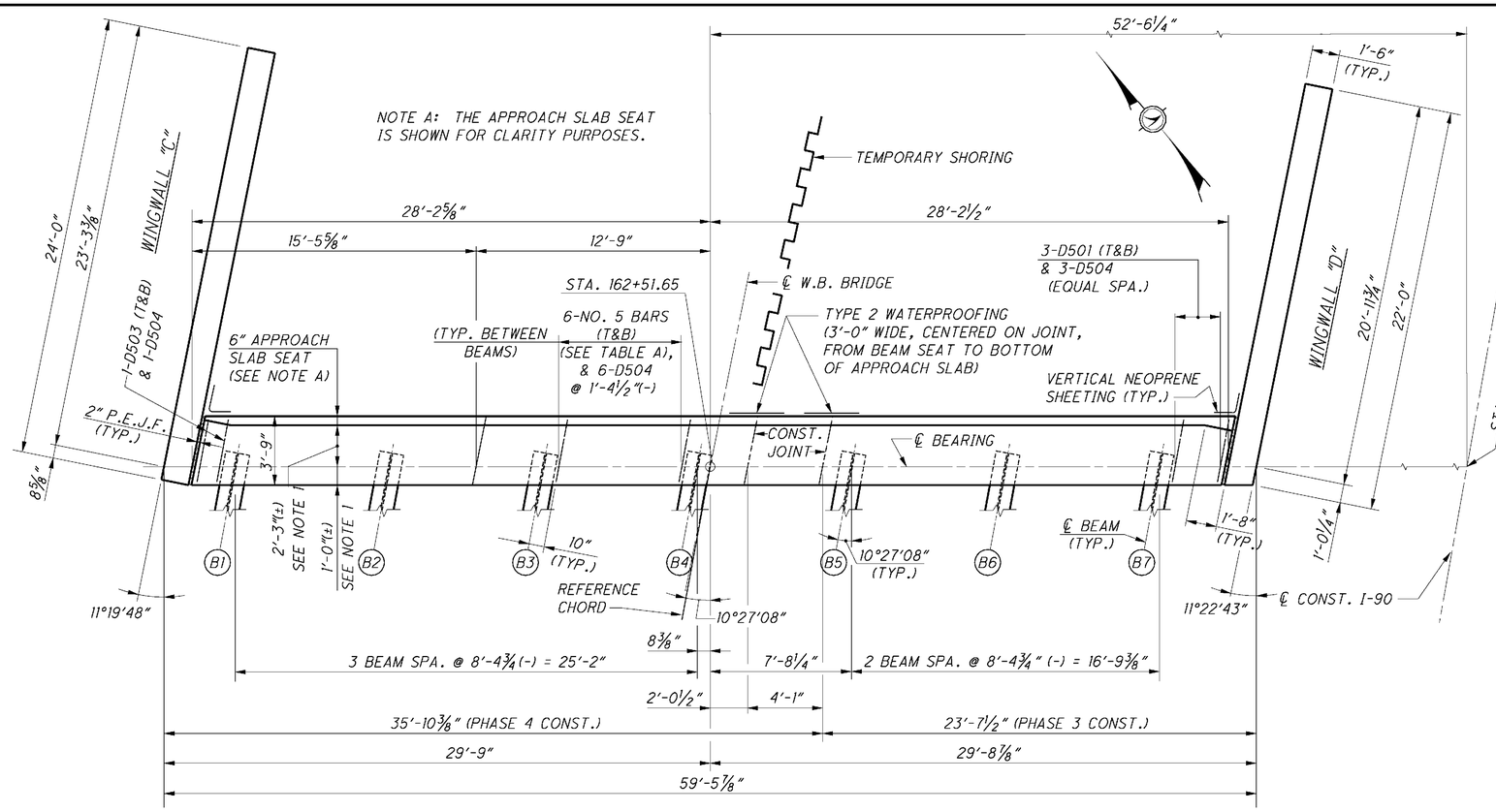

PLAN

(DECK SLAB AND APPROACH SLAB NOT SHOWN)
(FOR LONGITUDINAL REINFORCEMENT, SEE ELEVATION)

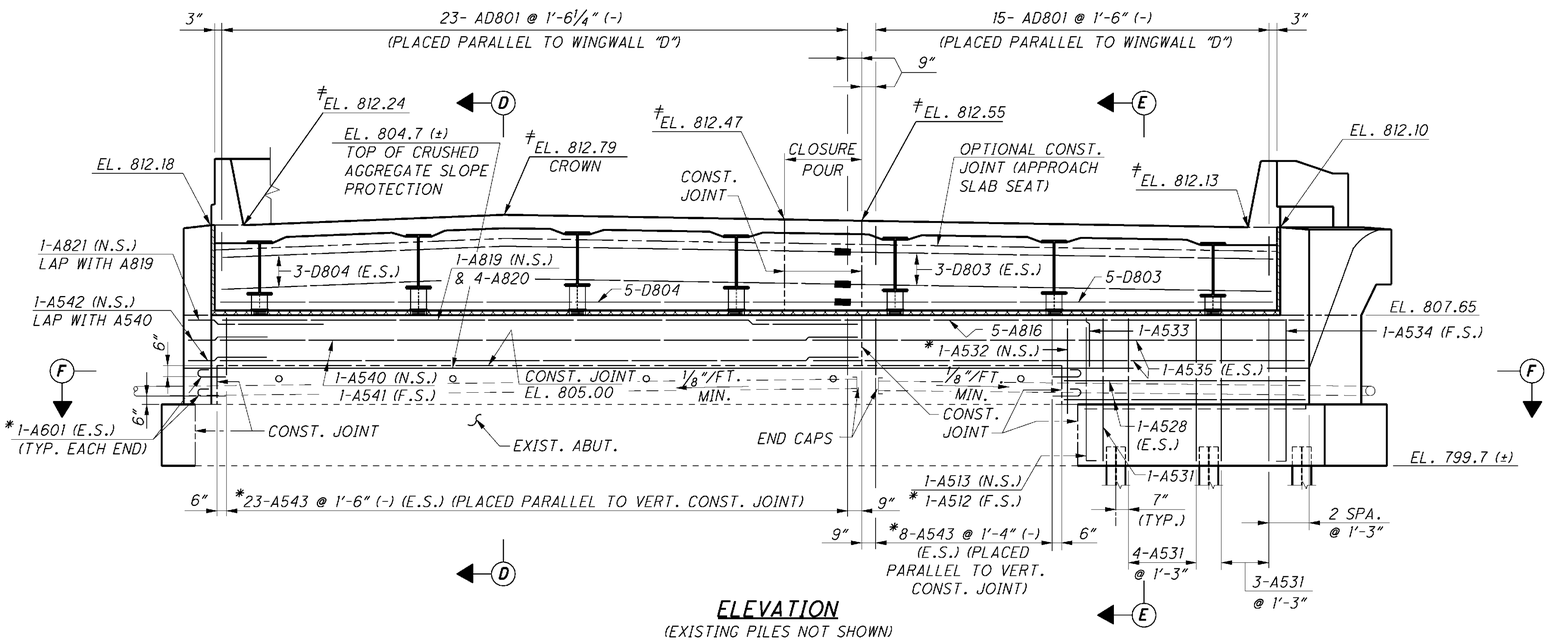

ELEVATION

(EXISTING PILES NOT SHOWN)

TABLE A	
LOCATION	BAR MARK
BEAM B1 - BEAM B2	D503
BEAM B2 - BEAM B3	D502
BEAM B3 - BEAM B4	D502
• BEAM B4 - BEAM B5	D502
BEAM B5 - BEAM B6	D505
BEAM B6 - BEAM B7	D501

• ONE BAR (T & B) IN PHASE 3 AND FIVE BARS (T & B) IN PHASE 4.

LEGEND:

- (B1) BEAM DESIGNATION
- LIMITS OF P.E.J.F.
- LIMITS OF EXPANDED POLYSTYRENE FILLER OR REMOVABLE FORMS.
- ≠ ELEVATION AT ℄ BEARING.
- * DENOTES DOWEL BAR GROUTED 6" INTO EXISTING STRUCTURE. (1'-3" FOR #5 BAR AND 1'-6" FOR #6 BAR)
- DENOTES MECHANICAL CONNECTOR

MINIMUM LAP LENGTHS
NO. 5 BAR = 2'-5"
NO. 8 BAR = 4'-11"

NOTES:

1. ℄ BEARING IS NOT PARALLEL TO FRONT FACE OF ABUTMENT. SEE GEOMETRIC LAYOUT DIAGRAM, SHEET 3/62, FOR LOCATION OF ℄ BEARING.
2. ALL REINFORCING BAR MARKS SHALL BE PREFIXED "L".
3. FOR ABUTMENT REMOVAL DETAILS, SEE SHEET 10/62.
4. FOR REAR ABUTMENT FOOTING PLAN, SEE SHEET 16/62.
5. FOR SECTIONS E-E AND D-D, SEE SHEET 17/62.
6. FOR SECTION F-F, SEE SHEET 16/61.
7. ABUTMENT DIAPHRAGM CONCRETE, STEEL SUPERSTRUCTURE, PHASED CONSTRUCTION: PLACE THE CONCRETE IN THE ABUTMENT DIAPHRAGM ENCASING STRUCTURAL STEEL MEMBERS OF AN INDIVIDUAL PHASE SEPARATELY OR WITH THE DECK CONCRETE OF THAT PHASE. IF THE DIAPHRAGM CONCRETE IS PLACED SEPARATELY, ALLOW AT LEAST 48 HOURS OF SET TIME BEFORE PLACING DECK CONCRETE. LOCATE THE HORIZONTAL CONSTRUCTION JOINT BETWEEN THE DIAPHRAGM AND DECK CONCRETE AT THE APPROACH SLAB SEAT.
8. FOR LIMITS OF SEALING CONCRETE SURFACES, SEE SHEET 17/62.
9. FOR WINGWALL DETAILS, SEE SHEET 19/62.
10. FOR BONDING GROUT NOTE, SEE SHEET 4/62.
11. FOR ABBREVIATIONS, SEE SHEET 5/62.

DESIGN AGENCY
KCI ASSOCIATES OF OHIO, P.A.
388 S. MAIN ST., SUITE 401
AKRON, OHIO 44311

DESIGNED SLH | DRAWN WEB | REVIEWED FJB | DATE 6/5/09
CHECKED HK | REVISED | STRUCTURE FILE NUMBER 04042681

FORWARD ABUTMENT PLAN AND ELEVATION - LEFT STRUCTURE

BRIDGE NO. ATB-90-1583 L
I-90 OVER ASHTABULA RIVER

ATB-90-14.25
PID No. 25199

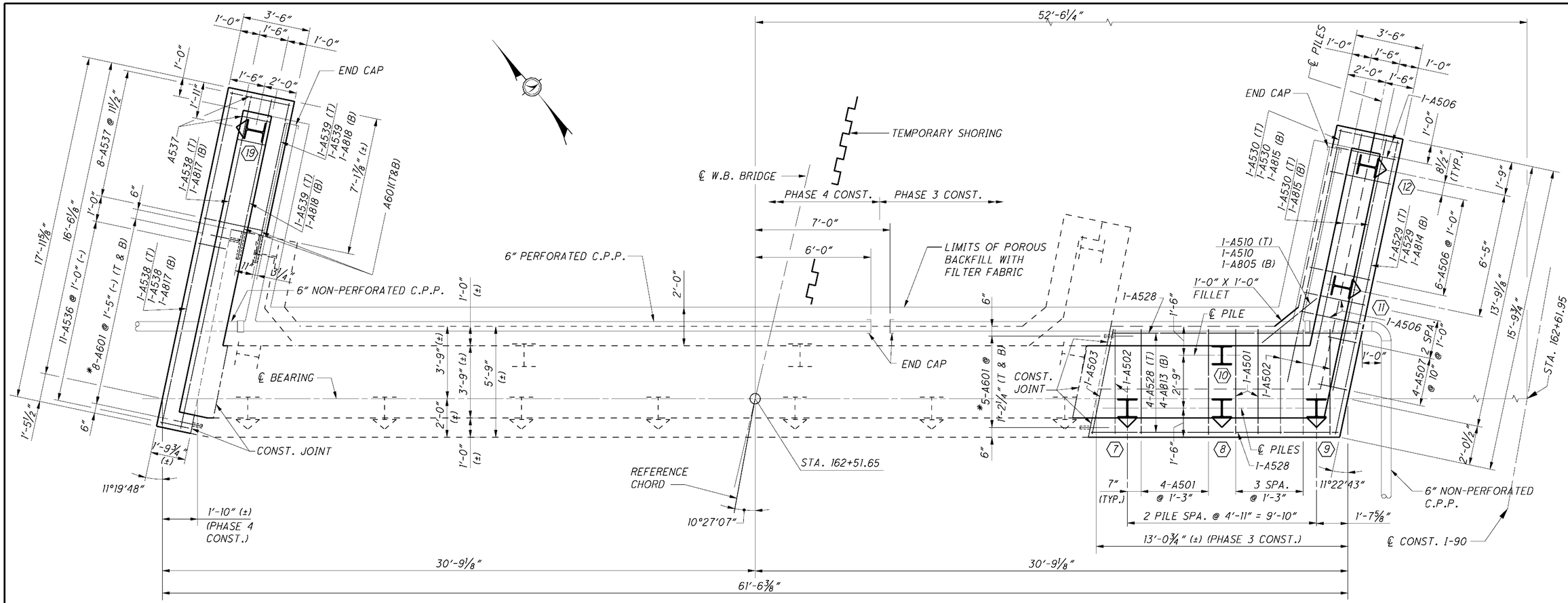

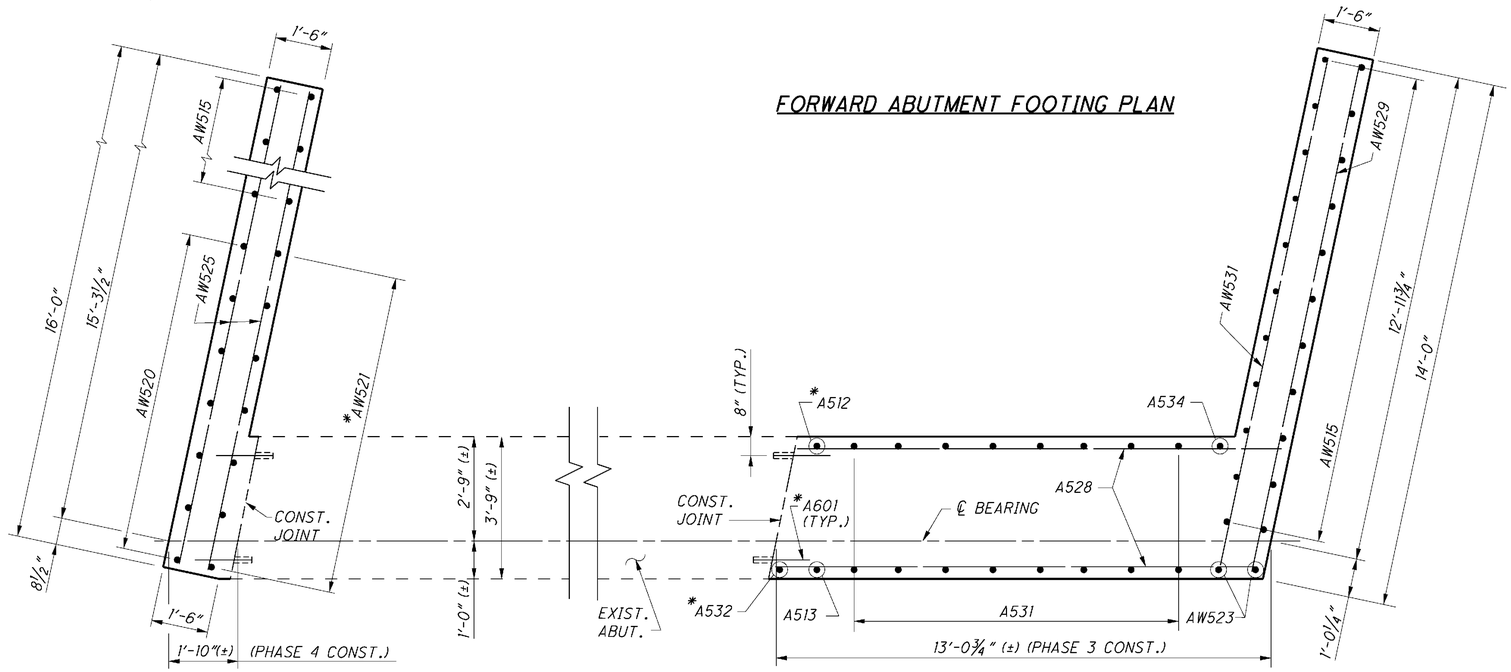

MINIMUM LAP LENGTHS
NO. 5 BAR = 2'-5"

LEGEND:

DENOTES BATTERED PILE (1:4)

INDICATES PILE IDENTIFICATION NUMBER.

* DENOTES DOWEL BAR GROUTED INTO EXISTING STRUCTURE. (1'-3" FOR #5 BAR AND 1'-6" FOR #6 BAR.) DOWEL BARS IN THE FOOTING SHALL BE 6" CLEAR FROM THE TOP AND BOTTOM OF EXISTING FOOTING.

NOTES:

1. ALL REINFORCING BAR MARKS SHALL BE PREFIXED "L".
2. ALL PILES ARE HP 12x53 STEEL PILES.
3. FOR ABUTMENT PLAN AND ELEVATION, AND LOCATION OF SECTION C-C, SEE SHEET 15/62.
4. POROUS BACKFILL WITH FILTER FABRIC, 2 FEET THICK SHALL EXTEND TO THE BOTTOM OF THE AGGREGATE BASE, TO 1 FOOT BELOW THE EMBANKMENT SURFACE, AND LATERALLY TO THE ENDS OF THE WINGWALLS.
5. TERMINATE 6" NON-PERFORATED PIPE AT THE SIDE SLOPE AS SHOWN ON STANDARD DRAWING SICD-1-96, SHEET 4 OF 7. PAYMENT FOR CRUSHED AGGREGATE SLOPE PROTECTION SHALL BE INCLUDED IN ITEM 601 - CRUSHED AGGREGATE SLOPE PROTECTION, AS PER PLAN. TERMINATE 6" NON-PERFORATED PIPE AT THE FRONT SLOPE AS SHOWN ON SHEET 17/62.
6. FOR ABBREVIATIONS, SEE SHEET 5/62.
7. FOR CLEANING EXISTING CONCRETE PRIOR TO PLACEMENT OF PROPOSED CONCRETE AND FOR "BONDING GROUT" NOTE, SEE SHEET 4/62.
8. FOR ADDITIONAL FOOTING REINFORCEMENT, SEE SHEETS 13/62 AND 18/62.

DESIGN AGENCY
KCI ASSOCIATES OF OHIO, P.A.
388 S. MAIN ST., SUITE 401
AKRON, OHIO 44311

DESIGNED	DRAWN	REVIEWED	DATE
SLH	WEB	FJB	6/5/09
CHECKED	REVISED	STRUCTURE FILE NUMBER	
HK		04042681	

FORWARD ABUTMENT DETAILS - LEFT STRUCTURE

BRIDGE NO. ATB-90-1583 L
I-90 OVER ASHTABULA RIVER

ATB-90-14.25
PID No. 25199

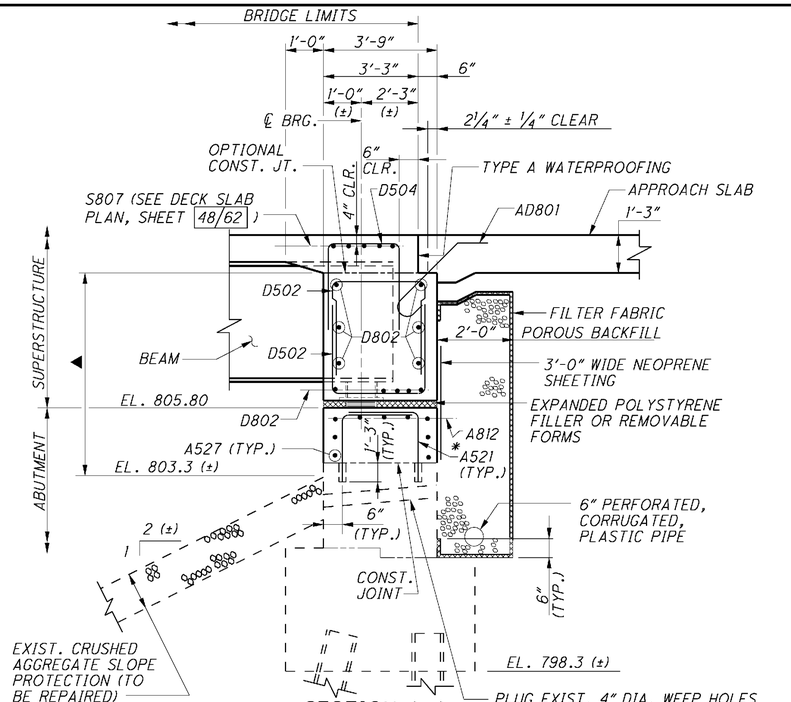

SECTION A-A

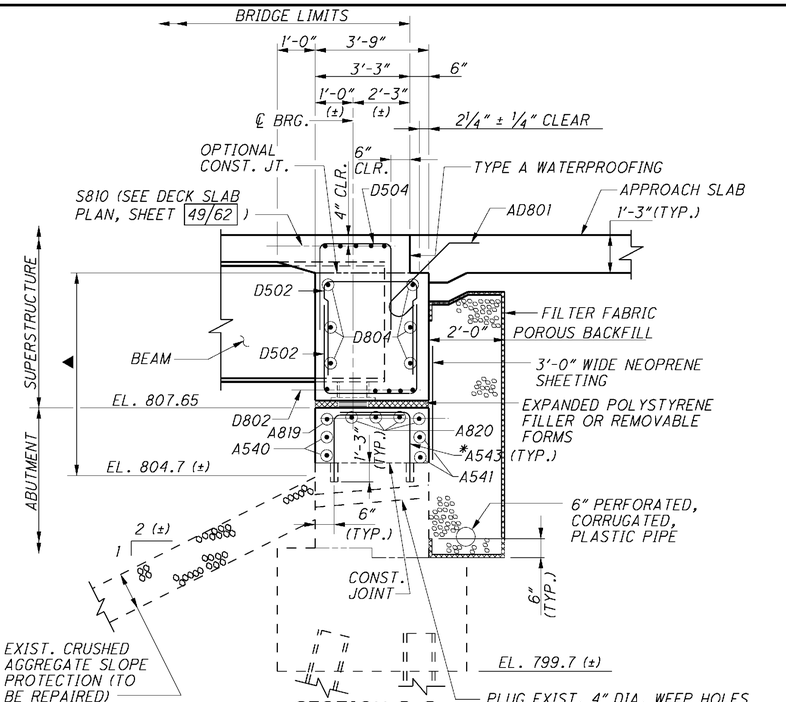

SECTION D-D

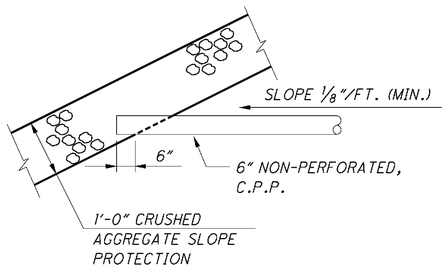

TERMINATION OF 6" PIPE AT THE FRONT SLOPE

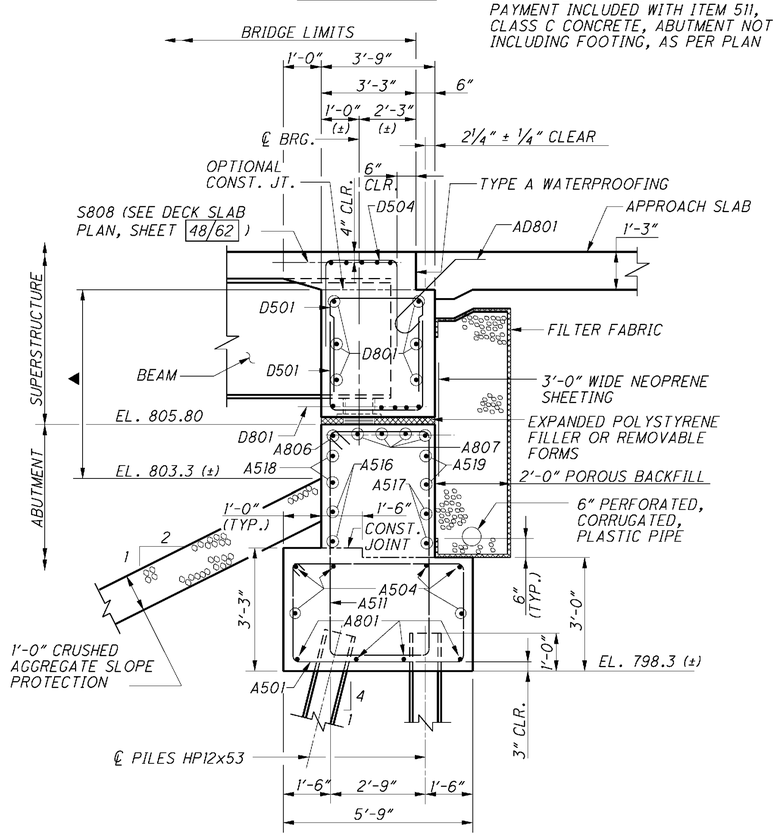

SECTION B-B

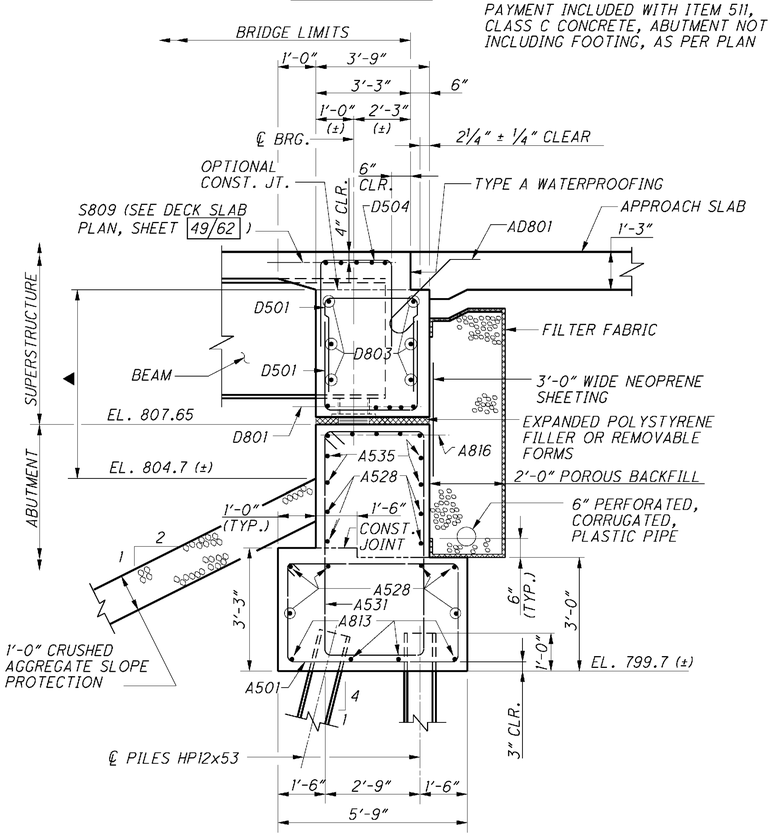

SECTION E-E

MINIMUM LAP LENGTHS
NO. 5 BAR = 2'-5"

LEGEND

▲ LIMITS OF ITEM 512 - SEALING OF CONCRETE SURFACES (EPOXY-URETHANE)

* DENOTES DOWEL BAR GROUTED INTO EXISTING STRUCTURE

NOTES

1. PREFIX "L" SHALL BE ADDED TO ALL REBAR MARKS SHOWN FOR LEFT STRUCTURE.
2. FOR REAR ABUTMENT PLAN AND ELEVATION, LOCATION OF SECTIONS A-A, B-B AND ADDITIONAL NOTES, SEE SHEETS 13/62 AND 14/62.
3. FOR FORWARD ABUTMENT PLAN AND ELEVATION, LOCATION OF SECTIONS D-D, E-E AND ADDITIONAL NOTES, SEE SHEETS 15/62 AND 16/62.
4. TYPE A WATERPROOFING SHALL BE INCLUDED WITH ITEM 526 - REINFORCED CONCRETE APPROACH SLABS (T=15") AS PER PLAN, FOR PAYMENT.
5. FOR ABBREVIATIONS, SEE SHEET 5/62.

DESIGN AGENCY
KCI ASSOCIATES OF OHIO, P.A.
388 S. MAIN ST., SUITE 401
AKRON, OHIO 44311

DESIGNED	DRAWN	REVIEWED	DATE
HK	WEB	FJB	6/5/09
CHECKED	REVISED		STRUCTURE FILE NUMBER
CWK			04042681

ABUTMENT DETAILS - LEFT STRUCTURE

BRIDGE NO. ATB-90-1583 L
I-90 OVER ASHTABULA RIVER

ATB-90-14.25
PID No. 25199

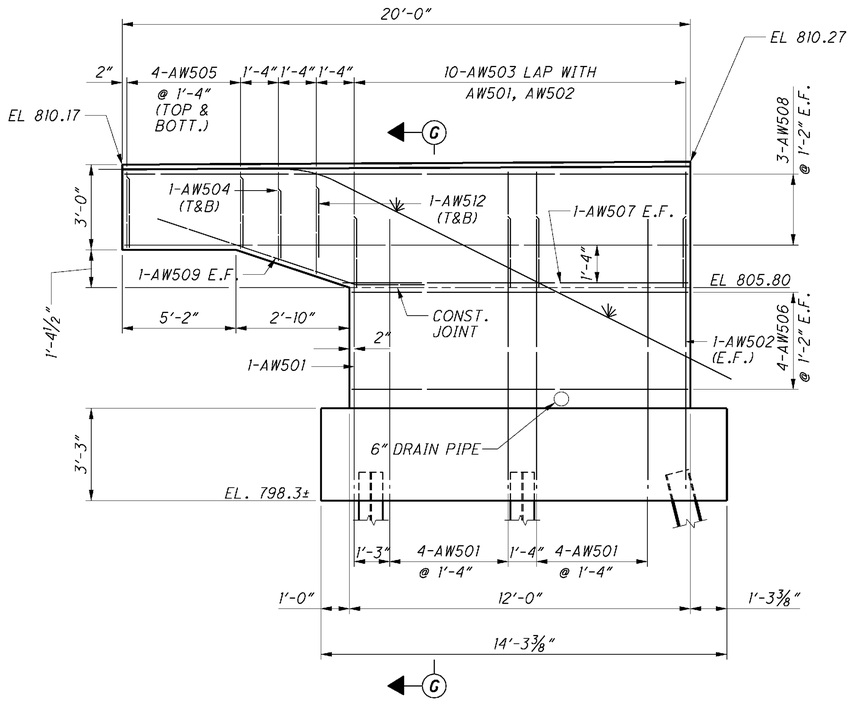

WINGWALL "A" ELEVATION

(PHASE 3 CONST.)

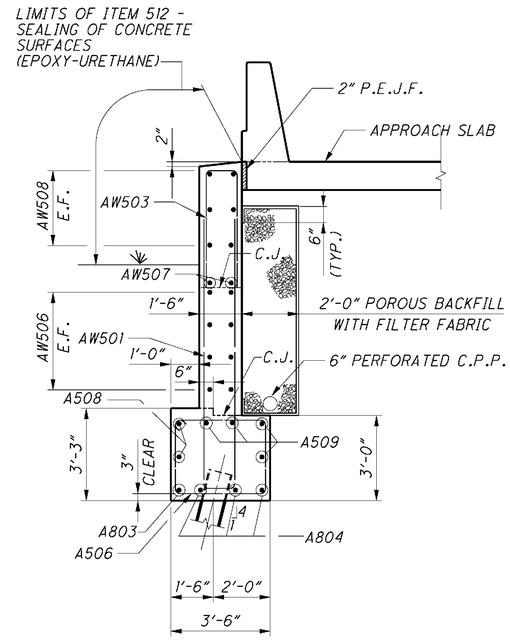

SECTION G-G

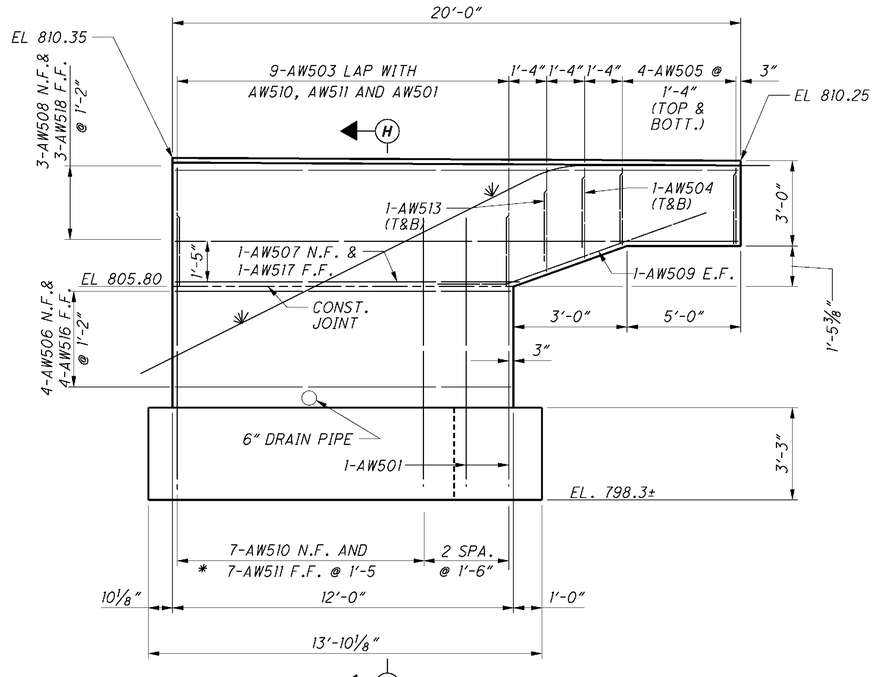

WINGWALL "B" ELEVATION

(PHASE 4 CONST.)

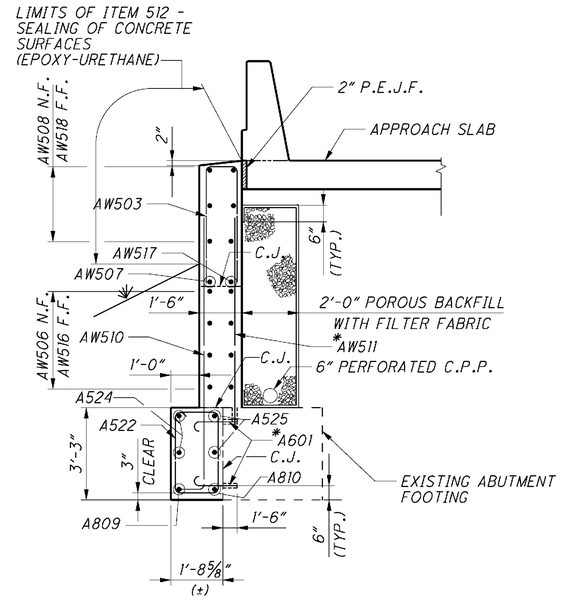

SECTION H-H

MINIMUM LAP LENGTHS
NO. 5 BAR = 2'-5"

LEGEND

* DENOTES DOWEL BAR GROUTED INTO EXISTING STRUCTURE. (1'-3" FOR #5 BAR AND 1'-6" FOR #6 BAR)

NOTES:

1. ALL REINFORCING BAR MARKS SHALL BE PREFIXED "L".
2. FOR ABUTMENT REMOVAL DETAILS, SEE SHEET 10/62.
3. FOR REAR ABUTMENT FOOTING PLAN, SEE SHEET 14/62.
4. FOR ABBREVIATIONS, SEE SHEET 5/62.

DESIGN AGENCY
KCI ASSOCIATES OF OHIO, P.A.
388 S. MAIN ST., SUITE 401
AKRON, OHIO 44311

DESIGNED	DRAWN	REVIEWED	DATE
HK	SAC	FJB	6/5/09
CHECKED	REVISED	STRUCTURE FILE NUMBER	
CMK		04042681	

REAR ABUTMENT WINGWALL DETAILS - LEFT STRUCTURE

BRIDGE NO. ATB-90-1583 L
I-90 OVER ASHTABULA RIVER

ATB-90-14.25
PID No. 25199

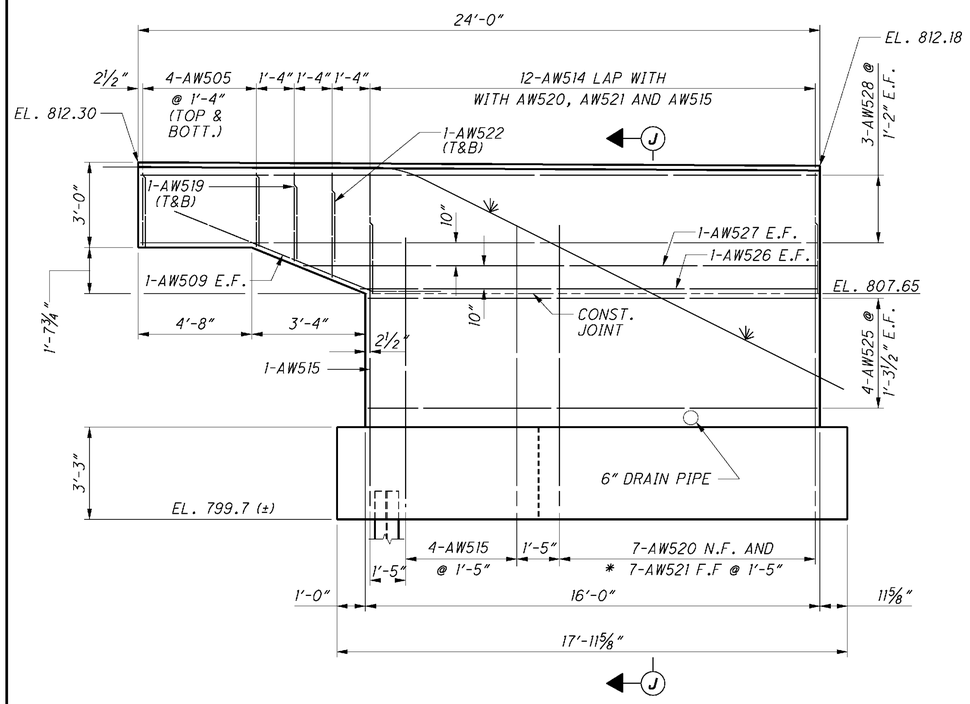

WINGWALL "C" ELEVATION

(PHASE 4 CONST.)

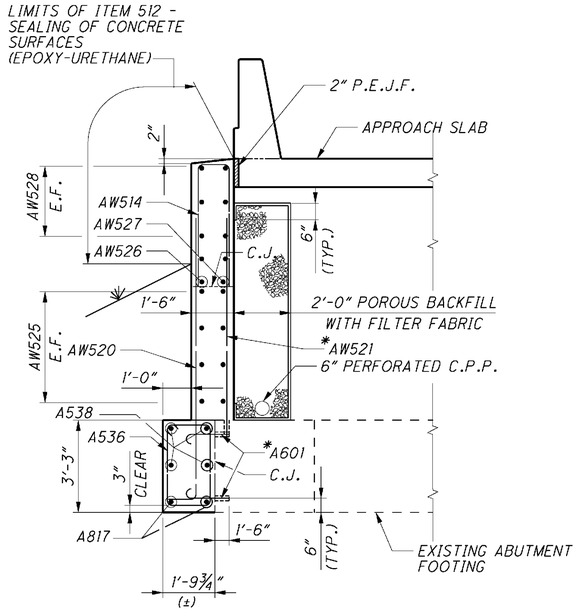

SECTION J-J

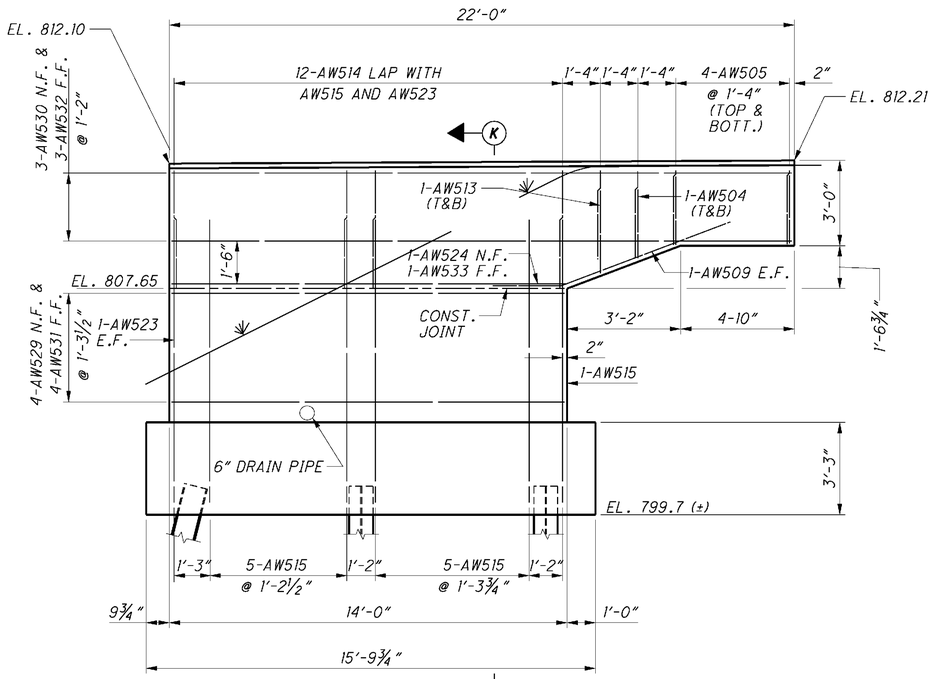

WINGWALL "D" ELEVATION

(PHASE 3 CONST.)

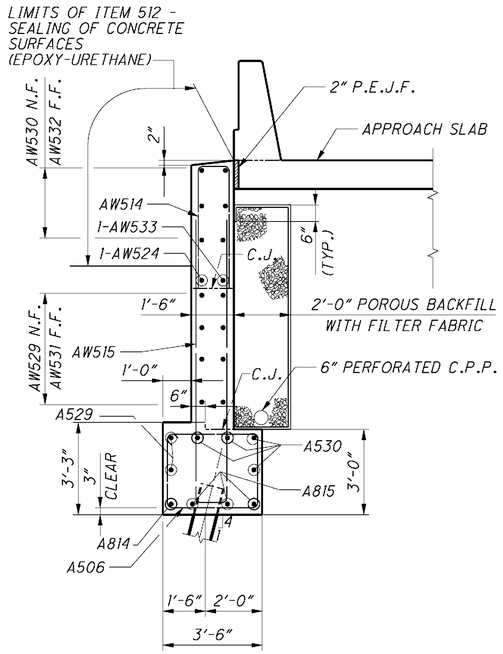

SECTION K-K

MINIMUM LAP LENGTHS
NO. 5 BAR = 2'-5"

LEGEND

* DENOTES DOWEL BAR GROUTED INTO EXISTING STRUCTURE. (1'-3" FOR #5 BAR AND 1'-6" FOR #6 BAR)

NOTES:

1. ALL REINFORCING BAR MARKS SHALL BE PREFIXED "L".
2. FOR ABUTMENT REMOVAL DETAILS, SEE SHEET 10/62.
3. FOR FORWARD ABUTMENT FOOTING PLAN, SEE SHEET 16/62.
4. FOR ABBREVIATIONS, SEE SHEET 5/62.

DESIGN AGENCY
KCI ASSOCIATES OF OHIO, P.A.
388 S. MAIN ST., SUITE 401
AKRON, OHIO 44311

DESIGNED HK | DRAWN SAC | REVIEWED FJB | DATE 6/5/09
CHECKED CMK | REVISED | STRUCTURE FILE NUMBER 0404268L

FORWARD ABUTMENT WINGWALL DETAILS - LEFT STRUCTURE
BRIDGE NO. ATB-90-1583 L
I-90 OVER ASHTABULA RIVER

ATB-90-14.25
PID No. 25199

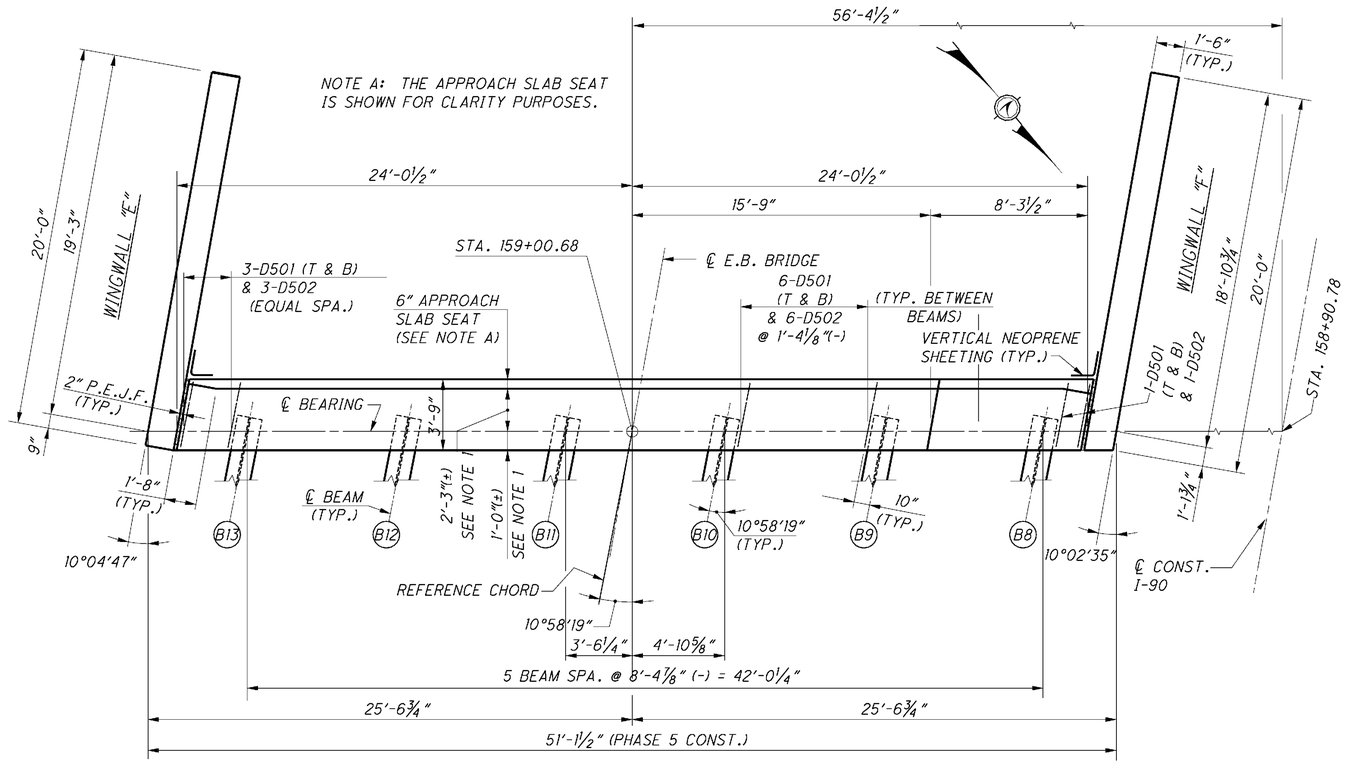

PLAN

(DECK SLAB AND APPROACH SLAB NOT SHOWN)
(FOR LONGITUDINAL REINFORCEMENT, SEE ELEVATION)

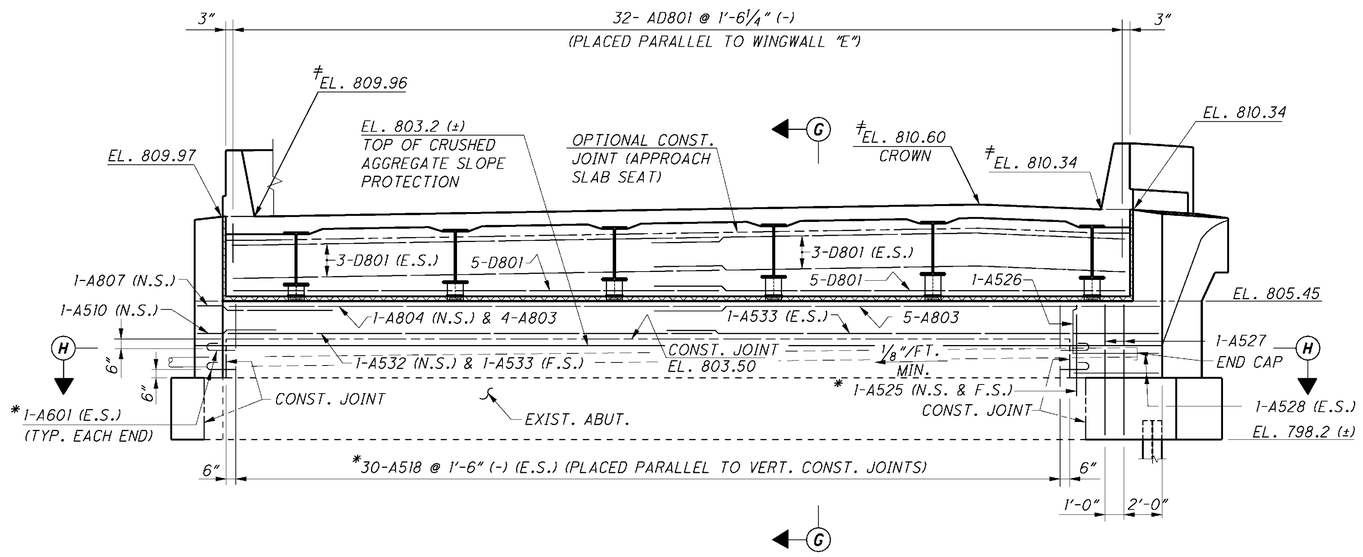

ELEVATION

(EXISTING PILES NOT SHOWN)

LEGEND:

- (B1) — BEAM DESIGNATION
- LIMITS OF P.E.J.F.
- LIMITS OF EXPANDED POLYSTYRENE FILLER OR REMOVABLE FORMS.
- ≠ — ELEVATION AT ℄ BEARING.
- * — DENOTES DOWEL BAR GROUTED INTO EXISTING STRUCTURE. (1'-3" FOR #5 BAR AND 1'-6" FOR #6 BAR)

MINIMUM LAP LENGTHS
NO. 5 BAR = 2'-5"
NO. 8 BAR = 4'-11"

NOTES:

1. ℄ BEARING IS NOT PARALLEL TO FRONT FACE OF ABUTMENT. SEE GEOMETRIC LAYOUT DIAGRAM, SHEET 3/62, FOR LOCATION OF ℄ BEARING.
2. ALL REINFORCING BAR MARKS SHALL BE PREFIXED "R".
3. FOR ABUTMENT REMOVAL DETAILS, SEE SHEET 10/62.
4. FOR REAR ABUTMENT FOOTING PLAN, SEE SHEET 21/62.
5. FOR SECTIONS G-G, SEE SHEET 24/62.
6. FOR SECTION H-H, SEE SHEET 21/62.
7. ABUTMENT DIAPHRAGM CONCRETE, STEEL SUPERSTRUCTURE: PLACE THE CONCRETE ENCASING THE STRUCTURAL STEEL MEMBERS WITH THE DECK CONCRETE OR AT LEAST 48 HOURS BEFORE PLACEMENT OF THE DECK CONCRETE.
8. FOR LIMITS OF SEALING CONCRETE SURFACES, SEE SHEET 24/62.
9. FOR WINGWALL DETAILS, SEE SHEET 25/62.
10. FOR BONDING GROUT NOTE, SEE SHEET 4/62.
11. FOR ABBREVIATIONS, SEE SHEET 5/62.

DESIGN AGENCY
KCI ASSOCIATES OF OHIO, P.A.
388 S. MAIN ST., SUITE 401
AKRON, OHIO 44311

DESIGNED HK | DRAWN JLS | REVIEWED FJB | DATE 6/5/09
CHECKED CMK | REVISED | STRUCTURE FILE NUMBER 0404292R

REAR ABUTMENT PLAN AND ELEVATION - RIGHT STRUCTURE
BRIDGE NO. ATB-90-1583 R
I-90 OVER ASHTABULA RIVER

ATB-90-14.25
PID No. 25199

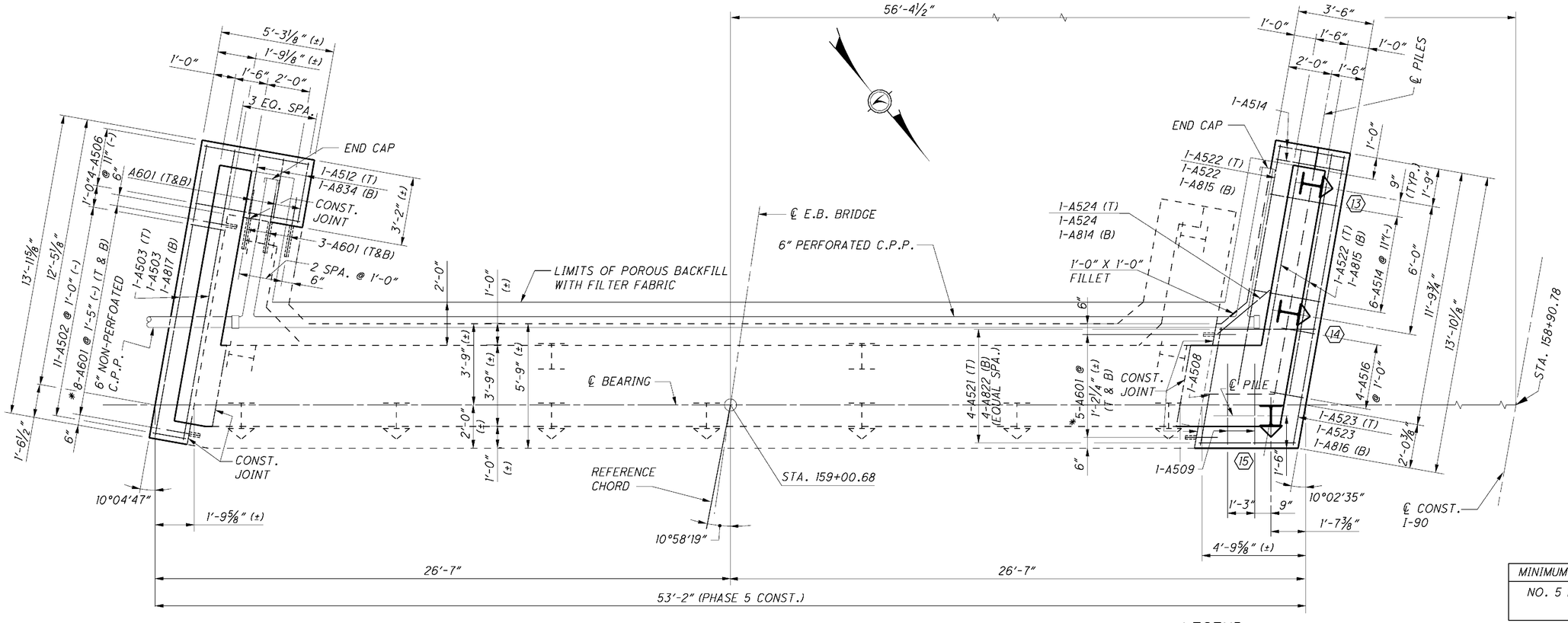

MINIMUM LAP LENGTHS
NO. 5 BAR = 2'-5"

REAR ABUTMENT FOOTING PLAN

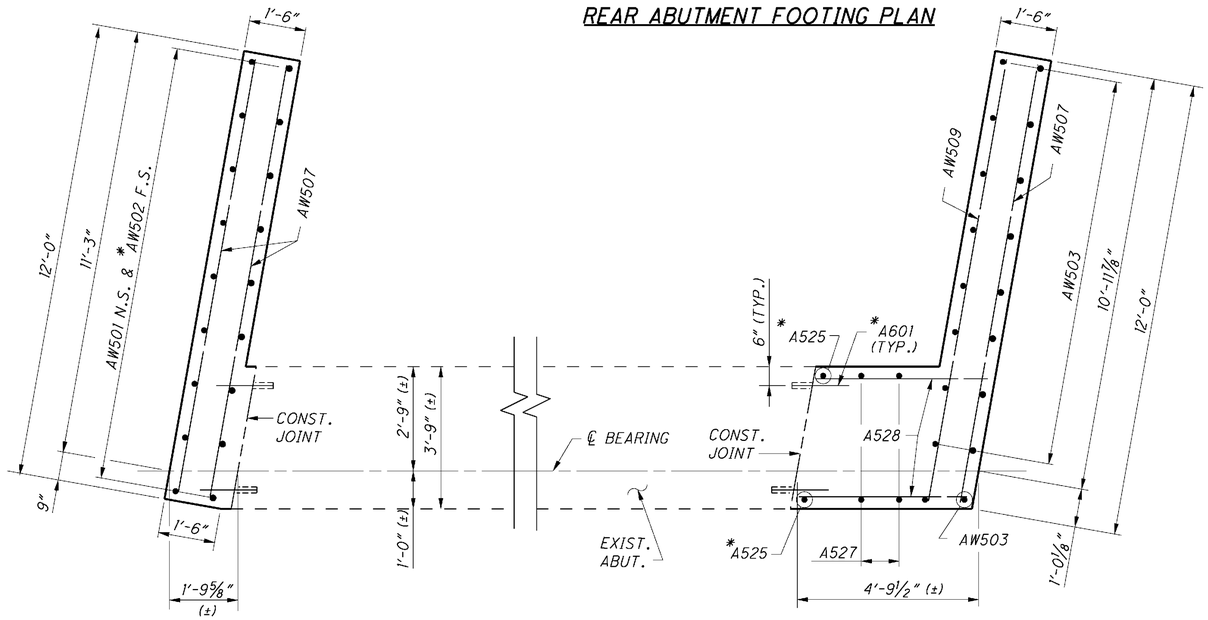

SECTION H-H

LEGEND:

- DENOTES BATTERED PILE (1:4)
- INDICATES PILE IDENTIFICATION NUMBER.
- * DENOTES DOWEL BAR GROUTED INTO EXISTING STRUCTURE. (1'-3" FOR #5 BAR AND 1'-6" FOR #6 BAR.) DOWEL BARS IN THE FOOTING SHALL BE 6" CLEAR FROM THE TOP AND BOTTOM OF EXISTING FOOTING.

NOTES:

1. ALL REINFORCING BAR MARKS SHALL BE PREFIXED "R".
2. ALL PILES ARE HP 12x53 STEEL PILES.
3. FOR ABUTMENT PLAN AND ELEVATION, AND LOCATION OF SECTION H-H, SEE SHEET 20/62 .
4. POROUS BACKFILL WITH FILTER FABRIC, 2 FEET THICK SHALL EXTEND TO THE BOTTOM OF THE AGGREGATE BASE, TO 1 FOOT BELOW THE EMBANKMENT SURFACE, AND LATERALLY TO THE ENDS OF THE WINGWALLS.
5. TERMINATE 6" NON-PERFORATED PIPE AS SHOWN ON STANDARD DRAWING SICD-1-96, SHEET 4 OF 7. PAYMENT FOR CRUSHED AGGREGATE SLOPE PROTECTION SHALL BE INCLUDED IN ITEM 601 - CRUSHED AGGREGATE SLOPE PROTECTION, AS PER PLAN, SEE SHEET 4/62 .
6. FOR ABBREVIATIONS, SEE SHEET 5/62 .
7. FOR CLEANING EXISTING CONCRETE PRIOR TO PLACEMENT OF PROPOSED CONCRETE AND FOR "BONDING GROUT" NOTE, SEE SHEET 4/62 .
8. FOR ADDITIONAL FOOTING REINFORCING, SEE SHEET 25/62 .

DESIGN AGENCY
KCI ASSOCIATES OF OHIO, P.A.
388 S. MAIN ST., SUITE 401
AKRON, OHIO 44311

DESIGNED	DRAWN	REVIEWED	DATE
HK	JLS	FJB	6/5/09
CHECKED	REVISED	STRUCTURE FILE NUMBER	
CMK		0404292R	

REAR ABUTMENT DETAILS - RIGHT STRUCTURE
BRIDGE NO. ATB-90-1583 R
I-90 OVER ASHTABULA RIVER

ATB-90-14.25
PID No. 25199

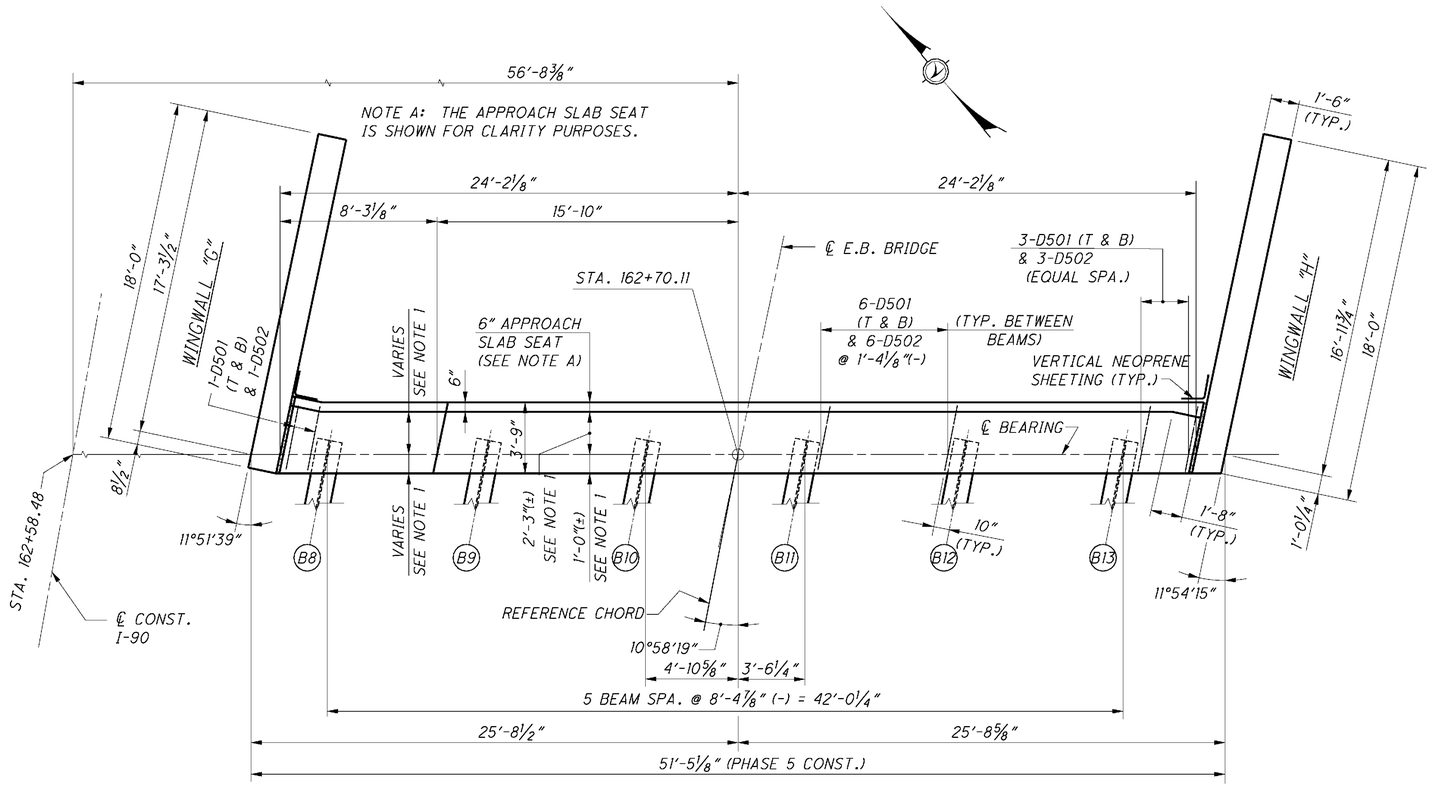

PLAN

(DECK SLAB AND APPROACH SLAB NOT SHOWN)
(FOR LONGITUDINAL REINFORCEMENT, SEE ELEVATION)

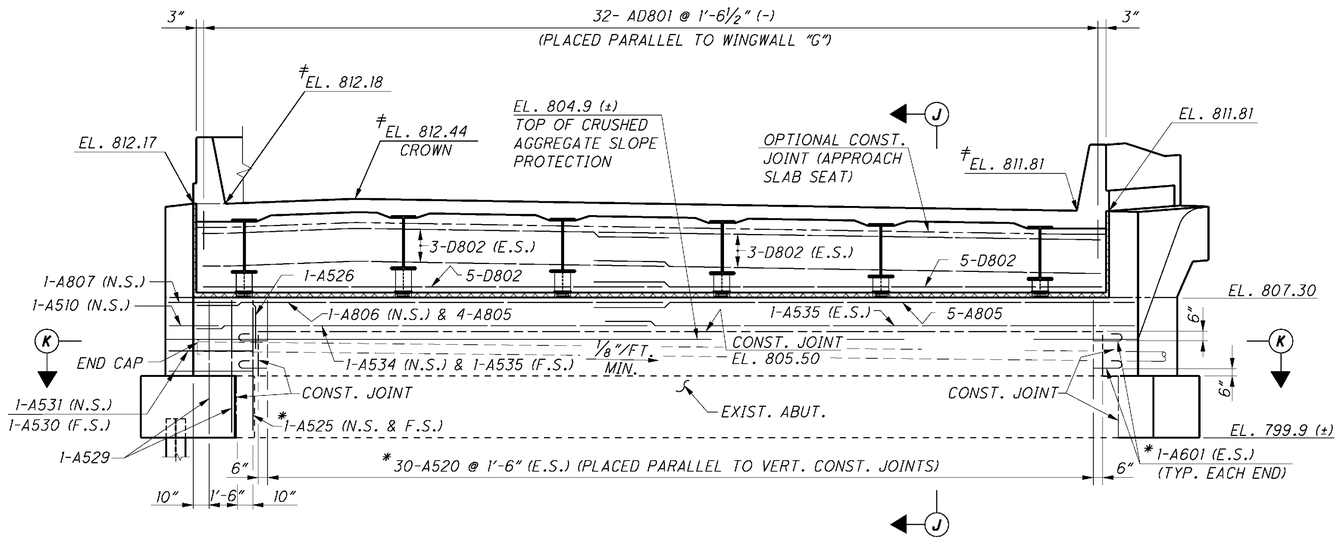

ELEVATION

(EXISTING PILES NOT SHOWN)

LEGEND:

- (B1) BEAM DESIGNATION
- LIMITS OF P.E.J.F.
- LIMITS OF EXPANDED POLYSTYRENE FILLER OR REMOVABLE FORMS.
- ≠ ELEVATION AT ℄ BEARING.
- * DENOTES DOWEL BAR GROUTED 6" INTO EXISTING STRUCTURE. (1'-3" FOR #5 BAR AND 1'-6" FOR #6 BAR)

MINIMUM LAP LENGTHS
NO. 5 BAR = 2'-5"
NO. 8 BAR = 4'-11"

NOTES:

1. ℄ BEARING IS NOT PARALLEL TO FRONT FACE OF ABUTMENT. SEE GEOMETRIC LAYOUT DIAGRAM, SHEET 3/62, FOR LOCATION OF ℄ BEARING.
2. ALL REINFORCING BAR MARKS SHALL BE PREFIXED "R".
3. FOR ABUTMENT REMOVAL DETAILS, SEE SHEET 10/62.
4. FOR REAR ABUTMENT FOOTING PLAN, SEE SHEET 23/62.
5. FOR SECTIONS J-J, SEE SHEET 24/62.
6. FOR SECTION K-K, SEE SHEET 23/62.
7. ABUTMENT DIAPHRAGM CONCRETE, STEEL SUPERSTRUCTURE: PLACE THE CONCRETE ENCASING THE STRUCTURAL STEEL MEMBERS WITH THE DECK CONCRETE OR AT LEAST 48 HOURS BEFORE PLACEMENT OF THE DECK CONCRETE.
8. FOR LIMITS OF SEALING CONCRETE SURFACES, SEE SHEET 24/62.
9. FOR WINGWALL DETAILS, SEE SHEET 25/62.
10. FOR BONDING GROUT NOTE, SEE SHEET 4/62.
11. FOR ABBREVIATIONS, SEE SHEET 5/62.

DESIGN AGENCY
KCI ASSOCIATES OF OHIO, P.A.
388 S. MAIN ST., SUITE 401
AKRON, OHIO 44311

DESIGNED	DRAWN	REVIEWED	DATE
HK	JLS	FJB	6/5/09
CHECKED	REVISED	STRUCTURE FILE NUMBER	
CMK		0404292R	

FORWARD ABUTMENT PLAN AND ELEVATION - RIGHT STRUCTURE

BRIDGE NO. ATB-90-1583 R
I-90 OVER ASHTABULA RIVER

ATB-90-14.25
PID No. 25199

22/62

383
437

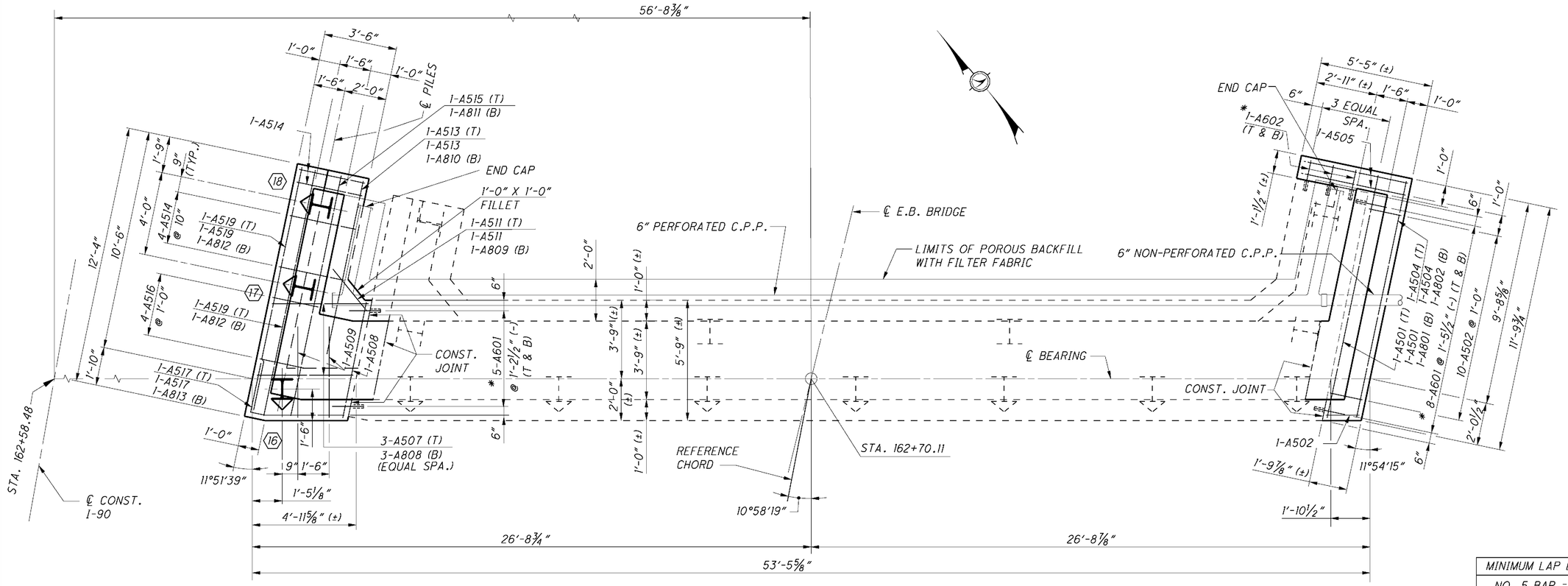

MINIMUM LAP LENGTHS
NO. 5 BAR = 2'-5"

FORWARD ABUTMENT FOOTING PLAN

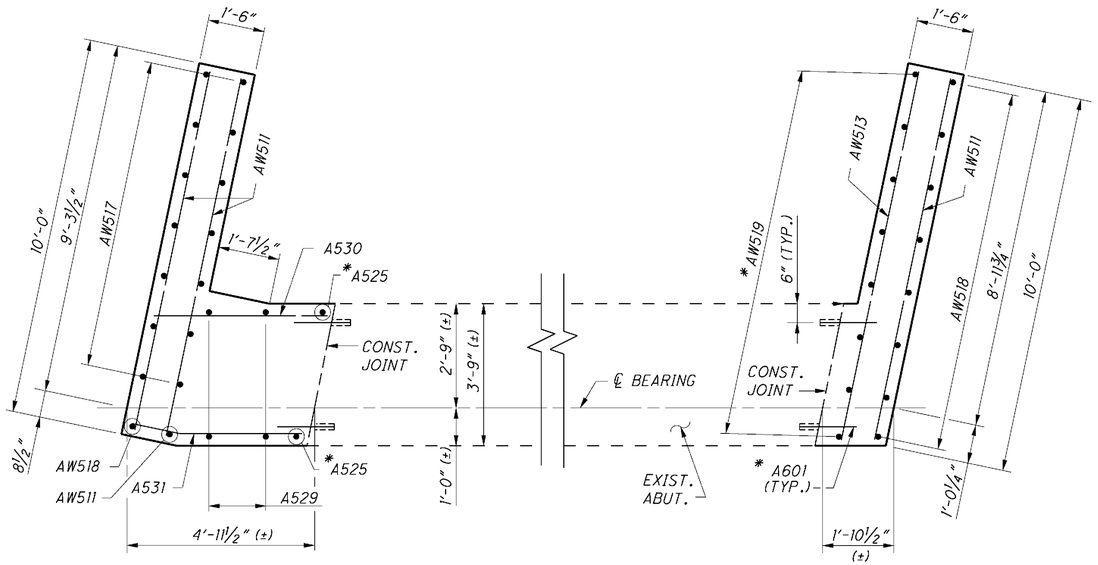

SECTION K-K

LEGEND:

DENOTES BATTERED PILE (1:4)

INDICATES PILE IDENTIFICATION NUMBER.

* DENOTES DOWEL BAR GROUTED INTO EXISTING STRUCTURE. (1'-3" FOR #5 BAR AND 1'-6" FOR #6 BAR.) DOWEL BARS IN THE FOOTING SHALL BE 6" CLEAR FROM THE TOP AND BOTTOM OF EXISTING FOOTING.

NOTES:

1. ALL REINFORCING BAR MARKS SHALL BE PREFIXED "R".
2. ALL PILES ARE HP 12x53 STEEL PILES.
3. FOR ABUTMENT PLAN AND ELEVATION, AND LOCATION OF SECTION K-K, SEE SHEET 22/62 .
4. POROUS BACKFILL WITH FILTER FABRIC, 2 FEET THICK SHALL EXTEND TO THE BOTTOM OF THE AGGREGATE BASE, TO 1 FOOT BELOW THE EMBANKMENT SURFACE, AND LATERALLY TO THE ENDS OF THE WINGWALLS.
5. TERMINATE 6" NON-PERFORATED PIPE AS SHOWN ON STANDARD DRAWING SICD-1-96, SHEET 4 OF 7. PAYMENT FOR CRUSHED AGGREGATE SLOPE PROTECTION SHALL BE INCLUDED IN ITEM 601 - CRUSHED AGGREGATE SLOPE PROTECTION, AS PER PLAN, SEE SHEET 4/62 .
6. FOR ABBREVIATIONS, SEE SHEET 5/62 .
7. FOR CLEANING EXISTING CONCRETE PRIOR TO PLACEMENT OF PROPOSED CONCRETE AND FOR "BONDING GROUT" NOTE, SEE SHEET 4/62 .
8. FOR ADDITIONAL FOOTING REINFORCING, SEE SHEETS 22/62 AND 26/62 .

DESIGN AGENCY
KCI ASSOCIATES OF OHIO, P.A.
388 S. MAIN ST., SUITE 401
AKRON, OHIO 44311

DESIGNED	DRAWN	REVIEWED	DATE
HK	JLS	FJB	6/5/09
CHECKED	REVISED	STRUCTURE FILE NUMBER	
CMK		0404292R	

FORWARD ABUTMENT DETAILS - RIGHT STRUCTURE
BRIDGE NO. ATB-90-1583 R
I-90 OVER ASHTABULA RIVER

ATB-90-14.25
PID No. 25199

23/62

384
437

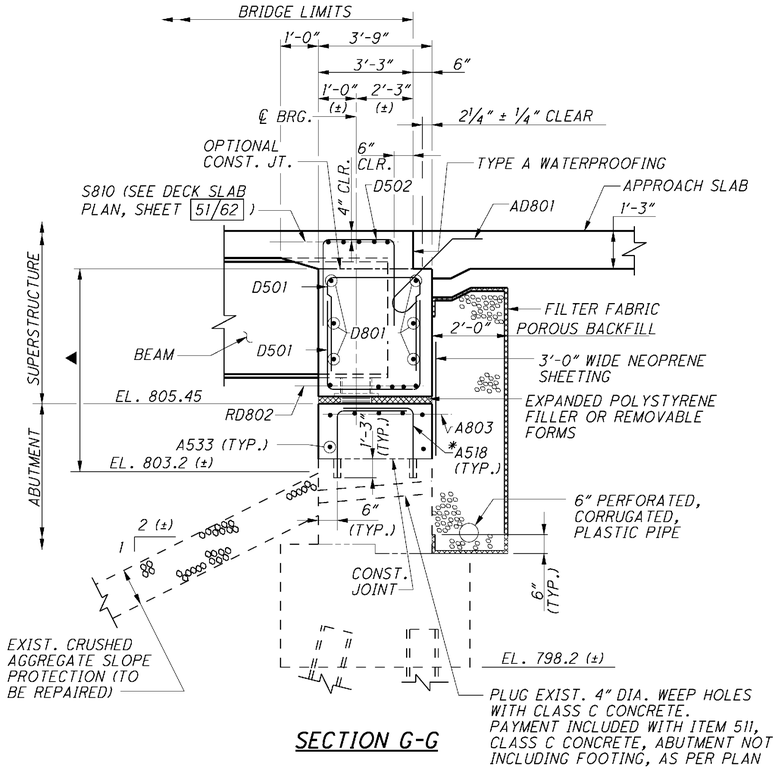

SECTION G-G

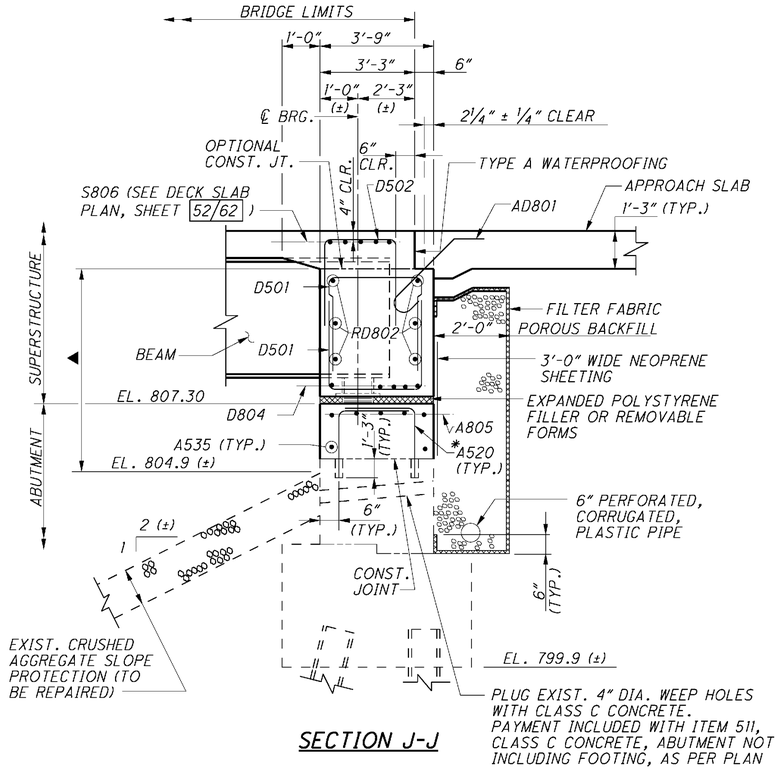

SECTION J-J

LEGEND

▲ LIMITS OF ITEM 512 - SEALING OF CONCRETE SURFACES (EPOXY-URETHANE)

* DENOTES DOWEL BAR GROUTED INTO EXISTING STRUCTURE

NOTES

1. PREFIX "R" SHALL BE ADDED TO ALL REBAR MARKS SHOWN FOR RIGHT STRUCTURE.
2. FOR REAR ABUTMENT PLAN AND ELEVATION, LOCATION OF SECTION G-G AND ADDITIONAL NOTES, SEE SHEETS 20/62 AND 21/62 .
3. FOR FORWARD ABUTMENT PLAN AND ELEVATION, LOCATION OF SECTION J-J AND ADDITIONAL NOTES, SEE SHEETS 22/62 AND 23/62 .
4. TYPE A WATERPROOFING SHALL BE INCLUDED WITH ITEM 526 - REINFORCED CONCRETE APPROACH SLABS (T=15") AS PER PLAN, FOR PAYMENT.
5. FOR ABBREVIATIONS, SEE SHEET 5/62 .

DESIGN AGENCY
KCI ASSOCIATES OF OHIO, P.A.
388 S. MAIN ST., SUITE 401
AKRON, OHIO 44311

DESIGNED	DRAWN	REVIEWED	DATE
HK	JLS	FJB	6/5/09
CHECKED	REVISED	STRUCTURE FILE NUMBER	
CMK		0404292R	

ABUTMENT DETAILS - RIGHT STRUCTURE
BRIDGE NO. ATB-90-1583 R
I-90 OVER ASHTABULA RIVER

ATB-90-14.25
PID No. 25199

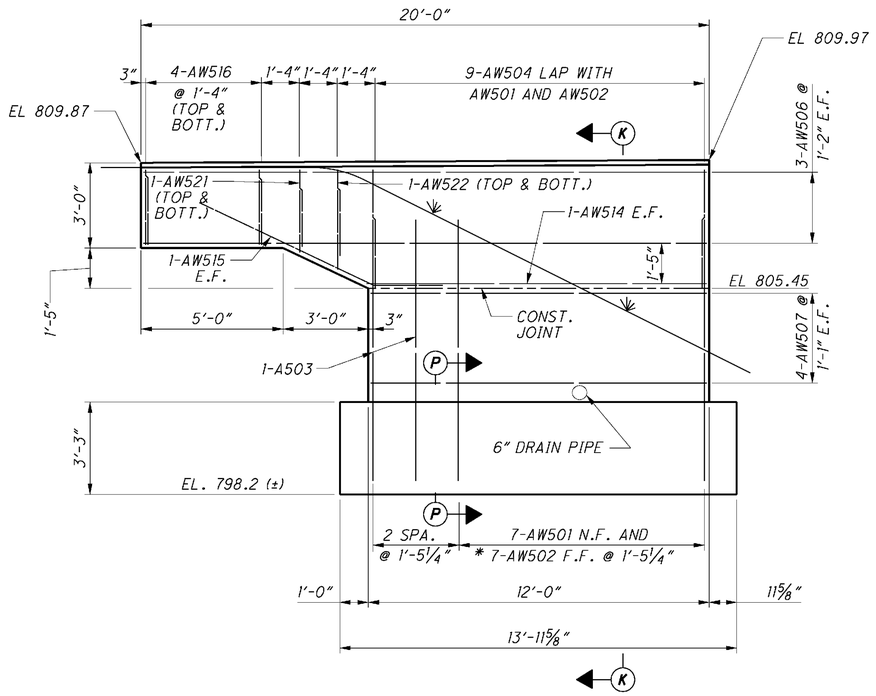

WINGWALL "E" ELEVATION

(PHASE 5 CONST.)

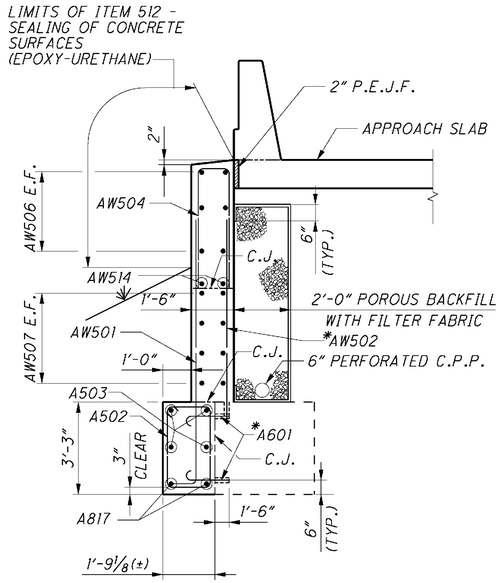

SECTION K-K

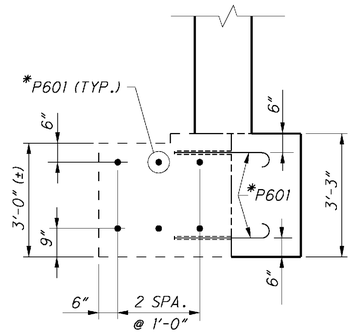

SECTION P-P

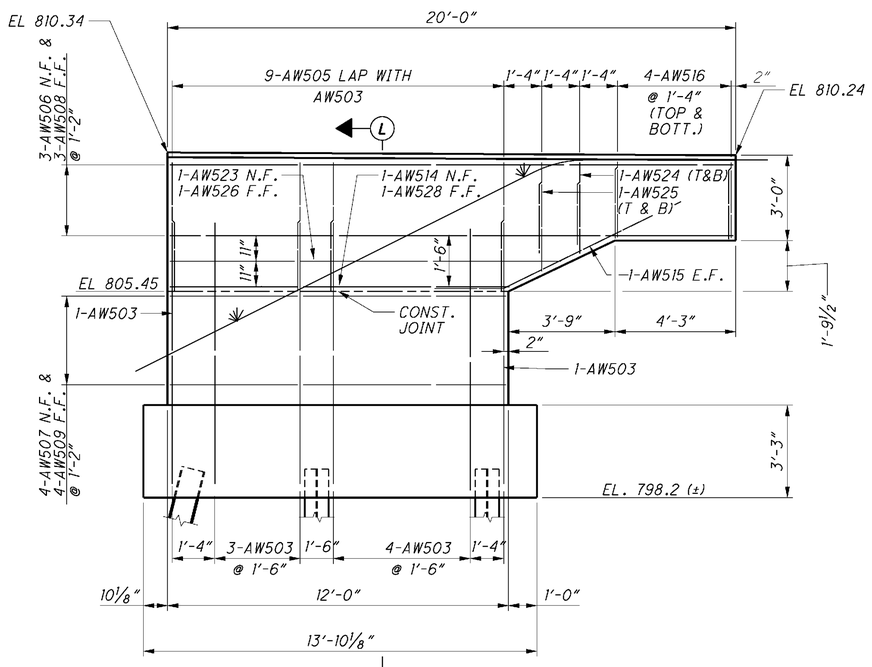

WINGWALL "F" ELEVATION

(PHASE 5 CONST.)

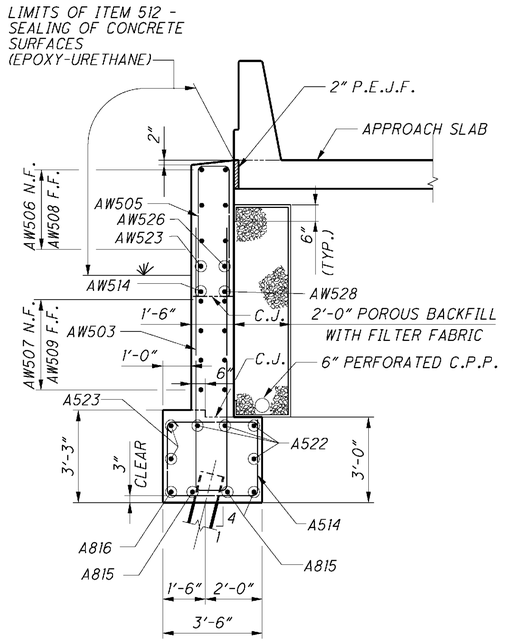

SECTION L-L

MINIMUM LAP LENGTHS
NO. 5 BAR = 2'-5"

LEGEND

* DENOTES DOWEL BAR GROUTED INTO EXISTING STRUCTURE. (1'-3" FOR #5 BAR AND 1'-6" FOR #6 BAR)

NOTES:

1. ALL REINFORCING BAR MARKS SHALL BE PREFIXED "R".
2. FOR ABUTMENT REMOVAL DETAILS, SEE SHEET 10/62.
3. FOR FORWARD ABUTMENT FOOTING PLAN, SEE SHEET 21/62.
4. FOR ABBREVIATIONS, SEE SHEET 5/62.

DESIGN AGENCY
KCI ASSOCIATES OF OHIO, P.A.
388 S. MAIN ST., SUITE 401
AKRON, OHIO 44311

DESIGNED	DRAWN	REVIEWED	DATE
HK	SAC	FJB	6/5/09
CHECKED	REVISED	STRUCTURE TILE NUMBER	
CMK		0404292R	

REAR ABUTMENT WINGWALL DETAILS - RIGHT STRUCTURE
BRIDGE NO. ATB-90-1583 R
I-90 OVER ASHTABULA RIVER

ATB-90-14.25
PID No. 25199

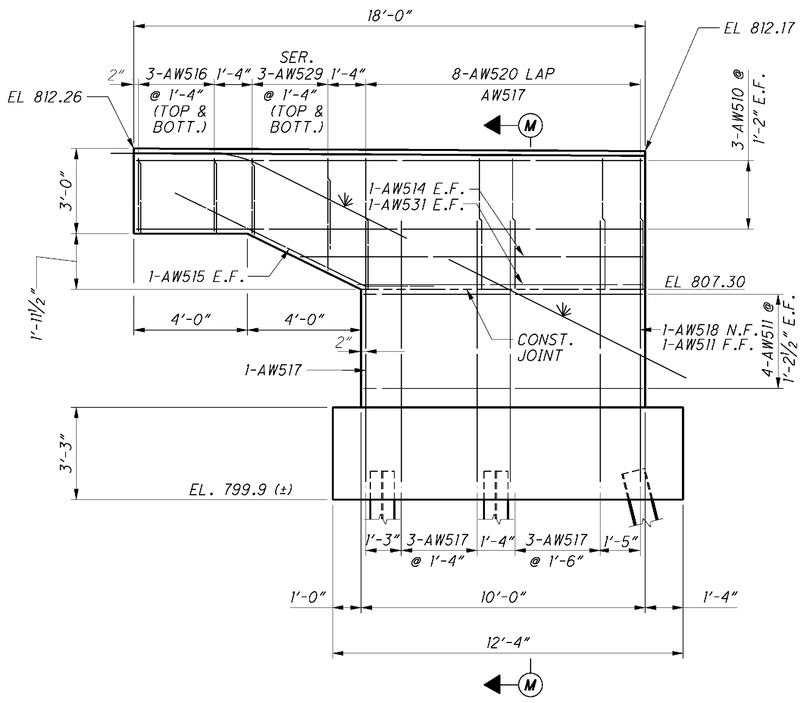

WINGWALL "G" ELEVATION

(PHASE 5 CONST.)

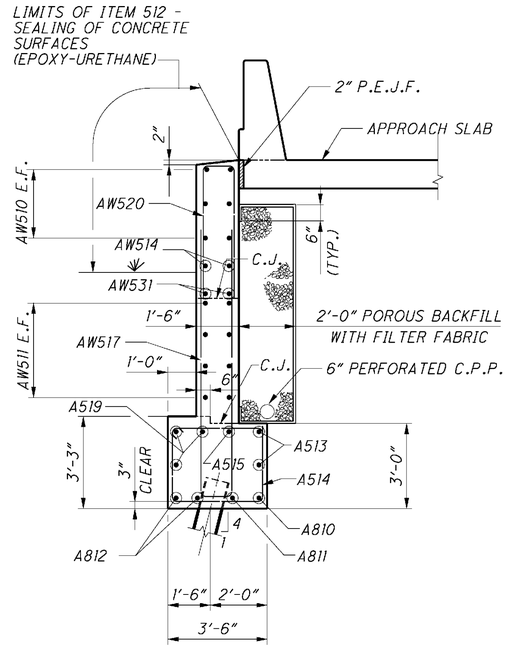

SECTION M-M

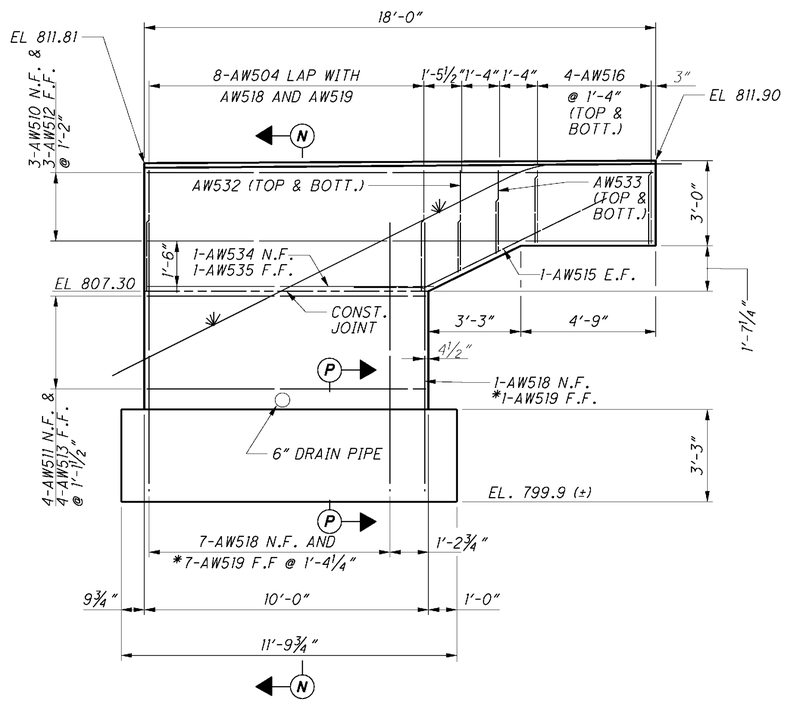

WINGWALL "H" ELEVATION

(PHASE 5 CONST.)

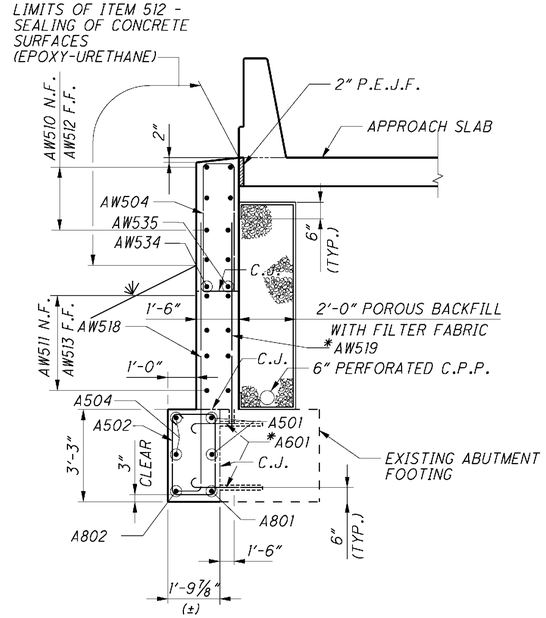

SECTION N-N

MINIMUM LAP LENGTHS
NO. 5 BAR = 2'-5"

LEGEND

* DENOTES DOWEL BAR GROUTED INTO EXISTING STRUCTURE. (1'-3" FOR #5 BAR AND 1'-6" FOR #6 BAR)

NOTES:

1. ALL REINFORCING BAR MARKS SHALL BE PREFIXED "R".
2. FOR ABUTMENT REMOVAL DETAILS, SEE SHEET 10/62.
3. FOR FORWARD ABUTMENT FOOTING PLAN, SEE SHEET 23/62.
4. FOR ABBREVIATIONS, SEE SHEET 5/62.
5. FOR SECTION P-P SEE SHEET 25/62.

DESIGN AGENCY
KCI ASSOCIATES OF OHIO, P.A.
388 S. MAIN ST., SUITE 401
AKRON, OHIO 44311

DESIGNED	DRAWN	REVIEWED	DATE
HK	SAC	FJB	6/5/09
CHECKED	REVISED	STRUCTURE FILE NUMBER	
CMK		0404292R	

FORWARD ABUTMENT WINGWALL DETAILS - RIGHT STRUCTURE
BRIDGE NO. ATB-90-1583 R
I-90 OVER ASHTABULA RIVER

ATB-90-14.25
PID No. 25199

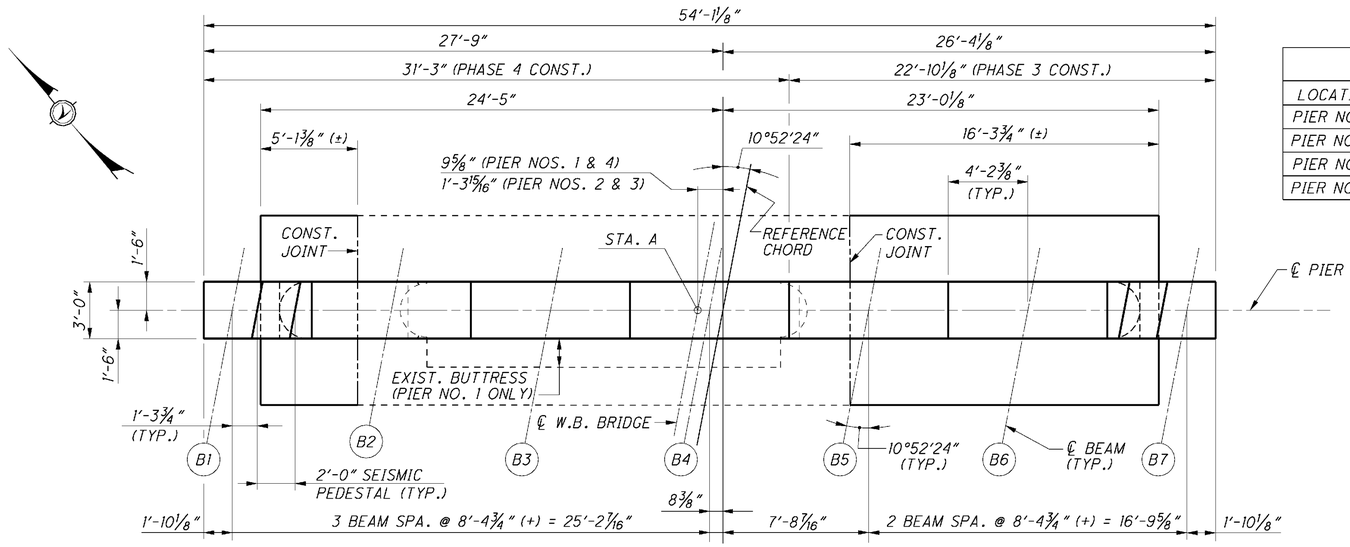

PLAN

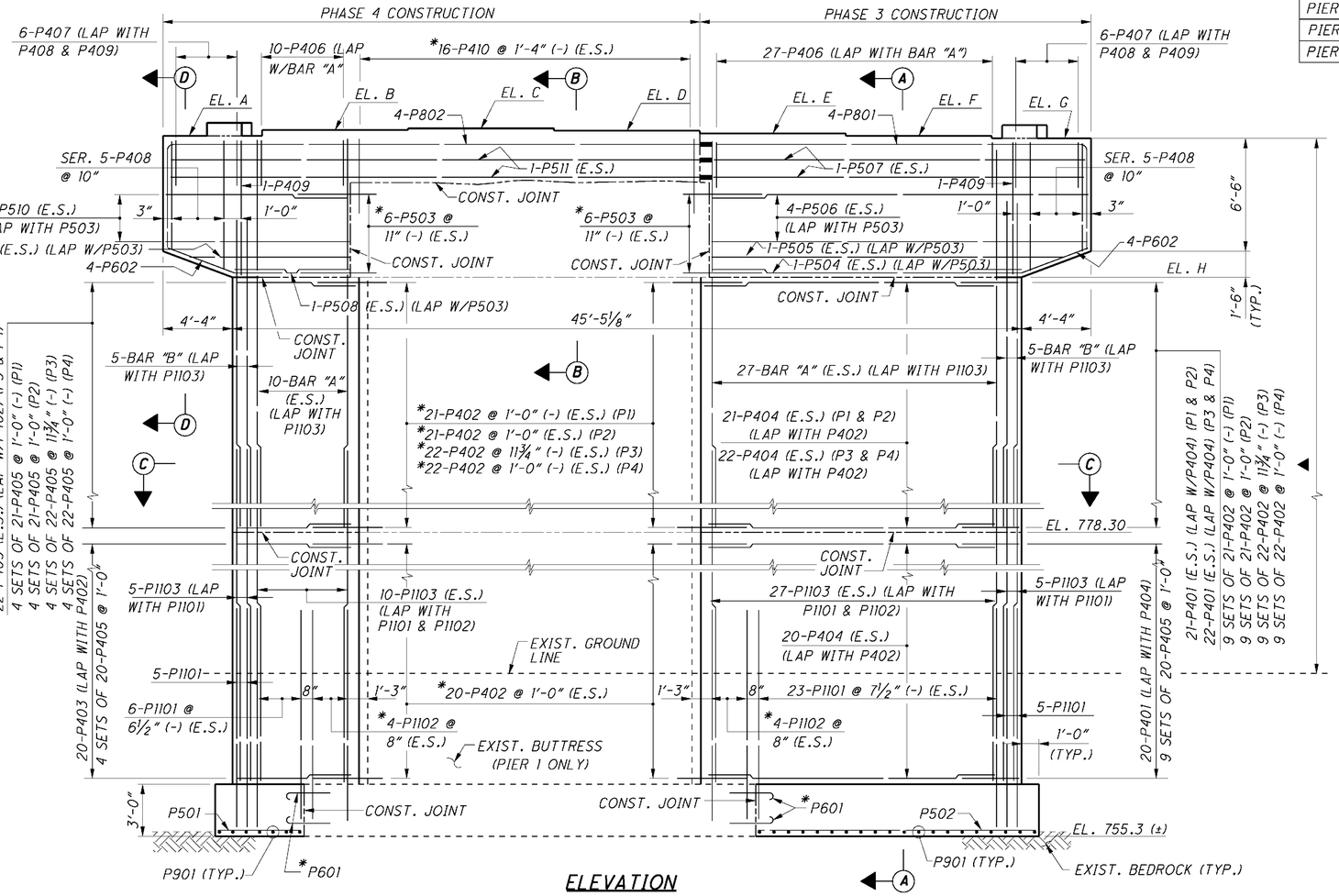

ELEVATION

STATIONS AND ELEVATIONS

LOCATION	STA. A	EL. A	EL. B	EL. C	EL. D	EL. E	EL. F	EL. G	EL. H
PIER NO. 1	159+49.13	806.59	806.93	807.02	806.88	806.73	806.59	806.45	798.45
PIER NO. 2	160+28.71	807.01	807.35	807.40	807.26	807.12	806.98	806.84	798.84
PIER NO. 3	161+08.18	807.41	807.74	807.80	807.66	807.52	807.38	807.24	799.24
PIER NO. 4	161+88.05	807.78	808.12	808.21	808.07	807.93	807.79	807.65	799.65

BAR MARKS

LOCATION	BAR "A"	BAR "B"
PIER NO. 1	P1104	P1108
PIER NO. 2	P1105	P1109
PIER NO. 3	P1106	P1110
PIER NO. 4	P1107	P1111

MINIMUM LAP LENGTHS
NO. 4 BAR = 1'-11"
NO. 5 BAR = 2'-5"
NO. 11 BAR = 12'-7"

LEGEND

(B1) BEAM DESIGNATION

* DENOTES DOWEL BAR GROUTED INTO EXISTING STRUCTURE AS FOLLOWS:
NO. 4 BAR = 1'-0" EXCEPT P402 BAR
P402 BAR = 1'-1"
NO. 5 BAR = 1'-3"
NO. 6 BAR = 1'-6"
NO. 11 BAR = 2'-0"
DOWEL BARS SHALL BE PLACED 6" FROM THE EDGE OF THE EXISTING STRUCTURE, UNLESS NOTED OTHERWISE.

—▬— DENOTES MECHANICAL CONNECTOR.

▲ LIMITS OF ITEM 512 - SEALING CONCRETE SURFACES (EPOXY URETHANE)

NOTES

1. ALL REINFORCING BAR MARKS SHALL BE PREFIXED "L".
2. FOR GEOMETRIC LAYOUT DIAGRAM, SEE SHEET 3/62 .
3. FOR SECTION A-A THRU D-D, AND SEISMIC PEDESTAL DETAILS, SEE SHEET 29/62 .
4. FOR FOOTING PLAN, SEE SHEET 28/62.
5. FOR ELASTOMERIC BEARING, SEE SHEET 33/62.
6. FOR CLEANING EXISTING CONCRETE PRIOR TO PLACEMENT OF PROPOSED CONCRETE AND FOR "BONDING GROUT" NOTE, SEE SHEET 4/62 .
7. FOR ABBREVIATIONS, SEE SHEET 5/62.

DESIGN AGENCY
KCI ASSOCIATES OF OHIO, P.A.
388 S. MAIN ST., SUITE 401
AKRON, OHIO 44311

DESIGNED CMK | DRAWN WEB | REVIEWED FJB | DATE 6/5/09
CHECKED HK | REVISED | STRUCTURE FILE NUMBER 0404268L

PIER DETAILS - LEFT STRUCTURE

BRIDGE NO. ATB-90-1583 L
I-90 OVER ASHTABULA RIVER

ATB-90-14.25
PID No. 25199

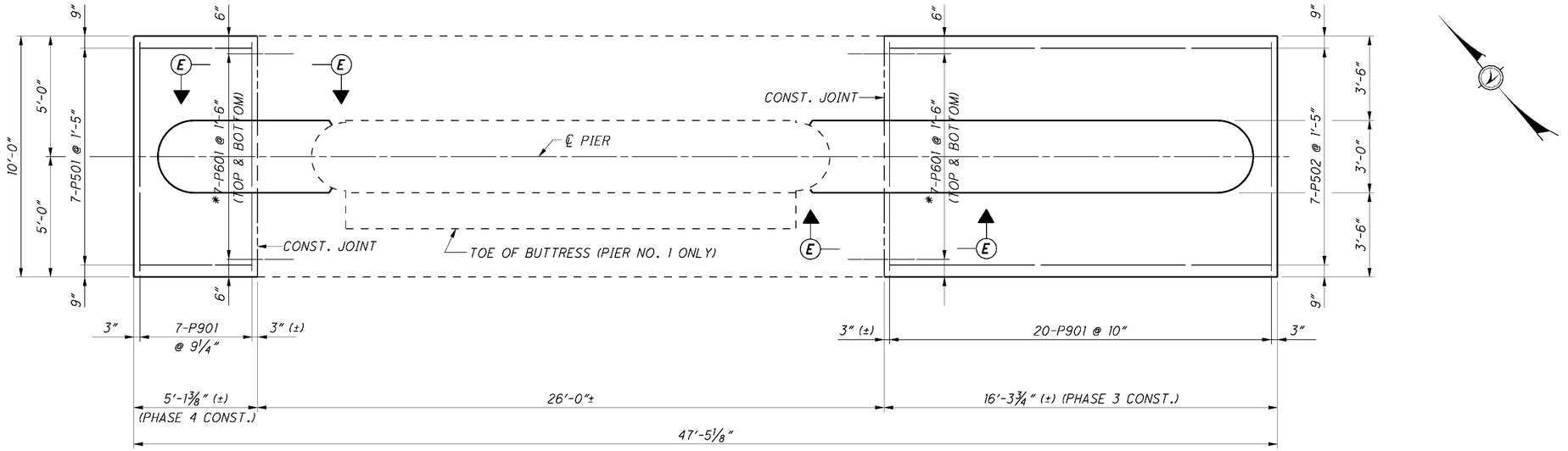

FOOTING PLAN

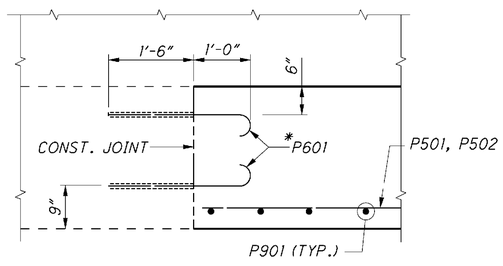

SECTION E-E

LEGEND

* DENOTES DOWEL BAR GROUTED INTO EXISTING STRUCTURE. (1'-6" FOR #6 BAR.)

NOTES:

1. ALL REINFORCING BAR MARKS SHALL BE PREFIXED "L".
2. FOR PIER PLAN AND ELEVATION, SEE SHEET 27/62.
3. FOR ABBREVIATIONS, SEE SHEET 5/62.

DESIGN AGENCY
KCI ASSOCIATES OF OHIO, P.A.
388 S. MAIN ST., SUITE 401
AKRON, OHIO 44311

DESIGNED	DRAWN	REVIEWED	DATE
CMK	WEB	FJB	6/5/09
CHECKED	REVISED	STRUCTURE FILE NUMBER	
HK		04042681	

PIER FOOTING DETAILS - LEFT STRUCTURE
BRIDGE NO. ATB-90-1583 L
I-90 OVER ASHTABULA RIVER

ATB-90-14.25
PID No. 25199

28/62

389/437

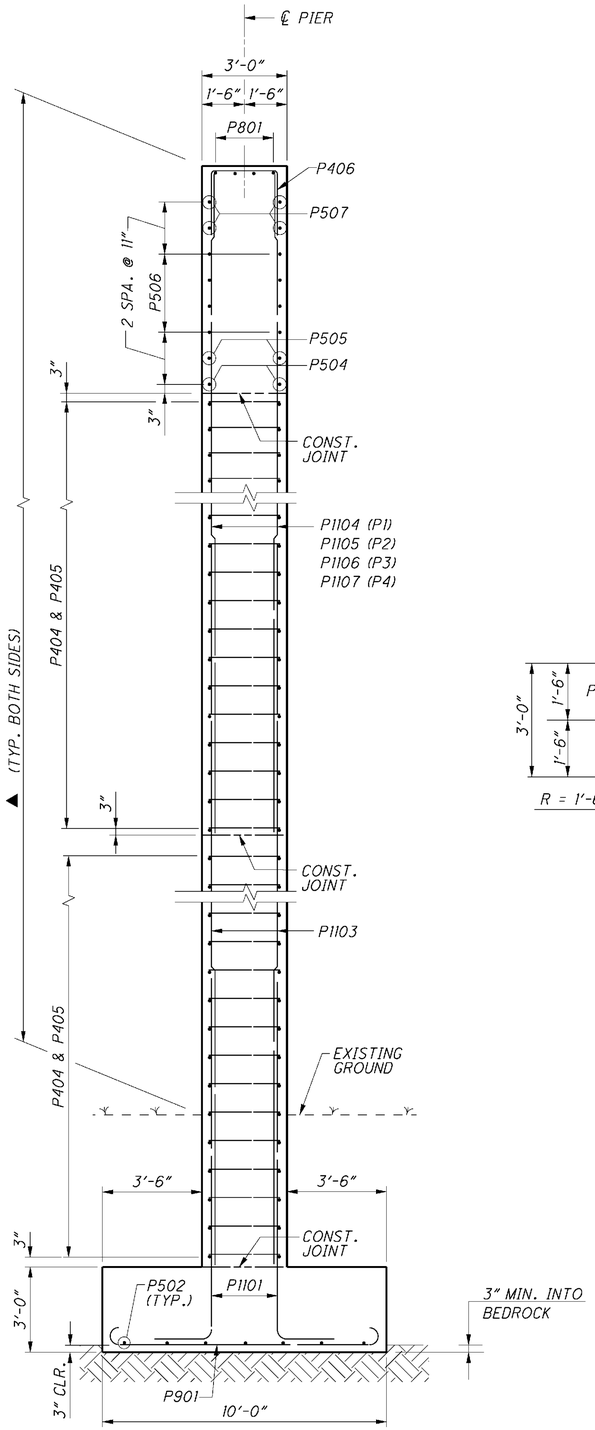

SECTION A-A

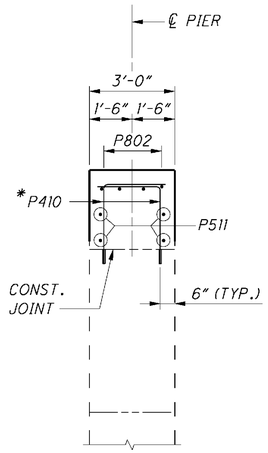

SECTION B-B

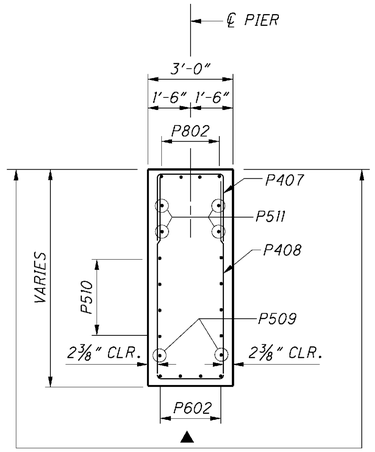

SECTION D-D

MINIMUM LAP LENGTHS
NO. 4 BAR = 1'-11"
NO. 5 BAR = 2'-5"
NO. 11 BAR = 12'-7"

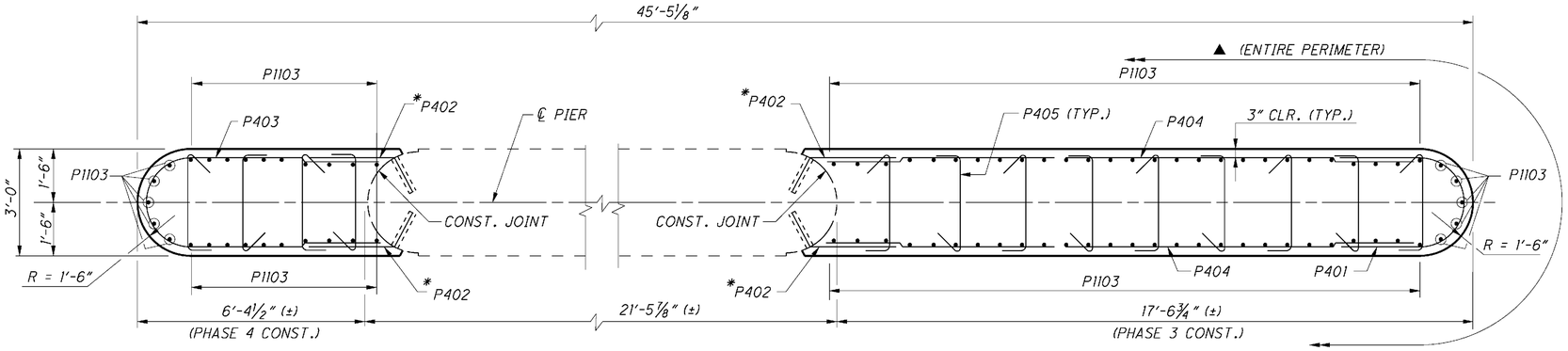

SECTION C-C

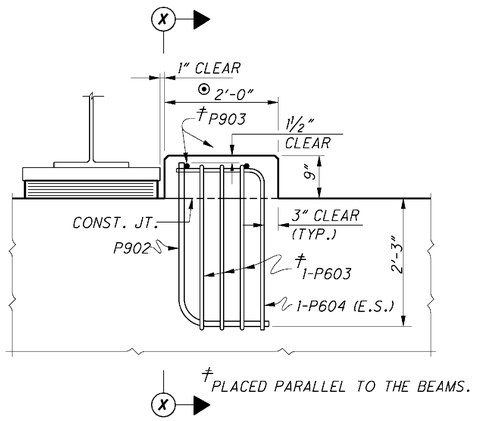

SEISMIC PEDESTAL DETAIL

(FRONT VIEW AT BEAM B1 SHOWN, FRONT VIEW AT BEAM B7 OPPOSITE HAND)

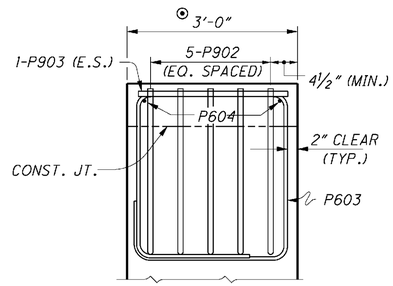

SECTION X-X

NOTES:
THE LOCATION OF THE MAIN REINFORCEMENT IN THE CAP BEAM MAY BE ADJUSTED HORIZONTALLY ±1" TO ACCOMMODATE THE P902 BARS.

⊙ - THE TOP SURFACE OF THE CAP BEAM IN THIS AREA SHALL BE FINISHED WITH A SERRATED TROWEL. THE SERRATIONS SHALL BE 1/4" DEEP MINIMUM.

LEGEND

* DENOTES DOWEL BAR GROUTED INTO EXISTING STRUCTURE AS FOLLOWS:
NO. 4 BAR = 1'-0" EXCEPT P402 BAR
P402 BAR = 1'-1"

▲ LIMITS OF ITEM 512 - SEALING CONCRETE SURFACES (EPOXY URETHANE)

NOTES

1. ALL REINFORCING BAR MARKS SHALL BE PREFIXED "L".
2. FOR LOCATION OF SECTIONS A-A THROUGH D-D AND ADDITIONAL NOTES, SEE SHEET 27/62.
3. FOR ABBREVIATIONS, SEE SHEET 5/62.

DESIGN AGENCY
KCI ASSOCIATES OF OHIO, P.A.
388 S. MAIN ST., SUITE 401
AKRON, OHIO 44311

DESIGNED	DRAWN	REVIEWED	DATE
HK	WEB	FJB	6/5/09
CHECKED	REVISED	STRUCTURE FILE NUMBER	
CMK		0404268L	

PIER DETAILS - LEFT STRUCTURE
BRIDGE NO. ATB-90-1583 L
I-90 OVER ASHTABULA RIVER

ATB-90-14.25
PID No. 25199

29/62

390/437

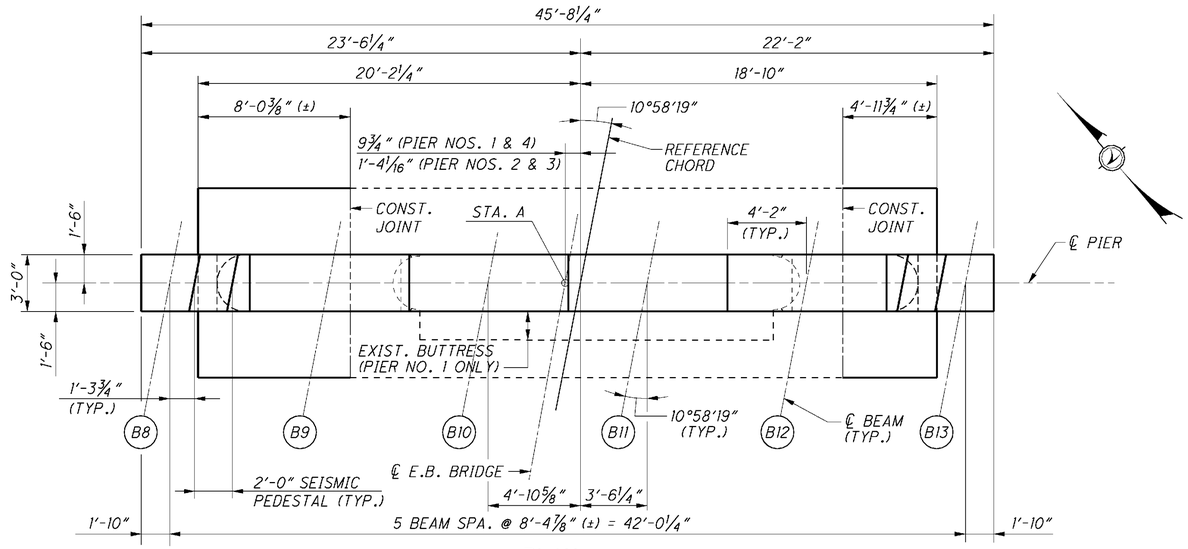

PLAN
(PHASE 5 CONSTRUCTION)

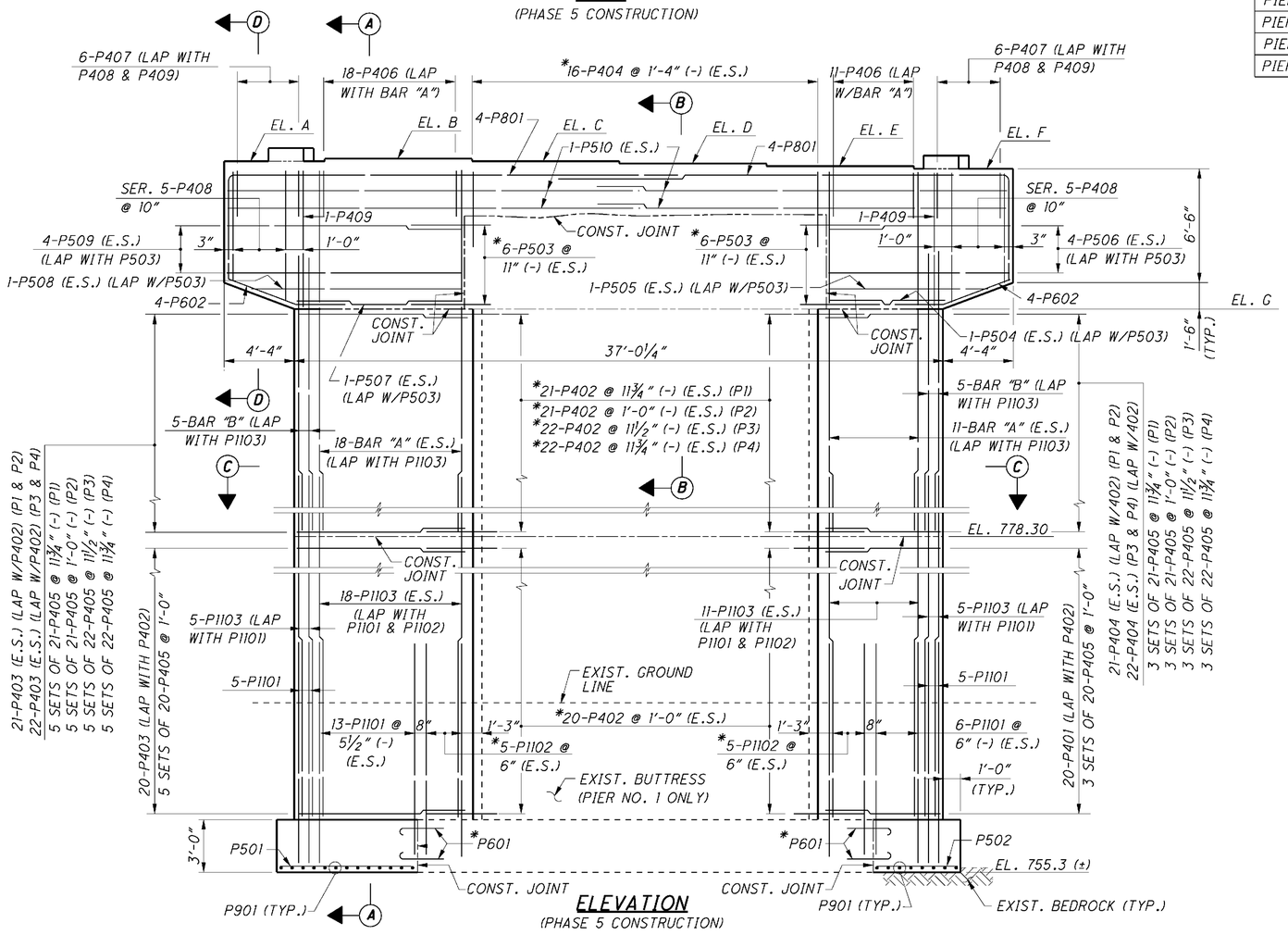

ELEVATION
(PHASE 5 CONSTRUCTION)

STATIONS AND ELEVATIONS								
LOCATION	STA. A	EL. A	EL. B	EL. C	EL. D	EL. E	EL. F	EL. G
PIER NO. 1	159+64.92	806.53	806.68	806.54	806.40	806.26	806.11	798.11
PIER NO. 2	160+45.15	806.95	807.07	806.93	806.79	806.65	806.51	798.51
PIER NO. 3	161+25.49	807.35	807.47	807.33	807.19	807.05	806.91	798.91
PIER NO. 4	162+05.97	807.73	807.88	807.74	807.60	807.46	807.32	799.32

BAR MARKS		
LOCATION	BAR "A"	BAR "B"
PIER NO. 1	P1104	P1108
PIER NO. 2	P1105	P1109
PIER NO. 3	P1106	P1110
PIER NO. 4	P1107	P1111

MINIMUM LAP LENGTHS
NO. 4 BAR = 1'-11"
NO. 5 BAR = 2'-5"
NO. 8 BAR = 6'-10"
NO. 11 BAR = 12'-7"

LEGEND

(B8) BEAM DESIGNATION

* DENOTES DOWEL BAR GROUTED INTO EXISTING STRUCTURE AS FOLLOWS:
NO. 4 BAR = 1'-0" EXCEPT P402 BAR
P402 BAR = 1'-1"
NO. 5 BAR = 1'-3"
NO. 6 BAR = 1'-6"
NO. 11 BAR = 2'-0"
DOWEL BARS SHALL BE PLACED 6" FROM THE EDGE OF THE EXISTING STRUCTURE, UNLESS NOTED OTHERWISE.

▲ LIMITS OF ITEM 512 - SEALING CONCRETE SURFACES (EPOXY URETHANE)

NOTES

1. ALL REINFORCING BAR MARKS SHALL BE PREFIXED "R".
2. FOR GEOMETRIC LAYOUT DIAGRAM, SEE SHEET 3/62 .
3. FOR SECTION A-A THRU D-D, AND SEISMIC PEDESTAL DETAILS, SEE SHEET 32/62 .
4. FOR FOOTING PLAN, SEE SHEET 31/62.
5. FOR ELASTOMERIC BEARING, SEE SHEET 33/62.
6. FOR CLEANING EXISTING CONCRETE PRIOR TO PLACEMENT OF PROPOSED CONCRETE AND FOR "BONDING GROUT" NOTE, SEE SHEET 4/62 .
7. FOR ABBREVIATIONS, SEE SHEET 5/62.

DESIGN AGENCY
KCI ASSOCIATES OF OHIO, P.A.
388 S. MAIN ST., SUITE 401
AKRON, OHIO 44311

DESIGNED CMK | DRAWN WEB | REVIEWED FJB | DATE 6/5/09
CHECKED HK | REVISED | STRUCTURE FILE NUMBER 0404292R

PIER DETAILS - RIGHT STRUCTURE
BRIDGE NO. ATB-90-1583 R
I-90 OVER ASHTABULA RIVER

ATB-90-14.25
PID No. 25199

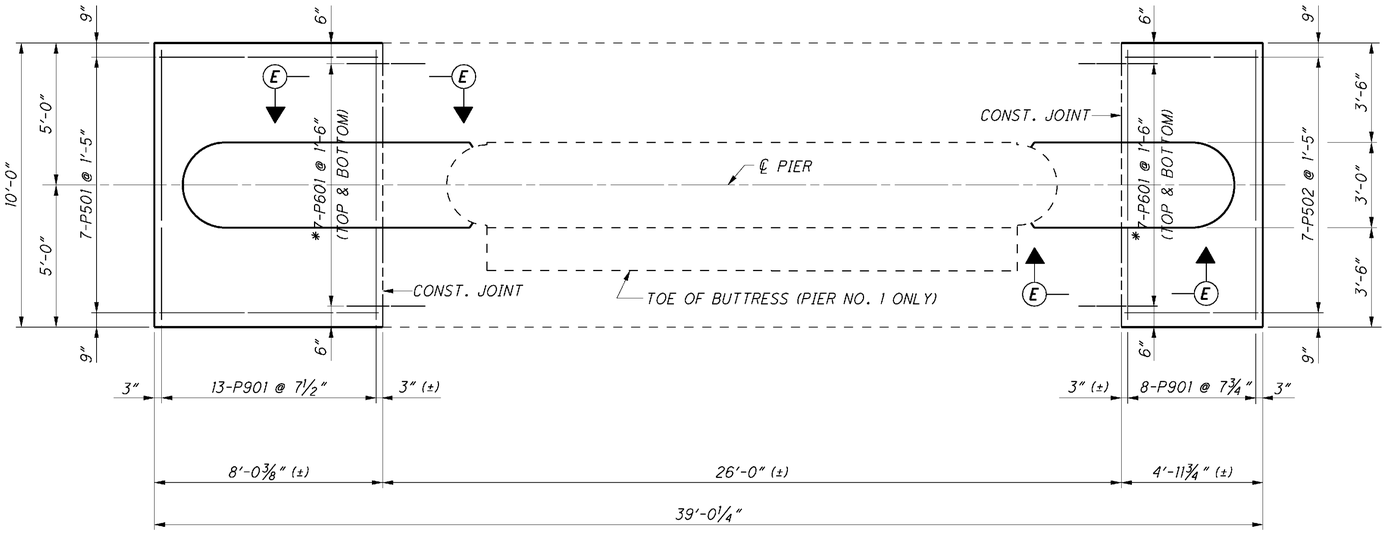

FOOTING PLAN
(PHASE 5 CONSTRUCTION)

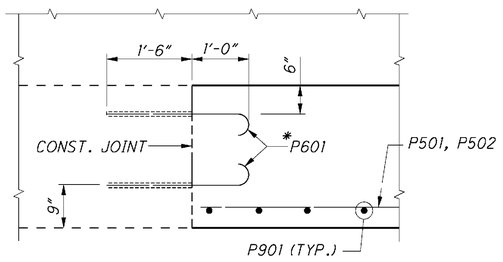

SECTION E-E

LEGEND

* DENOTES DOWEL BAR GROUTED INTO EXISTING STRUCTURE. (1'-6" FOR #6 BAR.)

NOTES:

1. ALL REINFORCING BAR MARKS SHALL BE PREFIXED "R".
2. FOR PIER PLAN AND ELEVATION, SEE SHEET 30/62.
3. FOR ABBREVIATIONS, SEE SHEET 5/62.

DESIGN AGENCY
KCI ASSOCIATES OF OHIO, P.A.
388 S. MAIN ST., SUITE 401
AKRON, OHIO 44311

DESIGNED	DRAWN	REVIEWED	DATE
CMK	WEB	FJB	6/5/09
CHECKED	REVISED	STRUCTURE FILE NUMBER	
HK		0404292R	

PIER FOOTING DETAILS - RIGHT STRUCTURE
BRIDGE NO. ATB-90-1583 R
I-90 OVER ASHTABULA RIVER

ATB-90-14.25
PID No. 25199

31/62

392
437

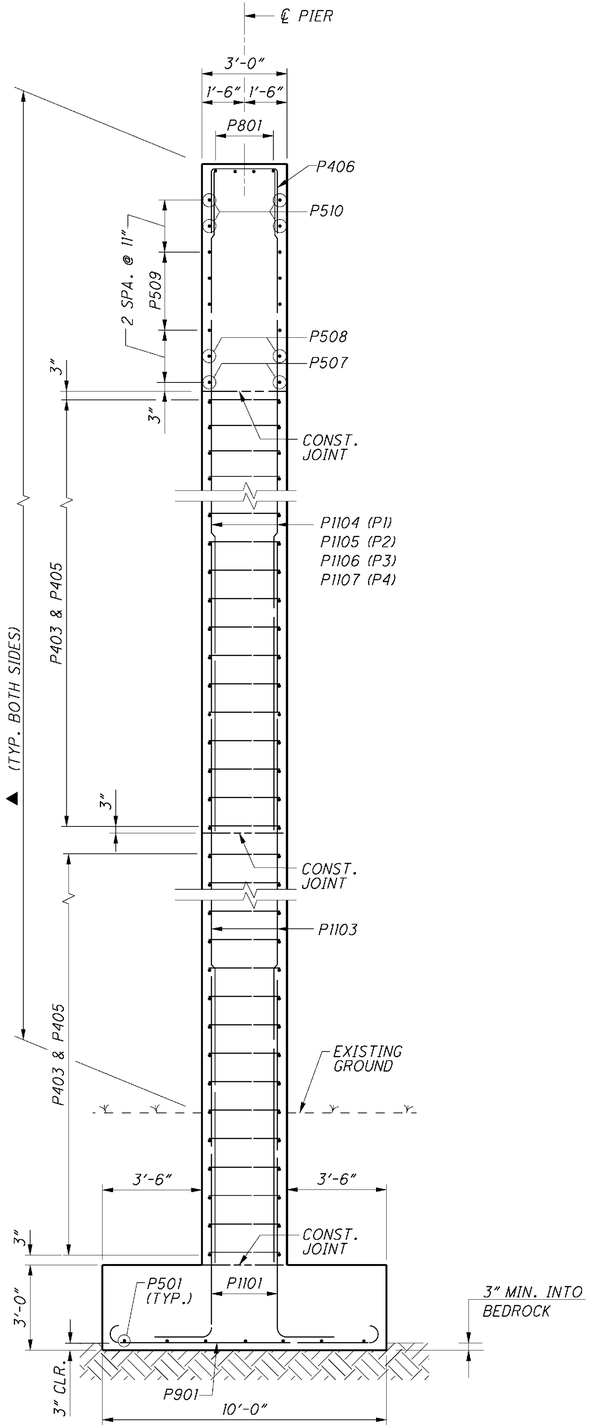

SECTION A-A

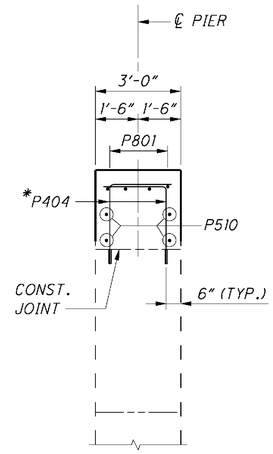

SECTION B-B

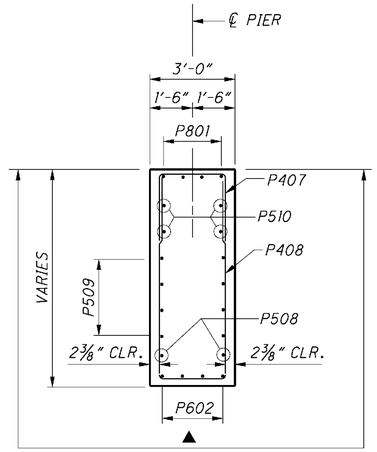

SECTION D-D

MINIMUM LAP LENGTHS
NO. 4 BAR = 1'-11"
NO. 5 BAR = 2'-5"
NO. 11 BAR = 12'-7"

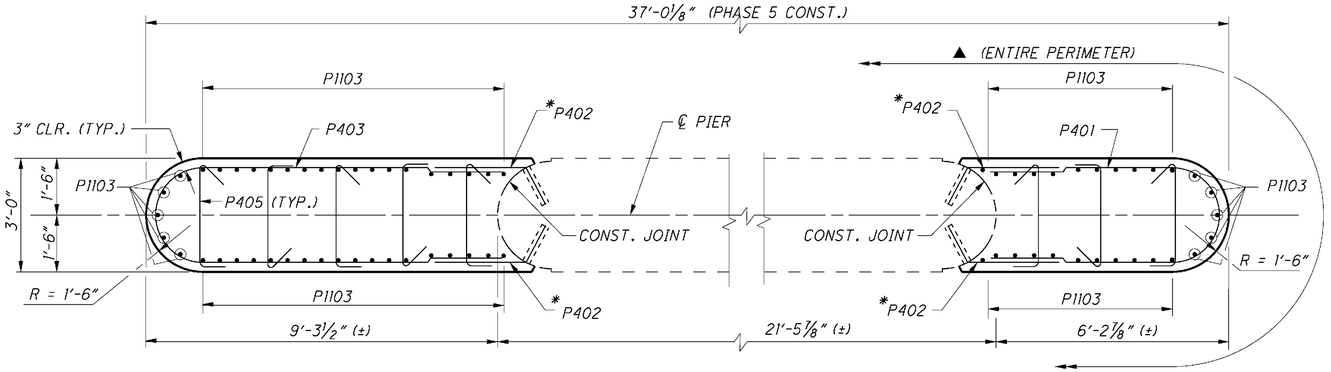

SECTION C-C
(PHASE 5 CONSTRUCTION)

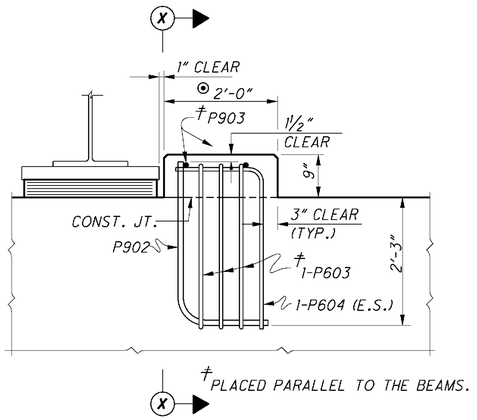

SEISMIC PEDESTAL DETAIL
(FRONT VIEW AT BEAM B8 SHOWN, FRONT VIEW AT BEAM B13 OPPOSITE HAND)

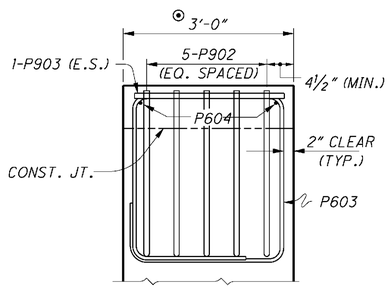

SECTION X-X

NOTES:
THE LOCATION OF THE MAIN REINFORCEMENT IN THE CAP BEAM MAY BE ADJUSTED HORIZONTALLY ±1" TO ACCOMMODATE THE P902 BARS.

⊙ - THE TOP SURFACE OF THE CAP BEAM IN THIS AREA SHALL BE FINISHED WITH A SERRATED TROWEL. THE SERRATIONS SHALL BE ¼" DEEP MINIMUM.

LEGEND

* DENOTES DOWEL BAR GROUTED INTO EXISTING STRUCTURE AS FOLLOWS:
NO. 4 BAR = 1'-0" EXCEPT P402 BAR
P402 BAR = 1'-1"

▲ LIMITS OF ITEM 512 - SEALING CONCRETE SURFACES (EPOXY URETHANE)

NOTES

1. ALL REINFORCING BAR MARKS SHALL BE PREFIXED "R".
2. FOR LOCATION OF SECTIONS A-A THROUGH D-D AND ADDITIONAL NOTES, SEE SHEET 30/62.
3. FOR ABBREVIATIONS, SEE SHEET 5/62.

DESIGN AGENCY
KCI ASSOCIATES OF OHIO, P.A.
388 S. MAIN ST., SUITE 401
AKRON, OHIO 44311

DESIGNED	DRAWN	REVIEWED	DATE
HK	WEB	FJB	6/5/09
CHECKED	REVISED	STRUCTURE FILE NUMBER	
CMK		0404292R	

PIER DETAILS - RIGHT STRUCTURE
BRIDGE NO. ATB-90-1583 R
I-90 OVER ASHTABULA RIVER

ATB-90-14.25
PID No. 25199

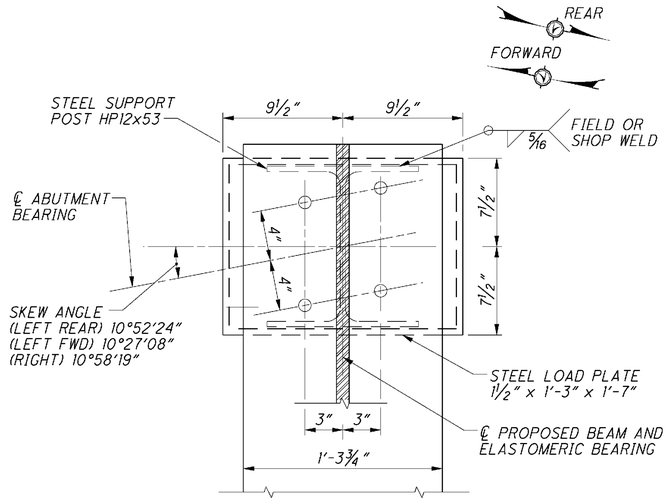

PLAN AT ABUTMENTS

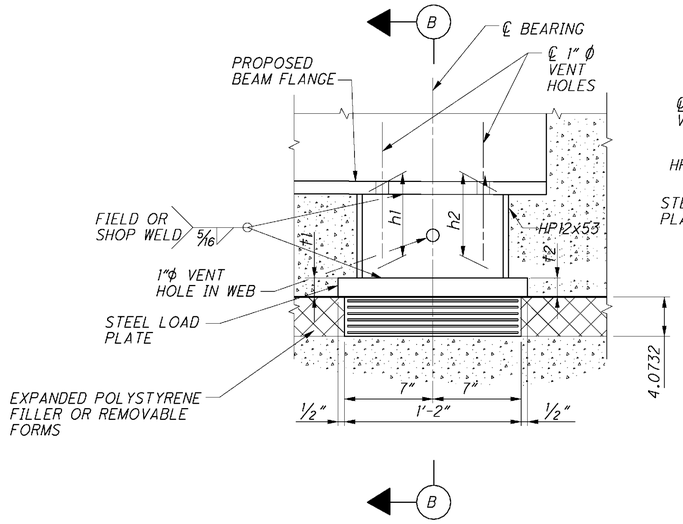

ABUTMENT BEARING ELEVATION

(50 DUROMETER HARDNESS)

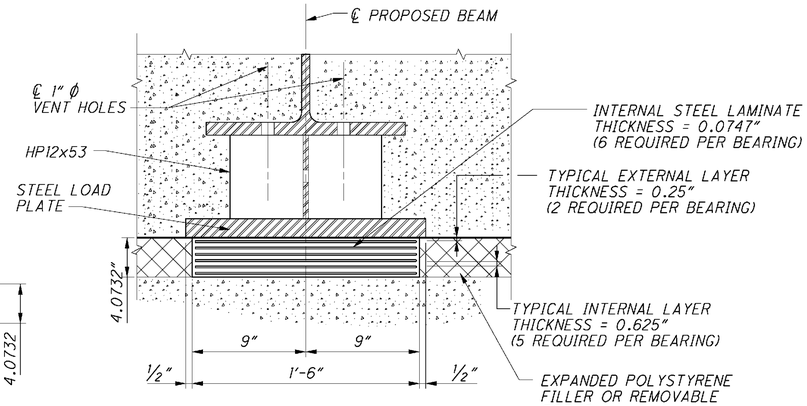

VIEW B - B

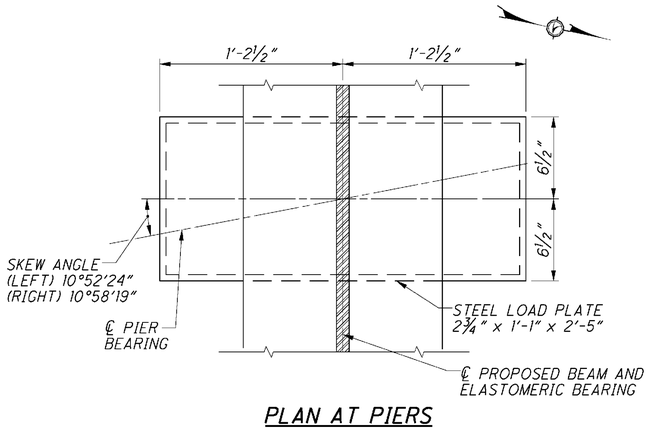

PLAN AT PIERS

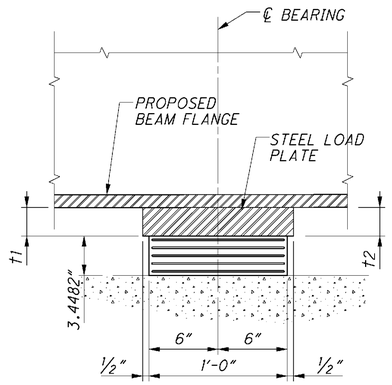

SECTION C - C

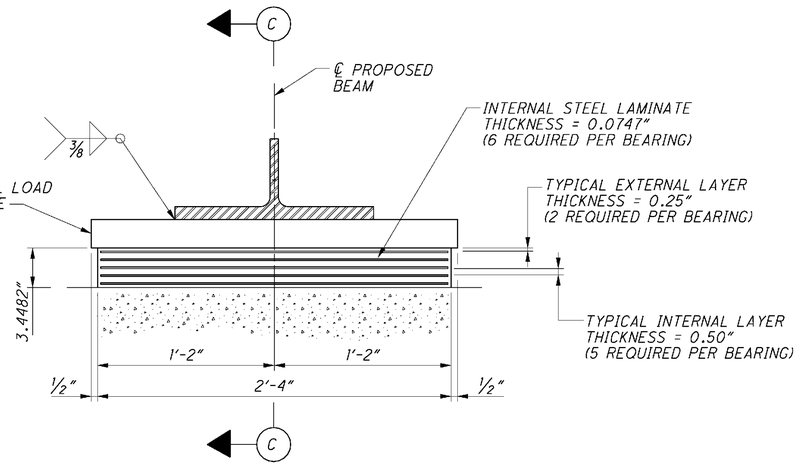

PIER BEARING ELEVATION

(60 DUROMETER HARDNESS)

LEFT STRUCTURE							
LOCATION	TYPE	NO.	DEAD LOAD	LIVE LOAD WITHOUT IMPACT	MAXIMUM DESIGN LOAD	LOAD PLATE t1	LOAD PLATE t2
REAR ABUTMENT	EXP.	7	57.2	61.3	118.5	1½"	1½"
PIER 1	EXP.	7	145.6	76.7	222.3	2¾"	2¾"
PIER 2	EXP.	7	145.6	79.4	225.0	2¾"	2¾"
PIER 3	EXP.	7	145.7	79.4	225.2	2¾"	2¾"
PIER 4	EXP.	7	145.6	76.7	222.3	2¾"	2¾"
FORWARD ABUTMENT	EXP.	7	57.1	61.2	118.3	1½"	1½"

RIGHT STRUCTURE							
LOCATION	TYPE	NO.	DEAD LOAD	LIVE LOAD WITHOUT IMPACT	MAXIMUM DESIGN LOAD	LOAD PLATE t1	LOAD PLATE t2
REAR ABUTMENT	EXP.	6	57.2	61.3	118.5	1½"	1½"
PIER 1	EXP.	6	145.2	76.8	222.0	2¾"	2¾"
PIER 2	EXP.	6	145.2	79.5	224.7	2¾"	2¾"
PIER 3	EXP.	6	145.4	79.57	224.9	2¾"	2¾"
PIER 4	EXP.	6	144.8	76.6	221.4	2¾"	2¾"
FORWARD ABUTMENT	EXP.	6	56.8	61.2	118.1	1½"	1½"

PEDESTAL HEIGHT LEFT STRUCTURE				
	REAR ABUT.		FWD. ABUT.	
	h1	h2	h1	h2
BEAM 1	5 13/16"	5 13/16"	5 5/16"	5 5/16"
BEAM 2	9 15/16"	9 15/16"	9 11/16"	9 11/16"
BEAM 3	11 7/16"	11 7/16"	11 1/4"	11 1/4"
BEAM 4	9 13/16"	9 13/16"	9 9/16"	9 9/16"
BEAM 5	8 1/8"	8 1/8"	7 7/8"	7 7/8"
BEAM 6	6 7/16"	6 7/16"	6 3/16"	6 3/16"
BEAM 7	4 3/4"	4 3/4"	4½"	4½"

PEDESTAL HEIGHT RIGHT STRUCTURE				
	REAR ABUT.		FWD. ABUT.	
	h1	h2	h1	h2
BEAM 8	9 3/16"	9 3/16"	9 3/16"	9 3/16"
BEAM 9	11 9/16"	11 9/16"	11 7/16"	11 7/16"
BEAM 10	9 15/16"	9 15/16"	9 13/16"	9 13/16"
BEAM 11	8 1/4"	8 1/4"	8 1/8"	8 1/8"
BEAM 12	6 9/16"	6 9/16"	6 7/16"	6 7/16"
BEAM 13	4 1/8"	4 1/8"	4 3/4"	4 3/4"

NOTES:

1. DESIGN LOADING: SERVICE LOAD REACTIONS - KIPS
2. ELASTOMERIC BEARINGS: THE ELASTOMER SHALL HAVE A HARDNESS OF 50 DUROMETERS FOR ABUTMENT BEARINGS AND 60 DUROMETER FOR PIER BEARINGS. THE BEARINGS WERE DESIGNED UNDER DIVISION I, SECTION 14.6.6 (METHOD A) OF THE AASHTO STANDARD SPECIFICATIONS FOR HIGHWAY BRIDGES.
3. LOAD PLATE: THE STEEL LOAD PLATE (ASTM A709, GRADE 50W) SHALL BE BONDED BY VULCANIZATION TO ELASTOMER DURING THE MOLDING PROCESS. WELDING OF THE SOLE PLATE TO THE STEEL SUPPORT POST OR SUPERSTRUCTURE SHALL BE CONTROLLED SO THAT THE PLATE TEMPERATURE AT THE ELASTOMER BONDED SURFACE SHALL NOT EXCEED 300° F AS DETERMINED BY THE USE OF PYROMETRIC STICKS OR OTHER TEMPERATURE MONITORING DEVICES.
4. BASIS OF PAYMENT: THE UNIT PRICE BID SHALL INCLUDE ALL MATERIALS, LABOR, STEEL SUPPORT POST AND INCIDENTALS NECESSARY TO FURNISH AND INSTALL LAMINATED ELASTOMERIC BEARINGS. PAYMENT WILL BE MADE AT THE CONTRACT PRICE FOR THE APPROPIATE ITEM 516, ELASTOMERIC BEARING WITH INTERNAL LAMINATES AND LOAD PLATE (NEOPRENE), AS PER PLAN.
5. FOR ABBREVATION SEE SHEET 5/62 .
6. BEARING REPOSITIONING: IF THE STEEL IS ERECTED AT AN AMBIENT TEMPERATURE HIGHER THAN 80°F OR LOWER THAN 40°F AND THE BEARING SHEAR DEFLECTION EXCEEDS 1/6 OF THE BEARING HEIGHT AT 60°F(+/-) 10°F, RAISE THE BEAMS OR GIRDERS TO ALLOW THE BEARINGS TO RETURN TO THEIR UNDEFORMED SHAPE AT 60°F(+/-) 10°F.

DESIGN AGENCY
KCI ASSOCIATES OF OHIO, P.A.
388 S. MAIN ST., SUITE 401
AKRON, OHIO 44311

DESIGNED	DRAWN	REVIEWED	DATE
SLH	JLS	FJB	6/5/09
CHECKED	REVISED	STRUCTURE FILE NUMBER	
MJW		0404268L/0404292R	

LAMINATED ELASTOMERIC BEARING DETAILS
BRIDGE NO. ATB-90-1583 L AND R
I-90 OVER ASHTABULA RIVER

ATB-90-14.25
PID No. 25199

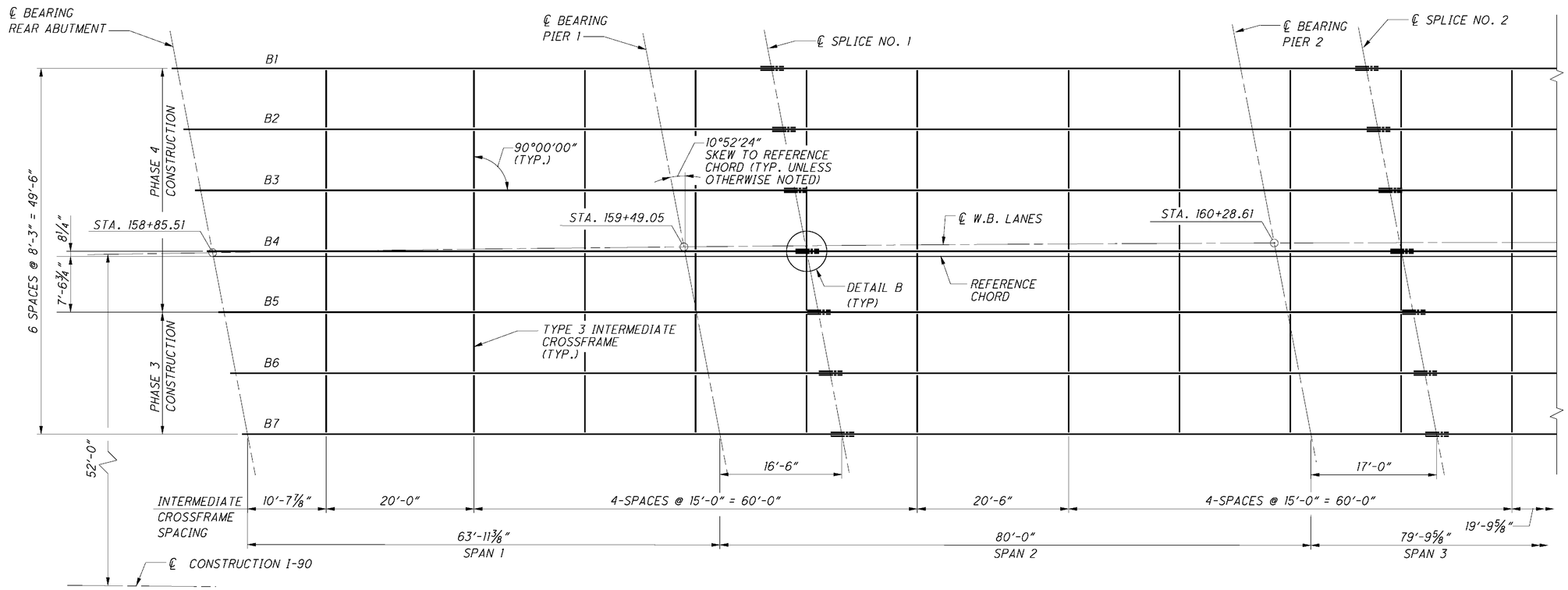

FRAMING PLAN

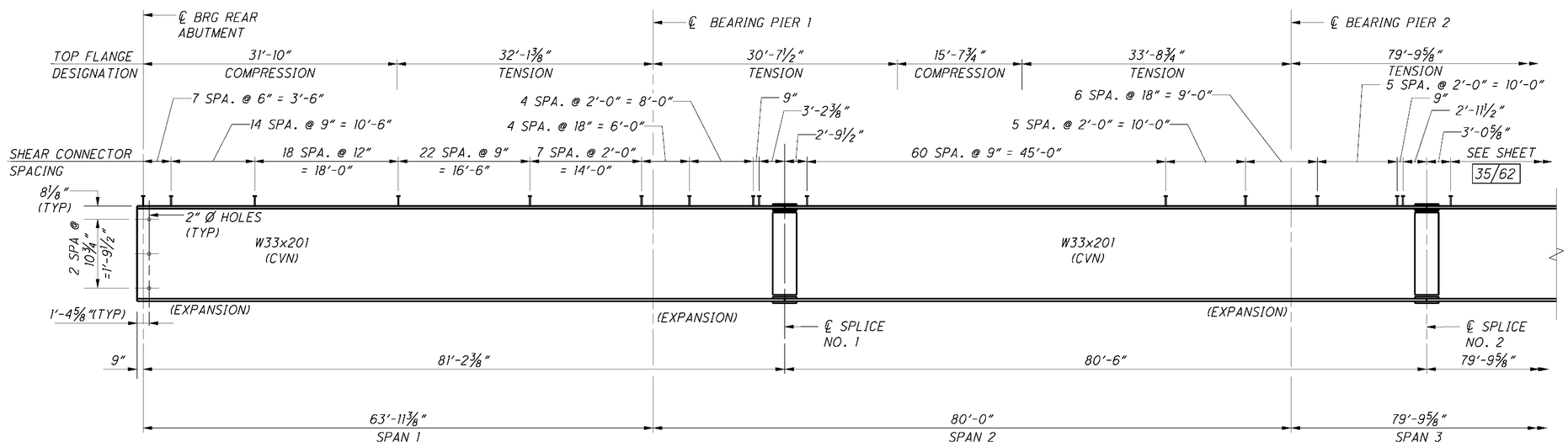

BEAM ELEVATION

NOTES:

1. FOR NOTES, DETAILS B AND SPLICE DETAIL SEE 38/62.
2. INTERMEDIATE CROSSFRAMES BETWEEN B4 AND B5 SHALL NOT BE INSTALLED UNTIL AFTER THE SLABS ARE PLACED BUT BEFORE THE CLOSURE POUR IS CONSTRUCTED.

DESIGN AGENCY
KCI ASSOCIATES OF OHIO, P.A.
388 S. MAIN ST., SUITE 401
AKRON, OHIO 44311

DESIGNED SLH | DRAWN JLS | REVIEWED FJB | DATE 6/5/09
CHECKED MJW | REVISED | STRUCTURE FILE NUMBER 0404268L

FRAMING PLAN 1 - LEFT STRUCTURE
BRIDGE NO. ATB-90-1583 L
I-90 OVER ASHTABULA RIVER

ATB-90-14.25
PID No. 25199

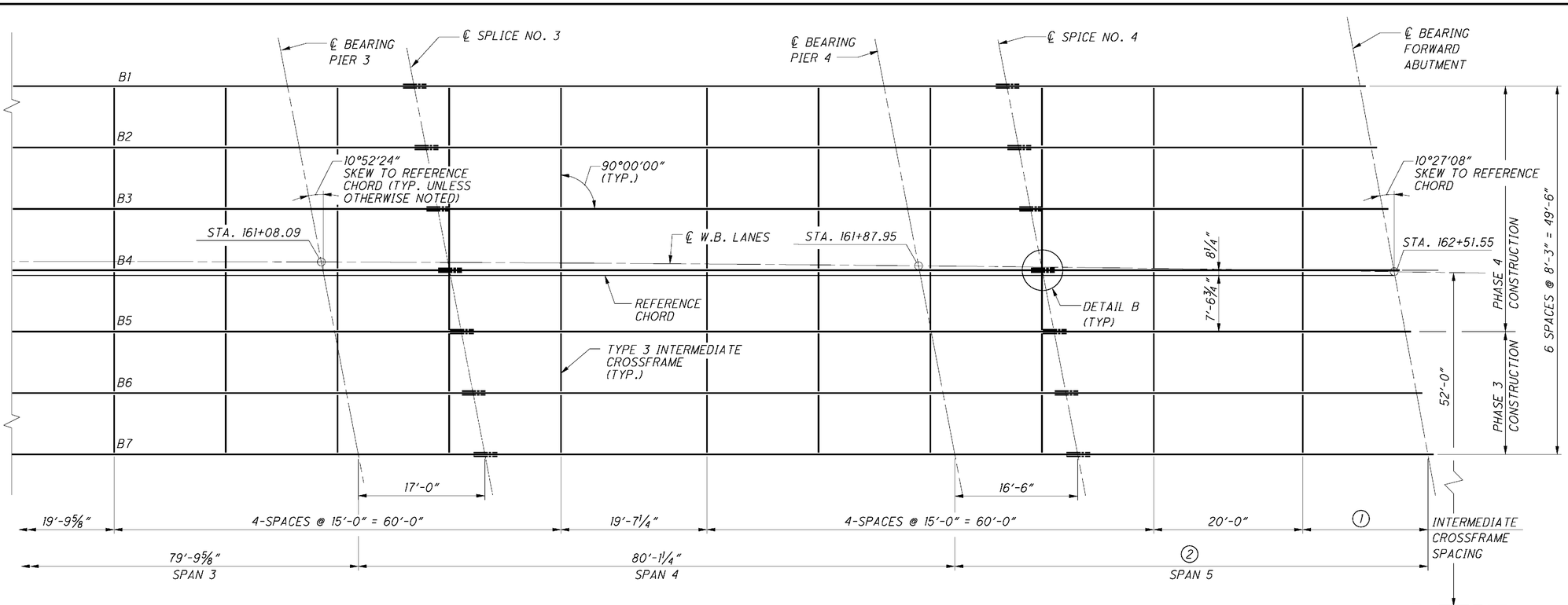

FRAMING PLAN

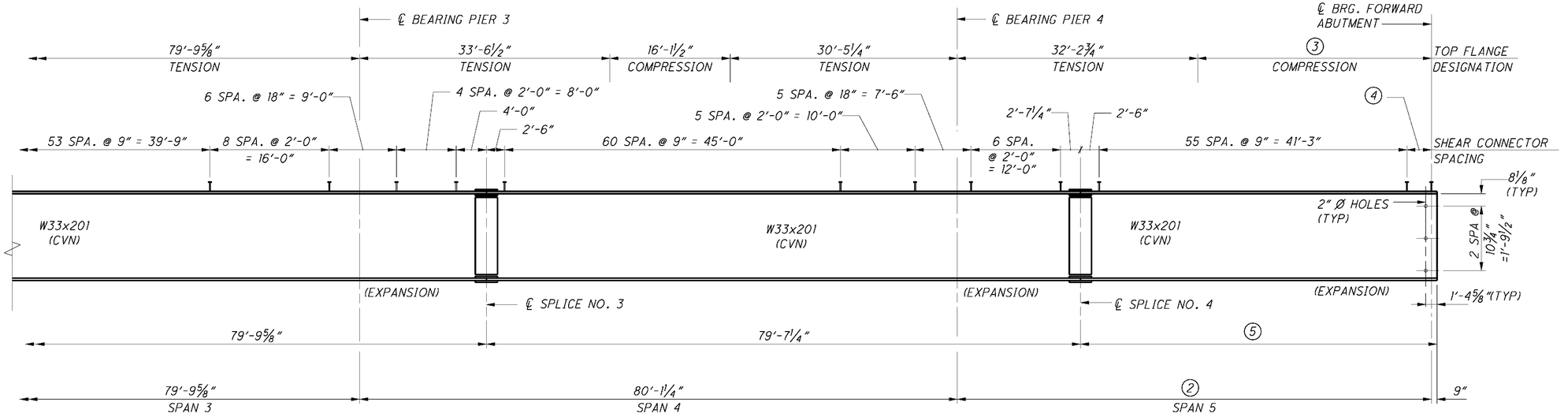

BEAM ELEVATION

SPAN 5 BEAM DIMENSIONS

BEAM NO.	①	②	③	④	⑤
1	7'-8⅜"	63'-10⅞"	31'-8⅛"	7 SPA. @ 6"(+) = 3'-7⅛"	48'-1⅞"
2	9'-2⅝"	63'-10⅛"	31'-7⅜"	7 SPA. @ 6"(+) = 3'-7⅛"	48'-1⅞"
3	10'-8⅛"	63'-9⅜"	31'-6⅝"	7 SPA. @ 6"(+) = 3'-6⅜"	48'-0⅜"
4	12'-3⅛"	63'-8⅝"	31'-5⅞"	7 SPA. @ 6"(-) = 3'-5⅝"	47'-11⅝"
5	13'-9⅜"	63'-7⅞"	31'-5⅛"	7 SPA. @ 6"(-) = 3'-4⅞"	47'-10⅞"
6	15'-3⅝"	63'-7⅛"	31'-4⅜"	7 SPA. @ 6"(-) = 3'-4⅛"	47'-10⅛"
7	16'-9⅛"	63'-6⅜"	31'-3⅝"	7 SPA. @ 6"(-) = 3'-3⅜"	47'-9⅜"

NOTES:

① FOR NOTES, DETAILS B AND SPLICE DETAIL SEE 38/62.

② INTERMEDIATE CROSSFRAMES BETWEEN B4 AND B5 SHALL NOT BE INSTALLED UNTIL AFTER THE SLABS ARE PLACED BUT BEFORE THE CLOSURE POUR IS CONSTRUCTED.

DESIGN AGENCY
KCI ASSOCIATES OF OHIO, P.A.
388 S. MAIN ST., SUITE 401
AKRON, OHIO 44311

DESIGNED RKP | DRAWN JLS | CHECKED SLH | REVIEWED FJB | DATE 6/5/09 | REVISED --- | STRUCTURE FILE NUMBER 0404268L

FRAMING PLAN 2 - LEFT STRUCTURE
BRIDGE NO. ATB-90-1583 L
I-90 OVER ASHTABULA RIVER

ATB-90-14.25
PID No. 25199

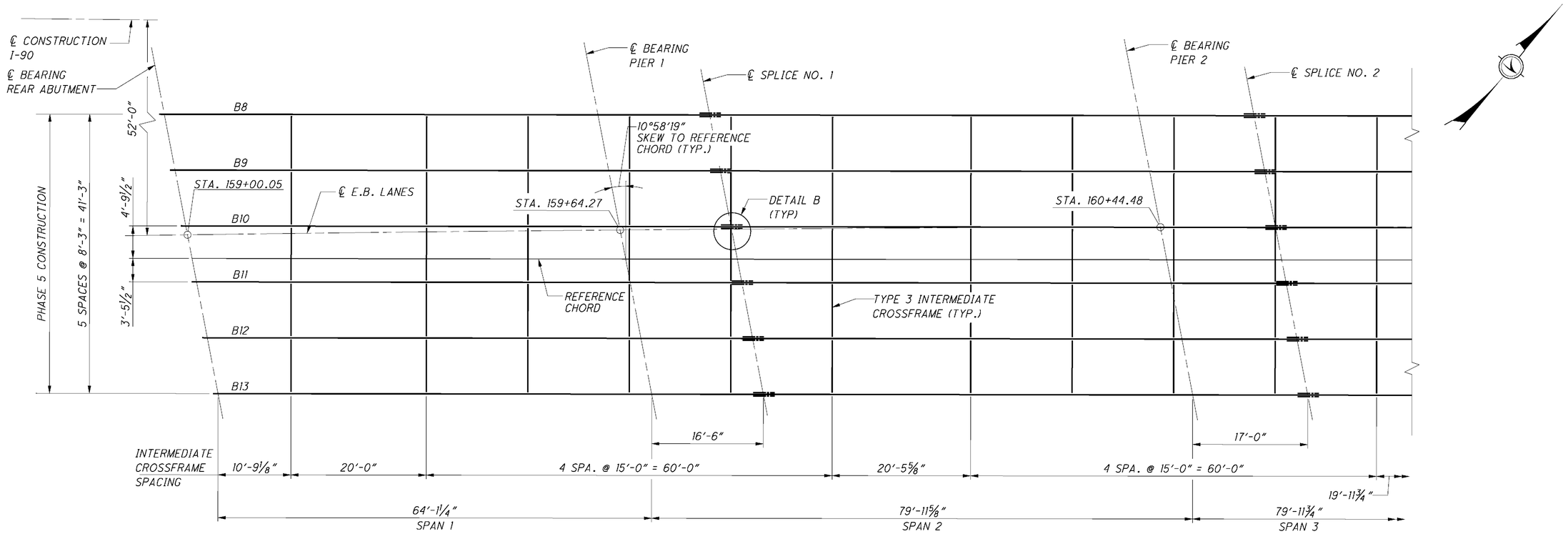

FRAMING PLAN

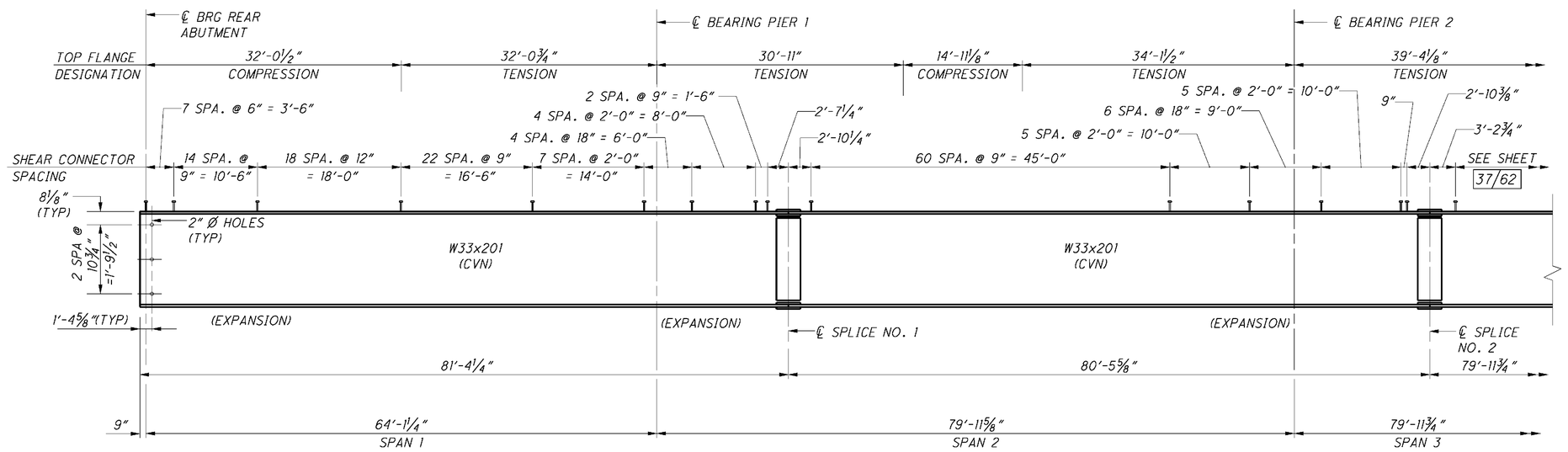

BEAM ELEVATION

NOTES:

(1) FOR NOTES, DETAIL B AND SPLICE DETAIL, SEE SHEET 38/62 .

DESIGN AGENCY
KCI ASSOCIATES OF OHIO, P.A.
388 S. MAIN ST., SUITE 401
AKRON, OHIO 44311

DESIGNED	DRAWN	REVIEWED	DATE
RKP	JLS	FJB	6/5/09
CHECKED	REVISED	STRUCTURE TITLE NUMBER	
SLH		0404292R	

FRAMING PLAN 1 - RIGHT STRUCTURE
BRIDGE NO. ATB-90-1583 R
I-90 OVER ASHTABULA RIVER

ATB-90-14.25
PID No. 25199

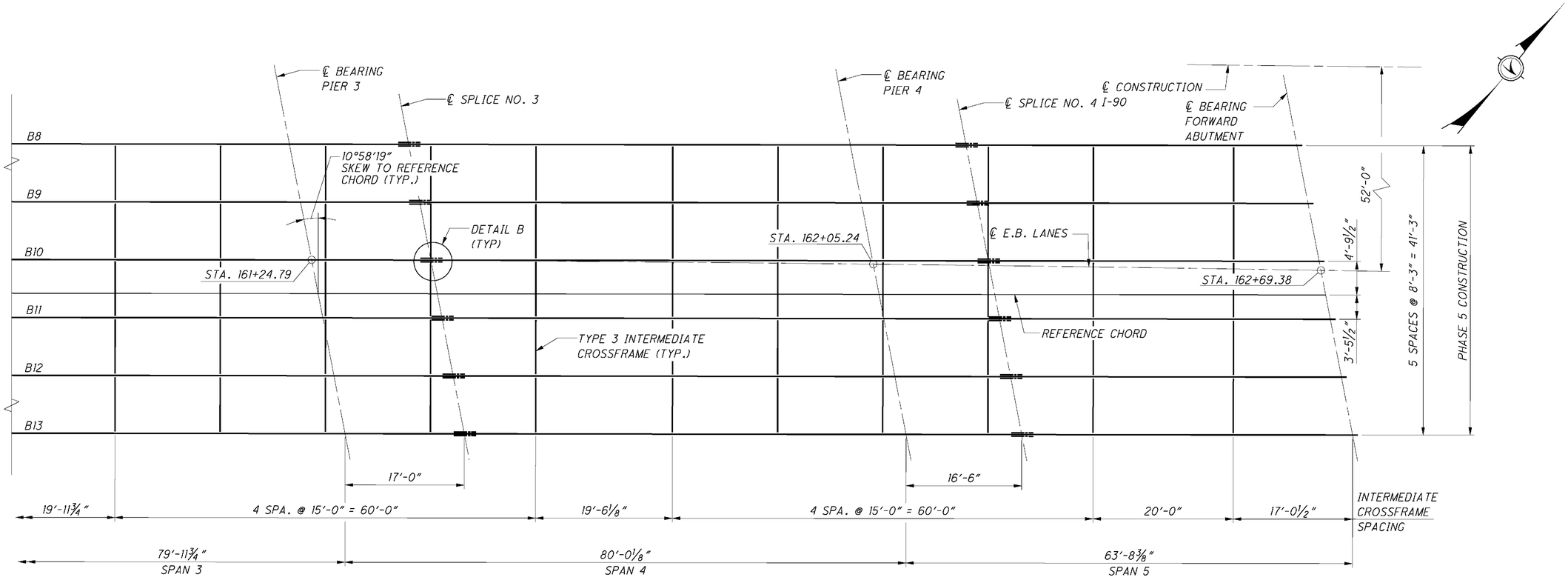

FRAMING PLAN

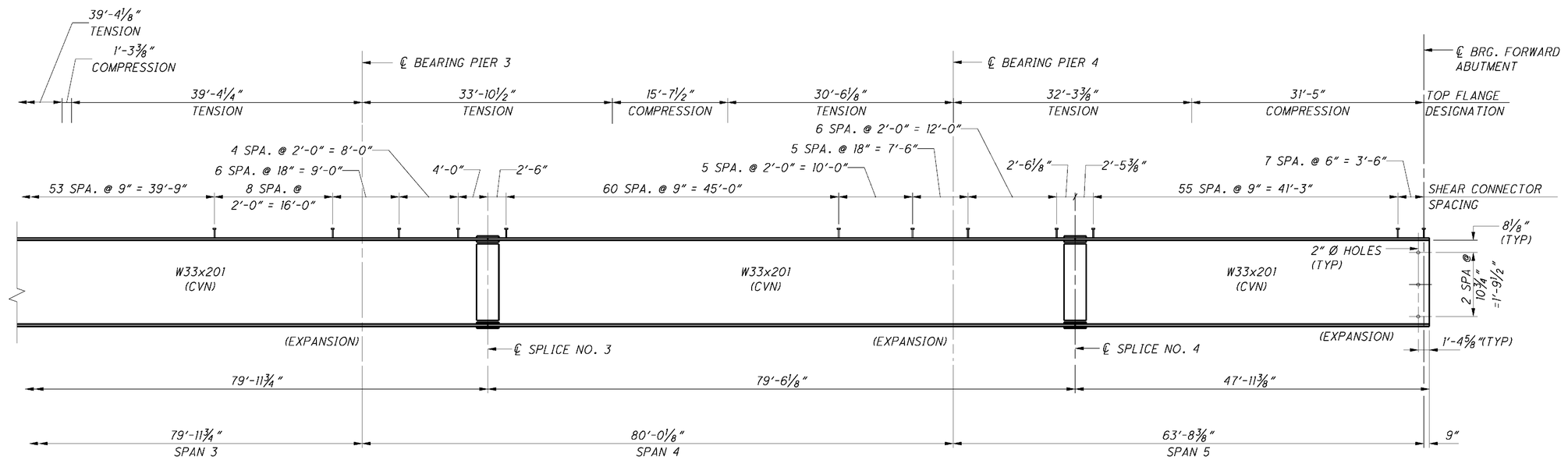

BEAM ELEVATION

NOTES:

(1) FOR NOTES, DETAIL B AND SPLICE DETAIL, SEE SHEET 38/62 .

DESIGN AGENCY
KCI ASSOCIATES OF OHIO, P.A.
388 S. MAIN ST., SUITE 401
AKRON, OHIO 44311

DESIGNED	DRAWN	REVIEWED	DATE
RKP	JLS	FJB	6/5/09
CHECKED	REVISED	STRUCTURE TILE NUMBER	
SLH		0404292R	

FRAMING PLAN 2 - RIGHT STRUCTURE
BRIDGE NO. ATB-90-1583 R
I-90 OVER ASHTABULA RIVER

ATB-90-14.25
PID No. 25199

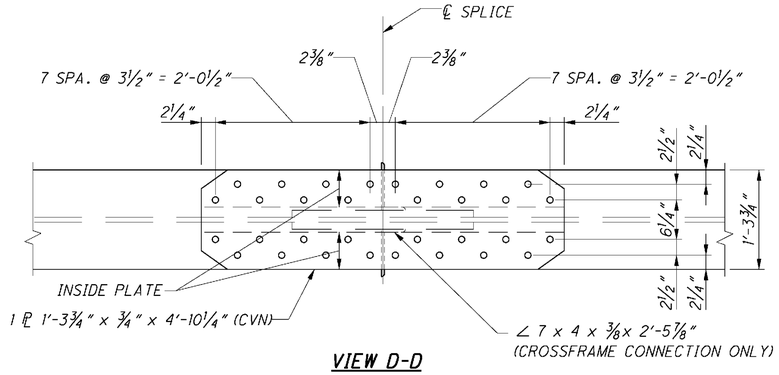

VIEW D-D

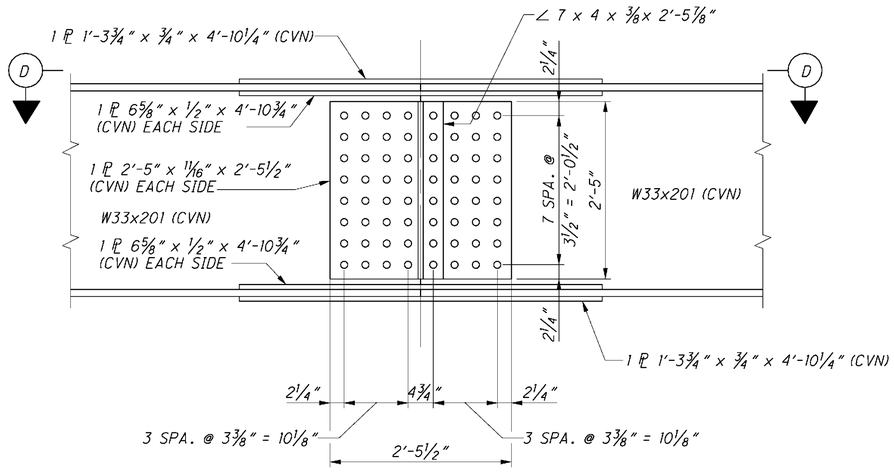

ELEVATION

BEAM SPLICE DETAIL

BEAMS B1-B7 (LEFT STRUCTURE)
BEAMS B8-B13 E.B. (RIGHT STRUCTURE)

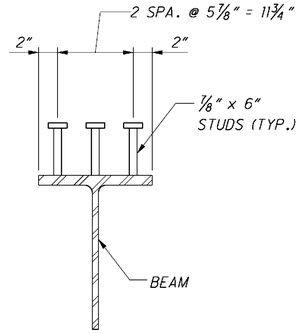

STUD CONNECTOR DETAIL

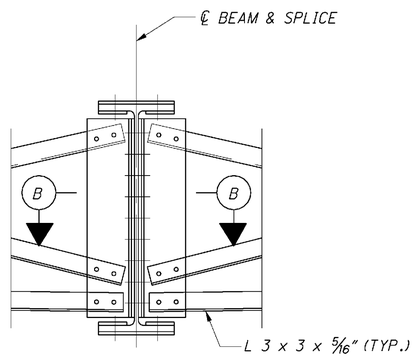

DETAIL B

(CONNECTION ANGLES AT SPLICE)
FOR ADDITIONAL DETAILS SEE S.C.D. GSD-1-96

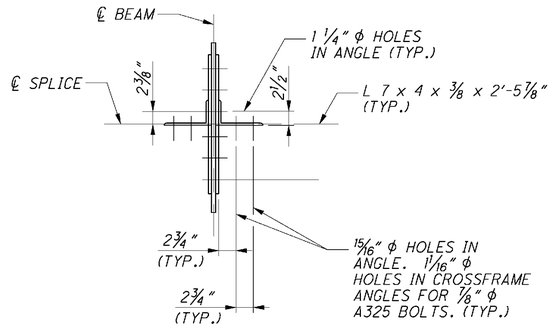

SECTION B - B

NOTES:

1. HIGH STRENGTH BOLTS SHALL BE 1⅛" ϕ A 325 TYPE 3 UNLESS OTHERWISE NOTED.
2. ALL STRUCTURAL STEEL SHALL BE ASTM A709 GRADE 50W.
3. WELD ATTACHMENT OF SUPPORTS FOR CONCRETE DECK FINISHING MACHINE TO AREAS OF THE FASCIA STRINGER FLANGES DESIGNATED "COMPRESSION". DO NOT WELD ATTACHMENTS TO AREAS DESIGNATED "TENSION". FILLET WELDS TO COMPRESSION FLANGES SHALL BE AT LEAST 1" FROM EDGE OF FLANGE, BE NO MORE THAN 2" LONG, AND BE AT LEAST ¼" FOR THICKNESSES UP TO ¾" OR 5⁄16" FOR GREATER THAN ¾" THICK.
4. CVN: WHERE A SHAPE OR PLATE IS DESIGNATED (CVN), FURNISH MATERIAL THAT MEETS THE MINIMUM NOTCH TOUGHNESS REQUIREMENTS AS SPECIFIED IN 711.01.
5. FOR TRANSVERSE SECTION, SEE SHEET 47/62 AND 50/62 .
6. FOR ELASTOMERIC BEARING DETAILS, SEE SHEET 33/62 .
7. FOR LOCATION OF BEAM SPLICE AND FRAMING PLANS, SEE SHEET, 34/62 35/62 , 36/62 AND 37/62 .
8. FOR ABBREVIATIONS, SEE SHEET 5/62 .
9. PAYMENT FOR DRILLING 2" Ø HOLES IN BEAM WEBS SHALL BE INCLUDED IN ITEM 513 - STRUCTURAL STEEL MEMBERS, LEVEL 3, AS PER PLAN

DESIGN AGENCY
KCI ASSOCIATES OF OHIO, P.A.
388 S. MAIN ST., SUITE 401
AKRON, OHIO 44311

DESIGNED	DRAWN	REVIEWED	DATE
RKP	JLS	FJB	6/5/09
CHECKED	REVISED	STRUCTURE FILE NUMBER	
SLH	---	0404268L/0404292R	

SUPERSTRUCTURE DETAILS

BRIDGE NO. ATB-90-1583 L AND R
I-90 OVER ASHTABULA RIVER

ATB-90-14.25
PID No. 25199

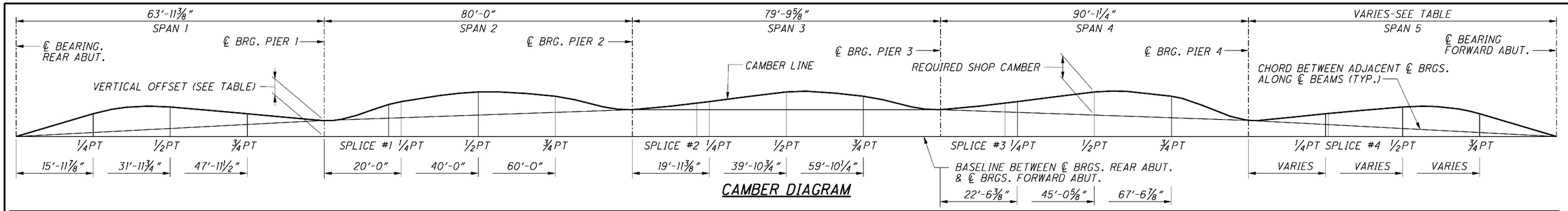

CAMBER DIAGRAM

DEFLECTION AND CAMBER TABLE

BEAM B1	SPAN 1				SPAN 2					SPAN 3					SPAN 4					SPAN 5				
	R.A.	¼PT	½PT	¾PT	PIER 1	SPLICE#1	¼PT	½PT	¾PT	PIER 2	SPLICE#2	¼PT	½PT	¾PT	PIER 3	SPLICE#3	¼PT	½PT	¾PT	PIER 4	¼PT	SPLICE#4	½PT	¾PT	F.A.
DEFLECTION DUE TO WEIGHT OF STEEL	0	1/16"	1/16"	1/16"	0	1/16"	1/16"	1/8"	1/16"	0	1/16"	1/16"	1/8"	1/16"	0	1/16"	1/16"	1/8"	1/16"	0	1/16"	1/16"	1/16"	1/16"	0
DEFLECTION DUE TO REMAINING DEAD LOAD	0	3/8"	7/16"	3/16"	0	1/4"	5/16"	9/16"	5/16"	0	1/4"	5/16"	9/16"	5/16"	0	1/4"	5/16"	9/16"	5/16"	0	3/16"	3/16"	7/16"	3/8"	0
VERTICAL CURVE CORRECTION	0	0	0	0	0	0	0	0	0	0	0	0	0	0	0	0	0	0	0	0	0	0	0	0	0
HORIZONTAL CURVE CORRECTION	0	0	0	0	0	0	0	0	0	0	0	0	0	0	0	0	0	0	0	0	0	0	0	0	0
REQUIRED SHOP CAMBER	0	7/16"	1/2"	1/4"	0	5/16"	3/8"	11/16"	3/8"	0	5/16"	3/8"	11/16"	3/8"	0	5/16"	3/8"	11/16"	3/8"	0	1/4"	1/4"	1/2"	7/16"	0
BEAM B2	**SPAN 1**				**SPAN 2**					**SPAN 3**					**SPAN 4**					**SPAN 5**				
	R.A.	¼PT	½PT	¾PT	PIER 1	SPLICE#1	¼PT	½PT	¾PT	PIER 2	SPLICE#2	¼PT	½PT	¾PT	PIER 3	SPLICE#3	¼PT	½PT	¾PT	PIER 4	¼PT	SPLICE#4	½PT	¾PT	F.A.
DEFLECTION DUE TO WEIGHT OF STEEL	0	1/16"	1/8"	1/16"	0	1/16"	1/16"	1/8"	1/16"	0	1/16"	1/16"	1/8"	1/16"	0	1/16"	1/16"	1/8"	1/16"	0	1/16"	1/16"	1/8"	1/16"	0
DEFLECTION DUE TO REMAINING DEAD LOAD	0	3/8"	7/16"	3/16"	0	1/4"	5/16"	9/16"	5/16"	0	1/4"	5/16"	9/16"	5/16"	0	1/4"	5/16"	9/16"	5/16"	0	3/16"	3/16"	7/16"	3/8"	0
VERTICAL CURVE CORRECTION	0	0	0	0	0	0	0	0	0	0	0	0	0	0	0	0	0	0	0	0	0	0	0	0	0
HORIZONTAL CURVE CORRECTION	0	0	0	0	0	0	0	0	0	0	0	0	0	0	0	0	0	0	0	0	0	0	0	0	0
REQUIRED SHOP CAMBER	0	7/16"	9/16"	1/4"	0	5/16"	3/8"	11/16"	3/8"	0	5/16"	3/8"	11/16"	3/8"	0	5/16"	3/8"	11/16"	3/8"	0	1/4"	1/4"	9/16"	7/16"	0
BEAMS B3 AND B4	**SPAN 1**				**SPAN 2**					**SPAN 3**					**SPAN 4**					**SPAN 5**				
	R.A.	¼PT	½PT	¾PT	PIER 1	SPLICE#1	¼PT	½PT	¾PT	PIER 2	SPLICE#2	¼PT	½PT	¾PT	PIER 3	SPLICE#3	¼PT	½PT	¾PT	PIER 4	¼PT	SPLICE#4	½PT	¾PT	F.A.
DEFLECTION DUE TO WEIGHT OF STEEL	0	1/16"	1/8"	1/16"	0	1/16"	1/16"	1/8"	1/16"	0	1/16"	1/16"	1/8"	1/16"	0	1/16"	1/16"	1/8"	1/16"	0	1/16"	1/16"	1/8"	1/16"	0
DEFLECTION DUE TO REMAINING DEAD LOAD	0	3/8"	7/16"	3/16"	0	1/4"	5/16"	9/16"	5/16"	0	1/4"	5/16"	9/16"	5/16"	0	1/4"	5/16"	9/16"	5/16"	0	3/16"	3/16"	7/16"	3/8"	0
VERTICAL CURVE CORRECTION	0	0	0	0	0	0	0	0	0	0	0	0	0	0	0	0	0	0	0	0	0	0	0	0	0
HORIZONTAL CURVE CORRECTION	0	0	0	0	0	0	0	0	0	0	0	0	0	0	0	0	0	0	0	0	0	0	0	0	0
REQUIRED SHOP CAMBER	0	7/16"	9/16"	1/4"	0	5/16"	3/8"	11/16"	3/8"	0	5/16"	3/8"	11/16"	3/8"	0	5/16"	3/8"	11/16"	3/8"	0	1/4"	1/4"	9/16"	7/16"	0
BEAMS B5 AND B6	**SPAN 1**				**SPAN 2**					**SPAN 3**					**SPAN 4**					**SPAN 5**				
	R.A.	¼PT	½PT	¾PT	PIER 1	SPLICE#1	¼PT	½PT	¾PT	PIER 2	SPLICE#2	¼PT	½PT	¾PT	PIER 3	SPLICE#3	¼PT	½PT	¾PT	PIER 4	¼PT	SPLICE#4	½PT	¾PT	F.A.
DEFLECTION DUE TO WEIGHT OF STEEL	0	1/16"	1/8"	1/16"	0	1/16"	1/16"	1/8"	1/16"	0	1/16"	1/16"	1/8"	1/16"	0	1/16"	1/16"	1/8"	1/16"	0	1/16"	1/16"	1/8"	1/16"	0
DEFLECTION DUE TO REMAINING DEAD LOAD	0	3/8"	7/16"	3/16"	0	1/4"	3/8"	5/8"	5/16"	0	1/4"	5/16"	9/16"	5/16"	0	1/4"	3/8"	5/8"	3/8"	0	3/16"	3/16"	7/16"	3/8"	0
VERTICAL CURVE CORRECTION	0	0	0	0	0	0	0	0	0	0	0	0	0	0	0	0	0	0	0	0	0	0	0	0	0
HORIZONTAL CURVE CORRECTION	0	0	0	0	0	0	0	0	0	0	0	0	0	0	0	0	0	0	0	0	0	0	0	0	0
REQUIRED SHOP CAMBER	0	7/16"	9/16"	1/4"	0	5/16"	7/16"	3/4"	3/8"	0	5/16"	3/8"	11/16"	3/8"	0	5/16"	7/16"	3/4"	7/16"	0	1/4"	1/4"	9/16"	7/16"	0
BEAM B7	**SPAN 1**				**SPAN 2**					**SPAN 3**					**SPAN 4**					**SPAN 5**				
	R.A.	¼PT	½PT	¾PT	PIER 1	SPLICE#1	¼PT	½PT	¾PT	PIER 2	SPLICE#2	¼PT	½PT	¾PT	PIER 3	SPLICE#3	¼PT	½PT	¾PT	PIER 4	¼PT	SPLICE#4	½PT	¾PT	F.A.
DEFLECTION DUE TO WEIGHT OF STEEL	0	1/16"	1/16"	1/16"	0	1/16"	1/16"	1/8"	1/16"	0	1/16"	1/16"	1/8"	1/16"	0	1/16"	1/16"	1/8"	1/16"	0	1/16"	1/16"	1/16"	1/16"	0
DEFLECTION DUE TO REMAINING DEAD LOAD	0	3/8"	7/16"	3/16"	0	1/4"	5/16"	9/16"	3/16"	0	1/4"	5/16"	1/2"	5/16"	0	1/4"	5/16"	9/16"	5/16"	0	3/16"	3/16"	7/16"	3/8"	0
VERTICAL CURVE CORRECTION	0	0	0	0	0	0	0	0	0	0	0	0	0	0	0	0	0	0	0	0	0	0	0	0	0
HORIZONTAL CURVE CORRECTION	0	0	0	0	0	0	0	0	0	0	0	0	0	0	0	0	0	0	0	0	0	0	0	0	0
REQUIRED SHOP CAMBER	0	7/16"	1/2"	1/4"	0	5/16"	3/8"	11/16"	3/8"	0	5/16"	3/8"	5/8"	3/8"	0	5/16"	3/8"	11/16"	3/8"	0	1/4"	1/4"	1/2"	7/16"	0

VERTICAL OFFSETS AT PIERS

BEAM NO.	PIER 1	PIER 2	PIER 3	PIER 4
1	3/8"	5/8"	5/8"	3/8"
2	3/8"	5/8"	5/8"	3/8"
3	-3/16"	-5/16"	-5/16"	-3/16"
4	-3/16"	-5/16"	-5/16"	-3/16"
5	-3/16"	-5/16"	-5/16"	-3/16"
6	-3/16"	-5/16"	-5/16"	-3/16"
7	-3/16"	-5/16"	-5/16"	-3/16"

BEAM NO.	SPAN 5
1	63'-10⅞"
2	63'-10⅛"
3	63'-9⅜"
4	63'-8⅝"
5	63'-7⅞"
6	63'-7⅛"
7	63'-6⅜"

NOTES:

1. DEFLECTION AND ADJUSTMENTS ARE GIVEN TO THE NEAREST 1/16". NEGATIVE VALUES INDICATE DIMENSIONS BELOW THE CHORD LINE.
2. FOR ABBREVIATIONS SEE SHEET 5/62.

DESIGN AGENCY
KCI ASSOCIATES OF OHIO, P.A.
388 S. MAIN ST., SUITE 401
AKRON, OHIO 44311

DESIGNED SLH | DRAWN JAS | REVIEWED FJB | DATE 6/5/09 | CHECKED RKP | REVISED --- | STRUCTURE FILE NUMBER 04042681

CAMBER TABLES - LEFT STRUCTURE

BRIDGE NO. ATB-90-1583 L
I-90 OVER ASHTABULA RIVER

ATB-90-14.25
PID No. 25199

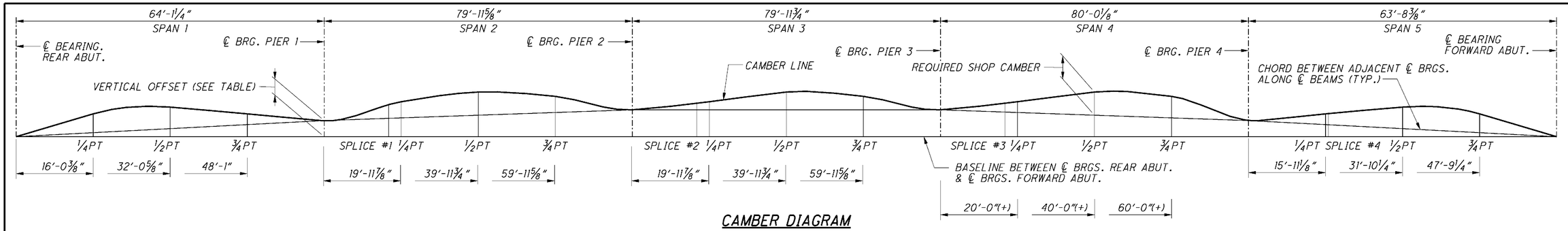

CAMBER DIAGRAM

DEFLECTION AND CAMBER TABLE

BEAM B8	SPAN 1				SPAN 2					SPAN 3					SPAN 4					SPAN 5				
	R.A.	¼PT	½PT	¾PT	PIER 1	SPLICE#1	¼PT	½PT	¾PT	PIER 2	SPLICE#2	¼PT	½PT	¾PT	PIER 3	SPLICE#3	¼PT	½PT	¾PT	PIER 4	¼PT	SPLICE#4	½PT	¾PT	F.A.
DEFLECTION DUE TO WEIGHT OF STEEL	0	1/16"	1/16"	1/16"	0	1/16"	1/16"	1/8"	1/16"	0	1/16"	1/16"	1/8"	1/16"	0	1/16"	1/16"	1/8"	1/16"	0	1/16"	1/16"	1/16"	1/16"	0
DEFLECTION DUE TO REMAINING DEAD LOAD	0	3/8"	7/16"	3/16"	0	1/4"	5/16"	5/8"	5/16"	0	1/4"	5/16"	9/16"	5/16"	0	1/4"	5/16"	5/8"	3/8"	0	3/16"	3/16"	1/8"	3/8"	0
VERTICAL CURVE CORRECTION	0	0	0	0	0	0	0	1/16"	0	0	0	0	1/16"	0	0	0	0	1/16"	0	0	0	0	0	0	0
HORIZONTAL CURVE CORRECTION	0	0	0	0	0	0	0	0	0	0	0	0	0	0	0	0	0	0	0	0	0	0	0	0	0
REQUIRED SHOP CAMBER	0	7/16"	1/2"	1/4"	0	5/16"	3/8"	13/16"	3/8"	0	5/16"	3/8"	3/4"	3/8"	0	5/16"	3/8"	13/16"	7/16"	0	1/4"	1/4"	1/2"	7/16"	0
BEAMS B9, B10, B11 AND B12	SPAN 1				SPAN 2					SPAN 3					SPAN 4					SPAN 5				
	R.A.	¼PT	½PT	¾PT	PIER 1	SPLICE#1	¼PT	½PT	¾PT	PIER 2	SPLICE#2	¼PT	½PT	¾PT	PIER 3	SPLICE#3	¼PT	½PT	¾PT	PIER 4	¼PT	SPLICE#4	½PT	¾PT	F.A.
DEFLECTION DUE TO WEIGHT OF STEEL	0	1/16"	1/8"	1/16"	0	1/16"	1/16"	1/8"	1/16"	0	1/16"	1/16"	1/8"	1/16"	0	1/16"	1/16"	1/8"	1/16"	0	1/16"	1/16"	1/8"	1/16"	0
DEFLECTION DUE TO REMAINING DEAD LOAD	0	3/8"	7/16"	3/16"	0	1/4"	5/16"	5/8"	5/16"	0	1/4"	5/16"	9/16"	5/16"	0	1/4"	5/16"	5/8"	3/8"	0	3/16"	3/16"	1/16"	3/8"	0
VERTICAL CURVE CORRECTION	0	0	0	0	0	0	0	0	0	0	0	0	0	0	0	0	0	0	0	0	0	0	0	0	0
HORIZONTAL CURVE CORRECTION	0	0	0	0	0	0	0	0	0	0	0	0	0	0	0	0	0	0	0	0	0	0	0	0	0
REQUIRED SHOP CAMBER	0	7/16"	9/16"	1/4"	0	5/16"	3/8"	3/4"	3/8"	0	5/16"	3/8"	11/16"	3/8"	0	5/16"	3/8"	3/4"	7/16"	0	1/4"	1/4"	9/16"	7/16"	0
BEAM B13	SPAN 1				SPAN 2					SPAN 3					SPAN 4					SPAN 5				
	R.A.	¼PT	½PT	¾PT	PIER 1	SPLICE#1	¼PT	½PT	¾PT	PIER 2	SPLICE#2	¼PT	½PT	¾PT	PIER 3	SPLICE#3	¼PT	½PT	¾PT	PIER 4	¼PT	SPLICE#4	½PT	¾PT	F.A.
DEFLECTION DUE TO WEIGHT OF STEEL	0	1/16"	1/16"	1/16"	0	1/16"	1/16"	1/8"	1/16"	0	1/16"	1/16"	1/8"	1/16"	0	1/16"	1/16"	1/8"	1/16"	0	1/16"	1/16"	1/16"	1/16"	0
DEFLECTION DUE TO REMAINING DEAD LOAD	0	3/8"	7/16"	3/16"	0	1/4"	5/16"	9/16"	5/16"	0	1/4"	5/16"	9/16"	5/16"	0	1/4"	5/16"	9/16"	3/8"	0	3/16"	3/16"	1/16"	3/8"	0
VERTICAL CURVE CORRECTION	0	0	0	0	0	0	0	0	0	0	0	0	1/16"	0	0	0	0	0	0	0	0	0	0	0	0
HORIZONTAL CURVE CORRECTION	0	0	0	0	0	0	0	0	0	0	0	0	0	0	0	0	0	0	0	0	0	0	0	0	0
REQUIRED SHOP CAMBER	0	1/16"	1/2"	1/4"	0	5/16"	3/8"	11/16"	3/8"	0	5/16"	3/8"	11/16"	3/8"	0	5/16"	3/8"	11/16"	3/8"	0	1/4"	1/4"	1/2"	7/16"	0

VERTICAL OFFSETS AT PIERS

BEAM NO.	PIER 1	PIER 2	PIER 3	PIER 4
8	3/8"	5/8"	5/8"	3/8"
9	-3/16"	-5/16"	-5/16"	-3/16"
10	-3/16"	-5/16"	-5/16"	-3/16"
11	-3/16"	-5/16"	-5/16"	-3/16"
12	-3/16"	-5/16"	-5/16"	-3/16"
13	-3/16"	-5/16"	-5/16"	-3/16"

NOTES:

1. DEFLECTION AND ADJUSTMENTS ARE GIVEN TO THE NEAREST 1/16". NEGATIVE VALUES INDICATE DIMENSIONS BELOW THE CHORD LINE.
2. FOR ABBREVIATIONS SEE SHEET 5/62.

DESIGN AGENCY
KCI ASSOCIATES OF OHIO, P.A.
388 S. MAIN ST., SUITE 401
AKRON, OHIO 44311

DESIGNED SLH | DRAWN JAS | REVIEWED FJB | DATE 6/5/09
CHECKED RKP | REVISED --- | STRUCTURE FILE NUMBER 0404292R

CAMBER TABLES - RIGHT STRUCTURE
BRIDGE NO. ATB-90-1583 R
I-90 OVER ASHTABULA RIVER

ATB-90-14.25
PID No. 25199

SCREED ELEVATION TABLE - LEFT STRUCTURE

LOCATION		SPAN 1				SPAN 2				SPAN 3				SPAN 4			
		℄ BRG. REAR ABUT.	¼PT	½PT	¾PT	℄ PIER 1	¼PT	½PT	¾PT	℄ PIER 2	¼PT	½PT	¾PT	℄ PIER 3	¼PT	½PT	¾PT
LEFT GUTTER LINE	STATION	158+81.04	158+96.88	159+12.73	159+28.58	159+44.43	159+64.27	159+84.12	160+03.97	160+23.83	160+43.64	160+63.47	160+83.29	161+03.13	161+23.04	161+42.96	161+62.89
	ELEVATION	810.41	810.53	810.61	810.67	810.73	810.86	810.98	811.06	811.12	811.25	811.38	811.45	811.52	811.65	811.78	811.85
CROWN	STATION	158+83.41	158+99.27	159+15.13	159+31.00	159+46.87	159+66.73	159+86.60	160+06.48	160+26.36	160+46.20	160+66.04	160+85.89	161+05.75	161+25.68	161+45.63	161+65.58
	ELEVATION	810.96	811.08	811.17	811.22	811.28	811.41	811.54	811.61	811.68	811.81	811.93	812.00	812.07	812.21	812.33	812.41
LEFT CONSTRUCTION JOINT	STATION	158+85.95	159+01.83	159+17.72	159+33.60	159+49.49	159+69.38	159+89.28	160+09.17	160+29.08	160+48.94	161+68.81	160+88.69	161+08.57	161+28.53	161+48.49	161+68.47
	ELEVATION	810.64	810.76	810.85	810.90	810.96	811.09	811.22	811.29	811.36	811.49	811.61	811.69	811.75	811.89	812.01	812.09
RIGHT CONSTRUCTION JOINT	STATION	158+86.66	159+02.54	159+18.43	159+34.32	159+50.22	159+70.11	159+90.01	160+09.92	160+29.83	160+49.70	160+69.58	160+89.46	161+09.34	161+29.31	161+49.29	161+69.27
	ELEVATION	810.72	810.84	810.92	810.98	811.04	811.17	811.30	811.37	811.43	811.56	811.69	811.76	811.83	811.96	812.09	812.16
PROFILE GRADE	STATION	158+87.63	159+03.52	159+19.42	159+35.31	159+51.22	159+71.12	159+91.03	160+10.95	160+30.87	160+50.75	160+70.63	160+90.52	161+10.42	161+30.39	161+50.38	161+70.37
	ELEVATION	810.55	810.67	810.76	810.81	810.87	811.00	811.13	811.20	811.27	811.40	811.52	811.60	811.66	811.80	811.93	812.00
RIGHT GUTTER LINE	STATION	158+90.19	159+06.10	159+22.01	159+37.93	159+53.85	159+73.78	159+93.72	160+13.65	160+33.60	160+53.50	160+73.41	160+93.33	161+13.25	161+33.25	161+53.26	161+73.27
	ELEVATION	810.30	810.42	810.51	810.56	810.62	810.75	810.88	810.95	811.02	811.15	811.27	811.35	811.42	811.55	811.67	811.75

SCREED ELEVATION TABLE - LEFT STRUCTURE

LOCATION		SPAN 5				
		℄ PIER 4	¼PT	½PT	¾PT	℄ BRG. FWD. ABUT.
LEFT GUTTER LINE	STATION	161+82.82	161+98.73	162+14.64	162+30.56	162+46.48
	ELEVATION	811.92	812.02	812.12	812.19	812.24
CROWN	STATION	161+85.53	162+01.43	162+17.34	162+33.25	162+49.16
	ELEVATION	812.47	812.57	812.67	812.75	812.79
LEFT CONSTRUCTION JOINT	STATION	161+88.45	162+04.34	162+20.24	162+36.14	162+52.05
	ELEVATION	812.15	812.25	812.36	812.43	812.47
RIGHT CONSTRUCTION JOINT	STATION	161+89.25	162+05.15	162+21.04	162+36.94	162+52.84
	ELEVATION	812.23	812.33	812.43	812.51	812.55
PROFILE GRADE	STATION	161+90.36	162+06.25	162+22.14	162+38.04	162+53.94
	ELEVATION	812.06	812.16	812.27	812.34	812.38
RIGHT GUTTER LINE	STATION	161+93.29	162+09.17	162+25.06	162+40.95	162+56.84
	ELEVATION	811.82	811.91	812.02	812.09	812.13

NOTES:

1. SCREED ELEVATIONS SHOWN REPRESENT THE THEORETICAL DECK SURFACE LOCATION PRIOR TO DEFLECTION CAUSED BY DECK PLACEMENT AND OTHER ANTICIPATED DEAD LOADS.
2. FOR LOCATION OF SCREED ELEVATIONS, SEE SHEET 47/62 .
3. FOR ABBREVIATION SEE SHEET 5/62 .

DESIGN AGENCY
KCI ASSOCIATES OF OHIO, P.A.
388 S. MAIN ST., SUITE 401
AKRON, OHIO 44311

DESIGNED SLH | DRAWN JLS | CHECKED RKP | REVIEWED FJB | DATE 6/5/09 | REVISED | STRUCTURE FILE NUMBER 04042681

SCREED ELEVATIONS - LEFT STRUCTURE
BRIDGE NO. ATB-90-1583 L
I-90 OVER ASHTABULA RIVER

ATB-90-14.25
PID No. 25199

SCREED ELEVATION TABLE - RIGHT STRUCTURE

LOCATION		SPAN 1					SPAN 2				SPAN 3				SPAN 4		
		℄ BRG. REAR ABUT.	¼PT	½PT	¾PT	**℄ PIER 1**	¼PT	½PT	¾PT	℄ PIER 2	¼PT	½PT	¾PT	℄ PIER 3	¼PT	½PT	¾PT
LEFT GUTTER LINE	STATION	158+96.75	159+12.77	159+28.80	159+44.83	159+60.87	159+80.88	160+00.90	160+20.92	160+40.95	160+60.99	160+81.04	161+01.09	161+21.14	161+41.22	161+61.29	161+81.38
	ELEVATION	810.34	810.46	810.55	810.60	810.66	810.79	810.92	810.99	811.06	811.19	811.32	811.39	811.46	811.59	811.72	811.79
PROFILE GRADE /CROWN	STATION	158+97.91	159+13.94	159+29.98	159+46.02	159+62.07	159+82.09	160+02.12	160+22.15	160+42.19	160+62.24	160+82.30	161+02.36	161+22.43	161+42.51	161+62.60	161+82.70
	ELEVATION	810.60	810.72	810.81	810.87	810.92	811.06	811.18	811.26	811.32	811.46	811.58	811.66	811.72	811.86	811.99	812.06
RIGHT GUTTER LINE	STATION	159+04.63	159+20.71	159+36.80	159+52.89	159+68.99	159+89.08	160+09.17	160+29.27	160+49.37	160+69.48	160+89.60	161+09.73	161+29.86	161+50.01	161+70.16	161+90.32
	ELEVATION	809.96	810.08	810.17	810.22	810.28	810.42	810.54	810.62	810.68	810.82	810.94	811.02	811.09	811.22	811.34	811.42

SCREED ELEVATION TABLE - RIGHT STRUCTURE

LOCATION		SPAN 5				
		℄ PIER 4	¼PT	½PT	¾PT	℄ BRG. FWD. ABUT.
LEFT GUTTER LINE	STATION	162+01.47	162+17.47	162+33.47	162+49.48	162+65.50
	ELEVATION	811.86	811.96	812.06	812.14	812.18
PROFILE GRADE /CROWN	STATION	162+02.80	162+18.81	162+34.82	162+50.84	162+66.86
	ELEVATION	812.13	812.23	812.33	812.40	812.44
RIGHT GUTTER LINE	STATION	162+10.49	162+26.55	162+42.61	162+58.68	162+74.75
	ELEVATION	811.49	811.59	811.69	811.76	811.81

NOTES:

1. SCREED ELEVATIONS SHOWN REPRESENT THE THEORETICAL DECK SURFACE LOCATION PRIOR TO DEFLECTION CAUSED BY DECK PLACEMENT AND OTHER ANTICIPATED DEAD LOADS.
2. FOR LOCATION OF SCREED ELEVATIONS, SEE SHEET 50/62 .
3. FOR ABBREVIATION SEE SHEET 5/62 .

DESIGN AGENCY
KCI ASSOCIATES OF OHIO, P.A.
388 S. MAIN ST., SUITE 401
AKRON, OHIO 44311

DESIGNED SLH | DRAWN JLS | REVIEWED FJB | DATE 6/5/09
CHECKED RKP | REVISED | STRUCTURE FILE NUMBER 0404292R

SCREED ELEVATIONS - RIGHT STRUCTURE
BRIDGE NO. ATB-90-1583 R
I-90 OVER ASHTABULA RIVER

ATB-90-14.25
PID No. 25199

TOP OF HAUNCH ELEVATION TABLE - LEFT STRUCTURE

LOCATION		SPAN 1					SPAN 2					SPAN 3					SPAN 4				
		℄ BRG. REAR ABUT.	¼PT	½PT	¾PT	℄ PIER 1	SPLICE #1	¼PT	½PT	¾PT	℄ PIER 2	SPLICE #2	¼PT	½PT	¾PT	℄ PIER 3	SPLICE #3	¼PT	½PT	¾PT
BEAM 1	STATION	158+81.13	158+97.01	159+12.89	159+28.78	159+44.67	159+61.06	159+64.54	159+84.42	160+04.30	160+24.18	160+41.07	160+44.01	160+63.83	160+83.66	161+03.49	161+20.39	161+23.40	161+43.30	161+63.20
	ELEVATION	809.72	809.85	809.94	810.01	810.07	810.19	810.21	810.34	810.42	810.49	810.60	810.62	810.75	810.82	810.89	811.00	811.02	811.14	811.21
BEAM 2	STATION	158+82.58	158+98.47	159+14.37	159+30.26	159+46.16	159+62.57	159+66.05	159+85.94	160+05.83	160+25.72	160+42.63	160+45.56	160+65.41	160+85.25	161+05.09	161+22.00	161+25.01	161+44.92	161+64.84
	ELEVATION	810.06	810.19	810.28	810.34	810.41	810.52	810.55	810.68	810.76	810.83	810.94	810.96	811.08	811.16	811.22	811.33	811.36	811.48	811.54
BEAM 3	STATION	158+84.03	158+99.93	159+15.84	159+31.75	159+47.65	159+64.07	159+67.56	159+87.46	160+07.37	160+27.27	160+44.19	160+47.13	160+66.98	160+86.84	161+06.69	161+23.61	161+26.62	161+46.55	161+66.48
	ELEVATION	810.19	810.31	810.39	810.44	810.50	810.60	810.63	810.75	810.82	810.88	810.99	811.01	811.14	811.21	811.28	811.39	811.41	811.54	811.62
BEAM 4	STATION	158+85.48	159+01.40	159+17.32	159+33.23	159+49.15	159+65.58	159+69.07	159+88.98	160+08.90	160+28.82	160+45.75	160+48.69	160+68.56	160+88.43	161+08.30	161+25.23	161+28.24	161+48.18	161+68.13
	ELEVATION	810.05	810.25	810.25	810.30	810.36	810.46	810.49	810.61	810.68	810.74	810.85	810.87	811.00	811.07	811.14	811.25	811.27	811.40	811.48
BEAM 5	STATION	158+86.94	159+02.87	159+18.79	159+34.72	159+50.65	159+67.09	159+70.58	159+90.51	160+10.44	160+30.37	160+47.31	160+50.26	160+70.14	160+90.02	161+09.90	161+26.84	161+29.86	161+49.82	161+69.77
	ELEVATION	809.91	810.02	810.11	810.16	810.21	810.32	810.34	810.47	810.54	810.60	810.71	810.73	810.86	810.93	811.00	811.11	811.13	811.26	811.34
BEAM 6	STATION	158+88.40	159+04.33	159+20.27	159+36.21	159+52.15	159+68.60	159+72.09	159+92.04	160+11.98	160+31.93	160+48.88	160+51.82	160+71.72	160+91.62	161+11.51	161+28.46	161+31.48	161+51.45	161+71.42
	ELEVATION	809.77	809.88	809.97	810.02	810.07	810.18	810.20	810.33	810.40	810.46	810.57	810.59	810.72	810.79	810.86	810.97	810.99	811.12	811.20
BEAM 7	STATION	158+89.86	159+05.81	159+21.75	159+37.70	159+53.65	159+70.12	159+73.61	159+93.57	160+13.53	160+33.48	160+50.45	160+53.39	160+73.30	160+93.21	161+13.12	161+30.08	161+33.10	161+53.09	161+73.07
	ELEVATION	809.63	809.74	809.82	809.87	809.93	810.04	810.06	810.18	810.25	810.32	810.43	810.45	810.57	810.65	810.72	810.83	810.85	810.98	811.06

TOP OF HAUNCH ELEVATION TABLE - LEFT STRUCTURE

LOCATION		SPAN 5					
		℄ PIER 4	¼PT	SPLICE #4	½PT	¾PT	℄ BRG. FWD. ABUT.
BEAM 1	STATION	161+83.10	161+98.98	161+99.50	162+14.86	162+30.73	162+46.61
	ELEVATION	811.26	811.36	811.36	811.45	811.52	811.55
BEAM 2	STATION	161+84.76	162+00.63	162+01.16	162+16.50	162+32.37	162+48.24
	ELEVATION	811.60	811.70	811.70	811.79	811.86	811.89
BEAM 3	STATION	161+86.41	162+02.28	162+02.83	162+18.14	162+34.01	162+49.88
	ELEVATION	811.69	811.79	811.79	811.90	811.97	812.02
BEAM 4	STATION	161+88.07	162+03.93	162+04.50	162+19.79	162+35.65	162+51.51
	ELEVATION	811.55	811.65	811.65	811.76	811.83	811.88
BEAM 5	STATION	161+89.73	162+05.58	162+06.17	162+21.44	162+37.30	162+53.15
	ELEVATION	811.41	811.51	811.51	811.62	811.69	811.74
BEAM 6	STATION	161+91.39	162+07.24	162+07.84	162+23.09	162+38.94	162+54.79
	ELEVATION	811.27	811.37	811.37	811.48	811.55	811.60
BEAM 7	STATION	161+93.05	162+08.90	162+09.51	162+24.74	162+40.59	162+56.44
	ELEVATION	811.13	811.23	811.23	811.33	811.41	811.46

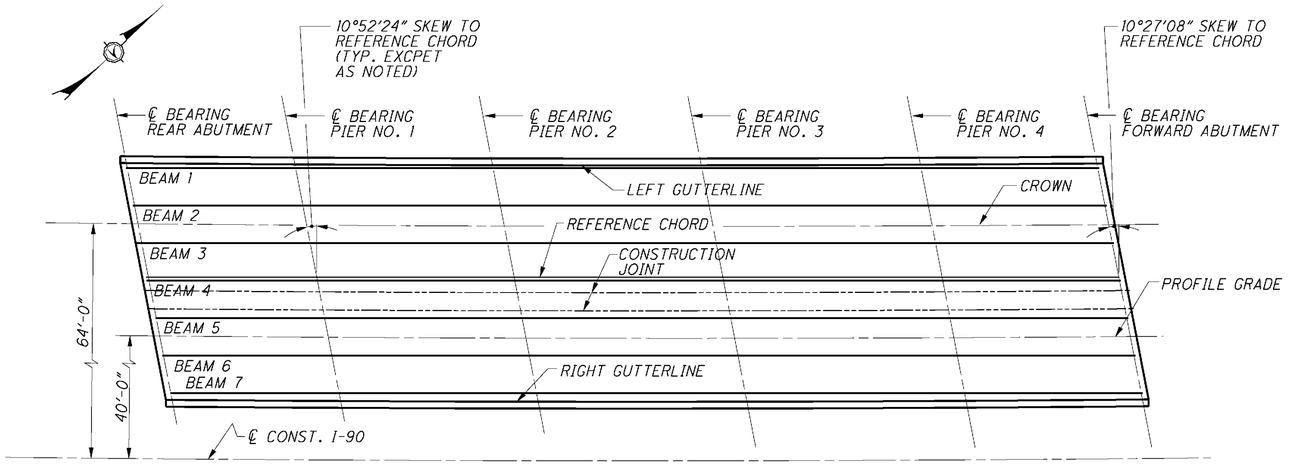

LOCATION KEY

NOTES:

1. TOP OF HAUNCH ELEVATIONS SHOWN REPRESENT THE THEORETICAL LOCATION OF THE BOTTOM OF THE DECK ABOVE THE BEAM HAUNCH PRIOR TO DEFLECTIONS CAUSED BY DECK PLACEMENT AND OTHER ANTICIPATED DEAD LOADS.
2. FOR LOCATION OF TOP OF HAUNCH ELEVATIONS, SEE SHEET 34/62 , 35/62 AND 47/62 .
3. FOR ABBREVIATION SEE SHEET 5/62 .

DESIGN AGENCY
KCI ASSOCIATES OF OHIO, P.A.
388 S. MAIN ST., SUITE 401
AKRON, OHIO 44311

DESIGNED SLH | DRAWN JLS | CHECKED RKP | REVIEWED FJB | DATE 6/5/09 | REVISED | STRUCTURE TILE NUMBER 04042681

TOP OF HAUNCH ELEVATIONS - LEFT STRUCTURE
BRIDGE NO. ATB-90-1583 L
I-90 OVER ASHTABULA RIVER

ATB-90-14.25
PID No. 25199

TOP OF HAUNCH ELEVATION TABLE - RIGHT STRUCTURE

LOCATION		SPAN 1					SPAN 2					SPAN 3					SPAN 4				
		℄ BRG. REAR ABUT.	¼PT	½PT	¾PT	**℄ PIER 1**	SPLICE #1	¼PT	½PT	¾PT	℄ PIER 2	SPLICE #2	¼PT	½PT	¾PT	℄ PIER 3	SPLICE #3	¼PT	½PT	¾PT
BEAM 8	STATION	158+96.86	159+12.93	159+29.00	159+45.07	159+61.14	159+77.69	159+81.19	160+01.24	160+21.29	160+41.34	160+58.39	160+61.39	160+81.44	161+01.50	161+21.55	161+38.60	161+41.61	161+61.67	161+81.73
	ELEVATION	809.65	809.78	809.88	809.94	810.01	810.12	810.15	810.28	810.36	810.43	810.54	810.56	810.69	810.77	810.83	810.94	810.96	811.08	811.15
BEAM 9	STATION	158+98.34	159+14.42	159+30.50	159+46.58	159+62.66	159+79.22	159+82.72	160+02.79	160+22.85	160+42.91	160+59.97	160+62.98	160+83.05	161+03.11	161+23.18	161+40.24	161+43.25	161+63.33	161+83.40
	ELEVATION	809.85	809.97	810.05	810.10	810.16	810.27	810.29	810.41	810.49	810.55	810.66	810.68	810.81	810.88	810.95	811.06	811.09	811.21	811.29
BEAM 10	STATION	158+99.82	159+15.91	159+32.00	159+48.09	159+64.19	159+80.76	159+84.26	160+04.34	160+24.41	160+44.49	160+61.56	160+64.57	160+84.65	161+04.73	161+24.81	161+41.88	161+44.90	161+64.98	161+85.07
	ELEVATION	809.71	809.83	809.91	809.96	810.02	810.12	810.15	810.27	810.34	811.41	810.52	810.54	810.67	810.74	810.81	810.92	810.95	811.07	811.15
BEAM 11	STATION	159+01.30	159+17.40	159+33.51	159+49.61	159+65.71	159+82.29	159+85.80	160+05.89	160+25.98	160+46.07	160+63.15	160+66.16	160+86.25	161+06.35	161+26.44	161+43.53	161+46.54	161+66.64	161+86.74
	ELEVATION	809.57	809.69	809.77	809.82	809.88	809.98	810.01	810.13	810.20	810.27	810.38	810.40	810.53	810.60	810.67	810.78	810.81	810.93	811.01
BEAM 12	STATION	159+02.78	159+18.90	159+35.01	159+51.12	159+67.24	159+83.83	159+87.34	160+07.44	160+27.55	160+47.65	160+64.75	160+67.76	160+87.87	161+07.97	161+28.08	161+45.17	161+48.19	161+68.31	161+88.42
	ELEVATION	809.43	809.54	809.63	809.68	809.74	809.84	809.87	809.99	810.06	810.13	810.24	810.26	810.38	810.46	810.53	810.64	810.67	810.79	810.87
BEAM 13	STATION	159+04.27	159+20.39	159+36.52	159+52.64	159+68.77	159+85.37	159+88.88	160+09.00	160+29.12	160+49.24	160+66.34	160+69.36	160+89.48	161+09.60	161+29.72	161+46.82	161+49.84	161+69.97	161+90.10
	ELEVATION	809.29	809.40	809.48	809.54	809.59	809.70	809.72	809.85	809.92	809.99	810.10	810.12	810.24	810.32	810.39	810.50	810.52	810.65	810.73

TOP OF HAUNCH ELEVATION TABLE - RIGHT STRUCTURE

LOCATION		SPAN 5					
		℄ PIER 4	¼PT	SPLICE #4	½PT	¾PT	℄ BRG. FWD. ABUT.
BEAM 8	STATION	162+01.79	162+17.76	162+18.33	162+33.72	162+49.69	162+65.66
	ELEVATION	811.21	811.31	811.31	811.40	811.47	811.50
BEAM 9	STATION	162+03.47	162+19.45	162+20.03	162+35.43	162+51.41	162+67.39
	ELEVATION	811.36	811.46	811.47	811.57	811.65	811.69
BEAM 10	STATION	162+05.16	162+21.15	162+21.72	162+37.14	162+53.12	162+69.11
	ELEVATION	811.22	811.32	811.33	811.43	811.51	811.55
BEAM 11	STATION	162+06.84	162+22.84	162+23.42	162+38.85	162+54.85	162+70.84
	ELEVATION	811.08	811.18	811.19	811.29	811.37	811.41
BEAM 12	STATION	162+08.53	162+24.55	162+25.12	162+40.56	162+56.57	162+72.58
	ELEVATION	810.94	811.04	811.05	811.15	811.23	811.27
BEAM 13	STATION	162+10.23	162+26.25	162+26.83	162+42.27	162+58.29	162+74.31
	ELEVATION	810.80	810.90	810.91	811.01	811.09	811.13

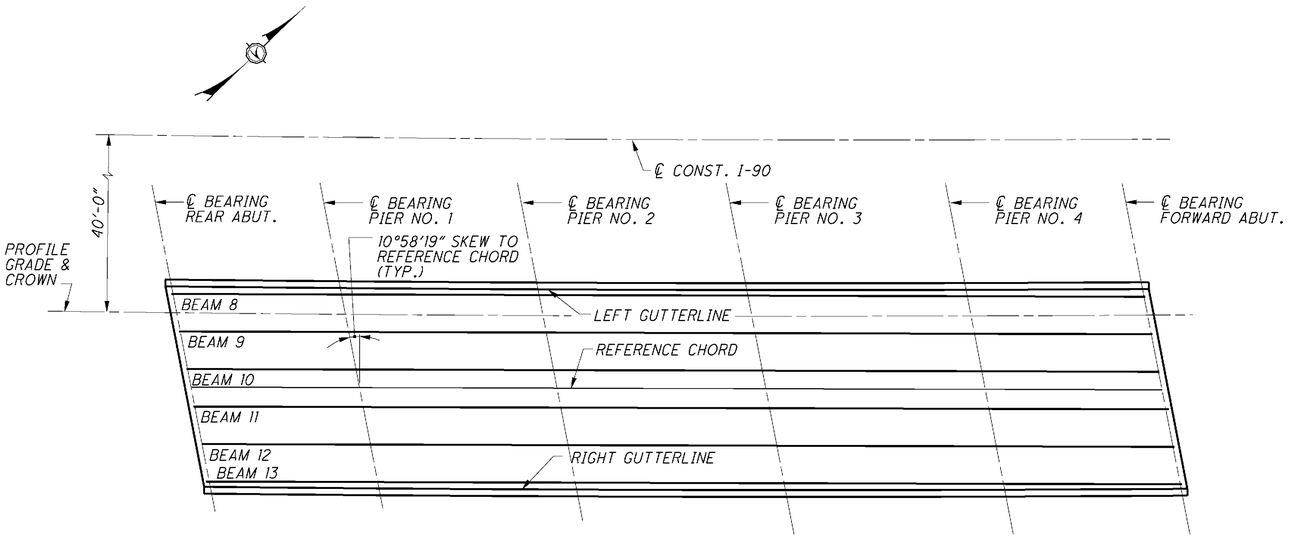

LOCATION KEY

NOTES:

1. TOP OF HAUNCH ELEVATIONS SHOWN REPRESENT THE THEORETICAL LOCATION OF THE BOTTOM OF THE DECK ABOVE THE BEAM HAUNCH PRIOR TO DEFLECTIONS CAUSED BY DECK PLACEMENT AND OTHER ANTICIPATED DEAD LOADS.
2. FOR LOCATION OF TOP OF HAUNCH ELEVATIONS, SEE SHEET 36/62 , 37/62 AND 50/62 .
3. FOR ABBREVIATION SEE SHEET 5/62 .

DESIGN AGENCY
KCI ASSOCIATES OF OHIO, P.A.
388 S. MAIN ST., SUITE 401
AKRON, OHIO 44311

DESIGNED SLH | DRAWN JLS | REVIEWED FJB | DATE 6/5/09

CHECKED RKP | REVISED | STRUCTURE TITLE NUMBER 0404292R

TOP OF HAUNCH ELEVATIONS - RIGHT STRUCTURE

BRIDGE NO. ATB-90-1583 R
I-90 OVER ASHTABULA RIVER

ATB-90-14.25
PID No. 25199

FINAL DECK SURFACE ELEVATION TABLE - LEFT STRUCTURE

LOCATION		SPAN 1					SPAN 2						SPAN 3						SPAN 4		
		℄ BRG. REAR ABUT.	¼PT	½PT	¾PT	℄ PIER 1	SPLICE #1	¼PT	½PT	¾PT	℄ PIER 2	SPLICE #2	¼PT	½PT	¾PT	℄ PIER 3	SPLICE #3	¼PT	½PT	¾PT
LEFT GUTTER LINE	STATION	158+81.04	158+96.88	159+12.73	159+28.58	159+44.43	-	159+64.27	159+84.12	160+03.97	160+23.83	-	160+43.64	160+63.47	160+83.29	161+03.13	-	161+23.04	161+42.96	161+62.89
	ELEVATION	810.41	810.49	810.57	810.65	810.73	-	810.83	810.93	811.03	811.12	-	811.22	811.32	811.42	811.52	-	811.62	811.72	811.82
BEAM 1	STATION	158+81.13	158+97.01	159+12.89	159+28.78	159+44.67	159+61.06	159+64.54	159+84.42	160+04.30	160+24.18	160+41.07	160+44.01	160+63.83	160+83.66	161+03.49	161+20.39	161+23.40	161+43.30	161+63.20
	ELEVATION	810.43	810.52	810.61	810.70	810.78	810.87	810.89	810.99	811.10	811.20	811.29	811.30	811.40	811.50	811.60	811.68	811.69	811.79	811.88
BEAM 2	STATION	158+82.58	158+98.47	159+14.37	159+30.26	159+46.16	159+62.57	159+66.05	159+85.94	160+05.83	160+25.72	160+42.63	160+45.56	160+65.41	160+85.25	161+05.09	161+22.00	161+25.01	161+44.92	161+64.84
	ELEVATION	810.77	810.86	810.95	811.03	811.12	811.21	811.23	811.33	811.44	811.54	811.62	811.64	811.74	811.84	811.93	812.02	812.03	812.13	812.22
CROWN	STATION	158+83.41	158+99.27	159+15.13	159+31.00	159+46.87	-	159+66.73	159+86.60	160+06.48	160+26.36	-	160+46.20	160+66.04	160+85.89	161+05.75	-	161+25.68	161+45.63	161+65.58
	ELEVATION	810.96	811.04	811.12	811.20	811.28	-	811.38	811.48	811.58	811.68	-	811.78	811.87	811.97	812.07	-	812.17	812.27	812.37
BEAM 3	STATION	158+84.03	158+99.93	159+15.84	159+31.75	159+47.65	159+64.07	159+67.56	159+87.46	160+07.37	160+27.27	160+44.19	160+47.13	160+66.98	160+86.84	161+06.69	161+23.61	161+26.62	161+46.55	161+66.48
	ELEVATION	810.90	810.98	811.05	811.13	811.21	811.29	811.30	811.40	811.50	811.59	811.68	811.69	811.79	811.89	811.99	812.08	812.09	812.19	812.29
BEAM 4	STATION	158+85.48	159+01.40	159+17.32	159+33.23	159+49.15	159+65.58	159+69.07	159+88.98	160+08.90	160+28.82	160+45.75	160+48.69	160+68.56	160+88.43	161+08.30	161+25.23	161+28.24	161+48.18	161+68.13
	ELEVATION	810.76	810.84	810.91	810.99	811.07	811.14	811.16	811.26	811.36	811.45	811.54	811.55	811.65	811.75	811.85	811.94	811.95	812.05	812.15
LEFT CONSTRUCTION JOINT	STATION	158+85.95	159+01.83	159+17.72	159+33.60	159+49.49	-	159+69.38	159+89.28	160+09.17	160+29.08	-	160+48.94	161+68.81	160+88.69	161+08.57	-	161+28.53	161+48.49	161+68.47
	ELEVATION	810.64	810.72	810.80	810.88	810.96	-	811.06	811.16	811.26	811.36	-	811.46	811.56	811.65	811.75	-	811.85	811.95	812.05
RIGHT CONSTRUCTION JOINT	STATION	158+86.66	159+02.54	159+18.43	159+34.32	159+50.22	-	159+70.11	159+90.01	160+09.92	160+29.83	-	160+49.70	160+69.58	160+89.46	161+09.34	-	161+29.31	161+49.29	161+69.27
	ELEVATION	810.72	810.80	810.88	810.96	811.04	-	811.14	811.23	811.33	811.43	-	811.53	811.63	811.73	811.83	-	811.93	812.03	812.13
BEAM 5	STATION	158+86.94	159+02.87	159+18.79	159+34.72	159+50.65	159+67.09	159+70.58	159+90.51	160+10.44	160+30.37	160+47.31	160+50.26	160+70.14	160+90.02	161+09.90	161+26.84	161+29.86	161+49.82	161+69.77
	ELEVATION	810.62	810.70	810.77	810.85	810.92	811.00	811.02	811.12	811.21	811.31	811.40	811.41	811.51	811.61	811.71	811.79	811.81	811.91	812.01
PROFILE GRADE	STATION	158+87.63	159+03.52	159+19.42	159+35.31	159+51.22	-	159+71.12	159+91.03	160+10.95	160+30.87	-	160+50.75	160+70.63	160+90.52	161+10.42	-	161+30.39	161+50.38	161+70.37
	ELEVATION	810.55	810.63	810.71	810.79	810.87	-	810.97	811.07	811.17	811.27	-	811.37	811.47	811.57	811.66	-	811.76	811.86	811.96
BEAM 6	STATION	158+88.40	159+04.33	159+20.27	159+36.21	159+52.15	159+68.60	159+72.09	159+92.04	160+11.98	160+31.93	160+48.88	160+51.82	160+71.72	160+91.62	161+11.51	161+28.46	161+31.48	161+51.45	161+71.42
	ELEVATION	810.48	810.55	810.63	810.71	810.78	810.86	810.88	810.98	811.07	811.17	811.26	811.27	811.37	811.47	811.57	811.65	811.67	811.77	811.87
BEAM 7	STATION	158+89.86	159+05.81	159+21.75	159+37.70	159+53.65	159+70.12	159+73.61	159+93.57	160+13.53	160+33.48	160+50.45	160+53.39	160+73.30	160+93.21	161+13.12	161+30.08	161+33.10	161+53.09	161+73.07
	ELEVATION	810.34	810.41	810.49	810.56	810.64	810.72	810.74	810.83	810.93	811.03	811.11	811.13	811.23	811.33	811.43	811.51	811.53	811.63	811.73
RIGHT GUTTER LINE	STATION	158+90.19	159+06.10	159+22.01	159+37.93	159+53.85	-	159+73.78	159+93.72	160+13.65	160+33.60	-	160+53.50	160+73.41	160+93.33	161+13.25	-	161+33.25	161+53.26	161+73.27
	ELEVATION	810.30	810.38	810.46	810.54	810.62	-	810.72	810.82	810.92	811.02	-	811.12	811.22	811.32	811.42	-	811.52	811.62	811.72

FINAL DECK SURFACE ELEVATION TABLE - LEFT STRUCTURE

LOCATION		SPAN 5					
		℄ PIER 4	¼PT	SPLICE #4	½PT	¾PT	℄ BRG. FWD. ABUT.
LEFT GUTTER LINE	STATION	161+82.82	161+98.73	-	162+14.64	162+30.56	162+46.48
	ELEVATION	811.92	812.00	-	812.08	812.16	812.24
BEAM 1	STATION	161+83.10	161+98.98	161+99.50	162+14.86	162+30.73	162+46.61
	ELEVATION	811.97	812.05	812.05	812.12	812.19	812.26
BEAM 2	STATION	161+84.76	162+00.63	162+01.16	162+16.50	162+32.37	162+48.24
	ELEVATION	812.31	812.39	812.39	812.46	812.53	812.60
CROWN	STATION	161+85.53	162+01.43	-	162+17.34	162+33.25	162+49.16
	ELEVATION	812.47	812.55	-	812.63	812.71	812.79
BEAM 3	STATION	161+86.41	162+02.28	162+02.83	162+18.14	162+34.01	162+49.88
	ELEVATION	812.40	812.48	812.48	812.56	812.64	812.73
BEAM 4	STATION	161+88.07	162+03.93	162+04.50	162+19.79	162+35.65	162+51.51
	ELEVATION	812.26	812.34	812.34	812.42	812.50	812.59
LEFT CONSTRUCTION JOINT	STATION	161+88.45	162+04.34	-	162+20.24	162+36.14	162+52.05
	ELEVATION	812.15	812.23	-	812.31	812.39	812.47
RIGHT CONSTRUCTION JOINT	STATION	161+89.25	162+05.15	-	162+21.04	162+36.94	162+52.84
	ELEVATION	812.23	812.31	-	812.39	812.47	812.55
BEAM 5	STATION	161+89.73	162+05.58	162+06.17	162+21.44	162+37.30	162+53.15
	ELEVATION	812.12	812.20	812.20	812.28	812.36	812.45
PROFILE GRADE	STATION	161+90.36	162+06.25	-	162+22.14	162+38.04	162+53.94
	ELEVATION	812.06	812.14	-	812.22	812.30	812.38
BEAM 6	STATION	161+91.39	162+07.24	162+07.84	162+23.09	162+38.94	162+54.79
	ELEVATION	811.98	812.06	812.06	812.14	812.22	812.31
BEAM 7	STATION	161+93.05	162+08.90	162+09.51	162+24.74	162+40.59	162+56.44
	ELEVATION	811.84	811.92	811.92	812.00	812.08	812.17
RIGHT GUTTER LINE	STATION	161+93.29	162+09.17	-	162+25.06	162+40.95	162+56.84
	ELEVATION	811.82	811.90	-	811.98	812.05	812.13

NOTES:

1. FINAL DECK SURFACE ELEVATIONS SHOWN REPRESENT THE DECK SURFACE LOCATION AFTER ALL ANTICIPATED DEAD LOAD DEFLECTIONS HAVE OCCURRED.
2. FOR LOCATION OF FINAL DECK SURFACE ELEVATIONS, SEE SHEET 47/62 , 48/62 AND 49/62.
3. FOR ABBREVIATIONS SEE SHEET 5/62.
4. FOR LOCATION KEY PLAN, SEE SHEET 43/62 .

DESIGN AGENCY
KCI ASSOCIATES OF OHIO, P.A.
388 S. MAIN ST., SUITE 401
AKRON, OHIO 44311

DESIGNED SLH | DRAWN JLS | CHECKED RKP | REVIEWED FJB | DATE 6/5/09 | REVISED | STRUCTURE FILE NUMBER 04042681

FINAL DECK SURFACE ELEVATIONS - LEFT STRUCTURE
BRIDGE NO. ATB-90-1583 L
I-90 OVER ASHTABULA RIVER

ATB-90-14.25
PID No. 25199

FINAL DECK SURFACE ELEVATION TABLE - RIGHT STRUCTURE

LOCATION		SPAN 1					SPAN 2					SPAN 3					SPAN 4				
		℄ BRG. REAR ABUT.	1/4PT	1/2PT	3/4PT	℄ PIER 1	SPLICE #1	1/4PT	1/2PT	3/4PT	℄ PIER 2	SPLICE #2	1/4PT	1/2PT	3/4PT	℄ PIER 3	SPLICE #3	1/4PT	1/2PT	3/4PT
LEFT GUTTER LINE	STATION	158+96.75	159+12.77	159+28.80	159+44.83	159+60.87	-	159+80.88	160+00.90	160+20.92	160+40.95	-	160+60.99	160+81.04	161+01.09	161+21.14	-	161+41.22	161+61.29	161+81.38
	ELEVATION	810.34	810.42	810.50	810.58	810.66	-	810.76	810.86	810.96	811.06	-	811.16	811.26	811.36	811.46	-	811.56	811.66	811.76
BEAM 8	STATION	158+96.86	159+12.93	159+29.00	159+45.07	159+61.14	159+77.69	159+81.19	160+01.24	160+21.29	160+41.34	160+58.39	160+61.39	160+81.44	161+01.50	161+21.55	161+38.60	161+41.61	161+61.67	161+81.73
	ELEVATION	810.36	810.45	810.54	810.63	810.72	810.81	810.83	810.93	811.04	811.14	811.23	811.24	811.34	811.44	811.54	811.62	811.64	811.73	811.83
PROFILE GRADE /CROWN	STATION	158+97.91	159+13.94	159+29.98	159+46.02	159+62.07	-	159+82.09	160+02.12	160+22.15	160+42.19	-	160+62.24	160+82.30	161+02.36	161+22.43	-	161+42.51	161+62.60	161+82.70
	ELEVATION	810.60	810.68	810.76	810.84	810.92	-	811.02	811.12	811.22	811.32	-	811.42	811.52	811.62	811.72	-	811.82	811.92	812.02
BEAM 9	STATION	158+98.34	159+14.42	159+30.50	159+46.58	159+62.66	159+79.22	159+82.72	160+02.79	160+22.85	160+42.91	160+59.97	160+62.98	160+83.05	161+03.11	161+23.18	161+40.24	161+43.25	161+63.33	161+83.40
	ELEVATION	810.56	810.64	810.72	810.79	810.87	810.95	810.97	811.06	811.16	811.26	811.34	811.36	811.46	811.56	811.66	811.75	811.76	811.86	811.97
BEAM 10	STATION	158+99.82	159+15.91	159+32.00	159+48.09	159+64.19	159+80.76	159+84.26	160+04.34	160+24.41	160+44.49	160+61.56	160+64.57	160+84.65	161+04.73	161+24.81	161+41.88	161+44.90	161+64.98	161+85.07
	ELEVATION	810.42	810.50	810.57	810.65	810.73	810.81	810.82	810.92	811.02	811.12	811.20	811.22	811.32	811.42	811.52	811.61	811.62	811.72	811.83
BEAM 11	STATION	159+01.30	159+17.40	159+33.51	159+49.61	159+65.71	159+82.29	159+85.80	160+05.89	160+25.98	160+46.07	160+63.15	160+66.16	160+86.25	161+06.35	161+26.44	161+43.53	161+46.54	161+66.64	161+86.74
	ELEVATION	810.28	810.36	810.43	810.51	810.59	810.67	810.68	810.78	810.88	810.98	811.06	811.08	811.18	811.28	811.38	811.47	811.48	811.58	811.69
BEAM 12	STATION	159+02.78	159+18.90	159+35.01	159+51.12	159+67.24	159+83.83	159+87.34	160+07.44	160+27.55	160+47.65	160+64.75	160+67.76	160+87.87	161+07.97	161+28.08	161+45.17	161+48.19	161+68.31	161+88.42
	ELEVATION	810.14	810.21	810.29	810.37	810.45	810.53	810.54	810.64	810.74	810.84	810.92	810.94	811.04	811.14	811.24	811.33	811.34	811.44	811.55
BEAM 13	STATION	159+04.27	159+20.39	159+36.52	159+52.64	159+68.77	159+85.37	159+88.88	160+09.00	160+29.12	160+49.24	160+66.34	160+69.36	160+89.48	161+09.60	161+29.72	161+46.82	161+49.84	161+69.97	161+90.10
	ELEVATION	810.00	810.07	810.15	810.23	810.30	810.38	810.40	810.50	810.60	810.70	810.78	810.80	810.90	811.00	811.10	811.19	811.20	811.30	811.41
RIGHT GUTTER LINE	STATION	159+04.63	159+20.71	159+36.80	159+52.89	159+68.99	-	159+89.08	160+09.17	160+29.27	160+49.37	-	160+69.48	160+89.60	161+09.73	161+29.86	-	161+50.01	161+70.16	161+90.32
	ELEVATION	809.96	810.04	810.12	810.20	810.28	-	810.38	810.48	810.58	810.68	-	810.79	810.89	810.99	811.09	-	811.19	811.29	811.39

FINAL DECK SURFACE ELEVATION TABLE - RIGHT STRUCTURE

LOCATION		SPAN 5					
		℄ PIER 4	1/4PT	SPLICE #4	1/2PT	3/4PT	℄ BRG. FWD. ABUT.
LEFT GUTTER LINE	STATION	162+01.47	162+17.47	-	162+33.47	162+49.48	162+65.50
	ELEVATION	811.86	811.94	-	812.02	812.10	812.18
BEAM 8	STATION	162+01.79	162+17.76	162+18.33	162+33.72	162+49.69	162+65.66
	ELEVATION	811.92	811.99	812.00	812.07	812.14	812.21
PROFILE GRADE /CROWN	STATION	162+02.80	162+18.81	-	162+34.82	162+50.84	162+66.86
	ELEVATION	812.13	812.20	-	812.28	812.36	812.44
BEAM 9	STATION	162+03.47	162+19.45	162+20.03	162+35.43	162+51.41	162+67.39
	ELEVATION	812.07	812.15	812.16	812.24	812.32	812.40
BEAM 10	STATION	162+05.16	162+21.15	162+21.72	162+37.14	162+53.12	162+69.11
	ELEVATION	811.93	812.01	812.02	812.10	812.18	812.26
BEAM 11	STATION	162+06.84	162+22.84	162+23.42	162+38.85	162+54.85	162+70.84
	ELEVATION	811.79	811.87	811.88	811.96	812.04	812.12
BEAM 12	STATION	162+08.53	162+24.55	162+25.12	162+40.56	162+56.57	162+72.58
	ELEVATION	811.65	811.73	811.74	811.82	811.90	811.98
BEAM 13	STATION	162+10.23	162+26.25	162+26.83	162+42.27	162+58.29	162+74.31
	ELEVATION	811.51	811.59	811.60	811.68	811.76	811.84
RIGHT GUTTER LINE	STATION	162+10.49	162+26.55	-	162+42.61	162+58.68	162+74.75
	ELEVATION	811.49	811.57	-	811.65	811.73	811.81

NOTES:

1. FINAL DECK SURFACE ELEVATIONS SHOWN REPRESENT THE DECK SURFACE LOCATION AFTER ALL ANTICIPATED DEAD LOAD DEFLECTIONS HAVE OCCURRED.
2. FOR LOCATION OF FINAL DECK SURFACE ELEVATIONS, SEE SHEET 50/62 , 51/62 AND 52/62 .
3. FOR ABBREVIATIONS SEE SHEET 5/62 .
4. FOR LOCATION KEY PLAN, SEE SHEET 44/62 .

DESIGN AGENCY
KCI ASSOCIATES OF OHIO, P.A.
388 S. MAIN ST., SUITE 401
AKRON, OHIO 44311

DESIGNED SLH | DRAWN JLS | REVIEWED FJB | DATE 6/5/09
CHECKED RKP | REVISED | STRUCTURE TITLE NUMBER 0404292R

FINAL DECK SURFACE ELEVATIONS - RIGHT STRUCTURE
BRIDGE NO. ATB-90-1583 R
I-90 OVER ASHTABULA RIVER

ATB-90-14.25
PID No. 25199

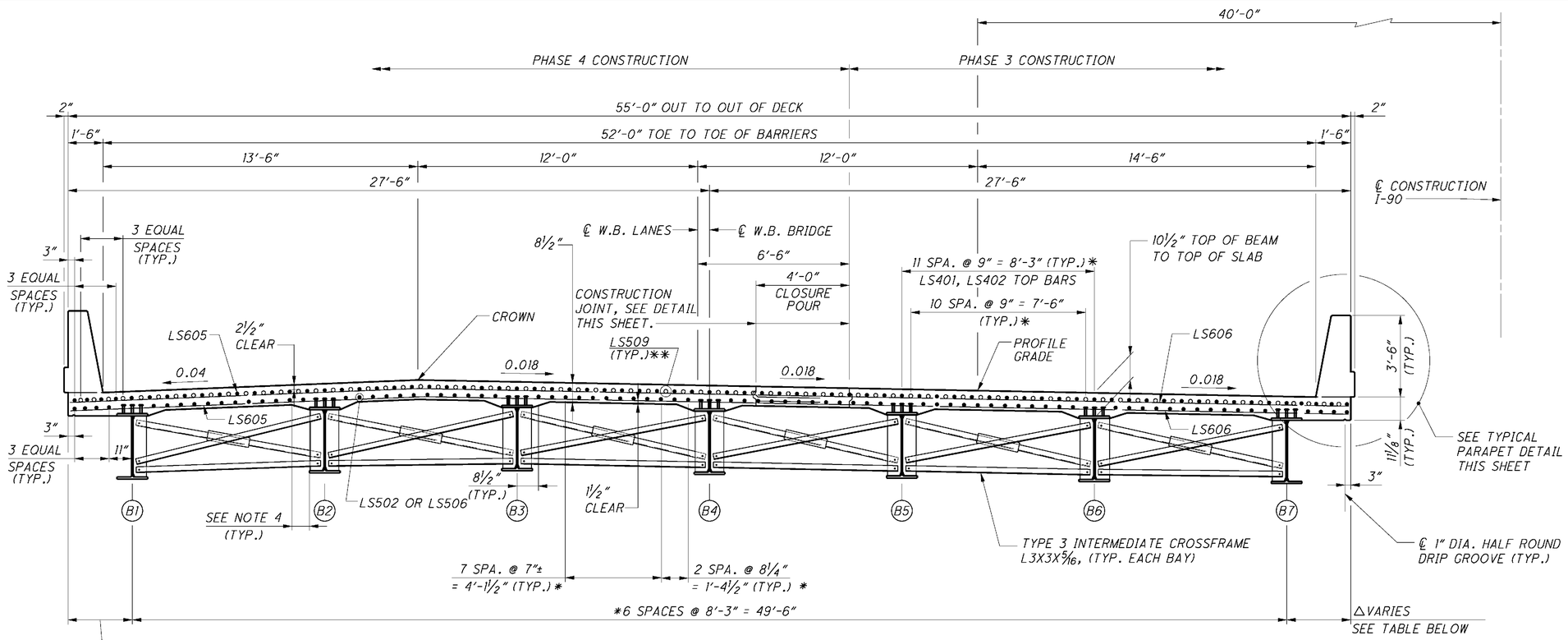

TRANSVERSE SECTION - LEFT STRUCTURE

NOTE: TRANSVERSE DIMENSIONS ARE MEASURED RADIALLY UNLESS OTHERWISE NOTED
* MEASURED PERPENDICULAR TO BEAMS

** ADDITIONAL REINFORCEMENT OVER THE PIERS, (TYP.). SEE DETAIL ON SHEET 49/62.

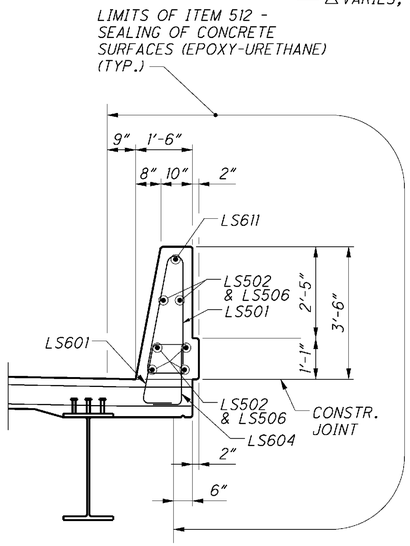

TYPICAL PARAPET DETAIL

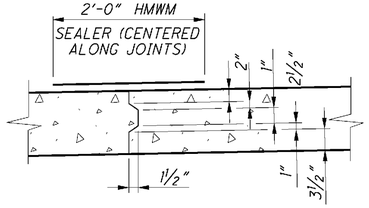

CONSTRUCTION JOINT DETAIL

NOTES:

1. FOR LEFT STRUCTURE SLAB PLAN AND PARAPET PANEL ELEVATION, SEE SHEET 48/62.
2. FOR SCREED ELEVATIONS, SEE SHEET 41/62.
3. FOR TOP OF HAUNCH ELEVATIONS, SEE SHEET 43/62.
4. DECK SLAB CONCRETE QUANTITY: THE ESTIMATED QUANTITY OF DECK SLAB CONCRETE IS BASED ON THE CONSTANT DECK SLAB THICKNESS, AS SHOWN, PLUS THE QUANTITY OF CONCRETE THAT FORMS EACH BEAM HAUNCH. THE ESTIMATE ASSUMES A CONSTANT HAUNCH THICKNESS OF INCHES AND A CONSTANT HAUNCH WIDTH OUTSIDE THE EDGE OF EACH BEAM FLANGE OF 9 INCHES. DEVIATE FROM THIS HAUNCH THICKNESS AS NECESSARY TO PLACE THE DECK SURFACE AT THE FINISHED GRADE. THE ALLOWABLE TOLERANCE FOR THE HAUNCH WIDTH OUTSIDE THE EDGE OF EACH BEAM FLANGE IS ± 3 INCHES.

   THE HAUNCH THICKNESS WAS MEASURED AT THE CENTERLINE OF THE BEAM, FROM THE SURFACE OF THE DECK TO THE BOTTOM OF THE TOP FLANGE MINUS THE DECK SLAB THICKNESS. THE AREA OF ALL EMBEDDED STEEL PLATES HAS BEEN DEDUCTED FROM THE HAUNCH QUANTITY IN ACCORDANCE WITH 511.24.
5. ADJUST REINFORCEMENT AS REQUIRED TO PLACE LONGITUDINAL JOINTS.
6. FOR ABBREVIATIONS, SEE SHEET 5/62.
7. FOR FRAMING PLAN, SEE SHEET 34/62 AND 35/62.

△ HORIZONTAL OFFSET TO EDGE OF SLAB

LOCATION	℄ BEARING REAR ABUTMENT	1/4	1/2	3/4	℄ BEARING PIER 1	1/4	1/2	3/4	℄ BEARING PIER 2	1/4	1/2	3/4	℄ BEARING PIER 3	1/4	1/2	3/4	℄ BEARING PIER 4	1/4	1/2	3/4	℄ BEARING FWD. ABUTMENT
LEFT SIDE	1'-11 1/8"	2'-2 3/4"	2'-5 1/4"	2'-7 5/8"	2'-9 5/8"	2'-11 7/8"	3'-1 3/4"	3'-3 1/8"	3'-4 1/4"	3'-4 7/8"	3'-5 1/4"	3'-5 1/8"	3'-4 5/8"	3'-3 3/4"	3'-2 1/2"	3'-0 7/8"	2'-10 3/4"	2'-8 7/8"	2'-6 3/4"	2'-4 1/4"	2'-1 5/8"
RIGHT SIDE	3'-4 3/8"	3'-1 3/4"	2'-11 3/8"	2'-9 1/8"	2'-7 1/4"	2'-5 1/4"	2'-3 1/2"	2'-2 1/4"	2'-1 3/8"	2'-0 7/8"	2'-0 3/4"	2'-1 1/8"	2'-1 3/4"	2'-2 7/8"	2'-4 1/4"	2'-6 1/8"	2'-8 3/8"	2'-10 3/8"	3'-0 3/4"	3'-3 1/4"	3'-6"

DESIGN AGENCY
KCI ASSOCIATES OF OHIO, P.A.
388 S. MAIN ST., SUITE 401
AKRON, OHIO 44311

DESIGNED	DRAWN	REVIEWED	DATE
RKP	JLS	FJB	6/5/09
CHECKED	REVISED	STRUCTURE FILE NUMBER	
SLH	---	0404268L	

TRANSVERSE SECTION - LEFT STRUCTURE
BRIDGE NO. ATB-90-1583 L
I-90 OVER ASHTABULA RIVER

ATB-90-14.25
PID No. 25199

$FILES

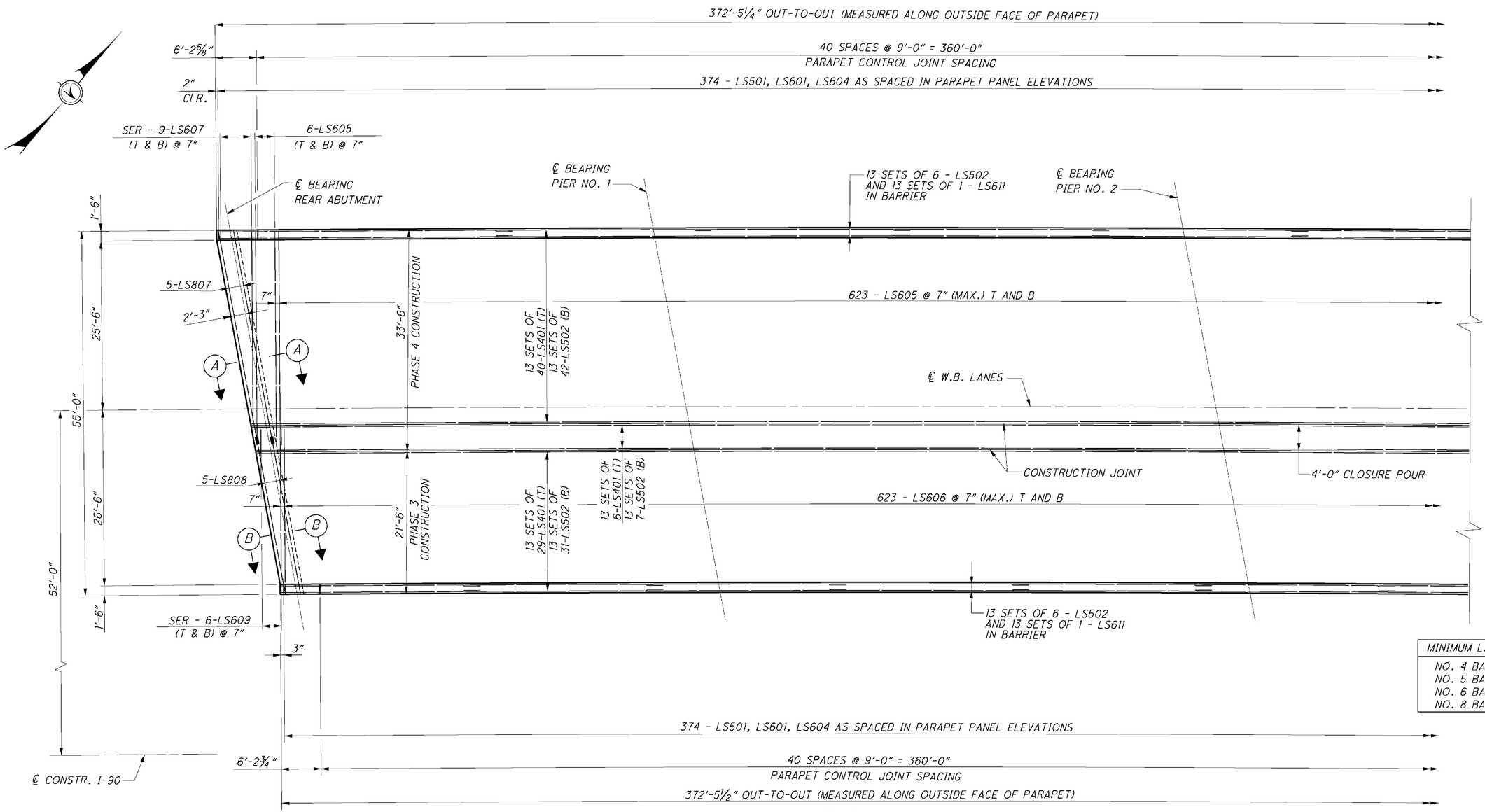

MINIMUM LAP LENGTHS
NO. 4 BAR = 1'-11"
NO. 5 BAR = 2'-5"
NO. 6 BAR = 2'-11"
NO. 8 BAR = 4'-11"

SLAB PLAN

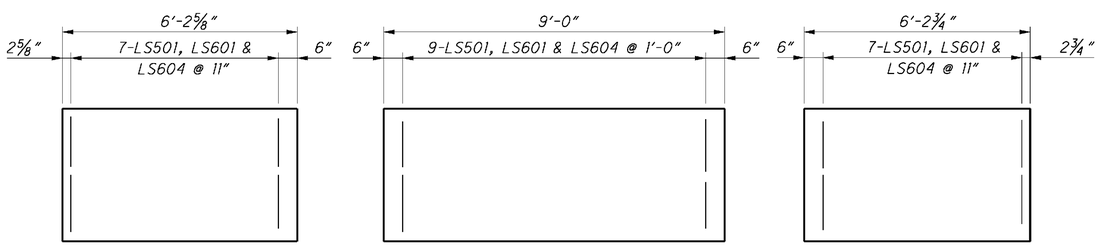

TYPICAL PARAPET PANEL ELEVATIONS

LEGEND

MECHANICAL SPLICE

NOTES:

1. FOR TRANSVERSE SECTION, SEE SHEET 47/62.
2. FOR SECTION A-A AND B-B, SEE SHEET 17/62.
3. FOR PHASE CONSTRUCTION JOINTS SEE SHEET 47/62.
4. FOR ABBREVIATIONS, SEE SHEET 5/62.

DESIGN AGENCY
KCI ASSOCIATES OF OHIO, P.A.
388 S. MAIN ST., SUITE 401
AKRON, OHIO 44311

DESIGNED	DRAWN	REVIEWED	DATE
RKP	JLS	FJB	6/5/09
CHECKED	REVISED	STRUCTURE FILE NUMBER	
HK	---	0404268L	

SLAB PLAN 1 - LEFT STRUCTURE

BRIDGE NO. ATB-90-1583 L
I-90 OVER ASHTABULA RIVER

ATB-90-14.25
PID No. 25199

372'-5¼" OUT-TO-OUT (MEASURED ALONG OUTSIDE FACE OF PARAPET)

40 SPACES @ 9'-0" = 360'-0"
PARAPET CONTROL JOINT SPACING

374 - LS501, LS601, LS604 AS SPACED IN PARAPET PANEL ELEVATIONS

6'-2⅝"

℄ BEARING
PIER NO. 3

13 SETS OF 6 - LS502
AND 13 SETS OF 1 - LS611
IN BARRIER

℄ BEARING
PIER NO. 4

℄ BEARING
FORWARD
ABUTMENT

6-LS506 AND
1-LS612 IN BARRIER

SER - 10-LS610
(T & B) @ 7"

3"

1'-6"

2'-3"

5-LS810

7"

623 - LS605 @ 7" (MAX.) T AND B

33'-6"
PHASE 4 CONSTRUCTION

13 SETS OF
6-LS401 (T)
13 SETS OF
7-LS502 (B)

13 SETS OF
40-LS401 (T)
13 SETS OF
42-LS502 (B)

40-LS402 (T)
42-LS506 (B)

7"

D

D

25'-6"

℄ W.B. LANES

6-LS402 (T)
7-LS506 (B)

55'-0"

5-LS809

CONSTRUCTION JOINT

4'-0" CLOSURE POUR

623 - LS606 @ 7" (MAX.) T AND B

21'-6"
PHASE 3
CONSTRUCTION

13 SETS OF
29-LS401(T)
13 SETS OF
31-LS502 (B)

7"

7"

26'-6"

29-LS402 (T)
31-LS506 (B)

E

E

52'-0"

1'-6"

6-LS506 AND
1-LS612 IN BARRIER

10-LS606
(T & B) @ 7"

SER - 8-LS614
(T & B) @ 7"

13 SETS OF 6 - LS502
AND 13 SETS OF 1 - LS611
IN BARRIER

MINIMUM LAP LENGTHS
NO. 4 BAR = 1'-11"
NO. 5 BAR = 2'-5"
NO. 6 BAR = 2'-11"
NO. 8 BAR = 4'-11"

374 - S501, S601, LS604 AS SPACED IN PARAPET PANEL ELEVATIONS

40 SPACES @ 9'-0" = 360'-0"
PARAPET CONTROL JOINT SPACING

372'-5½" OUT-TO-OUT (MEASURED ALONG OUTSIDE FACE OF PARAPET)

6'-2¾"

℄ CONSTR.

SLAB PLAN

℄ PIER

29-LS509 (T) PHASE 3
39-LS509 (T) PHASE 4
6-LS509 (T) CLOSURE POUR

3'-0" 22'-0" 22'-0" 3'-0"

ADDITIONAL REINFORCING OVER PIERS

LEGEND

MECHANICAL SPLICE

NOTES:

1. FOR TRANSVERSE SECTION, SEE SHEET 47/62.
2. FOR SECTION D-D AND E-E, SEE SHEET 17/62.
3. FOR PHASE CONSTRUCTION JOINTS SEE SHEET 47/62.
4. FOR ABBREVIATIONS, SEE SHEET 5/62.

DESIGN AGENCY
KCI ASSOCIATES OF OHIO, P.A.
388 S. MAIN ST., SUITE 401
AKRON, OHIO 44311

DESIGNED RKP | DRAWN JLS | CHECKED HK | REVIEWED FJB | DATE 6/5/09 | REVISED --- | STRUCTURE FILE NUMBER 04042681

SLAB PLAN 2 - LEFT STRUCTURE

BRIDGE NO. ATB-90-1583 L
I-90 OVER ASHTABULA RIVER

ATB-90-14.25
PID No. 25199

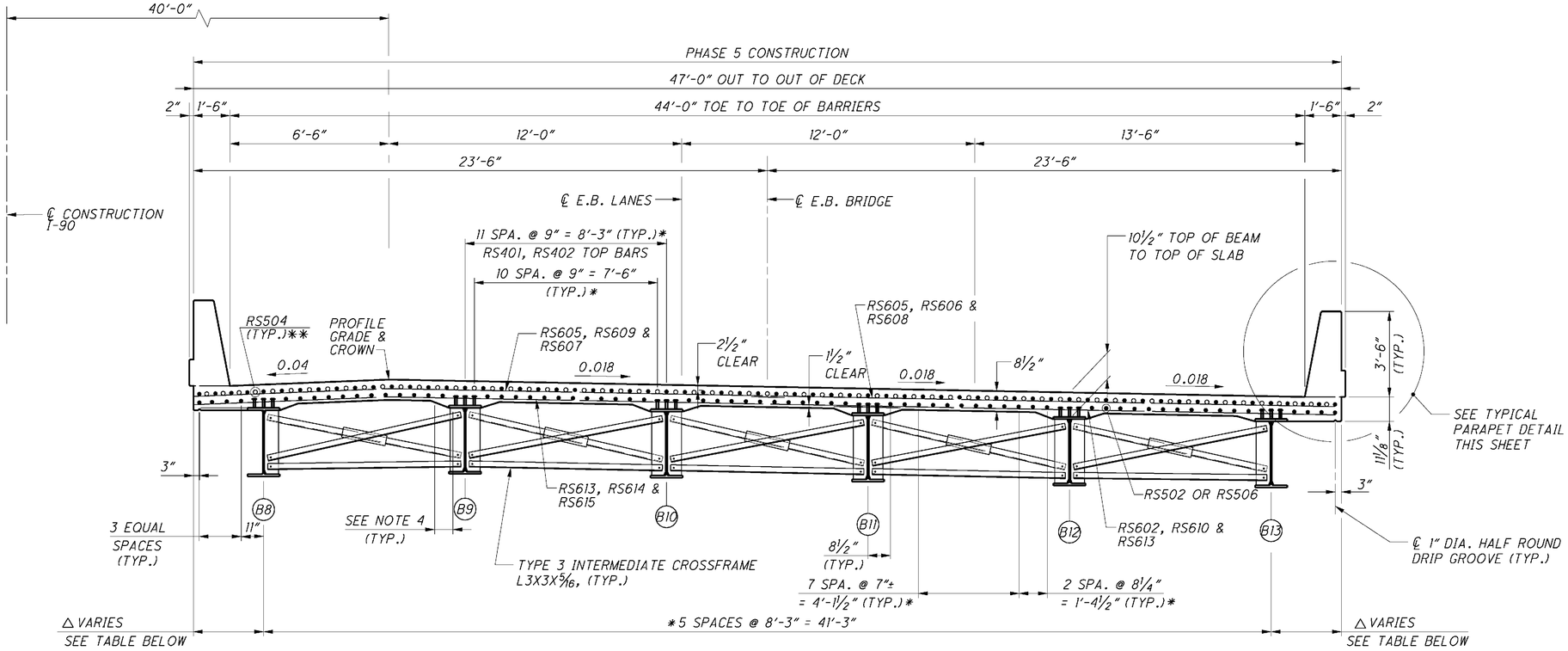

TRANSVERSE SECTION - RIGHT STRUCTURE

NOTE: TRANSVERSE DIMENSIONS ARE MEASURED RADIALLY UNLESS OTHERWISE NOTED
* MEASURED PERPENDICULAR TO BEAMS

** ADDITIONAL REINFORCEMENT OVER THE PIERS, (TYP.). SEE DETAIL ON SHEET 52/62.

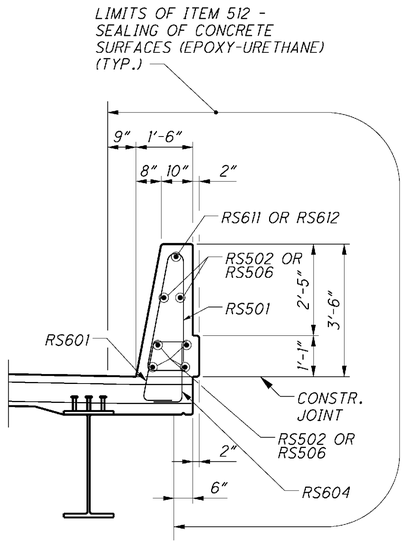

TYPICAL PARAPET DETAIL

NOTES:

1. FOR RIGHT STRUCTURE SLAB PLAN AND PARAPET PANEL ELEVATION, SEE SHEET 51/62.
2. FOR SCREED ELEVATIONS, SEE SHEET 42/62.
3. FOR TOP OF HAUNCH ELEVATIONS, SEE SHEET 44/62.
4. DECK SLAB CONCRETE QUANTITY: THE ESTIMATED QUANTITY OF DECK SLAB CONCRETE IS BASED ON THE CONSTANT DECK SLAB THICKNESS, AS SHOWN, PLUS THE QUANTITY OF CONCRETE THAT FORMS EACH BEAM HAUNCH. THE ESTIMATE ASSUMES A CONSTANT HAUNCH THICKNESS OF INCHES AND A CONSTANT HAUNCH WIDTH OUTSIDE THE EDGE OF EACH BEAM FLANGE OF 9 INCHES. DEVIATE FROM THIS HAUNCH THICKNESS AS NECESSARY TO PLACE THE DECK SURFACE AT THE FINISHED GRADE. THE ALLOWABLE TOLERANCE FOR THE HAUNCH WIDTH OUTSIDE THE EDGE OF EACH BEAM FLANGE IS ± 3 INCHES.

   THE HAUNCH THICKNESS WAS MEASURED AT THE CENTERLINE OF THE BEAM, FROM THE SURFACE OF THE DECK TO THE BOTTOM OF THE TOP FLANGE MINUS THE DECK SLAB THICKNESS. THE AREA OF ALL EMBEDDED STEEL PLATES HAS BEEN DEDUCTED FROM THE HAUNCH QUANTITY IN ACCORDANCE WITH 511.24.
5. ADJUST REINFORCEMENT AS REQUIRED TO PLACE LONGITUDINAL JOINTS.
6. FOR ABBREVIATIONS, SEE SHEET 5/62.
7. FOR FRAMING PLAN, SEE SHEET 36/62 AND 37/62.

	△ HORIZONTAL OFFSET TO EDGE OF SLAB																				
LOCATION	℄ BEARING REAR ABUTMENT	¼	½	¾	℄ BEARING PIER 1	¼	½	¾	℄ BEARING PIER 2	¼	½	¾	℄ BEARING PIER 3	¼	½	¾	℄ BEARING PIER 4	¼	½	¾	℄ BEARING FWD. ABUTMENT
LEFT SIDE	2'-1¾"	2'-4⅝"	2'-7⅛"	2'-9½"	2'-11⅝"	3'-1¾"	3'-3⅝"	3'-5⅛"	3'-6⅛"	3'-6⅞"	3'-7⅛"	3'-7"	3'-6½"	3'-5½"	3'-4¼"	3'-2⅝"	3'-0½"	2'-10½"	2'-8⅜"	2'-6"	2'-3¼"
RIGHT SIDE	3'-5⅛"	3'-3⅛"	3'-0⅝"	2'-10½"	2'-8½"	2'-6⅜"	2'-4¾"	2'-3½"	2'-2½"	2'-2"	2'-1⅛"	2'-2⅛"	2'-2⅞"	2'-3⅞"	2'-5⅜"	2'-7¼"	2'-9½"	2'-11½"	3'-1⅛"	3'-4⅜"	3'-7¼"

DESIGN AGENCY
KCI ASSOCIATES OF OHIO, P.A.
388 S. MAIN ST., SUITE 401
AKRON, OHIO 44311

DESIGNED RKP | DRAWN JLS | CHECKED SLH | REVIEWED FJB | DATE 6/5/09 | REVISED --- | STRUCTURE FILE NUMBER 0404292R

TRANSVERSE SECTION - RIGHT STRUCTURE
BRIDGE NO. ATB-90-1583 R
I-90 OVER ASHTABULA RIVER

ATB-90-14.25
PID No. 25199

$FILES

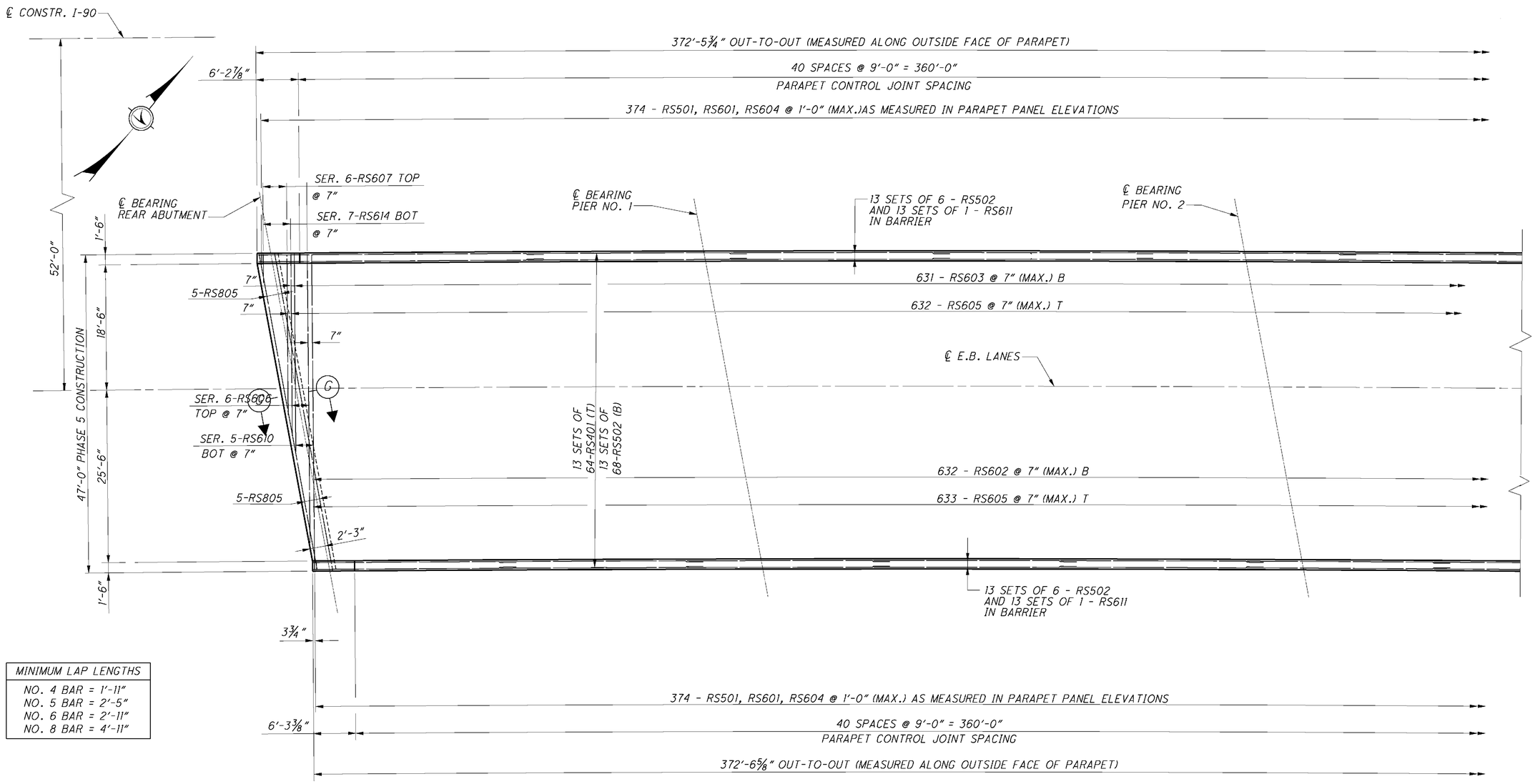

MINIMUM LAP LENGTHS
NO. 4 BAR = 1'-11"
NO. 5 BAR = 2'-5"
NO. 6 BAR = 2'-11"
NO. 8 BAR = 4'-11"

SLAB PLAN

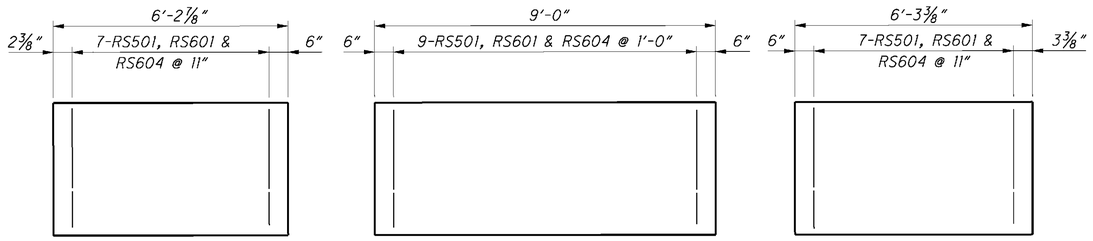

TYPICAL PARAPET PANEL ELEVATIONS

NOTES:

1. FOR TRANSVERSE SECTION, SEE SHEET 50/62.
2. FOR SECTION G-G, SEE SHEET 24/62.
3. FOR ABBREVIATIONS, SEE SHEET 5/62.

DESIGN AGENCY
KCI ASSOCIATES OF OHIO, P.A.
388 S. MAIN ST., SUITE 401
AKRON, OHIO 44311

DESIGNED RKP | DRAWN JLS | CHECKED HK | REVIEWED FJB | DATE 6/5/09 | REVISED | STRUCTURE FILE NUMBER 0404292R

SALB PLAN 1 - RIGHT STRUCTURE
BRIDGE NO. ATB-90-1583 R
I-90 OVER ASHTABULA RIVER

ATB-90-14.25
PID No. 25199

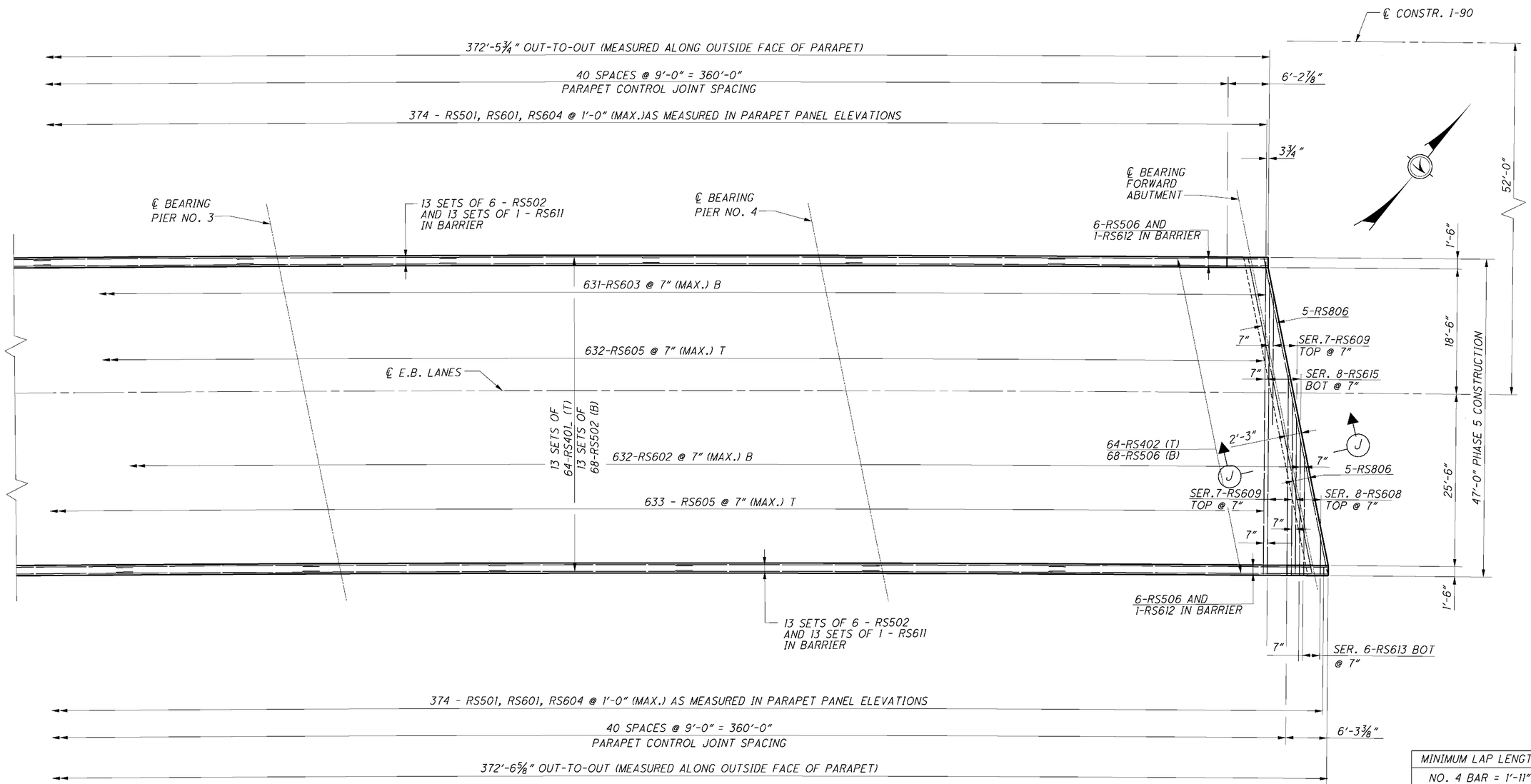

SLAB PLAN

MINIMUM LAP LENGTHS
NO. 4 BAR = 1'-11"
NO. 5 BAR = 2'-5"
NO. 6 BAR = 2'-11"
NO. 8 BAR = 4'-11"

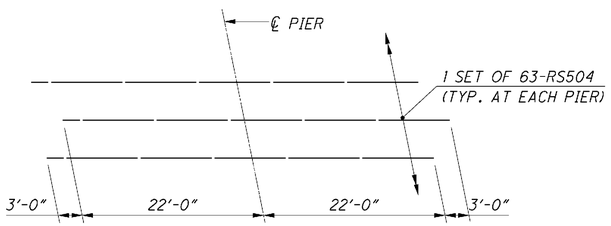

ADDITIONAL REINFORCING OVER PIERS

NOTES:

1. FOR TRANSVERSE SECTION, SEE SHEET 50/62.
2. FOR SECTION J-J, SEE SHEET 24/62.
3. FOR ABBREVIATIONS, SEE SHEET 5/62.

DESIGN AGENCY
KCI ASSOCIATES OF OHIO, P.A.
388 S. MAIN ST., SUITE 401
AKRON, OHIO 44311

DESIGNED	DRAWN	REVIEWED	DATE
RKP	JLS	FJB	6/5/09
CHECKED	REVISED	STRUCTURE TILE NUMBER	
HK		0404292R	

SLAB PLAN 2 - RIGHT STRUCTURE
BRIDGE NO. ATB-90-1583 R
I-90 OVER ASHTABULA RIVER

ATB-90-14.25
PID No. 25199

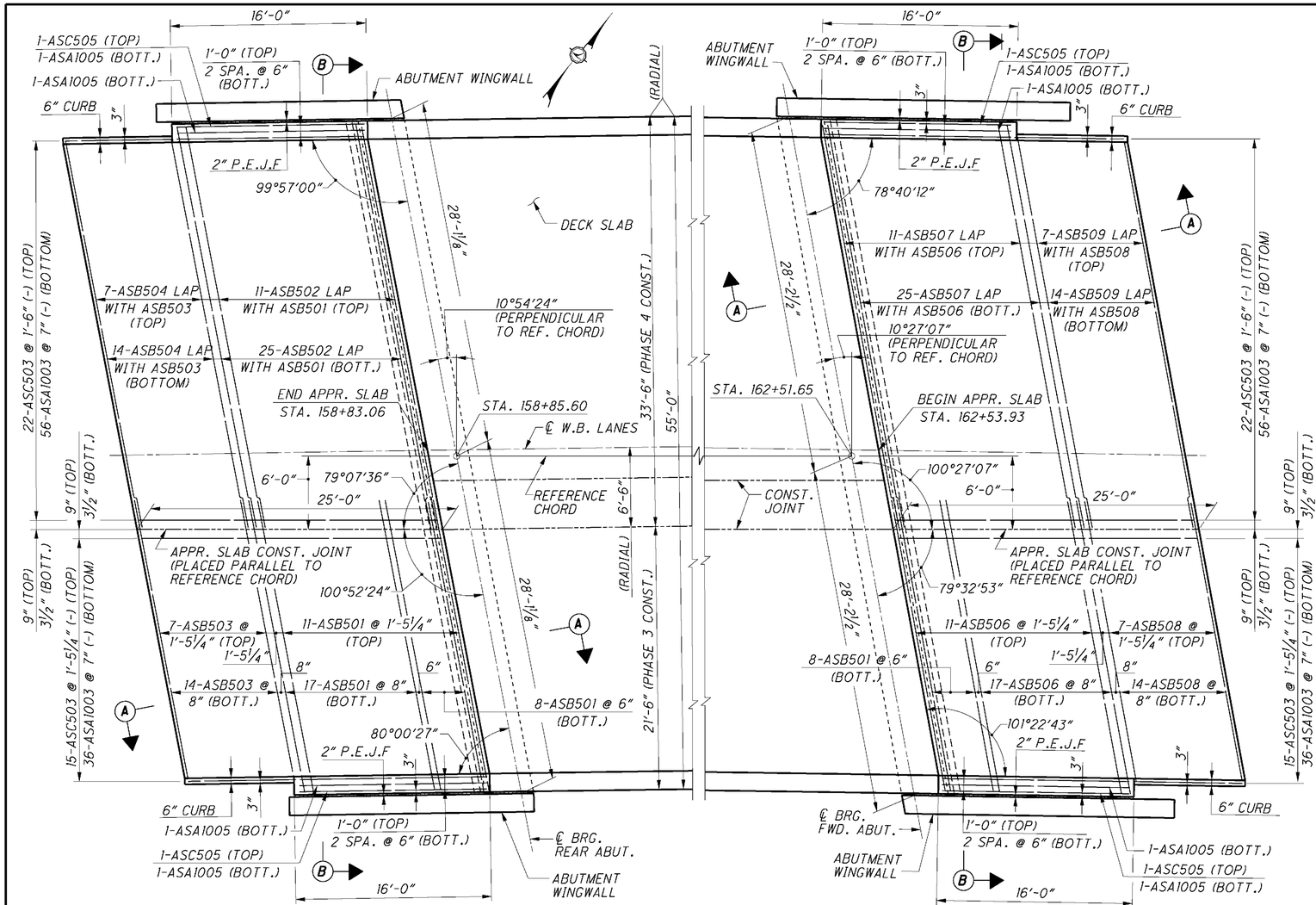

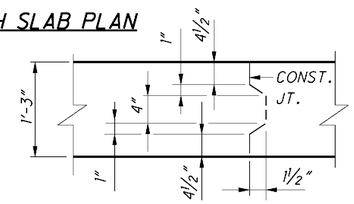

KEYED CONST. JT. DETAIL

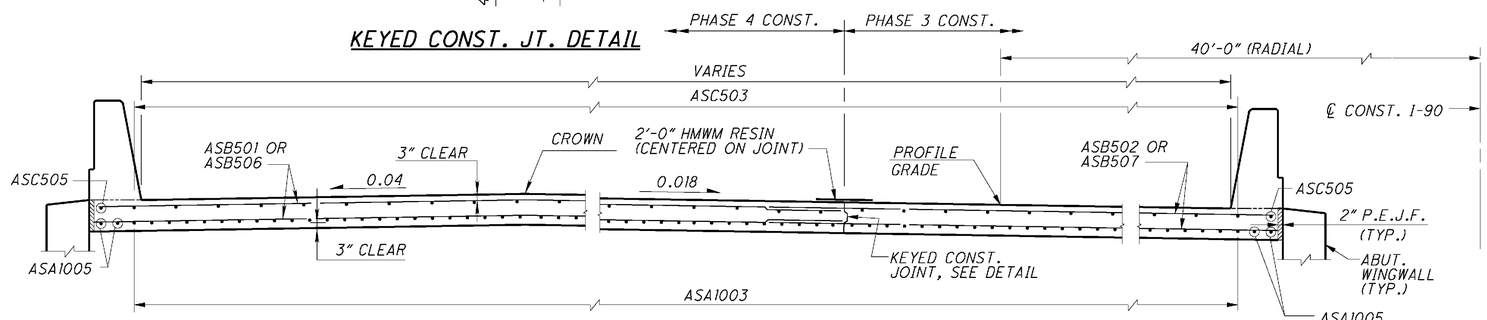

SECTION B-B

MINIMUM LAP LENGTHS
NO. 5 BAR = 2'-5"

REINFORCING STEEL LIST

MARK	NUMBER REAR PHASE 3	NUMBER REAR PHASE 4	NUMBER FORWARD PHASE 3	NUMBER FORWARD PHASE 4	TOTAL	LENGTH	WEIGHT (LBS.)	TYPE	DIMENSIONS A	B	C	INC.
LASA1003	36	56	36	56	184	25'-11"	20,520	16	24'-6"			
LASA1005	2	2	2	2	8	16'-11"	582	16	15'-6"			
LASB501	36				36	24'-1"	904	STR.				
LASB502		36			36	33'-9"	1267	STR.				
LASB503	21				21	23'-1"	506	STR.				
LASB504		21			21	32'-9"	717	STR.				
LASB506			36		36	24'-3"	911	STR.				
LASB507				36	36	33'-10"	1270	STR.				
LASB508			21		21	23'-2"	507	STR.				
LASB509				21	21	32'-10"	719	STR.				
LASC503	15	22	15	22	74	24'-6"	1891	STR.				
LASC505	1	1	1	1	4	15'-6"	65	STR.				
LASP501	3	3	3	3	12	7'-5"	93	23	1'-1"	3'-2"	3'-0"	
LASP502	3	3	3	3	12	5'-6"	69	25				
LASP503	5	5	5	5	20	5'-6"	115	STR.				
LASP504	6	6	6	6	24	4'-3"	106	STR.				
LASP505	8	8	8	8	32	10'-0"	334	STR.				
LASP601	3	3	3	3	12	3'-9"	68	35	1'-10"	1'-1"	1'-1"	
SERIES LASP603	△	△	△	△	8 SETS OF 11	4'-4" TO 5'-2"	628	1	1'-1"	3'-5" TO 4'-3"		1"
LASP604	3	3	3	3	12	2'-9"	50	1	1'-1"	1'-10"		
LASP607	1	1	1	1	4	4'-9"	29	19	1'-10"	2'-10⅞"	3"	
LASP608	8	8	8	8	32	4'-4"	208	1	1'-1"	3'-5"		
						TOTAL = 31,559						

△ INDICATES 2 SETS OF 11

NOTE: REINFORCING LIST FOR INFORMATION ONLY.

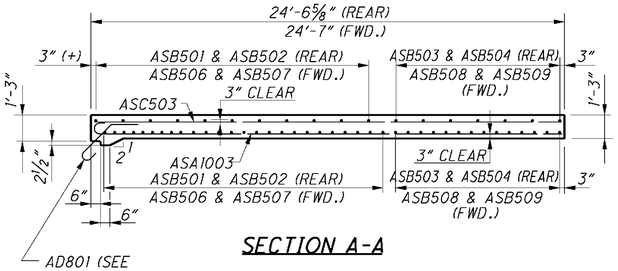

SECTION A-A

NOTES

1. ALL REINFORCING BAR MARKS SHALL BE PREFIXED "L".
2. BAR DIMENSIONS ARE OUT TO OUT UNLESS NOTED OTHERWISE.
3. ALL REINFORCING STEEL TO BE EPOXY COATED.
4. FOR BAR BENDING DIAGRAMS, SEE SHEET 54/62.
5. BAR SIZE AND LOCATION ARE INDICATED IN THE BAR MARK. THE ALPHABETICAL LETTERS INDICATE LOCATION. THE FIRST DIGIT OF THE THREE DIGIT MARK AND THE FIRST TWO DIGITS OF THE FOUR DIGIT MARK INDICATE BAR SIZE NUMBER.

   EXAMPLE:

   ASC 502
   - NO. 5 SIZE BAR
   - APPROACH SLAB

6. FOR PARAPET DETAILS, SEE SHEET 55/62.
7. FOR ABBREVIATIONS, SEE SHEET 5/62.
8. FOR REFERENCE CHORD LAYOUT, SEE SHEET 3/62.
9. LONGITUDINAL REINFORCEMENT, EXCEPT BARS AT EDGE OF SLAB, SHALL BE PLACED PARALLEL TO THE CONSTRUCTION JOINT.
10. FOR ADDITIONAL DETAILS, SEE STD. DWG. AS-1-81.

DESIGN AGENCY
KCI ASSOCIATES OF OHIO, P.A.
388 S. MAIN ST., SUITE 401
AKRON, OHIO 44311

DESIGNED HK | DRAWN WEB | CHECKED CMK | REVIEWED FJB | DATE 6/5/09 | STRUCTURE FILE NUMBER 04004268L | REVISED

APPROACH SLAB DETAILS - LEFT STRUCTURE

BRIDGE NO. ATB-90-1583 L
I-90 OVER ASHTABULA RIVER

ATB-90-14.25
PID No. 25199

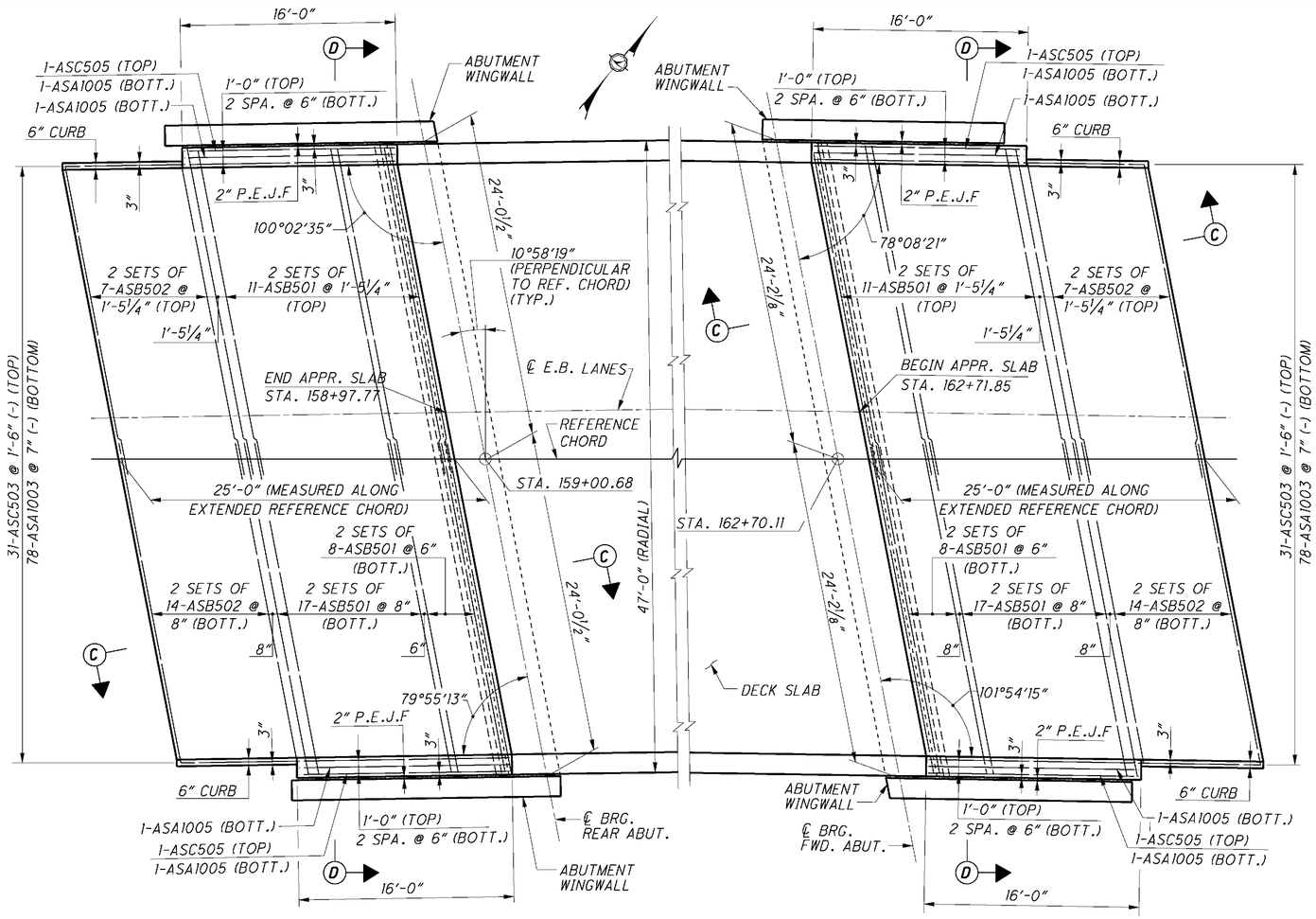

REAR APPROACH SLAB PLAN
(PHASE 5 CONST.)

FORWARD APPROACH SLAB PLAN
(PHASE 5 CONST.)

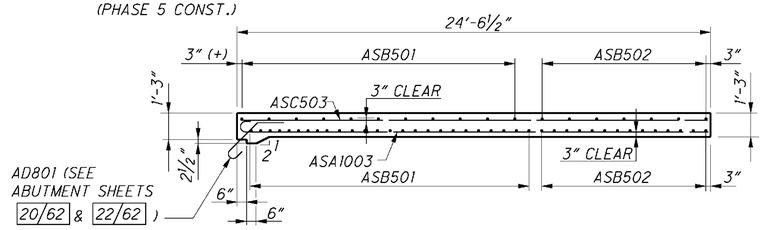

SECTION C-C

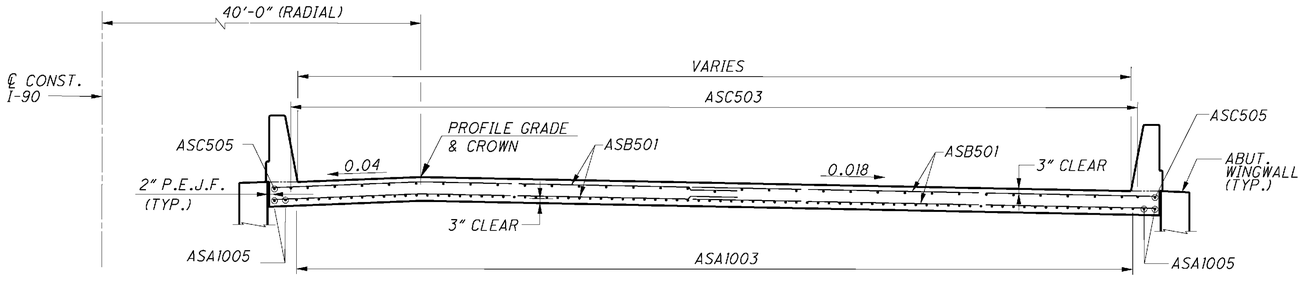

SECTION D-D

MINIMUM LAP LENGTHS
NO. 5 BAR = 2'-5"

REINFORCING STEEL LIST

MARK	NUMBER REAR	NUMBER FORWARD	NUMBER TOTAL	LENGTH	WEIGHT (LBS.)	TYPE	DIMENSIONS A	B	C	INC.
RASA1003	78	78	156	25'-11"	17,397	16	24'-6"			
RASA1005	4	4	8	16'-11"	582	16	15'-6"			
RASB501	72	72	144	25'-0"	3755	STR.				
RASB502	42	42	84	24'-0"	2103	STR.				
RASC503	31	31	62	24'-6"	1584	STR.				
RASC505	2	2	4	15'-6"	65	STR.				
RASP501	6	6	12	7'-5"	93	23	1'-1"	3'-2"	3'-0"	
RASP502	6	6	12	5'-6"	69	25				
RASP503	10	10	20	5'-6"	115	STR.				
RASP504	12	12	24	4'-3"	106	STR.				
RASP505	16	16	32	10'-0"	334	STR.				
RASP601	6	6	12	3'-9"	68	35	1'-10"	1'-1"	1'-1"	
SERIES RASP603	4 SETS OF 11	4 SETS OF 11	8 SETS OF 11	4'-4" TO 5'-2"	628	1	1'-1"	3'-5" TO 4'-3"		1"
RASP604	6	6	12	2'-9"	50	1	1'-1"	1'-10"		
RASP607	2	2	4	4'-9"	29	19	1'-10"	2'-10⅞"	3"	
RASP608	16	16	32	4'-4"	208	1	1'-1"	3'-5"		
				TOTAL = 27,186						

NOTE: REINFORCING LIST FOR INFORMATION ONLY.

TYPE-1

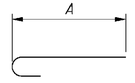

TYPE-16

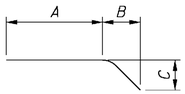

TYPE-19

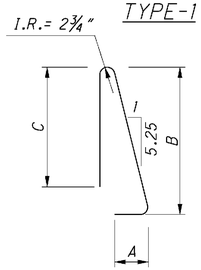

TYPE-23

TYPE-25

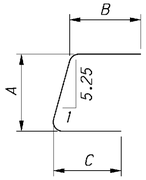

TYPE-35

BENDING DIAGRAMS

NOTES

1. ALL REINFORCING BAR MARKS SHALL BE PREFIXED "R".
2. BAR DIMENSIONS ARE OUT TO OUT UNLESS NOTED OTHERWISE.
3. ALL REINFORCING STEEL TO BE EPOXY COATED.
4. I.R. DENOTES INSIDE RADIUS.
5. BAR SIZE AND LOCATION ARE INDICATED IN THE BAR MARK. THE ALPHABETICAL LETTERS INDICATE LOCATION. THE FIRST DIGIT OF THE THREE DIGIT MARK AND THE FIRST TWO DIGITS OF THE FOUR DIGIT MARK INDICATE BAR SIZE NUMBER.

   EXAMPLE: ASC 502 — NO. 5 SIZE BAR; APPROACH SLAB
6. FOR PARAPET DETAILS, SEE SHEET 55/62.
7. FOR ABBREVIATIONS, SEE SHEET 5/62.
8. FOR REFERENCE CHORD LAYOUT, SEE SHEET 3/62.
9. LONGITUDINAL REINFORCEMENT, EXCEPT BARS AT EDGE OF SLAB, SHALL BE PLACED PARALLEL TO THE REFERENCE CHORD.
10. FOR ADDITIONAL DETAILS, SEE STD. DWG AS-1-81.

DESIGN AGENCY
KCI ASSOCIATES OF OHIO, P.A.
388 S. MAIN ST., SUITE 401
AKRON, OHIO 44311

DESIGNED HK | DRAWN WEB | CHECKED CMK | REVIEWED FJB | DATE 6/5/09 | REVISED | STRUCTURE TILE NUMBER 0404292R

APROACH SLAB DETAILS - RIGHT STRUCTURE
BRIDGE NO. ATB-90-1583 R
I-90 OVER ASHTABULA RIVER

ATB-90-14.25
PID No. 25199

54/62

415/437

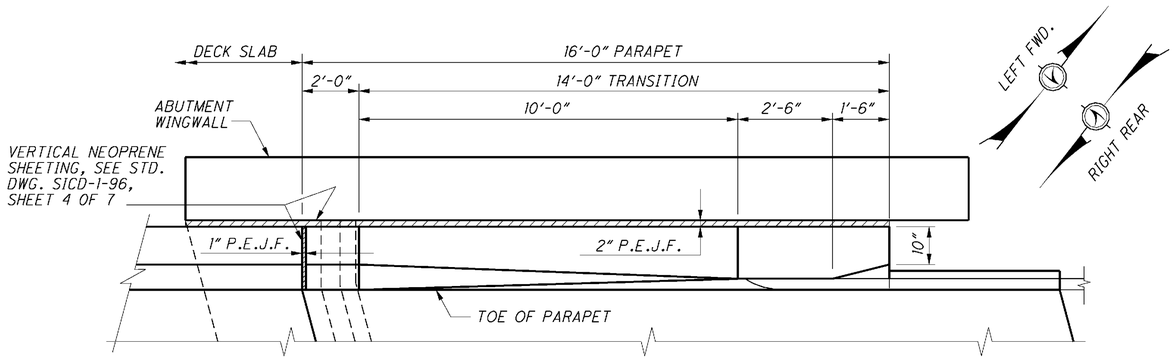

APPROACH SLAB PARAPET PLAN

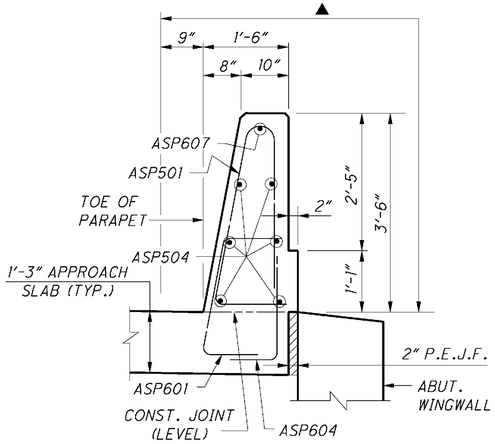

SECTION E-E

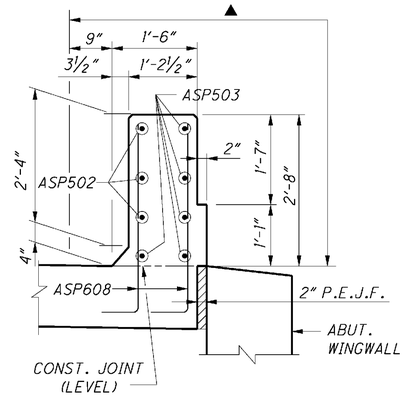

SECTION F-F

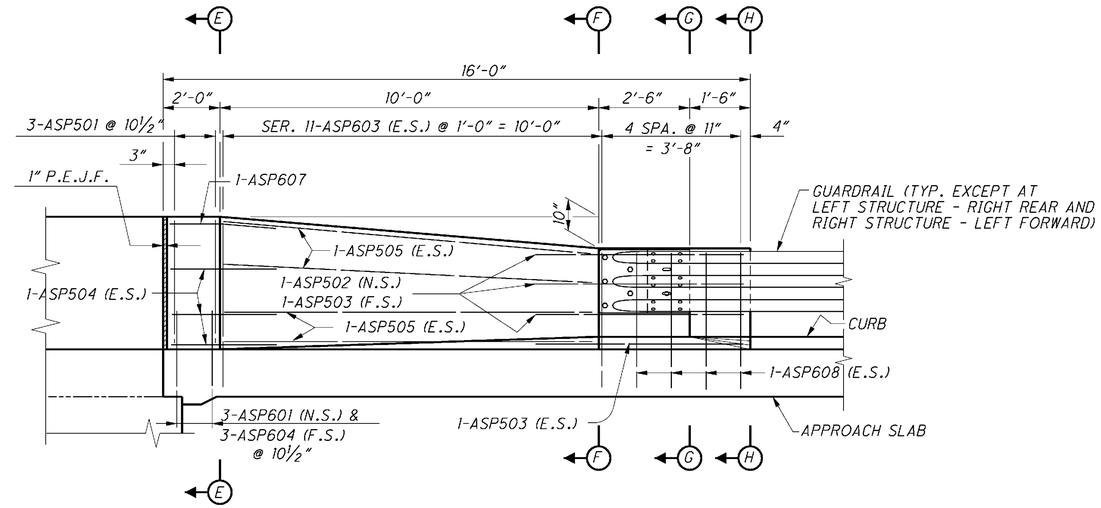

APPROACH SLAB PARAPET ELEVATION

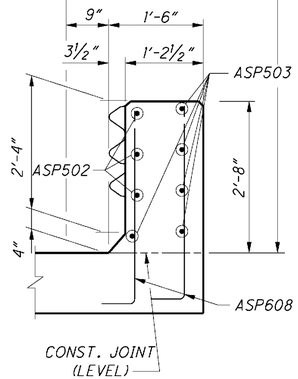

SECTION G-G

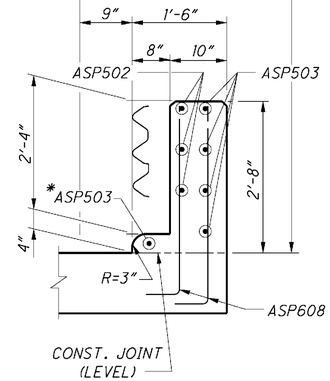

SECTION H-H

*FIELD BEND IF NECESSARY.

LEGEND

▲ LIMITS OF ITEM 512 - SEALING OF CONCRETE SURFACES (EPOXY-URETHANE)

NOTES

1. FOR APPROACH SLAB PLANS, SEE SHEET 53/62 AND 54/62 .
2. FOR ABBREVIATIONS, SEE SHEET 5/62 .
3. THE PARAPET SHALL BE INCLUDED WITH ITEM 526 - REINFORCED CONCRETE APPROACH SLAB, AS PER PLAN, FOR PAYMENT.
4. ALL REINFORCING BAR MARKS SHALL BE PREFIXED AS FOLLOWS:
   LEFT STRUCTURE - "L"
   RIGHT STRUCTURE - "R"

DESIGN AGENCY
KCI ASSOCIATES OF OHIO, P.A.
388 S. MAIN ST., SUITE 401
AKRON, OHIO 44311

DESIGNED	DRAWN	REVIEWED	DATE
HK	WEB	FJB	6/5/09
CHECKED	REVISED	STRUCTURE FILE NUMBER	
CMK		0404268L/0404292R	

APPROACH SLAB PARAPET DETAILS
BRIDGE NO. ATB-90-1583 L AND R
I-90 OVER ASHTABULA RIVER

ATB-90-14.25
PID No. 25199

55/62

416/437

REINFORCING STEEL LIST

MARK	NUMBER REAR PHASE 3	NUMBER REAR PHASE 4	NUMBER FORWARD PHASE 3	NUMBER FORWARD PHASE 4	TOTAL	LENGTH	WEIGHT (LBS.)	TYPE	DIMENSIONS A	B	C	D	INC
ABUTMENTS													
LA501	6		6		12	16'-7"	208	3	5'-5"	2'-7"			
LA502	3		4		7	13'-2"	96	2	5'-5"	2'-7"	5'-5"		
LA503	1		1		2	16'-9"	35	3	5'-6"	2'-7"			
LA504	6				6	11'-9"	74	STR.					
LA505	2				2	5'-5"	11	10	2'-4½"	5"	9"	2'-5"	
LA506	7		10		17	12'-1"	214	3	3'-2"	2'-7"			
LA507	5		4		9	5'-4"	50	2	1'-6"	2'-7"	1'-6"		
LA508	2				2	13'-11"	29	STR.					
LA509	4				4	11'-6"	48	STR.					
LA510	2		2		4	4'-0"	17	STR.					
LA511	8				8	21'-7"	180	3	3'-5"	7'-1"			
LA512	1		1		2	3'-10"	8	STR.					
LA513	1		1		2	6'-5"	13	1	1'-0"	5'-7"			
LA514	1				1	11'-2"	12	2	4'-0"	3'-5"	4'-0"		
LA515	1				1	5'-4"	6	STR.					
LA516	2				2	11'-3"	23	STR.					
LA517	2				2	12'-7"	26	STR.					
LA518	2				2	24'-6"	51	STR.					
LA519	2				2	25'-9"	54	STR.					
LA520	4				4	3'-8"	15	19	2'-5"	1'-3"	2½"		
LA521	16	46			62	6'-3"	404	1	3'-4"	3'-1"			
LA522		11			11	8'-11"	102	3	1'-4"	2'-10"			
LA523		4			4	15'-11"	66	3	4'-10"	2'-10"			
LA524		2			2	13'-6"	28	STR.					
LA525		2			2	13'-8"	29	STR.					
LA526		4			4	2'-8"	11	STR.					
LA527		4			4	35'-6"	148	STR.					
LA528			10		10	12'-8"	132	STR.					
LA529			2		2	15'-5"	32	STR.					
LA530			4		4	13'-4"	56	STR.					
LA531			8		8	22'-5"	187	3	3'-5"	7'-6"			
LA532			1		1	5'-9"	6	STR.					
LA533			1		1	12'-0"	13	2	4'-5"	3'-5"	4'-5"		
LA534			1		1	8'-4"	9	1	1'-0	7'-6"			
LA535			4		4	25'-10"	108	STR.					
LA536				11	11	9'-1"	104	3	1'-5"	2'-10"			
LA537				8	8	12'-7"	105	3	3'-2"	2'-10"			
LA538				4	4	17'-7"	92	STR.					
LA539				3	3	6'-10"	21	STR.					
LA540				2	2	34'-2"	71	STR.					
LA541				2	2	35'-8"	74	STR.					
LA542				2	2	3'-9"	8	19	2'-5"	1'-3½"	3⅛"		
LA543			16	46	62	6'-7"	426	1	3'-8"	3'-1"			
LA601	14	26	14	24	78	3'-2"	371	16	2'-6"				
LA801	4				4	11'-9"	125	STR.					
LA802	1				1	10'-4"	28	10	4'-10"	10½"	9"	4'-11"	
LA803	1				1	13'-11"	37	STR.					
LA804	3				3	11'-6"	92	STR.					
LA805	1		1		2	4'-0"	21	STR.					
LA806	1				1	27'-0"	72	STR.					
LA807	4				4	28'-3"	302	STR.					
SUB-TOTAL = 4,450													

REINFORCING STEEL LIST

MARK	NUMBER REAR PHASE 3	NUMBER REAR PHASE 4	NUMBER FORWARD PHASE 3	NUMBER FORWARD PHASE 4	TOTAL	LENGTH	WEIGHT (LBS.)	TYPE	DIMENSIONS A	B	C	D	INC
ABUTMENTS													
LA808	1				1	6'-2"	16	19	4'-11"	1'-3"	2½"		
LA809		1			1	13'-6"	36	STR.					
LA810		1			1	13'-8"	36	STR.					
LA811		3			3	2'-8"	21	STR.					
LA812		5			5	35'-6"	474	STR.					
LA813			4		4	12'-8"	135	STR.					
LA814			1		1	15'-5"	41	STR.					
LA815			3		3	13'-4"	107	STR.					
LA816			5		5	28'-5"	379	STR.					
LA817				2	2	17'-7"	94	STR.					
LA818				2	2	6'-10"	36	STR.					
LA819				1	1	34'-4"	92	STR.					
LA820				4	4	35'-7"	380	STR.					
LA821				1	1	6'-3"	17	19	4'-11"	1'-3½"	3⅛"		
LAD801	15	23*	15	23*	76	5'-0"	1015	18	2'-8"	1'-0"	1'-0"		
LAW501	9	2			11	20'-7"	236	2	9'-10"	1'-2"	9'-10"		
LAW502	2				2	9'-9"	20	STR.					
LAW503	10	9			19	8'-11"	177	2	4'-0"	1'-2"	4'-0"		
LAW504	2	2	2		6	6'-1"	38	2	2'-7"	1'-2"	2'-7"		
LAW505	8	8	8	8	32	5'-11"	197	2	2'-6"	1'-2"	2'-6"		
LAW506	8	4			12	11'-8"	146	STR.					
LAW507	2	1			3	11'-9"	37	STR.					
LAW508	6	3			9	19'-8"	185	STR.					
LAW509	2	2	2	2	8	6'-2"	51	19	2'-5"	3'-4"	1'-8"		
LAW510		7			7	10'-8"	78	1	1'-0"	9'-10"			
LAW511		7			7	8'-1"	59	STR.					
LAW512	2				2	6'-7"	14	2	2'-10"	1'-2"	2'-10"		
LAW513		2	2		4	6'-9"	28	2	2'-11"	1'-2"	2'-11"		
LAW514			12	12	24	9'-1"	227	2	4'-1"	1'-2"	4'-1"		
LAW515			5	12	17	21'-5"	380	2	10'-3"	1'-2"	10'-3"		
LAW516		4			4	11'-10"	49	STR.					
LAW517		1			1	11'-11"	12	STR.					
LAW518		3			3	19'-10"	62	STR.					
LAW519				2	2	6'-3"	13	2	2'-8"	1'-2"	2'-8"		
LAW520				7	7	11'-1"	81	1	1'-0"	10'-3"			
LAW521				7	7	8'-7"	63	STR.					
LAW522				2	2	6'-11"	14	2	3'-0"	1'-2"	3'-0"		
LAW523			2		2	10'-3	21	STR.					
LAW524			1		1	13'-9	14	STR.					
LAW525				8	8	15'-8"	131	STR.					
LAW526				2	2	15'-9"	33	STR.					
LAW527				2	2	17'-7	37	STR.					
LAW528				6	6	23'-8"	148	STR.					
LAW529			4		4	13'-8"	57	STR.					
LAW530			3		3	21'-8"	68	STR.					
LAW531			4		4	13'-10"	58	STR.					
LAW532			3		3	21'-10"	68	STR.					
SUB-TOTAL = 5,681													

* INCLUDES 3 BARS IN CLOSURE POUR

NOTE: FOR BAR BENDING DIAGRAMS AND NOTES SEE SHEET 57/62 .

DESIGN AGENCY
KCI ASSOCIATES OF OHIO, P.A.
388 S. MAIN ST., SUITE 401
AKRON, OHIO 44311

DESIGNED HK | DRAWN JLS | CHECKED CMK | REVISED | REVIEWED FJB | DATE 6/5/09 | STRUCTURE FILE NUMBER 04042681

REINFORCING STEEL LIST - LEFT STRUCTURE

BRIDGE NO. ATB-90-1583 L
I-90 OVER ASHTABULA RIVER

ATB-90-14.25
PID No. 25199

REINFORCING STEEL LIST

MARK	NUMBER				TOTAL	LENGTH	WEIGHT (LBS.)	TYPE	DIMENSIONS				
	REAR		FORWARD										
	PHASE 3	PHASE 4	PHASE 3	PHASE 4					A	B	C	D	INC
ABUTMENTS													
LAW533			1		1	13'-11"	15	STR.					
LD501	18		18		36	8'-4"	313	2	2'-7"	3'-5"	2'-7"		
LD502	14	**34	2	**34	84	9'-2"	803	2	3'-0"	3'-5"	3'-0"		
LD503		16		16	32	8'-10"	295	2	2'-10"	3'-5"	2'-10"		
LD504	16	*25	16	*25	82	7'-8"	656	2	2'-5"	3'-1"	2'-5"		
LD505			12		12	8'-6"	106	2	2'-8"	3'-5"	2'-8"		
LD801	11				11	22'-8"	666	50					
LD802		11			11	32'-10"	964	51					
LD803			11		11	22'-9"	668	50					
LD804				11	11	33'-0"	969	51					
						TOTAL = 15,586							

* INCLUDES 3 BARS IN CLOSURE POUR
** INCLUDES 6 BARS IN CLOSURE POUR

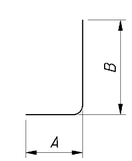

TYPE-1

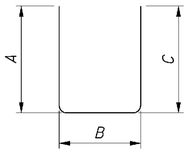

TYPE-2

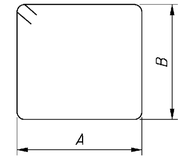

TYPE-3

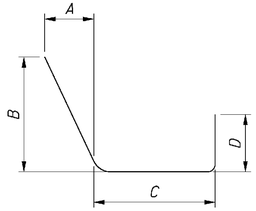

TYPE-10

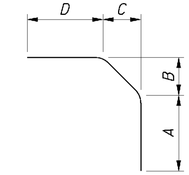

TYPE-13

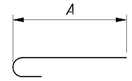

TYPE-16

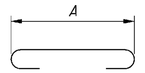

TYPE-17

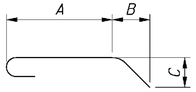

TYPE-18

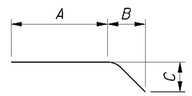

TYPE-19

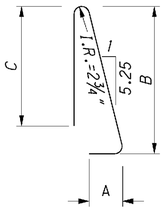

TYPE-23

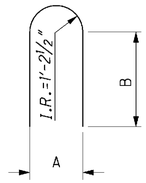

TYPE-24

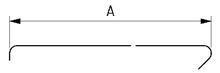

TYPE-32

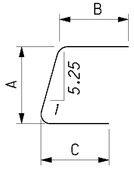

TYPE-35

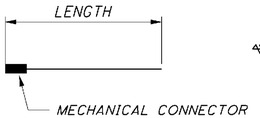

TYPE-50

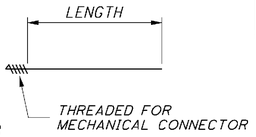

TYPE-51

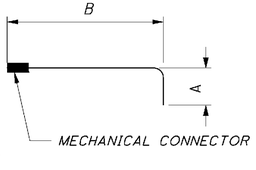

TYPE-52

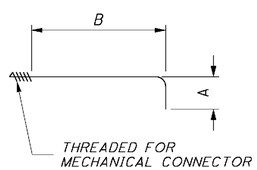

TYPE-53

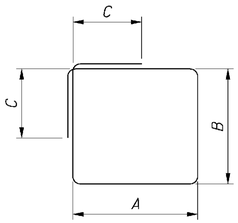

TYPE-54

BENDING DIAGRAMS

NOTES

1. BAR DIMENSIONS ARE OUT TO OUT UNLESS NOTED OTHERWISE.

2. ALL REINFORCING STEEL TO BE EPOXY COATED.

3. I.R. DENOTES INSIDE RADIUS.

4. BAR SIZE AND LOCATION ARE INDICATED IN THE BAR MARK. THE FIRST ALPHABETICAL LETTER INDICATES STRUCTURE, THE SECOND ALPHABETICAL LETTER INDICATES LOCATION . THE FIRST DIGIT OF THE THREE DIGIT MARK INDICATES BAR SIZE NUMBER.

EXAMPLES:

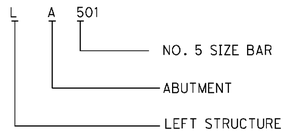

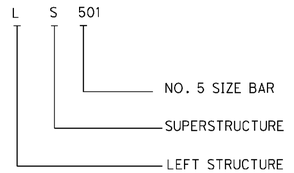

5. FOR ABBREVIATIONS, SEE SHEET 5/62.

DESIGN AGENCY
KCI ASSOCIATES OF OHIO, P.A.
388 S. MAIN ST., SUITE 401
AKRON, OHIO 44311

DESIGNED HK | DRAWN JLS | CHECKED CMK | REVIEWED FJB | DATE 6/5/09 | REVISED | STRUCTURE FILE NUMBER 04042681

REINFORCING STEEL LIST - LEFT STRUCTURE
BRIDGE NO. ATB-90-1583 L
I-90 OVER ASHTABULA RIVER

ATB-90-14.25
PID No. 25199

REINFORCING STEEL LIST

MARK	NUMBER								TOTAL	LENGTH	WEIGHT (LBS.)	TYPE	DIMENSIONS				
	PIER 1		PIER 2		PIER 3		PIER 4						A	B	C	D	INC
	PHASE 3	PHASE 4	PHASE 3	PHASE 4	PHASE 3	PHASE 4	PHASE 3	PHASE 4									
PIERS																	
LP401	41		41		41		41		164	8'-3"	904	24	2'-6"	2'-2"			
LP402	82	82	82	82	84	84	84	84	664	3'-6"	1552	19	2'-5"	6 1/8"	11 1/2"		
LP403		41		41		42		42	166	14'-3"	1580	24	2'-6"	5'-2"			
LP404	82		82		84		84		332	16'-4"	3622	STR.					
LP405	369	164	369	164	378	168	378	168	2158	3'-6"	5045	32	2'-6"				
LP406	27	10	27	10	27	10	27	10	148	7'-2"	709	2	2'-6"	2'-5"	2'-6"		
LP407	6	6	6	6	6	6	6	6	48	7'-4"	235	2	2'-6"	2'-7"	2'-6"		
LP408	1 SER. OF 5	1 SER. OF 5	1 SER. OF 5	1 SER. OF 5	1 SER. OF 5	1 SER. OF 5	1 SER. OF 5	1 SER. OF 5	8 SER. OF 5	14'-10" TO 17'-1"	426	2	6'-3" TO 7'-4 1/2"	2'-7"	6'-3" TO 7'-4 1/2"		6 3/4"
LP409	1	1	1	1	1	1	1	1	8	17'-8"	94	2	7'-8"	2'-7"	7'-8"		
LP410		32		32		32		32	128	5'-11"	506	1	3'-6"	2'-6"			
LP501		7		7		7		7	28	4'-9"	139	STR.					
LP502	7		7		7		7		28	15'-11"	465	STR.					
LP503	12	12	12	12	12	12	12	12	96	4'-0"	401	STR.					
LP504	2		2		2		2		8	17'-8"	147	STR.					
LP505	2		2		2		2		8	20'-7"	172	STR.					
LP506	8		8		8		8		32	22'-0"	734	STR.					
LP507	4		4		4		4		16	22'-8"	378	50					
LP508		2		2		2		2	8	6'-6"	54	STR.					
LP509		2		2		2		2	8	9'-6"	79	STR.					
LP510		8		8		8		8	32	10'-10"	362	STR.					
LP511		4		4		4		4	16	31'-1"	519	51					
LP601	14	14	14	14	14	14	14	14	112	3'-2"	533	16	2'-6"				
LP602	4	4	4	4	4	4	4	4	32	6'-9"	324	19	2'-5"	4'-2"	1'-3"		
LP603	3	3	3	3	3	3	3	3	24	12'-5"	448	54	2'-8 1/2"	2'-11"	1'-0"		
LP604	2	2	2	2	2	2	2	2	16	4'-3"	102	1	1'-7"	2'-10 1/2"			
LP801	4		4		4		4		16	28-7"	1221	52	6'-2"	22'-8"			
LP802		4		4		4		4	16	37'-0"	1580	53	6'-2"	31'-1"			
LP901	20	7	20	7	20	7	20	7	108	12'-2"	4468	17	9'-8"				
LP902	5	5	5	5	5	5	5	5	40	4'-2"	567	1	1'-7"	2'-10 1/2"			
LP903	2	2	2	2	2	2	2	2	16	2'-8"	145	STR.					
LP1101	51	17	51	17	51	17	51	17	272	17'-0"	24,567	1	2'-0"	15'-4"			
LP1102	8	8	8	8	8	8	8	8	64	14'-7"	4959	STR.					
LP1103	59	25	59	25	59	25	59	25	336	32'-7"	58,167	STR.					
LP1104	54	20							74	28'-1"	11,041	STR.					
LP1105			54	20					74	28'-6"	11,205	STR.					
LP1106					54	20			74	28'-11	11,369	STR.					
LP1107							54	20	74	29'-4"	11,533	STR.					
LP1108	5	5							10	25'-11"	1377	STR.					
LP1109			5	5					10	26'-3"	1395	STR.					
LP1110					5	5			10	26'-8"	1417	STR.					
LP1111							5	5	10	27'-1"	1439	STR.					
									TOTAL =		165,980						

NOTE: FOR BAR BENDING DIAGRAMS AND NOTES SEE SHEET 57/62 .

DESIGN AGENCY
KCI ASSOCIATES OF OHIO, P.A.
388 S. MAIN ST., SUITE 401
AKRON, OHIO 44311

DESIGNED HK | DRAWN MDB | REVIEWED FJB | DATE 6/5/09 | CHECKED CWK | REVISED

STRUCTURE FILE NUMBER 04042681

REINFORCING STEEL LIST - LEFT STRUCTURE

BRIDGE NO. ATB-90-1583 L
I-90 OVER ASHTABULA RIVER

ATB-90-14.25

PID No. 25199

REINFORCING STEEL LIST

MARK	NUMBER			LENGTH	WEIGHT (LBS.)	TYPE	DIMENSIONS				
	PHASE 3	PHASE 4	TOTAL				A	B	C	D	INCR.
SUPERSTRUCTURE											
LS401	377	598	975	30'-0"	19539	STR.					
LS402	29	46	75	7'-1"	354	STR.					
LS501	374	374	748	7'-5"	5786	23	1'-1"	3'-2"	3'-0"		
LS502	481	715	1196	30'-0"	37423	STR.					
LS506	37	55	92	13'-7"	1303	STR.					
LS509	116	180	296	47'-0"	14,510	STR.					
LS601	374	374	748	3'-7"	4026	35	1'-8"	1'-1"	1'-1"		
LS604	374	374	748	2'-7"	2902	1	1'-1"	1'-8"			
LS605	---	1258	1258	33'-0"	62,354	STR.					
LS606	1266	---	1266	25'-0"	47,538	STR.					
LS607	---	2 SER OF 9	2 SER OF 9	4'-3" TO 30'-8"	472	STR.					3'-3 5/8"
LS609	2 SER OF 6	---	2 SER OF 6	4'-0" TO 21'-0"	225	STR.					3'-4 3/4"
LS611	13	13	26	30'-0"	1172	STR.					
LS612	1	1	2	20'-1"	60	STR.					
LS610	---	2 SER OF 10	2 SER OF 10	4'-5" TO 29'-11"	516	STR.					2'-10"
LS614	2 SER OF 8	---	2 SER OF 8	3'-7" TO 23'-1"	320	STR.					2'-9"
LS807	---	5	5	32'-8"	436	51					
LS808	5	---	5	22'-10"	305	50					
LS809	5	---	5	22'-11"	306	50					
LS810	---	5	5	32'-10"	438	51					
TOTAL = 199,985											

NOTE: FOR BAR BENDING DIAGRAMS AND NOTES SEE SHEET 57/62 .

DESIGN AGENCY
KCI ASSOCIATES OF OHIO, P.A.
388 S. MAIN ST., SUITE 401
AKRON, OHIO 44311

DESIGNED HK | DRAWN MDB | REVIEWED FJB | DATE 6/5/09 | CHECKED CWK | REVISED | STRUCTURE FILE NUMBER 04042681

REINFORCING STEEL LIST - LEFT STRUCTURE

BRIDGE NO. ATB-90-1583 L
I-90 OVER ASHTABULA RIVER

ATB-90-14.25
PID No. 25199

REINFORCING STEEL LIST

MARK	NUMBER REAR PHASE 5	NUMBER FORWARD PHASE 5	TOTAL	LENGTH	WEIGHT (LBS.)	TYPE	DIMENSIONS A	B	C	D	INC
ABUTMENTS											
RA501		2	2	11'-8"	24	STR.					
RA502	11	11	22	9'-1"	208	3	2'-10"	1'-5"			
RA503	4		4	13'-7"	57	STR.					
RA504		2	2	11'-6"	24	STR.					
RA505		2	2	16'-5"	34	3	2'-10"	5'-1"			
RA506	4		4	16'-1"	67	3	2'-10"	4'-11"			
RA507		3	3	4'-7"	14	STR					
RA508	1	1	2	13'-4"	28	2	5'-6"	2'-7"	5'-6"		
RA509	2	2	4	11'-2"	47	2	4'-5"	2'-7"	4'-5"		
RA510	1	1	2	5'-11"	12	10	5½"	2'-4"	1'-4"	2'-5"	
RA511		2	2	2'-6"	5	STR.					
RA512	3		3	2'-10"	9	STR.					
RA513		2	2	9'-0"	19	STR.					
RA514	8	6	14	12'-1"	176	3	2'-7"	3'-2"			
RA515		1	1	11'-9"	12	STR.					
RA516	4	4	8	8'-4"	70	2	3'-0"	2'-7"	3'-0"		
RA517		2	2	7'-4"	15	10	8⅝"	3'-9"	1'-4"	2'-5"	
RA518	60		60	5'-11"	370	1	3'-1"	3'-0"			
RA519		3	3	12'-0"	38	STR.					
RA520		60	60	5'-9"	360	1	3'-1"	2'-10"			
RA521	4		4	4'-5"	18	STR.					
RA522	4		4	11'-8"	49	STR.					
RA523	2		2	13'-6"	28	STR.					
RA524	2		2	3'-0"	6	STR.					
RA525	2	2	4	3'-10"	16	STR.					
RA526	1	1	2	10'-9"	22	2	3'-9"	3'-6"	3'-9"		
RA527	2		2	21'-1"	44	3	3'-5"	6'-10"			
RA528	4		4	4'-6"	19	STR.					
RA529		2	2	21'-3"	44	3	3'-5"	6'-11"			
RA530		2	2	4'-8"	10	STR.					
RA531		2	2	4'-7"	10	19	3'-3"	1'-4"	2⅝"		
RA532	1		1	24'-11"	26	STR.					
RA533	3		3	26'-8"	83	STR.					
RA534		1	1	25'-2"	26	STR.					
RA535		3	3	26'-10"	84	STR.					
RA601	40	34	74	3'-2"	352	16	2'-6"				
RA602		6	6	3'-1"	28	16	2'-5"				
RA801		1	1	11'-8"	31	STR.					
RA802		1	1	11'-6"	31	STR.					
RA803	9		9	26'-2"	629	STR.					
RA804	1		1	27'-11"	75	STR.					
RA805		9	9	28'-0"	673	STR.					
RA806		1	1	26'-4	70	STR.					
RA807	1	1	2	10'-9"	57	10	11¼"	4'-10"	1'-4"	4'-11"	
RA808		3	3	4'-7"	37	STR.					
RA809		1	1	2'-6"	7	STR.					
RA810		1	1	9'-0"	24	STR.					
RA811		1	1	11'-9"	31	STR.					
RA812		2	2	12'-0"	64	STR.					
RA813		1	1	9'-8"	26	10	8⅝"	3'-9"	1'-4"	4'-11"	
				SUB-TOTAL =	4209						

REINFORCING STEEL LIST

MARK	NUMBER REAR PHASE 5	NUMBER FORWARD PHASE 5	TOTAL	LENGTH	WEIGHT (LBS.)	TYPE	DIMENSIONS A	B	C	D	INC
ABUTMENTS											
RA814	1		1	3'-0"	8	STR.					
RA815	3		3	11'-8"	93	STR.					
RA816	1		1	13'-6"	36	STR.					
RA817	2		2	13'-7"	73	STR.					
RAD801	32	32	64	5'-1"	869	18	2'-9"	1'-0"	1'-0"		
RD501	70	70	140	8'-4"	1217	2	2'-7"	3'-5"	2'-7"		
RD502	35	35	70	7'-2"	523	2	2'-5"	2'-7"	2'-5"		
RD801	22		22	26'-2"	1537	STR.					
RD802		22	22	26'-4"	1547	STR.					
RAW501	7		7	10'-3"	75	1	1'-0"	9'-5"			
RAW502	7		7	7'-9"	57	STR.					
RAW503	11		11	19'-9"	227	2	9'-5"	1'-2"	9'-5"		
RAW504	9	8	17	9'-1"	161	2	4'-1"	1'-2"	4'-1"		
RAW505	9		9	9'-7"	90	2	4'-4"	1'-2"	4'-4"		
RAW506	9		9	19'-8"	185	STR.					
RAW507	12		12	11'-8"	146	STR.					
RAW508	3		3	19'-10"	62	STR.					
RAW509	4		4	11'-10"	49	STR.					
RAW510		9	9	17'-8"	166	STR.					
RAW511		13	13	9'-8"	131	STR.					
RAW512		3	3	17'-10"	56	STR.					
RAW513		4	4	9'-10"	41	STR.					
RAW514	3	2	5	11'-11"	62	STR.					
RAW515	4	4	8	8'-3"	68	19	2'-5"	5'-4"	2'-8"		
RAW516	16	14	30	5'-11"	185	2	2'-6"	1'-2"	2'-6"		
RAW517		7	7	20'-3"	148	2	9'-8"	1'-2"	9'-8"		
RAW518		9	9	10'-6"	99	1	1'-0"	9'-8"			
RAW519		8	8	8'-0"	67	STR.					
RAW520		8	8	9'-11"	83	2	4'-6"	1'-2"	4'-6"		
RAW521	2		2	6'-1"	13	2	2'-7"	1'-2"	2'-7"		
RAW522	2		2	6'-9"	14	2	2'-11"	1'-2"	2'-11"		
RAW523	1		1	13'-10"	14	STR.					
RAW524	2		2	6'-5"	13	2	2'-9"	1'-2"	2'-9"		
RAW525	2		2	7'-1"	15	2	3'-1"	1'-2"	3'-1"		
RAW526	1		1	14'-0"	15	STR.					
RAW528	1		1	12'-1"	13	STR.					
SER. RAW529		2 SETS OF 3	2 SETS OF 3	5'-11 TO 7'-3"	41	2	2'-6" TO 3'-2"	1'-2"	2'-6" TO 3'-2"		8"
RAW531		2	2	9'-11"	21	STR.					
RAW532		2	2	6'-11"	14	2	3'-0"	1'-2"	3'-0"		
RAW533		2	2	6'-3"	13	2	2'-8"	1'-2"	2'-8"		
RAW534		1	1	10'-2"	11	STR.					
RAW535		1	1	10'-4"	11	STR.					
				TOTAL =	12,478						

NOTE: FOR BAR BENDING DIAGRAMS AND NOTES SEE SHEET 57/62 .

DESIGN AGENCY
KCI ASSOCIATES OF OHIO, P.A.
388 S. MAIN ST., SUITE 401
AKRON, OHIO 44311

DESIGNED HK | DRAWN JLS | REVIEWED FJB | DATE 6/5/09 | CHECKED CMK | REVISED | STRUCTURE FILE NUMBER 0404292R

REINFORCING STEEL LIST - RIGHT STRUCTURE
BRIDGE NO. ATB-90-1583 R
I-90 OVER ASHTABULA RIVER

ATB-90-14.25
PID No. 25199

REINFORCING STEEL LIST

MARK	NUMBER				TOTAL	LENGTH	WEIGHT	TYPE	DIMENSIONS				
	PIER 1	PIER 2	PIER 3	PIER 4			(LBS.)		A	B	C	D	INC
	PHASE 5	PHASE 5	PHASE 5	PHASE 5									
PIERS													
RP401	41	41	42	42	166	13'-11"	1543	24	2'-6"	5'-0"			
RP402	164	164	168	168	664	3'-6"	1552	19	2'-5"	6 1/8"	11 1/2"		
RP403	41	41	42	42	166	20'-1"	2227	24	2'-6"	8'-1"			
RP404	32	32	32	32	128	5'-6"	470	1	3'-1"	2'-6"			
RP405	668	668	668	668	2672	3'-6"	6247	32	2'-6"				
RP406	29	29	29	29	116	7'-2"	555	2	2'-6"	2'-5"	2'-6"		
RP407	12	12	12	12	48	7'-4"	235	2	2'-6"	2'-7"	2'-6"		
RP408	2 SER. OF 5	2 SER. OF 5	2 SER. OF 5	2 SER. OF 5	8 SER. OF 5	14'-10" TO 17'-1"	426	2	6'-3 TO 7'-4 1/2"	2'-7"	6'-3 TO 7'-4 1/2"		6 3/4"
RP409	2	2	2	2	8	17'-8"	94	2	7'-8"	2'-7"			
RP501	7	7	7	7	28	7'-8"	224	STR.					
RP502	7	7	7	7	28	4'-7"	134	STR.					
RP503	24	24	24	24	96	4'-0"	401	STR.					
RP504	2	2	2	2	8	6'-6"	54	STR.					
RP505	2	2	2	2	8	9'-5"	78	STR.					
RP506	8	8	8	8	32	10'-8"	356	STR.					
RP507	2	2	2	2	8	9'-5"	79	STR.					
RP508	2	2	2	2	8	12'-4"	103	STR.					
RP509	8	8	8	8	32	13'-8"	456	STR.					
RP510	4	4	4	4	16	23'-11"	399	STR.					
RP601	28	28	28	28	112	3'-2"	533	16	2'-6"				
RP602	8	8	8	8	32	6'-9"	324	19	2'-5"	4'-2"	1'-3"		
RP603	6	6	6	6	24	12'-5"	448	54	2'-8 1/2"	2'-11"	1'-0"		
RP604	4	4	4	4	16	4'-3"	102	1	1'-7"	2'-10 1/2"			
RP801	8	8	8	8	32	32'-0"	2734	1	6'-2"	26'-1"			
RP901	21	21	21	21	84	12'-2"	3475	17	9'-8"				
RP902	10	10	10	10	40	4'-2"	567	1	1'-7"	2'-10 1/2"			
RP903	4	4	4	4	16	2'-8"	145	STR.					
RP1101	48	48	48	48	192	17'-0"	17,342	1	2'-0"	15'-4"			
RP1102	20	20	20	20	80	14'-7"	6198	STR.					
RP1103	68	68	68	68	272	32'-7"	47,087	STR.					
RP1104	58				58	27'-7"	8500	STR.					
RP1105		58			58	28'-0"	8628	STR.					
RP1106			58		58	28'-5"	8757	STR.					
RP1107				58	58	28'-10"	8885	STR.					
RP1108	10				10	25'-6"	1355	STR.					
RP1109		10			10	25'-11"	1377	STR.					
RP1110			10		10	26'-4"	1399	STR.					
RP1111				10	10	26'-9"	1421	STR.					
					TOTAL =		134,910						

NOTE: FOR BAR BENDING DIAGRAMS AND NOTES SEE SHEET 57/62 .

DESIGN AGENCY
KCI ASSOCIATES OF OHIO, P.A.
388 S. MAIN ST., SUITE 401
AKRON, OHIO 44311

DESIGNED CMK | DRAWN MDB | CHECKED HK | REVIEWED FJB | DATE 6/5/09 | REVISED --- | STRUCTURE FILE NUMBER 0404292R

REINFORCING STEEL LIST - RIGHT STRUCTURE

BRIDGE NO. ATB-90-1583 R
I-90 OVER ASHTABULA RIVER

ATB-90-14.25
PID No. 25199

REINFORCING STEEL LIST

MARK	NUMBER		LENGTH	WEIGHT	TYPE	DIMENSIONS				
	PHASE 5	TOTAL		(LBS.)		A	B	C	D	INCR.
SUPERSTRUCTURE										
RS401	832	832	30'-0"	16673	STR.					
RS402	64	64	7'-3"	310	STR.					
RS501	748	748	7'-5"	5786	23	1'-1"	3'-2"	3'-0"		
RS502	1040	1040	30'-0"	32542	STR.					
RS504	252	252	47'-0"	12353	STR.					
RS506	80	80	13'-8"	1140	STR.					
RS601	748	748	3'-7"	4026	35	1'-8"	1'-1"	1'-1"		
RS602	634	634	20'-8"	19680	STR.					
RS603	631	631	28'-11"	27406	STR.					
RS604	748	748	2'-7"	2902	1	1'-1"	1'-8"			
RS605	1265	1265	24'-10"	47184	STR.					
SER. RS606	1 SET OF 6	1 SET OF 6	4'-1" TO 22'-1"	118	STR.					3'-7 1/4"
SER. RS607	1 SET OF 6	1 SET OF 6	5'-10"TO 22'-11"	130	STR.					3'-5"
SER. RS608	1 SET OF 8	1 SET OF 8	4'-6"TO 23'-9"	170	STR.					2'-9"
SER. RS609	1 SET OF 7	1 SET OF 7	4'-11"TO 22'-1"	142	STR.					2'-10 3/8"
SER. RS610	1 SET OF 5	1 SET OF 5	3'-6"TO 17'-11"	80	STR.					3'-7 1/4"
RS611	26	26	30'-0"	1172	STR.					
RS612	2	2	20'-0"	60	STR.					
SER. RS613	1 SET OF 7	1 SET OF 7	4'-6"TO 21'-0"	134	STR.					2'-9"
SER. RS614	1 SET OF 7	1 SET OF 7	5'-10"TO 26'-6"	170	STR.					3'-5 3/8"
SER. RS615	1 SET OF 8	1 SET OF 8	6'-3"TO 25'-3"	189	STR.					2'-8 1/2"
RS805	10	10	26'-2"	699	STR.					
RS806	10	10	26'-4"	703	STR.					
			TOTAL = 173770							

NOTE: FOR BAR BENDING DIAGRAMS AND NOTES SEE SHEET 57/62 .

DESIGN AGENCY
KCI ASSOCIATES OF OHIO, P.A.
388 S. MAIN ST., SUITE 401
AKRON, OHIO 44311

DESIGNED CMK | DRAWN MDB | REVIEWED FJB | DATE 6/5/09
CHECKED HK | REVISED | STRUCTURE TITLE NUMBER 0404292R

REINFORCING STEEL LIST - RIGHT STRUCTURE
BRIDGE NO. ATB-90-1583 R
I-90 OVER ASHTABULA RIVER

ATB-90-14.25
PID No. 25199

TRANSVERSE SECTION

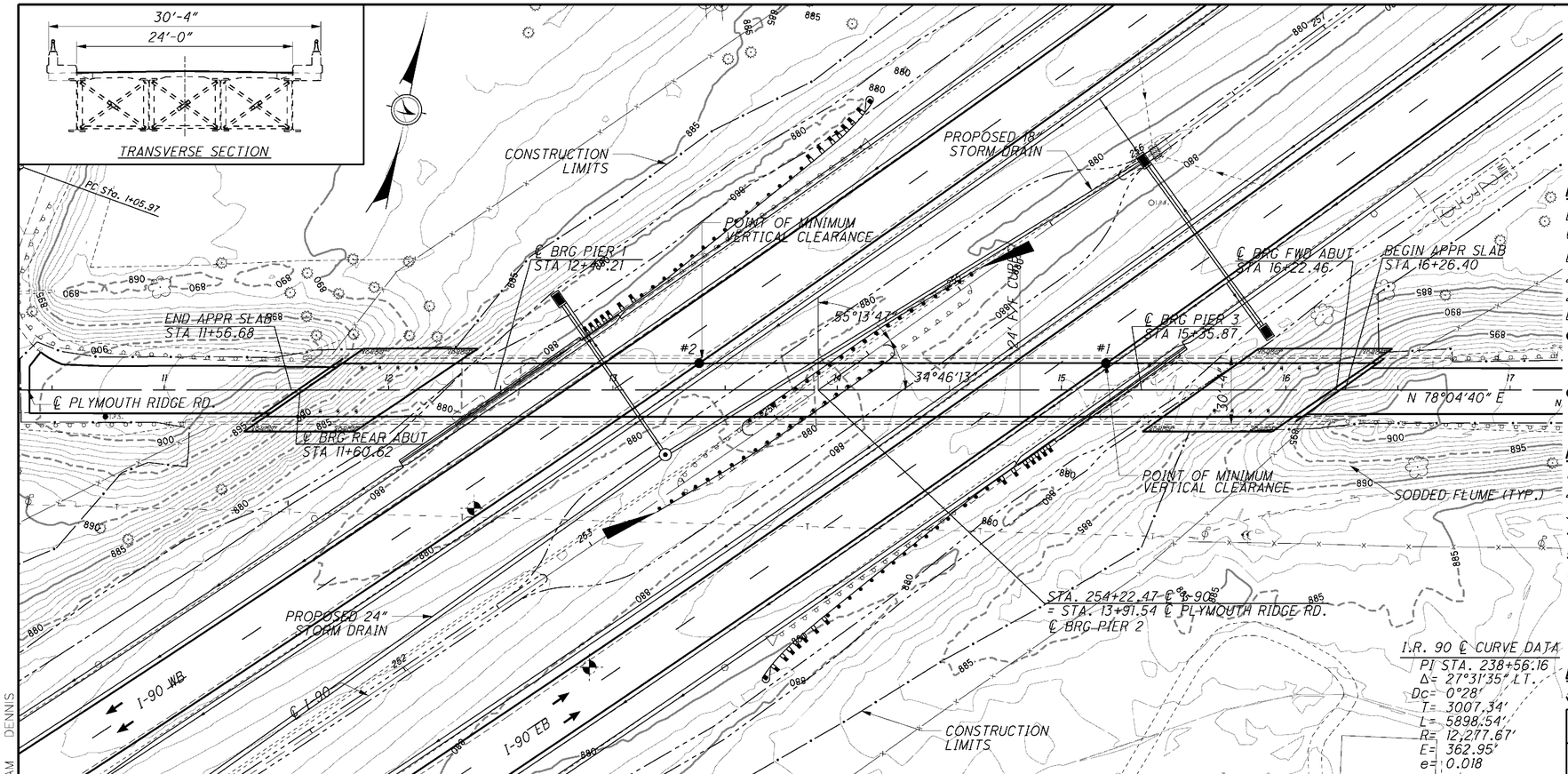

I.R. 90 ℄ CURVE DATA
PI STA. 238+56.16
Δ = 27°31'35" LT.
Dc = 0°28'
T = 3007.34'
L = 5898.54'
R = 12,277.67'
E = 362.95'
e = 0.018

PLAN

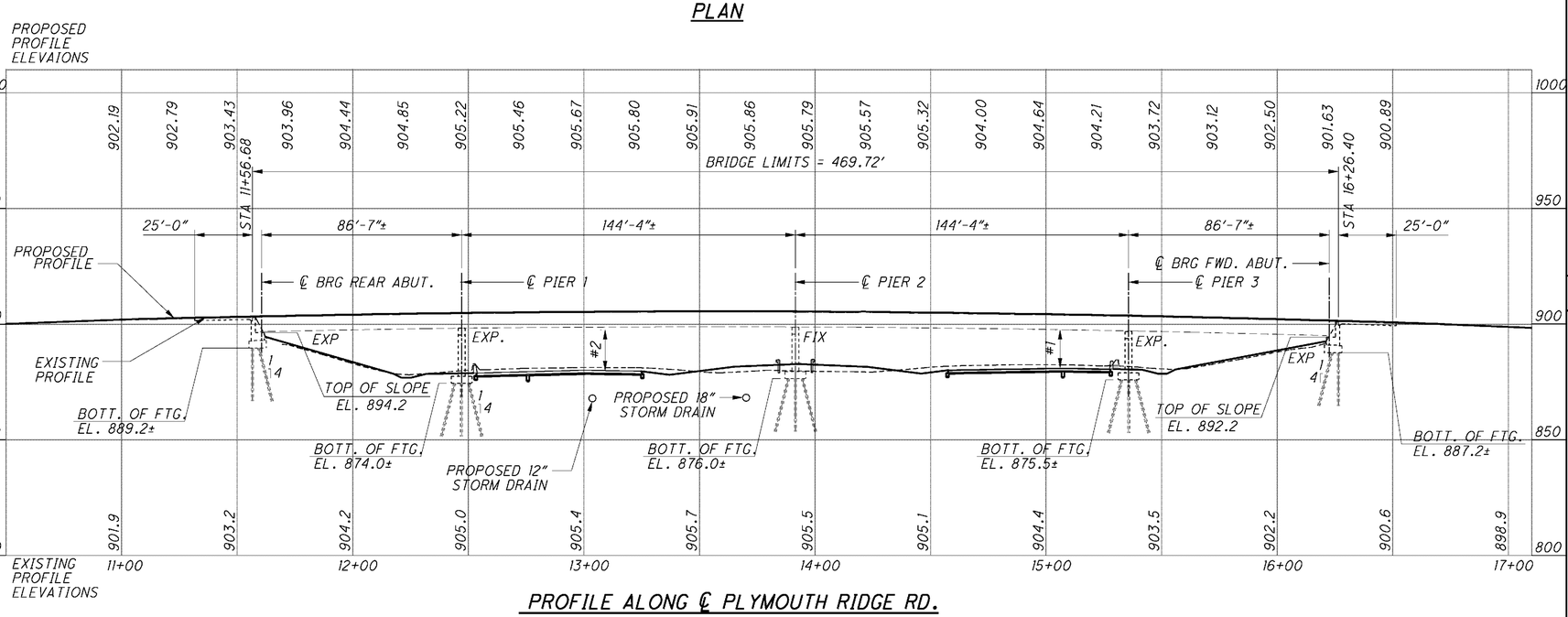

PROFILE ALONG ℄ PLYMOUTH RIDGE RD.

BENCHMARK DATA

BM #1 STA. 249+91.87, ELEV. 877.27 , OFFSET 83.07 , LEFT
BM #2 STA. 270+46.92, ELEV. 879.49 , OFFSET 83.10 , LEFT

NOTES

EARTHWORK LIMITS SHOWN ARE APPROXIMATE. ACTUAL SLOPES SHALL CONFORM TO PLAN CROSS SECTIONS.

DESIGN TRAFFIC:
2008 ADT = 940 2008 ADTT = 38
2028 ADT = 1110 2028 ADTT = 45
DIRECTIONAL DISTRIBUTION = 0.55

- #1 16'-6" REQUIRED MINIMUM VERTICAL CLEARANCE
  14'-7"± ACTUAL MINIMUM VERTICAL CLEARANCE (EXISTING)
  16'-10" VERTICAL CLEARANCE PROVIDED (PROPOSED)
- #2 16'-6" REQUIRED MINIMUM VERTICAL CLEARANCE
  16'-11"± ACTUAL MINIMUM VERTICAL CLEARANCE (EXISTING)
  19'-0" VERTICAL CLEARANCE PROVIDED (PROPOSED)

PROPOSED WORK

1. PERFORM VARIABLE AND FULL DEPTH DECK REPAIRS.
2. INSTALL TYPE 3 MEMBRANE WATER PROOFING ON BRIDGE DECK.
3. PAVE CONCRETE DECK WITH 3" ASPHALT OVERLAY.
4. PATCH SUBSTRUCTURE AREAS.
5. SEAL CONCRETE SURFACES.
6. SUPPLEMENT AND REGRADE ABUTMENT SLOPE PROTECTION.

LEGEND

ORIGINAL SOIL BORING LOCATION

EXISTING STRUCTURE

TYPE: 4-SPAN CONTINUOUS STEEL PLATE GIRDERS WITH REINFORCED CONCRETE DECK, ABUTMENTS, AND PIERS.

SPANS: 86'-7", 144'-4", 144'-4", 86'-7" c/c BEARINGS
ROADWAY: 24'-0" F/F SAFETY CURB
LOADING: H15 (CF=130)
SKEW: 55°13'47" LF
APPROACH SLABS: 25'-0"
WEARING SURFACE: 1" MONOLITHIC CONCRETE
ALIGNMENT: TANGENT
CROWN: 3/16" / ft
STRUCTURAL FILE NUMBER: 0404322
DATE BUILT: 1958

PROPOSED STRUCTURE

TYPE: EXISTING 4-SPAN CONTINUOUS STEEL PLATE GIRDERS WITH NEW 3" ASPHALT CONCRETE OVERLAY AND MEMBRANE WATERPROOFING ON EXISTING CONCRETE DECK

SPANS: 86'-7", 144'-4", 144'-4", 86'-7" c/c BEARINGS
ROADWAY: 24'-0" F/F SAFETY CURB
LOADING: H15 (CF=130)
SKEW: 55°13'47" LF
APPROACH SLABS: 25'-0"
WEARING SURFACE: 3" ASPHALT CONCRETE
ALIGNMENT: TANGENT
CROWN: .0156
COORDINATES: LATITUDE 41°51'12" N
LONGITUDE 80°41'52" W

DESIGN AGENCY
Palmer ENGINEERING
1300 CORNELL PARK DR
CINCINNATI, OHIO 45246

DESIGNED	DRAWN	REVIEWED	DATE
CEJ	VWK	MLJ	1/09
CHECKED	REVISED	STRUCTURE FILE NUMBER	
BJF			

ASHTABULA COUNTY
STA. 11+56.68
STA. 16+26.40

SITE PLAN
BRIDGE NO.ATB-90-1764
I.R. 90 UNDER PLYMOUTH RIDGE

ATB-90-14.25
PID No. 25199

1 / 7

424
437

O:\ODOT\ATB\25199\bridge\ATB090_1764C\sheets\090_1764sp001.dgn 6/6/2009 9:52:58 AM DENNIS

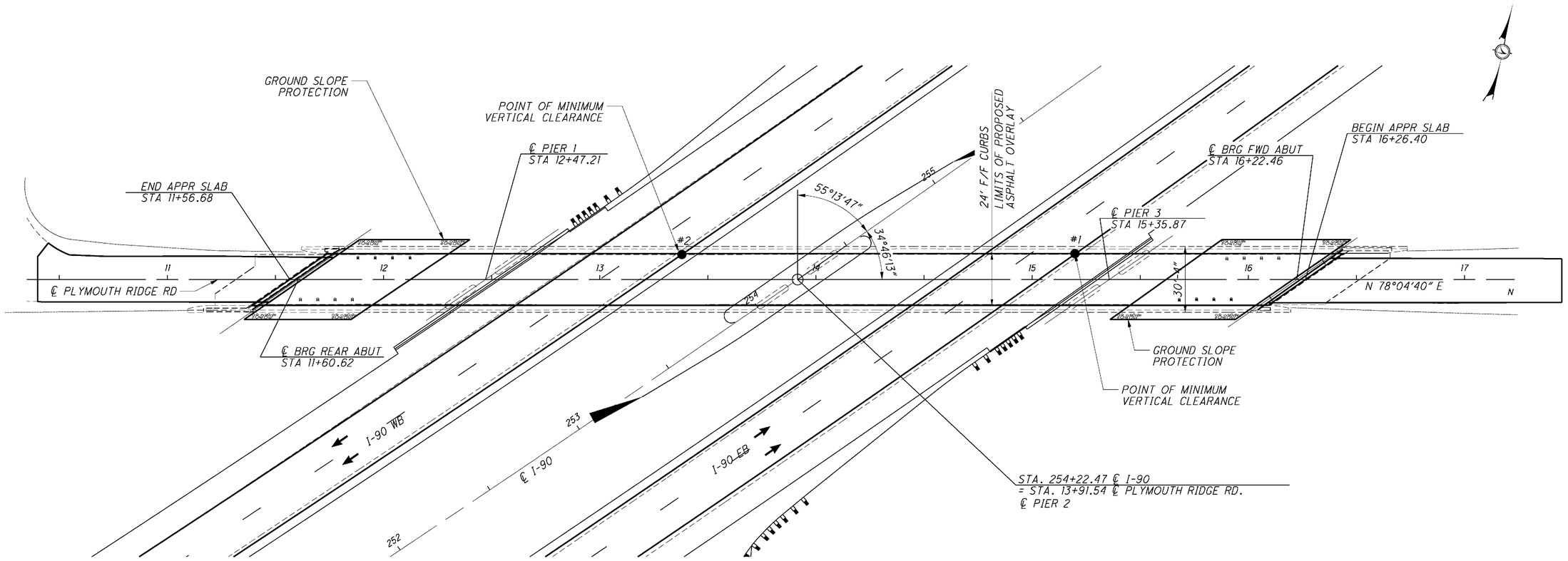

GENERAL PLAN

PROPOSED WORK

1. PERFORM VARIABLE AND FULL DEPTH DECK REPAIRS.
2. INSTALL TYPE 3 MEMBRANE WATER PROOFING ON BRIDGE DECK.
3. PAVE CONCRETE DECK WITH 3" ASPHALT OVERLAY.
4. PATCH SUBSTRUCTURE AREAS.
5. SEAL CONCRETE SURFACES.
6. SUPPLEMENT AND REGRADE ABUTMENT SLOPE PROTECTION.

C:\ODOT\ATB\25199\bridge\ATB090_1764C\sheets\090_1764GP001.dgn 6/6/2009 9:53:09 AM DENNIS

DESIGN AGENCY
Palmer PALMER ENGINEERING
1300 CORNELL PARK DR
BLUE ASH, OHIO 45242

DESIGNED	DRAWN	REVIEWED	DATE
CEJ	SDW	MLJ	1/09
CHECKED	REVISED	STRUCTURE FILE NUMBER	
BJF		0404322	

GENERAL PLAN
BRIDGE NO. ATB-90-1764
I.R. 90 UNDER PLYMOUTH RIDGE RD

ATB-90-14.25
PID No. 25199

2 / 7

425
437

DESIGN SPECIFICATIONS THIS STRUCTURE CONFORMS TO "STANDARD SPECIFICATIONS FOR HIGHWAY BRIDGES" ADOPTED BY THE AMERICAN ASSOCIATION OF STATE HIGHWAY AND TRANSPORTATION OFFICIALS, 17TH EDITION (2002), AND THE ODOT BRIDGE DESIGN MANUAL.

DECK PROTECTION METHOD
WATERPROOFING AND ASPHALT CONCRETE OVERLAY

ITEM 519 - PATCHING CONCRETE STRUCTURE, AS PER PLAN
PRIOR TO THE SURFACE CLEANING SPECIFIED IN 519.04 AND WITHIN 24 HOURS OF PLACING PATCHING MATERIAL, BLAST CLEAN ALL SURFACES TO BE PATCHED INCLUDING THE EXPOSED REINFORCING STEEL. ACCEPTABLE METHODS INCLUDE HIGH-PRESSURE WATER BLASTING WITH OR WITHOUT ABRASIVES IN THE WATER, ABRASIVE BLASTING WITH CONTAINMENT, OR VACUUM ABRASIVE BLASTING.

FOR PATCHWORK NEAR THE GROUND LINE, MINOR EXCAVATION MAY BE NECESSARY TO GAIN COMPLETE ACCESS TO THE AREAS OF UNSOUND CONCRETE. ANY SOIL OR CRUSHED AGGREGATE SLOPE PROTECTION REMOVED FOR THIS PURPOSE SHALL BE REPLACED UPON COMPLETION OF THE CONCRETE REPAIRS. PAYMENT FOR THE LABOR AND EQUIPMENT REQUIRED FOR THIS WORK SHALL BE INCLUDED IN THE CONTRACT PRICE FOR ITEM 519, PATCHING CONCRETE STRUCTURE, AS PER PLAN.

EXISTING STRUCTURE VERIFICATION DETAILS AND DIMENSIONS SHOWN ON THESE PLANS PERTAINING TO THE EXISTING STRUCTURE HAVE BEEN OBTAINED FROM PLANS OF THE EXISTING STRUCTURE AND FROM FIELD OBSERVATIONS AND MEASUREMENTS. CONSEQUENTLY, THEY ARE INDICATIVE OF THE EXISTING STRUCTURE AND THE PROPOSED WORK BUT THEY SHALL BE CONSIDERED TENTATIVE AND APPROXIMATE. THE CONTRACTOR IS REFERRED TO CMS SECTIONS 102.05 AND 105.02

BASE CONTRACT BID PRICES UPON A RECOGNITION OF THE UNCERTAINTIES DESCRIBED ABOVE AND UPON A PREBID EXAMINATION OF THE EXISTING STRUCTURE. HOWEVER, THE DEPARTMENT WILL PAY FOR ALL PROJECT WORK BASED UPON ACTUAL DETAILS AND DIMENSIONS THAT HAVE BEEN VERIFIED IN THE FIELD.

ITEM SPECIAL - PATCHING CONCRETE BRIDGE DECK OVERLAY WITH MICRO-SILICA MODIFIED CONCRETE.
VARIABLE DEPTH REPAIRS SHALL BE PAID AS DESCRIBED IN PROPOSAL NOTE 511 USING ITEM SPECIAL- PATCHING OF CONCRETE BRIDGE DECK OVERLAYS USING MICRO-SILICA MODIFIED CONCRETE.

ITEM SPECIAL - PATCHING CONCRETE STRUCTURE, MISC.: FULL DEPTH REPAIR - WHERE THE DECK IS SOUND FOR LESS THAN ONE HALF OF ITS ORIGINAL DEPTH, THE CONCRETE SHALL BE REMOVED FULL DEPTH EXCEPT FOR LIMITED AREAS AS MAY BE DESIGNATED BY THE ENGINEER. FORMS SHALL BE PROVIDED TO SUPPORT CONCRETE PLACED IN FULL-DEPTH REPAIR AREAS. THE FORMS FOR AREAS OF UP TO 4 SQUARE FEET MAY BE SUSPENDED FROM WIRES FROM THE REINFORCING STEEL. FOR AREAS GREATER THAN 4 SQUARE FEET, THE FORMS SHALL BE SUPPORTED FROM THE PRIMARY MEMBERS OF THE SUPERSTRUCTURE OR BY SHORING FROM BELOW. AREAS OF FULL-DEPTH REPAIR SHALL HAVE THE CONCRETE FACES AND REINFORCING STEEL CLEANED AS DESCRIBED HEREIN. MATERIALS, MIXING, PLACING AND CURING OF FULL DEPTH REPAIR CONCRETE SHALL BE AS DESCRIBED IN PROPOSAL NOTE 511.

ITEM 601 - CRUSHED AGGREGATE SLOPE PROTECTION, AS PER PLAN
THIS ITEM SHALL CONSIST OF REGRADING THE ABUTMENT EMBANKMENT SLOPE PROTECTION AND SUPPLEMENTING THE EXISTING SLOPE PROTECTION TO ACHIEVE THE MINIMUM THICKNESS OF 12 INCHES.

ITEM	ITEM EXT.	GRAND TOTAL	UNIT	DESCRIPTION	ABUT.	PIER	SUPER STRUCT	GENERAL	SHEET REF NO.
407	13900	94	GAL	TACK COAT, 702.13			94		
407	14000	63	GAL	TACK COAT FOR INTERMEDIATE COURSE			63		
448	46050	61	CU YD	ASPHALT CONCRETE INTERMEDIATE COURSE, TYPE 2, PG64-22			61		
448	47020	44	CU YD	ASPHALT CONCRETE INTERMEDIATE COURSE, TYPE 1, PG64-22			44		
512	10100	1313	SQ YD	SEALING OF CONCRETE SURFACES (EPOXY-URETHANE)	209	259	845		
512	33010	1253	SQ YD	TYPE 3 WATERPROOFING			1253		
SPECIAL	51631300	84	FT	POLYMER MODIFIED ASPHALT EXPANSION JOINT SYSTEM			84		
519	11101	122	SQ FT	PATCHING CONCRETE STRUCTURE, AS PER PLAN (*)	93	29			3/7
SPECIAL	51910000	235	SQ YD	PATCHING CONCRETE BRIDGE DECK OVERLAY WITH MICROSILICA MODIFIED CONCRETE (*)			235		3/7
SPECIAL	51911900	4	CU YD	PATCHING CONCRETE STRUCTURE, MISC.: FULL DEPTH REPAIR (*)			4		3/7
601	20001	100	SQ YD	CRUSHED AGGREGATE SLOPE PROTECTION, AS PER PLAN					3/7
							CALCULATED: CEJ		CHECKED: BJF

(*) REFER TO PROPOSAL NOTE 511.

DESIGN AGENCY
Palmer ENGINEERING
PALMER ENGINEERING 1300 CORNELL PARK DR. BLUE ASH, OHIO 45242

DESIGNED	DRAWN	REVIEWED	DATE
CEJ	SDW	MLJ	1/09
CHECKED	REVISED	STRUCTURE FILE NUMBER	
BJF		0404322	

GENERAL NOTES AND ESTIMATED QUANTITIES
BRIDGE NO. ATB-90-1764
I.R. 90 UNDER PLYMOUTH RIDGE RD.

ATB-90-14.25
PID No. 25199

3 / 7

426
437

O:\ODOT\ATB\25199\bridge\ATB090_1764C\sheets\090_1764GN001.dgn 6/9/2009 6:52:04 PM DENNIS

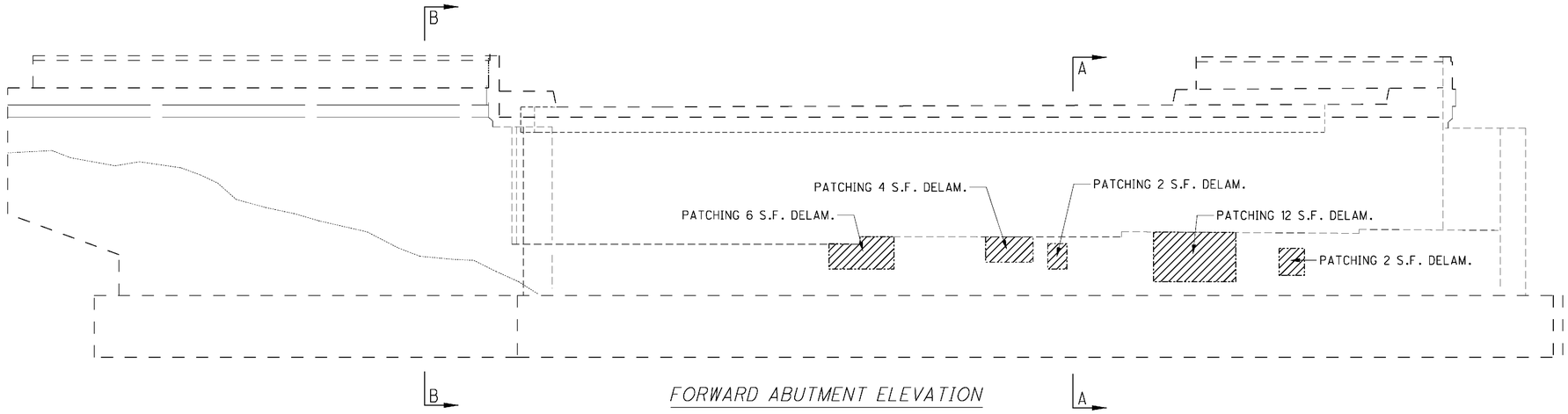

FORWARD ABUTMENT ELEVATION

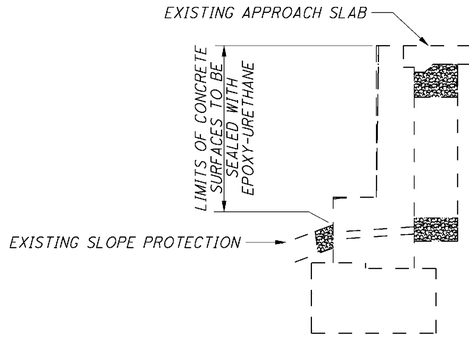

SECTION A-A

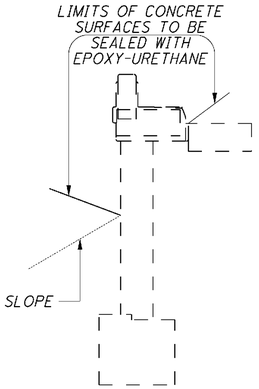

SECTION B-B

NOTE:
MINOR EXCAVATION WILL BE NECESSARY TO PATCH ABUTMENTS NEAR THE GROUND LINE. SEE GENERAL NOTES ON SHEET 3/7 FOR ADDITIONAL INFORMATION

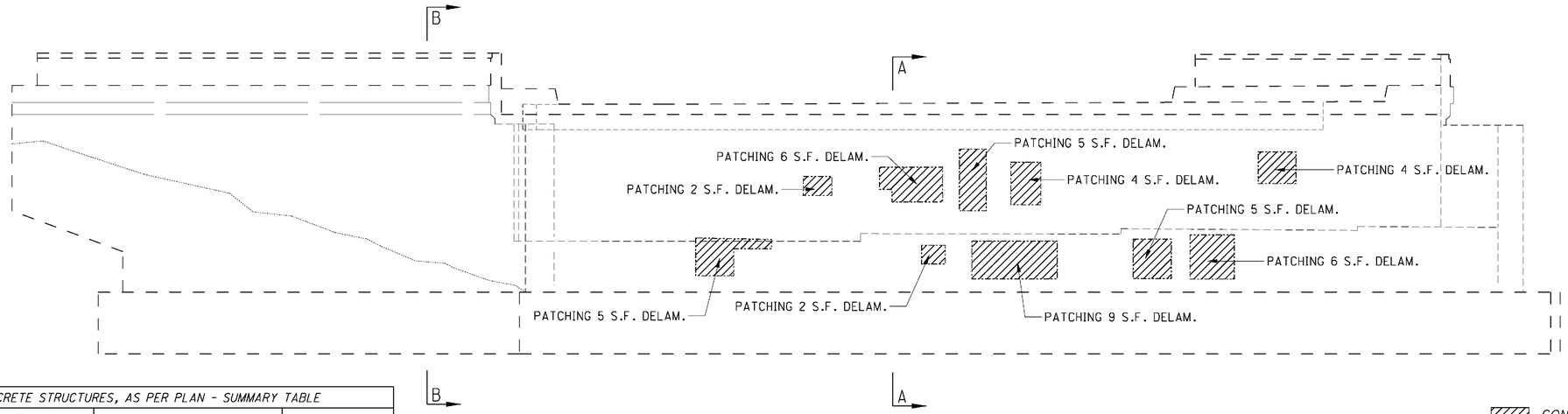

REAR ABUTMENT ELEVATION

ITEM 519 PATCHING, CONCRETE STRUCTURES, AS PER PLAN - SUMMARY TABLE			
LOCATION	MEASURED QTY (S.F.)	CONTINGENCY FACTOR	TOTAL (S.F.)
FORWARD ABUTMENT	26	1.25	33
REAR ABUTMENT	48	1.25	60

CONCRETE DELAMINATION TO BE PATCHED WITH ITEM 519, PATCHING CONCRETE STRUCTURES, AS PER PLAN. SEE SHEET 3/7 .

DESIGN AGENCY
Palmer ENGINEERING
1300 CORNELL PARK DR
BLUE ASH, OHIO 45242
CINCINNATI, DAYTON, COLUMBUS, LOUISVILLE

DESIGNED	DRAWN	REVIEWED	DATE
CEJ	VWK	MLJ	1/09
CHECKED	REVISED	STRUCTURE FILE NUMBER	
BJF		0404322	

ABUTMENT DETAILS
BRIDGE NO. ATB-90-1764
I.R. 90 UNDER PLYMOUTH RIDGE ROAD

ATB-90-14.25
PID No. 25199

4 / 7

427
437

C:\ODOT\ATB\25199\bridge\ATB090_1764C\sheets\090_1764AR001.dgn 6/6/2009 9:53:16 AM DENNIS

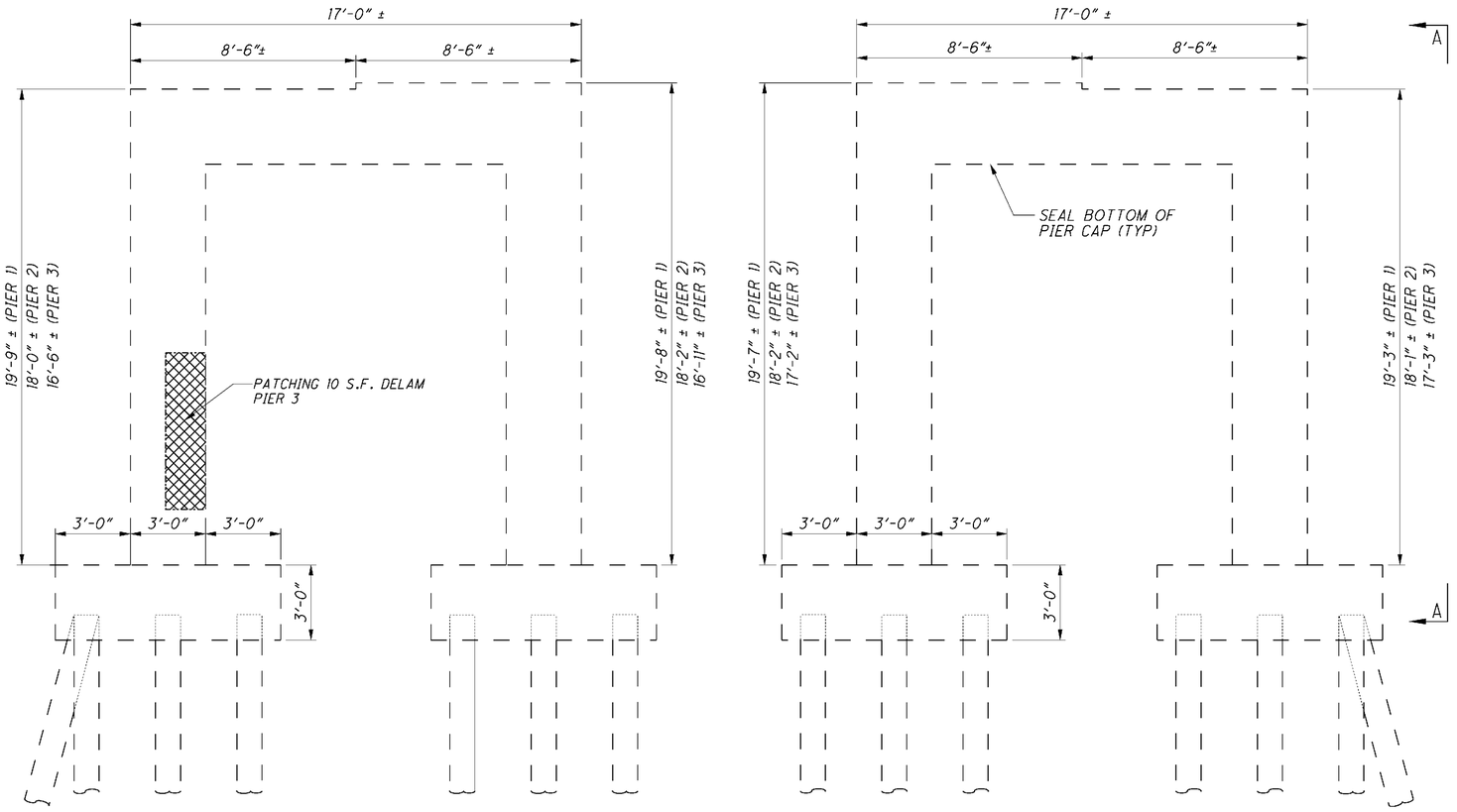

PIER ELEVATION

(LOOKING FORWARD)

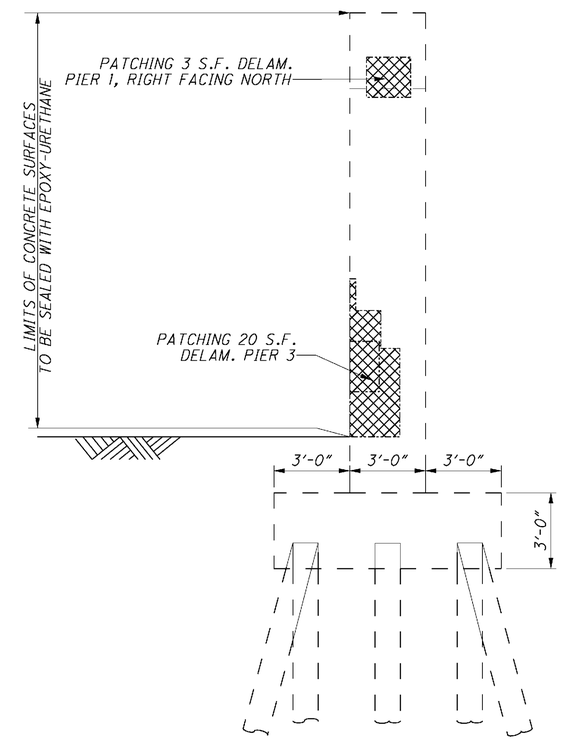

VIEW A-A

CONCRETE DELAMINATION TO BE PATCHED WITH ITEM 519, PATCHING CONCRETE STRUCTURES, AS PER PLAN. SEE SHEET 3/7 .

NOTE:
MINOR EXCAVATION WILL BE NECESSARY TO PATCH PIERS NEAR THE GROUND LINE. SEE GENERAL NOTES ON SHEET 3/7 FOR ADDITIONAL INFORMATION

ITEM 519, PATCHING CONCRETE STRUCTURES, AS PER PLAN - SUMMARY TABLE			
LOCATION	MEASURED QTY (S.F.)	CONTINGENCY FACTOR	TOTAL (S.F.)
PIER 1	3	1.25	4
PIER 3	20	1.25	25

DESIGN AGENCY
Palmer ENGINEERING
1300 CORNELL PARK DR
CINCINNATI, OHIO 45246
PHONE: (513) 771-1300
FAX: (513) 771-1313

DESIGNED	DRAWN	REVIEWED	DATE
CEJ	VWK	MLJ	1/09
CHECKED	REVISED	STRUCTURE FILE NUMBER	
BJF		0404322	

PIER DETAILS
BRIDGE NO. ATB-90-1764
I.R. 90 UNDER PLYMOUTH RIDGE ROAD

ATB-90-14.25
PID No. 25199

5 / 7

428
437

O:\ODOT\ATB\25199\bridge\ATB090_1764C\sheets\090_1764P1001.DGN 6/6/2009 9:53:18 AM DENNIS

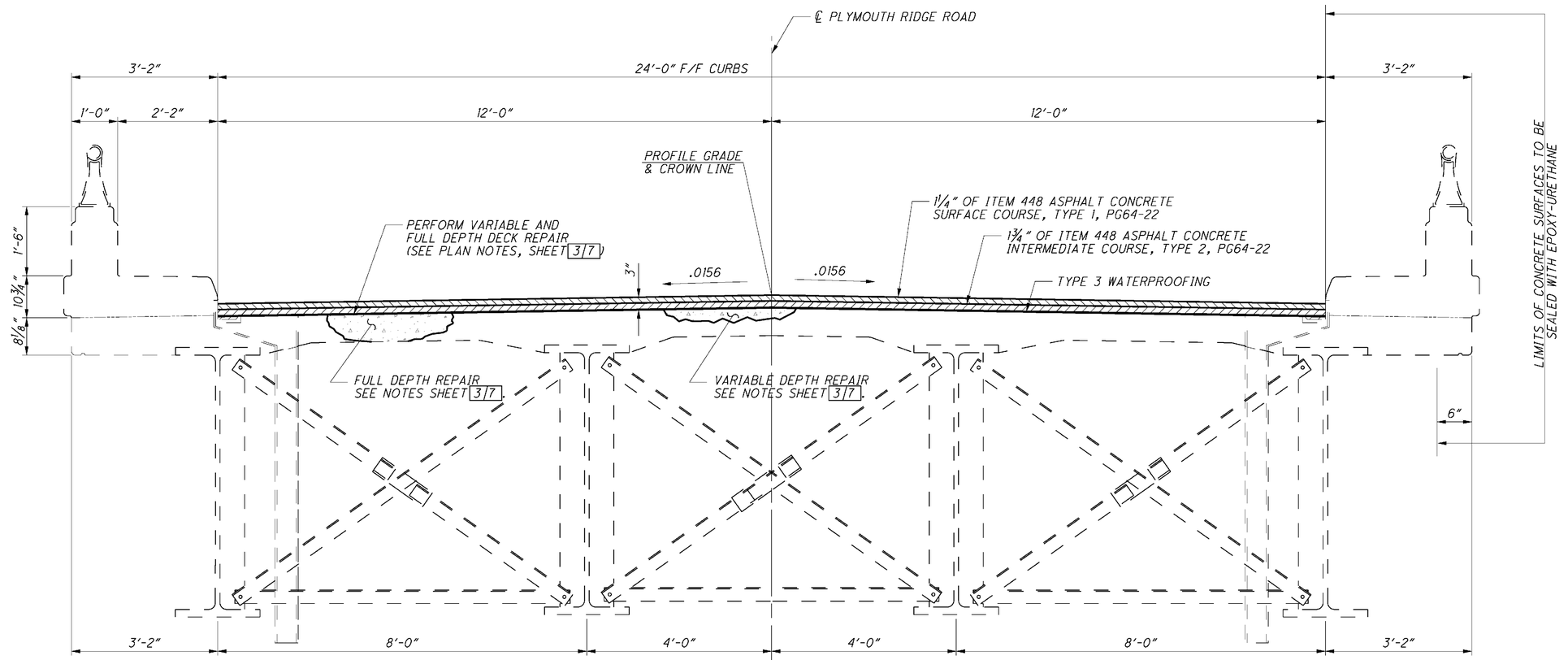

TYPICAL SECTION

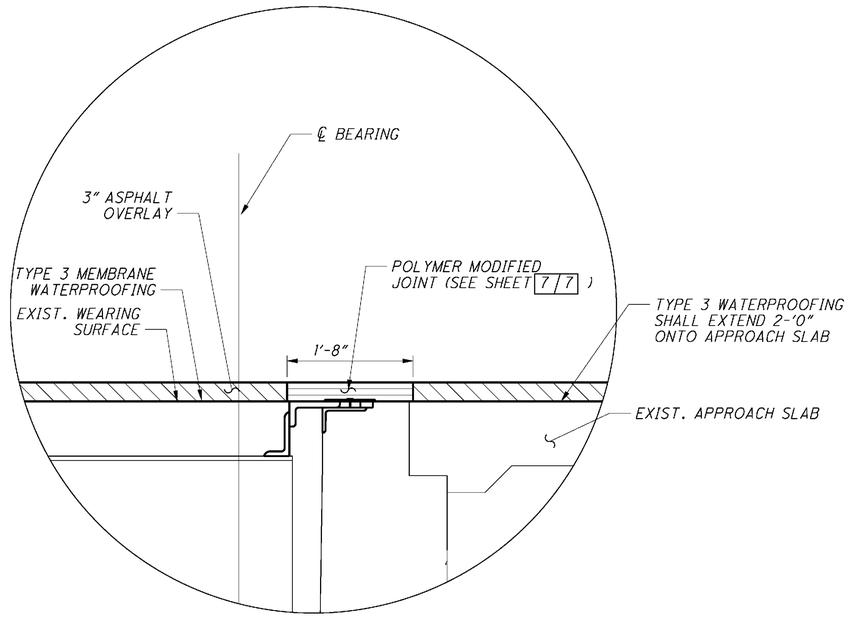

END JOINT DETAIL

DESIGN AGENCY
Palmer ENGINEERING
1300 CORNELL PARK DR
BLUE ASH, OHIO 45242
513.891.7248 FAX 513.891.7249

DESIGNED	DRAWN	REVIEWED	DATE
CEJ	GCK	MLJ	1/09
CHECKED	REVISED	STRUCTURE FILE NUMBER	
BJF		0404322	

TYPICAL SECTION
ATB-90-1764
I.R. 90 UNDER PLYMOUTH RIDGE ROAD

ATB-90-14.25
PID No. 25199

6 / 7

429
437

O:\ODOT\ATB\25199\bridge\ATB090_1764C\sheets\090_1764TS001.dgn 6/6/2009 9:53:21 AM DENNIS

GENERAL NOTES AND DETAILS FOR POLYMER MODIFIED ASPHALT EXPANSION JOINT SYSTEM

ITEM SPECIAL - POLYMER-MODIFIED ASPHALT EXPANSION JOINT SYSTEM

THIS ITEM WILL BE USED TO SEAL THE EXPANSION/CONTRACTION JOINTS AS PER THESE DETAILS AND THE MANUFACTURER'S REQUIREMENTS USING A POLYMER-MODIFIED ASPHALT SYSTEM. THE PRIME CONTRACTOR WILL OBTAIN THE SERVICES OF ONE OF THE FOLLOWING APPROVED APPLICATORS WHO WILL FURNISH AND INSTALL THE NEW BRIDGE EXPANSION JOINT SYSTEM AFTER ALL PAVING ON THE AFFECTED BRIDGE(S) HAS BEEN COMPLETED.

PRODUCT NAME	SUPPLIER	ADDRESS	PHONE NO.
THORMA-JOINT	DYNAMIC SURFACE APPLICATIONS, LTD	373 VILLAGE RD. PENNSDALE, PA 17756	(570)546-6041
MATRIX 502	CRAFCO INC.	420 N. ROOSEVELT AVE. CHANDLER, AZ 85226	(800)528-8242
EXPANDEX JOINT SYSTEM	WATSON-BOWMAN ACME	95 PINEVIEW DR. AMHERST, NY 14228	(716)691-7566
APJ ASPHALTIC PLUG EXPANSION JOINT	WYOMING EQUIPMENT SALES	281 SIXTH STREET P.O. BOX 287 WEST WYOMING, PA 18644	(570)693-2810

MATERIALS:

BRIDGING PLATE:

MILD STEEL 1/8" OR 1/4" THICK PLATE, 8" WIDE OR 18 GAUGE ALUMINUM, 8" WIDE.

BINDER:

TYPE:	POLYMER MODIFIED ASPHALT
SOFTENING POINT:	180 DEGREES F. MIN.
FLOW:	3 mm. MAX. AT 140 DEGREES F.
PENETRATION:	9 mm. MAX. AT 77 DEGREES F. 1 mm. MIN AT 0 DEGREES F. ASTM D 3407
DUCTILITY:	40 cm. MIN. ASTM D 113
RESILIENCE:	60% MIN. AT 77 DEGREES F.
TENSILE ADHESION:	700% MIN.
SPECIFIC GRAVITY:	1.10 * 0.05
POURING TEMP:	350 - 390 DEGREES F.

AGGREGATE:

TYPE:	CRUSHED, DOUBLE WASHED, AND DRIED GRANITE OR BASALT
GRADATION	THE GRADATION OF THE AGGREGATE VARIES BY MANUFACTURER AND WILL BE AS PER THE MANUFACTURER'S RECOMMENDATIONS FOR THE SYSTEM BEING USED ON THIS PROJECT.

BACKER ROD:

THE BACKER SHALL BE A CLOSED CELL FOAM EXPANSION JOINT FILLER CAPABLE OF WITHSTANDING THE PLACEMENT TEMPERATURE OF THE POLYMER MODIFIED ASPHALT.

NOTE: PRIOR TO PLACEMENT OF ANY PORTION OF THE JOINT SYSTEM, THE PROJECT ENGINEER MUST HAVE CERTIFIED TEST DATA MEETING ALL THE MINIMUM REQUIREMENTS OF ALL THE MATERIALS OF THE JOINT SYSTEM.

INSTALLATION PROCEDURES:

SAWING AND SURFACE PREPARATION:

AFTER ALL PAVING OPERATIONS ARE COMPLETE, THE OVERLAY IS TO BE TRANSVERSELY SAW CUT FULL DEPTH NO LESS THAN TWO INCHES DEEP (20" CENTERED OVER JOINT OPENING, UNLESS OTHERWISE NOTED). REMOVE ALL MATERIAL, INCLUDING WATER-PROOFING MATERIAL, BETWEEN SAW CUTS. THOROUGHLY CLEAN AND DRY EXPOSED CONCRETE, STEEL, AND CUT SURFACES USING COMPRESSED AIR AND A HOT COMPRESSED AIR (HCA) LANCE. THE LANCE MUST PRODUCE A FLAME RETARDED AIR STREAM TEMPERATURE OF 3000 DEGREES F. AT A VELOCITY OF 3,000 FEET PER SECOND WITH 15 PSIG CHAMBER PRESSURE. IF THERE IS AN INTERRUPTION DUE TO WEATHER OR OTHER CAUSES, THE OPERATION WILL BE REPEATED WITH THE HCA LANCE IMMEDIATELY BEFORE THE BINDER COAT OPERATION. ALSO, 6 INCHES OF THE ROAD SURFACE ON EITHER SIDE OF THE JOINT WILL BE DRIED SO THAT A SUITABLE SURFACE FOR BITUMEN ADHESION IS OBTAINED.

BOND BREAKER:

SPREAD BINDER OVER SURFACE AREA WHERE THE METAL BRIDGING PLATE WILL BE PLACED. CENTER THE BRIDGING PLATE OVER THE EXISTING JOINT AND BED INTO THE HOT BINDER. BUTT JOINT THE BRIDGING PLATES TO ACCOMODATE THE ENTIRE JOINT LENGTH. SPIKE HOLES WILL BE DRILLED AT 1 FOOT INTERVALS ALONG THE LONGITUDINAL CENTERLINE OF THE PLATES. SECURE BRIDGING PLATE WITH NAILS OR SPIKES. SEAL BUTT JOINTS WITH HOT BINDER AND ALLOW BINDER TO SETUP BEFORE NEXT OPERATION. WHEN ALUMINUM BRIDGING PLATES ARE USED, ONLY THE BINDER IS REQUIRED TO SECURE THE INDIVIDUAL PLATES.

BINDER COAT:

SEAL ALL PREPARED, EXPOSED SURFACES OF THE JOINT WITH BINDER. POUR THE HOT BINDER OVER THE FLOOR AREA OF THE JOINT AND SPREAD TO COAT ALL EXPOSED SURFACES. THE BINDER WILL BE A MINIMUM OF 1/32" THICK ON THE BOTTOM OF THE JOINT CAVITY, WITH POOLS OF GREATER THICKNESS WHERE SURFACE IRREGULARITIES EXIST. THE BINDER APPLICATION TEMPERATURE WILL BE BETWEEN 350 AND 390 DEGREES F. THE BINDER WILL NOT BE ALLOWED TO BE HEATED ABOVE 410 DEGREES F. NOR ALLOWED TO EXCEED 390 DEGREES F. FOR MORE THAN 1 HOUR. A DOUBLE JACKETED OIL MELTER WILL BE USED TO HEAT THE BINDER. THE MELTER WILL BE EQUIPPED WITH A CONTINUOUS AGITATION SYSTEM, TEMPERATURE CONTROLS, AND A CALIBRATED THERMOMETER. ALSO A SYSTEM FOR ACCURATELY MEASURING THE WEIGHTS OF THE BINDER AND THE AGGREGATE WILL BE REQUIRED.

BUILD-UP OF JOINT LAYERS:

AGGREGATE PREPARATION:

HEAT THE AGGREGATE TO A TEMPERATURE OF 275 TO 325 DEGREES F., WITH A SUITABLE ROTATING DRUM WITH ATTACHED HEAT SOURCE OR A HOT COMPRESSED AIR LANCE, TO REMOVE DUST AND MOISTURE.

AGGREGATE PROPORTION AND LAYER THICKNESS:

MIX THE AGGREGATE WITH THE BINDER SUCH THAT THE MINIMUM AGGREGATE CONTENT BY WEIGHT WILL BE 68%. THE HEATED AGGREGATE AND BINDER WILL BE COMBINED IN LAYERS, UNLESS PATENTED INSTALLATION REQUIRES DIFFERENTLY, NOT LESS THAN 3/4 OF AN INCH NOR EXCEEDING 2-1/2 INCHES. THE THICKNESS OF EACH LAYER CAN BE VARIED WITHIN THESE LIMITS, TO ACHIEVE THE REQUIRED JOINT THICKNESS (MIN. 2 INCHES). THE OBJECTIVE IS TO COAT EACH STONE AND FILL THE VOIDS WHILE AVOIDING AN EXCESS OF BINDER. THIS WILL ACHIEVE THE MAXIMUM CONTENT OF STONE CONSISTENT WITH ALL STONES BEING COATED WITH BINDER. RAKE THE MIXTURE TO MIX AND LEVEL.

THE TOP LAYER THICKNESS WILL VARY BETWEEN 1/2 INCH AND ONE (1) INCH. IN PREPARING THE TOP LAYER, THE RATIO OF AGGREGATE TO BINDER WILL BE APPROXIMATELY 6:1 BY WEIGHT. OVERFILL THE TOP LAYER AND COMPACT TO THE LEVEL OF THE ADJACENT SURFACES USING A ROLLER OR VIBRATORY PLATE COMPACTOR. IMMEDIATELY AFTER COMPLETION OF THE COMPACTION, POUR SUFFICIENT BINDER OVER THE JOINT TO FILL THE SURFACE VOIDS AND COAT THE SURFACE STONE. DUST THE FINISHED JOINT WITH A FINE, DRY AGGREGATE TO PREVENT TACKINESS.

MAINTENANCE OF TRAFFIC:

IF NECESSARY TO FACILITATE TRAFFIC MAINTENANCE, THE JOINT WILL BE INSTALLED IN TWO (2) HALF-WIDTH PHASES. DURING PHASE 1 APPROXIMATELY HALF OF THE TOTAL JOINT WILL BE INSTALLED. DURING PHASE 2, A MINIMUM OF TWO (2) INCHES OF THE PHASE 1 JOINT WILL BE REMOVED, AT OR NEAR THE CENTERLINE, WITH THE REMAINDER OF THE JOINT INSTALLED. IN ALL CASES, OPERATIONS WILL BE SCHEDULED SO THAT ALL LANES CAN BE OPEN TO TRAFFIC DURING ALL NON-WORKING HOURS.

TESTING:

CERTIFICATION WILL BE SUPPLIED FOR EACH PROJECT SHOWING BINDER COMPLIANCE WITH REQUIRED PROPERTIES. A ONE QUART SAMPLE OF BINDER WILL BE RETRIEVED FROM EACH BRIDGE FOR FURTHER TESTING BY THE O.D.O.T OFFICE OF MATERIALS MANAGEMENT.

METHOD OF MEASUREMENT AND BASIS OF PAYMENT:

THE DEPARTMENT WILL MEASURE THE JOINT BY THE NUMBER OF FEET AND WILL PAY FOR ACCEPTED QUANTITIES AT THE CONTRACT PRICE AS: ITEM SPECIAL, FEET, POLYMER MODIFIED ASPHALT EXPANSION JONT SYSTEM.

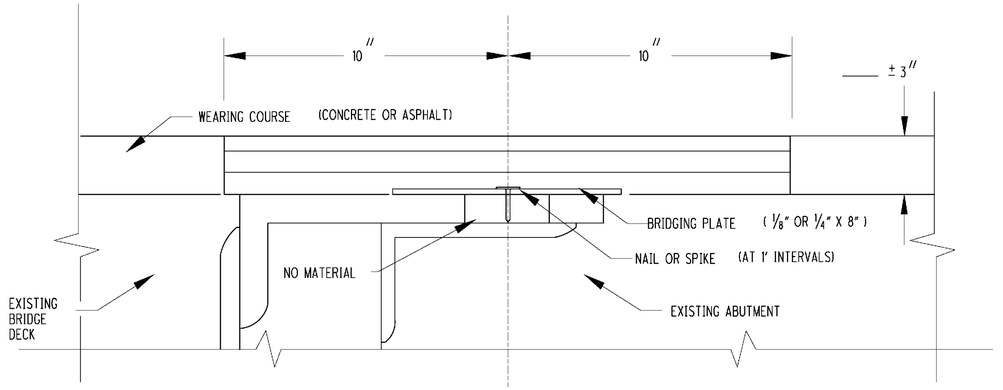

TYPICAL STEEL BEAM EXPANSION JOINT

DESIGN AGENCY
Palmer PALMER ENGINEERING
1300 CORNELL PARKWAY
BLUE ASH, OHIO 45240

DESIGNED	DRAWN	REVIEWED	DATE
CEJ	SDW	MLJ	1/09
CHECKED	REVISED	STRUCTURE FILE NUMBER	
BJF		0404322	

EXPANSION JOINT NOTES AND DETAILS
ATB-90-1764
I.R. 90 UNDER PLYMOUTH RIDGE ROAD

ATB-90-14.25
PID No. 25199

7 / 7

430
437

0:\ODOT\ATB\25199\bridge\ATB090_1764C\sheets\090_1764EX001.dgn 6/6/2009 9:53:23 AM DENNIS

TRANSVERSE SECTION

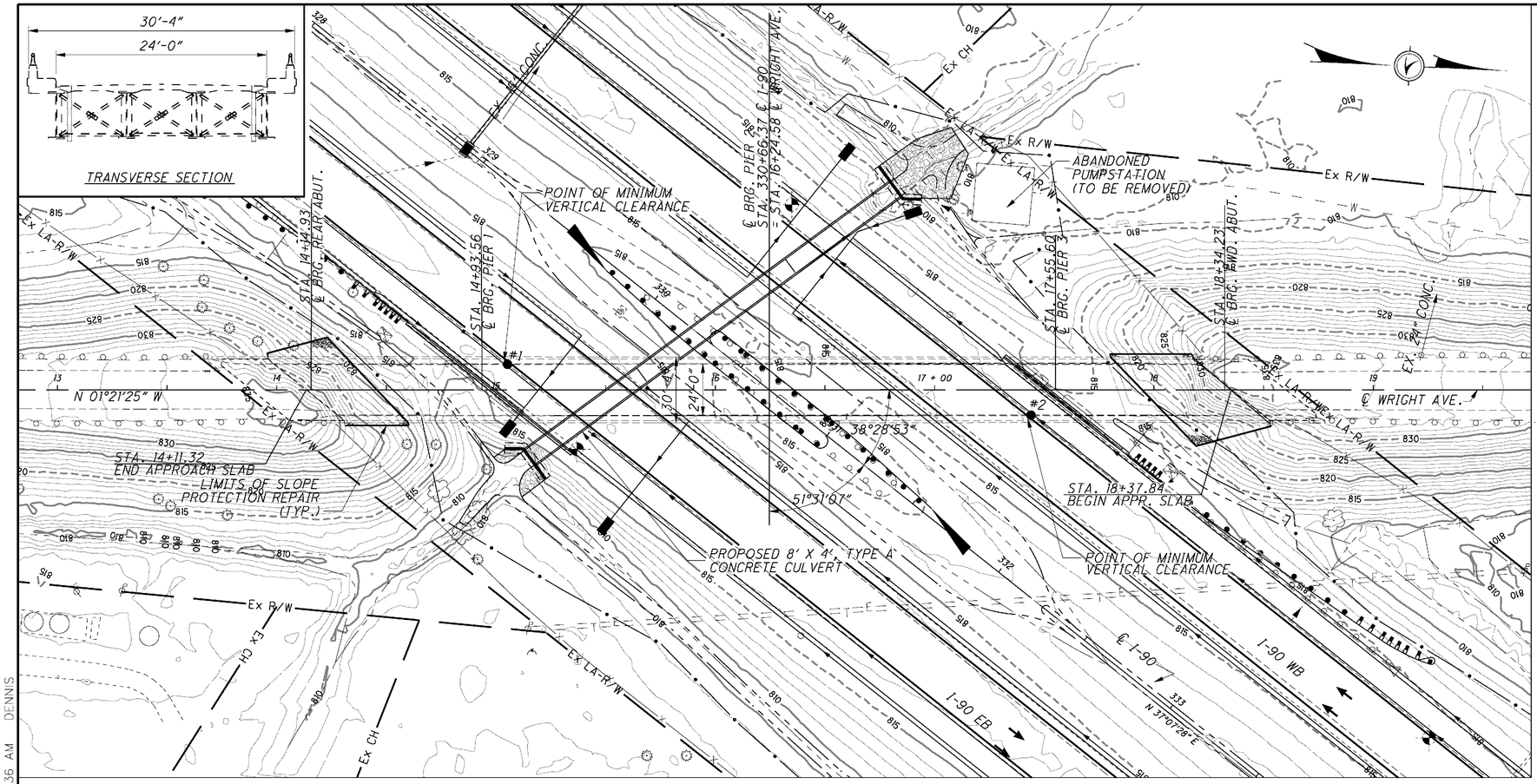

PLAN

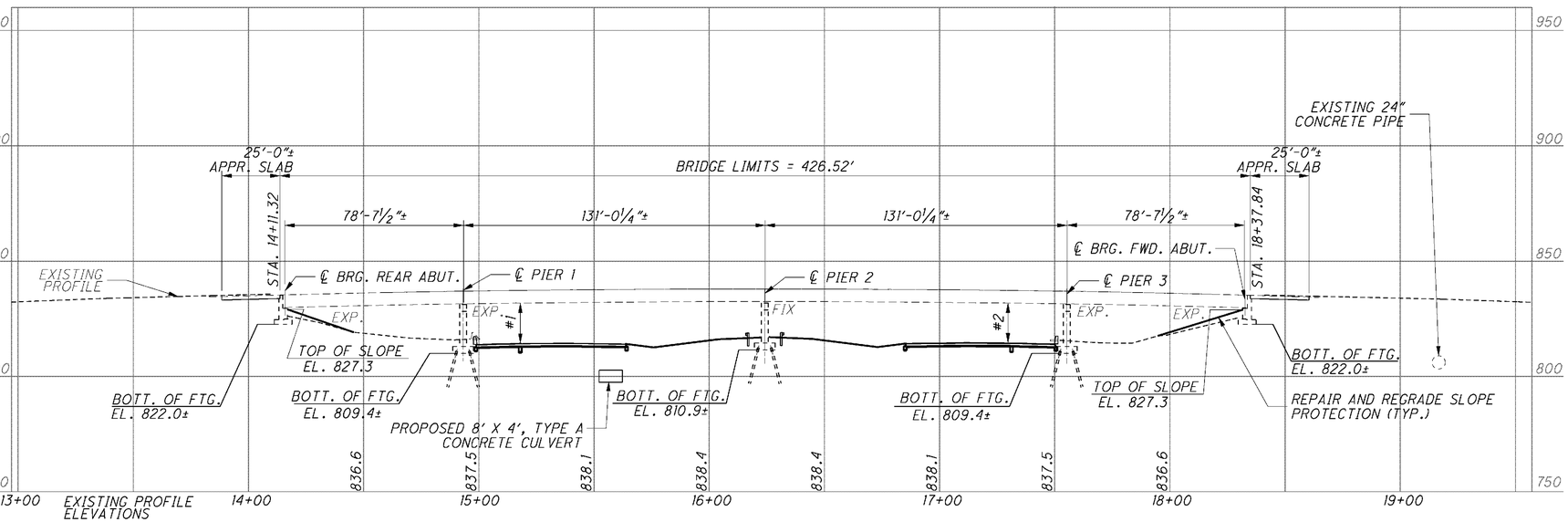

PROFILE ALONG ℄ WRIGHT AVENUE

BENCHMARK DATA

BM #1 STA. 327+58.70, ELEV. 816.21 , OFFSET 82.97 , LEFT
BM #2 STA. 337+23.66, ELEV. 813.96 , OFFSET 82.27 , LEFT

NOTES

EARTHWORK LIMITS SHOWN ARE APPROXIMATE. ACTUAL SLOPES SHALL CONFORM TO PLAN CROSS SECTIONS.

DESIGN TRAFFIC:
2008 ADT = 120 2008 ADTT = 5
2028 ADT = 140 2028 ADTT = 6
DIRECTIONAL DISTRIBUTION = 0.55

LEGEND

- ORIGINAL SOIL BORING LOCATION
- #1 16'-6" REQUIRED MINIMUM VERTICAL CLEARANCE
  14'-8" EXISTING MINIMUM VERTICAL CLEARANCE
  17'-1" PROPOSED VERTICAL CLEARANCE
- #2 16'-6" REQUIRED MINIMUM VERTICAL CLEARANCE
  15'-2" EXISTING MINIMUM VERTICAL CLEARANCE
  16'-11" PROPOSED VERTICAL CLEARANCE

SCOPE OF WORK

1. PATCH SUBSTRUCTURE AREAS.
2. CLEAN BULB ANGLE GUTTER SYSTEM AND SCUPPERS.
3. CLEAN DEBRIS FROM EXISTING WEARING SURFACE AND SEAL WITH SOLUBLE REACTIVE SILICATE.
4. REPAIR AND REGRADE ABUTMENT SLOPE PROTECTION.

EXISTING STRUCTURE

TYPE: 4-SPAN CONTINUOUS STEEL PLATE GIRDERS WITH REINFORCED CONCRETE DECK, ABUTMENTS, AND PIERS.
SPANS: 78'-7½", 131'-0¼", 131'-0¼", 78'-7½" c/c BEARINGS
ROADWAY: 24'-0" F/F SAFETY CURB
LOADING: H15 (CF-130)
SKEW: 51°31'07" RF
APPROACH SLABS: 25'-0"
ALIGNMENT: TANGENT
CROWN: 3/16 / FT.
WEARING SURFACE: 1" MONOLITHIC CONCRETE
STRUCTURAL FILE NUMBER: 0404357
DATE BUILT: 1958
DISPOSITION: FAIR

PROPOSED STRUCTURE

TYPE: EXISTING 4-SPAN CONTINUOUS STEEL PLATE GIRDERS WITH REINFORCED CONCRETE DECK, ABUTMENTS AND PIERS
SPANS: 78'-7½", 131'-0¼", 131'-0¼", 78'-7½" c/c BEARINGS
ROADWAY: 24'-0" F/F SAFETY CURB
LOADING: HS15 (CF-130)
SKEW: 51°31'07" RF
APPROACH SLABS: 25'-0"
ALIGNMENT: TANGENT
CROWN: 3/16 / FT.
WEARING SURFACE: 1" MONOLITHIC CONCRETE
COORDINATES: LATITUDE 41°-52'-10" N
LONGITUDE 80°-40'-49" W

DESIGN AGENCY
Palmer ENGINEERING
1300 CORNELL PARK DR
COLUMBUS, OHIO 43240
(614) 888-7858

DATE 1/09
REVIEWED MLJ
STRUCTURE FILE NUMBER 0404357
DRAWN VWK
REVISED
DESIGNED CEJ
CHECKED BJF

ASHTABULA COUNTY
STA. 14+11.32
STA. 18+37.84

SITE PLAN
BRIDGE NO. ATB-90-1905
I.R. 90 UNDER WRIGHT AVENUE

ATB-90-14.25
PID No. 25199

1 / 5

431
437

O:\ODOT\ATB\25199\bridge\ATB090_1905C\streets\090_1905sp001.dgn 6/6/2009 9:53:36 AM DENNIS

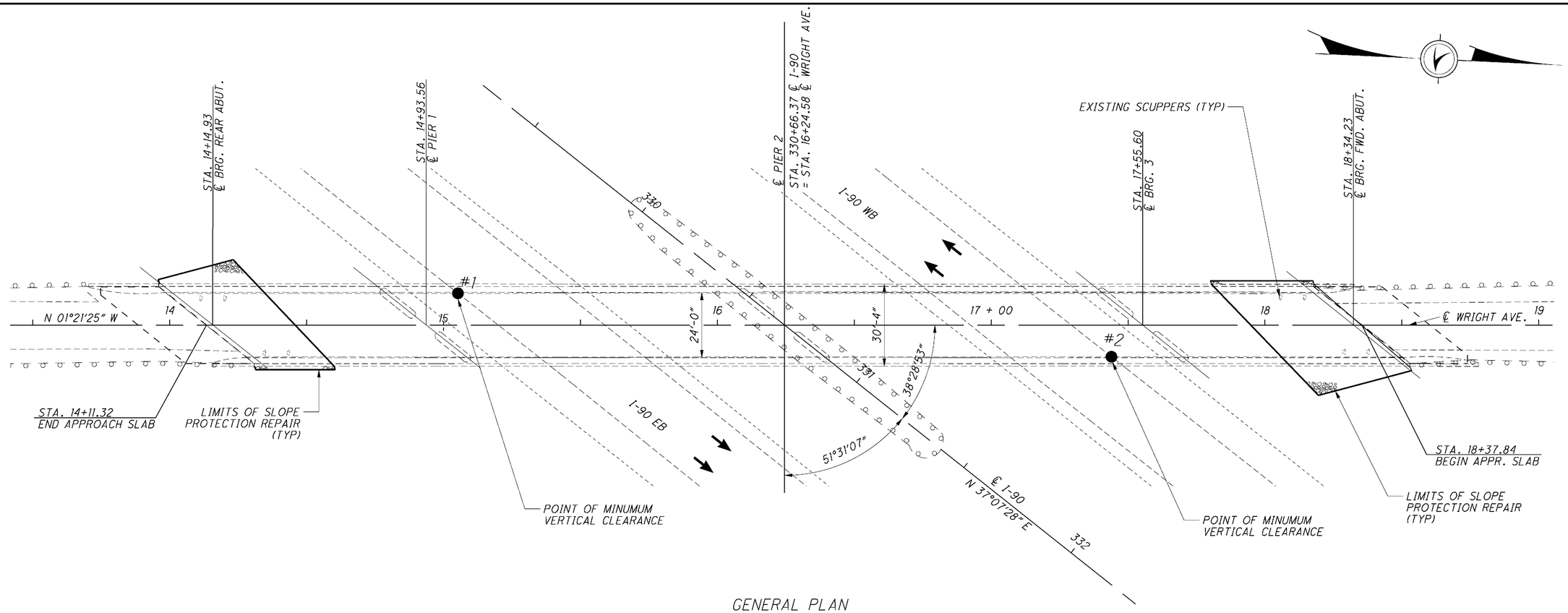

GENERAL PLAN

SCOPE OF WORK

1. PATCH SUBSTRUCTURE AREAS.
2. CLEAN BULB ANGLE GUTTER SYSTEM AND SCUPPERS.
3. CLEAN DEBRIS FROM EXISTING WEARING SURFACE AND SEAL WITH SOLUBLE REACTIVE SILICATE.
4. REPAIR AND REGRADE ABUTMENT SLOPE PROTECTION.

C:\ODOT\ATB\25199\bridge\ATB090_1905C\sheets\090_1905GP001.dgn 6/6/2009 9:53:44 AM DENNIS

DESIGN AGENCY
Palmer ENGINEERING
1300 CORNELL PARK DR
BLUE ASH, OHIO 45242
513.984.1900 FAX 513.984.1919

DESIGNED	DRAWN	REVIEWED	DATE
CEJ	SDW	MLJ	1/09
CHECKED	REVISED	STRUCTURE FILE NUMBER	
BJF		0404357	

GENERAL PLAN
BRIDGE NO. ATB-90-1905
I.R. 90 UNDER WRIGHT AVENUE

ATB-90-14.25
PID No. 25199

DESIGN SPECIFICATIONS *THIS STRUCTURE CONFORMS TO "STANDARD SPECIFICATIONS FOR HIGHWAY BRIDGES" ADOPTED BY THE AMERICAN ASSOCIATION OF STATE HIGHWAY AND TRANSPORTATION OFFICIALS, 17TH EDITION (2002), AND THE ODOT BRIDGE DESIGN MANUAL.*

DECK PROTECTION METHOD
SOLUBLE REACTIVE SILICATE SEAL

ITEM 518 - STRUCTURE DRAINAGE, MISC.: CLEANING GUTTERS AND SCUPPERS *THE CONTRACTOR MAY CLEAN DEBRIS FROM THE BULB ANGLE GUTTERS, SCUPPER INLETS AND DOWNSPOUTS USING HIGH PRESSURE WATER, OR OTHER METHODS APPROVED BY THE ENGINEER, THAT DO NOT DAMAGE THE GUTTERS OR SCUPPERS. AFTER CLEANING, THE GUTTERS AND SCUPPERS MUST DRAIN FREELY TO THE APPROVAL OF THE ENGINEER. PAYMENT FOR THIS WORK, INCLUDING ALL LABOR, MATERIALS AND EQUIPMENT, WILL BE MADE IN THE CONTRACT PRICE BID FOR ITEM 518, STRUCTURE DRAINAGE, MISC. ESTIMATED QUANTITES OF GUTTERS AND SCUPPERS TO BE CLEANED ARE: 853 LINEAR FEET OF GUTTER, 16 SCUPPERS EACH.*

ITEM 519 - PATCHING CONCRETE STRUCTURES, AS PER PLAN *PRIOR TO THE SURFACE CLEANING SPECIFIED IN 519.04 AND WITHIN 24 HOURS OF PLACING PATCHING MATERIAL, BLAST CLEAN ALL SURFACES TO BE PATCHED INCLUDING THE EXPOSED REINFORCING STEEL. ACCEPTABLE METHODS INCLUDE HIGH-PRESSURE WATER BLASTING WITH OR WITHOUT ABRASIVES IN THE WATER, ABRASIVE BLASTING WITH CONTAINMENT, OR VACUUM ABRASIVE BLASTING.*

FOR PATCHWORK NEAR THE GROUND LINE, MINOR EXCAVATION MAY BE NECESSARY TO GAIN COMPLETE ACCESS TO THE AREAS OF UNSOUND CONCRETE. ANY SOIL PROTECTION REMOVED FOR THIS PURPOSE SHALL BE REPLACED UPON COMPLETION OF THE CONCRETE REPAIRS. PAYMENT FOR THE LABOR AND EQUIPMENT REQUIRED FOR THIS WORK SHALL BE INCLUDED IN THE CONTRACT PRICE FOR ITEM 519, PATCHING CONCRETE STRUCTURES, AS PER PLAN. IN ADDITION TO THE AREAS OF PATCHWORK SHOWN IN THE PLANS, A CONTINGENCY QUANTITY OF 25 SQ FT HAS BEEN IN INCLUDED TO BE USED AS DIRECTED BY THE ENGINEER.

SEAL ALL PATCHED AREAS USING EPOXY URETHANE SEALER (CMS 512.03)

EXISTING STRUCTURE VERIFICATION *DETAILS AND DIMENSIONS SHOWN ON THESE PLANS PERTAINING TO THE EXISTING STRUCTURE HAVE BEEN OBTAINED FROM PLANS OF THE EXISTING STRUCTURE AND FROM FIELD OBSERVATIONS AND MEASUREMENTS. CONSEQUENTLY, THEY ARE INDICATIVE OF THE EXISTING STRUCTURE AND THE PROPOSED WORK BUT THEY SHALL BE CONSIDERED TENTATIVE AND APPROXIMATE. THE CONTRACTOR IS REFERRED TO CMS SECTIONS 102.05 AND 105.02.*

BASE CONTRACT BID PRICES UPON A RECOGNITION OF THE UNCERTAINTIES DESCRIBED ABOVE AND UPON A PREBID EXAMINATION OF THE EXISTING STRUCTURE. HOWEVER, THE DEPARTMENT WILL PAY FOR ALL PROJECT WORK BASED UPON ACTUAL DETAILS AND DIMENSIONS THAT HAVE BEEN VERIFIED IN THE FIELD.

MAINTENANCE OF TRAFFIC
FLAGGERS SHALL BE USED TO DIRECT ALL VEHICULAR TRAFFIC THROUGH ONE LANE ON THE BRIDGE, ALTERNATING DIRECTIONS AS NEEDED, WHILE CONSTRUCTION PROCEDURES ARE PERFORMED ON THE OTHER LANE.

ITEM 601 - CRUSHED AGGREGATE SLOPE PROTECTION, AS PER PLAN
THIS ITEM SHALL CONSIST OF REGRADING THE ABUTMENT EMBANKMENT SLOPE PROTECTION AND SUPPLEMENTING THE EXISTING SLOPE PROTECTION TO ACHIEVE THE MINIMUM THICKNESS OF 12 INCHES.

ITEM	ITEM EXT.	GRAND TOTAL	UNIT	DESCRIPTION	ABUT.	PIER	SUPER STRUCT	GENERAL	SHEET REF NO.
512	10400	1140	SQ YD	TREATING OF CONCRETE BRIDGE DECK WITH SRS			1140		
518	63300	LUMP		STRUCTURE DRAINAGE, MISC.: CLEANING GUTTERS AND SCUPPERS				LUMP	3/5
519	11101	35	SQ FT	PATCHING CONCRETE STRUCTURE, AS PER PLAN		10		25	3/5, 4/5
601	20001	60	SQ YD	CRUSHED AGGREGATE SLOPE PROTECTION, AS PER PLAN				60	3/5
						CALCULATED: CEJ		CHECKED: BJF	

DESIGN AGENCY
Palmer ENGINEERING
1300 CORNELL PARKWAY
CINCINNATI, OHIO 45240

DESIGNED	DRAWN	REVIEWED	DATE
CEJ	SDW	MLJ	1/09
CHECKED	REVISED	STRUCTURE FILE NUMBER	
BJF		0404357	

GENERAL NOTES AND ESTIMATED QUANTITIES
BRIDGE NO. ATB-90-1905
I.R. 90 UNDER WRIGHT AVENUE

ATB-90-14.25
PID No. 25199

O:\ODOT\ATB\25199\bridge\ATB090_1905C\sheets\090_1905GN001.dgn 6/6/2009 9:53:46 AM DENNIS

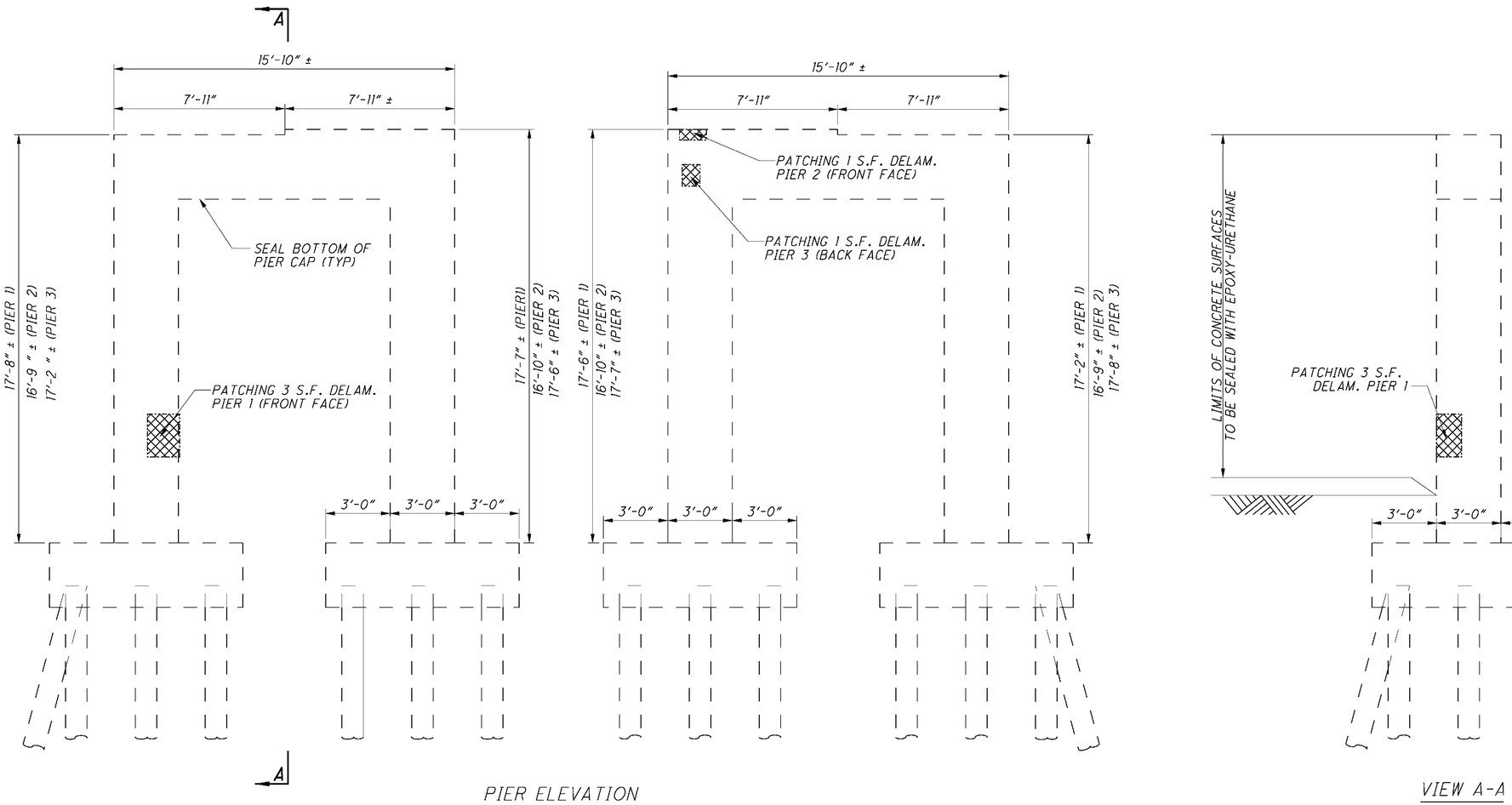

PIER ELEVATION

(LOOKING BACK)

VIEW A-A

ITEM 519, PATCHING CONCRETE STRUCTURES, AS PER PLAN - SUMMARY TABLE			
LOCATION	MEASURED QTY (S.F.)	CONTINGENCY FACTOR	TOTAL (S.F.)
PIER 1	3	1.25	4
PIER 2	1	1.25	2
PIER 3	1	1.25	2

NOTE:
MINOR EXCAVATION WILL BE NECESSARY TO PATCH PIERS NEAR THE GROUND LINE. SEE GENERAL NOTES ON SHEET 3/5 FOR ADDITIONAL INFORMATION

CONCRETE DELAMINATION TO BE PATCHED WITH ITEM 519, PATCHING CONCRETE STRUCTURES, AS PER PLAN

DESIGN AGENCY
Palmer ENGINEERING
PALMER ENGINEERING
1300 CORNELL PARK DR
CINCINNATI, OH 45242
WINCHESTER • LOUISVILLE • COLUMBUS
WEST LAKE • MIAMI • MONTANA

DESIGNED	DRAWN	REVIEWED	DATE
CEJ	VWK	MLJ	1/09
CHECKED	REVISED	STRUCTURE FILE NUMBER	
BJF		0404357	

PIER DETAILS
BRIDGE NO. ATB-90-1905
I.R. 90 UNDER WRIGHT AVENUE

ATB-90-14.25
PID No. 25199

O:\ODOT\ATB\25199\bridge\ATB090_1905C\sheets\090_1905PI001.dgn 6/6/2009 9:53:49 AM DENNIS

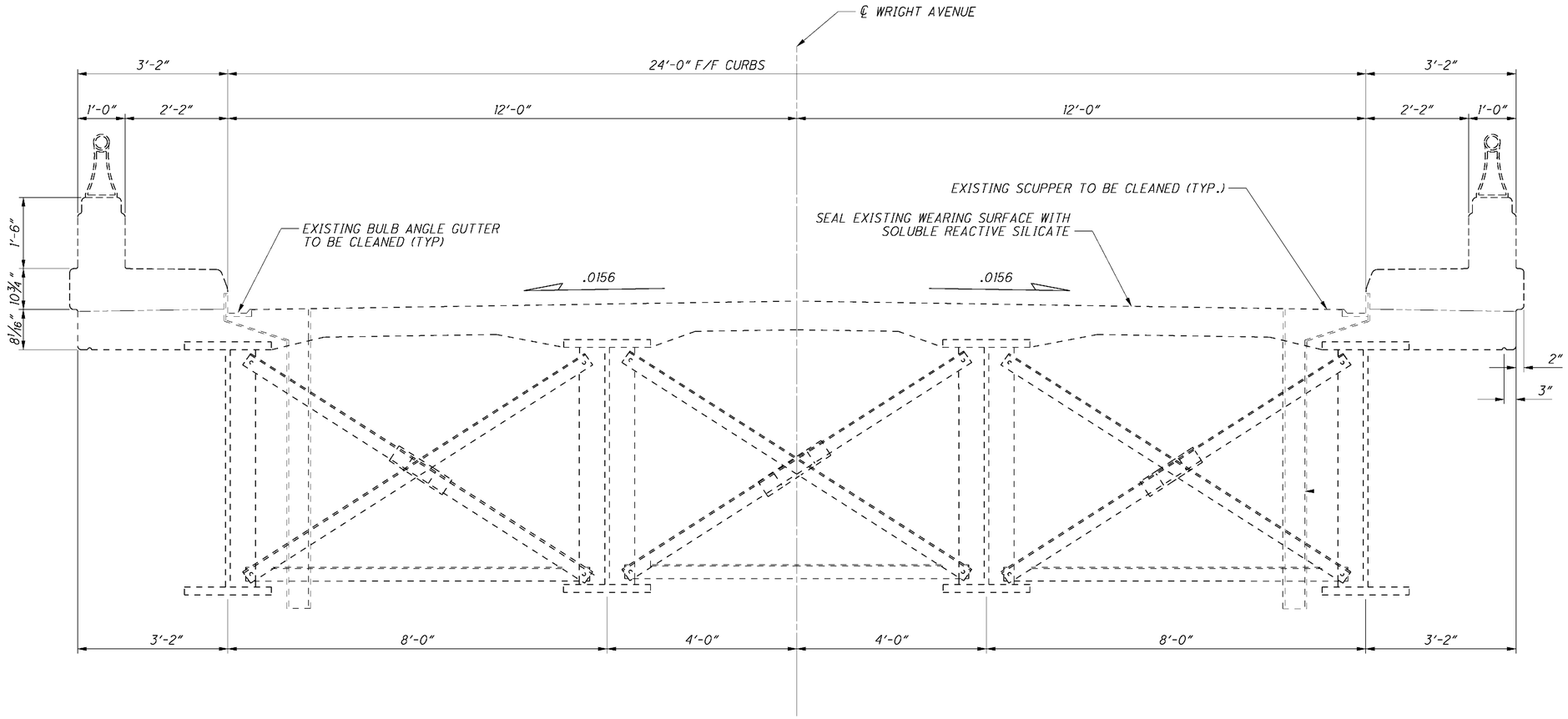

TYPICAL SECTION

DESIGN AGENCY
Palmer ENGINEERING
11300 CORNELL PARK DR
CINCINNATI, OHIO 45242
PROJECT ENGINEERS • ARCHITECTS • SURVEYORS • SOLUTIONS
WORKING DRAFTS • SUBSTANCE

DESIGNED	DRAWN	REVIEWED	DATE
CEJ	GJK	MLJ	1/09
CHECKED	REVISED	STRUCTURE FILE NUMBER	
BJF		0404357	

TYPICAL SECTION
ATB-90-1905
I.R. 90 UNDER WRIGHT AVENUE

ATB-90-14.25
PID No. 25199

O:\ODOT\ATB\25199\bridge\ATB090_1905C\sheets\090_1905TS001.dgn 6/6/2009 9:53:52 AM DENNIS

RIGHT OF WAY LEGEND SHEET ATB-90-14.50

ASHTABULA COUNTY

UTILITY OWNERS

TYPE	NAME AND ADDRESS
ELECTRIC	THE ILLUMINATING COMPANY 6896 MILLER ROAD BRECKSVILLE, OH 44141 ATTN: JERRY ROGERS
WATER	OHIO AMERICAN WATER 2905 NORTH BEND ROAD ASHTABULA, OH 44004 ATTN: BILL DINGLEDINE
CABLE	TIME WARNER CABLE 7757 AUBURN ROAD, SUITE 8 PAINESVILLE, OH 44077 ATTN: LARRY BOCK
TELECOM	LEVEL 3 COMMUNICATIONS 4000 CHESTER AVENUE CLEVELAND, OH 44103 ATTN: JOHN STRZALKA
GAS	OHIO GAS 7015 FREEDOM AVE NW NORTH CANTON, OH 44720 ATTN: SCOTT HALLAM
TELECOM	WINDSTREAM 4616 PARK AVENUE ASHTABULA, OH 44004 ATTN: SUSAN PETTI
SEWER	ASHTABULA COUNTY 25 WEST JEFFERSON STREET JEFFERSON, OH 44720 ATTN: BARRY FRENCH

NOTE: THE LOCATION OF THE UNDERGROUND UTILITIES SHOWN ON THE PLANS ARE OBTAINED FROM THE OWNER OF THE UTILITIES AS REQUIRED BY SECTION 153.64 O.R.C.

INDEX OF SHEETS:

LEGEND SHEET	1
SUMMARY SHEET	1
RAILROAD PLAT	2

PROJECT DESCRIPTION

MAJOR PAVEMENT REHABILITATION OF APPROXIMATELY 5.25 MILES OF INTERSTATE 90, FROM SLM 14.29 TO SLM 19.54, PROJECT INCLUDES NEW PAVEMENT, GUARDRAIL, DRAINAGE STRUCTURES AND TRAFFIC CONTROL. REHABILITATE 4 MAINLINE AND 3 OVERHEAD BRIDGES.

PROJECT CONTROL

STATE PLANE GRID - OHIO NORTH, NAD83
PROJECT ADJUSTMENT FACTORS
I-90 = 0.99999716996

PLANS PREPARED BY:

FIRM NAME: PALMER ENGINEERING

PLANS PREPARED BY: DENNIS JENNINGS

FIELD REVIEW BY: DENNIS JENNINGS
DATE COMPLETED: 5/22/08

OWNERSHIPS VERIFIED BY: DENNIS JENNINGS
DATE COMPLETED: 10/17/08

DATE COMPLETED:

TOTAL NUMBER OF :

1 OWNERSHIPS 0 TOTAL TAKES
5 PARCELS 0 OWNERSHIPS W/ STRUCTURES INVOLVED

SUMMARY OF ADDITIONAL RIGHT OF WAY

ALL AREAS IN ACRES

PARCEL NO.	OWNER	SHEET NO.	OWNERS RECORD BOOK	OWNERS RECORD PAGE	AUDITOR'S PARCEL	RECORD AREA	TOTAL P.R.O.	GROSS TAKE	P.R.O. IN TAKE	NET TAKE	STRUCTURE	NET RESIDUE LEFT	NET RESIDUE RIGHT	TYPE FUND	REMARKS	AS ACQUIRED BOOK	AS ACQUIRED PAGE
1-A	PENNSYLVANIA LINE LLC		0122	0037	42-000-00-284-00	7.650	0.0293	0.5219	0.0293	0.4926	NO			STATE	AERIAL EASEMENT		
1-SH1								0.0129	0.0073	0.0056	NO			STATE	EASEMENT FOR PIER & FOOTING		
1-SH2								0.0149	0.0073	0.0076	NO			STATE	EASEMENT FOR PIER & FOOTING		
1-SH3								0.0129	0.0073	0.0056	NO			STATE	EASEMENT FOR PIER & FOOTING		
1-SH4								0.0152	0.0073	0.0079	NO			STATE	EASEMENT FOR PIER & FOOTING		

CONVENTIONAL SYMBOLS

County Line
Township Line
Section Line
Corporation Line or
Fence Line (existing) (proposed)
Center Line
Trees, Stumps (to be removed)
Utility Poles: Telephone, Power, Light
Right of Way (only) R/W
Standard Highway Ease. SH
Temp. Right of Way T
Exist. Right of Way Ex R/W
Exist. Stand. High. Ease. Ex SH
Exist. Channel Ease. Ex CH
Exist. Utility Ease. Ex U
Property Line (in existing fence)
Railroad or
Guardrail (existing) (proposed)
Construction Limits Construction Limits

STRUCTURE KEY

RESIDENTIAL
COMMERCIAL
OUT-BUILDING

LEGEND:
WD = WARRANTY DEED
T = TEMPORARY EASEMENT

I RALPH PALMER, P.S. have conducted a survey of the existing conditions for the Ohio Department of Transportation on February 23, 2005. The results of that survey are contained herein. The horizontal coordinates expressed herein were supplied by the Ohio Department of Transpotation November 17, 2004 and are based on the Ohio State Plane Coordinates system, North Zone by ties to the ODOT CORS network. The Project Adjustment Factor used for this project is 0.99999716996 Further more; I have calculated the proposed property lines, Gross Take, Present Roadway Occupied (PRO), Net Take and Net Residue; as well as prepared the legal descriptions necessary to acquire these parcels as shown herein. As a part of this project I have determined the locations of the existing property lines for property takes contained herein. I also have set monuments at the proposed Property Corners, Section Corners and other points shown herein. This work will be done in accordance with OAC 4733-37 as cited below. All of my work contained herein was conducted in accordance with Ohio Administrative Code 4733-37 commonly known as Minimum Standards for Boundary Survey in the State of Ohio unless so noted. The words I and my as used herein are to mean that either myself or someone working for me under my direct control or supervision.

RALPH PALMER, P.S., Ohio Lic# S6935

SURVEYOR'S SEAL

SIGNED:
DATE:

FEDERAL PROJECT NO. E032101
PID NO. 25199
CALCULATED DCJ CHECKED RJP
RIGHT OF WAY LEGEND SHEET
ATB-90-14.25
1 / 2
436 437

Palmer ENGINEERING
PALMER ENGINEERING
11300 CORNELL PARK DR
CINCINNATI, OH 45242

C:\ODOT\ATB\25199\row\sheets\25199LG01.dgn 6/6/2009 9:53:54 AM DENNIS

NORFOLK SOUTHERN

PLYMOUTH TOWNSHIP
T.12N. R.3W.
ORIGINAL LOTS 37 &38

PARCEL NO	EASEMENT REQUIRED	TOTAL AREA (SF)	COMMENT	OVERLAP AREAS (SF) PROP. SH	PROP AERIAL	EXIST. SH	EXIST. AERIAL	EXIST. SLOPE
1-SH1	HIGHWAY	561.00	FOOTING & PIER		561.00	319.00	561.00	561.00
1-SH2	HIGHWAY	649.00	FOOTING & PIER		649.00	319.00	584.10	649.00
1-SH3	HIGHWAY	561.00	FOOTING & PIER		561.00	319.00	561.00	561.00
1-SH4	HIGHWAY	660.00	FOOTING & PIER		660.00	319.00	582.68	660.00
1-A	AERIAL	22,731.77	AERIAL	2,431.00		1,276.00	13,138.07	10,868.31

#-# INDICATES EXISTING EASEMENT PARCEL ACQUIRED UNDER ATB-1-12.89

CURVE-A DATA
P.I. STA. 96+36.34
Δ = 42° 57' 11" (LT)
Dc = 0° 28' 00"
R = 12,277.67'
T = 4,830.48'
L = 9,204.21'
E = 916.07'
S.E. = 0.018

CONSTRUCTION LIMITS

85+11.74, 94.00 RT (I-90)
229+70.82, 55.00 LT (RR)

85+14.83, 84.17 RT (I-90)
229+81.13, 55.00 LT (RR)

85+32.00, 29.84 RT (I-90)
230+38.14, 55.00 LT (RR)

85+51.05, 29.84 LT (I-90)
231+00.77, 55.00 LT (RR)

85+68.56, 84.17 LT (I-90)
231+57.83, 55.00 LT (RR)

85+87.83, 143.34 LT (I-90)
232+20.00, 55.00 LT (RR)

85+71.75, 94.00 LT (I-90)
231+68.16, 55.00 LT (RR)

N 0° 45' 25" W — 10.31' — 57.00' — 62.65' N 00° 45' 25" W — 57.06' — 10.33' — N 00° 45' 25" W

85+37.92, 68.84 RT (I-90)
230+02.77, 37.50 LT (RR)

85+74.44, 44.95 LT (I-90)
231+22.29, 37.42 LT (RR)

85+34.89, 78.37 RT (I-90)
229+92.77, 37.51 LT (RR)

85+46.72, 41.23 RT (I-90)
230+31.77, 37.48 LT (RR)

85+68.33, 25.90 LT (I-90)
231+02.29, 37.38 LT (RR)

85+83.33, 72.56 LT (I-90)
231+51.29, 37.48 LT (RR)

85+86.40, 82.09 LT (I-90)
231+61.29, 37.50 LT (RR)

85+29.33, 137.20 RT (I-90)
229+35.00, 25.00 LT (RR)

85+50.37, 29.80 RT (I-90)
230+43.77, 37.47 LT (RR)

S 89° 17' 43" W — N 89° 17' 43" E — S 89° 07' 28" W — N 89° 07' 28" E

85+78.83, 22.55 LT (I-90)
231+02.31, 26.38 LT (RR)

85+45.30, 81.72 RT (I-90)
229+92.76, 26.51 LT (RR)

85+60.82, 33.17 RT (I-90)
230+43.76, 26.47 LT (RR)

85+96.95, 78.72 LT (I-90)
231+61.31, 26.50 LT (RR)

I-SH1 — 10.00' — 29.00' N 00° 43' 03" W — 12.00' — S 00° 43' 03" E 29.00' — 10.00'

I-SH2 — 20.00' — N 00° 52' 32" W 29.00' — 10.00' — S 00° 52' 32" E 29.00' — 20.00'

11-12 — 11-12SL — 11-12A — 11-12A SL

PARCEL 42-000-00-284-00
1
NORFOLK SOUTHERN
(PENNSYLVANIA LINES LLC)

85+57.15, 44.59 RT (I-90)
230+31.76, 26.48 LT (RR)

85+48.33, 72.20 RT (I-90)
230+02.76, 26.50 LT (RR)

85+93.86, 69.20 LT (I-90)
231+31.76, 26.48 LT (RR)

85+84.95, 41.59 LT (I-90)
231+22.31, 26.42 LT (RR)

86+02.64, 91.29 LT (I-90)
231+75.00, 25.00 LT (RR)

11-12 AERIAL — 11-12A AERIAL — 1-A

STA. 85+99.28 ℄ I-90
= STA. 230+87.15 ℄ RR

S89°14'35"W 26.51' — 94.39' — 79.31' N 00° 45' 25" W 69.47' — 15.16' — 39.28' — S89°14'35"W 26.38'

55.00' — 60.00'

GREAT LOT 37
GREAT LOT 38

R=12,371.67
D=00° 33' 34" RT, L=120.81
CHD BRG=S 71° 23' 52" W
CHD LEN=120.81

℄ NORFOLK SOUTHERN RR

R=12,183.67
D=00° 34' 09" LT, L=121.01
CHD BRG=N 71° 06' 47" E
CHD LEN=121.01

72°01'34" TO TAN. — 29.84' — 54.33' — 94.00' — 15' — 60.00' N89°14'35"E — 39.55' N89°14'35"E — 40.14' N89°14'35"E

86+02.57, 103.20 RT (I-90)
229+90.00, 35.00 RT (RR)

86+18.46, 68.78 RT (I-90)
230+27.69, 39.57 RT (RR)

86+31.17, 29.82 RT (I-90)
230+68.69, 39.60 RT (RR)

86+56.23, 44.83 LT (I-90)
231+47.43, 40.10 RT (RR)

86+77.45, 124.84 LT (I-90)
232+30.00, 35.00 RT (RR)

86+27.45, 41.22 RT (I-90)
230+56.69, 39.59 RT (RR)

86+65.31, 72.39 LT (I-90)
231+76.43, 40.04 RT (RR)

86+68.45, 81.89 LT (I-90)
231+86.43, 40.02 RT (RR)

86+49.69, 24.87 LT (I-90)
231+26.43, 40.14 RT (RR)

86+15.38, 78.29 RT (I-90)
230+17.69, 39.56 RT (RR)

S 89° 17' 43" W — N 89° 17' 43" E — S 89° 08' 20" W — N 89° 08' 20" E

I-SH3 — 10.00' — 29.00' N 00° 43' 03" W — 12.00' — S 00° 43' 03" E 29.00' — 10.00'

I-SH4 — 21.00' — N 00° 52' 32" W 29.00' — 10.00' — S 00° 52' 32" E 29.00' — 21.00'

11-12B — 11-12A SL — 11-12C

86+60.16, 21.45 LT (I-90)
231+26.45, 51.14 RT (RR)

86+78.96, 78.45 LT (I-90)
231+86.45, 51.02 RT (RR)

86+93.70, 94.00 LT (I-90)
232+05.82, 60.00 RT (RR)

86+25.76, 81.71 RT (I-90)
230+17.68, 50.56 RT (RR)

86+37.86, 44.66 RT (I-90)
230+56.68, 50.59 RT (RR)

86+41.60, 33.26 RT (I-90)
230+68.68, 50.60 RT (RR)

86+75.82, 68.95 RT (I-90)
231+76.45, 51.04 RT (RR)

N 0° 45' 25" W — 10.34' — 62.85' — 10.36' — N 00° 45' 25" W

57.19' — S 00° 45' 25" E — EXIST 24" CONC — 57.24'

86+15.38, 144.22 RT (I-90)
229+55.00, 60.00 RT (RR)

86+31.63, 94.00 RT (I-90)
230+07.84, 60.00 RT (RR)

86+28.86, 72.21 RT (I-90)
230+27.68, 50.57 RT (RR)

86+34.83, 84.17 RT (I-90)
230+18.19, 60.00 RT (RR)

86+36.57, 29.84 LT (I-90)
231+38.21, 60.00 RT (RR)

86+52.59, 29.84 RT (I-90)
230+75.37, 60.00 RT (RR)

86+66.72, 41.40 LT (I-90)
231+47.45, 51.10 RT (RR)

86+90.40, 84.17 LT (I-90)
231+95.45, 60.00 RT (RR)

NOTE: THE RAILROAD STATIONING IS FROM THE FOLLOWING RAILROAD VALUATION MAP:

RIGHT OF WAY AND TRACK MAP
NEW YORK CENTRAL RAILROAD
244011 STA 211+20 TO 240+77

IN CONJUNCTION WITH THE RAILROAD PLAT FROM ODOT PROJECT ATB-1-12.89

CONSTRUCTION LIMITS

℄ I-90

NOTE: I-90 = ℄ I-90, RR = ℄ RAILROAD

REV. BY	DATE	DESCRIPTION
DATE COMPLETED		

HORIZONTAL SCALE IN FEET (0, 5, 10, 20)

PID NO. 25199

R/W DESIGNER DPF / DCJ
R/W REVIEWER RJP

RAILROAD PLAT

ATB-90-14.25

2 / 2

437 / 437

Palmer ENGINEERING
PALMER ENGINEERING
11300 CORNELL PARK DR
CINCINNATI, OH 45242

C:\ODOT\ATB\25199\row\sheets\25199RR001.dgn 6/6/2009 9:53:59 AM DENNIS

PROJECT LOCATION AND DESCRIPTION

BRIDGE NO. ATB 90-1450, PID 25199
I-90 BRIDGE OVER NORFOLK SOUTHERN RAILROAD FROM STA 85+14.93 TO STA 86+97.68.

THE PROJECT CONSISTS OF REPLACING THE BRIDGE CONCRETE DECK, CONVERTING ABUTMENTS TO SEMI-INTEGRAL, REPLACE STRUCTURAL STEEL, PATCH AND SEAL CONCRETE SURFACES. ALSO WE UNDERSTAND THAT THE PASSING LANES SHOULDERS WILL BE WIDENED. THE BRIDGE IS AND WILL REMAIN A 3-SPAN STRUCTURE.

HISTORIC RECORDS

HISTORIC RECORD FOR THIS PROJECT WERE SUBMITTED AS PART OF A RED FLAG SUMMARY REPORT BY CTL DATED JANUARY 4, 2006 UNDER EARLIER STEPS OF THE PDP.

SITE GEOLOGY

ACCORDING TO THE SOIL SURVEY OF ASHTABULA COUNTY, THE AREA KNOWN AS THE LAKE PLAIN REGION IS A BELT ABOUT 3.5 TO 5.5 MILES WIDE ADJACENT TO LAKE ERIE AND SOUTH TO THE PORTAGE ESCARPMENT MORAINES. THIS AREA CONSISTS OF WAVE-WASHED TILL, GLACIAL BEACH DEPOSITS, AND LACUSTRINE SEDIMENTS. SANDY AND GRAVELLY RIDGES RUNNING SOMEWHAT PARALLEL TO PRESENT DAY LAKE ERIE MARK THE BEACHES OF ANCIENT LAKES. THE MOST PROMINENT ARE NORTH RIDGE (ANCIENT LAKE WARREN) AND SOUTH RIDGE (ANCIENT LAKE WHITTLESEY). WAVE ACTION, LONG SHORE CURRENTS, AND WIND ALONG WITH HIGHER WATER LEVELS OF THE ANCIENT LAKES DETERMINED THE TOPOGRAPHY OF THE LAKE PLAIN STRIP. DRAINAGE ON THE LAKE PLAIN IS GENERALLY POOR EXCEPT NEAR STREAM DISSECTIONS AND ON ANCIENT BEACH RIDGES. MAJOR BEACH DEPOSITS FROM LAKES WARREN AND WHITTLESEY EXIST IN THE PROJECT AREA. THE MAJORITY OF THE SOIL AT THE PROJECT LOCATION CONSISTS OF ASHTABULA TILL, LACUSTRINE SEDIMENTS AND BEACH DEPOSITS OF THE HIGHER STAGES OF WHAT IS NOW LAKE ERIE. THE UPPER BEDROCK OF THE LAKE PLAIN REGION IS A SEDIMENTARY LAYER OF SAND, SILT AND CLAY OF OCEAN ORIGIN THAT HAVE CONSOLIDATED INTO ROCK. THE BEDROCK UNDERLYING THE PROJECT LOCATION IS THE CHAGRIN SHALE OF THE OHIO FORMATION OF DEVONIAN AGE.

RECONNAISSANCE

THE BRIDGE SITE CONSISTS OF THE EMBANKMENT APPROACH THAT IS ABOUT 27 TO 29 FEET HIGH AT THE MAXIMUM ELEVATION POINT AT THE RAILROAD UNDER-PATH. THE EMBANKMENT IS CONSTRUCTED AT ABOUT 2H:1V GRADE. THE SITE SURROUNDING THE BRIDGE EMBANKMENT IS RELATIVELY LEVEL.

SUBSURFACE EXPLORATION

TOTAL OF FOUR (4) TEST BORINGS, IDENTIFIED AS B-001THROUGH B-004 WERE DRILLED FOR THE BRIDGE WIDENING ALONG THE INSIDE (PASSING) LANES AT THE ABUTMENTS AND PIERS SUBSTRUCTURES. THE TEST BORINGS WERE DRILLED DURING THE PERIOD OF MARCH 26 THROUGH APRIL 23, 2008.

THE STRUCTURE TEST BORINGS WERE DRILLED TO DEPTHS RANGING FROM 88 TO 94 FEET FOR THE ABUTMENTS AT STREET LEVEL AND TO DEPTH RANGING FROM 65 TO 70 FEET FOR THE PIERS AT THE RAILROAD TRACK LEVEL. 5-FOOT ROCK CORES WERE EXTRACTED FROM BORINGS B-002 AND B-004 USING NX CORE BIT WITH WIRE-LINE DOUBLE BARREL.

THE TEST BORINGS WERE DRILLED USING A CME TRUCK-MOUNTED ROTARY DRILL RIG USING 3-1/4 INCH I.D. HOLLOW-STEM AUGERS. DISTURBED SOIL SAMPLES WERE OBTAINED IN ACCORDANCE WITH THE STANDARD PENETRATION TEST (AASHTO T206) AT CONTINUOUS, 2.5-FOOT AND 5.0-FOOT INTERVALS THROUGH THE SOIL USING AN AUTOMATIC HAMMER SYSTEM WITH CALIBRATION CERTIFICATE.

EXPLORATION FINDINGS

BORINGS B-001 AND B-004 (TAKEN CLOSE TO THE ABUTMENTS) CONTAINED SUITABLE FILL THAT STARTED AT THE SURFACE AND EXTENDED DOWN TO BETWEEN 42.5 AND 47 FEET BELOW THE SURFACE. THE FILL CONSISTED OF SILTY CLAY OR SILT AND CLAY AND WAS MOSTLY BROWN OR BROWN WITH GRAY IN COLOR. IT HAD A GENERAL CONSISTENCY OF STIFF TO VERY STIFF. SOIL BORINGS B-002 AND B-003 WERE TAKEN AT THE PIER LOCATIONS. BORING B-002 CONTAINED 6 INCHES OF GRAVEL AT THE SURFACE AND BORING B-003 HAD AN 8 INCH LAYER OF TOPSOIL AT THE SURFACE THAT WAS FOLLOWED BY A 13 FOOT LAYER OF FILL. THE FILL CONSISTED OF SILTY CLAY AND SILTY SAND AND GRAVEL.

CONTINUED....

LEGEND

DESCRIPTION	ODOT CLASS	CLASSIFIED MECH./VISUAL	
GRAVEL AND/OR STONE FRAGMENTS	A-1-a	-	1
GRAVEL AND/OR STONE FRAGMENTS WITH SAND	A-1-b	-	-
GRAVEL AND/OR STONE FRAGMENTS W/SAND AND SILT	A-2-4	-	-
GRAVEL AND/OR STONE FRAGMENTS W/SAND, SILT & CLAY	A-2-6	-	-
COARSE AND FINE SAND	A-3a	-	9
SANDY SILT	A-4a	7	25
SILT	A-4b	-	-
SILT AND CLAY	A-6a	3	17
SILTY CLAY	A-6b	-	13
CLAY	A-7-6	-	-
	TOTAL	10	65
CLAY-SHALE	VISUAL		
WEATHERED SHALE	VISUAL		8
SHALE	VISUAL		2

PAVEMENT OR BASE =X= APPROXIMATE THICKNESS

BORING LOCATION - PLAN VIEW

DRIVE SAMPLE AND/OR ROCK CORE BORING PLOTTED TO VERTICAL SCALE ONLY. HORIZONTAL BAR INDICATES A CHANGE IN STRATIGRAPHY.

X/Y/Z — NUMBER OF BLOWS FOR STANDARD PENETRATION TEST
X= NUMBER OF BLOWS FOR FIRST 6 INCHES
Y= NUMBER OF BLOWS FOR SECOND 6 INCHES
Z= NUMBER OF BLOWS FOR THIRD 6 INCHES

WC — INDICATES WATER CONTENT IN PERCENT.

W— — INDICATES FREE WATER ELEVATION.

● — INDICATES A PLASTIC MATERIAL WITH A MOISTURE CONTENT EQUAL TO GREATER THAN THE LIQUID LIMIT MINUS 3.

⊖ — INDICATES A NON-PLASTIC MATERIAL WITH A MOISTURE CONTENT GREATER THAN 25% OR GREATER THAN 19% WITH A WET APPEARANCE.

NP — INDICATES A NON-PLASTIC SAMPLE.

SS — INDICATES A SPLIT SPOON SAMPLE, STANDARD PENETRATION TEST.

ST — INDICATES A SHELBY TUBE SAMPLE.

TR — INDICATES TOP OF ROCK.

THE SUBSURFACE NATURAL MATERIAL AT THE SITE CONSISTED MOSTLY OF ALTERNATING LAYERS SILT AND CLAY OR SANDY SILT. THE SILT AND CLAY WAS MOSTLY GRAY OR BROWNISH GRAY AND SHOWED A CONSISTENCY MOSTLY BETWEEN STIFF AND VERY STIFF. THE SANDY SILT WAS ALSO GRAY TO BROWNISH GRAY AND HAD A CONSISTENCY GENERALLY BETWEEN LOOSE TO MEDIUM DENSE.

NATURAL SHALE WAS ENCOUNTERED BETWEEN 83 AND 87.4 FEET BELOW GRADE IN BORINGS B-001 AND B-004, AND BETWEEN 53 AND 58 FEET BELOW GRADE IN BORINGS B-002 AND B-003. THE SHALE WAS GRAY IN COLOR AND GENERALLY WAS HIGHLY TO COMPLETELY WEATHERED. FIVE-FOOT ROCK CORES WERE TAKEN AT BORINGS B-002 AND B-004 AND INDICATED A 0 TO 29 % RQD.

GROUND WATER WAS ENCOUNTERED AT AN ELEVATION RANGING BETWEEN 828.0 AND 836.5 FEET ABOVE SEA LEVEL.

CONTINUED....

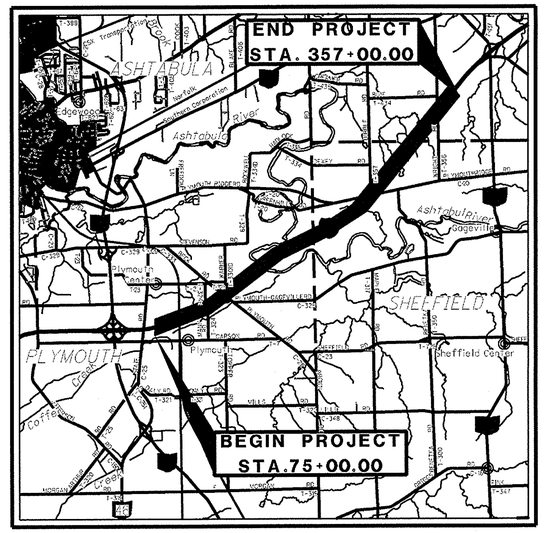

LOCATION MAP

SCALE IN MILES
0 1 2 3 4

N

PARTICLE SIZE DEFINITIONS

Boulders	Cobbles	Gravel	Coarse Sand	Fine Sand	Silt	Clay
12"	3"	2.0 mm (No. 10 sieve)	0.42 mm (No. 40 sieve)	0.074 mm (No. 200 sieve)	0.005 mm	

RECON. - HMK. 02/2008
DRILLING - CTL ENGINEERING INC. 3-26 TO 4-23-08
DRAWN - B.R.U. 6-12-08
REVIEWED - MK 6-12-08

SPECIFICATIONS

THIS GEOTECHNICAL EXPLORATION WAS PERFORMED IN ACCORDANCE WITH THE STATE OF OHIO, DEPARTMENT OF TRANSPORTATION, OFFICE OF GEOTECHNICAL ENGINEERING, SPECIFICATIONS FOR GEOTECHNICAL

AVAILABLE INFORMATION

PREVIOUSLY AVAILABLE INFORMATION ARE NOT SHOWN NOR INCLUDED IN THIS SUBMITTAL.

CTL ENGINEERING, INC.
6777 ENGLE ROAD
CLEVELAND, OHIO 44130
PHONE(440)239-9526 FAX(440)239-9529

PID NO. 25199

STRUCTURE FOUNDATION EXPLORATION
BRIDGE NO. ATB-90-14.50
I-90 BRIDGE OVER NORFOLK SOUTHERN R.R.

ATE-90-14.50

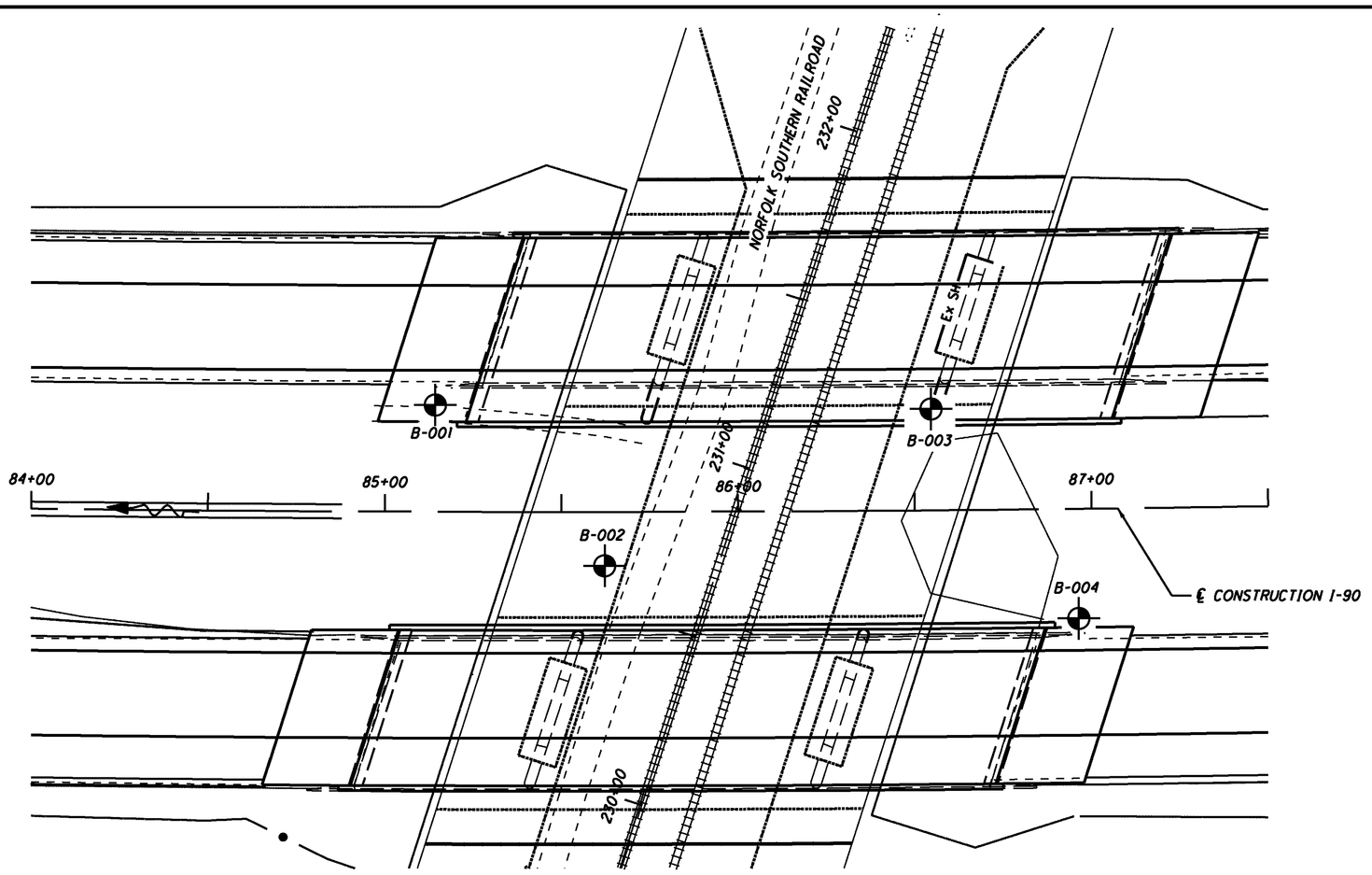

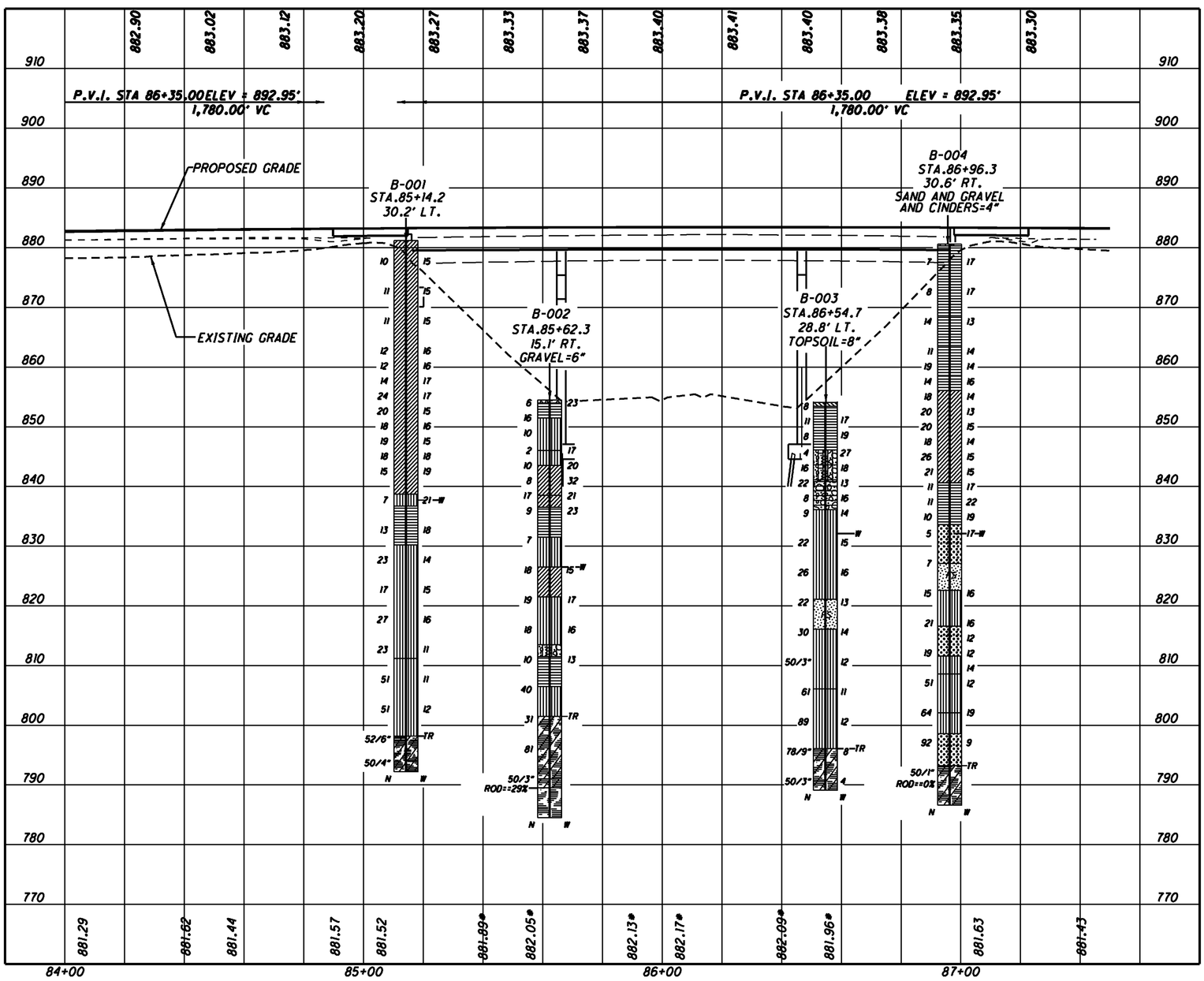

27	ATB-90-14.50 PID NO. - 25199	STRUCTURE FOUNDATION EXPLORATION BRIDGE NO. ATB-90-14.50 I-90 BRIDGE OVER NORFOLK SOUTHERN R.R.	DRAWN N.K.S. CHECKED MK 0 20 10 40 HORIZONTAL SCALE IN FEET

State of Ohio
Department of Transportation
Office of Geotechnical Engineering

LOG OF BORING

Date Started 04/23/08 | Sampler: Type SS | Dia. | Project Identification: Palmer Engineering
Date Completed 04/23/08 | Casing: Length | Dia. 3.25" | I-90 Bridge, ATB 90-1450
Water Elev. 837.7ft | Plymouth, Ohio, Ashtabula County
Boring No. B-001 | Station & Offset I-90, STA 85+14.2, 30.2' LF | Surface Elev. 881.2ft | CTL Project No. 080500I0CLE

Elev. (ft)	Depth (ft)	Std. Pen. RQD	Rec. (ft)	Loss (ft)	Description	Sample No.	Physical Characteristics % Agg	% C.S.	% F.S.	% Silt	% Clay	L.L.	P.I.	W.C.	ODOT Class
881.2	0														
	2														
	4	3/4/6	1.3	0.3	Stiff to very stiff, moist, brown with trace gray, SILT AND CLAY, little sand, little to trace gravel and rock fragment, (FILL)	SS-1								15	VIS.
	6														
	8														
	10	2/4/7	0.9	0.6		SS-2								15	VIS.
	12														
	14	4/5/6	1.3	0.3		SS-3								15	VIS.
	16														
	18														
	20	3/5/7	1.1	0.4		SS-4	4	5	8	43	40	32	14	16	A-6a
	22	5/6/6	0.2	1.3		SS-5								16	VIS.
	24	4/5/9	1.2	0.3		SS-6								17	VIS.
	26	5/9/15	1.2	0.3		SS-7								17	VIS.
	28	4/9/11	1.5	0.0		SS-8								15	VIS.
	30	4/6/12	1.3	0.3		SS-9								16	VIS.
	32	5/8/11	1.5	0.0		SS-10								15	VIS.
	34	4/7/11	1.2	0.3		SS-11								18	VIS.
	36	3/6/9	1.4	0.1		SS-12								19	VIS.
	38														
838.7	40				42.5'										
836.7	42	2/2/5	1.5	0.0	44.5' Loose, wet, brown, SANDY SILT, some clay	SS-13								21	VIS.
	44													20	
	46														
	48														
830.2	50	2/4/9	1.5	0.0	Medium stiff to stiff, very moist to wet, brown, SILTY CLAY, little sand, trace gravel, some sand lenses	SS-14								18	VIS.
	52				51.0'										
	54	4/10/13	1.5	0.0	Very stiff, very moist to wet, gray, SANDY SILT, little sand, trace gravel, occasional sand seams starting at 64.0'	SS-15								14	VIS.
	56														
	58														
	60	5/7/10	1.5	0.0		SS-16	6	6	9	42	37	26	10	15	A-4a
	62														
	64	6/11/16	1.5	0.0		SS-17								16	VIS.
	66														
	68														
811.2	70	6/9/14	1.1	0.4	70.0'	SS-18								11	VIS.
	72														
	74	11/19/32	1.0	0.5	Hard, moist, brownish gray, SANDY SILT, some clay, trace gravel and rock fragment	SS-19	10	11	14	39	26	22	7	11	A-4a
	76														
	78														
	80	16/21/30	1.5	0.0		SS-20								12	VIS.
	82														
798.2	84				83.0'										
	84	48/52	1.0	0.5	Soft to medium hard, gray, completely to highly weathered, SHALE	SS-21									VIS.
	86														
792.2	88	50/4"	0.3	0.0	89.0'	SS-22									VIS.

END OF BORING AT 89'

State of Ohio
Department of Transportation
Office of Geotechnical Engineering

LOG OF BORING

Date Started 03/26/08 | Sampler: Type SS | Dia. | Project Identification: Palmer Engineering
Date Completed 03/26/08 | Casing: Length | Dia. 3.25" | I-90 Bridge, ATB 90-1450
Water Elev. 826.5ft | Plymouth, Ohio, Ashtabula County
Boring No. B-002 | Station & Offset I-90, STA 85+62.3, 15.1' RT | Surface Elev. 854.5ft | CTL Project No. 080500I0CLE

Elev. (ft)	Depth (ft)	Std. Pen. RQD	Rec. (ft)	Loss (ft)			Description	Sample No.	Physical Characteristics % Agg	% C.S.	% F.S.	% Silt	% Clay	L.L.	P.I.	W.C.	ODOT Class
854.5	0																
854.0		3/3/3	1.1	0.4		0.5'	6" GRAVEL	SS-1								23	VIS.
	2						Medium stiff, wet, brown, SILTY CLAY, little sand, trace gravel and rooting										VIS.
851.5						3.0'											
	4	5/8/8	1.3	0.2			Medium dense to loose, brown, SANDY SILT, little clay and rock fragment	SS-2									VIS.
	6	9/5/5	0.0	1.5				SS-3									VIS.
846.0	8					8.5'											
	10	4/1/1	0.3	1.3			Very loose, very moist, brown, SANDY SILT, some clay, trace gravel	SS-4								17	VIS.
843.5						11.0'											
	12	4/5/5	1.0	0.5			Stiff to medium stiff, very moist, brown to brownish gray, SILT AND CLAY, some to little sand, trace gravel, slightly varved	SS-5								20	VIS.
	14	3/3/5	1.0	0.5				SS-6								32	VIS.
838.5	16					16.0'											
		5/7/10	1.1	0.4			Very stiff, moist, brown with gray, SILT AND CLAY, some sand, trace rock fragment, slightly dessicated	SS-7								21	VIS.
836.5	18					18.0'											
	20	5/4/5	0.8	0.7			Stiff, moist, dark brown, SILTY CLAY, trace sand	SS-8								23	VIS.
	22																
831.5						23.0'											
	24	3/3/4	0.6	0.9			Loose, moist, brown, SANDY SILT, little gravel	SS-9									VIS.
	26																
826.5	28					28.0'											
	30	6/7/11	1.1	0.4			Very stiff, moist, gray, SILT AND CLAY, little sand, trace gravel, varved	SS-10	5	7	10	42	36	26	11	15	A-6a
	32																
821.5						33.0'											
	34	7/7/12	1.1	0.4			Very stiff, wet, brownish gray, SANDY SILT, little sand, varved	SS-11	7	6	8	42	37	24	8	17	A-4a
	36																
	38																
	40	10/9/9	1.1	0.4			Very stiff, wet, brownish gray, SANDY SILT, little sand, varved	SS-12								16	VIS.
813.5						41.0'											
	42						Gray, SAND AND GRAVEL, running sands, wash out	SS-13									VIS.
811.5						43.0'											
	44	4/4/6	1.0	0.5			Stiff, wet, brownish gray, SILTY CLAY, little sand	SS-14								13	VIS.
	46																
806.5	48					48.0'											
	50	17/20/20	1.0	0.5			Hard, very moist, gray, SANDY SILT, some clay	SS-15									VIS.
	52																
801.5						53.0'											
	54	6/14/17	0.8	0.7			Soft to medium hard, gray, highly to completely weathered, CLAYEY SHALE	SS-16									VIS.
	56																
	58																
	60	20/39/42	0.9	0.6				SS-17									VIS.
	62																
791.0	64					63.5'											
789.5		50/3"	0.3	1.3		65.0'	Medium hard, gray, highly weathered, SHALE	SS-18									VIS.
	66	29% RQD	4.9	0.1			Hard, gray, weathered, SHALE	NX-19									VIS.
	68																
784.5	70	4.24 ksi				70.0'											
							END OF BORING AT 70'										

State of Ohio
Department of Transportation
Office of Geotechnical Engineering

LOG OF BORING

Date Started 03/26/08 Sampler: Type SS Dia. ____ Project Identification: Palmer Engineering
Date Completed 03/26/08 Casing: Length ____ Dia. 3.25" I-90 Bridge, ATB 90-1450
Water Elev. 832.1ft Plymouth, Ohio, Ashtabula County
Boring No. B-003 Station & Offset I-90, STA 86+54.7, 28.8' LF Surface Elev. 854.1ft CTL Project No. 08050010CLE

Elev. (ft)	Depth (ft)	Std. Pen. RQD	Rec. (ft)	Loss (ft)		Description	Sample No.	% Agg	% C.S.	% F.S.	% Silt	% Clay	L.L.	P.I.	W.C.	ODOT Class
854.1	0															
853.4					0.7'	8" TOPSOIL										VIS.
	2	3/4/4	1.0	0.3		Medium stiff to stiff, moist, brown, SILTY CLAY, little sand, trace gravel, trace hair roots, (FILL)	SS-1								15	VIS.
	4	4/5/6	1.0	0.5			SS-2								17	VIS.
	6	4/4/4	1.1	0.4			SS-3								19	VIS.
846.1	8				8.0'											
	10	3/2/2	1.0	0.5		Very loose, very moist, brownish gray, SILTY SAND AND GRAVEL, trace slag, (FILL)	SS-4								27	VIS.
843.6					10.5'											
	12	2/6/10	1.0	0.5		Medium dense, very moist, brownish gray, SILTY SAND AND GRAVEL, little slag, (FILL)	SS-5								18	VIS.
841.1					13.0'											
	14	10/13/9	1.0	0.5		Medium dense to loose, very moist to wet, brown, SILTY SAND, some rock fragments, some to little clay	SS-6								13	VIS.
	16	3/4/4	1.0	0.5			SS-7								16	VIS.
836.1	18				18.0'											
	20	2/3/6	1.0	0.5		Stiff to very stiff, moist, gray, SANDY SILT, little sand, trace rock fragments, varved, sand seams	SS-8	13	6	7	37	37	27	10	14	A-4a
	22															
	24	7/10/12	0.3	1.2			SS-9								15	VIS.
	26															
	28															
	30	8/12/14	0.8	0.8			SS-10								16	VIS.
	32															
821.1					33.0'											
	34	5/10/12	1.0	0.5	FS	Medium dense, wet, gray, SILTY SAND, trace gravel	SS-11								13	VIS.
	36															
816.1	38				38.0'											
	40	11/13/17	0.8	0.7		Very stiff to hard, very moist, gray, SANDY SILT, some to little shale rock fragments, slightly varved	SS-12								14	VIS.
	42															
	44	50/3"	0.3	1.3			SS-13	22	7	11	32	28	25	10	12	A-4a
	46															
806.1	48				48.0'											
	50	20/27/34	1.0	0.5		Hard, moist, gray, SANDY SILT, some gravel, little shale rock fragment, trace clay	SS-14								11	VIS.
	52															
	54	29/39/50	1.0	0.5			SS-15	26	11	11	42	10	NP	NP	12	A-4a
	56															
796.1	58				58.0'											
	60	8-28-50/3"	1.0	0.5		Soft to medium hard, gray, completely to highly weathered, SHALE	SS-16								8	VIS.
	62															
	64	50/3"	0.3	1.3			SS-17								4	VIS.
789.1					65.0'											

END OF BORING AT 65.0'

5/6

ATB-90-14.50
PID NO. - 25199

STRUCTURE FOUNDATION EXPLORATION
BRIDGE NO. ATB-90-14.50
I-90 BRIDGE OVER NORFOLK SOUTHERN R.R.

DRAWN C.L.
CHECKED MK

...\08050010CLE_TBR_Mod 06.25.08.d 6/25/2008 2:37:22 PM

State of Ohio
Department of Transportation
Office of Geotechnical Engineering

LOG OF BORING

Date Started 04/16/08 | Sampler: Type SS | Dia. | Project Identification: Palmer Engineering
Date Completed 04/18/08 | Casing: Length | Dia. 3.25" | I-90 Bridge, ATB 90-1450
Water Elev. 832.1ft | Plymouth, Ohio, Ashtabula County
Boring No. B-004 | Station & Offset I-90, STA 86+96.3, 30.6' RT | Surface Elev. 880.6ft | CTL Project No. 080500I0CLE

Elev. (ft)	Depth (ft)	Std. Pen. RQD	Rec. (ft)	Loss (ft)	Description	Sample No.	Physical Characteristics: % Agg	% C.S.	% F.S.	% Silt	% Clay	L.L.	P.I.	W.C.	ODOT Class
880.6	0														
880.3	0.3'				4" SAND AND GRAVEL, cinders										
	2														
	4	1/3/4	1.1	0.4	Medium stiff, very moist, brown, SILTY CLAY, little sand, trace gravel, some lean clay seams, (FILL)	SS-1								17	VIS.
	6														
	8														
	10	3/4/4	1.3	0.2		SS-2								17	VIS.
868.6	12														
	12.0'														
	14	4/6/8	1.3	0.3	Stiff, moist, gray and brown, SILTY CLAY, little sand, trace gravel, (FILL)	SS-3								13	VIS.
	16														
863.6	17.0'														
	18	2/4/7	0.9	0.6	Stiff to very stiff, moist, brown, SILTY CLAY, little sand, trace gravel and rock fragments, (FILL)	SS-4								14	VIS.
	20	6/8/11	1.5	0.0		SS-5								14	VIS.
858.6	22														
	22.0'	3/5/9	1.5	0.0	Stiff, very moist, grayish brown, SILTY CLAY, some silt, little sand, trace gravel, sandy seams, (FILL)	SS-6								16	VIS.
856.1	24.5'	4/7/11	1.5	0.0		SS-7								14	VIS.
	26	4/8/12	1.5	0.0	Very stiff, moist, brown, SILT AND CLAY, little sand, little to trace gravel and rock fragments, (FILL)	SS-8	5	4	7	41	43	32	13	13	A-6a
	28	4/8/12	1.5	0.0		SS-9								15	VIS.
	30	4/7/11	1.5	0.0		SS-10								14	VIS.
	32	6/11/15	1.5	0.0		SS-11								15	VIS.
	34	6/8/13	1.5	0.0		SS-12								15	VIS.
840.6	36	3/4/7	1.5	-1.0		SS-13								17	VIS.
	38	3/4/7	1.5	-0.5	Stiff, very moist, grayish brown with trace black, SILTY CLAY, little sand, trace gravel, trace sand seams, (FILL)	SS-14								22	VIS.
837.1	40														
	40.0'	3/4/6	1.5	0.0		SS-15								19	VIS.
	42				Stiff, very moist, brown and gray, SILTY CLAY, little sand, (FILL)										
833.6	43.5'														
	44	2/2/3	1.5	0.0	Loose, very moist, brown, SAND, some clay and gravel and silt	SS-16								17	VIS.
	46														
827.1	47.0'														
	48	2/3/4	1.5	0.0	Loose, wet, brown, SAND, little silt, trace clay	SS-17									VIS.
	50														
	52														
822.6	53.5'														
	54	3/6/9	1.1	0.4	Stiff, wet, gray, SANDY SILT, some sand, trace gravel	SS-18	6	8	11	43	32	25	10	16	A-4a
	56														
816.6	58.0'														
	58	5/8/13	1.5	0.0	Medium dense, very moist, gray, SAND, little clay and silt	SS-19								16	VIS.
	60					SS-20								12	VIS.
	62														
811.6	64.0'														
	64	6/8/11	1.3	0.3	Very stiff, very moist, gray, SANDY SILT, some clay, trace gravel, slightly varved	SS-21								12	VIS.
	66					SS-22								14	VIS.
808.6	69.0'														
	68	19/23/28	1.5	0.0	Hard, very moist, gray, SANDY SILT, some clay, little shale rock fragments	SS-23								12	VIS.
	70														
	72														
802.1	72.0'														
	74	18/29/35	1.5	0.0	Very dense, very moist, gray, SANDY SILT, trace clay	SS-24								19	VIS.
	76														
798.6	78.5'														
	78	30/38/54	1.5	0.0	Very dense, very moist, gray, SAND, some clay and gravel and shale fragments, little silt	SS-25								9	VIS.
	80														
	82														
793.2	82.0'														
	84														
	86														
	87.4'														
	88	50/1" 0% RQD	0.1	0.0	Medium hard to hard, gray, highly weathered, SHALE, (ROCK CORE STARTS AT 88.6')	SS-26									VIS.
	90		4.8	0.2		NX-27									VIS.
	92														
786.6	94														
	94.0'				END OF BORING AT 94'										

PROJECT LOCATION AND DESCRIPTION

BRIDGE NO.: ATB 90-1583, PID #25199
IR-90 BRIDGE OVER ASHTABULA RIVER FROM STA 158+88.64 TO 162+64.83

THE PROJECT CONSISTS OF REPLACING THE BRIDGE CONCRETE DECK, CONVERTING ABUTMENTS TO SEMI-INTEGRAL, AND REPLACE STRUCTURAL STEEL. ALSO WE UNDERSTAND THAT THE SHOULDERS LANES WILL BE WIDENED. THE BRIDGE IS AND WILL REMAIN A 5-SPAN STRUCTURE.

SUBSURFACE EXPLORATION

TOTAL OF TEN (10) TEST BORINGS, IDENTIFIED AS B-001THROUGH B-010 WERE DRILLED FOR THE BRIDGE WIDENING ALONG THE PASSING AND DRIVING LANES AT THE ABUTMENTS AND PIERS SUBSTRUCTURES. THE TEST BORINGS WERE DRILLED DURING THE PERIOD OF APRIL 25, 2008 THROUGH MAY 31, 2008.

THE BORINGS TIP ELEVATIONS VARIED FROM ABOUT 750 TO 740 FEET. EARTH BOUND DRILLING ADVANCED ALL BORINGS UNDER CTL ENGINEERING SUPERVISION. 10-FOOT ROCK CORES WERE EXTRACTED USING NX CORE BIT WITH WIRE-LINE DOUBLE BARREL FROM ALL BORINGS EXCEPT AT B-002 AND B-008 WHERE THE ROCK CORE WERE 15 FEET AND 5 FEET RESPECTIVELY.

THE TEST BORINGS WERE DRILLED USING A CME TRACK-MOUNTED ROTARY DRILL RIG USING 3-1/4 INCH I.D. HOLLOW-STEM AUGERS. DISTURBED SOIL SAMPLES WERE OBTAINED IN ACCORDANCE WITH THE STANDARD PENETRATION TEST (AASHTO T206) AT CONTINUOUS, 2.5-FOOT AND 5.0-FOOT INTERVALS THROUGH THE SOIL USING AN AUTOMATIC HAMMER SYSTEM WITH CALIBRATION CERTIFICATE.

PALMER ENGINEERING PROVIDED THE BORINGS ELEVATIONS, STATIONS, AND OFFSETS.

HISTORIC RECORDS

HISTORIC RECORD FOR THIS PROJECT WERE SUBMITTED AS PART OF A RED FLAG SUMMARY REPORT BY CTL DATED JANUARY 4, 2006 UNDER EARLIER STEPS OF THE PDP.

SITE RECONNAISANCE

THE ASHTABULA RIVER WEST BANK EMBANKMENT AT IR-90 MEDIAN IS CONSTRUCTED AT AN APPROXIMATE 1.8:1 (HORIZONTAL : VERTICAL) GRADES. THE SLOPE IS COVERED WITH GRASS AND VERY FEW PLANTED PINE TREES. A LOCALIZED SLOPE FAILURE BETWEEN THE EB AND WB BRIDGES NEAR TOE OF SLOPE ALONG THE RIVER WEST BANK HAD OCCURRED. WE BELIEVE THAT GROUND WATER SEEPAGE IS THE PRIMARY CAUSE OF THIS FAILURE. THE WATER COLLECTED IN THE CATCH BASIN NEAR TOP OF SLOPE IN THIS AREA DOES NOT APPEAR TO HAVE AN OUTLET. SIGNIFICANT SEEPAGE IS NOTED UNDER THE WB BRIDGE WEST ABUTMENT THAT HAS CAUSED UNDERMINING AND MOVEMENT OF THE ABUTMENT. SIMILAR SEEPAGE CONDITION AND UNDERMINING WAS ALSO NOTED AT THE WB BRIDGE EAST ABUTMENT, BUT NOT AS SEVERE AS THE WEST SIDE.

SITE GEOLOGY

ACCORDING TO THE SOIL SURVEY OF ASHTABULA COUNTY, THE AREA KNOWN AS THE LAKE PLAIN REGION IS A BELT ABOUT 3.5 TO 5.5 MILES WIDE ADJACENT TO LAKE ERIE AND SOUTH TO THE PORTAGE ESCARPMENT MORAINES. THIS AREA CONSISTS OF WAVE-WASHED TILL, GLACIAL BEACH DEPOSITS, AND LACUSTRINE SEDIMENTS. SANDY AND GRAVELLY RIDGES RUNNING SOMEWHAT PARALLEL TO PRESENT DAY LAKE ERIE MARK THE BEACHES OF ANCIENT LAKES. THE MOST PROMINENT ARE NORTH RIDGE (ANCIENT LAKE WARREN) AND SOUTH RIDGE (ANCIENT LAKE WHITTLESEY). WAVE ACTION, LONG SHORE CURRENTS, AND WIND ALONG WITH HIGHER WATER LEVELS OF THE ANCIENT LAKES DETERMINED THE TOPOGRAPHY OF THE LAKE PLAIN STRIP. DRAINAGE ON THE LAKE PLAIN IS GENERALLY POOR EXCEPT NEAR STREAM DISSECTIONS AND ON ANCIENT BEACH RIDGES. MAJOR BEACH DEPOSITS FROM LAKES WARREN AND WHITTLESEY EXIST IN THE PROJECT AREA. THE MAJORITY OF THE SOIL AT THE PROJECT LOCATION CONSISTS OF ASHTABULA TILL, LACUSTRINE SEDIMENTS AND BEACH DEPOSITS OF THE HIGHER STAGES OF WHAT IS NOW LAKE ERIE. THE UPPER BEDROCK OF THE LAKE PLAIN REGION IS A SEDIMENTARY LAYER OF SAND, SILT AND CLAY OF OCEAN ORIGIN THAT HAVE CONSOLIDATED INTO ROCK. THE BEDROCK UNDERLYING THE PROJECT LOCATION IS THE CHAGRIN SHALE OF THE OHIO FORMATION OF DEVONIAN AGE.

EXPLORATION FINDINGS

THE EAST AND WEST EMBANKMENT CONSISTED OF 41 FEET AND 37.5 FEET OF FILL RESPECTIVELY. THE FILLS ARE PREDOMINATELY BROWN AND/OR GRAY SANDY SILT AND/OR SILT AND CLAY. THE RIVERBED IN THE FLOOD PLAIN WAS COVERED WITH A THIN 1.5 TO 4 FEET OF SEDIMENTS OVER SHALE. THE AREA ALONG THE WEST SIDE OF THE RIVER WHERE THE BULK AND CONSTANT WATER FLOW IS OCCURRING, THE RIVERBED CONSISTED OF SHALE. THE SEDIMENTS CONSISTED MOSTLY OF SANDY SILT AND ARE CONSIDERED HIGHLY EROSIVE.

LEGEND

DESCRIPTION	ODOT CLASS	CLASSIFIED MECH./VISUAL
GRAVEL AND/OR STONE FRAGMENTS	A-1-a	- -
GRAVEL AND/OR STONE FRAGMENTS WITH SAND	A-1-b	- -
GRAVEL AND/OR STONE FRAGMENTS W/SAND AND SILT	A-2-4	- -
GRAVEL AND/OR STONE FRAGMENTS W/SAND, SILT & CLAY	A-2-6	- -
COARSE AND FINE SAND	A-3a	- -
SANDY SILT	A-4a	- -
SILT	A-4b	- -
SILT AND CLAY	A-6a	- -
SILTY CLAY	A-6b	- -
CLAY	A-7-6	- -
	TOTAL	
CLAY-SHALE	VISUAL	
WEATHERED SHALE	VISUAL	
SHALE	VISUAL	

XXXXX PAVEMENT OR BASE =X= APPROXIMATE THICKNESS

BORING LOCATION - PLAN VIEW

DRIVE SAMPLE AND/OR ROCK CORE BORING PLOTTED TO VERTICAL SCALE ONLY. HORIZONTAL BAR INDICATES A CHANGE IN STRATIGRAPHY.

X/Y/Z NUMBER OF BLOWS FOR STANDARD PENETRATION TEST
X= NUMBER OF BLOWS FOR FIRST 6 INCHES
Y= NUMBER OF BLOWS FOR SECOND 6 INCHES
Z= NUMBER OF BLOWS FOR THIRD 6 INCHES

WC INDICATES WATER CONTENT IN PERCENT.

W— INDICATES FREE WATER ELEVATION.

● INDICATES A PLASTIC MATERIAL WITH A MOISTURE CONTENT EQUAL TO GREATER THAN THE LIQUID LIMIT MINUS 3.

⊖ INDICATES A NON-PLASTIC MATERIAL WITH A MOISTURE CONTENT GREATER THAN 25% OR GREATER THAN 19% WITH A WET APPEARANCE.

NP INDICATES A NON-PLASTIC SAMPLE.

SS INDICATES A SPLIT SPOON SAMPLE, STANDARD PENETRATION TEST.

ST INDICATES A SHELBY TUBE SAMPLE.

TR INDICATES TOP OF ROCK.

THE SHALE WAS ENCOUNTERED AT ELEVATIONS RANGING FROM ABOUT 763 TO 754 FEET. THE ROCK QUALITY DESIGNATION (RQD) OF THE ROCK UPPER 10 FEET VARIED FROM 24 TO 79 % AND THE ROCK COMPRESSIVE STRENGTH VARIED FROM 1,331 TO 3,129 PSI.

GROUND WATER WAS ENCOUNTERED AT ELEVATIONS RANGING BETWEEN 764 AND 759 FEET ABOVE SEA LEVEL IN THE BORINGS TAKEN AT THIS SITE.

SPECIFICATIONS

THIS GEOTECHNICAL EXPLORATION WAS PERFORMED IN ACCORDANCE WITH THE STATE OF OHIO, DEPARTMENT OF TRANSPORTATION, OFFICE OF GEOTECHNICAL ENGINEERING, SPECIFICATIONS FOR GEOTECHNICAL EXPLORATIONS, DATED REVISED FEBRUARY 19, 2008.

AVAILABLE INFORMATION

PREVIOUSLY AVAILABLE INFORMATION ARE NOT SHOWN NOR INCLUDED IN THIS SUBMITTAL.

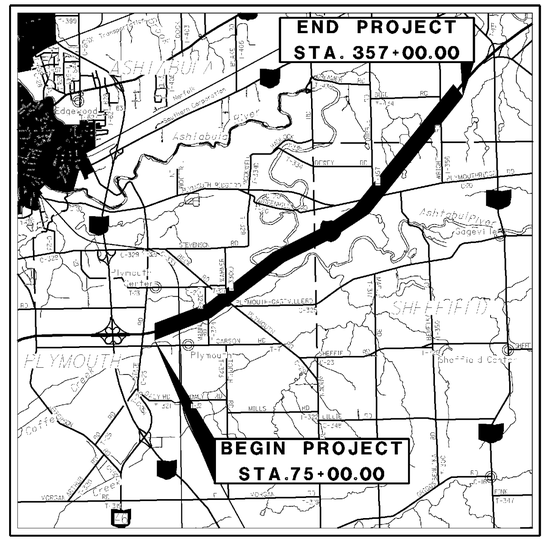

LOCATION MAP

SCALE IN MILES
0 1 2 3 4

N

PARTICLE SIZE DEFINITIONS

12"	3"	2.0 mm	0.42 mm	0.074 mm	0.005 mm
Boulders	Cobbles	Gravel	Coarse Sand	Fine Sand	Silt	Clay
		No. 10 sieve	No. 40 sieve	No. 200 sieve	

RECON. - FLS
DRILLING - CTL ENGINEERING INC.
DRAWN - B.R.U.
REVIEWED - MK

CTL ENGINEERING, INC.
2860 FISHER ROAD
COLUMBUS, OHIO 43204
PHONE:(614)276-8123 FAX:(614)276-6377

PID NO. 25199

STRUCTURE FOUNDATION EXPLORATION
BRIDGE NO. ATB 90-1583
I-90 BRIDGE OVER ASHTABULA RIVER

ATB 90-1583

1 / 13

ASHTABULA RIVER

B-004

B-002

B-006

B-008

B-010

158+00

159+00

160+00

161+00

162+00

163+00

B-001

℄ CONSTRUCTION I-90

B-005

B-009

B-003

B-007

ASHTABULA RIVER

0 10 20 40
HORIZONTAL SCALE IN FEET

DRAWN N.K.S.
CHECKED MK

STRUCTURE FOUNDATION EXPLORATION
BRIDGE NO. ATB 90-1583
I-90 BRIDGE OVER ASHTABULA RIVER

ATB 90-1583
PID NO. - 25199

...\08050010CLE_River Bridge P&P S 6/13/2008 1:47:59 PM

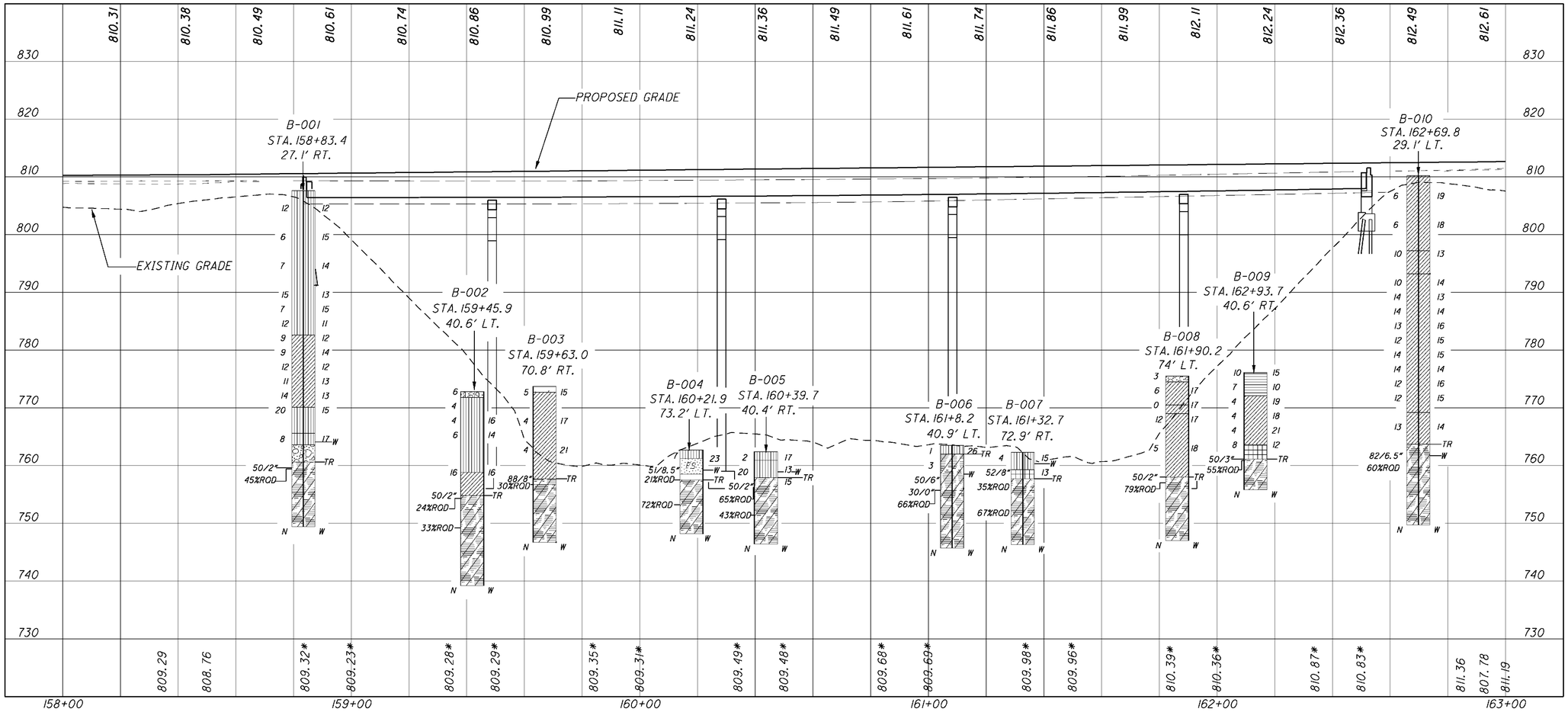

0 10 20 40
HORIZONTAL SCALE IN FEET

DRAWN C.L.
CHECKED MK

STRUCTURE FOUNDATION EXPLORATION
BRIDGE NO. ATB 90-1583
I-90 BRIDGE OVER ASHTABULA RIVER

ATB 90-1583
PID NO. - 25199

3 / 13

...\08050010CLE_River Bridge P&P S 6/13/2008 1:48:51 PM

State of Ohio
Department of Transportation
Office of Geotechnical Engineering

LOG OF BORING

Date Started 05/01/08 Sampler: Type SS Dia. ____ Project Identification: Palmer Engineering
Date Completed 05/04/08 Casing: Length ____ Dia. 3.25" I-90 Bridge, ATB 90-1583
Water Elev. 764.1ft Plymouth, Ohio, Ashtabula County
Boring No. B-001 Station & Offset I-90, STA 158+83.4, 27.1' RT Surface Elev. 807.6ft CTL Project No. 080500I0CLE

Elev. (ft)	Depth (ft)	Std. Pen. RQD	Rec. (ft)	Loss (ft)	Description	Sample No.	Physical Characteristics % Agg	% C.S.	% F.S.	% Silt	% Clay	L.L.	P.I.	W.C.	ODOT Class
807.6	0														
	2														
	4	4/5/7	1.0	0.5	Medium stiff to stiff, moist to very moist, gray with little to trace brown, SANDY SILT, some clay, little gravel and rock fragment, occasionally varved, (FILL)	SS-1							12	VIS.
	6														
	8	1/2/4	1.1	0.4		SS-2								15	VIS.
	10														
	12														
	14	1/3/4	1.0	0.5		SS-3								14	VIS.
	16														
	18	5/7/8	1.1	0.4		SS-4								13	VIS.
	20														
	22	3/3/4	1.3	0.3		SS-5	12	12	7	39	30	28	9	15	A-4a
	24	2/5/7	0.8	0.7		SS-6								11	VIS.
804.6					25.0'										
	26	2/3/6	1.5	0.0	Stiff, moist, brown with gray, SILT AND CLAY, little sand and gravel, trace rock fragment, trace sand seams, occasionally varved, (FILL)	SS-7								12	VIS.
	28	3/4/5	1.1	0.4		SS-8								14	VIS.
	30	3/4/8	1.4	0.1		SS-9								12	VIS.
	32	2/4/7	1.4	0.1		SS-10								13	VIS.
	34	4/5/9	1.3	0.2		SS-11								13	VIS.
782.1	36				37.5'										
	38	6/9/11	1.3	0.2	Very stiff, moist, brown, SANDY SILT, some clay, trace gravel	SS-12	6	6	5	45	38	30	10	15	A-4a
769.6	40				42.0'										
764.6	42	1/2/6	1.5	0.0	Loose, very moist to wet, grayish brown, SANDY SILT, some clay, trace gravel	SS-13								17	VIS.
	44				44.0'	SS-13									VIS.
	46				Loose, moist, grayish brown, SAND AND ROCK FRAGMENT, some silt, trace clay										
763.6					47.0'										
	48	50/2" 45%	0.2	0.0	Soft to moderately hard, gray, highly weathered, SHALE	SS-14									VIS.
	50		9.8	0.2		NX-15									VIS.
	52														
	54														
	56														
759.6	58				58.2'										

END OF BORING AT 58.2'

State of Ohio
Department of Transportation
Office of Geotechnical Engineering

LOG OF BORING

Date Started 05/28/08 Sampler: Type SS Dia. ____ Project Identification: Palmer Engineering
Date Completed 05/28/08 Casing: Length ____ Dia. 3.25" I-90 Bridge, ATB 90-1583
Water Elev. ft Plymouth, Ohio, Ashtabula County
Boring No. B-002 Station & Offset I-90, STA 159+45.9, 40.6' LT Surface Elev. 772.8ft CTL Project No. 080500I0CLE

Elev. (ft)	Depth (ft)	Std. Pen. RQD	Rec. (ft)	Loss (ft)	Description	Sample No.	Physical Characteristics % Agg	% C.S.	% F.S.	% Silt	% Clay	L.L.	P.I.	W.C.	ODOT Class
772.8	0	3/3/3	0.4	1.1	Loose, moist, dark brown, SAND AND GRAVEL, trace silt, (FILL)	SS-1									VIS.
					1.0'										
	2	0/2/2	0.1	1.4	Soft to medium stiff, very moist, brownish gray, SANDY SILT, trace clay and gravel, (FILL)	SS-2									VIS.
	4	1/2/2	0.5	1.0		SS-3	5	6	5	47	37	27	10	16	A-4a
	6	2/3/3	0.3	1.2		SS-4								14	VIS.
	8														
	10														
	12														
770.3	14	8/6/10	1.1	0.4	14.0' Very stiff, moist, gray and brown, CLAYEY SILT, some shale rock fragment, trace sand, (POSSIBLE FILL)	SS-5								16	VIS.
	16														
758.8	18	50/2" 24% 1.81 ksi	0.1 4.8	0.0 0.7	18.0' Soft to moderately hard, gray, completely to highly weathered, SHALE	SS-6 NX-7									VIS. VIS.
	20														
	22	1.33 ksi													
	24	33%	9.2	0.8		NX-8									VIS.
	26														
	28														
	30														
	32														
754.8					33.6' END OF BORING AT 33.6'										

State of Ohio
Department of Transportation
Office of Geotechnical Engineering

LOG OF BORING

Date Started 05/31/08 Sampler: Type SS Dia. ____ Project Identification: Palmer Engineering
Date Completed 05/31/08 Casing: Length ____ Dia. 3.25" I-90 Bridge, ATB 90-1583
Water Elev. ft Plymouth, Ohio, Ashtabula County
Boring No. B-003 Station & Offset I-90, STA 159+63.0, 70.8' RT Surface Elev. 773.7ft CTL Project No. 080500I0CLE

Elev. (ft)	Depth (ft)	Std. Pen. RQD	Rec. (ft)	Loss (ft)			Description	Sample No.	Physical Characteristics % Agg	% C.S.	% F.S.	% Silt	% Clay	L.L.	P.I.	W.C.	ODOT Class
773.7	0						BLACK CINDERS AND GRAVEL, (FILL)										VIS.
						1.0'											
		2/2/3	1.0	0.5			Medium stiff to stiff, very moist to wet, grayish brown to brown, SILT AND CLAY, little sand, trace gravel, (FILL)	SS-1								15	VIS.
	2																
	4																
	6	8/2/2	0.8	0.8				SS-2								17	VIS.
	8																
	10																
	12	2/2/2	0.3	1.2				SS-3	6	5	9	41	39	32	12	21	A-6a
	14																
772.7	16					16.0'											
		38/50-2"	0.7	0.3			Soft, gray, completely weathered, SHALE	SS-4									VIS.
757.7						17.0'											
		30%	9.3	0.7			Soft to moderately hard, gray, highly weathered, SHALE	NX-5									VIS.
	18																
	20																
	22																
	24																
	26																
756.7						27.0'											
							END OF BORING AT 27'										

State of Ohio
Department of Transportation
Office of Geotechnical Engineering

LOG OF BORING

Date Started 05/22/08 Sampler: Type SS Dia. ____ Project Identification: Palmer Engineering
Date Completed 05/23/08 Casing: Length ____ Dia. 3.25" I-90 Bridge, ATB 90-1583
Water Elev. 759.2ft Plymouth, Ohio, Ashtabula County
Boring No. B-004 Station & Offset I-90, STA 160+21.9, 73.2' LT Surface Elev. 762.7ft CTL Project No. 080500I0CLE

Elev. (ft)	Depth (ft)	Std. Pen. RQD	Rec. (ft)	Loss (ft)			Description	Sample No.	Physical Characteristics % Agg	% C.S.	% F.S.	% Silt	% Clay	L.L.	P.I.	W.C.	ODOT Class
762.7	0																
							Loose, very moist, brown, SANDY SILT, trace clay and hair roots										VIS.
		1/3/4	1.1	0.4				SS-1									VIS.
762.7						1.5'											
							Loose, moist, brown, SILTY SAND, some shale rock fragment, trace clay	SS-1								23	VIS.
					FS												
		1/50-2.5"	0.3	0.8				SS-2									VIS.
759.2						4.2'											
							CONCRETE	SS-2									VIS.
	5																
758.5						5.2'											
		21%	3.1	1.2			Soft to moderately hard, gray, completely weathered, SHALE	NX-3									VIS.
		72%	4.2	0.8			Soft to moderately hard, gray, moderately weathered, SHALE	NX-4									VIS.
	10																
757.5						14.5'											
							END OF BORING AT 14.5'										

ATB 90-1583
PID NO. - 25199

STRUCTURE FOUNDATION EXPLORATION
BRIDGE NO. ATB 90-1583
I-90 BRIDGE OVER ASHTABULA RIVER

DRAWN B.R.U.
CHECKED MK

State of Ohio
Department of Transportation
Office of Geotechnical Engineering

LOG OF BORING

Date Started 05/23/08 Sampler: Type SS Dia. ____ Project Identification: Palmer Engineering
Date Completed 05/24/08 Casing: Length ____ Dia. 3.25" I-90 Bridge, ATB 90-1583
Water Elev. 758.9ft Plymouth, Ohio, Ashtabula County
Boring No. B-005 Station & Offset I-90, STA 160+39.7, 40.4' RT Surface Elev. 762.4ft CTL Project No. 080500I0CLE

Elev. (ft)	Depth (ft)	Std. Pen. RQD	Rec. (ft)	Loss (ft)			Description	Sample No.	Physical Characteristics % Agg	% C.S.	% F.S.	% Silt	% Clay	L.L.	P.I.	W.C.	ODOT Class
762.4	0																
							Very loose, moist, brown, SANDY SILT, trace cinder and gravel										
		I/I/I	I.3	0.3				SS-I								I7	VIS.
761.4						I.5'											
							Loose, very moist to wet, brown, SANDY SILT, some shale rock fragment, trace clay	SS-I								I3	VIS.
		I/2/I8	I.3	0.3				SS-2								I5	VIS.
758.9						4.5'											
	5						Soft, gray, completely to highly weathered, SHALE	SS-2									VIS.
757.9						6.0'											
		50/2" 65%	0.I 4.8	0.I 0.0			Soft to moderately hard, gray, moderately to highly weathered, SHALE	SS-3 NX-4									VIS. VIS.
	I0																
		43%	4.3	0.7				NX-5									VIS.
	I5																
756.4						I6.0'											
							END OF BORING AT I6.0'										

State of Ohio
Department of Transportation
Office of Geotechnical Engineering

LOG OF BORING

Date Started 05/21/08 Sampler: Type SS Dia. ____ Project Identification: Palmer Engineering
Date Completed 05/22/08 Casing: Length ____ Dia. 3.25" I-90 Bridge, ATB 90-1583
Water Elev. 758.5ft Plymouth, Ohio, Ashtabula County
Boring No. B-006 Station & Offset I-90, STA 161+8.20, 40.9' LT Surface Elev. 763.5ft CTL Project No. 080500I0CLE

Elev. (ft)	Depth (ft)	Std. Pen. RQD	Rec. (ft)	Loss (ft)			Description	Sample No.	Physical Characteristics % Agg	% C.S.	% F.S.	% Silt	% Clay	L.L.	P.I.	W.C.	ODOT Class
763.5	0																
		I/0/I	0.8	0.8		1.5'	Very loose, moist, brown, SANDY SILT, trace clay and hair roots	SS-I								26	VIS.
763.5							Soft to medium hard, gray, completely to highly weathered, SHALE	SS-I									VIS.
		I/2/I	0.0	1.5				SS-2									VIS.
	5																
		50/6"	0.5	0.0				SS-3									VIS.
762.0						7.5'											
		30/0"	0.0	0.3				SS-4									VIS.
		66%	8.5	1.5			Soft to moderately hard, gray, moderately weathered, SHALE	NX-5									VIS.
	10																
	15																
755.7						17.8'											
							END OF BORING AT 17.8'										

ATB 90-1583
PID NO. - 25199

STRUCTURE FOUNDATION EXPLORATION
BRIDGE NO. ATB 90-1583
I-90 BRIDGE OVER ASHTABULA RIVER

DRAWN B.R.U.
CHECKED MK

State of Ohio
Department of Transportation
Office of Geotechnical Engineering

LOG OF BORING

Date Started 05/21/08 Sampler: Type SS Dia. ____ Project Identification: Palmer Engineering
Date Completed 05/21/08 Casing: Length ____ Dia. 3.25" I-90 Bridge, ATB 90-1583
Water Elev. 760.3ft Plymouth, Ohio, Ashtabula County
Boring No. B-007 Station & Offset I-90, STA 161+32.7, 72.9' RT Surface Elev. 762.3ft CTL Project No. 080500I0CLE

Elev. (ft)	Depth (ft)	Std. Pen. RQD	Rec. (ft)	Loss (ft)			Description	Sample No.	Physical Characteristics % Agg	% C.S.	% F.S.	% Silt	% Clay	L.L.	P.I.	W.C.	ODOT Class
762.3	0																
		2/2/2	0.5	1.0			Loose, very moist, brown, SANDY SILT, some shale rock fragment	SS-1								15	VIS.
761.3						3.0'											
		1/2/50-2"	1.0	0.5			Soft, wet, brown, SANDY CLAY, some shale rock fragment	SS-2								13	VIS.
758.8						4.6'											
	5						Soft to moderately hard, gray, highly to moderately weathered, SHALE	SS-2									VIS.
		35%	3.5	1.0				NX-3									VIS.
	10																
		67%	4.9	0.6				NX-4									VIS.
	15																
757.7						16.0'											
							END OF BORING AT 16.0'										

ATB 90-1583
PID NO. - 25199

STRUCTURE FOUNDATION EXPLORATION
BRIDGE NO. ATB 90-1583
I-90 BRIDGE OVER ASHTABULA RIVER

DRAWN B.R.U.
CHECKED MK

State of Ohio
Department of Transportation
Office of Geotechnical Engineering

LOG OF BORING

Date Started 05/27/08 Sampler: Type SS Dia. ____ Project Identification: Palmer Engineering
Date Completed 05/28/08 Casing: Length ____ Dia. 3.25" I-90 Bridge, ATB 90-1583
Water Elev. ft Plymouth, Ohio, Ashtabula County
Boring No. B-008 Station & Offset I-90, STA 161+90.2, 74.0' LT Surface Elev. 775.5ft CTL Project No. 080500I0CLE

Elev. (ft)	Depth (ft)	Std. Pen. RQD	Rec. (ft)	Loss (ft)			Description	Sample No.	Physical Characteristics % Agg	% C.S.	% F.S.	% Silt	% Clay	L.L.	P.I.	W.C.	ODOT Class
775.5	0	2/2/1	0.2	1.3		1.0'	Very loose, moist, black, SAND AND GRAVEL, trace plastic and cinders, (FILL)	SS-1									VIS.
	2							SS-1									VIS.
		3/3/3	0.5	1.0			Medium stiff, very moist, brown, SILT AND CLAY, little sand, trace gravel, (FILL)	SS-2								17	VIS.
	4																
774.5		1/0/0	0.4	1.1		5.0'	Very soft, very moist, brown, SILT AND CLAY, little sand, trace gravel, (FILL)	SS-3								17	VIS.
	6																
770.5						6.5'											
	8	5/5/7	1.1	0.4			Stiff to medium stiff, very moist, brown, SILT AND CLAY, little sand, trace gravel, (FILL)	SS-4								17	VIS.
	10																
	12																
		1/2/3	1.1	0.4				SS-5								18	VIS.
	14																
	16																
768.0						17.5'											
	18	50/2"	0.2	0.8			Soft to moderately hard, gray, slightly weathered, SHALE	SS-6									VIS.
		79%	10.0	0.0				NX-7									VIS.
	20																
	22																
	24																
	26																
	28																
758.0						28.5'											

END OF BORING AT 28.5'

State of Ohio
Department of Transportation
Office of Geotechnical Engineering

LOG OF BORING

Date Started 05/31/08 Sampler: Type SS Dia. ____ Project Identification: Palmer Engineering
Date Completed 05/31/08 Casing: Length ____ Dia. 3.25" I-90 Bridge, ATB 90-1583
Water Elev. ft Plymouth, Ohio, Ashtabula County
Boring No. B-009 Station & Offset I-90, STA 162+9.37, 40.6' RT Surface Elev. 776.1ft CTL Project No. 080500I0CLE

Elev. (ft)	Depth (ft)	Std. Pen. RQD	Rec. (ft)	Loss (ft)			Description	Sample No.	Physical Characteristics % Agg	% C.S.	% F.S.	% Silt	% Clay	L.L.	P.I.	W.C.	ODOT Class
776.1	0	2/5/5	0.4	1.1			Stiff to medium stiff, very moist to wet, brown with trace gray, SILTY CLAY, little gravel, trace sand, gravel seams, (FILL)	SS-1								15	VIS.
		6/5/2	0.5	1.0				SS-2								10	VIS.
776.1						4.0'											
	5	1/2/2	0.8	0.7			Soft, very moist to wet, brown, SILT AND CLAY, little sand, trace rock fragment, (FILL)	SS-3								19	VIS.
		1/2/2	0.8	0.7				SS-4	7	6	9	41	37	31	13	18	A-6a
	10	2/2/2	1.3	0.3				SS-5								21	VIS.
771.1						12.5'											
		5/4/4	1.1	0.4			Medium stiff, very moist, gray, SANDY CLAY, some silt and shale rock fragment, (POSSIBLE FILL)	SS-6								12	VIS.
763.6	15					15.0'											
		50/3" 55%	0.3 4.7	0.0 0.3			Soft to moderately hard, gray, moderately weathered, SHALE	SS-7 NX-8									VIS. VIS.
761.1	20					20.3'											
							END OF BORING AT 20.25'										

ATB 90-1583
PID NO. - 25199

STRUCTURE FOUNDATION EXPLORATION
BRIDGE NO. ATB 90-1583
I-90 BRIDGE OVER ASHTABULA RIVER

DRAWN B.R.U.
CHECKED MK

State of Ohio
Department of Transportation
Office of Geotechnical Engineering

LOG OF BORING

Date Started 04/25/08 Sampler: Type SS Dia. ____ Project Identification: Palmer Engineering
Date Completed 04/30/08 Casing: Length ____ Dia. 3.25" I-90 Bridge, ATB 90-1583
Water Elev. 761.7ft Plymouth, Ohio, Ashtabula County
Boring No. B-010 Station & Offset I-90, STA 162+69.8, 29.1' LT Surface Elev. 810.2ft CTL Project No. 080500I0CLE

Elev. (ft)	Depth (ft)	Std. Pen. RQD	Rec. (ft)	Loss (ft)			Description	Sample No.	Physical Characteristics % Agg	% C.S.	% F.S.	% Silt	% Clay	L.L.	P.I.	W.C.	ODOT Class
810.2	0																
	2																
	4	2/2/4	1.1	0.4			Medium stiff, moist, brown, SILT AND CLAY, little sand, trace gravel and rock fragment, (FILL)	SS-1								19	VIS.
	6																
	8																
	10	2/3/3	1.5	0.0				SS-2								18	VIS.
	12																
806.7						13.0'											
	14	3/4/6	1.1	0.4			Stiff, moist, gray, SILT AND CLAY, trace sand and grave, slightly varved, (FILL)	SS-3								13	VIS.
	16																
796.7						17.0'											
	18																
	20	4/4/6	1.3	0.2			Stiff, moist, brown with occasional gray, SILT AND CLAY, little to trace sand, trace gravel and rock fragment, (FILL)	SS-4								14	VIS.
	22	4/6/8	1.3	0.2				SS-5								13	VIS.
	24	4/6/8	1.5	0.0				SS-6								14	VIS.
	26	2/4/9	1.3	0.2				SS-7								16	VIS.
	28	4/6/6	1.2	0.3				SS-8								15	VIS.
	30	4/6/8	1.5	0.0				SS-9								15	VIS.
	32	6/7/7	1.3	0.3				SS-10								14	VIS.
	34	4/6/6	1.3	0.3			Stiff, moist, brown with occasional gray, SILT AND CLAY, little to trace sand, trace gravel and rock fragment, (FILL)	SS-11								16	VIS.
	36	4/6/6	1.5	0.0				SS-12								15	VIS.
	38																
791.7	40					41.0'											
	42																
	44	4/5/8	1.1	0.4			Stiff, very moist, brown, SILT AND CLAY, some shale rock fragment, little sand, trace wood chip, (FILL)	SS-13	24	12	5	31	28	33	13	14	A-6a
766.7	46					46.5'											
	48																
	50	32-50/0.5"	1.0	0.5			Soft to moderately hard, gray, moderately weathered, SHALE	SS-14									VIS.
	52	60% 3.13 ksi	9.5	0.5				NX-15									VIS.
	54																
	56																
	58																
761.7	60					60.5'											
							END OF BORING AT 60.5'										

PROJECT DESCRIPTION

HISTORIC RECORDS

GEOLOGY

RECONNAISSANCE

SUBSURFACE EXPLORATION

EXPLORATION FINDINGS

SPECIFICATIONS

THIS GEOTECHNICAL EXPLORATION WAS PERFORMED IN ACCORDANCE WITH THE STATE OF OHIO, DEPARTMENT OF TRANSPORTATION, OFFICE OF GEOTECHNICAL ENGINEERING, SPECIFICATIONS FOR GEOTECHNICAL EXPLORATIONS, DATED JANUARY 2007.

AVAILABLE INFORMATION

ALL AVAILABLE SOIL AND BEDROCK INFORMATION THAT CAN BE CONVENIENTLY SHOWN ON THE GEOTECHNICAL EXPLORATION SHEETS HAS BEEN SO REPORTED. ADDITIONAL EXPLORATIONS MAY HAVE BEEN MADE TO STUDY SOME SPECIAL ASPECT OF THE PROJECT. COPIES OF THIS DATA, IF ANY, MAY BE INSPECTED IN THE DISTRICT DEPUTY DIRECTOR'S OFFICE, THE OFFICE OF GEOTECHNICAL ENGINEERING AT 1600 WEST BROAD STREET OR THE OFFICE OF STRUCTURAL ENGINEERING AT 1980 WEST BROAD STREET.

INDEX OF SHEETS

LOCATION FROM STA.	TO STA.	PLAN VIEW SHEET	PROFILE SHEET	CROSS-SECTION SHEET	CUT MAX.	FILL EMB. MAX.
					YDS	YDS
					YDS YDS	YDS YDS
					YDS YDS YDS	YDS YDS YDS

LEGEND

	DESCRIPTION	ODOT CLASS	CLASSIFIED MECH./VISUAL
	(SOIL)		
		TOTAL	
	(ROCK)		
	PAVEMENT OR BASE = X = APPROXIMATE THICKNESS		*VISUAL*
	SOD AND TOPSOIL = X = APPROXIMATE THICKNESS		*VISUAL*
	BORING LOCATION - PLAN VIEW		
	DRIVE SAMPLE AND/OR ROCK CORE BORING PLOTTED TO VERTICAL SCALE ONLY. HORIZONTAL BAR INDICATES A CHANGE IN STRATIGRAPHY.		
WC	INDICATES WATER CONTENT IN PERCENT.		
N_{60}	INDICATES STANDARD PENETRATION RESISTANCE NORMALIZED TO 60% DRILL ROD ENERGY RATIO.		
X/Y/Z	NUMBER OF BLOWS FOR STANDARD PENETRATION TEST X= NUMBER OF BLOWS FOR FIRST 6 INCHES Y= NUMBER OF BLOWS FOR SECOND 6 INCHES Z= NUMBER OF BLOWS FOR THIRD 6 INCHES		
W	INDICATES FREE WATER ELEVATION.		
●	INDICATES A PLASTIC MATERIAL WITH A MOISTURE CONTENT EQUAL TO OR GREATER THAN THE LIQUID LIMIT MINUS 3.		
⊖	INDICATES A NON-PLASTIC MATERIAL WITH A MOISTURE CONTENT GREATER THAN 25 % OR GREATER THAN 19 % WITH A WET APPEARANCE.		
*	INDICATES A SAMPLE TAKEN WITHIN 3 FT OF PROPOSED GRADE.		
NP	INDICATES A NON-PLASTIC SAMPLE.		

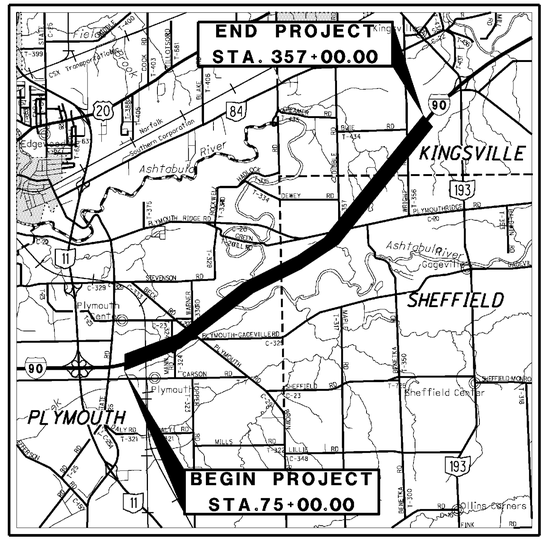

LOCATION MAP

SCALE IN MILES

0 1 2 3 4

N

PARTICLE SIZE DEFINITIONS

12"	3"	2.0 mm	0.42 mm	0.074 mm	0.005 mm
BOULDERS	COBBLES	GRAVEL	COARSE SAND	FINE SAND	SILT	CLAY
		No. 10 SIEVE	No. 40 SIEVE	No. 200 SIEVE		

SUMMARY OF SOIL TEST DATA

STATION & OFFSET	FROM	TO	SAMPLE TYPE	% REC	% AGG	% CS	% FS	% SILT	% CLAY	LL	PL	PI	% WC	OHIO CLASS

RECON. -
DRILLING -
DRAWN -
REVIEWED -

DESIGN AGENCY

PID NO.

ATB-90-14.25

C:\ODOT\ATB\25199\subsurface\sheets\25199C001.dgn 6/6/2009 9:55:49 AM DENNIS

P.I. STA. 96+36.34
Δ = 42° 57' 11" (LT)
Dc = 0° 28' 00"
R = 12,277.67'
T = 4,830.48'
L = 9,204.21'
E = 916.07'

6" HP GAS

Ex LA-R/W

STATE ROAD

EXIST. 36" CONC.

℄ CONSTRUCTION I-90

59 60 61 62 63 64 65 66 67 68 69 70 71 72

EXIST. 15" CMP

+64 ℄ CROSSOVER

EXIST. 15" CONC.

EXIST. 15" CONC.

MATCH LINE STA. 72+50

BEGIN WORK
STA 62+00

880
870
860
850
840
830
820

60+00 61+00 62+00 63+00 64+00 65+00 66+00 67+00 68+00 69+00 70+00 71+00 72+00

0:\000T\ATB\25199\subsurface\sheets\25199IP001.dgn 6/6/2009 9:56:02 AM DENNIS

HORIZONTAL SCALE IN FEET
0 25 50 100

CALCULATED
CHECKED

SOIL PROFILE
IR 90 STA. 59+00 TO STA. 72+50

ATB-90-14.25

2 / 26

STA. 75+00
BEGIN PROJECT
E032101

P.I. STA. 96+36.34
Δ = 42° 57' 11" (LT)
Dc = 0° 28' 00"
R = 12,277.67'
T = 4,830.48'
L = 9,204.21'
E = 916.07'
S.E. = 0.018

Ex LA-R/W

MATCH LINE STA. 72+50

MATCH LINE STA. 85+00

WS-24

WD-23

ES-01

ED-01

Ex CH

NOTE EASTBOUND SOIL PROFILES PLOTTED 10 FEET ABOVE ACTUAL ELEVATION FOR CLARIFICAION

ES-01
5/6/6 — 4
6/5/5 — 4
3/5/8

WS-24
12/18/10 — 4
6/5/4 — 3
3/3/3

ED-01
8/9/9 — 12
10/10/10 — 12
13/10/12

WD-23
11/10/11 — 15
4/6/8 — 6
3/1/1

HORIZONTAL SCALE IN FEET
0 25 50 100

CALCULATED
CHECKED

SOIL_PROFILE_____
I-90 STA. 72+50 TO STA. 85+00

ATB-90-14.25

3 / 26

O:\ODOT\ATB\25199\subsurface\sheets\25199IP002.dgn 6/6/2009 9:56:05 AM DENNIS

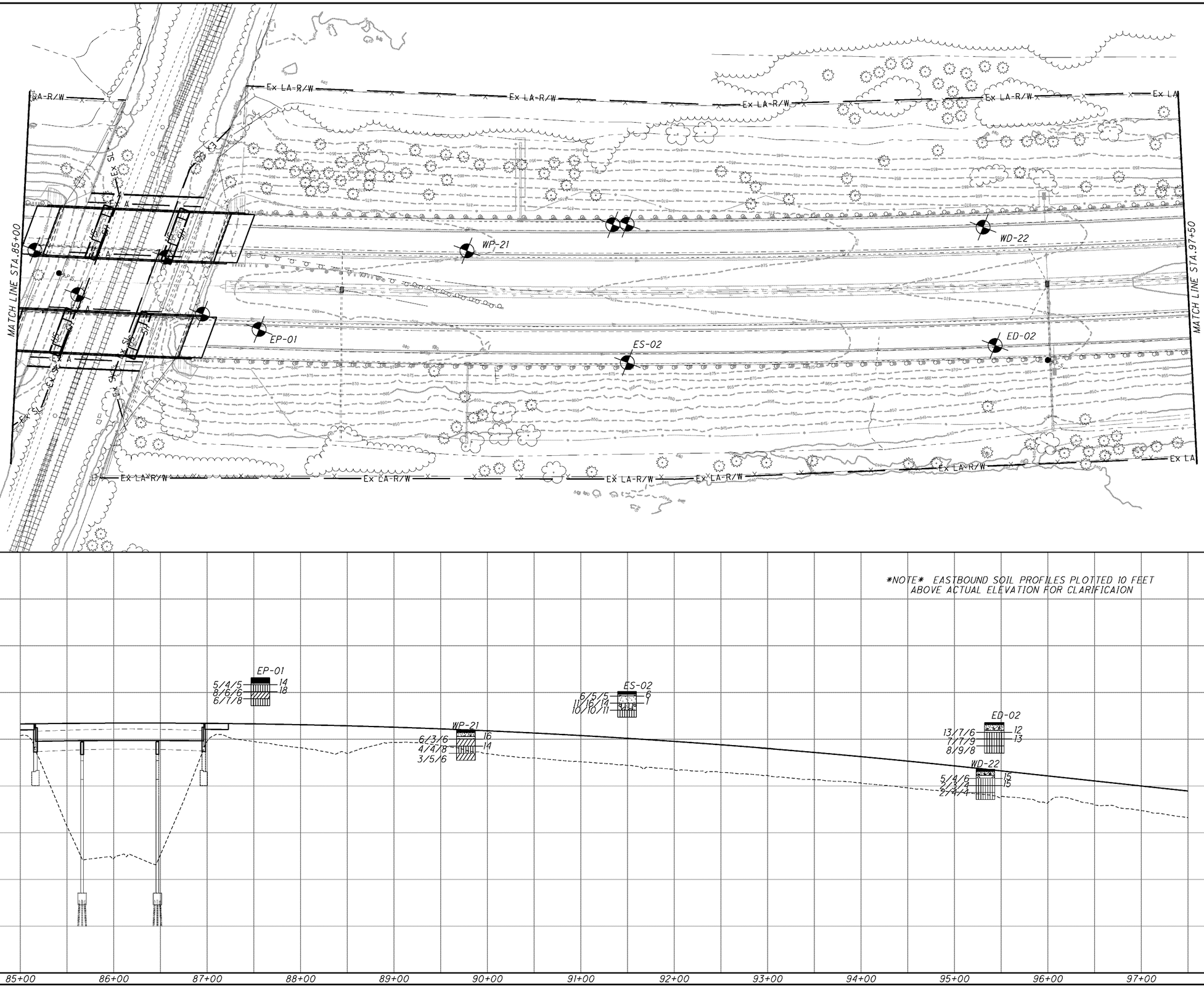

HORIZONTAL SCALE IN FEET
0 25 50 100

CALCULATED | CHECKED

SOIL PROFILE
IR 90 STA. 85+00 TO STA. 97+50

ATB-90-14.25

4 / 26

O:\ODOT\ATB\25199\subsurface\sheets\25199P003.dgn 6/6/2009 9:56:11 AM DENNIS

P.I. STA. 96+36.34
Δ = 42° 57' 11" (LT)
Dc = 0° 28' 00"
R = 12,277.67'
T = 4,830.48'
L = 9,204.21'
E = 916.07'
S.E. = 0.018

R/W Ex LA-R/W Ex LA-R/W Ex LA-R/W Ex LA-R/W Ex LA-R/W Ex LA-R/W Ex LA-R/W

MATCH LINE STA. 97+50

MATCH LINE STA. 110+00

WP-20 WS-23 EP-02 ES-03 ED-03

99 100 101 102 103 104 105 106 107 108 109

R/W Ex LA-R/W Ex LA-R/W Ex LA-R/W Ex LA-R/W Ex LA-R/W Ex LA-R/W

NOTE EASTBOUND SOIL PROFILES PLOTTED 10 FEET ABOVE ACTUAL ELEVATION FOR CLARIFICAION

EP-02
6/7/9 — 14
6/9/12 — 13
12/18/21

WP-20
3/4/6 — 16
3/5/4 — 16
4/5/7

ES-03
6/8/9 — 9
6/8/10 — 9
7/9/13

WS-23
9/4/3 — 7
9/3/5 — 16
10/4/4

ED-03
3/4/4 — 14
5/3/8 — 11
3/10/10

WD-21
2/1/3 — 18
1/6/7 — 17
3/5/8

880 870 860 850 840 830 820

98+00 99+00 100+00 101+00 102+00 103+00 104+00 105+00 106+00 107+00 108+00 109+00 110+00

HORIZONTAL SCALE IN FEET
0 25 50 100

CALCULATED
CHECKED

SOIL PROFILE
IR-90 STA. 97+50 TO STA. 110+00

ATB-90-14.25

5 / 26

O:\ODOT\ATB\25199\subsurface\sheets\25199IP004.dgn 6/6/2009 9:56:18 AM DENNIS

P.I. STA. 96+36.34
Δ = 42° 57' 11" (LT)
Dc = 0° 28' 00"
R = 12,277.67'
T = 4,830.48'
L = 9,204.21'
E = 916.07'
S.E. = 0.018

Ex LA-R/W

MATCH LINE STA.110+00

MATCH LINE STA.122+50

111 112 113 114 115 116 117 118 119 120 121 122

WS-22 WD-20 EP-03 ES-04 ED-04

Ex R/W

NOTE EASTBOUND SOIL PROFILES PLOTTED 10 FEET ABOVE ACTUAL ELEVATION FOR CLARIFICAION

EP-03
8/8/10 — 14
11/12/15 — 14
14/11/11

ES-04
9/8/9 — 3
14/15/10 — 5
6/5/4

WS-22
6/6/7 — 9
5/6/7 — 7
7/8/10

WD-20
5/6/6 — 22
5/5/8 — 22
4/4/6

ED-04
10/13/12 — 12
7/9/10 — 13
7/15/15

860 850 840 830 820 810 800

110+00 111+00 112+00 113+00 114+00 115+00 116+00 117+00 118+00 119+00 120+00 121+00 122+00

HORIZONTAL SCALE IN FEET
0 25 50 100

CALCULATED | CHECKED

SOIL PROFILE
IR-90 STA. 110+00 TO STA. 122+50

ATB-90-14.25

6 / 26

O:\ODOT\ATB\25199\subsurface\sheets\25199P005.dgn 6/6/2009 9:56:23 AM DENNIS

P.I. STA. 96+36.34
Δ = 42° 57' 11" (LT)
Dc = 0° 28' 00"
R = 12,277.67'
T = 4,830.48'
L = 9,204.21'
E = 916.07'
S.E. = 0.018

MATCH LINE STA.122+50

MATCH LINE STA.135+00

PLYMOUTH ROAD

WS-21

WD-19

EP-04

ES-05

ED-05

NOTE EASTBOUND SOIL PROFILES PLOTTED 10 FEET ABOVE ACTUAL ELEVATION FOR CLARIFICAION

EP-04: 14/12/11 — 12; 8/10/13 — 13; 14/15/13

ES-05: 10/11/10 — 3; 7/7/6 — 6; 8/6/9

WS-21: 9/10/10 — 5; 7/5/4 — 7; 4/4/4

ED-05: 4/4/6 — 20; 3/5/9 — 16; 3/5/5

WD-19: 4/5/7 — 18; 7/7/5 — 18; 7/5/8

2/4/8; 3/3/7; 3/9/10; 3/2/3; 4/3/4; 4/4/4

860 850 840 830 820 810 800

123+00 124+00 125+00 126+00 127+00 128+00 129+00 130+00 131+00 132+00 133+00 134+00 135+00

HORIZONTAL SCALE IN FEET
0 25 50 100

CALCULATED

CHECKED

SOIL PROFILE
IR 90 STA. 112+50 TO STA. 135+00

ATB-90-14.25

7 / 26

O:\ODOT\ATB\25199\subsurface\sheets\25199IP006.dgn 6/6/2009 9:56:28 AM DENNIS

P.I. STA. 96+36.34
Δ = 42° 57' 11" (LT)
Dc = 0° 28' 00"
R = 12,277.67'
T = 4,830.48'
L = 9,204.21'
E = 916.07'
S.E. = 0.018

Ex LA-R/W
Ex CH
MATCH LINE STA.135+00
MATCH LINE STA.151+00
WP-19
WS-18
WD-18
WP-18
EP-05
ES-06
ED-06
EP-06
136
137
138
139
140
144
145
146
147
148
149
150

NOTE EASTBOUND SOIL PROFILES PLOTTED 10 FEET ABOVE ACTUAL ELEVATION FOR CLARIFICAION

850
840
830
820
810
800
790

135+00 136+00 137+00 138+00 139+00 140+00 144+00 145+00 146+00 147+00 148+00 149+00 150+00 151+00

HORIZONTAL SCALE IN FEET
0 25 50 100
CALCULATED
CHECKED

SOIL PROFILE
IR 90 STA. 135+00 TO STA. 151+00

ATB-90-14.25

8 / 26

C:\ODOT\ATB\25199\subsurface\sheets\25199IP007.dgn 6/6/2009 9:56:33 AM DENNIS

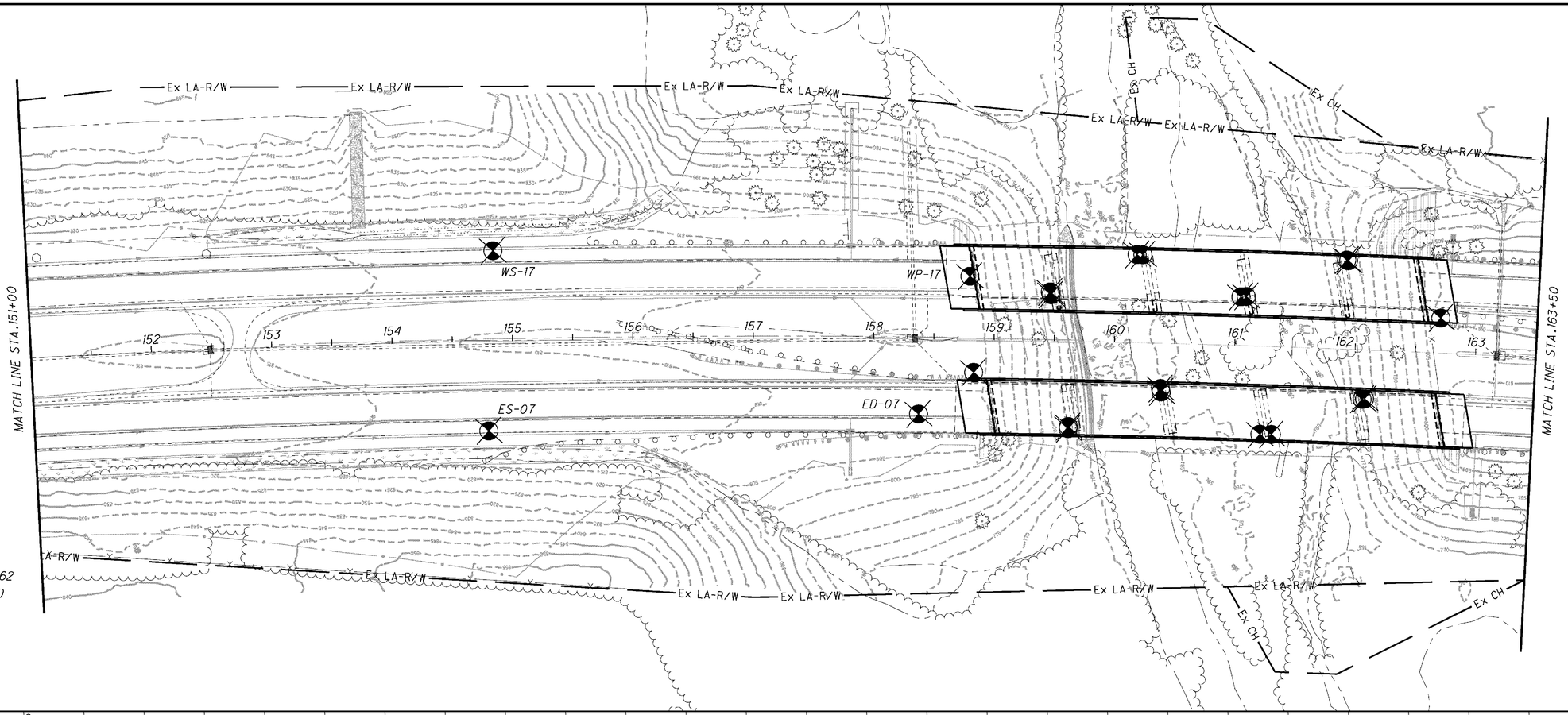

P.I. STA. 170+68.62
Δ= 18° 37' 55" (RT)
Dc = 0° 28' 00"
R = 12,277.67'
T = 2,014.07'
L = 3,992.59'
E = 164.10'
S.E. = 0.018

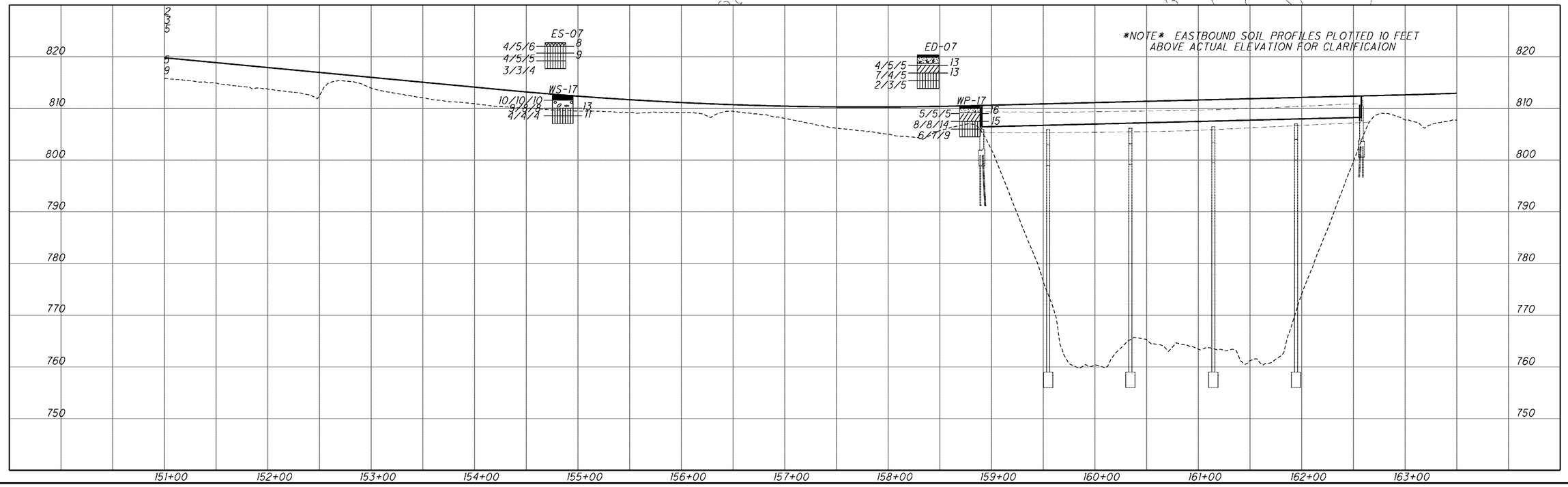

HORIZONTAL SCALE IN FEET
0 25 50 100
CALCULATED
CHECKED

SOIL PROFILE
IR 90 STA. 151+00 TO STA. 163+50

ATB-90-14.25

9 / 26

O:\ODOT\ATB\25199\subsurface\sheets\25199IP008.dgn 6/6/2009 9:56:37 AM DENNIS

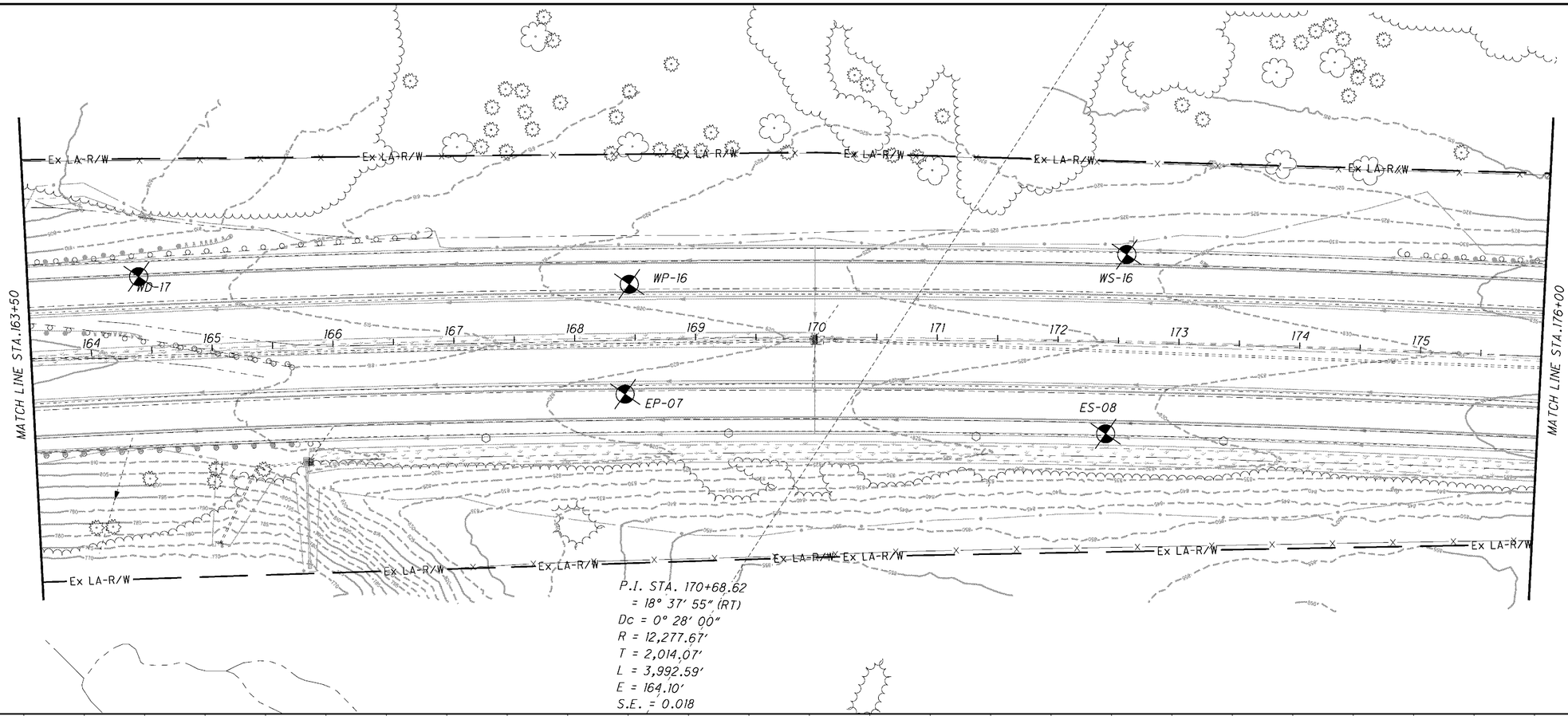

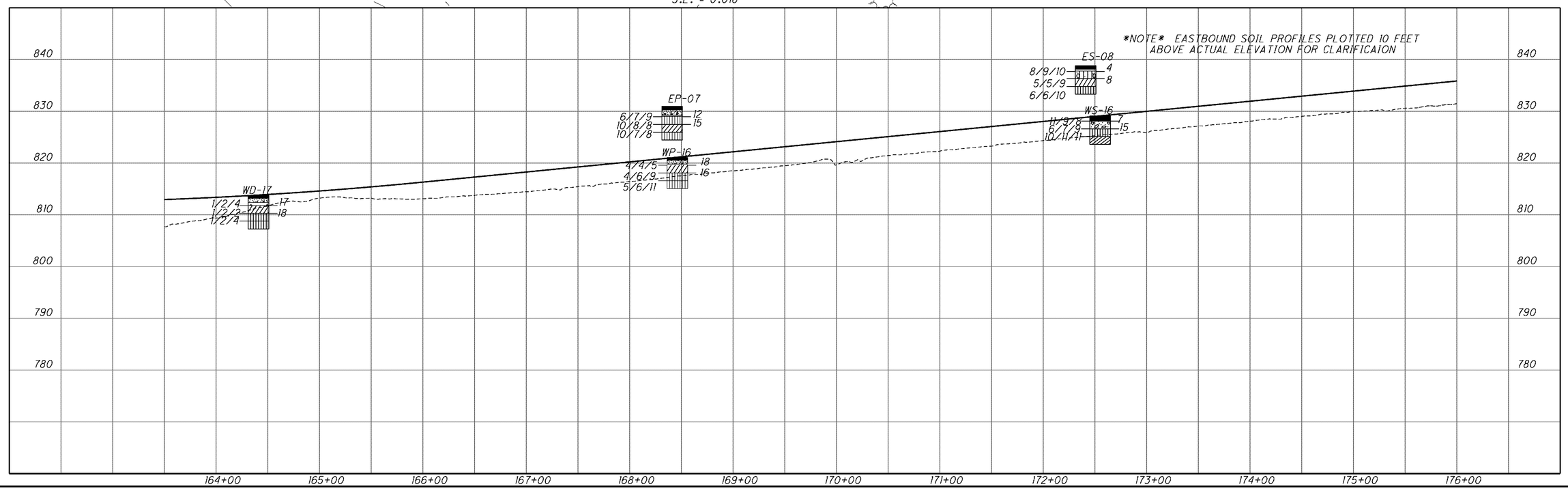

HORIZONTAL SCALE IN FEET
0
100

CALCULATED
CHECKED

SOIL PROFILE
IR 90 STA. 163+50 TO STA. 176+00

ATB-90-14.25

10 / 26

0:\ODOT\ATB\25199\subsurface\sheets\25199P009.dgn 6/6/2009 9:56:44 AM DENNIS

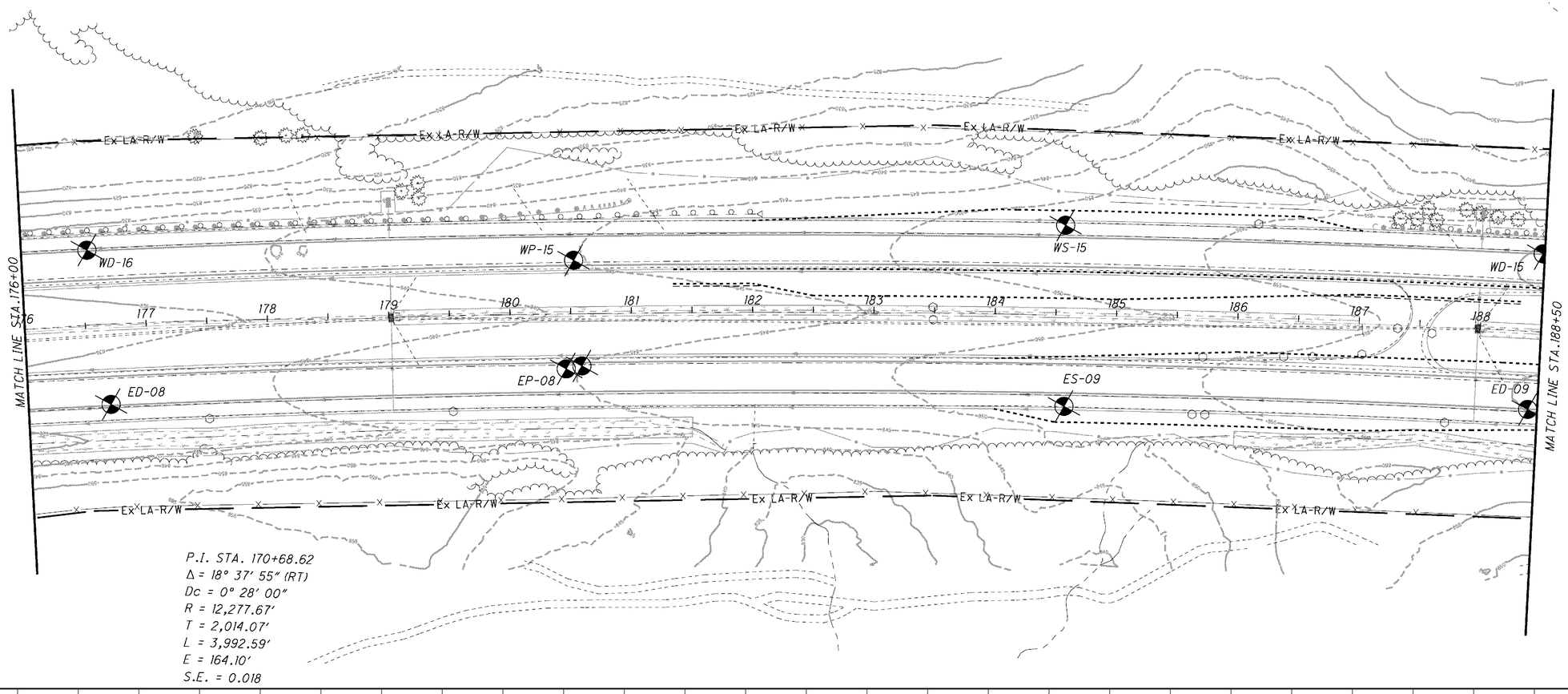

HORIZONTAL SCALE IN FEET
0 25 50 100

CALCULATED

CHECKED

SOIL PROFILE
IR 90 STA. 176+00 TO STA. 188+50

ATB-90-14.25

11 / 26

O:\ODOT\ATB\25199\subsurface\sheets\25199IP010.dgn 6/6/2009 9:56:49 AM DENNIS

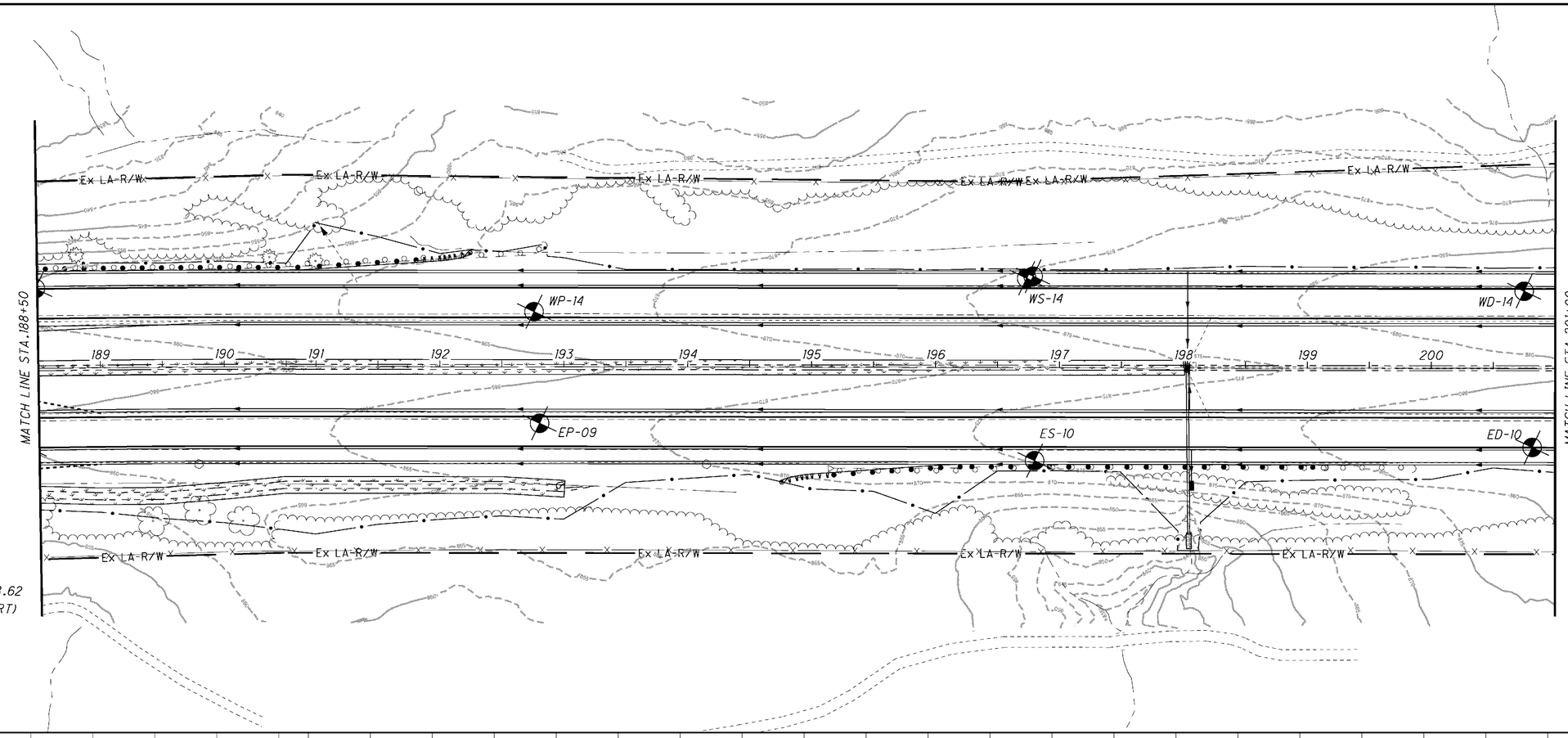

P.I. STA. 170+68.62
= 18° 37′ 55″ (RT)
Dc = 0° 28′ 00″
R = 12,277.67′
T = 2,014.07′
L = 3,992.59′
E = 164.10′
S.E. = 0.018

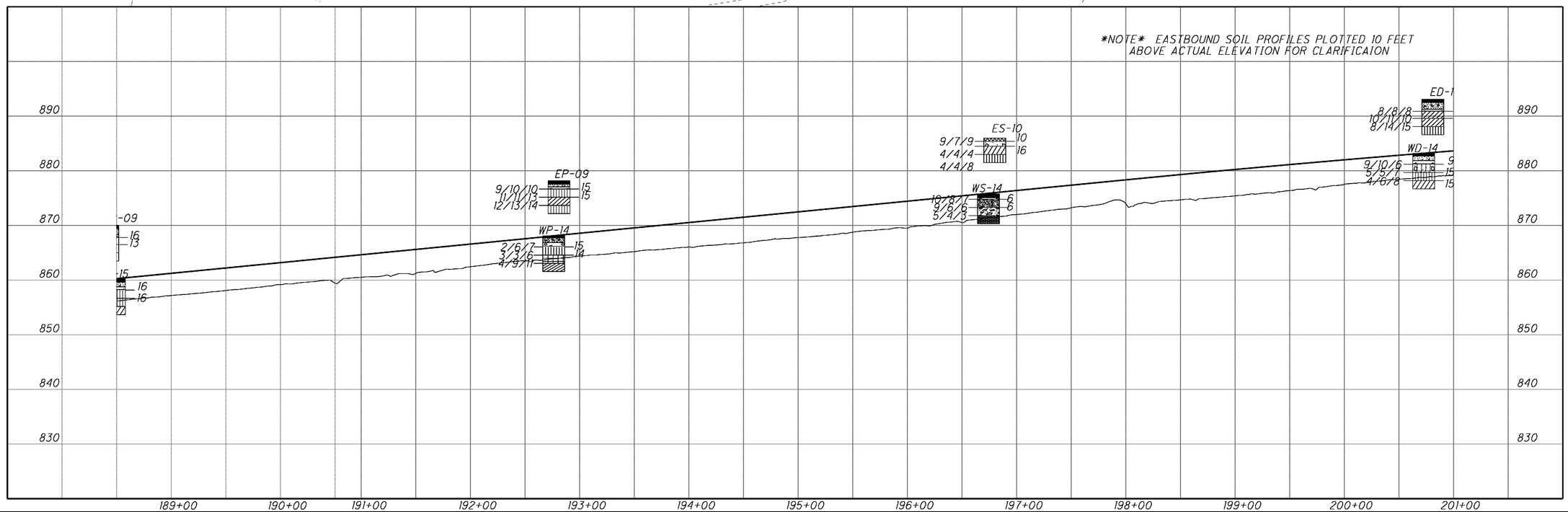

HORIZONTAL SCALE IN FEET
0 25 50 100

CALCULATED | CHECKED

SOIL PROFILE
IR 90 STA. 188+50 TO STA. 201+00

ATB-90-14.25

12 / 26

O:\ODOT\ATB\25199\subsurface\sheets\25199P011.dgn 6/6/2009 9:56:54 AM DENNIS

P.I. STA. 238+56.18
= 27° 31' 35" (LT)
Dc = 0° 28' 00"
R = 12,277.67'
T = 3,007.34'
L = 5,898.54'
E = 362.95'
S.E. = 0.018

Ex LA-R/W

MATCH LINE STA.201+00

MATCH LINE STA.213+50

WP-13

WS-13

WD-13

EP-10E

ES-11

ED-11

202 203 204 205 206 207 208 209 210 211 212 213

NOTE EASTBOUND SOIL PROFILES PLOTTED 10 FEET ABOVE ACTUAL ELEVATION FOR CLARIFICAION

910 900 890 880 870 860 850

201+00 202+00 203+00 204+00 205+00 206+00 207+00 208+00 209+00 210+00 211+00 212+00 213+00

HORIZONTAL SCALE IN FEET
0 25 50 100

CALCULATED

CHECKED

SOIL PROFILE
IR 90 STA. 201+00 TO STA. 213+50

ATB-90-14.25

13 / 26

O:\ODOT\ATB\25199\subsurface\sheets\25199IP012.dgn 6/6/2009 9:56:58 AM DENNIS

P.I. STA. 238+56.16
= 27° 31' 35" (LT)
Dc = 0° 28' 00"
R = 12,277.67'
T = 3,007.34'
L = 5,898.54'
E = 362.95'
S.E. = 0.018

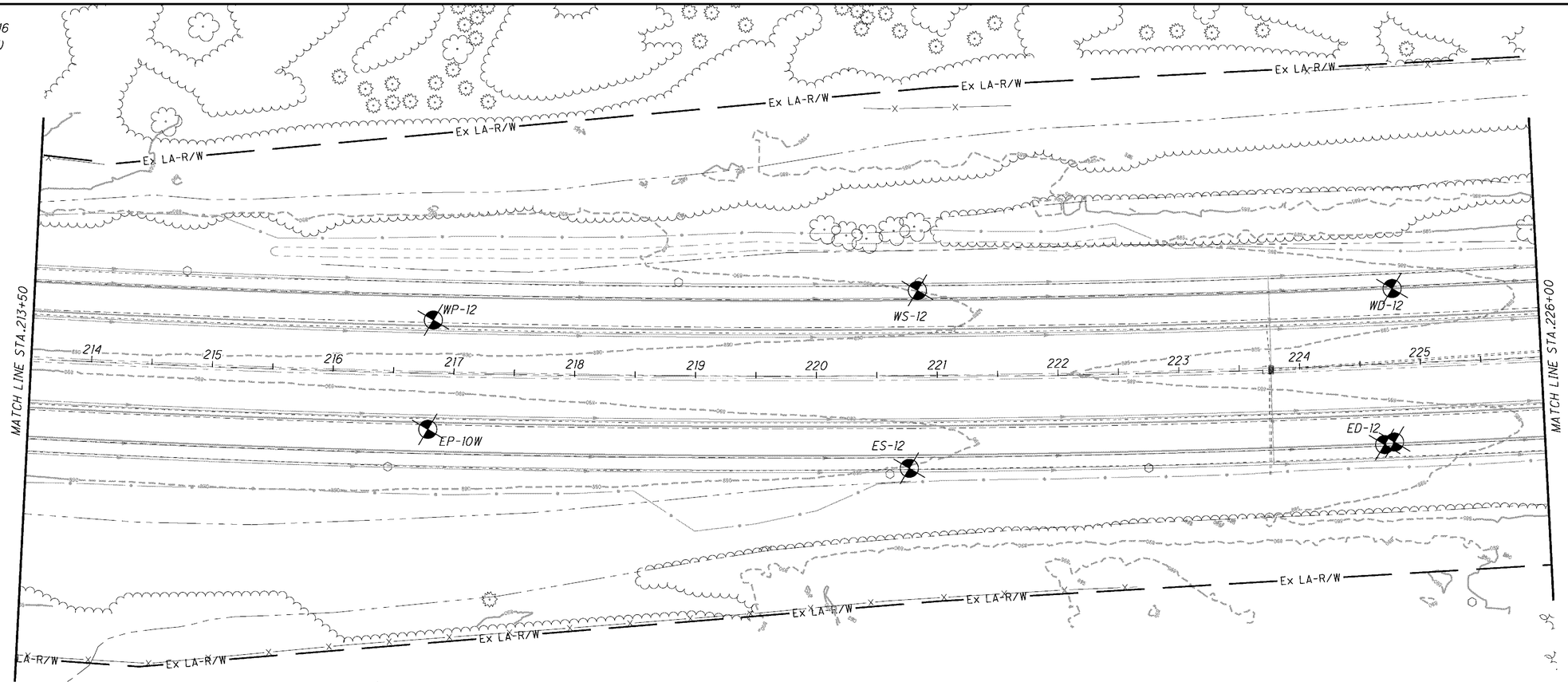

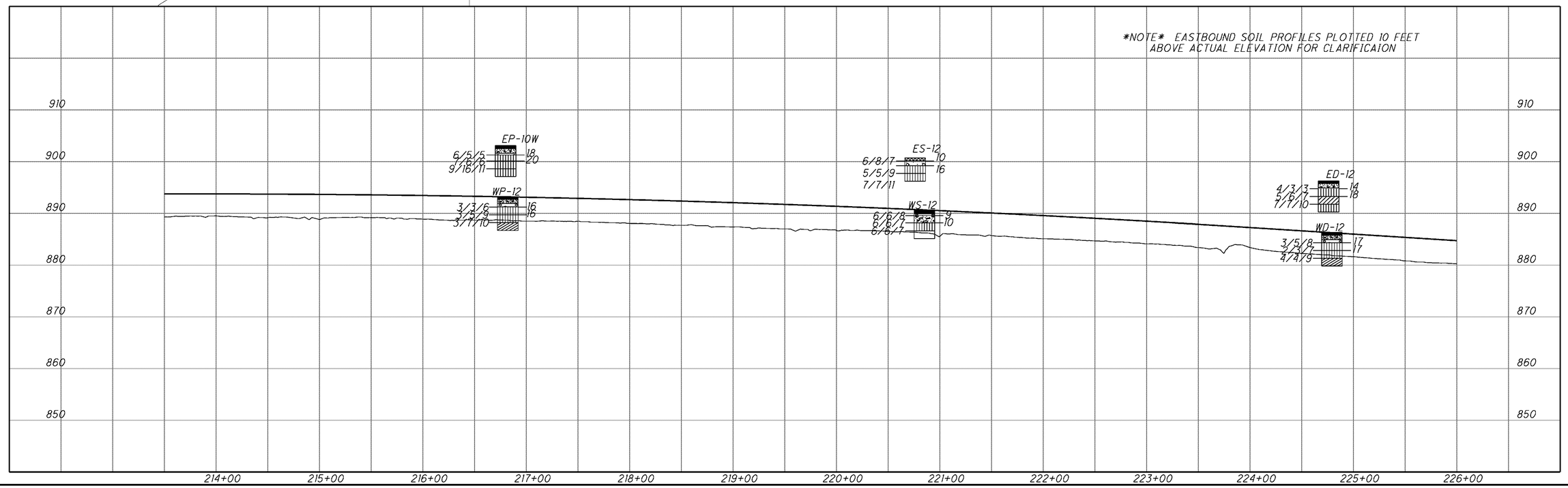

HORIZONTAL SCALE IN FEET
0 25 50 100
CALCULATED
CHECKED

SOIL PROFILE
IR 90 STA. 213+50 TO STA. 226+00

ATB-90-14.25

14 / 26

0:\ODOT\ATB\25199\subsurface\sheets\25199IP013.dgn 6/6/2009 9:57:02 AM DENNIS

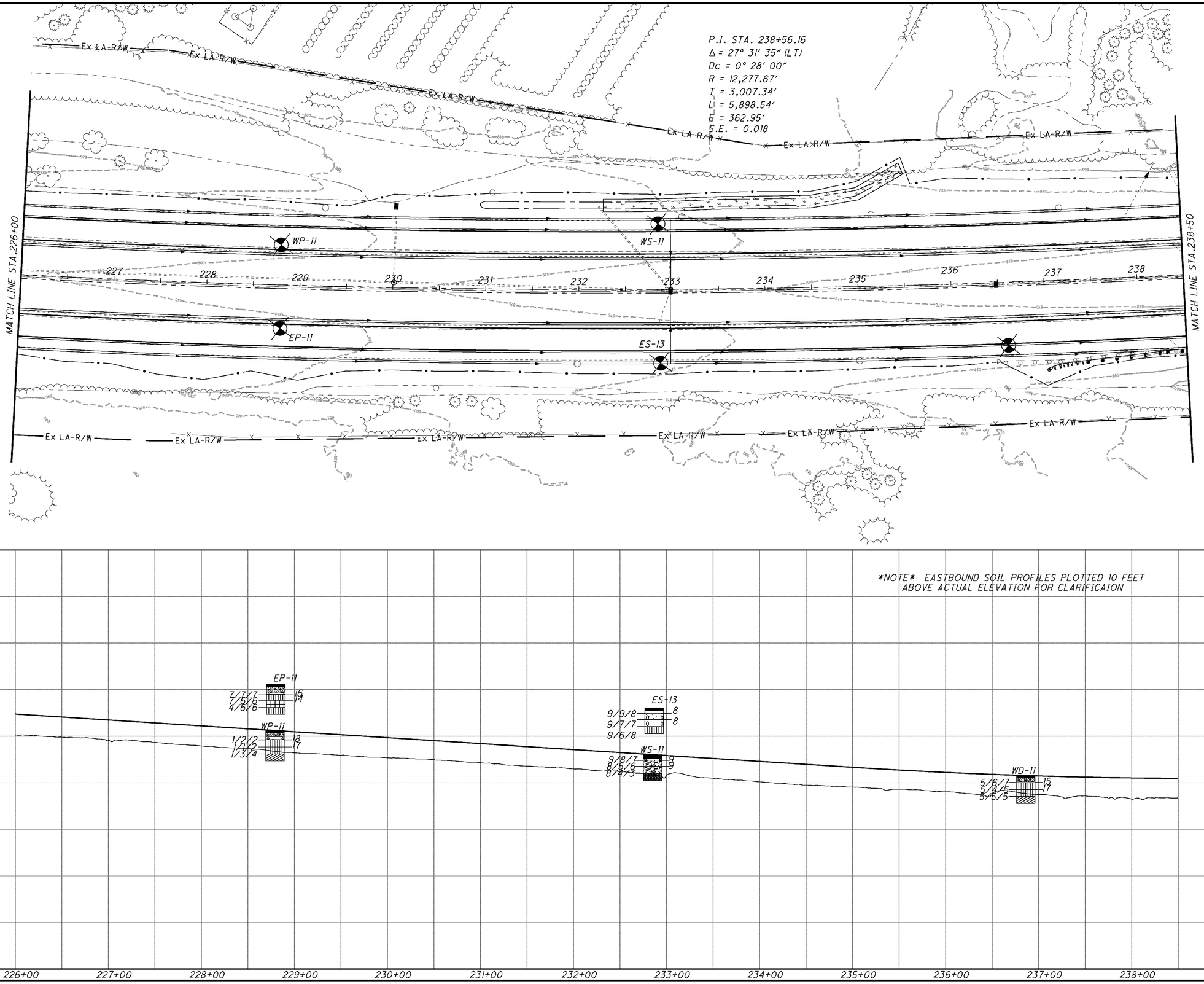

HORIZONTAL SCALE IN FEET
0 25 50 100

CALCULATED | CHECKED

SOIL PROFILE
IR 90 STA. 226+00 TO STA. 238+50

ATB-90-14.25

15 / 26

O:\ODOT\ATB\25199\subsurface\sheets\25199IP014.dgn 6/6/2009 9:57:06 AM DENNIS

P.I. STA. 238+56.16
Δ = 27° 31' 35" (LT)
Dc = 0° 28' 00"
R = 12,277.67'
T = 3,007.34'
L = 5,898.54'
E = 362.95'
S.E. = 0.018

Ex LA-R/W

MATCH LINE STA.238+50

MATCH LINE STA.251+00

WP-10 WS-10 WD-10

EP-12 ES-14 ED-14

239 240 241 242 243 244 245 246 247 248 249 250

NOTE EASTBOUND SOIL PROFILES PLOTTED 10 FEET ABOVE ACTUAL ELEVATION FOR CLARIFICAION

EP-12
5/5/7 — 16
5/5/5 — 16
4/5/6 — 18

WP-10
2/3/5 — 48
3/2/4 — 16
2/5/6

ES-14
6/4/4 — 13
4/7/9 — 15
4/8/10

WS-10
7/1/1 — 11
6/5/6 — 15
3/3/3

ED-14
6/6/8 — 8
8/10/11 — 16
10/11/17

WD-10
6/7/8 — 11
8/8/10 — 17
8/10/12

900 890 880 870 860 850 840

239+00 240+00 241+00 242+00 243+00 244+00 245+00 246+00 247+00 248+00 249+00 250+00 251+00

HORIZONTAL SCALE IN FEET
0 25 50 100

CALCULATED
CHECKED

SOIL PROFILE
IR 90 STA. 238+50 TO STA. 251+00

ATB-90-14.25

16 / 26

O:\ODOT\ATB\25199\subsurface\sheets\25199IP015.dgn 6/6/2009 9:57:10 AM DENNIS

DIBBLE ROAD

PLYMOUTH RIDGE ROAD

EX R/W

EX LA-R/W

P.I. STA. 238+56.16
Δ = 27° 31' 35" (LT)
Dc = 0° 28' 00"
R = 12,277.67'
T = 3,007.34'
L = 5,898.54'
E = 362.95'
S.E. = 0.018

MATCH LINE STA.251+00

MATCH LINE STA.263+50

WP-09

WS-09

WD-09

EP-14

ED-15

252 253 254 255 256 257 258 259 260 261 262 263

NOTE EASTBOUND SOIL PROFILES PLOTTED 10 FEET ABOVE ACTUAL ELEVATION FOR CLARIFICAION

EP-14
8/7/7 — 14
9/10/11 — 15
14/14/16

WP-09
2/5/7 — 17
2/5/8 — 16
3/5/6

ES-15
6/6/5 — 8
7/7/10 — 14
8/8/11

WS-09
10/9/9 — 8
8/9/10 — 11
5/6/9

ED-15
5/11/5 — 19
3/3/6 — 18
4/5/8 — 18

WD-09
1/3/6 — 17
2/5/7 — 17
3/5/5

900 890 880 870 860 850 840

251+00 252+00 253+00 254+00 255+00 256+00 257+00 258+00 259+00 260+00 261+00 262+00 263+00

HORIZONTAL SCALE IN FEET
0 25 50 100

CALCULATED

CHECKED

SOIL PROFILE
IR 90 STA. 251+00 TO STA. 263+50

ATB-90-14.25

17 / 26

0:\ODOT\ATB\25199\subsurface\sheets\25199IP016.dgn 6/6/2009 9:57:14 AM DENNIS

P.I. STA. 238+56.16
Δ = 27° 31' 35" (LT)
Dc = 0° 28' 00"
R = 12,277.67'
T = 3,007.34'
L = 5,898.54'
E = 362.95'
S.E. = 0.018

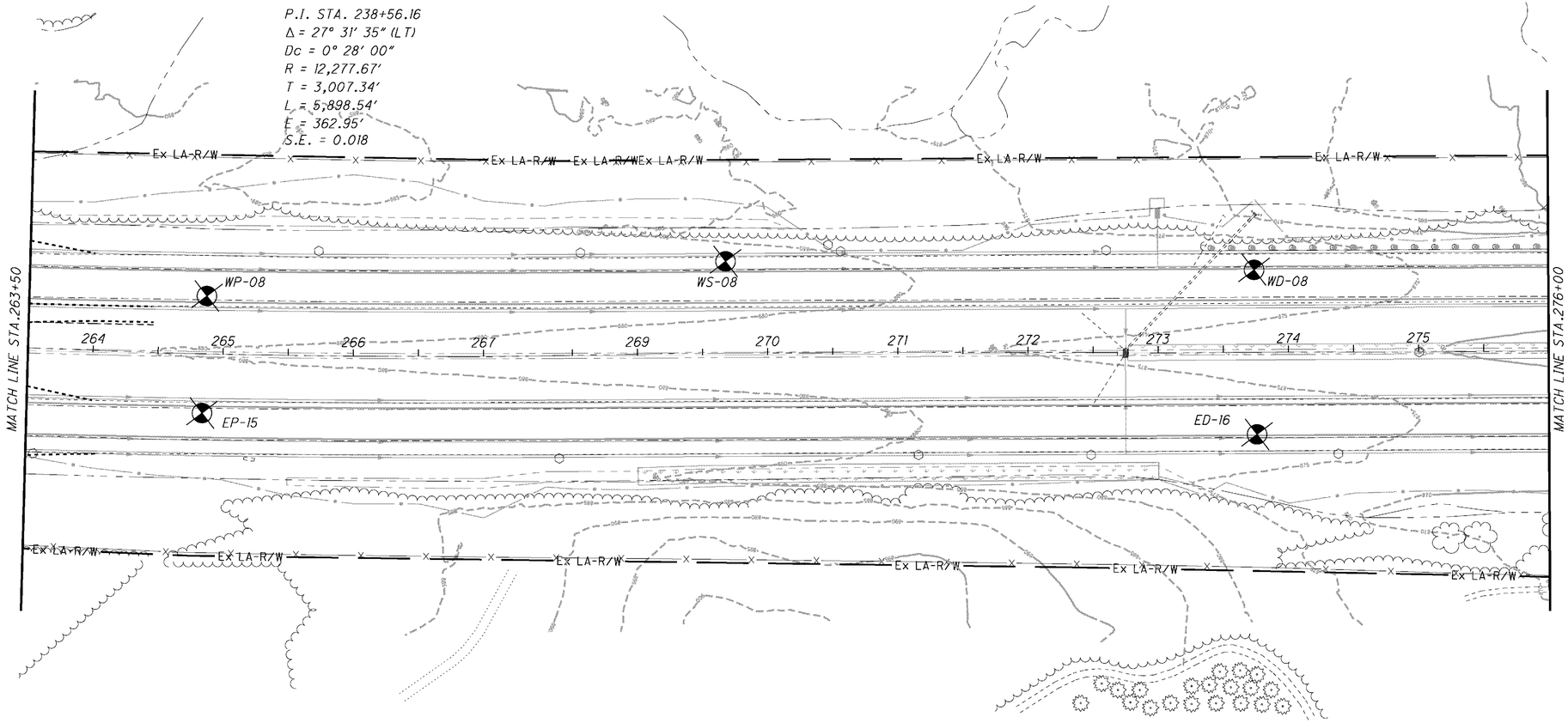

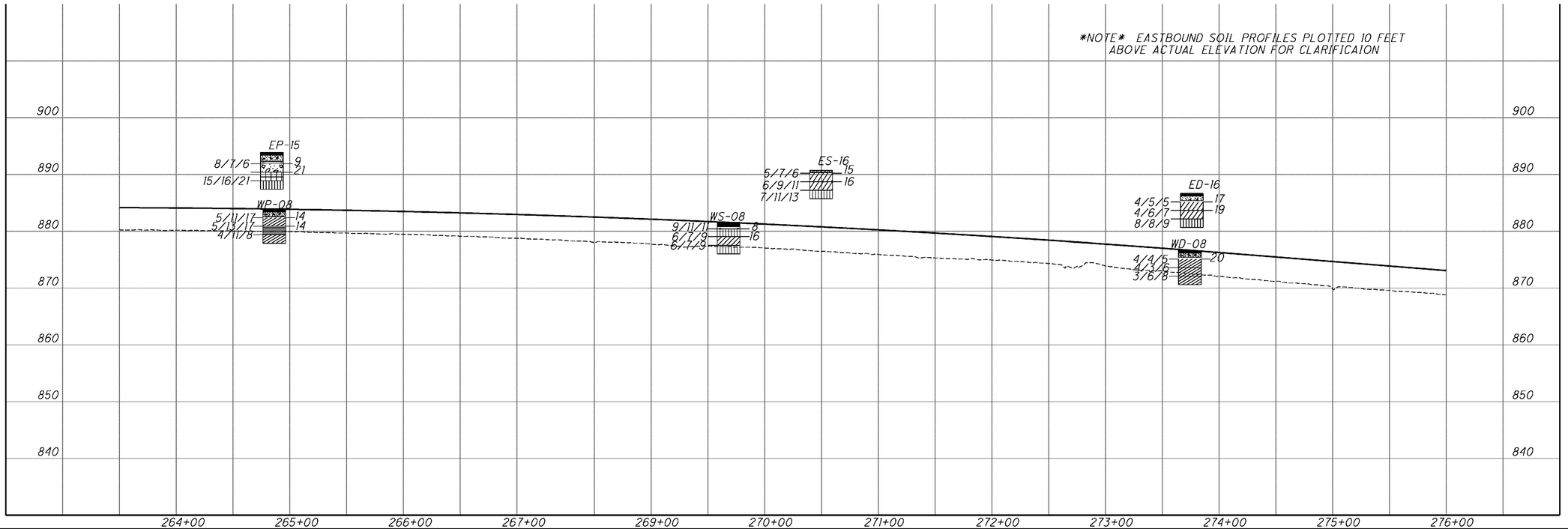

PLAN AND PROFILE
IR 90 STA. 263+50 TO STA. 276+00

ATB-90-14.25

18 / 26

HORIZONTAL SCALE IN FEET
0 25 50 100

CALCULATED
CHECKED

C:\ODOT\ATB\25199\subsurface\sheets\25199IP017.dgn 6/6/2009 9:57:19 AM DENNIS

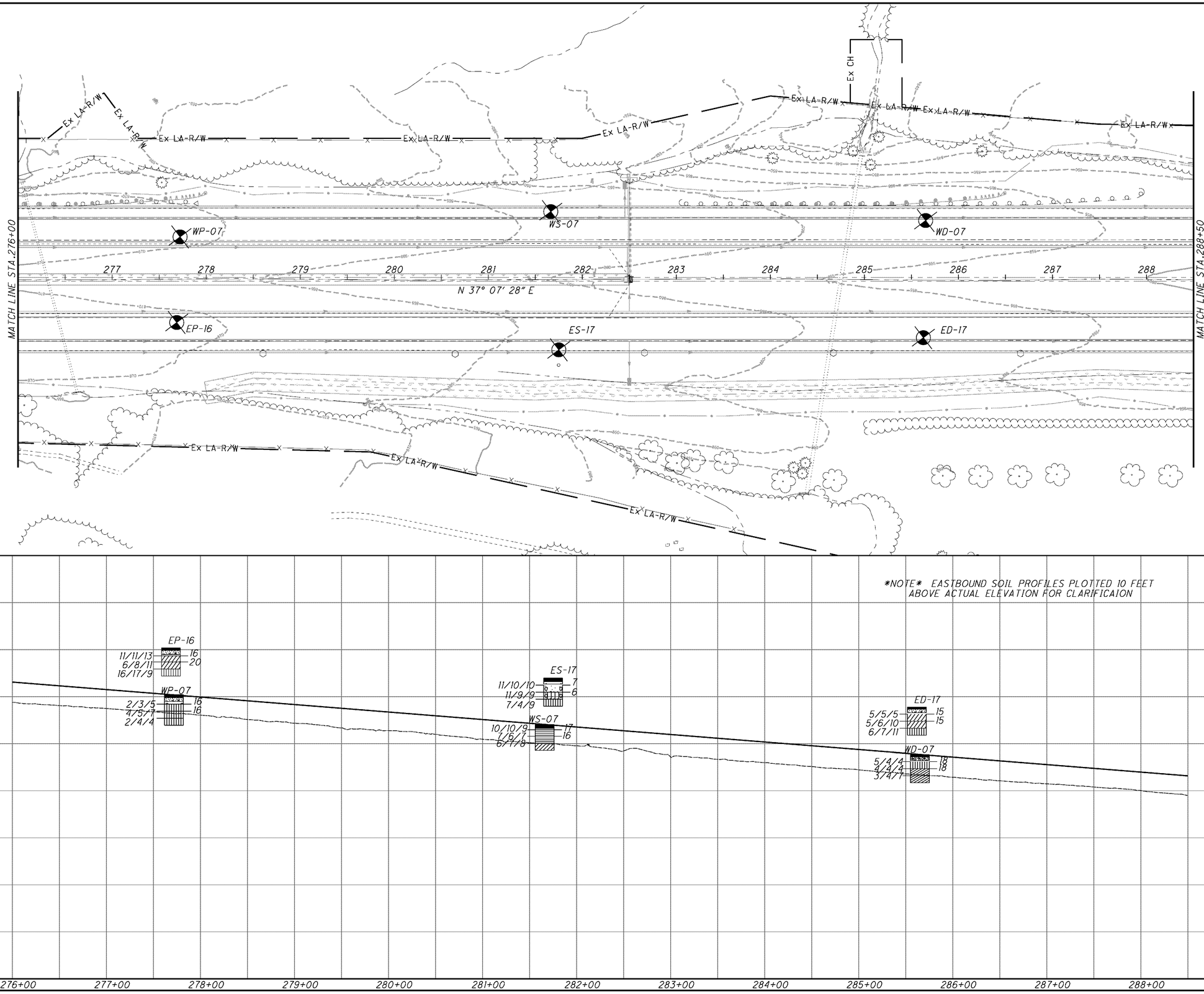

HORIZONTAL SCALE IN FEET
0 25 50 100

CALCULATED

CHECKED

SOIL PROFILE

IR 90 STA. 276+00 TO STA. 288+50

ATB-90-14.25

O:\ODOT\ATB\25199\subsurface\sheets\25199IP018.dgn 6/6/2009 9:57:23 AM DENNIS

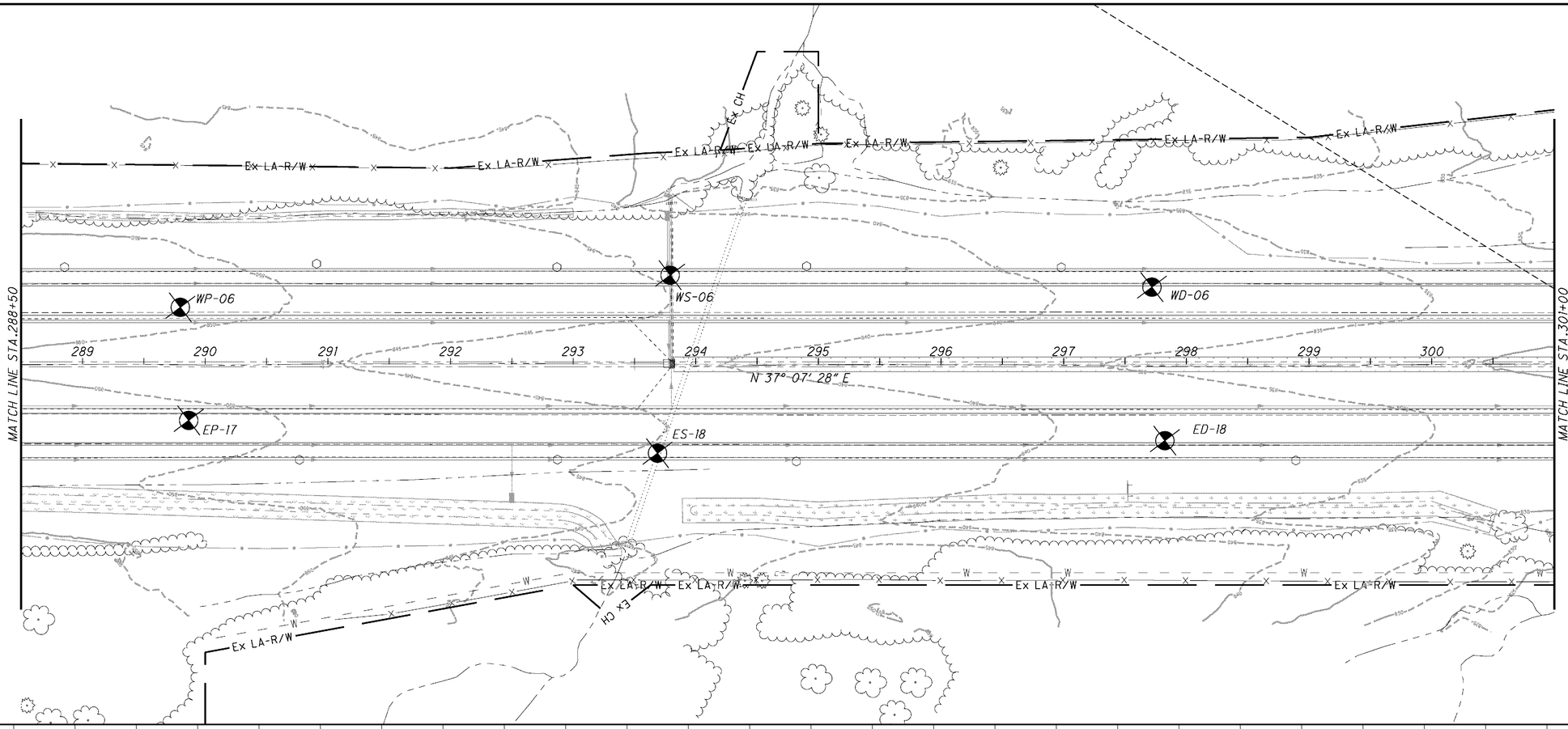

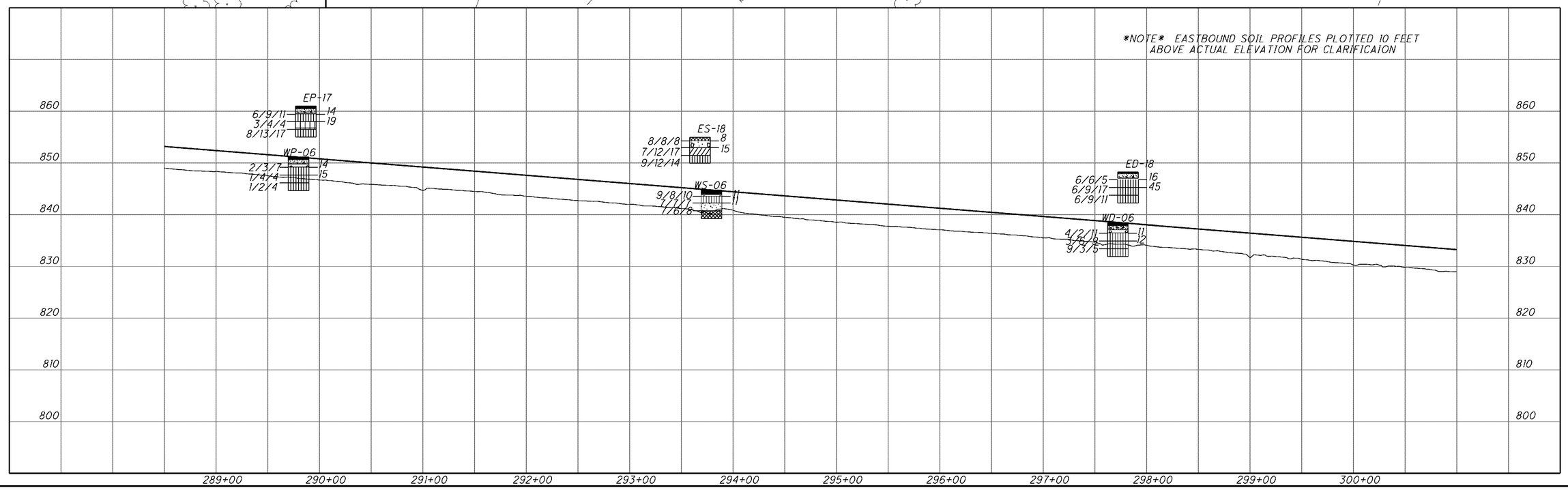

HORIZONTAL SCALE IN FEET
0 25 50 100
CALCULATED
CHECKED

SOIL PROFILE
IR 90 STA. 288+50 TO STA. 301+00

ATB-90-14.25

20/26

O:\ODOT\ATB\25199\subsurface\sheets\25199IP019.dgn 6/6/2009 9:57:27 AM DENNIS

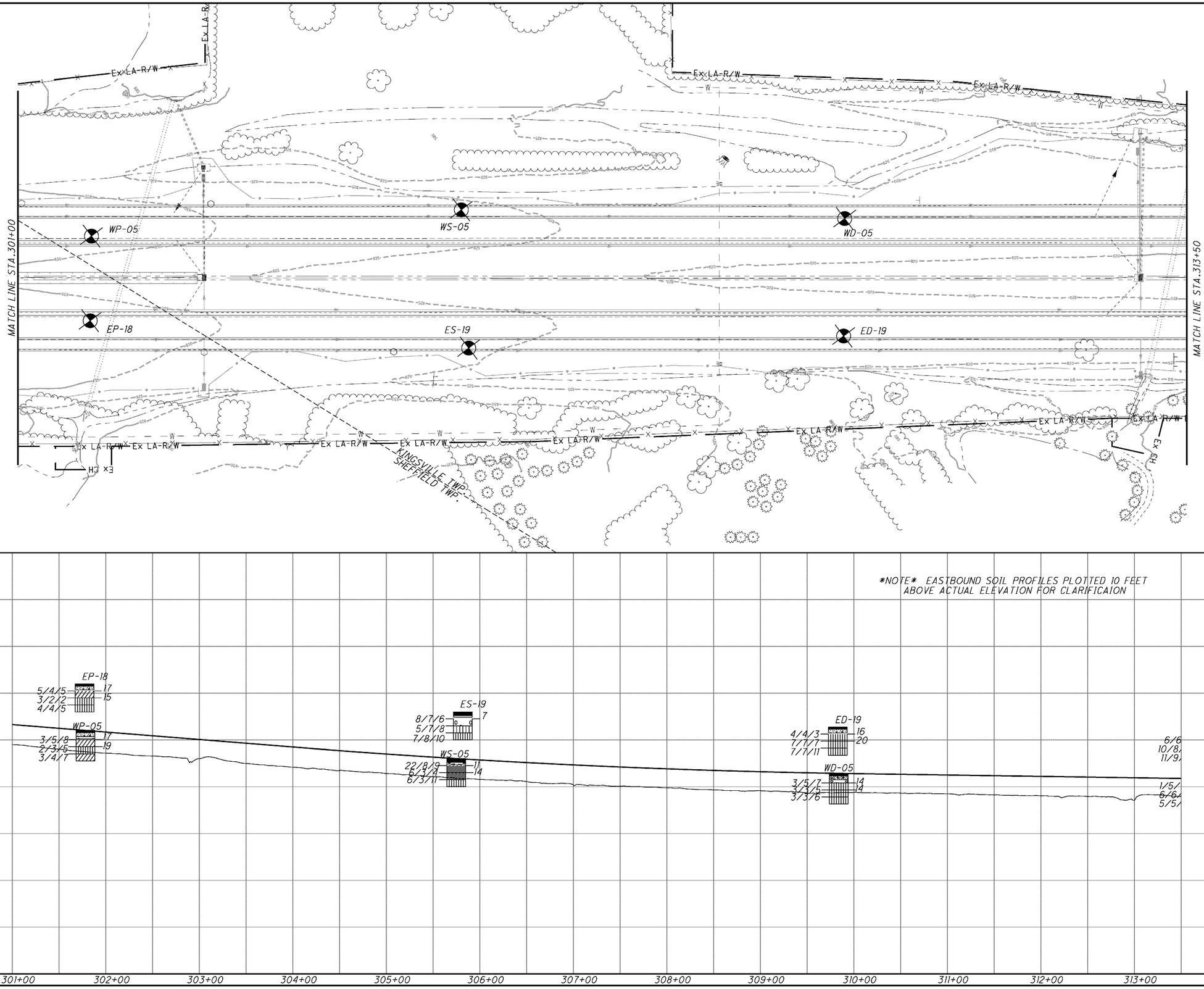

0:\ODOT\ATB\25199\subsurface\sheets\25199IP020.dgn 6/6/2009 9:57:30 AM DENNIS

HORIZONTAL SCALE IN FEET
0 25 50 100

CALCULATED | CHECKED

SOIL PROFILE
IR 90 STA. 301+00 TO STA. 313+50

ATB-90-14.25

21 / 26

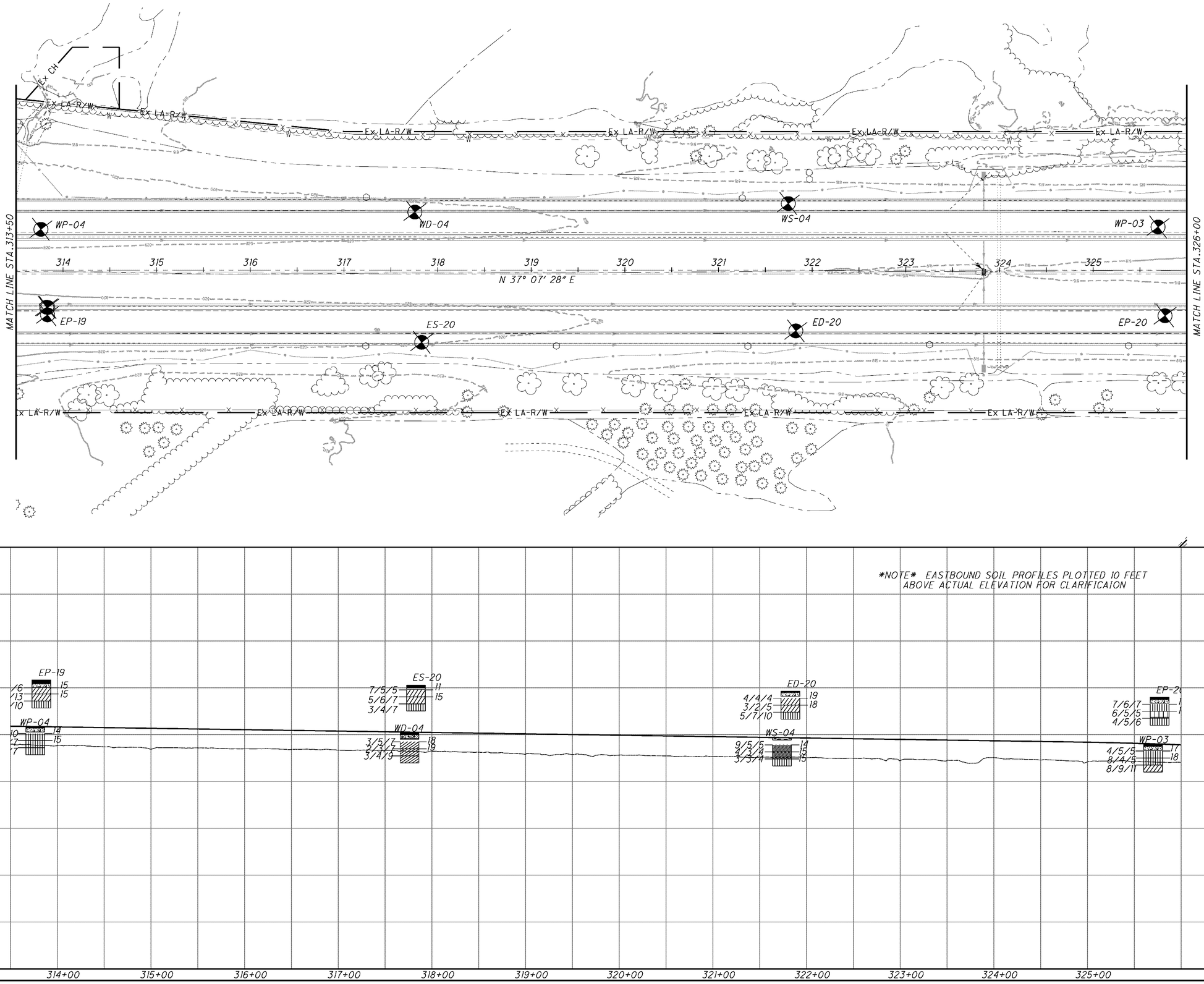

HORIZONTAL SCALE IN FEET
0 25 50 100

CALCULATED

CHECKED

SOIL PROFILE
IR 90 STA. 313+50 TO STA. 326+00

ATB-90-14.25

22 / 26

O:\ODOT\ATB\25199\subsurface\sheets\25199IP021.dgn 6/6/2009 9:57:34 AM DENNIS

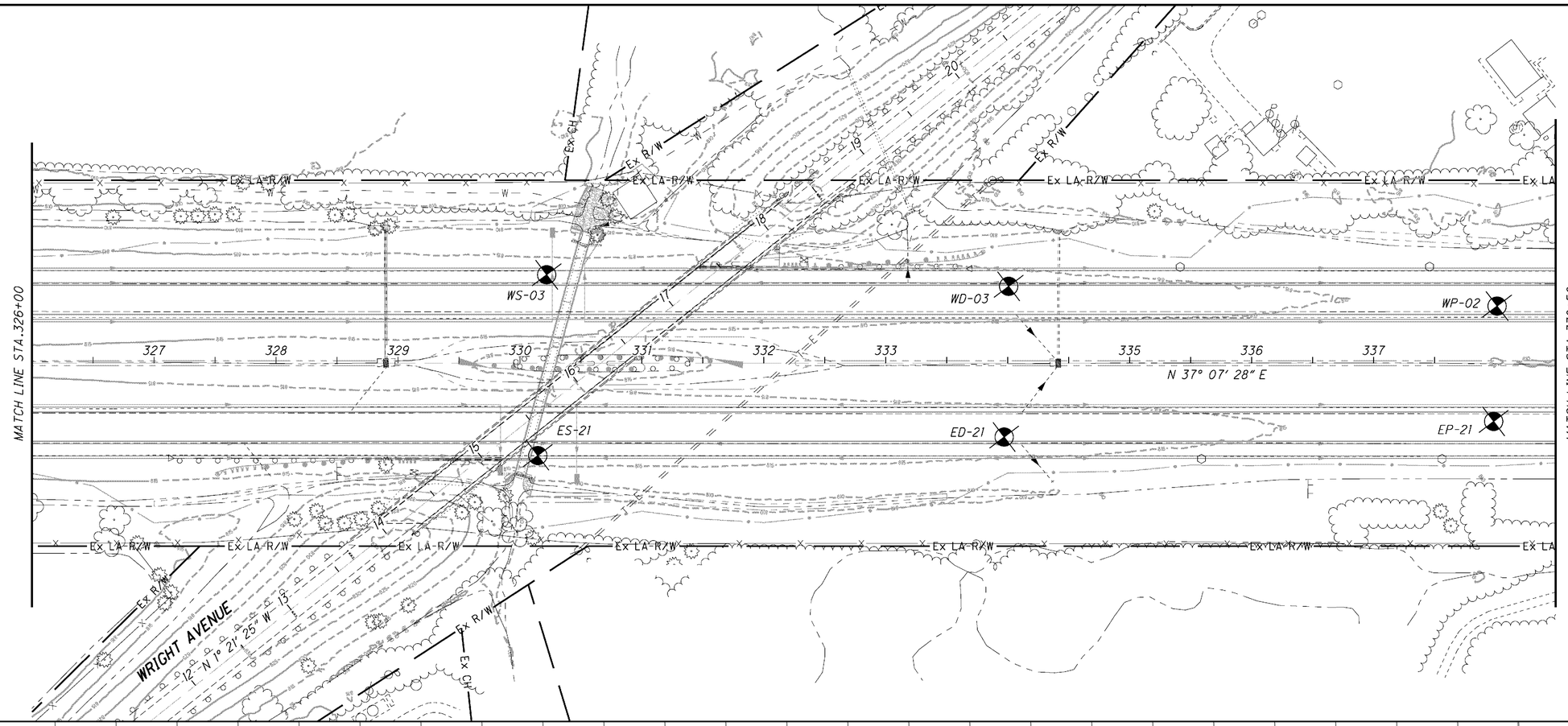

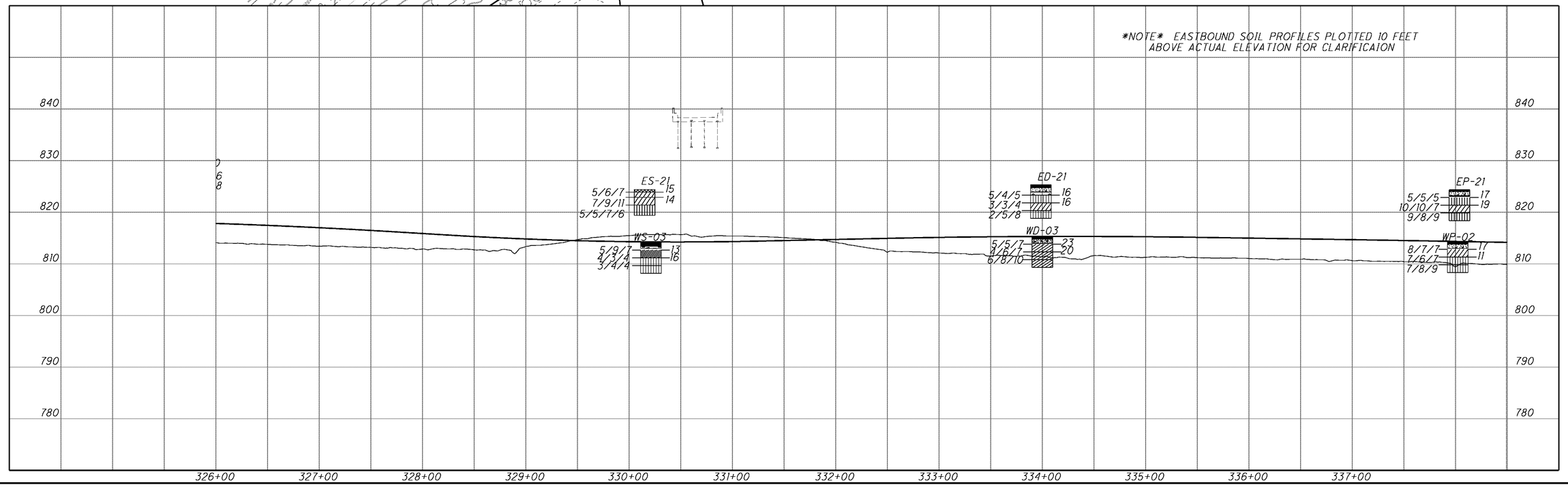

HORIZONTAL SCALE IN FEET
0 25 50 100
CALCULATED
CHECKED

SOIL PROFILE
IR 90 STA. 326+00 TO STA. 338+50

ATB-90-14.25

23 / 26

O:\ODOT\ATB\25199\subsurface\sheets\25199IP022.dgn 6/6/2009 9:57:38 AM DENNIS

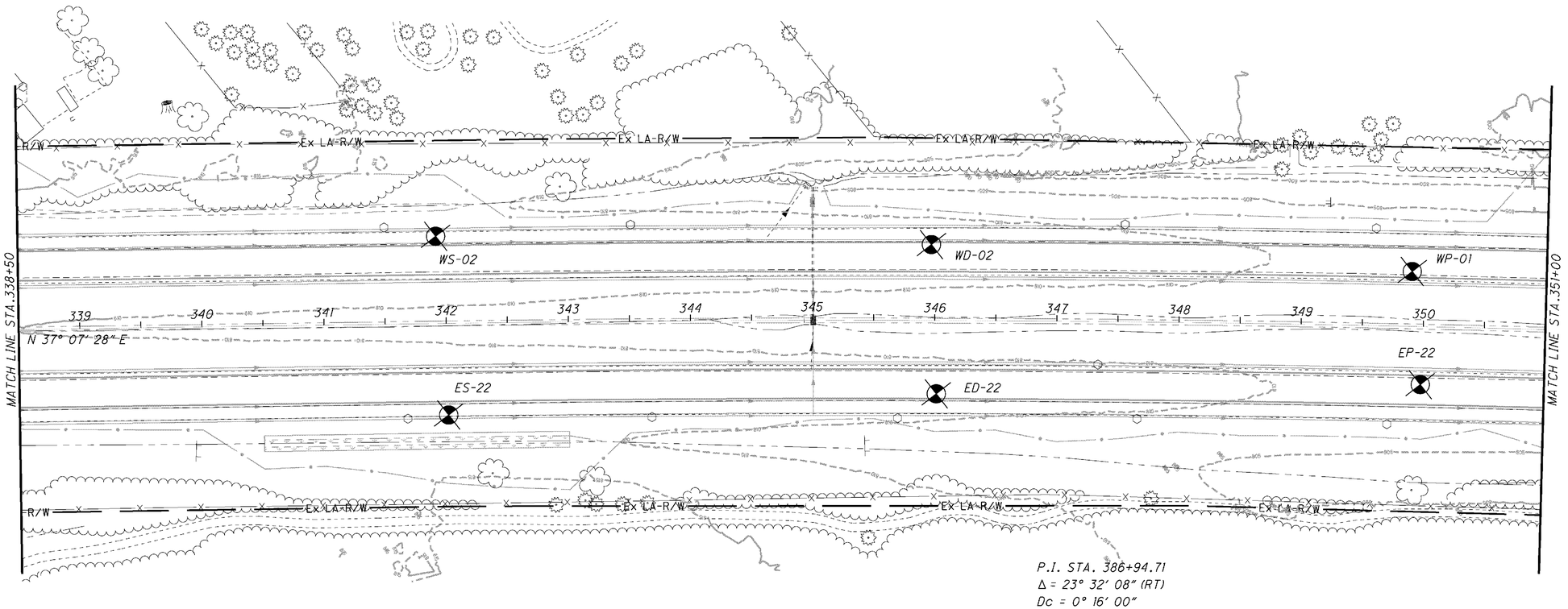

P.I. STA. 386+94.71
Δ = 23° 32' 08" (RT)
Dc = 0° 16' 00"
R = 21,485.92'
T = 4,476.03'
L = 8,825.83'
S.E. = N.C.

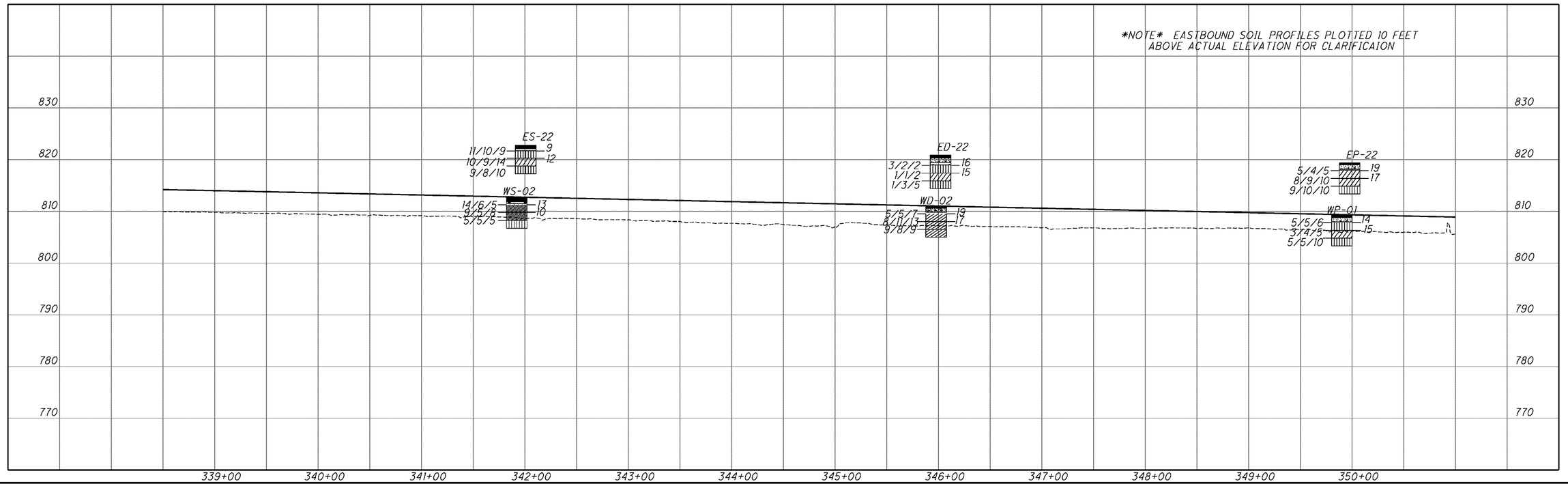

HORIZONTAL SCALE IN FEET
0 25 50 100
CALCULATED
CHECKED

SOIL PROFILE
IR 90 STA. 338+50 TO STA. 351+00

ATB-90-14.25

24/26

0:\ODOT\ATB\25199\subsurface\sheets\25199IP023.dgn 6/6/2009 9:57:43 AM DENNIS

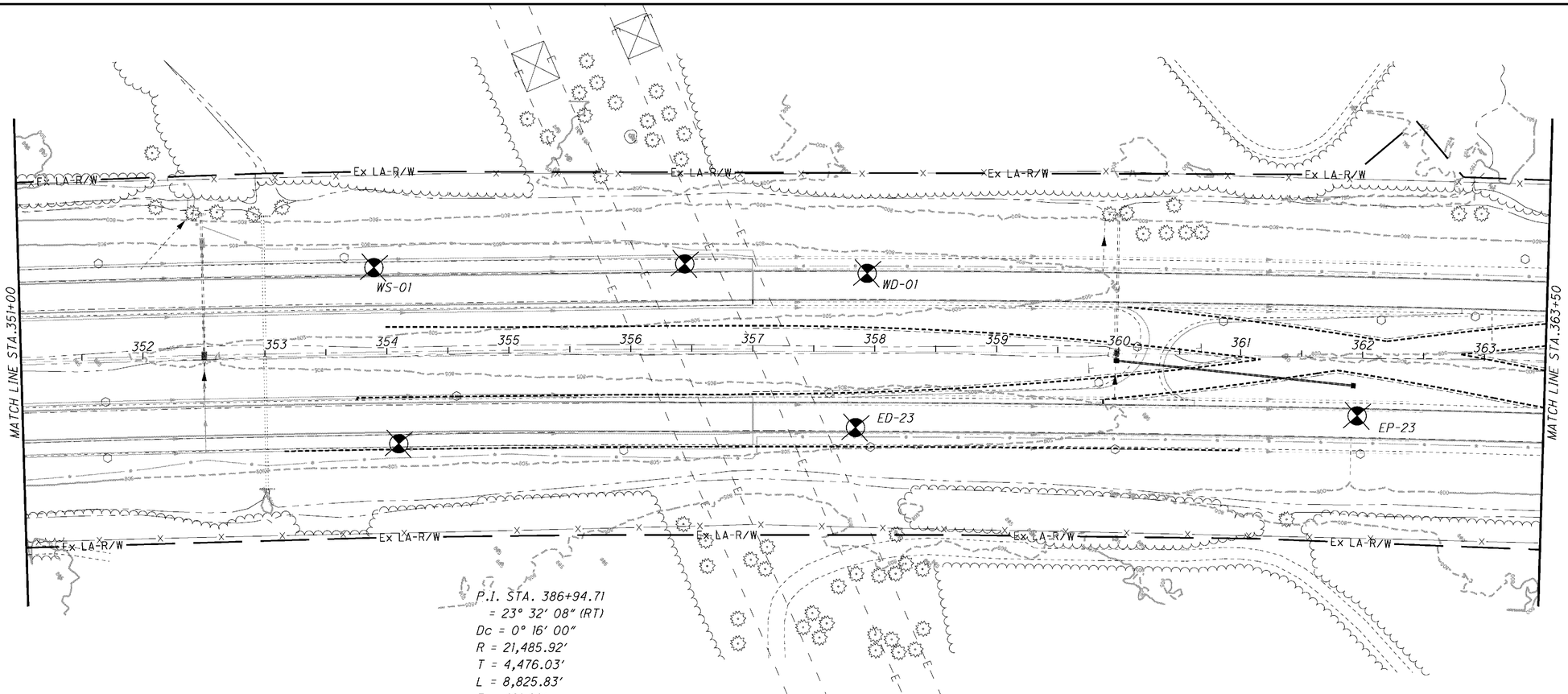

P.I. STA. 386+94.71
= 23° 32' 08" (RT)
Dc = 0° 16' 00"
R = 21,485.92'
T = 4,476.03'
L = 8,825.83'
E = 461.28'
S.E. = N.C.

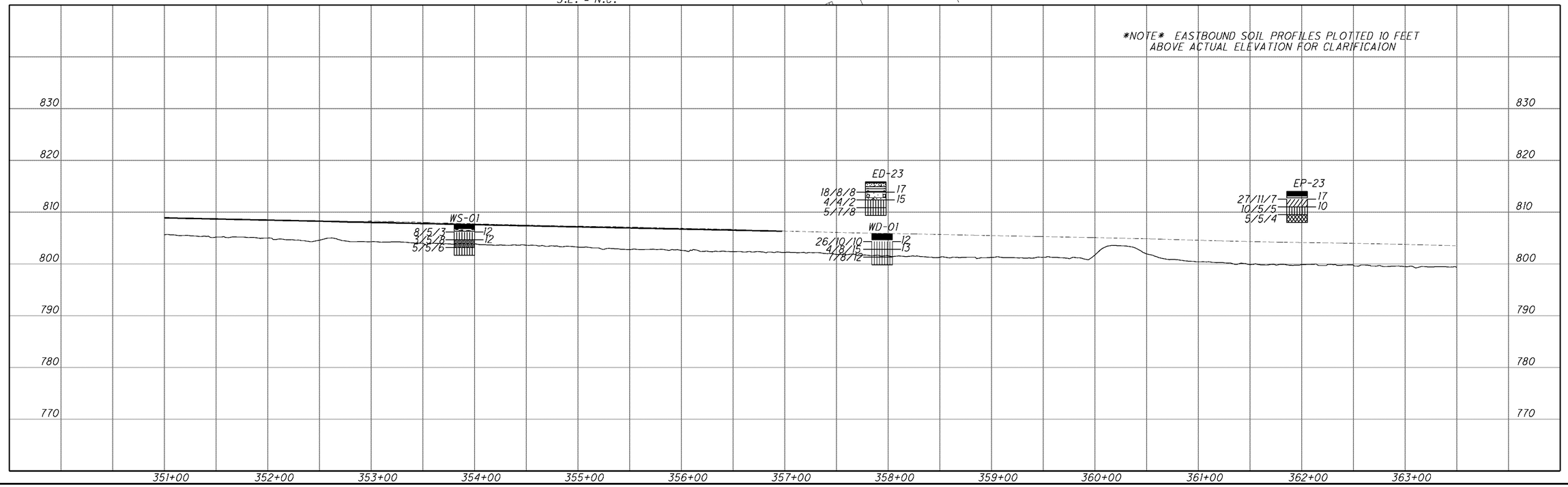

HORIZONTAL SCALE IN FEET
0 25 50 100
CALCULATED
CHECKED

SOIL PROFILE
IR 90 STA. 351+00 TO STA. 363+50

ATB-90-14.25

25/26

O:\ODOT\ATB\25199\subsurface\sheets\25199IP024.dgn 6/6/2009 9:57:46 AM DENNIS

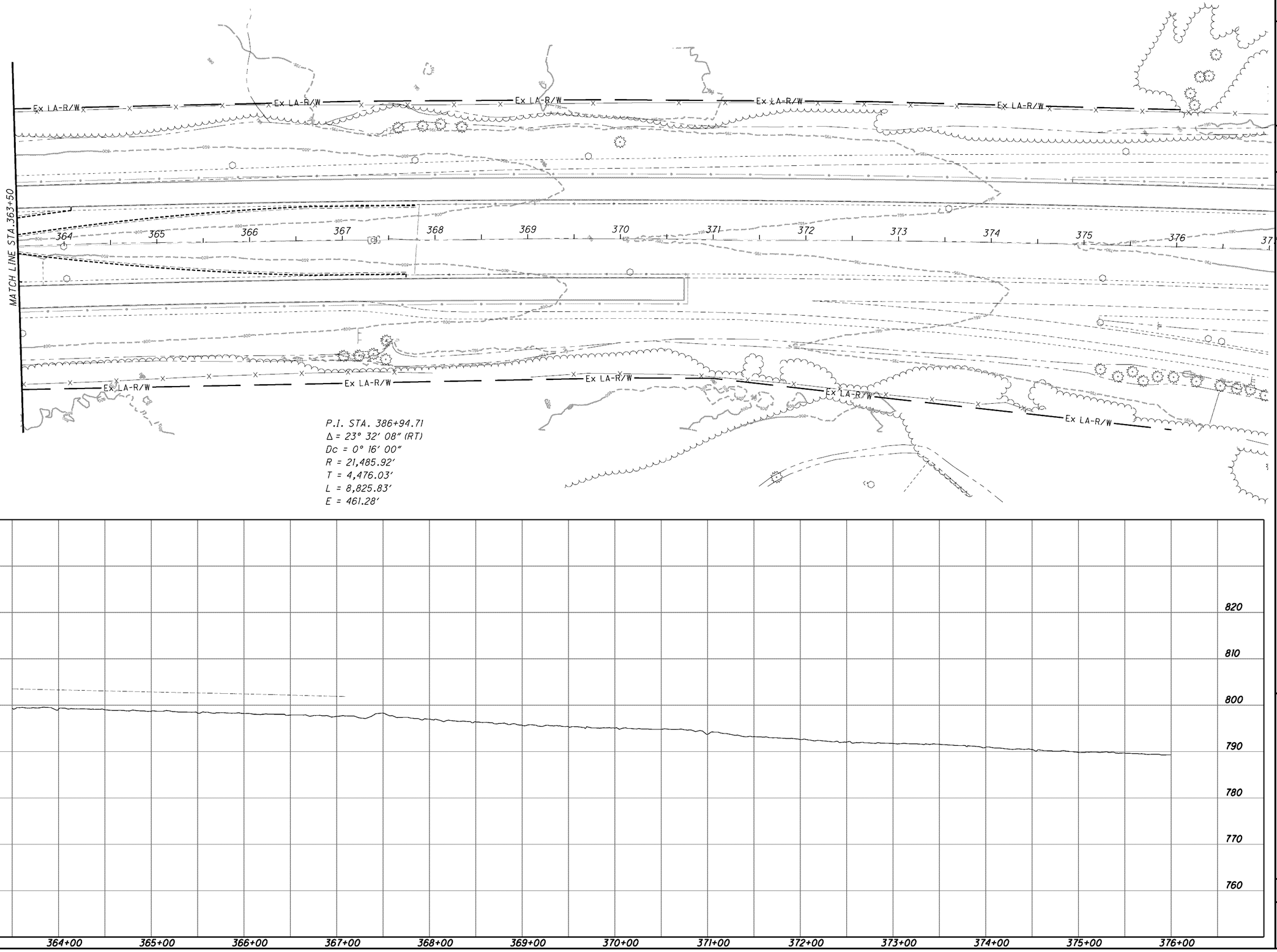

HORIZONTAL SCALE IN FEET
0 25 50 100

CALCULATED | CHECKED

SOIL PROFILE
IR 90 STA. 363+50 TO STA. 377+00

ATB-90-14.25

26/26

O:\ODOT\ATB\25199\subsurface\sheets\25199IP025.dgn 6/6/2009 9:57:50 AM DENNIS

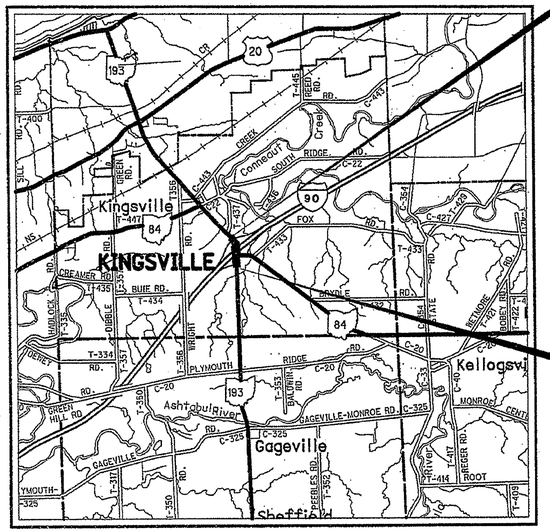

LOCATION MAP

LATITUDE: 41°52'50" N LONGITUDE: 80°40'00" W

SCALE IN MILES

0 ½ 1 1½ 2

N

PORTION TO BE IMPROVED

INTERSTATE & DIVIDED HIGHWAY

UNDIVIDED STATE & FEDERAL ROUTES

OTHER ROADS

DESIGN DESIGNATION

CURRENT ADT (2010)	8770
DESIGN YEAR ADT (2030)	10440
DESIGN HOURLY VOLUME (2030)	1044
DIRECTIONAL DISTRIBUTION	56%
TRUCKS (24 HOUR B&C)	14%
DESIGN SPEED	45 MPH
LEGAL SPEED	40 MPH
DESIGN FUNCTIONAL CLASSIFICATION: RURAL MAJOR COLLECTOR	
NHS PROJECT	YES

DESIGN EXCEPTIONS

DESIGN FEATURES	APPROVAL DATE	SHEET NO.
NONE		

UNDERGROUND UTILITIES

CONTACT BOTH SERVICES
CALL TWO WORKING DAYS
BEFORE YOU DIG

CALL
1-800-362-2764
(TOLL FREE)
OHIO UTILITIES PROTECTION SERVICE
NON-MEMBERS
MUST BE CALLED DIRECTLY

OIL & GAS PRODUCERS PROTECTIVE SERVICE CALL: 1-800-925-0988

STATE OF OHIO

DEPARTMENT OF TRANSPORTATION

ATB-84-20.50
PART 2

KINGSVILLE TOWNSHIP
ASHTABULA COUNTY
FOR PART 1 SEE ATB-90-14.50

INDEX OF SHEETS:

TITLE SHEET	1
SCHEMATIC PLAN	2
TYPICAL SECTIONS	3-5
PAVEMENT TRANSITION & SUPERELEVATION TABLE	6
GENERAL NOTES	7-8
MAINTENANCE OF TRAFFIC	9-20
GENERAL SUMMARY	21-22
CALCULATIONS	23-25
PROJECT SITE PLAN	26
PLAN & PROFILE	27-29
CROSS SECTIONS	30-36
INTERSECTION AND GUARDRAIL DETAIL	37
TRAFFIC CONTROL	38-40
STRUCTURES (OVER 20')	41-64

PROJECT DESCRIPTION

THE PROJECT CONSISTS OF THE REPLACEMENT OF THE DECK ON BRIDGE ATB-84-2050 OVER INTERSTATE ROUTE 90, PAINTING THE SUPERSTRUCTURE, NEW APPROACH SLABS AND APPROACH ROADWAY WORK.
PROJECT LENGTH = 0.07 MILES

PROJECT EARTH DISTURBED AREA:	1.1 ACRES
ESTIMATED CONTRACTOR EARTH DISTURBED AREA:	1.0 ACRES
NOTICE OF INTENT EARTH DISTURBED AREA:	4.90 ACRES

2008 SPECIFICATIONS

THE STANDARD SPECIFICATIONS OF THE STATE OF OHIO, DEPARTMENT OF TRANSPORTATION, INCLUDING CHANGES AND SUPPLEMENTAL SPECIFICATIONS LISTED IN THE PROPOSAL SHALL GOVERN THIS IMPROVEMENT.

I HEREBY APPROVE THESE PLANS AND DECLARE THAT THE MAKING OF THIS IMPROVEMENT WILL NOT REQUIRE THE CLOSING TO TRAFFIC OF THE HIGHWAY EXCEPT AS NOTED ON SHEET 9, AND THAT PROVISIONS FOR THE MAINTENANCE AND SAFETY OF TRAFFIC WILL BE AS SET FORTH ON THE PLANS AND ESTIMATES.

PLAN PREPARED BY:

RICHLAND ENGINEERING LIMITED
29 NORTH PARK STREET
MANSFIELD OHIO 44902
PHONE: (419) 524-0074 FAX: (419) 524-1812

STANDARD CONSTRUCTION DRAWINGS	SUPPLEMENTAL SPECIFICATIONS
SEE PART 1	SEE PART 1
	SPECIAL PROVISIONS

ENGINEERS SEAL:

STATE OF OHIO
DEAN A. PALMER
E-37475
REGISTERED
PROFESSIONAL ENGINEER

SIGNED: Dean A Palmer
DATE: 5-27-09

UNDER AUTHORITY OF SECTION 4511.21, DIVISION (H) OF THE OHIO REVISED CODE, THE REVISED PRIMA FACIE SPEED LIMITS AS INDICATED HEREIN ARE DETERMINED TO BE REASONABLE AND SAFE, AND ARE HEREBY ESTABLISHED ON I.R. 90 FOR THE DURATION OF THIS PROJECT. THE PRIMA FACIE SPEED LIMIT OR LIMTS HEREBY ESTABLISHED SHALL BECOME EFFECTIVE WHEN APPROPRIATE SIGNS GIVING NOTICE THEREOF ARE ERECTED.

APPROVED Eric M. Gotti
DATE 6-8-09 DISTRICT DEPUTY DIRECTOR

APPROVED Gabriel M. Makhoul III
DATE 6-26-09 DIRECTOR, DEPARTMENT OF TRANSPORTATION

FEDERAL PROJECT NO. E032101

PID NO. 25199

CONSTRUCTION PROJECT NO. ATB-84-20.50

RAILROAD INVOLVEMENT NONE

106078-A\25199GT001.DGN 05/27/09 LVB,SCB

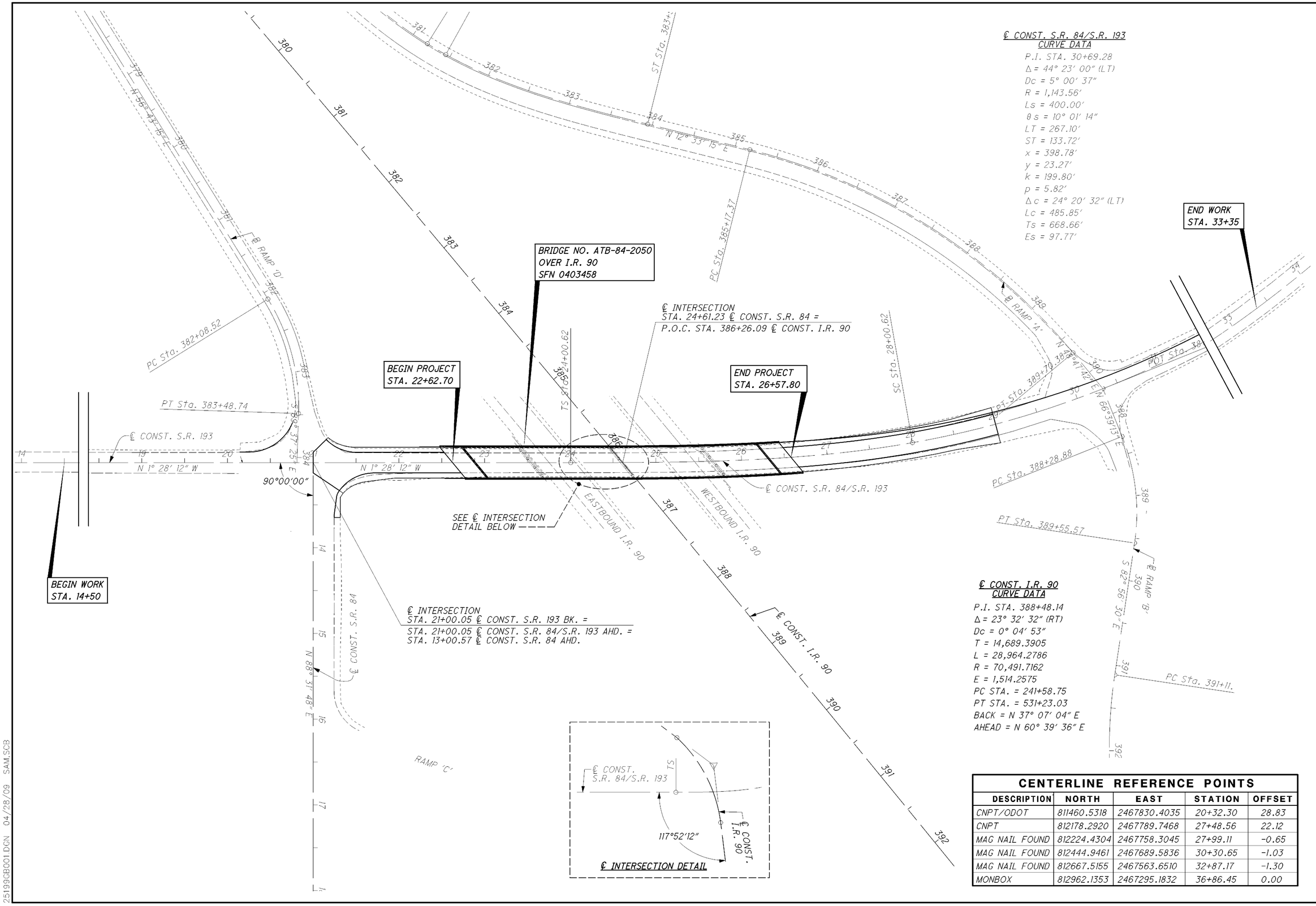

CENTERLINE REFERENCE POINTS				
DESCRIPTION	NORTH	EAST	STATION	OFFSET
CNPT/ODOT	811460.5318	2467830.4035	20+32.30	28.83
CNPT	812178.2920	2467789.7468	27+48.56	22.12
MAG NAIL FOUND	812224.4304	2467758.3045	27+99.11	-0.65
MAG NAIL FOUND	812444.9461	2467689.5836	30+30.65	-1.03
MAG NAIL FOUND	812667.5155	2467563.6510	32+87.17	-1.30
MONBOX	812962.1353	2467295.1832	36+86.45	0.00

HORIZONTAL SCALE IN FEET

SCHEMATIC PLAN

ATB-84-20.50

25199GB001.DGN 04/28/09 SAM.SCB

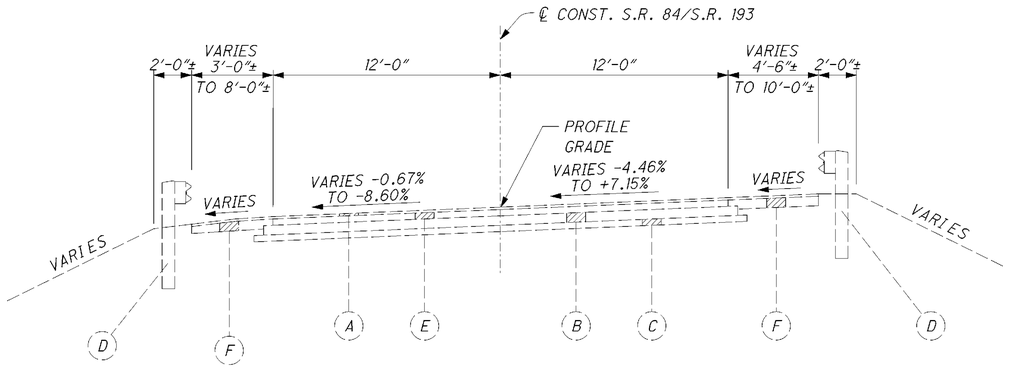

EXISTING TYPICAL SECTION
STA. 21+00.00 TO STA. 22+62.70
STA. 26+57.80 TO STA. 29+00.00

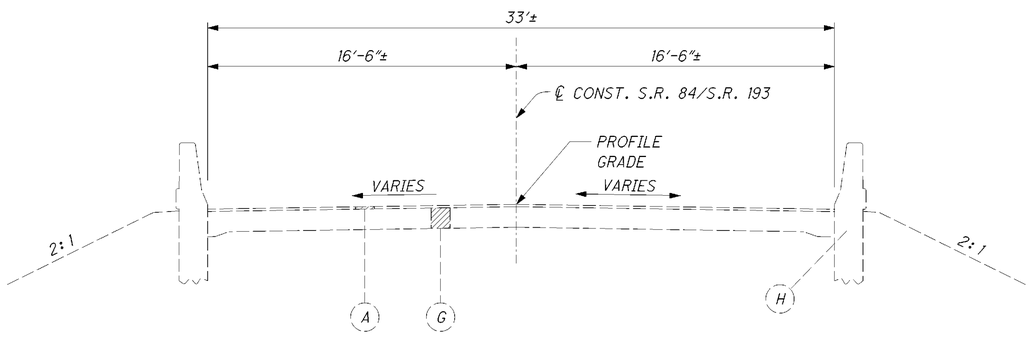

EXISTING APPROACH SLAB TYPICAL SECTION
STA. 22+62.70 TO STA. 22+87.70
STA. 26+32.80 TO STA. 26+57.80

EXISTING LEGEND

- (A) ASPHALT OVERLAY (3.0"-4.5"±)
- (B) ASPHALT BASE (6"±)
- (C) SUBBASE (4'±)
- (D) GUARDRAIL, TYPE 5
- (E) ASPHALT PAVEMENT (CONSISTS OF 1.5"± 404 AND 2.5"± 402 MATERIALS)
- (F) STABILIZED CRUSHED AGGREGATE (5"±)
- (G) APPROACH SLAB (13"±)
- (H) TURN BACK WINGWALL

EXISTING TYPICAL SECTIONS

ATB-84-20.50

25199GY001.DGN 04/27/09 LVB.SCB

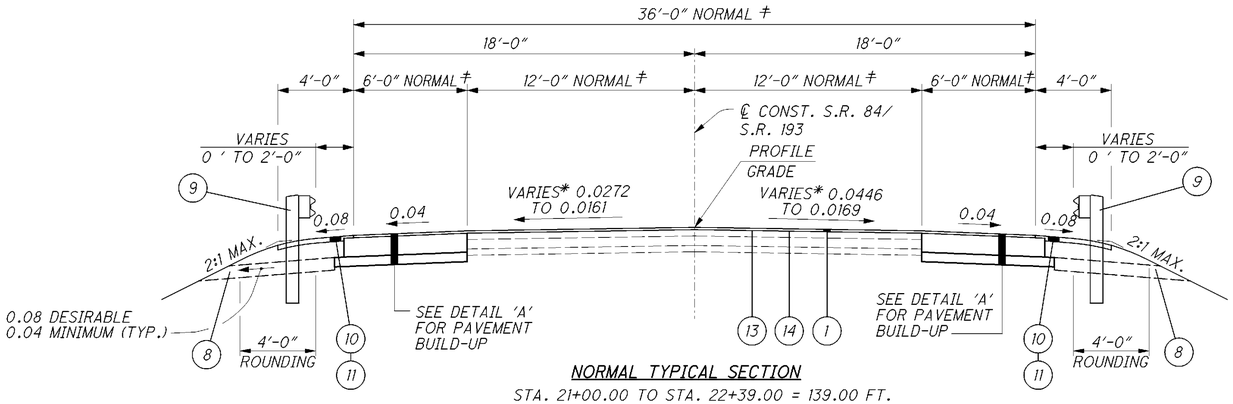

NORMAL TYPICAL SECTION

STA. 21+00.00 TO STA. 22+39.00 = 139.00 FT.

± DIMENSIONS VARY THROUGH INTERSECTION RADIUS RETURNS. SEE SHEET 37 FOR ADDITIONAL DETAILS.

* FOR PAVEMENT CROSS SLOPE SEE SUPERELEVATION TABLE SHEET 6.

NOTE: TRANSITION PAVED AND GRADED SHOULDER CROSS SLOPES TO MEET APPROACH SLABS IN 27'.

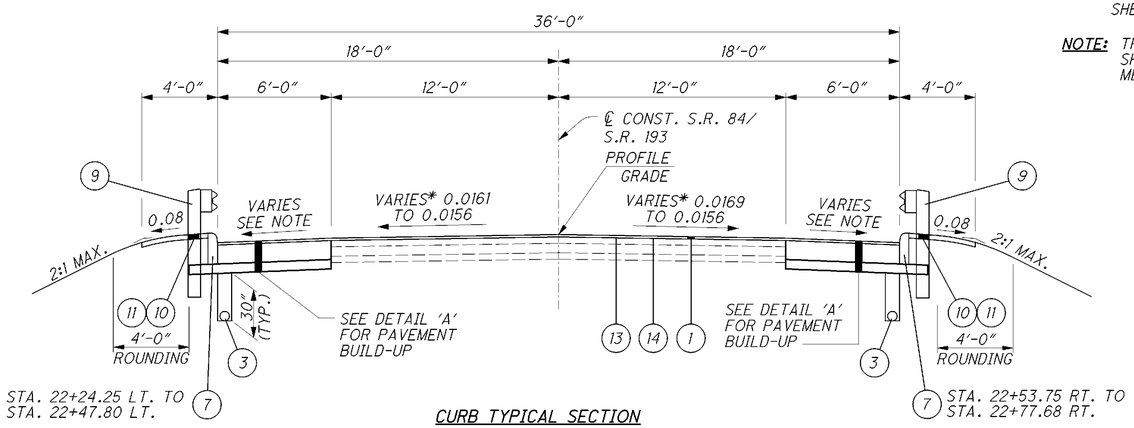

CURB TYPICAL SECTION

STA. 22+39.00 TO STA. 22+62.70 = 23.70 FT.

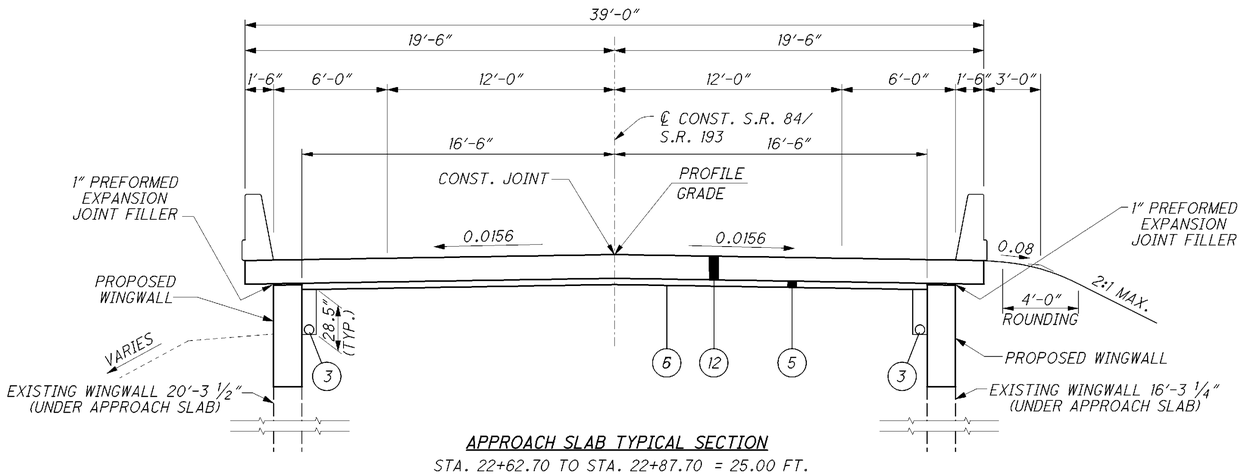

APPROACH SLAB TYPICAL SECTION

STA. 22+62.70 TO STA. 22+87.70 = 25.00 FT.

BRIDGE LIMITS: STA. 22+87.70 TO STA. 26+32.80 = 345.10 FT.

PROPOSED LEGEND

1. 448 - 1½" ASPHALT CONCRETE SURFACE COURSE, TYPE 1H
2. 407 - TACK COAT FOR INTERMEDIATE COURSE (APPLICATION RATE 0.04 GAL./SQ.YD.)
3. 605 - 6" SHALLOW PIPE UNDERDRAIN WITH FABRIC WRAP
4. 302 - 12" ASPHALT CONCRETE BASE, PG64-22 (2-LIFTS)
5. 304 - 6" AGGREGATE BASE, AS PER PLAN
6. 204 - SUBGRADE COMPACTION
7. 609 - CURB, TYPE 6
8. 605 - AGGREGATE DRAIN
9. 606 - GUARDRAIL, TYPE 5
10. 448 - 3" ASPHALT CONCRETE INTERMEDIATE COURSE, TYPE 1, UNDER GUARDRAIL, PG64-22, AS PER PLAN
11. 209 - LINEAR GRADING, AS PER PLAN
12. 526 - 15" REINFORCED CONCRETE APPROACH SLAB, AS PER PLAN SEE STRUCTURE DETAILS, SHEET 43, 63 & 64
13. 254 - PAVEMENT PLANING, ASPHALT CONCRETE, VARIABLE (1½" MIN. TO 5¾"± MAX.)
14. 407 - TACK COAT (APPLICATION RATE 0.075 GAL./SQ.YD.)

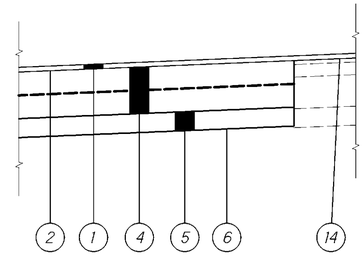

DETAIL 'A'

BUILD-UP IS TYPICAL FOR BOTH SIDES OF PAVEMENT

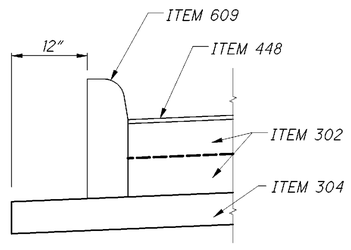

EDGE COURSE DESIGN WITH CURB, TYPE 6

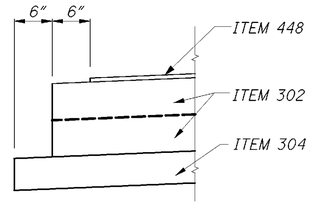

EDGE COURSE DESIGN WITHOUT CURB

PROPOSED TYPICAL SECTIONS

ATB-84-20.50

25199GY002.DGN 05/04/09 LVB,TWH,SCB

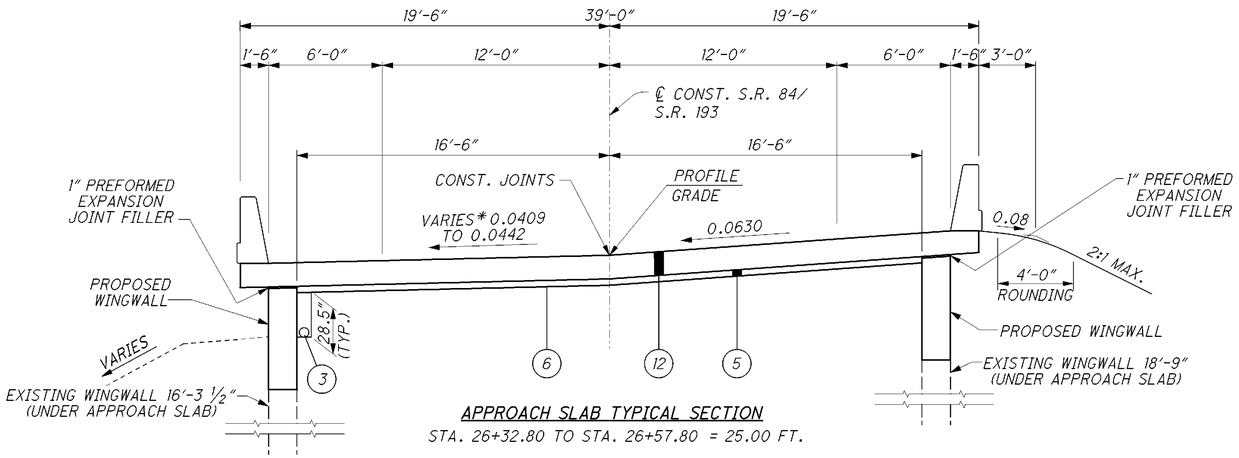

APPROACH SLAB TYPICAL SECTION

STA. 26+32.80 TO STA. 26+57.80 = 25.00 FT.

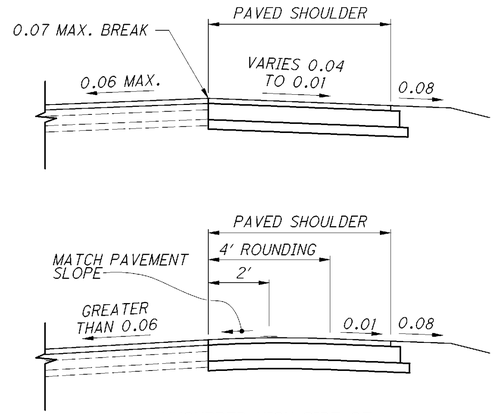

UNCURBED-HIGH SIDE OF SUPERELEVATED SECTION DETAIL

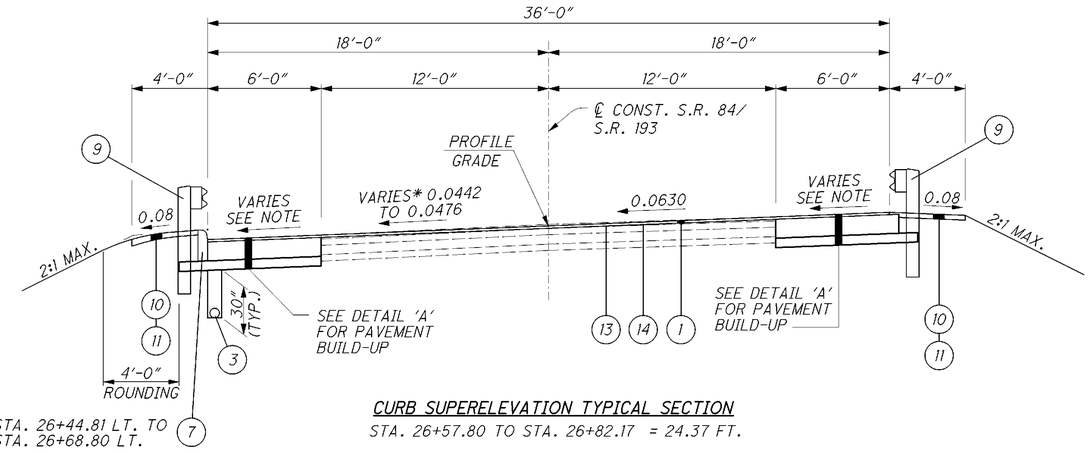

CURB SUPERELEVATION TYPICAL SECTION

STA. 26+57.80 TO STA. 26+82.17 = 24.37 FT.

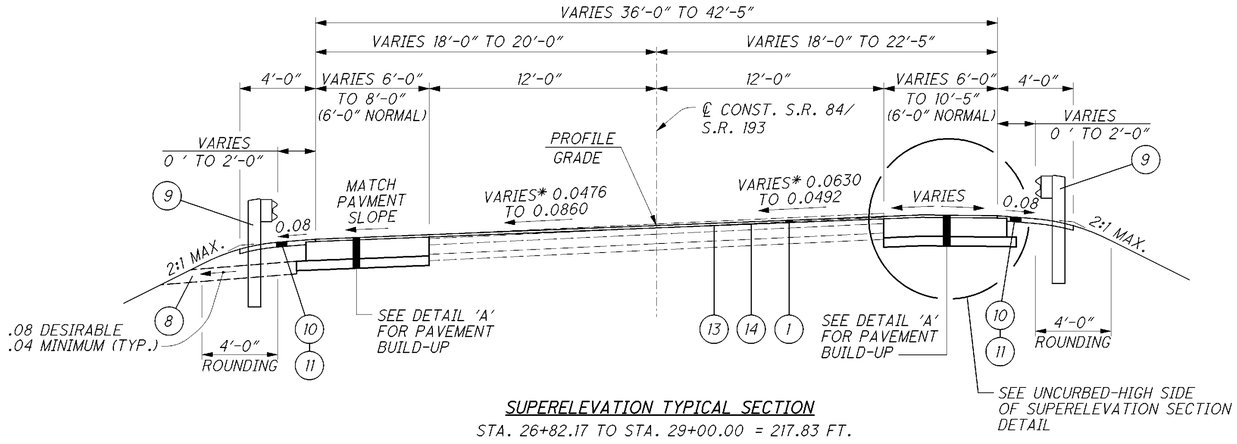

SUPERELEVATION TYPICAL SECTION

STA. 26+82.17 TO STA. 29+00.00 = 217.83 FT.

SEE SHEET 4 FOR ITEM LEGEND AND DETAIL 'A'

*FOR PAVEMENT CROSS SLOPE SEE SUPERELEVATION TABLE SHEET 6.

NOTE: TRANSITION PAVED AND GRADED SHOULDER CROSS SLOPES TO MEET APPROACH SLABS IN 27'.

PROPOSED TYPICAL SECTIONS

ATB-84-20.50

25199GY003.DGN 05/04/09 LVB.TWH.SCB

PAVEMENT TRANSITION & SUPERELEVATION TABLE

P.I. STATION 30+69.28 | CURVE 5° 00′ 37″

LEFT SIDE					CENTERLINE CONTROL		RIGHT SIDE					REMARKS
EDGE ELEVATION	TRANSITION RATE	ELEVATION CORRECTION	CROSS SLOPE	WIDTH	STATION	PROFILE GRADE	WIDTH	CROSS SLOPE	ELEVATION CORRECTION	TRANSITION RATE	EDGE ELEVATION	
802.07		-0.33	-0.0272	12.00	21+00.00	802.40	12.00	-0.0446	-0.54		801.86	MATCH
802.43		-0.30	-0.0253	12.00	21+25.00	802.73	12.00	-0.0398	-0.48		802.25	
802.77	1071.4:1	-0.28	-0.0233	12.00	21+50.00	803.05	12.00	-0.0349	-0.42	431:1	802.63	
803.00		-0.26	-0.0214	12.00	21+75.00	803.26	12.00	-0.0301	-0.36		802.90	
803.24		-0.23	-0.0195	12.00	22+00.00	803.47	12.00	-0.0253	-0.30		803.17	
803.38		-0.21	-0.0175	12.00	22+25.00	803.59	12.00	-0.0204	-0.24		803.35	
803.51		-0.19	-0.0156	12.00	22+50.00	803.70	12.00	-0.0156	-0.19		803.51	NC
803.62		-0.19	-0.0156	12.00	22+75.00	803.81	12.00	-0.0156	-0.19		803.62	
803.70		-0.19	-0.0156	12.00	23+00.00	803.89	12.00	-0.0156	-0.19		803.70	NC
803.75		-0.19	-0.0156	12.00	23+25.00	803.94	12.00	-0.0117	-0.14		803.80	
803.76		-0.19	-0.0156	12.00	23+50.00	803.95	12.00	-0.0078	-0.09		803.86	
803.74		-0.19	-0.0156	12.00	23+75.00	803.93	12.00	-0.004	-0.05	537.5:1	803.88	
803.69		-0.19	-0.0156	12.00	24+00.00	803.88	12.00	-0.0001	0.00		803.88	
803.69		-0.19	-0.0156	12.00	24+00.62	803.88	12.00	0.0000	0.00		803.88	TS
803.61		-0.19	-0.0156	12.00	24+25.00	803.80	12.00	0.0077	0.09		803.89	
803.54		-0.19	-0.0156	12.00	24+42.00	803.73	12.00	0.0131	0.16		803.89	
803.49		-0.20	-0.0167	12.00	24+50.00	803.69	12.00	0.0156	0.19		803.88	
			-0.0173		24+54.50			0.017				RC
803.30		-0.24	-0.0200	12.00	24+75.00	803.54	12.00	0.0235	0.28	263.7:1	803.82	
803.08		-0.28	-0.0233	12.00	25+00.00	803.36	12.00	0.0314	0.38		803.74	
802.83		-0.32	-0.0266	12.00	25+25.00	803.15	12.00	0.0393	0.47		803.62	
802.55		-0.36	-0.0299	12.00	25+50.00	802.91	12.00	0.0472	0.57		803.48	
802.24		-0.40	-0.0332	12.00	25+75.00	802.64	12.00	0.0551	0.66		803.30	
	628:1		-0.0352		25+90.00			0.0598				
801.89		-0.44	-0.0365	12.00	26+00.00	802.33	12.00	0.0630	0.76		803.09	
801.51		-0.48	-0.0398	12.00	26+25.00	801.99	12.00	0.0630	0.76		802.75	
801.10		-0.52	-0.0431	12.00	26+50.00	801.62	12.00	0.0630	0.76		802.38	
800.71		-0.56	-0.0464	12.00	26+75.00	801.27	12.00	0.0630	0.76		802.03	
			-0.0490		26+94.10			0.0630				
800.32		-0.60	-0.0498	12.00	27+00.00	800.92	12.00	0.0630	0.76		801.68	
799.83		-0.64	-0.0531	12.00	27+25.00	800.47	12.00	0.0630	0.76		801.23	
799.33		-0.68	-0.0564	12.00	27+50.00	800.01	12.00	0.0630	0.76		800.77	
798.70		-0.72	-0.0597	12.00	27+75.00	799.42	12.00	0.0630	0.76		800.18	
798.06		-0.76	-0.0630	12.00	28+00.00	798.82	12.00	0.0630	0.76		799.58	
798.04		-0.76	-0.0630	12.00	28+00.62	798.80	12.00	0.0630	0.76		799.56	SC
797.30	368:1	-0.82	-0.0686	12.00	28+25.00	798.12	12.00	0.0596	0.72	600:1	798.84	
796.53		-0.89	-0.0744	12.00	28+50.00	797.42	12.00	0.0561	0.67		798.09	
795.63		-0.96	-0.0802	12.00	28+75.00	796.59	12.00	0.0527	0.63		797.22	
794.72		-1.03	-0.0860	12.00	29+00.00	795.75	12.00	0.0492	0.59		796.34	MATCH

STA. 22+87.70

BRIDGE LIMITS

STA. 26+32.80

CALCULATED DAW
CHECKED PDG

PAVEMENT TRANSITION & SUPERELEVATION TABLE

ATB-84-20.50

25199GE001.DGN 04/28/09 SAM.SCB

UTILITIES

THE CONTRACTOR SHALL USE THE FOLLOWING PROCEDURE AT EACH LOCATION WHERE WORK IS PERFORMED, IN ACCORDANCE WITH SECTIONS 105.07 AND 107.16 IN THE CONSTRUCTION AND MATERIALS SPECIFICATIONS:

THE CONTRACTOR SHALL NOTIFY THE PROJECT ENGINEER, THE OHIO UTILITIES PROTECTION SERVICE (OUPS), THE OHIO & GAS PROCEDURES UNDERGROUND PROTECTION SERVICE (OGPUPS), THE OHIO DEPARTMENT OF TRANSPORTATION DISTRICT 4 HEADQUARTERS AND ALL NON REGISTERED UTILITY OWNERS AT LEAST TWO (2) WORKING DAYS PRIOR TO COMMENCING CONSTRUCTION OPERATIONS IN ALL AREAS.

OUPS 1-800-362-2764 (CONTACT LIMITED BASIS PARTICIPANTS DIRECTLY)
OGPUPS 1-800-925-0988
ODOT 330-786-3145 KEN GREENE

THE LOCATION OF THE UNDERGROUND UTILITIES SHOWN ON THE PLANS ARE AS OBTAINED FROM THE OWNERS AS REQUIRED BY SECTION 153.64 O.R.C.

THE UNDERGROUND UTILITIES ON THIS PLAN HAVE BEEN LOCATED BY USING A SUBSURFACE UTILITY ENGINEERING COMPANY (SUE). IF THERE ARE ANY DISCREPANCIES BETWEEN FIELD MARKINGS AND WHAT THE PLAN INDICATES, PLEASE CONTACT STEVE JONES, DISTRICT UTILITY COORDINATOR, (330) 786-4818, PRIOR TO ANY SUBSURFACE WORK BEING INDICATED.

LISTED BELOW ARE ALL UTILITIES LOCATED WITHIN THE PROJECT CONSTRUCTION LIMITS TOGETHER WITH THEIR RESPECTIVE OWNERS:

DOMINION EAST OHIO GAS COMPANY
1201 E. 55TH. STREET
CLEVELAND, OHIO 44103-1028
(216)-736-6884
ATTN: GEORGE TURNER

CEI
6896 MILLER RD.
BRECKSVILLE, OHIO 44141
(440)-717-6808
ATTN: JASON STEC

OHIO AMERICAN WATER COMPANY
2905 NORTH BEND RD.
ASHTABULA, OHIO 44004
(440)-997-7566
ATTN: WILLIAM DINGLEDINE

WINDSTREAM
100 OWEN BROWN RD.
HUDSON, OHIO 44236
(330)-650-8404
ATTN: JEFF GULYAS

ROUNDING

THE ROUNDING AT SLOPE BREAKPOINTS SHOWN ON THE TYPICAL SECTIONS APPLY TO ALL CROSS-SECTIONS EVEN THOUGH OTHERWISE SHOWN.

EXISTING PLANS

EXISTING PLANS ENTITLED ATB-7/84/193-18.42/19.75/25.97 AND ATB-1-19.20 MAY BE INSPECTED IN THE ODOT DISTRICT 4 OFFICE IN AKRON.

ALL ELEVATIONS SHOWN ON THE CONSTRUCTION PLANS ARE FROM FIELD SURVEY INFORMATION GATHERED JUNE OF 2007 AND APRIL OF 2008. THE OHIO DEPARTMENT OF TRANSPORTATION RESURFACING PROJECT ATB-7/84/193 - 18.42/19.75/25.97 WAS CONSTRUCTED IN JULY/AUGUST 2008. SLIGHT VARIATIONS IN THE EXISTING PAVEMENT ELEVATIONS SHOULD BE ANTICIPATED.

ELEVATION DATUM

ALL ELEVATIONS ARE BASED ON U.S.G.S. DATUM.

CONSTRUCTION LIMITS

THE CONSTRUCTION LIMITS SHOWN ON THESE PLANS ARE FOR PHYSICAL CONSTRUCTION ONLY. PROVIDE THE INSTALLATION AND OPERATION OF ALL WORK ZONE TRAFFIC CONTROL AND WORK ZONE TRAFFIC CONTROL DEVICES REQUIRED BY THESE PLANS WHETHER INSIDE OR OUTSIDE THESE CONSTRUCTION LIMITS.

CLEARING AND GRUBBING

ALTHOUGH THERE ARE NO TREES OR STUMPS SPECIFICALLY MARKED FOR REMOVAL WITHIN THE LIMITS OF THE PROJECT, A LUMP SUM QUANTITY IS INCLUDED IN THE GENERAL SUMMARY FOR ITEM 201, CLEARING AND GRUBBING. ALL PROVISIONS AS SET FORTH IN THE SPECIFICATIONS UNDER THIS ITEM ARE INCLUDED IN THE LUMP SUM PRICE BID FOR ITEM 201, CLEARING AND GRUBBING.

CONNECTION BETWEEN EXISTING AND PROPOSED GUARDRAIL

WHEN IT IS NECESSARY TO SPLICE PROPOSED GUARDRAIL TO EXISTING GUARDRAIL, ONLY THE EXISTING GUARDRAIL SHALL BE CUT, DRILLED, OR PUNCHED. THE CONNECTION SHALL BE MADE USING A "W-BEAM RAIL SPLICE" AS SHOWN IN AASHTO M 180. PAYMENT SHALL BE INCLUDED IN THE CONTRACT PRICE FOR THE RESPECTIVE GUARDRAIL ITEMS.

SEEDING AND MULCHING

THE FOLLOWING QUANTITIES ARE PROVIDED TO PROMOTE GROWTH AND CARE OF PERMANENT SEEDED AREAS:

659, TOPSOIL	254	CU. YD.
659, SEEDING AND MULCHING	2279	SQ. YD.
659, REPAIR SEEDING AND MULCHING	114	SQ. YD
659, COMMERCIAL FERTILIZER	0.31	TON
659, LIME	0.47	ACRES
659, WATER	13	M. GAL.

SEEDING AND MULCHING SHALL BE APPLIED TO ALL AREAS OF EXPOSED SOIL BETWEEN THE RIGHT-OF-WAY LINES, AND WITHIN THE CONSTRUCTION LIMITS FOR AREAS OUTSIDE THE RIGHT-OF-WAY LINES COVERED BY WORK AGREEMENT OR SLOPE EASEMENT. QUANTITY CALCULATIONS FOR SEEDING AND MULCHING ARE BASED ON THESE LIMITS.

STORM WATER POLLUTION PREVENTION PLAN (SWPPP) AND TEMPORARY SEDIMENT AMD EROSION CONTROL (TSEC)

THE CONTRACTOR SHALL PREPARE A SWPPP AND DEVELOP TSEC QUANTITIES ACCORDING TO SUPPLEMENTAL SPECIFICATIONS 832. PAYMENT SHALL BE MADE UNDER THE ITEMS SHOWN ON THE SITE PLAN SHEET 26 .

ITEM 304 - AGGREGATE BASE, AS PER PLAN

GRANULATED SLAG (GS) SHALL NOT BE PERMITTED FOR THIS ITEM. ALL OTHER REQUIREMENTS OF SECTION 304 AND 703.17 OF THE CONSTRUCTION AND MATERIAL SPECIFICATION SHALL STILL BE APPLICABLE.

ITEM 606 - ANCHOR ASSEMBLY, TYPE B-98

THIS ITEM SHALL CONSIST OF FURNISHING AND INSTALLING EITHER OF THE FOLLOWING GUARDRAIL END TERMINALS, OR AN APPROVED EQUAL AS LISTED ON ROADWAY ENGINEERING WEB PAGE AT WWW.DOT.STATE.OH.US/DRRC/ UNDER ROADSIDE SAFETY DEVICES FOR APPROVED GUARDRAIL END TREATMENTS:

1) THE SRT-350, GUARDRAIL END TERMINAL AS MANUFACTURED BY TRINITY INDUSTRY, 1170 N. STATE STREET, GIRARD, OHIO 44420 (TELEPHONE: 330-545-4373).

THE LENGTH OF THE SRT-350 SYSTEM IS CONSIDERED TO BE 37'-6", INCLUSIVE OF THREE 12'-6" LONG RAIL ELEMENTS. INSTALLATION SHALL BE AT THE LOCATIONS SPECIFIED IN THE PLANS, IN ACCORDANCE WITH THE MANUFACTURER'S SPECIFICATIONS AS DETAILED ON THE FOLLOWING PRE-APPROVED SHOP DRAWINGS:

DWG. NO.	DRAWING NAME	DWG./ REV. DATE	ODOT APPROVAL DATE
SS444	SLOTTED RAIL TERMINAL POST LAYOUT AND	7/12/99 Rev. 1	8/27/99
SS444M	ERECTION DETAILS SRT-350 (12.5, 8 POST)	7/12/99	
SS425M	SLOTTED RAIL TERMINAL SRT-350 POST LAYOUT AND ERECTION DETAILS (12.5, 9 POST)	6/21/97 Rev. 1	3/6/98

2) THE FLEAT-350 MANUFACTURED BY ROAD SYSTEMS, INC., 2516 MALLORY LANE, STOW, OHIO, 44224, (TELEPHONE: 330-346-0721).

THE LENGTH OF THE FLEAT-350 IS CONSIDERED TO BE 37'-6", INCLUSIVE OF THREE 12'-6" LONG RAIL ELEMENTS. INSTALLATION SHALL BE AT THE LOCATIONS SPECIFIED IN THE PLANS, IN ACCORDANCE WITH THE MANUFACTURER'S SPECIFICATIONS AS DETAILED ON THE FOLLOWING PRE-APPROVED SHOP DRAWINGS:

DWG. NO.	DRAWING NAME	DWG./ REV. DATE	ODOT APPROVAL DATE
FLT-M	FLARED ENERGY ABSORBING TERMINAL (FLEAT-350) ASSEMBLY	4/16/98	7/31/98

REFER TO THE MANUFACTURER'S INSTRUCTION REGARDING THE INSTALLATION OF, AND THE GRADING AROUND, THE FOUNDATION TUBES AND GROUND STRUT. THE TOP OF ANY FOUNDATION TUBE SHOULD BE LESS THAN 4-INCHES ABOVE THE GROUND. THE PLACEMENT OF THE FOUNDATION TUBES SHOULD BE AN APPROPRIATE DEPTH BELOW THE LEVEL LINE IN ORDER TO MAINTAIN THE FINISHED GUARDRAIL HEIGHT OF 27-3/4-INCHES FROM THE EDGE OF THE SHOULDER.

ON-SITE GRADING IS REQUIRED IF THE TOP OF THE FOUNDATION TUBES OR TOP OF THE GROUND STRUT DOES PROJECT MORE THAN 4 INCHES ABOVE THE GROUND LINE.

THE FACE OF THE TYPE B-98 IMPACT HEAD SHALL BE COVERED WITH TYPE G REFLECTIVE SHEETING, PER CMS 730.19: APPROXIMATELY 36" W X 12" H FOR THE SRT-350 AND 14" W X 20" H FOR THE FLEAT.

PAYMENT FOR THE ABOVE WORK SHALL BE MADE AT THE UNIT PRICE BID FOR ITEM 606, ANCHOR ASSEMBLY, TYPE B-98, EACH, AND SHALL INCLUDE ALL LABOR, TOOLS, EQUIPMENT AND MATERIALS NECESSARY TO CONSTRUCT A COMPLETE AND FUNCTIONAL ANCHOR ASSEMBLY SYSTEM, INCLUDING REFLECTIVE SHEETING AND ALL RELATED HARDWARE, GRADING, EMBANKMENT AND EXCAVATION NOT SEPARATELY SPECIFIED, AS REQUIRED BY THE MANUFACTURER.

PAVING UNDER GUARDRAIL

THIS OPERATION SHALL INCLUDE PREPARATION OF THE GRADED SHOULDER USING 209, LINEAR GRADING, AS PER PLAN AND PAVING UNDER THE GUARDRAIL USING 448 ASPHALT CONCRETE INTERMEDIATE COURSE, TYPE 1, UNDER GUARDRAIL, PG64-22, AS PER PLAN.

ITEM 209, LINEAR GRADING, AS PER PLAN SHALL CONSIST OF EXCAVATING EXISTING MATERIAL, PLACING GRANULAR MATERIAL AND APPLYING HERBICIDE AS SPECIFIED IN THE PLANS AND IN ACCORDANCE WITH THE FOLLOWING:

ALL COLLECTED DEBRIS, ASPHALT AND TOPSOIL, INCLUDING RHIZOMES, ROOTS AND OTHER VEGETATIVE PLANT MATERIAL SHALL BE REMOVED AND DISPOSED OF AS SPECIFIED IN 105.17.

THE REMOVED MATERIAL SHALL BE REPLACED WITH COMPACTABLE GRANULAR MATERIAL CONFORMING TO 703.16 PLACED TO GRADE AS DETAILED ON THE TYPICAL SECTION OR AS APPROVED BY THE ENGINEER.

HERBICIDE SHALL BE EPA APPROVED FOR PAVING UNDER GUARDRAIL. IT SHALL BE APPLIED TO THE PREPARED AREA AFTER FINAL LEVELING AND GRADING HAS BEEN COMPLETED. THE APPLICATION SHALL BE JUST PRIOR TO PAVING AND SHALL STRICTLY ADHERE TO THE MANUFACTURER'S INSTRUCTIONS.

EACH SUCCESSFUL BIDDER MUST BE LICENSED BY THE OHIO DEPARTMENT OF AGRICULTURE AS A COMMERCIAL APPLICATOR AND ALL PERSONS INVOLVED IN THE ACTUAL SPRAYING SHALL BE LICENSED AS COMMERCIAL OPERATORS IN THE APPROPRIATE SPRAY CATEGORY.

HERBICIDE LABEL, MATERIAL SAFETY DATA SHEET AND COPY OF APPLICATORS LICENSES SHALL BE SUBMITTED TO THE ENGINEER FOR VERIFICATION PRIOR TO COMMENCING WORK.

ALL EQUIPMENT, MATERIALS AND LABOR REQUIRED TO PERFORM THE WORK OUTLINED ABOVE SHALL BE INCLUDED FOR PAYMENT UNDER ITEM 209, LINEAR GRADING, AS PER PLAN.

PAVING UNDER GUARDRAIL SHALL CONSIST OF PLACING ITEM 448 TO THE DEPTH SPECIFIED. PAVING MAY BE PLACED UNDER EXISTING OR PROPOSED GUARDRAIL USING ONE OF THE FOLLOWING METHODS:

METHOD A: 1) SET GUARDRAIL POSTS (OMIT IF EXISTING GUARDRAIL IS TO REMAIN)

2) PLACE ITEM 448

METHOD B: 1) PLACE ITEM 448

2) BORE ASPHALT AT POST LOCATIONS (MAY BE OMITTED IF STEEL POSTS ARE USED)

3) SET GUARDRAIL POSTS

4) PATCH AROUND POSTS. THE MATERIALS USED FOR PATCHING SHALL BE AN ASPHALT CONCRETE APPROVED BY THE ENGINEER. PATCHED AREAS SHALL BE COMPACTED USING EITHER HAND OR MECHANICAL METHODS. FINISHED SURFACES SHALL BE SMOOTH AND SLOPED TO DRAIN AWAY FROM THE POSTS.

ALL EQUIPMENT, MATERIALS AND LABOR REQUIRED TO PERFORM THE WORK OUTLINED ABOVE, WITH THE EXCEPTION OF SETTING GUARDRAIL POSTS, SHALL BE INCLUDED FOR PAYMENT UNDER ITEM 448, ASPHALT CONCRETE, INTERMEDIATE COURSE, TYPE 1, UNDER GUARDRAIL, PG64-22, AS PER PLAN.

CALCULATED JDL CHECKED PDG

GENERAL NOTES

ATB-84-20.50

25199GN001.DGN 04/29/09 SAM.SCB

CALCULATED JDL
CHECKED PDG

GENERAL NOTES

ITEM 621 RAISED PAVEMENT MARKER REMOVED

RAISED PAVEMENT MARKERS WHICH CONFLICT WITH THE PROPOSED MAINTENANCE OF TRAFFIC PHASES AND PAVEMENT PLANING SHALL BE REMOVED IN A MANNER THAT PREVENTS DAMAGE TO THE PAVEMENT. THE FOLLOWING ESTIMATED QUANTITY HAS BEEN INCLUDED IN THE GENERAL SUMMARY:

ITEM 621 RAISED PAVEMENT MARKER REMOVED 11 EACH

ITEM SPECIAL - MAILBOX SUPPORT

THIS WORK SHALL CONSIST OF FURNISHING AND ERECTING MAIL-BOX SUPPORTS AND ANY ASSOCIATED MOUNTING HARDWARE IN ACCORDANCE WITH PLAN DETAILS, AND ATTACHING AN OWNER-SUPPLIED MAILBOX AT LOCATIONS SPECIFIED IN THE PLAN, OR OTHERWISE ESTABLISHED BY THE ENGINEER.

WOOD POSTS SHALL BE NOMINAL 4" BY 4" SQUARE OR 4½" DIAMETER ROUND, AND CONFORM TO 710.14.

STEEL POSTS SHALL BE NOMINAL PIPE SIZE 2" I.D. O.D., AND CONFORM TO AASHTO M 181.

HARDWARE (PLATES, SCREWS, BOLTS, ETC.) SHALL BE COMMER-CIAL-GRADE GALVANIZED STEEL.

POSTS SHALL BE SET PER THE FIRST PARAGRAPH OF 606.03, AND SHALL IN NO INSTANCE BE ENCASED IN CONCRETE.

SUPPORT HARDWARE SHALL ACCOMMODATE EITHER A SINGLE OR A DOUBLE MAILBOX INSTALLATION, AND NO MORE THAN TWO BOXES MAY BE MOUNTED ON A SINGLE POST.

THE MAILBOX SHALL BE SECURELY AND NEATLY ATTACHED BY THE CONTRACTOR TO THE NEW SUPPORT. THE CONTRACTOR SHALL FURNISH ALL NECESSARY ATTACHMENT HARDWARE (NUTS, BOLTS, PLATES, SPACERS, AND WASHERS) AS NECESSARY TO ACCOMMODATE THE COMPLETE INSTALLATION.

IN THE ABSENCE OF A NEW BOX SUPPLIED BY THE OWNER, THE CONTRACTOR SHALL SALVAGE THE EXISTING BOX AND PLACE IT ON THE NEW SUPPORT. DUE CARE SHALL BE EXERCISED IN SUCH AN OPERATION, AND THE CONTRACTOR SHALL BE RESPONSIBLE FOR REPAIRING OR REPLACING ANY BOX DAMAGED BY IMPROPER HANDLING ON HIS PART, AS JUDGED AND DIRECTED BY THE EN-GINEER.

THE CONTRACTOR SHALL BE RESPONSIBLE FOR COORDINATING WITH THE LOCAL POST MASTER REGARDING THE TIMING OF THE MOVEMENT OF ANY MAILBOX TO A NEW LOCATION.

PAYMENT UNDER THIS ITEM SHALL BE LIMITED TO FINAL PERM-ANENT INSTALLATIONS. TEMPORARY INSTALLATIONS SHALL BE IN ACCORDANCE WITH 107.10. HOWEVER, THE SAME MATERIAL AND SIZE LIMITATIONS AS FOR PERMANENT INSTALLATIONS SHALL APPLY.

A CONTINGENCY QUANTITY OF 2 MAILBOX SUPPORT SYSTEMS, SINGLE HAVE BEEN INCLUDED IN THE PLANS FOR USE AS DIRECTED BY THE ENGINEER.

MAILBOX SUPPORTS, COMPLETE IN PLACE, WILL BE PAID FOR AT THE CONTRACT UNIT PRICE PER EACH, FOR ITEM SPECIAL MAILBOX SUPPORT SYSTEM, SINGLE.

SIGN PLACEMENT

THE EXACT LOCATIONS OF SIGNS ARE TO BE STAKED AND CHECKED BY THE ENGINEER PRIOR TO PLACEMENT TO INSURE CLEARANCE OF DRIVES, ROADWAYS AND OTHER OBSTACLES. IF THERE ARE ANY CONFLICTS, THEY ARE TO BE ADJUSTED AS DIRECTED BY THE ENGINEER. PAYMENT FOR THIS IS INCIDENTAL TO ALL 630 ITEMS.

ITEM 605 - AGGREGATE DRAINS

AGGREGATE DRAINS SHALL BE PLACED AT 50 FOOT INTERVALS ON EACH SIDE OF NORMAL CROWNED SECTIONS, STAGGERED SO THAT EACH DRAIN IS 25 FEET FROM THE ADJACENT DRAIN ON THE OPPOSITE SIDE, AND AT 25 FOOT INTERVALS ON THE LOW SIDE ONLY OF SUPERELEVATED SECTIONS. AN AGGREGATE DRAIN SHALL BE PLACED AT THE LOW POINT OF EACH SAG VERTICAL CURVE.

THE FOLLOWING TABLE INDICATES THE PROPOSED AGGREGATE DRAIN LOCATIONS AND LENGTHS.

AGGREGATE DRAIN CALCULATION		
STATION	SIDE	LENGTH
21+24.00	LT.	20
21+52.00	RT.	16
21+74.00	LT.	15
22+03.00	RT.	12
26+95.00	LT.	8
27+20.00	LT.	7
27+46.00	LT.	7
27+71.00	LT.	8
27+96.00	LT.	9
28+22.00	LT.	9
28+47.00	LT.	8
28+73.00	LT.	7.5
28+98.00	LT.	7.5
TOTAL AGGREGATE DRAIN LENGTH CARRIED TO GENERAL SUMMARY =		134

ATB-84-20.50

25199GN002.DGN 04/28/09 SCB

ITEM 614 - MAINTAINING TRAFFIC

A. GENERAL

A MINIMUM OF ONE TEN FOOT LANE IN EACH DIRECTION SHALL BE MAINTAINED ON THE EXISTING PAVEMENT (COMPLETED PAVEMENT AND TEMPORARY PAVEMENT) DURING CONSTRUCTION OF THE WORK.

CONES SHALL NOT BE ACCEPTABLE TRAFFIC CONTROL DEVICES FOR LANE RESTRICTIONS OR LANE REDUCTIONS THAT ARE IN OPERATION ONE-HALF HOUR AFTER SUNSET OR ONE HALF-HOUR BEFORE SUNRISE. ALL NIGHTTIME LANE RESTRICTIONS SHALL REQUIRE DRUMS OR BARRICADES AT A MAXIMUM SPACING OF FIFTY (50) FEET.

STAGE 1 SHALL BE THE NEW BRIDGE DECK CONSTRUCTION IN PART-WIDTH PHASES WHILE MAINTAINING A MINIMUM OF ONE LANE OF TWO-WAY TRAFFIC ON S.R. 84 UTILIZING EXISTING AND TEMPORARY TRAFFIC SIGNALS AT THE INTERSECTIONS. DURING EACH CLOSURE ONLY ONE SIDE OF THE BRIDGE MAY BE WORKED ON AT ONE TIME.

I.R. 90 TRAFFIC SHALL BE MAINTAINED DURING THE STAGE 1 CONSTRUCTION AS DETAILED BELOW.

STAGE 2 SHALL BE THE PAINTING OF THE STEEL ON THE BRIDGE. BRIDGE PAINTING SHALL BE DONE AT NIGHT WITH LANE CLOSURES ON I.R. 90 AS PER THE PERMITTED LANE CLOSURE REQUIREMENTS BELOW AND DETAILS ON SHEETS 19 & 20 .

B. NOTIFICATION

THE CONTRACTOR SHALL ADVISE THE ODOT DISTRICT OFFICE (330) 786-2211 EIGHTEEN (18) DAYS IN ADVANCE PRIOR TO THE BEGINNING OF WORK. ALL WORK ZONE DEVICES REQUIRED SHALL BE FURNISHED, ERECTED, MAINTAINED, AND SUBSEQUENTLY REMOVED BY THE CONTRACTOR.

C. RESTRICTIONS

THE TWO (2) LANES OF TRAFFIC SHALL BE MAINTAINED ON S.R. 84 AT ALL TIMES EXCEPT DURING THE LANE RESTRICTIONS AS NOTED BELOW:

1. STAGE 1 PRE-PHASE 1 WORK:

A. S.R. 84 AND S.R. 193:

A MINIMUM OF ONE LANE TWO-WAY TRAFFIC USING FLAGGERS AS PER MT-97.10 SHALL BE MAINTAINED DURING WORKING HOURS ONLY FOR CONSTRUCTION OF THE PAVEMENTS FOR MAINTAINING TRAFFIC ON S.R. 193 AND S.R. 84/S.R.193.

B. I.R. 90 RAMPS 'B' AND 'D':

SEE REQUIREMENTS UNDER ITEM 5 BELOW.

2. STAGE 1 PHASE 1 AND 2 WORK (S.R. 84):

A MINIMUM OF ONE LANE TWO-WAY TRAFFIC SHALL BE MAINTAINED ON S.R. 84 DURING BRIDGE NO. ATB-84-2050 DECK RECONSTRUCTION OPERATIONS. STAGE 1 PHASES 1 AND 2 WORK (S.R. 84) SHALL BE COMPLETED IN 180 CONSECUTIVE DAYS.

THE SIGNALIZED CLOSING OF ONE LANE OF S.R. 84 WITH PCB SHALL BE AS PER MT-96.11 AS MODIFIED BY THE ACCOMPANYING MAINTENANCE OF TRAFFIC PLANS.

3. STAGE 1 PHASE 3 WORK (S.R. 84):

A MINIMUM OF ONE LANE TWO-WAY TRAFFIC USING FLAGGERS AS PER MT-97.10 SHALL BE MAINTAINED ON S.R. 84 DURING THE PLACEMENT OF THE FINAL SURFACE COURSE AND PAVEMENT MARKING.

4. ONLY DURING OFF-PEAK PERIODS (ie ANY PERIOD OTHER THAN 6-8AM AND 3-6PM) SHALL THE CONTRACTOR INSTALL AND SUBSEQUENTLY RESET ALL TRAFFIC CONTROL NECESSARY FOR THE WORK ZONE FOR EACH CONSTRUCTION PHASE.

PRIOR TO OPENING TO TRAFFIC EACH LANE SHALL BE IN A SAFE, PASSABLE CONDITION. ALL TRANSVERSE JOINTS SHALL EXTEND ACROSS THE FULL LANE AND SHOULDER WIDTH AND EACH LANE SHALL BE FREE FROM UNEVEN LONGITUDINAL JOINTS. THE CONTRACTOR SHALL PROVIDE ASPHALT WEDGES FOR TRANSVERSE JOINTS WHEREVER THERE ARE PAVEMENT ELEVATION DIFFERENCES.

5. I.R. 90 RAMPS:

TRAFFIC SHALL BE MAINTAINED AT ALL TIMES ON ALL THE I.R. 90 INTERCHANGE RAMPS. PAVEMENT FOR MAINTAINING TRAFFIC SHALL BE PLACED ON ONLY ONE SIDE OF THE PAVEMENT AT A TIME. A MINIMUM OF ONE 11-FOOT LANE SHALL BE MAINTAINED AT ALL TIMES, USING THE EXISTING PAVEMENT AND PAVED BERMS AND THE NEW PAVEMENT FOR MAINTAINING TRAFFIC.

6. I.R. 90:

ALL LANES OF I.R. 90 TRAFFIC SHALL BE MAINTAINED AT ALL TIMES, EXCEPT FOR MINIMUM PERIODS AS NOTED BELOW.

A. PERMITTED LANE CLOSURE REQUIREMENTS:

ONE LANE TRAFFIC ON I.R. 90 WILL BE PERMITTED, BUT IT IS THE INTENT TO MINIMIZE THE IMPACT TO THE TRAVELING PUBLIC. THE TIME AND DURATION OF ALL I.R. 90 LANE CLOSURES AND RESTRICTIONS SHALL BE AS PER THE PERMITTED LANE CLOSURE CHART ON THE DATE THIS PROJECT SELLS AVAILABLE ON THE DISTRICT WEB SITE AT:

HTTP://PLCM.DOT.STATE.OH.US//PLCM/PLCM_WEB.JSP

ALL MAINTENANCE OF TRAFFIC WORK ON I.R. 90, INCLUDING INSTALLATIONS OF SIGNING AND LANE CLOSURES SHALL OCCUR WITHIN THE PERMITTED CLOSURE TIME FRAMES. NO OTHER EXCEPTIONS OR TIME EXTENSIONS WILL BE PERMITTED.

THE CLOSING OF I.R. 90 TO ONE LANE TRAFFIC SHALL BE AS PER MT-95.30. LAW ENFORCEMENT OFFICERS (L.E.O.'S) WITH PATROL CAR SHALL BE USED DURING EACH CLOSURE SET-UP AND TEAR-DOWN.

B. ONE LANE MAY BE CLOSED TO TRAFFIC DURING DECK REMOVAL AND DECK REPLACEMENT OPERATIONS (STAGE 1) OVER THE VARIOUS TRAFFIC LANES.

NO FULL DEPTH BRIDGE REPAIR SHALL BE PERFORMED OVER AN OPEN LANE. A SAFETY NET OR PLATFORM SHALL BE REQUIRED TO PROTECT THE ROADWAY, RAILROAD OR STREAM DURING THE REMOVAL OF THE EXISTING CONCRETE PARAPET AND DECK. THE CONTRACTOR SHALL PROVIDE A SAFETY NET OR PLATFORM OF SUITABLE STRENGTH ON THE UNDERSIDE OF THE DECK. THE DESIGN OF THE NET OR PLATFORM SHALL CONFORM WITH OSHA REQUIREMENTS AND THE APPROVAL OF THE ENGINEER AND SHALL REMAIN IN PLACE UNTIL THE WORK HAS BEEN COMPLETED AND ACCEPTED OR AS DIRECTED BY THE ENGINEER. THE CONTRACTOR SHALL SUBMIT A DEMOLITION PLAN AND SAFETY NET OR PLATFORM DESIGN 10 DAYS PRIOR TO COMMENCING ANY DEMOLITION FOR APPROVAL BY THE ENGINEER. THE SUBMITTAL SHALL BE IN WRITING TO THE DISTRICT CONSTRUCTION ENGINEER WITH A COPY TO THE PROJECT ENGINEER.

C. ONE LANE MAY BE CLOSED TO TRAFFIC DURING BRIDGE PAINTING OPERATIONS (STAGE 2) OVER THE VARIOUS TRAFFIC LANE.

D. LIQUIDATED DAMAGES:

THE CONTRACTOR SHALL HAVE 180 CONSECUTIVE CALENDAR DAYS TO COMPLETE ALL WORK, AS DETAILED IN THE PLANS. THE 180 DAY TIME SPAN SHALL BEGIN THE FIRST DAY THAT TRAFFIC IS RESTRICTED ON SR 84 AND SHALL END WHEN THE TRAFFIC CAN TRAVERSE THE PROJECT UNRESTRICTED. THE CONTRACTOR SHALL BE ASSESSED A DISINCENTIVE PENALTY IN THE AMOUNT OF $1,300 PER DAY FOR EACH CALENDAR DAY THAT THE ABOVE SPECIFIED WORK IS NOT COMPLETED AND TRAFFIC IS NOT OPEN TO UNRESTRICTED TRAFFIC.

UNRESTRICTED TRAFFIC IS DEFINED AS ALL TRAFFIC LANES BEING UTILIZED IN THEIR FINAL DESIGN WIDTH WITH ALL MARKINGS, RPM'S, AND SAFETY FEATURES INSTALLED, ALONG WITH NO RESTRICTIONS WITHIN 2 FEET OF THE EDGE LINE ON THE SHOULDERS.

E. ESTIMATED QUANTITIES:

THE FOLLOWING ESTIMATED QUANTITY HAS BEEN CARRIED TO THE GENERAL SUMMARY FOR USE BY THE ENGINEER TO ADJUST OR REPAIR PAVEMENT SURFACES:

ITEM 614 ASPHALT CONCRETE FOR MAINTAINING TRAFFIC 20 CU. YD.

ALL WORK AND TRAFFIC CONTROL DEVICES SHALL BE IN ACCORDANCE WITH CMS 614 AND OTHER APPLICABLE PORTIONS OF THE SPECIFICATIONS, AS WELL AS THE OHIO MANUAL OF UNIFORM TRAFFIC CONTROL DEVICES. PAYMENT FOR ALL LABOR, EQUIPMENT AND MATERIALS SHALL BE INCLUDED IN THE LUMP SUM CONTRACT PRICE FOR ITEM 614, MAINTAINING TRAFFIC, UNLESS SEPARATELY ITEMIZED IN THE PLAN.

MAINTENANCE OF TRAFFIC SEQUENCE

STAGE 1 PRE-PHASE 1

SIMULTANEOUS TO THE MAINTENANCE OF TRAFFIC PAVEMENT CONSTRUCTION ON THE APPROACHES TO THE BRIDGE, CONSTRUCTION ON THE TEMPORARY SIGNAL SHALL BE DONE. AT THE COMPLETION OF THE MAINTENANCE OF TRAFFIC PAVEMENT AND THE TEMPORARY SIGNAL, AND IMMEDIATELY PRIOR TO ESTABLISHING THE SIGNALIZED CLOSING OF ONE LANE WITH THE EXISTING SIGNAL AND TEMPORARY SIGNAL, APPLY THE WORK ZONE PAVEMENT MARKING TO DELINEATE THE REVISED LANE USAGE AT THE INTERSECTIONS.

STAGE 1 PHASE 1

INITIATE THE SIGNALIZED CLOSING OF THE NORTHBOUND LANE OF S.R. 84 WITH THE MODIFIED EXISTING SIGNAL AND TEMPORARY SIGNAL. PLACE THE PORTABLE CONCRETE BARRIER AS SHOWN ON THE PLANS. REPLACE THE NORTHBOUND PORTION OF THE BRIDGE DECK AS SHOWN ON THE TYPICAL SECTIONS. ADDITIONALLY, CONSTRUCT PART WIDTH SECTIONS OF THE APPROACH SLABS AND THE FULL DEPTH PAVEMENT BUILD-UP THROUGH THE LIMITS OF THE 302 ON THE SHOULDERS BEHIND THE PORTABLE CONCRETE BARRIER. PROVIDE PAVEMENT PLANING TO ACCOMMODATE THE REVISED PROFILE GRADE PRIOR TO THE PAVEMENT WIDENING. PLACE WORK ZONE MARKING FOR PHASE 2 ON THE NEW CONSTRUCTION IN PREPARATION OF PHASE 2.

STAGE 1 PHASE 2

SHIFT THE SIGNALIZED CLOSING TO SOUTHBOUND S.R. 84 WITH THE MODIFIED EXISTING SIGNAL AND TEMPORARY SIGNAL. PLACE THE PCB AS SHOWN ON THE PLANS. REPLACE THE SOUTHBOUND PORTION OF THE BRIDGE DECK AS SHOWN ON THE TYPICAL SECTIONS. COMPLETE THE CONSTRUCTION OF THE APPROACH SLABS AND THE FULL DEPTH PAVEMENT BUILD-UP THROUGH THE LIMITS OF THE 302 ON THE OUTSIDE SHOULDERS BEHIND THE PORTABLE CONCRETE BARRIER. PROVIDE PAVEMENT PLANING TO ACCOMMODATE THE REVISED PROFILE GRADE PRIOR TO THE PAVEMENT WIDENING. PLACE WORK ZONE MARKINGS TO RE-ESTABLISH TWO-WAY TRAFFIC.

REMOVE THE TEMPORARY TRAFFIC SIGNAL AND CONFLICTING WORK ZONE MARKINGS ON THE APPROACHES. RESTORE THE EXISTING SIGNAL OPERATION TO THE PRE-CONSTRUCTION CONDITION.

STAGE 1 PHASE 3

PLACE THE ASPHALT CONCRETE SURFACE COURSE AND FINAL PAVEMENT MARKINGS MAINTAINING ONE LANE TRAFFIC WITH FLAGGERS, MT-97.10.

STAGE 2

PAINT STEEL ON BRIDGE AS PER MAINTENANCE OF TRAFFIC REQUIREMENTS OF ITEM 6 ABOVE. COMPLETE ALL MISCELLANEOUS CONSTRUCTION AND CLEAN-UP ACTIVITIES.

ALTERNATE MAINTENANCE OF TRAFFIC PLANS

IF THE CONTRACTOR SO ELECTS, HE MAY SUBMIT ALTERNATE METHODS FOR THE MAINTENANCE OF TRAFFIC, PROVIDED THE INTENT OF THE ABOVE PROVISIONS IS FOLLOWED AND NO ADDITIONAL INCONVENIENCE TO THE TRAVELING PUBLIC RESULTS THERE FROM. NO ALTERNATE PLANS SHALL BE PLACED IN EFFECT UNTIL APPROVAL HAS BEEN GRANTED IN WRITING BY THE ODOT DISTRICT CONSTRUCTION ENGINEER.

CALCULATED PDG CHECKED JDL

MAINTENANCE OF TRAFFIC NOTES

ATB-84-20.50

25199MN001.DGN 04/28/09 SAM.SCB

CALCULATED PDG CHECKED JDL

MAINTENANCE OF TRAFFIC NOTES

ITEM 614 - LAW ENFORCEMENT OFFICER WITH PATROL CAR

USE OF LAW ENFORCEMENT OFFICERS (LEOS) BY CONTRACTORS OTHER THAN THE USES SPECIFIED IN THIS NOTE WILL NOT GENERALLY BE PERMITTED AT PROJECT COST UNLESS PRIOR APPROVAL HAS BEEN OBTAINED FROM THE ENGINEER. LEOS SHOULD NOT BE USED WHERE THE OHIO MANUAL OF UNIFORM TRAFFIC CONTROL DEVICES (OMUTCD) INTENDS THAT FLAGGERS BE USED.

IN ADDITION TO THE REQUIREMENTS OF CMS 614 AND THE OMUTCD, A UNIFORMED LEO WITH AN OFFICIAL PATROL CAR (CAR WITH TOP-MOUNTED EMERGENCY FLASHING LIGHTS AND COMPLETE MARKINGS OF THE APPROPRIATE LAW ENFORCEMENT AGENCY) SHOULD BE PROVIDED FOR CONTROLLING TRAFFIC FOR THE FOLLOWING TASKS:

FOR LANE CLOSURES: DURING INITIAL SET-UP PERIODS, TEAR DOWN PERIODS, SUBSTANTIAL SHIFTS OF A CLOSURE POINT OR WHEN NEW LANE CLOSURE ARRANGEMENTS ARE INITIATED. IN GENERAL, LEOS SHOULD BE POSITIONED AT THE POINT OF LANE RESTRICTION OR ROAD CLOSURE AND TO MANUALLY CONTROL TRAFFIC MOVEMENTS THROUGH INTERSECTIONS IN WORK ZONES.

DURING THE ENTIRE ADVANCE PREPARATION AND CLOSURE SEQUENCE WHERE COMPLETE BLOCKAGE OF TRAFFIC IS REQUIRED.

DURING A TRAFFIC SIGNAL INSTALLATION OR WHEN TRAFFIC NEEDS TO BE DIRECTED THROUGH AN ENERGIZED TRAFFIC SIGNAL CONTRARY TO THE SIGNAL DISPLAY (E.G., DIRECTING MOTORISTS THROUGH A RED LIGHT).

LEOS SHOULD NOT FORGO THEIR TRAFFIC CONTROL RESPONSIBILITIES TO APPREHEND MOTORISTS FOR ROUTINE TRAFFIC VIOLATIONS. HOWEVER, IF A MOTORISTS ACTIONS ARE CONSIDERED TO BE RECKLESS, THEN PURSUIT OF THE MOTORIST IS APPROPRIATE.

THE LEOS WORK AT THE DIRECTION OF THE CONTRACTOR. THE CONTRACTOR IS RESPONSIBLE FOR SECURING THE SERVICES OF THE LEOS AND COMMUNICATING THE INTENTIONS OF THE PLANS WITH RESPECT TO DUTIES OF THE LEOS. THE ENGINEER SHALL HAVE FINAL CONTROL OVER THE LEOS' DUTIES AND PLACEMENT, AND WILL RESOLVE ANY ISSUES THAT MAY ARISE BETWEEN THE TWO PARTIES. THE CONTRACTOR SHALL PROVIDE THE ENGINEER WITH A LIST OF THE APPROPRIATE LAW ENFORCEMENT AGENCY(S), INCLUDING ADDRESS AND TELEPHONE NUMBER.

THE LEO SHOULD REPORT IN TO THE CONTRACTOR PRIOR TO THE START OF THE SHIFT TO RECEIVE INSTRUCTIONS REGARDING SPECIFIC WORK ASSIGNMENTS DURING THE SHIFT. THE LEO IS EXPECTED TO STAY AT THE PROJECT SITE FOR THE ENTIRE DURATION OF THE SHIFT. SHOULD IT BE NECESSARY TO LEAVE THE PROJECT SITE, THE LEO SHOULD NOTIFY THE ENGINEER. THE CONTRACTOR SHALL PROVIDE THE LEO WITH A TWO-WAY COMMUNICATION DEVICE WHICH SHALL BE RETURNED TO THE CONTRACTOR AT THE END OF THE SHIFT.

LAW ENFORCEMENT OFFICERS (WITH PATROL CAR) REQUIRED BY THE TRAFFIC MAINTENANCE TASKS ABOVE SHALL BE PAID FOR ON A UNIT PRICE (HOURLY) BASIS UNDER ITEM 614, LAW ENFORCEMENT OFFICER (WITH PATROL CAR). THE FOLLOWING ESTIMATED QUANTITY HAS BEEN CARRIED TO THE GENERAL SUMMARY.

ITEM 614, LAW ENFORCEMENT OFFICER WITH PATROL CAR 200 HOURS

THE HOURS PAID SHALL INCLUDE MINIMUM SHOW-UP TIME REQUIRED BY THE LAW ENFORCEMENT AGENCY INVOLVED.

ANY ADDITIONAL COSTS (ADMINISTRATIVE OR OTHERWISE) INCURRED BY THE CONTRACTOR TO OBTAIN THE SERVICES OF A LEO ARE INCLUDED WITH THE BID UNIT PRICE FOR ITEM 614, LAW ENFORCEMENT OFFICER WITH PATROL CAR.

ITEM 614 - BARRIER REFLECTORS AND/OR OBJECT MARKERS

BARRIER REFLECTORS AND/OR OBJECT MARKERS SHALL BE INSTALLED ON ALL PORTABLE CONCRETE BARRIER USED FOR TRAFFIC CONTROL. BARRIER REFLECTORS, OBJECT MARKERS AND THEIR INSTALLATION SHALL CONFORM TO CMS 626, EXCEPT THAT THE SPACING SHALL BE 50 FEET. SEE SHEET 12 FOR ESTIMATED QUANTITIES.

COORDINATION OF CONTRACTORS

THE ATB-90-14.50 PAVEMENT REHABILITATION PROJECT WILL BE CONSTRUCTED CONCURRENTLY WITH THE ATB-84-20.50 PROJECT. THE CONTRACTOR SHALL WORK TO ASSURE SMOOTH TRANSITIONAL FLOW FROM ONE PROJECT TO THE OTHER. THE MAINTENANCE OF TRAFFIC ZONES FOR THESE TWO PROJECTS ARE ADJACENT TO ONE ANOTHER. IT IS ESSENTIAL THAT THE CONTRACTOR COORDINATE THEIR IR-90 MAINTENANCE OF TRAFFIC SCHEMES TO AVOID CONFUSING OR CONTRADICTORY SIGNING AND LANE CLOSURES. THE CONTRACTOR SHALL CONDUCT THEIR WORK IN SUCH A MANNER AS NOT TO HINDER THE PROGRESS OR COMPLETION OF THE WORK ON THE OTHER PORTION OF THE PROJECT. ALL COORDINATION BETWEEN PART 1 AND PART 2 SHALL BE AS DIRECTED BY THE ENGINEER. ALL COSTS ASSOCIATED WITH THIS COORDINATION SHALL BE INCLUDED IN ITEM 614, MAINTAINING TRAFFIC.

ITEM 614 - WORK ZONE IMPACT ATTENUATOR FOR 24" WIDE HAZARDS (UNIDIRECTIONAL OR BIDIRECTIONAL)

THIS ITEM SHALL CONSIST OF FURNISHING AND INSTALLING ONE OF THE FOLLOWING IMPACT ATTENUATORS:

1. THE QUADGUARD CZ, (24 INCHES WIDE SIX-BAY) WORK ZONE IMPACT ATTENUATOR MANUFACTURED BY ENERGY ABSORPTION SYSTEMS, INC., 35 EAST WACKER DRIVE, CHICAGO, IL 60601 (TELEPHONE: 312-467-6750).

   THE LENGTH OF THE SIX-BAY QUADGUARD CZ IS 20'-9". INSTALLATION SHALL BE AT THE LOCATIONS SPECIFIED IN THE PLANS, IN ACCORDANCE WITH THE MANUFACTURER'S SPECIFICATIONS AS DETAILED ON THE FOLLOWING PRE-APPROVED SHOP DRAWINGS:

DRAWING NUMBER: QSCZCVR-T4
DRAWING NAME: QUADGUARD CZ SYSTEM FOR CONSTRUCTION ZONES
REVISION DATE: 5/13/99 REV. J
ODOT APPROVAL DATE: 8/27/99

DRAWING NUMBER: 35-40-10
DRAWING NAME: QUADGUARD SYSTEM CONCRETE PAD, CZ, QG
REVISION DATE: 11/19/97 REV. D
ODOT APPROVAL DATE: 8/27/99

DRAWING NUMBER: 35-40-16
DRAWING NAME: QUADGUARD SYSTEM BACKUP ASSEMBLY, CZ, QG
REVISION DATE: 7/30/99 REV. F
ODOT APPROVAL DATE: 8/27/99

DRAWING NUMBER: 35405IZ
DRAWING NAME: QUADGUARD CZ SYSTEM NOSE ASSEMBLY, CZ, QG, 24, 30, 36
REVISION DATE: 5/17/99
ODOT APPROVAL DATE: 8/27/99

DRAWING NUMBER: 35-40-18
DRAWING NAME: TRANSITION ASSEMBLY, 4 OFFSET, QG
REVISION DATE: 6/25/99 REV. F
ODOT APPROVAL DATE: 8/27/99

DRAWING NUMBER: 35400260
DRAWING NAME: QUADGUARD SYSTEM PCMB ANCHOR ASSEMBLY
REVISION DATE: 11/19/97 REV. C
ODOT APPROVAL DATE: 8/27/99

2. THE TRACC (TRINITY ATTENUATING CRASH CUSHION) MANUFACTURED BY TRINITY INDUSTRY, 1170 N. STATE STREET, GIRARD, OHIO 44420 (TELEPHONE: 330-545-4373).

   THE TRACC IS 21'-0" LONG AND 2'-7" WIDE. INSTALLATION SHALL BE AT THE LOCATIONS SPECIFIED IN THE PLANS, IN ACCORDANCE WITH THE MANUFACTURER'S SPECIFICATIONS AS DETAILED ON THE FOLLOWING PRE-APPROVED SHOP DRAWINGS:

DRAWING NUMBER: SS450
DRAWING NAME: CRASH-CUSHION ATTENUATING TERMINAL PLAN, ELEVATION & SECTIONS
REVISION DATE: 3/12/99 REV. 1
ODOT APPROVAL DATE: 8/27/99

DRAWING NUMBER: SS455
DRAWING NAME: TRACC TRANSITION TO W-BEAM MEDIAN BARRIER PLAN, ELEVATION & SECTIONS
REVISION DATE: 2/18/99
ODOT APPROVAL DATE: 8/27/99

DRAWING NUMBER: SS461
DRAWING NAME: TRACC TRANSITION TO CONCRETE SAFETY SHAPE BARRIER PLAN, ELEVATION & SECTIONS
REVISION DATE: 6/30/99 REV. 1
ODOT APPROVAL DATE: 8/27/99

DRAWING NUMBER: SS462
DRAWING NAME: TRACC TRANSITION TO CONCRETE BARRIER SINGLE SLOPE PLAN, ELEVATION & SECTIONS
REVISION DATE: 6/30/99
ODOT APPROVAL DATE: 8/27/99

3. THE BARRIER SYSTEMS, INC. TAU-II IMPACT ATTENUATOR, DISTRIBUTED BY ROAD SYSTEMS INC., SALES SUPPORT, 2183 ELM TRACE, AUSTINTOWN, OH 44515, (TELEPHONE 330-799-9291)

   THE TAU-II FOR THIS NOTE IS A PARALLEL 8-BAY UNIT (24' LONG AND 35" WIDE). INSTALLATION SHALL BE AT THE LOCATIONS SPECIFIEDIN THE PLANS, IN ACCORDANCE WITH THE MANUFACTURER'S SPECIFICATIONS AS DETAILED ON THE FOLLOWING PRE-APPROVED SHOP DRAWINGS:

DRAWING NUMBER: A040416
DRAWING NAME: UNIVERSAL TAU-II PARTS LIST
REVISION DATE: 4/22/04
ODOT APPROVAL DATE: 10/16/04

DRAWING NUMBER: A040420
DRAWING NAME: UNIVERSAL TAU-II FOUNDATION, FLUSH MOUNT BACKSTOP
REVISION DATE: 4/28/04
ODOT APPROVAL DATE: 10/16/04

DRAWING NUMBER: A040105
DRAWING NAME: UNIVERSAL TAU-II FOUNDATION, PCB BACKSTOP (REFERENCED ON A04020)
REVISION DATE: 1/07/04
ODOT APPROVAL DATE: 10/16/04

DRAWING NUMBER: B040239
DRAWING NAME: APPLICATION, FLUSH MOUNT BACKSTOP (TYPICAL FOR PARALLEL 60 MPH UNIT)
REVISION DATE: 4/21/04
ODOT APPROVAL DATE: 10/16/04

THE CONTRACTOR SHALL PROVIDE A REPLACEMENT UNIT WHEN AN IMPACT IS SEVERE ENOUGH TO REQUIRE COMPLETE REPLACEMENT OF THE ATTENUATOR. THE CONTRACTOR SHALL HAVE A SPARE PARTS PACKAGE AVAILABLE ON THE PROJECT SITE AT ALL TIMES WHEN AN ATTENUATOR IS IN PLACE. THE CONTRACTOR SHALL PROVIDE A MINIMUM OF ONE COMPLETE SPARE PARTS PACKAGE FOR EVERY ONE TO SIX UNITS INSTALLED ON THE PROJECT SITE. FOR EXAMPLE, FIVE INSTALLED UNITS REQUIRE ONE SPARE PARTS PACKAGE AND SEVEN INSTALLED UNITS REQUIRE TWO SPARE PARTS PACKAGES.

WHEN BIDIRECTIONAL DESIGNS ARE SPECIFIED, THE CONTRACTOR SHALL SUPPLY APPROPRIATE TRANSITIONS. PAYMENT FOR THE ABOVE WORK SHALL BE MADE AT THE UNIT PRICE BID AND SHALL INCLUDE ALL LABOR, TOOLS, EQUIPMENT AND MATERIALS NECESSARY TO CONSTRUCT, MAINTAIN AND REPAIR A COMPLETE AND FUNCTIONAL IMPACT ATTENUATOR SYSTEM, INCLUDING ALL RELATED BACKUPS, TRANSITIONS, LEVELING PADS, HARDWARE AND GRADING, NOT SEPARATELY SPECIFIED, AS REQUIRED BY THE MANUFACTURER.

ATB-84-20.50

25199MN002.DGN 04/27/09 SAM.SCB

CALCULATED PDG CHECKED JDL

MAINTENANCE OF TRAFFIC NOTES

COVERING OF SIGNS

WHERE THE PLANS CALL FOR A PERMANENT SIGN TO BE COVERED, THE CONTRACTOR SHALL DO SO IN SUCH A MANNER AS TO AVOID DAMAGING THE PERMANENT SIGN WHEN THE COVER IS REMOVED. THE COVER SHALL BE TOTALLY OPAQUE. THE USE OF ADHESIVE TAPE APPLIED DIRECTLY TO A SIGN FACE IS STRICTLY PROHIBITED. THE CONTRACTOR SHALL PROVIDE ALL OF THE "CLOSED" PLAQUES NECESSARY.

WHERE THE PLANS CALL FOR A PERMANENT SIGN TO BE OVERLAYED, THE CONTRACTOR SHALL DO SO IN SUCH A MANNER AS TO AVOID DAMAGING THE PERMANENT SIGN WHEN THE OVERLAY IS REMOVED. THE OVERLAY SHALL BE TOTALLY OPAQUE. THE USE OF ADHESIVE TAPE APPLIED DIRECTLY TO A SIGN FACE IS STRICTLY PROHIBITED. THE OVERLAYS MAY BE RIVETED TO THE PERMANENT SIGN. THE CONTRACTOR SHALL PROVIDE ALL OF THE PLAQUES, SIGNS AND SIGN PANELS NECESSARY.

FLOODLIGHTING

FLOODLIGHTING OF THE WORK SITE FOR OPERATIONS CONDUCTED DURING NIGHTTIME PERIODS SHALL BE ACCOMPLISHED SO THAT THE LIGHTS DO NOT CAUSE GLARE TO THE DRIVERS ON THE ROADWAY. TO ENSURE THE ADEQUACY OF THE FLOODLIGHT PLACEMENT, THE CONTRACTOR AND THE ENGINEER SHALL DRIVE THROUGH THE WORK SITE EACH NIGHT WHEN THE LIGHTING IS IN PLACE AND OPERATIVE PRIOR TO COMMENCING ANY WORK. IF GLARE IS DETECTED, THE LIGHT PLACEMENT AND SHIELDING SHALL BE ADJUSTED TO THE SATISFACTION OF THE ENGINEER BEFORE WORK PROCEEDS.

PAYMENT FOR ALL LABOR, EQUIPMENT AND MATERIALS SHALL BE INCLUDED IN THE LUMP SUM CONTRACT PRICE FOR ITEM 614, MAINTAINING TRAFFIC.

DUST CONTROL

THE CONTRACTOR SHALL FURNISH AND APPLY WATER FOR DUST CONTROL AS DIRECTED BY THE ENGINEER. THE FOLLOWING ESTIMATED QUANTITIES HAVE BEEN INCLUDED FOR DUST CONTROL PURPOSES:

ITEM 616 - WATER 10 M. GAL

EARTHWORK FOR MAINTAINING TRAFFIC

THE FOLLOWING QUANTITIES HAVE BEEN INCLUDED IN THE PLAN FOR INFORMATION ONLY AND ARE INCLUDED FOR PAYMENT IN LUMP SUM PRICE FOR ITEM 615 ROADS FOR MAINTAINING TRAFFIC:

EARTHWORK FOR MAINTAINING TRAFFIC		
	EXCAVATION	EMBANKMENT
S.R. 193 STA. 14+56 TO STA. 20+12.80 RT. (SEE SHEET 30)	214	21
S.R. 193/S.R. 84 STA. 30+17.60 TO STA. 33+00.00 LT. (SEE SHEET 36)	116	28
RAMP D STA. 380+64.00 TO STA. 383+96 LT. & RT. 332' x (8' + 3') x (14" / 12) / 27 = 332' x (2' + 2') x (1" / 12) / 27 =	158	4
RAMP B STA. 387+83.00 TO STA. 391+53 LT. & RT. 370' x (8' + 3') x (14" / 12) / 27 = 370' x (2' + 2') x (1" / 12) / 27 =	176	5
TOTALS FOR MAINTAINING TRAFFIC	**664**	**58**

ITEM 615 - PAVEMENT FOR MAINTAINING TRAFFIC, CLASS A, AS PER PLAN

IN ADDITION TO THE REQUIREMENTS OF 615, THIS ITEM REPLACES THE 7 INCHES [180MM] OF ITEM 301 BITUMINOUS AGGREGATE BASE AND THE 4 INCHES [100MM] OF ITEM 304 AGGREGATE BASE WITH 9 INCHES [230 MM] OF ITEM 302 BITUMINOUS AGGREGATE BASE. RIGID TEMPORARY PAVEMENT SHALL BE CLASS C CONCRETE CONFORMING TO ITEM 452 IN LIEU OF CLASS F CONCRETE.

THIS PAVEMENT FOR MAINTAINING TRAFFIC SHALL REMAIN IN PLACE AFTER THE COMPLETION OF THIS PROJECT.

TRENCH FOR WIDENING

TRENCH EXCAVATION FOR BASE WIDENING SHALL BE ONLY ON ONE SIDE OF THE PAVEMENT AT A TIME. FROM THE TIME THE EXCAVATION BEGINS ON THE TRENCH WIDENING, THE OPEN TRENCH SHALL BE ADEQUATELY MAINTAINED AND PROTECTED WITH DRUMS PLACED AT TEN [10] FOOT INTERVALS. THE LENGTH OF WIDENING OPEN AT ANY ONE TIME SHALL NOT BE GREATER THAN WHICH CAN BE COMPLETED WITHIN 14 CALENDAR DAYS. ALL PROPOSED SUBBASE AND 302 BASE MATERIAL SHALL BE COMPLETED IN A CONTINUOUS OPERATION.

BRIDGE PAINTING EQUIPMENT ON SHOULDERS

IF BRIDGE PAINTING EQUIPMENT IS TO REMAIN ON THE SHOULDERS WHEN THE CONTRACTOR IS NOT WORKING, IT SHALL BE PLACED BEHIND PORTABLE CONCRETE BARRIER (PCB) AND A WORK ZONE IMPACT ATTENUATOR (WZIA) SHALL PROTECT THE LEADING BLUNT END OF THE PCB (SEE OMUTCD, FIGURE 6H-5 *SHOULDER CLOSURE ON FREEWAY* (TYPICAL APPLICATION 5)). IF THE CONTRACTOR CHOOSES TO PROTECT PAINTING EQUIPMENT WITH PCB AND A WZIA, THE COST SHALL BE CONSIDERED INCIDENTAL TO THE LUMP SUM BID FOR MAINTAINING TRAFFIC.

TRAFFIC CONTROL INSPECTOR

THE CONTRACTOR SHALL DESIGNATE AN INDIVIDUAL OTHER THAN THE SUPERINTENDENT AND SUBJECT TO THE APPROVAL OF THE ENGINEER, TO CONTINUOUSLY INSPECT ALL TRAFFIC CONTROL DEVICES WHENEVER CONSTRUCTION WORK IS BEING PERFORMED WITHIN THE WORK LIMITS OF THE PROJECT. THE DESIGNATED INDIVIDUAL SHALL ALSO INSPECT ALL TRAFFIC DEVICES AT THE BEGINNING AND AT THE END OF EACH WORK DAY. THE DESIGNATED INDIVIDUAL OR A QUALIFIED REPRESENTATIVE SHALL ALSO BE AVAILABLE ON AN AROUND THE CLOCK BASIS TO REPAIR AND/OR REPLACE DAMAGED OR MISSING TRAFFIC CONTROL DEVICES. THESE INDIVIDUALS SHALL BE EQUIPPED WITH CELLULAR PHONES AND THEIR NAMES AND PHONE NUMBERS SHALL BE GIVEN TO THE PROJECT ENGINEER AT THE PRE-CONSTRUCTION MEETING. THE DESIGNATED INDIVIDUAL MAY HAVE OTHER CONSTRUCTION RELATED DUTIES AS LONG AS IMMEDIATE ATTENTION IS GIVEN TO TRAFFIC CONTROL. PAYMENT FOR THE SERVICES OF THE TRAFFIC CONTROL INSPECTOR SHALL BE INCLUDED IN THE LUMP SUM PRICE BID FOR ITEM 614 MAINTAINING TRAFFIC.

MAINTENANCE OF TRAFFIC SIGNAL/FLASHER INSTALLATION

THE CONTRACTOR SHALL BE RESPONSIBLE FOR MAINTAINING TRAFFIC SIGNAL INSTALLATIONS ONCE THE SIGNAL HAS BEEN AFFECTED, WITHIN THE PROJECT UNDER THE FOLLOWING CONDITIONS:

A) EXISTING SIGNAL/FLASHER INSTALLATIONS WHICH THE PLANS REQUIRE THE CONTRACTOR TO ADJUST, MODIFY, ADD ONTO OR REMOVE, OR WHICH THE CONTRACTOR ACTUALLY ADJUSTS, MODIFIES OR OTHERWISE DISTURBS INCLUDING DAMAGE DUE TO UTILITY RELOCATION. THE CONTRACTOR SHALL BE RESPONSIBLE FOR THE ENTIRE INSTALLATION AT AN INTERSECTION FROM THE TIME THE INSTALLATION IS FIRST DISTURBED, WHETHER FROM UTILITY WORK OR FROM THE CONTRACTOR UNTIL THE INSTALLATION HAS BEEN SUBSEQUENTLY REMOVED OR MODIFIED AND THE WORK IS ACCEPTED.

MAINTENANCE OF TRAFFIC SIGNAL/FLASHER INSTALLATION (CONT'D.)

B) NEW OR REUSED SIGNAL/FLASHER INSTALLATIONS OR DEVICES, INSTALLED BY THE CONTRACTOR. THE CONTRACTOR SHALL BE RESPONSIBLE FOR MAINTENANCE OF THESE FROM THE TIME OF INSTALLATION UNTIL THE WORK IS ACCEPTED.

THE CONTRACTOR SHALL CORRECT AS QUICKLY AS POSSIBLE ALL OUTAGES OR MALFUNCTIONS. AT THE PRE-CONSTRUCTION MEETING, THE CONTRACTOR SHALL PROVIDE THE MAINTAINING AGENCY AND THE PROJECT ENGINEER SUCH ADDRESSES AND PHONE NUMBERS WHERE HIS MAINTENANCE FORCES CAN BE CONTACTED. THE CONTRACTOR SHALL PROVIDE ONE OR MORE PERSONS TO RECEIVE ALL CALLS AND DISPATCH THE NECESSARY MAINTENANCE FORCES TO CORRECT OUTAGES. SUCH A PERSON OR PERSONS MAY BE USED TO PERFORM OTHER DUTIES AS LONG AS PROMPT ATTENTION IS GIVEN TO THESE CALLS AND A PERSON IS READILY AVAILABLE CONTINUOUSLY 24 HOURS A DAY, 7 DAYS A WEEK. THE CONTRACTOR SHALL HAVE THE MALFUNCTION CORRECTED AND/OR REPAIRED TO THE SATISFACTION OF THE ENGINEER WITHIN EIGHT HOURS OF THE NOTIFICATION OR LIQUIDATED DAMAGES OF $500 PER HOUR SHALL BE ASSESSED THE CONTRACTOR.

ALL LAMP OUTAGES, CABLE OUTAGES, ELECTRICAL FAILURES, EQUIPMENT MALFUNCTIONS AND MISALIGNED SIGNAL HEADS SHALL BE CORRECTED TO THE SATISFACTION OF THE PROJECT ENGINEER WITH THE SIGNAL BACK IN SERVICE WITHIN FOUR HOURS AFTER THE CONTRACTOR HAS BEEN NOTIFIED OF THE OUTAGES

IN THE EVENT NEW SIGNALS ARE DAMAGED PRIOR TO ACCEPTANCE, ALL DAMAGED EQUIPMENT EXCEPT POLES AND CONTROL EQUIPMENT SHALL BE REPLACED BY THE CONTRACTOR TO THE SATISFACTION OF THE PROJECT ENGINEER WITH THE SIGNAL BACK IN SERVICE WITHIN EIGHT HOURS AFTER THE CONTRACTOR IS NOTIFIED OF THE OUTAGE. THE CONTRACTOR SHALL ARRANGE FOR FULL TRAFFIC CONTROL UNTIL THE SIGNAL IS BACK IN OPERATION.

IF POLES AND/OR CONTROL EQUIPMENT ARE DAMAGED AND MUST BE REPLACED, THE CONTRACTOR SHALL MAKE TEMPORARY REPAIRS AS NECESSARY TO BRING THE SIGNAL BACK INTO FULL OPERATION WITHIN THE ALLOWED EIGHT HOUR PERIOD, AND SHALL MAKE PERMANENT REPAIRS OR REPLACEMENT AS SOON AS POSSIBLE.

NONE OF THE ABOVE SHALL BE CONSTRUED AS COLLECTIVE OR CONSECUTIVE OUTAGE TIME PERIODS AT ANY ONE LOCATION. THAT IS, WHERE MORE THAN ONE OUTAGE OCCURS AT ANY ONE LOCATION, THEN THE ALLOTTED TIME LIMIT SHALL BE FOR THE WORST SINGLE OUTAGE.

WHERE OUTAGES ARE THE DIRECT RESULT OF A VEHICLE ACCIDENT THE RESPONSE OF THE CONTRACTOR SHALL BE AS OUTLINED ABOVE. THE CONTRACTOR SHALL BE RESPONSIBLE FOR COLLECTION OF ANY COMPENSATION FOR THIS WORK FROM THOSE PARTIES RESPONSIBLE FOR THE DAMAGES AS PER 107.15.

WHERE THE CONTRACTOR HAS FAILED TO, OR CANNOT RESPOND TO, AN OUTAGE OR SIGNAL EQUIPMENT MALFUNCTION, AT THESE LOCATIONS WITHIN HIS RESPONSIBILITY, WITHIN PERIODS AS SPECIFIED ABOVE, THE PROJECT ENGINEER MAY INVOKE THE PROVISIONS OF SECTION 105.15 AND ANY SUBSEQUENT BILLINGS TO THE STATE OR THE ASHTABULA COUNTY SHERIFF'S DEPARTMENT SERVICES AND MAINTENANCE SERVICES BY STATE OR COUNTY FORCES SHALL BE DEDUCTED FROM MONEYS DUE OR TO BECOME DUE THE CONTRACTOR IN ACCORDANCE WITH PROVISIONS OF SECTION 105.15. IN ADDITION TO THESE BILLINGS, THE CONTRACTOR SHALL BE ASSESSED LIQUIDATED DAMAGES OF $500/HOUR FOR EACH HOUR BEYOND THE ALLOWED EIGHT HOUR PERIOD THAT THE SIGNAL IS INOPERATIVE.

THE CONTRACTOR SHALL PROVIDE THE MAINTENANCE SERVICES ENTIRELY WITH HIS FORCES OR HE MAY CHOOSE TO ENTER INTO A MUTUALLY ACCEPTABLE AGREEMENT WITH THE LOCAL MAINTAINING AGENCY TO PROVIDE THE MAINTENANCE.

MAINTENANCE OF TRAFFIC SIGNAL/FLASHER INSTALLATION (CONT'D.)

THE CONTRACTOR SHALL INFORM THE PROJECT ENGINEER, IN WRITING, OF THE MAINTENANCE METHOD SELECTED.

THE CONTRACTOR SHALL BE RESPONSIBLE FOR ANY DAMAGE TO ANY TRAFFIC SIGNAL COMPONENTS REQUIRED TO BE HANDLED DURING THE RELOCATION OF POLES AND REVISIONS TO THE SIGNAL SYSTEM.

WHEN A TRAFFIC SIGNAL MUST BE TAKEN OUT OF SERVICE BY THE CONTRACTOR, DUE TO CONSTRUCTION PROCEDURES, THIS OUTAGE SHALL NOT EXCEED FOUR HOURS AND SHALL NOT INCLUDE THE HOURS OF 6:00AM TO 8:00AM AND 4:00PM TO 6:00PM. ANY SIGNALIZED INTERSECTION, WHERE THE SIGNAL IS OUT OF SERVICE DUE TO CONSTRUCTION PROCEDURES, OR DUE TO AN OUTAGE OR MALFUNCTION OF EQUIPMENT AS DESCRIBED ABOVE, SHALL BE PROTECTED, BY THE CONTRACTOR, BY THE INSTALLATION OF TEMPORARY "STOP" SIGNS ANY VEHICULAR TRAFFIC SIGNAL HEAD, EITHER NEW OR EXISTING WHICH WILL BE OUT OF OPERATION SHALL BE COVERED, AS DESCRIBED IN 632.25.

THE CONTRACTOR SHALL MAINTAIN COMPLETE RECORDS OF MALFUNCTIONS INCLUDING: 1. TIME OF NOTIFICATION OF MALFUNCTION; 2. TIME OF WORK CREWS ARRIVAL TO CORRECT THE MALFUNCTION; 3. ACTIONS TAKEN TO CORRECT THE MALFUNCTION, INCLUDING A LIST OF PARTS REPAIRED OR REPLACED; 4. A DIAGNOSIS OF REASON FOR THE MALFUNCTION AND PROBABILITY OF REOCCURRENCE; AND 5. TIME OF COMPLETION OF REPAIR AND SYSTEM RESTORED TO FULL SERVICE. A COPY OF THESE RECORDS SHALL BE PROVIDED TO THE ENGINEER WITHIN THREE (3) WORKING DAYS FOLLOWING COMPLETION OF EACH REPAIR.

ALL COSTS RESULTING FROM THE ABOVE REQUIREMENTS SHALL BE CONSIDERED TO BE INCLUDED IN THE LUMP SUM PRICE BID FOR ITEM 614 - MAINTAINING TRAFFIC.

SPECIAL - WORK ZONE TRAFFIC SIGNALS

THIS ITEM SHALL CONSIST OF MODIFYING OR INSTALLING AND MAINTAINING TRAFFIC SIGNAL INSTALLATIONS TO BE USED AS WORK ZONE TRAFFIC SIGNALS. THIS ITEM SHALL CONFORM TO 614.10 AND WILL INCLUDE THE TEMPORARY MODIFICATION OF THE EXISTING SIGNAL INSTALLATION AT THE INTERSECTION OF STATE ROUTE 193, STATE ROUTE 84 AND INTERSTATE ROUTE 90 RAMP D AS DETAILED IN THE PLANS FOR USE AS PART OF THE WORK ZONE TRAFFIC SIGNAL. THIS ITEM OF WORK ALSO INCLUDES THE TEMPORARY INSTALLATION OF A SIGNAL AT THE INTERSECTION OF STATE ROUTE 84/193 AND INTERSTATE ROUTE 90 RAMP B FOR USE AS PART OF THE WORK ZONE TRAFFIC SIGNAL. THE WORK ZONE TRAFFIC SIGNALS SHALL OPERATE IN COORDINATION TO MAINTAIN ONE LANE - TWO WAY TRAFFIC OPERATION ACROSS THE STATE ROUTE-84-20.50 STRUCTURE DURING CONSTRUCTION. THE PROPOSED MOT SIGNAL TIMING, PHASING AND DETECTION HAVE BEEN SHOWN ON SHEET 16. THIS ITEM SHALL INCLUDE ALL THE SIGNAL EQUIPMENT (POLES, MESSENGER WIRE, SIGNAL CABLE, VEHICULAR SIGNAL HEADS, DETECTOR LOOPS, SIGNAL CONTROLLER EQUIPMENT, ETC.) LABOR, MATERIALS NECESSARY TO MODIFY, CONSTRUCT AND MAINTAIN THE WORK ZONE SIGNAL INSTALLATIONS.

THIS ITEM SHALL ALSO INCLUDE THE REMOVAL OF THE WORK ZONE TRAFFIC SIGNAL EQUIPMENT AT THE COMPLETION OF THE PROJECT. THE EXISTING SIGNAL INSTALLATION SHALL BE RETURNED TO ITS ORIGINAL STATE AND MODE OF OPERATION. THE EXISTING SIGNAL INSTALLATION SHALL BE THE RESPONSIBILITY OF THE CONTRACTOR FROM THE BEGINNING OF THE PROJECT THROUGH THE COMPLETION OF THE PROJECT. ANY NECESSARY MAINTENANCE AND OR REPAIRS TO THE SIGNAL INSTALLATION DURING THE PROJECT SHALL BE THE RESPONSIBILITY OF THE CONTRACTOR UNTIL FINAL ACCEPTANCE OF THE "UN-MODIFIED" SIGNAL HAS BEEN GIVEN TO THE CONTRACTOR IN WRITING FROM THE OHIO DEPARTMENT OF TRANSPORTATION DISTRICT 4.

PAYMENT FOR THIS ITEM SHALL BE MADE AT THE UNIT CONTRACT PRICE BID FOR ITEM SPECIAL - WORK ZONE TRAFFIC SIGNALS AND SHALL INCLUDE ALL EQUIPMENT, LABOR AND MATERIALS NECESSARY TO PERFORM THIS ITEM OF WORK AS DETAILED IN THIS NOTE AND THE PLANS.

ATB-84-20.50

25199MN003.DGN 04/28/09 SAM.SCB

SHEET NO.	STATION FROM	STATION TO	SIDE	304 AGGREGATE BASE, AS PER PLAN	614 SPECIAL - WORK ZONE TRAFFIC SIGNAL	614 WORK ZONE IMPACT ATTENUATOR (UNIDIRECTIONAL)	614 WORK ZONE IMPACT ATTENUATOR (BIDIRECTIONAL)	614 WORK ZONE RAISED PAVEMENT MARKER	614 BARRIER REFLECTOR, TYPE A2	614 BARRIER REFLECTOR, TYPE B	614 BARRIER REFLECTOR, TYPE B2	614 OBJECT MARKER, ONE WAY	614 OBJECT MARKER, TWO WAY	614 WORK ZONE EDGE LINE, CLASS I	614 WORK ZONE CHANNELIZING LINE, CLASS I	614 WORK ZONE STOP LINE, CLASS I	614 WORK ZONE LANE ARROW, CLASS I	615 PAVEMENT FOR MAINTAINING TRAFFIC, CLASS A, AS PER PLAN	622 PORTABLE CONCRETE BARRIER, 32"	622 PORTABLE CONCRETE BARRIER, 32", BRIDGE MOUNTED (2 ANCHORS PER SECTION)		
				CY	EACH	EACH	EACH	EACH	EACH	EACH	EACH	EACH	EACH	MILE	FT	FT	EACH	SY	FT	FT		
	TEMPORARY PAVEMENT																						
	S.R. 193																						
14	*14+56.00*	*20+12.80*	*RT.*															*557*					
	S.R. 84																						
14	*13+34.65*	*13+64.50*	*LT.*															*20*					
	RAMP D																						
14	*380+64.26*	*383+96.00*	*RT.*															*366*					
14	*380+64.26*	*383+61.00*	*LT.*															*99*					
	S.R. 84/ S.R. 193																						
14	*21+17.50*	*22+53.70*	*LT.*															*91*					
14 & 15	*26+48.12*	*29+00.00*	*LT.*															*168*					
15	*30+19.30*	*33+31.00*	*LT.*															*381*					
15	*32+25.00*	*32+50.00*	*LT.*	*8*																			
	RAMP B																						
15	*387+87.00*	*391+53.00*	*RT.*															*122*					
15	*387+84.50*	*391+53.00*	*LT.*															*409*					
	PHASE 1 TEMP MARKING																						
14	*14+56.00*	*15+25.00*	*RT.*											*0.01*									
14	*15+25.00*	*20+37.95*	*RT.*											*0.10*	*513*	*14*	*4*						
14	*20+37.95*	*20+76.05*	*RT.*											*0.01*									
14	*21+48.00*	*22+00.00*	*RT.*											*0.01*									
15	*28+00.00*	*29+28.00*	*LT.*											*0.02*									
15	*30+18.50*	*31+00.00*	*LT.*											*0.02*									
15	*31+00.00*	*33+31.00*	*LT.*											*0.04*	*231*	*24*	*3*						
	RAMP D																						
14	*380+64.26*	*381+15.00*	*RT./LT.*											*0.02*									
14	*381+15.00*	*383+62.00*	*RT./LT.*											*0.09*	*247*	*13*	*4*						
14	*383+62.00*	*383+97.00*	*RT.*											*0.02*									
	RAMP B																						
15	*387+80.00*	*388+05.00*	*RT./LT.*											*0.01*									
15	*388+05.00*	*391+05.00*	*RT./LT.*											*0.11*	*300*	*10*	*3*						
15	*391+05.00*	*391+55.00*	*RT./LT.*											*0.02*									
	PHASE 2 TEMP MARKING																						
17	*21+27.00*	*22+00.00*	*LT./ RT.*											*0.02*									
18	*28+00.00*	*29+28.00*	*RT./LT.*											*0.02*									
	MOT ITEMS																						
	PHASE 1																						
14	*15+72.00*	*16+02.00*	*RT.*	*2*		*1*				*2*		*2*							*30*				
14	*17+94.00*	*18+24.00*	*RT.*	*2*		*1*				*2*		*2*							*30*				
14 & 15	*21+50.00*	*29+28.00*	*LT./ RT.*				*2*	*272*	*6*		*22*		*14*						*320*	*350*			
15	*31+95.00*	*32+15.00*	*LT.*	*2*		*1*				*2*		*2*							*20*				
15	*30+60.00*	*31+50.00*	*RT.*									*3*											
16	*21+01*	*AND 30+17*	*CL*		*1*																		
	RAMP D																						
14	*380+64.26*	*383+97.00*	*RT.*									*9*											
	RAMP B																						
15	*388+05.00*	*391+55.00*	*RT./LT.*									*8*											
	PHASE 2																						
17 & 18	*21+30.00*	*29+28.00*	*LT./ RT.*				*2*	*112*	*6*		*22*		*14*						*320*	*350*			
TOTAL CARRIED TO GENERAL SUMMARY				*14*	*1*	*3*	*4*	*384*	*12*	*6*	*44*	*26*	*28*	*0.52*	*1291*	*61*	*14*	*2213*	*720*	*700*			

CALCULATED JDL CHECKED LVB

MAINTENANCE OF TRAFFIC - SUBSUMMARY

ATB-84-20.50

12
64

25199MS001.DGN 04/28/09 SCB

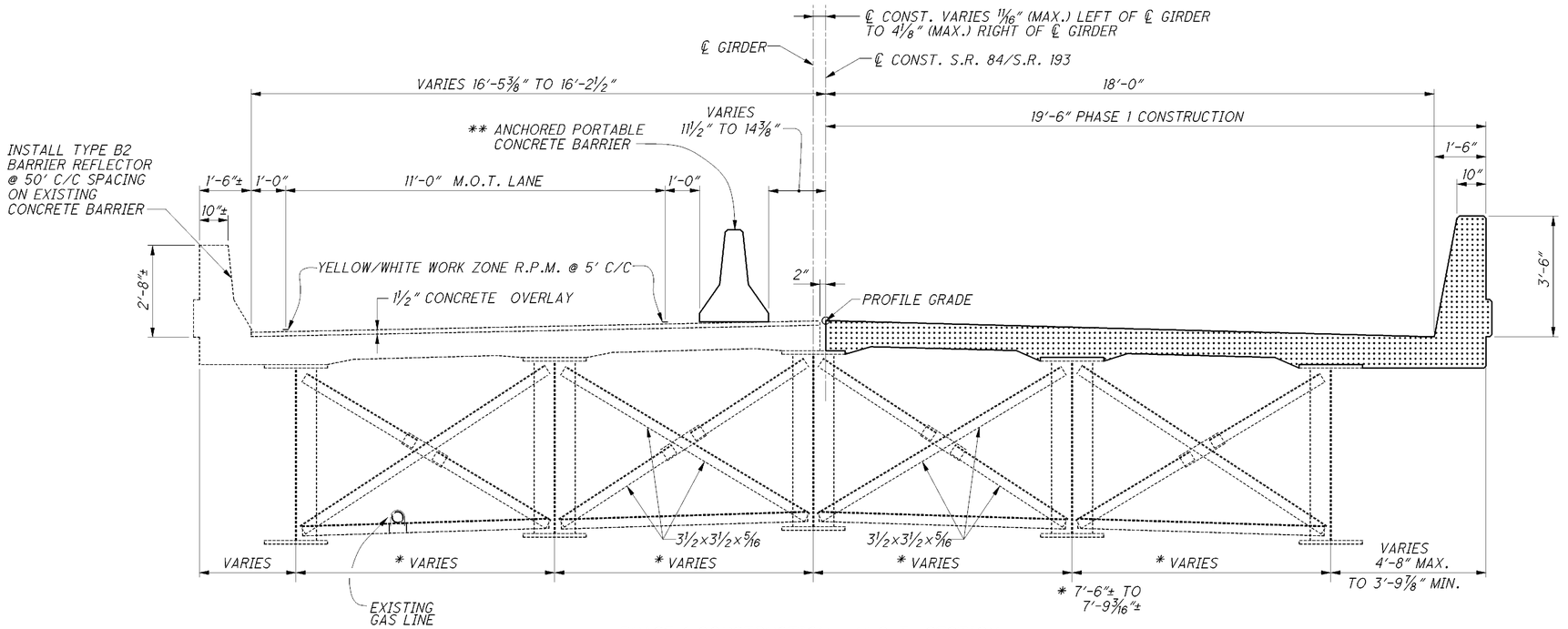

PHASE 1 CONSTRUCTION - M.O.T. SECTION

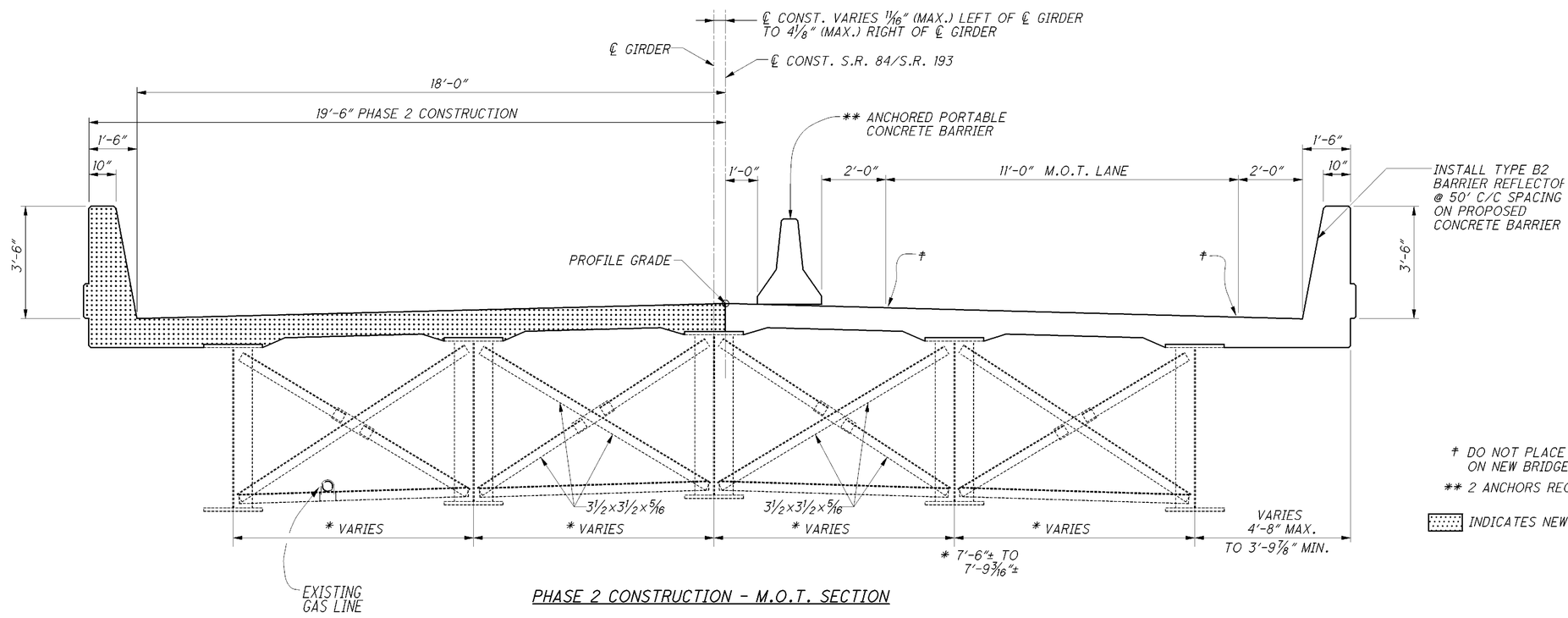

PHASE 2 CONSTRUCTION - M.O.T. SECTION

‡ DO NOT PLACE WORK ZONE R.P.M. ON NEW BRIDGE DECK

** 2 ANCHORS REQUIRED PER SEGMENT

INDICATES NEW CONSTRUCTION

MAINTENANCE OF TRAFFIC ON STRUCTURE
STAGE 1 PHASE CONSTRUCTION

ATB-84-20.50

25199MH001.DGN 04/23/09 TWH,SAM,SCB

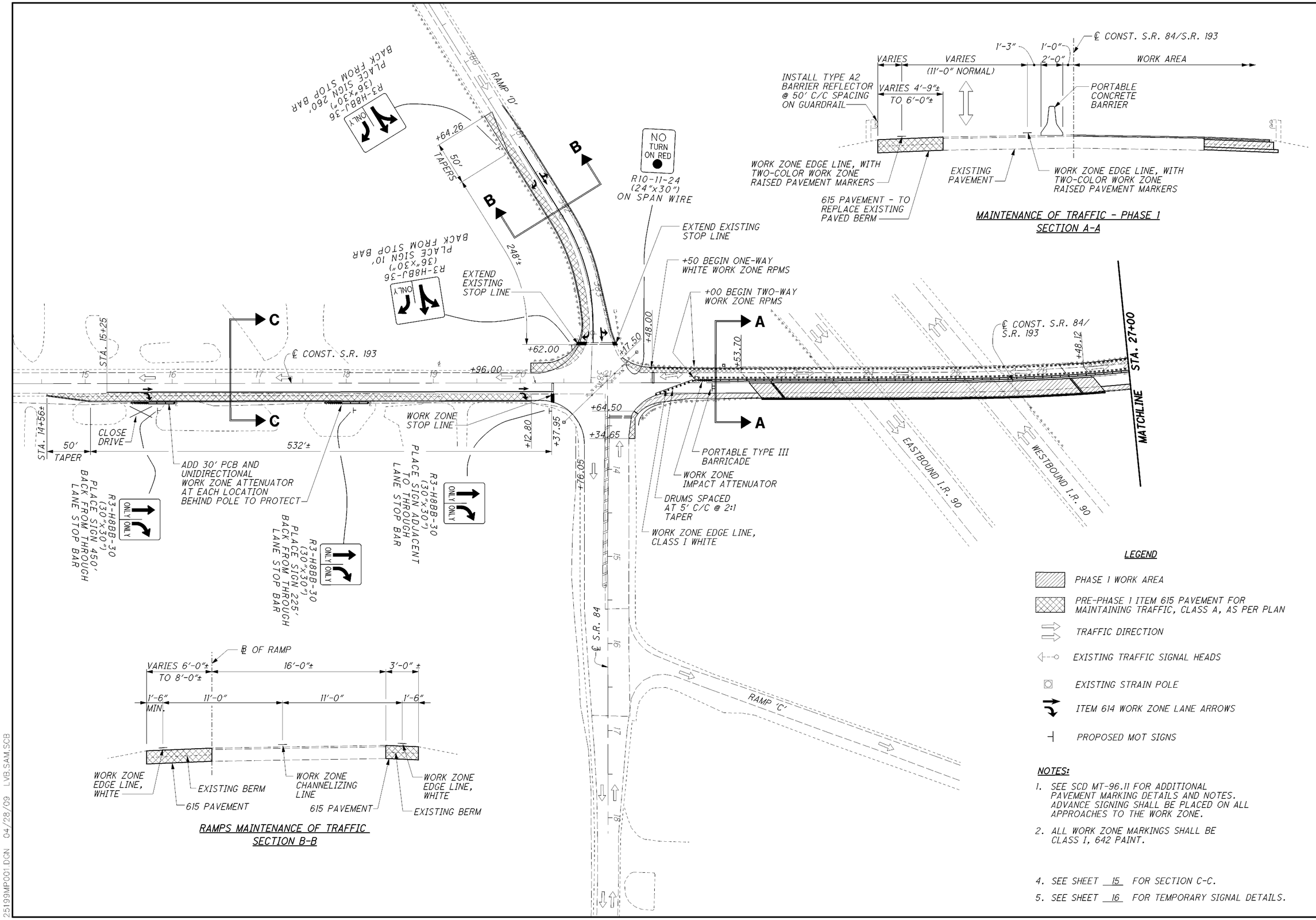

MAINTENANCE OF TRAFFIC - PHASE 1
SECTION A-A

RAMPS MAINTENANCE OF TRAFFIC
SECTION B-B

LEGEND

- PHASE 1 WORK AREA
- PRE-PHASE 1 ITEM 615 PAVEMENT FOR MAINTAINING TRAFFIC, CLASS A, AS PER PLAN
- TRAFFIC DIRECTION
- EXISTING TRAFFIC SIGNAL HEADS
- EXISTING STRAIN POLE
- ITEM 614 WORK ZONE LANE ARROWS
- PROPOSED MOT SIGNS

NOTES:

1. SEE SCD MT-96.11 FOR ADDITIONAL PAVEMENT MARKING DETAILS AND NOTES. ADVANCE SIGNING SHALL BE PLACED ON ALL APPROACHES TO THE WORK ZONE.
2. ALL WORK ZONE MARKINGS SHALL BE CLASS I, 642 PAINT.

4. SEE SHEET 15 FOR SECTION C-C.
5. SEE SHEET 16 FOR TEMPORARY SIGNAL DETAILS.

HORIZONTAL SCALE IN FEET
0 25 50 100

MAINTENANCE OF TRAFFIC PHASE 1 (STAGE 1)

ATB-84-20.50

25199MP001.DGN 04/28/09 LVB.SAM.SCB

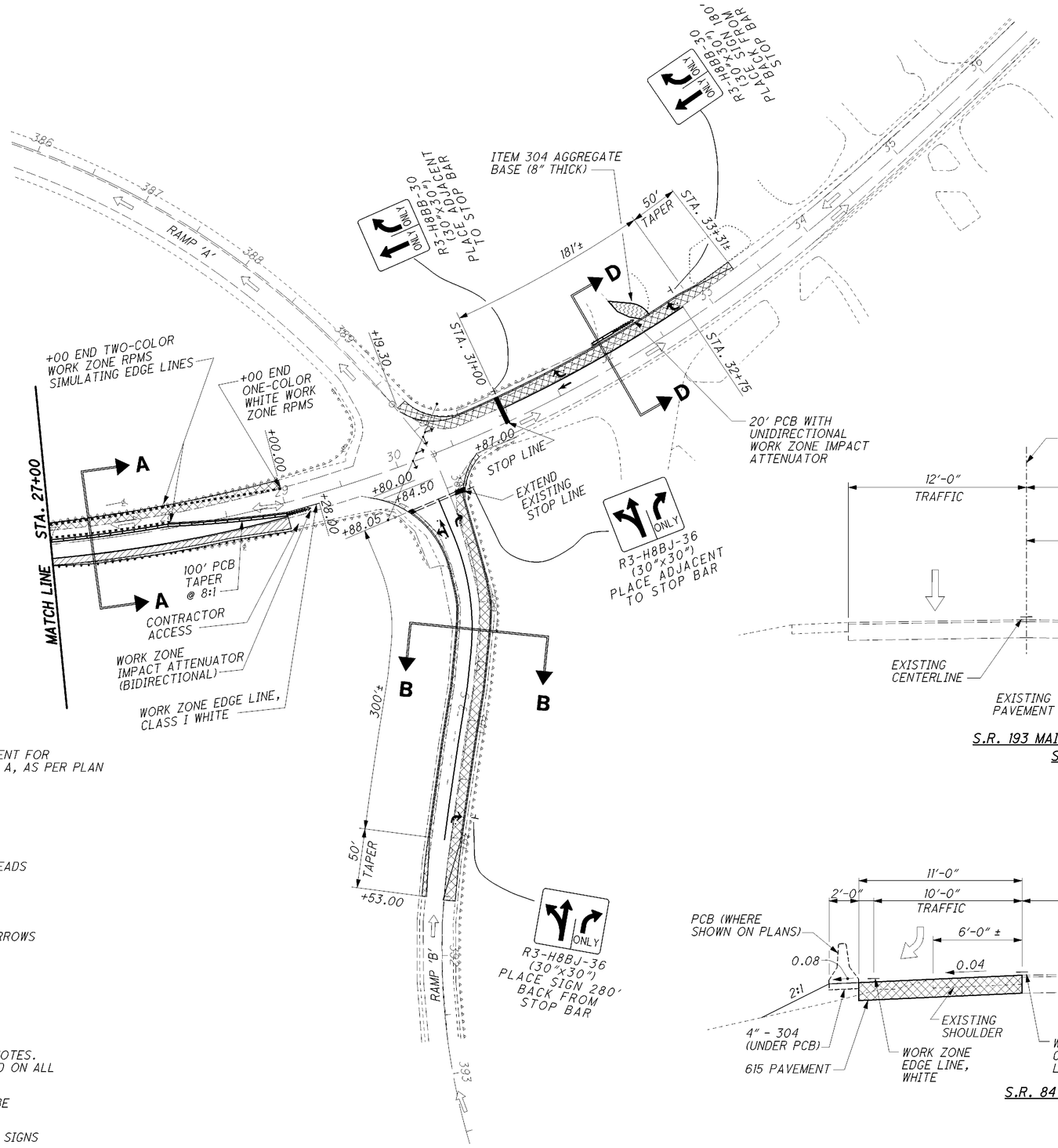

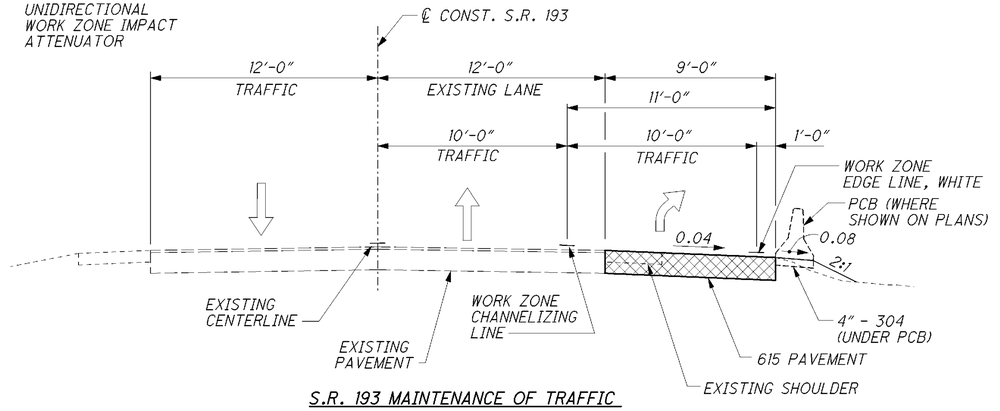

S.R. 193 MAINTENANCE OF TRAFFIC
SECTION C-C

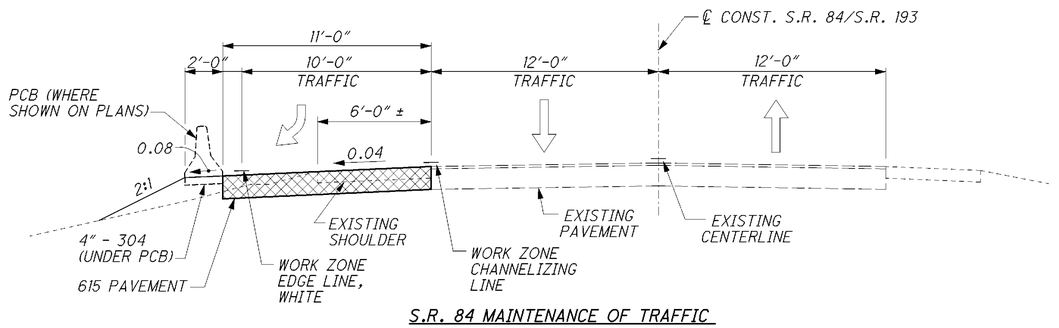

S.R. 84 MAINTENANCE OF TRAFFIC
SECTION D-D

LEGEND

- PHASE 1 WORK AREA
- PRE-PHASE 1 ITEM 615 PAVEMENT FOR MAINTAINING TRAFFIC, CLASS A, AS PER PLAN
- TEMPORARY DRIVE
- TRAFFIC DIRECTION
- TEMPORARY TRAFFIC SIGNALHEADS
- TEMPORARY STRAIN POLE
- ITEM 614 WORK ZONE LANE ARROWS
- PROPOSED MOT SIGNS

NOTES:

1. SEE SCD MT-96.11 FOR ADDITIONAL PAVEMENT MARKING DETAILS AND NOTES. ADVANCE SIGNING SHALL BE PLACED ON ALL APPROACHES TO THE WORK ZONE.
2. ALL WORK ZONE MARKINGS SHALL BE CLASS I, 642 PAINT.
3. REMOVE OR COVER EXISTING STOP SIGNS ON S.R. 84 AND RAMPS.
4. SEE SHEET 14 FOR SECTIONS A-A AND B-B.
5. SEE SHEET 16 FOR SIGNAL INTERVAL PHASING DIAGRAM.

HORIZONTAL SCALE IN FEET
0 25 50 100

TRAFFIC PHASE 1 (STAGE 1)

MAINTENANCE OF TRAFFIC

ATB-84-20.50

25169MP002.DGN 04/28/09 LVB,SAM,SCB

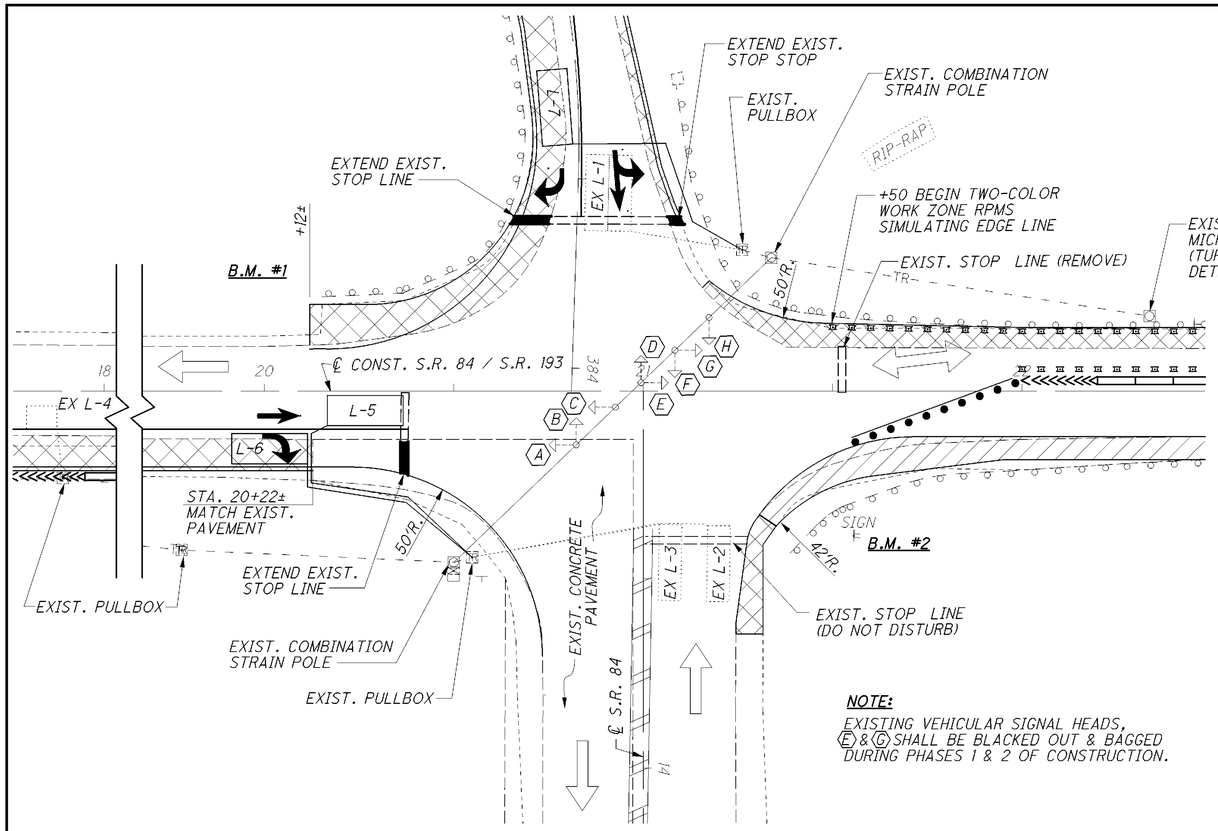

NOTE:

EXISTING VEHICULAR SIGNAL HEADS, (E) & (G) SHALL BE BLACKED OUT & BAGGED DURING PHASES 1 & 2 OF CONSTRUCTION.

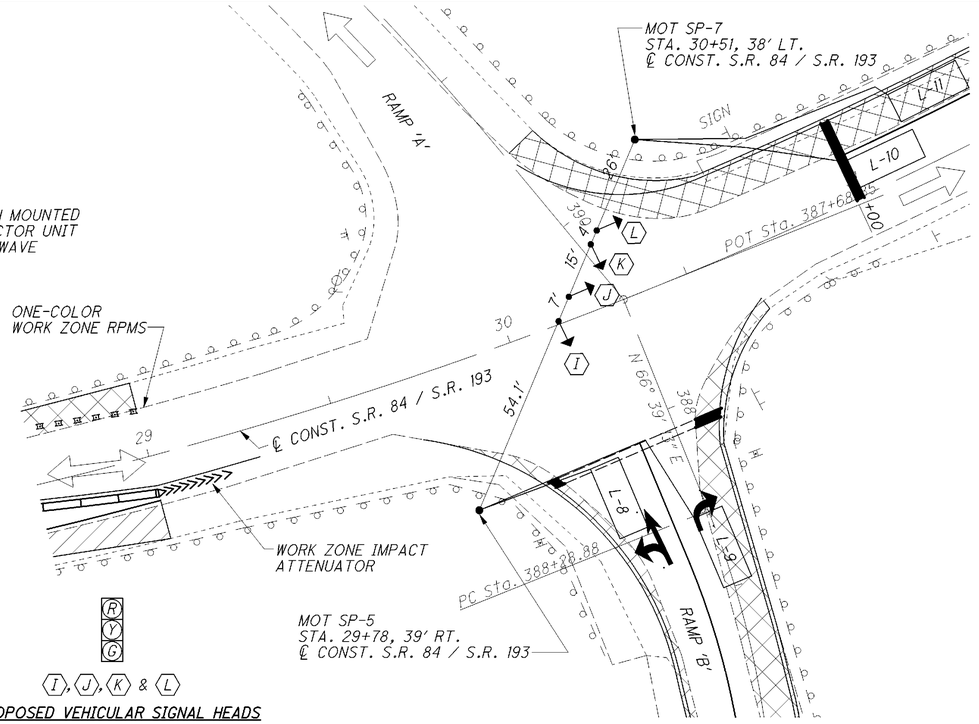

R Y G

(I), (J), (K) & (L)

PROPOSED VEHICULAR SIGNAL HEADS

VEHICULAR SIGNAL HEADS, ALUMINUM, 12" LENS WITH LED LAMP UNITS.

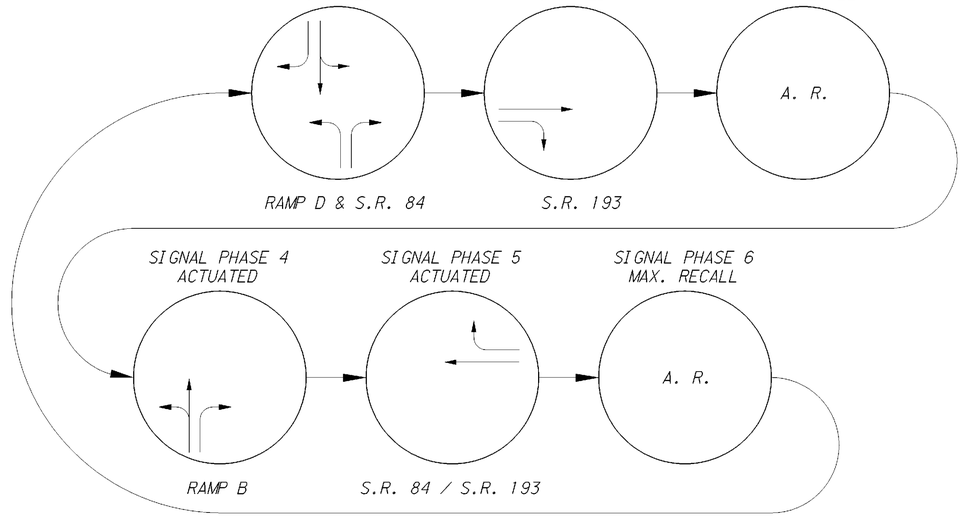

SYSTEM SHALL REST IN RED UNTIL ACTUATED

MAINTENANCE OF TRAFFIC SIGNAL INTERVAL PHASING

FIELD WIRING HOOK-UP CHART			
SIGNAL HEAD #	INDICATION	FIELD TERMINAL	FLASH
B (E.B. RAMP D)	R	ϕ 1 R	R
	Y	ϕ 1 Y	
	G	ϕ 1 G	
D (E.B. RAMP D)	R	ϕ 1 R	R
	Y	ϕ 1 Y	
	G	ϕ 1 G	
F (W.B. S.R. 84)	R	ϕ 1 R	R
	Y	ϕ 1 Y	
	G	ϕ 1 G	
H (W.B. S.R. 84)	R	ϕ 1 R	R
	Y	ϕ 1 Y	
	G	ϕ 1 G	
A (N.B. S.R. 193)	R	ϕ 2 R	R
	Y	ϕ 2 Y	
	G	ϕ 2 G	
C (N.B. S.R. 193)	R	ϕ 2 R	R
	Y	ϕ 2 Y	
	G	ϕ 2 G	
J (S.B. S.R. 193/84)	R	ϕ 5 R	R
	Y	ϕ 5 Y	
	G	ϕ 5 G	
L (S.B. S.R. 193/84)	R	ϕ 5 R	R
	Y	ϕ 5 Y	
	G	ϕ 5 G	
I (W.B. RAMP B)	R	ϕ 4 R	R
	Y	ϕ 4 Y	
	G	ϕ 4 G	
K (W.B. RAMP B)	R	ϕ 4 R	R
	Y	ϕ 4 Y	
	G	ϕ 4 G	

EXISTING HEADS E & G

SIGNAL DETECTOR CHARTS					
DETECTOR NO.	DETECTOR FUNCTION	M.O.T. ASSOCIATED PHASE	DELAY (SECONDS)	INHIBIT DELAY DURING PHASE	SIZE
EX L-1	PRESENCE	ϕ 1			
EX L-2	PRESENCE	ϕ 1	0		
EX L-3	PRESENCE	ϕ 1	0		
EX L-4	NOT USED				
L-5	PRESENCE	ϕ 2			6 x 20
L-6	PRESENCE	ϕ 2	10	ϕ 2	6 x 20
L-7	PRESENCE	ϕ 1	10	ϕ 1	6 x 20
L-8	PRESENCE	ϕ 4	0		8 x 20
L-9	PRESENCE	ϕ 4	10	ϕ 4	8 x 20
L-10	PRESENCE	ϕ 5			6 x 20
L-11	PRESENCE	ϕ 5	10	ϕ 5	6 x 20

MAINTENANCE OF TRAFFIC TIMING CHART		CYCLE LENGTH = 180 SEC.					
PHASE		1	2	3	4	5	6
MINIMUM GREEN (INITIAL)	(SEC.)	10	10	-	8	10	-
MAX GREEN I	(SEC.)	19	24	-	13	32	-
EXTENSION	(SEC.)	3	3	-	3	3	-
YELLOW CHANGE	(SEC.)	3.5	4.5	-	3.5	4.5	-
ALL RED CLEARANCE	(SEC.)	1.5	1.5	35	1.5	1.5	35

HORIZONTAL SCALE IN FEET

MAINTENANCE OF TRAFFIC PHASE 1: TRAFFIC CONTROL

ATB-84-20.50

25199M0001.DGN 04/29/09 LVB,KH,SCB

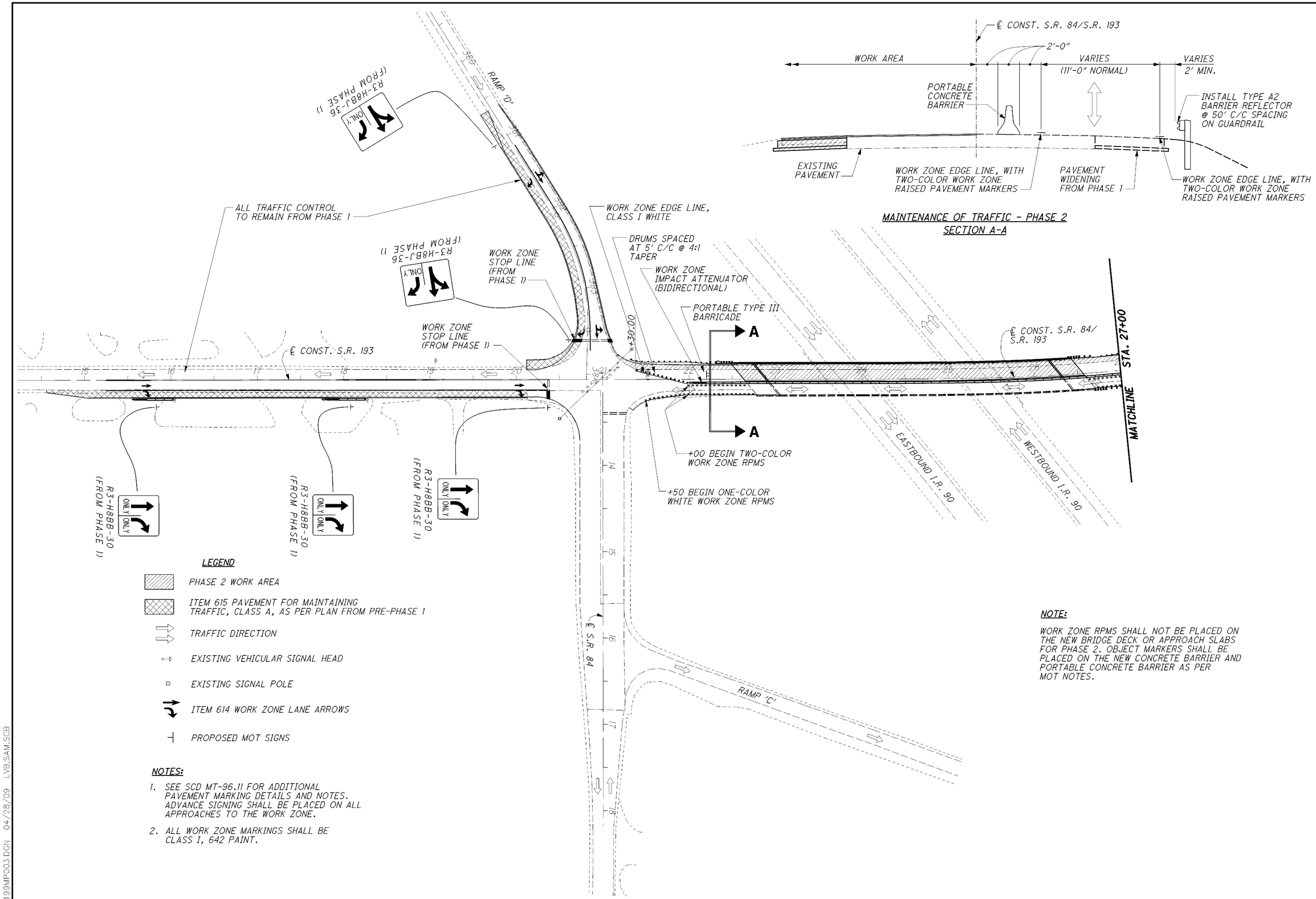
℄ CONST. S.R. 84/S.R. 193
2'-0"
WORK AREA
VARIES
(11'-0" NORMAL)
VARIES
2' MIN.
PORTABLE CONCRETE BARRIER
INSTALL TYPE A2 BARRIER REFLECTOR @ 50' C/C SPACING ON GUARDRAIL
EXISTING PAVEMENT
WORK ZONE EDGE LINE, WITH TWO-COLOR WORK ZONE RAISED PAVEMENT MARKERS
PAVEMENT WIDENING FROM PHASE 1
WORK ZONE EDGE LINE, WITH TWO-COLOR WORK ZONE RAISED PAVEMENT MARKERS
MAINTENANCE OF TRAFFIC - PHASE 2
SECTION A-A
RAMP 'D'
R3-H8BJ-36 (FROM PHASE 1)
ONLY
ALL TRAFFIC CONTROL TO REMAIN FROM PHASE 1
WORK ZONE EDGE LINE, CLASS I WHITE
DRUMS SPACED AT 5' C/C @ 4:1 TAPER
WORK ZONE IMPACT ATTENUATOR (BIDIRECTIONAL)
PORTABLE TYPE III BARRICADE
WORK ZONE STOP LINE (FROM PHASE 1)
+30.00
A
℄ CONST. S.R. 193
℄ CONST. S.R. 84/ S.R. 193
STA. 27+00
MATCHLINE
EASTBOUND I.R. 90
WESTBOUND I.R. 90
+00 BEGIN TWO-COLOR WORK ZONE RPMS
+50 BEGIN ONE-COLOR WHITE WORK ZONE RPMS
R3-H8BB-30 (FROM PHASE 1)
℄ S.R. 84
RAMP 'C'
LEGEND
PHASE 2 WORK AREA
ITEM 615 PAVEMENT FOR MAINTAINING TRAFFIC, CLASS A, AS PER PLAN FROM PRE-PHASE 1
TRAFFIC DIRECTION
EXISTING VEHICULAR SIGNAL HEAD
EXISTING SIGNAL POLE
ITEM 614 WORK ZONE LANE ARROWS
PROPOSED MOT SIGNS
NOTES:
1. SEE SCD MT-96.11 FOR ADDITIONAL PAVEMENT MARKING DETAILS AND NOTES. ADVANCE SIGNING SHALL BE PLACED ON ALL APPROACHES TO THE WORK ZONE.
2. ALL WORK ZONE MARKINGS SHALL BE CLASS I, 642 PAINT.
NOTE:
WORK ZONE RPMS SHALL NOT BE PLACED ON THE NEW BRIDGE DECK OR APPROACH SLABS FOR PHASE 2. OBJECT MARKERS SHALL BE PLACED ON THE NEW CONCRETE BARRIER AND PORTABLE CONCRETE BARRIER AS PER MOT NOTES.
HORIZONTAL SCALE IN FEET
0 25 50 100
MAINTENANCE OF TRAFFIC PHASE 2 (STAGE 1)
ATB-84-20.50
17
64
25199MPG03.DGN 04/28/09 LVB;SAM;SCB

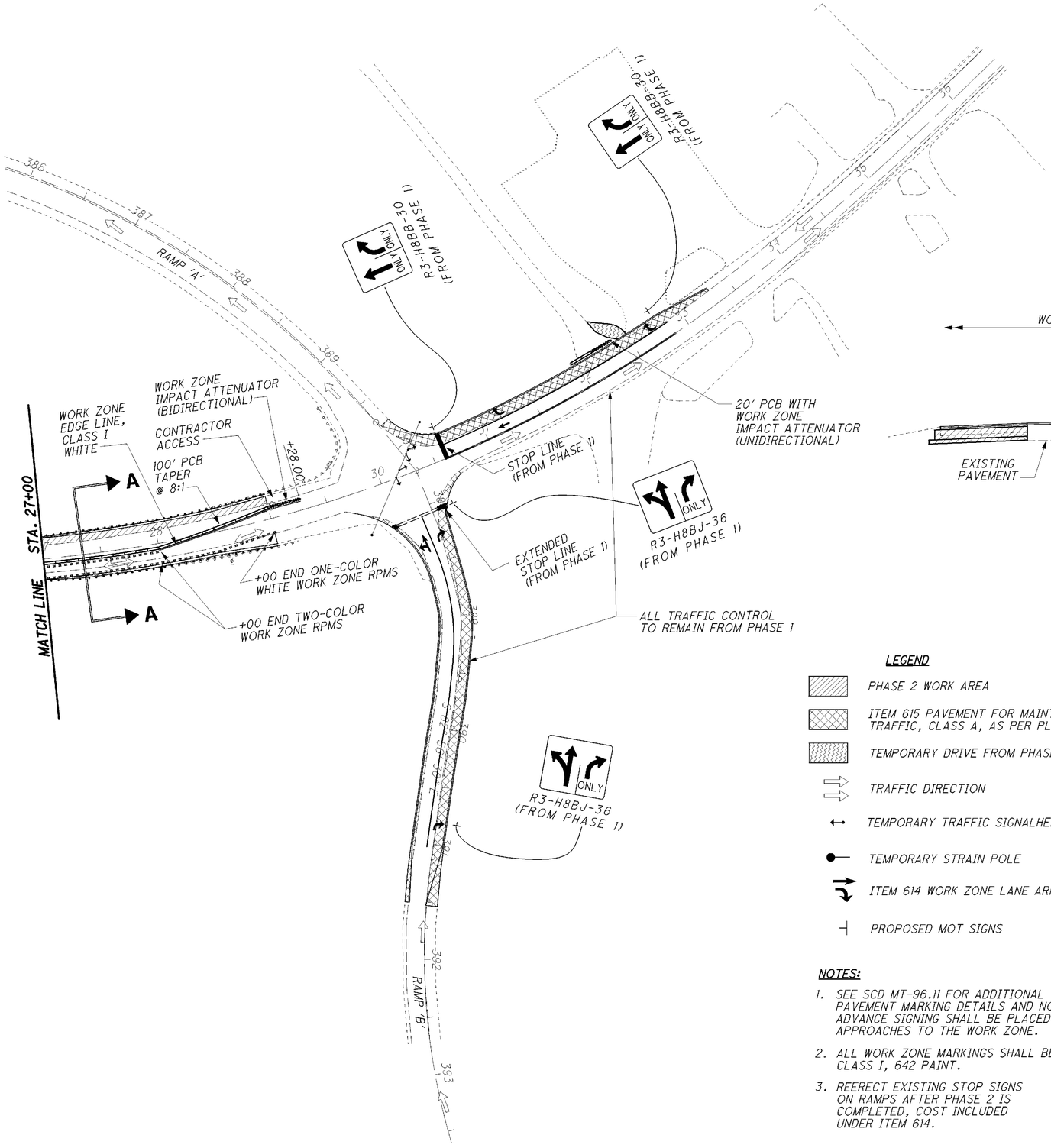

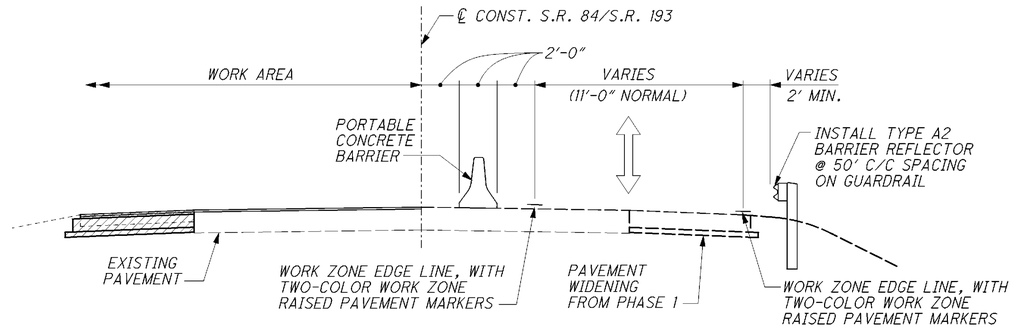

MAINTENANCE OF TRAFFIC - PHASE 2
SECTION A-A

LEGEND

- PHASE 2 WORK AREA
- ITEM 615 PAVEMENT FOR MAINTAINING TRAFFIC, CLASS A, AS PER PLAN FROM PHASE 1
- TEMPORARY DRIVE FROM PHASE 1
- TRAFFIC DIRECTION
- TEMPORARY TRAFFIC SIGNALHEADS
- TEMPORARY STRAIN POLE
- ITEM 614 WORK ZONE LANE ARROWS
- PROPOSED MOT SIGNS

NOTES:

1. SEE SCD MT-96.11 FOR ADDITIONAL PAVEMENT MARKING DETAILS AND NOTES. ADVANCE SIGNING SHALL BE PLACED ON ALL APPROACHES TO THE WORK ZONE.
2. ALL WORK ZONE MARKINGS SHALL BE CLASS I, 642 PAINT.
3. REERECT EXISTING STOP SIGNS ON RAMPS AFTER PHASE 2 IS COMPLETED, COST INCLUDED UNDER ITEM 614.

N

HORIZONTAL SCALE IN FEET
0 25 50 100

MAINTENANCE OF TRAFFIC PHASE 2 (STAGE 1)

ATB-84-20.50

25199MPC04.DGN 04/28/09 LVB,SAM,SCB

NOTES:

1. ALL CLOSING TO BE AT NIGHT PER PERMITTED LANE CLOSURE, FOR STAGES 1 AND 2.
2. WESTBOUND I.R. 90 CLOSING OUTSIDE LANE IS THE SAME CONCEPT RELATIVE TO THE WORK AREA.
3. NO WORK ZONE PAVEMENT MARKING REQUIRED.
4. REMOVE OR COVER ALL MOT SIGNS DURING NON-WORKING HOURS.
5. WORK ZONE SPEED LIMIT SIGNS FOR PART 1 SHALL BE LOCATED SO AS TO ALSO COVER THIS PART OF THE PROJECT.

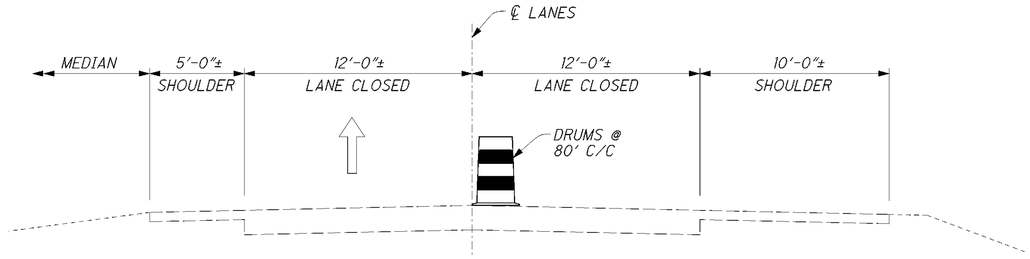

SECTION B-B

NOTE:

THE CONTRACTOR SHALL COORDINATE THE I.R. 90 LANE CLOSURES WITH ATB-90-14.50 PART 1 OF THIS PROJECT.

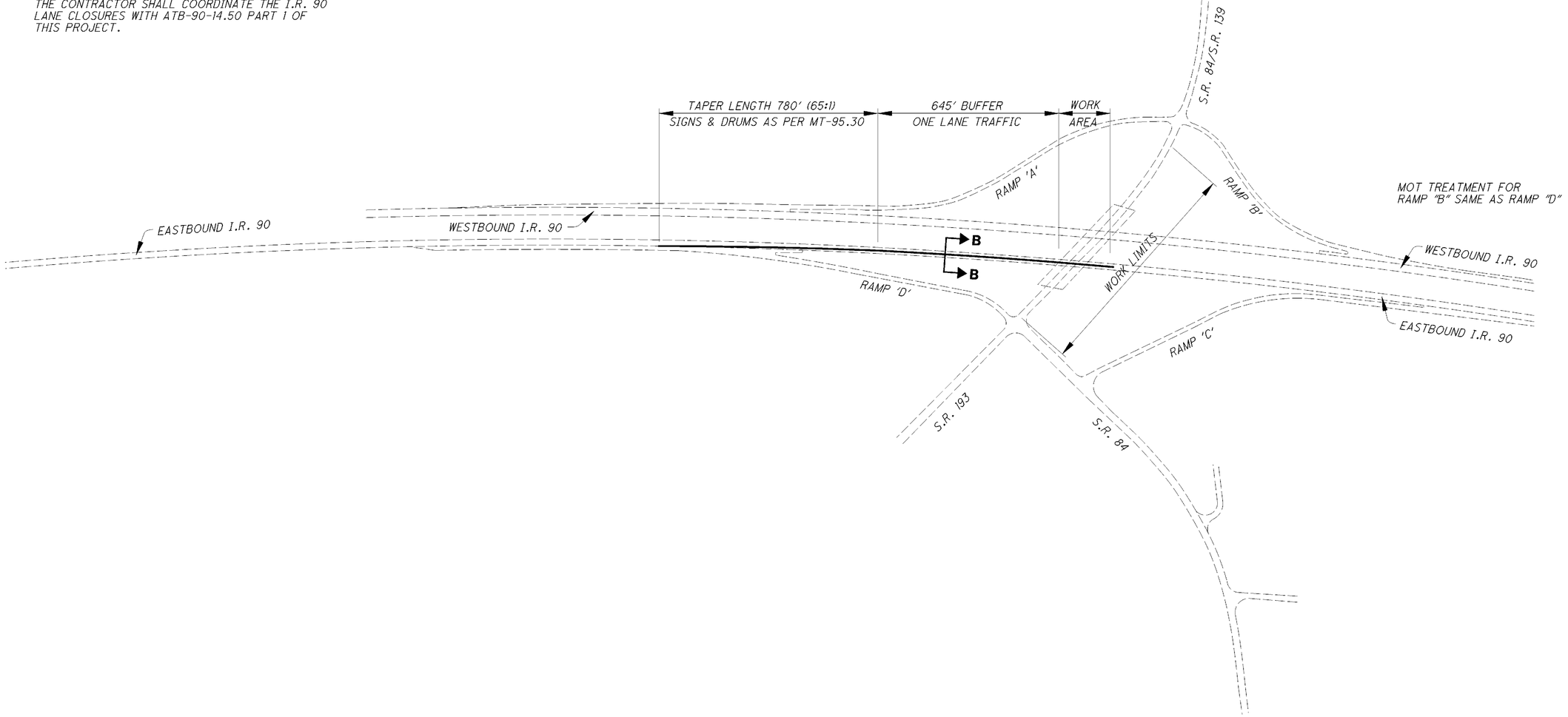

HORIZONTAL SCALE IN FEET
0 100 200 400

I.R. 90 MOT - CLOSING OUTSIDE LANE STAGES 1 AND 2

ATB-84-20.50

25199MP007.DGN 04/24/09 SAM.SCB

NOTES:

1. ALL CLOSING TO BE AT NIGHT PER PERMITTED LANE CLOSURE, FOR STAGES 1 AND 2.
2. WESTBOUND I.R. 90 CLOSING INSIDE LANE IS THE SAME CONCEPT RELATIVE TO THE WORK AREA.
3. NO WORK ZONE PAVEMENT MARKING REQUIRED.
4. REMOVE OR COVER ALL MOT SIGNS DURING NON-WORKING HOURS.
5. WORK ZONE SPEED LIMIT SIGNS FOR PART 1 SHALL BE LOCATED SO AS TO ALSO COVER THIS PART OF THE PROJECT.

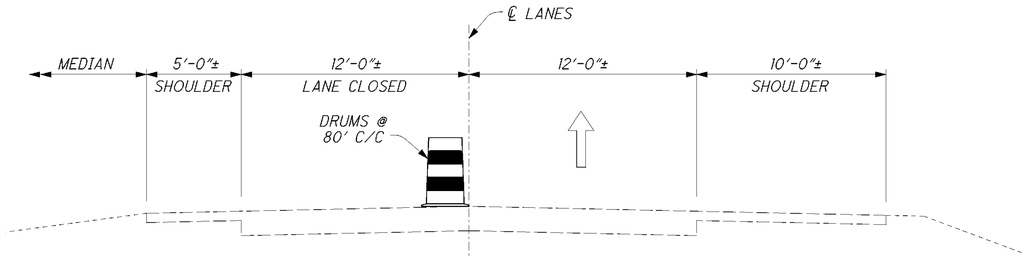

SECTION B-B

NOTE:

THE CONTRACTOR SHALL COORDINATE THE I.R. 90 LANE CLOSURES WITH ATB-90-14.50 PART 1 OF THIS PROJECT.

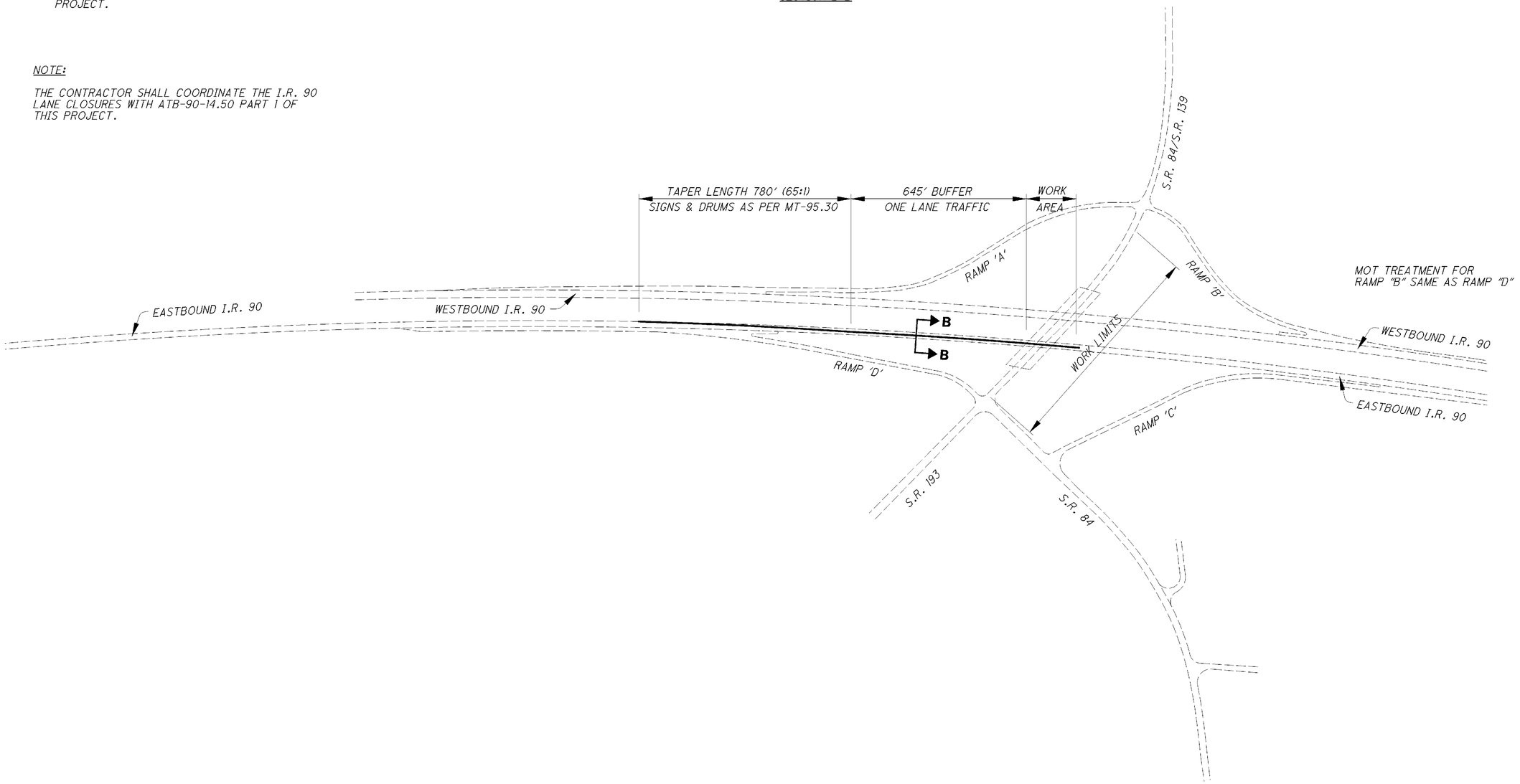

HORIZONTAL SCALE IN FEET
0 100 200 400

I.R. 90 MOT - CLOSING INSIDE LANE STAGES 1 AND 2

ATB-84-20.50

25199MP006.DGN 04/24/09 SAM SCB

SHEET NUMBER													ITEM	ITEM EXT.	GRAND TOTAL	UNIT	DESCRIPTION	SEE SHEET NO.
7-8	9-11	12	23-25	26	27	28	29	35	38									
																	ROADWAY	
LUMP													201	11000	LUMP		CLEARING AND GRUBBING	
					294		513						202	38000	807	FT	GUARDRAIL REMOVED	
								441					203	10000	441	CU YD	EXCAVATION	
								53					203	20000	53	CU YD	EMBANKMENT	
			860										204	10000	860	SQ YD	SUBGRADE COMPACTION	
					100	150							209	10000	250	FT	DITCH CLEANOUT	
					4		5						209	60201	9	STATION	LINEAR GRADING, AS PER PLAN	7
					287.5		500						606	13000	787.5	FT	GUARDRAIL, TYPE 5	
					1								606	22000	1	EACH	ANCHOR ASSEMBLY, TYPE B-98	7
					2		2						606	35000	4	EACH	BRIDGE TERMINAL ASSEMBLY, TYPE 1	
2													SPECIAL	69050100	2	EACH	SPECIAL - MAILBOX SUPPORT SYSTEM, SINGLE	8
																	EROSION CONTROL	
					223	231							601	20000	454	SQ YD	CRUSHED AGGREGATE SLOPE PROTECTION	
					3	1							601	32200	4	CU YD	ROCK CHANNEL PROTECTION, TYPE C WITH FILTER	
254													659	00300	254	CU YD	TOPSOIL	
2279													659	10000	2279	SQ YD	SEEDING AND MULCHING	
114													659	14000	114	SQ YD	REPAIR SEEDING AND MULCHING	
0.31													659	20000	0.31	TON	COMMERCIAL FERTILIZER	
0.47													659	31000	0.47	ACRE	LIME	
13													659	35000	13	M GAL	WATER	
				LUMP									832	15000	LUMP		STORM WATER POLLUTION PREVENTION PLAN	
				3000									832	30000	3000	EACH	EROSION CONTROL	
																	DRAINAGE	
					0.4	0.2							602	20000	0.6	CU YD	CONCRETE MASONRY	
					85	62							603	05200	147	FT	12" CONDUIT, TYPE F, 707.05 OR 707.07, TYPE C	
					2	1							604	00800	3	EACH	CATCH BASIN, NO. 3A	
					51	27							605	11110	78	FT	6" SHALLOW PIPE UNDERDRAINS WITH FABRIC WRAP	
134													605	31100	134	FT	AGGREGATE DRAINS	
																	PAVEMENT	
			1174										254	01000	1174	SQ YD	PAVEMENT PLANING, ASPHALT CONCRETE	
			118										254	01600	118	SQ YD	PATCHING PLANED SURFACE	
			216										302	46000	216	CU YD	ASPHALT CONCRETE BASE, PG64-22	
		14	137										304	20001	151	CU YD	AGGREGATE BASE, AS PER PLAN	7
			89										407	10000	89	GALLON	TACK COAT	
			22										407	14000	22	GALLON	TACK COAT FOR INTERMEDIATE COURSE	
			72										448	50000	72	CU YD	ASPHALT CONCRETE SURFACE COURSE, TYPE 1H	
					11		19						448	46061	30	CU YD	ASPHALT CONCRETE INTERMEDIATE COURSE, TYPE 1, UNDER GUARDRAIL, PG64-22, AS PER PLAN	7
			72										609	26000	72	FT	CURB, TYPE 6	

CALCULATED JDL
CHECKED LVB

GENERAL SUMMARY

ATB-84-20.50

25199GG001.DGN 04/28/09 SCB

SHEET NUMBER													ITEM	ITEM EXT.	GRAND TOTAL	UNIT	DESCRIPTION	SEE SHEET NO.
7-8	9-11	12	23-25	26	27	28	29	35	38									
																	TRAFFIC CONTROL	
									11				621	00100	11	EACH	RPM	
11													621	54000	11	EACH	RAISED PAVEMENT MARKER REMOVED	
									18				626	00100	18	EACH	BARRIER REFLECTOR	
									47				630	02100	47	FT	GROUND MOUNTED SUPPORT, NO. 2 POST	
									33				630	04100	33	FT	GROUND MOUNTED SUPPORT, NO. 4 POST	
									2				630	80100	2	SQ FT	SIGN, FLAT SHEET	
									2				630	84900	2	EACH	REMOVAL OF GROUND MOUNTED SIGN AND DISPOSAL	
									11				630	85100	11	EACH	REMOVAL OF GROUND MOUNTED SIGN AND REERECTION	
									7				630	86002	7	EACH	REMOVAL OF GROUND MOUNTED POST SUPPORT AND DISPOSAL	
									1				632	26500	1	EACH	DETECTOR LOOP	
									0.61				642	00100	0.61	MILE	EDGE LINE, TYPE 1	
									0.08				642	00300	0.08	MILE	CENTER LINE, TYPE 1	
									12				642	00500	12	FT	STOP LINE, TYPE 1	
									0.15				646	10000	0.15	MILE	EDGE LINE	
									0.07				646	10200	0.07	MILE	CENTER LINE	
																	FOR STRUCTURES OVER 20' SEE SHEET 44	
																	MAINTENANCE OF TRAFFIC	
	200												614	11100	200	HOUR	LAW ENFORCEMENT OFFICER WITH PATROL CAR	
		1											SPECIAL	61411300	1	EACH	WORK ZONE TRAFFIC SIGNAL	11
		3											614	12336	3	EACH	WORK ZONE IMPACT ATTENUATOR (UNIDIRECTIONAL)	10
		4											614	12338	4	EACH	WORK ZONE IMPACT ATTENUATOR (BIDIRECTIONAL)	10
		384											614	12800	384	EACH	WORK ZONE RAISED PAVEMENT MARKER	
	20												614	13000	20	CU YD	ASPHALT CONCRETE FOR MAINTAINING TRAFFIC	
		12											614	13202	12	EACH	BARRIER REFLECTOR, TYPE A2	
		6											614	13300	6	EACH	BARRIER REFLECTOR, TYPE B	
		44											614	13302	44	EACH	BARRIER REFLECTOR, TYPE B2	
		26											614	13350	26	EACH	OBJECT MARKER, ONE WAY	
		28											614	13360	28	EACH	OBJECT MARKER, TWO WAY	
		0.52											614	22000	0.52	MILE	WORK ZONE EDGE LINE, CLASS I	
		1291											614	23000	1291	FT	WORK ZONE CHANNELIZING LINE, CLASS I	
		61											614	26000	61	FT	WORK ZONE STOP LINE, CLASS I	
		14											614	30000	14	EACH	WORK ZONE ARROW, CLASS I	
	LUMP												615	10000	LUMP		ROADS FOR MAINTAINING TRAFFIC	
		2213											615	20001	2213	SQ YD	PAVEMENT FOR MAINTAINING TRAFFIC, CLASS A, AS PER PLAN	11
	10												616	10000	10	M GAL	WATER	
		720											622	40020	720	FT	PORTABLE CONCRETE BARRIER, 32"	
		700											622	40040	700	FT	PORTABLE CONCRETE BARRIER, 32", BRIDGE MOUNTED	
													SPECIAL	10810000	LUMP		CPM PROGRESS SCHEDULE	
													614	11000	LUMP		MAINTAINING TRAFFIC	
													619	16010	6	MONTH	FIELD OFFICE, TYPE B	
													623	10000	LUMP		CONSTRUCTION LAYOUT STAKES	
													624	10000	LUMP		MOBILIZATION	

CALCULATED JDL
CHECKED LVB

GENERAL SUMMARY

ATB-84-20.50

25199GG002.DGN 05/08/09 SCB

LINE	DESCRIPTION	CALCULATION		QUANTITY
	S.R.84 SHOULDER WIDENING AREA			
1	STA. 21+16.38 TO STA. 21+50.95 LT. =	COMPUTER GENERATED AREA	=	181.56 SQ. FT.
2	STA. 21+50.95 , 12.00 FT. LT. - 18.00 FT. LT. =	6.00 FT.		
3	STA. 22+52.75 , 12.00 FT. LT. - 18.00 FT. LT. =	6.00 FT. : (6 FT. + 6 FT.) / 2 x 101.80 FT.	=	610.80 SQ. FT.
4	STA. 26+49.21 , 12.00 FT. LT. - 18.00 FT. LT. =	6.00 FT.		
5	STA. 28+50.00 , 12.00 FT. LT. - 18.00 FT. LT. =	6.00 FT. : (6 FT. + 6 FT.) / 2 x 200.79 FT.	=	1204.74 SQ. FT.
6	STA. 29+00.00 , 12.00 FT. LT. - 20.00 FT. LT. =	8.00 FT. : (8 FT. + 6 FT.) / 2 x 50.00 FT.	=	350.00 SQ. FT.
7	NOT USED			
8	STA. 21+32.88 TO STA. 21+95.44 RT. =	COMPUTER GENERATED AREA	=	517.10 SQ. FT.
9	STA. 21+95.44 , 12.00 FT. LT. - 18.00 FT. LT. =	6.00 FT.		
10	STA. 22+72.67 , 12.00 FT. LT. - 18.00 FT. LT. =	6.00 FT. : (6 FT. + 6 FT.) / 2 x 77.23 FT.	=	463.38 SQ. FT.
11	STA. 26+66.37 , 12.00 FT. RT. - 18.00 FT. RT. =	6.00 FT.		
12	STA. 28+50.00 , 12.00 FT. RT. - 18.00 FT. RT. =	6.00 FT. : (6 FT. + 6 FT.) / 2 x 183.63 FT.	=	1101.78 SQ. FT.
13	STA. 29+00.00 , 12.00 FT. RT. - 22.40 FT. RT. =	10.40 FT. : (10.4 FT. + 6 FT.) / 2 x 50.00 FT.	=	410.00 SQ. FT.
14	TOTAL LINES 1 TO 13		=	4839.36 SQ. FT.
	S.R. 84 RESURFACING AREA			
15	STA. 21+00.00 TO STA. 21+71.13 =	COMPUTER GENERATED AREA	=	2553.09 SQ. FT.
16	STA. 21+71.13 , 12.00 FT. RT. + 12.00 FT. LT. =	24.00 FT.		
17	STA. 22+62.70 , 12.00 FT. RT. + 12.00 FT. LT. =	24.00 FT. : (24 FT. + 24 FT.) / 2 x 91.57 FT.	=	2197.68 SQ. FT.
18	STA. 26+57.80 , 12.00 FT. RT. + 12.00 FT. LT. =	24.00 FT.		
19	STA. 29+00.00 , 12.00 FT. RT. + 12.00 FT. LT. =	24.00 FT. : (24 FT. + 24 FT.) / 2 x 242.20 FT.	=	5812.80 SQ. FT.
20	TOTAL LINES 15 TO 19		=	10563.57 SQ. FT.
	S.R. 84 APPROACH SLAB AREAS			
21	STA. 22+62.70 , 19.50 FT. RT. + 19.50 FT. LT. =	39.00 FT.		
22	STA. 22+87.70 , 19.50 FT. RT. + 19.50 FT. LT. =	39.00 FT. : (39 FT. + 39 FT.) / 2 x 25.00 FT.	=	975.00 SQ. FT.
23	STA. 26+32.80 , 19.50 FT. RT. + 19.50 FT. LT. =	39.00 FT.		
24	STA. 26+57.80 , 19.50 FT. RT. + 19.50 FT. LT. =	39.00 FT. : (39 FT. + 39 FT.) / 2 x 25.00 FT.	=	975.00 SQ. FT.
25	TOTAL LINES 21 TO 24		=	1950.00 SQ. FT.
	ITEM 254 PAVEMENT PLANING, ASPHALT CONCRETE			
26	LINE 20 = 10563.57 S.F.x / 9	TOTAL (254)	=	1173.73 SQ. YD.
		TOTAL CARRIED TO GENERAL SUMMARY	=	1174 SQ. YD.
	ITEM 254 PATCHING PLANED SURFACE			
27	LINE 20 = 10563.57S.F. / 9 x 10%	TOTAL (254)	=	117.37 SQ. YD.
		TOTAL CARRIED TO GENERAL SUMMARY	=	118 SQ. YD.
	ITEM 448 1½" ASPHALT CONCRETE SURFACE COURSE, TYPE 1H			
28	LINE 14 = 4839.36 S.F.x 1½" / 12 / 27		=	22.40 CU. YD.
29	LINE 20 = 10563.57 S.F.x 1½" / 12 / 27		=	48.91 CU. YD.
30	TOTAL LINES 28 & 29	TOTAL (448)	=	71.31 CU. YD.
		TOTAL CARRIED TO GENERAL SUMMARY	=	72 CU. YD.

CALCULATED JDL
CHECKED LVB

PAVEMENT CALCULATIONS

ATB-84-20.50

25199GC001.DGN 04/24/09 SCB

LINE	DESCRIPTION	CALCULATION				QUANTITY
	ITEM 302 ASPHALT CONCRETE BASE, PG64-22					
31	LINE 14 = 4839.36 S.F.x 12" / 12 / 27				=	179.24 CU. YD.
	ADDITIONAL AT EDGE OF SHOULDER					
32	STA. 21+16.38 , 29.20 FT. LT. - 29.70 FT. LT. =	0.50 FT.				
33	STA. 21+50.95 , 18.00 FT. LT. - 18.50 FT. LT. =	0.50 FT. : (0.5 FT. + 0.5 FT.) / 2 x	38.00 FT.		=	19.00 SQ. FT.
34	STA. 22+24.25 , 18.00 FT. LT. - 18.50 FT. LT. =	0.50 FT. : (0.5 FT. + 0.5 FT.) / 2 x	73.30 FT.		=	36.65 SQ. FT.
35	STA. 26+68.80 , 18.00 FT. LT. - 18.50 FT. LT. =	0.50 FT.				
36	STA. 28+50.00 , 18.00 FT. LT. - 18.50 FT. LT. =	0.50 FT. : (0.5 FT. + 0.5 FT.) / 2 x	181.20 FT.		=	90.60 SQ. FT.
37	STA. 29+00.00 , 20.00 FT. LT. - 20.50 FT. LT. =	0.50 FT. : (0.5 FT. + 0.5 FT.) / 2 x	50.00 FT.		=	25.00 SQ. FT.
38	STA. 21+35.00 , 35.78 FT. RT. - 36.28 FT. RT. =	0.50 FT.				
39	STA. 21+95.44 , 18.00 FT. RT. - 18.50 FT. RT. =	0.50 FT. : (0.5 FT. + 0.5 FT.) / 2 x	47.10 FT.		=	23.55 SQ. FT.
40	STA. 22+53.75 , 18.00 FT. RT. - 18.50 FT. RT. =	0.50 FT. : (0.5 FT. + 0.5 FT.) / 2 x	58.31 FT.		=	29.16 SQ. FT.
41	STA. 26+70.48 , 18.00 FT. RT. - 18.50 FT. RT. =	0.50 FT.				
42	STA. 28+50.00 , 18.00 FT. RT. - 18.50 FT. RT. =	0.50 FT. : (0.5 FT. + 0.5 FT.) / 2 x	179.52FT.		=	89.76 SQ. FT.
43	STA. 29+00.00 , 22.40 FT. RT. - 22.90 FT. RT. =	0.50 FT. : (0.5 FT. + 0.5 FT.) / 2 x	50.00 FT.		=	25.00 SQ. FT.
44	TOTAL LINES 32 TO 43				=	338.72 SQ. FT.
45	LINE 44 = 338.72 S.F.x 12" / 12 / 27				=	36.11 CU. YD.
46	TOTAL LINES 31 & 45			TOTAL (302)	=	215.32 CU. YD.
				TOTAL CARRIED TO GENERAL SUMMARY	=	216 CU. YD.
	ITEM 304 AGGREGATE BASE, AS PER PLAN					
47	LINE 14 = 4838.7 S.F. x 6" / 12 / 27				=	89.61 CU. YD.
48	LINE 25 = 1950 S.F. x 6" / 12 / 27				=	36.11 CU. YD.
	ADDITIONAL AT EDGE OF SHOULDER					
49	STA. 21+16.38 , 29.20 FT. LT. - 30.20 FT. LT. =	1.00 FT.				
50	STA. 21+50.95 , 18.00 FT. LT. - 19.00 FT. LT. =	1.00 FT.:(1 FT. + 1 FT.) / 2 x	38.00 FT.		=	38.00 SQ. FT.
51	STA. 22+24.25 , 18.00 FT. LT. - 19.00 FT. LT. =	1.00 FT.:(1 FT. + 1 FT.) / 2 x	73.30 FT.		=	73.30 SQ. FT.
52	STA. 22+24.25 , 18.00 FT. LT. - 19.50 FT. LT. =	1.50 FT.				
53	STA. 22+47.75 , 18.00 FT. LT. - 19.50 FT. LT. =	1.50 FT.:(1.5 FT. + 1.5 FT.) / 2 x	23.50 FT.		=	35.25 SQ. FT.
54	STA. 26+44.87 , 18.00 FT. LT. - 19.50 FT. LT. =	1.50 FT.				
55	STA. 26+68.80 , 18.00 FT. LT. - 19.50 FT. LT. =	1.50 FT.:(1.5 FT. + 1.5 FT.) / 2 x	23.93 FT.		=	35.90 SQ. FT.
56	STA. 26+68.80 , 18.00 FT. LT. - 19.00 FT. LT. =	1.00 FT.				
57	STA. 28+50.00 , 18.00 FT. LT. - 19.00 FT. LT. =	1.00 FT.:(1 FT. + 1 FT.) / 2 x	181.20 FT.		=	181.20 SQ. FT.
58	STA. 29+00.00 , 20.00 FT. LT. - 21.00 FT. LT. =	1.00 FT.:(1 FT. + 1 FT.) / 2 x	50.00 FT.		=	50.00 SQ. FT.
59	STA. 21+35.00 , 35.78 FT. RT. - 36.78 FT. RT. =	1.00 FT.				
60	STA. 21+95.44 , 18.00 FT. RT. - 19.00 FT. RT. =	1.00 FT.:(1 FT. + 1 FT.) / 2 x	47.10 FT.		=	47.10 SQ. FT.
61	STA. 22+53.75 , 18.00 FT. RT. - 19.00 FT. RT. =	1.00 FT.:(1 FT. + 1 FT.) / 2 x	58.31 FT.		=	58.31 SQ. FT.
62	STA. 22+53.75 , 18.00 FT. RT. - 19.50 FT. RT. =	1.50 FT.				
63	STA. 22+77.65 , 18.00 FT. RT. - 19.50 FT. RT. =	1.50 FT.:(1.5 FT. + 1.5 FT.) / 2 x	23.90 FT.		=	29.88 SQ. FT.
64	STA. 26+70.42 , 18.00 FT. RT. - 19.00 FT. RT. =	1.00 FT.				
65	STA. 28+50.00 , 18.00 FT. RT. - 19.00 FT. RT. =	1.00 FT.:(1 FT. + 1 FT.) / 2 x	179.58 FT.		=	179.58 SQ. FT.
66	STA. 29+00.00 , 22.40 FT. RT. - 23.40 FT. RT. =	1.00 FT.:(1 FT. + 1 FT.) / 2 x	50.00 FT.		=	50.00 SQ. FT.
	ADDITIONAL AT APPROACH SLABS					
67	STA. 22+47.75 , 19.50 FT. LT. - 20.50 FT. LT. =	1.00 FT.				
68	STA. 22+52.51 , 19.50 FT. LT. - 20.50 FT. LT. =	1.00 FT.:(1 FT. + 1 FT.) / 2 x	4.76 FT.		=	4.76 SQ. FT.
69	STA. 26+36.23 , 19.50 FT. LT. - 20.50 FT. LT. =	1.00 FT.				
70	STA. 26+44.87 , 19.50 FT. LT. - 20.50 FT. LT. =	1.00 FT.:(1 FT. + 1 FT.) / 2 x	8.64 FT.		=	8.64 SQ. FT.
71	STA. 22+77.65 , 19.50 FT. RT. - 20.50 FT. RT. =	1.00 FT.				
72	STA. 22+86.41 , 19.50 FT. RT. - 20.50 FT. RT. =	1.00 FT.:(1 FT. + 1 FT.) / 2 x	8.76 FT.		=	8.76 SQ. FT.
73	STA. 26+66.18 , 19.50 FT. RT. - 20.50 FT. RT. =	1.00 FT.				
74	STA. 26+70.42 , 19.50 FT. RT. - 20.50 FT. RT. =	1.00 FT.:(1 FT. + 1 FT.) / 2 x	4.24 FT.		=	4.24 SQ. FT.
	DEDUCT ON APPROACH SLAB OUTSIDE TURNBACK WINGWALL					
75	STA. 22+52.78 , 16.50 FT. LT. - 19.50 FT. LT. =	-3.00 FT.				
76	STA. 22+72.67 , 16.50 FT. LT. - 19.50 FT. LT. =	-3.00 FT.:(-3 FT. + -3 FT.) / 2 x	19.89 FT.		=	-59.67 SQ. FT.
77	STA. 22+86.41 , 16.50 FT. RT. - 19.50 FT. RT. =	-3.00 FT.				
78	STA. 23+02.68 , 16.50 FT. RT. - 19.50 FT. RT. =	-3.00 FT.:(-3 FT. + -3 FT.) / 2 x	16.27 FT.		=	-48.81 SQ. FT.
79	STA. 26+19.44 , 16.50 FT. LT. - 19.50 FT. LT. =	-3.00 FT.				
80	STA. 26+36.23 , 16.50 FT. LT. - 19.50 FT. LT. =	-3.00 FT.:(-3 FT. + -3 FT.) / 2 x	16.79 FT.		=	-50.37 SQ. FT.
81	STA. 26+45.90 , 16.50 FT. RT. - 19.50 FT. RT. =	-3.00 FT.				
82	STA. 26+64.65 , 16.50 FT. RT. - 19.50 FT. RT. =	-3.00 FT.:(-3 FT. + -3 FT.) / 2 x	18.75 FT.		=	-56.25 SQ. FT.
83	TOTAL LINES 49 TO 82				=	589.81 SQ. FT.
84	LINE 83 = 589.81 S.F. x 6" / 12 / 27				=	10.92 CU. YD.
85	TOTAL LINES 47 , 48 & 84			TOTAL (304)	=	136.64 CU. YD.
				TOTAL CARRIED TO GENERAL SUMMARY	=	137 CU. YD.
	ITEM 407 TACK COAT					
86	LINE 20 = 10563.57 S. F. / 9 x 0.075 GAL./ S.Y.			TOTAL (304)	=	88.03 GAL.
				TOTAL CARRIED TO GENERAL SUMMARY	=	89 GAL.

CALCULATED JDL
CHECKED LVB

PAVEMENT CALCULATIONS

ATB-84-20.50

25199GC002.DGN 04/24/09 SCB

LINE	DESCRIPTION	CALCULATION			QUANTITY
	ITEM 407 TACK COAT FOR INTERMEDIATE COURSE				
87	LINE 14 = 4838.7 S. F. / 9 x 0.04 GAL./ S.Y.			TOTAL (407) =	21.51 GAL.
				TOTAL CARRIED TO GENERAL SUMMARY =	22 GAL.
	ITEM 204 SUBGRADE COMPACTION				
88	LINE 14 = 4838.7 S.F. / 9			=	537.63 SQ. YD.
89	LINE 25 = 1950 S.F. / 9			=	216.67 SQ. YD.
	ADDITIONAL AT EDGE OF SHOULDER				
90	STA. 21+16.38 , 29.20 FT. LT. - 30.70 FT. LT. =	1.50 FT.			
91	STA. 21+50.95 , 18.00 FT. LT. - 19.50 FT. LT. =	1.50 FT.:(1.5 FT. + 1.5 FT.) / 2 x	38.00 FT.	=	57.00 SQ. FT.
92	STA. 22+24.25 , 18.00 FT. LT. - 19.50 FT. LT. =	1.50 FT.:(1.5 FT. + 1.5 FT.) / 2 x	73.30 FT.	=	109.95 SQ. FT.
93	STA. 22+24.25 , 18.00 FT. LT. - 19.50 FT. LT. =	1.50 FT.			
94	STA. 22+47.75 , 18.00 FT. LT. - 19.50 FT. LT. =	1.50 FT.:(1.5 FT. + 1.5 FT.) / 2 x	23.50 FT.	=	35.25 SQ. FT.
95	STA. 26+44.87 , 18.00 FT. LT. - 19.50 FT. LT. =	1.50 FT.			
96	STA. 26+68.80 , 18.00 FT. LT. - 19.50 FT. LT. =	1.50 FT.:(1.5 FT. + 1.5 FT.) / 2 x	23.93 FT.	=	35.90 SQ. FT.
97	STA. 26+68.80 , 18.00 FT. LT. - 19.50 FT. LT. =	1.50 FT.			
98	STA. 28+50.00 , 18.00 FT. LT. - 19.50 FT. LT. =	1.50 FT.:(1.5 FT. + 1.5 FT.) / 2 x	181.20 FT.	=	271.80 SQ. FT.
99	STA. 29+00.00 , 20.00 FT. LT. - 21.50 FT. LT. =	1.50 FT.:(1.5 FT. + 1.5 FT.) / 2 x	50.00 FT.	=	75.00 SQ. FT.
100	STA. 21+35.00 , 35.78 FT. RT. - 37.28 FT. RT. =	1.50 FT.			
101	STA. 21+95.44 , 18.00 FT. RT. - 19.50 FT. RT. =	1.50 FT.:(1.5 FT. + 1.5 FT.) / 2 x	47.10 FT.	=	70.65 SQ. FT.
102	STA. 22+53.75 , 18.00 FT. RT. - 19.50 FT. RT. =	1.50 FT.:(1.5 FT. + 1.5 FT.) / 2 x	58.31 FT.	=	87.46 SQ. FT.
103	STA. 22+53.75 , 18.00 FT. RT. - 19.50 FT. RT. =	1.50 FT.			
104	STA. 22+77.65 , 18.00 FT. RT. - 19.50 FT. RT. =	1.50 FT.:(1.5 FT. + 1.5 FT.) / 2 x	23.90 FT.	=	35.85 SQ. FT.
105	STA. 26+70.42 , 18.00 FT. RT. - 19.50 FT. RT. =	1.50 FT.			
106	STA. 28+50.00 , 18.00 FT. RT. - 19.50 FT. RT. =	1.50 FT.:(1.5 FT. + 1.5 FT.) / 2 x	179.58 FT.	=	269.37 SQ. FT.
107	STA. 29+00.00 , 22.40 FT. RT. - 23.90 FT. RT. =	1.50 FT.:(1.5 FT. + 1.5 FT.) / 2 x	50.00 FT.	=	75.00 SQ. FT.
	ADDITIONAL AT APPROACH SLABS				
108	STA. 22+47.75 , 19.50 FT. LT. - 21.00 FT. LT. =	1.50 FT.			
109	STA. 22+52.51 , 19.50 FT. LT. - 21.00 FT. LT. =	1.50 FT.:(1.5 FT. + 1.5 FT.) / 2 x	4.76 FT.	=	7.14 SQ. FT.
110	STA. 26+36.23 , 19.50 FT. LT. - 21.00 FT. LT. =	1.50 FT.			
111	STA. 26+44.87 , 19.50 FT. LT. - 21.00 FT. LT. =	1.50 FT.:(1.5 FT. + 1.5 FT.) / 2 x	8.64 FT.	=	12.96 SQ. FT.
112	STA. 22+77.65 , 19.50 FT. RT. - 21.00 FT. RT. =	1.50 FT.			
113	STA. 22+86.41 , 19.50 FT. RT. - 21.00 FT. RT. =	1.50 FT.:(1.5 FT. + 1.5 FT.) / 2 x	8.76 FT.	=	13.14 SQ. FT.
114	STA. 26+66.18 , 19.50 FT. RT. - 21.00 FT. RT. =	1.50 FT.			
115	STA. 26+70.42 , 19.50 FT. RT. - 21.00 FT. RT. =	1.50 FT.:(1.5 FT. + 1.5 FT.) / 2 x	4.24 FT.	=	6.36 SQ. FT.
	DEDUCT ON APPROACH SLAB OUTSIDE TURNBACK WINGWALL				
116	STA. 22+52.51 , 16.50 FT. LT. - 19.50 FT. LT. =	-3.00 FT.			
117	STA. 22+72.80 , 16.50 FT. LT. - 19.50 FT. LT. =	-3.00 FT.:(-3 FT. + -3 FT.) / 2 x	20.29 FT.	=	-60.87 SQ. FT.
118	STA. 22+86.41 , 16.50 FT. RT. - 19.50 FT. RT. =	-3.00 FT.			
119	STA. 23+02.68 , 16.50 FT. RT. - 19.50 FT. RT. =	-3.00 FT.:(-3 FT. + -3 FT.) / 2 x	16.27 FT.	=	-48.81 SQ. FT.
120	STA. 26+19.44 , 16.50 FT. LT. - 19.50 FT. LT. =	-3.00 FT.			
121	STA. 26+36.23 , 16.50 FT. LT. - 19.50 FT. LT. =	-3.00 FT.:(-3 FT. + -3 FT.) / 2 x	16.79 FT.	=	-50.37 SQ. FT.
122	STA. 26+45.90 , 16.50 FT. RT. - 19.50 FT. RT. =	-3.00 FT.			
123	STA. 26+64.65 , 16.50 FT. RT. - 19.50 FT. RT. =	-3.00 FT.:(-3 FT. + -3 FT.) / 2 x	18.75 FT.	=	-56.25 SQ. FT.
124	TOTAL LINES 90 TO 123			=	946.53 SQ. FT.
125	LINE 124 = 946.53 S.F. / 9			=	105.17 SQ. YD.
126	TOTAL LINES 88 , 89 & 125			TOTAL (204) =	859.47 SQ. YD.
				TOTAL CARRIED TO GENERAL SUMMARY =	860 SQ. YD.
	ITEM 609 CURB, TYPE 6				
127	FROM STA. 22+24.25 TO STA. 22+47.80 LT.			=	23.55 FT.
128	FROM STA. 26+44.81 TO STA. 26+68.80 LT.			=	23.99 FT.
129	FROM STA. 22+53.75 TO STA. 22+77.68 RT.			=	23.93 FT.
130	TOTAL LINES 127 TO 129			TOTAL (609) =	71.47 FT.
				TOTAL CARRIED TO GENERAL SUMMARY =	72 FT.

EROSION CONTROL CALCULATIONS

	ITEM 659 COMMERCIAL FERTILIZER				
1	TOTAL SEEDING FROM SHEET #7			=	2279 SQ. YD.
2	LINE 1 = 2279.00 SQ. YD. x 9 / 1000 x 30 /2000			TOTAL (659) =	0.308 TON
				CARRIED TO THE GENERAL NOTES USE =	0.31 TON
	ITEM 659 WATER				
3	LINE 1 = 2279.00 SQ. YD. x 9 / 1000 x 300 x 2 /1000			TOTAL (659) =	12.31 MGAL
				CARRIED TO THE GENERAL NOTES USE =	13 MGAL
	ITEM 659 TOPSOIL (4" THICK)				
4	LINE 1 = 2279.00 SQ. YD. x 9 x 4" / 12 / 27			TOTAL (659) =	253.20 CU. YD.
				CARRIED TO THE GENERAL NOTES USE =	254 CU. YD.
	ITEM 659 REPAIR SEEDING AND MULCHING				
5	LINE 1 = 2279.00 SQ. YD. x 5%			TOTAL (659) =	113.95 SQ. YD.
				CARRIED TO THE GENERAL NOTES USE =	114 SQ. YD.
	ITEM 659 LIME				
6	LINE 1 = 2279.00 SQ. YD. x 9 / 43560			TOTAL (659) =	0.470 ACRE
				CARRIED TO THE GENERAL NOTES USE =	0.47 ACRE

CALCULATED JDL
CHECKED LVB

PAVEMENT AND EROSION CONTROL CALCULATIONS

ATB-84-20.50

25199GC003.DGN 04/29/09 SCB

PROJECT DATA

TOTAL AREA (RIGHT-OF-WAY):	* ACRES	RUNOFF COEFFICIENT FOR PRE-CONSTRUCTION SITE:	0.619
PROJECT EARTH DISTURB AREA:	1.10 ACRES	RUNOFF COEFFICIENT FOR POST CONSTRUCTION SITE:	0.619
ESTIMATED CONTRACTOR EARTH DISTURB AREA:	1.0 ACRES	SOIL SURVEY OF ASHTABULA COUNTY MAP NO.	8
NOTICE OF INTENT EARTH DISTURBED AREA:	4.90 ACRES	IMMEDIATE RECEIVING WATERS:	UNNAMED STREAM
IMPERVIOUS AREA FOR PRE-CONSTRUCTION SITE:	1.87 ACRES	SUBSEQUENT RECEIVING WATER:	CONNEAUT RIVER
IMPERVIOUS AREA FOR POST CONSTRUCTION SITE:	1.95 ACRES		

* = INTERSTATE INTERCHANGE
I.R. 90 AND S.R. 84 / S.R. 193

THE FOLLOWING QUANTITIES HAVE BEEN CARRIED TO THE GENERAL SUMMARY.

ITEM 832 - EROSION CONTROL	3,000 EACH
ITEM 832 - STORM WATER POLLUTION PREVENTION PLAN	LUMP

LEGEND

DRAINAGE AREA

DRAINAGE FLOW ARROWS
EXISTING LAND USE IS INTERSTATE INTERCHANGE
USGS QUADRANGLE NO. AMS 4867 I NW - V852
NORTH KINGSVILLE, OHIO

LATITUDE: N 41°52'50"
LONGITUDE: W 80°40'00"

PROJECT DESCRIPTION

THE PROJECT CONSISTS OF THE REPLACEMENT OF THE DECK ON BRIDGE ATB-84-2050 OVER INTERSTATE ROUTE 90, PAINTING THE SUPERSTRUCTURE, NEW APPROACH SLABS AND APPROACH ROADWAY WORK.
PROJECT LENGTH = 0.07 MILES

HORIZONTAL SCALE IN FEET
0 25 50 100

BEGIN WORK
STA. 14+50

BEGIN PROJECT
STA. 22+62.70

END PROJECT
STA. 26+57.80

END WORK
STA. 33+35

D.A.1=0.05 AC.

D.A.2=0.04 AC

D.A.3=0.26 AC

℄ CONST. S.R. 193

℄ CONST. S.R. 84/S.R. 193

℄ CONST. S.R. 84

EASTBOUND I.R. 90

WESTBOUND I.R. 90

RAMP 'A'

RAMP 'B'
S 82° 56' 30" E

RAMP 'C'

PROJECT SITE PLAN

ATB-84-20.50

25199DE001.DGN 04/29/09 SAM.SCB

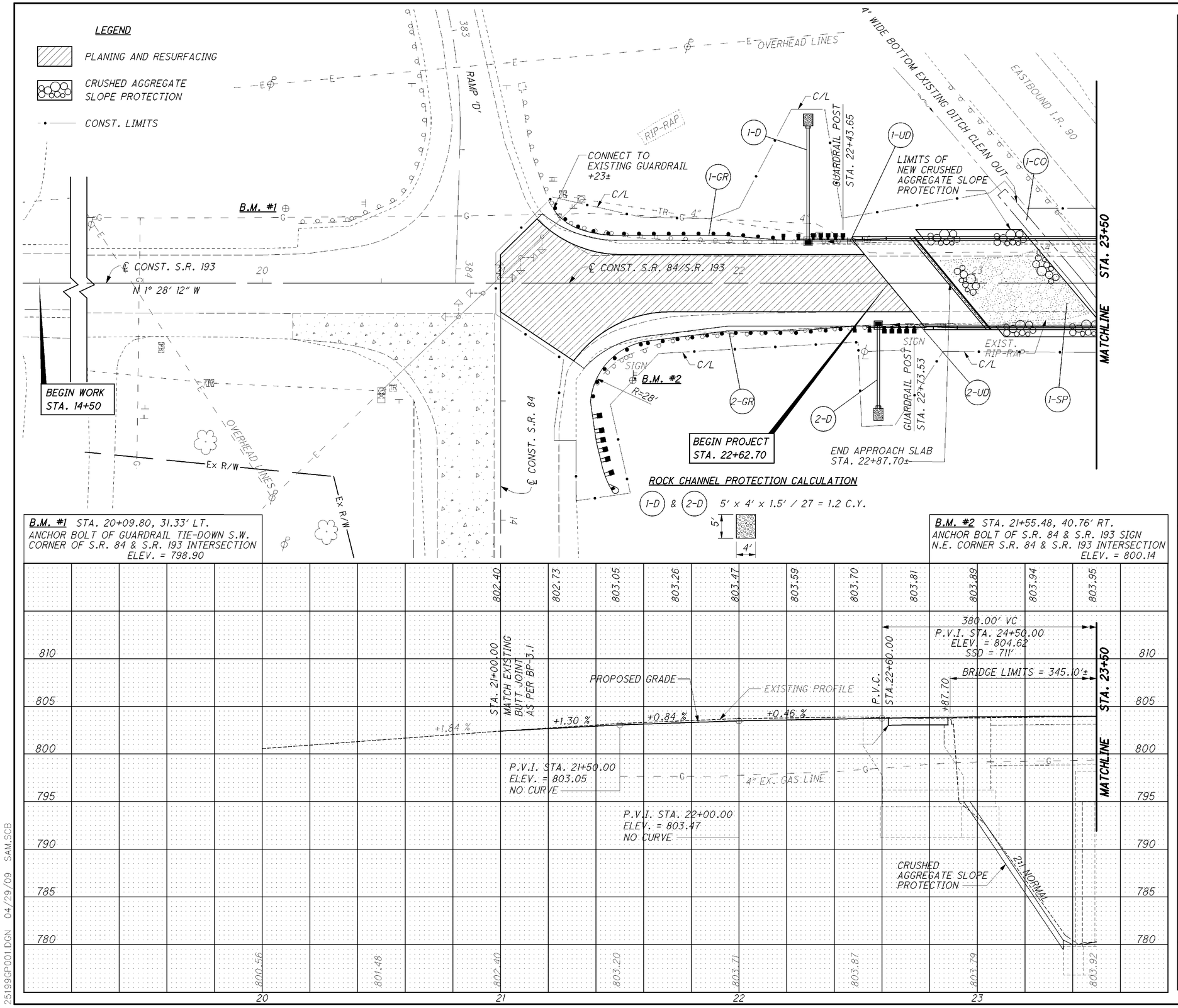

REF NO.		STATION FROM	STATION TO	SIDE	606 BRIDGE TERMINAL ASSEMBLY, TYPE 1 EACH	606 ANCHOR ASSEMBLY, TYPE B-98 EACH	606 GUARDRAIL, TYPE 5 FT	605 6" SHALLOW PIPE UNDERDRAINS W/ FABRIC WRAP FT	604 CATCH BASIN, NO. 3A EACH	603 12" CONDUIT, TYPE F, 707.05 OR 707.07, TYPE C FT	602 CONCRETE MASONRY CY	601 ROCK CHANNEL PROTECTION, TYPE C WITH FILTER (T=18") CY	601 CRUSHED AGGREGATE SLOPE PROTECTION SY	448 ASPHALT CONC. INTERMEDIATE COURSE, TYPE 1, UNDER GUARDRAIL, PG64-22, AS PER PLAN CY	209 LINEAR GRADING, AS PER PLAN STA	209 DITCH CLEANOUT FT	202 GUARDRAIL REMOVED FT
1-D		22+29.00		LT.		1	131.25					0.21		4.8	1.3		137.50
2-D		22+58.50		RT.		1	156.25					0.21		5.7	1.8		156.25
1-GR		21+22±	22+49.90	LT.	1			23		49		1.2					
2-GR		21+38.46	22+79.78	RT.	1			28		36		1.2					
1-UD		22+29.00	22+52.00	LT.									223				
2-UD		22+58.50	22+86.00	RT.													
1-SP		22+93.00	23+35.50	LT./ RT.												100	
1-CO		23+09±	23+73±	LT./ RT.													
TOTALS CARRIED TO GENERAL SUMMARY					2	1	287.5	51	2	85	0.4	3	223	11	4	100	294

HORIZONTAL SCALE IN FEET
0 10 20 40

CALCULATED PDG
CHECKED JDL

PLAN AND PROFILE
STA. 20+00 TO STA. 23+50

ATB-84-20.50

25199GP001.DGN 04/29/09 SAM.SCB

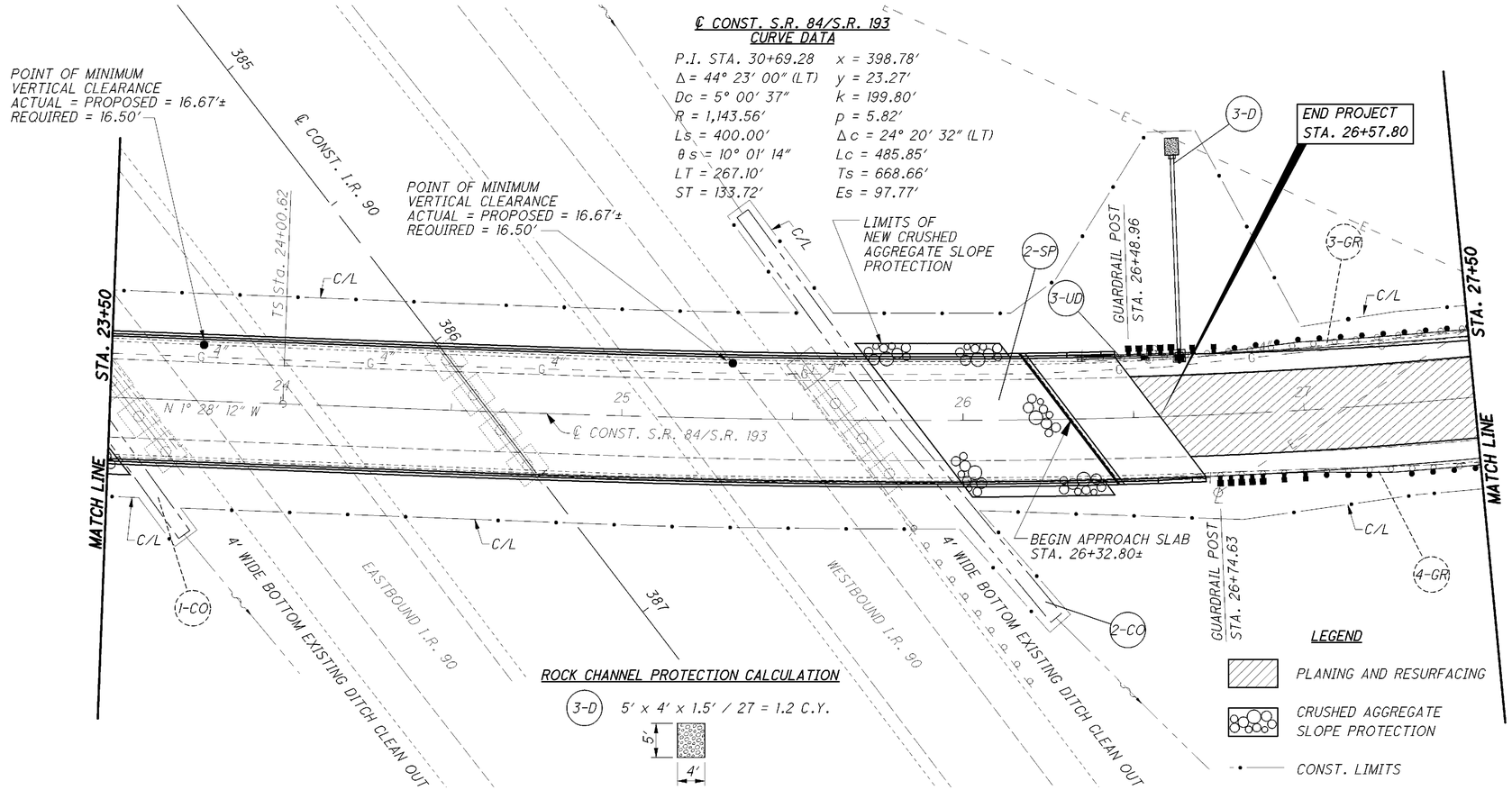

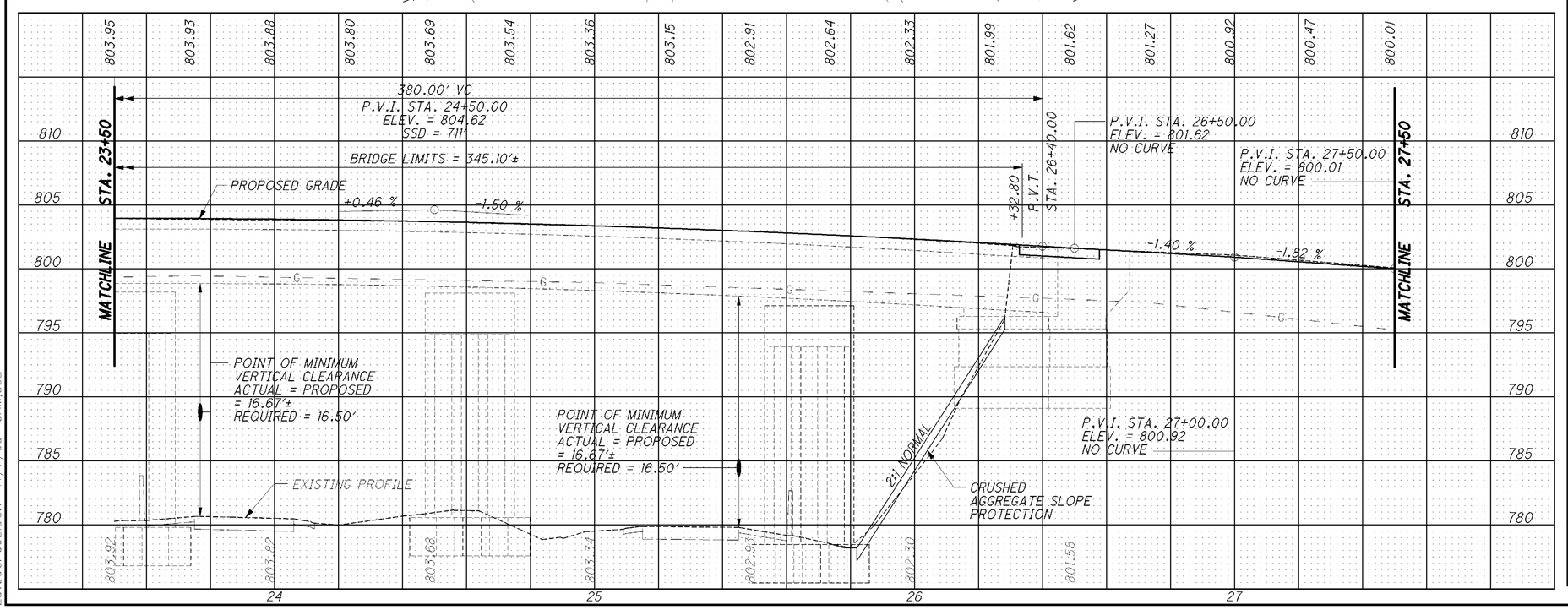

EXISTING STRUCTURE

TYPE: CONTINUOUS STEEL GIRDER WITH REINFORCED CONCRETE DECK AND REINFORCED CONCRETE SUBSTRUCTURE.
SPANS: 63′-7½″±; 106′-0½″±; 106′-0½″± & 63′-7½″± C/C BEARINGS ALONG CHORD LINE
ROADWAY: 33′-0″± F/F PARAPETS
LOADING: CF=400 (57)
SKEW: 39°42′14″± R.F. WITH RESPECT TO REFERENCE LINE
WEARING SURFACE: CONCRETE OVERLAY
APPROACH SLABS: 25′-0″± LONG
ALIGNMENT: TANGENT-SPIRAL
SUPERELEVATIION: VARIES
STRUCTURAL FILE NUMBER: 0403458
DATE BUILT: 1960 - REHABILITATED 1993
CONDITION: FAIR

PROPOSED STRUCTURE

TYPE: REHABILITATION OF BRIDGE WITH NEW COMPOSITE DECK AND NEW DEFLECTOR PARAPETS. BRIDGE PAINTING AND NEW ABUTMENT BEARINGS, SUBSTRUCTURE PATCHING AND SEALING.
SPANS: 63′-7½″±; 106′-0½″±; 106′-0½″± & 63′-7½″± C/C BEARINGS ALONG CHORD LINE
ROADWAY: 36′-0″ F/F PARAPETS
LOADING: HS20-44 CASE II, THE ALTERNATE MILITARY LOADING AND 60 PSF FUTURE WEARING SURFACE
SKEW: 39°42′14″± WITH RESPECT TO REFERENCE LINE
APPROACH SLABS: AS-1-81 (25′-0″ LONG)
ALIGNMENT: TANGENT-SPIRAL
SUPERELEVATION: VARIES
COORDINATES: LATITUDE 41°52′50″ N
LONGITUDE 80°40′00″ W
WEARING SURFACE: 1″ MONOLITHIC CONCRETE WEARING SURFACE
CURRENT AVERAGE DAILY TRAFFIC: 8770 (2010)
DESIGN AVERAGE DAILY TRAFFIC: 0440 (2030)
DESIGN AVERAGE DAILY TRUCK TRAFFIC: 1462 (2030)

REF NO.	STATION FROM	STATION TO	SIDE					TOTALS CARRIED TO GENERAL SUMMARY
605				6″ SHALLOW PIPE UNDERDRAINS WITH FABRIC WRAP	FT		27	27
604				CATCH BASIN, NO. 3A	EA	1		1
603				12″ CONDUIT, TYPE F, 707.05 OR 707.07, TYPE C	FT	62		62
602				CONCRETE MASONRY	CY	0.21		0.2
601				ROCK CHANNELPROTECTION, TYPE C WITH FILTER (T=18″)	CY	1.2		1
				CRUSHED AGGREGATE SLOPE PROTECTION	SY		231	231
209				DITCH CLEANOUT	FT		150	150
3-D	26+64.00	26+64.00	LT.					
3-UD	26+37.00	26+64.00	LT.					
2-SP	25+84.50	26+28.45	LT./ RT.					
2-CO	25+34±	26+26±	LT./ RT.					

HORIZONTAL SCALE IN FEET
0 10 20 40
CALCULATED PDG CHECKED JDL

PLAN AND PROFILE
STA. 23+50 TO STA. 27+50

ATB-84-20.50

28
64

25199GP002.DGN 11/7/08 SAM.SCB

℄ CONST. S.R. 84/S.R. 193
CURVE DATA

P.I. STA. 30+69.28
Δ = 44° 23′ 00″ (LT)
Dc = 5° 00′ 37″
R = 1,143.56′
Ls = 400.00′
θs = 10° 01′ 14″
LT = 267.10′
ST = 133.72′

x = 398.78′
y = 23.27′
k = 199.80′
p = 5.82′
Δc = 24° 20′ 32″ (LT)
Lc = 485.85′
Ts = 668.66′
Es = 97.77′

LEGEND

PLANING AND RESURFACING

CONST. LIMITS

B.M. #3 STA. 29+92.45, 115.34′ RT.
ANCHOR BOLT OF GUARDRAIL TIE-DOWN S. SIDE OF RAMP 'B', E. SIDE OF S.R. 84/S.R. 193
ELEV. = 790.66

B.M. #4 STA. 31+50.35, 27.18′ LT.
ANCHOR BOLT OF GUARDRAIL TIE-DOWN N. SIDE OF RAMP 'A', W. SIDE OF S.R. 84/S.R. 193
ELEV. = 786.90

REF NO.	STATION FROM	STATION TO	SIDE	606 BRIDGE TERMINAL ASSEMBLY, TYPE 1	606 GUARDRAIL, TYPE 5	448 ASPHALT CONC. INTERMEDIATE COURSE, TYPE 1, UNDER GUARDRAIL, PG64-22, AS PER PLAN	209 LINEAR GRADING, AS PER PLAN	202 GUARDRAIL REMOVED
				EACH	FT	CY	STA	FT
3-GR	26+42.71	29+03±	LT.	1	256.25	9.4	2.6	265.63
4-GR	26+68.38	29+08±	RT.	1	243.75	8.9	2.4	246.87
TOTALS CARRIED TO GENERAL SUMMARY				2	500	19	5	513

HORIZONTAL SCALE IN FEET
0 10 20 40

CALCULATED PDG
CHECKED JDL

PLAN AND PROFILE
STA. 27+50 TO STA. 31+00

ATB-84-20.50

25199GP003.DGN 04/29/09 SAM.SCB

SEEDING	
END WIDTH	SQ. YDS.

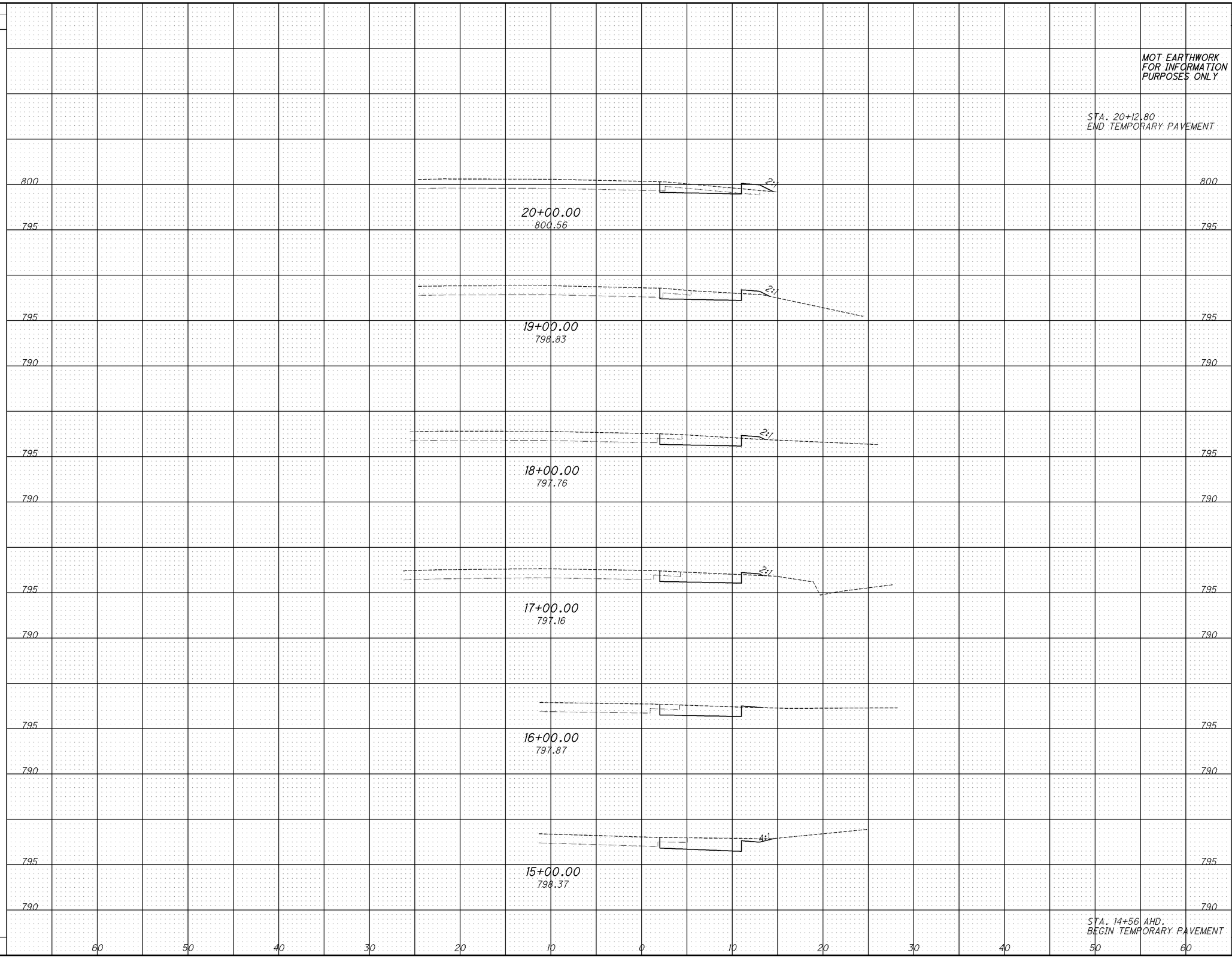

END AREA		VOLUME	
CUT	FILL	CUT	FILL
		214	21
9	0		
		5	1
9	2		
		34	6
9	1		
		36	4
10	1		
		37	4
10	1		
		37	4
10	1		
		43	2
13	0		
		22	0
13	0		

CALCULATED DAW
CHECKED LVB

MAINTENANCE OF TRAFFIC CROSS SECTIONS
STA 15+00.00 TO STA. 20+00.00

ATB-84-20.50

25199XS001.DGN 11/7/08 SAM

SEEDING END WIDTH	SEEDING SQ. YDS.		END AREA CUT	END AREA FILL	VOLUME CUT	VOLUME FILL
61	217		32	2	55	6
17		STA. 21+50 AHD.	27	4		
10		STA. 21+50 RT. BK.	13	3		
8		STA. 21+50 LT. BK.	15	1		
10		STA. 21+35 RT. AHD.	9	0		
8		STA. 21+17.5 LT. AHD.	5	0		
		RT.			7	1
		LT.			13	1
190		SEEDING ALONG 615 PAVEMENT, STA. 14+56 TO STA. 20+22 RT.				
120		SEEDING ALONG 615 PAVEMENT, RAMP D, LT. & RT.				
	573				75	8

5' x 4' x 18" THICK ROCK CHANNEL PROTECTION, TYPE C, WITH FILTER

MATCH LINE 60' LT. (SEE BELOW)

STA. 22+29.00, 66.00' LT.
HW=2.1 HEADWALL
℄ 12" PIPE 789.52

80 70 80

6'-4" - 12" CONDUIT, TYPE F, 707.05 OR 707.07, TYPE C @ 1.00%

EXISTING WOOD POLE FOR SIGNAL EQUIPMENT

STA. 22+29.00, 18' LT.
NO. 3A CATCH BASIN
℄ GRATE 803.20
℄ 12" PIPE (W) EL= 799.00
℄ 6" PIPE (N) EL= 799.13

4:1

12:1

4" GAS LINE

27' - 12" CONDUIT, TYPE F, 707.05 OR 707.07, TYPE C @ 36.62%

MATCH LINE 60' LT. (SEE ABOVE)

15'-6" - 12" CONDUIT, TYPE F, 707.05 OR 707.07, TYPE C @ 1.00%

803.47
22+00.00
803.71

6:1

STA. 21+17.5 AHD.

STA. 21+35 AHD.

803.05
21+50.00
803.20

802.40
21+00.00 BEGIN PLANING AND RESURFACING
802.40

795 800 805 790

60 50 40 30 20 10 0 10 20 30 40 50 60

CALCULATED JDL
CHECKED LVB

CROSS SECTIONS STA. 21+00 TO STA. 22+00

ATB-84-20.50

31
64

25199XS001.DGN 11/7/08 SAM.SCB

SEEDING	
END WIDTH	SQ. YDS.
18	
	46
46	
	298
61	
	344

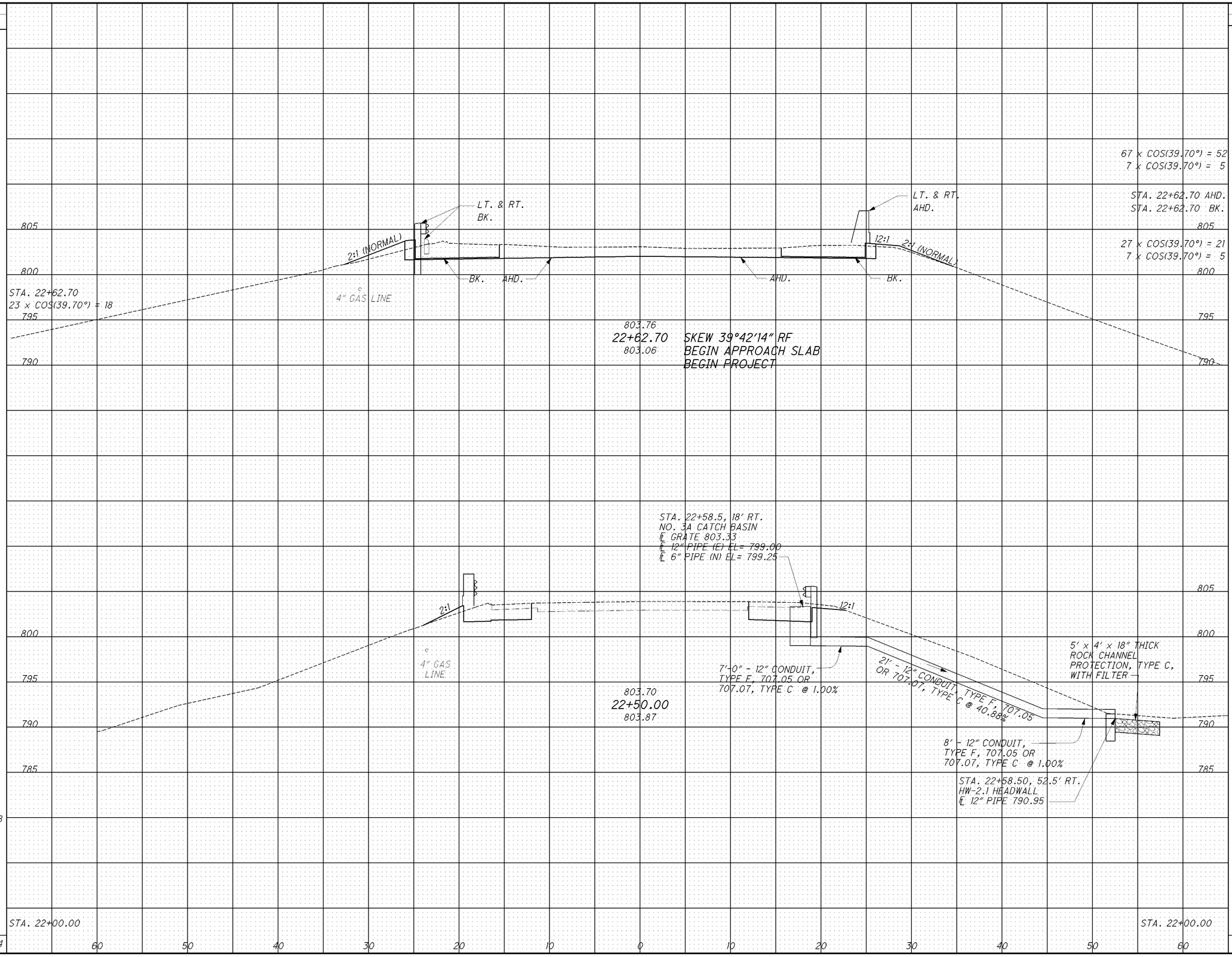

END AREA		VOLUME	
CUT	FILL	CUT	FILL
STA. 22+62.70 AHD.	52	5	
STA. 22+62.70 BK.	21	5	
		12	2
28	1		
		56	3
32	2		
		68	5

CALCULATED JDL
CHECKED LVB

CROSS SECTIONS
STA. 22+50 TO STA. 22+63.59

ATB-84-20.50

32
64

25199XS001.DGN 11/7/08 SAM.SCB

SEEDING END WIDTH	SEEDING SQ. YDS.		END AREA CUT	END AREA FILL	VOLUME CUT	VOLUME FILL
		24 x COS(33.87°) = 20				
20		STA. 26+32.80 AHD.				
12		STA. 26+32.80 BK.				
		14 x COS(33.87°) = 12				
	42				0	4
4		STA. 24+84.50 AHD. TOUCH DOWN				
	133	ADDITIONAL SEEDING FOR DITCH CLEANOUT AT FORWARD TOUCH DOWN				
	89	ADDITIONAL SEEDING FOR DITCH CLEANOUT AT REAR TOUCH DOWN				
4		STA. 23+35.50 BK. TOUCH DOWN				
	43				0	6
		14 x COS(39.70°) = 12				
12		STA. 22+87.70 AHD.				
19		STA. 22+87.70 BK.				
		24 x COS(39.70°) = 19				
	52				29	6
18		STA. 22+63.59				
	359				29	16

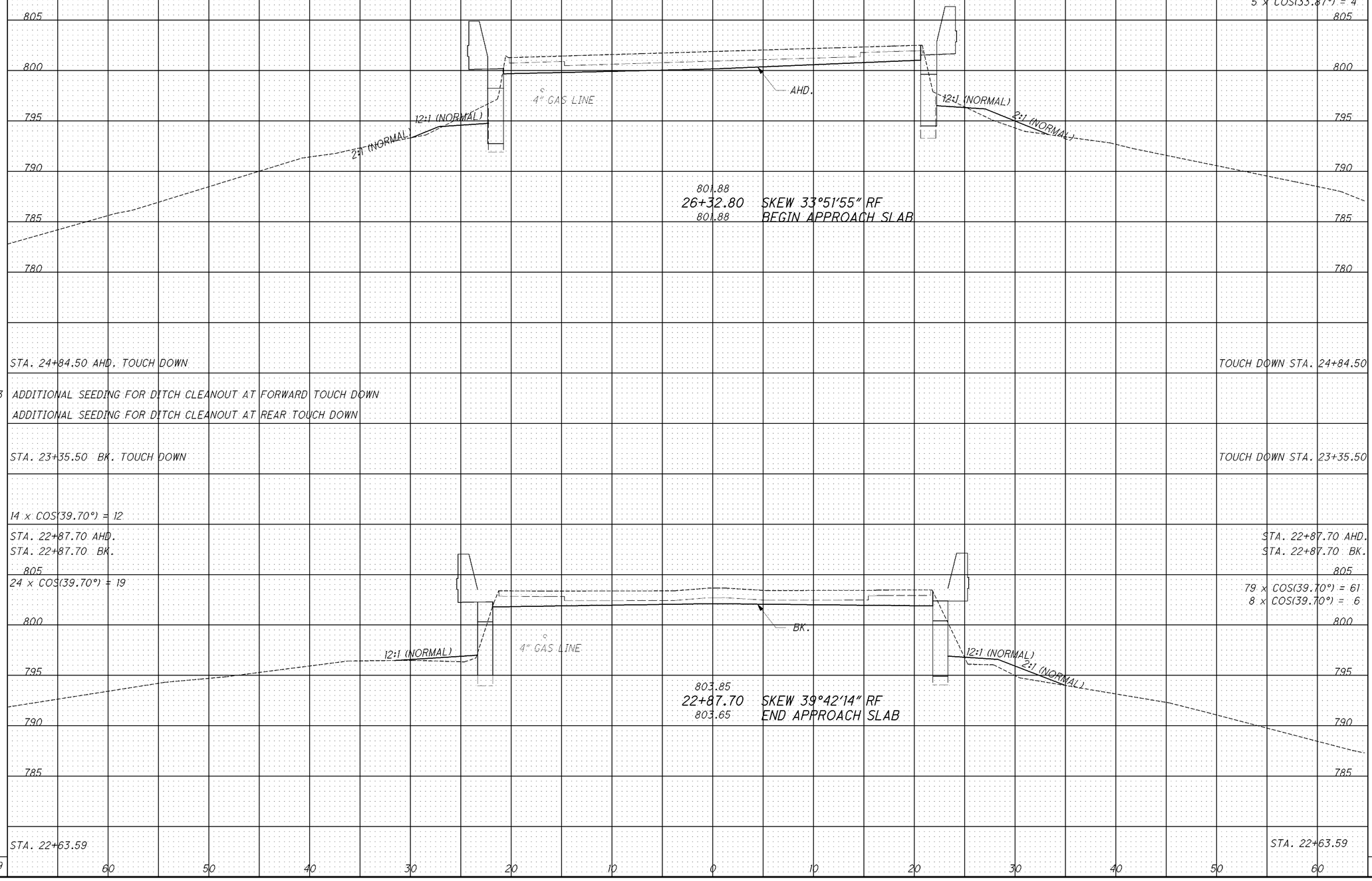

CALCULATED JDL
CHECKED LVB

CROSS SECTIONS
STA. 22+88.59 TO STA. 26+33.68

ATB-84-20.50

25199XS001.DGN 11/7/08 SAM SCB

SEEDING	
END WIDTH	SQ. YDS.
70	
	246
32	
	73
20	
	319

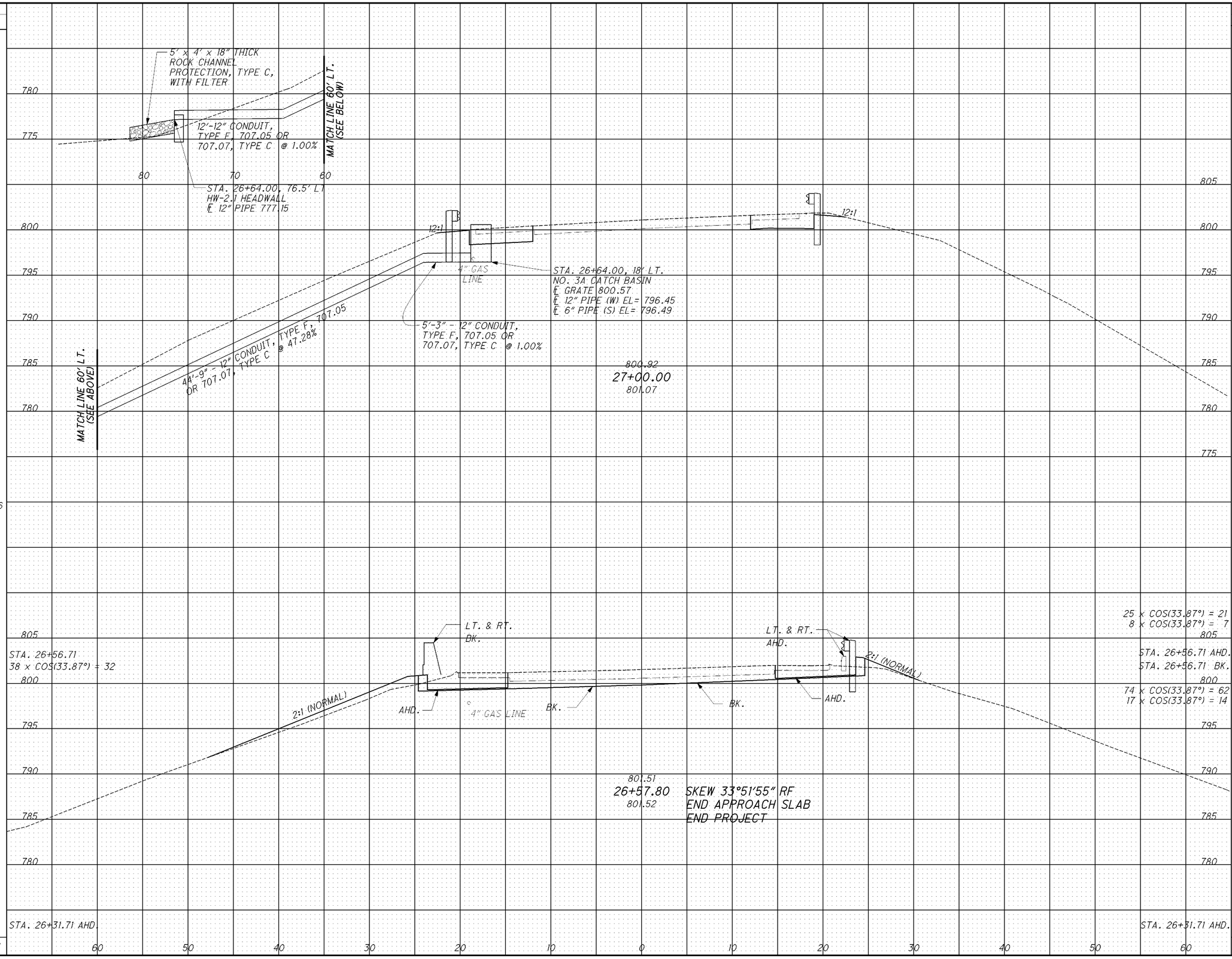

END AREA		VOLUME	
CUT	FILL	CUT	FILL
24	0		
		37	6
21	7		
62	14		
61	4		
		33	9
		70	15

CALCULATED JDL
CHECKED LVB

CROSS SECTIONS
STA. 26+58.68 TO STA. 27+00

ATB-84-20.50

34
64

25199XS001.DGN 11/7/08 SAM.SCB

SEEDING END WIDTH	SEEDING SQ. YDS.	
	2279	SEEDING TOTALS CARRIED TO GENERAL NOTES
	110	SEEDING ALONG 615 PAVEMENT, STA. 30+25 TO STA. 33+31 LT.
	160	SEEDING ALONG 615 PAVEMENT, RAMP B, LT. & RT.
4		STA. 29+15
	10	
8		
	117	
13		
10	64	
	223	
70		STA. 27+00.00
	684	

STA. 29+03±
CONNECT NEW TYPE 5
GUARDRAIL TO EXISTING

STA. 29+08±
CONNECT NEW TYPE 5
GUARDRAIL TO EXISTING

EARTHWORK TOTALS
CARRIED TO SUMMARY

2:1

BACK (TYP.)

795.75
29+00.00
795.75

END PLANING AND RESURFACING
END SHOULDER WIDENING

STA. 28+50.00 BEGIN SHOULDER
CROSS SLOPE TRANSITION LT. & RT.
TO MATCH EXISTING

4:1

12:1

℄
4" GAS LINE

798.82
28+00.00
798.88

2:1

12:1

℄
4" GAS LINE

800.01
27+50.00
800.07

STA. 27+00.00

STA. 27+00.00

END AREA CUT	END AREA FILL	VOLUME CUT	VOLUME FILL
		441	53
0	0		
34	1		
		110	4
25	1		
		45	3
23	2		
		44	2
24	0		
		199	9

CALCULATED JDL
CHECKED LVB

CROSS SECTIONS
STA. 27+50 TO STA. 29+00

ATB-84-20.50

35
64

25199XS001.DGN 11/7/08 SAM.SCB

SEEDING		END AREA		VOLUME	
END WIDTH	SQ. YDS.	CUT	FILL	CUT	FILL
				116	28
		10	0	37	6
		10	3	41	12
		12	3	38	10
		12	3		

MOT EARTHWORK FOR INFORMATION PURPOSES ONLY

790
785
780
795

33+00.00 END TEMPORARY PAVEMENT
786.53

STA. 33+00.00 BK.
END TEMPORARY PAVEMENT

3:1

32+00.00
787.98

3:1

31+00.00
798.99

STA. 30+17.60
BEGIN TEMPORARY PAVEMENT
(IN RETURN LT.)

30+00.00 IN INTERSECTION
792.51

60 50 40 30 20 10 0 10 20 30 40 50 60

25199XS001.DGN 11/7/08 SAM

CALCULATED

CHECKED

MOT CROSS SECTIONS
STA. 30+00 TO STA. 33+00

ATB-84-20.50

25199GI001.DGN 11/7/08 SAM.SCB

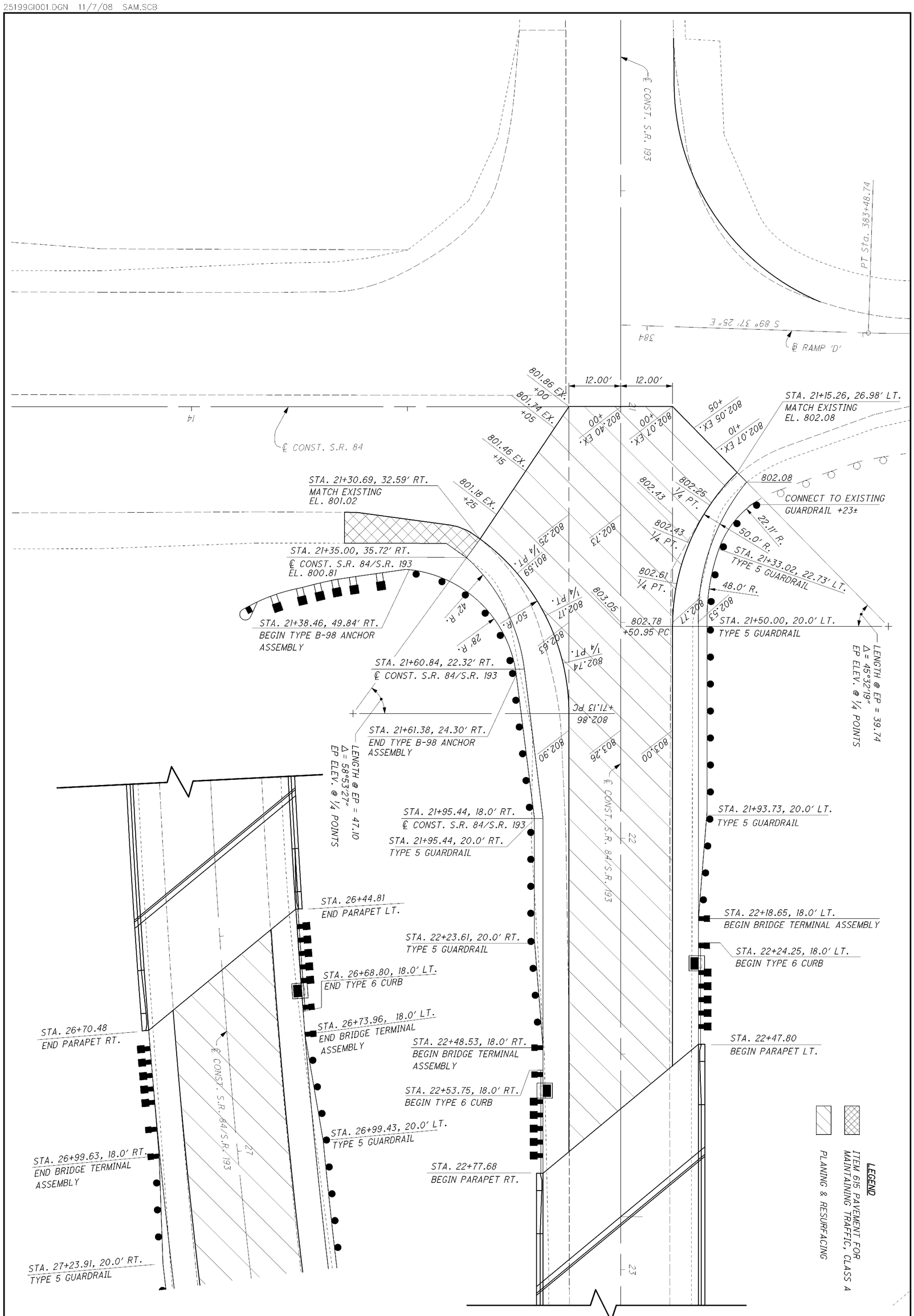

37/64	ATB-84-20.50	INTERSECTION AND GUARDRAIL DETAIL	CALCULATED JDL / CHECKED LVB	HORIZONTAL SCALE IN FEET (0, 10, 55, 20)

SHEET NO.	REFERENCE NO.	STATION FROM	STATION TO	SIDE	SIGN CODE	SIZE (INCHES)	621 RPM	626 BARRIER REFLECTOR		630 GROUND MOUNTED SUPPORT, NO. 2 POST	630 GROUND MOUNTED SUPPORT, NO. 4 POST	630 SIGN, FLAT SHEET, 730.20	630 REMOVAL OF GROUND MOUNTED SIGN AND DISPOSAL	630 REMOVAL OF GROUND MOUNTED SIGN AND REERECTION	630 REMOVAL OF GROUND MOUNTED POST SUPPORT AND DISPOSAL	632 DETECTOR LOOP	642 EDGE LINE, TYPE 1		642 CENTER LINE, TYPE 1, SOLID DOUBLE	642 STOP LINE, TYPE 1	646 EDGE LINE	646 CENTER LINE
							YELLOW / YELLOW	TYPE A	TYPE B								WHITE	YELLOW			WHITE	
							EACH	EACH		FT	FT	SQ FT	EACH	EACH	EACH	EACH	FT		FT	FT	FT	
S.R. 84/ S.R. 193																						
39	S 1	22+78.0		RT.	I-H25A	12 x 12				7.5		1									39	39
39	S 2	26+45.0		LT.	I-H25A	12 x 12				7.5		1										
39	R 1	22+45.5	22+48.0	LT.	OM-H3L					10.5				1	1							
39	R 2	22+73.7	22+63.5	RT.	M3-4						16.5			1	1							
					M1-1-2									1								
					M5-1L									1								
					OM-H3R									1								
39	R 3	22+86.6		RT.	I-H25A								1		1							
39	R 4	26+35.2		LT.	I-H25A								1		1							
39	R 5	26+54.3	26+62.0	LT.	OM-H3R					10.5				1	1							
39	R 6	26+71.7	26+97.0	RT.	OM-H3L					10.5				1	1							
40	R 7	27+54.0	27+78.0	LT.	M3-2						16.5			1	1							
					M1-1-2									1								
					M1-5-2									1								
					M5-1L									1								
		LOOP DETECTOR																				
39		17+88.00		RT.												1						
S.R. 84/ S.R. 193																						
39	EW	14+50.00	13+62.75	RT.													654.55					
39	EW	21+50.00	22+52.80	LT.													102.80					
39	EW	22+52.80	26+49.20	LT.																	396.40	
39-40	EW	26+49.20	29+50.00	LT.													300.80					
39	CL	21+50.00	22+62.70	℄															112.70			
39	CL	22+62.70	26+57.80	℄																		395.10
39-40	CL	26+57.80	29+50.00	℄															292.20			
39	EW	21+27.50	22+72.60	RT.													154.60					
39	EW	22+72.60	26+66.30	RT.																	393.70	
39-40	EW	26+66.30	29+50.00	RT.													283.70					
40	EW	30+16.50	33+60.00	LT.													343.50					
39	SL	21+50.00		LT.																12		
39-40	RPM	21+51.00	29+60.00	℄			11															
39-40	BR1	21+31.35	29+00.00	LT.				5	4													
39-40	BR2	21+48.13	29+00.00	RT.				5	4													
RAMP D																						
39	EW	380+64.00	383+96.01	RT.													352.00					
39	EY	380+64.00	383+62.14	LT.														298.14				
RAMP B																						
40	EY	388+06.00	391+50.00	RT.														344.00				
40	EW	30+85.00	391+50.00	LT.													403.20					
TOTAL THIS SHEET							11	10	8	46.5	33.0	2	2	11	7	1	2595.15	642.14	404.90	12	790.10	395.10
CONVERT APLLICABLE ITEMS TO MILES																	0.61		0.08		0.15	0.07
TOTALS CARRIED TO GENERAL SUMMARY							11	18		47	33	2	2	11	7	1	0.61		0.08	12	0.15	0.07

CALCULATED JDL
CHECKED LVB

TRAFFIC CONTROL SUBSUMMARY

ATB-84-20.50

25199TS001.DGN 05/11/09 SCB

PAVEMENT MARKING LEGEND

- (CL) 642, 646 CENTER LINE, SOLID DOUBLE
- (EW) 642, 646 EDGE LINE, WHITE
- (SL) 642 STOP LINE
- (EY) 642 EDGE LINE, YELLOW
- TRAFFIC DIRECTION

SIGNING LEGEND

- PROPOSED SIGN
- EXISTING SIGN TO REMAIN
- EXISTING SIGN TO BE REMOVED
- EXISTING SIGN REMOVED & REERECTED

RAISED PAVEMENT MARKING LEGEND

(RPM) TWO WAY (YELLOW/YELLOW) @ 80' C/C

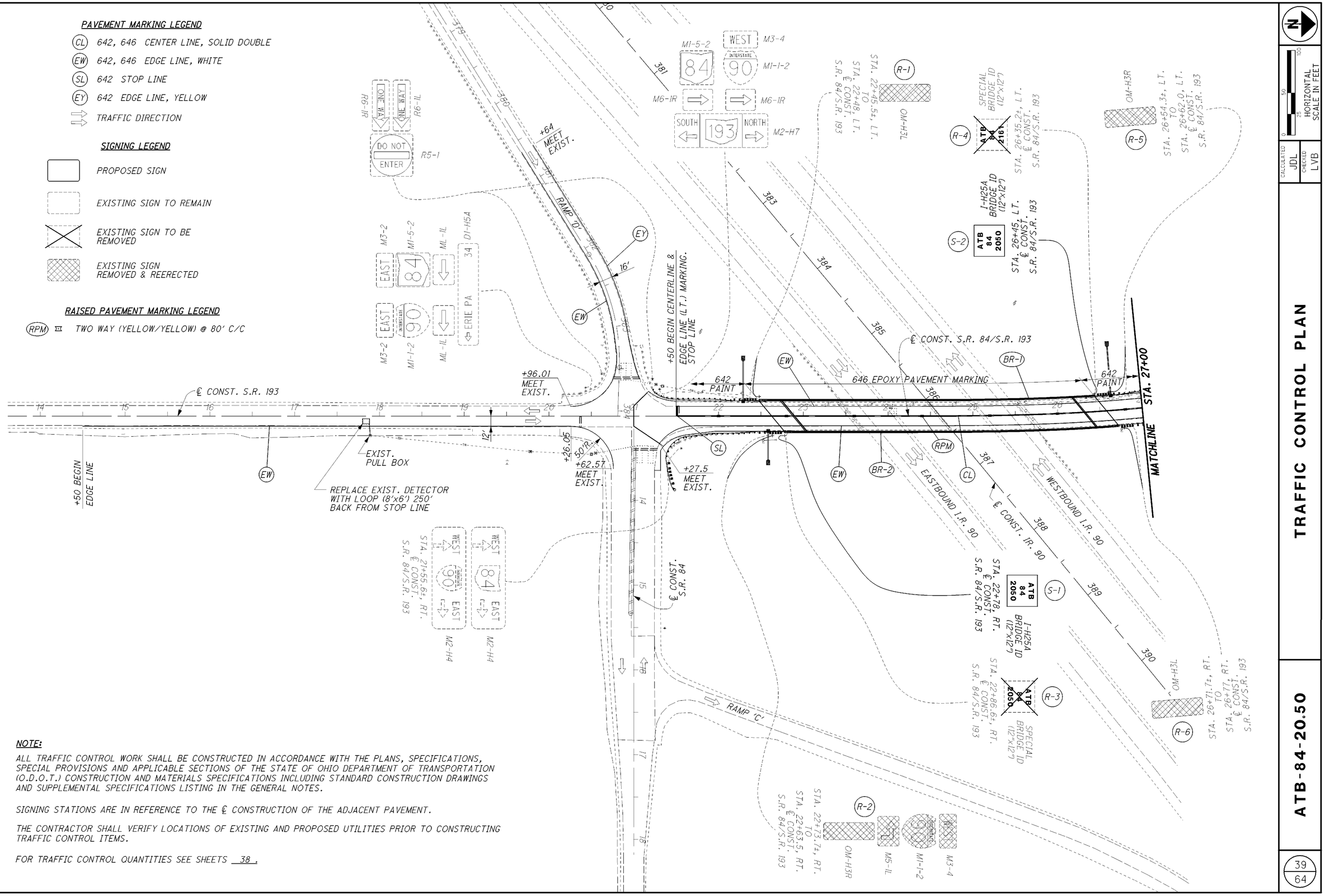

NOTE:

ALL TRAFFIC CONTROL WORK SHALL BE CONSTRUCTED IN ACCORDANCE WITH THE PLANS, SPECIFICATIONS, SPECIAL PROVISIONS AND APPLICABLE SECTIONS OF THE STATE OF OHIO DEPARTMENT OF TRANSPORTATION (O.D.O.T.) CONSTRUCTION AND MATERIALS SPECIFICATIONS INCLUDING STANDARD CONSTRUCTION DRAWINGS AND SUPPLEMENTAL SPECIFICATIONS LISTING IN THE GENERAL NOTES.

SIGNING STATIONS ARE IN REFERENCE TO THE ℄ CONSTRUCTION OF THE ADJACENT PAVEMENT.

THE CONTRACTOR SHALL VERIFY LOCATIONS OF EXISTING AND PROPOSED UTILITIES PRIOR TO CONSTRUCTING TRAFFIC CONTROL ITEMS.

FOR TRAFFIC CONTROL QUANTITIES SEE SHEETS 38 .

25199TP001.DGN 05/08/09 SAM.SCB

HORIZONTAL SCALE IN FEET
0 25 50 100

CALCULATED JDL
CHECKED LVB

TRAFFIC CONTROL PLAN

ATB-84-20.50

39
64

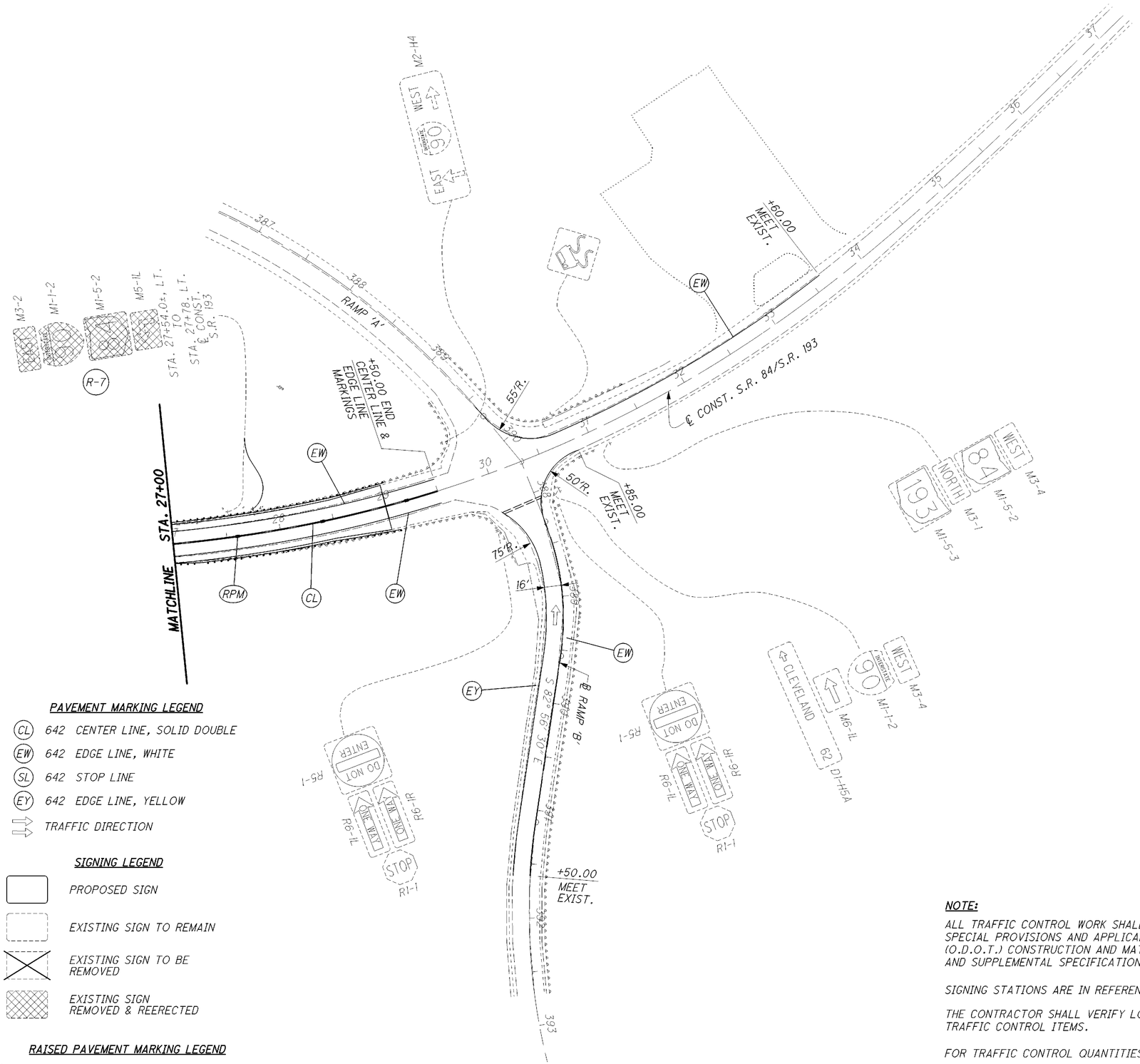

PAVEMENT MARKING LEGEND

- (CL) 642 CENTER LINE, SOLID DOUBLE
- (EW) 642 EDGE LINE, WHITE
- (SL) 642 STOP LINE
- (EY) 642 EDGE LINE, YELLOW
- TRAFFIC DIRECTION

SIGNING LEGEND

- PROPOSED SIGN
- EXISTING SIGN TO REMAIN
- EXISTING SIGN TO BE REMOVED
- EXISTING SIGN REMOVED & REERECTED

RAISED PAVEMENT MARKING LEGEND

(RPM) ⌑ TWO WAY (YELLOW/YELLOW) @ 80' C/C

STRUCTURE IDENTIFICATION SIGNS

STRUCTURE IDENTIFICATION SIGNS (I-H25a) WILL BE PLACED ON EACH APPROACH OFF THE RIGHT SHOULDER, FACING TRAFFIC, AND BEHIND THE GUARDRAIL IF APPLICABLE. A QUANTITY OF ONE SIGN PER APPROACH WILL BE INSTALLED. THE SIGNS WILL HAVE A NON-REFLECTIVE WHITE SHEETING BACKGROUND (730.20).

THE SIGNS WILL BE MOUNTED ON NEW NO. 2 POSTS AND WILL BE INSTALLED AS PER STANDARD CONSTRUCTION DRAWING TC-41.20, MOST CURRENT REVISION. EACH POST WILL BE 7.5' IN LENGTH.

INSTALL SIGNS FOR THE FOLLOWING STRUCTURES:
ATB-84-20.50

THE FOLLOWING QUANTITIES HAVE BEEN INCLUDED FOR EACH APPROACH:
- ITEM 630 - SIGN, FLAT SHEET, 730.20, 1 SQ FT
- ITEM 630 - GROUND MOUNTED SUPPORT, NO. 2 POST, 7.5 FT

NOTE:

ALL TRAFFIC CONTROL WORK SHALL BE CONSTRUCTED IN ACCORDANCE WITH THE PLANS, SPECIFICATIONS, SPECIAL PROVISIONS AND APPLICABLE SECTIONS OF THE STATE OF OHIO DEPARTMENT OF TRANSPORTATION (O.D.O.T.) CONSTRUCTION AND MATERIALS SPECIFICATIONS INCLUDING STANDARD CONSTRUCTION DRAWINGS AND SUPPLEMENTAL SPECIFICATIONS LISTING IN THE GENERAL NOTES.

SIGNING STATIONS ARE IN REFERENCE TO THE ℄ CONSTRUCTION OF THE ADJACENT PAVEMENT.

THE CONTRACTOR SHALL VERIFY LOCATIONS OF EXISTING AND PROPOSED UTILITIES PRIOR TO CONSTRUCTING TRAFFIC CONTROL ITEMS.

FOR TRAFFIC CONTROL QUANTITIES SEE SHEETS 38 .

HORIZONTAL SCALE IN FEET
0 25 50 100

CALCULATED JDL
CHECKED LVB

TRAFFIC CONTROL PLAN

ATB-84-20.50

25199TP002.DGN 04/24/09 SAM.SCB

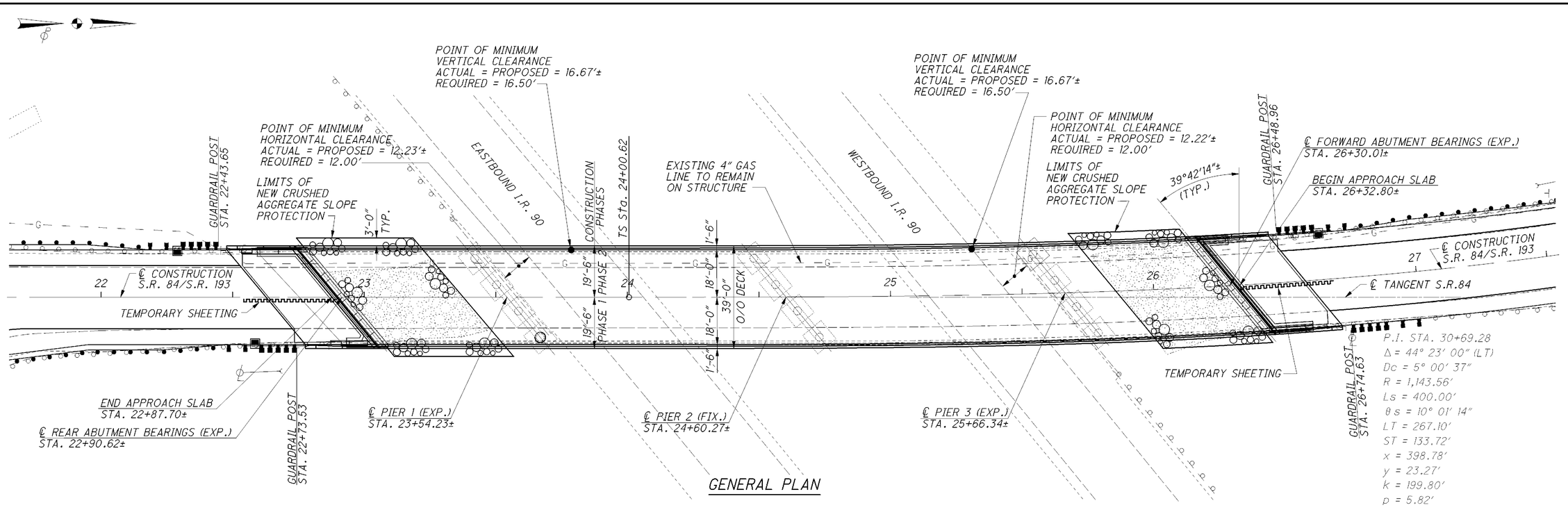

GENERAL PLAN

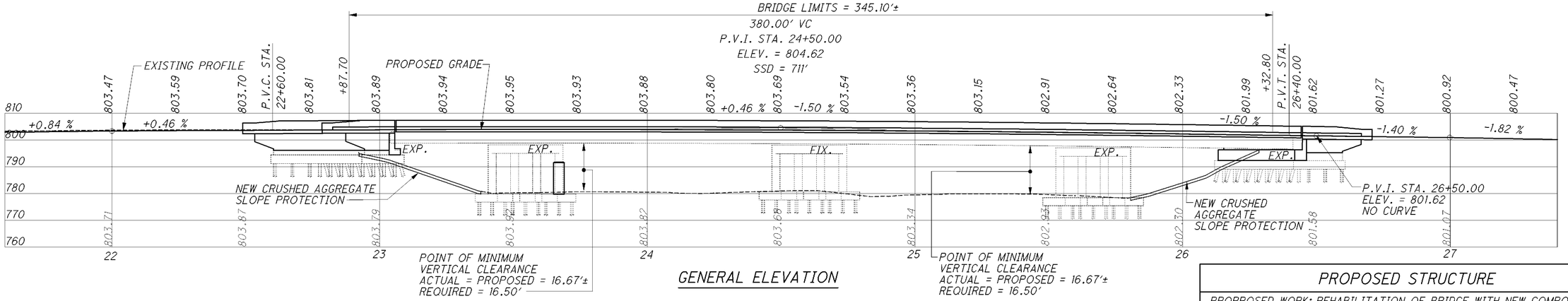

GENERAL ELEVATION

EXISTING STRUCTURE

TYPE: CONTINUOUS STEEL GIRDER WITH REINFORCED CONCRETE DECK AND REINFORCED CONCRETE SUBSTRUCTURE.

SPANS: 63'-7½"±; 106'-0⅜"±; 106'-0⅛"± & 63'-7½"± C/C BEARINGS ALONG CHORD LINE

ROADWAY: 33'-0"± F/F PARAPETS

LOADING: CF=400 (57)

SKEW: 39°42'14"± R.F. WITH RESPECT TO REFERENCE LINE

WEARING SURFACE: CONCRETE OVERLAY

APPROACH SLABS: 25'-0"± LONG

ALIGNMENT: TANGENT-SPIRAL

SUPERELEVATIION: VARIES

STRUCTURAL FILE NUMBER: 0403458

DATE BUILT: 1960 - REHABILITATED 1993

CONDITION: FAIR

PROPOSED STRUCTURE

PRORPOSED WORK: REHABILITATION OF BRIDGE WITH NEW COMPOSITE DECK AND NEW DEFLECTOR PARAPETS. BRIDGE PAINTING AND NEW ABUTMENTS BEARINGS, SUBSTRUCTURE PATCHING AND SEALING.

SPANS: 63'-7½"±; 106'-0⅜"±; 106'-0⅛"± & 63'-7½"± C/C BEARINGS ALONG CHORD LINE

ROADWAY: 36'-0" F/F PARAPETS

LOADING: HS20-44 CASE II, THE ALTERNATE MILITARY LOADING AND 60 PSF FUTURE WEARING SURFACE

SKEW: 39°42'14" ± WITH RESPECT TO REFERENCE LINE

APPROACH SLABS: AS-1-81 (25'-0" LONG)

ALIGNMENT: TANGENT-SPIRAL

SUPERELEVATION: VARIES

COORDINATES: LATITUDE 41°52'50" N
LONGITUDE 80°40'00" W

WEARING SURFACE: 1" MONOLITHIC CONCRETE WEARING SURFACE

CURRENT AVERAGE DAILY TRAFFIC: 8770 (2010)

DESIGN AVERAGE DAILY TRAFFIC: 10440 (2030)

DESIGN AVERAGE DAILY TRUCK TRAFFIC: 1462 (2030)

RICHLAND ENGINEERING LIMITED
29 NORTH PARK STREET
MANSFIELD, OHIO 44902

DESIGNED BLN | DRAWN TWH | REVIEWED DAP | DATE 5/06/09

CHECKED ALP | REVISED | STRUCTURE FILE NUMBER 0403458

ASHTABULA COUNTY
STA. 22+87.70±
STA. 26+32.80±

GENERAL PLAN AND ELEVATION

BRIDGE NO. ATB-84-2050
OVER I.R. 90

ATB-84-20.50
PID No. 25199

084-2050CGP001.DGN 05/27/09 RB,JLS,TWH,SCB

REFER TO THE FOLLOWING STANDAD BRIDGE DRAWINGS:

DM-1.1 (REVISED 04-21-06)
AS-1-81, SHEETS 1 AND 2 OF 3 (REVISED 07-19-02)
EXJ-4-87 (REVISED 07-19-02)
GSD-1-96 (REVISED 07-19-02)
SBR-1-99 (REVISED 07-19-02)
PCB-91 (REVISED 07-19-02)

DESIGN SPECIFICATIONS: THIS STRUCTURE CONFORMS TO THE 17th EDITION OF THE AASHTO STANDARD SPECIFICATION FOR HIGHWAY BRIDGES, 2002 INCLUDING ALL SUBSEQUENT INTERIM SPECIFICATIONS AND THE 2004 ODOT BRIDGE DESIGN MANUAL INCLUDING INTERIMS.

DESIGN DATA

DESIGN LOADING (SUPERSTRUCTURE AND ABUTMENTS)
- HS20-44, CASE II AND THE ALTERNATE MILITARY LOADING
- FUTURE WEARING SURFACE OF 60 LBS/FT²

CONCRETE CLASS HP - COMPRESSIVE STRENGTH 4500 PSI (SUPERSTRUCTURE)
CONCRETE CLASS C - COMPRESSIVE STRENGTH 4000 PSI (SUBSTRUCTURE)
CONCRETE CLASS S - COMPRESSIVE STRENGTH 4500 PSI (SUBSTRUCTURE)
REINFORCING STEEL - ASTM A615 OR A996
- GRADE 60 WITH MINIMUM YIELD STRESS OF 60 KSI
- SPIRAL REINFORCEMENT MAY BE PLAIN BARS, ASTM A82 OR A615

STRUCTURAL STEEL - EXISTING; YIELD STRESS 32 KSI
NEW STRUCTURAL STEEL - ASTM A709 GRADE 50 - YIELD STRENGTH 50 KSI

CONSTRUCTION SEQUENCE

SEE MAINTENANCE OF TRAFFIC PLAN SHEET 13 OF 64.

PHASE 1

1. SET UP ZONE TO MAINTAIN TRAFFIC.
2. REMOVE PORTION OF EXISTING REINFORCED CONCRETE DECK INCLUDING PARAPETS. REMOVE SCUPPERS.
3. REMOVE PORTION OF EXISTING APPROACH SLABS AND BACKWALLS.
4. DRIVE SHEETING AT ABUTMENTS.
5. JACK AND SUPPORT THE EXISTING BEAMS IN THIS CONSTRUCTION PHASE PER NOTE "ITEM 516 - JACKING AND TEMPORARY SUPPORT OF SUPERSTRUCTURE, AS PER PLAN". REMOVE EXISTING ABUTMENT BEARINGS AND GRIND BEAM FLANGES SMOOTH.
6. REMOVE PORTION OF EXISTING ABUTMENTS.
7. CONSTRUCT PORTIONS OF ABUTMENT CONCRETE. INSTALL NEW POROUS BACKFILL WITH FILTER FABRIC BEHIND THE ABUTMENTS AND PROVIDE A PIPE TO COLLECT AND DISCHARGE THE DRAINAGE.
8. VISUALLY INSPECT BEAM WELDS OVER PIERS AND SEAL WELD BOTTOM FLANGE PLATE ABOVE THE BEARING SOLE PLATE AS REQUIRED.
9. INSTALL NEW ELASTOMERIC BEARINGS AT ABUTMENTS.
10. CONSTRUCT PORTION OF NEW REINFORCED CONCRETE DECK, INCLUDING PARAPET, DESIGNED TO BE COMPOSITE WITH THE EXISTING BEAMS.
11. INSTALL PORTION OF NEW APPROACH SLABS, CATCH BASINS AND APPROACH GUARDRAIL.
12. REMOVE TRAFFIC MAINTENANCE ZONES.

PHASE 2

1. SET UP ZONE TO MAINTAIN TRAFFIC AND SWITCH TRAFFIC ONTO THE NEW PORTION OF THE STRUCTURE.
2. REMOVE REMAINING PORTION OF EXISTING REINFORCED CONCRETE DECK INCLUDING PARAPETS. REMOVE SCUPPERS.
3. REMOVE REMAINING PORTION OF EXISTING APPROACH SLABS.
4. THE EXISTING BEAMS IN THIS CONSTRUCTION PHASE SHALL BE JACKED AND TEMPORARILY SUPPORTED PER NOTE "ITEM 516 - JACKING AND TEMPORARY SUPPORT OF SUPERSTRUCTURE, AS PER PLAN". REMOVE EXISTING ABUTMENT BEARINGS AND GRIND BEAM FLANGES SMOOTH.
5. REMOVE REMAINING PORTION OF EXISTING ABUTMENTS.
6. CONSTRUCT REMAINING PORTIONS OF ABUTMENT CONCRETE. INSTALL NEW POROUS BACKFILL WITH FILTER FABRIC BEHIND THE ABUTMENTS AND PROVIDE A PIPE TO COLLECT AND DISCHARGE THE DRAINAGE.
7. VISUALLY INSPECT BEAM WELDS OVER PIERS AND SEAL WELD BOTTOM FLANGE PLATE ABOVE BEARING SOLE PLATE AS REQUIRED.
8. INSTALL NEW ELASTOMERIC BEARINGS AT ABUTMENTS.
9. CONSTRUCT PORTION OF NEW REINFORCED CONCRETE DECK, INCLUDING THE PARAPET, DESIGNED TO BE COMPOSITE WITH THE EXISTING BEAMS.
10. APPLY THE HMWM RESIN TO THE CONCRETE DECK AND SEAL OTHER CONCRETE SURFACES WHERE APPLICABLE, INCLUDING PORTABLE CONCRETE BARRIER ANCHOR HOLES.
11. INSTALL PORTION OF NEW APPROACH SLABS, CATCH BASINS, AND APPROACH GUARDRAIL.
12. REMOVE ZONE TO MAINTAIN TRAFFIC.

OTHER WORK TO BE COMPLETED INCLUDES THE FOLLOWING:

1. REMOVE ALL BRUSH UNDER AND WITHIN 20 FEET OF THE EXTERIOR SIDE OF THE PROPOSED STRUCTURE.
2. THE EXISTING OZEU PAINT IS TO BE COMPLETELY REMOVED. BLAST CLEAN AND PRIME PAINT THE EXISTING STEEL PER SYSTEM OZEU. PROTECT THE EXISTING WRAPPED GAS LINE FROM BLAST DAMAGE. EXPOSED STEEL GAS LINE BRACKETS AND CASING PIPE SHALL BE CLEANED AND PAINTED. COAT NEW AND EXISTING STEEL WITH INTERMEDIATE AND FINISH COATS OF EPOXY-URETHANE PAINT.
3. PATCH MARKED LOCATIONS ON PIERS AS DIRECTED BY THE ENGINEER.
4. SEAL CONCRETE SURFACES WITH EPOXY-URETHANE SEALER PER PLAN DETAILS (PARAPET AND SUBSTRUCTURE).
5. INSTALL CRUSHED AGGREGATE SLOPE PROTECTION AT THE REAR AND FORWARD ABUTMENTS.

DECK PROTECTION METHOD: EPOXY COATED REINFORCING STEEL AND 2½ INCH CONCRETE COVER.

MONOLITHIC WEARING SURFACE IS ASSUMED, FOR DESIGN PURPOSES, TO BE 1 INCH THICK.

EXISTING STRUCTURES VERIFICATION: DETAILS AND DIMENSIONS SHOWN ON THESE PLANS PERTAINING TO THE EXISTING STRUCTURE HAVE BEEN OBTAINED FROM PLANS OF THE EXISTING STRUCTURE AND FROM FIELD OBSERVATIONS AND MEASUREMENTS. CONSEQUENTLY, THEY ARE INDICATIVE OF THE EXISTING STRUCTURE AND THE PROPOSED WORK, BUT THEY SHALL BE CONSIDERED TENTATIVE AND APPROXIMATE. THE CONTRACTOR IS REFERRED TO CMS SECTIONS 102.05, 105.02 AND 513.04.

BASE CONTRACT BID PRICES UPON A RECOGNITION OF THE UNCERTAINTIES DESCRIBED ABOVE AND UPON A PREBID EXAMINATION OF THE EXISTING STRUCTURE. HOWEVER, THE DEPARTMENT WILL PAY FOR ALL PROJECT WORK BASED UPON ACTUAL DETAILS AND DIMENSIONS THAT HAVE BEEN VERIFIED IN THE FIELD.

EXISTING STRUCTURE PLANS MAY BE VIEWED BY PROSPECTIVE BIDDERS AT THE ODOT DISTRICT 4 OFFICE, AKRON, OHIO.

ITEM 202 - PORTIONS OF STRUCTURE REMOVED, OVER 20 FOOT SPAN, AS PER PLAN

THIS WORK CONSISTS OF THE REMOVAL OF CONCRETE DECK INCLUDING PARAPETS, DECK JOINTS, SCUPPERS AND OTHER APPURTENANCES FROM STEEL SUPPORTING SYSTEMS (BEAMS, CROSSFRAMES, ETC.). THE PROVISIONS OF ITEM 202 APPLY EXCEPT AS SPECIFIED BY THE FOLLOWING NOTES. PERFORM WORK CAREFULLY DURING DECK REMOVAL TO PROTECT PORTIONS OF SUCH SYSTEMS THAT ARE TO BE SALVAGED AND INCORPORATED INTO THE PROPOSED STRUCTURE. THE USE OF EXPLOSIVES, HEADACHE BALLS AND/OR HOE RAM TYPE OF EQUIPMENT IS PROHIBITED. SUBMIT CONSTRUCTION PLANS ACCORDING TO CMS 501.05.

PROTECTION OF STEEL SUPPORT SYSTEMS: BEFORE DECK SLAB CUTTING IS PERMITTED, DRAW THE OUTLINE OF PRIMARY STEEL MEMBERS IN CONTACT WITH THE BOTTOM OF THE DECK ON THE SURFACE OF THE DECK. DRILL SMALL DIAMETER PILOT HOLES 2 INCHES OUTSIDE THESE LINES TO CONFIRM THE LOCATION OF FLANGE EDGES. DECK CUTS OVER OR WITHIN 2 INCHES OF FLANGE EDGES SHALL NOT EXTEND LOWER THAN THE BOTTOM LAYER OF DECK SLAB REINFORCING STEEL. CUTS MADE OUTSIDE 2 INCHES OF FLANGE EDGES MAY EXTEND FULL DEPTH OF THE DECK. SPECIAL CARE SHALL BE MADE THAT THE SLAB THAT REMAINS DURING PHASE CONSTRUCTION HAS ADEQUATE BEARING ON THE CENTER BEAM. PERFORM WORK CAREFULLY DURING CUTTING OF THE DECK SLAB TO AVOID DAMAGING STEEL MEMBERS THAT ARE TO BE INCORPORATED INTO THE PROPOSED STRUCTURE. REPLACE OR REPAIR STEEL MEMBERS DAMAGED BY THE DECK SLAB CUTTING OPERATIONS AT NO COST TO THE PROJECT. AT LEAST 7 DAYS BEFORE PERFORMING REPAIR WORK, SUBMIT A PROPOSED REPAIR PLAN, DEVELOPED BY AN OHIO REGISTERED PROFESSIONAL ENGINEER TO THE DIRECTOR. OBTAIN THE DIRECTOR'S APPROVAL BEFORE PERFORMING REPAIR.

REMOVAL METHODS: THE CONTRACTOR MAY REMOVE CONCRETE BY CUTTING AND BY MEANS OF HAND OPERATED PNEUMATIC HAMMERS EMPLOYING POINTED OR BLUNTED CHISEL TYPE TOOLS. FOR REMOVALS OVER STRUCTURAL MEMBERS (STEEL BEAM), THE CONTRACTOR MAY USE A HAMMER HEAVIER THAN 35 POUNDS BUT NOT TO EXCEED 90 POUNDS UNLESS APPROVED BY THE ENGINEER. REMOVAL METHODS OVER STRUCTURAL MEMBERS SHALL ENSURE ADEQUATE DEPTH CONTROL AND PREVENT NICKING OR GOUGING THE PRIMARY STRUCTURAL MEMBERS.

DUE TO THE POSSIBLE PRESENCE OF ATTACHMENTS (E.G., FINISHING MACHINE, SCUPPER AND FORM SUPPORTS, ETC.) TO EXISTING STRUCTURAL MEMBERS, PERFORM WORK CAREFULLY DURING DECK REMOVAL TO AVOID DAMAGING STRUCTURAL MEMBERS TO REMAIN. REPLACE OR REPAIR STRUCTURAL MEMBERS DAMAGED BY THE REMOVAL OPERATIONS AT NO COST TO THE PROJECT. AT LEAST 7 DAYS BEFORE PERFORMING REPAIR WORK, SUBMIT A PROPOSED REPAIR PLAN, DEVELOPED BY AN OHIO REGISTERED PROFESSIONAL ENGINEER TO THE DIRECTOR. OBTAIN THE DIRECTOR'S APPROVAL BEFORE PERFORMING REPAIR.

EXISTING WELDED ATTACHMENT: REMOVE EXSITING WELDED ATTACHMENTS (E.G., FINISHING MACHINE AND FORM SUPPORTS; AND SUPPORTS FOR SCUPPERS AND BULB ANGLES WHICH ARE TO BE REMOVED) LOCATED IN THE DESIGNATED TENSION PORTIONS OF THE TOP FLANGES OF EXISTING STEEL MEMBERS AND GRIND THE FLANGE SURFACES SMOOTH. CAREFULLY GRIND PARALLEL TO THE FLANGES.

CUT LINE CONSTRUCTION JOINT PREPARATION: SAW CUT BOUNDARIES OF PROPOSED CONCRETE REMOVALS 1 INCH DEEP. REMOVE CONCRETE TO A ROUGH SURFACE. LEAVE EXISTING REINFORCING STEEL, IF REQUIRED IN THE PLANS, IN PLACE. INSTALL DOWEL BARS IF SPECIFIED. PRIOR TO CONCRETE PLACEMENT ABRASIVELY CLEAN JOINT SURFACES AND EXISTING EXPOSED REINFORCEMENT TO REMOVE LOOSE AND DISINTEGRATED CONCRETE AND LOOSE RUST. THOROUGHLY CLEAN THE JOINT SURFACE AND EXPOSED REINFORCEMENT OF ALL DIRT, DUST, RUST OR OTHER FOREIGN MATERIAL BY THE USE OF WATER, AIR UNDER PRESSURE, OR OTHER METHODS THAT PRODUCE SATISFACTORY RESULTS. EXISTING REINFORCING STEEL DOES NOT HAVE TO HAVE A BRIGHT STEEL FINISH, BUT REMOVE ALL PACK AND LOOSE RUST. THOROUGHLY DRENCH EXISTING CONCRETE SURFACES WITH CLEAN WATER AND ALLOW TO DRY TO A DAMP CONDITION BEFORE PLACING CONCRETE.

SUBSTRUCTURE CONCRETE REMOVAL: REMOVE CONCRETE BY MEANS OF APPROVED PNEUMATIC HAMMERS EMPLOYING POINTED AND BLUNT CHISEL TOOLS. HYDRAULIC HOE-RAM TYPE HAMMERS WILL NOT BE PERMITTED. THE WEIGHT OF THE HAMMER SHALL NOT BE MORE THAN 35 POUNDS FOR REMOVAL WITHIN 18 INCHES OF PORTIONS TO BE PRESERVED. OUTSIDE THE 18 INCH LIMIT, THE CONTRACTOR MAY USE HAMMERS NOT EXCEEDING 90 POUNDS UPON THE APPROVAL OF THE ENGINEER. DO NOT PLACE PNEUMATIC HAMMERS IN DIRECT CONTACT WITH REINFORCING STEEL THAT IS TO BE RETAINED IN THE REBUILT STRUCTURE.

MEASUREMENT AND PAYMENT: THE DEPARTMENT WILL MEASURE THE QUANTITY OF REMOVALS ON A LUMP SUM BASIS. THE DEPARTMENT WILL PAY FOR THE ACCEPTED QUANTITIES OF REMOVALS AT THE CONTRACT PRICE FOR ITEM 202, PORTIONS OF STRUCTURE REMOVED, AS PER PLAN.

ITEM 503 - COFFERDAMS, CRIBS AND SHEETING, AS PER PLAN

TEMPORARY SHEET PILING SHALL BE PERFORMED IN ACCORDANCE WITH ITEM 503 AND DRIVEN TO SUPPORT THE ROADWAY EMBANKMENT DURING CONSTRUCTION.

SHEET PILING AT THE ABUTMENT SHALL BEGIN BEHIND THE EXISTING ABUTMENT FOOTING AND EXTEND APPROXIMATELY 25 FEET. IT SHALL BE DRIVEN TO A MINIMUM DEPTH OF 16 FEET BELOW THE BOTTOM OF FOOTING ELEVATION OF THE PROPOSED ABUTMENT AND HAVE A MINIMUM SECTION MODULUS OF 6 IN³ PER FOOT OF WALL.

ALL SHEET PILING SHALL BE REMOVED WHEN BACKFILLING IS COMPLETE. THIS WORK SHALL BE INCLUDED WITH ITEM 503 - COFFERDAMS, CRIBS AND SHEETING, AS PER PLAN, FOR PAYMENT.

ITEM 509 - REINFORCING STEEL, REPLACEMENT OF EXISTING REINFORCING STEEL, AS PER PLAN

REPLACE ALL EXISTING REINFORCING BARS DEEMED BY THE ENGINEER TO BE UNUSABLE BECAUSE OF CORROSION. THE DEPARTMENT WILL MEASURE THE REPLACEMENT REINFORCING STEEL BY THE NUMBER OF POUNDS ACCEPTED IN PLACE.

REPLACE ALL EXISTING REINFORCING STEEL BARS WHICH ARE TO BE INCORPORATED INTO THE NEW WORK AND ARE DEEMED BY THE ENGINEER TO BE MADE UNUSABLE BY CONCRETE REMOVAL OPERATIONS WITH NEW EPOXY COATED REINFORCING STEEL OF THE SAME SIZE AT NO COST TO THE DEPARTMENT.

ITEM 511 - CLASS HP CONCRETE, AS PER PLAN

THE PROVISIONS OF ITEM 511 SHALL APPLY EXCEPT AS NOTED BELOW.

MIX OPTIONS:
ALL SUPERSTRUCTURE, BRIDGE DECK, APPROACH SLABS AND PARAPET CONCRETE SHALL BE THIS MIX (HP4, AS PER PLAN). THE FOLLOWING PROPORTIONS WILL BE USED AS A STARTING MIX DESIGN.

CONCRETE TABLE
QUANTITIES PER CUBIC YARD
AGGREGATES (SSD)

MIX 4, AS PER PLAN (GGBF SLAG + MICROSILICA)

AGGREGATE TYPE	FINE AGGRE. (LB)	#8 COARSE AGGRE. (LB) *	#57 COARSE AGGRE. (LB) *	TOTAL	CEMENT CONTENT	GGBF SLAG	MICRO-SILICA	MAX WATER TO CEMENTITOUS RATIO	AIR CONTENT ±2%
GRAVEL	1370	650	790	2810	440	190	30	0.42	6
LIMESTONE	1370	655	800	2820	440	190	30	0.42	6
SLAG	1370	570	695	2635	440	190	30	0.42	6

* ALL COURSE AGGREGATE SHALL HAVE AN ABSORPTION OF 1.00% OR GREATER AS DEFINED PER ASTM C127.

BASIS OF PAYMENT:
PAYMENT FOR THE ABOVE COMPLETED AND ACCEPTED QUANTITIES WILL BE MADE AT THE CONTRACT BID PRICE FOR:
ITEM 511 - CLASS HP CONCRETE, BRIDGE DECK, AS PER PLAN, CU YD
ITEM 511 - CLASS HP CONCRETE, BRIDGE DECK (PARAPET), AS PER PLAN, CU YD

ADDITIONAL NOTES: SEE SHEET 3/24.

RICHLAND ENGINEERING LIMITED
29 NORTH PARK STREET
MANSFIELD, OHIO 44902

DESIGNED BLN | DRAWN JLS | CHECKED ALP | REVIEWED DAP | DATE 5/06/09
STRUCTURE TITLE NUMBER 0403458

GENERAL NOTES - 1
BRIDGE NO. ATB-84-2050
OVER I.R. 90

ATB-84-20.50
PID No. 25199

2 / 24

42
64

084_2050CGN001.DGN 5-06-09 RB,JLS,TWH

ITEM 511 - CLASS S CONCRETE, MISC.: PIER ENCASEMENT, AS PER PLAN

THIS ITEM SHALL INCLUDE THE COST OF THE REINFORCING STEEL.

ITEM 512 - SEALING OF CONCRETE SURFACES (EPOXY-URETHANE), AS PER PLAN

EPOXY-URETHANE SHALL BE THE BUFF COLOR MEETING FEDERAL COLOR STANDARD NUMBER 595B-13522. ALL ABUTMENT AND PIER SURFACES SHALL BE COMPLETELY SEALED DOWN TO THE GROUND LINE WITH EPOXY-URETHANE PER PLAN DETAILS. THE SUPERSTRUCTURE SHALL BE SEALED AS PER PLAN DETAILS.

ITEM 512 - SEALING OF CONCRETE BRIDGE DECKS WITH HMWM RESIN, AS PER PLAN

THE SEALING OF THE STAGED CONSTRUCTION JOINT SHALL BE PER PLAN DETAILS FOR THE CONCRETE BRIDGE DECK AND APPROACH SLAB.

ITEM 513 - STRUCTURAL STEEL, MISC.: INSPECTION OF BEAM WELDS OVER PIERS

THIS ITEM CONISTS OF CLEANING AND VISUALLY INSPECTING THE ORIGINAL FIELD WELDS OVER THE PIERS. ANY SUSPICIOUS WELDS OR POTENTIAL CRACKS SHALL BE INSPECTED BY A PROFESSIONAL ENGINEER. A SEAL WELD SHALL ALSO BE MADE TO THE BOTTOM FLANGE PLATE ABOVE THE PIER BEARING SOLE PLATE WHERE THERE IS NO WELD.

THE DEPARTMENT WILL MEASURE THIS WORK ON A LUMP SUM BASIS. THE DEPARTMENT WILL PAY FOR ACCEPTED QUANTITIES AT THE CONTRACT PRICE FOR ITEM-513 STRUCTURAL STEEL, MISC.: INSPECTION OF BEAM WELDS OVER PIERS.

ITEM 514 - FIELD PAINTING OF EXISTING STRUCTURAL STEEL, PRIME COAT, AS PER PLAN

ITEM 514 - FIELD PAINTING STRUCTURAL STEEL, INTERMEDIATE COAT, AS PER PLAN

ITEM 514- FIELD PAINTING STRUCTURAL STEEL, FINISH COAT, AS PER PLAN

THE COLOR OF THE FINISH COAT SHALL BE THE BLUE COLOR MEETING FEDERAL COLOR STANDARD NUMBER 595B-15526. NO PERCENTAGE WAS USED FOR THE INCIDENTALS PER CMS 514.23. ALL SURFACE AREA WAS CALCULATED.

ITEM 516 - JACKING AND TEMPORARY SUPPORT OF SUPERSTRUCTURE, AS PER PLAN

THIS ITEM SHALL CONSIST OF FURNISHING ALL NECESSARY LABOR, MATERIALS AND EQUIPMENT TO RAISE OR RE-POSITION THE EXISTING STRUCTURE TO THE DIMENSIONS AND REQUIREMENTS DEFINED IN THE PROJECT PLANS.

SUBMIT CONSTRUCTION PLANS IN ACCORDANCE WITH CMS 501.05.

THE BEAMS ARE TO REMAIN AT THEIR PRE-CONSTRUCTION ELEVATIONS IN THE REHABILITATED STRUCTURE, WITH THE SUBSTRUCTURE SEATS RAISED TO ACCOMODATE THE NEW BEARING AND THE DECK HAUNCHES ADJUSTED TO MATCH THE PROPOSED PROFILE GRADE. THE CONTRACTOR IS LIMITED TO RAISING THE BEAMS A MAXIMUM OF 1/4".

THE WORK REQUIRED INCLUDES SUPPORTING THE BEAMS WHILE THE ABUTMENTS ARE MODIFIED AND THE BEARINGS REPLACED. WITHOUT THE DECK, THE ESTIMATED UNFACTURED DEAD LOAD FOR BEAM LINES 1, 2, 4 AND 5 IS 2 TONS AT THE ABUTMENTS. THE ABUTMENT UNFACTURED LIVE LOAD AND DEAD LOAD FOR BEAM 3 IS 45 TONS. THE WORK SHALL BE PERFORMED ACCORDING TO THE CONSTRUCTION SEQUENCE.

JACKS ALONE SHALL NOT BE USED TO SUPPORT LOADS EXCEPT DURING THE ACTUAL JACKING OPERATION. TEMPORARY SUPPORTS, BLOCKING OR OTHER METHODS APPROVED BY THE DIRECTOR SHALL BE USED. ANY DAMAGE TO THE STRUCTURAL MEMBERS, CONNECTIONS, OR PARTS THAT ARE TO REMAIN AS PART OF THE PERMANENT CONSTRUCTION SHALL BE CORRECTED OR REPAIRED BY THE CONTRACTOR, AT HIS EXPENSE, TO THE SATISFACTION OF THE ENGINEER.

THE DEPARTMENT WILL MEASURE THIS WORK ON A LUMP SUM BASIS.

THE DEPARTMENT WILL PAY FOR ACCEPTED QUANTITIES AT THE CONTRACT PRICE FOR ITEM 516 - JACKING AND TEMPORARY SUPPORT OF SUPERSTRUCTURE, AS PER PLAN.

ITEM 516 - 6" NON-PERFORATED CORRUGATED PLASTIC PIPE, INCLUDING SPECIALS, AS PER PLAN

ANIMAL GUARDS SHALL BE PROVIDED AT THE OUTLET OF THE DRAINAGE PIPES. THE STEEL BOLTS OR RODS FOR THE ANIMAL GUARDS SHALL BE GALVANIZED PER CMS 711.02. SEE STANDARD DRAWING DM-1.1 FOR ADDITIONAL DETAILS AND NOTES. THE ANIMAL GUARDS AND ROCK CHANNEL PROTECTION, TYPE C ARE INCIDENTAL TO ITEM 518 - 6" NON-PERFORATED CORRUGATED PLASTIC PIPE, INCLUDING SPECIALS, AS PER PLAN.

ITEM 519 - PATCHING CONCRETE STRUCTURE, AS PER PLAN

PRIOR TO THE SURFACE CLEANING SPECIFIED IN 519.04 AND WITHIN 24 HOURS OF PLACING PATCHING MATERIAL, BLAST CLEAN ALL PIER SURFACES TO BE PATCHED INCLUDING ALL EXPOSED REINFORCING STEEL. ACCEPTABLE METHODS INCLUDE HIGH-PRESSURE WATER BLASTING WITH OR WITHOUT ABRASIVES IN THE WATER, ABRASIVE BLASTING WITH CONTAINMENT, OR VACUUM ABRASIVE BLASTING.

LOCATIONS WHERE THE LARGE PIER BARS WERE PLACED TOO CLOSE TO THE SURFACE DURING ORIGINAL CONSTRUCTION AND CAN NOT BE EASILY DRIVEN IN, SHALL JUST BE CLEANED AND COATED WITH TWO COATS OF THE EPOXY-URETHANE SEALER.

THE ESTIMATED QUANTITY OF PATCHING REQUIRED IS BASED ON FIELD MEASUREMENTS OF ABOVE GROUND DETERIORATION. THE CONTRACTOR SHALL EXCAVATE REPAIR AREAS THAT EXTEND TO THE EXISTING GROUND LINE. THE ENGINEER SHALL DETERMINE THE EXTENT OF BELOW GROUND REPAIR BASED ON THE CONTRACTOR'S EXCAVATION.

THE CONTRACTOR SHOULD INCLUDE THIS EXCAVATION, PERFORMED IN ACCORDANCE WITH ITEM 503, IN THE UNIT PRICE BID FOR ITEM 519 - PATCHING CONCRETE STRUCTURE, AS PER PLAN.

ITEM 526 - REINFORCED CONCRETE APPROACH SLAB (T=15"), AS PER PLAN

CONCRETE FOR THE APPROACH SLABS SHALL BE CLASS HP CONCRETE, MIX 4. THE PROPORTIONS FOR THE STARTING MIX DESIGN ARE DESCRIBED IN THE "ITEM 511 - CLASS HP CONCRETE, BRIDGE DECK, AS PER PLAN.

THE PARAPETS WILL BE CARRIED ONTO THE APPROACH SLABS AND TRANSITIONED AT THE ENDS OF THE APPROACH SLABS. CONCRETE, REINFORCING STEEL, DEFLECTION JOINT SAW CUT, CAULKING MATERIAL, AND SEALING OF CONCRETE SURFACES FOR THE PARAPET SHALL BE INCLUDED WITH ITEM 526 - REINFORCED CONCRETE APPROACH SLAB (T=15"), AS PER PLAN FOR PAYMENT. SEE SHEETS 23/24 THROUGH 24/24 FOR APPROACH SLAB DETAILS.

DECK PLACEMENT DESIGN ASSUMPTIONS:

THE FOLLOWING ASSUMPTIONS OF CONSTRUCTION MEANS AND METHODS WERE MADE FOR THE ANALYSIS AND DESIGN OF THE SUPERSTRUCTURE. THE CONTRACTOR IS RESPONSIBLE FOR THE DESIGN OF THE FALSEWORK SUPPORT SYSTEM WITHIN THESE PARAMETERS AND WILL ASSUME RESPONSIBILITY FOR SUPERSTRUCTURE ANALYSIS FOR DEVIATION FROM THESE DESIGN ASSUMPTIONS.

AN EIGHT WHEEL FINISHING MACHINE WITH A MAXIMUM WHEEL LOAD OF 1.2 KIPS FOR A TOTAL MACHINE LOAD OF 9.9 KIPS.

A MINIMUM OUT-TO-OUT WHEEL SPACING AT EACH END OF THE MACHINE OF 103".

A MAXIMUM SPACING OF OVERHANG FALSEWORK BRACKETS OF 48 IN.

A MAXIMUM DISTANCE FROM THE CENTERLINE OF THE FASCIA GIRDER TO THE FACE OF THE SAFETY HANDRAIL OF 65".

RICHLAND ENGINEERING LIMITED
29 NORTH PARK STREET
MANSFIELD, OHIO 44902

DESIGNED BLN | DRAWN JLS | REVIEWED DAP | DATE 5/06/09
CHECKED ALP | REVISED | STRUCTURE TITLE NUMBER 0403458

GENERAL NOTES - 2
BRIDGE NO. ATB-84-2050
OVER I.R. 90

ATB-84-20.50
PID No. 25199

084_2050CGN002.DGN 05/27/09 RB,JLS,TWH,SCB

ESTIMATED QUANTITIES

CALCULATED JLS DATED 11/08
CHECKED TWH DATED 5/09

ITEM	ITEM EXT.			TOTAL	UNIT	DESCRIPTION	STRUCTURE				SEE SHEET
							SUPER	ABUTS.	PIER	GEN'L	
202	11203			LUMP		PORTIONS OF STRUCTURE REMOVED, OVER 20 FOOT SPAN, AS PER PLAN				LUMP	2/24
202	22901			184	SY	APPROACH SLAB REMOVED, AS PER PLAN				184	5/24
503	11101			LUMP		COFFERDAMS, CRIBS AND SHEETING, AS PER PLAN				LUMP	2/24
503	21300			LUMP		UNCLASSIFIED EXCAVATION		LUMP			
509	10000			144,805	POUND	EPOXY COATED REINFORCING STEEL	135,740	8,791	274		
509	20001			50	POUND	REINFORCING STEEL, REPLACEMENT OF REINFORCING STEEL, AS PER PLAN		50			2/24
510	10000			202	EACH	DOWEL HOLES WITH NONSHRINK, NONMETALLIC GROUT		202			
511	34450			3	CY	CLASS S CONCRETE, MISC.: PIER ENCASEMENT, AS PER PLAN			3		3/24 & 11/24
511	45700			83	CY	CLASS C CONCRETE, ABUTMENT		83			
511	50001			388	CY	CLASS HP CONCRETE, BRIDGE DECK, AS PER PLAN	388				2/24
511	50101			109	CY	CLASS HP CONCRETE, BRIDGE DECK (PARAPET), AS PER PLAN	108	1			2/24
511	52000			LUMP		CLASS HP CONCRETE, TEST SLAB				LUMP	
512	10101			1,273	SY	SEALING OF CONCRETE SURFACES (EPOXY-URETHANE), AS PER PLAN	791	157	325		3/24
512	10301			89	SY	SEALING CONCRETE BRIDGE DECKS WITH HMWM RESIN, AS PER PLAN	76	1	12		3/24
512	33000			4	SY	TYPE 2 WATERPROOFING		4			
513	20000			2,580	EACH	WELDED STUD SHEAR CONNECTORS	2,580				
513	21500			96	POUND	REPLACEMENT OF DETERIORATED END CROSSFRAMES	96				
513	95020			LUMP		STRUCTURAL STEEL, MISC.: INSPECTION OF BEAM WELDS OVER PIERS				LUMP	3/24
514	00050			31,530	SF	SURFACE PREPARATION OF EXISTING STRUCTURAL STEEL	31,530				
514	00057			31,530	SF	FIELD PAINTING OF EXISTING STRUCTURAL STEEL, PRIME COAT, AS PER PLAN	31,530				3/24
514	00061			31,530	SF	FIELD PAINTING STRUCTURAL STEEL, INTERMEDIATE COAT, AS PER PLAN	31,530				3/24
514	00067			31,530	SF	FIELD PAINTING STRUCTURAL STEEL, FINISH COAT, AS PER PLAN	31,530				3/24
514	00504			29	MNHR	GRINDING FINS, TEARS, SLIVERS ON EXISTING STRUCTURAL STEEL	29				
514	10000			18	EACH	FINAL INSPECTION REPAIR				18	
516	11210			98	FT	STRUCTURAL EXPANSION JOINT INCLUDING ELASTOMERIC STRIP SEAL	98				
516	44201			10	EACH	ELASTOMERIC BEARING WITH INTERNAL LAMINATES AND LOAD PLATE (NEOPRENE) (3.118"x9½"x1'-2" PAD AND 2"x10½"x1'-3" PLATE), AS PER PLAN	10				20/24
516	47001			LUMP		JACKING AND TEMPORARY SUPPORT OF SUPERSTRUCTURE, AS PER PLAN				LUMP	3/24
518	21200			81	CY	POROUS BACKFILL WITH FILTER FABRIC		81			
518	40000			121	FT	6" PERFORATED CORRUGATED PLASTIC PIPE		121			
518	40011			109	FT	6" NON-PERFORATED CORRUGATED PLASTIC PIPE, INCLUDING SPECIALS, AS PER PLAN		109			3/24
519	11101			5	SF	PATCHING CONCRETE STRUCTURE, AS PER PLAN			5		3/24
526	25001			217	SY	REINFORCED CONCRETE APPROACH SLABS (T=15"), AS PER PLAN				217	3/24

106078-A 2050CEQ001.DGN 5/06/09 KH,JLS,TWH

RICHLAND ENGINEERING LIMITED
29 NORTH PARK STREET
MANSFIELD, OHIO 44902

DESIGNED BLN | DRAWN TWH | CHECKED ALP | REVIEWED DAP | DATE 5/06/09 | REVISED | STRUCTURE TITLE NUMBER 0403458

ESTIMATED QUANTITIES
BRIDGE NO. ATB-84-2050
OVER I.R.90

ATB-84-20.50
PID No. 25199

4/24

44
64

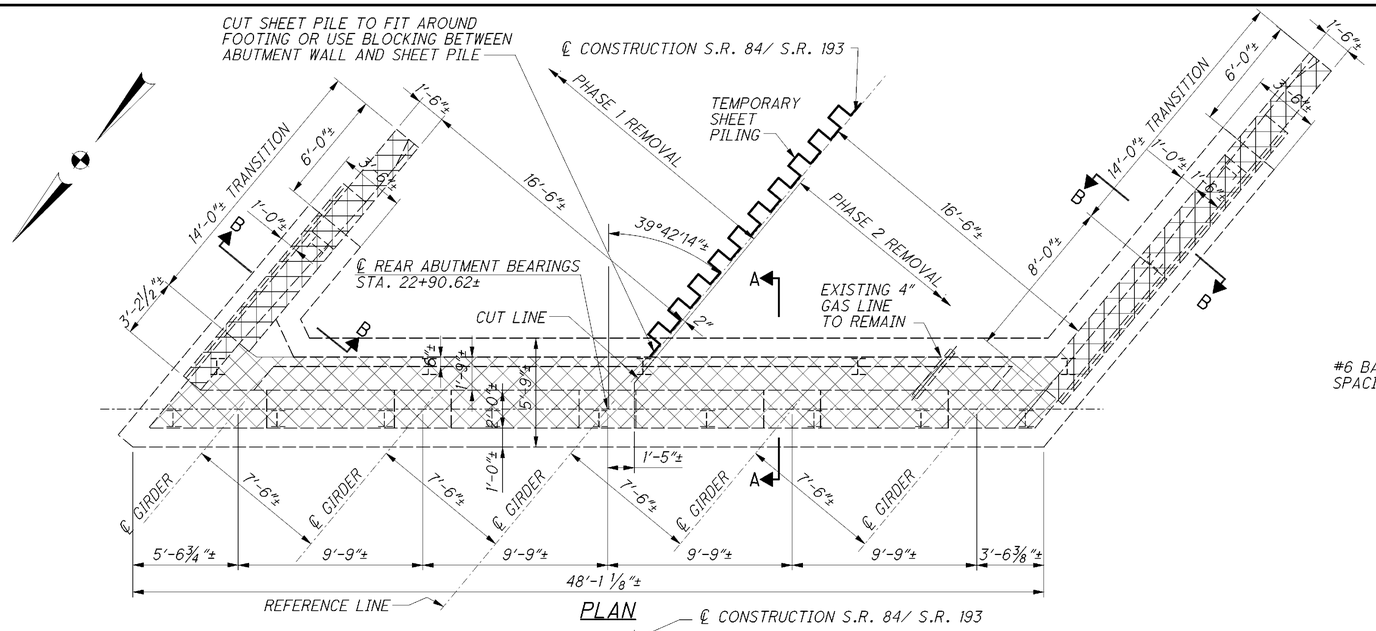

PLAN

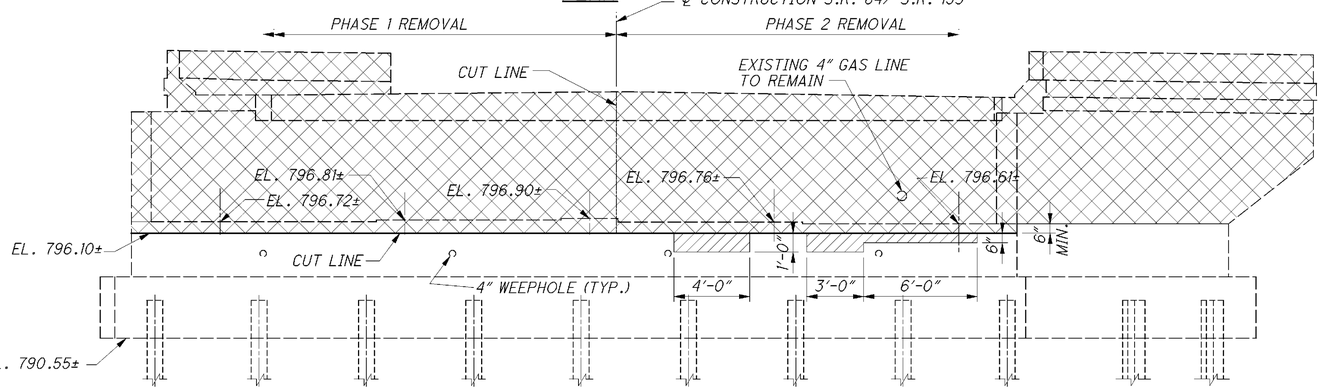

ELEVATION

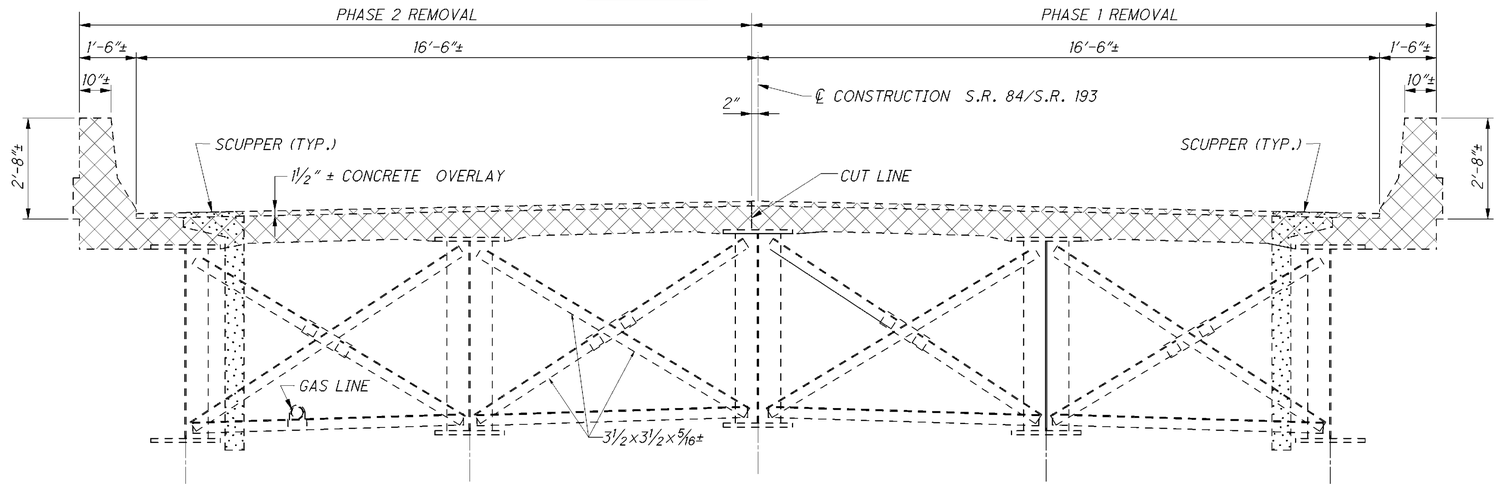

PHASE 1 & PHASE 2 DECK REMOVAL SECTION

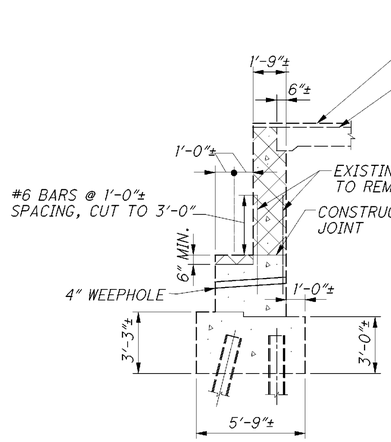

SECTION A-A

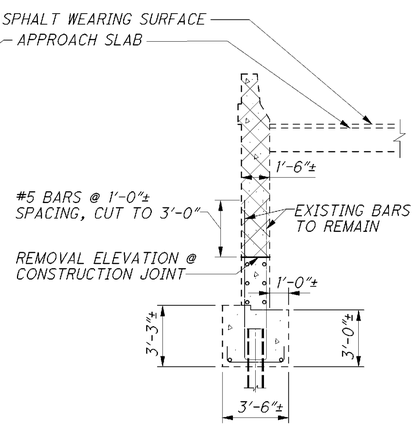

SECTION B-B

LEGEND

- INDICATES AREAS OF DELAMINATED OR DETERIORATED CONCRETE TO BE REMOVED BEFORE PLACING NEW CONCRETE.
- CONCRETE REMOVAL
- SCUPPER REMOVAL

NOTES

MATERIALS SHOWN ARE EXISTING UNLESS OTHERWISE NOTED.

PHASE CONSTRUCTION DETAILS: FOR MAINTENANCE OF TRAFFIC DETAILS AND NOTES SEE SHEETS 13 OF 64.

ALL WELDS ATTACHING ITEMS TO BE REMOVED FROM THE REUSED STEEL BEAMS SHALL BE GROUND FLUSH WITH THE SURFACE OF THE BEAMS. THE ITEMS DESIGNATED FOR REMOVAL INCLUDE, BUT ARE NOT LIMITED TO, SCUPPERS AND END CROSSFRAMES TO BE REMOVED.

* REMOVING OF VARIABLE ASPHALT WEARING SURFACE ON EXISTING APPROACH SLAB IS INCLUDED WITH ITEM 202 APPROACH SLAB REMOVED, AS PER PLAN.

RICHLAND ENGINEERING LIMITED
29 NORTH PARK STREET
MANSFIELD, OHIO 44902

DESIGNED BLN | DRAWN TWH | CHECKED ALP | REVIEWED DAP | DATE 5/06/09 | STRUCTURE/TILE NUMBER 0403458 | REVISED

REAR ABUTMENT & DECK - REMOVAL
BRIDGE NO. ATB-84-2050
OVER I.R.90

ATB-84-20.50
PID No. 25199

106078-A 2050CMD001.DGN 4/21/09 JLS,TWH

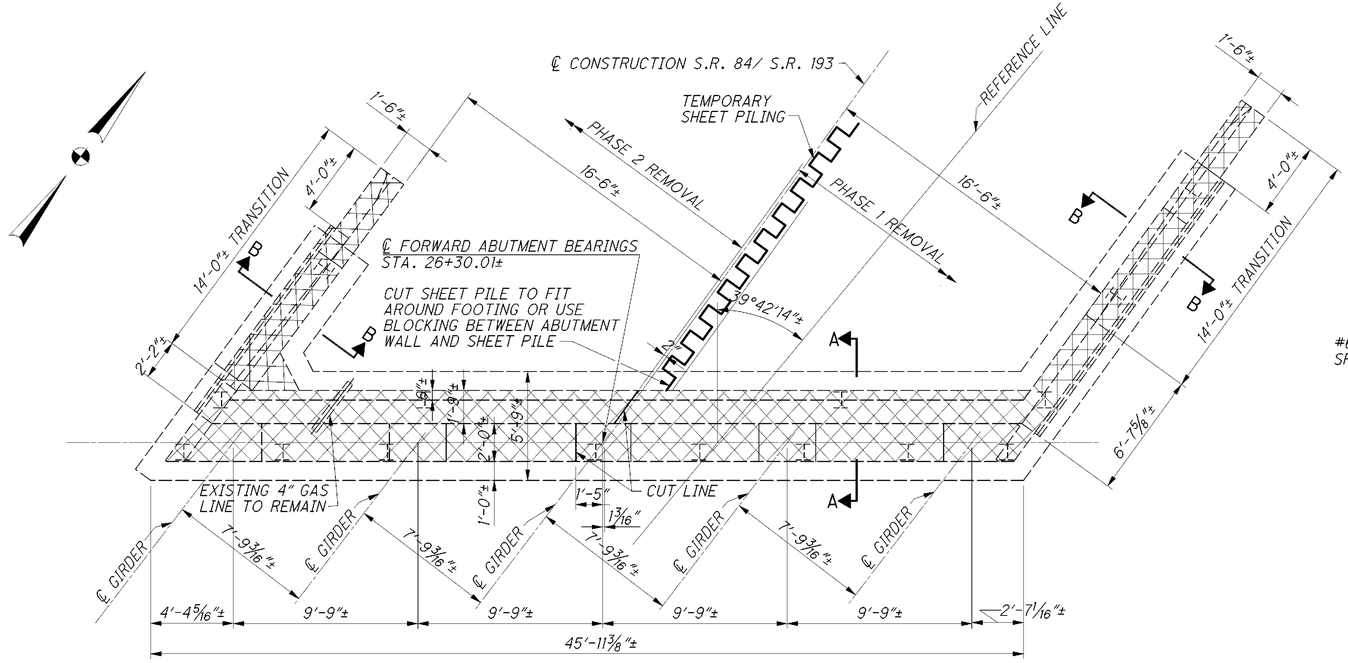

PLAN

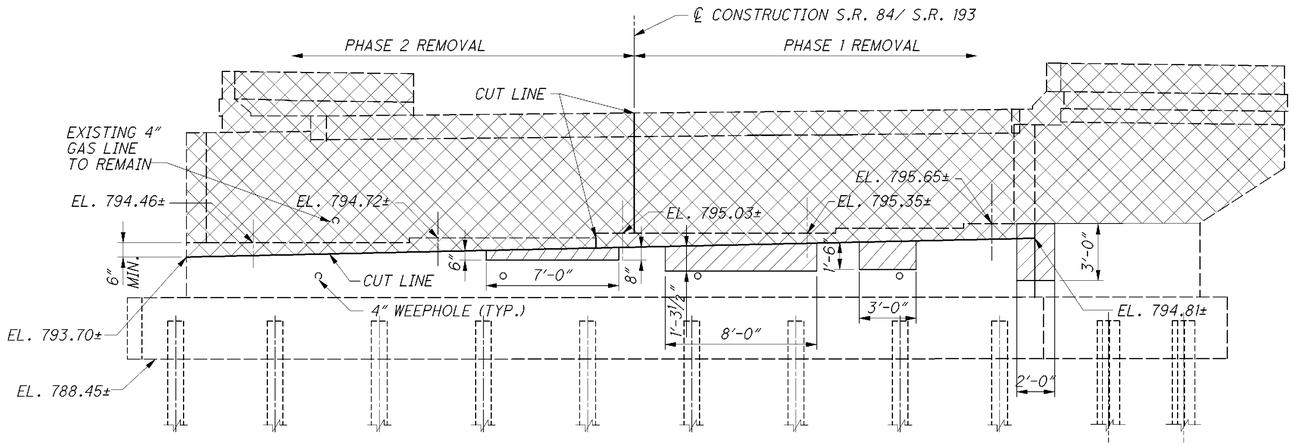

ELEVATION

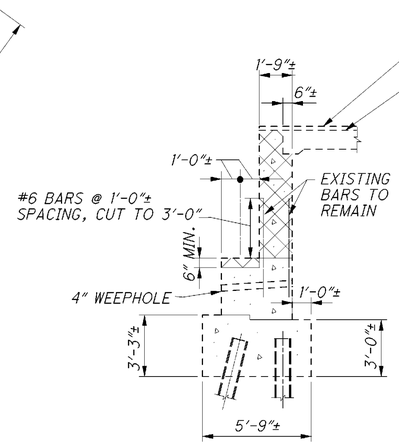

SECTION A-A

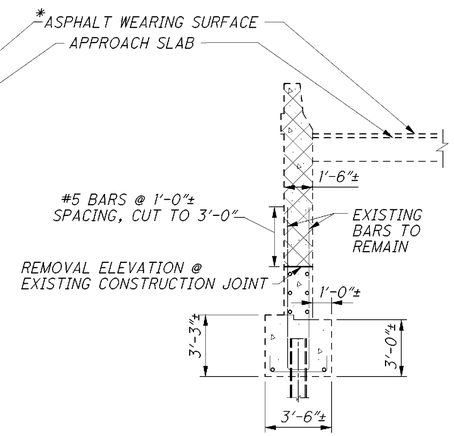

SECTION B-B

LEGEND

- INDICATES AREAS OF DELAMINATED OR DETERIORATED CONCRETE TO BE REMOVED BEFORE PLACING NEW CONCRETE.

- CONCRETE REMOVAL

NOTES

MATERIALS SHOWN ARE EXISTING UNLESS OTHERWISE NOTED.

PHASE CONSTRUCTION DETAILS: FOR MAINTENANCE OF TRAFFIC DETAILS AND NOTES, SEE SHEETS 13 OF 64.

* REMOVING OF VARIABLE ASPHALT WEARING SURFACE ON EXISTING APPROACH SLAB IS INCLUDED WITH ITEM 202 APPROACH SLAB REMOVED, AS PER PLAN.

RICHLAND ENGINEERING LIMITED
29 NORTH PARK STREET
MANSFIELD, OHIO 44902

DESIGNED BLN | DRAWN TWH | REVIEWED DAP | DATE 5/06/09 | CHECKED ALP | REVISED | STRUCTURE TITLE NUMBER 0403458

FORWARD ABUTMENT - REMOVAL
BRIDGE NO. ATB-84-2050
OVER I.R.90

ATB-84-20.50
PID No. 25199

6 / 24

46
64

106078-A 2050CMD002.DGN 4/21/09 JLS,TWH

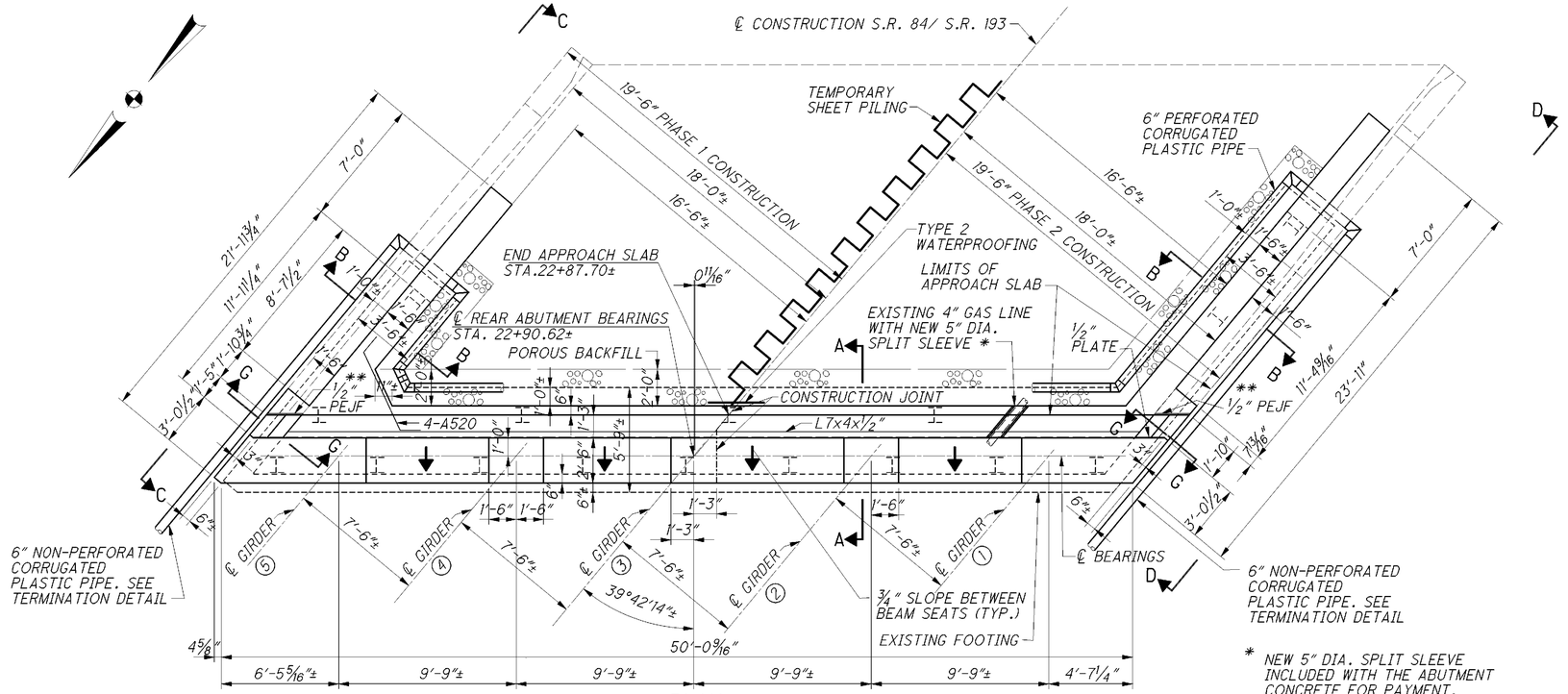

* NEW 5" DIA. SPLIT SLEEVE INCLUDED WITH THE ABUTMENT CONCRETE FOR PAYMENT.

** ½" PREFORMED EXPANSION JOINT FILLER INCLUDED WITH APPROACH SLAB FOR PAYMENT

± LOCATED AT BRIDGE LIMITS

NOTES

SECTIONS A-A, B-B & C-G: SEE SHEETS [8/24].

VIEWS C-C & D-D: SEE SHEETS [8/24].

REINFORCING SPLICE LENGTHS SHALL BE 2'-0" FOR #5 VERTICAL BARS, 2'-9" FOR #5 HORIZONTAL BARS, 2'-5" FOR #6 VERTICAL BARS & 3'-4" FOR #6 HORIZONTAL BARS.

TERMINATION DETAIL: SEE SHEET [8/24].

PEJF INDICATES PREFORMED EXPANSION JOINT FILLER.

POROUS BACKFILL WITH FILTER FABRIC 2 FEET THICK SHALL EXTEND UP TO THE PLANE OF THE SUBGRADE, TO 1 FOOT BELOW THE EMBANKMENT SURFACE, AND LATERALLY AS SHOWN ON THE PLANS.

SEALING OF ABUTMENT BEAM SEATS: IF THE BEAMS SEATS ARE SEALED WITH AN EPOXY URETHANE SEALER PRIOR TO SETTING THE BEARINGS, DO NOT APPLY SEALER TO THE CONCRETE SURFACES UNDER THE PROPOSED BEARING LOCATIONS. IF THESE LOCATIONS ARE SEALED, REMOVE THE SEALER TO THE SATISFACTION OF THE ENGINEER PRIOR TO SETTING THE BEARINGS. THE DEPARTMENT WILL NOT PAY FOR THIS REMOVAL.

TYPE 2 WATERPROOFING IS TO BE 3'-0" WIDE, CENTERED ON THE CONSTRUCTION JOINT AND SEALED FROM THE APPROACH SLAB SEAT TO THE EXISTING BEAM SEAT.

RICHLAND ENGINEERING LIMITED
29 NORTH PARK STREET
MANSFIELD, OHIO 44902

DESIGNED BLN | DRAWN TWH | CHECKED ALP | REVIEWED DAP | DATE 5/06/09 | REVISED | STRUCTURE FILE NUMBER 0403458

REAR ABUTMENT
BRIDGE NO. ATB-84-2050
OVER I.R.90

ATB-84-20.50
PID No. 25199

7/24

47/64

106078-A 2050CRA001.DGN 4/22/09 JLS.TWH

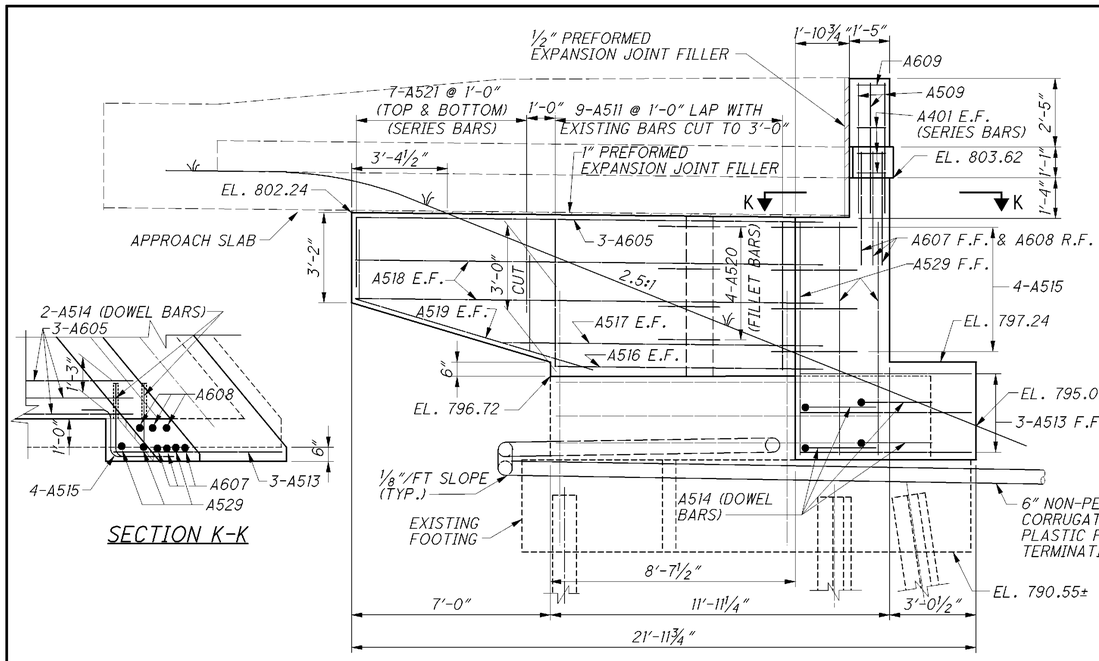

SECTION K-K

VIEW C-C ELEVATION

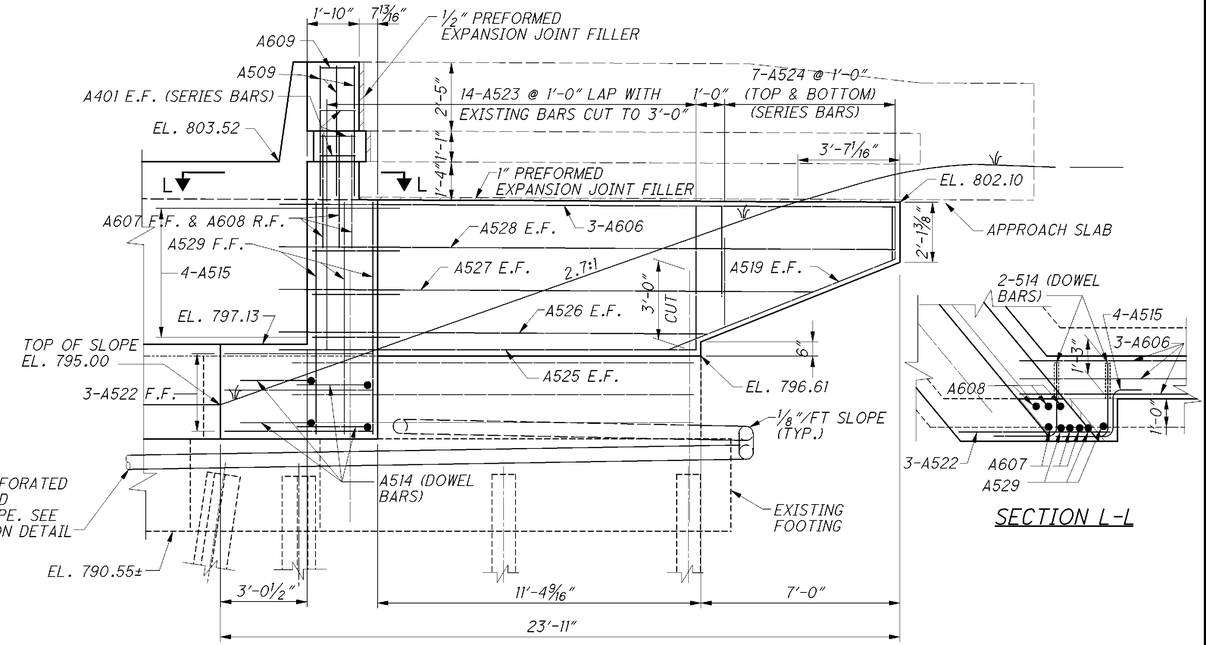

SECTION L-L

VIEW D-D ELEVATION

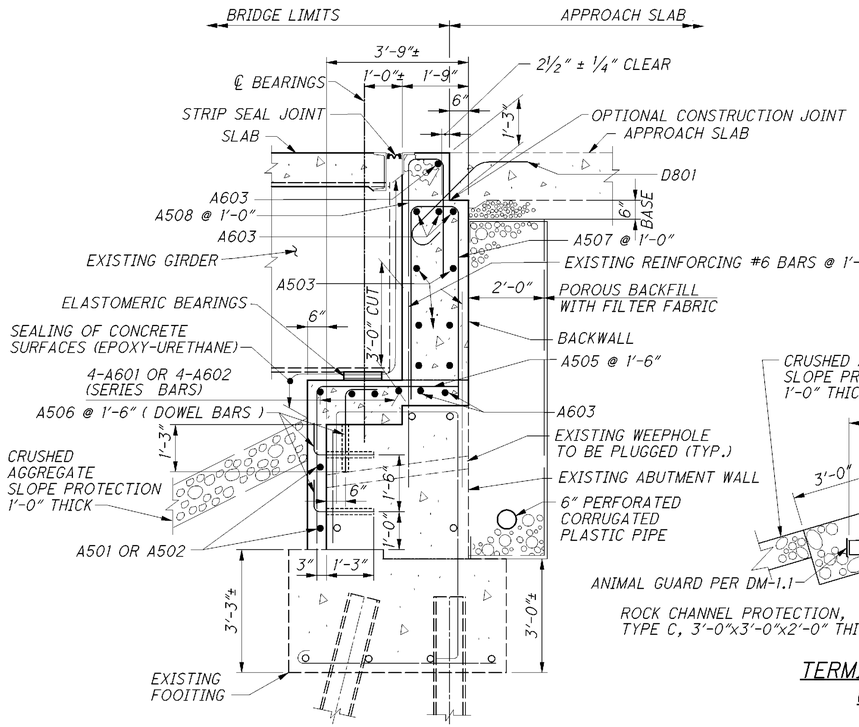

SECTION A-A

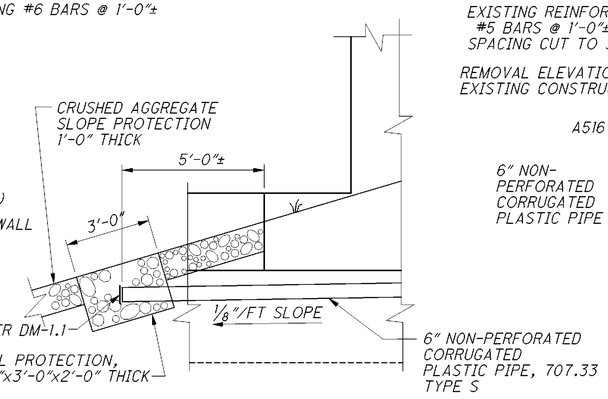

TERMINATION OF 6" NON-PERFORATED CORRUGATED PLASTIC PIPE

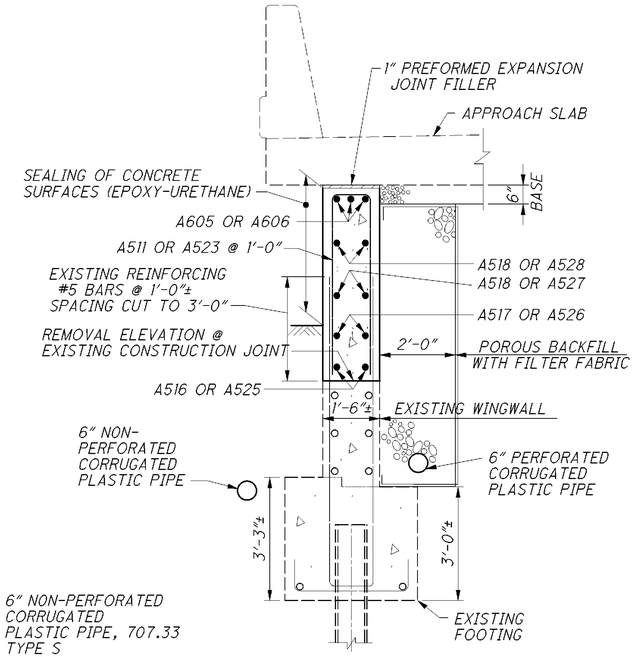

SECTION B-B

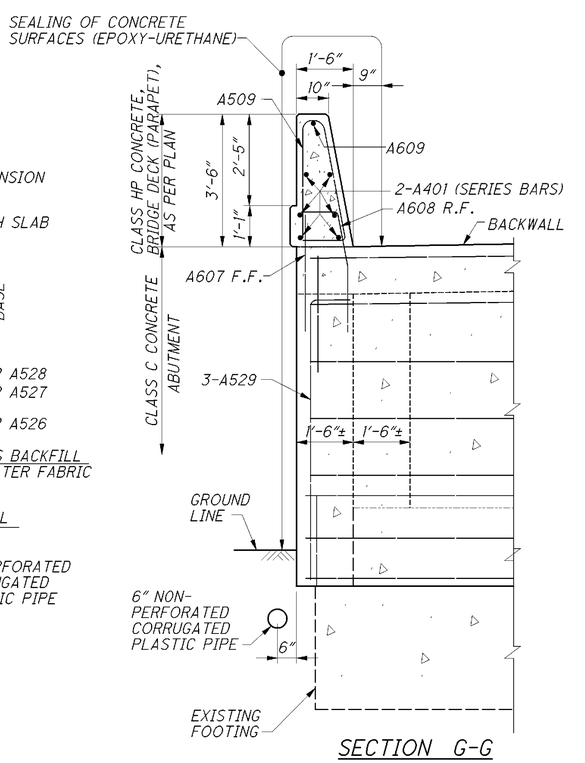

SECTION G-G

NOTES

VIEWS C-C & D-D: FOR LOCATIONS SEE SHEET 7/24.

SECTIONS A-A, B-B & G-G: FOR LOCATIONS SEE SHEET 7/24.

ADDITIONAL NOTES: SEE SHEET 7/24.

RICHLAND ENGINEERING LIMITED
29 NORTH PARK STREET
MANSFIELD, OHIO 44902

DESIGNED BLN | DRAWN TWH | REVIEWED DAP | DATE 5/06/09 | STRUCTURE FILE NUMBER 0403458
CHECKED ALP | REVISED

REAR ABUTMENT SECTIONS AND WINGWALLS
BRIDGE NO. ATB-84-2050
OVER I.R.90

ATB-84-20.50
PID No. 25199

8 / 24

48 / 64

106078-A 2050CRA002.DGN 4/21/09 SCB,TWH

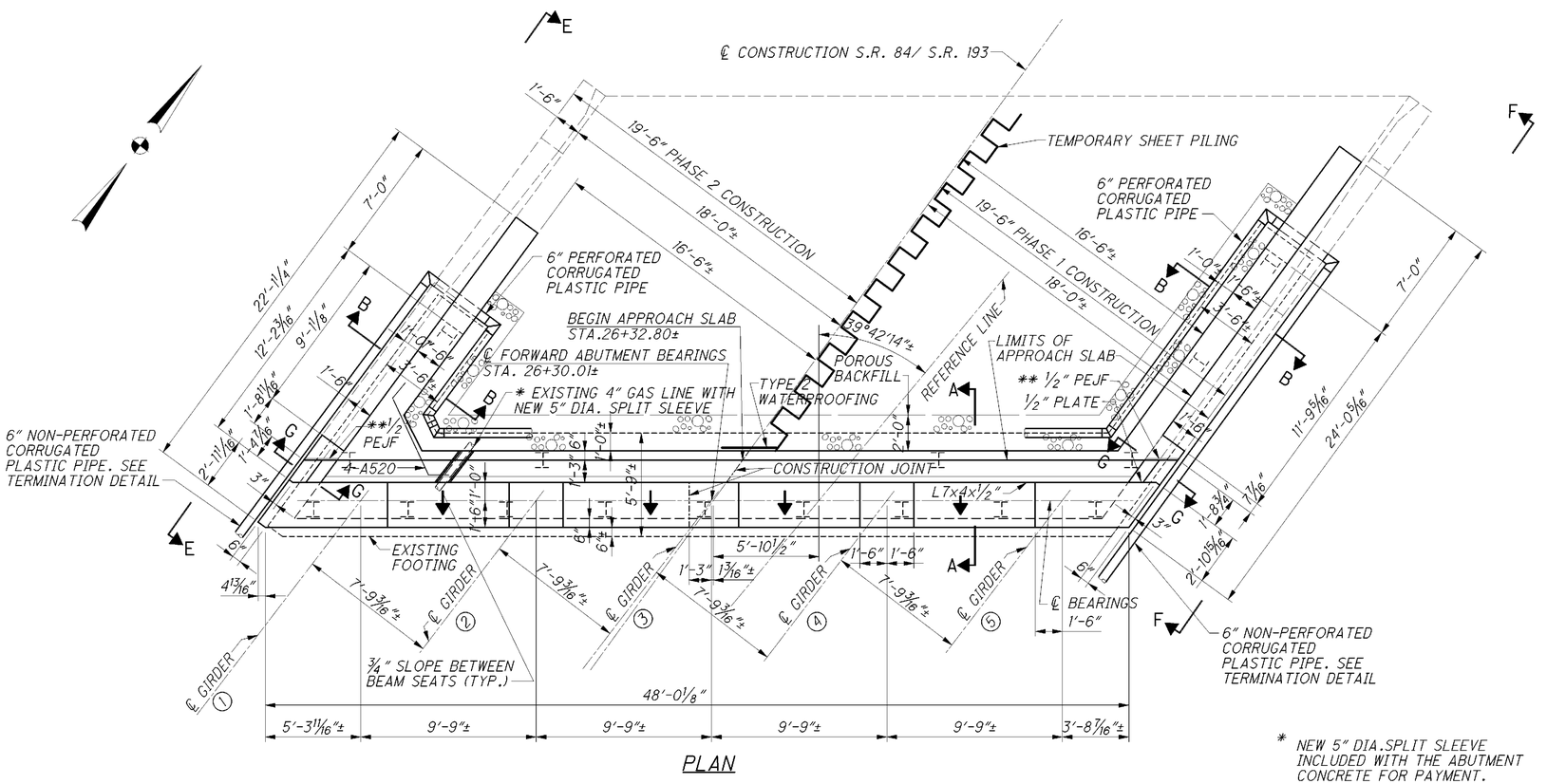

NOTES

SECTIONS A-A, B-B & G-G: SEE SHEETS 10/24.

VIEWS E-E & F-F: SEE SHEETS 10/24.

TERMINATION DETAIL: SEE SHEETS 10/24.

PEJF INDICATES PREFORMED EXPANSION JOINT FILLER.

ADDITIONAL NOTES: SEE SHEETS 7/24.

RICHLAND ENGINEERING LIMITED
29 NORTH PARK STREET
MANSFIELD, OHIO 44902

DESIGNED BLN | DRAWN TWH | REVIEWED DAP | DATE 5/06/09
CHECKED ALP | REVISED | STRUCTURE TITLE NUMBER 0403458

FORWARD ABUTMENT
BRIDGE NO. ATB-84-2050
OVER I.R.90

ATB-84-20.50
PID No. 25199

9 / 24

49 / 64

106078-A 2050CFA001.DGN 4/30/09 JLS,TWH

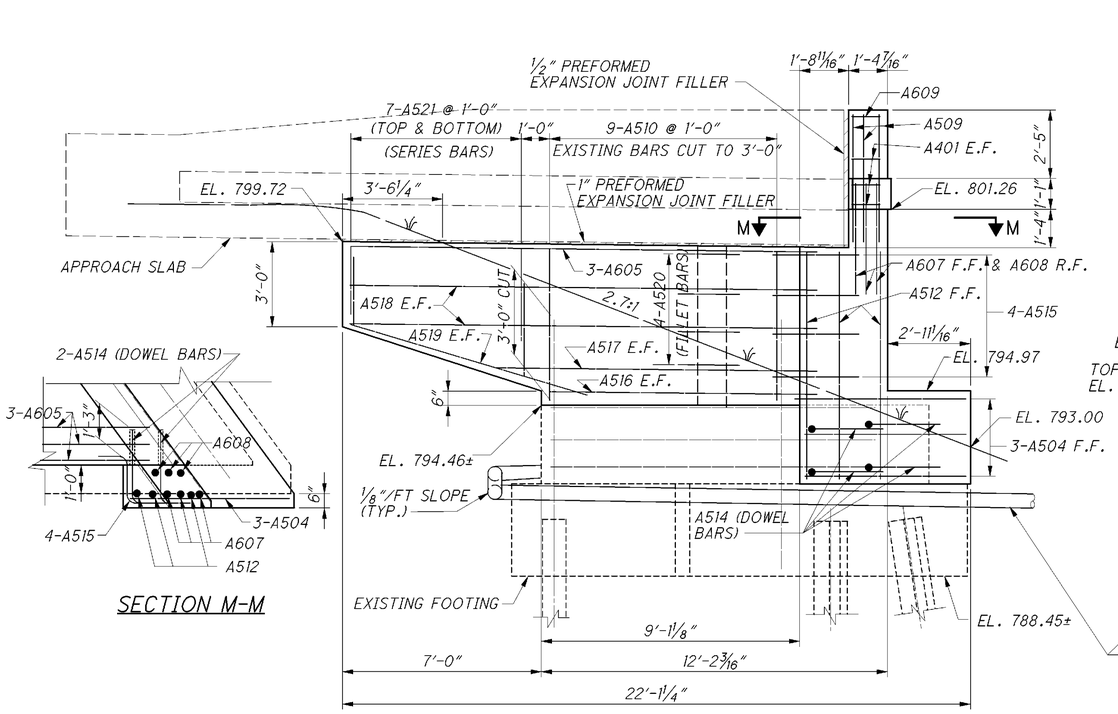

SECTION M-M

VIEW E-E ELEVATION

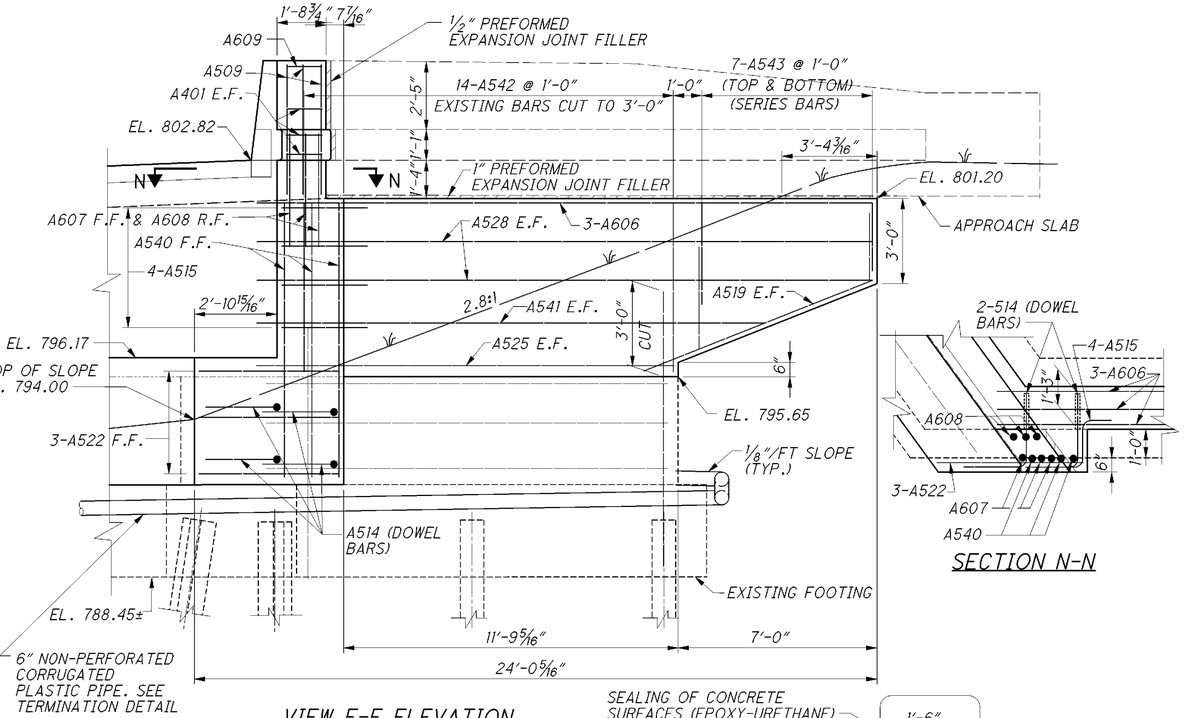

SECTION N-N

VIEW F-F ELEVATION

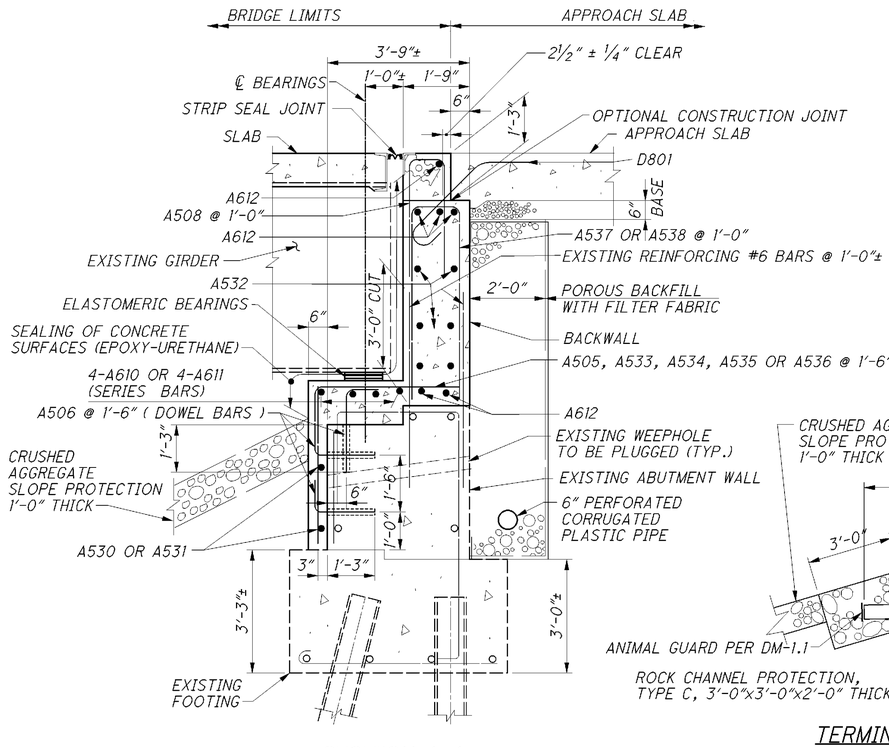

SECTION A-A

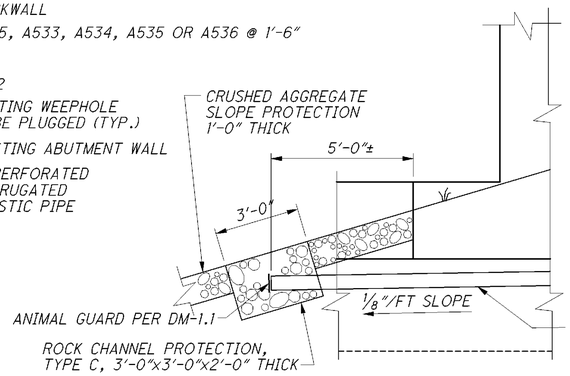

TERMINATION OF 6" NON-PERFORATED CORRUGATED PLASTIC PIPE

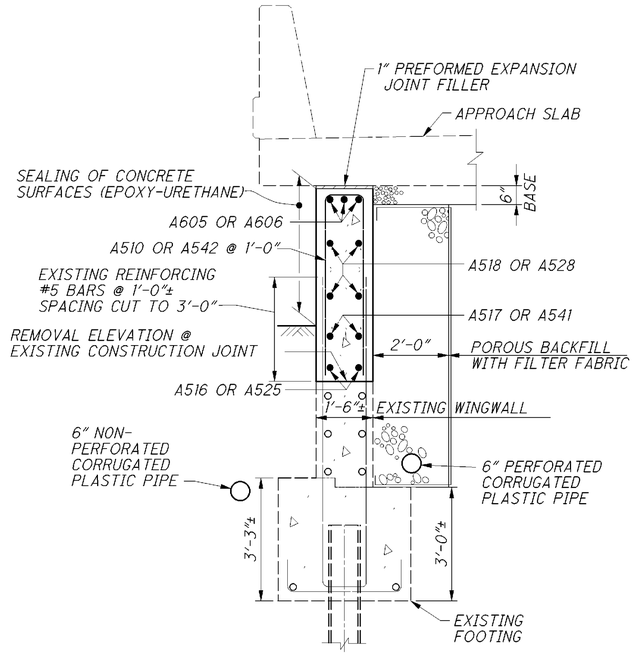

SECTION B-B

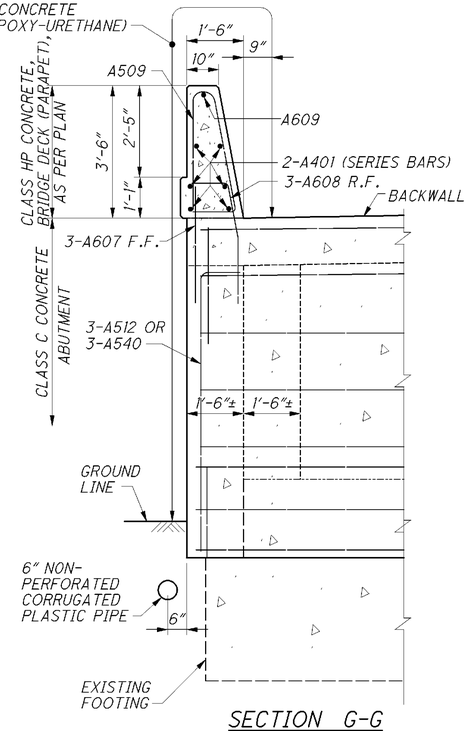

SECTION G-G

NOTES

VIEWS E-E & F-F: FOR LOCATIONS SEE SHEET 9/24 .

SECTIONS A-A, B-B & G-G: FOR LOCATIONS SEE SHEET 9/24.

ADDITIONAL NOTES: SEE SHEET 7/24.

RICHLAND ENGINEERING LIMITED
29 NORTH PARK STREET
MANSFIELD, OHIO 44902

DESIGNED BLN | DRAWN TWH | REVIEWED DAP | DATE 5/06/09 | STRUCTURE FILE NUMBER 0403458 | CHECKED ALP | REVISED

FORWARD ABUTMENT SECTIONS AND WINGWALLS
BRIDGE NO. ATB-84-2050
OVER I.R.90

ATB-84-20.50
PID No. 25199

10 / 24

50 / 64

106078-A 2050CFA002.DGN 4/21/09 SCB,TWH

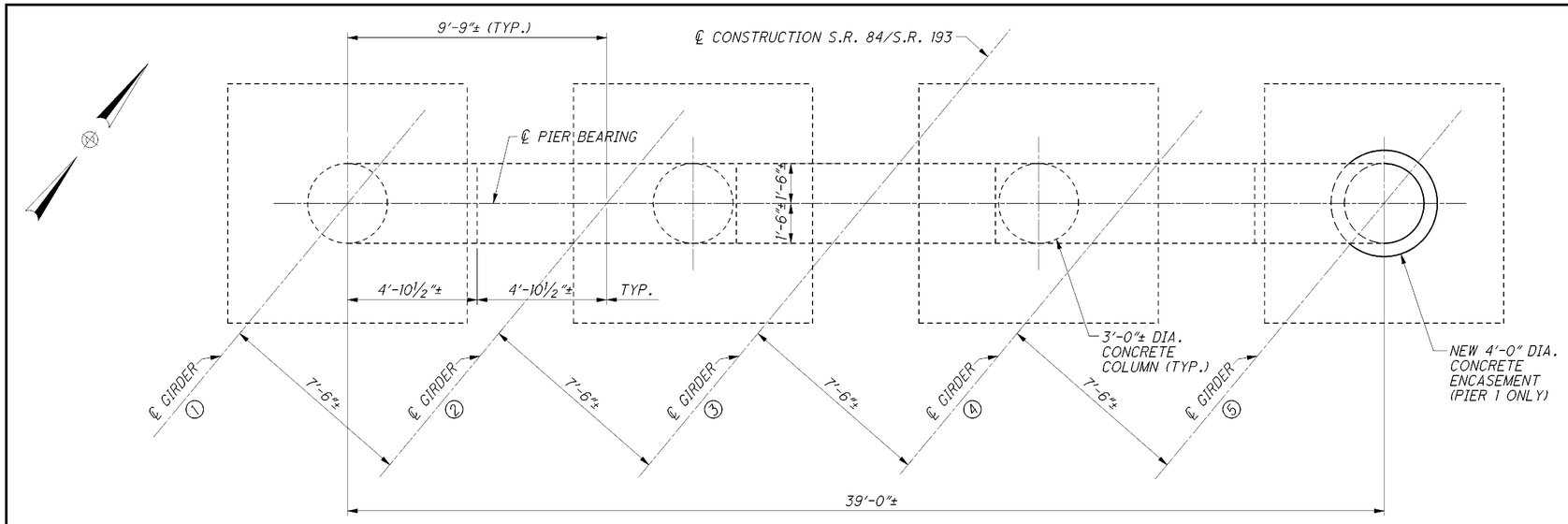

PLAN

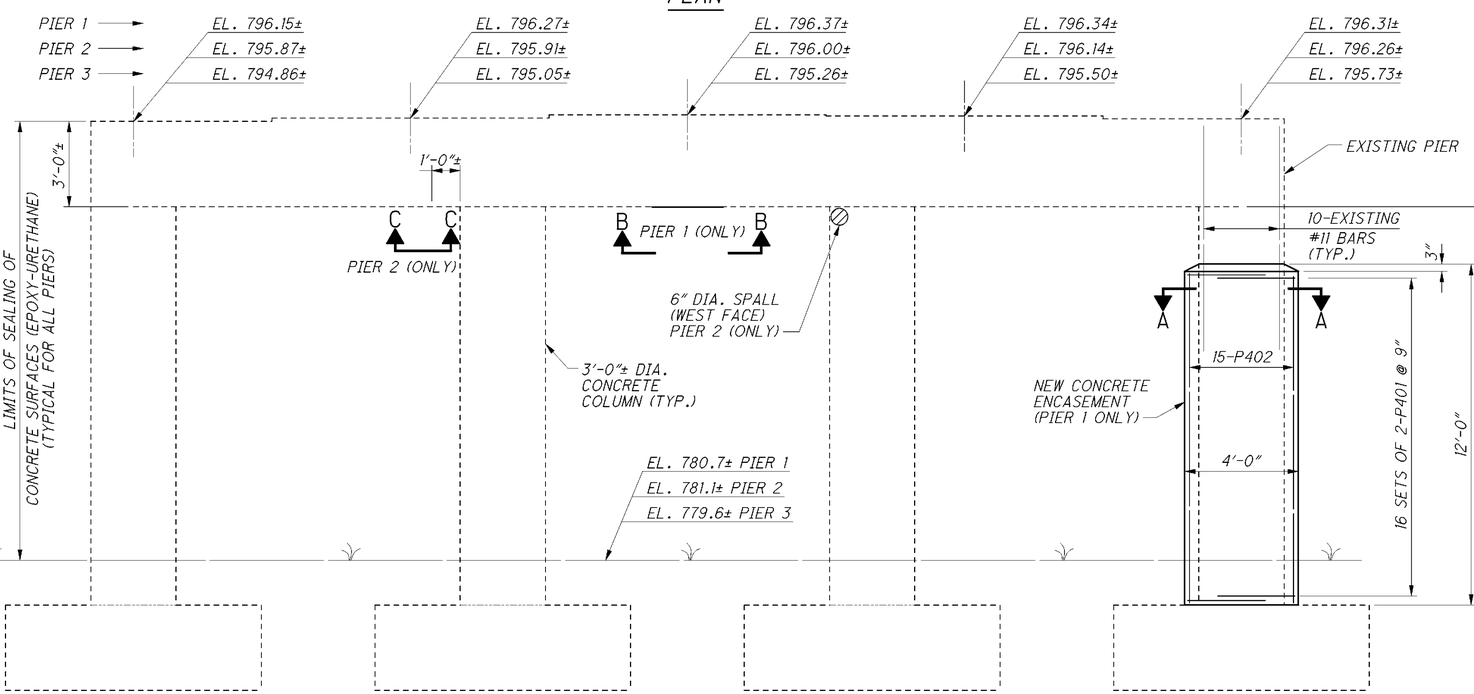

ELEVATION

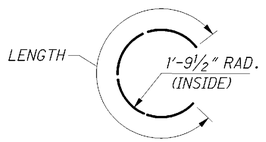

TYPE 1

REINFORCING STEEL	CALCULATED TWH DATE 11/08 CHECKED JLS DATE 4/09				
MARK	NUMBER		LENGTH	WEIGHT	TYPE
	PIER 1	TOTAL			
P401	32	32	7'-6	160	1
P402	15	15	11'-5"	114	STR.
		TOTAL		274	

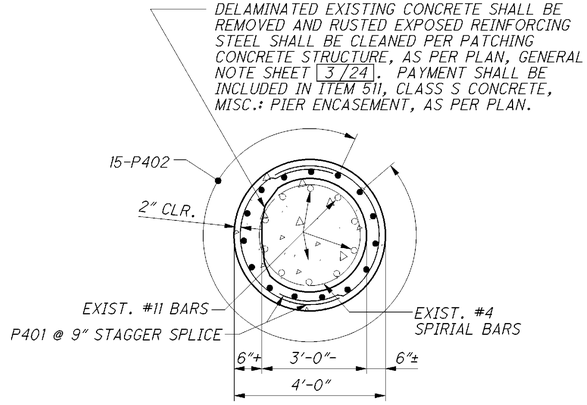

SECTION A-A

PIER 1 (ONLY)

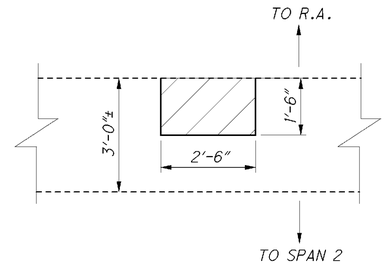

VIEW B-B

PIER 1 (ONLY)

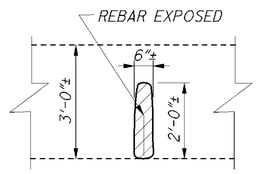

VIEW C-C

PIER 2 (ONLY)

LEGEND

▨ - INDICATES ITEM 519 - PATCHING CONCRETE STRUCTURE, AS PER PLAN

NOTES

REINFORCING STEEL SPLICE LENGTH SHALL BE 1'-8" FOR #4 BARS.

RICHLAND ENGINEERING LIMITED
29 NORTH PARK STREET
MANSFIELD, OHIO 44902

DESIGNED BLN | DRAWN TWH | REVIEWED DAP | DATE 5/06/09 | CHECKED ALP | REVISED | STRUCTURE TITLE NUMBER 0403458

PIERS
BRIDGE NO. ATB-84-2050
OVER I.R. 90

ATB-84-20.50
PID No. 25199

11 / 24

51
64

106078-A 2050CMD003.DGN 4/29/09 TWH,KH,SCB,JLS

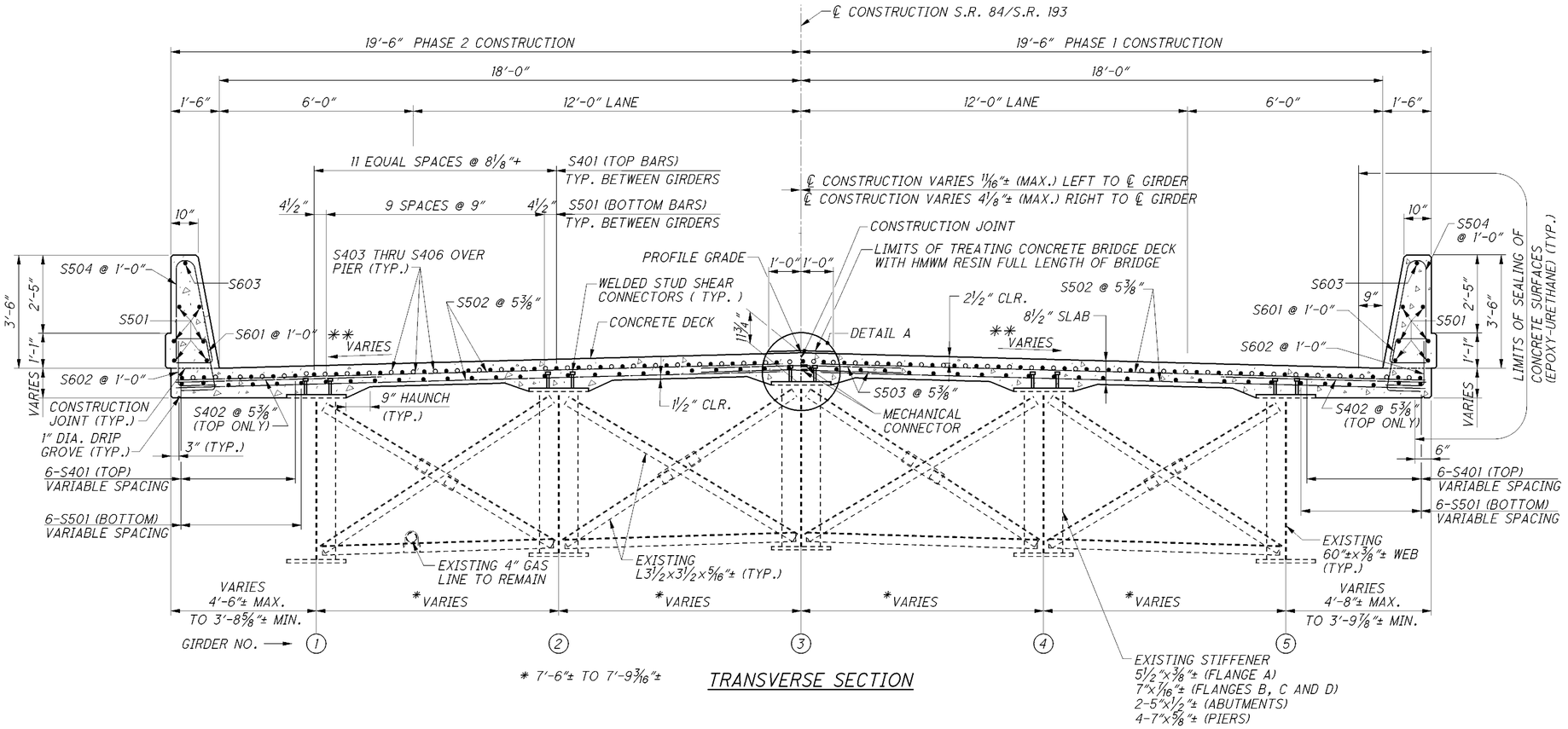

* 7'-6"± TO 7'-9 3/16"±

TRANSVERSE SECTION

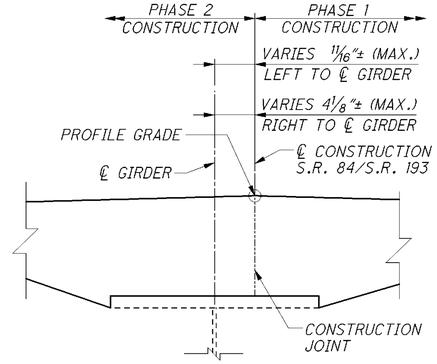

DETAIL A

SEE SHEET 14/24 FOR LAYOUT GEOMETRY DETAILS.

** SEE SHEET 6 OF 64.

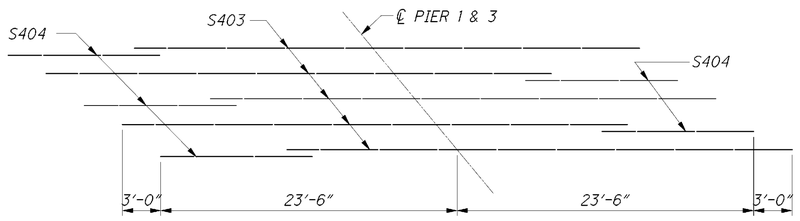

STAGGER BARS OVER PIER 1 & 3 (TOP)

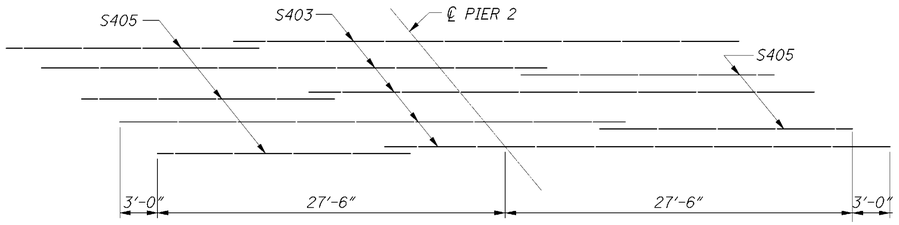

STAGGER BARS OVER PIER 2 (TOP)

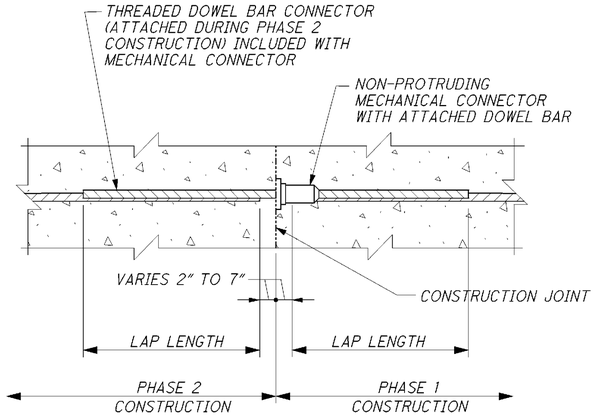

MECHANICAL CONNECTOR DETAIL

NOTES

MATERIALS SHOWN ARE NEW UNLESS OTHERWISE NOTED.

DECK SLAB CONCRETE QUANTITY: THE ESTIMATED QUANTITY OF DECK SLAB CONCRETE IS BASED ON THE CONSTANT DECK SLAB THICKNESS, AS SHOWN, PLUS THE QUANTITY OF CONCRETE THAT FORMS EACH GIRDER HAUNCH. THE ESTIMATE ASSUMES A CONSTANT HAUNCH THICKNESS OF 2 INCHES AND A CONSTANT HAUNCH WIDTH OUTSIDE THE EDGE OF EACH GIRDER FLANGE OF 9 INCHES. DEVIATE FROM THIS HAUNCH THICKNESS AS NECESSARY TO PLACE THE DECK SURFACE AT THE FINISHED GRADE. THE ALLOWABLE TOLERANCE FOR THE HAUNCH WIDTH OUTSIDE THE EDGE OF EACH GIRDER FLANGE IS ±3 INCHES.

THE HAUNCH THICKNESS WAS MEASURED AT THE CENTERLINE OF THE GIRDER, FROM THE SURFACE OF THE DECK TO BOTTOM OF THE TOP FLANGE MINUS THE DECK SLAB THICKNESS. THE AREA OF ALL EMBEDDED STEEL PLATES HAS BEEN DEDUCTED FROM THE HAUNCH QUANTITY IN ACCORDANCE WITH 511.24.

REINFORCING STEEL SPLICE LENGTHS SHALL BE 2'-0" FOR #4 BARS, 2'-6" FOR #5 BARS, AND 3'-0" FOR #6 BARS.

CONCRETE PARAPET: SEE STANDARD DRAWING SBR-1-99.

GENERAL STEEL DETAILS: SEE STANDARD DRAWING GSD-1-96.

PHASE CONSTUCTION DETAILS: SEE SHEET 13 OF 64 FOR MAINTENANCE OF TRAFFIC DETAILS AND NOTES.

OVERHANG WIDTHS: SEE STRUCTURE LAYOUT PLAN SHEET 14/24.

FLANGES A, B, C AND D: SEE SHEET 13/24.

RICHLAND ENGINEERING LIMITED
29 NORTH PARK STREET
MANSFIELD, OHIO 44902

DESIGNED BLN | DRAWN TWH | CHECKED ALP | REVIEWED DAP | DATE 5/06/09 | STRUCTURE TILE NUMBER 0403458 | REVISED

TRANSVERSE SECTION
BRIDGE NO. ATB-84-2050
OVER I.R.90

ATB-84-20.50
PID No. 25199

12/24

52/64

106078-A\084_2050CTS001.DGN 05/27/09 JLS;KH;SCB;TWH

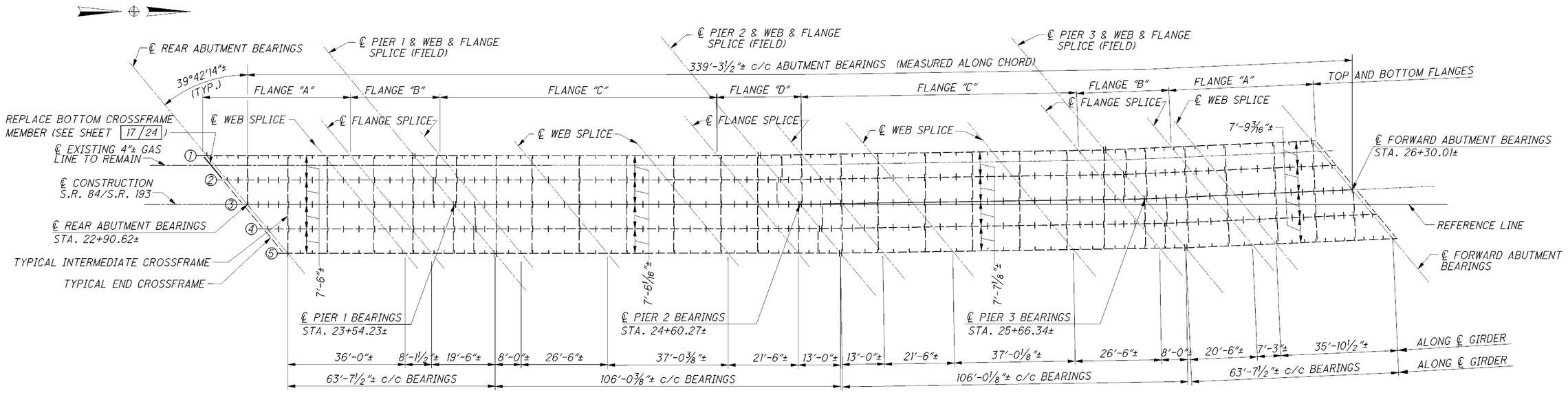

FRAMING PLAN

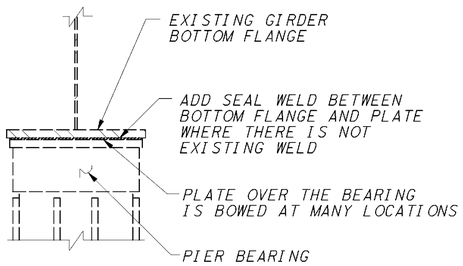

PIER BEARINGS

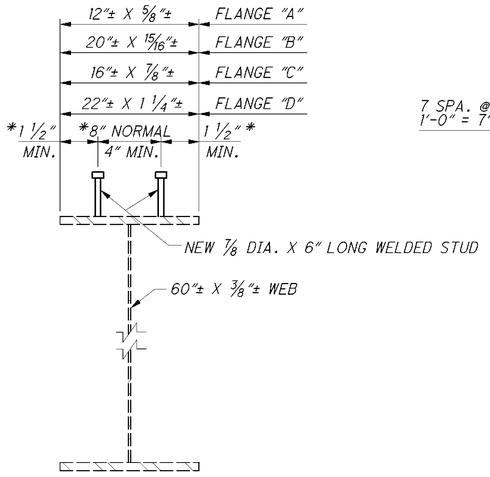

GIRDER SECTION

* ADJUST THE LOCATION OF THE STUD WITHIN MINIMUMS FOR GIRDER LINE 3 WHERE THERE IS A CONFLICT WITH THE PHASE CONSTRUCTION JOINT.

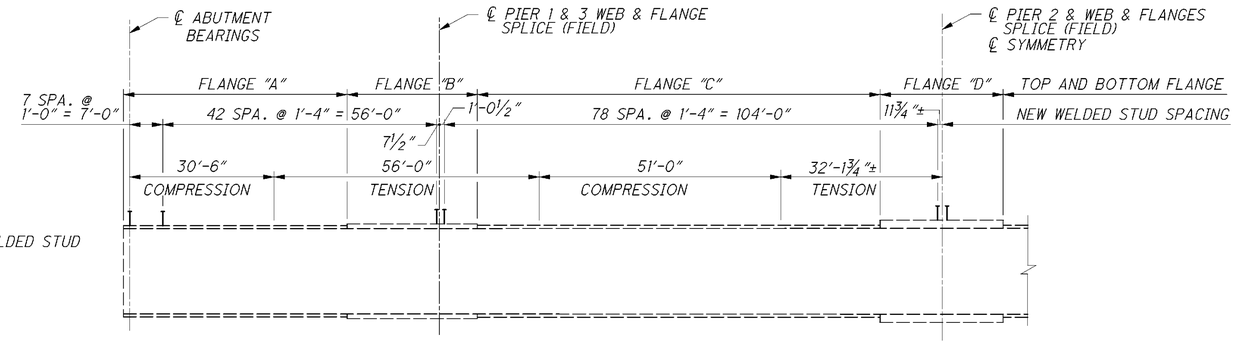

GIRDER ELEVATION STUD LAYOUT

NOTES

MATERIALS SHOWN ARE EXISTING UNLESS OTHERWISE NOTED.

BEARING DETAILS: SEE SHEET 20/24.

TRANSVERSE SECTION: SEE SHEET 12/24.

WELD ATTACHMENT OF SUPPORTS FOR CONCRETE DECK FINISHING MACHINE TO AREAS OF THE FASCIA STRINGER FLANGES DESIGNATED "COMPRESSION". DO NOT WELD ATTACHMENTS TO AREAS DESIGNATED "TENSION". FILLET WELDS TO COMPRESSION FLANGES SHALL BE AT LEAST 1" FROM EDGE OF FLANGE, BE NO MORE THAN 2" LONG, AND BE AT LEAST ¼" FOR THICKNESSES UP TO ¾" OR 5⁄16" FOR GREATER THAN ¾" THICK.

RICHLAND ENGINEERING LIMITED
29 NORTH PARK STREET
MANSFIELD, OHIO 44902

DESIGNED BLN | DRAWN TWH | CHECKED ALP | REVIEWED DAP | DATE 5/06/09 | REVISED | STRUCTURE TITLE NUMBER 0403458

FRAMING PLAN
BRIDGE NO. ATB-84-2050
OVER I.R.90

ATB-84-20.50
PID No. 25199

13/24

53/64

106078-A 2050CSD001.DGN 05/27/09 JLS;KH;SCB;TWH

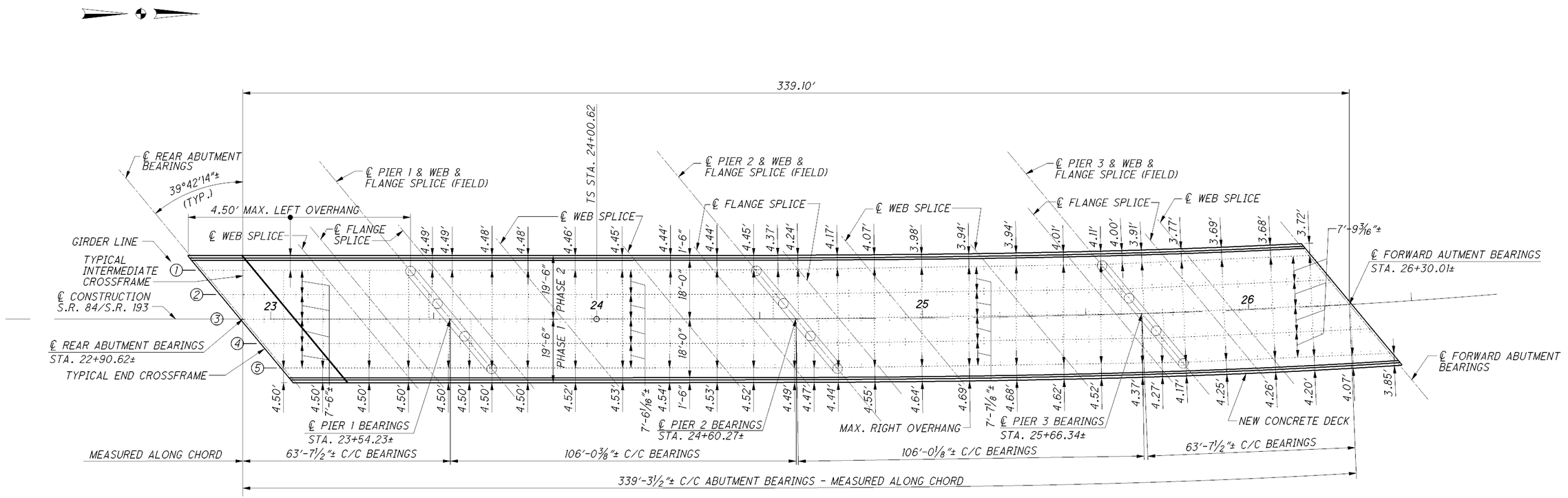

DECK SLAB OVERHANG PLAN

NOTE: THE CHORD LINE IS THE ℄ OF THE EXISTING CENTER GIRDER BETWEEN THE ℄ OF BEARINGS.

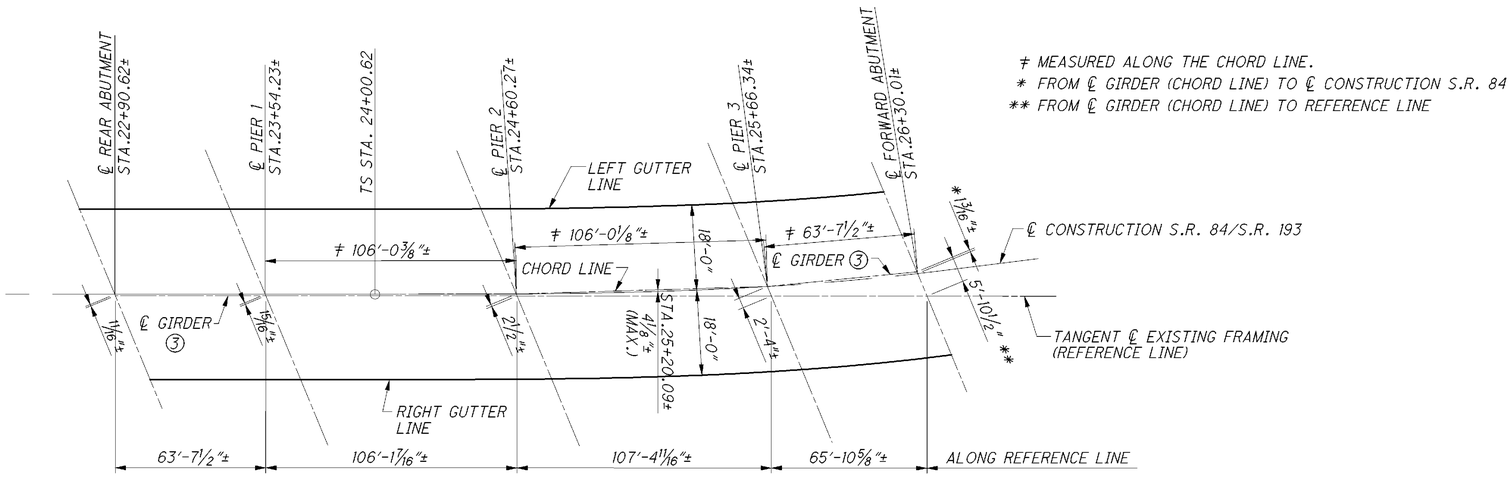

LAYOUT GEOMETRY

(NO SCALE)

≠ MEASURED ALONG THE CHORD LINE.
* FROM ℄ GIRDER (CHORD LINE) TO ℄ CONSTRUCTION S.R. 84
** FROM ℄ GIRDER (CHORD LINE) TO REFERENCE LINE

CURVE DATA

P.I. STA. 30+69.28
Δ = 44° 23' 00" (LT)
Dc = 5° 00' 37"
R = 1,143.56'
Ls = 400.00'
θs = 10° 01' 14"
LT = 267.10'
ST = 133.72'
x = 398.78'
y = 23.27'
k = 199.80'
p = 5.82'
Δc = 24° 20' 32" (LT)
Lc = 485.85'
Ts = 668.66'
Es = 97.77'

NOTES

MATERIALS SHOWN ARE EXISTING UNLESS OTHERWISE NOTED.

TRANSVERSE SECTION: SEE SHEET 12/24.

DECK SLAB OVERHANG: ALL OVERHANG DIMENSIONS ARE ± AND ARE APPROXIMATELY LOCATED AT THE EXISTING CROSSFRAMES.

RICHLAND ENGINEERING LIMITED
29 NORTH PARK STREET
MANSFIELD, OHIO 44902

DESIGNED BLN | DRAWN TWH | REVIEWED DAP | DATE 5/06/09
CHECKED ALP | REVISED | STRUCTURE TILE NUMBER 0403458

STRUCTURE LAYOUT PLAN
BRIDGE NO. ATB-84-2050
OVER I.R.90

ATB-84-20.50
PID No. 25199

14/24

54/64

106078-A 2050CSD003.DGN 4/21/09 JLS,KH,TWH

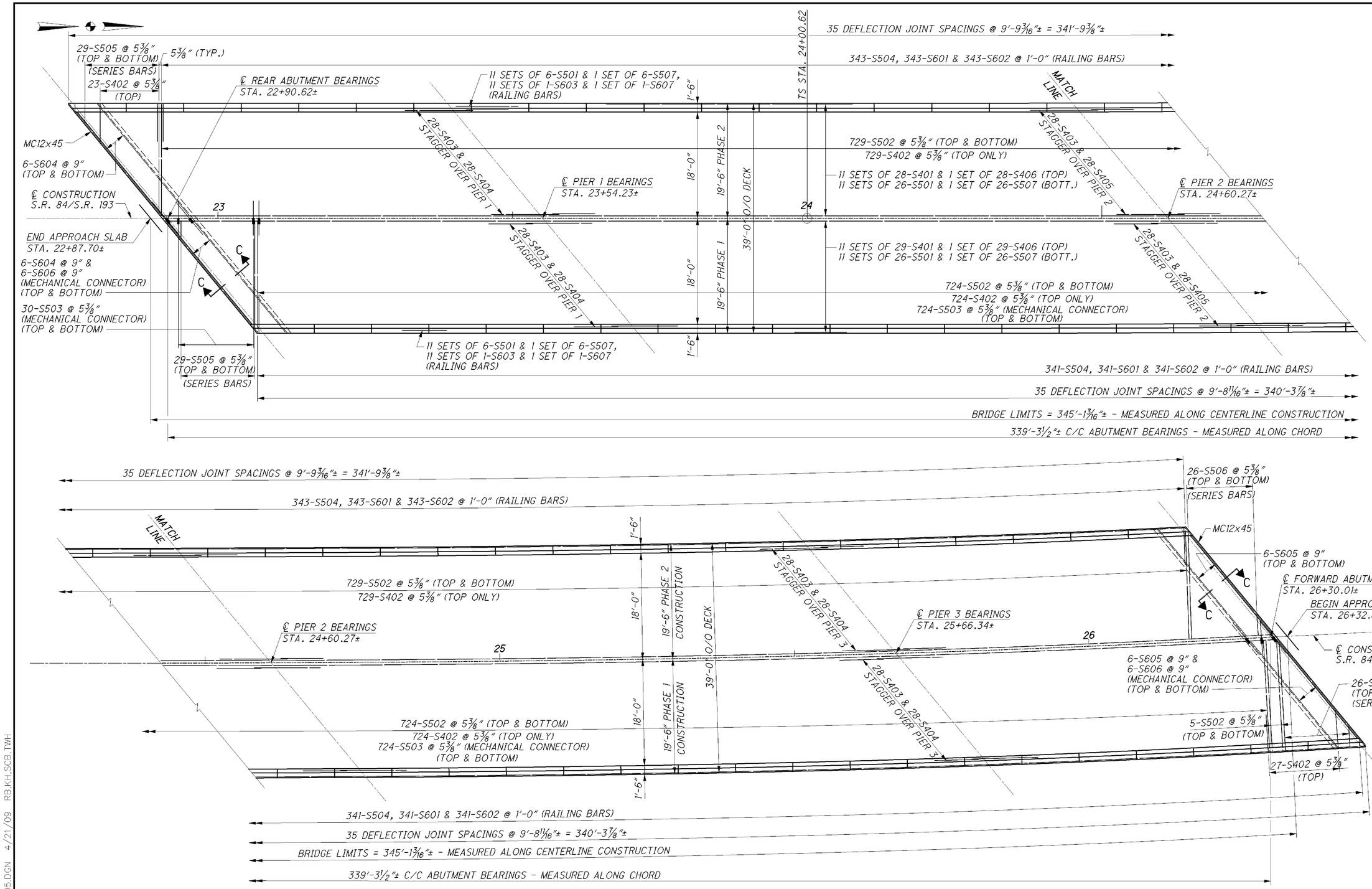

SLAB PLAN

NOTES

ADDITIONAL NOTES: SEE SHEET 12/24.

TRANSVERSE SECTION: SEE SHEET 12/24.

SLAB TRANSVERSE REINFORCING MAY BE MOVED SLIGHTLY TO AVOID SHEAR STUDS.

REINFORCING STEEL SPLICE LENGTH: SEE SHEET 12/24.

MECHANICAL CONNECTOR DETAIL: SEE SHEET 12/24.

STAGGER OF BARS OVER PIERS: SEE SHEET 12/24.

PARAPET DETAILS: SEE SHEET 12/24.

SECTION C-C: SEE SHEET 19/24.

CURVE DATA: SEE SHEET 14/24.

RICHLAND ENGINEERING LIMITED
29 NORTH PARK STREET
MANSFIELD, OHIO 44902

DESIGNED BLN | DRAWN TWH | CHECKED ALP | REVIEWED DAP | DATE 5/06/09 | REVISED | STRUCTURE TITLE NUMBER 0403458

SLAB PLAN
BRIDGE NO. ATB-84-2050 OVER I.R.90

ATB-84-20.50
PID No. 25199

106078-A 2050CSD005.DGN 4/21/09 RB,KH,SCB,TWH

SCREED ELEVATION TABLE - SPAN 1

SPAN POINT	℄ R.A. BEARINGS	1/4	1/2	3/4	℄ PIER 1 BEARINGS
	STATION & OFFSET ELEVATION	STATION & OFFSET ELEVATION	STATION & OFFSET ELEVATION	STATION & OFFSET ELEVATION	STATION & OFFSET ELEVATION
TOE OF CURB	22+75.75 , 18.0' LT. 803.53	22+91.58 , 18.0' LT. 803.59	23+07.48 , 18.0' LT. 803.64	23+23.38 , 18.0' LT. 803.65	23+39.28 , 18.0' LT. 803.67
GIRDER 1	22+78.20 , 14.95' LT. 803.59	22+94.11 , 14.95' LT. 803.64	23+10.01 , 14.95' LT. 803.69	23+25.92 , 14.95' LT. 803.70	23+41.82 , 14.95' LT. 803.72
GIRDER 2	22+84.43 , 7.46' LT. 803.73	23+00.34 , 7.46' LT. 803.77	23+16.24 , 7.46' LT. 803.82	23+32.15 , 7.46' LT. 803.83	23+48.05 , 7.46' LT. 803.84
PROFILE GRADE/C.J.	22+90.62 , CL. 803.86	23+06.52 , CL. 803.90	23+22.43 , CL. 803.94	23+38.33 , CL. 803.95	23+54.23 , CL. 803.95
GIRDER 4	22+96.89 , 7.55' RT. 803.76	23+12.80 , 7.55' RT. 803.81	23+28.70 , 7.55' RT. 803.87	23+44.61 , 7.55' RT. 803.89	23+60.51 , 7.55' RT. 803.90
GIRDER 5	23+03.12 , 15.05' RT. 803.67	23+19.03 , 15.05' RT. 803.74	23+34.93 , 15.05' RT. 803.80	23+50.84 , 15.05' RT. 803.84	23+66.74 , 15.06' RT. 803.86
TOE OF CURB	23+05.57 , 18.0' RT. 803.64	23+21.47 , 18.0' RT. 803.71	23+37.37 , 18.0' RT. 803.78	23+53.27 , 18.0' RT. 803.82	23+69.18 , 18.0' RT. 803.85

SCREED ELEVATION TABLE - SPAN 2

SPAN POINT	1/8	1/4	3/8	1/2	5/8	3/4	7/8	℄ PIER 2 BEARINGS
	STATION & OFFSET ELEVATION	STATION & OFFSET ELEVATION	STATION & OFFSET ELEVATION	STATION & OFFSET ELEVATION	STATION & OFFSET ELEVATION	STATION & OFFSET ELEVATION	STATION & OFFSET ELEVATION	STATION & OFFSET ELEVATION
TOE OF CURB	23+52.54 , 18.0' LT. 803.68	23+65.79 , 18.0' LT. 803.68	23+79.05 , 18.0' LT. 803.68	23+92.32 , 18.0' LT. 803.66	24+05.58 , 18.0' LT. 803.62	24+18.84 , 18.0' LT. 803.57	24+32.09 , 18.0' LT. 803.50	24+45.39 , 18.0' LT. 803.43
GIRDER 1	23+55.08 , 14.96' LT. 803.73	23+68.33 , 14.97' LT. 803.73	23+81.58 , 14.98' LT. 803.72	23+94.83 , 14.99' LT. 803.70	24+08.09 , 15.00' LT. 803.66	24+21.35 , 15.01' LT. 803.60	24+34.61 , 15.01' LT. 803.54	24+47.88 , 15.00' LT. 803.47
GIRDER 2	22+61.31 , 7.45' LT. 803.84	22+74.56 , 7.46' LT. 803.84	23+87.81 , 7.48' LT. 803.83	24+01.06 , 7.49' LT. 803.80	24+14.32 , 7.50' LT. 803.75	24+27.57 , 7.50' LT. 803.70	24+40.83 , 7.50' LT. 803.63	24+54.10 , 7.48' LT. 803.54
PROFILE GRADE/C.J.	22+67.49 , CL. 803.95	23+80.74 , CL. 803.95	23+94.00 , CL. 803.93	24+07.25 , CL. 803.90	24+20.51 , CL. 803.85	24+33.76 , CL. 803.79	24+47.02 , CL. 803.71	24+60.27 , CL. 803.63
GIRDER 4	22+73.76 , 7.55' RT. 803.91	23+87.02 , 7.54' RT. 803.92	24+00.27 , 7.53' RT. 803.91	24+13.52 , 7.52' RT. 803.92	24+26.77 , 7.51' RT. 803.89	24+40.01 , 7.52' RT. 803.85	24+53.26 , 7.53' RT. 803.81	24+66.50 , 7.57' RT. 803.75
GIRDER 5	23+79.99 , 15.05' RT. 803.89	23+93.25 , 15.04' RT. 803.90	24+06.50 , 15.03' RT. 803.93	24+19.75 , 15.02' RT. 803.95	24+32.99 , 15.02' RT. 803.95	24+46.22 , 15.30' RT. 803.94	24+59.45 , 15.06' RT. 803.93	24+72.69 , 15.11' RT. 803.90
TOE OF CURB	23+82.43 , 18.0' RT. 803.88	23+95.69 , 18.0' RT. 803.90	24+08.92 , 18.0' RT. 803.94	24+22.16 , 18.0' RT. 803.98	24+35.40 , 18.0' RT. 803.99	24+48.62 , 18.0' RT. 803.99	24+61.84 , 18.0' RT. 803.98	24+75.05 , 18.0' RT. 803.97

SCREED ELEVATION TABLE - SPAN 3

SPAN POINT	1/8	1/4	3/8	1/2	5/8	3/4	7/8	℄ PIER 3 BEARINGS
	STATION & OFFSET ELEVATION	STATION & OFFSET ELEVATION	STATION & OFFSET ELEVATION	STATION & OFFSET ELEVATION	STATION & OFFSET ELEVATION	STATION & OFFSET ELEVATION	STATION & OFFSET ELEVATION	STATION & OFFSET ELEVATION
TOE OF CURB	24+58.72 , 18.0' LT. 803.34	24+72.04 , 18.0' LT. 803.23	24+85.38 , 18.0' LT. 803.12	24+98.73 , 18.0' LT. 803.00	25+12.08 , 18.0' LT. 802.85	25+25.43 , 18.0' LT. 802.69	25+38.80 , 18.0' LT. 802.52	25+52.17 , 18.0' LT. 802.35
GIRDER 1	24+61.16 , 15.16' LT. 803.37	24+74.44 , 15.30' LT. 803.26	24+87.72 , 15.41' LT. 803.15	25+01.02 , 15.49' LT. 803.05	25+14.32 , 15.53' LT. 802.89	25+27.62 , 15.53' LT. 802.73	25+40.94 , 15.48' LT. 802.57	25+54.25 , 15.37' LT. 802.40
GIRDER 2	24+67.36 , 7.63' LT. 803.46	24+80.63 , 7.76' LT. 803.36	24+93.90 , 7.86' LT. 803.26	25+07.18 , 7.92' LT. 803.16	25+20.46 , 7.94' LT. 803.02	25+33.74 , 7.91' LT. 802.87	25+47.02 , 7.84' LT. 802.72	25+60.30 , 7.71' LT. 802.56
PROFILE GRADE/C.J.	24+73.53 , CL. 803.56	24+86.79 , CL. 803.48	25+00.05 , CL. 803.39	25+13.31 , CL. 803.30	25+26.56 , CL. 803.17	25+39.82 , CL. 803.03	25+53.08 , CL. 802.89	25+66.34 , CL. 802.74
GIRDER 4	24+79.74 , 7.44' RT. 803.71	24+92.97 , 7.34' RT. 803.65	25+06.20 , 7.28' RT. 803.59	25+19.43 , 7.26' RT. 803.52	25+32.66 , 7.28' RT. 803.42	25+45.88 , 7.35' RT. 803.31	25+59.10 , 7.48' RT. 803.20	25+72.31 , 7.67' RT. 803.08
GIRDER 5	24+86.78 , 14.99' RT. 803.88	24+99.12 , 14.91' RT. 803.85	25+12.32 , 14.86' RT. 803.82	25+25.52 , 14.86' RT. 803.77	25+38.72 , 14.90' RT. 803.70	25+51.91 , 15.00' RT. 803.63	25+65.09 , 15.15' RT. 803.55	25+78.26 , 15.37' RT. 803.46
TOE OF CURB	24+88.24 , 18.0' RT. 803.96	25+01.40 , 18.0' RT. 803.95	25+14.56 , 18.0' RT. 803.92	25+27.72 , 18.0' RT. 803.89	25+40.87 , 18.0' RT. 803.83	25+54.01 , 18.0' RT. 803.76	25+67.15 , 18.0' RT. 803.68	25+80.28 , 18.0' RT. 803.60

SCREED ELEVATION TABLE - SPAN 4

SPAN POINT	1/4	1/2	3/4	℄ F.A. BEARINGS
	STATION & OFFSET ELEVATION	STATION & OFFSET ELEVATION	STATION & OFFSET ELEVATION	STATION & OFFSET ELEVATION
TOE OF CURB	25+68.26 , 18.0' LT. 802.13	25+84.35 , 18.0' LT. 801.92	26+00.46 , 18.0' LT. 801.67	26+16.58 , 18.0' LT. 801.42
GIRDER 1	25+70.25 , 15.61' LT. 802.18	25+86.25 , 15.76' LT. 801.97	26+02.26 , 15.81' LT. 801.72	26+18.28 , 15.74' LT. 801.47
GIRDER 2	25+76.25 , 7.91' LT. 802.36	25+92.21 , 8.02' LT. 802.15	26+08.17 , 8.03' LT. 801.92	26+24.14 , 7.92' LT. 801.69
PROFILE GRADE/C.J.	25+82.26 , CL. 802.55	25+98.18 , CL. 802.36	26+14.09 , CL. 802.14	26+30.01 , CL. 801.92
GIRDER 4	25+88.17 , 7.53' RT. 802.93	26+04.02 , 7.50' RT. 802.76	26+19.87 , 7.58' RT. 802.54	26+35.71 , 7.78' RT. 802.33
GIRDER 5	25+94.06 , 15.27' RT. 803.34	26+09.86 , 15.28' RT. 803.17	26+25.65 , 15.40' RT. 802.95	26+41.43 , 15.64' RT. 802.74
TOE OF CURB	25+96.00 , 18.0' RT. 803.49	26+11.72 , 18.0' RT. 803.32	26+27.43 , 18.0' RT. 803.09	26+43.13 , 18.0' RT. 802.86

NOTES

SCREED ELEVATIONS SHOWN ARE FOR THE DECK SLAB SURFACE PRIOR TO CONCRETE PLACEMENT. ALLOWANCE HAS BEEN MADE FOR ANTICIPATED CALCULATED DEAD LOAD DEFLECTIONS.

SUPERELEVATION TABLE: SEE SHEET 6 OF 64 .

NOTATION: R.A. - REAR ABUTMENT
F.A. - FORWARD ABUTMENT
C.J. - CONSTRUCTION JOINT

RICHLAND ENGINEERING LIMITED
29 NORTH PARK STREET
MANSFIELD, OHIO 44902

DESIGNED BLN | DRAWN TWH | CHECKED ALP | REVIEWED DAP | DATE 5/06/09 | REVISED | STRUCTURE TITLE NUMBER 0403458

SCREED ELEVATIONS
BRIDGE NO. ATB-84-2050
OVER I.R.90

ATB-84-20.50
PID No. 25199

106078-A 2050CSD006.DGN 4/21/09 JLS.SCB.TWH

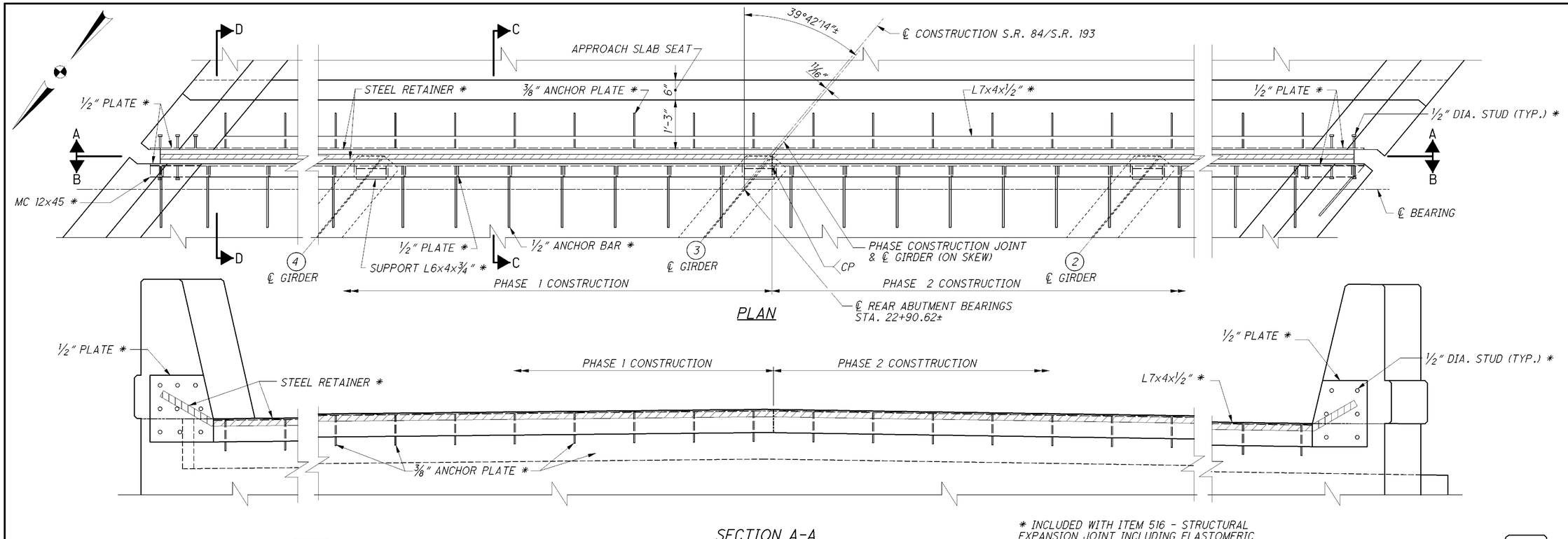

PLAN

SECTION A-A

* INCLUDED WITH ITEM 516 - STRUCTURAL EXPANSION JOINT INCLUDING ELASTOMERIC STRIP SEAL FOR PAYMENT.

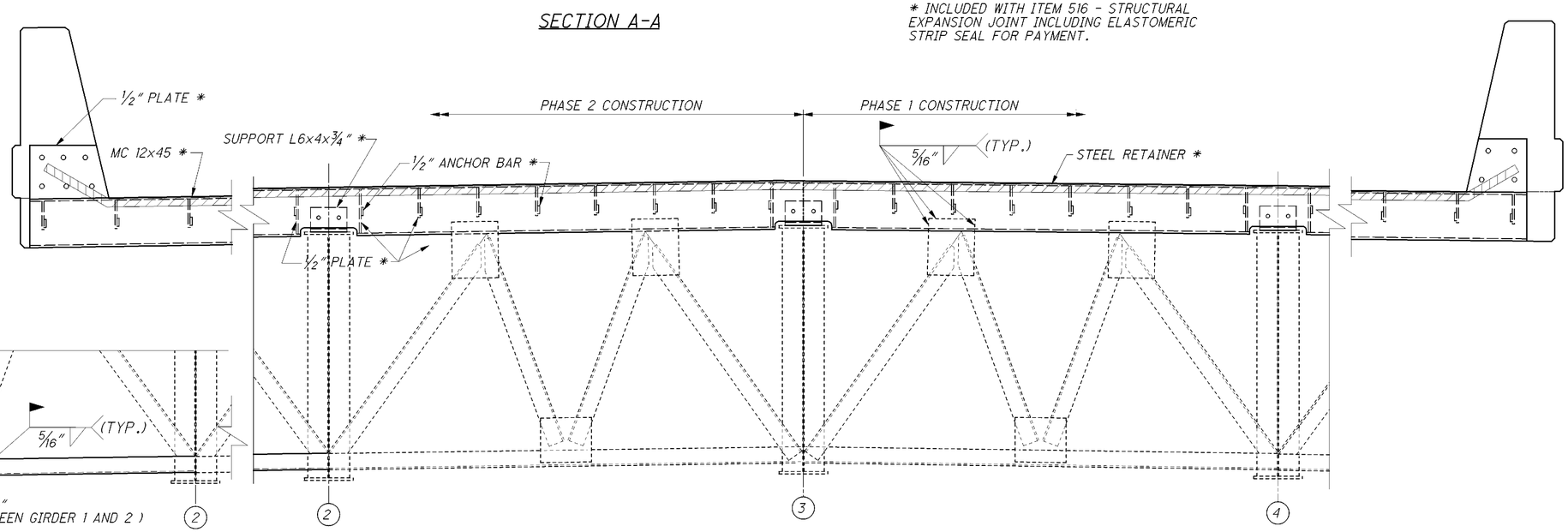

SECTION B-B

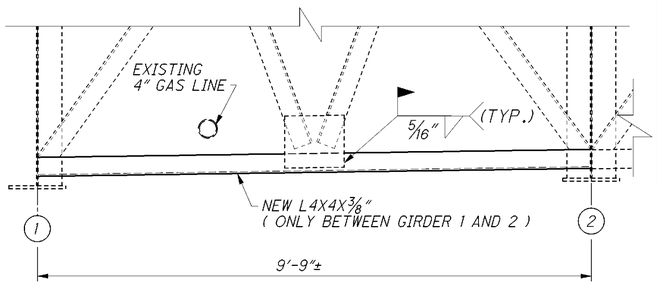

NEW END CROSSFRAME DETAIL

NOTES

SECTIONS C-C & D-D: SEE SHEETS 19/24.

ADDITIONAL NOTES: SEE SHEETS 19/24.

ADDITIONAL DETAILS: SEE STANDARD DRAWING EXJ-4-87.

NEW STRUCTURAL STEEL: ASTM A709 GRADE 50.

RICHLAND ENGINEERING LIMITED
29 NORTH PARK STREET
MANSFIELD, OHIO 44902

DESIGNED	DRAWN	REVIEWED	DATE
BLN	TWH	DAP	5/06/09
CHECKED	REVISED	STRUCTURE FILE NUMBER	
ALP		0403458	

REAR ABUTMENT EXPANSION JOINT
BRIDGE NO. ATB-84-2050
OVER I.R.90

ATB-84-20.50
PID No. 25199

17 / 24

57 / 64

106078-A 2050CEX001.DGN 4/21/09 JLS,SCB,TWH

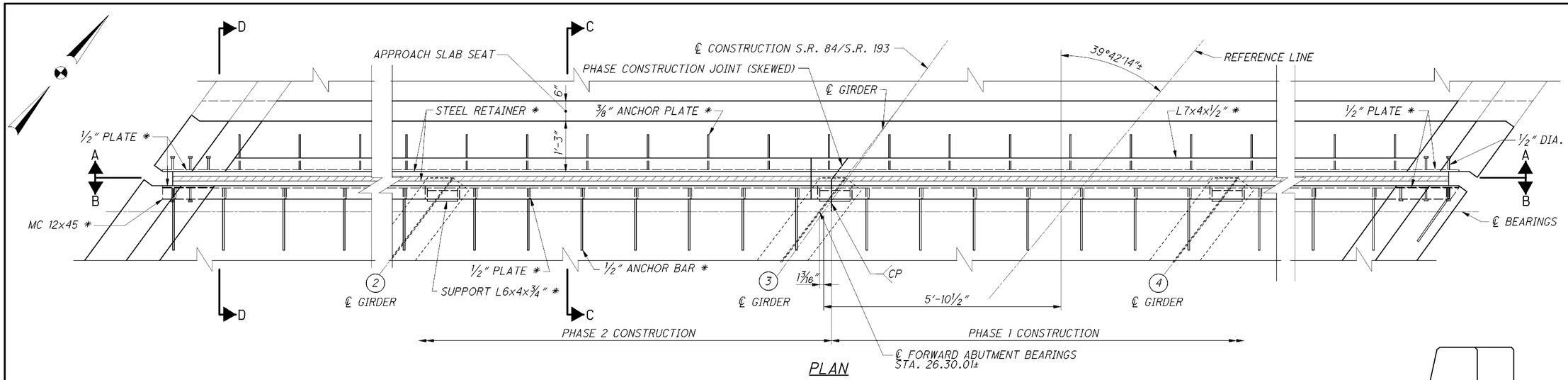

PLAN

* INCLUDED WITH ITEM 516 - STRUCTURAL EXPANSION JOINT INCLUDING ELASTOMERIC STRIP SEAL FOR PAYMENT.

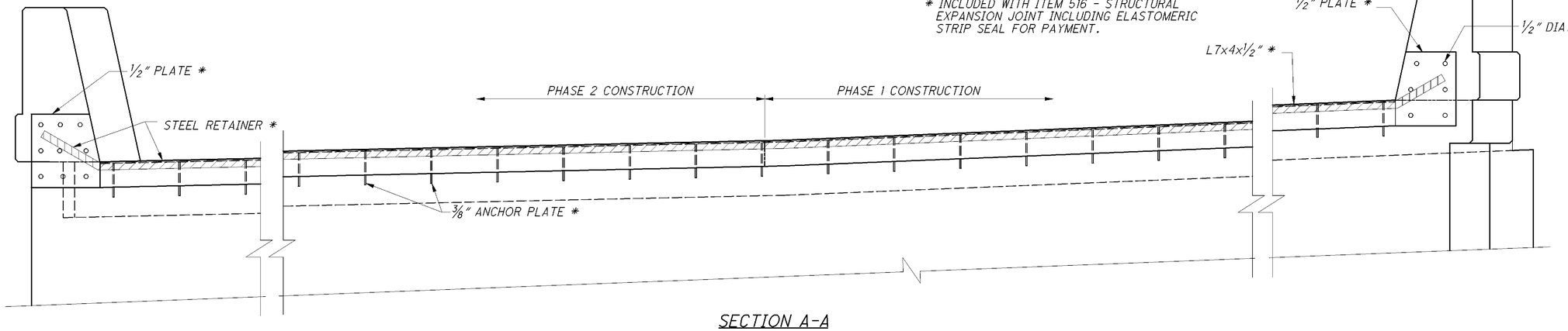

SECTION A-A

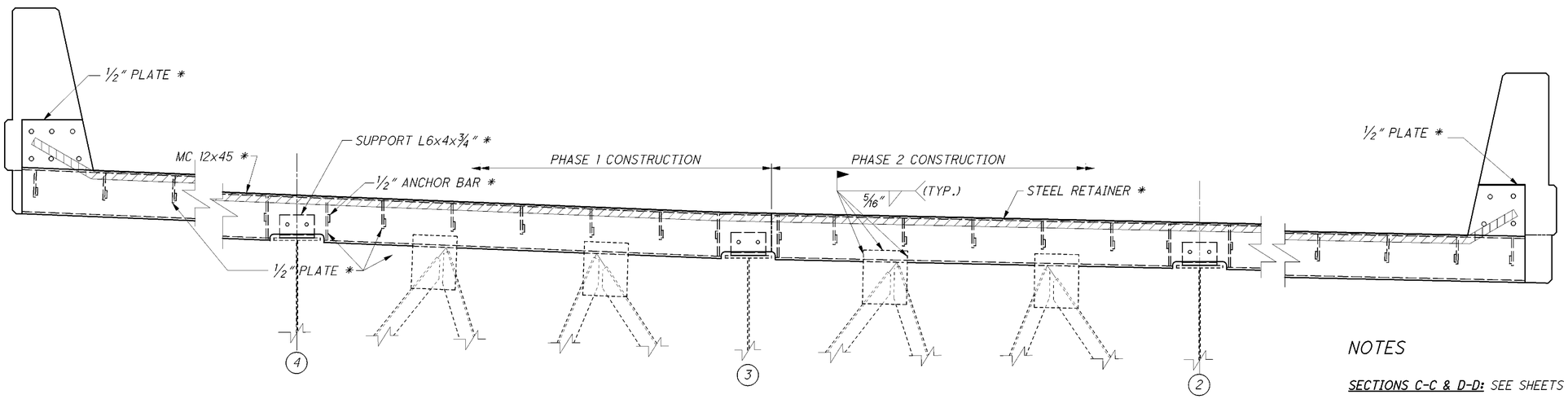

SECTION B-B

NOTES

SECTIONS C-C & D-D: SEE SHEETS 19/24.

ADDITIONAL NOTES: SEE SHEETS 19/24.

ADDITIONAL DETAILS: SEE STANDARD DRAWING EXJ-4-87.

RICHLAND ENGINEERING LIMITED
29 NORTH PARK STREET
MANSFIELD, OHIO 44902

DESIGNED	DRAWN	REVIEWED	DATE
BLN	TWH	DAP	5/06/09
CHECKED	REVISED	STRUCTURE FILE NUMBER	
ALP		0403458	

FORWARD ABUTMENT EXPANSION JOINT
BRIDGE NO. ATB-84-2050
OVER I.R.90

ATB-84-20.50
PID No. 25199

18 / 24

58 / 64

106078-A 2050CEX002.DGN 4/21/09 SCB,TWH

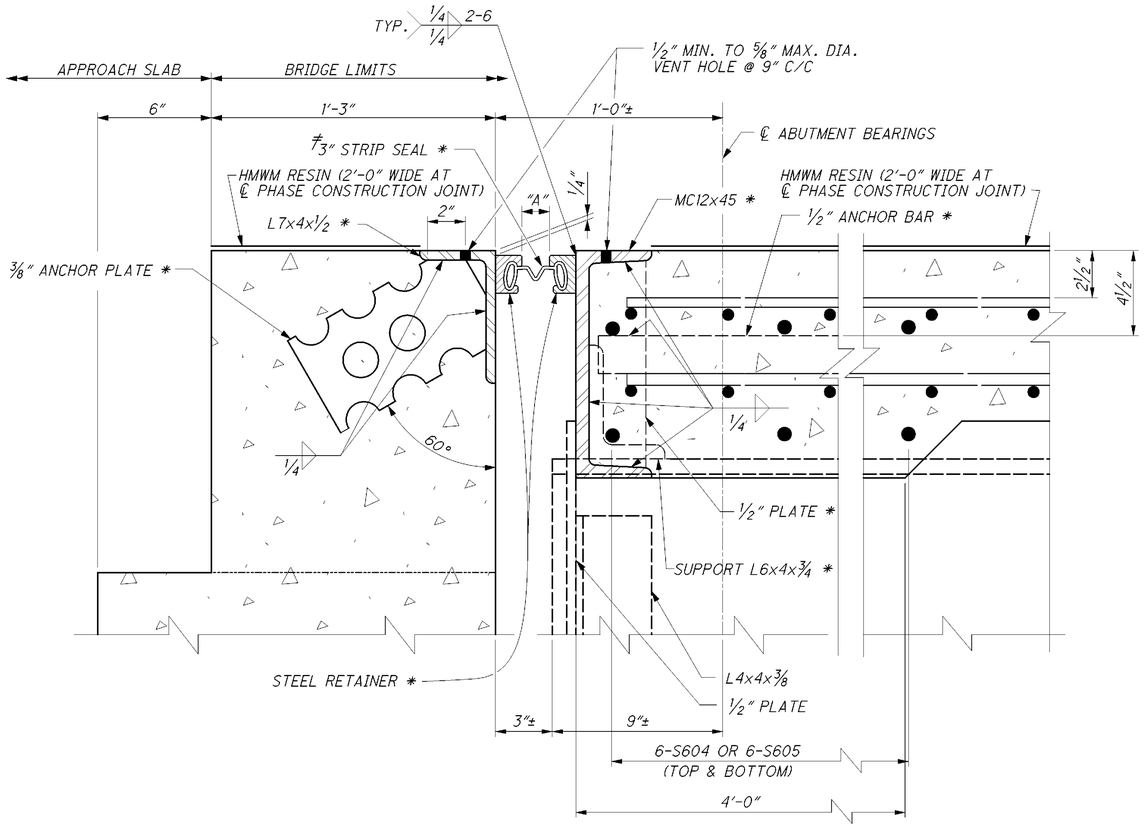

SECTION C-C

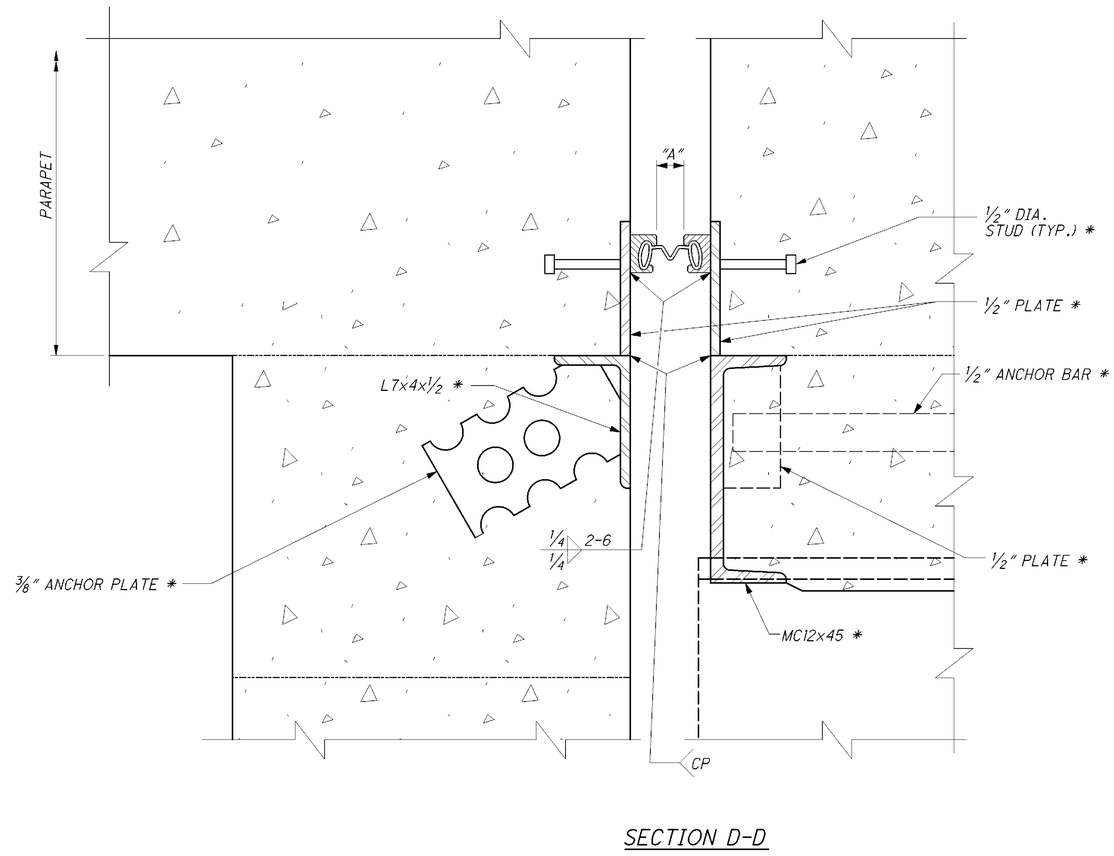

SECTION D-D

* INCLUDED WITH ITEM 516 - STRUCTURAL EXPANSION JOINT INCLUDING ELASTOMERIC STRIP SEAL FOR PAYMENT.

≠ 3" STRIP SEAL SHALL BE CONTINUOUS ACROSS THE BRIDGE DECK

JOINT SETTING TABLE		
AMBIENT TEMPERATURE	DIMENSION "A"	
	REAR ABUTMENT	FORWARD ABUTMENT
30°	1 7/8"	1 7/8"
40°	1 13/16"	1 13/16"
50°	1 11/16"	1 11/16"
60°	1 5/8"	1 5/8"
70°	1 1/2"	1 1/2"
80°	1 3/8"	1 3/8"
90°	1 5/16"	1 5/16"

NOTES

SECTIONS C-C & D-D: FOR LOCATION SEE SHEETS 17/24 AND 18/24.

ADDITIONAL NOTES AND DETAILS: SEE STANDARD DRAWING EXJ-4-87.

END CROSSFRAME DETAILS: SEE STANDARD DRAWING GSD-1-96.

INSTALLATION OF SEAL: DURING INSTALLATION OF THE SUPPORT/ARMOR FOR THE SUPERSTRUCTURE SIDE OF THE JOINT SEAL, OBSERVE THE SEATING OF GIRDERS ON BEARINGS TO ASSURE THAT POSITIVE BEARING IS MAINTAINED.

RICHLAND ENGINEERING LIMITED
29 NORTH PARK STREET
MANSFIELD, OHIO 44902

DESIGNED BLN | DRAWN TWH | CHECKED ALP | REVIEWED DAP | DATE 5/06/09 | REVISED | STRUCTURE TITLE NUMBER 0403458

ABUTMENT JOINT DETAILS
BRIDGE NO. ATB-84-2050 OVER I.R.90

ATB-84-20.50
PID No. 25199

19/24

59/64

106078-A 2050CTS002.DGN 4/24/09 KH,TWH

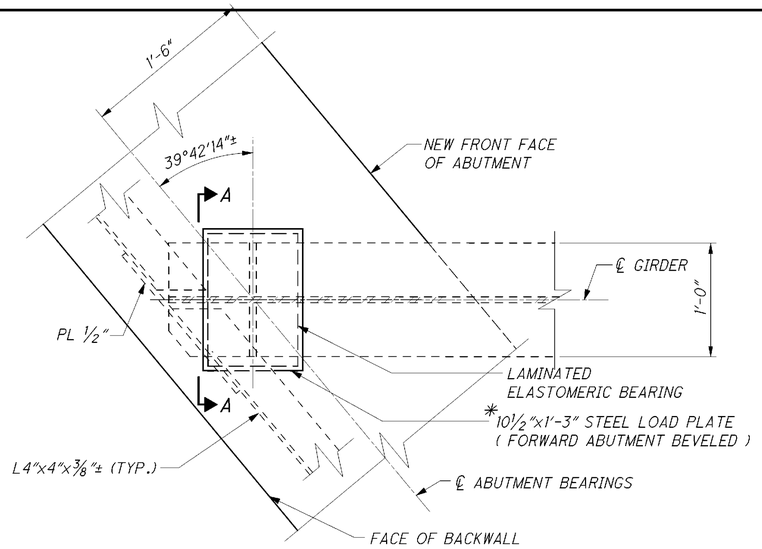

PLAN

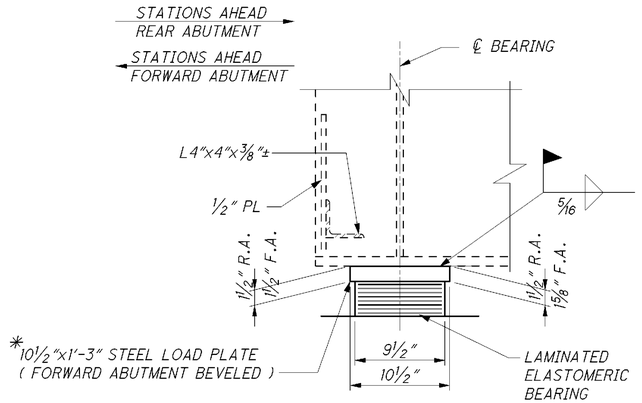

ELEVATION

* INCLUDED WITH BEARING FOR PAYMENT

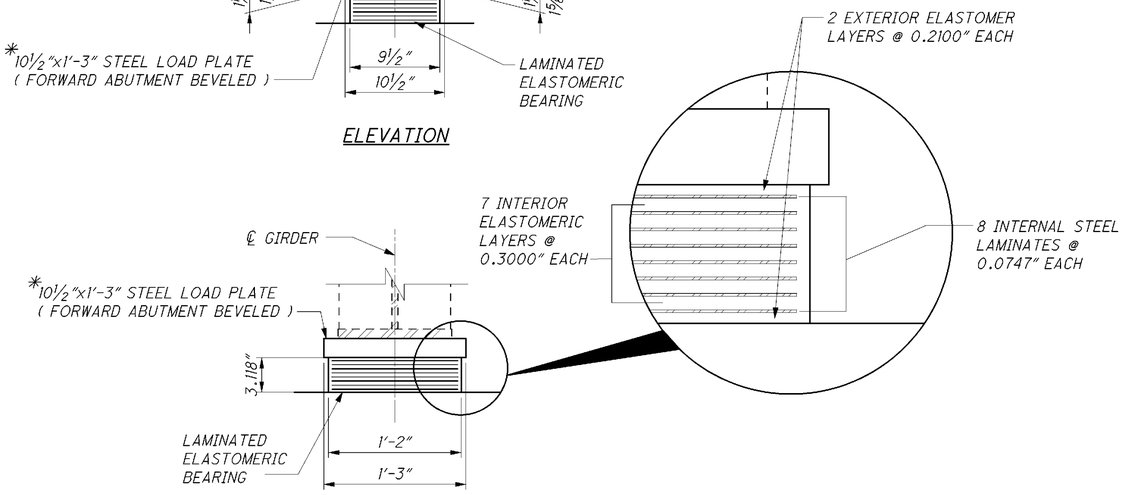

VIEW A-A

LAMINATED ELASTOMERIC BEARING

(EXPANSION 3.118"x9.50"x14.00")

MAXIMUM DEAD LOAD REACTION	= 34.3 K
MAXIMUM LIVE LOAD REACTION (NOT INCLUDING IMPACT)	= 52.7 K
TOTAL	= 87.0 K

NOTES

STRUCTURAL STEEL AND LOAD PLATES: SHALL BE ASTM A709, GRADE 50 - YIELD STRENGTH 50 KSI. THE BEARING PLATES SHALL BE PAINTED WITH THE REST OF THE STRUCTURAL STEEL.

WELDING: CONTROL WELDING SO THAT THE PLATE TEMPERATURE AT THE ELASTOMER BONDED SURFACE DOES NOT EXCEED 300° F AS DETERMINED BY USE OF PYROMETRIC STICKS OR OTHER TEMPERATURE MONITORING DEVICES.

BEARING REPOSITIONING: IF THE STEEL IS ERECTED AT AN AMBIENT TEMPERATURE HIGHER THAN 80°F OR LOWER THAN 40°F AND THE BEARING SHEAR DEFLECTION EXCEEDS 1/6 OF THE BEARING HEIGHT AT 60°F (±) 10°F, RAISE THE BEAMS OR GIRDERS TO ALLOW THE BEARINGS TO RETURN TO THEIR UNDEFORMED SHAPE AT 60°F (±) 10°F.

ELASTOMERIC BEARINGS: THE ELASTOMER SHALL HAVE A HARDNESS OF 50 DUROMETER. THE BEARINGS WERE DESIGNED UNDER DIVISION I, SECTION 14.6.6 (METHOD A) OF THE AASHTO STANDARD SPECIFICATIONS FOR HIGHWAY BRIDGES. THE STEEL LOAD PLATE SHALL BE BONDED BY VULCANIZATION TO THE ELASTOMERIC DURING THE MOLDING PROCESS.

RICHLAND ENGINEERING LIMITED
29 NORTH PARK STREET
MANSFIELD, OHIO 44902

DESIGNED	DRAWN	REVIEWED	DATE
BLN	TWH	DAP	5/06/09
CHECKED	REVISED	STRUCTURE TITLE NUMBER	
ALP		0403458	

ABUTMENT BEARING DETAILS
BRIDGE NO. ATB-84-2050
OVER I.R.90

ATB-84-20.50
PID No. 25199

106078-A 2050CBR001.DGN 4/24/09 RB, TWH

ABUTMENTS

CALCULATED TWH DATE 11/08
CHECKED KH DATE 11/08

MARK	NUMBER			LENGTH	WEIGHT	TYPE	DIMENSIONS						
	R.A.	F.A.	TOTAL				A	B	C	D	E	R	INC
A401	4 SER. OF 3	4 SER. OF 3	8 SER. OF 3	2'-10" TO 3'-2"	48	28	0'-8" TO 1'-0"	1'-2"	1'-2"				0'-2"
A501	2		2	26'-10"	56	STR							
A502	2		2	22'-7"	47	STR							
A503	12		12	24'-7"	308	STR							
A504		3	3	5'-8"	18	STR							
A505	35	10	45	6'-9"	317	1	3'-10"	3'-0"					
A506	96	90	186	2'-6"	485	1	1'-0"	1'-7"					
A507	52		52	11'-10"	642	2	5'-4"	1'-5"	5'-4"				
A508	50	47	97	6'-2"	624	2	2'-9"	0'-11"	2'-9"				
A509	6	6	12	7'-10"	98	23	1'-6"	3'-2"	3'-0"			0'-2 3/4"	
A510		9	9	10'-11"	102	2	5'-0"	1'-2"	5'-0"				
A511	9		9	11'-5"	107	2	5'-3"	1'-2"	5'-3"				
A512		3	3	8'-11"	28	1	1'-2"	7'-10"					
A513	3		3	6'-0"	19	STR							
A514	8	8	16	4'-11"	82	1	2'-6"	2'-6"					
A515	8	8	16	4'-3"	71	8	1'-0"	1'-6"	2'-0"				
A516	2	2	4	9'-5"	39	STR							
A517	2	2	4	11'-4"	47	STR							
A518	4	4	8	16'-6"	138	STR							
A519	4	4	8	8'-8"	72	STR							
A520	4	4	8	6'-11"	58	20	1'-0"	0'-6"	4'-9"	0'-6"	1'-0"		
A521	2 SER. OF 7	2 SER. OF 7	4 SER. OF 7	5'-9" TO 7'-3"	190	2	2'-5" TO 3'-2"	1'-2"	2'-5" TO 3'-2"				0'-1½"
A522	3	3	6	5'-2"	32	STR							
A523	14		14	11'-5"	167	2	5'-3"	1'-2"	5'-3"				
A524	2 SER. OF 7		2 SER. OF 7	4'-7" TO 7'-3"	86	2	1'-10" TO 3'-2"	1'-2"	1'-10" TO 3'-2"				0'-2⅝"+
A525	2	2	4	14'-8"	61	STR							
A526	2		2	15'-1"	31	STR							
A527	2		2	18'-10"	39	STR							
A528	2	4	6	21'-8"	136	STR							
A529	6		6	9'-3"	58	1	1'-2"	8'-2"					
A530		2	2	23'-2"	48	STR							
A531		2	2	23'-9"	50	STR							
A532		12	12	23'-7"	295	STR							
A533		7	7	6'-11"	50	1	3'-10"	3'-2"					
A534		6	6	7'-3"	45	1	3'-10"	3'-6"					
A535		7	7	7'-7"	55	1	3'-10"	3'-10"					
A536		4	4	7'-11"	33	1	3'-10"	4'-2"					
A537		23	23	12'-2"	292	2	5'-6"	1'-5"	5'-6"				
A538		24	24	12'-6"	313	2	5'-8"	1'-5"	5'-8"				
A539	8	8	16	6'-2"	103 *	34							
A540		3	3	10'-4"	32	1	1'-2"	9'-3"					
A541		2	2	18'-0"	38	STR							
A542		14	14	11'-5"	167	2	5'-3"	1'-2"	5'-3"				
A543		2 SER. OF 7	2 SER. OF 7	5'-9" TO 8'-1"	101	2	2'-5" TO 3'-7"	1'-2"	2'-5" TO 3'-7"				0'-2⅜"-

ABUTMENTS (CONTINUED)

CALCULATED TWH DATE 11/08
CHECKED KH DATE 11/08

MARK	NUMBER			LENGTH	WEIGHT	TYPE	DIMENSIONS						
	R.A.	F.A.	TOTAL				A	B	C	D	E	R	INC
A601	1 SER. OF 4		1 SER. OF 4	25'-1" TO 26'-10"	156	STR							0'-7"
A602	1 SER. OF 4		1 SER. OF 4	22'-2" TO 23'-11"	138	STR							0'-7"
A603	12		12	24'-7"	443	STR							
A604	10	10	20	7'-2"	215 *	34							
A605	3	3	6	16'-5"	148	STR							
A606	3	3	6	21'-8"	195	STR							
A607	6	6	12	3'-0"	54	STR							
A608	6	6	12	4'-4"	78	13	2'-0"	0'-11"	0'-5"	1'-6"			
A609	2	2	4	1'-2"	7	STR							
A610		1 SER. OF 4	1 SER. OF 4	21'-8" TO 23'-2"	135	STR							0'-6"
A611		1 SER. OF 4	1 SER. OF 4	23'-10" TO 25'-1"	147	STR							0'-5"
A612		12	12	23'-7"	425	STR							
D801	28	28	56	5'-6"	822	18	3'-4"	1'-0"	1'-0"				
				TOTAL	8791								

* WEIGHT DOES NOT INCLUDE WEIGHT OF MECHANICAL CONNECTORS

NOTES

BENDING DIAGRAM: SEE SHEET 22/24.

ADDITIONAL NOTES: SEE SHEET 22/24.

RICHLAND ENGINEERING LIMITED
29 NORTH PARK STREET
MANSFIELD, OHIO 44902

DESIGNED BLN | DRAWN TWH | REVIEWED DAP | DATE 5/06/09
CHECKED ALP | REVISED | STRUCTURE FILE NUMBER 0403458

REINFORCING STEEL LIST - 1
BRIDGE NO. ATB-84-2050
OVER I.R.90

ATB-84-20.50
PID No. 25199

106078-A 2050CRL001.DGN 11/17/08 TWH,KH

SUPERSTRUCTURE

CALCULATED TWH DATE 11/08
CHECKED JLS DATE 4/09

MARK	NUMBER TOTAL	LENGTH	WEIGHT	TYPE	DIMENSIONS A	B	C	D	E	R	INC
S401	627	30'-0"	12,565	STR							
S402	1503	6'-8"	6693	STR							
S403	168	40'-0"	4489	STR							
S404	112	12'-0"	898	STR							
S405	56	20'-0"	748	STR							
S406	57	34'-0"	1295	STR							
S501	704	30'-0"	22,028	STR							
S502	2916	19'-2"	58,293	STR							
S503	1508	5'-10"	9175 *	34							
S504	684	7'-5"	5291	23	1'-1"	3'-2"	3'-0"			0'-2¾"	
S505	4 SER. OF 29	3'-2" TO 18'-4"	1301	STR							0'-6½"
S506	4 SER.OF 26	3'-6" TO 18'-1"	1171	STR							0'-7"
S507	64	39'-2"	2614	STR							
S601	684	3'-6"	3596	22	1'-6"	1'-1"	1'-1"				
S602	684	2'-5"	2483	1	1'-1"	1'-6"					
S603	22	30'-0"	991	STR							
S604	24	24'-6"	883	STR							
S605	24	23'-6"	847	STR							
S606	24	7'-1"	255 *	34							
S607	2	41'-5"	124	STR							
		TOTAL	135,740								

* WEIGHT DOES NOT INCLUDE WEIGHT OF MECHANICAL CONNECTORS

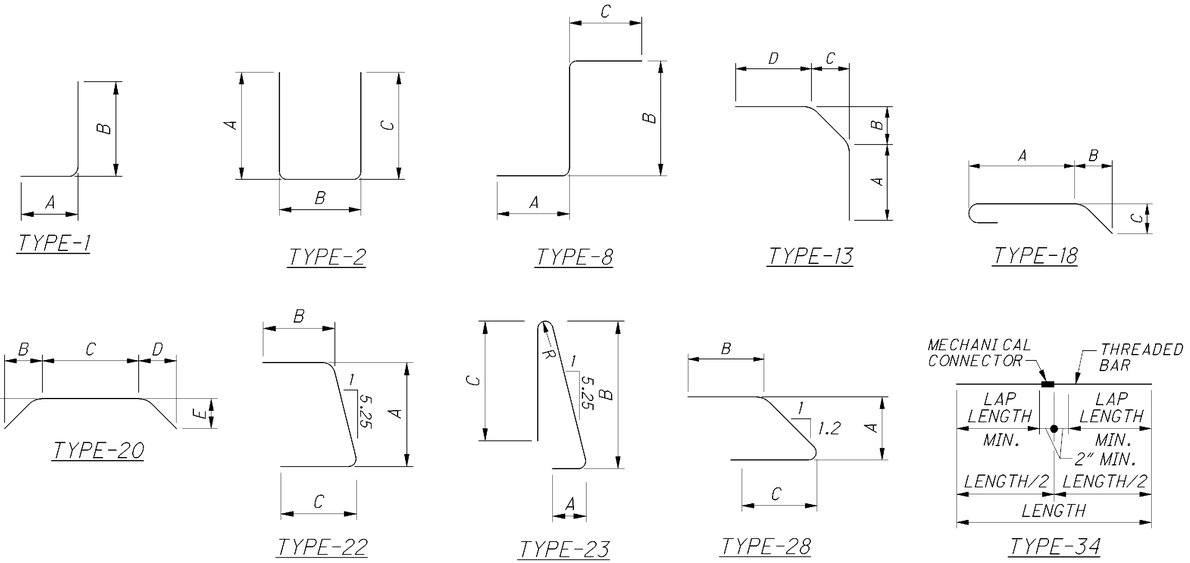

BENDING DIAGRAMS

NOTES

BAR SIZE IS INDICATED IN THE BAR MARK. THE FIRST LETTER IDENTIFIES BAR LOCATION, THE NEXT DIGIT INDICATES THE BAR SIZE DESIGNATION. THE REMAINING DIGITS STATE THE SEQUENCE NUMBER.

EXAMPLE: 511
A = LOCATION OF THE BAR IN STRUCTURE (ABUTMENT)
5 = BAR SIZE DESIGNATION
11 = SEQUENCE NUMBER

BAR DIMENSIONS SHOWN ARE OUT TO OUT UNLESS OTHERWISE INDICATED. R INDICATES INSIDE RADIUS, UNLESS OTHERWISE NOTED.

ALL REINFORCING STEEL TO BE EPOXY COATED, PER CMS 709.00.

NOTATION: R.A. - REAR ABUTMENT
F.A. - FORWARD ABUTMENT

RICHLAND ENGINEERING LIMITED
29 NORTH PARK STREET
MANSFIELD, OHIO 44902

REVIEWED DAP DATE 5/06/09
STRUCTURE TITLE NUMBER 0403458
DRAWN TWH REVISED
DESIGNED BLN CHECKED ALP

REINFORCING STEEL LIST - 2
BRIDGE NO. ATB-84-2050
OVER I.R.90

ATB-84-20.50
PID No. 25199

22/24
62/64

106078-A 2050CRL002.DGN 4/29/08 KH,TWH,JLS

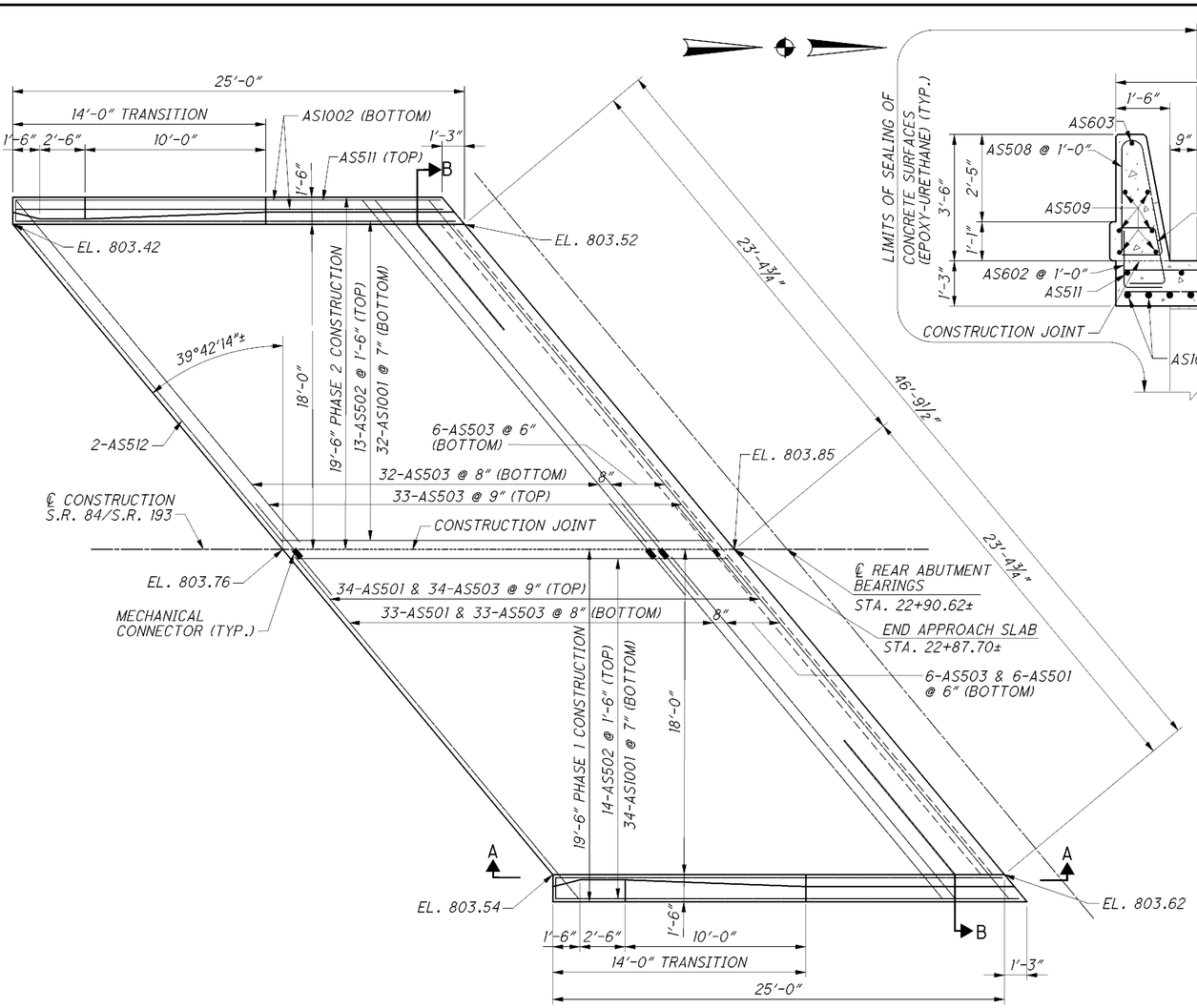

PLAN

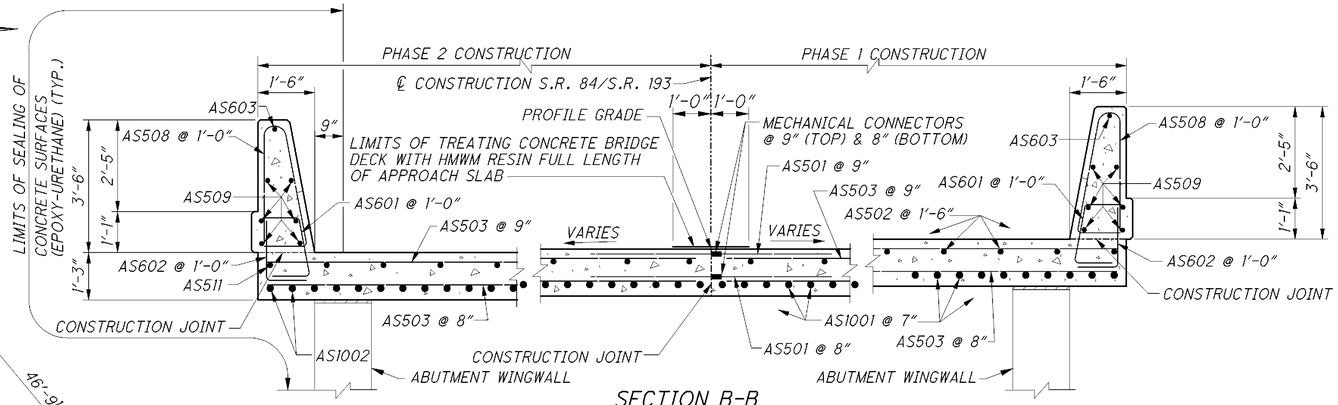

SECTION B-B

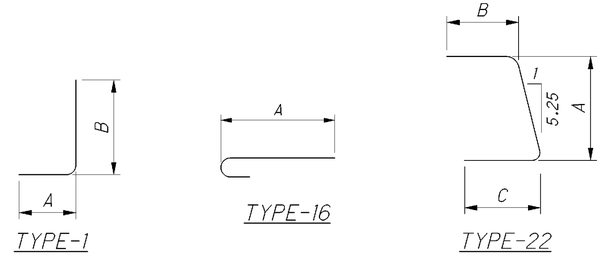

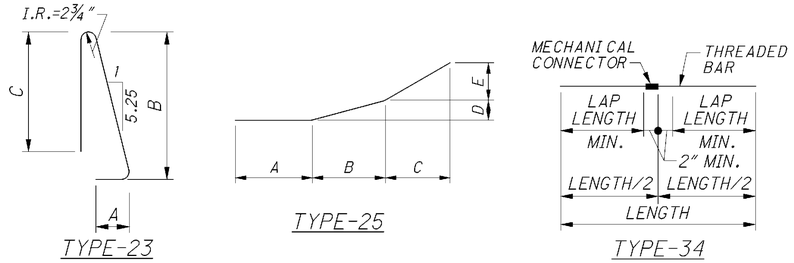

BENDING DIAGRAMS

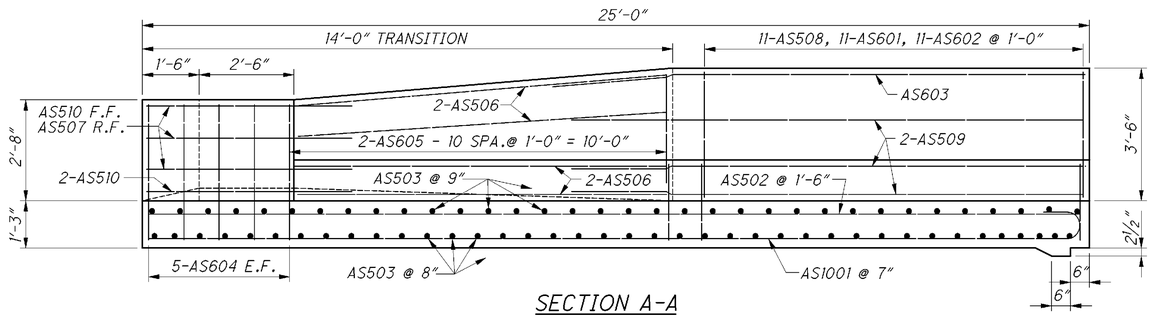

SECTION A-A

NOTES

MECHANICAL CONNECTOR DETAIL: SEE SHEET 12/24.

ITEM 526 - REINFORCED CONCRETE APPROACH SLAB: SEE SHEET 3/24.

REINFORCING STEEL SPLICE LENGTHS SHALL BE 2'-9" FOR #5 BARS.

CONCRETE PARAPET: SEE STANDARD DRAWING SBR-1-99.

REINFORCING STEEL LIST: SEE SHEET 24/24.

ADDITIONAL DETAILS: SEE STANDARD DRAWING AS-1-81.

BRIDGE TERMINAL ASSEMBLY: SEE STANDARD CONSTRUCTION DRAWINGS GR-3.1 AND GR-3.2.

NOTATION: F.F. - FRONT FACE
R.F. - REAR FACE
E.F. - EACH FACE

RICHLAND ENGINEERING LIMITED
29 NORTH PARK STREET
MANSFIELD, OHIO 44902

DESIGNED BLN | DRAWN TWH | CHECKED ALP | REVIEWED DAP | DATE 5/06/09 | REVISED | STRUCTURE TITLE NUMBER 0403458

REAR APPROACH SLAB DETAILS
BRIDGE NO. ATB-84-2050
OVER I.R.90

ATB-84-20.50
PID No. 25199

23/24

63/64

106078-A 2050CMDA001.DGN 4/27/09 KH,TWH

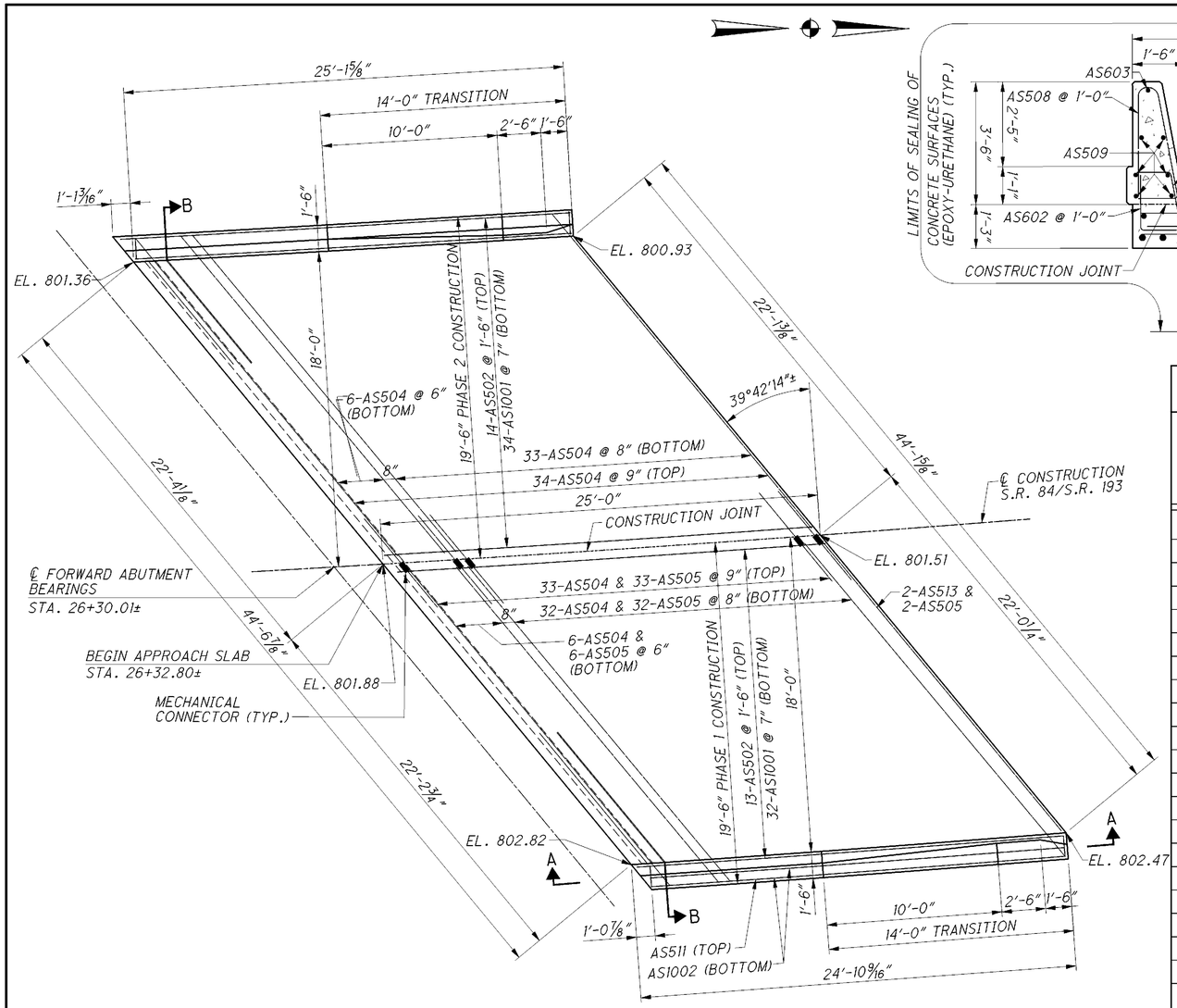

PLAN

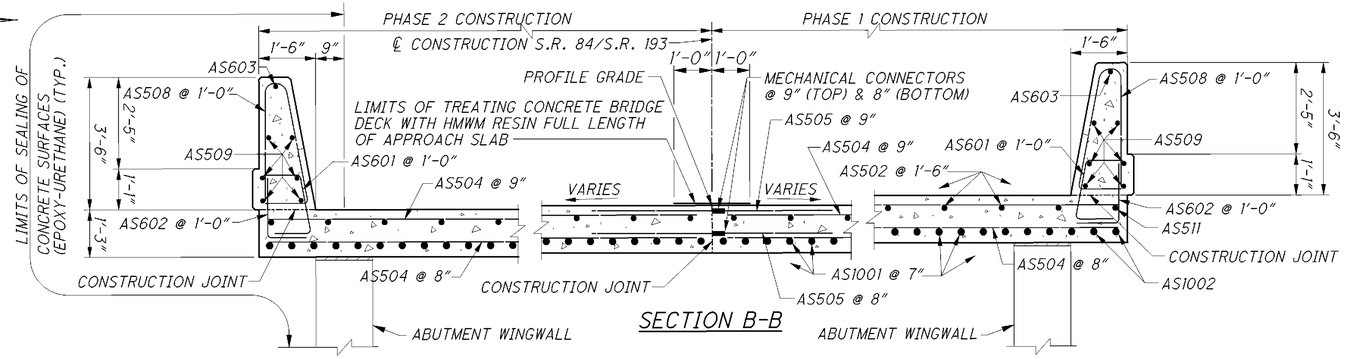

SECTION B-B

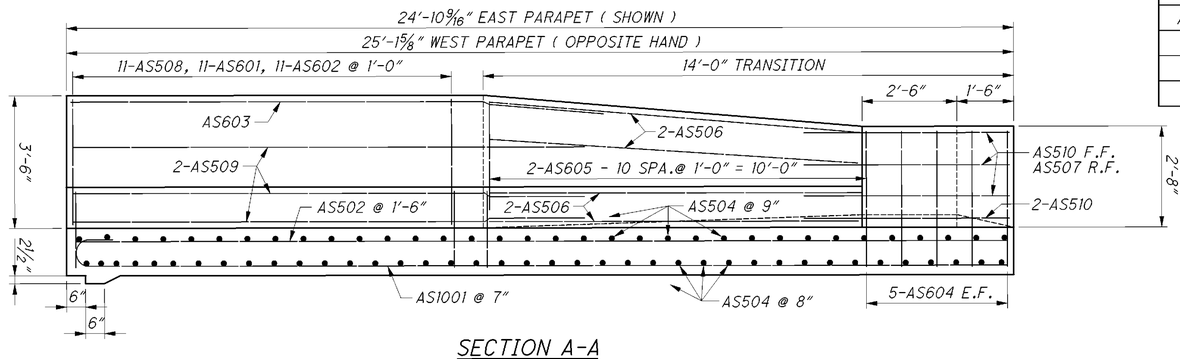

SECTION A-A

REINFORCING STEEL LIST

CALCULATED KH DATE 11/08
CHECKED TWH DATE 11/08

MARK	NUMBER REAR ABUT.	NUMBER FORW. ABUT.	NUMBER TOTAL	LENGTH	WEIGHT	TYPE	DIMENSIONS A	B	C	D	E	INC.
AS501	73		73	6'-7"	501	34						
AS502	27	27	54	24'-6"	1380	STR						
AS503	144		144	24'-7"	3692	STR						
AS504		144	144	23'-1"	3467	STR						
AS505		73	73	7'-3"	552	34						
AS506	16	16	32	10'-0"	334	STR						
AS507	6	6	12	5'-6"	69	25	1'-8"	2'-5"	1'-5"	0'-1 ½"	5"	
AS508	22	22	44	7'-5"	340	23	1'-1"	3'-2"	3'-0"			
AS509	12	12	24	13'-6"	338	STR						
AS510	10	10	20	5'-6"	115	STR						
AS511	1	1	2	23'-4"	49	STR						
AS512	2		2	22'-8"	47	STR						
AS513		2	2	21'-2"	44	STR						
AS601	22	22	44	3'-10"	253	22	1'-10"	1'-1"	1'-1"			
AS602	22	22	44	2'-9"	182	1	0'-11"	1'-10"				
AS603	2	2	4	14'-0"	84	STR						
AS604	20	20	40	3'-6"	210	STR						
AS605	4 SER. OF 11	4 SER. OF 11	8 SER. OF 11	3'-6" TO 4'-4"	518	STR						1"
AS1001	66	66	132	25'-11"	14,721	16	24'-6"					
AS1002	2	2	4	24'-9"	426	16	23'-4"					
			TOTAL		27,322 **							

* WEIGHT DOES NOT INCLUDE WEIGHT OF MECHANICAL CONNECTORS

** WEIGHTS FOR INFORMATIONAL PURPOSES ONLY. REINFORCING STEEL IS INCLUDED WITH ITEM 526 - REINFORCED CONCRETE APPROACH SLABS (T=15"), AS PER PLAN FOR PAYMENT

NOTES

ADDITIONAL NOTES: SEE SHEET 23/24.

BENDING DIAGRAMS: SEE SHEET 23/24.

NOTATION: F.F - FRONT FACE
R.F. - REAR FACE
E.F. - EACH FACE

RICHLAND ENGINEERING LIMITED
29 NORTH PARK STREET
MANSFIELD, OHIO 44902

DESIGNED BLN | DRAWN TWH | REVIEWED DAP | DATE 5/06/09 | CHECKED ALP | REVISED | STRUCTURE TITLE NUMBER 0403458

FORWARD APPROACH SLAB DETAILS
BRIDGE NO. ATB-84-2050
OVER I.R.90

ATB-84-20.50
PID No. 25199

24/24

64
64

106078-A 2050CMDA002.DGN 4/27/09 KH,TWH