FED. RD. DIVISION	STATE	PROJECT	
2	OHIO		

207/232

ATH - 50 - (4.01 - 11.91)

Approx. 2.7 Miles North of Hebbardsville

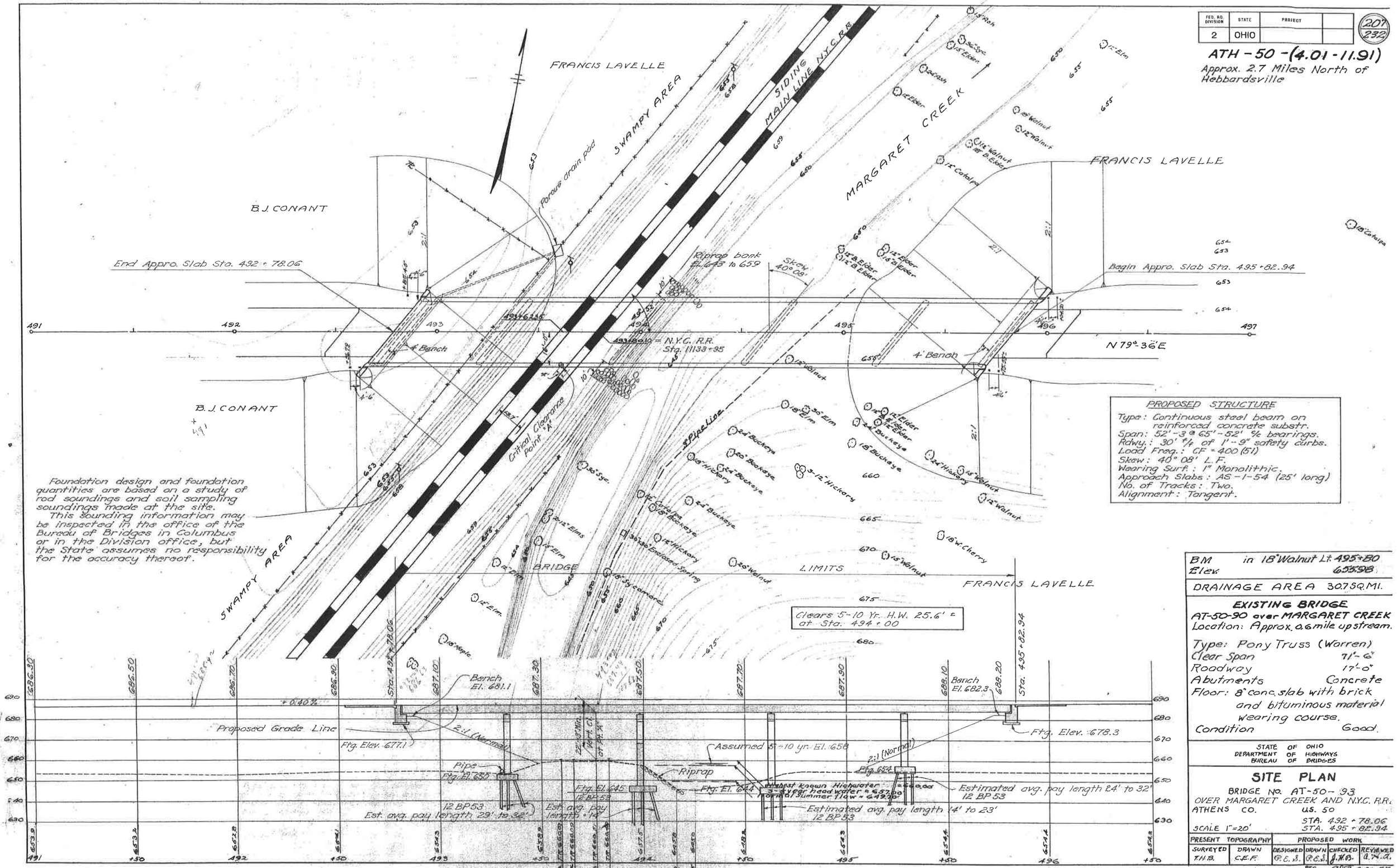

PROPOSED STRUCTURE

Type: Continuous steel beam on reinforced concrete substr.
Span: 52'-3 @ 65'-52' % bearings.
Rdwy.: 30' t/t of 1'-9" safety curbs.
Load Freq.: CF = 400 (51)
Skew: 40° 08' L.F.
Wearing Surf.: 1" Monolithic.
Approach Slabs: AS-1-54 (25' long)
No. of Tracks: Two.
Alignment: Tangent.

B.M. in 18" Walnut Lt. 495+80
Elev. 655.98

DRAINAGE AREA 30.7 SQ. MI.

EXISTING BRIDGE

AT-50-90 over MARGARET CREEK
Location: Approx. 0.6 mile upstream.

Type: Pony Truss (Warren)
Clear Span 71'-6"
Roadway 17'-0"
Abutments Concrete
Floor: 8" conc. slab with brick and bituminous material wearing course.
Condition Good.

STATE OF OHIO
DEPARTMENT OF HIGHWAYS
BUREAU OF BRIDGES

SITE PLAN

BRIDGE No. AT-50-93
OVER MARGARET CREEK AND N.Y.C. R.R.
ATHENS CO. U.S. 50
SCALE 1"=20'
STA. 492 + 78.06
STA. 495 + 82.94

PRESENT TOPOGRAPHY		PROPOSED WORK			
SURVEYED	DRAWN	DESIGNED	DRAWN	CHECKED	REVIEWED
T.H.B.	C.E.F.	G.E.S.	G.E.S.	J.H.B.	A.T.D.

BFG G.E.S. 6-30-55

FED. RD. DIVISION	STATE	PROJECT	
2	OHIO		

208
232

ATH-50-(4.01-11.91)

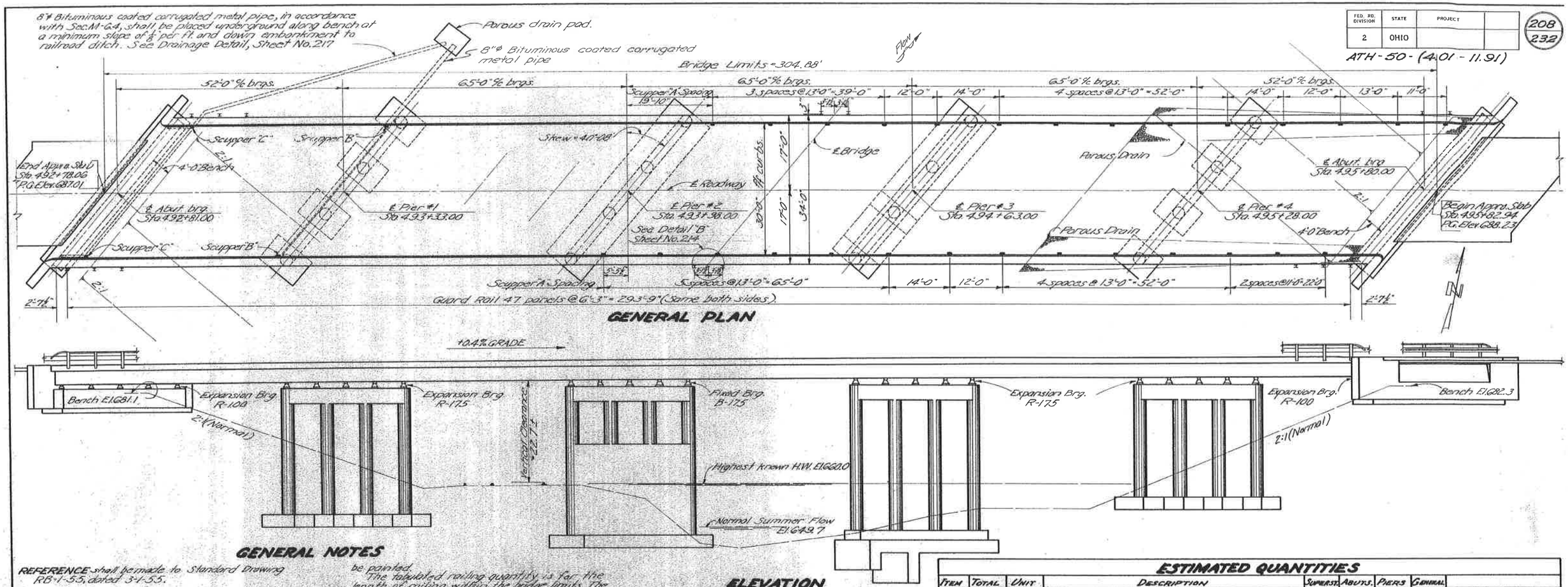

GENERAL PLAN

GENERAL NOTES

REFERENCE shall be made to Standard Drawing RB-1-55, dated 3-1-55.

DESIGN SPECIFICATIONS: This structure conforms to the requirements of "Design Specifications for Highway Structures" of the State of Ohio, Department of Highways, dated October 1, 1951, together with revisions thereof dated July 15, 1952, April 1, 1954 and February 1, 1955.

WELDING of structural steel and wrought iron shall be Class "A". Any welds shown as field welds may, at the option of the Contractor, be made in the shop. Class "B" welds shown thus B.

PILES shall be driven to firm contact with shale which shall be considered as attained when the capacity according to the formula in Sec. S-18.05 is at least 45 tons per pile for the piles in Piers 2 and 3 and 60 tons for the piles in Piers 1 and 4 if a 7,000 ft# steam hammer is used, or 35 tons for the piles in Piers 2 and 3 and 50 tons for the piles in Piers 1 and 4 if a steam hammer or drop hammer of 15,000 ft# or greater energy is used and if the length of penetration is approximately equal to the depth to shale according to the bridge foundation investigation report. If the energy rating of the hammer is between these values, the required formula capacity shall be determined by interpolation. The design load is 36 tons per pile for the piles in Piers 1 and 4, 24 tons in Pier 2 and 20 tons in Pier 3.

RAILING: The transition between the guard rail height on the bridge and on the approaches shall be made in a distance of 100 feet from end of the curved panels.

The guard rail and hand rail shall be painted white in accordance with Section T-15.07 of the Construction and Material Specifications. Galvanized posts and anchor bolts shall not be painted.

The tabulated railing quantity is for the length of railing within the bridge limits. The price per lineal foot of railing includes payment for guard rail, hand rail, posts, anchors, connections, galvanizing and painting, and also includes payment for those curved portions of the hand rail which project beyond the above stated limits.

GALVANIZING of all members, which are specified to be galvanized, except straps and bolts for mounting down-spouts, shall be as called for in Sec. M-24.01.

FIELD PAINTING: One additional field coat, of the same kind as the shop coat, shall be applied to all structural steel in the truss span except railings and except that which is to be in contact with concrete. It shall be applied prior to the application of the aluminum paint.

SURFACE FINISH OF CONCRETE: Curb faces and fascias of deck shall receive a rubbed surface finish. All other exposed surfaces shall be governed by the provisions of Item S-1.

GRAVEL, if used as the coarse aggregate, shall be according to Sec. M-3.03 instead of M-3.01 for Class "C" concrete in the superstructure. Gravel meeting the requirements of Sec. M-3.03 also may be used for other concrete in this structure.

POROUS DRAINS, shall extend from the face of abutment to Elev. 654.0 at both forward corners of the bridge. The drains shall be 8 ft wide at the low end, tapering to 4 ft wide at the face of abutment, and one foot thick.

END FINISH AND BULB ANGLE GUTTERS shall be copper-bearing steel. A welded butt joint in the end finish, at the center line of roadway, will be required for that portion of the end finish attached to the superstructure.

EXCAVATION QUANTITY includes the removal of fill material between top of earth bench and bottom of abutment footing.

ELEVATION

Pier piles not shown.

POROUS BACKFILL at the abutments shall extend upward to the approach slab and to the surface of the earth shoulders, and outward to the surface of embankment slopes. Excavation therefor, in excess of that required for construction of the footing, shall be considered as paid for in the bid price per cu. yd. paid for porous backfill.

CONSTRUCTION CLEARANCES of at least 19'-0" above top of rails and at least 8'-0" horizontally east from center line of main line tracks and 8'-0" west of center line of siding tracks shall be maintained at all times.

SHEETING & BRACING: Before construction is begun, plans of sheeting and bracing to be used adjacent to tracks for pier excavation shall be submitted to the Director of Highways for approval by the Department of Highways and the New York Central Railroad Company.

SPECIAL PROVISION is hereby made as follows: After the Contractor has complied with the requirements in Sections E-2.04 and E-2.08 of the Construction and Material Specifications in that he has completed under the supervision of the Railroad Company, all excavation and backfill adjacent to the Railroad tracks and sufficiently braced excavation to insure proper support of roadbed and tracks, nothing in Sections E-2.04, E-2.08, or G-8.07 of the Specifications shall be construed to hold the Contractor liable for the aligning and resurfacing of tracks. These are items of work to be done after the Contractor's operations adjacent to the tracks are completed, and are set up as force account items to be performed by the Railroad Company.

ESTIMATED QUANTITIES

Item	Total	Unit	Description	Superst.	Abuts.	Piers	General		
E-2	lump	sum	Cofferdams, cribs and sheeting.				lump		
E-2	726	cu. yd.	Unclassified excavation.		136	590			
S-1	304	cu. yd.	Class "C" concrete, superstructure.	304					
S-1	133	cu. yd.	Class "C" concrete, pier caps and columns.			133			
S-1	119	cu. yd.	Class "E" concrete, abutments.		119				
S-1	255	cu. yd.	Class "E" concrete, footings.		23	232			
S-1	87	cu. yd.	Class "E" concrete, pier wall.			87			
S-4	151,847	lb.	Reinforcing steel.	87,443	4,820	64,394	182		
S-7	301,000	lb.	Structural steel.	301,000					
S-8	301,000	lb.	Field painting of structural steel, as per plan.	301,000					
S-14	609.76	lin. ft.	Railing (Type #15.13 with handrail and galv. steel posts)	609.76					
S-16	lump	sum	First test pile.				lump		
S-18	2380	lin. ft.	Steel piling, 12BP53.			2380			
S-29	28	cu. yd.	Porous backfill.		28				
S-29	35	cu. yd.	Porous drains on embankment slopes.				35		
S-29	200	lin. ft.	8" dia. bituminous coated corrugated metal pipe.		110	90			
S-29	60	lin. ft.	6" dia. standard wrought iron or galvanized steel pipe, including specials.			60			
I-10	220	sq. yd.	Type "A" riprap.				220		

STATE OF OHIO
DEPARTMENT OF HIGHWAYS
DIVISION OF DESIGN AND CONSTRUCTION
BUREAU OF BRIDGES

GENERAL PLAN, ELEVATION, NOTES & ESTIMATED QUANTITIES

BRIDGE NO. AT-50-93
OVER MARGARET CREEK & N. Y. C. RR.

ATHENS COUNTY — STA. 492+78.06 — STA. 495+82.94

DESIGNED	DRAWN	TRACED	CHECKED	REVIEWED BFG	DATE	REVISED
D.C.A.	D.C.A.	S.J.	mfal	a.g.f.	6-30-55	

FED. RD. DIVISION	STATE	PROJECT	
2	OHIO		

209
232

ATH-50-(4.01-11.91)

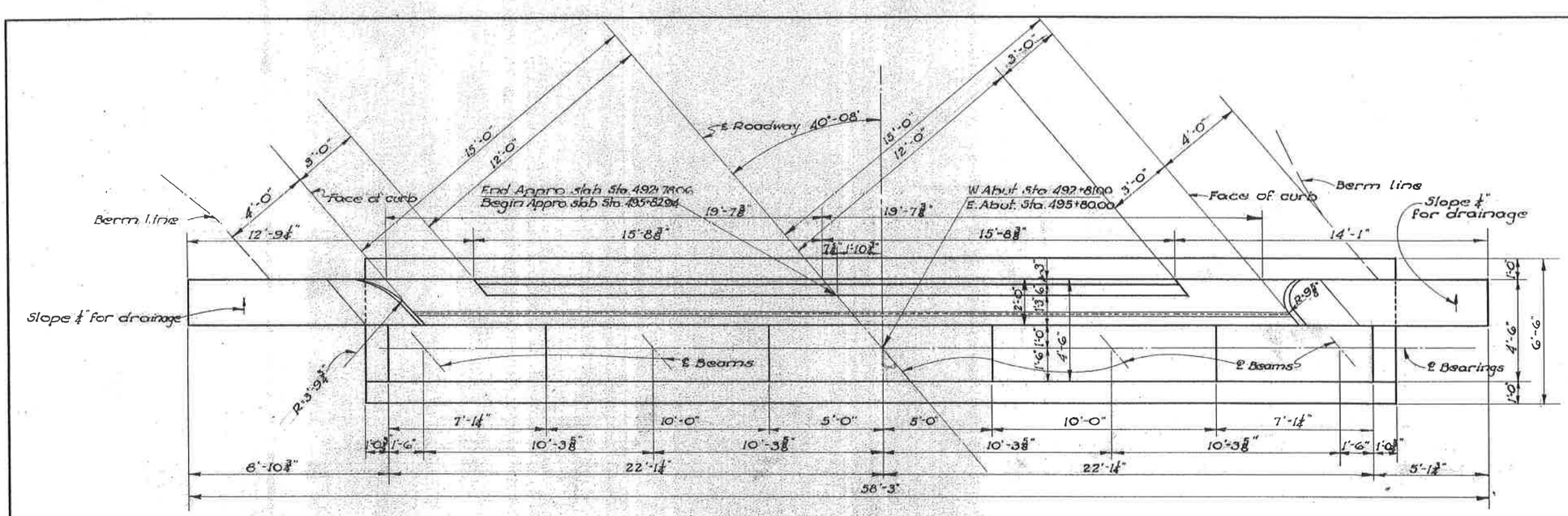

ABUTMENT PLAN

NOTE:
All earth fill shall be made full height of earth bench. Excavation then shall be made for abutment footing.

All reinforcing steel shall be 2" clear from surface of concrete unless otherwise shown.

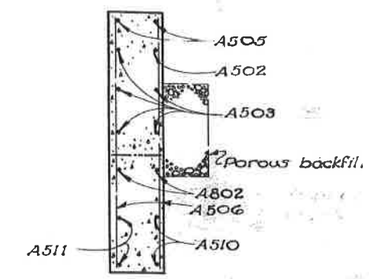

SECTION B-B

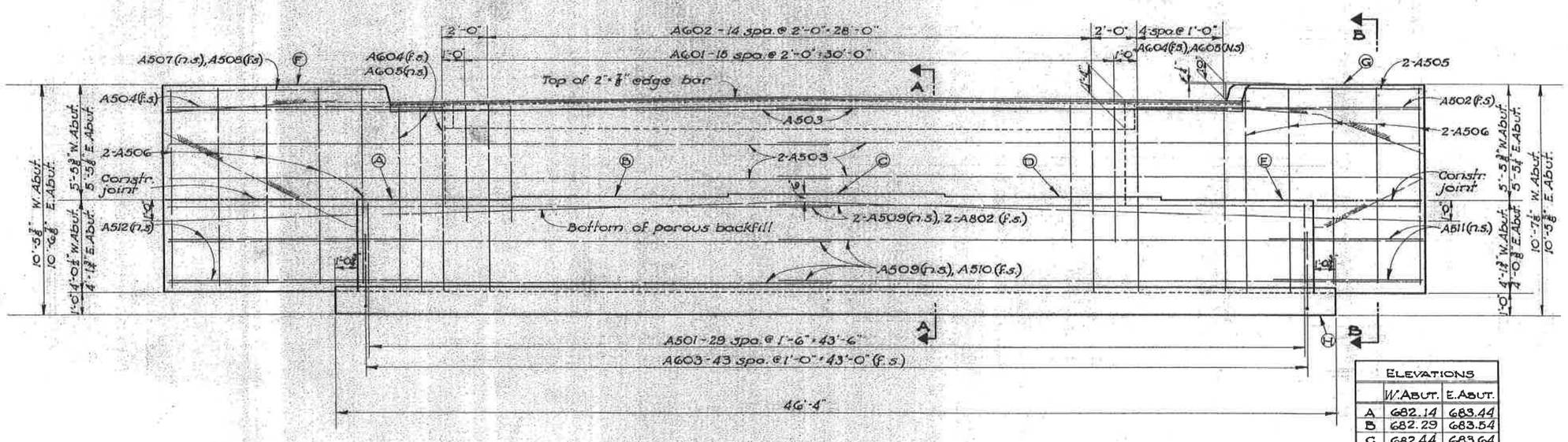

ELEVATION

ELEVATIONS		
	W. ABUT.	E. ABUT.
A	682.14	683.44
B	682.29	683.54
C	682.44	683.64
D	682.34	683.49
E	682.24	683.33
F	687.59	688.87
G	687.69	688.77
H	677.10	678.30

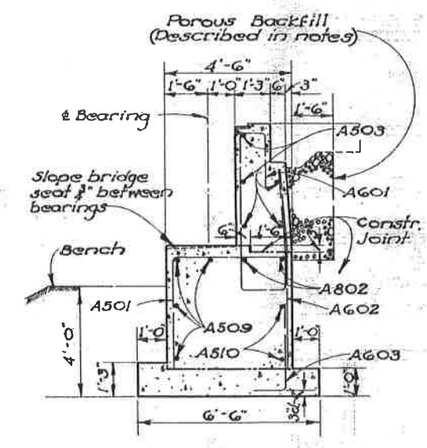

SECTION A-A

STATE OF OHIO
DEPARTMENT OF HIGHWAYS
DIVISION OF DESIGN AND CONSTRUCTION
BUREAU OF BRIDGES

ABUTMENT DETAILS

BRIDGE No. AT-50-93
OVER MARGARET CREEK AND N.Y.C. R.R.

ATHENS COUNTY

STA. 492+78.0
495+82.9

DESIGNED	DRAWN	TRACED	CHECKED	REVIEWED	DATE	REVISED
D.L.H.	D.L.H.	RGB	mfs	BFG A.J.F.	6-30-55	

FED. RD. DIVISION	STATE	PROJECT	
2	OHIO		

210
232

ATH-50-(4.01 - 11.91)

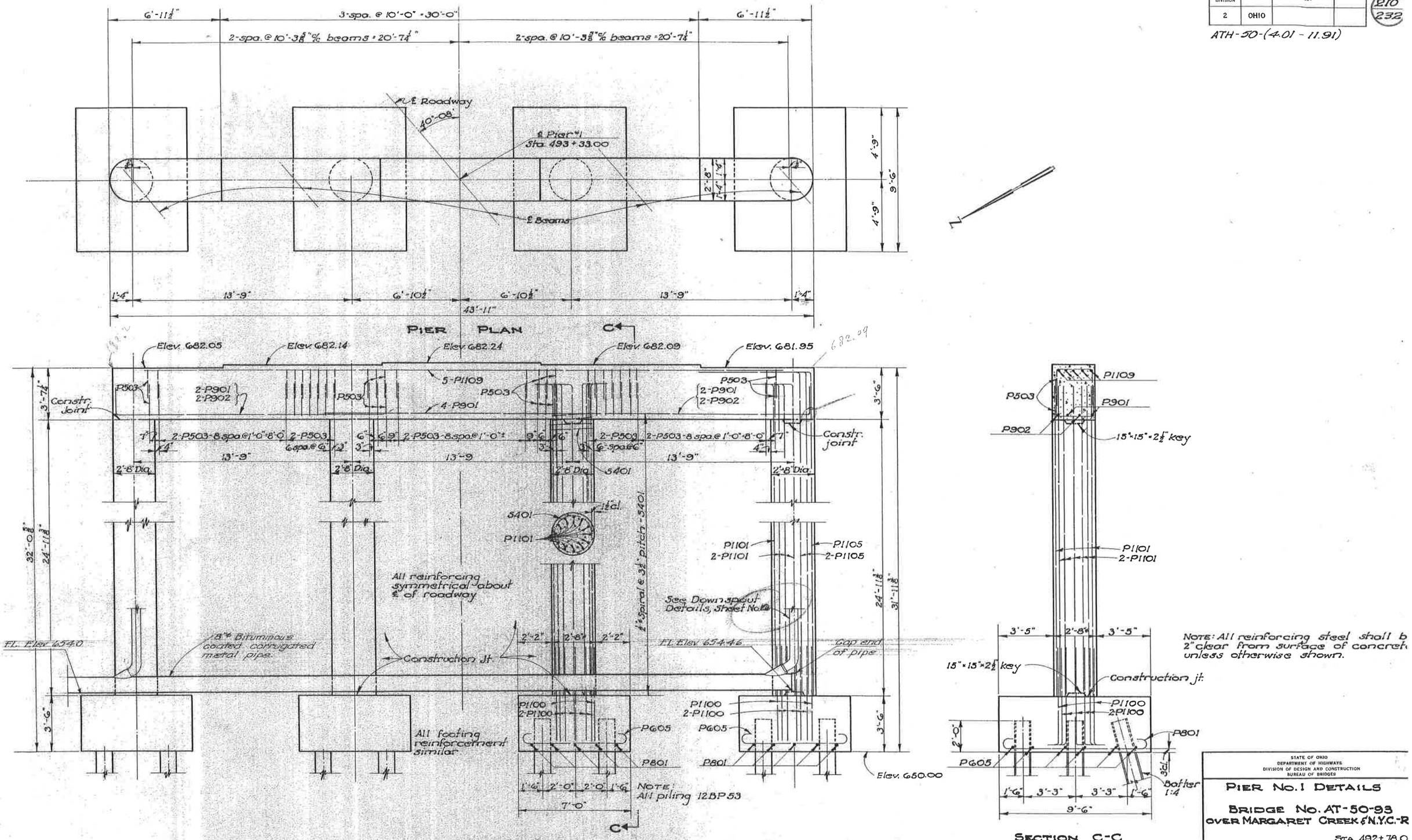

STATE OF OHIO
DEPARTMENT OF HIGHWAYS
DIVISION OF DESIGN AND CONSTRUCTION
BUREAU OF BRIDGES

PIER No. 1 DETAILS

BRIDGE No. AT-50-93
OVER MARGARET CREEK & N.Y.C.-R

STA. 492+78.0
495+82.9

ATHENS COUNTY

DESIGNED	DRAWN	TRACED	CHECKED	REVIEWED	DATE	REVISE
DGH	DGH	RGB	mfw	BFG	6-30-55	

FED. RD. DIVISION	STATE	PROJECT	
2	OHIO		

211
232

ATH-50-(4.01-11.91)

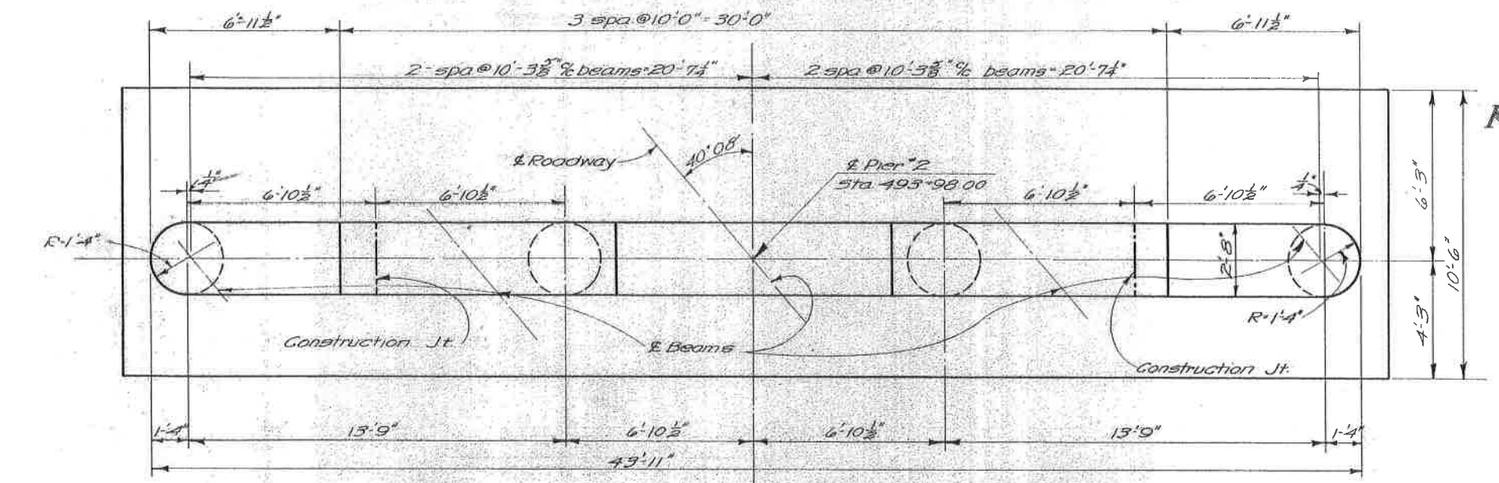

PIER PLAN

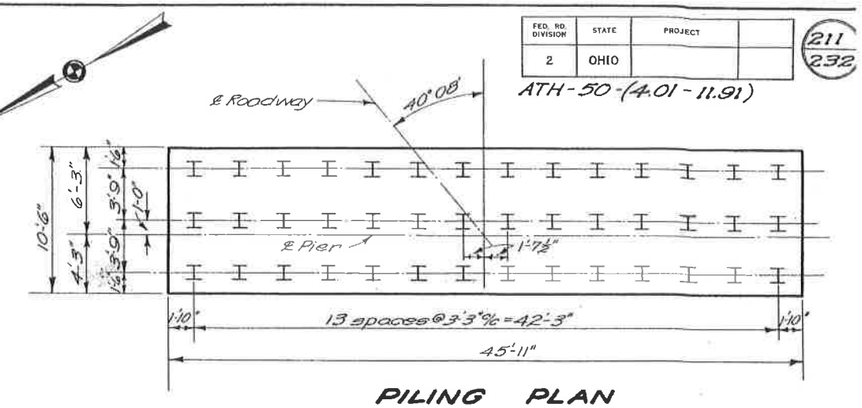

PILING PLAN

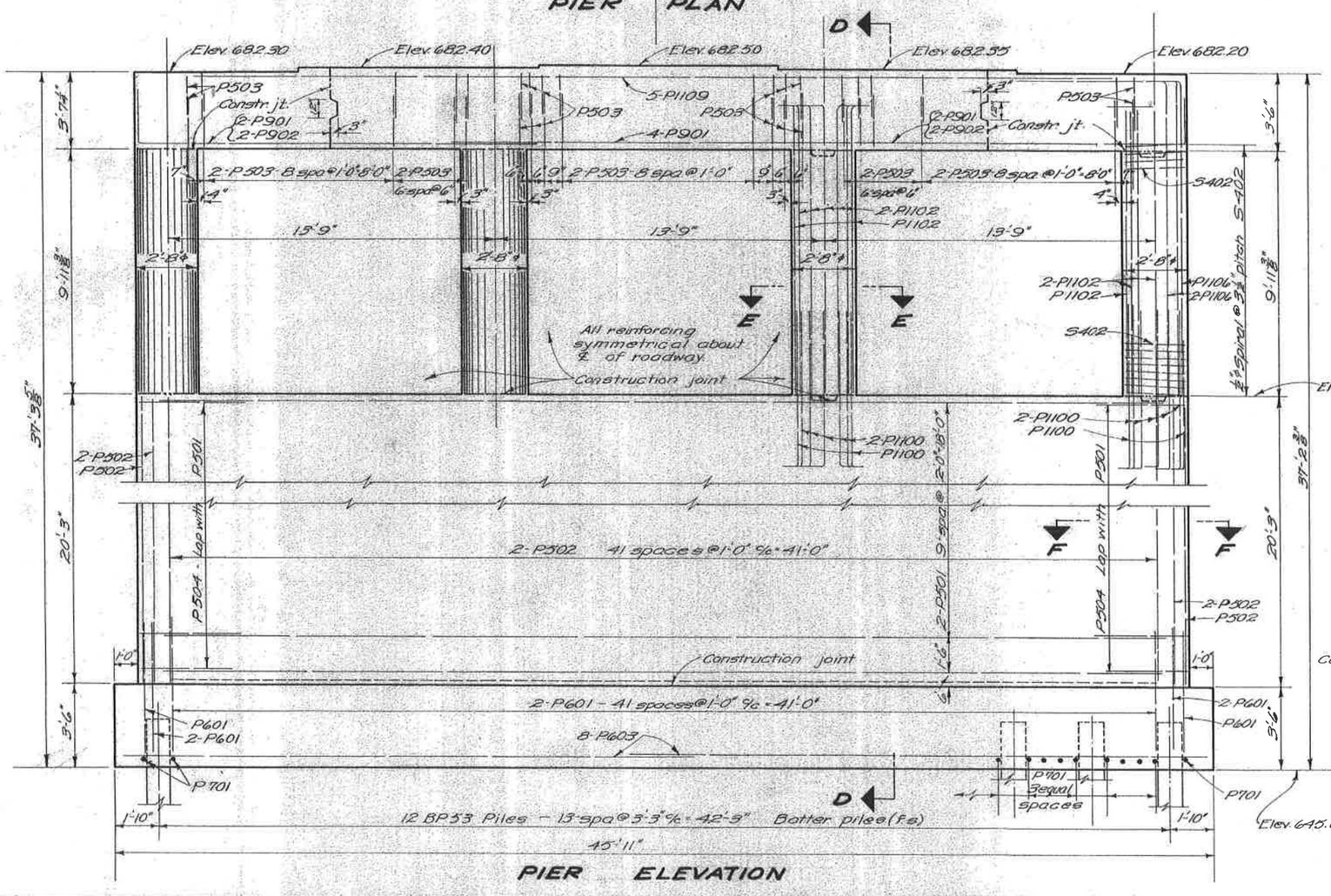

PIER ELEVATION

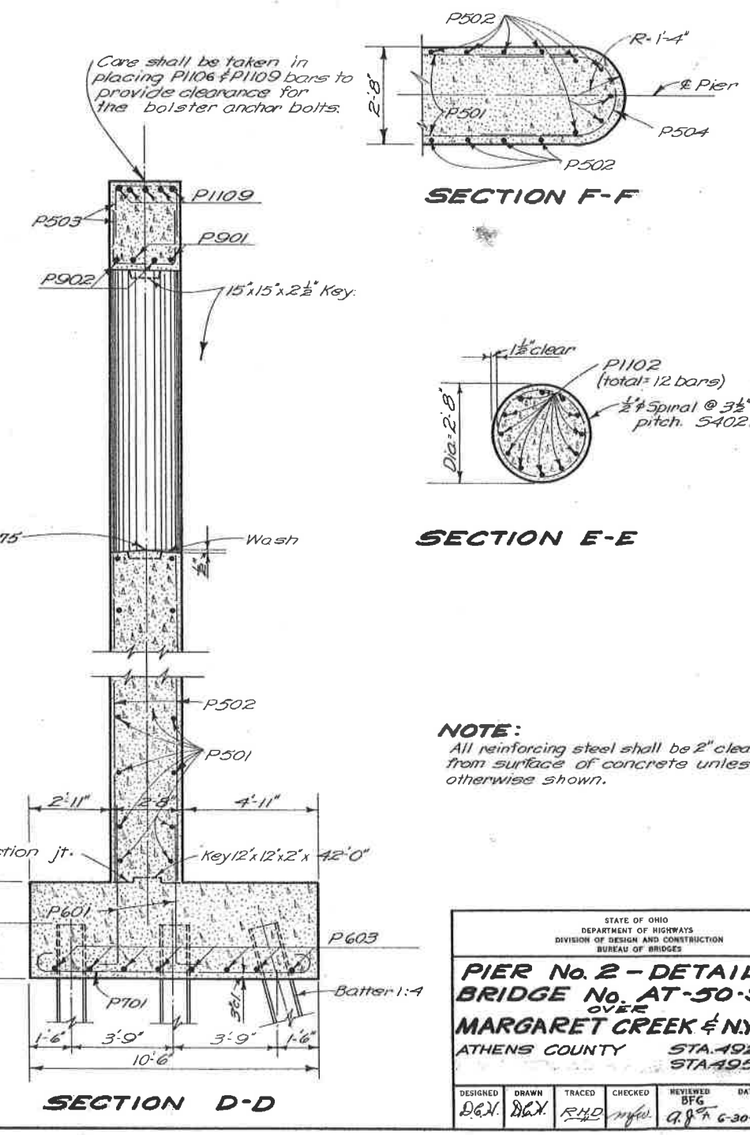

SECTION D-D

SECTION F-F

SECTION E-E

NOTE:
All reinforcing steel shall be 2" clear from surface of concrete unless otherwise shown.

STATE OF OHIO
DEPARTMENT OF HIGHWAYS
DIVISION OF DESIGN AND CONSTRUCTION
BUREAU OF BRIDGES

PIER No. 2 - DETAILS
BRIDGE No. AT-50-93
OVER
MARGARET CREEK & N.Y.C. R.R.

ATHENS COUNTY STA. 492+78.0
STA. 495+82.9

DESIGNED	DRAWN	TRACED	CHECKED	REVIEWED	DATE	REVISED
D.G.V.	D.G.V.	R.H.D.	M.F.W.	BFG G.J.C.	6-30-55	

FED. RD. DIVISION	STATE	PROJECT	
2	OHIO		

212
232

ATH-50-(4.01-11.91)

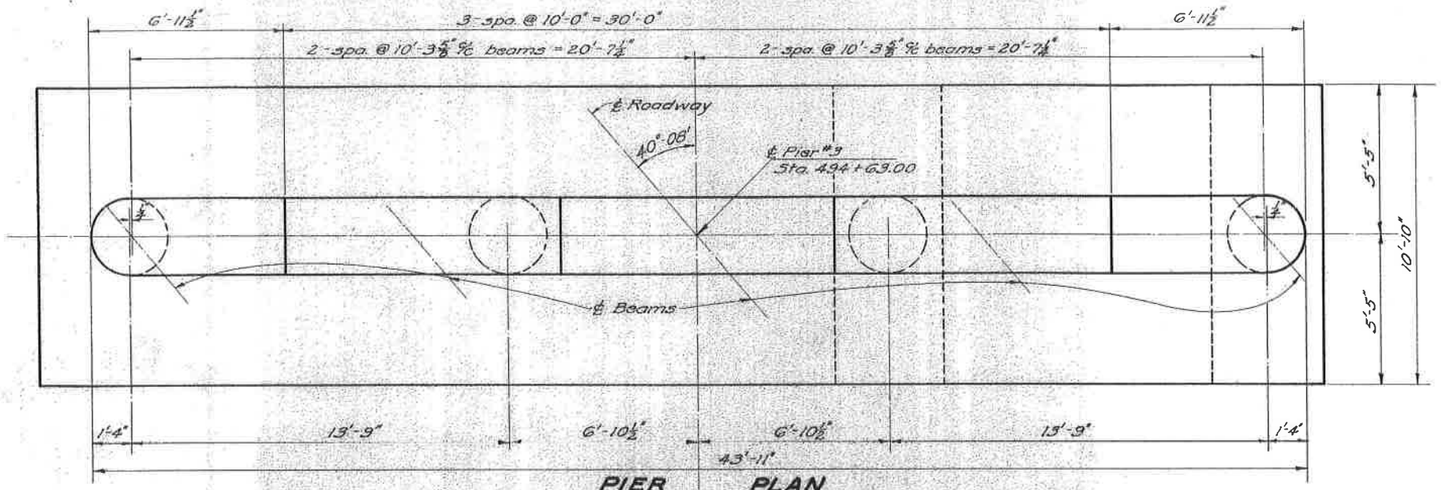

PIER PLAN

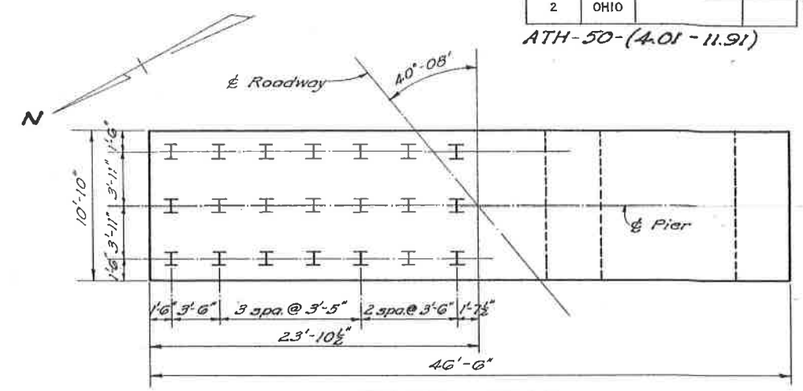

PILING PLAN

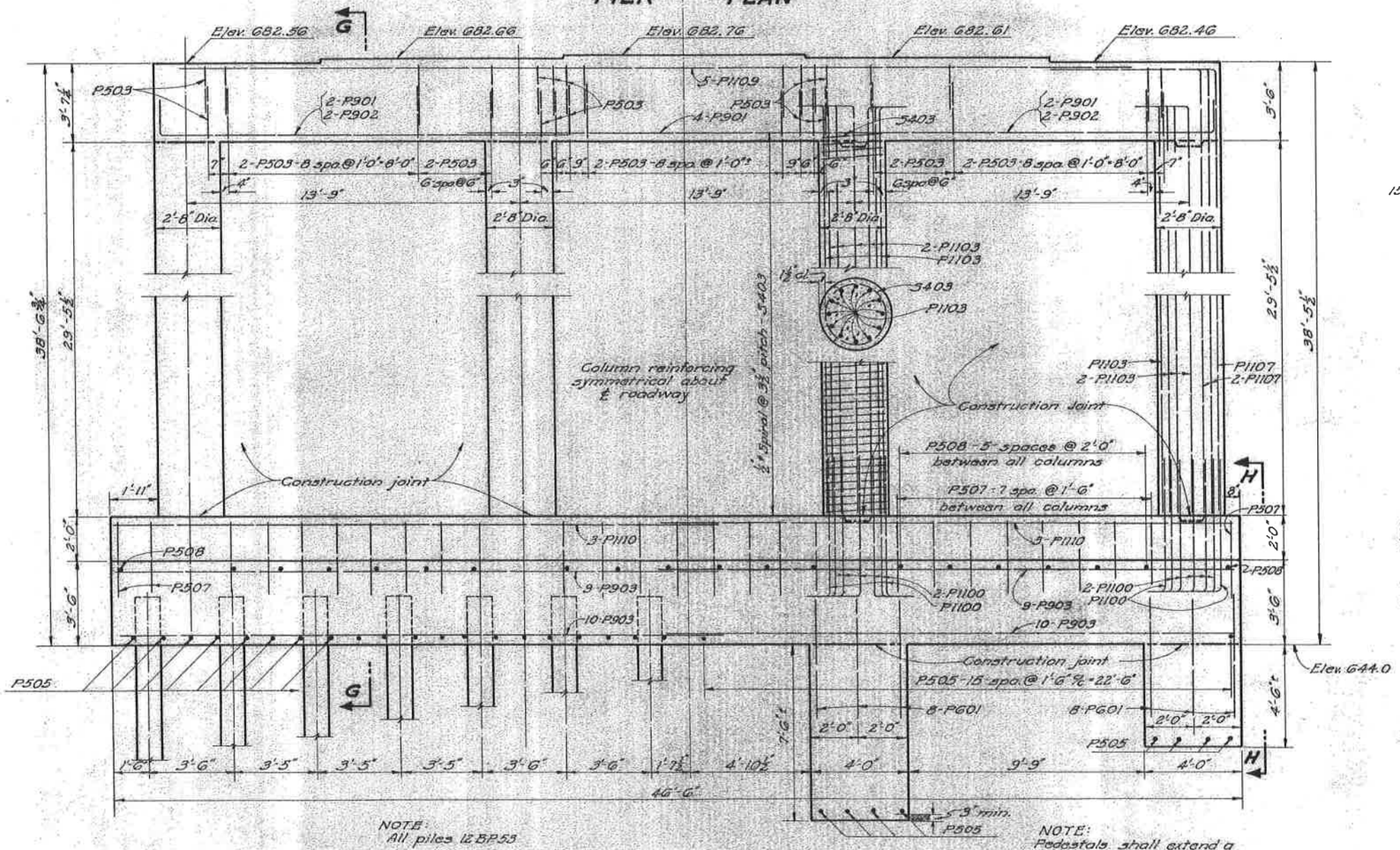

PIER ELEVATION

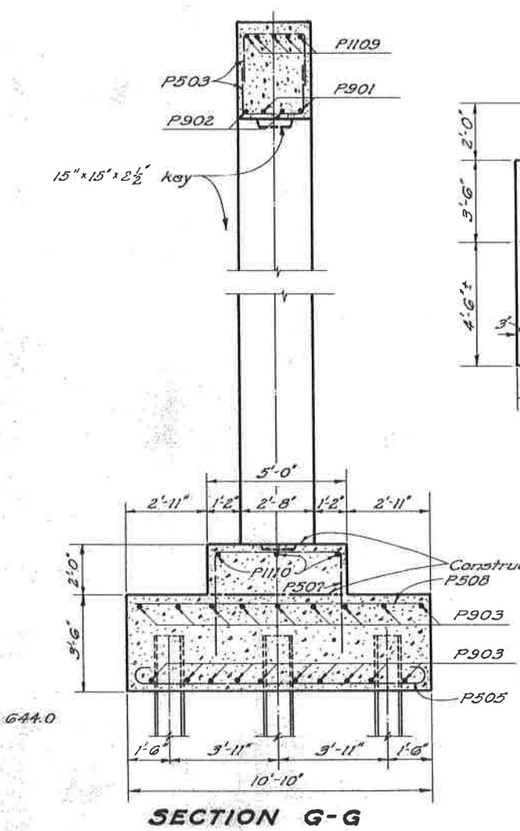

SECTION G-G

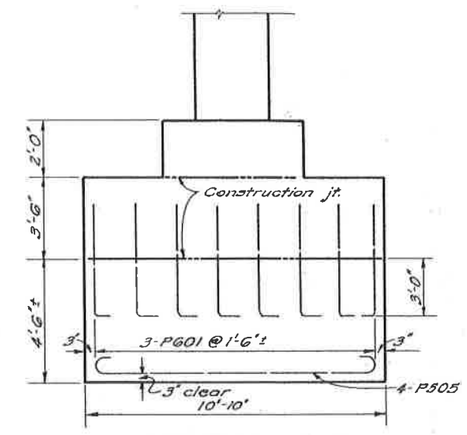

SECTION H-H

For details not shown see Section G-G

NOTE:
All reinforcing steel shall be 2" clear from surface of concrete unless otherwise shown.

STATE OF OHIO
DEPARTMENT OF HIGHWAYS
DIVISION OF DESIGN AND CONSTRUCTION
BUREAU OF BRIDGES

PIER NO. 3 DETAILS

BRIDGE NO. AT-50-93
OVER Margaret Creek & N.Y.C. R.R.
ATHENS COUNTY STA. 492+78.06
495+82.94

DESIGNED	DRAWN	TRACED	CHECKED	REVIEWED	DATE	REVISED
D.L.K.	D.L.K.	J.D.J.	M.J.W.	DFG A.R.K.	6-30-55	

FED. RD. DIVISION	STATE	PROJECT	
2	OHIO		

213
232

ATH-50-(4.01-11-91)

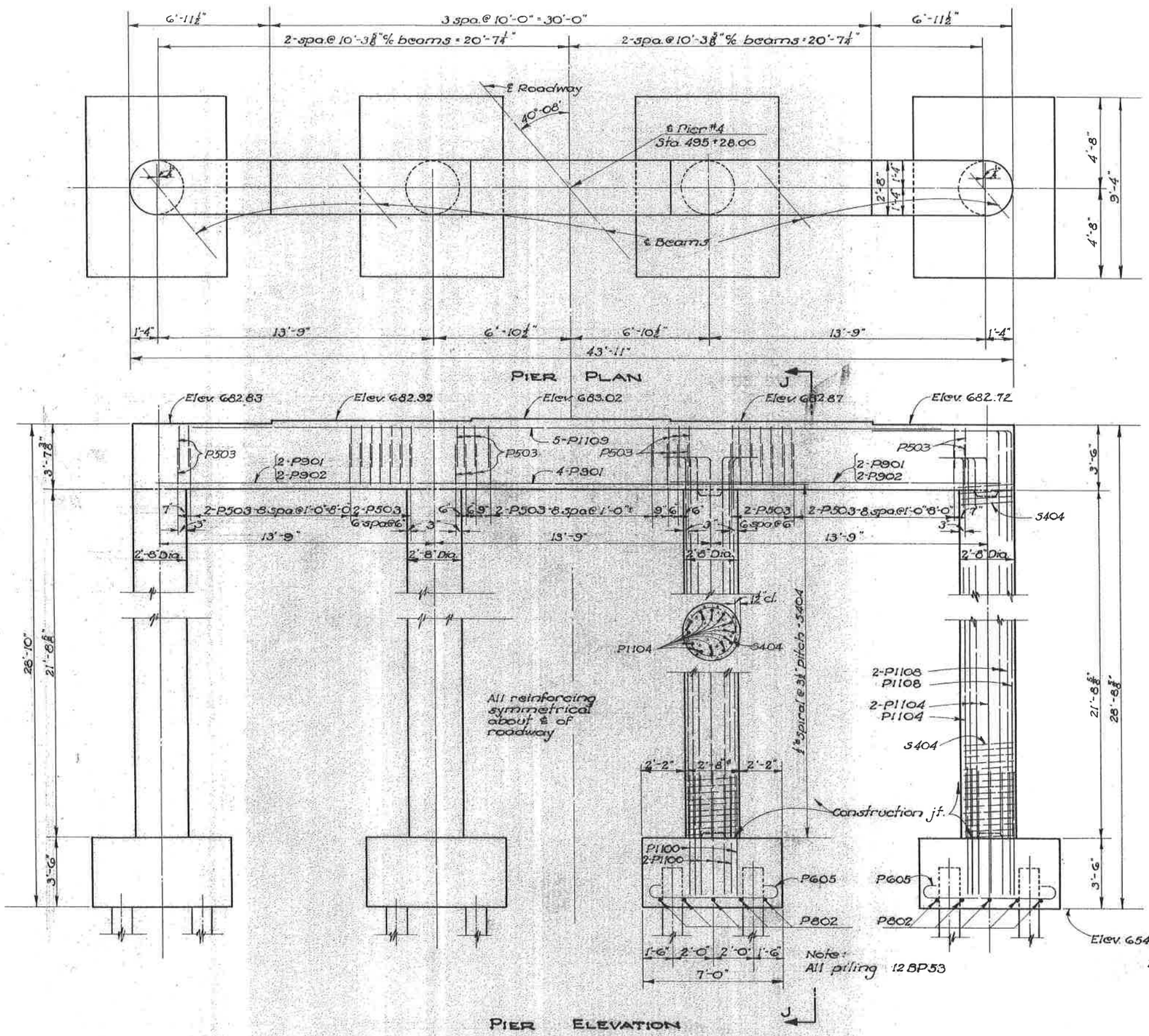

NOTE:
All reinforcing steel shall be 2" clear from surface of concrete unless otherwise shown.

STATE OF OHIO
DEPARTMENT OF HIGHWAYS
DIVISION OF DESIGN AND CONSTRUCTION
BUREAU OF BRIDGES

PIER No. 4 DETAILS

BRIDGE No. AT-50-93
OVER MARGARET CREEK AND NYC-R.R.

ATHENS COUNTY

STA. 492+78.06
495+82.94

DESIGNED	DRAWN	TRACED	CHECKED	REVIEWED BEG	DATE	REVISED
D.G.H.	D.G.H.	RSB	MJW	A.R.F.	6-30-55	

FED. RD. DIVISION	STATE	PROJECT	
2	OHIO		

214/232

ATH-50-(4.01-11.91)

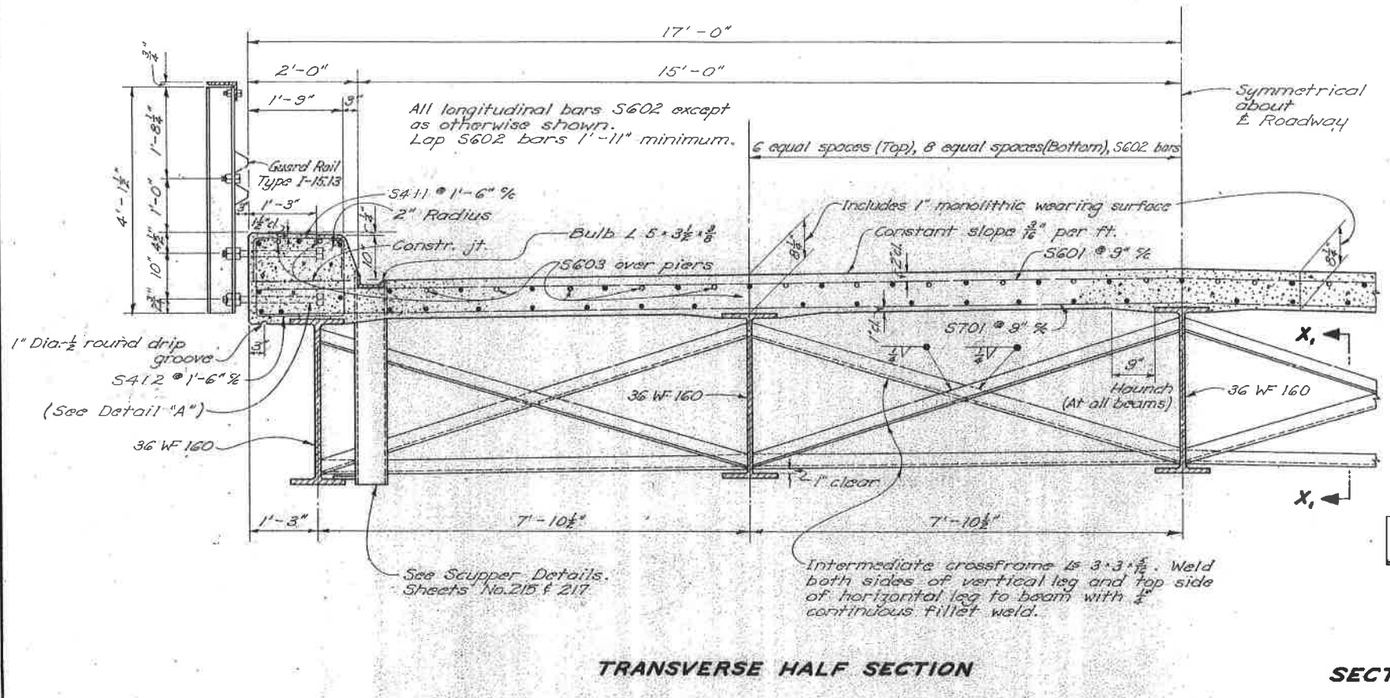

TRANSVERSE HALF SECTION

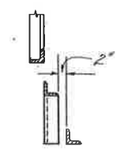

SECTION X₁-X₁

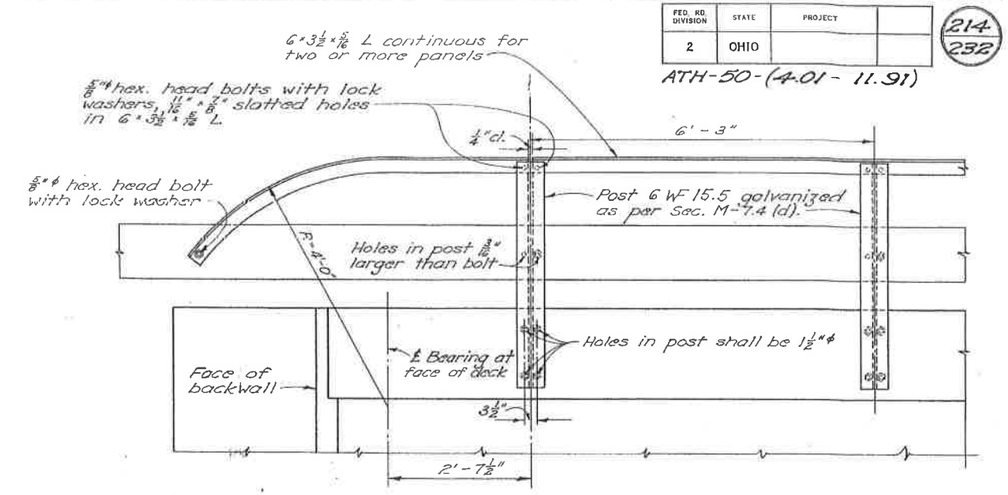

ELEVATION OF RAILING

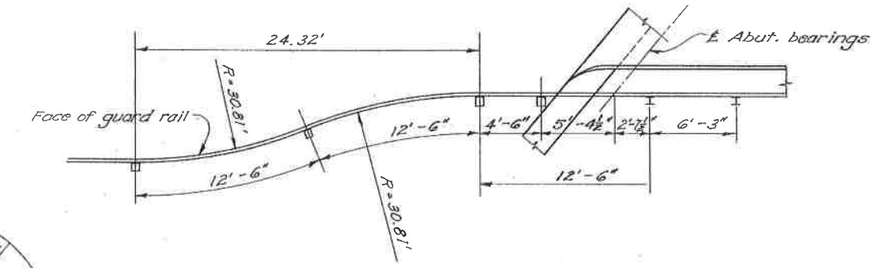

PLAN OF GUARD RAIL AT APPROACHES

SOUTH WEST CORNER SHOWN

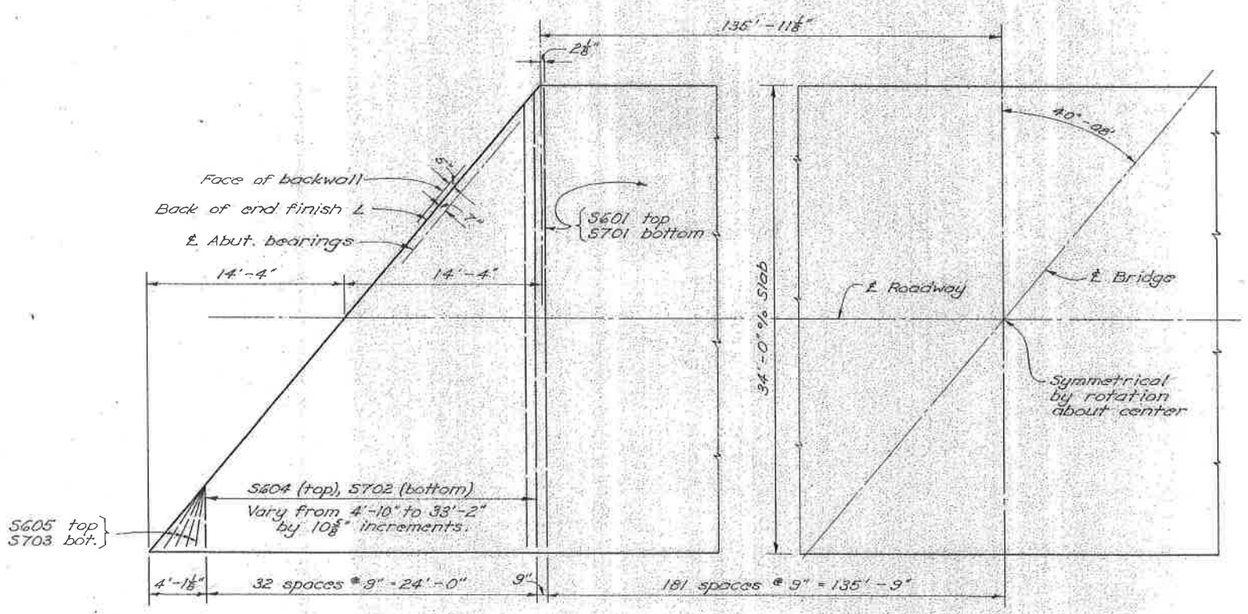

TRANSVERSE SLAB REINFORCING

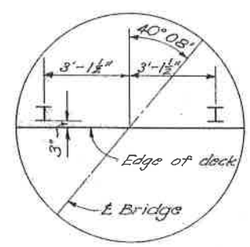

DETAIL "B"

For location see Sheet 208

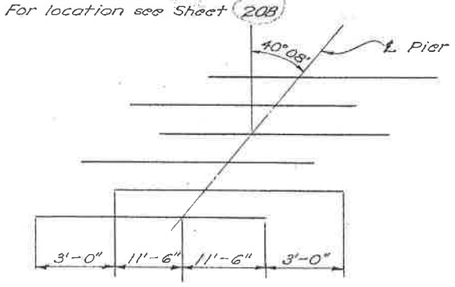

STAGGER OF S603 BARS OVER PIERS

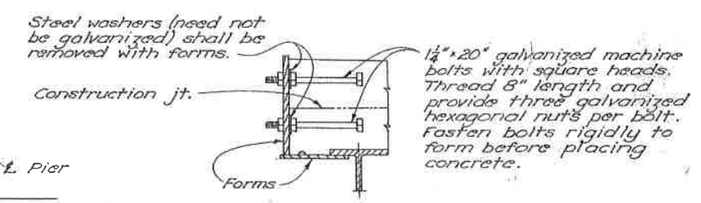

DETAIL "A"

STATE OF OHIO
DEPARTMENT OF HIGHWAYS
DIVISION OF DESIGN AND CONSTRUCTION
BUREAU OF BRIDGES

SUPERSTRUCTURE DETAILS

BRIDGE No. AT-50-93
over MARGARET CREEK & N.Y.C. R.R

Athens County

Sta. 492 + 78.06
Sta. 495 + 82.94

DESIGNED	DRAWN	TRACED	CHECKED	REVIEWED	DATE	REVISED
D.C.A.	D.C.A.		mfw	BFG A.J.F.	6-30-53	

FED. RD. DIVISION	STATE	PROJECT	
2	OHIO		

215
232

ATH-50-(4.01-11.91)

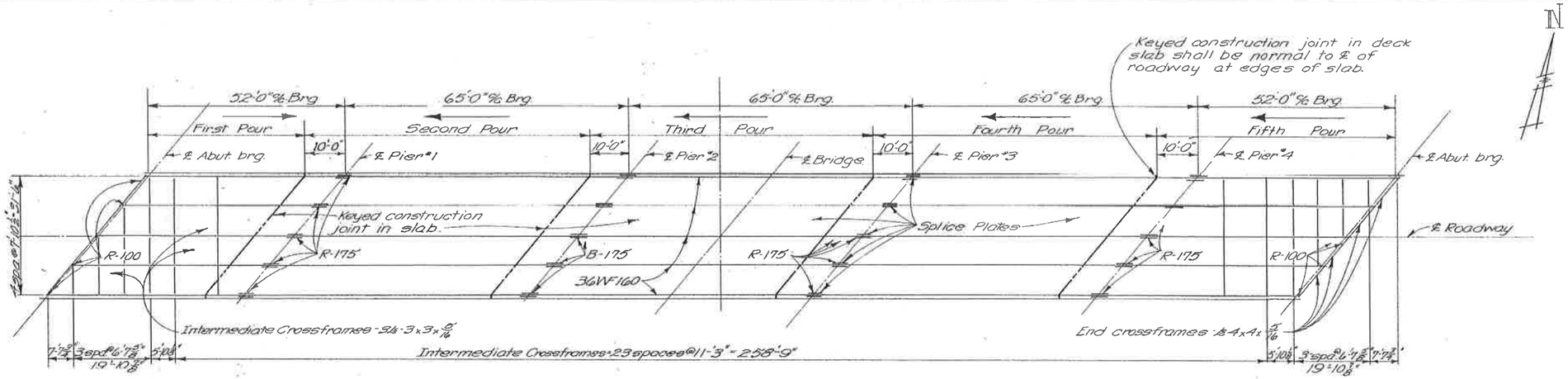

STEEL FRAMING PLAN AND SLAB POURING SEQUENCE

NOTE:
DECK CONSTRUCTION PROCEDURE: The deck slab shall be placed in sections, between transverse construction joints, in the numerical order and in the direction indicated on the "Steel Framing Plan and Slab Pouring Sequence", in order that the major portion of the dead load deflection will occur prior to placing concrete over each pier.

NOTE:
BEAM SPLICE WELDING PROCEDURE:
1. Raise end of beam at Pier #2 1".
2. Butt-weld beam flanges and web at Pier #1.
3. Weld top and bottom flange splice plates at Pier #1.
4. Lower ends of beams at Pier #2.
5. Make splices at Piers 2, 3 & 4 in the same manner, raising the beams 1" at piers and 3/4" at the forward abutment.

CAMBER: No camber is required but beams shall be so fabricated that any curved beams shall be placed with convex flange up.

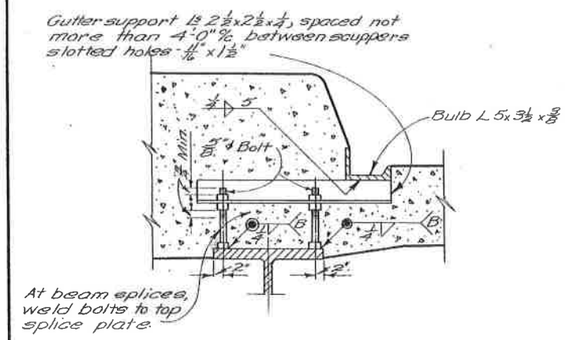

GUTTER SUPPORT

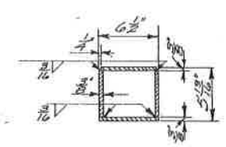

SECTION K-K

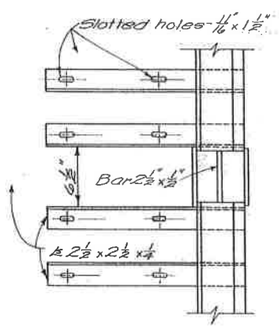

PART PLAN

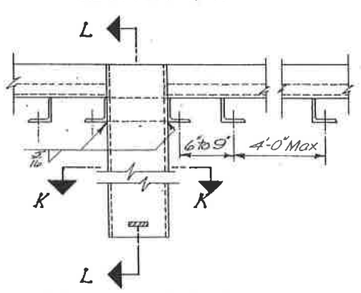

REAR ELEVATION

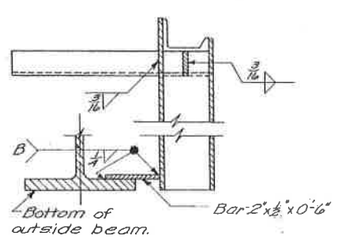

SECTION L-L

GUTTER AND SCUPPER "A" DETAILS

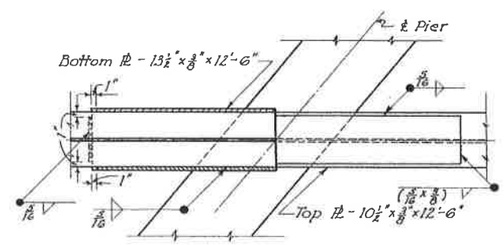

SECTION M-M

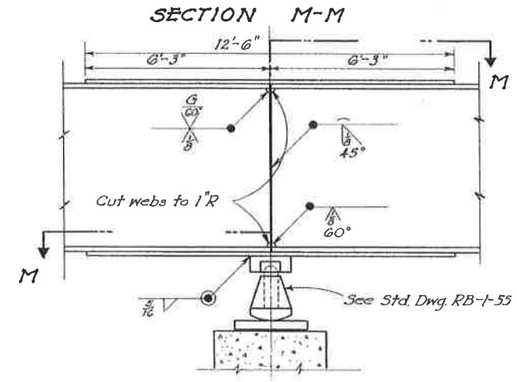

BEAM SPLICE DETAILS

STATE OF OHIO
DEPARTMENT OF HIGHWAYS
DIVISION OF DESIGN AND CONSTRUCTION
BUREAU OF BRIDGES

SUPERSTRUCTURE DETAILS

BRIDGE No. AT-50-93
OVER MARGARET CREEK & N.Y.C. R.
ATHENS COUNTY STA. 492+78.
STA. 495+82.

DESIGNED	DRAWN	TRACED	CHECKED	REVIEWED	DATE	REVIS
D.G.H.	D.G.H.	Brassell	mfd	BFG A.J.K.	6-30-55	

FED. RD. DIVISION	STATE	PROJECT	
2	OHIO		

216
232

ATH-50-(4.01-11.91)

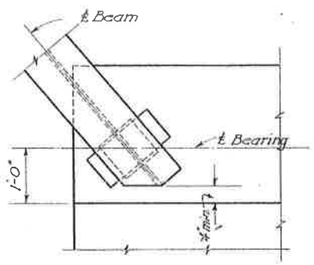

SECTION P-P

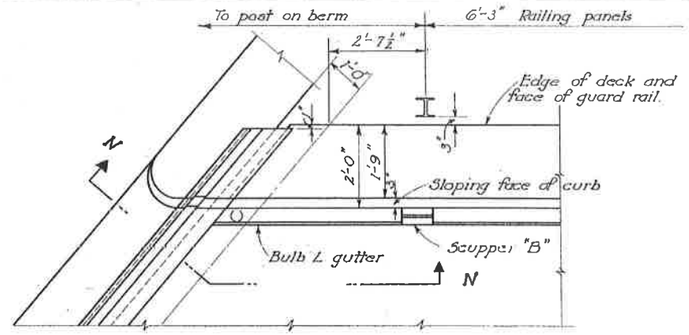

PART PLAN AT N.W. ABUTMENT

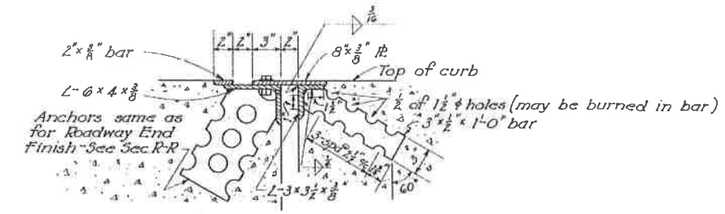

SECTION T-T
for additional details see Sec. R-R

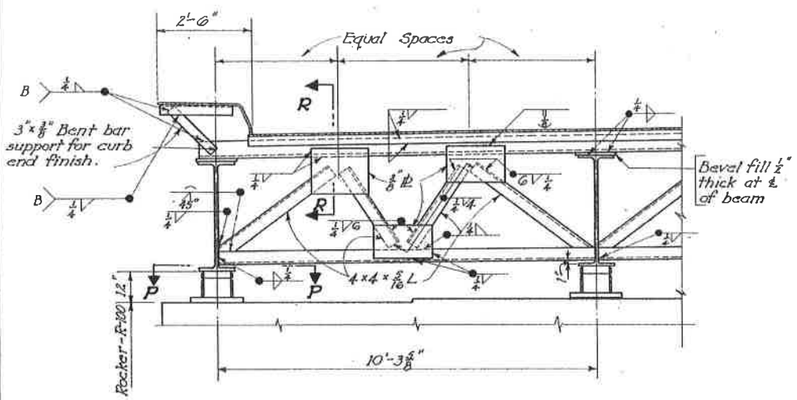

SECTION O-O

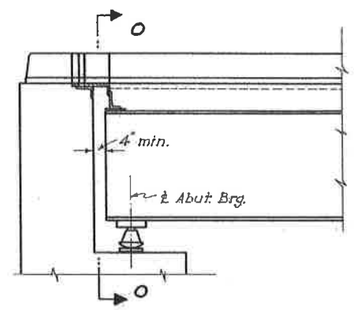

SECTION N-N

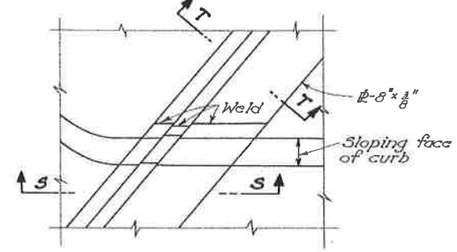

PART PLAN

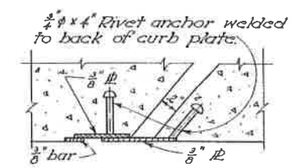

SECTION U-U

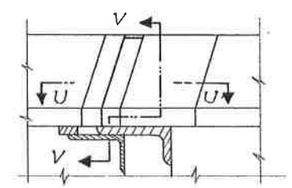

SECTION S-S

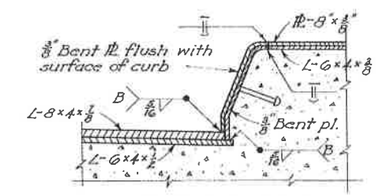

SECTION V-V

CURB PLATE DETAILS

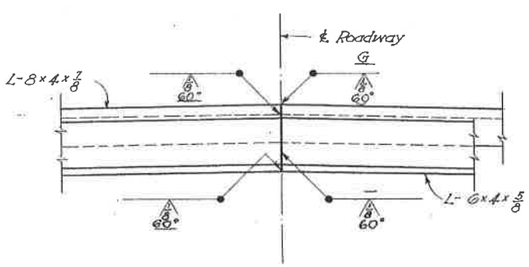

WELDED BUTT JOINT IN END FINISH ANGLES

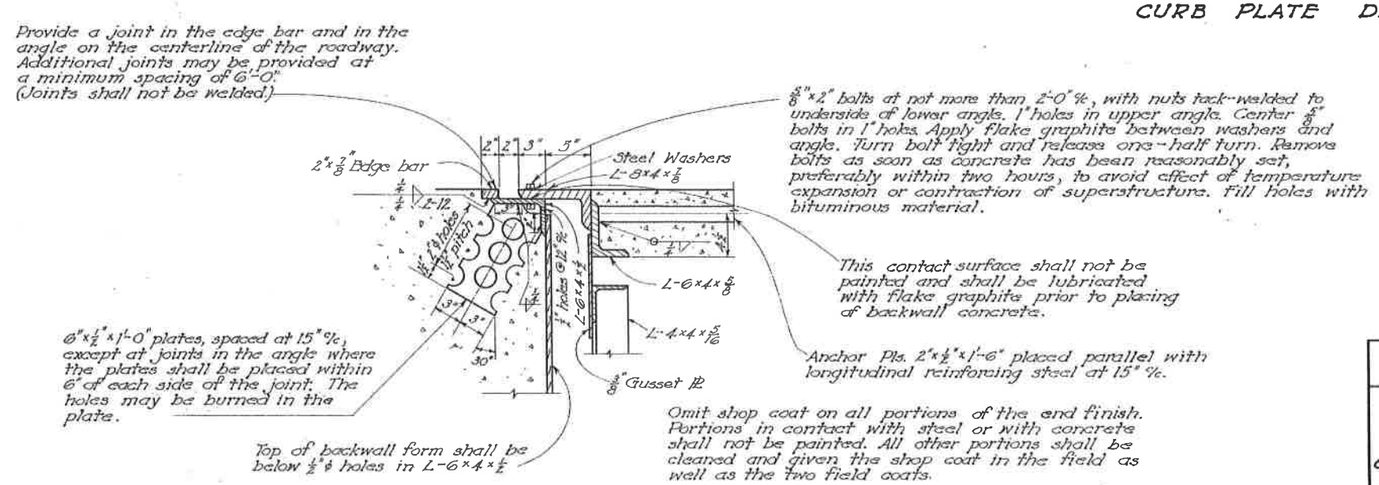

SECTION R-R

STATE OF OHIO
DEPARTMENT OF HIGHWAYS
DIVISION OF DESIGN AND CONSTRUCTION
BUREAU OF BRIDGES

SUPERSTRUCTURE DETAILS

BRIDGE No. AT-50-93
OVER MARGARET CREEK & N.Y.C.-R.R.
ATHENS COUNTY — STA. 492+78.06, STA. 495+82.94

DESIGNED	DRAWN	TRACED	CHECKED	REVIEWED	DATE	REVISE
D.L.H.	D.L.H.		MJ	BFG A.J.K.	6-30-55	

FED. RD. DIVISION	STATE	PROJECT	
2	OHIO		

217
232

ATH-50-(4.01-11.91)

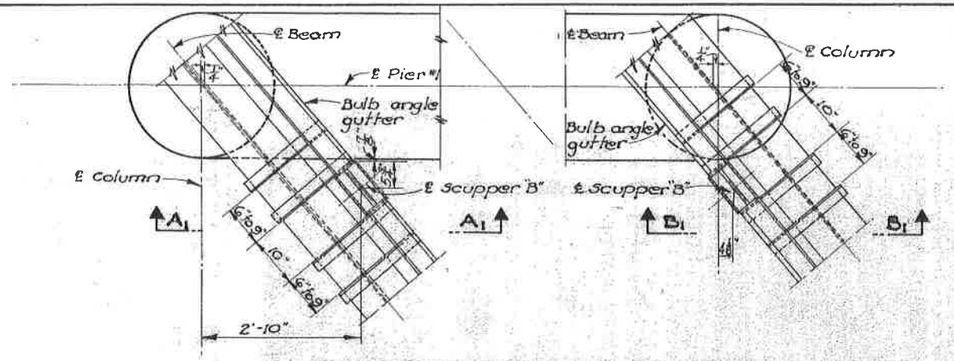

SUPERSTRUCTURE PART PLAN

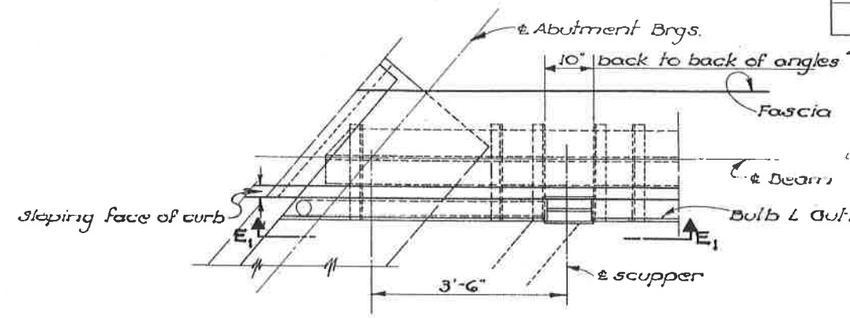

SUPERSTRUCTURE PART PLAN

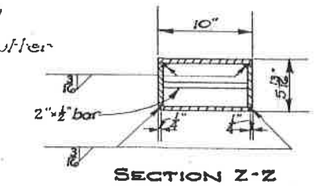

SECTION Z-Z

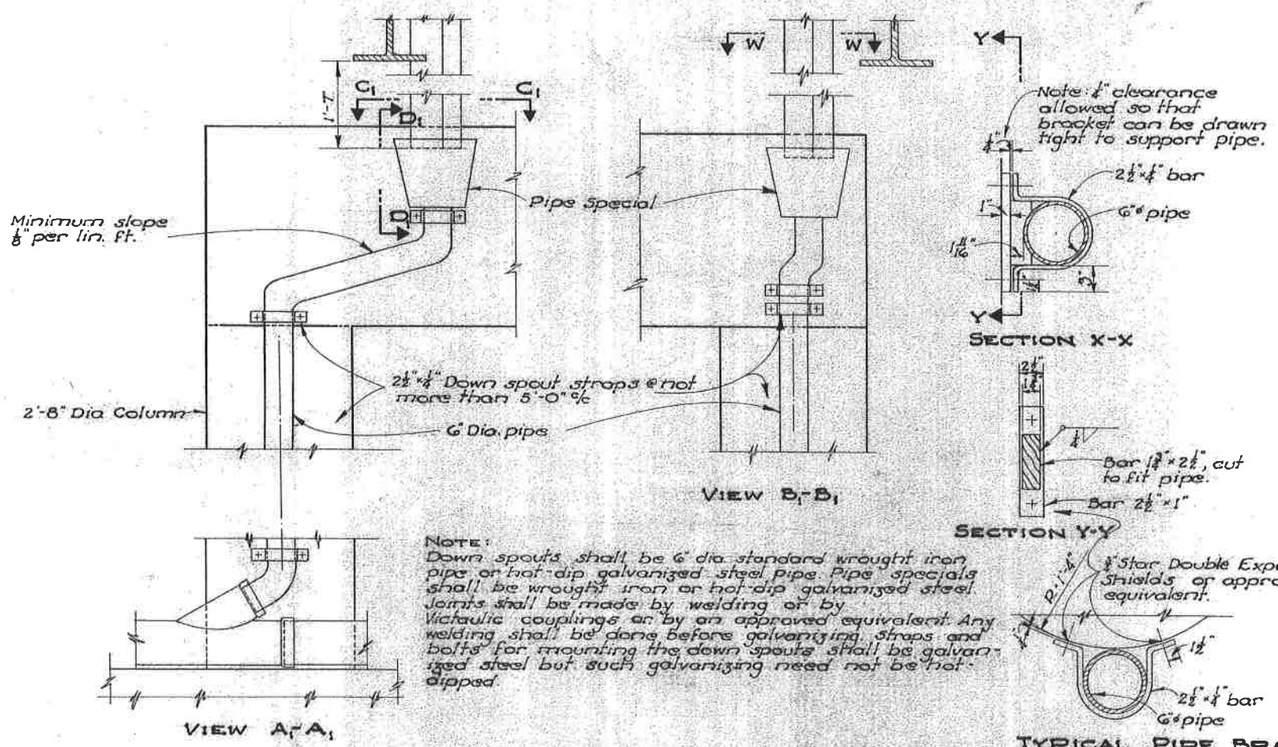

VIEW B1-B1

SECTION X-X

SECTION Y-Y

NOTE:
Down spouts shall be 6" dia. standard wrought iron pipe or hot-dip galvanized steel pipe. Pipe specials shall be wrought iron or hot-dip galvanized steel. Joints shall be made by welding or by Victaulic couplings or by an approved equivalent. Any welding shall be done before galvanizing. Straps and bolts for mounting the down spouts shall be galvanized steel but such galvanizing need not be hot-dipped.

VIEW A1-A1

TYPICAL PIPE BRACKET AT COLUMN

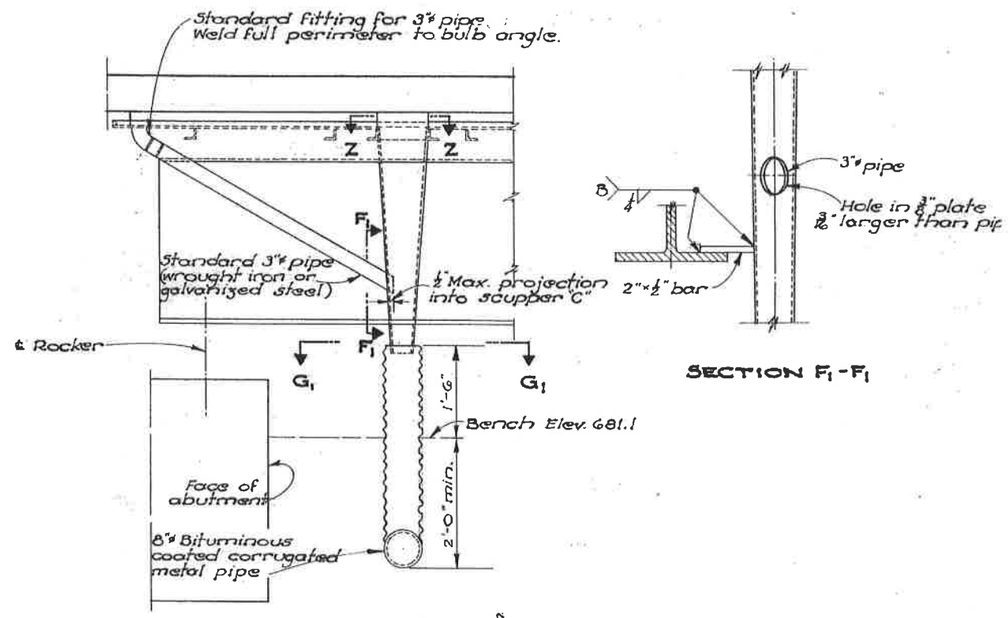

VIEW E-E

SECTION F1-F1

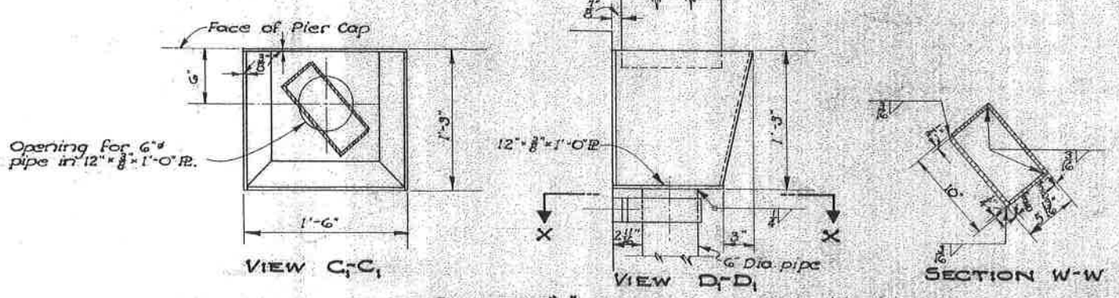

VIEW C1-C1

VIEW D1-D1

SECTION W-W

SCUPPER "B" DETAILS AT PIER #1

NOTE: For details not shown, see Typical Scupper Details sheet No. 215

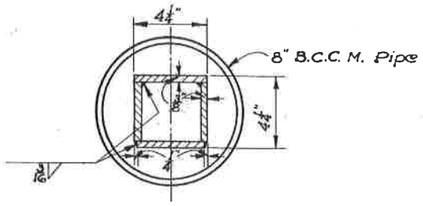

SECTION G1-G1

SCUPPER "C" DETAILS AT REAR ABUTMENT

NOTE: For details not shown see Typical Scupper Details Sheet No. 215

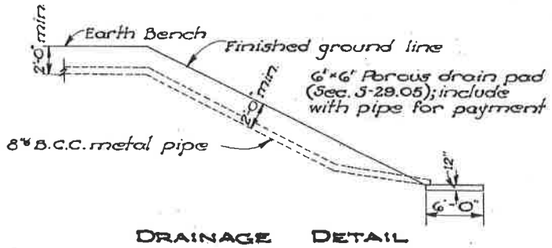

DRAINAGE DETAIL

STATE OF OHIO
DEPARTMENT OF HIGHWAYS
DIVISION OF DESIGN AND CONSTRUCTION
BUREAU OF BRIDGES

DRAINAGE DETAILS

BRIDGE No. AT-50-93
OVER MARGARET CREEK AND N.Y.C.R.R.

ATHENS COUNTY

STA. 492+78.06
495+82.94

DESIGNED	DRAWN	TRACED	CHECKED	REVIEWED BFG	DATE	REVISE
D.G.H.	D.G.H.	RGB	mfw	A.J.K.	6-30-55	

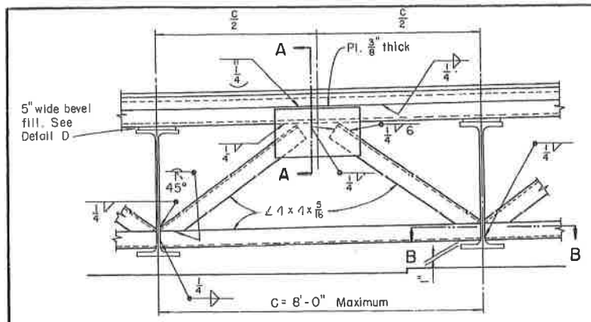

END CROSSFRAME

For beam spacing of 8'-0" or less measured parallel to end dam.

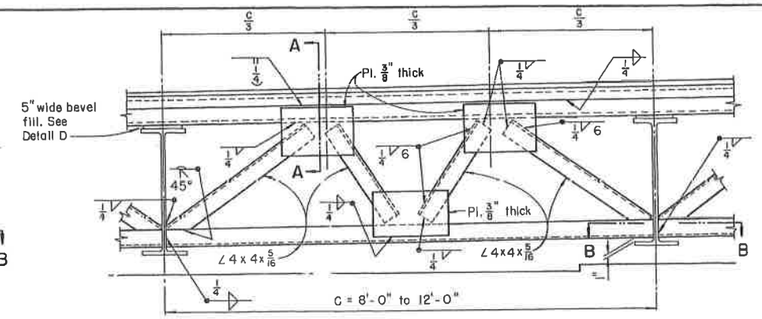

END CROSSFRAME

For beam spacing of 8'-0" to 12'-0" measured parallel to end dam.

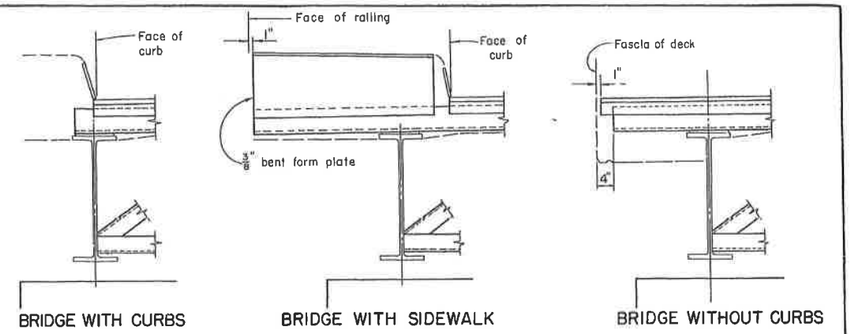

END DAM DETAILS AT FASCIA BEAM

(For additional details see Sheet No 2)

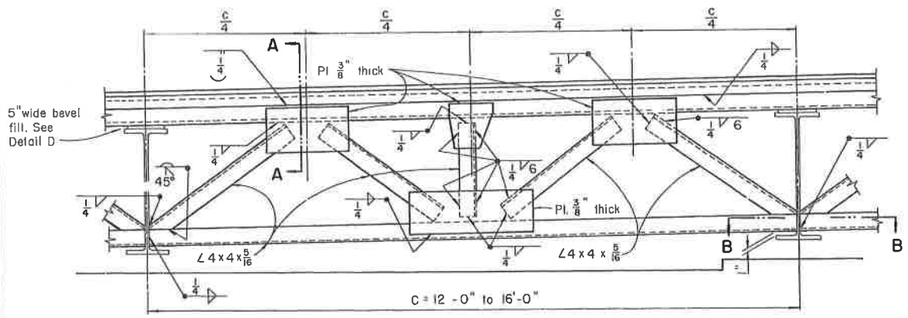

END CROSSFRAME

For beam spacing of 12'-0" to 16'-0" measured parallel to end dam.

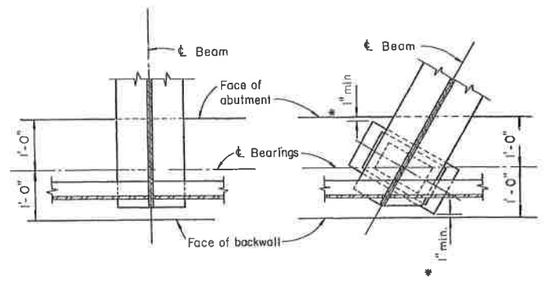

FOR SQUARE BRIDGES

FOR SKEWED BRIDGES

SECTION B - B

* Where necessary, cope corner of masonry plate in order to maintain 1" clearance.

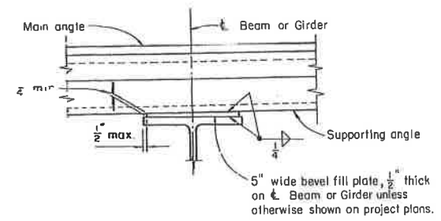

DETAIL D

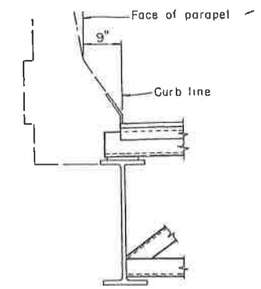

BRIDGE WITH ROADWAY PARAPET RAILING

A welded butt joint in the end dam, at the apex of roadway, will be required for that portion of the end dam attached to the superstructure. The portion attached to the backwall shall be placed in segments not less than 6'-0" in length, with a joint at each joint in the backwall and with one of the joints at the apex of roadway. These shall be closely butted but shall not be welded.

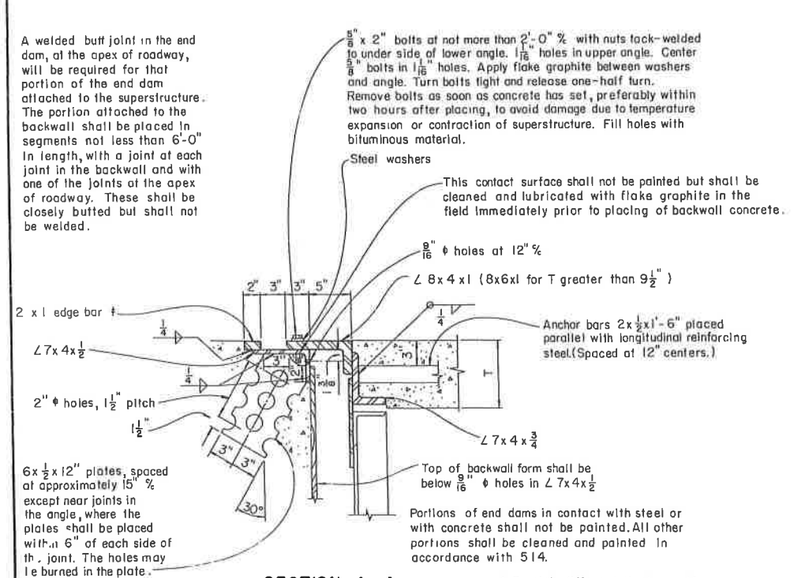

SECTION A - A

SHOWING ROADWAY END DAM FOR MONOLITHIC WEARING SURFACE

† Furnish different thickness if required to compensate for grades in excess of 2%.

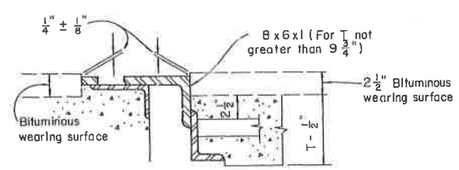

SECTION A - A

SHOWING ROADWAY END DAM FOR BITUMINOUS WEARING SURFACE

Same as SECTION A-A for monolithic wearing surface except as shown.

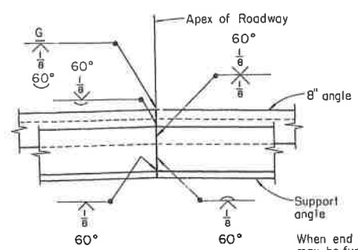

WELDED BUTT JOINT IN SUPERSTRUCTURE END DAM

When end dam contains no apex, a butt joint may be furnished near the centerline of the deck, if necessary to facilitate handling and shipping.

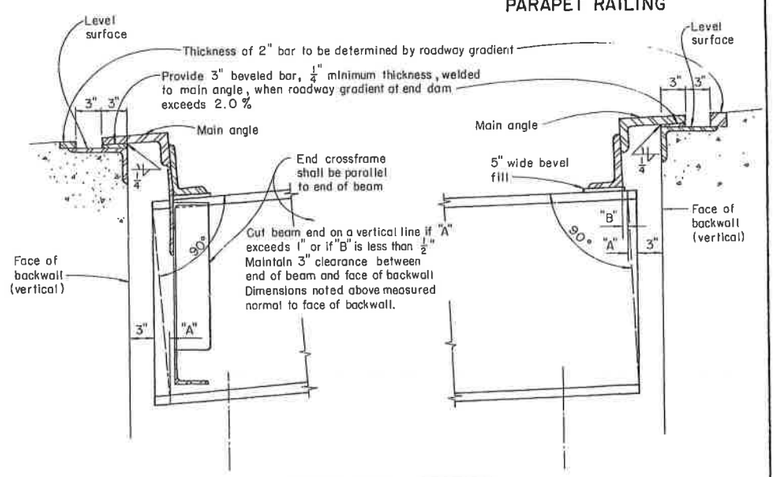

LONGITUDINAL SECTION BRIDGE ON GRADE

REVISIONS	STATE OF OHIO DEPARTMENT OF HIGHWAYS DIVISION OF DESIGN AND CONSTRUCTION BUREAU OF BRIDGES				
	STANDARD SUPERSTRUCTURE DETAILS FOR STEEL BEAM AND GIRDER BRIDGES				
	APPROVED: C. H. Alberter ENGINEER OF BRIDGES DATE 6-12-69				DRAWING NUMBER SD-1-69
	PREPARED FFE	TRACED NRB	CHECKED WJJ FFE	REVIEWED CDB RVH BFG	SHEET NO. 1 OF 4 SHEETS

MICROFILMED FEB 21 1969

MICROFILMED
FEB 21 1990

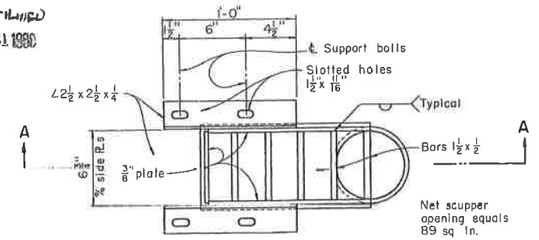

PLAN
STANDARD SCUPPER

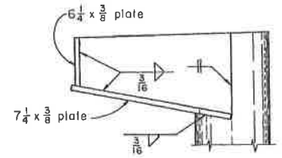

SCUPPER ELEVATION

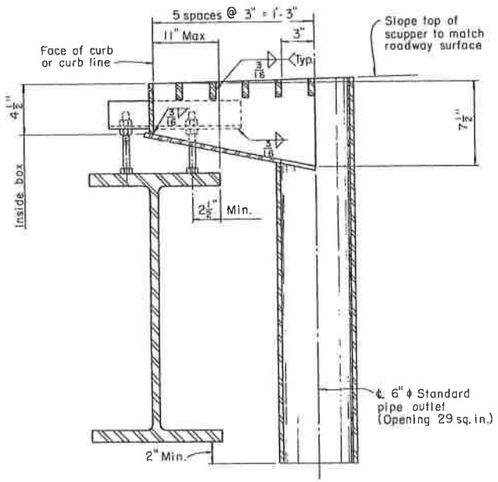

SECTION A-A

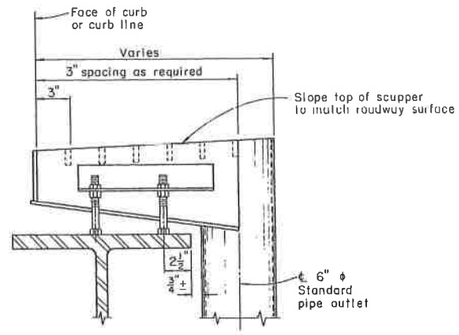

DETAIL A

Scupper elevation showing method for lengthening scupper where necessary to clear the flanges

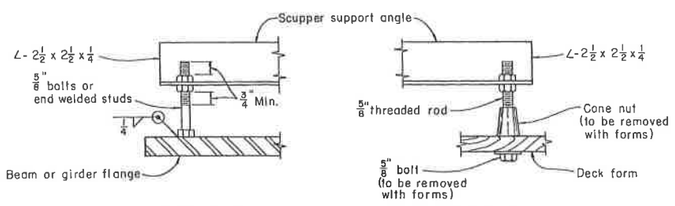

DETAIL B

DETAIL C

For scuppers that are not located adjacent to a beam or girder flange.

SCUPPER SUPPORT BOLTS

Scuppers shall be furnished in sufficient number to provide one square inch of net scupper opening for each 12 to 15 square feet of deck area to be drained. The downspout shall have at least one square inch of opening for each five square inch of net scupper opening, with a minimum nominal diameter of 6 inches.

Scupper should clear crossframes by at least 6" and abutments by 2'-6". They shall be no nearer to ℄ of pier bearings than 0.10 of span length.

The support angles and support bolts are included with scupper for payment.

Scuppers, including support angles, shall be galvanized in accordance with 711.

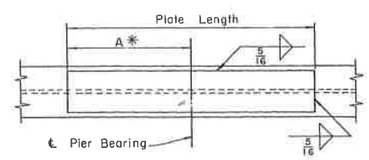

TOP FLANGE

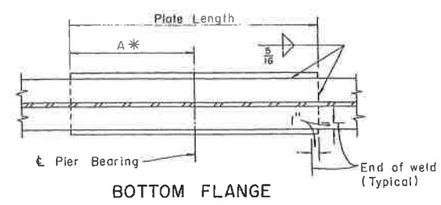

BOTTOM FLANGE

MOMENT PLATES

* See Standard Drawings or project plans for dimension "A". Dimension "A" equals 1/2 plate length unless otherwise shown, in which case the plans shall indicate the span to which dimension "A" applies.

REVISIONS	STATE OF OHIO DEPARTMENT OF HIGHWAYS DIVISION OF DESIGN AND CONSTRUCTION BUREAU OF BRIDGES				
	STANDARD SUPERSTRUCTURE DETAILS FOR STEEL BEAM AND GIRDER BRIDGES				
	APPROVED DATE: 6-12-69 C. H. Wooten ENGINEER OF BRIDGES				DRAWING NUMBER SD-1-69
	PREPARED MPB	TRACED NRB	CHECKED WJJ	REVIEWED CDB RVH BFG	SHEET NO 3 OF 4 SHEETS

22" 17" 11" 8.5"

8.5" 11" 17" 22"

FHWA REGION	STATE	PROJECT	
5	OHIO		

52/584

ATH-50-4.95
4.0 miles ± west of Athens

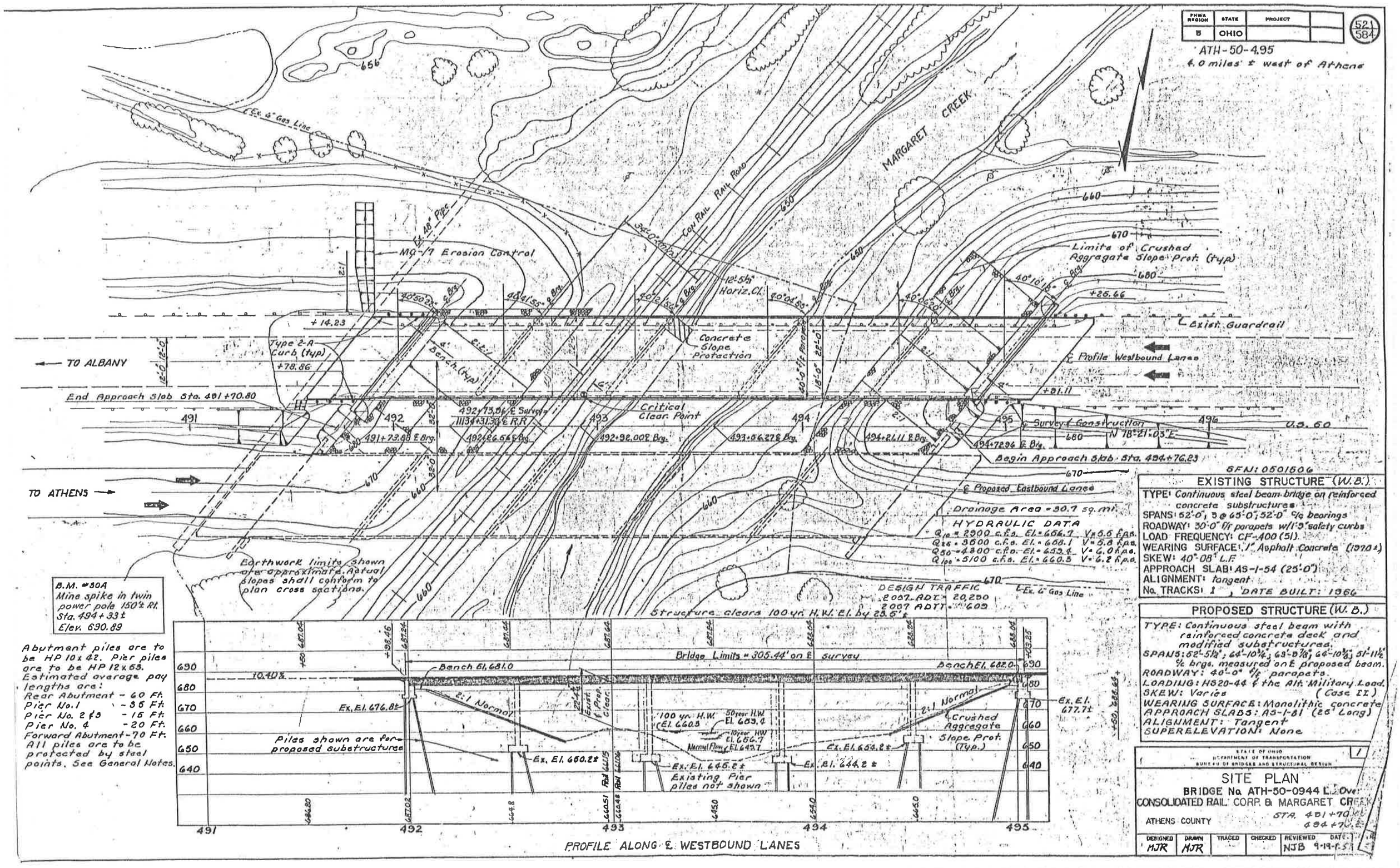

PROFILE ALONG ℄ WESTBOUND LANES

Abutment piles are to be HP 10x42. Pier piles are to be HP 12x53. Estimated average pay lengths are:
Rear Abutment - 60 Ft.
Pier No. 1 - 35 Ft.
Pier No. 2 & 3 - 15 Ft.
Pier No. 4 - 20 Ft.
Forward Abutment - 70 Ft.
All piles are to be protected by steel points. See General Notes.

SFN: 0501606

EXISTING STRUCTURE (W.B.)

TYPE: Continuous steel beam bridge on reinforced concrete substructures.
SPANS: 52'-0", 3 @ 65'-0", 52'-0" c/c bearings
ROADWAY: 30'-0" f/f parapets w/1'-9" safety curbs
LOAD FREQUENCY: CF-400 (51).
WEARING SURFACE: 1" Asphalt Concrete (1970 ±)
SKEW: 40°-08' L.F.
APPROACH SLAB: AS-1-54 (25'-0")
ALIGNMENT: tangent
No. TRACKS: 1 , DATE BUILT: 1966

PROPOSED STRUCTURE (W.B.)

TYPE: Continuous steel beam with reinforced concrete deck and modified substructures.
SPANS: 52'-5½"; 66'-10¾"; 65'-0⅛"; 66'-10¾"; 51'-11½" c/c brgs. measured on ℄ proposed beam.
ROADWAY: 40'-0" f/f parapets.
LOADING: HS20-44 & the Alt. Military Load. (Case II)
SKEW: Varies
WEARING SURFACE: Monolithic concrete
APPROACH SLABS: AS-1-81 (26' Long)
ALIGNMENT: Tangent
SUPERELEVATION: None

STATE OF OHIO
DEPARTMENT OF TRANSPORTATION
BUREAU OF BRIDGES AND STRUCTURAL DESIGN

1

SITE PLAN

BRIDGE No. ATH-50-0944 L.J. Over
CONSOLIDATED RAIL CORP. & MARGARET CREEK

ATHENS COUNTY

STA. 491+70.80
494+76.23

DESIGNED	DRAWN	TRACED	CHECKED	REVIEWED	DATE
MJR	MJR			NJB	9-19-75

FHWA REGION	STATE	PROJECT	
5	OHIO		

522/584

ATH-50-4.95

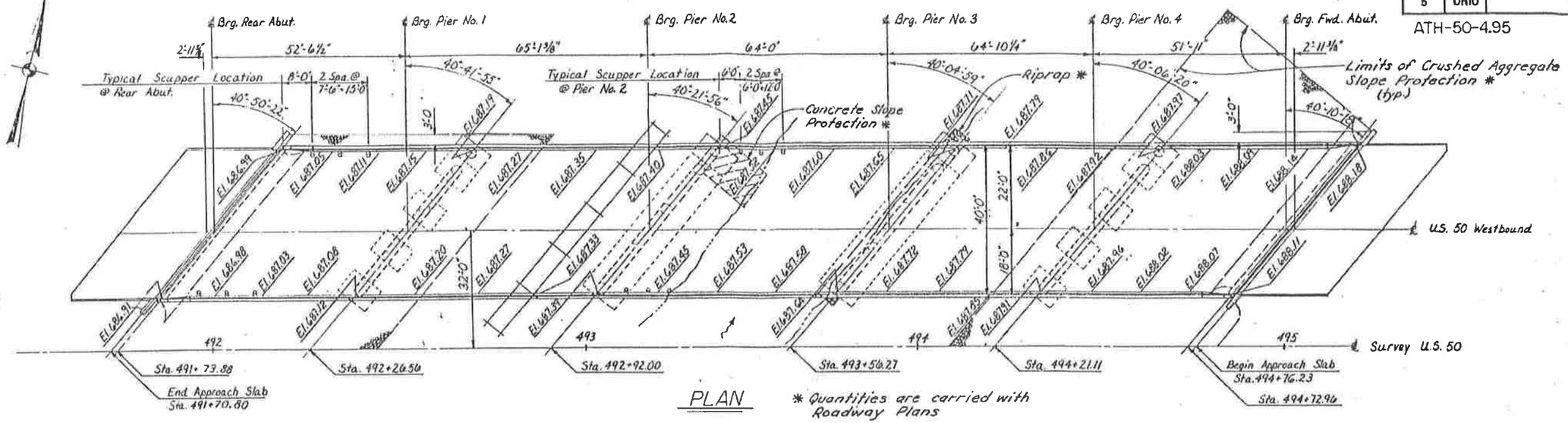

PLAN

* Quantities are carried with Roadway Plans

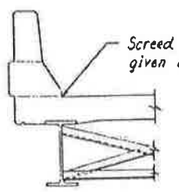

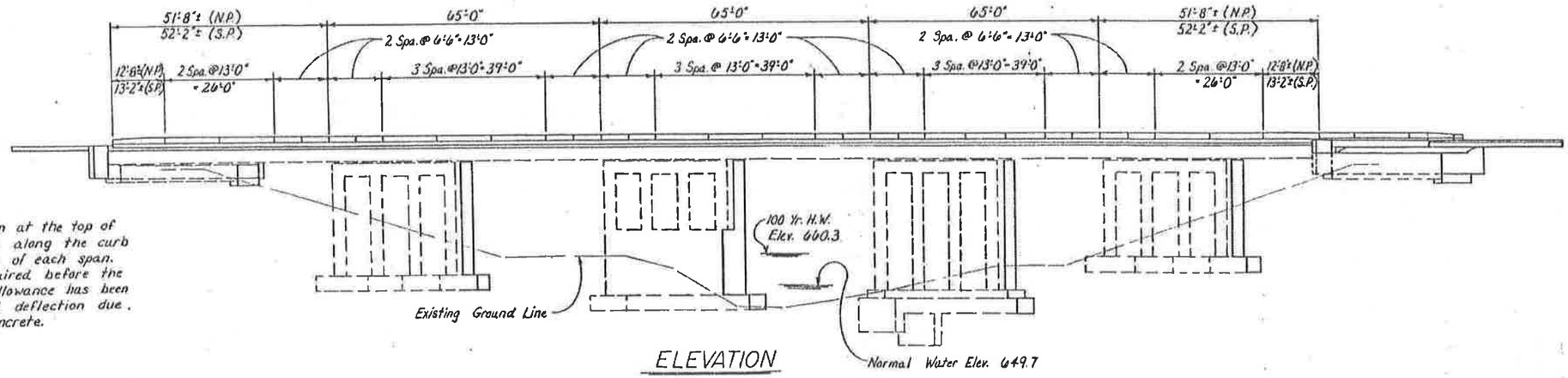

ELEVATION

Note: Piles are not shown.

Screed elevations are given at the top of the portland cement deck along the curb line for the quarter points of each span. These elevations are required before the deck is placed. Proper allowance has been made for the dead load deflection due to the weight of the concrete.

LEGEND

N.P. - North Parapet

S.P. - South Parapet

STATE OF OHIO
DEPARTMENT OF TRANSPORTATION
BUREAU OF BRIDGES AND STRUCTURAL DESIGN

2 / 17

GENERAL PLAN

BRIDGE NO. ATH-50-0944 L

over

CONRAIL CORP. & MARGARET CREEK

DESIGNED	DRAWN	TRACED	CHECKED	REVIEWED	DATE	REVISED
BRA	BRA		AJM	WTF	3-27-86	

FHWA REGION	STATE	PROJECT	
5	OHIO		

ATH - 50 - 4.95

523
584

GENERAL NOTES

REFERENCE shall be made to Standard Drawings:

AS-1-81	Dated	11-27-81
BR-1	Dated	5-29-79
RB-1-55	Revised	2-2-59
SD-1-69	Dated	6-12-69 (sheets 1 and 3 of 4)

and to Supplemental Specifications:

824	Dated	10-8-82
836	Dated	11-12-85

DESIGN SPECIFICATIONS: This structure conforms to "Standard Specifications for Highway Bridges" adopted by the American Association of State Highway and Transportation Officials, 1983, including the 1984 Interim Specifications and the Ohio "Supplement" to these specifications.

DESIGN DATA:

DESIGN LOADING - HS20-44 Case II and the Alternate Military Loading.

DESIGN STRESSES -

Concrete Class S - compressive strength 4500 p.s.i.
Concrete Class C - compressive strength 4000 p.s.i.
Reinforcing Steel - ASTM A615, A616, A617 - Grade 60 minimum yield strength 60,000 p.s.i.
Spiral reinforcement may be plain bars, ASTM A82 or A615
Structural Steel - ASTM A36 yield strength 36,000 p.s.i.

DECK PROTECTION METHOD: Epoxy coated reinforcing steel, both mats, and calcium nitrite corrosion inhibiting admixture in the concrete.

MONOLITHIC WEARING SURFACE is assumed for design purposes, to be 1" thick.

REPLACEMENT OF EXISTING REINFORCING STEEL: Any existing reinforcing bars which are to be incorporated into the new work and which are made unusable by the Contractor's concrete removal operations shall be replaced with new steel at his cost. Any existing reinforcing bars deemed by the Engineer to be unusable because of corrosion shall be replaced with new steel. An allowance of 100 pounds is included in Item 509 for this purpose.

EMBANKMENT CONSTRUCTION: The embankments shall be widened as per plan. Construct the widening up to the level of the subgrade for a minimum distance of 200 feet back of the abutments. Excavation may then be made for the abutment extensions and piles driven.

PILES shall be driven to refusal on bedrock. Refusal shall be considered as attained by penetrating soft bedrock with a minimum resistance of 20 blows per inch, or refusal shall be considered as attained after the pile has contacted hard bedrock and the pile has then received at least 20 blows.

The design load is 40 tons per pile for the abutment piles and 60 tons per pile for the pier piles.

CONSTRUCTION CLEARANCE OF 9 ft. horizontally from the center of tracks and 19 ft. vertically from a point level with the top of the higher rail, and 6 feet from the center of tracks, shall be maintained at all times.

UTILITY LINES: All expense involved in relocating the affected utility lines shall be borne by the Owner. The Contractor and Owner are requested to cooperate by arranging their work in such a manner that inconvenience to either will be held to a minimum.

ITEM SPECIAL, SEALING OF CONCRETE SURFACES: A concrete sealer, either a non-epoxy or an epoxy sealer, shall be applied to the following concrete surfaces; all sides and ends of deflector parapet, deck fascia and 6" in from the deck fascia on the underside of the deck. See the Proposal for surface preparation requirements, application rates, material requirements and application procedures.

EXISTING STRUCTURE VERIFICATION: Details and dimensions shown on these plans pertaining to the existing structure have been obtained from plans of the existing structure and/or from field observations and measurements. Consequently, they are indicative of the existing structure and the proposed work but they shall be considered tentative and approximate. The Contractor is referred to CMS Sections 102.05, 105.02 and 513.02.

Contract bid prices shall be based upon a recognition of the uncertainties described above and upon a prebid examination of the existing structure by the Contractor. However, all project work shall be based upon actual details and dimensions which have been verified by the Contractor in the field.

EXISTING BRIDGE PLANS may be inspected at the Bureau of Bridges and Structural Design in Columbus, Ohio or in District Office in Marietta, Ohio.

TRAFFIC MAINTENANCE: See Roadway Plan General Notes under Maintenance of Traffic.

PILE POINTS: Steel pile points shall be used to protect the tips of the proposed steel "H" piling. The steel points shall be furnished by Associated Pile and Fitting Corporation, 262 Rutherford Boulevard, Clifton, New Jersey 07014; International Construction Equipment, Inc., 301 Warehouse Drive, Matthews, North Carolina 28015; Dougherty Foundation Products, Inc., P.O. Box 688, Franklin Lakes, New Jersey 07417; Versa Steel Inc., 3601 N.W. Yeon Ave., P.O. Box 10559, Portland, Oregon 97210 or by a manufacturer that can furnish a steel point that is acceptable to the Director. The pile points shall satisfy or exceed the requirements of ASTM A27 (Grade 65/30 or ASTM A148 (Grade 90/60).

SOIL BORINGS: This Plan does not contain structure foundation investigation drawings. This information may be inspected at the Bureau of Bridges and Structural Design in Columbus, Ohio or in the District Office in Marietta, Ohio.

CONSTRUCTION SEQUENCE:

1. Remove existing deep beam railing and posts.
2. Remove the existing concrete deck, scuppers and portions of of the existing end dams as indicated by the plans.
3. Remove existing approach slabs and portions of existing abutments as per plan.
4. Jack existing steel beams to their final elevations at both abutments and secure them against movement. (During jacking operations counterweights on beams at Piers No. 1 and/or No. 4 may be required to insure that pier bearings remain in firm contact with the pier caps.) See Item Special.
5. Rebuild the abutments up to the level of the bridge seat construction joint and construct the pier extensions as per plan.
6. Erect the new stringer and seat the existing stringers on shim packs at both abutments.
7. Adjust and/or reset all rockers as required.
8. Complete remaining Contract items.

ITEM SPECIAL, JACKING OF STEEL SUPERSTRUCTURE: Existing steel beams shall be hydraulically jacked at both abutments. Approximate lifts are 5" to 5½" at the rear and 6" to 6½" at the forward abutment. Jacks shall have a capacity of at least 5 tons each with one placed under each beam. All jacks shall be stroked uniformly at each abutment. Proposed steel shim packs shall then be placed and existing rockers adjusted and reset. All labor, tools, equipment and incidentals necessary to complete this work are included under Item Special, Lump Sum, Jacking of steel superstructure.

PORTIONS OF STRUCTURES REMOVED: In addition to the removal items already noted or detailed on these plans, the existing 6"ϕ downspouts, drain boxes, and mounting brackets located at Pier No. 1 and the 8"ϕ downspouts at the rear abutment shall be removed. All downspouts shall be removed to a point one foot below the finished ground line and sealed with a precast clay or concrete stopper in accordance with item 202. All materials, labor, tools, equipment and incidentals necessary to complete this work are included under Item 202, Lump Sum, Portions of structures removed.

ESTIMATED QUANTITIES

ITEM	TOTAL	UNIT	DESCRIPTION	ABUT.	PIERS	SUPER.	GEN.
202	Lump		Portions of structures removed				Lump
503	Lump		Cofferdams, cribs and sheeting				Lump
503	Lump		Unclassified excavation				Lump
505	Lump		Pile driving equipment mobilization				Lump
507	330	Lin. ft.	Steel piles, HP10×42	330			
507	340	Lin. ft.	Steel piles, HP12×53		340		
507	21	Each	Steel points	5	16		
509	23,842	Lb.	Reinforcing steel, Grade 60	7,209	16,633		100
510	129	Each	Dowel holes	85	44		
511	66	Cu. yd.	Class C concrete, footings	21	45		
511	91	Cu. yd.	Class C concrete, above footings	55	36		
511	409	Cu. yd.	Class S concrete, superstructure (see Proposal Note)			409	
512	21	Sq. yd.	Type A waterproofing	21			
* 513	61,400	Lb.	Structural steel (AISC Category I)			61,400	
514	61,400	Lb.	Field painting of new structural steel, system B (708.09)			61,400	
514	Lump		Field painting of existing steel, surface preparation **			Lump	
514	Lump		Field painting of existing steel, spot prime **			Lump	
514	Lump		Field painting of existing steel, complete coat finish, system B (708.09)			Lump	
516	110	Lin. ft.	Structural expansion joints incuding elastomeric strip seals			110	
518	44	Cu. yd.	Porous backfill	44			
518	12	Each	Scuppers, including supports			12	
824	93,788	Lb.	Epoxy coated reinforcing steel, Grade 60			93,788	
Special	527	Sq. yd.	Sealing of concrete surfaces (see Proposal Note)			527	
Special	Lump		Jacking of steel superstructure			Lump	

* Includes Shim Packs. ** System B

STATE OF OHIO
DEPARTMENT OF TRANSPORTATION
BUREAU OF BRIDGES AND STRUCTURAL DESIGN

3 | 17

GENERAL NOTES & ESTIMATED QUANTITIES
BRIDGE NO. ATH-50-0944L
over
CONRAIL CORP. & MARGARET CREEK

DESIGNED	DRAWN	TRACED	CHECKED	REVIEWED	DATE	REVISED
AJM	AJM		Ohol 3-26-86	WTF	3-27-86	

FHWA REGION	STATE	PROJECT	
5	OHIO		

524
584

ATH-50-4.95

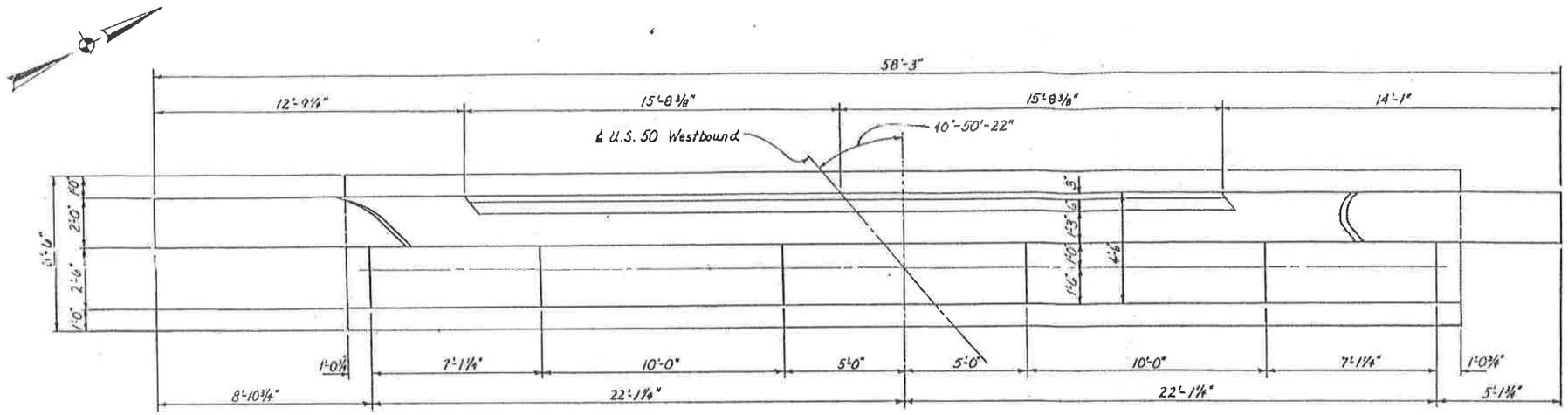

PLAN

Details of removal are not shown in this view.

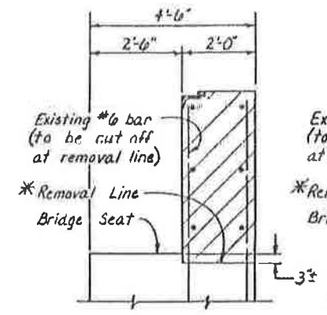

SECTION B-B

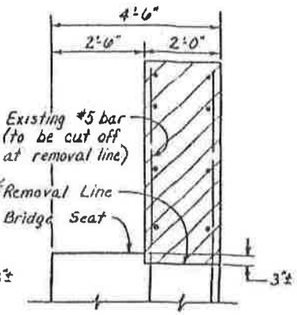

SECTION C-C

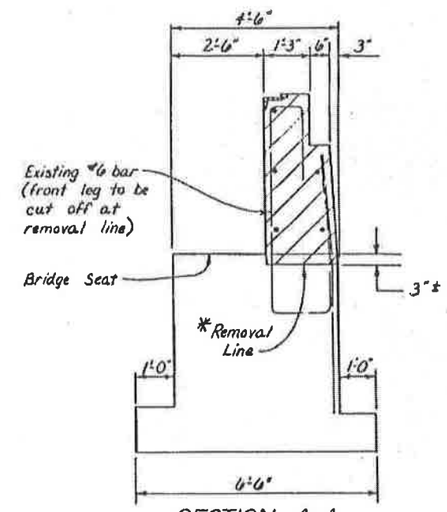

SECTION A-A

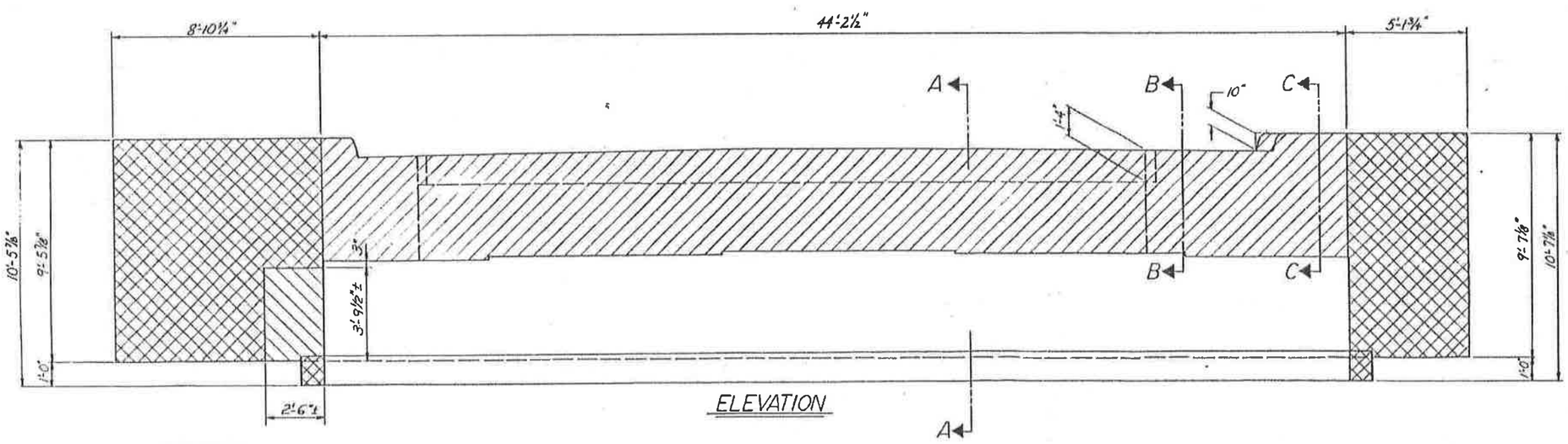

ELEVATION

* All concrete and horizontal reinforcement above the removal line shall be carefully removed. Vertical reinforcement above the removal line shall be preserved and cleaned except where noted.

LEGEND

- Portions of structure where concrete shall be carefully removed and vertical steel preserved and cleaned.
- Portions of structure where concrete shall be carefully removed and horizontal steel preserved and cleaned.
- Portions of structure to be completely removed.

STATE OF OHIO
DEPARTMENT OF TRANSPORTATION
BUREAU OF BRIDGES AND STRUCTURAL DESIGN

4 / 17

REAR ABUTMENT REMOVAL DETAILS

BRIDGE NO. ATH-50-0944L over CONRAIL CORP. & MARGARET CREEK

DESIGNED	DRAWN	TRACED	CHECKED	REVIEWED	DATE	REVISED
BRA	BRA		AJM	WTF	3-27-86	

FHWA REGION	STATE	PROJECT	
5	OHIO		

525/584

ATH-50-4.95

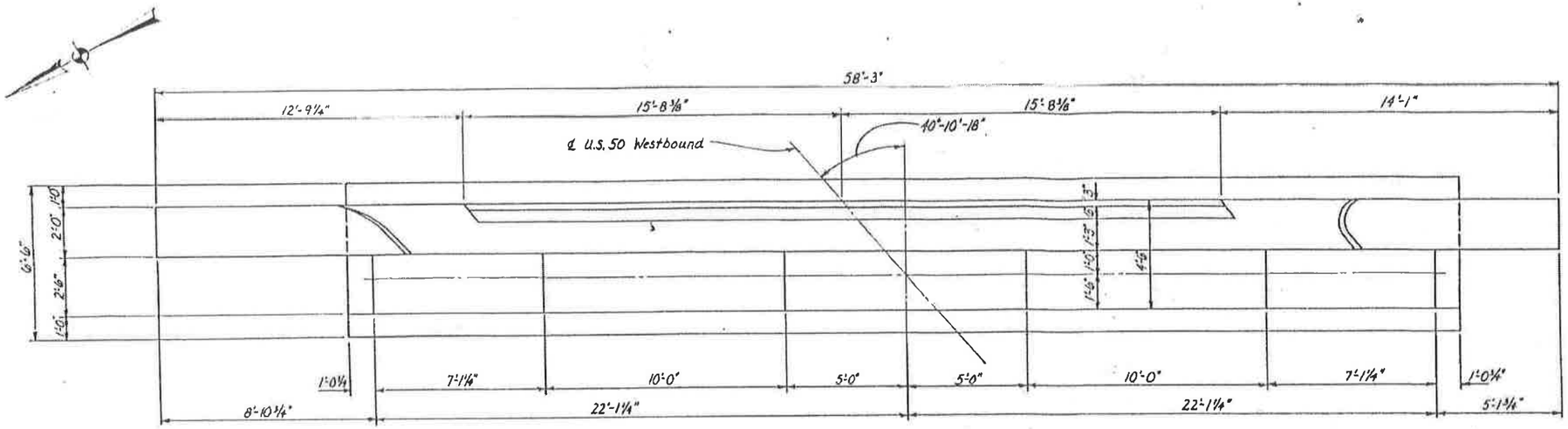

PLAN

Details of removal are not shown in this view.

LEGEND

- Portions of structure where concrete shall be carefully removed and vertical steel preserved and cleaned.
- Portions of structure where concrete shall be carefully removed and horizontal steel preserved and cleaned.
- Portions of structure to be completely removed.

For details of all sections see sheet 6/17.

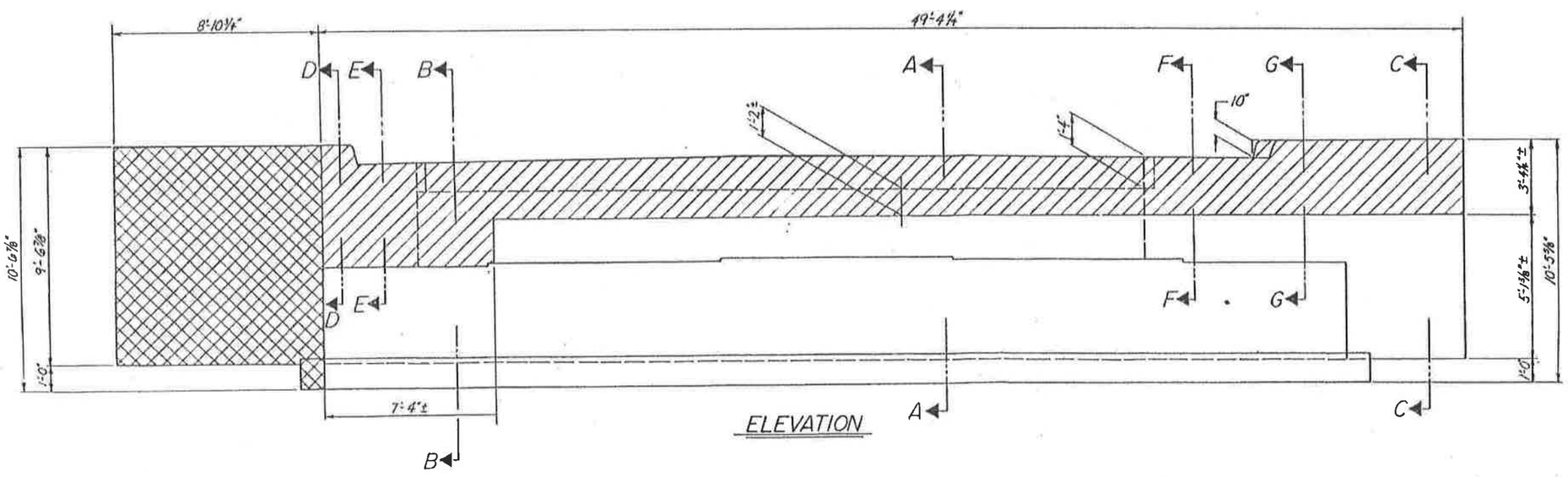

ELEVATION

STATE OF OHIO DEPARTMENT OF TRANSPORTATION BUREAU OF BRIDGES AND STRUCTURAL DESIGN	5/17

FORWARD ABUTMENT REMOVAL DETAILS

BRIDGE NO. ATH-50-0944L over CONRAIL CORP. & MARGARET CREEK

DESIGNED	DRAWN	TRACED	CHECKED	REVIEWED	DATE	REVISED
BRA	BRA		AJM	WTF	3-27-86	

FHWA REGION	STATE	PROJECT	
5	OHIO		

526/584

ATH-50-4.95

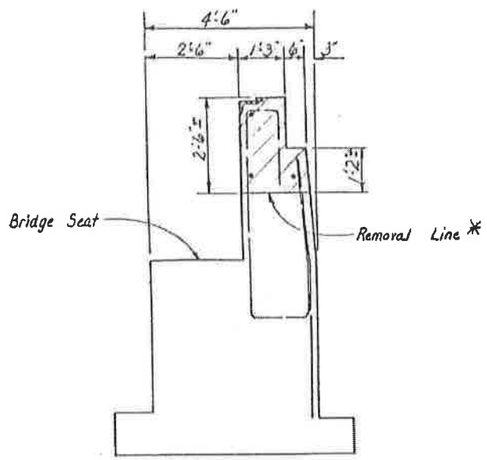

SECTION A-A

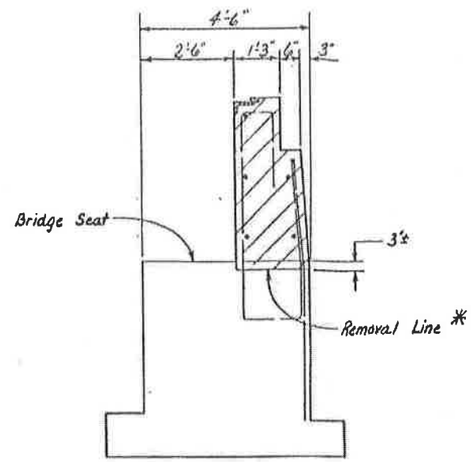

SECTION B-B

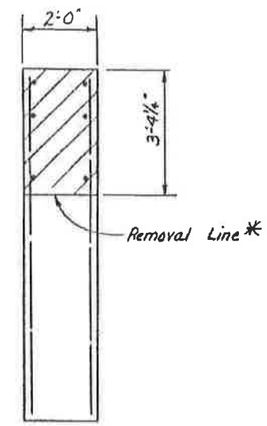

SECTION C-C

LEGEND

- Portions of structure where concrete shall be carefully removed and vertical steel shall be preserved and cleaned.

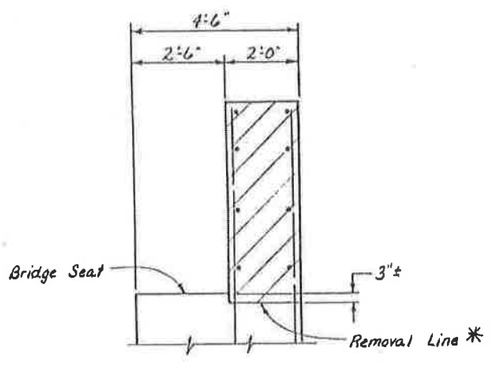

SECTION D-D

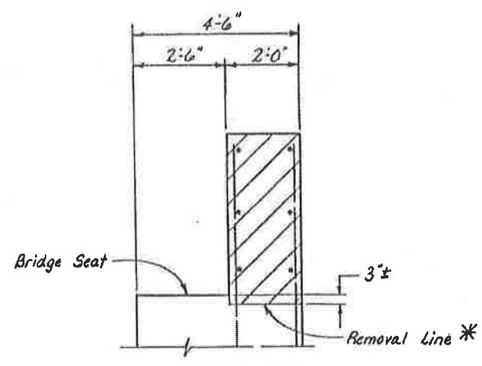

SECTION E-E

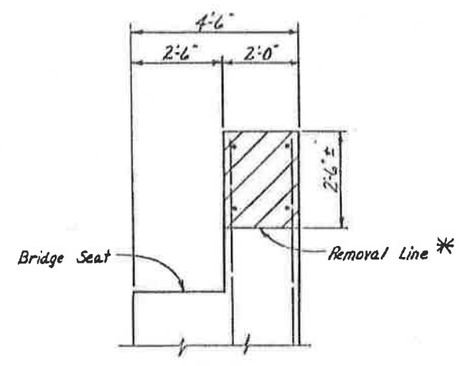

SECTION F-F

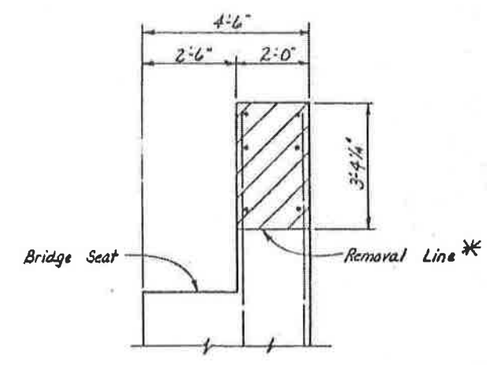

SECTION G-G

* All concrete and horizontal reinforcement above the removal line shall be carefully removed. Vertical reinforcement above the removal line shall be preserved and cleaned.

STATE OF OHIO
DEPARTMENT OF TRANSPORTATION
BUREAU OF BRIDGES AND STRUCTURAL DESIGN

6 / 17

FORWARD ABUTMENT REMOVAL DETAILS

BRIDGE NO. ATH-50-0944L
over
CONRAIL CORP. & MARGARET CREEK

DESIGNED	DRAWN	TRACED	CHECKED	REVIEWED	DATE	REVISED
BRA	BRA		AJM	WTF	3-27-86	

FHWA REGION	STATE	PROJECT	
5	OHIO		

527/584

ATH-50-4.95

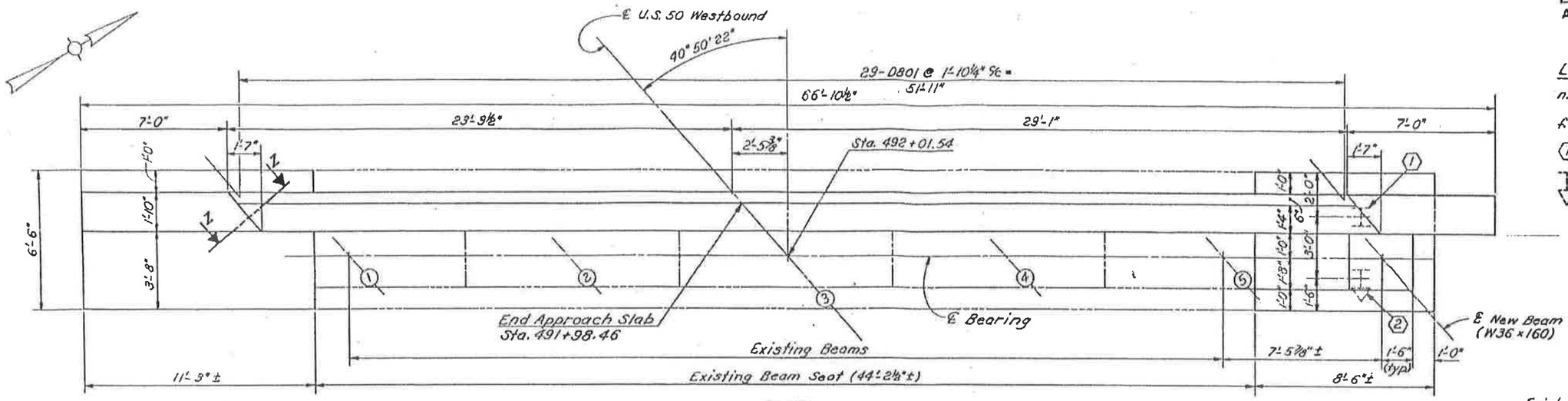

PLAN

LEGEND

n.f. - indicates near face

f.f. - indicates far face

(1) - indicates pile number

- indicates pile to be battered 1:4 in the direction shown

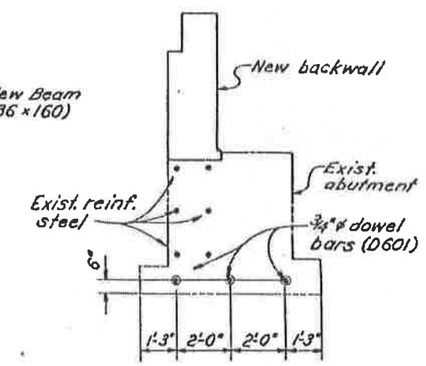

SECTION X-X

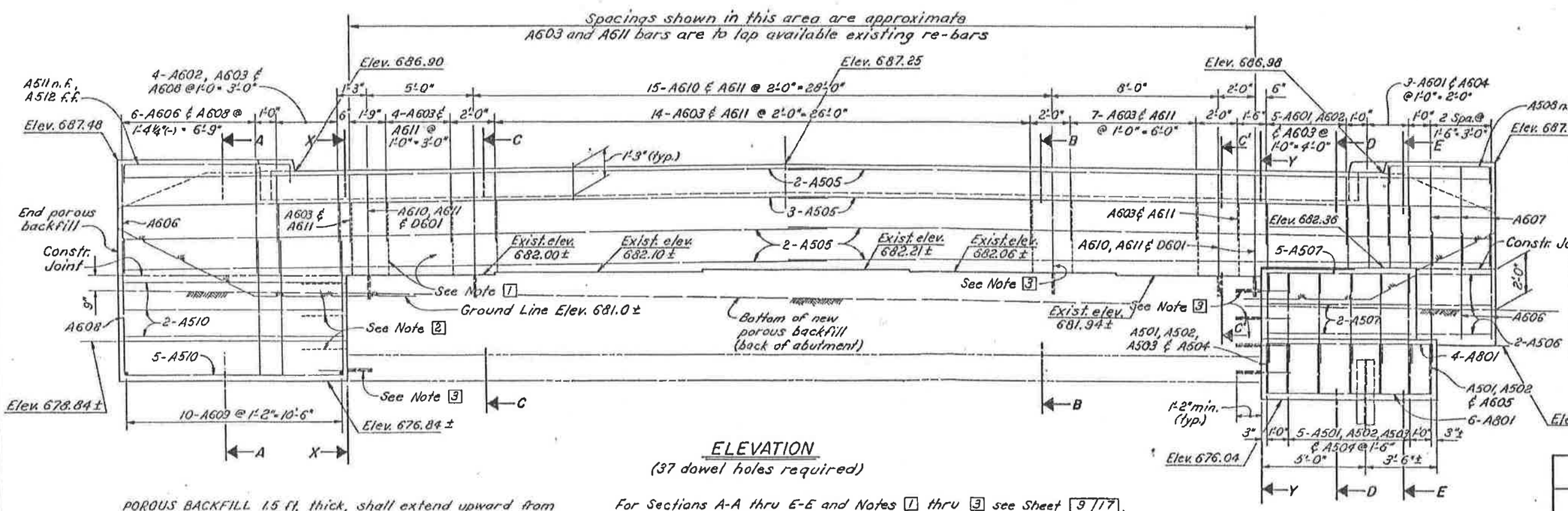

ELEVATION

(37 dowel holes required)

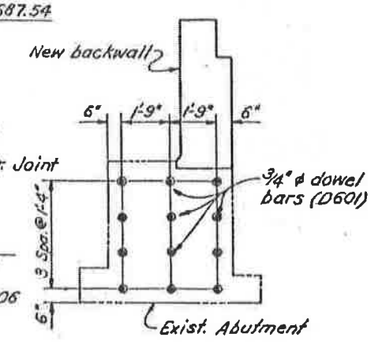

SECTION Y-Y

POROUS BACKFILL 1.5 ft. thick, shall extend upward from the level shown to the plane of the subgrade and laterally from end of south wingwall to the surface of north embankment slope.

BACKWALL CONCRETE: In addition to the provisions of 511.08, backwall concrete above the optional constr. joint at the approach slab seat shall not be placed until deck concrete in the span adjacent to the abut. has been placed.

For Sections A-A thru E-E and Notes 1 thru 3 see Sheet 9/17.

For Section Z-Z see Sheet 8/17.

For Shim Pack Details see Sheet 8/17.

STATE OF OHIO
DEPARTMENT OF TRANSPORTATION
BUREAU OF BRIDGES AND STRUCTURAL DESIGN

7/17

REAR ABUTMENT

BRIDGE NO. ATH-50-0944L
over
CONRAIL CORP. & MARGARET CREEK

DESIGNED	DRAWN	TRACED	CHECKED	REVIEWED	DATE	REVISED
AJM	AJM		Ohol	WTF	3-27-86	

FHWA REGION	STATE	PROJECT	
5	OHIO		

ATH-50-4.95

528
584

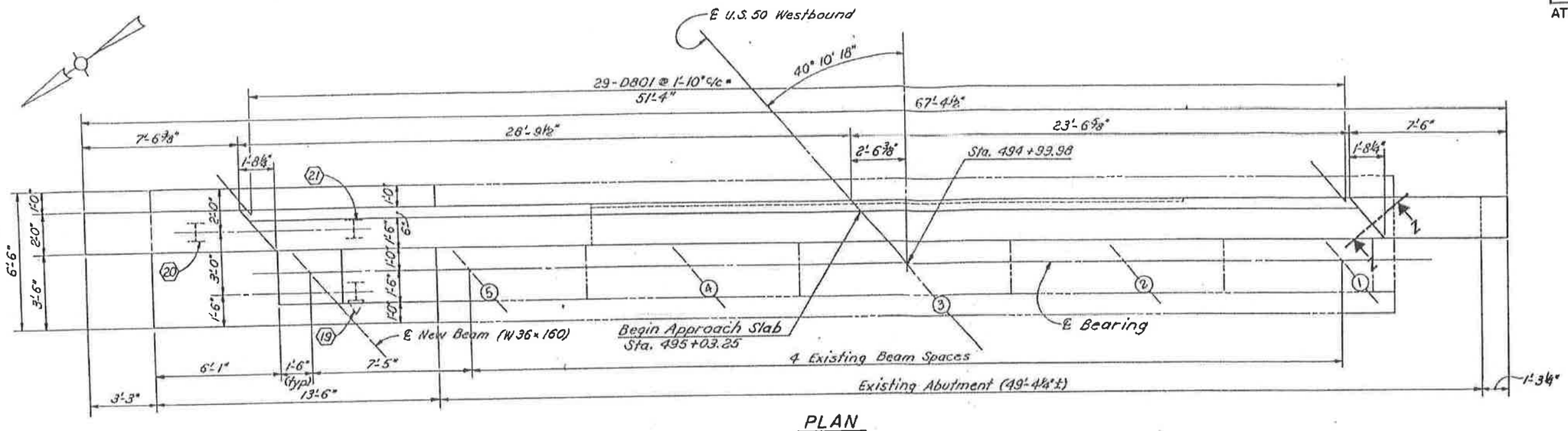

PLAN

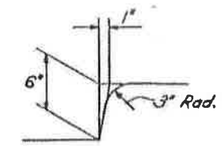

SECTION Z-Z

LEGEND

n.f. - indicates near face

f.f. - indicates far face

(21) - indicates pile number

- indicates pile to be battered 1:4 in the direction shown

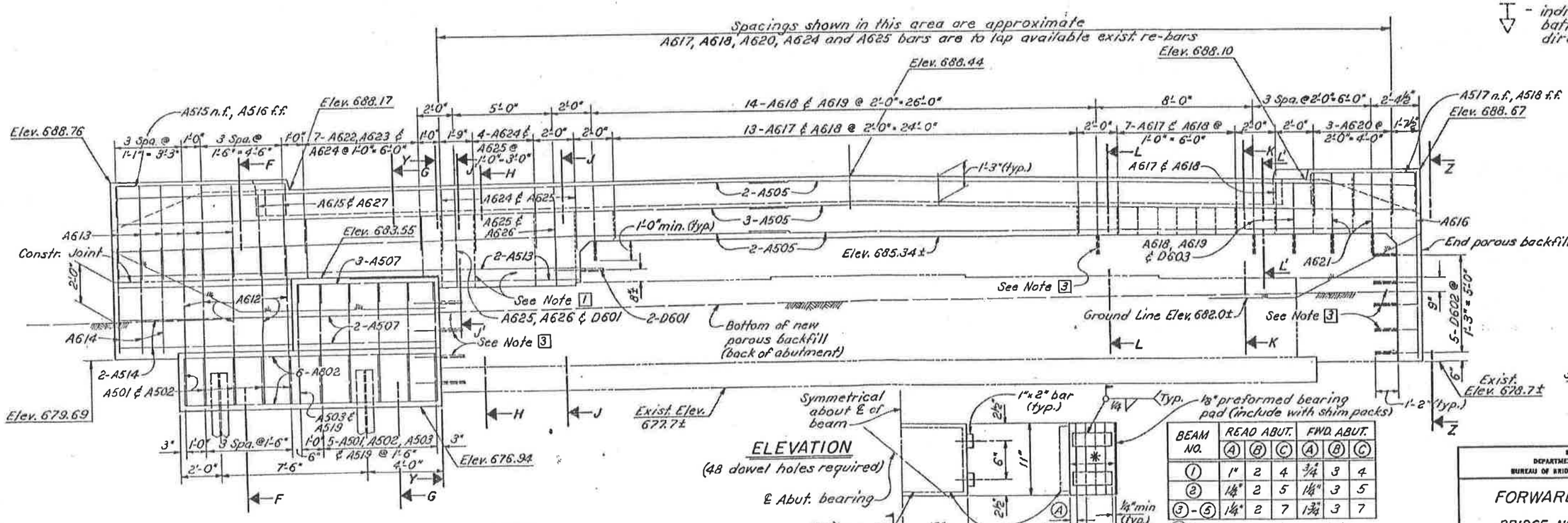

ELEVATION

(48 dowel holes required)

℄ Abut. bearing

* Actual depth of plates required shall be field measured after beams are jacked to final position.

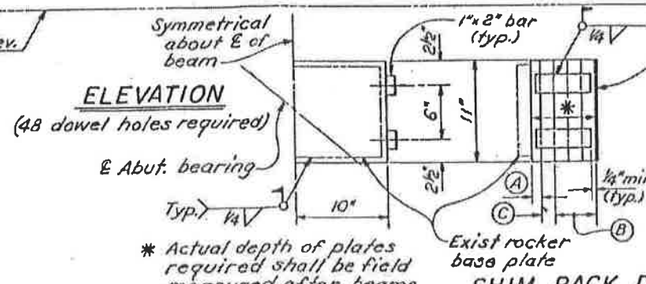

SHIM PACK DETAILS

BEAM NO.	READ ABUT. Ⓐ	Ⓑ	Ⓒ	FWD. ABUT. Ⓐ	Ⓑ	Ⓒ
1	1"	2	4	¾"	3	4
2	¼"	2	5	¼"	3	5
3-5	¼"	2	7	¾"	3	7

Ⓐ = Thickness of top plate

Ⓑ = Number of 1½" plates

Ⓒ = Number of ⅛" plates ‡

‡ Unused plates shall become property of the State.

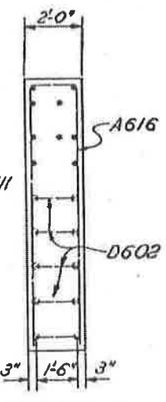

VIEW Z-Z

For Porous Backfill note and Section Y-Y see Sheet 7/17.

For Sections F-F thru L-L and Notes 1 thru 3 see Sheet 9/17.

STATE OF OHIO
DEPARTMENT OF TRANSPORTATION
BUREAU OF BRIDGES AND STRUCTURAL DESIGN

8 / 17

FORWARD ABUTMENT

BRIDGE NO. ATH-50-0944 L
over
CONRAIL CORP. & MARGARET CREEK

DESIGNED	DRAWN	TRACED	CHECKED	REVIEWED	DATE	REVISED
AJM	AJM		Ohol	WTF	3-27-86	

FHWA REGION	STATE	PROJECT	
5	OHIO		

ATH-50-4.95

529
584

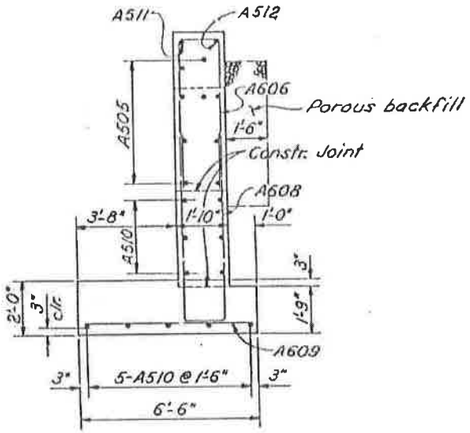

SECTION A-A

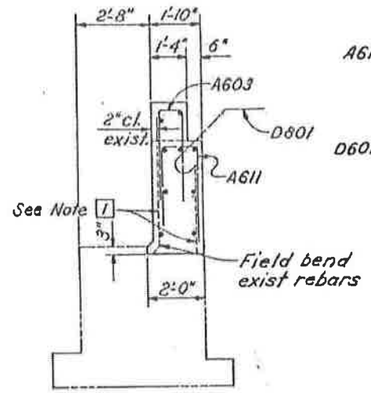

SECTION B-B

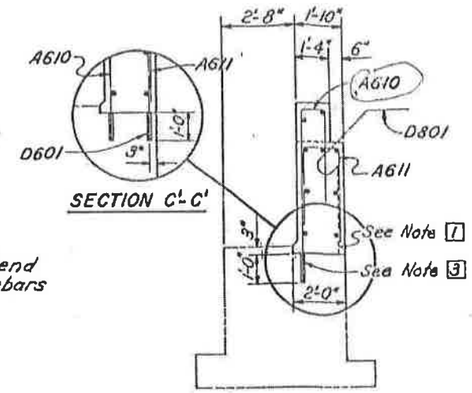

SECTION C'-C'

SECTION C-C

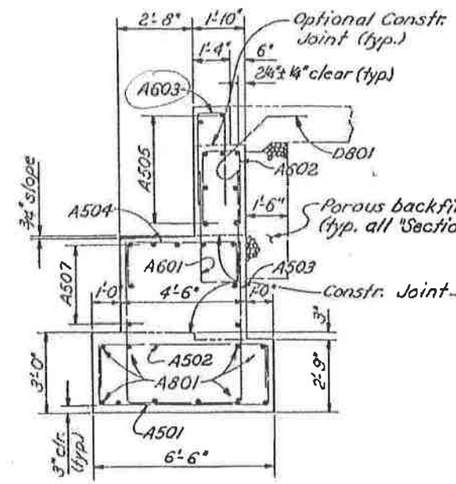

SECTION D-D

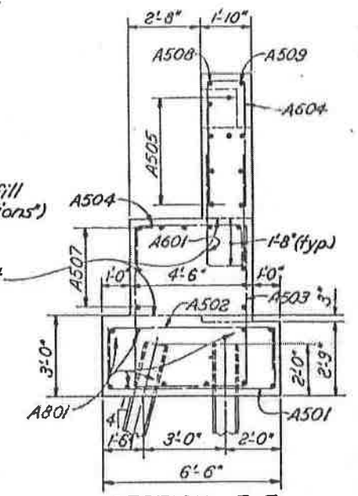

SECTION E-E

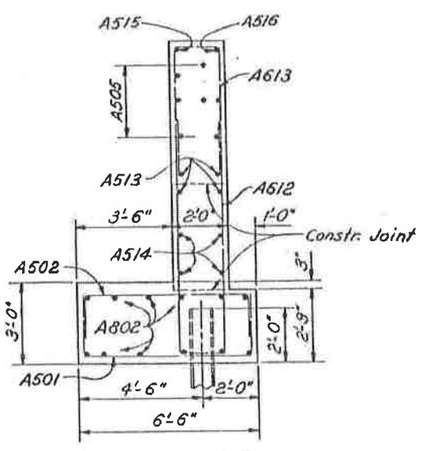

SECTION F-F

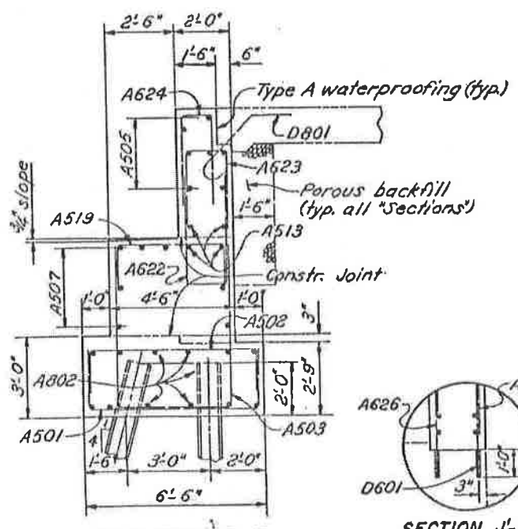

SECTION G-G

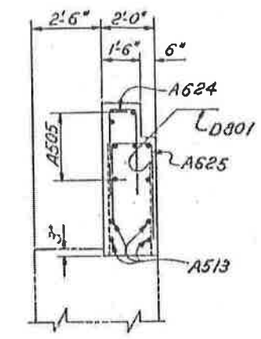

SECTION H-H

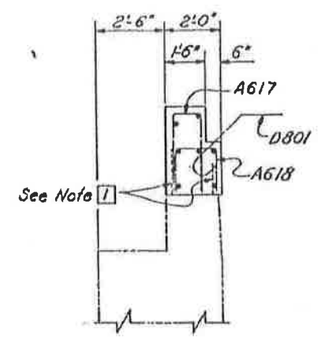

SECTION K-K

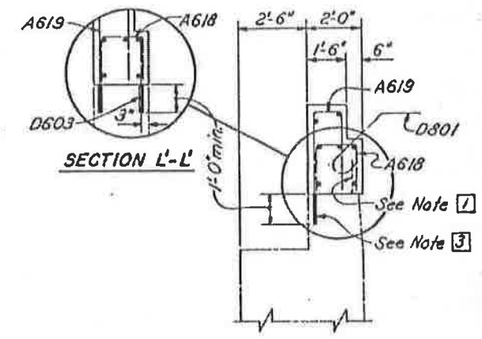

SECTION L'-L'

SECTION L-L

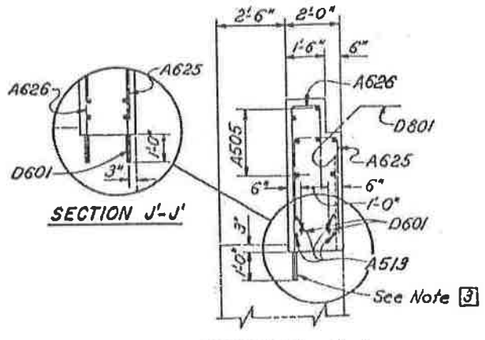

SECTION J'-J'

SECTION J-J

Note 1 - All vertical reinforcing steel in the existing backwall, within the limits of the existing bridge seat, shall be carefully cleaned and preserved for use in lapping new backwall reinforcement.

Note 2 - Existing horizontal reinforcing steel in the area shown on Sheet 7/17 shall be carefully cleaned and preserved for projection into the new concrete wingwall.

Note 3 - Dowel holes shall be drilled into the existing backwall and bridge seat as indicated on this sheet and on Sheets 7/17 and 8/17. For method of payment and procedures see CMS item 510.

For the location of section cutting planes see Sheets 7/17 and 8/17.

STATE OF OHIO
DEPARTMENT OF TRANSPORTATION
BUREAU OF BRIDGES AND STRUCTURAL DESIGN

9/17

ABUTMENT DETAILS

BRIDGE NO. ATH-50-0944L
over
CONRAIL CORP. & MARGARET CREEK

DESIGNED	DRAWN	TRACED	CHECKED	REVIEWED	DATE	REVISED
AJM	AJM		Ohol	WTF	3-27-86	

FHWA REGION	STATE	PROJECT	
5	OHIO		

530/584

ATH-50-4.95

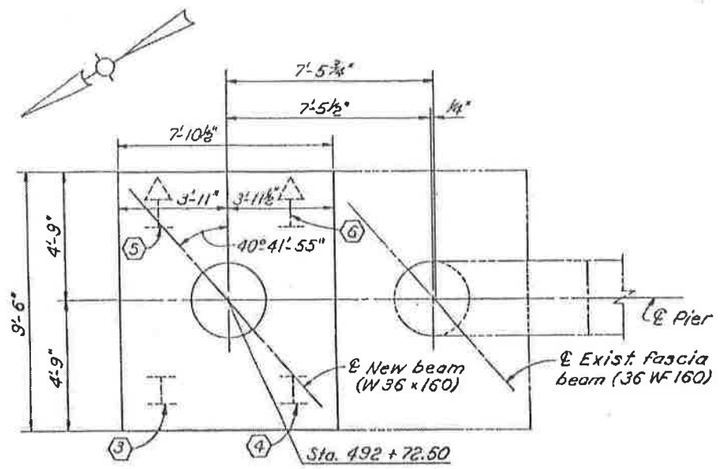

PART PLAN - PIER NO. 1

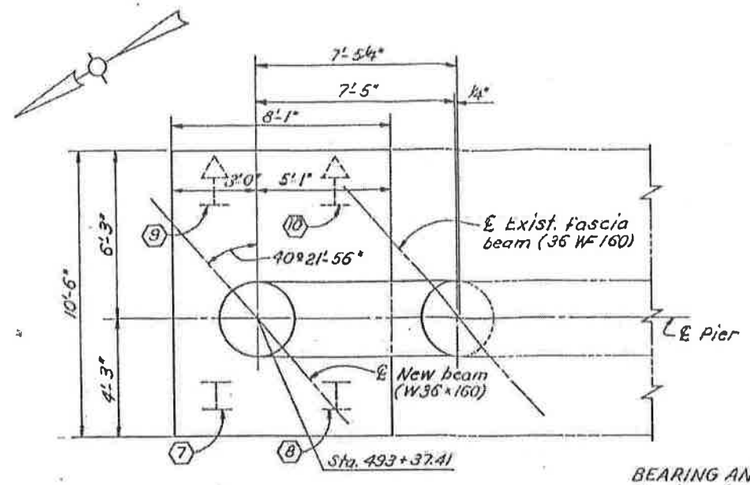

PART PLAN - PIER NO. 2

BEARING ANCHORS: At the option of the Contractor, bearing anchors, located and supported by templates, may be cast in place at Pier No. 2.

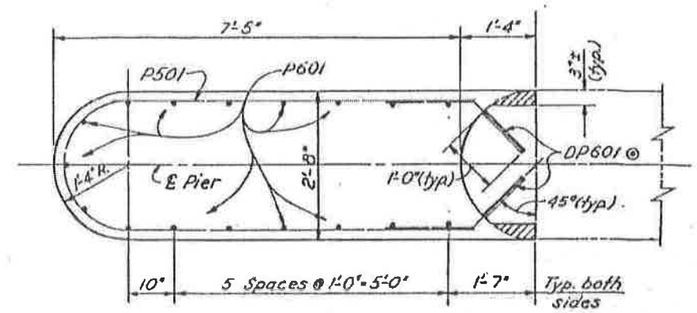

SECTION B-B

Existing concrete to be removed. Care shall be used so that existing re-bars are not damaged.

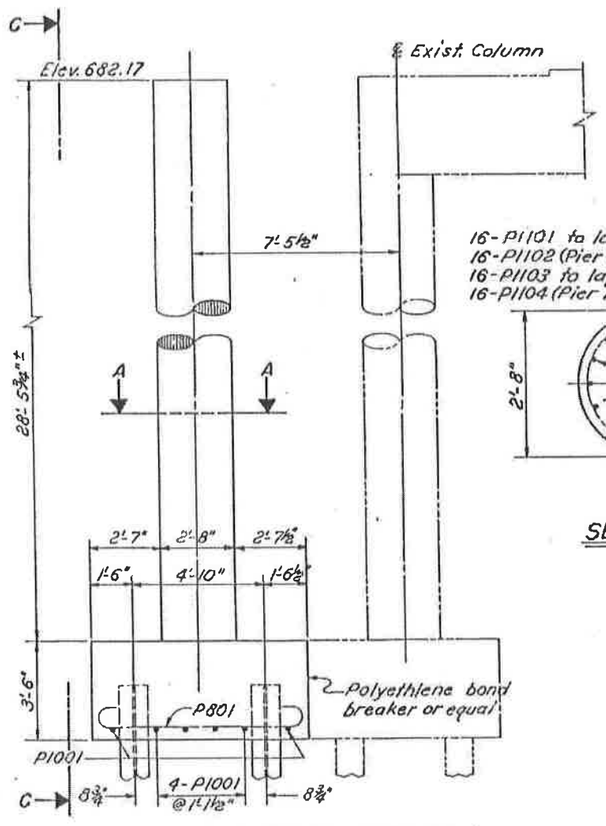

PART ELEVATION - PIER NO. 1

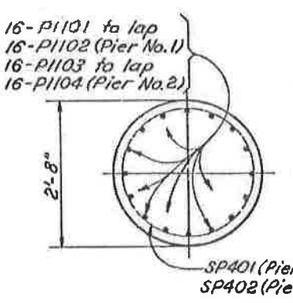

SECTION A-A

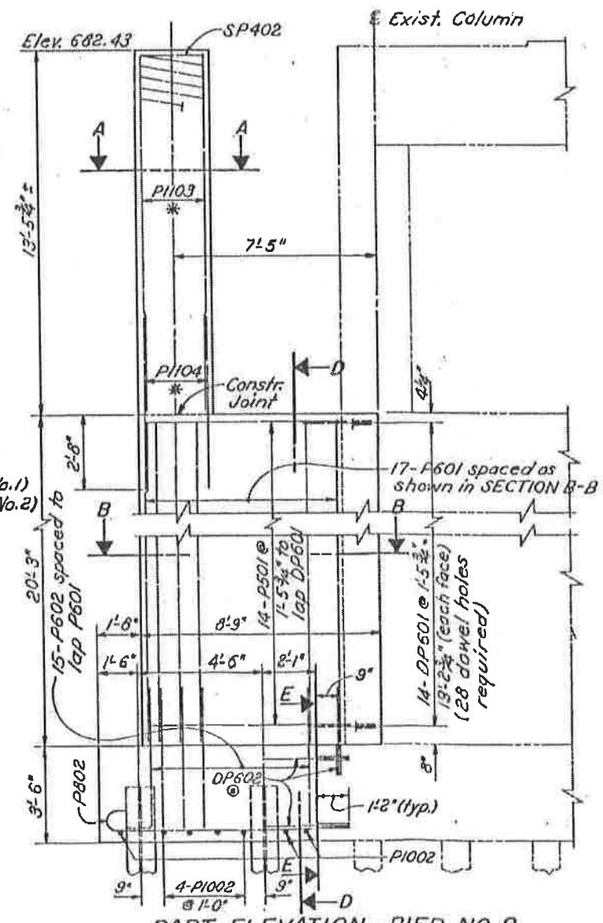

PART ELEVATION - PIER NO. 2

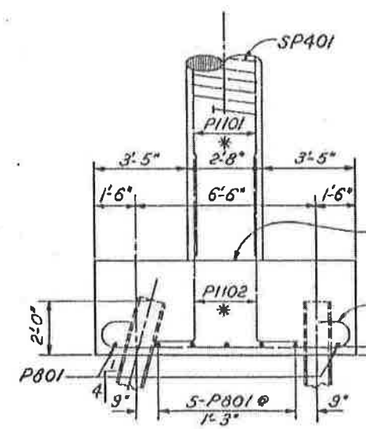

VIEW C-C

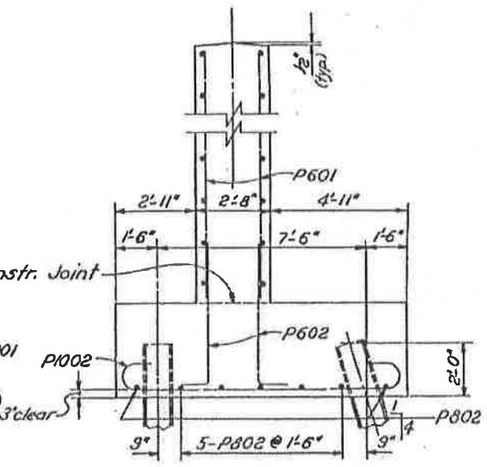

SECTION D-D

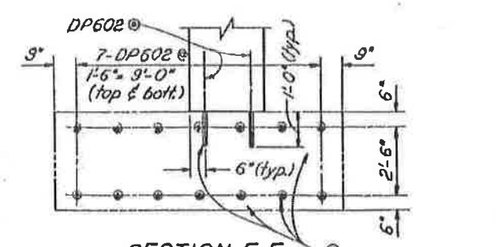

SECTION E-E

(16 dowel holes required)

* See SECTION A-A

LEGEND

(4) - indicates pile number

- indicates pile to be battered 1:4 in the direction shown

STATE OF OHIO
DEPARTMENT OF TRANSPORTATION
BUREAU OF BRIDGES AND STRUCTURAL DESIGN

10 | 17

PIER DETAILS

BRIDGE NO. ATH-50-0944L
over
CONRAIL CORP. & MARGARET CREEK

DESIGNED	DRAWN	TRACED	CHECKED	REVIEWED	DATE	REVISED
AJM	AJM		Ohol	WTF	3-27-86	

FHWA REGION	STATE	PROJECT	
5	OHIO		

ATH-50-4.95

531/584

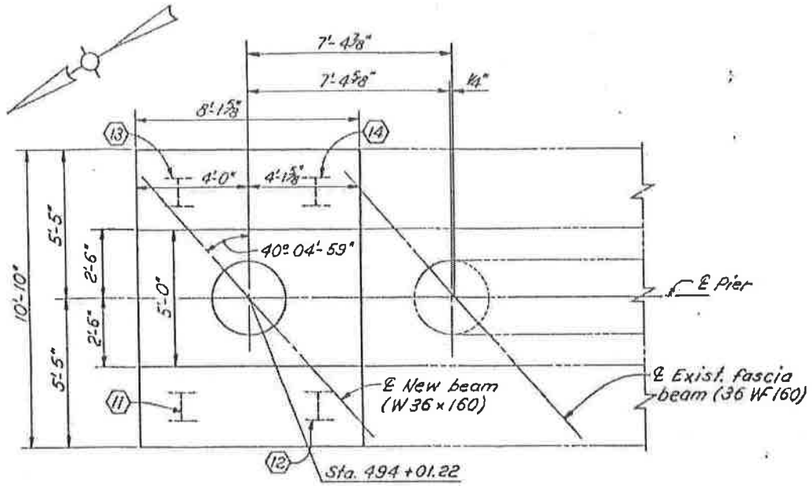

PART PLAN - PIER NO. 3

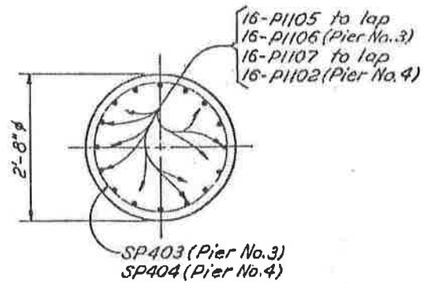

SECTION F-F

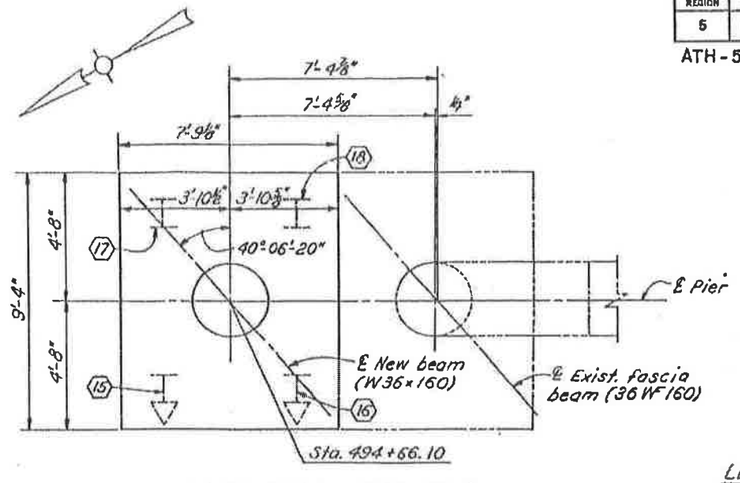

PART PLAN - PIER NO. 4

LEGEND

(11) - indicates pile number

- indicates pile to be battered 1:4 in the direction shown

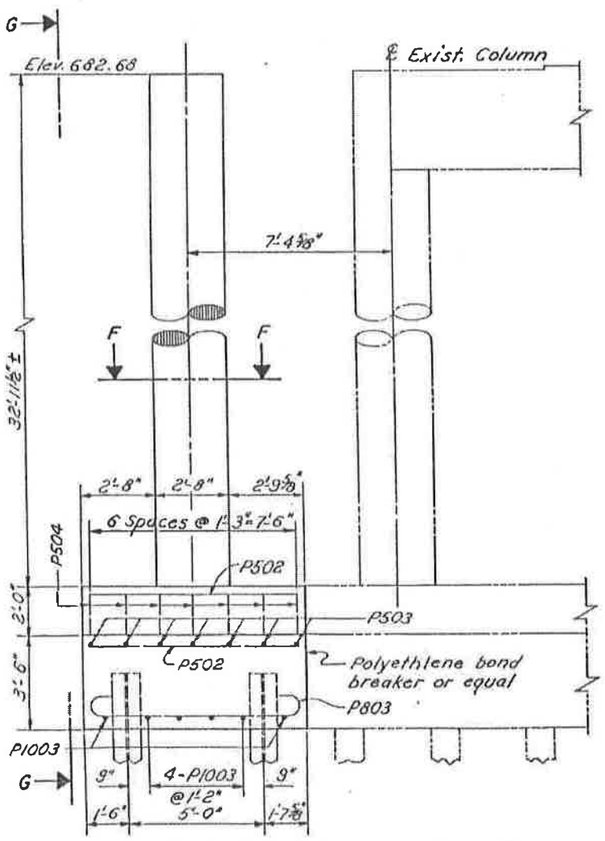

PART ELEVATION - PIER NO. 3

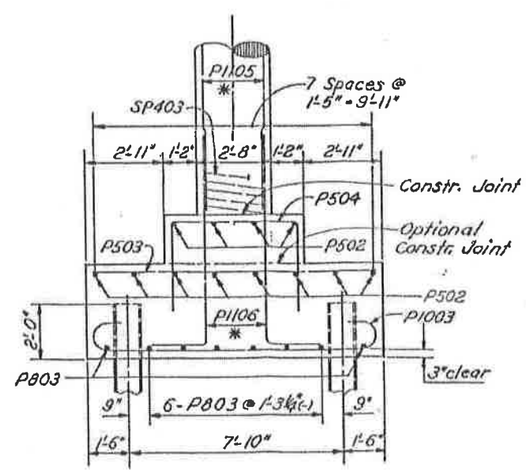

VIEW G-G

* See SECTION F-F

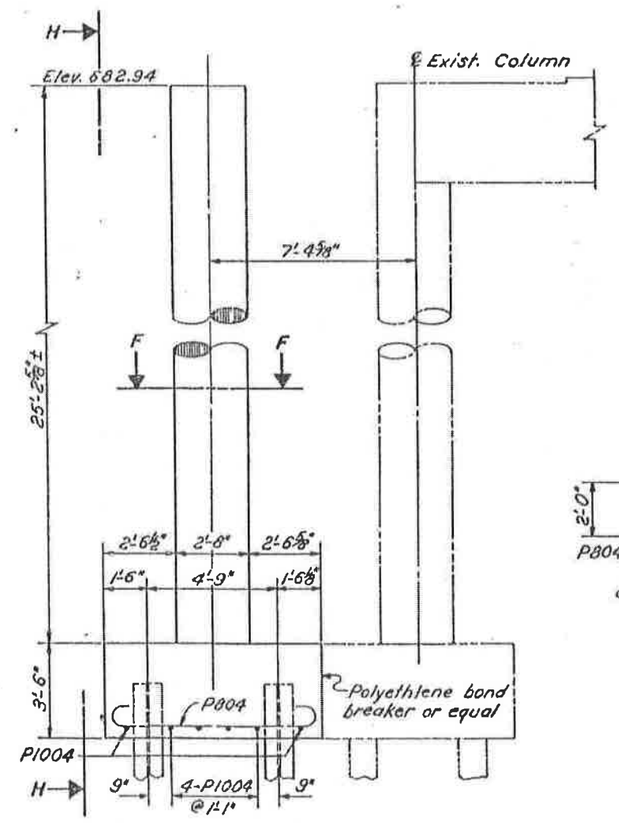

PART ELEVATION - PIER NO. 4

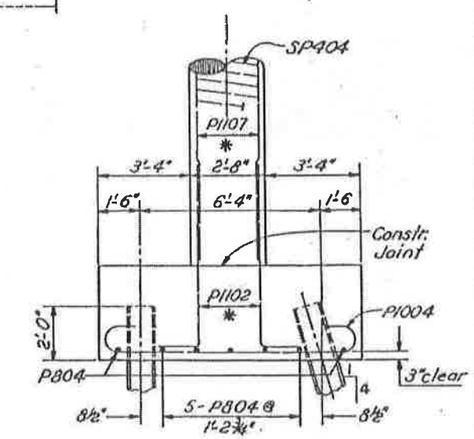

VIEW H-H

STATE OF OHIO
DEPARTMENT OF TRANSPORTATION
BUREAU OF BRIDGES AND STRUCTURAL DESIGN

11 | 17

PIER DETAILS

BRIDGE NO. ATH-50-0944L
over
CONRAIL CORP. & MARGARET CREEK

DESIGNED	DRAWN	TRACED	CHECKED	REVIEWED	DATE	REVISED
AJM	AJM		Ohol	WTF	3-27-86	

FHWA REGION	STATE	PROJECT	
5	OHIO		

ATH-50-4.95

532
584

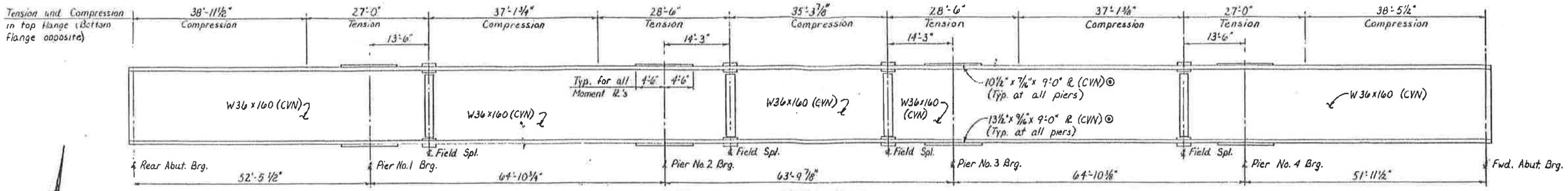

NEW BEAM ELEVATION

◎ For Moment Plate welding details see Std. Dwg. SD-1-69, sheet 3 of 4.

‡ Crossframe spacing may be altered to avoid interference with field splices but shall not exceed 14'-0".

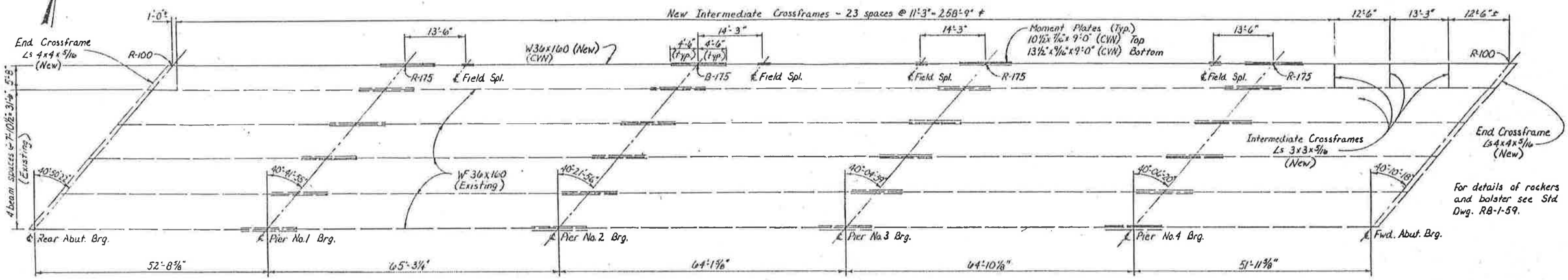

FRAMING PLAN

WELDED ATTACHMENT of supports for concrete deck finishing machine may be made to areas of the new fascia stringer flanges designated "Compression". Attachments shall not be made to areas designated "Tension". No welded attachment of supports may be made to the top flange of the existing stringers within 15'-0" of the centerline of all piers. No welds shall be made to the bottom flange of the existing stringers. Fillet welds to flanges where welding is allowed shall not be made closer than 1" from edge of flange, be not more than 2" long and be not smaller than the minimum size required by AASHTO.

DEFLECTION AND CAMBER TABLE															
LOCATION	SPAN 1			SPAN 2			SPAN 3			SPAN 4			SPAN 5		
	¼ Pt. A	½ Pt. B	¾ Pt. C	Spl. Pt. D	½ Pt. E	¾ Pt. F	Spl. Pt. G	½ Pt. H	Spl. Pt. J	¼ Pt. K	½ Pt. L	Spl. Pt. M	¼ Pt. N	½ Pt. O	¾ Pt. P
Deflection due to weight of steel	0	1/16"	0	0	1/16"	0	0	1/16"	0	0	1/16"	0	0	1/16"	0
Deflection due to remaining dead load	1/8"	3/16"	1/16"	1/8"	1/4"	1/8"	1/16"	3/16"	1/16"	1/8"	3/16"	1/8"	1/16"	3/16"	1/8"
Required shop camber	1/8"	1/4"	1/16"	1/8"	5/16"	1/8"	1/16"	1/4"	1/16"	1/8"	1/4"	1/8"	1/16"	1/4"	1/8"

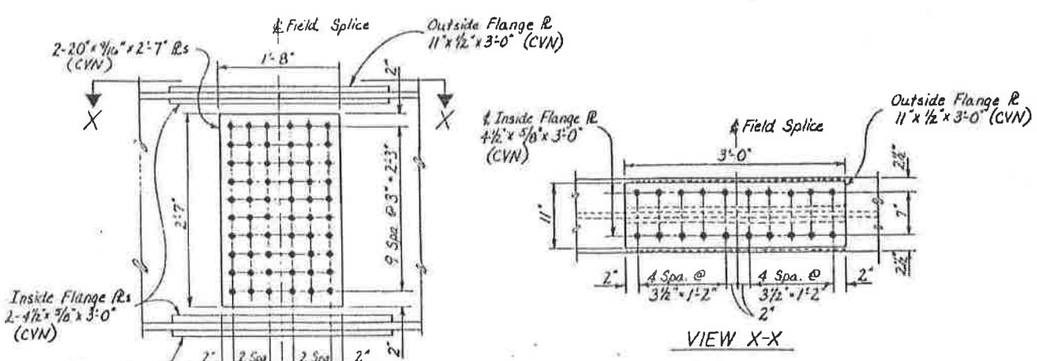

HIGH STRENGTH BOLTS shall be 1" diameter ASTM A325.

FIELD SPLICE DETAILS

Where a shape or plate is designated (CVN) the material shall meet minimum notch toughness requirements as specified in 711.01 of CMS.

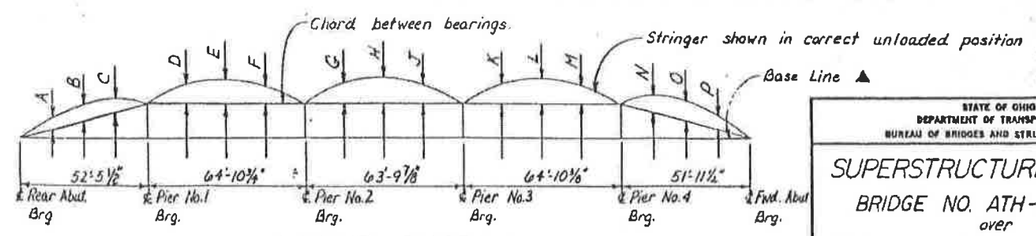

LAYOUT DIAGRAM

▲ BASE LINE is a line from ℄ of Beam Web at ℄ Bearing Rear Abutment to ℄ of Beam Web at ℄ Bearing Forward Abutment.

STATE OF OHIO
DEPARTMENT OF TRANSPORTATION
BUREAU OF BRIDGES AND STRUCTURAL DESIGN

12 | 17

SUPERSTRUCTURE DETAILS

BRIDGE NO. ATH-50-0944 L
over
CONRAIL CORP. & MARGARET CREEK

DESIGNED	DRAWN	TRACED	CHECKED	REVIEWED	DATE	REVISED
BRA	BRA		AJM	WTF	3-27-86	

FHWA REGION	STATE	PROJECT	
5	OHIO		

533/584

ATH-50-4.95

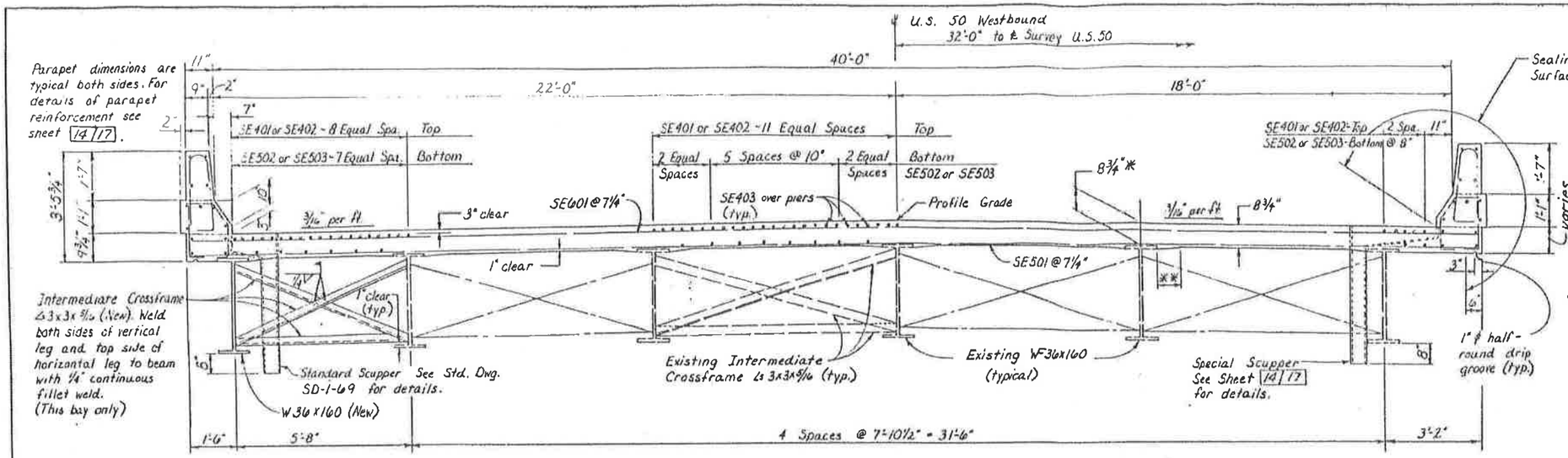

TRANSVERSE SECTION

NOTES:

* DECK SLAB DEPTH: The distance shown from top of the deck slab to the top of steel beam is the design dimension. The quantity of deck concrete to be paid for shall be based on this dimension, even though deviation from it may be necessary because the top flange of the beam may not have the exact camber or conformation required to place it parallel to the finished grade.

** A HAUNCH WIDTH of 9" shall be used for computing quantity of concrete. However, the haunch width may vary between 6" and 12" (provided that the slope shall be not more than 1:4 for a haunch less than 9" width).

SCUPPERS shall be in accordance with Std. Dwg. SD-1-69 except that the scupper pipes shall extend 8" below the bottom of the beams instead of 2".

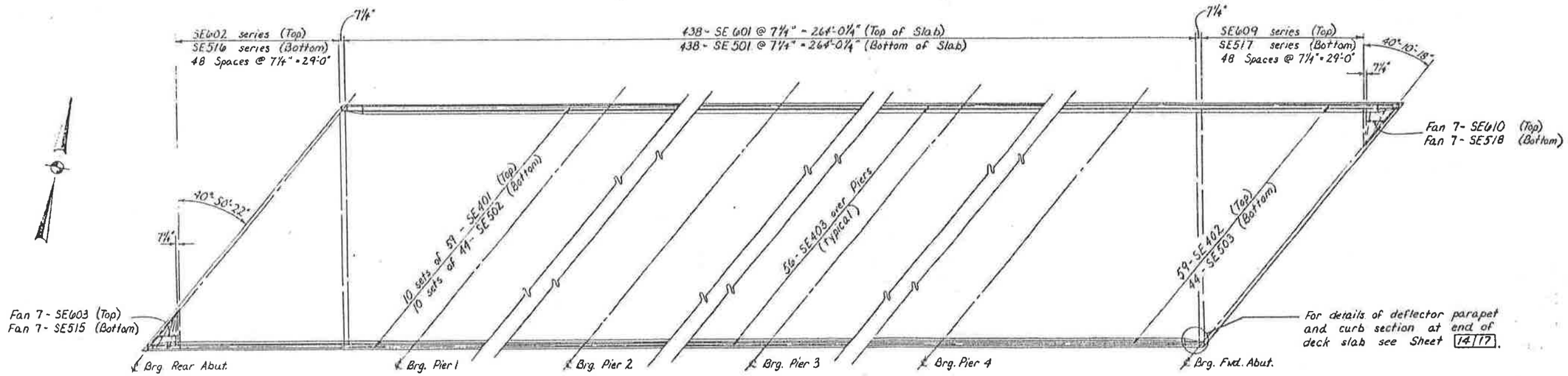

SLAB PLAN

Parapet reinforcement is not shown. See sheet 14/17 for details.

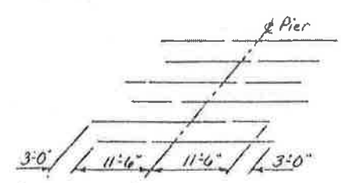

STAGGER DIAGRAM OF SE403 BARS

STATE OF OHIO
DEPARTMENT OF TRANSPORTATION
BUREAU OF BRIDGES AND STRUCTURAL DESIGN

13/17

SUPERSTRUCTURE DETAILS

BRIDGE NO. ATH-50-0944L
over
CONRAIL CORP & MARGARET CREEK

DESIGNED	DRAWN	TRACED	CHECKED	REVIEWED	DATE	REVISED
BRA	BRA		AJM	WTF	5-27-86	.

FHWA REGION	STATE	PROJECT	
5	OHIO		

ATH-50-4.95

534/584

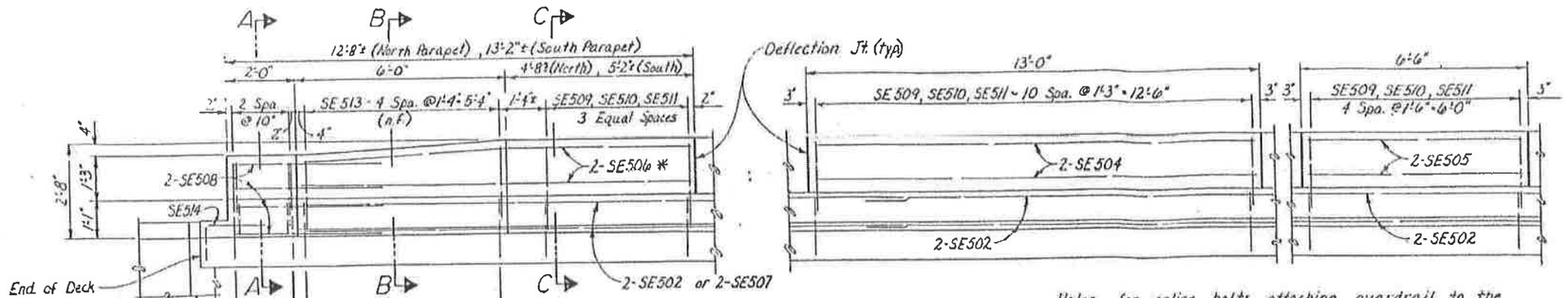

** SE 512 (f.f.), SE513 (n.f.), SE604 (n.f.)

* Bend in field where necessary.

PARAPET ELEVATION

Deck reinforcement is not shown.

Holes for splice bolts attaching guardrail to the terminal connector at ends of parapets shall be slotted 29/32" x 3" and all bolts shall be tightened as specified for expansion joints as per CMS 606.05 to allow for bridge movement.

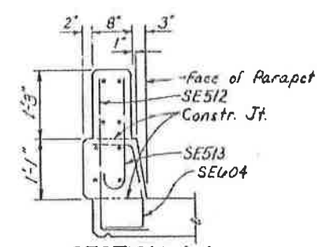

SECTION A-A

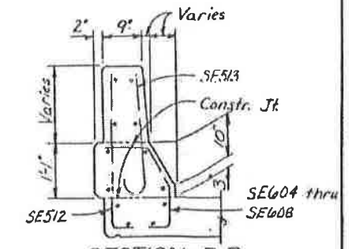

SECTION B-B

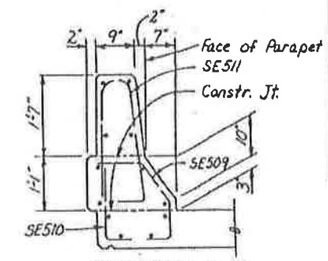

SECTION C-C

LEGEND

n.f. - near face

f.f. - far face

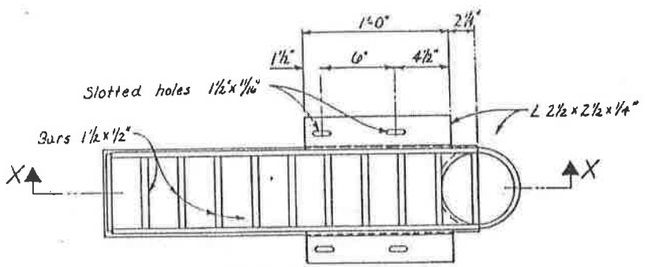

PLAN-SPECIAL SCUPPER

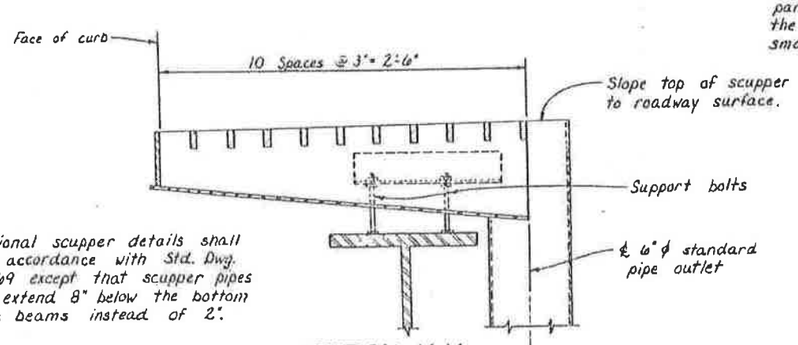

Additional scupper details shall be in accordance with Std. Dwg. SD-1-69 except that scupper pipes shall extend 8" below the bottom of the beams instead of 2".

SECTION X-X

* Existing ⅜" gusset plates shall be cut with a minimum of ½" clearance from the end of the crossframe angles. The cut shall be made parallel to the bottom edge of the plate and shall be ground smooth.

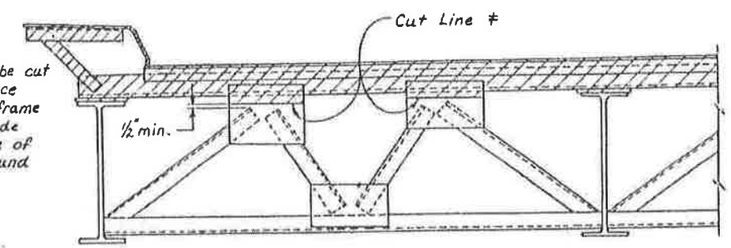

EXISTING END CROSSFRAME

Crosshatching indicates limits of structural steel removal.

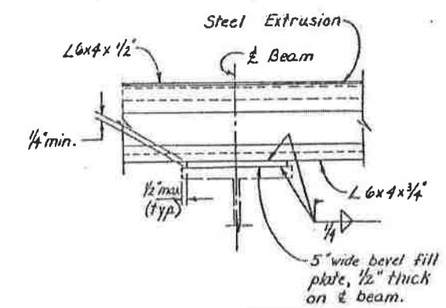

DETAIL D

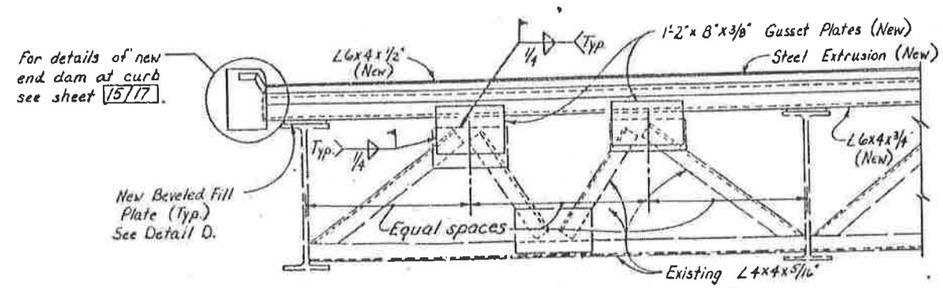

MODIFIED END CROSSFRAME

This detail shall be used between existing beams. For details of the end crossframe between the new beam and the existing beam refer to Std. Dwg. SD-1-69, sheet 1 of 4 and sheet 13/17.

STATE OF OHIO
DEPARTMENT OF TRANSPORTATION
BUREAU OF BRIDGES AND STRUCTURAL DESIGN

14/17

SUPERSTRUCTURE DETAILS

BRIDGE NO. ATH-50-0944L

CONRAIL CORP. & MARGARET CREEK

DESIGNED	DRAWN	TRACED	CHECKED	REVIEWED	DATE	REVISED
BRA	BRA		AJM	WTF	3-27-86	

FHWA REGION	STATE	PROJECT	
5	OHIO		

ATH-50-4.95

535/584

NOTE: The guardrail post shown on Standard Construction Drawing GR-3, located 2'-3" from end of parapet shall be eliminated at all corners.

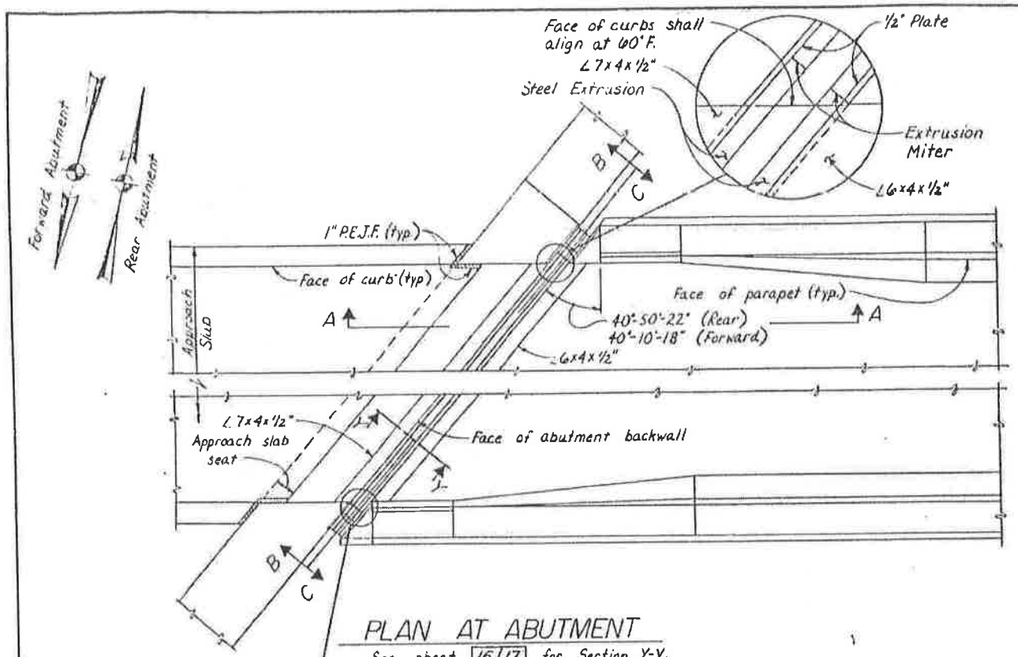

PLAN AT ABUTMENT

See sheet 16/17 for Section Y-Y.

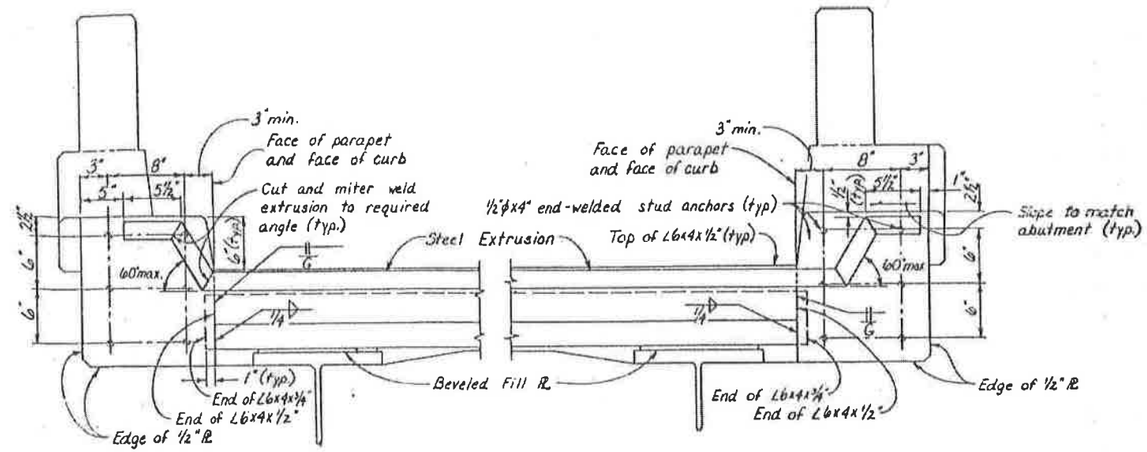

SECTION C-C

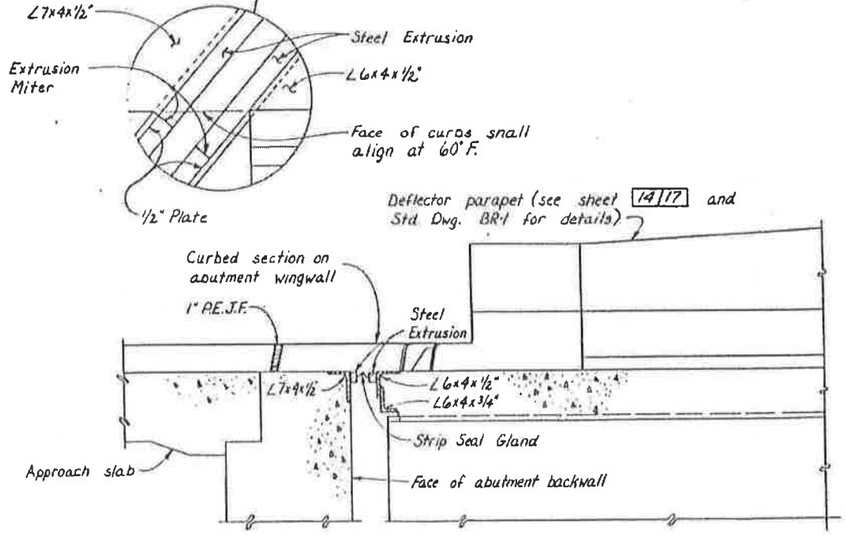

SECTION A-A

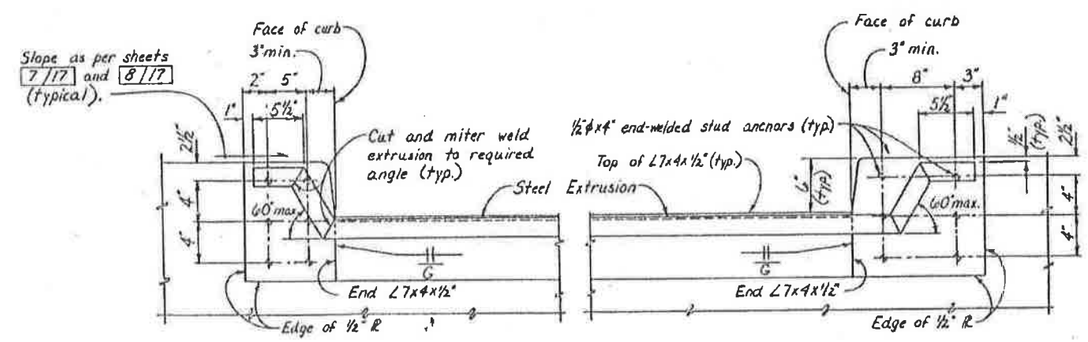

SECTION B-B

See sheet 16/17 for notes, construction procedure and additional details.

STATE OF OHIO
DEPARTMENT OF TRANSPORTATION
BUREAU OF BRIDGES AND STRUCTURAL DESIGN

15/17

STRIP SEAL EXPANSION JOINT DETAILS

BRIDGE NO. ATH-50-0944 L

over

CONRAIL CORP. & MARGARET CREEK

DESIGNED	DRAWN	TRACED	CHECKED	REVIEWED	DATE	REVISED
BRA	BRA		AJM	WTF	3-27-86	

FHWA REGION	STATE	PROJECT	
5	OHIO		

536
584

ATH-50-4.95

CONSTRUCTION PROCEDURE

1. Abutment backwall concrete shall not be placed until after superstructure concrete in the span adjacent to the abutment has been placed.
2. Place backwall concrete during stable or rising ambient temperatures and conclude placement at or immediately before the day's peak ambient temperature.
3. Not more than four hours prior to the day's peak ambient temperature, set abutment expansion joint width to dimension "A" which shall be determined from TABLE "B".
4. Loosen temporary joint armor bolts after initial set of concrete, preferably not later than two hours after conclusion of concrete placement.

TABLE "E"
(PHYSICAL PROPERTIES OF SEAL ELEMENT)

PROPERTY	REQUIREMENT	ASTM METHOD
TENSILE STRENGTH, MIN. P.S.I.	2000	D412
ELONGATION AT BREAK, MIN. PERCENT	250	D412
HARDNESS, TYPE A DUROMETER	60 MIN. 65 MAX.	D2240 (MODIFIED)
OVEN AGING, 70 HR. AT 212°F TENSILE STRENGTH, LOSS, MAX. ELONGATION, LOSS, MAX. HARDNESS, TYPE A DUROMETER (POINTS CHANGE)	 20 PERCENT 20 PERCENT 0 TO +10	D573
OZONE RESISTANCE 20 PERCENT STRAIN, 300 PPHM, IN AIR AT 104°F (WIPED WITH TOLUENE TO REMOVE SURFACE CONTAMINATION)	NO CRACKS	D1149

INSTALLATION OF SEAL: During installation of the support/armor for the superstructure side of the expansion joint seal, the seating of beams on bearings shall be carefully observed to assure that positive bearing is maintained. Proper vertical fit of support/armor on the beams shall be achieved by positioning of the bevel fill plates rather than by clamping force.

JOINTS IN END DAM ARMOR
Transverse joints in superstructure angles shall have complete penetration butt welds. Transverse joints in abutment angle shall be closely butted with a minimum of 6'-0" between joints. Welds in contact with seal glands shall be ground flush.

TABLE "B"

AMBIENT TEMP (°F)	DIM. "A"
30°	1 15/16"
40°	1 13/16"
50°	1 11/16"
60°	1 9/16"
70°	1 1/2"
80°	1 3/8"
90°	1 1/4"

STRIP SEAL NOTES

MATERIALS: A588 or A36 with paint as specified for the main structural steel, except that System B shall be used when the main structural steel is to remain unpainted. No shop coat is required. Field paint shall consist of one prime coat for System A or two prime coats for System B, and one finish coat.

The preformed strip seal gland shall be extruded polychloroprene material meeting the requirements of ASTM D2628. Due to the configurations of the Strip Seal, the recovery tests are not applicable. Physical Properties shall meet the requirements specified in Table "E" this sheet.

Lubricant - adhesive used to install the preformed strip seals shall be a polyurethane and hydrocarbon solvent mixture as specified by the seal manufacturer (unless otherwise approved by the Director). It shall have suitable consistency at the temperature at which the seals are installed and shall be compatible with the seals and the steel extrusions.

PREPARATIONS FOR INSTALLATION: To avoid the subsequent contamination of the prepared surfaces, all surfaces of elastomeric strip seal glands shall be cleaned with methyl ethyl ketone (MEK), toluene (T) or other approved solvent using clean disposable cloths.

The bonding surfaces of the steel extrusions (the interior of the anchor grooves) shall be prepared to Grade Sa 3, ASTM D2200. Preparation shall be accomplished not more than 24 hours prior to adhesive bonding.

INSTALLATION: Immediately prior to application of lubricant-adhesive, bonding surfaces shall be clean, dry and warmer than 45°F, and they shall be maintained at or above this temperature until the adhesive has cured. Lubricant-adhesive shall be applied liberally to both steel and elastomeric bonding surfaces using a stiff brush if necessary to achieve a complete and relatively uniform coating. Then the bulbed edges of the elastomeric seal shall be inserted into the anchor grooves. After installation, excess lubricant - adhesive shall be removed from the exposed seal surfaces.

MEASUREMENT for pay purposes shall be based on the linear foot of sealed joint system, measured horizontally along the joint centerlines and between the outer limits of the fabricated joint, furnished and placed, including all labor, materials and equipment necessary to complete the joint in place, which includes the joint armor, anchoring devices, temporary supports and end crossframe gusset plates. Payment shall be made per linear foot for Item 516 "Structural Expansion Joints, Including Elastomeric Strip Seals."

Finish concrete surface either flush with or slightly above joint armor.

† Polychloroprene strip seal glands and steel extrusions shall be an AS300 strip seal with Type A extrusions as manufactured by Watson-Bowman & Acme Corp., a SS300 strip seal with Type SS extrusions as manufactured by D.S. Brown Company or approved equals.

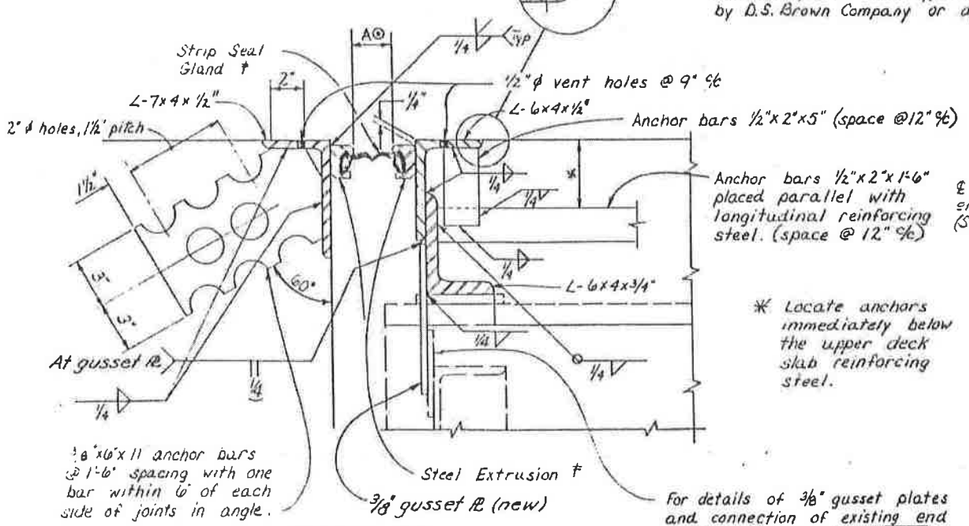

** Locate anchors immediately below the upper deck slab reinforcing steel.*

For details of 3/8" gusset plates and connection of existing end crossframes see sheet 14/17.

⊙ - Dimension "A" shall be determined from Table "B".

SECTION Y-Y

Fill bolt holes in angle with 705.01 or 705.02 Joint Sealer.

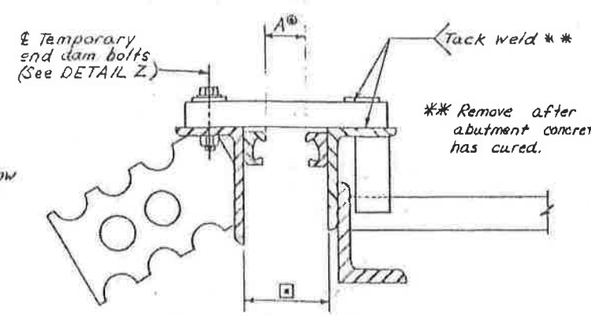

JOINT ARMOR ADJUSTMENT DETAIL

⊡ - This dimension is the sum of (2x steel extrusion width) + (dim. "A").

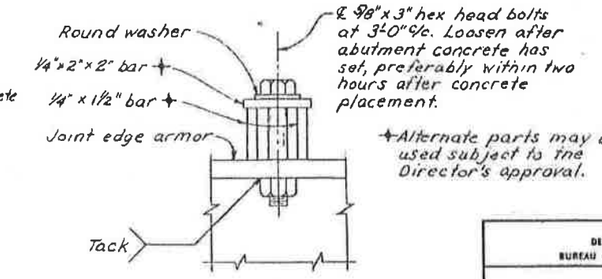

DETAIL Z
TEMPORARY SUPPORT BARS

STATE OF OHIO
DEPARTMENT OF TRANSPORTATION
BUREAU OF BRIDGES AND STRUCTURAL DESIGN

16 | 17

STRIP SEAL DETAILS
BRIDGE NO. ATH-50-0944L
over
CONRAIL CORP. & MARGARET CREEK

DESIGNED	DRAWN	TRACED	CHECKED	REVIEWED	DATE	REVISED
BRA	BRA		AJM	WTF	3-27-86	

FHWA REGION	STATE	PROJECT	
5	OHIO		

537/584

ATH-50-4.95

MARK	NUMBER REAR	NUMBER FWD.	NUMBER TOTAL	LENGTH	WEIGHT	TYPE	DIMENSIONS A	B	C	R	INC.
ABUTMENTS											
A501	7	10	17	10'-7"	188	2	6'-2"	2'-4"	2'-4"		
A502	7	10	17	9'-1"	161	2	6'-2"	1'-7"	1'-7"		
A503	6	6	12	15'-9"	197	2	4'-2"	5'-11"	5'-11"		
A504	6		6	7'-1"	44	2	4'-2"	1'-7"	1'-7"		
A505	18	14	32	34'-4"	1146	Str.					
A506	6		6	4'-7"	29	Str.					
A507	9	7	16	7'-2"	97	Str.					
A508	1		1	8'-1"	8	2	5'-2"	1'-7"	1'-7"		
A509	1		1	9'-4"	10	2	6'-5	1'-7"	1'-7"		
A510	11		11	10'-11"	125	Str.					
A511	1		1	10'-11"	11	2	8'-0"	1'-7"	1'-7"		
A512	1		1	9'-8"	10	2	6'-9"	1'-7"	1'-7"		
A513		4	4	23'-9"	99	Str.					
A514		4	4	11'-0"	46	Str.					
A515		1	1	11'-6"	12	2	8'-7"	1'-7"	1'-7"		
A516		1	1	10'-2"	11	2	7'-3"	1'-7"	1'-7"		
A517		1	1	8'-7"	9	2	5'-8"	1'-7"	1'-7"		
A518		1	1	9'-11"	10	2	7'-0"	1'-7"	1'-7"		
A519		6	6	7'-7"	47	2	4'-2"	1'-10"	1'-10"		
A601	8		8	9'-2"	110	2	1'-6"	4'-0"	4'-0"		
A602	9		9	6'-10"	92	2	1'-6"	2'-10"	2'-10"		
A603	36		36	7'-0"	379	2	1'-0"	3'-2"	3'-2"		
A604	3		3	10'-8"	48	2	1'-6"	4'-9"	4'-9"		
A605	1		1	17'-6"	26	2	1'-6"	8'-2"	8'-2"		
A606	8		8	11'-8"	140	2	1'-6"	5'-3"	5'-3"		
A607	3		3	11'-0"	50	2	1'-6"	4'-11"	4'-11"		
A608	10		10	15'-2"	228	2	1'-6"	7'-0"	7'-0"		
A609	10		10	6'-2"	93	Str.					
A610	18		18	8'-9"	237	2	1'-0"	4'-11"	3'-2"		
A611	45		45	7'-5"	501	2	1'-6"	2'-9"	3'-6		
A612		5	5	18'-4"	138	2	1'-8"	8'-6"	8'-6"		
A613		6	6	10'-10"	98	2	1'-8"	4'-9"	4'-9"		
A614		3	3	12'-10"	58	2	1'-8"	5'-9"	5'-9"		
A615		2	2	9'-4"	28	2	1'-2"	4'-3"	4'-3"		
A616		1	1	20'-6"	31	2	1'-8"	9'-7"	9'-7"		
A617		21	21	5'-10"	184	2	1'-2"	2'-6"	2'-6"		
A618		37	37	3'-10"	213	2	1'-8"	1'-3"	1'-3"		
A619		16	16	6'-11"	166	2	1'-2"	2'-6"	3'-7"		
A620		3	3	6'-4"	29	2	1'-8"	2'-6"	2'-6"		
A621		2	2	7'-11"	24	2	1'-8"	2'-6"	4'-1"		
A622		7	7	9'-4"	98	2	1'-8"	4'-0"	4'-0"		
A623		7	7	7'-0"	74	2	1'-8"	2'-10"	2'-10"		
A624		13	13	7'-2"	140	2	1'-2"	3'-2"	3'-2"		
A625		8	8	7'-7"	91	2	1'-8"	2'-9"	3'-6"		
A626		2	2	10'-3"	31	2	1'-2"	6'-3"	3'-2"		
A627		2	2	9'-10"	30	2	1'-8"	4'-3"	4'-3"		
D601	18	15	33	3'-3"	161	Str.					
D602		5	5	5'-8"	43	2	1'-6"	2'-3"	2'-3"		
D603		2	2	2'-3"	7	Str.					
A801	10		10	8'-2"	218	Str.					
A802		12	12	13'-2"	422	Str.					
D801	29	29	58	4'-11"	761	19	1'-0"	2'-7"			

MARK	NUMBER	LENGTH	WEIGHT	TYPE	DIMENSIONS A	B	C	D	E	R	INC.
SUPERSTRUCTURE											
SE401	590	30'-0"	11824	Str.							
SE402	59	13'-4"	525	Str.							
SE403	224	26'-0"	3890	Str.							
SE501	438	41'-6"	18959	Str.							
SE502	520	30'-0"	16271	Str.							
SE503	44	16'-8"	765	Str.							
SE504	104	12'-8"	1374	Str.							
SE505	128	6'-2"	823	Str.							
SE506	16	10'-4"	172	Str.							
SE507	8	13'-6"	113	Str.							
SE508	32	4'-10"	161	Str.							
SE509	462	3'-0"	1446	16	9"	8½"	9"	6"	10½"		
SE510	462	2'-3"	1084	1	1'-6"	10½"					
SE511	462	5'-3"	2530	17	2'-2"	2'-5"	1¼	7½"		2⅛"	
SE512	32	3'-6"	117	1	2'-9"	10½"					
SE513	32	2'-8"	89	7	2'-1"						
SE514	4	4'-0"	17	1	3'-2"	11"					
SE515	7	6'-7"	48	Str.							
	1 Ser.	7'-6"									
SE516	of	to	1239	Str.							8⅜"
	49	41'-0"									
	1 Ser.	6'-6"									
SE517	of	to	1214	Str.							8⅜"
	49	41'-0"									
SE518	7	6'-0"	44	Str.							
SE601	438	41'-6"	27302	Str.							
	1 Ser.	7'-6"									
SE602	of	to	1785	Str.							8⅜"
	49	41'-0"									
SE603	7	7'-0"	74	Str.							
SE604	16	2'-6"	60	16	9"	8½"	7"	2"	8"		
SE605	4	2'-8"	16	16	9"	8½"	7"	3"	10"		
SE606	4	2'-10"	17	16	9"	8½"	8"	4"	11"		
SE607	4	2'-11"	18	16	9"	8½"	8"	5"	1'-0"		
SE608	4	3'-0"	18	16	9"	8½"	9"	6"	1'-0"		
	1 Ser.	6'-0"									
SE609	of	to	1730	Str.							8⅜"
	49	41'-0"									
SE610	7	6'-0"	69	Str.							

MARK	NUMBER No. 1	No. 2	No. 3	No. 4	TOTAL	LENGTH	WEIGHT	TYPE	DIMENSIONS A	B	C	R	INC.
PIERS													
SP401	1				1	28'-3"	626	12	28"	3"			
SP402		1			1	13'-3"	301	12	28"	3"			
SP403			1		1	32'-9"	723	12	28"	3"			
SP404				1	1	25'-0"	555	12	28"	3"			
P501		14			14	16'-3"	237	5	6'-4"	2'-4"		1'-1⅜"	
P502			12		12	7'-9"	97	Str.					
P503			7		7	10'-6"	77	Str.					
P504			7		7	11'-7"	85	2	4'-8"	3'-7"	3'-7"		
P601		17			17	20'-0"	511	Str.					
P602		15			16	6'-0"	135	1	5'-2"	1'-0"			
DP601		28			28	2'-10"	119	3	1'-7"	1'-3"			
DP602		16			16	3'-9"	78	Str.					
P801	7				7	9'-4"	174	6	7'-6"				
P802		7			7	8'-8"	162	7	7'-9"				
P803			8		8	9'-7"	205	6	7'-9"				
P804				7	7	9'-3"	173	6	7'-5"				
P1001	6				6	12'-0"	310	6	9'-2"				
P1002		7			7	13'-0"	392	6	10'-2"				
P1003			6		6	13'-4"	344	6	10'-6"				
P1004				6	6	11'-10"	306	6	9'-0"				
P1101	16				16	28'-2"	2394	Str.					
P1102	16			16	32	7'-5"	1261	1	5'-9"	2'-0"			
P1103		16			16	13'-2"	1119	Str.					
P1104		16			16	5'-6"	468	Str.					
P1105			16		16	32'-8"	2777	Str.					
P1106			16		16	10'-5"	886	1	8'-9"	2'-0"			
P1107				16	16	24'-11"	2118	Str.					

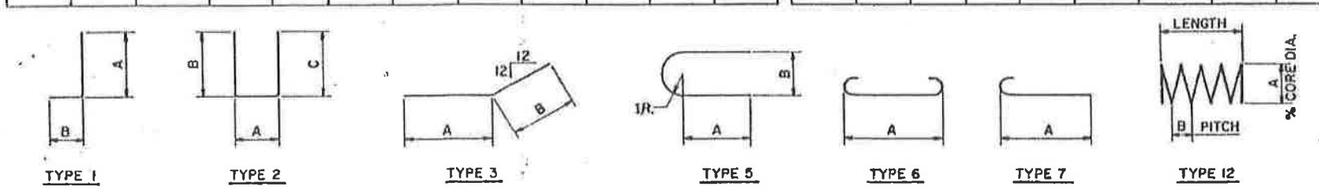

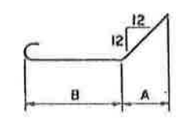

TYPE 19

BAR SIZE is indicated in the bar mark. The first digit where three digits are used, and the first two digits where four are used, indicate the bar size number. For example, A700 bar is a No.7 and A10M bar is a No.10 size. Bar dimensions shown are out to out unless otherwise noted. A standard bend at end of bent bars shall be used unless otherwise indicated.

"E" in prefix designates epoxy coated bars.

REINFORCING STEEL SAMPLES - Refer to CMS sections 106.03, 700, 709.01 through 709.05 and 709.08. Sufficient additional reinforcing steel shall be provided for sampling. Random samples shall be replaced in the structures by the additional steel, spliced in accordance with 509.08.

STATE OF OHIO
DEPARTMENT OF TRANSPORTATION
BUREAU OF BRIDGES AND STRUCTURAL DESIGN

17 | 17

REINFORCING STEEL LIST

BRIDGE NO. ATH-50-0944L
over
CONRAIL CORP. & MARGARET CREEK

DESIGNED	DRAWN	TRACED	CHECKED	REVIEWED	DATE	REVISED
AJM	AJM		Ohol	WTF	3-27-86	

MICROFILMED JUNE 19, 1979 REVISION

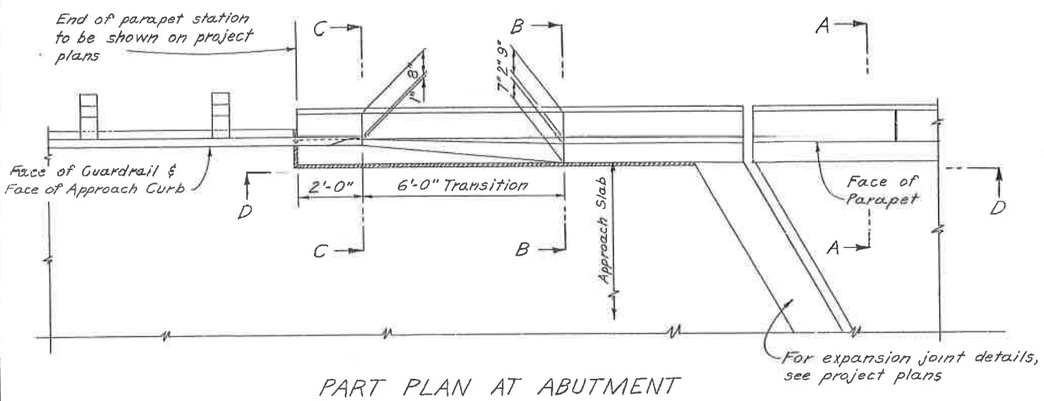

PART PLAN AT ABUTMENT

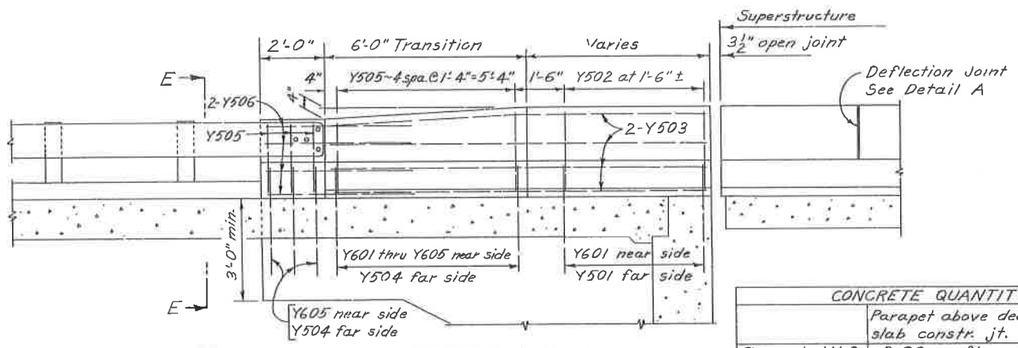

SECTION D-D

CONCRETE QUANTITY		
	Parapet above deck slab constr. jt.	Each 8'-0" Transition
Concrete W.S.	2.88 cu. ft. per ft.	18.4 cu. ft.
Asph. Conc. S.C.	3.23 cu. ft. per ft.	20.4 cu. ft.

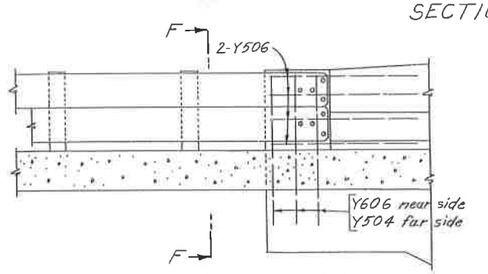

PART ELEVATION
Showing guardrail connection with wheelguard and no curb on approaches

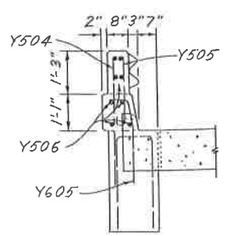

VIEW E-E

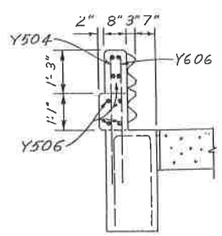

VIEW F-F

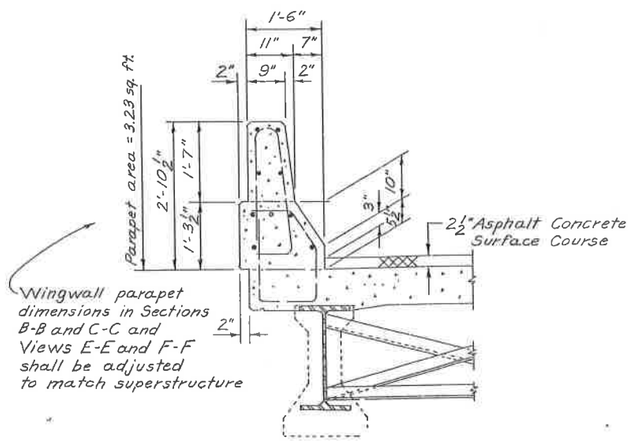

Wingwall parapet dimensions in Sections B-B and C-C and Views E-E and F-F shall be adjusted to match superstructure

SECTION A-A
With Asphalt Concrete Surface Course

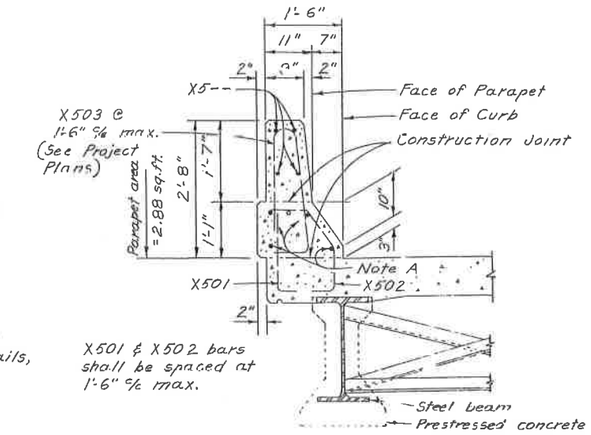

X501 & X502 bars shall be spaced at 1'-6" % max.

SECTION A-A
With Concrete Wearing Surface

Note A: Longitudinal bars in lower part of parapet shall be similar to longitudinal bars in bridge deck

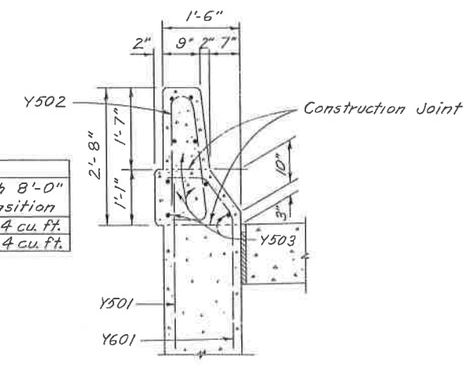

SECTION B-B

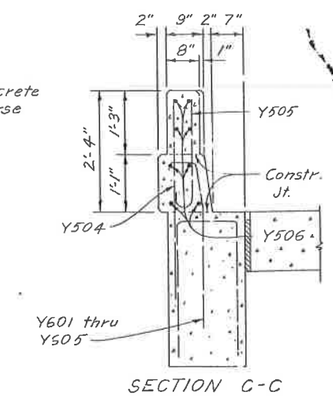

SECTION C-C

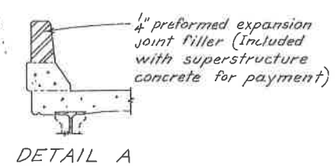

DETAIL A
Section thru deflection joint

FHWA REGION	STATE	PROJECT	
5	OHIO		

REINFORCING STEEL

MARK	LENGTH	SHP
X501	B + .9"	Bt.
X502	A + 2'-3"	Bt.
X503	9'-3"	Bt.
X5--	*	Str.
Y501	3'-0"	Str.
Y502	5'-3"	Bt.
Y503	As Req'd.	Str.*
Y504	4'-7"	Str.
Y505	2'-8"	Bt.
Y506	4'-4"	Str.
Y601	3'-9"	Bt
Y602	3'-8"	Bt
Y603	3'-8"	Bt
Y604	3'-7"	Bt
Y605	3'-7"	Bt.
Y606	4'-3"	Str.

BENDING DIAGRAMS

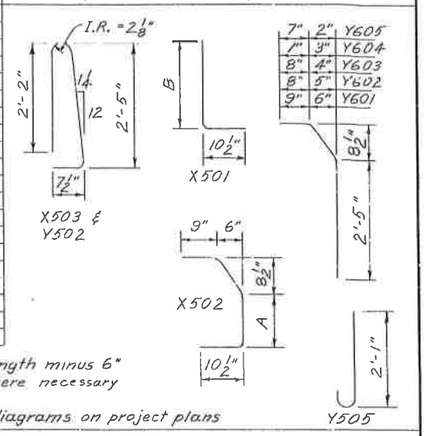

* Parapet panel length minus 6"
* Bend in field where necessary

Include bending diagrams on project plans

GENERAL NOTES

DESIGN SPECIFICATIONS: "Standard Specifications for Highway Bridges" adopted by AASHTO, 1977, including the Ohio "Supplement" to these specifications.

DESIGN DATA:
Concrete Class S - f'_c = 4500 p.s.i , f_c = 1800 p.s.i
Reinforcing Steel - ASTM A615, A616 or A617 Grade 60
f_y = 60,000 p.s.i , f_s = 24,000 p.s.i.

PREFORMED EXPANSION JOINT FILLER in the parapet deflection joints may be either ¼" gray sponge rubber or ¼" gray cellular polyvinyl chloride (PVC) sponge. If rubber is used it shall meet the requirements of AASHTO M-153.

DEFLECTION JOINTS shall be spaced at 16'-0" centers, max., except that for continuous structures the panels shall be further subdivided in the negative moment region (over the piers) into lengths of not less than 5'-0" nor more than 7'-6". Reinforcing bars shall not extend through deflection joints.

CONCRETE PARAPETS above upper construction joint shall be placed in alternate sections by the use of bulkheads. Closing sections shall be placed after removal of bulkheads and after placement of expansion joint filler. Exposed edges of the filler shall be flush with the surface of concrete and shall be free of mortar.

CONCRETE INSERT ANCHOR ASSEMBLY, as shown on Std. Dwgs. GR-1 and GR-3, shall be provided for the attachment of guardrail terminal connectors. (Included with abutment concrete for payment.)

QUANTITIES of concrete and reinforcing steel for parapet are included with their appropriate item under either abutments or superstructure for payment.

REINFORCING STEEL in deflector parapets shall be epoxy coated if so specified in the project plans.

REVISIONS

STATE OF OHIO
DEPARTMENT OF TRANSPORTATION
BUREAU OF BRIDGES AND STRUCTURAL DESIGN

1 / 1

STANDARD
BRIDGE RAILING
DEFLECTOR PARAPET TYPE

APPROVED: Robert B. Pfeifer
DATE: 5-29-79 ENGINEER OF BRIDGES

DRAWING NO. BR-1

DESIGNED	DRAWN	TRACED	CHECKED	REVIEWED
FFE	FFE		DWI	WJJ

22" 17" 11" 8.5" 8.5" 11" 17" 22"

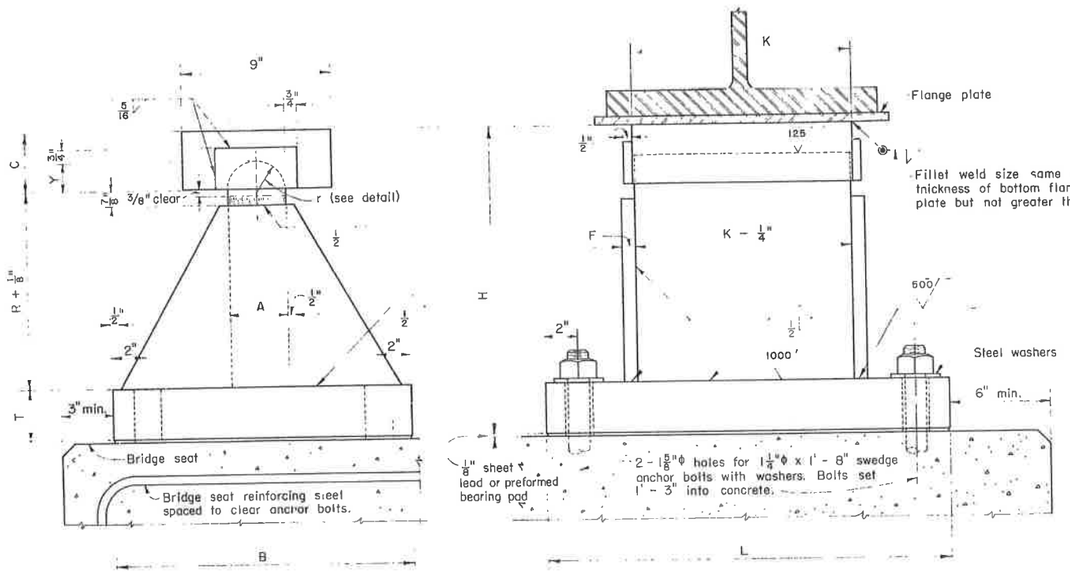

STRUCTURAL STEEL BOLSTER

See table below for additional dimensions.

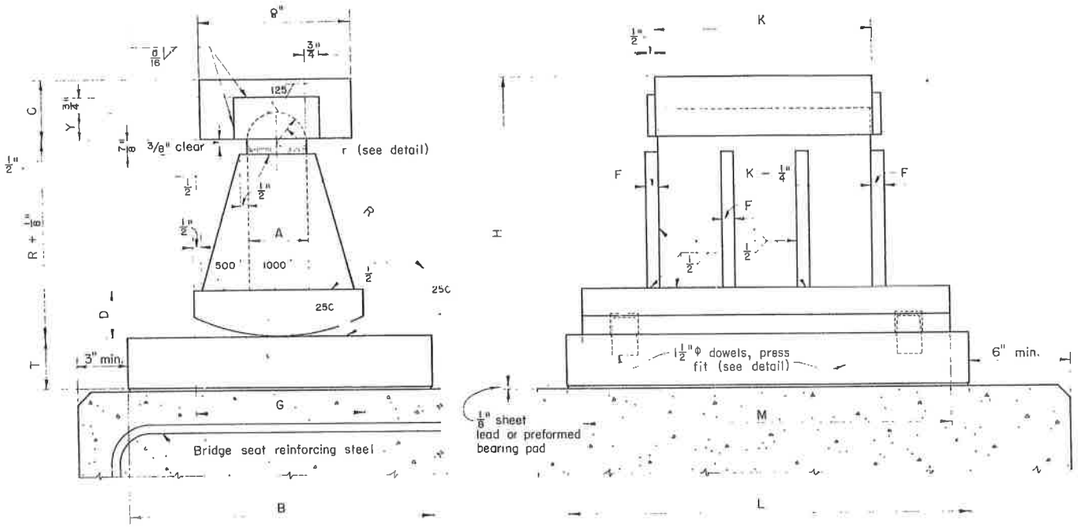

STRUCTURAL STEEL ROCKER

See table below for additional dimensions.

Bolster No.	Rocker No.	Dimensions (inches)													Weight each (lb.)		Maximum Load (lb.)
		A	B	C	D	F	G	H	K	L	M	R	T	Y	Bolster	Rocker	
	R-75	2 1/2	8	2 1/2	1 3/4	1/2	7	9 5/8	9	18	16	5 1/2	1 1/2	1 3/16		205	75,000
B-100	R-100	2 1/2	10	2 1/2	2	1/2	7 1/2	10 5/8	9	19	17	6 1/2	1 1/2	1 3/16	225	250	100,000
B-125	R-125	3	11	3	2	1/2	8	12 1/8	10 1/2	20	18	7 1/2	1 1/2	1 7/16	295	315	125,000
B-150	R-150	3	12	3	2 1/4	1/2	8 1/2	13 3/8	11 1/2	22	19	8 1/2	1 3/4	1 7/16	360	400	150,000
B-175	R-175	3	14	3 1/2	2 1/2	1/2	9	15 1/8	12	23	20	9 1/2	2	1 7/16	455	505	175,000
B-200	R-200	3	16	3 1/2	2 3/4	5/8	9	16 3/8	12	24	21	10 1/2	2 1/4	1 7/16	540	605	200,000
B-225	R-225	3	17	3 1/2	2 3/4	5/8	9	16 7/8	13	25	22	11	2 1/4	1 7/16	590	665	225,000
B-250	R-250	3 1/2	18	3 1/2	2 3/4	3/4	10	17 5/8	13	26	23	11 1/2	2 1/2	1 11/16	695	775	250,000
B-275	R-275	3 1/2	19	3 1/2	3 1/4	3/4	12	18 3/8	14	27	24	12	2 3/4	1 11/16	800	945	275,000
B-300	R-300	3 1/2	20	3 1/2	3 1/4	3/4	12	19 1/8	14	28	25	12 1/2	3	1 11/16	895	1050	300,000

Weights given are for one rocker or bolster complete (including sheet lead, anchor bolts and washers).

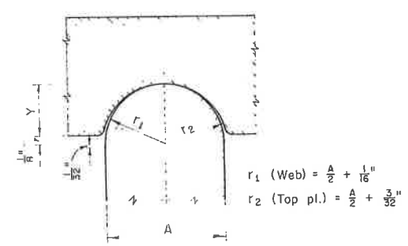

TOP BEARING DETAIL

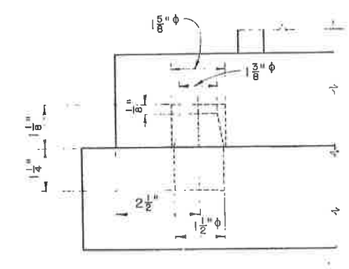

DOWEL DETAIL

DESIGN SPECIFICATIONS: This standard drawing conforms to the requirements of "Design Specifications for Highway Structures" of the State of Ohio, Department of Highways, dated October 1, 1951, together with revisions thereof dated July 15, 1952, April 1, 1954 and February 1, 1955.

LIMITATION: This rocker and bolster design shall not be used where the anticipated movement is in excess of 2 inches.

REVISIONS	STATE OF OHIO DEPARTMENT OF HIGHWAYS DIVISION OF DESIGN AND CONSTRUCTION BUREAU OF BRIDGES
2-2-59	STANDARD ROCKERS AND BOLSTERS FOR STEEL BEAM AND GIRDER BRIDGES REACTIONS 75,000 lb. TO 300,000 lb.

APPROVED Richard Dodt
DATE 3-1-55 ENGINEER OF BRIDGES

PREPARED	TRACED	CHECKED	REVIEWED	DRAWING NUMBER
MPB CFB JCM WHR	JVP	CEM GPH	CBD BFG CHA RJF DHO	RB-1-55

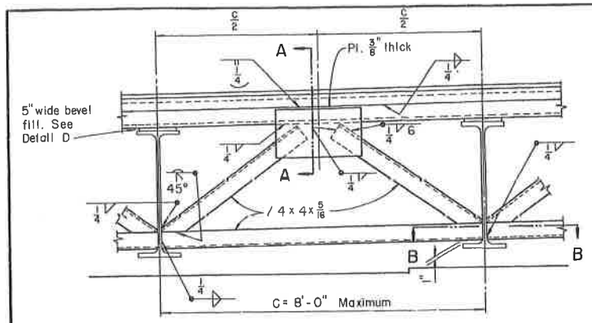

END CROSSFRAME

For beam spacing of 8'-0" or less measured parallel to end dam.

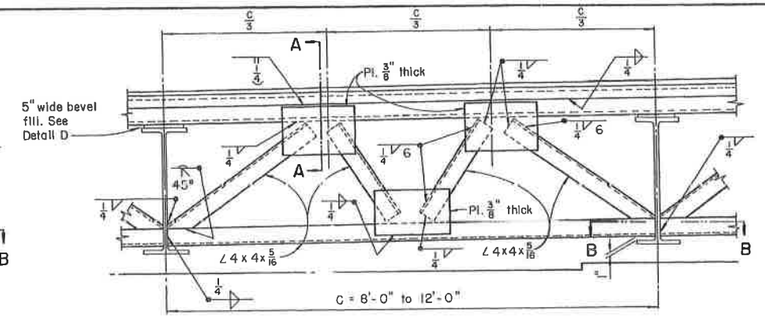

END CROSSFRAME

For beam spacing of 8'-0" to 12'-0" measured parallel to end dam.

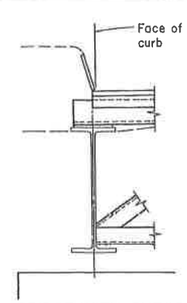

BRIDGE WITH CURBS

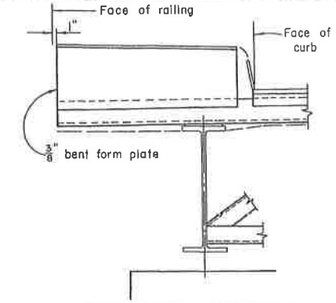

BRIDGE WITH SIDEWALK

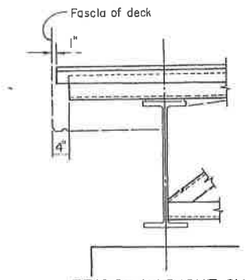

BRIDGE WITHOUT CURBS

END DAM DETAILS AT FASCIA BEAM

(For additional details see Sheet No 2)

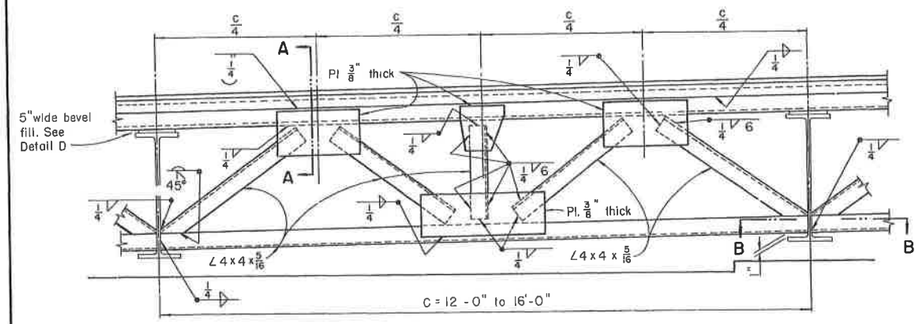

END CROSSFRAME

For beam spacing of 12'-0" to 16'-0" measured parallel to end dam.

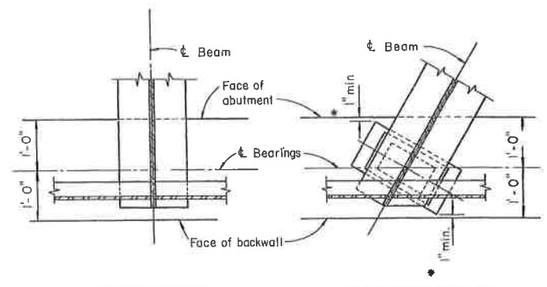

FOR SQUARE BRIDGES FOR SKEWED BRIDGES

SECTION B - B

* Where necessary, cope corner of masonry plate in order to maintain 1" clearance.

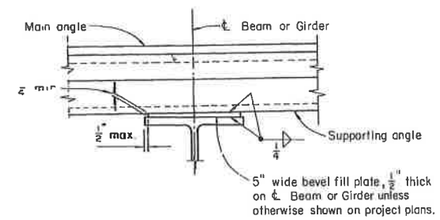

DETAIL D

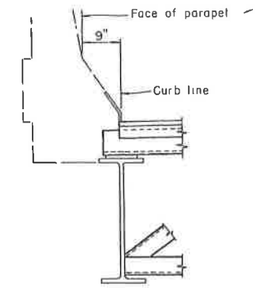

BRIDGE WITH ROADWAY PARAPET RAILING

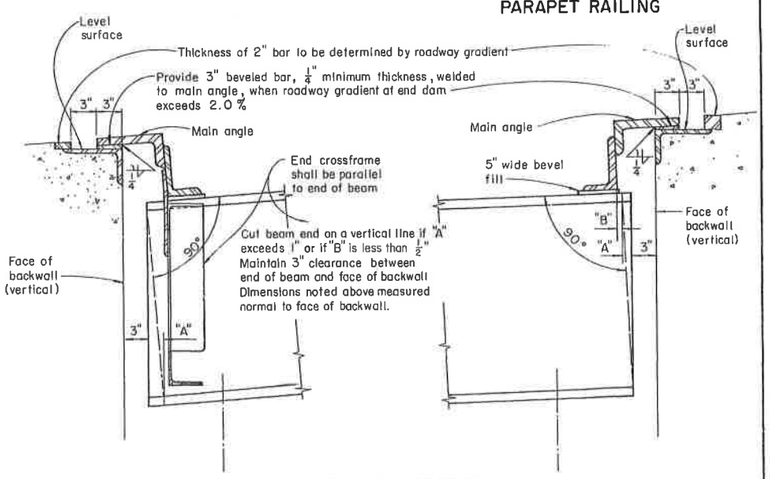

LONGITUDINAL SECTION
BRIDGE ON GRADE

A welded butt joint in the end dam, at the apex of roadway, will be required for that portion of the end dam attached to the superstructure. The portion attached to the backwall shall be placed in segments not less than 6'-0" in length, with a joint at each joint in the backwall and with one of the joints at the apex of roadway. These shall be closely butted but shall not be welded.

5/8" x 2" bolts at not more than 2'-0" % with nuts tack-welded to under side of lower angle. 1 1/16" holes in upper angle. Center 5/8" bolts in 1 1/16" holes. Apply flake graphite between washers and angle. Turn bolts tight and release one-half turn. Remove bolts as soon as concrete has set, preferably within two hours after placing, to avoid damage due to temperature expansion or contraction of superstructure. Fill holes with bituminous material.

Steel washers

This contact surface shall not be painted but shall be cleaned and lubricated with flake graphite in the field immediately prior to placing of backwall concrete.

9/16" ϕ holes at 12" %

∠ 8x4x1 (8x6x1 for T greater than 9 1/2")

2 x 1 edge bar †

∠7x4x1/2

2" ϕ holes, 1 1/2" pitch

1 1/2"

Anchor bars 2x1/2x1'-6" placed parallel with longitudinal reinforcing steel.(Spaced at 12" centers.)

∠7x4x3/4

6x1/2x12" plates, spaced at approximately 15" % except near joints in the angle, where the plates shall be placed within 6" of each side of the joint. The holes may be burned in the plate.

Top of backwall form shall be below 9/16" ϕ holes in ∠ 7x4x1/2

Portions of end dams in contact with steel or with concrete shall not be painted. All other portions shall be cleaned and painted in accordance with 514.

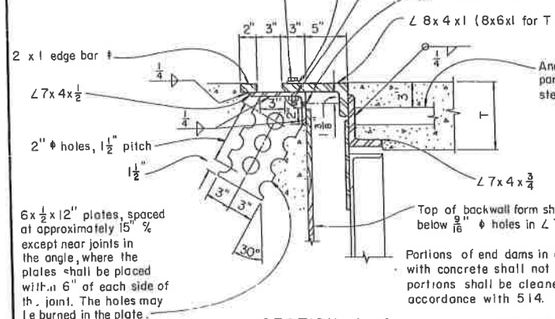

SECTION A - A

SHOWING ROADWAY END DAM FOR MONOLITHIC WEARING SURFACE

† Furnish different thickness if required to compensate for grades in excess of 2%.

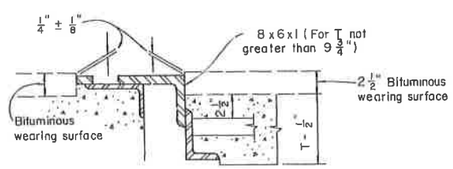

SECTION A - A

SHOWING ROADWAY END DAM FOR BITUMINOUS WEARING SURFACE

Same as SECTION A-A for monolithic wearing surface except as shown.

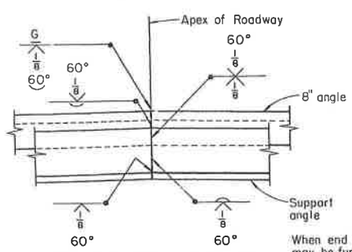

WELDED BUTT JOINT IN SUPERSTRUCTURE END DAM

When end dam contains no apex, a butt joint may be furnished near the centerline of the deck, if necessary to facilitate handling and shipping.

REVISIONS	STATE OF OHIO DEPARTMENT OF HIGHWAYS DIVISION OF DESIGN AND CONSTRUCTION BUREAU OF BRIDGES				
	STANDARD SUPERSTRUCTURE DETAILS FOR STEEL BEAM AND GIRDER BRIDGES				
	APPROVED: C. H. Alleman DATE 6-12-69 ENGINEER OF BRIDGES				DRAWING NUMBER SD-1-69
	PREPARED FFE	TRACED NRB	CHECKED WJJ FFE	REVIEWED CDB RVH BFG	SHEET NO. 1 OF 4 SHEETS

MICROFILMED
FEB 21 1990

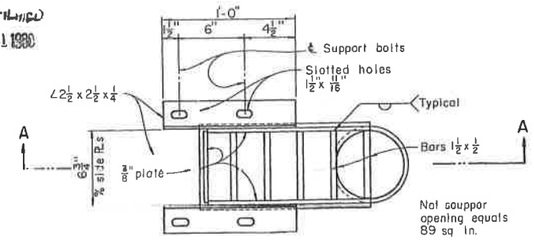

PLAN
STANDARD SCUPPER

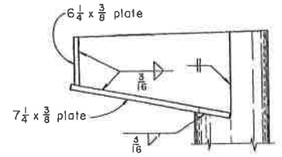

SCUPPER ELEVATION

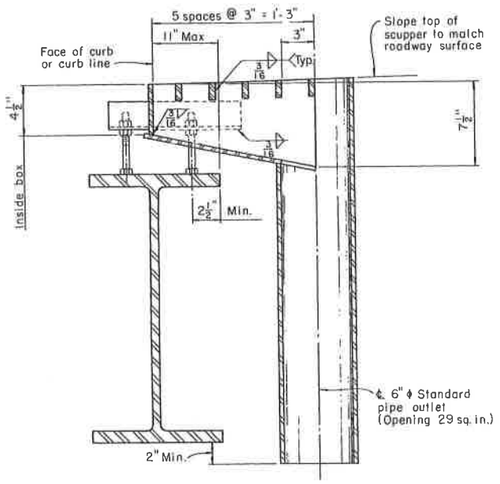

SECTION A-A

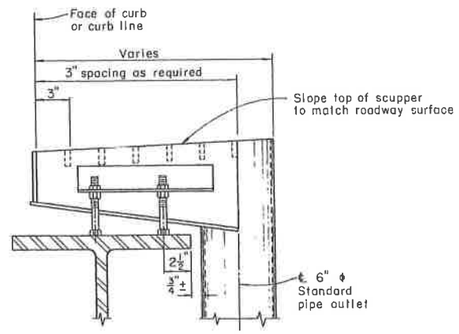

DETAIL A

Scupper elevation showing method for lengthening scupper where necessary to clear the flanges

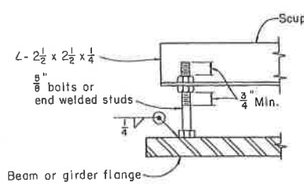

DETAIL B

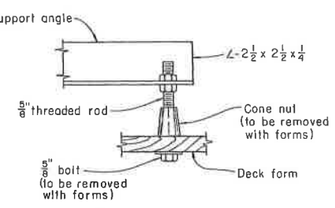

DETAIL C

For scuppers that are not located adjacent to a beam or girder flange.

SCUPPER SUPPORT BOLTS

Scuppers shall be furnished in sufficient number to provide one square inch of net scupper opening for each 12 to 15 square feet of deck area to be drained. The downspout shall have at least one square inch of opening for each five square inch of net scupper opening, with a minimum nominal diameter of 6 inches.

Scupper should clear crossframes by at least 6" and abutments by 2'-6". They shall be no nearer to ℄ of pier bearings than 0.10 of span length.

The support angles and support bolts are included with scupper for payment.

Scuppers, including support angles, shall be galvanized in accordance with 711.

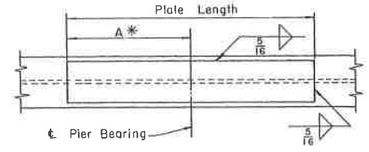

TOP FLANGE

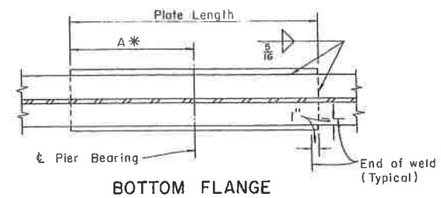

BOTTOM FLANGE

MOMENT PLATES

* See Standard Drawings or project plans for dimension "A". Dimension "A" equals 1/2 plate length unless otherwise shown, in which case the plans shall indicate the span to which dimension "A" applies.

REVISIONS	STATE OF OHIO DEPARTMENT OF HIGHWAYS DIVISION OF DESIGN AND CONSTRUCTION BUREAU OF BRIDGES				
	STANDARD SUPERSTRUCTURE DETAILS FOR STEEL BEAM AND GIRDER BRIDGES				
	APPROVED DATE: 6-12-69	C. H. Wheeler ENGINEER OF BRIDGES			DRAWING NUMBER SD-1-69
	PREPARED	TRACED	CHECKED	REVIEWED	SHEET NO 3
	MPB	NRB	WJJ	CDB RVH BFG	OF 4 SHEETS

FED. RD. DIVISION	STATE	PROJECT	
5	OHIO		

509/584

ATH-50-4.96
4.0 MILES WEST OF ATHENS

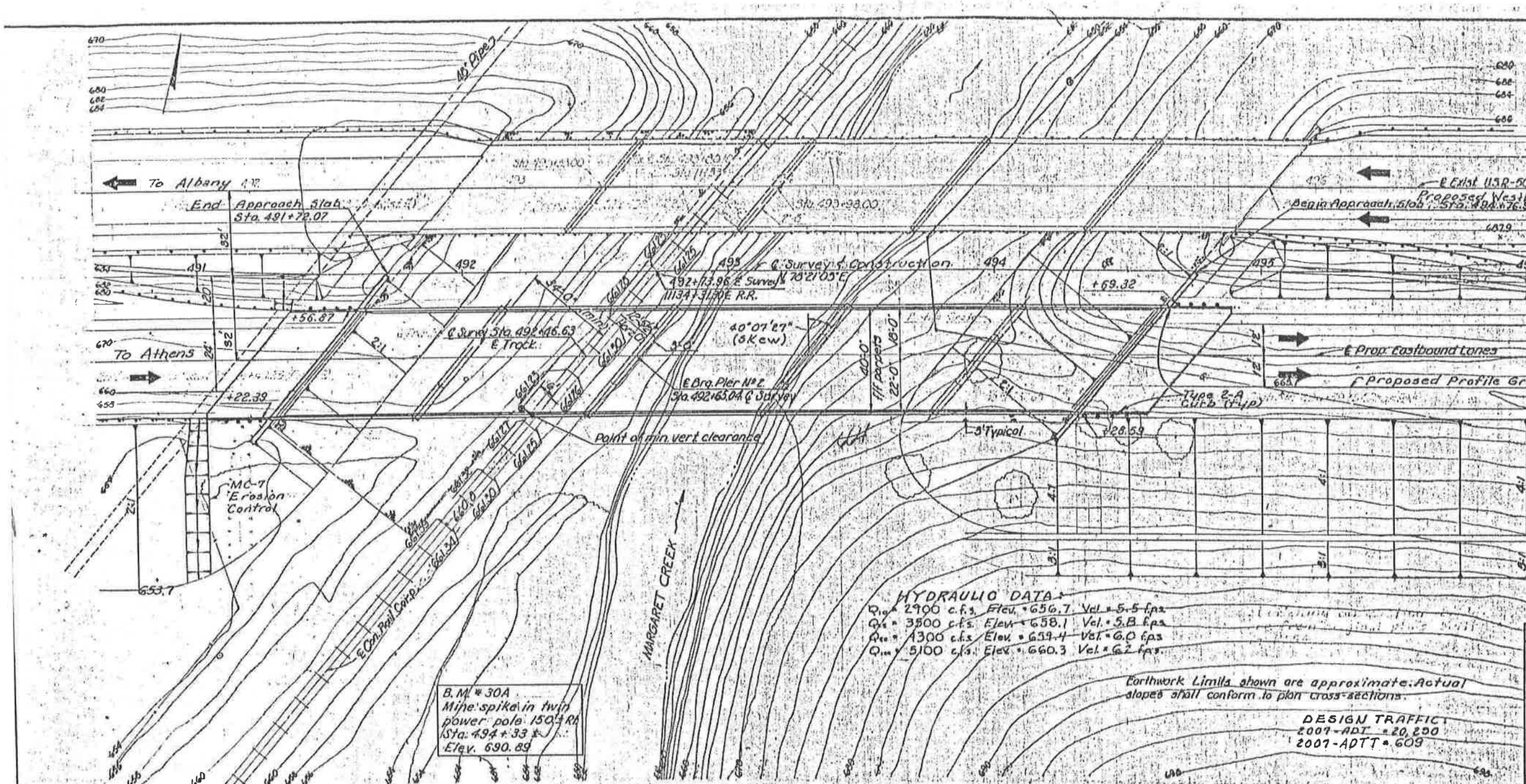

PLAN

Structure clears 100 Year Design Highwater by 28.6'±

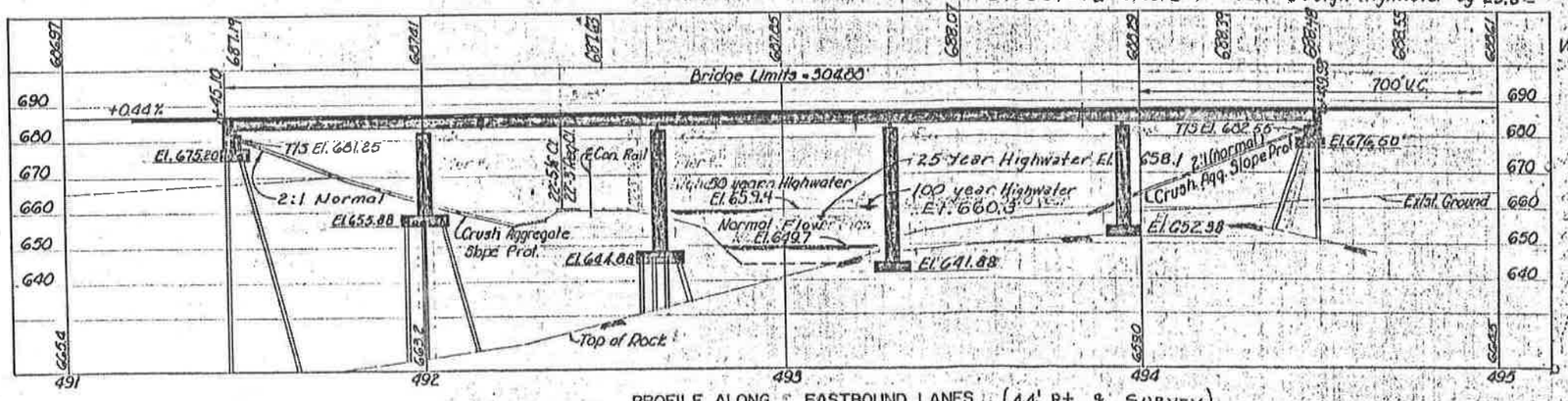

PROFILE ALONG ℄ EASTBOUND LANES (44' Rt. ℄ SURVEY)

Drainage Area 30.7 sq.mi.
Q100 = 4,300 c.f.s.

Vertical Curve Data
P.V.I. Sta. 497+50
Length = 700'
Elev. = 609.83
G1 = +0.44%
G2 = -1.20%

All abutment and pier piles are to be HP10x42.
Estimated average pay lengths are:
Rear abutment - 65 Ft.
Pier No. 1 - 36 Ft.
Pier No. 2 - 15 Ft.
Forward abutment - 26 Ft.
All piles are to be protected by steel points. See General Notes.

EXISTING STRUCTURE (W.B.)

TYPE: Continuous steel beam bridge on reinforced concrete substructures
SPANS: 52'-0"; 3 @ 65'-0"; 52'-0" % bearing
ROADWAY: 30'-0" f/f parapets w/1'-9" safety curbs
LOAD FREQUENCY: CF = 400 (51)
WEARING SURFACE: 1" asphaltic concrete
SKEW: 40°08' L.F.
APPROACH SLAB: A3-1-54 (25'-0")
ALIGNMENT: tangent
No. TRACKS: 1, DISPOSITION: To remain TO BE MODIFIED

PROPOSED STRUCTURE (E.B.)

TYPE: Continuous Steel Beam Bridge with reinforced concrete deck & substructures
SPANS: 52'-0"; 3 @ 65'-0"; 52'-0" % Bearings
ROADWAY: 40' f/f of parapets
LOADING: HS 20-44 & Alt. Mil. Loading (Sec. II)
WEARING SURFACE: 1" Monolithic Concrete
SKEW: 40°07'27" L.F.
APPROACH SLAB: A3-1-81 (25'-0" long)
ALIGNMENT: tangent
SUPERELEVATION: none
AVERAGE DAILY TRAFFIC:

STATE OF OHIO
DEPARTMENT OF TRANSPORTATION
BUREAU OF BRIDGES AND STRUCTURAL DESIGN

1/12

SITE PLAN

BRIDGE No. ATH-50-0943R OVER
CON. RAIL CORP. & MARGARET CREEK
ATHENS COUNTY Sta. 491+72.07 to 494+76.95

DESIGNED	DRAWN	TRACED	CHECKED	REVIEWED	DATE	REVISED
HM	H.A. Hall		S.Y.	JK	7/22/88	HJR 3-14-85

FHWA REGION	STATE	PROJECT	
5	OHIO		

510/584

ATH-50-4.95

Screed elevations given at the top of the portland cement deck along the curb line for the quarter points of each span. These elevations are required before the deck is placed. Proper allowance has been made for the dead load deflection due to the weight of the concrete.

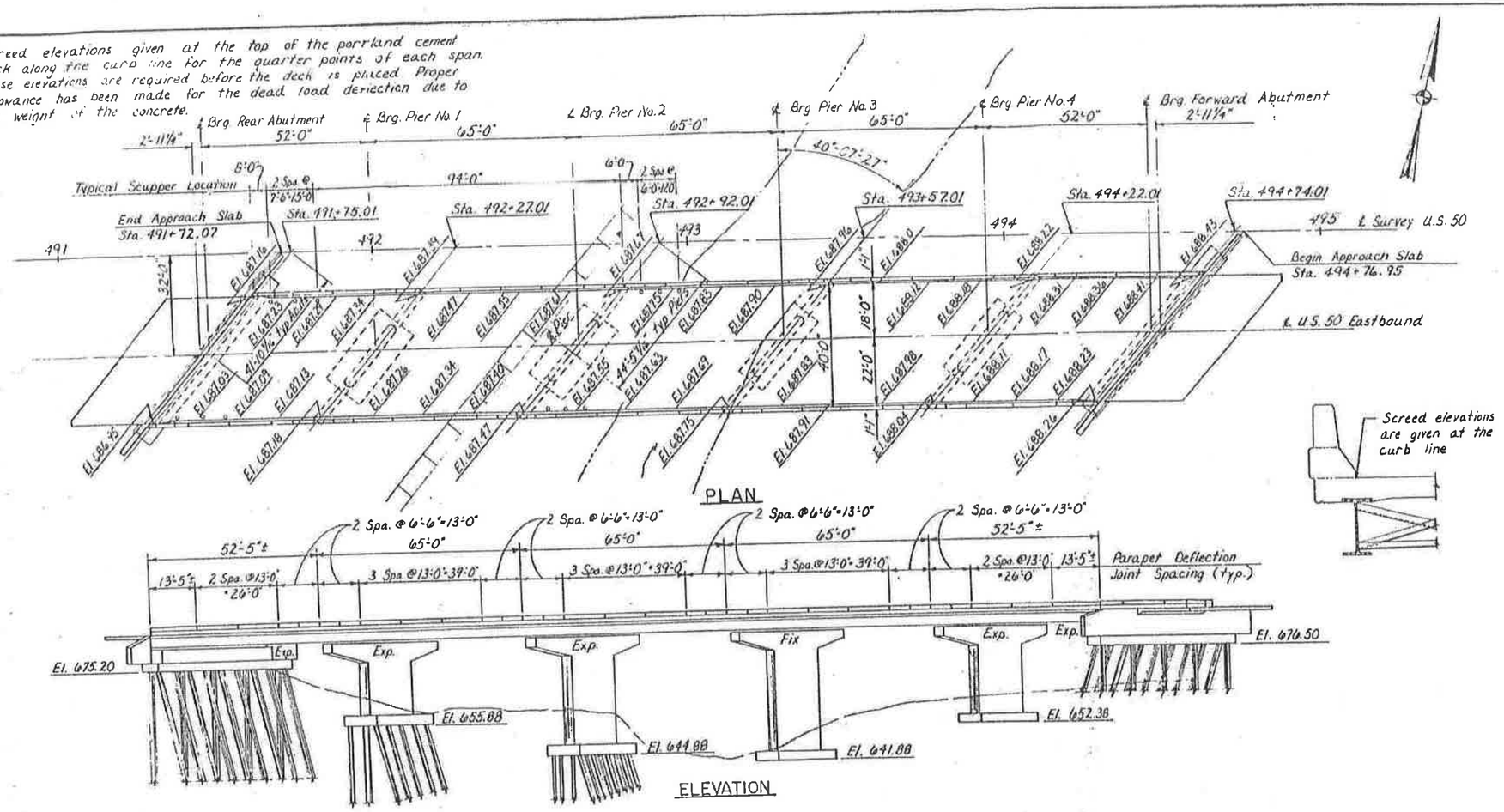

GENERAL NOTES

REFERENCE SHALL BE MADE TO STANDARD DRAWINGS:

AS-1-81	DATED	11-27-81
BR-1	DATED	5-29-79
RB-1-55	REVISED	2-2-59
SD-1-69	DATED	6-12-69 SHEETS 1 AND 3 OF 4

AND TO SUPPLEMENTAL SPECIFICATIONS:

824	DATED	10-8-82
836	DATED	11-12-85

DESIGN SPECIFICATIONS: THIS STRUCTURE CONFORMS TO "STANDARD SPECIFICATIONS FOR HIGHWAY BRIDGES" ADOPTED BY THE AMERICAN ASSOCIATION OF STATE HIGHWAY AND TRANSPORTATION OFFICIALS, 1983, INCLUDING THE 1984 INTERIM SPECIFICATIONS AND THE OHIO "SUPPLEMENT" TO THESE SPECIFICATIONS.

DESIGN DATA:
DESIGN LOADING-HS20-44 CASE II AND THE ALTERNATE MILITARY LOADING.

DESIGN STRESSES:
CONCRETE, CLASS S- COMPRESSIVE STRESS 4500 P.S.I.
CONCRETE, CLASS C- COMPRESSIVE STRESS 4000 P.S.I.
REINFORCING STEEL- ASTM A615, A616 OR A617 GRADE 60 MINIMUM YIELD STRENGTH 60,000 P.S.I.
STRUCTURAL STEEL A36- YIELD STRENGTH 36,000 P.S.I.

DECK PROTECTION METHOD- EPOXY COATED REINFORCING STEEL, BOTH MATS.

MONOLITHIC WEARING SURFACE IS ASSUMED, FOR DESIGN PURPOSES, TO BE 1" THICK.

EMBANKMENT CONSTRUCTION: THE EMBANKMENTS SHALL BE CONSTRUCTED TO THE LEVEL OF THE SUBGRADE FOR A MINIMUM DISTANCE OF 200 FEET BACK OF THE ABUTMENTS. EXCAVATION MAY THEN BE MADE FOR THE ABUTMENTS AND FOR PIER NO. 4 AND PILES DRIVEN.

PILES SHALL BE DRIVEN TO REFUSAL ON BEDROCK. REFUSAL SHALL BE CONSIDERED AS ATTAINED BY PENETRATING SOFT BEDROCK WITH A MINIMUM RESISTANCE OF 20 BLOWS PER INCH, OR REFUSAL SHALL BE CONSIDERED ATTAINED AFTER THE PILE HAS CONTACTED HARD BEDROCK AND THE PILE HAS THEN RECEIVED AT LEAST 20 BLOWS.

THE DESIGN LOAD IS 35 TONS PER PILE FOR THE ABUTMENT PILES, 50 TONS PER PILE FOR PIER NO. 1 PILES AND 40 TONS PER PILE FOR PIER NO. 2 PILES.

FOUNDATION BEARING PRESSURE: PIER NOS. 3 AND 4 FOOTINGS, AS DESIGNED, PRODUCE A MAXIMUM BEARING PRESSURE OF 3 TONS PER SQ. FT.

FOOTINGS FOR PIER NOS. 3 AND 4 SHALL EXTEND A MINIMUM OF 3 INCHES INTO BEDROCK OR TO THE ELEVATION SHOWN, WHICHEVER IS LOWER.

UTILITY LINES: ALL EXPENSE INVOLVED IN RELOCATING THE AFFECTED UTILITY LINES SHALL BE BORNE BY THE OWNERS. THE CONTRACTOR AND OWNERS ARE REQUESTED TO COOPERATE BY ARRANGING THIER WORK IN SUCH A MANNER THAT INCONVENIENCE TO EITHER WILL BE HELD TO A MINIMUM.

CONSTRUCTION CLEARANCE OF 9 FT. HORIZONTALLY FROM THE CENTER OF TRACKS AND 19 FT. VERTICALLY FROM A POINT LEVEL WITH THE TOP OF THE HIGHER RAIL, AND 6 FEET FROM THE CENTER OF THE TRACKS, SHALL BE MAINTAINED AT ALL TIMES.

ITEM SPECIAL, SEALING OF CONCRETE SURFACES: A CONCRETE SEALER, EITHER NON-EPOXY OR AN EPOXY SEALER, SHALL BE APPLIED TO THE FOLLOWING CONCRETE SURFACES: ALL SIDES AND ENDS OF THE DEFLECTOR PARAPET, DECK FASCIA AND 6" IN FROM THE DECK FASCIA ON THE UNDERSIDE OF THE DECK. SEE THE PROPOSAL FOR SURFACE PREPARATION REQUIREMENTS, APPLICATION RATES, MATERIALS REQUIREMENTS AND APPLICATION PROCEDURES.

ESTIMATED QUANTITIES

ITEM	TOTAL	UNIT	DESCRIPTION	ABUT.	PIERS	SUPER.	GEN.
503	LUMP		COFFERDAMS, CRIBS AND SHEETING				LUMP
503	855	CU. YD.	UNCLASSIFIED EXCAVATION	279	576		
503	74	CU. YD.	ROCK EXCAVATION		74		
505	LUMP		PILE DRIVING EQUIPMENT MOBILIZATION				LUMP
507	2085	LIN. FT.	STEEL PILES, HP10x42	1260	825		
509	97773	LB.	REINFORCING STEEL, GRADE 60	14469	83304		
511	254	CU. YD.	CLASS C CONCRETE, FOOTINGS	92	162		
511	398	CU. YD.	CLASS C CONCRETE, PIERS ABOVE FOOTINGS		398		
511	116	CU. YD.	CLASS C CONCRETE, ABUTMENTS ABOVE FOOTINGS	116			
511	429	CU. YD.	CLASS S CONCRETE, SUPERSTRUCTURE			429	
512	21	SQ. YD.	TYPE A WATERPROOFING	21			
513	307900	LB.	STRUCTURAL STEEL (AISC CATEGORY I)			307900	
514	307900	LB.	FIELD PAINTING OF NEW STEEL, SYSTEM A			307900	
516	110	LIN. FT.	STRUCTURAL EXPANSION JOINTS INCLUDING ELASTOMERIC STRIP SEALS			110	
518	84	CU. YD.	POROUS BACKFILL	84			
518	130	LIN. FT.	6" PERFORATED HELICAL CORRUGATED STEEL PIPE, 707.01	130			
518	42	LIN. FT.	6" NON-PERFORATED HELICAL CORRUGATED STEEL PIPE, INCLUDING SPECIALS, 707.01	42			
518	12	EACH	SCUPPERS, INCLUDING SUPPORTS	28	35	12	
507	63	EACH	STEEL POINTS			105343	
824	105343	LB.	EPOXY COATED REINFORCING STEEL, GRADE 60				
SPECIAL	536	SQ. YD.	SEALING OF CONCRETE SURFACES (SEE PROPOSAL NOTE)			536	

PILE POINTS: STEEL PILE POINTS SHALL BE USED TO PROTECT THE TIPS OF THE PROPOSED STEEL "H" PILING. THE STEEL POINTS SHALL BE FURNISHED BY ASSOCIATED PILE AND FITTING CORPORATION, 262 RUTHERFORD BOULEVARD, CLIFTON, NEW JERSEY 07014; INTERNATIONAL CONSTRUCTION EQUIPMENT, INC., 301 WAREHOUSE DRIVE, MATTHEWS, NORTH CAROLINA 28015; DOUGHERTY FOUNDATION PRODUCTS, INC., P.O. BOX 688, FRANKLIN LAKES, NEW JERSEY 07417; VERSA STEEL INC., 3601 N.W. YEON AVE., P.O. BOX 10559, PORTLAND, OREGON 97210 OR BY A MANUFACTURER THAT CAN FURNISH A STEEL POINT THAT IS ACCEPTABLE TO THE DIRECTOR. THE PILE POINTS SHALL SATISFY OR EXCEED THE REQUIREMENTS OF ASTM A27 (GRADE 65/30) OR ASTM A148 (GRADE 90/60)".

STATE OF OHIO
DEPARTMENT OF TRANSPORTATION
BUREAU OF BRIDGES AND STRUCTURAL DESIGN

2 | 12

GENERAL PLAN, GENERAL NOTES and ESTIMATED QUANTITIES

BRIDGE NO. ATH-50-0943R over CONRAIL CORP. & MARGARET CREEK

DESIGNED	DRAWN	TRACED	CHECKED	REVIEWED	DATE	REVISED
BRA	BRA		3-5-86 AUM	WTF	3-6-86	

FHWA REGION	STATE	PROJECT	
5	OHIO		

ATH-50-4.95

511/584

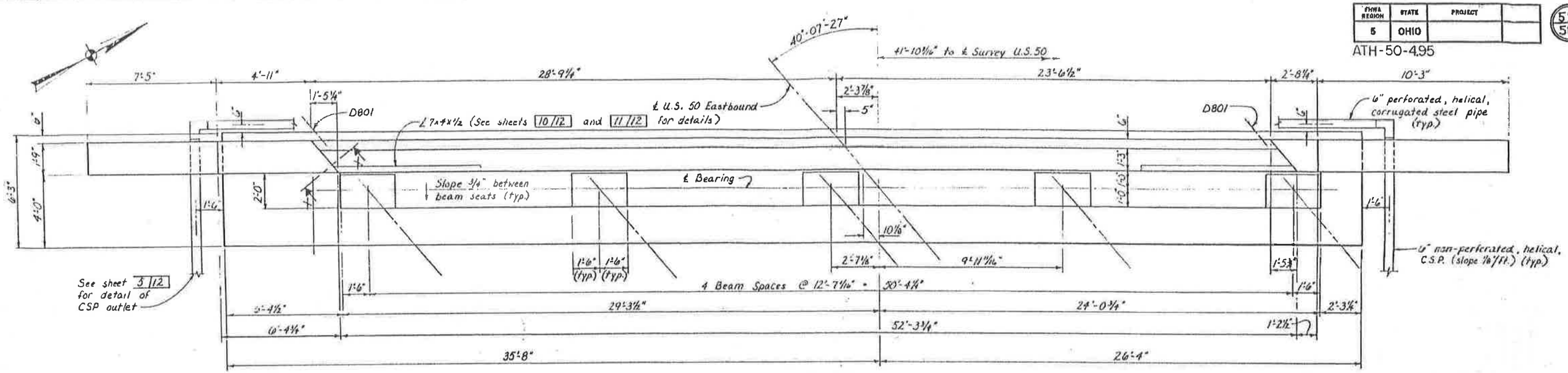

PLAN

Piles are not shown.

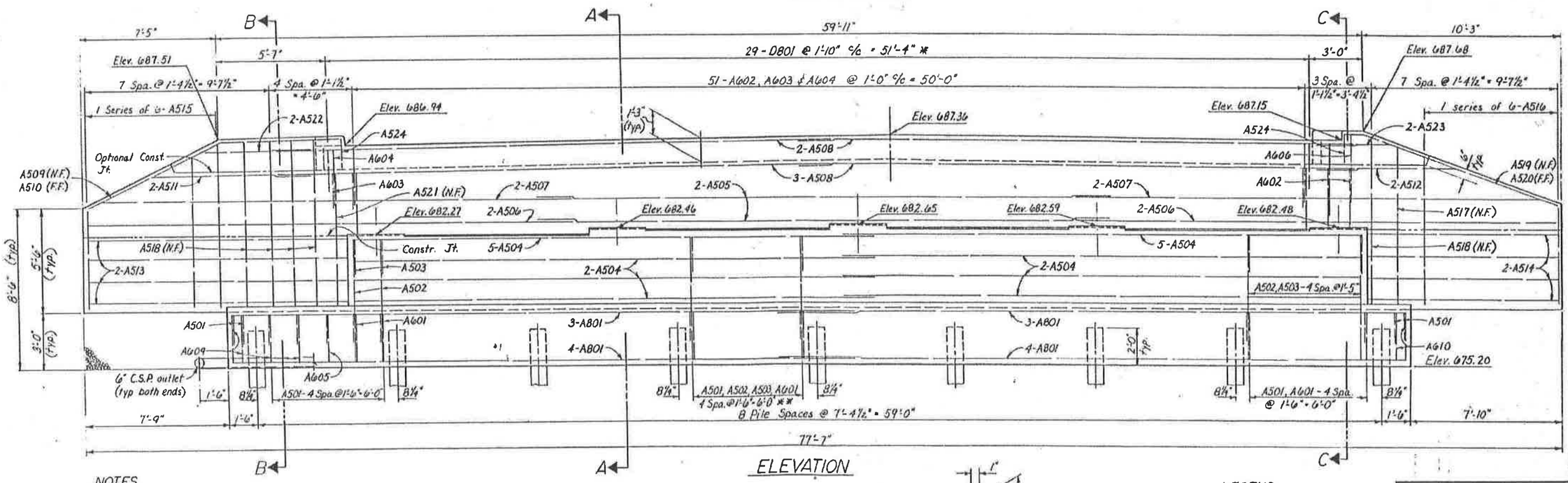

ELEVATION

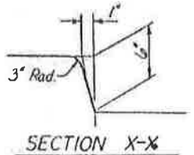

SECTION X-X

NOTES

* D801 bars shall be placed parallel to the ℄ U.S. 50 Eastbound.

** Typical reinforcement spacing between piles except where noted.

Refer to sheet 5/12 for Sections A-A, B-B, C-C and FOOTING PLAN.

POROUS BACKFILL, 1.5 ft. thick, shall extend up to the plane of the subgrade and laterally to the ends of the wingwalls.

Backwall elevations are given at face of backwall. Seat elevations are provided at ℄ Bearing.

LEGEND

N.F. - near face
F.F. - far face

STATE OF OHIO
DEPARTMENT OF TRANSPORTATION
BUREAU OF BRIDGES AND STRUCTURAL DESIGN

3/12

REAR ABUTMENT

BRIDGE NO. ATH-50-0943 R
over
CONRAIL CORP. & MARGARET CREEK

DESIGNED	DRAWN	TRACED	CHECKED	REVIEWED	DATE	REVISED
BRA	BRA		AJM	WTF	3-6-86	

FHWA REGION	STATE	PROJECT	
5	OHIO		

ATH-50-4.95

512/584

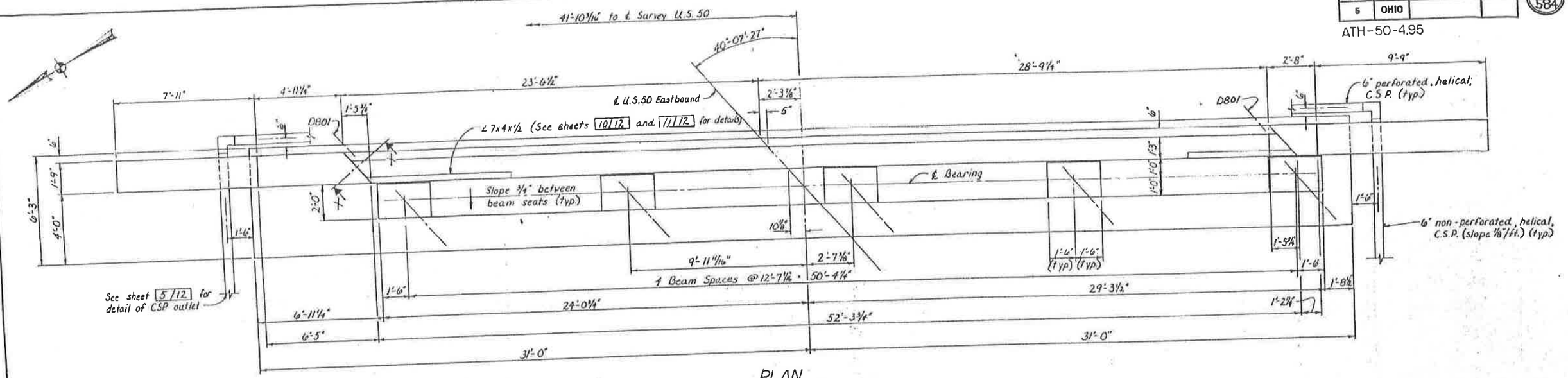

PLAN

Piles are not shown.

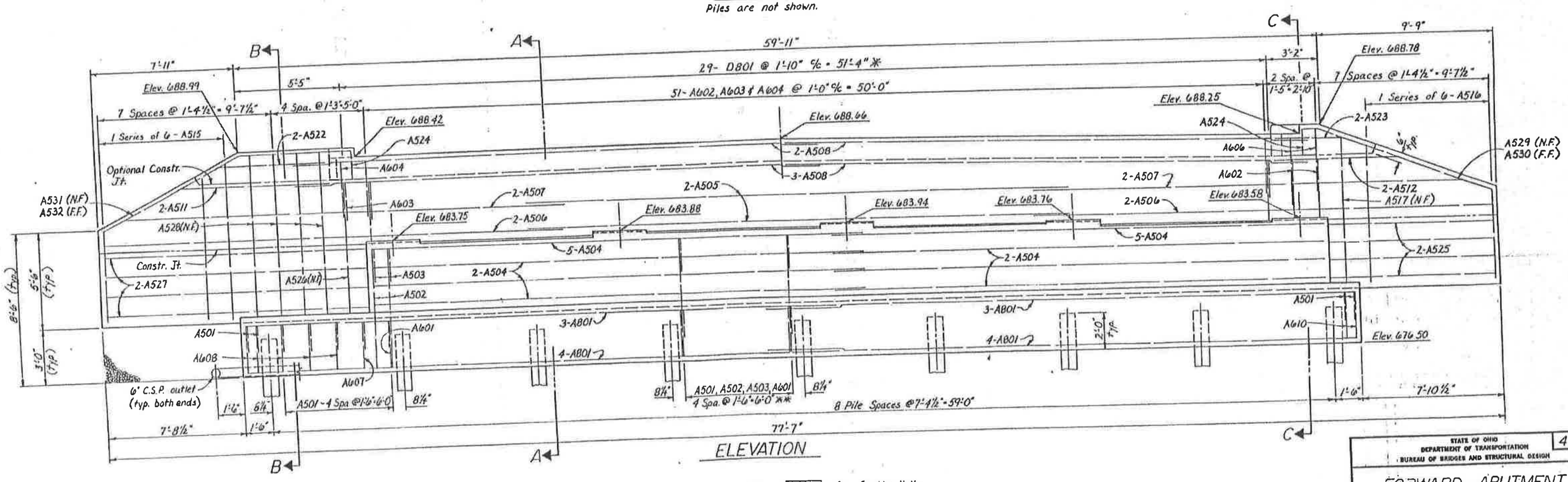

ELEVATION

See sheet 3/12 for Section X-X.

NOTES

* D801 bars shall be placed parallel to the ℄ U.S. 50 Eastbound.

** Typical reinforcement spacing between piles except where noted.

Refer to sheet 5/12 for Sections A-A, B-B, C-C and FOOTING PLAN.

POROUS BACKFILL, 15 ft. thick, shall extend up to the plane of the subgrade and laterally to the ends of the wingwalls.

Backwall elevations are given at face of backwall. Seat elevations are provided at ℄ bearing.

LEGEND

N.F. - near face
F.F. - far face

STATE OF OHIO
DEPARTMENT OF TRANSPORTATION
BUREAU OF BRIDGES AND STRUCTURAL DESIGN

4/12

FORWARD ABUTMENT

BRIDGE NO. ATH-50-0943R
over
CONRAIL CORP. & MARGARET CREEK

DESIGNED	DRAWN	TRACED	CHECKED	REVIEWED	DATE	REV
BRA	BRA		AJM	WTF	3-6-86	

FIGWA REGION	STATE	PROJECT	
5	OHIO		

ATH-50-4.95

513/584

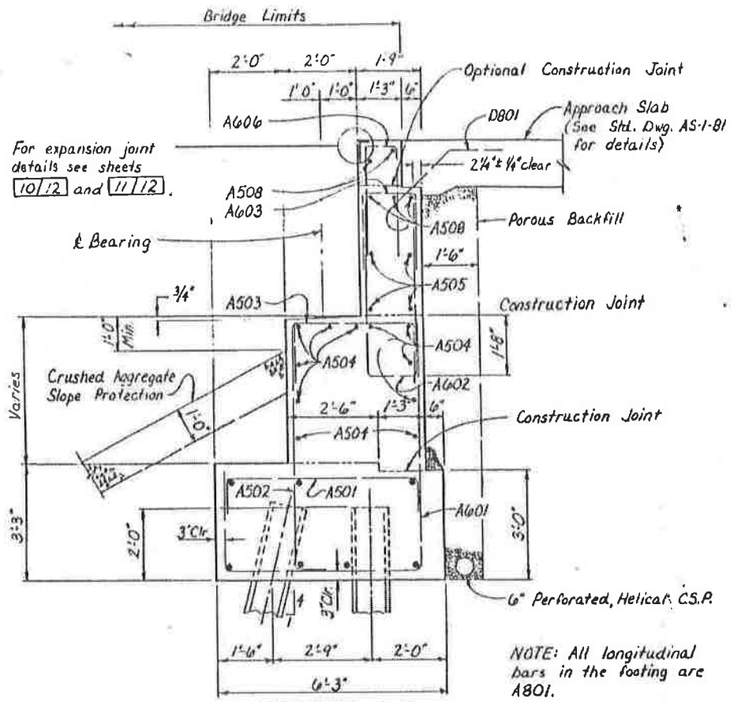

SECTION A-A

NOTE: All longitudinal bars in the footing are A801.

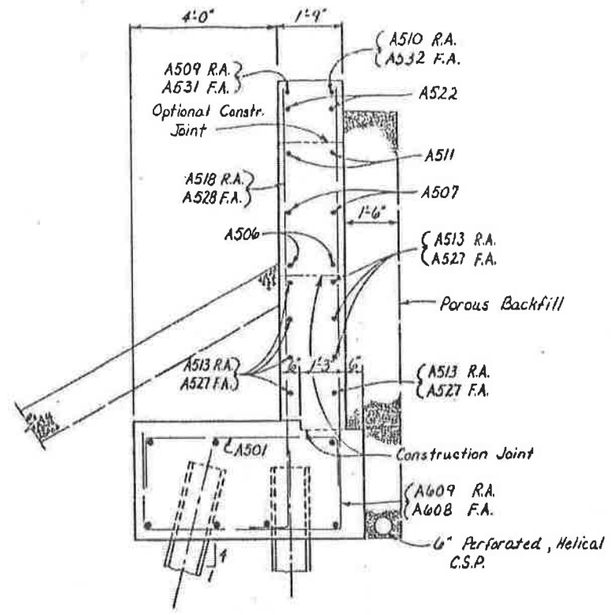

SECTION B-B

Refer to Section A-A for details of footing reinforcement.

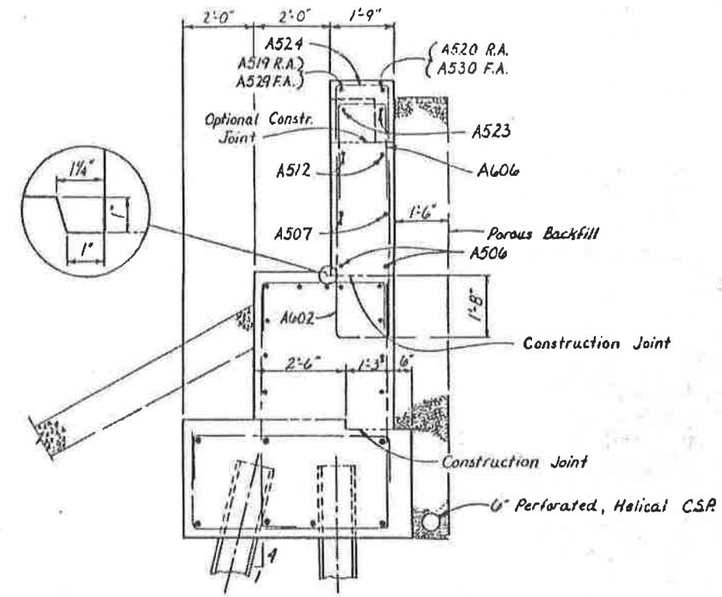

SECTION C-C

Refer to Section A-A for details of reinforcement below the beam seat.

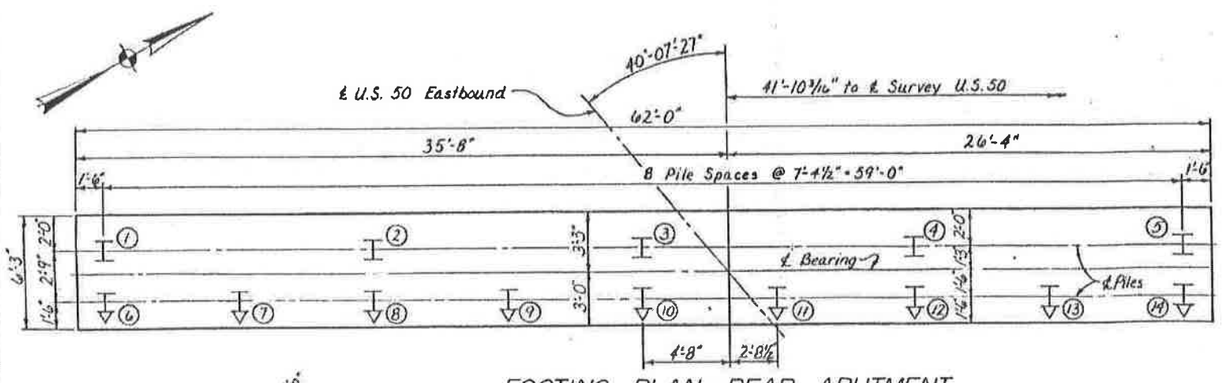

FOOTING PLAN-REAR ABUTMENT

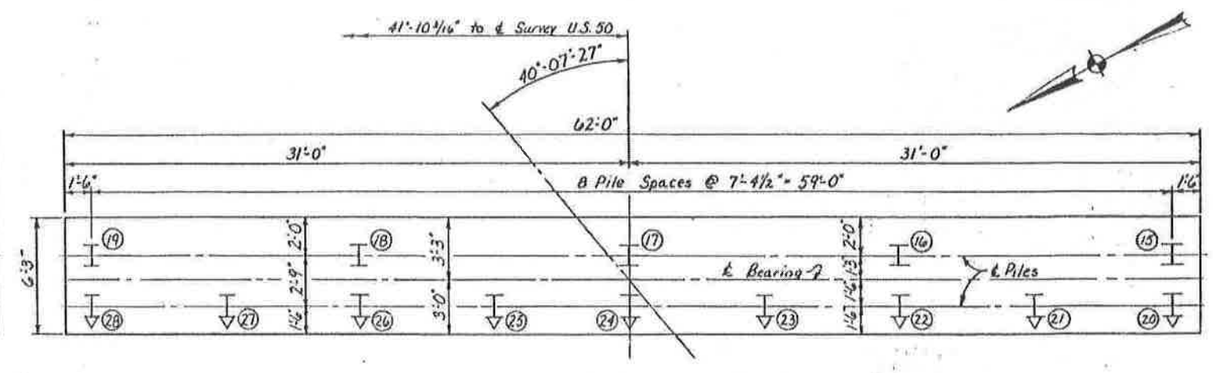

FOOTING PLAN-FORWARD ABUTMENT

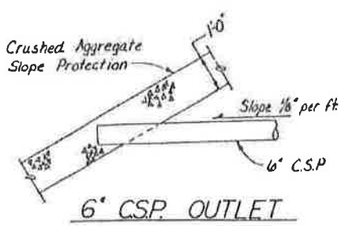

6" CSP OUTLET

NOTE: All piles shall be HP10x42.

LEGEND

- Battered Pile (batter 1:4 in direction shown)
- Vertical Pile
- (6) - Pile Number
- R.A. - Rear Abutment
- F.A. - Forward Abutment

STATE OF OHIO
DEPARTMENT OF TRANSPORTATION
BUREAU OF BRIDGES AND STRUCTURAL DESIGN

5/12

ABUTMENT DETAILS

BRIDGE NO. ATH-50-0943R
over
CONRAIL CORP. & MARGARET CREEK

DESIGNED	DRAWN	TRACED	CHECKED	REVIEWED	DATE	REVISED
BRA	BRA		AJM	WTF	3-6-86	

FHWA REGION	STATE	PROJECT	
5	OHIO		

ATH-50-4.95

514/584

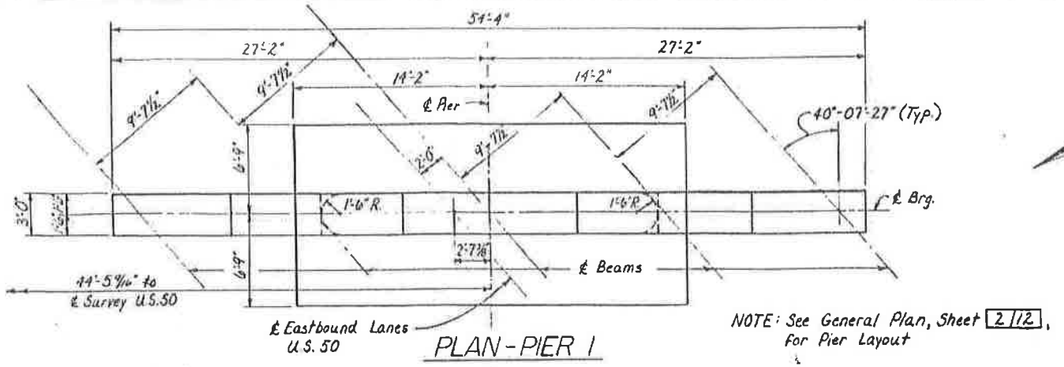

NOTE: See General Plan, Sheet 2/12, for Pier Layout

PLAN - PIER 1

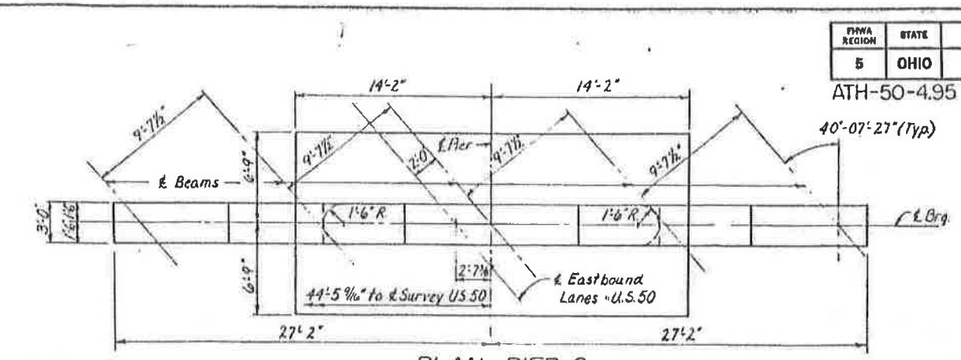

PLAN - PIER 2

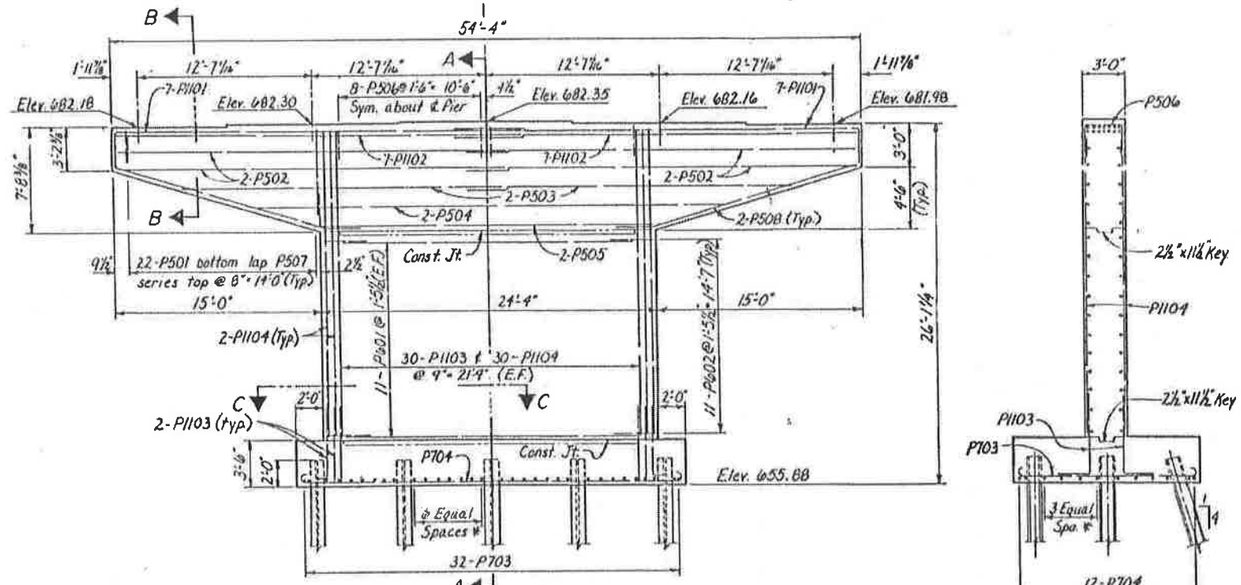

ELEVATION - PIER 1

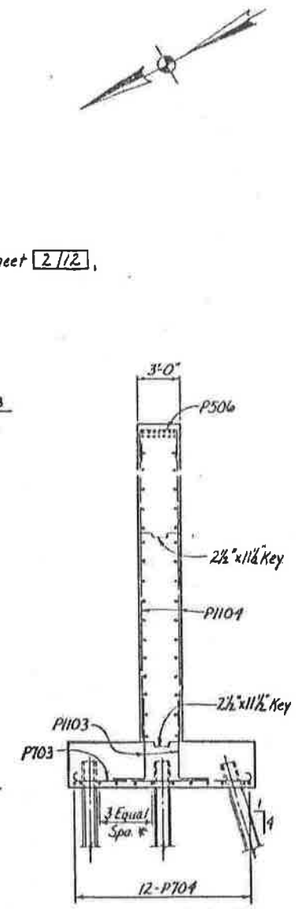

SECTION A-A

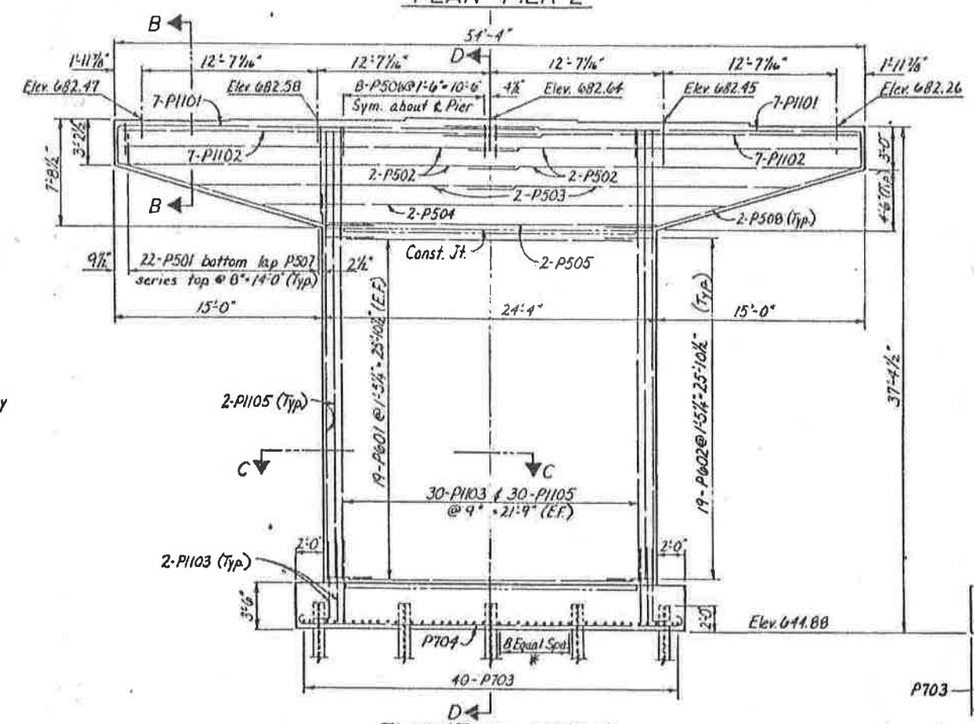

ELEVATION - PIER 2

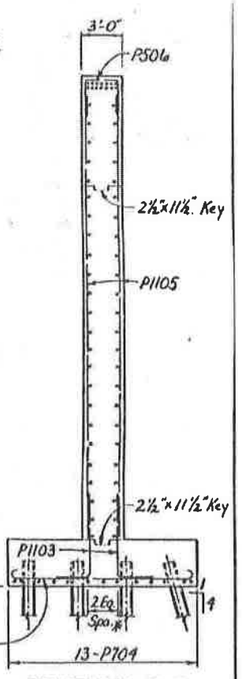

SECTION D-D

All piles shall be HP 10x42.

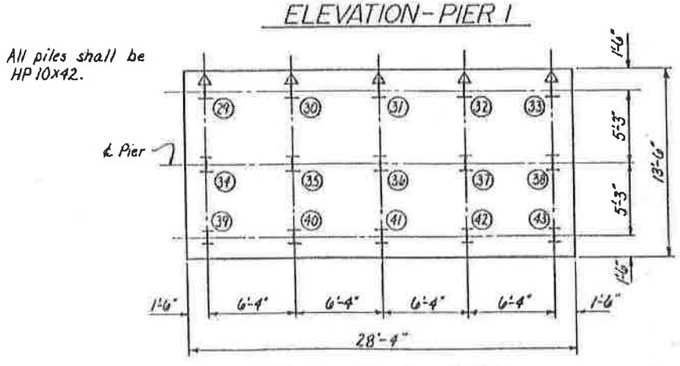

FOOTING PLAN - PIER 1

All piles shall be HP10x42.

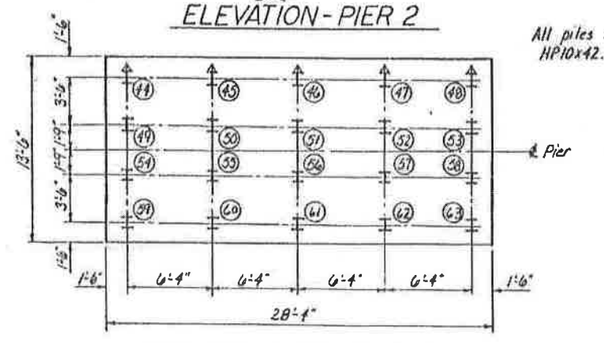

FOOTING PLAN - PIER 2

See Sheet 7/12 for Sections B-B & C-C.

LEGEND

E.F. - Each Face

(33) - Pile Number

- Battered Pile and direction of batter

* - Typical reinforcing spacing between piles

STATE OF OHIO
DEPARTMENT OF TRANSPORTATION
BUREAU OF BRIDGES AND STRUCTURAL DESIGN

6/12

PIER 1 & PIER 2

BRIDGE NO. ATH-50-0943R over CONRAIL CORP. & MARGARET CREEK

DESIGNED	DRAWN	TRACED	CHECKED	REVIEWED	DATE	REVISED
BRA	BRA		AJM	WTF	3-6-86	

FHWA REGION	STATE	PROJECT	
5	OHIO		

ATH-50-4.95

515 SBA

NOTE: See General Plan, sheet 2/12, for Pier Layout.

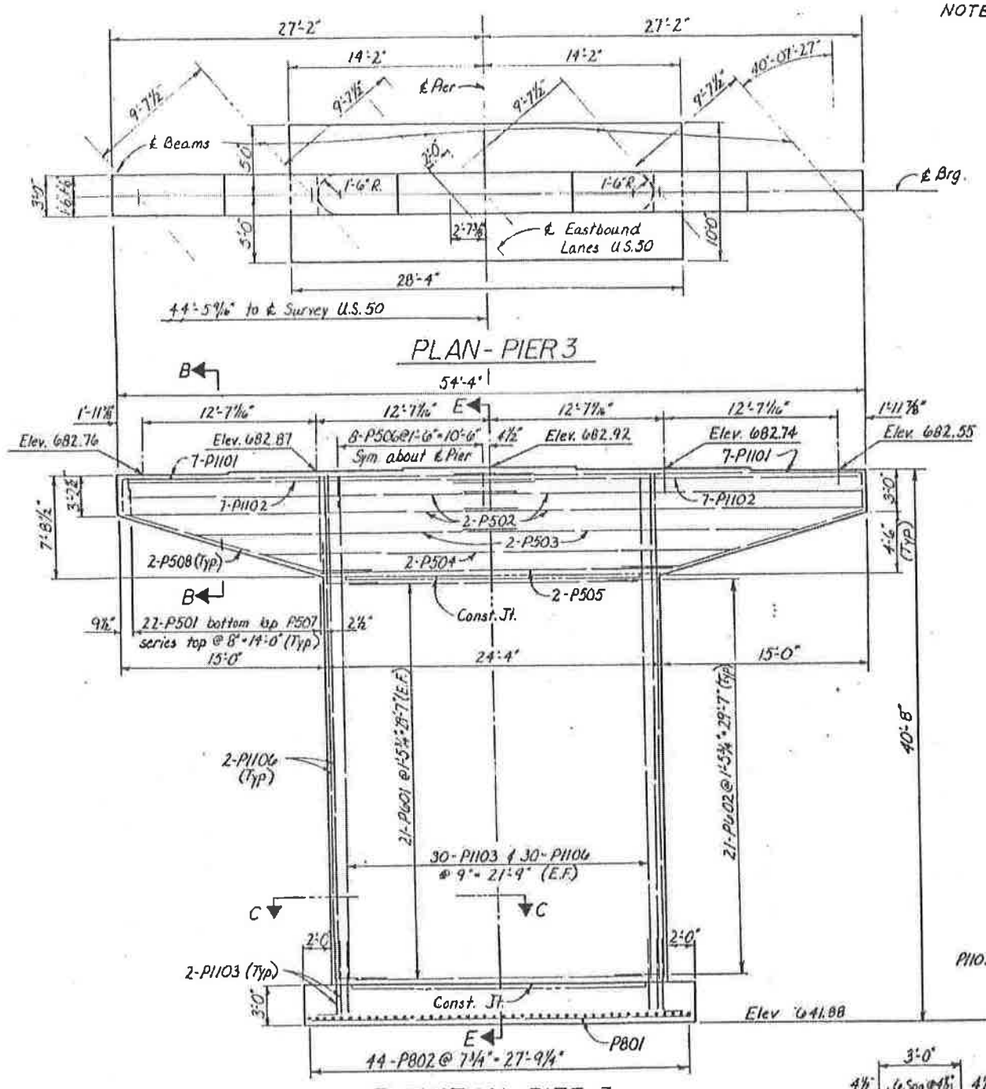

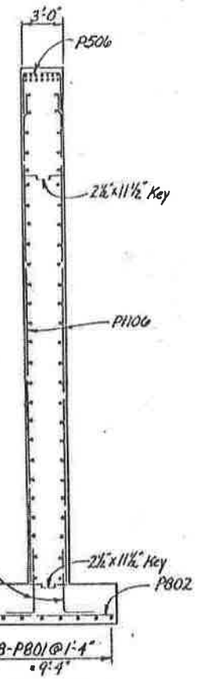

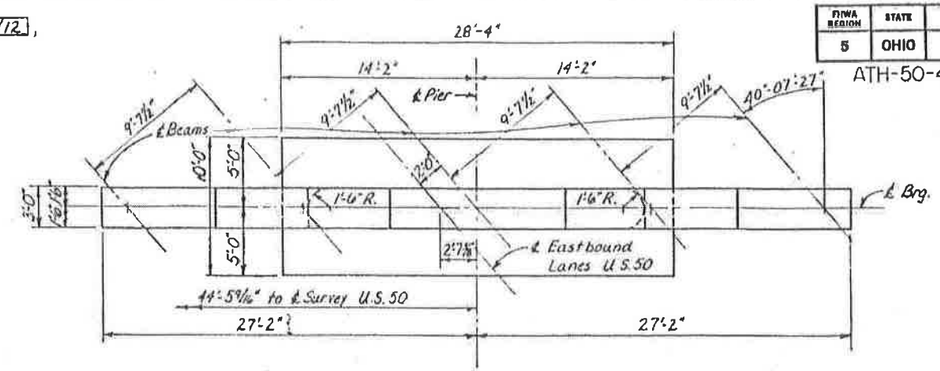

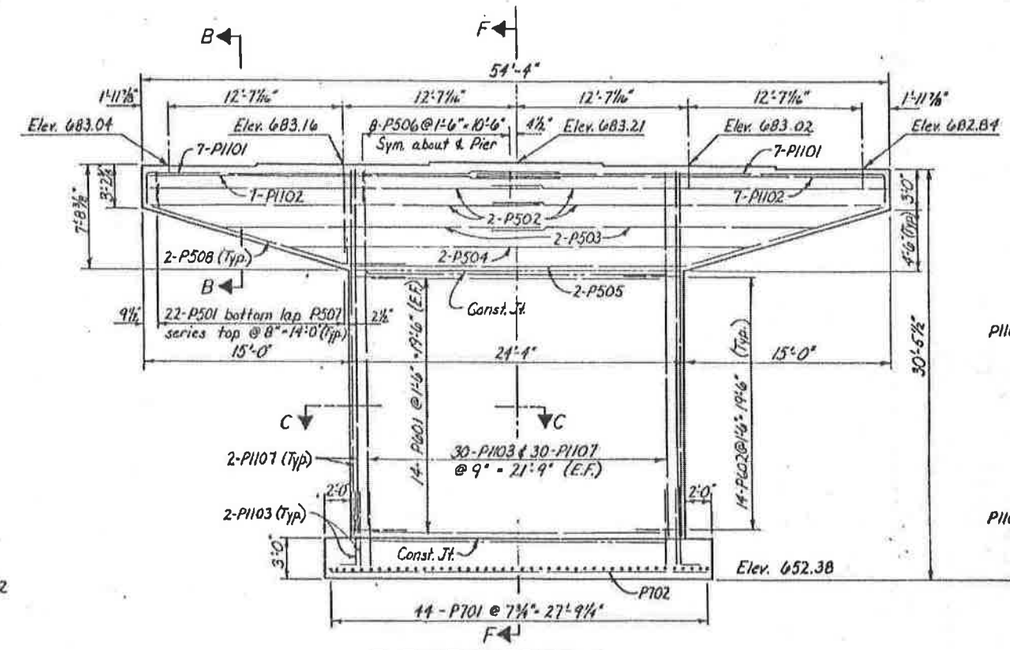

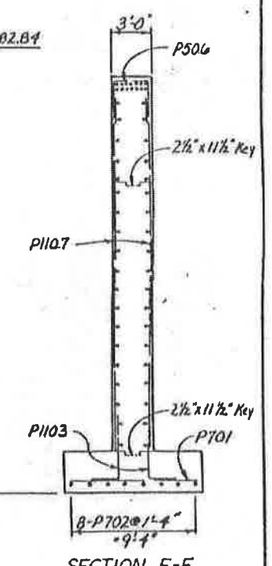

Bridge Seat Reinforcing @ Pier 3: Special care shall be taken in placing reinforcing steel in the vicinity of the bridge seat so as to avoid interference with the drilling of anchor bar holes.

Bearing Anchors: At the option of the Contractor, bearing anchors or formed holes, located and supported by templates, may be cast in place.

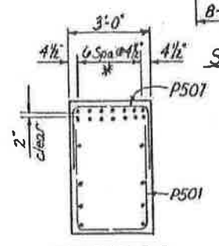

LEGEND

E.F. - Each Face

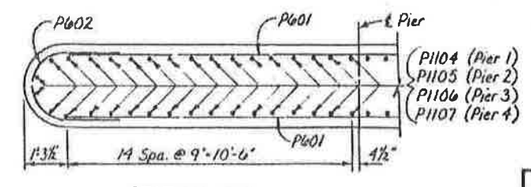

STATE OF OHIO
DEPARTMENT OF TRANSPORTATION
BUREAU OF BRIDGES AND STRUCTURAL DESIGN

7 | 12

PIER 3 & PIER 4

BRIDGE NO. ATH-50-0943 R

CONRAIL CORP. over MARGARET CREEK

DESIGNED	DRAWN	TRACED	CHECKED	REVIEWED	DATE	REVISED
BRA	BRA		AJM	WTF	3-6-86	

FHWA REGION	STATE	PROJECT	
5	OHIO		

516/584

ATH-50-4.95

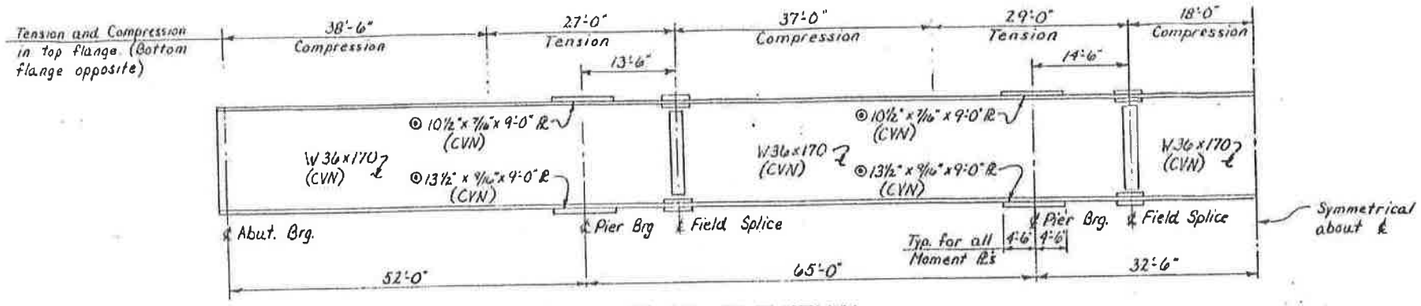

BEAM ELEVATION

⊙ For Moment Plate welding details see Std. Dwg. SD-1-69, sheet 3 of 4.

† Crossframe spacing may be altered to avoid interference with field splices but shall not exceed 14'-0".

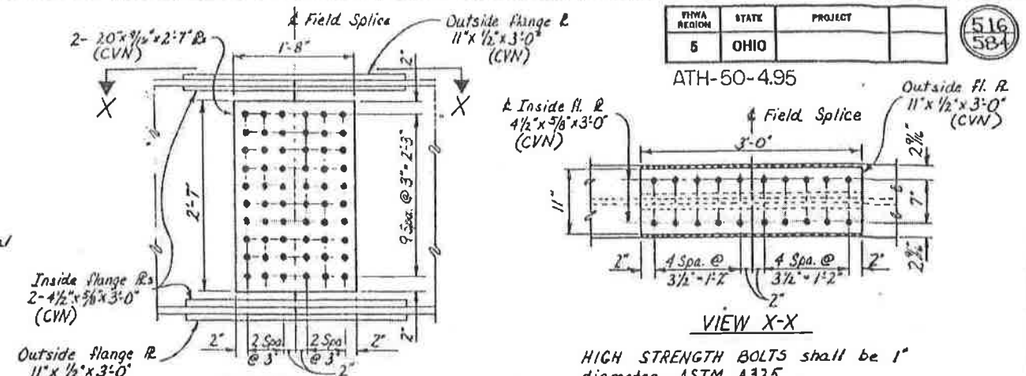

HIGH STRENGTH BOLTS shall be 1" diameter ASTM A325.

FIELD SPLICE DETAILS

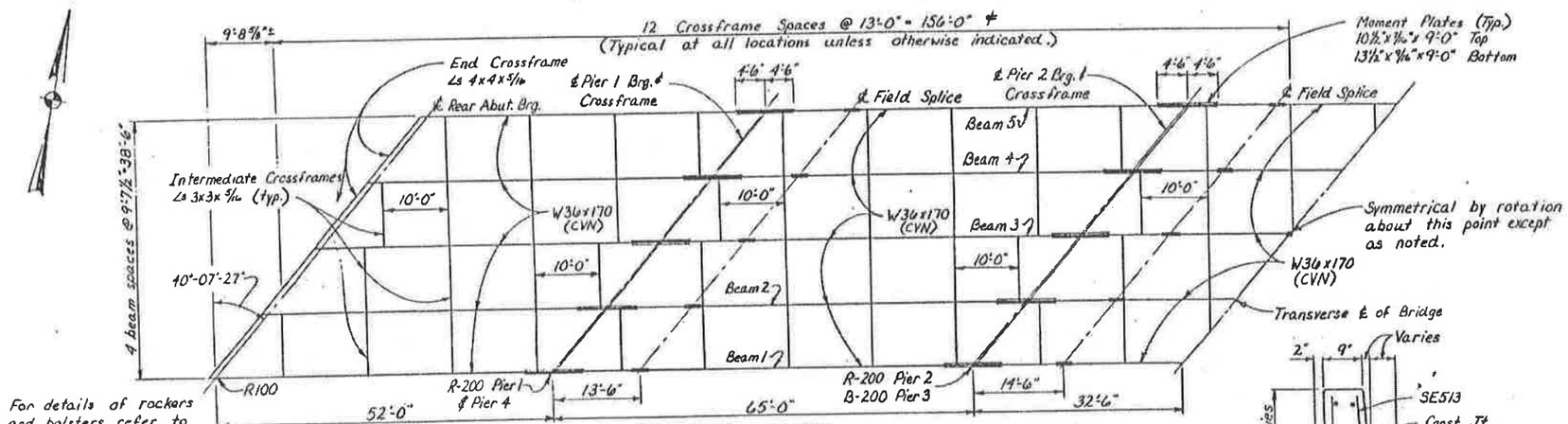

FRAMING PLAN

For details of rockers and bolsters refer to Std. Dwg. RB-1-59.

For End Crossframe details see Std. Dwg. SD-1-69, sheet 1 of 4.

Where a shape or plate is designated (CVN) the material shall meet specified minimum notch toughness requirements as specified in 711.01 of CMS.

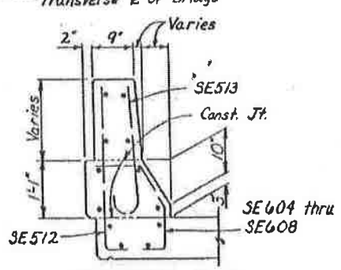

SECTION B-B

NOTES:
WELDED ATTACHMENT of supports for concrete deck finishing machine may be made to areas of the fascia stringer flanges designated "Compression". Attachments shall not be made to areas designated "Tension". Fillet welds to compression flanges shall not be closer than 1" from edge of flange, be not more than 2" long, and be not smaller than the minimum size required by AASHTO.

▲ BASE LINE is a line from ℄ of Beam Web at ℄ Bearing Rear Abutment to ℄ of Beam Web at ℄ Bearing Forward Abutment.

For dimensions R, S, T and U see small table below.

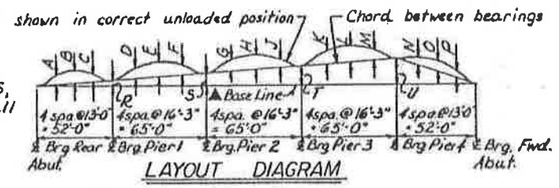

LAYOUT DIAGRAM

DEFLECTION AND CAMBER TABLE															
LOCATION	SPAN 1			SPAN 2			SPAN 3			SPAN 4			SPAN 5		
	¼ Pt A	½ Pt B	¾ Pt C	¼ Pt D	½ Pt E	¾ Pt F	¼ Pt G	½ Pt H	¾ Pt J	¼ Pt K	½ Pt L	¾ Pt M	¼ Pt N	½ Pt O	¾ Pt P
Deflection due to weight of steel	0	1/16"	0	0	1/16"	0	0	1/16"	0	0	1/16"	0	0	1/16"	0
Deflection due to remaining dead load	3/16"	1/4"	1/8"	1/8"	1/4"	1/8"	1/8"	1/4"	1/8"	1/8"	1/4"	1/8"	1/8"	1/4"	3/16"
Adjustment required for vertical curve	0	0	0	0	0	0	0	0	0	0	0	0	0	1/16"	0
Required shop camber	3/16"	5/16"	1/8"	1/8"	5/16"	1/8"	1/8"	5/16"	1/8"	1/8"	5/16"	1/8"	1/8"	3/8"	3/16"

Holes for splice bolts attaching guardrail to the terminal connector at ends of parapets shall be slotted 29/32" x 3" and all bolts shall be tightened as specified for expansion joints as per CMS 606.05 to allow for bridge movement.

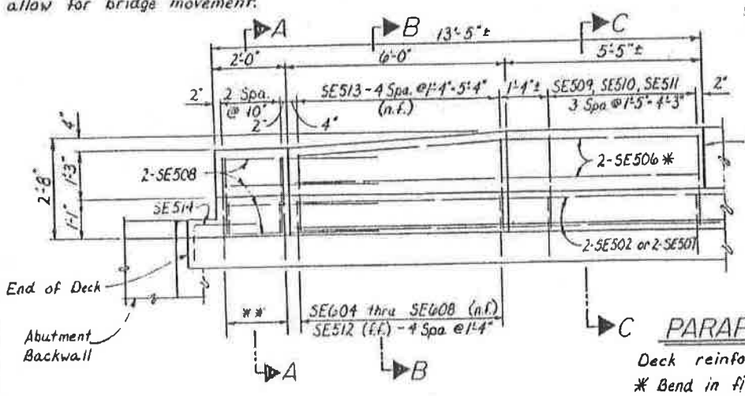

PARAPET ELEVATION

Deck reinforcement is not shown.
* Bend in field where necessary.
** SE512 (f.f.), SE513 (n.f.), SE604 (n.f.)

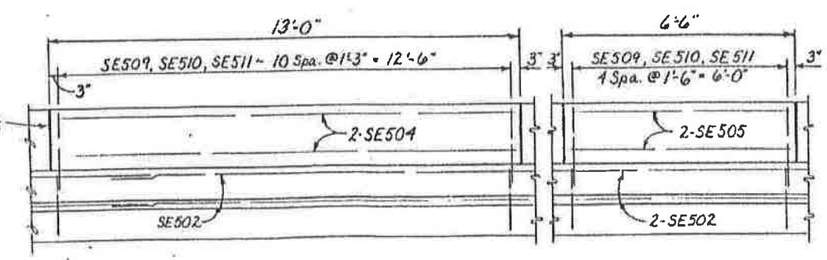

For Section A-A see sheet 9/12.
For additional parapet details see Std. Dwg. BR-1.

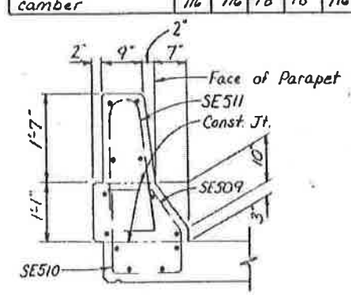

SECTION C-C

DIM \ BM	1	2	3	4	5
R	1/16"	0	0	1/8"	1/8"
S	1/16"	1/16"	1/8"	3/16"	1/4"
T	1/8"	3/16"	3/16"	1/4"	3/8"
U	3/16"	3/16"	1/4"	3/8"	7/16"

STATE OF OHIO
DEPARTMENT OF TRANSPORTATION
BUREAU OF BRIDGES AND STRUCTURAL DESIGN

8/12

SUPERSTRUCTURE DETAILS
BRIDGE NO. ATH-50-0943R
over
CONRAIL CORP. & MARGARET CREEK

DESIGNED	DRAWN	TRACED	CHECKED	REVIEWED	DATE	REVISED
BRA	BRA		AJM	WTF	3-6-86	

FHWA REGION	STATE	PROJECT	
5	OHIO		

ATH-50-4.95

517/584

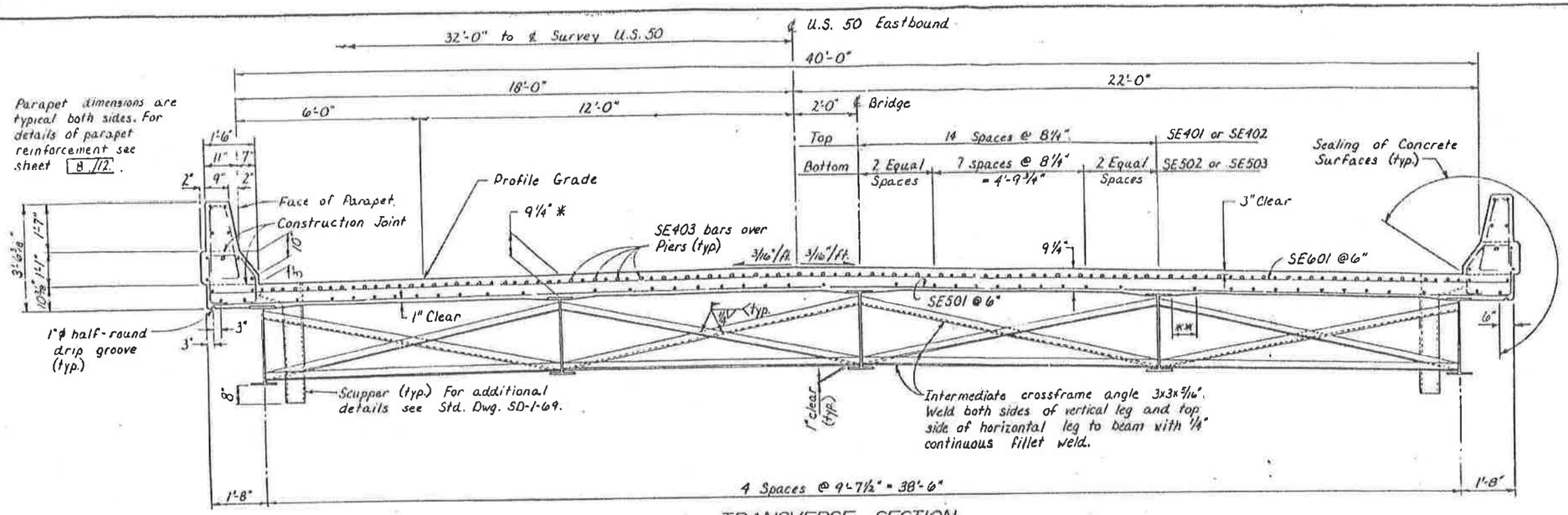

TRANSVERSE SECTION

NOTES:

* DECK SLAB DEPTH: The distance shown from top of the deck slab to top of steel beam is the design dimension. The quantity of deck concrete to be paid for shall be based on this dimension, even though deviation from it may be necessary because the top flange of the beam may not have the exact camber or conformation required to place it parallel to the finished grade.

** A HAUNCH WIDTH of 9" shall be used for computing quantity of concrete. However, the haunch width may vary between 6" and 12" (provided that the slope shall be not more than 1:4 for a haunch less than 9" width).

SCUPPERS shall be in accordance with Std. Dwg. SD-1-69 except that the scupper pipes shall extend 8" below the bottom of the beams instead of 2".

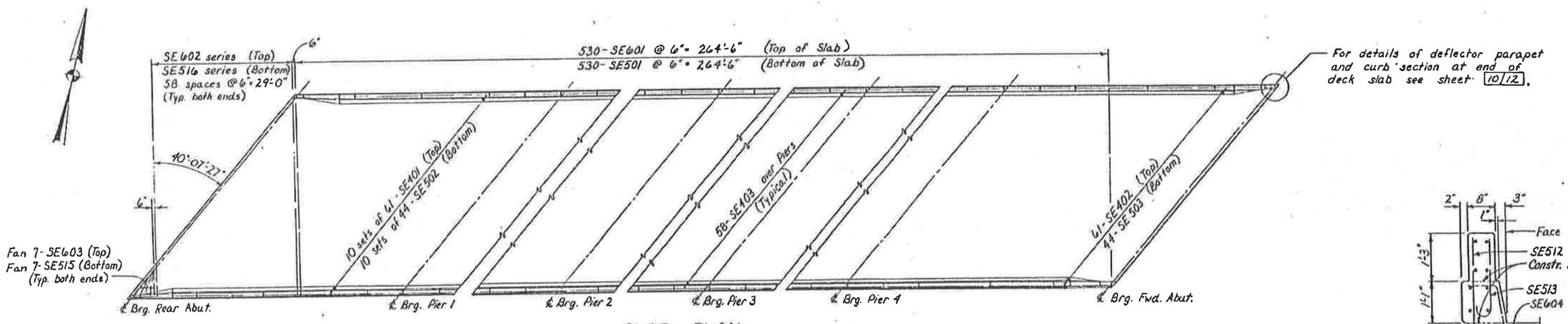

SLAB PLAN

Parapet reinforcement is not shown. See sheet 8/12 for details.

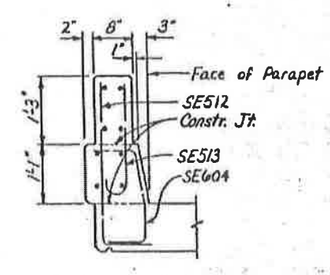

SECTION A-A

For location of Section A-A see sheet 8/12.

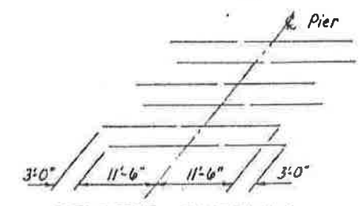

STAGGER DIAGRAM OF SE403 BARS

STATE OF OHIO
DEPARTMENT OF TRANSPORTATION
BUREAU OF BRIDGES AND STRUCTURAL DESIGN

9/12

SUPERSTRUCTURE DETAILS

BRIDGE NO. ATH-50-0943R over CONRAIL CORP. & MARGARET CREEK

DESIGNED	DRAWN	TRACED	CHECKED	REVIEWED	DATE	REVISE
BRA	RRA		AJM	WTF	3-6-86	

FHWA REGION	STATE	PROJECT	
5	OHIO		

ATH-50-4.95

518/584

NOTE: THE GUARDRAIL POST SHOWN ON ROADWAY STANDARD DRAWING GR-3, LOCATED 2'-3" FROM END OF PARAPET SHALL BE ELIMINATED AT ALL CORNERS.

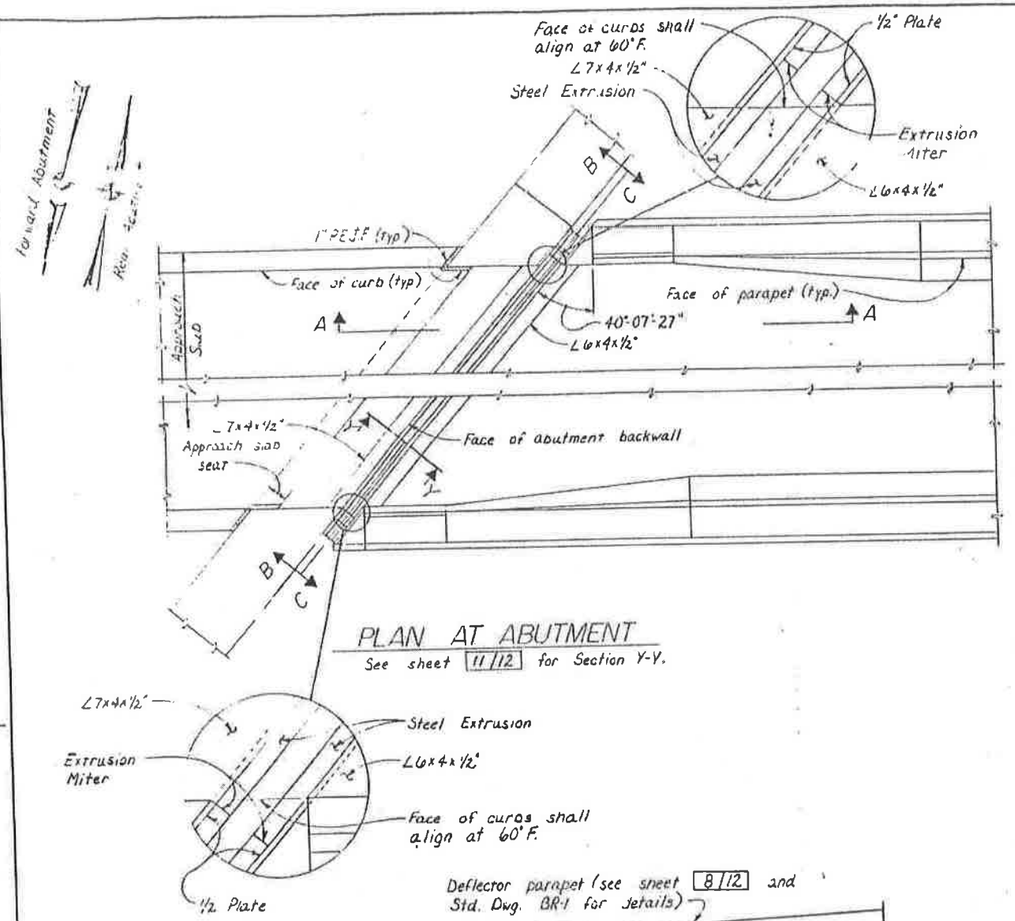

PLAN AT ABUTMENT

See sheet 11/12 for Section Y-Y.

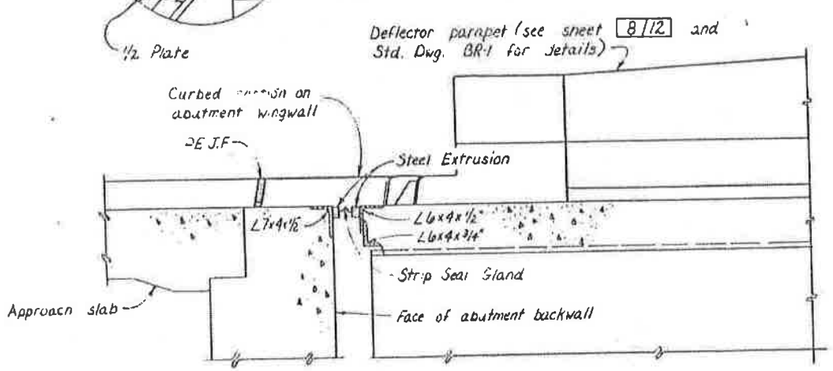

SECTION A-A

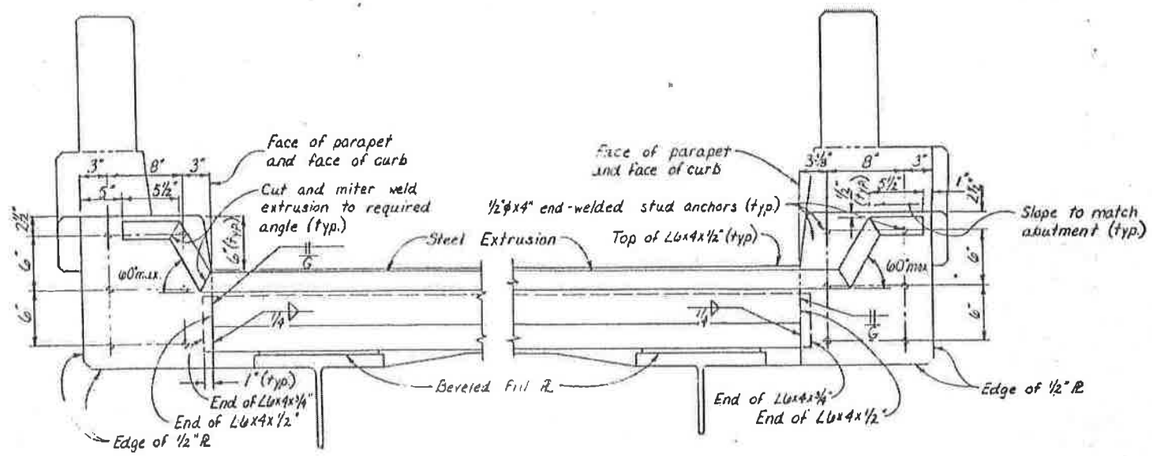

SECTION C-C

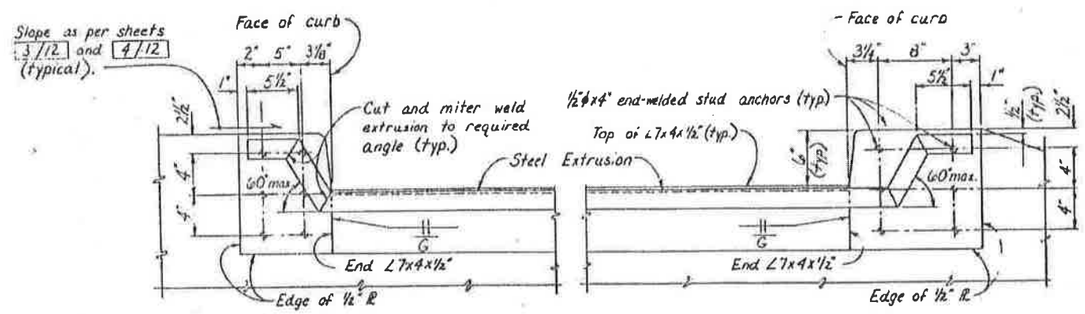

SECTION B-B

See sheet 11/12 for notes, construction procedure and additional details.

STATE OF OHIO
DEPARTMENT OF TRANSPORTATION
BUREAU OF BRIDGES AND STRUCTURAL DESIGN

10/12

STRIP SEAL EXPANSION JOINT DETAILS
BRIDGE NO. ATH-50-0943R
over
CONRAIL CORP & MARGARET STREET

DESIGNED	DRAWN	TRACED	CHECKED	REVIEWED	DATE	REVI
BRA	BRA		AJM	WTF	3-6-86	

FHWA REGION	STATE	PROJECT	
5	OHIO		

519
584

ATH-50-1.95

CONSTRUCTION PROCEDURE

1. Abutment backwall concrete shall not be placed until after superstructure concrete in the span adjacent to the abutment has been placed.
2. Place backwall concrete during stable or rising ambient temperatures and conclude placement at or immediately before the day's peak ambient temperature.
3. Not more than four hours prior to the day's peak ambient temperature, set abutment expansion joint width to dimension "A" which shall be determined from TABLE "B".
4. Loosen temporary joint armor bolts after initial set of concrete, preferably not later than two hours after conclusion of concrete placement.

TABLE "E"
(PHYSICAL PROPERTIES OF SEAL ELEMENT)

PROPERTY	REQUIREMENT	ASTM METHOD
TENSILE STRENGTH, MIN. P.S.I.	2000	D412
ELONGATION AT BREAK, MIN. PERCENT	250	D412
HARDNESS, TYPE A DUROMETER	50 MIN. 65 MAX.	D2240 (MODIFIED)
OVEN AGING, 70 HR. AT 212°F TENSILE STRENGTH, LOSS, MAX. ELONGATION, LOSS, MAX. HARDNESS, TYPE A DUROMETER (POINTS CHANGE)	 20 PERCENT 20 PERCENT 0 TO +10	D573
OZONE RESISTANCE 20 PERCENT STRAIN, 300 PPHM, IN AIR AT 104°F (WIPED WITH TOLUENE TO REMOVE SURFACE CONTAMINATION)	NO CRACKS	D1149

TABLE "B"

AMBIENT TEMP (°F)	DIM. "A"
30°	1 13/16"
40°	1 13/16"
50°	1 11/16"
60°	1 9/16"
70°	1 1/2"
80°	1 3/8"
90°	1 1/4"

JOINTS IN END DAM ARMOR

Transverse joints in superstructure angles shall have complete penetration butt welds. Transverse joints in abutment angle shall be closely butted with a minimum of 6'-0" between joints. Welds in contact with seal glands shall be ground flush.

† Polychloroprene strip seal glands and steel extrusions shall be an AS300 strip seal with Type A extrusions as manufactured by Watson-Bowman & Acme Corp., a SS300 strip seal with Type SS extrusions as manufactured by D.S. Brown Company or approved equals.

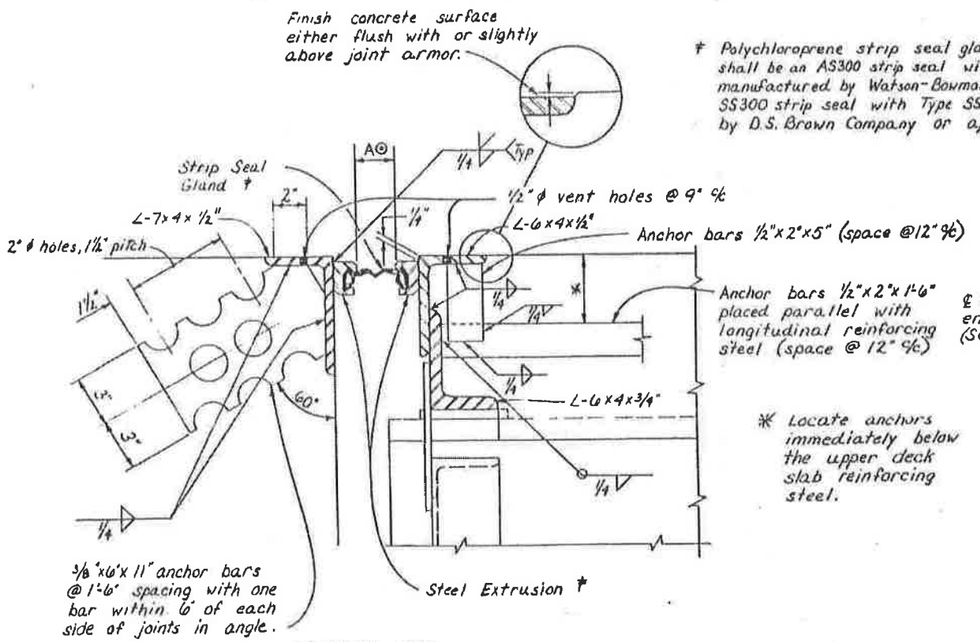

SECTION X-X

⊙ - Dimension "A" shall be determined from Table "B".

* Locate anchors immediately below the upper deck slab reinforcing steel.

Fill bolt holes in angle with 705.01 or 705.02 Joint Sealer.

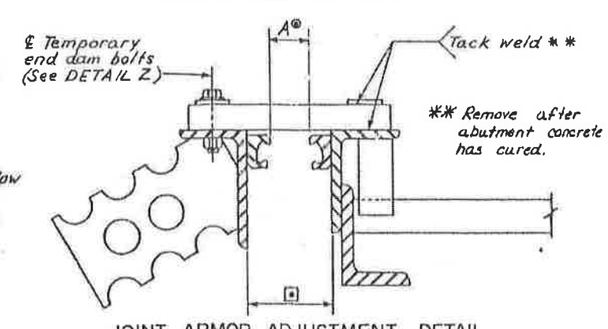

JOINT ARMOR ADJUSTMENT DETAIL

⊡ - This dimension is the sum of (2x steel extrusion width) + (dim. "A").

STRIP SEAL NOTES

MATERIALS: A588 or A36 with paint as specified for the main structural steel, except that System B shall be used when the main structural steel is to remain unpainted. No shop coat is required. Field paint shall consist of one prime coat for System A or two prime coats for System B, and one finish coat.

The preformed strip seal gland shall be extruded polychloroprene material meeting the requirements of ASTM D2628. Due to the configurations of the Strip Seal, the recovery tests are not applicable. Physical Properties shall meet the requirements specified in Table "E" this sheet.

Lubricant - adhesive used to install the preformed strip seals shall be a polyurethane and hydrocarbon solvent mixture as specified by the seal manufacturer (unless otherwise approved by the Director). It shall have suitable consistency at the temperature at which the seals are installed and shall be compatible with the seals and the steel extrusions.

PREPARATIONS FOR INSTALLATION: To avoid the subsequent contamination of the prepared surfaces, all surfaces of elastomeric strip seal glands shall be cleaned with methyl ethyl ketone (MEK), toluene (T) or other approved solvent using clean disposable cloths.

The bonding surfaces of the steel extrusions (the interior of the anchor grooves) shall be prepared to Grade Sa 3, ASTM D2200. Preparation shall be accomplished not more than 24 hours prior to adhesive bonding.

INSTALLATION: Immediately prior to application of lubricant-adhesive, bonding surfaces shall be clean, dry and warmer than 45°F, and they shall be maintained at or above this temperature until the adhesive has cured. Lubricant-adhesive shall be applied liberally to both steel and elastomeric bonding surfaces using a stiff brush if necessary to achieve a complete and relatively uniform coating. Then the bulbed edges of the elastomeric seal shall be inserted into the anchor grooves. After installation, excess lubricant - adhesive shall be removed from the exposed seal surfaces.

MEASUREMENT for pay purposes shall be based on the linear foot of sealed joint system, measured horizontally along the joint centerlines and between the outer limits of the fabricated joint, furnished and placed, including all labor, materials and equipment necessary to complete the joint in place, which includes the joint armor, anchoring devices, temporary supports and end crossframe gusset plates. Payment shall be made per linear foot for Item 516 "Structural Expansion Joints, including Elastomeric Strip Seals."

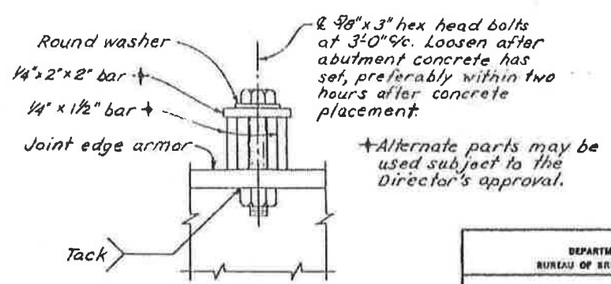

DETAIL Z
TEMPORARY SUPPORT BARS

STATE OF OHIO
DEPARTMENT OF TRANSPORTATION
BUREAU OF BRIDGES AND STRUCTURAL DESIGN

11 | 12

STRIP SEAL DETAILS
BRIDGE NO. ATH-50-0943R
over
CONRAIL CORP. & MARGARET CREEK

DESIGNED	DRAWN	TRACED	CHECKED	REVIEWED	DATE	REVISED
BRA	BRA		AJM	WTF	3-6-86	

FHWA REGION	STATE	PROJECT	
5	OHIO		

ATH-50-4.95

520/584

MARK	NUMBER REAR	NUMBER FWD	NUMBER TOTAL	LENGTH	WEIGHT	TYPE	DIMENSIONS A	B	C	D	E	R	INC.
ABUTMENTS													
A501	44	44	88	8'- 3"	757	2	5'- 4"	1'- 7"	1'- 7"				
A502	37	37	74	7'- 4"	566	1	6'- 7"	10"					
A503	37	37	74	7'- 4"	566	2	3'- 5"	2'- 1"	2'- 1"				
A504	22	22	44	27'- 6"	1262	STR.							
A505	4	4	8	30'- 0"	250	STR.							
A506	4	4	8	25'- 4"	211	STR.							
A507	4	4	8	24'- 9"	207	STR.							
A508	10	10	20	29'- 1"	607	STR.							
A509	1		1	14'- 0"	15	3	5'-11"	8'- 1"	6				
A510	1		1	12'-10"	13	3	4'- 9"	8'- 1"	6				
A511	2	2	4	9'- 6"	40	STR.							
A512	2	2	4	8'- 4"	35	STR.							
A513	8		8	15'-10"	132	STR.							
A514	8		8	11'-10"	99	STR.							
	1ser.	1ser.	2ser.	11'- 4"				5'- 1"	5'- 1"				
A515	of	of	of	to	186	2	1'- 5"	to	to				8¾"
	6	6	6	18'- 4"				8'- 7"	8'- 7"				
	1ser.	1ser.	2ser.	11'- 4"				5'- 1"	5'- 1"				
A516	of	of	of	to	175	2	1'- 5"	to	to				6¾"
	6	6	6	16'- 8"				7'- 9"	7'- 9"				
A517	1	1	2	12'- 1"	25	1	11'- 4"	10"					
A518	5		5	12'- 7"	66	1	11'-10"	10"					
A519	1		1	11'- 9"	12	3	1'- 0"	10'- 9"	4½				
A520	1		1	12'-11"	13	3	2'- 2"	10'- 9"	4½				
A521	1		1	10'- 9"	11	1	10'- 0"	10"					
A522	2	2	4	7'- 0"	29	STR.							
A523	2	2	4	5'- 0"	21	STR.							
A524	2	2	4	4'- 6"	19	2	1'- 9"	1'- 6"	1'- 6"				
A525		8	8	11'- 3"	94	STR.							
A526		1	1	11'- 0"	11	1	10'- 3"	10"					
A527		8	8	16'- 4"	136	STR.							
A528		4	4	12'- 9"	53	1	12'- 0"	10"					
A529		1	1	11'- 3"	12	3	1'- 0"	10'- 3"	4⅝				
A530		1	1	12'- 5"	13	3	2'- 2"	10'- 3"	4⅝				
A531		1	1	14'- 7"	15	3	5'-11"	8'- 8"	6				
A532		1	1	13'- 5"	14	3	4'- 9"	8'- 8"	6				
A601	37	36	73	14'- 2"	1553	2	5'- 4"	2'- 7"	6'- 7"				
A602	53	53	106	10'-11"	1738	2	1'- 5"	4'-11"	4'-11"				
A603	52	52	104	5'- 1"	794	2	1'- 5"	2'- 0"	2'- 0"				
A604	52	52	104	6'- 5"	1002	2	11"	2'-11"	2'-11"				
A605	1		1	17'-7"	26	2	5'- 4"	2'- 7"	10'- 0"				
A606	2	2	4	8'- 7"	52	2	1'- 5"	3'- 9"	3'- 9"				
A607		1	1	17'-10"	27	2	5'- 4"	2'- 7"	10'- 3"				
A608		5	5	19'- 7"	147	2	5'- 4"	2'- 7"	12'- 0"				
A609	4		4	19'- 5"	117	2	5'- 4"	2'- 7"	11'-10"				
A610	2	2	4	18'-10"	113	2	5'- 4"	2'- 7"	11'- 3"				
A801	14	14	28	32'-11"	2461	STR.							
D801	29	29	58	5'- 0"	774	19	1'- 0"	2'- 7"					

BAR SIZE IS INDICATED IN THE BAR MARK. THE FIRST DIGIT WHERE THREE DIGITS ARE USED, AND THE FIRST TWO DIGITS WHERE FOUR ARE USED, INDICATE THE BAR SIZE NUMBER. FOR EXAMPLE, A700 IS A NO. 7 AND A1014 IS A NO. 10 SIZE. BAR DIMENSIONS SHOWN ARE OUT TO OUT UNLESS OTHERWISE INDICATED. R INDICATES INSIDE RADIUS, UNLESS OTHERWISE NOTED. A STANDARD BEND AT THE END OF BENT BARS SHALL BE USED UNLESS OTHERWISE INDICATED.

REINFORCING STEEL SAMPLES - REFER TO CMS SECTIONS 106.03, 700, 709.01 THROUGH 709.05 AND 709.08. SUFFICIENT ADDITIONAL REINFORCING STEEL SHALL BE PROVIDED FOR SAMPLING. RANDOM SAMPLES SHALL BE REPLACED IN THE STRUCTURES BY THE ADDITIONAL STEEL, SPLICED IN ACCORDANCE WITH 509.08.

"E" IN PREFIX DESIGNATES EPOXY COATED BARS.

MARK	NUMBER		TOTAL	LENGTH	WEIGHT	TYPE	DIMENSIONS A	B	C	D	E	R	INC.
SUPERSTRUCTURE													
SE401			610	30'- 0"	12224	STR.							
SE402			61	13'- 4"	543	STR.							
SE403			232	26'- 0"	4029	STR.							
SE501			530	41'- 6"	22941	STR.							
SE502			520	30'- 0"	16271	STR.							
SE503			44	16'- 8"	765	STR.							
SE504			104	12'- 8"	1374	STR.							
SE505			128	6'- 2"	823	STR.							
* SE506			16	11'- 1"	185	STR.	* BEND IN FIELD WHERE NECESSARY						
SE507			8	13'- 8"	114	STR.							
SE508			32	4'- 4"	145	STR.							
SE509			466	3'- 0"	1458	16	9"	8½"	9"	6"	10½"		
SE510			466	2'- 3"	1094	1	1'- 6"	10½"					
SE511			466	5'- 3"	2552	17	2'- 2"	2'- 5"	1¼"	7½"		2⅛"	
SE512			32	3'- 6"	117	1	2'- 9"	10½"					
SE513			32	2'- 8"	89	7	2'- 1"						
SE514			4	4'- 0"	17	1	3'- 2"	11"					
SE515			14	6'- 2"	90	STR.							
			2ser.	6'-9¾"									
SE516			of	to	2958	STR.							7⅛"
			59	41'- 3"									
SE601			530	41'- 6"	33036	STR.							
			2ser.	6'-9¾"									
SE602			of	to	4259	STR.							7⅛"
			59	41'- 3"									
SE603			14	6'- 2"	130	STR.							
SE604			16	2'- 6"	60	16	9"	8½"	7"	2"	8"		
SE605			4	2'- 8"	16	16	9"	8½"	7"	3"	10"		
SE606			4	2'-10"	17	16	9"	8½"	8"	4"	11"		
SE607			4	2'-11"	18	16	9"	8½"	8"	5"	1'- 0"		
SE608			4	3'- 0"	18	16	9"	8½"	9"	6"	1'- 0"		

MARK	NUMBER #1	#2	#3	#4	TOTAL	LENGTH	WEIGHT	TYPE	DIMENSIONS A	B	C	D	E	R	INC.
PIERS															
P501	44	44	44	44	176	7'- 5"	1361	2	2'- 8"	2'- 6"	2'- 6"				
P502	8	8	8	8	32	28'- 0"	935	STR.							
P503	4	4	4	4	16	22'- 6"	375	STR.							
P504	2	2	2	2	8	34'- 0"	284	STR.							
P505	2	2	2	2	8	24'- 0"	200	STR.							
P506	16	16	16	16	64	5'- 9"	384	2	2'- 8"	1'- 8"	1'- 8"				
	2ser.	2ser.	2ser.	2ser.	8 ser.	7'- 1"				2'- 4"	2'- 4"				
P507	of	of	of	of	of	to	2103	2	2'- 8"	to	to				2½"
	22	22	22	22	22	15'-10"				6'-8½"	6'-8½"				
P508	4	4	4	4	16	17'- 3"	288	3	1'-10"	15'- 5"	3⅝				
P601	22	38	42	28	130	21'- 4"	4166	STR.							
P602	22	38	42	28	130	8'- 6"	1660	5	2'- 2"	2'- 8"				1'- 3¼"	
P701				44	44	9'- 6"	854	STR.							
P702				8	8	27'-10"	455	STR.							
P703	32	40			72	14'- 8"	2158	6	13'- 0"						
P704	12	13			25	29'- 6"	1507	6	27'-10"						
P801			8		8	27'-10"	595	STR.							
P802			44		44	9'- 6"	1116	STR.							
P1101	7	7	7	7	28	31'- 2"	4636	1	28'-10"	2'- 8"					
P1102	7	7	7	7	28	28'-10"	4289	STR.							
P1103	68	68	68	68	272	8'- 5"	12163	1	6'- 9"	2'- 0"					
P1104	68				68	22'- 6"	8129	STR.							
P1105		68			68	33'- 9"	12193	STR.							
P1106			68		68	37'- 7"	13578	STR.							
P1107				68	68	27'- 4"	9875	STR.							

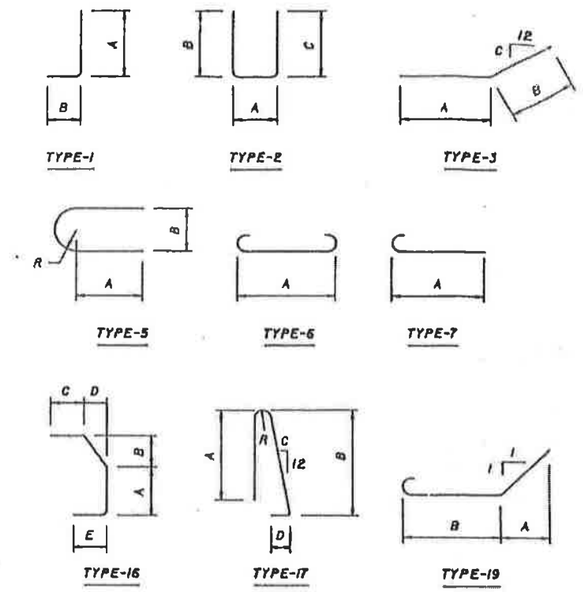

STATE OF OHIO
DEPARTMENT OF TRANSPORTATION
BUREAU OF BRIDGES AND STRUCTURAL DESIGN

12/12

REINFORCING STEEL LIST

BRIDGE NO. ATH-50-0943R
OVER
CONRAIL & MARGARET CREEK

DESIGNED	DRAWN	TRACED	CHECKED	REVIEWED	DATE	REVISED
BRA	REF		AJW	WTF	3-6-86	