FED. RD. DIVISION	STATE	PROJECT	
2	OHIO		

ATH-33-17.77

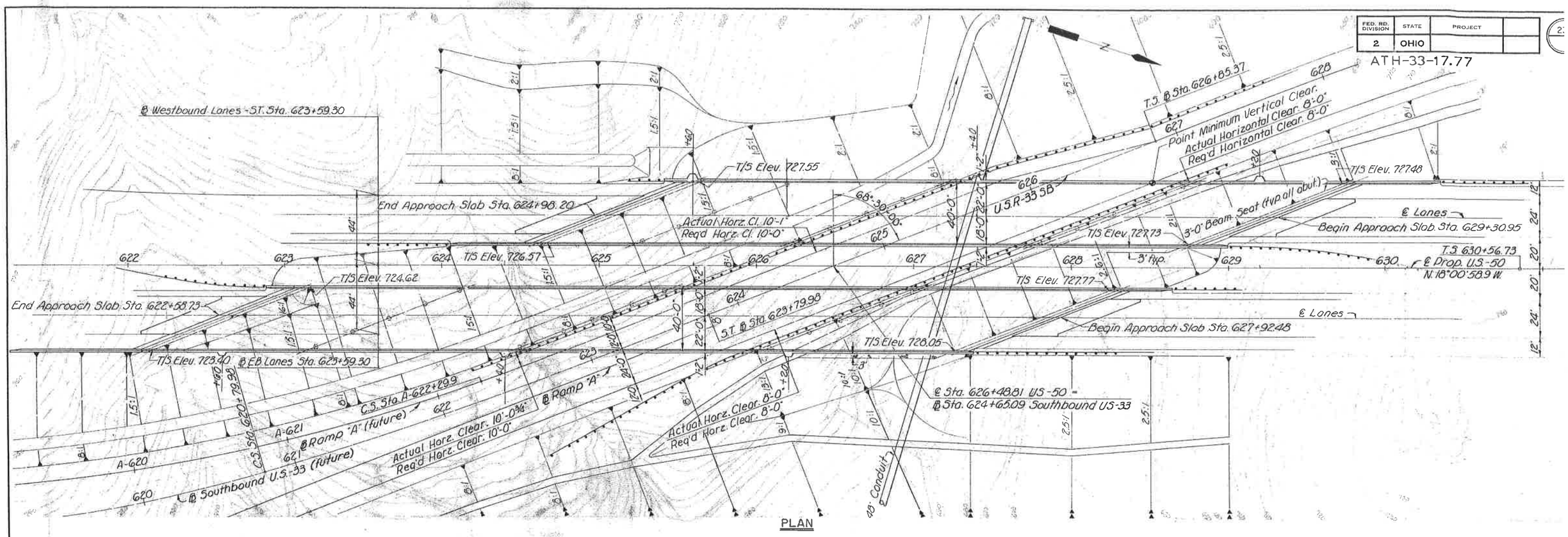

PLAN

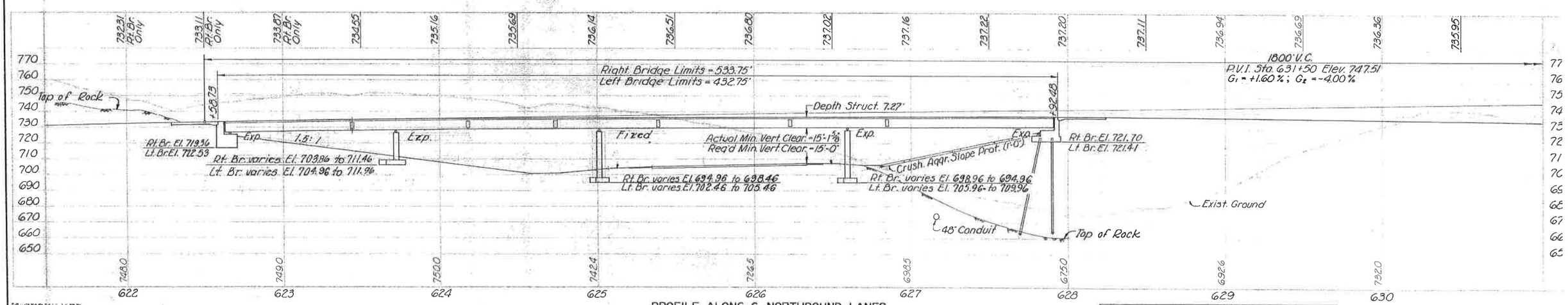

PROFILE ALONG ℄ NORTHBOUND LANES

MICROFILMED JUN 91982

Horz. Curve Data - US-33 SB (fut)

P.I. Sta. 619+66.87

Δ = 21°29'59"	L_s = 300.00'
	T_s = 422.39'
D_c = 4°00'00"	E_s = 28.25'
R_c = 1432.39'	θ_s = 6°00'00"
L_c = 237.49'	LT = 200.12'
	ST = 100.10'

Vertical Curve Data - US-33 SB

P.V.I. Sta. 634+50

L.V.C. = 1350' Elev. = 740.92

G_1 = +3.32% G_2 = -4.28%

Horz. Curve Data - RAMP "A" (future)

P.I. Sta. 619+66.86

Δ_c = 26°48'43"	
D_c = 5°00'00"	
R_c = 1145.92'	
L_c = 536.24'	
T_c = 273.12'	
E = 32.10'	

DESIGN ADT (1990) = 18,580
DESIGN ADTT (1990) = 1,858
DIRECTIONAL DISTRIBUTION (D) = 50%

Right Bridge: Forward Abutment Steel H-Piles, HP10x42
Estimated Average Pay Length 35' to 60'

Left Bridge: Forward Pier, Steel H-Piles, HP10x42
Estimated Average Pay Length 40'
Forward Abutment Steel H-Piles, HP10x42
Estimated Average Pay Length 15' to 37'

PROPOSED STRUCTURE

TYPE: Continuous steel girder bridge with reinforced concrete deck and substructure
LT. BR. SPANS: 63'-0"; 97'-0"; 155'-9"; 102'-0"
RT. BR. SPANS: 105'-0"; 130'-0"; 157'-9"; 126'-0"
ROADWAY: 40'-0" face to face parapet
LOADING: HS 20-44
WEARING SURFACE: monolithic concrete
SKEW: 68°30'00" L.F.
APPROACH SLAB: AS-1-72 (25'-0" long Modified)
ALIGNMENT: tangent
SUPERELEVATION: none

Scale: 1" = 30'

FRANKLIN ENGINEERING, LIMITED
Consulting Engineers
COLUMBUS, OHIO

SITE PLAN

BRIDGE № ATH-33-1821
BRIDGE № ATH-33-1823
US-50 over SB. US-33 & RAMP "A"

ATHENS COUNTY USA

DESIGNED	DRAWN	TRACED	CHECKED	REVIEWED	DATE
					1/5-70

MICROFILMED
JUN 9 1982

FED. RD. DIVISION	STATE	PROJECT	
2	OHIO		

240

ATH-33-17.77

ESTIMATED QUANTITIES

ITEM	TOTAL BOTH BR.	TOTALS Left Br.	TOTALS Right Br.	UNIT	DESCRIPTION	SUPERSTR. Left Br.	SUPERSTR. Right Br.	ABUTMENTS Left Br.	ABUTMENTS Right Br.	PIERS Left Br.	PIERS Right Br.	GENERAL Left Br.	GENERAL Right Br.
503	898	542	356	Cu. Yds.	Unclassified Excavation			402	356	140			
503	1033	429	604	Cu. Yds.	Rock Excavation			181	146	278	458		
505		Lump		Sum	Test Pile							Lump	
506		Lump		Sum	Pile Test Load							Lump	
507	4,152	2632	1520	L.F.	Steel H Piles HP10×42			832	1520	1800			
506	1	1		Ea.	Subsequent Pile Test load							1	
509	358,507	161,106	197,401	Lbs.	Reinforcing Steel	86811	107,543	35039	33610	39256	56248		
511	1249	562	687	Cu. Yds.	Class C Concrete, Superstructure	562	687						
511	1093	555	538	Cu. Yds.	Class C Concrete, Abutments			555	538				
511	343	176	167	Cu. Yds.	Class C Concrete, Pier Footing					176	167		
511	163	72	91	Cu. Yds.	Class C Concrete, Piers above footings					72	91		
512	60	30	30	L.F.	Premolded Sealing Strip			30	30				
513	42700	21350	21350	Lbs.	Structural Steel, as per plan	21350	21350						
513	1642600	701600	941000	Lbs.	Structural Steel, Primer per 846 (See Prop. Note)	701600	941000						
846	1642600	701600	941000	Lbs.	Field Painting of Structural Steel	701600	941000						
516	283	142	141	S.F.	Preformed Expansion Joint Filler. (1")			142	141				
518	27	12	15	Each	Scuppers, including supports	12	15						
518	228	117	111	Cu. Yds.	Porous Backfill			117	111				
518	176	88	88	L.F.	6" Perf. Helical Corrugated Steel Pipe incl. spec. 707.01			88	88				
518	174	88	86	L.F.	6" Non Perf. Helical Corrugated Steel Pipe 707.01			88	86				
601	1439	695	744	Sq. Yds.	Crushed Aggregate Slope Protection					695	744		
S625					For S625 Lighting Summary see sheet No 214								
808	1249	562	687	Unit	Chemical Admixture for Concrete Type A, B or D	562	687						
Special	234981	105531	129450	Lbs.	Epoxy Coated Reinforcing Steel (See Proposal Note)	102,113	125,330	3418	4120				

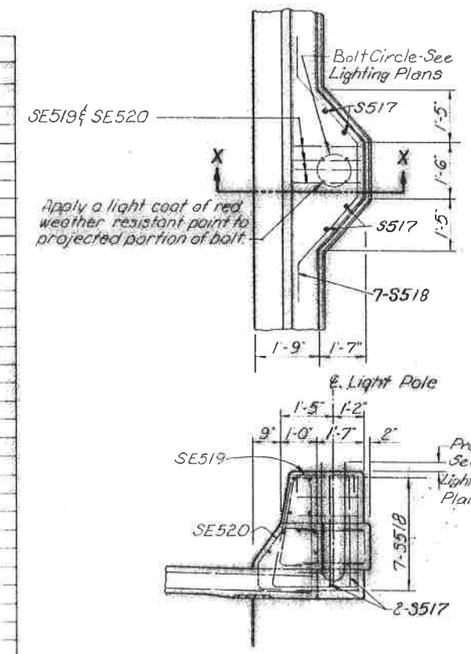

SECTION X-X

LIGHT POLE PILASTER

REFERENCE shall be made to Standard Drawings BR-1-67 revised 10-15-71 RB-1-65 (rev. 2-2-69), SD-1-69 (dated 6-12-69) sheet 1, 2 & 3 of 3. Supplemental Specifications 808 (dated 1-1-71), 846, 950 & 951 all dated 10-7-75 and 836 (dated 3-12-75).

DESIGN SPECIFICATIONS:
This structure conforms to Standard Specifications for Highway Bridges adopted by the American Association of State Highway Officials, 1965, including the Ohio "Supplement" to those specifications.

DESIGN DATA

Design Loading	HS 20-44
Concrete Class C	Unit Stress 1200 p.s.i. for Superstructure Unit Stress 1838 p.s.i. for Substructure
Structural Steel	ASTM A-36 Unit Stress 20,000 p.s.i.
Reinforcing Steel	ASTM A615, A616, or A617 Unit Stress 20,000 p.s.i. Spiral Reinforcement may be plain bars ASTM A82 or A615.

EMBANKMENT CONSTRUCTION
The embankment for the forward abutments shall be constructed to the level of the subgrade for a minimum distance of 200 feet back of the abutments. Excavation shall then be made for the forward piers and abutments.

MONOLITHIC WEARING SURFACE is assumed, for design purposes, to be 1":
DECK PROTECTION METHOD: Epoxy coated reinforcing steel, top mat only.
TEST PILE: Payment will be made for only one test pile. It may be driven for either the Right or Left Bridge.

APPROACH SLABS shall be as shown on Standard Drawing AS-1-72 except they shall be 24'-0" wide and top steel shall have a 3" minimum cover instead of 2".

DECK SURFACE FINISH: See Sheet 228.

PILES shall be driven to refusal on bedrock or to 20 blows per inch for the last few inches of penetration. The design load is 50 tons per pile for both forward abutment piles, and 50 tons per pile for forward pier, left bridge.

SPREAD FOOTINGS shall extend a minimum of 9 inches into bedrock or to elevation shown, whichever is lower.

UTILITY LINES
All expense involved in relocating and installing the affected utility lines shall be born by the owners. The Contractor and Owners are requested to cooperate by arranging their work in such a manner that inconvenience to either would be held to a minimum.

For Lighting Details not shown see Standard Construction Drawings HL-3, HL-4, HL-5 and HL-7.

2/15

FRANKLIN ENGINEERING, LIMITED
Consulting Engineers
COLUMBUS, OHIO

ESTIMATED QUANTITIES
BRIDGE No. ATH-33-1821
BRIDGE No. ATH-33-1823
US-50 over SB. US-33 & RAMP "A"

DESIGNED	DRAWN	TRACED	CHECKED	REVIEWED	DATE	REVISED
M.G.			R.D.D.		1/5-70	5-23-77 6-8-77

MICROFILMED
JUN 91982

FED. RD. DIVISION	STATE	PROJECT	
2	OHIO		

ATH-33-17.77

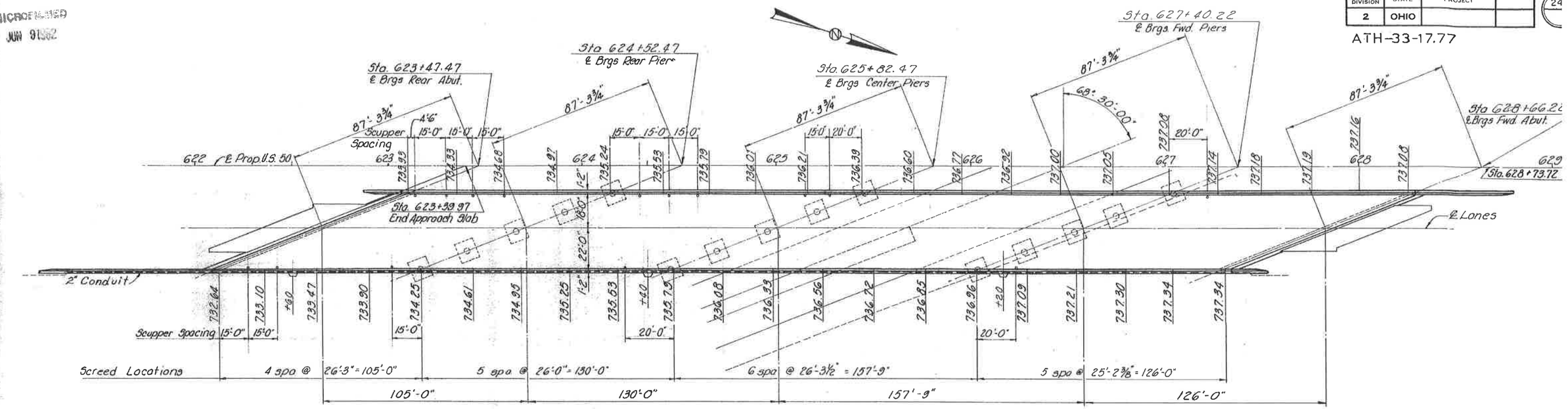

Note: Elevations shown at Gutter Lines are Screed Elevations and are elevations before concrete is poured

PLAN

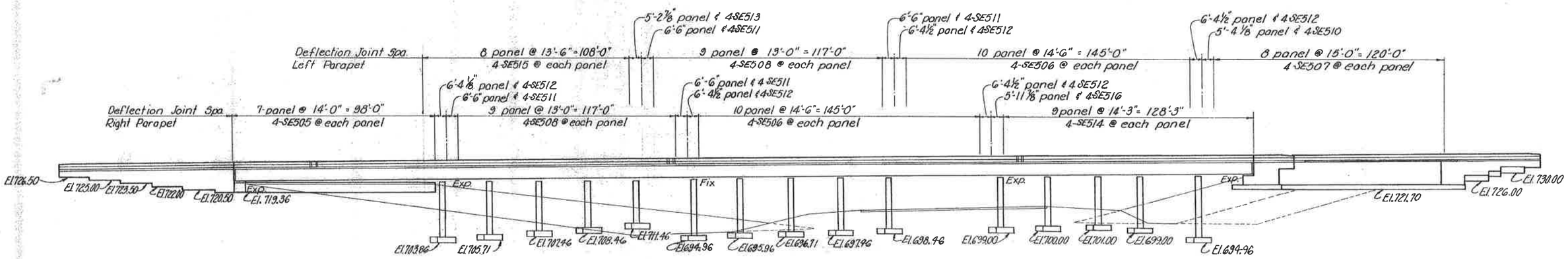

ELEVATION

(Piles not shown)

3

FRANKLIN ENGINEERING, LIMITED
Consulting Engineers
COLUMBUS, OHIO

RIGHT BRIDGE
GENERAL PLAN

BRIDGE Nº ATH-33-1821

US-50 over SB. US-33 & RAMP "A"

ATHENS COUNTY U3R

DESIGNED	DRAWN	TRACED	CHECKED	REVIEWED	DATE	REV
M.C.					1/15-70	

MICROFILMED
JUN 01 1982

FED. RD. DIVISION	STATE	PROJECT	
2	OHIO		

ATH-33-17.77

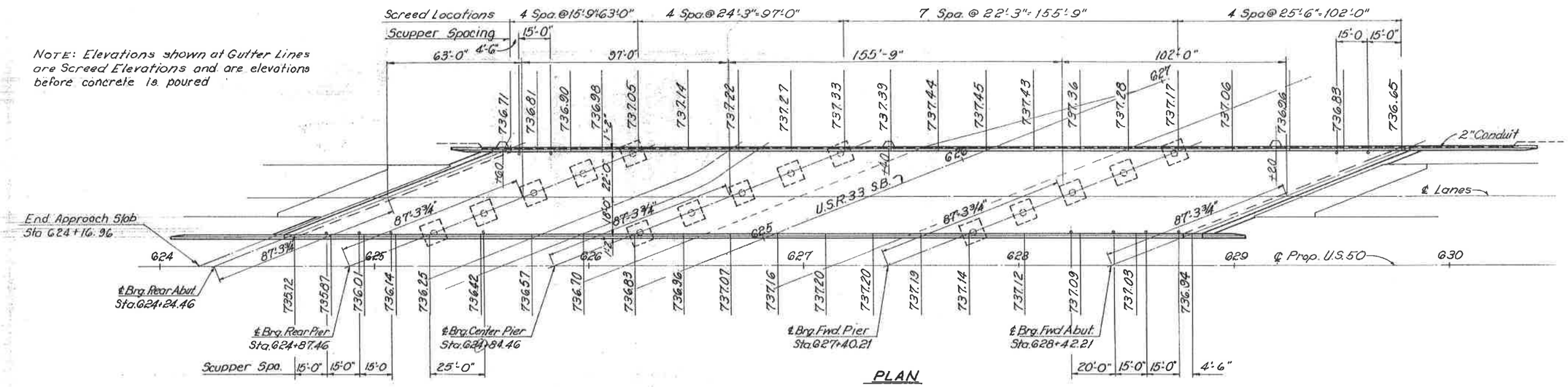

PLAN

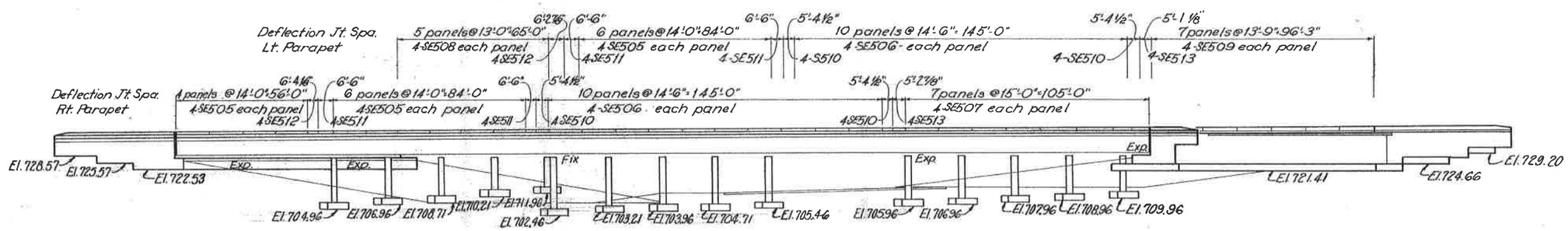

ELEVATION

Piles not shown

4

FRANKLIN ENGINEERING, LIMITED
Consulting Engineers
COLUMBUS, OHIO

LEFT BRIDGE
GENERAL PLAN

BRIDGE No. ATH-33-1823
US-50 over S.B. US-33 & Ramp 'A'

ATHENS COUNTY U.S.R.-33

DESIGNED	DRAWN	TRACED	CHECKED	REVIEWED	DATE	REV
M.G.	F.S.		J.B.D.	J.F.	1/5-70	

MICROFILMED
JUN 9 1982

FED. RD. DIVISION	STATE	PROJECT	
2	OHIO		

ATH-33-17.77

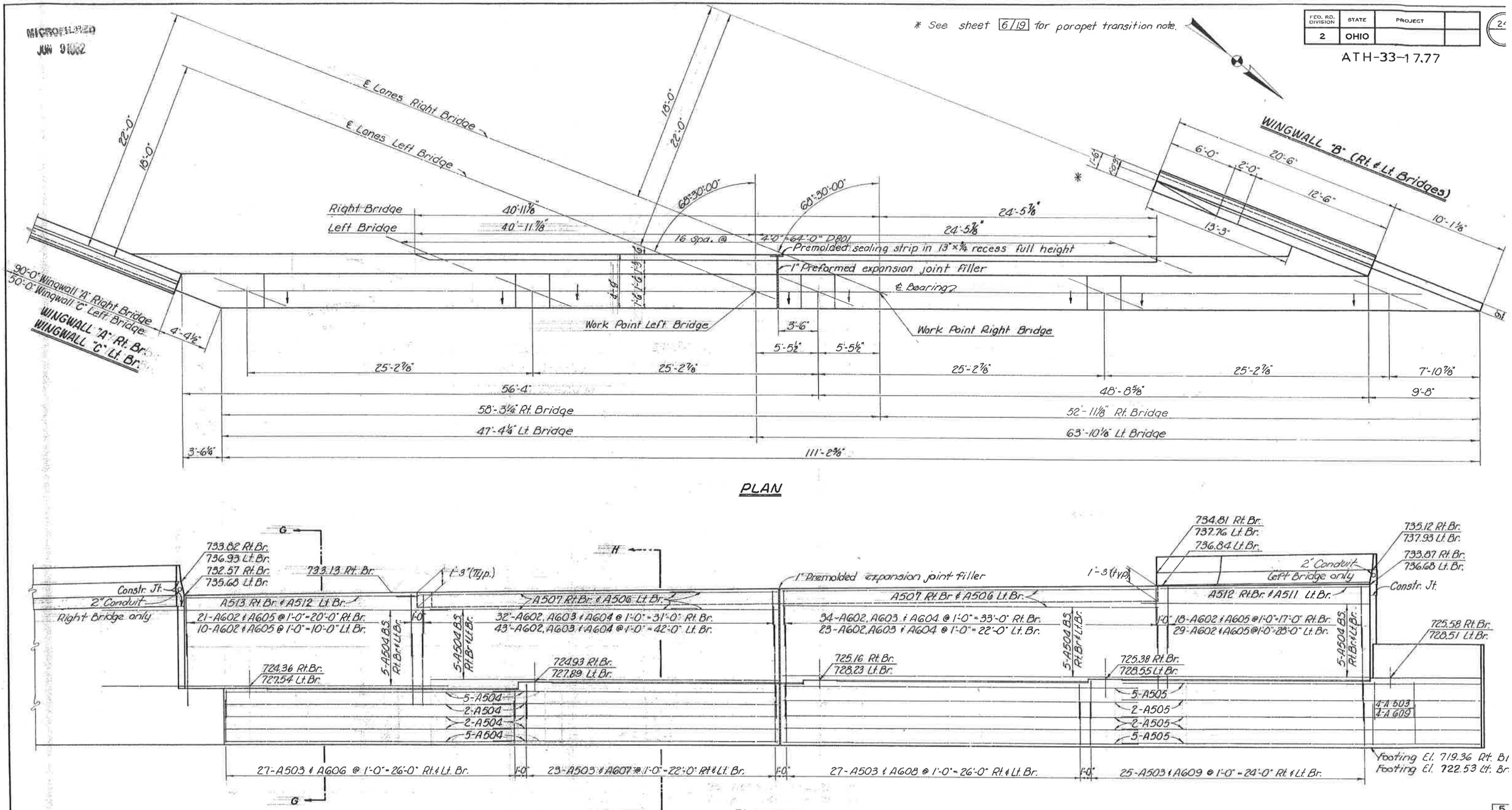

PLAN

ELEVATION

All footing reinforcing steel shall have 3" clearence from all concrete surfaces.

Concrete for the Rear Abutments, which is below the finished earth surface, shall be poured directly into the excavation without the use of formwork so it will be in direct contact with bedrock.

For detail of expansion fittings at abutments, see Std. Dr wg. HL5

5

FRANKLIN ENGINEERING, LIMITED
Consulting Engineers
COLUMBUS, OHIO

REAR ABUTMENT DETAILS

BRIDGE No. ATH-33-1821 & 1823
US-50 over SB. US-33 & RAMP "A"

ATHENS COUNTY USR

DESIGNED	DRAWN	TRACED	CHECKED	REVIEWED	DATE	REV
M.G					1/5/70	

MICROFILMED
JAN 0 1972

FED. RD. DIVISION	STATE	PROJECT	
2	OHIO		

ATH-33-17.77

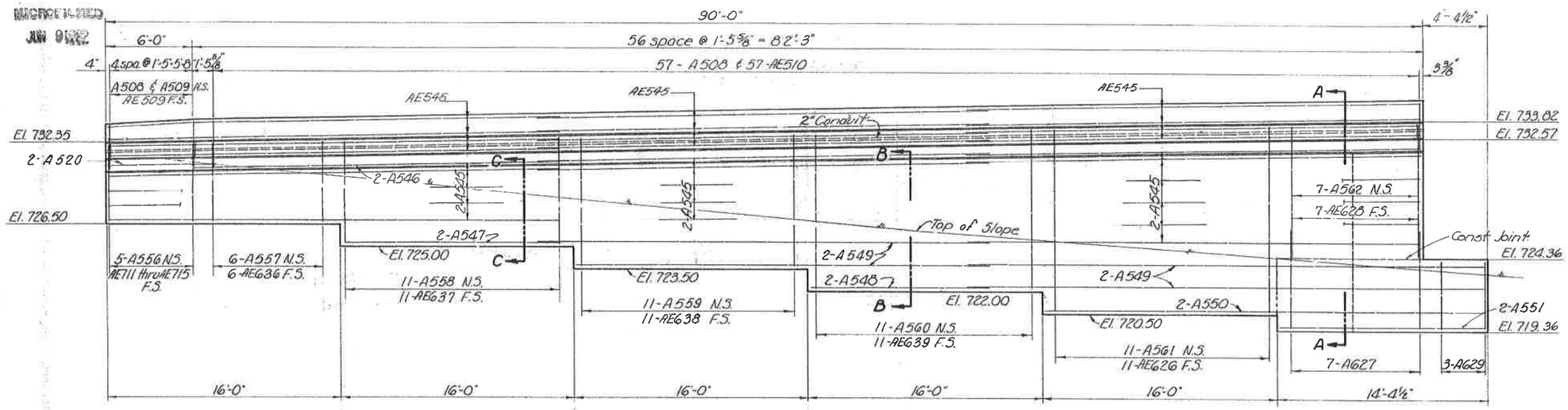

WINGWALL "A" RIGHT BRIDGE

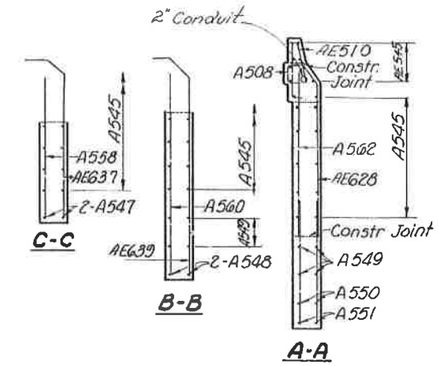

SECTIONS of WINGWALL "A"

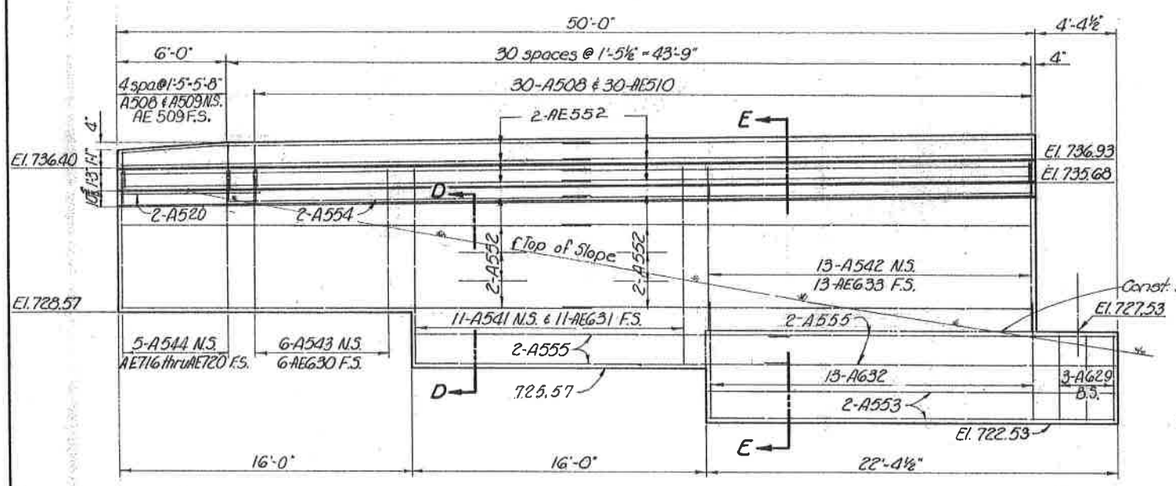

WINGWALL "C" LEFT BRIDGE

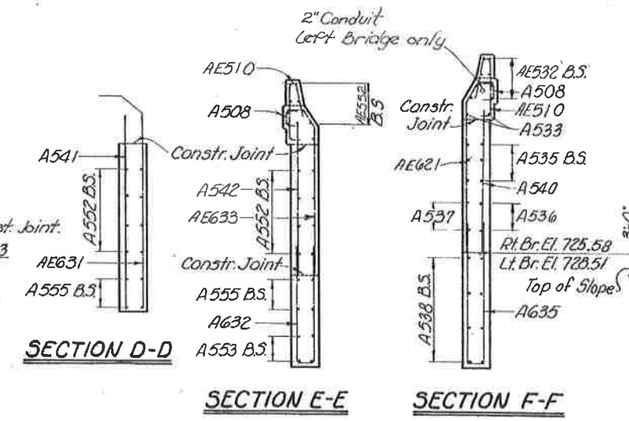

SECTION D-D

SECTION E-E

SECTION F-F

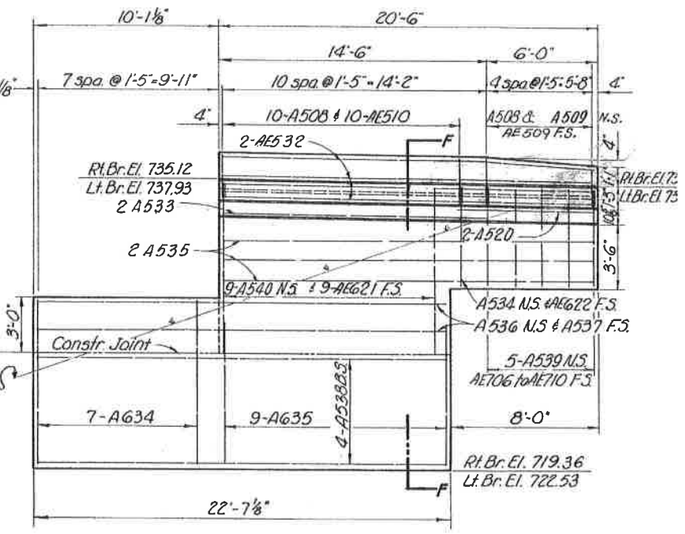

WINGWALL "B" RIGHT AND LEFT BRIDGE

Note: Footing concrete below top of slope shall be placed in a carefully made trench against undisturbed rock.

For details of electrical expansion fittings, couplings and conduit in wingwalls see Standard Drawing HL-5.

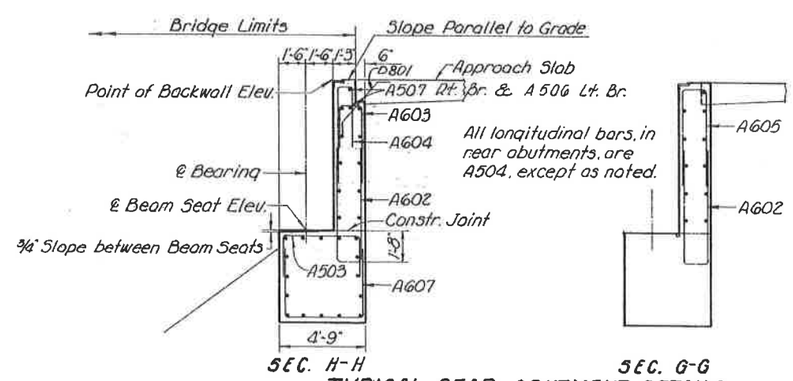

SEC. H-H

SEC. G-G

TYPICAL REAR ABUTMENT DETAILS

PARAPET TRANSITIONS AND WINGWALL ENDS shall be as sh on Std. Drwg. BR-1-67 revised 1-1-71. Reinforcing stee shall be field bent or cut to fit the revised shape.

6

FRANKLIN ENGINEERING, LIMITED
Consulting Engineers
COLUMBUS, OHIO

WINGWALL DETAILS & TYPIC SECTIONS of REAR ABUTMEN

BRIDGE No. ATH-33-1821 & 1823
US-50 over SB. US-33 & RAMP "A"

ATHENS COUNTY USR

DESIGNED	DRAWN	TRACED	CHECKED	REVIEWED	DATE	RE
M.G.			R.B.B.	J.F.	1/8/70	

MICROFILMED
JUN 91382

FED. RD. DIVISION	STATE	PROJECT	
2	OHIO		

ATH-33-17.77

24

* See sheet 6/19 for parapet transition note.

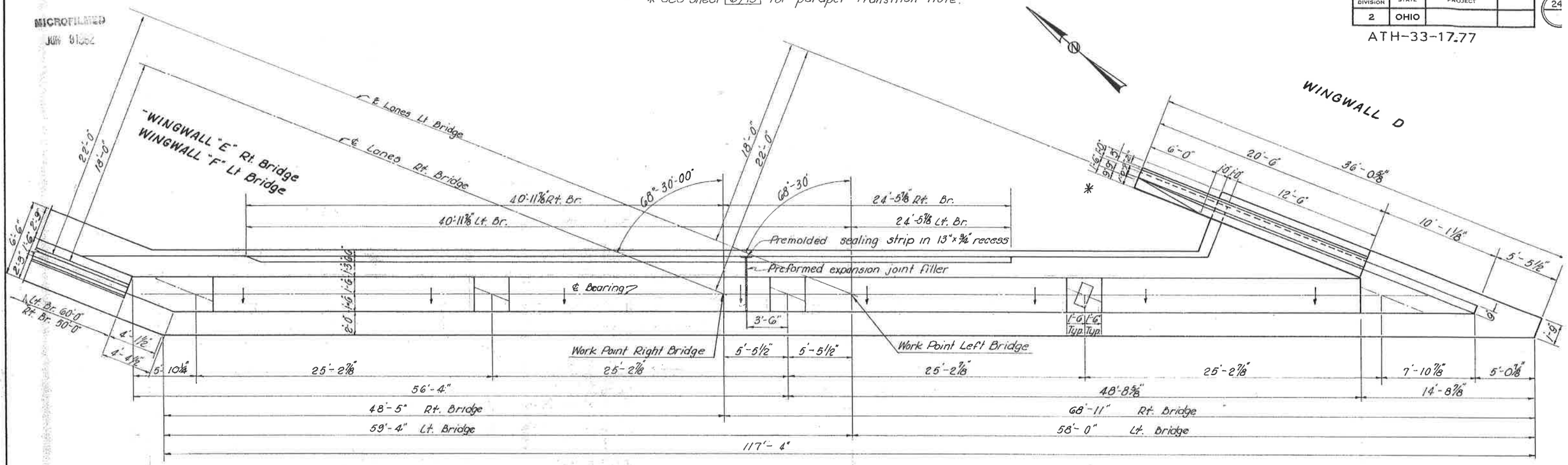

PLAN

FORWARD ABUTMENTS

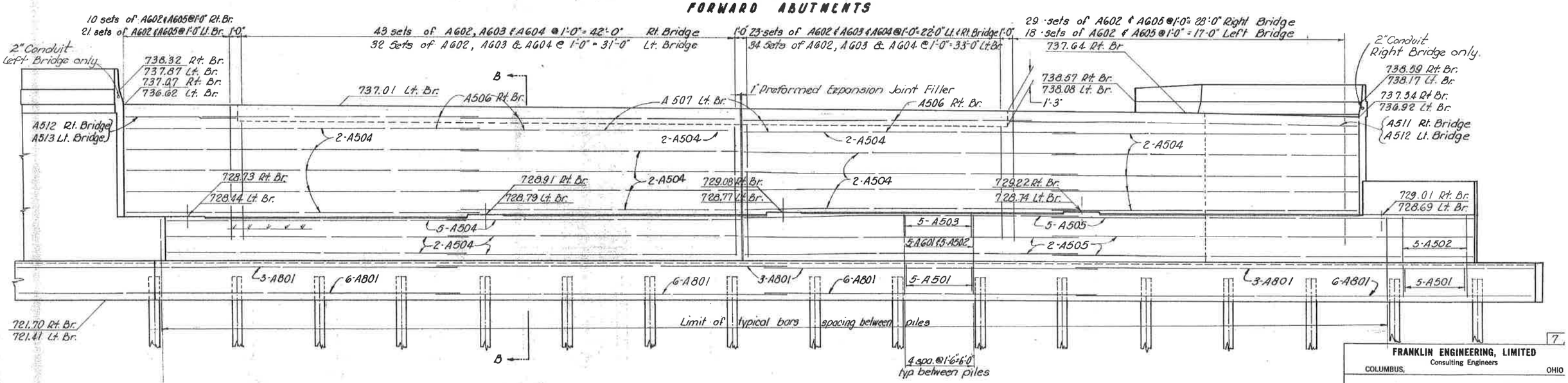

ELEVATION

For detail of expansion fittings at abutments, see Standard Drawing HL-5.

7

FRANKLIN ENGINEERING, LIMITED
Consulting Engineers
COLUMBUS, OHIO

FORWARD ABUTMENT DETAIL

BRIDGE NO. ATH-33-1821 & 1823

U.S.-50 over S.B. US-33 & RAMP "A

ATHENS COUNTY USR-

DESIGNED	DRAWN	TRACED	CHECKED	REVIEWED	DATE	REV
M.G			D.B.D	JH	1/8-70	

MICROFILMED
JUN 9 1982

FED. RD. DIVISION	STATE	PROJECT	
2	OHIO		

ATH-33-17.77

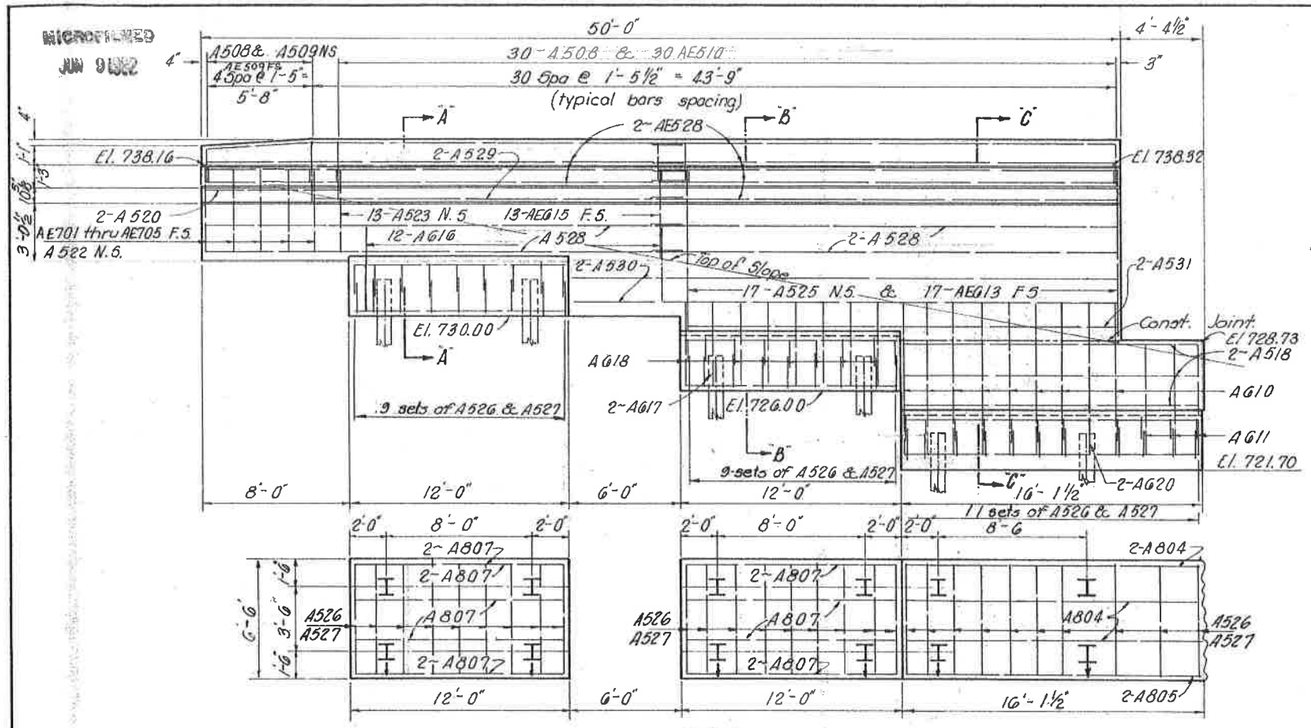

WINGWALL "E" RT. BRIDGE

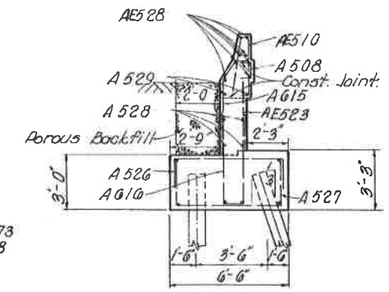

SECTION A-A

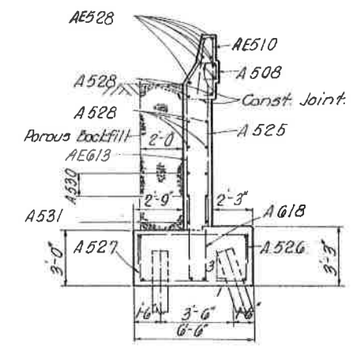

SECTION B-B

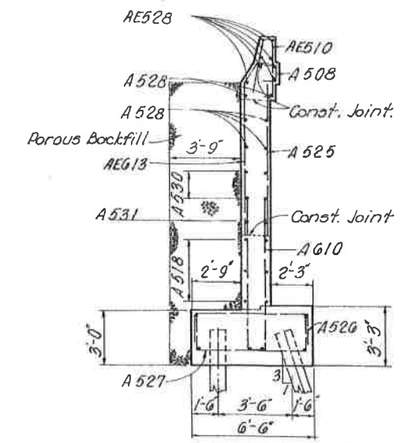

SECTION C-C

NOTE: Porous Backfill shall extend up to the subgrade with the thickness shown, full length of wingwalls.
Battered Piles to be battered 1:3
Reinforcing Steel in footings and pedestals shall have 3" of clearance from all concrete surfaces.

PARAPET TRANSITION: See sheet 6/19

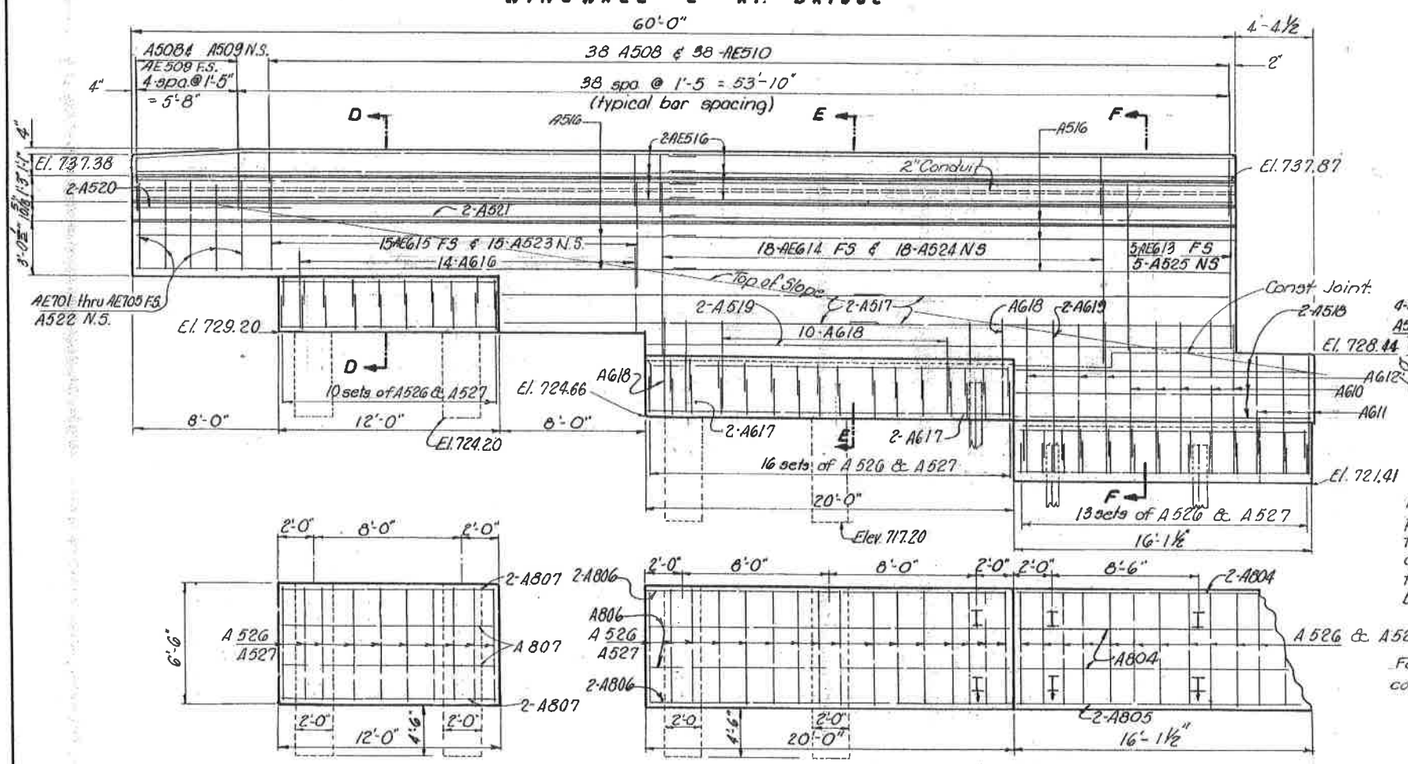

WINGWALL "F" LT. BRIDGE

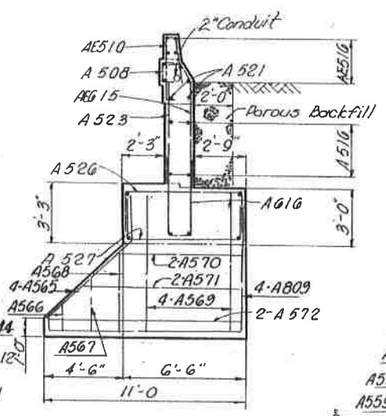

SECTION D-D

NOTE: Pedestals shall extend a minimum of 3" into bedrock. If necessary the pedestals should be lowered. However, if the low point of the surface of the bedrock occures 2 feet or more above plan elevation, the pedestals may be raised, after approval by the Director, but to an elevation not higher than the footing elevation.

For details of electrical expansion fitting, coupling and conduit in wingwall see Standard Drawing HL-5.

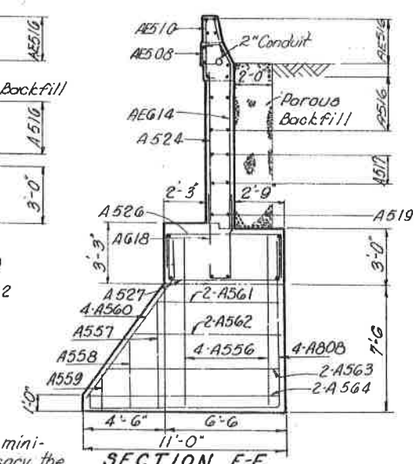

SECTION E-E

NOTE: Provide Sufficient Clearance for passage of the 6" helical C.S.P. thru the bottom of the footing. All Bars in the footing are No. 8 bars.

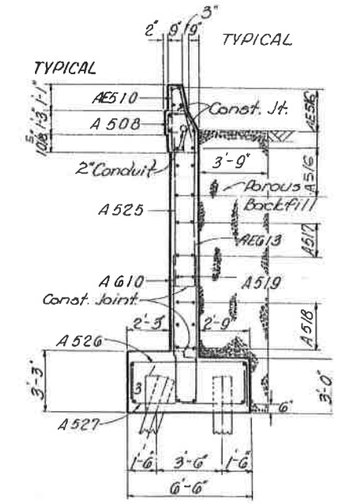

SECTION F-F

8

FRANKLIN ENGINEERING, LIMITED
Consulting Engineers
COLUMBUS, OHIO

FORWARD ABUTMENT DETAIL

BRIDGE NO. ATH-33-1821 & 1823
US-50-OVER SB US 33 & RAMP

ATHENS COUNTY U S R 3

DESIGNED	DRAWN	TRACED	CHECKED	REVIEWED	DATE	RE
M.G.	F.G.		DAD	JF	1/5-70	

MICROFILMED
JUN 91 1982

FED. RD. DIVISION	STATE	PROJECT	
2	OHIO		

ATH-33-17.77

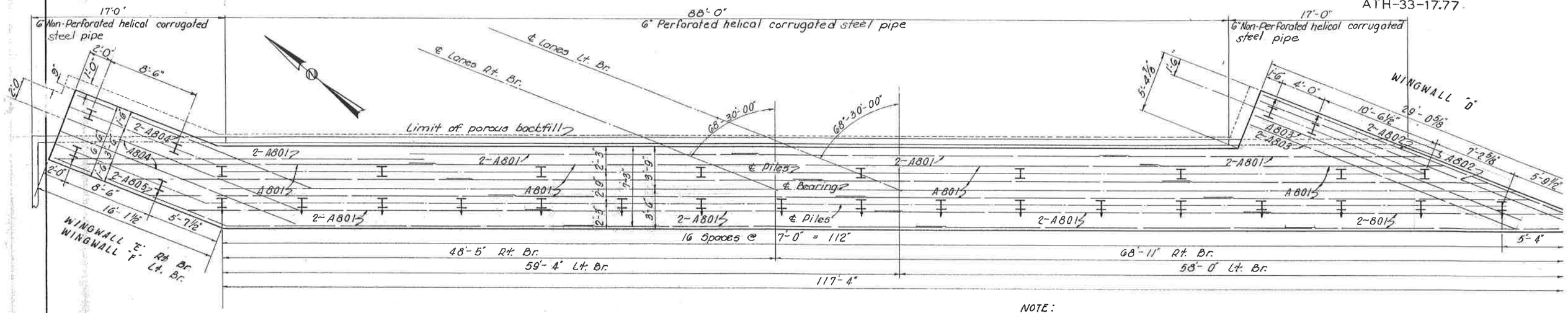

FOOTING PLAN
FORWARD ABUTMENT

NOTE:
Battered Piles to be battered 1:3
All Piles are HP10x42

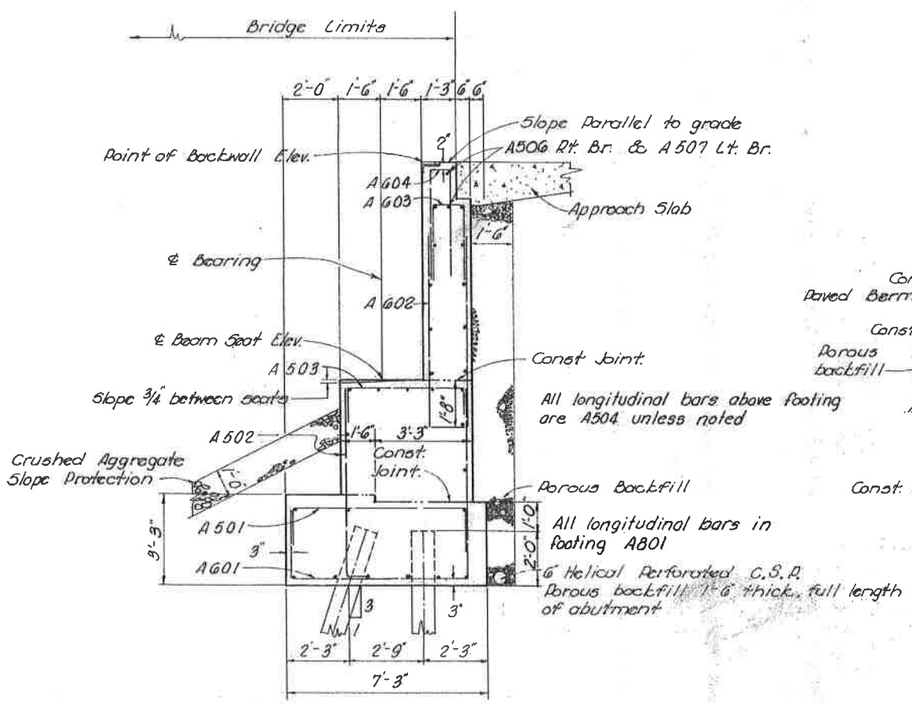

SECTION B-B

TYPICAL FORWARD ABUTMENT SECTION

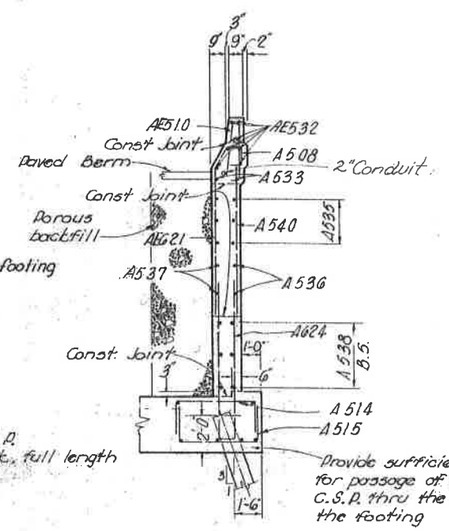

SECTION A-A

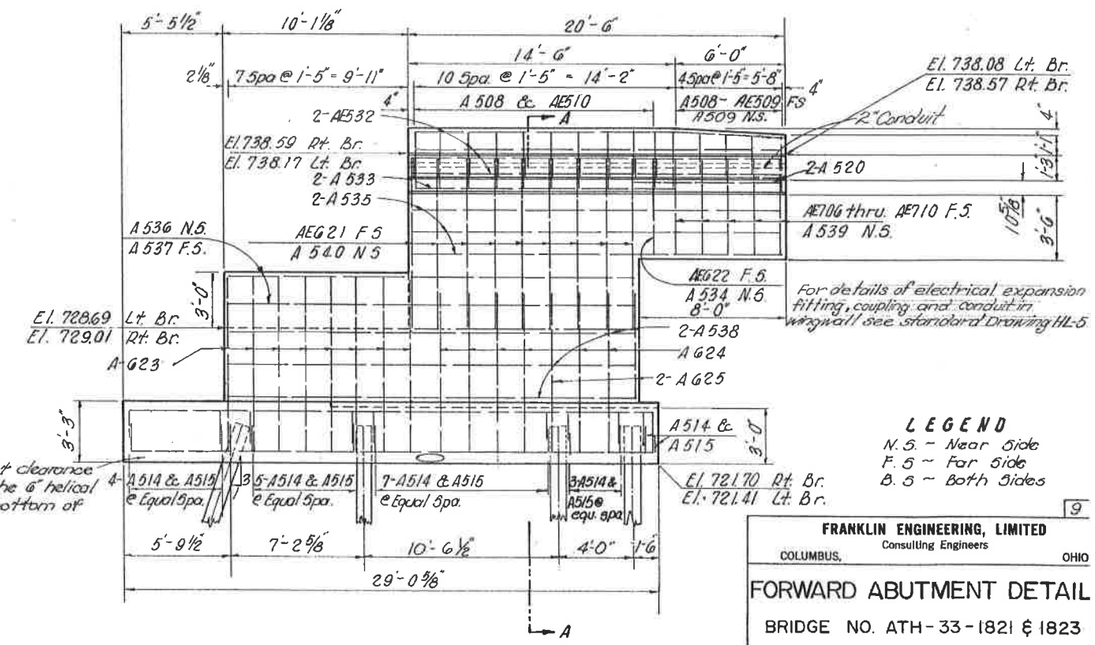

FORWARD ABUTMENTS ~ DETAILS
FOOTING PLAN & WINGWALL "D"
Right and Left Bridge

LEGEND
N.S. ~ Near Side
F.S. ~ Far Side
B.S. ~ Both Sides

9

FRANKLIN ENGINEERING, LIMITED
Consulting Engineers
COLUMBUS, OHIO

FORWARD ABUTMENT DETAIL

BRIDGE NO. ATH-33-1821 & 1823

U.S.-50-OVER S.B. U.S. 33 & RAMP

ATHENS COUNTY USR-33

DESIGNED	DRAWN	TRACED	CHECKED	REVIEWED	DATE	REV
M.G.	F.G.		J.B.P.	JF	1/5/70	

MICROFILMED
JUN 9 1982

FED. RD. DIVISION	STATE	PROJECT	
2	OHIO		

ATH-33-17.77

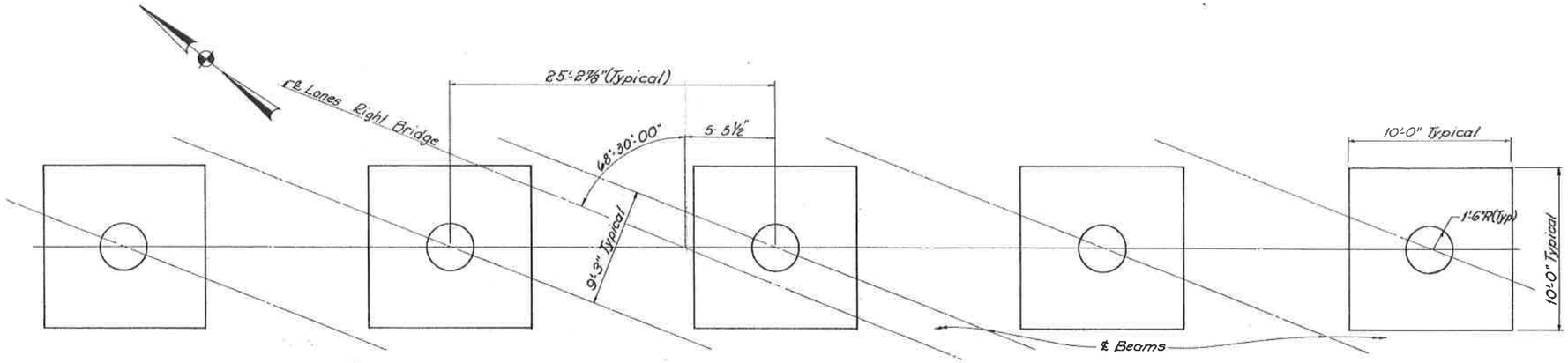

PLAN

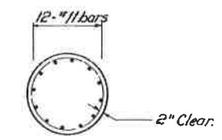

Rear Pier

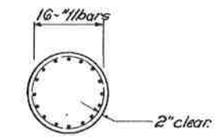

Center Pier

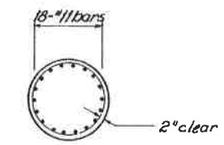

Forward Pier

SECTION B-B

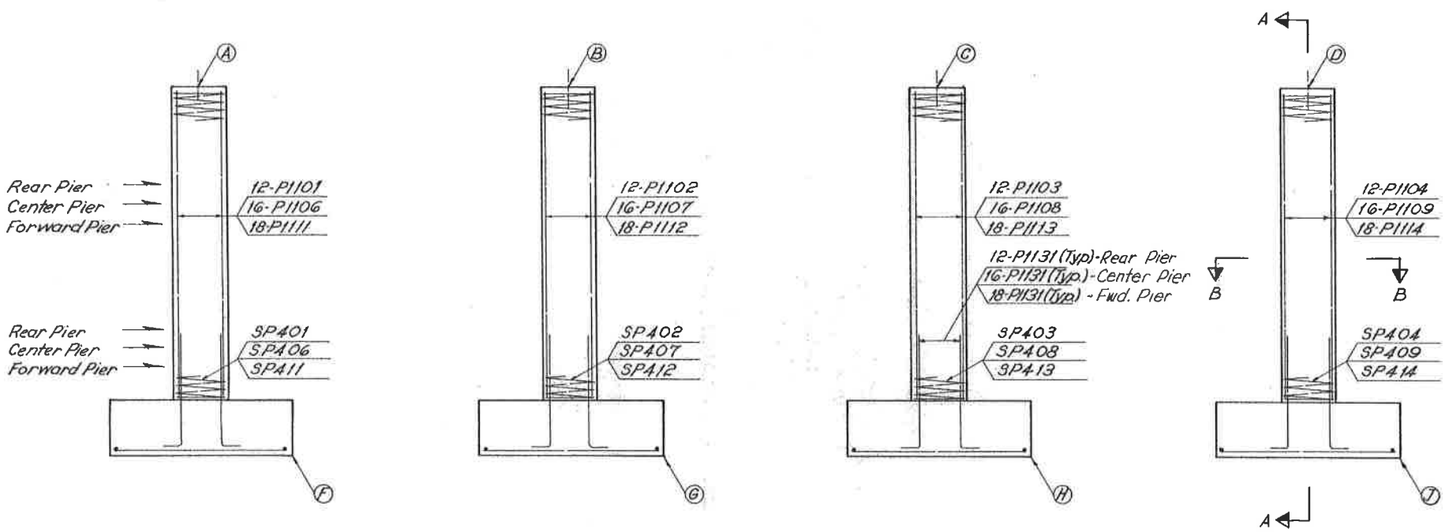

ELEVATION

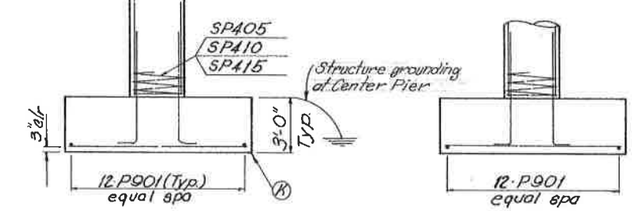

SECTION A-A
(Typical All Columns)

NOTE: All footing reinforcing steel must have a 3" clearance from all concrete surfaces.

TABLE OF ELEVATIONS										
	A	B	C	D	E	F	G	H	J	K
Rear Pier	726.32	726.20	726.06	725.90	725.39	711.46	709.46	707.46	705.71	703.86
Center Pier	727.43	727.40	727.36	727.30	726.88	698.46	697.46	696.71	695.96	694.96
Forward Pier	727.94	728.03	728.10	728.15	727.85	694.96	698.96	700.96	699.96	698.96

Center Pier: For Structure Grounding See Standard Construction Drawing HL-7.

10

FRANKLIN ENGINEERING, LIMITED
Consulting Engineers
COLUMBUS, OHIO

RIGHT BRIDGE
PIERS

BRIDGE No. ATH-33-1821
U.S. 50 over S.B. U.S. 33 & Ramp "A"

ATHENS COUNTY U.S.R.-3.

DESIGNED	DRAWN	TRACED	CHECKED	REVIEWED	DATE	RE
M.C.	F.D.S.	F.D.S.	J.B.D.	J.F.	1/8-70	

MICROFILMED
JUN 01 1992

FED. RD. DIVISION	STATE	PROJECT	
2	OHIO		

24

ATH-33-17.77

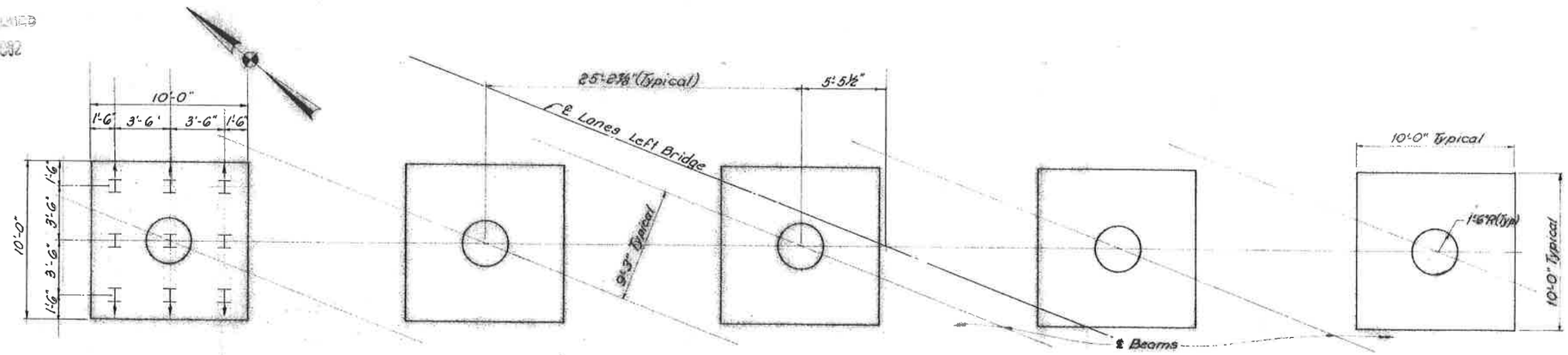

Note: Forward Pier on Piles.
All Piles to be HP10×42, indicated (1) to be battered 1:4.

Note:
See General Plan for Layout

PLAN

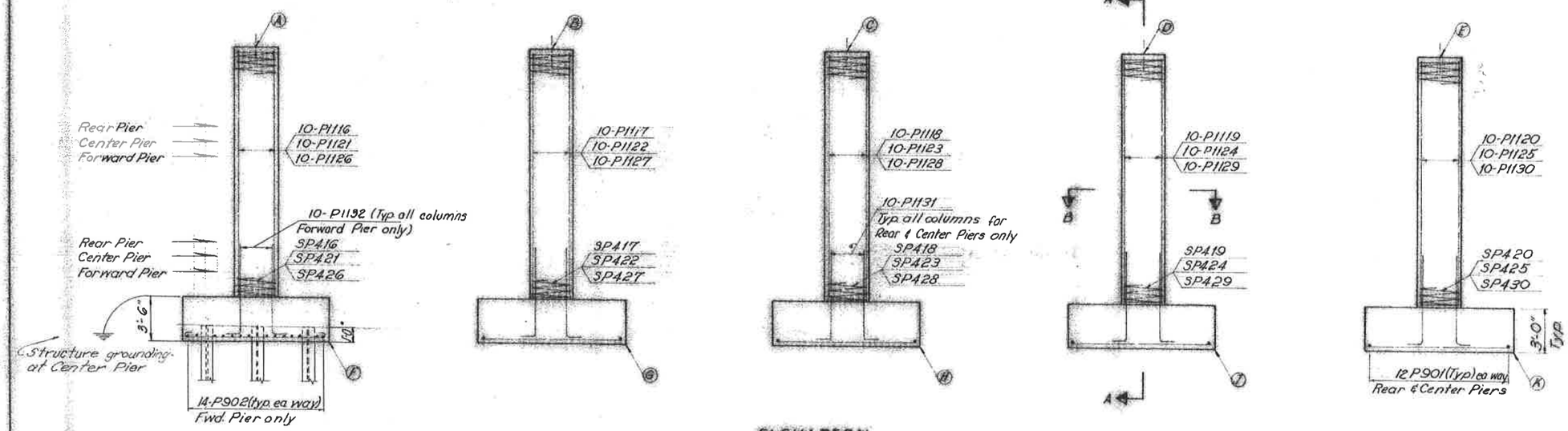

ELEVATION

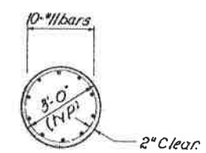

SECTION B-B
(Typ. All Columns)

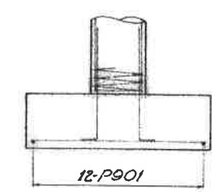

SECTION A-A

NOTE: All footing reinforcing steel must have a 3" clearance from all concrete surfaces.

TABLE OF ELEVATIONS

	A	B	C	D	E	F	G	H	J	K
Rear Pier	728.46	728.54	728.27	727.97	727.66	711.96	710.21	708.71	706.96	704.96
Center Pier	728.41	728.57	728.36	728.14	727.90	705.46	704.71	703.96	703.21	702.46
Forward Pier	728.25	728.51	728.42	728.31	728.18	709.96	708.96	707.96	706.96	705.96

Center Pier: For Structure Grounding See Standard Construction Drawing H L-7.

11/1

FRANKLIN ENGINEERING, LIMITED
Consulting Engineers
COLUMBUS, OHIO

LEFT BRIDGE
PIERS

BRIDGE No. ATH-33-1823
US50 over S.R. US 33 & Ramp "A"

ATHENS COUNTY USR 33

DESIGNED	DRAWN	TRACED	CHECKED	REVIEWED	DATE	REVD
M.C.	FDS	FDS	J.B.D.	JH	1/8/70	

FED. RD. DIVISION	STATE	PROJECT	
2	OHIO		

ATH-33-1777

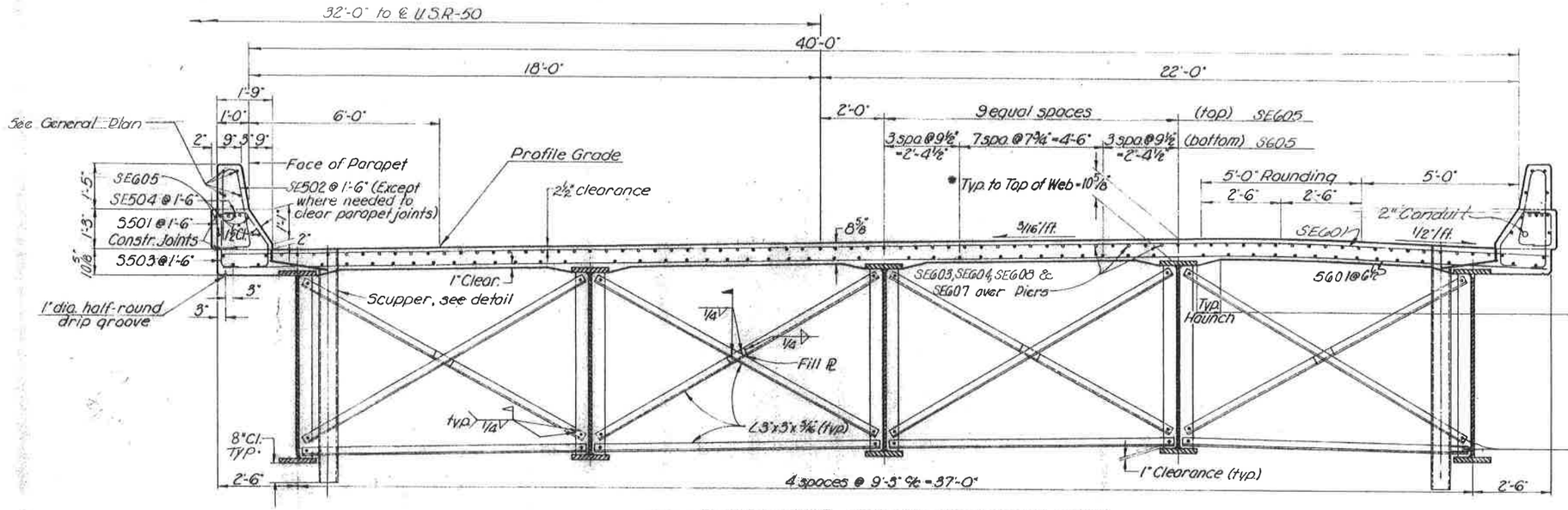

TRANSVERSE SECTION - RIGHT BRIDGE SHOWN
LEFT BRIDGE, OPPOSITE HAND

*This is the design dimension. The quantity of deck concrete to be paid for shall be based on this dimension even though deviation from it may be necessary because the top flange of the girder may not have the exact camber or conformation required to place it parallel to the finished grade. Deductions shall be made for the volume of encased steel plates as per Section 511.18 of the Construction and Material Specifications.

A typical haunch width of 9" shall be used for computing the quantity of concrete. However, the haunch width may vary between 6" & 12" provided that the slope shall be not more than 1:4 for a haunch less than 9" in width.

Erection bolts may be ⅝" diameter and shall be of the same type as splice bolts. Provide 11/16" holes in crossframes and 13/16" holes in girder stiffeners. The bolts when left in place shall be properly torqued if high strength or nuts shall be tack welded.

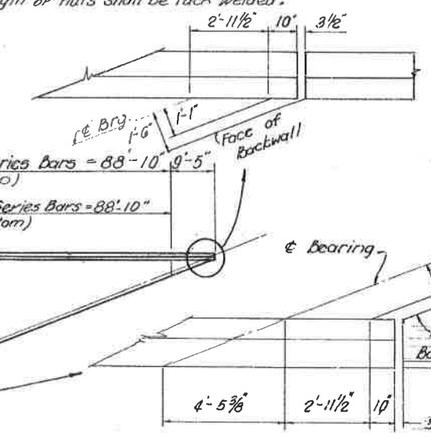

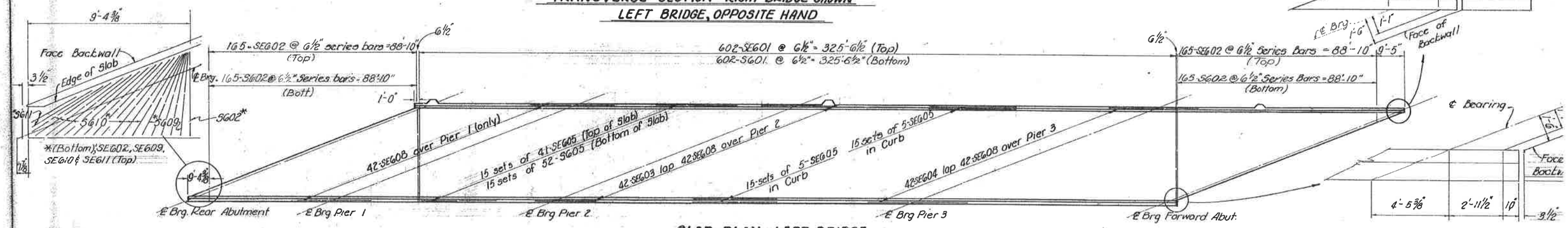

SLAB PLAN - LEFT BRIDGE

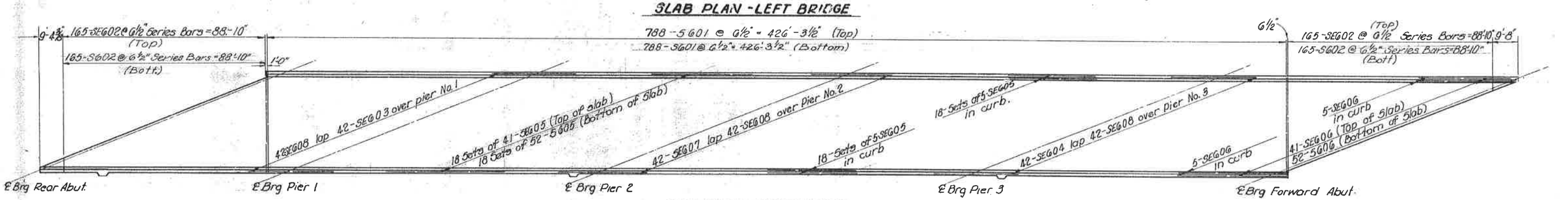

SLAB PLAN - RIGHT BRIDGE

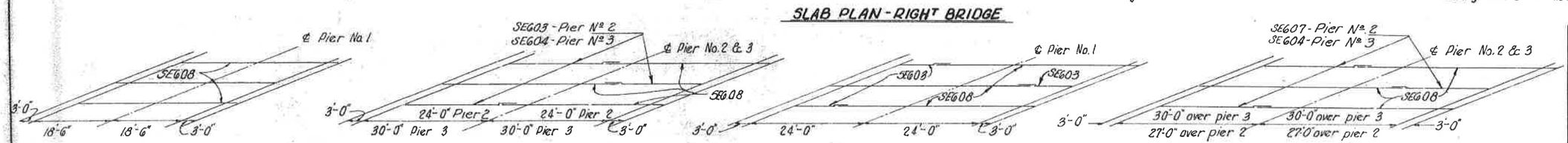

DIAGRAM SHOWING STAGGER SE608 BARS OVER PIER NO. 1 (LEFT BRIDGE)

DIAGRAM SHOWING STAGGER SE603, SE604 & SE608 BARS OVER PIERS NO. 2 & 3 (LEFT BRIDGE)

DIAGRAM SHOWING STAGGER SE603 & SE608 BARS OVER PIER NO. 1 (RIGHT BRIDGE)

DIAGRAM SHOWING STAGGER SE604, SE607 & SE608 BARS OVER PIER NO. 2 & 3 (RIGHT BRIDGE)

FRANKLIN ENGINEERING, LIMITED
Consulting Engineers
COLUMBUS, OHIO

LEFT & RIGHT BRIDGE
TRANSVERSE SECTION & SLAB PLAN
BRIDGE Nº ATH-33-1821 & 1823
US 50 over SB. US 33 & RAMP

ATHENS COUNTY USR

DESIGNED	DRAWN	TRACED	CHECKED	REVIEWED	DATE	REV.
M.G.			D.H. V.B.D.	J.J.	1/5/70	

MICROFILMED
JUN 91502

FED. RD. DIVISION	STATE	PROJECT	
2	OHIO		

25

ATH-33-17.77

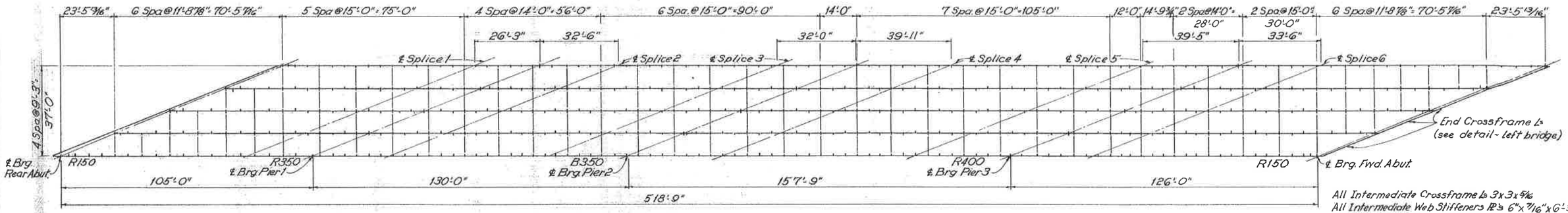

FRAMING PLAN INTERMEDIATE GIRDER

All Intermediate Crossframe Ls 3x3x5/16
All Intermediate Web Stiffeners Pls 6"x 7/16"x 6'-3"
Place Intermediate Stiffeners at equal spaces between crossframes except where necessary to clear web splices by 2" minimum.
Maximum stiffener spacing = 6'-0"

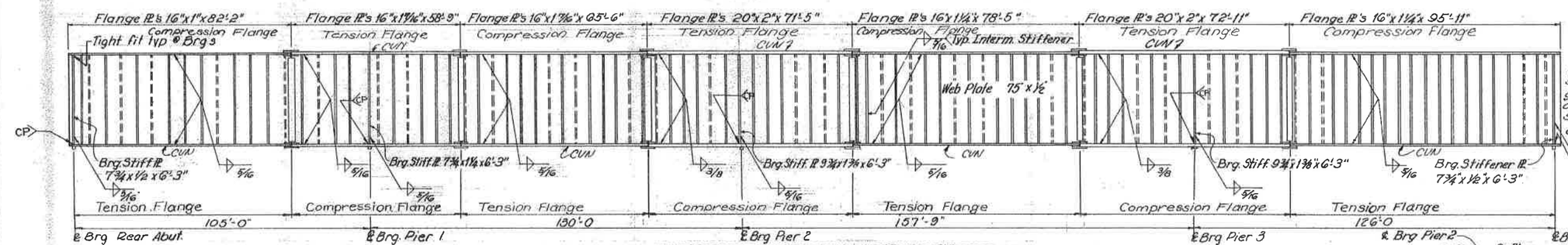

GIRDER ELEVATION - INTERMEDIATE GIRDER

Use single intermediate stiffeners on alternate sides of interior girders and on the inside of fascia girders. Use in pairs where required for crossframe attachment. If a stiffener is located at a bolted field splice it shall be an L6x3 1/2 x 3/8 bolted to the web at one of the vertical web bolt lines with its 6" leg outstanding.

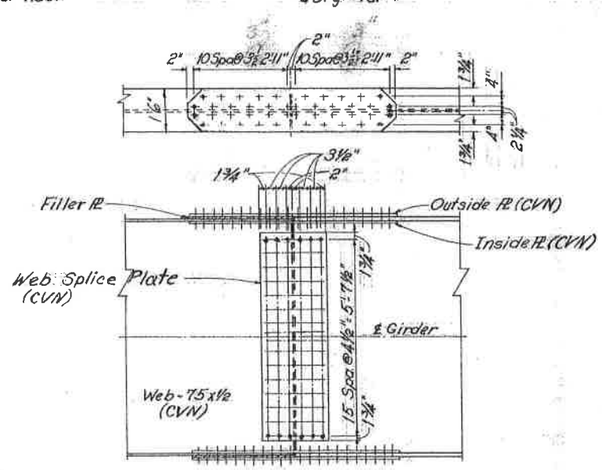

All holes are 1 1/16" ϕ for 1" H.S. bolts

TYPICAL FIELD SPLICE

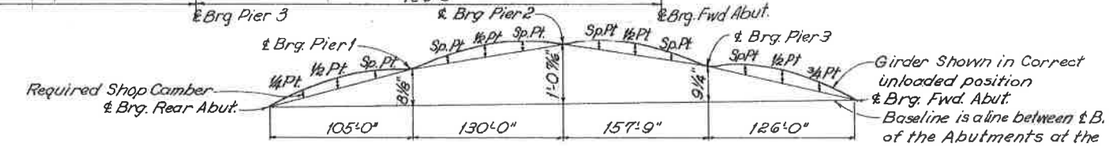

LAYOUT DIAGRAM

Splice No.	FLANGE SPLICE PLATES			*WEB SPLICE Pls.
	*Outside Pls-2 req.	*Inside Pls-4 req.	Filler Pls-2 req.	2 required
1	16"x 3/4 x 5'-8"	7 1/2 x 1/2 x 5'-8"	16"x 7/16"x 2'-9 7/8"	21 1/2 x 3/8 x 5'-11"
2	16"x 3/4 x 5'-8"	7 1/2 x 1/2 x 5'-8"	none	21 1/2 x 3/8 x 5'-11"
3	16"x 3/4 x 5'-8"	7 1/2 x 1/2 x 5'-8"	16"x 9/16"x 2'-9 7/8"	21 1/2 x 3/8 x 5'-11"
4	16"x 3/4 x 5'-8"	7 1/2 x 1/2 x 5'-8"	16"x 3/4"x 2'-9 7/8"	21 1/2 x 3/8 x 5'-11"
5	16"x 3/4 x 5'-8"	7 1/2 x 1/2 x 5'-8"	16"x 3/4"x 2'-9 7/8"	21 1/2 x 3/8 x 5'-11"
6	16"x 3/4 x 5'-8"	7 1/2 x 1/2 x 5'-8"	16"x 3/4"x 2'-9 7/8"	21 1/2 x 3/8 x 5'-11"

*CVN

CP denotes Complete Penetration butt weld

Where a shape or plate is designated (CVN), the material shall meet minimum notch toughness requirements.

GRINDING OF SHOP WELDS: Except for webs of fascia girders web welds shall be ground flush from the neutral axis of the web to the flange which is in tension. Webs of fascia girders shall be ground flush for their full depth. Grinding shall be done in the direction of stress.

DEFLECTION AND CAMBER

	SPAN 1			SPAN 2			SPAN 3			SPAN 4		
	1/4 Pt.	1/2 Pt.	Spl. Pt.	Spl. Pt.	1/2 Pt.	Spl. Pt.	Spl. Pt.	1/2 Pt.	Spl. Pt.	Spl. Pt.	1/2 Pt.	3/4 Pt.
Deflection due to weight of steel	1/8	1/8	1/16	0	1/16	0	3/16	5/16	3/16	1/16	3/16	3/16
Deflection due to remaining dead load	1/2	9/16	1/4	1/8	1/4	1/16	5/8	1	1/2	1/4	11/16	9/16
Adjustment req'd for vertical curve	3/8	1/2	3/8	5/8	13/16	5/8	7/8	1 3/16	7/8	9/16	3/4	9/16
Required Shop Camber	1	1 3/16	11/16	3/4	1 1/8	11/16	1 11/16	2 1/2	1 9/16	7/8	1 5/8	1 5/16

NOTE: The Contractor shall submit to the Director for approval 3 sets of prints showing the proposed erection proceedure.

All gusset plates attached to the end dams shall be A588. End dams shall be galvanized according to 711.02. Payment shall be made under Item 513, Structural steel as per plan.

15

FRANKLIN ENGINEERING, LIMITED
Consulting Engineers
COLUMBUS, OHIO

RIGHT BRIDGE
GIRDER DETAILS
BRIDGE № ATH-33-1821
US 50 over SB. US 33 & RAMP A

ATHENS COUNTY U.S.R. 33

DESIGNED	DRAWN	TRACED	CHECKED	REVIEWED	DATE	REV.
M.C	FDS	FDS	D.B.D.	J.F.	1/5-70	

MICROFILMED
JUN 91992

FED. RD. DIVISION	STATE	PROJECT	
2	OHIO		

ATH-33-17.77

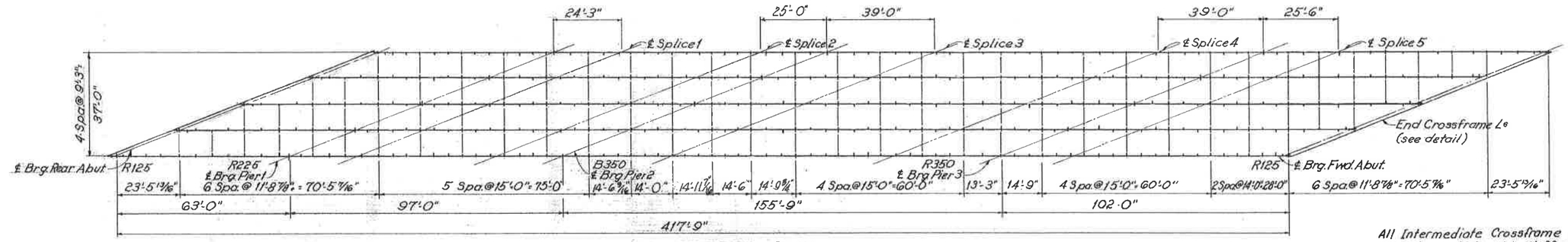

FRAMING PLAN

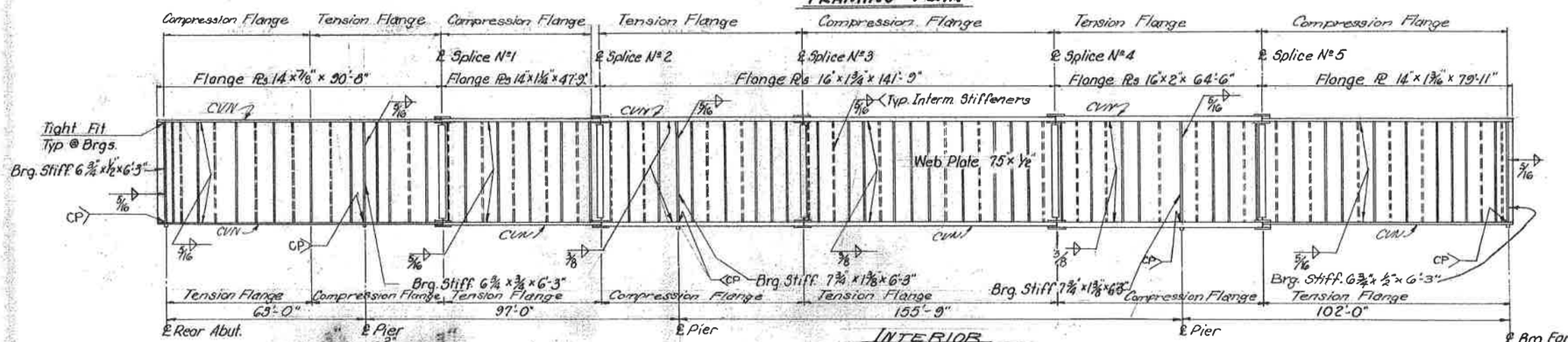

INTERIOR GIRDER ELEVATION

All Intermediate Crossframe Ls 3 x 3 x 5/16
All Intermediate Web Stiffeners are Plates 6" x 3/8" x 6'-3"

Place Intermediate Stiffeners at equal spaces between cross frames except where necessary to clear web splices by 2" min. In no case shall Intermediate Stiffeners spacing be more than 6'-0"

Use Single intermediate stiffeners on alternate sides of interior girders and on the inside of fascia girders. Use in pairs where required for crossframe attachment.
If a stiffener is located at a bolted field splice it shall be an L 6 x 3½ x 3/8 bolted to the web of one of the vertical web bolt lines with its 6" leg outstanding.
End dams shall be galvanized according to 711.02. All gusset plates attached to the end dams shall be A588. Payment shall be made under Item 513, structural steel, as per plan.

Grinding of Shop Welds: Except for webs of fascia girders, web welds shall be ground flush from the neutral axis of the web to the flange which is in tension. Webs of fascia girders shall be ground flush for their full depth. Grinding shall be done in the direction of stress.

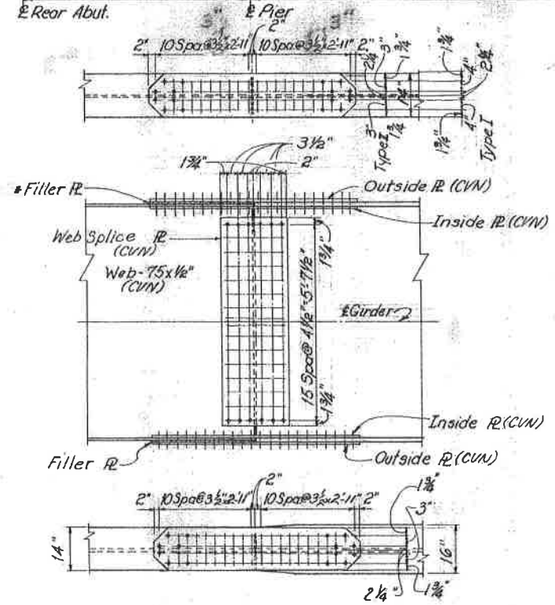

TYPICAL FIELD SPLICE

All holes 1 1/16" ϕ for 1" ϕ high strength bolts (A325)

Splice No.	Flange Splice Plates: Outside Pls.-2 req.	Inside Pls.-4 req.	Filler Pls.-2 req.	Web Splice Pls. 2 required	Type
1	14" x 3/4" x 5'-8"	6 1/2" x 1/2" x 5'-8"	14" x 1/2" x 2'-9 7/16"	21 1/2" x 3/8" x 5'-11"	II
2	14" x 3/4" x 5'-8"	6 1/2" x 1/2" x 5'-8"	14" x 1/2" x 2'-9 7/16"	21 1/2" x 3/8" x 5'-11"	II
3	16" x 3/4" x 5'-8"	7 1/2" x 1/2" x 5'-8"	none	21 1/2" x 3/8" x 5'-11"	I
4	16" x 3/4" x 5'-8"	7 1/2" x 1/2" x 5'-8"	16" x 1/4" x 2'-9 7/16"	21 1/2" x 3/8" x 5'-11"	I
5	14" x 3/4" x 5'-8"	6 1/2" x 1/2" x 5'-8"	14" x 1 3/16" x 2'-9 7/16"	21 1/2" x 3/8" x 5'-11"	II

Rocker-Bolster Dimensions														
Bearing		A	B	C	D	F	G	H	K	L	M	R	T	Y
B350	R350	4	22	3¾	3½	⅞	13	19⅞	15	30	27	12¾	3¼	1 5/16
	R400	4	24	4	3¾	⅞	14	22⅛	16	32	29	14½	3½	1 5/16

NOTE: This table is to be used with reference to Standard Drawing RB-1-55, revised 2-2-59.

CP denotes complete penetration butt weld.
Where a shape or plate is designated (CVN) the material shall meet minimum notch toughness requirements.

Note: The Contractor shall submit to the Director for approval three sets of prints showing his proposed erection of the plate girders

141

FRANKLIN ENGINEERING, LIMITED
Consulting Engineers
COLUMBUS, OHIO

LEFT GIRDER BRIDGE DETAILS
BRIDGE No. ATH-33-1823
US 50 over S.B. US 33 & RAMP A

ATHENS COUNTY U.S.R. 33

DESIGNED	DRAWN	TRACED	CHECKED	REVIEWED	DATE	REV.
M.C.				J.A.D.	J.F. 1/15-70	

MICROFILMED
JUN 21 1982

FED. RD. DIVISION	STATE	PROJECT	
2	OHIO		

ATH-33-17.77

25

For additional details see SD-1-69, sheet no. 1 of 4.

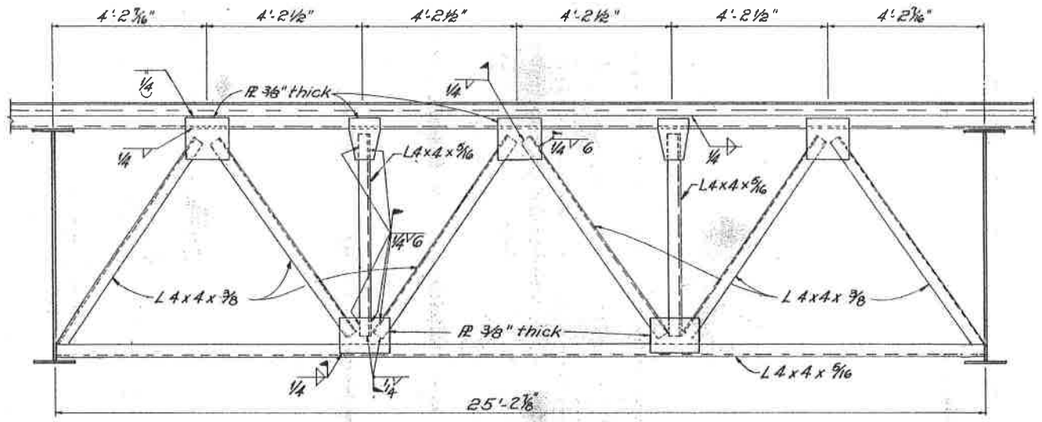

END CROSSFRAME DETAILS

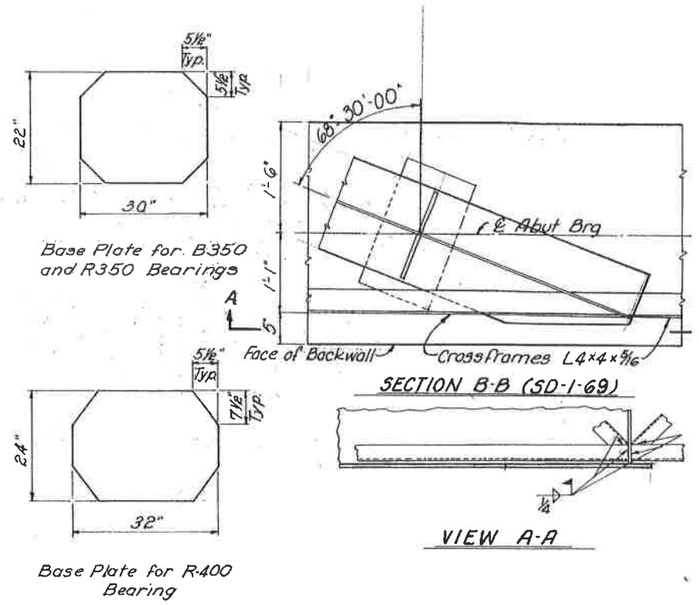

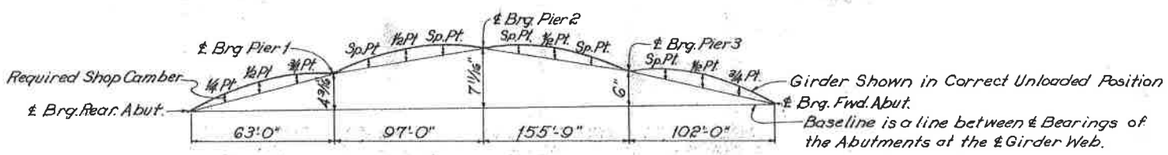

LAYOUT DIAGRAM

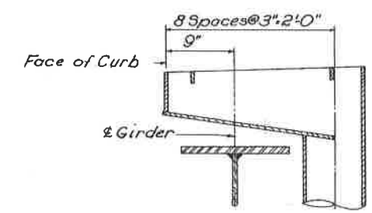

SCUPPER DETAIL

DEFLECTION AND CAMBER

	SPAN 1			SPAN 2			SPAN 3			SPAN 4		
	1/4 Pt.	1/2 Pt.	3/4 Pt.	Spl. Pt.	1/2 Pt.	Spl. Pt.	Spl. Pt.	1/2 Pt.	Spl. Pt.	Spl. Pt.	1/2 Pt.	3/4 Pt.
Deflection due to weight of steel	0	0	0	0	0	1/16"	5/16"	1/2"	5/16"	0	0	0
Deflection due to remaining dead load	1/8"	1/8"	1/16"	0	1/16"	1/8"	7/8"	1 5/16"	1 3/16"	1/16"	1/8"	3/16"
Adjustment requ'd. for vertical curve	1/8"	3/16"	1/8"	5/16"	7/16"	5/16"	7/8"	1 1/8"	7/8"	3/8"	1/2"	3/8"
Requ'd Shop Camber	1/4"	5/16"	3/16"	5/16"	1/2"	1/2"	2 1/16"	2 15/16"	2"	7/16"	5/8"	3/16"

15

FRANKLIN ENGINEERING, LIMITED
Consulting Engineers
COLUMBUS, OHIO

LEFT BRIDGE
SUPERSTRUCTURE DETAILS
BRIDGE No ATH-33-1823
US 50 over S.B. US33 & RAMP.

ATHENS COUNTY USR 3.

DESIGNED	DRAWN	TRACED	CHECKED	REVIEWED	DATE	REV
M.G.	FDS	FDS	J.B.D.	JF	1/5-70	

MICROFILMED
MAR 03 1989
BERWINGTON

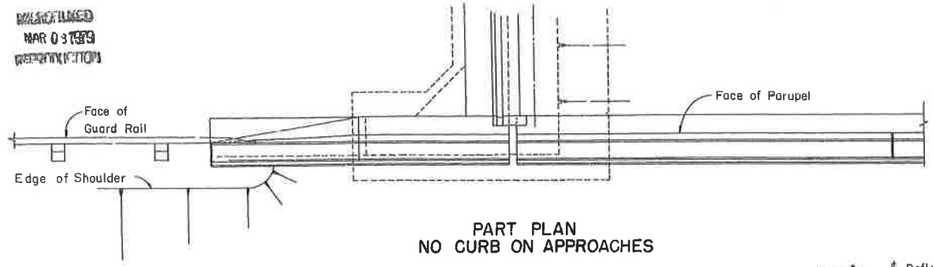

PART PLAN
NO CURB ON APPROACHES

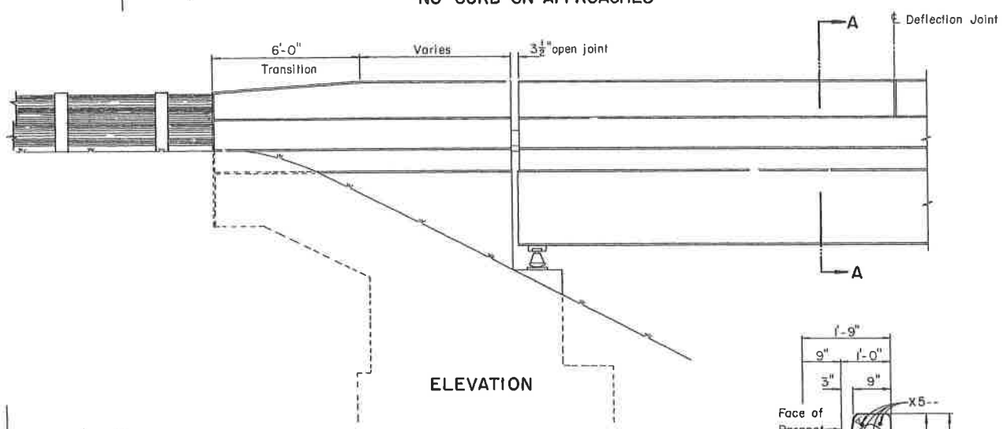

ELEVATION

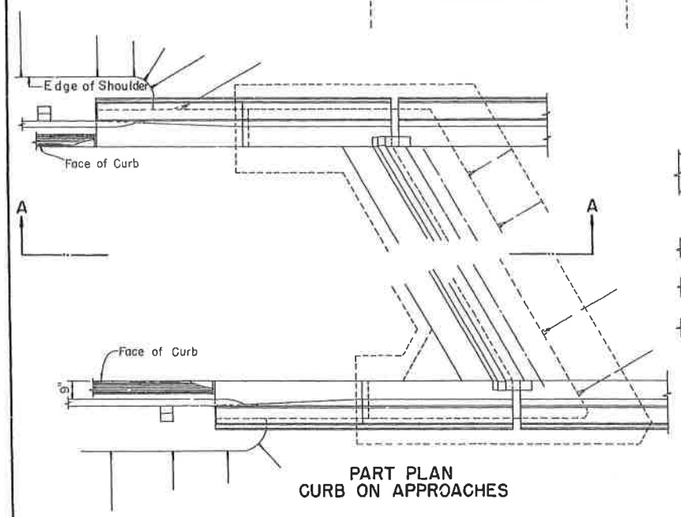

PART PLAN
CURB ON APPROACHES

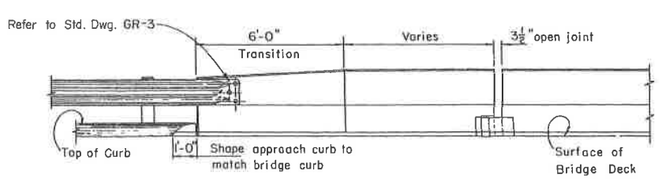

VIEW A-A

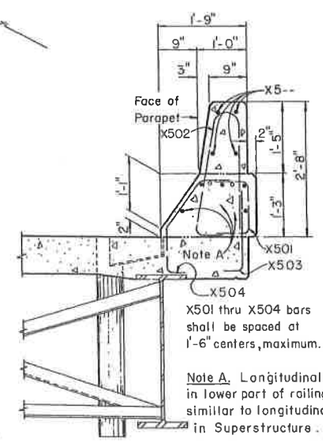

X501 thru X504 bars shall be spaced at 1'-6" centers, maximum.

Note A. Longitudinal reinforcing in lower part of railing should be similar to longitudinal reinforcing in Superstructure.

SECTION A-A

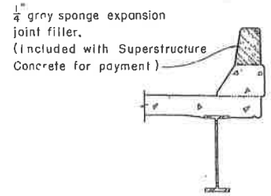

SECTION THRU
DEFLECTION JOINT

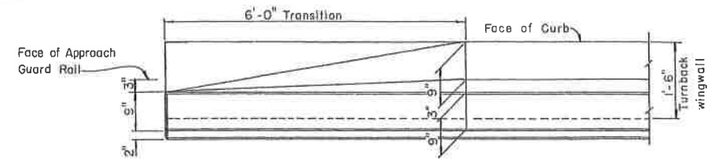

NO CURB ON APPROACHES

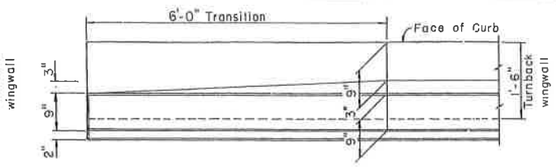

CURBS ON APPROACHES

PART PLANS-PARAPET ON WINGWALL

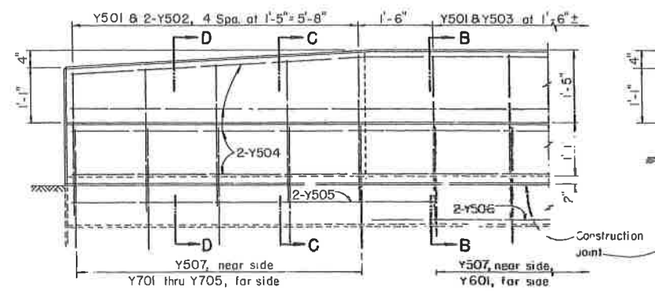

ELEVATION

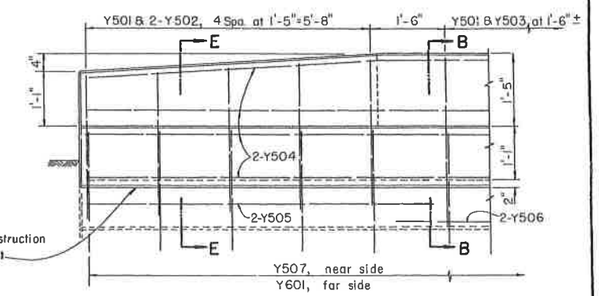

ELEVATION

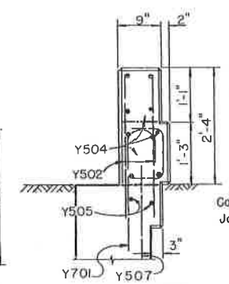

END VIEW

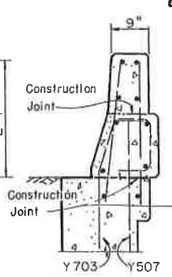

SECTION D-D

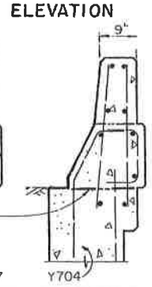

SECTION C-C

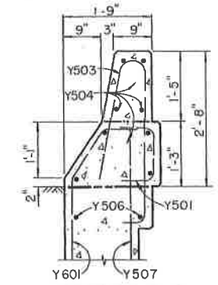

SECTION B-B

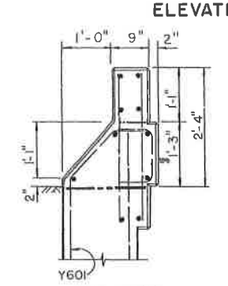

END VIEW

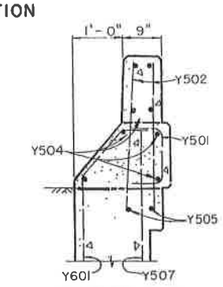

SECTION E-E

GENERAL NOTES

DESIGN SPECIFICATIONS: "Standard Specifications for Highway Bridges" adopted by AASHO, 1969, including the Ohio "Supplement" to these Specifications.

PREFORMED EXPANSION JOINT FILLER in the railing parapet deflection joints may be either 1/4" gray sponge rubber or 1/4" gray cellular polyvinyl chloride (PVC) sponge. If rubber is used it shall meet the requirements of AASHO M-153

DEFLECTION JOINTS shall be spaced at 16 feet centers, maximum. For continuous structures the panels shall be further subdivided in the negative moment region (over the piers) into lengths of not less than 5'-0" nor more than 7'-6".

QUANTITIES of concrete and reinforcing steel for railing shall be included with their appropriate Item under either Abutments or Superstructure for payment.

CONCRETE PARAPETS above upper construction joint shall be placed in alternate sections by the use of bulkheads. Closing sections shall be placed after removal of bulkheads and after placement of expansion joint filler. Exposed edges of the filler shall be flush with the surface of concrete and shall be free of mortar.

RAILING REINFORCING STEEL

Mark	Length	Shape
X501	2'-0"	Bt.
X502	5'-4"	Bt.
X503	A	Bt.
X504	A	Bt.
X5--		St.
Y501	2'-0"	Bt.
Y502	A	St.
Y503	A	Bt.
Y504	B	St.*
Y505	7'-3"	St.
Y506	B	St.
Y507	2'-10"	St.
Y601	4'-11"	Bt.*
Y701	4'-4"	Bt.
Y702	4'-8"	Bt.
Y703	4'-9"	Bt.
Y704	4'-10"	Bt.
Y705	4'-11"	Bt.

Bending Diagram

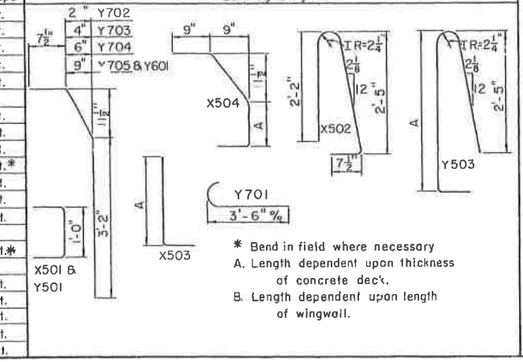

* Bend in field where necessary
A. Length dependent upon thickness of concrete deck.
B. Length dependent upon length of wingwall.

REVISIONS
1-1-71
10-15-71

STATE OF OHIO
DEPARTMENT OF HIGHWAYS
DIVISION OF DESIGN AND CONSTRUCTION
BUREAU OF BRIDGES

STANDARD BRIDGE ROADWAY RAILING FOR BEAM AND GIRDER BRIDGES

APPROVED				DRAWING NUMBER
DATE 2-1-68	ENGINEER OF BRIDGES			BR-1-67
PREPARED	TRACED	CHECKED	REVIEWED	SHEET NO 1
C.P.D.	N.R.B.	J.D.R.	BFG HHH	OF 3 SHEETS

MICROFILMED
MAR 0 9 1972
CONSTRUCTION

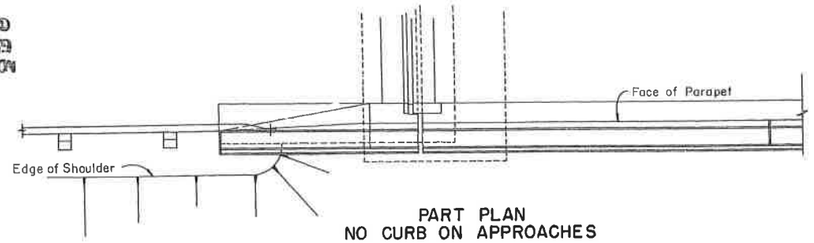

PART PLAN
NO CURB ON APPROACHES

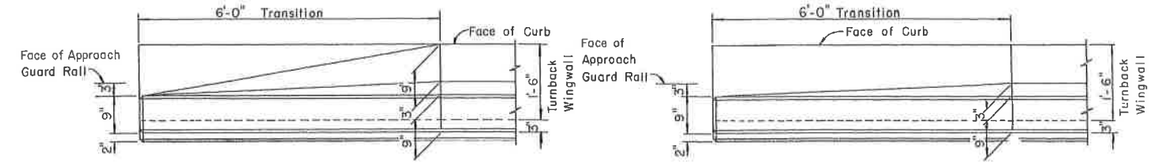

NO CURB ON APPROACHES

CURBS ON APPROACHES

PART PLAN – PARAPET ON WINGWALL

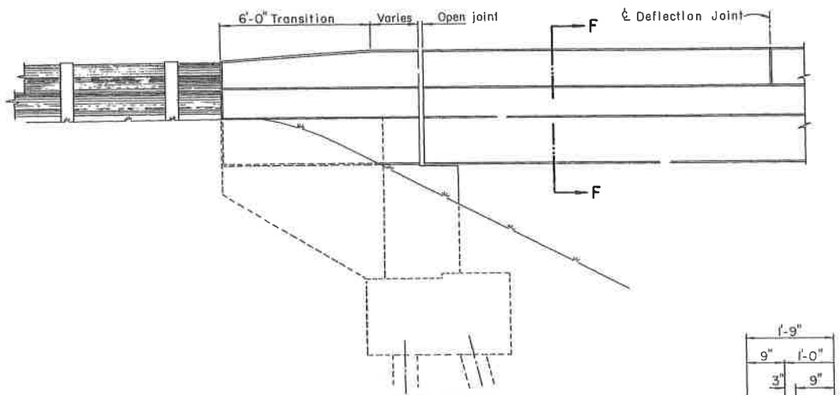

ELEVATION

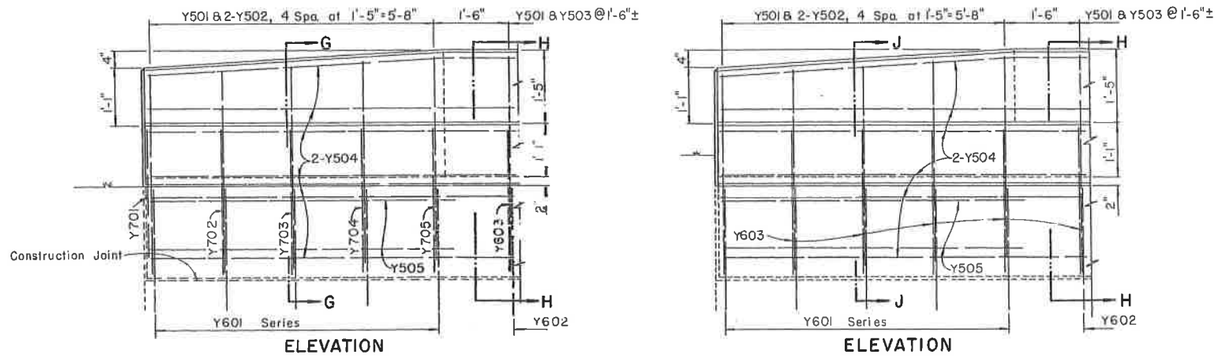

ELEVATION

ELEVATION

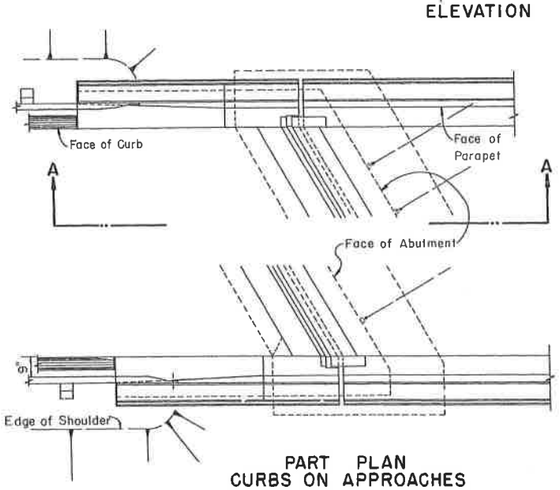

PART PLAN
CURBS ON APPROACHES

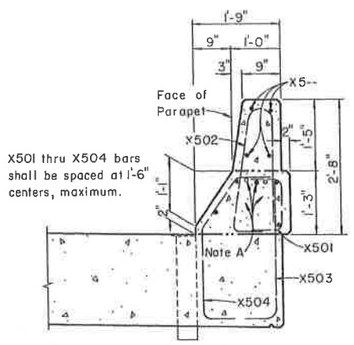

Note A. Longitudinal reinforcing in lower part of railing should be similar to longitudinal reinforcing in the Superstructure.

SECTION F-F

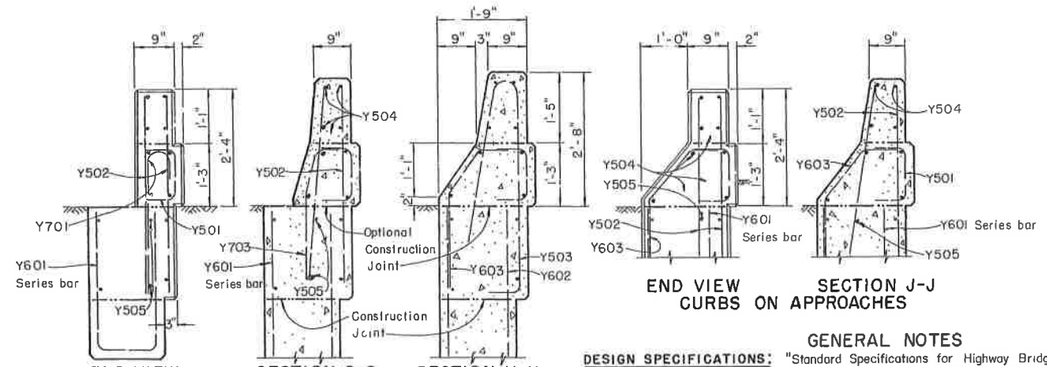

END VIEW SECTION G-G SECTION H-H

NO CURB ON APPROACHES

END VIEW SECTION J-J

CURBS ON APPROACHES

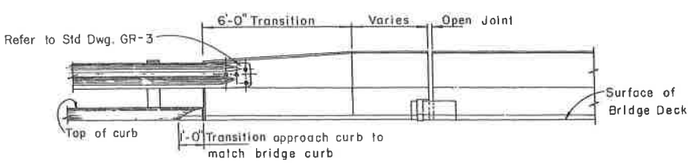

VIEW A-A

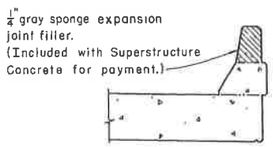

SECTION THRU DEFLECTION JOINT

RAILING REINFORCING STEEL

Mark	Length	Shape
X501	2'-0"	Bt.
X502	5'-4"	Bt.
X503	A	Bt.
X504	A	Bt.
X5--		St.
Y501	2'-0"	Bt.
Y502	A	St.
Y503	A	Bt.
Y504	B	St.*
Y505	5'-10"	St
Y601	C(Series)	Bt.
Y602	C	Bt.
Y603	A	Bt.
Y701	A	Bt.
Y702	A	Bt
Y703	A	Bt.
Y704	A	Bt.
Y705	A	Bt.

Bending Diagrams

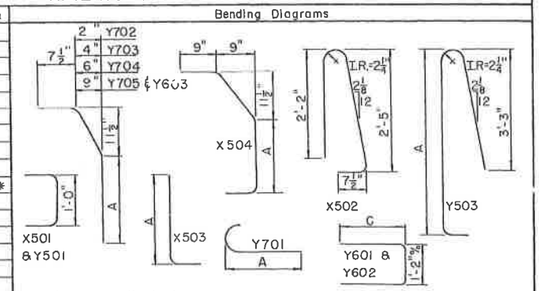

* Bend in field where necessary
A. Length dependent upon thickness of concrete deck
B. Length dependent upon length of wingwall
C. Length dependent upon location in wingwall

GENERAL NOTES

DESIGN SPECIFICATIONS: "Standard Specifications for Highway Bridges" adopted by AASHO, 1969, including the Ohio "Supplement" to these Specifications.

DEFLECTION JOINTS shall be spaced at 16 feet centers, maximum. For continuous structures the panels shall be further subdivided in the negative moment region (over the piers) into lengths of not less than 5'-0" nor more than 7'-6".

CONCRETE PARAPETS above upper construction joint shall be placed in alternate sections by the use of bulkheads. Closing sections shall be placed after removal of bulkheads and after placement of expansion joint filler. Exposed edges of the filler shall be flush with the surface of concrete and shall be free of mortar.

QUANTITIES of Concrete and Reinforcing Steel for Railing shall be included with their appropriate Item under either Abutments or Superstructure for payment.

PREFORMED EXPANSION JOINT FILLER in the railing parapet deflection joints may be either ¼" gray sponge rubber or ¼" gray cellular polyvinyl chloride (PVC) sponge. If rubber is used it shall meet the requirements of AASHO M-153.

REVISIONS
1-1-71
10-15-71

STATE OF OHIO
DEPARTMENT OF HIGHWAYS
DIVISION OF DESIGN AND CONSTRUCTION
BUREAU OF BRIDGES

STANDARD BRIDGE ROADWAY RAILING FOR CONCRETE SLAB BRIDGES WITH EXPANSION PROVISION AT ABUTMENTS

APPROVED: DATE: 2-1-68				DRAWING NUMBER BR-1-67
PREPARED C.P.D	TRACED N.R.B	CHECKED J.D.R.	REVIEWED WFG HHH	SHEET NO. 2 OF 3 SHEETS

MICROFILMED
FEB 21 1980

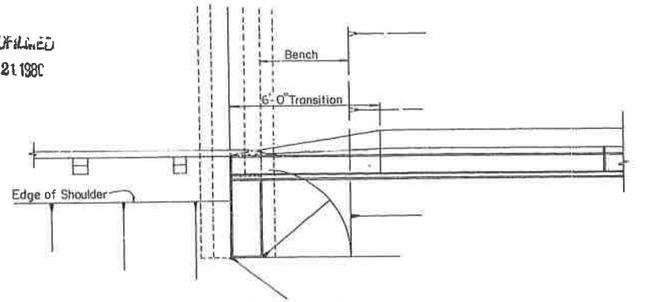

PART PLAN
NO CURB ON APPROACHES

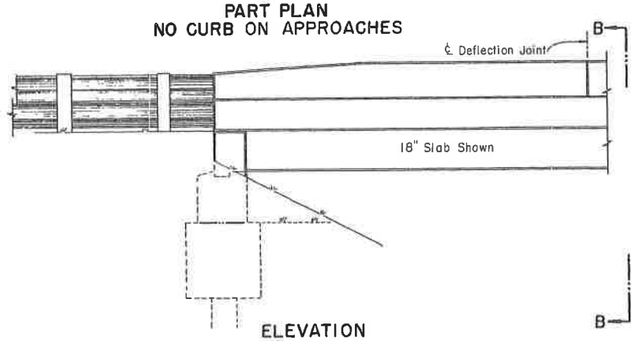

ELEVATION

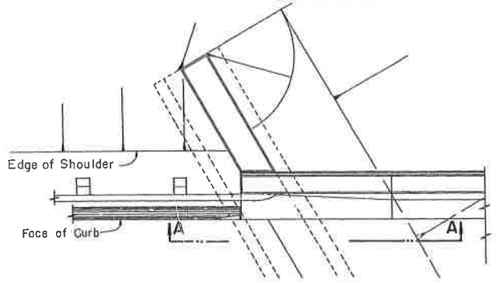

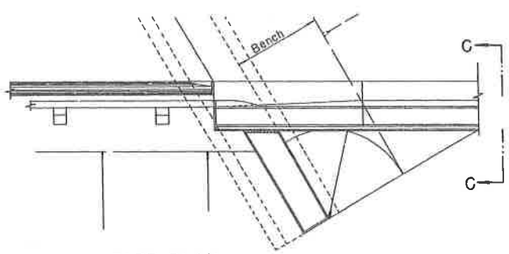

PART PLAN
CURBS ON APPROACHES

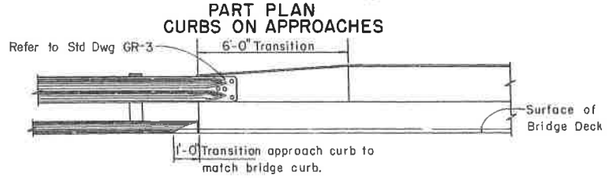

VIEW A-A
SLAB BRIDGE DETAILS

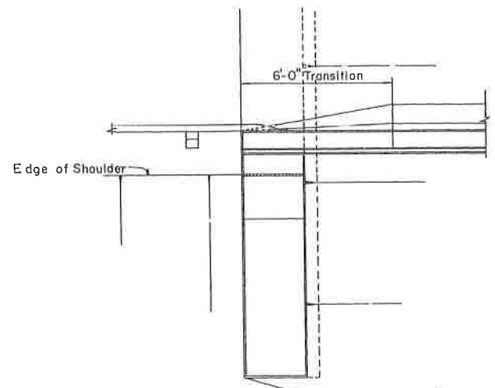

PART PLAN
NO CURB ON APPROACHES

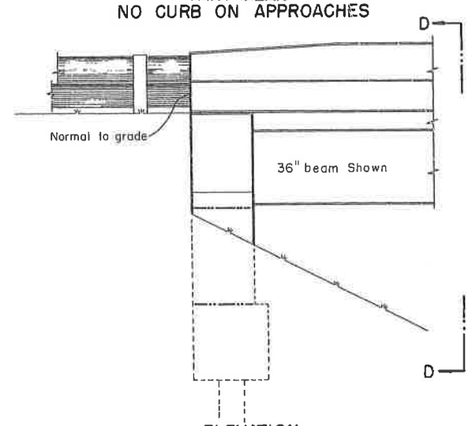

ELEVATION

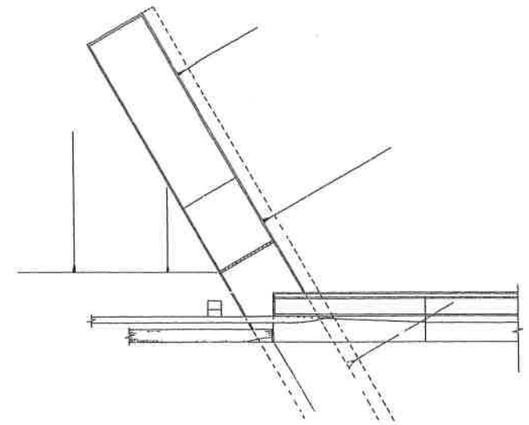

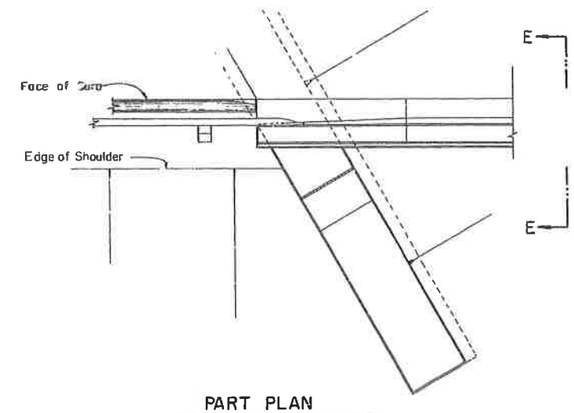

PART PLAN
CURBS ON APPROACHES

STEEL BEAM BRIDGE DETAILS

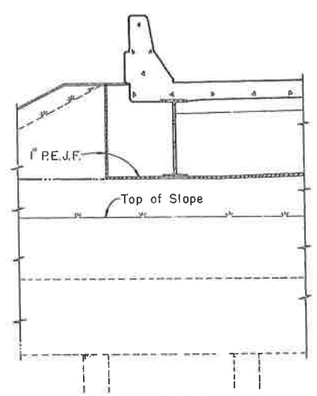

VIEW D-D

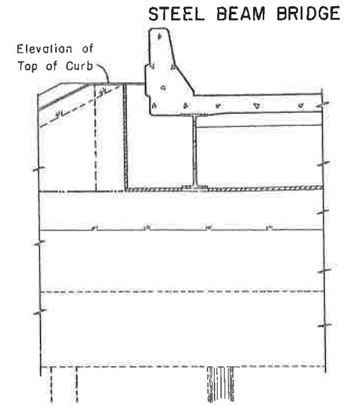

VIEW E-E

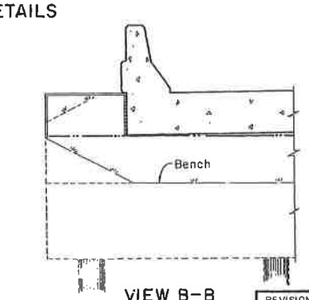

VIEW B-B

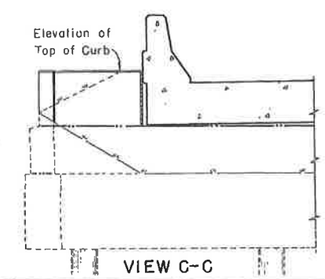

VIEW C-C

This drawing furnishes information to aid the designer in adapting the railing details to bridges with abutments which do not provide for expansion. It is not intended for use as a construction drawing.

REVISIONS	STATE OF OHIO DEPARTMENT OF HIGHWAYS DIVISION OF DESIGN AND CONSTRUCTION BUREAU OF BRIDGES			
1-1-71 10-15-71	TYPICAL BRIDGE ROADWAY RAILING DETAILS FOR STEEL BEAM OR CONCRETE SLAB BRIDGES WITH NO EXPANSION PROVISION AT ABUTMENTS			
	APPROVED: DATE: 2-1-68			DRAWING NUMBER BR-1-67
	PREPARED C.P.D.	TRACED N.R.B.	CHECKED J.D.R.	REVIEWED BFG HHH	SHEET NO 3 OF 3 SHEETS

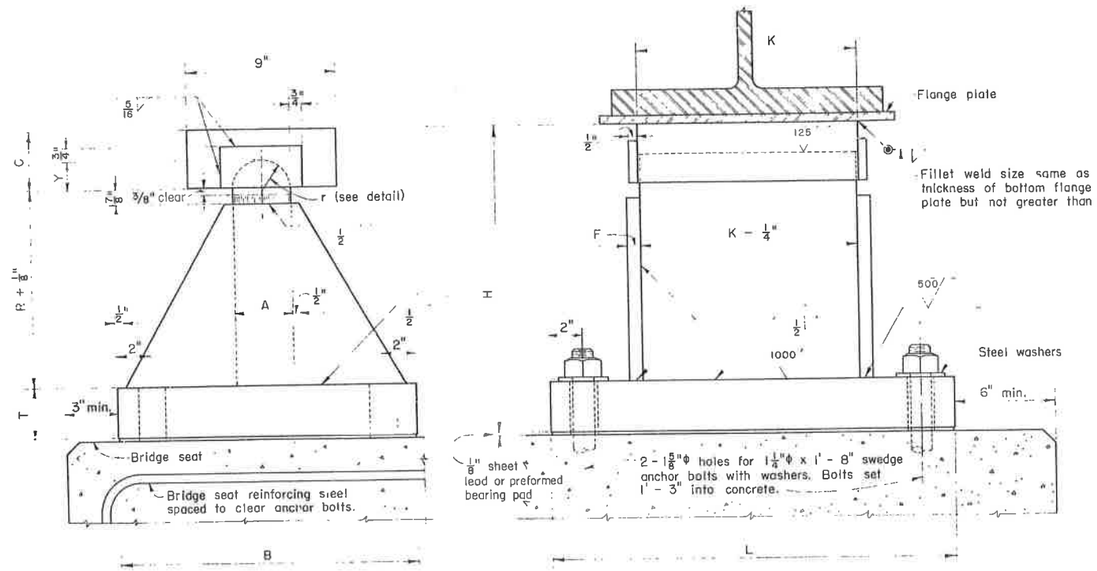

STRUCTURAL STEEL BOLSTER

See table below for additional dimensions.

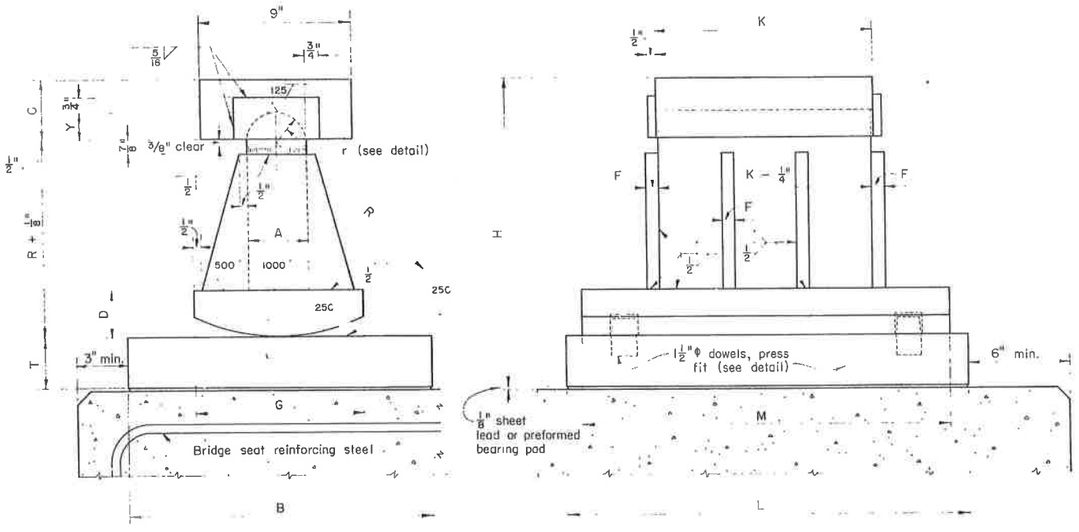

STRUCTURAL STEEL ROCKER

See table below for additional dimensions.

Bolster No.	Rocker No.	Dimensions (inches)													Weight each (lb.)		Maximum Load (lb.)
		A	B	C	D	F	G	H	K	L	M	R	T	Y	Bolster	Rocker	
	R-75	2 1/2	8	2 1/2	1 3/4	1/2	7	9 5/8	9	18	16	5 1/2	1 1/2	1 3/16		205	75,000
B-100	R-100	2 1/2	10	2 1/2	2	1/2	7 1/2	10 5/8	9	19	17	6 1/2	1 1/2	1 3/16	225	250	100,000
B-125	R-125	3	11	3	2	1/2	8	12 1/8	10 1/2	20	18	7 1/2	1 1/2	1 7/16	295	315	125,000
B-150	R-150	3	12	3	2 1/4	1/2	8 1/2	13 3/8	11 1/2	22	19	8 1/2	1 3/4	1 7/16	360	400	150,000
B-175	R-175	3	14	3 1/2	2 1/2	1/2	9	15 1/8	12	23	20	9 1/2	2	1 7/16	455	505	175,000
B-200	R-200	3	16	3 1/2	2 3/4	5/8	9	16 3/8	12	24	21	10 1/2	2 1/4	1 7/16	540	605	200,000
B-225	R-225	3	17	3 1/2	2 3/4	5/8	9	16 7/8	13	25	22	11	2 1/4	1 7/16	590	665	225,000
B-250	R-250	3 1/2	18	3 1/2	2 3/4	3/4	10	17 5/8	13	26	23	11 1/2	2 1/2	1 11/16	695	775	250,000
B-275	R-275	3 1/2	19	3 1/2	3 1/4	3/4	12	18 3/8	14	27	24	12	2 3/4	1 11/16	800	945	275,000
B-300	R-300	3 1/2	20	3 1/2	3 1/4	3/4	12	19 1/8	14	28	25	12 1/2	3	1 11/16	895	1050	300,000

Weights given are for one rocker or bolster complete (including sheet lead, anchor bolts and washers).

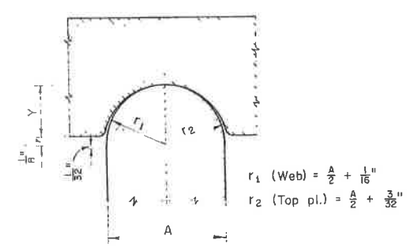

TOP BEARING DETAIL

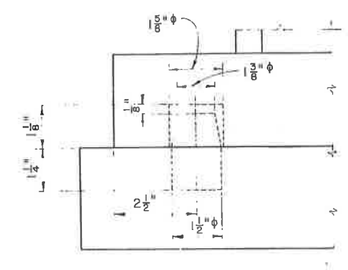

DOWEL DETAIL

DESIGN SPECIFICATIONS: This standard drawing conforms to the requirements of "Design Specifications for Highway Structures" of the State of Ohio, Department of Highways, dated October 1, 1951, together with revisions thereof dated July 15, 1952, April 1, 1954 and February 1, 1955.

LIMITATION: This rocker and bolster design shall not be used where the anticipated movement is in excess of 2 inches.

REVISIONS

2-2-59

STATE OF OHIO
DEPARTMENT OF HIGHWAYS
DIVISION OF DESIGN AND CONSTRUCTION
BUREAU OF BRIDGES

STANDARD

ROCKERS AND BOLSTERS

FOR STEEL BEAM AND GIRDER BRIDGES

REACTIONS 75,000 lb. TO 300,000 lb.

APPROVED
DATE 3-1-59
Richard Orth
ENGINEER OF BRIDGES

DRAWING NUMBER RB-1-55

PREPARED	TRACED	CHECKED	REVIEWED
NPB CFB JCM WHR	JVP	GEM GPM	CSD BFG CHA AJF DHO

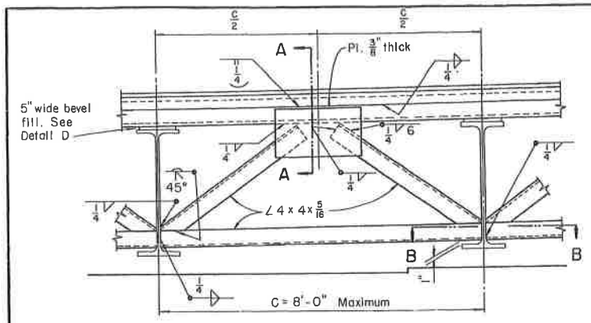

END CROSSFRAME

For beam spacing of 8'-0" or less measured parallel to end dam.

MiCiOrdinuc
FEB 21 1990

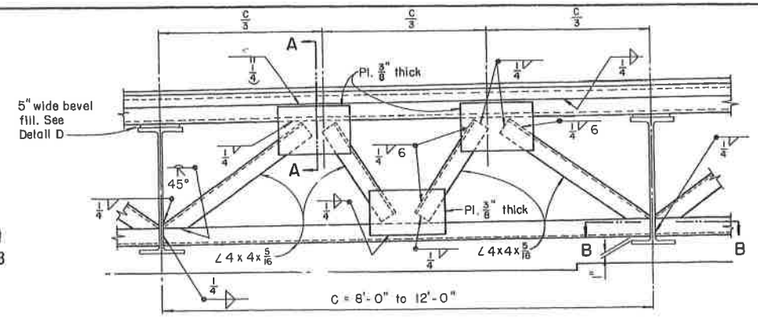

END CROSSFRAME

For beam spacing of 8'-0" to 12'-0" measured parallel to end dam.

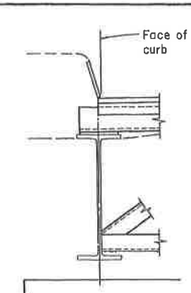

BRIDGE WITH CURBS

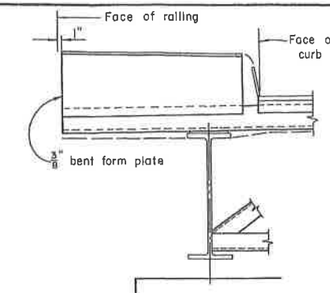

BRIDGE WITH SIDEWALK

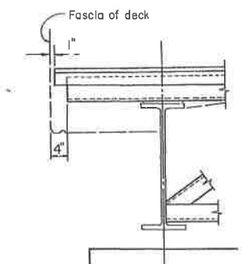

BRIDGE WITHOUT CURBS

END DAM DETAILS AT FASCIA BEAM

(For additional details see Sheet No 2)

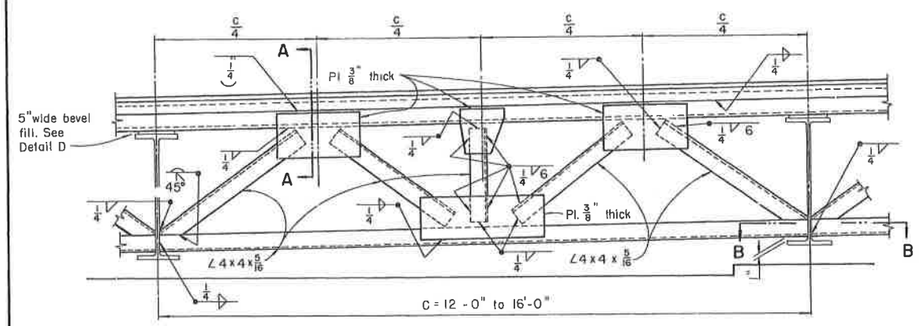

END CROSSFRAME

For beam spacing of 12'-0" to 16'-0" measured parallel to end dam.

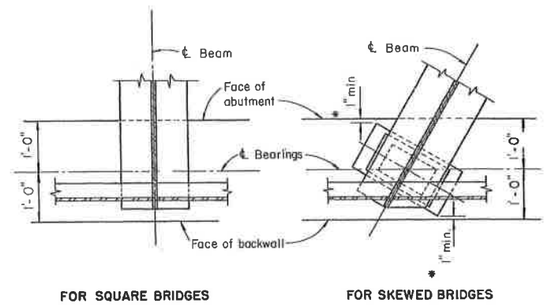

FOR SQUARE BRIDGES

FOR SKEWED BRIDGES

SECTION B - B

* Where necessary, cope corner of masonry plate in order to maintain 1" clearance.

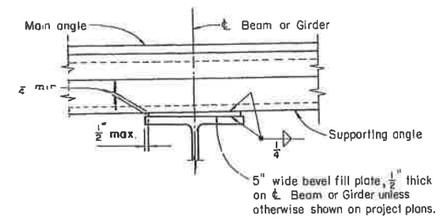

DETAIL D

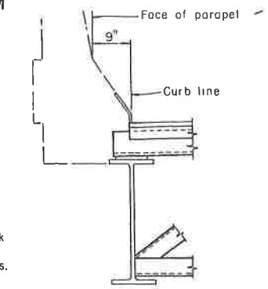

BRIDGE WITH ROADWAY PARAPET RAILING

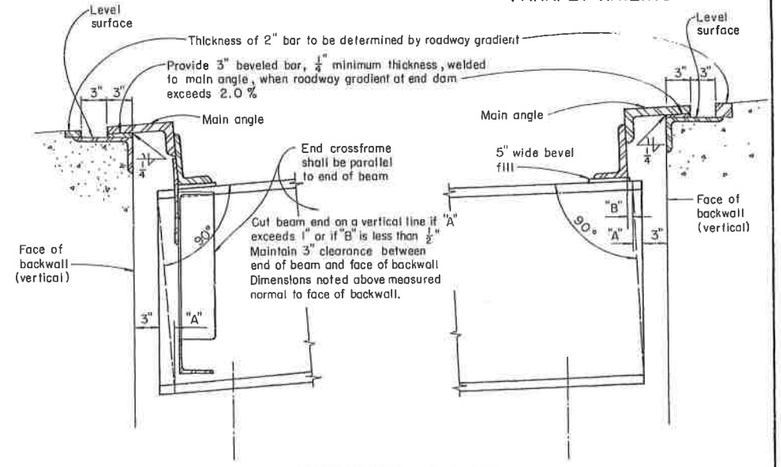

LONGITUDINAL SECTION
BRIDGE ON GRADE

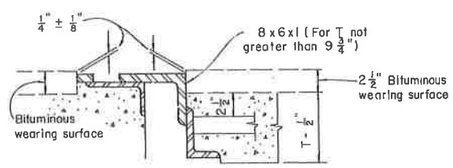

SECTION A - A

SHOWING ROADWAY END DAM FOR BITUMINOUS WEARING SURFACE

Same as SECTION A-A for monolithic wearing surface except as shown.

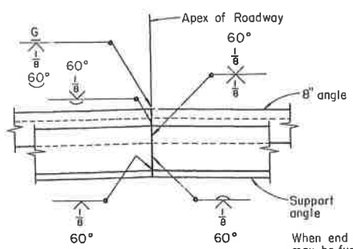

WELDED BUTT JOINT IN SUPERSTRUCTURE END DAM

When end dam contains no apex, a butt joint may be furnished near the centerline of the deck, if necessary to facilitate handling and shipping.

A welded butt joint in the end dam, at the apex of roadway, will be required for that portion of the end dam attached to the superstructure. The portion attached to the backwall shall be placed in segments not less than 6'-0" in length, with a joint at each joint in the backwall and with one of the joints at the apex of roadway. These shall be closely butted but shall not be welded.

5/8" x 2" bolts at not more than 2'-0" % with nuts tack-welded to under side of lower angle. 1 1/16" holes in upper angle. Center 5/8" bolts in 1 1/16" holes. Apply flake graphite between washers and angle. Turn bolts tight and release one-half turn. Remove bolts as soon as concrete has set, preferably within two hours after placing, to avoid damage due to temperature expansion or contraction of superstructure. Fill holes with bituminous material.

Steel washers

This contact surface shall not be painted but shall be cleaned and lubricated with flake graphite in the field immediately prior to placing of backwall concrete.

9/16" ϕ holes at 12" %

∠ 8 x 4 x 1 (8x6x1 for T greater than 9 1/2")

2 x 1 edge bar †

∠7x 4x1/2

2" ϕ holes, 1 1/2" pitch

1 1/2"

Anchor bars 2x1/2x1'-6" placed parallel with longitudinal reinforcing steel.(Spaced at 12" centers.)

∠ 7x 4 x 3/4

6x1/2 x 12" plates, spaced at approximately 15" % except near joints in the angle, where the plates shall be placed within 6" of each side of the joint. The holes may be burned in the plate.

Top of backwall form shall be below 9/16" ϕ holes in ∠ 7x4x1/2

Portions of end dams in contact with steel or with concrete shall not be painted. All other portions shall be cleaned and painted in accordance with 514.

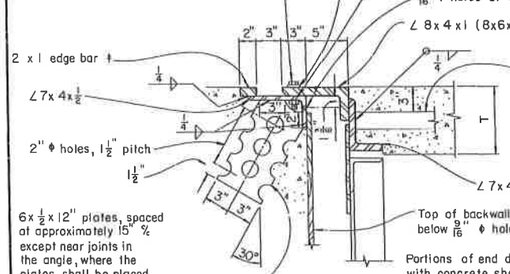

SECTION A - A

SHOWING ROADWAY END DAM FOR MONOLITHIC WEARING SURFACE

† Furnish different thickness if required to compensate for grades in excess of 2%.

REVISIONS	STATE OF OHIO DEPARTMENT OF HIGHWAYS DIVISION OF DESIGN AND CONSTRUCTION BUREAU OF BRIDGES				
	STANDARD SUPERSTRUCTURE DETAILS FOR STEEL BEAM AND GIRDER BRIDGES				
	APPROVED: R. H. Abraham ENGINEER OF BRIDGES DATE 6-12-69				DRAWING NUMBER SD-1-69
	PREPARED FFE	TRACED NRB	CHECKED WJJ FFE	REVIEWED CDB RVH BFG	SHEET NO. 1 OF 4 SHEETS

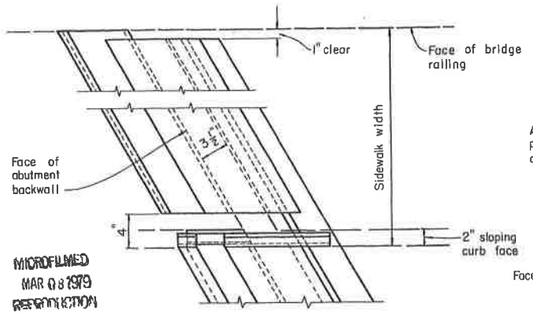

PART DECK PLAN
SKEWED BRIDGES

MICROFILMED
MAR 08 1979
REPRODUCTION

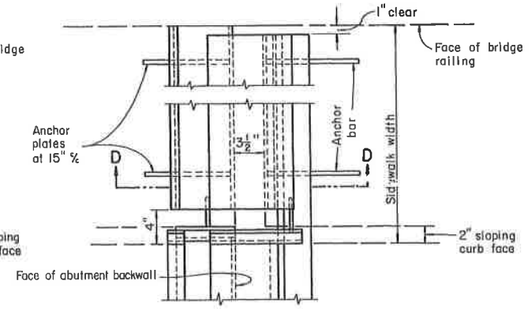

PART DECK PLAN
SQUARE BRIDGES

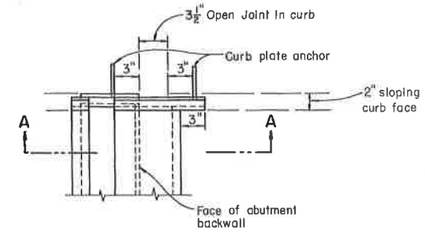

PART DECK PLAN
SQUARE BRIDGES

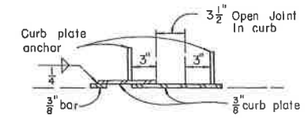

SECTION C-C

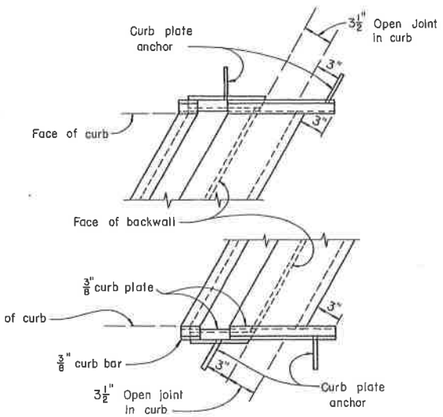

PART DECK PLAN
SKEWED BRIDGES

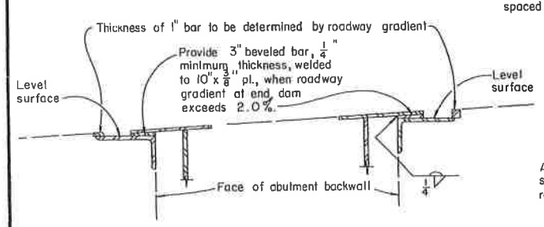

SIDEWALK END DAMS
FOR BRIDGE ON GRADE

For additional details see Section D-D

SIDEWALK END DAM DETAILS

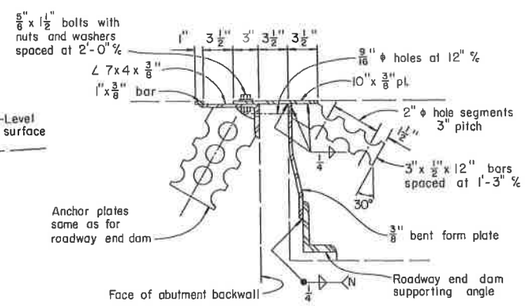

SECTION D-D

For additional notes and details see Section A-A on Sheet No. 1

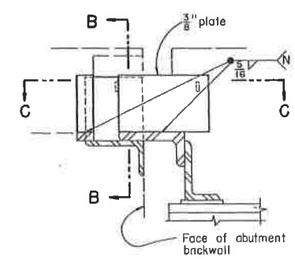

SECTION A-A

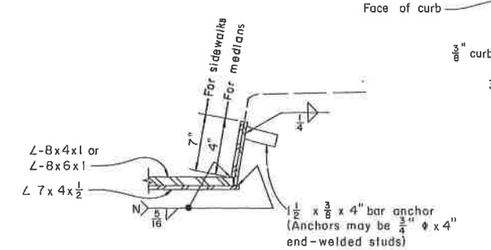

SECTION B-B

CURB PLATE DETAILS
SIDEWALKS, SAFETY CURBS
AND RAISED MEDIANS

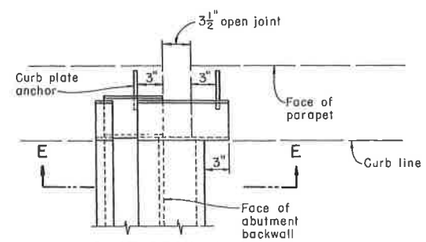

PART DECK PLAN
SQUARE BRIDGES

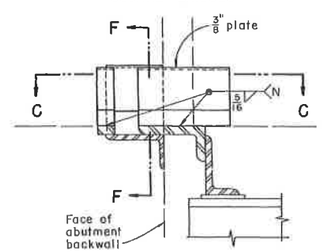

SECTION E-E

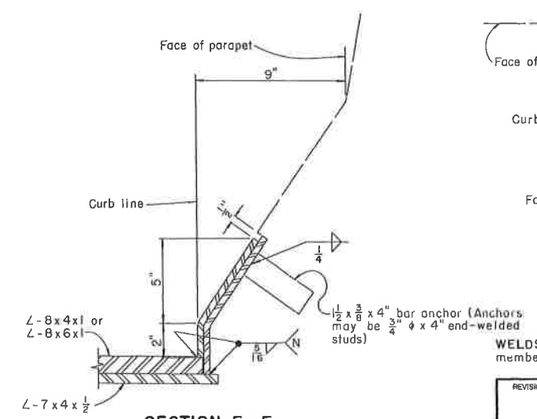

SECTION F-F

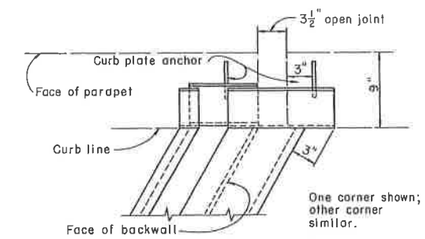

PART DECK PLAN
SKEWED BRIDGES

WELDS on non-stress-carrying members are shown thus: N 5/16

CURB PLATE DETAILS
ROADWAY PARAPET
RAILINGS AND BARRIER MEDIANS

REVISIONS	STATE OF OHIO DEPARTMENT OF HIGHWAYS DIVISION OF DESIGN AND CONSTRUCTION BUREAU OF BRIDGES			
	STANDARD SUPERSTRUCTURE DETAILS FOR STEEL BEAM AND GIRDER BRIDGES			
	APPROVED: DATE: 6-12-69 ENGINEER OF BRIDGES			DRAWING NUMBER SD-1-69
	PREPARED FFE JFS	TRACED NRB	CHECKED MPB CDB	REVIEWED CDB RVH BFG	SHEET NO. 2 OF 4 SHEETS

MICROFILMED
FEB 21 1980

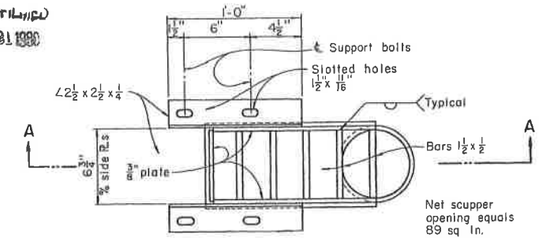

PLAN
STANDARD SCUPPER

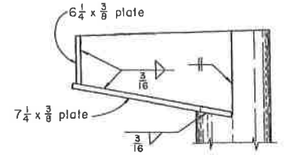

SCUPPER ELEVATION

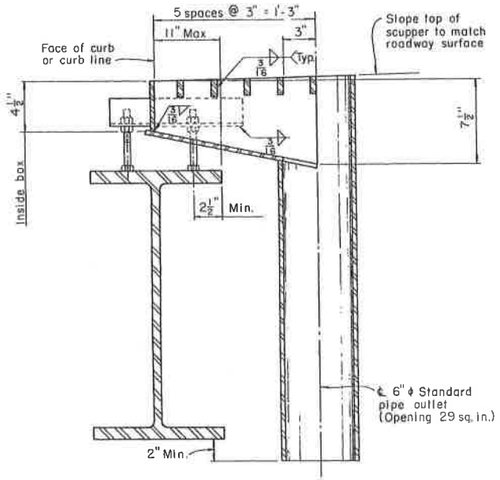

SECTION A-A

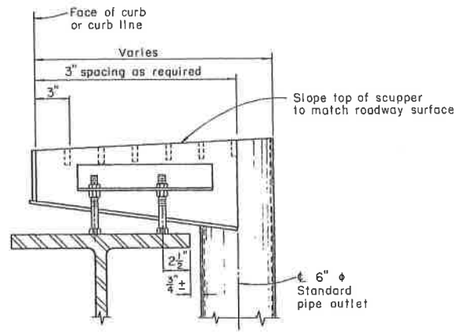

DETAIL A

Scupper elevation showing method for lengthening scupper where necessary to clear the flanges

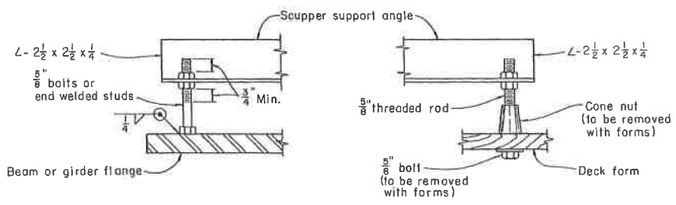

DETAIL B

DETAIL C

For scuppers that are not located adjacent to a beam or girder flange.

SCUPPER SUPPORT BOLTS

Scuppers shall be furnished in sufficient number to provide one square inch of net scupper opening for each 12 to 15 square feet of deck area to be drained. The downspout shall have at least one square inch of opening for each five square inch of net scupper opening, with a minimum nominal diameter of 6 inches.

Scupper should clear crossframes by at least 6" and abutments by 2'-6". They shall be no nearer to ℄ of pier bearings than 0.10 of span length.

The support angles and support bolts are included with scupper for payment.

Scuppers, including support angles, shall be galvanized in accordance with 711.

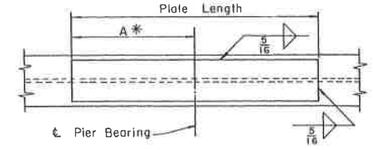

TOP FLANGE

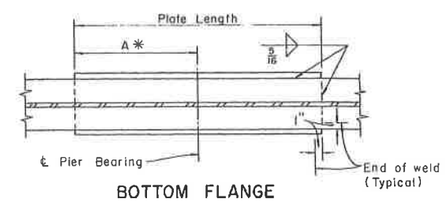

BOTTOM FLANGE

MOMENT PLATES

* See Standard Drawings or project plans for dimension "A". Dimension "A" equals ½ plate length unless otherwise shown, in which case the plans shall indicate the span to which dimension "A" applies.

REVISIONS	STATE OF OHIO DEPARTMENT OF HIGHWAYS DIVISION OF DESIGN AND CONSTRUCTION BUREAU OF BRIDGES				
	STANDARD SUPERSTRUCTURE DETAILS FOR STEEL BEAM AND GIRDER BRIDGES				
	APPROVED DATE: 6-12-69	C. H. Wheeler ENGINEER OF BRIDGES			DRAWING NUMBER SD-1-69
	PREPARED	TRACED	CHECKED	REVIEWED	SHEET NO 3
	MPB	NRB	WJJ	CDB RVH BFG	OF 4 SHEETS

22"
17"
11"
8.5"
8.5"
11"
17"
22"